SPC
Spare Parts Catalogue

Tetra Pak A3/Flex

648575-0150

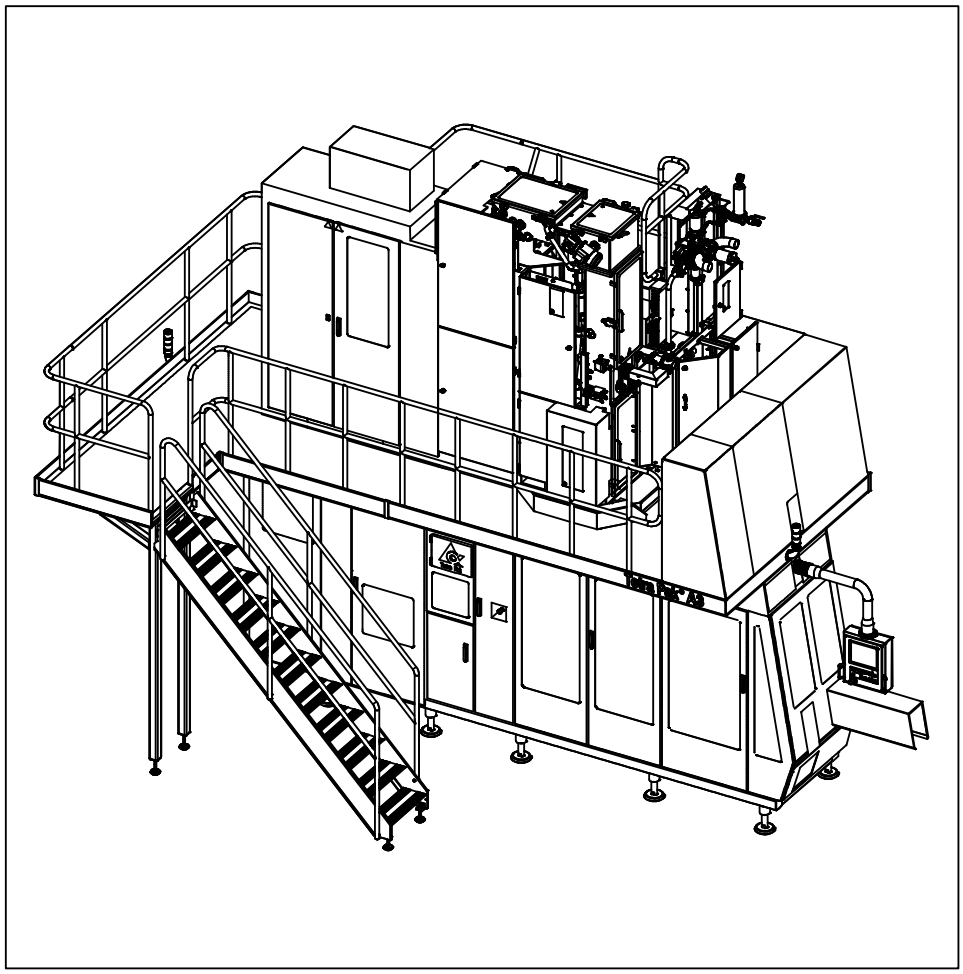

Tetra Pak

Doc. No: SPC-2851301-0101

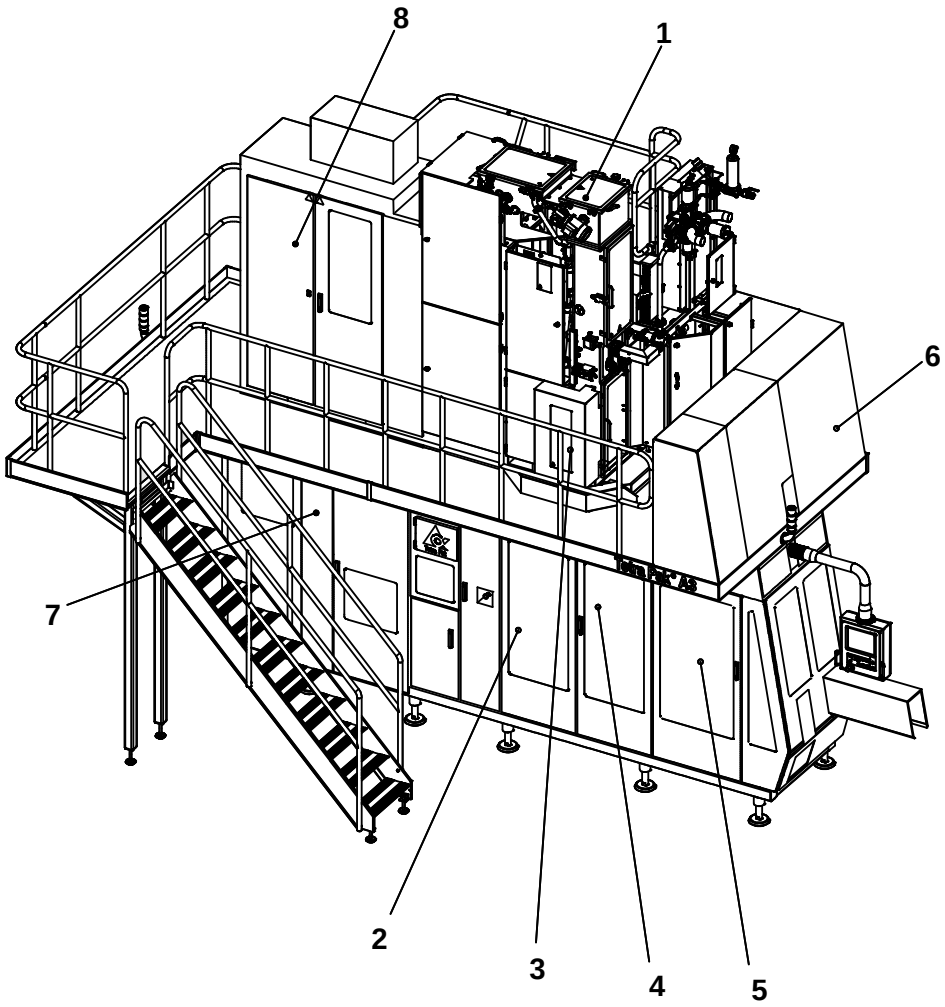

The position numbers in the illustration correspond with the chapter numbers listed on the next page.

Copyright © 2006 Tetra Pak Group

All rights reserved. No part of this document may be reproduced or copied in any form or by any means without written permission from Tetra Pak Carton Ambient S.p.A..

Tetra Pak and all Tetra Pak products are trademarks belonging to the Tetra Pak Group.

The content of this manual is in accordance with the design and construction of the machine or equipment at the time of publishing. Tetra Pak reserves the right to introduce design modifications without prior notice.

This document was produced by:

Tetra Pak Carton Ambient S.p.A.
Technical Publications
Via Delfini 1
41100 Modena /Italy

This Tetra Pak equipment was manufactured by:

Tetra Pak Carton Ambient S.p.A.
Via Delfini 1
41100 Modena /Italy

Additional copies can be ordered from Tetra Pak Parts or the nearest Tetra Pak office. When ordering additional copies, always provide the document number. This can be found in the machine specification document. It is also printed on the front cover and in the footer on each page of the manual.

Doc. No. SPC-2851301-0101

Issue 2006-10

This document is valid from:

21211/00001

Series No/Machine No Sign.

SPC

Spare Parts Catalogue

Tetra Pak A3/Flex
648575-0150

BINDER 1

i Introduction

1 Superstructure
B-648555-0100

2 Machine Body
B-648559-0250

3 Drive Unit
B-648543-0450

4 Jaw System
B-648549-0350

BINDER 2

5 Final Folder
B-648552-0150

6 Service Unit
B-648506-0400

7 Automatic Splicing Unit
B-648528-0200

8 Electrical Cabinet
B-648539-0250

9 Regular Accessories
B-648561-0100

10 Optional Accessories
B-648564-0100

ii Part Number Index

iii Electrical Parts Index

A list of all optional equipment, optional kits, and rebuilding kits that this catalogue is valid for is found on the next page.

Doc. No: SPC-2851301-0101

Issue 2006-10

Tetra Pak

Tetra Pak Carton Ambient S.p.A.

Valid for:

HI - Headspace by Injection
2636960-0100

Stair on RH side
2564231-0100

Tetra Pak DIMC
648553-0100

Tetra Pak PT/Flex
648556-0100

Update Log for Doc. No. SPC-2851301-0101

This table shows all changes made to this catalogue, such as kits installed and pages added or removed.

Date	Installed Kit	Added Pages (Doc. No.)	Removed Pages	Signature

Date	Installed Kit	Added Pages (Doc. No.)	Removed Pages	Signature

i Introduction

en About the Introduction Chapter
This chapter contains basic information about this catalogue and related Tetra Pak equipment.

cs Seznámení s úvodní kapitolou
Tato kapitola obsahuje základní informace o tomto katalogu a o příslušném zařízení Tetra Pak.

da Om indledningen
Kapitlet indeholder grundlæggende oplysninger om dette katalog og tilhørende Tetra Pak-udstyr.

de Zur Einleitung
Dieses Kapitel enthält grundlegende Informationen zu diesem Handbuch und der entsprechenden Tetra Pak Ausrüstung.

el Σχετικά με το Κεφάλαιο 'Εισαγωγή'
Αυτό το κεφάλαιο περιέχει βασικές πληροφορίες για τον παρόντα κατάλογο και τον σχετικό εξοπλισμό της Tetra Pak.

es Sobre el Capítulo de Introducción
Este capítulo contiene información básica sobre este manual y el equipo Tetra Pak relacionado.

et Sissejuhatava peatüki kohta
Sellest peatükist leiate põhiinfo kataloogi ja Tetra Pak seadmete kohta.

fi Tietoja Johdanto-luvusta
Tässä luvussa on perustietoja tästä luettelosta ja Tetra Pak -laitteesta.

fr Concernant le chapitre d'Introduction
Le présent chapitre contient les renseignements de base concernant ce manuel et l'équipement Tetra Pak concerné.

hu A Bevezetés fejezetről
Ezen fejezet alapvető információt tartalmaz jelen kézikönyvről és a kapcsolódó Tetra Pak berendezésről.

it Informazioni sulla sezione Introduzione
Questa sezione contiene informazioni generali sul presente catalogo e la relativa macchina Tetra Pak.

lt Apie pristatymo skyrių
Šiame skyriuje yra pagrindinė informacija apie šį katalogą ir su juo susijusią Tetra Pak įrangą.

lv Par Ievada nodaļu
Šī nodaļa satur galveno informāciju par katalogu un par Tetra Pak iekārtām, uz kurām tas attiecas.

mt Dwar il-Kapitlu ta' l-Introduzzjoni
Dan il-kapitlu fih informazzjoni bażika dwar dan il-katalgu u tagħmir relatat ta' Tetra Pak.

nl Omtrent het hoofdstuk Inleiding
Dit hoofdstuk bevat basisinformatie betreffende dit handboek en daarmee verband houdende apparatuur van Tetra Pak.

no Om kapitlet Introduksjon
Dette kapitlet inneholder grunnleggende informasjon om denne katalogen og relatert Tetra Pak-ustyr.

pl Informacje na temat Rozdziału Wprowadzającego
Rozdział ten zawiera podstawowe informacje na temat niniejszego katalogu i związanego z nim wyposażenia Tetra Pak.

pt Sobre o capítulo Introdução
Este capítulo contém informações básicas sobre este catálogo e ao equipamento Tetra Pak relacionado.

sk O úvodnej kapitole
Táto kapitola obsahuje základné informácie o tomto katalógu a príslušnom zariadení Tetra Pak.

sl Informacija o uvodnem poglavju
Poglavje vsebuje osnovne informacije o tem katalogu in opremi Tetra Pak.

sv Om inledningskapitlet
Det här kapitlet innehåller grundläggande information om katalogen och Tetra Pak-utrustningen.

Introduction

Illustrations . . . . . i - 5
English Text . . . . . i - 7

Úvod

Obrázky . . . . . i - 5
Český text . . . . . i - 11

Indledning

Illustrationer . . . . . i - 5
Dansk tekst . . . . . i - 15

Einleitung

Abbildungen . . . . . i - 5
Deutscher Text . . . . . i - 19

Εισαγωγή

Εικόνες . . . . . i - 5
Ελληνικό Κείμενο . . . . . i - 23

Introducción

Ilustraciones . . . . . i - 5
Texto español . . . . . i - 27

Sissejuhatus

Illustratsioonid . . . . . i - 5
Eestikeelne tekst . . . . . i - 31

Johdanto

Kuvat . . . . . i - 5
Suomenkielinen teksti . . . . . i - 35

Introduction

Figures . . . . . i - 5
Texte français . . . . . i - 39

Bevezetés

Ábrák . . . . . i - 5
Magyar szöveg . . . . . i - 43

Introduzione

Figure . . . . . i - 5
Testo in italiano . . . . . i - 47

Įvadas

Iliustracijos . . . . . i - 5
Lietuviškas tekstas . . . . . i - 51

Ievads

Ilustrācijas . . . . . i - 5
Latviešu teksts . . . . . i - 55

Introduzzjoni

Stampi . . . . . i - 5
Test bil-Malti . . . . . i - 59

Inleiding

Illustraties . . . . . i - 5
Nederlands tekst . . . . . i - 63

Introduksjon

Illustrasjoner . . . . . i - 5
Norsk tekst . . . . . i - 67

Wprowadzenie

Ilustracje . . . . . i - 5
Tekst po polsku . . . . . i - 71

Introdução

Ilustrações . . . . . i - 5
Texto em portugese . . . . . i - 75

Úvod

Zobrazenie . . . . . i - 5
Slovenský text . . . . . i - 79

Uvod

Risbe . . . . . i - 5
Slovensko besedilo . . . . . i - 83

Inledning

Bilder . . . . . i - 5
Svensk text . . . . . i - 87

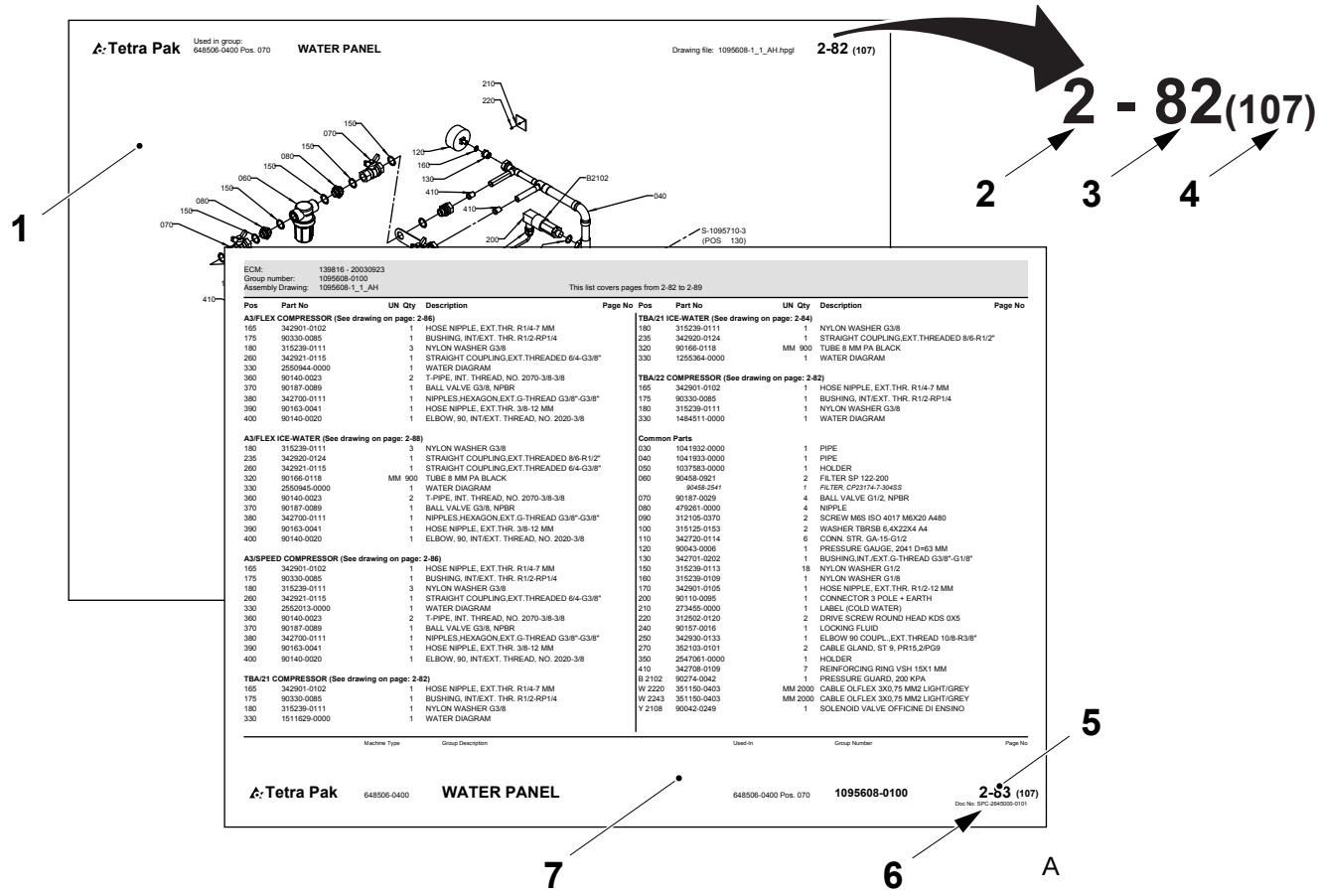
Tetra Pak
Used in group: 648506-0400 Pos. 070
WATER PANEL
Drawing file: 1095608-1_1_AH.hpgl
2-82 (107)
2 - 82(107)
1
2
3
4
5
6
7
A
ECM: 139816 - 20030923
Group number: 1095608-0100
Assembly Drawing: 1095608-1_1_AH
This list covers pages from 2-82 to 2-89
Tetra Pak 648506-0400 WATER PANEL 648506-0400 Pos. 070 1095608-0100 2-83 (107)

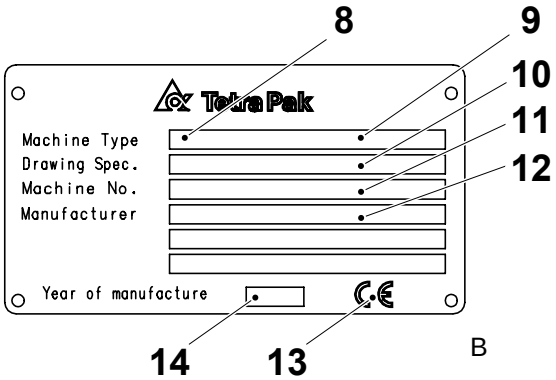
8
9
10
11
12
Tetra Pak
Machine Type
Drawing Spec.
Machine No.
Manufacturer
Year of manufacture
14
13
B

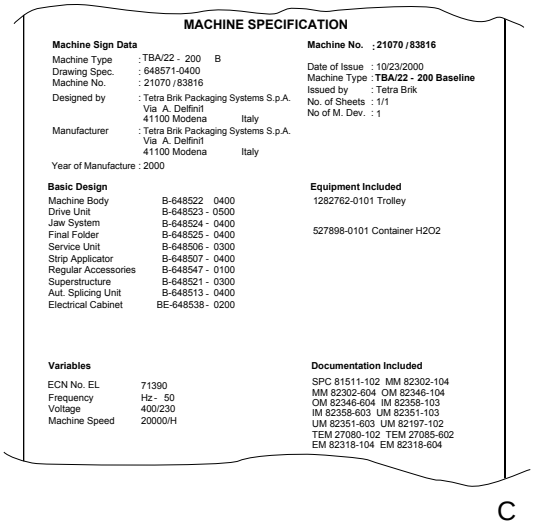
MACHINE SPECIFICATION
Machine Sign Data
Machine Type : TBA/22 - 200 B
Drawing Spec. : 648571-0400
Machine No. : 21070 / 83816
Designed by : Tetra Brik Packaging Systems S.p.A. Via A. Delfini 41100 Modena Italy
Manufacturer : Tetra Brik Packaging Systems S.p.A. Via A. Delfini 41100 Modena Italy
Year of Manufacture : 2000
Machine No. : 21070 / 83816
Date of Issue : 10/23/2000
Machine Type : TBA/22 - 200 Baseline
Issued by : Tetra Brik
No. of Sheets : 1/1
No of M. Dev. : 1
Basic Design
Machine Body B-648522 0400
Drive Unit B-648523 - 0500
Jaw System B-648524 - 0400
Final Folder B-648525 - 0400
Service Unit B-648506 - 0300
Strip Applicator B-648507 - 0400
Regular Accessories B-648547 - 0100
Superstructure B-648521 - 0300
Aut. Splicing Unit B-648513 - 0400
Electrical Cabinet BE-648538 - 0200
Equipment Included
1282762-0101 Trolley
527898-0101 Container H2O2
Variables
ECN No. EL 71390
Frequency Hz - 50
Voltage 400/230
Machine Speed 20000/H
Documentation Included
SPC 81511-102 MM 82302-104
MM 82302-604 OM 82346-104
OM 82346-604 IM 82358-103
IM 82358-603 UM 82351-103
UM 82351-603 UM 82197-102
TEM 27080-102 TEM 27085-602
EM 82318-104 EM 82318-604
C

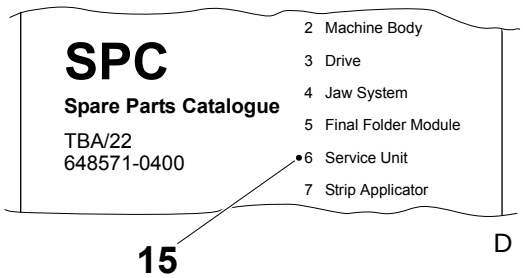
SPC
Spare Parts Catalogue
TBA/22
648571-0400
2 Machine Body
3 Drive
4 Jaw System
5 Final Folder Module
6 Service Unit
7 Strip Applicator
15
D

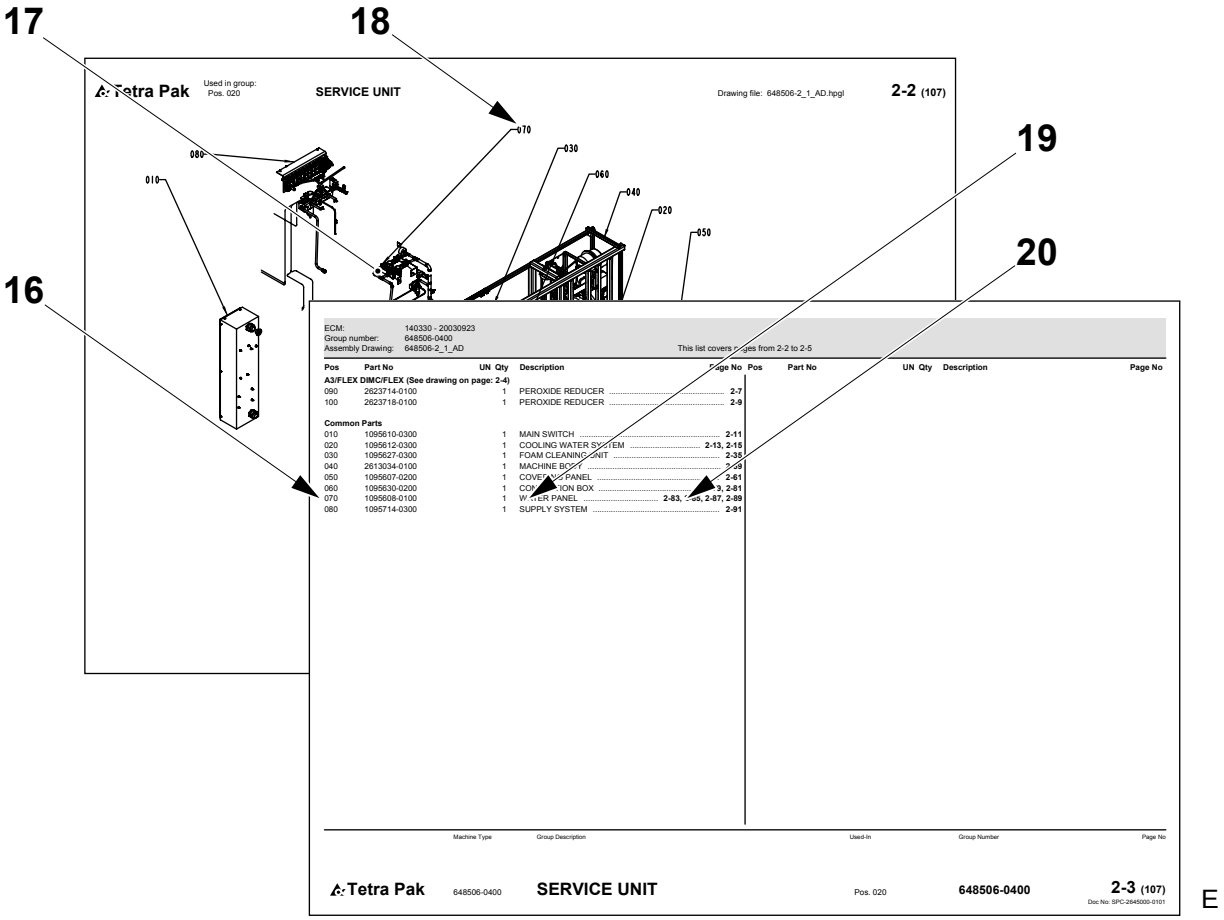
17
18
19
20
16
Tetra Pak
SERVICE UNIT
Drawing file: 648506-2_1_AD.hpgl
2-2 (107)
070
030
080
060
010
040
020
050
ECM: 140330 - 20030923
Group number: 648506-0400
Assembly Drawing: 648506-2_1_AD
This list covers pages from 2-2 to 2-5
Pos Part No UN Qty Description Page No
A3/FLEX DIMC/FLEX (See drawing on page: 2-4)
090 2623714-0100 1 PEROXIDE REDUCER 2-7
100 2623718-0100 1 PEROXIDE REDUCER 2-9
Common Parts
010 1095610-0300 1 MAIN SWITCH 2-11
020 1095612-0300 1 COOLING WATER SYSTEM 2-13, 2-15
030 1095627-0300 1 FOAM CLEANING UNIT 2-35
040 2613034-0100 1 MACHINE BODY
050 1095607-0200 1 COVERING PANEL 2-61
060 1095630-0200 1 CONTROL BOX 2-3, 2-81
070 1095608-0100 1 WATER PANEL 2-83, 2-87, 2-89
080 1095714-0300 1 SUPPLY SYSTEM 2-91
Machine Type
Group Description
Used-In
Group Number
Page No
Tetra Pak
648506-0400
SERVICE UNIT
Pos. 020
648506-0400
2-3 (107)
Doc No: SPC-2645000-0101

E

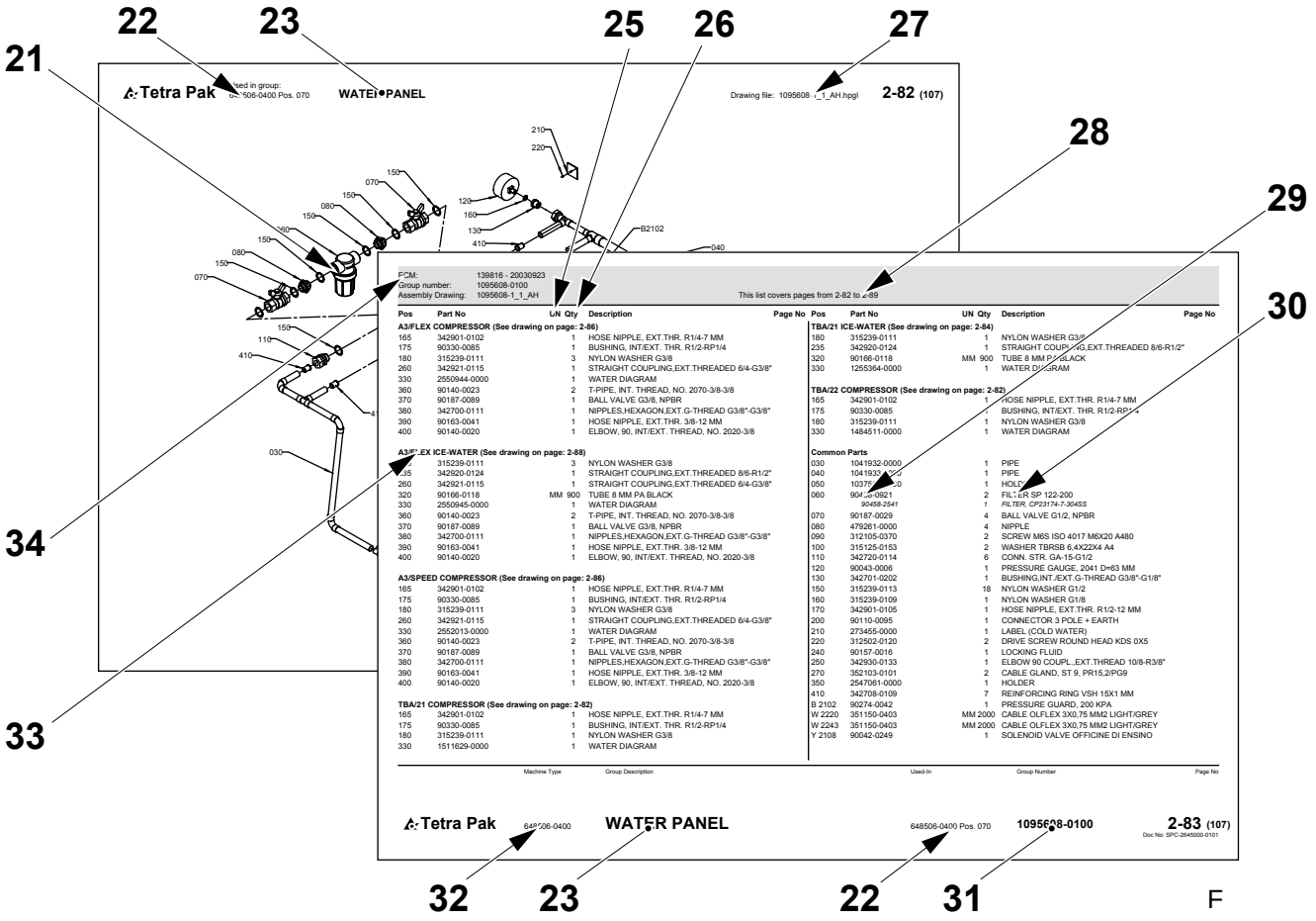
22
23
25
26
27
21
28
29
30
34
33
Tetra Pak
WATER PANEL
Drawing file: 1095608-1_1_AH.hpgl
2-82 (107)
210
220
150
070
080
120
160
130
410
B2102
040
030
110
ECM: 139816 - 20030923
Group number: 1095608-0100
Assembly Drawing: 1095608-1_1_AH
This list covers pages from 2-82 to 2-89
Pos Part No UN Qty Description Page No
A3/FLEX COMPRESSOR (See drawing on page: 2-86)
165 342901-0102 1 HOSE NIPPLE, EXT.THR. R1/4-7 MM
175 90330-0085 1 BUSHING, INT/EXT. THR. R1/2-RP1/4
180 315239-0111 3 NYLON WASHER G3/8
260 342921-0115 1 STRAIGHT COUPLING,EXT.THREADED 6/4-G3/8"
330 2550944-0000 1 WATER DIAGRAM
360 90140-0023 2 T-PIPE, INT. THREAD, NO. 2070-3/8-3/8
370 90187-0089 1 BALL VALVE G3/8, NPBR
380 342700-0111 1 NIPPLES,HEXAGON,EXT.G-THREAD G3/8"-G3/8"
390 90163-0041 1 HOSE NIPPLE, EXT.THR. 3/8-12 MM
400 90140-0020 1 ELBOW, 90, INT/EXT. THREAD, NO. 2020-3/8
A3/FLEX ICE-WATER (See drawing on page: 2-88)
155 315239-0111 3 NYLON WASHER G3/8
165 342920-0124 1 STRAIGHT COUPLING,EXT.THREADED 8/6-R1/2"
260 342921-0115 1 STRAIGHT COUPLING,EXT.THREADED 6/4-G3/8"
320 90166-0118 MM 900 TUBE 8 MM PA BLACK
330 2550945-0000 1 WATER DIAGRAM
360 90140-0023 2 T-PIPE, INT. THREAD, NO. 2070-3/8-3/8
370 90187-0089 1 BALL VALVE G3/8, NPBR
380 342700-0111 1 NIPPLES,HEXAGON,EXT.G-THREAD G3/8"-G3/8"
390 90163-0041 1 HOSE NIPPLE, EXT.THR. 3/8-12 MM
400 90140-0020 1 ELBOW, 90, INT/EXT. THREAD, NO. 2020-3/8
A3/SPEED COMPRESSOR (See drawing on page: 2-86)
165 342901-0102 1 HOSE NIPPLE, EXT.THR. R1/4-7 MM
175 90330-0085 1 BUSHING, INT/EXT. THR. R1/2-RP1/4
180 315239-0111 3 NYLON WASHER G3/8
260 342921-0115 1 STRAIGHT COUPLING,EXT.THREADED 6/4-G3/8"
330 2552013-0000 1 WATER DIAGRAM
360 90140-0023 2 T-PIPE, INT. THREAD, NO. 2070-3/8-3/8
370 90187-0089 1 BALL VALVE G3/8, NPBR
380 342700-0111 1 NIPPLES,HEXAGON,EXT.G-THREAD G3/8"-G3/8"
390 90163-0041 1 HOSE NIPPLE, EXT.THR. 3/8-12 MM
400 90140-0020 1 ELBOW, 90, INT/EXT. THREAD, NO. 2020-3/8
TBA/21 COMPRESSOR (See drawing on page: 2-82)
165 342901-0102 1 HOSE NIPPLE, EXT.THR. R1/4-7 MM
175 90330-0085 1 BUSHING, INT/EXT. THR. R1/2-RP1/4
180 315239-0111 1 NYLON WASHER G3/8
330 1511629-0000 1 WATER DIAGRAM
TBA/21 ICE-WATER (See drawing on page: 2-84)
180 315239-0111 1 NYLON WASHER G3/8
235 342920-0124 1 STRAIGHT COUPLING,EXT.THREADED 8/6-R1/2"
320 90166-0118 MM 900 TUBE 8 MM PA BLACK
330 1255364-0000 1 WATER DIAGRAM
TBA/22 COMPRESSOR (See drawing on page: 2-82)
165 342901-0102 1 HOSE NIPPLE, EXT.THR. R1/4-7 MM
175 90330-0085 1 BUSHING, INT/EXT. THR. R1/2-RP1/4
180 315239-0111 1 NYLON WASHER G3/8
330 1484511-0000 1 WATER DIAGRAM
Common Parts
030 1041932-0000 1 PIPE
040 1041933-0000 1 PIPE
050 1037[illegible] 1 HOLDER
060 9045[illegible]-0921 2 FILTER SP 122-200
90458-2541 1 FILTER, CP23174-7-30455
070 90187-0029 4 BALL VALVE G1/2, NPBR
080 479261-0000 4 NIPPLE
090 312105-0370 2 SCREW M6S ISO 4017 M6X20 A480
100 315125-0153 2 WASHER TBRSB 6,4X22X4 A4
110 342720-0114 6 CONN. STR. GA-15-G1/2
120 90043-0006 1 PRESSURE GAUGE, 2041 D=63 MM
130 342701-0202 1 BUSHING,INT./EXT.G-THREAD G3/8"-G1/8"
150 315239-0113 18 NYLON WASHER G1/2
160 315239-0109 1 NYLON WASHER G1/8
170 342901-0105 1 HOSE NIPPLE, EXT.THR. R1/2-12 MM
200 90110-0095 1 CONNECTOR 3 POLE + EARTH
210 273455-0000 1 LABEL (COLD WATER)
220 312502-0120 2 DRIVE SCREW ROUND HEAD KDS 0X5
240 90157-0016 1 LOCKING FLUID
250 342930-0133 1 ELBOW 90 COUPL.,EXT.THREAD 10/8-R3/8"
270 352103-0101 2 CABLE GLAND, ST 9, PR15,2/PG9
350 2547061-0000 1 HOLDER
410 342708-0109 7 REINFORCING RING VSH 15X1 MM
B 2102 90274-0042 1 PRESSURE GUARD, 200 KPA
W 2220 351150-0403 MM 2000 CABLE OLFLEX 3X0,75 MM2 LIGHT/GREY
W 2243 351150-0403 MM 2000 CABLE OLFLEX 3X0,75 MM2 LIGHT/GREY
Y 2108 90042-0249 1 SOLENOID VALVE OFFICINE DI ENSINO
Machine Type
Group Description
Used-In
Group Number
Page No
Tetra Pak
648506-0400
WATER PANEL
648506-0400 Pos. 070
1095608-0100
2-83 (107)
Doc No: SPC-2648000-0101
32
23
22
31

F

Introduction

Manual Information

Tetra Pak recommends reading all delivered manuals carefully. Make sure that the delivered manuals are available to personnel who operate or maintain the equipment.

It is important to keep this catalogue for the lifetime of the equipment and to pass the catalogue on to any subsequent holder or user.

Tetra Pak will not be held responsible for any damage to the equipment caused by not following the instructions given in the manuals that accompany this equipment.

Delivered Manuals

The manuals delivered with this equipment may include

- Conversion Manual (CM)
  This manual provides technicians with information on converting the equipment between different production modes.
- Electrical Manual (EM)
  This manual provides technicians with information about the equipment's electrical system.
- Installation Manual (IM)
  This manual provides technicians with information required to safely install the equipment.
- Maintenance Manual (MM)
  This manual provides technicians with information on maintaining the equipment.
- Operation Manual (OM)
  This manual provides the operator with information on handling and operating the equipment before, during, and after production.
- Spare Parts Catalogue (SPC)
  This manual provides the information necessary to order spare parts from Tetra Pak.
- Technical Manual (TeM)
  - provides technicians with information required to safely install the equipment
  - provides technicians with information on maintaining the equipment
  - provides technicians with information about the equipment's electrical system
  - provides the information necessary to order spare parts from Tetra Pak

Page Layout

Refer to the illustration (A) on page i-5: The main pages in a Spare Parts Catalogue consist of an illustration page (1) and a corresponding list page (7). The page number (5) is shown in the header of an illustration page and in the footer of a list page. The document number (6) is shown in the footer of a list page.

Page Numbering

Refer to the illustration (A) on page i-5: A page number (5) has three parts:

- chapter number (2)
- consecutive page number within the chapter (3)
- total number of pages in the chapter (4)

Machine Introduction

Manufacturer

For the manufacturer's name and address, see the second page of this catalogue.

Service

To order spare parts for this machine, or to report problems associated with operating this machine, contact the nearest Tetra Pak office.

Contact the Liaison with other inquiries, comments, or suggestions for improvement regarding the equipment and its documentation.

Identification

CE Classification

This equipment complies with the basic health and safety regulations of the European Economic Area (EEA).

Machine Plate

The illustration (B) on page i-5 shows an example of a machine plate. An illustration of the valid machine plate and its location on the equipment is shown in the Introduction chapter of the manuals delivered with this equipment. The machine plate contains the data listed below, needed when contacting Tetra Pak concerning this specific equipment.

- Machine type (8)
- Volume (9)
- Drawing specifications (10)
- Machine serial number (11)
- Manufacturer (12)
- CE mark (13)
- Year of manufacture (14)

The illustration (C) on page i-5 shows an example of a machine specification. Make sure that the equipment data listed in the front pages of this manual corresponds to the machine plate data and the machine specification.

How to Use This Spare Parts Catalogue

Locate a Spare Part Number

a) Refer to the illustration (D) on page i-5: Go to the chapter number (15) indicated beside the main group that contains the part you want to locate.

Items b) and c) refer to the illustration (E) on page i-6.

b) On the main group illustration, look for the machine subgroup (17) that contains the part or subgroup you are looking for. Note the position number (18) and go to the list page that follows the illustration.

c) Look for the position number (16) or the subgroup name (19). Go to the corresponding page number (20) listed in the right-hand column.

Items d) and e) refer to the illustration (F) on page i-6.

d) Locate the part (21) that you are looking for on the subgroup illustration and note the part's position number.

e) The part number (29) and part description (30) are listed beside the position number on the list page.

Information Listed in a Spare Parts Catalogue

The list below refers to the illustration (F) on page i-6. A Spare Parts Catalogue contains the following information about groups, subgroups, and spare parts for the equipment:

- Group structure reference (22). Indicates the next higher group in the equipment list structure.
- Group name (23)
- Unit of measure (25)
- Quantity (26)
- Assembly drawing number (27)
- List page range (28). Included if there are multiple pages in the group illustration or list.
- Part or subgroup number (29)
- Subgroup name or part description (30)
- Group number (31)
- Equipment number (32)
- Group information heading (33). Indicates if the section below the heading is for a specific machine variant or if it is a list of common parts. If a list has more than one variant and each variant has its own assembly drawing, a page reference to the variant's assembly drawing is shown.
- Internal information (34)

Úvod

Informace o příručce

Společnost Tetra Pak doporučuje, abyste se důkladně seznámili se všemi dodanými příručkami. Dodané příručky musí být k dispozici pracovníkům, kteří provádějí obsluhu nebo údržbu zařízení.

Tento katalog je třeba uchovávat po celou dobu životnosti zařízení a předat jej každému dalšímu vlastníkovi nebo uživateli.

Společnost Tetra Pak nezodpovídá za škody na zařízení způsobené nedodržováním pokynů uvedených v příručkách dodaných se zařízením.

Dodané příručky

Mezi příručky dodané se zařízením patří:

- Příručka pro konverzi (CM)
  Tato příručka obsahuje informace pro techniky o konverzi zařízení mezi jednotlivými výrobními režimy.
- Příručka pro elektroinstalaci (EM)
  Tato příručka obsahuje informace pro techniky o elektroinstalaci zařízení.
- Příručka pro instalaci (IM)
  Tato příručka obsahuje informace pro techniky týkající se bezpečné instalace zařízení.
- Příručka pro obsluhu (MM)
  Tato příručka obsahuje informace pro techniky o údržbě zařízení.
- Provozní příručka (OM)
  Tato příručka obsahuje informace pro obsluhu o manipulaci a provozu zařízení před, během a po výrobě.
- Katalog náhradních dílů (SPC)
  Tato příručka obsahuje informace nezbytné pro objednávání náhradních dílů od společnosti Tetra Pak.
- Technická příručka (TeM)
  - obsahuje informace pro techniky týkající se bezpečné instalace zařízení
  - obsahuje informace pro techniky o údržbě zařízení
  - obsahuje informace pro techniky o elektroinstalaci zařízení
  - obsahuje informace nezbytné pro objednávání náhradních dílů od společnosti Tetra Pak

Vzhled stránky

Viz obrázek (A) na stránce i-5: hlavní stránky v katalogu náhradních dílů se skládají ze stránky s obrázkem (1) a z odpovídající katalogové stránky (7). Číslo stránky (5) je uvedeno v záhlaví stránky s obrázkem a v zapatí katalogové stránky. Číslo dokumentu (6) je uvedeno v záhlaví katalogové stránky.

Číslování stránek

Viz obrázek (A) na stránce i-5: číslo stránky (5) se skládá ze tří částí:

- číslo kapitoly (2)
- číslo další stránky (3) v rámci kapitoly
- celkový počet stránek (4) v kapitole

Seznámení se zařízením

Výrobce

Název a adresa výrobce jsou uvedeny na druhé stránce tohoto katalogu.

Servis

Chcete-li objednat náhradní díly pro toto zařízení nebo chcete-li ohlásit potíže spojené s provozem zařízení, obrat'te se na nejbližší pobočku společnosti Tetra Pak.

S ostatními stížnostmi, připomínkami nebo zlepšovacími návrhy v souvislosti se zařízením a dokumentací se obrat'te na zastoupení společnosti.

Označení

Klasifikace CE

Toto zařízení vyhovuje základním zdravotním a bezpečnostním směrnicím EEA (European Economic Area).

Typový štítek

Na obrázku (B) na stránce i-5 je uveden příklad typového štítku zařízení. Příslušné typové štítky a jejich umístění na zařízení jsou uvedeny v kapitole Úvod v příručkách dodaných se zařízením. Typový štítek obsahuje níže uvedené údaje, které je třeba uvést při kontaktování společnosti Tetra Pak ohledně tohoto zařízení.

- typ zařízení (8)
- množství (9)
- označení schémat (10)
- sériové číslo zařízení (11)
- výrobce (12)
- symbol CE (13)
- rok výroby (14)

Na obrázku (C) na stránce i-5 je uveden příklad specifikace zařízení. Údaje o zařízení uvedené na předních stránkách této příručky musí souhlasit s údaji na typovém štítku a se specifikacemi zařízení.

Jak používat tento katalog náhradních dílů

Vyhledání čísla náhradního dílů

a) Viz obrázek (D) na stránce i-5: přejdete na číslo kapitoly (15) uvedené vedle hlavní skupiny, která obsahuje hledaný díl.

Položky b) a c) odkazují na obrázek (E) na stránce i-6.

b) Na obrázku hlavní skupiny vyhledejte podskupinu zařízení (17) která obsahuje hledaný díl nebo podskupinu. Zapamatujte si číslo umístění (18) a přejděte na katalogovou stránku, která následuje obrázek.

c) Vyhledejte číslo umístění (16) nebo název podskupiny (19). Přejděte na příslušné číslo stránky (20) uvedené v pravém sloupci.

Položky d) a e) odkazují na obrázek (F) na stránce i-6.

d) Na obrázku podskupiny vyhledejte požadovaný díl (21) a poznamenejte si číslo jeho umístění.

e) Na katalogové stránce je vedle čísla umístění uvedeno číslo dílu (29) a popis (30).

Informace uvedené v katalogu náhradních dílů

Následující seznam odkazuje na obrázek (F) na stránce i-6. Katalog náhradních dílů obsahuje následující informace o skupinách, podskupinách a náhradních dílech pro toto zařízení:

- Označení struktury skupiny (22). Označuje další vyšší skupinu ve struktuře katalogu zařízení.
- Název skupiny (23)
- Měrné jednotky (25)
- Množství (26)
- Číslo schématu součásti (27)
- Rozsah katalogových stránek (28). Je uvedeno, pokud obrázek skupiny nebo katalog obsahují více stránek.
- Číslo dílu nebo podskupiny (29)
- Název podskupiny nebo popis dílu (30)
- Číslo skupiny (31)
- Číslo zařízení (32)
- Nadpis informací o skupině (33). Označuje, zda se oddíl pod nadpisem vztahuje na konkrétní variantu zařízení nebo představuje katalog běžných dílů. Pokud některý katalog obsahuje více, než jednu variantu, a pokud má každá varianta vlastní schéma součásti, zobrazí se odkaz na stránku se schématem součásti dané varianty.
- Vnitřní informace (34)

Indledning

Information om manualen

Tetra Pak anbefaler, at alle leverede manualer læses omhyggeligt. Sørg for, at de leverede manualer er tilgængelige for medarbejdere, der betjener eller vedligeholder udstyret.

Det er vigtigt at opbevare dette katalog hele udstyrets levetid og give kataloget videre til eventuelt kommende ejere eller brugere.

Tetra Pak kan ikke holdes ansvarlig for eventuel beskadigelse af udstyr, der opstår, fordi instruktionerne i manualerne til dette udstyr ikke følges.

Leverede manualer

De manualer, der leveres sammen med dette udstyr, kan omfatte:

- Konverteringsmanual (CM)
  Denne manual forsyner teknikere med informationer om konvertering af udstyret mellem forskellige produktionstilstande.
- Elektrisk manual (EM)
  Denne manual forsyner teknikere med informationer om udstyrets elektriske system.
- Installationsmanual (IM)
  Denne manual forsyner teknikere med informationer, der er nødvendige for en sikker installation af udstyret.
- Vedligeholdelsesmanual (MM)
  Denne manual forsyner teknikere med informationer om vedligeholdelse af udstyret.
- Betjeningsmanual (OM)
  Denne manual forsyner operatøren med informationer om håndtering og betjening af udstyret før, under og efter produktion.
- Reservedelskatalog (SPC)
  Denne manual indeholder de informationer, der er nødvendige for at kunne bestille reservedele fra Tetra Pak.
- Teknisk manual (TeM)
  - forsyner teknikere med informationer, der er nødvendige for en sikker installation af udstyret.
  - forsyner teknikere med informationer om vedligeholdelse af udstyret.
  - forsyner teknikere med informationer om udstyrets elektriske system.
  - indeholder de informationer, der er nødvendige for at kunne bestille reservedele fra Tetra Pak.

Sidelayout

Se illustrationen (A) på side i-5: Hovedsiderne i et reservedelskatalog består af en illustrationsside (1) og en tilsvarende listeside (7). Sidenummeret (5) vises i sidehovedet på en illlustrationsside og i sidefoden på en listeside. Dokumentnummeret (6) vises i sidefoden på en listeside.

Sidenummerering

Se illustrationen (A) på side i-5: Et sidenummer (5) har tre dele:

- kapitelnummer (2)
- fortløbende sidenummer i kapitlet (3)
- samlet sideantal i kapitlet (4)

Præsentation af maskinen

Producent

Producentens navn og adresse findes på side to i dette katalog.

Service

Kontakt nærmeste Tetra Pak-kontor for at bestille reservedele eller rapportere problemer i forbindelse med betjening af denne maskine.

Kontakt kontaktpersonen med andre forespørgsler, kommentarer eller forslag til forbedringer af udstyret og dets dokumentation.

Identifikation

CE-klassificering

Dette udstyr overholder de grundlæggende sundheds- og sikkerhedsbestemmelser for Det Europæiske Økonomiske Samarbejdsområde (EØS).

Maskinskilt

Illustrationen (B) på side i-5 viser et eksempel på et maskinskilt. En illustration af et gyldigt maskinskilt og dets placering på udstyret er vist i indledningskapitlet i de manualer, der leveres med dette udstyr. Maskinskiltet indeholder nedennævnte data. Disse er nødvendige ved kontakt med Tetra Pak vedrørende dette specifikke udstyr.

- Maskintype (8)
- Volumen (9)
- Tegningsspecifikationer (10)
- Maskinens serienummer (11)
- Producent (12)
- CE-mærke (13)
- Produktionsår (14)

Illustrationen (C) på side i-5 viser et eksempel på en maskinspecifikation. Kontroller, at de udstyrsdata, der er anført på de første sider i denne manual, svarer til maskinskiltsdataene og maskinspecifikationen.

Sådan bruges dette reservedelskatalog

Find et reservedelsnummer

a) Se illustrationen (D) på side i-5: Gå til kapitelnummeret (15), der er angivet ved siden af hovedgruppen, der indeholder den del, der ønskes fundet.

Punkterne b) og c) refererer til illustrationen (E) på side i-6.

b) I hovedgruppeillustrationen skal man se efter maskinundergruppen (17), som indeholder den del eller undergruppe, der søges. Bemærk placeringsnummeret (18), og gå til listesiden, som følger illustrationen.

c) Se efter placeringsnummeret (16) eller undergruppens navn (19). Gå til det tilsvarende sidenummer (20) angivet i den højre kolonne.

Punkterne d) og e) refererer til illustrationen (F) på side i-6.

d) Find den del (21), du søger i undergruppeillustrationen, og notér delens placeringsnummer.

e) Reservedelsnummeret (29) og -beskrivelsen (30) er angivet ved siden af placeringsnummeret på listesiden.

Informationer der er angivet i et reservedelskatalog

Listen nedenfor refererer til illustrationen (F) på side i-6. Et reservedelskatalog indeholder følgende informationer om grupper, undergrupper og reservedele til udstyret:

- Gruppestrukturreference (22). Angiver næste overordnede gruppe i udstyrslistestrukturen.
- Gruppenavn (23)
- Måleenhed (25)
- Antal (26)
- Samletegningsnummer (27)
- Listens sideområde (28). Er angivet, hvis gruppeillustrationen eller -listen inkluderer mange sider.
- Del- eller undergruppenummer (29)
- Undergruppens navn eller delsbeskrivelse (30)
- Gruppenummer (31)
- Udstyrsnummer (32)
- Overskrift for gruppeinformation (33). Angiver om afsnittet under overskriften er for en specifik maskinvariant, eller om det er en liste over fælles dele. Hvis en liste har mere end én variant, og hver variant har sin egen samletegning, vises en sidereference til variantens samletegning.
- Intern information (34)

Einleitung

Handbuch-Informationen

Tetra Pak empfiehlt, alle gelieferten Handbücher sorgfältig zu lesen. Es muss sichergestellt werden, dass die gelieferten Handbücher dem Bediener- oder Wartungspersonal der Ausrüstung verfügbar sind.

Es ist wichtig, dieses Handbuch während der Lebensdauer der Ausrüstung vorzuhalten und es an nachfolgende Halter oder Benutzer weiterzugeben.

Tetra Pak ist nicht verantwortlich für Schäden an der Ausrüstung, die durch die Nichtbefolgung der Anweisungen dieses Handbuchs verursacht werden.

Gelieferte Handbücher

Die mit dieser Ausrüstung gelieferten Handbücher umfassen

- Umbauhandbuch (CM)
  Dieses Handbuch liefert den Technikern Informationen über den Umbau der Ausrüstung zwischen den verschiedenen Produktionsweisen.
- Elektrohandbuch (EM)
  Dieses Handbuch liefert den Technikern Informationen zum Elektrosystem der Ausrüstung.
- Installationshandbuch (IM)
  Dieses Handbuch liefert den Technikern Informationen für die sichere Installation der Ausrüstung.
- Wartungshandbuch (MM)
  Dieses Handbuch liefert den Technikern Informationen über die Wartung der Ausrüstung.
- Betriebshandbuch (OM)
  Dieses Handbuch liefert dem Bediener Informationen über die Handhabung und den Betrieb der Ausrüstung vor, während und nach der Produktion.
- Ersatzteilkatalog (SPC)
  Dieses Handbuch liefert Informationen, wie sie für die Bestellung von Ersatzteilen bei Tetra Pak erforderlich sind.
- Technisches Handbuch (TeM)
  - liefert den Technikern Informationen für die sichere Installation der Ausrüstung
  - liefert den Technikern Informationen über die Wartung der Ausrüstung
  - liefert den Technikern Informationen über das Elektrosystem der Ausrüstung
  - liefert die erforderlichen Informationen für die Bestellung von Ersatzteilen bei Tetra Pak.

Seitenlayout

Bezugnahme Abbildung (A) auf Seite i-5: Die Hauptseiten in einem Ersatzteilkatalog bestehen aus einer Abbildungsseite (1) und einer entsprechenden Listenseite (7). Die Seitennummer (5) ist im Kopf einer Abbilldungsseite und im Fuß einer Listenseite aufgeführt. Die Dokumentennummer (6) ist ist im Fuß einer Listenseite angegeben.

Seitennummerierung

Bezugnahme Abbildung (A) auf Seite i-5: Eine Seitennummer (5) besteht aus drei Teilen:

- Kapitelnummer (2)
- Fortlaufende Seitennummer innerhalb des Kapitels (3)
- Gesamtanzahl der Seiten im Kapitel (4)

Einführung in die Maschine

Hersteller

Für Name und Anschrift des Herstellers, siehe die zweite Seite dieses Kataloges.

Service

Um Ersatzteile für diese Maschine zu bestellen oder um über Probleme beim Betrieb dieser Maschine zu berichten, ist das nächstgelegene Büro von Tetra Pak anzusprechen.

Mit anderen Anfragen. Kommentaren oder Vorschlägen zur Ausrüstung und der Dokumentation ist die Verbindungsstelle anzusprechen.

Identifizierung

CE-Klassifizierung

Diese Ausrüstung entspricht den grundlegenden Gesundheits- und Sicherheitsvorschriften des Europäischen Wirtschaftsraumes (EEA).

Maschinenschild

Die Abbildung (B) auf Seite i-5 zeigt das Beispiel eines Maschinenschildes. Die Abbildung eines gültigen Maschinenschildes und die Lage desselben auf der Ausrüstung befindet sich im Einleitungskapitel der mit der Ausrüstung gelieferten Handbücher. Das Maschinenschild enthält die nachstehend aufgeführten Daten, wie sie erforderlich sind, wenn Tetra Pak wegen dieser spezifischen Ausrüstung anzusprechen ist.

- Maschinentyp (8)
- Volumen (9)
- Zeichnungs-Spezifikationen (10)
- Serien-Nummer der Maschine (11)
- Hersteller (12)
- CE-Markierung (13)
- Baujahr (14)

Die Abbildung (C) auf Seite i-5 zeigt das Beispiel einer Maschinenspezifikation. Es muss sichergestellt sein, dass die in den Frontseiten dieses Handbuchs aufgeführten Ausrüstungsdaten mit den Daten des Maschinenschildes und der Maschinenspezifikation übereinstimmen.

Verwendung dieses Ersatzteilkatalogs

Anordnung einer Ersatzteilnummer

a) Bezugnahme auf Abbildung (D) auf Seite i-5: Weiter zur Kapitelnummer (15), die neben der Hauptgruppe angegeben ist, die das entsprechende Teil enthält.

Die Pos. b) und c) beziehen sich auf die Abbildung (E) auf Seite i-6.

b) Auf der Hauptgruppenabbildung die Maschinen-Untergruppe (17) suchen, die das gesuchte Teil oder die gesuchte Untergruppe enthält. Die Positionsnummer (18) notieren und weiter zur Listenseite gehen, die der Abbildung folgt.

c) Die Positionsnummer (16) oder den Namen der Untergruppe (19) suchen. Dann zur entsprechenden Seitennummer (20) in der rechten Spalte gehen.

Pos. d) und e) beziehen sich auf die Abbildung (F) auf Seite i-6.

d) Suchen Sie Teil (21) auf der Untergruppen-Abbildung und notieren Sie die Positionsnummer des Teils.

e) Die Teilnummer (29) und die Teilebeschreibung (30) finden Sie neben der Positionsnummer auf der Listenseite.

In einem Ersatzteilkatalog enthaltene Information

Die nachstehende Liste bezieht sich auf die Abbildung (F) auf Seite i-6. Ein Ersatzteilkatalog enthält folgende Informationen über Gruppen, Untergruppen und Ersatzteile für die Ausrüstung:

- Gruppenstrukturreferenz (22). Sie gibt die nächst höhere Gruppe in der Ausrüstungslistenstruktur an
- Gruppenname (23)
- Maßeinheit (25)
- Menge (26)
- Nummer der Zusammenbauzeichnung (27)
- Listenseite, Bereich (28). Eingeschlossen, wenn Mehrfachseiten in der Gruppenabbildung oder Liste enthalten sind
- Teile- oder Untergruppennummer (29)
- Untergruppenname oder Teilebeschreibung (30)
- Gruppennummer (31)
- Ausrüstungsnummer (32)
- Gruppeninformationsüberschrift (33). Gibt an, ob der Abschnitt unter der Überschrift sich auf eine spezifische Maschinenvariante bezieht oder eine Liste der allgemeinen Teile ist. Wenn eine Liste sich auf mehr als eine Variante bezieht und jede Variante eine eigene Zusammenbauzeichnung hat, wird eine Seitenreferenz zur Zusammenbauzeichnung der Variante vorgestellt.
- Interne Information (34)

Εισαγωγή

Πληροφορίες για το Εγχειρίδιο

Η Tetra Pak σας συνιστά να διαβάζετε προσεκτικά όλα τα χορηγούμενα εγχειρίδια. Βεβαιωθείτε ότι είναι διαθέσιμα όλα τα χορηγούμενα εγχειρίδια για το προσωπικό που χειρίζεται ή συντηρεί τον εξοπλισμό.

Είναι σημαντικό να διατηρείτε αυτό τον κατάλογο καθ' όλη τη διάρκεια ζωής του εξοπλισμού καθώς και να παραδίδετε τον κατάλογο στον τυχόν επόμενο ιδιοκτήτη ή χρήστη του εξοπλισμού.

Η Tetra Pak δεν πρόκειται να αναλάβει καμία ευθύνη για οποιαδήποτε ζημιά που προκαλείται στον εξοπλισμό λόγω της παράβλεψης των οδηγιών που δίνονται στα εγχειρίδια που συνοδεύουν αυτό τον εξοπλισμό.

Χορηγούμενα Εγχειρίδια

Τα εγχειρίδια που χορηγούνται μ' αυτόν τον εξοπλισμό, μπορεί να περιλαμβάνουν

- Εγχειρίδιο Μετατροπής (CM)
  Αυτό το εγχειρίδιο χορηγεί στους τεχνικούς πληροφορίες για τη μετατροπή του εξοπλισμού στους διαφορετικούς τρόπους παραγωγής.
- Εγχειρίδιο Ηλεκτρικού (EM)
  Αυτό το εγχειρίδιο χορηγεί στους τεχνικούς πληροφορίες για το ηλεκτρικό σύστημα του εξοπλισμού.
- Εγχειρίδιο Εγκατάστασης (IM)
  Αυτό το εγχειρίδιο χορηγεί στους τεχνικούς τις απαιτούμενες πληροφορίες για την ασφαλή εγκατάσταση του εξοπλισμού.
- Εγχειρίδιο Συντήρησης (MM)
  Αυτό το εγχειρίδιο χορηγεί στους τεχνικούς πληροφορίες για τη συντήρηση του εξοπλισμού.
- Εγχειρίδιο Χρήσης (OM)
  Αυτό το εγχειρίδιο χορηγεί στο χειριστή πληροφορίες για τη διακίνηση και το χειρισμό του εξοπλισμού πριν, κατά τη διάρκεια και μετά την παραγωγή.
- Κατάλογος Ανταλλακτικών (SPC)
  Αυτό το εγχειρίδιο χορηγεί τις απαραίτητες πληροφορίες για την παραγγελία ανταλλακτικών από την Tetra Pak.
- Τεχνικό Εγχειρίδιο (TeM)
  - χορηγεί στους τεχνικούς τις απαιτούμενες πληροφορίες για την ασφαλή εγκατάσταση του εξοπλισμού
  - χορηγεί στους τεχνικούς πληροφορίες για τη συντήρηση του εξοπλισμού
  - χορηγεί στους τεχνικούς πληροφορίες για το ηλεκτρικό σύστημα του εξοπλισμού
  - χορηγεί τις απαραίτητες πληροφορίες για την παραγγελία ανταλλακτικών από την Tetra Pak

Σχεδίαση Σελίδας

Ανατρέξτε στην εικόνα (A) της σελίδας i-5: Οι κύριες σελίδες ενός Καταλόγου Ανταλλακτικών αποτελούνται από μία εικονογραφημένη σελίδα (1) και από μία αντίστοιχη σελίδα καταλόγου (7). Ο αριθμός σελίδας (5) φαίνεται στην κεφαλίδα μιας εικονογραφημένης σελίδας και στο υποσέλιδο μιας σελίδας καταλόγου. Ο αριθμός εγγράφου (6) φαίνεται στο υποσέλιδο μιας σελίδας λίστας.

Αρίθμηση Σελίδων

Ανατρέξτε στην εικόνα (A) της σελίδας i-5: Ένας αριθμός σελίδας (5) αποτελείται από τρία μέρη:

- αριθμός κεφαλαίου (2)
- αύξων αριθμός σελίδας του κεφαλαίου (3)
- συνολικός αριθμός σελίδων του κεφαλαίου (4)

Εισαγωγή στη Μηχανή

Κατασκευαστής

Για την επωνυμία και τη διεύθυνση του κατασκευαστή, βλέπετε στη δεύτερη σελίδα αυτού του καταλόγου.

Σέρβις

Για να παραγγείλετε ανταλλακτικά για τη συγκεκριμένη μηχανή, ή για να αναφέρετε προβλήματα που σχετίζονται με το χειρισμό αυτής της μηχανής, επικοινωνήστε με το πλησιέστερο γραφείο της Tetra Pak.

Εάν έχετε άλλου είδους ερωτήσεις, σχόλια ή προτάσεις βελτίωσης όσον αφορά τον εξοπλισμό και την έγγραφη τεκμηρίωσή του, επικοινωνήστε με το Τμήμα Σχέσεων.

Αναγνώριση

Κατάταξη ΕΚ

Αυτός ο εξοπλισμός συμμορφώνεται με τους βασικούς κανονισμούς υγείας και ασφάλειας του Ευρωπαϊκού Οικονομικού Χώρου (ΕΟΧ).

Πινακίδα Μηχανής

Η εικόνα (B) της σελίδας i-5 δείχνει ένα παράδειγμα μιας πινακίδας μηχανής. Μια εικόνα της ενδεδειγμένης μορφής και θέσης της πινακίδας μηχανής στον εξοπλισμό, υποδεικνύεται στο κεφάλαιο 'Εισαγωγή' των εγχειριδίων που χορηγούνται μ' αυτόν τον εξοπλισμό. Η πινακίδα μηχανής περιέχει τα στοιχεία που παρατίθενται παρακάτω, τα οποία χρειάζονται όταν επικοινωνείτε με την Tetra Pak για όσον αφορά αυτό το συγκεκριμένο εξοπλισμό.

- Τύπος μηχανής (8)
- Όγκος (9)
- Προδιαγραφές σχεδίου (10)
- Αριθμός σειράς μηχανής (11)
- Κατασκευαστής (12)
- Σήμα ΕΚ (13)
- Έτος κατασκευής (14)

Η εικόνα (C) της σελίδας i-5 δείχνει ένα παράδειγμα τεχνικών χαρακτηριστικών μηχανής. Βεβαιωθείτε ότι τα στοιχεία εξοπλισμού που παρατίθενται στις πρώτες σελίδες αυτού του εγχειριδίου αντιστοιχούν με τα στοιχεία της πινακίδας μηχανής και τα τεχνικά χαρακτηριστικά μηχανής.

Πώς Χρησιμοποιείται Αυτός ο Κατάλογος Ανταλλακτικών

Εντοπισμός ενός Αριθμού Ανταλλακτικού

a) Ανατρέξτε στην εικόνα (D) της σελίδας i-5: Πηγαίνετε στον αριθμό κεφαλαίου (15) που υποδεικνύεται δίπλα από το κύριο συγκρότημα το οποίο περιλαμβάνει το εξάρτημα που θέλετε να εντοπίσετε.

Τα βήματα b) και c) αναφέρονται στην εικόνα (E) της σελίδας i-6.

b) Στην εικόνα της κύριου συγκροτήματος, αναζητήστε το υποσυγκρότημα μηχανής (17) που περιλαμβάνει το εξάρτημα ή το υποσυγκρότημα που αναζητάτε. Σημειώστε τον αριθμό θέσης (18) και πηγαίνετε στη σελίδα καταλόγου που ακολουθεί την εικόνα.

c) Αναζητήστε τον αριθμό θέσης (16) ή το όνομα υποσυγκροτήματος (19). Πηγαίνετε στον αντίστοιχο αριθμό σελίδας (20) που αναγράφεται στη δεξιά στήλη.

Τα βήματα d) και e) αναφέρονται στην εικόνα (F) της σελίδας i-6.

d) Εντοπίστε το εξάρτημα (21) που αναζητάτε στην εικόνα υποσυγκροτήματος και σημειώστε τον αριθμό θέσης του εξαρτήματος.

e) Ο αριθμός του εξαρτήματος (29) και η περιγραφή του εξαρτήματος (30) παρατίθενται δίπλα στον αριθμό θέσης στη σελίδα καταλόγου.

Πληροφορίες που Περιέχονται σε έναν Κατάλογο Ανταλλακτικών

Ο παρακάτω κατάλογος αναφέρεται στην εικόνα (F) της σελίδας i-6. Ένας Κατάλογος Ανταλλακτικών περιέχει τις ακόλουθες πληροφορίες σχετικά με συγκροτήματα, υποσυγκροτήματα και ανταλλακτικά του εξοπλισμού:

- Αναφορά συγκροτήματος κατασκευής (22). Υποδεικνύει το επόμενο μεγαλύτερο συγκρότημα στον πίνακα εξοπλισμού κατασκευής.
- Όνομα συγκροτήματος (23)
- Μονάδα μέτρησης (25)
- Ποσότητα (26)
- Αριθμός σχεδίου συναρμολόγησης (27)
- Σειρά σελίδων καταλόγου (28). Περιλαμβάνεται εάν υπάρχουν πολλαπλές σελίδες στην εικόνα ή στον κατάλογο συγκροτήματος.
- Αριθμός εξαρτήματος ή υποσυγκροτήματος (29)
- Όνομα υποσυγκροτήματος ή περιγραφή εξαρτήματος (30)
- Αριθμός συγκροτήματος (31)
- Αριθμός εξοπλισμού (32)
- Επικεφαλίδα πληροφοριών συγκροτήματος (33). Υποδεικνύει εάν η ενότητα κάτω από την επικεφαλίδα αφορά μια ειδική παραλλαγή μηχανής ή είναι ένας κατάλογος κοινών εξαρτημάτων. Εάν ένας κατάλογος περιέχει περισσότερες από μία παραλλαγές και κάθε παραλλαγή έχει το δικό της σχέδιο συναρμολόγησης, υποδεικνύεται μια παραπομπή στη σελίδα σχεδίου συναρμολόγησης της παραλλαγής.
- Εσωτερικές πληροφορίες (34)

Introducción

Información del manual

Tetra Pak recomienda que se lean cuidadosamente todos los manuales entregados. Comprobar que todos los manuales entregados estén disponibles para el personal que efectúe la operación o el mantenimiento del equipo.

Es importante conservar este manual durante la vida útil del equipo, así como facilitárselo a cualquier propietario o usuario posterior.

Tetra Pak no se responsabilizará de daños en la máquina o equipo debidos a la inobservancia de las instrucciones dadas en los manuales que acompañan este equipo.

Manuales entregados

Los manuales entregados con este equipo pueden incluir

- Manual de conversión (CM)
  Este manual proporciona a los técnicos información sobre cómo convertir el equipo entre diferentes modos de producción.
- Manual eléctrico (EM)
  Este manual proporciona a los técnicos información acerca del sistema eléctrico del sistema.
- Manual de instalación (IM)
  Este manual proporciona a los técnicos la información necesaria para la instalación segura del equipo.
- Manual de mantenimiento (MM)
  Este manual proporciona a los técnicos la información acerca del mantenimiento del equipo.
- Manual de servicio (OM)
  Este manual proporciona al operador información acerca de la manipulación y operación de la máquina antes, durante y después de la producción.
- Catálogo de piezas de recambio (SPC)
  Este manual proporciona la información necesaria para pedir piezas de recambio a Tetra Pak.
- Manual técnico (TeM)
  - proporciona a los técnicos la información necesaria para la instalación segura del equipo
  - proporciona a los técnicos la información acerca del mantenimiento del equipo
  - proporciona a los técnicos información acerca del sistema eléctrico del sistema
  - proporciona la información necesaria para pedir piezas de recambio a Tetra Pak

Organización de las páginas

Remitirse a la ilustración (A) en la página i-5: Las páginas principales en un Catálogo de piezas de recambio se componen de una página de ilustración (1) y una página de lista correspondiente (7). El número de la página (5) se muestra en el encabezado de una página de ilustración y en el pie de página de una página de lista. El número del documento (6) se muestra en el pie de página de una página de lista.

Numeración de las páginas

Remitirse a la ilustración (A) en la página i-5: Un número de página (5) se compone de tres partes:

- Número de capítulo (2)
- número de página consecutivo (2) dentro del capítulo (3)
- número total de páginas del capítulo (4)

Introducción a la máquina

Fabricante

Para el nombre y la dirección del fabricante, ver la segunda página de este catálogo.

Servicio

Para pedir piezas de recambio para esta máquina o informar problemas asociados con la operación de esta máquina, contactar con la oficina de Tetra Pak más cercana.

Ponerse en contacto con el responsable correspondiente para otras preguntas, comentarios o sugerencias sobre mejoras de la máquina o equipo y su documentación.

Identificación

Clasificación de la CE

Este equipo cumple los requisitos esenciales relativos a la salud y la seguridad del Área Económica Europea (EEA).

Placa de la máquina

La ilustración (B) en la página i-5 muestra un ejemplo de placa de máquina. En la Introducción del capítulo de los manuales entregados con este equipo se muestra una ilustración de la placa de máquina válida y su ubicación en el equipo La placa de máquina contiene los datos listados a continuación requeridos al contactar con Tetra Pak en relaciôn a este equipo específico.

- Tipo de máquina (8)
- Volumen (9)
- Especificaciones de plano (10)
- Número de serie de la máquina (11)
- Fabricante (12)
- Marca de la CE (13)
- Año de fabricación (14)

La ilustración (C) en la página i-5 muestra un ejemplo de especificación máquina. Asegúrese que los datos de equipo listados en las páginas de cubierta de este manual corresponden a los datos de la placa de máquina y la especificación máquinav.

Cómo utilizar este Catálogo de piezas de recambio

Localizar un número de pieza de recambio

a) Remitirse a la ilustración (D) en la página i-5: Ir al número de capítulo (15) indicado detrás el grupo principal que contiene la parte que usted desea localizar.

Los items b) y c) se refieren a la ilustracióni (E) en la página i-6.

b) En la ilustración del grupo principal, buscar el subgrupo máquina (17) que contiene la pieza o subgrupo que usted busca. Anote el número de posición (18) y vaya a la página de lista que sigue la ilustración.

c) Busque el número de posición (16) o el nombre del subgrupo (19). Vaya al número de página correspondiente (20) listado en la columna de la derecha.

Los items d) y e) se refieren a la ilustración (F) en la página i-6.

d) Localizar la pieza (21) que busca en la ilustración del subgrupo y anotar el número de posición de la pieza.

e) El número de pieza (29) y la descripción de pieza (30) están listadas detrás del número de posición en la página de lista.

Información listada en un Catálogo de piezas de recambio

La lista a continuación remite a la ilustración (F) en la página i-6.
Un Catálogo de piezas de recambio contiene la siguiente información sobre grupos, subgrupos y piezas de recambio para el equipo:

- Referencia de estructura de grupo (22). Indica el siguiente grupo más alto en la estructura de lista del equipo.
- Nombre del grupo (23)
- Unidad de medida (25)
- Cantidad (26)
- Número de plano de conjunto (27)
- Gama de página lista (28). Incluida si hay páginas múltiples en la ilustración o lista de grupo.
- Número de pieza o subgrupo (29)
- Nombre, subgrupo o descripción de pieza (30)
- Número de grupo (31)
- Número de equipo (32)
- Encabezado de información grupo (33). Indica si la sección debajo del encabezado es para una variante máquina específica o si es una lista de piezas comunes. Si la lista tiene más de una variante y cada variante tiene su propio plano de conjunto, se muestra una referencia página para el plano de conjunto de la variante.
- Información interna (34)

Sissejuhatus

Kasutusjuhendi teave

Tetra Pak soovitab lugeda hoolega kõiki kaasasolevaid juhendeid. Veenduge, et juhendid on seadmega töötavatele ja neid hooldavatele töötajatele kättesaadavad.

Oluline on hoida kataloog alles kogu seadme eluea jooksul ja anda kataloog kaasa ka järgmisele omanikule või kasutajale.

Tetra Pak ei vastuta seadme kahjustuste eest, mille põhjuseks on seadmega kaasasolevas juhendis toodud juhiste mittejärgimine.

Kaasasolevad juhendid

Seadmega kaasasolevad juhendid võivad sisaldada järgmist:

- Konverteerimisjuhend (ÜJ)
  Juhend annab tehnikutele teavet seadme konverteerimise kohta eri tootmisrežiimide korral.
- Elektrijuhend (EJ)
  Juhend annab tehnikutele teavet seadme elektrisüsteemi kohta.
- Paigaldusjuhend (PJ)
  Juhend annab tehnikutele teavet seadme ohutu paigaldamise kohta.
- Hooldusjuhend (HJ)
  Juhend annab tehnikutele teavet seadme hoolduse kohta.
- Kasutusjuhend (KJ)
  Juhend annab operaatorile teavet seadme käitlemise ja töö kohta enne tootmist, selle ajal ja pärast seda.
- Varuosade kataloog (VOK)
  Juhend annab Tetra Pakilt varuosade tellimiseks vajalikku teavet.
- Tehniline juhend (TJ)
  - annab tehnikutele seadme ohutuks paigaldamiseks vajalikku teavet
  - annab tehnikutele teavet seadme hoolduse kohta
  - annab tehnikutele teavet seadme elektrisüsteemi kohta
  - annab Tetra Pakilt varuosade tellimiseks vajalikku teavet

Küljend

Vt illustratsiooni (A) lk i-5: Varuosade kataloogi põhilehtedeks on illustratsioonilehed (1) ja vastavad loetelulehed (7). Leheküljе number (5) on toodud illustratsioonilehe päises ja loetelulehe jaluses. Dokumendi number (6) on toodud loetelulehe jaluses.

Leheküljenummerdus

Vt illustratsiooni (A) lk i-5: Leheküljе number (5) koosneb kolmest osast:

- peatüki number (2)
- lehekülgede järjestikused numbrid peatüki sees (3)
- lehekülgede koguarv peatükis (4)

Sissejuhatus masina kohta

Tootja

Tootja nimi ja aadress on toodud kataloogi teisel lehel.

Teenindus

Varuosade tellimiseks masinale või selle tööga seotud probleemidest teatamiseks võtke ühendust lähima Tetra Pak kontoriga.

Kui teil on muid küsimusi, märkusi või soovitusi seadmete ja dokumentatsiooni täiustamise kohta, võtke ühendust Tetra Paki kontaktisikuga.

Identifitseerimine

CE-klassifikatsioon

Seade vastab Euroopa Majanduspiirkonna (EMP) põhilistele tervisekaitse ja ohutuse alastele määrustele.

Masina andmeplaat

Illustratsioon (B) leheküljel i-5 kujutab masina andmeplaati.
Masina andmeplaadi pilt ja selle asukoht seadmel on toodud seadmega kaasasolevate juhendite sissejuhatavas peatükis. Masina andmeplaadil on allpool nimetatud andmed, mida vajate antud konkreetse seadmega seoses Tetra Paki poole pöördudes.

- Masina tüüp (8)
- Maht (9)
- Joonisspetsifikatsioonid (10)
- Masina seerianumber (11)
- Tootja (12)
- CE-tähis (13)
- Tootmisaasta (14)

Illustratsioon (C) leheküljel i-5 kujutab masina spetsifikatsiooni. Veenduge, et käesoleva juhendi esimestel lehekülgedel toodud andmed seadme kohta vastavad masina andmesildil olevatele andmetele ja masina spetsifikatsioonile.

Kuidas varuosade kataloogi kasutada

Leidke varuosa number

a) Vt illustratsiooni (D) lk i-5: Leidke peatükk, mille number (15) on toodud selle põhirühma juures, mis sisaldab teie poolt otsitavat varuosa.

Punktid b) ja c) käivad illustratsiooni (E) kohta lk i-6.

b) Põhirühma illustratsioonil leidke masina alarühm (17), mis sisaldab osa või alarühma, mida otsite. Leidke positsiooni number (18) ja avage siis illustratsioonile järgnev loeteluleht.

c) Leidke positsiooni number (16) või alarühma nimetus (19). Leidke vastav leheküljenumber (20) parempoolsest veerust.

Punktid d) ja e) käivad illustratsiooni (F) kohta lk i-6.

d) Leidke otsitav osa (21) alarühma illustratsioonilt ja siis osa positsiooninumber.

e) Osa number (29) ja osa kirjeldus (30) on toodud positsiooninumbri kõrval loetelulehel.

Varuosade kataloogis toodud teave

Allpool toodud loetelu käib illustratsiooni (F) kohta lk i-6. Varuosade kataloogis on järgmine teave seadme rühmade, alarühmade ja varuosade kohta:

- Rühmastruktuuri viide (22). Esitab järgmise kõrgema rühma seadmete loetelu struktuuris.
- Rühma nimetus (23)
- Mõõtühik (25)
- Kogus (26)
- Koostejoonise number (27)
- Loetelu lehekülgede vahemik (28). Märgitud, kui rühma illustratsioonid või loetelu on mitmel lehel.
- Osa või alarühma number (29)
- Alarühma nimetus või osa kirjeldus (30)
- Rühma number (31)
- Seadme number (32)
- Rühma teabe rubriik (33). Näitab, kas rubriigi all toodud jaotis on konkreetse masinavariandi kohta või on tegemist tavaliste varuosade loeteluga. Kui loetelus on üle ühe variandi ja iga variandi jaoks on oma koostejoonis, esitatakse viide selle variandi koostejoonise leheküljele.
- Siseteave (34)

Johdanto

Tietoja käsikirjasta

Tetra Pak suosittelee kaikkien toimitettavien oppaiden lukemista huolellisesti. Varmista, että toimitetut oppaat ovat laitetta käyttävän tai huoltavan henkilökunnan saatavilla.

Tämä luettelo on säilytettävä laitteen käyttöiän ajan ja toimitettava edelleen mahdolliselle seuraavalle omistajalle tai käyttäjälle.

Tetra Pak ei vastaa laitevaurioista, jotka aiheutuvat laitteen mukana tulevissa oppaissa annettujen ohjeiden noudattamatta jättämisestä.

Toimitettavat ohjeet

Tämän laitteen mukana toimitettaviin ohjeisiin kuuluvat:

- Muutoskirja (CM)
  Tässä oppaassa on teknikoille tarkoitettuja ohjeita laitteiston muuttamisesta eti tuotantotiloihin.
- Sähkökirja (EM)
  Tässä oppaassa on teknikoille tarkoitettuja tietoja laitteen sähköjärjestelmästä.
- Asennuskäsikirja (IM)
  Tässä oppaassa on teknikoille tarkoitettuja tietoja, jotka tarvitaan laitteen turvallista asentamista varten.
- Huoltokäsikirja (MM)
  Tässä oppaassa on teknikoille tarkoitettuja tietoja tämän laitteen huoltamisesta.
- Käyttäjän käsikirja (OM)
  Tässä oppaassa on käyttäjälle tarkoitettuja tietoja laitteiston käsittelystä ja käyttämisestä ennen tuotantoa, tuotannon aikana ja sen jälkeen.
- Varaosakuvasto (SPC)
  Tässä oppaassa on tietoja, joita tarvitaan varaosien tilaamiseen Tetra Pakilta.
- Tekninen käsikirja (TeM)
  - sisältää teknikoille tarkoitettuja tietoja, joita tarvitaan laitteen turvallista asentamista varten
  - sisältää teknikoille tarkoitettuja tietoja laitteen huoltamisesta
  - sisältää teknikoille tarkoitettuja tietoja laitteen sähköjärjestelmästä
  - sisältää tietoja, joita tarvitaan varaosien tilaamiseen Tetra Pakilta.

Sivujen asettelu

Katso kuva (A) sivulla i-5: Varaosaluettelon pääsivut koostuvat kuvasivusta (1) ja sitä vastaavasta luettelosivusta (7). Sivunumero (5) näytetään kuvasivun ylätunnisteessa ja luettelosivun alatunnisteessa. Asiakirjan numero (6) näytetään luettelosivun alatunnisteessa.

Sivunumerointi

Katso kuva (A) sivulla i-5: Sivunumerossa (5) on kolme osaa:

- luvun numero (2)
- perättäinen sivunumero (3) luvun sisällä
- luvun kokonaissivumäärä (4).

Koneen esittely

Valmistaja

Valmistajan nimi ja osoite on ilmoitettu tämän luettelon toisella sivulla.

Huolto

Jos haluat tilata tähän koneeseen varaosia tai jos tämän koneen käytössä ilmenee ongelmia, jotka haluat raportoida, ota yhteyttä lähimpään Tetra Pakin toimistoon.

Jos sinulla on muuta kysyttävää, huomautettavaa tai ehdotuksia laitteistoa ja sen asiakirjoja koskevista parannuksista, ota yhteys yhteyshenkilöön.

Tunnistetiedot

CE-luokitus

Tämä laite vastaa Euroopan talousalueen (EEA) perustason terveys- ja turvallisuusvaatimuksia.

Koneen tyyppikilpi

Kuvassa (B) sivulla i-5 on esimerkki koneen tyyppikilvestä. Voimassa olevan tyyppikilven kuva ja sen sijainti koneessa käy ilmi laitteiston mukana tulleiden ohjeiden Johdanto-luvusta. Tyyppikilvessä on tarvitsemasi Tetra Pakin voimassa olevat yhteystiedot, kun on kyseessä tämä nimenomainen laite.

- Konetyyppi (8)
- Tilavuus (9)
- Piirustuserittelyt (10)
- Koneen sarjanumero (11)
- Valmistaja (12)
- CE-merkki (13)
- Valmistusvuosi (14)

Kuvassa (C) sivulla i-5 on esimerkki koneen erittelystä. Varmista, että tämän ohjeen etusivuilla ilmoitetut laitetiedot vastaavat tyyppikilven ja kone-erittelyn tietoja.

Tämän varaosaluettelon käyttäminen

Etsi varaosan numero

a) Katso kuva (D) sivulla i-5: Siirry lukuun (15), joka on ilmoitettu etsittävän osan pääryhmän vieressä.

Kohdat b) ja c) viittaavat kuvaan (E) sivulla i-6.

b) Etsi pääryhmän kuvasta koneen alaryhmä (17), joka sisältää etsimäsi osan tai alaryhmän. Merkitse muistiin paikkanumero (18) ja siirry luettelosivulle, joka seuraa kuvaa.

c) Etsi paikkanumero (16) tai alaryhmän nimi (19). Siirry vastaavalle sivunumerolle (20), joka on ilmoitettu oikeassa sarakkeessa.

Kohdat d) ja e) viittaavat kuvaan (F) sivulla i-6.

d) Hae etsittävä osa (21) alaryhmän kuvasta ja merkitse osan paikkanumero muistiin.

e) Osanumero (29) ja osan kuvaus (30) on annettu paikkanumeron vieressä luettelosivulla.

Varaosaluettelossa olevat tiedot

Alla oleva luettelo viittaa kuvaan (F) sivulla i-6. Varaosaluettelo sisältää seuraavat tiedot ryhmistä, alaryhmistä ja laitteen varaosista:

- Ryhmärakenneviite (22). Osoittaa seuraavaksi ylemmän ryhmän laiteluettelorakenteessa.
- Ryhmän nimi (23)
- Mittayksikkö (25)
- Määrä (26)
- Kokoonpanopiirustuksen numero (27)
- Luettelosivun väli (28). Tämä on mukana, jos ryhmäkuvassa tai luettelossa on useita sivuja.
- Osan tai alaryhmän numero (29)
- Alaryhmän nimi tai osan kuvaus (30)
- Ryhmän numero (31)
- Laitteen numero (32)
- Ryhmätietojen otsikko (33). Osoittaa, koskeeko alla oleva osio tiettyä koneversiota vai onko kyseessä yleisten osien luettelo. Jos luettelolla on useampi kuin yksi versio ja kullakin versiolla on oma kokoonpanopiirustuksensa, näytetään version kokoonpanopiirustuksen sivuviittaus.
- Sisäiset tiedot (34)

Introduction

Information sur le manuel

Tetra Pak recommande de lire attentivement tous les manuels fournis. S'assurer que les manuels fournis soient accessibles au personnel qui s'occupe du fonctionnement ou de la maintenance de l'équipement.

Il est important de conserver ce manuel pendant toute la durée d'utilisation de la machine et de le transmettre à tout détenteur ou utilisateur ultérieur.

Tetra Pak ne sera pas tenu responsable d'un dommage causé à la machine ou à l'équipement par le fait de ne pas avoir respecté les instructions figurant dans le présent manuel.

Manuels fournis

Les manuels fournis avec cette machine comprennent

- Le Manuel de Conversion (CM)
  Ce manuel fournit aux techniciens les informations nécessaires pour convertir la machine en vue des différents modes de production.
- Manuel Electrique (EM)
  Ce manuel fournit aux techniciens les informations sur le système électrique de la machine.
- Manuel de Mise en Place (IM)
  Ce manuel fournit aux techniciens les informations nécessaires pour l'installation de la machine en toute sécurité.
- Manuel de Maintenance (MM)
  Ce manuel fournit aux techniciens les informations pour la maintenance.
- Manuel d'Opérateur (OM)
  Ce manuel fournit aux opérateurs les informations nécessaires pour la manutention et le fonctionnement de la machine avant, pendant et après la production.
- Catalogue de Pièces de Rechange (SPC)
  Ce manuel fournit l'information nécessaire à la commande de pièces de rechange auprès de Tetra Pak
- Manuel Technique (TeM)
  - fournit aux techniciens les informations nécessaires pour l'installation de la machine en toute sécurité
  - fournit aux techniciens les informations pour la maintenance
  - fournit aux techniciens les informations sur le système électrique de la machine
  - fournit l' information nécessaire à la commande de pièces de rechange auprès de Tetra Pak

Présentation d'une page

Se référer à la figure (A) à la page i-5: Les pages principales du Catalogue des Pièces de Rechange sont composées d'une page de figure (1) et d'une page de liste correspondante (7). Le numéro de page (5) est indiqué dans le titre de la page de figure et dans le bas de page d'une page de liste.
Le numéro de document (6) est indiqué dans le bas de page de la page de liste.

Numérotation de page

Se référer (A) à la page i-5: Un numéro de page (5) possède trois parties:

- Numéro de chapitre (2)
- numéro de page consécutif (2) à l'intérieur du chapitre (3)
- nombre total de pages dans le chapitre (4)

Présentation de la machine

Fabricant

Pour le nom et l'adresse du fabricant, voir la deuxième page de ce catalogue.

Assistance technique

Pour commander les pièces de rechange de cette machine ou pour rapporter les problèmes associés au fonctionnement de celle-ci, prendre contact avec le bureau Tetra Pak le plus proche.

Prendre contact avec le responsable de liaison pour les renseignements, commentaires ou suggestions concernant la machine ou l'équipement et sa documentation.

Identification

Certification CE

Cet équipement est conforme aux réglementations essentielles d'hygiène et de sécurité de la Communauté Economique Européenne (CEE).

Plaque signalétique de machine

La figure (B) à la page i-5 montre un exemple d'une plaque signalétique de machine.
Une représentation de la plaque de machine valable et son emplacement sur l'équipement est indiquée au Chapitre Introduction des manuels fournis avec l'équipement. La plaque de machine contient les caractéristiques figurant dans la liste ci-dessous, nécessaires pour prendre contact avec Tetra Pak au sujet de cet équipement spécifique.

- Type de machine (8)
- Volume (9)
- Spécifications du plan (10)
- Numéro de série de la machine (11)
- Fabricant (12)
- Marquage CE (13)
- Année de fabrication (14)

La figure (C) à la page i-5 montre un exemple d'une spécification de machine. S'assurer que les caractéristiques de l'équipement figurant dans la liste des pages de garde de ce manuel correspondent aux caractéristiques de la plaque signalétique de la machine et à ses spécifications.

Comment utiliser ce Catalogue de Pièces de Rechange

Localiser un numéro de pièce de rechange

a) Se référer à la figure (D) à la page i-5: Aller au numéro de chapitre (15) indiqué à côté du groupe principal qui contient la pièce que vous souhaitez localiser.

Les articles b) et c) se réfèrent à la figure (E) à la page i-6.

b) Sur la figure du groupe principal, chercher la sous-groupe de machine (17) qui contient la pièce ou le sous-groupe que vous recherchez. Noter le numéro de repère (18) et aller à la page de liste qui suit la figure.

c) Rechercher le numéro de repère (16) ou le nom de sous-groupe (19). Aller au numéro de page correspondant (20) figurant dans la liste de la colonne de droite.

Les articles d) et e) se réfèrent à la figure (F) à la page i-6.

d) Localiser la pièce (21) que vous recherchez sur la figure de sous-groupe et noter le numéro de repère de la pièce.

e) Le numéro de pièce (29) et la description de la pièce (30) figurent dans la liste à côté du numéro de repère sur la page de liste.

Informations figurant dans la liste dans un Catalogue de Pièces de Rechange

La liste ci-dessous se réfère à la figure (F) à la page i-6. Un Catalogue de Pièces de Rechange contient les renseignements suivants relatifs aux groupes, sous-groupes et pièces de rechange de l'équipement:

- Référence de structure de groupe (22). Indique le groupe supérieur suivant dans la structure de liste d'équipement.
- Nom du groupe (23).
- Unité de mesure (25).
- Quantité (26).
- Numéro de plan de montage (27).
- Gamme de la page de liste (28). Incluse s'il y a des pages multiples dans la figure de groupe ou dans la liste.
- Numéro de pièce ou de sous-groupe (29).
- Nom de sous-groupe ou description de la pièce (30).
- Numéro de groupe (31).
- Numéro de l'équipement (32).
- Titre des informations de groupe (33). Indique si la section sous le titre est pour une variante de machine spécifique ou s'il y a une liste de pièces communes. Si une liste comporte plus d'une variante et que chaque variante possède son propre plan de montage, une référence de page au plan de montage de la variante est alors indiqué.
- Renseignements internes (34).

Bevezetés

Kézikönyv információ

A Tetra Pak az összes rendelkezésre bocsátott kézikönyv figyelmes elolvasását ajánlja. Győződjön meg arról, hogy a rendelkezésre bocsátott kézikönyveket hozzáférhetővé tették a berendezést kezelő és karbantartó személyzet számára.

Föltétlenül őrizzék meg ezen kézikönyvet a berendezés teljes élethossza alatt, és adják át a következő tulajdonosnak vagy felhasználónak.

A Tetra Pak nem vonható felelősségre a berendezést ért olyan károkért, amelyek a kézikönyvben meghatározott utasítások be nem tartásából erednek.

Rendelkezésre bocsátott kézikönyvek

A géppel vagy berendezéssel együtt a következő dokumentumokat szállítjuk

- Karbantartási kézikönyv (CM)
  Ezen kézikönyv a technikusok számára szolgáltat adatokat a berendezés átkapcsolásáról egyik üzemmódból a másikba.
- Elektromos kézikönyv (EM)
  Ezen kézikönyv a villamosmérnökök és szervizelő technikusok számára szolgáltat adatokat a berendezés elektromos hálózatáról.
- Beszerelési kézikönyv (IM)
  Ezen kézikönyv a berendezés biztonságos beszerelésével kapcsolatos adatokat szolgáltat a technikusoknak.
- Karbantartási kézikönyv (MM)
  Ezen kézikönyv a technikusok számára szolgáltat adatokat a berendezés karbantartásáról.
- Kezelési kézikönyv (OM)
  Ezen kézikönyv a berendezés kezelésével és vezérlésével kapcsolatos adatokat szolgáltat a kezelőknek termelés előtt, közben és után.
- Cserealkatrész katalógus (SPC)
  Ezen kézikönyv a cserealkatrészek Tetra Pak cégtől való megrendeléséhez szükséges adatokat tartalmaz.
- Műszaki kézikönyv (TeM)
  - a berendezés biztonságos beszerelésével kapcsolatos adatokat szolgáltat a technikusoknak
  - a technikusok számára szolgáltat adatokat a berendezés karbantartásáról
  - a villamosmérnökök és szervizelő technikusok számára szolgáltat adatokat a berendezés elektromos hálózatáról
  - a cserealkatrészek Tetra Pak cégtől való megrendeléséhez szükséges adatokat tartalmaz

Lap elrendezése

Tekintse meg a i-5 oldalon levő ábrát (A): A Cserealkatrészek katalógusának főoldalai egy rajzoldalból (1) és egy hozzá tartozó listaoldalból (7) állnak. Az oldalszám (5) a rajzoldal fejlécében és a listaoldal láblécében jelenik meg. A dokumentumszám (6) a listaoldal láblécében jelenik meg.

Oldalszámozás

Tekintse meg a i-5 oldalon levő ábrát (A): Az oldalszám (5) három részből áll:

- fejezetszám (2)
- folytonos oldalszám (3) a fejezeten belül
- fejezet oldalszáma (4)

A gép bemutatása

Gyártó

A gyártó neve és címe ezen katalógus, második oldalán található.

Szervizelés

Ezen gép valamely cserealkatrészének megrendelése vagy a gép működésével kapcsolatos üzemzavarok bejelentése végett, forduljon a legközelebbi Tetra Pak képviselethez.

Bármilyen más, a berendezés, illetve dokumentációjának feljavítására irányuló kérdéseivel, megjegyzéseivel vagy javaslataival forduljon kapcsolattartóhoz.

Azonosítás

CE besorolás

Ezen berendezés megfelel az Európai Gazdasági Régió (EEA) alapvető egészségügyi és biztonsági előírásainak.

A gép adattáblája

A i-5 oldalon található ábra (B) a gép adattáblájának egyik példája. A megfelelő gép-adattábla ábrája és helye a berendezésen a berendezéssel szállított kézikönyvek Bevezetés fejezetében található. A gép adattáblája az alább felsorolt adatokat tartalmazza, amelyek ezen berendezésre vonatkoznak, és a Tetra Pak céggel való kapcsolat felvételekor szükségesek.

- Géptípus (8)
- Térfogat (9)
- Tervrajz (10)
- A gép sorozatszáma (11)
- Gyártó (12)
- CE jelzés (13)
- Gyártás éve (14)

A i-5 oldalon található ábra (C) példa a gép műszaki leírására. Győződjön meg arról, hogy ezen kézikönyv előlapjain közölt berendezésadatok megegyeznek a gép adattábláján és a gép műszaki leírásában megjelenő információval.

A Cserealkatrészek katalógus használata

Keresse meg a cserealkatrész számát

a) Tekintse meg a i-5 oldalon levő ábrát (D): Lapozzon a keresett alkatrészt tartalmazó főcsoport mellett feltüntetett számú (15) fejezetre.

A b) és c) elemek a i-6 oldalon levő ábrára vonatkoznak.

b) A főcsoport-ábrán keresse meg azt az alcsoportot (17), amelyik a keresett alkatrészt vagy alcsoportot tartalmazza. Jegyezze le a helyszámot (18), majd lapozzon az ábrát követő listaoldalra.

c) Keresse meg a lejegyzett helyszámot (16) vagy a keresett alcsoport nevét (19). Lapozzon a jobb oldali oszlopban feltüntetett számú (20) oldalra.

A d) és e) elemek a i-6 oldalon levő ábrára (F) vonatkoznak.

d) Az alcsoport ábrán keresse meg a keresett alkatrészt (21), és jegyezze le az alkatrész helyszámát.

e) Az alkatrészek száma (29) és leírása (30) a listaoldalon, a helyszám mellett láthatóak.

A Cserelkatrész katalógusban közölt adatok

Az alábbi lista a i-6 oldalon található ábrára (F) vonatkozik. A Cserealkatrészek katalógus a következő, csoportokra, alcsoportokra és cserealkatrészekre vonatkozó, adatokat tartalmazza:

- Csoportstruktúra hivatkozás (22). A berendezés listás struktúrájában közvetlenül az aktuális csoport fölött álló csoportot jelöli.
- Csoportnév (23)
- Mértékegység (25)
- Menniség (26)
- Szerelvény tervrajza (27)
- Lista oldaltartománya (28). Abban az esetben jelenik meg, ha a csoport ábrája vagy listája többoldalas.
- Alkatrész vagy alcsoport száma (29)
- Alcsoport neve vagy alkatrész leírása (30)
- Csoportszám (31)
- Berendezésszám (32)
- Csoportinformáció fejléc (33). Azt mutatja, hogy a fejléc után következő rész egy bizonyos gépváltozatra vonatkozik vagy az általános cserealkatrészek listája. Ha a listának több változata van, és mindegyikhez más szerelvény-tervrajz tartozik, az illető szerelvény-tervrajz oldalhivatkozása is megjelenik.
- Belső információ (34)

Introduzione

Informazioni sul manuale

Tetra Pak consiglia di leggere con attenzione tutti i manuali forniti in dotazione. Assicurarsi che tutti i manuali in dotazione siano disponibili per il personale addetto al funzionamento e alla manutenzione della macchina.

È importante conservare il presente catalogo per tutta la durata della macchina e consegnarlo al successivo proprietario o utilizzatore.

Tetra Pak non sarà da ritenersi responsabile per eventuali danni alla macchina causati dal mancato rispetto delle istruzioni fornite nei manuali che accompagnano le macchine.

Manuali in dotazione

I manuali consegnati con la presente macchina possono comprendere:

- Manuale di Conversione (CM)
  Questo manuale fornisce ai tecnici le informazioni necessarie per la conversione della macchina da una modalità di produzione a un'altra.
- Manuale Elettrico (EM)
  Questo manuale fornisce ai tecnici informazioni sull'impianto elettrico della macchina.
- Manuale di Installazione (IM)
  Questo manuale fornisce ai tecnici le informazioni necessarie per installare in sicurezza la macchina.
- Manuale di Manutenzione (MM)
  Questo manuale fornisce ai tecnici le informazioni necessarie per la manutenzione della macchina.
- Manuale Operativo (OM)
  Questo manuale fornisce all'operatore le informazioni sull'utilizzo e il funzionamento della macchina prima, durante e dopo la produzione.
- Catalogo Pezzi di Ricambio (SPC)
  Questo manuale fornisce le informazioni necessarie per ordinare a Tetra Pak i pezzi di ricambio.
- Manuale Tecnico (TeM)
  - fornisce ai tecnici le informazioni necessarie per installare in sicurezza la macchina
  - fornisce ai tecnici le informazioni necessarie per la manutenzione della macchina
  - fornisce ai tecnici informazioni sull'impianto elettrico della macchina
  - fornisce le informazioni necessarie per ordinare a Tetra Pak i pezzi di ricambio.

Schema della pagina

Consultare la figura (A) a pagina i-5. Le pagine principali del Catalogo Pezzi di Ricambio consistono in una pagina con la figura (1) e una pagina elenco corrispondente (7). Il numero di pagina (5) è indicato nell'intestazione delle pagine con le figure e nel piè di pagina delle pagine elenco. Il codice del documento (6) è indicato nel piè di pagina delle pagine elenco.

Numerazione delle pagine

Consultare la figura (A) a pagina i-5. Il numero di pagina (5) è suddiviso in tre parti:

- numero della sezione (2)
- numero progressivo di pagina all'interno della sezione (3)
- numero totale di pagine della sezione (4)

Introduzione alla macchina

Fabbricante

Il nome e l'indirizzo del fabbricante sono riportati sulla seconda pagina del presente catalogo.

Assistenza

Per ordinare i pezzi di ricambio per questa macchina oppure per riferire problemi associati con il funzionamento della macchina, contattare il più vicino ufficio Tetra Pak.

Per tutte le altre richieste, commenti o suggerimenti per eventuali miglioramenti da apportare alla macchina e alla relativa documentazione, contattare il responsabile di collegamento.

Identificazione

Marchio CE

La macchina è conforme alle principali norme sanitarie e di sicurezza dell'Area Economica Europea (EEA).

Targhetta della macchina

La figura (B) a pagina i-5 illustra un esempio di targhetta della macchina. La sezione Introduzione di tutti i manuali consegnati con la presente macchina contiene invece la figura della targhetta della macchina valida e l'illustrazione della sua posizione sulla macchina. La targhetta riporta i dati elencati sotto che sono necessari per contattare Tetra Pak in relazione a questa macchina specifica.

- Tipo di macchina (8)
- Volume (9)
- Specifiche disegno (10)
- Numero di matricola della macchina (11)
- Fabbricante (12)
- Marchio CE (13)
- Anno di fabbricazione (14)

La figura (C) a pagina i-5 mostra un esempio delle specifiche di una macchina. Verificare che i dati relativi alla macchina elencati nelle pagine iniziali del manuale corrispondano ai dati riportati sulla targhetta della macchina e nelle specifiche della macchina.

Come usare questo Catalogo Pezzi di Ricambio

Individuare il numero del pezzo di ricambio

f) Vedere la figura (D) a pagina i-5. Andare al numero della sezione (15) indicato accanto al gruppo principale che contiene il pezzo che si desidera individuare.

I punti b) e c) fanno riferimento alla figura (E) a pagina i-6.

g) Nella figura del gruppo principale, identificare il sottogruppo della macchina (17) che contiene il pezzo o il sottogruppo cercato. Annotare il numero di posizione (18) e andare alla pagina elenco che segue la figura.

h) Identificare il numero di posizione (16) o il nome del sottogruppo (19). Andare al numero di pagina corrispondente (20) indicato nella colonna di destra.

I punti d) e e) fanno riferimento alla figura (F) a pagina i-6.

i) Individuare il pezzo (21) cercato sulla figura del sottogruppo e annotare il numero di posizione del pezzo.

j) Il numero del pezzo (29) e la descrizione del pezzo (30) sono indicati accanto al numero di posizione sulla pagina elenco.

Informazioni contenute nel Catalogo Pezzi di Ricambio

L'elenco seguente fa riferimento alla figura (F) a pagina i-6. Il Catalogo Pezzi di Ricambio contiene le seguenti informazioni sui gruppi, i sottogruppi e i pezzi di ricambio della macchina:

- Riferimento struttura gruppo (22). Indica il gruppo superiore più prossimo nella struttura elenco della macchina.
- Nome gruppo (23)
- Unità di misura (25)
- Quantità (26)
- Numero disegno di assemblaggio (27)
- Pagine dell'elenco (28). Questa informazione è presente se la figura o l'elenco relativi al gruppo occupano più di una pagina del manuale.
- Numero pezzo o sottogruppo (29)
- Nome sottogruppo o descrizione pezzo (30)
- Numero gruppo (31)
- Numero macchina (32)
- Titolo informazioni gruppo (33). Indica se la sezione che segue il titolo si riferisce a una variante di macchina specifica oppure se si tratta di un elenco di parti comuni. Se un elenco contiene più di una variante ed esiste un disegno di assemblaggio specifico per ogni variante, viene fornito il riferimento alla pagina in cui è riportato il disegno di assemblaggio relativo alla variante.
- Informazioni interne (34)

Įvadas

Žinyno informacija

Tetra Pak rekomenduoja atidžiai perskaityti visus pateikiamus žinynus. Užtikrinkite, kad pateikti žinynai būtų prieinami darbuotojams, kurie naudoja ar aptarnauja įrangą.

Svarbu išsaugoti šį katalogą visą įrangos naudojimo laiką ir perduoti jį vėlesniems savininkams ar naudotojams.

Tetra Pak neprisiima atsakomybės už bet kokius pažeidimus įrangai, kuriuos sukels nurodymų, pateikiamų žinynuose kartu su įranga, nesilaikymas.

Pateikiami žinynai

Žinynuose, pateikiamuose su šia įranga, gali būti:

- Konversijos žinynas (KŽ)
  Šiame žinyne technikams pateikiama informacija apie įrangos perjungimą skirtingais gamybiniais režimais.
- Elektros žinynas (EŽ)
  Šiame žinyne technikams pateikiama informacija apie įrangos elektros sistemą.
- Montavimo žinynas (MŽ)
  Šiame žinyne technikams pateikiama informacija, reikalinga saugiam įrangos sumontavimui.
- Aptarnavimo žinynas (AŽ)
  Šiame žinyne technikams pateikiama informacija apie įrangos aptarnavimą.
- Naudotojo žinynas (NŽ)
  Šiame žinyne operatoriui pateikiama informacija apie įrangos priežiūrą ir naudojimą prieš gamybos procesą, jo metu ir po jo.
- Atsarginių detalių katalogas (ADK)
  Šiame žinyne pateikiama informacija, reikalinga norint užsakyti atsargines detales iš Tetra Pak.
- Techninis žinynas (TeŽ)
  - pateikia technikams informaciją, reikalingą saugiam įrangos sumontavimui
  - pateikia technikams informaciją, reikalingą įrangos aptarnavimui
  - pateikiama technikams informacija apie įrangos elektros sistemą
  - pateikiama informacija, kaip užsakyti atsargines detales iš Tetra Pak

Puslapio išdėstymas

Remkitės iliustracija (A) puslapyje i-5: Pagrindiniai atsarginių detalių katalogo puslapiai yra sudaryti iš iliustracijos puslapio (1) ir jį atitinkančio sąrašo puslapio (7). Puslapio numeris (5) parodytas iliustracijos puslapio viršutinėje paraštėje ir sąrašo puslapio apatinėje paraštėje. Dokumento numeris (6) yra parodytas apatinėje sąrašo puslapio paraštėje.

Puslapių numeravimas

Vadovaukitės iliustracija (A) puslapyje i-5: A puslapio numeris (5) turi tris dalis:

- skyriaus numerį (2)
- puslapio eilės numerį skyriuje (3)
- bendrą puslapių skaičių skyriuje (4)

Mašinos pristatymas

Gamintojas

Gamintojo pavadinimą ir adresą galite rasti šio katalogo antrajame puslapyje.

Aptarnavimas

Norėdami užsakyti atsargines detales šiai mašinai arba pranešti apie nesklandumus, susijusius su šios mašinos naudojimu, susisiekite su artimiausiu Tetra Pak biuru.

Susisiekite su Liaison dėl kitų komentarų, klausimų ar pasiūlymų, kaip patobulinti įrangą ar jos dokumentaciją.

Identifikacija

CE Klasifikacija

Ši įranga atitinka Europos ekonominės erdvės (EEE) pirminius sveikatos ir saugumo normatyvus.

Mašinos plokštelė

Iliustracijoje (B) puslapyje i-5 parodytas mašinos plokštelės pavyzdys. Mašinos specifikacijos plokštelės iliustracija ir jos vieta prie įrangos parodyta įžanginiame žinynų, pateikiamų su šia įranga, skyriuje. Mašinos plokštelėje yra žemiau išvardinti duomenys, reikalingi kreipiantis į Tetra Pak su šia konkrečia įranga susijusiais klausimais:

- mašinos tipas (8)
- tomas (9)
- brėžinių specifikacijos (10)
- mašinos serijos numeris (11)
- gamintojas (12)
- CE ženklas (13)
- pagaminimo metai (14)

Iliustracija (C) puslapyje i-5 vaizduoja mašinos specifikacijos pavyzdį. Įsitikinkite, kad įrangos duomenys, išdėstyti šio žinyno pirmuosiuose puslapiuose, atitinka duomenis mašinos plokštelėje ir mašinos specifikaciją.

Kaip naudotis šiuo atsarginių detalių katalogu?

Atsarginės detalės numerio nustatymas

a) Remkitės iliustracija (D) puslapyje i-5: eikite į skyrių Nr. (15), nurodytą šalia pagrindinės grupės, kurioje yra jūsų ieškoma detalė.

Elementai b) ir c) nurodo iliustraciją (E) puslapyje i-6.

b) Pagrindinės grupės iliustracijoje suraskite mašinos pogrupį (17), kuriame yra jūsų ieškoma detalė. Įsidėmėkite pozicijos numerį ir pereikite į sąrašo puslapį, kuris atitinka iliustraciją.

c) Ieškokite pozicijos numerio (16) arba pogrupio pavadinimo (19). Pereikite į atitinkamo numerio puslapį (20), kuris nurodytas dešiniajame stulpelyje.

Elementai d) ir e) nurodo iliustraciją (F) puslapyje i-6.

d) Raskite ieškomą detalę (21) pogrupio iliustracijoje ir įsidėmėkite detalės pozicijos numerį.

e) Detalės numeris (29) ir detalės aprašymas (30) pateikiami šalia pozicijos numerio sąrašo puslapyje.

Informacija, pateikiama atsarginių detalių kataloge

Žemiau pateikiamas sąrašas nurodo iliustraciją (F) puslapyje i-6. Atsarginių detalių kataloge yra tokia informacija apie grupes, pogrupius ir atsargines detales įrangai:

- Grupės struktūros nuorodos (22). Nurodo tolimesnę aukštesnę grupę įrangos sąrašo struktūroje.
- Grupės pavadinimas (23)
- Mato vienetas (25)
- Kiekis (26)
- Surinkimo brėžinio numeris (27)
- Sąrašo puslapio diapazonas (28). Įtrauktas, jei egzistuoja daug puslapių grupės iliustracijoje arba sąraše.
- Detalės arba pogrupio numeris (29)
- Pogrupio pavadinimas ar detalės aprašymas (30)
- Grupės numeris (31)
- Įrangos numeris (32)
- Grupės informacinė antraštė (33). Nurodo, ar žemiau antraštės esantis skyrius yra skirtas specifiniam mašinos variantui, ar tai yra įprastinių detalių sąrašas. Jei sąrašas turi daugiau nei vieną variantą ir kiekvienas variantas iliustruojamas surinkimo brėžiniu, pateikiama nuoroda į surinkimo brėžinio puslapį.
- Vidinė informacija (34)

Ievads

Informācija par rokasgrāmatu

Tetra Pak iesaka rūpīgi izlasīt visas piegādātās rokasgrāmatas. Piegādātajām rokasgrāmatām ir jābūt pieejamām personālam, kas apkalpo iekārtas vai veic to apkopi.

Nepieciešams saglabāt šo katalogu visu laiku, kamēr iekārtas tiek izmantotas, un nodot katalogu nākamajam īpašniekam vai lietotājam.

Tetra Pak neatbild par iekārtas bojājumiem, kuri rodas līdz ar iekārtu piegādāto instrukciju neievērošanas rezultātā.

Piegādātās rokasgrāmatas

Līdz ar iekārtu var tikt piegādātas šādas rokasgrāmatas

- Pārslēgšanas rokasgrāmata (CM)
  Šī rokasgrāmata sniedz tehniķiem informāciju par iekārtas pārslēgšanu dažādos atšķirīgos ražošanas režīmos.
- Elektriskās instalācijas rokasgrāmata (EM)
  Šī rokasgrāmata sniedz tehniķiem informāciju par iekārtas elektriskās instalācijas sistēmu.
- Uzstādīšanas rokasgrāmata (IM)
  Šī rokasgrāmata sniedz tehniķiem informāciju, kas nepieciešama drošai iekārtas uzstādīšanai.
- Apkopes rokasgrāmata (MM)
  Šī rokasgrāmata sniedz tehniķiem informāciju par iekārtas apkopi.
- Ekspluatācijas rokasgrāmata (OM)
  Šī rokasgrāmata sniedz apkalpojošajam personālam informāciju par iekārtas apkalpošanu un ekspluatēšanu pirms darba sākuma, darba laikā un pēc darba beigām.
- Rezerves daļu katalogs (SPC)
  Šī rokasgrāmata sniedz informāciju, kas nepieciešama, lai pasūtītu rezerves daļas no Tetra Pak.
- Tehniskā rokasgrāmata (TeM)
  - sniedz tehniķiem informāciju, kas nepieciešama drošai iekārtas uzstādīšanai
  - sniedz tehniķiem informāciju par iekārtas apkopi
  - sniedz tehniķiem informāciju par iekārtas elektrisko instalāciju
  - sniedz informāciju, kas nepieciešama, lai pasūtītu rezerves daļas no Tetra Pak

Lappuses izkārtojums

Skatīt ilustrāciju (A) i-5 lappusē: Galvenās lappuses Rezerves daļu katalogā sastāv no ilustrāciju lapas (1) un atbilstīgās saraksta lapas (7). Lappuses numurs (5) ir norādīts ilustrācijas lapas galvenē un saraksta lapas kājenē. Dokumenta numurs (6) ir norādīts saraksta lapas kājenē.

Lappušu numerācija

Skatīt ilustrāciju (A) lappusē i-5: Lappuses numurs (5) sastāv no trim daļām:

- nodaļas numura (2)
- secīga lappuses numura nodaļas ietvaros (3)
- kopējā lappušu skaita nodaļā (4)

Iepazīstināšana ar iekārtu

Ražotājs

Ražotāja nosaukumu un adresi skatīt šī kataloga otrajā lappusē.

Serviss

Ja nepieciešams pasūtīt rezerves daļas šai mašīnai vai ziņot par problēmām, kas saistītas ar mašīnas ekspluatāciju, tad, lūdzu, sazinieties ar tuvāko Tetra Pak pārstāvniecību.

Ja Jums ir citi jautājumi, piezīmes vai ieteikumi par iekārtas un tās dokumentācijas uzlabošanu, tad lūdzam sazināties ar Sakaru biroju.

Identifikācija

CE klasifikācija

Šī iekārta atbilst galvenajām Eiropas Ekonomiskās Zonas (EEA) regulām, kuras attiecas uz veselību un drošību.

Mašīnas tipa plāksnīte

Ilustrācijā (B) i-5lappusē redzams mašīnas tipa plāksnītes paraugs. Aktuālās mašīnas tipa plāksnīte un tās atrašanās vieta uz iekārtas ir parādīta līdz ar šo iekārtu piegādāto rokasgrāmatu Ievada nodaļā. Mašīnas tipa plāksnīte satur tālāk uzskaitīto informāciju, kura ir nepieciešama, sazinoties ar Tetra Pak par šo iekārtu.

- Mašīnas tips (8)
- Daudzums (9)
- Rasējuma specifikācijas (10)
- Mašīnas sērijas numurs (11)
- Ražotājs (12)
- CE apzīmējums (13)
- Izgatavošanas gads (14)

Ilustrācijā (C) i-5lappusē ir parādīts mašīnas specifikācijas paraugs. Pārliecinieties, ka šīs rokasgrāmatas titullapās minētā informācija par iekārtu atbilst tai, kas norādīta uz mašīnas tipa plāksnītes un mašīnas specifikācijā.

Rezerves daļu kataloga lietošana

Vajadzīgās rezerves daļas numura atrašana

a) Skatiet ilustrāciju (D) i-5lappusē: atrodiet nodaļas numuru (15), kas norādīts līdzās galvenajai grupai, kurā ietilpst Jūsu meklētā rezerves daļa.

Pozīcijas b) un c) skatiet ilustrāciju (E) i-6lappusē.

b) Galvenās grupas ilustrācijā atrodiet mašīnas apakšgrupu (17), kurā ietilpst Jūsu meklētā detaļa vai apakšgrupa. Atzīmējiet pozīcijas numuru (18) un pievērsieties saraksta lappusei, kura seko šai ilustrācijai.

c) Sameklējiet atbilstīgo pozīcijas numuru (16) vai apakšgrupas nosaukumu (19). Pievērsieties atbilstīgajam lappuses numuram (20), kas norādīts ailē pa labi.

Pozīcijas d) un e) skatiet ilustrāciju (E) i-6lappusē.

d) Atrodiet vajadzīgo rezerves daļu (21) apakšgrupas ilustrācijā un atzīmējiet šīs detaļas pozīcijas numuru.

e) Šīs daļas numurs (29) un apraksts (30) atrodas saraksta lapā līdzās pozīcijas numuram.

Rezerves daļu katalogā sniegtā informācija

Šis saraksts attiecas uz ilustrāciju (F) i-6lappusē. Rezerves daļu katalogs satur šādu informāciju par grupām, apakšgrupām un iekārtas rezerves daļām:

- Norādes par grupu struktūru (22). Norāde uz tuvāko augstāko grupu iekārtas saraksta struktūrā.
- Grupas nosaukums (23)
- Mērvienība (25)
- Skaits (26)
- Montāžas rasējuma numurs (27)
- Saraksta lappuses zona (28). Tiek izmantota tad, ja grupas ilustrācija vai saraksts ir uz vairākām lappusēm.
- Daļas vai apakšgrupas numurs (29)
- Apakšgrupas nosaukums vai daļas apraksts (30)
- Grupas numurs (31)
- Iekārtas numurs (32)
- Grupas informācijas iedaļas apzīmējums (33). Norāda, vai iedaļa zem šī apzīmējuma attiecas uz noteiktu mašīnas variantu, vai arī tas ir kopējo rezerves daļu saraksts. Ja sarakstam ir vairāk par vienu variantu un katram variantam ir savs montāžas rasējums, tad tiek dota atsauce uz lappusi, kur atrodams katra varianta montāžas rasējums.
- Iekšējā informācija (34)

Introduzzjoni

Informazzjoni tal-Manwal

Tetra Pak tirrakkomanda li jinqraw bl-attenzjoni l-manwali kkunsinnati kollha. Aċċerta ruħek li l-manwali kkunsinnati kollha huma disponibbli għall-personàl li jħaddem jew li jagħmel manutezjoni fuq it-tagħmir.

Huwa importanti li żżomm dan il-katalgu sakemm idum jaħdem it-tagħmir, u li tgħaddi l-katalgu lil xi sid jew lil xi persuna oħra li tuża dan it-tagħmir fil-futur.

Tetra Pak ma tistax tinżamm responsabbli ta' xi ħsara lit-tagħmir ikkawżata minn nuqqas ta' osservanza ta' l-istruzzjonijiet li jingħataw f'dan il-manwal.

Manwali Kkunsinnati

Il-manwali kkunsinnati ma' dan it-tagħmir jinkludu

- Manwal tal-Konverżjoni (CM)
  Dan il-manwal jipprovdi informazzjoni lit-tekniċi dwar il-konverżjoni tat-tagħmir bejn modi differenti tal-produzzjoni.
- Manwal Elettriku (EM)
  Dan il-manwal jipprovdi informazzjoni lit-tekniċi dwar is-sistema ta' l-elettriku tat-tagħmir.
- Manwal ta' l-Installazzjoni (IM)
  Dan il-manwal jipprovdi lit-tekniċi b'informazzjoni meħtieġa biex jinstallaw it-tagħmir mingħajr periklu.
- Manwal tal-Manutenzjoni (MM)
  Dan il-manwal jipprovdi lit-tekniċi b'informazzjoni fuq kif jagħmlu manutenzjoni fuq it-tagħmir.
- Manwal ta' l-Operazzjoni (OM)
  Dan il-manwal jipprovdi informazzjoni lill-operatur fuq kif jimmaniġġja u jħaddem it-tagħmir, qabel, waqt, u wara l-produzzjoni.
- Katalgu tal-Partijiet Għat-Tibdil (SPC)
  Dan il-manwal jipprovdi l-informazzjoni neċessarja biex jiġu ordnati partijiet għat-tibdil mingħand Tetra Pak.
- Manwal Tekniku (TeM)
  - jipprovdi lit-tekniċi b'informazzjoni meħtieġa biex jinstallaw it-tagħmir mingħajr periklu
  - jipprovdi lit-tekniċi b'informazzjoni fuq kif jagħmlu manutenzjoni fuq it-tagħmir
  - jipprovdi informazzjoni lit-tekniċi dwar is-sistema ta' l-elettriku tat-tagħmir.
  - jipprovdi l-informazzjoni neċessarja biex jiġu ordnati partijiet għat-tibdil mingħand Tetra Pak

Taqsim tal-Paġna

Irreferi għal stampa (A) f'paġna i-5: Il-paġni ewlenin fil-Katalgu tal-Partijiet Għat-Tibdil jikkonsistu f'paġna bl-istampi (1) u paġna b'lista li tikkorrispondi (7). In-numru tal-paġna (5) jintwera fil-header ta' paġna bl-istampi u fil-footer ta' paġna b'lista. In-numru tad-dokument (6) jintwera fil-footer ta' paġna b'lista.

Numru tal-paġna

Irreferi għal stampa (A) f'paġna i-5: In-numru tal-paġna (5) fih tliet partijiet:

- numru tal-kapitlu (2)
- in-numru konsekuttiv tal-paġna fil-kapitlu (3)
- in-numru totali ta' paġni fil-kapitlu (4)

Introduzzjoni tal-Magna

Manifattur

Għall-isem u l-indirizz tal-manifattur, ara t-tieni paġna ta' dan il-katalgu.

Servizz

Biex tordna partijiet għat-tibdil għal din il-magna, jew biex tirrapporta problemi assoċjati mat-thaddim ta' din il-magna, ikkuntattja l-eqreb uffiċċju ta' Tetra Pak.

Ikkuntattja lill-persuna responsabbli mill-komunikazzjoni jekk ikollok xi mistoqsijiet, kummenti, jew suġġerimenti ohrajn biex ittejjeb it-tagħmir u d-dokumentazzjoni tiegħu.

Identifikazzjoni

Klassifikazzjoni CE

Dan it-tagħmir huwa konformi mar-regolamenti bażiċi tas-saħħa u s-sigurtà tal- European Economic Area (EEA).

Pjanċa tal-Magna

L-istampa (B) fuq paġna i-5 turi eżempju ta' pjanċa tal-magna.
Stampa tal-pjanċa valida tal-magna u l-lok tagħha fuq it-tagħmir hi murija fil-kapitlu ta' l-Introduzzjoni tal-manwali kkunsinnati ma' dan it-tagħmir.
Il-pjanċa tat-tagħmir fiha l-informazzjoni elenkata hawn taħt, meħtieġa meta tikkuntattja lil Tetra Pak dwar dan it-tagħmir partikulari.

- Tip ta' magna (8)
- Volum (9)
- Speċifikazzjonijiet tad-Disinn (10)
- Numru tas-serje tal-magna (11)
- Manifattur (12)
- Marka CE (13)
- Sena tal-manifattura (14)

L-istampa (Ċ) fuq paġna i-5 turi eżempju ta' speċifikazzjoni tal-magna.
Aċċerta ruħek li l-informazzjoni tat-tagħmir elenkata fuq il-paġni ta' quddiem ta' dan il-manwal tikkorrispondi għall-informazzjoni tal-pjanċa tal-magna u l-ispeċifikazzjoni tal-magna.

Kif Tuża Dan il-Katalgu tal-Partijiet Għat-Tibdil

Sib Numru ta' Parti Għat-Tibdil

a) Irreferi għal stampa (D) f'paġna i-5: Mur fin-numru tal-kapitlu (15) indikat ħdejn il-grupp prinċipali li fih il-parti li trid issib.

Oġġetti b) u c) irreferi għal stampa (E) f'paġna i-6.

b) Fl-istampa tal-grupp prinċipali, fittex għas-sottogrupp tal-magna (17) li fih il-parti jew sottogrupp li tkun qed tfittex. Innota n-numru tal-pożizzjoni (18) u mur fil-paġna bil-lista li ssegwi l-istampa.

c) Fittex in-numru tal-pożizzjoni (16) jew l-isem tas-sottogrupp (19). Mur fin-numru tal-paġna li jikkorrispondi (20) elenkat fil-kolonna tan-naħa tal-lemin.

Oġġetti d) u e) irreferi għal stampa (F) f'paġna i-6.

d) Sib il-parti (21) li qed tfittex fl-istampa tas-sottogrupp u nnota n-numru tal-pożizzjoni tal-parti.

e) In-numru tal-parti (29) u d-deskrizzjoni tal-parti (30) huma elenkati ħdejn n-numru tal-pożizzjoni fuq il-paġna bil-lista.

Informazzjoni Elenkata fil-Katalgu tal-Partijiet Għat-Tibdil

Il-lista t'hawn taħt tirreferi għal stampa (F) fuq paġna i-6. Il-Katalgu tal-Partijiet Għat-Tibdil fih din l-informazzjoni li ġejja dwar gruppi, sottogruppi, u partijiet għat-tibdil għat-tagħmir:

- Referenza ta' l-istruttura tal-grupp (22). Tindika l-ogħla grupp li jmiss fl-istruttura tal-lista tat-tagħmir.
- Isem tal-grupp (23)
- Unit tal-kejl (25)
- Kwantità (26)
- Numru tad-disinn ta' l-immuntar (27)
- Medda tal-paġni tal-lista (28). Inkluži jekk hemm paġni multipli fil-lista jew fl-istampa tal-grupp.
- Numru tal-parti jew sottogrupp (29)
- Deskrizzjoni ta' l-isem tas-sottogrupp jew parti (30)
- Numru tal-grupp (31)
- Numru tat-tagħmir (32)
- Heading ta' l-informazzjoni tal-grupp (33). Tindika jekk is-sezzjoni ta' taħt il-heading hix għal xi varjant speċifiku tal-magna jew jekk hix lista ta' partijiet komuni. Jekk lista jkun fiha aktar minn varjant wieħed u jekk kull varjant ikollu d-disinn ta' l-immuntar tiegħu, tintwera referenza ta' paġna għad-disinn ta' l-immuntar tal-varjant.
- Informazzjoni interna (34)

Inleiding

Informatie betreffende dit handboek

Tetra Pak raadt aan alle geleverde documentatie zorgvuldig te lezen. Ga na of de geleverde documentatie ter beschikking is van het personeel dat de machine moet bedienen of servicewerkzaamheden moet uitvoeren.

Het is belangrijk deze catalogus voor de duur van de machine te bewaren en de catalogus door te geven aan elke volgende eigenaar of gebruiker.

Tetra Pak aanvaardt geen verantwoordelijkheid voor om het even welke soort beschadiging aan de machine als gevolg van het niet opvolgen van de in dit handboek gegeven instructies.

Bijgeleverde handboeken

De met deze apparatuur geleverde handboeken omvatten

- Conversiehandboek (CM)
  Dit handboek geeft technici informatie over het ombouwen van de apparatuur tussen verschillende productiemodi.
- Handboek Elektriciteit (EM)
  Dit handboek geeft elektriciens en servicetechnici informatie betreffende het elektrisch systeem van de apparatuur.
- Installatiehandboek (IM)
  Dit handboek geeft installatiepersoneel informatie om op veilige wijze de apparatuur te installeren.
- Onderhoudshandboek (MM)
  Dit handboek geeft technici informatie over het onderhoud van de apparatuur.
- Bedieningshandboek (OM)
  Dit handboek geeft de operator informatie betreffende het omgaan met en bedienen van de apparatuur, voor, tijdens en na productie.
- Catalogus reservedelen (SPC).
  Dit handboek geeft de nodige informatie om reserveonderdelen bij Tetra Pak te bestellen.
- Technisch Handboek (TeM)
  - Dit handboek geeft technici informatie, nodig om op veilige wijze de apparatuur te installeren
  - Dit handboek geeft technici informatie over het onderhoud van de apparatuur
  - Dit handboek geeft technici informatie betreffende het elektrisch systeem van de apparatuur
  - geeft de nodige informatie, nodig om reserveonderdelen bij Tetra Pak te bestellen

Pagina lay-out

Refereer naar de illustratie (A) op bladzijde i-5: De belangrijkste bladzijden van een Catalogus Reserveonderdelen bestaan uit een bladzijde met een illustratie (1) en een corresponderende bladzijde met een lijst (7).
Het bladzijdenummer (5) is te vinden in de kop van een illustratiebladzijde en in de voetnoot van de lijstbladzijde. Het documentnummer (6) is te vinden in de voetnoot van een lijstbladzijde.

Bladzijdenummering

Refereer naar de illustratie (A) op bladzijde i-5: een bladzijdenummer (5) bestaat uit drie delen:

- hoofdstuknummer (2)
- opeenvolgende bladzijdenummer in het hoofdstuk (3)
- totaal aantal bladzijden in het hoofdstuk (4)

Introductie van de machine

Fabrikant

Voor naam en adres van de fabrikant, zie de tweede bladzijde van deze catalogus.

Service

Voor het bestellen van reserveonderdelen of om bedieningsproblemen van deze machine te melden, contacteer de dichtst bijzijnde vestiging van Tetra Pak.

Neem contact op met de contactpersoon voor andere informatie, opmerkingen of suggesties ter verbetering van de machine en de bijbehorende documentatie.

Identificatie

CE-classificatie

Deze apparatuur voldoet aan de basiseisen voor gezondheid en veiligheid voor het Europese Economische Gebied (EEA).

Machineplaatje

De illustratie (B) op bladzijde i-5 toont een voorbeeld van een machineplaatje.
Een illustratie van het wettige machineplaatje en de plaatsing ervan wordt getoond in het hoofdstuk Introductie van de handboeken, meegeleverd met deze apparatuur. Het machineplaatje bevat onderstaande gegevens die nodig zijn wanneer Tetra Pak moet worden gecontacteerd betreffende deze apparatuur.

- Machinetype (8)
- Volume (9)
- Tekeningspecificaties (10)
- Serienummer machine (11)
- Fabrikant (12)
- CE-markering (13)
- Fabricagejaar (14)

De illustratie (C) op bladzijde i-5 toont een voorbeeld van een machineplaatje. Controleer of de gegevens betreffende de apparatuur in de voorste bladzijden van dit handboek overeenkomen met de gegevens op het machineplaatje en de machinespecificaties.

Hoe dient deze catalogus reserveonderdelen te worden gebruikt

Lokaliseren van een nummer van een reserveonderdeel

a) Refereer naar de illustratie (D) op bladzijde i-5: ga naar het hoofdstuknummer (15), naast de hoofdgroep die het gewenste deel bevat.

Items b) en c) refereer naar de illustratie (E) op bladzijde i-6.

b) Op de illustratie van de hoofdgroep, zoek de machinesub-groep (17) op die het deel van de gewenste sub-groep bevat. Noteer het positienummer (18) en ga naar de lijstbladzijde die op de illustratie volgt.

c) Op de illustratie van de hoofdgroep, zoek de machinesub-groep (17) op die het deel van de gewenste sub-groep bevat. Noteer het positienummer (18) en ga naar de lijstbladzijde die op de illustratie volgt.

Items d) en e) refereren naar de illustratie (F) op bladzijde i-6.

d) Lokaliseer het gewenste onderdeel (21) in de illustratie van de sub-groep en noteer het positienummer van het onderdeel.

e) Het onderdeelnummer (29) en de beschrijving ervan (30) worden naast het positienummer op de lijstbladzijde weergegeven.

Informatie die in een Catalogus reserveonderdelen wordt gegeven

Onderstaande lijst verwijst naar de illustratie (F) op bladzijde i-6.
Een Catalogus reserveonderdelen bevat de volgende informatie betreffende groepen, sub-groepen en reserveonderdelen voor de apparatuur:

- Referentie groepsstructuur (22). Geeft de volgende hoogste groep in de structuur van de apparatuur aan.
- Groepsnaam(23)
- Meeteenheid (25)
- Hoeveelheid (26)
- Tekeningnummer montage (27)
- Lijst met bladzijdenreeks (28). Inclusief indien er meerdere bladzijden in de groepsillustratie of lijst voorkomen.
- Onderdeel of sub-groepsnummer (29)
- Naam sub-groep of beschrijving onderdeel (30)
- Groepsnummer (31)
- Apparatuurnummer (32)
- Titel groepsinformatie (33). Geeft aan of het deel onder de titel voor een specifieke machine is, voor een variant of een lijst is met algemene onderdelen. Indien een lijst meer dan één variant bevat en elke variant heeft zijn eigen montagetekening, wordt een bladzijdenreferentie naar de montagetekening van de variant gegeven.
- Interne informatie (34)

Introduksjon

Informasjon om håndboken

Tetra Pak anbefaler at du leser nøye gjennom alle leverte håndbøker. Sørg for at håndbøkene er tilgjengelige for alle som betjener eller vedlikeholder utstyret.

Det er viktig at du tar vare på denne katalogen under hele levetiden til utstyret og at du gir den videre til eventuelle nye eiere eller brukere.

Tetra Pak vil ikke være ansvarlig for skader på utstyret som oppstår fordi brukeren ikke følger instruksjonene i håndbøkene som følger med utstyret.

Leverte håndbøker

Håndbøkene som leveres med dette utstyret, kan inkludere

- Konverteringsmanual (CM)
  Denne håndboken gir teknikere informasjon om hvordan de konverterer utstyret mellom ulike produksjonsmodi.
- Electrisk manual (EM)
  Denne håndboken gir teknikere informasjon om utstyrets elektriske system.
- Installasjonsmanual (IM)
  Denne håndboken gir teknikere informasjon som kreves for å kunne installere utstyret på en sikker måte.
- Vedlikeholdsmanual (MM)
  Denne håndboken gir teknikere informasjon om vedlikehold av utstyret.
- Driftsmanual (OM)
  Denne håndboken gir operatøren informasjon om hvordan han håndterer og bruker utstyret før, under og etter produksjon.
- Reservedelskatalog (SPC)
  Denne håndboken inneholder informasjon som du trenger for å bestille reservedeler fra Tetra Pak.
- Teknisk manual (TeM)
  - gir teknikere informasjon om sikker installasjon av utstyret
  - gir teknikere informasjon om vedlikehold av utstyret
  - gir teknikere informasjon om utstyrets elektriske system
  - inneholder informasjon som du trenger for å bestille reservedeler fra Tetra Pak

Sideoppsett

Se illustrasjonen (A) på side i-5: Hovedsidene i reservedelskatalogen består av en illustrasjonsside (1) og en korresponderende listeside (7). Sidenummeret (5) vises i toppteksten på illustrasjonssiden og i bunnteksten listesiden. Dokumentnummeret (6) vises i bunnteksten på listesiden.

Sidenummerering

Se illustrasjonen (A) på side i-5: Et sidenummer (5) består av tre deler:

- kapittelnummer (2)
- etterfølgende sidenummer i kapitlet (3)
- det totale antall sider i kapitlet (4)

Introduksjon av maskinen

Produsent

Hvis du ønsker produsentens navn og adresse, kan du se side to i denne katalogen.

Service

Når du skal bestille reservedeler til denne maskinen eller rapportere problemer forbundet med driften av denne maskinen, må du kontakte ditt nærmeste Tetra Pak-kontor.

Når det gjelder andre forespørsler, kommentarer eller forslag til forbedringer av utstyret og dets dokumentasjon, kan du ta kontakt med din kontaktperson.

Identifisering

CE-klassifisering

Dette utstyret er i overensstemmelse med de grunnleggende helse- og sikkerhetsforskriftene i Det europeiske økonomiske samarbeidsområdet (EØS).

Maskinplate

Illustrasjonen (B) på side i-5 viser et eksempel på en maskinplate. En illustrasjon av en gyldig maskinplate og hvor denne er plassert på utstyret, er vist i introduksjonskapitlet i håndbøkene som følger med dette utstyret. Maskinplaten inneholder nedenstående data, som du trenger når du skal kontakte Tetra Pak angående dette bestemte utstyret.

- Maskintype (8)
- Volum (9)
- Tegningsspesifikasjoner (10)
- Maskin-serienummer (11)
- Produsent (12)
- CE-merke (13)
- Produksjonsår (14)

Illustrasjonen (C) på side i-5 viser et eksempel på en maskinspesifikasjon. Sørg for at utstyrsdataene som står oppført foran i denne håndboken samsvarer med dataene på maskinplaten og maskinspesifikasjonen.

Hvordan bruke denne reservedelskatalogen

Finn et reservedelsnummer

a) Se illustrasjonen (D) på side i-5: Gå til kapittelnummeret (15) som er angitt ved siden av hovedgruppen som inneholder delen du vil finne.

Punkt b) og c) viser til illustrasjonen (E) på side i-6.

b) På hovedgruppeillustrasjonen ser du etter maskinundergruppen (17) som inneholder delen eller undergruppen du ser etter. Merk deg posisjonsnummeret (18), og gå til listesiden som kommer etter illustrasjonen.

c) Se etter posisjonsnummeret (16) eller undergruppenavnet (19). Gå til det korresponderende sidenummeret (20) som står oppført i høyre kolonne.

Punkt d) og e) viser til illustrasjonen (F) på side i-6.

d) Finn delen (21) du ser etter på undergruppeillustrasjonen, og merk deg delens posisjonsnummer.

e) Delenummeret (29) og delebeskrivelsen (30) finner du ved siden av posisjonsnummeret på listesiden.

Informasjon i en reservedelskatalog

Listen nedenfor viser til illustrasjonen (F) på side i-6. En reservedelskatalog inneholder følgende informasjon om grupper, undergrupper og reservedeler for utstyret:

- Gruppeinndelingsreferanse (22). Angir den neste gruppen opp i inndelingen av utstyrslisten.
- Gruppenavn (23)
- Målenhet (25)
- Antall (26)
- Tegningsnummer (27)
- Listesideområde (28). Inkludert hvis det er flere sider i gruppeillustrasjonen eller listen.
- Dele- eller undergruppenummer (29)
- Undergruppenavn eller delebeskrivelse (30)
- Gruppenummer (31)
- Utstyrsnummer (32)
- Gruppeinformasjonsoverskrift (33). Angir om avsnittet under overskriften er for en bestemt maskinvariant eller om det er en liste over vanlige deler. Hvis en liste har flere varianter og hver variant har sin egen sammenstillingstegning, vises det en sidereferanse til variantens sammenstillingstegning.
- Intern informasjon (34)

Wprowadzenie

Informacje o Instrukcji

Tetra Pak zaleca dokładne zapoznanie się ze wszystkimi dostarczonymi instrukcjami obsługi. Upewnij się, że dostarczone instrukcje obsługi są dostępne dla personelu obsługującego lub konserwującego wyposażenie.

Ważne jest, aby niniejszy katalog zachować na cały okres eksploatacji urządzenia i przekazać go każdemu kolejnemu użytkownikowi/ właścicielowi.

Tetra Pak nie ponosi odpowiedzialności za żadne uszkodzenia urządzenia spowodowane nieprzestrzeganiem zaleceń zawartych instrukcjach dołączonych do tego urządzenia.

Dostarczone Instrukcje

Instrukcje dostarczone z tym urządzeniem zawierają

- Instrukcję Konwersji (CM)
  Instrukcja ta dostarcza technikom informacje o sposobie konwersji urządzenia pomiędzy różnymi trybami produkcji.
- Instrukcję Elektryki (EM)
  Instrukcja ta dostarcza technikom informacje o układzie elektrycznym urządzenia.
- Instrukcję Instalacyjną (IM)
  Instrukcja ta dostarcza technikom informacje niezbędne do bezpiecznego zainstalowania urządzenia.
- Instrukcję Konserwacji (MM)
  Instrukcja ta dostarcza technikom informacje o sposobie konserwacji urządzenia.
- Instrukcję Operacyjną (OM)
  Instrukcja ta dostarcza operatorowi informacje o sposobie manipulacji i obsługi urządzenia przed, podczas i po produkcji.
- Katalog Części Zamiennych (SPC)
  Instrukcja ta dostarcza informacje niezbędne do zamawiania części zamiennych z firmy Tetra Pak.
- Instrukcję Techniczną (TeM)
  - dostarcza technikom informacje niezbędne do bezpiecznego zainstalowania urządzenia
  - dostarcza technikom informacje o konserwacji urządzenia
  - dostarcza technikom informacje o układzie elektrycznym urządzenia
  - dostarcza informacje niezbędne do zamawiania części zamiennych z firmy Tetra Pak

Układ Strony

Patrz ilustracja (A) na stronie i-5: Kartki główne Katalogu Części Zamiennych składają się z ze strony z ilustracją (1) oraz odpowiadającej jej strony z listą (7). W nagłówku strony z ilustracją oraz w stopce strony z listą pokazany jest numer strony (5). Numer dokumentu (6)umieszczony jest w stopce strony z listą.

Numeracja stron

Patrz ilustracja (A) na stronie i-5:Numer strony (5) zawiera trzy części:

- numer rozdziału (2)
- kolejny numer strony (3) w ramach rozdziału
- łączna ilość stron (4) w rozdziale

Wprowadzenie do Maszyny

Producent

Nazwę i adres producenta można znaleźć na drugiej stronie niniejszego katalogu.

Serwis

Aby zamówić części zapasowe do tej maszyny lub zgłosić problemy związane z jej pracą należy skontaktować się z najbliższym biurem Tetra Pak.

Prosimy o nawiązanie kontaktu w przypadku jakichkolwiek zapytań, komentarzy, lub sugestii zmierzających do usprawnienia wyposażenia oraz dokumentacji z nimi związanych.

Identyfikacja

Klasyfikacja CE

Urządzenie spełnia wymagania podstawowych przepisów BHP Europejskiego Obszaru Ekonomicznego (EEA).

Płyta znamionowa maszyny

Ilustracja (B) przedstawiona na stronie i-5 pokazuje przykład płyty znamionowej maszyny.
Ilustracja prawidłowej płyty znamionowej oraz jej położenie na urządzeniu pokazana jest w rozdziale Wprowadzenie zawartym w instrukcjach dostarczonych z tym urządzeniem. Płyta znamionowa maszyny zawiera niżej przedstawione dane, potrzebne podczas kontaktowania się z firmą Tetra Pak w sprawach dotyczących tego konkretnego urządzenia.

- Typ maszyny (8)
- Objętość (9)
- Specyfikacje rysunkowe (10)
- Numer seryjny urządzenia (11)
- Producent (12)
- Oznaczenie symbolemCE (13)
- Rok produkcji (14)

Ilustracja (C) zawarta na stronie i-5 pokazuje przykład specyfikacji maszyny. Należy sprawdzić, czy dane wyposażenia przedstawione na pierwszej stronie tej instrukcji odpowiadają danym zawartym na płycie znamionowej maszyny oraz specyfikacji maszyny.

Jak Korzystać z niniejszego Katalogu Części Zamiennych

Należy znaleźć Numer części zamiennej

a) Patrz ilustracja (D) zawarta na stronie i-5: Przejdź do numeru rozdziału (15) pokazanego obok głównej grupy zawierającej część, którą chcesz odszukać.

Pozycje b) i c) odnoszą się do ilustracji (E) zawartej na stronie i-6.

b) Na ilustracji grupy głównej odszukaj podgrupę maszyny (17), która zawiera odpowiednią część lub podgrupę, której szukasz. Zanotuj numer pozycji (18) i przejdź na stronę z listą, umieszczoną za ilustracją.

c) Odszukaj numer pozycji (16) lub nazwę podgrupy (19). Przejdź do odpowiedniego numeru strony (20) pokazanego w kolumnie umieszczonej po prawej stronie.

Pozycje d) i e) odnoszą się do ilustracji (F) zawartej na stronie i-6.

d) Znajdź na ilustracji podgrupy część (21), której szukasz i zanotuj numer pozycji części.

e) Numer części (29) oraz opis części (30) są umieszczone na stronie z listą obok numeru pozycji.

Informacje zawarte w Katalogu Części Zamiennych

Poniższa lista odnosi się do ilustracji (F) zawartej na stronie i-6. Katalog Części Zamiennych zawiera następujące informacje o grupach, podgrupach oraz częściach zamiennych dla urządzenia:

- Struktura referencji grup (22). Wskazuje następną wyższą grupę zawartą w strukturze listy wyposażenia.
- Nazwa grupy (23)
- Jednostka miary(25)
- Ilość (26)
- Numer rysunku montażowego (27)
- Zakres strony z listą (28). Zawarty w przypadku występowania wielu stron dla ilustracji lub listy grupy.
- Numer części lub podgrupy (29)
- Nazwa podgrupy lub opis części (30)
- Numer grupy (31)
- Numer urządzenia (32)
- Nagłówek informacyjny grupy (33). Wskazuje, czy sekcja umieszczona pod nagłówkiem dotyczy określonego wariantu maszyny, czy też jest to lista wspólna dla wszystkich wariantów. Jeśli lista występuje w wielu wariantach i dla każdego z nich dostępny jest własny rysunek montażowy, pokazany jest numer strony odniesienia rysunku montażowego dla danego wariantu.
- Informacje wewnętrzne (34)

Introdução

Informação do Manual

A Tetra Pak recomenda ler cuidadosamente todos os manuais fornecidos. Verificar se os manuais fornecidos estão ao dispor do pessoal que trabalha com o equipamento ou que faz a manutenção do mesmo.

É importante guardar este catálogo durante o tempo útil de vida da máquina ou do equipamento e de entregar o catálogo a qualquer proprietário ou utilizador subsequente.

A Tetra Pak não toma a responsabilidade por quaisquer danos no equipamento causados devido ao facto de que as instruções dadas nos manuais que acompanham este equipamento não foram seguidas.

Manuais fornecidos

Os manuais fornecidos com este equipamento incluem

- Manual de Conversão (CM)
  Este manual fornece aos técnicos as informações sobre a conversão do equipamento entre os diferentes modos de produção.
- Manual Eléctrico (EM)
  Este manual fornece aos técnicos as informações sobre o sistema eléctrico do equipamento.
- Manual de Instalação (IM)
  Este manual fornece aos técnicos as informações necessárias para instalar seguramente o equipamento.
- Manual de Manutenção (MM)
  Este manual fornece aos técnicos as informações para a manutenção do equipamento.
- Manual de Operação (OM)
  Este manual fornece ao operador as informações que ele necessita para manejar e accionar o equipamento antes, durante e depois da produção.
- Catálogo de Peças Sobressalentes (SPC)
  Este manual fornece as informações necessárias para encomendar peças sobressalentes à Tetra Pak.
- Manual Técnico (TeM)
  - fornece aos técnicos as informações necessárias para instalar seguramente o equipamento
  - fornece aos técnicos as informações para a manutenção do equipamento
  - fornece aos técnicos as informações sobre o sistema eléctrico do equipamento
  - fornece as informações necessárias para encomendar peças sobressalentes à Tetra Pak

Disposição da página

Referência à ilustração (A) na página i-5: As páginas principais num Catálogo de Peças Sobressalentes consistem numa página ilustrada (1) e numa página com a lista correspondente (7). O número da página (5) é mostrado no cabeçalho de uma página ilustrada e no rodapé de uma página com lista. O número do documento (6) é mostrado no rodapé de uma página com lista.

Numeração da página

Referência à ilustração (A) na página i-5: Um número de página (5) tem três partes:

- Número do capítulo (2)
- número consecutivo da página dentro do capítulo (3)
- número total de páginas no capítulo (4)

Introdução da máquina

Fabricante

Para o nome e morada do fabricante, ver a segunda página deste catálogo.

Assistência técnica

Para encomendar peças sobressalentes para esta máquina, ou para relatar problemas associados com a operação desta máquina, contactar a companhia Tetra Pak mais próxima.

Contactar a Liaison se tiver quaisquer questões, comentários ou sugestões para o desenvolvimento relacionado com o equipamento e a sua documentação.

Identificação

Classificação CE

Este equipamento está de acordo com os regulamentos de segurança e saúde da Área Económica Europeia (EEA).

Placa da máquina

A ilustração (B) na página i-5 mostra um exemplo de uma placa da máquina. Uma ilustração da placa da máquina válida e a sua localização no equipamento é mostrada no capítulo Introdução dos manuais fornecidos com este equipamento. A placa da máquina contem os dados alistados em baixo, necessários quando se contactar a Tetra Pak relacionando-se a este equipamento em específico.

- Tipo da máquina (8)
- Volume (9)
- Especificações dos desenhos (10)
- Número de série da máquina (11)
- Fabricante (12)
- Marca CE (13)
- Ano de construção (14)

A ilustração (C) na página i-5 mostra um exemplo de uma especificação da máquina. Verificar se os dados do equipamento alistados nas páginas da frente deste manual correspondem aos dados na placa da máquina e à especificação da máquina.

Como usar este Catálogo de Peças Sobressalentes

Localizar um Número da peça sobressalente

f) Referência à ilustração (D) na página i-5: Para o número do capítulo (15) indicado ao lado do grupo principal que contem a peça que quer localizar.

Pos. b) e c) referem-se à ilustração (E) na página i-6.

g) Na ilustração do grupo principal, procurar o subgrupo da máquina (17) que contem a peça ou subgrupo que está à procura. Anotar o número da posição (18) e passar para a página da lista que segue a ilustração.

h) Procurar o número da posição (16) ou o nome do subgrupo (19). Passar para o número da página correspondente (20) alistado na coluna do lado direito.

Pos. d) e e) referem-se à ilustração (F) na página i-6.

i) Localizar a peça (21) que está à procura na ilustração do subgrupo e anotar o número da posição da peça.

j) O número da peça (29) e a descrição da peça (30) estão alistados ao lado do número da posição na página da lista.

Informações indicadas num Catálogo de Peças Sobressalentes

A lista em baixo refere-se à ilustração (F) na página i-6. Um Catálogo de Peças Sobressalentes contem as seguintes informações sobre grupos, subgrupos e peças sobressalentes para o equipamento:

- Referência da estrutura do grupo (22). Indica o grupo a seguir mais elevado na estrutura da lista do equipamento.
- Nome do grupo (23)
- Unidade de medição (25)
- Quantidade (26)
- Número do desenho de montagem (27)
- Gama da página de lista (28). Incluída se houver páginas múltiplas na ilustração do grupo ou lista.
- Número da peça ou do subgrupo (29)
- Nome do subgrupo ou descrição da peça (30)
- Número do grupo (31)
- Número do equipamento (32)
- Título da informação do grupo (33). Indica se a secção abaixo do título é para uma variante de máquina específica ou se é uma lista de peças comuns. Se uma lista tiver mais do que uma variante e cada variante tiver o seu próprio desenho de montagem, é mostrada uma referência para a página do desenho de montagem da variante.
- Informação interna (34)

Úvod

Informácie o príručke

Tetra Pak doporučuje čítat' pozorne všetky dodané príručky. Presvedčte sa, že dodané príručky sú k dispozícii personálu, ktorý vykonáva obsluhu alebo údržbu zariadenia.

Je dôležité ponechat' si tento katalóg počas životnosti zariadenia a odovzdat' katalóg inému majiteľovi alebo užívateľovi.

Tetra Pak nebude zodpovedat' za nijaké zničenie zariadenia spôsobené nedodržaním pokynov uvedených v príručke vzhľadom na toto zariadenie.

Dodané príručky

Príručky dodané s týmto zariadením majú obsahovat'

- Konverznú príručku (CM)
  Táto príručka poskytuje technikom informácie o konvertovaní zariadenia medzi rozličnými režimami výroby.
- Príručku elektriky (EM)
  Táto príručka poskytujetechnikom informácie o zariadeniach elektrickej inštalácie.
- Inštalačnú príručku (IM)
  Táto príručka poskytuje technikom informácie, požadované pre bezpečnú inštaláciu zariadenia.
- Údržbársku príručku (MM)
  Táto príručka poskytujetechnikom informáciu o údržbe zariadenia.
- Návod k použitiu (OM)
  Táto príručka poskytuje obsluhe informáciu o zaobchádzaní a obsluhe zariadenia pred, počas a po výrobe.
- Katalóg náhradných dielov (SPC)
  Táto príručka poskytuje informácie potrebné pre objednávku náhradných dielov Tetra Pak.
- Technická príručka (TeM)
  - poskytuje technikom informácie potrebné pre bezpečnú inštaláciu zariadenia
  - poskytuje technikom informácie o údržbe zariadenia
  - poskytujetechnikom informácie o zariadení elektrickej inštalácie
  - poskytuje informácie potrebné pre objednávku náhradných dielov z Tetra Pak

Formát stránky

Odvoláva sa na zobrazenie (A) na stranei-5: Hlavné stránky v katalógu náhradných dielov pozostávajú zo stránky zobrazenia (1) a stránky príslušného zoznamu (7). Stránka číslo (5) ukazuje v hlavičke stránky zobrazenie a v zápätí stránky zoznam. Číslo dokumentu (6) je zobrazené v zápätí stránky zoznamu.

Číslo stránky

Odvoláva sa na zobrazenie (A) na stranei-5: Číslo stránky (5) má tri časti:

- číslo kapitoly (2)
- nasledujúce číslo stránky v rámci kapitoly (3)
- celkový počet strán v kapitole (4)

Úvod o stroji

Výrobca

Pre názov a adresu výrobcu, viď druhá strana tohoto katalógu.

Servis

Pre objednávku náhradných dielov pre tento stroj, alebo pre hlásenie problémov spojených s obsluhou tohoto stroja, kontaktujte najbližšiu pobočku spoločnosti Tetra Pak.

Kontaktujte styčnú osobu s inými žiadost'ami, poznámkami, alebo zlepšovacími návrhmi týkajúcimi sa zariadenia a jeho dokumentácie.

Označenie

CE klasifikácia

Zariadenie spĺňa základné zdravotné a bezpečnostné predpisy Európskeho hospodárskeho priestoru (EEA).

Prístrojová doska

Zobrazenie (B) na strane i-5 ukazuje príklad prístrojovej dosky. Zobrazenie správnej prístrojovej dosky a jej umiestnenie na zariadení je uvedené v kapitole Úvod príručky dodanej s týmto zariadením. Prístrojová doska obsahuje dole zoznam údajov, potrebných ak kontaktujete spoločnost' Tetra Pak ohľadom tohoto špeciálneho zariadenia.

- Typ stroja (8)
- Kapacita (9)
- Výkres špecifikácie (10)
- Sériové číslo stroja (11)
- Výrobca (12)
- značka CE (13)
- Rok výroby (14)

Zobrazenie (C) na strane i-5 ukazuje príklad špecifikácie stroja. Presvedčte sa, či údaje zariadenia uvedené na prednej strane tejto príručky zodpovedajú údajom prístrojovej dosky a špecifikácii stroja.

Ako používat' tento katalóg náhradných dielov

Vyhľadajte číslo náhradného dielu

a) Odvoláva sa na zobrazenie (D) na strane i-5: Choďte na kapitolu číslo (15) označenú pri halvnej skupine, ktorá obsahuje diel, ktorý chcete vyhľadat'.

Položky b) a c) sa odvolávajú na zobrazenie (E) na strane i-6

b) Na zobrazení hlavnej skupiny, hľadajte pre stroj podskupinu (17) ktorá obsahuje diel alebo podskupinu, ktoré hľadáte. Zaznamenajte pozíciu číslo (18) a choďte na stránku zoznamu, ktorá sleduje zobrazenie.

c) Hľadajte číslo položky (16) alebo názov podskupiny (19). Choďte na zodpovedajúcu stránku číslo (20)uvedenú v stĺpci po pravej ruke.

Položky d) a e) sa odvolávajú na zobrazenie (F) na stranei-6

d) Vyhľadajte diel (21), ktorý hľadáte podľa zobrazenia podskupiny a poznámky čísla položky dielu.

e) Číslo dielu (29) a popis dielu (30) sú uvedené pri čísle položky na zozname stránok.

Informácie uvedené v katalógu náhradných dielov

Zoznam dole sa odvoláva na zobrazenie (F) na strane i-6 Katalóg náhradných dielov obsahuje informácie o skupinách, podskupinách a náhradných dieloch pre zariadenie:

- Odkaz na usporiadanie skupiny (22) Označuje nasledujúcu vyššiu skupinu v štruktúre zoznamu zariadenia.
- Názov skupiny (23)
- Jednotka merania(25)
- Množstvo (26)
- Číslo výkresu montáže (27)
- Zoznam rozsahu stránok (28). Zahrnutý, ak sú to mnohonásobné stránky v zobrazení skupiny alebo zoznam.
- Diel alebo číslo podskupiny (29)
- Názov podskupiny alebo popis dielu (30)
- Číslo skupiny (31)
- Číslo zariadenia (32)
- Základné informácie o skupine (33). Označuje, ak sekcia pod hlavičkou je pre špeciálnu variantu stroja alebo ak je to zoznam všeobecných dielov. Ak zoznam má viac ako jednu variantu a každá varianta má svoj vlastný montážny výkres, tak je zobrazená strana, ktorá odkazuje na varianty montážneho výkresu.
- Interné informácie (34)

Uvod

Informacija o priročnikih

Podjetje Tetra Pak priporoča, da natančno preberete vse priložene priročnike. Osebje, ki upravlja in vzdržuje opremo, mora imeti dostop do priloženih priročnikov.

Katalog hranite v celotnem času uporabe opreme. V primeru, ko opremo pridobi drug uporabnik, mu obenem izročite tudi katalog.

Podjetje Tetra Pak ne prevzema odgovornosti za poškodbe na opremi, ki nastanejo zaradi neupoštevanja navodil iz priročnikov, ki so priloženi opremi.

Priloženi priročniki

Priročniki, ki so priloženi opremi, vključujejo

- Priročnik za zamenjavo (CM)
  V tem priročniku so podatki, ki tehnikom omogočajo izvesti zamenjavo opreme med različnimi načini proizvodnje.
- Električni priročnik (EM)
  Priročnik vsebuje informacije za tehnike o električnem sistemu opreme.
- Priročnik za namestitev (IM)
  Priročnik vsebuje ustrezne tehnične informacije za varno namestitev opreme.
- Priročnik za vzdrževanje (MM)
  Priročnik vsebuje informacije za tehnike o vzdrževanju opreme.
- Priročnik za obratovanje (OM)
  Priročnik je namenjen informiranju za pravilno rokovanje in upravljanje s strojem pred, med in po proizvodnem postopku.
- Katalog rezervnih delov (SPC)
  Priročnik vsebuje potrebne informacije za naročanje rezervnih delov v podjetju Tetra Pak.
- Tehnični priročnik (TeM) vsebuje:
  - ustrezne tehnične informacije za tehnike za varno namestitev opreme
  - informacije za tehnike o vzdrževanju opreme
  - informacije za tehnike o električnem sistemu opreme
  - potrebne informacije za naročanje rezervnih delov v podjetju Tetra Pak

Zgradba strani

Oglejte si risbo (A) na strani i-5: Glavne strani v Katalogu rezervnih delov sestavljata stran z risbo (1) ter ustrezna stran s seznamom (7). Številka strani (5) je v glavi na strani z risbo ter v nogi na strani s seznamom. Številka dokumenta (6) je v nogi na strani s seznamom.

Številčenje strani

Oglejte si risbo (A) na strani i-5: Številko strani (5) sestavljajo trije deli:

- številka poglavja (2)
- zaporedna številka strani v poglavju (3)
- skupno število strani poglavja (4)

Predstavitev stroja

Proizvajalec

Ime in naslov proizvajalca poiščite na drugi strani tega kataloga.

Servis

Za naročanje rezervnih delov za stroj ter za sporočanje motenj pri delovanju stroja se obrnite na najbližjo servisno službo podjetja Tetra Pak.

V primeru drugih zahtev, komentarjev, predlogov za izboljšavo opreme ali dokumentacije se obrnite na odgovorno osebo.

Identifikacijska oznaka

CE klasifikacija

Oprema je izdelana v skladu z osnovnimi zdravstvenimi in varnostnimi predpisi Evropskega gospodarskega prostora (EGP).

Ploščica s podatki

Risba (B) na strani i-5 prikazuje primer ploščice s podatki.
Risba veljavne ploščice s podatki ter mesto njene namestitve na opremi je v uvodnem poglavju posameznih priročnikov, ki so priloženi opremi.
Na ploščici s podatki so zapisani spodaj našteti podatki, ki jih potrebujete pri posvetovanju s podjetjem Tetra Pak.

- Tip stroja (8)
- Prostornina (9)
- Specifikacija risbe (10)
- Serijska številka stroja (11)
- Proizvajalec (12)
- CE oznaka (13)
- Leto izdelave (14)

Risba (C) na strani i-5 prikazuje primer specifikacije strojne opreme. Prepričajte se, da podatki o opremi, ki so zapisani na prvih straneh priročnika, ustrezajo podatkom na ploščici s podatki in specifikaciji strojne opreme.

Uporaba Kataloga rezervnih delov

Določitev številke rezervnega dela

a) Oglejte si risbo (D) na strani i-5: Zatem si oglejte poglavje številka (15), ki je označeno poleg glavne skupine, ki vsebuje želeni del.

Točki b) in c) se nanašata na risbo (E) na strani i-6.

b) Na risbi glavne skupine poiščite podskupino stroja (17), ki vključuje del ali podskupino, ki ga (jo) iščete. Zapomnite si pozicijsko številko (18) in pojdite na stran s seznamom, ki sledi risbi.

c) Poiščite pozicijsko številko (16) ali ime podskupine (19). Pojdite na ustrezno številko strani (20), ki je označena v desnem stolpcu.

Točki d) in e) se nanašata na risbo (F) na strani i-6.

d) Na risbi podskupine poiščite sestavni del (21) in si zapišite njegovo pozicijsko številko.

e) Številka sestavnega dela (29) in opis sestavnega dela (30) se nahajata poleg pozicijske številke na strani s seznamom.

Informacije v Katalogu rezervnih delov

Spodnji seznam se nanaša na risbo (F) na strani i-6. V Katalogu rezervnih delov so naslednje informacije o skupinah, podskupinah in rezervnih delih za opremo:

- Referenca strukture skupine (22). Označuje naslednjo višjo skupino v strukturi seznama opreme.
- Ime skupine (23)
- Merska enota (25)
- Količina (26)
- Številka sestavne risbe (27)
- Število strani seznama (28). Vključeno, kadar risba ali seznam skupine vsebuje več strani.
- Številka dela ali podskupine (29)
- Ime podskupine ali opis dela (30)
- Številka skupine (31)
- Številka opreme (32)
- Naslov skupine informacij (33). Označuje, če se odsek pod naslovom nanaša na specifično izvedbo stroja, ali je seznam skupnih delov. Če ima seznam več izvedb ter ima vsaka izvedba svojo sestavno risbo, je prikazana referenčna stran sestavne risbe za to izvedbo.
- Interna informacija (34)

Inledning

Information om manualerna

Tetra Pak rekommenderar att alla manualer läses noggrant. Se till att manualerna är tillgängliga för personalen som använder eller underhåller utrustningen.

Det är viktigt att denna katalog behålls under utrustningens livslängd, och att den överlämnas till varje efterföljande innehavare eller användare av utrustningen.

Tetra Pak tar inte ansvar för någon skada på utrustningen som orsakats av att instruktionerna i medföljande manualer inte har följts.

Medföljande manualer

Följande manualer kan levereras tillsammans med utrustningen:

- Konverteringsmanual (CM)
  Manualen innehåller information för tekniker om hur utrustningen ska konverteras mellan olika produktionslägen.
- Elektrisk manual (EM)
  Manualen innehåller information för tekniker om utrustningens elektriska system.
- Installationsmanual (IM)
  Manualen innehåller information för tekniker om hur utrustningen installeras på ett säkert sätt.
- Underhållsmanual (MM)
  Manualen innehåller information för tekniker om hur utrustningen ska underhållas.
- Driftsmanual (OM)
  Manualen innehåller information för operatören om hur utrustningen ska hanteras före, under och efter produktion.
- Reservdelskatalog (SPC)
  Manualen innehåller information som behövs för beställning av reservdelar från Tetra Pak.
- Teknisk manual (TeM)
  - innehåller information för tekniker om hur utrustningen installeras på ett säkert sätt.
  - innehåller information för tekniker om hur utrustningen ska underhållas.
  - innehåller information för tekniker om utrustningens elektriska system.
  - innehåller information som behövs för beställning av reservdelar från Tetra Pak.

Sidlayout

Se bilden (A) på sidan i-5: Huvudsidorna i reservdelskatalogen består av en bildsida (1) och en motsvarande listsida (7). Sidnumret (5) visas i sidhuvudet på bildsidan och i sidfoten på listsidan. Dokumentnumret (6) visas i sidfoten på listsidan.

Sidnumrering

Se bilden (A) på sidan i-5: Ett sidnummer (5) består av tre delar:

- kapitelnummer (2)
- löpande sidnummer inom kapitlet (3)
- totalt sidantal i kapitlet (4)

Introduktion till maskinen

Tillverkare

Tillverkarens namn och adress finns på sidan 2 i katalogen.

Service

För att beställa reservdelar till denna maskin eller för att rapportera problem som uppstått i samband med driften kontaktar du närmaste Tetra Pak-kontor.

Har du andra frågor, kommentarer eller förslag som gäller förbättring av maskinen eller utrustningen och dokumentationen vänder du dig till din kontaktperson på Tetra Pak.

Identifiering

CE-klassificering

Denna utrustning överensstämmer med de grundläggande hälso- och säkerhetsbestämmelserna inom den europeiska ekonomiska unionen (EEA).

Maskinskylt

Bilden (B) på sidan i-5 visar ett exempel på en maskinskylt. En bild på giltig maskinskylt och dess placering på utrustningen visas i inledningskapitlet som medföljer utrustningen. Skylten innehåller de uppgifter som listas nedan och som behövs vid kontakt med Tetra Pak angående utrustningen.

- Maskintyp (8)
- Volym (9)
- Ritningsspecifikationer (10)
- Maskinnummer (11)
- Tillverkare (12)
- CE-märkning (13)
- Tillverkningsår (14)

Bilden (C) på sidan i-5 visar ett exempel på en maskinspecifikation. Kontrollera att informationen om utrustningen som listas på manualens framsida motsvarar informationen på maskinskylten och i maskinspecifikationen.

Använda reservdelskatalogen

Hitta ett reservdelsnummer

a) Se bilden (D) på sidan i-5: Gå till kapitelnumret (15) som står vid sidan om huvudgruppen som innehåller den del du vill leta reda på.

Punkt b) och c) hänvisar till bilden (E) på sidan i-6.

b) På huvudgruppsbilden letar du efter den maskinundergrupp (17) som innehåller delen eller undergruppen du letar efter. Notera positionsnumret (18) och gå till listsidan som följer efter bilden.

c) Leta efter positionsnumret (16) eller undergruppsnamnet (19). Gå till motsvarande sidnummer (20) som listas i den högra kolumnen.

Punkt d) och e) hänvisar till bilden (F) på sidan i-6.

d) Leta reda på delen (21) i undergruppsbilden och notera delens positionsnummer.

e) Reservdelsnumret (29) och reservdelsbeskrivningen (30) står bredvid positionsnumret på listsidan.

Information i reservdelskatalogen

Listan nedan hänvisar till bilden (F) på sidan i-6. Reservdelskatalogen innehåller följande information om grupper, undergrupper och reservdelar för utrustningen:

- Gruppstrukturreferens (22). Anger nästa högre grupp i utrustningslistans struktur.
- Gruppnamn (23)
- Måttenhet (25)
- Kvantitet (26)
- Monteringsritningsnummer (27)
- Listsidesintervall (28). Står med om det finns flera sidor i gruppbilden eller listan.
- Reservdels- eller undergruppsnummer (29)
- Undergruppsnamn eller reservdelsbeskrivning (30)
- Gruppnummer (31)
- Utrustningsnummer (32)
- Gruppinformationsrubrik (33). Anger om avsnittet under rubriken gäller en viss maskinvariant eller om det är en lista över allmänna delar. Om en lista har fler än en variant och varje variant har sin egen monteringsritning, visas en sidhänvisning till variantens monteringsritning.
- Intern information (34)

SPC
Spare Parts Catalogue

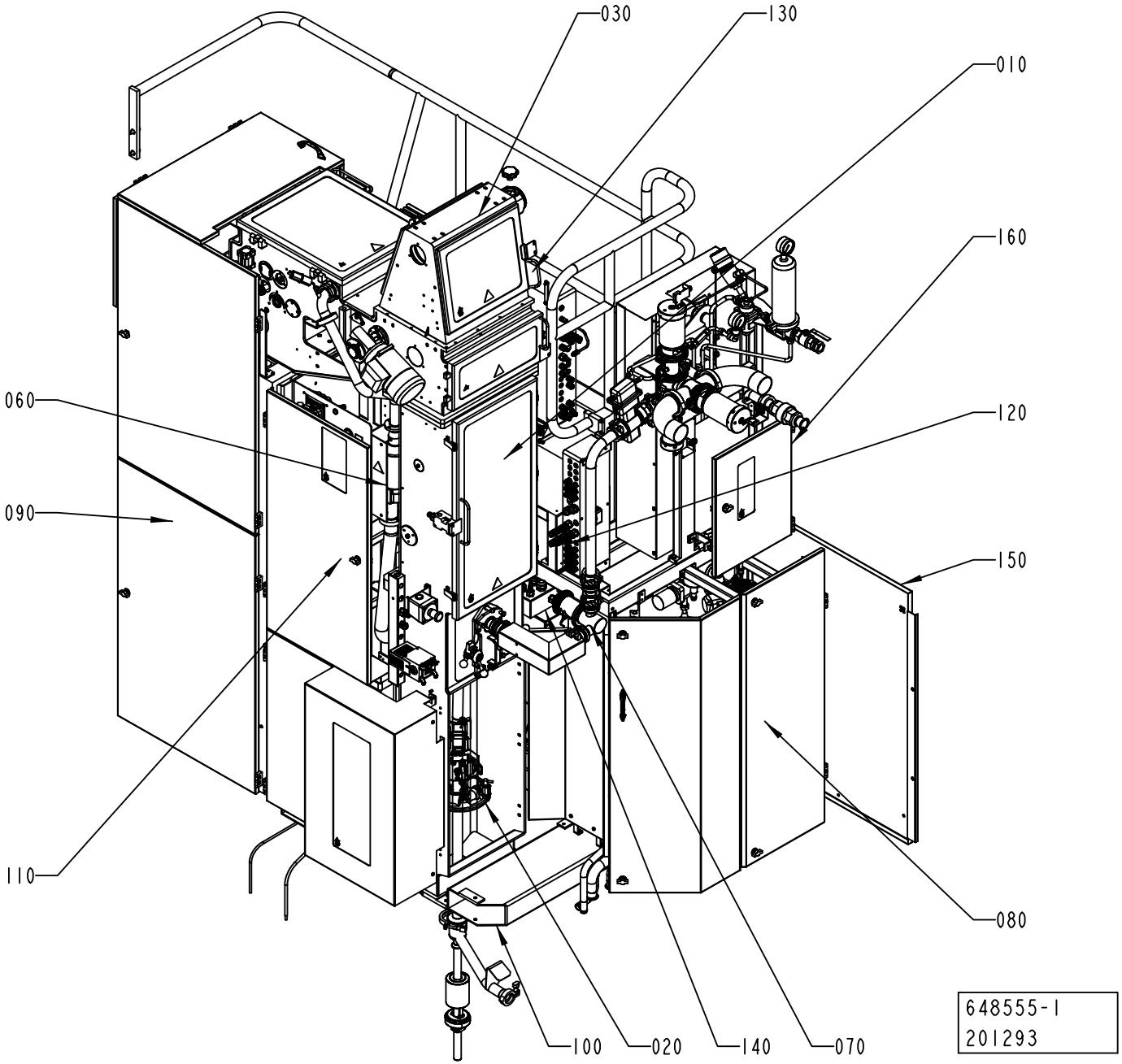
030
130
010
160
060
120
090
150
110
080
100
020
140
070
648555-1
201293

ECM: 201294 - 20050224
Group number: 648555-0100
Assembly Drawing: 648555-1_1_AC

Pos	Part No	UN	Qty	Description	Page No
-					
010	2539440-0100		1	ASEPTIC CHAMBER	**1-5**
020	2544850-0100		1	FORMING SECTION	**1-21, 1-23, 1-25, 1-27**
030	2539450-0200		1	DRYING CHAMBER	**1-101, 1-103**
060	2528076-0100		1	STERILE AIR SYSTEM	**1-177**
070	2501290-0200		1	FILLING SYSTEM	**1-207, 1-209**
080	2512910-0200		1	CLEANING SYSTEM	**1-257**
090	2541680-0100		1	HYDROGEN PEROXIDE	**1-277**
100	1558497-0200		1	FRAME SECTION,UPPER	**1-295**
110	2528079-0200		1	PNEUMATIC SYSTEM	**1-319**
120	1558834-0200		1	CONNECTION BOX	**1-349**
130	1548733-0100		1	CONNECTION BOX	**1-353, 1-355, 1-357, 1-359**
140	2504502-0100		1	CABLE TRENCH	**1-365, 1-367, 1-369, 1-371, 1-373, 1-375, 1-377, 1-379**
150	2533766-0100		1	COVERING PANEL	**1-389**
160	2532909-0200		1	COVERING PANEL	**1-391**
170	2504496-0100		1	TRANSPORT EQUIPMENT	**1-397**

Pos	Part No	UN	Qty	Description	Page No

Machine Type | Group Description | Used-In | Group Number | Page No

ASEPTIC CHAMBER

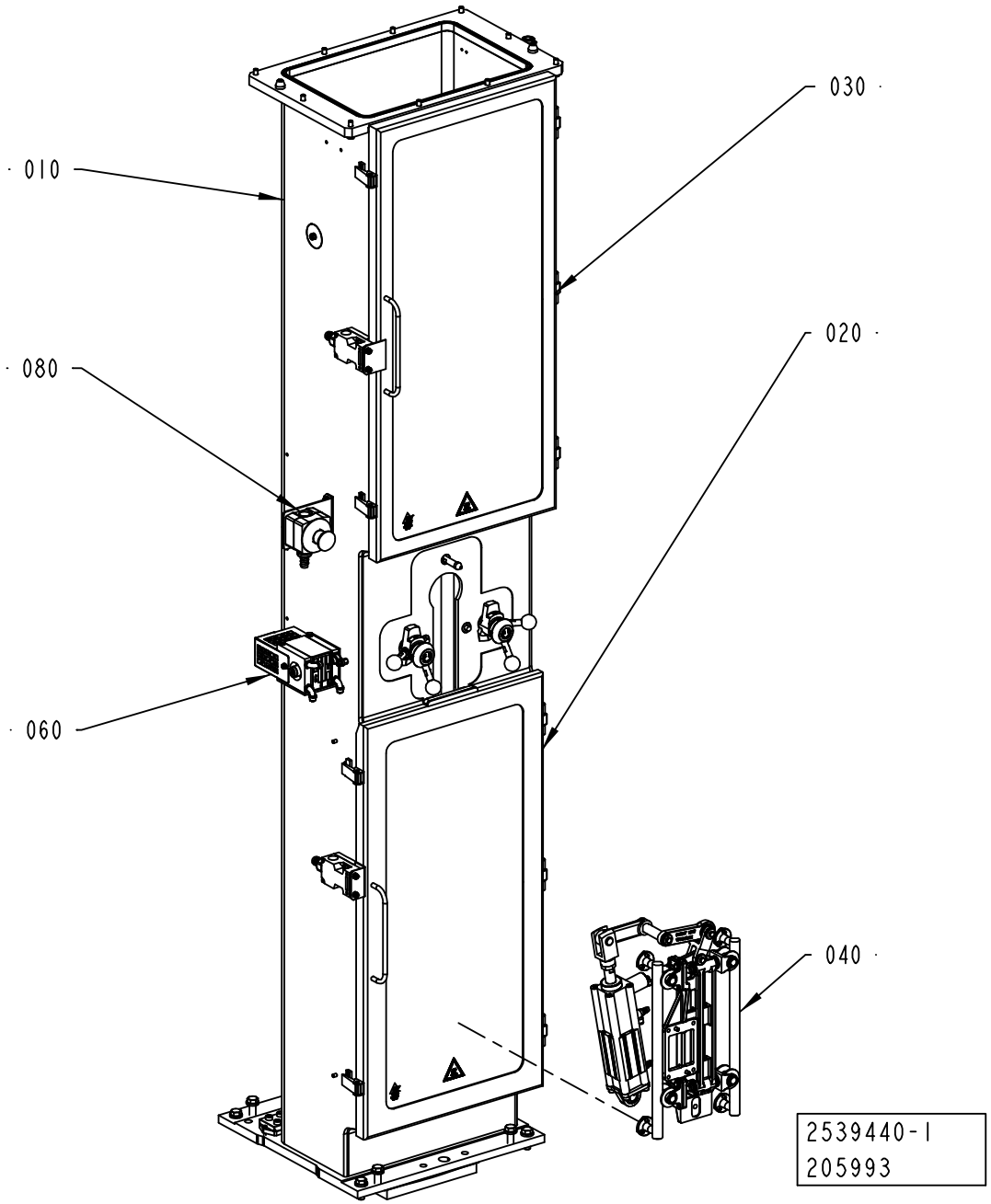

ECM: 206202 - 20050627
Group number: 2539440-0100
Assembly Drawing: 2539440-1_1_AC

Pos	Part No	UN	Qty	Description	Page No
A3/FLEX					
020	2508283-0200		1	DOOR	**1-7**
030	2508279-0100		1	DOOR	**1-9**
040	2512930-0200		1	SUPPORT RAIL	**1-11**
060	1548876-0100		1	IH EQUIPMENT	**1-13**
Common Parts					
010	1548872-0100		1	PILLAR	**1-15, 1-17**
080	2528087-0100		1	EMERGENCY STOP	**1-19**

Pos	Part No	UN	Qty	Description	Page No

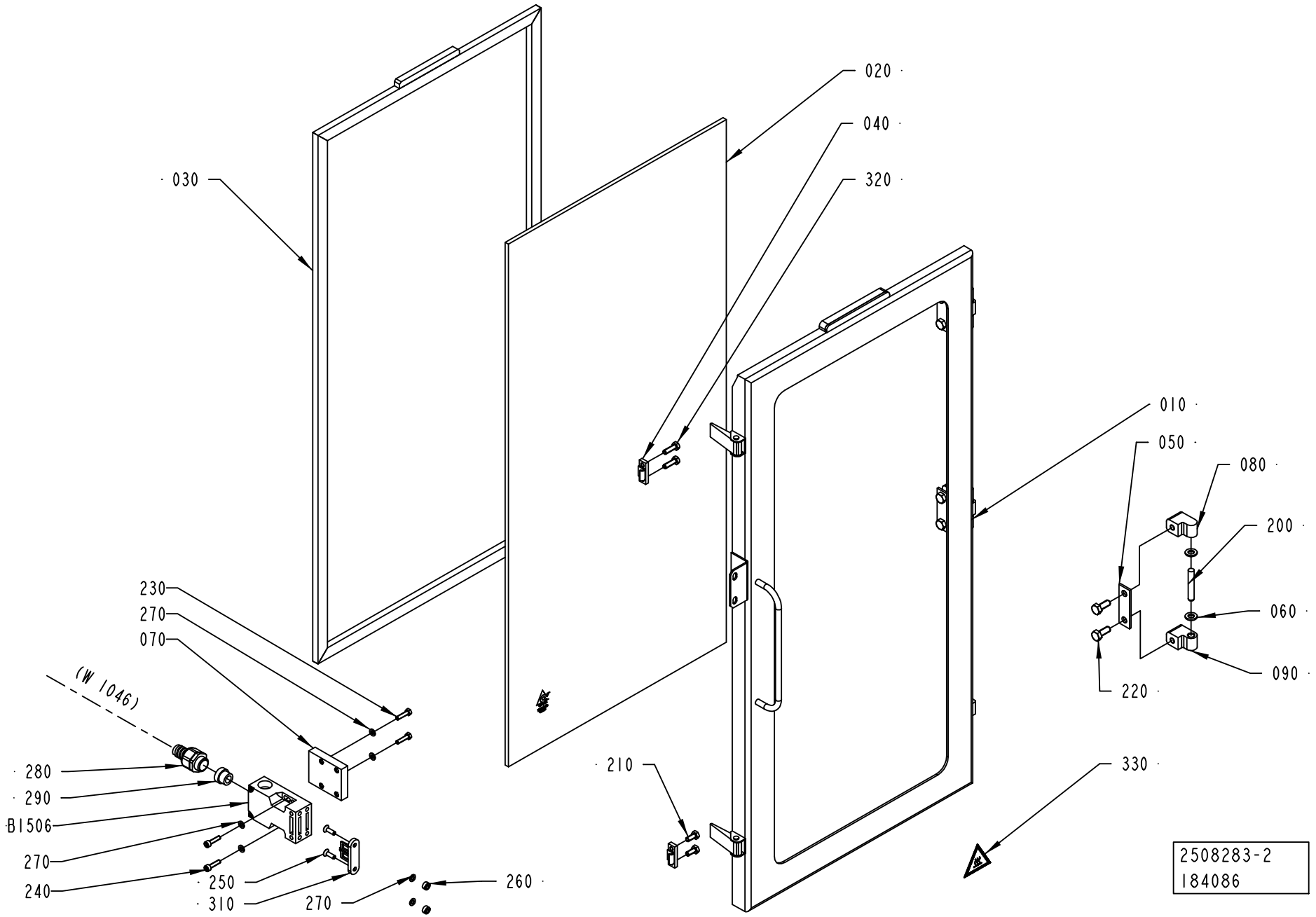
020
040
320
030
010
050
080
200
060
090
220
230
270
070
(W 1046)
280
290
B1506
270
240
250
310
270
260
210
330
2508283-2
184086

ECM: 220648 - 20050615
Group number: 2508283-0200
Assembly Drawing: 2508283-2_1_AA

Pos	Part No	UN	Qty	Description	Page No
-					
010	2695984-0000		1	FRAME	
020	2695983-0000		1	GLASS PANE	
030	2508285-0000		1	GASKET	
040	271860-0000		2	CLAMP BLOCK	
050	441737-0000		3	WASHER	
060	441739-0000		6	WASHER	
070	2541651-0000		1	PLATE	
080	1041978-0000		3	HINGE FLANGE	
090	1041979-0000		3	HINGE FLANGE	
200	311103-0413		3	PARALLEL PIN ISO 2338 8M6X50 A1	
210	312105-0367		2	SCREW M6S ISO 4017 M6X14 A480	
220	312105-0451		6	SCREW M6S ISO 4017 M8X20 A480	
230	312105-0331		2	SCREW M6S ISO 4017 M5X20 A480	
240	312115-0331		2	SCREW ISO4762 M5X20 A4 80	
250	312155-0329		2	SCREW DIN 7991 MF6S M5X16 A4 70	
260	575034-0000		2	ROUND NUT	
270	315105-0146		6	WASHER BRB 5,3X10 RFR	
280	90458-0429		1	HOSE GLAND W/O INSERT M20 EXTENDED	
290	353249-0011		1	INSERT, SINGEL HOLE, EK 153/11	
310	90044-0310		1	KEY FOR SAFETY SWITCH AZ 15/16 B1	
320	312105-0370		2	SCREW M6S ISO 4017 M6X20 A480	
330	359705-0007		1	WARNING SIGN ISO, HOT SURFACE	
B1506	90459-0472		1	KEY SAF.SW. AZ 16 02ZVRK-M20-2152-2254	

Pos	Part No	UN	Qty	Description	Page No

Machine Type	Group Description	Used-In	Group Number	Page No

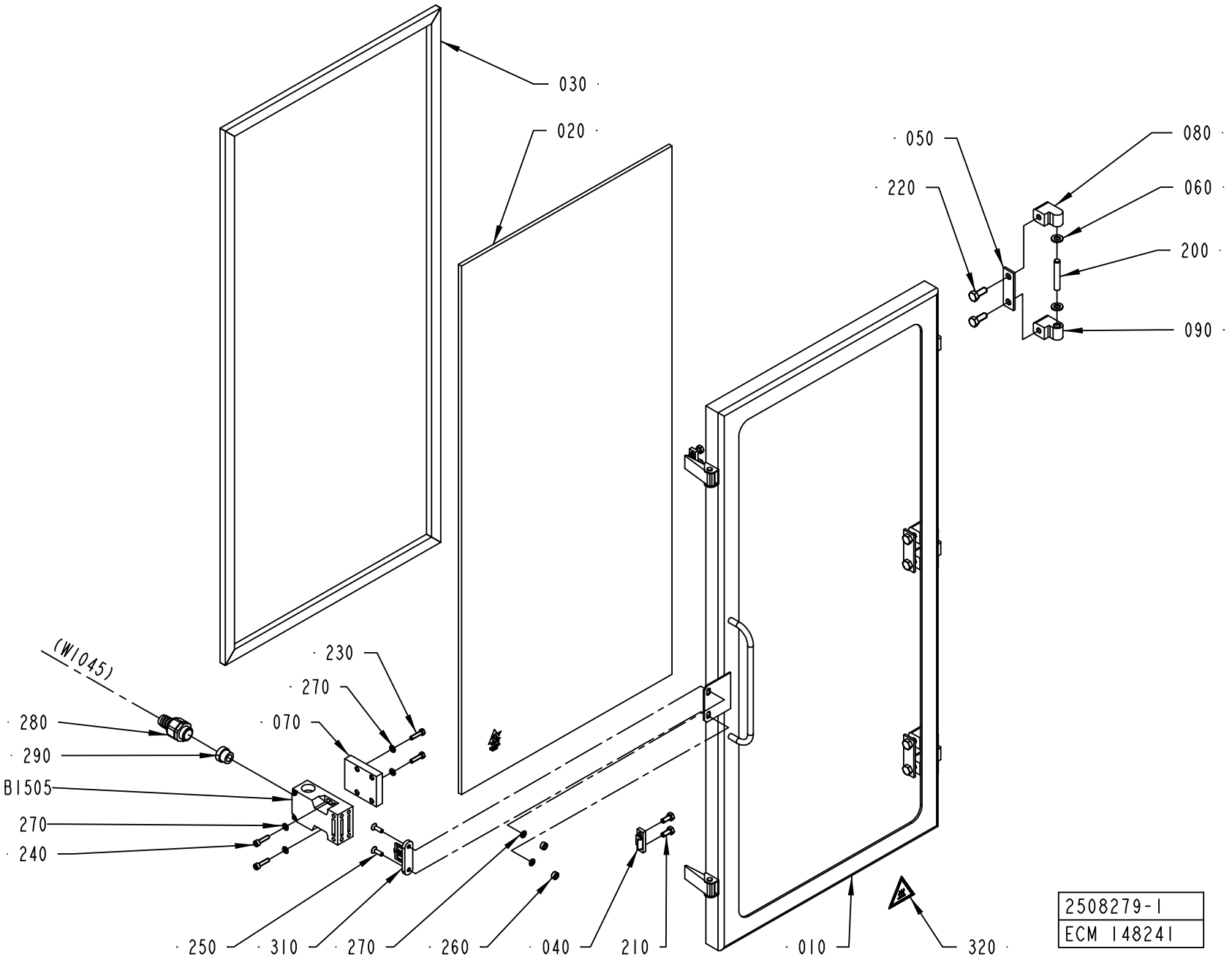
030
020
050
220
080
060
200
090
(W1045)
230
270
070
280
290
B1505
270
240
250
310
270
260
040
210
010
320
2508279-1
ECM 148241

ECM: 188344 - 20041117
Group number: 2508279-0100
Assembly Drawing: 2508279-1_1_AB

Pos	Part No	UN	Qty	Description	Page No
-					
010	2508280-0000		1	FRAME	
020	2508282-0000		1	GLASS PANE	
030	2508281-0000		1	GASKET	
040	271860-0000		2	CLAMP BLOCK	
050	441737-0000		3	WASHER	
060	441739-0000		6	WASHER	
070	2541651-0000		1	PLATE	
080	1041978-0000		3	HINGE FLANGE	
090	1041979-0000		3	HINGE FLANGE	
200	311103-0413		3	PARALLEL PIN ISO 2338 8M6X50 A1	
210	312105-0367		4	SCREW M6S ISO 4017 M6X14 A480	
220	312105-0451		6	SCREW M6S ISO 4017 M8X20 A480	
230	312105-0331		2	SCREW M6S ISO 4017 M5X20 A480	
240	312115-0331		2	SCREW ISO4762 M5X20 A4 80	
250	312155-0329		2	SCREW DIN 7991 MF6S M5X16 A4 70	
260	575034-0000		2	ROUND NUT	
270	315105-0146		6	WASHER BRB 5,3X10 RFR	
280	90458-0429		1	HOSE GLAND W/O INSERT M20 EXTENDED	
290	353249-0011		1	INSERT, SINGEL HOLE, EK 153/11	
310	90044-0310		1	KEY FOR SAFETY SWITCH AZ 15/16 B1	
320	359705-0007		1	WARNING SIGN ISO, HOT SURFACE	
B1505	90459-0472		1	KEY SAF.SW. AZ 16 02ZVRK-M20-2152-2254	

Pos	Part No	UN	Qty	Description	Page No

Machine Type	Group Description	Used-In	Group Number	Page No

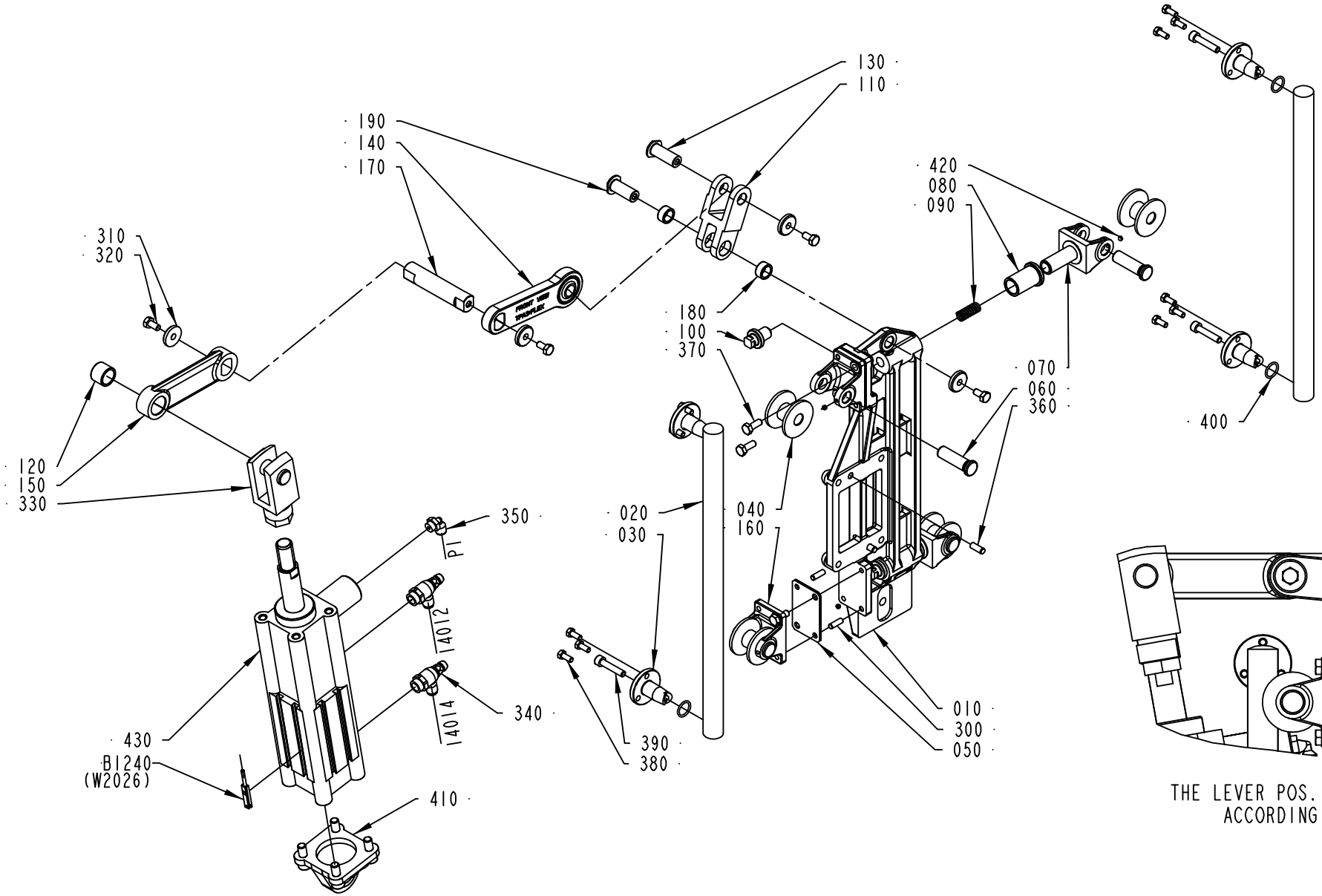

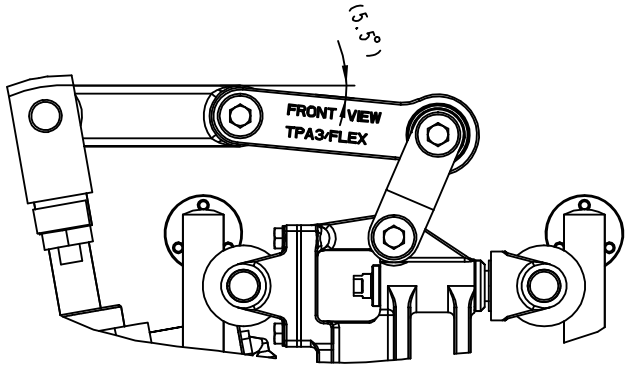

THE LEVER POS. 140 MUST BE MOUNTED ACCORDING TO THE PICTURE

2512930-4
205993

ECM: 205995 - 20050627
Group number: 2512930-0200
Assembly Drawing: 2512930-4_1_AA

Pos	Part No	UN	Qty	Description	Page No
A3/FLEX					
110	2731434-0000		1	LEVER	
Common Parts					
010	2547401-0000		1	SUPPORT PLATE	
020	2504521-0000		2	BAR	
030	2504523-0000		4	CENTERING	
040	2547403-0000		4	WHEEL	
050	2547419-0000		2	SHIM	
060	2526841-0000		4	SHAFT	
070	2552121-0000		2	BRACKET	
080	2522233-0000		2	BUSHING	
090	2522235-0000		2	COMPRESSION SPRING	
100	2541658-0000		2	SCREW	
120	2506269-0000		1	BUSHING	
130	2709262-0000		1	SHAFT	
140	2715618-0000		1	LEVER	
150	2506273-0000		1	LEVER	
160	2547402-0000		2	BRACKET	
170	2715601-0000		1	SHAFT	
180	2506291-0000		2	BUSHING	
190	2751466-0000		1	SHAFT	
300	311103-0308		4	PARALLEL PIN ISO 2338 5M6X16 A1	
310	315125-0153		4	WASHER TBRSB 6,4X22X4 A4	
320	312105-0366		4	SCREW M6S ISO 4017 M6X12 A480	
330	2547387-0000		1	ROD END	
340	90235-0847		2	THROTTLE CHECK VALVE, G1/4", MANUAL,6	
350	90458-2956		1	ELBOW PIPE JOINT, EXT.THREAD, D=6MM-G1/8	
360	311103-0351		2	PARALLEL PIN ISO 2338 6M6X16 A1	
370	312105-0368		4	SCREW M6S ISO 4017 M6X16 A480	
380	312105-0327		12	SCREW M6S ISO 4017 M5X12 A480	
390	312115-0374		4	SCREW ISO4762 M6X30 A4 80	
400	315205-0703		4	O-RING 14,0X1,78 MM	
410	90459-0586		1	SWIVEL FLANGE 50	
420	90459-1395		4	SCREW HEX.SOCK.SET CONEPT.MS6SS M4X4 A2	
430	90459-0587		1	DOUBLE ACTING, PROFILE, CYL 50-50	
B1240	90458-2775		1	PROXIMITY SENSOR, SMT-8-PS-K5-LED-24-B	

Pos	Part No	UN	Qty	Description	Page No

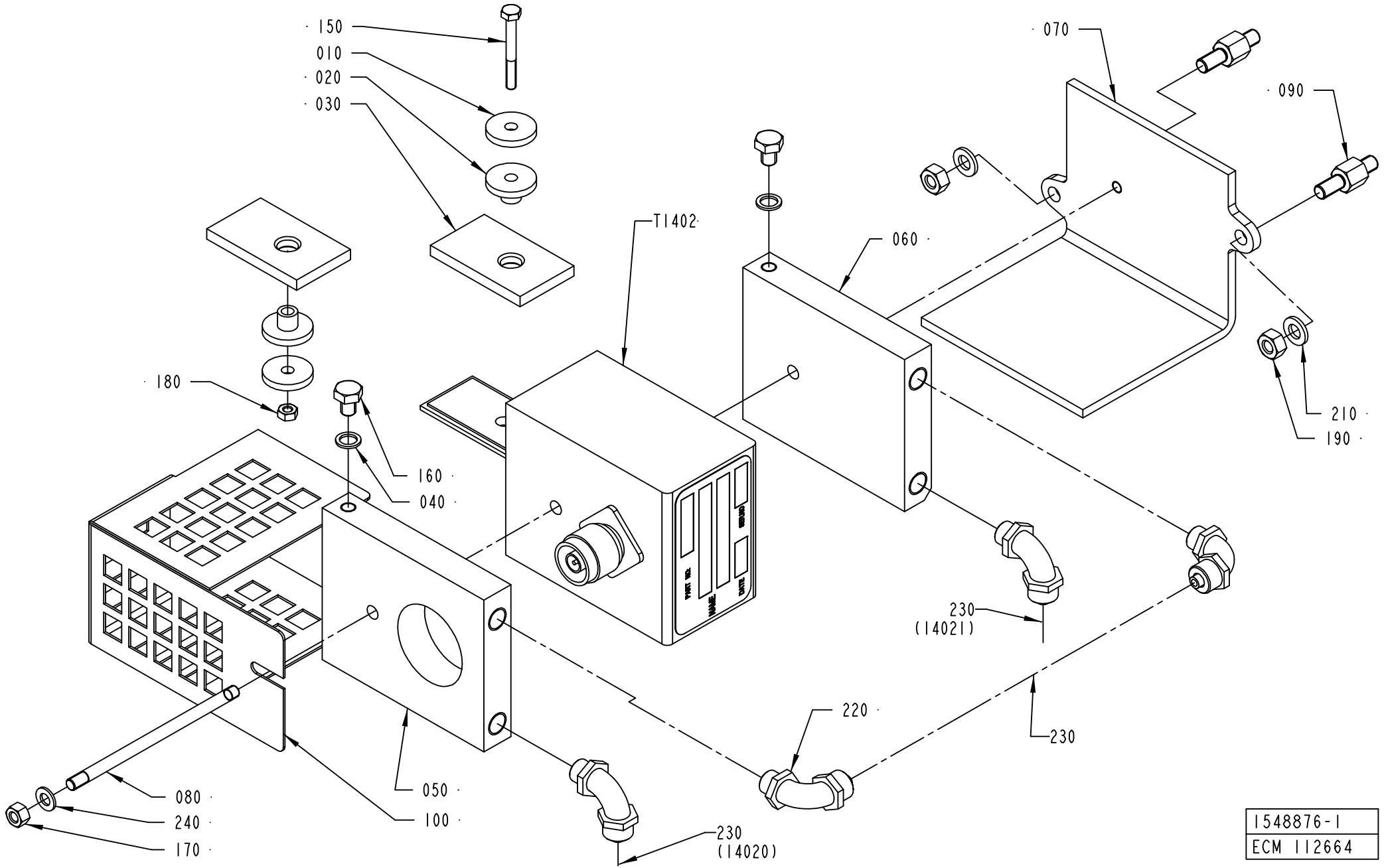
150
010
020
030
070
090
T1402
060
180
210
190
160
040
230
(14021)
220
230
080
240
170
050
100
230
(14020)
1548876-1
ECM 112664

ECM: 267092 - 20060703
Group number: 1548876-0100
Assembly Drawing: 1548876-1_1_AA

Pos	Part No	UN	Qty	Description	Page No
A3/FLEX TBA 0200B, A3/FLEX TBA 0250B, A3/FLEX TBA 0330S, A3/FLEX TPA 0330SQ, A3/FLEX TPA 0500SQ, A3/FLEX TBA 0500S					
230	90166-0118	MM	6000	TUBE 8 MM PA BLACK	
T1402	67379-0412		1	TRANSFORMER	
A3/FLEX TBA 0200S, A3/FLEX TBA 1890S, A3/FLEX TBA 2000S, A3/FLEX TBA 0200M, A3/FLEX TBA 0250S, A3/FLEX TPA 0200SQ QC, A3/FLEX TPA 0250SQ QC, A3/FLEX TBA 0200SQ, A3/FLEX TBA 0250SQ, A3/FLEX TBA 1400B					
230	90166-0118	MM	6000	TUBE 8 MM PA BLACK	
T1402	67379-0414		1	TRANSFORMER	
A3/FLEX TBA 0500B, A3/FLEX TBA 1000B, A3/FLEX TPA 1000SQ, A3/FLEX TBA 1500S, A3/FLEX TPA 0750SQ					
230	90166-0118	MM	6000	TUBE 8 MM PA BLACK	
T1402	67379-0417		1	TRANSFORMER	
A3/FLEX TBA 1000S NODIMC					
230	90166-0118	MM	6000	TUBE 8 MM PA BLACK	
T1402	67379-0404		1	TRANSFORMER	
A3/FLEX TBA 1000SQ, A3/FLEX TBA 1000S DIMC/FLEX					
230	90166-0118	MM	6000	TUBE 8 MM PA BLACK	
T1402	67379-0405		1	TRANSFORMER	
Common Parts					
010	263311-0000		2	WASHER	
020	1539174-0000		2	BUSHING	
030	1539175-0000		2	PLATE	
040	1140077-0000		2	RING	
050	1558830-0000		1	COOLING PLATE	
060	1558831-0000		1	COOLING PLATE	
070	1558441-0000		1	BRACKET	
080	2559066-0000		1	STUD SCREW	
090	2532979-0000		2	SPACER	
100	2541664-0000		1	COVER	
150	312105-0301		1	SCREW M6S ISO 4017 M4X35 A470	
160	312105-0362		2	SCREW M6S ISO 4017 M6X8 A480	
170	312605-0314		1	HEXAGON NUT, M6M M5 A280	
180	312605-0312		1	HEXAGON NUT, M6M M4 A280	
190	312605-0316		2	HEXAGON NUT, M6M M6 A280	
210	315105-0153		2	WASHER BRB 6,4X12 RFR	
220	342931-0121		4	ELBOW 90 COUPL.,EXT.THREAD 8/6-G1/8"	
240	315105-0146		1	WASHER BRB 5,3X10 RFR	
250	90157-0037		1	THREAD SEALANT LOCTITE 542	

Pos	Part No	UN	Qty	Description	Page No

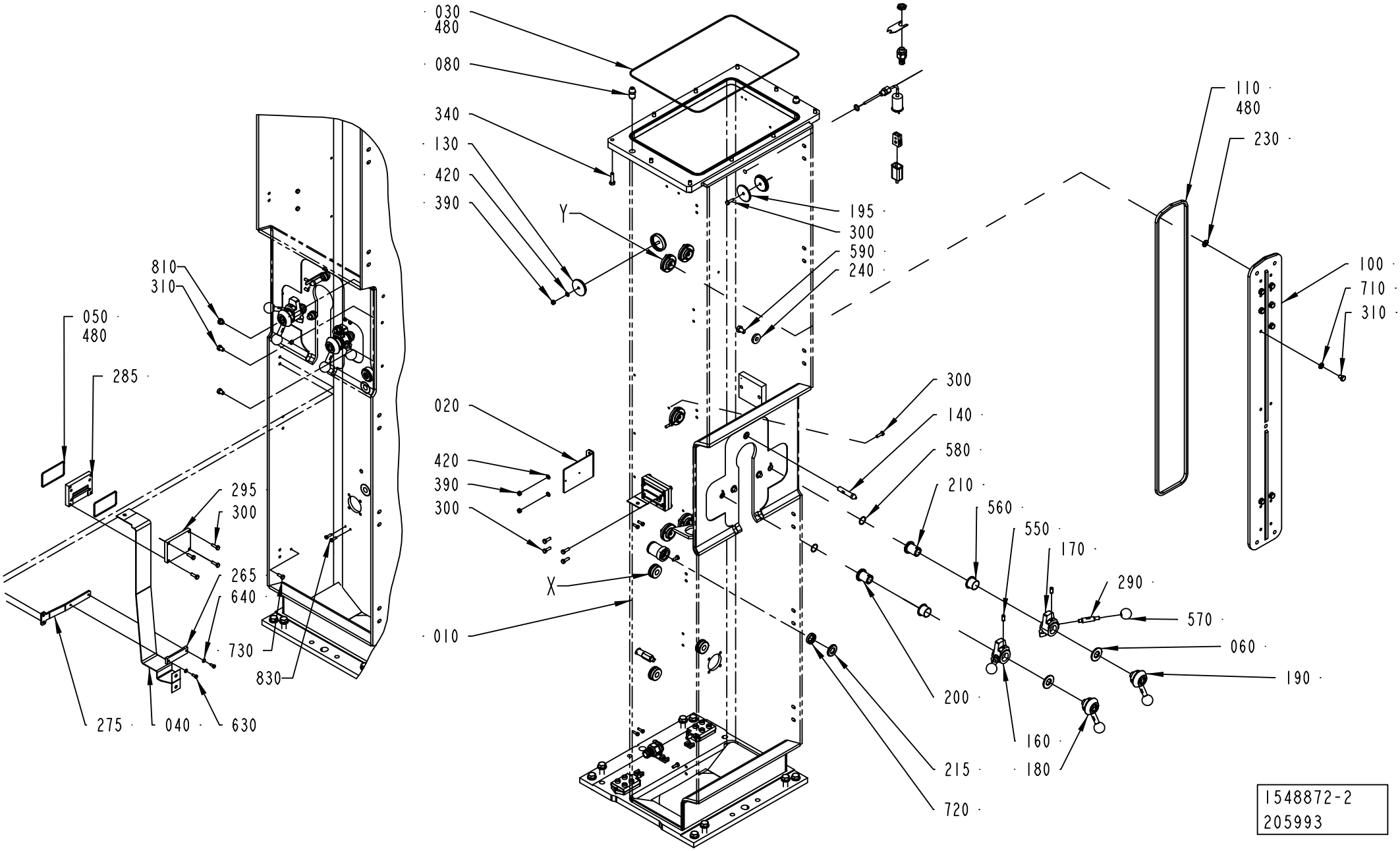
030
480
080
340
130
420
390
Y
195
300
590
240
110
480
230
100
710
310
810
310
050
480
285
295
300
265
640
730
830
275
040
630
020
420
390
300
X
010
300
140
580
210
560
550
170
290
570
060
190
200
160
180
215
720
1548872-2
205993

ECM: 274256 - 20060728
Group number: 1548872-0100
Assembly Drawing: 1548872-2_1_AE

This list covers pages from 1-14 to 1-17

Pos	Part No	UN	Qty	Description	Page No
A3/FLEX (See drawing on pages: 1-14, 1-16)					
010	1558513-0000		1	PILLAR	
040	2698178-0000		1	BUSBAR	
050	90459-1174		2	O-RING 75,87X2,62 MM	
150	1036293-0000		1	HOLDER	
265	2532978-0000		1	PLATE	
275	2532977-0000		1	BRACKET	
285	2533628-0000		1	SUPPORT BLOCK	
295	2533627-0000		1	SUPPORT BLOCK	
296	1129086-0000		1	BRACKET	
300	312105-0370		12	SCREW M6S ISO 4017 M6X20 A480	
310	312105-0447		16	SCREW M6S ISO 4017 M8X12 A480	
390	312605-0316		4	HEXAGON NUT, M6M M6 A280	
490	90099-0104		1	NUT, PR 15,2 (PG9)	
500	353243-0001		1	HOSE GLAND W/O INSERT PG9 EXTENDED	
510	353249-0008		1	INSERT, SINGEL HOLE, EK 152/7	
520	90326-0020		1	PLUG, FEMALE YELLOW CR-AL	
530	90326-0012		1	PROTECTIVE COVER, T31A4618	
540	315237-0110		1	WASHER,PL.RND.AL.13,5/18,H=1,5	
630	312105-0327		2	SCREW M6S ISO 4017 M5X12 A480	
640	315105-0146		2	WASHER BRB 5,3X10 RFR	
680	90458-0638		2	DISTRIBUTION FRAME, ASB 4/LED 5-4-12/5M	
690	312115-0293		6	SCREW ISO4762 M4X16 A4 80	
730	312105-0368		2	SCREW M6S ISO 4017 M6X16 A480	
780	353243-0005		1	HOSE GLAND W/O INSERT PG16 EXTENDED	
790	353249-0014		1	INSERT, SINGEL HOLE, EK 154/16	
800	90099-0110		1	NUT, PR 22,5 (PG16)	
810	90330-0066		1	PLUG, EXT. G-THREAD, G1/8	
830	312105-0329		4	SCREW M6S ISO 4017 M5X16 A480	
B1109	90458-0341		1	THERMOCOUPLE, 5130050-001	
Common Parts					
020	2528088-0000		1	HOLDER	
030	90459-1175		1	O-RING 418X3,0 MM	
060	2562677-0000		2	WASHER	
080	1519150-0000		2	PIN	
100	2528111-0000		1	PLATE	
110	2634997-0000		1	GASKET	
120	2544865-0000		1	BUSHING	
130	2506281-0000		2	PLUG	
140	2506283-0000		1	PIN	
160	2526859-0000		1	CAM	
170	2528068-0000		1	CAM	
180	2528070-0000		1	LOCKING LEVER	
190	2528102-0000		1	LOCKING LEVER	
195	2552138-0000		2	LID	
200	2512769-0000		1	SHAFT	
210	2512768-0000		1	SHAFT	
215	2544866-0000		1	WASHER	
220	2512774-0000		4	SHIM	
230	2528107-0000		5	SHIM	
235	2541645-0000		4	SHIM	
240	315125-0173		2	WASHER TBRSB 10,5X28X6 A4	
245	2541646-0000		5	SHIM	
255	2547386-0000		1	SHAFT	
280	2528106-0000		5	FLANGE	
290	2526858-0000		2	DOWEL	
320	312105-0449		5	SCREW M6S ISO 4017 M8X16 A480	
340	312105-0455		10	SCREW M6S ISO 4017 M8X30 A480	
360	312105-0536		4	SCREW M6S ISO 4017 M12X30 A480	
370	312105-0538		4	SCREW M6S ISO 4017 M12X35 A480	
380	312125-0366		3	SCREW ISO 1207 M6X12 A4	
420	315105-0153		4	WASHER BRB 6,4X12 RFR	
450	315115-0178		8	WASHER PLAIN, TBRB 13/24 H=4	
460	352113-0204		3	ANCHOR PLATES FOR STRIPS, TYPE TM3S25-M	
480	90153-0023		1	ADHESIVE, SILICON 251470 TUB 90CC	
550	90287-0112		2	SCREW SPRINGLOAD. SLOTTED HEAD M8X16	
560	90240-0293		2	FLANGE BUSHING, 25X28X21 MM	
570	318800-0104		2	HANDLE,SPHERICAL KNOB,INT.THRE.,D.30-M8	
580	315205-0707		2	O-RING 20,35X1,78 MM	
590	312105-0489		2	SCREW M6S ISO 4017 M10X16 A480	
600	312105-0325		15	SCREW M6S ISO 4017 M5X10 A480	
670	315751-0113		1	RETAINING RING FOR SHAFT DIN 471 16 A2	
710	315115-0165		16	WASHER PLAIN, TBRB 8,4/16 H=3	
720	90459-0871		1	SEALING RING 18X30X7 MM	

Machine Type | Group Description | Used-In | Group Number | Page No

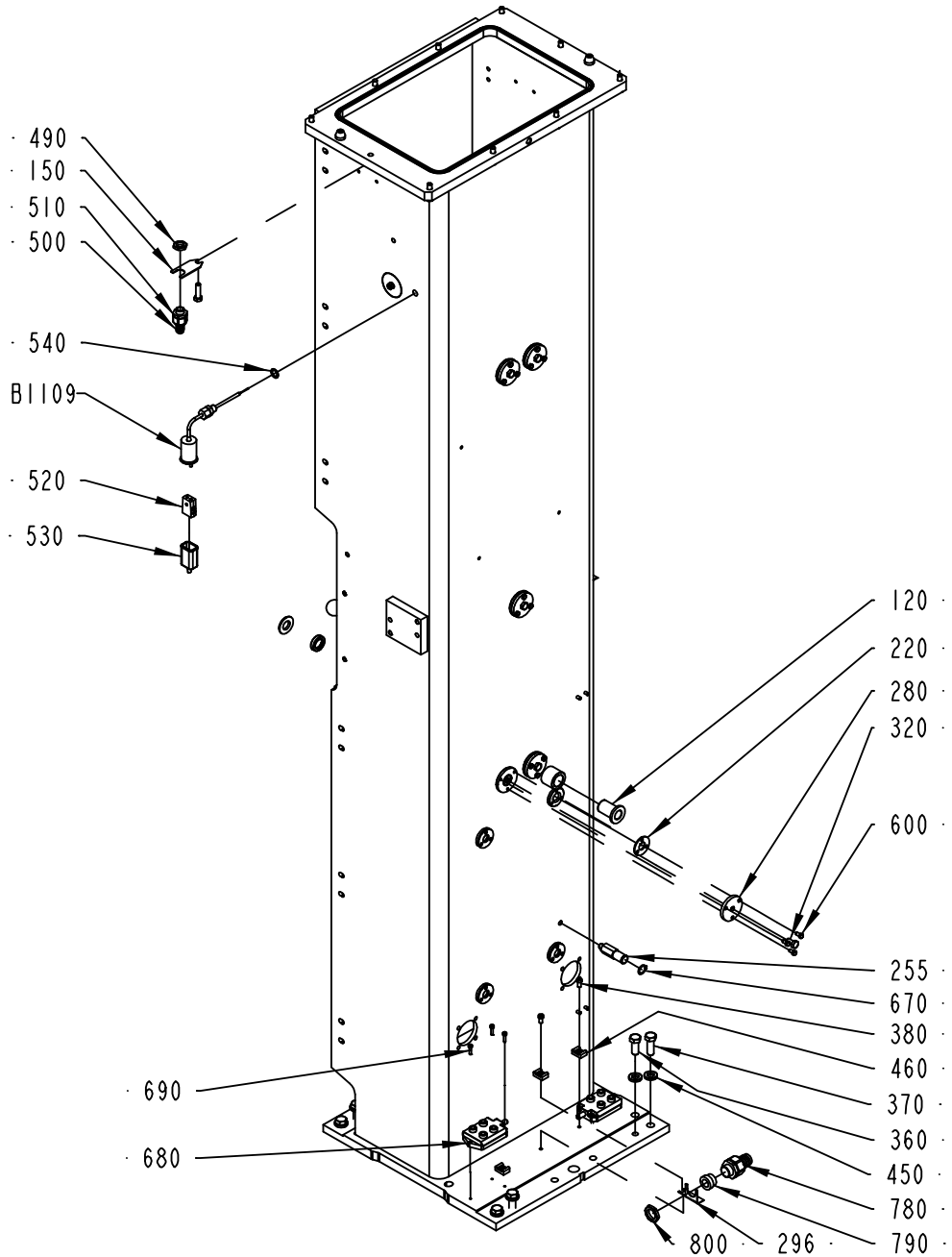

1548872-2
205993

ECM: 274256 - 20060728
Group number: 1548872-0100
Assembly Drawing: 1548872-2_2_AE

This list covers pages from 1-14 to 1-17

Pos	Part No	UN	Qty	Description	Page No
A3/FLEX (See drawing on pages: 1-14, 1-16)					
010	1558513-0000		1	PILLAR	
040	2698178-0000		1	BUSBAR	
050	90459-1174		2	O-RING 75,87X2,62 MM	
150	1036293-0000		1	HOLDER	
265	2532978-0000		1	PLATE	
275	2532977-0000		1	BRACKET	
285	2533628-0000		1	SUPPORT BLOCK	
295	2533627-0000		1	SUPPORT BLOCK	
296	1129086-0000		1	BRACKET	
300	312105-0370		12	SCREW M6S ISO 4017 M6X20 A480	
310	312105-0447		16	SCREW M6S ISO 4017 M8X12 A480	
390	312605-0316		4	HEXAGON NUT, M6M M6 A280	
490	90099-0104		1	NUT, PR 15,2 (PG9)	
500	353243-0001		1	HOSE GLAND W/O INSERT PG9 EXTENDED	
510	353249-0008		1	INSERT, SINGEL HOLE, EK 152/7	
520	90326-0020		1	PLUG, FEMALE YELLOW CR-AL	
530	90326-0012		1	PROTECTIVE COVER, T31A4618	
540	315237-0110		1	WASHER,PL.RND.AL.13,5/18,H=1,5	
630	312105-0327		2	SCREW M6S ISO 4017 M5X12 A480	
640	315105-0146		2	WASHER BRB 5,3X10 RFR	
680	90458-0638		2	DISTRIBUTION FRAME, ASB 4/LED 5-4-12/5M	
690	312115-0293		6	SCREW ISO4762 M4X16 A4 80	
730	312105-0368		2	SCREW M6S ISO 4017 M6X16 A480	
780	353243-0005		1	HOSE GLAND W/O INSERT PG16 EXTENDED	
790	353249-0014		1	INSERT, SINGEL HOLE, EK 154/16	
800	90099-0110		1	NUT, PR 22,5 (PG16)	
810	90330-0066		1	PLUG, EXT. G-THREAD, G1/8	
830	312105-0329		4	SCREW M6S ISO 4017 M5X16 A480	
B1109	90458-0341		1	THERMOCOUPLE, 5130050-001	
Common Parts					
020	2528088-0000		1	HOLDER	
030	90459-1175		1	O-RING 418X3,0 MM	
060	2562677-0000		2	WASHER	
080	1519150-0000		2	PIN	
100	2528111-0000		1	PLATE	
110	2634997-0000		1	GASKET	
120	2544865-0000		1	BUSHING	
130	2506281-0000		2	PLUG	
140	2506283-0000		1	PIN	
160	2526859-0000		1	CAM	
170	2528068-0000		1	CAM	
180	2528070-0000		1	LOCKING LEVER	
190	2528102-0000		1	LOCKING LEVER	
195	2552138-0000		2	LID	
200	2512769-0000		1	SHAFT	
210	2512768-0000		1	SHAFT	
215	2544866-0000		1	WASHER	
220	2512774-0000		4	SHIM	
230	2528107-0000		5	SHIM	
235	2541645-0000		4	SHIM	
240	315125-0173		2	WASHER TBRSB 10,5X28X6 A4	
245	2541646-0000		5	SHIM	
255	2547386-0000		1	SHAFT	
280	2528106-0000		5	FLANGE	
290	2526858-0000		2	DOWEL	
320	312105-0449		5	SCREW M6S ISO 4017 M8X16 A480	
340	312105-0455		10	SCREW M6S ISO 4017 M8X30 A480	
360	312105-0536		4	SCREW M6S ISO 4017 M12X30 A480	
370	312105-0538		4	SCREW M6S ISO 4017 M12X35 A480	
380	312125-0366		3	SCREW ISO 1207 M6X12 A4	
420	315105-0153		4	WASHER BRB 6,4X12 RFR	
450	315115-0178		8	WASHER PLAIN, TBRB 13/24 H=4	
460	352113-0204		3	ANCHOR PLATES FOR STRIPS, TYPE TM3S25-M	
480	90153-0023		1	ADHESIVE, SILICON 251470 TUB 90CC	
550	90287-0112		2	SCREW SPRINGLOAD. SLOTTED HEAD M8X16	
560	90240-0293		2	FLANGE BUSHING, 25X28X21 MM	
570	318800-0104		2	HANDLE,SPHERICAL KNOB,INT.THRE.,D.30-M8	
580	315205-0707		2	O-RING 20,35X1,78 MM	
590	312105-0489		2	SCREW M6S ISO 4017 M10X16 A480	
600	312105-0325		15	SCREW M6S ISO 4017 M5X10 A480	
670	315751-0113		1	RETAINING RING FOR SHAFT DIN 471 16 A2	
710	315115-0165		16	WASHER PLAIN, TBRB 8,4/16 H=3	
720	90459-0871		1	SEALING RING 18X30X7 MM	

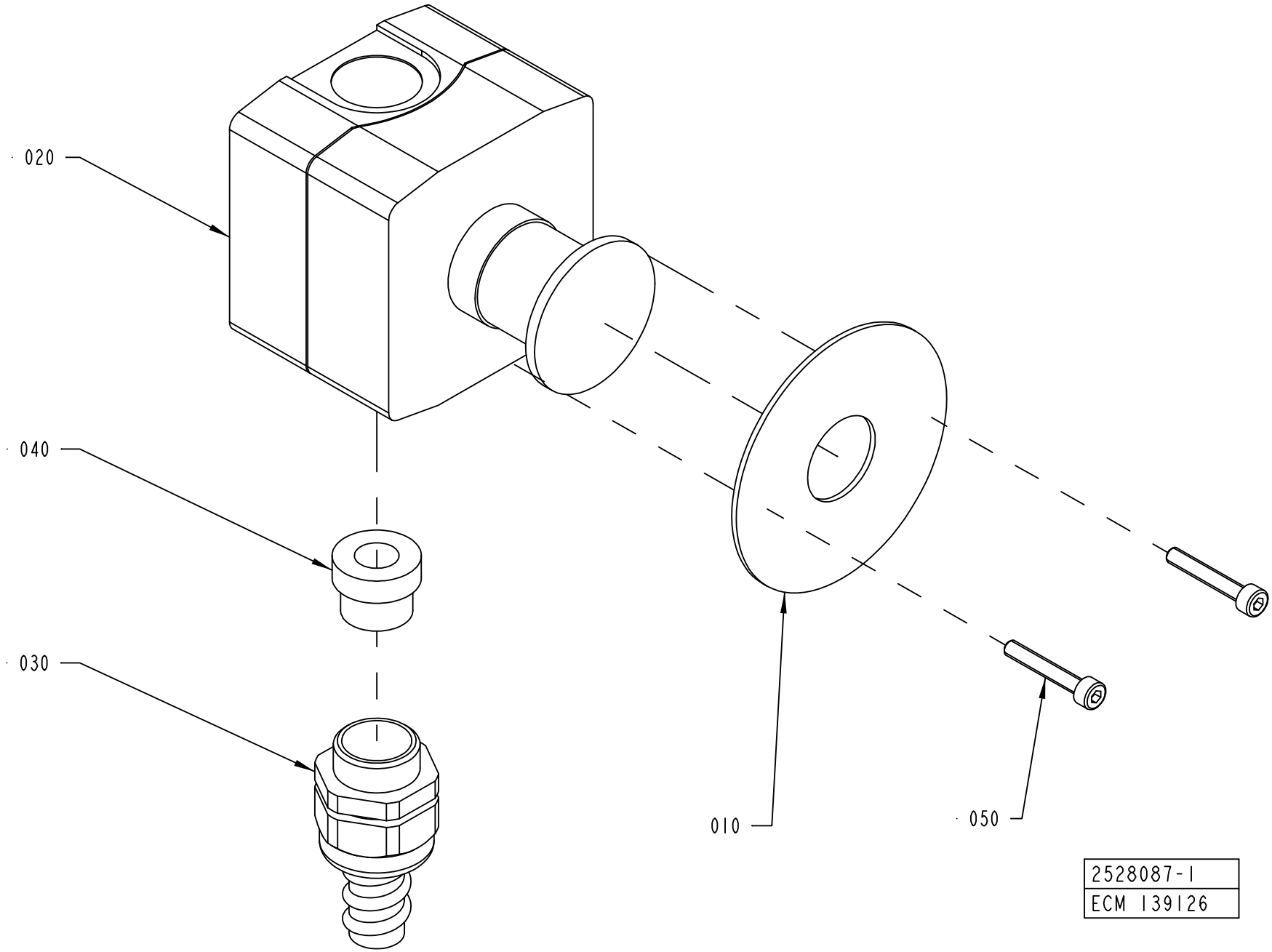
020
040
030
010
050
2528087-1
ECM 139126

ECM: 188383 - 20041117
Group number: 2528087-0100
Assembly Drawing: 2528087-1_1_AA

Pos	Part No	UN	Qty	Description	Page No
-					
010	486826-0001		1	SIGN "EMERGENCY STOP"	
020	90459-1130		1	EM. STOP XAL-K178F	
030	353243-0009		1	HOSE GLAND W/O INSERT PG13,5 EXTENDED	
040	353249-0011		1	INSERT, SINGEL HOLE, EK 153/11	
050	312115-0297		2	SCREW ISO4762 M4X25 A4 80	

Pos	Part No	UN	Qty	Description	Page No

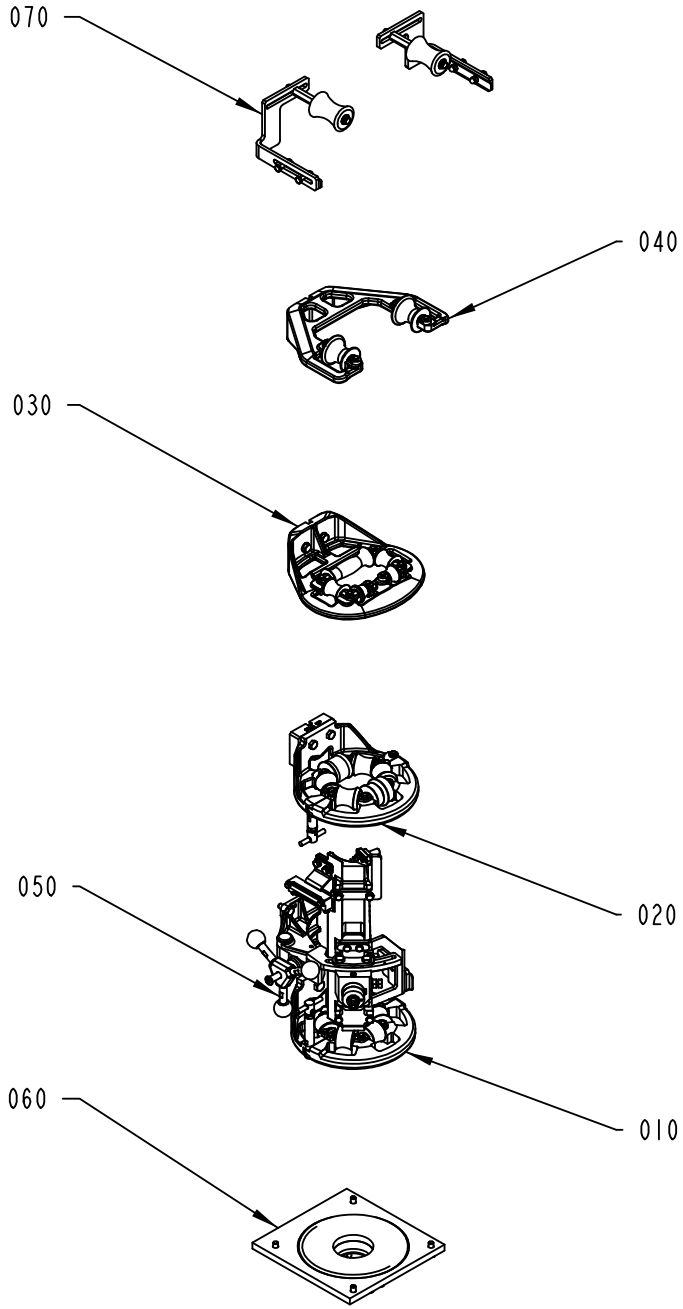

2544850-1
201309

Pos	Part No	UN	Qty	Description	Page No
A3/FLEX DIMC/FLEX (See drawing on page: 1-22)					**1-71, 1-73**
010	2559063-0200		1	LOWER FORMING RING	**1-29, 1-31**
020	2559061-0200		1	UPPER FORMING RING	**1-33, 1-35, 1-37**
030	2592550-0100		1	FORMING RING	**1-39**
050	2657873-0100		1	LONGITUDINAL SEALING	**1-41, 1-43**
060	2559064-0100		1	SEAL	**1-47, 1-49, 1-51**
A3/FLEX TBA 0200M NODIMC, A3/FLEX TBA 0250S NODIMC (See drawing on page: 1-20)					
010	2559062-0200		1	LOWER FORMING RING	**1-53, 1-55, 1-57**
020	2547422-0200		1	UPPER FORMING RING **1-59, 1-61, 1-63, 1-65, 1-67, 1-69**	**1-71, 1-73**
030	2547421-0100		1	FORMING RING	**1-75, 1-77, 1-79**
040	2674188-0100		1	EDGE ROLLER	**1-81, 1-83**
050	2657873-0100		1	LONGITUDINAL SEALING	**1-41, 1-43**
060	2512780-0100		1	SEAL	**1-85, 1-87, 1-89**
A3/FLEX TBA 0200S NODIMC, A3/FLEX TBA 0200B NODIMC, A3/FLEX TBA 0250B NODIMC, A3/FLEX TBA 0330S NODIMC, A3/FLEX TPA 0200SQ NODIMC, A3/FLEX TPA 0250SQ NODIMC (See drawing on page: 1-20)					
010	2559062-0200		1	LOWER FORMING RING	**1-53, 1-55, 1-57**
020	2547422-0200		1	UPPER FORMING RING **1-59, 1-61, 1-63, 1-65, 1-67, 1-69**	**1-71, 1-73**
030	2547421-0100		1	FORMING RING	**1-75, 1-77, 1-79**
040	2674188-0100		1	EDGE ROLLER	**1-81, 1-83**
050	2657873-0100		1	LONGITUDINAL SEALING	**1-41, 1-43**
060	2512780-0100		1	SEAL	**1-85, 1-87, 1-89**
A3/FLEX TBA 0200SQ NODIMC, A3/FLEX TBA 0250SQ NODIMC (See drawing on page: 1-22)					
010	2559062-0200		1	LOWER FORMING RING	**1-53, 1-55, 1-57**
020	2547422-0200		1	UPPER FORMING RING **1-59, 1-61, 1-63, 1-65, 1-67, 1-69**	**1-71, 1-73**
030	2547421-0100		1	FORMING RING	**1-75, 1-77, 1-79**
050	2657873-0100		1	LONGITUDINAL SEALING	**1-41, 1-43**
060	2512780-0100		1	SEAL	**1-85, 1-87, 1-89**
A3/FLEX TBA 0500S NODIMC (See drawing on page: 1-22)					
010	2559062-0200		1	LOWER FORMING RING	**1-53, 1-55, 1-57**
020	2547422-0200		1	UPPER FORMING RING **1-59, 1-61, 1-63, 1-65, 1-67, 1-69**	**1-71, 1-73**
030	2547421-0100		1	FORMING RING	**1-75, 1-77, 1-79**
050	2657873-0100		1	LONGITUDINAL SEALING	**1-41, 1-43**
060	2512780-0100		1	SEAL	**1-85, 1-87, 1-89**
A3/FLEX TBA 1000B NODIMC, A3/FLEX TBA 0500B NODIMC, A3/FLEX TBA 1000S NODIMC, A3/FLEX TBA 1000SQ NODIMC, A3/FLEX TBA 1500S NODIMC (See drawing on page: 1-22)					
010	2559062-0200		1	LOWER FORMING RING	**1-53, 1-55, 1-57**
020	2547422-0200		1	UPPER FORMING RING **1-59, 1-61, 1-63, 1-65, 1-67, 1-69**	
030	2547421-0100		1	FORMING RING	**1-75, 1-77, 1-79**
050	2657873-0100		1	LONGITUDINAL SEALING	**1-41, 1-43**
060	2512780-0100		1	SEAL	**1-85, 1-87, 1-89**
A3/FLEX TBA 2000S NODIMC, A3/FLEX TBA 1890S NODIMC, A3/FLEX TBA 1400B NODIMC (See drawing on page: 1-24)					
010	2559062-0200		1	LOWER FORMING RING	**1-53, 1-55, 1-57**
020	2547422-0200		1	UPPER FORMING RING **1-59, 1-61, 1-63, 1-65, 1-67, 1-69**	**1-71, 1-73**
030	2547421-0100		1	FORMING RING	**1-75, 1-77, 1-79**
040	2547420-0100		1	EDGE ROLLER	**1-91, 1-93**
050	2657873-0100		1	LONGITUDINAL SEALING	**1-41, 1-43**
060	2512780-0100		1	SEAL	**1-85, 1-87, 1-89**
090	2555627-0100		1	PRESSURE ROLLER	**1-95**
A3/FLEX TPA 0330SQ NODIMC (See drawing on page: 1-22)					
010	2559062-0200		1	LOWER FORMING RING	**1-53, 1-55, 1-57**
020	2547422-0200		1	UPPER FORMING RING **1-59, 1-61, 1-63, 1-65, 1-67, 1-69**	**1-71, 1-73**
030	2547421-0100		1	FORMING RING	**1-75, 1-77, 1-79**
050	2657873-0100		1	LONGITUDINAL SEALING	**1-41, 1-43**
060	2512780-0100		1	SEAL	**1-85, 1-87, 1-89**
A3/FLEX TPA 0500SQ NODIMC (See drawing on page: 1-22)					
010	2559062-0200		1	LOWER FORMING RING	**1-53, 1-55, 1-57**
020	2547422-0200		1	UPPER FORMING RING **1-59, 1-61, 1-63, 1-65, 1-67, 1-69**	**1-71, 1-73**
030	2547421-0100		1	FORMING RING	**1-75, 1-77, 1-79**
050	2657873-0100		1	LONGITUDINAL SEALING	**1-41, 1-43**
060	2512780-0100		1	SEAL	**1-85, 1-87, 1-89**
A3/FLEX TPA 1000SQ NODIMC QC, A3/FLEX TPA 0750SQ NODIMC QC (See drawing on page: 1-26)					
010	2559062-0200		1	LOWER FORMING RING	**1-53, 1-55, 1-57**
020	2547422-0200		1	UPPER FORMING RING **1-59, 1-61, 1-63, 1-65, 1-67, 1-69**	**1-71, 1-73**
030	2547421-0100		1	FORMING RING	**1-75, 1-77, 1-79**
050	2657873-0100		1	LONGITUDINAL SEALING	**1-41, 1-43**
060	2512780-0100		1	SEAL	**1-85, 1-87, 1-89**
090	2555627-0100		1	PRESSURE ROLLER	**1-95**
A3/FLEX TPA 1000SQ NODIMC NOQC (See drawing on page: 1-26)					
010	2559062-0200		1	LOWER FORMING RING	**1-53, 1-55, 1-57**
020	2547422-0200		1	UPPER FORMING RING **1-59, 1-61, 1-63, 1-65, 1-67, 1-69**	**1-71, 1-73**
030	2547421-0100		1	FORMING RING	**1-75, 1-77, 1-79**
050	2657873-0100		1	LONGITUDINAL SEALING	**1-41, 1-43**

Machine Type | Group Description | Used-In | Group Number | Page No

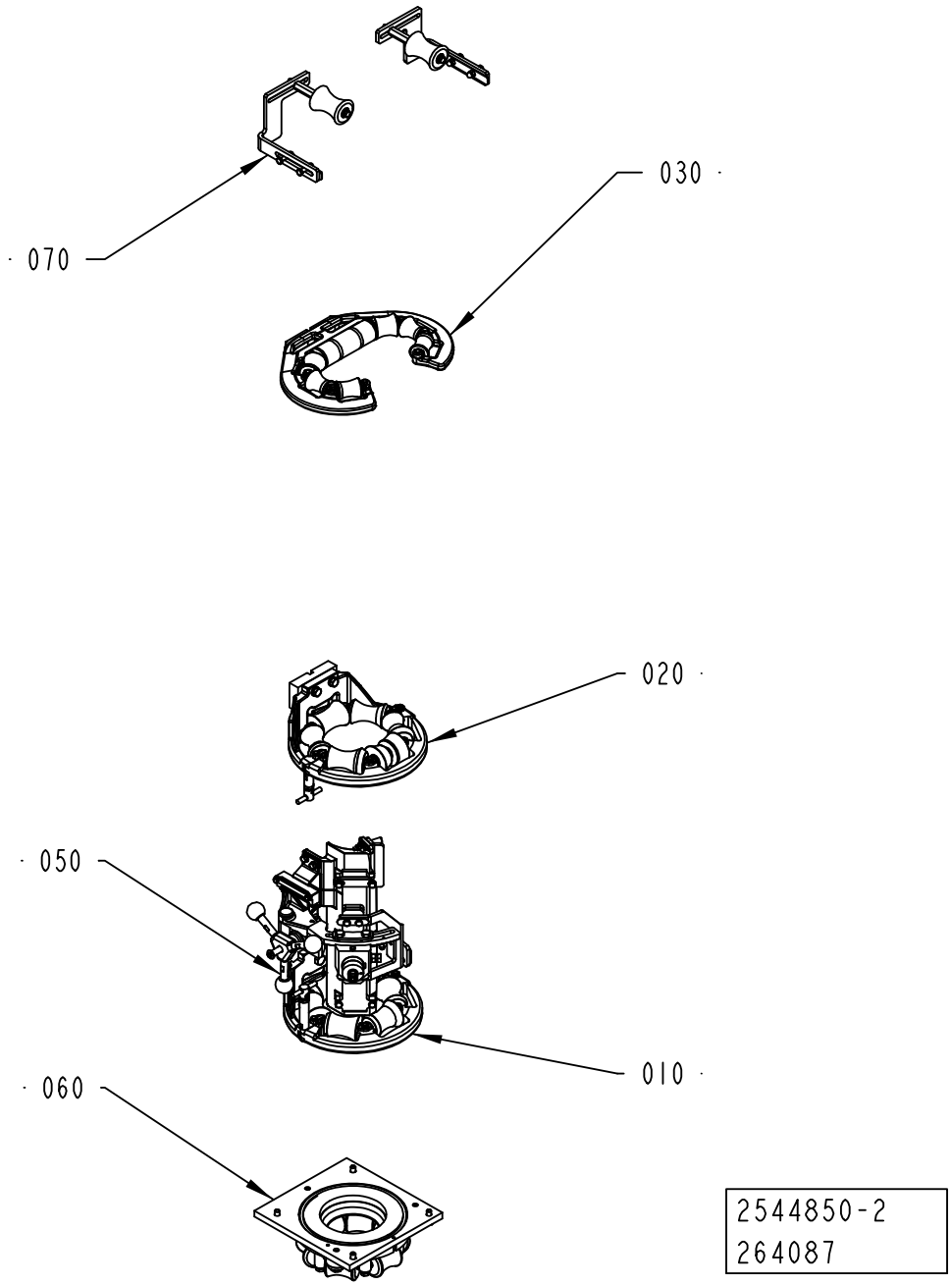
070
030
020
050
010
060
2544850-2
264087

ECM: 271584 - 20060706
Group number: 2544850-0100
Assembly Drawing: 2544850-2_1_AJ

This list covers pages from 1-20 to 1-27

Pos	Part No	UN	Qty	Description	Page No
A3/FLEX DIMC/FLEX (See drawing on page: 1-22)					**1-71, 1-73**
010	2559063-0200		1	LOWER FORMING RING	**1-29, 1-31**
020	2559061-0200		1	UPPER FORMING RING	**1-33, 1-35, 1-37**
030	2592550-0100		1	FORMING RING	**1-39**
050	2657873-0100		1	LONGITUDINAL SEALING	**1-41, 1-43**
060	2559064-0100		1	SEAL	**1-47, 1-49, 1-51**
A3/FLEX TBA 0200M NODIMC, A3/FLEX TBA 0250S NODIMC (See drawing on page: 1-20)					
010	2559062-0200		1	LOWER FORMING RING	**1-53, 1-55, 1-57**
020	2547422-0200		1	UPPER FORMING RING **1-59, 1-61, 1-63, 1-65, 1-67, 1-69**	**1-71, 1-73**
030	2547421-0100		1	FORMING RING	**1-75, 1-77, 1-79**
040	2674188-0100		1	EDGE ROLLER	**1-81, 1-83**
050	2657873-0100		1	LONGITUDINAL SEALING	**1-41, 1-43**
060	2512780-0100		1	SEAL	**1-85, 1-87, 1-89**
A3/FLEX TBA 0200S NODIMC, A3/FLEX TBA 0200B NODIMC, A3/FLEX TBA 0250B NODIMC, A3/FLEX TBA 0330S NODIMC, A3/FLEX TPA 0200SQ NODIMC, A3/FLEX TPA 0250SQ NODIMC (See drawing on page: 1-20)					
010	2559062-0200		1	LOWER FORMING RING	**1-53, 1-55, 1-57**
020	2547422-0200		1	UPPER FORMING RING **1-59, 1-61, 1-63, 1-65, 1-67, 1-69**	**1-71, 1-73**
030	2547421-0100		1	FORMING RING	**1-75, 1-77, 1-79**
040	2674188-0100		1	EDGE ROLLER	**1-81, 1-83**
050	2657873-0100		1	LONGITUDINAL SEALING	**1-41, 1-43**
060	2512780-0100		1	SEAL	**1-85, 1-87, 1-89**
A3/FLEX TBA 0200SQ NODIMC, A3/FLEX TBA 0250SQ NODIMC (See drawing on page: 1-22)					
010	2559062-0200		1	LOWER FORMING RING	**1-53, 1-55, 1-57**
020	2547422-0200		1	UPPER FORMING RING **1-59, 1-61, 1-63, 1-65, 1-67, 1-69**	**1-71, 1-73**
030	2547421-0100		1	FORMING RING	**1-75, 1-77, 1-79**
050	2657873-0100		1	LONGITUDINAL SEALING	**1-41, 1-43**
060	2512780-0100		1	SEAL	**1-85, 1-87, 1-89**
A3/FLEX TBA 0500S NODIMC (See drawing on page: 1-22)					
010	2559062-0200		1	LOWER FORMING RING	**1-53, 1-55, 1-57**
020	2547422-0200		1	UPPER FORMING RING **1-59, 1-61, 1-63, 1-65, 1-67, 1-69**	**1-71, 1-73**
030	2547421-0100		1	FORMING RING	**1-75, 1-77, 1-79**
050	2657873-0100		1	LONGITUDINAL SEALING	**1-41, 1-43**
060	2512780-0100		1	SEAL	**1-85, 1-87, 1-89**
A3/FLEX TBA 1000B NODIMC, A3/FLEX TBA 0500B NODIMC, A3/FLEX TBA 1000S NODIMC, A3/FLEX TBA 1000SQ NODIMC, A3/FLEX TBA 1500S NODIMC (See drawing on page: 1-22)					
010	2559062-0200		1	LOWER FORMING RING	**1-53, 1-55, 1-57**
020	2547422-0200		1	UPPER FORMING RING **1-59, 1-61, 1-63, 1-65, 1-67, 1-69**	
030	2547421-0100		1	FORMING RING	**1-75, 1-77, 1-79**
050	2657873-0100		1	LONGITUDINAL SEALING	**1-41, 1-43**
060	2512780-0100		1	SEAL	**1-85, 1-87, 1-89**
A3/FLEX TBA 2000S NODIMC, A3/FLEX TBA 1890S NODIMC, A3/FLEX TBA 1400B NODIMC (See drawing on page: 1-24)					
010	2559062-0200		1	LOWER FORMING RING	**1-53, 1-55, 1-57**
020	2547422-0200		1	UPPER FORMING RING **1-59, 1-61, 1-63, 1-65, 1-67, 1-69**	**1-71, 1-73**
030	2547421-0100		1	FORMING RING	**1-75, 1-77, 1-79**
040	2547420-0100		1	EDGE ROLLER	**1-91, 1-93**
050	2657873-0100		1	LONGITUDINAL SEALING	**1-41, 1-43**
060	2512780-0100		1	SEAL	**1-85, 1-87, 1-89**
090	2555627-0100		1	PRESSURE ROLLER	**1-95**
A3/FLEX TPA 0330SQ NODIMC (See drawing on page: 1-22)					
010	2559062-0200		1	LOWER FORMING RING	**1-53, 1-55, 1-57**
020	2547422-0200		1	UPPER FORMING RING **1-59, 1-61, 1-63, 1-65, 1-67, 1-69**	**1-71, 1-73**
030	2547421-0100		1	FORMING RING	**1-75, 1-77, 1-79**
050	2657873-0100		1	LONGITUDINAL SEALING	**1-41, 1-43**
060	2512780-0100		1	SEAL	**1-85, 1-87, 1-89**
A3/FLEX TPA 0500SQ NODIMC (See drawing on page: 1-22)					
010	2559062-0200		1	LOWER FORMING RING	**1-53, 1-55, 1-57**
020	2547422-0200		1	UPPER FORMING RING **1-59, 1-61, 1-63, 1-65, 1-67, 1-69**	**1-71, 1-73**
030	2547421-0100		1	FORMING RING	**1-75, 1-77, 1-79**
050	2657873-0100		1	LONGITUDINAL SEALING	**1-41, 1-43**
060	2512780-0100		1	SEAL	**1-85, 1-87, 1-89**
A3/FLEX TPA 1000SQ NODIMC QC, A3/FLEX TPA 0750SQ NODIMC QC (See drawing on page: 1-26)					
010	2559062-0200		1	LOWER FORMING RING	**1-53, 1-55, 1-57**
020	2547422-0200		1	UPPER FORMING RING **1-59, 1-61, 1-63, 1-65, 1-67, 1-69**	**1-71, 1-73**
030	2547421-0100		1	FORMING RING	**1-75, 1-77, 1-79**
050	2657873-0100		1	LONGITUDINAL SEALING	**1-41, 1-43**
060	2512780-0100		1	SEAL	**1-85, 1-87, 1-89**
090	2555627-0100		1	PRESSURE ROLLER	**1-95**
A3/FLEX TPA 1000SQ NODIMC NOQC (See drawing on page: 1-26)					
010	2559062-0200		1	LOWER FORMING RING	**1-53, 1-55, 1-57**
020	2547422-0200		1	UPPER FORMING RING **1-59, 1-61, 1-63, 1-65, 1-67, 1-69**	**1-71, 1-73**
030	2547421-0100		1	FORMING RING	**1-75, 1-77, 1-79**
050	2657873-0100		1	LONGITUDINAL SEALING	**1-41, 1-43**

Machine Type | Group Description | Used-In | Group Number | Page No

FORMING SECTION

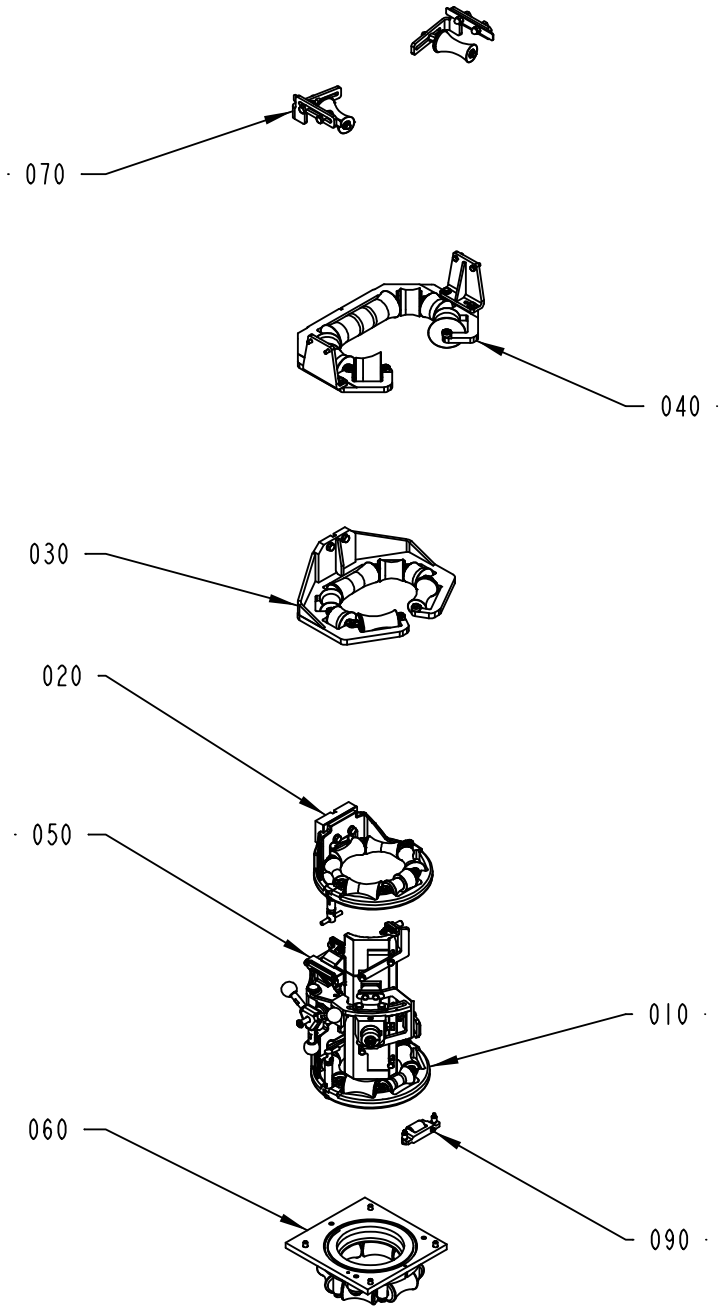

2544850-5
201309

ECM: 271584 - 20060706
Group number: 2544850-0100
Assembly Drawing: 2544850-5_1_AB

This list covers pages from 1-20 to 1-27

Pos	Part No	UN	Qty	Description	Page No
A3/FLEX DIMC/FLEX (See drawing on page: 1-22)					**1-71, 1-73**
010	2559063-0200		1	LOWER FORMING RING	**1-29, 1-31**
020	2559061-0200		1	UPPER FORMING RING	**1-33, 1-35, 1-37**
030	2592550-0100		1	FORMING RING	**1-39**
050	2657873-0100		1	LONGITUDINAL SEALING	**1-41, 1-43**
060	2559064-0100		1	SEAL	**1-47, 1-49, 1-51**
A3/FLEX TBA 0200M NODIMC, A3/FLEX TBA 0250S NODIMC (See drawing on page: 1-20)					
010	2559062-0200		1	LOWER FORMING RING	**1-53, 1-55, 1-57**
020	2547422-0200		1	UPPER FORMING RING **1-59, 1-61, 1-63, 1-65, 1-67, 1-69**	**1-71, 1-73**
030	2547421-0100		1	FORMING RING	**1-75, 1-77, 1-79**
040	2674188-0100		1	EDGE ROLLER	**1-81, 1-83**
050	2657873-0100		1	LONGITUDINAL SEALING	**1-41, 1-43**
060	2512780-0100		1	SEAL	**1-85, 1-87, 1-89**
A3/FLEX TBA 0200S NODIMC, A3/FLEX TBA 0200B NODIMC, A3/FLEX TBA 0250B NODIMC, A3/FLEX TBA 0330S NODIMC, A3/FLEX TPA 0200SQ NODIMC, A3/FLEX TPA 0250SQ NODIMC (See drawing on page: 1-20)					
010	2559062-0200		1	LOWER FORMING RING	**1-53, 1-55, 1-57**
020	2547422-0200		1	UPPER FORMING RING **1-59, 1-61, 1-63, 1-65, 1-67, 1-69**	**1-71, 1-73**
030	2547421-0100		1	FORMING RING	**1-75, 1-77, 1-79**
040	2674188-0100		1	EDGE ROLLER	**1-81, 1-83**
050	2657873-0100		1	LONGITUDINAL SEALING	**1-41, 1-43**
060	2512780-0100		1	SEAL	**1-85, 1-87, 1-89**
A3/FLEX TBA 0200SQ NODIMC, A3/FLEX TBA 0250SQ NODIMC (See drawing on page: 1-22)					
010	2559062-0200		1	LOWER FORMING RING	**1-53, 1-55, 1-57**
020	2547422-0200		1	UPPER FORMING RING **1-59, 1-61, 1-63, 1-65, 1-67, 1-69**	**1-71, 1-73**
030	2547421-0100		1	FORMING RING	**1-75, 1-77, 1-79**
050	2657873-0100		1	LONGITUDINAL SEALING	**1-41, 1-43**
060	2512780-0100		1	SEAL	**1-85, 1-87, 1-89**
A3/FLEX TBA 0500S NODIMC (See drawing on page: 1-22)					
010	2559062-0200		1	LOWER FORMING RING	**1-53, 1-55, 1-57**
020	2547422-0200		1	UPPER FORMING RING **1-59, 1-61, 1-63, 1-65, 1-67, 1-69**	**1-71, 1-73**
030	2547421-0100		1	FORMING RING	**1-75, 1-77, 1-79**
050	2657873-0100		1	LONGITUDINAL SEALING	**1-41, 1-43**
060	2512780-0100		1	SEAL	**1-85, 1-87, 1-89**
A3/FLEX TBA 1000B NODIMC, A3/FLEX TBA 0500B NODIMC, A3/FLEX TBA 1000S NODIMC, A3/FLEX TBA 1000SQ NODIMC, A3/FLEX TBA 1500S NODIMC (See drawing on page: 1-22)					
010	2559062-0200		1	LOWER FORMING RING	**1-53, 1-55, 1-57**
020	2547422-0200		1	UPPER FORMING RING **1-59, 1-61, 1-63, 1-65, 1-67, 1-69**	
030	2547421-0100		1	FORMING RING	**1-75, 1-77, 1-79**
050	2657873-0100		1	LONGITUDINAL SEALING	**1-41, 1-43**
060	2512780-0100		1	SEAL	**1-85, 1-87, 1-89**
A3/FLEX TBA 2000S NODIMC, A3/FLEX TBA 1890S NODIMC, A3/FLEX TBA 1400B NODIMC (See drawing on page: 1-24)					
010	2559062-0200		1	LOWER FORMING RING	**1-53, 1-55, 1-57**
020	2547422-0200		1	UPPER FORMING RING **1-59, 1-61, 1-63, 1-65, 1-67, 1-69**	**1-71, 1-73**
030	2547421-0100		1	FORMING RING	**1-75, 1-77, 1-79**
040	2547420-0100		1	EDGE ROLLER	**1-91, 1-93**
050	2657873-0100		1	LONGITUDINAL SEALING	**1-41, 1-43**
060	2512780-0100		1	SEAL	**1-85, 1-87, 1-89**
090	2555627-0100		1	PRESSURE ROLLER	**1-95**
A3/FLEX TPA 0330SQ NODIMC (See drawing on page: 1-22)					
010	2559062-0200		1	LOWER FORMING RING	**1-53, 1-55, 1-57**
020	2547422-0200		1	UPPER FORMING RING **1-59, 1-61, 1-63, 1-65, 1-67, 1-69**	**1-71, 1-73**
030	2547421-0100		1	FORMING RING	**1-75, 1-77, 1-79**
050	2657873-0100		1	LONGITUDINAL SEALING	**1-41, 1-43**
060	2512780-0100		1	SEAL	**1-85, 1-87, 1-89**
A3/FLEX TPA 0500SQ NODIMC (See drawing on page: 1-22)					
010	2559062-0200		1	LOWER FORMING RING	**1-53, 1-55, 1-57**
020	2547422-0200		1	UPPER FORMING RING **1-59, 1-61, 1-63, 1-65, 1-67, 1-69**	**1-71, 1-73**
030	2547421-0100		1	FORMING RING	**1-75, 1-77, 1-79**
050	2657873-0100		1	LONGITUDINAL SEALING	**1-41, 1-43**
060	2512780-0100		1	SEAL	**1-85, 1-87, 1-89**
A3/FLEX TPA 1000SQ NODIMC QC, A3/FLEX TPA 0750SQ NODIMC QC (See drawing on page: 1-26)					
010	2559062-0200		1	LOWER FORMING RING	**1-53, 1-55, 1-57**
020	2547422-0200		1	UPPER FORMING RING **1-59, 1-61, 1-63, 1-65, 1-67, 1-69**	**1-71, 1-73**
030	2547421-0100		1	FORMING RING	**1-75, 1-77, 1-79**
050	2657873-0100		1	LONGITUDINAL SEALING	**1-41, 1-43**
060	2512780-0100		1	SEAL	**1-85, 1-87, 1-89**
090	2555627-0100		1	PRESSURE ROLLER	**1-95**
A3/FLEX TPA 1000SQ NODIMC NOQC (See drawing on page: 1-26)					
010	2559062-0200		1	LOWER FORMING RING	**1-53, 1-55, 1-57**
020	2547422-0200		1	UPPER FORMING RING **1-59, 1-61, 1-63, 1-65, 1-67, 1-69**	**1-71, 1-73**
030	2547421-0100		1	FORMING RING	**1-75, 1-77, 1-79**
050	2657873-0100		1	LONGITUDINAL SEALING	**1-41, 1-43**

Machine Type | Group Description | Used-In | Group Number | Page No

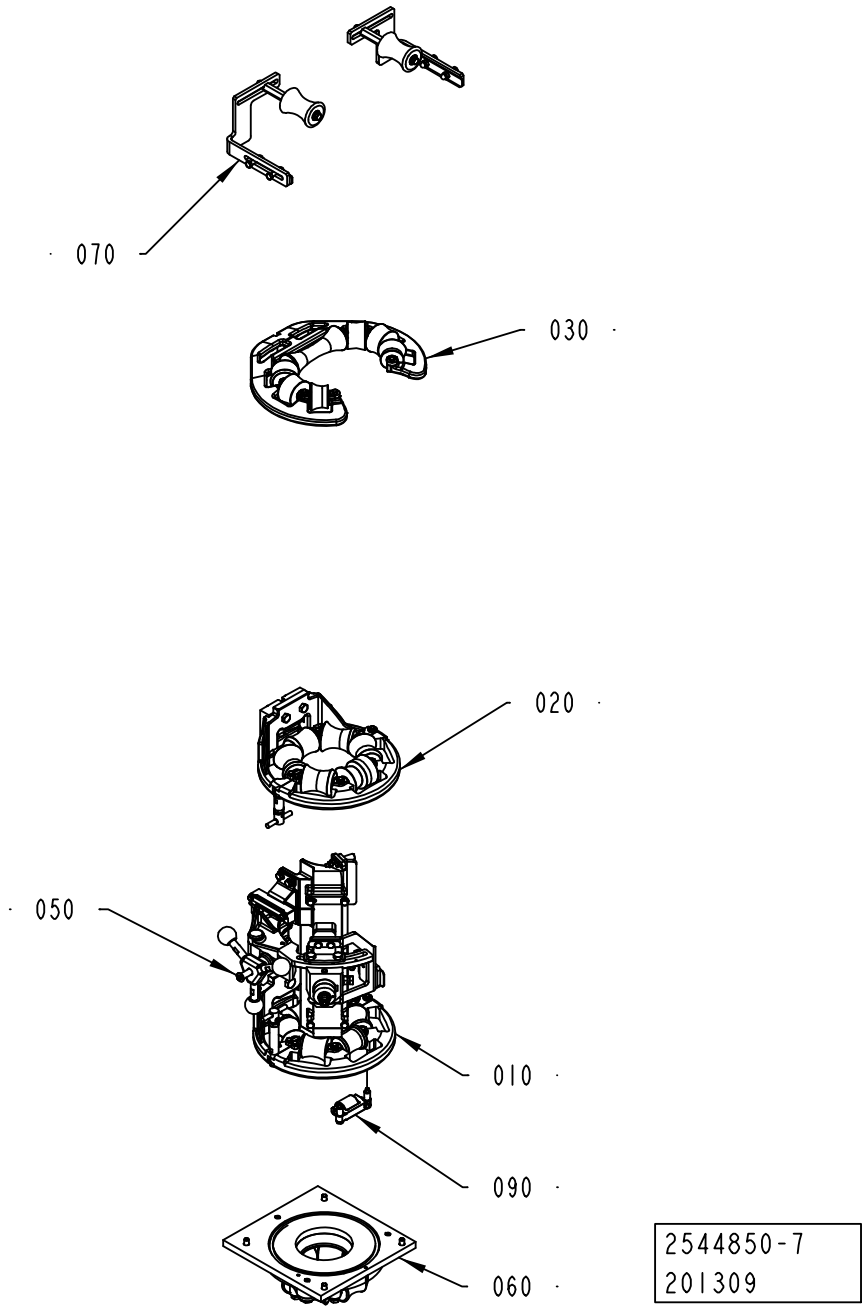
070
030
020
050
010
090
060
2544850-7
201309

ECM: 271584 - 20060706
Group number: 2544850-0100
Assembly Drawing: 2544850-7_1_AA

This list covers pages from 1-20 to 1-27

Pos	Part No	UN	Qty	Description	Page No
A3/FLEX DIMC/FLEX (See drawing on page: 1-22)					**1-71, 1-73**
010	2559063-0200		1	LOWER FORMING RING	**1-29, 1-31**
020	2559061-0200		1	UPPER FORMING RING	**1-33, 1-35, 1-37**
030	2592550-0100		1	FORMING RING	**1-39**
050	2657873-0100		1	LONGITUDINAL SEALING	**1-41, 1-43**
060	2559064-0100		1	SEAL	**1-47, 1-49, 1-51**
A3/FLEX TBA 0200M NODIMC, A3/FLEX TBA 0250S NODIMC (See drawing on page: 1-20)					
010	2559062-0200		1	LOWER FORMING RING	**1-53, 1-55, 1-57**
020	2547422-0200		1	UPPER FORMING RING **1-59, 1-61, 1-63, 1-65, 1-67, 1-69**	**1-71, 1-73**
030	2547421-0100		1	FORMING RING	**1-75, 1-77, 1-79**
040	2674188-0100		1	EDGE ROLLER	**1-81, 1-83**
050	2657873-0100		1	LONGITUDINAL SEALING	**1-41, 1-43**
060	2512780-0100		1	SEAL	**1-85, 1-87, 1-89**
A3/FLEX TBA 0200S NODIMC, A3/FLEX TBA 0200B NODIMC, A3/FLEX TBA 0250B NODIMC, A3/FLEX TBA 0330S NODIMC, A3/FLEX TPA 0200SQ NODIMC, A3/FLEX TPA 0250SQ NODIMC (See drawing on page: 1-20)					
010	2559062-0200		1	LOWER FORMING RING	**1-53, 1-55, 1-57**
020	2547422-0200		1	UPPER FORMING RING **1-59, 1-61, 1-63, 1-65, 1-67, 1-69**	**1-71, 1-73**
030	2547421-0100		1	FORMING RING	**1-75, 1-77, 1-79**
040	2674188-0100		1	EDGE ROLLER	**1-81, 1-83**
050	2657873-0100		1	LONGITUDINAL SEALING	**1-41, 1-43**
060	2512780-0100		1	SEAL	**1-85, 1-87, 1-89**
A3/FLEX TBA 0200SQ NODIMC, A3/FLEX TBA 0250SQ NODIMC (See drawing on page: 1-22)					
010	2559062-0200		1	LOWER FORMING RING	**1-53, 1-55, 1-57**
020	2547422-0200		1	UPPER FORMING RING **1-59, 1-61, 1-63, 1-65, 1-67, 1-69**	**1-71, 1-73**
030	2547421-0100		1	FORMING RING	**1-75, 1-77, 1-79**
050	2657873-0100		1	LONGITUDINAL SEALING	**1-41, 1-43**
060	2512780-0100		1	SEAL	**1-85, 1-87, 1-89**
A3/FLEX TBA 0500S NODIMC (See drawing on page: 1-22)					
010	2559062-0200		1	LOWER FORMING RING	**1-53, 1-55, 1-57**
020	2547422-0200		1	UPPER FORMING RING **1-59, 1-61, 1-63, 1-65, 1-67, 1-69**	**1-71, 1-73**
030	2547421-0100		1	FORMING RING	**1-75, 1-77, 1-79**
050	2657873-0100		1	LONGITUDINAL SEALING	**1-41, 1-43**
060	2512780-0100		1	SEAL	**1-85, 1-87, 1-89**
A3/FLEX TBA 1000B NODIMC, A3/FLEX TBA 0500B NODIMC, A3/FLEX TBA 1000S NODIMC, A3/FLEX TBA 1000SQ NODIMC, A3/FLEX TBA 1500S NODIMC (See drawing on page: 1-22)					
010	2559062-0200		1	LOWER FORMING RING	**1-53, 1-55, 1-57**
020	2547422-0200		1	UPPER FORMING RING **1-59, 1-61, 1-63, 1-65, 1-67, 1-69**	
030	2547421-0100		1	FORMING RING	**1-75, 1-77, 1-79**
050	2657873-0100		1	LONGITUDINAL SEALING	**1-41, 1-43**
060	2512780-0100		1	SEAL	**1-85, 1-87, 1-89**
A3/FLEX TBA 2000S NODIMC, A3/FLEX TBA 1890S NODIMC, A3/FLEX TBA 1400B NODIMC (See drawing on page: 1-24)					
010	2559062-0200		1	LOWER FORMING RING	**1-53, 1-55, 1-57**
020	2547422-0200		1	UPPER FORMING RING **1-59, 1-61, 1-63, 1-65, 1-67, 1-69**	**1-71, 1-73**
030	2547421-0100		1	FORMING RING	**1-75, 1-77, 1-79**
040	2547420-0100		1	EDGE ROLLER	**1-91, 1-93**
050	2657873-0100		1	LONGITUDINAL SEALING	**1-41, 1-43**
060	2512780-0100		1	SEAL	**1-85, 1-87, 1-89**
090	2555627-0100		1	PRESSURE ROLLER	**1-95**
A3/FLEX TPA 0330SQ NODIMC (See drawing on page: 1-22)					
010	2559062-0200		1	LOWER FORMING RING	**1-53, 1-55, 1-57**
020	2547422-0200		1	UPPER FORMING RING **1-59, 1-61, 1-63, 1-65, 1-67, 1-69**	**1-71, 1-73**
030	2547421-0100		1	FORMING RING	**1-75, 1-77, 1-79**
050	2657873-0100		1	LONGITUDINAL SEALING	**1-41, 1-43**
060	2512780-0100		1	SEAL	**1-85, 1-87, 1-89**
A3/FLEX TPA 0500SQ NODIMC (See drawing on page: 1-22)					
010	2559062-0200		1	LOWER FORMING RING	**1-53, 1-55, 1-57**
020	2547422-0200		1	UPPER FORMING RING **1-59, 1-61, 1-63, 1-65, 1-67, 1-69**	**1-71, 1-73**
030	2547421-0100		1	FORMING RING	**1-75, 1-77, 1-79**
050	2657873-0100		1	LONGITUDINAL SEALING	**1-41, 1-43**
060	2512780-0100		1	SEAL	**1-85, 1-87, 1-89**
A3/FLEX TPA 1000SQ NODIMC QC, A3/FLEX TPA 0750SQ NODIMC QC (See drawing on page: 1-26)					
010	2559062-0200		1	LOWER FORMING RING	**1-53, 1-55, 1-57**
020	2547422-0200		1	UPPER FORMING RING **1-59, 1-61, 1-63, 1-65, 1-67, 1-69**	**1-71, 1-73**
030	2547421-0100		1	FORMING RING	**1-75, 1-77, 1-79**
050	2657873-0100		1	LONGITUDINAL SEALING	**1-41, 1-43**
060	2512780-0100		1	SEAL	**1-85, 1-87, 1-89**
090	2555627-0100		1	PRESSURE ROLLER	**1-95**
A3/FLEX TPA 1000SQ NODIMC NOQC (See drawing on page: 1-26)					
010	2559062-0200		1	LOWER FORMING RING	**1-53, 1-55, 1-57**
020	2547422-0200		1	UPPER FORMING RING **1-59, 1-61, 1-63, 1-65, 1-67, 1-69**	**1-71, 1-73**
030	2547421-0100		1	FORMING RING	**1-75, 1-77, 1-79**
050	2657873-0100		1	LONGITUDINAL SEALING	**1-41, 1-43**

Machine Type | Group Description | Used-In | Group Number | Page No

LOWER FORMING RING

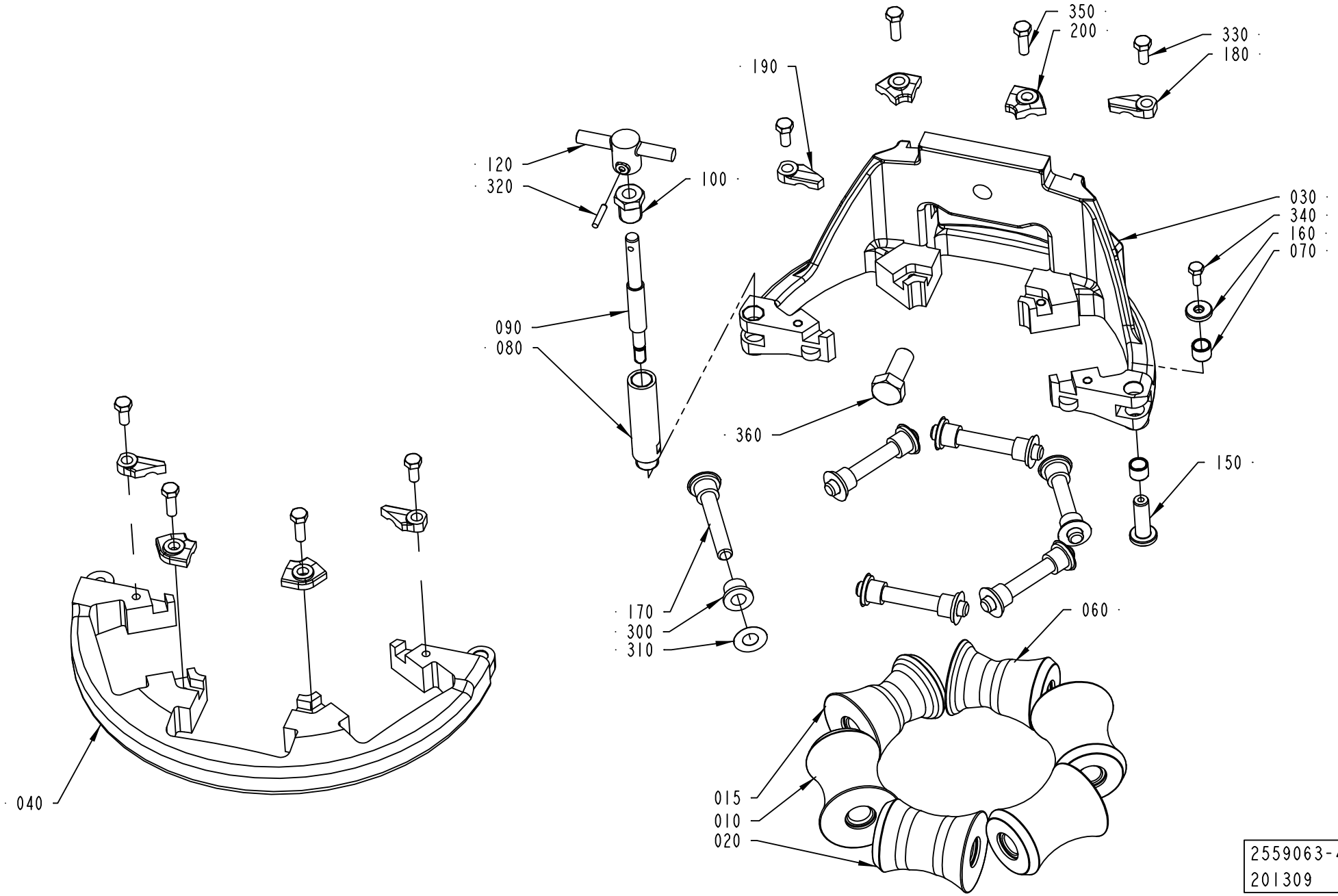

2559063-4
201309

ECM: 264017 - 20060702
Group number: 2559063-0200
Assembly Drawing: 2559063-4_1_AA

This list covers pages from 1-28 to 1-31

Pos	Part No	UN	Qty	Description	Page No
TBA 1000B (See drawing on page: 1-28)					
010	1349851-0000		3	ROLL	
	Remark : PLUS ROLLER 1349853-0000				
	MINUS ROLLER 1349852-0000				
015	2592540-0000		1	ROLLER	
020	2518098-0000		1	COUNTER ROLLER	
030	2764026-0000		1	LOWER FORMING RING	
040	2700546-0000		1	FRONT RING	
060	2592539-0000		1	ROLLER	
170	752186-0014		6	SHAFT	
180	2528119-0004		2	LOCK PLATE	
190	2528118-0004		2	LOCK PLATE	
TBA 1000S LIGHTCAP (See drawing on page: 1-30)					
010	567746-0001		3	ROLLER (STANDARD SIZE)	
	Remark : PLUS ROLLER 3-567746-2				
	MINUS ROLLER 3-567746-3				
015	2716541-0000		1	ROLLER	
020	1334856-0000		1	COUNTER ROLLER	
030	2764027-0000		1	LOWER FORMING RING	
040	2721423-0000		1	FORMING RING	
060	2716544-0000		1	ROLLER	
170	752186-0016		6	SHAFT	
180	2528119-0005		2	LOCK PLATE	
190	2528119-0005		2	LOCK PLATE	
TBA 1000S STDA7, TBA 1000S NOMOLDEDCAP (See drawing on page: 1-28)					
010	567746-0001		3	ROLLER (STANDARD SIZE)	
	Remark : PLUS ROLLER 3-567746-2				
	MINUS ROLLER 3-567746-3				
015	1523664-0001		1	ROLLER (STANDARD SIZE)	
020	1334856-0000		1	COUNTER ROLLER	
030	2764027-0000		1	LOWER FORMING RING	
040	2721423-0000		1	FORMING RING	
060	1523665-0001		1	ROLLER (STANDARD SIZE)	
170	752186-0016		6	SHAFT	
180	2528119-0005		2	LOCK PLATE	
190	2528119-0005		2	LOCK PLATE	
Common Parts					
070	2526826-0000		2	BUSHING	
080	2764032-0000		1	SHAFT	
090	2764033-0000		1	SHAFT	
100	2731428-0000		1	NUT	
120	2764036-0000		1	KNOB	
150	2526827-0000		1	SHAFT	
160	2526825-0000		1	WASHER	
200	2528123-0004		4	LOCK PLATE	
300	90240-0172		12	FLANGE BUSHING, 8X12X10 MM	
310	2033-0011		12	WASHER	
320	311103-0236		1	PARALLEL PIN ISO 2338 3M6X16 A1	
330	312105-0327		4	SCREW M6S ISO 4017 M5X12 A480	
340	312105-0289		1	SCREW M6S ISO 4017 M4X10 A470	
350	312105-0329		4	SCREW M6S ISO 4017 M5X16 A480	
360	312105-0493		1	SCREW M6S ISO 4017 M10X25 A480	

Machine Type | Group Description | Used-In | Group Number | Page No

LOWER FORMING RING

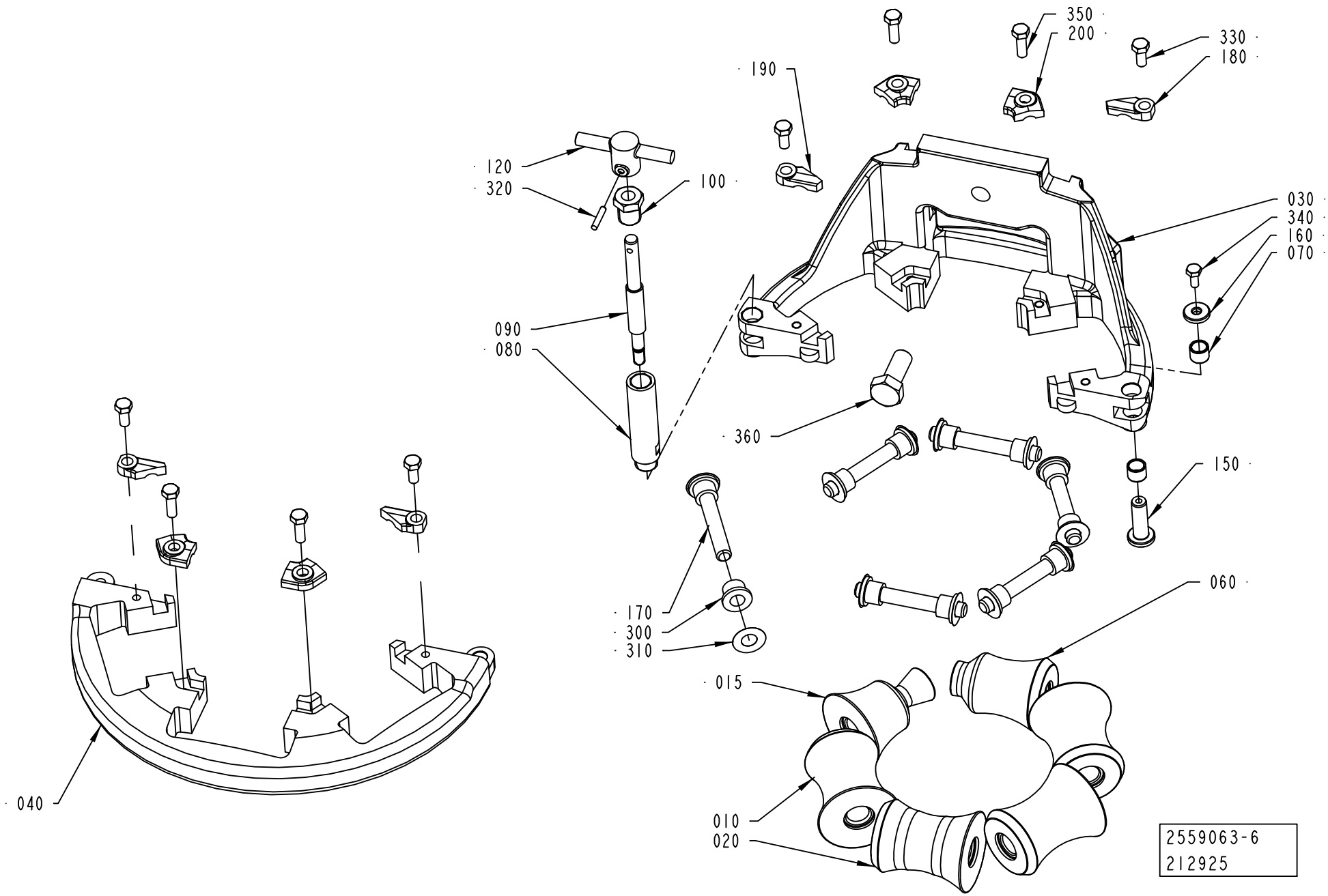

ECM: 264017 - 20060702
Group number: 2559063-0200
Assembly Drawing: 2559063-6_1_AA

This list covers pages from 1-28 to 1-31

Pos	Part No	UN	Qty	Description	Page No
TBA 1000B (See drawing on page: 1-28)					
010	1349851-0000		3	ROLL	
	Remark : PLUS ROLLER 1349853-0000				
	MINUS ROLLER 1349852-0000				
015	2592540-0000		1	ROLLER	
020	2518098-0000		1	COUNTER ROLLER	
030	2764026-0000		1	LOWER FORMING RING	
040	2700546-0000		1	FRONT RING	
060	2592539-0000		1	ROLLER	
170	752186-0014		6	SHAFT	
180	2528119-0004		2	LOCK PLATE	
190	2528118-0004		2	LOCK PLATE	
TBA 1000S LIGHTCAP (See drawing on page: 1-30)					
010	567746-0001		3	ROLLER (STANDARD SIZE)	
	Remark : PLUS ROLLER 3-567746-2				
	MINUS ROLLER 3-567746-3				
015	2716541-0000		1	ROLLER	
020	1334856-0000		1	COUNTER ROLLER	
030	2764027-0000		1	LOWER FORMING RING	
040	2721423-0000		1	FORMING RING	
060	2716544-0000		1	ROLLER	
170	752186-0016		6	SHAFT	
180	2528119-0005		2	LOCK PLATE	
190	2528119-0005		2	LOCK PLATE	
TBA 1000S STDA7, TBA 1000S NOMOLDEDCAP (See drawing on page: 1-28)					
010	567746-0001		3	ROLLER (STANDARD SIZE)	
	Remark : PLUS ROLLER 3-567746-2				
	MINUS ROLLER 3-567746-3				
015	1523664-0001		1	ROLLER (STANDARD SIZE)	
020	1334856-0000		1	COUNTER ROLLER	
030	2764027-0000		1	LOWER FORMING RING	
040	2721423-0000		1	FORMING RING	
060	1523665-0001		1	ROLLER (STANDARD SIZE)	
170	752186-0016		6	SHAFT	
180	2528119-0005		2	LOCK PLATE	
190	2528119-0005		2	LOCK PLATE	
Common Parts					
070	2526826-0000		2	BUSHING	
080	2764032-0000		1	SHAFT	
090	2764033-0000		1	SHAFT	
100	2731428-0000		1	NUT	
120	2764036-0000		1	KNOB	
150	2526827-0000		1	SHAFT	
160	2526825-0000		1	WASHER	
200	2528123-0004		4	LOCK PLATE	
300	90240-0172		12	FLANGE BUSHING, 8X12X10 MM	
310	2033-0011		12	WASHER	
320	311103-0236		1	PARALLEL PIN ISO 2338 3M6X16 A1	
330	312105-0327		4	SCREW M6S ISO 4017 M5X12 A480	
340	312105-0289		1	SCREW M6S ISO 4017 M4X10 A470	
350	312105-0329		4	SCREW M6S ISO 4017 M5X16 A480	
360	312105-0493		1	SCREW M6S ISO 4017 M10X25 A480	

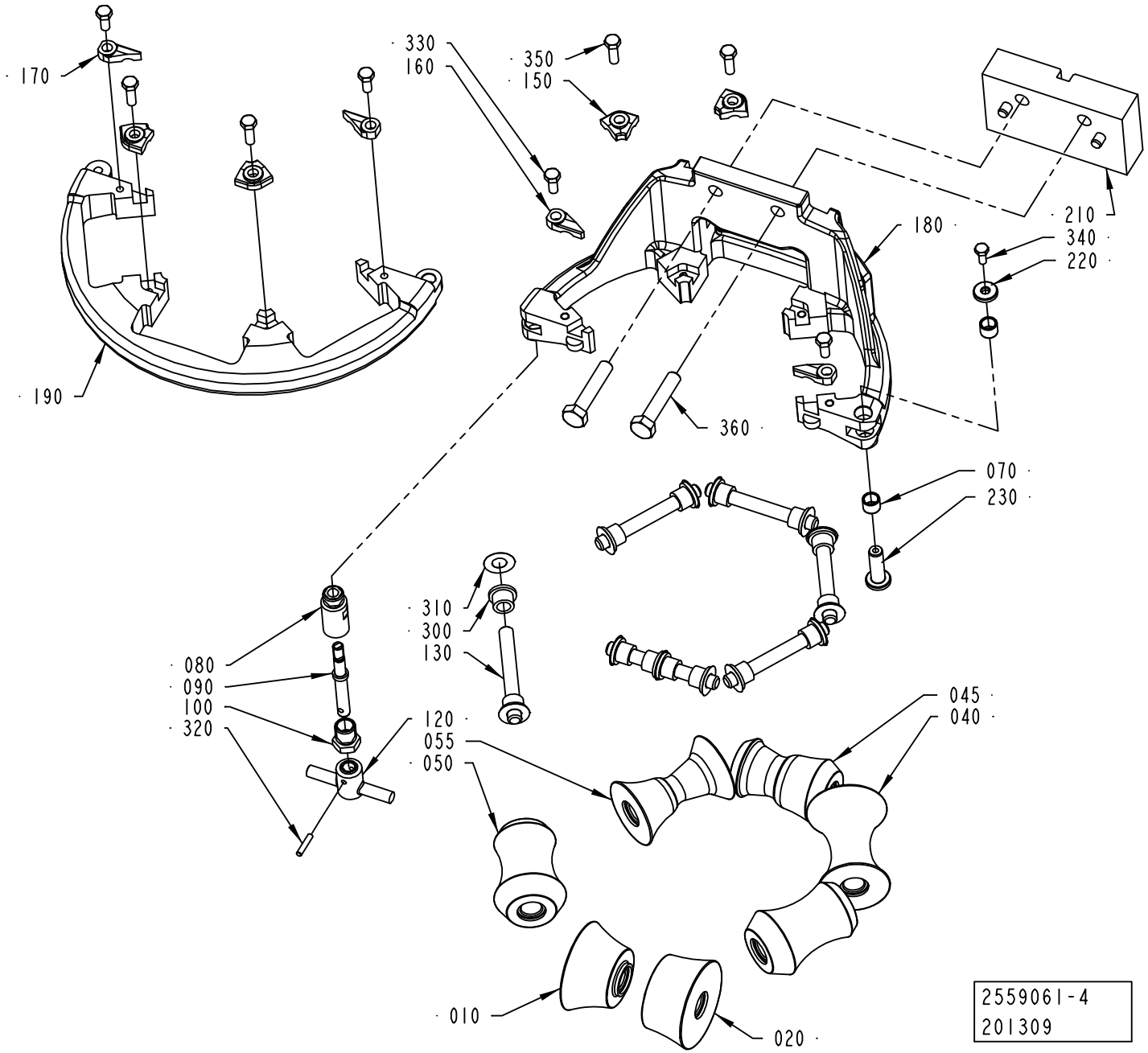
170
330
160
350
150
210
340
220
180
190
360
070
230
310
300
130
080
090
100
320
120
055
050
045
040
010
020
2559061-4
201309

ECM: 264016 - 20060702
Group number: 2559061-0200
Assembly Drawing: 2559061-4_1_AA

This list covers pages from 1-32 to 1-37

Pos	Part No	UN	Qty	Description	Page No
TBA 1000B (See drawing on page: 1-34)					
010	2751479-0000		1	ROLLER	
020	2751478-0000		1	ROLLER	
030	2751483-0000		1	ROLLER	
040	2751481-0000		1	ROLLER	
045	2758084-0000		1	ROLLER	
055	2758085-0000		1	ROLLER	
060	2751482-0000		1	ROLLER	
130	752186-0015		3	SHAFT	
135	752186-0007		3	SHAFT	
150	2528123-0004		2	LOCK PLATE	
155	2528123-0008		2	LOCK PLATE	
160	2528118-0005		1	LOCK PLATE	
165	2528118-0001		1	LOCK PLATE	
170	2528119-0005		1	LOCK PLATE	
175	2528119-0001		1	LOCK PLATE	
180	2764022-0000		1	UPPER FORMING RING	
190	2736677-0000		1	UPPER FORMING RING	
300	90240-0172		14	FLANGE BUSHING, 8X12X10 MM	
360	312109-0460		2	SCREW M6S ISO 4017 M8X45 A480	
380	315115-0165		2	WASHER PLAIN, TBRB 8,4/16 H=3	
TBA 1000S LIGHTCAP (See drawing on page: 1-36)					
010	2512737-0000		1	ROLLER	
020	2512738-0000		1	ROLLER	
040	2512741-0000		1	ROLLER	
045	2716540-0000		1	ROLLER	
050	2512742-0000		2	ROLLER	
055	2716539-0000		1	ROLLER	
130	752186-0007		6	SHAFT	
150	2528123-0001		4	LOCK PLATE	
160	2528118-0001		2	LOCK PLATE	
170	2528119-0001		2	LOCK PLATE	
180	2764014-0000		1	UPPER FORMING RING	
190	2736676-0000		1	UPPER FORMING RING	
300	90240-0172		10	FLANGE BUSHING, 8X12X10 MM	
305	2740795-0000		4	FLANGE BUSHING	
360	312109-0459		2	SCREW M6S ISO 4017 M8X40 A480	
TBA 1000S STDA7, TBA 1000S NOMOLDEDCAP (See drawing on page: 1-32)					
010	2512737-0000		1	ROLLER	
020	2512738-0000		1	ROLLER	
040	2512741-0000		1	ROLLER	
045	2555622-0000		1	ROLLER	
050	2512742-0000		2	ROLLER	
055	2555621-0000		1	ROLLER	
130	752186-0007		6	SHAFT	
150	2528123-0001		4	LOCK PLATE	
160	2528118-0001		2	LOCK PLATE	
170	2528119-0001		2	LOCK PLATE	
180	2764014-0000		1	UPPER FORMING RING	
190	2736676-0000		1	UPPER FORMING RING	
300	90240-0172		14	FLANGE BUSHING, 8X12X10 MM	
360	312109-0459		2	SCREW M6S ISO 4017 M8X40 A480	
Common Parts					
070	2526826-0000		2	BUSHING	
080	2764034-0000		1	SHAFT	
090	2764035-0000		1	SHAFT	
100	2731428-0000		1	NUT	
120	2764036-0000		1	KNOB	
210	2532914-0000		1	SPACER	
220	2526825-0000		1	WASHER	
230	2526827-0000		1	SHAFT	
310	2033-0011		14	WASHER	
320	311103-0236		1	PARALLEL PIN ISO 2338 3M6X16 A1	
330	312105-0327		4	SCREW M6S ISO 4017 M5X12 A480	
340	312105-0289		1	SCREW M6S ISO 4017 M4X10 A470	
350	312105-0329		4	SCREW M6S ISO 4017 M5X16 A480	

UPPER FORMING RING

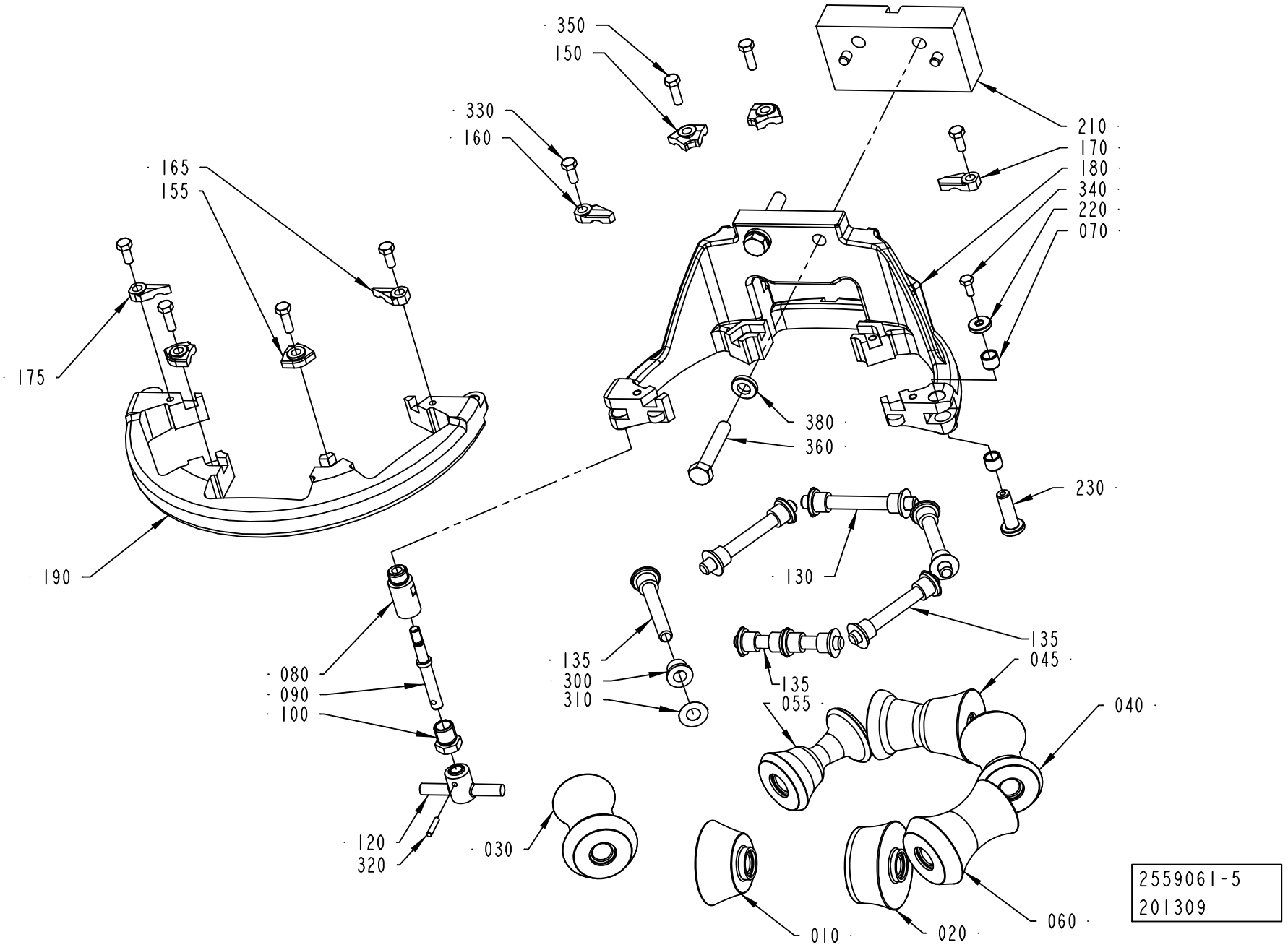

ECM: 264016 - 20060702
Group number: 2559061-0200
Assembly Drawing: 2559061-5_1_AA

This list covers pages from 1-32 to 1-37

Pos	Part No	UN	Qty	Description	Page No
TBA 1000B (See drawing on page: 1-34)					
010	2751479-0000		1	ROLLER	
020	2751478-0000		1	ROLLER	
030	2751483-0000		1	ROLLER	
040	2751481-0000		1	ROLLER	
045	2758084-0000		1	ROLLER	
055	2758085-0000		1	ROLLER	
060	2751482-0000		1	ROLLER	
130	752186-0015		3	SHAFT	
135	752186-0007		3	SHAFT	
150	2528123-0004		2	LOCK PLATE	
155	2528123-0008		2	LOCK PLATE	
160	2528118-0005		1	LOCK PLATE	
165	2528118-0001		1	LOCK PLATE	
170	2528119-0005		1	LOCK PLATE	
175	2528119-0001		1	LOCK PLATE	
180	2764022-0000		1	UPPER FORMING RING	
190	2736677-0000		1	UPPER FORMING RING	
300	90240-0172		14	FLANGE BUSHING, 8X12X10 MM	
360	312109-0460		2	SCREW M6S ISO 4017 M8X45 A480	
380	315115-0165		2	WASHER PLAIN, TBRB 8,4/16 H=3	
TBA 1000S LIGHTCAP (See drawing on page: 1-36)					
010	2512737-0000		1	ROLLER	
020	2512738-0000		1	ROLLER	
040	2512741-0000		1	ROLLER	
045	2716540-0000		1	ROLLER	
050	2512742-0000		2	ROLLER	
055	2716539-0000		1	ROLLER	
130	752186-0007		6	SHAFT	
150	2528123-0001		4	LOCK PLATE	
160	2528118-0001		2	LOCK PLATE	
170	2528119-0001		2	LOCK PLATE	
180	2764014-0000		1	UPPER FORMING RING	
190	2736676-0000		1	UPPER FORMING RING	
300	90240-0172		10	FLANGE BUSHING, 8X12X10 MM	
305	2740795-0000		4	FLANGE BUSHING	
360	312109-0459		2	SCREW M6S ISO 4017 M8X40 A480	
TBA 1000S STDA7, TBA 1000S NOMOLDEDCAP (See drawing on page: 1-32)					
010	2512737-0000		1	ROLLER	
020	2512738-0000		1	ROLLER	
040	2512741-0000		1	ROLLER	
045	2555622-0000		1	ROLLER	
050	2512742-0000		2	ROLLER	
055	2555621-0000		1	ROLLER	
130	752186-0007		6	SHAFT	
150	2528123-0001		4	LOCK PLATE	
160	2528118-0001		2	LOCK PLATE	
170	2528119-0001		2	LOCK PLATE	
180	2764014-0000		1	UPPER FORMING RING	
190	2736676-0000		1	UPPER FORMING RING	
300	90240-0172		14	FLANGE BUSHING, 8X12X10 MM	
360	312109-0459		2	SCREW M6S ISO 4017 M8X40 A480	
Common Parts					
070	2526826-0000		2	BUSHING	
080	2764034-0000		1	SHAFT	
090	2764035-0000		1	SHAFT	
100	2731428-0000		1	NUT	
120	2764036-0000		1	KNOB	
210	2532914-0000		1	SPACER	
220	2526825-0000		1	WASHER	
230	2526827-0000		1	SHAFT	
310	2033-0011		14	WASHER	
320	311103-0236		1	PARALLEL PIN ISO 2338 3M6X16 A1	
330	312105-0327		4	SCREW M6S ISO 4017 M5X12 A480	
340	312105-0289		1	SCREW M6S ISO 4017 M4X10 A470	
350	312105-0329		4	SCREW M6S ISO 4017 M5X16 A480	

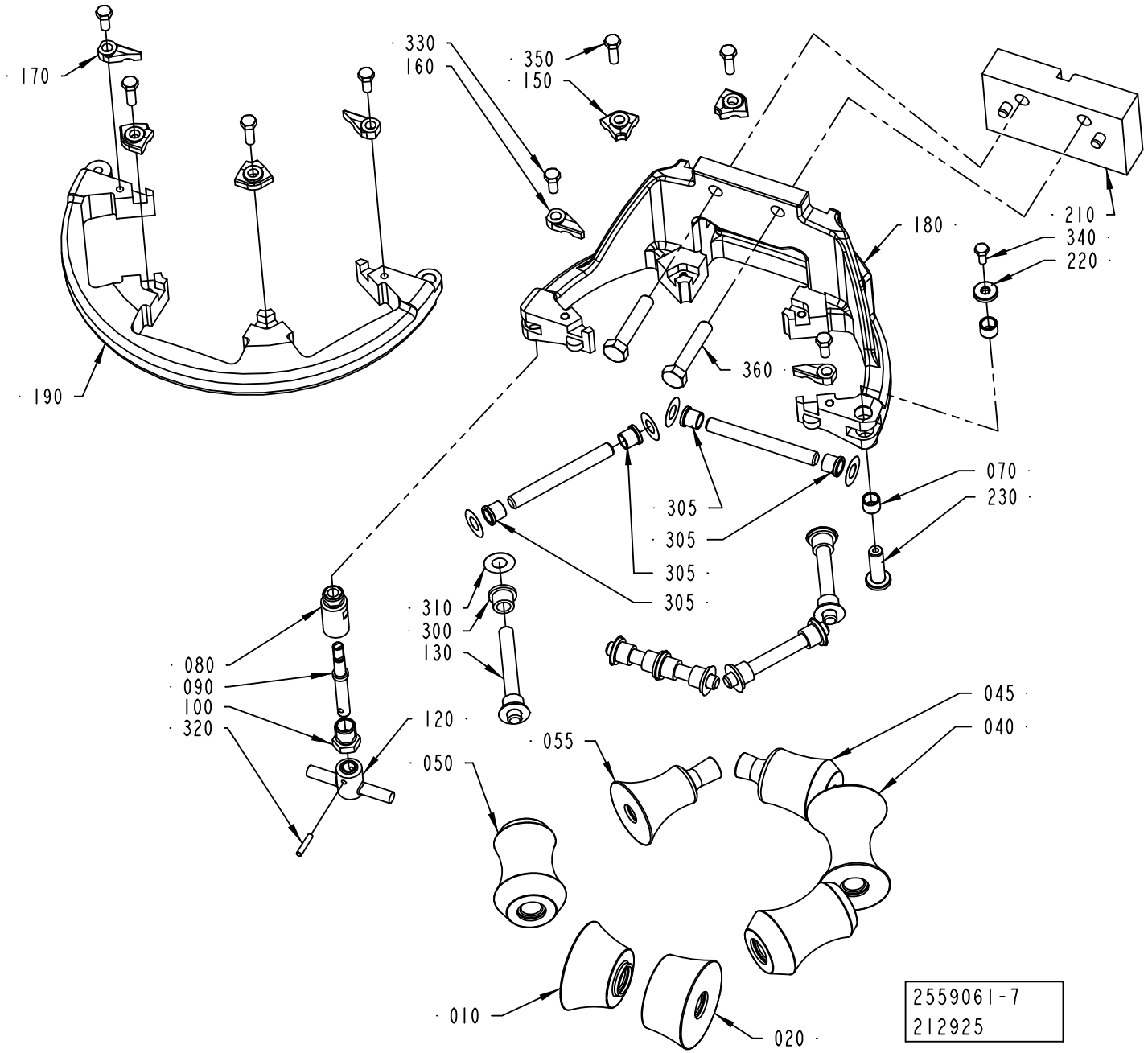
170
330
160
350
150
210
340
220
180
190
360
070
230
305
305
305
305
310
300
130
080
090
100
320
120
050
055
045
040
010
020
2559061-7
212925

ECM: 264016 - 20060702
Group number: 2559061-0200
Assembly Drawing: 2559061-7_1_AA

This list covers pages from 1-32 to 1-37

Pos	Part No	UN	Qty	Description	Page No
TBA 1000B (See drawing on page: 1-34)					
010	2751479-0000		1	ROLLER	
020	2751478-0000		1	ROLLER	
030	2751483-0000		1	ROLLER	
040	2751481-0000		1	ROLLER	
045	2758084-0000		1	ROLLER	
055	2758085-0000		1	ROLLER	
060	2751482-0000		1	ROLLER	
130	752186-0015		3	SHAFT	
135	752186-0007		3	SHAFT	
150	2528123-0004		2	LOCK PLATE	
155	2528123-0008		2	LOCK PLATE	
160	2528118-0005		1	LOCK PLATE	
165	2528118-0001		1	LOCK PLATE	
170	2528119-0005		1	LOCK PLATE	
175	2528119-0001		1	LOCK PLATE	
180	2764022-0000		1	UPPER FORMING RING	
190	2736677-0000		1	UPPER FORMING RING	
300	90240-0172		14	FLANGE BUSHING, 8X12X10 MM	
360	312109-0460		2	SCREW M6S ISO 4017 M8X45 A480	
380	315115-0165		2	WASHER PLAIN, TBRB 8,4/16 H=3	
TBA 1000S LIGHTCAP (See drawing on page: 1-36)					
010	2512737-0000		1	ROLLER	
020	2512738-0000		1	ROLLER	
040	2512741-0000		1	ROLLER	
045	2716540-0000		1	ROLLER	
050	2512742-0000		2	ROLLER	
055	2716539-0000		1	ROLLER	
130	752186-0007		6	SHAFT	
150	2528123-0001		4	LOCK PLATE	
160	2528118-0001		2	LOCK PLATE	
170	2528119-0001		2	LOCK PLATE	
180	2764014-0000		1	UPPER FORMING RING	
190	2736676-0000		1	UPPER FORMING RING	
300	90240-0172		10	FLANGE BUSHING, 8X12X10 MM	
305	2740795-0000		4	FLANGE BUSHING	
360	312109-0459		2	SCREW M6S ISO 4017 M8X40 A480	
TBA 1000S STDA7, TBA 1000S NOMOLDEDCAP (See drawing on page: 1-32)					
010	2512737-0000		1	ROLLER	
020	2512738-0000		1	ROLLER	
040	2512741-0000		1	ROLLER	
045	2555622-0000		1	ROLLER	
050	2512742-0000		2	ROLLER	
055	2555621-0000		1	ROLLER	
130	752186-0007		6	SHAFT	
150	2528123-0001		4	LOCK PLATE	
160	2528118-0001		2	LOCK PLATE	
170	2528119-0001		2	LOCK PLATE	
180	2764014-0000		1	UPPER FORMING RING	
190	2736676-0000		1	UPPER FORMING RING	
300	90240-0172		14	FLANGE BUSHING, 8X12X10 MM	
360	312109-0459		2	SCREW M6S ISO 4017 M8X40 A480	
Common Parts					
070	2526826-0000		2	BUSHING	
080	2764034-0000		1	SHAFT	
090	2764035-0000		1	SHAFT	
100	2731428-0000		1	NUT	
120	2764036-0000		1	KNOB	
210	2532914-0000		1	SPACER	
220	2526825-0000		1	WASHER	
230	2526827-0000		1	SHAFT	
310	2033-0011		14	WASHER	
320	311103-0236		1	PARALLEL PIN ISO 2338 3M6X16 A1	
330	312105-0327		4	SCREW M6S ISO 4017 M5X12 A480	
340	312105-0289		1	SCREW M6S ISO 4017 M4X10 A470	
350	312105-0329		4	SCREW M6S ISO 4017 M5X16 A480	

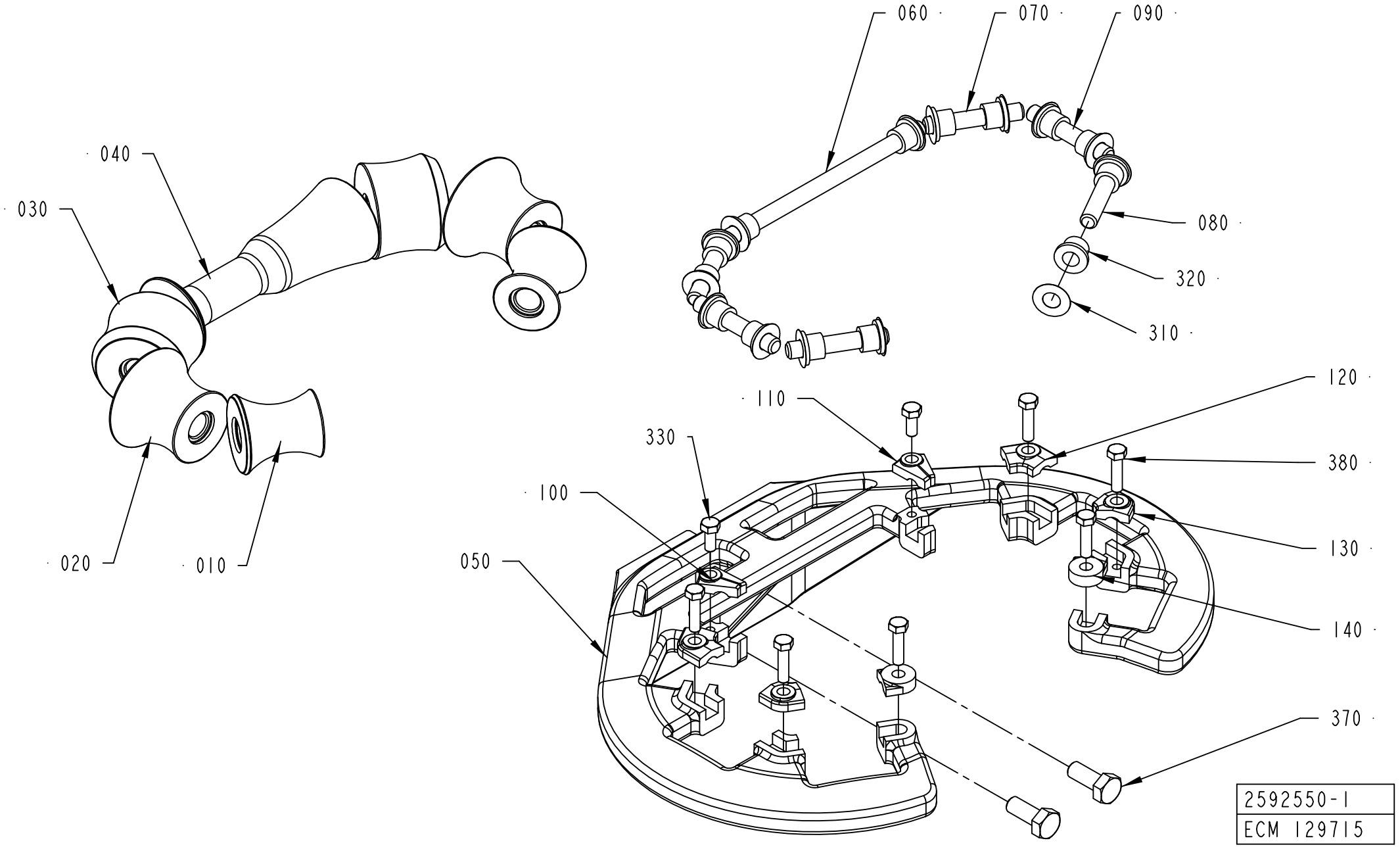
060
070
090
080
320
310
040
030
020
010
120
110
330
380
100
130
050
140
370
2592550-1
ECM 129715

ECM: 258304 - 20060702
Group number: 2592550-0100
Assembly Drawing: 2592550-1_1_AA

Pos	Part No	UN	Qty	Description	Page No
TBA 1000B					
010	2552206-0000		2	ROLLER	
020	2552205-0000		2	ROLLER	
030	2552188-0000		2	ROLLER	
040	2601240-0000		1	ROLLER	
050	2552160-0000		1	SUPPORT RING	
100	2552176-0001		1	LOCK PLATE	
110	2552177-0001		1	LOCK PLATE	
120	2528123-0002		2	LOCK PLATE	
130	2528123-0008		2	LOCK PLATE	
140	2532895-0004		2	LOCK PLATE	
TBA 1000S LIGHTCAP					
010	2512748-0000		2	ROLLER	
020	2512749-0000		2	ROLLER	
030	2512746-0000		2	ROLLER	
040	2716443-0000		1	ROLLER	
050	2552161-0000		1	SUPPORT RING	
100	2552176-0003		1	LOCK PLATE	
110	2552177-0003		1	LOCK PLATE	
120	2528123-0007		2	LOCK PLATE	
130	2528123-0001		2	LOCK PLATE	
140	2532895-0003		2	LOCK PLATE	
TBA 1000S STDA7, TBA 1000S NOMOLDEDCAP					
010	2512748-0000		2	ROLLER	
020	2512749-0000		2	ROLLER	
030	2512746-0000		2	ROLLER	
040	2592545-0000		1	ROLLER	
050	2552161-0000		1	SUPPORT RING	
100	2552176-0003		1	LOCK PLATE	
110	2552177-0003		1	LOCK PLATE	
120	2528123-0007		2	LOCK PLATE	
130	2528123-0001		2	LOCK PLATE	
140	2532895-0003		2	LOCK PLATE	
Common Parts					
060	2522213-0005		1	SHAFT	
070	752186-0005		2	SHAFT	
080	2522213-0004		2	SHAFT	
090	752186-0019		2	SHAFT	
310	2033-0011		14	WASHER	
320	90240-0172		14	FLANGE BUSHING, 8X12X10 MM	
330	312105-0327		2	SCREW M6S ISO 4017 M5X12 A480	
370	312105-0451		2	SCREW M6S ISO 4017 M8X20 A480	
380	312105-0331		6	SCREW M6S ISO 4017 M5X20 A480	

Machine Type | Group Description | Used-In | Group Number | Page No

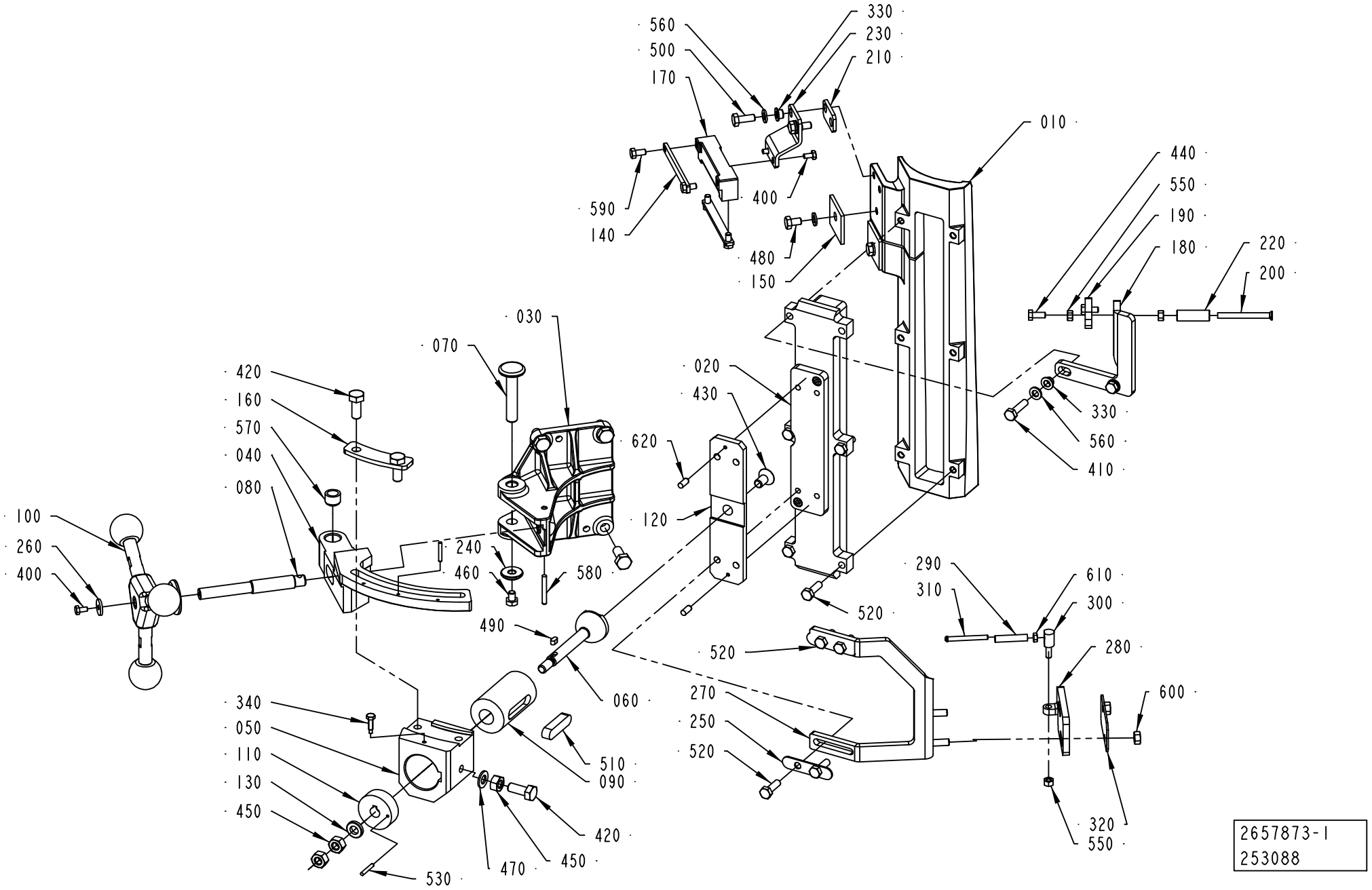
560
500
170
330
230
210
010
590
140
400
480
150
440
550
190
180
220
200
030
070
420
160
570
040
080
020
430
620
120
330
560
410
100
260
400
240
460
580
490
060
290
310
610
300
280
520
520
270
250
520
600
340
050
110
130
450
510
090
420
530
470
450
320
550
2657873-1
253088

ECM: 253090 - 20060701
Group number: 2657873-0100
Assembly Drawing: 2657873-1_1_AD

This list covers pages from 1-40 to 1-43

Pos	Part No	UN	Qty	Description	Page No
TBA 0200S, TPA 0250SQ, TPA 0200SQ					
010	2565440-0000		1	INDUCTOR	
020	2565441-0000		1	INSULATING PLATE	
180	2547404-0000		1	BRACKET	
270	2555614-0000		1	BRACKET	
280	2555619-0000		1	BRACKET	
410	312105-0372		2	SCREW M6S ISO 4017 M6X25 A480	
520	312105-0370		8	SCREW M6S ISO 4017 M6X20 A480	
TBA 0250S, TBA 0200M					
010	2611053-0000		1	INDUCTOR	
020	2611054-0000		1	INSULATING PLATE	
180	2547404-0000		1	BRACKET	
270	2555614-0000		1	BRACKET	
280	2555619-0000		1	BRACKET	
410	312105-0372		2	SCREW M6S ISO 4017 M6X25 A480	
520	312105-0370		8	SCREW M6S ISO 4017 M6X20 A480	
TBA 0330S, TBA 0200B, TBA 0250B, TBA 0200SQ, TBA 0250SQ					
010	2532938-0000		1	INDUCTOR	
020	2544894-0000		1	INSULATING PLATE	
180	2547404-0000		1	BRACKET	
270	2555614-0000		1	BRACKET	
280	2555619-0000		1	BRACKET	
410	312105-0372		2	SCREW M6S ISO 4017 M6X25 A480	
520	312105-0370		8	SCREW M6S ISO 4017 M6X20 A480	
TBA 0500B, TBA 1000B, TBA 1500S					
010	2514514-0000		1	INDUCTOR	
020	2544891-0000		1	INSULATING PLATE	
180	2547404-0000		1	BRACKET	
270	2555614-0000		1	BRACKET	
280	2555615-0000		1	BRACKET	
410	312105-0372		2	SCREW M6S ISO 4017 M6X25 A480	
520	312105-0370		8	SCREW M6S ISO 4017 M6X20 A480	
TBA 0500S					
010	2672984-0000		1	INDUCTOR	
020	2672968-0000		1	INSULATING PLATE	
180	2547404-0000		1	BRACKET	
270	2555614-0000		1	BRACKET	
280	2555615-0000		1	BRACKET	
410	312105-0372		2	SCREW M6S ISO 4017 M6X25 A480	
520	312105-0370		8	SCREW M6S ISO 4017 M6X20 A480	
TBA 1000SQ					
010	2532925-0000		1	INDUCTOR	
020	2544893-0000		1	INSULATING PLATE	
180	2547404-0000		1	BRACKET	
270	2555614-0000		1	BRACKET	
280	2555615-0000		1	BRACKET	
410	312105-0372		2	SCREW M6S ISO 4017 M6X25 A480	
520	312105-0370		8	SCREW M6S ISO 4017 M6X20 A480	
TBA 1000S					
010	2514522-0000		1	INDUCTOR	
020	2544892-0000		1	INSULATING PLATE	
180	2547404-0000		1	BRACKET	
270	2555614-0000		1	BRACKET	
280	2555615-0000		1	BRACKET	
410	312105-0374		2	SCREW M6S ISO 4014 M6X30 A480	
520	312105-0370		8	SCREW M6S ISO 4017 M6X20 A480	
TBA 1890S, TBA 2000S, TBA 1400B					
010	2601247-0000		1	INDUCTOR	
020	2601248-0000		1	INSULATING PLATE	
180	2601249-0000		1	BRACKET	
270	2594636-0000		1	BRACKET	
280	2555615-0000		1	BRACKET	
410	312105-0372		2	SCREW M6S ISO 4017 M6X25 A480	
520	312105-0370		7	SCREW M6S ISO 4017 M6X20 A480	
TPA 0330SQ					
010	2695800-0000		1	INDUCTOR	
020	2544894-0000		1	INSULATING PLATE	
180	2547404-0000		1	BRACKET	
270	2555614-0000		1	BRACKET	
280	2555619-0000		1	BRACKET	
410	312105-0372		2	SCREW M6S ISO 4017 M6X25 A480	
520	312105-0370		8	SCREW M6S ISO 4017 M6X20 A480	
TPA 0500SQ					
010	2691359-0000		1	INDUCTOR	
020	2611056-0000		1	INSULATING PLATE	
180	2547404-0000		1	BRACKET	
270	2555614-0000		1	BRACKET	
280	2555619-0000		1	BRACKET	
410	312105-0372		2	SCREW M6S ISO 4017 M6X25 A480	
520	312105-0370		8	SCREW M6S ISO 4017 M6X20 A480	
TPA 1000SQ, TPA 0750SQ					
010	2601289-0000		1	INDUCTOR	
020	2601307-0000		1	INSULATING PLATE	
180	2547404-0000		1	BRACKET	

Machine Type | Group Description | Used-In | Group Number | Page No

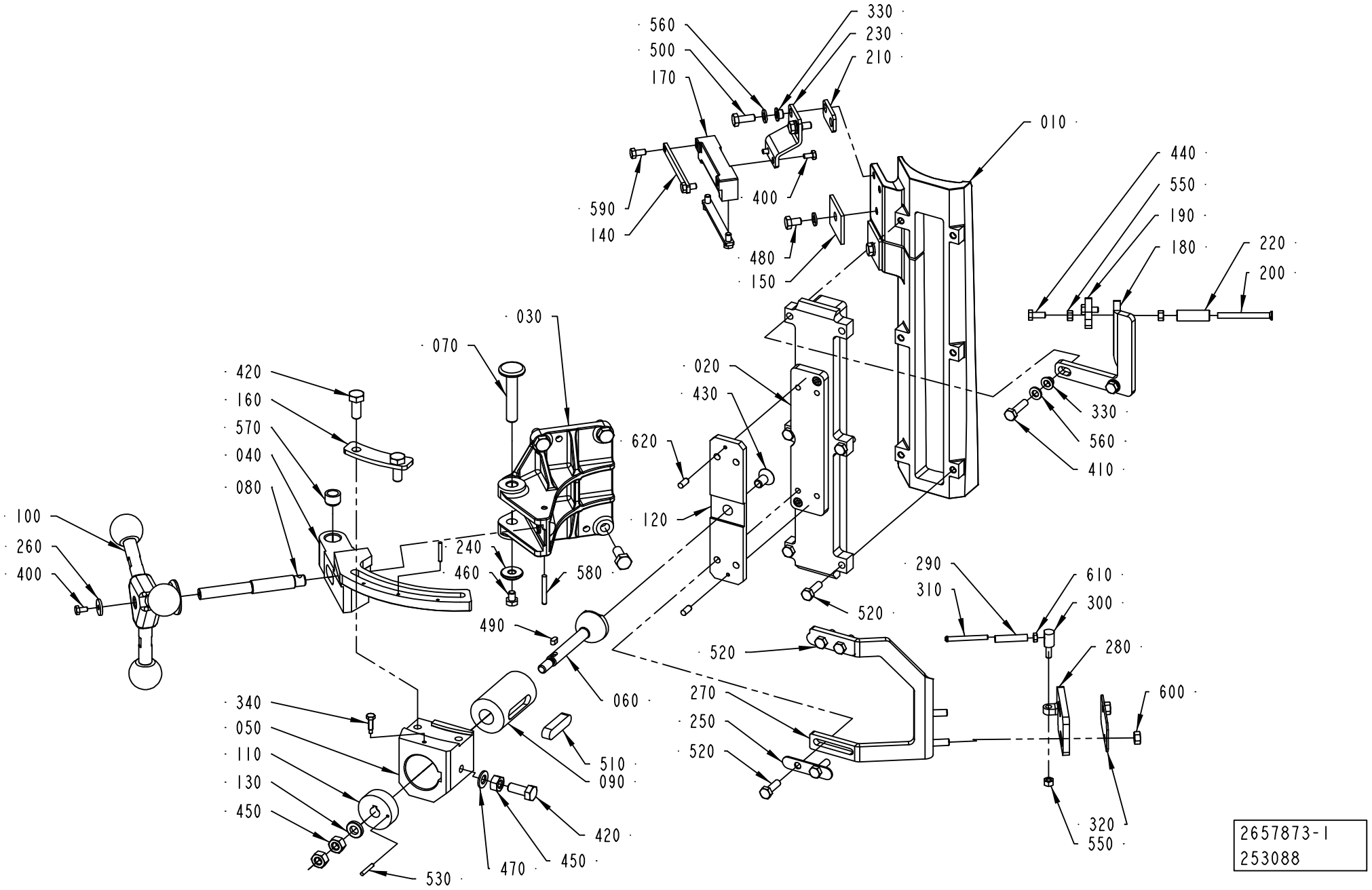
560
500
170
330
230
210
010
590
140
400
480
150
440
550
190
180
220
200
030
070
420
160
570
040
080
020
430
620
120
330
560
410
100
260
400
240
460
580
490
060
290
310
610
300
280
520
520
270
250
520
600
340
050
110
130
450
510
090
420
530
470
450
320
550
2657873-1
253088

ECM: 253090 - 20060701
Group number: 2657873-0100
Assembly Drawing: 2657873-1_1_AD

This list covers pages from 1-40 to 1-43

Pos	Part No	UN	Qty	Description	Page No
TPA 1000SQ, TPA 0750SQ (Cont'd)					
270	2555614-0000		1	BRACKET	
280	2555615-0000		1	BRACKET	
410	312105-0372		2	SCREW M6S ISO 4017 M6X25 A480	
520	312105-0370		8	SCREW M6S ISO 4017 M6X20 A480	
Common Parts					
030	2544897-0000		1	BRACKET	
040	2694714-0000		1	GUIDE	
050	2694715-0000		1	SUPPORT	
060	2641000-0000		1	SHAFT	
070	2547388-0000		1	AXLE PIN	
080	2544898-0000		1	SHAFT	
090	2640991-0000		1	SLIDE	
100	2547376-0100		1	KNOB	**1-45**
110	2640992-0000		1	SLIDE	
120	2640993-0000		1	PLATE	
130	315115-0165		1	WASHER PLAIN, TBRB 8,4/16 H=3	
140	2508309-0000		2	PLATE	
150	2508311-0000		2	PLATE	
160	2694716-0000		1	PLATE	
170	2531060-0000		1	BRACKET	
190	2547405-0000		1	BRACKET	
200	269151-0000		1	SHAFT	
210	2532898-0000		1	BRACKET	
220	2555625-0000		1	ROLL	
230	2532899-0000		1	BRACKET	
240	2508297-0000		1	WASHER	
250	2555623-0000		2	COVER	
260	2547377-0000		1	WASHER	
290	2555616-0000		1	ROLLER	
300	2555617-0000		1	PIN	
310	2555618-0000		1	SHAFT	
320	2555620-0000		1	COVER	
330	2508292-0000		4	BUSHING	
340	2725526-0000		1	SCREW	
400	312105-0287		3	SCREW M6S ISO 4017 M4X8 A470	
420	312105-0451		7	SCREW M6S ISO 4017 M8X20 A480	
430	312155-0449		1	SCREW DIN 7991 MF6S M8X16 A4 70	
440	312105-0327		2	SCREW M6S ISO 4017 M5X12 A480	
450	312605-0318		3	HEXAGON NUT, M6M M8 A280	
460	312105-0362		1	SCREW M6S ISO 4017 M6X8 A480	
470	315105-0165		1	WASHER BRB 8,4X16 RFR	
480	312105-0364		2	SCREW M6S ISO 4017 M6X10 A480	
490	315705-0164		1	PARALLEL KEY W. ROUND ENDS 4X4X8 MM	
500	312105-0368		2	SCREW M6S ISO 4017 M6X16 A480	
510	315705-0301		1	PARALLEL KEY W. ROUND ENDS 10X8X40 MM	
530	311103-0238		2	PARALLEL PIN ISO 2338 3M6X20 A1	
550	312605-0314		3	HEXAGON NUT, M6M M5 A280	
560	315105-0153		6	WASHER BRB 6,4X12 RFR	
570	321137-0140		2	BUSHING, 10X14X10 MM	
580	311103-0276		1	PARALLEL PIN ISO 2338 4M6X30 A1	
590	312105-0325		4	SCREW M6S ISO 4017 M5X10 A480	
600	312605-0316		2	HEXAGON NUT, M6M M6 A280	
610	312605-0312		1	HEXAGON NUT, M6M M4 A280	
620	311103-0306		2	PARALLEL PIN ISO 2338 5M6X12 A1	

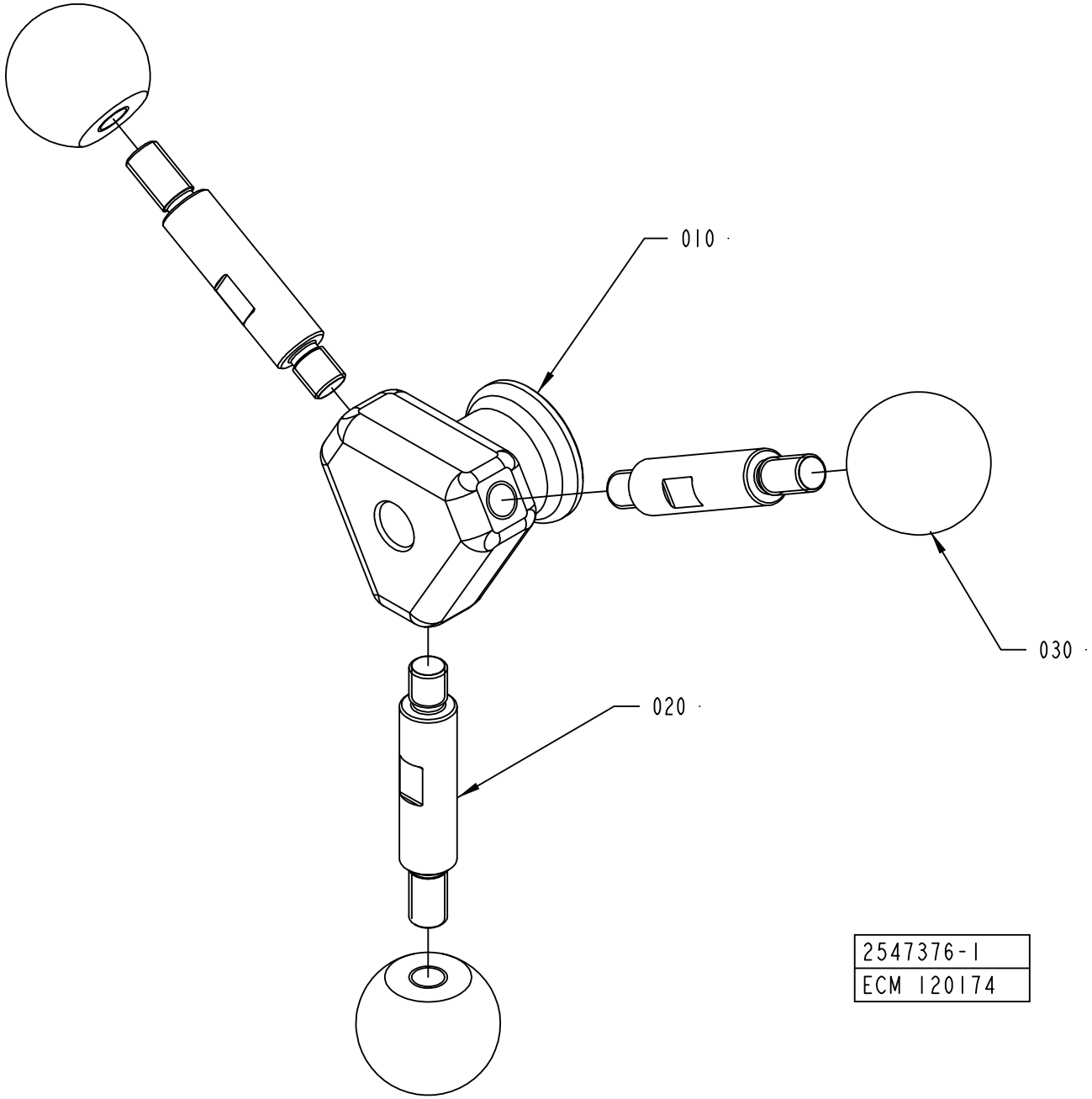
010
020
030
2547376-1
ECM 120174

ECM: 121123 - 20030123
Group number: 2547376-0100
Assembly Drawing: 2547376-1_1_AA

Pos	Part No	UN	Qty	Description	Page No
-					
010	2582574-0000		1	BODY	
020	2526858-0000		3	DOWEL	
030	2582575-0000		3	KNOB	

Pos	Part No	UN	Qty	Description	Page No

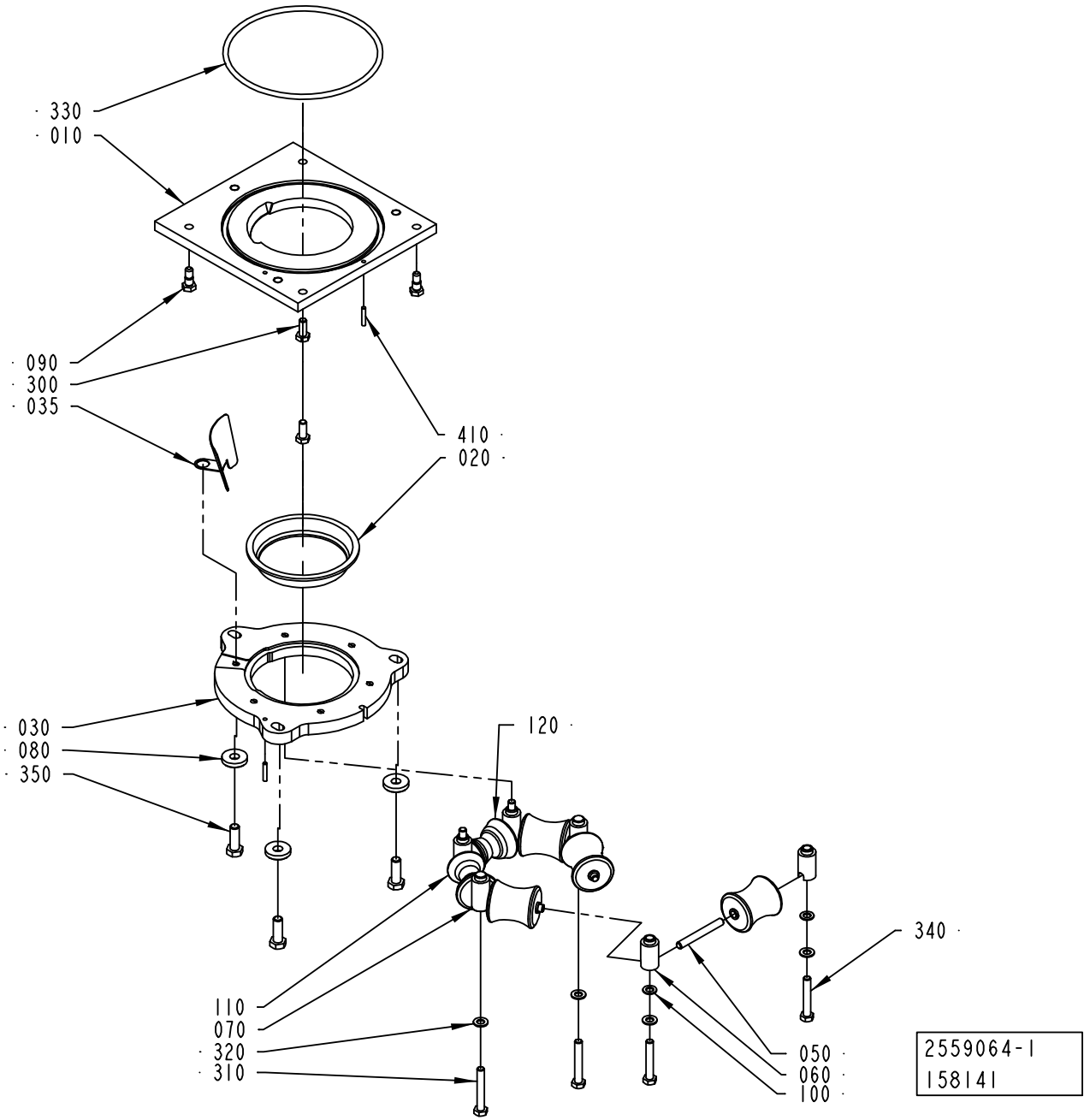
330
010
090
300
035
410
020
030
080
350
120
110
070
320
310
340
050
060
100
2559064-1
158141

ECM: 223716 - 20060701
Group number: 2559064-0100
Assembly Drawing: 2559064-1_1_AB

This list covers pages from 1-46 to 1-51

Pos	Part No	UN	Qty	Description	Page No
TBA 1000B (See drawing on page: 1-48)					
010	2562687-0000		1	PLATE	
020	466042-0000		1	SEAL	
030	2562688-0000		1	RING	
040	466046-0000		4	ROLLER	
110	2592548-0000		1	ROLLER	
120	2592549-0000		1	ROLLER	
TBA 1000S LIGHTCAP (See drawing on page: 1-50)					
010	2794725-0000		1	PLATE	
020	2795266-0000		1	SEAL	
030	2794726-0000		1	RING	
110	2716548-0000		1	ROLLER	
120	2716547-0000		1	ROLLER	
TBA 1000S STDA7, TBA 1000S NOMOLDEDCAP (See drawing on page: 1-46)					
010	2562687-0000		1	PLATE	
020	567743-0000		1	SEAL	
030	2562688-0000		1	RING	
035	1523696-0000		1	GUIDE	
040	573504-0000		4	ROLLER	
110	2592546-0000		1	ROLLER	
120	2592547-0000		1	ROLLER	
Common Parts					
050	263655-0009		6	SHAFT	
060	1036954-0000		4	AXLE SUPPORT	
070	1036955-0000		2	AXLE SUPPORT	
080	315125-0173		3	WASHER TBRSB 10,5X28X6 A4	
090	1037885-0000		2	REAMED BOLT	
100	1129431-0000		4	WASHER	
300	312105-0451		2	SCREW M6S ISO 4017 M8X20 A480	
310	312105-0462		2	SCREW M6S ISO 4014 M8X55 A480	
320	315115-0165		6	WASHER PLAIN, TBRB 8,4/16 H=3	
330	315204-0324		1	O-RING 164,3X5,7 MM	
340	312109-0461		4	SCREW M6S ISO 4017 M8X50 A480	
350	312105-0495		3	SCREW M6S ISO 4017 M10X30 A480	
370	311103-1274		2	PARALLEL PIN ISO 2338 4M6X24 A1	

Pos	Part No	UN	Qty	Description	Page No

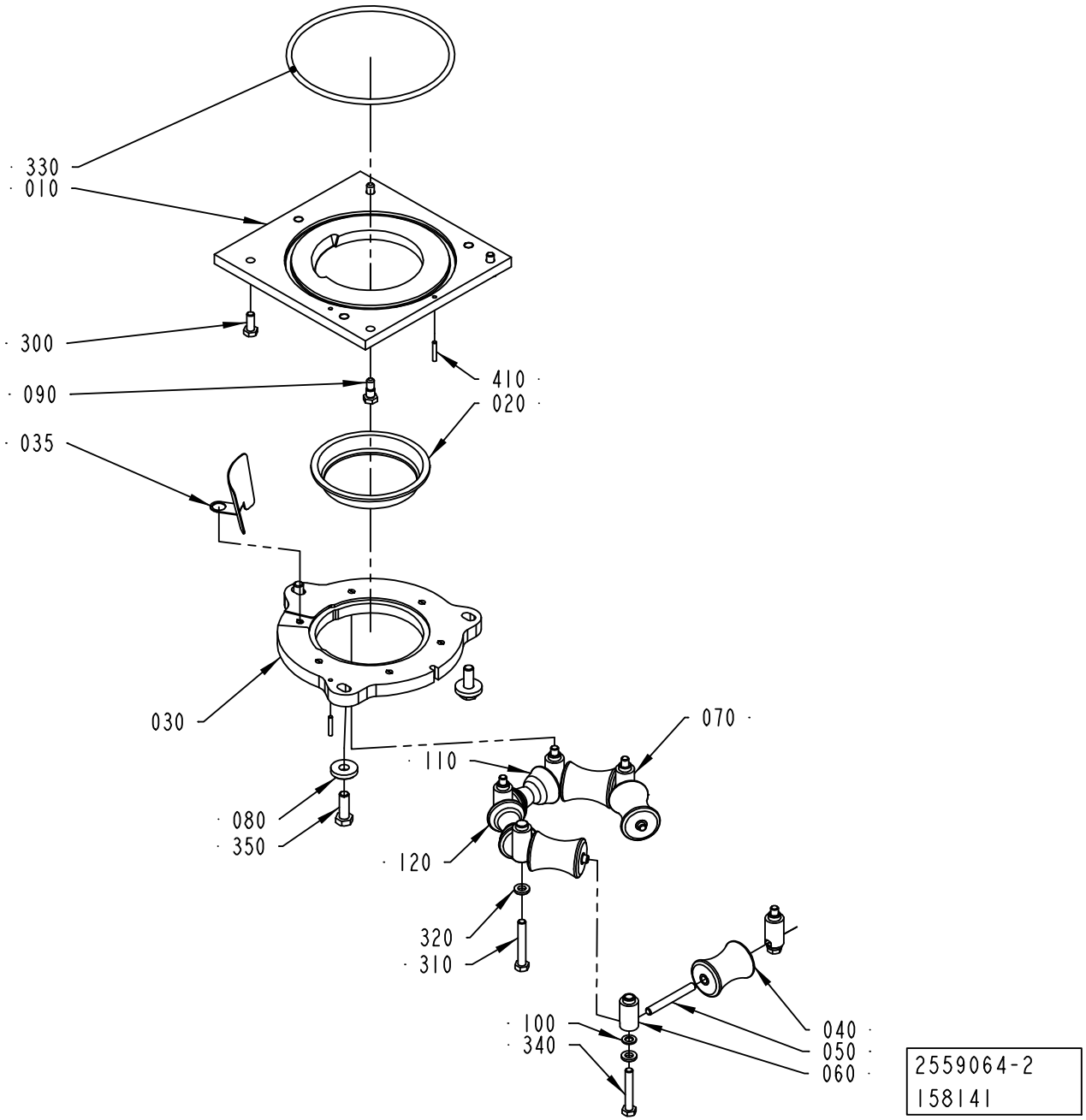
330
010
300
090
035
030
080
350
410
020
070
110
120
320
310
100
340
040
050
060
2559064-2
158141

ECM: 223716 - 20060701
Group number: 2559064-0100
Assembly Drawing: 2559064-2_1_AB

This list covers pages from 1-46 to 1-51

Pos	Part No	UN	Qty	Description	Page No
TBA 1000B (See drawing on page: 1-48)					
010	2562687-0000		1	PLATE	
020	466042-0000		1	SEAL	
030	2562688-0000		1	RING	
040	466046-0000		4	ROLLER	
110	2592548-0000		1	ROLLER	
120	2592549-0000		1	ROLLER	
TBA 1000S LIGHTCAP (See drawing on page: 1-50)					
010	2794725-0000		1	PLATE	
020	2795266-0000		1	SEAL	
030	2794726-0000		1	RING	
110	2716548-0000		1	ROLLER	
120	2716547-0000		1	ROLLER	
TBA 1000S STDA7, TBA 1000S NOMOLDEDCAP (See drawing on page: 1-46)					
010	2562687-0000		1	PLATE	
020	567743-0000		1	SEAL	
030	2562688-0000		1	RING	
035	1523696-0000		1	GUIDE	
040	573504-0000		4	ROLLER	
110	2592546-0000		1	ROLLER	
120	2592547-0000		1	ROLLER	
Common Parts					
050	263655-0009		6	SHAFT	
060	1036954-0000		4	AXLE SUPPORT	
070	1036955-0000		2	AXLE SUPPORT	
080	315125-0173		3	WASHER TBRSB 10,5X28X6 A4	
090	1037885-0000		2	REAMED BOLT	
100	1129431-0000		4	WASHER	
300	312105-0451		2	SCREW M6S ISO 4017 M8X20 A480	
310	312105-0462		2	SCREW M6S ISO 4014 M8X55 A480	
320	315115-0165		6	WASHER PLAIN, TBRB 8,4/16 H=3	
330	315204-0324		1	O-RING 164,3X5,7 MM	
340	312109-0461		4	SCREW M6S ISO 4017 M8X50 A480	
350	312105-0495		3	SCREW M6S ISO 4017 M10X30 A480	
370	311103-1274		2	PARALLEL PIN ISO 2338 4M6X24 A1	

Pos	Part No	UN	Qty	Description	Page No

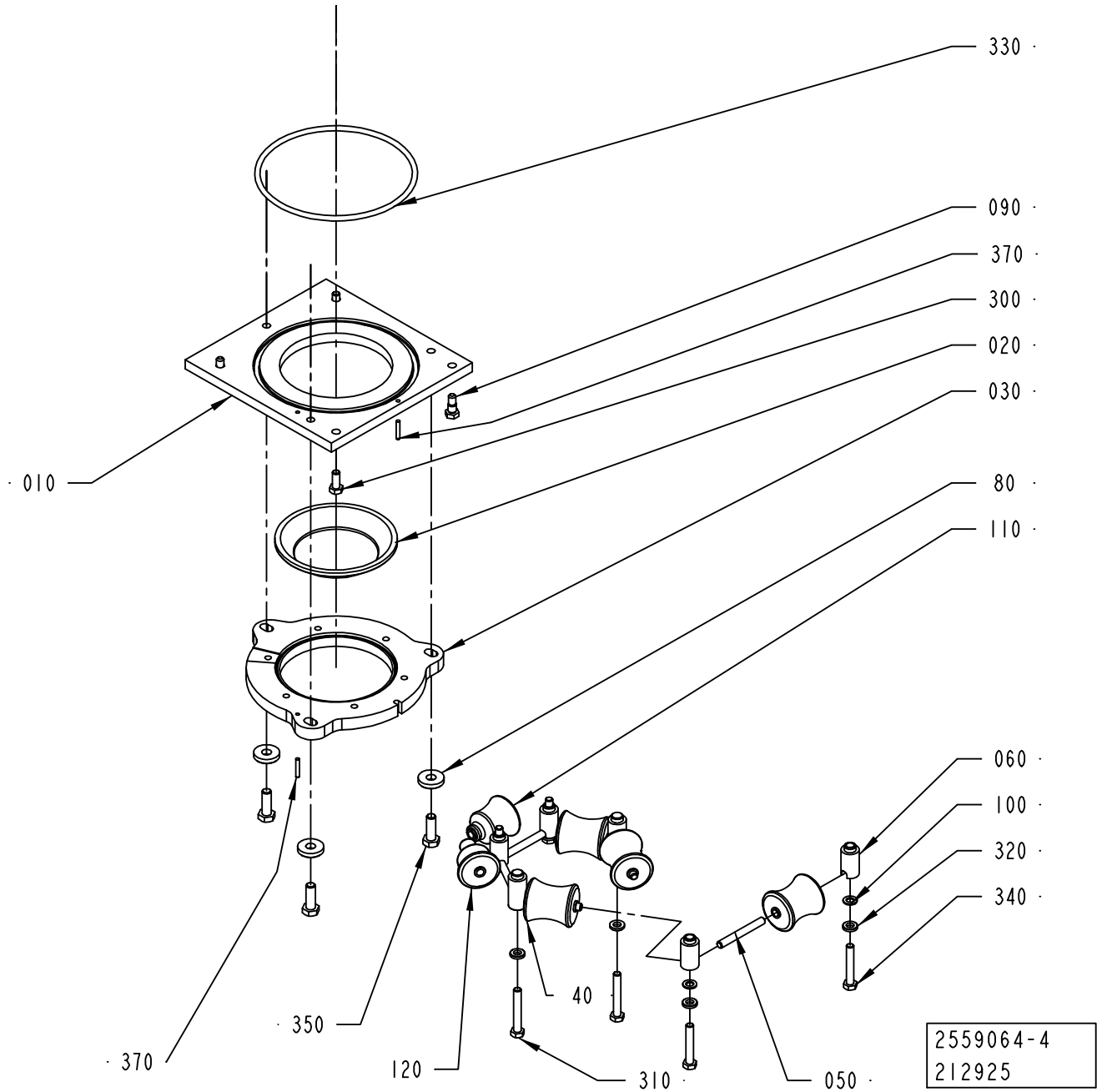
330
090
370
300
020
030
010
80
110
060
100
320
340
40
350
370
120
310
050
2559064-4
212925

ECM: 223716 - 20060701
Group number: 2559064-0100
Assembly Drawing: 2559064-4_1_AA

This list covers pages from 1-46 to 1-51

Pos	Part No	UN	Qty	Description	Page No
TBA 1000B (See drawing on page: 1-48)					
010	2562687-0000		1	PLATE	
020	466042-0000		1	SEAL	
030	2562688-0000		1	RING	
040	466046-0000		4	ROLLER	
110	2592548-0000		1	ROLLER	
120	2592549-0000		1	ROLLER	
TBA 1000S LIGHTCAP (See drawing on page: 1-50)					
010	2794725-0000		1	PLATE	
020	2795266-0000		1	SEAL	
030	2794726-0000		1	RING	
110	2716548-0000		1	ROLLER	
120	2716547-0000		1	ROLLER	
TBA 1000S STDA7, TBA 1000S NOMOLDEDCAP (See drawing on page: 1-46)					
010	2562687-0000		1	PLATE	
020	567743-0000		1	SEAL	
030	2562688-0000		1	RING	
035	1523696-0000		1	GUIDE	
040	573504-0000		4	ROLLER	
110	2592546-0000		1	ROLLER	
120	2592547-0000		1	ROLLER	
Common Parts					
050	263655-0009		6	SHAFT	
060	1036954-0000		4	AXLE SUPPORT	
070	1036955-0000		2	AXLE SUPPORT	
080	315125-0173		3	WASHER TBRSB 10,5X28X6 A4	
090	1037885-0000		2	REAMED BOLT	
100	1129431-0000		4	WASHER	
300	312105-0451		2	SCREW M6S ISO 4017 M8X20 A480	
310	312105-0462		2	SCREW M6S ISO 4014 M8X55 A480	
320	315115-0165		6	WASHER PLAIN, TBRB 8,4/16 H=3	
330	315204-0324		1	O-RING 164,3X5,7 MM	
340	312109-0461		4	SCREW M6S ISO 4017 M8X50 A480	
350	312105-0495		3	SCREW M6S ISO 4017 M10X30 A480	
370	311103-1274		2	PARALLEL PIN ISO 2338 4M6X24 A1	

Pos	Part No	UN	Qty	Description	Page No

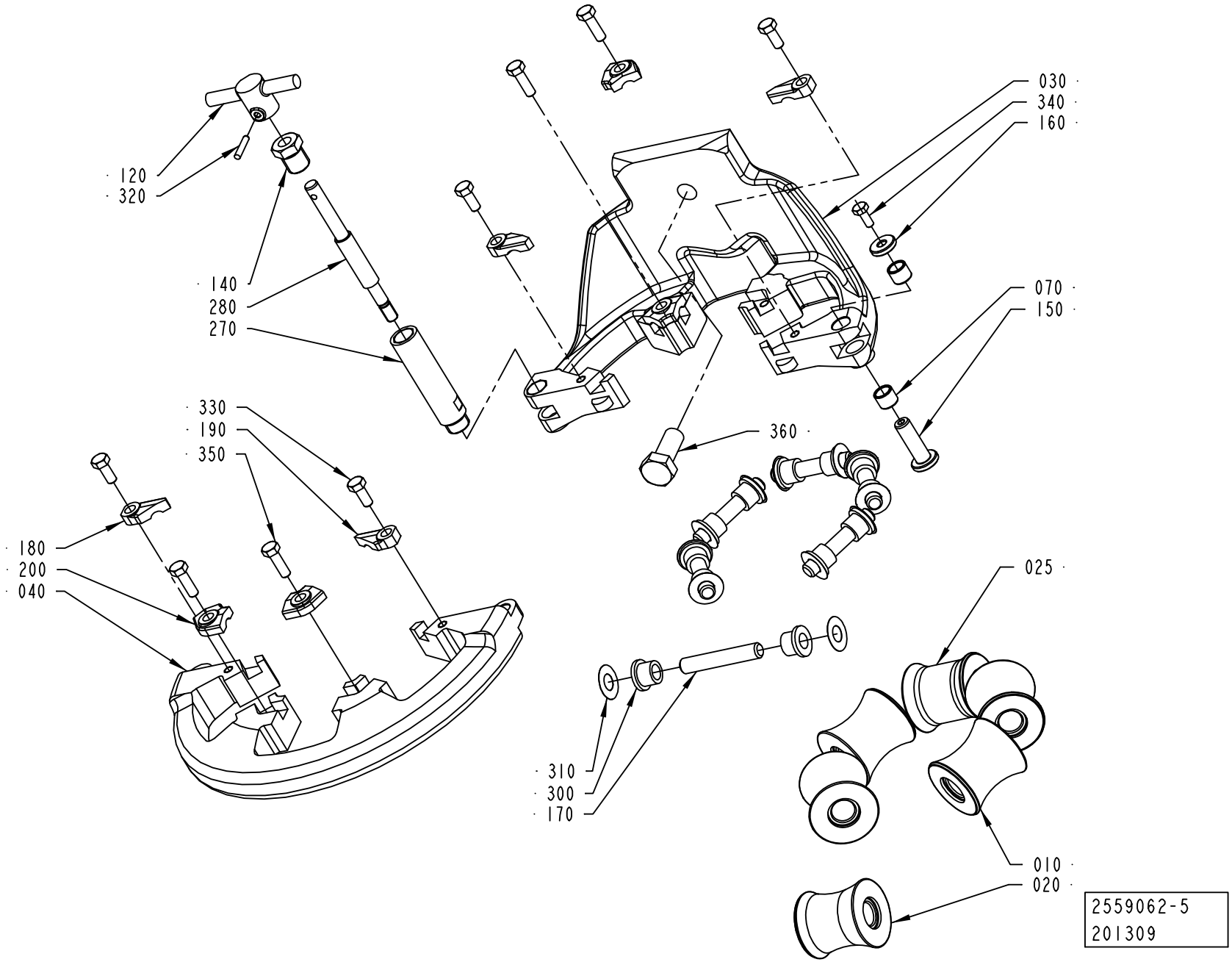
120
320
140
280
270
330
190
350
180
200
040
030
340
160
070
150
360
310
300
170
025
010
020
2559062-5
201309

Pos	Part No	UN	Qty	Description	Page No
TBA 0200S, TPA 0250SQ, TPA 0200SQ (See drawing on page: 1-56)					
010	2565424-0000		5	ROLLER	
	Remark : PLUS ROLLER 2641278-0002				
	MINUS ROLLER 2641278-0001				
020	2565425-0000		1	COUNTER ROLLER	
030	2764028-0000		1	LOWER FORMING RING	
040	2736628-0000		1	LOWER FORMING RING	
170	752186-0004		6	SHAFT	
180	2528119-0005		2	LOCK PLATE	
190	2528118-0005		2	LOCK PLATE	
200	2528123-0004		4	LOCK PLATE	
TBA 0200SQ, TBA 0250SQ (See drawing on page: 1-56)					
010	751502-0000		5	ROLLER	
	Remark : PLUS ROLLER 3-752462				
	MINUS ROLLER 3-752463				
020	2720846-0000		1	COUNTER ROLLER	
030	2764024-0000		1	LOWER FORMING RING	
040	2736630-0000		1	LOWER FORMING RING	
170	752186-0005		6	SHAFT	
180	2528119-0005		2	LOCK PLATE	
190	2528118-0005		2	LOCK PLATE	
200	2528123-0004		4	LOCK PLATE	
TBA 0250S, TBA 0200M (See drawing on page: 1-56)					
010	2601308-0000		5	ROLLER	
	Remark : PLUS ROLLER 2641280-0002				
	MINUS ROLLER 2641280-0001				
020	2601309-0000		1	ROLLER	
030	2764030-0000		1	LOWER FORMING RING	
040	2736629-0000		1	LOWER FORMING RING	
170	752186-0004		6	SHAFT	
180	2528119-0003		2	LOCK PLATE	
190	2528118-0003		2	LOCK PLATE	
200	2528123-0002		4	LOCK PLATE	
TBA 0330S, TBA 0200B, TBA 0250B (See drawing on page: 1-56)					
010	751502-0000		5	ROLLER	
	Remark : PLUS ROLLER 3-752462				
	MINUS ROLLER 3-752463				
020	2544882-0000		1	COUNTER ROLLER	
030	2764024-0000		1	LOWER FORMING RING	
040	2736630-0000		1	LOWER FORMING RING	
170	752186-0005		6	SHAFT	
180	2528119-0005		2	LOCK PLATE	
190	2528118-0005		2	LOCK PLATE	
200	2528123-0004		4	LOCK PLATE	
TBA 0500B, TBA 1000B, TBA 1500S (See drawing on page: 1-56)					
010	1349851-0000		5	ROLL	
	Remark : PLUS ROLLER 1349853-0000				
	MINUS ROLLER 1349852-0000				
020	2518098-0000		1	COUNTER ROLLER	
030	2764026-0000		1	LOWER FORMING RING	
040	2700546-0000		1	FRONT RING	
170	752186-0014		6	SHAFT	
180	2528119-0004		2	LOCK PLATE	
190	2528118-0004		2	LOCK PLATE	
200	2528123-0004		4	LOCK PLATE	
TBA 0500S (See drawing on page: 1-56)					
010	1499636-0000		5	ROLLER	
	Remark : PLUS ROLLER 1538616-0000				
	MINUS ROLLER 1538617-0000				
020	2709785-0000		1	ROLLER	
030	2764025-0000		1	LOWER FORMING RING	
040	2731503-0000		1	LOWER FORMING RING	
170	2522213-0006		6	SHAFT	
180	2528119-0005		2	LOCK PLATE	
190	2528118-0005		2	LOCK PLATE	
200	2528123-0004		4	LOCK PLATE	
TBA 1000SQ (See drawing on page: 1-56)					
010	1490765-0000		5	ROLLER	
	Remark : PLUS ROLLER 1490767-0000				
	MINUS ROLLER 1490763				
020	1499411-0000		1	COUNTER ROLLER	
030	2764023-0000		1	LOWER FORMING RING	
040	2736705-0000		1	LOWER FORMING RING	
170	752186-0016		6	SHAFT	
180	2528119-0004		2	LOCK PLATE	
190	2528118-0004		2	LOCK PLATE	
200	2528123-0004		4	LOCK PLATE	
TBA 1000S (See drawing on page: 1-56)					
010	567746-0001		5	ROLLER (STANDARD SIZE)	
	Remark : PLUS ROLLER 3-567746-2				
	MINUS ROLLER 3-567746-3				
020	1334856-0000		1	COUNTER ROLLER	
030	2764027-0000		1	LOWER FORMING RING	
040	2721423-0000		1	FORMING RING	

Machine Type | Group Description | Used-In | Group Number | Page No

LOWER FORMING RING

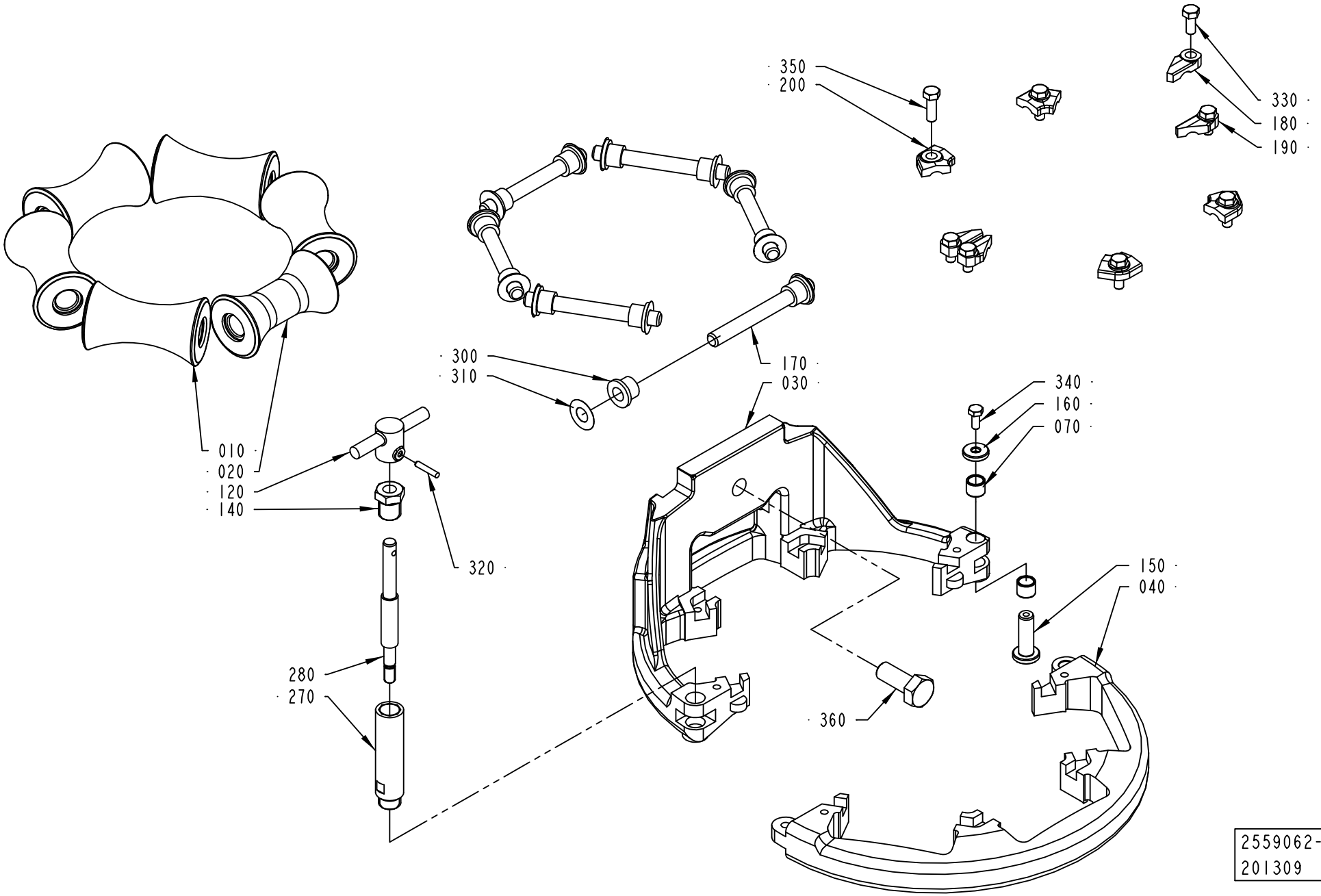

ECM: 264015 - 20060702
Group number: 2559062-0200
Assembly Drawing: 2559062-6_1_AA

This list covers pages from 1-52 to 1-57

Pos	Part No	UN	Qty	Description	Page No
TBA 1000S (Cont'd) (See drawing on page: 1-56)					
170	752186-0016		6	SHAFT	
180	2528119-0005		2	LOCK PLATE	
190	2528118-0005		2	LOCK PLATE	
200	2528123-0004		4	LOCK PLATE	
TBA 1890S, TBA 2000S, TBA 1400B (See drawing on page: 1-54)					
010	2565513-0000		5	ROLLER	
	Remark : PLUS ROLLER 2601311-0000				
	MINUS ROLLER 2601310-0000				
020	2657923-0000		1	COUNTER ROLLER	
030	2764029-0000		1	LOWER FORMING RING	
040	2673023-0000		1	LOWER FORMING RING	
170	752186-0015		6	SHAFT	
180	2528119-0004		2	LOCK PLATE	
190	2528118-0004		2	LOCK PLATE	
200	2528123-0004		4	LOCK PLATE	
TPA 0330SQ (See drawing on page: 1-56)					
010	2594644-0000		5	ROLLER	
	Remark : PLUS ROLLER 2611279-0001				
	MINUS ROLLER 2611279-0002				
020	2641282-0000		1	COUNTER ROLLER	
030	2764024-0000		1	LOWER FORMING RING	
040	2736630-0000		1	LOWER FORMING RING	
170	752186-0005		6	SHAFT	
180	2528119-0005		2	LOCK PLATE	
190	2528118-0005		2	LOCK PLATE	
200	2528123-0004		4	LOCK PLATE	
TPA 0500SQ (See drawing on page: 1-52)					
010	2601328-0000		4	ROLLER	
	Remark : PLUS ROLLER 2641281-0002				
	MINUS ROLLER 2641281-0001				
020	2686861-0000		1	ROLLER	
025	2601327-0000		1	ROLLER	
030	2764031-0000		1	LOWER FORMING RING	
040	2731506-0000		1	LOWER FORMING RING	
170	752186-0005		6	SHAFT	
180	2528119-0004		2	LOCK PLATE	
190	2528118-0004		2	LOCK PLATE	
200	2528123-0003		4	LOCK PLATE	
TPA 1000SQ, TPA 0750SQ (See drawing on page: 1-56)					
010	1524156-0000		5	ROLLER	
020	2601259-0000		1	COUNTER ROLLER	
030	2764025-0000		1	LOWER FORMING RING	
040	2731503-0000		1	LOWER FORMING RING	
170	2522213-0006		6	SHAFT	
180	2528119-0005		2	LOCK PLATE	
190	2528118-0005		2	LOCK PLATE	
200	2528123-0004		4	LOCK PLATE	
Common Parts					
070	2526826-0000		2	BUSHING	
120	2764036-0000		1	KNOB	
140	2731428-0000		1	NUT	
150	2526827-0000		1	SHAFT	
160	2526825-0000		1	WASHER	
270	2764032-0000		1	SHAFT	
280	2764033-0000		1	SHAFT	
300	90240-0172		12	FLANGE BUSHING, 8X12X10 MM	
310	2033-0011		12	WASHER	
320	311103-0236		1	PARALLEL PIN ISO 2338 3M6X16 A1	
330	312105-0327		4	SCREW M6S ISO 4017 M5X12 A480	
340	312105-0289		1	SCREW M6S ISO 4017 M4X10 A470	
350	312105-0329		4	SCREW M6S ISO 4017 M5X16 A480	
360	312105-0493		1	SCREW M6S ISO 4017 M10X25 A480	

LOWER FORMING RING

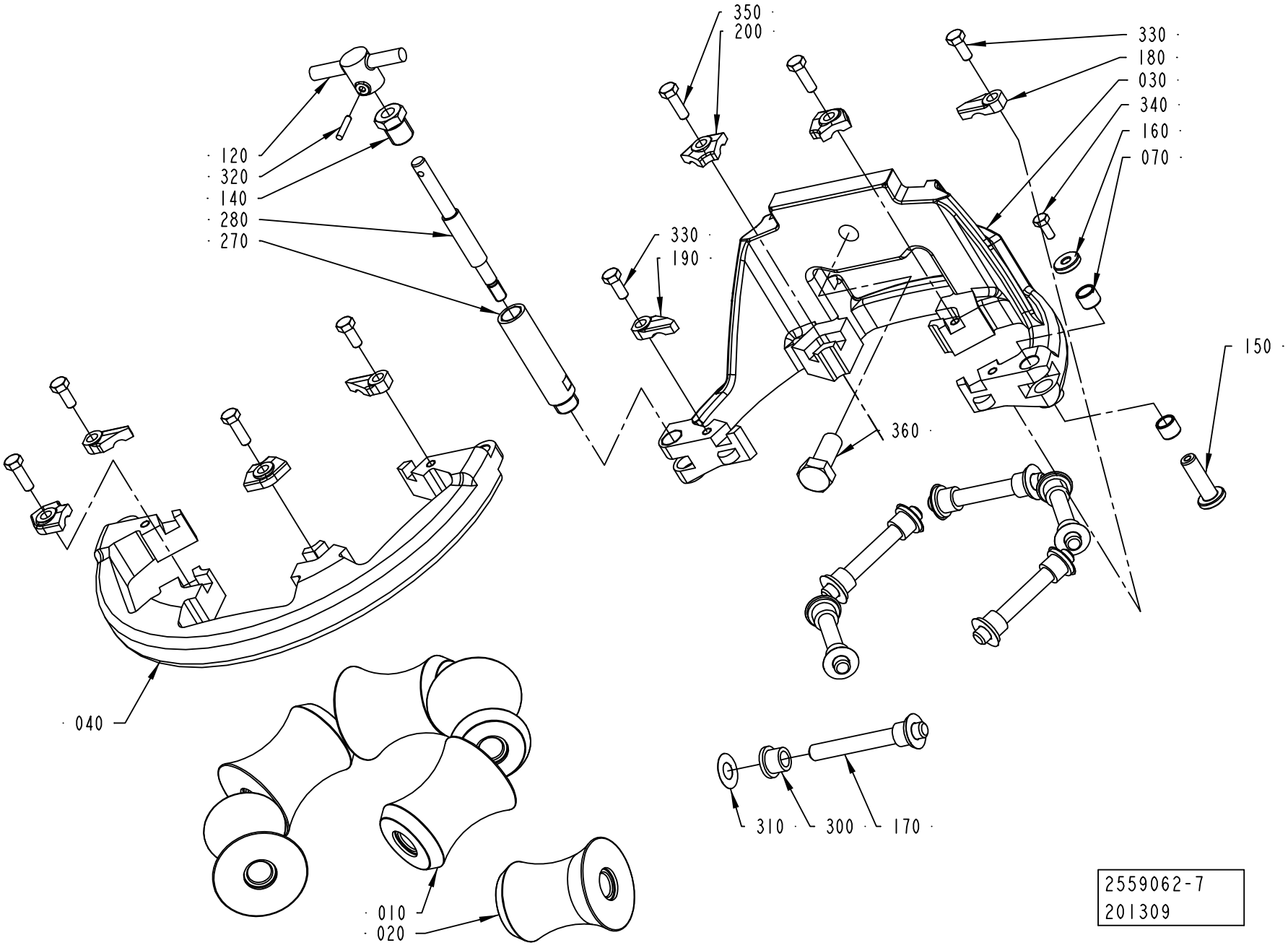

ECM: 264015 - 20060702
Group number: 2559062-0200
Assembly Drawing: 2559062-7_1_AA

This list covers pages from 1-52 to 1-57

Pos	Part No	UN	Qty	Description	Page No	Pos	Part No	UN	Qty	Description	Page No

SEE PREVIOUS LISTS PAGES: 1-53, 1-55.

UPPER FORMING RING

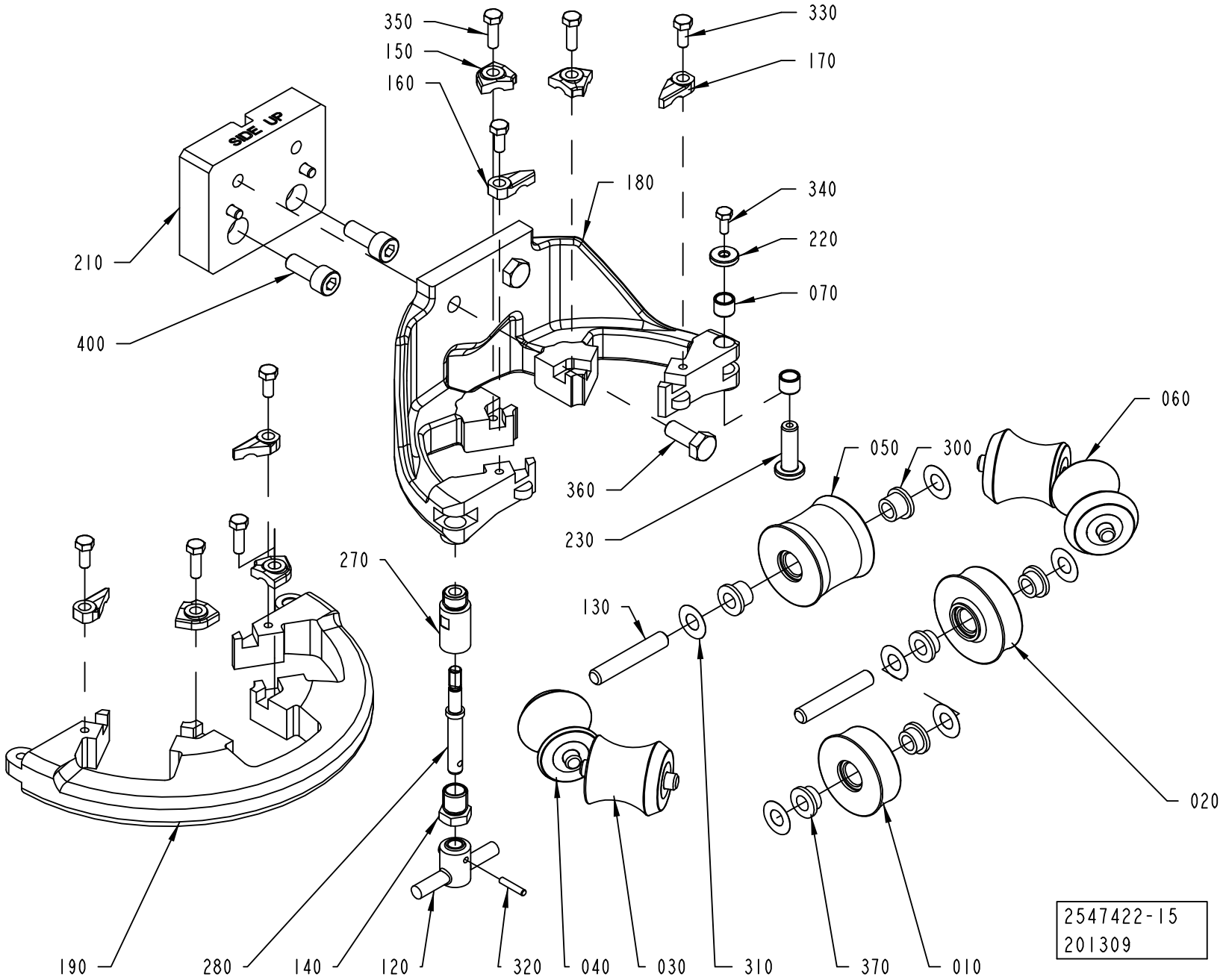

ECM: 264087 - 20060702
Group number: 2547422-0200
Assembly Drawing: 2547422-15_1_AA

This list covers pages from 1-58 to 1-73

Pos	Part No	UN	Qty	Description	Page No
TBA 0200S, TPA 0250SQ, TPA 0200SQ (See drawing on page: 1-58)					
010	2634984-0000		1	ROLLER	
020	2634985-0000		1	ROLLER	
030	2634949-0000		1	ROLLER	
040	2634948-0000		2	ROLLER	
050	2634947-0000		1	ROLLER	
060	2634983-0000		1	ROLLER	
130	2522213-0004		6	SHAFT	
150	2528123-0001		4	LOCK PLATE	
160	2528118-0002		2	LOCK PLATE	
170	2528119-0002		2	LOCK PLATE	
180	2764018-0000		1	UPPER FORMING RING	
190	2736634-0000		1	UPPER FORMING RING	
210	2634987-0000		1	SPACER	
300	90240-0172		10	FLANGE BUSHING, 8X12X10 MM	
360	312105-0451		2	SCREW M6S ISO 4017 M8X20 A480	
370	752156-0000		4	FLANGE BUSHING	
400	312115-0541		2	SCREW ISO4762 M12X45 A4 80	
TBA 0200SQ, TBA 0250SQ (See drawing on page: 1-58)					
010	2759322-0000		1	ROLLER	
020	2759323-0000		1	ROLLER	
030	2641287-0000		1	ROLLER	
040	2641288-0000		2	ROLLER	
050	2641289-0000		1	ROLLER	
060	2641290-0000		1	ROLLER	
130	2522213-0015		6	SHAFT	
150	2528123-0003		4	LOCK PLATE	
160	2528118-0003		2	LOCK PLATE	
170	2528119-0003		2	LOCK PLATE	
180	2764020-0000		1	UPPER FORMING RING	
190	2736636-0000		1	UPPER FORMING RING	
210	2634987-0000		1	SPACER	
300	90240-0172		10	FLANGE BUSHING, 8X12X10 MM	
360	312105-0451		2	SCREW M6S ISO 4017 M8X20 A480	
370	752156-0000		4	FLANGE BUSHING	
400	312115-0541		2	SCREW ISO4762 M12X45 A4 80	
TBA 0250S, TBA 0200M (See drawing on page: 1-58)					
010	2634988-0000		1	ROLLER	
020	2634989-0000		1	ROLLER	
030	2611012-0000		1	ROLLER	
040	2601334-0000		2	ROLLER	
050	2601333-0000		1	ROLLER	
060	2634990-0000		1	ROLLER	
130	2522213-0004		6	SHAFT	
150	2528123-0001		4	LOCK PLATE	
160	2528118-0002		2	LOCK PLATE	
170	2528119-0002		2	LOCK PLATE	
180	2764016-0000		1	UPPER FORMING RING	
190	2736635-0000		1	UPPER FORMING RING	
210	2634987-0000		1	SPACER	
300	90240-0172		10	FLANGE BUSHING, 8X12X10 MM	
360	312105-0451		2	SCREW M6S ISO 4017 M8X20 A480	
370	752156-0000		4	FLANGE BUSHING	
400	312115-0541		2	SCREW ISO4762 M12X45 A4 80	
TBA 0330S, TBA 0200B, TBA 0250B (See drawing on page: 1-58)					
010	2641285-0000		1	ROLLER	
020	2641286-0000		1	ROLLER	
030	2641287-0000		1	ROLLER	
040	2641288-0000		2	ROLLER	
050	2641289-0000		1	ROLLER	
060	2641290-0000		1	ROLLER	
130	2522213-0015		6	SHAFT	
150	2528123-0003		4	LOCK PLATE	
160	2528118-0003		2	LOCK PLATE	
170	2528119-0003		2	LOCK PLATE	
180	2764020-0000		1	UPPER FORMING RING	
190	2736636-0000		1	UPPER FORMING RING	
210	2634987-0000		1	SPACER	
300	90240-0172		10	FLANGE BUSHING, 8X12X10 MM	
360	312105-0451		2	SCREW M6S ISO 4017 M8X20 A480	
370	752156-0000		4	FLANGE BUSHING	
400	312115-0541		2	SCREW ISO4762 M12X45 A4 80	
TBA 0500B, TBA 1000B, TBA 1500S (See drawing on page: 1-72)					
010	2751479-0000		1	ROLLER	
020	2751478-0000		1	ROLLER	
030	2751483-0000		1	ROLLER	
040	2751481-0000		2	ROLLER	
050	2751480-0000		1	ROLLER	
060	2751482-0000		1	ROLLER	
130	752186-0015		3	SHAFT	
135	752186-0007		3	SHAFT	
150	2528123-0004		2	LOCK PLATE	
155	2528123-0008		2	LOCK PLATE	
160	2528118-0005		1	LOCK PLATE	

Machine Type | Group Description | Used-In | Group Number | Page No

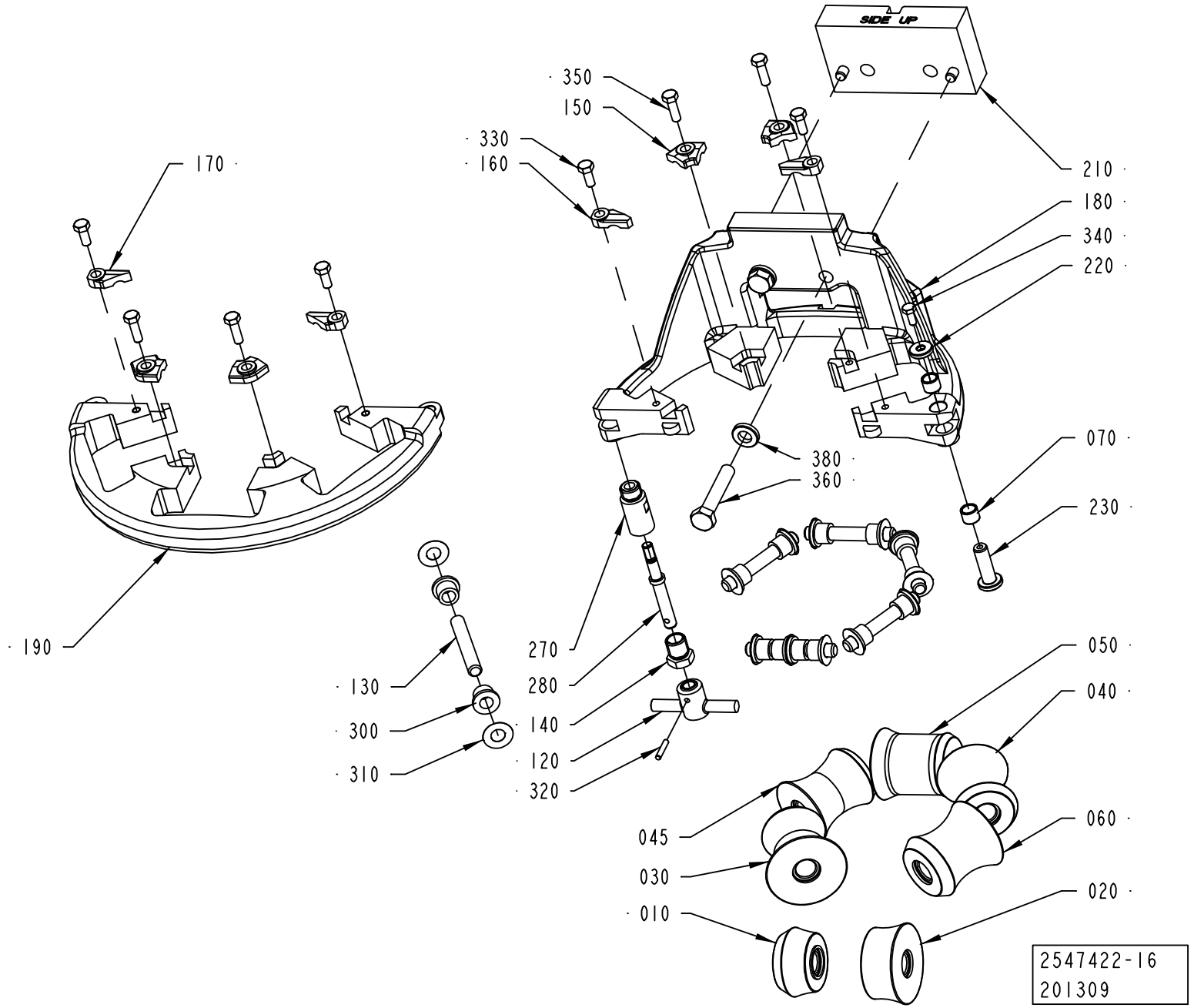
SIDE UP
350
150
330
160
170
210
180
340
220
070
380
360
230
190
270
280
140
120
320
130
300
310
050
040
045
060
030
020
010
2547422-16
201309

ECM: 264087 - 20060702
Group number: 2547422-0200
Assembly Drawing: 2547422-16_1_AA

This list covers pages from 1-58 to 1-73

Pos	Part No	UN	Qty	Description	Page No
TBA 0500B, TBA 1000B, TBA 1500S (Cont'd) (See drawing on page: 1-72)					
165	2528118-0001		1	LOCK PLATE	
170	2528119-0005		1	LOCK PLATE	
175	2528119-0001		1	LOCK PLATE	
180	2764022-0000		1	UPPER FORMING RING	
190	2736677-0000		1	UPPER FORMING RING	
210	2696412-0000		1	SPACER	
300	90240-0172		14	FLANGE BUSHING, 8X12X10 MM	
360	312109-0460		2	SCREW M6S ISO 4017 M8X45 A480	
380	315115-0165		2	WASHER PLAIN, TBRB 8,4/16 H=3	
TBA 0500S (See drawing on page: 1-70)					
010	2611020-0000		1	ROLLER	
020	2720717-0000		1	ROLLER	
030	2672980-0000		1	ROLLER	
040	2672979-0000		2	ROLLER	
050	2672978-0000		1	ROLLER	
060	2672981-0000		1	ROLLER	
130	2522213-0007		6	SHAFT	
150	2528123-0005		4	LOCK PLATE	
160	2528118-0005		2	LOCK PLATE	
170	2528119-0005		2	LOCK PLATE	
180	2764021-0000		1	UPPER FORMING RING	
190	2736631-0000		1	UPPER FORMING RING	
210	2532914-0000		1	SPACER	
300	90240-0172		14	FLANGE BUSHING, 8X12X10 MM	
360	312109-0459		2	SCREW M6S ISO 4017 M8X40 A480	
TBA 1000SQ (See drawing on page: 1-66)					
010	2532965-0000		1	ROLLER	
020	1548541-0000		1	ROLLER	
030	1548531-0000		4	ROLLER	
060	1548540-0000		1	ROLLER	
130	752186-0007		6	SHAFT	
150	2528123-0004		4	LOCK PLATE	
160	2528118-0004		2	LOCK PLATE	
170	2528119-0004		2	LOCK PLATE	
180	2764013-0000		1	UPPER FORMING RING	
190	2736697-0000		1	UPPER FORMING RING	
210	2532914-0000		1	SPACER	
300	90240-0172		14	FLANGE BUSHING, 8X12X10 MM	
360	312109-0459		2	SCREW M6S ISO 4017 M8X40 A480	
TBA 1000S (See drawing on page: 1-68)					
010	2512737-0000		1	ROLLER	
020	2512738-0000		1	ROLLER	
030	2512740-0000		1	ROLLER	
040	2512741-0000		2	ROLLER	
050	2512742-0000		2	ROLLER	
130	752186-0007		6	SHAFT	
150	2528123-0001		4	LOCK PLATE	
160	2528118-0001		2	LOCK PLATE	
170	2528119-0001		2	LOCK PLATE	
180	2764014-0000		1	UPPER FORMING RING	
190	2736676-0000		1	UPPER FORMING RING	
210	2532914-0000		1	SPACER	
300	90240-0172		14	FLANGE BUSHING, 8X12X10 MM	
360	312109-0459		2	SCREW M6S ISO 4017 M8X40 A480	
TBA 1890S, TBA 2000S, TBA 1400B (See drawing on page: 1-64)					
010	2634958-0000		1	ROLLER	
020	2634957-0000		1	ROLLER	
030	2634956-0000		1	ROLLER	
040	2634954-0000		2	ROLLER	
050	2634953-0000		1	ROLLER	
060	2634955-0000		1	ROLLER	
130	752186-0015		6	SHAFT	
150	2528123-0002		4	LOCK PLATE	
160	2528118-0003		2	LOCK PLATE	
170	2528119-0003		2	LOCK PLATE	
180	2764019-0000		1	UPPER FORMING RING	
190	2736633-0000		1	UPPER FORMING RING	
210	2532914-0000		1	SPACER	
215	2634961-0000		1	SHIM	
300	90240-0172		14	FLANGE BUSHING, 8X12X10 MM	
360	312109-0459		2	SCREW M6S ISO 4017 M8X40 A480	
380	315105-0165		2	WASHER BRB 8,4X16 RFR	
TPA 0330SQ (See drawing on page: 1-58)					
010	2672950-0000		1	ROLLER	
020	2672951-0000		1	ROLLER	
030	2672955-0000		1	ROLLER	
040	2672953-0000		2	ROLLER	
050	2672954-0000		1	ROLLER	
060	2672952-0000		1	ROLLER	
130	2522213-0015		6	SHAFT	
150	2528123-0003		4	LOCK PLATE	
160	2528118-0003		2	LOCK PLATE	
170	2528119-0003		2	LOCK PLATE	

Machine Type | Group Description | Used-In | Group Number | Page No

UPPER FORMING RING

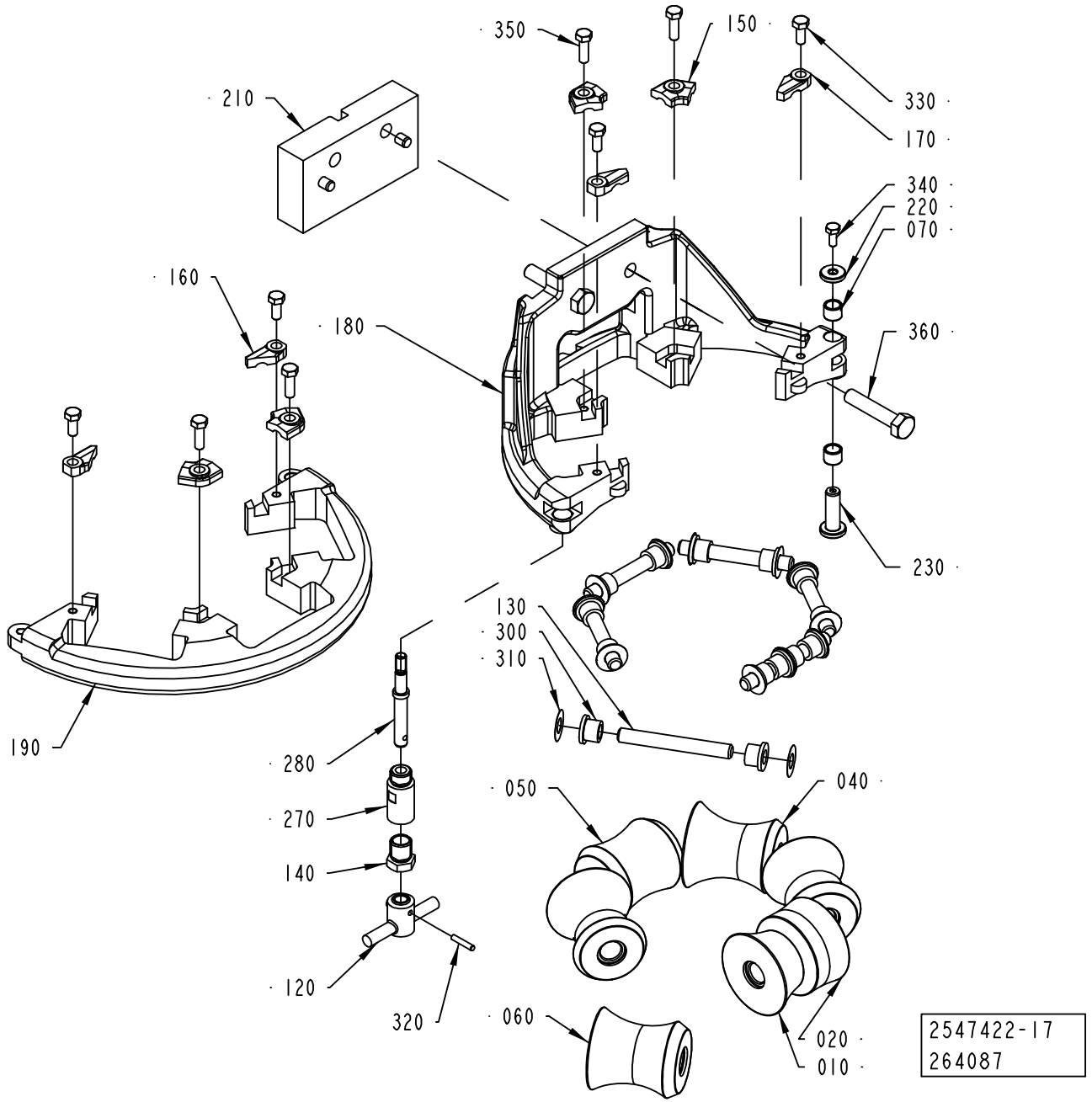

Pos	Part No	UN	Qty	Description	Page No
TPA 0330SQ (Cont'd) (See drawing on page: 1-58)					
180	2764020-0000		1	UPPER FORMING RING	
190	2736636-0000		1	UPPER FORMING RING	
210	2689172-0000		1	SPACER	
300	90240-0172		10	FLANGE BUSHING, 8X12X10 MM	
360	312105-0451		2	SCREW M6S ISO 4017 M8X20 A480	
370	752156-0000		4	FLANGE BUSHING	
400	312115-0541		2	SCREW ISO4762 M12X45 A4 80	
TPA 0500SQ (See drawing on page: 1-60)					
010	2680198-0000		1	ROLLER	
020	2680201-0000		1	ROLLER	
030	2680197-0000		1	ROLLER	
040	2611016-0000		1	ROLLER	
045	2680196-0000		1	ROLLER	
050	2680195-0000		1	ROLLER	
060	2611017-0000		1	ROLLER	
130	752186-0006		6	SHAFT	
150	2528123-0003		4	LOCK PLATE	
160	2528118-0004		2	LOCK PLATE	
170	2528119-0004		2	LOCK PLATE	
180	2764017-0000		1	UPPER FORMING RING	
190	2736632-0000		1	UPPER FORMING RING	
210	2611024-0000		1	SPACER	
300	90240-0172		14	FLANGE BUSHING, 8X12X10 MM	
360	312109-0460		2	SCREW M6S ISO 4017 M8X45 A480	
380	315115-0165		2	WASHER PLAIN, TBRB 8,4/16 H=3	
TPA 1000SQ, TPA 0750SQ (See drawing on page: 1-62)					
010	2562685-0000		1	ROLLER	
020	2693162-0000		1	ROLLER	
030	1524151-0000		2	ROLLER	
040	1524152-0000		2	ROLLER	
050	2562686-0000		1	ROLLER	
130	2522213-0007		6	SHAFT	
150	2528123-0005		4	LOCK PLATE	
160	2528118-0005		2	LOCK PLATE	
170	2528119-0005		2	LOCK PLATE	
180	2764015-0000		1	UPPER FORMING RING	
190	2736631-0000		1	UPPER FORMING RING	
210	2696411-0000		1	SPACER	
300	90240-0172		14	FLANGE BUSHING, 8X12X10 MM	
360	312109-0459		2	SCREW M6S ISO 4017 M8X40 A480	
Common Parts					
070	2526826-0000		2	BUSHING	
120	2764036-0000		1	KNOB	
140	2731428-0000		1	NUT	
220	2526825-0000		1	WASHER	
230	2526827-0000		1	SHAFT	
270	2764034-0000		1	SHAFT	
280	2764035-0000		1	SHAFT	
310	2033-0011		14	WASHER	
320	311103-0236		1	PARALLEL PIN ISO 2338 3M6X16 A1	
330	312105-0327		4	SCREW M6S ISO 4017 M5X12 A480	
340	312105-0289		1	SCREW M6S ISO 4017 M4X10 A470	
350	312105-0329		4	SCREW M6S ISO 4017 M5X16 A480	

UPPER FORMING RING

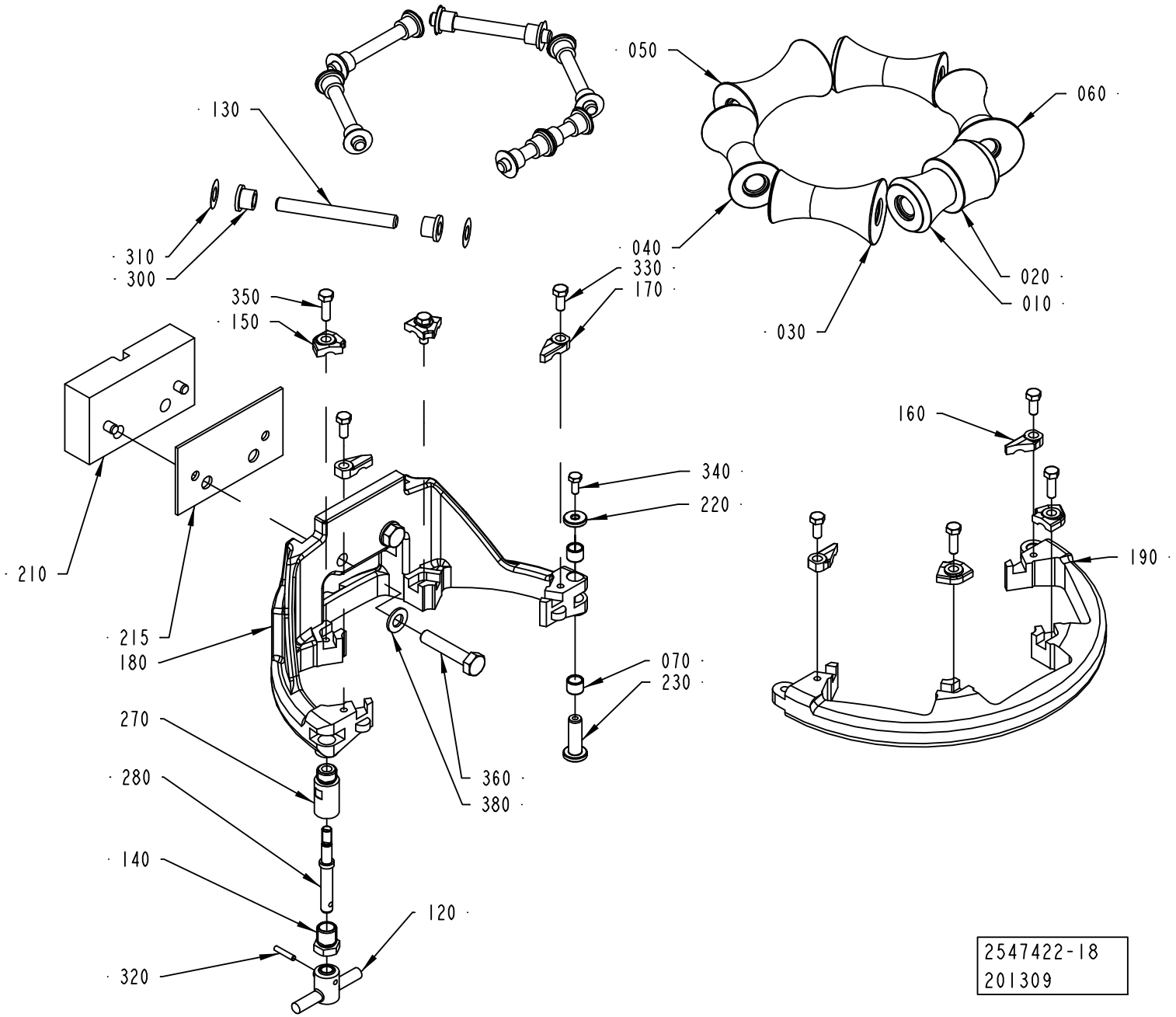

ECM: 264087 - 20060702
Group number: 2547422-0200
Assembly Drawing: 2547422-18_1_AA

This list covers pages from 1-58 to 1-73

Pos	Part No	UN	Qty	Description	Page No	Pos	Part No	UN	Qty	Description	Page No
SEE PREVIOUS LISTS PAGES: 1-59, 1-61, 1-63.											

UPPER FORMING RING

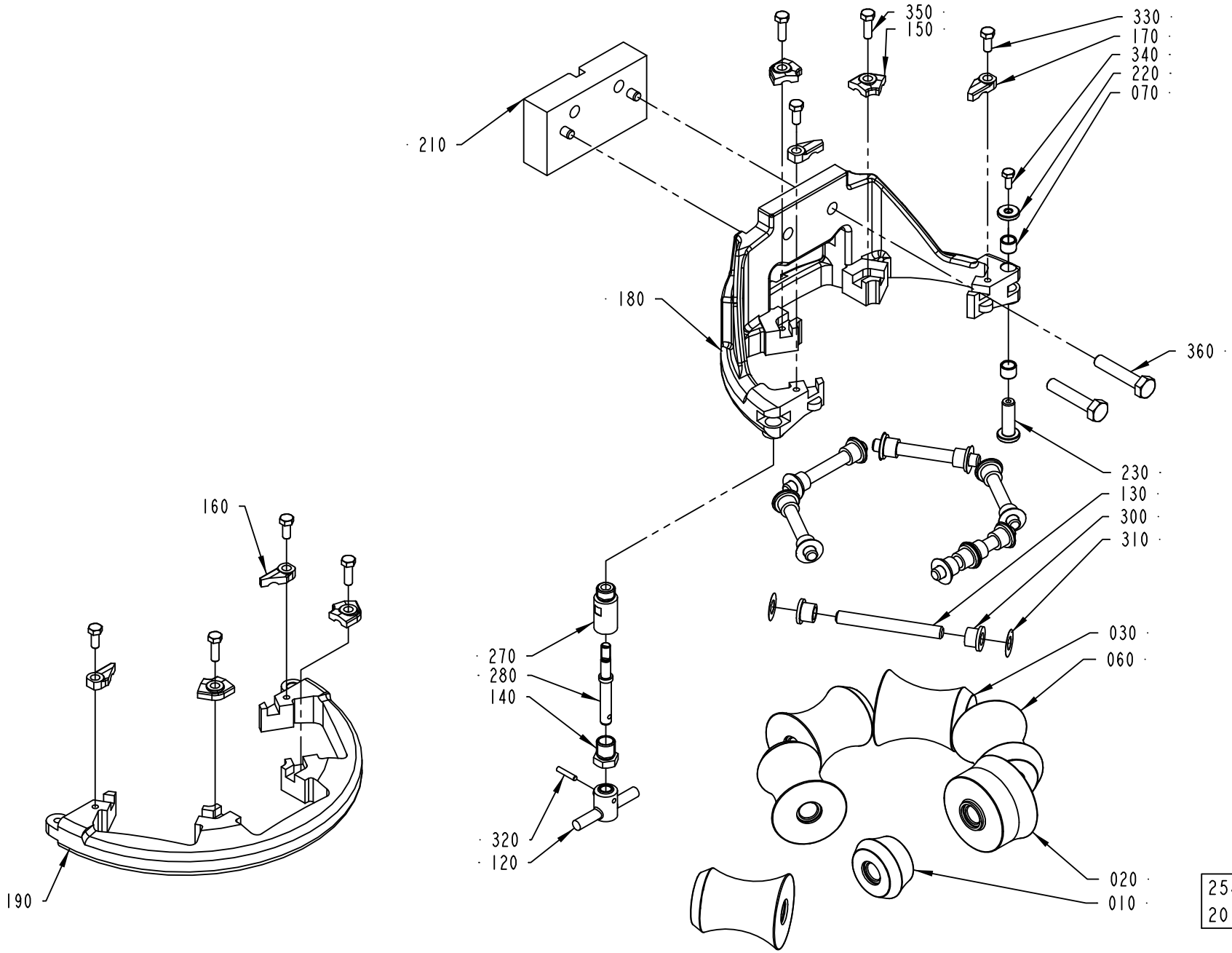

ECM: 264087 - 20060702
Group number: 2547422-0200
Assembly Drawing: 2547422-19_1_AA

This list covers pages from 1-58 to 1-73

Pos	Part No	UN	Qty	Description	Page No	Pos	Part No	UN	Qty	Description	Page No

SEE PREVIOUS LISTS PAGES: 1-59, 1-61, 1-63.

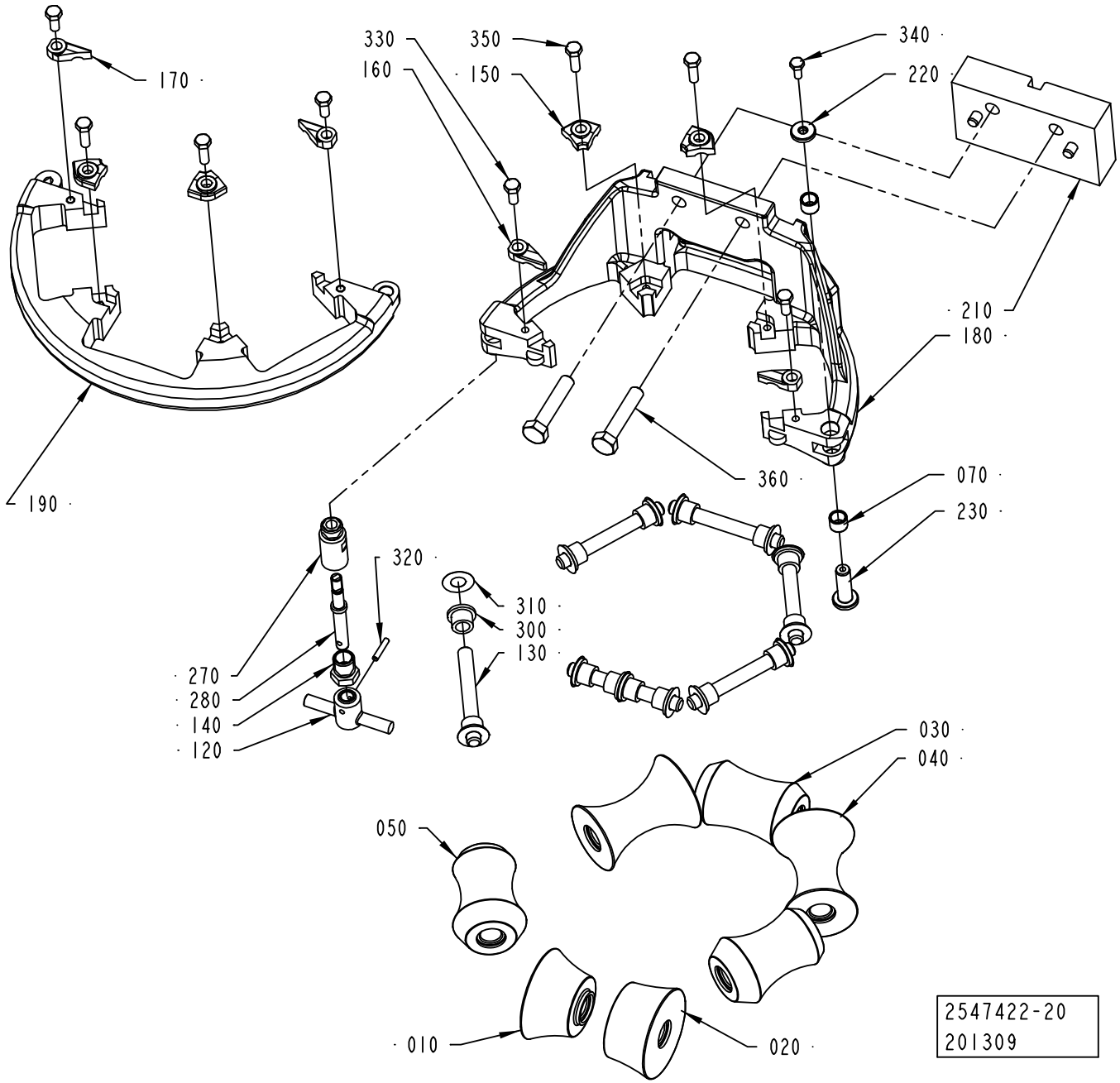
170
330
160
350
150
340
220
210
180
190
360
070
230
320
310
300
130
270
280
140
120
030
040
050
010
020
2547422-20
201309

ECM: 264087 - 20060702
Group number: 2547422-0200
Assembly Drawing: 2547422-20_1_AA

This list covers pages from 1-58 to 1-73

Pos	Part No	UN	Qty	Description	Page No	Pos	Part No	UN	Qty	Description	Page No
SEE PREVIOUS LISTS PAGES: 1-59, 1-61, 1-63.											

UPPER FORMING RING

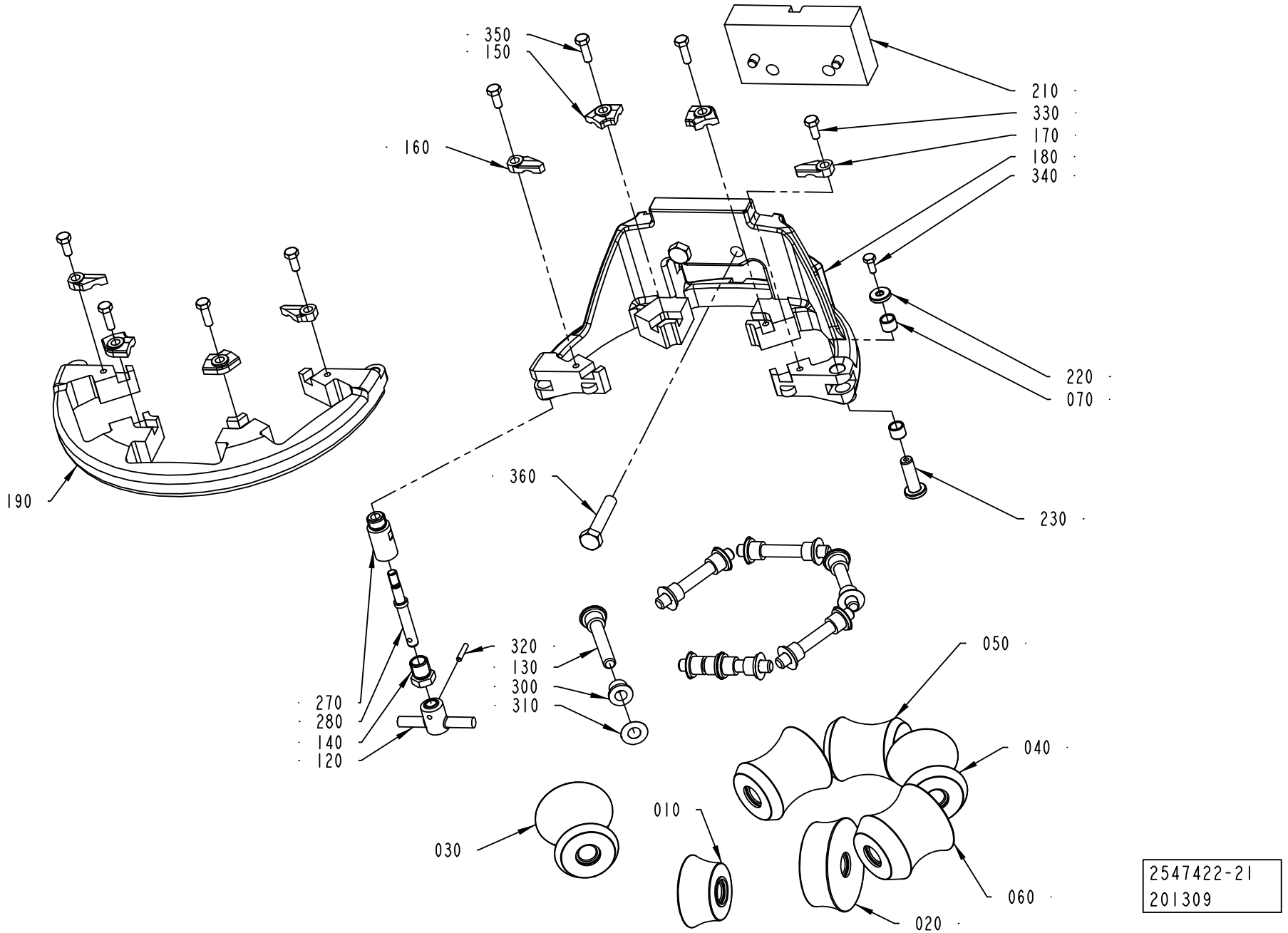

2547422-21
201309

ECM: 264087 - 20060702
Group number: 2547422-0200
Assembly Drawing: 2547422-21_1_AA

This list covers pages from 1-58 to 1-73

Pos	Part No	UN	Qty	Description	Page No
SEE PREVIOUS LISTS PAGES: 1-59, 1-61, 1-63.					

Pos	Part No	UN	Qty	Description	Page No

UPPER FORMING RING

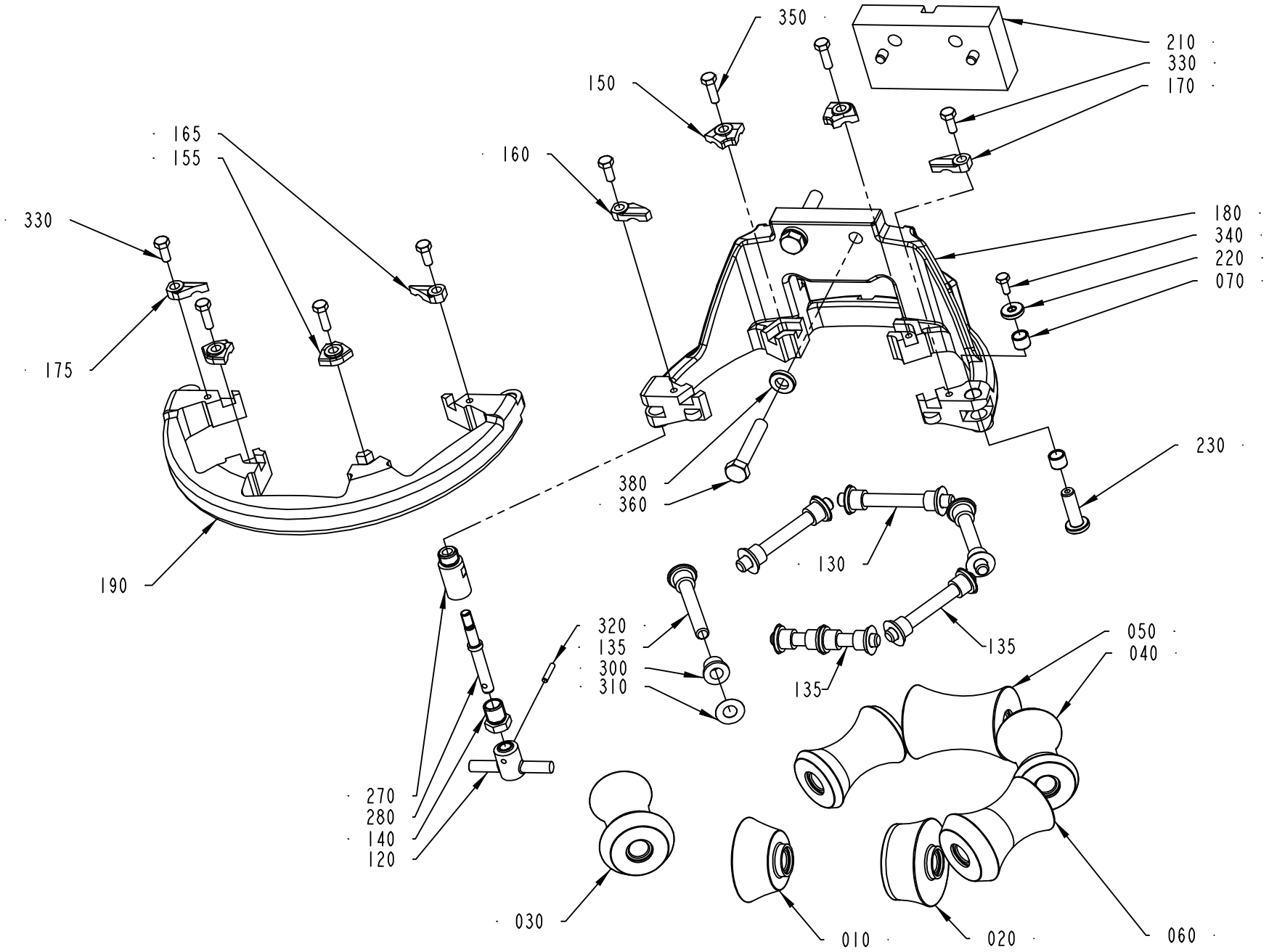

2547422-22
201309

Pos	Part No	UN	Qty	Description	Page No	Pos	Part No	UN	Qty	Description	Page No

SEE PREVIOUS LISTS PAGES: 1-59, 1-61, 1-63.

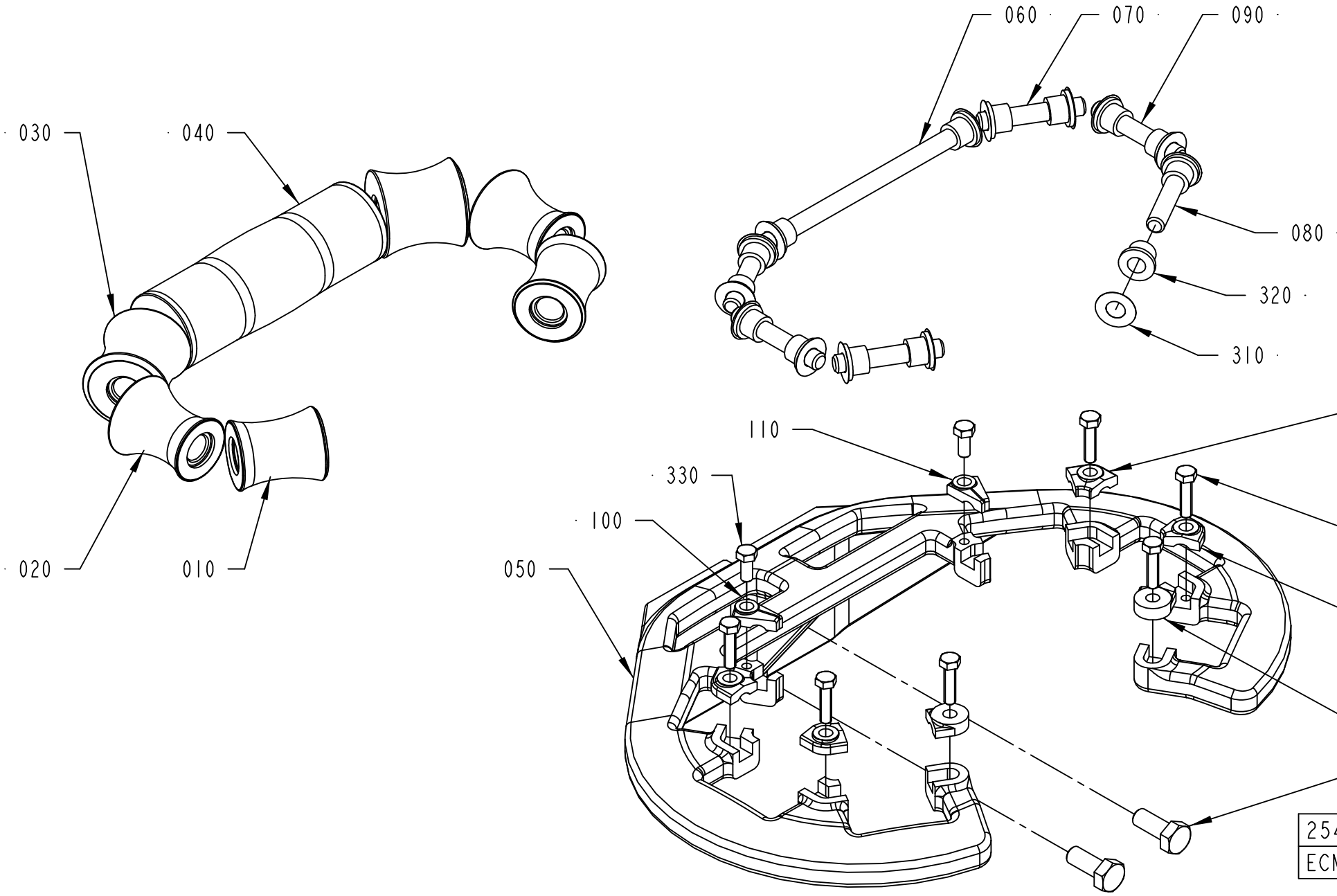
060
070
090
080
320
310
030
040
020
010
110
330
100
050
120
380
130
140
370
2547421-1
ECM 117070

ECM: 274258 - 20060728
Group number: 2547421-0100
Assembly Drawing: 2547421-1_1_AA

This list covers pages from 1-74 to 1-79

Pos	Part No	UN	Qty	Description	Page No
TPA 0330SQ (See drawing on page: 1-74)					
010	2682169-0000		2	ROLLER	
020	2682168-0000		2	ROLLER	
030	2682167-0000		2	ROLLER	
040	2682170-0000		1	ROLLER	
050	2611038-0000		1	SUPPORT RING	
060	752186-0009		1	SHAFT	
070	752186-0012		2	SHAFT	
080	752186-0012		2	SHAFT	
090	752186-0002		2	SHAFT	
120	2562667-0008		6	LOCK PLATE	
140	2532895-0001		2	LOCK PLATE	
310	2033-0011		14	WASHER	
320	90240-0172		14	FLANGE BUSHING, 8X12X10 MM	
370	312105-0453		2	SCREW M6S ISO 4017 M8X25 A480	
380	312105-0331		8	SCREW M6S ISO 4017 M5X20 A480	
TPA 0500SQ (See drawing on page: 1-74)					
010	2680193-0000		2	ROLLER	
020	2685633-0000		2	ROLLER	
030	2685632-0000		2	ROLLER	
040	2685631-0000		1	ROLLER	
050	2611038-0000		1	SUPPORT RING	
060	752186-0009		1	SHAFT	
070	752186-0012		2	SHAFT	
080	752186-0012		2	SHAFT	
090	752186-0002		2	SHAFT	
120	2562667-0008		6	LOCK PLATE	
140	2532895-0001		2	LOCK PLATE	
310	2033-0011		14	WASHER	
320	90240-0172		14	FLANGE BUSHING, 8X12X10 MM	
370	312105-0453		2	SCREW M6S ISO 4017 M8X25 A480	
380	312105-0331		8	SCREW M6S ISO 4017 M5X20 A480	
TPA 1000SQ, TPA 0750SQ (See drawing on page: 1-74)					
010	1524150-0000		2	ROLLER	
020	1524149-0000		2	ROLLER	
030	1524148-0000		2	ROLLER	
040	1524147-0000		1	ROLLER	
050	2559105-0000		1	SUPPORT RING	
060	2522213-0008		1	SHAFT	
070	752186-0012		2	SHAFT	
080	2522213-0009		4	SHAFT	
120	2562667-0008		6	LOCK PLATE	
140	2532895-0008		2	LOCK PLATE	
310	2033-0011		14	WASHER	
320	90240-0172		14	FLANGE BUSHING, 8X12X10 MM	
370	312105-0451		2	SCREW M6S ISO 4017 M8X20 A480	
380	312105-0331		8	SCREW M6S ISO 4017 M5X20 A480	
A3/FLEX TBA 1000S (See drawing on page: 1-74)					
010	2512748-0000		2	ROLLER	
020	2512749-0000		2	ROLLER	
030	2512746-0000		2	ROLLER	
040	2514521-0000		2	ROLLER	
050	2552161-0000		1	SUPPORT RING	
060	2522213-0005		1	SHAFT	
070	752186-0005		2	SHAFT	
080	2522213-0004		2	SHAFT	
090	752186-0019		2	SHAFT	
100	2552176-0003		1	LOCK PLATE	
110	2552177-0003		1	LOCK PLATE	
120	2528123-0007		2	LOCK PLATE	
130	2528123-0001		2	LOCK PLATE	
140	2532895-0003		2	LOCK PLATE	
310	2033-0011		16	WASHER	
320	90240-0172		16	FLANGE BUSHING, 8X12X10 MM	
330	312105-0327		2	SCREW M6S ISO 4017 M5X12 A480	
370	312105-0451		2	SCREW M6S ISO 4017 M8X20 A480	
380	312105-0331		6	SCREW M6S ISO 4017 M5X20 A480	
A3/FLEX TBA 1000SQ (See drawing on page: 1-74)					
010	2634971-0000		2	ROLLER	
020	2634970-0000		2	ROLLER	
030	2634969-0000		2	ROLLER	
040	2634968-0000		1	ROLLER	
050	2634967-0000		1	SUPPORT RING	
060	2522213-0008		1	SHAFT	
070	752186-0012		2	SHAFT	
080	2522213-0009		4	SHAFT	
120	2562667-0009		6	LOCK PLATE	
140	2532895-0003		2	LOCK PLATE	
310	2033-0011		14	WASHER	
320	90240-0172		14	FLANGE BUSHING, 8X12X10 MM	
370	312105-0451		2	SCREW M6S ISO 4017 M8X20 A480	
380	312105-0331		8	SCREW M6S ISO 4017 M5X20 A480	
TBA 0200S, TPA 0250SQ, TPA 0200SQ (See drawing on page: 1-76)					
010	752128-0000		2	FORMING ROLLER	

Machine Type | Group Description | Used-In | Group Number | Page No

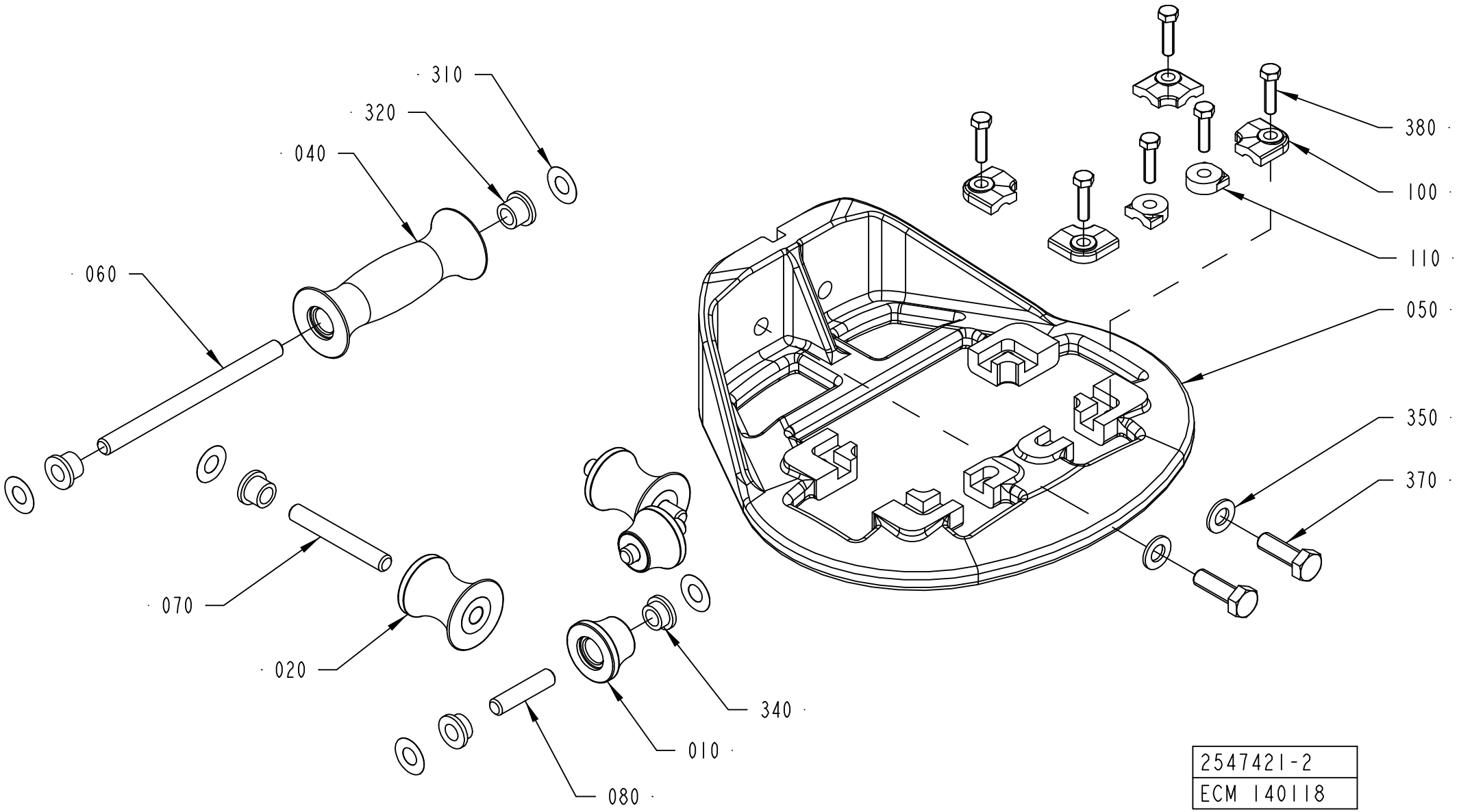
310
320
040
060
070
020
080
010
340
380
100
110
050
350
370
2547421-2
ECM 140118

Pos	Part No	UN	Qty	Description	Page No
TBA 0200S, TPA 0250SQ, TPA 0200SQ (Cont'd) (See drawing on page: 1-76)					
020	752127-0000		2	FORMING ROLLER	
040	752126-0000		1	FORMING ROLLER	
050	2565430-0000		1	SUPPORT RING	
060	752186-0008		1	SHAFT	
070	2522213-0006		2	SHAFT	
080	2522213-0010		2	SHAFT	
100	2532912-0001		4	LOCK PLATE	
110	2532895-0002		2	LOCK PLATE	
310	2033-0011		10	WASHER	
320	90240-0172		6	FLANGE BUSHING, 8X12X10 MM	
340	752156-0000		4	FLANGE BUSHING	
350	315105-0165		2	WASHER BRB 8,4X16 RFR	
370	312105-0453		2	SCREW M6S ISO 4017 M8X25 A480	
380	312105-0331		6	SCREW M6S ISO 4017 M5X20 A480	
TBA 0200SQ, TBA 0250SQ (See drawing on page: 1-78)					
010	2761021-0000		2	ROLLER	
020	2761020-0000		2	ROLLER	
030	2761019-0000		2	ROLLER	
040	2761018-0000		1	ROLLER	
050	2761017-0000		1	SUPPORT RING	
060	2522213-0004		1	SHAFT	
070	752186-0006		2	SHAFT	
080	752186-0006		2	SHAFT	
090	2522213-0006		2	SHAFT	
120	2761022-0000		2	LOCK PLATE	
130	2528123-0007		4	LOCK PLATE	
140	2532895-0002		2	LOCK PLATE	
310	2033-0011		14	WASHER	
320	90240-0172		14	FLANGE BUSHING, 8X12X10 MM	
370	312105-0453		2	SCREW M6S ISO 4017 M8X25 A480	
380	312105-0331		8	SCREW M6S ISO 4017 M5X20 A480	
TBA 0250S, TBA 0200M (See drawing on page: 1-76)					
010	2611027-0000		2	ROLLER	
020	2611026-0000		2	ROLLER	
040	2611025-0000		1	ROLLER	
050	2611028-0000		1	SUPPORT ROLLER	
060	752186-0008		1	SHAFT	
070	2522213-0006		2	SHAFT	
080	752186-0013		2	SHAFT	
100	2532912-0002		4	LOCK PLATE	
110	2532895-0006		2	LOCK PLATE	
310	2033-0011		10	WASHER	
320	90240-0172		6	FLANGE BUSHING, 8X12X10 MM	
340	752156-0000		4	FLANGE BUSHING	
350	315105-0165		2	WASHER BRB 8,4X16 RFR	
370	312105-0453		2	SCREW M6S ISO 4017 M8X25 A480	
380	312105-0331		6	SCREW M6S ISO 4017 M5X20 A480	
TBA 0330S, TBA 0200B, TBA 0250B (See drawing on page: 1-76)					
010	2544881-0000		2	ROLLER	
020	751492-0000		2	ROLL	
040	751491-0000		1	ROLL	
050	2565431-0000		1	SUPPORT RING	
060	2522213-0005		1	SHAFT	
070	2522213-0006		2	SHAFT	
080	2522213-0004		2	SHAFT	
100	2532912-0002		4	LOCK PLATE	
110	2532895-0003		2	LOCK PLATE	
310	2033-0011		10	WASHER	
320	90240-0172		10	FLANGE BUSHING, 8X12X10 MM	
350	315105-0165		2	WASHER BRB 8,4X16 RFR	
370	312105-0453		2	SCREW M6S ISO 4017 M8X25 A480	
380	312105-0331		6	SCREW M6S ISO 4017 M5X20 A480	
TBA 0500B, TBA 1000B, TBA 1500S (See drawing on page: 1-74)					
010	2552206-0000		2	ROLLER	
020	2552205-0000		2	ROLLER	
030	2552188-0000		2	ROLLER	
040	2552187-0000		1	ROLLER	
050	2552160-0000		1	SUPPORT RING	
060	2522213-0005		1	SHAFT	
070	752186-0005		2	SHAFT	
080	2522213-0004		2	SHAFT	
090	752186-0019		2	SHAFT	
100	2552176-0001		1	LOCK PLATE	
110	2552177-0001		1	LOCK PLATE	
120	2528123-0002		2	LOCK PLATE	
130	2528123-0008		2	LOCK PLATE	
140	2532895-0004		2	LOCK PLATE	
310	2033-0011		14	WASHER	
320	90240-0172		14	FLANGE BUSHING, 8X12X10 MM	
330	312105-0327		2	SCREW M6S ISO 4017 M5X12 A480	
370	312105-0451		2	SCREW M6S ISO 4017 M8X20 A480	
380	312105-0331		6	SCREW M6S ISO 4017 M5X20 A480	
TBA 0500S (See drawing on page: 1-74)					

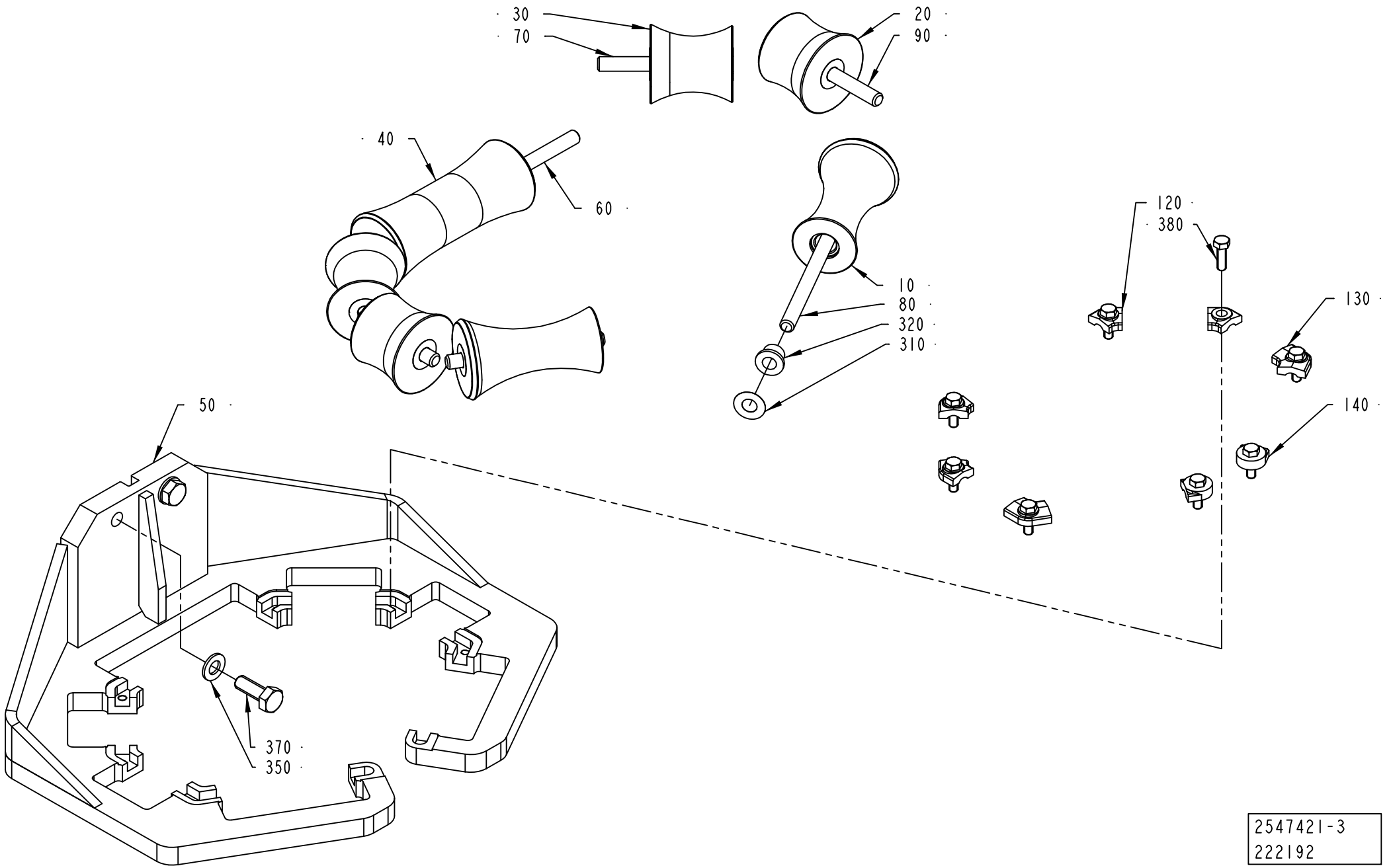

2547421-3
222192

Pos	Part No	UN	Qty	Description	Page No
TBA 0500S (Cont'd) (See drawing on page: 1-74)					
010	2672986-0000		2	ROLLER	
020	2672985-0000		2	ROLLER	
030	2672970-0000		2	ROLLER	
040	2709302-0000		1	ROLLER	
050	2611038-0000		1	SUPPORT RING	
060	752186-0009		1	SHAFT	
070	752186-0012		2	SHAFT	
080	752186-0012		2	SHAFT	
090	752186-0002		2	SHAFT	
120	2562667-0008		6	LOCK PLATE	
140	2532895-0001		2	LOCK PLATE	
310	2033-0011		14	WASHER	
320	90240-0172		14	FLANGE BUSHING, 8X12X10 MM	
370	312105-0451		2	SCREW M6S ISO 4017 M8X20 A480	
380	312105-0331		8	SCREW M6S ISO 4017 M5X20 A480	
TBA 1890S, TBA 2000S, TBA 1400B (See drawing on page: 1-78)					
010	2601286-0000		2	ROLLER	
020	2601285-0000		2	ROLLER	
030	2601279-0000		2	ROLLER	
040	2601278-0000		1	ROLLER	
050	2634926-0000		1	SUPPORT ROLLER	
060	2522213-0019		1	SHAFT	
070	752186-0006		2	SHAFT	
080	2522213-0020		2	SHAFT	
090	752186-0019		2	SHAFT	
120	2562667-0008		4	LOCK PLATE	
130	2528123-0007		2	LOCK PLATE	
140	2532895-0002		2	LOCK PLATE	
310	2033-0011		14	WASHER	
320	90240-0172		14	FLANGE BUSHING, 8X12X10 MM	
350	315105-0165		2	WASHER BRB 8,4X16 RFR	
370	312105-0452		2	SCREW M6S ISO 4017 M8X22 A4 80	
380	312105-0329		8	SCREW M6S ISO 4017 M5X16 A480	

Pos	Part No	UN	Qty	Description	Page No

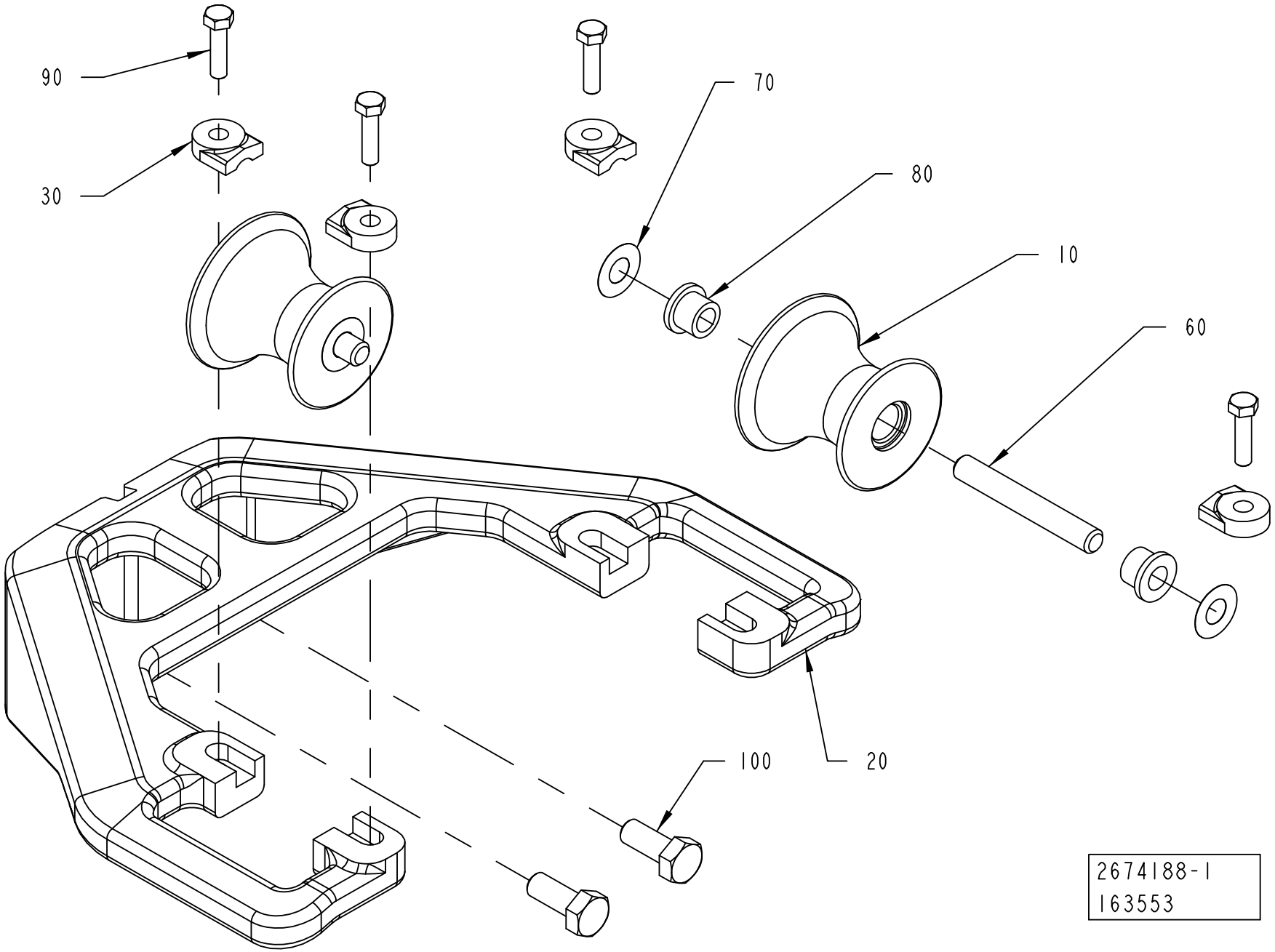
90
30
70
80
10
60
100
20
2674188-1
163553

ECM: 223505 - 20050713
Group number: 2674188-0100
Assembly Drawing: 2674188-1_1_AA

This list covers pages from 1-80 to 1-83

Pos	Part No	UN	Qty	Description	Page No
TBA 0200S, TPA 0250SQ, TPA 0200SQ (See drawing on page: 1-80)					
010	2640354-0000		2	ROLLER	
020	2640353-0000		1	BRACKET	
030	2532895-0009		4	LOCK PLATE	
060	2522213-0006		2	SHAFT	
070	2033-0011		4	WASHER	
080	90240-0172		4	FLANGE BUSHING, 8X12X10 MM	
090	312105-0331		4	SCREW M6S ISO 4017 M5X20 A480	
100	312105-0451		2	SCREW M6S ISO 4017 M8X20 A480	
TBA 0250S, TBA 0200M (See drawing on page: 1-82)					
005	2611039-0000		1	ROLLER	
010	2611040-0000		2	ROLLER	
020	2611041-0000		1	SUPPORT ROLLER	
030	2532895-0009		4	LOCK PLATE	
040	2532895-0003		2	LOCK PLATE	
060	2522213-0006		3	SHAFT	
070	2033-0011		6	WASHER	
080	90240-0172		6	FLANGE BUSHING, 8X12X10 MM	
090	312105-0331		6	SCREW M6S ISO 4017 M5X20 A480	
100	312105-0451		2	SCREW M6S ISO 4017 M8X20 A480	
TBA 0330S, TBA 0200B, TBA 0250B (See drawing on page: 1-80)					
010	2634943-0000		2	ROLLER	
020	2657860-0000		1	BRACKET	
030	2532895-0005		4	LOCK PLATE	
060	2522213-0007		2	SHAFT	
070	2033-0011		4	WASHER	
080	90240-0172		4	FLANGE BUSHING, 8X12X10 MM	
090	312105-0331		4	SCREW M6S ISO 4017 M5X20 A480	
100	312105-0449		2	SCREW M6S ISO 4017 M8X16 A480	

Pos	Part No	UN	Qty	Description	Page No

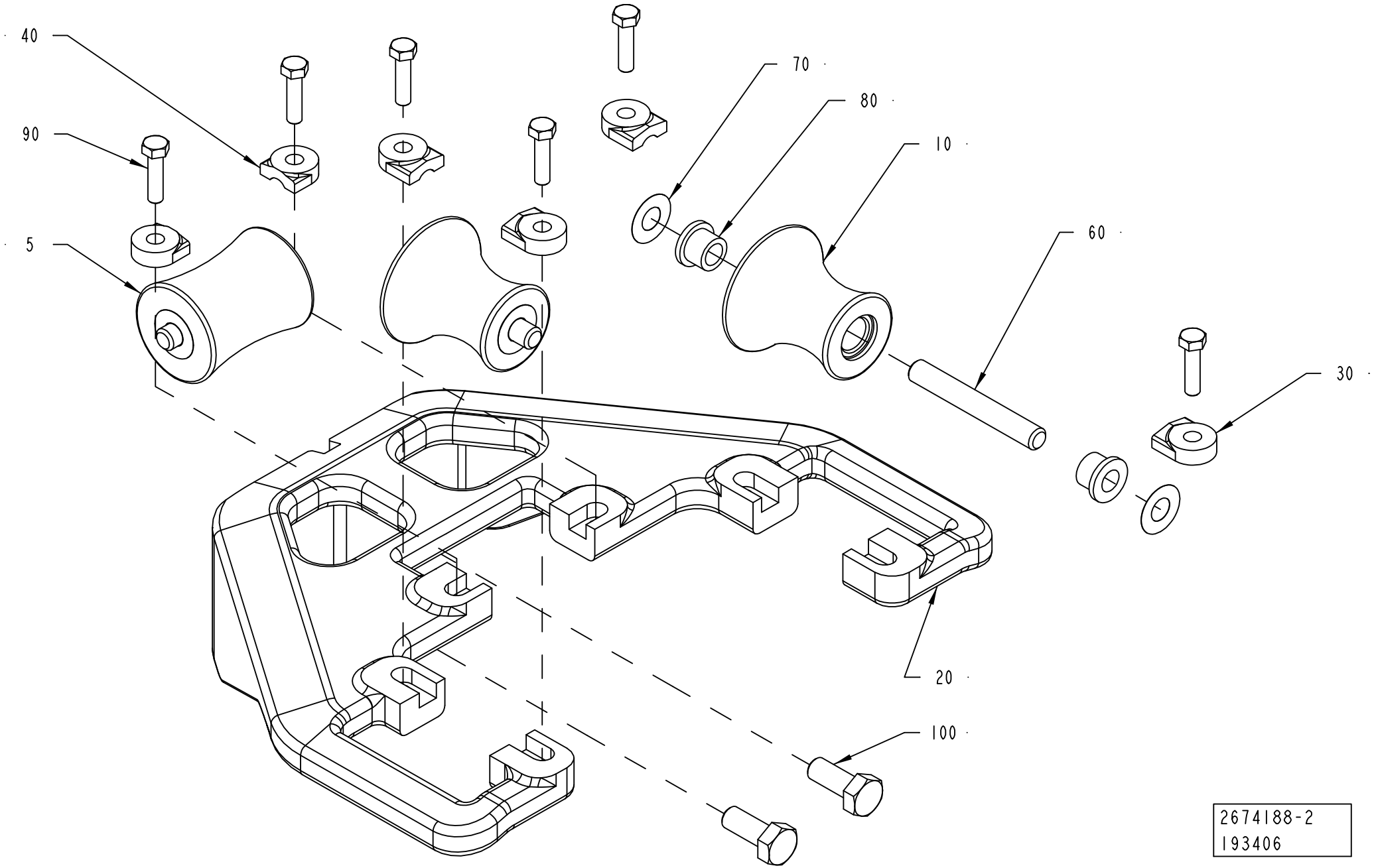
40
90
5
70
80
10
60
30
20
100
2674188-2
193406

ECM: 223505 - 20050713
Group number: 2674188-0100
Assembly Drawing: 2674188-2_1_AA

This list covers pages from 1-80 to 1-83

Pos	Part No	UN	Qty	Description	Page No
TBA 0200S, TPA 0250SQ, TPA 0200SQ (See drawing on page: 1-80)					
010	2640354-0000		2	ROLLER	
020	2640353-0000		1	BRACKET	
030	2532895-0009		4	LOCK PLATE	
060	2522213-0006		2	SHAFT	
070	2033-0011		4	WASHER	
080	90240-0172		4	FLANGE BUSHING, 8X12X10 MM	
090	312105-0331		4	SCREW M6S ISO 4017 M5X20 A480	
100	312105-0451		2	SCREW M6S ISO 4017 M8X20 A480	
TBA 0250S, TBA 0200M (See drawing on page: 1-82)					
005	2611039-0000		1	ROLLER	
010	2611040-0000		2	ROLLER	
020	2611041-0000		1	SUPPORT ROLLER	
030	2532895-0009		4	LOCK PLATE	
040	2532895-0003		2	LOCK PLATE	
060	2522213-0006		3	SHAFT	
070	2033-0011		6	WASHER	
080	90240-0172		6	FLANGE BUSHING, 8X12X10 MM	
090	312105-0331		6	SCREW M6S ISO 4017 M5X20 A480	
100	312105-0451		2	SCREW M6S ISO 4017 M8X20 A480	
TBA 0330S, TBA 0200B, TBA 0250B (See drawing on page: 1-80)					
010	2634943-0000		2	ROLLER	
020	2657860-0000		1	BRACKET	
030	2532895-0005		4	LOCK PLATE	
060	2522213-0007		2	SHAFT	
070	2033-0011		4	WASHER	
080	90240-0172		4	FLANGE BUSHING, 8X12X10 MM	
090	312105-0331		4	SCREW M6S ISO 4017 M5X20 A480	
100	312105-0449		2	SCREW M6S ISO 4017 M8X16 A480	

Pos	Part No	UN	Qty	Description	Page No

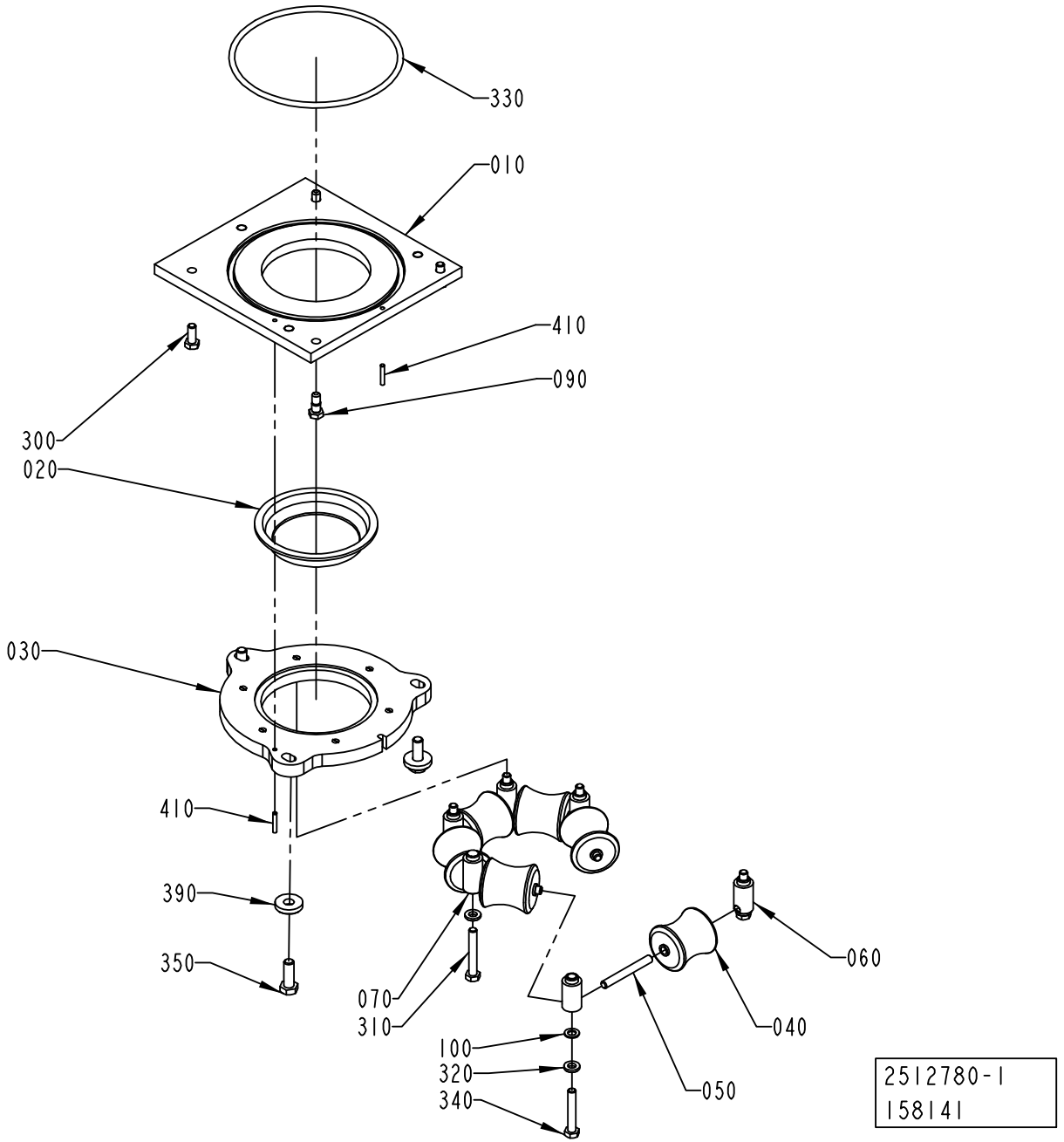
330
010
410
090
300
020
030
410
390
350
070
310
100
320
340
060
040
050
2512780-1
158141

ECM: 271560 - 20060706
Group number: 2512780-0100
Assembly Drawing: 2512780-1_1_AB

This list covers pages from 1-84 to 1-89

Pos	Part No	UN	Qty	Description	Page No
TBA 0200S, TPA 0250SQ, TPA 0200SQ (See drawing on page: 1-86)					
010	2562711-0000		1	PLATE	
020	490901-0000		1	SEAL	
030	2562710-0000		1	RING	
040	2562709-0000		2	ROLLER	
050	263655-0018		2	SHAFT	
060	1038576-0000		4	AXLE SUPPORT	
340	312109-0459		4	SCREW M6S ISO 4017 M8X40 A480	
350	312105-0372		3	SCREW M6S ISO 4017 M6X25 A480	
390	315115-0153		3	WASHER PLAIN, TBRB 6,4/12 H=3	
410	311103-1274		1	PARALLEL PIN ISO 2338 4M6X24 A1	
TBA 0250S, TBA 0200M (See drawing on page: 1-86)					
010	2611044-0000		1	PLATE	
020	574336-0000		1	SEAL	
030	2611045-0000		1	RING	
040	2616231-0000		2	ROLLER	
050	263655-0018		2	SHAFT	
060	1038576-0000		4	AXLE SUPPORT	
340	312109-0459		4	SCREW M6S ISO 4017 M8X40 A480	
350	312105-0372		3	SCREW M6S ISO 4017 M6X25 A480	
390	315115-0153		3	WASHER PLAIN, TBRB 6,4/12 H=3	
410	311103-1274		1	PARALLEL PIN ISO 2338 4M6X24 A1	
TBA 0330S, TBA 0200B, TBA 0250B, TBA 0200SQ, TBA 0250SQ (See drawing on page: 1-86)					
010	2528097-0000		1	PLATE	
020	273953-0000		1	SEAL	
030	2528096-0000		1	RING	
040	456796-0000		2	ROLLER	
050	263655-0006		2	SHAFT	
060	1038576-0000		4	AXLE SUPPORT	
340	312109-0459		4	SCREW M6S ISO 4017 M8X40 A480	
350	312105-0372		3	SCREW M6S ISO 4017 M6X25 A480	
390	315115-0153		3	WASHER PLAIN, TBRB 6,4/12 H=3	
410	311103-1274		1	PARALLEL PIN ISO 2338 4M6X24 A1	
TBA 0500B, TBA 1000B, TBA 1500S (See drawing on page: 1-84)					
010	2559104-0000		1	PLATE	
020	466042-0000		1	SEAL	
030	2512779-0000		1	RING	
040	466046-0000		6	ROLLER	
050	263655-0009		6	SHAFT	
060	1036954-0000		4	AXLE SUPPORT	
070	1036955-0000		2	AXLE SUPPORT	
100	1129431-0000		4	WASHER	
310	312105-0462		2	SCREW M6S ISO 4014 M8X55 A480	
320	315115-0165		6	WASHER PLAIN, TBRB 8,4/16 H=3	
340	312109-0461		4	SCREW M6S ISO 4017 M8X50 A480	
350	312105-0495		3	SCREW M6S ISO 4017 M10X30 A480	
390	315125-0173		3	WASHER TBRSB 10,5X28X6 A4	
410	311103-1274		2	PARALLEL PIN ISO 2338 4M6X24 A1	
TBA 0500S (See drawing on page: 1-84)					
010	2559103-0000		1	PLATE	
020	466089-0000		1	SEAL	
030	2559102-0000		1	RING	
040	466092-0000		6	ROLL	
050	263655-0007		6	SHAFT	
060	1036954-0000		4	AXLE SUPPORT	
070	1036955-0000		2	AXLE SUPPORT	
100	1129431-0000		4	WASHER	
310	312105-0462		2	SCREW M6S ISO 4014 M8X55 A480	
320	315115-0165		6	WASHER PLAIN, TBRB 8,4/16 H=3	
340	312109-0461		4	SCREW M6S ISO 4017 M8X50 A480	
350	312105-0495		3	SCREW M6S ISO 4017 M10X30 A480	
390	315125-0173		3	WASHER TBRSB 10,5X28X6 A4	
410	311103-1274		2	PARALLEL PIN ISO 2338 4M6X24 A1	
TBA 1000SQ (See drawing on page: 1-84)					
010	2559104-0000		1	PLATE	
020	579318-0000		1	SEAL	
030	2512779-0000		1	RING	
040	1490762-0000		6	ROLLER	
050	263655-0009		6	SHAFT	
060	1036954-0000		4	AXLE SUPPORT	
070	1036955-0000		2	AXLE SUPPORT	
100	1129431-0000		4	WASHER	
310	312105-0462		2	SCREW M6S ISO 4014 M8X55 A480	
320	315115-0165		6	WASHER PLAIN, TBRB 8,4/16 H=3	
340	312109-0461		4	SCREW M6S ISO 4017 M8X50 A480	
350	312105-0495		3	SCREW M6S ISO 4017 M10X30 A480	
390	315125-0173		3	WASHER TBRSB 10,5X28X6 A4	
410	311103-1274		2	PARALLEL PIN ISO 2338 4M6X24 A1	
TBA 1000S (See drawing on page: 1-84)					
010	2559104-0000		1	PLATE	
020	567743-0000		1	SEAL	
030	2512779-0000		1	RING	
040	573504-0000		6	ROLLER	
050	263655-0009		6	SHAFT	

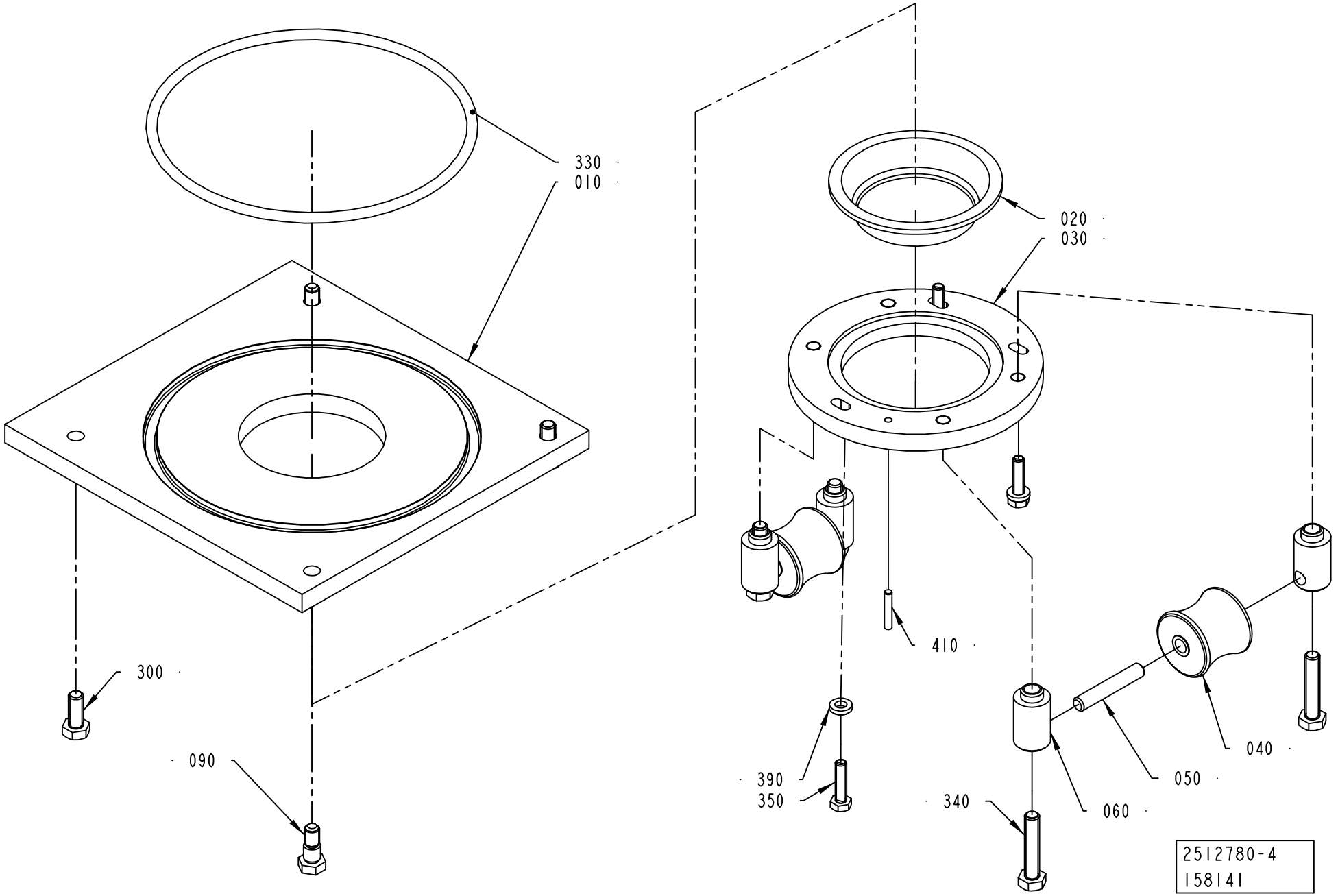
330
010
020
030
300
090
410
390
350
340
060
050
040
2512780-4
158141

Pos	Part No	UN	Qty	Description	Page No
TBA 1000S (Cont'd) (See drawing on page: 1-84)					
060	1036954-0000		4	AXLE SUPPORT	
070	1036955-0000		2	AXLE SUPPORT	
100	1129431-0000		4	WASHER	
310	312105-0462		2	SCREW M6S ISO 4014 M8X55 A480	
320	315115-0165		6	WASHER PLAIN, TBRB 8,4/16 H=3	
340	312109-0461		4	SCREW M6S ISO 4017 M8X50 A480	
350	312105-0495		3	SCREW M6S ISO 4017 M10X30 A480	
390	315125-0173		3	WASHER TBRSB 10,5X28X6 A4	
410	311103-1274		2	PARALLEL PIN ISO 2338 4M6X24 A1	
TBA 1890S, TBA 2000S, TBA 1400B (See drawing on page: 1-84)					
010	2582616-0000		1	PLATE	
020	2582623-0000		1	SEAL	
030	2582629-0000		1	RING	
040	2582630-0000		6	ROLLER	
050	263655-0015		6	SHAFT	
060	1036954-0000		4	AXLE SUPPORT	
070	1036955-0000		2	AXLE SUPPORT	
100	1129431-0000		4	WASHER	
310	312105-0462		2	SCREW M6S ISO 4014 M8X55 A480	
320	315115-0165		6	WASHER PLAIN, TBRB 8,4/16 H=3	
340	312109-0461		4	SCREW M6S ISO 4017 M8X50 A480	
350	312105-0495		3	SCREW M6S ISO 4017 M10X30 A480	
390	315125-0173		3	WASHER TBRSB 10,5X28X6 A4	
410	311103-1274		2	PARALLEL PIN ISO 2338 4M6X24 A1	
TPA 0330SQ (See drawing on page: 1-86)					
010	2528097-0000		1	PLATE	
020	929286-0000		1	SEAL	
030	2528096-0000		1	RING	
040	929284-0000		2	ROLLER	
050	263655-0006		2	SHAFT	
060	1038576-0000		4	AXLE SUPPORT	
340	312109-0459		4	SCREW M6S ISO 4017 M8X40 A480	
350	312105-0372		3	SCREW M6S ISO 4017 M6X25 A480	
390	315115-0153		3	WASHER PLAIN, TBRB 6,4/12 H=3	
410	311103-1274		1	PARALLEL PIN ISO 2338 4M6X24 A1	
TPA 0500SQ (See drawing on page: 1-88)					
010	2611046-0000		1	PLATE	
020	2718901-0000		1	SEAL	
030	2611047-0000		1	RING	
040	2552655-0000		5	ROLLER	
045	2552656-0000		1	ROLLER	
050	263655-0007		6	SHAFT	
060	1036954-0000		4	AXLE SUPPORT	
070	1036955-0000		2	AXLE SUPPORT	
100	1129431-0000		4	WASHER	
310	312105-0462		2	SCREW M6S ISO 4014 M8X55 A480	
320	315115-0165		6	WASHER PLAIN, TBRB 8,4/16 H=3	
340	312109-0461		4	SCREW M6S ISO 4017 M8X50 A480	
350	312105-0495		3	SCREW M6S ISO 4017 M10X30 A480	
390	315125-0173		3	WASHER TBRSB 10,5X28X6 A4	
410	311103-1274		2	PARALLEL PIN ISO 2338 4M6X24 A1	
TPA 1000SQ, TPA 0750SQ (See drawing on page: 1-84)					
010	2559103-0000		1	PLATE	
020	1524414-0000		1	SEAL	
030	2559102-0000		1	RING	
040	1524416-0000		6	ROLLER	
050	263655-0007		6	SHAFT	
060	1036954-0000		4	AXLE SUPPORT	
070	1036955-0000		2	AXLE SUPPORT	
100	1129431-0000		4	WASHER	
310	312105-0462		2	SCREW M6S ISO 4014 M8X55 A480	
320	315115-0165		6	WASHER PLAIN, TBRB 8,4/16 H=3	
340	312109-0461		4	SCREW M6S ISO 4017 M8X50 A480	
350	312105-0495		3	SCREW M6S ISO 4017 M10X30 A480	
390	315125-0173		3	WASHER TBRSB 10,5X28X6 A4	
410	311103-1274		2	PARALLEL PIN ISO 2338 4M6X24 A1	
Common Parts					
090	1037885-0000		2	REAMED BOLT	
300	312105-0451		2	SCREW M6S ISO 4017 M8X20 A480	
330	315204-0324		1	O-RING 164,3X5,7 MM	

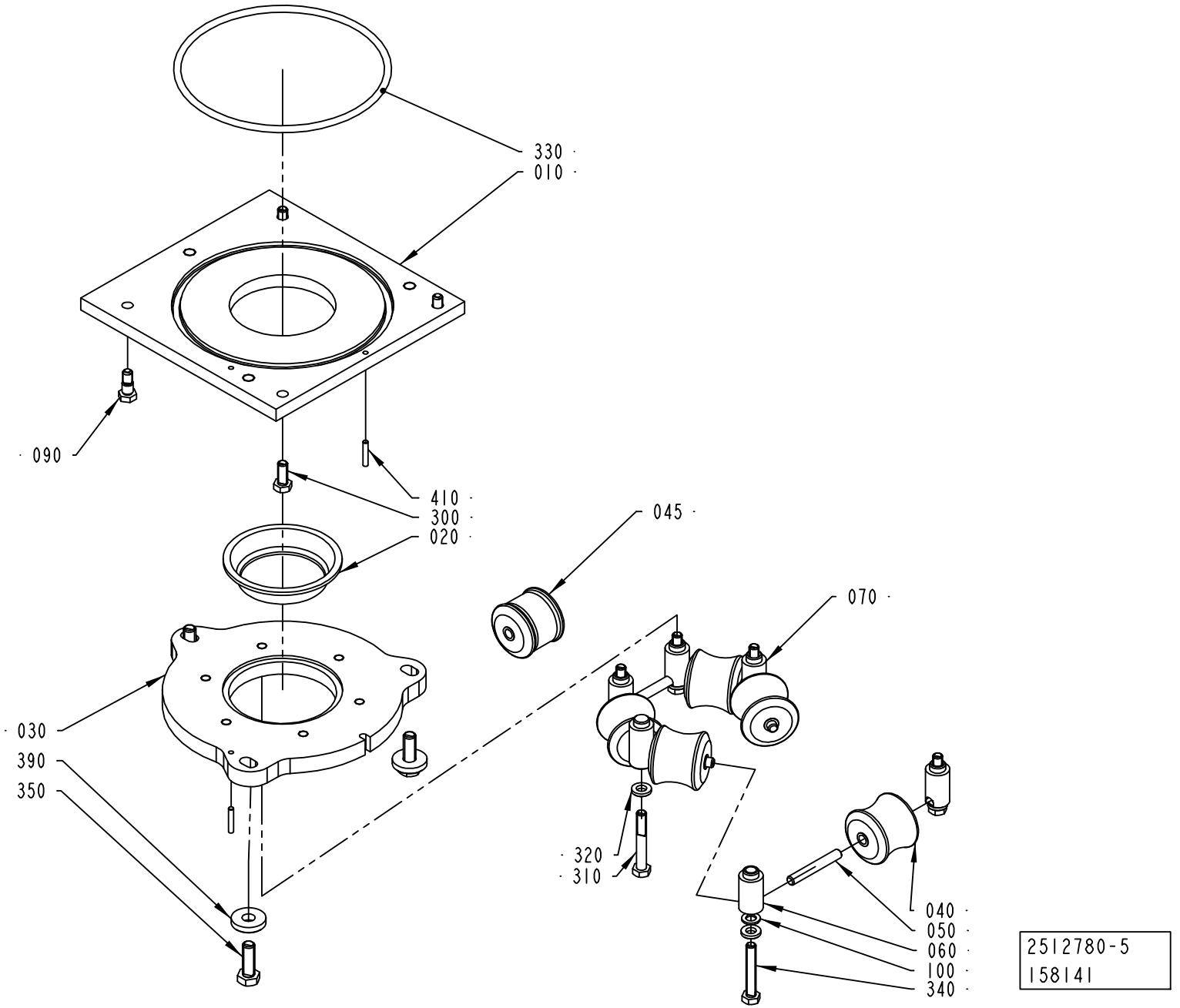
330
010
090
410
300
020
045
070
030
390
350
320
310
040
050
060
100
340
2512780-5
158141

Pos	Part No	UN	Qty	Description	Page No	Pos	Part No	UN	Qty	Description	Page No

SEE PREVIOUS LISTS PAGES: 1-85, 1-87.

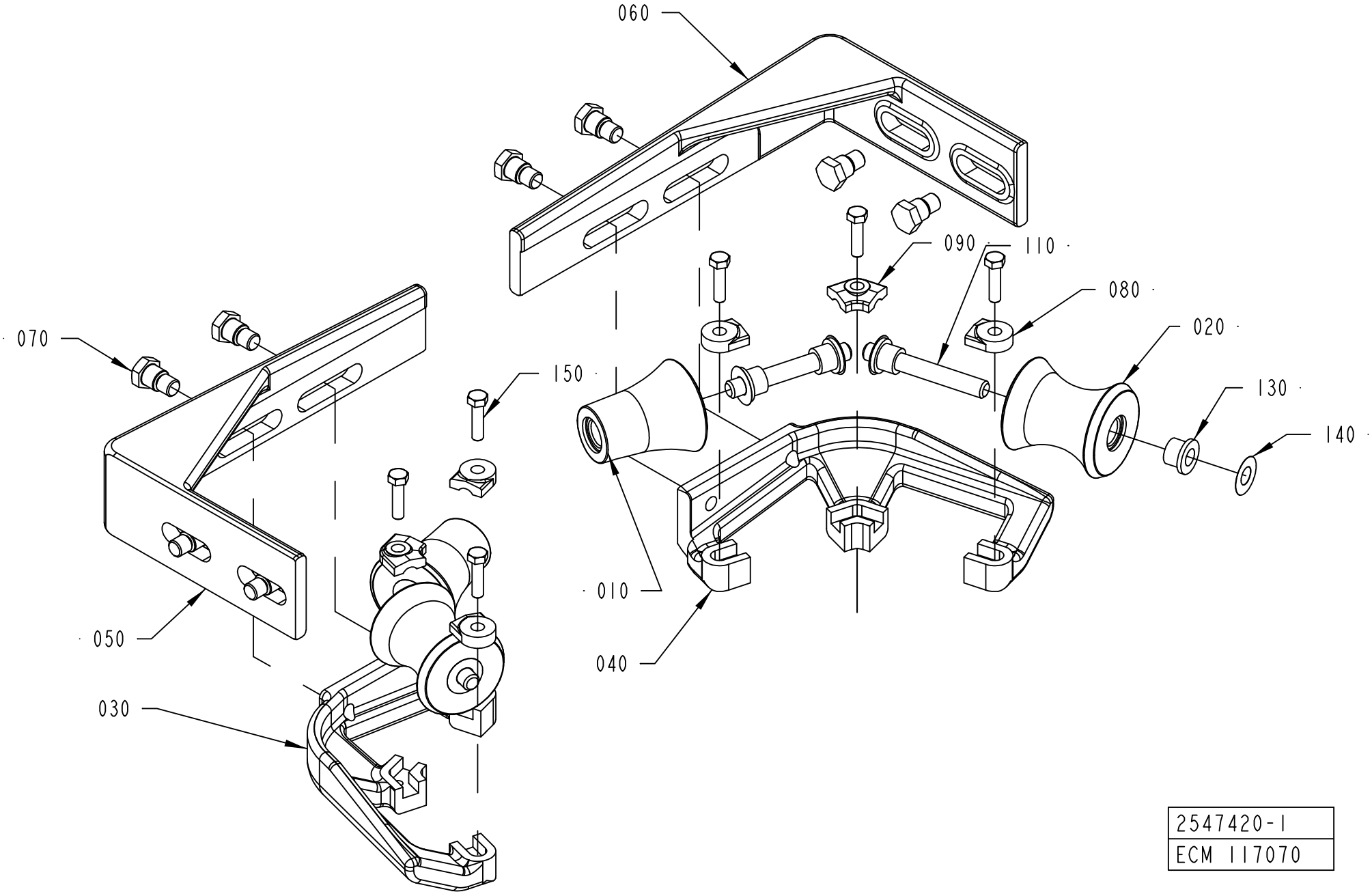

2547420-1
ECM 117070

ECM: 271579 - 20060706
Group number: 2547420-0100
Assembly Drawing: 2547420-1_1_AA

This list covers pages from 1-90 to 1-93

Pos	Part No	UN	Qty	Description	Page No
TBA 0500B, TBA 1000B (See drawing on page: 1-90)					
010	2651790-0000		2	ROLLER	
020	2651789-0000		2	ROLLER	
030	2552140-0000		1	BRACKET	
040	2552141-0000		1	BRACKET	
050	2552142-0000		1	BRACKET	
060	2552143-0000		1	BRACKET	
070	2552158-0000		8	SCREW	
080	2532895-0008		4	LOCK PLATE	
090	2528123-0006		2	LOCK PLATE	
110	752186-0016		4	SHAFT	
130	90240-0172		8	FLANGE BUSHING, 8X12X10 MM	
140	2033-0011		8	WASHER	
150	312105-0331		6	SCREW M6S ISO 4017 M5X20 A480	
TBA 1000S, TBA 1500S (See drawing on page: 1-90)					
010	2552144-0000		2	ROLL	
020	2562664-0000		2	ROLL	
030	2552140-0000		1	BRACKET	
040	2552141-0000		1	BRACKET	
050	2552142-0000		1	BRACKET	
060	2552143-0000		1	BRACKET	
070	2552158-0000		8	SCREW	
080	2532895-0008		4	LOCK PLATE	
090	2528123-0006		2	LOCK PLATE	
110	752186-0016		4	SHAFT	
130	90240-0172		8	FLANGE BUSHING, 8X12X10 MM	
140	2033-0011		8	WASHER	
150	312105-0331		6	SCREW M6S ISO 4017 M5X20 A480	
TBA 1000SQ (See drawing on page: 1-90)					
010	2552155-0000		2	ROLL	
020	2562684-0000		2	ROLL	
030	2552140-0000		1	BRACKET	
040	2552141-0000		1	BRACKET	
050	2552142-0000		1	BRACKET	
060	2552143-0000		1	BRACKET	
070	2552158-0000		8	SCREW	
080	2532895-0008		4	LOCK PLATE	
090	2528123-0006		2	LOCK PLATE	
110	752186-0016		4	SHAFT	
130	90240-0172		8	FLANGE BUSHING, 8X12X10 MM	
140	2033-0011		8	WASHER	
150	312105-0331		6	SCREW M6S ISO 4017 M5X20 A480	
TBA 1890S, TBA 2000S, TBA 1400B (See drawing on page: 1-92)					
010	2601269-0000		1	ROLLER	
015	2601272-0000		2	ROLLER	
020	2601271-0000		2	ROLLER	
025	2601273-0000		2	ROLLER	
050	2634930-0000		1	SUPPORT ROLLER	
060	2634931-0000		2	BRACKET	
080	2532895-0004		2	LOCK PLATE	
090	2562667-0002		6	LOCK PLATE	
100	2522213-0016		1	SHAFT	
110	2522213-0015		4	SHAFT	
120	2522213-0017		2	SHAFT	
130	90240-0172		14	FLANGE BUSHING, 8X12X10 MM	
140	2033-0011		14	WASHER	
150	312105-0329		8	SCREW M6S ISO 4017 M5X16 A480	
160	312105-0368		4	SCREW M6S ISO 4017 M6X16 A480	
170	312105-0370		4	SCREW M6S ISO 4017 M6X20 A480	
180	90005-0060		4	WASHER PLAIN, RBS 6,4/M6)/18,H=1,5	
190	311103-0353		2	PARALLEL PIN ISO 2338 6M6X20 A1	
TPA 1000SQ, TPA 0750SQ (See drawing on page: 1-90)					
010	2562694-0000		2	ROLLER	
020	2562695-0000		2	ROLLER	
030	2562696-0000		1	BRACKET	
040	2562697-0000		1	BRACKET	
050	2562692-0000		1	BRACKET	
060	2562693-0000		1	BRACKET	
070	2552158-0000		8	SCREW	
080	2532895-0008		4	LOCK PLATE	
090	2528123-0009		2	LOCK PLATE	
110	752186-0016		4	SHAFT	
130	90240-0172		8	FLANGE BUSHING, 8X12X10 MM	
140	2033-0011		8	WASHER	
150	312105-0331		6	SCREW M6S ISO 4017 M5X20 A480	

Machine Type | Group Description | Used-In | Group Number | Page No

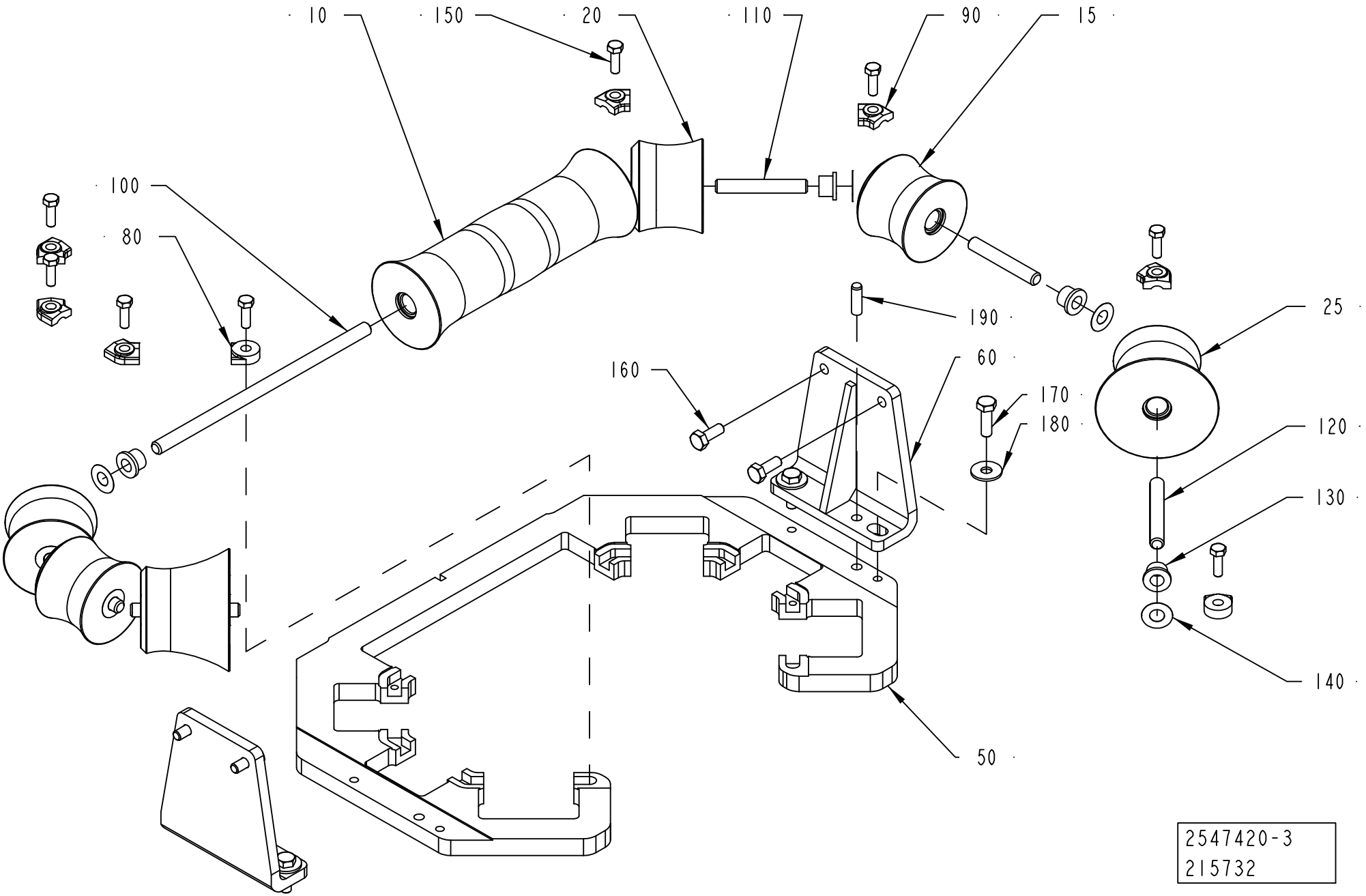
10
150
20
110
90
15
100
80
190
25
160
60
170
180
120
130
140
50
2547420-3
215732

ECM: 271579 - 20060706
Group number: 2547420-0100
Assembly Drawing: 2547420-3_1_AB

This list covers pages from 1-90 to 1-93

Pos	Part No	UN	Qty	Description	Page No
TBA 0500B, TBA 1000B (See drawing on page: 1-90)					
010	2651790-0000		2	ROLLER	
020	2651789-0000		2	ROLLER	
030	2552140-0000		1	BRACKET	
040	2552141-0000		1	BRACKET	
050	2552142-0000		1	BRACKET	
060	2552143-0000		1	BRACKET	
070	2552158-0000		8	SCREW	
080	2532895-0008		4	LOCK PLATE	
090	2528123-0006		2	LOCK PLATE	
110	752186-0016		4	SHAFT	
130	90240-0172		8	FLANGE BUSHING, 8X12X10 MM	
140	2033-0011		8	WASHER	
150	312105-0331		6	SCREW M6S ISO 4017 M5X20 A480	
TBA 1000S, TBA 1500S (See drawing on page: 1-90)					
010	2552144-0000		2	ROLL	
020	2562664-0000		2	ROLL	
030	2552140-0000		1	BRACKET	
040	2552141-0000		1	BRACKET	
050	2552142-0000		1	BRACKET	
060	2552143-0000		1	BRACKET	
070	2552158-0000		8	SCREW	
080	2532895-0008		4	LOCK PLATE	
090	2528123-0006		2	LOCK PLATE	
110	752186-0016		4	SHAFT	
130	90240-0172		8	FLANGE BUSHING, 8X12X10 MM	
140	2033-0011		8	WASHER	
150	312105-0331		6	SCREW M6S ISO 4017 M5X20 A480	
TBA 1000SQ (See drawing on page: 1-90)					
010	2552155-0000		2	ROLL	
020	2562684-0000		2	ROLL	
030	2552140-0000		1	BRACKET	
040	2552141-0000		1	BRACKET	
050	2552142-0000		1	BRACKET	
060	2552143-0000		1	BRACKET	
070	2552158-0000		8	SCREW	
080	2532895-0008		4	LOCK PLATE	
090	2528123-0006		2	LOCK PLATE	
110	752186-0016		4	SHAFT	
130	90240-0172		8	FLANGE BUSHING, 8X12X10 MM	
140	2033-0011		8	WASHER	
150	312105-0331		6	SCREW M6S ISO 4017 M5X20 A480	
TBA 1890S, TBA 2000S, TBA 1400B (See drawing on page: 1-92)					
010	2601269-0000		1	ROLLER	
015	2601272-0000		2	ROLLER	
020	2601271-0000		2	ROLLER	
025	2601273-0000		2	ROLLER	
050	2634930-0000		1	SUPPORT ROLLER	
060	2634931-0000		2	BRACKET	
080	2532895-0004		2	LOCK PLATE	
090	2562667-0002		6	LOCK PLATE	
100	2522213-0016		1	SHAFT	
110	2522213-0015		4	SHAFT	
120	2522213-0017		2	SHAFT	
130	90240-0172		14	FLANGE BUSHING, 8X12X10 MM	
140	2033-0011		14	WASHER	
150	312105-0329		8	SCREW M6S ISO 4017 M5X16 A480	
160	312105-0368		4	SCREW M6S ISO 4017 M6X16 A480	
170	312105-0370		4	SCREW M6S ISO 4017 M6X20 A480	
180	90005-0060		4	WASHER PLAIN, RBS 6,4/M6)/18,H=1,5	
190	311103-0353		2	PARALLEL PIN ISO 2338 6M6X20 A1	
TPA 1000SQ, TPA 0750SQ (See drawing on page: 1-90)					
010	2562694-0000		2	ROLLER	
020	2562695-0000		2	ROLLER	
030	2562696-0000		1	BRACKET	
040	2562697-0000		1	BRACKET	
050	2562692-0000		1	BRACKET	
060	2562693-0000		1	BRACKET	
070	2552158-0000		8	SCREW	
080	2532895-0008		4	LOCK PLATE	
090	2528123-0009		2	LOCK PLATE	
110	752186-0016		4	SHAFT	
130	90240-0172		8	FLANGE BUSHING, 8X12X10 MM	
140	2033-0011		8	WASHER	
150	312105-0331		6	SCREW M6S ISO 4017 M5X20 A480	

Machine Type | Group Description | Used-In | Group Number | Page No

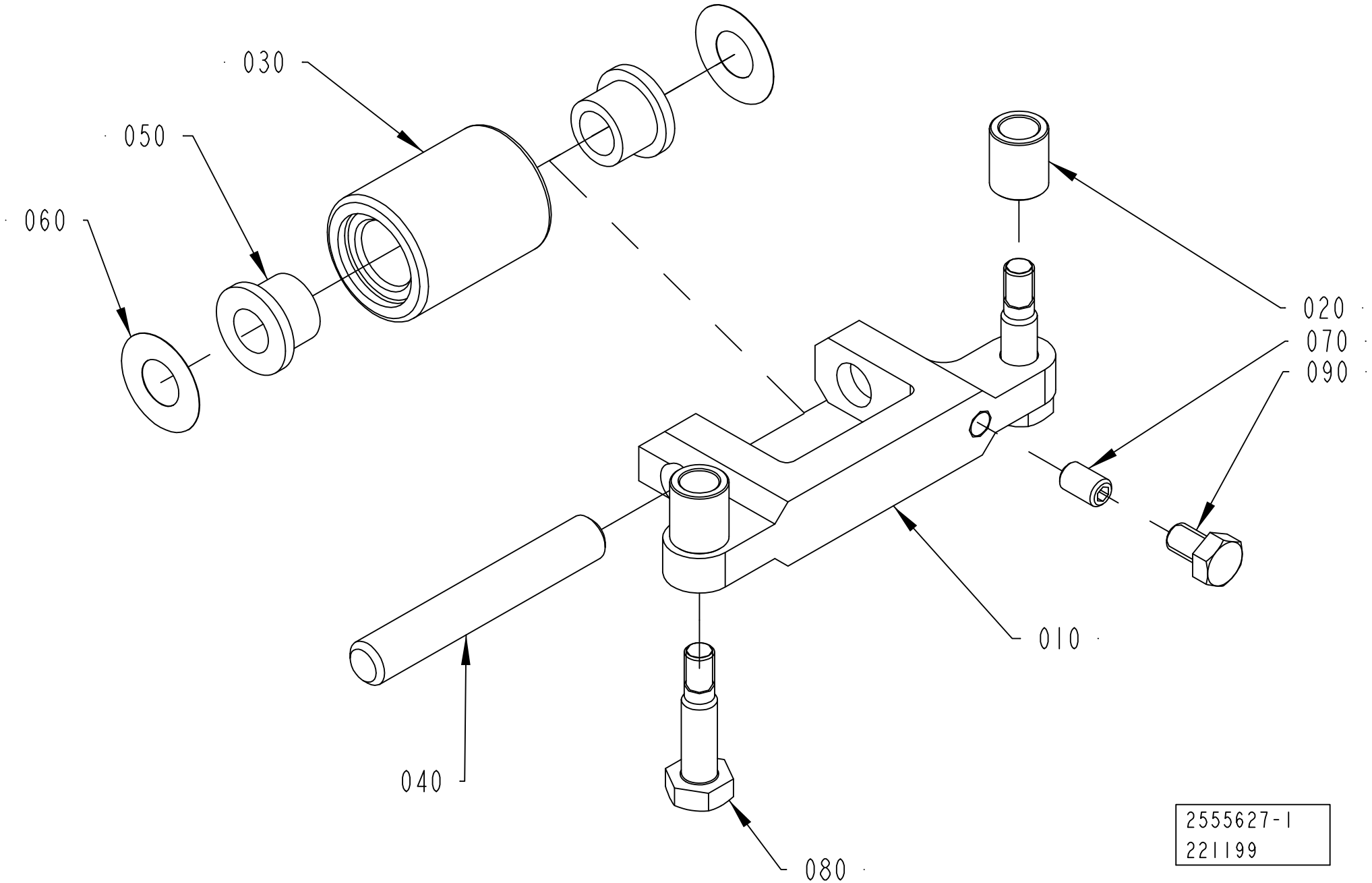
030
050
060
020
070
090
010
040
080
2555627-1
221199

ECM: 267089 - 20060703
Group number: 2555627-0100
Assembly Drawing: 2555627-1_1_AB

Pos	Part No	UN	Qty	Description	Page No
A3/FLEX TBA 1890S, A3/FLEX TBA 2000S, A3/FLEX TBA 1400B					
010	2594596-0000		1	BRACKET	
020	2715649-0004		2	SPACER	
030	2657925-0000		1	ROLLER	
080	2715650-0002		2	SCREW	
A3/FLEX TPA 1000SQ, A3/FLEX TPA 0750SQ					
010	2715567-0000		1	BRACKET	
020	2715649-0005		2	SPACER	
030	2715570-0000		1	ROLLER	
080	2715650-0006		2	SCREW	
Common Parts					
040	2522213-0015		1	SHAFT	
050	90240-0172		2	FLANGE BUSHING, 8X12X10 MM	
060	2033-0011		2	WASHER	
070	312318-0323		1	SCREW ISO4029 M5X8 A4	
090	312105-0323		1	SCREW M6S ISO 4017 M5X8 A480	

Pos	Part No	UN	Qty	Description	Page No

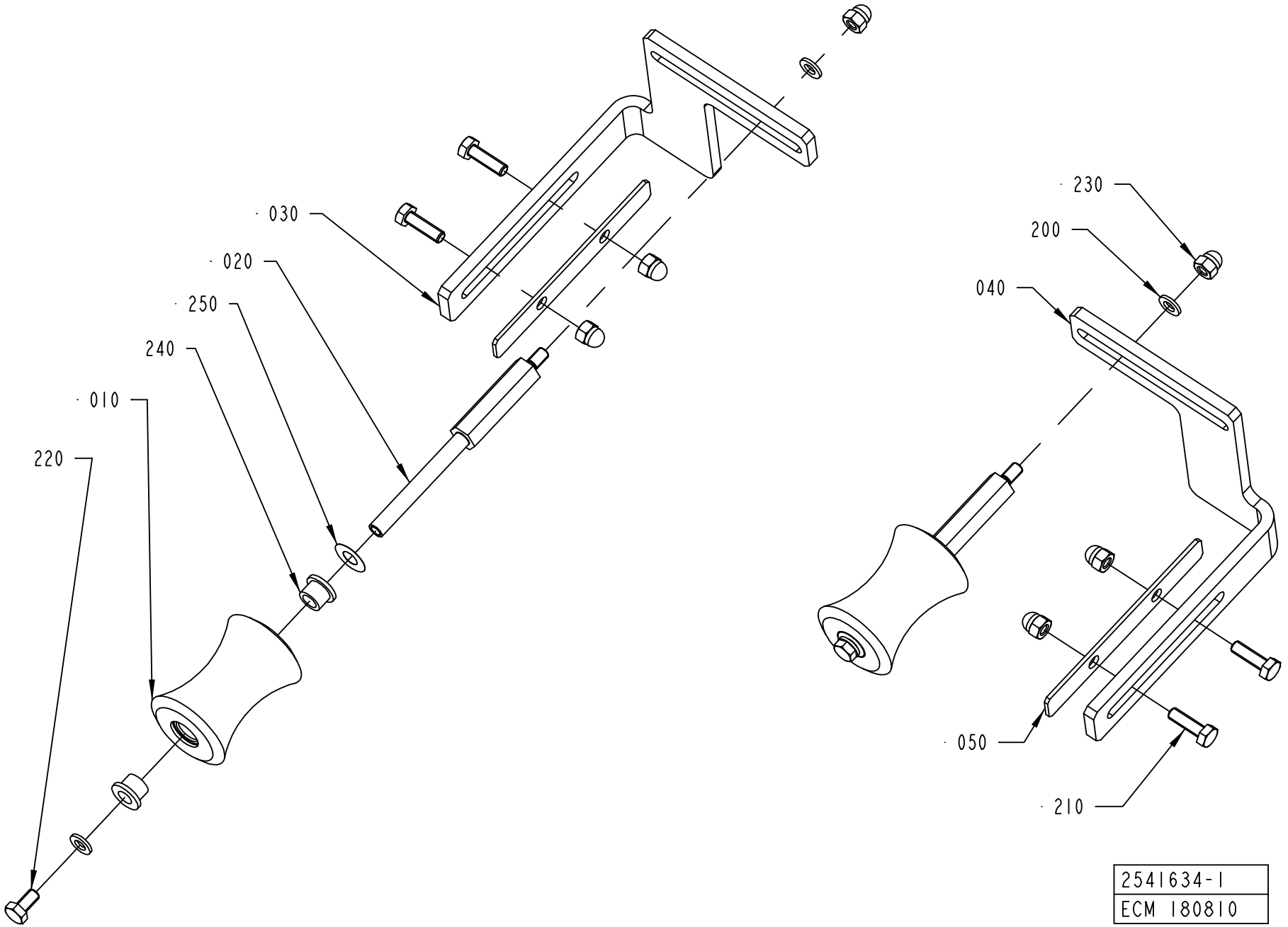
030
020
250
240
010
220
230
200
040
050
210
2541634-1
ECM 180810

Pos	Part No	UN	Qty	Description	Page No
A3/FLEX TBA 0500B, A3/FLEX TBA 1000B, A3/FLEX TBA 1000S, A3/FLEX TBA 1000SQ, A3/FLEX TPA 1000SQ, A3/FLEX TBA 0200S, A3/FLEX TBA 1500S, A3/FLEX TBA 0200B, A3/FLEX TBA 0250B, A3/FLEX TBA 0330S, A3/FLEX TPA 0330SQ, A3/FLEX TPA 0500SQ, A3/FLEX TBA 0200M, A3/FLEX TBA 0250S, A3/FLEX TBA 0500S, A3/FLEX TPA 0250SQ, A3/FLEX TPA 0200SQ, A3/FLEX TPA 0750SQ, A3/FLEX TBA 0200SQ, A3/FLEX TBA 0250SQ (See drawing on page: 1-96)					
010	1478359-0000		2	ROLLER	
020	1511492-0000		2	SHAFT	
030	2528112-0000		1	BRACKET	
040	2528113-0000		1	BRACKET	
050	2528114-0000		2	COVER PLATE	
200	315105-0153		4	WASHER BRB 6,4X12 RFR	
210	312105-0370		4	SCREW M6S ISO 4017 M6X20 A480	
220	312105-0366		2	SCREW M6S ISO 4017 M6X12 A480	
230	312705-0316		6	NUT HEX. DOMED CAP MHM-6 M6 A280	
240	90240-0172		4	FLANGE BUSHING, 8X12X10 MM	
A3/FLEX TBA 1890S, A3/FLEX TBA 2000S, A3/FLEX TBA 1400B (See drawing on page: 1-98)					
010	2601286-0000		2	ROLLER	
020	2634934-0000		2	SHAFT	
030	2634932-0000		1	BRACKET	
040	2634933-0000		1	BRACKET	
050	2651695-0000		2	COVER PLATE	
200	315105-0153		4	WASHER BRB 6,4X12 RFR	
210	312105-0452		4	SCREW M6S ISO 4017 M8X22 A4 80	
220	312105-0366		2	SCREW M6S ISO 4017 M6X12 A480	
230	312705-0316		2	NUT HEX. DOMED CAP MHM-6 M6 A280	
240	90240-0172		4	FLANGE BUSHING, 8X12X10 MM	
260	312705-0318		4	NUT HEX. DOMED CAP MHM-6 M8 A280	
Common Parts					
250	2033-0011		2	WASHER	

Pos	Part No	UN	Qty	Description	Page No

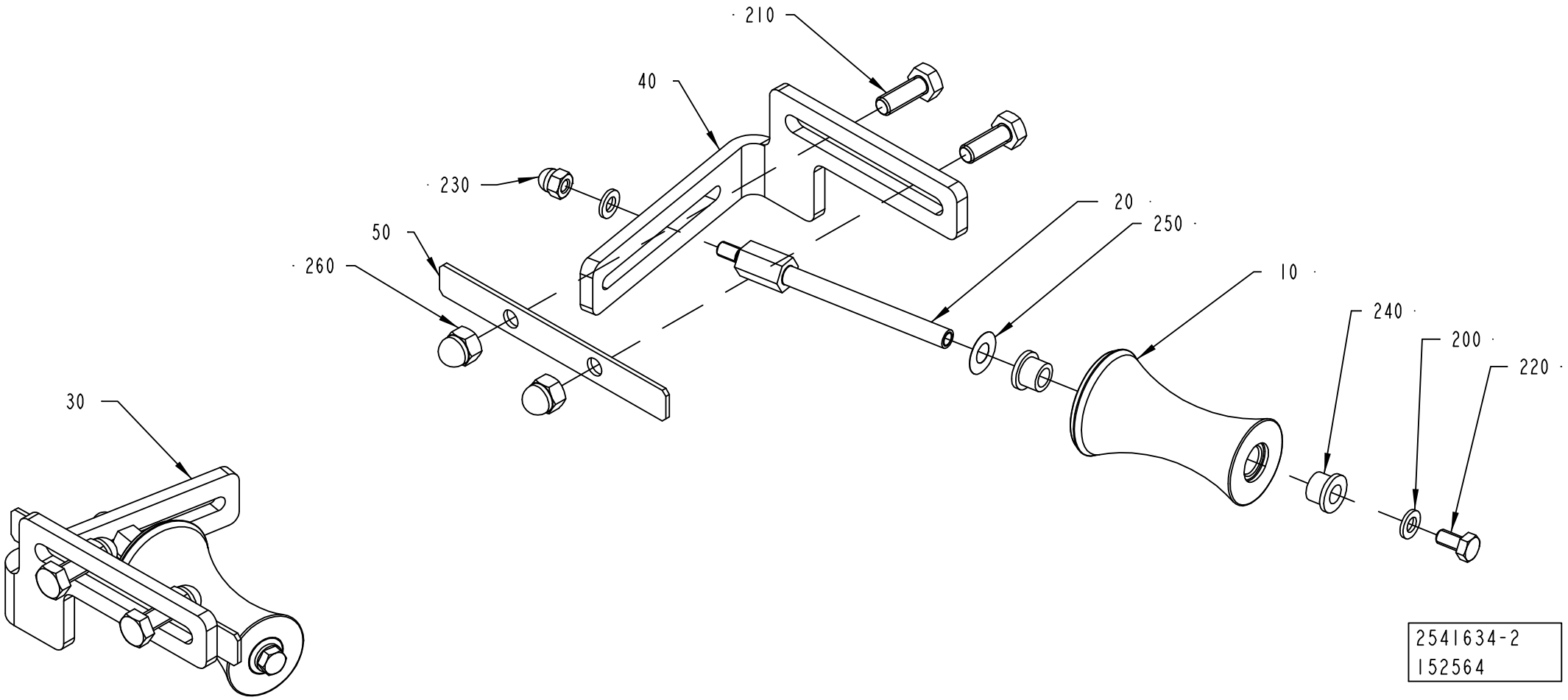
210
40
230
50
260
20
250
10
240
200
220
30
2541634-2
152564

Pos	Part No	UN	Qty	Description	Page No
A3/FLEX TBA 0500B, A3/FLEX TBA 1000B, A3/FLEX TBA 1000S, A3/FLEX TBA 1000SQ, A3/FLEX TPA 1000SQ, A3/FLEX TBA 0200S, A3/FLEX TBA 1500S, A3/FLEX TBA 0200B, A3/FLEX TBA 0250B, A3/FLEX TBA 0330S, A3/FLEX TPA 0330SQ, A3/FLEX TPA 0500SQ, A3/FLEX TBA 0200M, A3/FLEX TBA 0250S, A3/FLEX TBA 0500S, A3/FLEX TPA 0250SQ, A3/FLEX TPA 0200SQ, A3/FLEX TPA 0750SQ, A3/FLEX TBA 0200SQ, A3/FLEX TBA 0250SQ (See drawing on page: 1-96)					
010	1478359-0000		2	ROLLER	
020	1511492-0000		2	SHAFT	
030	2528112-0000		1	BRACKET	
040	2528113-0000		1	BRACKET	
050	2528114-0000		2	COVER PLATE	
200	315105-0153		4	WASHER BRB 6,4X12 RFR	
210	312105-0370		4	SCREW M6S ISO 4017 M6X20 A480	
220	312105-0366		2	SCREW M6S ISO 4017 M6X12 A480	
230	312705-0316		6	NUT HEX. DOMED CAP MHM-6 M6 A280	
240	90240-0172		4	FLANGE BUSHING, 8X12X10 MM	
A3/FLEX TBA 1890S, A3/FLEX TBA 2000S, A3/FLEX TBA 1400B (See drawing on page: 1-98)					
010	2601286-0000		2	ROLLER	
020	2634934-0000		2	SHAFT	
030	2634932-0000		1	BRACKET	
040	2634933-0000		1	BRACKET	
050	2651695-0000		2	COVER PLATE	
200	315105-0153		4	WASHER BRB 6,4X12 RFR	
210	312105-0452		4	SCREW M6S ISO 4017 M8X22 A4 80	
220	312105-0366		2	SCREW M6S ISO 4017 M6X12 A480	
230	312705-0316		2	NUT HEX. DOMED CAP MHM-6 M6 A280	
240	90240-0172		4	FLANGE BUSHING, 8X12X10 MM	
260	312705-0318		4	NUT HEX. DOMED CAP MHM-6 M8 A280	
Common Parts					
250	2033-0011		2	WASHER	

Pos	Part No	UN	Qty	Description	Page No

DRYING CHAMBER

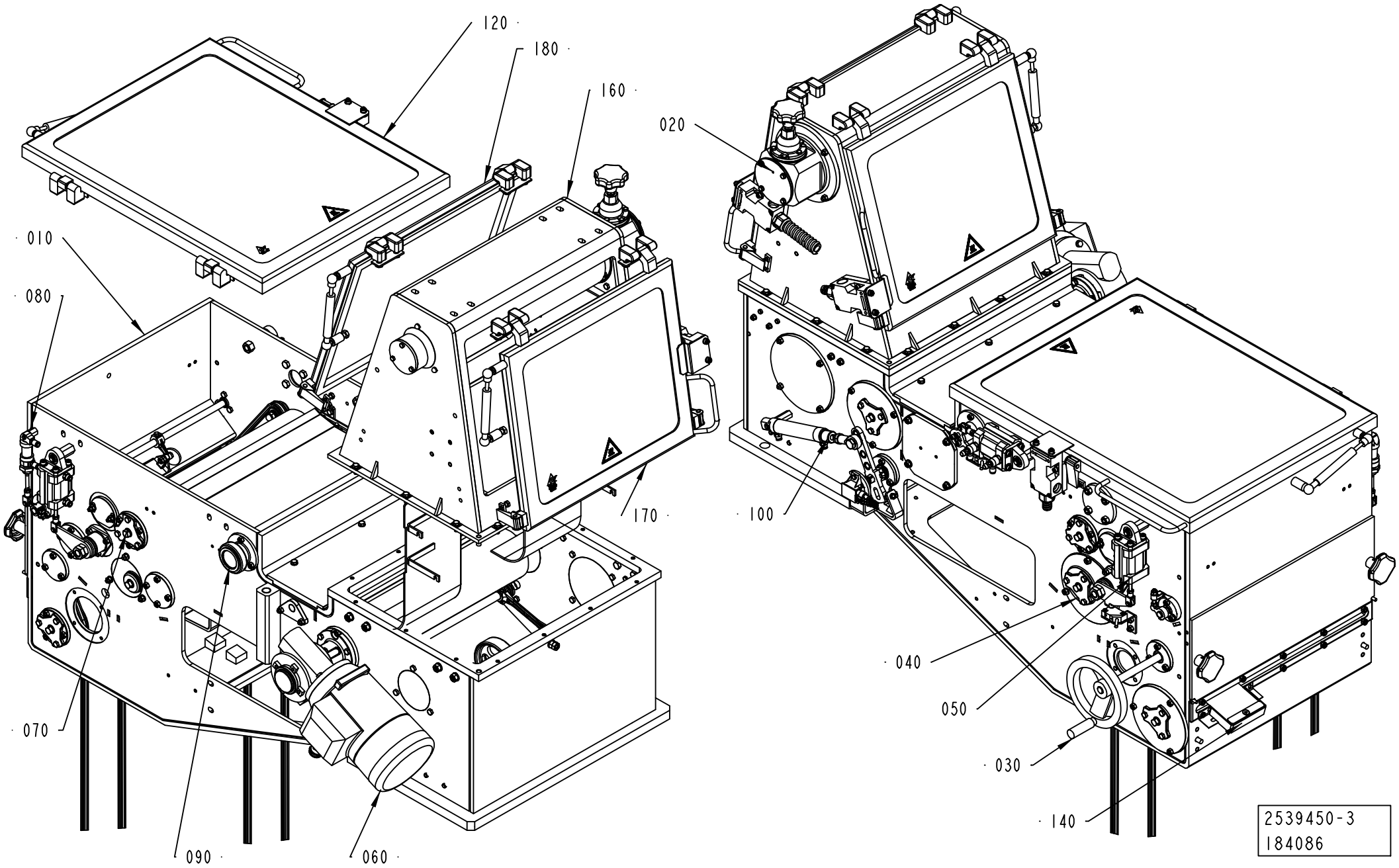

ECM: 267088 - 20060703
Group number: 2539450-0200
Assembly Drawing: 2539450-3_1_AB

This list covers pages from 1-100 to 1-103

Pos	Part No	UN	Qty	Description	Page No
A3/FLEX DIMC/FLEX (See drawing on page: 1-102)					
020	1558522-0100		1	ADJUSTING ROLLER	**1-105, 1-107**
110	2528146-0100		1	DOOR	**1-109**
140	1528746-0100		1	GUIDE	**1-111**
150	2528101-0100		1	BLOWING SYSTEM	**1-113**
A3/FLEX NODIMC NOPT (See drawing on page: 1-102)					
020	1558522-0100		1	ADJUSTING ROLLER	**1-105, 1-107**
110	2528146-0100		1	DOOR	**1-109**
A3/FLEX TBA 0200B NODIMC PT/FLEX, A3/FLEX TBA 0200S NODIMC PT/FLEX, A3/FLEX TBA 0250B NODIMC PT/FLEX, A3/FLEX TBA 0330S NODIMC PT/FLEX, A3/FLEX TBA 0500B NODIMC PT/FLEX, A3/FLEX TBA 0500S NODIMC PT/FLEX, A3/FLEX TBA 1000B NODIMC PT/FLEX, A3/FLEX TBA 1000S NODIMC PT/FLEX, A3/FLEX TBA 1000SQ NODIMC PT/FLEX, A3/FLEX TBA 1500S NODIMC PT/FLEX, A3/FLEX TPA 1000SQ NODIMC PT/FLEX, A3/FLEX TPA 0330SQ NODIMC PT/FLEX, A3/FLEX TPA 0500SQ NODIMC PT/FLEX, A3/FLEX TBA 0250S NODIMC PT/FLEX, A3/FLEX TBA 0200M NODIMC PT/FLEX, A3/FLEX TBA 0200SQ NODIMC PT/FLEX, A3/FLEX TBA 0250SQ NODIMC PT/FLEX, A3/FLEX TPA 0250SQ NODIMC PT/FLEX, A3/FLEX TPA 0200SQ NODIMC PT/FLEX (See drawing on page: 1-102)					
020	1558522-0100		1	ADJUSTING ROLLER	**1-105, 1-107**
110	2528146-0100		1	DOOR	**1-109**
140	1528746-0100		1	GUIDE	**1-111**
A3/FLEX TBA 1890S NODIMC PT/FLEX, A3/FLEX TBA 2000S NODIMC PT/FLEX, A3/FLEX TBA 1400B NODIMC PT/FLEX (See drawing on page: 1-100)					
020	1558522-0100		1	ADJUSTING ROLLER	**1-105, 1-107**
140	1528746-0100		1	GUIDE	**1-111**
160	2531043-0100		1	HOUSING	**1-117**
170	2531039-0100		1	DOOR	**1-119**
180	2528145-0100		1	DOOR	**1-121**
Common Parts					
010	2531047-0200		1	HOUSING	**1-123, 1-125, 1-127**
030	1549573-0100		1	CRANK	**1-131, 1-133, 1-135**
040	2541635-0100		1	SQUEE-GEE ROLLER	**1-137, 1-139, 1-141, 1-143, 1-145**
050	1548892-0100		1	CALENDER ROLLER	**1-147, 1-149, 1-151**
060	1548753-0100		1	DRIVE ROLLER	**1-153, 1-155**
070	1548736-0100		1	BENDING ROLLER	**1-157, 1-159, 1-161, 1-163**
080	2539455-0100		1	VALVE	**1-165**
090	2532934-0100		1	AIR KNIFE	**1-167, 1-169, 1-171**
100	2539445-0200		1	PENDULUM ROLLER	**1-173**
120	1539746-0200		1	DOOR	**1-175**

Pos	Part No	UN	Qty	Description	Page No

DRYING CHAMBER

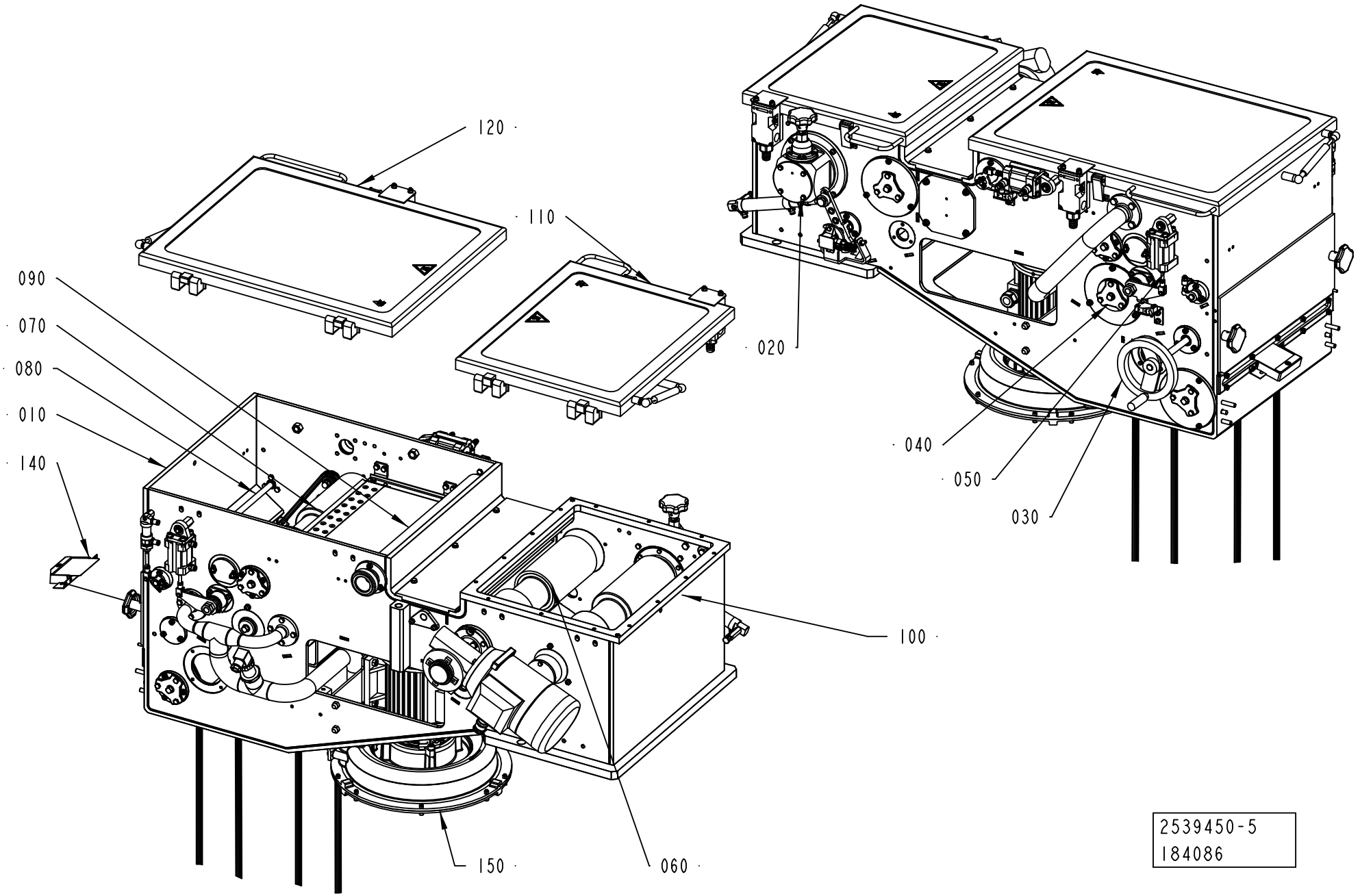

Pos	Part No	UN	Qty	Description	Page No
A3/FLEX DIMC/FLEX (See drawing on page: 1-102)					
020	1558522-0100		1	ADJUSTING ROLLER	**1-105, 1-107**
110	2528146-0100		1	DOOR	**1-109**
140	1528746-0100		1	GUIDE	**1-111**
150	2528101-0100		1	BLOWING SYSTEM	**1-113**
A3/FLEX NODIMC NOPT (See drawing on page: 1-102)					
020	1558522-0100		1	ADJUSTING ROLLER	**1-105, 1-107**
110	2528146-0100		1	DOOR	**1-109**
A3/FLEX TBA 0200B NODIMC PT/FLEX, A3/FLEX TBA 0200S NODIMC PT/FLEX, A3/FLEX TBA 0250B NODIMC PT/FLEX, A3/FLEX TBA 0330S NODIMC PT/FLEX, A3/FLEX TBA 0500B NODIMC PT/FLEX, A3/FLEX TBA 0500S NODIMC PT/FLEX, A3/FLEX TBA 1000B NODIMC PT/FLEX, A3/FLEX TBA 1000S NODIMC PT/FLEX, A3/FLEX TBA 1000SQ NODIMC PT/FLEX, A3/FLEX TBA 1500S NODIMC PT/FLEX, A3/FLEX TPA 1000SQ NODIMC PT/FLEX, A3/FLEX TPA 0330SQ NODIMC PT/FLEX, A3/FLEX TPA 0500SQ NODIMC PT/FLEX, A3/FLEX TBA 0250S NODIMC PT/FLEX, A3/FLEX TBA 0200M NODIMC PT/FLEX, A3/FLEX TBA 0200SQ NODIMC PT/FLEX, A3/FLEX TBA 0250SQ NODIMC PT/FLEX, A3/FLEX TPA 0250SQ NODIMC PT/FLEX, A3/FLEX TPA 0200SQ NODIMC PT/FLEX (See drawing on page: 1-102)					
020	1558522-0100		1	ADJUSTING ROLLER	**1-105, 1-107**
110	2528146-0100		1	DOOR	**1-109**
140	1528746-0100		1	GUIDE	**1-111**
A3/FLEX TBA 1890S NODIMC PT/FLEX, A3/FLEX TBA 2000S NODIMC PT/FLEX, A3/FLEX TBA 1400B NODIMC PT/FLEX (See drawing on page: 1-100)					
020	1558522-0100		1	ADJUSTING ROLLER	**1-105, 1-107**
140	1528746-0100		1	GUIDE	**1-111**
160	2531043-0100		1	HOUSING	**1-117**
170	2531039-0100		1	DOOR	**1-119**
180	2528145-0100		1	DOOR	**1-121**
Common Parts					
010	2531047-0200		1	HOUSING	**1-123, 1-125, 1-127**
030	1549573-0100		1	CRANK	**1-131, 1-133, 1-135**
040	2541635-0100		1	SQUEE-GEE ROLLER	**1-137, 1-139, 1-141, 1-143, 1-145**
050	1548892-0100		1	CALENDER ROLLER	**1-147, 1-149, 1-151**
060	1548753-0100		1	DRIVE ROLLER	**1-153, 1-155**
070	1548736-0100		1	BENDING ROLLER	**1-157, 1-159, 1-161, 1-163**
080	2539455-0100		1	VALVE	**1-165**
090	2532934-0100		1	AIR KNIFE	**1-167, 1-169, 1-171**
100	2539445-0200		1	PENDULUM ROLLER	**1-173**
120	1539746-0200		1	DOOR	**1-175**

Pos	Part No	UN	Qty	Description	Page No

ADJUSTING ROLLER

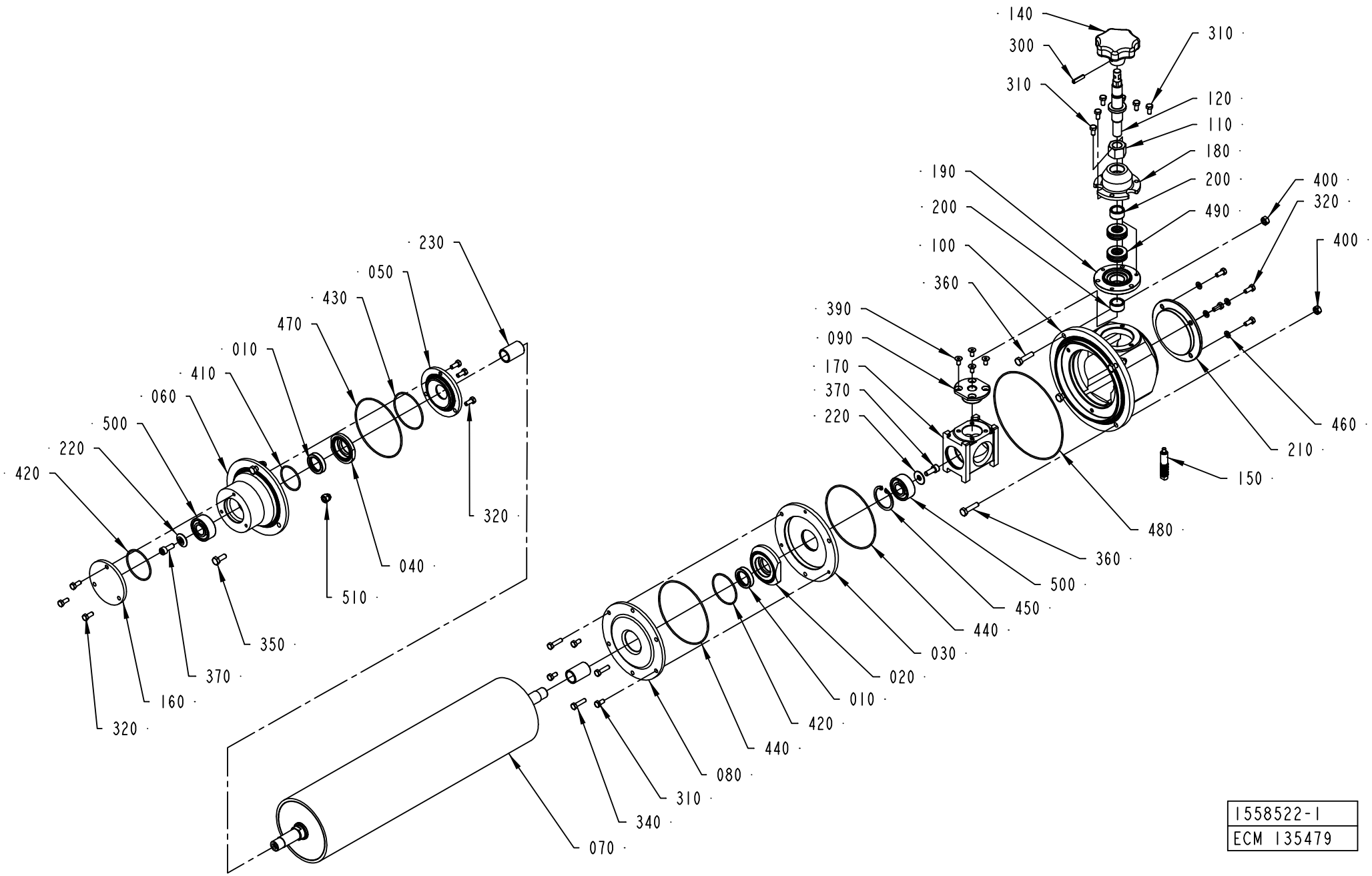

1558522-1
ECM 135479

ECM: 266129 - 20060702
Group number: 1558522-0100
Assembly Drawing: 1558522-1_1_AB

This list covers pages from 1-104 to 1-107

Pos	Part No	UN	Qty	Description	Page No
A3/FLEX DIMC/FLEX (See drawing on page: 1-106)					
070	2550893-0000		1	BENDING ROLLER	
A3/FLEX TBA 2000S NODIMC, A3/FLEX TBA 1890S NODIMC, A3/FLEX TBA 1400B NODIMC (See drawing on page: 1-104)					
070	2601237-0000		1	BENDING ROLLER	
A3/FLEX TBA 1000B NODIMC, A3/FLEX TBA 0500B NODIMC, A3/FLEX TBA 1000S NODIMC, A3/FLEX TBA 1000SQ NODIMC, A3/FLEX TBA 0200S NODIMC, A3/FLEX TPA 1000SQ NODIMC, A3/FLEX TBA 1500S NODIMC, A3/FLEX TBA 0200B NODIMC, A3/FLEX TBA 0250B NODIMC, A3/FLEX TBA 0330S NODIMC, A3/FLEX TPA 0330SQ NODIMC, A3/FLEX TPA 0500SQ NODIMC, A3/FLEX TBA 0200M NODIMC, A3/FLEX TBA 0250S NODIMC, A3/FLEX TBA 0500S NODIMC, A3/FLEX TPA 0200SQ NODIMC, A3/FLEX TPA 0250SQ NODIMC, A3/FLEX TPA 0750SQ NODIMC, A3/FLEX TBA 0200SQ NODIMC, A3/FLEX TBA 0250SQ NODIMC (See drawing on page: 1-104)					
070	2550891-0000		1	BENDING ROLLER	
Common Parts					
010	90458-0639		2	VARILIP 20X30X7 MM	
020	1558748-0000		1	FLANGE	
030	1558749-0000		1	FLANGE	
040	1558750-0000		1	FLANGE	
050	1558751-0000		1	FLANGE	
060	1558752-0000		1	FLANGE	
080	1558754-0000		1	LID	
090	1558755-0000		1	FLANGE	
100	1558756-0000		1	HOUSING	
110	1558757-0000		1	NUT	
120	1558758-0000		1	SHAFT	
140	1558760-0000		1	KNOB	
150	1558761-0000		1	SHAFT	
160	1558762-0000		1	LID	
170	1558763-0000		1	SLIDER	
180	1558764-0000		1	FLANGE	
190	1558765-0000		1	FLANGE	
200	1558766-0000		2	BUSHING	
210	2528073-0000		1	LID	
220	1558768-0000		2	WASHER	
230	2555613-0000		2	BUSHING	
300	311112-0256		1	SPRING PIN, ISO 8752 4X20-C	
310	312105-0325		9	SCREW M6S ISO 4017 M5X10 A480	
320	312105-0327		10	SCREW M6S ISO 4017 M5X12 A480	
340	312105-0331		3	SCREW M6S ISO 4017 M5X20 A480	
350	312105-0368		3	SCREW M6S ISO 4017 M6X16 A480	
360	312105-0372		4	SCREW M6S ISO 4017 M6X25 A480	
370	312115-0368		2	SCREW ISO4762 M6X16 A4 80	
390	312155-0325		4	SCREW DIN 7991 MF6S M5X10 A4 70	
400	312605-0316		4	HEXAGON NUT, M6M M6 A280	
410	315205-0716		1	O-RING 34,65X1,78 MM	
420	315205-0803		2	O-RING 44,17X1,78 MM	
430	315205-0805		1	O-RING 53,7X1,78 MM	
440	315205-0807		2	O-RING 94,97X1,78 MM	
450	315753-0124		1	RETAINING RING FOR BORE DIN 472 35 A2	
460	315105-0146		4	WASHER BRB 5,3X10 RFR	
470	90458-0640		1	O-RING 88,62X1,78 MM	
480	90459-0094		1	O-RING 133,07X1,78 MM	
490	90459-0098		2	THRUST BALL BEARING, 15X28X9 MM	
500	90214-0105		2	SPHERICAL BALL BEARING, 15X35X14 MM	
510	312705-0316		3	NUT HEX. DOMED CAP MHM-6 M6 A280	

ADJUSTING ROLLER

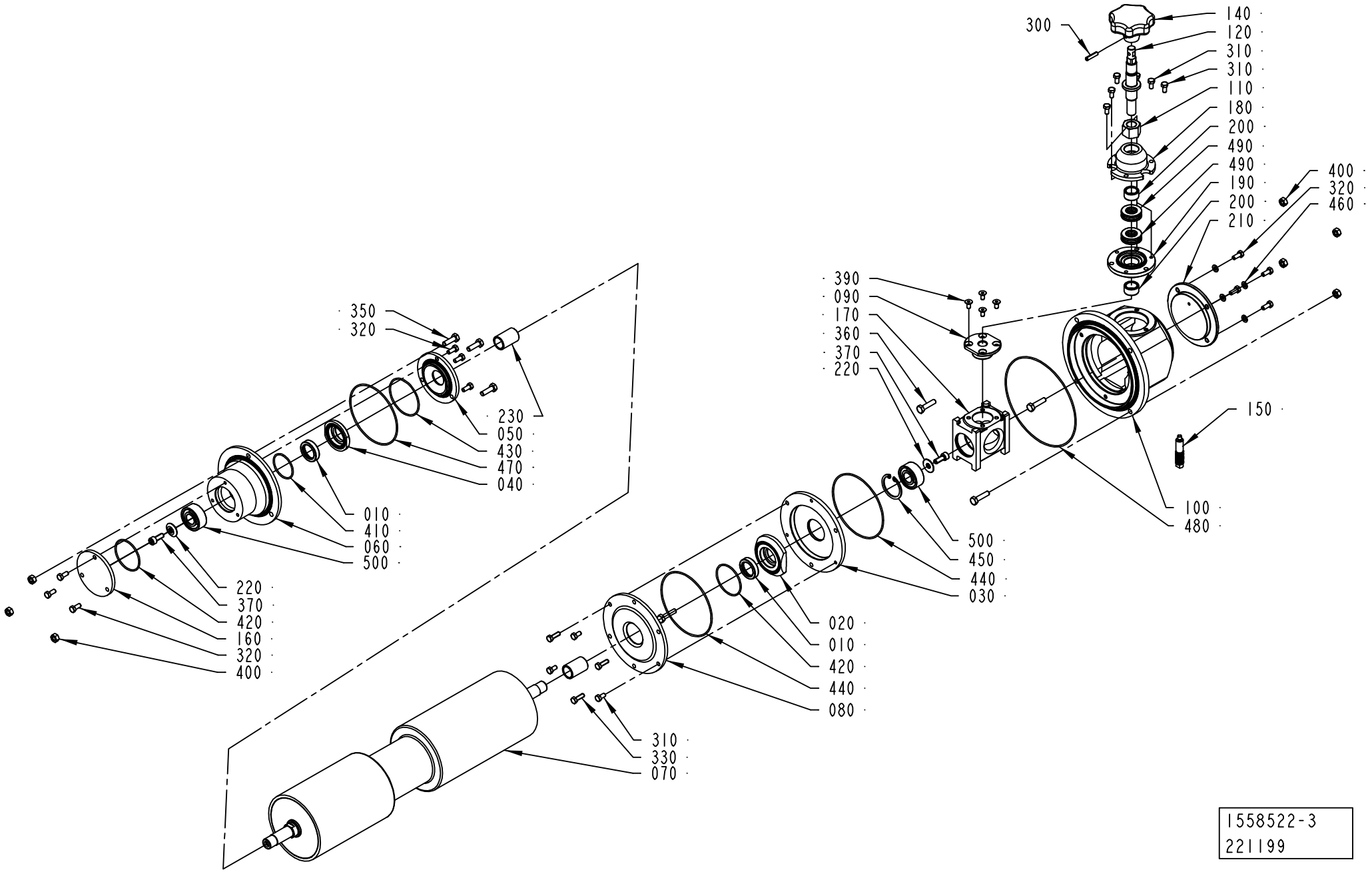

ECM: 266129 - 20060702
Group number: 1558522-0100
Assembly Drawing: 1558522-3_1_AA

This list covers pages from 1-104 to 1-107

Pos	Part No	UN	Qty	Description	Page No
A3/FLEX DIMC/FLEX (See drawing on page: 1-106)					
070	2550893-0000		1	BENDING ROLLER	
A3/FLEX TBA 2000S NODIMC, A3/FLEX TBA 1890S NODIMC, A3/FLEX TBA 1400B NODIMC (See drawing on page: 1-104)					
070	2601237-0000		1	BENDING ROLLER	
A3/FLEX TBA 1000B NODIMC, A3/FLEX TBA 0500B NODIMC, A3/FLEX TBA 1000S NODIMC, A3/FLEX TBA 1000SQ NODIMC, A3/FLEX TBA 0200S NODIMC, A3/FLEX TPA 1000SQ NODIMC, A3/FLEX TBA 1500S NODIMC, A3/FLEX TBA 0200B NODIMC, A3/FLEX TBA 0250B NODIMC, A3/FLEX TBA 0330S NODIMC, A3/FLEX TPA 0330SQ NODIMC, A3/FLEX TPA 0500SQ NODIMC, A3/FLEX TBA 0200M NODIMC, A3/FLEX TBA 0250S NODIMC, A3/FLEX TBA 0500S NODIMC, A3/FLEX TPA 0200SQ NODIMC, A3/FLEX TPA 0250SQ NODIMC, A3/FLEX TPA 0750SQ NODIMC, A3/FLEX TBA 0200SQ NODIMC, A3/FLEX TBA 0250SQ NODIMC (See drawing on page: 1-104)					
070	2550891-0000		1	BENDING ROLLER	
Common Parts					
010	90458-0639		2	VARILIP 20X30X7 MM	
020	1558748-0000		1	FLANGE	
030	1558749-0000		1	FLANGE	
040	1558750-0000		1	FLANGE	
050	1558751-0000		1	FLANGE	
060	1558752-0000		1	FLANGE	
080	1558754-0000		1	LID	
090	1558755-0000		1	FLANGE	
100	1558756-0000		1	HOUSING	
110	1558757-0000		1	NUT	
120	1558758-0000		1	SHAFT	
140	1558760-0000		1	KNOB	
150	1558761-0000		1	SHAFT	
160	1558762-0000		1	LID	
170	1558763-0000		1	SLIDER	
180	1558764-0000		1	FLANGE	
190	1558765-0000		1	FLANGE	
200	1558766-0000		2	BUSHING	
210	2528073-0000		1	LID	
220	1558768-0000		2	WASHER	
230	2555613-0000		2	BUSHING	
300	311112-0256		1	SPRING PIN, ISO 8752 4X20-C	
310	312105-0325		9	SCREW M6S ISO 4017 M5X10 A480	
320	312105-0327		10	SCREW M6S ISO 4017 M5X12 A480	
340	312105-0331		3	SCREW M6S ISO 4017 M5X20 A480	
350	312105-0368		3	SCREW M6S ISO 4017 M6X16 A480	
360	312105-0372		4	SCREW M6S ISO 4017 M6X25 A480	
370	312115-0368		2	SCREW ISO4762 M6X16 A4 80	
390	312155-0325		4	SCREW DIN 7991 MF6S M5X10 A4 70	
400	312605-0316		4	HEXAGON NUT, M6M M6 A280	
410	315205-0716		1	O-RING 34,65X1,78 MM	
420	315205-0803		2	O-RING 44,17X1,78 MM	
430	315205-0805		1	O-RING 53,7X1,78 MM	
440	315205-0807		2	O-RING 94,97X1,78 MM	
450	315753-0124		1	RETAINING RING FOR BORE DIN 472 35 A2	
460	315105-0146		4	WASHER BRB 5,3X10 RFR	
470	90458-0640		1	O-RING 88,62X1,78 MM	
480	90459-0094		1	O-RING 133,07X1,78 MM	
490	90459-0098		2	THRUST BALL BEARING, 15X28X9 MM	
500	90214-0105		2	SPHERICAL BALL BEARING, 15X35X14 MM	
510	312705-0316		3	NUT HEX. DOMED CAP MHM-6 M6 A280	

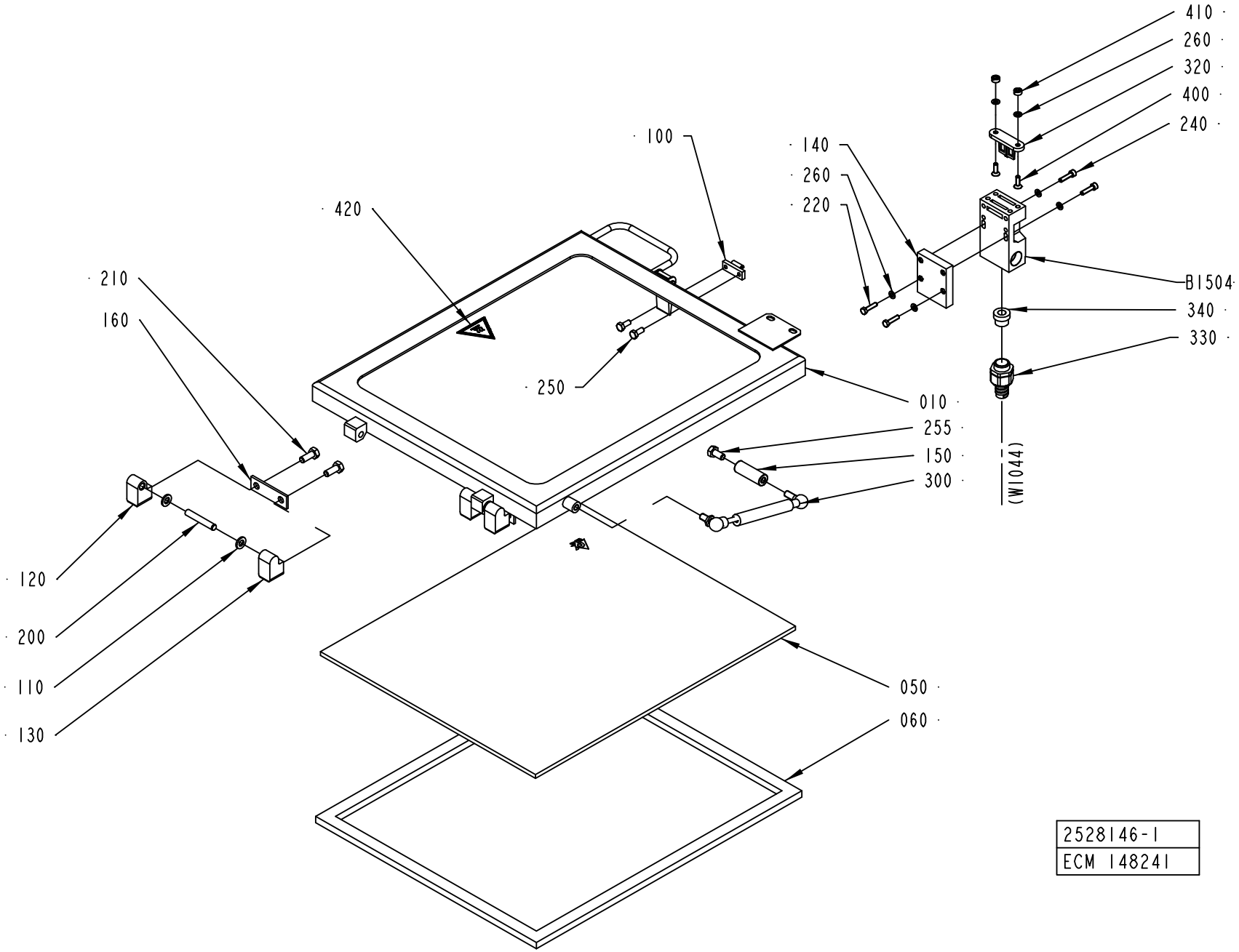
410
260
320
400
240
100
140
260
220
420
B1504
340
330
210
160
250
010
255
150
300
(W1044)
120
200
110
130
050
060
2528146-1
ECM 148241

ECM: 189725 - 20041104
Group number: 2528146-0100
Assembly Drawing: 2528146-1_1_AB

Pos	Part No	UN	Qty	Description	Page No
-					
010	2531037-0000		1	FRAME	
050	2531046-0000		1	GLASS PANE	
060	2531045-0000		1	GASKET	
100	271860-0000		1	CLAMP BLOCK	
110	441739-0000		4	WASHER	
120	1041979-0000		2	HINGE FLANGE	
130	1041978-0000		2	HINGE FLANGE	
140	2541651-0000		1	PLATE	
150	1548877-0000		1	SPACER	
160	441737-0000		2	WASHER	
200	311103-0413		2	PARALLEL PIN ISO 2338 8M6X50 A1	
210	312105-0451		4	SCREW M6S ISO 4017 M8X20 A480	
220	312105-0331		2	SCREW M6S ISO 4017 M5X20 A480	
240	312115-0331		2	SCREW ISO4762 M5X20 A4 80	
250	312105-0367		2	SCREW M6S ISO 4017 M6X14 A480	
255	312105-0449		1	SCREW M6S ISO 4017 M8X16 A480	
260	315105-0146		6	WASHER BRB 5,3X10 RFR	
300	90347-0039		1	DAMPER	
320	90044-0310		1	KEY FOR SAFETY SWITCH AZ 15/16 B1	
330	90458-0429		1	HOSE GLAND W/O INSERT M20 EXTENDED	
340	353249-0011		1	INSERT, SINGEL HOLE, EK 153/11	
400	312155-0329		2	SCREW DIN 7991 MF6S M5X16 A4 70	
410	575034-0000		2	ROUND NUT	
420	359705-0007		1	WARNING SIGN ISO, HOT SURFACE	
B1504	90459-0472		1	KEY SAF.SW. AZ 16 02ZVRK-M20-2152-2254	

Pos	Part No	UN	Qty	Description	Page No

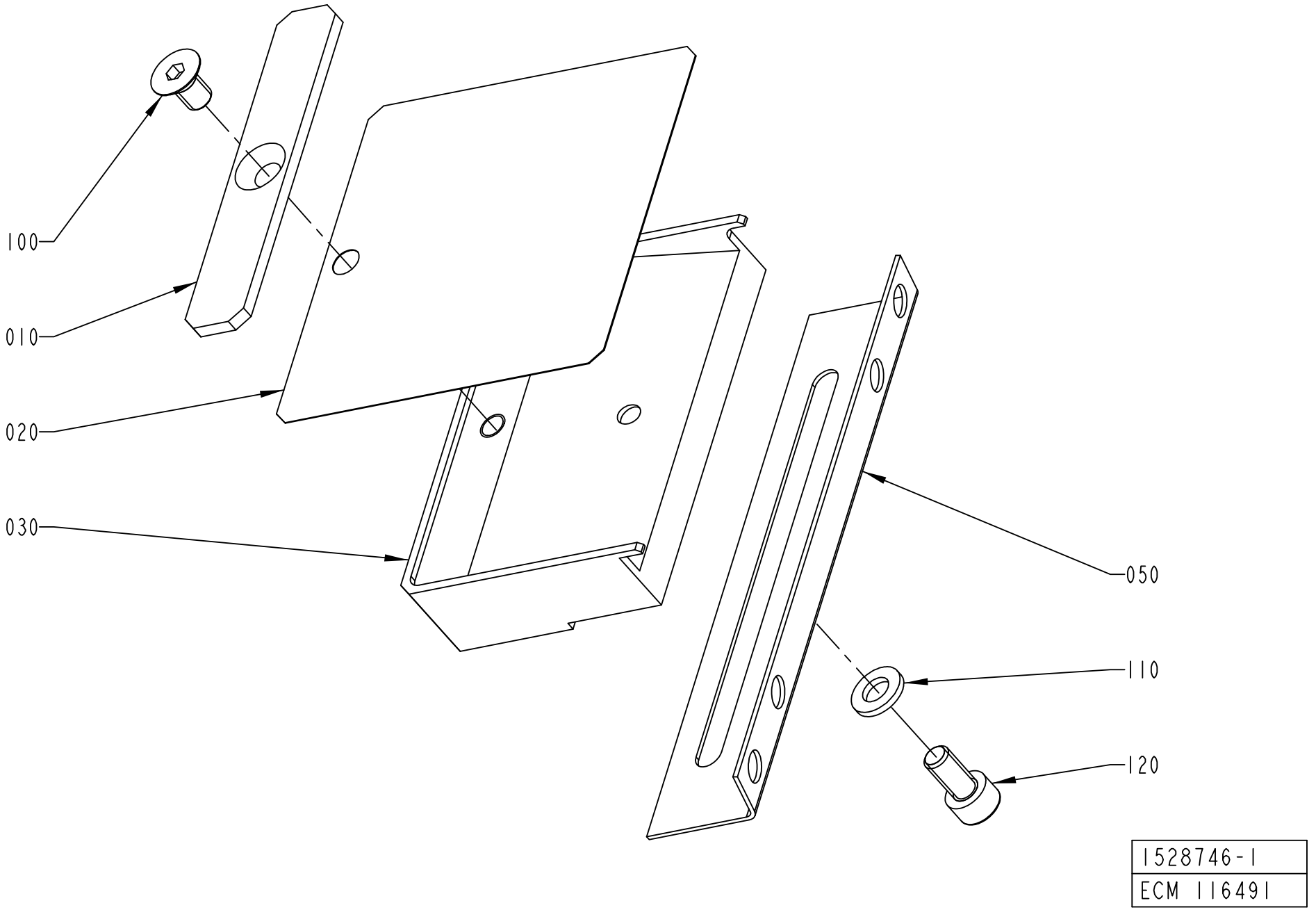
100
010
020
030
050
110
120
1528746-1
ECM 116491

ECM: 200391 - 20050121
Group number: 1528746-0100
Assembly Drawing: 1528746-1_1_AA

Pos	Part No	UN	Qty	Description	Page No
-					
010	1490715-0000		1	DOLLY	
020	1490714-0000		1	GUIDE	
030	1490713-0000		1	SPRING HOLDER	
040	1519799-0000		1	ANGLE BRACKET	
100	312155-0364		1	SCREW DIN 7991 MF6S M6X10 A4 70	
110	315105-0153		1	WASHER BRB 6,4X12 RFR	
120	312115-0366		1	SCREW ISO4762 M6X12 A4 80	

Pos	Part No	UN	Qty	Description	Page No

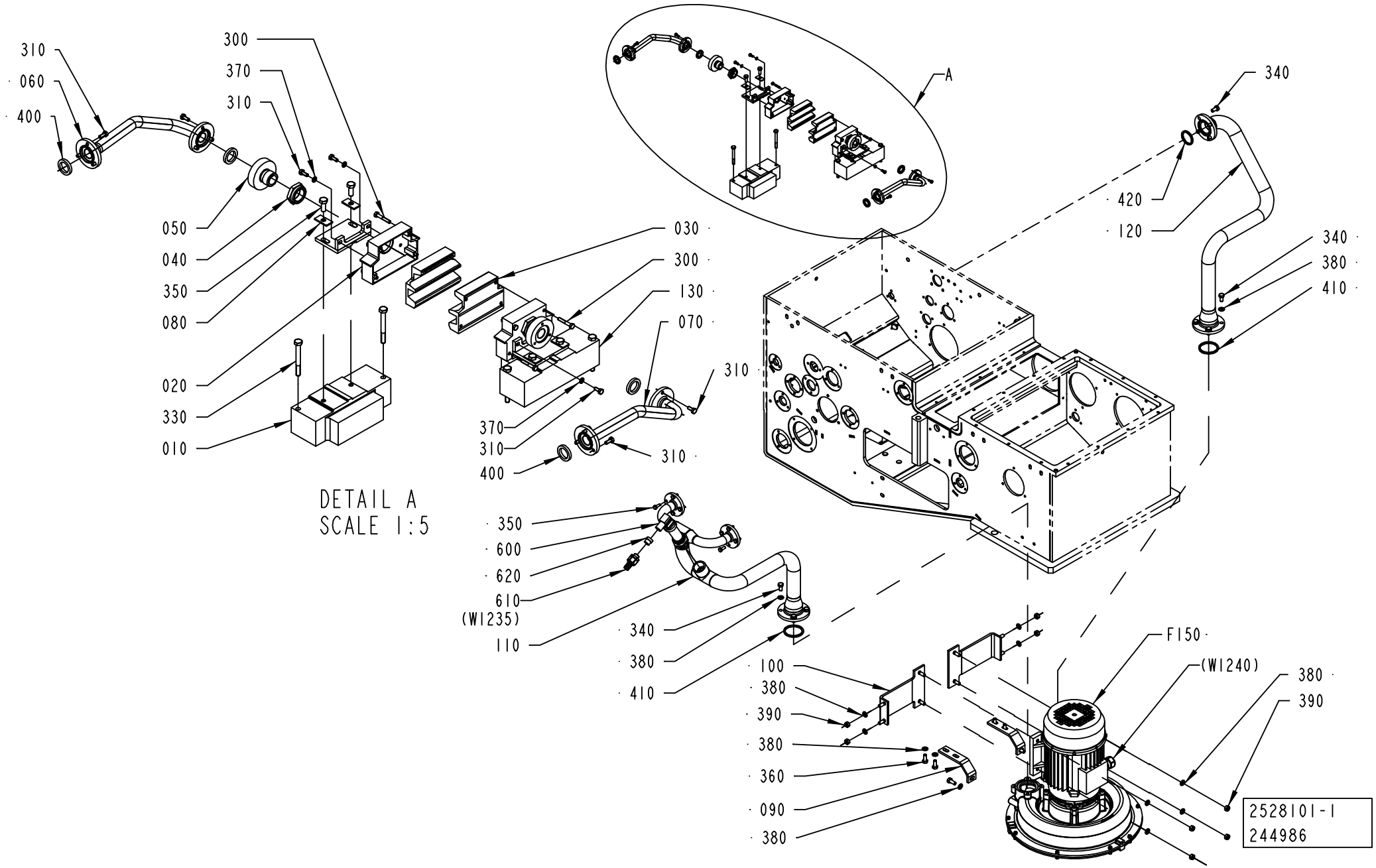
310
060
400
300
370
310
050
040
350
080
020
330
010
030
300
130
070
310
370
310
400
310
A
340
420
120
340
380
410
DETAIL A
SCALE 1:5
350
600
620
610
(W1235)
110
340
380
410
100
380
390
380
360
090
380
F150
(W1240)
380
390
2528101-1
244986

ECM: 274497 - 20060728
Group number: 2528101-0100
Assembly Drawing: 2528101-1_1_AC

Pos	Part No	UN	Qty	Description	Page No
LIGHTCAP					
030	2811776-0000		2	NOZZLE	
STDA7 CAP, NOMOLDEDCAP					
030	2565483-0000		2	NOZZLE	
Common Parts					
010	2553093-0000		1	PLATE	
015	2611104-0000		2	HOLDER	
020	2565482-0000		2	BOX	
040	1484969-0000		2	SLEEVE	
050	2616237-0000		2	CONNECTION	
060	2553095-0000		1	PIPE	
070	2553094-0000		1	PIPE	
080	2616236-0000		4	WASHER	
090	2616238-0000		2	HOLDER	
100	2616239-0000		2	HOLDER	
110	1523680-0000		1	PIPE	
120	2616240-0000		1	PIPE	
130	2553092-0000		1	PLATE	
300	312105-0297		8	SCREW M6S ISO 4017 M4X25 A470	
310	312105-0289		16	SCREW M6S ISO 4017 M4X10 A470	
330	312105-0381		4	SCREW M6S ISO 4014 M6X55 A480	
340	312105-0449		12	SCREW M6S ISO 4017 M8X16 A480	
350	312105-0368		12	SCREW M6S ISO 4017 M6X16 A480	
360	312105-0451		6	SCREW M6S ISO 4017 M8X20 A480	
370	315105-0136		4	WASHER BRB 4,3X9 RFR	
380	315105-0165		22	WASHER BRB 8,4X16 RFR	
390	312605-0318		8	HEXAGON NUT, M6M M8 A280	
400	315229-0102		4	GASKETS, 16,8X23,8X3,7 MM 3/4" FDA	
410	315229-0105		2	GASKETS, 48,5X55,5X3,7 MM 2" FDA	
420	315229-0104		1	GASKETS, 35,8X42,8X3,7 MM 1"1/2 FD	
600	90459-0689		1	PRESSURE TRANSMITTER 0 - 0,6 BAR	
610	353243-0001		1	HOSE GLAND W/O INSERT PG9 EXTENDED	
620	353249-0009		1	INSERT, SINGEL HOLE, EK 152/9	
F150	1523691-0100		1	BLOWING DEVICE	**1-115**

Pos	Part No	UN	Qty	Description	Page No

Machine Type | Group Description | Used-In | Group Number | Page No

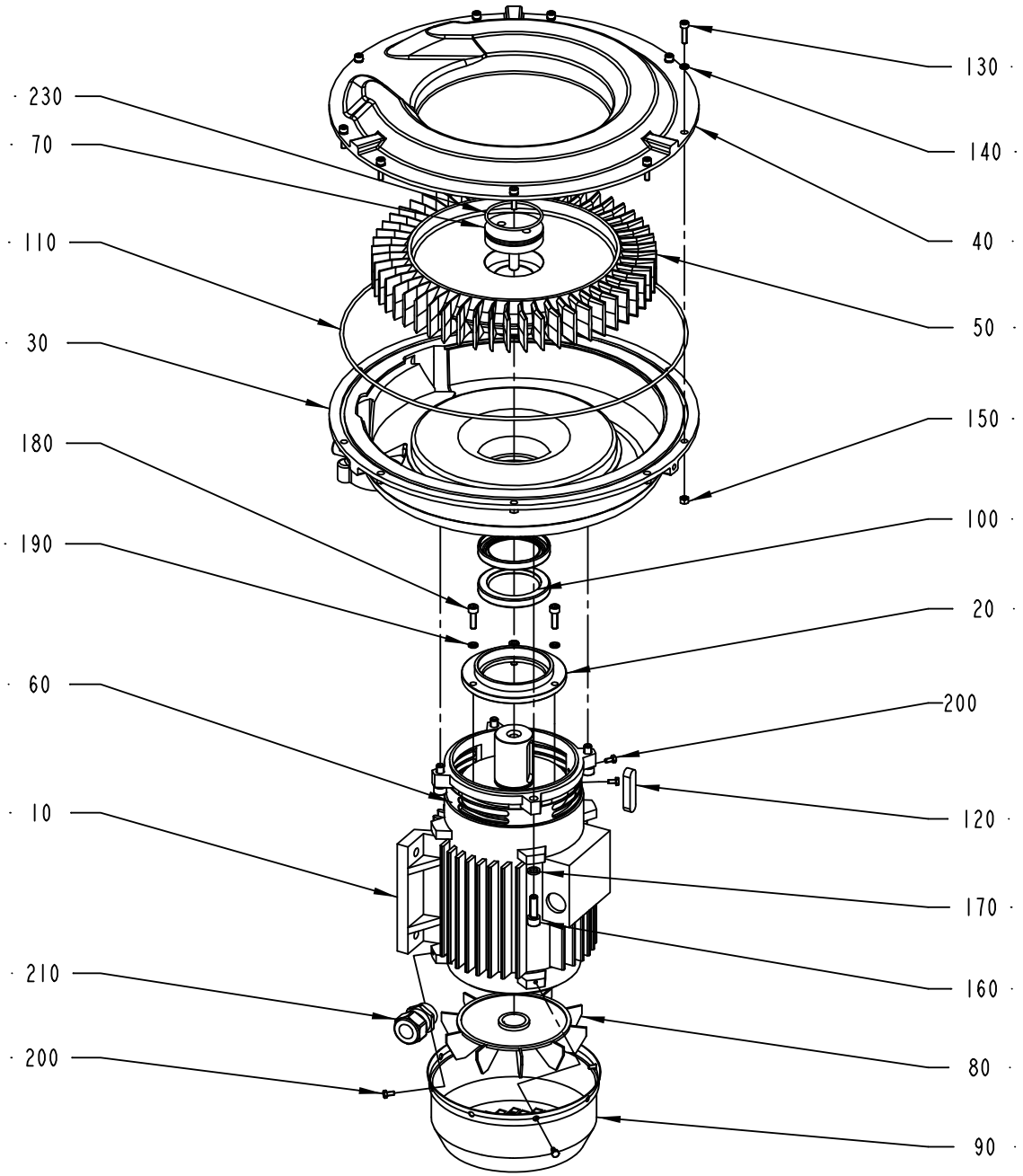
230
70
110
30
180
190
60
10
210
200
130
140
40
50
150
100
20
200
120
170
160
80
90
1523691-1
ECM 218328

ECM: 218328 - 20050603
Group number: 1523691-0100
Assembly Drawing: 1523691-1_1_AD

Pos	Part No	UN	Qty	Description	Page No
-					
010	90459-0804		1	MOTOR B3/B5 CE CODE: 159353	
	90459-3854		*1*	*ANG. BALL BEAR, 45X85X30,2 MM*	
020	2503634-0000		1	BEARING FLANGE	
030	1523687-0000		1	PUMP BODY	
040	1523686-0000		1	LID	
050	1523685-0000		1	IMPELLER	
060	2503635-0000		1	SHIELD	
070	2503636-0000		1	STOP SCREW	
080	2503637-0000		1	FAN	
090	2503638-0000		1	FAN HOUSING	
100	90459-0802		2	RADIAL SEAL 55X75X10 MM	
110	90459-0803		1	O-RING 355,19X3,53 MM	
120	315705-0334		1	PARALLEL KEY W. ROUND ENDS 12X8X50 MM	
130	312115-0331		9	SCREW ISO4762 M5X20 A4 80	
140	90062-0029		9	LOCK WASHER 5,1X 8,6, T= 1,5 DIN 7980	
150	312605-0314		9	HEXAGON NUT, M6M M5 A280	
160	312115-0453		4	SCREW ISO4762 M8X25 A4 80	
170	90062-0031		4	"LOCK WASHER 8,2X12,8; T=2 DIN 7980"	
180	312115-0370		3	SCREW ISO4762 M6X20 A4 80	
190	90062-0030		3	LOCK WASHER 6,1X9,7; T=1,5 DIN 7980	
200	312105-0287		6	SCREW M6S ISO 4017 M4X8 A470	
210	90458-0441		1	GLAND, EXTENDED WITH INSERT, M25X1,5	
230	315202-0739		1	O-RING 55,25X2,62 MM	

Pos	Part No	UN	Qty	Description	Page No

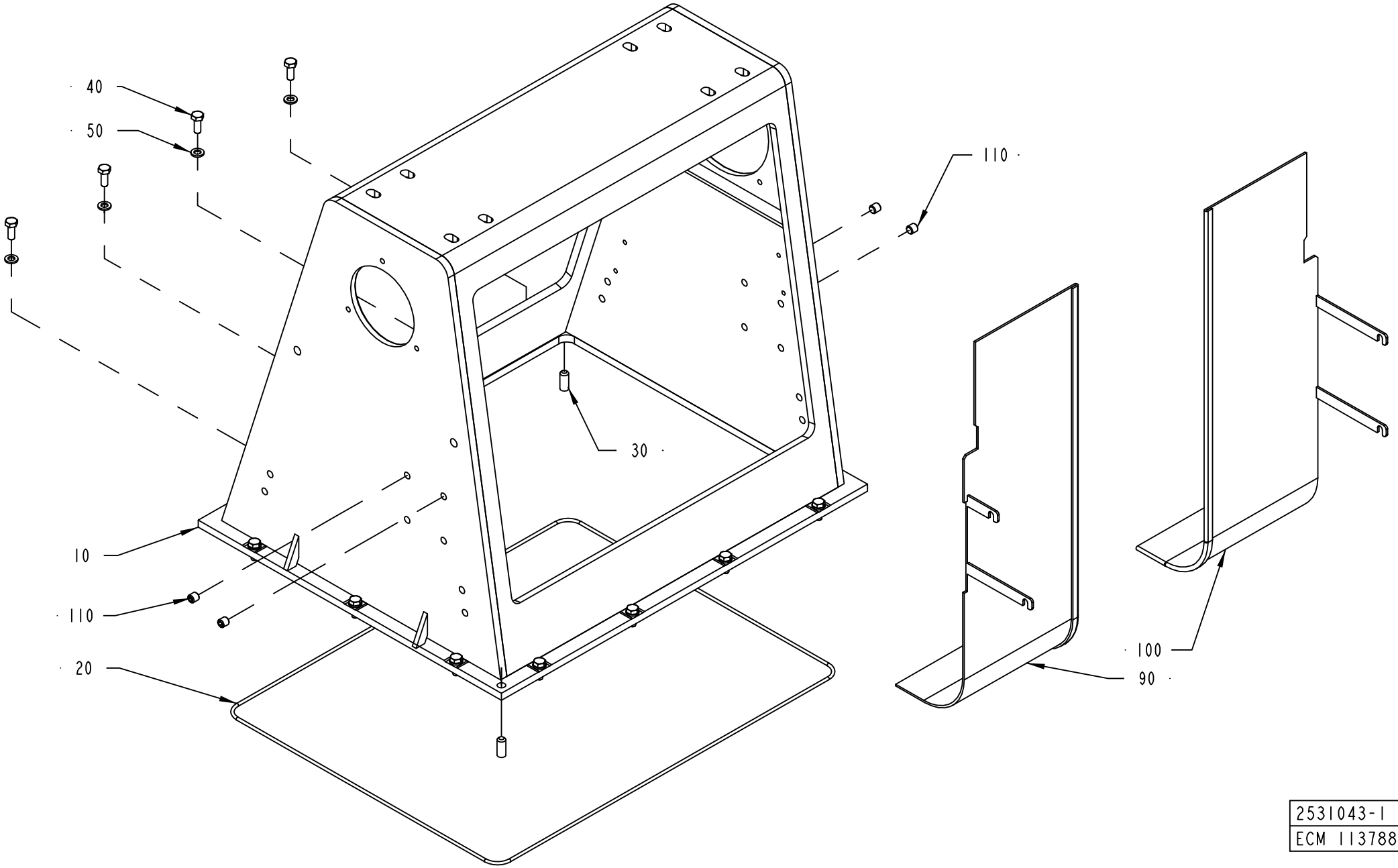

2531043-1
ECM 113788

ECM: 267087 - 20060703
Group number: 2531043-0100
Assembly Drawing: 2531043-1_1_AA

Pos	Part No	UN	Qty	Description	Page No
A3/FLEX TBA 1890S, A3/FLEX TBA 2000S, A3/FLEX TBA 1400B					
090	2532963-0000		1	DEFLECTOR	
100	2532964-0000		1	DEFLECTOR	
Common Parts					
010	2531044-0000		1	BOX FRAME	
020	90459-1314		1	O-RING 491X3 MM	
030	311103-0401		2	PARALLEL PIN ISO 2338 8M6X20 A1	
040	312105-0368		14	SCREW M6S ISO 4017 M6X16 A480	
050	315105-0153		14	WASHER BRB 6,4X12 RFR	
060	90153-0023		1	ADHESIVE, SILICON 251470 TUB 90CC	
110	312318-0443		4	SCREW ISO4029 M8X8 A4	

Pos	Part No	UN	Qty	Description	Page No

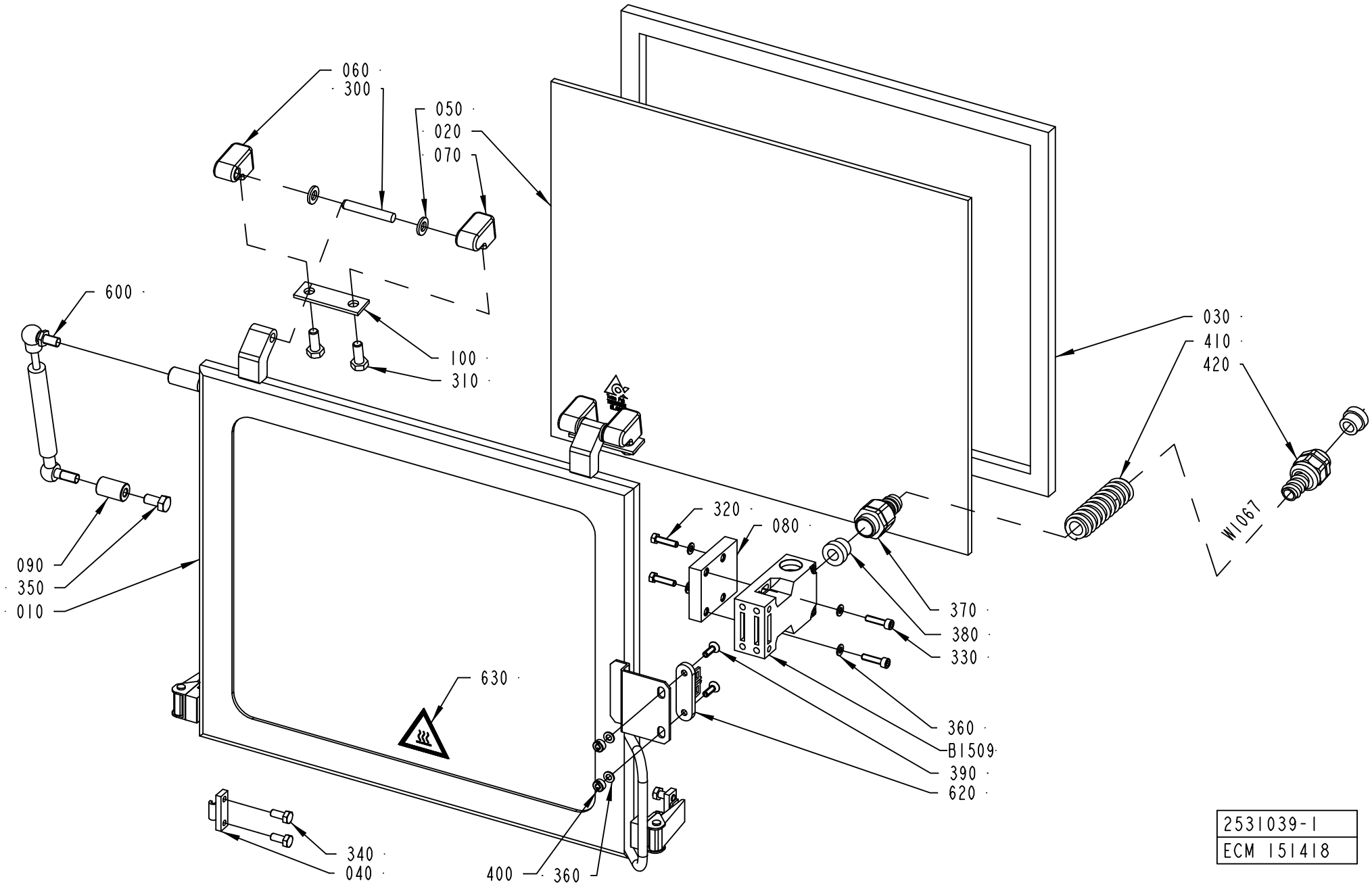
060
300
050
020
070
600
100
310
030
410
420
W1067
320
080
090
350
010
370
380
330
630
360
B1509
390
620
340
040
400
360
2531039-1
ECM 151418

ECM: 190567 - 20041104
Group number: 2531039-0100
Assembly Drawing: 2531039-1_1_AC

Pos	Part No	UN	Qty	Description	Page No
-					
010	2531038-0000		1	FRAME	
020	2531041-0000		1	GLASS PANE	
030	2531040-0000		1	GASKET	
040	271860-0000		2	CLAMP BLOCK	
050	441739-0000		4	WASHER	
060	1549992-0000		2	HINGE FLANGE	
070	1549993-0000		2	HINGE FLANGE	
080	2541651-0000		1	PLATE	
090	1549994-0000		1	SPACER	
100	441737-0000		2	WASHER	
300	311103-0413		2	PARALLEL PIN ISO 2338 8M6X50 A1	
310	312105-0451		4	SCREW M6S ISO 4017 M8X20 A480	
320	312105-0331		2	SCREW M6S ISO 4017 M5X20 A480	
330	312115-0331		2	SCREW ISO4762 M5X20 A4 80	
340	312105-0367		4	SCREW M6S ISO 4017 M6X14 A480	
350	312105-0449		1	SCREW M6S ISO 4017 M8X16 A480	
360	315105-0146		6	WASHER BRB 5,3X10 RFR	
370	90458-0429		1	HOSE GLAND W/O INSERT M20 EXTENDED	
380	353249-0011		2	INSERT, SINGEL HOLE, EK 153/11	
390	312155-0329		2	SCREW DIN 7991 MF6S M5X16 A4 70	
400	575034-0000		2	ROUND NUT	
410	90152-0050	M	1	SPIRAL CONDUIT, 20X13, UL 1313	
420	353243-0009		1	HOSE GLAND W/O INSERT PG13,5 EXTENDED	
600	90347-0039		1	DAMPER	
620	90044-0310		1	KEY FOR SAFETY SWITCH AZ 15/16 B1	
630	359705-0007		1	WARNING SIGN ISO, HOT SURFACE	
B1509	90459-0472		1	KEY SAF.SW. AZ 16 02ZVRK-M20-2152-2254	
W1067	351150-0405	M	1	CABLE OLFLEX 5X0,75 MM2 LIGHT/GREY	

Pos	Part No	UN	Qty	Description	Page No

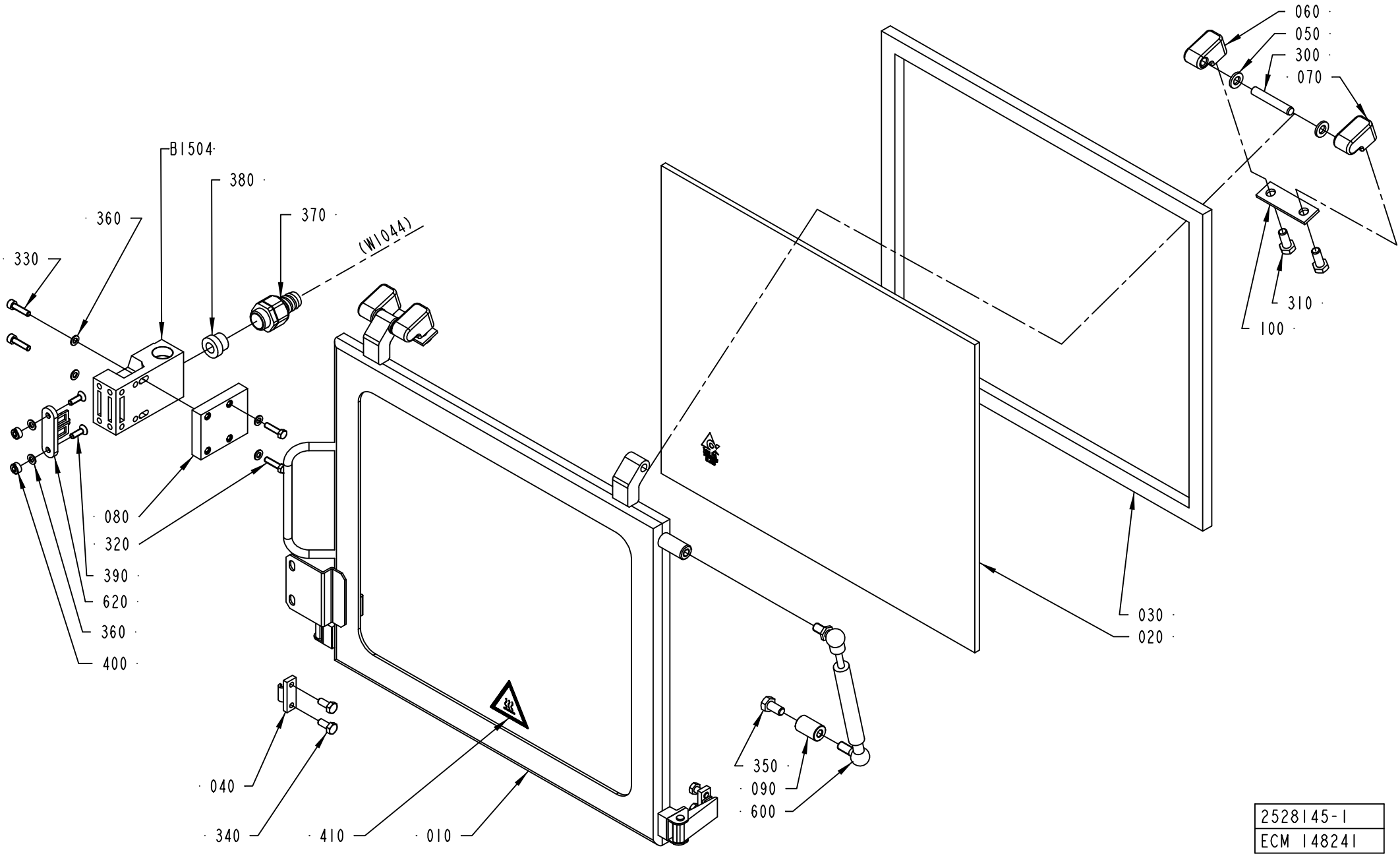

2528145-1
ECM 148241

ECM: 189731 - 20041104
Group number: 2528145-0100
Assembly Drawing: 2528145-1_1_AB

Pos	Part No	UN	Qty	Description	Page No
-					
010	2528144-0000		1	FRAME	
020	2531041-0000		1	GLASS PANE	
030	2531040-0000		1	GASKET	
040	271860-0000		2	CLAMP BLOCK	
050	441739-0000		4	WASHER	
060	1549992-0000		2	HINGE FLANGE	
070	1549993-0000		2	HINGE FLANGE	
080	2541651-0000		1	PLATE	
090	1549994-0000		1	SPACER	
100	441737-0000		2	WASHER	
300	311103-0413		2	PARALLEL PIN ISO 2338 8M6X50 A1	
310	312105-0451		4	SCREW M6S ISO 4017 M8X20 A480	
320	312105-0331		2	SCREW M6S ISO 4017 M5X20 A480	
330	312115-0331		2	SCREW ISO4762 M5X20 A4 80	
340	312105-0367		4	SCREW M6S ISO 4017 M6X14 A480	
350	312105-0449		1	SCREW M6S ISO 4017 M8X16 A480	
360	315105-0146		6	WASHER BRB 5,3X10 RFR	
370	90458-0429		1	HOSE GLAND W/O INSERT M20 EXTENDED	
380	353249-0011		1	INSERT, SINGEL HOLE, EK 153/11	
390	312155-0329		2	SCREW DIN 7991 MF6S M5X16 A4 70	
400	575034-0000		2	ROUND NUT	
410	359705-0007		1	WARNING SIGN ISO, HOT SURFACE	
600	90347-0039		1	DAMPER	
620	90044-0310		1	KEY FOR SAFETY SWITCH AZ 15/16 B1	
B1504	90459-0472		1	KEY SAF.SW. AZ 16 02ZVRK-M20-2152-2254	

Pos	Part No	UN	Qty	Description	Page No

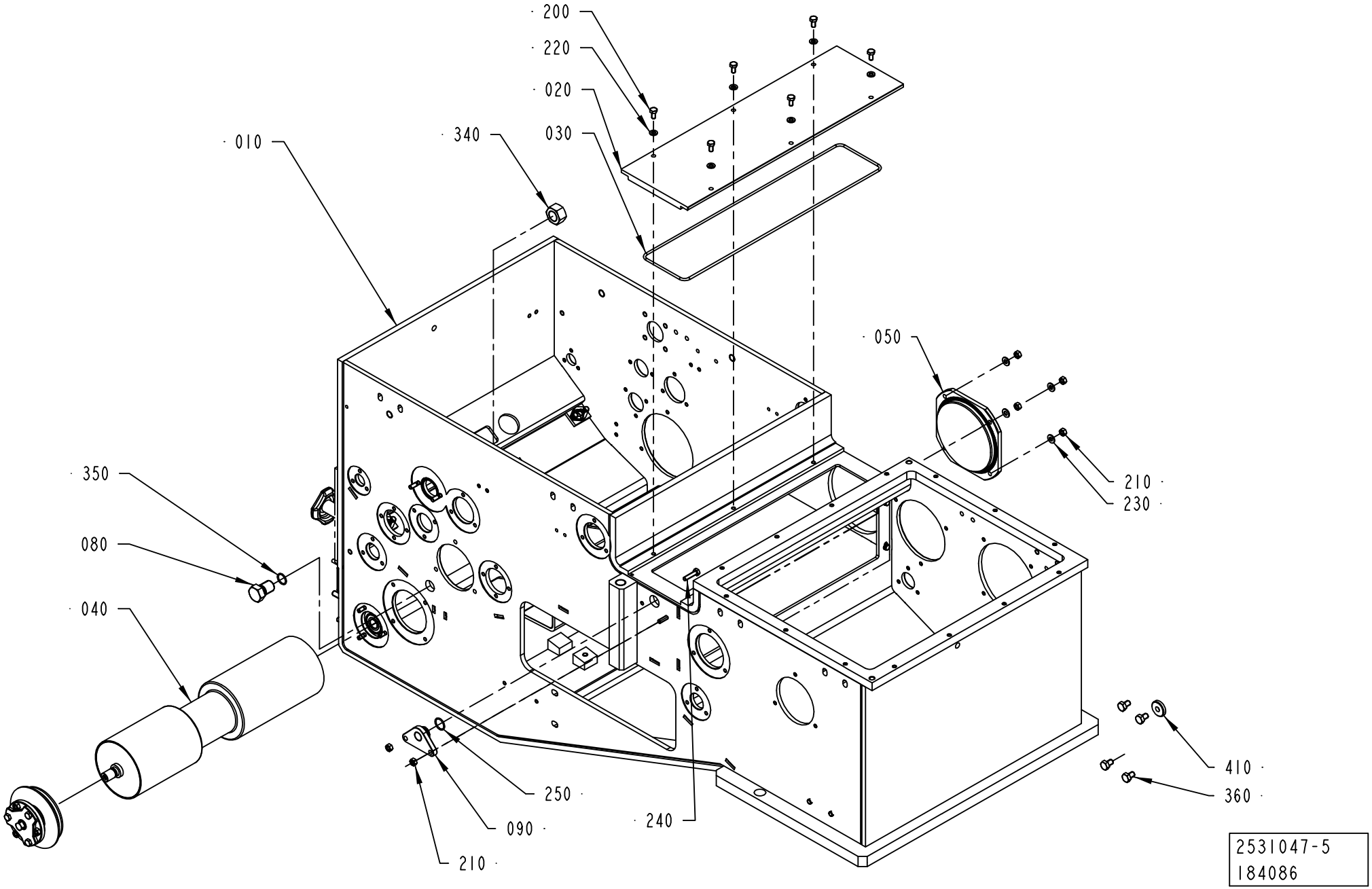
200
220
020
030
340
010
050
210
230
350
080
040
250
090
210
240
410
360
2531047-5
184086

ECM: 258300 - 20060702
Group number: 2531047-0200
Assembly Drawing: 2531047-5_1_AA

This list covers pages from 1-122 to 1-127

Pos	Part No	UN	Qty	Description	Page No
A3/FLEX TBA 1000B NODIMC, A3/FLEX TBA 0500B NODIMC, A3/FLEX TBA 1000S NODIMC, A3/FLEX TBA 1000SQ NODIMC, A3/FLEX TBA 0200S NODIMC, A3/FLEX TPA 1000SQ NODIMC, A3/FLEX TBA 1500S NODIMC, A3/FLEX TBA 0200B NODIMC, A3/FLEX TBA 0250B NODIMC, A3/FLEX TBA 0330S NODIMC, A3/FLEX TPA 0330SQ NODIMC, A3/FLEX TPA 0500SQ NODIMC, A3/FLEX TBA 0200M NODIMC, A3/FLEX TBA 0250S NODIMC, A3/FLEX TBA 0500S NODIMC, A3/FLEX TPA 0200SQ NODIMC, A3/FLEX TPA 0250SQ NODIMC, A3/FLEX TBA 0200SQ NODIMC, A3/FLEX TBA 0250SQ NODIMC (See drawing on page: 1-124)					
020	2532896-0000		1	COVER	
030	2532897-0000		1	GASKET	
040	1498784-0000		1	BENDING ROLLER	
050	1548732-0000		1	LID	
090	2531053-0000		1	PLUG	
100	2531054-0000		2	PLUG	
110	2531055-0000		1	PLUG	
200	312105-0366		6	SCREW M6S ISO 4017 M6X12 A480	
210	312605-0316		14	HEXAGON NUT, M6M M6 A280	
220	315105-0153		6	WASHER BRB 6,4X12 RFR	
230	315105-0156		4	WASHER BRB 6,7X14 RFR	
240	312105-0372		2	SCREW M6S ISO 4017 M6X25 A480	
250	315205-0705		1	O-RING 17,17X1,78 MM	
260	315205-0802		2	O-RING 41,0X1,78 MM	
270	315229-0104		1	GASKETS, 35,8X42,8X3,7 MM 1"1/2 FD	
280	312105-0371		8	SCREW M6S ISO 4017 M6X22 A480	
290	312105-0452		4	SCREW M6S ISO 4017 M8X22 A4 80	
300	312605-0318		4	HEXAGON NUT, M6M M8 A280	
360	312105-0447		6	SCREW M6S ISO 4017 M8X12 A480	
410	315125-0165		1	WASHER TBRSB 8,4X26X5 A4	
A3/FLEX TBA 1000S LIGHTCAP (See drawing on page: 1-122)					
020	2532896-0000		1	COVER	
030	2532897-0000		1	GASKET	
040	2715553-0000		1	BENDING ROLLER	
050	1548732-0000		1	LID	
080	2594624-0000		1	PLUG	
090	2531053-0000		1	PLUG	
200	312105-0366		6	SCREW M6S ISO 4017 M6X12 A480	
210	312605-0316		6	HEXAGON NUT, M6M M6 A280	
220	315105-0153		6	WASHER BRB 6,4X12 RFR	
230	315105-0156		4	WASHER BRB 6,7X14 RFR	
240	312105-0372		2	SCREW M6S ISO 4017 M6X25 A480	
250	315205-0705		1	O-RING 17,17X1,78 MM	
340	90099-0095		1	NUT HEX. M18X1,5	
350	315205-0704		1	O-RING 15,6X1,78 MM	
360	312105-0447		6	SCREW M6S ISO 4017 M8X12 A480	
410	315125-0165		1	WASHER TBRSB 8,4X26X5 A4	
A3/FLEX TBA 1000S STDA7, A3/FLEX TBA 1000B STDA7, A3/FLEX TBA 1000S NOMOLDEDCAP (See drawing on page: 1-122)					
020	2532896-0000		1	COVER	
030	2532897-0000		1	GASKET	
040	2531048-0000		1	BENDING ROLLER	
050	1548732-0000		1	LID	
080	2594624-0000		1	PLUG	
090	2531053-0000		1	PLUG	
200	312105-0366		6	SCREW M6S ISO 4017 M6X12 A480	
210	312605-0316		6	HEXAGON NUT, M6M M6 A280	
220	315105-0153		6	WASHER BRB 6,4X12 RFR	
230	315105-0156		4	WASHER BRB 6,7X14 RFR	
240	312105-0372		2	SCREW M6S ISO 4017 M6X25 A480	
250	315205-0705		1	O-RING 17,17X1,78 MM	
340	90099-0095		1	NUT HEX. M18X1,5	
350	315205-0704		1	O-RING 15,6X1,78 MM	
360	312105-0447		6	SCREW M6S ISO 4017 M8X12 A480	
410	315125-0165		1	WASHER TBRSB 8,4X26X5 A4	
A3/FLEX TBA 2000S NODIMC, A3/FLEX TBA 1890S NODIMC, A3/FLEX TBA 1400B NODIMC (See drawing on page: 1-126)					
020	2532896-0000		1	COVER	
030	2532897-0000		1	GASKET	
040	1498784-0000		1	BENDING ROLLER	
050	1548732-0000		1	LID	
090	2531053-0000		1	PLUG	
100	2531054-0000		2	PLUG	
110	2531055-0000		1	PLUG	
120	2547398-0000		1	LID	
130	2547399-0000		1	LID	
140	441737-0000		2	WASHER	
200	312105-0366		6	SCREW M6S ISO 4017 M6X12 A480	
210	312605-0316		17	HEXAGON NUT, M6M M6 A280	
220	315105-0153		8	WASHER BRB 6,4X12 RFR	
230	315105-0156		4	WASHER BRB 6,7X14 RFR	
240	312105-0372		2	SCREW M6S ISO 4017 M6X25 A480	
250	315205-0705		1	O-RING 17,17X1,78 MM	
260	315205-0802		2	O-RING 41,0X1,78 MM	
270	315229-0104		1	GASKETS, 35,8X42,8X3,7 MM 1"1/2 FD	
280	312105-0371		15	SCREW M6S ISO 4017 M6X22 A480	
290	312105-0452		9	SCREW M6S ISO 4017 M8X22 A4 80	
300	312605-0318		10	HEXAGON NUT, M6M M8 A280	

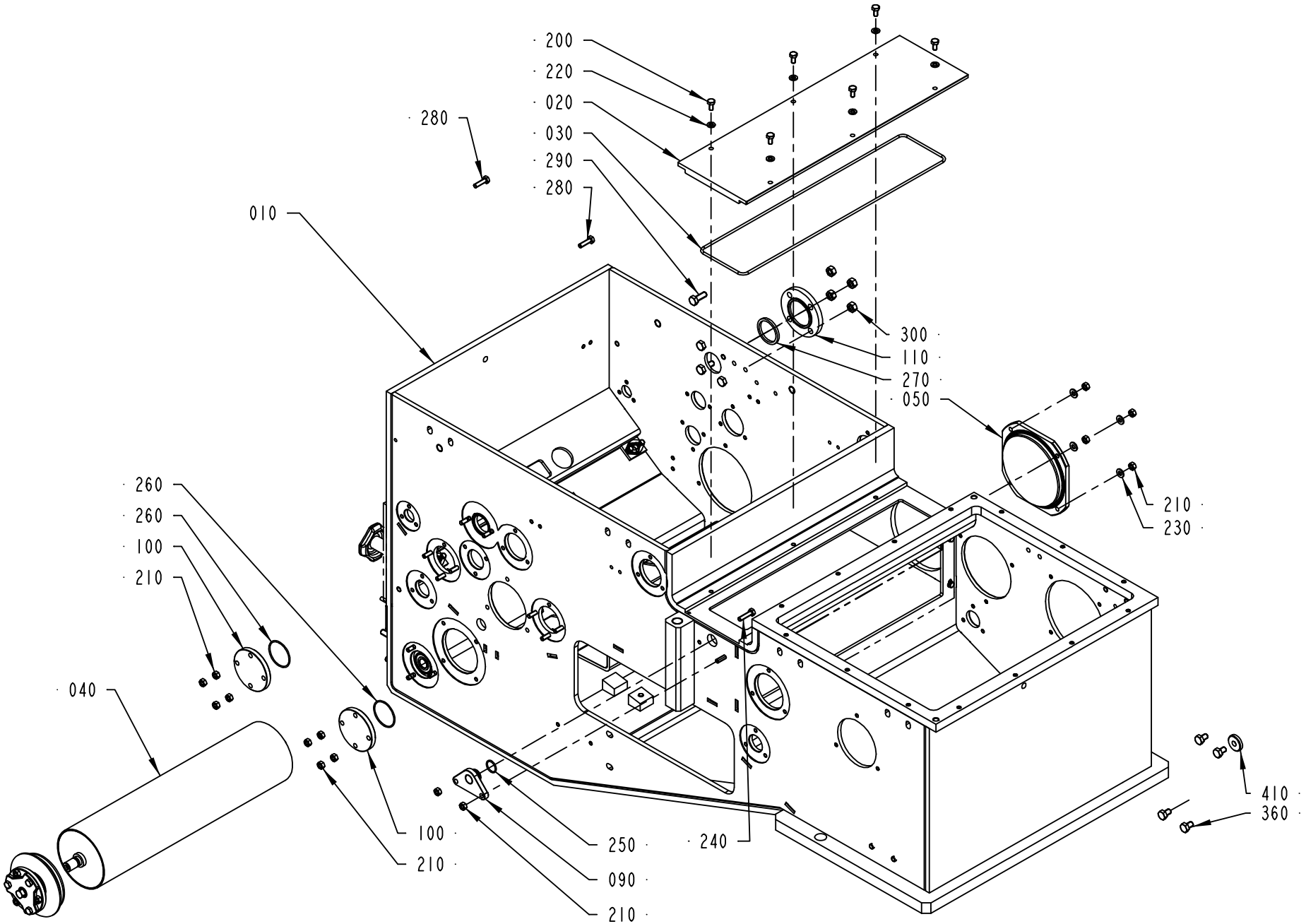
200
220
020
030
290
280
280
010
300
110
270
050
210
230
260
260
100
210
040
100
210
250
090
210
240
410
360
2531047-6
184086

ECM: 258300 - 20060702
Group number: 2531047-0200
Assembly Drawing: 2531047-6_1_AA

This list covers pages from 1-122 to 1-127

Pos	Part No	UN	Qty	Description	Page No
A3/FLEX TBA 2000S NODIMC, A3/FLEX TBA 1890S NODIMC, A3/FLEX TBA 1400B NODIMC (Cont'd) (See drawing on page: 1-126)					
320	90459-0094		1	O-RING 133,07X1,78 MM	
330	315105-0165		5	WASHER BRB 8,4X16 RFR	
360	312105-0447		6	SCREW M6S ISO 4017 M8X12 A480	
370	312105-0329		2	SCREW M6S ISO 4017 M5X16 A480	
380	315105-0146		2	WASHER BRB 5,3X10 RFR	
390	312605-0314		2	HEXAGON NUT, M6M M5 A280	
400	312105-0368		2	SCREW M6S ISO 4017 M6X16 A480	
Common Parts					
010	2528129-0200		1	FRAME HOUSING	**1-129**

Pos	Part No	UN	Qty	Description	Page No

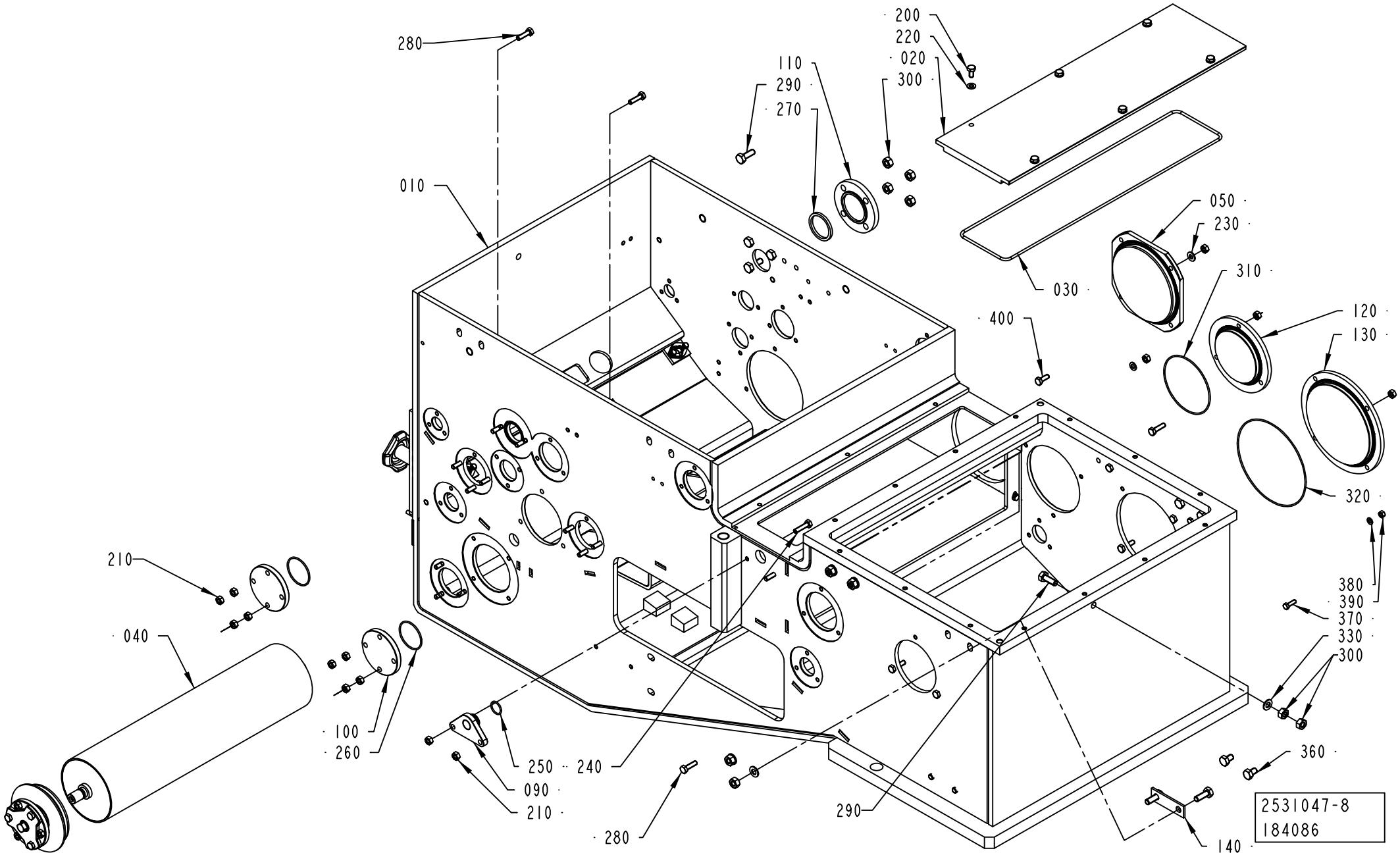
280
010
110
290
270
200
220
020
300
050
230
030
310
400
120
130
320
210
040
100
260
250
240
090
210
280
290
380
390
370
330
300
360
140
2531047-8
184086

ECM: 258300 - 20060702
Group number: 2531047-0200
Assembly Drawing: 2531047-8_1_AA

This list covers pages from 1-122 to 1-127

Pos	Part No	UN	Qty	Description	Page No	Pos	Part No	UN	Qty	Description	Page No

SEE PREVIOUS LISTS PAGES: 1-123, 1-125.

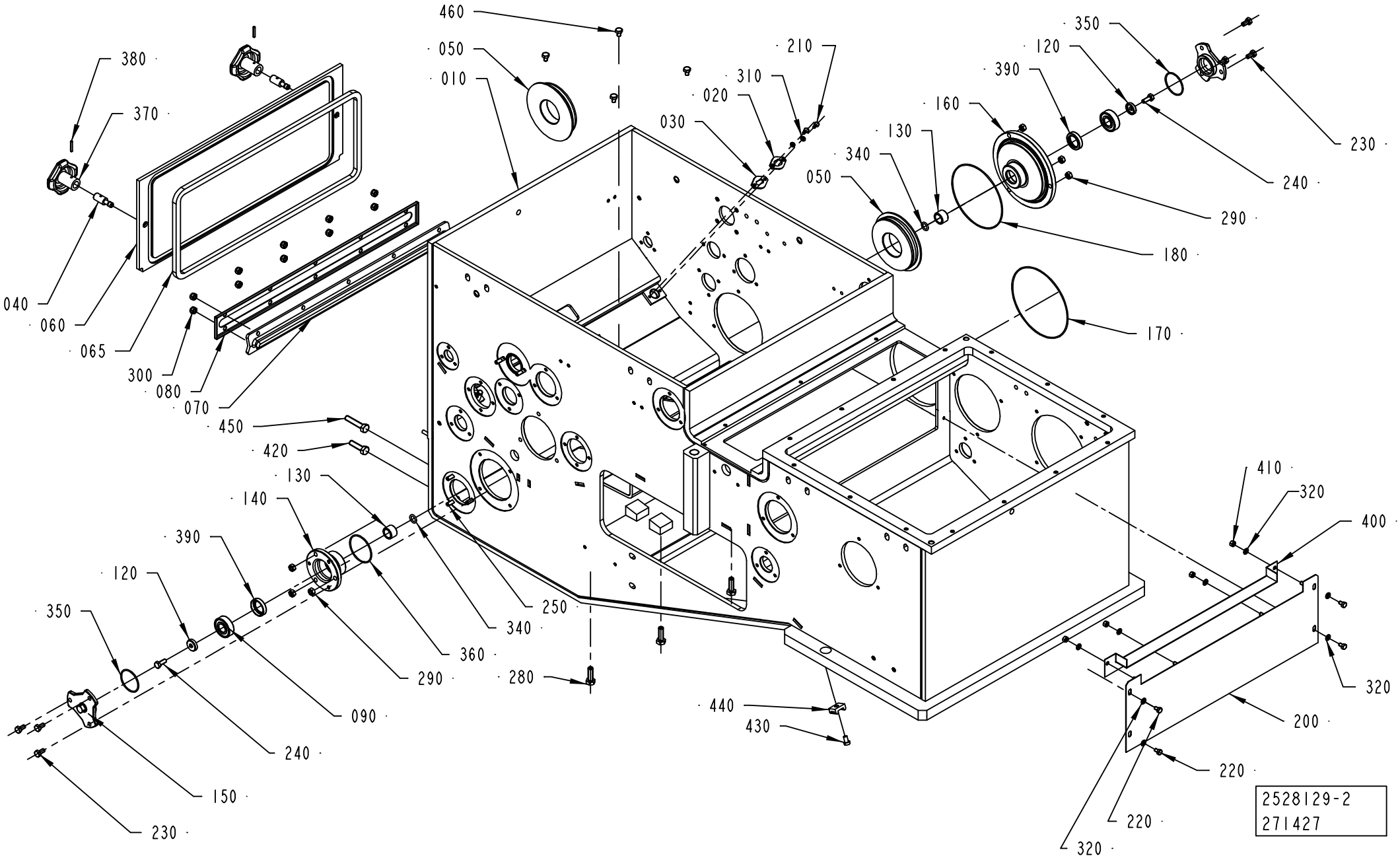
460
050
010
210
310
020
030
350
120
390
160
130
340
050
230
240
290
180
170
380
370
040
060
065
300
080
070
450
420
130
140
390
120
350
250
340
360
290
280
090
240
150
230
440
430
410
320
400
320
200
220
220
320
2528129-2
271427

ECM: 272125 - 20061101
Group number: 2528129-0200
Assembly Drawing: 2528129-2_1_AB

Pos	Part No	UN	Qty	Description	Page No
TBA 0250S, TBA 0200S, TBA 0200M, TPA 0250SQ, TPA 0200SQ					
200	2619171-0000		1	PLATE	
320	315105-0146		8	WASHER BRB 5,3X10 RFR	
400	2844043-0000		1	SLIDE	
410	312605-0314		4	HEXAGON NUT, M6M M5 A280	
TBA 0330S, TBA 0200B, TBA 0250B, TBA 0200SQ, TPA 0330SQ, TBA 0250SQ					
200	2619171-0000		1	PLATE	
320	315105-0146		8	WASHER BRB 5,3X10 RFR	
400	2844044-0000		1	SLIDE	
410	312605-0314		4	HEXAGON NUT, M6M M5 A280	
TBA 0500B, TBA 1000SQ, TBA 1000B, TBA 1500S, TBA 1000S STDA7, TBA 1000S NOMOLDEDCAP					
200	2619171-0000		1	PLATE	
320	315105-0146		8	WASHER BRB 5,3X10 RFR	
400	2844047-0000		1	SLIDE	
410	312605-0314		4	HEXAGON NUT, M6M M5 A280	
TBA 0500S, TPA 1000SQ, TPA 0750SQ					
200	2619171-0000		1	PLATE	
320	315105-0146		8	WASHER BRB 5,3X10 RFR	
400	2844045-0000		1	SLIDE	
410	312605-0314		4	HEXAGON NUT, M6M M5 A280	
TBA 1000S LIGHTCAP					
050	2725564-0000		2	WHEEL	
200	2716445-0000		1	PLATE	
320	315105-0146		8	WASHER BRB 5,3X10 RFR	
400	2716444-0000		1	SLIDE	
410	312605-0314		4	HEXAGON NUT, M6M M5 A280	
TBA 1890S, TBA 2000S, TBA 1400B					
200	2592530-0000		1	PLATE	
320	315105-0146		4	WASHER BRB 5,3X10 RFR	
TPA 0500SQ					
200	2619171-0000		1	PLATE	
320	315105-0146		8	WASHER BRB 5,3X10 RFR	
400	2844046-0000		1	SLIDE	
410	312605-0314		4	HEXAGON NUT, M6M M5 A280	
Common Parts					
010	2695982-0000		1	HOUSING	
020	2528133-0000		2	WASHER	
030	2528134-0000		2	GASKET	
040	1036475-0000		2	PIN	
050	1498783-0000		2	WHEEL	
060	1499168-0000		1	LID	
065	1499169-0000		1	GASKET	
070	1499170-0000		1	GASKET	
080	1499171-0000		1	LID	
090	90458-1704		2	BALL BEARING, 15X35X11 MM	
120	1538725-0000		2	WASHER	
130	1538726-0000		2	BUSHING	
140	1548734-0000		1	FLANGE	
150	1548735-0000		2	LID	
160	1548739-0000		1	FLANGE	
170	90459-1686		1	O-RING 126,72X1,78 MM	
180	90459-1627		1	O-RING 114,02X1,78 MM	
210	312105-0289		4	SCREW M6S ISO 4017 M4X10 A470	
220	312105-0323		4	SCREW M6S ISO 4017 M5X8 A480	
230	312105-0366		6	SCREW M6S ISO 4017 M6X12 A480	
240	312105-0368		2	SCREW M6S ISO 4017 M6X16 A480	
250	312105-0370		16	SCREW M6S ISO 4017 M6X20 A480	
280	312105-0453		3	SCREW M6S ISO 4017 M8X25 A480	
290	312605-0316		6	HEXAGON NUT, M6M M6 A280	
300	312812-0316		10	HEXAGON NUT, NY-LOCK M6 A480	
310	315105-0136		4	WASHER BRB 4,3X9 RFR	
340	315204-0209		2	O-RING 10,3X2,4 MM	
350	315205-0801		2	O-RING 37,82X1,78 MM	
360	315205-0804		1	O-RING 47,35X1,78 MM	
370	90051-0045		2	STELLAR KNOB, NO. 8323-257	
380	90258-0031		2	PIN, STRAIGHT SLOTTED SPRING FRP 3X20	
390	90458-0639		2	VARILIP 20X30X7 MM	
420	312105-0455		2	SCREW M6S ISO 4017 M8X30 A480	
430	312125-0364		6	SCREW ISO 1207 M6X10 A4	
440	352113-0204		6	ANCHOR PLATES FOR STRIPS, TYPE TM3S25-M	
450	312109-0459		2	SCREW M6S ISO 4017 M8X40 A480	
460	312105-0362		4	SCREW M6S ISO 4017 M6X8 A480	
500	312105-0447		4	SCREW M6S ISO 4017 M8X12 A480	

Machine Type | Group Description | Used-In | Group Number | Page No

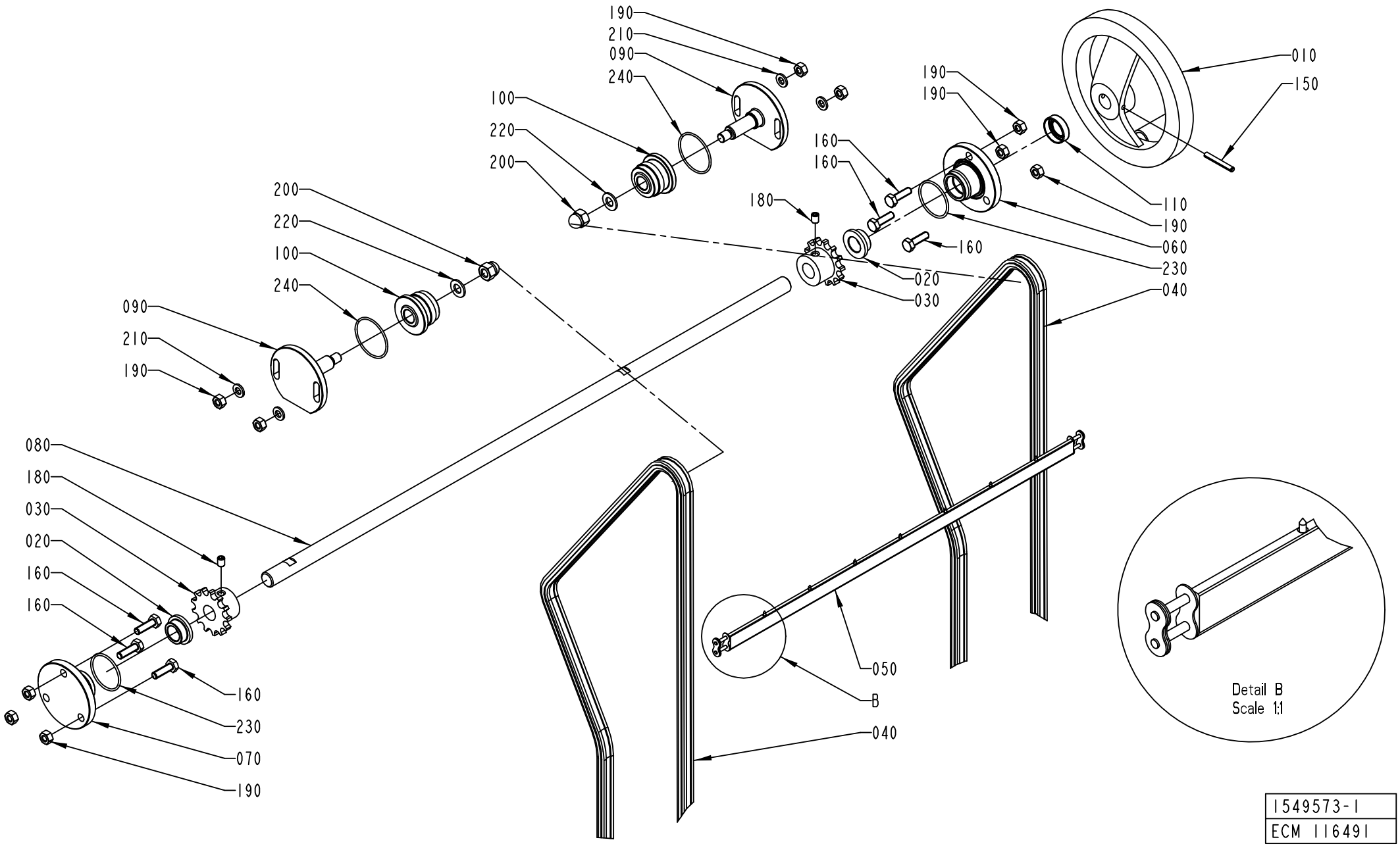

1549573-1
ECM 116491

ECM: 258295 - 20060702
Group number: 1549573-0100
Assembly Drawing: 1549573-1_1_AA

This list covers pages from 1-130 to 1-135

Pos	Part No	UN	Qty	Description	Page No
LIGHTCAP (See drawing on pages: 1-132, 1-134)					
090	2709225-0000		2	SHAFT	
STDA7 CAP, NOMOLDEDCAP (See drawing on page: 1-130)					
090	1523191-0000		2	SHAFT	
Common Parts					
010	247358-0000		1	SHIFTER HANDLE	
020	279008-0000		2	BUSHING	
030	1038464-0000		2	SPROCKET	
040	1549568-0000		2	CHAIN	
050	1511740-0000		1	CARRIER	
060	1549982-0000		1	FLANGE	
070	1549981-0000		1	FLANGE	
080	1523190-0000		1	SHAFT	
100	1532249-0000		2	WHEEL	
110	90459-1148		1	VARILIP 14X24X7 MM	
150	311112-0262		1	SPRING PIN, ISO 8752 4X32-C	
160	312105-0370		6	SCREW M6S ISO 4017 M6X20 A480	
180	312318-0362		2	SCREW ISO4029 M6X8 A4	
190	312605-0316		10	HEXAGON NUT, M6M M6 A280	
200	312705-0318		2	NUT HEX. DOMED CAP MHM-6 M8 A280	
210	315105-0153		4	WASHER BRB 6,4X12 RFR	
220	315105-0165		2	WASHER BRB 8,4X16 RFR	
230	315205-0714		2	O-RING 31,47X1,78 MM	
240	315204-0123		2	O-RING 35,1X1,6 MM	

Pos	Part No	UN	Qty	Description	Page No

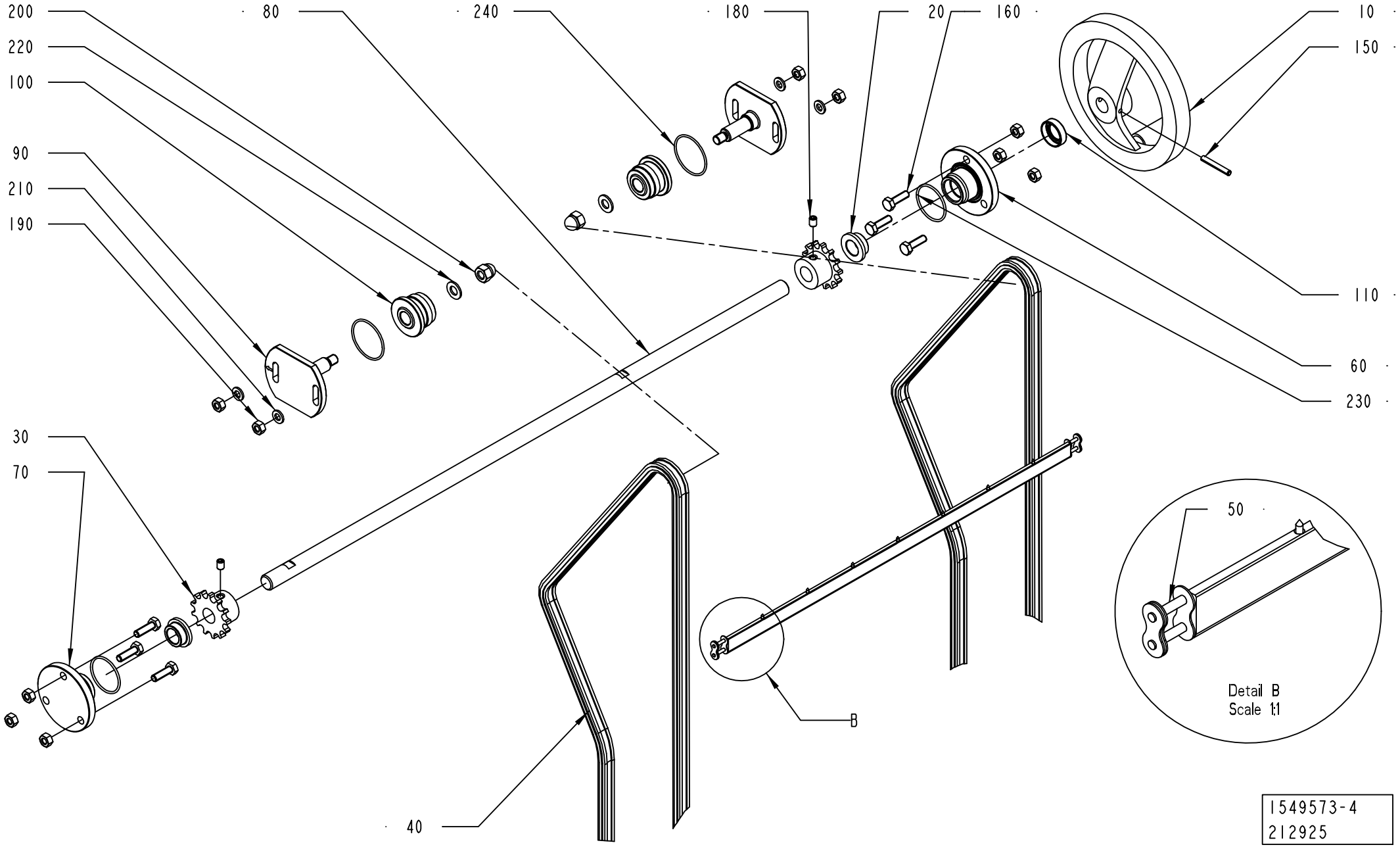
200
220
100
90
210
190
80
240
180
20
160
10
150
110
60
230
30
70
40
50
B
Detail B
Scale 1:1
1549573-4
212925

ECM: 258295 - 20060702
Group number: 1549573-0100
Assembly Drawing: 1549573-4_1_AA

This list covers pages from 1-130 to 1-135

Pos	Part No	UN	Qty	Description	Page No
LIGHTCAP (See drawing on pages: 1-132, 1-134)					
090	2709225-0000		2	SHAFT	
STDA7 CAP, NOMOLDEDCAP (See drawing on page: 1-130)					
090	1523191-0000		2	SHAFT	
Common Parts					
010	247358-0000		1	SHIFTER HANDLE	
020	279008-0000		2	BUSHING	
030	1038464-0000		2	SPROCKET	
040	1549568-0000		2	CHAIN	
050	1511740-0000		1	CARRIER	
060	1549982-0000		1	FLANGE	
070	1549981-0000		1	FLANGE	
080	1523190-0000		1	SHAFT	
100	1532249-0000		2	WHEEL	
110	90459-1148		1	VARILIP 14X24X7 MM	
150	311112-0262		1	SPRING PIN, ISO 8752 4X32-C	
160	312105-0370		6	SCREW M6S ISO 4017 M6X20 A480	
180	312318-0362		2	SCREW ISO4029 M6X8 A4	
190	312605-0316		10	HEXAGON NUT, M6M M6 A280	
200	312705-0318		2	NUT HEX. DOMED CAP MHM-6 M8 A280	
210	315105-0153		4	WASHER BRB 6,4X12 RFR	
220	315105-0165		2	WASHER BRB 8,4X16 RFR	
230	315205-0714		2	O-RING 31,47X1,78 MM	
240	315204-0123		2	O-RING 35,1X1,6 MM	

Pos	Part No	UN	Qty	Description	Page No

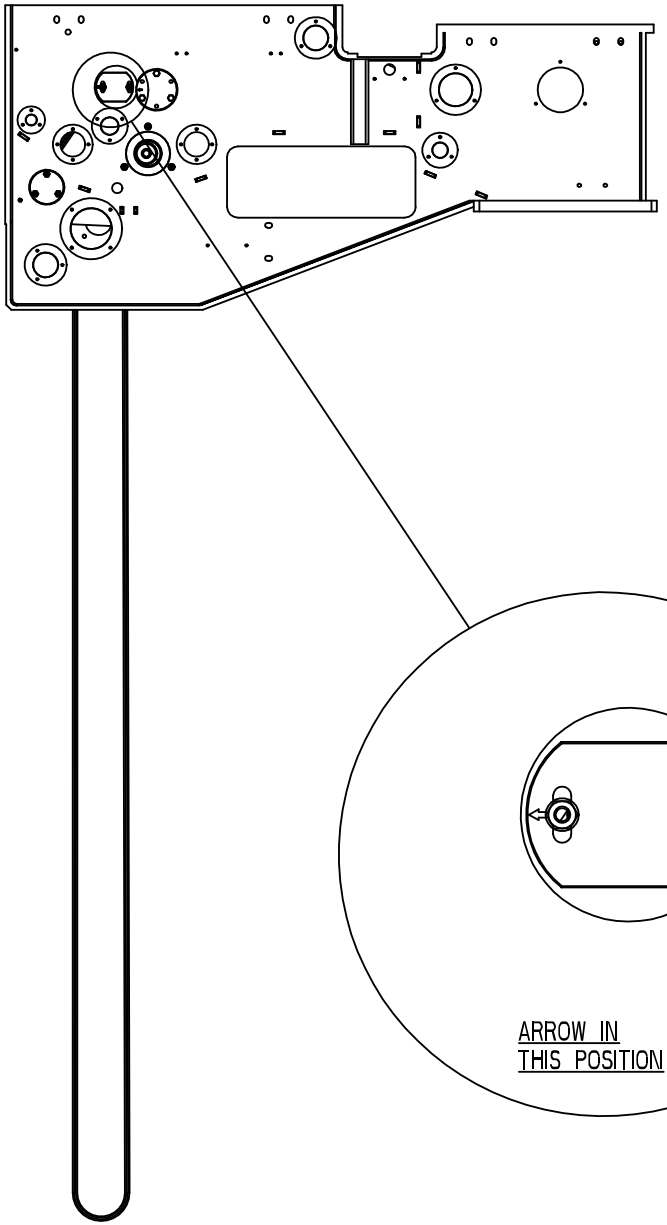

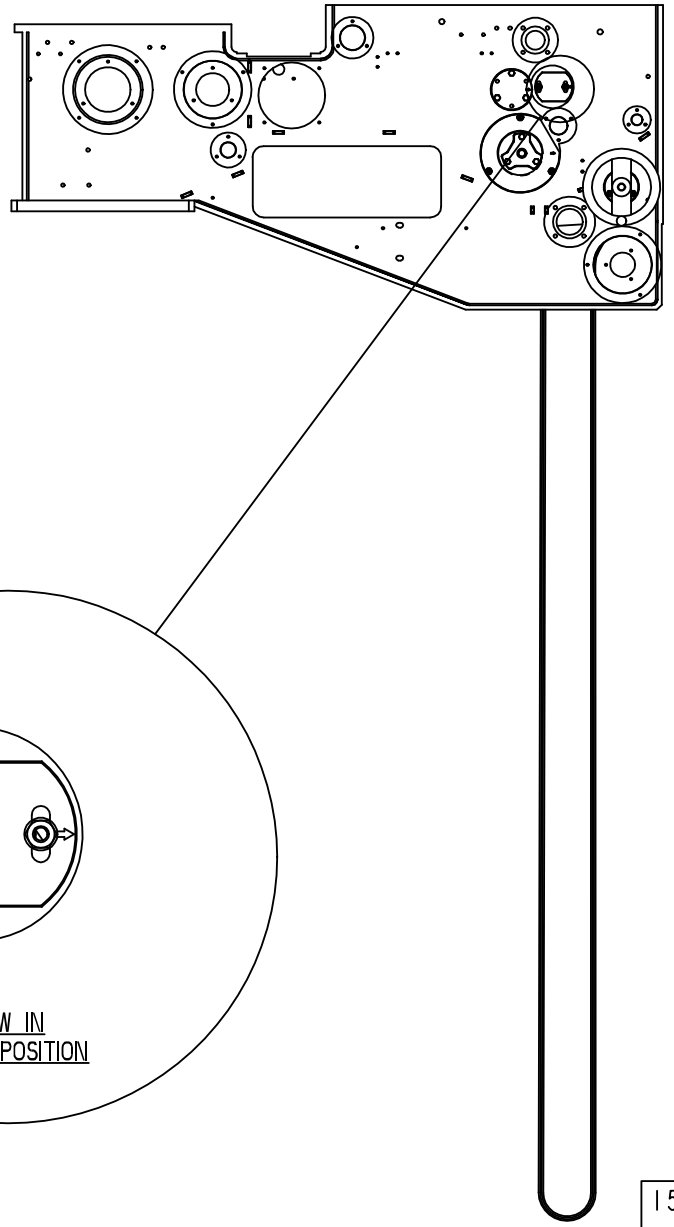

1549573-4
212925

ECM: 258295 - 20060702
Group number: 1549573-0100
Assembly Drawing: 1549573-4_2_AA

This list covers pages from 1-130 to 1-135

Pos	Part No	UN	Qty	Description	Page No
LIGHTCAP (See drawing on pages: 1-132, 1-134)					
090	2709225-0000		2	SHAFT	
STDA7 CAP, NOMOLDEDCAP (See drawing on page: 1-130)					
090	1523191-0000		2	SHAFT	
Common Parts					
010	247358-0000		1	SHIFTER HANDLE	
020	279008-0000		2	BUSHING	
030	1038464-0000		2	SPROCKET	
040	1549568-0000		2	CHAIN	
050	1511740-0000		1	CARRIER	
060	1549982-0000		1	FLANGE	
070	1549981-0000		1	FLANGE	
080	1523190-0000		1	SHAFT	
100	1532249-0000		2	WHEEL	
110	90459-1148		1	VARILIP 14X24X7 MM	
150	311112-0262		1	SPRING PIN, ISO 8752 4X32-C	
160	312105-0370		6	SCREW M6S ISO 4017 M6X20 A480	
180	312318-0362		2	SCREW ISO4029 M6X8 A4	
190	312605-0316		10	HEXAGON NUT, M6M M6 A280	
200	312705-0318		2	NUT HEX. DOMED CAP MHM-6 M8 A280	
210	315105-0153		4	WASHER BRB 6,4X12 RFR	
220	315105-0165		2	WASHER BRB 8,4X16 RFR	
230	315205-0714		2	O-RING 31,47X1,78 MM	
240	315204-0123		2	O-RING 35,1X1,6 MM	

Pos	Part No	UN	Qty	Description	Page No

SQUEE-GEE ROLLER

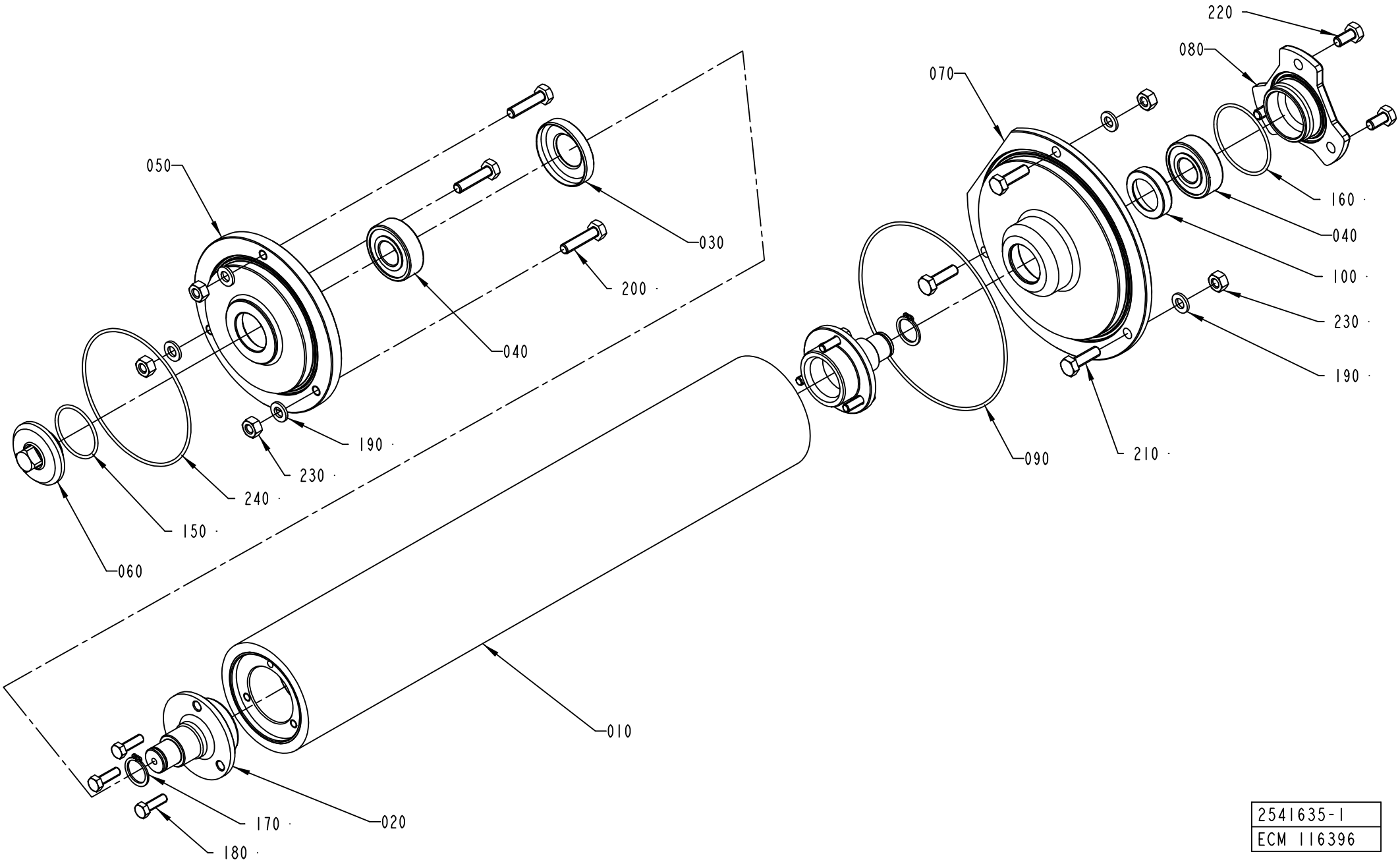

2541635-1
ECM 116396

Pos	Part No	UN	Qty	Description	Page No
A3/FLEX TBA 1000B NODIMC, A3/FLEX TBA 0500B NODIMC, A3/FLEX TBA 1000S NODIMC, A3/FLEX TBA 1000SQ NODIMC, A3/FLEX TBA 0200S NODIMC, A3/FLEX TPA 1000SQ NODIMC, A3/FLEX TBA 1500S NODIMC, A3/FLEX TBA 0200B NODIMC, A3/FLEX TBA 0250B NODIMC, A3/FLEX TBA 0330S NODIMC, A3/FLEX TPA 0330SQ NODIMC, A3/FLEX TPA 0500SQ NODIMC, A3/FLEX TBA 0200M NODIMC, A3/FLEX TBA 0250S NODIMC, A3/FLEX TBA 0500S NODIMC, A3/FLEX TPA 0200SQ NODIMC, A3/FLEX TPA 0250SQ NODIMC, A3/FLEX TPA 0750SQ NODIMC, A3/FLEX TBA 0200SQ NODIMC, A3/FLEX TBA 0250SQ NODIMC (See drawing on page: 1-136)					
010	1511769-0000		1	ROLLER	
050	2541633-0000		1	FLANGE	
070	2532984-0000		1	FLANGE	
A3/FLEX TBA 1000S LIGHTCAP (See drawing on pages: 1-142, 1-144)					
010	2528136-0000		1	SQUEE-GEE ROLLER	
050	2709213-0000		1	FLANGE	
070	2709214-0000		1	FLANGE	
A3/FLEX TBA 1000S STDA7, A3/FLEX TBA 1000B STDA7, A3/FLEX TBA 1000S NOMOLDEDCAP (See drawing on page: 1-138)					
010	2528136-0000		1	SQUEE-GEE ROLLER	
050	2541633-0000		1	FLANGE	
070	2532984-0000		1	FLANGE	
A3/FLEX TBA 2000S NODIMC, A3/FLEX TBA 1890S NODIMC, A3/FLEX TBA 1400B NODIMC (See drawing on page: 1-140)					
010	2547406-0000		1	ROLLER	
050	2541641-0000		1	FLANGE	
070	2541640-0000		1	FLANGE	
Common Parts					
020	2541637-0000		2	SHAFT	
030	2541647-0000		1	LID	
040	90458-1704		2	BALL BEARING, 15X35X11 MM	
060	2532983-0000		1	FLANGE	
080	2541639-0000		1	LID	
090	90459-1627		1	O-RING 114,02X1,78 MM	
100	2541648-0000		1	LID	
150	315205-0713		1	O-RING 29,87X1,78 MM	
160	315205-0802		1	O-RING 41,0X1,78 MM	
170	315751-0112		2	RETAINING RING FOR SHAFT DIN 471 15 A2	
180	312105-0329		6	SCREW M6S ISO 4017 M5X16 A480	
190	315103-0153		6	WASHER, BRB, 6,4/12,H=1,5 NIPL BR	
200	312105-0372		3	SCREW M6S ISO 4017 M6X25 A480	
210	312105-0370		3	SCREW M6S ISO 4017 M6X20 A480	
220	312105-0366		3	SCREW M6S ISO 4017 M6X12 A480	
230	312605-0316		6	HEXAGON NUT, M6M M6 A280	
240	90242-0270		1	O-RING 82,27X1,78 MM	

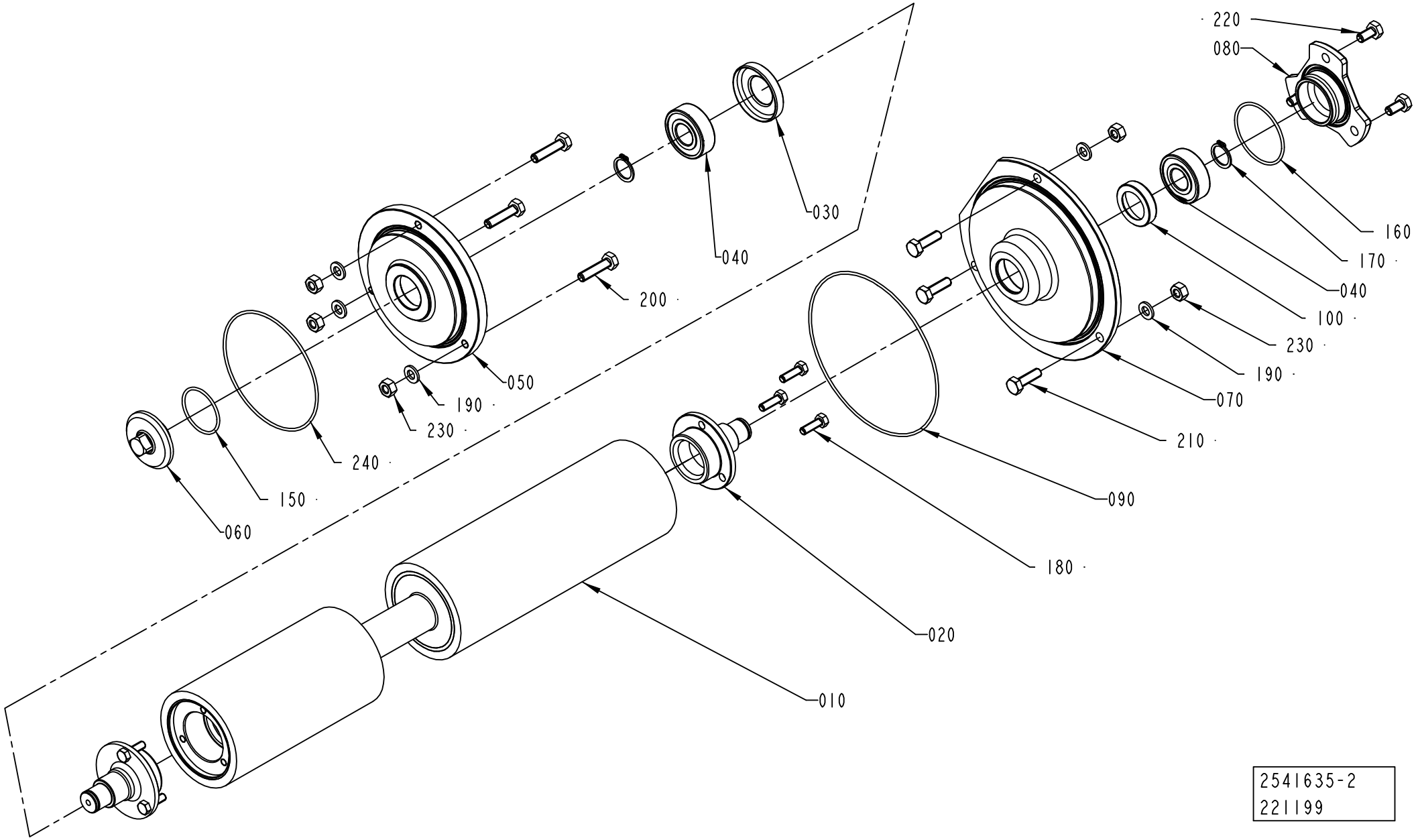
220
080
160
170
040
100
230
190
070
210
030
040
200
050
190
230
240
150
060
090
180
020
010
2541635-2
221199

Pos	Part No	UN	Qty	Description	Page No
A3/FLEX TBA 1000B NODIMC, A3/FLEX TBA 0500B NODIMC, A3/FLEX TBA 1000S NODIMC, A3/FLEX TBA 1000SQ NODIMC, A3/FLEX TBA 0200S NODIMC, A3/FLEX TPA 1000SQ NODIMC, A3/FLEX TBA 1500S NODIMC, A3/FLEX TBA 0200B NODIMC, A3/FLEX TBA 0250B NODIMC, A3/FLEX TBA 0330S NODIMC, A3/FLEX TPA 0330SQ NODIMC, A3/FLEX TPA 0500SQ NODIMC, A3/FLEX TBA 0200M NODIMC, A3/FLEX TBA 0250S NODIMC, A3/FLEX TBA 0500S NODIMC, A3/FLEX TPA 0200SQ NODIMC, A3/FLEX TPA 0250SQ NODIMC, A3/FLEX TPA 0750SQ NODIMC, A3/FLEX TBA 0200SQ NODIMC, A3/FLEX TBA 0250SQ NODIMC (See drawing on page: 1-136)					
010	1511769-0000		1	ROLLER	
050	2541633-0000		1	FLANGE	
070	2532984-0000		1	FLANGE	
A3/FLEX TBA 1000S LIGHTCAP (See drawing on pages: 1-142, 1-144)					
010	2528136-0000		1	SQUEE-GEE ROLLER	
050	2709213-0000		1	FLANGE	
070	2709214-0000		1	FLANGE	
A3/FLEX TBA 1000S STDA7, A3/FLEX TBA 1000B STDA7, A3/FLEX TBA 1000S NOMOLDEDCAP (See drawing on page: 1-138)					
010	2528136-0000		1	SQUEE-GEE ROLLER	
050	2541633-0000		1	FLANGE	
070	2532984-0000		1	FLANGE	
A3/FLEX TBA 2000S NODIMC, A3/FLEX TBA 1890S NODIMC, A3/FLEX TBA 1400B NODIMC (See drawing on page: 1-140)					
010	2547406-0000		1	ROLLER	
050	2541641-0000		1	FLANGE	
070	2541640-0000		1	FLANGE	
Common Parts					
020	2541637-0000		2	SHAFT	
030	2541647-0000		1	LID	
040	90458-1704		2	BALL BEARING, 15X35X11 MM	
060	2532983-0000		1	FLANGE	
080	2541639-0000		1	LID	
090	90459-1627		1	O-RING 114,02X1,78 MM	
100	2541648-0000		1	LID	
150	315205-0713		1	O-RING 29,87X1,78 MM	
160	315205-0802		1	O-RING 41,0X1,78 MM	
170	315751-0112		2	RETAINING RING FOR SHAFT DIN 471 15 A2	
180	312105-0329		6	SCREW M6S ISO 4017 M5X16 A480	
190	315103-0153		6	WASHER, BRB, 6,4/12,H=1,5 NIPL BR	
200	312105-0372		3	SCREW M6S ISO 4017 M6X25 A480	
210	312105-0370		3	SCREW M6S ISO 4017 M6X20 A480	
220	312105-0366		3	SCREW M6S ISO 4017 M6X12 A480	
230	312605-0316		6	HEXAGON NUT, M6M M6 A280	
240	90242-0270		1	O-RING 82,27X1,78 MM	

Pos	Part No	UN	Qty	Description	Page No

SQUEE-GEE ROLLER

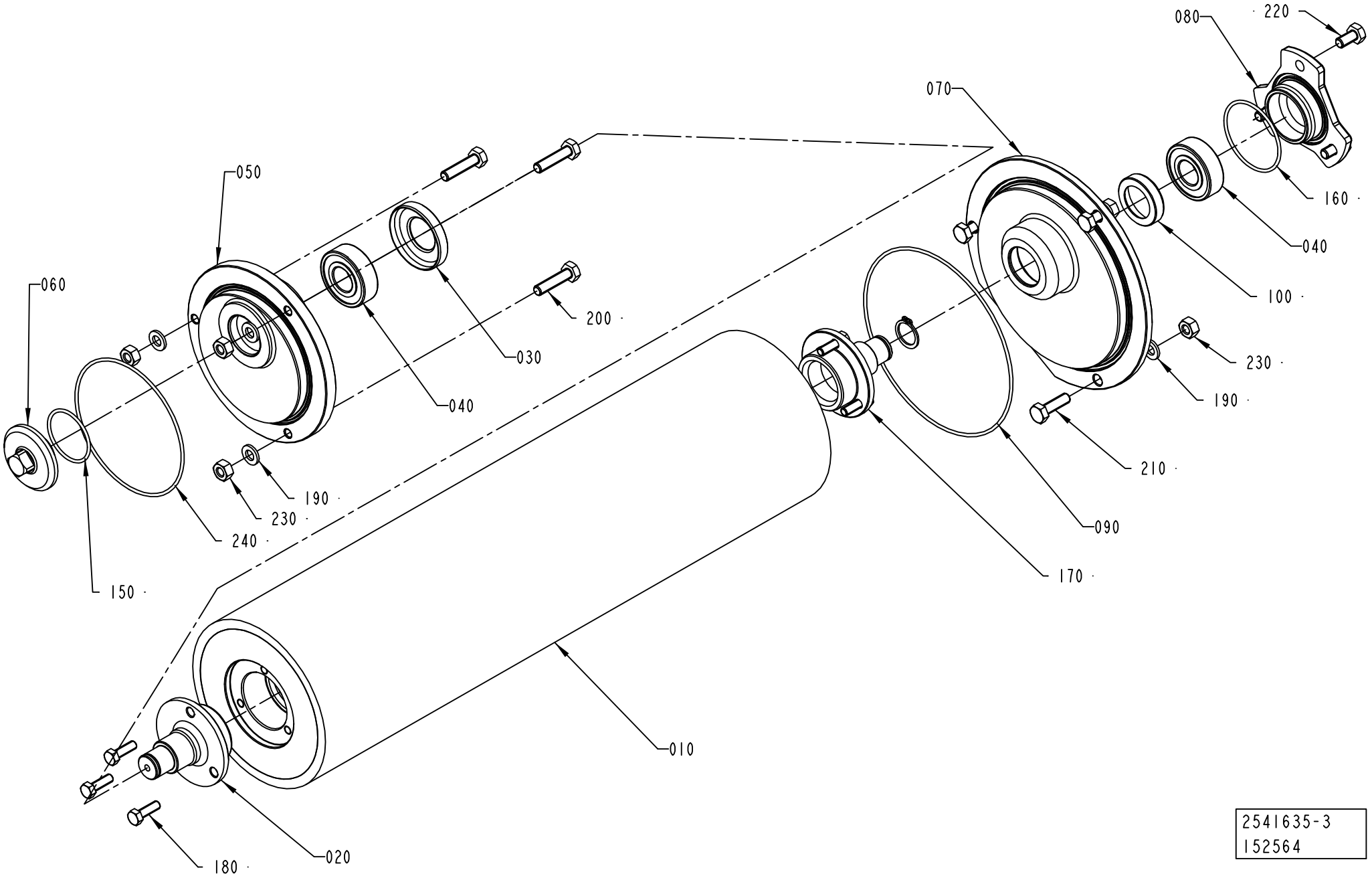

Pos	Part No	UN	Qty	Description	Page No
A3/FLEX TBA 1000B NODIMC, A3/FLEX TBA 0500B NODIMC, A3/FLEX TBA 1000S NODIMC, A3/FLEX TBA 1000SQ NODIMC, A3/FLEX TBA 0200S NODIMC, A3/FLEX TPA 1000SQ NODIMC, A3/FLEX TBA 1500S NODIMC, A3/FLEX TBA 0200B NODIMC, A3/FLEX TBA 0250B NODIMC, A3/FLEX TBA 0330S NODIMC, A3/FLEX TPA 0330SQ NODIMC, A3/FLEX TPA 0500SQ NODIMC, A3/FLEX TBA 0200M NODIMC, A3/FLEX TBA 0250S NODIMC, A3/FLEX TBA 0500S NODIMC, A3/FLEX TPA 0200SQ NODIMC, A3/FLEX TPA 0250SQ NODIMC, A3/FLEX TPA 0750SQ NODIMC, A3/FLEX TBA 0200SQ NODIMC, A3/FLEX TBA 0250SQ NODIMC (See drawing on page: 1-136)					
010	1511769-0000		1	ROLLER	
050	2541633-0000		1	FLANGE	
070	2532984-0000		1	FLANGE	
A3/FLEX TBA 1000S LIGHTCAP (See drawing on pages: 1-142, 1-144)					
010	2528136-0000		1	SQUEE-GEE ROLLER	
050	2709213-0000		1	FLANGE	
070	2709214-0000		1	FLANGE	
A3/FLEX TBA 1000S STDA7, A3/FLEX TBA 1000B STDA7, A3/FLEX TBA 1000S NOMOLDEDCAP (See drawing on page: 1-138)					
010	2528136-0000		1	SQUEE-GEE ROLLER	
050	2541633-0000		1	FLANGE	
070	2532984-0000		1	FLANGE	
A3/FLEX TBA 2000S NODIMC, A3/FLEX TBA 1890S NODIMC, A3/FLEX TBA 1400B NODIMC (See drawing on page: 1-140)					
010	2547406-0000		1	ROLLER	
050	2541641-0000		1	FLANGE	
070	2541640-0000		1	FLANGE	
Common Parts					
020	2541637-0000		2	SHAFT	
030	2541647-0000		1	LID	
040	90458-1704		2	BALL BEARING, 15X35X11 MM	
060	2532983-0000		1	FLANGE	
080	2541639-0000		1	LID	
090	90459-1627		1	O-RING 114,02X1,78 MM	
100	2541648-0000		1	LID	
150	315205-0713		1	O-RING 29,87X1,78 MM	
160	315205-0802		1	O-RING 41,0X1,78 MM	
170	315751-0112		2	RETAINING RING FOR SHAFT DIN 471 15 A2	
180	312105-0329		6	SCREW M6S ISO 4017 M5X16 A480	
190	315103-0153		6	WASHER, BRB, 6,4/12,H=1,5 NIPL BR	
200	312105-0372		3	SCREW M6S ISO 4017 M6X25 A480	
210	312105-0370		3	SCREW M6S ISO 4017 M6X20 A480	
220	312105-0366		3	SCREW M6S ISO 4017 M6X12 A480	
230	312605-0316		6	HEXAGON NUT, M6M M6 A280	
240	90242-0270		1	O-RING 82,27X1,78 MM	

SQUEE-GEE ROLLER

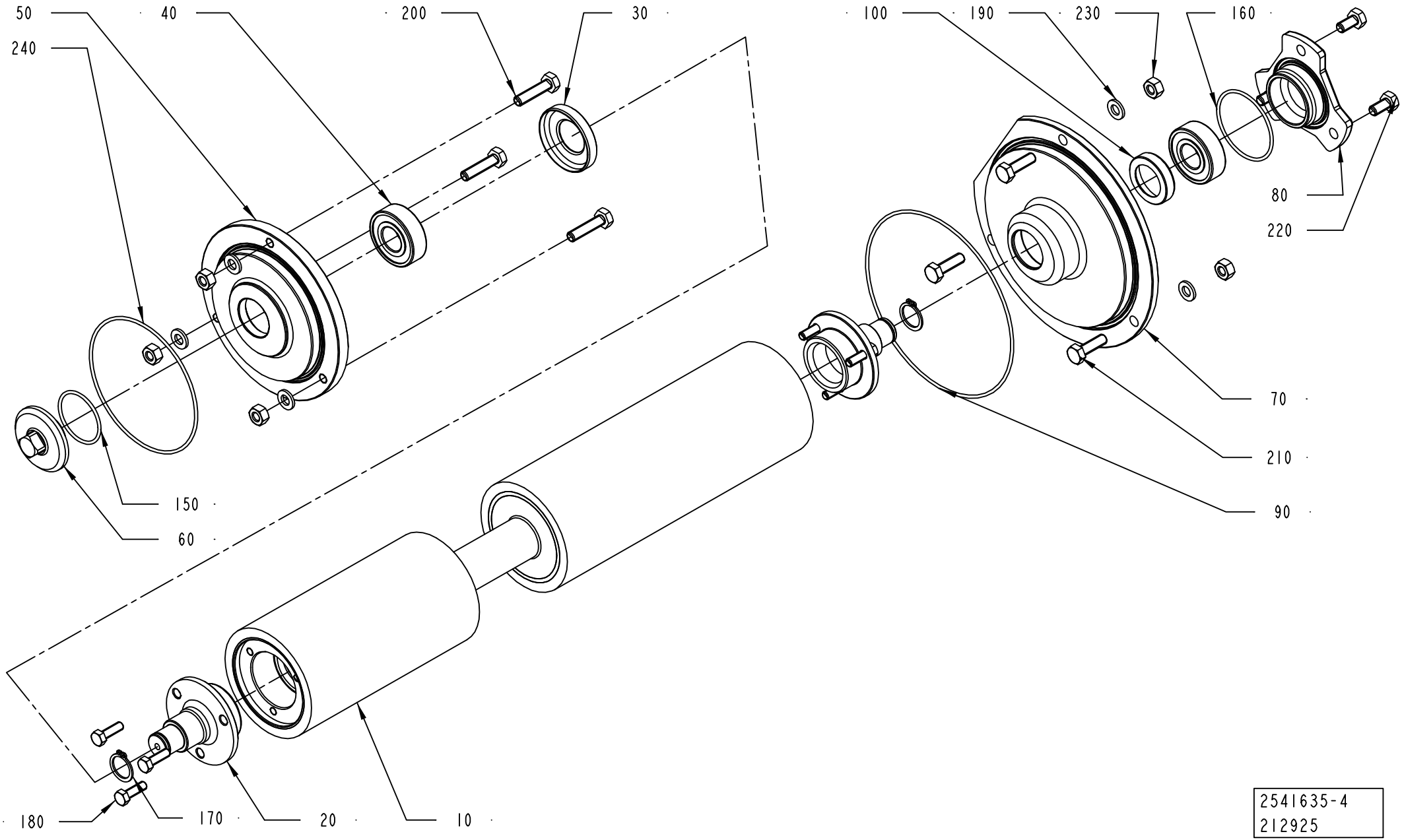

2541635-4
212925

Pos	Part No	UN	Qty	Description	Page No
A3/FLEX TBA 1000B NODIMC, A3/FLEX TBA 0500B NODIMC, A3/FLEX TBA 1000S NODIMC, A3/FLEX TBA 1000SQ NODIMC, A3/FLEX TBA 0200S NODIMC, A3/FLEX TPA 1000SQ NODIMC, A3/FLEX TBA 1500S NODIMC, A3/FLEX TBA 0200B NODIMC, A3/FLEX TBA 0250B NODIMC, A3/FLEX TBA 0330S NODIMC, A3/FLEX TPA 0330SQ NODIMC, A3/FLEX TPA 0500SQ NODIMC, A3/FLEX TBA 0200M NODIMC, A3/FLEX TBA 0250S NODIMC, A3/FLEX TBA 0500S NODIMC, A3/FLEX TPA 0200SQ NODIMC, A3/FLEX TPA 0250SQ NODIMC, A3/FLEX TPA 0750SQ NODIMC, A3/FLEX TBA 0200SQ NODIMC, A3/FLEX TBA 0250SQ NODIMC (See drawing on page: 1-136)					
010	1511769-0000		1	ROLLER	
050	2541633-0000		1	FLANGE	
070	2532984-0000		1	FLANGE	
A3/FLEX TBA 1000S LIGHTCAP (See drawing on pages: 1-142, 1-144)					
010	2528136-0000		1	SQUEE-GEE ROLLER	
050	2709213-0000		1	FLANGE	
070	2709214-0000		1	FLANGE	
A3/FLEX TBA 1000S STDA7, A3/FLEX TBA 1000B STDA7, A3/FLEX TBA 1000S NOMOLDEDCAP (See drawing on page: 1-138)					
010	2528136-0000		1	SQUEE-GEE ROLLER	
050	2541633-0000		1	FLANGE	
070	2532984-0000		1	FLANGE	
A3/FLEX TBA 2000S NODIMC, A3/FLEX TBA 1890S NODIMC, A3/FLEX TBA 1400B NODIMC (See drawing on page: 1-140)					
010	2547406-0000		1	ROLLER	
050	2541641-0000		1	FLANGE	
070	2541640-0000		1	FLANGE	
Common Parts					
020	2541637-0000		2	SHAFT	
030	2541647-0000		1	LID	
040	90458-1704		2	BALL BEARING, 15X35X11 MM	
060	2532983-0000		1	FLANGE	
080	2541639-0000		1	LID	
090	90459-1627		1	O-RING 114,02X1,78 MM	
100	2541648-0000		1	LID	
150	315205-0713		1	O-RING 29,87X1,78 MM	
160	315205-0802		1	O-RING 41,0X1,78 MM	
170	315751-0112		2	RETAINING RING FOR SHAFT DIN 471 15 A2	
180	312105-0329		6	SCREW M6S ISO 4017 M5X16 A480	
190	315103-0153		6	WASHER, BRB, 6,4/12,H=1,5 NIPL BR	
200	312105-0372		3	SCREW M6S ISO 4017 M6X25 A480	
210	312105-0370		3	SCREW M6S ISO 4017 M6X20 A480	
220	312105-0366		3	SCREW M6S ISO 4017 M6X12 A480	
230	312605-0316		6	HEXAGON NUT, M6M M6 A280	
240	90242-0270		1	O-RING 82,27X1,78 MM	

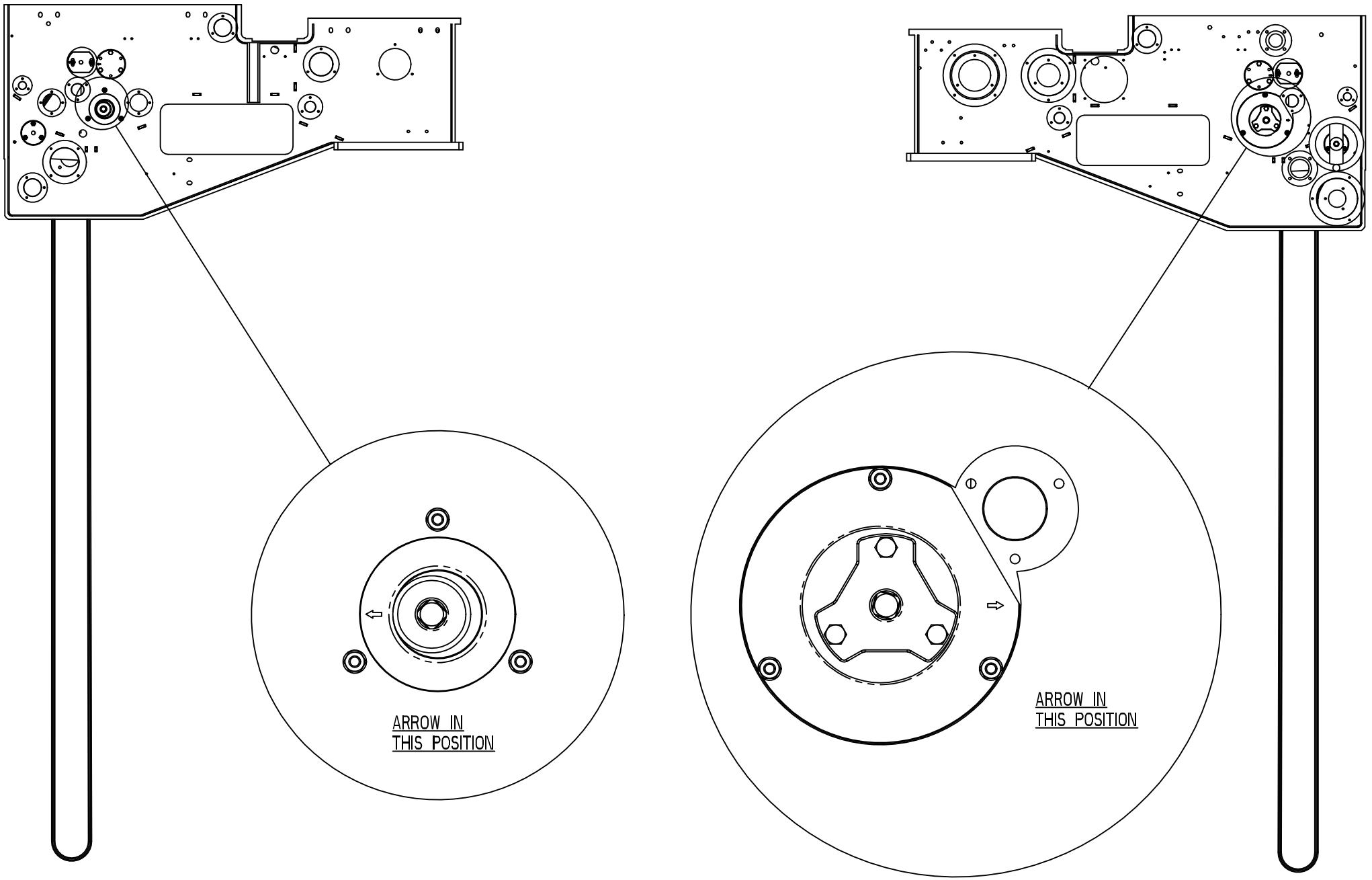
ARROW IN
THIS POSITION
ARROW IN
THIS POSITION

Pos	Part No	UN	Qty	Description	Page No
A3/FLEX TBA 1000B NODIMC, A3/FLEX TBA 0500B NODIMC, A3/FLEX TBA 1000S NODIMC, A3/FLEX TBA 1000SQ NODIMC, A3/FLEX TBA 0200S NODIMC, A3/FLEX TPA 1000SQ NODIMC, A3/FLEX TBA 1500S NODIMC, A3/FLEX TBA 0200B NODIMC, A3/FLEX TBA 0250B NODIMC, A3/FLEX TBA 0330S NODIMC, A3/FLEX TPA 0330SQ NODIMC, A3/FLEX TPA 0500SQ NODIMC, A3/FLEX TBA 0200M NODIMC, A3/FLEX TBA 0250S NODIMC, A3/FLEX TBA 0500S NODIMC, A3/FLEX TPA 0200SQ NODIMC, A3/FLEX TPA 0250SQ NODIMC, A3/FLEX TPA 0750SQ NODIMC, A3/FLEX TBA 0200SQ NODIMC, A3/FLEX TBA 0250SQ NODIMC (See drawing on page: 1-136)					
010	1511769-0000		1	ROLLER	
050	2541633-0000		1	FLANGE	
070	2532984-0000		1	FLANGE	
A3/FLEX TBA 1000S LIGHTCAP (See drawing on pages: 1-142, 1-144)					
010	2528136-0000		1	SQUEE-GEE ROLLER	
050	2709213-0000		1	FLANGE	
070	2709214-0000		1	FLANGE	
A3/FLEX TBA 1000S STDA7, A3/FLEX TBA 1000B STDA7, A3/FLEX TBA 1000S NOMOLDEDCAP (See drawing on page: 1-138)					
010	2528136-0000		1	SQUEE-GEE ROLLER	
050	2541633-0000		1	FLANGE	
070	2532984-0000		1	FLANGE	
A3/FLEX TBA 2000S NODIMC, A3/FLEX TBA 1890S NODIMC, A3/FLEX TBA 1400B NODIMC (See drawing on page: 1-140)					
010	2547406-0000		1	ROLLER	
050	2541641-0000		1	FLANGE	
070	2541640-0000		1	FLANGE	
Common Parts					
020	2541637-0000		2	SHAFT	
030	2541647-0000		1	LID	
040	90458-1704		2	BALL BEARING, 15X35X11 MM	
060	2532983-0000		1	FLANGE	
080	2541639-0000		1	LID	
090	90459-1627		1	O-RING 114,02X1,78 MM	
100	2541648-0000		1	LID	
150	315205-0713		1	O-RING 29,87X1,78 MM	
160	315205-0802		1	O-RING 41,0X1,78 MM	
170	315751-0112		2	RETAINING RING FOR SHAFT DIN 471 15 A2	
180	312105-0329		6	SCREW M6S ISO 4017 M5X16 A480	
190	315103-0153		6	WASHER, BRB, 6,4/12,H=1,5 NIPL BR	
200	312105-0372		3	SCREW M6S ISO 4017 M6X25 A480	
210	312105-0370		3	SCREW M6S ISO 4017 M6X20 A480	
220	312105-0366		3	SCREW M6S ISO 4017 M6X12 A480	
230	312605-0316		6	HEXAGON NUT, M6M M6 A280	
240	90242-0270		1	O-RING 82,27X1,78 MM	

Pos	Part No	UN	Qty	Description	Page No

CALENDER ROLLER

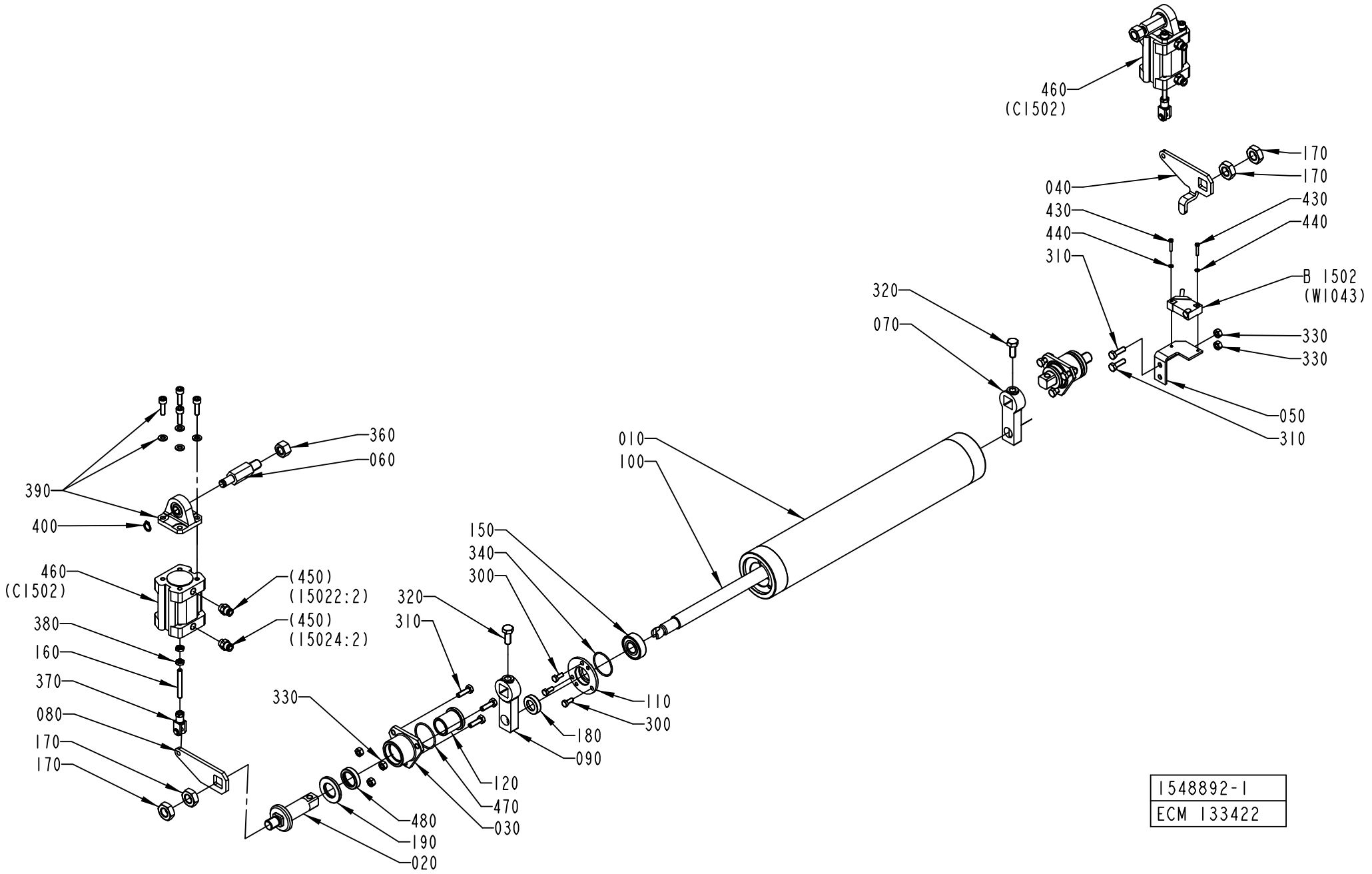

ECM: 271749 - 20060728
Group number: 1548892-0100
Assembly Drawing: 1548892-1_1_AB

This list covers pages from 1-146 to 1-151

Pos	Part No	UN	Qty	Description	Page No
A3/FLEX DIMC/FLEX (See drawing on page: 1-150)					
010	2528136-0000		1	SQUEE-GEE ROLLER	
040	1498130-0000		1	PLATE	
060	1498132-0000		2	SHAFT	
070	1498133-0000		1	ARM	
080	1498134-0000		1	PLATE	
090	1498135-0000		1	ARM	
390	90450-0756		2	BRACKET, REAR EYE 32	
400	90141-0016		2	RETAINING RING FOR SHAFT DIN 471 10 A2	
A3/FLEX TBA 1000B NODIMC, A3/FLEX TBA 0500B NODIMC, A3/FLEX TBA 1000S NODIMC, A3/FLEX TBA 1000SQ NODIMC, A3/FLEX TBA 0200S NODIMC, A3/FLEX TBA 0200M NODIMC, A3/FLEX TBA 0250S NODIMC (See drawing on page: 1-146)					
010	1538496-0000		1	ROLLER	
040	1498130-0000		1	PLATE	
060	1498132-0000		2	SHAFT	
070	1498133-0000		1	ARM	
080	1498134-0000		1	PLATE	
090	1498135-0000		1	ARM	
390	90450-0756		2	BRACKET, REAR EYE 32	
400	90141-0016		2	RETAINING RING FOR SHAFT DIN 471 10 A2	
460	90458-0528		2	DOUBLE ACTING, COMPACT, CYL 32-25	
A3/FLEX TBA 2000S NODIMC, A3/FLEX TBA 1890S NODIMC, A3/FLEX TBA 1400B NODIMC (See drawing on page: 1-148)					
010	2547406-0000		1	ROLLER	
040	2544883-0000		1	PLATE	
060	1498132-0000		2	SHAFT	
070	2544885-0000		1	ARM	
080	2544884-0000		1	PLATE	
090	2544886-0000		1	ARM	
390	90450-0756		2	BRACKET, REAR EYE 32	
400	90141-0016		2	RETAINING RING FOR SHAFT DIN 471 10 A2	
460	90458-0528		2	DOUBLE ACTING, COMPACT, CYL 32-25	
A3/FLEX TPA 1000SQ NODIMC, A3/FLEX TBA 1500S NODIMC, A3/FLEX TBA 0200B NODIMC, A3/FLEX TBA 0250B NODIMC, A3/FLEX TBA 0330S NODIMC, A3/FLEX TPA 0330SQ NODIMC, A3/FLEX TPA 0500SQ NODIMC, A3/FLEX TBA 0500S NODIMC, A3/FLEX TPA 0200SQ NODIMC, A3/FLEX TPA 0250SQ NODIMC, A3/FLEX TPA 0750SQ NODIMC, A3/FLEX TBA 0200SQ NODIMC, A3/FLEX TBA 0250SQ NODIMC (See drawing on page: 1-146)					
010	1511769-0000		1	ROLLER	
040	1498130-0000		1	PLATE	
060	1498132-0000		2	SHAFT	
070	1498133-0000		1	ARM	
080	1498134-0000		1	PLATE	
090	1498135-0000		1	ARM	
390	90450-0756		2	BRACKET, REAR EYE 32	
400	90141-0016		2	RETAINING RING FOR SHAFT DIN 471 10 A2	
460	90458-0528		2	DOUBLE ACTING, COMPACT, CYL 32-25	
Common Parts					
020	2532969-0000		2	SHAFT	
030	2541643-0000		2	FLANGE	
050	1498131-0000		1	BRACKET	
100	1498790-0000		1	SHAFT	
110	1498791-0000		2	FLANGE	
120	2541682-0000		2	BUSHING	
150	90458-1704		2	BALL BEARING, 15X35X11 MM	
160	90459-1728		2	SCREW ISO4029 M6X45 A4	
170	90099-0027		4	HEXAGON NUT, M14, DIN936	
180	2541650-0000		2	LID	
190	2541681-0000		2	WASHER	
300	312105-0327		6	SCREW M6S ISO 4017 M5X12 A480	
310	312105-0370		8	SCREW M6S ISO 4017 M6X20 A480	
320	312105-0451		2	SCREW M6S ISO 4017 M8X20 A480	
330	312605-0316		8	HEXAGON NUT, M6M M6 A280	
340	315204-0122		2	O-RING 32,1X1,6 MM	
360	312605-0322		2	HEXAGON NUT, M6M M12 A280	
370	90239-0489		2	ROD END, CLEVIS WITH AXLE M6X1,25	
380	312625-0316		4	HEXAGON THIN NUT, EN 24035 ML6M M6 A4	
430	312125-0228		2	SCREW ISO 1207 M3X16 A4	
440	315105-0124		2	WASHER BRB 3,2X7 RFR	
450	342722-0202		4	PIPE COUPLING 1/8" D=6MM	
470	315205-0716		2	O-RING 34,65X1,78 MM	
480	90458-0639		2	VARILIP 20X30X7 MM	
B1502	90044-0194		1	PROX.SW. IN5329/IN3002-BPKG(EX90044-104)	

CALENDER ROLLER

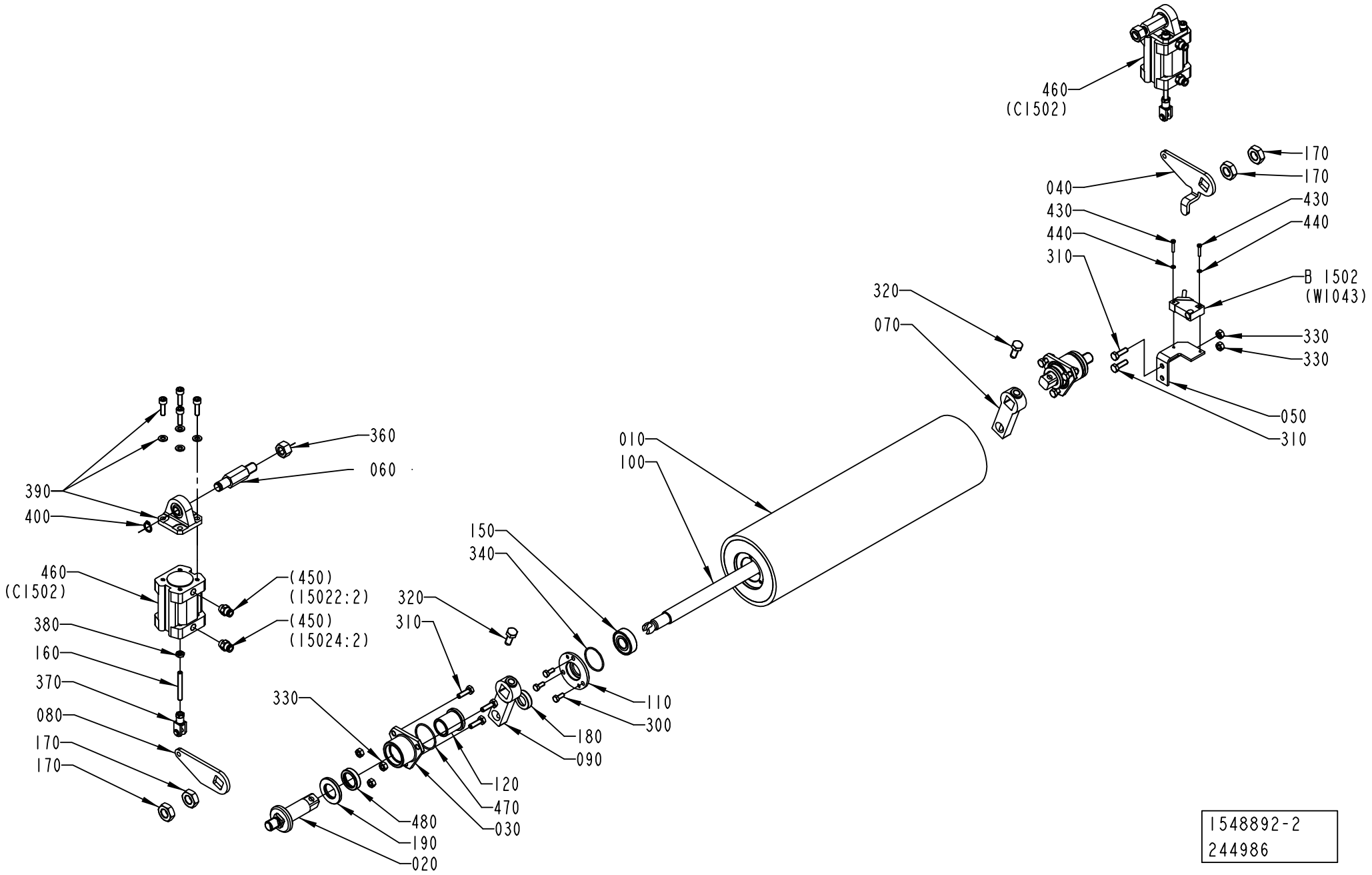

1548892-2
244986

ECM: 271749 - 20060728
Group number: 1548892-0100
Assembly Drawing: 1548892-2_1_AB

This list covers pages from 1-146 to 1-151

Pos	Part No	UN	Qty	Description	Page No
A3/FLEX DIMC/FLEX (See drawing on page: 1-150)					
010	2528136-0000		1	SQUEE-GEE ROLLER	
040	1498130-0000		1	PLATE	
060	1498132-0000		2	SHAFT	
070	1498133-0000		1	ARM	
080	1498134-0000		1	PLATE	
090	1498135-0000		1	ARM	
390	90450-0756		2	BRACKET, REAR EYE 32	
400	90141-0016		2	RETAINING RING FOR SHAFT DIN 471 10 A2	
A3/FLEX TBA 1000B NODIMC, A3/FLEX TBA 0500B NODIMC, A3/FLEX TBA 1000S NODIMC, A3/FLEX TBA 1000SQ NODIMC, A3/FLEX TBA 0200S NODIMC, A3/FLEX TBA 0200M NODIMC, A3/FLEX TBA 0250S NODIMC (See drawing on page: 1-146)					
010	1538496-0000		1	ROLLER	
040	1498130-0000		1	PLATE	
060	1498132-0000		2	SHAFT	
070	1498133-0000		1	ARM	
080	1498134-0000		1	PLATE	
090	1498135-0000		1	ARM	
390	90450-0756		2	BRACKET, REAR EYE 32	
400	90141-0016		2	RETAINING RING FOR SHAFT DIN 471 10 A2	
460	90458-0528		2	DOUBLE ACTING, COMPACT, CYL 32-25	
A3/FLEX TBA 2000S NODIMC, A3/FLEX TBA 1890S NODIMC, A3/FLEX TBA 1400B NODIMC (See drawing on page: 1-148)					
010	2547406-0000		1	ROLLER	
040	2544883-0000		1	PLATE	
060	1498132-0000		2	SHAFT	
070	2544885-0000		1	ARM	
080	2544884-0000		1	PLATE	
090	2544886-0000		1	ARM	
390	90450-0756		2	BRACKET, REAR EYE 32	
400	90141-0016		2	RETAINING RING FOR SHAFT DIN 471 10 A2	
460	90458-0528		2	DOUBLE ACTING, COMPACT, CYL 32-25	
A3/FLEX TPA 1000SQ NODIMC, A3/FLEX TBA 1500S NODIMC, A3/FLEX TBA 0200B NODIMC, A3/FLEX TBA 0250B NODIMC, A3/FLEX TBA 0330S NODIMC, A3/FLEX TPA 0330SQ NODIMC, A3/FLEX TPA 0500SQ NODIMC, A3/FLEX TBA 0500S NODIMC, A3/FLEX TPA 0200SQ NODIMC, A3/FLEX TPA 0250SQ NODIMC, A3/FLEX TPA 0750SQ NODIMC, A3/FLEX TBA 0200SQ NODIMC, A3/FLEX TBA 0250SQ NODIMC (See drawing on page: 1-146)					
010	1511769-0000		1	ROLLER	
040	1498130-0000		1	PLATE	
060	1498132-0000		2	SHAFT	
070	1498133-0000		1	ARM	
080	1498134-0000		1	PLATE	
090	1498135-0000		1	ARM	
390	90450-0756		2	BRACKET, REAR EYE 32	
400	90141-0016		2	RETAINING RING FOR SHAFT DIN 471 10 A2	
460	90458-0528		2	DOUBLE ACTING, COMPACT, CYL 32-25	
Common Parts					
020	2532969-0000		2	SHAFT	
030	2541643-0000		2	FLANGE	
050	1498131-0000		1	BRACKET	
100	1498790-0000		1	SHAFT	
110	1498791-0000		2	FLANGE	
120	2541682-0000		2	BUSHING	
150	90458-1704		2	BALL BEARING, 15X35X11 MM	
160	90459-1728		2	SCREW ISO4029 M6X45 A4	
170	90099-0027		4	HEXAGON NUT, M14, DIN936	
180	2541650-0000		2	LID	
190	2541681-0000		2	WASHER	
300	312105-0327		6	SCREW M6S ISO 4017 M5X12 A480	
310	312105-0370		8	SCREW M6S ISO 4017 M6X20 A480	
320	312105-0451		2	SCREW M6S ISO 4017 M8X20 A480	
330	312605-0316		8	HEXAGON NUT, M6M M6 A280	
340	315204-0122		2	O-RING 32,1X1,6 MM	
360	312605-0322		2	HEXAGON NUT, M6M M12 A280	
370	90239-0489		2	ROD END, CLEVIS WITH AXLE M6X1,25	
380	312625-0316		4	HEXAGON THIN NUT, EN 24035 ML6M M6 A4	
430	312125-0228		2	SCREW ISO 1207 M3X16 A4	
440	315105-0124		2	WASHER BRB 3,2X7 RFR	
450	342722-0202		4	PIPE COUPLING 1/8" D=6MM	
470	315205-0716		2	O-RING 34,65X1,78 MM	
480	90458-0639		2	VARILIP 20X30X7 MM	
B1502	90044-0194		1	PROX.SW. IN5329/IN3002-BPKG(EX90044-104)	

Machine Type | Group Description | Used-In | Group Number | Page No

CALENDER ROLLER

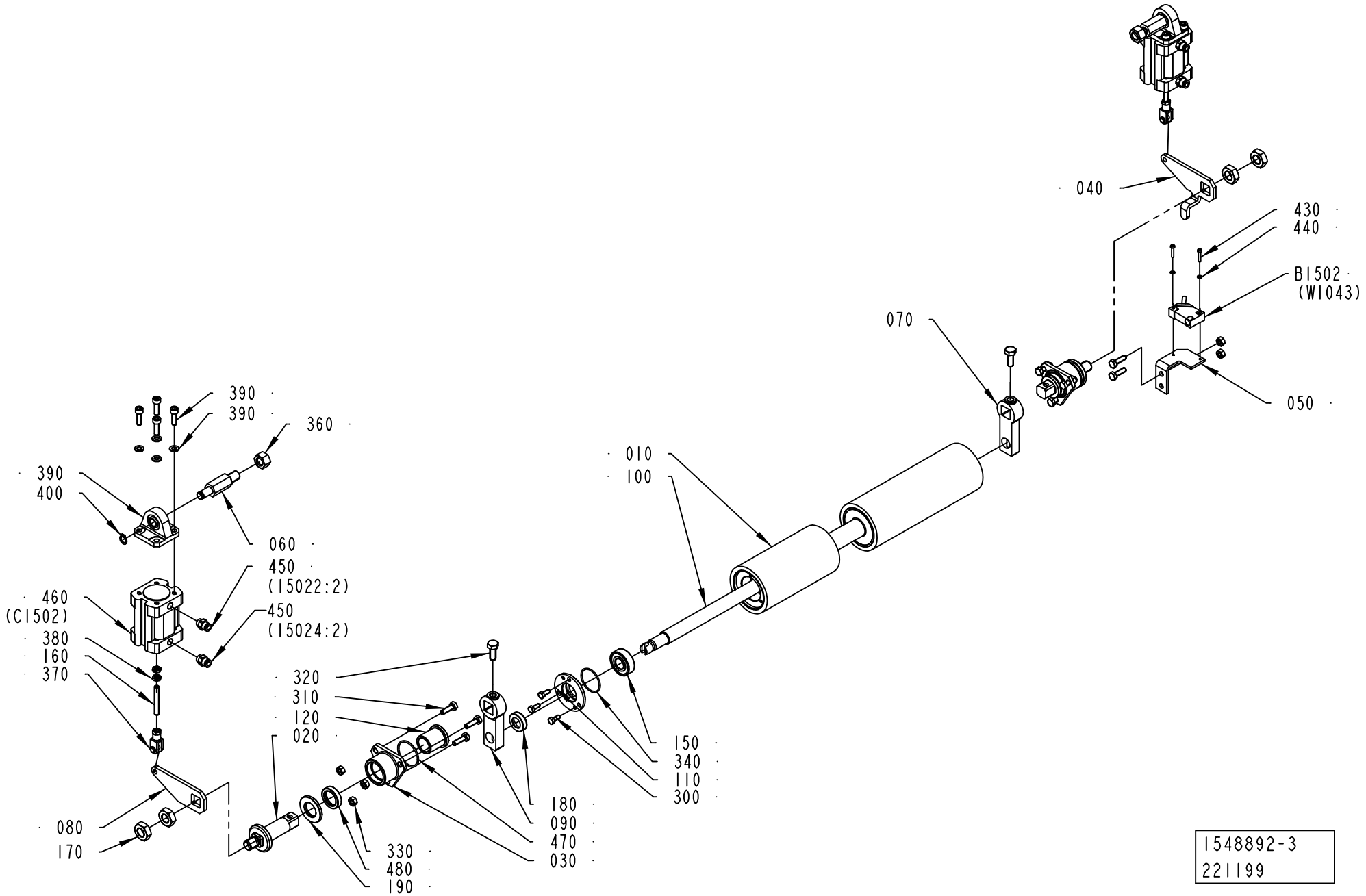

ECM: 271749 - 20060728
Group number: 1548892-0100
Assembly Drawing: 1548892-3_1_AA

This list covers pages from 1-146 to 1-151

Pos	Part No	UN	Qty	Description	Page No
A3/FLEX DIMC/FLEX (See drawing on page: 1-150)					
010	2528136-0000		1	SQUEE-GEE ROLLER	
040	1498130-0000		1	PLATE	
060	1498132-0000		2	SHAFT	
070	1498133-0000		1	ARM	
080	1498134-0000		1	PLATE	
090	1498135-0000		1	ARM	
390	90450-0756		2	BRACKET, REAR EYE 32	
400	90141-0016		2	RETAINING RING FOR SHAFT DIN 471 10 A2	
A3/FLEX TBA 1000B NODIMC, A3/FLEX TBA 0500B NODIMC, A3/FLEX TBA 1000S NODIMC, A3/FLEX TBA 1000SQ NODIMC, A3/FLEX TBA 0200S NODIMC, A3/FLEX TBA 0200M NODIMC, A3/FLEX TBA 0250S NODIMC (See drawing on page: 1-146)					
010	1538496-0000		1	ROLLER	
040	1498130-0000		1	PLATE	
060	1498132-0000		2	SHAFT	
070	1498133-0000		1	ARM	
080	1498134-0000		1	PLATE	
090	1498135-0000		1	ARM	
390	90450-0756		2	BRACKET, REAR EYE 32	
400	90141-0016		2	RETAINING RING FOR SHAFT DIN 471 10 A2	
460	90458-0528		2	DOUBLE ACTING, COMPACT, CYL 32-25	
A3/FLEX TBA 2000S NODIMC, A3/FLEX TBA 1890S NODIMC, A3/FLEX TBA 1400B NODIMC (See drawing on page: 1-148)					
010	2547406-0000		1	ROLLER	
040	2544883-0000		1	PLATE	
060	1498132-0000		2	SHAFT	
070	2544885-0000		1	ARM	
080	2544884-0000		1	PLATE	
090	2544886-0000		1	ARM	
390	90450-0756		2	BRACKET, REAR EYE 32	
400	90141-0016		2	RETAINING RING FOR SHAFT DIN 471 10 A2	
460	90458-0528		2	DOUBLE ACTING, COMPACT, CYL 32-25	
A3/FLEX TPA 1000SQ NODIMC, A3/FLEX TBA 1500S NODIMC, A3/FLEX TBA 0200B NODIMC, A3/FLEX TBA 0250B NODIMC, A3/FLEX TBA 0330S NODIMC, A3/FLEX TPA 0330SQ NODIMC, A3/FLEX TPA 0500SQ NODIMC, A3/FLEX TBA 0500S NODIMC, A3/FLEX TPA 0200SQ NODIMC, A3/FLEX TPA 0250SQ NODIMC, A3/FLEX TPA 0750SQ NODIMC, A3/FLEX TBA 0200SQ NODIMC, A3/FLEX TBA 0250SQ NODIMC (See drawing on page: 1-146)					
010	1511769-0000		1	ROLLER	
040	1498130-0000		1	PLATE	
060	1498132-0000		2	SHAFT	
070	1498133-0000		1	ARM	
080	1498134-0000		1	PLATE	
090	1498135-0000		1	ARM	
390	90450-0756		2	BRACKET, REAR EYE 32	
400	90141-0016		2	RETAINING RING FOR SHAFT DIN 471 10 A2	
460	90458-0528		2	DOUBLE ACTING, COMPACT, CYL 32-25	
Common Parts					
020	2532969-0000		2	SHAFT	
030	2541643-0000		2	FLANGE	
050	1498131-0000		1	BRACKET	
100	1498790-0000		1	SHAFT	
110	1498791-0000		2	FLANGE	
120	2541682-0000		2	BUSHING	
150	90458-1704		2	BALL BEARING, 15X35X11 MM	
160	90459-1728		2	SCREW ISO4029 M6X45 A4	
170	90099-0027		4	HEXAGON NUT, M14, DIN936	
180	2541650-0000		2	LID	
190	2541681-0000		2	WASHER	
300	312105-0327		6	SCREW M6S ISO 4017 M5X12 A480	
310	312105-0370		8	SCREW M6S ISO 4017 M6X20 A480	
320	312105-0451		2	SCREW M6S ISO 4017 M8X20 A480	
330	312605-0316		8	HEXAGON NUT, M6M M6 A280	
340	315204-0122		2	O-RING 32,1X1,6 MM	
360	312605-0322		2	HEXAGON NUT, M6M M12 A280	
370	90239-0489		2	ROD END, CLEVIS WITH AXLE M6X1,25	
380	312625-0316		4	HEXAGON THIN NUT, EN 24035 ML6M M6 A4	
430	312125-0228		2	SCREW ISO 1207 M3X16 A4	
440	315105-0124		2	WASHER BRB 3,2X7 RFR	
450	342722-0202		4	PIPE COUPLING 1/8" D=6MM	
470	315205-0716		2	O-RING 34,65X1,78 MM	
480	90458-0639		2	VARILIP 20X30X7 MM	
B1502	90044-0194		1	PROX.SW. IN5329/IN3002-BPKG(EX90044-104)	

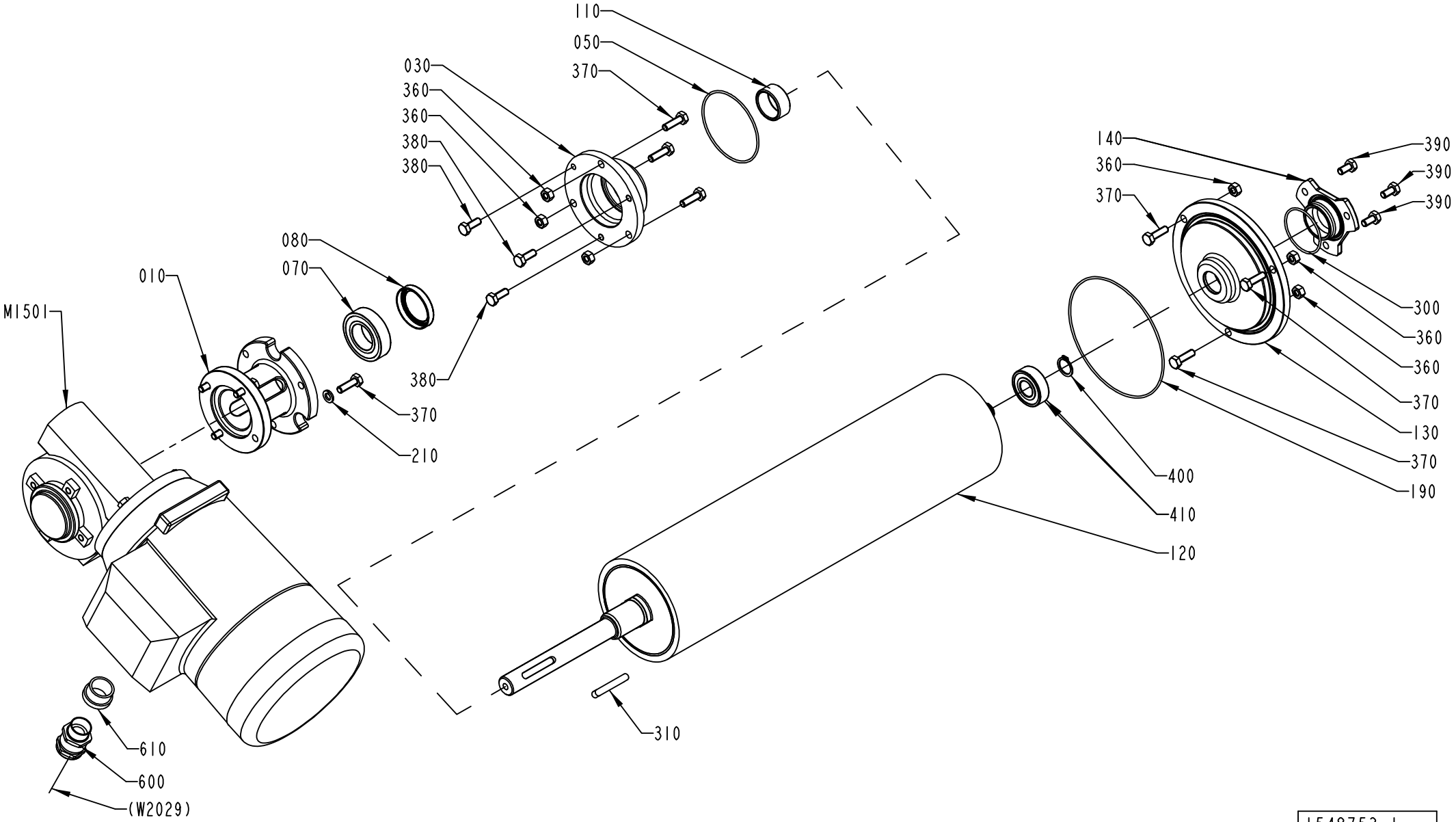

1548753-1
ECM 116071

ECM: 233031 - 20051102
Group number: 1548753-0100
Assembly Drawing: 1548753-1_1_AA

This list covers pages from 1-152 to 1-155

Pos	Part No	UN	Qty	Description	Page No
A3/FLEX DIMC/FLEX (See drawing on page: 1-154)					
120	2552139-0000		1	BENDING ROLLER	
M1501	90459-1226		1	GEARS, WORM MOTOR VF 44P-10+BN71B 0.37KW	
A3/FLEX NODIMC (See drawing on page: 1-152)					
120	2552135-0000		1	BENDING ROLLER	
M1501	90459-1226		1	GEARS, WORM MOTOR VF 44P-10+BN71B 0.37KW	
Common Parts					
010	2532931-0000		1	FLANGE	
030	1548882-0000		1	FLANGE	
050	90459-1623		1	O-RING 66,40X1,78 MM	
070	90214-0165		1	BALL BEARING, 25X47X12 MM	
080	90459-1650		1	VARILIP 30X40X7 MM	
110	1548751-0000		1	BUSHING	
130	2552136-0000		1	FLANGE	
140	2541639-0000		1	LID	
190	90459-1627		1	O-RING 114,02X1,78 MM	
210	315402-0156		4	LOCK WASHER FBB 6,5	
300	315205-0802		1	O-RING 41,0X1,78 MM	
310	315701-0239		1	PARALLEL KEY W. ROUND ENDS 6X6X40 MM	
360	312605-0316		6	HEXAGON NUT, M6M M6 A280	
370	312105-0370		10	SCREW M6S ISO 4017 M6X20 A480	
380	312105-0368		3	SCREW M6S ISO 4017 M6X16 A480	
390	312105-0366		3	SCREW M6S ISO 4017 M6X12 A480	
400	315751-0112		1	RETAINING RING FOR SHAFT DIN 471 15 A2	
410	90458-1704		1	BALL BEARING, 15X35X11 MM	
600	90012-0137		1	GLAND, EXTENDED WITH INSERT, PG11	
610	90089-0003		1	REDUCING SLEEVE, PR22,5/PR18,6	

Pos	Part No	UN	Qty	Description	Page No

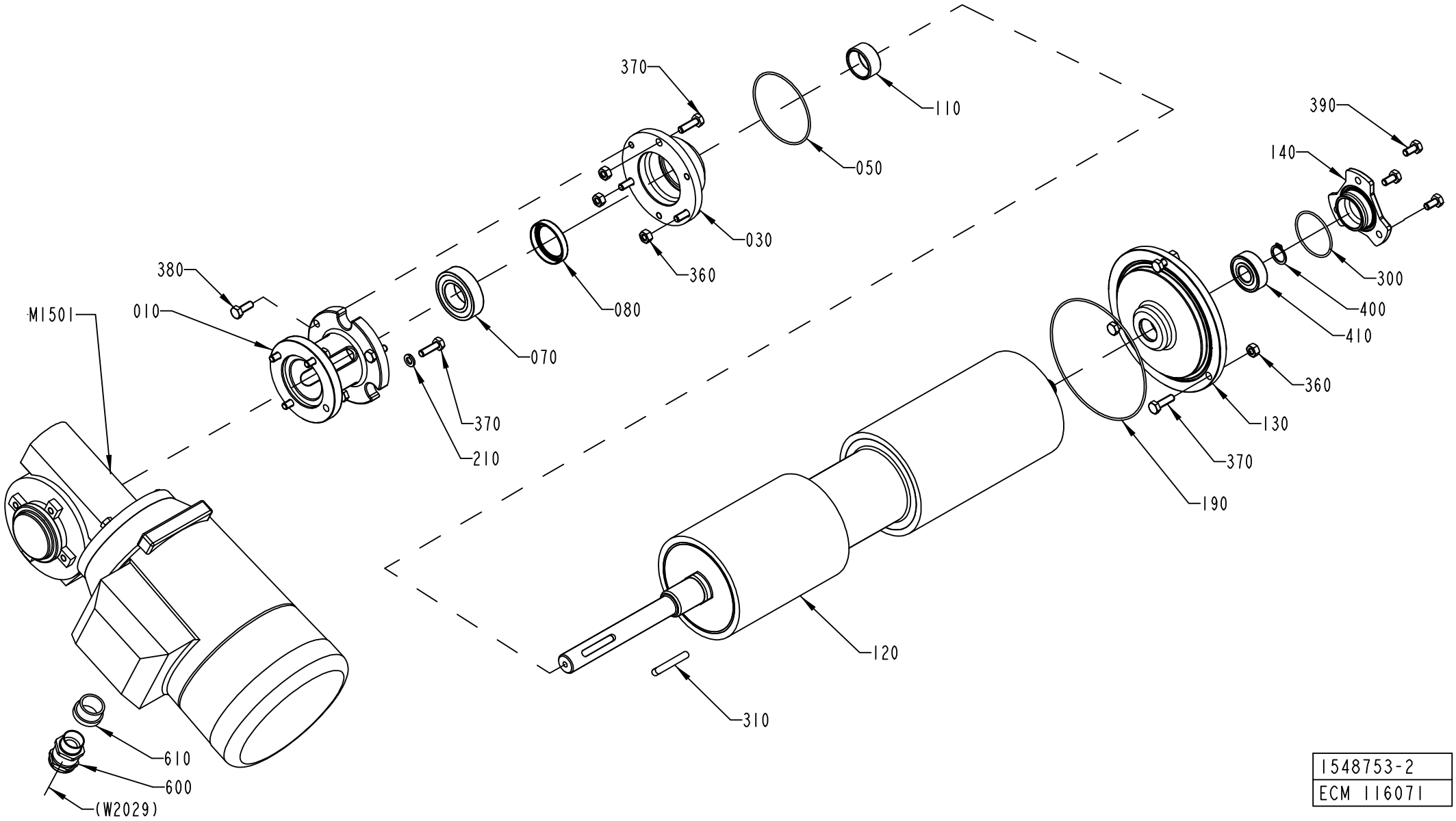

1548753-2
ECM 116071

ECM: 233031 - 20051102
Group number: 1548753-0100
Assembly Drawing: 1548753-2_1_AA

This list covers pages from 1-152 to 1-155

Pos	Part No	UN	Qty	Description	Page No
A3/FLEX DIMC/FLEX (See drawing on page: 1-154)					
120	2552139-0000		1	BENDING ROLLER	
M1501	90459-1226		1	GEARS, WORM MOTOR VF 44P-10+BN71B 0.37KW	
A3/FLEX NODIMC (See drawing on page: 1-152)					
120	2552135-0000		1	BENDING ROLLER	
M1501	90459-1226		1	GEARS, WORM MOTOR VF 44P-10+BN71B 0.37KW	
Common Parts					
010	2532931-0000		1	FLANGE	
030	1548882-0000		1	FLANGE	
050	90459-1623		1	O-RING 66,40X1,78 MM	
070	90214-0165		1	BALL BEARING, 25X47X12 MM	
080	90459-1650		1	VARILIP 30X40X7 MM	
110	1548751-0000		1	BUSHING	
130	2552136-0000		1	FLANGE	
140	2541639-0000		1	LID	
190	90459-1627		1	O-RING 114,02X1,78 MM	
210	315402-0156		4	LOCK WASHER FBB 6,5	
300	315205-0802		1	O-RING 41,0X1,78 MM	
310	315701-0239		1	PARALLEL KEY W. ROUND ENDS 6X6X40 MM	
360	312605-0316		6	HEXAGON NUT, M6M M6 A280	
370	312105-0370		10	SCREW M6S ISO 4017 M6X20 A480	
380	312105-0368		3	SCREW M6S ISO 4017 M6X16 A480	
390	312105-0366		3	SCREW M6S ISO 4017 M6X12 A480	
400	315751-0112		1	RETAINING RING FOR SHAFT DIN 471 15 A2	
410	90458-1704		1	BALL BEARING, 15X35X11 MM	
600	90012-0137		1	GLAND, EXTENDED WITH INSERT, PG11	
610	90089-0003		1	REDUCING SLEEVE, PR22,5/PR18,6	

Pos	Part No	UN	Qty	Description	Page No

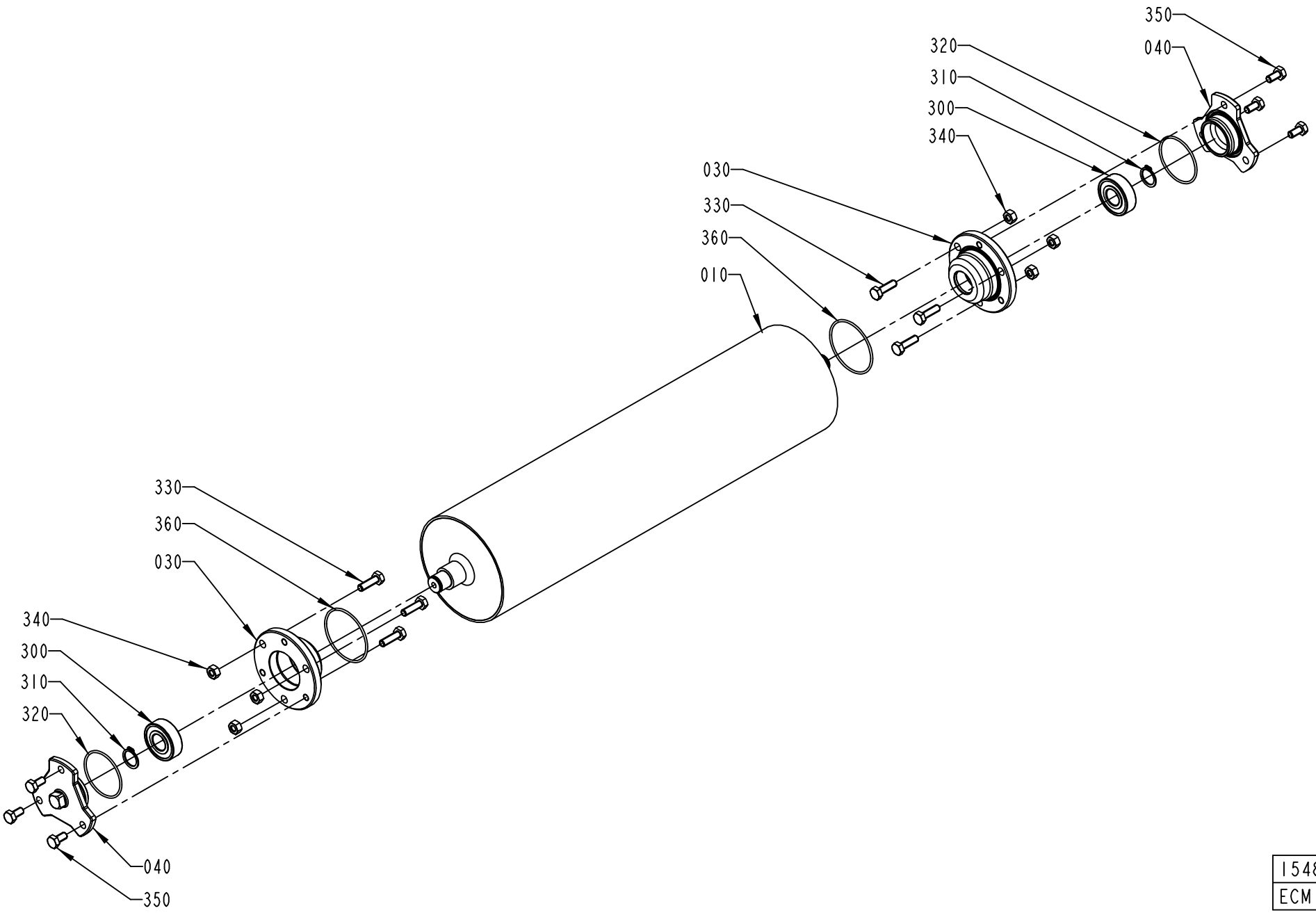

1548736-1
ECM 116071

ECM: 258302 - 20060702
Group number: 1548736-0100
Assembly Drawing: 1548736-1_1_AA

This list covers pages from 1-156 to 1-163

Pos	Part No	UN	Qty	Description	Page No
LIGHTCAP (See drawing on pages: 1-160, 1-162)					
010	2552133-0000		1	BENDING ROLLER	
030	2709210-0000		2	FLANGE	
040	2709212-0000		2	LID	
NOMOLDEDCAP (See drawing on page: 1-156)					
010	2532956-0000		1	BENDING ROLLER	
340	312605-0316		6	HEXAGON NUT, M6M M6 A280	
350	312105-0366		6	SCREW M6S ISO 4017 M6X12 A480	
STDA7 CAP (See drawing on page: 1-158)					
010	2552133-0000		1	BENDING ROLLER	
030	2552127-0000		2	FLANGE	
040	2541639-0000		2	LID	
340	312605-0316		6	HEXAGON NUT, M6M M6 A280	
350	312105-0366		6	SCREW M6S ISO 4017 M6X12 A480	
Common Parts					
300	90458-1704		2	BALL BEARING, 15X35X11 MM	
310	315751-0112		2	RETAINING RING FOR SHAFT DIN 471 15 A2	
320	315205-0802		2	O-RING 41,0X1,78 MM	
330	312105-0370		6	SCREW M6S ISO 4017 M6X20 A480	
360	315205-0804		2	O-RING 47,35X1,78 MM	

Pos	Part No	UN	Qty	Description	Page No

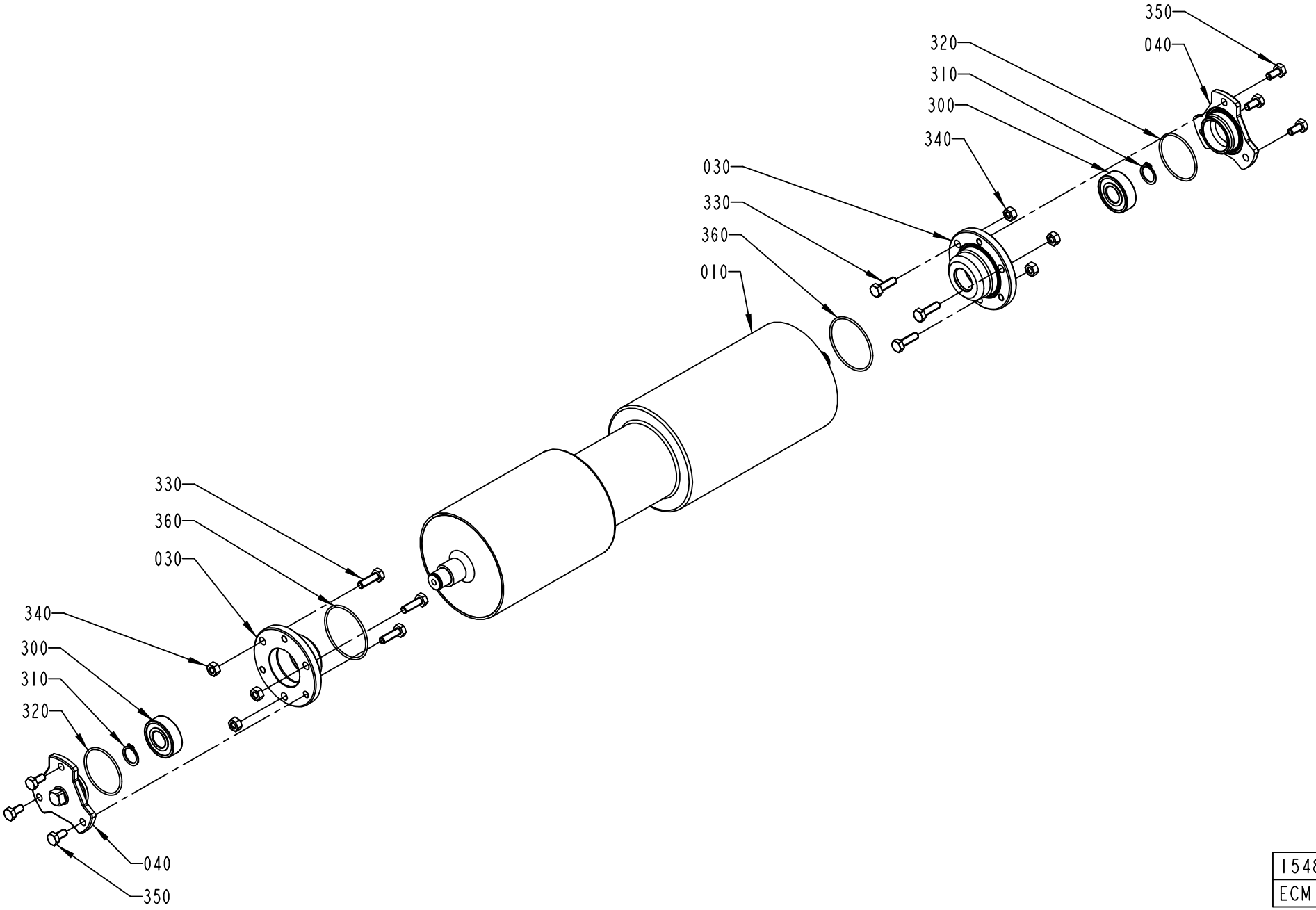

1548736-2
ECM 116071

ECM: 258302 - 20060702
Group number: 1548736-0100
Assembly Drawing: 1548736-2_1_AA

This list covers pages from 1-156 to 1-163

Pos	Part No	UN	Qty	Description	Page No
LIGHTCAP (See drawing on pages: 1-160, 1-162)					
010	2552133-0000		1	BENDING ROLLER	
030	2709210-0000		2	FLANGE	
040	2709212-0000		2	LID	
NOMOLDEDCAP (See drawing on page: 1-156)					
010	2532956-0000		1	BENDING ROLLER	
340	312605-0316		6	HEXAGON NUT, M6M M6 A280	
350	312105-0366		6	SCREW M6S ISO 4017 M6X12 A480	
STDA7 CAP (See drawing on page: 1-158)					
010	2552133-0000		1	BENDING ROLLER	
030	2552127-0000		2	FLANGE	
040	2541639-0000		2	LID	
340	312605-0316		6	HEXAGON NUT, M6M M6 A280	
350	312105-0366		6	SCREW M6S ISO 4017 M6X12 A480	
Common Parts					
300	90458-1704		2	BALL BEARING, 15X35X11 MM	
310	315751-0112		2	RETAINING RING FOR SHAFT DIN 471 15 A2	
320	315205-0802		2	O-RING 41,0X1,78 MM	
330	312105-0370		6	SCREW M6S ISO 4017 M6X20 A480	
360	315205-0804		2	O-RING 47,35X1,78 MM	

Pos	Part No	UN	Qty	Description	Page No

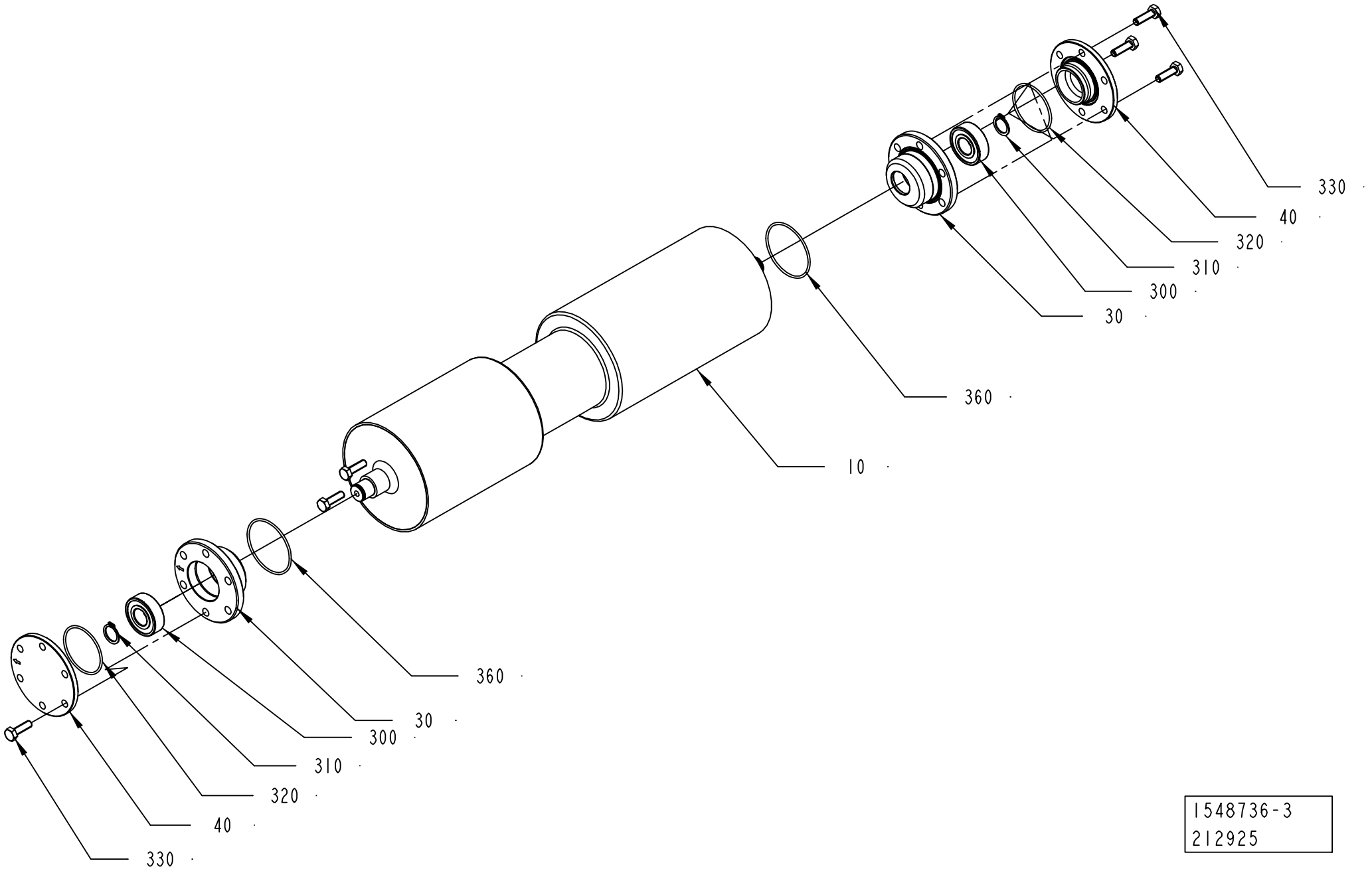
330
40
320
310
300
30
360
10
360
30
300
310
320
40
330
1548736-3
212925

ECM: 258302 - 20060702
Group number: 1548736-0100
Assembly Drawing: 1548736-3_1_AA

This list covers pages from 1-156 to 1-163

Pos	Part No	UN	Qty	Description	Page No
LIGHTCAP (See drawing on pages: 1-160, 1-162)					
010	2552133-0000		1	BENDING ROLLER	
030	2709210-0000		2	FLANGE	
040	2709212-0000		2	LID	
NOMOLDEDCAP (See drawing on page: 1-156)					
010	2532956-0000		1	BENDING ROLLER	
340	312605-0316		6	HEXAGON NUT, M6M M6 A280	
350	312105-0366		6	SCREW M6S ISO 4017 M6X12 A480	
STDA7 CAP (See drawing on page: 1-158)					
010	2552133-0000		1	BENDING ROLLER	
030	2552127-0000		2	FLANGE	
040	2541639-0000		2	LID	
340	312605-0316		6	HEXAGON NUT, M6M M6 A280	
350	312105-0366		6	SCREW M6S ISO 4017 M6X12 A480	
Common Parts					
300	90458-1704		2	BALL BEARING, 15X35X11 MM	
310	315751-0112		2	RETAINING RING FOR SHAFT DIN 471 15 A2	
320	315205-0802		2	O-RING 41,0X1,78 MM	
330	312105-0370		6	SCREW M6S ISO 4017 M6X20 A480	
360	315205-0804		2	O-RING 47,35X1,78 MM	

Pos	Part No	UN	Qty	Description	Page No

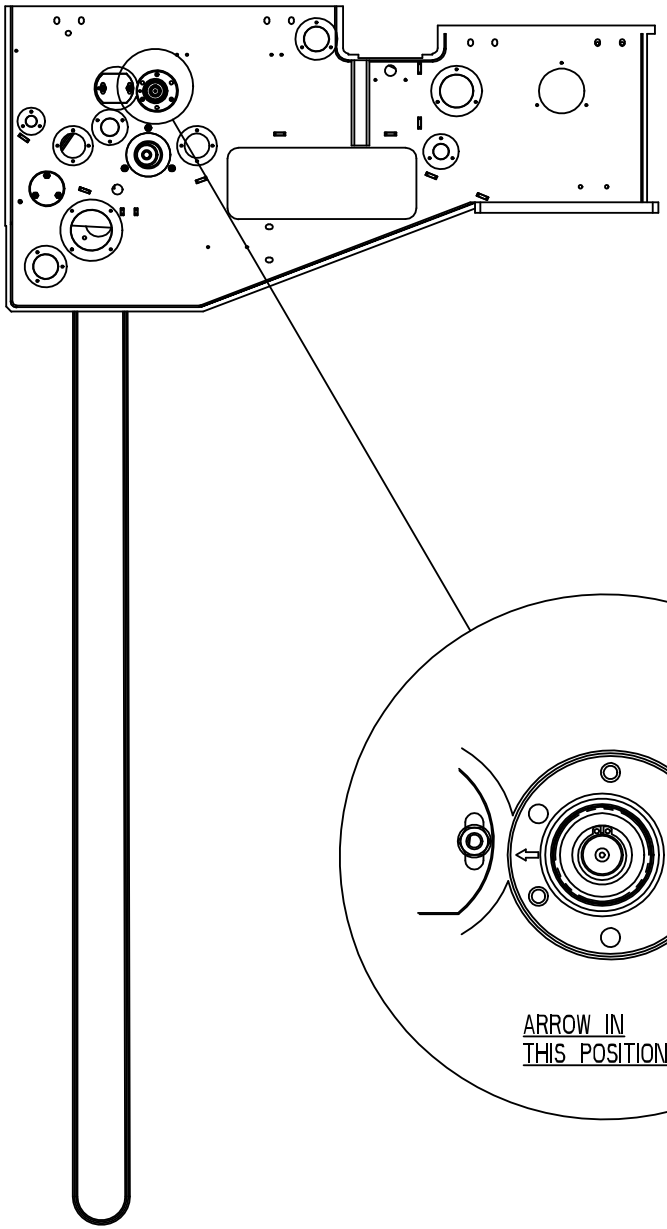

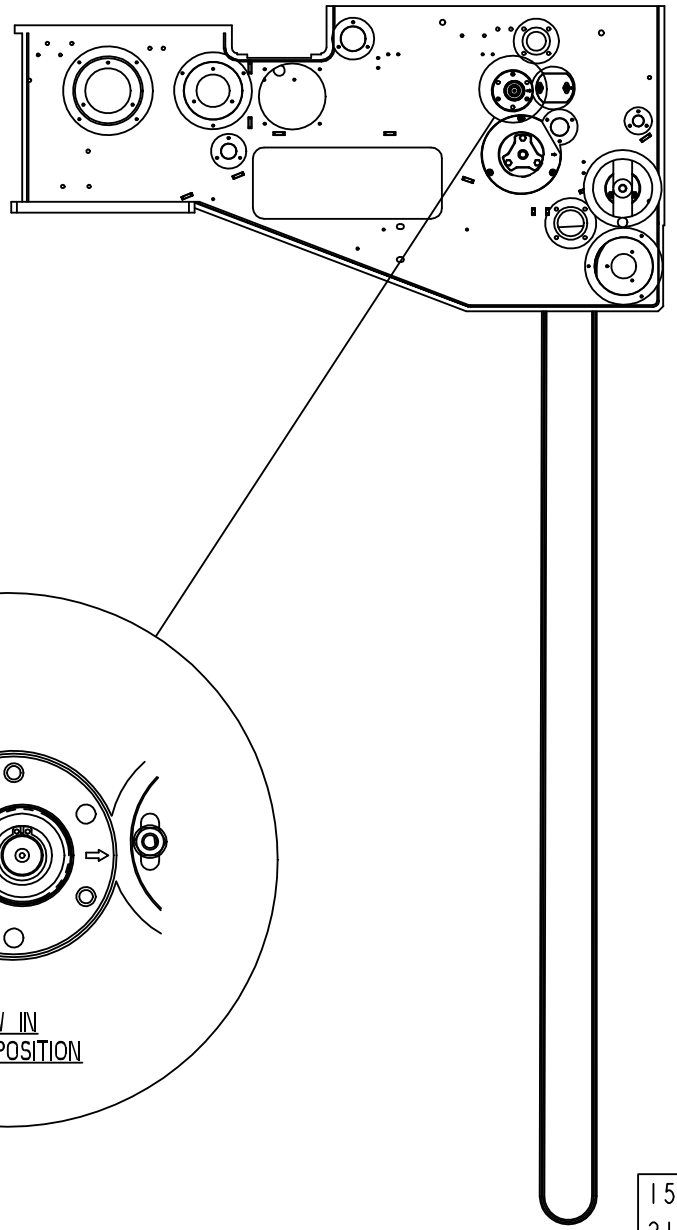

1548736-3
212925

ECM: 258302 - 20060702
Group number: 1548736-0100
Assembly Drawing: 1548736-3_2_AA

This list covers pages from 1-156 to 1-163

Pos	Part No	UN	Qty	Description	Page No
LIGHTCAP (See drawing on pages: 1-160, 1-162)					
010	2552133-0000		1	BENDING ROLLER	
030	2709210-0000		2	FLANGE	
040	2709212-0000		2	LID	
NOMOLDEDCAP (See drawing on page: 1-156)					
010	2532956-0000		1	BENDING ROLLER	
340	312605-0316		6	HEXAGON NUT, M6M M6 A280	
350	312105-0366		6	SCREW M6S ISO 4017 M6X12 A480	
STDA7 CAP (See drawing on page: 1-158)					
010	2552133-0000		1	BENDING ROLLER	
030	2552127-0000		2	FLANGE	
040	2541639-0000		2	LID	
340	312605-0316		6	HEXAGON NUT, M6M M6 A280	
350	312105-0366		6	SCREW M6S ISO 4017 M6X12 A480	
Common Parts					
300	90458-1704		2	BALL BEARING, 15X35X11 MM	
310	315751-0112		2	RETAINING RING FOR SHAFT DIN 471 15 A2	
320	315205-0802		2	O-RING 41,0X1,78 MM	
330	312105-0370		6	SCREW M6S ISO 4017 M6X20 A480	
360	315205-0804		2	O-RING 47,35X1,78 MM	

Pos	Part No	UN	Qty	Description	Page No

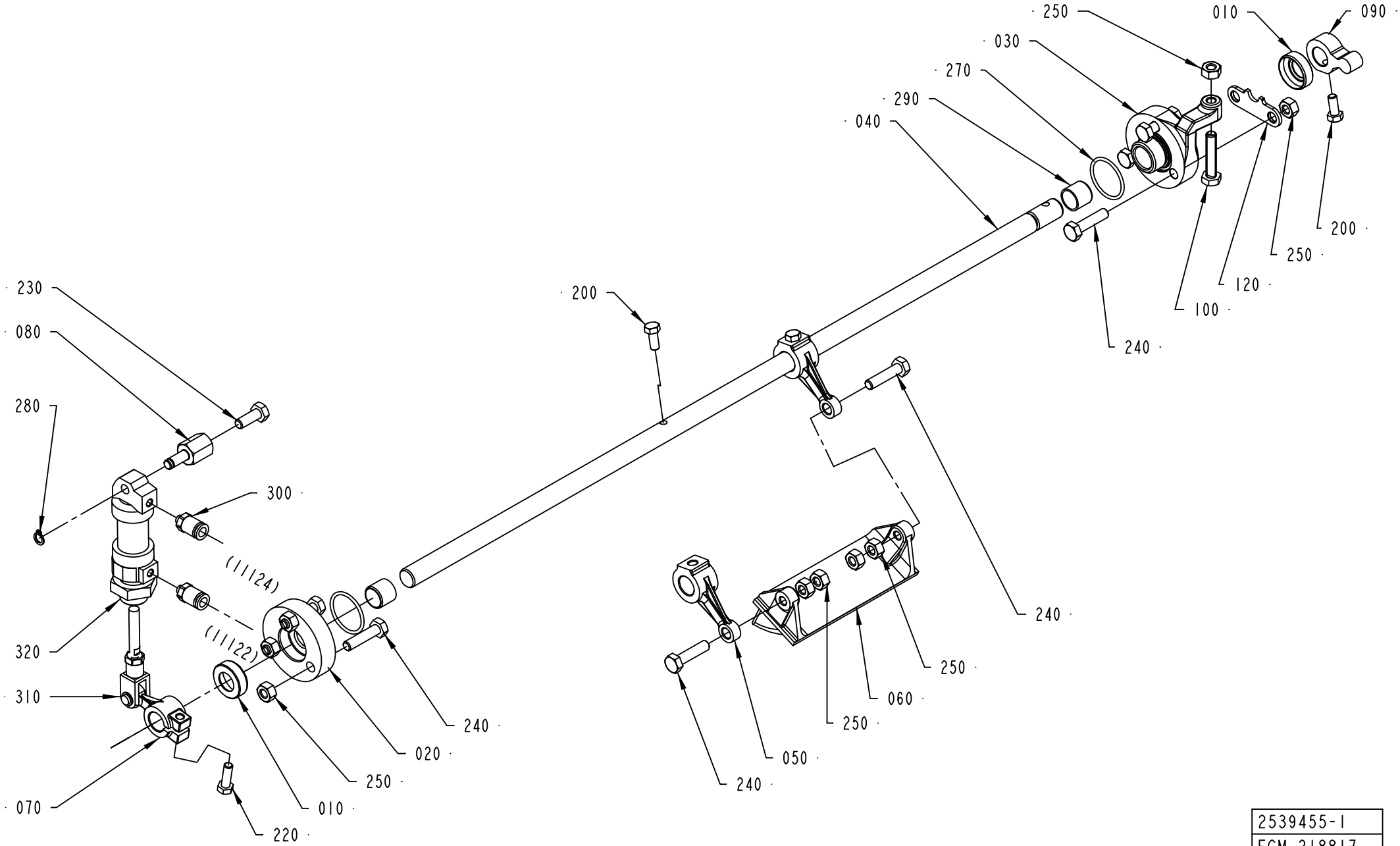

2539455-1
ECM 218817

ECM: 222708 - 20050701
Group number: 2539455-0100
Assembly Drawing: 2539455-1_1_AD

Pos	Part No	UN	Qty	Description	Page No
A3/FLEX					
060	2526851-0000		1	SHUTTER	
Common Parts					
010	2541661-0000		2	LID	
020	1523179-0000		1	FLANGE	
030	2522258-0000		1	FLANGE	
040	2526850-0000		1	SHAFT	
050	2526842-0000		2	LINK	
070	2526820-0000		1	LINK	
080	1523185-0000		1	AXLE PIN	
090	1538163-0000		1	LEVER	
100	312109-0374		1	SCREW M6S ISO 4017 M6X30 A480	
120	2526849-0000		1	PLATE	
200	312105-0327		3	SCREW M6S ISO 4017 M5X12 A480	
220	312105-0329		1	SCREW M6S ISO 4017 M5X16 A480	
230	312105-0368		1	SCREW M6S ISO 4017 M6X16 A480	
240	312105-0372		8	SCREW M6S ISO 4017 M6X25 A480	
250	312605-0316		11	HEXAGON NUT, M6M M6 A280	
270	315205-0709		2	O-RING 23,52X1,78 MM	
280	315751-0103		1	RETAINING RING FOR SHAFT DIN 471 6 A2	
290	321133-0180		2	BUSHING, 12X14X12 MM	
300	342722-0197		2	STRAIGHT COUPLING	
310	90239-0489		1	ROD END, CLEVIS WITH AXLE M6X1,25	
320	90239-0841		1	DOUBLE ACTING, MINI-ISO, CYL. 16-25	

Pos	Part No	UN	Qty	Description	Page No

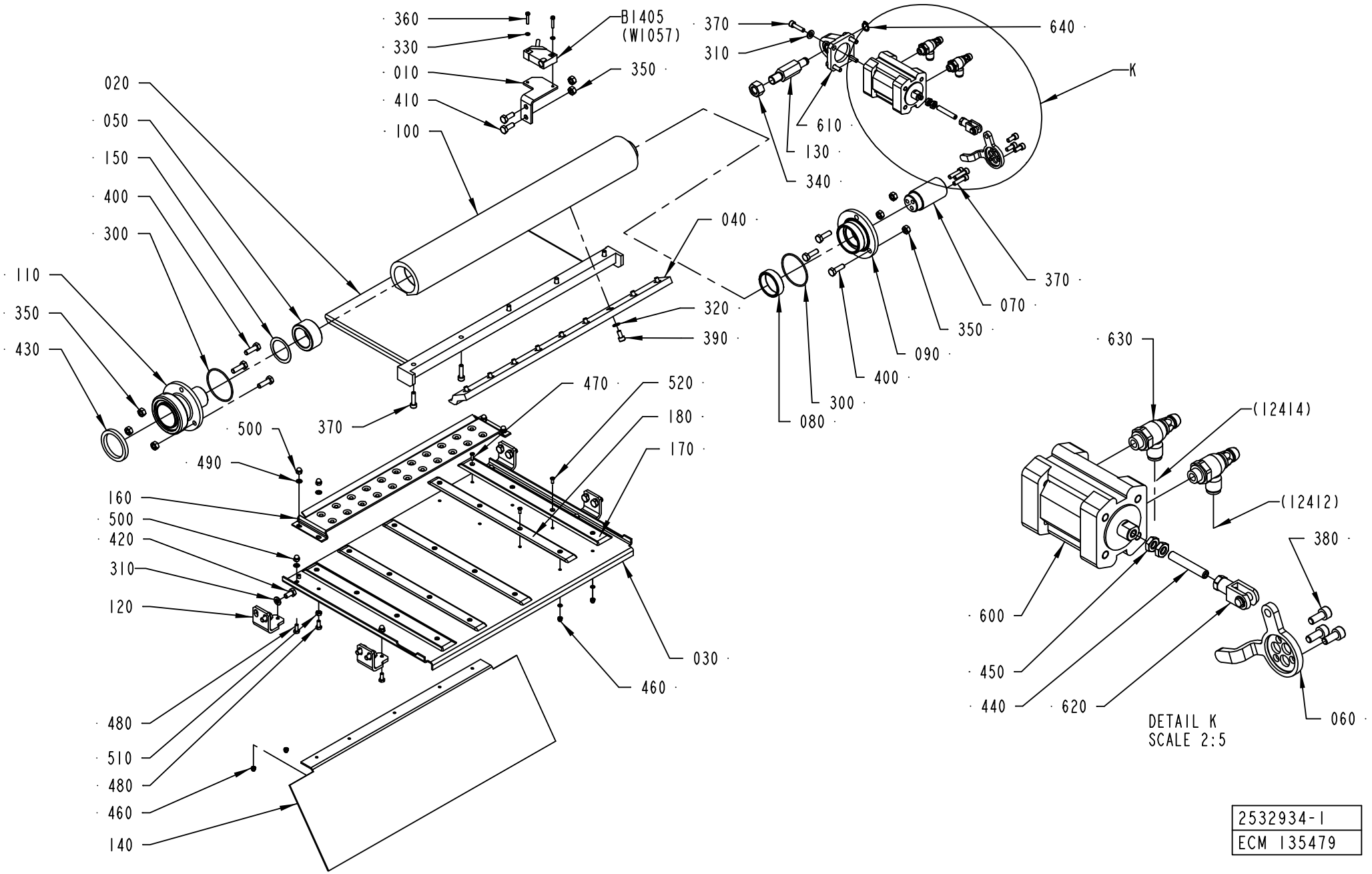

2532934-1
ECM 135479

Pos	Part No	UN	Qty	Description	Page No
A3/FLEX TBA 1000B NODIMC, A3/FLEX TBA 0500B NODIMC, A3/FLEX TBA 1000S NODIMC, A3/FLEX TBA 1000SQ NODIMC, A3/FLEX TBA 0200S NODIMC, A3/FLEX TPA 1000SQ NODIMC, A3/FLEX TBA 1500S NODIMC, A3/FLEX TBA 0200B NODIMC, A3/FLEX TBA 0250B NODIMC, A3/FLEX TBA 0330S NODIMC, A3/FLEX TPA 0330SQ NODIMC, A3/FLEX TPA 0500SQ NODIMC, A3/FLEX TBA 0200M NODIMC, A3/FLEX TBA 0250S NODIMC, A3/FLEX TBA 0500S NODIMC, A3/FLEX TPA 0200SQ NODIMC, A3/FLEX TPA 0250SQ NODIMC, A3/FLEX TPA 0750SQ NODIMC, A3/FLEX TBA 0200SQ NODIMC, A3/FLEX TBA 0250SQ NODIMC (See drawing on page: 1-166)					
030	2603823-0000		1	BOTTOM PLATE	
140	2532919-0000		1	PLATE	
160	2603824-0000		1	COUNTER PLATE	
170	2603546-0000		2	SLIDE PLATE	
180	2603630-0000		3	SLIDE PLATE	
330	315105-0124		22	WASHER BRB 3,2X7 RFR	
460	312705-0310		20	NUT HEX. DOMED CAP MHM-6 M3 A2	
470	312145-0224		5	SCREW ISO 2009 MFS M3X10 A4	
520	312145-0222		15	SCREW ISO 2009 MFS M3X8 A4	
A3/FLEX TBA 1000S LIGHTCAP (See drawing on page: 1-168)					
030	2716441-0000		1	BOTTOM PLATE	
140	2716442-0000		1	PLATE	
160	2603824-0000		1	COUNTER PLATE	
180	2603630-0000		2	SLIDE PLATE	
190	2607440-0000		1	SLIDE PLATE	
330	315105-0124		14	WASHER BRB 3,2X7 RFR	
460	312705-0310		12	NUT HEX. DOMED CAP MHM-6 M3 A2	
470	312145-0224		2	SCREW ISO 2009 MFS M3X10 A4	
520	312145-0222		10	SCREW ISO 2009 MFS M3X8 A4	
A3/FLEX TBA 1000S STDA7, A3/FLEX TBA 1000B STDA7, A3/FLEX TBA 1000S NOMOLDEDCAP (See drawing on page: 1-168)					
030	2607087-0000		1	BOTTOM PLATE	
140	2532922-0000		1	PLATE	
160	2603824-0000		1	COUNTER PLATE	
180	2603630-0000		2	SLIDE PLATE	
190	2607440-0000		1	SLIDE PLATE	
330	315105-0124		14	WASHER BRB 3,2X7 RFR	
460	312705-0310		12	NUT HEX. DOMED CAP MHM-6 M3 A2	
470	312145-0224		2	SCREW ISO 2009 MFS M3X10 A4	
520	312145-0222		10	SCREW ISO 2009 MFS M3X8 A4	
A3/FLEX TBA 2000S NODIMC, A3/FLEX TBA 1890S NODIMC, A3/FLEX TBA 1400B NODIMC (See drawing on page: 1-170)					
010	2582651-0000		1	AIR GUIDE	
030	2582652-0000		1	AIR GUIDE	
040	2594601-0000		1	RAIL	
120	2582655-0000		4	HOLDER	
140	2582654-0000		1	PLATE	
160	2657886-0000		1	COUNTER PLATE	
170	2603546-0000		2	SLIDE PLATE	
180	2603630-0000		3	SLIDE PLATE	
330	315105-0124		22	WASHER BRB 3,2X7 RFR	
460	312705-0310		20	NUT HEX. DOMED CAP MHM-6 M3 A2	
470	312145-0224		5	SCREW ISO 2009 MFS M3X10 A4	
520	312145-0222		15	SCREW ISO 2009 MFS M3X8 A4	
650	312105-0291		2	SCREW M6S ISO 4017 M4X12 A470	
Common Parts					
010	2509674-0000		1	BRACKET	
020	2532916-0000		1	AIR GUIDE	
040	2509681-0000		1	RAIL	
050	1519166-0000		1	BUSHING	
060	1519163-0000		1	ARM	
070	1519160-0000		1	SHAFT	
080	1519159-0000		1	BUSHING	
090	1519158-0000		1	LID	
100	1519156-0000		1	AIR DISTRIBUTOR	
110	1532231-0000		1	CONNECTION	
120	2532918-0000		4	HOLDER	
130	1498132-0000		1	SHAFT	
150	2532915-0000		1	WASHER	
300	315205-0804		2	O-RING 47,35X1,78 MM	
310	315105-0153		12	WASHER BRB 6,4X12 RFR	
320	315105-0146		9	WASHER BRB 5,3X10 RFR	
340	312605-0322		1	HEXAGON NUT, M6M M12 A280	
350	312605-0316		8	HEXAGON NUT, M6M M6 A280	
360	312125-0228		2	SCREW ISO 1207 M3X16 A4	
370	312115-0331		12	SCREW ISO4762 M5X20 A4 80	
380	312115-0327		3	SCREW ISO4762 M5X12 A4 80	
390	312115-0325		9	SCREW ISO4762 M5X10 A4 80	
400	312105-0370		6	SCREW M6S ISO 4017 M6X20 A480	
410	312105-0368		2	SCREW M6S ISO 4017 M6X16 A480	
420	312105-0366		8	SCREW M6S ISO 4017 M6X12 A480	
430	12242-0003		1	GASKET 48X38X5,5	
440	312318-0376		1	SCREW ISO4029 M6X35 A4	
450	312625-0316		2	HEXAGON THIN NUT, EN 24035 ML6M M6 A4	
480	312105-0289		8	SCREW M6S ISO 4017 M4X10 A470	
490	315105-0136		8	WASHER BRB 4,3X9 RFR	
500	312705-0312		8	NUT HEX. DOMED CAP MHM-6 M4 A280	

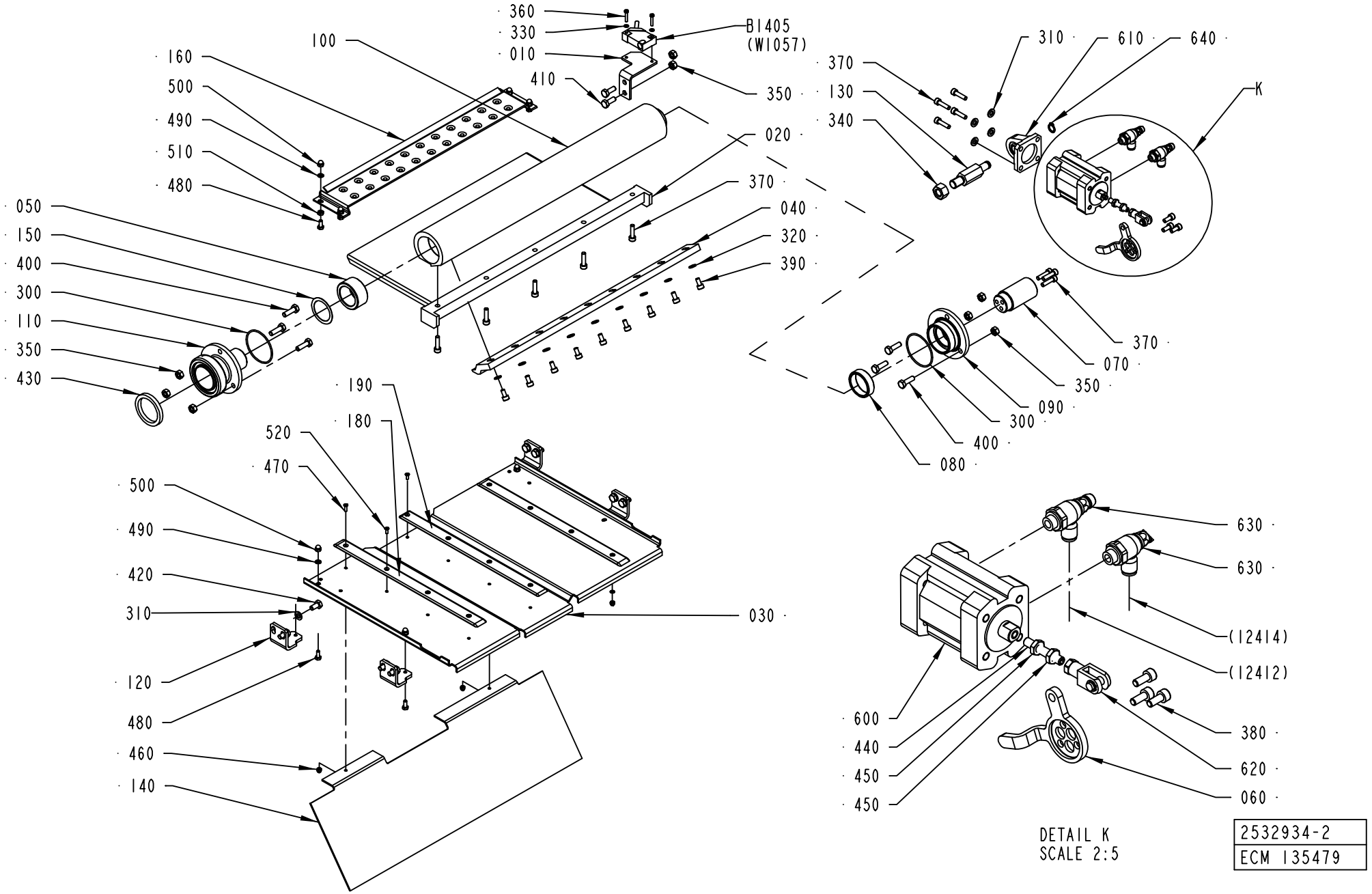
360
330
010
410
B1405
(W1057)
350
100
160
500
490
510
480
050
150
400
300
110
350
430
020
370
040
320
390
190
180
520
470
500
490
420
310
120
480
460
140
030
310
610
640
370
130
340
K
370
070
350
090
300
400
080
630
630
(12414)
(12412)
600
440
450
450
380
620
060
DETAIL K
SCALE 2:5
2532934-2
ECM 135479

Pos	Part No	UN	Qty	Description	Page No
Common Parts (Cont'd)					
610	90450-0756		1	BRACKET, REAR EYE 32	
620	90239-0489		1	ROD END, CLEVIS WITH AXLE M6X1,25	
630	90235-0846		2	THROTTLE CHECK VALVE G1/8", MANUAL, 6	
640	90141-0016		1	RETAINING RING FOR SHAFT DIN 471 10 A2	
B1405	90044-0194		1	PROX.SW. IN5329/IN3002-BPKG(EX90044-104)	

Pos	Part No	UN	Qty	Description	Page No

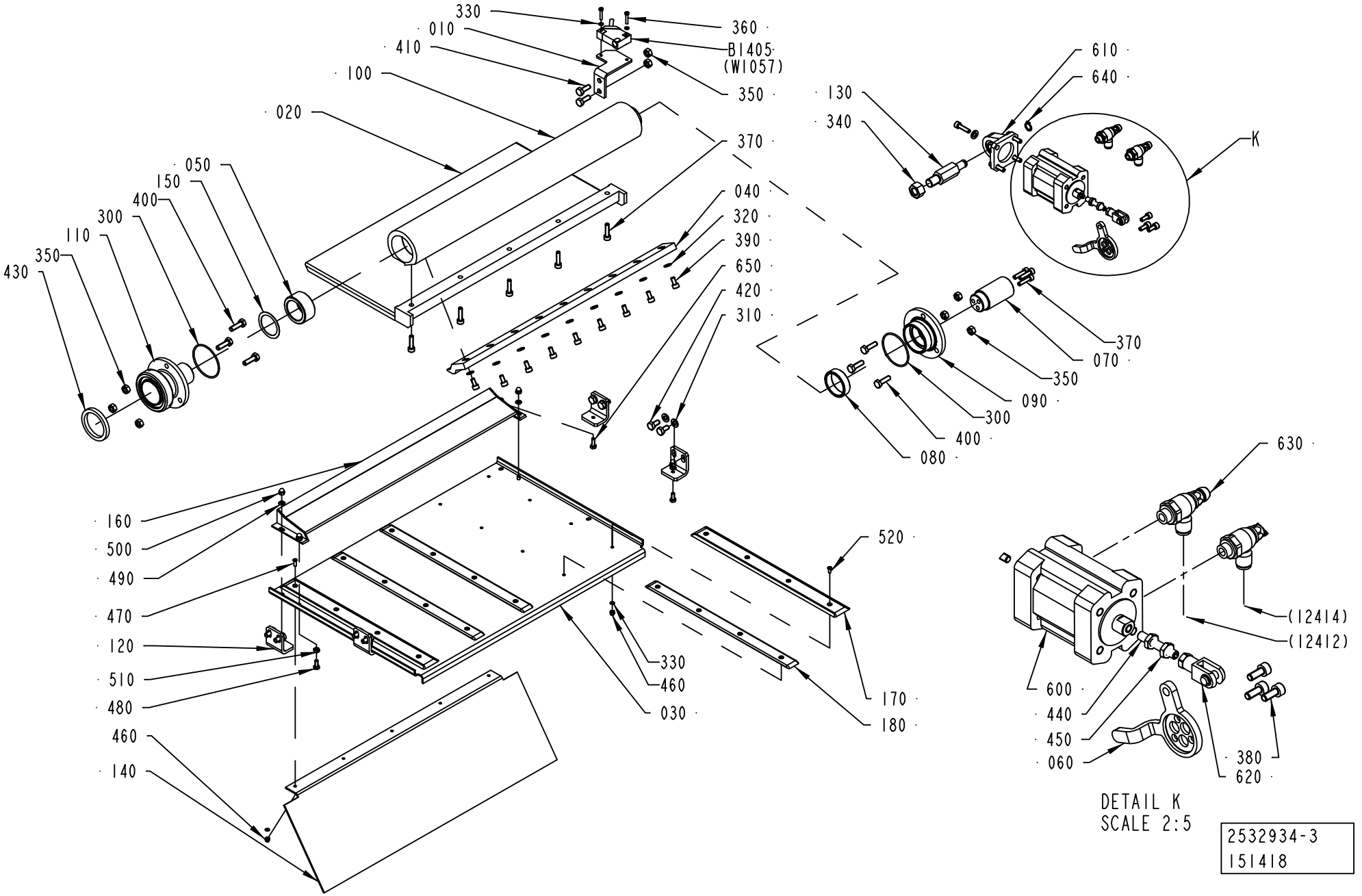
330
010
410
100
020
050
150
400
300
110
350
430
360
B1405
(W1057)
350
370
040
320
390
650
420
310
610
640
130
340
K
370
070
350
090
300
400
080
160
500
490
470
120
510
480
460
140
520
330
460
030
170
180
630
(12414)
(12412)
600
440
450
060
380
620
DETAIL K
SCALE 2:5
2532934-3
151418

ECM: 258297 - 20060702
Group number: 2532934-0100
Assembly Drawing: 2532934-3_1_AA

This list covers pages from 1-166 to 1-171

Pos	Part No	UN	Qty	Description	Page No	Pos	Part No	UN	Qty	Description	Page No

SEE PREVIOUS LISTS PAGES: 1-167, 1-169.

PENDULUM ROLLER

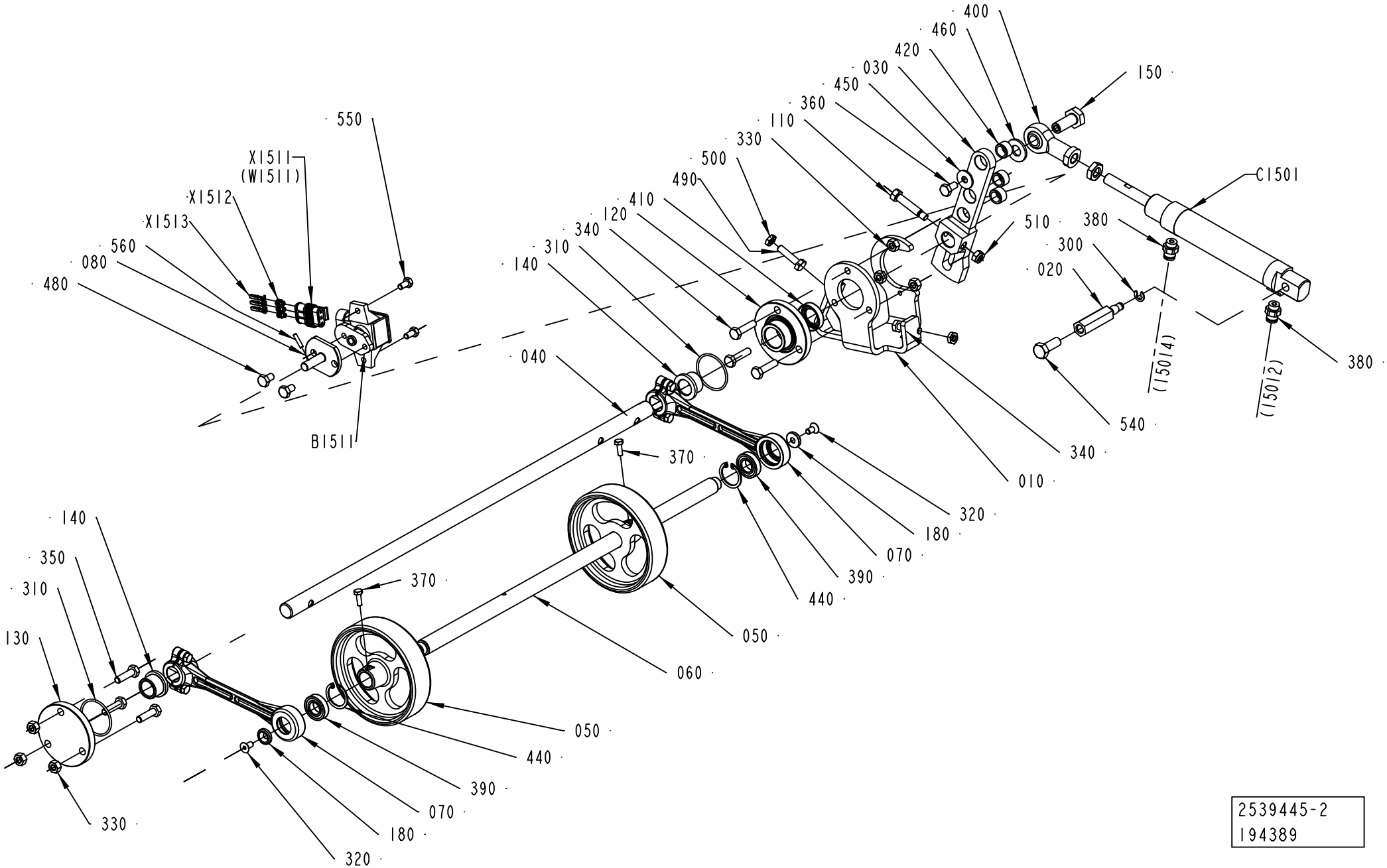

2539445-2
194389

ECM: 195302 - 20041203
Group number: 2539445-0200
Assembly Drawing: 2539445-2_1_AB

Pos	Part No	UN	Qty	Description	Page No
-					
010	2691185-0000		1	SUPPORT	
020	2658077-0000		1	SHAFT	
030	2648780-0000		1	LEVER	
040	2691184-0000		1	SHAFT	
050	1558358-0000		2	WHEEL	
060	1558357-0000		1	SHAFT	
070	2601284-0000		2	LEVER	
080	2691183-0000		1	FLANGED SHAFT	
110	2653607-0000		1	SCREW	
120	1549548-0000		1	FLANGE	
130	1549545-0000		1	FLANGE	
140	1511512-0000		2	BEARING BUSHING	
150	2611009-0000		1	SHAFT	
180	2594621-0000		2	WASHER	
300	315755-0107		1	RETAINING RING SHAFT DIN 6799 5 A2	
310	315205-0715		2	O-RING 33,05X1,78 MM	
320	312155-0325		2	SCREW DIN 7991 MF6S M5X10 A4 70	
330	312605-0316		6	HEXAGON NUT, M6M M6 A280	
340	312105-0372		4	SCREW M6S ISO 4017 M6X25 A480	
350	312105-0371		3	SCREW M6S ISO 4017 M6X22 A480	
360	312105-0366		1	SCREW M6S ISO 4017 M6X12 A480	
370	312105-0291		2	SCREW M6S ISO 4017 M4X12 A470	
380	342722-0202		2	PIPE COUPLING 1/8" D=6MM	
390	90214-0112		2	2BALL BEARING, 12X24X6 MM	
400	90459-1018		1	ROD END,BALL JOINT EYE M10X1,25	
410	90091-0429		1	VARILIP 15X26X7 MM	
420	90459-0805		3	BUSHING, 10X14X8 MM	
440	90458-2071		2	RETAINING RING FOR BORE DIN 472 24 A2	
450	90005-0060		1	WASHER PLAIN, RBS 6,4/M6)/18,H=1,5	
460	315105-0173		1	WASHER BRB 10,5X20 RFR	
480	312105-0364		2	SCREW M6S ISO 4017 M6X10 A480	
490	312105-0372		1	SCREW M6S ISO 4017 M6X25 A480	
500	312625-0316		2	HEXAGON THIN NUT, EN 24035 ML6M M6 A4	
510	312812-0316		1	HEXAGON NUT, NY-LOCK M6 A480	
540	312105-0452		1	SCREW M6S ISO 4017 M8X22 A4 80	
550	312105-0325		2	SCREW M6S ISO 4017 M5X10 A480	
560	311103-0235		1	PARALLEL PIN ISO 2338 3M6X14 A1	
B1511	90459-3682		1	ROTARY POSITION SENSOR RPN1A111	
C1501	90459-3650		1	DOUBLE ACTING, MINI-ISO, CYL 25-40	
X1511	90459-3709		1	CONNECTOR 3-POLE AMP 282087-1	
X1512	90459-4077		3	WIRE SEAL , AMP 281934	
X1513	90459-4079		3	MINI MIC SRS, AMP 183035-1	

Machine Type | Group Description | Used-In | Group Number | Page No

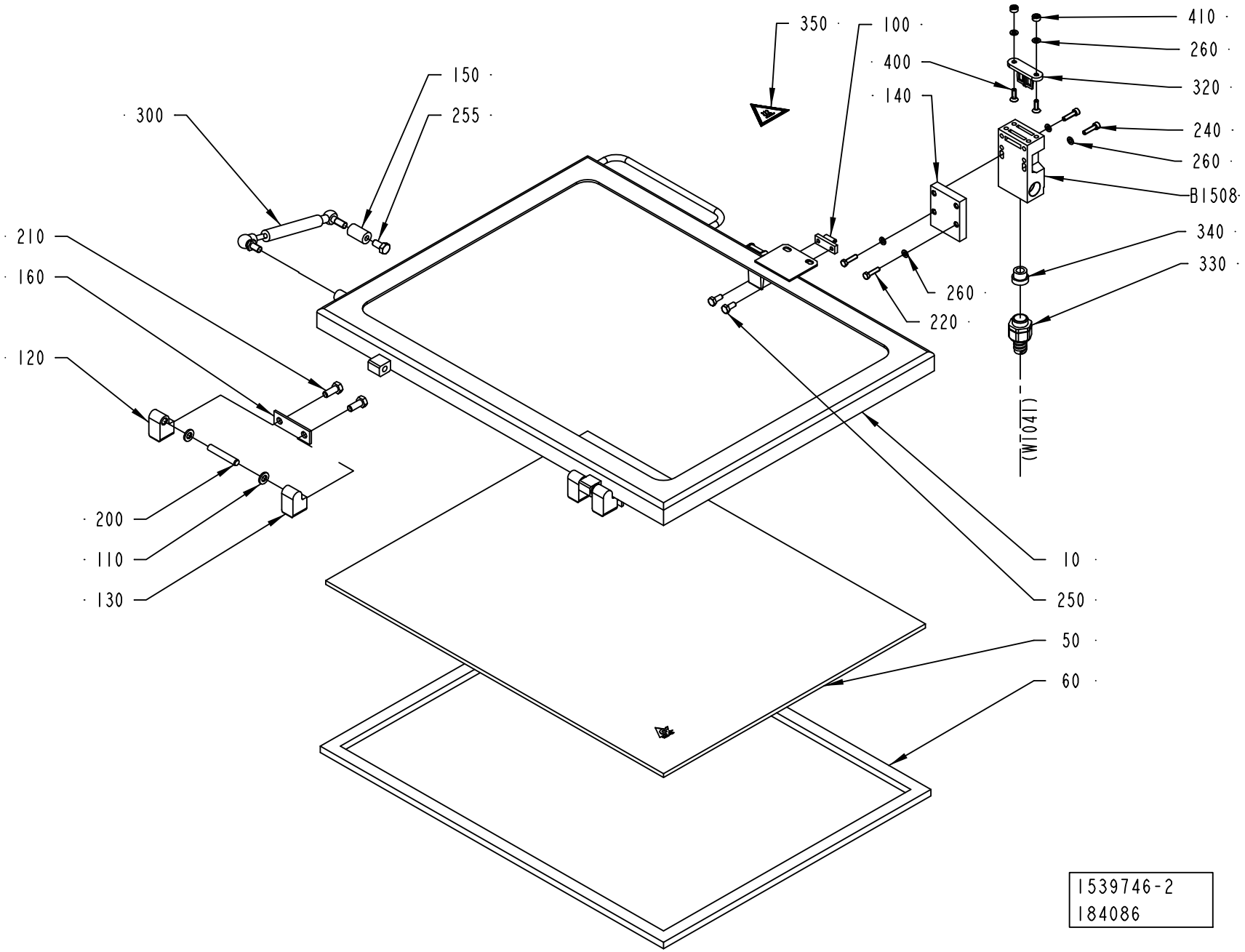
350
100
410
260
320
400
140
150
255
300
240
260
B1508
340
330
210
160
120
260
220
(W1041)
200
110
130
10
250
50
60
1539746-2
184086

ECM: 194061 - 20050224
Group number: 1539746-0200
Assembly Drawing: 1539746-2_1_AA

Pos	Part No	UN	Qty	Description	Page No
-					
010	2709216-0000		1	FRAME	
050	2709218-0000		1	GLASS PANE	
060	2709217-0000		1	GASKET	
100	271860-0000		1	CLAMP BLOCK	
110	441739-0000		4	WASHER	
120	1041979-0000		2	HINGE FLANGE	
130	1041978-0000		2	HINGE FLANGE	
140	2541651-0000		1	PLATE	
150	1037089-0000		1	SPACER	
160	441737-0000		2	WASHER	
200	311103-0413		2	PARALLEL PIN ISO 2338 8M6X50 A1	
210	312105-0451		4	SCREW M6S ISO 4017 M8X20 A480	
220	312105-0331		2	SCREW M6S ISO 4017 M5X20 A480	
240	312115-0331		2	SCREW ISO4762 M5X20 A4 80	
250	312105-0367		2	SCREW M6S ISO 4017 M6X14 A480	
255	312105-0449		1	SCREW M6S ISO 4017 M8X16 A480	
260	315105-0146		6	WASHER BRB 5,3X10 RFR	
300	90347-0039		1	DAMPER	
320	90044-0310		1	KEY FOR SAFETY SWITCH AZ 15/16 B1	
330	90458-0429		1	HOSE GLAND W/O INSERT M20 EXTENDED	
340	353249-0011		1	INSERT, SINGEL HOLE, EK 153/11	
350	359705-0007		1	WARNING SIGN ISO, HOT SURFACE	
400	312155-0329		2	SCREW DIN 7991 MF6S M5X16 A4 70	
410	575034-0000		2	ROUND NUT	
B1508	90459-0472		1	KEY SAF.SW. AZ 16 02ZVRK-M20-2152-2254	

Pos	Part No	UN	Qty	Description	Page No

STERILE AIR SYSTEM

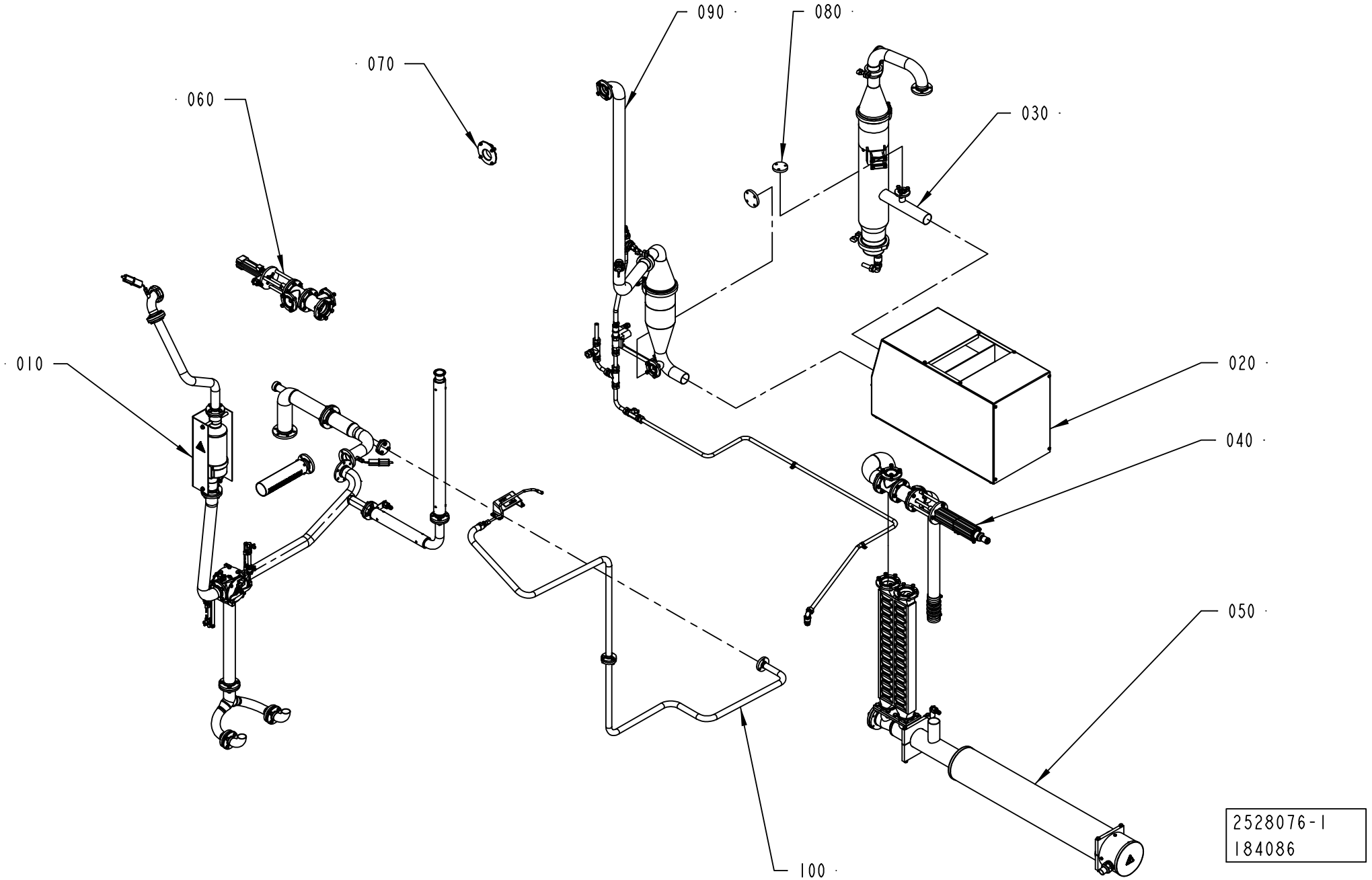

ECM: 221356 - 20050701
Group number: 2528076-0100
Assembly Drawing: 2528076-1_1_AE

Pos	Part No	UN	Qty	Description	Page No
A3/FLEX DIMC/FLEX (See drawing on page: 1-176)					
020	1517134-0100		1	COMPRESSOR UNIT	**1-179**
080	2547205-0200		1	PRESSURE REGULATOR	**1-181, 1-183**
A3/FLEX NODIMC (See drawing on page: 1-176)					
020	1517134-0100		1	COMPRESSOR UNIT	**1-179**
080	2547205-0200		1	PRESSURE REGULATOR	**1-181, 1-183**
100	2594606-0100		1	STERILE AIR PIPE	**1-185**
Common Parts					
010	1558511-0200		1	PIPE WORK-AIR	**1-191**
030	1558769-0200		1	SEPARATOR	**1-195**
040	1532250-0100		1	HEAT EXCHANGER VALVE	**1-197**
050	1499158-0100		1	AIR SUPER-HEATER	**1-199**
060	1538166-0100		1	AIR VALVE	**1-201**
070	2550890-0100		1	VALVE	**1-203**
090	1499160-0200		1	SCRUBBER	**1-205**

Pos	Part No	UN	Qty	Description	Page No

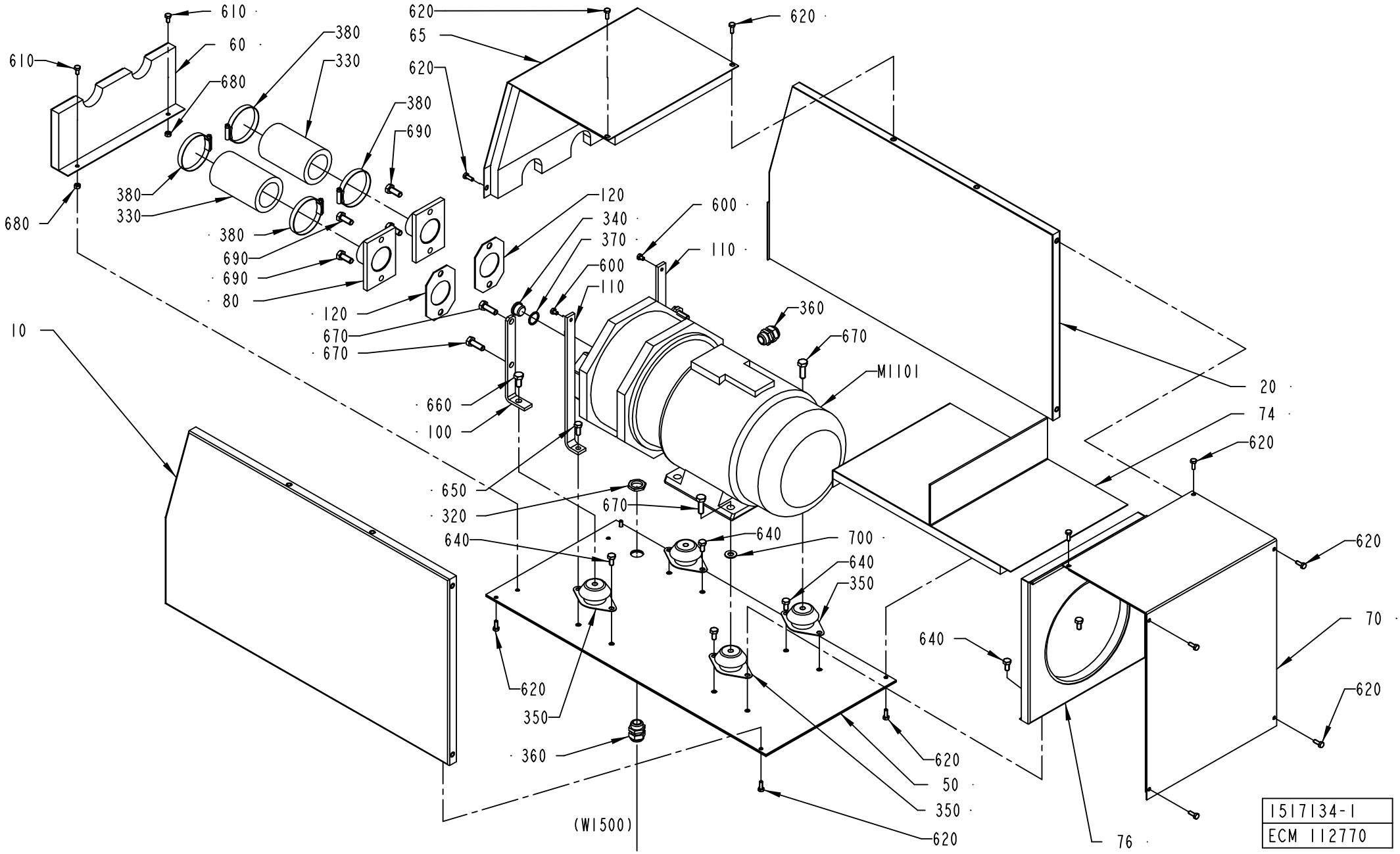
610
60
380
330
680
620
65
620
620
380
690
680
380
330
120
340
370
600
110
600
110
380
690
690
80
120
670
670
360
670
M1101
10
660
100
20
74
620
650
320
670
640
640
700
640
350
620
620
70
640
620
350
360
620
50
350
620
(W1500)
76
1517134-1
ECM 112770

ECM: 188391 - 20041117
Group number: 1517134-0100
Assembly Drawing: 1517134-1_1_AA

Pos	Part No	UN	Qty	Description	Page No
-					
010	1517137-0000		1	COVER	
020	1517138-0000		1	COVER	
050	1036314-0000		1	BOTTOM PANEL	
060	1517135-0000		1	FRONT PLATE	
065	1517136-0000		1	COVER	
070	1040876-0000		1	COVER	
074	1040877-0000		1	PLATE	
076	1040878-0000		1	PLATE	
080	1036318-0000		2	PIPE	
100	269859-0000		2	BRACKET	
110	1036319-0000		2	BRACKET	
120	230551-0000		2	GASKET	
320	90099-0110		1	NUT, PR 22,5 (PG16)	
330	90166-0199	MM	240	RUBBER HOSE	
340	342713-0213		1	PLUG, EXT THREAD HEX SOCKET 8638-00-120	
350	90347-0144		4	VIBRATION DAMPER, NO. RA 40EM-A	
360	352103-0111		2	CABLE GLAND, ST 16, PR22,5/PG16	
370	315234-0113		1	WASHER PL.RND.CU.21,3//26 H=1,5	
380	342991-0111		4	HOSE CLIP,WORM DRIVE TYPE (63)-73	
600	312105-0362		2	SCREW M6S ISO 4017 M6X8 A480	
610	312105-0366		2	SCREW M6S ISO 4017 M6X12 A480	
620	312105-0368		14	SCREW M6S ISO 4017 M6X16 A480	
640	312105-0449		6	SCREW M6S ISO 4017 M8X16 A480	
650	312105-0451		2	SCREW M6S ISO 4017 M8X20 A480	
660	312105-0491		2	SCREW M6S ISO 4017 M10X20 A480	
670	312105-0495		6	SCREW M6S ISO 4017 M10X30 A480	
680	312605-0316		2	HEXAGON NUT, M6M M6 A280	
690	312105-0493		4	SCREW M6S ISO 4017 M10X25 A480	
700	315105-0173		2	WASHER BRB 10,5X20 RFR	
M1101	90270-0017		1	COMPRESSOR NASH/ELMO 112 MB/4-2083	

Pos	Part No	UN	Qty	Description	Page No

PRESSURE REGULATOR

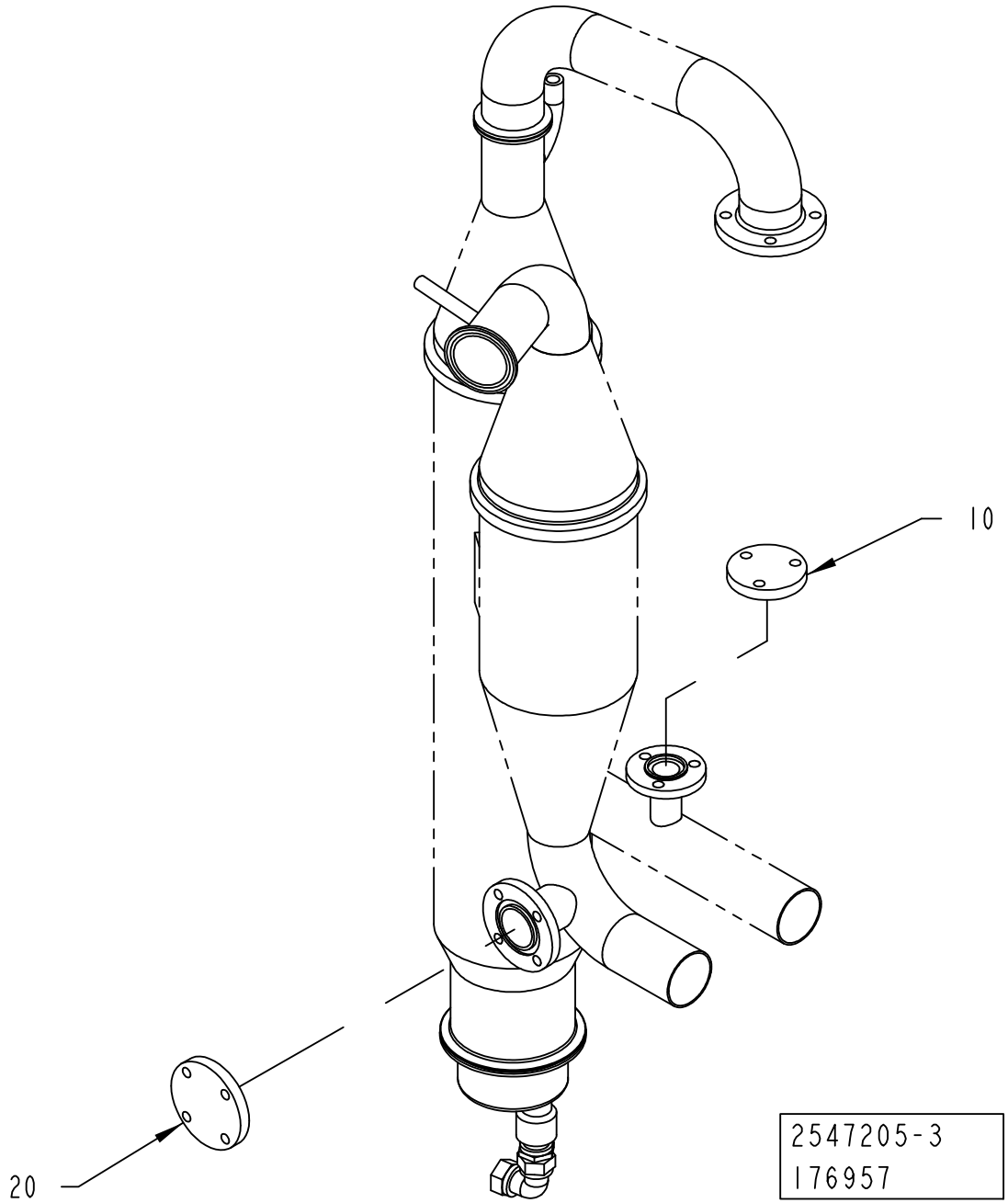

ECM: 190574 - 20041104
Group number: 2547205-0200
Assembly Drawing: 2547205-3_1_AA

This list covers pages from 1-180 to 1-183

Pos	Part No	UN	Qty	Description	Page No
50HZ (See drawing on page: 1-180)					
010	1037129-0000		1	LID	
020	1037268-0000		1	LID	
60HZ (See drawing on page: 1-182)					
010	1037267-0000		1	PIPE	
020	2685238-0000		1	PIPE	
030	490998-0000		1	THROTTLE SCREW	
040	442237-0000		1	NUT	
100	315202-0119		1	O-RING 25,1X1,6 MM	
110	315229-0203		1	GASKET 22,1X31,1X3,7 MM 1"	
120	312105-0453		3	SCREW M6S ISO 4017 M8X25 A480	
130	312605-0318		3	HEXAGON NUT, M6M M8 A280	

Pos	Part No	UN	Qty	Description	Page No

PRESSURE REGULATOR

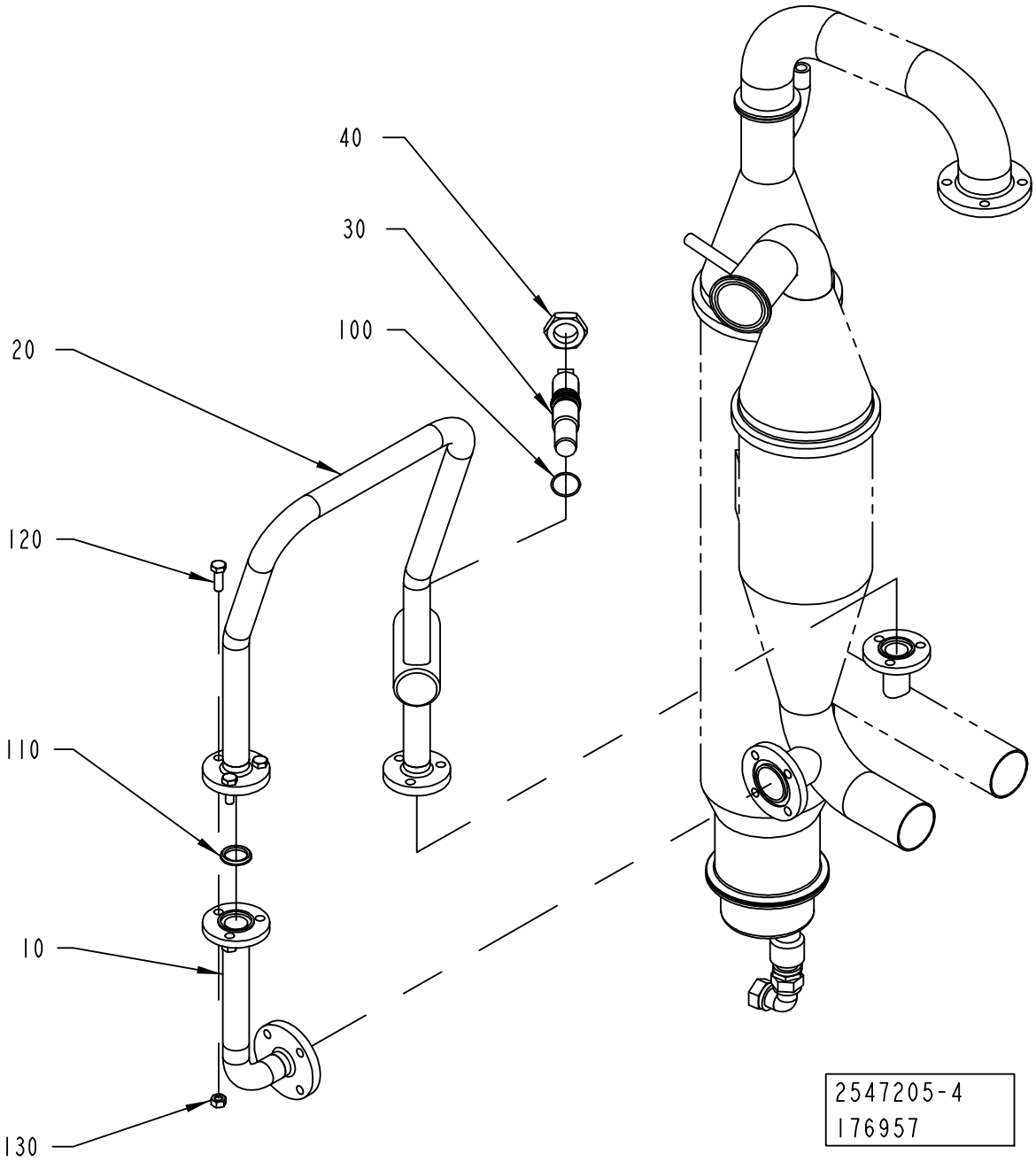

ECM: 190574 - 20041104
Group number: 2547205-0200
Assembly Drawing: 2547205-4_1_AA

This list covers pages from 1-180 to 1-183

Pos	Part No	UN	Qty	Description	Page No
50HZ (See drawing on page: 1-180)					
010	1037129-0000		1	LID	
020	1037268-0000		1	LID	
60HZ (See drawing on page: 1-182)					
010	1037267-0000		1	PIPE	
020	2685238-0000		1	PIPE	
030	490998-0000		1	THROTTLE SCREW	
040	442237-0000		1	NUT	
100	315202-0119		1	O-RING 25,1X1,6 MM	
110	315229-0203		1	GASKET 22,1X31,1X3,7 MM 1"	
120	312105-0453		3	SCREW M6S ISO 4017 M8X25 A480	
130	312605-0318		3	HEXAGON NUT, M6M M8 A280	

Pos	Part No	UN	Qty	Description	Page No

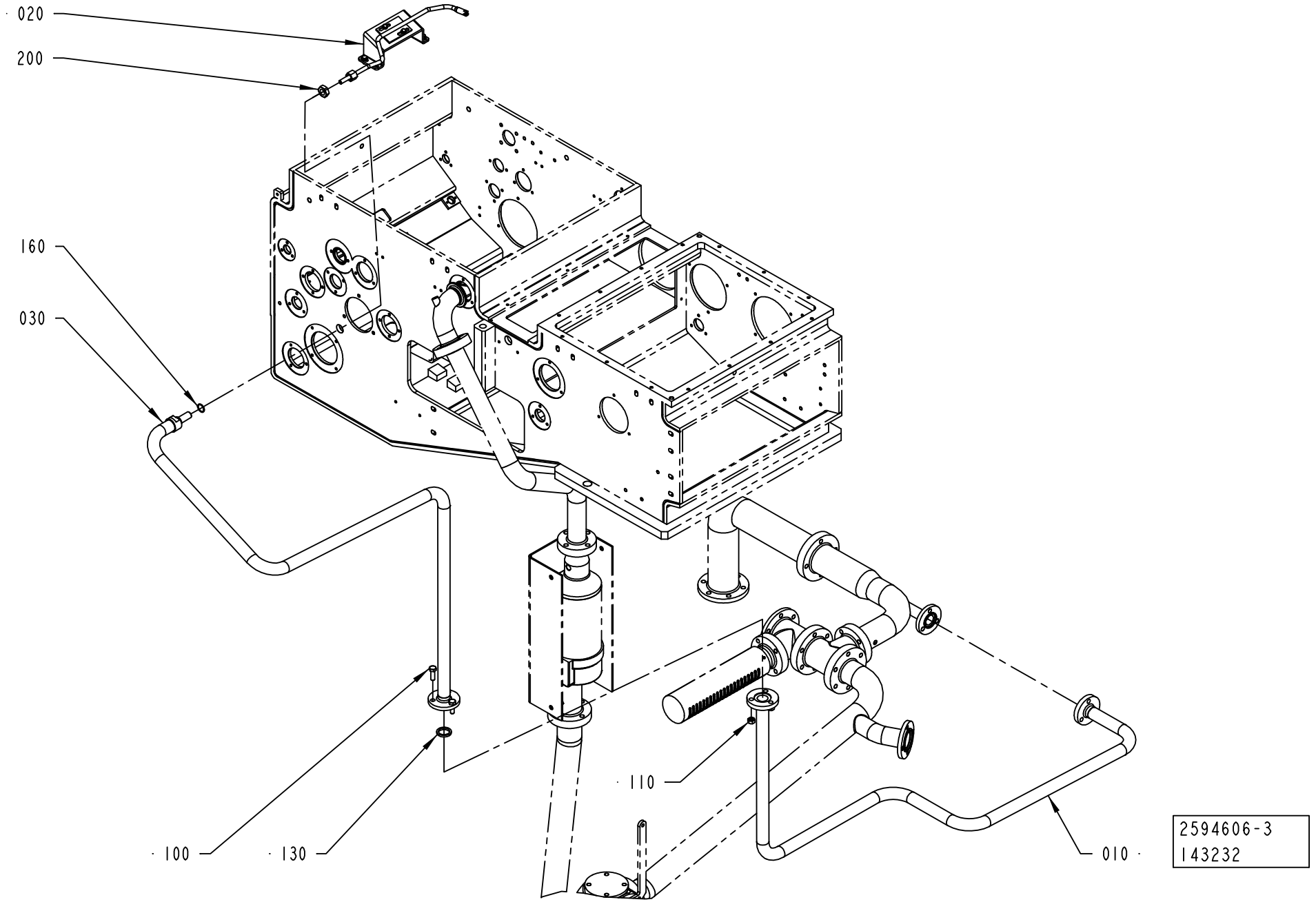
020
200
160
030
110
100
130
010
2594606-3
143232

ECM: 226035 - 20050712
Group number: 2594606-0100
Assembly Drawing: 2594606-3_1_AA

Pos	Part No	UN	Qty	Description	Page No
A3/FLEX					
030	2641322-0000		1	PIPE	
160	315205-0704		1	O-RING 15,6X1,78 MM	
200	90099-0053		1	HEXAGON NUT, M14X1,5, SMS2176	
Common Parts					
010	2641298-0000		1	PIPE	
020	2671730-0100		1	AIR NOZZLE	**1-187, 1-189**
100	312105-0453		3	SCREW M6S ISO 4017 M8X25 A480	
110	312605-0318		3	HEXAGON NUT, M6M M8 A280	
130	315229-0203		1	GASKET 22,1X31,1X3,7 MM 1"	

Pos	Part No	UN	Qty	Description	Page No

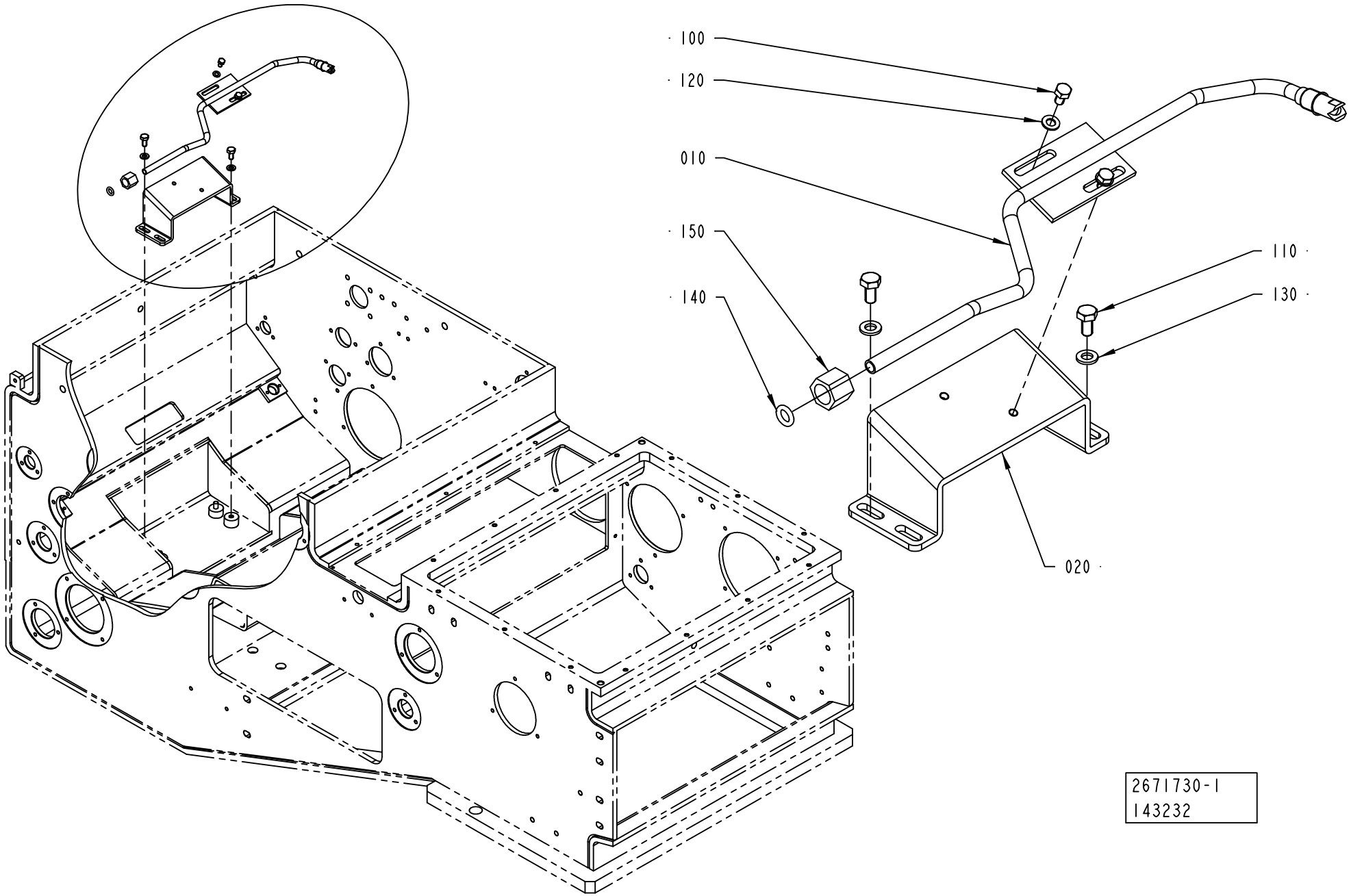
100
120
010
150
140
110
130
020
2671730-1
143232

Pos	Part No	UN	Qty	Description	Page No
A3/FLEX TBA 0500B, A3/FLEX TBA 1000B, A3/FLEX TBA 1000S, A3/FLEX TBA 1000SQ, A3/FLEX TBA 0200S, A3/FLEX TBA 0200B, A3/FLEX TBA 0250B, A3/FLEX TBA 0200M, A3/FLEX TBA 0250S, A3/FLEX TBA 0500S, A3/FLEX TPA 1000S (See drawing on page: 1-188)					
010	2668569-0000		1	PLUG	
140	315205-0808		1	O-RING 7,59X2,62 MM	
A3/FLEX TBA 1500S (See drawing on page: 1-186)					
010	2641318-0000		1	NOZZLE	
140	315205-0808		1	O-RING 7,59X2,62 MM	
150	342703-0208		1	NUT, PIPES & CONNECTORS,NUT M-8 SS	
A3/FLEX TBA 1890S, A3/FLEX TBA 2000S, A3/FLEX TBA 1400B (See drawing on page: 1-186)					
010	2641317-0000		1	PIPE	
140	315205-0808		1	O-RING 7,59X2,62 MM	
150	342703-0208		1	NUT, PIPES & CONNECTORS,NUT M-8 SS	
A3/FLEX TPA 1000SQ, A3/FLEX TPA 0330SQ, A3/FLEX TPA 0500SQ, A3/FLEX TPA 0250SQ, A3/FLEX TPA 0200SQ, A3/FLEX TPA 0750SQ, A3/FLEX TBA 0200SQ, A3/FLEX TBA 0250SQ (See drawing on page: 1-186)					
010	2668565-0000		1	NOZZLE	
140	315205-0808		1	O-RING 7,59X2,62 MM	
150	342703-0208		1	NUT, PIPES & CONNECTORS,NUT M-8 SS	
Common Parts					
020	2641319-0000		1	BRACKET	
100	312105-0323		2	SCREW M6S ISO 4017 M5X8 A480	
110	312105-0366		2	SCREW M6S ISO 4017 M6X12 A480	
120	315105-0146		2	WASHER BRB 5,3X10 RFR	
130	315105-0153		2	WASHER BRB 6,4X12 RFR	

Pos	Part No	UN	Qty	Description	Page No

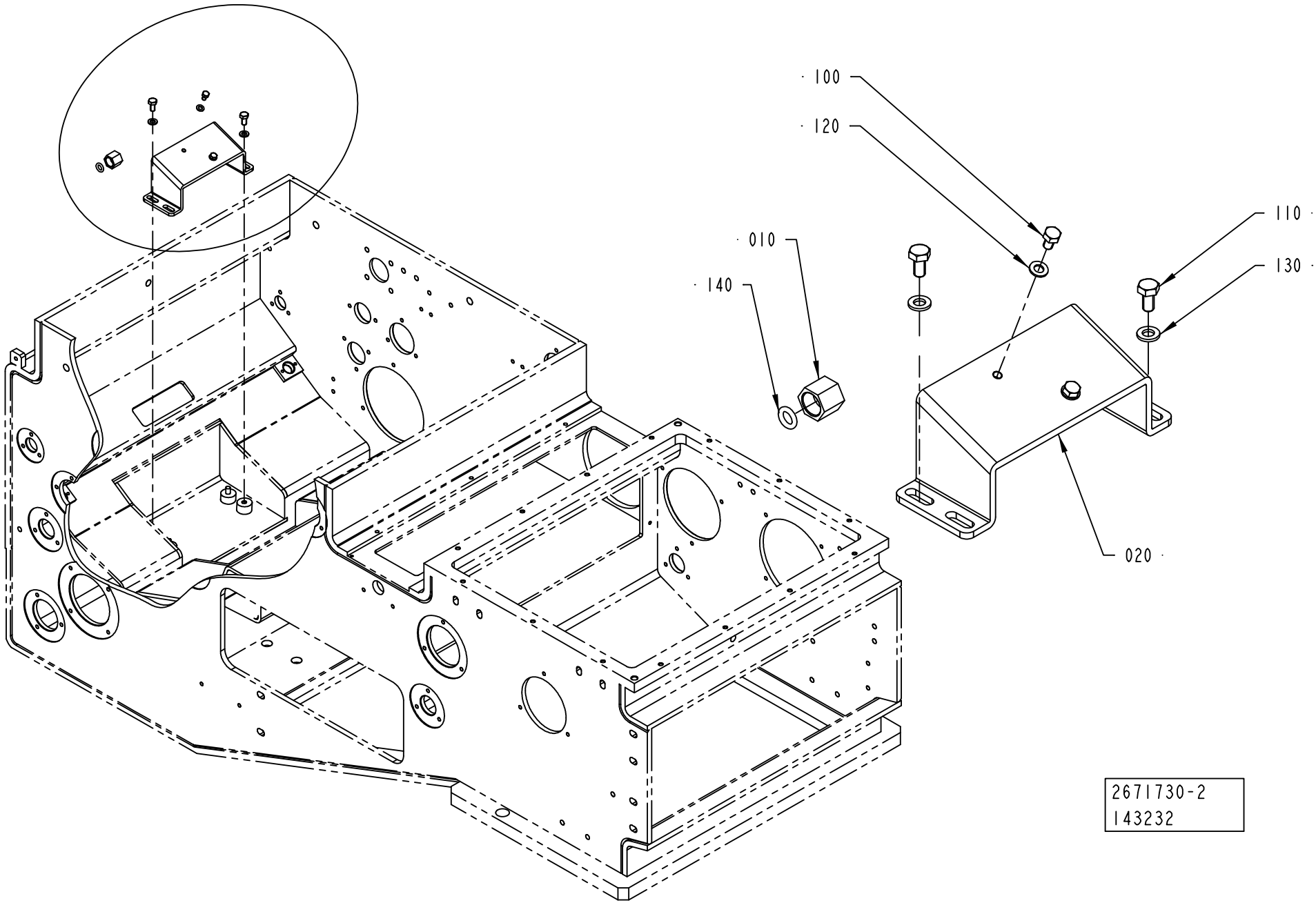
100
120
110
130
010
140
020
2671730-2
143232

Pos	Part No	UN	Qty	Description	Page No
A3/FLEX TBA 0500B, A3/FLEX TBA 1000B, A3/FLEX TBA 1000S, A3/FLEX TBA 1000SQ, A3/FLEX TBA 0200S, A3/FLEX TBA 0200B, A3/FLEX TBA 0250B, A3/FLEX TBA 0200M, A3/FLEX TBA 0250S, A3/FLEX TBA 0500S, A3/FLEX TPA 1000S (See drawing on page: 1-188)					
010	2668569-0000		1	PLUG	
140	315205-0808		1	O-RING 7,59X2,62 MM	
A3/FLEX TBA 1500S (See drawing on page: 1-186)					
010	2641318-0000		1	NOZZLE	
140	315205-0808		1	O-RING 7,59X2,62 MM	
150	342703-0208		1	NUT, PIPES & CONNECTORS,NUT M-8 SS	
A3/FLEX TBA 1890S, A3/FLEX TBA 2000S, A3/FLEX TBA 1400B (See drawing on page: 1-186)					
010	2641317-0000		1	PIPE	
140	315205-0808		1	O-RING 7,59X2,62 MM	
150	342703-0208		1	NUT, PIPES & CONNECTORS,NUT M-8 SS	
A3/FLEX TPA 1000SQ, A3/FLEX TPA 0330SQ, A3/FLEX TPA 0500SQ, A3/FLEX TPA 0250SQ, A3/FLEX TPA 0200SQ, A3/FLEX TPA 0750SQ, A3/FLEX TBA 0200SQ, A3/FLEX TBA 0250SQ (See drawing on page: 1-186)					
010	2668565-0000		1	NOZZLE	
140	315205-0808		1	O-RING 7,59X2,62 MM	
150	342703-0208		1	NUT, PIPES & CONNECTORS,NUT M-8 SS	
Common Parts					
020	2641319-0000		1	BRACKET	
100	312105-0323		2	SCREW M6S ISO 4017 M5X8 A480	
110	312105-0366		2	SCREW M6S ISO 4017 M6X12 A480	
120	315105-0146		2	WASHER BRB 5,3X10 RFR	
130	315105-0153		2	WASHER BRB 6,4X12 RFR	

Pos	Part No	UN	Qty	Description	Page No

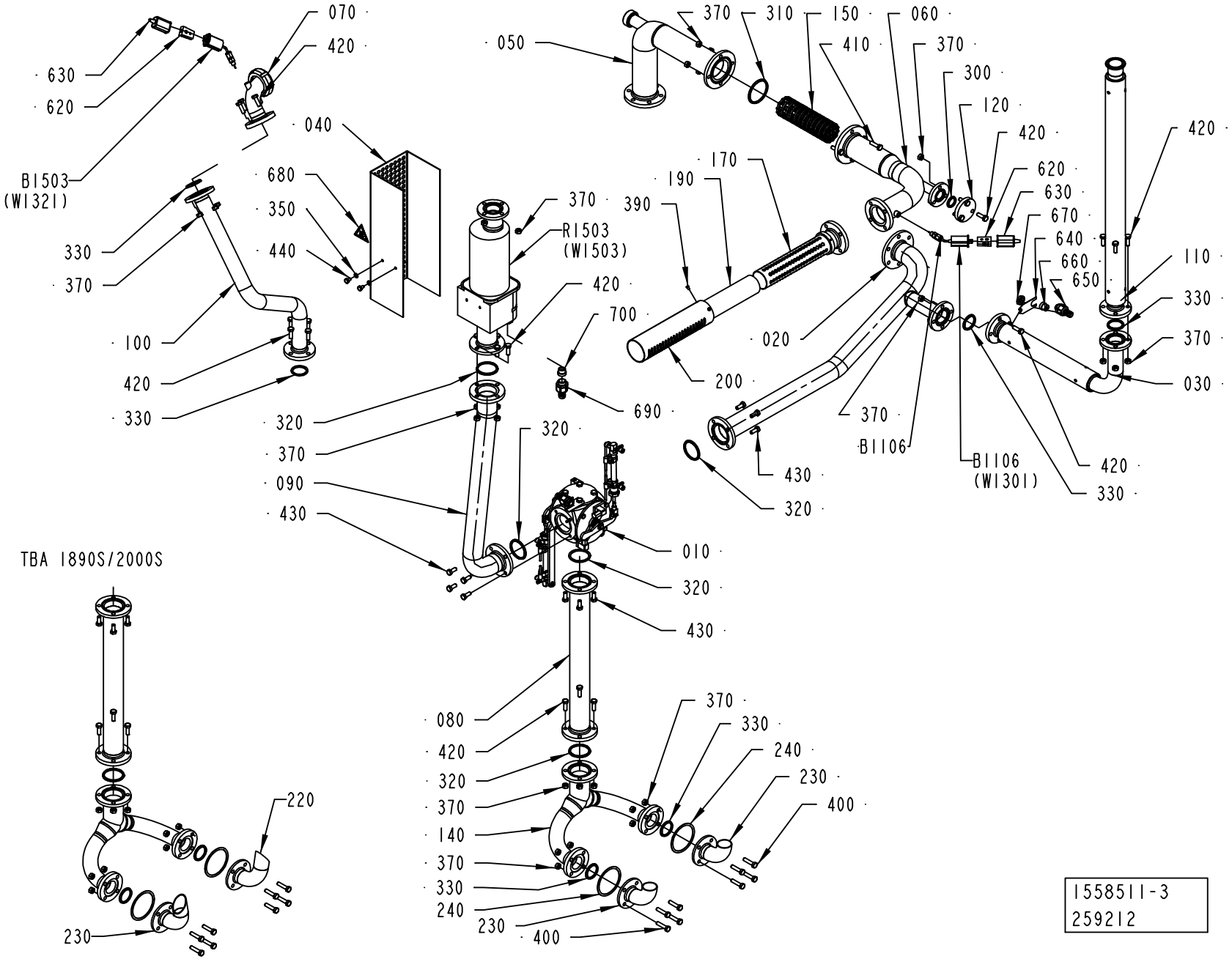

1558511-3
259212

ECM: 269551 - 20060703
Group number: 1558511-0200
Assembly Drawing: 1558511-3_1_AB

Pos	Part No	UN	Qty	Description	Page No
A3/FLEX DIMC/FLEX					
080	1538183-0000		1	PIPE	
120	2565467-0000		1	FLANGE	
230	2547407-0000		2	PIPE	
320	315229-0205		5	GASKET 47,5X55,5X3,7 MM 2 INCH	
370	312605-0318		39	HEXAGON NUT, M6M M8 A280	
420	312105-0453		27	SCREW M6S ISO 4017 M8X25 A480	
A3/FLEX TBA 1000B NODIMC, A3/FLEX TBA 0500B NODIMC, A3/FLEX TBA 1000S NODIMC, A3/FLEX TBA 1000SQ NODIMC, A3/FLEX TBA 0200S NODIMC, A3/FLEX TPA 1000SQ NODIMC, A3/FLEX TBA 1500S NODIMC, A3/FLEX TBA 0200B NODIMC, A3/FLEX TBA 0250B NODIMC, A3/FLEX TBA 0330S NODIMC, A3/FLEX TPA 0330SQ NODIMC, A3/FLEX TPA 0500SQ NODIMC, A3/FLEX TBA 0200M NODIMC, A3/FLEX TBA 0250S NODIMC, A3/FLEX TBA 0500S NODIMC, A3/FLEX TPA 0200SQ NODIMC, A3/FLEX TPA 0250SQ NODIMC, A3/FLEX TPA 0750SQ NODIMC, A3/FLEX TBA 0200SQ NODIMC, A3/FLEX TBA 0250SQ NODIMC					
080	1538183-0000		1	PIPE	
230	2547407-0000		2	PIPE	
320	315229-0205		5	GASKET 47,5X55,5X3,7 MM 2 INCH	
370	312605-0318		39	HEXAGON NUT, M6M M8 A280	
420	312105-0453		27	SCREW M6S ISO 4017 M8X25 A480	
A3/FLEX TBA 2000S NODIMC, A3/FLEX TBA 1890S NODIMC, A3/FLEX TBA 1400B NODIMC					
080	1538183-0000		1	PIPE	
220	2657887-0000		1	HORN	
230	2657888-0000		1	HORN	
320	315229-0205		5	GASKET 47,5X55,5X3,7 MM 2 INCH	
370	312605-0318		39	HEXAGON NUT, M6M M8 A280	
420	312105-0453		27	SCREW M6S ISO 4017 M8X25 A480	
Common Parts					
010	2550895-0100		1	CHANGE OVER VALVE	**1-193**
020	2695997-0000		1	PIPE	
030	1558510-0000		1	PIPE	
040	2829288-0000		1	COVERING PLATE	
050	1538487-0000		1	PIPE	
060	2641296-0000		1	PIPE	
070	1538474-0000		1	PIPE	
090	2641299-0000		1	PIPE	
100	1538181-0000		1	PIPE	
110	2695998-0000		1	PIPE	
140	1538154-0000		1	DRAIN PIPE	
150	1549526-0000		1	CONTAINER	
170	1517482-0000		1	TUBE	
190	1511755-0000		1	NET	
200	1511503-0000		1	PIPE	
240	1036294-0000		2	GASKET	
300	315229-0203		1	GASKET 22,1X31,1X3,7 MM 1"	
310	315229-0206		1	GASKET 60,2X68,2X3,7 MM 2"1/2	
330	315229-0204		6	GASKET 34,8X42,8X3,7 MM 1"1/2	
350	315101-0153		2	WASHER PLAIN, BRB, 6,4/12 H=1,5	
390	312125-0285		4	SCREW ISO 1207 M4X6 A4	
400	312109-0457		8	SCREW M6S ISO 4017 M8X35 A480	
410	312105-0455		4	SCREW M6S ISO 4017 M8X30 A480	
430	312105-0451		12	SCREW M6S ISO 4017 M8X20 A480	
440	90600-0657		2	SCREW UNC 1/4-20 X10	
620	90326-0020		2	PLUG, FEMALE YELLOW CR-AL	
630	90326-0012		2	PROTECTIVE COVER, T31A4618	
640	1036293-0000		1	HOLDER	
650	353243-0001		1	HOSE GLAND W/O INSERT PG9 EXTENDED	
660	353249-0008		1	INSERT, SINGEL HOLE, EK 152/7	
670	90099-0104		1	NUT, PR 15,2 (PG9)	
680	359705-0007		1	WARNING SIGN ISO, HOT SURFACE	
690	90458-0429		1	HOSE GLAND W/O INSERT M20 EXTENDED	
700	353249-0011		1	INSERT, SINGEL HOLE, EK 153/11	
B1106	90326-0057		1	THERMOCOUPLE, CR-AL	
B1503	90326-0057		1	THERMOCOUPLE, CR-AL	
R1503	2793360-0000		1	HEATER	
W1301	90220-0034	MM	8000	THERMOCABLE TEX/SITW-20F-KX 2X0,5MM2	
W1321	90220-0034	MM	8000	THERMOCABLE TEX/SITW-20F-KX 2X0,5MM2	
W1503	351120-0164	MM	9000	CABLE SIHF 4X1,5MM2 GREEN/YELLOW	

Machine Type | Group Description | Used-In | Group Number | Page No

CHANGE OVER VALVE

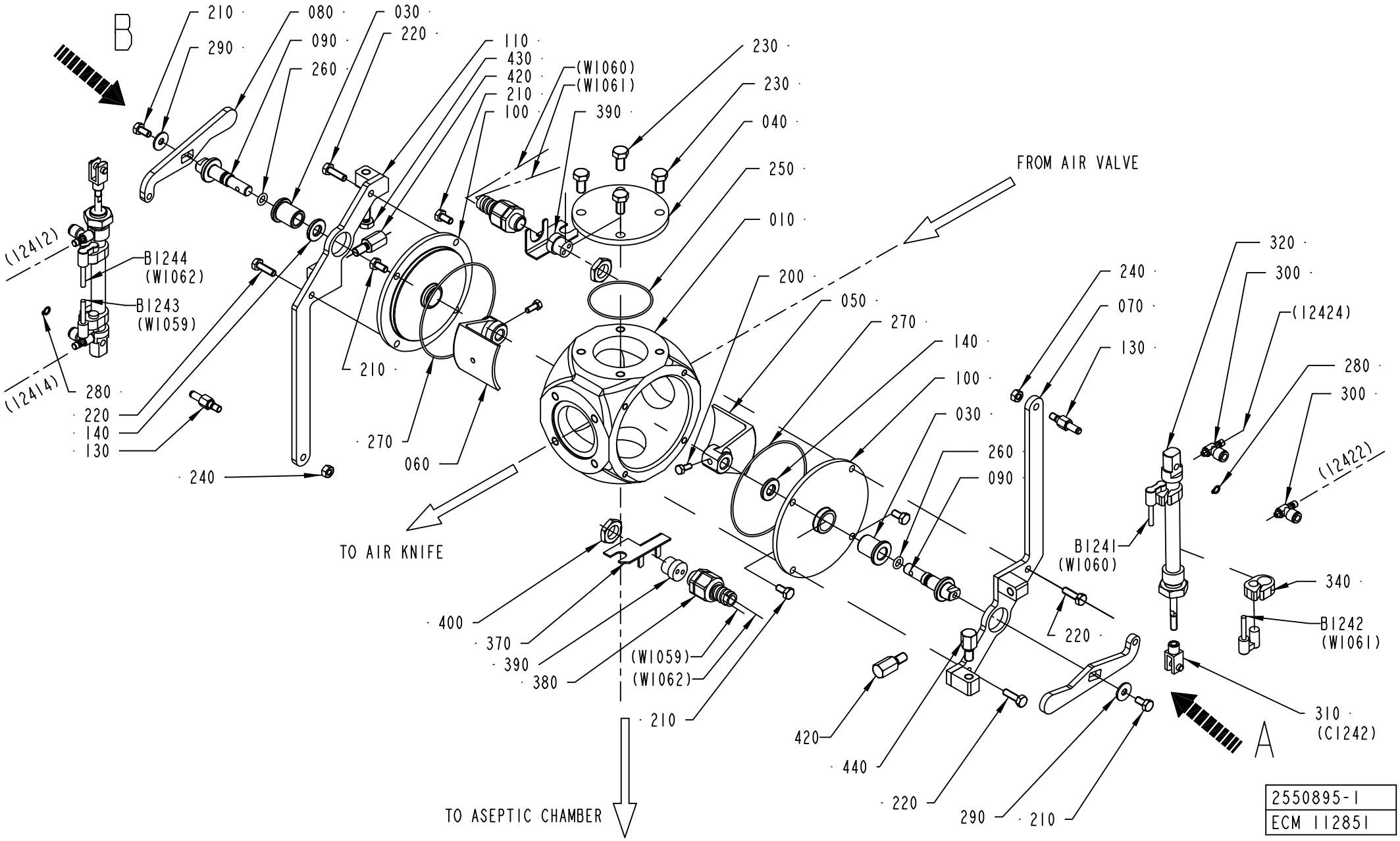

ECM: 188390 - 20041117
Group number: 2550895-0100
Assembly Drawing: 2550895-1_1_AA

Pos	Part No	UN	Qty	Description	Page No
A3/FLEX					
440	2582576-0000		1	STOP SCREW	
Common Parts					
010	1524236-0000		1	VALVE HOUSING	
030	1539740-0000		2	BUSHING	
040	1539741-0000		1	COVER	
050	1539742-0000		1	SHUTTER	
060	1539743-0000		1	SHUTTER	
070	1539744-0000		1	BRACKET	
080	1539745-0000		2	LEVER	
090	1539750-0000		2	SHAFT	
100	1539751-0000		2	COVER	
110	1539752-0000		1	BRACKET	
130	1548742-0000		2	SPACER	
140	1548743-0000		2	WASHER	
200	312105-0327		2	SCREW M6S ISO 4017 M5X12 A480	
210	312105-0366		6	SCREW M6S ISO 4017 M6X12 A480	
220	312105-0370		4	SCREW M6S ISO 4017 M6X20 A480	
230	312105-0449		4	SCREW M6S ISO 4017 M8X16 A480	
240	312605-0316		4	HEXAGON NUT, M6M M6 A280	
250	90459-1189		1	O-RING 56,87X1,78 MM	
260	315204-0206		2	O-RING 7,3X2,4 MM	
270	315205-0807		2	O-RING 94,97X1,78 MM	
280	315751-0103		2	RETAINING RING FOR SHAFT DIN 471 6 A2	
290	90005-0060		2	WASHER PLAIN, RBS 6,4/M6)/18,H=1,5	
300	90235-0844		4	THROTTLE CHECK VALVE, M5, MANUAL, 6MM	
310	90450-0725		2	ROD END, CLEVIS WITH AXLE M6	
320	90459-0713		2	DOUBLE ACTING, MINI-ISO, CYL 12-80	
340	90459-0799		4	SENSOR BRACKET SMBR-12 FOR CYL 12	
370	1036610-0000		2	BRACKET	
380	353243-0001		2	HOSE GLAND W/O INSERT PG9 EXTENDED	
390	353249-0036		2	INSERT, MULTI HOLE, EK152 M 2X4	
400	90099-0104		2	NUT, PR 15,2 (PG9)	
420	2528061-0000		2	SCREW	
430	2528062-0000		1	SCREW	
B1241	90459-0829		1	PROXIMITY SENSOR, SMTO-4U-PS-K-LED-24	
B1242	90459-0829		1	PROXIMITY SENSOR, SMTO-4U-PS-K-LED-24	
B1243	90459-0829		1	PROXIMITY SENSOR, SMTO-4U-PS-K-LED-24	
B1244	90459-0829		1	PROXIMITY SENSOR, SMTO-4U-PS-K-LED-24	

Pos	Part No	UN	Qty	Description	Page No

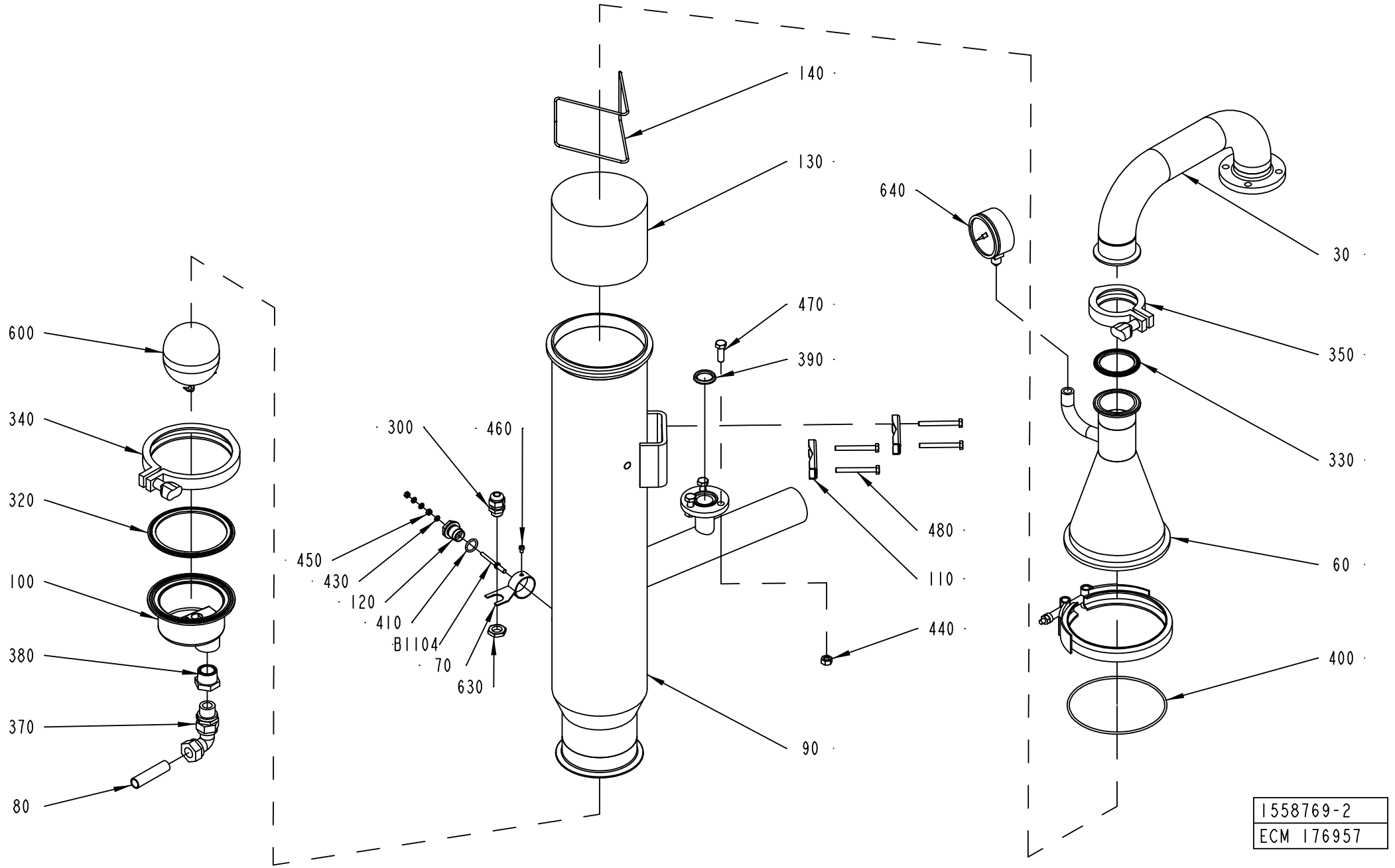
140
130
640
30
470
390
350
330
600
340
320
100
380
370
80
300
460
450
430
120
410
B1104
70
630
480
110
440
60
400
90
1558769-2
ECM 176957

ECM: 272120 - 20060728
Group number: 1558769-0200
Assembly Drawing: 1558769-2_1_AA

Pos	Part No	UN	Qty	Description	Page No
A3/FLEX					
090	1038866-0000		1	INTERMEDIARY SECTION	
390	315229-0203		1	GASKET 22,1X31,1X3,7 MM 1"	
440	312605-0318		3	HEXAGON NUT, M6M M8 A280	
470	312105-0453		3	SCREW M6S ISO 4017 M8X25 A480	
Common Parts					
030	2685246-0000		1	PIPE	
060	2685247-0000		1	UPPER SECTION	
070	1538169-0000		1	HOLDER	
080	1490963-0000		1	PIPE	
100	1038634-0000		1	DRAINING	
110	1036811-0000		2	CLAMP	
120	560931-0000		1	BRACKET	
130	546929-0000		1	FILTER	
140	2685375-0000		1	RETAINING RING	
300	352103-0101		1	CABLE GLAND, ST 9, PR15,2/PG9	
320	342850-0408		1	GASKET 97X117,7X5,2 MM 4" FDA	
330	342850-0405		1	GASKET 47,8X62,6X5,2 MM 2" FDA	
340	342840-0108		1	CLAMP, 101,6 MM 3-A PCS+PMCS	
350	342840-0105		1	CLAMPING PIECE	
370	342738-0221		1	ADJUSTABLE ELBOW CONNECTION,EXT 15-G1/2	
380	342206-0109		1	BUSHING, TAPERED, INT/EXT. THR NO. R211	
400	315204-0317		1	O-RING 129,5X3 MM	
410	315204-0213		1	O-RING 15,2X2,4 MM	
430	315105-0136		3	WASHER BRB 4,3X9 RFR	
450	312605-0312		2	HEXAGON NUT, M6M M4 A280	
460	312125-0285		1	SCREW ISO 1207 M4X6 A4	
480	312105-0381		4	SCREW M6S ISO 4014 M6X55 A480	
600	90360-0305		1	FLOAT, ART NO 10739920	
610	90157-0037		1	THREAD SEALANT LOCTITE 542	
620	90132-0030		1	SUPORTE MV 87177 KS 580T	
630	90099-0104		1	NUT, PR 15,2 (PG9)	
640	90043-0095		1	PRESSURE GAUGE, 2740, D=63 MM, GLYC.	
700	90144-0073		1	TREBOFLON-TAPE W=13MM	
B1104	979500-0003		1	ELECTRODE	

Pos	Part No	UN	Qty	Description	Page No

HEAT EXCHANGER VALVE

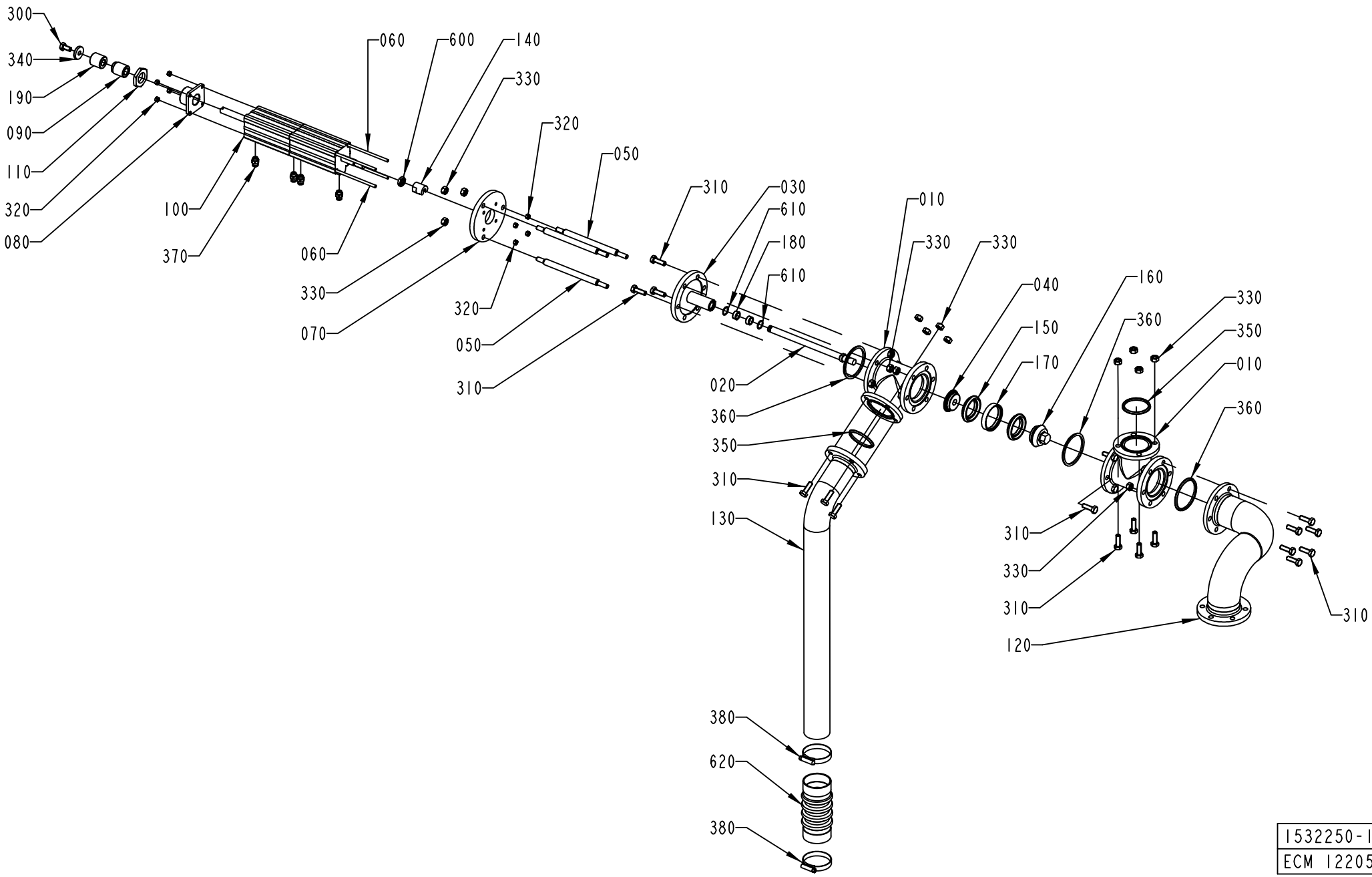

1532250-1
ECM 122050

ECM: 188392 - 20041117
Group number: 1532250-0100
Assembly Drawing: 1532250-1_1_AB

Pos	Part No	UN	Qty	Description	Page No
-					
010	1036187-0000		2	T-PIPE	
020	1036188-0000		1	SHAFT	
030	1036189-0000		1	SPINDEL GUIDE	
040	1036191-0000		1	SEAL HOLDER	
050	1036192-0000		3	SPACER ROD	
060	1346656-0000		4	ROD	
070	1346657-0000		1	CYLINDER BRACKET	
080	1346658-0000		1	BRACKET	
090	1346659-0000		1	SCREW	
100	1346677-0000		1	CYLINDER	
110	1349398-0000		1	NUT	
120	1538157-0000		1	PIPE	
130	1538158-0000		1	PIPE	
140	441871-0000		1	PENDULUM SUSPENSION	
150	530589-0000		2	SEAL RING	
160	530590-0000		1	VALVE CONE	
170	530599-0000		1	RING	
180	532349-0000		2	PLAIN BEARING	
190	2532968-0000		1	BUSHING	
300	312105-0449		1	SCREW M6S ISO 4017 M8X16 A480	
310	312105-0453		23	SCREW M6S ISO 4017 M8X25 A480	
320	312605-0314		8	HEXAGON NUT, M6M M5 A280	
330	312605-0318		29	HEXAGON NUT, M6M M8 A280	
340	315125-0165		1	WASHER TBRSB 8,4X26X5 A4	
350	315229-0205		2	GASKET 47,5X55,5X3,7 MM 2 INCH	
360	315229-0206		3	GASKET 60,2X68,2X3,7 MM 2"1/2	
370	342722-0202		4	PIPE COUPLING 1/8" D=6MM	
380	342991-0109		2	HOSE CLIP,WORM DRIVE TYPE (48)-50	
600	90099-0051		1	NUT HEX. M10X1,25, FE FZB	
610	90141-0022		2	SNAP RING B 16	
620	90342-0022		1	BELLOWS	

Pos	Part No	UN	Qty	Description	Page No

Machine Type	Group Description	Used-In	Group Number	Page No

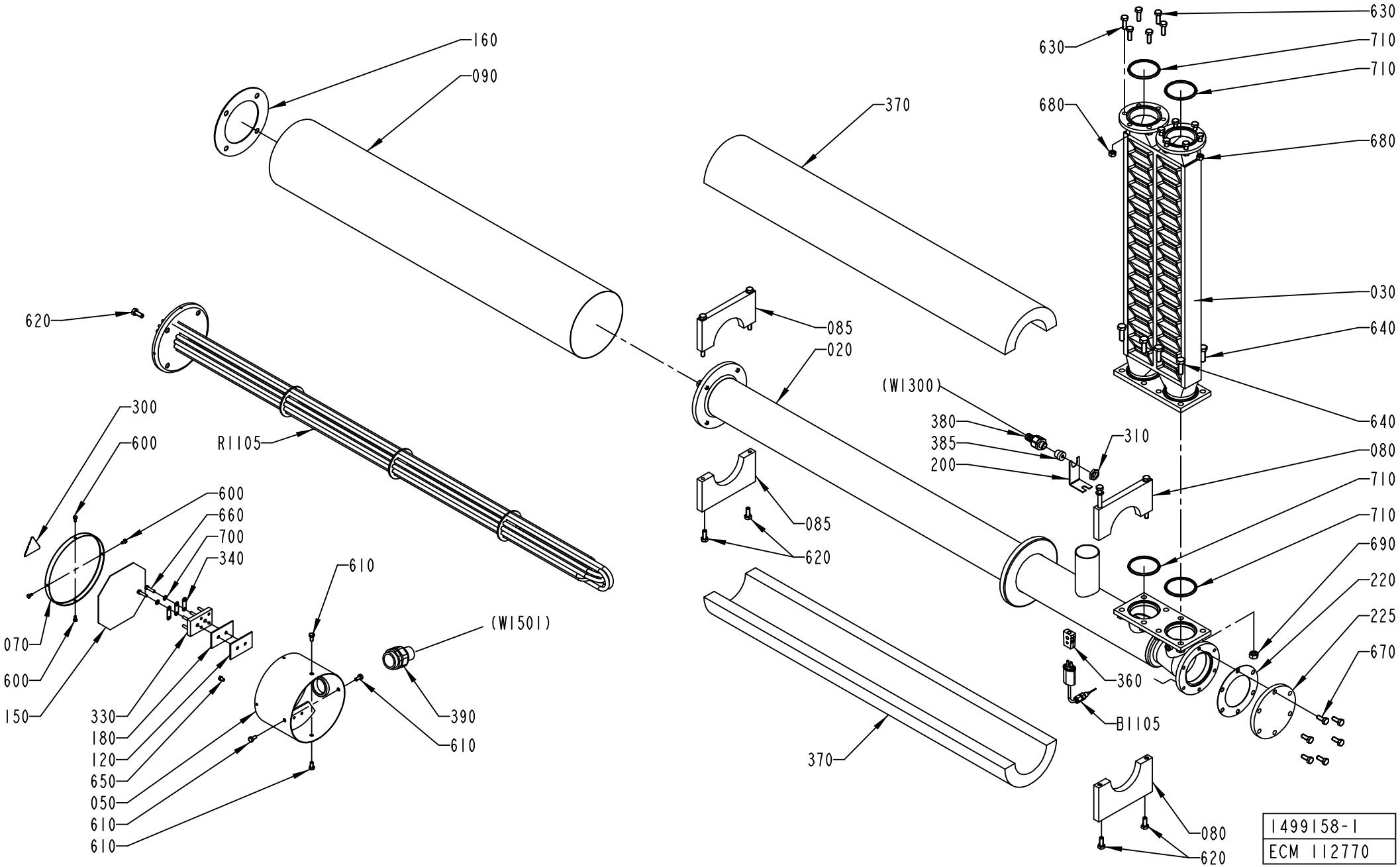
160
090
620
300
600
R1105
600
660
700
340
070
600
150
330
180
120
650
050
610
610
610
(W1501)
390
370
085
020
085
620
370
630
630
710
710
680
680
030
640
640
(W1300)
380
385
200
310
080
710
710
690
220
225
670
360
B1105
080
620
1499158-1
ECM 112770

ECM: 222758 - 20050701
Group number: 1499158-0100
Assembly Drawing: 1499158-1_1_AA

Pos	Part No	UN	Qty	Description	Page No
A3/FLEX					
030	1347245-0000		1	HEAT EXCHANGER	
Common Parts					
020	1499157-0000		1	HEATING PIPE	
050	451430-0000		1	CONNECTION HOUS.(MINOR)	
070	29876-0000		1	COVER	
080	456123-0000		1	SUPPORT	
	315105-0165		*2*	*WASHER BRB 8,4X16 RFR*	
	312105-0471		*2*	*SCREW M6S ISO 4014 M8X100 A480*	
085	1484080-0000		1	SUPPORT	
090	1036372-0000		1	PIPE	
120	30298-0000		1	INSULATION	
150	491305-0000		1	CONN.DIAGRAM AIR SUPERH.	
160	531731-0000		1	GASKET	
180	751009-0000		1	INSULATION	
190	90326-0051		1	THERMOCOUPLE, 12826-33	
195	273429-0000		1	WASHER	
200	1036373-0000		1	HOLDER	
220	927454-0000		1	GASKET	
225	1490962-0000		1	LID	
300	359705-0015		1	WARNING SIGN ISO, RISK OF ELECTRIC SHOCK	
310	90099-0104		1	NUT, PR 15,2 (PG9)	
320	90153-0020		1	ADHESIVE, BOSTIK 1782 125ML	
330	90195-0028		1	TERM.BLOCK 6-POLE STEATIT	
340	90195-0029		3	CONN. LINK NO324 FOR -28	
360	90326-0020		1	PLUG, FEMALE YELLOW CR-AL	
370	90411-0005	MM	900	INSULATOR	
380	353243-0001		1	HOSE GLAND W/O INSERT PG9 EXTENDED	
385	353249-0008		1	INSERT, SINGEL HOLE, EK 152/7	
390	90012-0126		1	HOSE GLAND W/O INSERT PG29 NORMAL	
600	312105-0287		4	SCREW M6S ISO 4017 M4X8 A470	
610	312105-0366		4	SCREW M6S ISO 4017 M6X12 A480	
620	312105-0451		8	SCREW M6S ISO 4017 M8X20 A480	
630	312105-0453		12	SCREW M6S ISO 4017 M8X25 A480	
640	312105-0495		8	SCREW M6S ISO 4017 M10X30 A480	
650	312125-0323		1	SCREW ISO 1207 M5X8 A4	
660	312125-0331		2	SCREW ISO 1207 M5X20 A4	
670	312105-0451		6	SCREW M6S ISO 4017 M8X20 A480	
680	312605-0318		12	HEXAGON NUT, M6M M8 A280	
690	312605-0320		8	HEXAGON NUT, M6M M10 A280	
700	315105-0146		2	WASHER BRB 5,3X10 RFR	
710	315229-0206		4	GASKET 60,2X68,2X3,7 MM 2"1/2	

Pos	Part No	UN	Qty	Description	Page No
R1105	449939-0001		1	HEATING ELEMENT 15KW	
	449938-0003		*2*	*HEATING PIPE*	
	449938-0002		*2*	*HEATING PIPE*	
	449938-0001		*2*	*HEATING PIPE*	

Machine Type | Group Description | Used-In | Group Number | Page No

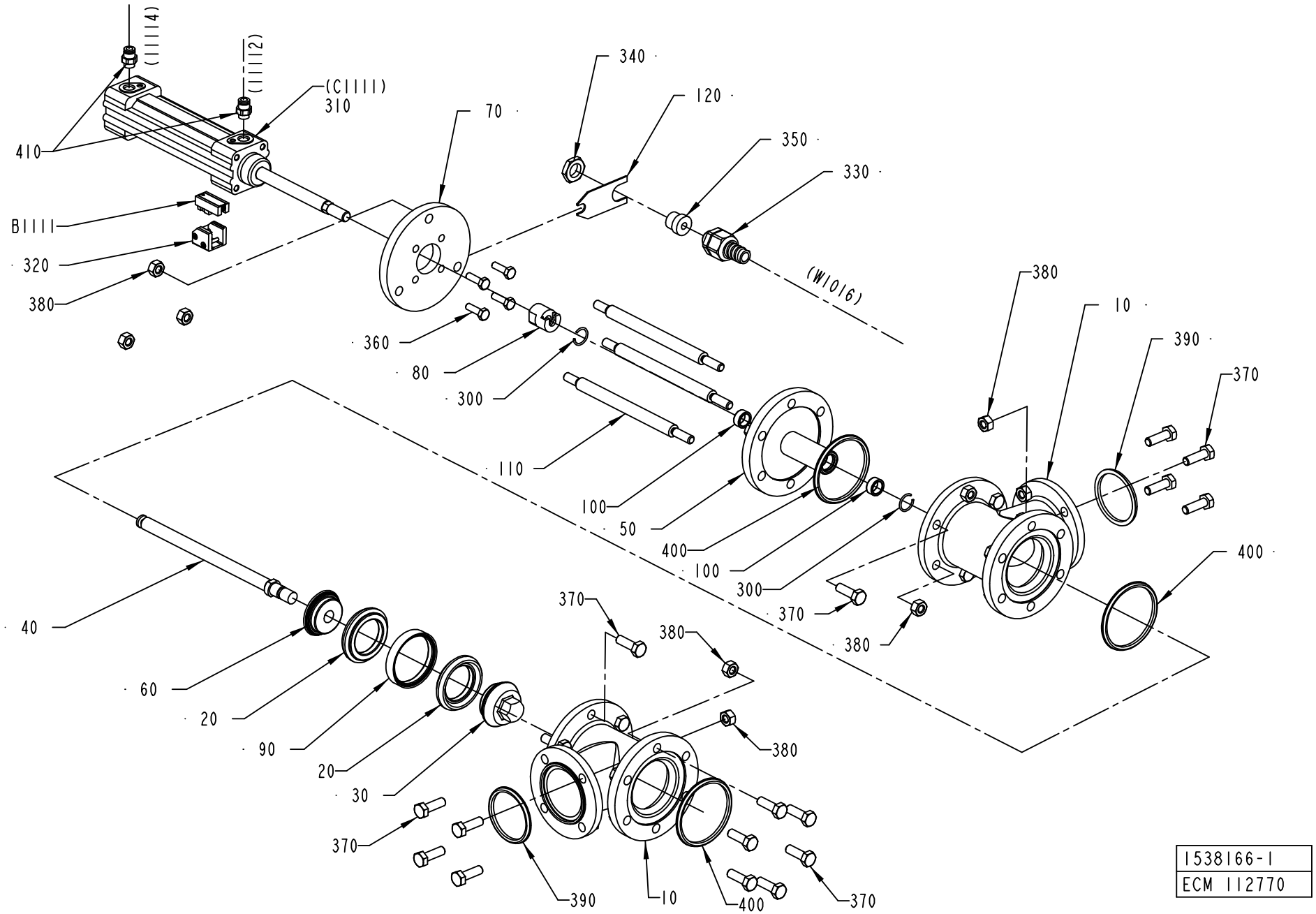

1538166-1
ECM 112770

ECM: 188394 - 20041117
Group number: 1538166-0100
Assembly Drawing: 1538166-1_1_AA

Pos	Part No	UN	Qty	Description	Page No
-					
010	1036187-0000		2	T-PIPE	
020	530589-0000		2	SEAL RING	
030	530590-0000		1	VALVE CONE	
040	1036188-0000		1	SHAFT	
050	1036189-0000		1	SPINDEL GUIDE	
060	1036191-0000		1	SEAL HOLDER	
070	1036193-0000		1	CYLINDER BRACKET	
080	441871-0000		1	PENDULUM SUSPENSION	
090	530599-0000		1	RING	
100	532349-0000		2	PLAIN BEARING	
110	1036192-0000		3	SPACER ROD	
120	1036293-0000		1	HOLDER	
300	90141-0022		2	SNAP RING B 16	
310	90450-0281		1	DOUBLE ACTING,PROF.CYL 32-80	
320	90450-0669		1	SENSOR, BRACKET SERIES 168	
330	353243-0001		1	HOSE GLAND W/O INSERT PG9 EXTENDED	
340	90099-0104		1	NUT, PR 15,2 (PG9)	
350	353249-0008		1	INSERT, SINGEL HOLE, EK 152/7	
360	312105-0370		4	SCREW M6S ISO 4017 M6X20 A480	
370	312105-0453		23	SCREW M6S ISO 4017 M8X25 A480	
380	312605-0318		31	HEXAGON NUT, M6M M8 A280	
390	315229-0205		2	GASKET 47,5X55,5X3,7 MM 2 INCH	
400	315229-0206		3	GASKET 60,2X68,2X3,7 MM 2"1/2	
410	342722-0202		2	PIPE COUPLING 1/8" D=6MM	
B1111	90457-0047		1	SENSOR 2750-1-5111-1 W.ADAPTER PNP	

Pos	Part No	UN	Qty	Description	Page No

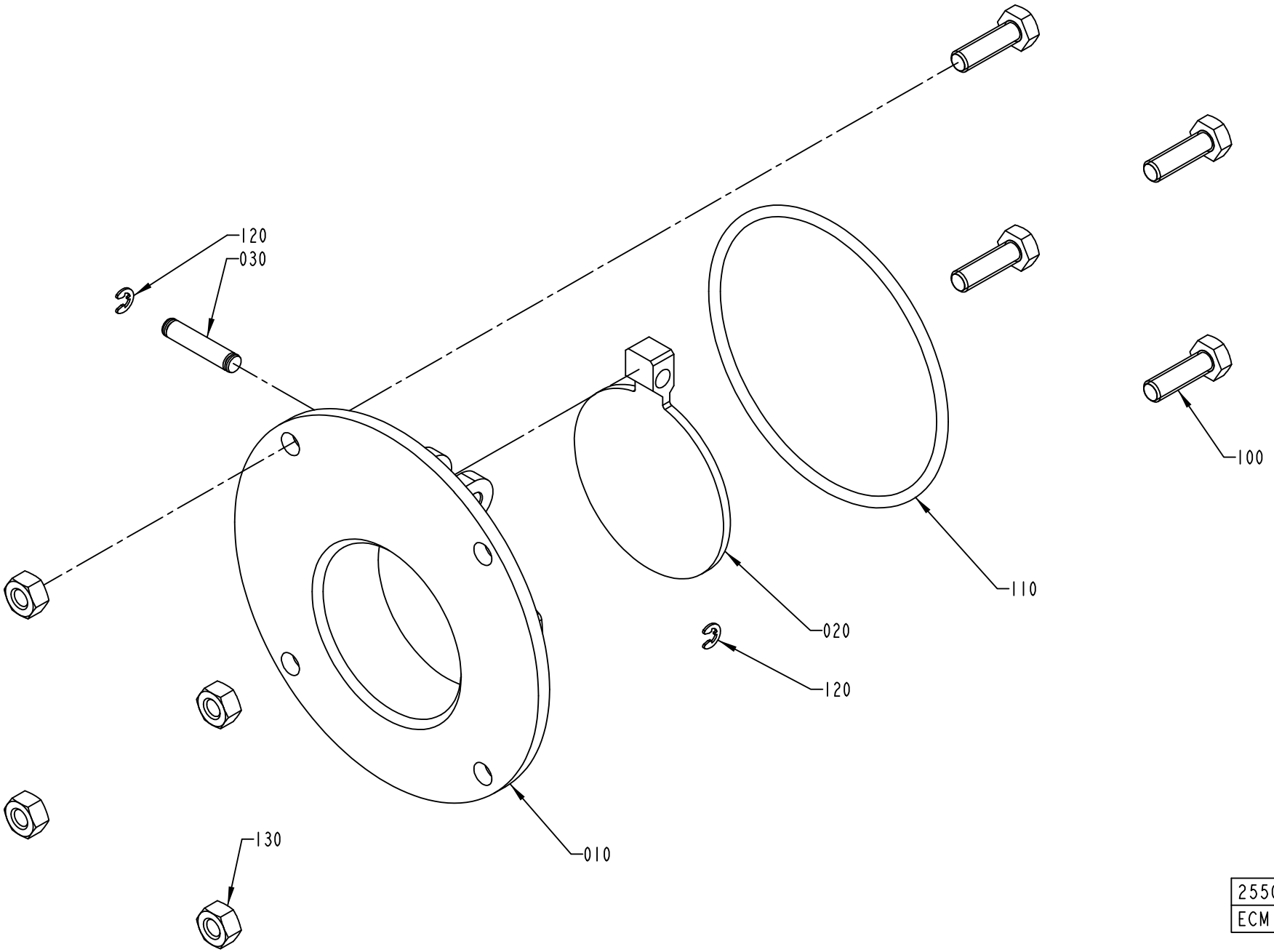

2550890-1
ECM 112851

ECM: 188395 - 20041117
Group number: 2550890-0100
Assembly Drawing: 2550890-1_1_AA

Pos	Part No	UN	Qty	Description	Page No
-					
010	1558417-0000		1	FLANGE	
020	1538494-0000		1	LID	
030	1558418-0000		1	SHAFT	
100	312105-0370		4	SCREW M6S ISO 4017 M6X20 A480	
110	315204-0307		1	O-RING 79,5X3 MM	
120	315755-0105		2	RETAINING RING SHAFT DIN 6799 3,2 A2	
130	312605-0316		4	HEXAGON NUT, M6M M6 A280	

Pos	Part No	UN	Qty	Description	Page No

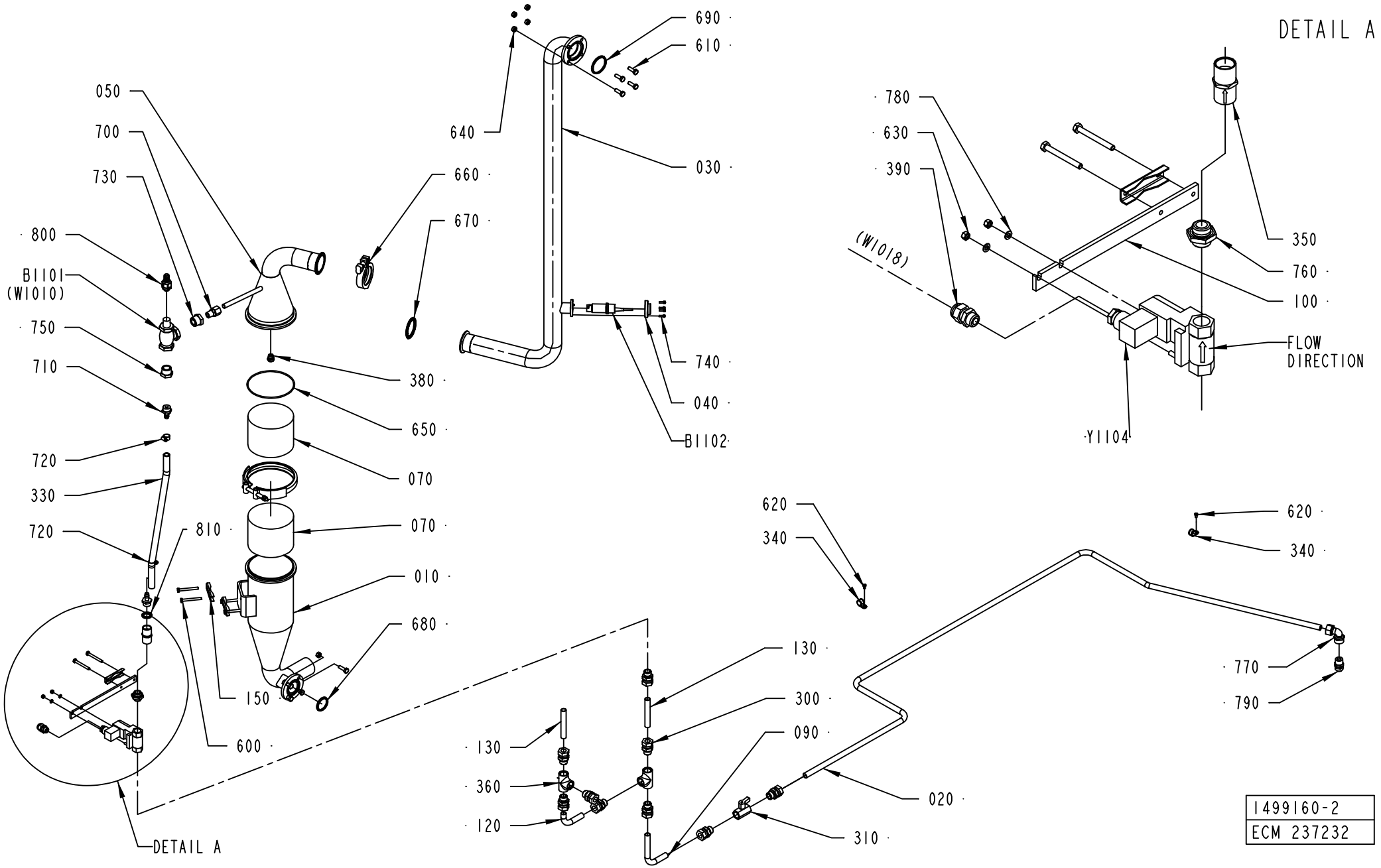
690
610
640
030
660
670
740
040
B1102
050
700
730
800
B1101
(W1010)
750
710
380
650
070
720
330
720
810
070
010
680
150
600
DETAIL A
DETAIL A
780
630
390
(W1018)
350
760
100
FLOW
DIRECTION
Y1104
620
340
620
340
130
300
090
020
310
130
360
120
770
790
1499160-2
ECM 237232

ECM: 271743 - 20060728
Group number: 1499160-0200
Assembly Drawing: 1499160-2_1_AB

Pos	Part No	UN	Qty	Description	Page No
A3/FLEX					
010	1036911-0000		1	CONTAINER	
030	2685271-0000		1	PIPE	
040	2547211-0000		1	FLANGE	
050	1499172-0000		1	UPPER SECTION	
350	90270-0349		1	CONSTANT FLOW VALVE, 1/2"X1/2" 2GPM	
380	90424-0054		1	SPRAY NOZZLE 120 DEG	
610	312105-0453		8	SCREW M6S ISO 4017 M8X25 A480	
640	312605-0318		8	HEXAGON NUT, M6M M8 A280	
680	315229-0204		1	GASKET 34,8X42,8X3,7 MM 1"1/2	
740	312115-0291		4	SCREW ISO4762 M4X12 A4 80	
B1101	90459-0711		1	FLOW SENSOR FS-400 SERIES / 26440	
B1102	2547213-0000		1	FLOW SENSOR	
Common Parts					
020	1499162-0000		1	TUBE	
070	546929-0000		2	FILTER	
090	2519437-0000		1	TUBE	
100	1037041-0000		1	HOLDER	
120	2519439-0000		1	TUBE	
130	2519440-0000		2	TUBE	
150	1036811-0000		3	CLAMP	
300	90030-0188		9	CONN. STR. GA-15-G1/2	
310	90187-0062		1	BALL VALVE G1/2, NPBR	
330	90166-0121	MM	450	HOSE	
340	90165-0039		2	PIPE CLAMP D=15 MM, GSK15/12	
360	90330-0049		2	T-PIPE, INT. THREAD, R-221R1/2	
390	352103-0101		1	CABLE GLAND, ST 9, PR15,2/PG9	
400	90132-0030		1	SUPORTE MV 87177 KS 580T	
410	90144-0073		1	TREBOFLON-TAPE W=13MM	
420	90157-0037		1	THREAD SEALANT LOCTITE 542	
600	312105-0381		6	SCREW M6S ISO 4014 M6X55 A480	
620	312125-0323		2	SCREW ISO 1207 M5X8 A4	
630	312605-0314		2	HEXAGON NUT, M6M M5 A280	
650	315204-0317		1	O-RING 129,5X3 MM	
660	342840-0105		1	CLAMPING PIECE	
670	342850-0405		1	GASKET 47,8X62,6X5,2 MM 2" FDA	
690	315229-0205		1	GASKET 47,5X55,5X3,7 MM 2 INCH	
700	90030-0181		1	CONN. STR. GE 12-3/8-18 NPTF	
710	342901-0105		2	HOSE NIPPLE, EXT.THR. R1/2-12 MM	
720	342991-0101		2	HOSE CLIP,WORM DRIVE TYPE (13)-16	
730	90330-0078		1	BUSHING, INT/EXT. THR. R3/4-RP3/8	
750	342206-0109		1	BUSHING, TAPERED, INT/EXT. THR NO. R211	
760	479261-0000		1	NIPPLE	
770	342733-0114		1	CONN. ELBOW WI-15-G1/2	
780	315105-0146		2	WASHER BRB 5,3X10 RFR	
790	342920-0151		1	STRAIGHT COUPL.,EXT.THREAD.15/12,5-R1/2"	
800	353243-0001		1	HOSE GLAND W/O INSERT PG9 EXTENDED	
810	315211-0111		1	BONDED SEAL SS/NBR90 G1/2	
Y1104	90042-0172		1	SOLENOID VALVE 4023/1005/1032 24VDC	
	90042-0467		*1*	*COIL 24VDC GSR*	

Machine Type	Group Description	Used-In	Group Number	Page No

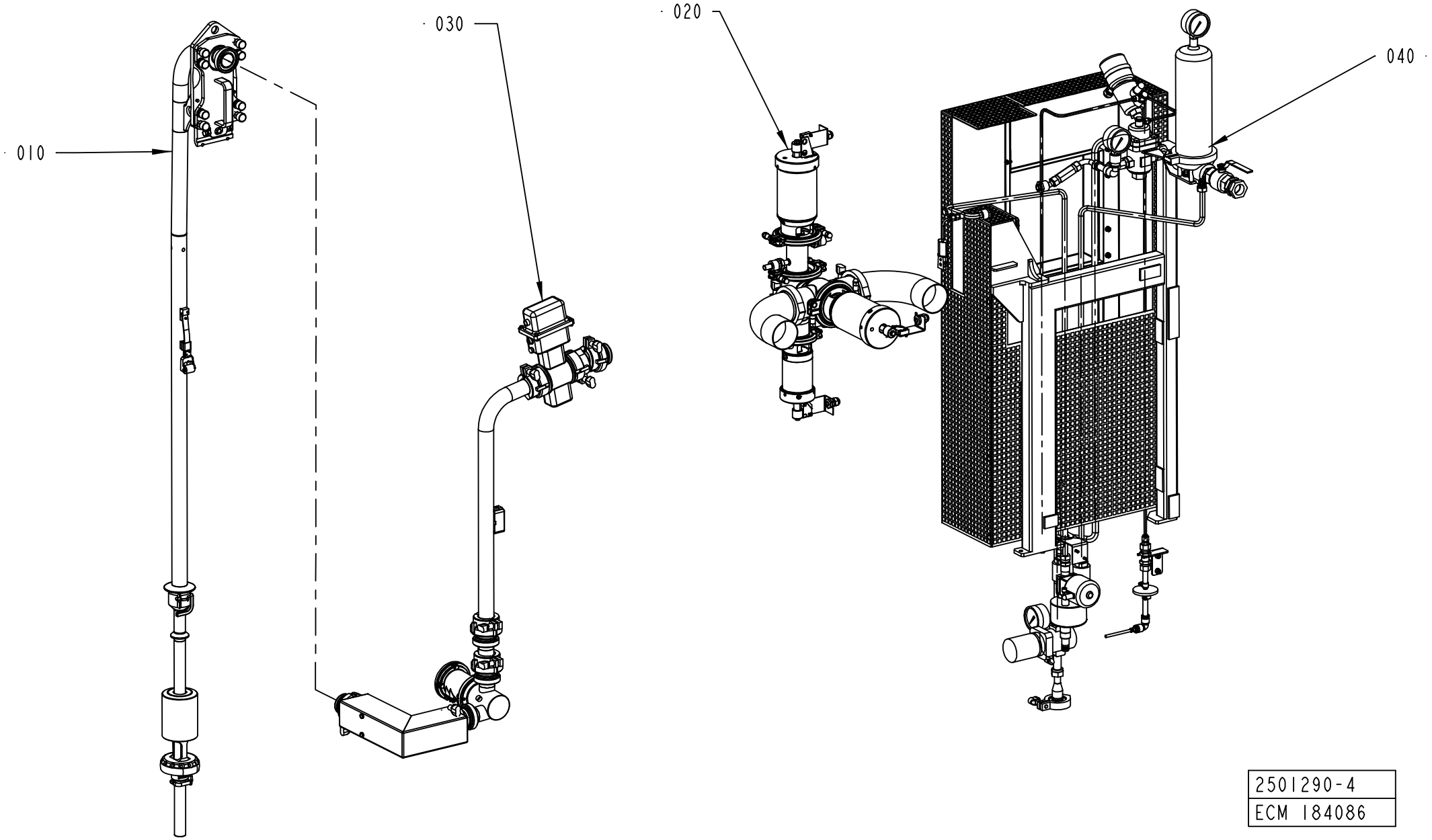

2501290-4
ECM 184086

ECM: 270981 - 20061101
Group number: 2501290-0200
Assembly Drawing: 2501290-4_1_AA

This list covers pages from 1-206 to 1-209

Pos	Part No	UN	Qty	Description	Page No
A3/FLEX HI (See drawing on page: 1-208)					
010	2501310-0100		1	FILLING PIPE	**1-211, 1-213, 1-215**
060	2656910-0200		1	HEAD SPACE BY INJECTION	**1-217**
A3/FLEX NOHI (See drawing on page: 1-206)					
010	2501310-0100		1	FILLING PIPE	**1-211, 1-213, 1-215**
Common Parts					
020	1558494-0200		1	PRODUCT VALVE	**1-229**
030	2507060-0200		1	PRODUCT LINES	**1-243, 1-245**
040	2545651-0200		1	STEAM SYSTEM	**1-251**

Pos	Part No	UN	Qty	Description	Page No

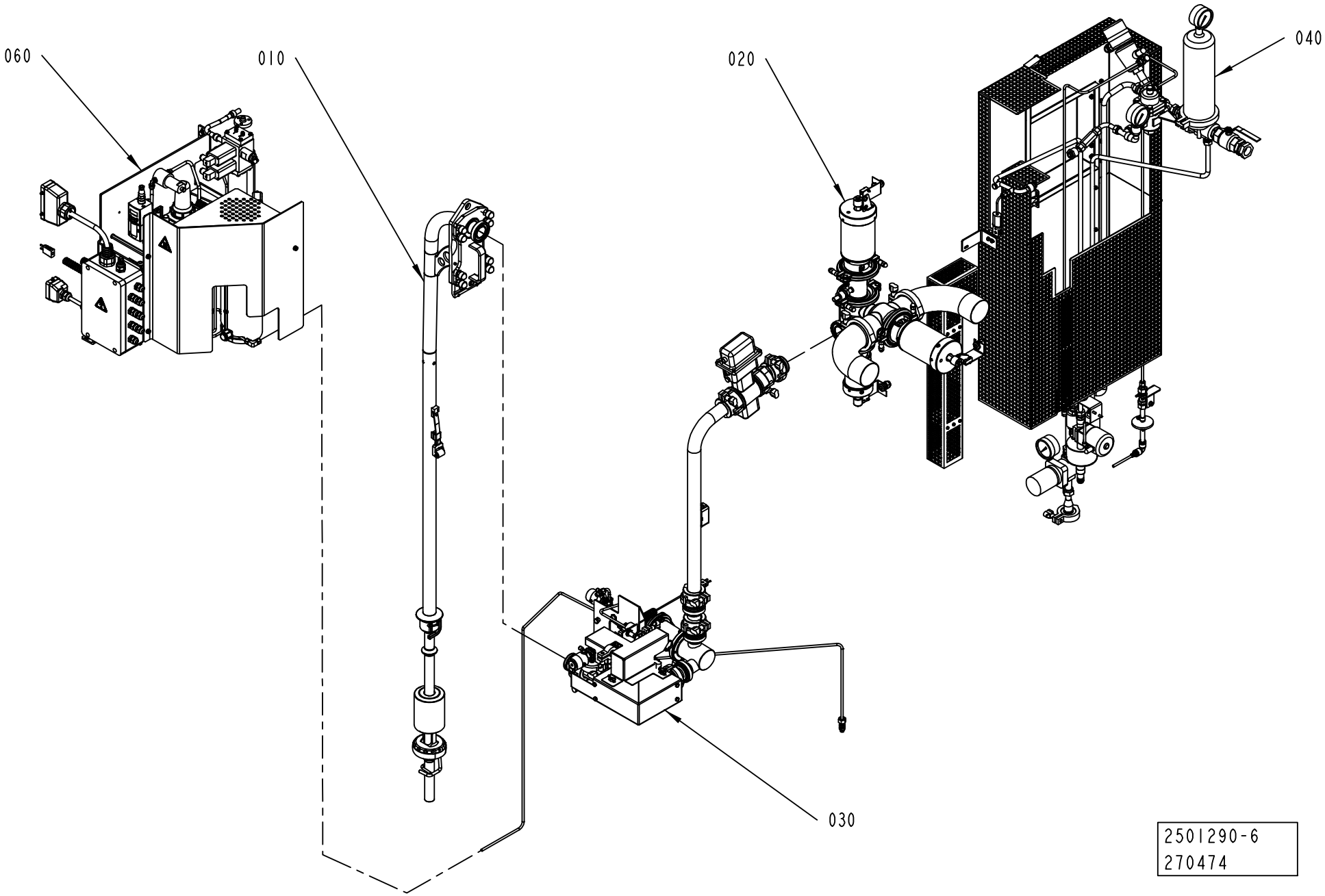

2501290-6
270474

ECM: 270981 - 20061101
Group number: 2501290-0200
Assembly Drawing: 2501290-6_1_AB

This list covers pages from 1-206 to 1-209

Pos	Part No	UN	Qty	Description	Page No
A3/FLEX HI (See drawing on page: 1-208)					
010	2501310-0100		1	FILLING PIPE	**1-211, 1-213, 1-215**
060	2656910-0200		1	HEAD SPACE BY INJECTION	**1-217**
A3/FLEX NOHI (See drawing on page: 1-206)					
010	2501310-0100		1	FILLING PIPE	**1-211, 1-213, 1-215**
Common Parts					
020	1558494-0200		1	PRODUCT VALVE	**1-229**
030	2507060-0200		1	PRODUCT LINES	**1-243, 1-245**
040	2545651-0200		1	STEAM SYSTEM	**1-251**

Pos	Part No	UN	Qty	Description	Page No

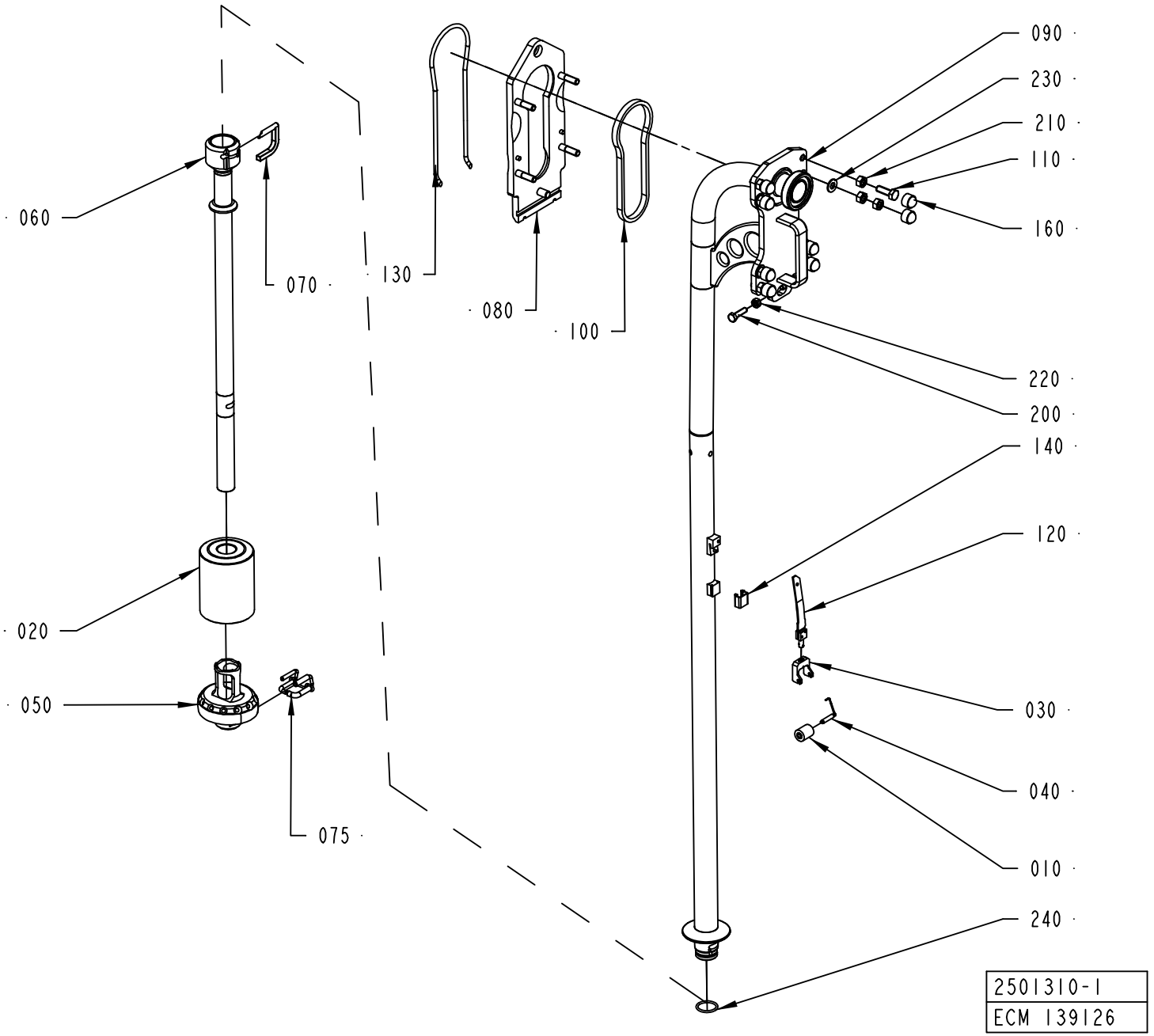
090
230
210
110
160
060
070
130
080
100
220
200
140
120
020
030
050
040
075
010
240
2501310-1
ECM 139126

ECM: 270355 - 20060704
Group number: 2501310-0100
Assembly Drawing: 2501310-1_1_AC

This list covers pages from 1-210 to 1-215

Pos	Part No	UN	Qty	Description	Page No
TPA 0250SQ, TPA 0200SQ (See drawing on page: 1-212)					
010	272479-0000		1	PRESSURE ROLLER	
020	2564601-0000		1	FLOAT	
030	255978-0000		1	FORK	
040	2529416-0000		1	SHAFT	
050	2601473-0000		1	PRESSURE FLANGE	
060	2731438-0000		1	FILLING PIPE	
070	2605148-0000		2	STOP PIN	
075	2563292-0000		1	STOP PIN	
090	2528104-0000		1	PIPE	
120	2719686-0000		1	SPRING	
140	295377-0001		1	HOOD	
150	1499114-0000		1	LOCK RING	
240	315204-0215		1	O-RING 19,2X3 MM	
TPA 0330SQ (See drawing on page: 1-212)					
010	257330-0000		1	PRESSURE ROLLER	
020	2564599-0000		1	FLOAT	
030	1348047-0000		1	FORK	
040	2529417-0000		1	SHAFT	
050	2601470-0000		1	PRESSURE FLANGE	
060	2598018-0000		1	LOWER FILLING PIPE	
070	2605148-0000		2	STOP PIN	
075	2563292-0000		1	STOP PIN	
090	2528104-0000		1	PIPE	
120	544894-0000		1	SPRING	
140	295377-0003		1	HOOD	
150	1498143-0000		1	LOCK RING	
240	315204-0215		1	O-RING 19,2X3 MM	
TPA 0500SQ (See drawing on page: 1-210)					
010	257330-0000		1	PRESSURE ROLLER	
020	2564600-0000		1	FLOAT	
030	2673015-0000		1	FORK	
040	2673021-0000		1	SHAFT	
050	2601474-0000		1	PRESSURE FLANGE	
060	2672949-0000		1	FILLING PIPE	
070	2598010-0000		1	STOP PIN	
075	2563295-0000		1	STOP PIN	
090	2673005-0000		1	FILLING PIPE	
120	2679889-0000		1	SPRING	
140	14600-0000		1	HOOD	
240	315204-0219		1	O-RING 29,2X3 MM	
TPA 1000SQ NOQC, TPA 1000SQ QC, TPA 0750SQ QC (See drawing on page: 1-214)					
010	257330-0000		2	PRESSURE ROLLER	
020	2564602-0000		1	FLOAT	
030	2715652-0000		1	FORK	
040	2634972-0000		1	SHAFT	
050	2570017-0000		1	PRESSURE FLANGE	
060	2770494-0000		1	FILLING PIPE	
070	2598008-0000		1	STOP PIN	
075	2563295-0000		1	STOP PIN	
090	2565436-0000		1	FILLING PIPE	
120	2641261-0000		1	SPRING	
140	2572071-0000		1	HOOD	
170	24928-0000		3	LOCKING RUBBER	
185	499011-0000		2	SHAFT	
190	2715569-0000		1	BRACKET	
240	315204-0219		1	O-RING 29,2X3 MM	
TBA 0200B NOQC, TBA 0250B NOQC (See drawing on page: 1-212)					
010	257330-0000		1	PRESSURE ROLLER	
020	2564600-0000		1	FLOAT	
030	1317438-0000		1	FORK	
040	2529418-0000		1	SHAFT	
050	2601472-0000		1	PRESSURE FLANGE	
060	2598015-0000		1	LOWER FILLING PIPE	
070	2605148-0000		2	STOP PIN	
075	2563292-0000		1	STOP PIN	
090	2528104-0000		1	PIPE	
120	1498621-0000		1	SPRING	
140	295377-0003		1	HOOD	
150	1498143-0000		1	LOCK RING	
240	315204-0215		1	O-RING 19,2X3 MM	
TBA 0500B NOQC, TBA 1000B NOQC (See drawing on page: 1-210)					
010	232979-0000		1	PRESSURE ROLLER (PAK OF 10)	
020	2564596-0000		1	FLOAT	
030	1348048-0000		1	FORK	
040	2523268-0000		1	SHAFT	
050	2563294-0000		1	PRESSURE FLANGE	
060	2563293-0000		1	LOWER FILLING PIPE	
070	2598008-0000		1	STOP PIN	
075	2563295-0000		1	STOP PIN	
090	2501311-0000		1	FILLING PIPE	
120	1517053-0000		1	SPRING	
140	14600-0000		1	HOOD	
240	315204-0219		1	O-RING 29,2X3 MM	

Machine Type | Group Description | Used-In | Group Number | Page No

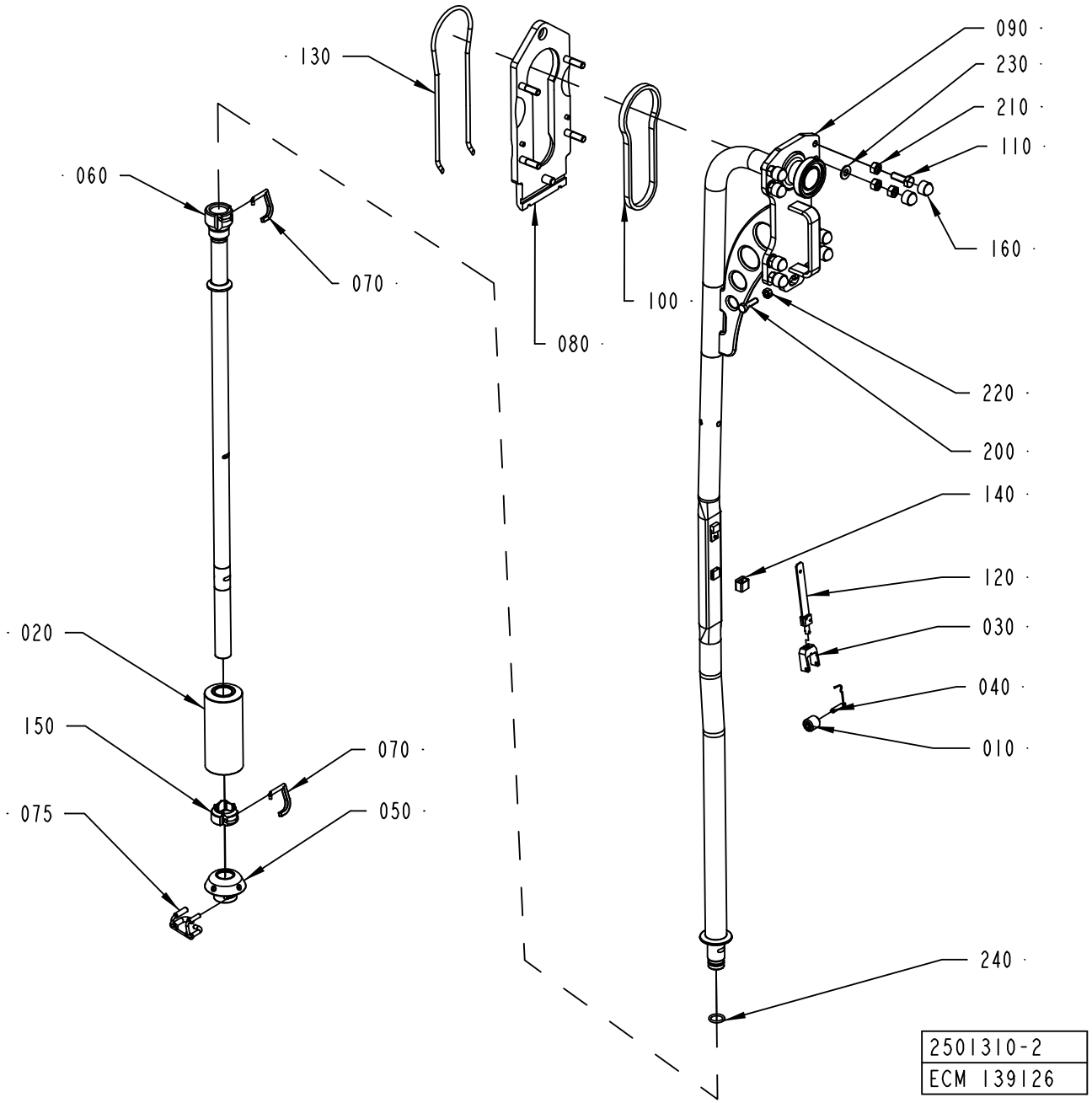
130
060
070
080
100
090
230
210
110
160
220
200
140
120
030
040
010
020
150
070
075
050
240
2501310-2
ECM 139126

Pos	Part No	UN	Qty	Description	Page No
TBA 0200B QC, TBA 0330S QC, TBA 0250B QC (Cont'd) (See drawing on page: 1-210)					
010	257330-0000		1	PRESSURE ROLLER	
020	2564600-0000		1	FLOAT	
030	1317438-0000		1	FORK	
040	2529418-0000		1	SHAFT	
050	2601472-0000		1	PRESSURE FLANGE	
060	2664098-0000		1	FILLING PIPE	
070	2605148-0000		2	STOP PIN	
075	2563292-0000		1	STOP PIN	
090	2528104-0000		1	PIPE	
120	1498621-0000		1	SPRING	
140	295377-0003		1	HOOD	
150	1498143-0000		1	LOCK RING	
240	315204-0215		1	O-RING 19,2X3 MM	
TBA 0200S (See drawing on page: 1-212)					
010	272479-0000		1	PRESSURE ROLLER	
020	2564601-0000		1	FLOAT	
030	255978-0000		1	FORK	
040	2529416-0000		1	SHAFT	
050	2570015-0000		1	PRESSURE FLANGE	
060	2563296-0000		1	LOWER FILLING PIPE	
070	2605148-0000		2	STOP PIN	
075	2563292-0000		1	STOP PIN	
090	2528104-0000		1	PIPE	
120	751604-0000		1	SPRING	
140	295377-0001		1	HOOD	
150	1499114-0000		1	LOCK RING	
240	315204-0215		1	O-RING 19,2X3 MM	
TBA 0200SQ, TBA 0250SQ (See drawing on page: 1-212)					
010	2607089-0000		1	PRESSURE ROLLER	
020	2564600-0000		1	FLOAT	
030	1317438-0000		1	FORK	
040	2529418-0000		1	SHAFT	
050	2657902-0000		1	PRESSURE FLANGE	
060	2657903-0000		1	FILLING PIPE	
070	2605148-0000		2	STOP PIN	
075	2563292-0000		1	STOP PIN	
090	2528104-0000		1	PIPE	
120	1498621-0000		1	SPRING	
140	295377-0003		1	HOOD	
150	1498143-0000		1	LOCK RING	
240	315204-0215		1	O-RING 19,2X3 MM	
TBA 0250S, TBA 0200M (See drawing on page: 1-212)					
010	272479-0000		1	PRESSURE ROLLER	
020	2564601-0000		1	FLOAT	
030	255978-0000		1	FORK	
040	2529416-0000		1	SHAFT	
050	2685306-0000		1	PRESSURE FLANGE	
060	2601321-0000		1	FILLING PIPE	
070	2605148-0000		2	STOP PIN	
075	2563292-0000		1	STOP PIN	
090	2528104-0000		1	PIPE	
120	751604-0000		1	SPRING	
140	295377-0001		1	HOOD	
150	1499114-0000		1	LOCK RING	
240	315204-0215		1	O-RING 19,2X3 MM	
TBA 0500B QC, TBA 1000B QC (See drawing on page: 1-210)					
010	232979-0000		1	PRESSURE ROLLER (PAK OF 10)	
020	2564596-0000		1	FLOAT	
030	1348048-0000		1	FORK	
040	2523268-0000		1	SHAFT	
050	2634524-0000		1	PRESSURE FLANGE	
060	2634523-0000		1	LOWER FILLING PIPE	
070	2598008-0000		1	STOP PIN	
075	2563295-0000		1	STOP PIN	
090	2501311-0000		1	FILLING PIPE	
120	1517053-0000		1	SPRING	
140	14600-0000		1	HOOD	
240	315204-0219		1	O-RING 29,2X3 MM	
TBA 0500S (See drawing on page: 1-210)					
010	257330-0000		1	PRESSURE ROLLER	
020	2564598-0000		1	FLOAT	
030	2673016-0000		1	FORK	
040	2673022-0000		1	SHAFT	
050	2601468-0000		1	PRESSURE FLANGE	
060	2685277-0000		1	FILLING PIPE	
070	2598008-0000		1	STOP PIN	
075	2563295-0000		1	STOP PIN	
090	2673005-0000		1	FILLING PIPE	
120	1517053-0000		1	SPRING	
140	14600-0000		1	HOOD	
240	315204-0219		1	O-RING 29,2X3 MM	
TBA 1000S (See drawing on page: 1-210)					
010	499387-0000		1	PRESSURE ROLLER	

Machine Type | Group Description | Used-In | Group Number | Page No

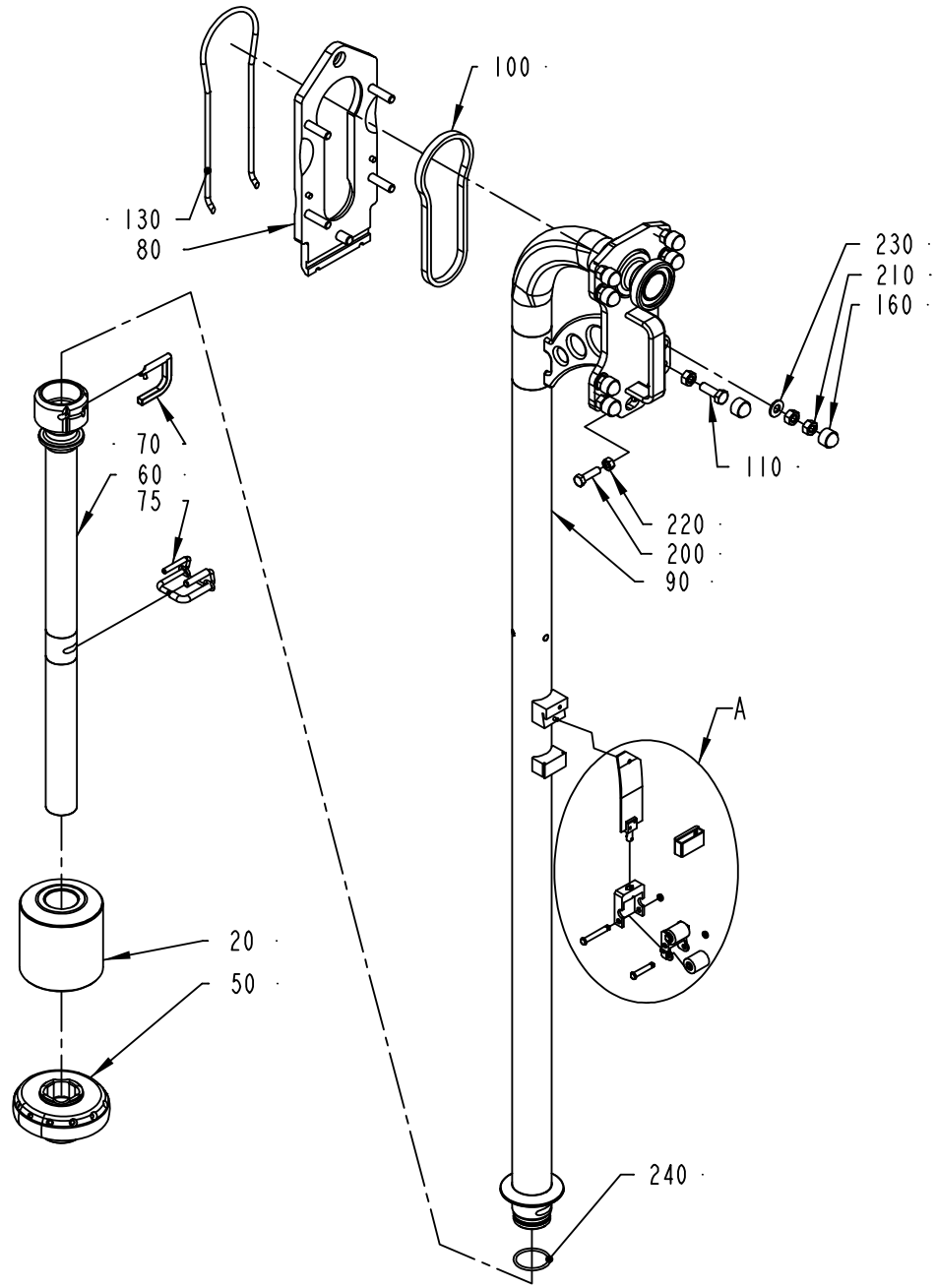

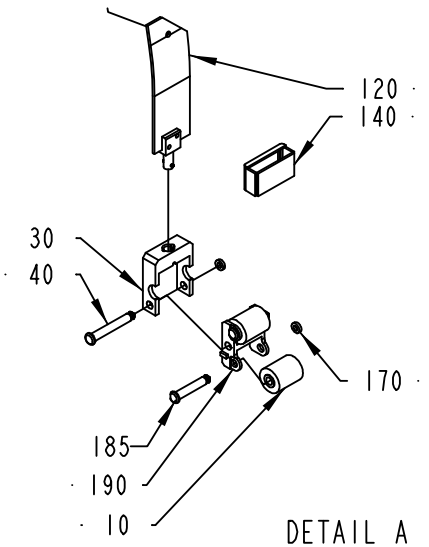

DETAIL A
SCALE 1:4

2501310-3
248571

ECM: 270355 - 20060704
Group number: 2501310-0100
Assembly Drawing: 2501310-3_1_AC

This list covers pages from 1-210 to 1-215

Pos	Part No	UN	Qty	Description	Page No
TBA 1000S (Cont'd) (See drawing on page: 1-210)					
020	2564596-0000		1	FLOAT	
030	1348047-0000		1	FORK	
040	2529419-0000		1	SHAFT	
050	2563290-0000		1	PRESSURE FLANGE	
060	2563289-0000		1	LOWER FILLING PIPE	
070	2598008-0000		1	STOP PIN	
075	2563295-0000		1	STOP PIN	
090	2501311-0000		1	FILLING PIPE	
120	2539453-0000		1	SPRING	
140	434665-0000		1	HOOD	
240	315204-0219		1	O-RING 29,2X3 MM	
TBA 1000SQ (See drawing on page: 1-210)					
010	257330-0000		1	PRESSURE ROLLER	
020	2564597-0000		1	FLOAT	
030	1348049-0000		1	FORK	
040	2529420-0000		1	SHAFT	
050	2601469-0000		1	PRESSURE FLANGE	
060	2563289-0000		1	LOWER FILLING PIPE	
070	2598008-0000		1	STOP PIN	
075	2563295-0000		1	STOP PIN	
090	2501311-0000		1	FILLING PIPE	
120	2539453-0000		1	SPRING	
140	434665-0000		1	HOOD	
240	315204-0219		1	O-RING 29,2X3 MM	
TBA 1500S (See drawing on page: 1-210)					
010	232979-0000		1	PRESSURE ROLLER (PAK OF 10)	
020	2564596-0000		1	FLOAT	
030	1348048-0000		1	FORK	
040	2523268-0000		1	SHAFT	
050	2598017-0000		1	PRESSURE FLANGE	
060	2592525-0000		1	FILLING PIPE	
070	2598008-0000		1	STOP PIN	
075	2563295-0000		1	STOP PIN	
090	2501311-0000		1	FILLING PIPE	
120	1517053-0000		1	SPRING	
140	14600-0000		1	HOOD	
240	315204-0219		1	O-RING 29,2X3 MM	
TBA 1890S QC, TBA 2000S QC, TBA 1400B (See drawing on page: 1-214)					
010	232979-0000		2	PRESSURE ROLLER (PAK OF 10)	
020	2634995-0000		1	FLOAT	
030	1538952-0000		1	FORK	
040	1538953-0000		1	SHAFT	
050	2641297-0000		1	PRESSURE FLANGE	
060	2594629-0000		1	FILLING PIPE	
070	2777382-0000		1	STOP PIN	
075	2641294-0000		1	STOP PIN	
090	2592544-0000		1	FILLING PIPE	
120	2601239-0000		1	SPRING	
140	2672994-0000		1	HOOD	
170	24928-0000		3	LOCKING RUBBER	
185	2638077-0000		2	SHAFT	
190	2685285-0000		1	BRACKET	
240	315204-0223		1	O-RING 39,2X3 MM	
Common Parts					
080	2500082-0000		1	MOUNTING PLATE	
100	2507048-0000		1	GASKET	
110	312105-0495		4	SCREW M6S ISO 4017 M10X30 A480	
130	2500071-0000		1	O-RING	
160	90459-0729		8	HEXAGONAL PROTECTIVE CAP GPN 1000	
200	312105-0455		2	SCREW M6S ISO 4017 M8X30 A480	
210	312605-0320		12	HEXAGON NUT, M6M M10 A280	
220	312605-0318		2	HEXAGON NUT, M6M M8 A280	
230	315105-0173		4	WASHER BRB 10,5X20 RFR	

Machine Type | Group Description | Used-In | Group Number | Page No

HEAD SPACE BY INJECTION

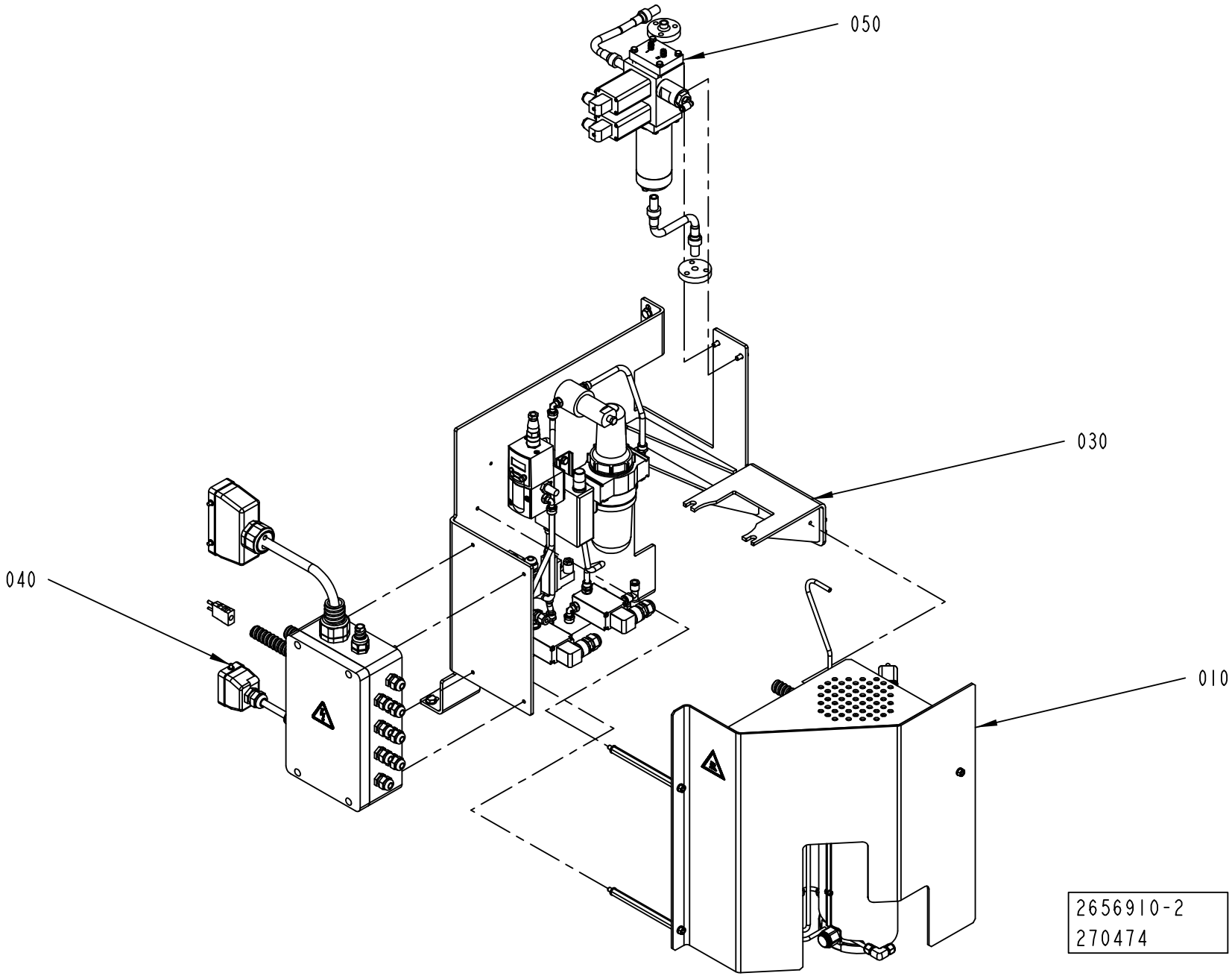

ECM: 270474 - 20061101
Group number: 2656910-0200
Assembly Drawing: 2656910-2_1_AA

Pos	Part No	UN	Qty	Description	Page No
-					
010	2696118-0100		1	HEATER	**1-219**
030	2696120-0100		1	PNEUMATIC PANEL	**1-221**
040	2564106-0100		1	CONNECTION BOX	**1-223**
050	2539458-0100		1	SPRAY TANK	**1-227**

Pos	Part No	UN	Qty	Description	Page No

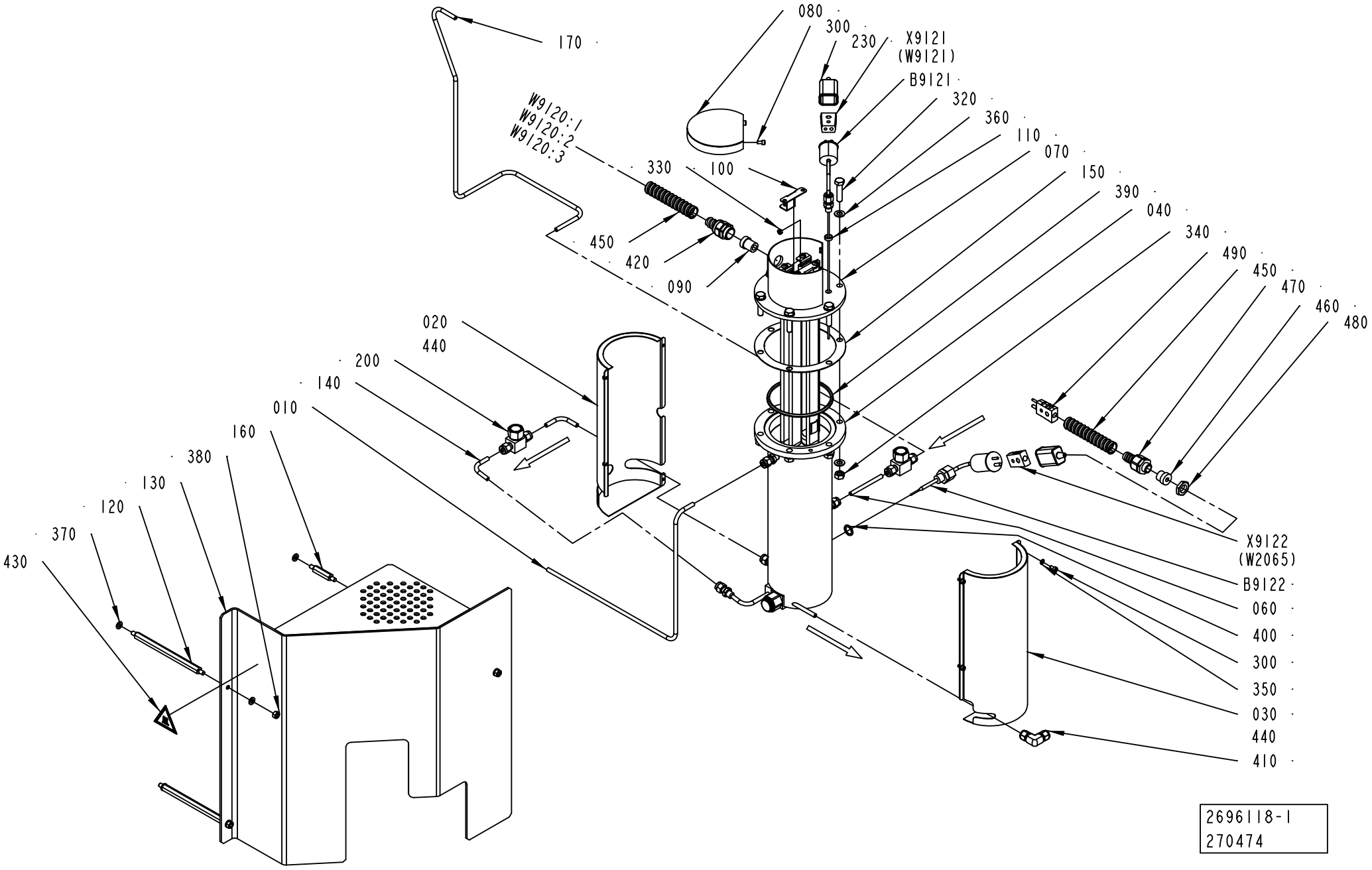
170
080
300
230
X9121
(W9121)
B9121
320
360
110
070
150
390
040
340
490
450
470
460
480
W9120:1
W9120:2
W9120:3
330
100
450
420
090
020
440
200
140
010
160
380
130
120
370
430
X9122
(W2065)
B9122
060
400
300
350
030
440
410
2696118-1
270474

ECM: 270978 - 20061101
Group number: 2696118-0100
Assembly Drawing: 2696118-1_1_AA

Pos	Part No	UN	Qty	Description	Page No
-					
010	2696119-0000		1	PIPE	
020	2685340-0000		1	COVER	
030	2685341-0000		1	COVER	
040	2685314-0000		1	COIL	
	90277-0407		*1*	*FILTER ELEMENT 60µ, SS-4F-K4-60*	
060	2562307-0000		1	PIPE	
070	2685342-0000		1	HEATING ELEMENT	
080	2562315-0000		1	PLUG	
090	90600-0976		1	INSERT, SINGEL HOLE, HI.TEMP, EK153I9	
100	2598084-0000		2	PLATE	
110	2598085-0000		1	SPACER	
120	2672975-0000		2	SPACER	
130	2709219-0000		1	COVER	
140	2736707-0000		2	PIPE	
150	2685339-0000		1	GASKET	
160	2709220-0000		1	SPACER	
170	2685346-0000		1	PIPE	
200	90230-0064		2	CHECK VALVE, 6 MM HIGH TEMP.	
230	90326-0012		2	PROTECTIVE COVER, T31A4618	
300	312115-0287		6	SCREW ISO4762 M4X8 A4 80	
320	312109-0457		6	SCREW M6S ISO 4017 M8X35 A480	
330	312605-0312		1	HEXAGON NUT, M6M M4 A280	
340	312605-0318		6	HEXAGON NUT, M6M M8 A280	
350	315105-0136		4	WASHER BRB 4,3X9 RFR	
360	315105-0165		12	WASHER BRB 8,4X16 RFR	
370	315105-0153		6	WASHER BRB 6,4X12 RFR	
380	312605-0316		3	HEXAGON NUT, M6M M6 A280	
390	315229-0208		1	GASKET 97,4X105,4X3,7 MM 4"	
400	315234-0110		1	WASHER,PL.RND.CU.13,5/18 H=1,5	
410	90459-4511		1	CONN. ELBOW, 6	
420	90600-0975		1	HOSE GLAND W/O INSERT PG13,5 EXTENDED	
430	359705-0007		1	WARNING SIGN ISO, HOT SURFACE	
440	90411-0001	M	1	INSULATING MAT	
450	90152-0050	MM	2000	SPIRAL CONDUIT, 20X13, UL 1313	
460	353249-0008		1	INSERT, SINGEL HOLE, EK 152/7	
470	353243-0001		1	HOSE GLAND W/O INSERT PG9 EXTENDED	
480	90099-0104		1	NUT, PR 15,2 (PG9)	
490	90326-0022		1	PLUG, MALE YELLOW CR-AL	
B9121	90459-2122		1	THERMOCOUPLE, EN-5130060-0001	
B9122	90326-0053		1	THERMOCOUPLE, 12826-35	
W9120:3	90459-3154	M	1	CABLE OLFLONPTFE 1X4,72 MM² YELLOW-GREEN	
W9120:2	90459-3165	M	1	CABLE OLFLON PTFE 1X4,72 MM² BLACK	
W9120:1	90459-3165	M	1	CABLE OLFLON PTFE 1X4,72 MM² BLACK	
X9121	90326-0020		1	PLUG, FEMALE YELLOW CR-AL	
X9122	90326-0020		1	PLUG, FEMALE YELLOW CR-AL	

Machine Type	Group Description	Used-In	Group Number	Page No

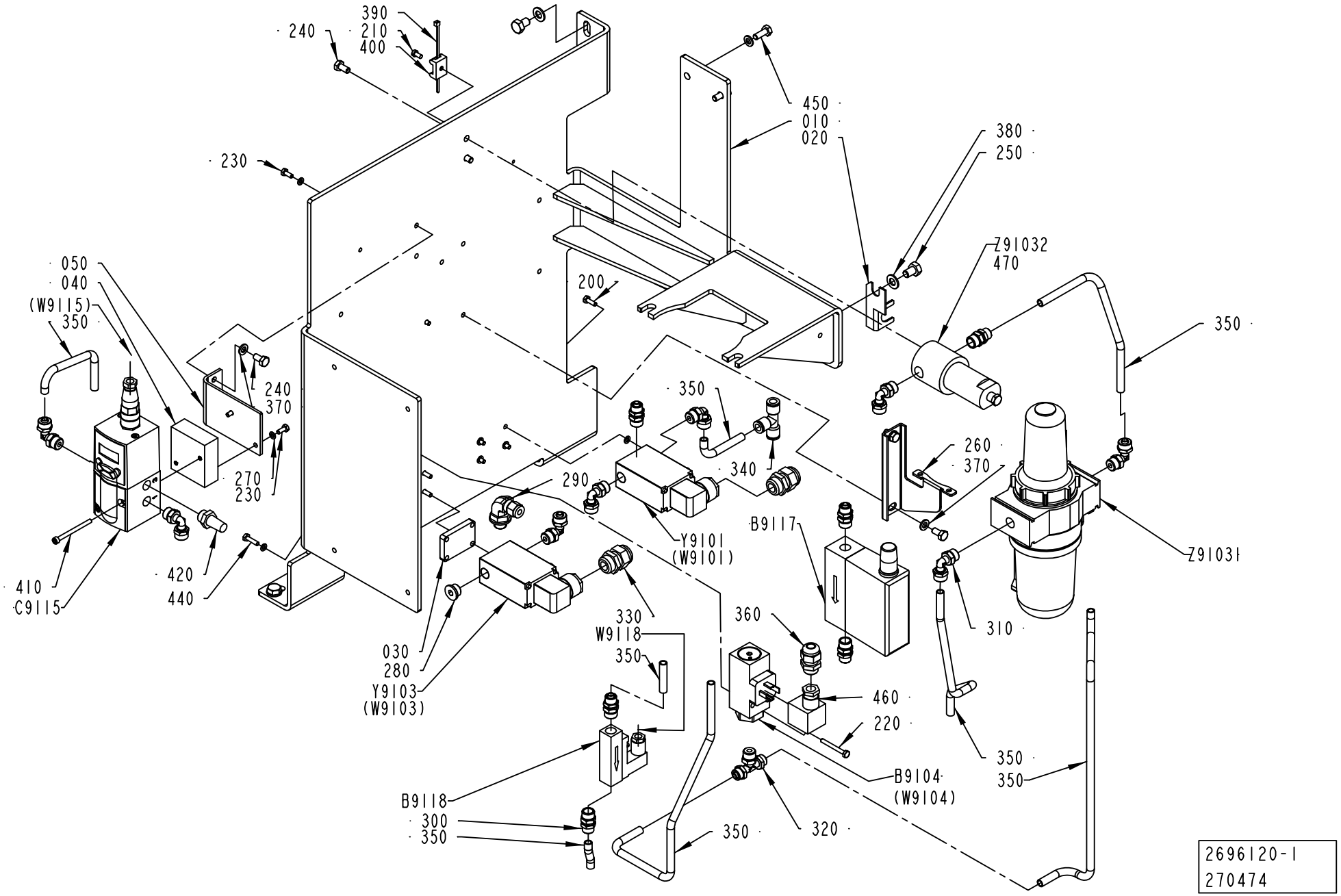
390
210
400
240
230
450
010
020
380
250
Z91032
470
350
050
040
(W9115)
350
200
240
370
270
230
350
340
290
260
370
Y9101
(W9101)
B9117
Z91031
410
C9115
420
440
330
W9118
350
360
310
030
280
Y9103
(W9103)
460
220
350
350
B9104
(W9104)
B9118
300
350
350
320
2696120-1
270474

ECM: 270980 - 20061101
Group number: 2696120-0100
Assembly Drawing: 2696120-1_1_AA

Pos	Part No	UN	Qty	Description	Page No
-					
010	2763948-0000		1	BRACKET	
020	1036610-0000		1	BRACKET	
030	2777968-0000		1	SPACER	
040	2511330-0000		1	SPACER	
050	2564606-0000		1	SUPPORT PLATE	
200	312105-0291		4	SCREW M6S ISO 4017 M4X12 A470	
210	312125-0287		2	SCREW ISO 1207 M4X8 A4	
220	312105-0301		2	SCREW M6S ISO 4017 M4X35 A470	
230	312105-0289		4	SCREW M6S ISO 4017 M4X10 A470	
240	312105-0366		8	SCREW M6S ISO 4017 M6X12 A480	
250	312105-0447		7	SCREW M6S ISO 4017 M8X12 A480	
260	90236-0041		1	BRACKET	
270	315105-0136		16	WASHER BRB 4,3X9 RFR	
280	342713-0210		1	PLUG,EXT THREAD HEX SOCKET(PAK OF 10 PCS	
290	90600-0731		1	ADJUSTABLE ELBOW CONNECTION,EXT 6-G1/4	
300	342921-0122		6	STRAIGHT COUPLING,EXT.THREADED 8/6-G1/4"	
310	342931-0122		8	ELBOW 90 COUPL.,EXT.THREAD 8/6-G1/4"	
320	342941-0122		1	T-COUPLING,EXT.THREAD 8/6-G1/4"	
330	352103-0106		2	CABLE GLAND, ST 11, PR18,6/PG11	
340	342748-0103		1	T-CONNECTION 8MM	
350	90166-0013	MM	2000	TUBE 8 MM PA BLUE	
360	352103-0101		1	CABLE GLAND, ST 9, PR15,2/PG9	
370	315105-0153		8	WASHER BRB 6,4X12 RFR	
380	315105-0165		7	WASHER BRB 8,4X16 RFR	
390	352113-0101		2	CABLE TIE, BLACK 92X2,5 MM	
400	352113-0203		2	ANCHOR PLATES FOR STRIPS, TYPE TM3S8-M0	
410	312115-0305		2	SCREW ISO4762 M4X50 A4 80	
420	346800-0110		1	SILENCER FILTER R1/4"	
440	312105-0293		4	SCREW M6S ISO 4017 M4X16 A470	
450	312105-0368		2	SCREW M6S ISO 4017 M6X16 A480	
460	90110-0095		1	CONNECTOR 3 POLE + EARTH	
470	90277-0324		1	FILTER CARTRIDGE 050-11-A	
B9104	90458-2241		1	PRESSURE SWITCH 0,5-10 BAR ADJUSTABLE	
B9117	90458-2619		1	FLOW METER, D-6230-HGB-BB-AV-99-0-N2	
B9118	90459-6215		1	FLOW SWITCH BFS-10-N-G1/4	
C9115	90459-1420		1	PROPORTIONAL VALVE 0 - 10V/0-6 BAR	
	90458-1262		*1*	*CONNECTOR 131028001 FOR PROP. VALVE*	
Y9101	90042-0171		1	SOLENOID VALVE BURKERT	
	90042-0466		*1*	*DIAPHRAGM 330.95.2 VITON*	
Y9103	90042-0171		1	SOLENOID VALVE BURKERT	
	90042-0466		*1*	*DIAPHRAGM 330.95.2 VITON*	
Z91031	90277-0104		1	FILTER F64B-2GN-ARO	
	90113-0458		*1*	*FILTER ELEMENTS, 5350-99*	
	90113-0457		*1*	*FILTER ELEMENTS*	
Z91032	90277-0323		1	FILTER HOUSING / ART.NO 95S6-1/4 S 5430	

Machine Type	Group Description	Used-In	Group Number	Page No

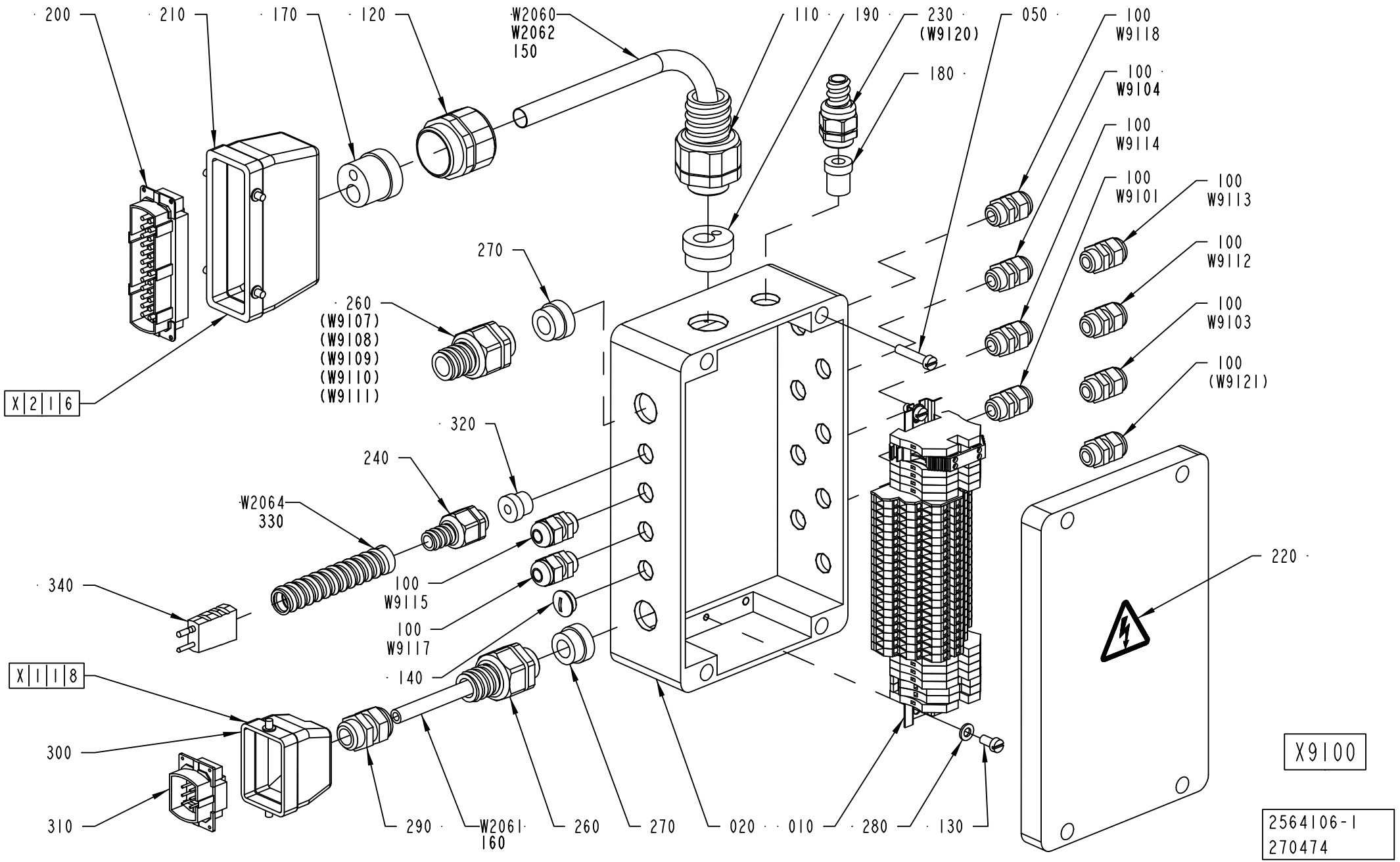
200
210
170
120
W2060
W2062
150
110
190
230
(W9120)
180
050
100
W9118
100
W9104
100
W9114
100
W9101
100
W9113
100
W9112
100
W9103
100
(W9121)
270
260
(W9107)
(W9108)
(W9109)
(W9110)
(W9111)
X216
320
240
W2064
330
340
100
W9115
100
W9117
X118
140
300
310
290
W2061
160
260
270
020
010
280
130
220
X9100
2564106-1
270474

ECM: 270976 - 20061101
Group number: 2564106-0100
Assembly Drawing: 2564106-1_1_AC

Pos	Part No	UN	Qty	Description	Page No
-					
010	2565432-0100		1	TERMINAL BLOCK	**1-225**
020	2564105-0000		1	CONNECTION BOX	
050	312125-0374		4	SCREW ISO 1207 M6X30 A4	
100	352103-0101		10	CABLE GLAND, ST 9, PR15,2/PG9	
110	353243-0007		1	HOSE GLAND W/O INSERT PG21 EXTENDED	
120	353240-0006		1	GLAND W/O INSERT PG29 NORMAL	
130	312125-0366		2	SCREW ISO 1207 M6X12 A4	
140	90002-0013		1	BLANK-OFF PLUG, PR 15,2 SKINDICHT-BLK9	
150	90152-0070	MM	1500	METAL HOSE, 32,5X26, UL 2621	
160	90152-0051	MM	1850	SPIRAL CONDUIT, 25X18, UL 1816	
170	1347880-0000		1	INSERT	
180	90600-0976		1	INSERT, SINGEL HOLE, HI.TEMP, EK153I9	
190	2649167-0000		1	INSERT	
200	90110-0150		1	MALE INSERT 121110 0000	
210	90110-0152		1	CABLE HOOD 24-POL 70.352.2428.1	
220	359705-0015		1	WARNING SIGN ISO, RISK OF ELECTRIC SHOCK	
230	90600-0975		1	HOSE GLAND W/O INSERT PG13,5 EXTENDED	
240	353243-0001		1	HOSE GLAND W/O INSERT PG9 EXTENDED	
260	353243-0005		2	HOSE GLAND W/O INSERT PG16 EXTENDED	
270	353249-0013		2	INSERT, SINGEL HOLE, EK 154/13	
280	315105-0153		2	WASHER BRB 6,4X12 RFR	
290	352103-0108		1	CABLE GLAND, ST 13,5 , PR20,4/PG13,5	
300	90110-0157		1	CABLE HOOD 6-POL 70.352.0628.1	
310	90110-0159		1	MALE INSERT 70.310.0640.0	
320	353249-0008		1	INSERT, SINGEL HOLE, EK 152/7	
330	90152-0050	MM	1700	SPIRAL CONDUIT, 20X13, UL 1313	
340	90326-0022		1	PLUG, MALE YELLOW CR-AL	
W2060	90220-0201	MM	1500	CABLE OLFLEX 18X0,75 MM2	
W2061	351150-0417	MM	5600	CABLE OLFLEX 3X2,5 MM2 LIGHT/GREY	
W2062	90220-0165	MM	5600	SCR. CABLE 5X0,34MM2	
W2064	90220-0034	MM	7000	THERMOCABLE TEX/SITW-20F-KX 2X0,5MM2	
W9101	351150-0403	MM	1400	CABLE OLFLEX 3X0,75 MM2 LIGHT/GREY	
W9103	351150-0403	MM	1100	CABLE OLFLEX 3X0,75 MM2 LIGHT/GREY	
W9104	351150-0403	MM	1100	CABLE OLFLEX 3X0,75 MM2 LIGHT/GREY	
W9112	351150-0403	MM	800	CABLE OLFLEX 3X0,75 MM2 LIGHT/GREY	
W9113	351150-0404	MM	1000	CABLE OLFLEX 4X0,75 MM2 LIGHT/GREY	
W9114	351150-0403	MM	900	CABLE OLFLEX 3X0,75 MM2 LIGHT/GREY	
W9115	90220-0165	MM	1300	SCR. CABLE 5X0,34MM2	
W9117	90220-0165	MM	1400	SCR. CABLE 5X0,34MM2	
W9118	351150-0403	MM	500	CABLE OLFLEX 3X0,75 MM2 LIGHT/GREY	

Pos	Part No	UN	Qty	Description	Page No

TERMINAL BLOCK

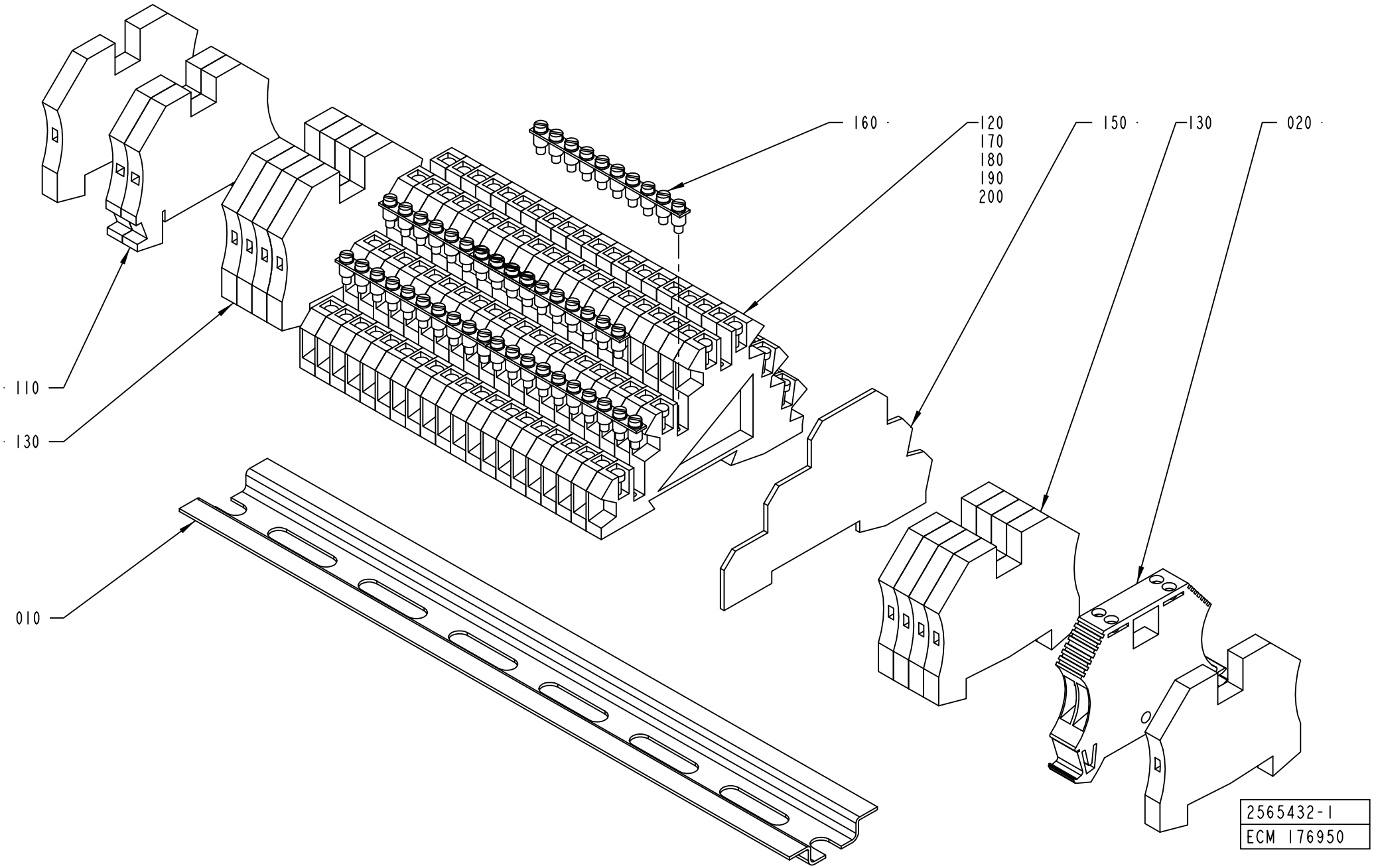

ECM: 176950 - 20041115
Group number: 2565432-0100
Assembly Drawing: 2565432-1_1_AB

Pos	Part No	UN	Qty	Description	Page No
-					
010	1532237-0000		1	RAIL	
020	90459-1742		1	FEED THROUGH TERMINAL, 1024100	
110	353021-0213		2	FEED THROUGH TERMINAL, 10201.0	
120	353021-0302		20	TERMINALS,TRIPLE-LEVEL, DLD 2,5/35 PA	
130	353024-0205		10	EARTH TERMINAL, 1010.1	
150	353032-0302		1	END PLATE WAP, 13176.6	
160	353034-0404		5	BRIDGE CONNECTOR Q10, 13131.0	
170	359011-0823		1	SET OF SIGNS 6-FW 101-150	
180	359011-0834		1	SET OF SIGNS 6-GW(EARTH)	
190	359011-0832		1	SET OF SIGNS 6-GW (+)	
200	359011-0833		1	SET OF SIGNS 6-GW (-)	

Pos	Part No	UN	Qty	Description	Page No

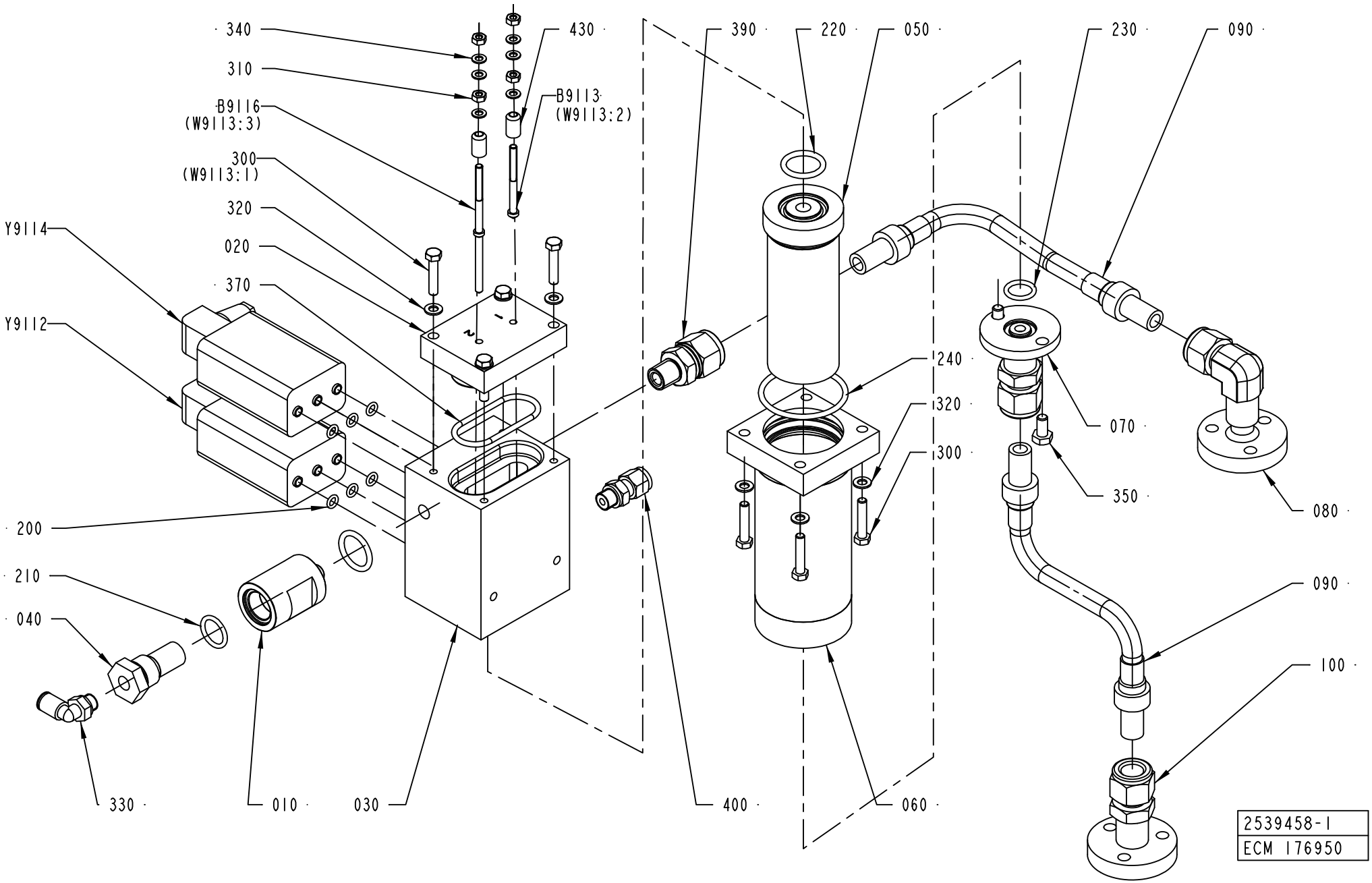
340
310
B9116
(W9113:3)
300
(W9113:1)
320
020
370
Y9114
Y9112
200
210
040
330
010
030
430
B9113
(W9113:2)
390
220
050
230
090
240
320
300
070
350
080
090
100
400
060
2539458-1
ECM 176950

ECM: 190571 - 20041125
Group number: 2539458-0100
Assembly Drawing: 2539458-1_1_AC

Pos	Part No	UN	Qty	Description	Page No
-					
010	1519486-0000		1	FILTER HOUSING	
020	2553167-0000		1	LID	
030	2512939-0000		1	DISTRIBUTOR BLOCK	
040	450833-0000		1	FILTER	
050	554141-0000		1	FILTER	
060	554142-0000		1	FILTER HOUSING	
070	2657865-0000		1	PIPE CONNECTION	
080	2657863-0000		1	PIPE CONNECTION	
090	90459-4151		2	HOSE ASSEMBLY 12,7 X 304,8 MM	
100	2657864-0000		1	PIPE CONNECTION	
200	927420-0001		6	O-RING 5.1X1.6 SILICONE	
210	927421-0004		1	O-RING 15.3X2.4 SILICONE	
220	927422-0001		2	O-RING 19.2X3 SILICONE	
230	927421-0003		1	O-RING 13.3X2.4 SILICONE	
240	927422-0007		1	O-RING 44.2X3 SILICONE	
300	312105-0333		8	SCREW M6S ISO 4017 M5X25 A480	
310	312605-0312		4	HEXAGON NUT, M6M M4 A280	
320	315105-0146		8	WASHER BRB 5,3X10 RFR	
330	350002-0006		1	PUSH-IN L-FITTING QSL-F-G1/8-6	
340	315105-0136		6	WASHER BRB 4,3X9 RFR	
350	312105-0366		2	SCREW M6S ISO 4017 M6X12 A480	
370	927422-0006		1	O-RING 42.2X3 SILICONE	
390	90459-4148		1	CONN. STR., 1/2"-1/4 ISO 7/1, EXT. THREA	
400	90459-1424		1	CONN. STR., 6-G1/8, EXT. THREAD	
430	2672974-0000		2	BUSHING	
B9113	2672972-0000		1	ELECTRODE	
B9116	2672973-0000		1	ELECTRODE	
Y9112	90042-0203		1	SOLENOID VALVE BüRKERT	
Y9114	90042-0203		1	SOLENOID VALVE BüRKERT	

Pos	Part No	UN	Qty	Description	Page No

Machine Type	Group Description	Used-In	Group Number	Page No

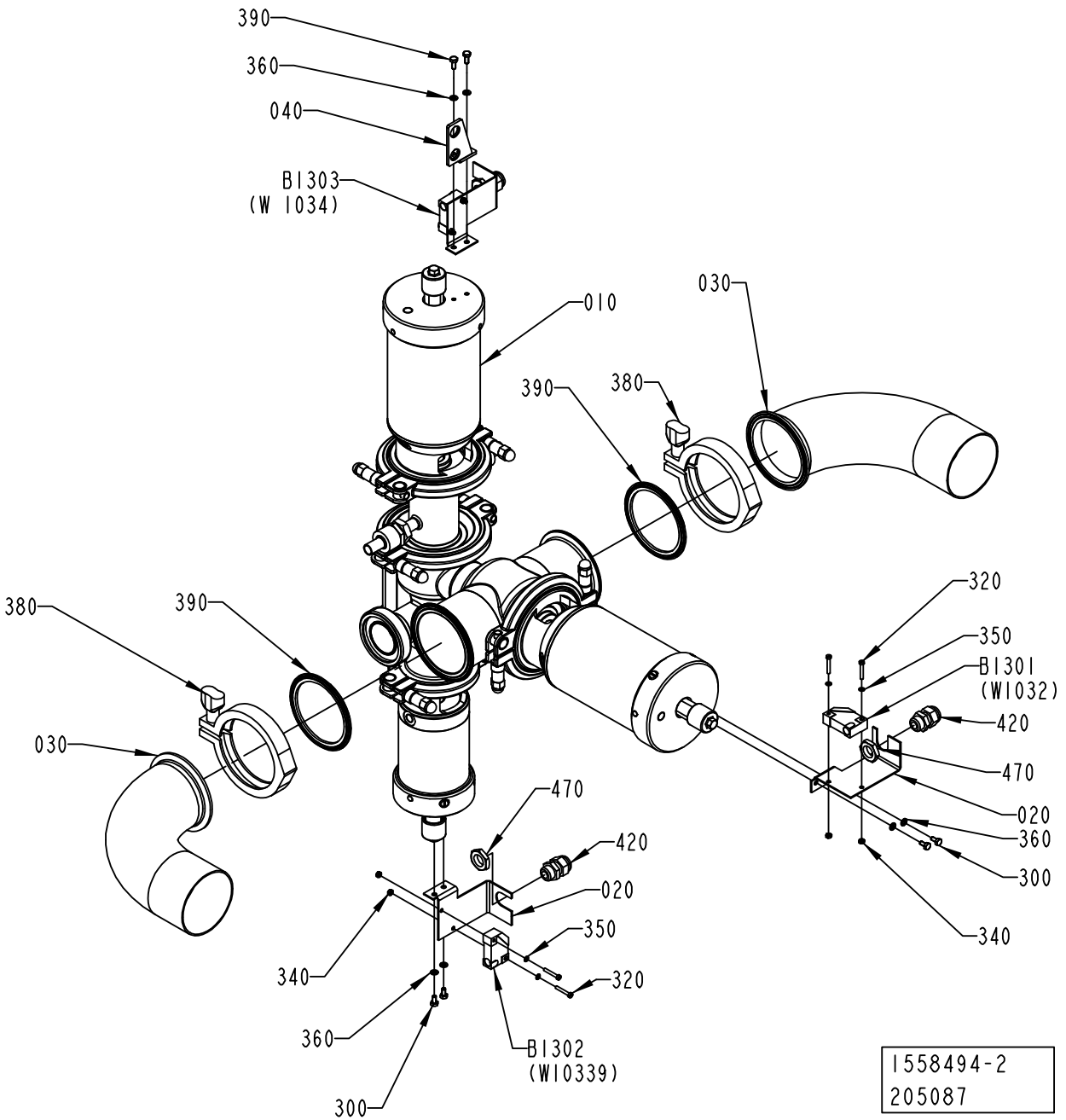
390
360
040
B1303
(W 1034)
010
030
390
380
380
390
030
320
350
B1301
(W1032)
420
470
020
360
300
340
470
420
020
350
320
340
360
300
B1302
(W10339)
1558494-2
205087

ECM: 207187 - 20050615
Group number: 1558494-0200
Assembly Drawing: 1558494-2_1_AB

Pos	Part No	UN	Qty	Description	Page No
2"					
030	1129801-0000		2	PIPE	
380	342840-0105		2	CLAMPING PIECE	
390	342850-0305		2	GASKET 47,8X62,6X5,2 MM 2" FDA	
3"					
030	1129802-0000		2	PIPE	
380	342840-0107		2	CLAMPING PIECE	
390	342850-0307		2	GASKET 72,9X89,6X5,2 MM 3" FDA	
Common Parts					
010	2547410-0100		1	PRODUCT VALVE	**1-231**
020	1037093-0000		3	SENSOR BRACKET	
040	2559095-0000		1	BRACKET	
300	312105-0287		4	SCREW M6S ISO 4017 M4X8 A470	
320	312125-0230		6	SCREW ISO 1207 M3X20 A4	
340	312605-0310		6	HEXAGON NUT, M6M M3 A280	
350	315105-0124		6	WASHER BRB 3,2X7 RFR	
360	315105-0136		6	WASHER BRB 4,3X9 RFR	
390	312105-0289		2	SCREW M6S ISO 4017 M4X10 A470	
420	352103-0101		3	CABLE GLAND, ST 9, PR15,2/PG9	
470	90099-0104		3	NUT, PR 15,2 (PG9)	
B1301	90044-0194		1	PROX.SW. IN5329/IN3002-BPKG(EX90044-104)	
B1302	90044-0194		1	PROX.SW. IN5329/IN3002-BPKG(EX90044-104)	
B1303	90044-0194		1	PROX.SW. IN5329/IN3002-BPKG(EX90044-104)	

Pos	Part No	UN	Qty	Description	Page No

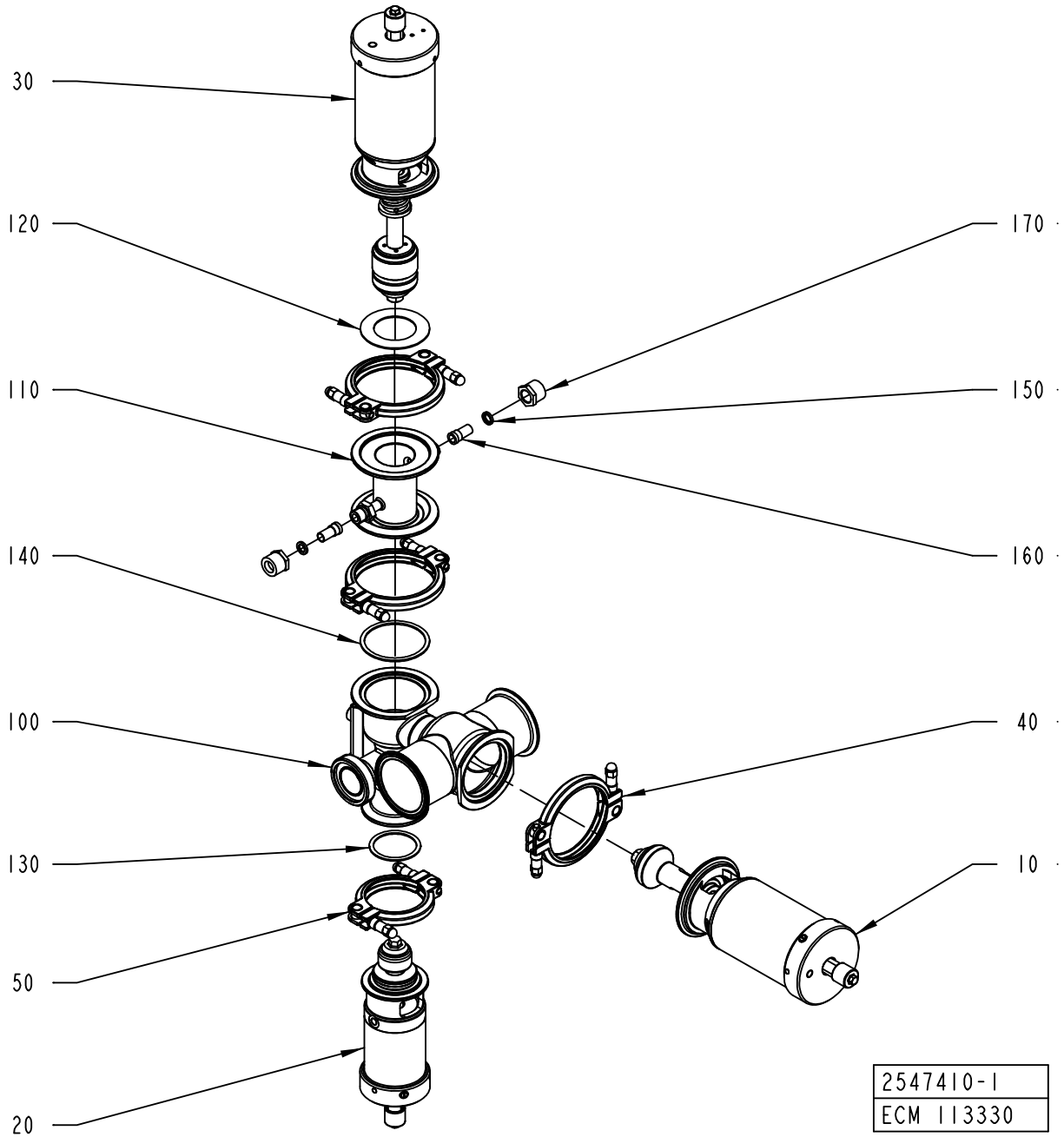
30
120
110
140
100
130
50
20
170
150
160
40
10
2547410-1
ECM 113330

ECM: 188739 - 20041117
Group number: 2547410-0100
Assembly Drawing: 2547410-1_1_AA

Pos	Part No	UN	Qty	Description	Page No
2"					
100	2629156-0000		1	BODY	
3"					
100	2547408-0000		1	BODY	
Common Parts					
010	576436-0100		1	A-CYLINDER	**1-233**
020	576438-0100		1	B-CYLINDER	**1-235**
030	576437-0100		1	C-CYLINDER	**1-237**
040	541163-0200		3	CLAMP RING	**1-239**
050	541164-0200		1	CLAMP RING	**1-241**
110	567018-0000		1	STEAM HOUSE	
120	539212-0000		1	GASKET	
130	90207-0365		1	GASKET	
140	90207-0363		1	GASKET	
150	90091-0266		2	SEAL RING 10,4X16,3X2,5 MM	
160	90030-0336		2	CONN. STRAIGHT, 316L-12M-BVCO-3	
170	90030-0338		2	NUT, PIPE & CONNECTORS, SS-8-BVCO-4	

Pos	Part No	UN	Qty	Description	Page No

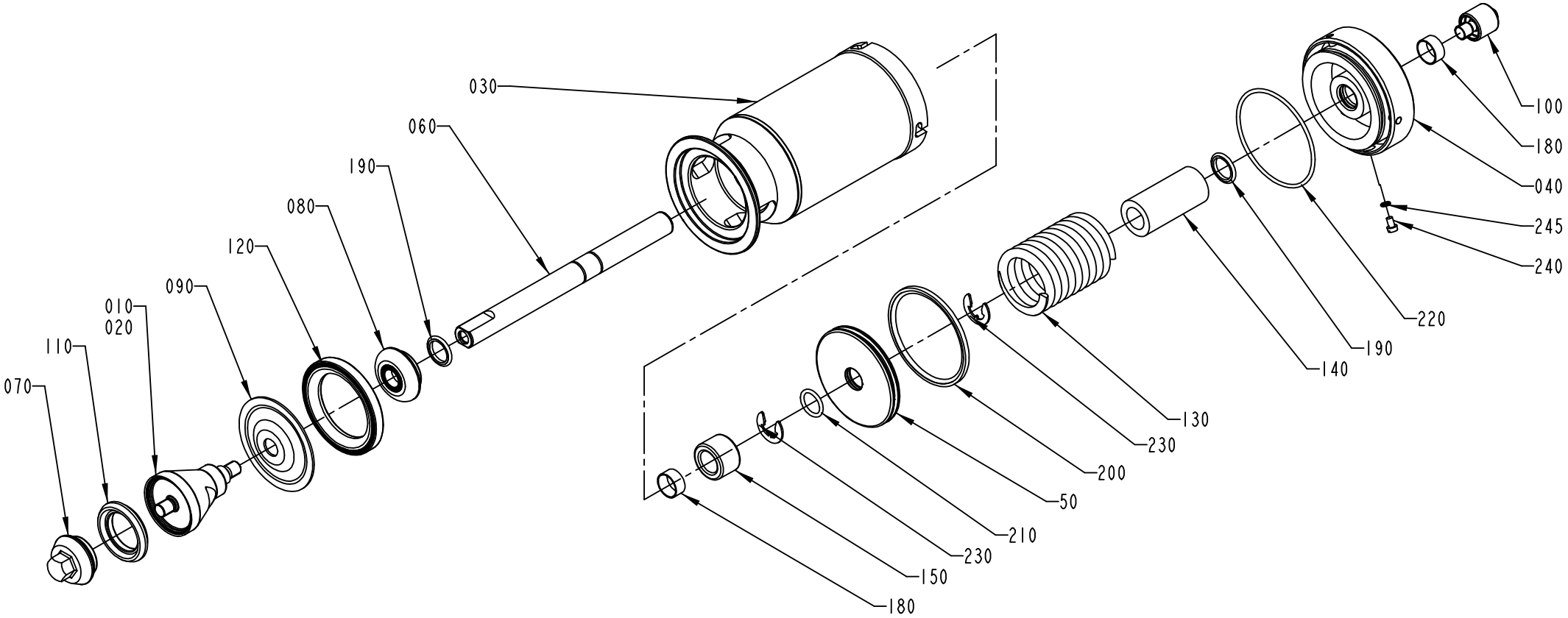

576436-1
ECN 73164

ECM: 259397 - 20060419
Group number: 576436-0100
Assembly Drawing: 576436-1_1_AB

Pos	Part No	UN	Qty	Description	Page No
2"					
010	530592-0000		1	SEAL RING HOLDER	
3"					
010	530595-0000		1	SEAL RING HOLDER	
Common Parts					
030	576439-0000		1	CYLINDER HOUSING	
040	576440-0000		1	END SECTION	
050	576441-0000		1	PISTON	
060	576446-0000		1	PISTON ROD	
070	530590-0000		1	VALVE CONE	
080	541166-0000		1	WASHER	
090	533169-0000		1	DIAPHRAGM	
100	553607-0000		1	SLEEVE	
110	530589-0000		1	SEAL RING	
120	440655-0000		1	RING	
130	440663-0000		1	COMPRESSION SPRING	
140	576448-0000		1	SPACER	
150	576449-0000		1	SPACER	
180	90091-0238		2	WEAR RING 20X22X10 MM	
190	90091-0237		2	ROD SEAL, GLIDORING 20X27,5X3 MM	
200	90091-0336		1	PISTON SEAL GLIDE RING 79X90X4 MM	
210	315204-0215		1	O-RING 19,2X3 MM	
220	315202-0308		1	O-RING 84,5X3 MM	
230	315754-0113		2	LOCKING WAE 15	
240	312125-0323		1	SCREW ISO 1207 M5X8 A4	
245	315233-0101		1	WASHER CAPTIVE SEALING M5(NEW315239-101)	

Pos	Part No	UN	Qty	Description	Page No

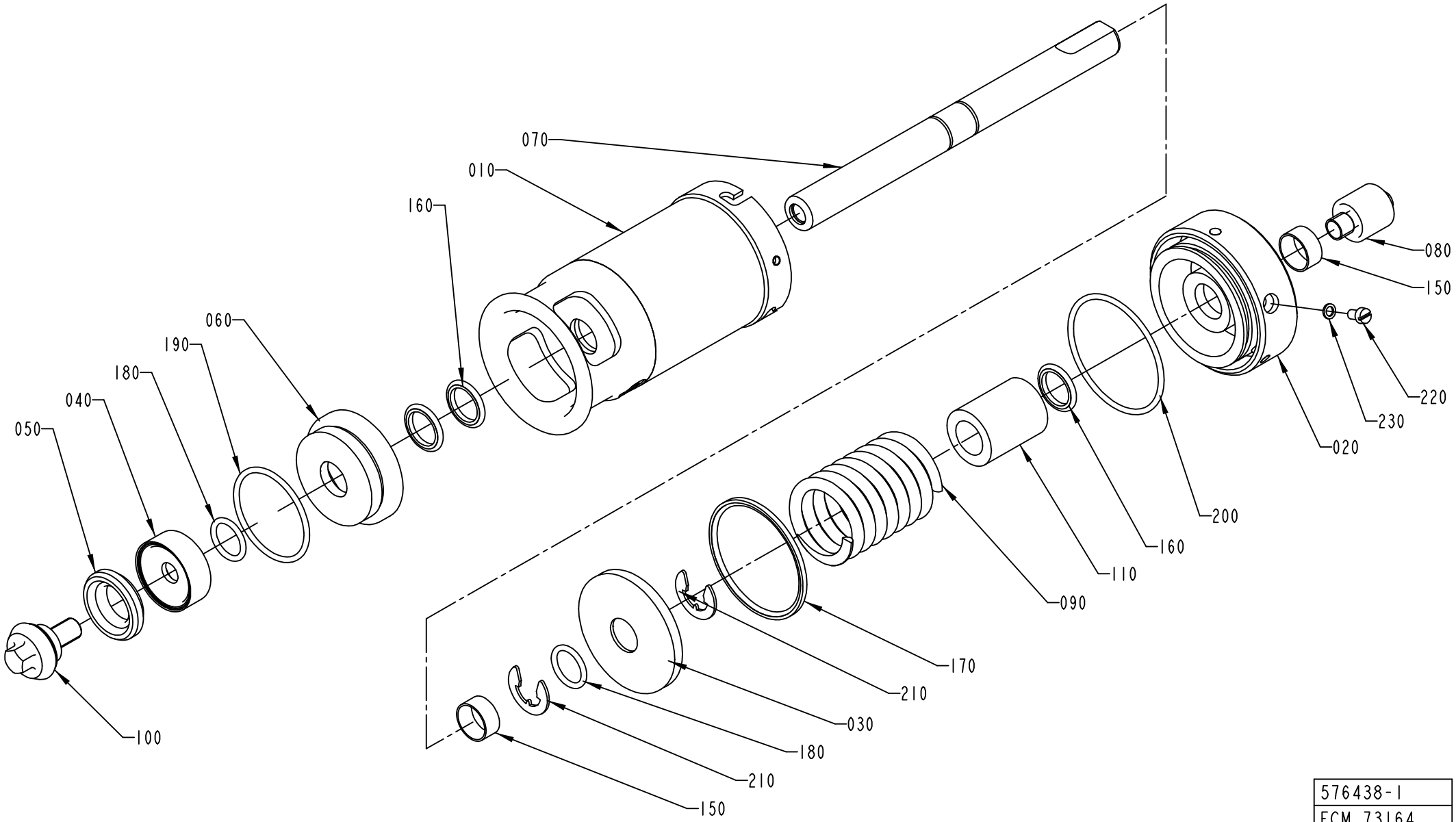

576438-1
ECM 73164

ECM: 259399 - 20060419
Group number: 576438-0100
Assembly Drawing: 576438-1_1_AB

Pos	Part No	UN	Qty	Description	Page No
-					
010	576443-0000		1	CYLINDER HOUSING	
020	576444-0000		1	END SECTION	
030	576445-0000		1	PISTON	
040	530587-0000		1	WASHER	
050	530588-0000		1	SEAL RING	
060	556133-0000		1	SEALING WASHER	
070	576447-0000		1	PISTON ROD	
080	553607-0000		1	SLEEVE	
090	440662-0000		1	COMPRESSION SPRING	
100	476185-0000		1	VALVE CONE	
110	576451-0000		1	SPACER	
150	90091-0238		2	WEAR RING 20X22X10 MM	
160	90091-0237		3	ROD SEAL, GLIDORING 20X27,5X3 MM	
170	90091-0335		1	PISTON SEAL GLIDE RING 62,5X70X3 MM	
180	315204-0215		2	O-RING 19,2X3 MM	
190	315204-0301		1	O-RING 49,5X3 MM	
200	315202-0304		1	O-RING 64,5X3 MM	
210	315754-0113		2	LOCKING WAE 15	
220	312125-0323		1	SCREW ISO 1207 M5X8 A4	
230	315233-0101		1	WASHER CAPTIVE SEALING M5(NEW315239-101)	

Pos	Part No	UN	Qty	Description	Page No

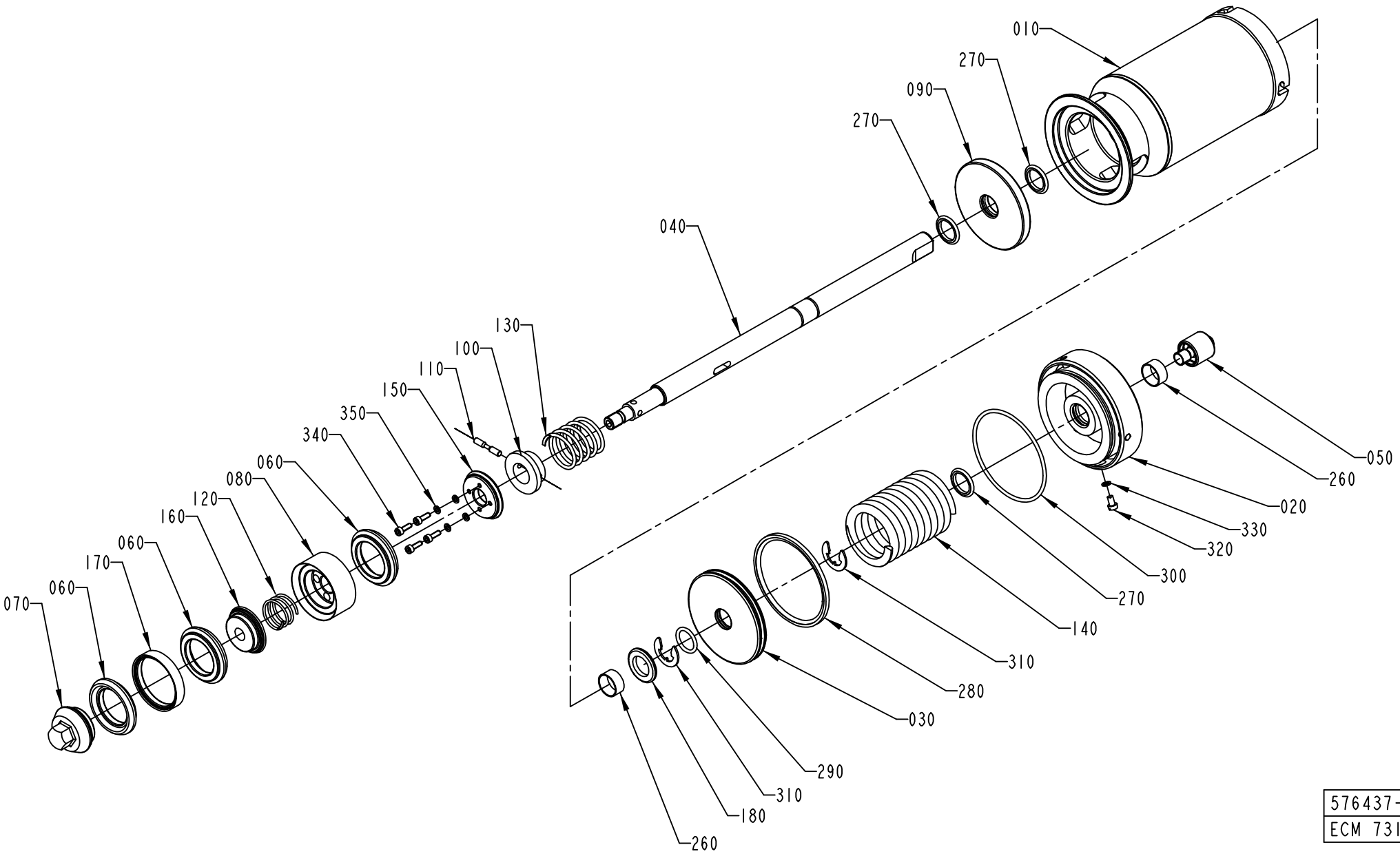

576437-1
ECM 73164

ECM: 259398 - 20060419
Group number: 576437-0100
Assembly Drawing: 576437-1_1_AB

Pos	Part No	UN	Qty	Description	Page No
-					
010	576439-0000		1	CYLINDER HOUSING	
020	576440-0000		1	END SECTION	
030	576441-0000		1	PISTON	
040	576442-0000		1	PISTON ROD	
050	553607-0000		1	SLEEVE	
060	530589-0000		3	SEAL RING	
070	530590-0000		1	VALVE CONE	
080	530591-0000		1	HOLDER	
090	555458-0000		1	SEALING WASHER	
100	440650-0000		1	WASHER	
110	440659-0000		1	CYLINDRICAL PIN	
120	440660-0000		1	COMPRESSION SPRING	
130	440661-0000		1	COMPRESSION SPRING	
140	440663-0000		1	COMPRESSION SPRING	
150	530597-0000		1	WASHER	
160	530598-0000		1	WASHER	
170	530599-0000		2	RING	
180	576450-0000		1	SPACER	
260	90091-0238		2	WEAR RING 20X22X10 MM	
270	90091-0237		3	ROD SEAL, GLIDORING 20X27,5X3 MM	
280	90091-0336		1	PISTON SEAL GLIDE RING 79X90X4 MM	
290	315204-0215		1	O-RING 19,2X3 MM	
300	315202-0308		1	O-RING 84,5X3 MM	
310	315754-0113		2	LOCKING WAE 15	
320	312125-0323		1	SCREW ISO 1207 M5X8 A4	
330	315233-0101		1	WASHER CAPTIVE SEALING M5(NEW315239-101)	
340	312115-0291		4	SCREW ISO4762 M4X12 A4 80	
350	315402-0136		4	LOCK WASHER FBB 4,1	

Pos	Part No	UN	Qty	Description	Page No

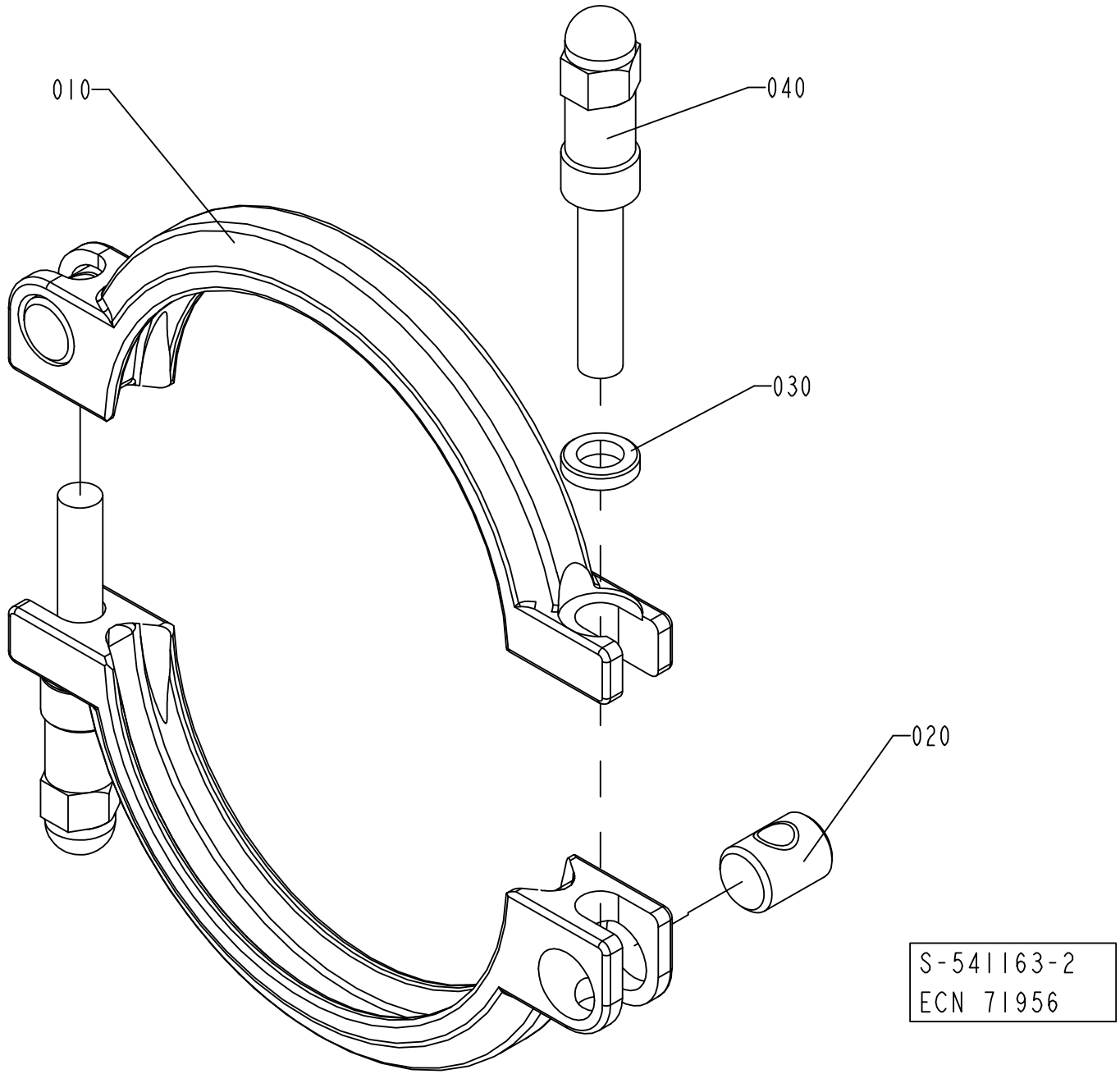
010
040
030
020
S-541163-2
ECN 71956

ECM: 178064 - 20040910
Group number: 541163-0200
Assembly Drawing: 541163-2_1_AB

Pos	Part No	UN	Qty	Description	Page No
-					
010	532117-0000		2	CLAMP RING	
020	497748-0000		2	PIN	
030	541165-0000		2	WASHER	
040	554162-0000		2	SCREW	

Pos	Part No	UN	Qty	Description	Page No

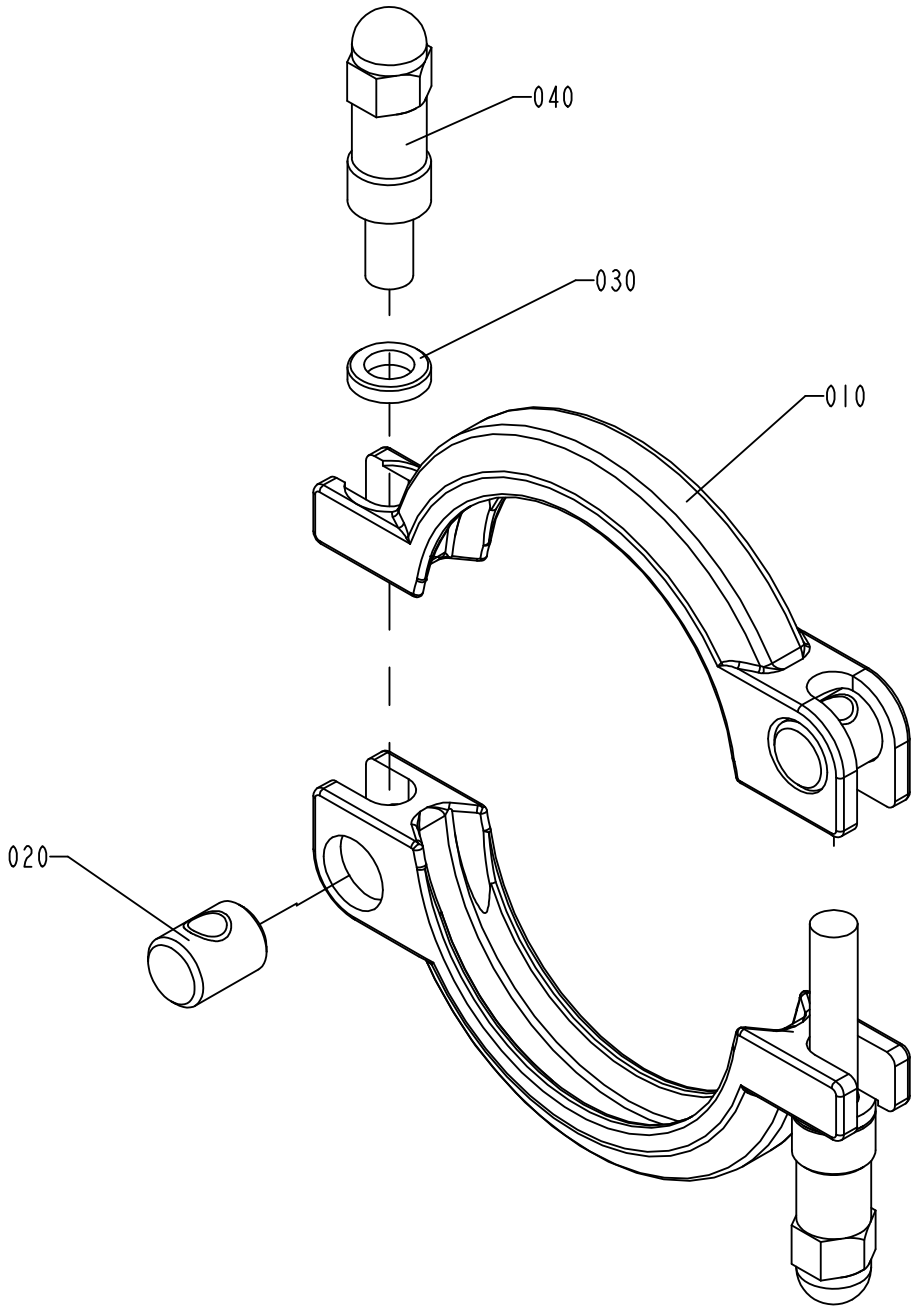

S-541164-2
ECN 71956

ECM: 178065 - 20040910
Group number: 541164-0200
Assembly Drawing: 541164-2_1_AB

Pos	Part No	UN	Qty	Description	Page No
-					
010	532118-0000		2	CLAMP RING	
020	497748-0000		2	PIN	
030	541165-0000		2	WASHER	
040	554162-0000		2	SCREW	

Pos	Part No	UN	Qty	Description	Page No

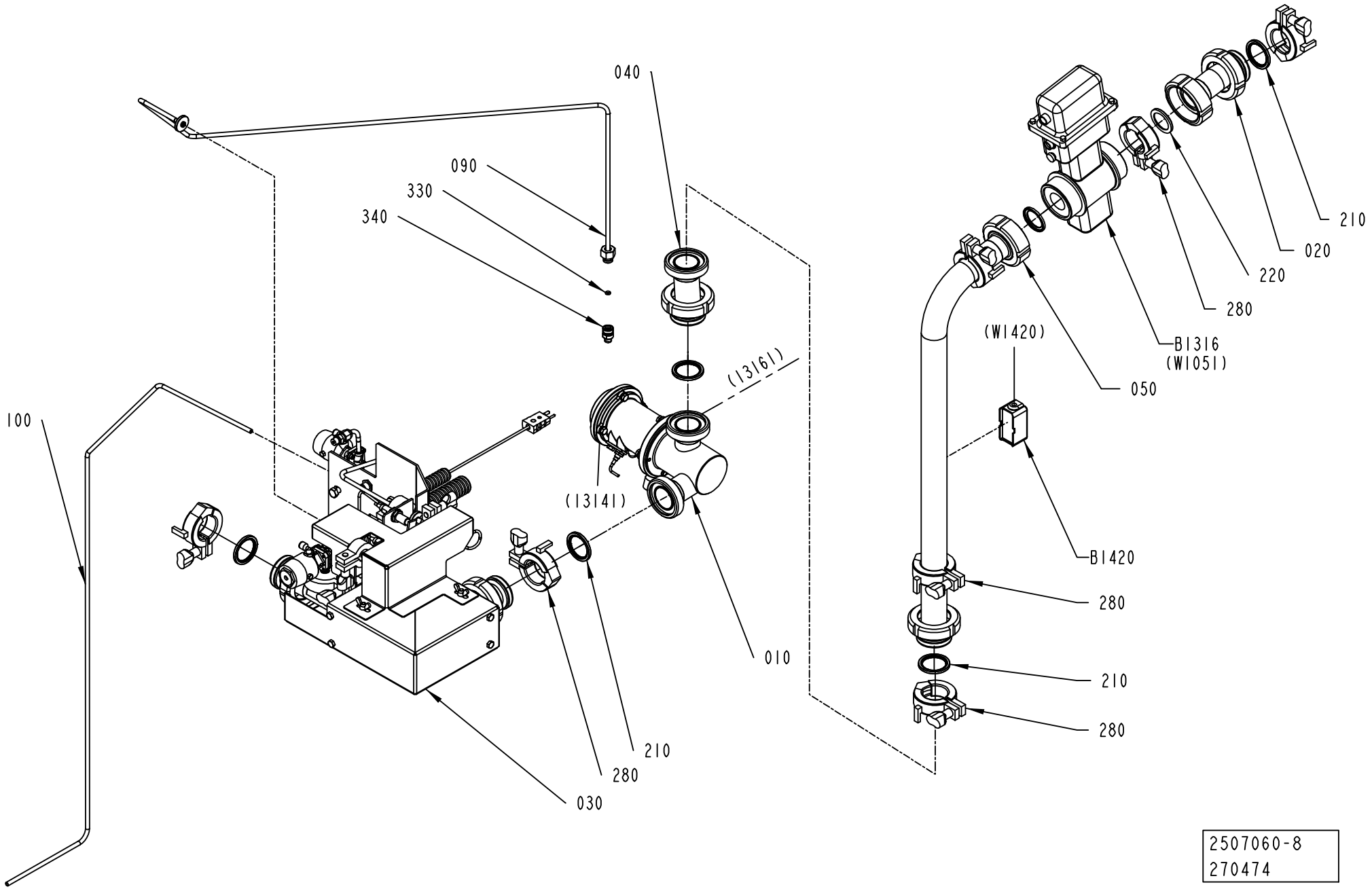

2507060-8
270474

ECM: 274267 - 20061101
Group number: 2507060-0200
Assembly Drawing: 2507060-8_1_AB

This list covers pages from 1-242 to 1-245

Pos	Part No	UN	Qty	Description	Page No
A3/FLEX NOHI (See drawing on page: 1-244)					
030	2500081-0000		1	ELBOW PIPE	
050	2672962-0000		1	CONNECTING PIPE	
060	2529750-0000		1	COVERING PANEL	
070	1140480-0000		1	CLAMP	
080	1041988-0000		1	CLAMP	
290	312105-0362		2	SCREW M6S ISO 4017 M6X8 A480	
300	312109-0376		2	SCREW M6S ISO 4017 M6X35 A480	
310	312105-0303		2	SCREW M6S ISO 4017 M4X40 A470	
320	315105-0136		2	WASHER BRB 4,3X9 RFR	
A3/FLEX TBA 0200B HI, A3/FLEX TBA 0200M HI, A3/FLEX TBA 0200S HI, A3/FLEX TBA 0250B HI, A3/FLEX TBA 0250S HI, A3/FLEX TBA 0330S HI, A3/FLEX TPA 0330SQ HI, A3/FLEX TBA 0500B HI, A3/FLEX TBA 1000B HI, A3/FLEX TBA 1000S HI, A3/FLEX TBA 1000SQ HI, A3/FLEX TPA 0500SQ HI, A3/FLEX TPA 1000SQ HI, A3/FLEX TBA 1500S HI, A3/FLEX TBA 0500S HI, A3/FLEX TPA 0750SQ HI, A3/FLEX TBA 0200SQ HI, A3/FLEX TBA 0250SQ HI, A3/FLEX TPA 0200SQ HI, A3/FLEX TPA 0250SQ HI, A3/FLEX TBA 1400B HI (See drawing on page: 1-242)					
030	2632642-0200		1	NOZZLE UNIT	**1-247**
050	2672962-0000		1	CONNECTING PIPE	
090	2819098-0000		1	PIPE	
100	2834329-0000		1	PIPE	
330	90600-0495		1	O-RING	
340	2847311-0000		1	CONNECTION	
A3/FLEX TBA 2000S HI, A3/FLEX TBA 1890S HI (See drawing on page: 1-242)					
030	2632642-0200		1	NOZZLE UNIT	**1-247**
050	2685311-0000		1	CONNECTING PIPE	
090	2819098-0000		1	PIPE	
100	2834329-0000		1	PIPE	
330	90600-0495		1	O-RING	
340	2847311-0000		1	CONNECTION	
Common Parts					
010	2507059-0300		1	REGULATING VALVE	**1-249**
020	2672963-0000		1	CONNECTING PIPE	
040	2501278-0000		1	ECCENTRIC	
210	90217-0348		5	GASKET 35,4X46,8X4 MM	
220	90459-4179		2	GASKET 30,5X42X4 MM FDA	
280	2552201-0000		7	LOCKING DEVICE	
B1316	90458-0806		1	FLOW METER, NO. XF DF23-DN32	
B1420	90459-0181		1	PIPE SURFACE THERM., PT-100 -50° -+120°C	

Pos	Part No	UN	Qty	Description	Page No

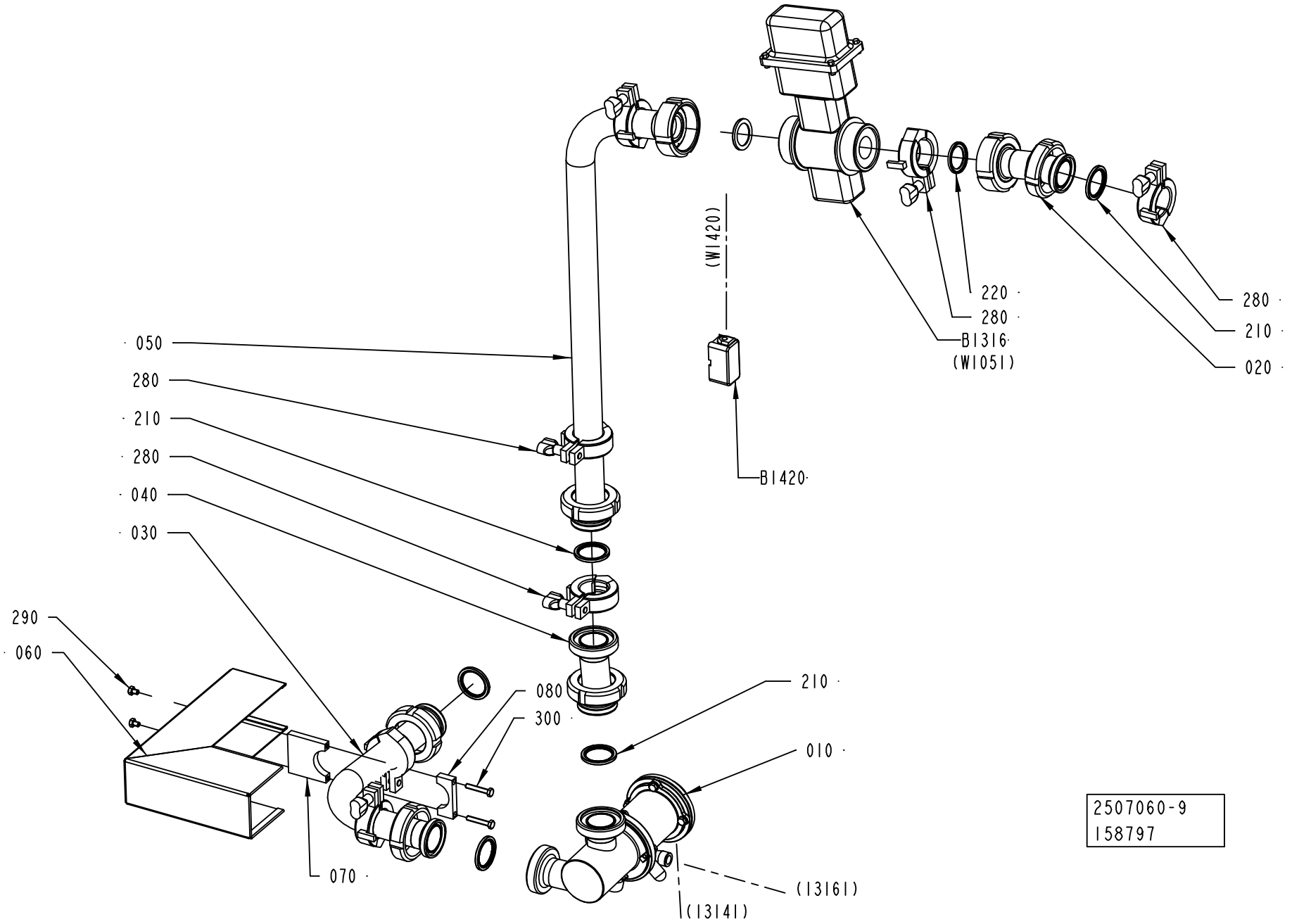
(W1420)
220
280
B1316
(W1051)
280
210
020
B1420
050
280
210
280
040
030
290
060
080
300
210
010
070
(13161)
(13141)
2507060-9
158797

Pos	Part No	UN	Qty	Description	Page No
A3/FLEX NOHI (See drawing on page: 1-244)					
030	2500081-0000		1	ELBOW PIPE	
050	2672962-0000		1	CONNECTING PIPE	
060	2529750-0000		1	COVERING PANEL	
070	1140480-0000		1	CLAMP	
080	1041988-0000		1	CLAMP	
290	312105-0362		2	SCREW M6S ISO 4017 M6X8 A480	
300	312109-0376		2	SCREW M6S ISO 4017 M6X35 A480	
310	312105-0303		2	SCREW M6S ISO 4017 M4X40 A470	
320	315105-0136		2	WASHER BRB 4,3X9 RFR	
A3/FLEX TBA 0200B HI, A3/FLEX TBA 0200M HI, A3/FLEX TBA 0200S HI, A3/FLEX TBA 0250B HI, A3/FLEX TBA 0250S HI, A3/FLEX TBA 0330S HI, A3/FLEX TPA 0330SQ HI, A3/FLEX TBA 0500B HI, A3/FLEX TBA 1000B HI, A3/FLEX TBA 1000S HI, A3/FLEX TBA 1000SQ HI, A3/FLEX TPA 0500SQ HI, A3/FLEX TPA 1000SQ HI, A3/FLEX TBA 1500S HI, A3/FLEX TBA 0500S HI, A3/FLEX TPA 0750SQ HI, A3/FLEX TBA 0200SQ HI, A3/FLEX TBA 0250SQ HI, A3/FLEX TPA 0200SQ HI, A3/FLEX TPA 0250SQ HI, A3/FLEX TBA 1400B HI (See drawing on page: 1-242)					
030	2632642-0200		1	NOZZLE UNIT	**1-247**
050	2672962-0000		1	CONNECTING PIPE	
090	2819098-0000		1	PIPE	
100	2834329-0000		1	PIPE	
330	90600-0495		1	O-RING	
340	2847311-0000		1	CONNECTION	
A3/FLEX TBA 2000S HI, A3/FLEX TBA 1890S HI (See drawing on page: 1-242)					
030	2632642-0200		1	NOZZLE UNIT	**1-247**
050	2685311-0000		1	CONNECTING PIPE	
090	2819098-0000		1	PIPE	
100	2834329-0000		1	PIPE	
330	90600-0495		1	O-RING	
340	2847311-0000		1	CONNECTION	
Common Parts					
010	2507059-0300		1	REGULATING VALVE	**1-249**
020	2672963-0000		1	CONNECTING PIPE	
040	2501278-0000		1	ECCENTRIC	
210	90217-0348		5	GASKET 35,4X46,8X4 MM	
220	90459-4179		2	GASKET 30,5X42X4 MM FDA	
280	2552201-0000		7	LOCKING DEVICE	
B1316	90458-0806		1	FLOW METER, NO. XF DF23-DN32	
B1420	90459-0181		1	PIPE SURFACE THERM., PT-100 -50° -+120°C	

Pos	Part No	UN	Qty	Description	Page No

NOZZLE UNIT

Drawing file: 2632642-2_1_AA.hpgl

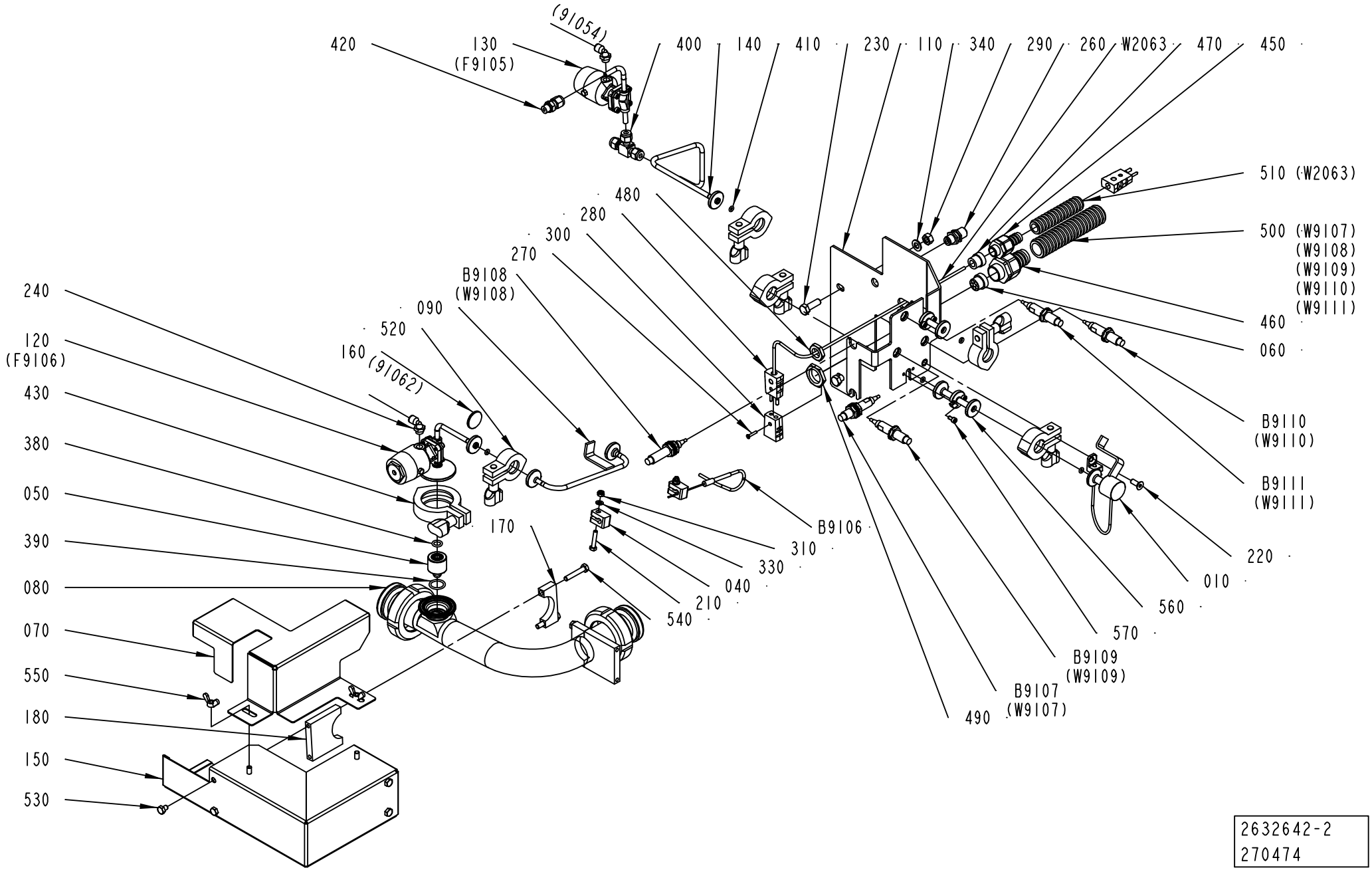

2632642-2
270474

ECM: 270977 - 20061101
Group number: 2632642-0200
Assembly Drawing: 2632642-2_1_AA

Pos	Part No	UN	Qty	Description	Page No
-					
010	2696109-0000		1	PLUG	
040	978440-0000		2	CRAMP	
050	1523154-0004		1	SPRAY NOZZLE	
050	1523154-0005		1	SPRAY NOZZLE	
050	1523154-0006		1	SPRAY NOZZLE	
050	1523154-0003		1	SPRAY NOZZLE	
060	2559051-0000		1	INSERT	
070	2763994-0000		1	COVER	
080	2763949-0000		1	ELBOW PIPE	
090	2715602-0000		1	PIPE	
110	2696106-0000		1	BRACKET	
120	2696112-0000		1	VALVE BODY	
	90600-0500		*1*	*DIAPHRAGM VALVE, 650.004.D.0.34.5A.1.U30*	
	90600-0493		*1*	*DIAPHRAGM 3A, 600-008-M5A*	
	90600-0491		*1*	*ACTUATOR, 9650-0089-Z-I-OTI*	
130	2696111-0000		1	VALVE BODY	
	90600-0500		*1*	*DIAPHRAGM VALVE, 650.004.D.0.34.5A.1.U30*	
	90600-0493		*1*	*DIAPHRAGM 3A, 600-008-M5A*	
	90600-0491		*1*	*ACTUATOR, 9650-0089-Z-I-OTI*	
140	2696108-0000		1	PIPE	
150	2763995-0000		1	TOUCH GUARD	
160	90600-0614		1	BLANK PLUG, 16AMP-316-1/2"-3/4"-AR	
170	1041988-0000		2	CLAMP	
180	1140480-0000		2	CLAMP	
210	312105-0333		2	SCREW M6S ISO 4017 M5X25 A480	
220	312155-0368		1	SCREW DIN 7991 MF6S M6X16 A4 70	
230	312105-0453		2	SCREW M6S ISO 4017 M8X25 A480	
240	90458-2956		2	ELBOW PIPE JOINT, EXT.THREAD, D=6MM-G1/8	
260	342768-0102		1	BULKHEAD CONNECTOR, 6 MM	
270	312145-0228		1	SCREW ISO 2009 MFS M3X16 A4	
280	90326-0022		2	PLUG, MALE YELLOW CR-AL	
290	312605-0318		2	HEXAGON NUT, M6M M8 A280	
300	90326-0020		1	PLUG, FEMALE YELLOW CR-AL	
310	312812-0314		2	HEXAGON NUT, NY-LOCK M5 A480	
330	315105-0146		2	WASHER BRB 5,3X10 RFR	
340	315105-0165		2	WASHER BRB 8,4X16 RFR	
380	315204-0208		1	O-RING 9,3X2,4 MM	
390	315204-0214		1	O-RING 17,3X2,4 MM	
400	90030-0571		1	CONN. T-PIPE 6	
410	90600-0495		5	O-RING	
420	90459-1424		1	CONN. STR., 6-G1/8, EXT. THREAD	
430	342840-0103		1	CLAMPING PIECE	
450	353243-0001		1	HOSE GLAND W/O INSERT PG9 EXTENDED	
460	353243-0005		1	HOSE GLAND W/O INSERT PG16 EXTENDED	
470	353249-0009		1	INSERT, SINGEL HOLE, EK 152/9	
480	90099-0104		1	NUT, PR 15,2 (PG9)	
490	90099-0110		1	NUT, PR 22,5 (PG16)	
500	90152-0051	MM	2100	SPIRAL CONDUIT, 25X18, UL 1816	
510	90152-0059	MM	700	SPIRAL CONDUIT, 18X12, UL 1211	
520	342840-0101		5	CLAMP, 12,7 AND 19,1 MM 3-A PCS+PMCS	
530	312105-0362		4	SCREW M6S ISO 4017 M6X8 A480	
540	312109-0376		4	SCREW M6S ISO 4017 M6X35 A480	
550	312715-0116		2	WING NUT DIN 315 A2 MVM-K M6	
560	2847310-0000		2	CONNECTION	
570	312115-0287		4	SCREW ISO4762 M4X8 A4 80	
B9106	90326-0060		1	THERMOCOUPLE, CR-AL	
B9107	90458-0672		1	PROXIMITY SENSOR E2E2-X5MB1-5M	
B9108	90458-0672		1	PROXIMITY SENSOR E2E2-X5MB1-5M	
B9109	90458-0672		1	PROXIMITY SENSOR E2E2-X5MB1-5M	
B9110	90458-0672		1	PROXIMITY SENSOR E2E2-X5MB1-5M	
B9111	90458-0672		1	PROXIMITY SENSOR E2E2-X5MB1-5M	
W2063	90220-0034	MM	7000	THERMOCABLE TEX/SITW-20F-KX 2X0,5MM2	

Machine Type | Group Description | Used-In | Group Number | Page No

REGULATING VALVE

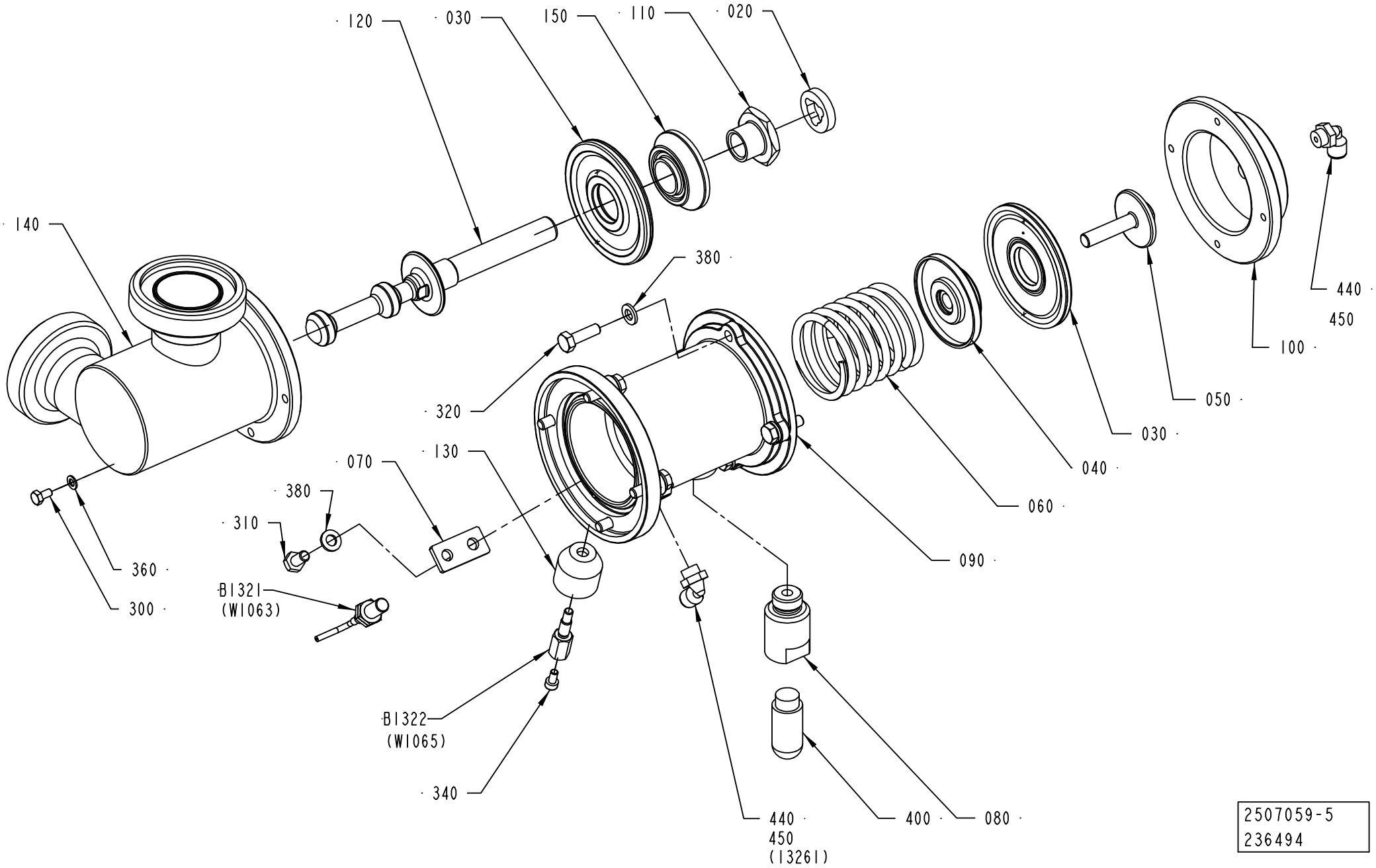

2507059-5
236494

ECM: 236502 - 20061101
Group number: 2507059-0300
Assembly Drawing: 2507059-5_1_AA

Pos	Part No	UN	Qty	Description	Page No
A3/FLEX TBA 0200S, A3/FLEX TBA 0200B, A3/FLEX TBA 0250B, A3/FLEX TBA 0330S, A3/FLEX TPA 0330SQ, A3/FLEX TBA 0200M, A3/FLEX TBA 0250S, A3/FLEX TPA 0250SQ, A3/FLEX TPA 0200SQ, A3/FLEX TBA 0200SQ, A3/FLEX TBA 0250SQ					
120	2790432-0000		1	SHUTTER	
140	2562704-0000		1	BODY	
A3/FLEX TBA 0500B, A3/FLEX TBA 1000B, A3/FLEX TBA 1000S, A3/FLEX TBA 1000SQ, A3/FLEX TPA 1000SQ, A3/FLEX TPA 0500SQ, A3/FLEX TBA 0500S, A3/FLEX TPA 0750SQ					
120	2790430-0000		1	SHUTTER	
140	1548230-0000		1	BODY	
A3/FLEX TBA 1500S					
120	2790431-0000		1	SHUTTER	
140	1498526-0000		1	REGULATOR BODY	
A3/FLEX TBA 1890S, A3/FLEX TBA 2000S					
120	2790429-0000		1	SHUTTER	
140	2500078-0000		1	BODY	
Common Parts					
020	2594043-0000		1	SHOCK ABSORBER	
030	925998-0000		2	DIAPHRAGM	
040	2693622-0000		1	SPACER	
050	926907-0000		1	SCREW	
060	1195397-0000		1	COMPRESSION SPRING	
070	926934-0000		1	SUPPORT	
080	927044-0000		1	SPACER	
090	2790433-0000		1	BODY	
100	927203-0000		1	COVER	
110	979434-0000		1	FERRULE	
130	1478813-0000		1	SPACER	
150	1511600-0000		1	SPACER	
300	312105-0287		1	SCREW M6S ISO 4017 M4X8 A470	
310	312105-0366		1	SCREW M6S ISO 4017 M6X12 A480	
320	312105-0370		8	SCREW M6S ISO 4017 M6X20 A480	
340	312115-0287		1	SCREW ISO4762 M4X8 A4 80	
360	315105-0136		1	WASHER BRB 4,3X9 RFR	
380	315105-0153		9	WASHER BRB 6,4X12 RFR	
400	90328-0026		1	SILENCER G1/4"	
440	90458-2956		2	ELBOW PIPE JOINT, EXT.THREAD, D=6MM-G1/8	
450	90144-0073		1	TREBOFLON-TAPE W=13MM	
B1321	90458-0138		1	PROX. SWITCH, E2EG-X1R5B1-5M	
B1322	1478814-0000		1	SENSOR	

Pos	Part No	UN	Qty	Description	Page No

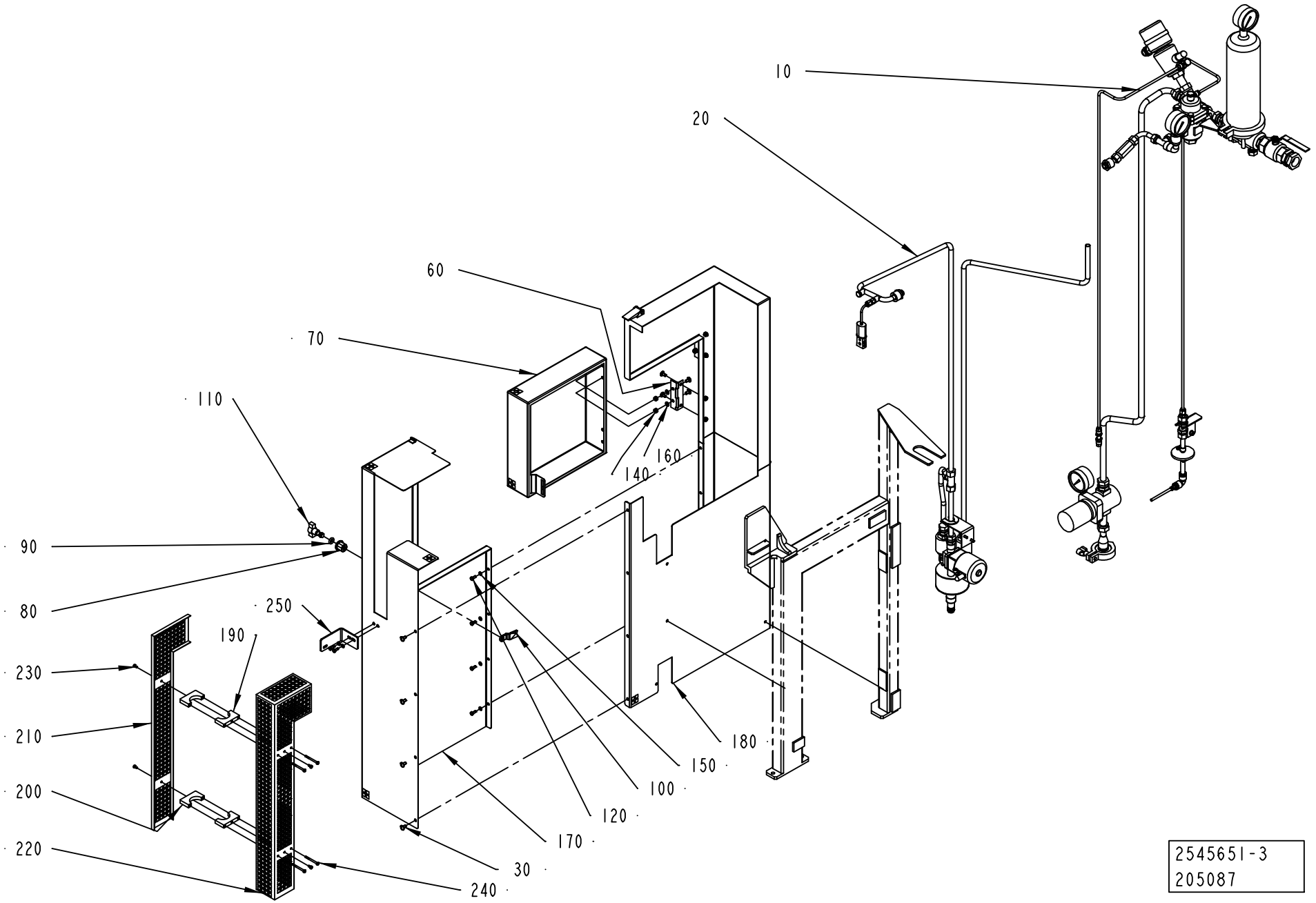
10
20
60
70
110
140
160
90
80
250
190
230
210
200
220
180
150
100
120
170
30
240
2545651-3
205087

ECM: 239320 - 20051011
Group number: 2545651-0200
Assembly Drawing: 2545651-3_1_AB

Pos	Part No	UN	Qty	Description	Page No
A3/FLEX					
190	2748216-0000		2	CLAMP	
200	2748217-0000		2	CLAMP	
210	2748218-0000		1	TOUCH GUARD	
220	2748219-0000		1	TOUCH GUARD	
230	312105-0287		4	SCREW M6S ISO 4017 M4X8 A470	
240	312105-0303		4	SCREW M6S ISO 4017 M4X40 A470	
Common Parts					
010	2544199-0200		1	STEAM PIPE	**1-253**
020	2552215-0200		1	STEAM TRAP	**1-255**
030	927354-0000		12	SCREW	
060	2711251-0000		2	HINGE	
070	2711254-0000		1	COVER	
080	90237-0319		1	LOCK HOUSING, 1000-U134	
090	90237-0323		1	LOCK O-RING, 1000-24	
100	90237-0335		1	LOCKING CATCH	
110	90237-0337		1	LOCK HANDLE FOR 90237-319	
120	312105-0327		6	SCREW M6S ISO 4017 M5X12 A480	
140	312605-0316		4	HEXAGON NUT, M6M M6 A280	
150	315105-0146		6	WASHER BRB 5,3X10 RFR	
160	315105-0153		4	WASHER BRB 6,4X12 RFR	
170	2711247-0000		1	COVER	
180	2711245-0000		1	COVER	
250	2748220-0000		1	HANGER	

Pos	Part No	UN	Qty	Description	Page No

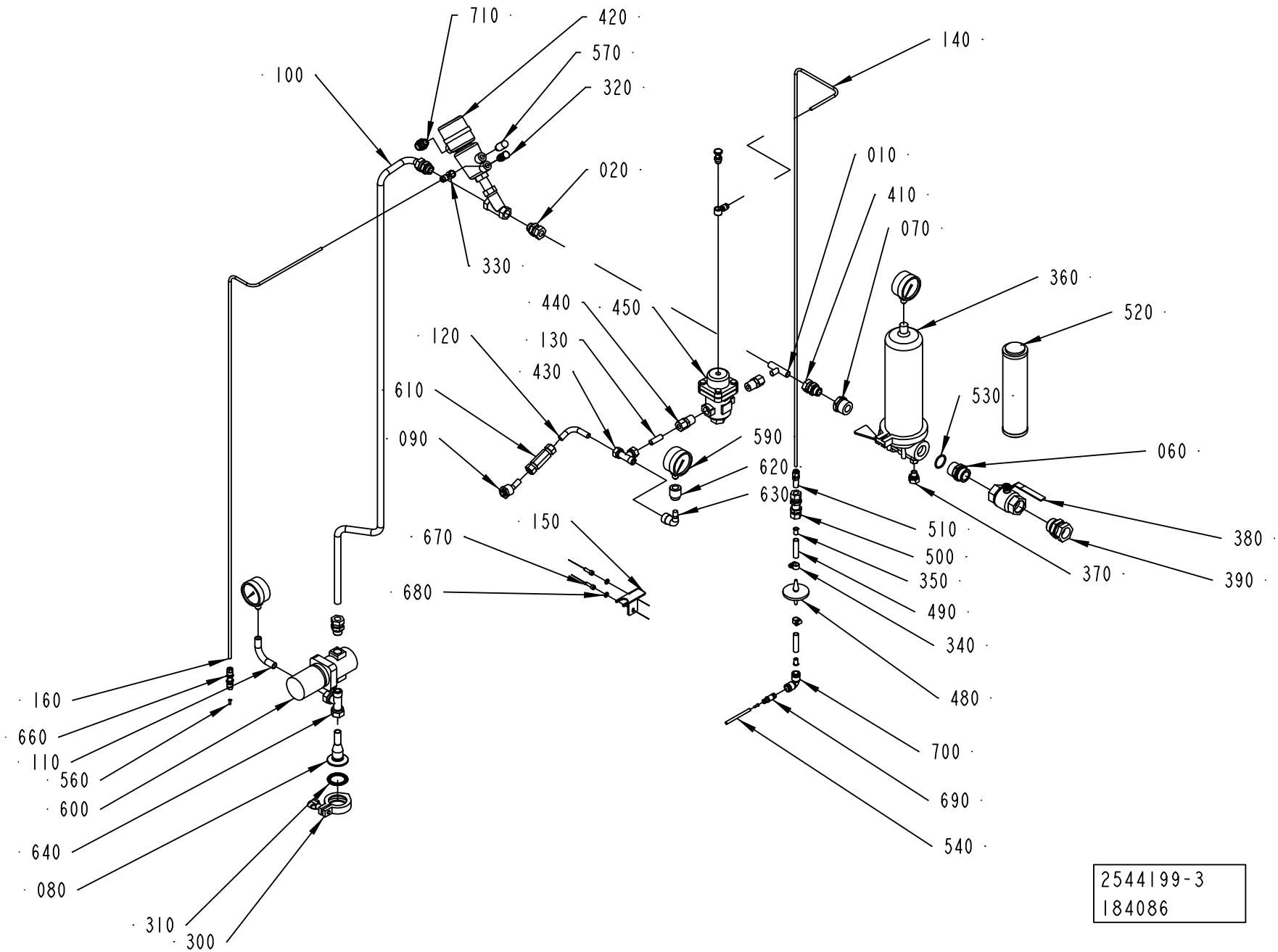
710
420
570
320
100
020
330
140
010
410
070
360
520
530
060
380
390
370
440
450
120
130
430
610
090
590
620
630
150
670
680
510
500
350
490
340
480
700
690
540
160
660
110
560
600
640
080
310
300
2544199-3
184086

ECM: 211119 - 20050615
Group number: 2544199-0200
Assembly Drawing: 2544199-3_1_AA

Pos	Part No	UN	Qty	Description	Page No
-					
010	2695987-0000		1	PIPE	
020	2522195-0000		2	CONNECTION	
060	2552776-0000		1	ADAPTER	
070	2552777-0000		1	ADAPTER	
080	2611077-0000		1	PIPE	
090	2695990-0000		1	PIPE	
100	2695988-0000		1	PIPE	
110	2582590-0000		1	PIPE	
120	2695991-0000		1	PIPE	
130	2695992-0000		1	PIPE	
140	2695993-0000		1	PIPE	
150	2616298-0000		1	BRACKET	
160	2695989-0000		1	PIPE	
300	342840-0103		1	CLAMPING PIECE	
310	342850-0204		1	GASKET 35,4X49,1X5,2 MM 1"1/2 FDA 3-A	
320	342980-0304		2	BANJO-HOLLOW BOLT COUPL,EXT.THR.01-G1/4	
330	342797-0122		2	CONN. BANJO, RINGPIECE 6-1/4	
340	342991-0100		2	HOSE CLIP,WORM DRIVE TYPE 10-13	
350	342706-0195		2	ACCESSORIES, INSERT SLEEVE 12 MM	
360	90459-5503		1	FILTER HOUSING / IDL 11 GB 16 C2H	
370	90030-0088		1	CONN. STR., 12-R1/4, EXT. THREAD	
380	90187-0096		1	BALL VALVE G1	
390	90030-0193		1	CONN. STR. GA-28-G1	
410	90030-0188		2	CONN. STR. GA-15-G1/2	
420	90459-1235		1	ANGLE SEAT VALVE, N.C. DN13 TYPE 2002	
430	342751-0215		1	CONN. L-PIPE, EXT. LE-12-R3/8	
440	90030-0180		2	CONN. STR. GE 12-1/2-14 NPTF	
450	90458-2264		1	PRESSURE REGULATOR ARC-30-1/2"	
	90458-2653		*1*	*BELLOWS AISI 316L FOR ARC-30-1/2"*	
	90458-2654		*1*	*GASKET KIT FOR ARC-30-1/2"*	
	90458-2655		*1*	*STRAINER FOR ARC-30-1/2"*	
480	90458-2554		1	STERILE GRADE MEMBRANE FILTER 0,2µM	
490	90166-0195	MM	50	TUBE 12 MM PA BLUE	
500	90030-0030		1	CONN. BULKHEAD SV 12-L/SY	
510	90030-0481		1	REDUCER M12TURM6-316	
520	90277-0355		1	FILTER INSERT / MBS 100 IPH	
530	315204-0219		1	O-RING 29,2X3 MM	
540	90166-0193	MM	3500	TUBE 6 MM PUR BLUE	
550	90166-0195	MM	50	TUBE 12 MM PA BLUE	
560	342706-0130		2	ACCESSORIES, INSERT SLEEVE 6 MM	
570	90328-0026		1	SILENCER G1/4"	
590	90043-0082		3	PRESSURE GAUGE, 2740, D=63 MM	
600	90113-0064		1	PRESSURE REGULATOR	
610	90459-4686		1	NON-RETURN VALVE, M12A-C6L-1-EPR-SS	
620	90330-0011		1	SLEEVE, REDUCTION, INT, R-2023/8X1/4	
630	90330-0172		1	ELBOW, 90 INT/EXT, SS-6-SE	
640	342751-0221		1	CONN. L-PIPE, EXT. LE-15-R1/2	
660	90224-0349		1	CONN. BULKHEAD. 1250-6	
670	312115-0370		2	SCREW ISO4762 M6X20 A4 80	
680	315105-0153		2	WASHER BRB 6,4X12 RFR	
690	342716-0210		1	REDUCER 6-12	
700	342735-0109		1	ELBOW PIPE JOINT	
710	352103-0106		1	CABLE GLAND, ST 11, PR18,6/PG11	

Machine Type	Group Description	Used-In	Group Number	Page No

STEAM TRAP

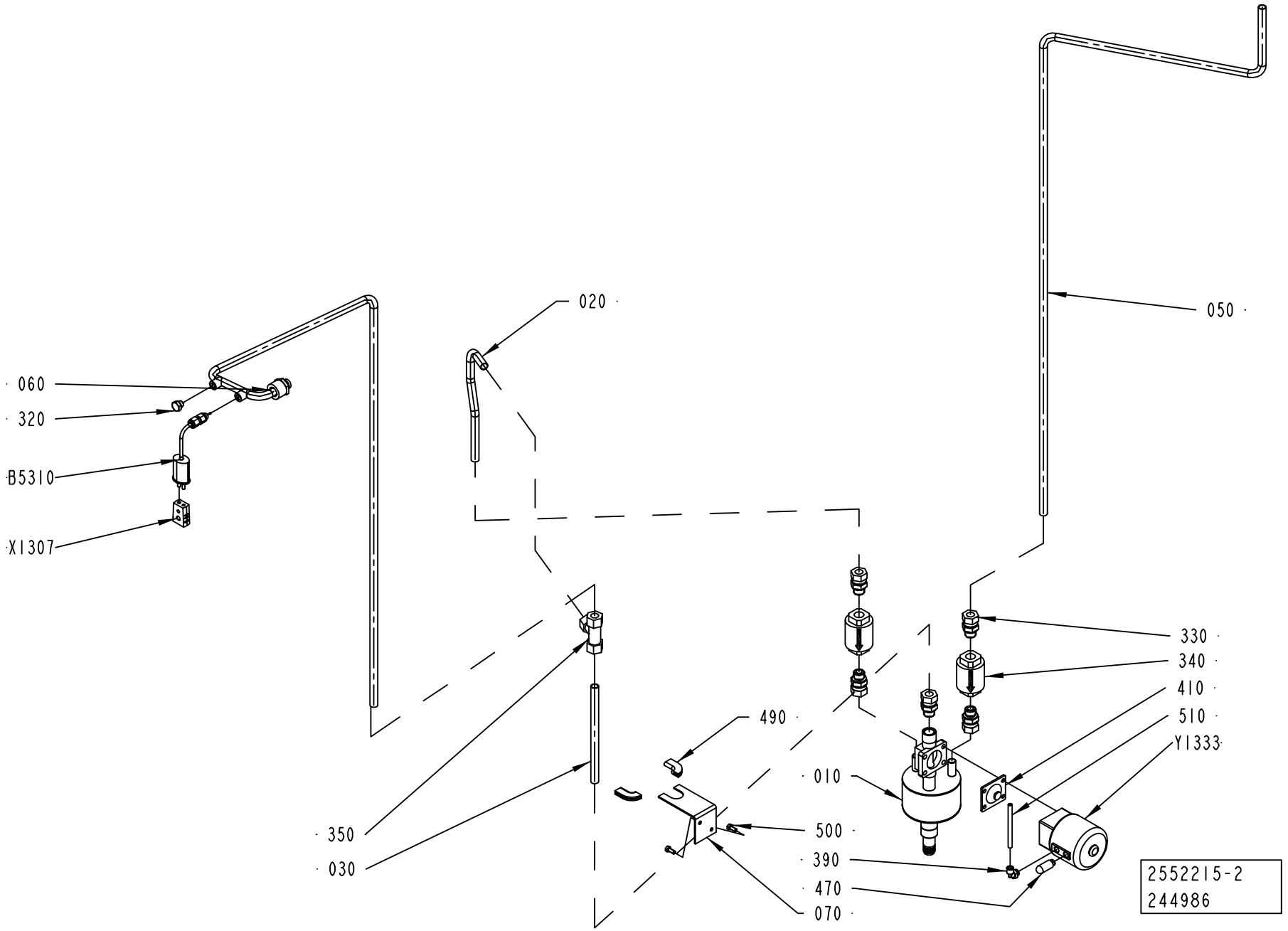
020
050
060
320
B5310
X1307
330
340
410
510
Y1333
490
010
350
030
500
390
470
070
2552215-2
244986

ECM: 244986 - 20060728
Group number: 2552215-0200
Assembly Drawing: 2552215-2_1_AB

Pos	Part No	UN	Qty	Description	Page No
-					
010	2695994-0000		1	ATTACHMENT PIPE	
020	2696037-0000		1	PIPE	
030	2696025-0000		1	PIPE	
050	2695995-0000		1	PIPE	
060	2695996-0000		1	PIPE	
070	2725559-0000		1	PLATE	
320	90330-0066		1	PLUG, EXT. G-THREAD, G1/8	
330	90030-0187		5	CONN. STR. GA-12-G3/8	
340	90360-0020		2	STEAM TRAP / MK36/51 3/8 INCH	
	90360-0310		*1*	*CAPSULE, FOR STEAM TRAP 90360-20*	
	90360-0309		*1*	*STRAINER, FOR STEAM TRAP 90360-20*	
350	90030-0058		1	CONN. T-PIPE T-12	
390	90458-2956		1	ELBOW PIPE JOINT, EXT.THREAD, D=6MM-G1/8	
410	90187-0312		1	DIAPHRAGM #328 FOR SIZE 15 VALVE	
470	90328-0047		1	SILENCER G1/8"	
490	90143-0059	MM	33	SEAL STRIP 4610069	
500	312105-0327		2	SCREW M6S ISO 4017 M5X12 A480	
510	90166-0193	MM	1000	TUBE 6 MM PUR BLUE	
B5310	90326-0089		1	THERMOCOUPLE, 5110-089-000	
X1307	90326-0020		1	PLUG, FEMALE YELLOW CR-AL	
Y1333	90187-0110		1	DIAPHRAGM VALVE DN15, NC WELD CONN.	

Pos	Part No	UN	Qty	Description	Page No

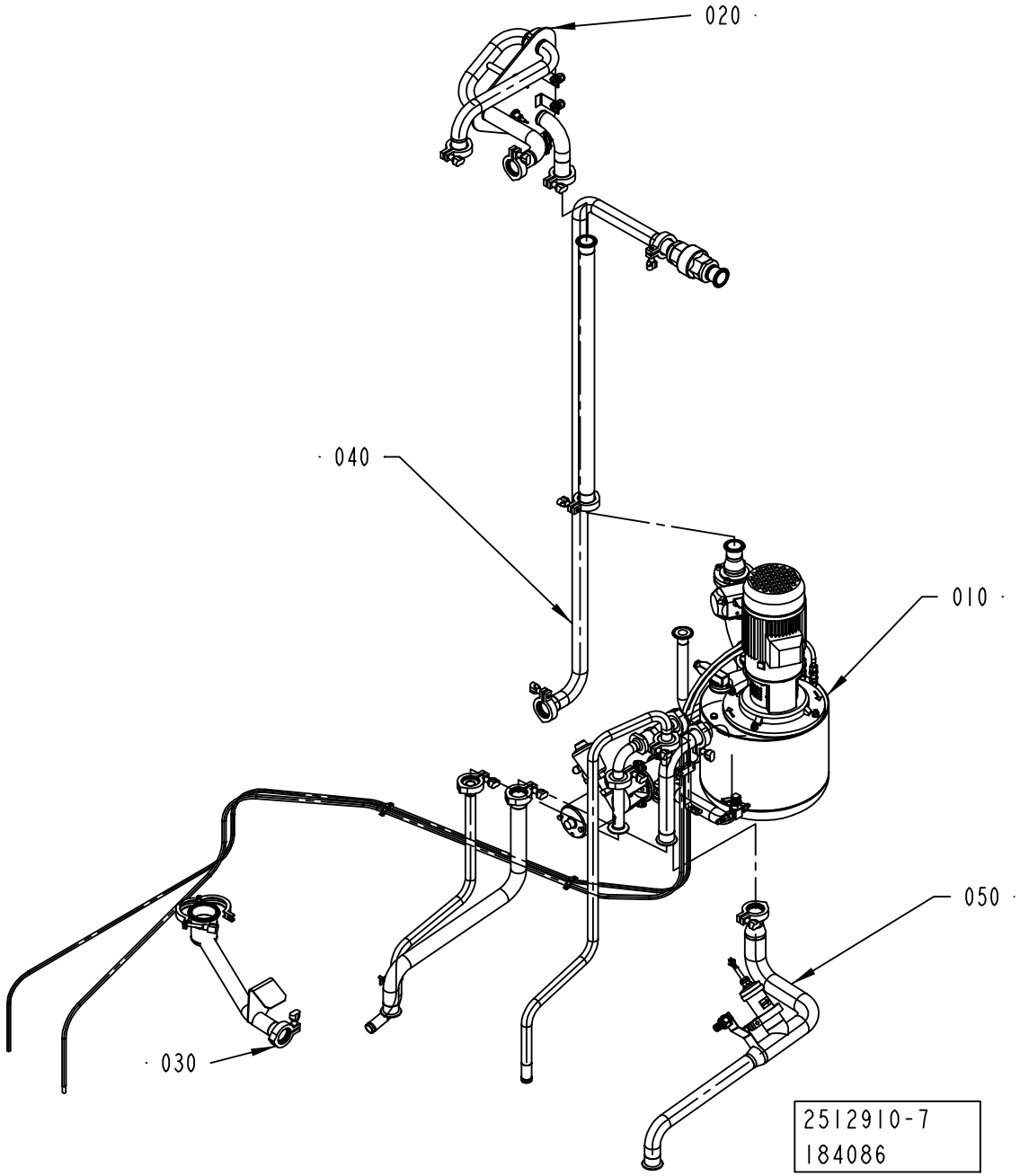
020
040
010
050
030
2512910-7
184086

ECM: 186104 - 20050224
Group number: 2512910-0200
Assembly Drawing: 2512910-7_1_AA

Pos	Part No	UN	Qty	Description	Page No
A3/FLEX MANUALCIP					
020	2539452-0200		1	FLOW SWITCH	**1-259**
030	2512936-0100		1	CLEANING CUP	**1-261, 1-263**
Common Parts					
010	2531076-0200		1	INTEGRATED CLEANING UNIT	**1-265**
040	2539442-0200		1	CLEANING PIPE	**1-273**
050	2539448-0200		1	CLEANING PIPE	**1-275**

FLOW SWITCH

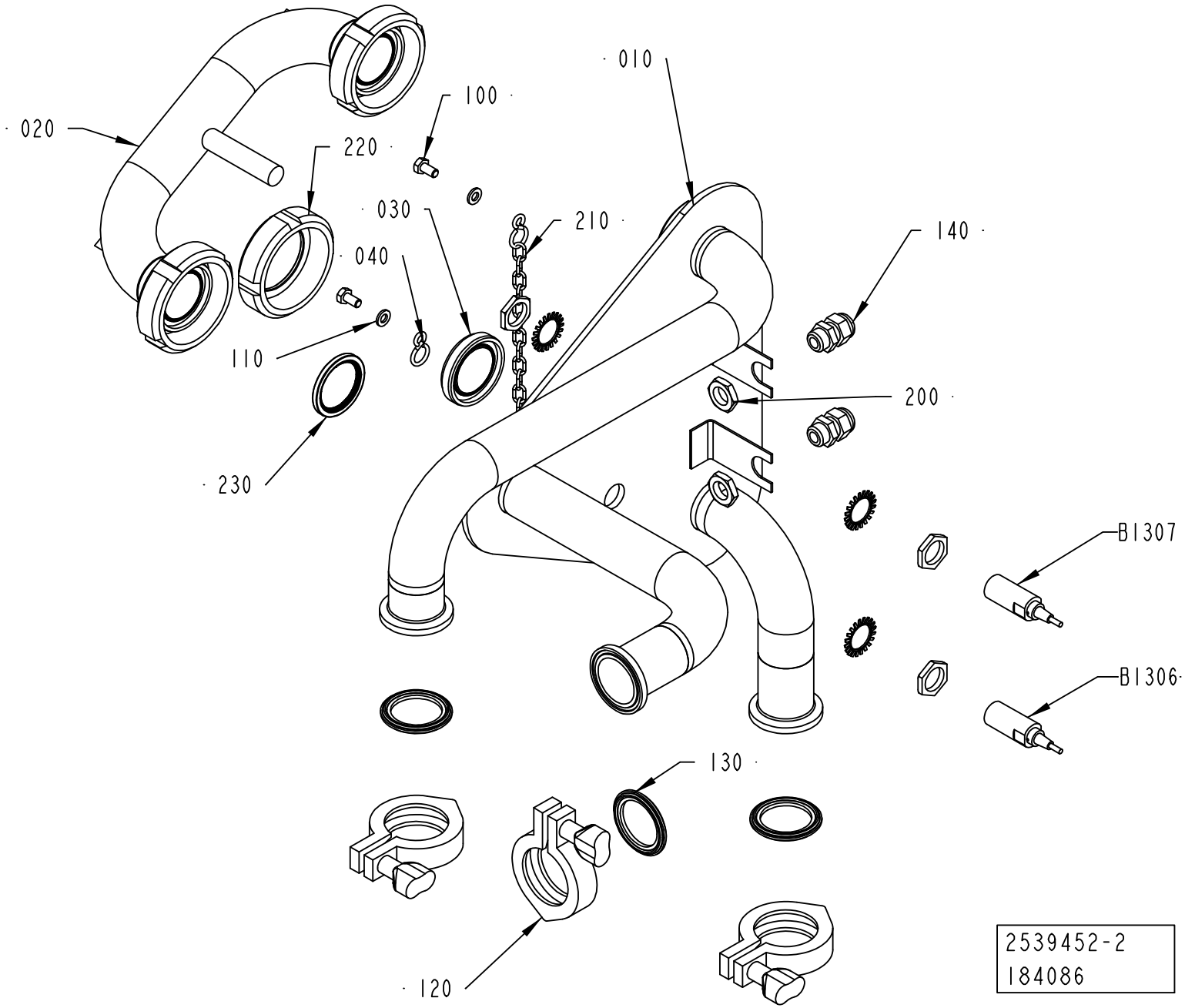
020
100
010
220
030
210
140
040
110
200
230
B1307
B1306
130
120
2539452-2
184086

ECM: 185354 - 20050224
Group number: 2539452-0200
Assembly Drawing: 2539452-2_1_AA

Pos	Part No	UN	Qty	Description	Page No
-					
010	2696028-0000		1	PIPE SUPPORT	
020	2696029-0000		1	CONNECTING PIPE	
030	2525338-0000		1	PLUG	
040	209183-0000		2	RING	
100	312105-0366		2	SCREW M6S ISO 4017 M6X12 A480	
110	315105-0153		2	WASHER BRB 6,4X12 RFR	
120	342840-0103		3	CLAMPING PIECE	
130	342850-0304		3	GASKET 35,4X49,1X5,2 1"1/2 FDA	
140	352103-0101		2	CABLE GLAND, ST 9, PR15,2/PG9	
200	90099-0104		2	NUT, PR 15,2 (PG9)	
210	90155-0008	MM	500	HANGER CHAIN, 18	
220	90217-0206		1	UNION NUT, 1 1/2 APV, 07-01-376/17	
230	90217-0348		3	GASKET 35,4X46,8X4 MM	
B1306	90458-0676		1	PROXIMITY SWITCH,E2EG-X5B1-6M	
B1307	90458-0676		1	PROXIMITY SWITCH,E2EG-X5B1-6M	

Pos	Part No	UN	Qty	Description	Page No

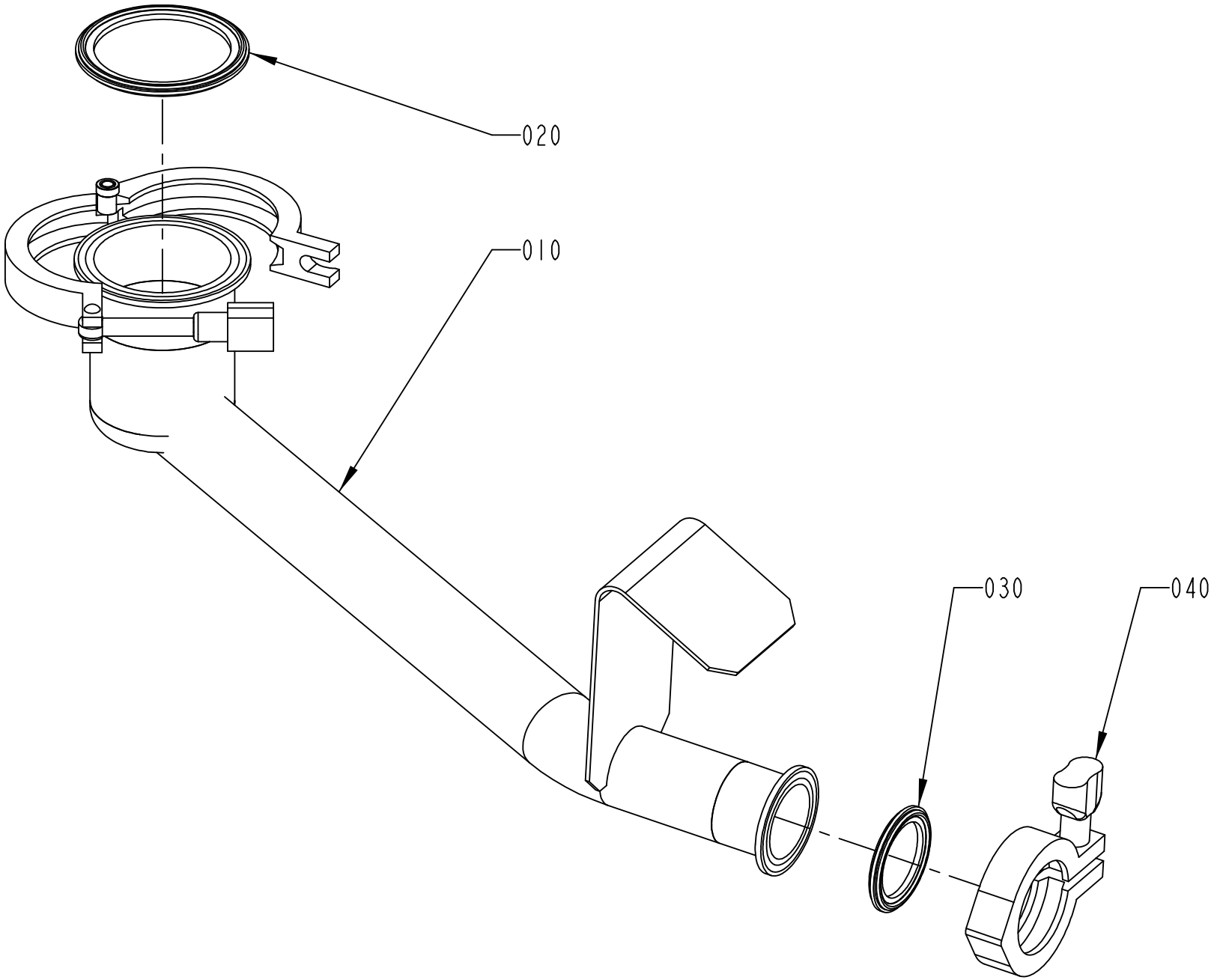
020
010
030
040
2512936-1
ECM 112508

Pos	Part No	UN	Qty	Description	Page No
TBA 0330S, TBA 0200B, TBA 0250S, TBA 0200S, TBA 0200M, TBA 0250B, TBA 0200SQ, TPA 0250SQ, TPA 0330SQ, TPA 0200SQ, TBA 0250SQ (See drawing on page: 1-262)					
010	2540615-0000		1	CLEANING CUP	
030	342850-0304		2	GASKET 35,4X49,1X5,2 1"1/2 FDA	
TBA 0500S, TPA 1000SQ, TPA 0500SQ, TPA 0750SQ (See drawing on page: 1-260)					
010	2565437-0000		1	CLEANING CUP	
020	342850-0305		1	GASKET 47,8X62,6X5,2 MM 2" FDA	
030	342850-0304		1	GASKET 35,4X49,1X5,2 1"1/2 FDA	
TBA 1000S, TBA 1000SQ, TBA 1000B, TBA 1500S, TBA 1890S, TBA 2000S, TBA 1400B (See drawing on page: 1-260)					
010	2501312-0000		1	CLEANING CUP	
020	342850-0306		1	GASKET 60,3X76,1X5,2 MM 2"1/2 FDA	
030	342850-0304		1	GASKET 35,4X49,1X5,2 1"1/2 FDA	
Common Parts					
040	342840-0103		1	CLAMPING PIECE	

Pos	Part No	UN	Qty	Description	Page No

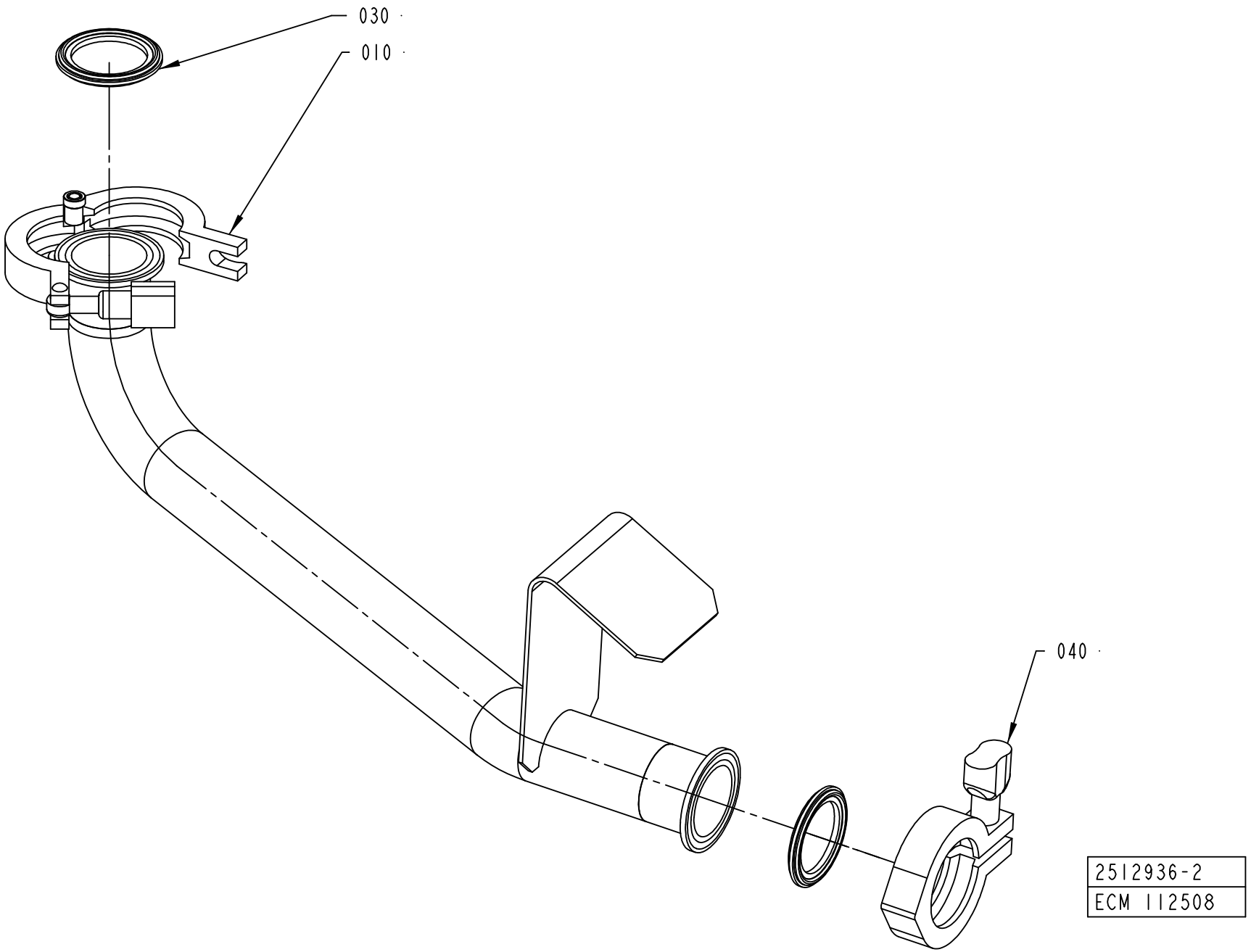
030
010
040
2512936-2
ECM 112508

ECM: 272935 - 20060706
Group number: 2512936-0100
Assembly Drawing: 2512936-2_1_AA

This list covers pages from 1-260 to 1-263

Pos	Part No	UN	Qty	Description	Page No
TBA 0330S, TBA 0200B, TBA 0250S, TBA 0200S, TBA 0200M, TBA 0250B, TBA 0200SQ, TPA 0250SQ, TPA 0330SQ, TPA 0200SQ, TBA 0250SQ (See drawing on page: 1-262)					
010	2540615-0000		1	CLEANING CUP	
030	342850-0304		2	GASKET 35,4X49,1X5,2 1"1/2 FDA	
TBA 0500S, TPA 1000SQ, TPA 0500SQ, TPA 0750SQ (See drawing on page: 1-260)					
010	2565437-0000		1	CLEANING CUP	
020	342850-0305		1	GASKET 47,8X62,6X5,2 MM 2" FDA	
030	342850-0304		1	GASKET 35,4X49,1X5,2 1"1/2 FDA	
TBA 1000S, TBA 1000SQ, TBA 1000B, TBA 1500S, TBA 1890S, TBA 2000S, TBA 1400B (See drawing on page: 1-260)					
010	2501312-0000		1	CLEANING CUP	
020	342850-0306		1	GASKET 60,3X76,1X5,2 MM 2"1/2 FDA	
030	342850-0304		1	GASKET 35,4X49,1X5,2 1"1/2 FDA	
Common Parts					
040	342840-0103		1	CLAMPING PIECE	

Pos	Part No	UN	Qty	Description	Page No

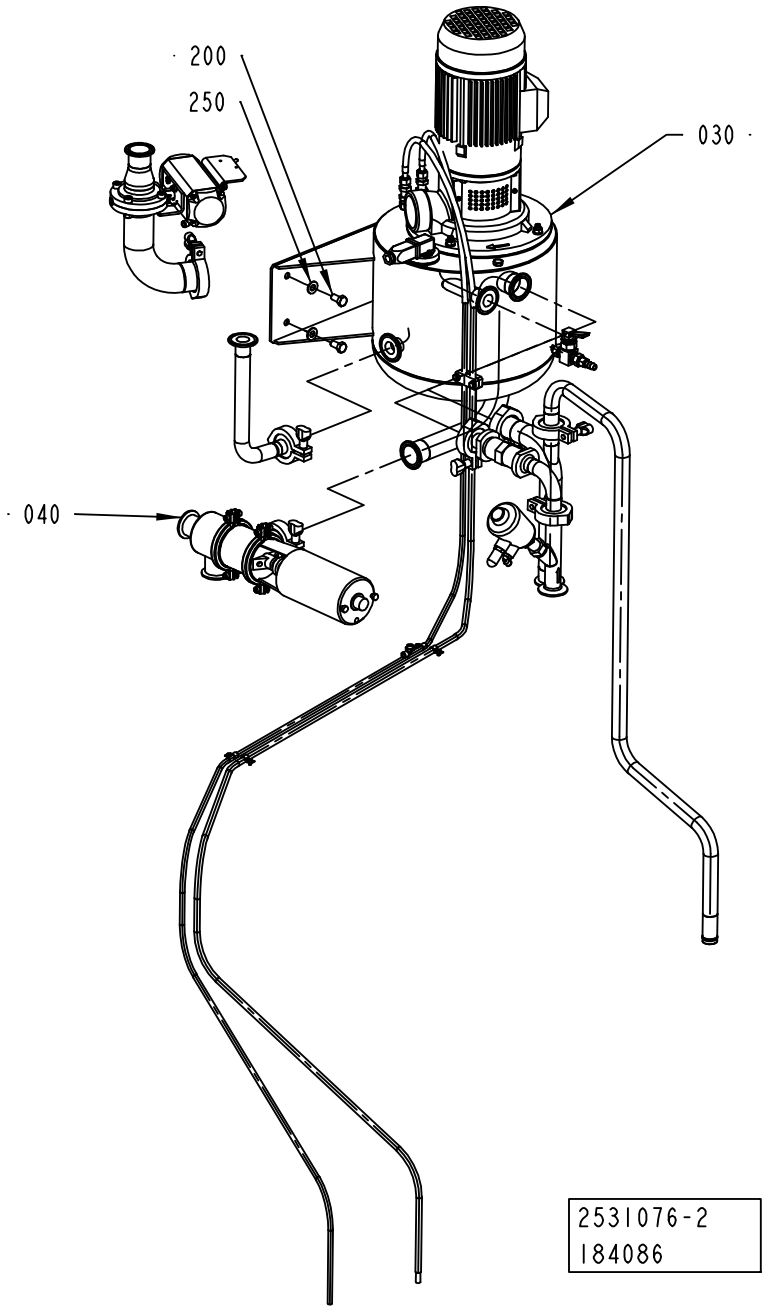
200
250
030
040
2531076-2
184086

ECM: 185350 - 20050224
Group number: 2531076-0200
Assembly Drawing: 2531076-2_1_AA

Pos	Part No	UN	Qty	Description	Page No
-					
030	2531077-0200		1	CLEANING TANK	**1-267**
040	2531078-0200		1	VALVE PIPE	**1-271**
200	312105-0491		2	SCREW M6S ISO 4017 M10X20 A480	
250	315105-0173		2	WASHER BRB 10,5X20 RFR	

Pos	Part No	UN	Qty	Description	Page No

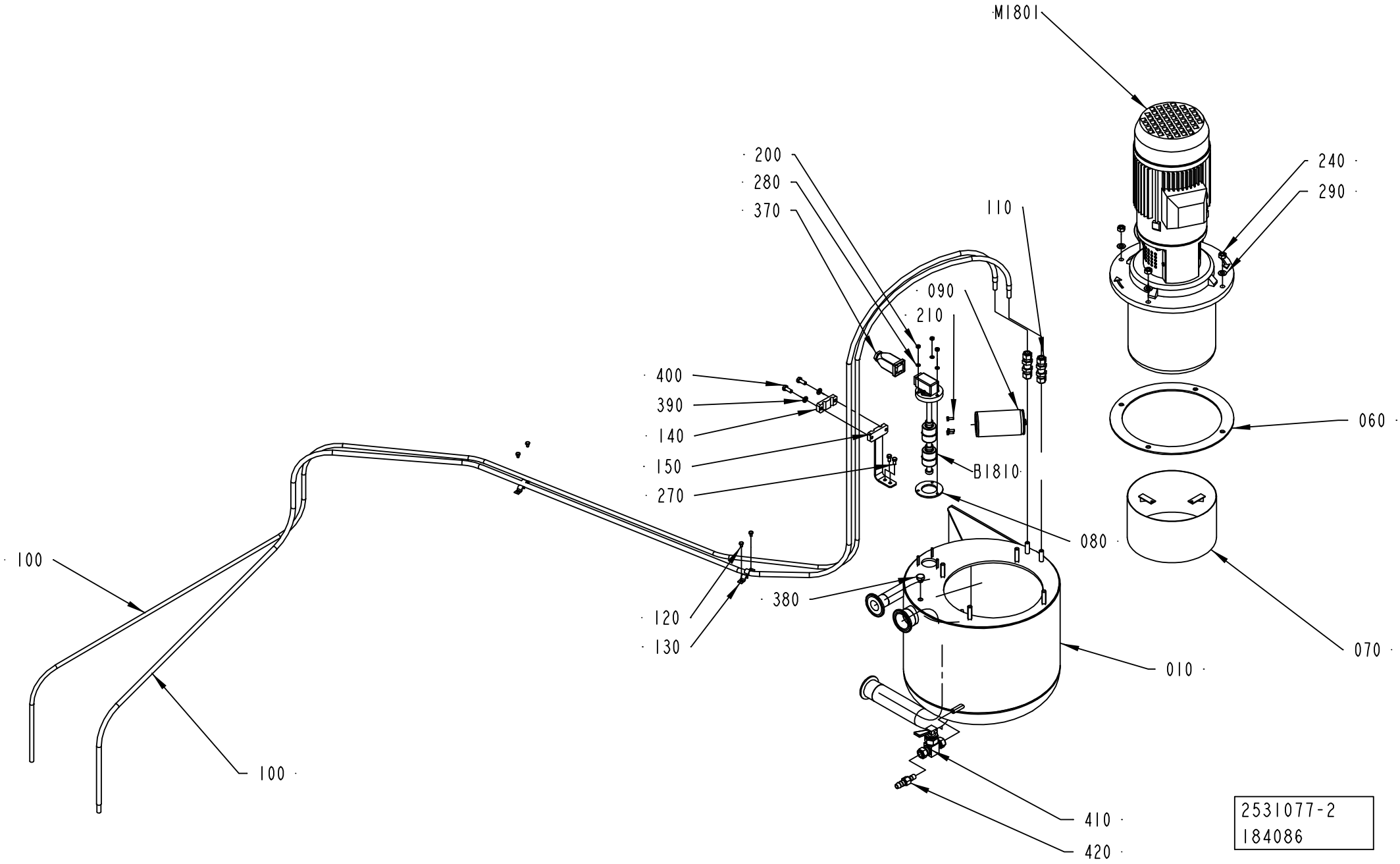
M1801
200
280
370
240
290
110
090
210
400
390
140
150
270
060
B1810
080
100
380
120
130
070
010
100
410
420
2531077-2
184086

ECM: 216483 - 20050615
Group number: 2531077-0200
Assembly Drawing: 2531077-2_1_AA

Pos	Part No	UN	Qty	Description	Page No
-					
010	2696002-0000		1	TANK	
060	2504547-0000		1	GASKET	
070	2504567-0000		1	LINING	
080	2696003-0000		1	GASKET	
090	2537849-0100		1	DIFFUSOR	**1-269**
100	90459-4169		2	HOSE ASSEMBLY 919-1D-1D-8-8-5C-3800	
110	90030-0485		2	CONN. BULKHEAD SV 8-	
120	312105-0285		4	SCREW M6S ISO 4017 M4X6 A470	
130	316810-0106		4	PIPE CLIP FOR TUBE D=8 MM	
140	2530875-0000		1	BRACKET	
150	2672847-0000		1	ARM	
200	312602-0312		3	HEXAGON NUT, EN 24032 M6M M4 NIPLBR	
210	312105-0289		3	SCREW M6S ISO 4017 M4X10 A470	
240	312605-0318		4	HEXAGON NUT, M6M M8 A280	
270	312105-0325		2	SCREW M6S ISO 4017 M5X10 A480	
280	315105-0136		3	WASHER BRB 4,3X9 RFR	
290	315105-0165		4	WASHER BRB 8,4X16 RFR	
370	90458-2664		1	CONNECTOR 4 POLE COD.600.00.750-1	
380	90330-0066		1	PLUG, EXT. G-THREAD, G1/8	
390	315105-0153		2	WASHER BRB 6,4X12 RFR	
400	312105-0368		2	SCREW M6S ISO 4017 M6X16 A480	
410	90459-2609		1	BALL VALVE 3/8", SS-1GS6-S1-SPR	
420	90459-2615		1	HOSE NIPPLE SS-6-HC-A-601	
B1810	90459-5337		1	LEVEL SENSOR, COD. 90459	
M1801	90458-1607		1	PUMP, SVI 8 03/03 N15T 1.5KW	
	315206-0607		*1*	*O-RING 59,92X3,53 MM*	
	90459-5671		*1*	*PIPE, 16408240*	

Pos	Part No	UN	Qty	Description	Page No

Machine Type | Group Description | Used-In | Group Number | Page No

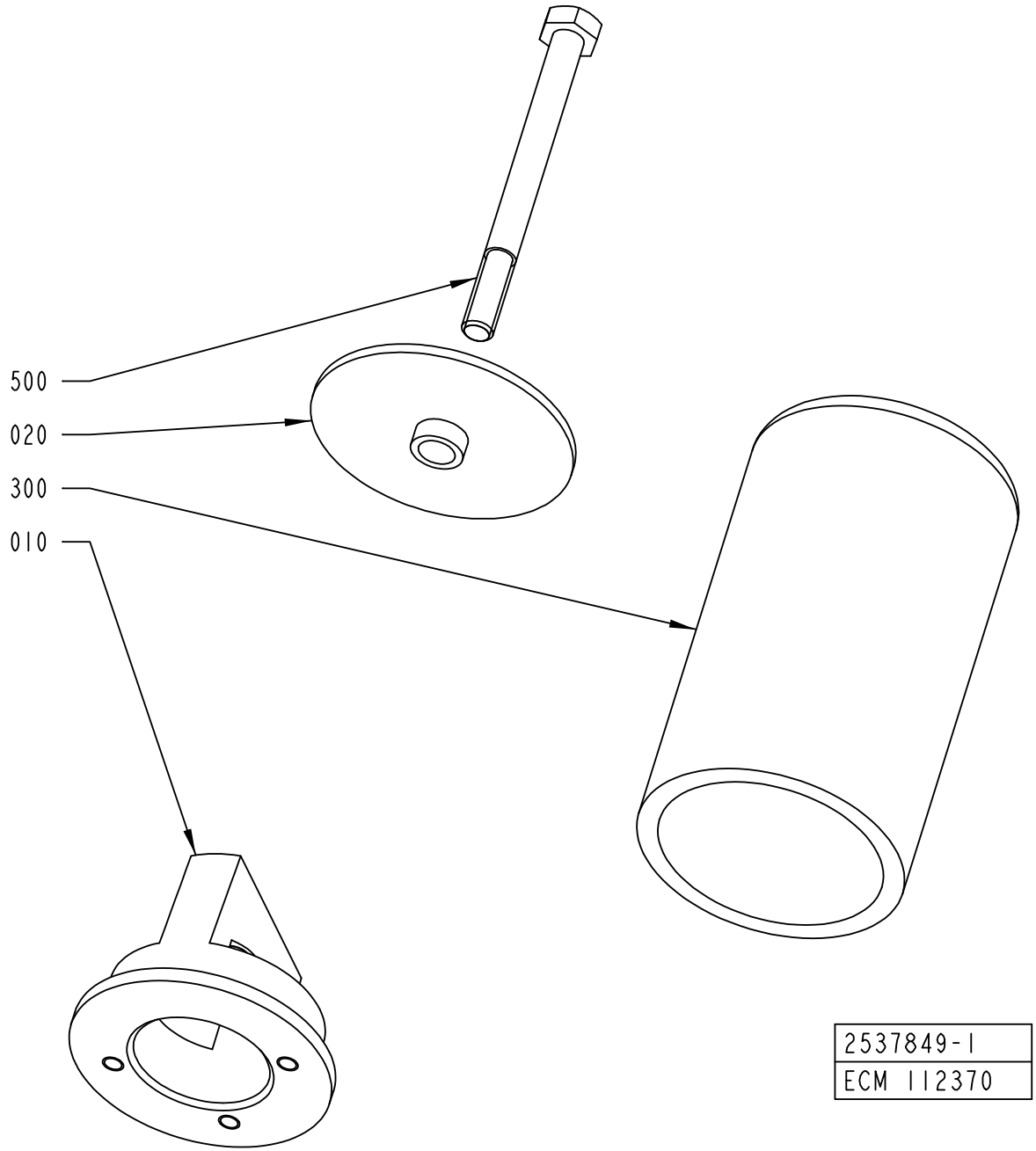
500
020
300
010
2537849-1
ECM 112370

ECM: 188834 - 20041104
Group number: 2537849-0100
Assembly Drawing: 2537849-1_1_AA

Pos	Part No	UN	Qty	Description	Page No
-					
010	2537848-0000		1	HOUSE	
020	2504569-0000		1	WASHER	
300	90458-2638		1	FILTER ELEMENT SINTERED, C3SF	
500	312105-0384		1	SCREW M6S ISO 4014 M6X70 A480	

Pos	Part No	UN	Qty	Description	Page No

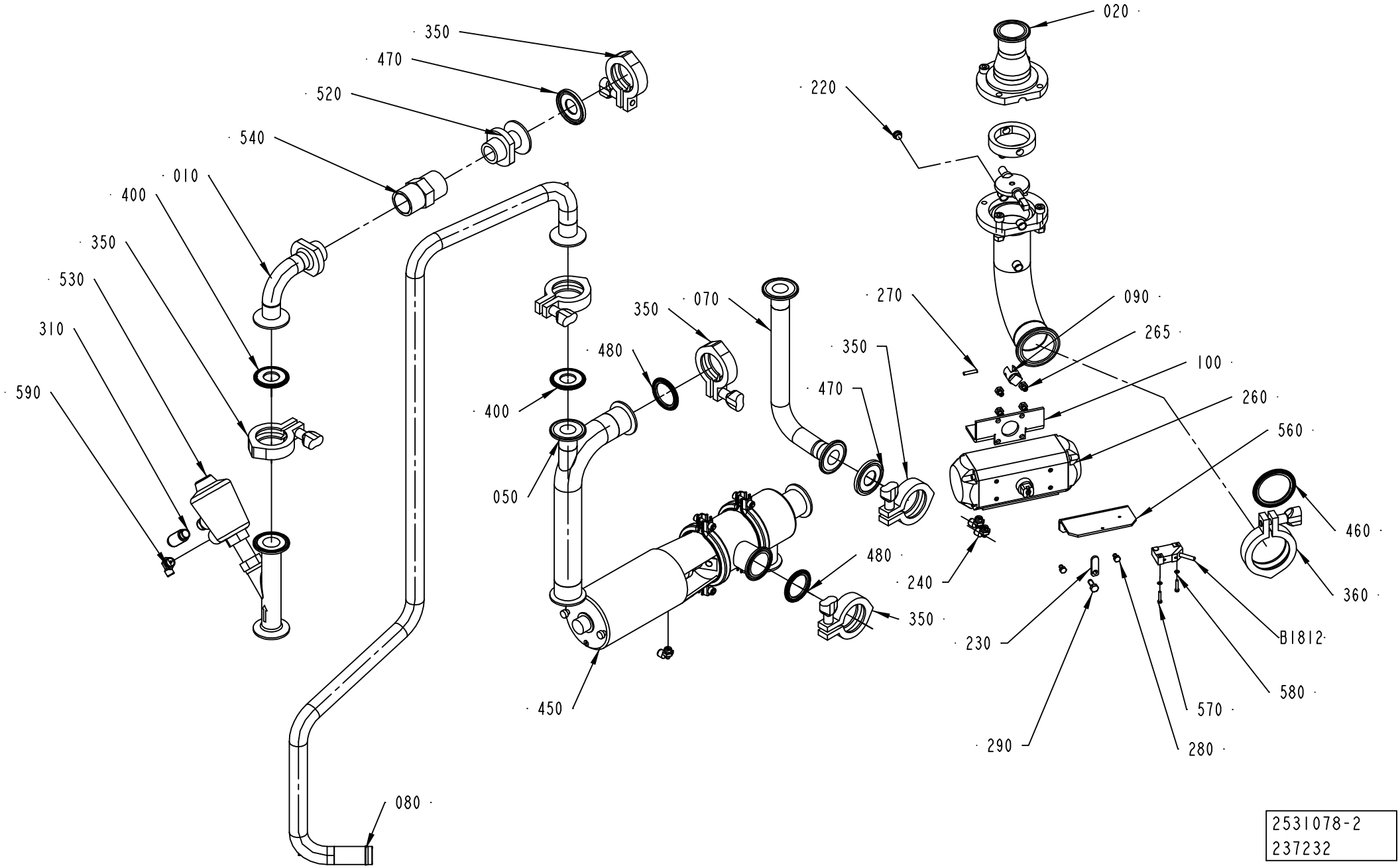

2531078-2
237232

ECM: 239318 - 20051011
Group number: 2531078-0200
Assembly Drawing: 2531078-2_1_AC

Pos	Part No	UN	Qty	Description	Page No
A3/FLEX					
080	2696008-0000		1	PIPE	
Common Parts					
010	2531079-0000		1	PIPE	
020	2696007-0000		1	PIPE	
050	2696005-0000		1	PIPE	
070	2696006-0000		1	PIPE	
090	2662432-0000		1	COUPLING	
100	2662434-0000		1	BRACKET	
210	90240-0302		2	BUSHING, 10X12X10 MM	
220	2531435-0000		1	PLUG	
230	2611034-0000		1	BRACKET	
240	90458-2956		3	ELBOW PIPE JOINT, EXT.THREAD, D=6MM-G1/8	
260	90459-4145		1	ROTARY ACTUATOR DRD-4-F05	
265	312105-0362		4	SCREW M6S ISO 4017 M6X8 A480	
270	311103-0272		1	PARALLEL PIN ISO 2338 4M6X20 A1	
280	312105-0323		2	SCREW M6S ISO 4017 M5X8 A480	
290	312105-0368		1	SCREW M6S ISO 4017 M6X16 A480	
310	90328-0026		1	SILENCER G1/4"	
350	342840-0103		6	CLAMPING PIECE	
360	342840-0105		1	CLAMPING PIECE	
400	342850-0303		1	GASKET 22,7X49,1X5,2 MM 1" FDA	
450	90459-0241		1	VALVE, SEAT, N.C. SRC-38-NC-21	
460	342850-0305		1	GASKET 47,8X62,6X5,2 MM 2" FDA	
470	90217-0306		2	GASKET 22,8X50,5X5,5 MM	
480	342850-0304		2	GASKET 35,4X49,1X5,2 1"1/2 FDA	
520	90458-2003		1	ADAPTER 1" MALE NPT X 1" DAIRY CLAMP	
530	90459-1241		1	ANGLE SEAT VALVE, TRI-CLAMP, N.C. DN20	
540	90458-2490		1	CONSTANT FLOW VALVE, GX 1"FX1"F 10GPM	
560	2662433-0000		1	BRACKET	
570	312125-0228		2	SCREW ISO 1207 M3X16 A4	
580	315105-0124		2	WASHER BRB 3,2X7 RFR	
590	90458-2957		1	ELBOW PIPE JOINT, EXT.THREAD, D=6MM-G1/4	
B1812	90044-0194		1	PROX.SW. IN5329/IN3002-BPKG(EX90044-104)	

Pos	Part No	UN	Qty	Description	Page No

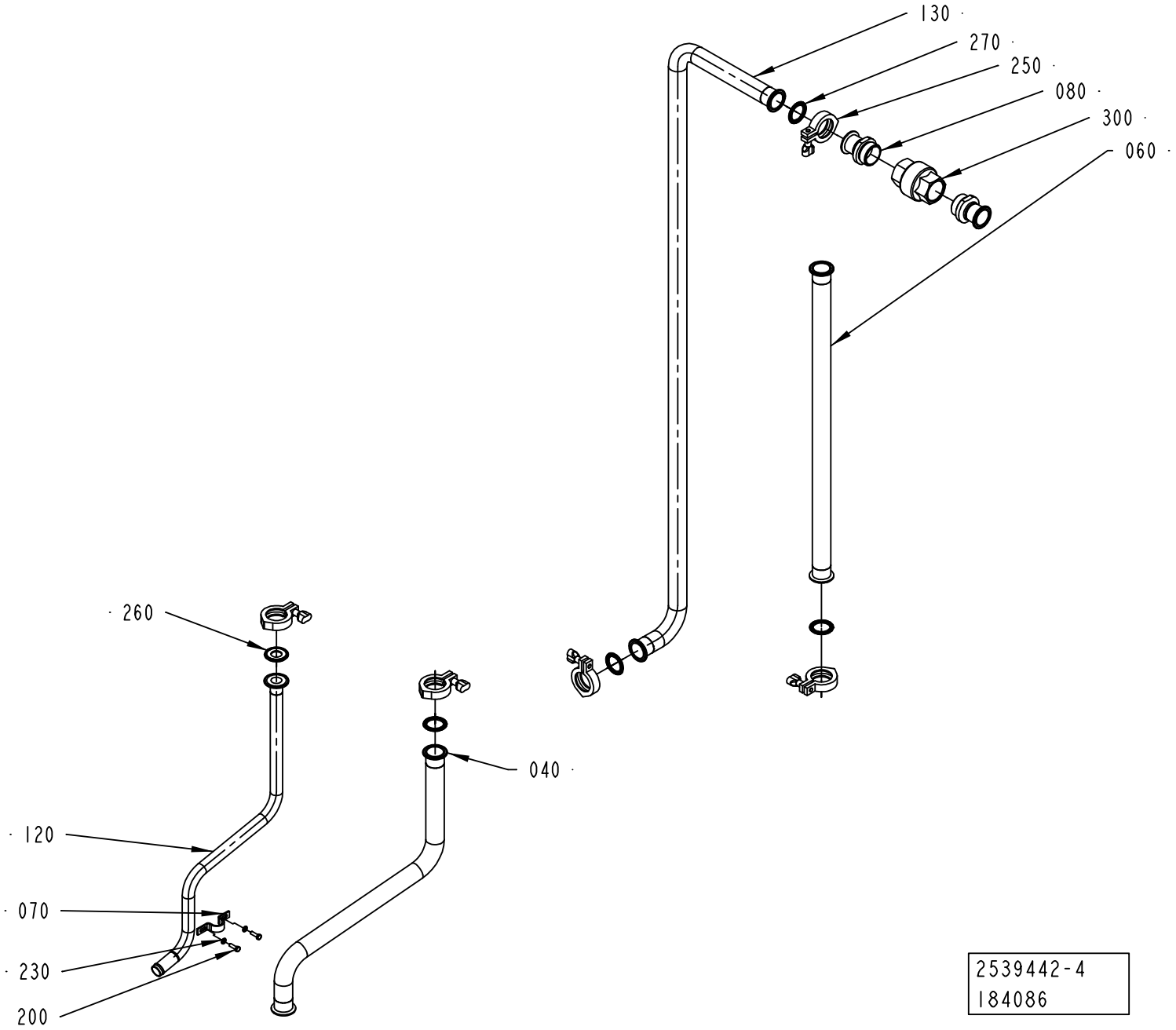
130
270
250
080
300
060
260
040
120
070
230
200
2539442-4
184086

ECM: 185356 - 20050224
Group number: 2539442-0200
Assembly Drawing: 2539442-4_1_AA

Pos	Part No	UN	Qty	Description	Page No
-					
040	2696026-0000		1	PIPE	
060	2696027-0000		1	PIPE	
070	2531082-0000		1	CLAMP	
080	2531083-0000		2	SLEEVE	
120	2696013-0000		1	PIPE	
130	2696012-0000		1	PIPE	
200	312105-0370		2	SCREW M6S ISO 4017 M6X20 A480	
230	315105-0153		2	WASHER BRB 6,4X12 RFR	
250	342840-0103		5	CLAMPING PIECE	
260	342850-0303		1	GASKET 22,7X49,1X5,2 MM 1" FDA	
270	342850-0304		4	GASKET 35,4X49,1X5,2 1"1/2 FDA	
300	90230-0045		1	NON-RETURN VALVE 1 1/2"	
	90230-0309		*1*	*GASKET KIT*	

Pos	Part No	UN	Qty	Description	Page No

Machine Type | Group Description | Used-In | Group Number | Page No

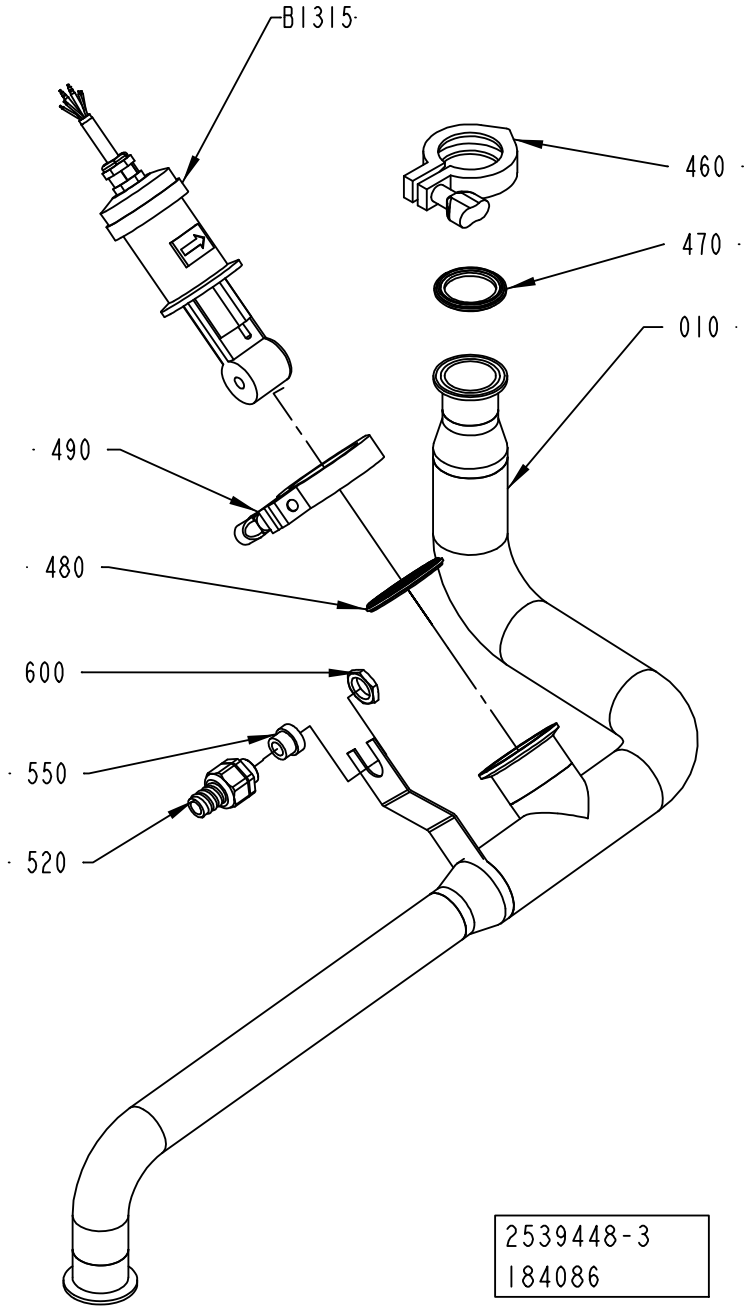
B1315
460
470
010
490
480
600
550
520
2539448-3
184086

ECM: 210314 - 20050615
Group number: 2539448-0200
Assembly Drawing: 2539448-3_1_AA

Pos	Part No	UN	Qty	Description	Page No
A3/FLEX					
010	2696010-0000		1	PIPE	
460	342840-0103		1	CLAMPING PIECE	
470	342850-0304		1	GASKET 35,4X49,1X5,2 1"1/2 FDA	
Common Parts					
480	342850-0305		1	GASKET 47,8X62,6X5,2 MM 2" FDA	
490	342850-0105		1	GASKET, FDA, 3-A, 2	
520	353243-0003		1	HOSE GLAND W/O INSERT PG11 EXTENDED	
550	353249-0011		1	INSERT, SINGEL HOLE, EK 153/11	
600	90099-0117		1	NUT, PR 18,6 (PG11)	
B1315	90459-5015		1	CONDUCTIVITY SENSOR CLS 52-A1CS1A2	

Pos	Part No	UN	Qty	Description	Page No

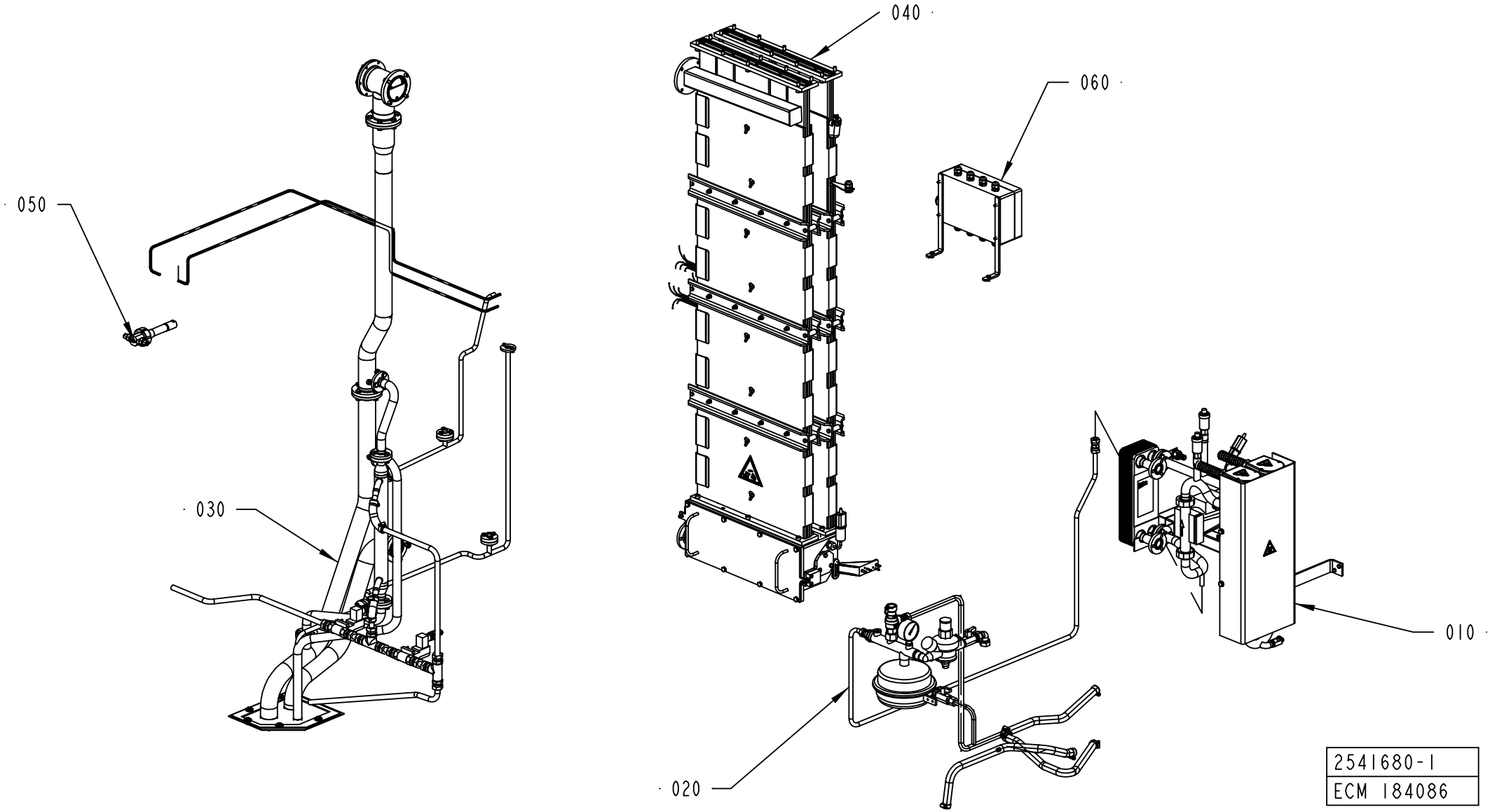
040
060
050
030
010
020
2541680-1
ECM 184086

ECM: 196313 - 20050224
Group number: 2541680-0100
Assembly Drawing: 2541680-1_1_AB

Pos	Part No	UN	Qty	Description	Page No
-					
010	1558495-0100		1	HEATING UNIT	**1-279**
020	2531052-0100		1	PRESSURE UNIT	**1-281**
030	2529484-0100		1	PEROXIDE PIPE	**1-283**
040	2715556-0100		1	BATH	**1-285, 1-287**
050	2547391-0100		1	NOZZLE	**1-289**
060	1532239-0100		1	CONNECTION BOX	**1-291**

Pos	Part No	UN	Qty	Description	Page No

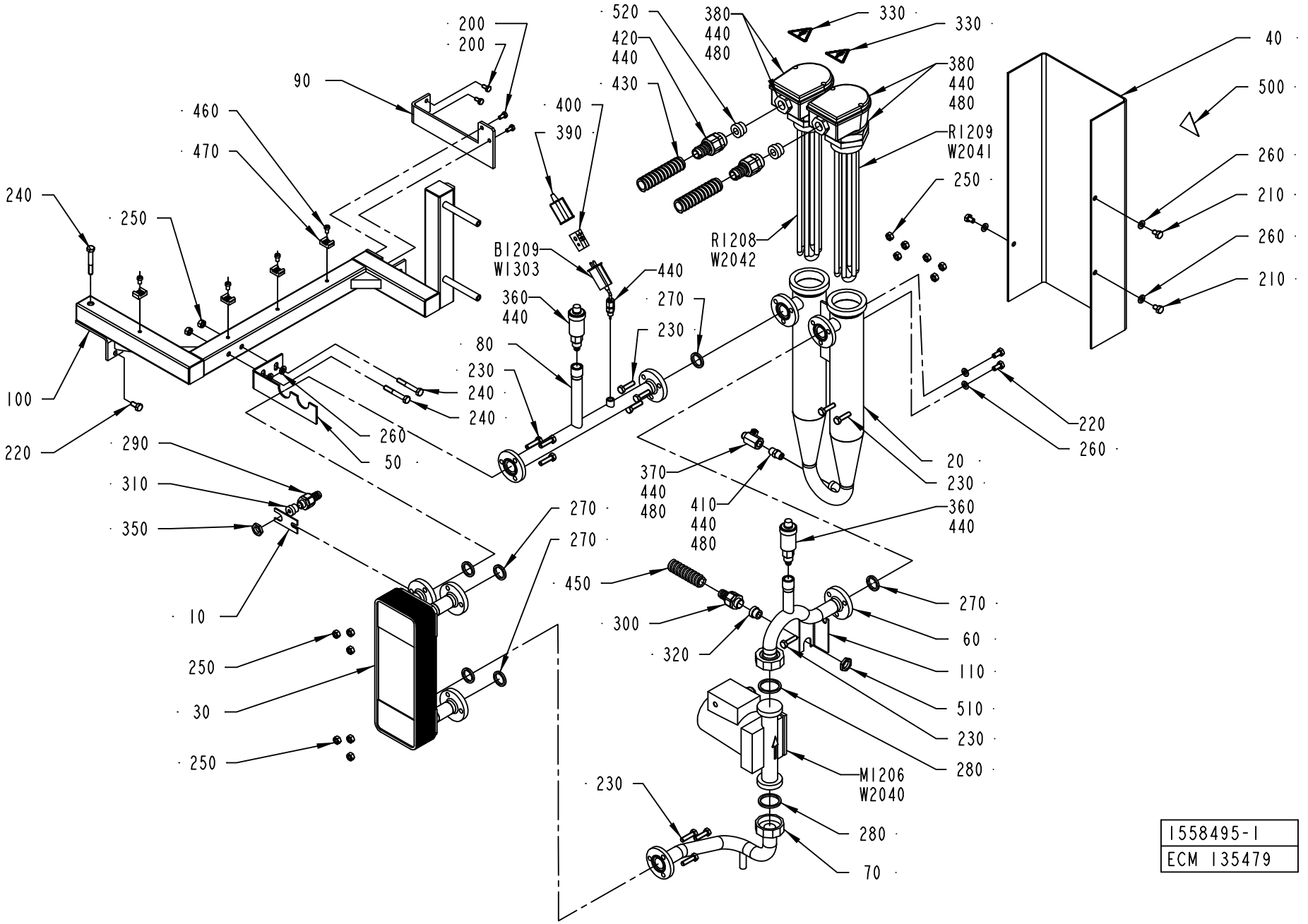
200
200
90
460
470
240
250
100
220
290
310
350
10
250
30
250
400
390
520
420
440
430
380
440
480
330
330
380
440
480
R1209
W2041
R1208
W2042
250
40
500
260
210
260
210
B1209
W1303
440
360
440
270
230
80
230
240
240
260
50
220
260
20
230
370
440
480
410
440
480
360
440
270
270
450
300
320
270
60
110
510
230
280
M1206
W2040
230
280
70
1558495-1
ECM 135479

ECM: 188845 - 20041104
Group number: 1558495-0100
Assembly Drawing: 1558495-1_1_AB

Pos	Part No	UN	Qty	Description	Page No
50HZ					
M1206	90321-0134		1	CIRC. PUMP TMB 40/2 230V50HZ	
60HZ					
M1206	90321-0135		1	CIRC. PUMP TMB 40/2 230V60HZ	
Common Parts					
010	1040970-0000		1	BRACKET	
020	1334507-0000		1	TUBE	
030	1346568-0000		1	HEAT EXCHANGER	
040	2544880-0000		1	PROTECTION	
050	1349608-0000		1	HOLDER	
060	1538049-0000		1	PIPE	
070	1538503-0000		1	PIPE	
080	1538723-0000		1	PIPE	
090	1538724-0000		1	BRACKET	
100	1558496-0000		1	FRAME	
110	1517707-0000		1	BRACKET	
200	312105-0366		4	SCREW M6S ISO 4017 M6X12 A480	
210	312105-0447		3	SCREW M6S ISO 4017 M8X12 A480	
220	312105-0449		3	SCREW M6S ISO 4017 M8X16 A480	
230	312105-0455		12	SCREW M6S ISO 4017 M8X30 A480	
240	312105-0462		3	SCREW M6S ISO 4014 M8X55 A480	
250	312605-0318		14	HEXAGON NUT, M6M M8 A280	
260	315105-0165		7	WASHER BRB 8,4X16 RFR	
270	315229-0103		6	GASKETS, 23,1X30,1X3,7 MM 1" FDA	
280	315229-0104		2	GASKETS, 35,8X42,8X3,7 MM 1"1/2 FD	
290	353243-0001		1	HOSE GLAND W/O INSERT PG9 EXTENDED	
300	353243-0003		1	HOSE GLAND W/O INSERT PG11 EXTENDED	
310	353249-0008		1	INSERT, SINGEL HOLE, EK 152/7	
320	353249-0011		1	INSERT, SINGEL HOLE, EK 153/11	
330	359705-0015		2	WARNING SIGN ISO, RISK OF ELECTRIC SHOCK	
350	90099-0104		1	NUT, PR 15,2 (PG9)	
360	90187-0105		2	PURGING VALVE, G3/8 FOR WATER	
370	90187-0158		1	THROTTLE BALL VALVE G1/4, R1/4	
380	90206-0326		2	JUNCTION BOX FOR 90206-56	
390	90326-0012		1	PROTECTIVE COVER, T31A4618	
400	90326-0020		1	PLUG, FEMALE YELLOW CR-AL	
410	90330-0043		1	NIPPLES, EXT. THREAD. R-207R1/4	
420	90012-0131		2	HOSE GLAND W/O INSERT PG21 NORMAL	
430	90152-0051	M	4	SPIRAL CONDUIT, 25X18, UL 1816	
440	90144-0073		1	TREBOFLON-TAPE W=13MM	
450	90152-0050	M	3	SPIRAL CONDUIT, 20X13, UL 1313	
460	312125-0364		4	SCREW ISO 1207 M6X10 A4	
470	352113-0204		4	ANCHOR PLATES FOR STRIPS, TYPE TM3S25-M	
480	90157-0037		1	THREAD SEALANT LOCTITE 542	
500	359705-0007		1	WARNING SIGN ISO, HOT SURFACE	
510	90099-0117		1	NUT, PR 18,6 (PG11)	
520	353249-0013		2	INSERT, SINGEL HOLE, EK 154/13	
B1209	90326-0057		1	THERMOCOUPLE, CR-AL	
R1208	90206-0070		1	HEATING ELEMENT 6000W 380/220V	
	90206-0326		*1*	*JUNCTION BOX FOR 90206-56*	
	90269-0308		*1*	*GASKET 59X68X3 MM*	
R1209	90206-0070		1	HEATING ELEMENT 6000W 380/220V	
	90206-0326		*1*	*JUNCTION BOX FOR 90206-56*	
	90269-0308		*1*	*GASKET 59X68X3 MM*	
W1303	90220-0034	M	5	THERMOCABLE TEX/SITW-20F-KX 2X0,5MM2	
W2040	351150-0412	M	4	CABLE OLFLEX 3X1,5 MM2 LIGHT/GREY	
W2041	351120-0164	M	4	CABLE SIHF 4X1,5MM2 GREEN/YELLOW	
W2042	351120-0164	M	4	CABLE SIHF 4X1,5MM2 GREEN/YELLOW	

Machine Type | Group Description | Used-In | Group Number | Page No

PRESSURE UNIT

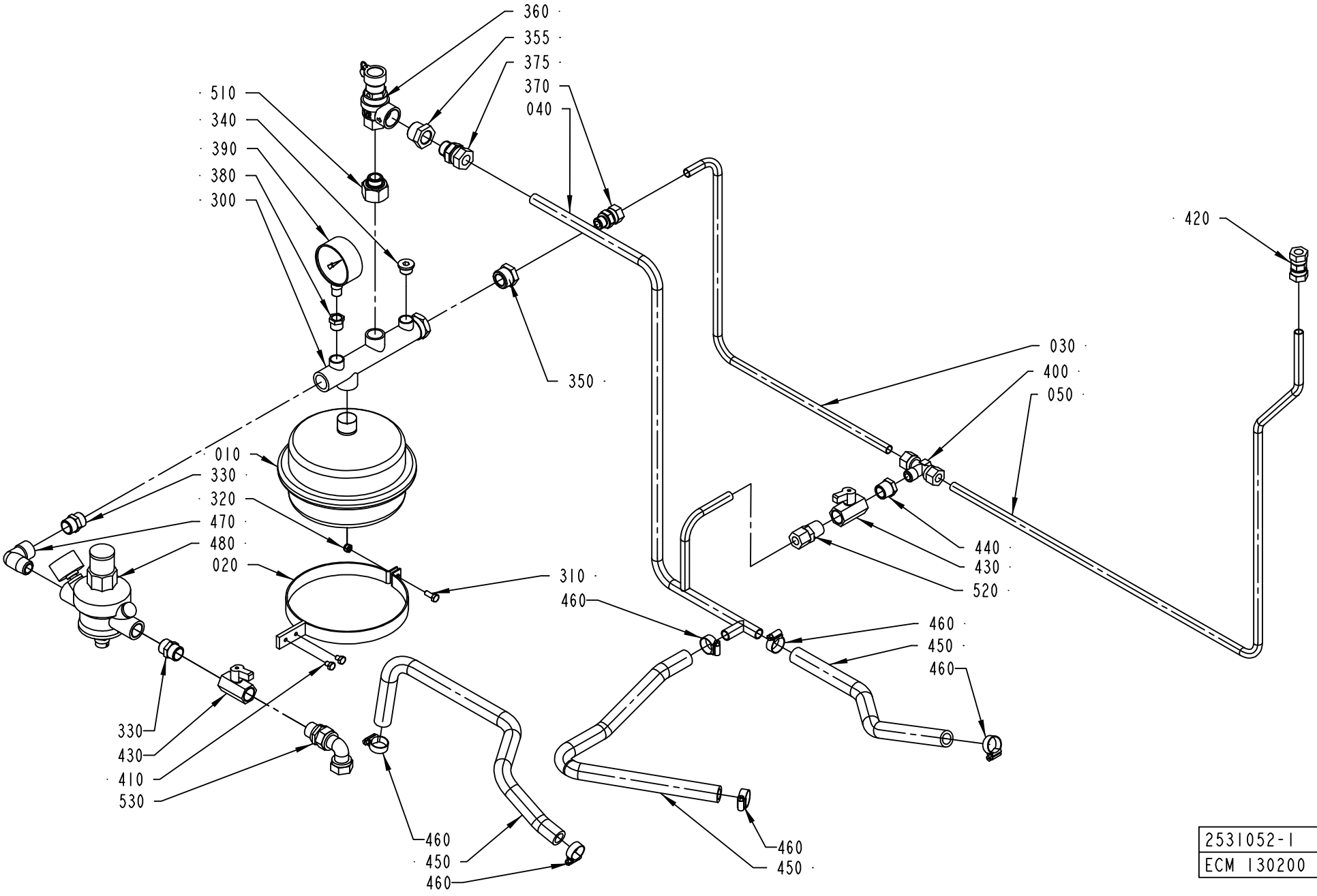

2531052-1
ECM 130200

ECM: 188846 - 20041104
Group number: 2531052-0100
Assembly Drawing: 2531052-1_1_AB

Pos	Part No	UN	Qty	Description	Page No
-					
010	1511497-0000		1	CONTAINER	
020	1484081-0000		1	BRACKET	
030	1499166-0000		1	PIPE	
040	2611051-0000		1	PIPE	
050	1538502-0000		1	PIPE	
300	90304-0307		1	ATTACHMENT PIPE	
310	312105-0368		1	SCREW M6S ISO 4017 M6X16 A480	
320	312812-0316		1	HEXAGON NUT, NY-LOCK M6 A480	
330	342700-0113		2	NIPPLES,HEXAGON,EXT.G-THREAD G1/2"-G1/2"	
340	342713-0211		1	PLUG, EXT THREAD HEX SOCKET 8638-00-380	
350	342701-0209		1	BUSHING,INT./EXT.G-THREAD G3/4"-G3/8"	
355	342206-0109		1	BUSHING, TAPERED, INT/EXT. THR NO. R211	
360	90458-0200		1	PEROX. SAFETY VALVE, NO. 527-430 1/2X3/4	
370	90030-0187		1	CONN. STR. GA-12-G3/8	
375	90030-0188		1	CONN. STR. GA-15-G1/2	
380	342701-0203		1	BUSHING, INT/EXT. G-THREAD NO. 3/8-1/4	
390	90043-0002		1	PRESSURE GAUGE, 2040 D=63 MM	
400	342741-0209		1	CONN. T-PIPE TE-12-R3/8	
410	312105-0362		2	SCREW M6S ISO 4017 M6X8 A480	
420	90030-0106		1	CONN. PIPE G-12	
430	90187-0062		2	BALL VALVE G1/2, NPBR	
440	90330-0048		1	BUSHING, INT/EXT. THR. R1/2-RP3/8	
450	90166-0087	MM	1500	HOSE 15/23 REINF.PVC TRANSP.	
460	342991-0103		6	HOSE CLIP,WORM DRIVE TYPE (19)-23	
470	90140-0012		1	ELBOW, 90 INT/EXT, 2020-1/2-1/2	
480	90458-0201		1	FLUID AUT. FEEDER, ALINOX 1/2 46.04.00	
490	90144-0073	MM	1	TREBOFLON-TAPE W=13MM	
500	90157-0037	ML	1	THREAD SEALANT LOCTITE 542	
510	90458-0751		1	BUSHING,INT./EXT.G-THREAD G3/4"-G1/2"	
520	90030-0180		1	CONN. STR. GE 12-1/2-14 NPTF	
530	342738-0221		1	ADJUSTABLE ELBOW CONNECTION,EXT 15-G1/2	

Pos	Part No	UN	Qty	Description	Page No

PEROXIDE PIPE

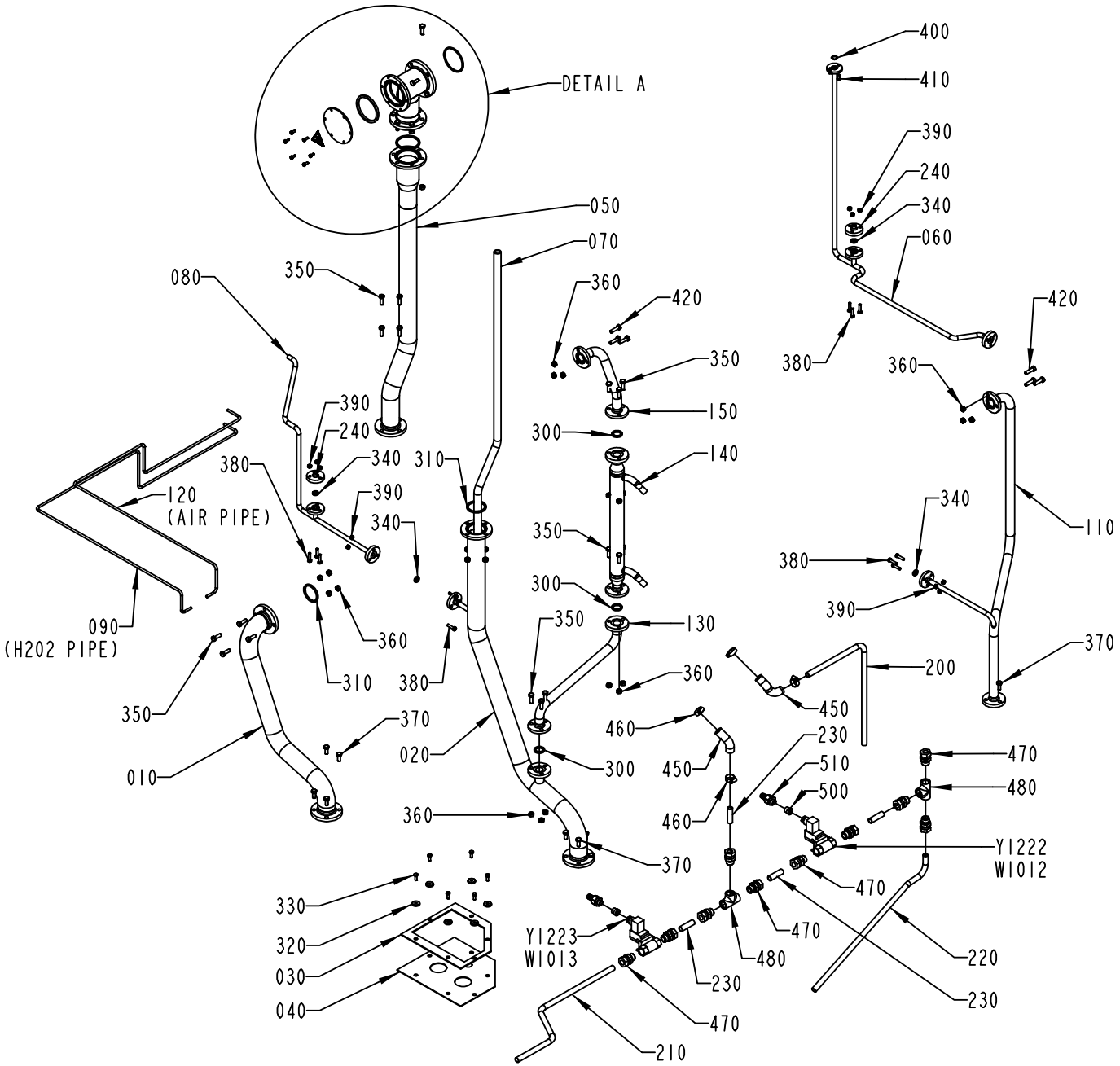

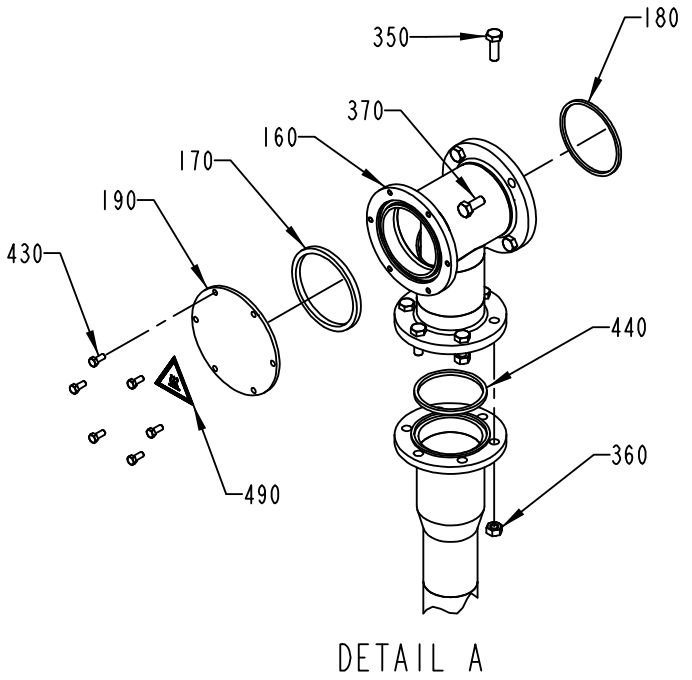

2529484-1
ECM 184086

ECM: 196314 - 20050224
Group number: 2529484-0100
Assembly Drawing: 2529484-1_1_AC

Pos	Part No	UN	Qty	Description	Page No
-					
010	1558842-0000		1	PIPE	
020	1558841-0000		1	PIPE	
030	1038688-0000		1	HOLDER	
040	1255551-0000		1	SEAL CLOTH	
050	1499156-0000		1	PIPE	
060	2529073-0000		1	PIPE	
070	1499726-0000		1	PLASTIC HOSE	
080	2529072-0000		1	PIPE	
090	2563279-0000		1	PIPE	
110	1558840-0000		1	PIPE	
120	2563281-0000		1	PIPE	
130	2509654-0000		1	PIPE	
140	2509656-0000		1	PIPE	
150	2509655-0000		1	PIPE	
160	2708584-0000		1	'CONNECTION PIPE	
170	436781-0000		1	GASKET	
180	1523808-0000		1	GASKET	
190	1558427-0000		1	LID	
200	2519444-0000		1	TUBE	
210	2519441-0000		1	TUBE	
220	2519443-0000		1	TUBE	
230	2519442-0000		4	TUBE	
240	2564107-0000		2	LID	
300	315229-0103		3	GASKETS, 23,1X30,1X3,7 MM 1" FDA	
310	315229-0105		2	GASKETS, 48,5X55,5X3,7 MM 2" FDA	
320	315125-0153		6	WASHER TBRSB 6,4X22X4 A4	
330	312105-0368		6	SCREW M6S ISO 4017 M6X16 A480	
340	315229-0101		4	GASKETS, 10,4X17,4X3,7 MM 1/2" FDA	
350	312105-0453		23	SCREW M6S ISO 4017 M8X25 A480	
360	312605-0318		29	HEXAGON NUT, M6M M8 A280	
370	312105-0451		15	SCREW M6S ISO 4017 M8X20 A480	
380	312105-0372		12	SCREW M6S ISO 4017 M6X25 A480	
390	312605-0316		12	HEXAGON NUT, M6M M6 A280	
400	927421-0003		1	O-RING 13.3X2.4 SILICONE	
410	312105-0366		2	SCREW M6S ISO 4017 M6X12 A480	
420	312105-0455		6	SCREW M6S ISO 4017 M8X30 A480	
430	312105-0327		6	SCREW M6S ISO 4017 M5X12 A480	
440	315229-0106		1	GASKETS, 61,2X68,2X3,7 MM 2"1/2 FD	
450	90166-0087	MM	330	HOSE 15/23 REINF.PVC TRANSP.	
460	342991-0103		4	HOSE CLIP,WORM DRIVE TYPE (19)-23	
470	90030-0188		10	CONN. STR. GA-15-G1/2	
480	90330-0049		2	T-PIPE, INT. THREAD, R-221R1/2	
490	359705-0007		1	WARNING SIGN ISO, HOT SURFACE	
500	353249-0009		2	INSERT, SINGEL HOLE, EK 152/9	
510	353243-0001		2	HOSE GLAND W/O INSERT PG9 EXTENDED	
Y1222	90042-0172		1	SOLENOID VALVE 4023/1005/1032 24VDC	
	90042-0467		*1*	*COIL 24VDC GSR*	
Y1223	90042-0172		1	SOLENOID VALVE 4023/1005/1032 24VDC	
	90042-0467		*1*	*COIL 24VDC GSR*	

Machine Type | Group Description | Used-In | Group Number | Page No

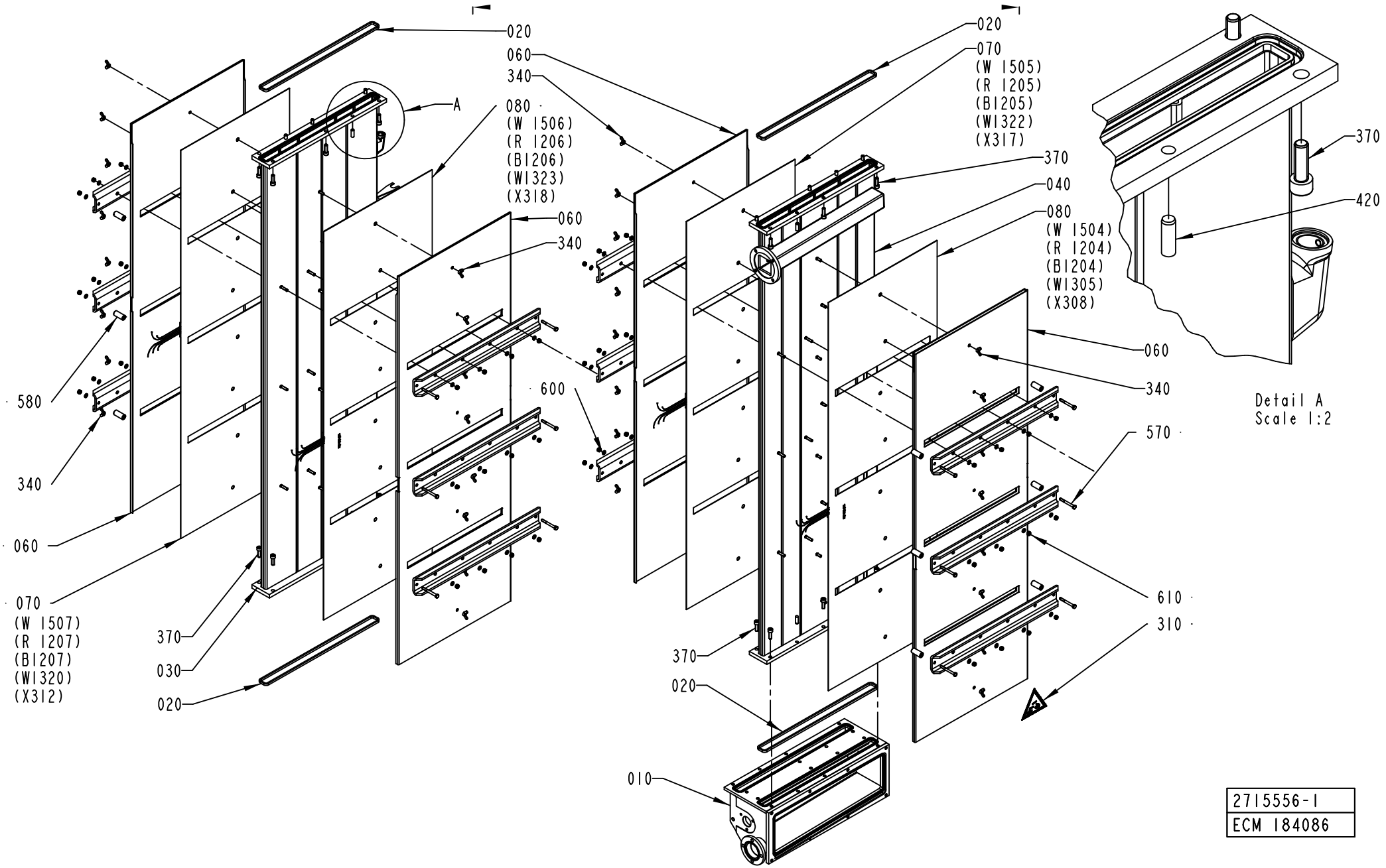

2715556-1
ECM 184086

ECM: 258294 - 20060702
Group number: 2715556-0100
Assembly Drawing: 2715556-1_1_AA

This list covers pages from 1-284 to 1-287

Pos	Part No	UN	Qty	Description	Page No
LIGHTCAP					
040	2802438-0000		1	PEROXIDE CHAMBER	
140	2709224-0000		2	WHEEL	
150	2709223-0000		1	BENDING ROLLER	
STDA7 CAP, NOMOLDEDCAP					
040	2696095-0000		1	PEROXIDE CHAMBER	
140	1539727-0000		2	WHEEL	
150	1490057-0000		1	BENDING ROLLER	
Common Parts					
010	2778562-0000		1	BOTTOM SECTION	
020	1538735-0000		4	GASKET	
030	2696094-0000		1	CHAMBER	
050	1528639-0000		1	GASKET	
060	2528058-0000		4	COVER	
070	2528056-0000		2	RESISTANCE	
080	2528057-0000		2	RESISTANCE	
090	1523805-0000		2	PIN	
100	1511759-0000		32	SPRING	
110	2528059-0000		2	BRACKET	
120	1539729-0000		2	BRACKET	
130	1538742-0000		1	LID	
170	1539726-0000		2	SHAFT	
180	2508315-0000		1	SCREW	
190	1484428-0000		1	PLASTIC PLUG	
300	927421-0004		1	O-RING 15.3X2.4 SILICONE	
310	359705-0004		1	WARNING SIGN ISO, DANGEROUS CHEMICALS	
320	352103-0101		1	CABLE GLAND, ST 9, PR15,2/PG9	
330	315237-0110		1	WASHER,PL.RND.AL.13,5/18,H=1,5	
340	312715-0116		32	WING NUT DIN 315 A2 MVM-K M6	
350	312605-0316		14	HEXAGON NUT, M6M M6 A280	
370	312115-0453		24	SCREW ISO4762 M8X25 A4 80	
380	312105-0370		8	SCREW M6S ISO 4017 M6X20 A480	
390	312115-0329		4	SCREW ISO4762 M5X16 A4 80	
400	312105-0449		4	SCREW M6S ISO 4017 M8X16 A480	
420	311103-1403		8	PARALLEL PIN ISO 2338 8M6X24 A1	
430	311103-0270		4	PARALLEL PIN ISO 2338 4M6X16 A1	
440	312105-0451		4	SCREW M6S ISO 4017 M8X20 A480	
450	90144-0073	MM	1	TREBOFLON-TAPE W=13MM	
460	90326-0053		1	THERMOCOUPLE, 12826-35	
470	90326-0020		1	PLUG, FEMALE YELLOW CR-AL	
480	90326-0012		1	PROTECTIVE COVER, T31A4618	
490	315205-0802		2	O-RING 41,0X1,78 MM	
500	90240-0146		2	FLANGE BUSHING, 15X21X20 MM	
510	90099-0104		1	NUT, PR 15,2 (PG9)	
520	90044-0084		2	LIMIT SW. 14 CE1-4	
530	567070-0012		1	ELECTRODE	
540	312605-0312		2	HEXAGON NUT, M6M M4 A280	
550	315105-0136		3	WASHER BRB 4,3X9 RFR	
560	312115-0370		4	SCREW ISO4762 M6X20 A4 80	
570	312105-0381		12	SCREW M6S ISO 4014 M6X55 A480	
580	2685380-0000		12	SPACER	
590	2696097-0000		12	PLATE	
600	315105-0153		60	WASHER BRB 6,4X12 RFR	
610	312812-0316		48	HEXAGON NUT, NY-LOCK M6 A480	

Machine Type | Group Description | Used-In | Group Number | Page No

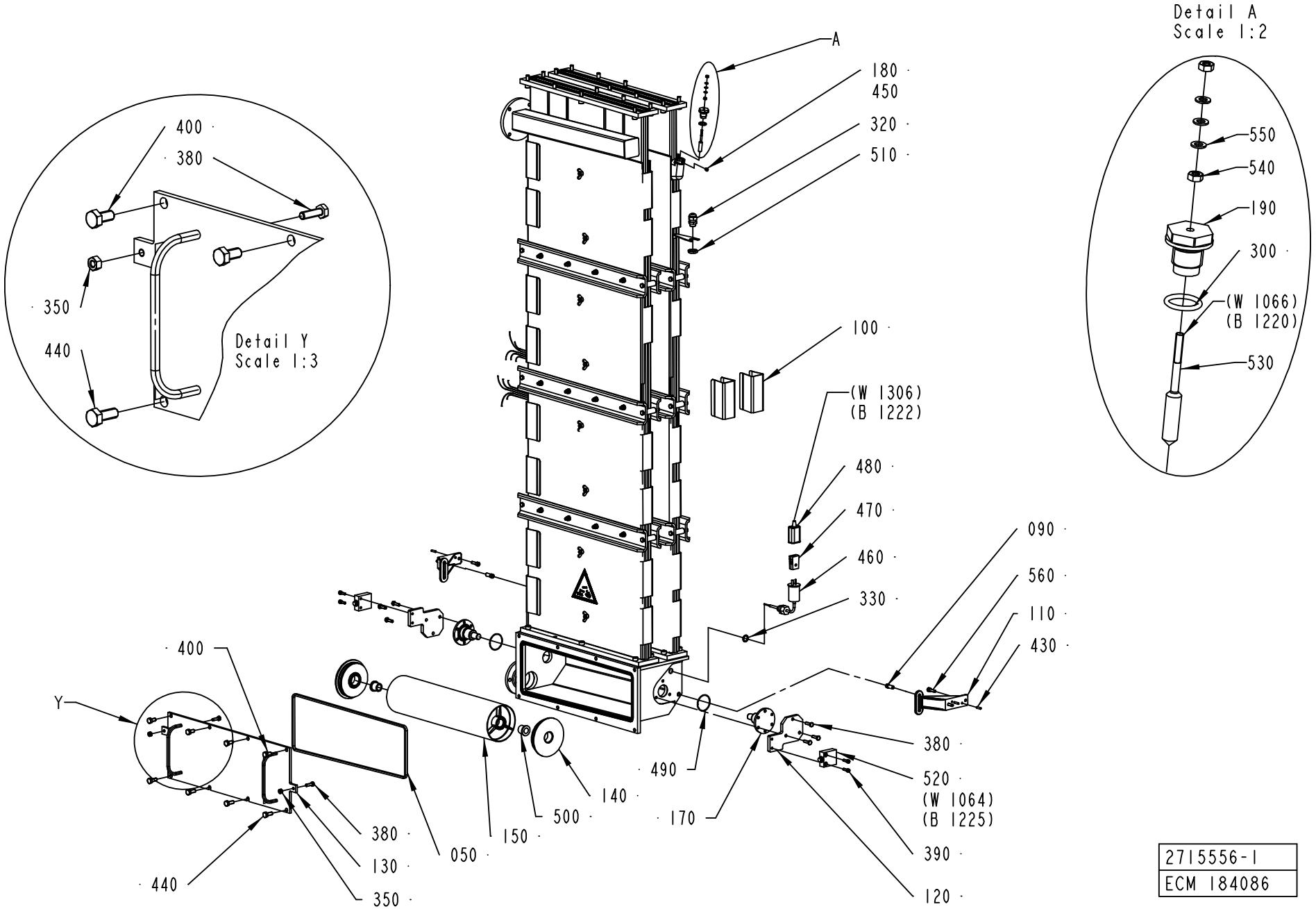

2715556-1
ECM 184086

ECM: 258294 - 20060702
Group number: 2715556-0100
Assembly Drawing: 2715556-1_2_AA

This list covers pages from 1-284 to 1-287

Pos	Part No	UN	Qty	Description	Page No
LIGHTCAP					
040	2802438-0000		1	PEROXIDE CHAMBER	
140	2709224-0000		2	WHEEL	
150	2709223-0000		1	BENDING ROLLER	
STDA7 CAP, NOMOLDEDCAP					
040	2696095-0000		1	PEROXIDE CHAMBER	
140	1539727-0000		2	WHEEL	
150	1490057-0000		1	BENDING ROLLER	
Common Parts					
010	2778562-0000		1	BOTTOM SECTION	
020	1538735-0000		4	GASKET	
030	2696094-0000		1	CHAMBER	
050	1528639-0000		1	GASKET	
060	2528058-0000		4	COVER	
070	2528056-0000		2	RESISTANCE	
080	2528057-0000		2	RESISTANCE	
090	1523805-0000		2	PIN	
100	1511759-0000		32	SPRING	
110	2528059-0000		2	BRACKET	
120	1539729-0000		2	BRACKET	
130	1538742-0000		1	LID	
170	1539726-0000		2	SHAFT	
180	2508315-0000		1	SCREW	
190	1484428-0000		1	PLASTIC PLUG	
300	927421-0004		1	O-RING 15.3X2.4 SILICONE	
310	359705-0004		1	WARNING SIGN ISO, DANGEROUS CHEMICALS	
320	352103-0101		1	CABLE GLAND, ST 9, PR15,2/PG9	
330	315237-0110		1	WASHER,PL.RND.AL.13,5/18,H=1,5	
340	312715-0116		32	WING NUT DIN 315 A2 MVM-K M6	
350	312605-0316		14	HEXAGON NUT, M6M M6 A280	
370	312115-0453		24	SCREW ISO4762 M8X25 A4 80	
380	312105-0370		8	SCREW M6S ISO 4017 M6X20 A480	
390	312115-0329		4	SCREW ISO4762 M5X16 A4 80	
400	312105-0449		4	SCREW M6S ISO 4017 M8X16 A480	
420	311103-1403		8	PARALLEL PIN ISO 2338 8M6X24 A1	
430	311103-0270		4	PARALLEL PIN ISO 2338 4M6X16 A1	
440	312105-0451		4	SCREW M6S ISO 4017 M8X20 A480	
450	90144-0073	MM	1	TREBOFLON-TAPE W=13MM	
460	90326-0053		1	THERMOCOUPLE, 12826-35	
470	90326-0020		1	PLUG, FEMALE YELLOW CR-AL	
480	90326-0012		1	PROTECTIVE COVER, T31A4618	
490	315205-0802		2	O-RING 41,0X1,78 MM	
500	90240-0146		2	FLANGE BUSHING, 15X21X20 MM	
510	90099-0104		1	NUT, PR 15,2 (PG9)	
520	90044-0084		2	LIMIT SW. 14 CE1-4	
530	567070-0012		1	ELECTRODE	
540	312605-0312		2	HEXAGON NUT, M6M M4 A280	
550	315105-0136		3	WASHER BRB 4,3X9 RFR	
560	312115-0370		4	SCREW ISO4762 M6X20 A4 80	
570	312105-0381		12	SCREW M6S ISO 4014 M6X55 A480	
580	2685380-0000		12	SPACER	
590	2696097-0000		12	PLATE	
600	315105-0153		60	WASHER BRB 6,4X12 RFR	
610	312812-0316		48	HEXAGON NUT, NY-LOCK M6 A480	

Machine Type | Group Description | Used-In | Group Number | Page No

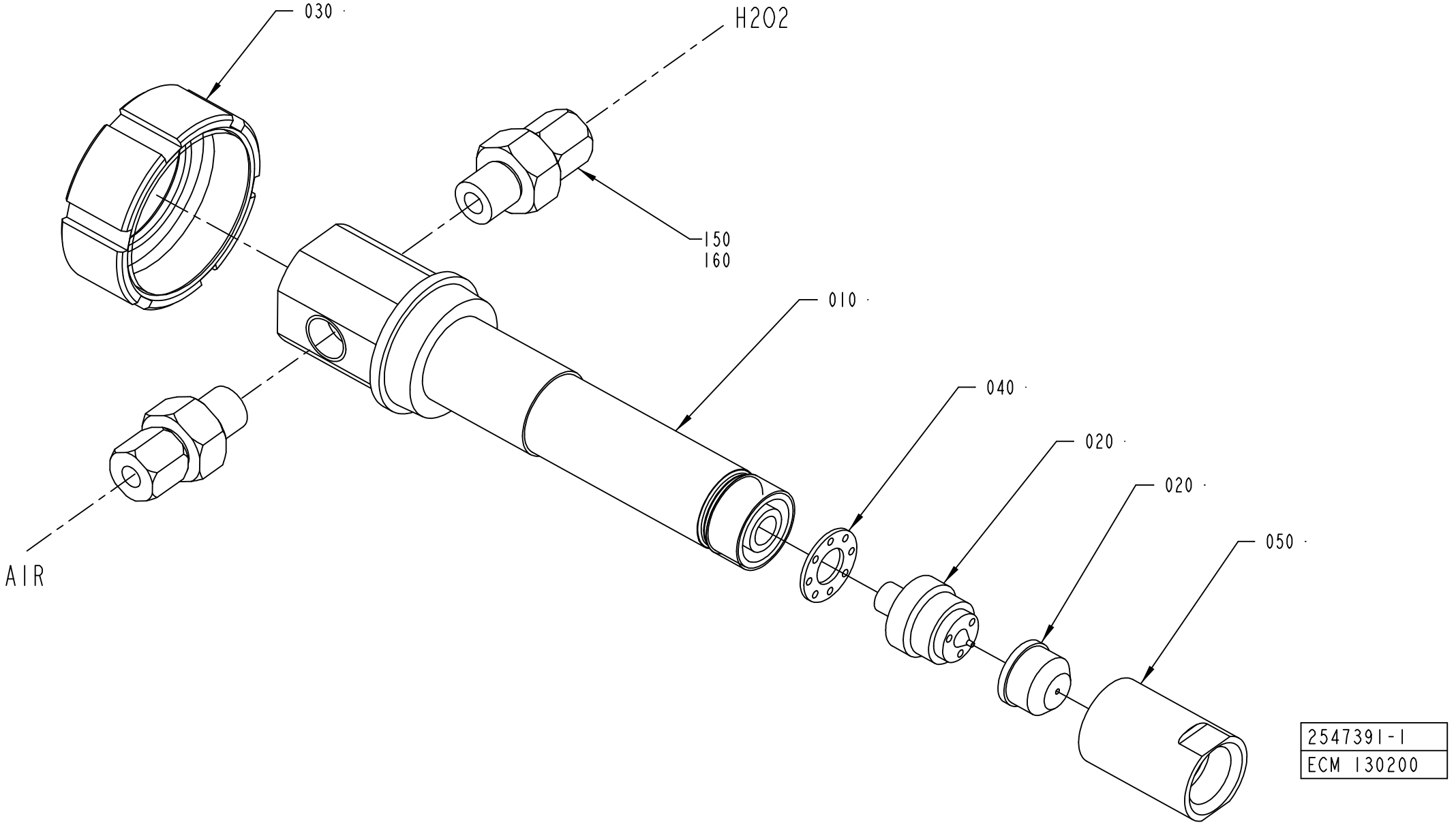
030
H2O2
150
160
010
040
020
020
050
AIR
2547391-1
ECM 130200

ECM: 188838 - 20041104
Group number: 2547391-0100
Assembly Drawing: 2547391-1_1_AB

Pos	Part No	UN	Qty	Description	Page No
-					
010	2563760-0000		1	EXTENSION	
020	2563759-0000		1	SPRAY SYSTEM	
030	1512405-0000		1	NUT	
040	2563762-0000		1	SPACER	
050	2563761-0000		1	NUT	
150	90030-0202		2	CONN. STR., 6-G1/4, EXT. THREAD	
160	90144-0007		1	TAPE	

Pos	Part No	UN	Qty	Description	Page No

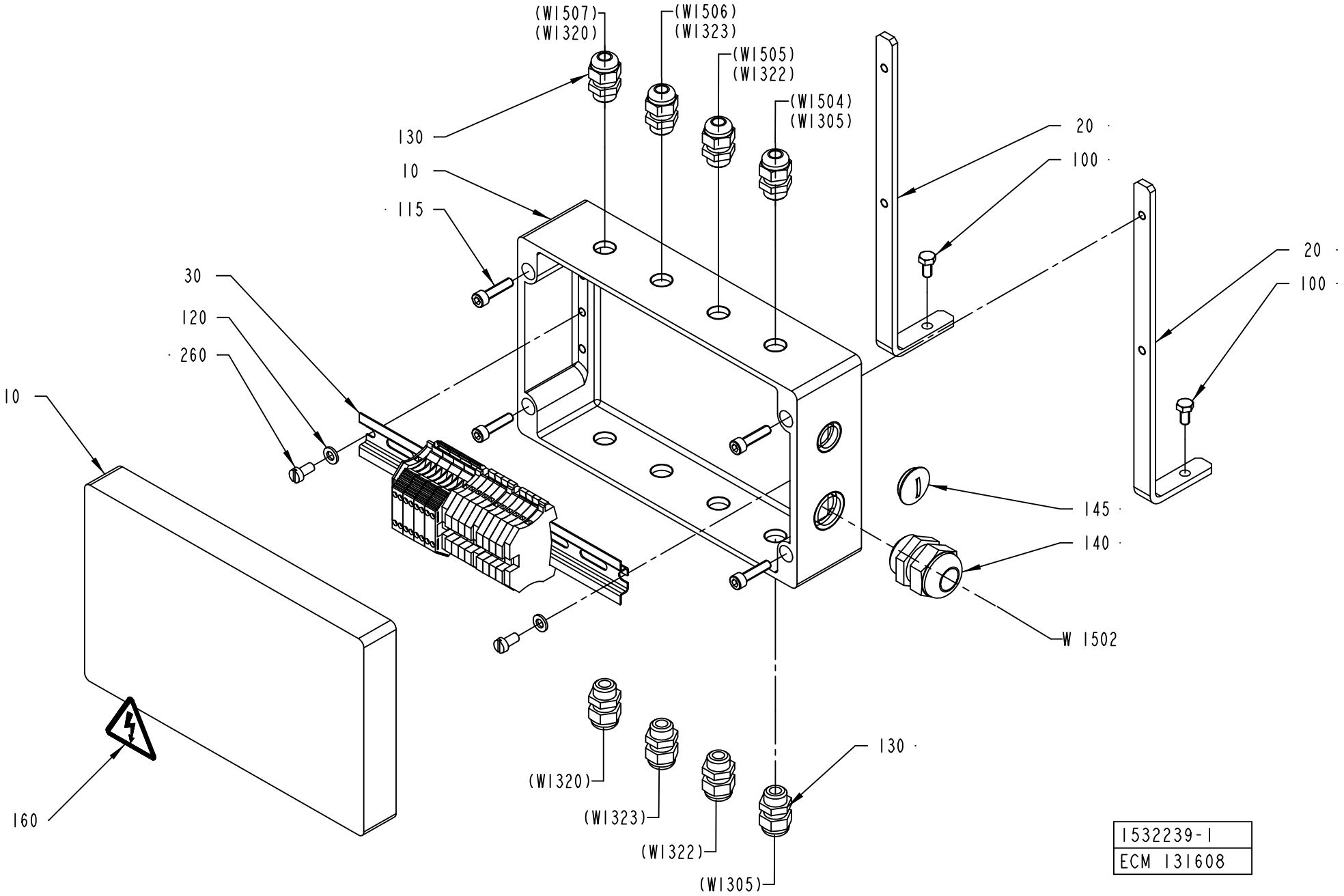
(W1507)
(W1320)
(W1506)
(W1323)
(W1505)
(W1322)
(W1504)
(W1305)
130
10
115
30
120
260
10
160
20
100
20
100
145
140
W 1502
(W1320)
(W1323)
(W1322)
(W1305)
130
1532239-1
ECM 131608

ECM: 189100 - 20041104
Group number: 1532239-0100
Assembly Drawing: 1532239-1_1_AB

Pos	Part No	UN	Qty	Description	Page No
-					
010	1532236-0000		1	CONNECTION BOX	
020	1532240-0000		2	BRACKET	
030	1532238-0100		1	TERMINAL BLOCK	**1-293**
100	312105-0366		2	SCREW M6S ISO 4017 M6X12 A480	
115	312115-0372		4	SCREW ISO4762 M6X25 A4 80	
120	315105-0153		2	WASHER BRB 6,4X12 RFR	
130	352103-0101		8	CABLE GLAND, ST 9, PR15,2/PG9	
140	352103-0115		1	CABLE GLAND, STR 21, PR28,3/PG21	
145	90002-0004		1	BLANK-OFF PLUG, PR 22,5 SKINDICHT-BLK16	
160	359705-0015		1	WARNING SIGN ISO, RISK OF ELECTRIC SHOCK	
260	312125-0366		2	SCREW ISO 1207 M6X12 A4	
W1502	351150-0196	M	7	CABLE OLFLEX 7X4 MM2 LIGHT/GREY	

Pos	Part No	UN	Qty	Description	Page No

TERMINAL BLOCK

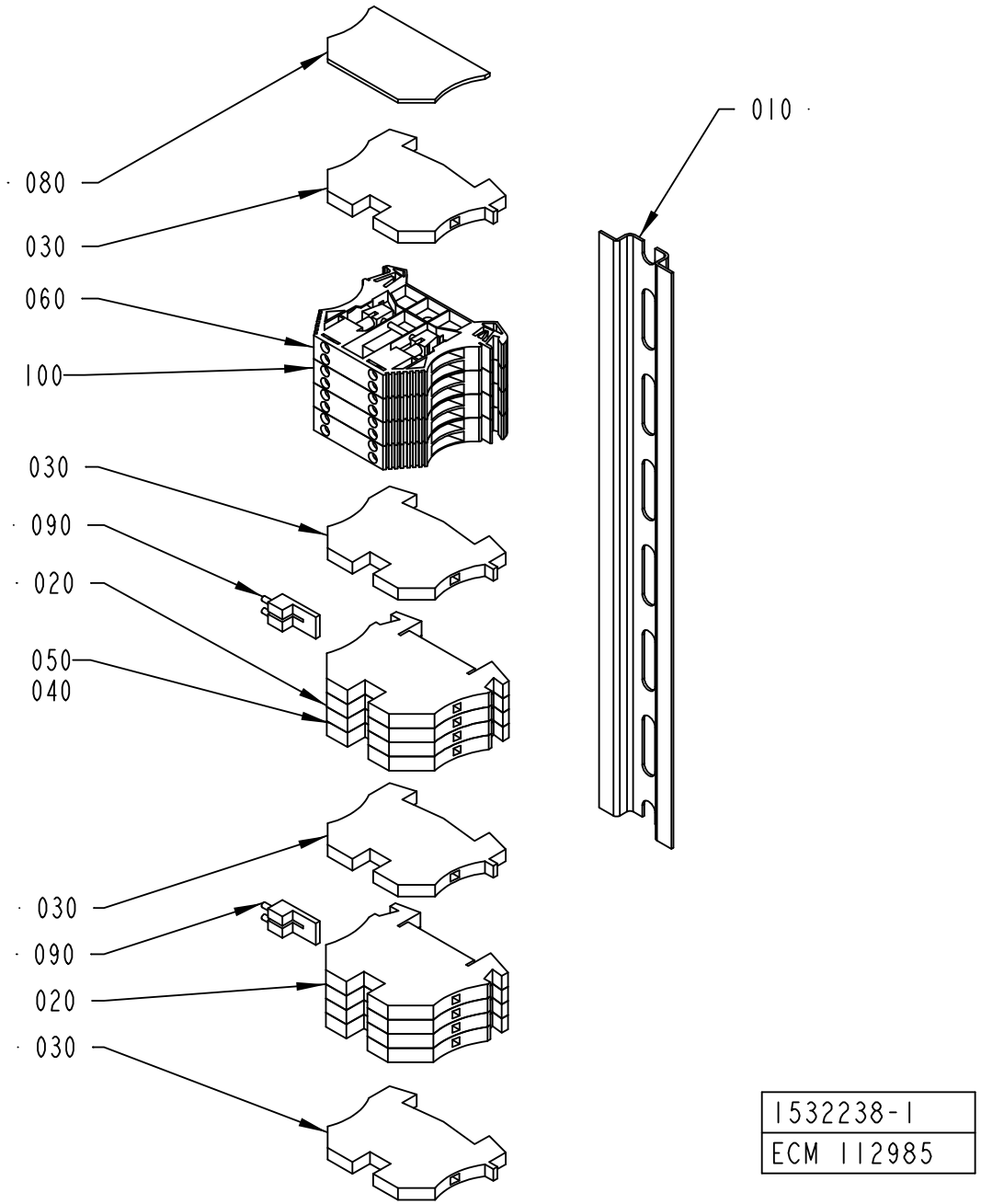

1532238-1
ECM 112985

ECM: 189101 - 20041104
Group number: 1532238-0100
Assembly Drawing: 1532238-1_1_AA

Pos	Part No	UN	Qty	Description	Page No
-					
010	1532237-0000		1	RAIL	
020	353021-0213		8	FEED THROUGH TERMINAL, 10201.0	
030	353024-0204		4	EARTH TERMINAL WPE 2,5	
040	359011-0834		1	SET OF SIGNS 6-GW(EARTH)	
050	359011-0821		1	SET OF SIGNS 6-FW 1-50	
060	90459-1742		4	FEED THROUGH TERMINAL, 1024100	
080	353032-0004		1	END PLATE WAP 2,5-10 BEIGE	
090	353034-0030		1	BRIDGE CONNECTOR WQV 2,5/10, 10544.6	
100	359011-0823		1	SET OF SIGNS 6-FW 101-150	
110	359011-0832		1	SET OF SIGNS 6-GW (+)	
120	359011-0833		1	SET OF SIGNS 6-GW (-)	

Pos	Part No	UN	Qty	Description	Page No

FRAME SECTION,UPPER

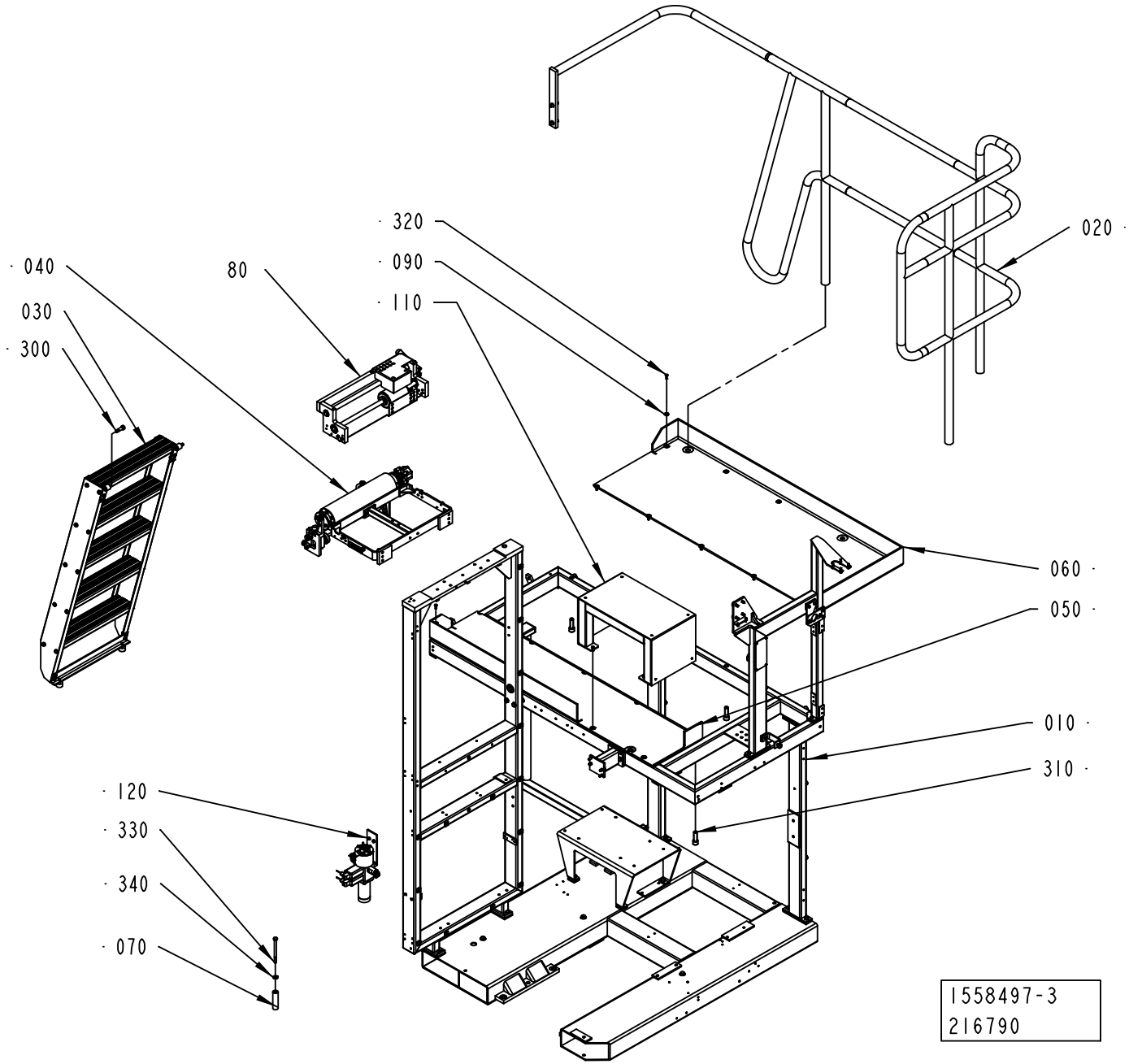

ECM: 236726 - 20060101
Group number: 1558497-0200
Assembly Drawing: 1558497-3_1_AB

Pos	Part No	UN	Qty	Description	Page No
-					
010	1549980-0200		1	FRAME	**1-297, 1-299**
020	2529991-0100		1	RAILING	**1-301**
030	1095862-0100		1	LADDER	**1-303**
040	2552125-0100		1	BENDING ROLLER	**1-305, 1-307**
050	1558438-0000		1	CHECKER PLATE	
060	1558439-0000		1	CHECKER PLATE	
070	1511504-0000		3	SPACER	
090	2541673-0000		13	WASHER	
110	2530188-0100		1	STEP	**1-315**
120	2529485-0200		1	SPRAY SYSTEM	**1-317**
300	312180-0534		2	SCREW ISO7379 H12X25	
310	312115-0630		3	SCREW ISO4762 M16X50 A4 80	
320	312156-0370		13	SCREW EN 10642 MF6S M6X20 A470	
330	312105-0517		4	SCREW M6S ISO 4014 M10X130 A480	
340	315115-0173		4	WASHER PLAIN, TBRB 10,5/22 H=4	

Pos	Part No	UN	Qty	Description	Page No

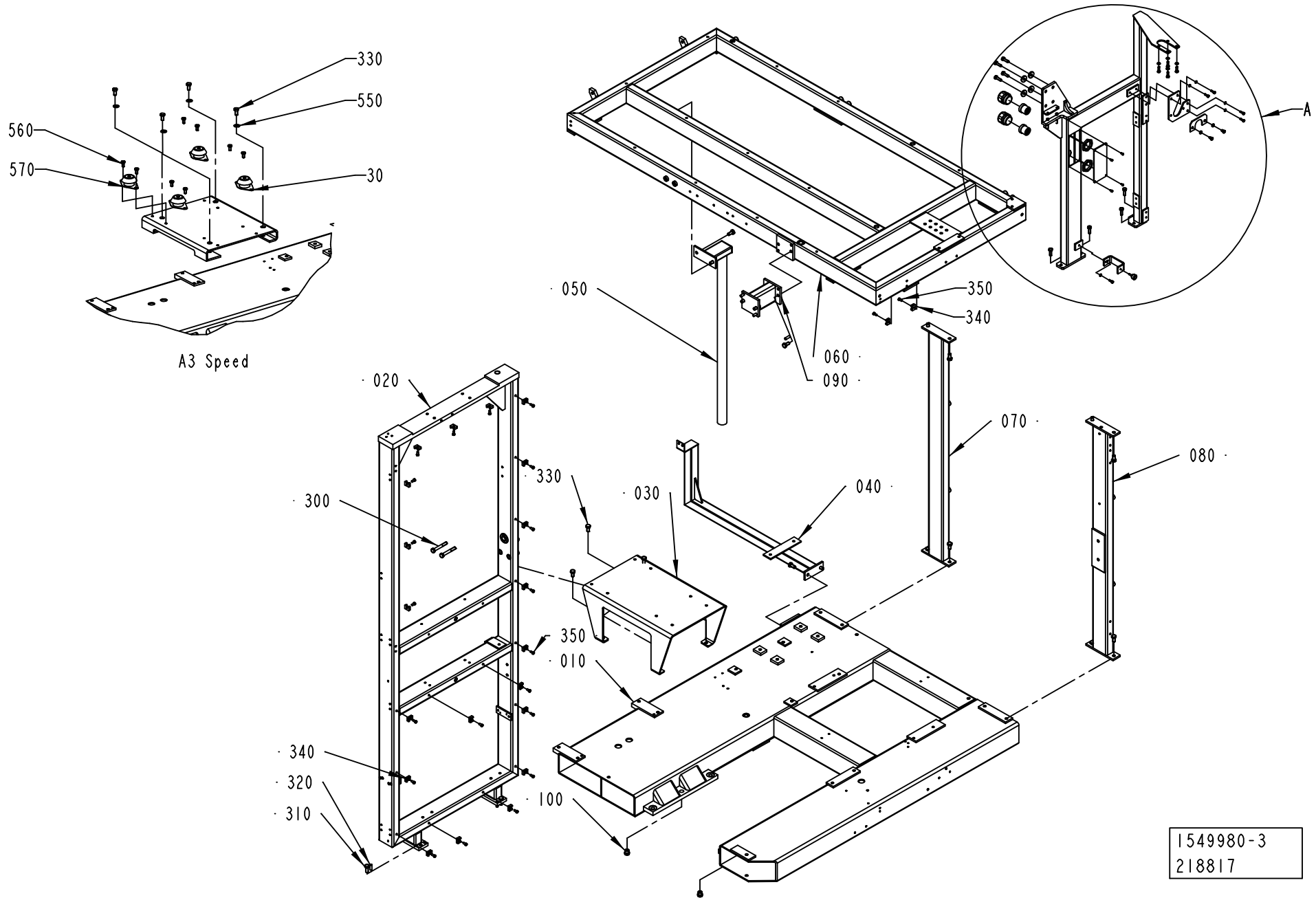
330
550
560
570
30
A3 Speed
A
050
350
340
060
090
070
080
020
330
030
040
300
350
010
340
320
310
100
1549980-3
218817

ECM: 218817 - 20050701
Group number: 1549980-0200
Assembly Drawing: 1549980-3_1_AB

This list covers pages from 1-296 to 1-299

Pos	Part No	UN	Qty	Description	Page No
A3/FLEX					
030	1498122-0000		1	BRACKET	
Common Parts					
010	1498121-0000		1	BASE PLATE	
020	1558437-0000		1	FRAME	
040	1498782-0000		1	TANK BRACKET	
050	1484067-0000		1	BRACKET	
060	2696031-0000		1	FRAME UPPER	
070	1498787-0000		1	BRACKET	
080	2696104-0000		1	BRACKET	
090	1558440-0000		1	BRACKET	
100	1490046-0000		2	PIN	
110	2696035-0000		1	COVER	
120	2696034-0000		1	HOLDER	
130	2696036-0000		1	HOLDER	
140	2696032-0000		1	FRAME	
150	2545658-0000		1	PLATE	
300	312105-0505		2	SCREW M6S ISO 4014 M10X70 A480	
310	312105-0493		4	SCREW M6S ISO 4017 M10X25 A480	
320	311103-0403		6	PARALLEL PIN ISO 2338 8M6X25 A1	
330	312105-0491		20	SCREW M6S ISO 4017 M10X20 A480	
340	352113-0204		22	ANCHOR PLATES FOR STRIPS, TYPE TM3S25-M	
350	312125-0366		22	SCREW ISO 1207 M6X12 A4	
360	90051-0035		1	KNOB, EXTERNAL THREAD. NO. 8308-1135	
370	90099-0120		2	NUT, PR 37 (PG29)	
380	312105-0329		5	SCREW M6S ISO 4017 M5X16 A480	
400	312105-0453		8	SCREW M6S ISO 4017 M8X25 A480	
420	312125-0287		4	SCREW ISO 1207 M4X8 A4	
430	312311-0329		2	SCREW ISO4028 M5X16 FZB	
440	312605-0314		2	HEXAGON NUT, M6M M5 A280	
460	315105-0146		5	WASHER BRB 5,3X10 RFR	
490	315125-0165		4	WASHER TBRSB 8,4X26X5 A4	
500	353240-0006		2	GLAND W/O INSERT PG29 NORMAL	
510	353249-0079		2	INSERT, MULTI HOLE, E155M8X5,5	
520	312105-0370		4	SCREW M6S ISO 4017 M6X20 A480	
530	312105-0364		2	SCREW M6S ISO 4017 M6X10 A480	
540	315105-0153		6	WASHER BRB 6,4X12 RFR	

Pos	Part No	UN	Qty	Description	Page No

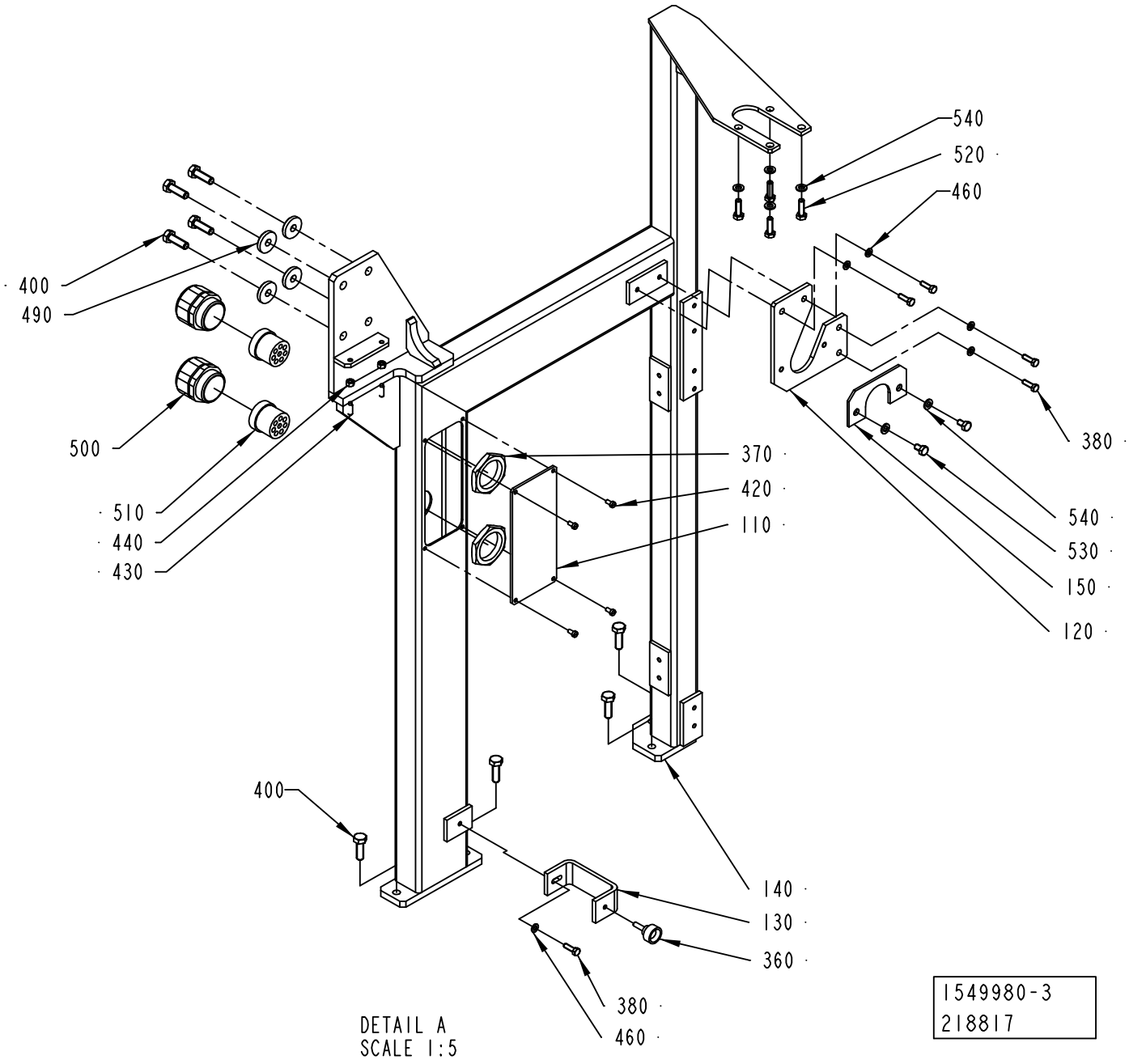
540
520
460
400
490
500
510
440
430
370
420
110
380
540
530
150
120
400
140
130
360
380
460
DETAIL A
SCALE 1:5
1549980-3
218817

ECM: 218817 - 20050701
Group number: 1549980-0200
Assembly Drawing: 1549980-3_2_AB

This list covers pages from 1-296 to 1-299

Pos	Part No	UN	Qty	Description	Page No
A3/FLEX					
030	1498122-0000		1	BRACKET	
Common Parts					
010	1498121-0000		1	BASE PLATE	
020	1558437-0000		1	FRAME	
040	1498782-0000		1	TANK BRACKET	
050	1484067-0000		1	BRACKET	
060	2696031-0000		1	FRAME UPPER	
070	1498787-0000		1	BRACKET	
080	2696104-0000		1	BRACKET	
090	1558440-0000		1	BRACKET	
100	1490046-0000		2	PIN	
110	2696035-0000		1	COVER	
120	2696034-0000		1	HOLDER	
130	2696036-0000		1	HOLDER	
140	2696032-0000		1	FRAME	
150	2545658-0000		1	PLATE	
300	312105-0505		2	SCREW M6S ISO 4014 M10X70 A480	
310	312105-0493		4	SCREW M6S ISO 4017 M10X25 A480	
320	311103-0403		6	PARALLEL PIN ISO 2338 8M6X25 A1	
330	312105-0491		20	SCREW M6S ISO 4017 M10X20 A480	
340	352113-0204		22	ANCHOR PLATES FOR STRIPS, TYPE TM3S25-M	
350	312125-0366		22	SCREW ISO 1207 M6X12 A4	
360	90051-0035		1	KNOB, EXTERNAL THREAD. NO. 8308-1135	
370	90099-0120		2	NUT, PR 37 (PG29)	
380	312105-0329		5	SCREW M6S ISO 4017 M5X16 A480	
400	312105-0453		8	SCREW M6S ISO 4017 M8X25 A480	
420	312125-0287		4	SCREW ISO 1207 M4X8 A4	
430	312311-0329		2	SCREW ISO4028 M5X16 FZB	
440	312605-0314		2	HEXAGON NUT, M6M M5 A280	
460	315105-0146		5	WASHER BRB 5,3X10 RFR	
490	315125-0165		4	WASHER TBRSB 8,4X26X5 A4	
500	353240-0006		2	GLAND W/O INSERT PG29 NORMAL	
510	353249-0079		2	INSERT, MULTI HOLE, E155M8X5,5	
520	312105-0370		4	SCREW M6S ISO 4017 M6X20 A480	
530	312105-0364		2	SCREW M6S ISO 4017 M6X10 A480	
540	315105-0153		6	WASHER BRB 6,4X12 RFR	

Pos	Part No	UN	Qty	Description	Page No

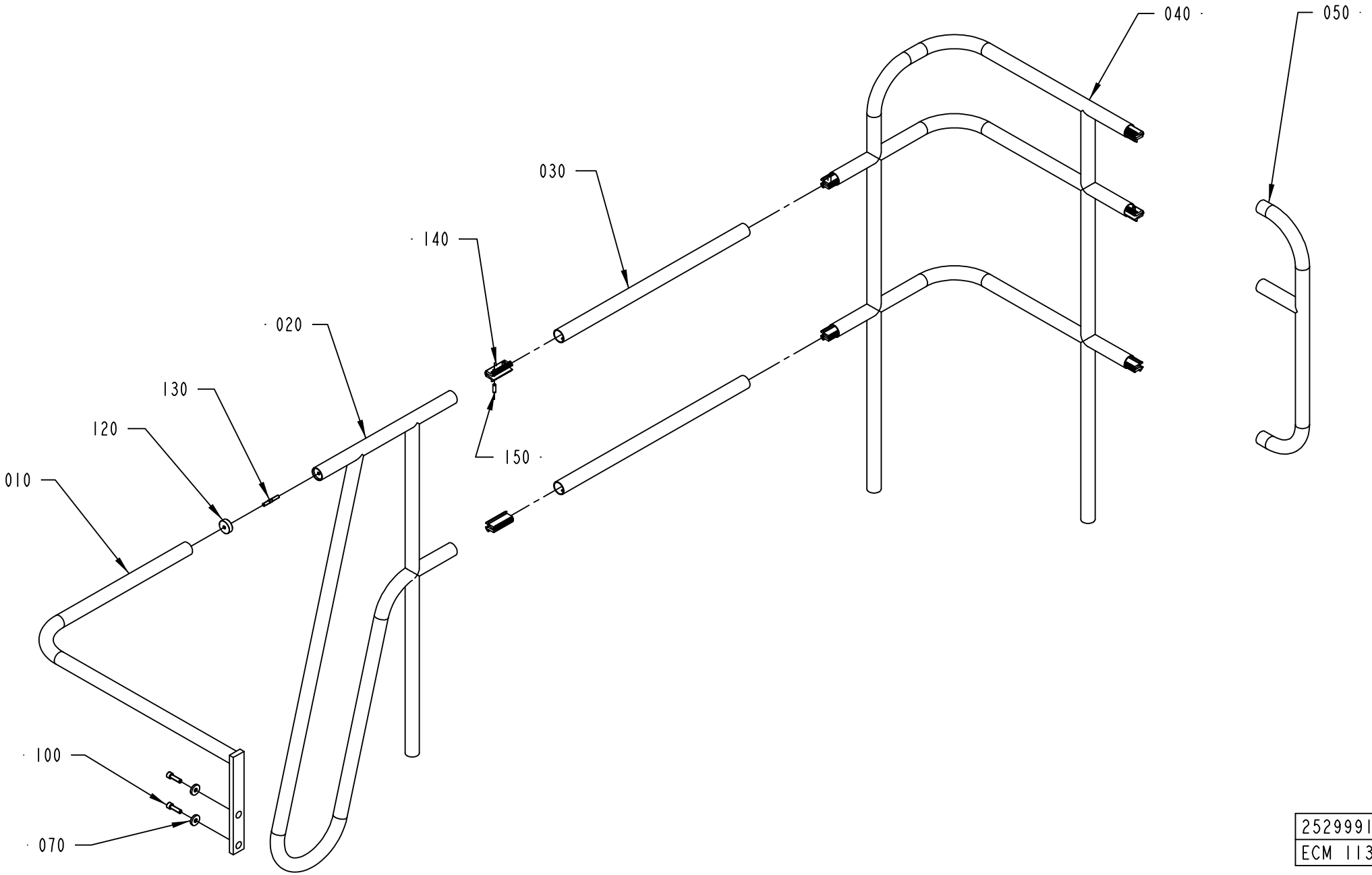

2529991-1
ECM 113014

ECM: 189104 - 20041104
Group number: 2529991-0100
Assembly Drawing: 2529991-1_1_AA

Pos	Part No	UN	Qty	Description	Page No
-					
010	1499735-0000		1	RAILING	
020	1129741-0000		1	RAILING	
030	1037044-0000		2	RAILING	
040	2530096-0000		1	RAILING	
050	2529926-0000		1	RAILING	
100	312115-0497		2	SCREW ISO4762 M10X35 A4 80	
110	1254410-0000		2	WASHER	
120	578640-0000		1	CLAMPING RING	
130	751485-0000		1	SCREW	
140	1035654-0000		7	CONNECTION	
150	312318-0453		14	SCREW ISO4029 M8X25 A4	

Pos	Part No	UN	Qty	Description	Page No

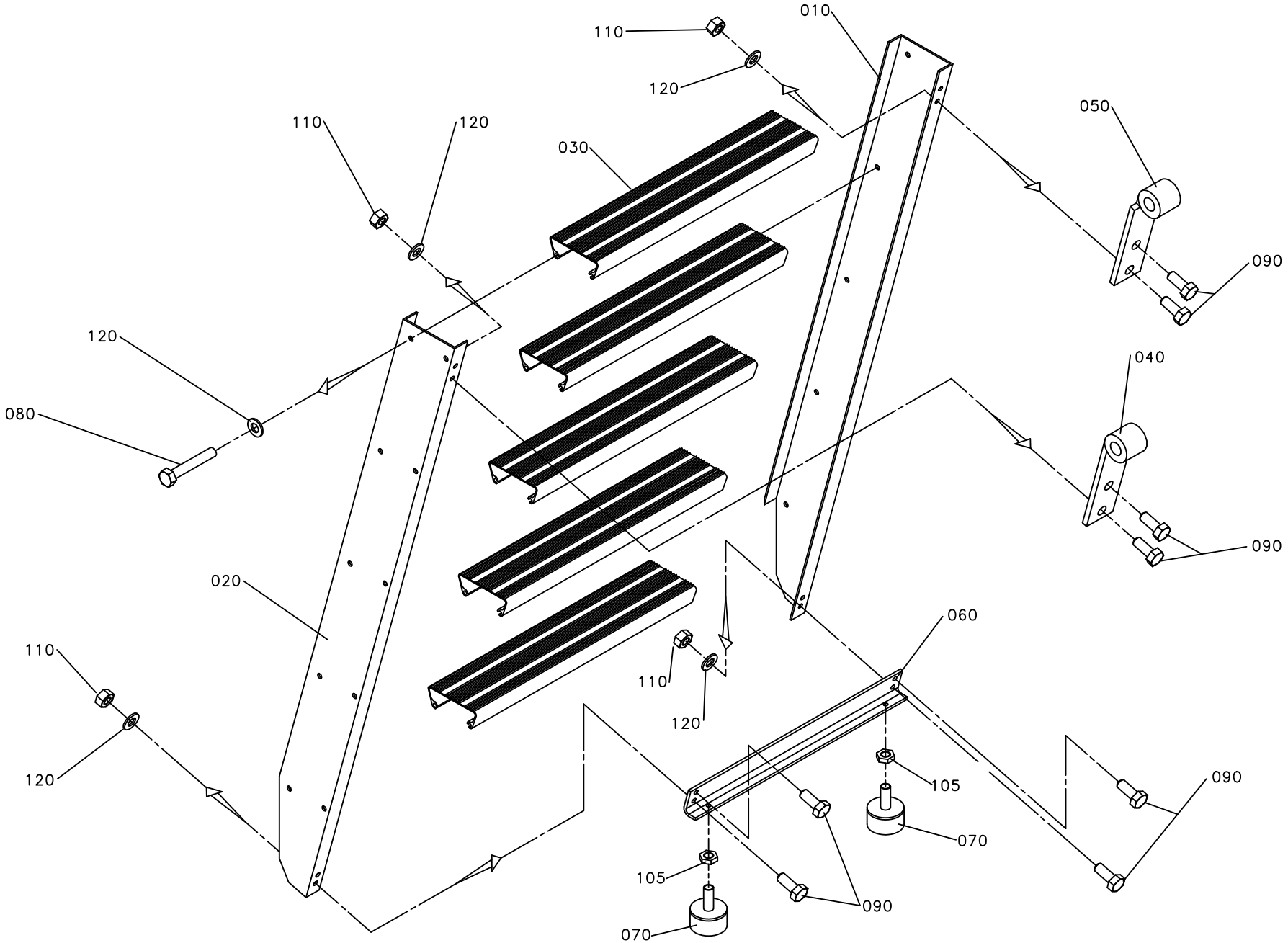
010
110
120
050
110
120
030
090
120
080
040
090
020
060
110
120
110
120
105
090
070
105
090
070

ECM: 189105 - 20041104
Group number: 1095862-0100
Assembly Drawing: 1095862-1_1_AA

Pos	Part No	UN	Qty	Description	Page No
-					
010	1036939-0000		1	SIDE PIECE	
020	1036940-0000		1	SIDE PIECE	
030	1129643-0000		5	STAIR	
040	1036963-0000		1	HOOK HOLDER	
050	1036965-0000		1	HOOK HOLDER	
060	1129644-0000		2	BRACKET	
070	90347-0004		2	VIBRATION DAMPER D=30 TH=M8 H=17 H2=21MM	
080	312104-0461		20	SCREW M6S M8X50H FZB	
090	312105-0451		8	SCREW M6S ISO 4017 M8X20 A480	
105	312625-0318		2	HEXAGON THIN NUT, EN 24035 ML6M M8 A4	
110	312605-0318		8	HEXAGON NUT, M6M M8 A280	
120	315101-0165		28	WASHER PLAIN, BRB, 8,4/16 H=1,5	

Pos	Part No	UN	Qty	Description	Page No

BENDING ROLLER

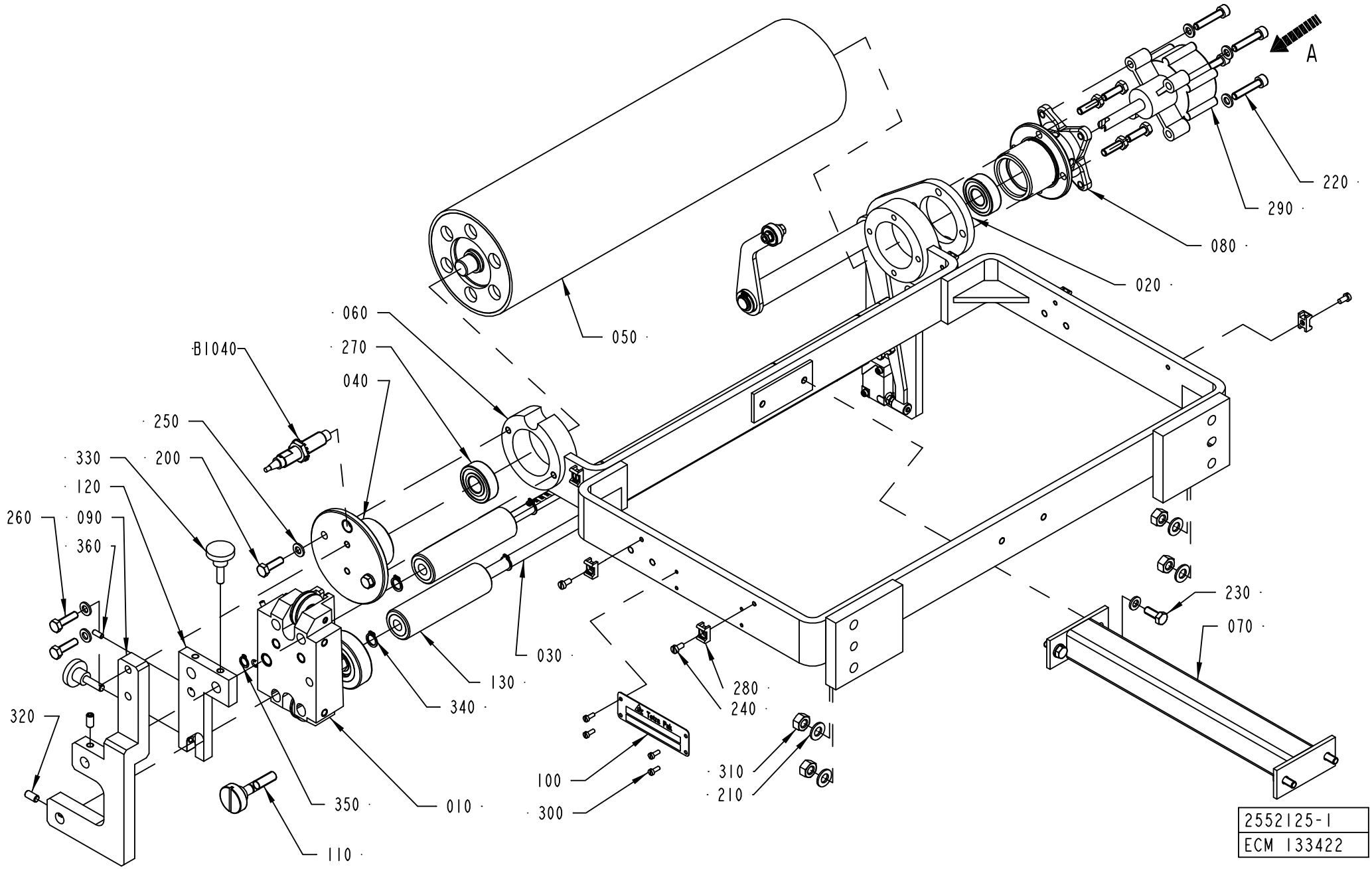

ECM: 276682 - 20060929
Group number: 2552125-0100
Assembly Drawing: 2552125-1_1_AB

This list covers pages from 1-304 to 1-307

Pos	Part No	UN	Qty	Description	Page No
A3/FLEX DIMC/FLEX (See drawing on page: 1-306)					
040	1558352-0000		1	FLANGE	
050	2532908-0000		1	ROLLER	
270	321313-0102		2	BALL BEARING, 15X35X11 MM	
A3/FLEX TBA 2000S NODIMC, A3/FLEX TBA 1890S NODIMC, A3/FLEX TBA 1400B NODIMC (See drawing on page: 1-304)					
040	1558352-0000		1	FLANGE	
050	2662639-0000		1	ROLLER	
270	321313-0102		2	BALL BEARING, 15X35X11 MM	
A3/FLEX TBA 1000B NODIMC, A3/FLEX TBA 0500B NODIMC, A3/FLEX TBA 1000S NODIMC, A3/FLEX TBA 1000SQ NODIMC, A3/FLEX TBA 0200S NODIMC, A3/FLEX TPA 1000SQ NODIMC, A3/FLEX TBA 1500S NODIMC, A3/FLEX TBA 0200B NODIMC, A3/FLEX TBA 0250B NODIMC, A3/FLEX TBA 0330S NODIMC, A3/FLEX TPA 0330SQ NODIMC, A3/FLEX TPA 0500SQ NODIMC, A3/FLEX TBA 0200M NODIMC, A3/FLEX TBA 0250S NODIMC, A3/FLEX TBA 0500S NODIMC, A3/FLEX TPA 0200SQ NODIMC, A3/FLEX TPA 0250SQ NODIMC, A3/FLEX TPA 0750SQ NODIMC, A3/FLEX TBA 0200SQ NODIMC, A3/FLEX TBA 0250SQ NODIMC (See drawing on page: 1-304)					
040	1558352-0000		1	FLANGE	
050	2532911-0000		1	ROLLER	
270	321313-0102		2	BALL BEARING, 15X35X11 MM	
Common Parts					
010	2601483-0100		1	PAPER GUIDE	**1-309**
020	1558356-0100		1	SPLICE DETECTOR	**1-311, 1-313**
030	2547566-0000		2	ROD	
060	2547425-0000		1	BRACKET	
070	2552124-0000		1	BRACKET	
080	2528110-0000		1	HOUSING	
090	2547568-0000		1	PLATE	
100	979548-0000		1	MACHINE PLATE	
110	1317713-0000		1	SHAFT	
120	2547565-0000		1	HOLDER	
130	2551075-0000		2	ROLLER	
200	312105-0370		6	SCREW M6S ISO 4017 M6X20 A480	
210	315105-0165		4	WASHER BRB 8,4X16 RFR	
220	312115-0374		4	SCREW ISO4762 M6X30 A4 80	
230	312105-0368		4	SCREW M6S ISO 4017 M6X16 A480	
240	312125-0287		6	SCREW ISO 1207 M4X8 A4	
250	315105-0153		12	WASHER BRB 6,4X12 RFR	
260	312105-0371		2	SCREW M6S ISO 4017 M6X22 A480	
280	352113-0205		6	ANCHOR PLATES FOR STRIPS, TYPE TM2S8-C10	
290	90347-0054		1	DAMPER	
300	312125-0222		4	SCREW ISO 1207 M3X8 A4	
310	312605-0318		4	HEXAGON NUT, M6M M8 A280	
320	312318-0366		2	SCREW ISO4029 M6X12 A4	
330	90051-0049		2	KNOB, ADJUST.HI.EXT.THREAD, NO 8324-3755	
340	90141-0016		4	RETAINING RING FOR SHAFT DIN 471 10 A2	
350	315755-0108		1	RETAINING RING SHAFT DIN 6799 6 A2	
360	312318-0289		1	SCREW ISO4029 M4X10 A4	
390	312105-0455		4	SCREW M6S ISO 4017 M8X30 A480	
B1040	90458-0672		1	PROXIMITY SENSOR E2E2-X5MB1-5M	

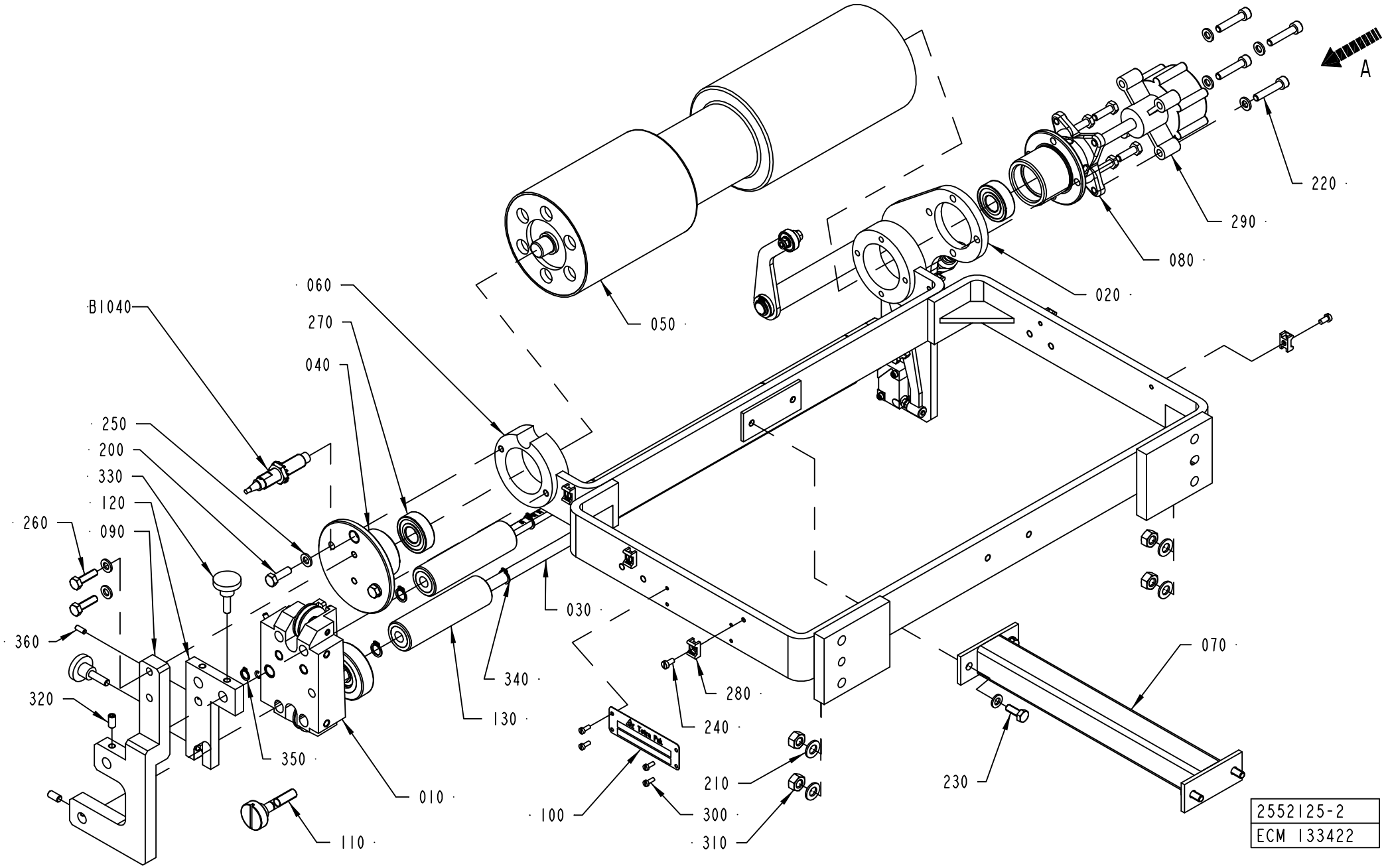
A
B1040
060
270
040
250
200
330
120
090
260
360
320
050
020
080
290
220
070
030
340
130
280
240
350
010
110
100
210
300
310
230
2552125-2
ECM 133422

ECM: 276682 - 20060929
Group number: 2552125-0100
Assembly Drawing: 2552125-2_1_AB

This list covers pages from 1-304 to 1-307

Pos	Part No	UN	Qty	Description	Page No
A3/FLEX DIMC/FLEX (See drawing on page: 1-306)					
040	1558352-0000		1	FLANGE	
050	2532908-0000		1	ROLLER	
270	321313-0102		2	BALL BEARING, 15X35X11 MM	
A3/FLEX TBA 2000S NODIMC, A3/FLEX TBA 1890S NODIMC, A3/FLEX TBA 1400B NODIMC (See drawing on page: 1-304)					
040	1558352-0000		1	FLANGE	
050	2662639-0000		1	ROLLER	
270	321313-0102		2	BALL BEARING, 15X35X11 MM	
A3/FLEX TBA 1000B NODIMC, A3/FLEX TBA 0500B NODIMC, A3/FLEX TBA 1000S NODIMC, A3/FLEX TBA 1000SQ NODIMC, A3/FLEX TBA 0200S NODIMC, A3/FLEX TPA 1000SQ NODIMC, A3/FLEX TBA 1500S NODIMC, A3/FLEX TBA 0200B NODIMC, A3/FLEX TBA 0250B NODIMC, A3/FLEX TBA 0330S NODIMC, A3/FLEX TPA 0330SQ NODIMC, A3/FLEX TPA 0500SQ NODIMC, A3/FLEX TBA 0200M NODIMC, A3/FLEX TBA 0250S NODIMC, A3/FLEX TBA 0500S NODIMC, A3/FLEX TPA 0200SQ NODIMC, A3/FLEX TPA 0250SQ NODIMC, A3/FLEX TPA 0750SQ NODIMC, A3/FLEX TBA 0200SQ NODIMC, A3/FLEX TBA 0250SQ NODIMC (See drawing on page: 1-304)					
040	1558352-0000		1	FLANGE	
050	2532911-0000		1	ROLLER	
270	321313-0102		2	BALL BEARING, 15X35X11 MM	
Common Parts					
010	2601483-0100		1	PAPER GUIDE	**1-309**
020	1558356-0100		1	SPLICE DETECTOR	**1-311, 1-313**
030	2547566-0000		2	ROD	
060	2547425-0000		1	BRACKET	
070	2552124-0000		1	BRACKET	
080	2528110-0000		1	HOUSING	
090	2547568-0000		1	PLATE	
100	979548-0000		1	MACHINE PLATE	
110	1317713-0000		1	SHAFT	
120	2547565-0000		1	HOLDER	
130	2551075-0000		2	ROLLER	
200	312105-0370		6	SCREW M6S ISO 4017 M6X20 A480	
210	315105-0165		4	WASHER BRB 8,4X16 RFR	
220	312115-0374		4	SCREW ISO4762 M6X30 A4 80	
230	312105-0368		4	SCREW M6S ISO 4017 M6X16 A480	
240	312125-0287		6	SCREW ISO 1207 M4X8 A4	
250	315105-0153		12	WASHER BRB 6,4X12 RFR	
260	312105-0371		2	SCREW M6S ISO 4017 M6X22 A480	
280	352113-0205		6	ANCHOR PLATES FOR STRIPS, TYPE TM2S8-C10	
290	90347-0054		1	DAMPER	
300	312125-0222		4	SCREW ISO 1207 M3X8 A4	
310	312605-0318		4	HEXAGON NUT, M6M M8 A280	
320	312318-0366		2	SCREW ISO4029 M6X12 A4	
330	90051-0049		2	KNOB, ADJUST.HI.EXT.THREAD, NO 8324-3755	
340	90141-0016		4	RETAINING RING FOR SHAFT DIN 471 10 A2	
350	315755-0108		1	RETAINING RING SHAFT DIN 6799 6 A2	
360	312318-0289		1	SCREW ISO4029 M4X10 A4	
390	312105-0455		4	SCREW M6S ISO 4017 M8X30 A480	
B1040	90458-0672		1	PROXIMITY SENSOR E2E2-X5MB1-5M	

PAPER GUIDE

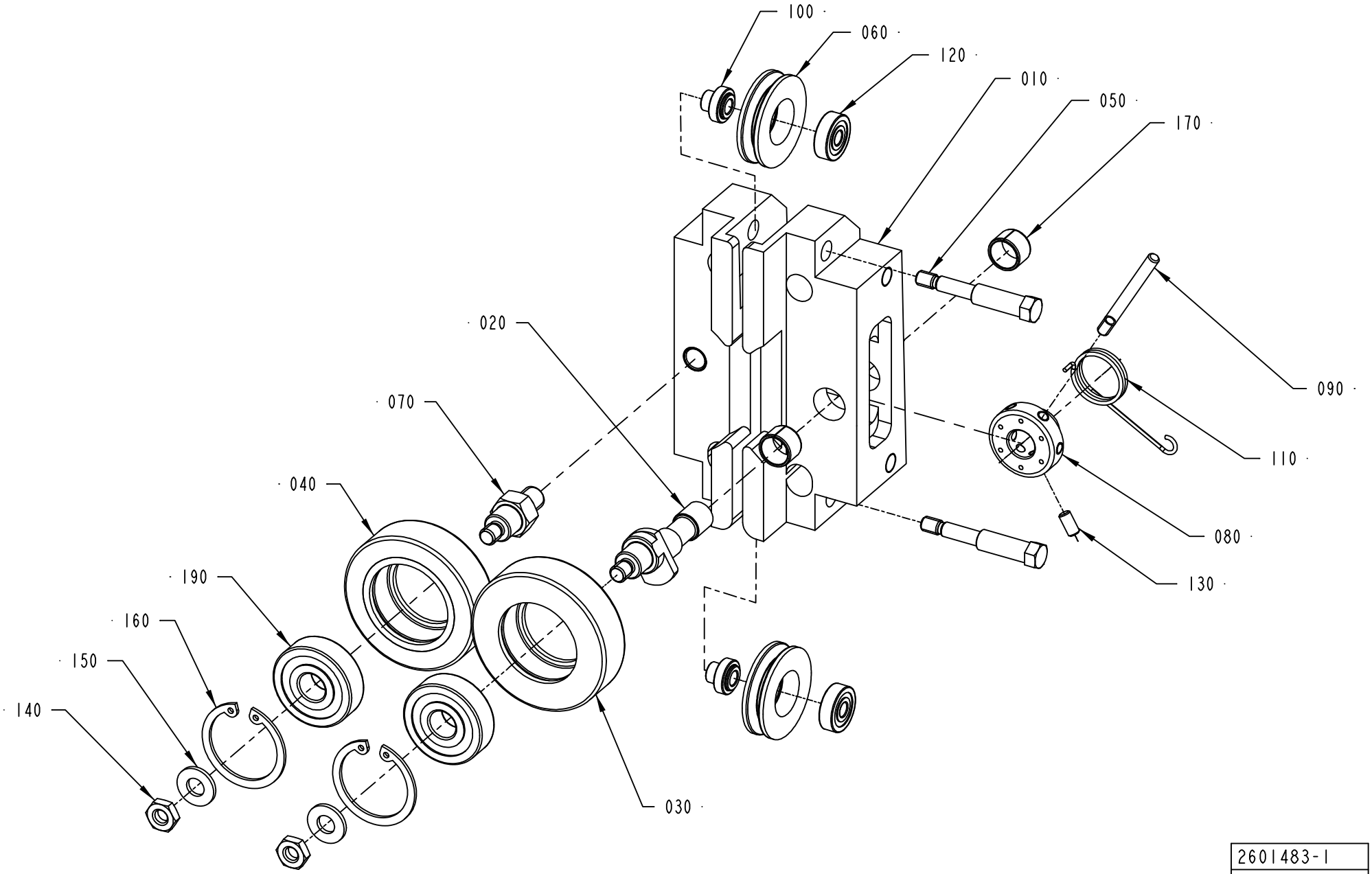

2601483-1
ECM 122050

ECM: 189106 - 20041104
Group number: 2601483-0100
Assembly Drawing: 2601483-1_1_AA

Pos	Part No	UN	Qty	Description	Page No
-					
010	2533670-0000		1	SUPPORT	
020	2503436-0000		1	SHAFT	
030	2594126-0000		1	GUIDE ROLLER	
040	1036623-0000		1	GUIDE ROLLER	
050	2533671-0000		2	SCREW	
060	2533673-0000		2	ROLLER	
070	1558254-0000		1	SHAFT	
080	2594125-0000		1	SLEEVE	
090	2503438-0000		1	LEVER	
100	2533672-0000		2	SHAFT	
110	2591782-0000		1	SPRING	
120	90214-0037		2	BALL BEARING, 5X16X5 MM	
130	312318-0287		1	SCREW ISO4029 M4X8 A4	
140	312625-0316		2	HEXAGON THIN NUT, EN 24035 ML6M M6 A4	
150	315105-0156		2	WASHER BRB 6,7X14 RFR	
160	315753-0122		2	RETAINING RING FOR BORE DIN 472 30 A2	
170	321141-0138		2	BEARING BUSH W/O FLANGE, 10X12X8 MM	
190	321313-0100		2	BALL BEARING, 10X30X9 MM	

Pos	Part No	UN	Qty	Description	Page No

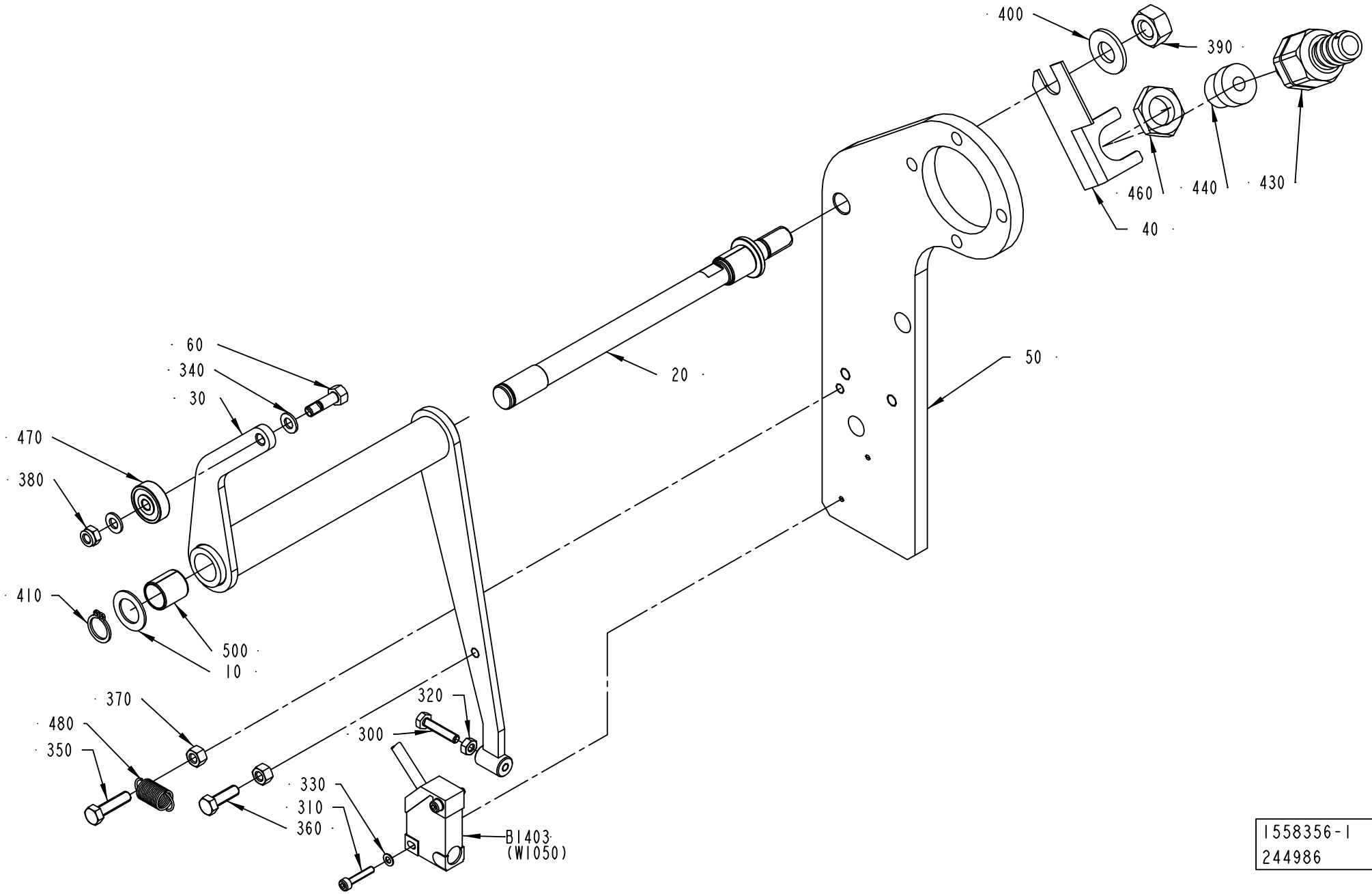
400
390
460
440
430
40
60
340
30
20
50
470
380
410
500
10
370
480
350
320
300
330
310
360
B1403
(W1050)
1558356-1
244986

ECM: 271750 - 20060728
Group number: 1558356-0100
Assembly Drawing: 1558356-1_1_AB

This list covers pages from 1-310 to 1-313

Pos	Part No	UN	Qty	Description	Page No
A3/FLEX TBA 0200B, A3/FLEX TBA 0250B, A3/FLEX TBA 0330S (See drawing on page: 1-310)					
020	2707506-0000		1	SHAFT	
030	2690377-0000		1	BRACKET	
060	2528135-0000		1	SHAFT	
340	315105-0146		2	WASHER BRB 5,3X10 RFR	
470	90214-0138		1	BALL BEARING, 5X19X6 MM	
480	90335-0089		1	TENSION SPRING 41490, 0,9X10X23	
A3/FLEX TBA 0500B, A3/FLEX TBA 1000B, A3/FLEX TBA 1000S, A3/FLEX TBA 1000SQ, A3/FLEX TPA 1000SQ, A3/FLEX TBA 0200S, A3/FLEX TBA 1500S, A3/FLEX TPA 0330SQ, A3/FLEX TPA 0500SQ, A3/FLEX TBA 0200M, A3/FLEX TBA 0250S, A3/FLEX TBA 0500S, A3/FLEX TPA 0200SQ QC, A3/FLEX TPA 0250SQ QC, A3/FLEX TBA 0200SQ, A3/FLEX TBA 0250SQ (See drawing on page: 1-310)					
020	2528128-0000		1	SHAFT	
030	2528127-0000		1	BRACKET	
060	2528135-0000		1	SHAFT	
340	315105-0146		2	WASHER BRB 5,3X10 RFR	
470	90214-0138		1	BALL BEARING, 5X19X6 MM	
480	90335-0089		1	TENSION SPRING 41490, 0,9X10X23	
A3/FLEX TBA 1890S, A3/FLEX TBA 2000S, A3/FLEX TBA 1400B (See drawing on page: 1-312)					
020	2528128-0000		1	SHAFT	
030	2528127-0000		1	BRACKET	
060	2721434-0000		1	SHAFT	
340	315105-0146		4	WASHER BRB 5,3X10 RFR	
470	90214-0138		2	BALL BEARING, 5X19X6 MM	
480	90459-5581		1	TENSION SPRING 1,2X23X8,5	
Common Parts					
010	266737-0000		1	WASHER	
040	1036610-0000		1	BRACKET	
050	2528105-0000		1	PLATE	
300	312105-0295		1	SCREW M6S ISO 4017 M4X20 A470	
310	312115-0228		2	SCREW ISO4762 M3X16 A4 80	
320	312605-0312		1	HEXAGON NUT, M6M M4 A280	
330	315105-0124		2	WASHER BRB 3,2X7 RFR	
350	312105-0331		1	SCREW M6S ISO 4017 M5X20 A480	
360	312105-0329		1	SCREW M6S ISO 4017 M5X16 A480	
370	312605-0314		2	HEXAGON NUT, M6M M5 A280	
380	312812-0314		1	HEXAGON NUT, NY-LOCK M5 A480	
390	312605-0320		1	HEXAGON NUT, M6M M10 A280	
400	315105-0173		1	WASHER BRB 10,5X20 RFR	
410	315751-0109		1	RETAINING RING FOR SHAFT DIN 471 12 A2	
430	353243-0001		1	HOSE GLAND W/O INSERT PG9 EXTENDED	
440	353249-0008		1	INSERT, SINGEL HOLE, EK 152/7	
460	90099-0104		1	NUT, PR 15,2 (PG9)	
500	321141-0183		2	BEARING BUSH W/O FLANGE, 12X14X15 MM	
B1403	90044-0194		1	PROX.SW. IN5329/IN3002-BPKG(EX90044-104)	

Machine Type	Group Description	Used-In	Group Number	Page No

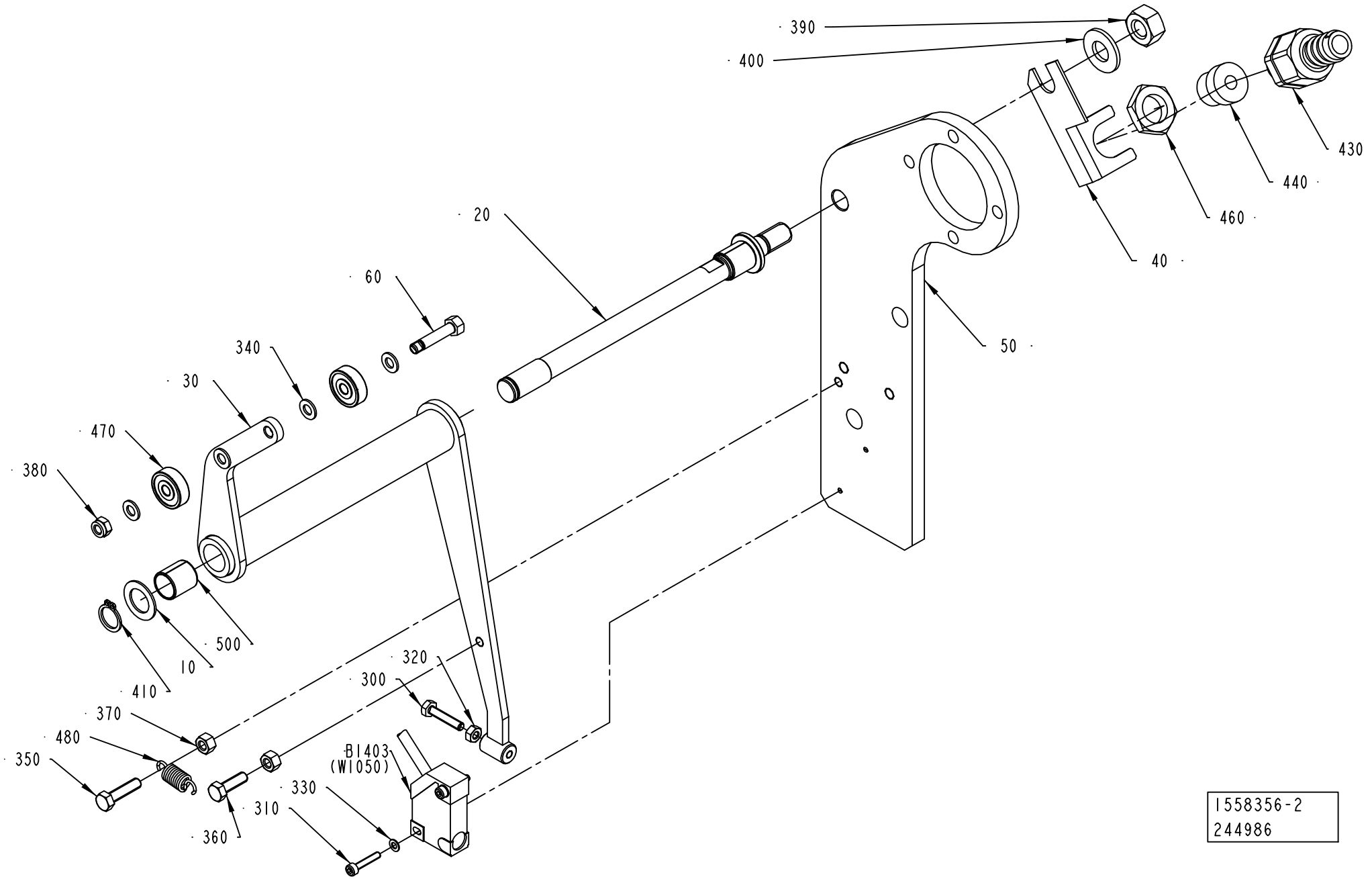
390
400
430
440
460
40
20
50
60
340
30
470
380
500
10
410
320
300
370
480
350
BI403
(WI050)
330
310
360
1558356-2
244986

ECM: 271750 - 20060728
Group number: 1558356-0100
Assembly Drawing: 1558356-2_1_AB

This list covers pages from 1-310 to 1-313

Pos	Part No	UN	Qty	Description	Page No
A3/FLEX TBA 0200B, A3/FLEX TBA 0250B, A3/FLEX TBA 0330S (See drawing on page: 1-310)					
020	2707506-0000		1	SHAFT	
030	2690377-0000		1	BRACKET	
060	2528135-0000		1	SHAFT	
340	315105-0146		2	WASHER BRB 5,3X10 RFR	
470	90214-0138		1	BALL BEARING, 5X19X6 MM	
480	90335-0089		1	TENSION SPRING 41490, 0,9X10X23	
A3/FLEX TBA 0500B, A3/FLEX TBA 1000B, A3/FLEX TBA 1000S, A3/FLEX TBA 1000SQ, A3/FLEX TPA 1000SQ, A3/FLEX TBA 0200S, A3/FLEX TBA 1500S, A3/FLEX TPA 0330SQ, A3/FLEX TPA 0500SQ, A3/FLEX TBA 0200M, A3/FLEX TBA 0250S, A3/FLEX TBA 0500S, A3/FLEX TPA 0200SQ QC, A3/FLEX TPA 0250SQ QC, A3/FLEX TBA 0200SQ, A3/FLEX TBA 0250SQ (See drawing on page: 1-310)					
020	2528128-0000		1	SHAFT	
030	2528127-0000		1	BRACKET	
060	2528135-0000		1	SHAFT	
340	315105-0146		2	WASHER BRB 5,3X10 RFR	
470	90214-0138		1	BALL BEARING, 5X19X6 MM	
480	90335-0089		1	TENSION SPRING 41490, 0,9X10X23	
A3/FLEX TBA 1890S, A3/FLEX TBA 2000S, A3/FLEX TBA 1400B (See drawing on page: 1-312)					
020	2528128-0000		1	SHAFT	
030	2528127-0000		1	BRACKET	
060	2721434-0000		1	SHAFT	
340	315105-0146		4	WASHER BRB 5,3X10 RFR	
470	90214-0138		2	BALL BEARING, 5X19X6 MM	
480	90459-5581		1	TENSION SPRING 1,2X23X8,5	
Common Parts					
010	266737-0000		1	WASHER	
040	1036610-0000		1	BRACKET	
050	2528105-0000		1	PLATE	
300	312105-0295		1	SCREW M6S ISO 4017 M4X20 A470	
310	312115-0228		2	SCREW ISO4762 M3X16 A4 80	
320	312605-0312		1	HEXAGON NUT, M6M M4 A280	
330	315105-0124		2	WASHER BRB 3,2X7 RFR	
350	312105-0331		1	SCREW M6S ISO 4017 M5X20 A480	
360	312105-0329		1	SCREW M6S ISO 4017 M5X16 A480	
370	312605-0314		2	HEXAGON NUT, M6M M5 A280	
380	312812-0314		1	HEXAGON NUT, NY-LOCK M5 A480	
390	312605-0320		1	HEXAGON NUT, M6M M10 A280	
400	315105-0173		1	WASHER BRB 10,5X20 RFR	
410	315751-0109		1	RETAINING RING FOR SHAFT DIN 471 12 A2	
430	353243-0001		1	HOSE GLAND W/O INSERT PG9 EXTENDED	
440	353249-0008		1	INSERT, SINGEL HOLE, EK 152/7	
460	90099-0104		1	NUT, PR 15,2 (PG9)	
500	321141-0183		2	BEARING BUSH W/O FLANGE, 12X14X15 MM	
B1403	90044-0194		1	PROX.SW. IN5329/IN3002-BPKG(EX90044-104)	

Machine Type	Group Description	Used-In	Group Number	Page No

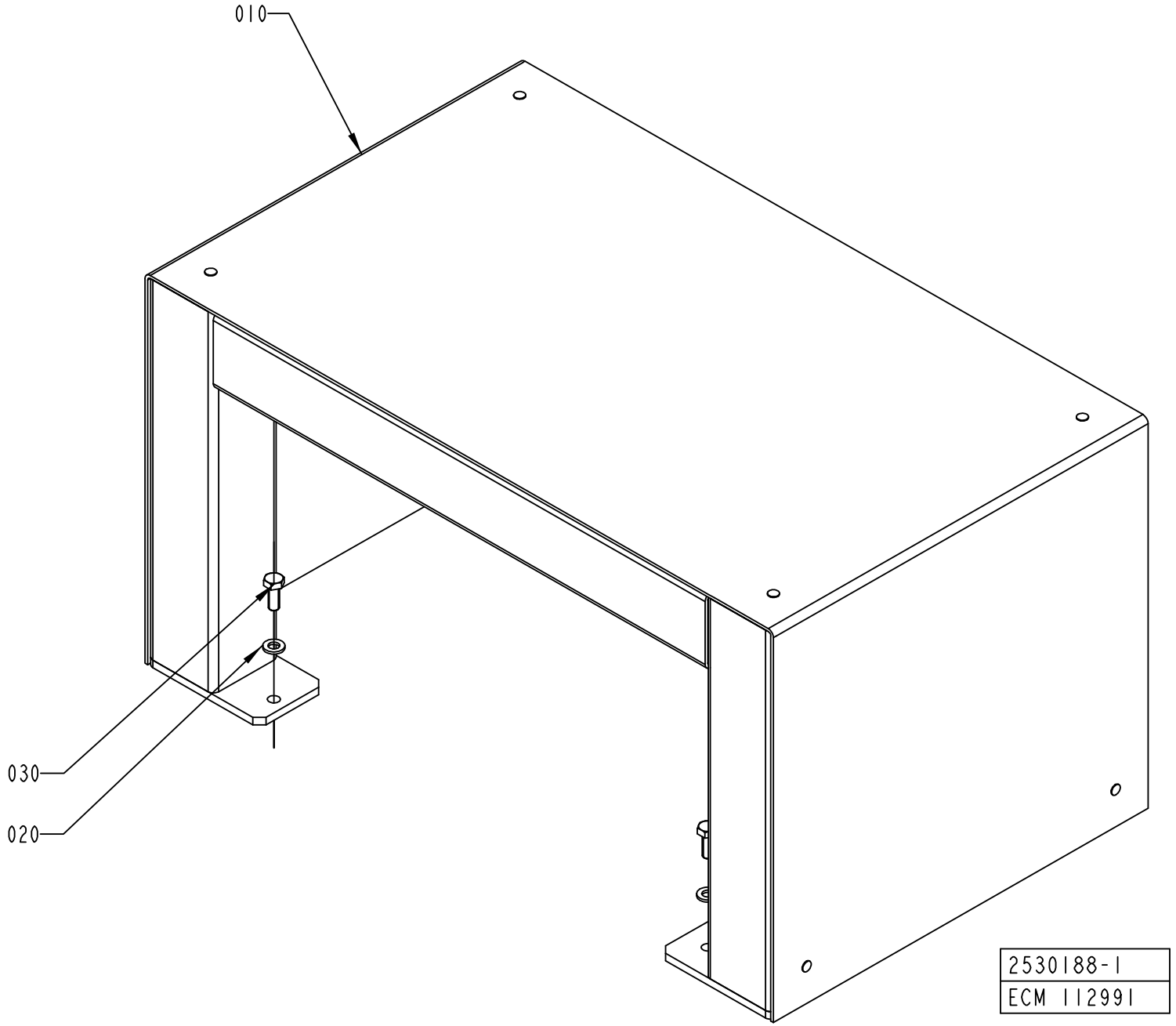
010
030
020
2530188-1
ECM 112991

ECM: 189109 - 20041104
Group number: 2530188-0100
Assembly Drawing: 2530188-1_1_AA

Pos	Part No	UN	Qty	Description	Page No
-					
010	2529925-0000		1	STEP	
020	315105-0153		2	WASHER BRB 6,4X12 RFR	
030	312105-0368		2	SCREW M6S ISO 4017 M6X16 A480	

Pos	Part No	UN	Qty	Description	Page No

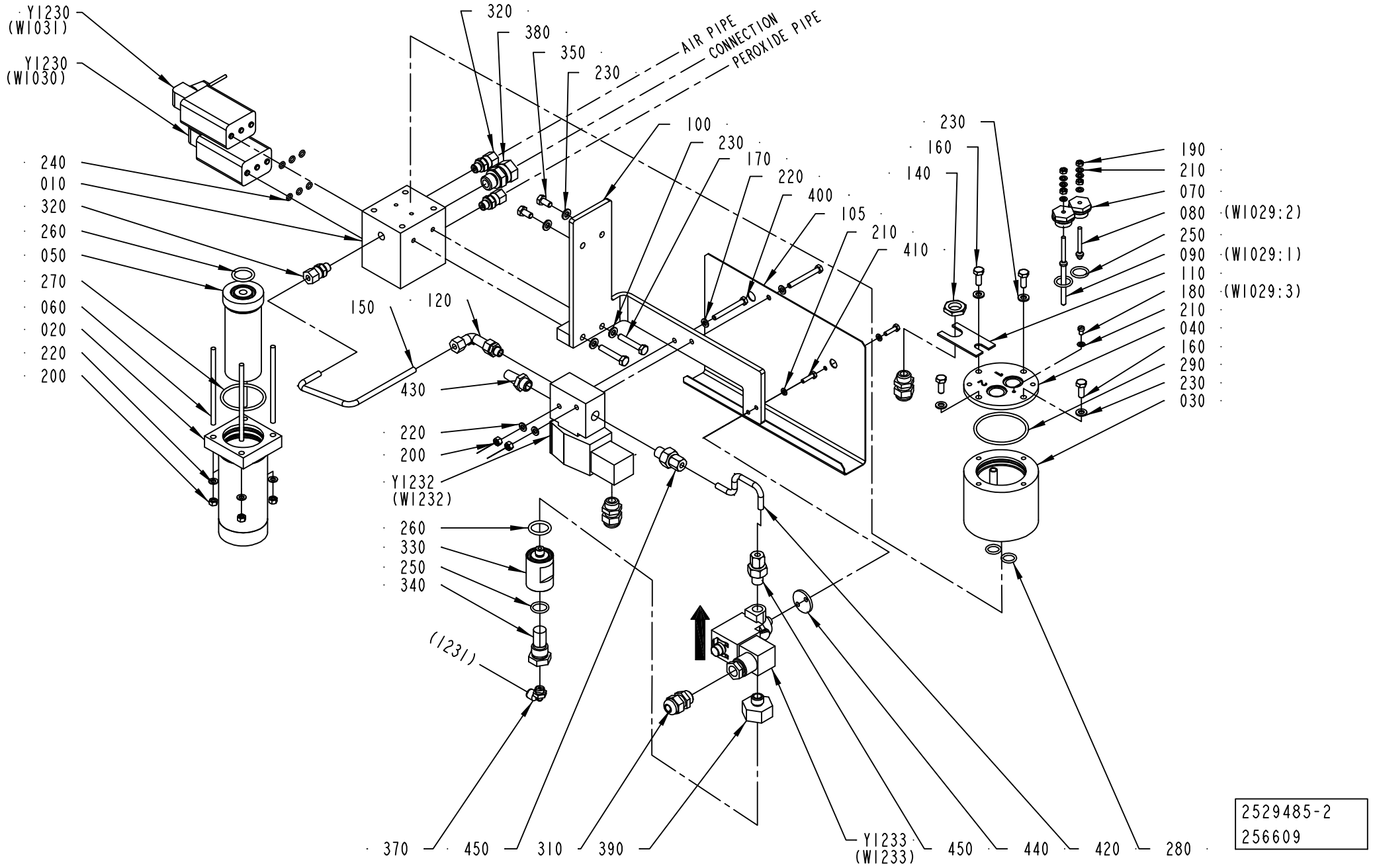
Y1230 (W1031)
Y1230 (W1030)
240
010
320
260
050
270
060
020
220
200
320
380
350
230
AIR PIPE
CONNECTION
PEROXIDE PIPE
100
230
170
220
400
105
210
410
230
160
140
190
210
070
080 (W1029:2)
250
090 (W1029:1)
110
180 (W1029:3)
210
040
160
290
230
030
150
120
430
220
200
Y1232 (W1232)
260
330
250
340
(1231)
370
450
310
390
Y1233 (W1233)
450
440
420
280
2529485-2
256609

ECM: 256611 - 20060701
Group number: 2529485-0200
Assembly Drawing: 2529485-2_1_AB

Pos	Part No	UN	Qty	Description	Page No
-					
010	1532223-0000		1	BLOCK	
020	554142-0000		1	FILTER HOUSING	
030	1478170-0000		1	CONTAINER	
040	549267-0000		1	LID	
050	554141-0000		1	FILTER	
060	554585-0000		4	STUD SCREW	
070	2578486-0000		2	BRACKET	
080	2559045-0004		1	ELECTRODE	
090	2559045-0003		1	ELECTRODE	
100	2763962-0000		1	BRACKET	
105	2812556-0000		1	HEAT GUARD	
110	1040970-0000		1	BRACKET	
120	90030-0203		1	ADJUSTABLE ELBOW CONNECTION,EXT 6-G1/4	
140	90099-0104		1	NUT, PR 15,2 (PG9)	
150	2763966-0000		1	PIPE	
160	312105-0368		4	SCREW M6S ISO 4017 M6X16 A480	
170	312109-0376		2	SCREW M6S ISO 4017 M6X35 A480	
180	312125-0285		1	SCREW ISO 1207 M4X6 A4	
190	312605-0312		4	HEXAGON NUT, M6M M4 A280	
200	312605-0314		6	HEXAGON NUT, M6M M5 A280	
210	315105-0136		9	WASHER BRB 4,3X9 RFR	
220	315105-0146		8	WASHER BRB 5,3X10 RFR	
230	315105-0153		8	WASHER BRB 6,4X12 RFR	
240	927420-0001		6	O-RING 5.1X1.6 SILICONE	
250	927421-0004		3	O-RING 15.3X2.4 SILICONE	
260	927422-0001		2	O-RING 19.2X3 SILICONE	
270	927422-0007		1	O-RING 44.2X3 SILICONE	
280	927421-0002		2	O-RING 12.3X2.4 SILICONE	
290	927422-0009		1	O-RING 54.5X3 SILICONE	
310	352103-0101		3	CABLE GLAND, ST 9, PR15,2/PG9	
320	90030-0184		3	CONN. STR. GA-6-G1/8	
330	1519486-0000		1	FILTER HOUSING	
340	450833-0000		1	FILTER	
350	312105-0366		2	SCREW M6S ISO 4017 M6X12 A480	
370	90458-2956		1	ELBOW PIPE JOINT, EXT.THREAD, D=6MM-G1/8	
380	90030-0187		1	CONN. STR. GA-12-G3/8	
390	2763969-0000		1	REDUCER	
400	312105-0340		2	SCREW M6S ISO 4014 M5X45 A480	
410	312105-0293		2	SCREW M6S ISO 4017 M4X16 A470	
420	2763967-0000		1	PIPE	
430	346800-0110		1	SILENCER FILTER R1/4"	
440	2763968-0000		1	SPACER	
450	90030-0202		2	CONN. STR., 6-G1/4, EXT. THREAD	
Y1230	90042-0203		1	SOLENOID VALVE BüRKERT	
Y1231	90042-0203		1	SOLENOID VALVE BüRKERT	
Y1232	90459-6975		1	SOLENOID VALVE G1/4, 2401186082702400	
Y1233	90459-6977		1	SOLENOID VALVE G1/4, V04B286N-B423A	

Machine Type | Group Description | Used-In | Group Number | Page No

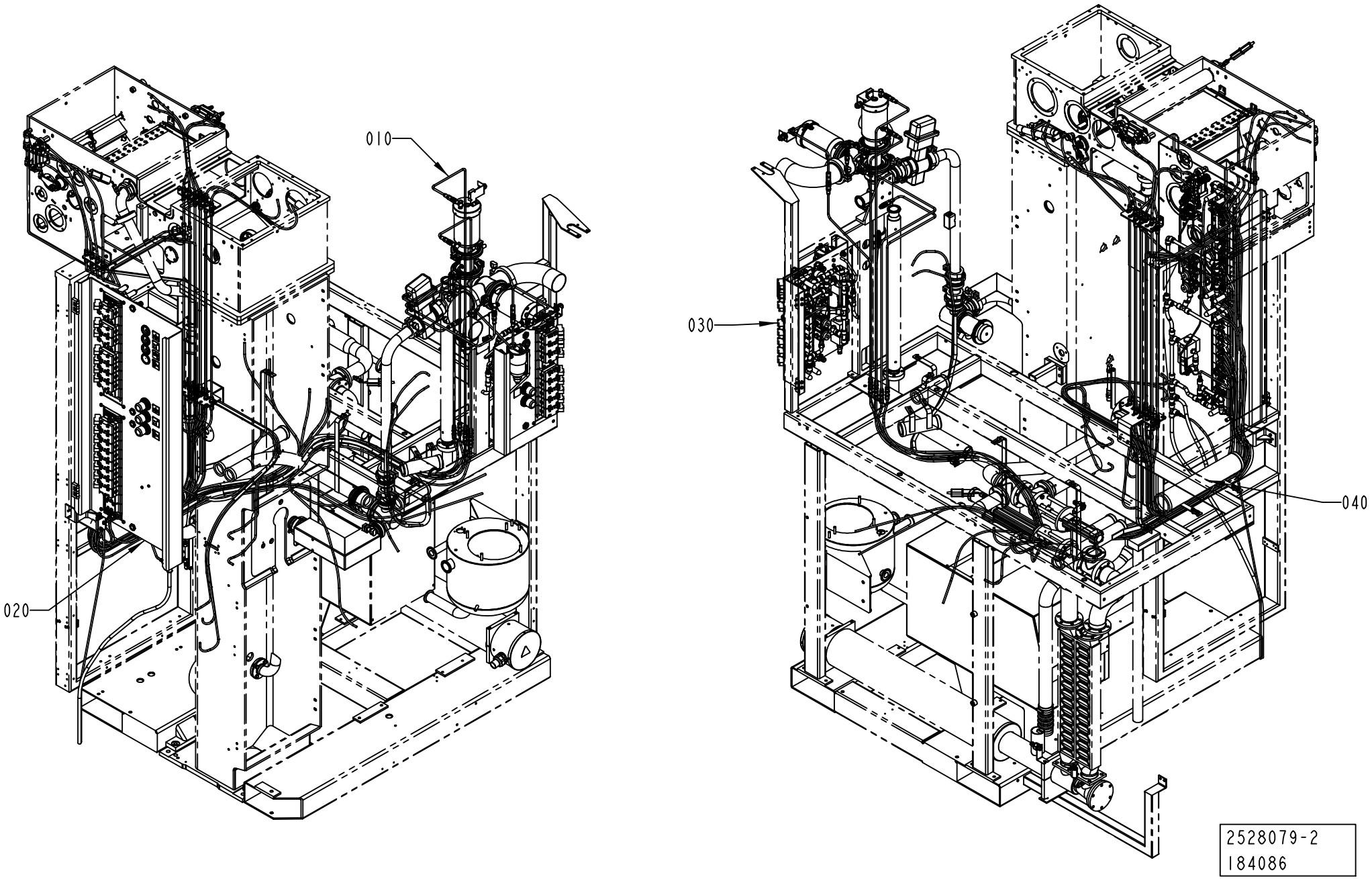
010
020
030
040
2528079-2
184086

ECM: 273804 - 20061101
Group number: 2528079-0200
Assembly Drawing: 2528079-2_1_AA

Pos	Part No	UN	Qty	Description	Page No
-					
005	2563276-0000		1	PNEUMATIC DIAGRAM	
005	2565492-0000		1	PNEUMATIC DIAGRAM	
005	2565493-0000		1	PNEUMATIC DIAGRAM	
005	2565494-0000		1	PNEUMATIC DIAGRAM	
010	2528080-0200		1	HOSE INSTALLATION	**1-321, 1-323, 1-325, 1-327, 1-329 ..... 1-331**
020	2526854-0200		1	VALVE PANEL	**1-333**
030	2526853-0400		1	VALVE PANEL	**1-341**
040	2528081-0200		1	HOSE HOLDER	**1-347**

Pos	Part No	UN	Qty	Description	Page No

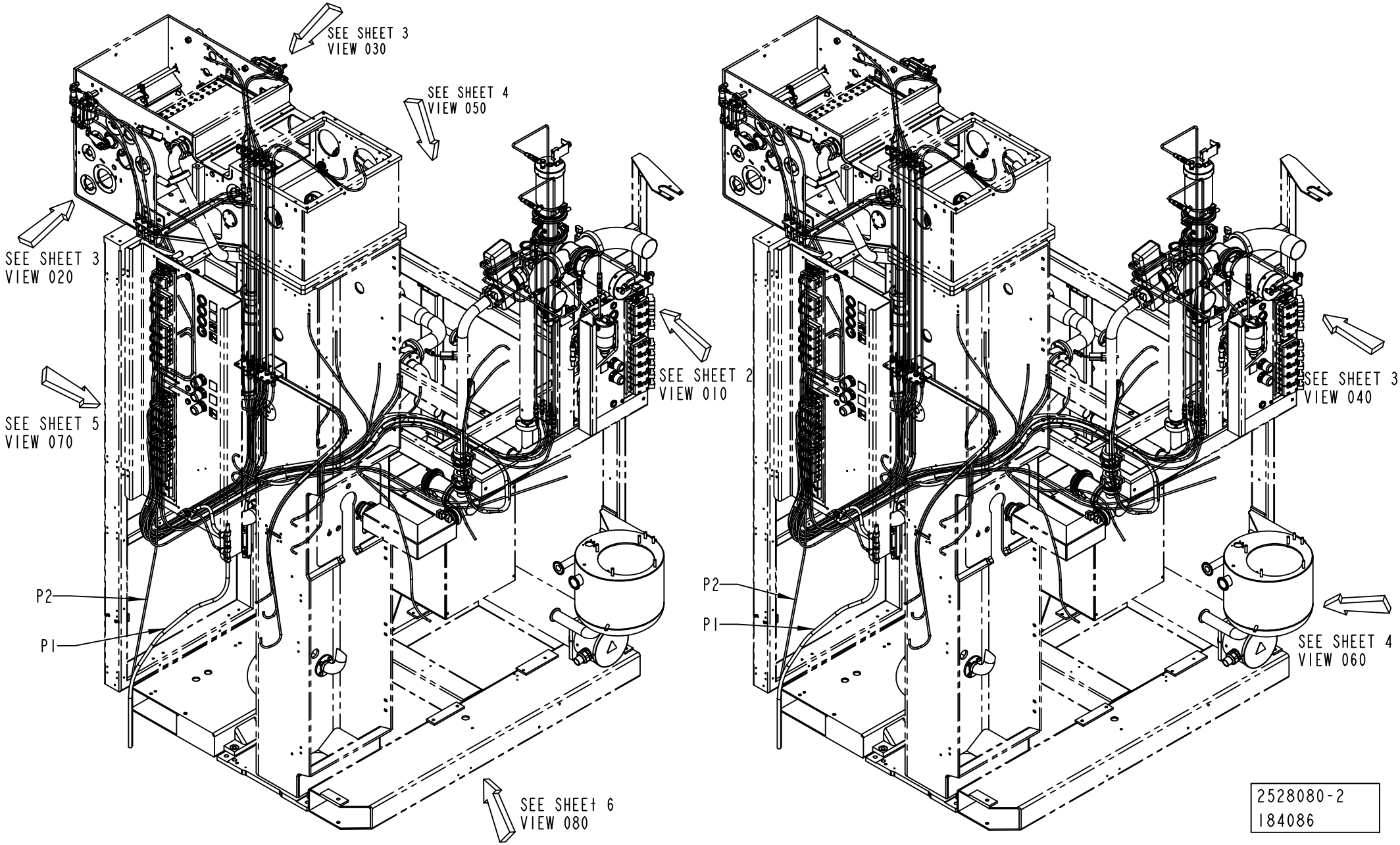
SEE SHEET 3
VIEW 030
SEE SHEET 4
VIEW 050
SEE SHEET 3
VIEW 020
SEE SHEET 2
VIEW 010
SEE SHEET 5
VIEW 070
P2
P1
SEE SHEET 6
VIEW 080
P2
P1
SEE SHEET 3
VIEW 040
SEE SHEET 4
VIEW 060
2528080-2
184086

ECM: 274260 - 20060728
Group number: 2528080-0200
Assembly Drawing: 2528080-2_1_AA

This list covers pages from 1-320 to 1-331

Pos	Part No	UN	Qty	Description	Page No
A3/FLEX HI					
13184	90166-0193	MM	6000	TUBE 6 MM PUR BLUE	
91014	90166-0193	MM	2500	TUBE 6 MM PUR BLUE	
91052	90166-0193	MM	3800	TUBE 6 MM PUR BLUE	
91064	90166-0193	MM	3800	TUBE 6 MM PUR BLUE	
A3/FLEX NOHI					
13184	90166-0193	MM	6000	TUBE 6 MM PUR BLUE	
Common Parts					
010	1484405-0000		1	PIPE	
020	1524237-0000		1	PIPE	
030	2695999-0000		1	PIPE	
040	1524239-0000		1	PIPE	
050	2696000-0000		1	PIPE	
060	2696001-0000		1	PIPE	
070	1524242-0000		1	PIPE	
080	1528727-0000		2	PIPE	
090	1528728-0000		2	PIPE	
100	1524233-0000		2	PIPE	
110	1524234-0000		6	PIPE	
120	1524243-0000		2	PIPE	
130	1523818-0000		1	BRACKET	
140	1523819-0000		1	BRACKET	
150	1523820-0000		1	BRACKET	
300	312105-0366		6	SCREW M6S ISO 4017 M6X12 A480	
310	315237-0109		6	WASHER,PL.RND.AL.10/14,H=1,5	
320	342706-0130		28	ACCESSORIES, INSERT SLEEVE 6 MM	
330	342724-0102		1	CONN. STR. PIPE GI 6-G1/8	
340	342797-0121		1	CONN. BANJO, RINGPIECE 6-1/8	
350	342980-0303		4	BANJO-HOLLOW BOLT COUPL,EXT.THR.01-G1/8	
360	342747-0102		2	CONN. T-PIPE T-6	
370	342748-0109		2	T-CONNECTION 12MM	
380	342716-0210		1	REDUCER 6-12	
400	90163-0057		6	QUICK COUPLING, (M) 5150-1/8	
410	90163-0062		6	QUICK COUPLING, (F) 5053-1/8	
420	90458-1849		6	CONN. STR., 6-R1/8, EXT. THREAD	
430	90224-0308		4	CONN. BANJO, ART. NO. 2023-1/8-1/8	
440	90224-0349		30	CONN. BULKHEAD. 1250-6	
450	90235-0274		1	THROTTLE CHECK VALVE, G1/8", SCU-604-1/8	
460	359000-0400		50	WIRE MARKING, YELLOW, PA2/4"0"	
470	359000-0401		50	WIRE MARKING, YELLOW, PA2/4"1"	
480	359000-0402		50	WIRE MARKING, YELLOW, PA2/4"2"	
490	359000-0403		50	WIRE MARKING, YELLOW, PA2/4"3"	
500	359000-0404		50	WIRE MARKING, YELLOW, PA2/4"4"	
510	359000-0405		50	WIRE MARKING, YELLOW, PA2/4"5"	
520	359000-0406		50	WIRE MARKING, YELLOW, PA2/4"6"	
530	359000-0407		50	WIRE MARKING, YELLOW, PA2/4"7"	
540	359000-0408		50	WIRE MARKING, YELLOW, PA2/4"8"	
550	359000-0409		50	WIRE MARKING, YELLOW, PA2/4"9"	
560	315105-0153		2	WASHER BRB 6,4X12 RFR	
1231	90166-0193	MM	3000	TUBE 6 MM PUR BLUE	
11072	90166-0193	MM	2600	TUBE 6 MM PUR BLUE	
11074	90166-0193	MM	2600	TUBE 6 MM PUR BLUE	
11082	90166-0193	MM	2600	TUBE 6 MM PUR BLUE	
11084	90166-0193	MM	2600	TUBE 6 MM PUR BLUE	
11112	90166-0193	MM	2800	TUBE 6 MM PUR BLUE	
11114	90166-0193	MM	2800	TUBE 6 MM PUR BLUE	
11122:1	90166-0193	MM	700	TUBE 6 MM PUR BLUE	
11122	90166-0193	MM	1900	TUBE 6 MM PUR BLUE	
11124:1	90166-0193	MM	700	TUBE 6 MM PUR BLUE	
11124	90166-0193	MM	1900	TUBE 6 MM PUR BLUE	
12412	90166-0193	MM	3300	TUBE 6 MM PUR BLUE	
12414	90166-0193	MM	3300	TUBE 6 MM PUR BLUE	
12422	90166-0193	MM	2800	TUBE 6 MM PUR BLUE	
12424	90166-0193	MM	2800	TUBE 6 MM PUR BLUE	
13032	90166-0193	MM	3700	TUBE 6 MM PUR BLUE	
13034	90166-0193	MM	3700	TUBE 6 MM PUR BLUE	
13122	90166-0193	MM	3700	TUBE 6 MM PUR BLUE	
13124	90166-0193	MM	3700	TUBE 6 MM PUR BLUE	
13141	90166-0193	MM	1200	TUBE 6 MM PUR BLUE	
13232	90166-0193	MM	3700	TUBE 6 MM PUR BLUE	
13234	90166-0193	MM	3500	TUBE 6 MM PUR BLUE	
13261	90166-0068	MM	1250	TUBE 12 MM PA BLUE	
14012	90166-0193	MM	3500	TUBE 6 MM PUR BLUE	
14014	90166-0193	MM	3500	TUBE 6 MM PUR BLUE	
15012:1	90166-0193	MM	650	TUBE 6 MM PUR BLUE	
15012	90166-0193	MM	2600	TUBE 6 MM PUR BLUE	
15014:1	90166-0193	MM	600	TUBE 6 MM PUR BLUE	
15014	90166-0193	MM	2000	TUBE 6 MM PUR BLUE	
15022:2	90166-0193	MM	550	TUBE 6 MM PUR BLUE	
15022:1	90166-0193	MM	500	TUBE 6 MM PUR BLUE	
15022	90166-0193	MM	2600	TUBE 6 MM PUR BLUE	
15024:2	90166-0193	MM	550	TUBE 6 MM PUR BLUE	
15024:1	90166-0193	MM	500	TUBE 6 MM PUR BLUE	
15024	90166-0193	MM	2600	TUBE 6 MM PUR BLUE	

Machine Type | Group Description | Used-In | Group Number | Page No

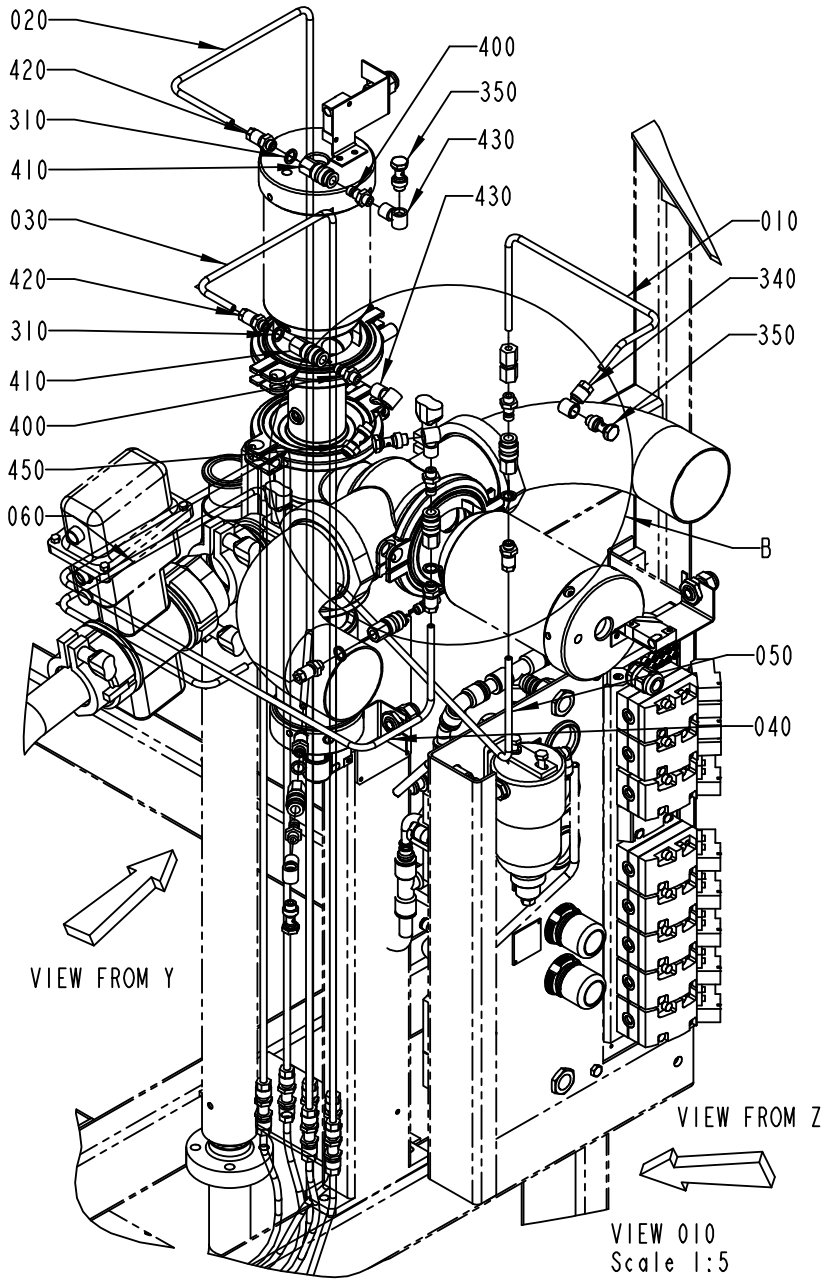

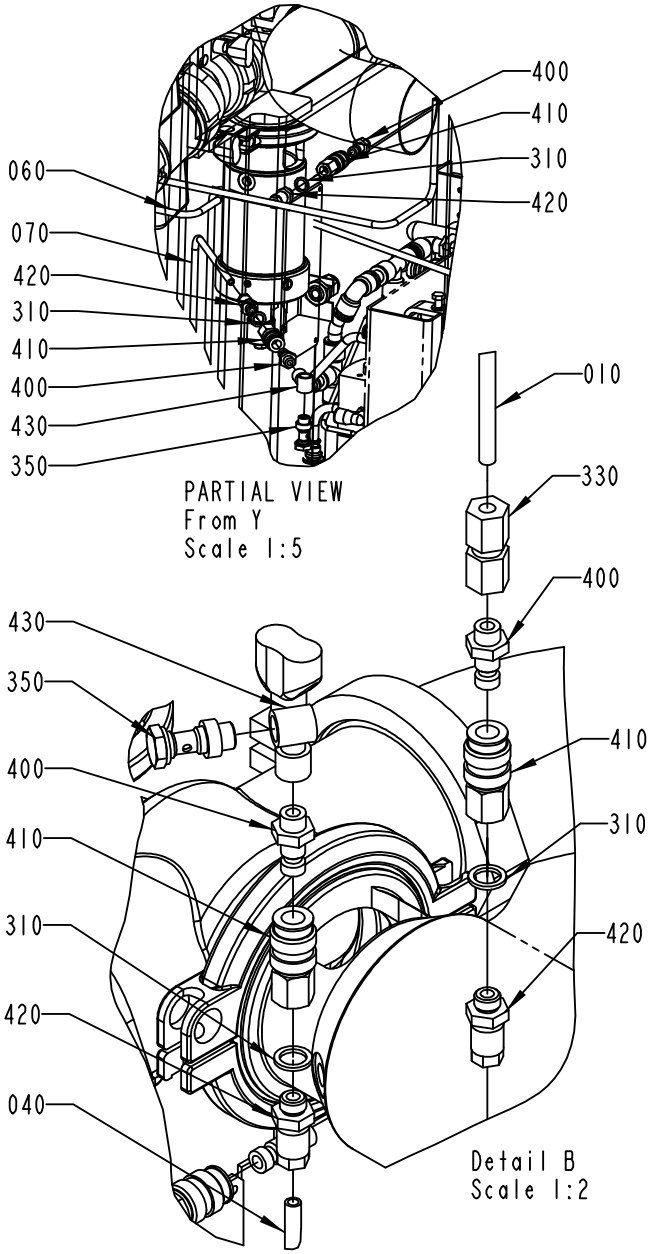

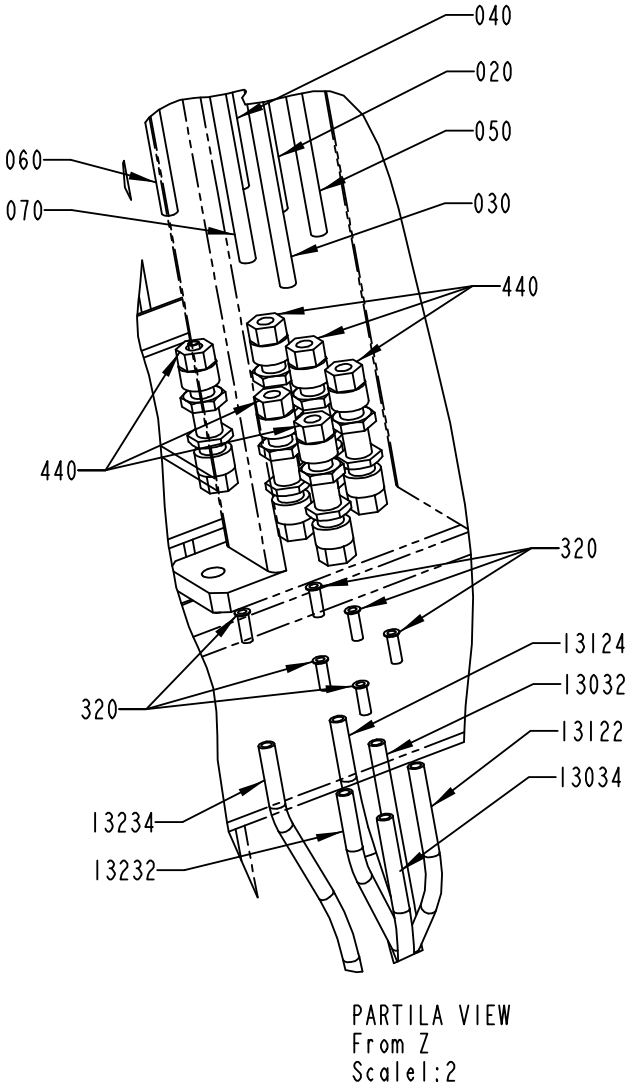

2528080-2
184086

ECM: 274260 - 20060728
Group number: 2528080-0200
Assembly Drawing: 2528080-2_2_AA

This list covers pages from 1-320 to 1-331

Pos	Part No	UN	Qty	Description	Page No
Common Parts (Cont'd)					
15032:1	90166-0193	MM	450	TUBE 6 MM PUR BLUE	
15032	90166-0193	MM	2600	TUBE 6 MM PUR BLUE	
15034:1	90166-0193	MM	450	TUBE 6 MM PUR BLUE	
15034	90166-0193	MM	2600	TUBE 6 MM PUR BLUE	
18024	90166-0193	MM	2000	TUBE 6 MM PUR BLUE	
18034	90166-0193	MM	2500	TUBE 6 MM PUR BLUE	
18102	90166-0193	MM	3700	TUBE 6 MM PUR BLUE	
18104	90166-0193	MM	3700	TUBE 6 MM PUR BLUE	
P1:3	90166-0195	MM	3800	TUBE 12 MM PA BLUE	
P1:1	90166-0193	MM	3500	TUBE 6 MM PUR BLUE	
P1	90166-0195	MM	2000	TUBE 12 MM PA BLUE	
P2	90166-0013	MM	3000	TUBE 8 MM PA BLUE	

Pos	Part No	UN	Qty	Description	Page No

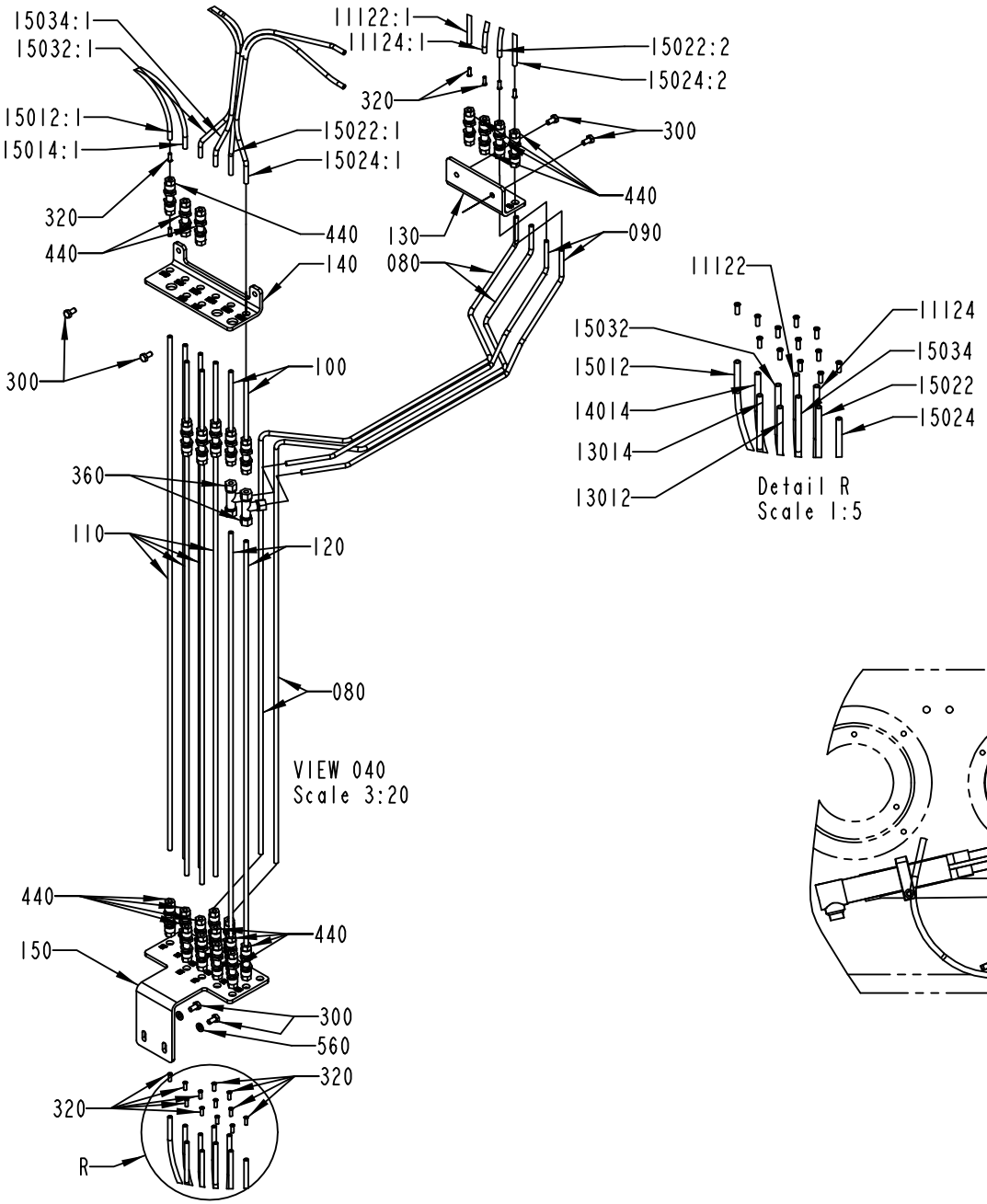
15034:1
15032:1
15012:1
15014:1
320
440
300
11122:1
11124:1
15022:2
15024:2
15022:1
15024:1
130
140
080
090
100
110
120
360
VIEW 040
Scale 3:20
150
560
R

11122
11124
15032
15034
15012
15022
14014
15024
13014
13012
Detail R
Scale 1:5

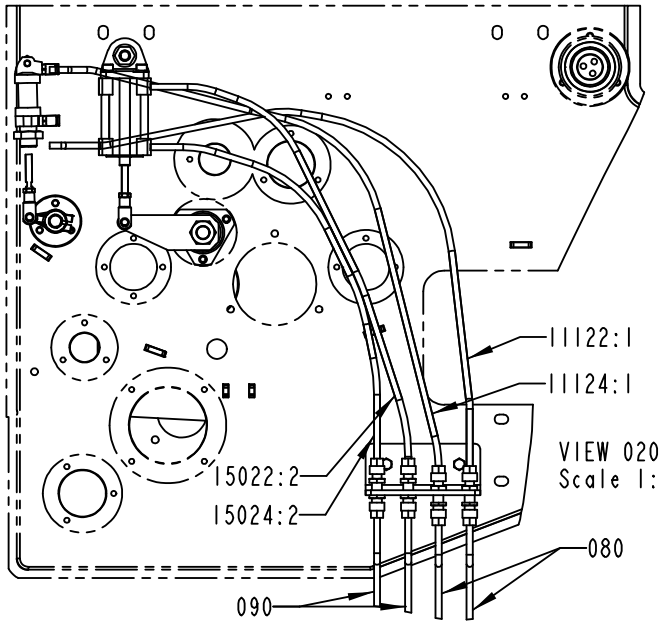
11122:1
11124:1
15022:2
15024:2
VIEW 020
Scale 1:5
080
090

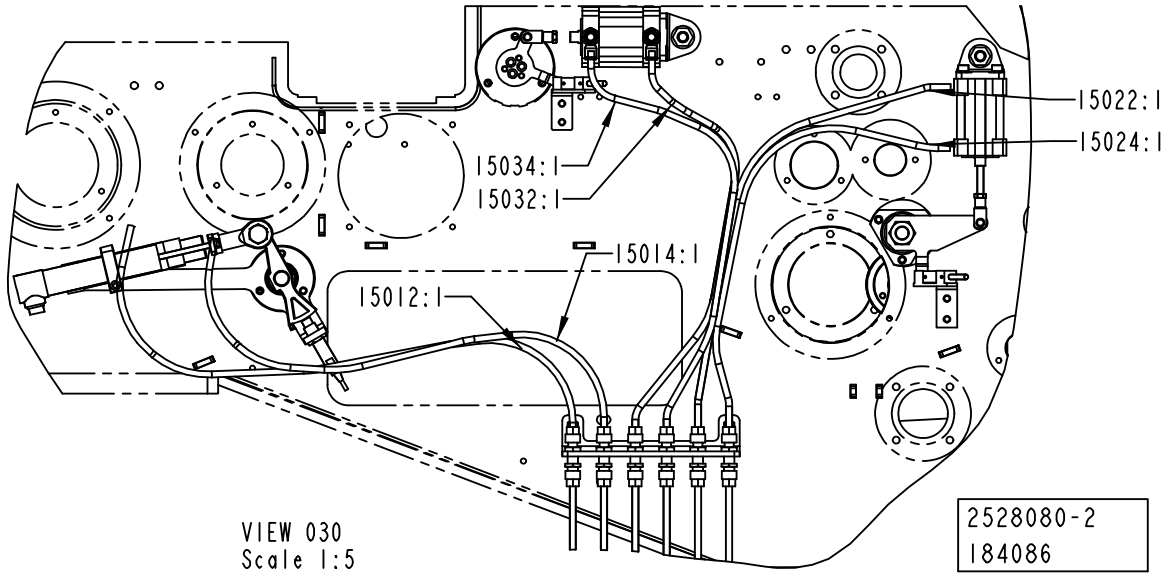
15022:1
15024:1
15034:1
15032:1
15014:1
15012:1
VIEW 030
Scale 1:5
2528080-2
184086

ECM: 274260 - 20060728
Group number: 2528080-0200
Assembly Drawing: 2528080-2_3_AA

This list covers pages from 1-320 to 1-331

Pos	Part No	UN	Qty	Description	Page No	Pos	Part No	UN	Qty	Description	Page No

SEE PREVIOUS LISTS PAGES: 1-321, 1-323.

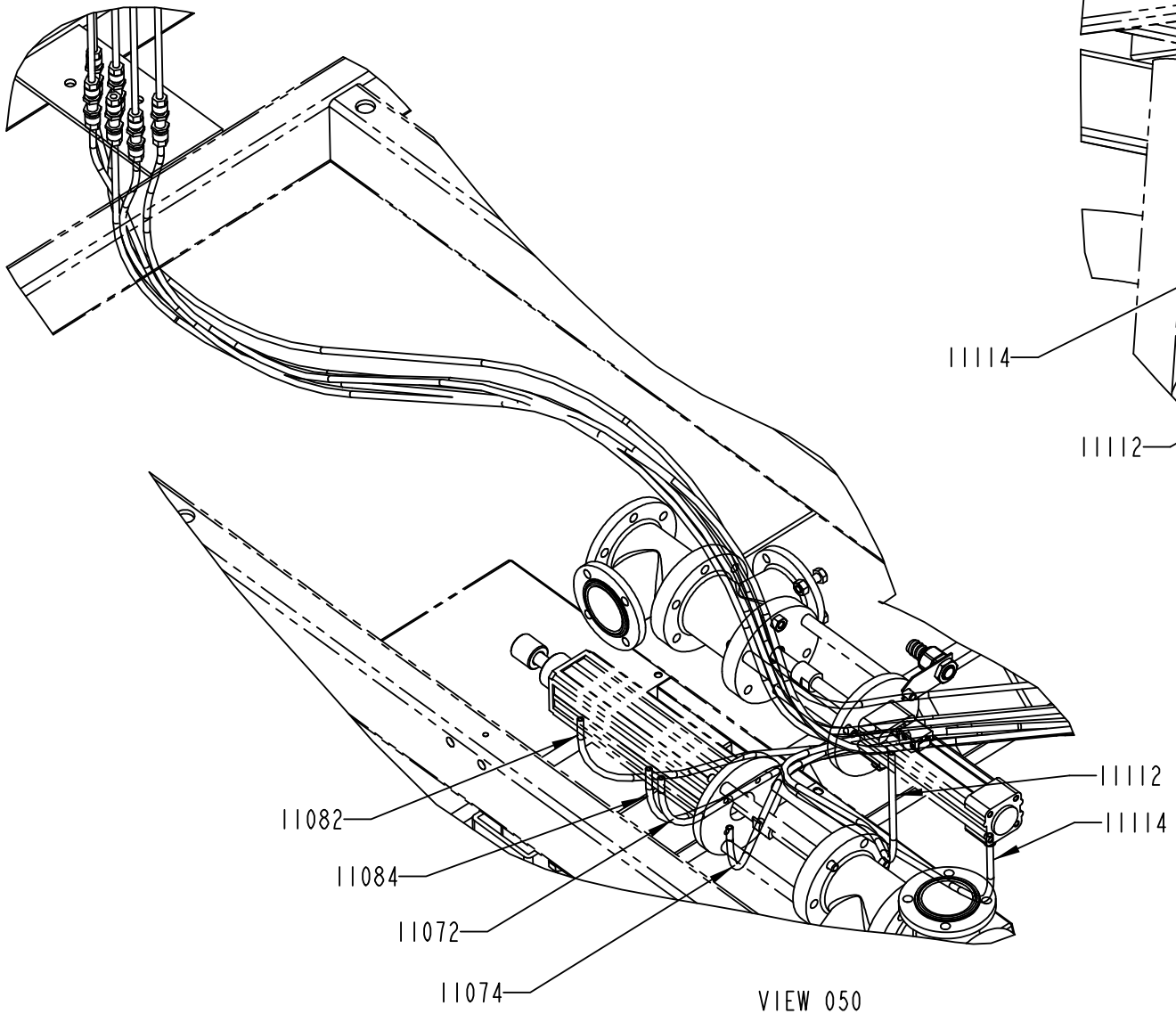

VIEW 050
Scale 1:5

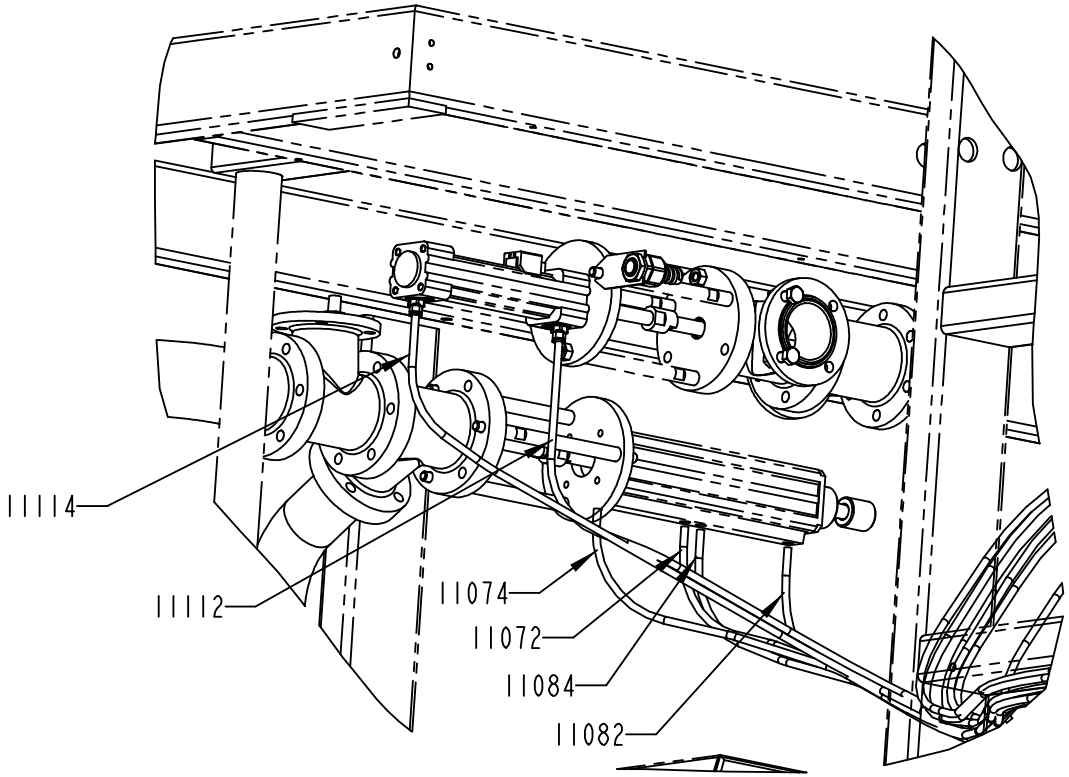

VIEW 060
Scale 1:5

2528080-2
184086

ECM: 274260 - 20060728
Group number: 2528080-0200
Assembly Drawing: 2528080-2_4_AA

This list covers pages from 1-320 to 1-331

Pos	Part No	UN	Qty	Description	Page No	Pos	Part No	UN	Qty	Description	Page No

SEE PREVIOUS LISTS PAGES: 1-321, 1-323.

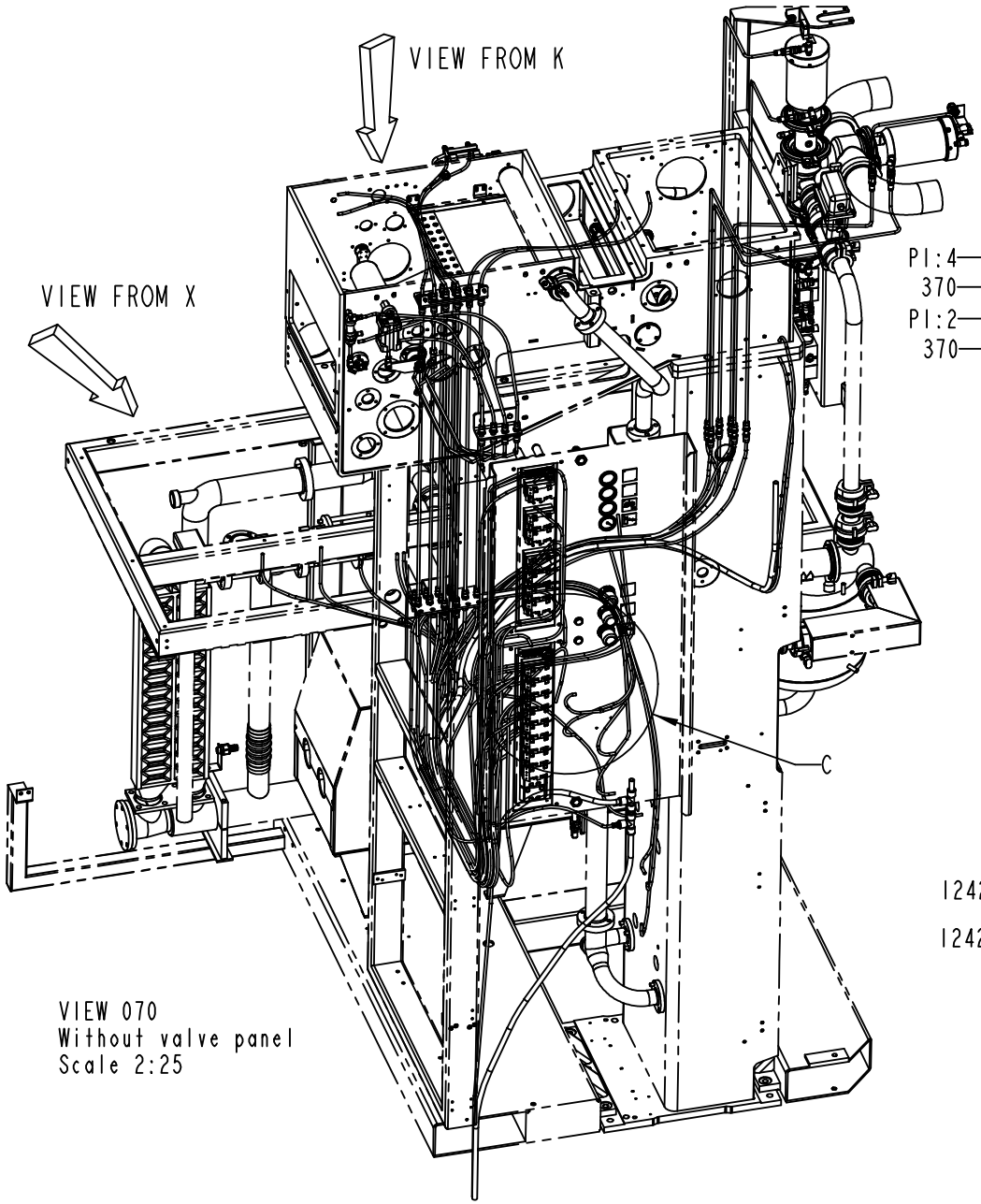

VIEW 070
Without valve panel
Scale 2:25

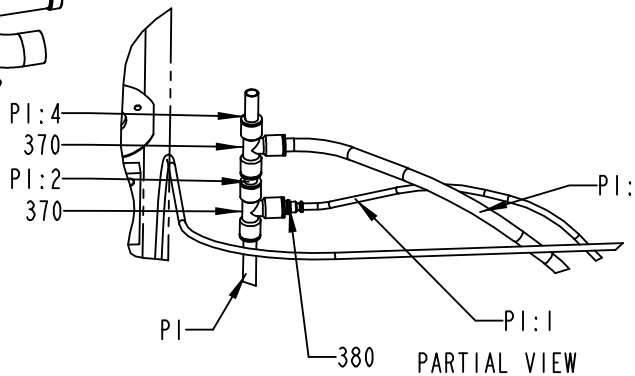

PARTIAL VIEW
From K with valve panel
Sacle 1:5

Valve Panel

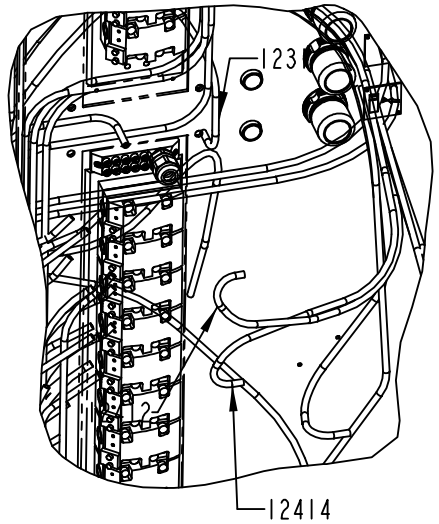

Detail C
Sacle 1:5

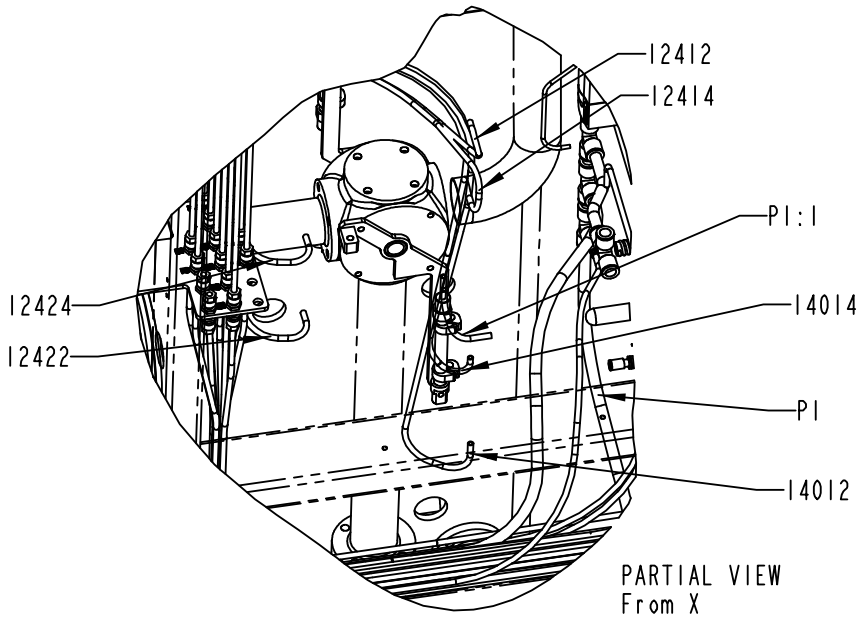

PARTIAL VIEW
From X
Scale 17:100

2528080-2
184086

ECM: 274260 - 20060728
Group number: 2528080-0200
Assembly Drawing: 2528080-2_5_AA

This list covers pages from 1-320 to 1-331

Pos	Part No	UN	Qty	Description	Page No	Pos	Part No	UN	Qty	Description	Page No

SEE PREVIOUS LISTS PAGES: 1-321, 1-323.

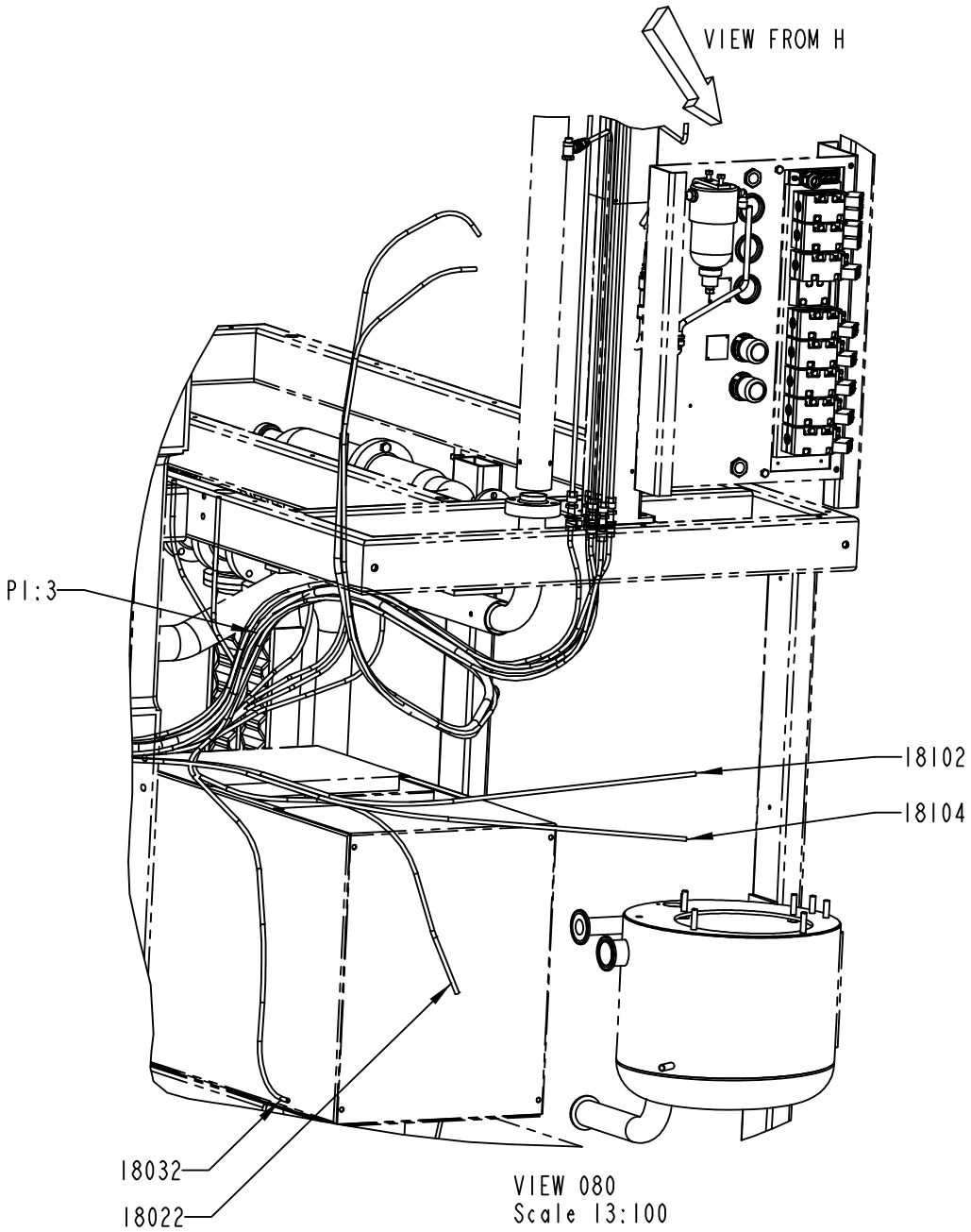

VIEW 080
Scale 13:100

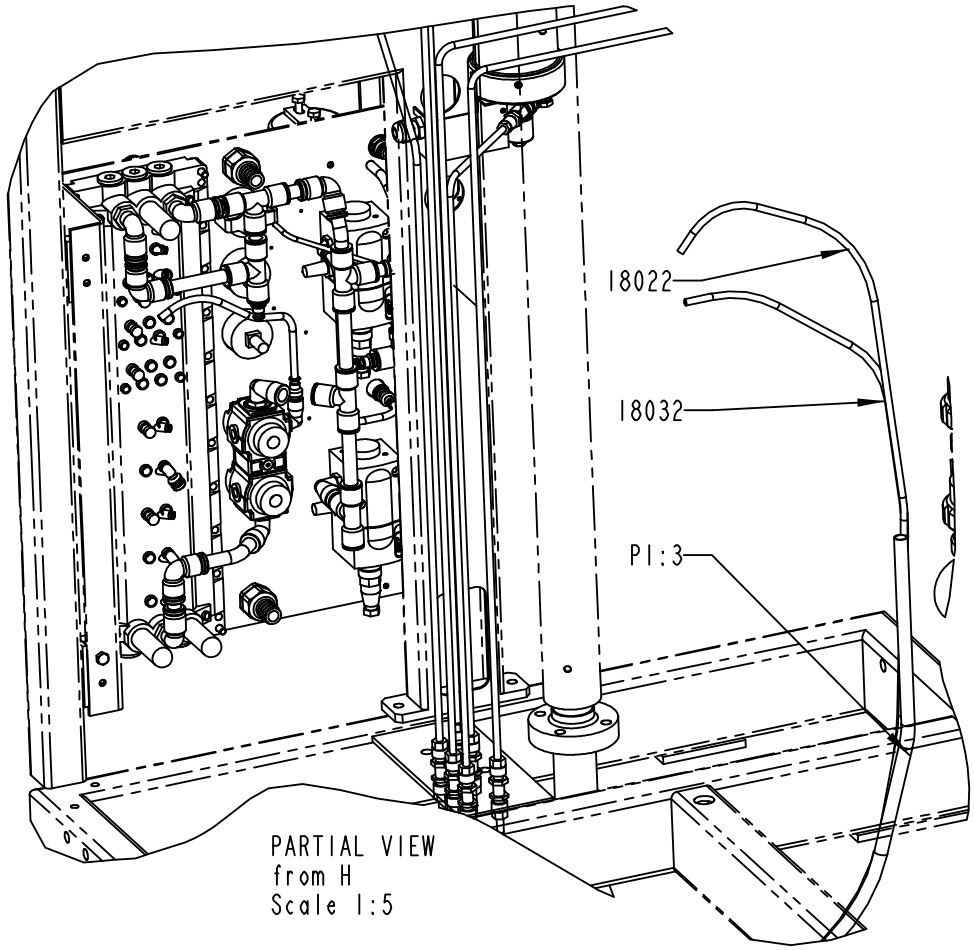

PARTIAL VIEW
from H
Scale 1:5

2528080-2
184086

ECM: 274260 - 20060728
Group number: 2528080-0200
Assembly Drawing: 2528080-2_6_AA

This list covers pages from 1-320 to 1-331

Pos	Part No	UN	Qty	Description	Page No	Pos	Part No	UN	Qty	Description	Page No

SEE PREVIOUS LISTS PAGES: 1-321, 1-323.

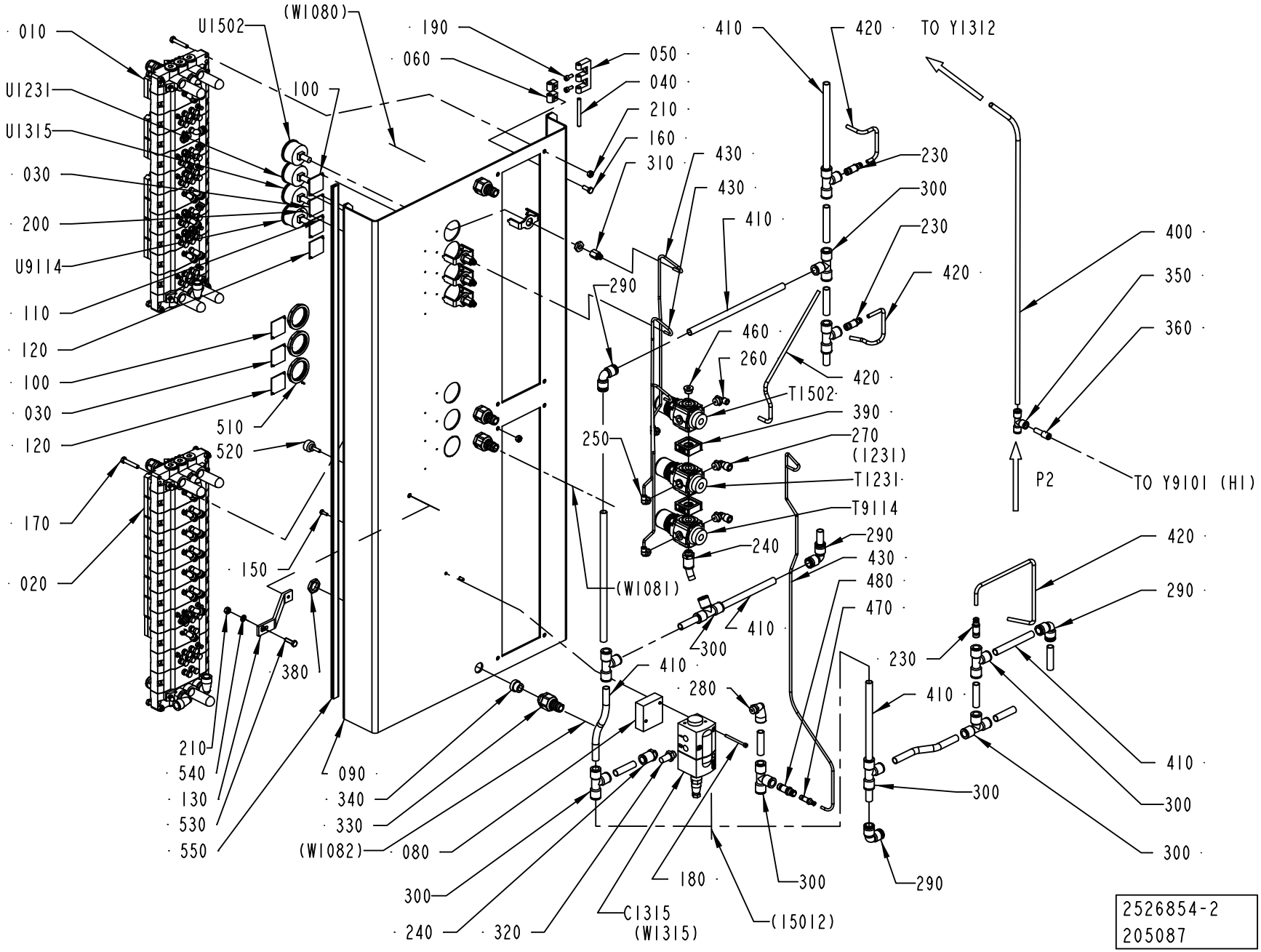
010
U1502
(W1080)
190
060
050
040
210
160
310
430
430
410
410
420
TO Y1312
230
300
230
420
400
350
360
U1231
U1315
030
200
U9114
110
120
100
030
120
100
290
460
260
420
T1502
390
270
(1231)
T1231
T9114
240
250
510
520
170
020
150
380
(W1081)
290
430
480
470
410
300
410
280
230
410
420
290
410
300
300
210
540
130
530
550
090
340
330
(W1082)
080
300
240
320
C1315
(W1315)
180
300
(15012)
290
P2
TO Y9101 (HI)
2526854-2
205087

ECM: 207192 - 20050615
Group number: 2526854-0200
Assembly Drawing: 2526854-2_1_AB

Pos	Part No	UN	Qty	Description	Page No
HI					
120	2640822-0000		2	SIGN	
200	312502-0120		14	DRIVE SCREW ROUND HEAD KDS 0X5	
250	90458-2955		3	ELBOW PIPE JOINT, EXT.THREAD,	
270	90458-2958		2	ELBOW PIPE JOINT, EXT.THREAD, D=8MM-G1/4	
310	342770-0101		4	STRAIGHT COUPLING INT, D=4 MM - G1/8	
350	342748-0103		1	T-CONNECTION 8MM	
360	350006-0003		1	PUSH-IN FITTING QS-F-8H-6	
390	90113-0140		2	QUICK CLAMP	
400	90166-0013	MM	1000	TUBE 8 MM PA BLUE	
510	90457-0078		3	PANEL NUT	
T9114	90113-0469		1	MANIFOLD REGULATOR 4 BAR	
U9114	90043-0065		1	MKC NEW FILL PUMP VACUUM PRESSURE GAUGE	
NOHI					
200	312502-0120		10	DRIVE SCREW ROUND HEAD KDS 0X5	
250	90458-2955		2	ELBOW PIPE JOINT, EXT.THREAD,	
270	90458-2958		1	ELBOW PIPE JOINT, EXT.THREAD, D=8MM-G1/4	
310	342770-0101		3	STRAIGHT COUPLING INT, D=4 MM - G1/8	
390	90113-0140		1	QUICK CLAMP	
510	90457-0078		2	PANEL NUT	
Common Parts					
010	2515324-0100		1	VALVE RAMP	**1-335**
020	2515325-0100		1	VALVE RAMP	**1-337, 1-339**
030	273450-0000		2	SIGN, AIR SPRAY	
040	988685-0000		2	PIN	
050	1035792-0000		2	E-HINGE	
060	1129770-0000		2	BLOCKING PIECE	
080	2511330-0000		1	SPACER	
090	2715581-0000		1	PLATE	
100	273452-0000		2	SIGN, ROLLING MACHINE FOR FABRICS	
110	1041937-0000		1	SIGN	
130	2736702-0000		1	BRACKET	
150	312105-0291		2	SCREW M6S ISO 4017 M4X12 A470	
160	312105-0368		4	SCREW M6S ISO 4017 M6X16 A480	
170	312109-0376		8	SCREW M6S ISO 4017 M6X35 A480	
180	312115-0305		2	SCREW ISO4762 M4X50 A4 80	
190	312115-0327		4	SCREW ISO4762 M5X12 A4 80	
210	312605-0316		9	HEXAGON NUT, M6M M6 A280	
230	342716-0210		3	REDUCER 6-12	
240	342722-0209		2	STRAIGHT COUPLING D=12-G1/4"	
260	90458-2957		1	ELBOW PIPE JOINT, EXT.THREAD, D=6MM-G1/4	
280	90458-2959		1	ELBOW PIPE JOINT, EXT.THREAD,D=12MM-G1/4	
290	342735-0109		4	ELBOW PIPE JOINT	
300	342748-0109		10	T-CONNECTION 12MM	
320	346800-0110		1	SILENCER FILTER R1/4"	
330	353243-0003		4	HOSE GLAND W/O INSERT PG11 EXTENDED	
340	353249-0011		4	INSERT, SINGEL HOLE, EK 153/11	
380	90099-0117		4	NUT, PR 18,6 (PG11)	
410	90166-0068	MM	5000	TUBE 12 MM PA BLUE	
420	90166-0081	MM	5000	TUBE 6 MM PA BLUE	
430	90166-0095	MM	4000	TUBE 4 MM PA BLUE (50M)	
460	342713-0210		1	PLUG,EXT THREAD HEX SOCKET(PAK OF 10 PCS	
470	342716-0205		1	REDUCER 4-8	
480	342716-0209		1	REDUCER 8-12	
520	90051-0035		1	KNOB, EXTERNAL THREAD. NO. 8308-1135	
530	312105-0370		1	SCREW M6S ISO 4017 M6X20 A480	
540	315105-0153		1	WASHER BRB 6,4X12 RFR	
550	90143-0059	MM	1100	SEAL STRIP 4610069	
C1315	90458-1092		1	PROPORTIONAL VALVE 0 - 10V/0-6 BAR	
	90458-1262		*1*	*CONNECTOR 131028001 FOR PROP. VALVE*	
T1231	90113-0469		1	MANIFOLD REGULATOR 4 BAR	
T1502	90113-0470		1	MANIFOLD REGULATOR 10 BAR	
U1231	90043-0065		1	MKC NEW FILL PUMP VACUUM PRESSURE GAUGE	
U1315	90043-0065		1	MKC NEW FILL PUMP VACUUM PRESSURE GAUGE	
U1502	90043-0065		1	MKC NEW FILL PUMP VACUUM PRESSURE GAUGE	

Machine Type | Group Description | Used-In | Group Number | Page No

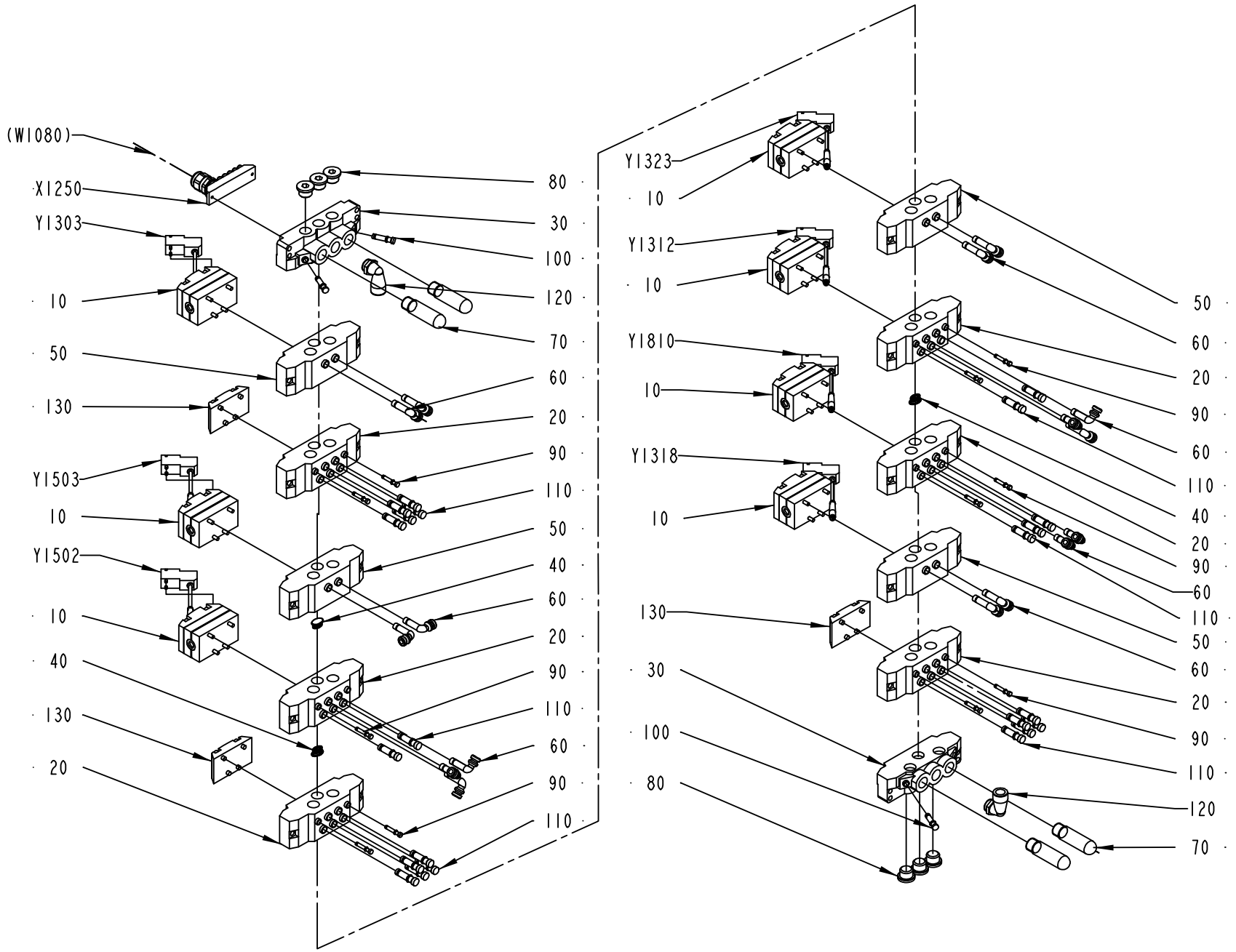

2515324-1
ECM 131608

ECM: 189208 - 20041104
Group number: 2515324-0100
Assembly Drawing: 2515324-1_1_AB

Pos	Part No	UN	Qty	Description	Page No
A3/FLEX					
010	90042-0215		7	VALVE BODY 5/2 UNISTABLE	
130	90042-0519		3	BLANK PLATE ISO SIZE 1	
Common Parts					
020	90042-0520		6	BASE PLATE ISO SIZE 1	
030	90042-0522		2	PORTED END PIECE ISO SIZE 1	
040	90042-0528		3	BLANKING KIT SEALS ISO SIZE 1	
050	90042-0532		4	BASE PLATE ISO SIZE 1	
060	90055-0143		16	HOSE,ELBOW 90 COUPLING,FPT,6X8MM	
070	90328-0024		4	SILENCER G3/8"	
080	342713-0211		6	PLUG, EXT THREAD HEX SOCKET 8638-00-380	
090	342715-0100		11	BLIND PLUG 4 MM	
100	342715-0102		3	BLIND PLUG 6 MM	
110	342715-0103		22	BLIND PLUG 8 MM	
120	90458-2960		2	ELBOW PIPE JOINT, EXT.THREAD,D=12MM-G3/8	
X1250	90042-0535		1	TERMINAL BOARD 19 CORDS	
Y1303	90042-0538		1	PILOT VALVE L=500MM	
Y1312	90042-0538		1	PILOT VALVE L=500MM	
Y1318	90042-0538		1	PILOT VALVE L=500MM	
Y1323	90042-0538		1	PILOT VALVE L=500MM	
Y1502	90042-0538		1	PILOT VALVE L=500MM	
Y1503	90042-0538		1	PILOT VALVE L=500MM	
Y1810	90042-0538		1	PILOT VALVE L=500MM	

Pos	Part No	UN	Qty	Description	Page No

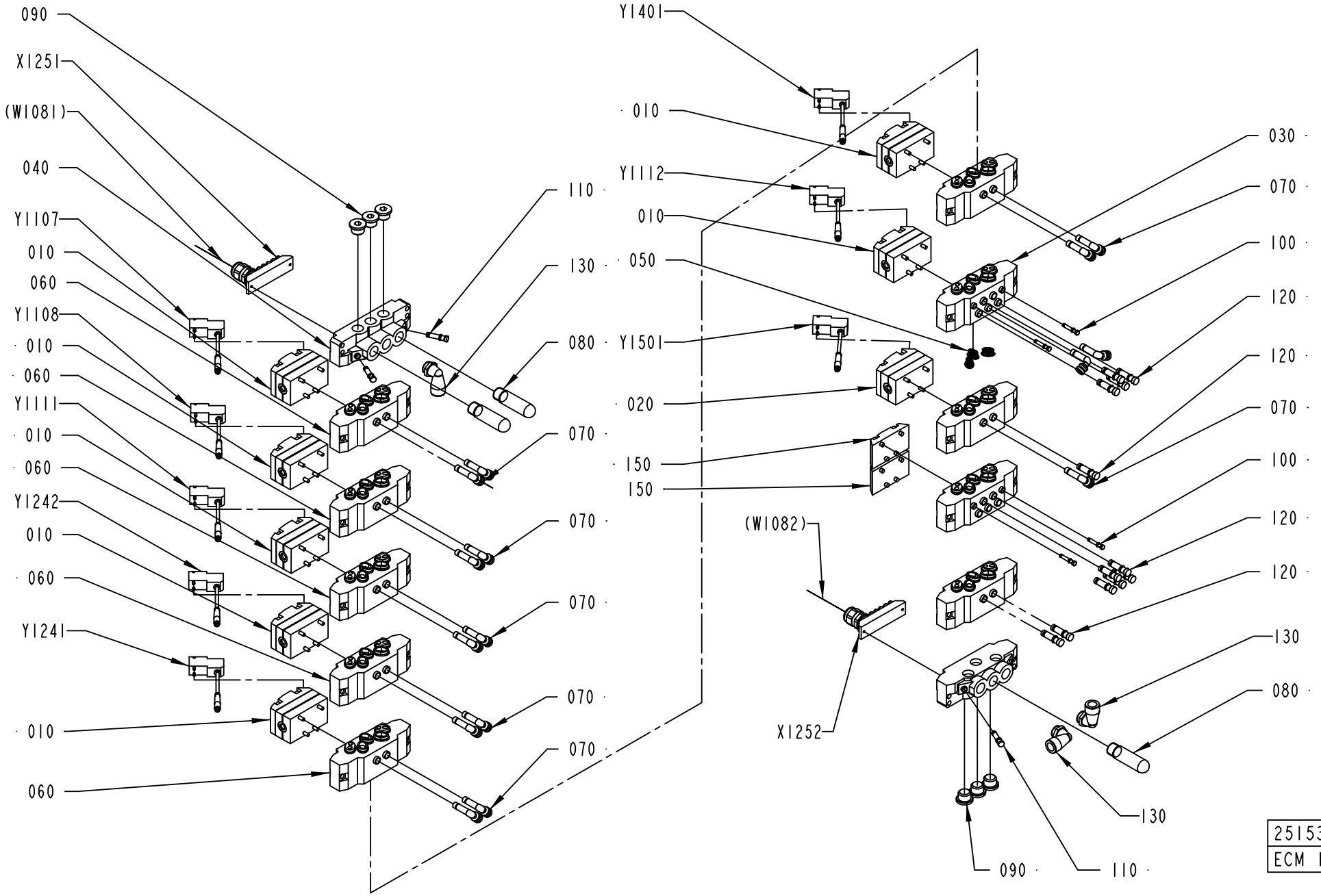
090
X1251
(W1081)
040
Y1107
010
060
Y1108
010
060
Y1111
010
060
Y1242
010
060
Y1241
010
060
110
130
080
070
070
070
070
070
Y1401
010
Y1112
010
050
Y1501
020
150
150
(W1082)
X1252
030
070
100
120
120
070
100
120
120
130
080
130
090
110
2515325-1
ECM 140502

ECM: 176950 - 20041115
Group number: 2515325-0100
Assembly Drawing: 2515325-1_1_AC

This list covers pages from 1-336 to 1-339

Pos	Part No	UN	Qty	Description	Page No
HI (See drawing on page: 1-338)					
020	90042-0271		2	VALVE BODY 2X3/2	
070	90055-0143		16	HOSE,ELBOW 90 COUPLING,FPT,6X8MM	
120	342715-0103		10	BLIND PLUG 8 MM	
150	90042-0519		1	BLANK PLATE ISO SIZE 1	
Y9105	90042-0538		1	PILOT VALVE L=500MM	
Y9106	90042-0538		1	PILOT VALVE L=500MM	
NOHI (See drawing on page: 1-336)					
020	90042-0271		1	VALVE BODY 2X3/2	
070	90055-0143		14	HOSE,ELBOW 90 COUPLING,FPT,6X8MM	
120	342715-0103		12	BLIND PLUG 8 MM	
150	90042-0519		2	BLANK PLATE ISO SIZE 1	
Common Parts					
010	90042-0215		7	VALVE BODY 5/2 UNISTABLE	
030	90042-0520		2	BASE PLATE ISO SIZE 1	
040	90042-0522		2	PORTED END PIECE ISO SIZE 1	
050	90042-0528		3	BLANKING KIT SEALS ISO SIZE 1	
060	90042-0532		8	BASE PLATE ISO SIZE 1	
080	90328-0024		3	SILENCER G3/8"	
090	342713-0211		6	PLUG, EXT THREAD HEX SOCKET 8638-00-380	
100	342715-0100		4	BLIND PLUG 4 MM	
110	342715-0102		3	BLIND PLUG 6 MM	
130	90458-2960		3	ELBOW PIPE JOINT, EXT.THREAD,D=12MM-G3/8	
X1251	90042-0535		1	TERMINAL BOARD 19 CORDS	
X1252	90042-0535		1	TERMINAL BOARD 19 CORDS	
Y1107	90042-0538		1	PILOT VALVE L=500MM	
Y1108	90042-0538		1	PILOT VALVE L=500MM	
Y1111	90042-0538		1	PILOT VALVE L=500MM	
Y1112	90042-0538		1	PILOT VALVE L=500MM	
Y1241	90042-0538		1	PILOT VALVE L=500MM	
Y1242	90042-0538		1	PILOT VALVE L=500MM	
Y1401	90042-0538		1	PILOT VALVE L=500MM	
Y1501	90042-0538		1	PILOT VALVE L=500MM	

Pos	Part No	UN	Qty	Description	Page No

VALVE RAMP

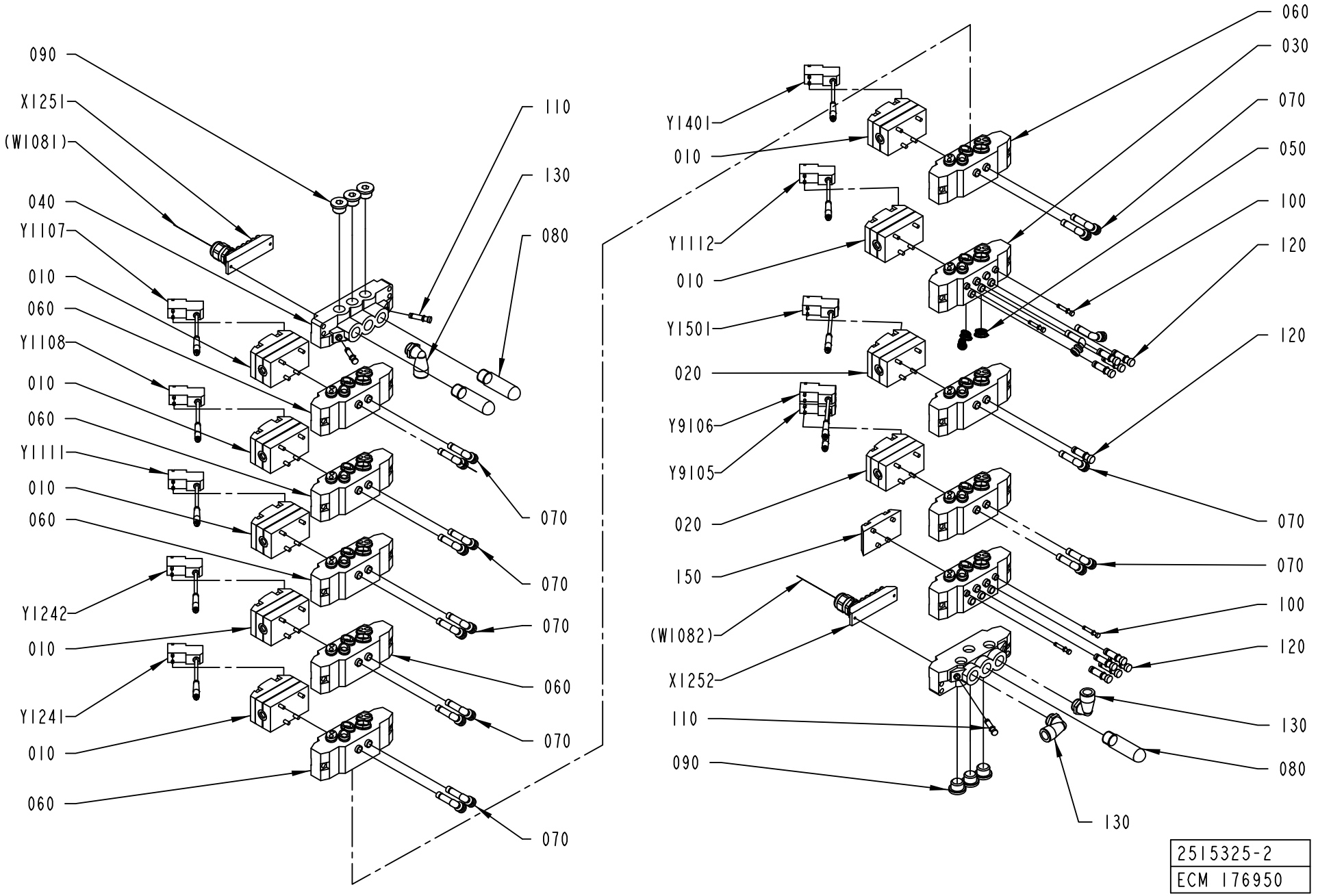

2515325-2
ECM 176950

ECM: 176950 - 20041115
Group number: 2515325-0100
Assembly Drawing: 2515325-2_1_AB

This list covers pages from 1-336 to 1-339

Pos	Part No	UN	Qty	Description	Page No
HI (See drawing on page: 1-338)					
020	90042-0271		2	VALVE BODY 2X3/2	
070	90055-0143		16	HOSE,ELBOW 90 COUPLING,FPT,6X8MM	
120	342715-0103		10	BLIND PLUG 8 MM	
150	90042-0519		1	BLANK PLATE ISO SIZE 1	
Y9105	90042-0538		1	PILOT VALVE L=500MM	
Y9106	90042-0538		1	PILOT VALVE L=500MM	
NOHI (See drawing on page: 1-336)					
020	90042-0271		1	VALVE BODY 2X3/2	
070	90055-0143		14	HOSE,ELBOW 90 COUPLING,FPT,6X8MM	
120	342715-0103		12	BLIND PLUG 8 MM	
150	90042-0519		2	BLANK PLATE ISO SIZE 1	
Common Parts					
010	90042-0215		7	VALVE BODY 5/2 UNISTABLE	
030	90042-0520		2	BASE PLATE ISO SIZE 1	
040	90042-0522		2	PORTED END PIECE ISO SIZE 1	
050	90042-0528		3	BLANKING KIT SEALS ISO SIZE 1	
060	90042-0532		8	BASE PLATE ISO SIZE 1	
080	90328-0024		3	SILENCER G3/8"	
090	342713-0211		6	PLUG, EXT THREAD HEX SOCKET 8638-00-380	
100	342715-0100		4	BLIND PLUG 4 MM	
110	342715-0102		3	BLIND PLUG 6 MM	
130	90458-2960		3	ELBOW PIPE JOINT, EXT.THREAD,D=12MM-G3/8	
X1251	90042-0535		1	TERMINAL BOARD 19 CORDS	
X1252	90042-0535		1	TERMINAL BOARD 19 CORDS	
Y1107	90042-0538		1	PILOT VALVE L=500MM	
Y1108	90042-0538		1	PILOT VALVE L=500MM	
Y1111	90042-0538		1	PILOT VALVE L=500MM	
Y1112	90042-0538		1	PILOT VALVE L=500MM	
Y1241	90042-0538		1	PILOT VALVE L=500MM	
Y1242	90042-0538		1	PILOT VALVE L=500MM	
Y1401	90042-0538		1	PILOT VALVE L=500MM	
Y1501	90042-0538		1	PILOT VALVE L=500MM	

Pos	Part No	UN	Qty	Description	Page No

VALVE PANEL

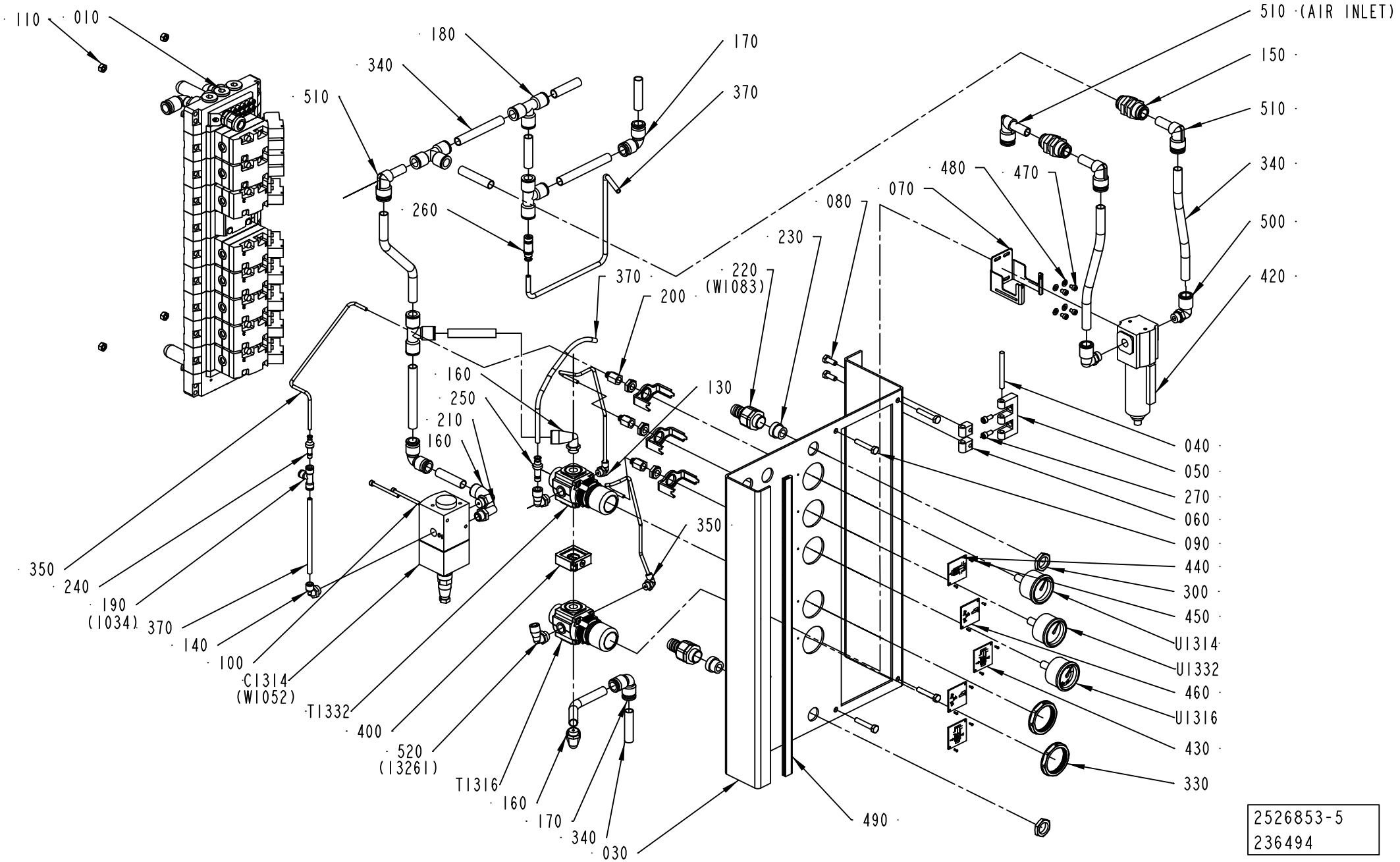

2526853-5
236494

ECM: 238298 - 20061101
Group number: 2526853-0400
Assembly Drawing: 2526853-5_1_AA

Pos	Part No	UN	Qty	Description	Page No
-					
010	2515323-0100		1	VALVE RAMP	**1-343, 1-345**
030	2790434-0000		1	PLATE	
040	988685-0000		2	PIN	
050	1035792-0000		2	E-HINGE	
060	1129770-0000		4	BLOCKING PIECE	
070	90459-7110		1	BRACKET, 4224-50	
080	312105-0368		4	SCREW M6S ISO 4017 M6X16 A480	
090	312109-0376		4	SCREW M6S ISO 4017 M6X35 A480	
100	312115-0305		2	SCREW ISO4762 M4X50 A4 80	
110	312605-0316		4	HEXAGON NUT, M6M M6 A280	
130	90458-2955		2	ELBOW PIPE JOINT, EXT.THREAD,	
140	90458-2957		2	ELBOW PIPE JOINT, EXT.THREAD, D=6MM-G1/4	
150	350010-0005		2	PUSH-IN BULKHEAD FITTING QSS-F-12	
160	90458-2959		3	ELBOW PIPE JOINT, EXT.THREAD,D=12MM-G1/4	
170	342735-0109		3	ELBOW PIPE JOINT	
180	342748-0109		4	T-CONNECTION 12MM	
190	342748-0102		1	T-CONNECTION 6MM	
200	342770-0101		3	STRAIGHT COUPLING INT, D=4 MM - G1/8	
210	346800-0110		1	SILENCER FILTER R1/4"	
220	353243-0003		2	HOSE GLAND W/O INSERT PG11 EXTENDED	
230	353249-0011		2	INSERT, SINGEL HOLE, EK 153/11	
240	342716-0202		1	REDUCER 4-6	
250	342716-0203		1	REDUCER 6-8	
260	342716-0210		1	REDUCER 6-12	
270	312115-0327		4	SCREW ISO4762 M5X12 A4 80	
280	90458-2958		1	ELBOW PIPE JOINT, EXT.THREAD, D=8MM-G1/4	
300	90099-0117		2	NUT, PR 18,6 (PG11)	
330	90457-0078		2	PANEL NUT	
340	90166-0068	MM	250	TUBE 12 MM PA BLUE	
350	90166-0095	MM	900	TUBE 4 MM PA BLUE (50M)	
370	90166-0081	MM	900	TUBE 6 MM PA BLUE	
400	90113-0140		1	QUICK CLAMP	
420	90113-0472		1	FILTER 0,01 MICRON, F72C-2GD-AEO	
	90113-0471		*1*	*FILTER ELEMENT COALESCING*	
430	1548001-0000		2	SIGN	
440	2672942-0000		1	SYMBOLSIGN	
450	312502-0120		10	DRIVE SCREW ROUND HEAD KDS 0X5	
460	2634917-0000		2	SIGN	
470	312115-0285		4	SCREW ISO4762 M4X6 A4 80	
480	315106-0136		4	WASHER ISO 7089-4-200 HV A4	
490	90143-0059	MM	480	SEAL STRIP 4610069	
500	350002-0011		2	PUSH-IN L-FITTING QSL-F-G1/4-12	
510	90459-1825		4	ELBOW WITH TAILPIECE 12/12 MM	
13261	90166-0081	MM	2000	TUBE 6 MM PA BLUE	
C1314	90458-1092		1	PROPORTIONAL VALVE 0 - 10V/0-6 BAR	
	90458-1262		*1*	*CONNECTOR 131028001 FOR PROP. VALVE*	
T1316	90457-0144		1	REGULATOR 0,3-2 BAR	
T1332	90113-0469		1	MANIFOLD REGULATOR 4 BAR	
U1314	90043-0065		1	MKC NEW FILL PUMP VACUUM PRESSURE GAUGE	
U1316	90459-4991		1	PRESSURE GAUGE, 9063064 D=40 MM	
U1332	90043-0065		1	MKC NEW FILL PUMP VACUUM PRESSURE GAUGE	

Machine Type | Group Description | Used-In | Group Number | Page No

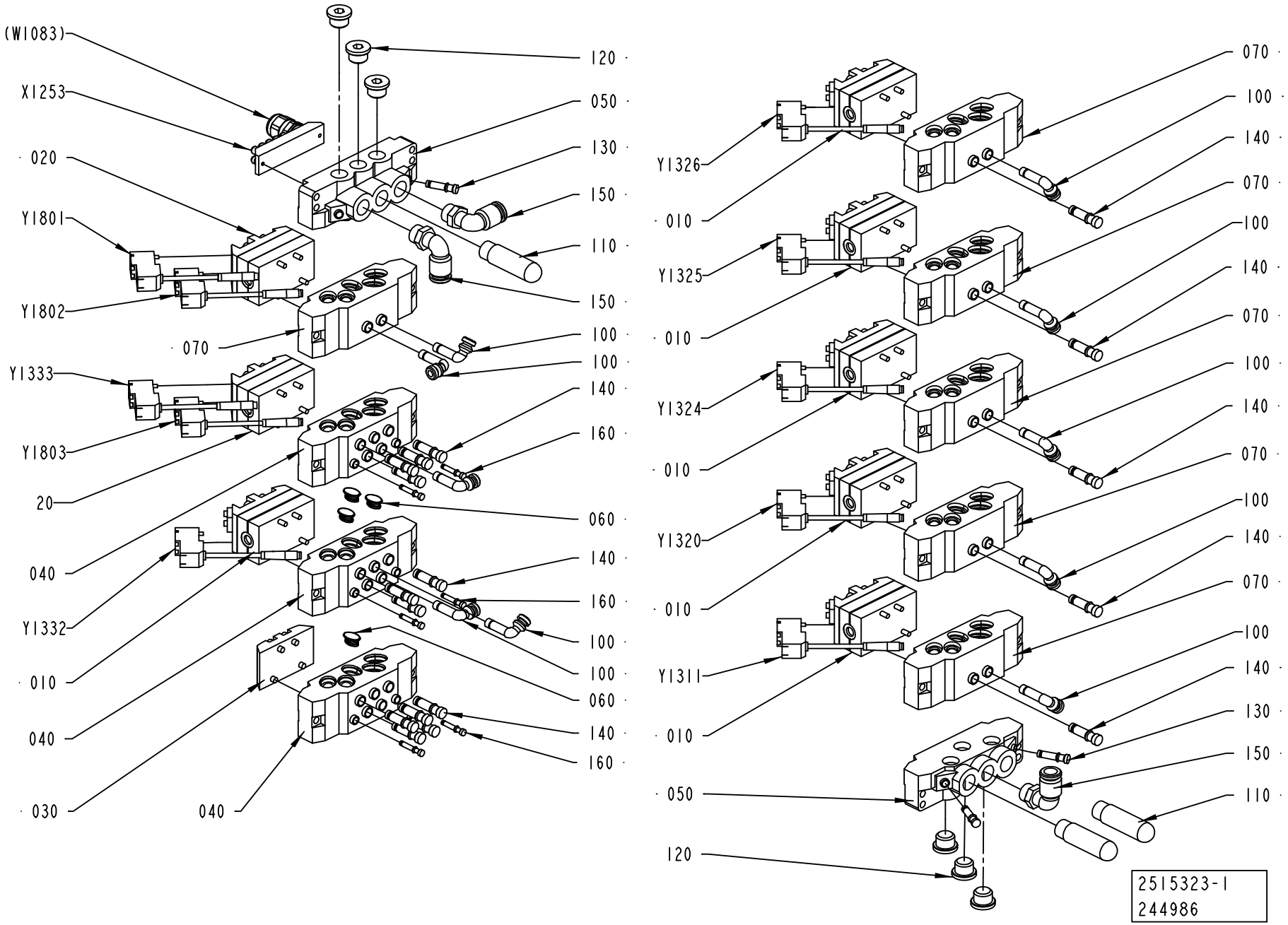
(W1083)
X1253
020
Y1801
Y1802
070
Y1333
Y1803
20
040
Y1332
010
040
030
040
120
050
130
150
110
150
100
100
140
160
060
140
160
100
100
060
140
160
070
100
140
070
Y1326
010
Y1325
010
Y1324
010
Y1320
010
Y1311
010
050
120
070
100
140
070
100
140
070
100
140
070
100
140
130
150
110
2515323-1
244986

ECM: 275953 - 20060928
Group number: 2515323-0100
Assembly Drawing: 2515323-1_1_AC

This list covers pages from 1-342 to 1-345

Pos	Part No	UN	Qty	Description	Page No
A3/FLEX AUTOMCIP (See drawing on page: 1-342)					
010	90042-0215		6	VALVE BODY 5/2 UNISTABLE	
030	90042-0519		1	BLANK PLATE ISO SIZE 1	
100	90055-0143		10	HOSE,ELBOW 90 COUPLING,FPT,6X8MM	
140	342715-0103		17	BLIND PLUG 8 MM	
Y1311	90042-0538		1	PILOT VALVE L=500MM	
Y1320	90042-0538		1	PILOT VALVE L=500MM	
Y1324	90042-0538		1	PILOT VALVE L=500MM	
Y1325	90042-0538		1	PILOT VALVE L=500MM	
Y1326	90042-0538		1	PILOT VALVE L=500MM	
Y1801	90042-0538		1	PILOT VALVE L=500MM	
Y1802	90042-0538		1	PILOT VALVE L=500MM	
Y1803	90042-0538		1	PILOT VALVE L=500MM	
A3/FLEX MANUALCIP (See drawing on page: 1-344)					
010	90042-0215		1	VALVE BODY 5/2 UNISTABLE	
030	90042-0519		6	BLANK PLATE ISO SIZE 1	
100	90055-0143		6	HOSE,ELBOW 90 COUPLING,FPT,6X8MM	
140	342715-0103		21	BLIND PLUG 8 MM	
Y1801	90042-0538		1	PILOT VALVE L=500MM	
Y1802	90042-0538		1	PILOT VALVE L=500MM	
Y1803	90042-0538		1	PILOT VALVE L=500MM	
Common Parts					
020	90042-0271		2	VALVE BODY 2X3/2	
040	90042-0520		3	BASE PLATE ISO SIZE 1	
050	90042-0522		2	PORTED END PIECE ISO SIZE 1	
060	90042-0528		4	BLANKING KIT SEALS ISO SIZE 1	
070	90042-0532		6	BASE PLATE ISO SIZE 1	
110	90328-0024		3	SILENCER G3/8"	
120	342713-0211		6	PLUG, EXT THREAD HEX SOCKET 8638-00-380	
130	342715-0102		3	BLIND PLUG 6 MM	
150	90458-2960		3	ELBOW PIPE JOINT, EXT.THREAD,D=12MM-G3/8	
160	342715-0100		6	BLIND PLUG 4 MM	
X1253	90042-0535		1	TERMINAL BOARD 19 CORDS	
Y1332	90042-0538		1	PILOT VALVE L=500MM	
Y1333	90042-0538		1	PILOT VALVE L=500MM	

Pos	Part No	UN	Qty	Description	Page No

Machine Type | Group Description | Used-In | Group Number | Page No

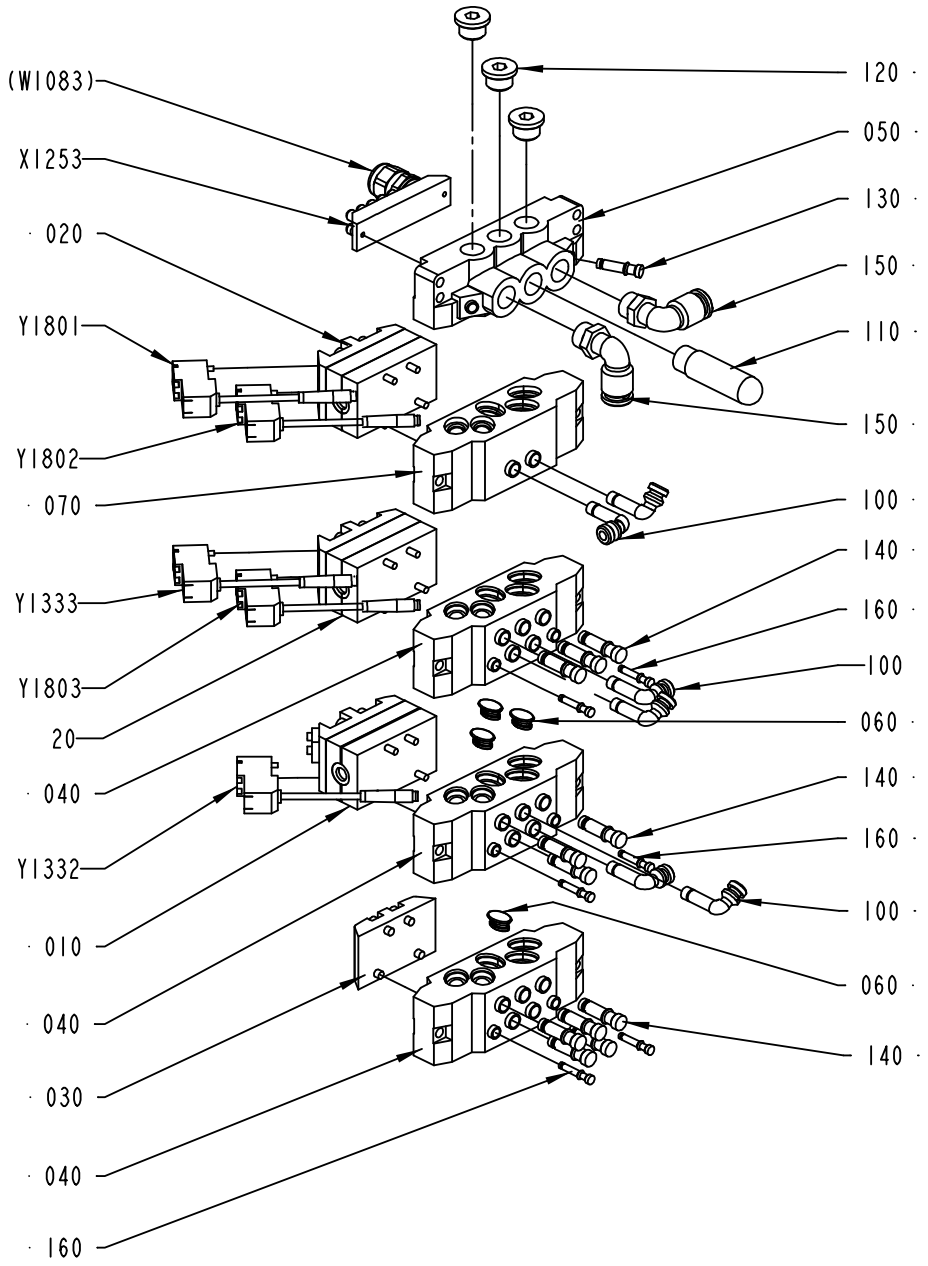

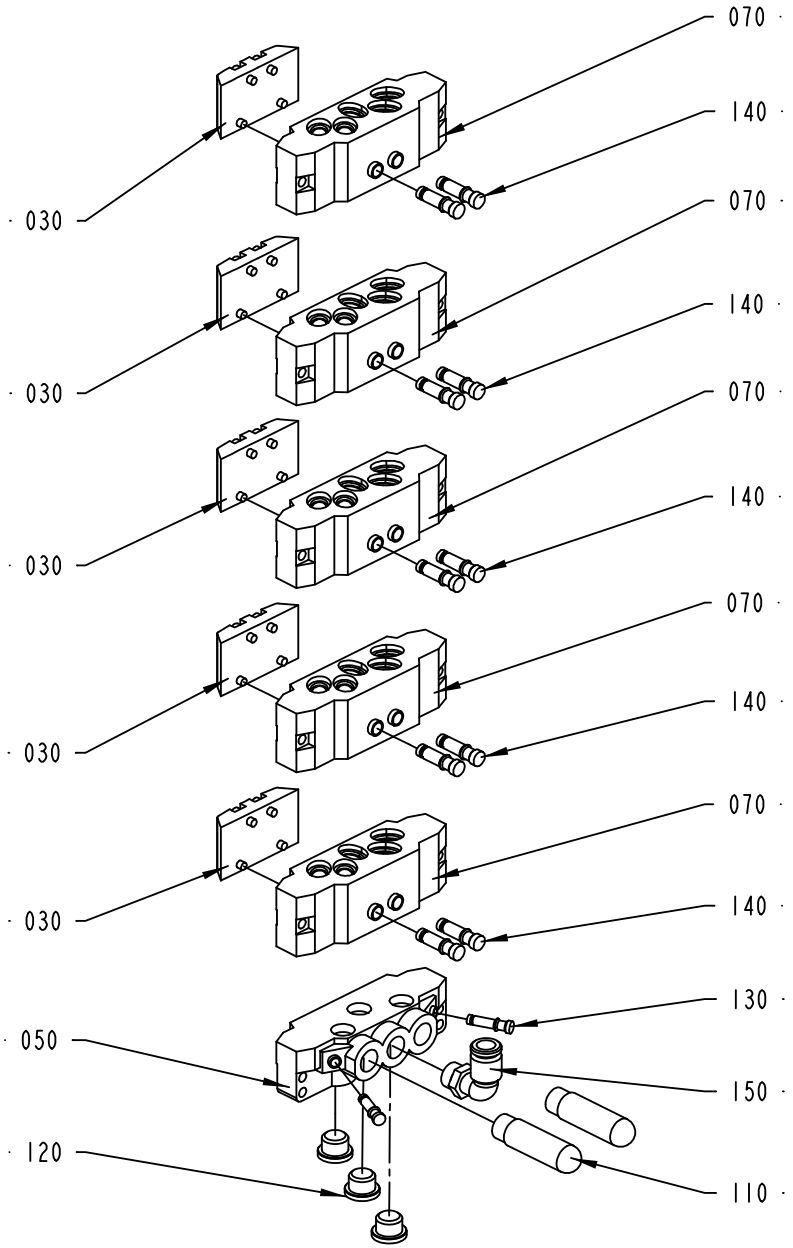

2515323-2
244986

ECM: 275953 - 20060928
Group number: 2515323-0100
Assembly Drawing: 2515323-2_1_AC

This list covers pages from 1-342 to 1-345

Pos	Part No	UN	Qty	Description	Page No
A3/FLEX AUTOMCIP (See drawing on page: 1-342)					
010	90042-0215		6	VALVE BODY 5/2 UNISTABLE	
030	90042-0519		1	BLANK PLATE ISO SIZE 1	
100	90055-0143		10	HOSE,ELBOW 90 COUPLING,FPT,6X8MM	
140	342715-0103		17	BLIND PLUG 8 MM	
Y1311	90042-0538		1	PILOT VALVE L=500MM	
Y1320	90042-0538		1	PILOT VALVE L=500MM	
Y1324	90042-0538		1	PILOT VALVE L=500MM	
Y1325	90042-0538		1	PILOT VALVE L=500MM	
Y1326	90042-0538		1	PILOT VALVE L=500MM	
Y1801	90042-0538		1	PILOT VALVE L=500MM	
Y1802	90042-0538		1	PILOT VALVE L=500MM	
Y1803	90042-0538		1	PILOT VALVE L=500MM	
A3/FLEX MANUALCIP (See drawing on page: 1-344)					
010	90042-0215		1	VALVE BODY 5/2 UNISTABLE	
030	90042-0519		6	BLANK PLATE ISO SIZE 1	
100	90055-0143		6	HOSE,ELBOW 90 COUPLING,FPT,6X8MM	
140	342715-0103		21	BLIND PLUG 8 MM	
Y1801	90042-0538		1	PILOT VALVE L=500MM	
Y1802	90042-0538		1	PILOT VALVE L=500MM	
Y1803	90042-0538		1	PILOT VALVE L=500MM	
Common Parts					
020	90042-0271		2	VALVE BODY 2X3/2	
040	90042-0520		3	BASE PLATE ISO SIZE 1	
050	90042-0522		2	PORTED END PIECE ISO SIZE 1	
060	90042-0528		4	BLANKING KIT SEALS ISO SIZE 1	
070	90042-0532		6	BASE PLATE ISO SIZE 1	
110	90328-0024		3	SILENCER G3/8"	
120	342713-0211		6	PLUG, EXT THREAD HEX SOCKET 8638-00-380	
130	342715-0102		3	BLIND PLUG 6 MM	
150	90458-2960		3	ELBOW PIPE JOINT, EXT.THREAD,D=12MM-G3/8	
160	342715-0100		6	BLIND PLUG 4 MM	
X1253	90042-0535		1	TERMINAL BOARD 19 CORDS	
Y1332	90042-0538		1	PILOT VALVE L=500MM	
Y1333	90042-0538		1	PILOT VALVE L=500MM	

Pos	Part No	UN	Qty	Description	Page No

Machine Type | Group Description | Used-In | Group Number | Page No

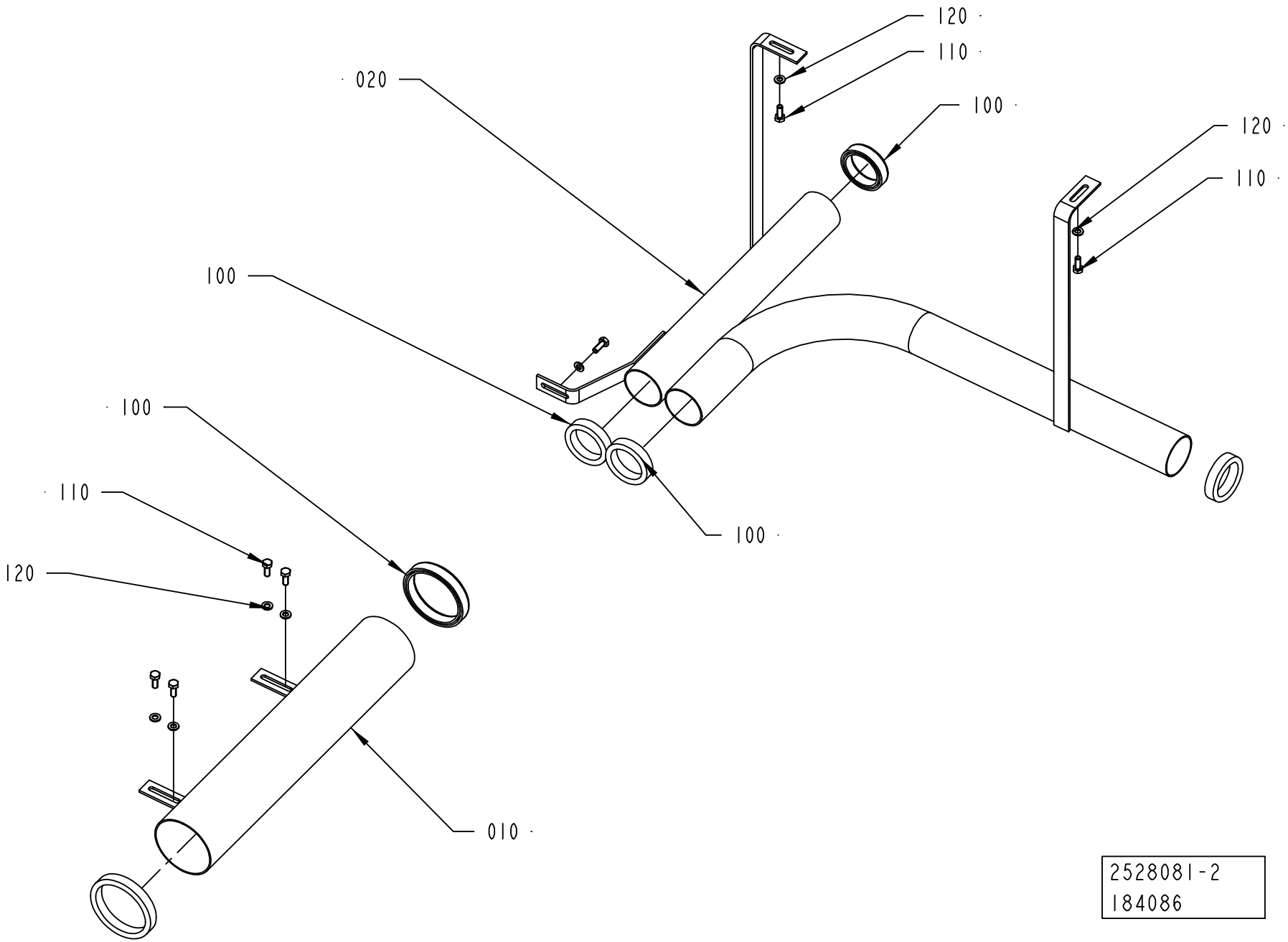
120
110
020
100
120
110
100
100
100
110
120
010
2528081-2
184086

ECM: 202216 - 20050224
Group number: 2528081-0200
Assembly Drawing: 2528081-2_1_AA

Pos	Part No	UN	Qty	Description	Page No
-					
010	2528082-0000		1	PIPE	
020	2528083-0000		1	TUBE	
100	90143-0059	MM	1600	SEAL STRIP 4610069	
110	312105-0368		7	SCREW M6S ISO 4017 M6X16 A480	
120	315105-0153		7	WASHER BRB 6,4X12 RFR	

Pos	Part No	UN	Qty	Description	Page No

CONNECTION BOX

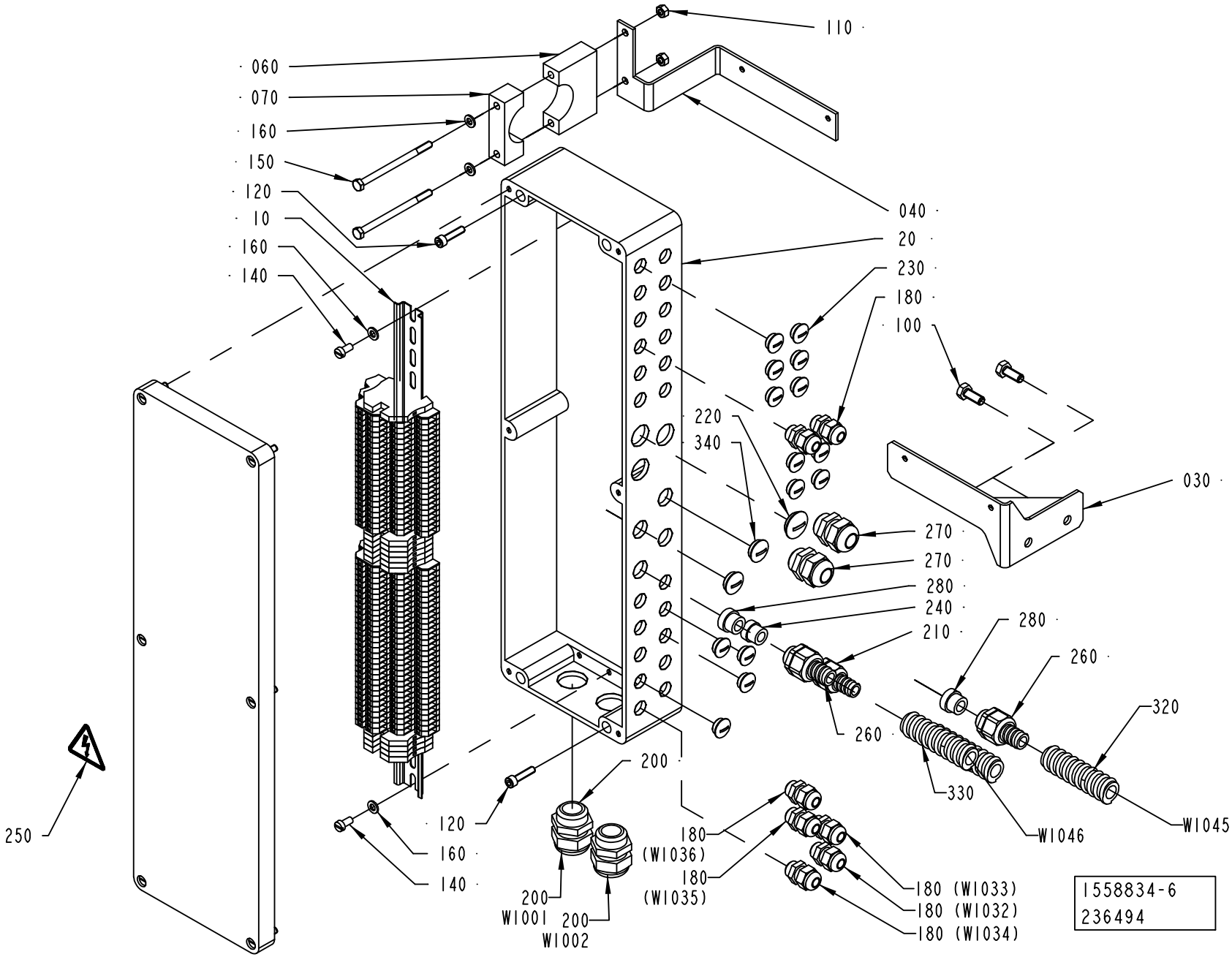

ECM: 272122 - 20061101
Group number: 1558834-0200
Assembly Drawing: 1558834-6_1_AC

Pos	Part No	UN	Qty	Description	Page No
A3/FLEX					
180	352103-0101		7	CABLE GLAND, ST 9, PR15,2/PG9	
220	90002-0004		1	BLANK-OFF PLUG, PR 22,5 SKINDICHT-BLK16	
230	90002-0013		14	BLANK-OFF PLUG, PR 15,2 SKINDICHT-BLK9	
260	353243-0003		2	HOSE GLAND W/O INSERT PG11 EXTENDED	
270	352103-0110		2	CABLE GLAND, STR 16, PR22,5/PG16	
280	353249-0011		2	INSERT, SINGEL HOLE, EK 153/11	
330	90152-0050	MM	900	SPIRAL CONDUIT, 20X13, UL 1313	
340	90002-0009		2	BLANK-OFF PLUG, PR 18.6 SKINDICHT-BLK11	
Common Parts					
010	1558519-0100		1	TERMINAL BLOCK	**1-351**
020	1558833-0000		1	CONNECTION BOX	
030	2696039-0000		1	BRACKET	
040	2696038-0000		1	BRACKET	
060	2529742-0000		1	CLAMP	
070	735041-0000		1	CONNECTION CLAMP	
100	312105-0451		2	SCREW M6S ISO 4017 M8X20 A480	
110	312605-0316		2	HEXAGON NUT, M6M M6 A280	
120	312115-0372		4	SCREW ISO4762 M6X25 A4 80	
140	312125-0366		2	SCREW ISO 1207 M6X12 A4	
150	312105-0388		2	SCREW M6S ISO 4014 M6X90 A480	
160	315105-0153		4	WASHER BRB 6,4X12 RFR	
200	352103-0116		2	CABLE GLAND, ST 21, PR28,3/PG21	
210	353243-0001		1	HOSE GLAND W/O INSERT PG9 EXTENDED	
240	353249-0009		1	INSERT, SINGEL HOLE, EK 152/9	
250	359705-0015		1	WARNING SIGN ISO, RISK OF ELECTRIC SHOCK	
320	90152-0050	MM	1200	SPIRAL CONDUIT, 20X13, UL 1313	
380	90152-0050	MM	2200	SPIRAL CONDUIT, 20X13, UL 1313	
W1001	351150-0425	M	6	CABLE OLFLEX 25X0,75 MM2 LIGHT/GREY	
W1002	351150-0425	M	6	CABLE OLFLEX 25X0,75 MM2 LIGHT/GREY	
W1045	351150-0405	M	6	CABLE OLFLEX 5X0,75 MM2 LIGHT/GREY	
W1046	351150-0405	M	6	CABLE OLFLEX 5X0,75 MM2 LIGHT/GREY	
W1801	351150-0404	M	3	CABLE OLFLEX 4X0,75 MM2 LIGHT/GREY	
W1810	351150-0404	M	2	CABLE OLFLEX 4X0,75 MM2 LIGHT/GREY	

Pos	Part No	UN	Qty	Description	Page No

TERMINAL BLOCK

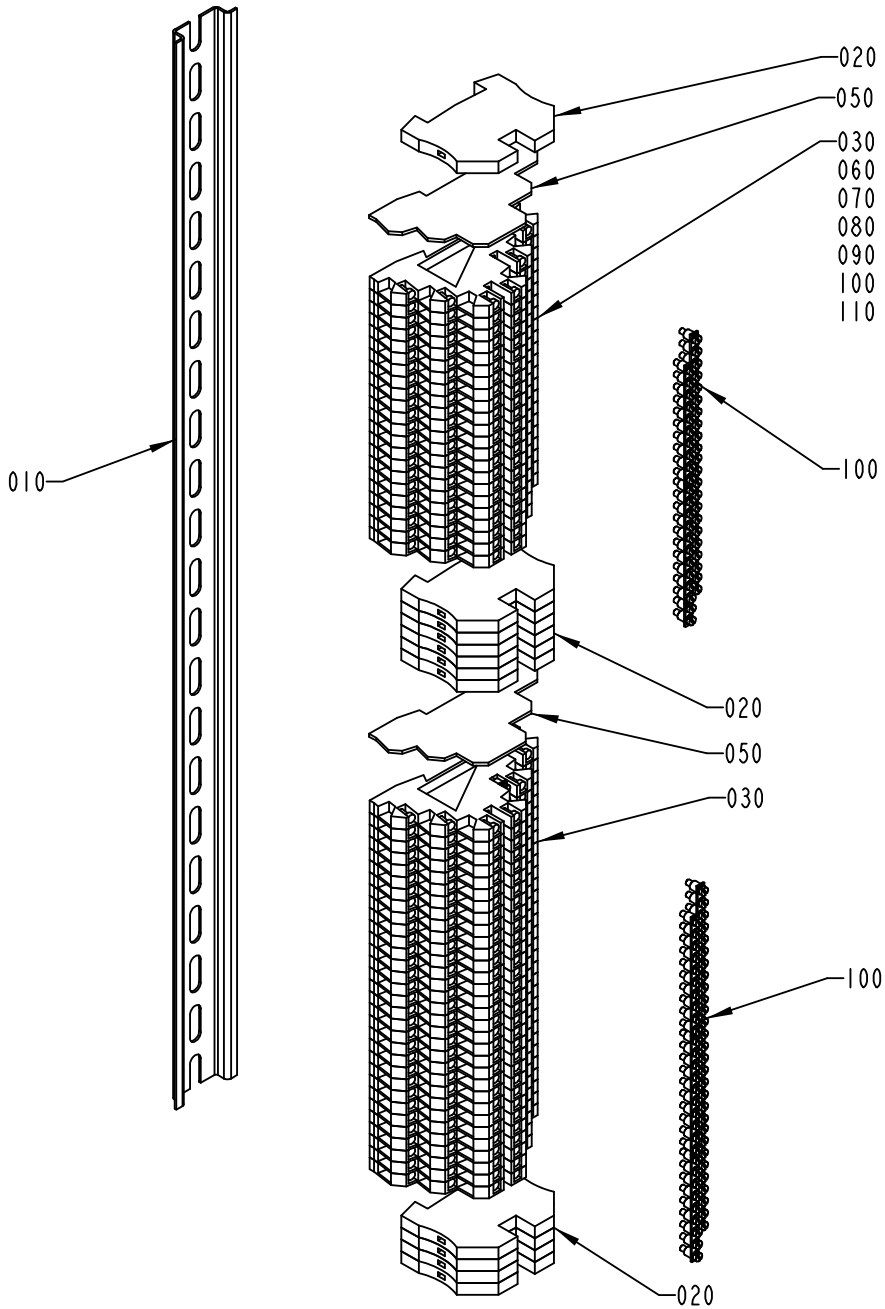

ECM: 189211 - 20041104
Group number: 1558519-0100
Assembly Drawing: 1558519-1_1_AA

Pos	Part No	UN	Qty	Description	Page No
-					
010	1558832-0000		1	RAIL	
020	353024-0205		11	EARTH TERMINAL, 1010.1	
030	353021-0302		53	TERMINALS,TRIPLE-LEVEL, DLD 2,5/35 PA	
050	353032-0302		2	END PLATE WAP, 13176.6	
060	359011-0834		2	SET OF SIGNS 6-GW(EARTH)	
070	359011-0833		5	SET OF SIGNS 6-GW (-)	
080	359011-0832		5	SET OF SIGNS 6-GW (+)	
090	359011-0823		2	SET OF SIGNS 6-FW 101-150	
100	353034-0404		11	BRIDGE CONNECTOR Q10, 13131.0	
110	359011-0824		2	SET OF SIGNS 6-FW 151-200	

Pos	Part No	UN	Qty	Description	Page No

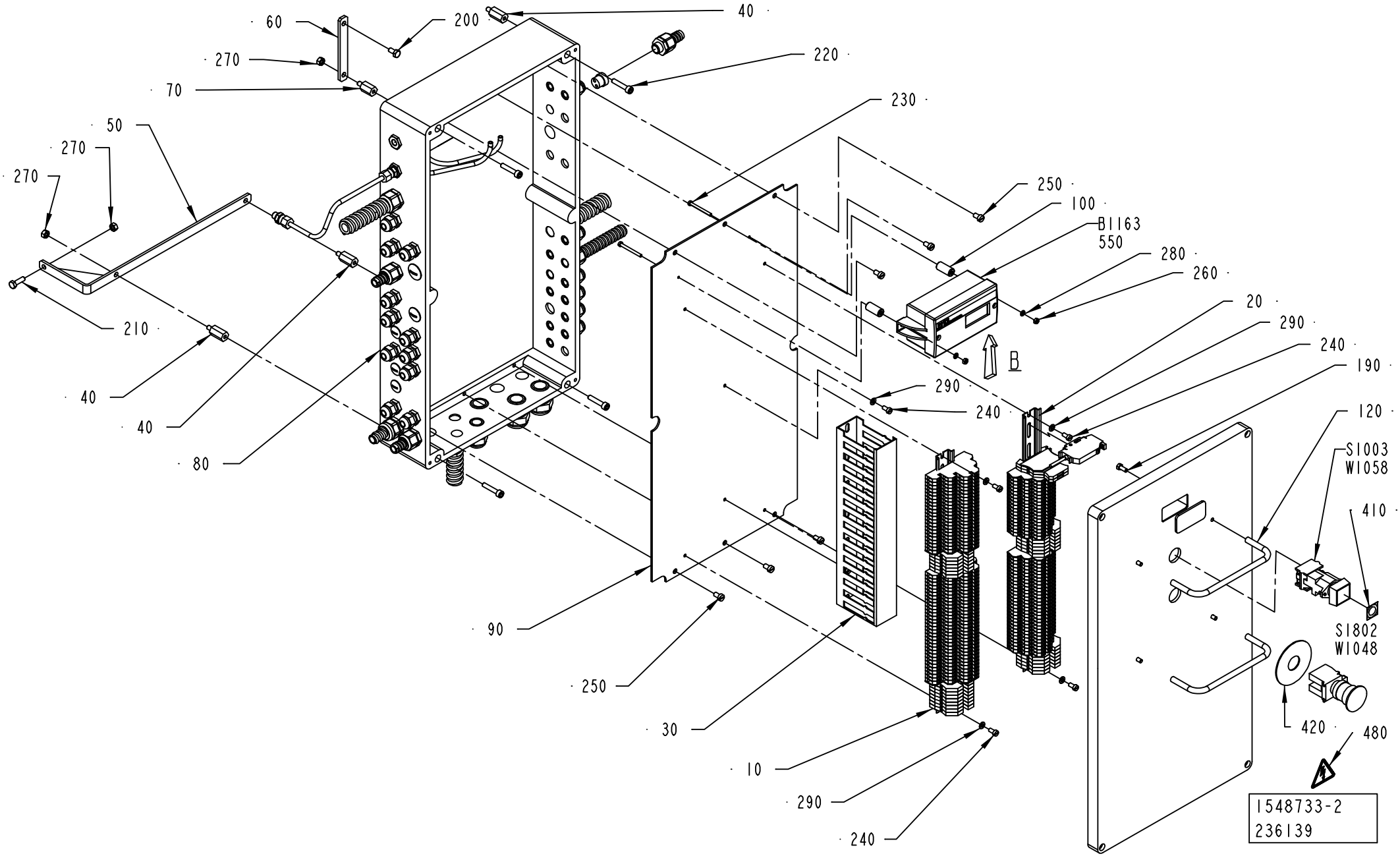
60
200
40
270
220
70
230
50
270
270
250
100
B1163
550
280
260
20
290
240
190
210
B
290
240
120
S1003
W1058
410
40
40
80
90
250
S1802
W1048
30
10
290
240
420
480
1548733-2
236139

ECM: 259567 - 20060411
Group number: 1548733-0100
Assembly Drawing: 1548733-2_1_AD

This list covers pages from 1-352 to 1-359

Pos	Part No	UN	Qty	Description	Page No
A3/FLEX DIMC/FLEX (See drawing on pages: 1-356, 1-358)					
040	1548869-0000		3	SPACER	
060	1519790-0000		1	PLATE	
070	1548870-0000		1	SPACER	
080	1548726-0000		1	CONNECTION BOX	
100	1548730-0000		2	SPACER	
110	1548749-0000		1	PIPE	
200	312105-0366		1	SCREW M6S ISO 4017 M6X12 A480	
210	312105-0370		1	SCREW M6S ISO 4017 M6X20 A480	
230	312125-0303		2	SCREW ISO 1207 M4X40 A4	
260	312605-0312		2	HEXAGON NUT, M6M M4 A280	
270	312605-0316		4	HEXAGON NUT, M6M M6 A280	
280	315105-0136		2	WASHER BRB 4,3X9 RFR	
300	342767-0100		2	CONN. BULKHEAD G1/8	
310	342921-0113		2	STRAIGHT COUPLING,EXT.THREADED 6/4-G1/8"	
320	352103-0101		23	CABLE GLAND, ST 9, PR15,2/PG9	
370	353243-0001		4	HOSE GLAND W/O INSERT PG9 EXTENDED	
380	353243-0003		4	HOSE GLAND W/O INSERT PG11 EXTENDED	
400	353249-0011		6	INSERT, SINGEL HOLE, EK 153/11	
440	90002-0009		2	BLANK-OFF PLUG, PR 18.6 SKINDICHT-BLK11	
450	90002-0013		8	BLANK-OFF PLUG, PR 15,2 SKINDICHT-BLK9	
460	90002-0016		2	BLANK-OFF PLUG PR 20.4 SKINDICHT-BLK13,5	
470	90030-0184		2	CONN. STR. GA-6-G1/8	
490	90166-0176	MM	210	RUBBER HOSE	
500	90166-0176	MM	170	RUBBER HOSE	
510	90152-0050	M	12	SPIRAL CONDUIT, 20X13, UL 1313	
520	90152-0058	M	1	SPIRAL CONDUIT, 15X9, UL 0909	
550	351160-0102	M	4	CABLE (1UNIT = 100M)	
580	353243-0009		1	HOSE GLAND W/O INSERT PG13,5 EXTENDED	
590	353249-0008		1	INSERT, SINGEL HOLE, EK 152/7	
600	353249-0036		2	INSERT, MULTI HOLE, EK152 M 2X4	
610	351160-0102	M	5	CABLE (1UNIT = 100M)	
B1163	90459-0643		1	DIFF. PRESS. TRANSDUCER 2671-10CLD2EG2HD	
W1012	351150-0403	M	5	CABLE OLFLEX 3X0,75 MM2 LIGHT/GREY	
W1013	351150-0403	M	4	CABLE OLFLEX 3X0,75 MM2 LIGHT/GREY	
W1015	351150-0403	M	4	CABLE OLFLEX 3X0,75 MM2 LIGHT/GREY	
W1018	351150-0403	M	4	CABLE OLFLEX 3X0,75 MM2 LIGHT/GREY	
W1041	351150-0405	M	3	CABLE OLFLEX 5X0,75 MM2 LIGHT/GREY	
W1066	351150-0403	M	2	CABLE OLFLEX 3X0,75 MM2 LIGHT/GREY	
W1232	351150-0403	M	3	CABLE OLFLEX 3X0,75 MM2 LIGHT/GREY	
W1233	351150-0403	M	3	CABLE OLFLEX 3X0,75 MM2 LIGHT/GREY	
W1235	351150-0403	M	2	CABLE OLFLEX 3X0,75 MM2 LIGHT/GREY	

Pos	Part No	UN	Qty	Description	Page No
A3/FLEX NODIMC (See drawing on pages: 1-352, 1-354)					
040	1548869-0000		3	SPACER	
060	1519790-0000		1	PLATE	
070	1548870-0000		1	SPACER	
080	1548726-0000		1	CONNECTION BOX	
100	1548730-0000		2	SPACER	
110	1548749-0000		1	PIPE	
200	312105-0366		1	SCREW M6S ISO 4017 M6X12 A480	
210	312105-0370		1	SCREW M6S ISO 4017 M6X20 A480	
230	312125-0303		2	SCREW ISO 1207 M4X40 A4	
260	312605-0312		2	HEXAGON NUT, M6M M4 A280	
270	312605-0316		4	HEXAGON NUT, M6M M6 A280	
280	315105-0136		2	WASHER BRB 4,3X9 RFR	
300	342767-0100		2	CONN. BULKHEAD G1/8	
310	342921-0113		2	STRAIGHT COUPLING,EXT.THREADED 6/4-G1/8"	
320	352103-0101		22	CABLE GLAND, ST 9, PR15,2/PG9	
370	353243-0001		4	HOSE GLAND W/O INSERT PG9 EXTENDED	
380	353243-0003		3	HOSE GLAND W/O INSERT PG11 EXTENDED	
390	353249-0009		1	INSERT, SINGEL HOLE, EK 152/9	
400	353249-0011		4	INSERT, SINGEL HOLE, EK 153/11	
440	90002-0009		3	BLANK-OFF PLUG, PR 18.6 SKINDICHT-BLK11	
450	90002-0013		8	BLANK-OFF PLUG, PR 15,2 SKINDICHT-BLK9	
460	90002-0016		2	BLANK-OFF PLUG PR 20.4 SKINDICHT-BLK13,5	
470	90030-0184		2	CONN. STR. GA-6-G1/8	
490	90166-0176	MM	210	RUBBER HOSE	
500	90166-0176	MM	170	RUBBER HOSE	
510	90152-0050	M	12	SPIRAL CONDUIT, 20X13, UL 1313	
520	90152-0058	M	1	SPIRAL CONDUIT, 15X9, UL 0909	
550	351160-0102	M	4	CABLE (1UNIT = 100M)	
580	353243-0009		1	HOSE GLAND W/O INSERT PG13,5 EXTENDED	
590	353249-0008		1	INSERT, SINGEL HOLE, EK 152/7	
600	353249-0036		2	INSERT, MULTI HOLE, EK152 M 2X4	
610	351160-0102	M	5	CABLE (1UNIT = 100M)	
B1163	90459-0643		1	DIFF. PRESS. TRANSDUCER 2671-10CLD2EG2HD	
W1012	351150-0403	M	5	CABLE OLFLEX 3X0,75 MM2 LIGHT/GREY	
W1013	351150-0403	M	4	CABLE OLFLEX 3X0,75 MM2 LIGHT/GREY	
W1015	351150-0403	M	4	CABLE OLFLEX 3X0,75 MM2 LIGHT/GREY	
W1018	351150-0403	M	4	CABLE OLFLEX 3X0,75 MM2 LIGHT/GREY	
W1041	351150-0405	M	3	CABLE OLFLEX 5X0,75 MM2 LIGHT/GREY	
W1066	351150-0403	M	2	CABLE OLFLEX 3X0,75 MM2 LIGHT/GREY	
W1232	351150-0403	M	3	CABLE OLFLEX 3X0,75 MM2 LIGHT/GREY	
W1233	351150-0403	M	3	CABLE OLFLEX 3X0,75 MM2 LIGHT/GREY	

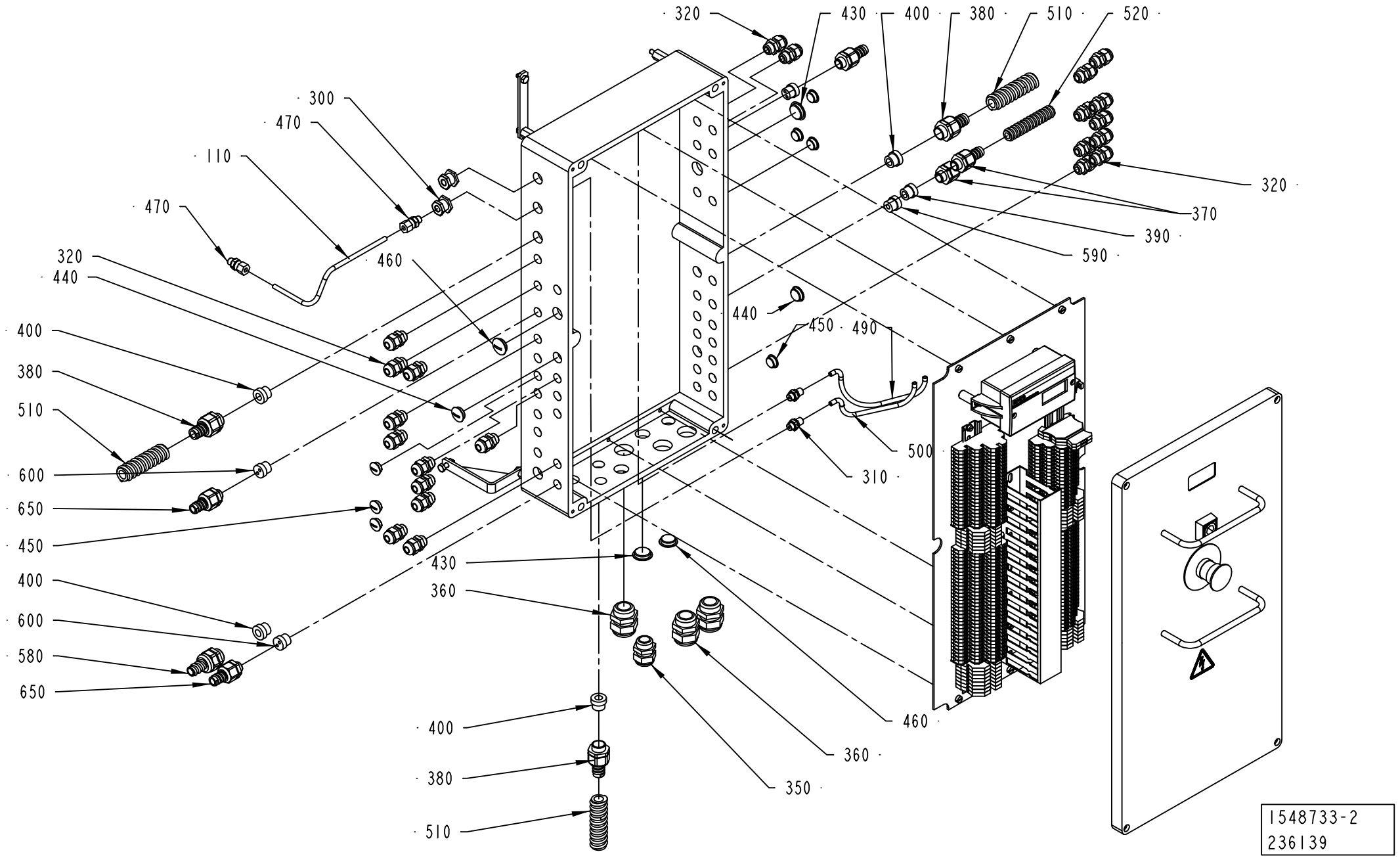
320
430
400
380
510
520
300
470
110
470
460
320
440
400
380
510
600
650
450
400
600
580
650
320
370
390
590
440
450
490
500
310
430
360
460
360
350
400
380
510
1548733-2
236139

ECM: 259567 - 20060411
Group number: 1548733-0100
Assembly Drawing: 1548733-2_2_AD

This list covers pages from 1-352 to 1-359

Pos	Part No	UN	Qty	Description	Page No
Common Parts (Cont'd)					
010	1549542-0100		1	TERMINAL BLOCK	**1-361**
020	1548728-0100		1	TERMINAL BLOCK	**1-363**
030	1129480-0000		1	CABLE DUCT	
050	1519789-0000		1	BRACKET	
090	1548727-0000		1	MOUNTING PLATE	
120	2570678-0000		2	HANDLE	
190	312105-0327		4	SCREW M6S ISO 4017 M5X12 A480	
220	312115-0374		4	SCREW ISO4762 M6X30 A4 80	
240	312125-0325		6	SCREW ISO 1207 M5X10 A4	
250	312125-0364		6	SCREW ISO 1207 M6X10 A4	
290	315105-0146		6	WASHER BRB 5,3X10 RFR	
350	352103-0111		1	CABLE GLAND, ST 16, PR22,5/PG16	
360	352103-0116		3	CABLE GLAND, ST 21, PR28,3/PG21	
410	359301-0110		1	BUTTON SIGN, SHORT STOP	
420	486826-0001		1	SIGN "EMERGENCY STOP"	
430	90002-0004		3	BLANK-OFF PLUG, PR 22,5 SKINDICHT-BLK16	
480	359705-0015		1	WARNING SIGN ISO, RISK OF ELECTRIC SHOCK	
S1003	90064-0084		1	PUSH BUTTON, YELLOW	
S1802	90458-1651		1	EMERGENCY STOP, ZB4-BS-844 ZB4-BZ-104	
W1003	351150-0425	M	7	CABLE OLFLEX 25X0,75 MM2 LIGHT/GREY	
W1004	351150-0425	M	7	CABLE OLFLEX 25X0,75 MM2 LIGHT/GREY	
W1005	351150-0425	M	7	CABLE OLFLEX 25X0,75 MM2 LIGHT/GREY	
W1006	351150-0407	M	6	CABLE OLFLEX 12X0,75 MM2 LIGHT/GREY	
W1011	351150-0405	M	3	CABLE OLFLEX 5X0,75 MM2 LIGHT/GREY	
W1029	351150-0404	M	2	CABLE OLFLEX 4X0,75 MM2 LIGHT/GREY	
W1030	351150-0403	M	3	CABLE OLFLEX 3X0,75 MM2 LIGHT/GREY	
W1031	351150-0403	M	3	CABLE OLFLEX 3X0,75 MM2 LIGHT/GREY	
W1044	351150-0405	M	3	CABLE OLFLEX 5X0,75 MM2 LIGHT/GREY	
W1048	351150-0405	M	1	CABLE OLFLEX 5X0,75 MM2 LIGHT/GREY	
W1058	351150-0403	M	1	CABLE OLFLEX 3X0,75 MM2 LIGHT/GREY	
W1065	351150-0403	M	3	CABLE OLFLEX 3X0,75 MM2 LIGHT/GREY	
W1511	90220-0165	M	1	SCR. CABLE 5X0,34MM2	

Pos	Part No	UN	Qty	Description	Page No

CONNECTION BOX

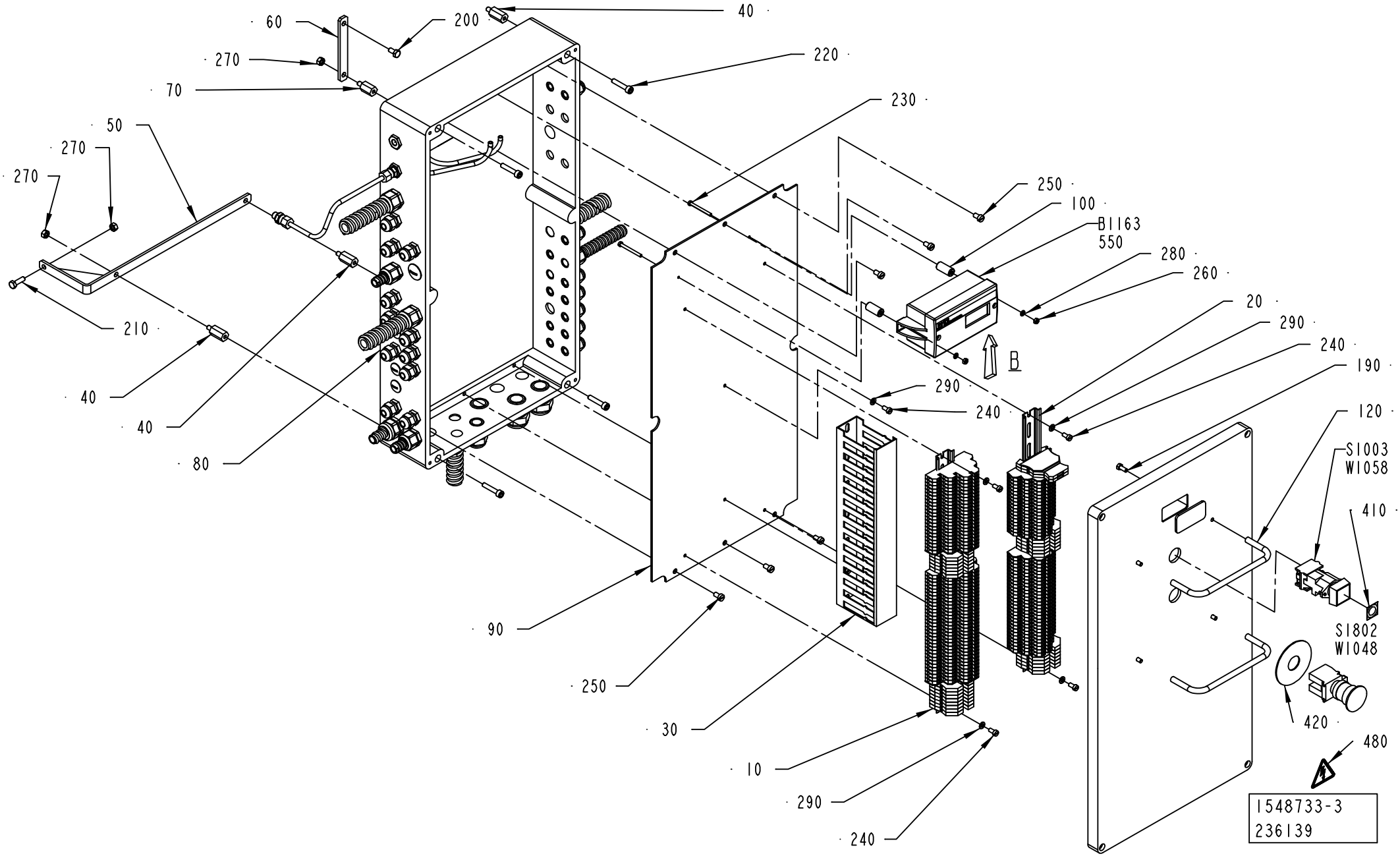

Pos	Part No	UN	Qty	Description	Page No	Pos	Part No	UN	Qty	Description	Page No

SEE PREVIOUS LISTS PAGES: 1-353, 1-355.

CONNECTION BOX

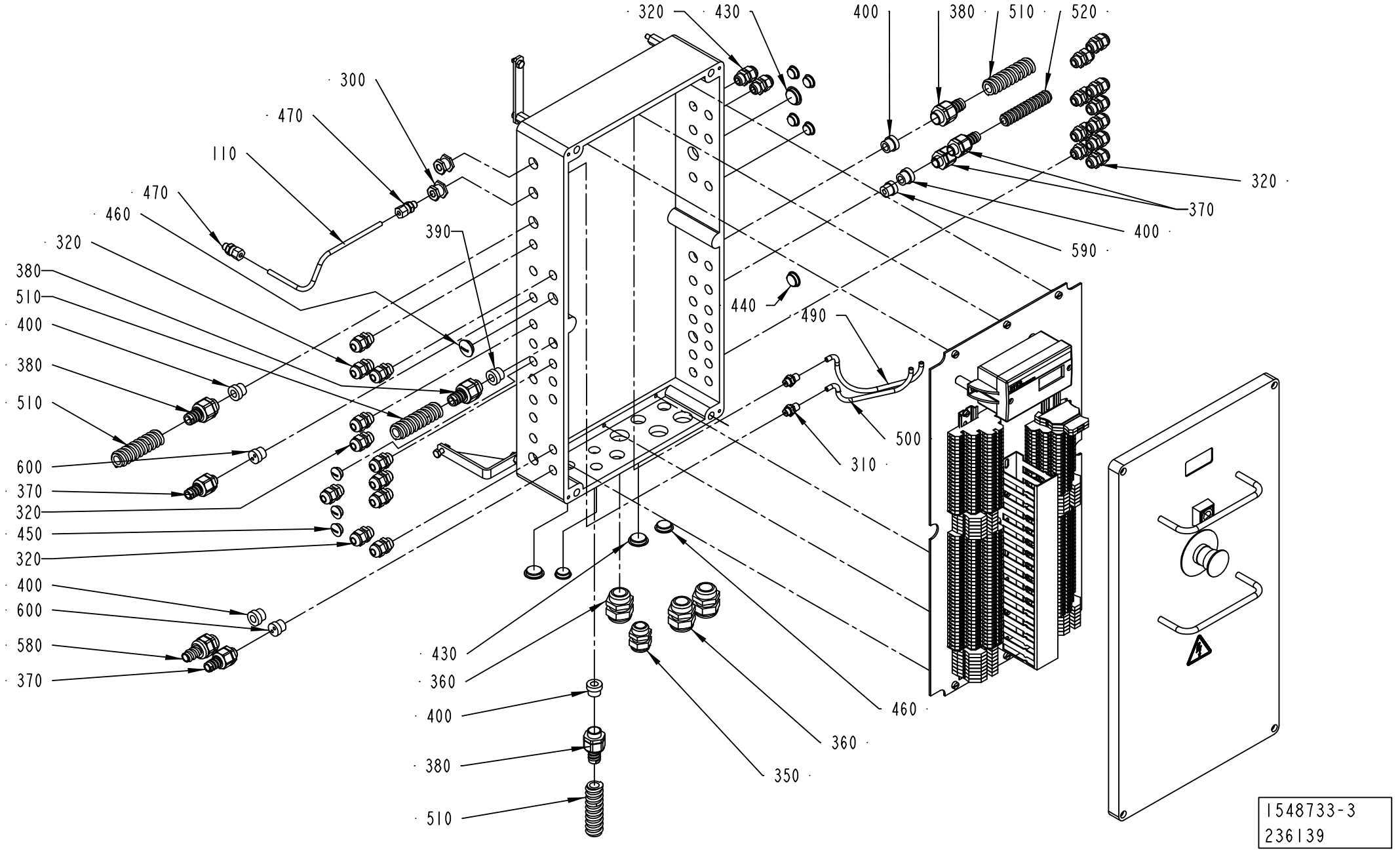

ECM: 259567 - 20060411
Group number: 1548733-0100
Assembly Drawing: 1548733-3_2_AD

This list covers pages from 1-352 to 1-359

Pos	Part No	UN	Qty	Description	Page No	Pos	Part No	UN	Qty	Description	Page No

SEE PREVIOUS LISTS PAGES: 1-353, 1-355.

TERMINAL BLOCK

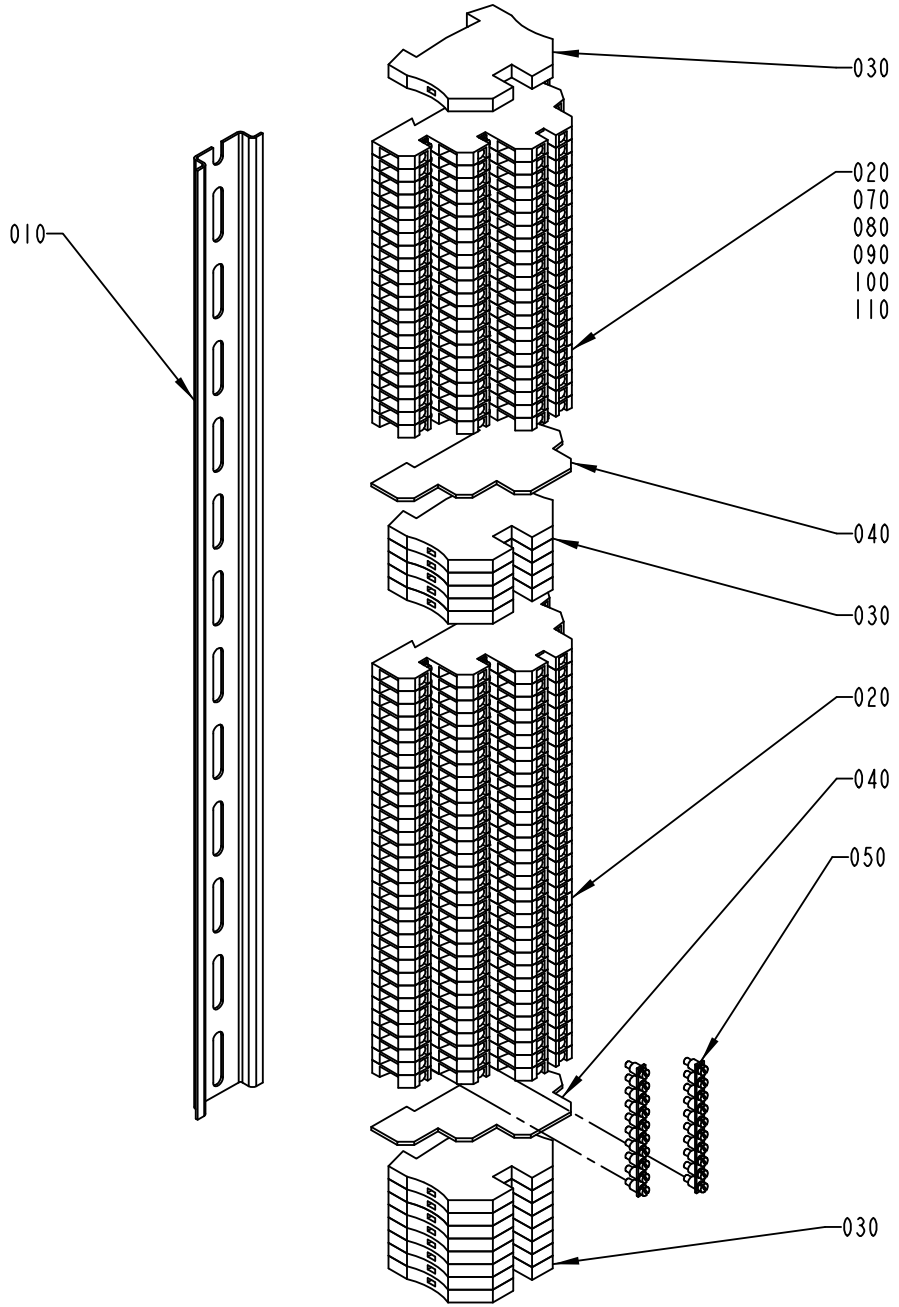

ECM: 274550 - 20060728
Group number: 1549542-0100
Assembly Drawing: 1549542-1_1_AB

Pos	Part No	UN	Qty	Description	Page No
-					
010	1548729-0000		1	RAIL	
020	353021-0302		54	TERMINALS,TRIPLE-LEVEL, DLD 2,5/35 PA	
030	353024-0205		14	EARTH TERMINAL, 1010.1	
040	353032-0302		2	END PLATE WAP, 13176.6	
050	353034-0404		11	BRIDGE CONNECTOR Q10, 13131.0	
060	359011-0823		1	SET OF SIGNS 6-FW 101-150	
070	359011-0832		1	SET OF SIGNS 6-GW (+)	
080	359011-0833		1	SET OF SIGNS 6-GW (-)	
090	359011-0834		1	SET OF SIGNS 6-GW(EARTH)	
100	359011-0824		1	SET OF SIGNS 6-FW 151-200	
110	359011-0825		1	SET OF SIGNS 6-FW 201-250	

Pos	Part No	UN	Qty	Description	Page No

TERMINAL BLOCK

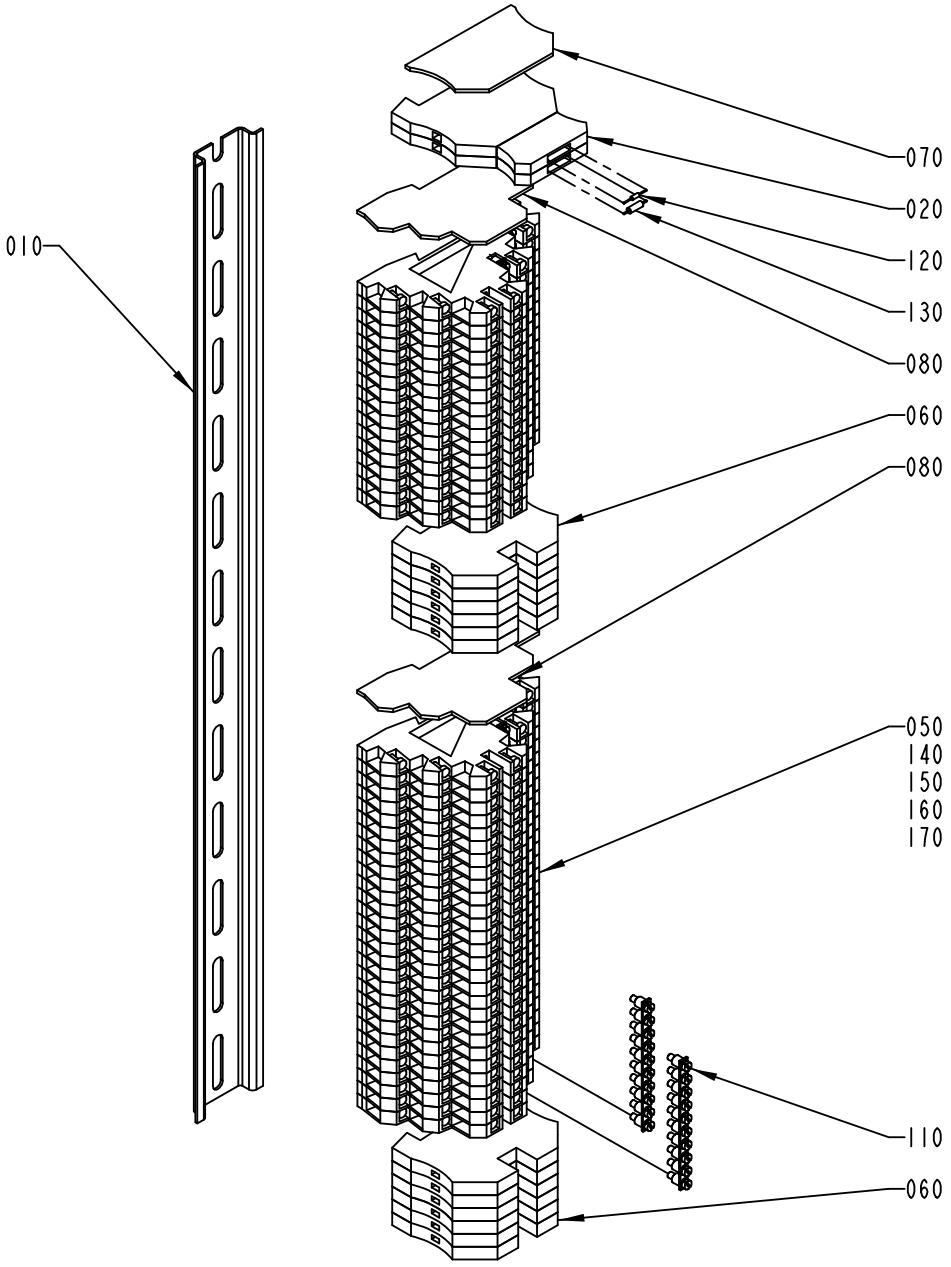

1548728-1
ECN 114362

ECM: 189213 - 20041104
Group number: 1548728-0100
Assembly Drawing: 1548728-1_1_AA

Pos	Part No	UN	Qty	Description	Page No
-					
010	1548729-0000		1	RAIL	
020	353021-0127		2	TERMINAL DISCONNECTBLE, WTR 2,5+WSD 2,5	
050	353021-0302		45	TERMINALS,TRIPLE-LEVEL, DLD 2,5/35 PA	
060	353024-0205		12	EARTH TERMINAL, 1010.1	
070	353032-0004		1	END PLATE WAP 2,5-10 BEIGE	
080	353032-0302		2	END PLATE WAP, 13176.6	
110	353034-0404		10	BRIDGE CONNECTOR Q10, 13131.0	
120	90038-0049		1	DIODE	
130	90121-0127		1	RESISTANCE FIXED, 1,5 KOHM, 0,25 W	
140	359011-0823		1	SET OF SIGNS 6-FW 101-150	
150	359011-0832		1	SET OF SIGNS 6-GW (+)	
160	359011-0833		1	SET OF SIGNS 6-GW (-)	
170	359011-0834		1	SET OF SIGNS 6-GW(EARTH)	

Pos	Part No	UN	Qty	Description	Page No

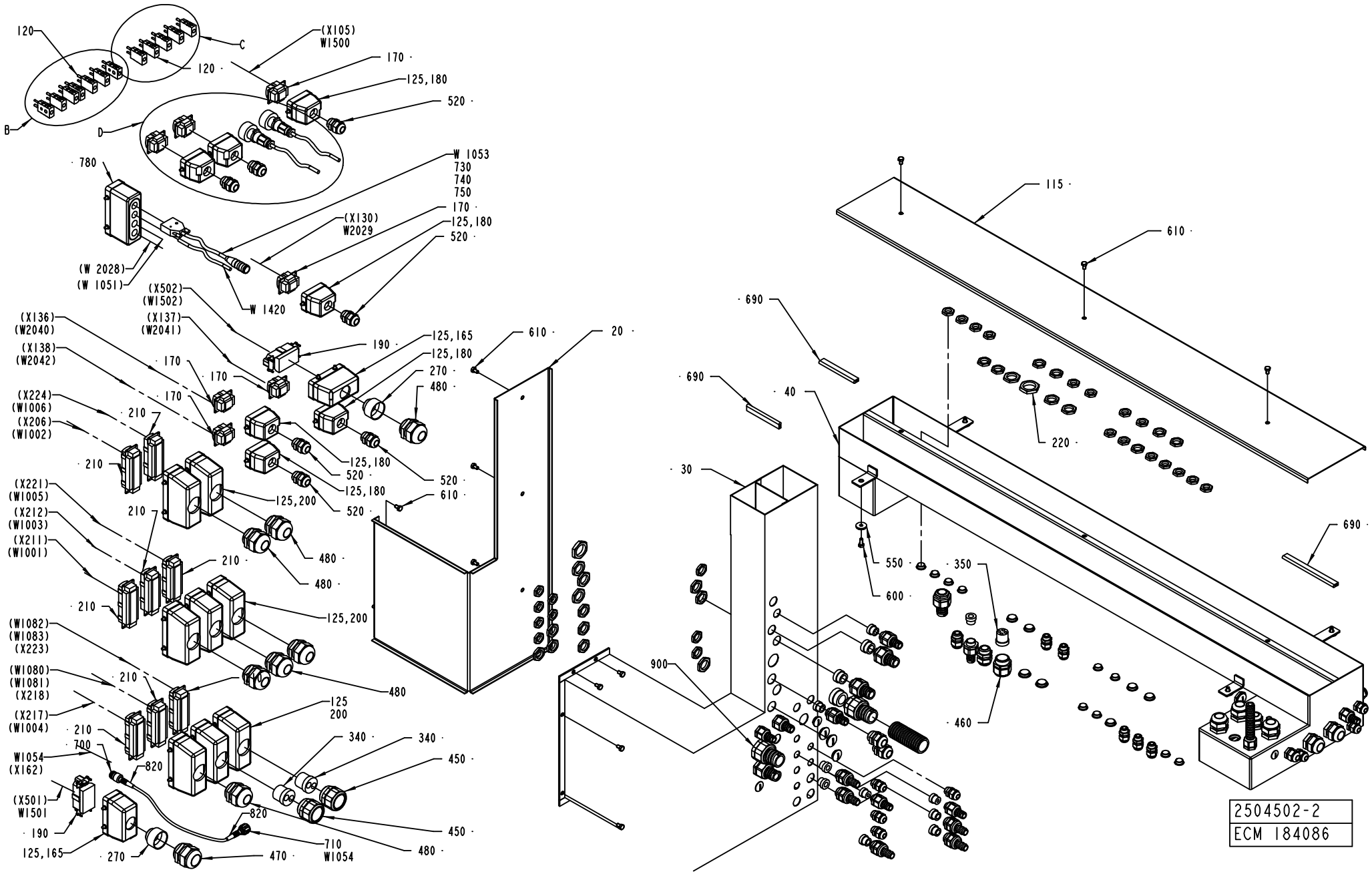
120
C
(X105)
W1500
170 ·
120 ·
125,180
520 ·
B
D
780
W 1053
730
740
750
170 ·
(X130)
W2029
125,180
520 ·
(W 2028)
(W 1051)
W 1420
(X502)
(W1502)
(X136)
(W2040)
(X137)
(W2041)
190 ·
125,165
125,180
270 ·
480 ·
610 ·
20 ·
(X138)
(W2042)
170 ·
170 ·
170 ·
(X224)
(W1006)
210 ·
(X206)
(W1002)
210 ·
125,180
520 ·
520 ·
125,180
610 ·
(X221)
(W1005)
125,200
520 ·
210 ·
(X212)
(W1003)
(X211)
(W1001)
480 ·
480 ·
210 ·
125,200
(W1082)
(W1083)
(X223)
480
(W1080)
(W1081)
(X218)
210 ·
(X217)
(W1004)
210 ·
125
200
700 ·
340 ·
340 ·
W1054
(X162)
820
450 ·
(X501)
W1501
820
450 ·
190 ·
710
W1054
480 ·
125,165
270 ·
470 ·
115 ·
610 ·
690 ·
690 ·
40 ·
220 ·
30 ·
690 ·
550 ·
350 ·
600 ·
900
460
2504502-2
ECM 184086

ECM: 237232 - 20051011
Group number: 2504502-0100
Assembly Drawing: 2504502-2_1_AD

This list covers pages from 1-364 to 1-379

Pos	Part No	UN	Qty	Description	Page No
A3/FLEX DIMC/FLEX (See drawing on pages: 1-372, 1-374, 1-376, 1-378)					
050	2509652-0000		1	COVER	
060	2509650-0000		1	COVER	
070	2509651-0000		1	COVER	
080	2509649-0000		1	COVER	
090	2509648-0000		1	CABLE DUCT	
100	2509647-0000		1	CABLE DUCT	
110	2509646-0000		1	CABLE DUCT	
125	90110-0385		18	MARKING HOLDER, 4.242.3853.0	
150	90152-0050	M	2	SPIRAL CONDUIT, 20X13, UL 1313	
155	90152-0050	M	8	SPIRAL CONDUIT, 20X13, UL 1313	
170	90110-0159		8	MALE INSERT 70.310.0640.0	
180	90110-0157		8	CABLE HOOD 6-POL 70.352.0628.1	
240	90099-0117		27	NUT, PR 18,6 (PG11)	
260	90099-0104		52	NUT, PR 15,2 (PG9)	
290	90002-0013		25	BLANK-OFF PLUG, PR 15,2 SKINDICHT-BLK9	
310	90002-0009		13	BLANK-OFF PLUG, PR 18.6 SKINDICHT-BLK11	
320	90002-0004		2	BLANK-OFF PLUG, PR 22,5 SKINDICHT-BLK16	
360	353249-0014		2	INSERT, SINGEL HOLE, EK 154/16	
380	353249-0009		1	INSERT, SINGEL HOLE, EK 152/9	
390	353249-0008		4	INSERT, SINGEL HOLE, EK 152/7	
430	353243-0003		11	HOSE GLAND W/O INSERT PG11 EXTENDED	
440	353243-0001		9	HOSE GLAND W/O INSERT PG9 EXTENDED	
500	352103-0111		6	CABLE GLAND, ST 16, PR22,5/PG16	
530	352103-0101		17	CABLE GLAND, ST 9, PR15,2/PG9	
540	352103-0100		2	CABLE GLAND, STR 9, PR15,2/PG9	
640	353249-0036		4	INSERT, MULTI HOLE, EK152 M 2X4	
760	353243-0005		2	HOSE GLAND W/O INSERT PG16 EXTENDED	
870	90089-0029		1	ENLARGING SLEEVE	
W1240	90220-0105	M	6	SCR. CABLE 4X2,5MM2	
A3/FLEX NODIMC (See drawing on pages: 1-364, 1-366, 1-368, 1-370)					
050	2509652-0000		1	COVER	
060	2509650-0000		1	COVER	
070	2509651-0000		1	COVER	
080	2509649-0000		1	COVER	
090	2509648-0000		1	CABLE DUCT	
100	2509647-0000		1	CABLE DUCT	
110	2509646-0000		1	CABLE DUCT	
125	90110-0385		17	MARKING HOLDER, 4.242.3853.0	
150	90152-0050	M	2	SPIRAL CONDUIT, 20X13, UL 1313	
170	90110-0159		7	MALE INSERT 70.310.0640.0	
180	90110-0157		7	CABLE HOOD 6-POL 70.352.0628.1	
240	90099-0117		27	NUT, PR 18,6 (PG11)	
260	90099-0104		54	NUT, PR 15,2 (PG9)	
290	90002-0013		25	BLANK-OFF PLUG, PR 15,2 SKINDICHT-BLK9	
310	90002-0009		13	BLANK-OFF PLUG, PR 18.6 SKINDICHT-BLK11	
320	90002-0004		3	BLANK-OFF PLUG, PR 22,5 SKINDICHT-BLK16	
360	353249-0014		3	INSERT, SINGEL HOLE, EK 154/16	
370	353249-0011		16	INSERT, SINGEL HOLE, EK 153/11	
380	353249-0009		1	INSERT, SINGEL HOLE, EK 152/9	
390	353249-0008		5	INSERT, SINGEL HOLE, EK 152/7	
430	353243-0003		11	HOSE GLAND W/O INSERT PG11 EXTENDED	
440	353243-0001		10	HOSE GLAND W/O INSERT PG9 EXTENDED	
500	352103-0111		4	CABLE GLAND, ST 16, PR22,5/PG16	
530	352103-0101		17	CABLE GLAND, ST 9, PR15,2/PG9	
540	352103-0100		2	CABLE GLAND, STR 9, PR15,2/PG9	
640	353249-0036		4	INSERT, MULTI HOLE, EK152 M 2X4	
760	353243-0005		2	HOSE GLAND W/O INSERT PG16 EXTENDED	
Common Parts					
010	2504503-0000		1	COVER	
020	2504499-0000		1	LID	
030	2504498-0000		1	CABLE DUCT	
040	2504497-0000		1	CABLE DUCT	
115	1129372-0000		1	LID	
120	90326-0022		13	PLUG, MALE YELLOW CR-AL	
130	90152-0050	M	1	SPIRAL CONDUIT, 20X13, UL 1313	
135	90152-0050	M	1	SPIRAL CONDUIT, 20X13, UL 1313	
140	90152-0050	M	1	SPIRAL CONDUIT, 20X13, UL 1313	
160	90152-0058	M	1	SPIRAL CONDUIT, 15X9, UL 0909	
165	90110-0160		2	CABLE HOOD 6-16-POL 70.352.1628.1	
190	90110-0156		2	MALE INSERT 70.210.0653.0	
200	90110-0152		8	CABLE HOOD 24-POL 70.352.2428.1	
210	90110-0150		8	MALE INSERT 121110 0000	
220	90099-0119		9	NUT, PR 28,3 (PG21)	
230	90099-0118		15	NUT, PR 20,4 (PG13,5)	
250	90099-0110		8	NUT, PR 22,5 (PG16)	
270	90089-0015		2	REDUCING SLEEVE, PR37M/PR28,3F	
280	90002-0016		7	BLANK-OFF PLUG PR 20.4 SKINDICHT-BLK13,5	
300	90002-0012		1	BLANK-OFF PLUG, PR 28,3 SKINDICHT-BLK21	
330	353249-0061		1	INSERT, SINGEL HOLE, EK 155/20	
340	353249-0060		2	INSERT, MULTI HOLE, E155M2X13	
350	353249-0051		1	INSERT, MULTI HOLE, E154M4X6	
400	353243-0009		5	HOSE GLAND W/O INSERT PG13,5 EXTENDED	
410	353243-0007		1	HOSE GLAND W/O INSERT PG21 EXTENDED	

Machine Type | Group Description | Used-In | Group Number | Page No

CABLE TRENCH

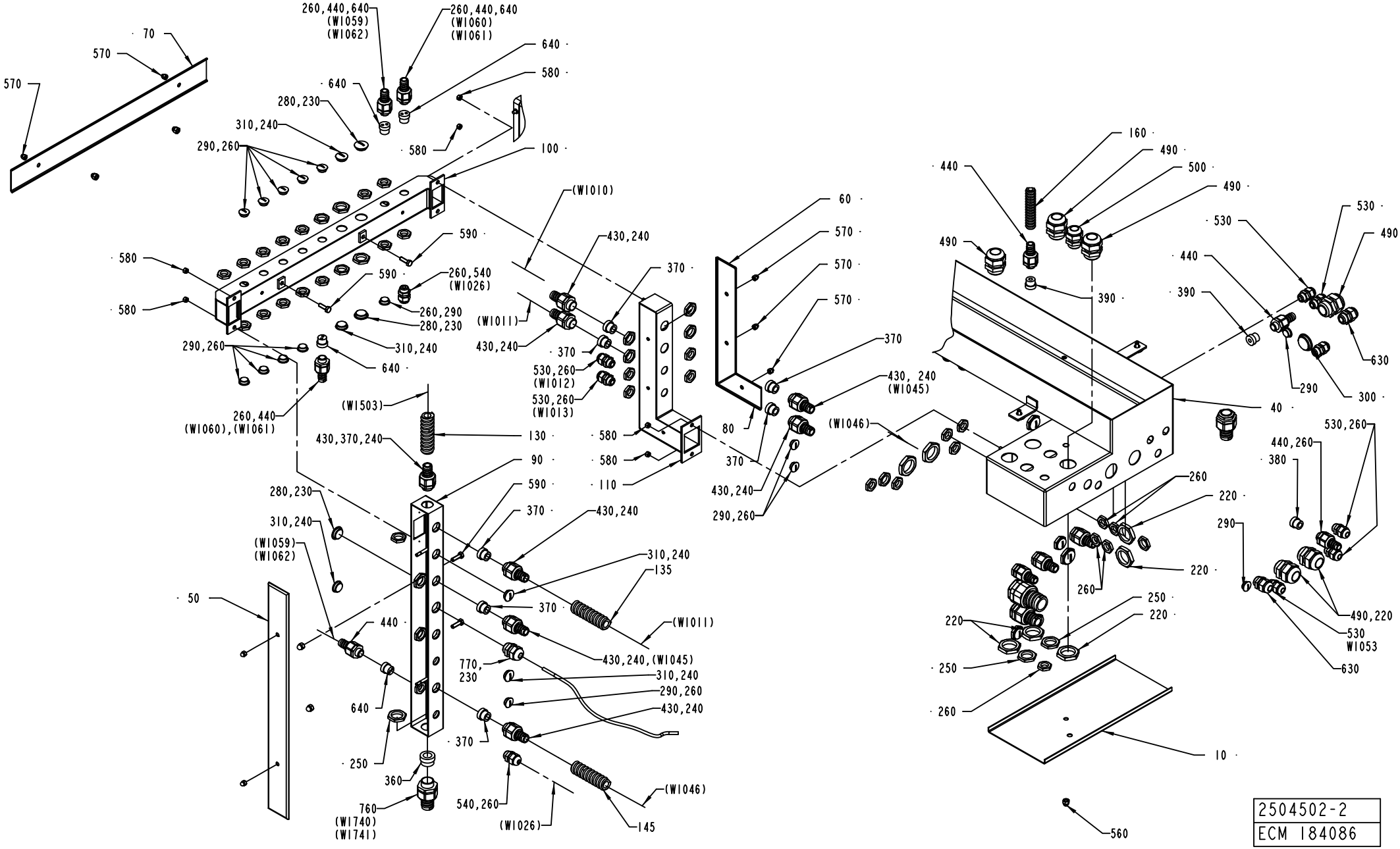

Pos	Part No	UN	Qty	Description	Page No
Common Parts (Cont'd)					
420	353243-0004		2	HOSE GLAND W/O INSERT PG13,5 EXTENDED	
450	353240-0006		2	GLAND W/O INSERT PG29 NORMAL	
460	353240-0005		1	GLAND W/O INSERT PG21 NORMAL	
470	352103-0121		1	CABLE GLAND, ST 29, PR37,0/PG29	
480	352103-0120		7	CABLE GLAND, STR 29, PR37,0/PG29	
490	352103-0116		6	CABLE GLAND, ST 21, PR28,3/PG21	
520	352103-0108		7	CABLE GLAND, ST 13,5 , PR20,4/PG13,5	
550	315125-0153		4	WASHER TBRSB 6,4X22X4 A4	
560	312705-0316		5	NUT HEX. DOMED CAP MHM-6 M6 A280	
570	312705-0314		7	NUT HEX. DOMED CAP MHM-6 M5 A280	
580	312605-0314		6	HEXAGON NUT, M6M M5 A280	
590	312105-0370		4	SCREW M6S ISO 4017 M6X20 A480	
600	312105-0367		4	SCREW M6S ISO 4017 M6X14 A480	
610	312105-0364		12	SCREW M6S ISO 4017 M6X10 A480	
630	352103-0106		4	CABLE GLAND, ST 11, PR18,6/PG11	
690	90143-0059	M	1	SEAL STRIP 4610069	
700	90458-2890		1	CONNECTOR, 21N-50N12N133NE	
710	90458-2892		1	CONNECTOR, 11 N-50-3-31/133 NE	
720	90110-0235		2	CABLE CONTACT, PX0739/P	
730	90459-2106		1	CABLE CONNECTOR, C091 31D004 100 2	
740	90110-0144		1	COVER	
750	90110-0147		1	CONTACT UNIT	
770	90012-0049		1	CABLE GLAND, STR13,5, PR20,4/PG13,5	
780	90110-0381		1	COVER, 310601-33 CYR24.4	
790	353300-0006	M		SHRINKABLE HOSE	
800	353300-0008	M		SHRINKABLE HOSE	
810	353300-0008	M	1	SHRINKABLE HOSE	
820	90458-2893		2	SLEEVE, 78 Z-0-3-4	
830	90459-1297		2	RESISTANCE FIXED, 120 OHM, 0,25 W	
840	90121-0132		2	RESISTANCE FIXED, 0,51 KOHM, 0,25 W	
850	353001-0116		12	END SLEEVE H0.5/14 ORANGE	
860	90152-0070	M	2	METAL HOSE, 32,5X26, UL 2621	
880	353300-0010		1	SHRINKABLE HOSE	
890	353300-0001	M		SHRINKABLE HOSE	
900	2656905-0100		1	OPTIONAL PARTS	**1-381, 1-383, 1-385**
W1052	90220-0165	M	7	SCR. CABLE 5X0,34MM2	
W1053	90220-0091	M	10	PAIR TWISTED CABLE 2X2X0,25MM2	
W1054	90458-2895	M	6	COAXIAL CABLE RG 400/U BROWN	
W1107	90220-0034	M	7	THERMOCABLE TEX/SITW-20F-KX 2X0,5MM2	
W1300	90220-0034	M	5	THERMOCABLE TEX/SITW-20F-KX 2X0,5MM2	
W1302	90220-0034	M	8	THERMOCABLE TEX/SITW-20F-KX 2X0,5MM2	
W1305	90220-0034	M	8	THERMOCABLE TEX/SITW-20F-KX 2X0,5MM2	
W1307	90220-0034	M	8	THERMOCABLE TEX/SITW-20F-KX 2X0,5MM2	
W1315	90220-0165	M	7	SCR. CABLE 5X0,34MM2	
W1320	90220-0034	M	7	THERMOCABLE TEX/SITW-20F-KX 2X0,5MM2	
W1322	90220-0034	M	7	THERMOCABLE TEX/SITW-20F-KX 2X0,5MM2	
W1323	90220-0034	M	7	THERMOCABLE TEX/SITW-20F-KX 2X0,5MM2	
W1420	90220-0072	M	10	SCR. CABLE 4X0,34MM2	
W1500	351150-0418	M	5	CABLE OLFLEX 4X2,5 MM2 LIGHT/GREY	
W1501	351120-0168	M	5	CABLE SIHF 4X10MM2 GREEN/YELLOW	
W1820	90220-0034	M	8	THERMOCABLE TEX/SITW-20F-KX 2X0,5MM2	
W1830	90220-0104	M	6	SCR. CABLE 4X1,5MM2	
W2029	90220-0104	M	6	SCR. CABLE 4X1,5MM2	
X308	90326-0022		1	PLUG, MALE YELLOW CR-AL	
X312	90326-0022		1	PLUG, MALE YELLOW CR-AL	
X317	90326-0022		1	PLUG, MALE YELLOW CR-AL	
X318	90326-0022		1	PLUG, MALE YELLOW CR-AL	
X600	90110-0381		1	COVER, 310601-33 CYR24.4	

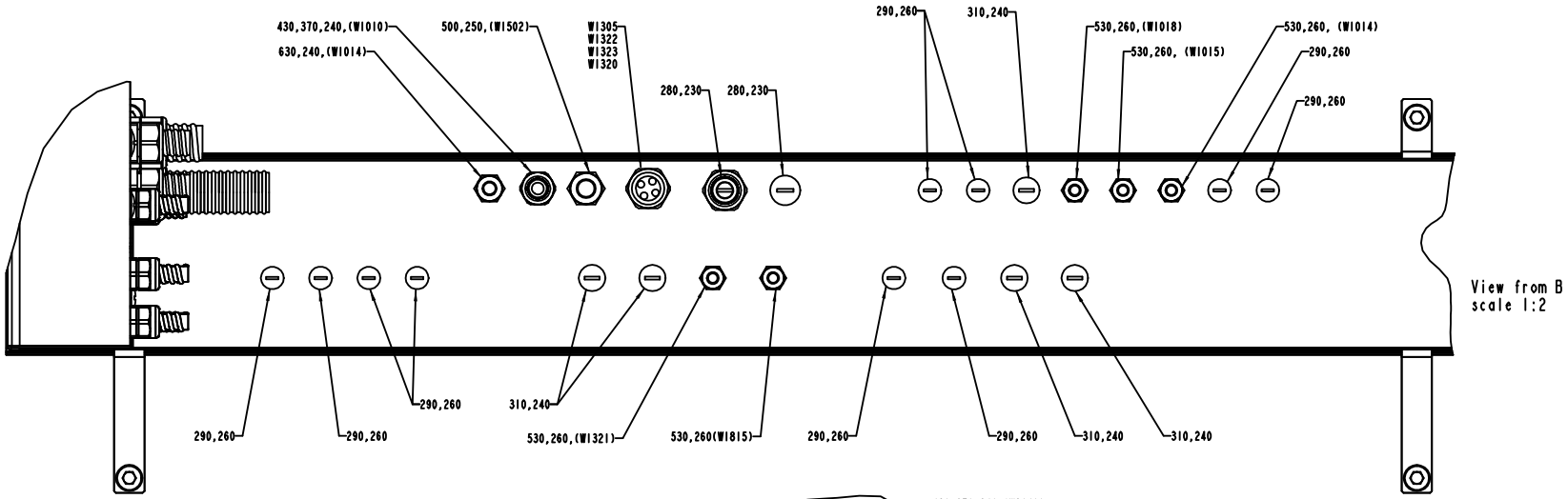
430,370,240,(W1010)
630,240,(W1014)
500,250,(W1502)
W1305
W1322
W1323
W1320
280,230
280,230
290,260
310,240
530,260,(W1018)
530,260, (W1015)
530,260, (W1014)
290,260
290,260
290,260
290,260
290,260
310,240
530,260,(W1321)
530,260(W1815)
290,260
290,260
310,240
310,240
View from B
scale 1:2

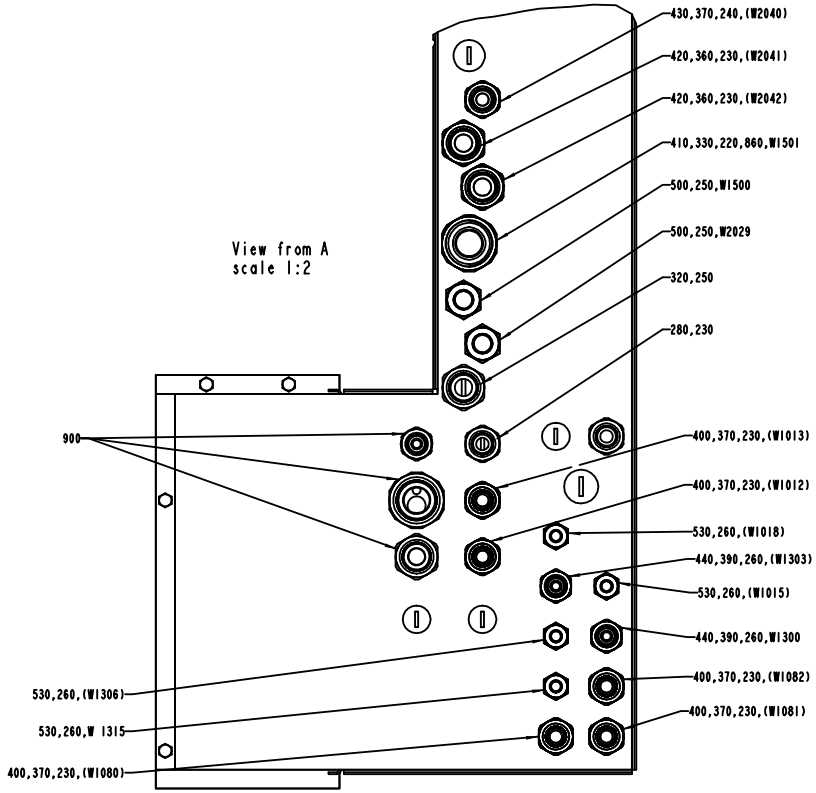
View from A
scale 1:2
430,370,240,(W2040)
420,360,230,(W2041)
420,360,230,(W2042)
410,330,220,860,W1501
500,250,W1500
500,250,W2029
320,250
280,230
900
400,370,230,(W1013)
400,370,230,(W1012)
530,260,(W1018)
440,390,260,(W1303)
530,260,(W1015)
440,390,260,W1300
400,370,230,(W1082)
400,370,230,(W1081)
530,260,(W1306)
530,260,W 1315
400,370,230,(W1080)

Pos	Part No	UN	Qty	Description	Page No	Pos	Part No	UN	Qty	Description	Page No

SEE PREVIOUS LISTS PAGES: 1-365, 1-367.

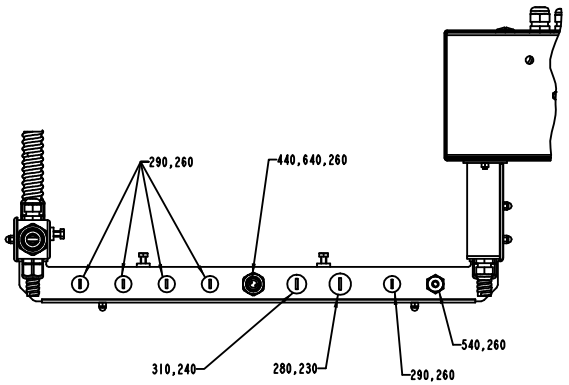

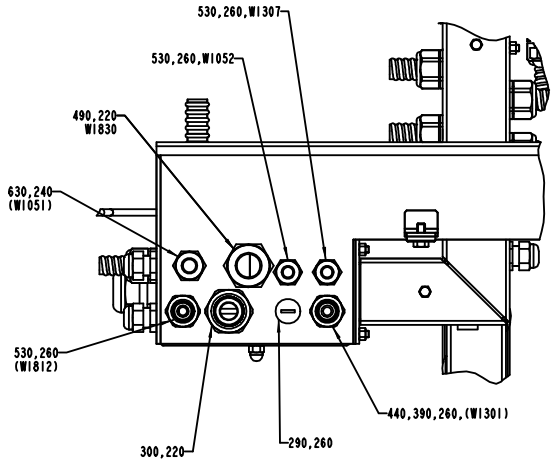

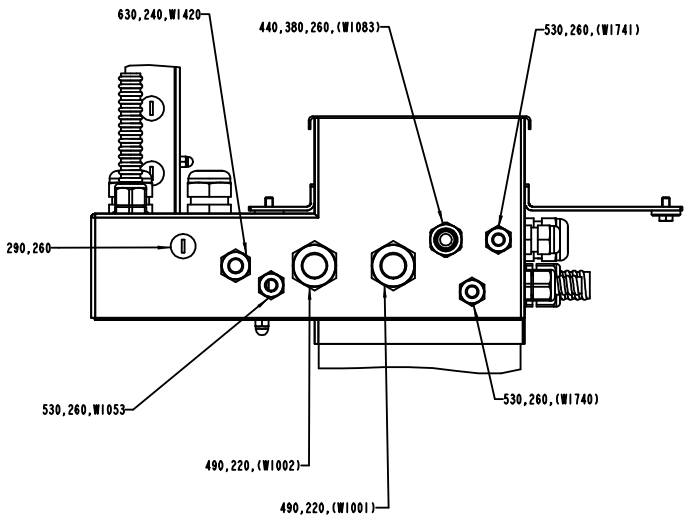

View from D
scale 1:2

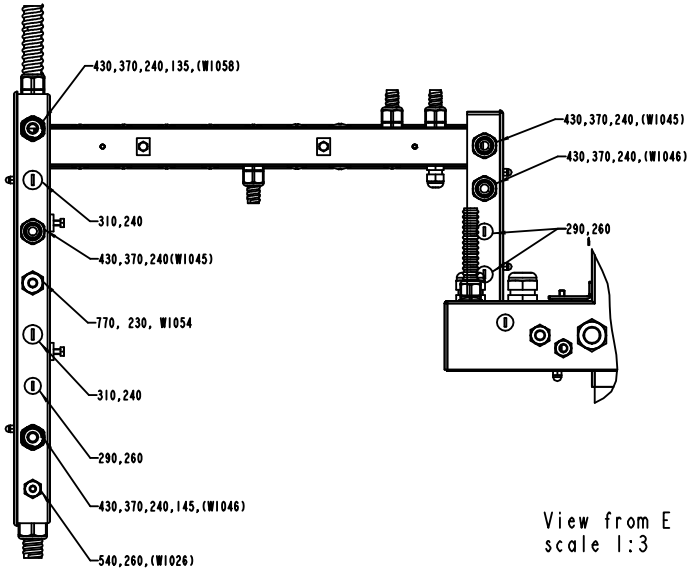

View from E
scale 1:3

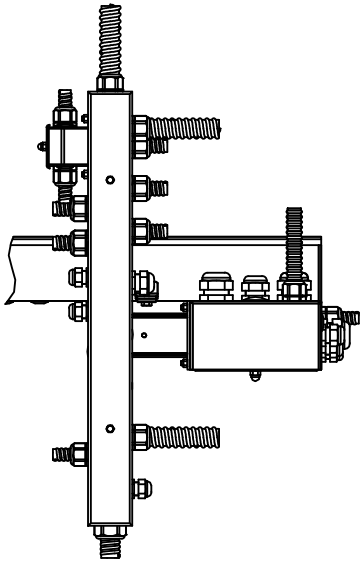

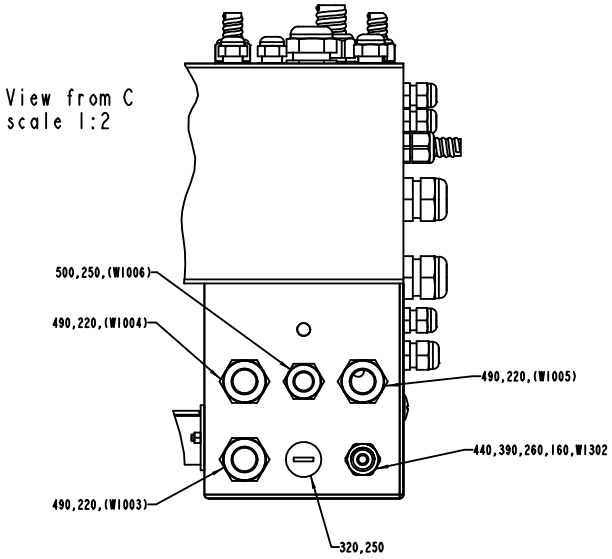

View from C
scale 1:2

Pos	Part No	UN	Qty	Description	Page No	Pos	Part No	UN	Qty	Description	Page No

SEE PREVIOUS LISTS PAGES: 1-365, 1-367.

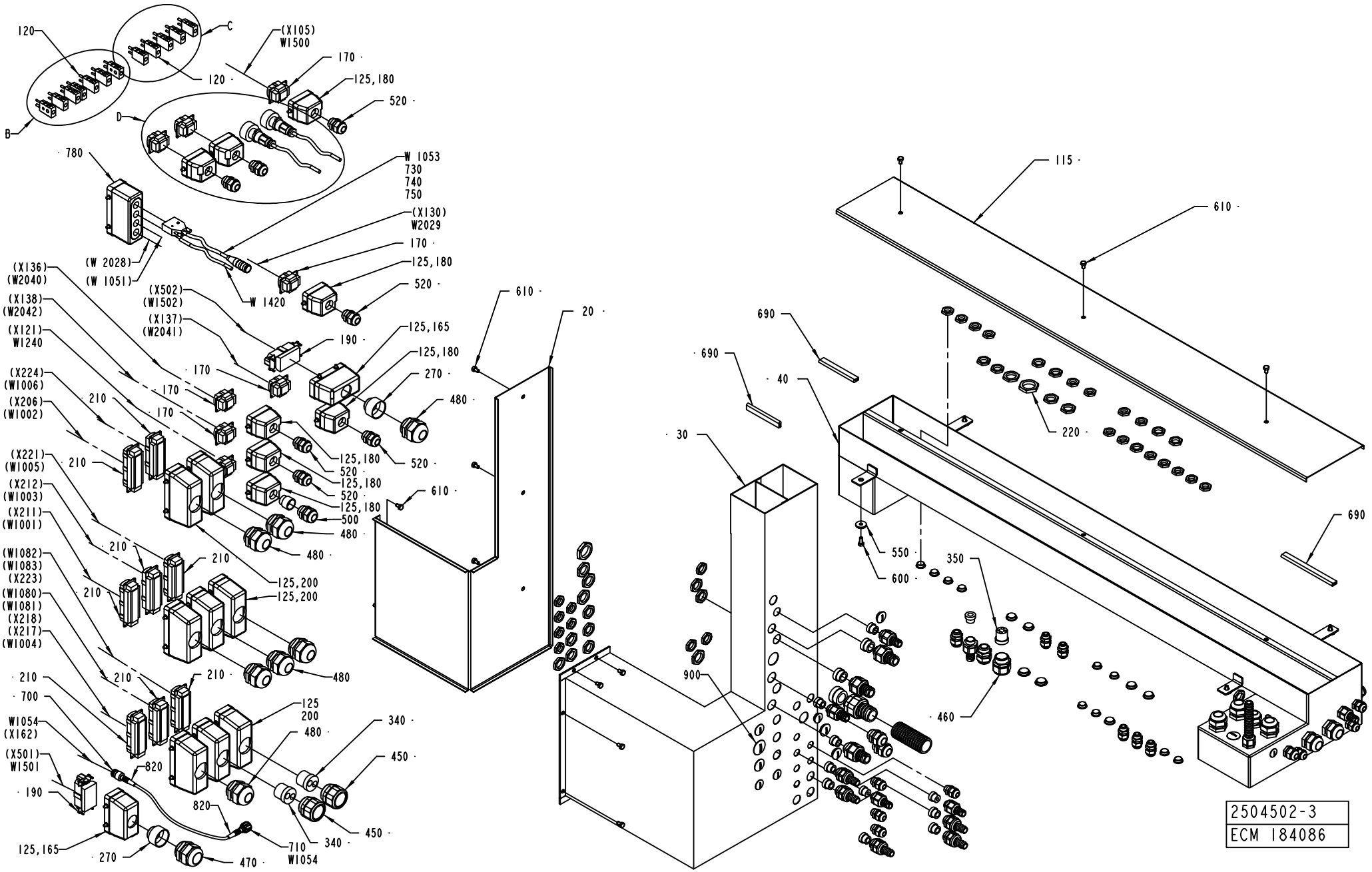
120
C
(X105)
W1500
170
120
125,180
520
D
B
780
W 1053
730
740
750
(X130)
W2029
170
125,180
520
(W 2028)
(W 1051)
W 1420
(X136)
(W2040)
(X138)
(W2042)
(X121)
W1240
(X502)
(W1502)
(X137)
(W2041)
190
125,165
125,180
270
480
520
610
20
170
170
170
(X224)
(W1006)
(X206)
(W1002)
210
210
(X221)
(W1005)
(X212)
(W1003)
(X211)
(W1001)
125,180
520
125,180
520
125,180
500
480
480
610
(W1082)
(W1083)
(X223)
(W1080)
(W1081)
(X218)
(X217)
(W1004)
210
210
210
210
210
210
125,200
125,200
480
700
W1054
(X162)
(X501)
W1501
190
820
820
125,165
270
470
710
W1054
125
200
480
340
450
340
450
690
690
40
30
900
115
610
220
690
550
600
350
460
2504502-3
ECM 184086

Pos	Part No	UN	Qty	Description	Page No	Pos	Part No	UN	Qty	Description	Page No

SEE PREVIOUS LISTS PAGES: 1-365, 1-367.

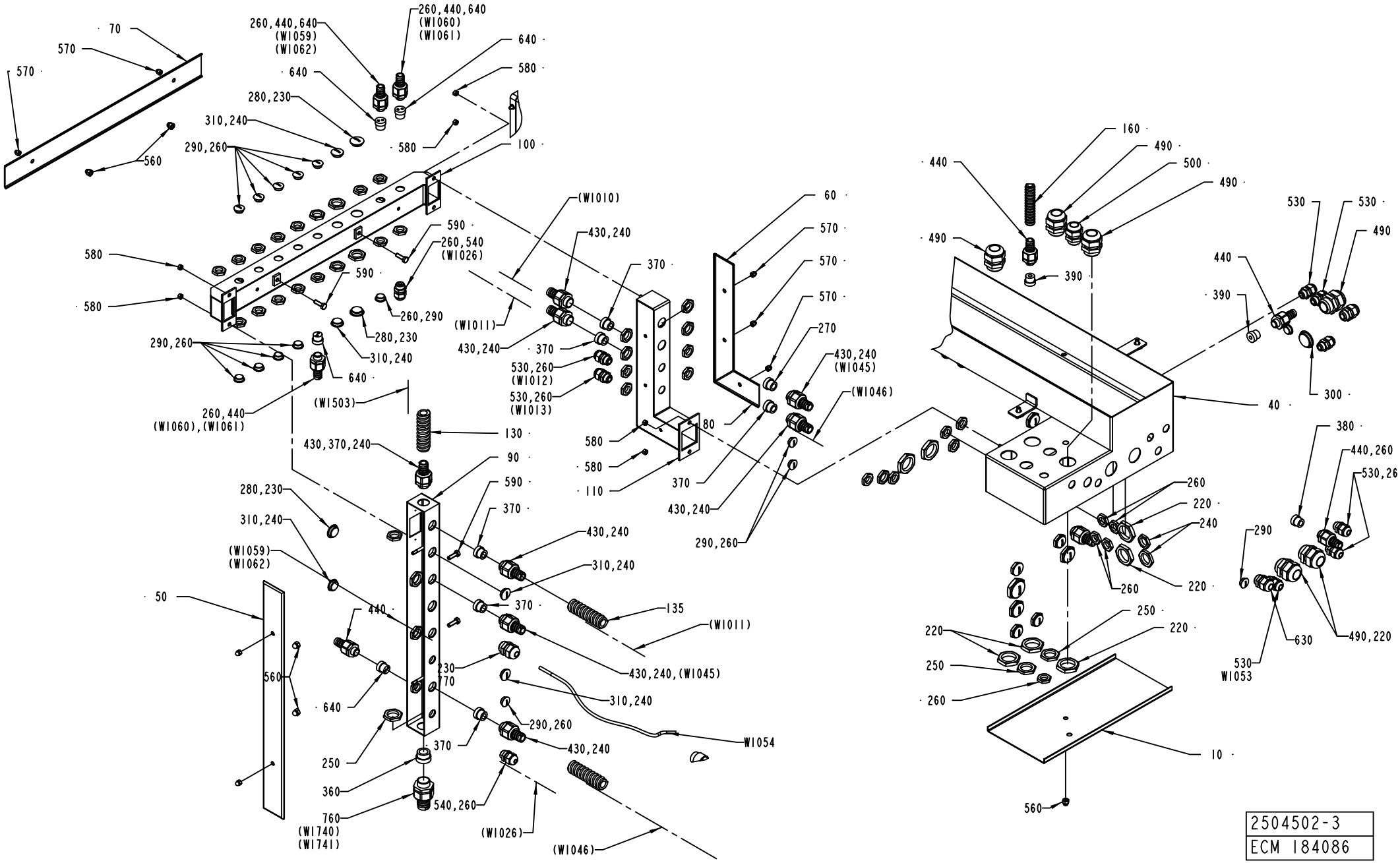
70
570
570
560
260,440,640
(W1059)
(W1062)
260,440,640
(W1060)
(W1061)
640
640
580
280,230
310,240
290,260
580
100
580
590
260,540
(W1026)
590
580
260,290
280,230
310,240
290,260
640
260,440
(W1060),(W1061)
(W1503)
(W1010)
(W1011)
430,240
370
430,240
370
530,260
(W1012)
530,260
(W1013)
60
570
570
570
270
430,240
(W1045)
(W1046)
80
580
580
110
370
430,240
290,260
130
430,370,240
90
590
370
280,230
310,240
(W1059)
(W1062)
50
560
440
640
250
360
760
(W1740)
(W1741)
370
540,260
(W1026)
(W1046)
430,240
310,240
370
135
(W1011)
430,240,(W1045)
230
170
310,240
290,260
430,240
W1054
160
490
500
490
440
490
530
530
490
440
390
390
300
40
380
440,260
530,26
260
220
240
260
220
290
630
530
W1053
490,220
250
220
220
250
260
10
560
2504502-3
ECM 184086

Pos	Part No	UN	Qty	Description	Page No	Pos	Part No	UN	Qty	Description	Page No

SEE PREVIOUS LISTS PAGES: 1-365, 1-367.

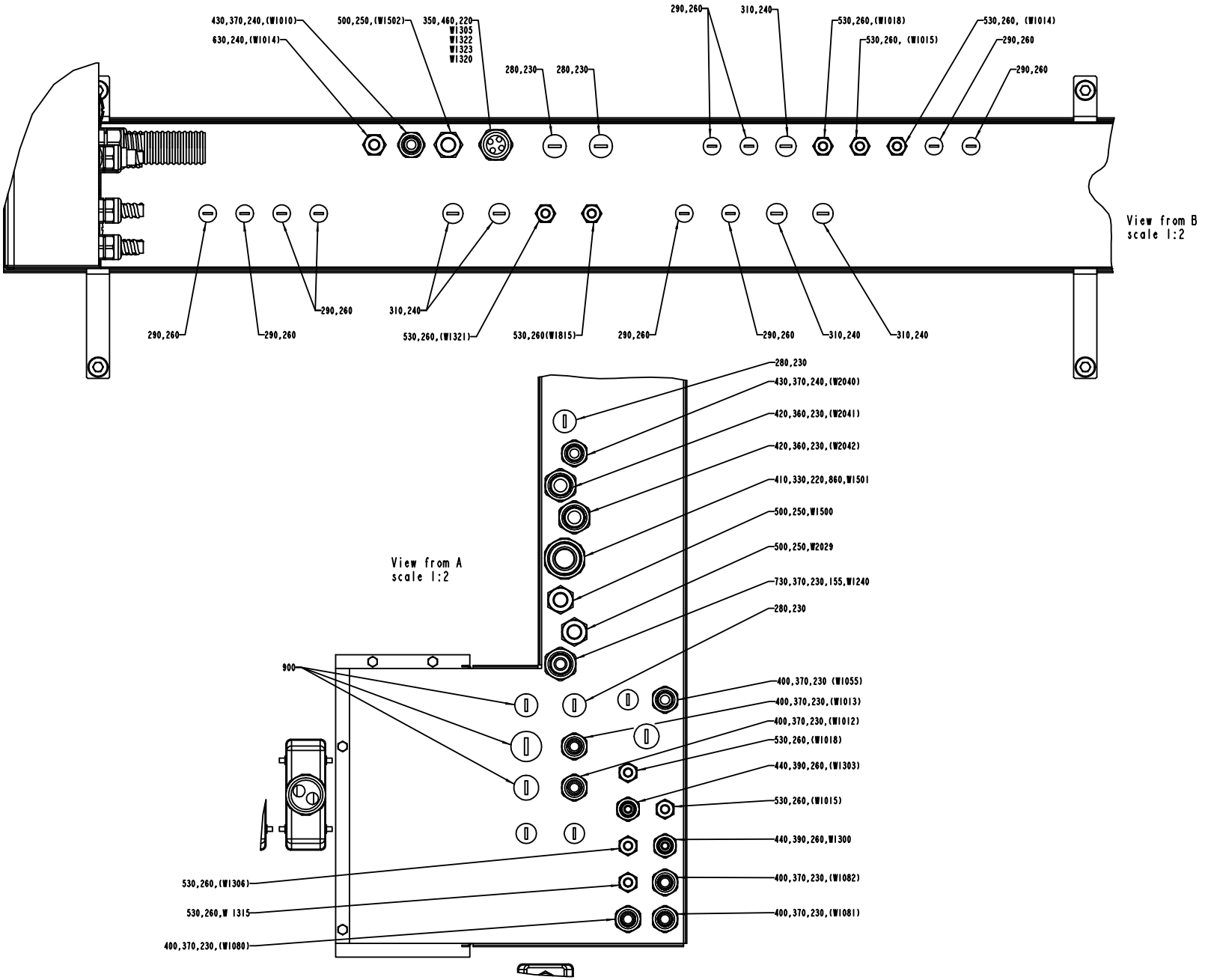
430,370,240,(W1010)
630,240,(W1014)
500,250,(W1502)
350,460,220
W1305
W1322
W1323
W1320
280,230
280,230
290,260
310,240
530,260,(W1018)
530,260, (W1015)
530,260, (W1014)
290,260
290,260
290,260
290,260
290,260
310,240
530,260,(W1321)
530,260(W1815)
290,260
290,260
310,240
310,240
View from B
scale 1:2
280,230
430,370,240,(W2040)
420,360,230,(W2041)
420,360,230,(W2042)
410,330,220,860,W1501
500,250,W1500
500,250,W2029
730,370,230,155,W1240
280,230
View from A
scale 1:2
900
400,370,230 (W1055)
400,370,230,(W1013)
400,370,230,(W1012)
530,260,(W1018)
440,390,260,(W1303)
530,260,(W1015)
440,390,260,W1300
400,370,230,(W1082)
400,370,230,(W1081)
530,260,(W1306)
530,260,W 1315
400,370,230,(W1080)

ECM: 237232 - 20051011
Group number: 2504502-0100
Assembly Drawing: 2504502-3_3_AC

This list covers pages from 1-364 to 1-379

Pos	Part No	UN	Qty	Description	Page No	Pos	Part No	UN	Qty	Description	Page No

SEE PREVIOUS LISTS PAGES: 1-365, 1-367.

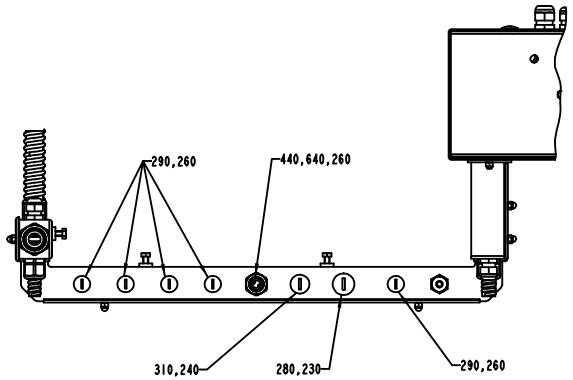
290,260
440,640,260
310,240
280,230
290,260

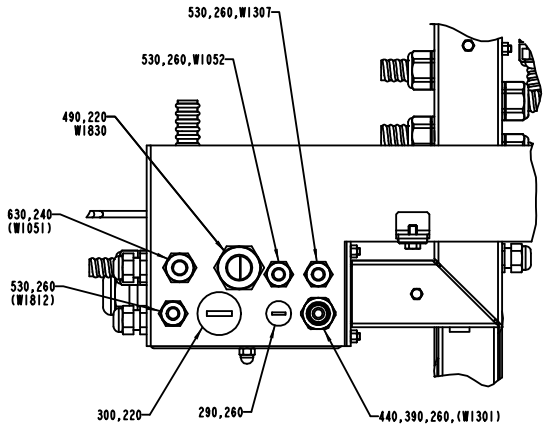
530,260,WI307
530,260,WI052
490,220
WI830
630,240
(WI051)
530,260
(WI812)
300,220
290,260
440,390,260,(WI301)

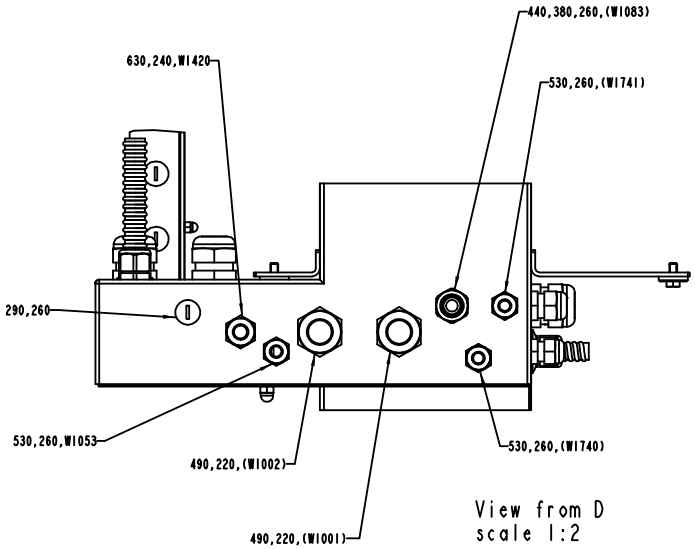
440,380,260,(WI083)
630,240,WI420
530,260,(WI741)
290,260
530,260,WI053
490,220,(WI002)
530,260,(WI740)
490,220,(WI001)
View from D
scale 1:2

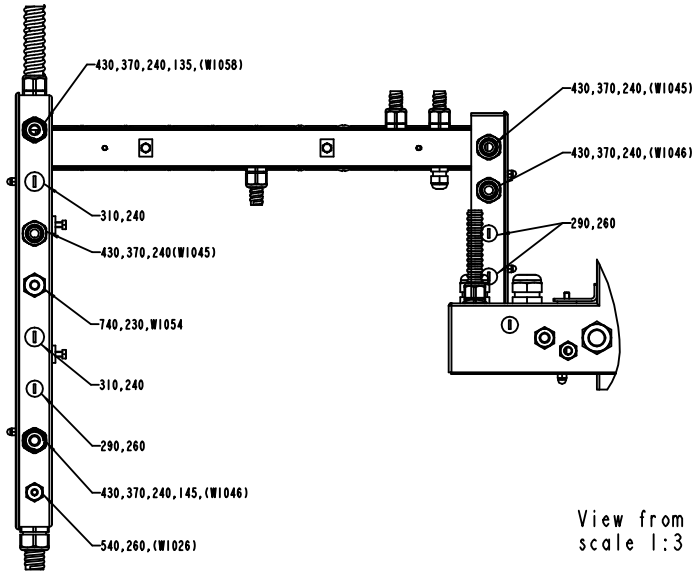
430,370,240,135,(WI058)
430,370,240,(WI045)
430,370,240,(WI046)
310,240
290,260
430,370,240(WI045)
740,230,WI054
310,240
290,260
430,370,240,145,(WI046)
540,260,(WI026)

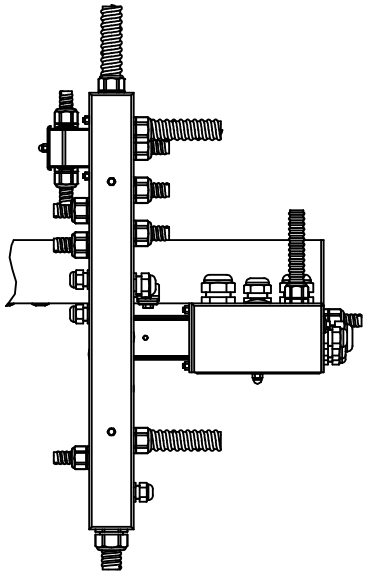
View from E
scale 1:3

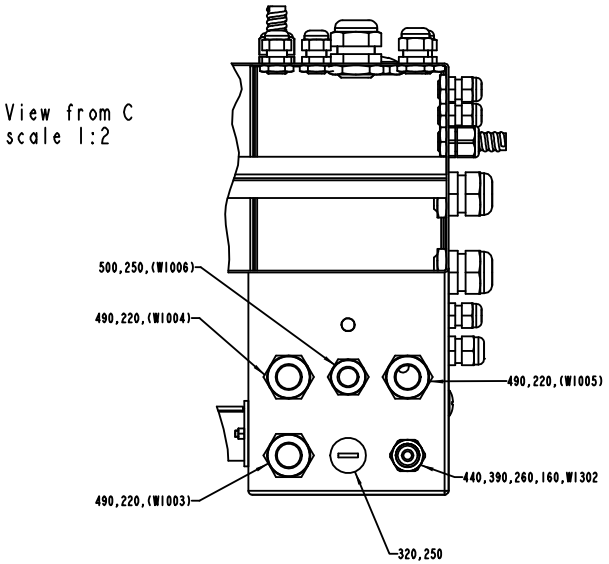
View from C
scale 1:2
500,250,(WI006)
490,220,(WI004)
490,220,(WI005)
440,390,260,160,WI302
490,220,(WI003)
320,250

Pos	Part No	UN	Qty	Description	Page No	Pos	Part No	UN	Qty	Description	Page No

SEE PREVIOUS LISTS PAGES: 1-365, 1-367.

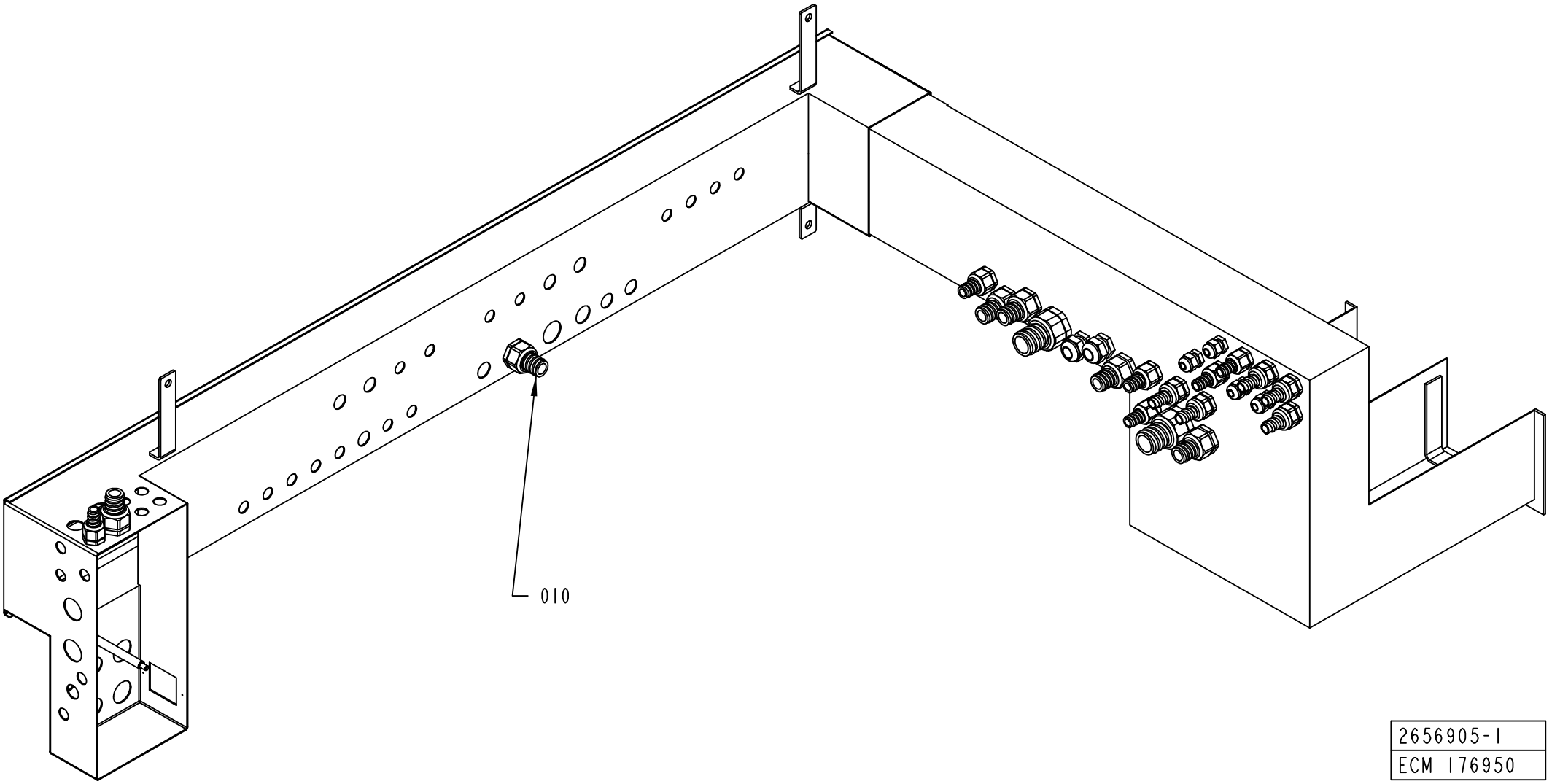

2656905-1
ECM 176950

Pos	Part No	UN	Qty	Description	Page No
HI (See drawing on page: 1-380)					
010	2649165-0100		1	CABLE DUCT	**1-387**
NOHI (See drawing on pages: 1-382, 1-384)					
050	90099-0119		2	NUT, PR 28,3 (PG21)	
060	90099-0110		1	NUT, PR 22,5 (PG16)	
090	90099-0118		3	NUT, PR 20,4 (PG13,5)	
100	90002-0004		1	BLANK-OFF PLUG, PR 22,5 SKINDICHT-BLK16	
110	90002-0012		2	BLANK-OFF PLUG, PR 28,3 SKINDICHT-BLK21	
120	90002-0016		3	BLANK-OFF PLUG PR 20.4 SKINDICHT-BLK13,5	
130	90002-0013		1	BLANK-OFF PLUG, PR 15,2 SKINDICHT-BLK9	
140	90099-0104		1	NUT, PR 15,2 (PG9)	

Pos	Part No	UN	Qty	Description	Page No

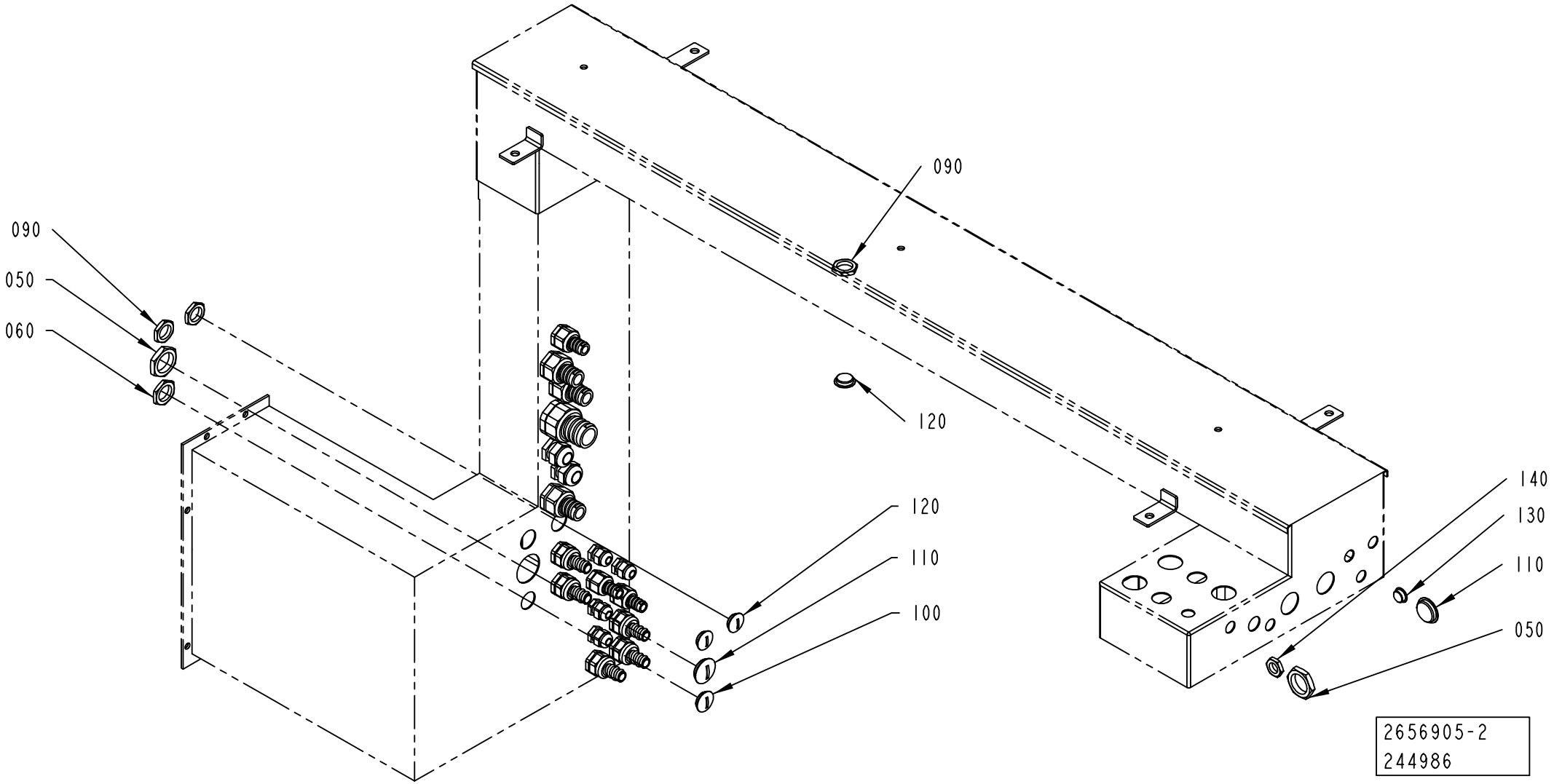
090
090
050
060
120
120
110
100
140
130
110
050
2656905-2
244986

Pos	Part No	UN	Qty	Description	Page No
HI (See drawing on page: 1-380)					
010	2649165-0100		1	CABLE DUCT	**1-387**
NOHI (See drawing on pages: 1-382, 1-384)					
050	90099-0119		2	NUT, PR 28,3 (PG21)	
060	90099-0110		1	NUT, PR 22,5 (PG16)	
090	90099-0118		3	NUT, PR 20,4 (PG13,5)	
100	90002-0004		1	BLANK-OFF PLUG, PR 22,5 SKINDICHT-BLK16	
110	90002-0012		2	BLANK-OFF PLUG, PR 28,3 SKINDICHT-BLK21	
120	90002-0016		3	BLANK-OFF PLUG PR 20.4 SKINDICHT-BLK13,5	
130	90002-0013		1	BLANK-OFF PLUG, PR 15,2 SKINDICHT-BLK9	
140	90099-0104		1	NUT, PR 15,2 (PG9)	

Pos	Part No	UN	Qty	Description	Page No

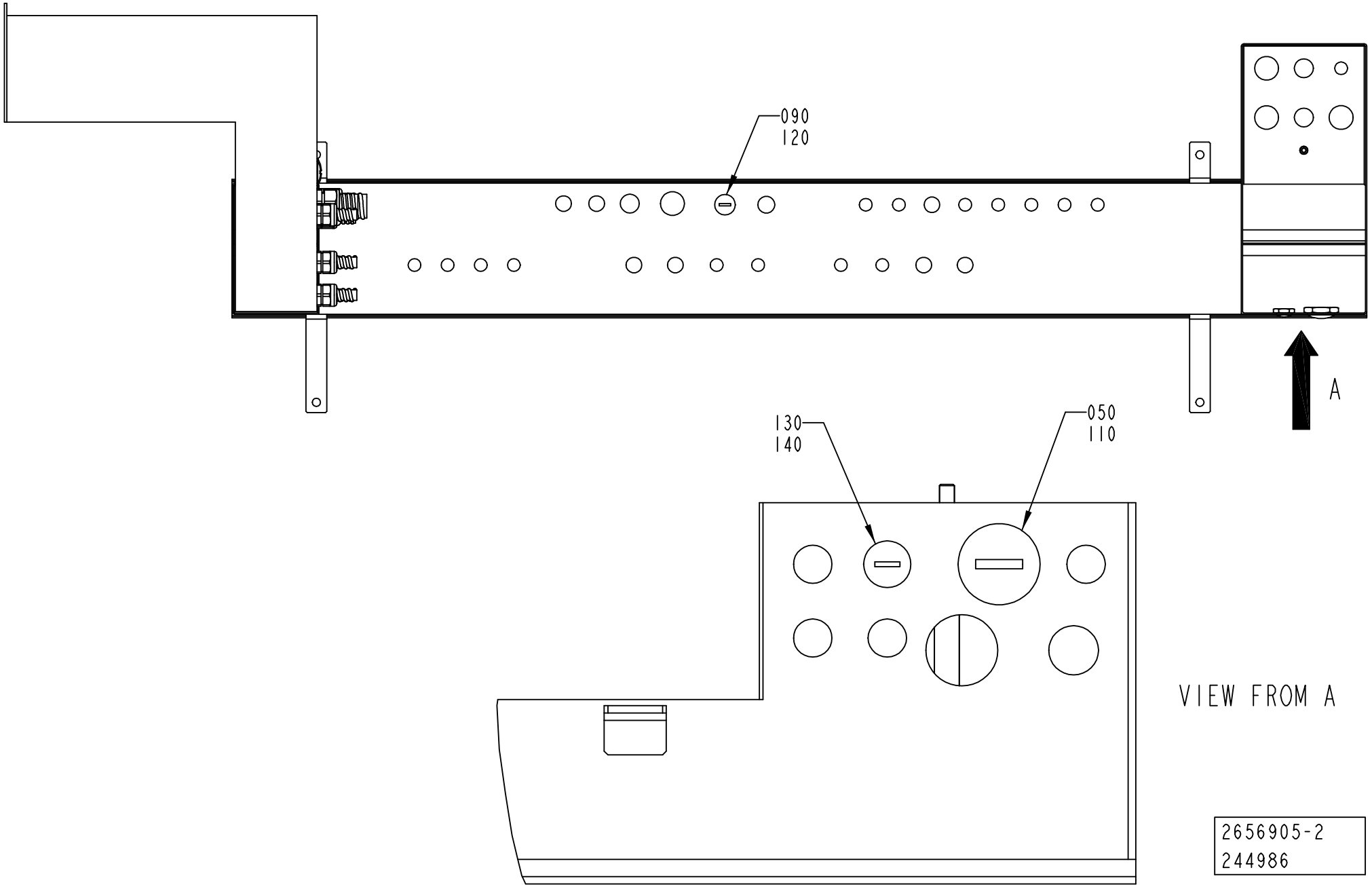
090
120
A
130
140
050
110
VIEW FROM A
2656905-2
244986

ECM: 270974 - 20060728
Group number: 2656905-0100
Assembly Drawing: 2656905-2_2_AC

This list covers pages from 1-380 to 1-385

Pos	Part No	UN	Qty	Description	Page No
HI (See drawing on page: 1-380)					
010	2649165-0100		1	CABLE DUCT	**1-387**
NOHI (See drawing on pages: 1-382, 1-384)					
050	90099-0119		2	NUT, PR 28,3 (PG21)	
060	90099-0110		1	NUT, PR 22,5 (PG16)	
090	90099-0118		3	NUT, PR 20,4 (PG13,5)	
100	90002-0004		1	BLANK-OFF PLUG, PR 22,5 SKINDICHT-BLK16	
110	90002-0012		2	BLANK-OFF PLUG, PR 28,3 SKINDICHT-BLK21	
120	90002-0016		3	BLANK-OFF PLUG PR 20.4 SKINDICHT-BLK13,5	
130	90002-0013		1	BLANK-OFF PLUG, PR 15,2 SKINDICHT-BLK9	
140	90099-0104		1	NUT, PR 15,2 (PG9)	

Pos	Part No	UN	Qty	Description	Page No

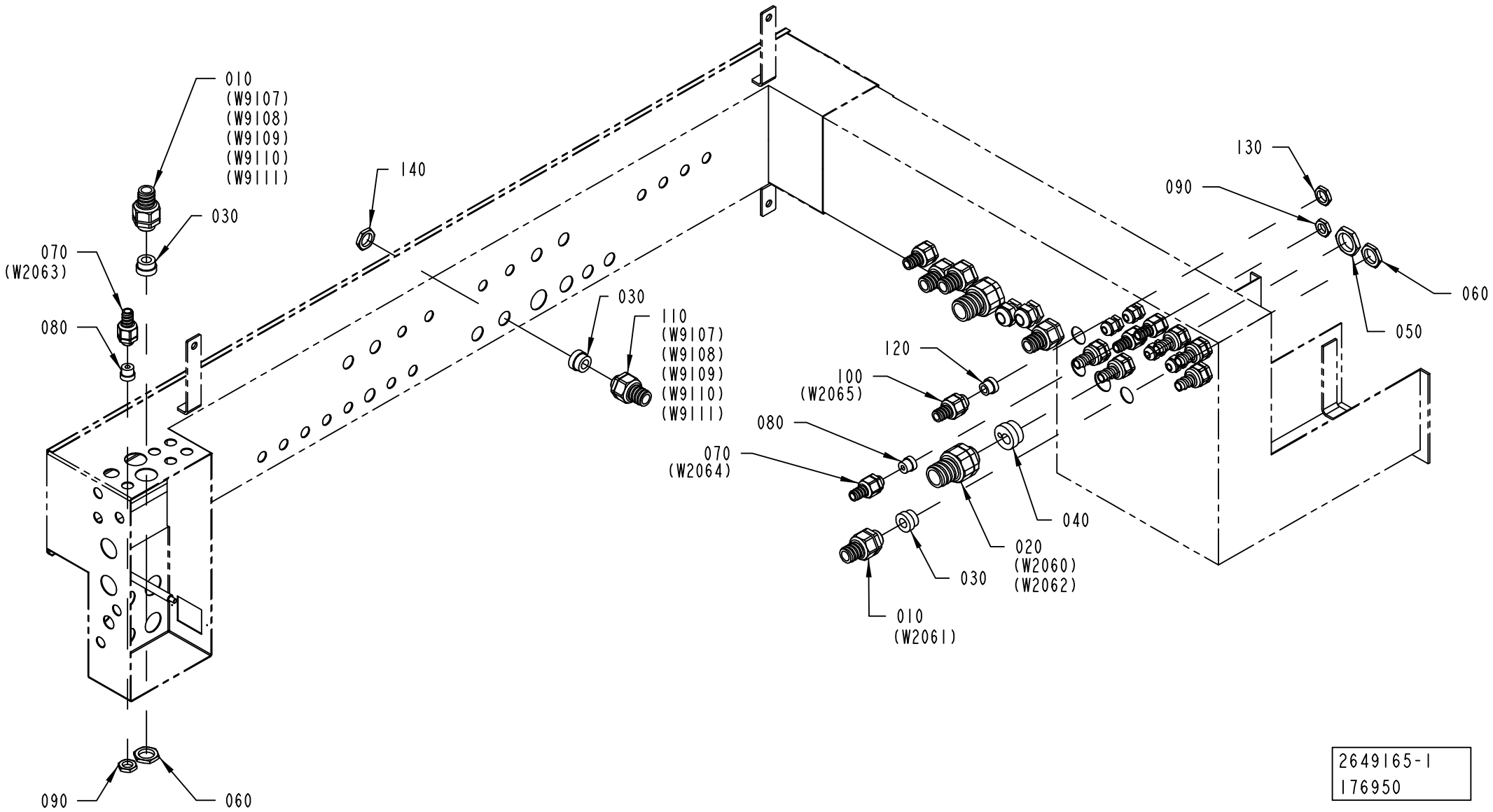
010
(W9107)
(W9108)
(W9109)
(W9110)
(W9111)
030
070
(W2063)
080
140
030
110
(W9107)
(W9108)
(W9109)
(W9110)
(W9111)
090
060
130
090
060
050
120
100
(W2065)
080
070
(W2064)
040
020
(W2060)
(W2062)
030
010
(W2061)
2649165-1
176950

ECM: 176950 - 20041115
Group number: 2649165-0100
Assembly Drawing: 2649165-1_1_AB

Pos	Part No	UN	Qty	Description	Page No
-					
010	353243-0005		2	HOSE GLAND W/O INSERT PG16 EXTENDED	
020	353243-0007		1	HOSE GLAND W/O INSERT PG21 EXTENDED	
030	353249-0013		3	INSERT, SINGEL HOLE, EK 154/13	
040	2649167-0000		1	INSERT	
050	90099-0119		1	NUT, PR 28,3 (PG21)	
060	90099-0110		2	NUT, PR 22,5 (PG16)	
070	353243-0001		2	HOSE GLAND W/O INSERT PG9 EXTENDED	
080	353249-0008		2	INSERT, SINGEL HOLE, EK 152/7	
090	90099-0104		2	NUT, PR 15,2 (PG9)	
100	353243-0003		1	HOSE GLAND W/O INSERT PG11 EXTENDED	
110	353243-0004		1	HOSE GLAND W/O INSERT PG13,5 EXTENDED	
120	353249-0011		1	INSERT, SINGEL HOLE, EK 153/11	
130	90099-0117		1	NUT, PR 18,6 (PG11)	
140	90099-0118		1	NUT, PR 20,4 (PG13,5)	

Pos	Part No	UN	Qty	Description	Page No

COVERING PANEL

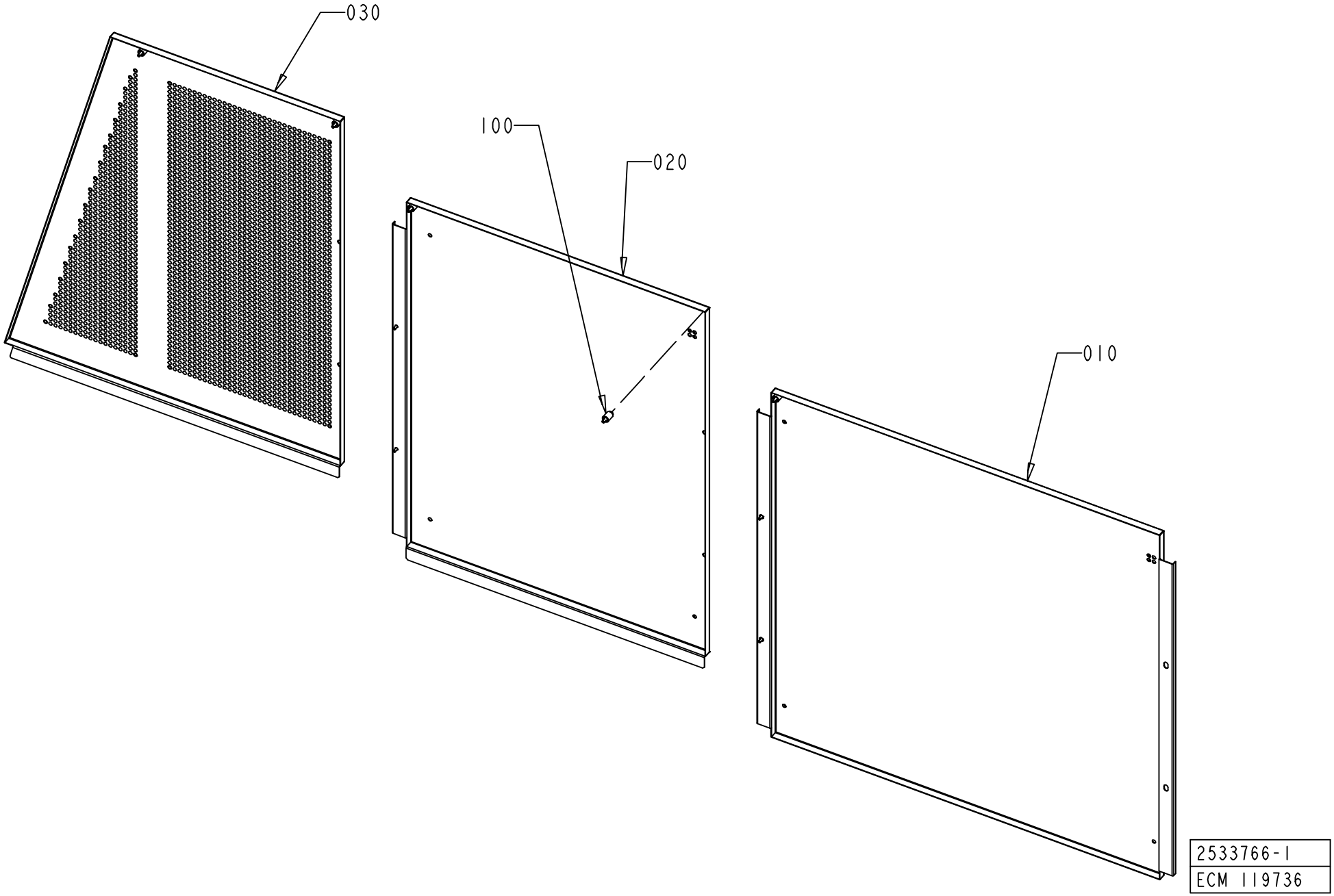

ECM: 264012 - 20060702
Group number: 2533766-0100
Assembly Drawing: 2533766-1_1_AA

Pos	Part No	UN	Qty	Description	Page No
A3/FLEX TBA, A3/FLEX TPA					
010	2533763-0000		1	COVERING PANEL	
Common Parts					
020	2533768-0000		1	COVERING PLATE	
030	2539471-0000		1	COVERING PLATE	
100	90226-0458		9	MOUNTING SCREW	

Pos	Part No	UN	Qty	Description	Page No

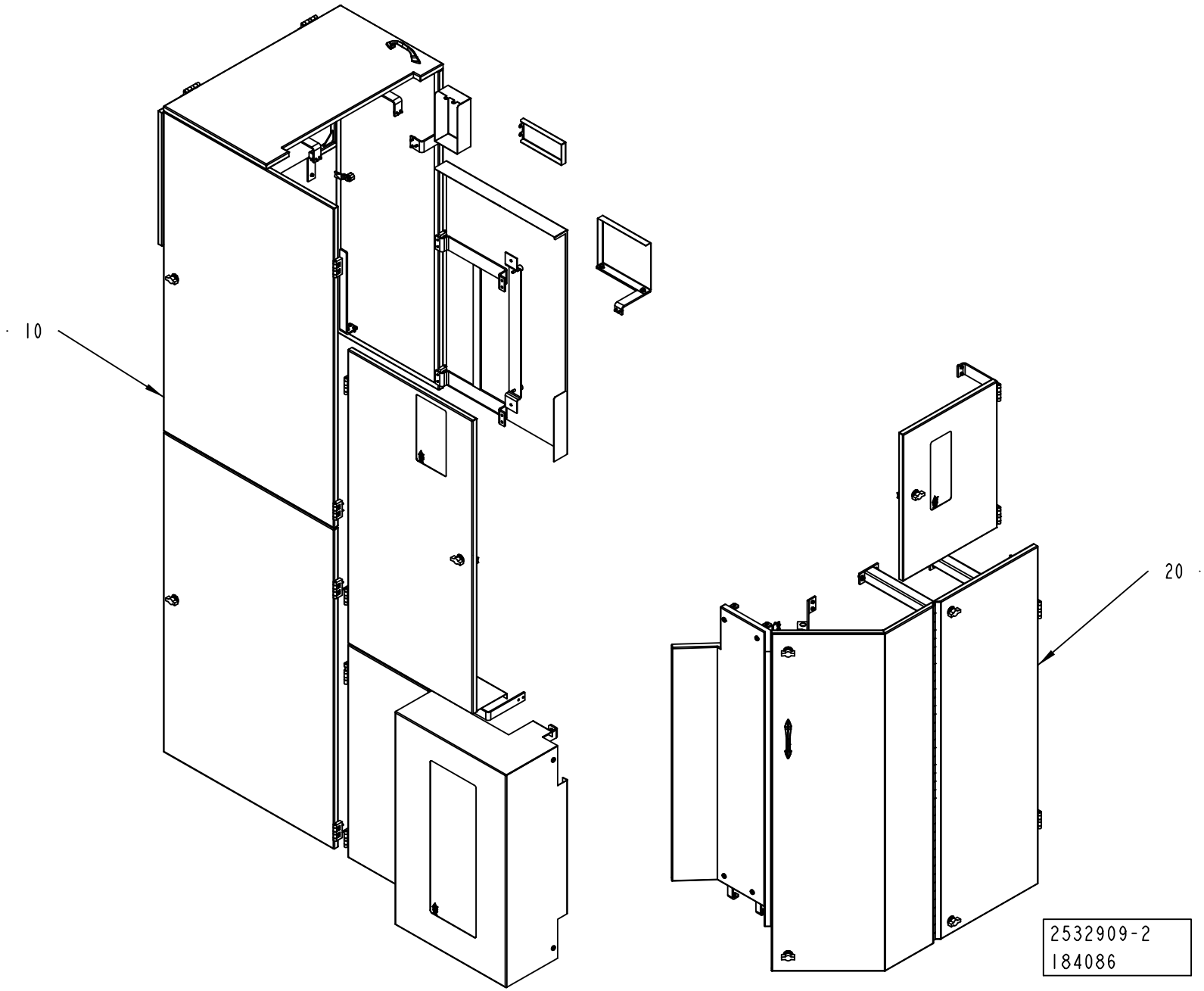
10
20
2532909-2
184086

ECM: 186105 - 20050224
Group number: 2532909-0200
Assembly Drawing: 2532909-2_1_AA

Pos	Part No	UN	Qty	Description	Page No
-					
010	2529760-0200		1	COVERING PANEL	**1-393**
020	2545639-0200		1	COVERING PANEL	**1-395**

Pos	Part No	UN	Qty	Description	Page No

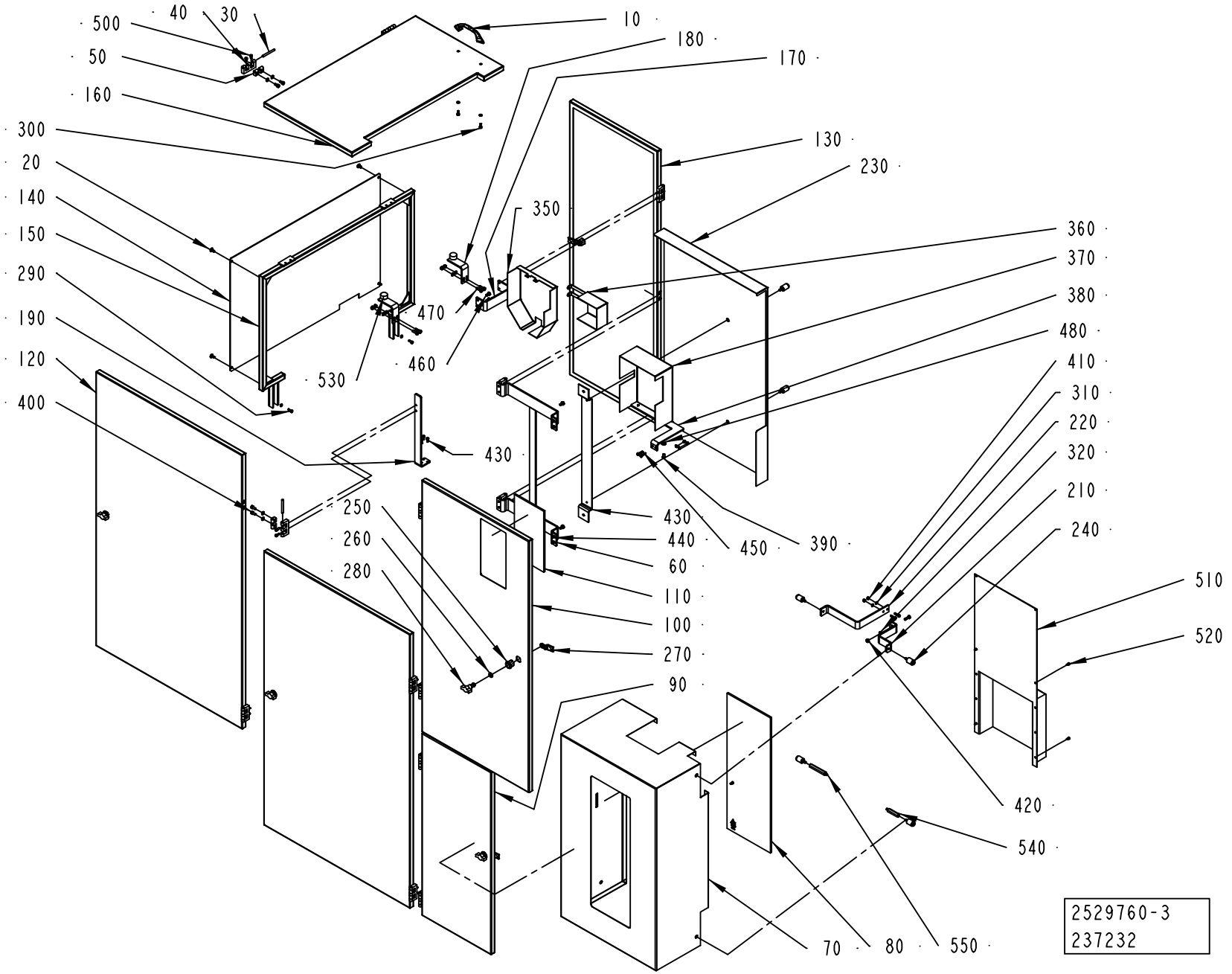
500
40
30
10
180
170
50
160
300
130
230
20
140
350
360
150
370
290
380
470
480
190
530
460
410
120
310
400
220
430
320
250
210
430
240
260
440
450
390
280
60
510
110
100
520
270
90
420
540
70
80
550
2529760-3
237232

ECM: 239321 - 20051011
Group number: 2529760-0200
Assembly Drawing: 2529760-3_1_AC

Pos	Part No	UN	Qty	Description	Page No
A3/FLEX					
020	927354-0000		4	SCREW	
070	2710561-0000		1	COVERING PANEL	
080	2710562-0000		1	GLASS PANE	
090	2710564-0000		1	DOOR	
140	2711249-0000		1	PANEL	
210	2711266-0000		1	BRACKET	
220	2711267-0000		1	BRACKET	
230	2712433-0000		1	COVERING PANEL	
240	90226-0458		6	MOUNTING SCREW	
295	312105-0368		6	SCREW M6S ISO 4017 M6X16 A480	
310	315105-0146		10	WASHER BRB 5,3X10 RFR	
320	315105-0153		27	WASHER BRB 6,4X12 RFR	
410	312605-0314		4	HEXAGON NUT, M6M M5 A280	
420	312605-0316		5	HEXAGON NUT, M6M M6 A280	
510	2619607-0000		1	COVER	
520	312105-0287		4	SCREW M6S ISO 4017 M4X8 A470	
540	2743319-0000		1	SUPPORT	
550	2743320-0000		1	SUPPORT	
Common Parts					
010	7309-0000		1	HANDLE	
030	988685-0000		13	PIN	
040	1035792-0000		13	E-HINGE	
050	1129770-0000		26	BLOCKING PIECE	
060	2509658-0000		1	BRACKET	
100	2711243-0000		1	COVERING PANEL	
110	2711244-0000		1	GLASS PANE	
120	2711246-0000		2	COVERING PANEL	
130	2711248-0000		1	DOOR	
150	2711250-0000		1	FRAME	
160	2711255-0000		1	COVERING PANEL	
170	2711261-0000		1	BRACKET	
180	2711262-0000		2	BRACKET	
190	2711263-0000		1	BRACKET	
250	90237-0319		5	LOCK HOUSING, 1000-U134	
260	90237-0323		5	LOCK O-RING, 1000-24	
270	90237-0335		5	LOCKING CATCH	
280	90237-0337		5	LOCK HANDLE FOR 90237-319	
290	312105-0328		4	SCREW M6S ISO 4017 M5X14 A480	
300	312115-0327		28	SCREW ISO4762 M5X12 A4 80	
350	2788635-0000		1	TOUCH GUARD	
360	2788636-0000		1	TOUCH GUARD	
370	2788637-0000		1	COVERING PANEL	
380	2788638-0000		1	BRACKET	
390	312105-0364		4	SCREW M6S ISO 4017 M6X10 A480	
400	312115-0366		26	SCREW ISO4762 M6X12 A4 80	
430	2509659-0000		1	PLATE	
440	312105-0327		3	SCREW M6S ISO 4017 M5X12 A480	
450	312105-0329		4	SCREW M6S ISO 4017 M5X16 A480	
460	312105-0331		5	SCREW M6S ISO 4017 M5X20 A480	
470	312105-0366		5	SCREW M6S ISO 4017 M6X12 A480	
480	312105-0370		2	SCREW M6S ISO 4017 M6X20 A480	
490	315105-0165		2	WASHER BRB 8,4X16 RFR	
500	312115-0323		4	SCREW ISO4762 M5X8 A4 80	
530	90347-0034		2	VIBRATION DAMPER	

Machine Type	Group Description	Used-In	Group Number	Page No

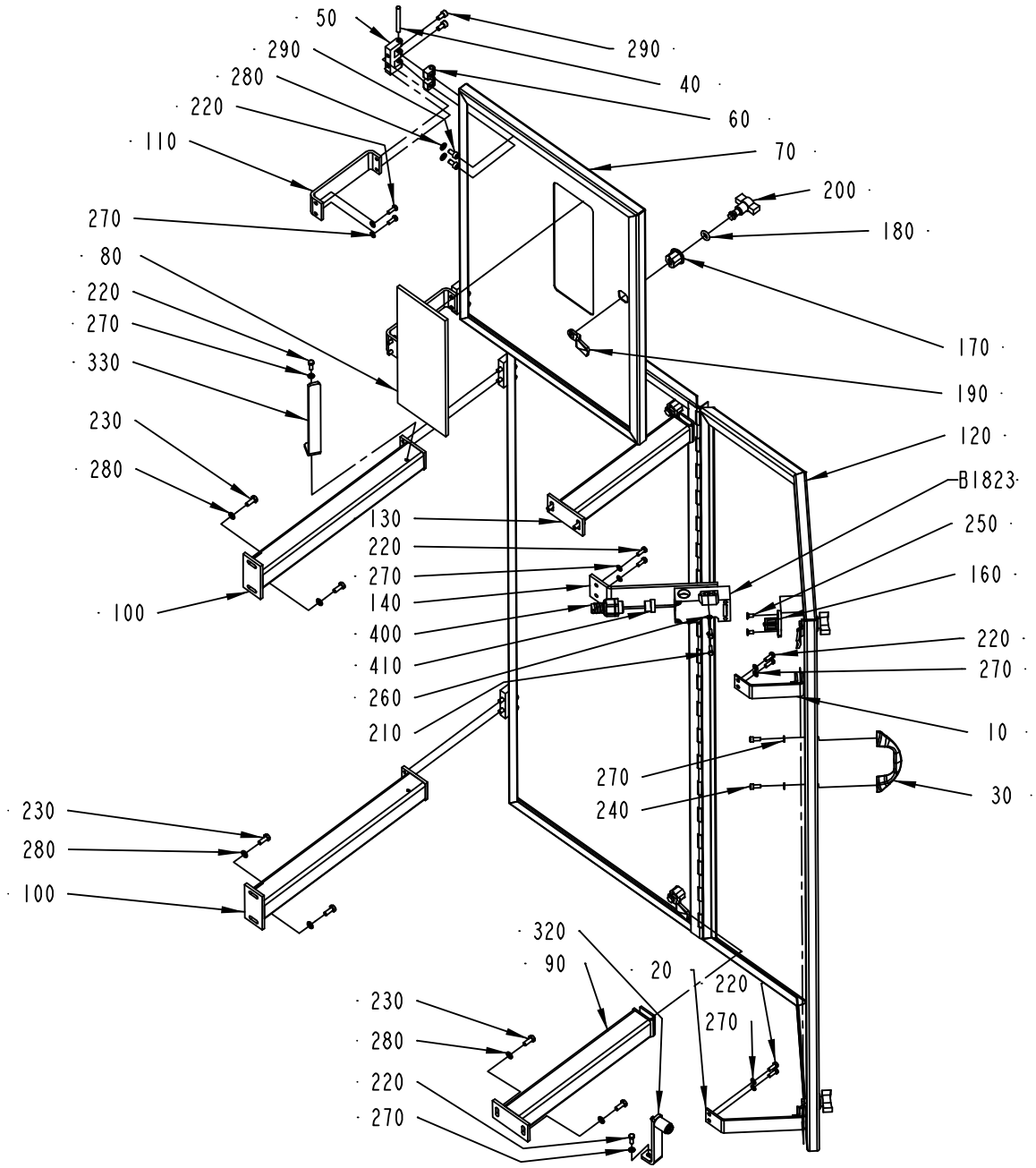
50
290
280
220
110
270
80
220
270
330
230
280
100
290
40
60
70
200
180
170
190
120
B1823
250
160
220
270
10
30
130
220
270
140
400
410
260
210
270
240
230
280
100
320
90
20
220
270
230
280
220
270

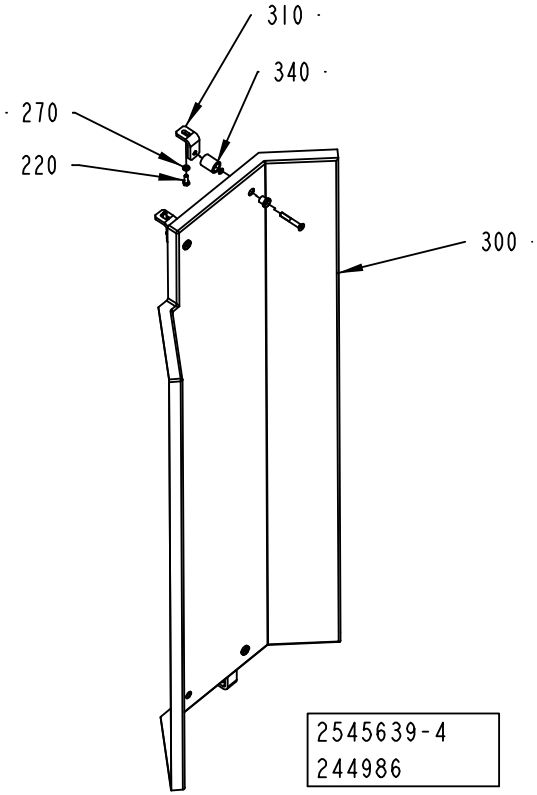
310
340
270
220
300
2545639-4
244986

ECM: 244986 - 20060728
Group number: 2545639-0200
Assembly Drawing: 2545639-4_1_AB

Pos	Part No	UN	Qty	Description	Page No
-					
010	2711256-0000		1	BRACKET	
020	2711257-0000		1	BRACKET	
030	7309-0000		1	HANDLE	
040	988685-0000		4	PIN	
050	1035792-0000		4	E-HINGE	
060	1129770-0000		8	BLOCKING PIECE	
070	2710558-0000		1	COVERING PANEL	
080	2710559-0000		1	GLASS PANE	
090	2711258-0000		1	FRAME	
100	2711259-0000		2	FRAME	
110	2711260-0000		2	BRACKET	
120	2711269-0000		1	DOOR	
130	2712434-0000		1	FRAME	
140	2712435-0000		1	BRACKET	
150	90459-1194		1	KEY SAF.SW. AZ16-03 ZVRK-M16	
160	90044-0310		1	KEY FOR SAFETY SWITCH AZ 15/16 B1	
170	90237-0319		5	LOCK HOUSING, 1000-U134	
180	90237-0323		5	LOCK O-RING, 1000-24	
190	90237-0335		5	LOCKING CATCH	
200	90237-0337		5	LOCK HANDLE FOR 90237-319	
210	312105-0292		2	SCREW M6S ISO 4017 M4X14 A470	
220	312105-0328		15	SCREW M6S ISO 4017 M5X14 A480	
230	312105-0368		8	SCREW M6S ISO 4017 M6X16 A480	
240	312115-0327		2	SCREW ISO4762 M5X12 A4 80	
250	312155-0325		2	SCREW DIN 7991 MF6S M5X10 A4 70	
260	315105-0136		2	WASHER BRB 4,3X9 RFR	
270	315105-0146		17	WASHER BRB 5,3X10 RFR	
280	315105-0153		16	WASHER BRB 6,4X12 RFR	
290	312115-0366		16	SCREW ISO4762 M6X12 A4 80	
300	2710560-0000		1	COVER	
310	2710563-0000		2	BRACKET	
320	2711240-0000		2	BRACKET	
330	2711242-0000		1	BRACKET	
340	90226-0458		4	MOUNTING SCREW	
400	90458-0429		1	HOSE GLAND W/O INSERT M20 EXTENDED	
410	353249-0011		1	INSERT, SINGEL HOLE, EK 153/11	
B1823	90459-0472		1	KEY SAF.SW. AZ 16 02ZVRK-M20-2152-2254	

Pos	Part No	UN	Qty	Description	Page No

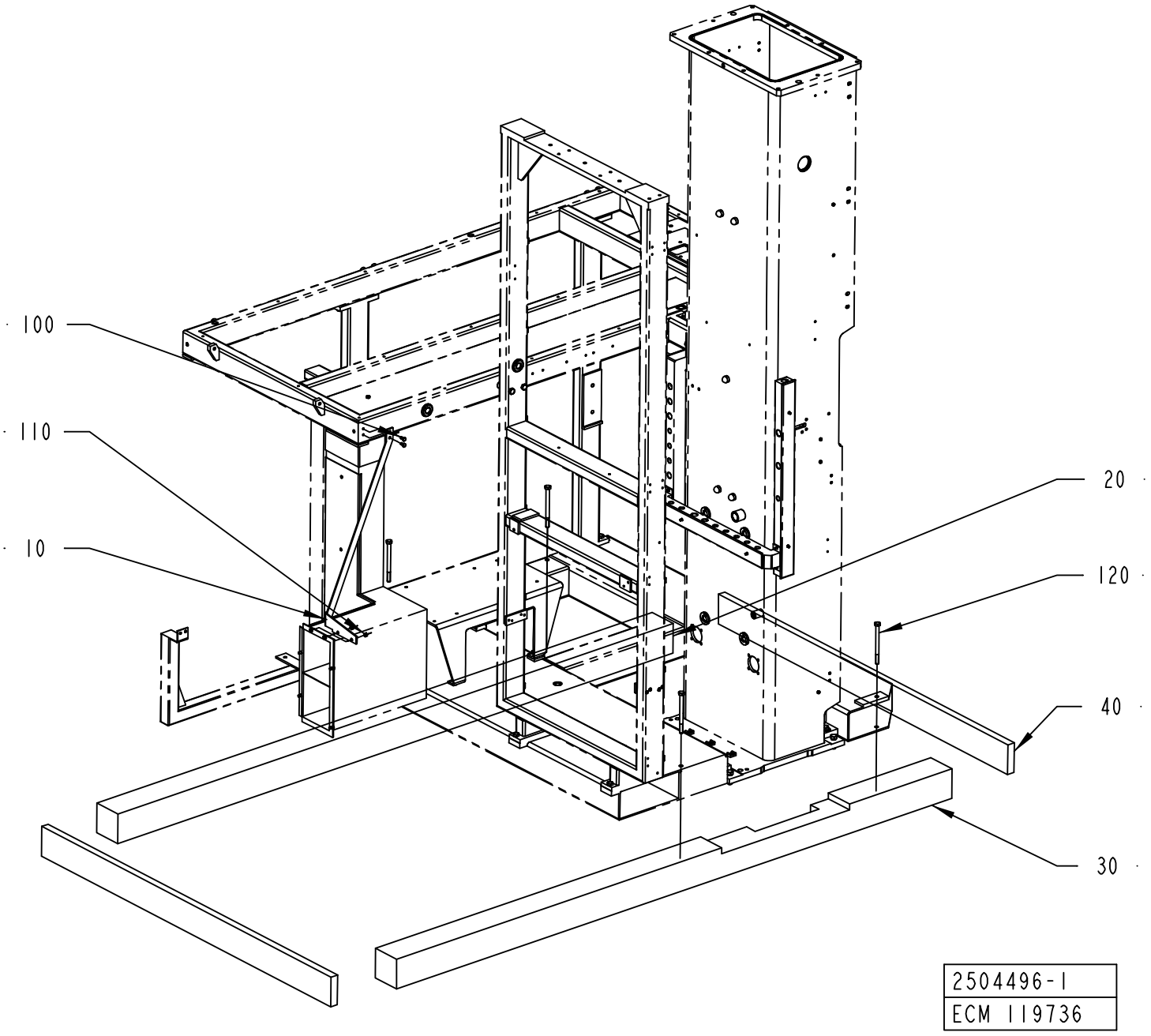
100
110
10
20
120
40
30
2504496-1
ECM 119736

ECM: 189221 - 20041104
Group number: 2504496-0100
Assembly Drawing: 2504496-1_1_AA

Pos	Part No	UN	Qty	Description	Page No
-					
010	1558845-0000		1	BRACKET	
020	1140685-0000		1	BEAM	
030	2541656-0000		1	BEAM	
040	2541657-0000		2	BEAM	
100	312105-0366		2	SCREW M6S ISO 4017 M6X12 A480	
110	312605-0316		2	HEXAGON NUT, M6M M6 A280	
120	312230-0150		4	SCREW HEX.HEAD WOOD T6S 10X160 SS	

Pos	Part No	UN	Qty	Description	Page No

Tetra Pak

SPC
Spare Parts Catalogue

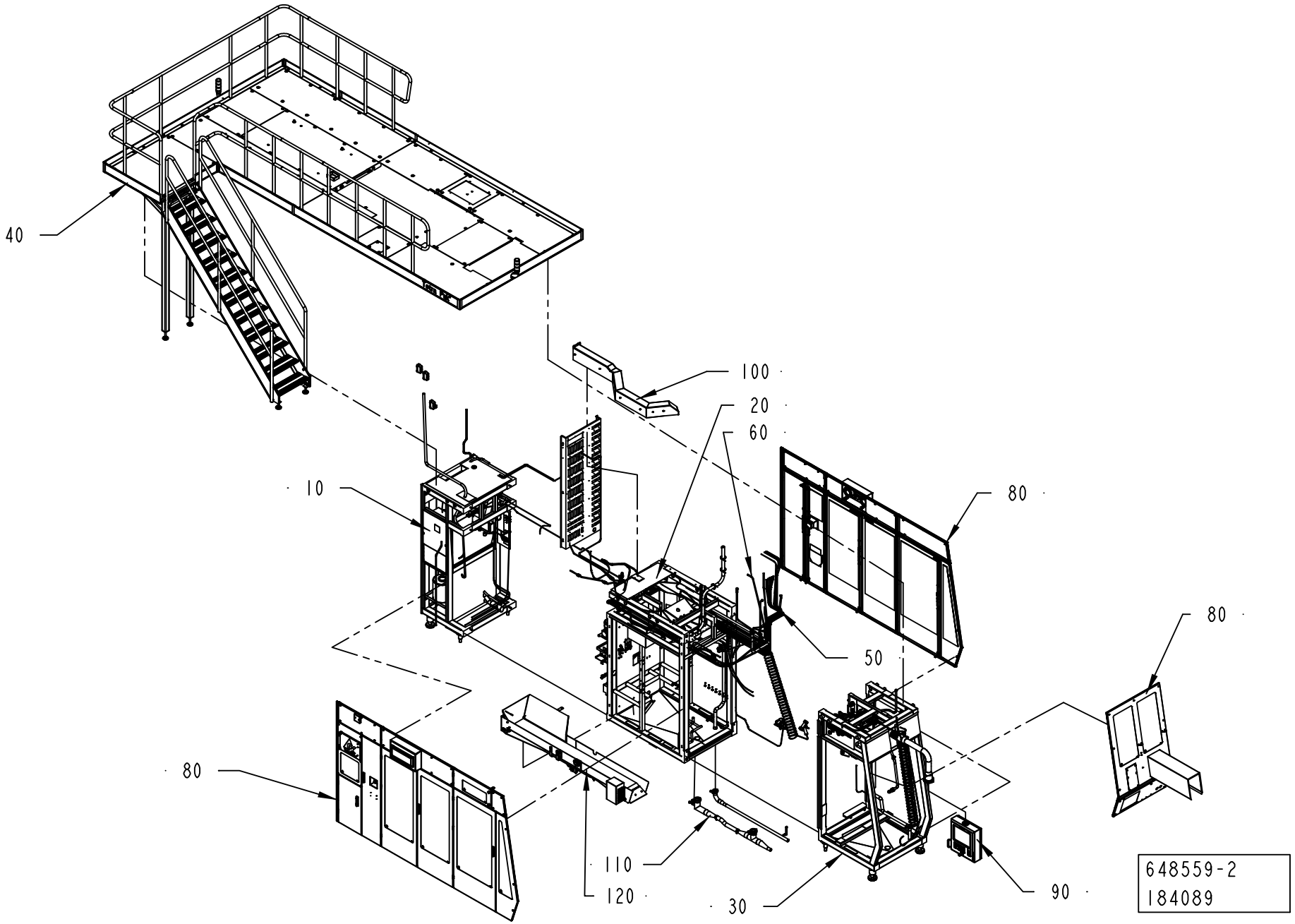
40
100
20
60
10
80
80
50
80
110
120
30
90
648559-2
184089

ECM: 274237 - 20061101
Group number: 648559-0250
Assembly Drawing: 648559-2_1_AA

Pos	Part No	UN	Qty	Description	Page No
A3/FLEX					
010	2504779-0100		1	REAR MODULE	**2-5, 2-7**
Common Parts					
020	2504785-0250		1	CENTRAL MODULE	**2-63**
030	2504793-0150		1	FRONT MODULE	**2-117**
040	2550139-0100		1	PLATFORM	**2-159, 2-161, 2-163, 2-165, 2-167, 2-169**
050	2504917-0100		1	PIPE WORK-WATER	**2-195**
060	2504918-0100		1	PNEUMATIC SYSTEM	**2-211, 2-213**
080	2504920-0100		1	DOORS AND COVERS	**2-215**
090	2518146-0100		1	TPOP PANEL 15"	**2-263**
100	2504791-0100		1	CABLE DUCT	**2-269**
110	2519570-0100		1	DRAINING	**2-271**
120	2542325-0100		1	WASTE CONVEYOR	**2-273, 2-275**

Pos	Part No	UN	Qty	Description	Page No

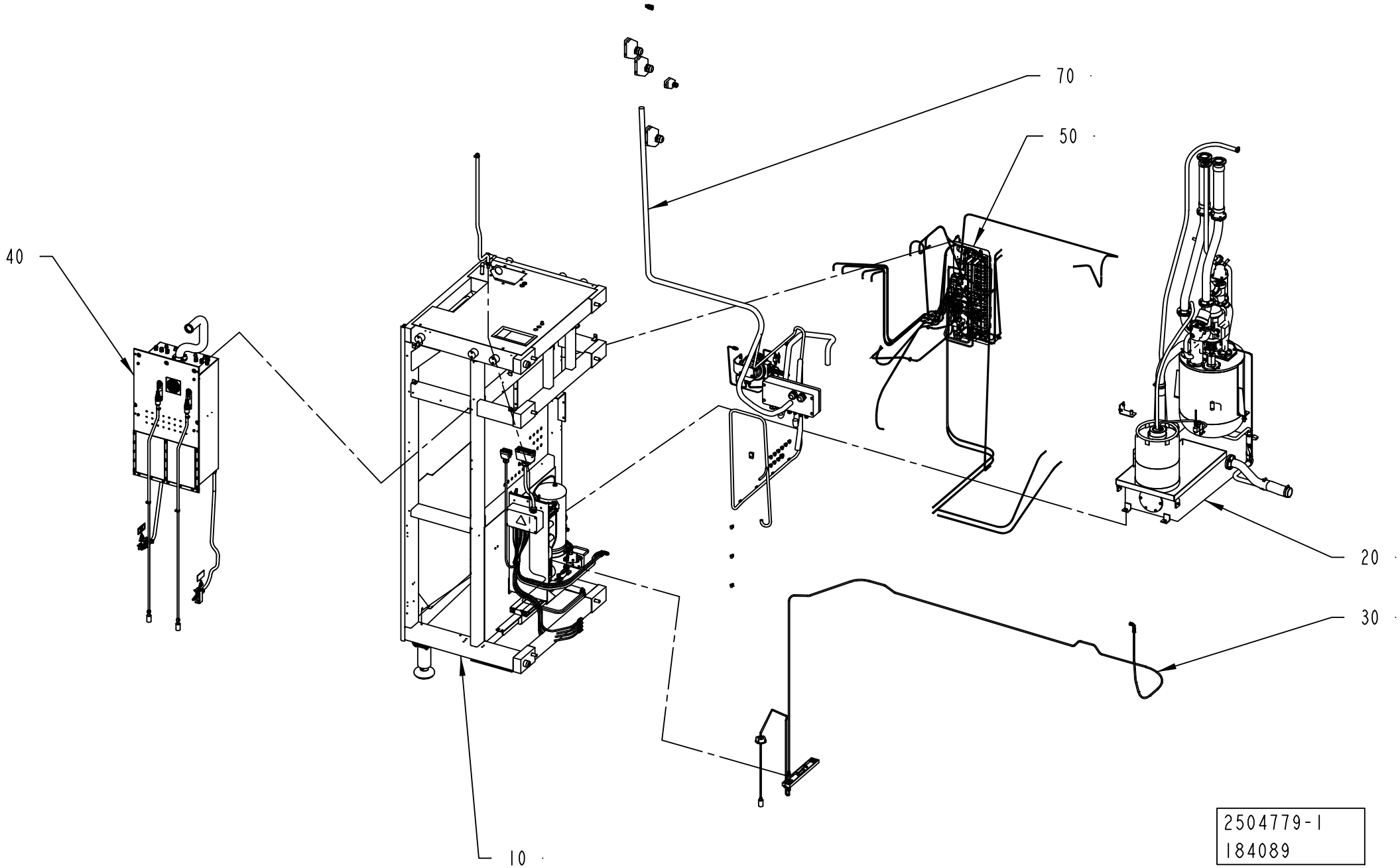
70
50
40
20
30
10
2504779-1
184089

ECM: 192976 - 20050620
Group number: 2504779-0100
Assembly Drawing: 2504779-1_1_AE

This list covers pages from 2-4 to 2-7

Pos	Part No	UN	Qty	Description	Page No
-					
010	2504780-0100		1	MACHINE BODY	**2-9**
020	2504781-0100		1	HYDROGEN PEROXIDE	**2-17**
030	2504782-0100		1	CHEMICALS	**2-37**
040	2544326-0100		1	INTEGRATED CLEANING UNIT	**2-39**
050	2528457-0100		1	PNEUMATIC SYSTEM	**2-43**
070	2528455-0100		1	ELECTRIC EQUIPMENT	**2-53**

Pos	Part No	UN	Qty	Description	Page No

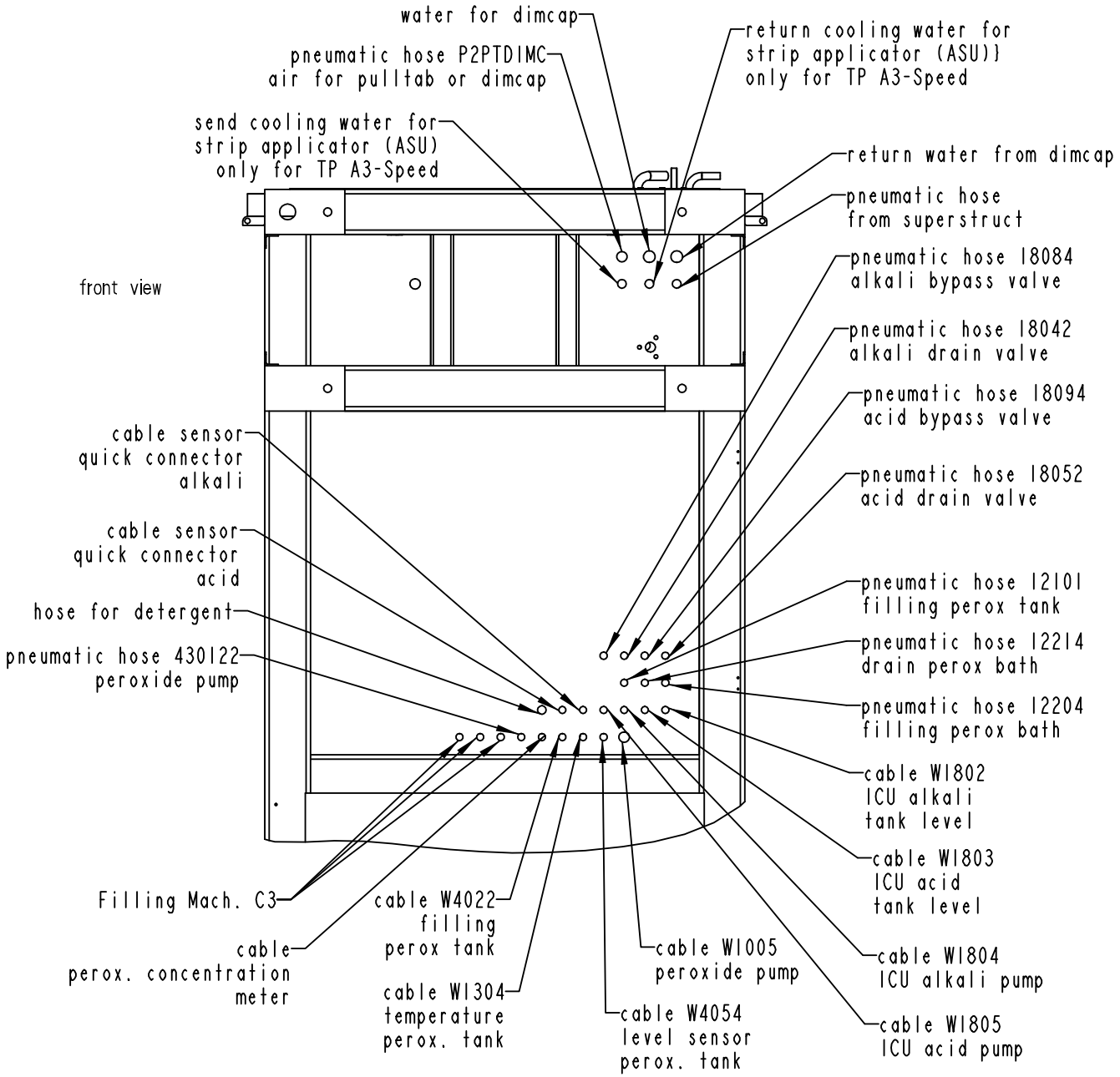

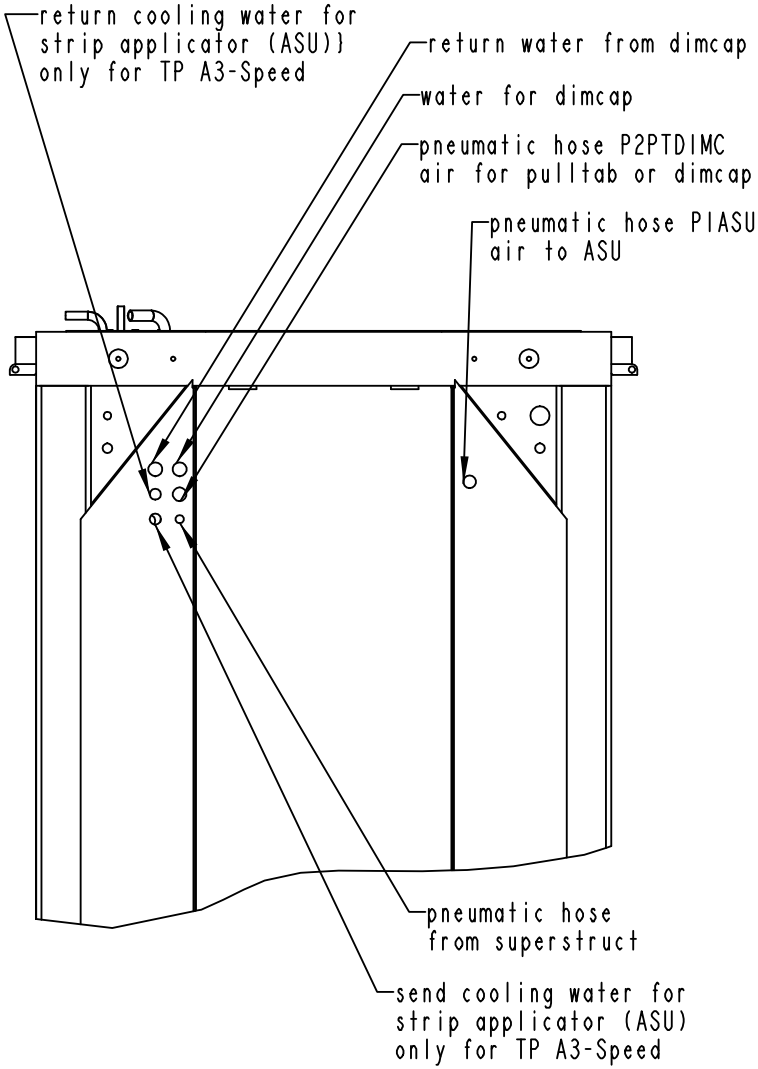

2504779-1
184089

ECM: 192976 - 20050620
Group number: 2504779-0100
Assembly Drawing: 2504779-1_2_AE

This list covers pages from 2-4 to 2-7

Pos	Part No	UN	Qty	Description	Page No
-					
010	2504780-0100		1	MACHINE BODY	**2-9**
020	2504781-0100		1	HYDROGEN PEROXIDE	**2-17**
030	2504782-0100		1	CHEMICALS	**2-37**
040	2544326-0100		1	INTEGRATED CLEANING UNIT	**2-39**
050	2528457-0100		1	PNEUMATIC SYSTEM	**2-43**
070	2528455-0100		1	ELECTRIC EQUIPMENT	**2-53**

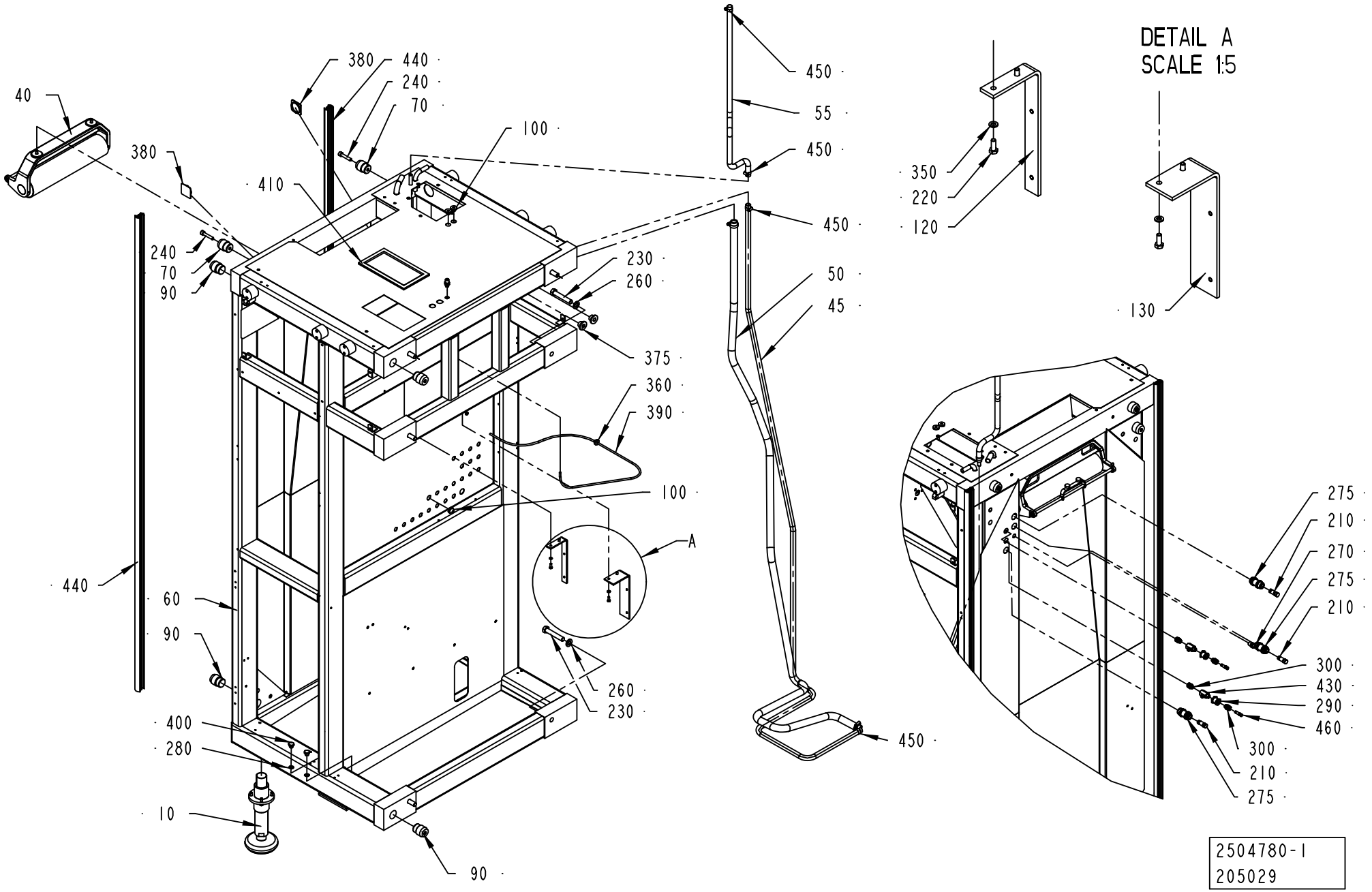
DETAIL A
SCALE 1:5
40
380
440
240
70
100
410
450
55
450
350
220
120
130
240
70
90
230
260
450
50
45
375
360
390
100
A
440
60
90
260
230
400
280
10
90
450
275
210
270
275
210
300
430
290
460
300
210
275
2504780-1
205029

ECM: 224433 - 20060701
Group number: 2504780-0100
Assembly Drawing: 2504780-1_1_AG

Pos	Part No	UN	Qty	Description	Page No
-					
010	2761766-0100		2	FOOT	**2-11**
040	2504784-0200		1	BENDING ROLLER	**2-13**
045	90166-0121	MM	3200	HOSE	
050	2514204-0100		1	DRAINING	**2-15**
055	90166-0121	MM	2100	HOSE	
060	2504435-0000		1	MACHINE BODY	
070	591341-0000		2	PIN	
090	2506636-0000		4	PIN	
100	90015-0023		2	LEAD-IN, TET7-10, E-1458019	
120	2683974-0000		1	HOLDER	
130	2683975-0000		1	HOLDER	
210	342715-0106		3	BLIND PLUG 14 MM	
220	312105-0368		4	SCREW M6S ISO 4017 M6X16 A480	
230	312105-0638		6	SCREW M6S ISO 4014 M16X90 A480	
240	312115-0501		2	SCREW ISO4762 M10X50 A4 80	
260	315105-0186		6	WASHER BRB 17X30 RFR	
270	342768-0102		2	BULKHEAD CONNECTOR, 6 MM	
275	342768-0110		3	BULKHEAD CONNECTOR, 14 MM	
280	315237-0110		2	WASHER,PL.RND.AL.13,5/18,H=1,5	
290	342767-0104		2	CONN. BULKHEAD G1/4	
300	90055-0274		4	STRAIGHT COUPLING, D=8 MM - G1/4"	
350	315105-0153		4	WASHER BRB 6,4X12 RFR	
360	90015-0020		1	LEAD-IN, TET5-7, E-1458016	
370	90015-0023		1	LEAD-IN, TET7-10, E-1458019	
375	90015-0022		2	LEAD-IN, TET14-20, E-1458029	
380	90261-0070		2	PLASTIC PLUG SS 0082.31	
390	90166-0081	MM	1320	TUBE 6 MM PA BLUE	
400	90330-0026		2	PLUG, EXT. G-THREAD, G1/4	
410	90143-0059	MM	700	SEAL STRIP 4610069	
430	90187-0158		2	THROTTLE BALL VALVE G1/4, R1/4	
440	90459-1009	MM	4500	RUBBER STRIP, 1025088988	
450	342991-0102		4	HOSE CLIP,WORM DRIVE TYPE (16)-19	
460	342715-0102		1	BLIND PLUG 6 MM	

Pos	Part No	UN	Qty	Description	Page No

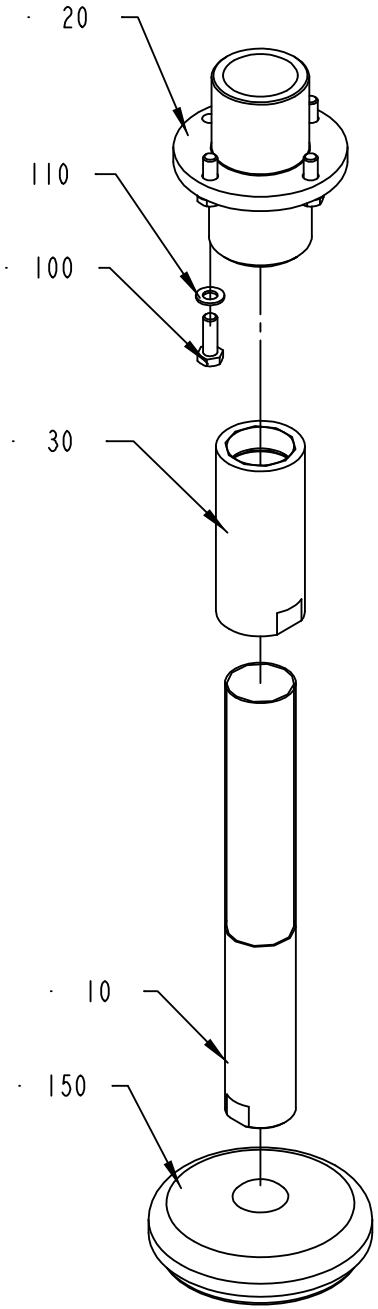

2761766-1
205029

ECM: 253976 - 20060701
Group number: 2761766-0100
Assembly Drawing: 2761766-1_1_AB

Pos	Part No	UN	Qty	Description	Page No
-					
010	2761763-0000		1	LEG	
020	2761764-0000		1	SLEEVE	
030	2761765-0000		1	SLEEVE	
100	312105-0453		4	SCREW M6S ISO 4017 M8X25 A480	
110	315105-0165		4	WASHER BRB 8,4X16 RFR	
150	90347-0175		1	MACHINE SHOE BRIK T 125	

Pos	Part No	UN	Qty	Description	Page No

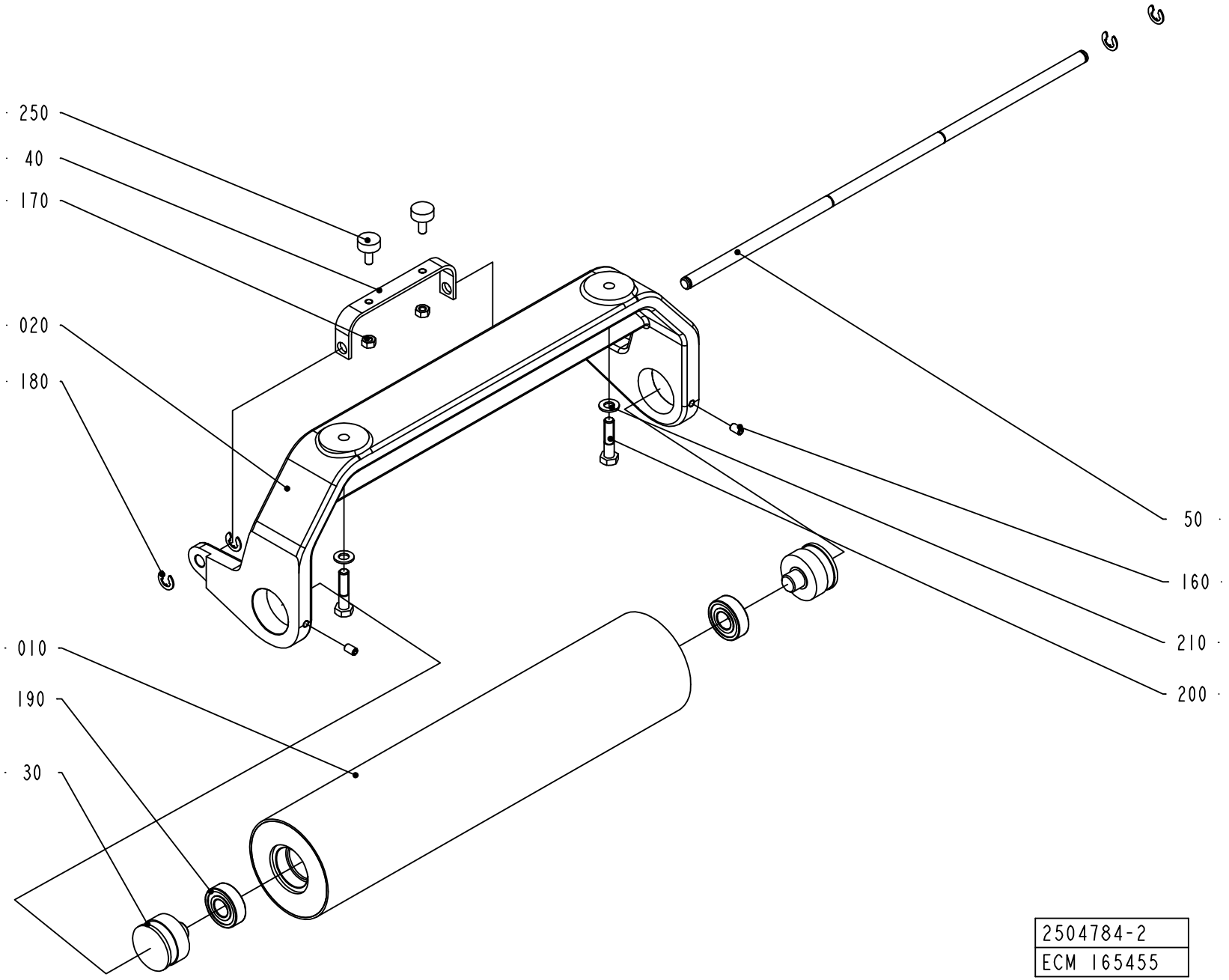
250
40
170
020
180
010
190
30
50
160
210
200
2504784-2
ECM 165455

ECM: 165457 - 20040715
Group number: 2504784-0200
Assembly Drawing: 2504784-2_1_AA

Pos	Part No	UN	Qty	Description	Page No
-					
010	2605877-0000		1	BENDING ROLLER	
020	2605879-0000		1	CANTILEVER	
030	1037012-0000		2	AXLE PIN	
040	1041603-0000		1	BRACKET	
050	2605880-0000		1	SHAFT	
160	312318-0364		2	SCREW ISO4029 M6X10 A4	
170	312605-0316		2	HEXAGON NUT, M6M M6 A280	
180	315755-0801		4	RETAINING RING SHAFT DIN 6799 8 A2	
190	321313-0102		2	BALL BEARING, 15X35X11 MM	
200	312105-0457		2	SCREW M6S ISO 4014 M8X35 A480	
210	315105-0165		2	WASHER BRB 8,4X16 RFR	
250	90347-0007		2	VIBRATION DAMPER	

Pos	Part No	UN	Qty	Description	Page No

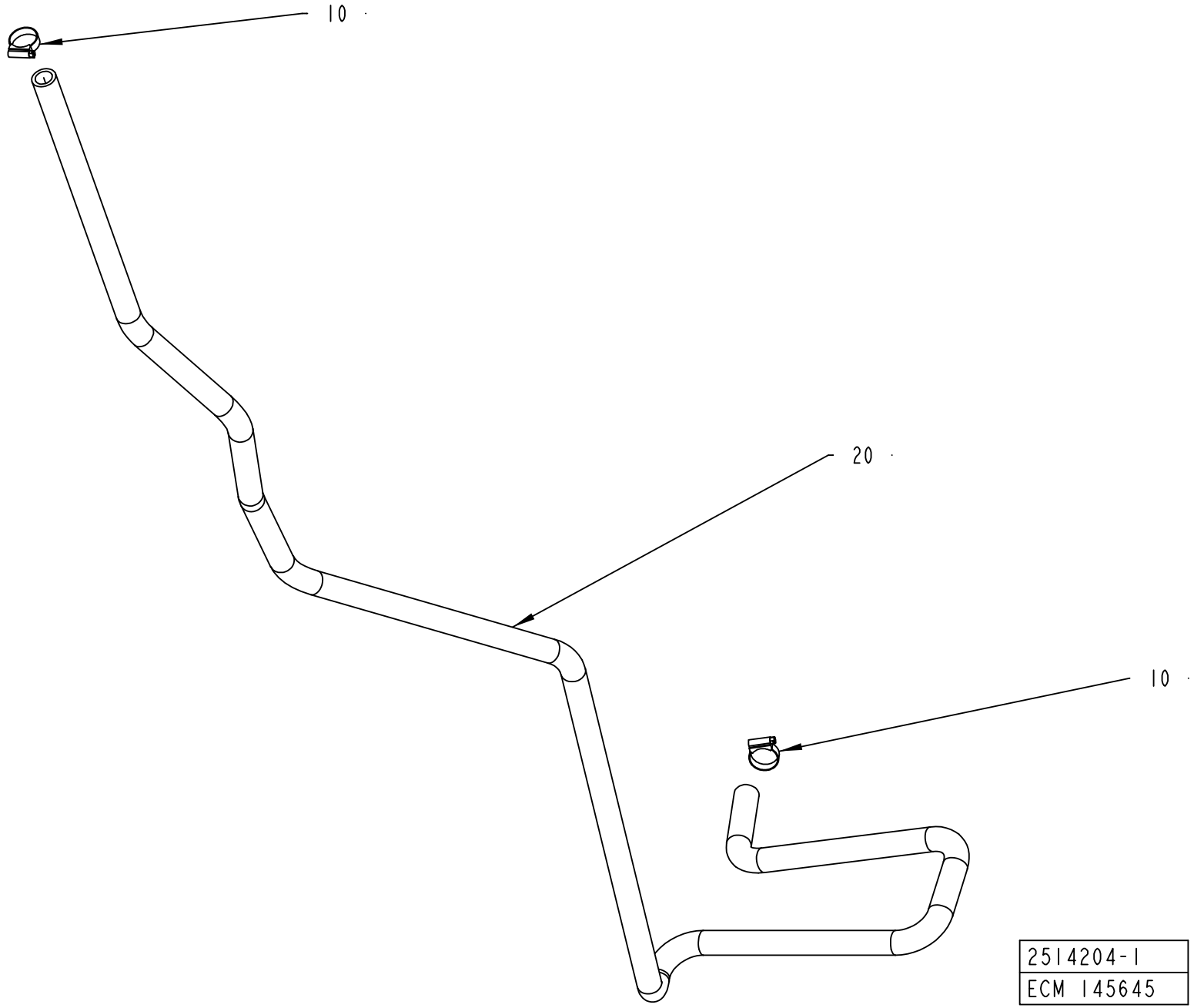
10
20
10
2514204-1
ECM 145645

ECM: 189743 - 20041104
Group number: 2514204-0100
Assembly Drawing: 2514204-1_1_AB

Pos	Part No	UN	Qty	Description	Page No
A3/FLEX					
020	90166-0060	MM	2450	HOSE 19/26-27 REINF.PVC	
Common Parts					
010	342991-0105		2	HOSE CLIP,WORM DRIVE TYPE (27)-30	

Pos	Part No	UN	Qty	Description	Page No

Machine Type | Group Description | Used-In | Group Number | Page No

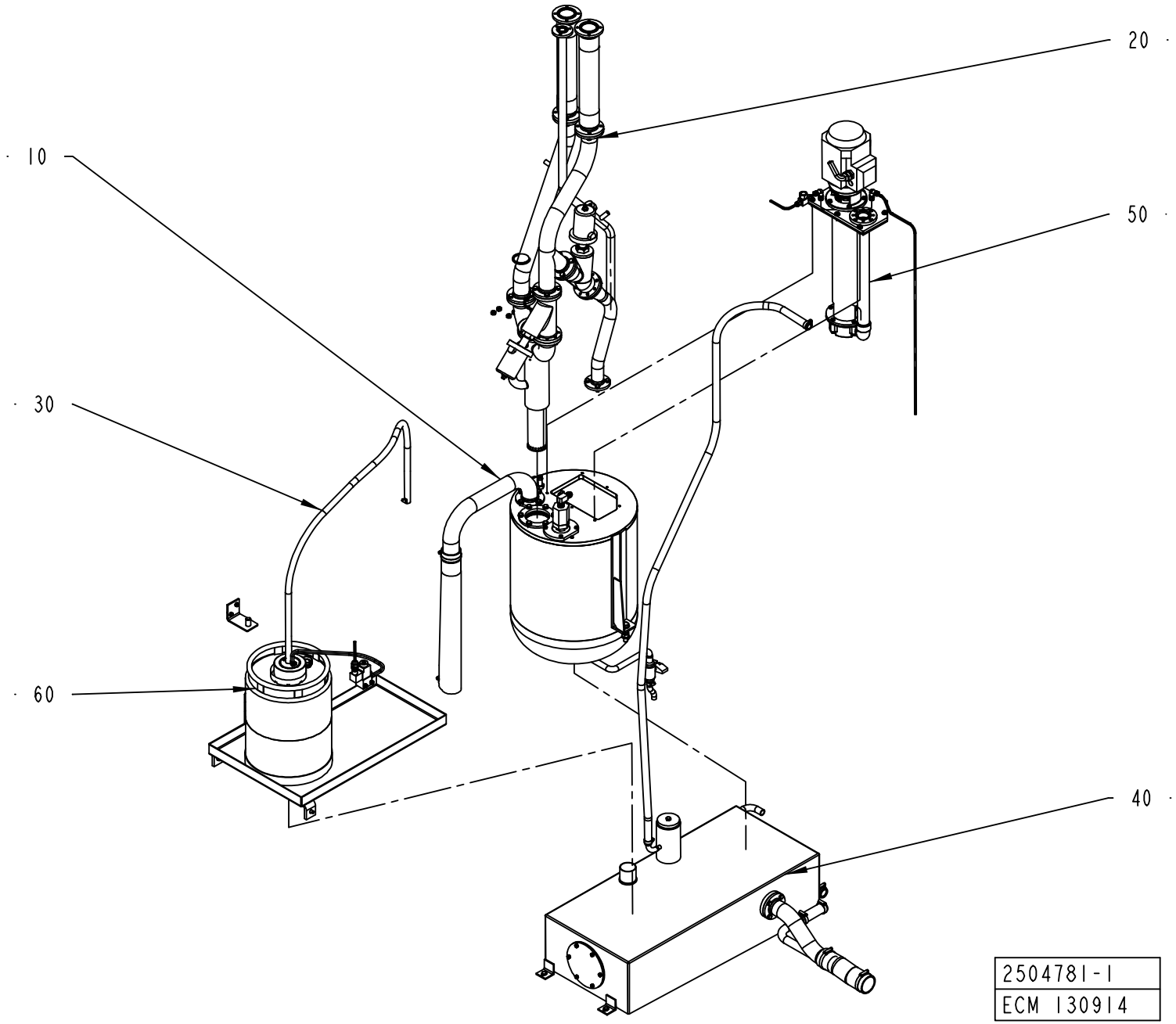
20
10
50
30
60
40
2504781-1
ECM 130914

ECM: 131957 - 20030522
Group number: 2504781-0100
Assembly Drawing: 2504781-1_1_AB

Pos	Part No	UN	Qty	Description	Page No
-					
010	1282894-0100		1	PEROXIDE TANK	**2-19, 2-21**
020	1282895-0200		1	PEROXIDE PIPE	**2-25**
030	2506637-0100		1	AIR PIPE-LINE	**2-27**
040	1282896-0100		1	TANK	**2-29**
050	996388-0500		1	PEROXIDE PUMP	**2-33**
060	527898-0100		1	MKS CONTAINER H2O2	**2-35, 10-69**

Pos	Part No	UN	Qty	Description	Page No

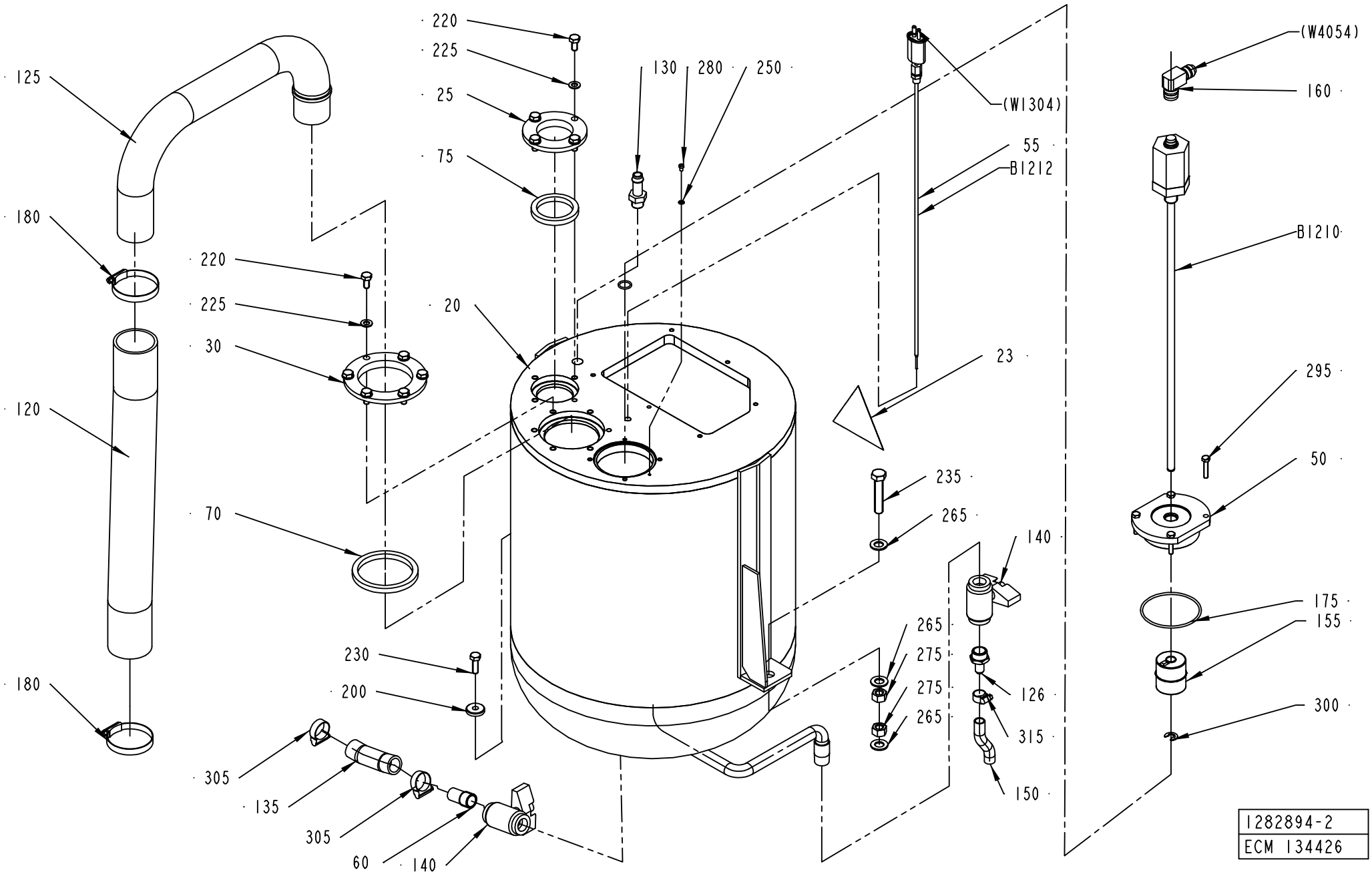
125
180
120
180
220
225
30
70
220
225
25
75
20
130
280
250
(W1304)
55
B1212
23
235
265
140
265
275
275
265
126
315
150
230
200
305
135
305
60
140
(W4054)
160
B1210
295
50
175
155
300
1282894-2
ECM 134426

ECM: 277394 - 20061103
Group number: 1282894-0100
Assembly Drawing: 1282894-2_1_AB

This list covers pages from 2-18 to 2-21

Pos	Part No	UN	Qty	Description	Page No
A3/FLEX DIMC/FLEX, A3/FLEX TBA 2000S NODIMC, A3/FLEX TBA 1890S NODIMC, A3/FLEX TBA 1400B NODIMC (See drawing on page: 2-20)					
127	2623721-0100		1	PEROXIDE REDUCER	**2-23**
A3/FLEX TBA 1000B NODIMC, A3/FLEX TBA 0500B NODIMC, A3/FLEX TBA 1000S NODIMC, A3/FLEX TBA 1000SQ NODIMC, A3/FLEX TBA 0200S NODIMC, A3/FLEX TPA 1000SQ NODIMC, A3/FLEX TBA 1500S NODIMC, A3/FLEX TBA 0200B NODIMC, A3/FLEX TBA 0250B NODIMC, A3/FLEX TBA 0330S NODIMC, A3/FLEX TPA 0330SQ NODIMC, A3/FLEX TPA 0500SQ NODIMC, A3/FLEX TBA 0200M NODIMC, A3/FLEX TBA 0250S NODIMC, A3/FLEX TBA 0500S NODIMC, A3/FLEX TPA 0200SQ NODIMC, A3/FLEX TPA 0250SQ NODIMC, A3/FLEX TPA 0750SQ NODIMC, A3/FLEX TBA 0200SQ NODIMC, A3/FLEX TBA 0250SQ NODIMC (See drawing on page: 2-18)					
050	1558327-0000		1	LID	
155	90458-2358		1	FLOAT, BTL2-S-4414-4Z	
160	90458-1595		1	CONNECTION, BKS-S 33M-00	
250	315105-0136		1	WASHER BRB 4,3X9 RFR	
300	315755-0110		1	RETAINING RING SHAFT DIN 6799 9 A2	
B1210	90459-0951		1	TRANSDUCER, BTL5-A11-M0400-B-S32	
Common Parts					
020	1255559-0000		1	PEROXIDE TANK	
023	359705-0004		1	WARNING SIGN ISO, DANGEROUS CHEMICALS	
025	1040840-0000		1	FLANGE	
030	1040841-0000		1	FLANGE	
055	1347704-0000		1	THERMOCOUPLE	
	90326-0306		*1*	*GLAND FITTING 9041-45-KS-KR.1/8" D=4,5MM*	
	1040890-0000		*1*	*THERMOCOUPLE*	
060	1037102-0000		1	SPACER PIPE	
070	1040852-0000		1	SEALING RING	
075	1040853-0000		1	SEALING RING	
120	1282899-0000		1	HOSE	
125	1282891-0000		1	PIPE	
126	1282906-0000		1	NIPPLE	
130	90055-0051		1	HOSE NIPPLE, EXT.THR. R3/8X13 MM	
135	90166-0151	MM	140	HOSE	
140	90187-0059		2	BALL VALVE FOR HYDR.PER. G1/2 3MM HOLE	
150	90166-0138	MM	85	HOSE	
175	927422-0016		1	O-RING 79.5X3 SILICONE	
180	342991-0110		2	HOSE CLIP,WORM DRIVE TYPE (54)-63	
200	315125-0165		1	WASHER TBRSB 8,4X26X5 A4	
220	312105-0449		10	SCREW M6S ISO 4017 M8X16 A480	
225	315105-0165		10	WASHER BRB 8,4X16 RFR	
230	312105-0453		1	SCREW M6S ISO 4017 M8X25 A480	
235	312109-0544		1	SCREW M6S ISO 4017 M12X60 A480	
265	315105-0178		3	WASHER BRB 13X24 RFR	
275	312605-0322		2	HEXAGON NUT, M6M M12 A280	
280	312125-0285		1	SCREW ISO 1207 M4X6 A4	
295	312109-0374		4	SCREW M6S ISO 4017 M6X30 A480	
305	342991-0104		2	HOSE CLIP,WORM DRIVE TYPE (23)-27	
315	342991-0101		1	HOSE CLIP,WORM DRIVE TYPE (13)-16	

Machine Type | Group Description | Used-In | Group Number | Page No

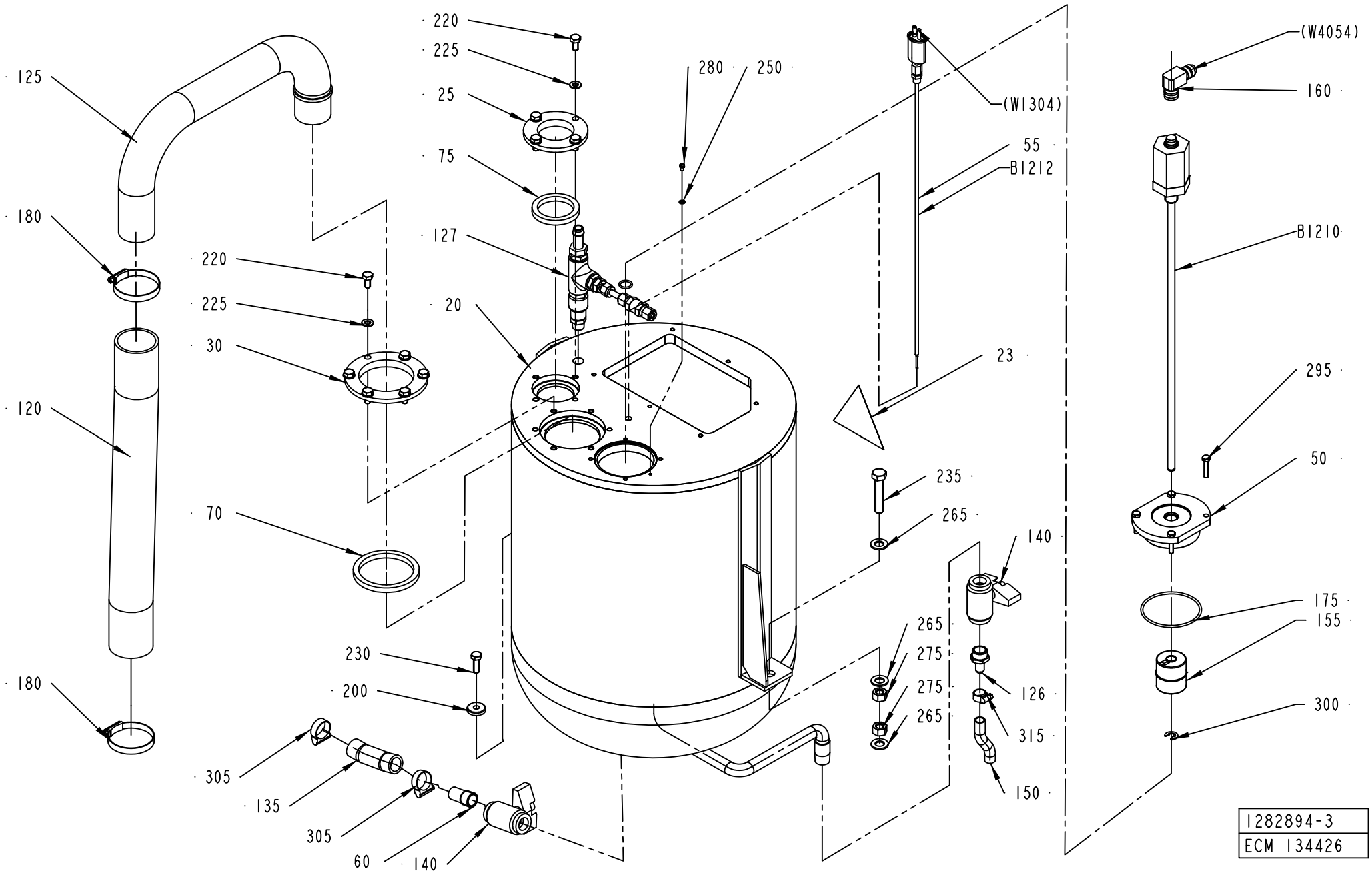
125
180
120
180
220
225
30
70
220
225
25
75
127
20
280
250
(W1304)
55
B1212
23
235
265
140
265
275
275
265
126
315
150
230
200
305
135
305
60
140
(W4054)
160
B1210
295
50
175
155
300
1282894-3
ECM 134426

ECM: 277394 - 20061103
Group number: 1282894-0100
Assembly Drawing: 1282894-3_1_AA

This list covers pages from 2-18 to 2-21

Pos	Part No	UN	Qty	Description	Page No
A3/FLEX DIMC/FLEX, A3/FLEX TBA 2000S NODIMC, A3/FLEX TBA 1890S NODIMC, A3/FLEX TBA 1400B NODIMC (See drawing on page: 2-20)					
127	2623721-0100		1	PEROXIDE REDUCER	**2-23**
A3/FLEX TBA 1000B NODIMC, A3/FLEX TBA 0500B NODIMC, A3/FLEX TBA 1000S NODIMC, A3/FLEX TBA 1000SQ NODIMC, A3/FLEX TBA 0200S NODIMC, A3/FLEX TPA 1000SQ NODIMC, A3/FLEX TBA 1500S NODIMC, A3/FLEX TBA 0200B NODIMC, A3/FLEX TBA 0250B NODIMC, A3/FLEX TBA 0330S NODIMC, A3/FLEX TPA 0330SQ NODIMC, A3/FLEX TPA 0500SQ NODIMC, A3/FLEX TBA 0200M NODIMC, A3/FLEX TBA 0250S NODIMC, A3/FLEX TBA 0500S NODIMC, A3/FLEX TPA 0200SQ NODIMC, A3/FLEX TPA 0250SQ NODIMC, A3/FLEX TPA 0750SQ NODIMC, A3/FLEX TBA 0200SQ NODIMC, A3/FLEX TBA 0250SQ NODIMC (See drawing on page: 2-18)					
050	1558327-0000		1	LID	
155	90458-2358		1	FLOAT, BTL2-S-4414-4Z	
160	90458-1595		1	CONNECTION, BKS-S 33M-00	
250	315105-0136		1	WASHER BRB 4,3X9 RFR	
300	315755-0110		1	RETAINING RING SHAFT DIN 6799 9 A2	
B1210	90459-0951		1	TRANSDUCER, BTL5-A11-M0400-B-S32	
Common Parts					
020	1255559-0000		1	PEROXIDE TANK	
023	359705-0004		1	WARNING SIGN ISO, DANGEROUS CHEMICALS	
025	1040840-0000		1	FLANGE	
030	1040841-0000		1	FLANGE	
055	1347704-0000		1	THERMOCOUPLE	
	90326-0306		*1*	*GLAND FITTING 9041-45-KS-KR.1/8" D=4,5MM*	
	1040890-0000		*1*	*THERMOCOUPLE*	
060	1037102-0000		1	SPACER PIPE	
070	1040852-0000		1	SEALING RING	
075	1040853-0000		1	SEALING RING	
120	1282899-0000		1	HOSE	
125	1282891-0000		1	PIPE	
126	1282906-0000		1	NIPPLE	
130	90055-0051		1	HOSE NIPPLE, EXT.THR. R3/8X13 MM	
135	90166-0151	MM	140	HOSE	
140	90187-0059		2	BALL VALVE FOR HYDR.PER. G1/2 3MM HOLE	
150	90166-0138	MM	85	HOSE	
175	927422-0016		1	O-RING 79.5X3 SILICONE	
180	342991-0110		2	HOSE CLIP,WORM DRIVE TYPE (54)-63	
200	315125-0165		1	WASHER TBRSB 8,4X26X5 A4	
220	312105-0449		10	SCREW M6S ISO 4017 M8X16 A480	
225	315105-0165		10	WASHER BRB 8,4X16 RFR	
230	312105-0453		1	SCREW M6S ISO 4017 M8X25 A480	
235	312109-0544		1	SCREW M6S ISO 4017 M12X60 A480	
265	315105-0178		3	WASHER BRB 13X24 RFR	
275	312605-0322		2	HEXAGON NUT, M6M M12 A280	
280	312125-0285		1	SCREW ISO 1207 M4X6 A4	
295	312109-0374		4	SCREW M6S ISO 4017 M6X30 A480	
305	342991-0104		2	HOSE CLIP,WORM DRIVE TYPE (23)-27	
315	342991-0101		1	HOSE CLIP,WORM DRIVE TYPE (13)-16	

Machine Type | Group Description | Used-In | Group Number | Page No

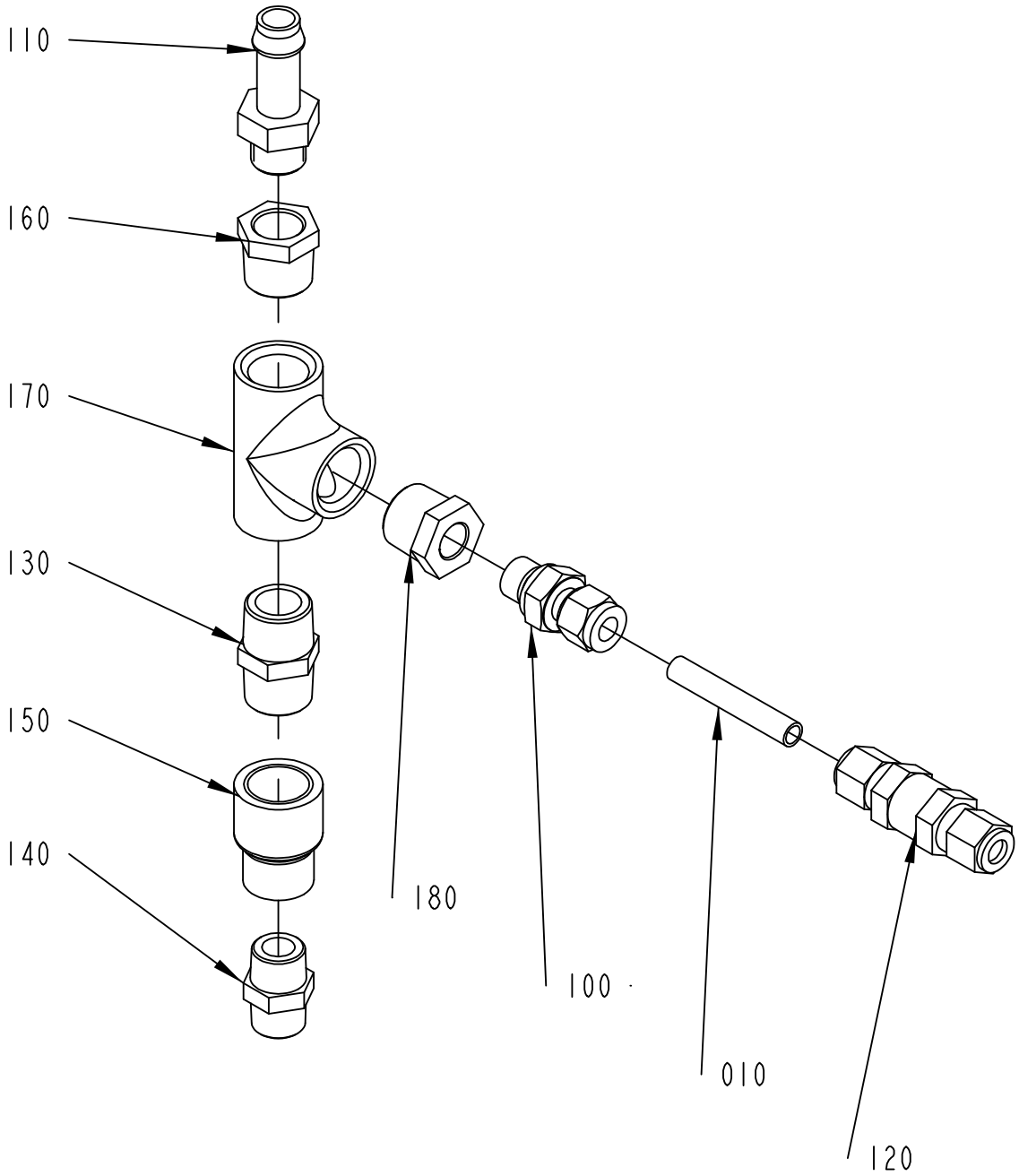

2623721-1
ECM 134426

ECM: 189745 - 20041104
Group number: 2623721-0100
Assembly Drawing: 2623721-1_1_AA

Pos	Part No	UN	Qty	Description	Page No
-					
010	2624539-0000		1	PIPE	
100	90030-0344		1	CONN. STR., 8-G1/4	
110	90055-0051		1	HOSE NIPPLE, EXT.THR. R3/8X13 MM	
120	90230-0032		1	NON-RETURN VALVE, 8MM, L=63,25	
130	90330-0021		1	NIPPLES, EXT. THREAD. R-207R1/2	
140	90330-0028		1	NIPPLES, EXT. THREAD. R-207R3/8	
150	90330-0047		1	SLEEVE, REDUCTION, INT, R-2021/2X3/8	
160	90330-0048		1	BUSHING, INT/EXT. THR. R1/2-RP3/8	
170	90330-0049		1	T-PIPE, INT. THREAD, R-221R1/2	
180	90330-0085		1	BUSHING, INT/EXT. THR. R1/2-RP1/4	

Pos	Part No	UN	Qty	Description	Page No

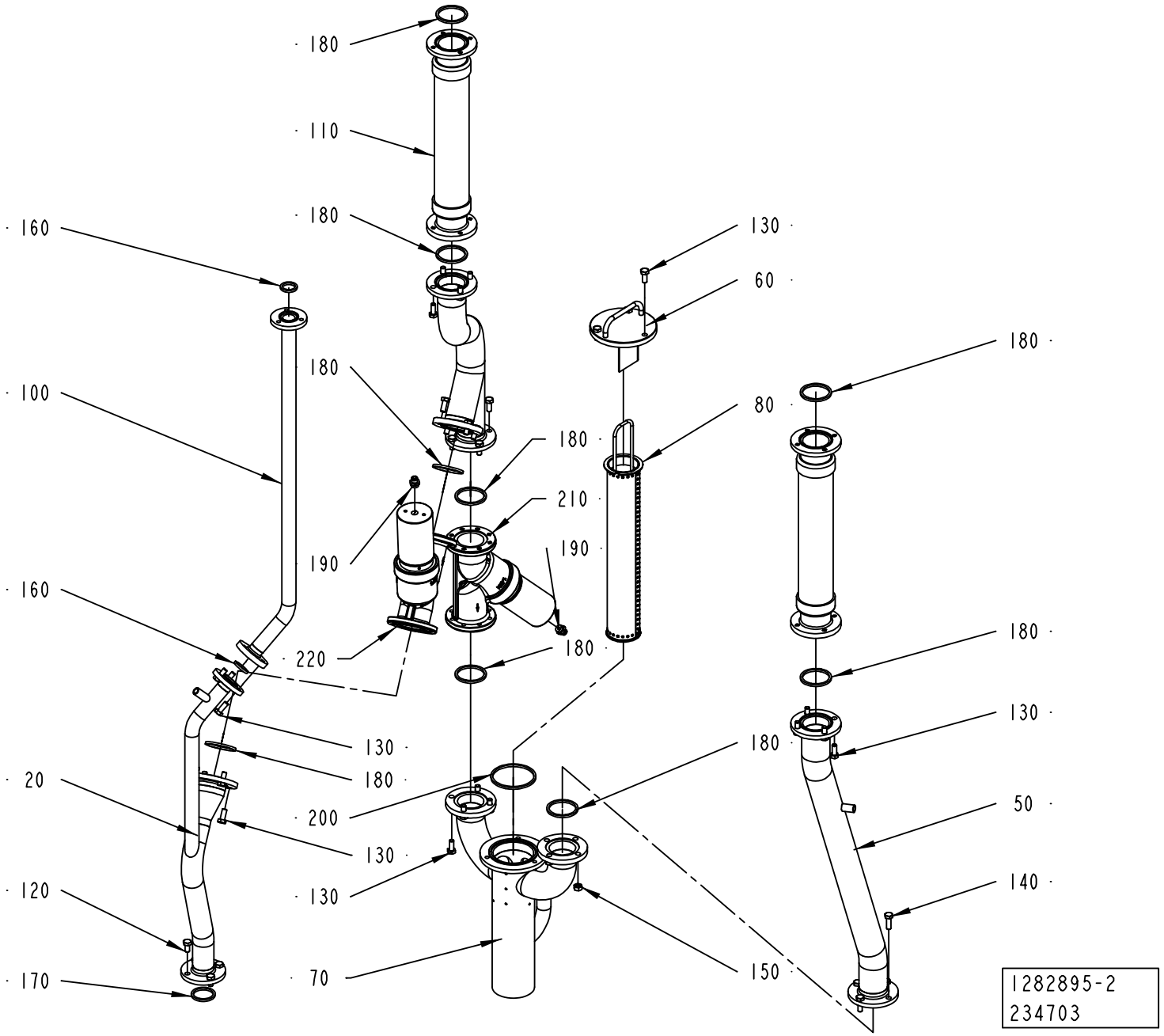
180
110
180
160
130
60
180
100
180
80
180
210
190
190
160
180
220
180
130
180
20
200
130
130
120
70
150
50
140
170
1282895-2
234703

ECM: 234703 - 20060313
Group number: 1282895-0200
Assembly Drawing: 1282895-2_1_AD

Pos	Part No	UN	Qty	Description	Page No
-					
020	2519554-0000		1	PIPE	
040	1282876-0000		1	PIPE	
050	2519555-0000		1	PIPE	
060	1348530-0000		1	LID	
070	1282879-0000		1	CONNECTING PIPE	
080	1348529-0000		1	STRAINER	
100	1282901-0000		1	PIPE	
110	2598689-0000		2	HOSE	
120	312105-0449		4	SCREW M6S ISO 4017 M8X16 A480	
130	312105-0451		30	SCREW M6S ISO 4017 M8X20 A480	
140	312105-0453		4	SCREW M6S ISO 4017 M8X25 A480	
150	312605-0318		4	HEXAGON NUT, M6M M8 A280	
160	315229-0103		2	GASKETS, 23,1X30,1X3,7 MM 1" FDA	
170	315229-0104		1	GASKETS, 35,8X42,8X3,7 MM 1"1/2 FD	
180	315229-0105		9	GASKETS, 48,5X55,5X3,7 MM 2" FDA	
190	342722-0203		2	STRAIGHT COUPLING	
200	315229-0107		1	GASKETS, 73,9X80,9X3,7 MM 2"1/2 FD	
210	90459-5177		1	ANGLE SEAT VALVE W. FLANGES, N.O.8498668	
220	90459-5178		1	ANGLE SEAT VALVE W. FLANGES, N.O.8498669	

Pos	Part No	UN	Qty	Description	Page No

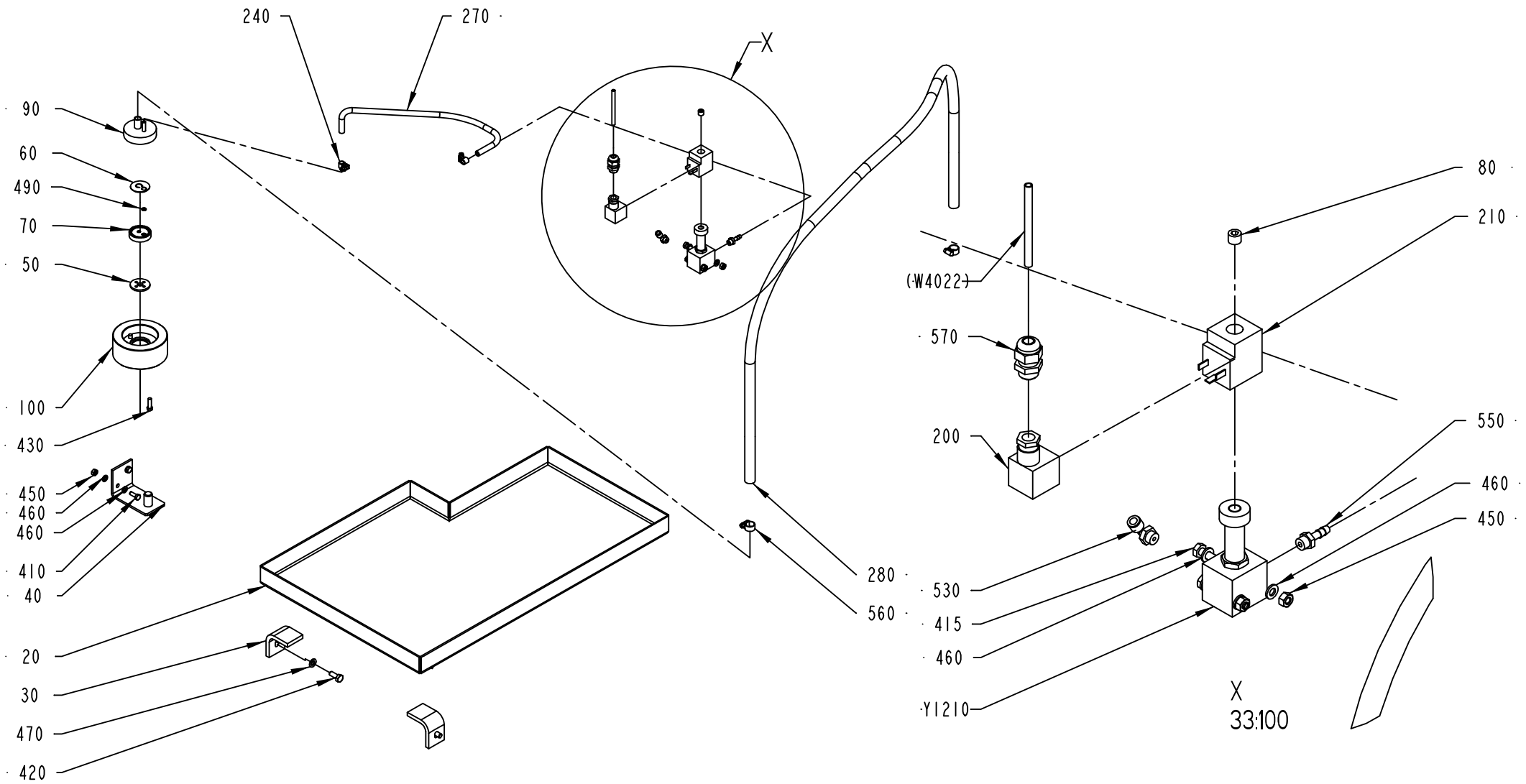

2506637-1
ECM 117202

ECM: 189746 - 20041104
Group number: 2506637-0100
Assembly Drawing: 2506637-1_1_AA

Pos	Part No	UN	Qty	Description	Page No
-					
020	1490950-0000		1	SPLASH PLATE	
030	1037539-0000		2	BRACKET	
040	1317784-0000		1	BRACKET	
050	273981-0000		1	GASKET	
060	527912-0000		1	NON-RETURN VALVE	
070	530551-0000		1	WASHER	
080	563285-0000		1	BLIND PLUG	
090	1129328-0000		1	ATTACHMENT	
100	1317226-0000		1	WEIGHT	
200	90110-0095		1	CONNECTOR 3 POLE + EARTH	
210	90042-0487		1	COIL 24 VDC/15W, 04983 197 18	
240	90132-0021		2	HOSE CLIP 6-10MM	
270	90166-0101	MM	700	HOSE, SILICONE, 60 SHORE, 6/10 MM	
280	90166-0161	MM	1600	HOSE	
410	312105-0368		2	SCREW M6S ISO 4017 M6X16 A480	
415	312105-0379		2	SCREW M6S ISO 4014 M6X45 A480	
420	312105-0451		2	SCREW M6S ISO 4017 M8X20 A480	
430	312125-0370		2	SCREW ISO 1207 M6X20 A4	
450	312605-0316		4	HEXAGON NUT, M6M M6 A280	
460	315105-0153		8	WASHER BRB 6,4X12 RFR	
470	315105-0165		2	WASHER BRB 8,4X16 RFR	
490	315204-0103		1	O-RING 5,1X1,6 MM	
530	90458-2956		1	ELBOW PIPE JOINT, EXT.THREAD, D=6MM-G1/8	
550	342901-0101		1	HOSE NIPPLE, EXT.THR. R1/8-7 MM	
560	342991-0101		2	HOSE CLIP,WORM DRIVE TYPE (13)-16	
570	352103-0101		1	CABLE GLAND, ST 9, PR15,2/PG9	
Y1210	90042-0206		1	SOLENOID VALVE G1/8, 444-111-000-1	

Pos	Part No	UN	Qty	Description	Page No

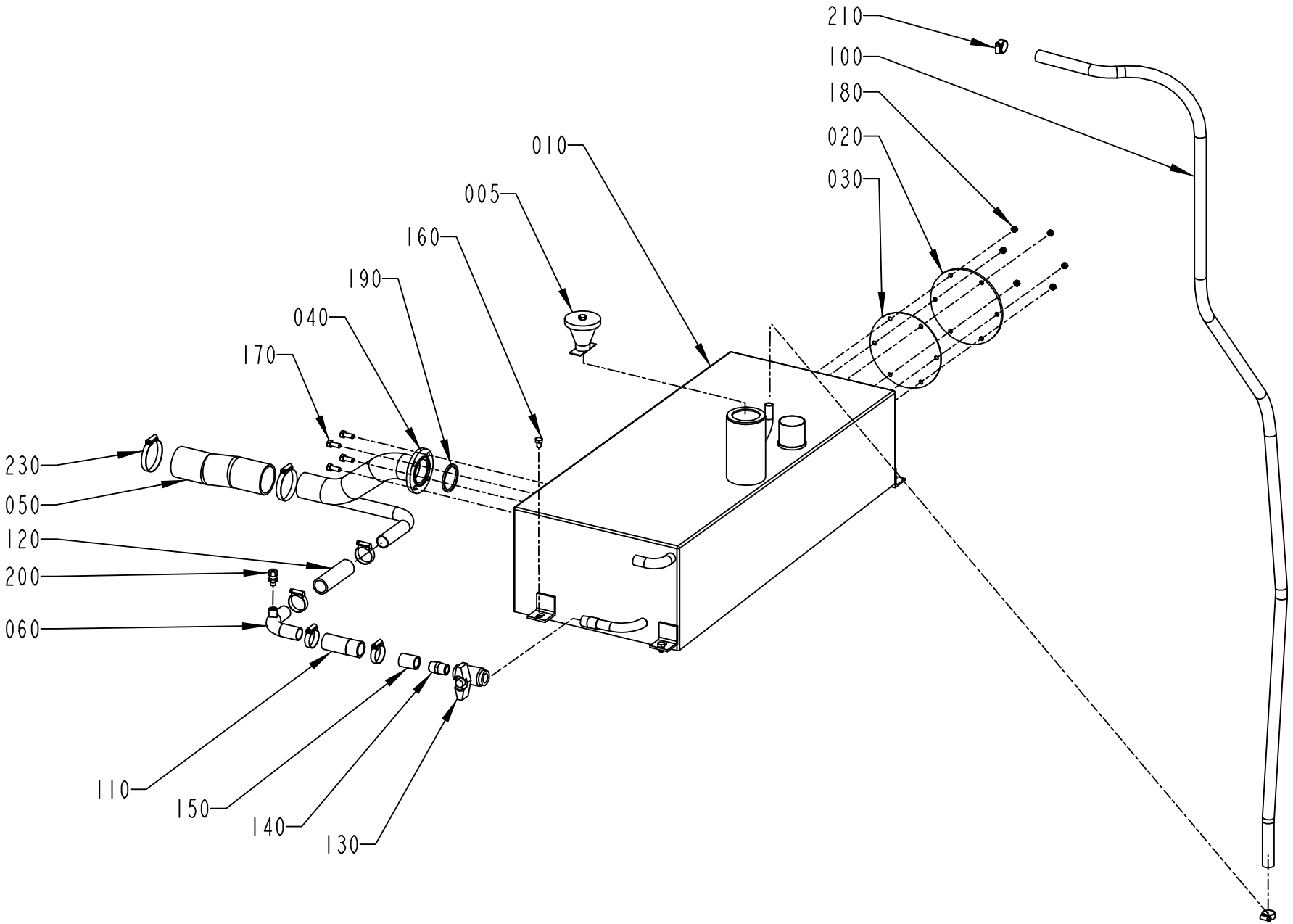

1282896-1
ECM 121676

ECM: 224842 - 20050831
Group number: 1282896-0100
Assembly Drawing: 1282896-1_1_AB

Pos	Part No	UN	Qty	Description	Page No
-					
005	566196-0100		1	LID WITH WEIGHT	**2-31**
010	1282892-0000		1	TANK	
020	1040807-0000		1	LID	
030	1040808-0000		1	GASKET	
040	1282893-0000		1	PIPE	
050	1282898-0000		1	HOSE	
060	2574421-0000		1	PIPE	
100	90166-0087	MM	2500	HOSE 15/23 REINF.PVC TRANSP.	
110	90166-0158	MM	85	HOSE	
120	90166-0158	MM	105	HOSE	
130	90187-0059		1	BALL VALVE FOR HYDR.PER. G1/2 3MM HOLE	
140	90330-0021		1	NIPPLES, EXT. THREAD. R-207R1/2	
150	90330-0054		1	SLEEVE, INT. THREAD, NO. R-201R1/2	
160	312105-0447		4	SCREW M6S ISO 4017 M8X12 A480	
170	312105-0451		4	SCREW M6S ISO 4017 M8X20 A480	
180	312605-0316		6	HEXAGON NUT, M6M M6 A280	
190	315229-0105		1	GASKETS, 48,5X55,5X3,7 MM 2" FDA	
200	90030-0184		1	CONN. STR. GA-6-G1/8	
210	342991-0103		2	HOSE CLIP,WORM DRIVE TYPE (19)-23	
220	342991-0106		4	HOSE CLIP,WORM DRIVE TYPE (30)-36	
230	342991-0110		2	HOSE CLIP,WORM DRIVE TYPE (54)-63	

Pos	Part No	UN	Qty	Description	Page No

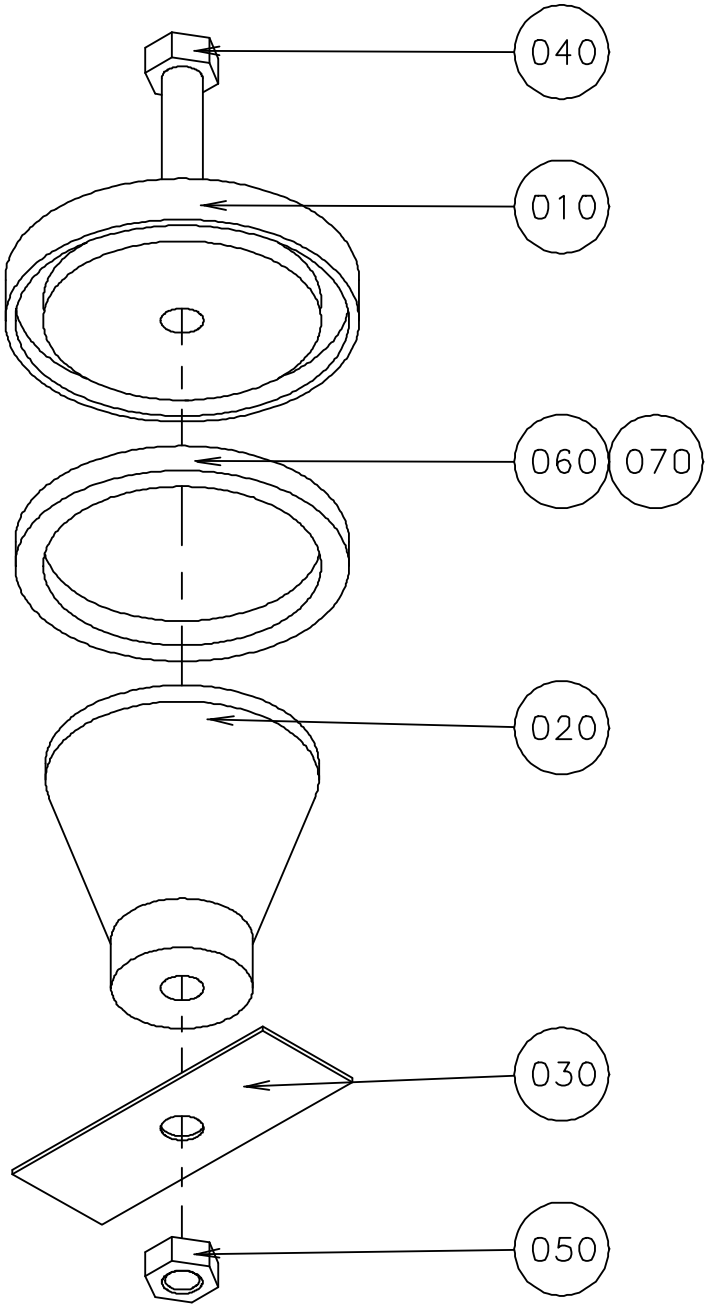

S-566196-1
ECN 70662

ECM: 189748 - 20041104
Group number: 566196-0100
Assembly Drawing: 566196-1_1_AA

Pos	Part No	UN	Qty	Description	Page No
-					
010	566195-0000		1	LID	
020	566194-0000		1	WEIGHT	
030	566171-0000		1	CUP SPRING	
040	312105-0466		1	SCREW M6S ISO 4014 M8X75 A480	
050	312605-0318		1	HEXAGON NUT, M6M M8 A280	
060	90143-0020	MM	190	STRIP	
070	90153-0023		1	ADHESIVE, SILICON 251470 TUB 90CC	

Pos	Part No	UN	Qty	Description	Page No

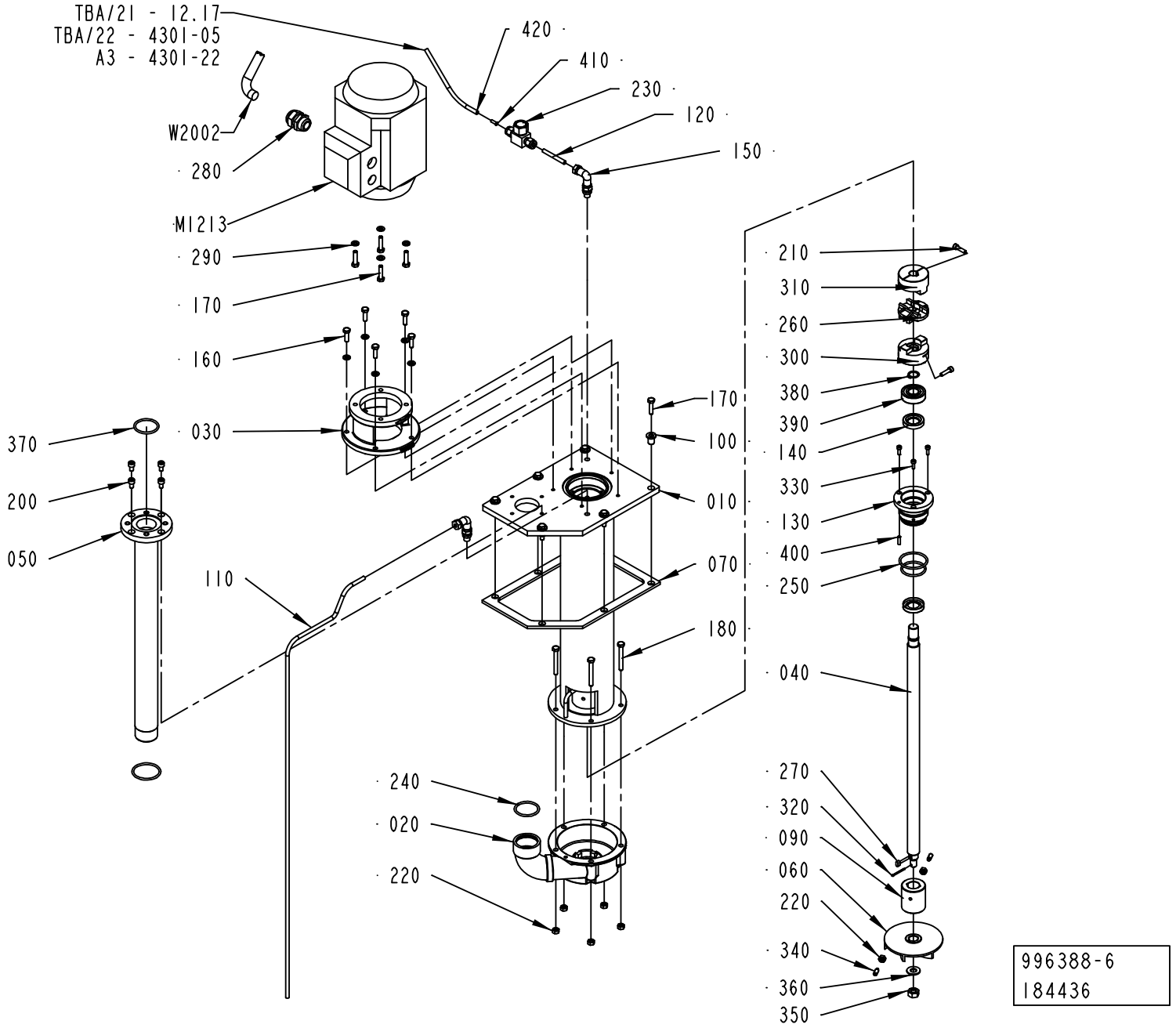
TBA/21 - 12.17
TBA/22 - 4301-05
A3 - 4301-22
W2002
280
M1213
290
170
160
030
370
200
050
110
240
020
220
420
410
230
120
150
170
100
010
070
180
210
310
260
300
380
390
140
330
130
400
250
040
270
320
090
060
220
340
360
350
996388-6
184436

ECM: 222142 - 20060313
Group number: 996388-0500
Assembly Drawing: 996388-6_1_AC

Pos	Part No	UN	Qty	Description	Page No
-					
010	2529413-0000		1	EXTENSION PIPE	
020	2529412-0000		1	PUMP HOUSING	
030	751395-0000		1	FLANGE	
040	2523266-0000		1	PUMP SHAFT	
050	1040796-0000		1	PIPE	
060	491929-0000		1	IMPELLER WHEEL	
070	1255557-0000		1	GASKET	
090	2510372-0000		1	BUSHING	
100	2564342-0000		6	SPACER	
110	2564561-0000		1	PIPE	
120	2564978-0000		1	PIPE	
130	2564225-0000		1	BUSHING	
140	90091-0412		2	SEAL RING	
150	90030-0171		2	ADJUSTABLE ELBOW CONNECTION,EXT 6-G1/8	
160	312105-0370		5	SCREW M6S ISO 4017 M6X20 A480	
170	312105-0372		10	SCREW M6S ISO 4017 M6X25 A480	
180	312109-0380		5	SCREW M6S ISO 4017 M6X50 A480	
200	312115-0364		4	SCREW ISO4762 M6X10 A4 80	
210	312115-0331		2	SCREW ISO4762 M5X20 A4 80	
220	312605-0316		7	HEXAGON NUT, M6M M6 A280	
230	90230-0064		1	CHECK VALVE, 6 MM HIGH TEMP.	
240	927422-0005		2	O-RING 36.2X3 SILICONE	
250	927422-0006		2	O-RING 42.2X3 SILICONE	
260	90458-0274		1	DISC FOR COUPLING, HUCO 236.50T	
270	315705-0196		1	PARALLEL KEY W.ROUND ENDS 5X5X10	
280	352103-0110		1	CABLE GLAND, STR 16, PR22,5/PG16	
290	315105-0153		9	WASHER BRB 6,4X12 RFR	
300	90459-1535		1	FLEXIBLE COUPLING DISC, 16 MM	
310	90459-1536		1	FLEXIBLE COUPLING DISC, 14 MM	
320	311411-0169		1	SPLIT PIN SP2,5X25RFR	
330	312115-0291		3	SCREW ISO4762 M4X12 A4 80	
340	90287-0159		2	SCREW, SOCK.SET DOGPOINT M6X16	
350	312605-0320		1	HEXAGON NUT, M6M M10 A280	
360	315105-0173		1	WASHER BRB 10,5X20 RFR	
370	315204-0222		1	O-RING 36,2X3 MM	
380	315751-0113		1	RETAINING RING FOR SHAFT DIN 471 16 A2	
390	321313-0103		1	BALL BEARING, 17X40X12MM	
400	311103-0270		1	PARALLEL PIN ISO 2338 4M6X16 A1	
410	342706-0130		1	ACCESSORIES, INSERT SLEEVE 6 MM	
420	90166-0081	M	1	TUBE 6 MM PA BLUE	
M 1213	90458-2466		1	MOTOR 3GVA071002-CSB	
W 2002	351150-0418	M	4	CABLE OLFLEX 4X2,5 MM2 LIGHT/GREY	

Machine Type | Group Description | Used-In | Group Number | Page No

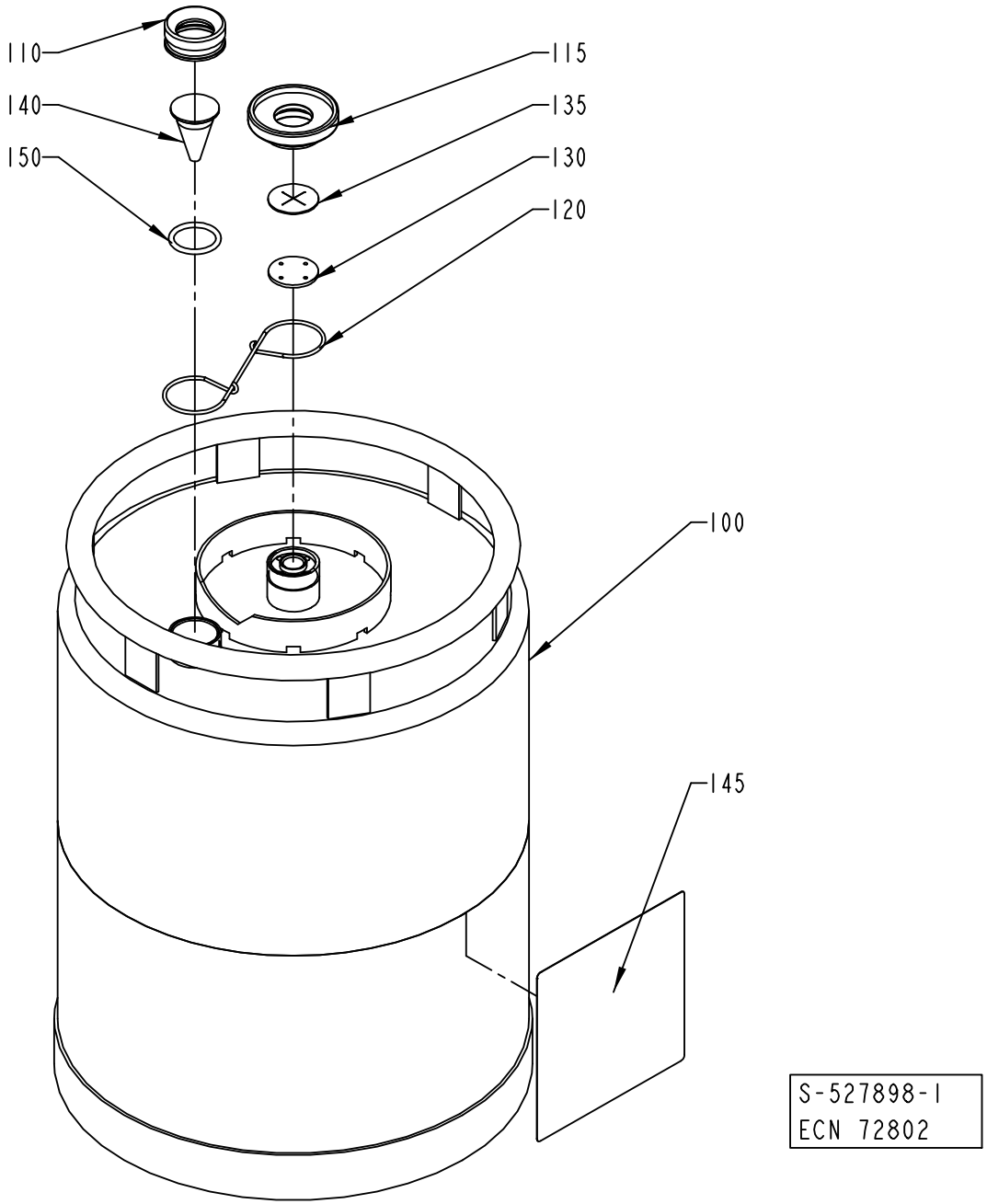
110
140
150
115
135
130
120
100
145
S-527898-1
ECN 72802

ECM: 224840 - 20050831
Group number: 527898-0100
Assembly Drawing: 527898-1_1_AB

Pos	Part No	UN	Qty	Description	Page No	Pos	Part No	UN	Qty	Description	Page No
-											
100	561427-0000		1	CONTAINER							
110	273977-0000		1	NUT							
115	273996-0000		1	NUT							
120	273980-0000		1	SPRING							
130	565250-0000		1	WASHER							
135	565251-0000		1	VALVE							
140	273978-0000		1	LEVEL GLAS							
145	532655-0000		1	CAUTION SIGN							
150	927422-0003		1	O.RING 24.2X3 SILICONE							

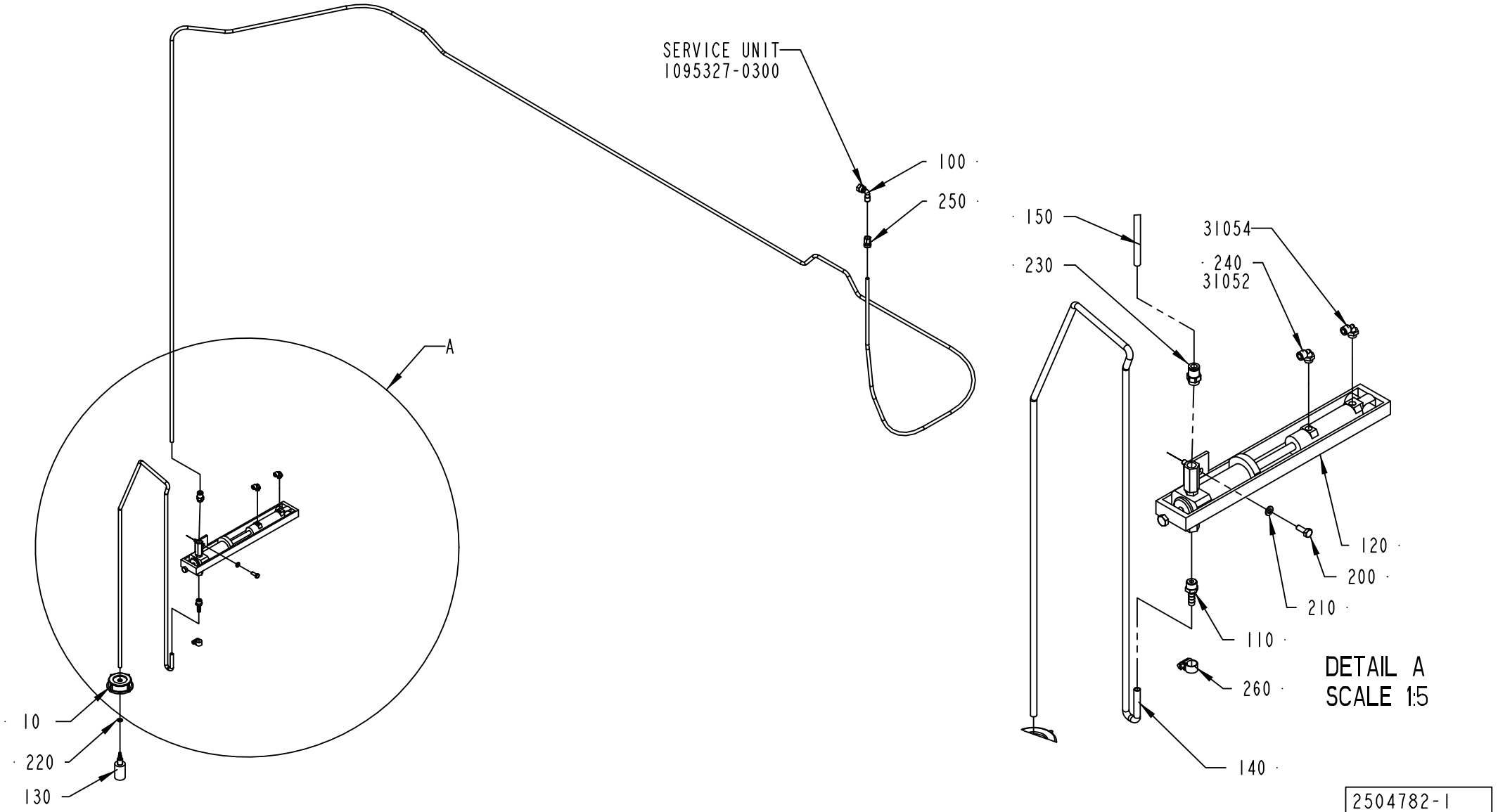
SERVICE UNIT
1095327-0300
100
250
A
10
220
130
150
230
31054
240
31052
120
200
210
110
260
140
DETAIL A
SCALE 1:5
2504782-1
184089

ECM: 192977 - 20050620
Group number: 2504782-0100
Assembly Drawing: 2504782-1_1_AB

Pos	Part No	UN	Qty	Description	Page No
-					
010	1129432-0000		1	LID	
100	90030-0071		1	CONN. ELBOW WA 8-R1/4	
110	90055-0132		1	HOSE NIPPLE, EXT.THR. R1/4X7,8 MM	
120	90321-0128		1	CHEM. PUMP 081778	
130	90415-0052		1	FILTER ART NO 12565 C-340-6E FOTVENTI EP	
140	90166-0008	MM	1500	HOSE 7/10 PVC TRANSP.	
150	90166-0118	MM	5300	TUBE 8 MM PA BLACK	
200	312105-0368		2	SCREW M6S ISO 4017 M6X16 A480	
210	315101-0153		2	WASHER PLAIN, BRB, 6,4/12 H=1,5	
220	315204-0207		1	O-RING 8,3X2,4 MM	
230	342722-0205		1	STRAIGHT COUPLING D=8-G1/4"	
240	90458-2956		2	ELBOW PIPE JOINT, EXT.THREAD, D=6MM-G1/8	
250	342923-0122		1	STRAIGHT COUPL.,INT.THREADED 8/6-G1/4"	
260	342991-0100		1	HOSE CLIP,WORM DRIVE TYPE 10-13	

Pos	Part No	UN	Qty	Description	Page No

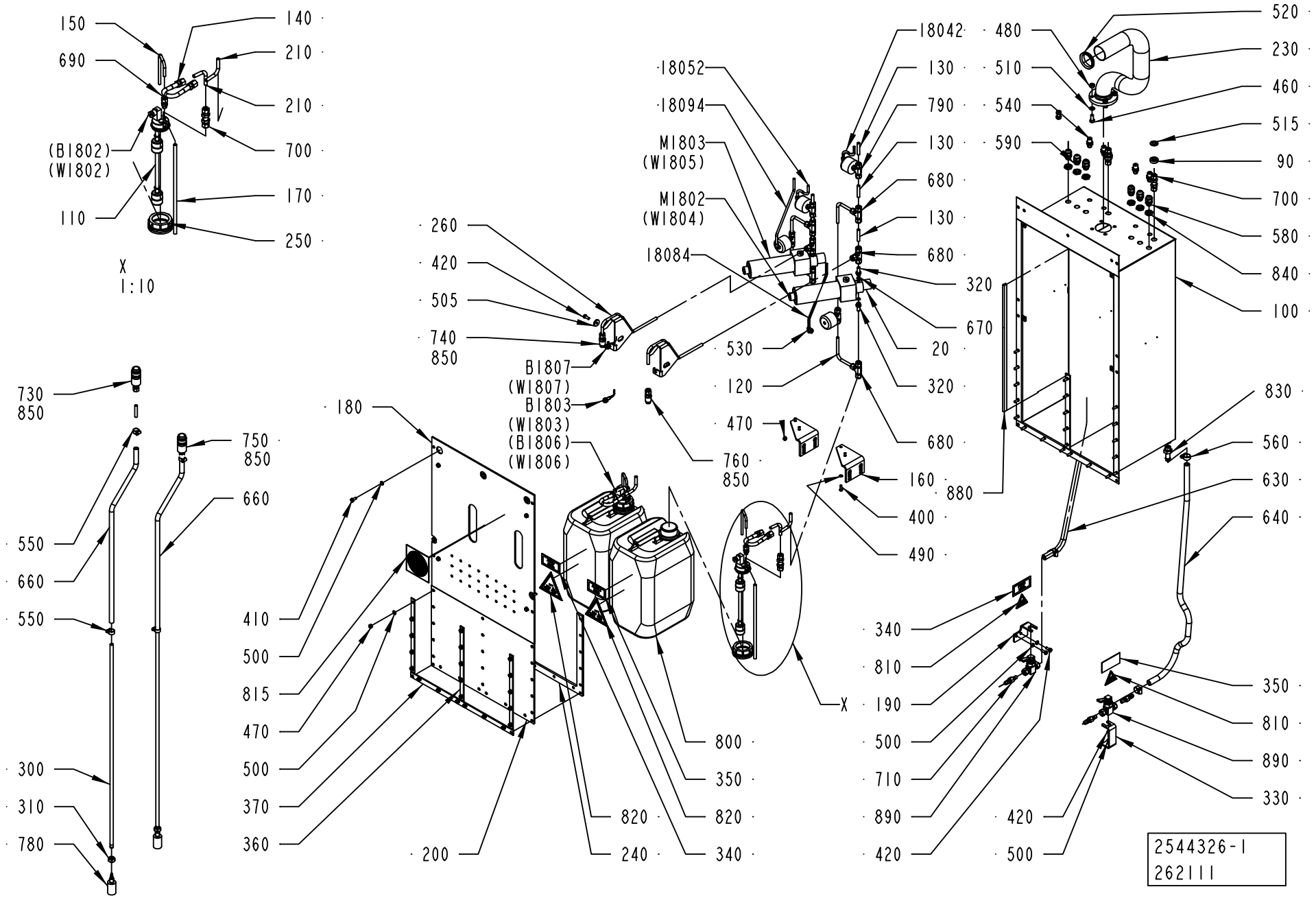
150
140
690
210
210
700
(B1802)
(W1802)
170
110
250
X
1:10
260
420
505
740
850
B1807
(W1807)
B1803
(W1803)
(B1806)
(W1806)
180
760
850
18052
18094
M1803
(W1805)
M1802
(W1804)
18084
530
120
470
18042
130
790
130
680
130
680
320
670
20
320
680
160
400
490
880
480
510
540
590
520
230
460
515
90
700
580
840
100
830
560
630
640
730
850
750
850
660
550
660
550
300
310
780
410
500
815
470
500
370
360
200
800
350
820
820
240
340
X
340
810
190
500
710
890
420
420
500
350
810
890
330
2544326-1
262111

ECM: 262113 - 20060410
Group number: 2544326-0100
Assembly Drawing: 2544326-1_1_AE

Pos	Part No	UN	Qty	Description	Page No
-					
020	927244-0100		2	PUMP	2-41
090	2603387-0000		2	SPACER	
100	2544311-0000		1	BOX	
110	2544312-0000		2	FLOAT	
120	2544313-0000		4	PIPE	
130	2544314-0000		8	PIPE	
140	2559977-0000		2	HOSE	
150	2544316-0000		2	PIPE	
160	2559976-0000		2	BRACKET	
170	2544318-0000		2	PIPE	
180	2544319-0000		1	COVER	
190	2608104-0000		1	BRACKET	
200	2544321-0000		1	COVER	
210	2559978-0000		4	PIPE	
230	2544324-0000		1	PIPE	
240	2544325-0000		1	GASKET	
250	2544330-0000		2	PLUG	
260	2558826-0000		2	PIPE	
300	927262-0000		2	PIPE	
310	928025-0000		2	PLUG	
320	2559461-0000		4	SPACER	
330	2608103-0000		1	BRACKET	
340	2566211-0000		2	LABEL	
350	2566212-0000		2	LABEL	
360	2566209-0000		3	PLATE	
370	2566210-0000		1	PLATE	
400	312105-0329		4	SCREW M6S ISO 4017 M5X16 A480	
410	312105-0367		9	SCREW M6S ISO 4017 M6X14 A480	
420	312105-0368		5	SCREW M6S ISO 4017 M6X16 A480	
460	312105-0451		4	SCREW M6S ISO 4017 M8X20 A480	
470	312605-0316		25	HEXAGON NUT, M6M M6 A280	
480	312605-0318		4	HEXAGON NUT, M6M M8 A280	
490	315105-0146		4	WASHER BRB 5,3X10 RFR	
500	315105-0153		33	WASHER BRB 6,4X12 RFR	
505	315125-0153		2	WASHER TBRSB 6,4X22X4 A4	
510	315105-0165		4	WASHER BRB 8,4X16 RFR	
515	315105-0178		2	WASHER BRB 13X24 RFR	
520	315220-0198		1	V-RINGS 45X55X13 MM V-50S	
530	90458-2956		4	ELBOW PIPE JOINT, EXT.THREAD, D=6MM-G1/8	
540	342768-0102		4	BULKHEAD CONNECTOR, 6 MM	
550	342991-0101		4	HOSE CLIP,WORM DRIVE TYPE (13)-16	
560	342991-0102		4	HOSE CLIP,WORM DRIVE TYPE (16)-19	
580	352103-0101		4	CABLE GLAND, ST 9, PR15,2/PG9	
590	352103-0100		2	CABLE GLAND, STR 9, PR15,2/PG9	
630	90166-0198	MM	700	RUBBER HOSE	
640	90166-0198	MM	950	RUBBER HOSE	
650	90166-0225	MM	680	HOSE	
660	90166-0225	MM	680	HOSE	
670	315206-0506		4	O-RING 7,65X1,78 MM	
680	90459-1425		6	CONN. T-PIPE 8	
690	90459-1424		2	CONN. STR., 6-G1/8, EXT. THREAD	
700	90030-0485		4	CONN. BULKHEAD SV 8-	
710	90459-2615		4	HOSE NIPPLE SS-6-HC-A-601	
730	90163-0172		1	QUICK-RELEASE COUPLING SS-QTM2A-B-8M0-K4	
740	90459-1430		1	QUICK-RELEASE COUPLING, SS-QTM2-D-8M0-K4	
750	90163-0141		1	QUICK-RELEASE COUPLING SS-QTM2A-B-8M0-K2	
760	90459-1427		1	QUICK-RELEASE COUPLING, SS-QTM2-D-8M0-K2	
780	90415-0052		2	FILTER ART NO 12565 C-340-6E FOTVENTI EP	
790	90458-2333		4	VALVE, M8A-V4LQ-KZ-11AO-SS PNEUM. OPER.	
800	90459-0462		2	CANISTER LY 500-10	
810	359705-0003		2	WARNING SIGN ISO, DANGEROUS CHEMICALS	
815	359605-0002		1	MANDATORY SIGN ISO, EYE PROTECTION	
820	359705-0004		2	WARNING SIGN ISO, DANGEROUS CHEMICALS	
830	90055-0051		2	HOSE NIPPLE, EXT.THR. R3/8X13 MM	
840	90099-0104		6	NUT, PR 15,2 (PG9)	
850	90144-0073		1	TREBOFLON-TAPE W=13MM	
880	90143-0059	MM	495	SEAL STRIP 4610069	
890	90459-2609		2	BALL VALVE 3/8", SS-1GS6-S1-SPR	
18042	90166-0081	MM	150	TUBE 6 MM PA BLUE	
18052	90166-0081	MM	150	TUBE 6 MM PA BLUE	
18084	90166-0081	MM	300	TUBE 6 MM PA BLUE	
18094	90166-0081	MM	300	TUBE 6 MM PA BLUE	
B1803	90458-0138		1	PROX. SWITCH, E2EG-X1R5B1-5M	
B1807	90458-0138		1	PROX. SWITCH, E2EG-X1R5B1-5M	

Machine Type	Group Description	Used-In	Group Number	Page No

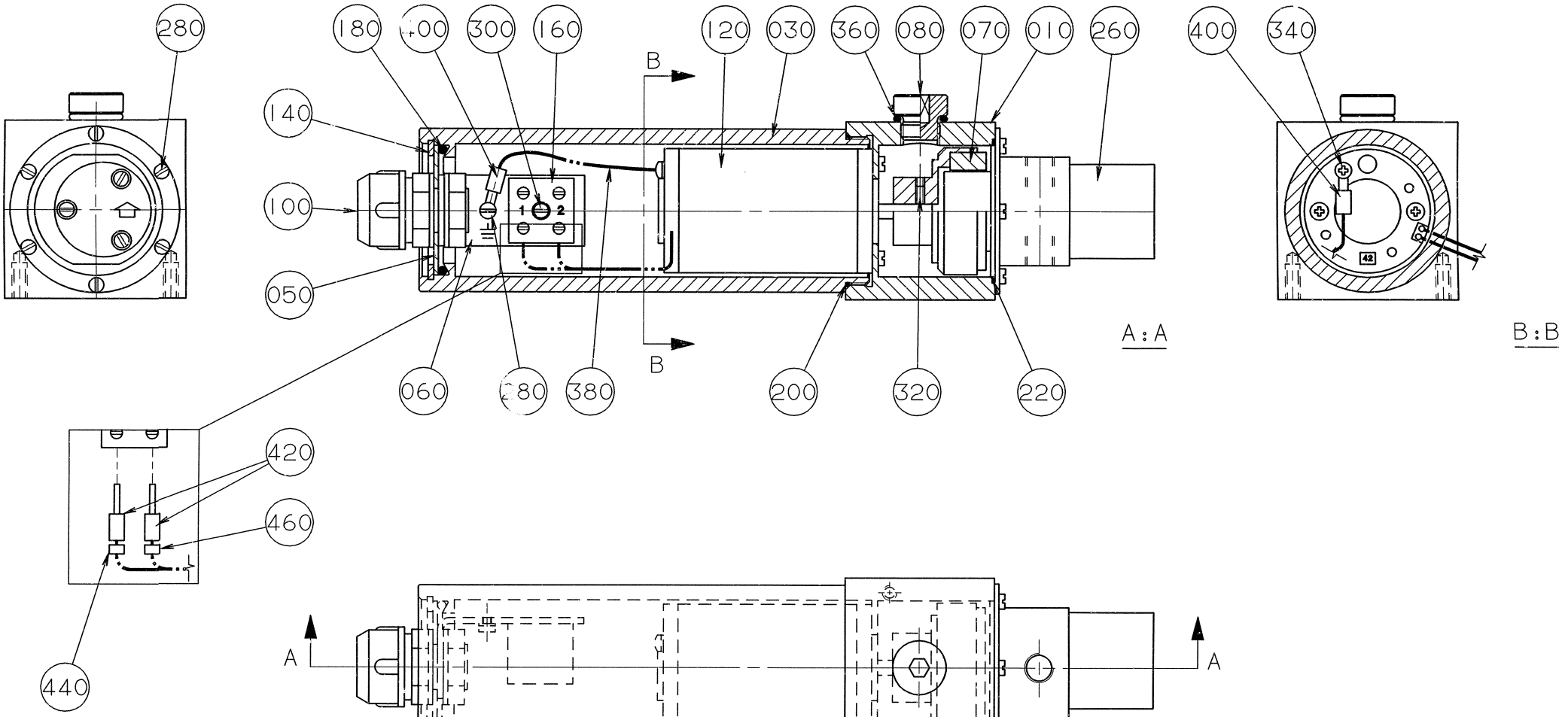
280
180
200
300
160
120
030
360
080
070
010
260
400
340
140
100
050
060
280
380
200
320
220
A : A
B : B
420
460
440
A
A

ECM: 189751 - 20041104
Group number: 927244-0100
Assembly Drawing: 927244-1_1_AA

Pos	Part No	UN	Qty	Description	Page No
-					
010	927339-0000		1	ADAPTER	
030	927342-0000		1	CYLINDER	
050	927340-0000		1	DISC	
060	927341-0000		1	HOLDER	
070	927362-0000		1	MAGNET	
080	927363-0000		1	PLUG	
100	90012-0063		1	CABLE GLAND PR 15,2	
120	90045-0162		1	MOTOR M42X30/I	
140	90141-0020		1	RETAINING RING FOR BORE DIN 472 42 A2	
160	90195-0020		1	TERMINAL BLOCK, 1977.2	
180	90242-0222		1	O-RING 45,36X3,53 MM	
200	90242-0223		1	O-RING 47,35X1,78 MM	
220	90242-0224		1	O-RING 44,17X1,78 MM	
260	90321-0102		1	PUMP, MG209XTS37	
280	312125-0220		11	SCREW ISO 1207 M3X6 A4	
300	312125-0232		1	SCREW ISO 1207 M3X25 A4	
320	312318-0285		1	SCREW ISO4029 M4X6 A4	
340	312503-0225		1	TAPPING SCREW ISO 7049-ST2,9X9,5-C-Z	
360	315202-0701		1	O-RING 10,82X1,78 MM	
380	351175-0102	MM	300	CABLE AWM 1X 075 MM2 YELLOW-GREEN	
400	353101-0118		2	CABLE SHOE 0,5-1,5MM2 M3 RED	
420	353105-0117		2	PIN CABLE SHOE 0,75-1,5MM2 RED A1519SR	
440	359000-0101		1	WIRE MARKING, YELLOW, PY01/3"1"	
460	359000-0102		1	WIRE MARKING, YELLOW, PY01/3"2"	

Pos	Part No	UN	Qty	Description	Page No

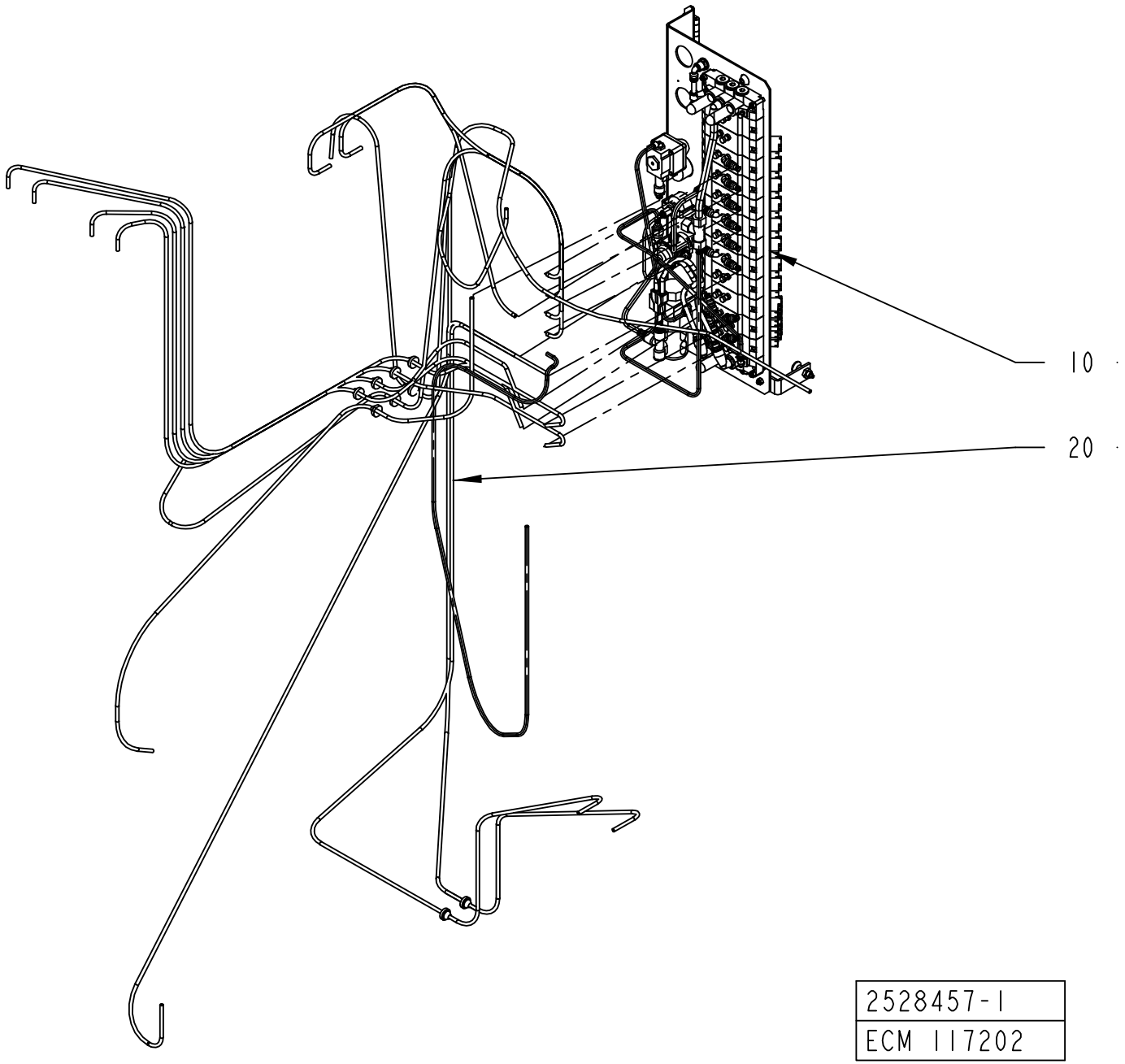
10
20
2528457-1
ECM 117202

ECM: 117202 - 20030403
Group number: 2528457-0100
Assembly Drawing: 2528457-1_1_AA

Pos	Part No	UN	Qty	Description	Page No
A3/FLEX					
020	2552931-0100		1	HOSE INSTALLATION	**2-45, 2-47**
Common Parts					
010	2506359-0100		1	VALVE PANEL	**2-49**

Pos	Part No	UN	Qty	Description	Page No

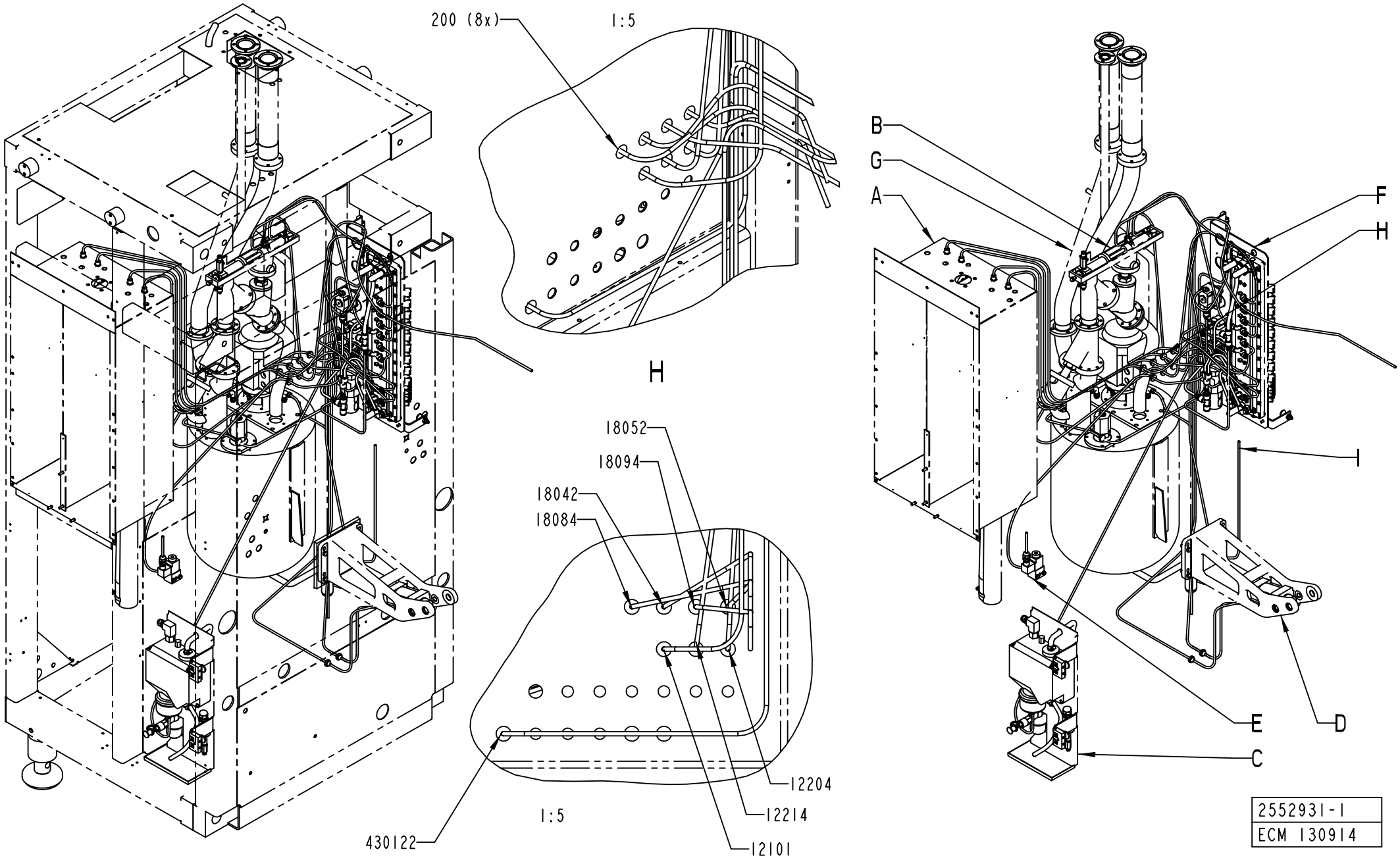
200 (8x)
1:5
H
18052
18094
18042
18084
12204
12214
12101
430122
1:5
B
G
A
F
H
I
E
D
C
2552931-1
ECM 130914

ECM: 189753 - 20041104
Group number: 2552931-0100
Assembly Drawing: 2552931-1_1_AB

This list covers pages from 2-44 to 2-47

Pos	Part No	UN	Qty	Description	Page No
-					
200	90015-0020		10	LEAD-IN, TET5-7, E-1458016	
12101	90166-0081	MM	1750	TUBE 6 MM PA BLUE	
12204	90166-0081	MM	2070	TUBE 6 MM PA BLUE	
12214	90166-0081	MM	2010	TUBE 6 MM PA BLUE	
18042	90166-0081	MM	2070	TUBE 6 MM PA BLUE	
18052	90166-0081	MM	2000	TUBE 6 MM PA BLUE	
18084	90166-0081	MM	2210	TUBE 6 MM PA BLUE	
18094	90166-0081	MM	2120	TUBE 6 MM PA BLUE	
21044	90166-0081	MM	2040	TUBE 6 MM PA BLUE	
24014	90166-0081	MM	2760	TUBE 6 MM PA BLUE	
31052	90166-0081	MM	1230	TUBE 6 MM PA BLUE	
31054	90166-0081	MM	1310	TUBE 6 MM PA BLUE	
43012	90166-0081	MM	1800	TUBE 6 MM PA BLUE	
55012	90166-0081	MM	2490	TUBE 6 MM PA BLUE	
55014	90166-0081	MM	2700	TUBE 6 MM PA BLUE	
430122	90166-0081	MM	1800	TUBE 6 MM PA BLUE	

Pos	Part No	UN	Qty	Description	Page No

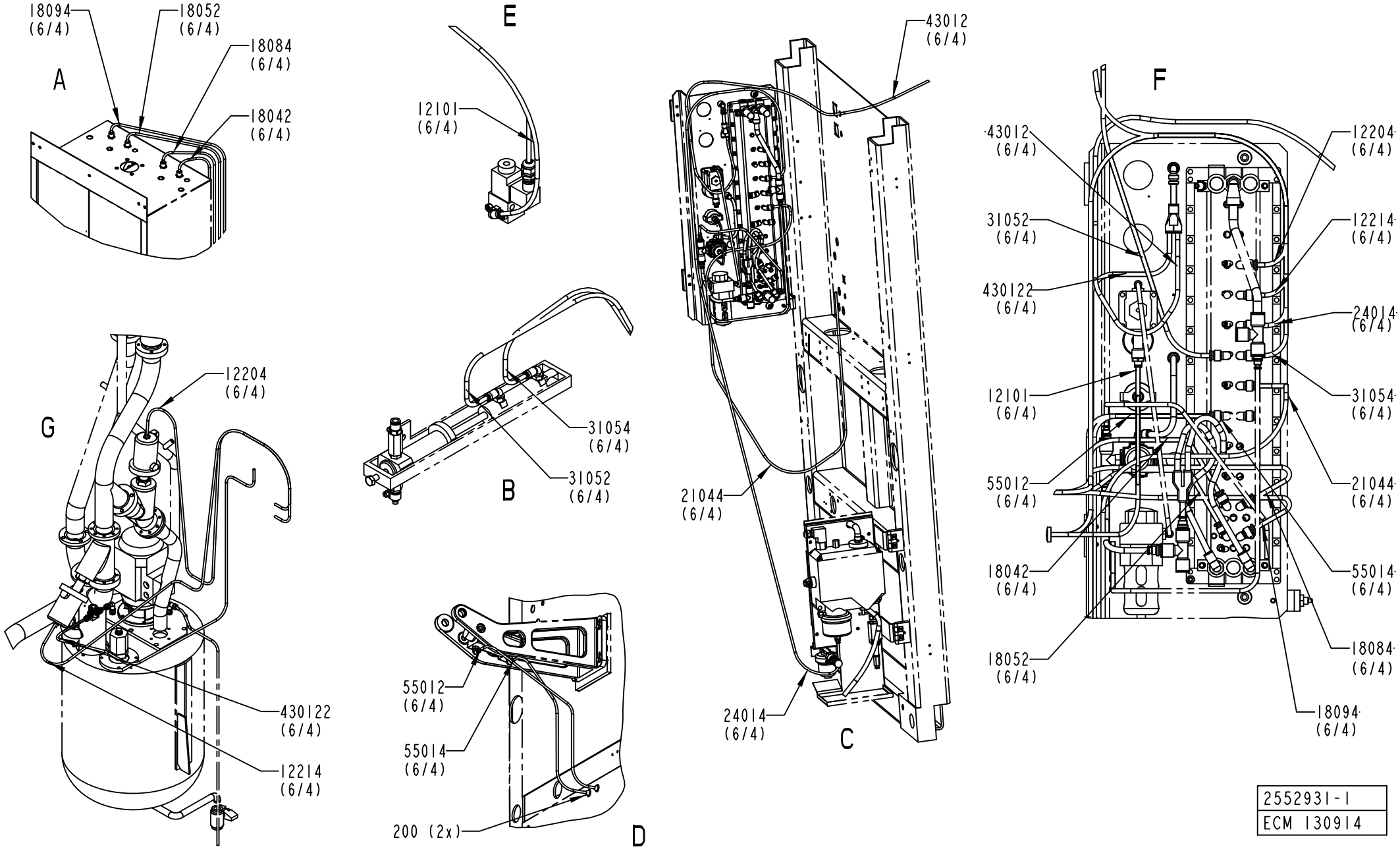

2552931-1
ECM 130914

ECM: 189753 - 20041104
Group number: 2552931-0100
Assembly Drawing: 2552931-1_2_AB

This list covers pages from 2-44 to 2-47

Pos	Part No	UN	Qty	Description	Page No
-					
200	90015-0020		10	LEAD-IN, TET5-7, E-1458016	
12101	90166-0081	MM	1750	TUBE 6 MM PA BLUE	
12204	90166-0081	MM	2070	TUBE 6 MM PA BLUE	
12214	90166-0081	MM	2010	TUBE 6 MM PA BLUE	
18042	90166-0081	MM	2070	TUBE 6 MM PA BLUE	
18052	90166-0081	MM	2000	TUBE 6 MM PA BLUE	
18084	90166-0081	MM	2210	TUBE 6 MM PA BLUE	
18094	90166-0081	MM	2120	TUBE 6 MM PA BLUE	
21044	90166-0081	MM	2040	TUBE 6 MM PA BLUE	
24014	90166-0081	MM	2760	TUBE 6 MM PA BLUE	
31052	90166-0081	MM	1230	TUBE 6 MM PA BLUE	
31054	90166-0081	MM	1310	TUBE 6 MM PA BLUE	
43012	90166-0081	MM	1800	TUBE 6 MM PA BLUE	
55012	90166-0081	MM	2490	TUBE 6 MM PA BLUE	
55014	90166-0081	MM	2700	TUBE 6 MM PA BLUE	
430122	90166-0081	MM	1800	TUBE 6 MM PA BLUE	

Pos	Part No	UN	Qty	Description	Page No

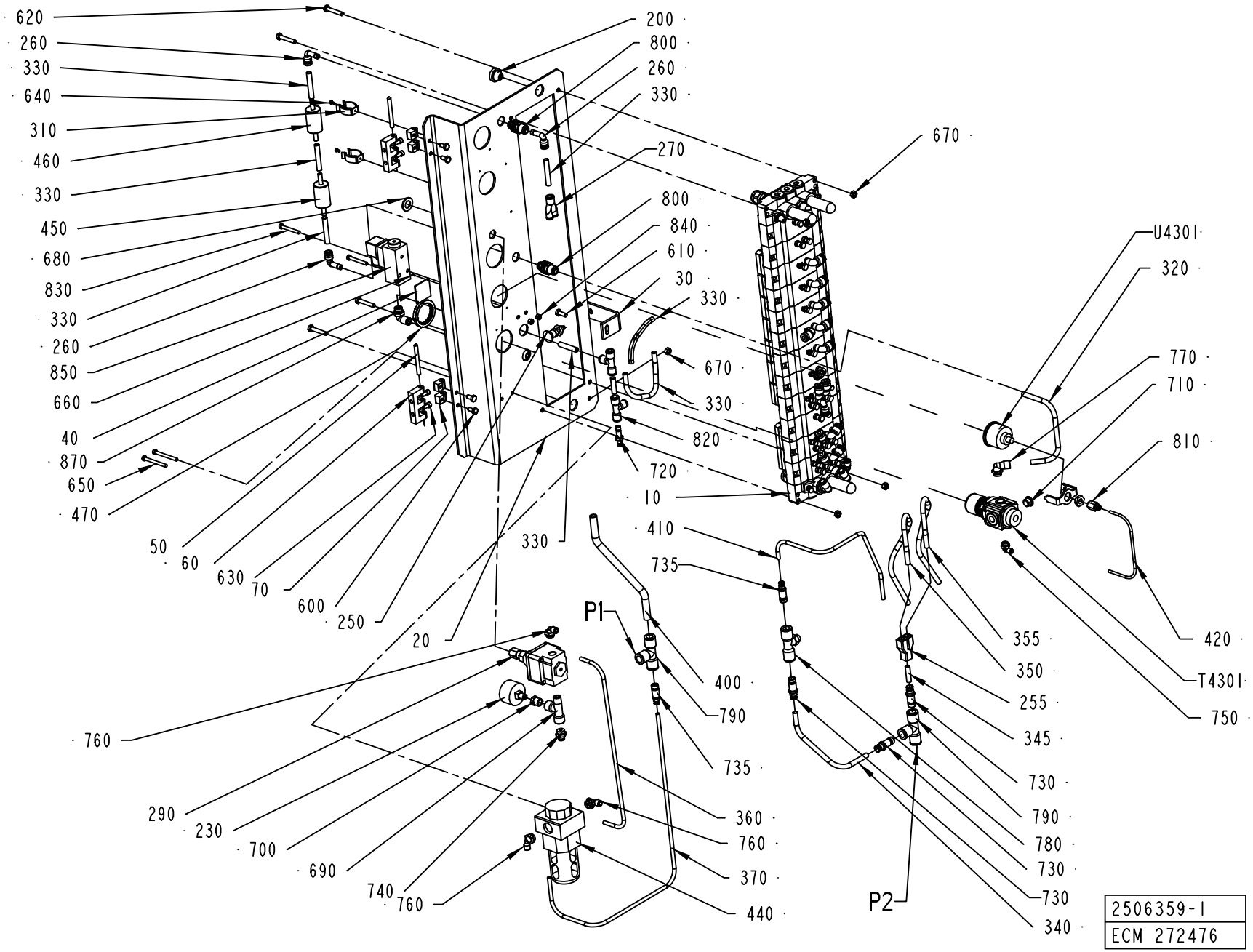
620
260
330
640
310
460
330
450
680
830
330
260
850
660
40
870
650
470
50
60
630
70
600
250
20
200
800
260
330
270
800
840
610
30
330
670
330
820
720
10
670
U4301
320
770
710
810
420
T4301
750
410
735
P1
400
790
735
360
760
370
440
355
350
255
345
730
790
780
730
730
340
P2
760
290
230
700
690
740
760
2506359-1
ECM 272476

ECM: 277397 - 20061103
Group number: 2506359-0100
Assembly Drawing: 2506359-1_1_AF

Pos	Part No	UN	Qty	Description	Page No
A3/FLEX TBA 0500B, A3/FLEX TBA 1000B, A3/FLEX TBA 1000S, A3/FLEX TBA 1000SQ, A3/FLEX TPA 1000SQ, A3/FLEX TBA 0200S, A3/FLEX TBA 1500S, A3/FLEX TBA 0200B, A3/FLEX TBA 0250B, A3/FLEX TBA 0330S, A3/FLEX TPA 0330SQ, A3/FLEX TPA 0500SQ, A3/FLEX TBA 0200M, A3/FLEX TBA 0250S, A3/FLEX TBA 0500S					
	2527509-0000		1	PNEUMATIC DIAGRAM	
A3/FLEX TBA 1890S, A3/FLEX TBA 2000S, A3/FLEX TBA 1400B (See drawing on pages: 2-48)					
	2719738-0000		1	PNEUMATIC DIAGRAM	
Common Parts					
	2527368-0000		1	PNEUMATIC DIAGRAM	
010	2506360-0100		1	VALVE RAMP	**2-51**
020	2506361-0000		1	PANEL	
030	2546319-0000		1	HOLDER	
040	978603-0000		1	SIGN	
050	988685-0000		2	PIN	
060	1035792-0000		2	E-HINGE	
070	1129770-0000		4	BLOCKING PIECE	
200	90015-0023		3	LEAD-IN, TET7-10, E-1458019	
230	90043-0021		1	PRESSURE GAUGE 0-1 BAR 1/8" D=40	
250	90051-0112		1	LOCK KNOB, NO. GN 617 NIK5	
255	90055-0101		1	Y-CONNECTION, 8-8	
260	90055-0172		3	ELBOW WITH TAILPIECE 8/8 MM	
270	90055-0227		1	Y-CONNECTION, 6-8	
290	90113-0056		1	REGULATOR, 11-818-998	
310	90165-0019		2	TOOL CLIP, 81/3, OPEN, 20 - 30 MM	
320	90166-0013	MM	300	TUBE 8 MM PA BLUE	
330	90166-0013	MM	600	TUBE 8 MM PA BLUE	
340	90166-0013	MM	320	TUBE 8 MM PA BLUE	
345	90166-0013	MM	350	TUBE 8 MM PA BLUE	
350	90166-0013	MM	290	TUBE 8 MM PA BLUE	
355	90166-0013	MM	300	TUBE 8 MM PA BLUE	
360	90166-0081	MM	550	TUBE 6 MM PA BLUE	
370	90166-0081	MM	800	TUBE 6 MM PA BLUE	
400	90166-0068	MM	300	TUBE 12 MM PA BLUE	
410	90166-0081	MM	600	TUBE 6 MM PA BLUE	
420	90166-0095	MM	300	TUBE 4 MM PA BLUE (50M)	
440	90277-0039		1	FILTER HOUSING LF -1/4-S-5M-B	
	90234-0328		*1*	*COVER*	
	90277-0346		*1*	*FILTER CARTRIDGE, LFP-1/4-S-5M*	
450	90277-0045		1	FILTER / 9900-05-BK	
460	90277-0046		1	FILTER / 9933-05-101	
470	90457-0078		1	PANEL NUT	
600	312105-0366		4	SCREW M6S ISO 4017 M6X12 A480	
610	312105-0368		1	SCREW M6S ISO 4017 M6X16 A480	
620	312109-0376		4	SCREW M6S ISO 4017 M6X35 A480	
630	312115-0327		4	SCREW ISO4762 M5X12 A4 80	
640	312125-0220		2	SCREW ISO 1207 M3X6 A4	
650	312125-0341		2	SCREW ISO 1207 M5X50 A4	
660	312502-0120		2	DRIVE SCREW ROUND HEAD KDS 0X5	
670	312605-0316		5	HEXAGON NUT, M6M M6 A280	
680	315105-0178		1	WASHER BRB 13X24 RFR	
690	342245-0102		1	T-PIPE, INT. THREAD, R1/4XKR1/4	
700	342701-0201		1	BUSHING,INT./EXT.G-THREAD G1/4"-G1/8"	
710	342713-0210		1	PLUG,EXT THREAD HEX SOCKET(PAK OF 10 PCS	
730	342716-0209		3	REDUCER 8-12	
735	342716-0210		2	REDUCER 6-12	
740	342722-0203		1	STRAIGHT COUPLING	
750	90458-2955		1	ELBOW PIPE JOINT, EXT.THREAD,	
760	90458-2957		3	ELBOW PIPE JOINT, EXT.THREAD, D=6MM-G1/4	
770	90458-2958		1	ELBOW PIPE JOINT, EXT.THREAD, D=8MM-G1/4	
780	90055-0278		1	T-COUPLING, ADJ.12-G1/4"	
790	342748-0109		2	T-CONNECTION 12MM	
800	342768-0103		2	BULKHEAD CONNECTOR, 8 MM	
810	342770-0101		1	STRAIGHT COUPLING INT, D=4 MM - G1/8	
820	342748-0103		2	T-CONNECTION 8MM	
830	312125-0339		2	SCREW ISO 1207 M5X40 A4	
840	312607-0314		2	HEXAGON NUT, EN 24032 M6M M5 A480	
850	90274-0103		1	PRESSURE GUARD PEV-1/4-B (10773	
870	350002-0009		1	PUSH-IN L-FITTING QSL-F-G1/4-8	
T4301	90457-0144		1	REGULATOR 0,3-2 BAR	
U4301	90043-0090		1	PRESSURE GAUGE, 2048 D=40 MM	

Machine Type | Group Description | Used-In | Group Number | Page No

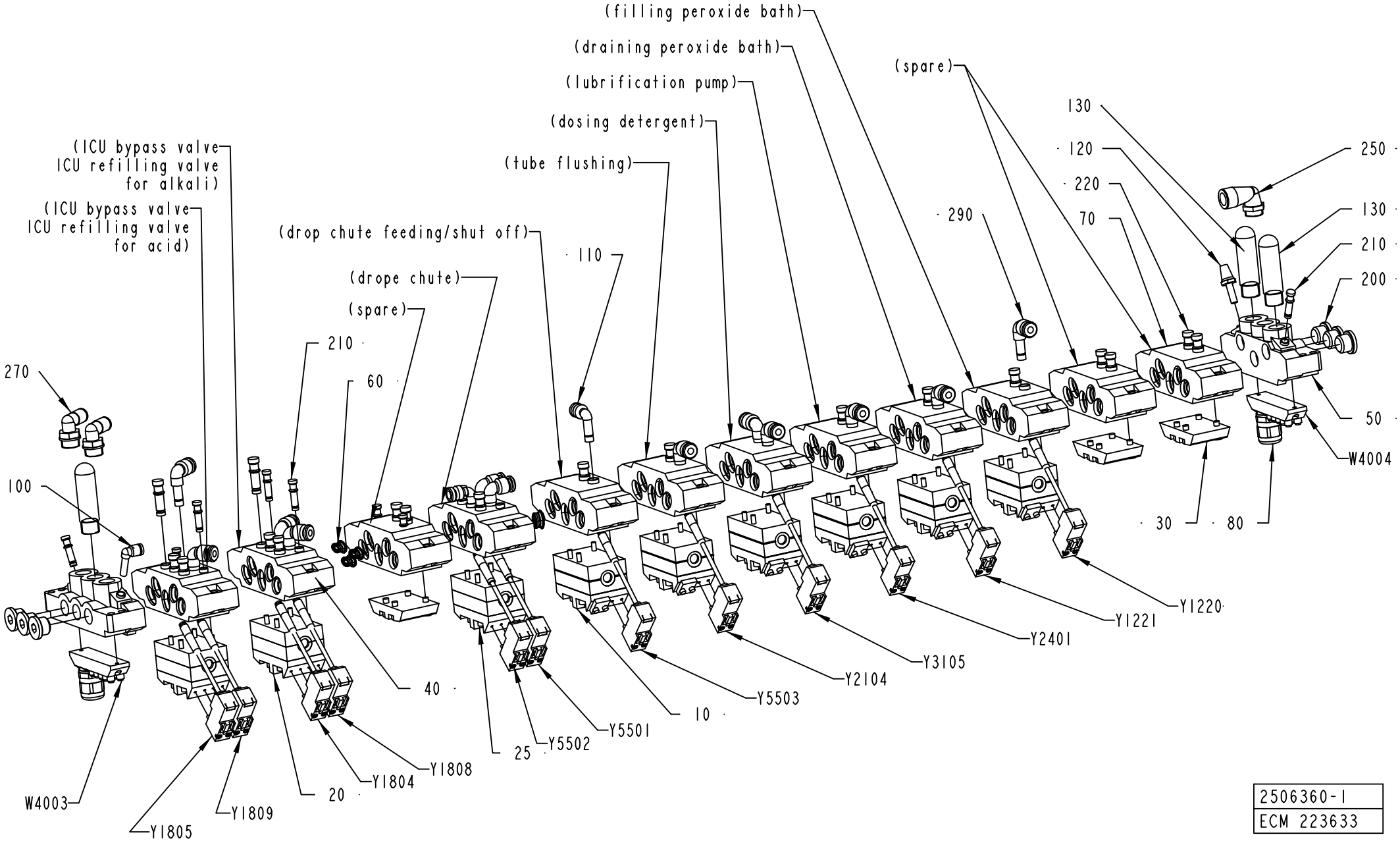

2506360-1
ECM 223633

ECM: 265568 - 20060425
Group number: 2506360-0100
Assembly Drawing: 2506360-1_1_AC

Pos	Part No	UN	Qty	Description	Page No
A3/FLEX					
010	90042-0215		6	VALVE BODY 5/2 UNISTABLE	
020	90042-0271		2	VALVE BODY 2X3/2	
060	90042-0528		4	BLANKING KIT SEALS ISO SIZE 1	
070	90042-0532		10	BASE PLATE ISO SIZE 1	
110	90055-0172		2	ELBOW WITH TAILPIECE 8/8 MM	
130	90328-0024		3	SILENCER G3/8"	
210	342715-0102		8	BLIND PLUG 6 MM	
220	342715-0103		19	BLIND PLUG 8 MM	
270	350002-0012		2	PUSH-IN L-FITTING QSL-F-G3/8-8	
290	90055-0173		12	ELBOW WITH TAILPIECE 8/6 MM	
Y1220	90042-0538		1	PILOT VALVE L=500MM	
Y1221	90042-0538		1	PILOT VALVE L=500MM	
Y1804	90042-0538		1	PILOT VALVE L=500MM	
Y1805	90042-0538		1	PILOT VALVE L=500MM	
Y1808	90042-0538		1	PILOT VALVE L=500MM	
Y1809	90042-0538		1	PILOT VALVE L=500MM	
Y2104	90042-0538		1	PILOT VALVE L=500MM	
Y2401	90042-0538		1	PILOT VALVE L=500MM	
Common Parts					
025	90042-0230		1	VALVE BODY 5/3 OPEN CENTRE	
030	90042-0519		3	BLANK PLATE ISO SIZE 1	
040	90042-0520		3	BASE PLATE ISO SIZE 1	
050	90042-0522		2	PORTED END PIECE ISO SIZE 1	
080	90042-0535		2	TERMINAL BOARD 19 CORDS	
100	90055-0217		1	ELBOW PIPE JOINT	
120	90328-0017		1	SILENCER, D=6 MM	
200	342713-0211		6	PLUG, EXT THREAD HEX SOCKET 8638-00-380	
250	90458-2960		1	ELBOW PIPE JOINT, EXT.THREAD,D=12MM-G3/8	
Y3105	90042-0538		1	PILOT VALVE L=500MM	
Y5501	90042-0538		1	PILOT VALVE L=500MM	
Y5502	90042-0538		1	PILOT VALVE L=500MM	
Y5503	90042-0539		1	PILOT VALVE L=350MM	

Pos	Part No	UN	Qty	Description	Page No

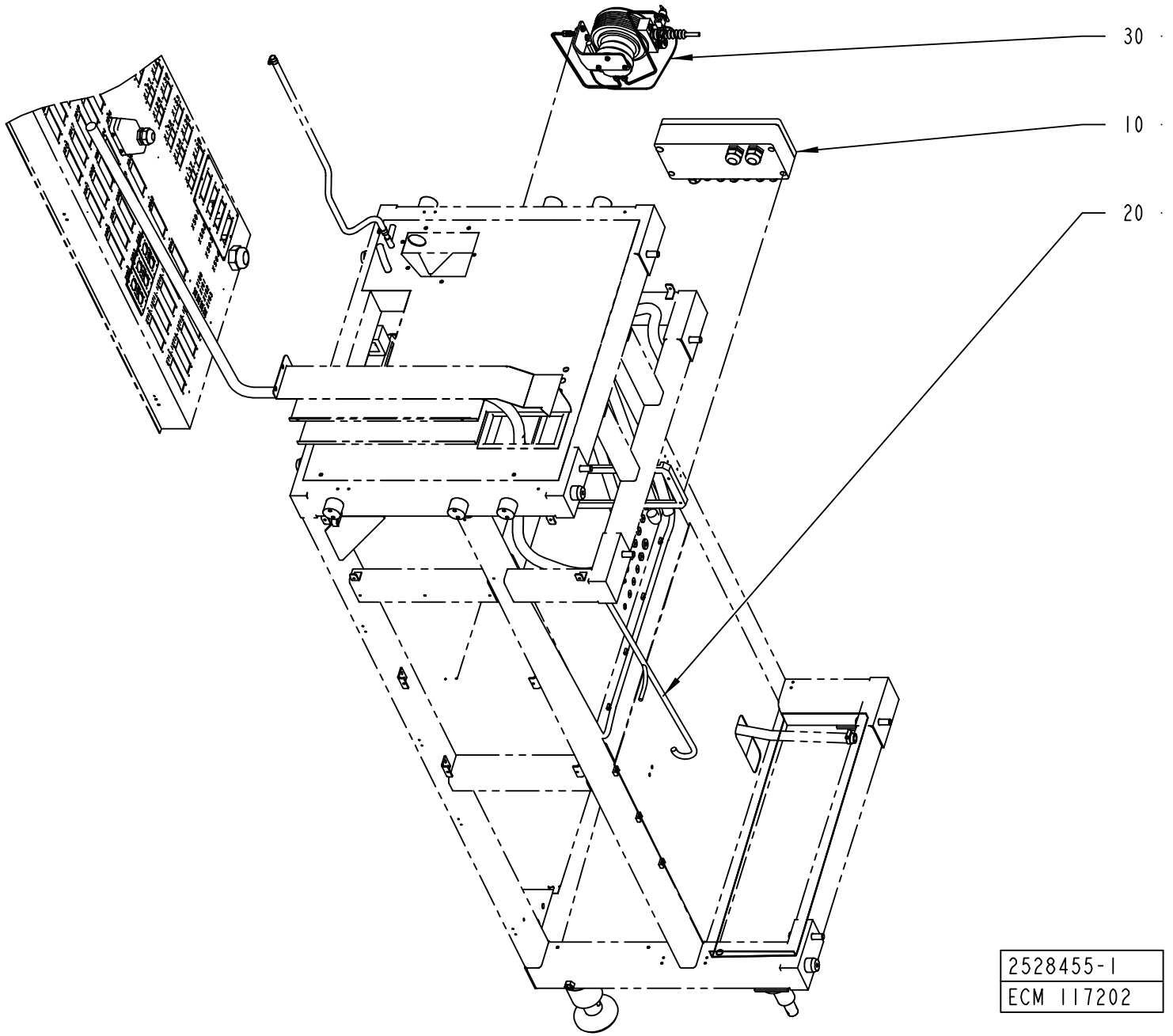
30
10
20
2528455-1
ECM 117202

ECM: 117202 - 20030403
Group number: 2528455-0100
Assembly Drawing: 2528455-1_1_AA

Pos	Part No	UN	Qty	Description	Page No
-					
010	2527253-0100		1	CONNECTION BOX	**2-55**
020	2529499-0100		1	CABLE HARNESS	**2-57, 2-59**
030	2519574-0100		1	HYDROGEN PEROXIDE CONCENTRATION METER	**2-61**

Pos	Part No	UN	Qty	Description	Page No

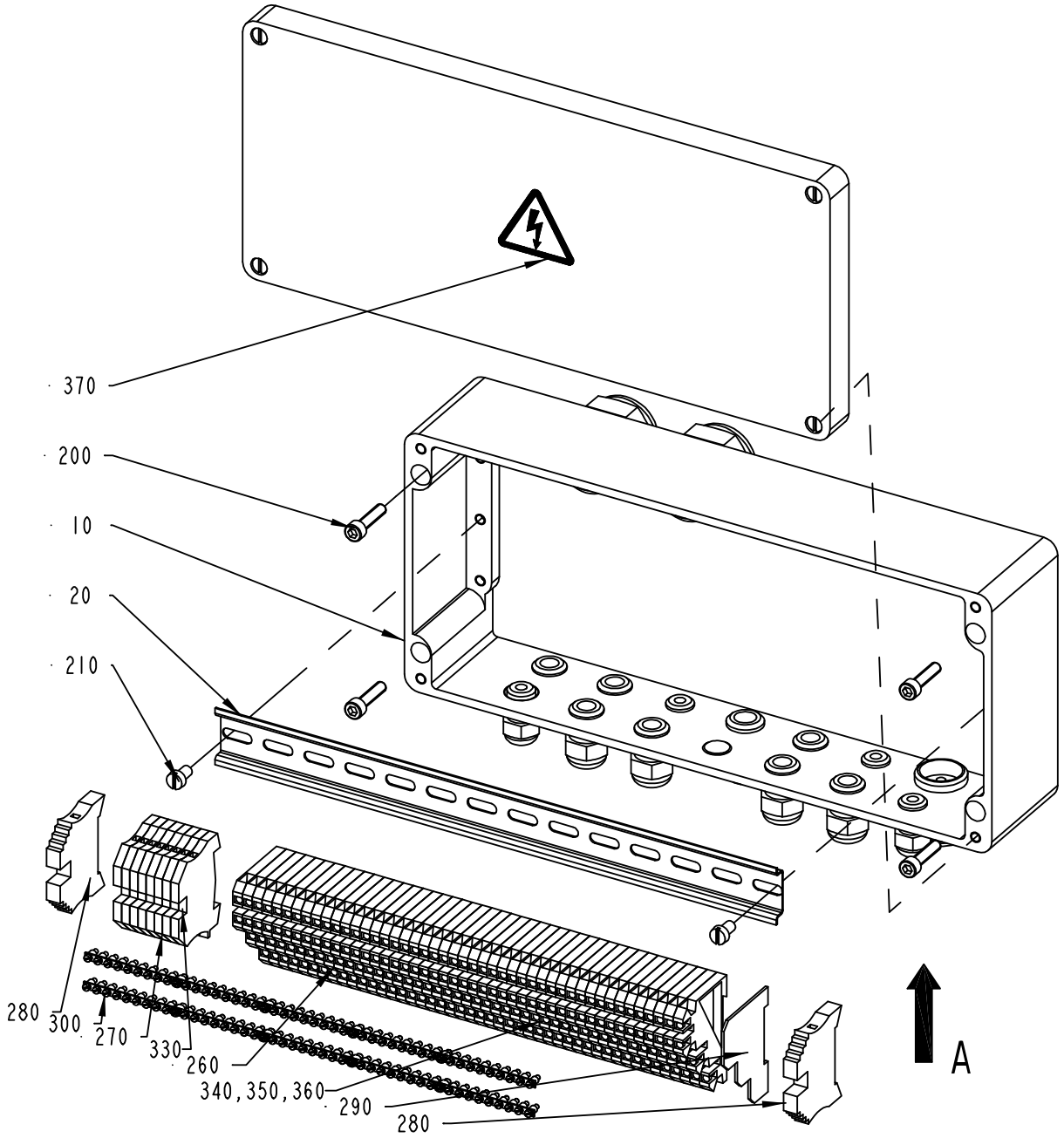

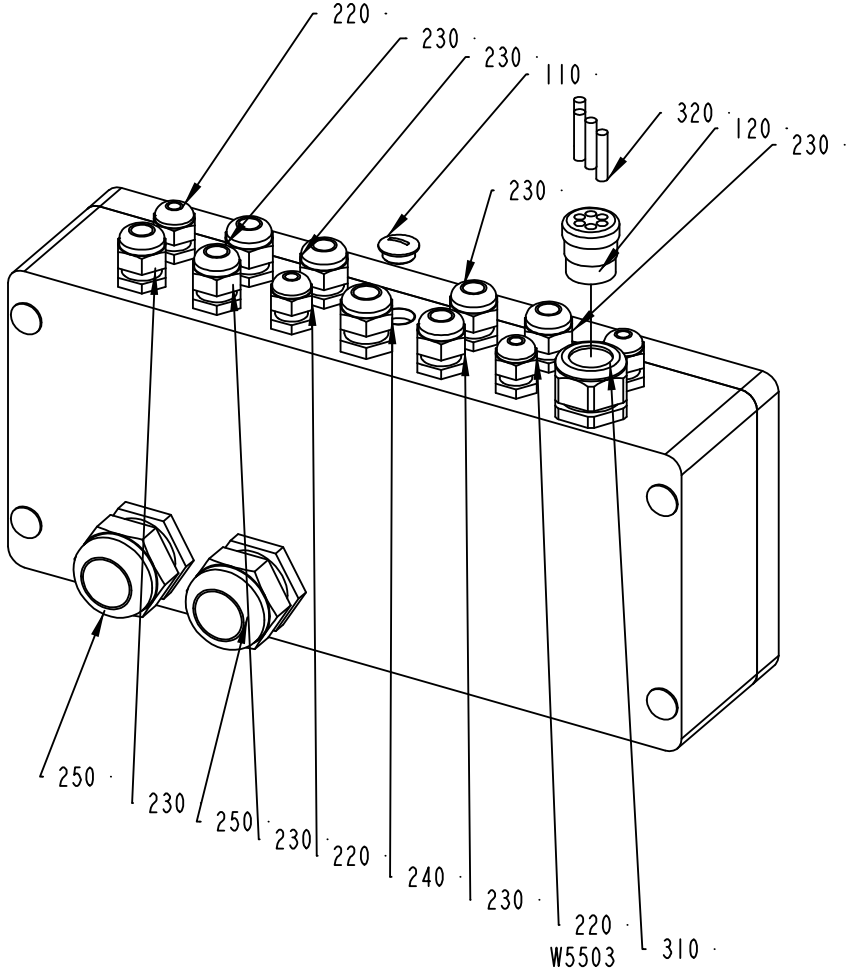

VIEW FROM A

2527253-1
ECM 197448

ECM: 205843 - 20050701
Group number: 2527253-0100
Assembly Drawing: 2527253-1_1_AB

Pos	Part No	UN	Qty	Description	Page No
-					
010	2537112-0000		1	BOX	
020	2546496-0000		1	RAIL	
110	90002-0013		1	BLANK-OFF PLUG, PR 15,2 SKINDICHT-BLK9	
120	90012-0125		1	GLAND FITTING	
200	312115-0372		4	SCREW ISO4762 M6X25 A4 80	
210	312121-0364		2	SCREW ISO 1207 M6X10 4.8 - 5.8 Z.PL.	
220	352103-0100		4	CABLE GLAND, STR 9, PR15,2/PG9	
230	352103-0106		7	CABLE GLAND, ST 11, PR18,6/PG11	
240	352103-0108		1	CABLE GLAND, ST 13,5 , PR20,4/PG13,5	
250	352103-0121		2	CABLE GLAND, ST 29, PR37,0/PG29	
260	353021-0301		46	TERMINALS,TRIPLE-LEVEL, DLI 2,5/35 PA	
270	353024-0204		8	EARTH TERMINAL WPE 2,5	
280	353031-0203		2	END SUPPORT, WEW 35/2	
290	353032-0301		1	END PLATE WAP, 13132.6	
300	353034-0404		10	BRIDGE CONNECTOR Q10, 13131.0	
310	353240-0005		1	GLAND W/O INSERT PG21 NORMAL	
320	353249-0303		4	SEALING PIN, 5,3X25	
330	359011-0834		1	SET OF SIGNS 6-GW(EARTH)	
340	359011-0817		1	SYMBOL 5-GW (+) 50PC	
350	359011-0818		1	SYMBOL 5-GW (-) 50PC	
360	359012-0800		2	MARKING LABEL, WHITE, BSGW, 800	
370	359705-0015		1	WARNING SIGN ISO, RISK OF ELECTRIC SHOCK	

Pos	Part No	UN	Qty	Description	Page No

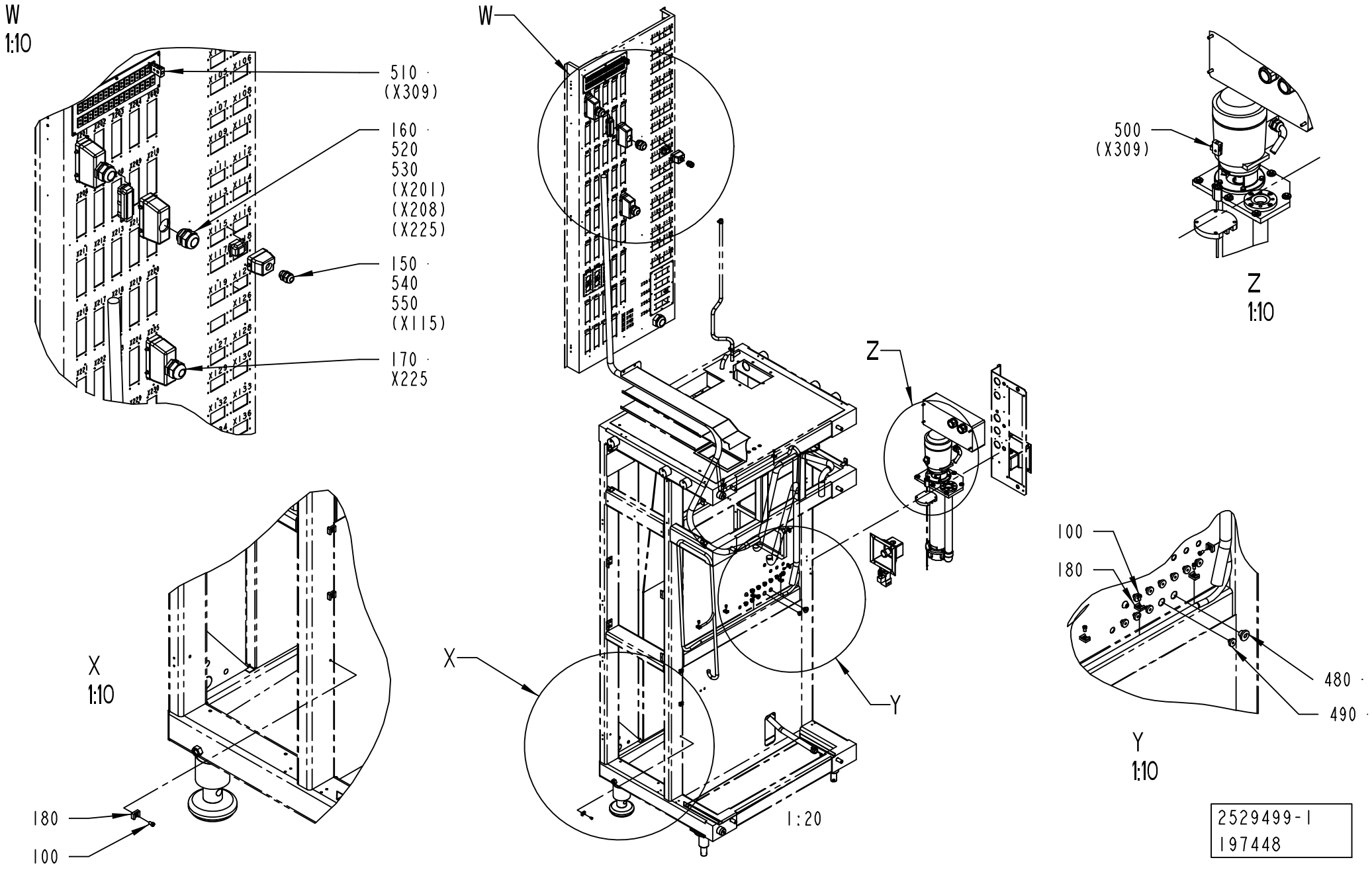
W
1:10
510 · (X309)
160 · 520 530 (X201) (X208) (X225)
150 · 540 550 (X115)
170 · X225
W
Z
X
Y
1:20
500 (X309)
Z
1:10
X
1:10
180
100
100
180
480 ·
490 ·
Y
1:10
2529499-1
197448

ECM: 217855 - 20050701
Group number: 2529499-0100
Assembly Drawing: 2529499-1_1_AB

This list covers pages from 2-56 to 2-59

Pos	Part No	UN	Qty	Description	Page No
-					
100	312125-0364		12	SCREW ISO 1207 M6X10 A4	
150	352103-0108		1	CABLE GLAND, ST 13,5 , PR20,4/PG13,5	
160	352103-0121		3	CABLE GLAND, ST 29, PR37,0/PG29	
170	352103-0120		1	CABLE GLAND, STR 29, PR37,0/PG29	
180	352113-0204		12	ANCHOR PLATES FOR STRIPS, TYPE TM3S25-M	
480	90015-0021		1	LEAD-IN, TET10-14, E-1458023	
490	90015-0021		10	LEAD-IN, TET10-14, E-1458023	
500	90326-0020		1	PLUG, FEMALE YELLOW CR-AL	
510	90326-0022		1	PLUG, MALE YELLOW CR-AL	
520	90110-0150		3	MALE INSERT 121110 0000	
530	90110-0152		3	CABLE HOOD 24-POL 70.352.2428.1	
540	90110-0157		1	CABLE HOOD 6-POL 70.352.0628.1	
550	90110-0159		1	MALE INSERT 70.310.0640.0	
560	359005-0010		1	MARKING LABEL KIT 0 - 9, 04.841.2150.0	
570	359005-0050		3	MARKING LABEL KIT X, 04.841.4550.0	
580	90110-0385		3	MARKING HOLDER, 4.242.3853.0	
W1005	351150-0418	MM	6000	CABLE OLFLEX 4X2,5 MM2 LIGHT/GREY	
W1304	90220-0034	MM	7500	THERMOCABLE TEX/SITW-20F-KX 2X0,5MM2	
W1802	351150-0404	MM	2500	CABLE OLFLEX 4X0,75 MM2 LIGHT/GREY	
W1804	351150-0403	MM	3800	CABLE OLFLEX 3X0,75 MM2 LIGHT/GREY	
W1805	351150-0403	MM	3800	CABLE OLFLEX 3X0,75 MM2 LIGHT/GREY	
W1806	351150-0404	MM	2500	CABLE OLFLEX 4X0,75 MM2 LIGHT/GREY	
W2254	351150-0405	MM	3000	CABLE OLFLEX 5X0,75 MM2 LIGHT/GREY	
W2255	351150-0405	MM	5000	CABLE OLFLEX 5X0,75 MM2 LIGHT/GREY	
W4001	351150-0425	MM	5000	CABLE OLFLEX 25X0,75 MM2 LIGHT/GREY	
W4002	351150-0425	MM	5000	CABLE OLFLEX 25X0,75 MM2 LIGHT/GREY	
W4022	351150-0403	MM	2300	CABLE OLFLEX 3X0,75 MM2 LIGHT/GREY	
W4054	351150-0406	MM	2000	CABLE OLFLEX 7X0,75 MM2 LIGHT/GREY	
W5503	351150-0403	M	3	CABLE OLFLEX 3X0,75 MM2 LIGHT/GREY	

Pos	Part No	UN	Qty	Description	Page No

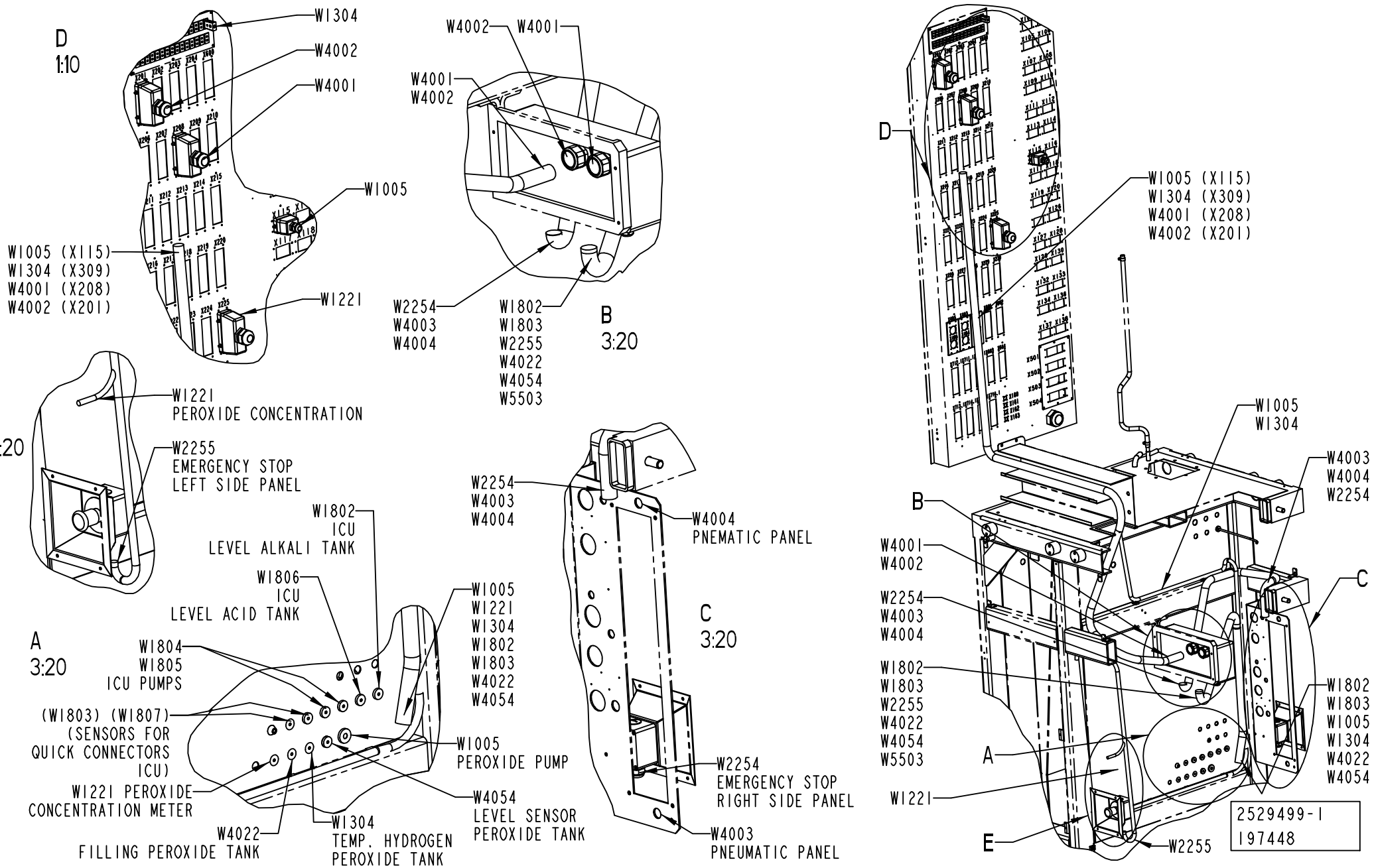
D
1:10
W1304
W4002
W4001
W1005
W1005 (X115)
W1304 (X309)
W4001 (X208)
W4002 (X201)
W1221
W4002
W4001
W4001
W4002
W2254
W4003
W4004
W1802
W1803
W2255
W4022
W4054
W5503
B
3:20
E
3:20
W1221
PEROXIDE CONCENTRATION
W2255
EMERGENCY STOP
LEFT SIDE PANEL
W1802
ICU
LEVEL ALKALI TANK
W1806
ICU
LEVEL ACID TANK
A
3:20
W1804
W1805
ICU PUMPS
(W1803) (W1807)
(SENSORS FOR
QUICK CONNECTORS
ICU)
W1221 PEROXIDE
CONCENTRATION METER
W4022
FILLING PEROXIDE TANK
W1304
TEMP. HYDROGEN
PEROXIDE TANK
W1005
W1221
W1304
W1802
W1803
W4022
W4054
W1005
PEROXIDE PUMP
W4054
LEVEL SENSOR
PEROXIDE TANK
W2254
W4003
W4004
W4004
PNEMATIC PANEL
C
3:20
W2254
EMERGENCY STOP
RIGHT SIDE PANEL
W4003
PNEUMATIC PANEL
D
W1005 (X115)
W1304 (X309)
W4001 (X208)
W4002 (X201)
W1005
W1304
W4003
W4004
W2254
B
W4001
W4002
C
W2254
W4003
W4004
W1802
W1803
W2255
W4022
W4054
W5503
A
W1221
E
W2255
W1802
W1803
W1005
W1304
W4022
W4054
2529499-1
197448

ECM: 217855 - 20050701
Group number: 2529499-0100
Assembly Drawing: 2529499-1_2_AB

This list covers pages from 2-56 to 2-59

Pos	Part No	UN	Qty	Description	Page No
-					
100	312125-0364		12	SCREW ISO 1207 M6X10 A4	
150	352103-0108		1	CABLE GLAND, ST 13,5 , PR20,4/PG13,5	
160	352103-0121		3	CABLE GLAND, ST 29, PR37,0/PG29	
170	352103-0120		1	CABLE GLAND, STR 29, PR37,0/PG29	
180	352113-0204		12	ANCHOR PLATES FOR STRIPS, TYPE TM3S25-M	
480	90015-0021		1	LEAD-IN, TET10-14, E-1458023	
490	90015-0021		10	LEAD-IN, TET10-14, E-1458023	
500	90326-0020		1	PLUG, FEMALE YELLOW CR-AL	
510	90326-0022		1	PLUG, MALE YELLOW CR-AL	
520	90110-0150		3	MALE INSERT 121110 0000	
530	90110-0152		3	CABLE HOOD 24-POL 70.352.2428.1	
540	90110-0157		1	CABLE HOOD 6-POL 70.352.0628.1	
550	90110-0159		1	MALE INSERT 70.310.0640.0	
560	359005-0010		1	MARKING LABEL KIT 0 - 9, 04.841.2150.0	
570	359005-0050		3	MARKING LABEL KIT X, 04.841.4550.0	
580	90110-0385		3	MARKING HOLDER, 4.242.3853.0	
W1005	351150-0418	MM	6000	CABLE OLFLEX 4X2,5 MM2 LIGHT/GREY	
W1304	90220-0034	MM	7500	THERMOCABLE TEX/SITW-20F-KX 2X0,5MM2	
W1802	351150-0404	MM	2500	CABLE OLFLEX 4X0,75 MM2 LIGHT/GREY	
W1804	351150-0403	MM	3800	CABLE OLFLEX 3X0,75 MM2 LIGHT/GREY	
W1805	351150-0403	MM	3800	CABLE OLFLEX 3X0,75 MM2 LIGHT/GREY	
W1806	351150-0404	MM	2500	CABLE OLFLEX 4X0,75 MM2 LIGHT/GREY	
W2254	351150-0405	MM	3000	CABLE OLFLEX 5X0,75 MM2 LIGHT/GREY	
W2255	351150-0405	MM	5000	CABLE OLFLEX 5X0,75 MM2 LIGHT/GREY	
W4001	351150-0425	MM	5000	CABLE OLFLEX 25X0,75 MM2 LIGHT/GREY	
W4002	351150-0425	MM	5000	CABLE OLFLEX 25X0,75 MM2 LIGHT/GREY	
W4022	351150-0403	MM	2300	CABLE OLFLEX 3X0,75 MM2 LIGHT/GREY	
W4054	351150-0406	MM	2000	CABLE OLFLEX 7X0,75 MM2 LIGHT/GREY	
W5503	351150-0403	M	3	CABLE OLFLEX 3X0,75 MM2 LIGHT/GREY	

Pos	Part No	UN	Qty	Description	Page No

HYDROGEN PEROXIDE CONCENTRATION METER

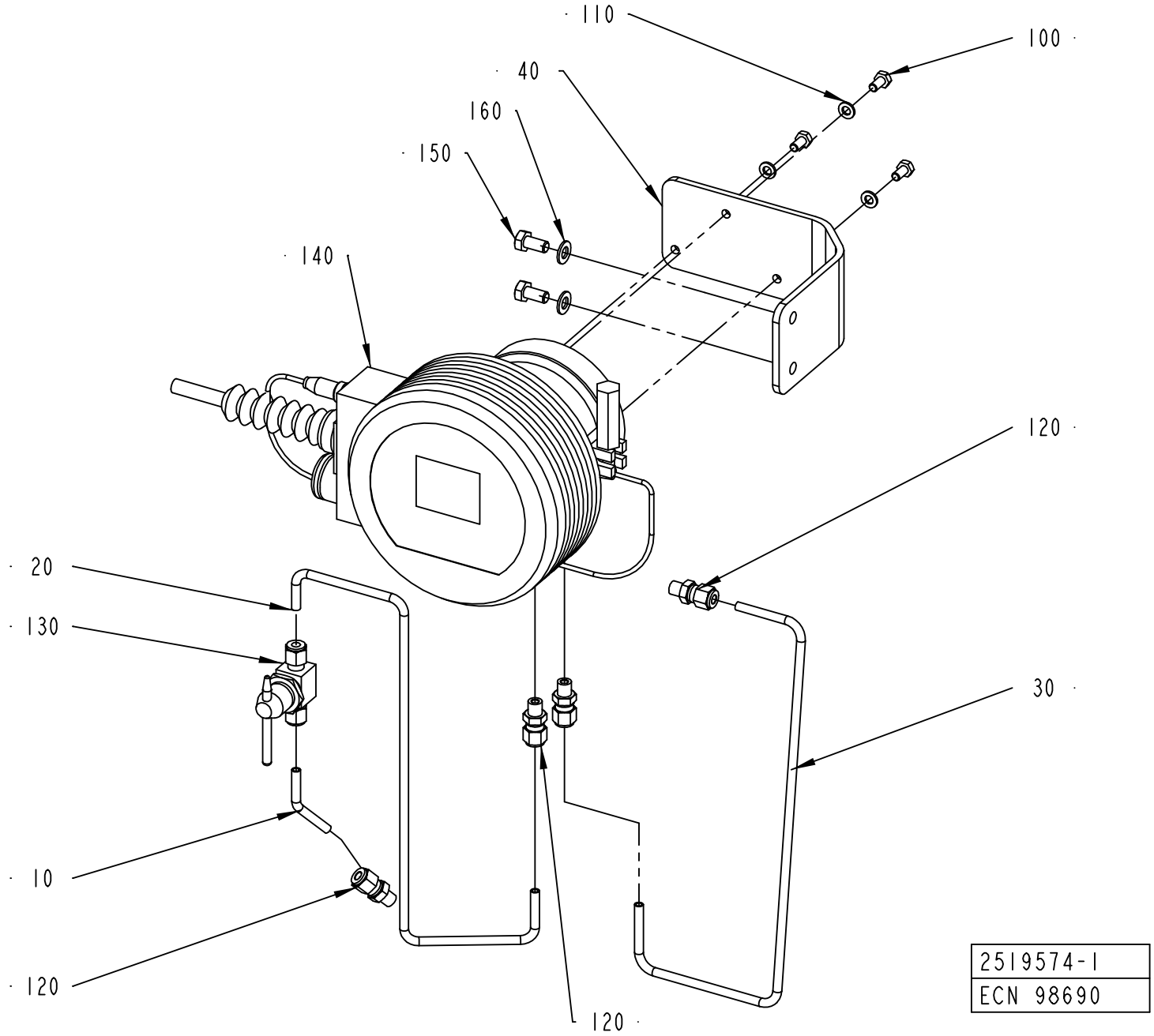

2519574-1
ECN 98690

ECM: 224852 - 20050831
Group number: 2519574-0100
Assembly Drawing: 2519574-1_1_AA

Pos	Part No	UN	Qty	Description	Page No
-					
010	2501378-0000		1	PIPE	
020	2531500-0000		1	PIPE	
030	2531501-0000		1	PIPE	
040	2519556-0000		1	BRACKET	
100	312105-0366		3	SCREW M6S ISO 4017 M6X12 A480	
110	315105-0153		3	WASHER BRB 6,4X12 RFR	
120	90458-1477		4	CONNECTOR 6-1/8 NPT, EXT. TAPERED	
130	90458-1478		1	BALL VALVE SS-43T6MM-SH-10147	
140	90458-1977		1	REFRACTOMETER SET DA15FC15A DFTP A	
	90458-1892		*1*	*GASKET A0539066 80,5X90,5X2 MM*	
	90458-1893		*1*	*FILTER CARTRIDGE A0111004*	
	90458-1940		*1*	*CLAMP A0515170 3" AISI 304*	
	90458-1941		*1*	*O-RING A0701180 10,82X1,78 MM*	
	90458-1943		*1*	*O-RING A0701145 53,65X2,62 MM*	
	90458-1950		*1*	*PROBE A0803021 IPT100 1/8" GAS TRIC-B*	
	90458-1976		*1*	*CABLE A0804273*	
	90458-1979		*1*	*BELLOWS A0710020*	
	90458-1980		*1*	*REFRACTOMETER DA16FC16B*	
	90458-2269		*1*	*DEFLECTOR A0808137*	
150	312105-0449		2	SCREW M6S ISO 4017 M8X16 A480	
160	315105-0165		2	WASHER BRB 8,4X16 RFR	

Pos	Part No	UN	Qty	Description	Page No

Machine Type | Group Description | Used-In | Group Number | Page No

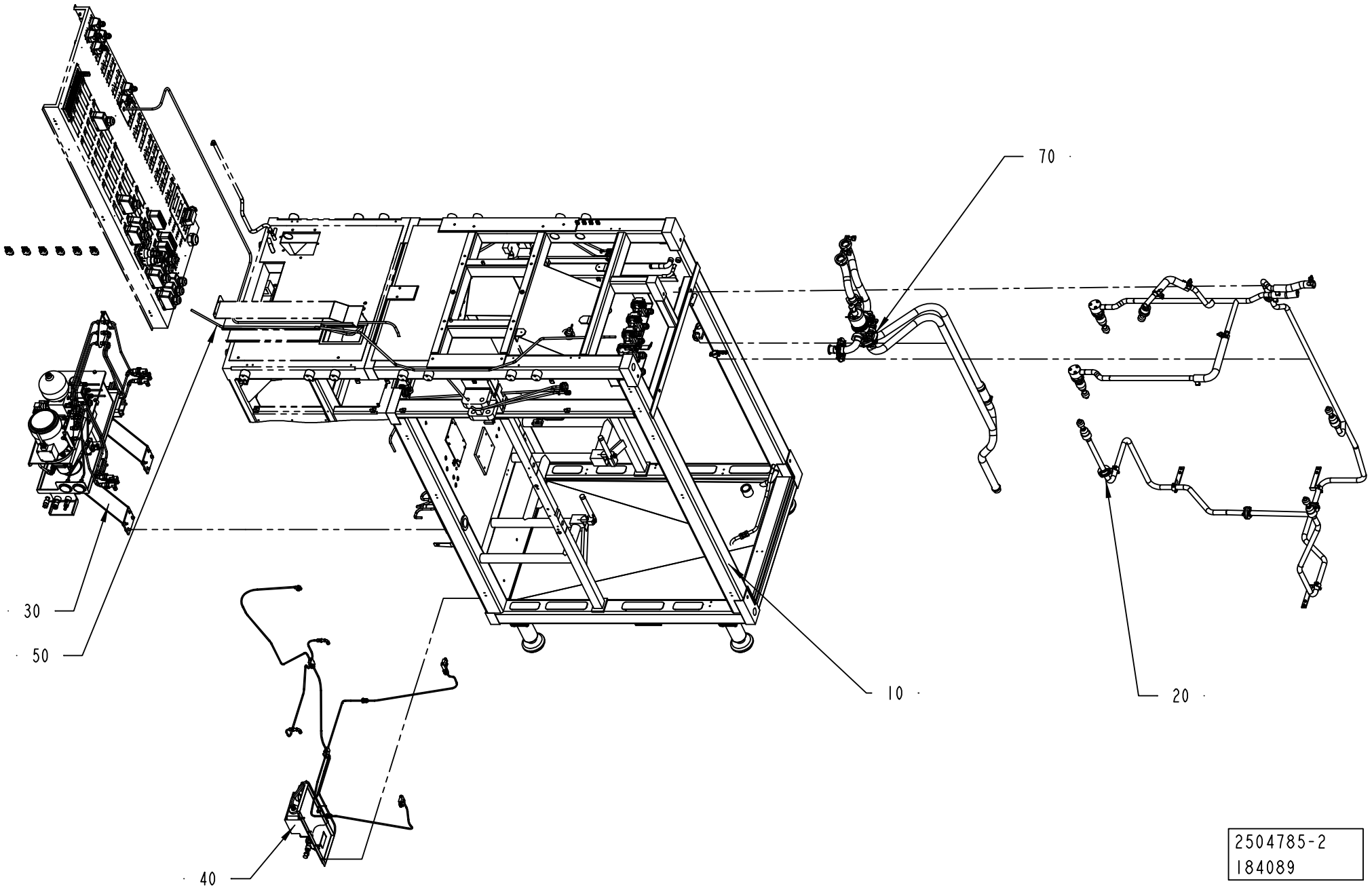
70
30
50
10
20
40
2504785-2
184089

ECM: 274233 - 20061101
Group number: 2504785-0250
Assembly Drawing: 2504785-2_1_AA

Pos	Part No	UN	Qty	Description	Page No
-					
010	2504786-0200		1	MACHINE BODY	**2-65**
020	2504787-0100		1	CLEANING SYSTEM	**2-69**
030	2546500-0100		1	HYDRAULIC SYSTEM	**2-71**
040	2529167-0200		1	LUBRICATING SYSTEM	**2-85**
050	2529116-0150		1	ELECTRIC EQUIPMENT	**2-91**
070	2504792-0100		1	DRAINING	**2-113**

Pos	Part No	UN	Qty	Description	Page No

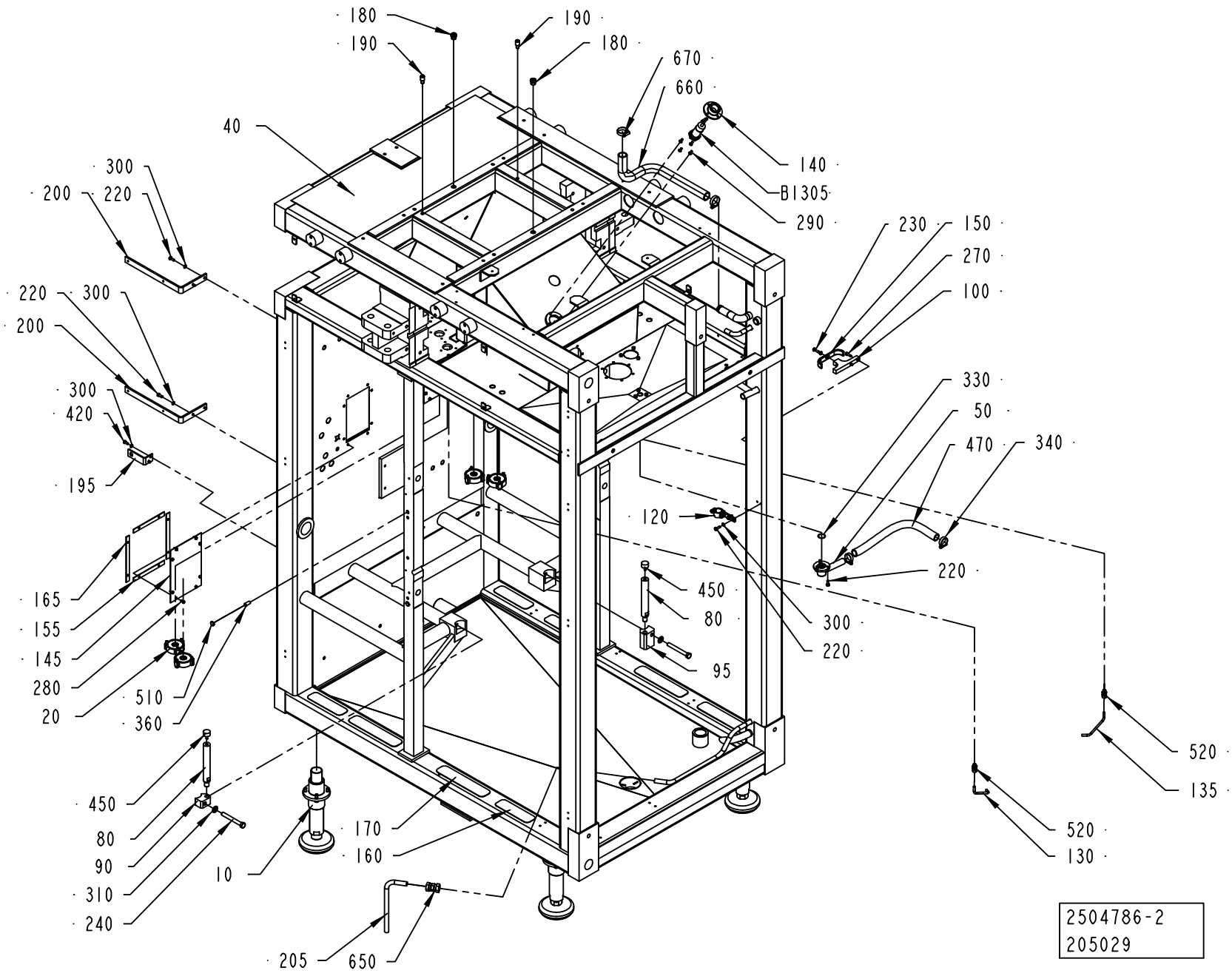
180
190
190
180
670
660
40
140
B1305
290
300
200
220
230
150
270
100
220
300
200
330
50
300
420
470
340
195
120
220
450
80
165
155
145
280
20
510
360
300
220
95
520
135
520
130
450
80
90
310
240
10
170
160
205
650
2504786-2
205029

ECM: 270308 - 20060704
Group number: 2504786-0200
Assembly Drawing: 2504786-2_1_AC

Pos	Part No	UN	Qty	Description	Page No
A3/FLEX					
145	2598844-0000		2	COVER	
Common Parts					
010	2761766-0100		4	FOOT	**2-11**
020	2542491-0100		4	HOLDER	**2-67**
040	2723460-0000		1	FRAME	
050	2509552-0000		1	DRAINING	
080	2542340-0000		2	COLUMN	
090	2542493-0000		1	BLOCK	
095	2542494-0000		1	BLOCK	
100	2510901-0000		1	BRACKET	
120	2510904-0000		1	HOLDER	
130	2542341-0000		1	DRAINING	
135	2543349-0000		1	DRAINING	
140	450457-0000		1	FLANGE	
150	2537120-0000		1	BRACKET	
155	2529341-0000		4	GASKET	
160	1103298-0000		4	NON-SKID	
165	2529342-0000		4	GASKET	
170	1103300-0000		4	NON-SKID	
180	1490046-0000		2	PIN	
190	2514804-0000		2	PIN	
195	2764809-0000		1	CANTILEVER	
200	2524504-0000		2	BRACKET	
205	2565526-0000		1	PIPE	
220	312105-0368		9	SCREW M6S ISO 4017 M6X16 A480	
230	312105-0370		1	SCREW M6S ISO 4017 M6X20 A480	
240	312105-0552		2	SCREW M6S ISO 4014 M12X100 A480	
270	312115-0368		2	SCREW ISO4762 M6X16 A4 80	
280	312105-0325		16	SCREW M6S ISO 4017 M5X10 A480	
290	312155-0329		4	SCREW DIN 7991 MF6S M5X16 A4 70	
300	315105-0153		9	WASHER BRB 6,4X12 RFR	
310	315105-0178		2	WASHER BRB 13X24 RFR	
330	315202-0709		1	O-RING 23,52X1,78 MM	
340	342991-0105		2	HOSE CLIP,WORM DRIVE TYPE (27)-30	
360	311103-1456		4	PARALLEL PIN ISO 2338 10M6X24 A1	
420	312105-0366		2	SCREW M6S ISO 4017 M6X12 A480	
450	90347-0034		2	VIBRATION DAMPER	
470	90166-0151	MM	440	HOSE	
510	90261-0057		4	PLUG, BLIND, PLASTIC	
520	90030-0184		2	CONN. STR. GA-6-G1/8	
530	312105-0631		6	SCREW M6S ISO 4014 M16X55 A480	
540	315105-0186		6	WASHER BRB 17X30 RFR	
600	90157-0016		1	LOCKING FLUID LOCTITE 242 50 ML	
650	342727-0214		1	CONN. PIPE G-15-L/SY	
660	90166-0158	MM	700	HOSE	
670	342991-0106		2	HOSE CLIP,WORM DRIVE TYPE (30)-36	
B1305	90458-0256		1	PROXIMITY SWITCH IIA 3010-BPKG/6M	

Machine Type | Group Description | Used-In | Group Number | Page No

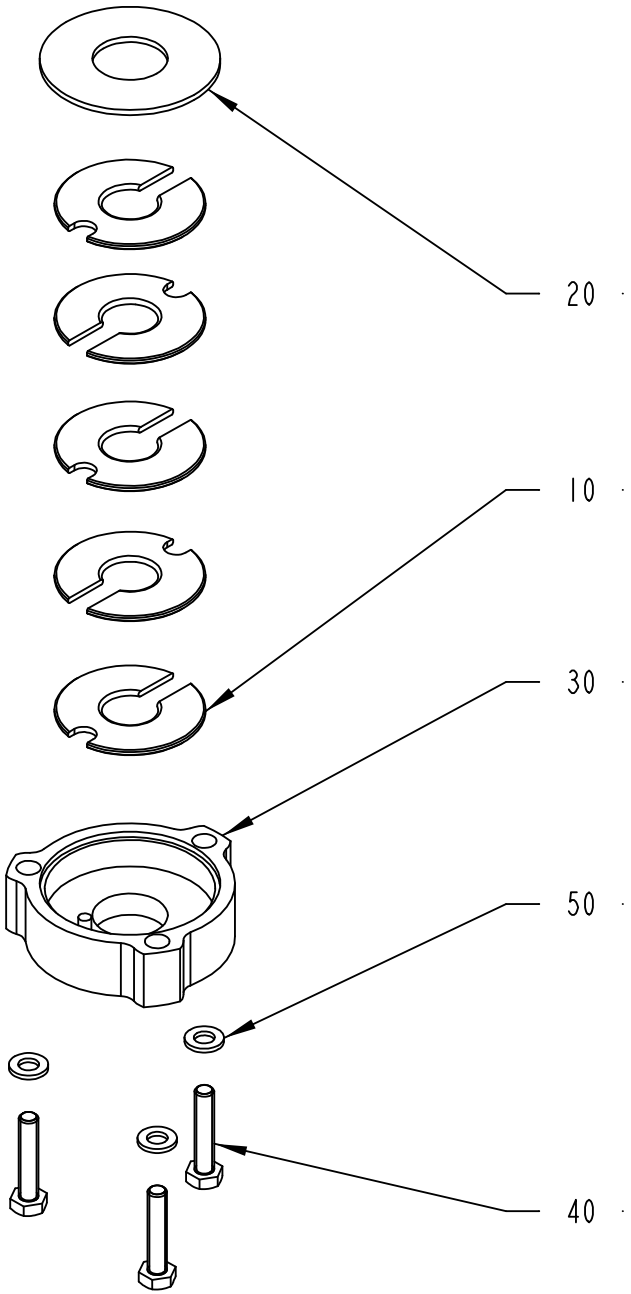

2542491-1
ECM 117204

ECM: 189758 - 20041104
Group number: 2542491-0100
Assembly Drawing: 2542491-1_1_AA

Pos	Part No	UN	Qty	Description	Page No
-					
010	2544303-0000		5	GASKET	
020	2542490-0000		1	LID	
030	2542492-0000		1	LID	
040	312109-0374		3	SCREW M6S ISO 4017 M6X30 A480	
050	315105-0153		3	WASHER BRB 6,4X12 RFR	

Pos	Part No	UN	Qty	Description	Page No

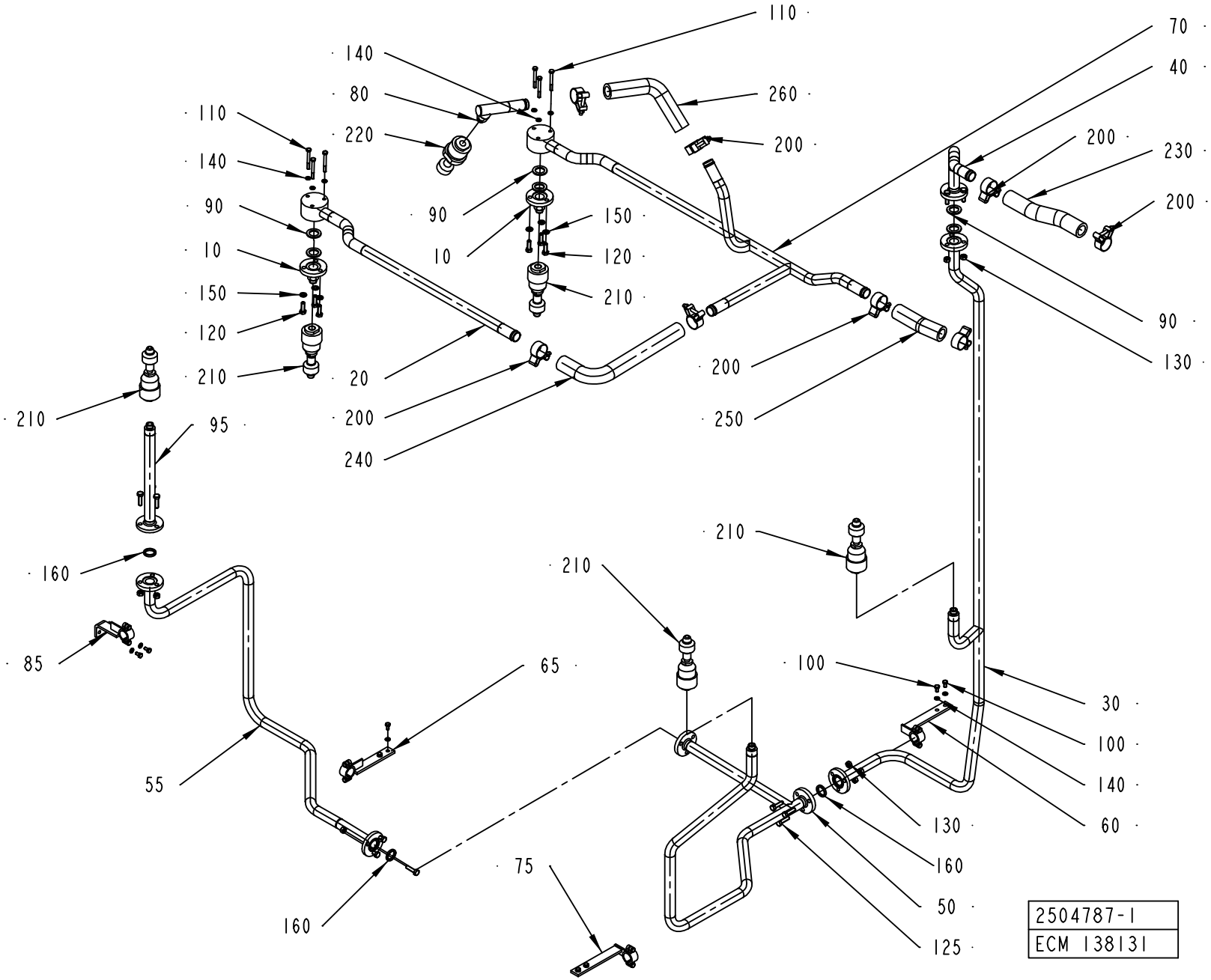
110
140
80
220
260
200
70
40
200
230
200
110
140
90
10
150
120
210
90
150
120
210
20
200
240
200
250
90
130
210
95
210
160
85
210
210
100
30
100
140
60
65
55
130
160
50
125
75
160
2504787-1
ECM 138131

ECM: 189759 - 20041104
Group number: 2504787-0100
Assembly Drawing: 2504787-1_1_AB

Pos	Part No	UN	Qty	Description	Page No
-					
010	1511203-0000		2	PIPE	
020	2506653-0000		1	PIPE	
030	2506933-0000		1	PIPE	
040	2506934-0000		1	PIPE	
050	2508424-0000		1	PIPE	
055	2529069-0000		1	PIPE	
060	2508427-0000		1	BRACKET	
065	2529110-0000		1	BRACKET	
070	2508428-0000		1	PIPE	
075	2529111-0000		1	BRACKET	
080	2510833-0000		1	PIPE	
085	2544213-0000		1	BRACKET	
090	1037443-0000		6	GASKET	
095	2544214-0000		1	PIPE	
100	312105-0366		8	SCREW M6S ISO 4017 M6X12 A480	
110	312105-0381		6	SCREW M6S ISO 4014 M6X55 A480	
120	312105-0453		6	SCREW M6S ISO 4017 M8X25 A480	
125	312105-0455		9	SCREW M6S ISO 4017 M8X30 A480	
130	312605-0318		12	HEXAGON NUT, M6M M8 A280	
140	315105-0153		14	WASHER BRB 6,4X12 RFR	
150	315105-0165		6	WASHER BRB 8,4X16 RFR	
160	315229-0103		3	GASKETS, 23,1X30,1X3,7 MM 1" FDA	
200	90459-2366		8	HOSE CLIP, (32)-35	
210	90424-0066		5	ROT.SPRAY NOZZLE, D26984-B3/8"-PVDF/4.5	
220	90424-0071		1	ROT.SPRAY NOZZLE, D40140-R3/8-PVDF 4.5	
230	90166-0233	MM	260	HOSE	
240	90166-0233	MM	430	HOSE	
250	90166-0233	MM	175	HOSE	
260	90166-0233	MM	300	HOSE	

Pos	Part No	UN	Qty	Description	Page No

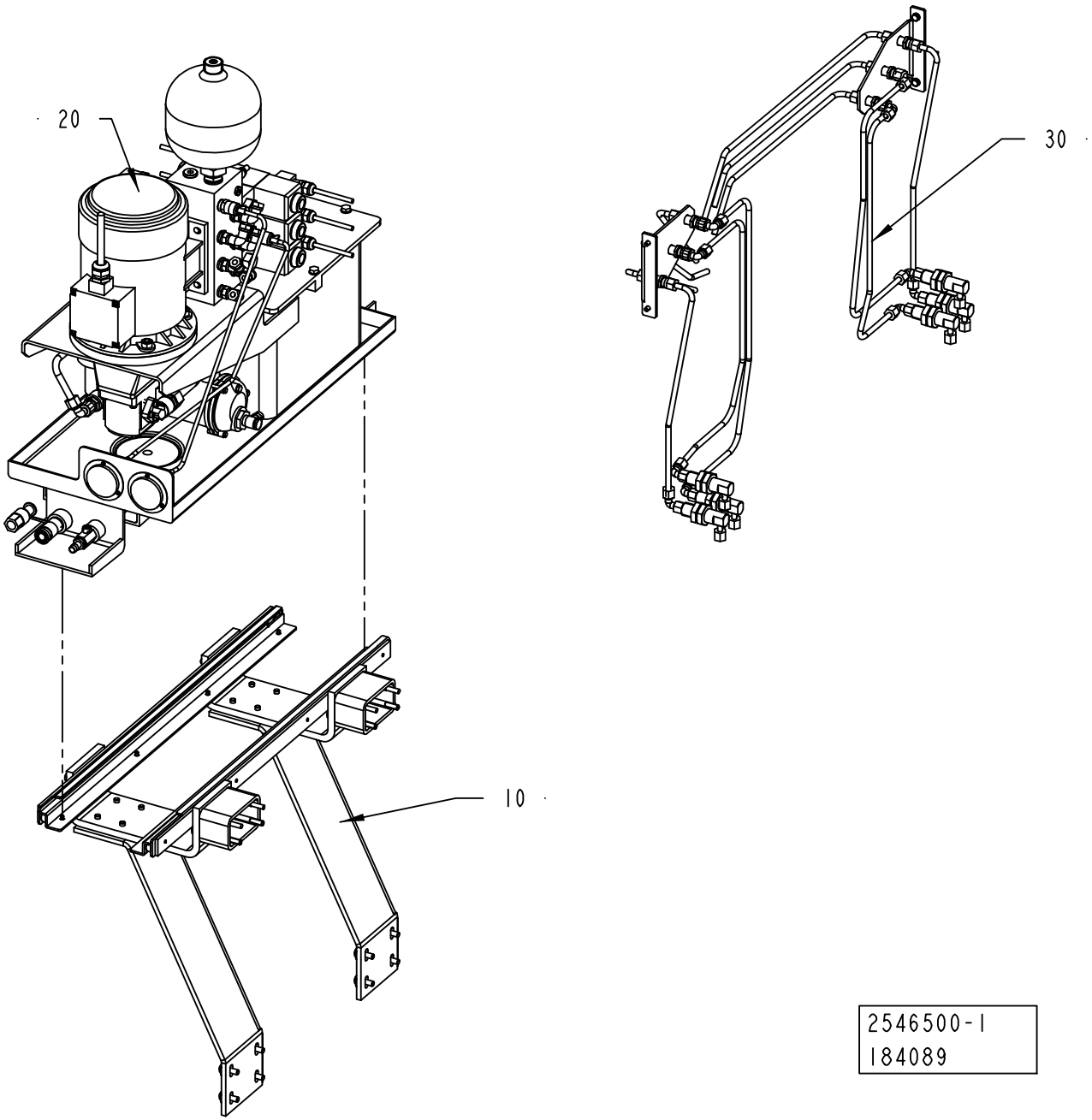
20
30
10
2546500-1
184089

ECM: 195315 - 20050620
Group number: 2546500-0100
Assembly Drawing: 2546500-1_1_AB

Pos	Part No	UN	Qty	Description	Page No
-					
005	2552001-0000		1	HYDRAULIC DIAGRAM	
010	2546499-0200		1	GUIDE	**2-73**
020	2558947-0200		1	HYDRAULIC UNIT	**2-75**
030	2520484-0100		1	PIPE WORK-HYDRAULIC	**2-83**

Pos	Part No	UN	Qty	Description	Page No

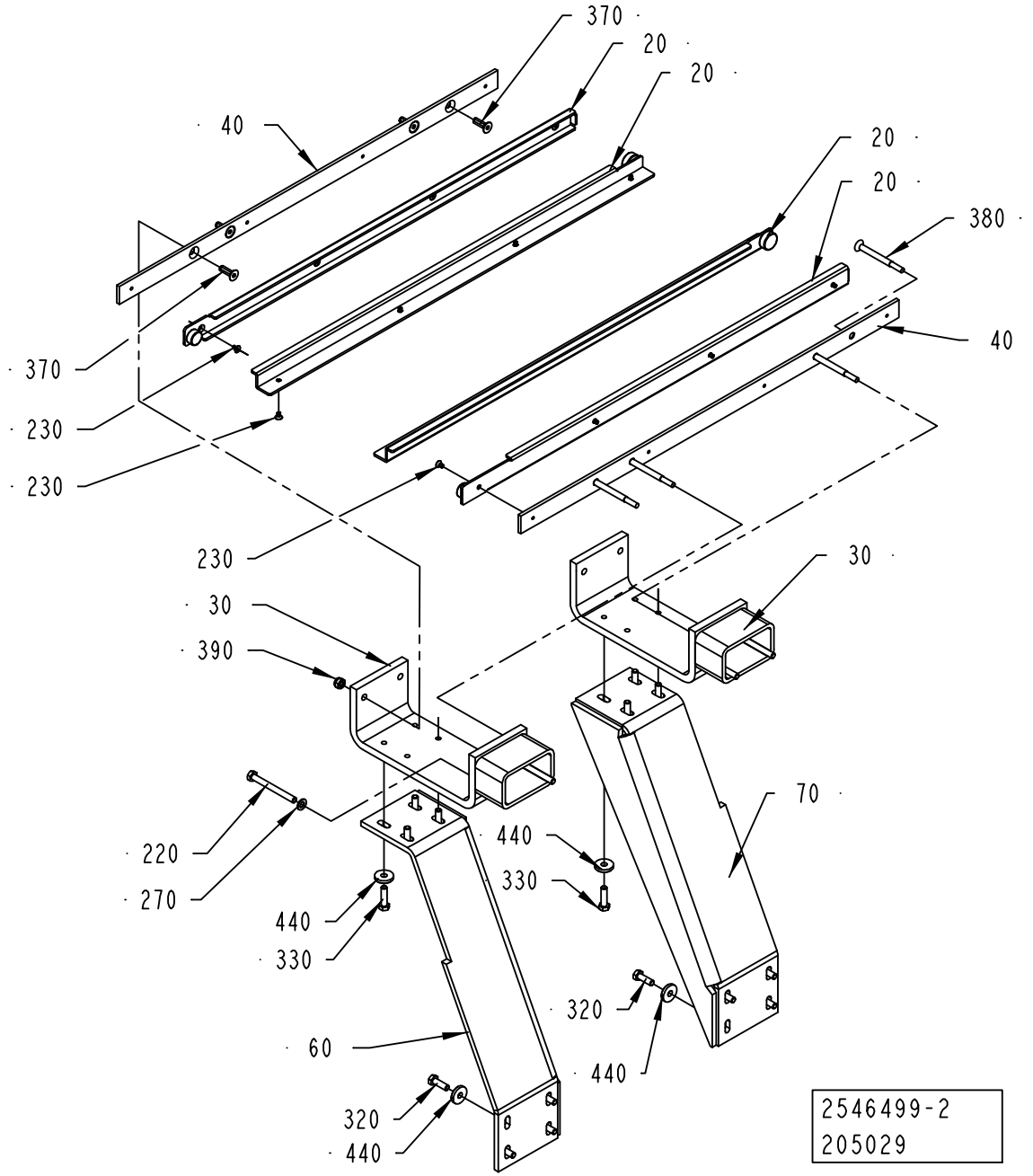
370
20
20
40
20
20
380
40
370
230
230
230
30
30
390
220
270
440
330
440
330
60
320
440
70
440
330
320
440
2546499-2
205029

ECM: 224431 - 20060701
Group number: 2546499-0200
Assembly Drawing: 2546499-2_1_AB

Pos	Part No	UN	Qty	Description	Page No
-					
020	90459-5633		1	GUIDE CONSOLE, 30X13X750	
030	2686319-0000		2	BRACKET	
040	2686318-0000		2	HOLDER	
060	2686317-0000		1	SUPPORT	
070	2770115-0000		1	SUPPORT	
220	312105-0467		4	SCREW M6S ISO 4014 M8X80 A480	
230	312155-0323		16	SCREW DIN 7991 MF6S M5X8 A4 70	
270	315105-0165		4	WASHER BRB 8,4X16 RFR	
320	312105-0453		8	SCREW M6S ISO 4017 M8X25 A480	
330	312105-0455		8	SCREW M6S ISO 4017 M8X30 A480	
370	312155-0453		4	SCREW DIN 7991 MF6S M8X25 A4 70	
380	90287-0264		4	SCREW	
390	312812-0318		4	HEXAGON NUT, NY-LOCK M8 A480	
440	315125-0165		16	WASHER TBRSB 8,4X26X5 A4	

Pos	Part No	UN	Qty	Description	Page No

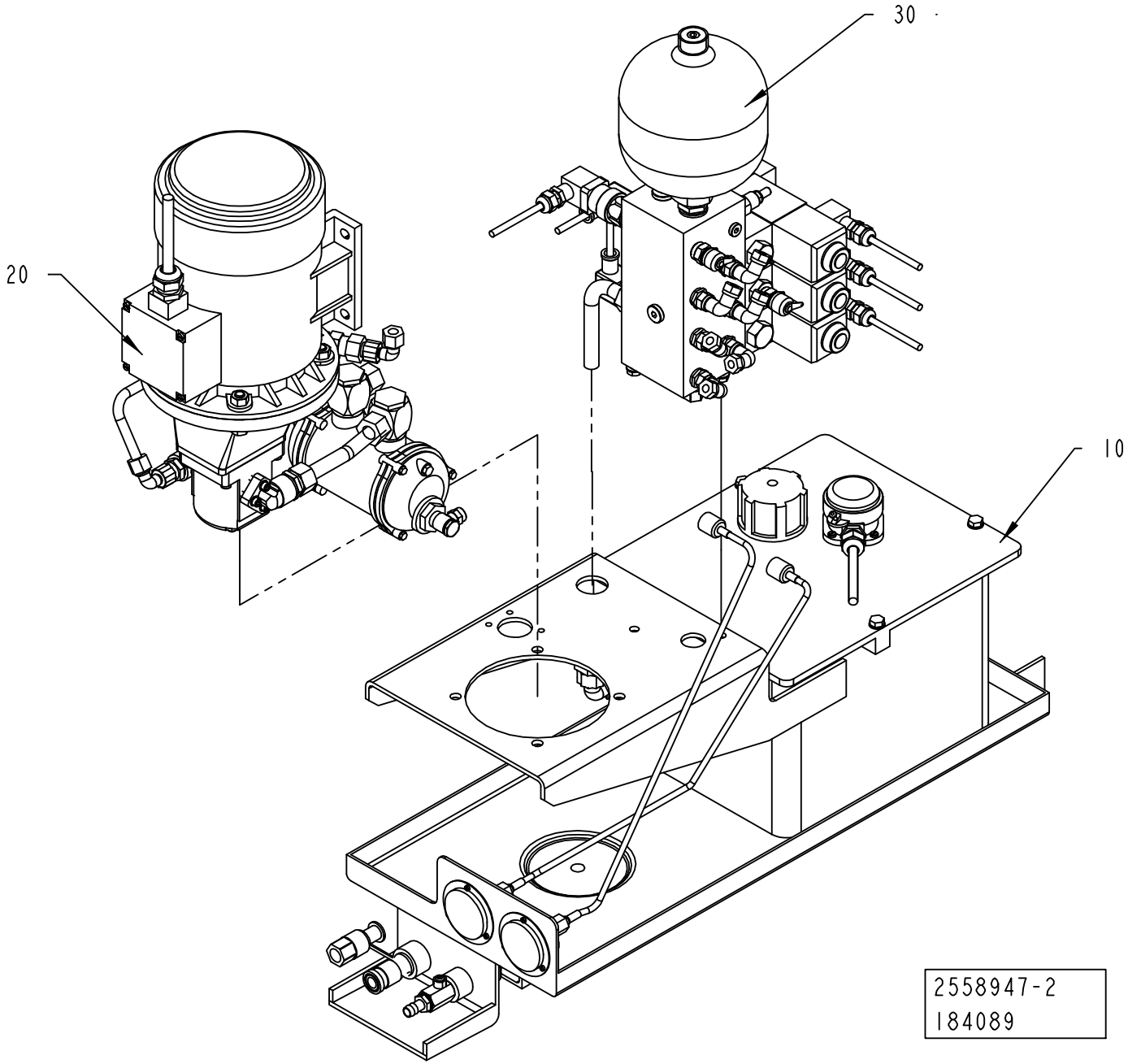
30
20
10
2558947-2
184089

ECM: 192979 - 20050620
Group number: 2558947-0200
Assembly Drawing: 2558947-2_1_AA

Pos	Part No	UN	Qty	Description	Page No
-					
010	2558845-0200		1	TANK	**2-77**
020	2558930-0100		1	PUMP	**2-79**
030	2559111-0200		1	HYDRAULIC VALVE	**2-81**

Pos	Part No	UN	Qty	Description	Page No

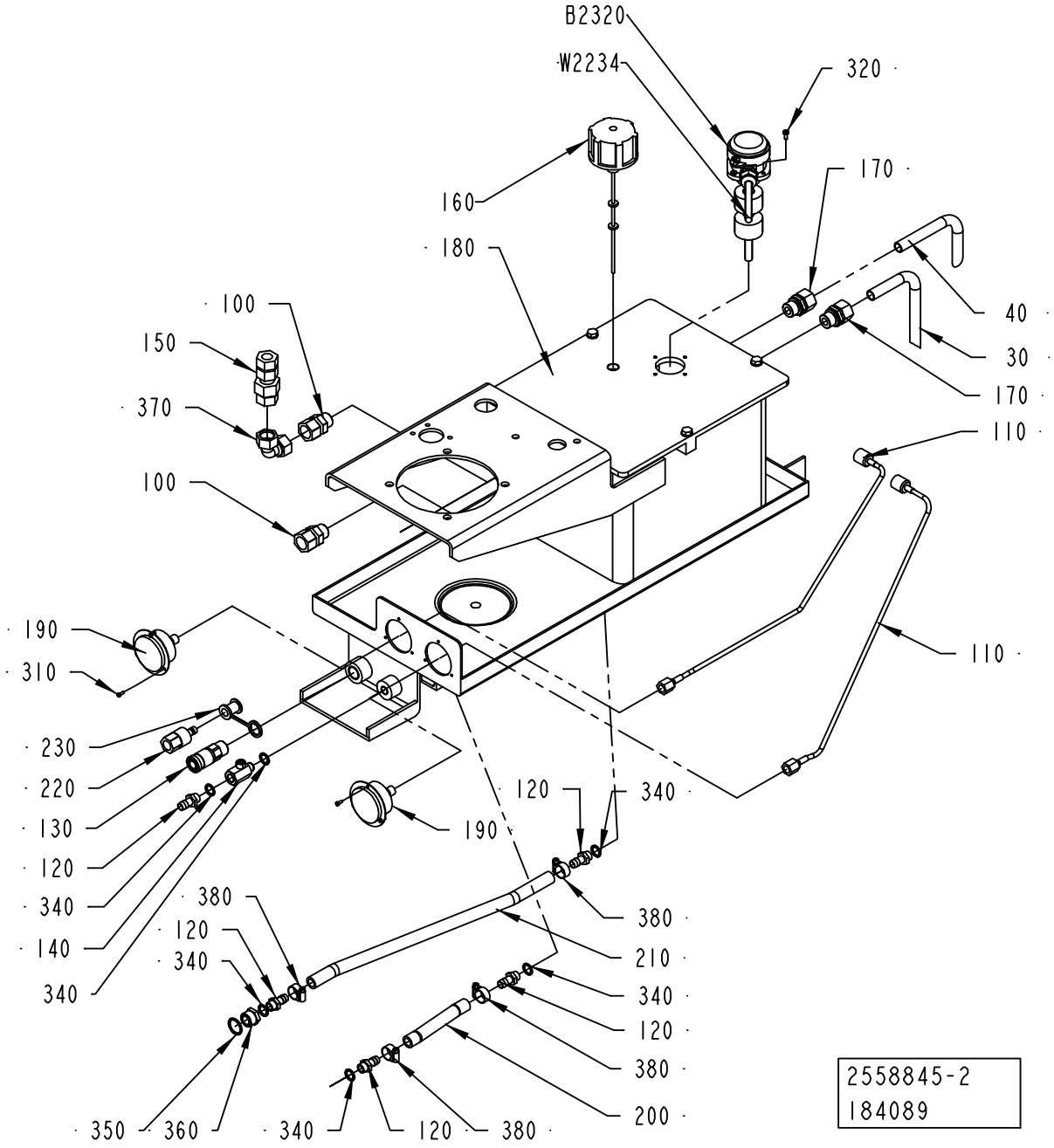
B2320
W2234
320
160
170
180
100
150
370
100
40
30
170
110
190
310
110
230
220
130
120
340
140
340
120
340
190
380
120
340
380
210
340
120
380
200
350
360
340
120
380
2558845-2
184089

ECM: 192978 - 20050620
Group number: 2558845-0200
Assembly Drawing: 2558845-2_1_AA

Pos	Part No	UN	Qty	Description	Page No
-					
030	2569036-0000		1	PIPE	
040	2569037-0000		1	PIPE	
100	90030-0567		2	CONN. STR., 15-R1/2, EXT. THREAD	
110	90148-0101		2	MEASURING HOSE,MINIMESS S110-AC-FA-0063	
120	90163-0052		5	HOSE NIPPLE, EXT.THR. 1/4-12 MM	
130	90163-0076		1	QUICK COUPLING, (F) LP-006-0-WR021	
140	90187-0158		1	THROTTLE BALL VALVE G1/4, R1/4	
150	90230-0023		1	NON-RETURN VALVE	
160	90277-0086		1	AIR FILTER / ART.NO. BK 464125 (70)	
170	90457-0035		2	REDUCING UNIUN	
180	90459-5635		1	HYDRAULIC TANK, 12 L, A1-19101+A3-16783	
190	90459-1223		2	PRESSURE GAUGE HYDRAULIC, 1184954.03-11	
200	90166-0121	MM	130	HOSE	
210	90166-0121	MM	440	HOSE	
220	90163-0064		1	QUICK COUPLING, (M) LP-006-2-WR517	
230	90163-0304		1	QUICK COUPLING, LP-006-5-74-KU (DUST CAP	
310	312125-0222		6	SCREW ISO 1207 M3X8 A4	
320	312132-0289		4	SCREW SLOT. PAN HEAD MSCS M4X10	
340	315234-0110		6	WASHER,PL.RND.CU.13,5/18 H=1,5	
350	315234-0113		1	WASHER PL.RND.CU.21,3//26 H=1,5	
360	342701-0205		1	BUSHING,INT./EXT.G-THREAD G1/2"-G1/4"	
370	342744-0114		1	CONN. ELBOW ADJ.,INT 15	
380	342991-0102		4	HOSE CLIP,WORM DRIVE TYPE (16)-19	
B2320	90457-0019		1	LEVEL PROBE, HMFB-S=45-0=80-0=90-T70	
W2234	351150-0406	M	4	CABLE OLFLEX 7X0,75 MM2 LIGHT/GREY	

Pos	Part No	UN	Qty	Description	Page No

Machine Type | Group Description | Used-In | Group Number | Page No

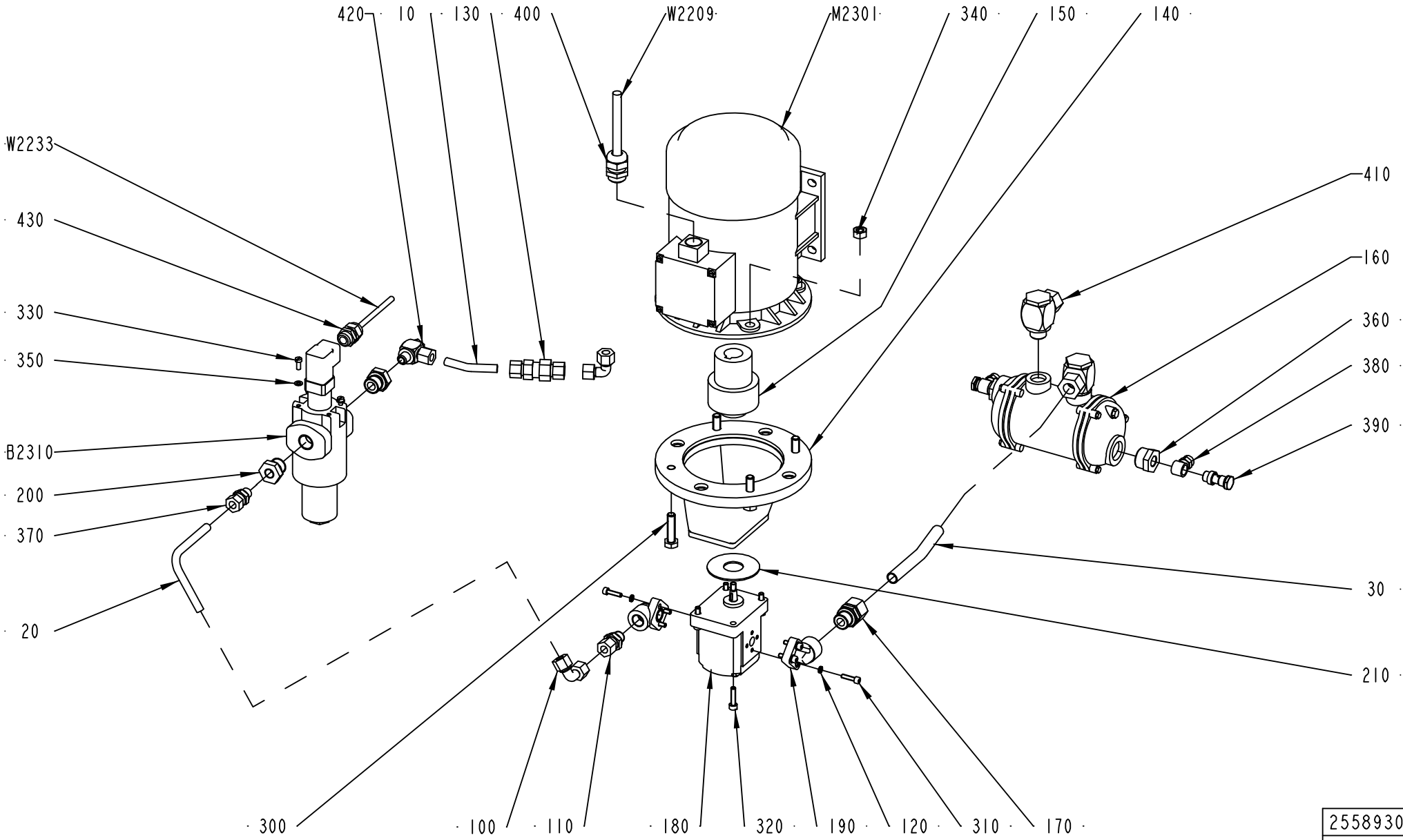

2558930-1
ECM 118242

ECM: 189763 - 20041104
Group number: 2558930-0100
Assembly Drawing: 2558930-1_1_AA

Pos	Part No	UN	Qty	Description	Page No
-					
010	2569035-0000		1	PIPE	
020	2569038-0000		1	PIPE	
030	2569039-0000		1	PIPE	
100	90030-0121		2	CONN. ELBOW ADJ.,INT 10	
110	90030-0157		1	CONN. STR. 10-R3/8, EXT. THREAD	
120	90062-0029		6	LOCK WASHER 5,1X 8,6, T= 1,5 DIN 7980	
130	90230-0017		1	NON-RETURN VALVE RHD 10-L	
140	90321-0574		1	PUMP BRACKET LSE-201	
150	90321-0575		1	SHAFT COUPLING, 24 MM	
160	90422-0008		1	COOLER	
	315202-0612		*1*	*O-RING 75,79X3,53 MM*	
170	90457-0035		1	REDUCING UNIUN	
180	90457-0037		1	HYDR. PUMP TFP100 3/8-S-C001	
190	90457-0039		2	PUMP CONN. ELBOW FLANGE T-26/12-3/8	
200	90457-0043		2	BUSHING, INT/EXT. G-THREAD NO. 1/2-1/4	
210	90457-0046		1	WASHER PLAIN ROUND 25,4/67,5, H=2	
300	312109-0499		4	SCREW M6S ISO 4017 M10X40 A480	
310	312115-0331		6	SCREW ISO4762 M5X20 A4 80	
320	312115-0372		4	SCREW ISO4762 M6X25 A4 80	
330	312125-0327		3	SCREW ISO 1207 M5X12 A4	
340	312605-0320		4	HEXAGON NUT, M6M M10 A280	
350	315105-0146		3	WASHER BRB 5,3X10 RFR	
360	342701-0208		2	BUSHING, INT/EXT. G-THREAD NO. 3/4-1/4	
370	342752-0104		1	CONN. STR. GA-10-G1/4	
380	342980-0122		2	BANJO-CONNECTION,RING 8/6-G1/4 INCH	
390	342980-0304		2	BANJO-HOLLOW BOLT COUPL,EXT.THR.01-G1/4	
400	352103-0111		1	CABLE GLAND, ST 16, PR22,5/PG16	
410	342796-0114		2	CONN. BANJO,WH 15-G1/2	
420	342796-0108		1	CONN. BANJO,WH 10-G1/4	
430	352103-0106		1	CABLE GLAND, ST 11, PR18,6/PG11	
B2310	90459-1224		1	FILTER UNIT, MDF-BNHC-30-LB10-C1.0/B6	
M2301	90457-0036		1	3-PHASE MOTOR,FOOT MOUNT.1,1KW,1410 RPM	
W2209	351150-0418	M	4	CABLE OLFLEX 4X2,5 MM2 LIGHT/GREY	
W2233	351150-0403	M	4	CABLE OLFLEX 3X0,75 MM2 LIGHT/GREY	

Pos	Part No	UN	Qty	Description	Page No

HYDRAULIC VALVE

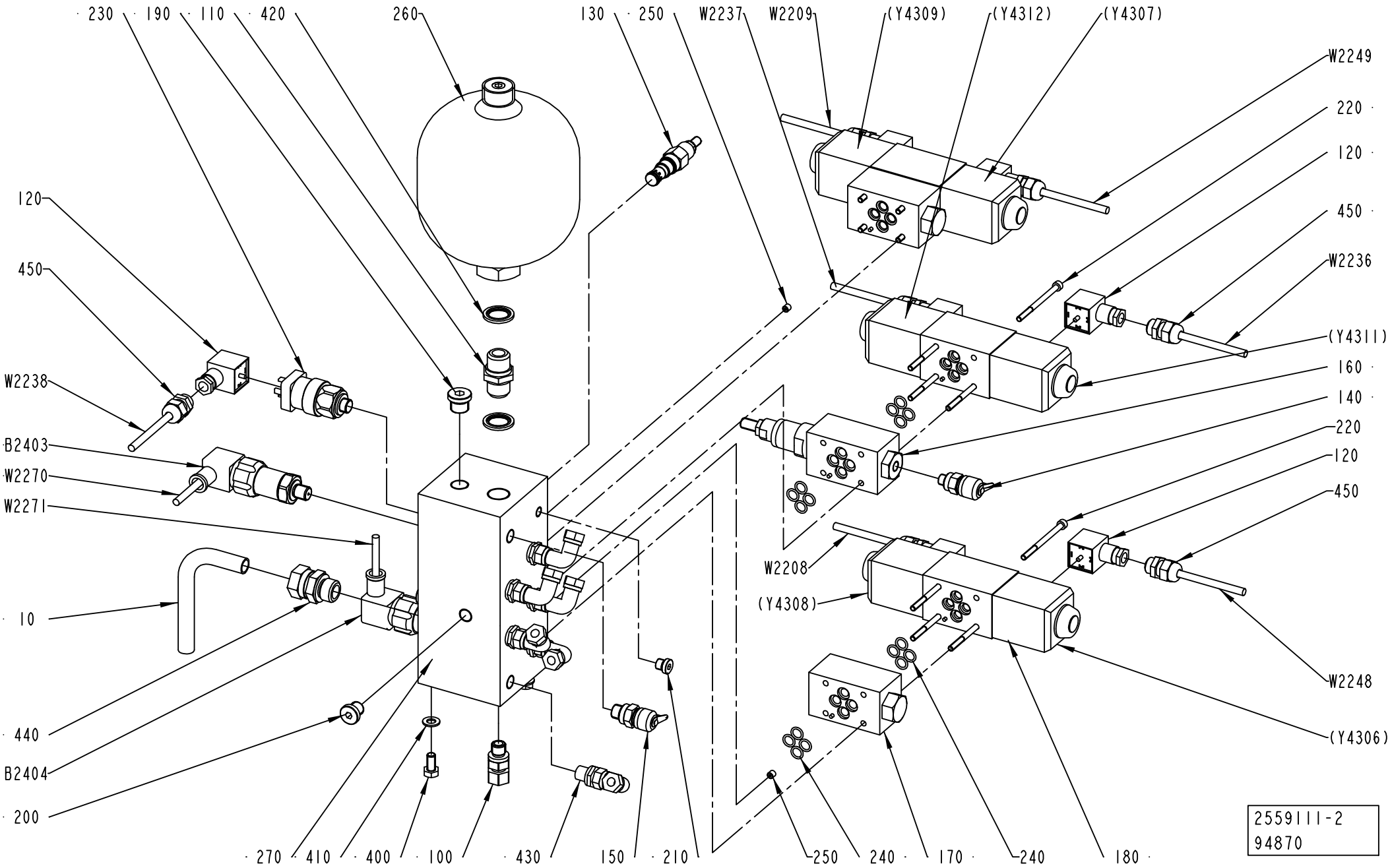

ECM: 191247 - 20050103
Group number: 2559111-0200
Assembly Drawing: 2559111-2_1_AA

Pos	Part No	UN	Qty	Description	Page No
-					
010	2569034-0000		1	PIPE	
100	90030-0178		1	CONN. STR., 10-R1/4, EXT. THREAD	
110	90030-0340		1	NIPPLES, EXT. THREAD, HEXAGON, RA-G1/2A3	
120	90110-0095		7	CONNECTOR 3 POLE + EARTH	
130	90201-0131		1	VALVE	
140	90201-0132		1	VALVE	
150	90201-0133		1	VALVE	
160	90201-0135		1	PRESSURE REDUCING VALVE	
170	90201-0136		2	DIRECT CHECK VALVE, NO. DGMDC-3-Y-PK-41	
180	90459-1690		3	DIRECTIONAL VALVE, DG4V-3-6C-MUH-7-60-EN	
190	90201-0448		1	PLUG	
200	90201-0449		4	PLUG	
210	90201-0450		1	PLUG	
220	90201-0456		12	BOLT KIT, NO. BK 464125M	
230	90274-0124		1	PRESSURE SWITCH	
240	90457-0134		24	O-RING	
250	90457-0177		2	FLOW-RESTRICTOR, 2,0 MM, M6	
260	90459-4032		1	HYDR.ACC., SBO-210-1.4E1/112U-210AK	
270	90459-1227		1	MANIFOLD BLOCK, A1-17351	
400	312105-0449		2	SCREW M6S ISO 4017 M8X16 A480	
410	315105-0165		2	WASHER BRB 8,4X16 RFR	
420	315211-0111		2	BONDED SEAL SS/NBR90 G1/2	
430	342738-0208		6	ADJUSTABLE ELBOW CONNECTION,EXT 8-G1/4	
440	342752-0114		1	CONN. STR. GA-15-G1/2	
450	352103-0101		7	CABLE GLAND, ST 9, PR15,2/PG9	
B2403	90459-1038		1	PRESSURE TRANSMITTER, 250BAR	
B2404	90459-1038		1	PRESSURE TRANSMITTER, 250BAR	
W2208	351150-0403	M	4	CABLE OLFLEX 3X0,75 MM2 LIGHT/GREY	
W2209	351150-0403	M	4	CABLE OLFLEX 3X0,75 MM2 LIGHT/GREY	
W2236	351150-0403	M	4	CABLE OLFLEX 3X0,75 MM2 LIGHT/GREY	
W2237	351150-0403	M	4	CABLE OLFLEX 3X0,75 MM2 LIGHT/GREY	
W2238	351150-0403	M	4	CABLE OLFLEX 3X0,75 MM2 LIGHT/GREY	
W2248	351150-0403	M	4	CABLE OLFLEX 3X0,75 MM2 LIGHT/GREY	
W2249	351150-0403	M	4	CABLE OLFLEX 3X0,75 MM2 LIGHT/GREY	
W2270	90220-0091	M	4	PAIR TWISTED CABLE 2X2X0,25MM2	
W2271	90220-0091	M	4	PAIR TWISTED CABLE 2X2X0,25MM2	

Pos	Part No	UN	Qty	Description	Page No

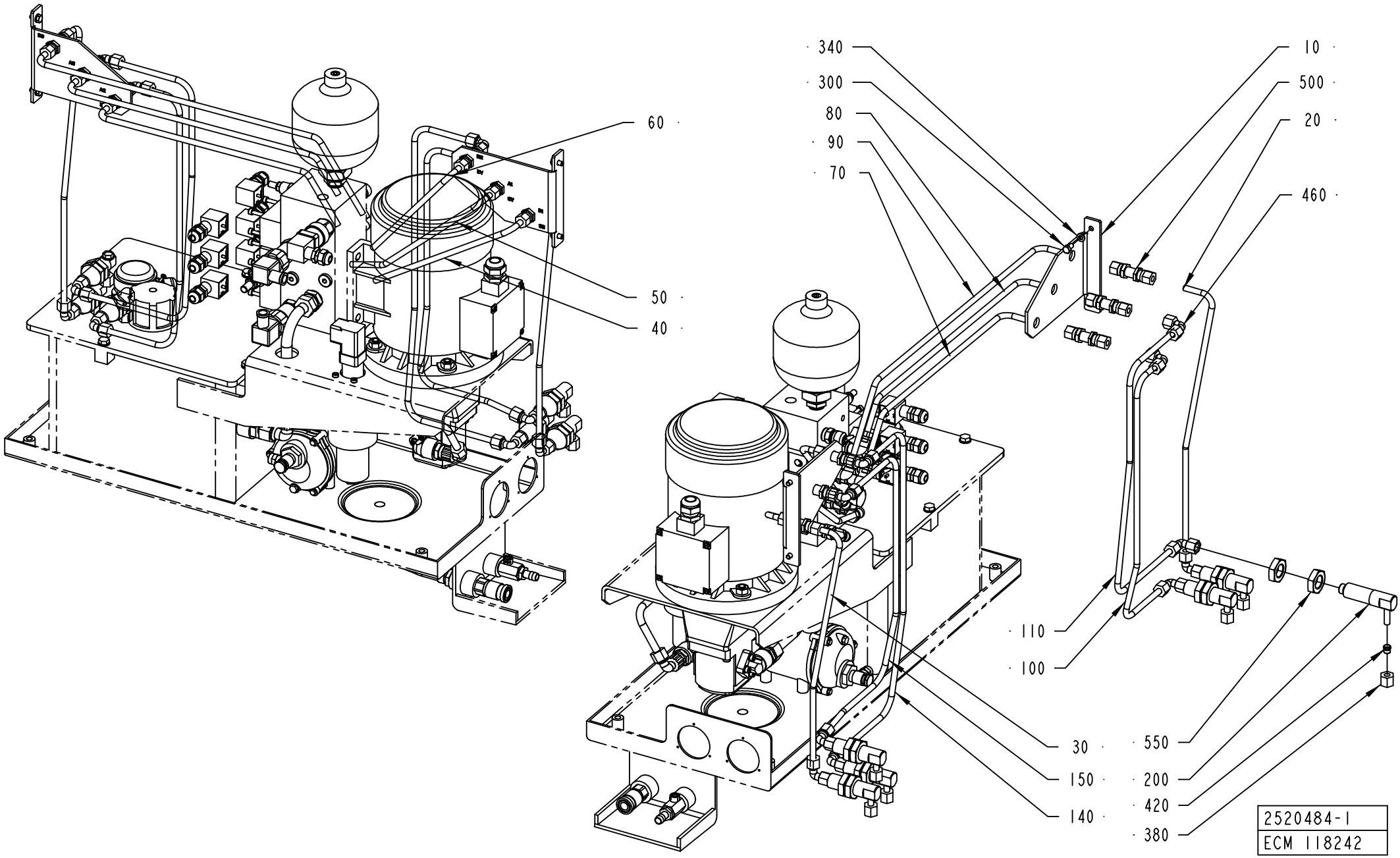
340
300
80
90
70
10
500
20
460
60
50
40
110
100
30
150
140
550
200
420
380
2520484-1
ECM 118242

ECM: 189761 - 20041104
Group number: 2520484-0100
Assembly Drawing: 2520484-1_1_AA

Pos	Part No	UN	Qty	Description	Page No
-					
010	2527525-0000		2	BRACKET	
020	2559310-0000		1	HYDRAULIC PIPE	
030	2559311-0000		1	HYDRAULIC PIPE	
040	2531238-0000		1	HYDRAULIC PIPE	
050	2531237-0000		1	HYDRAULIC PIPE	
060	2531236-0000		1	HYDRAULIC PIPE	
070	2531235-0000		1	HYDRAULIC PIPE	
080	2531234-0000		1	HYDRAULIC PIPE	
090	2531233-0000		1	HYDRAULIC PIPE	
100	2529178-0000		1	HYDRAULIC PIPE	
110	2529179-0000		1	HYDRAULIC PIPE	
140	2529182-0000		1	HYDRAULIC PIPE	
150	2529183-0000		1	HYDRAULIC PIPE	
200	540718-0000		6	ELBOW PIPE JOINT	
300	312105-0366		4	SCREW M6S ISO 4017 M6X12 A480	
340	315105-0153		4	WASHER BRB 6,4X12 RFR	
380	342703-0208		6	NUT, PIPES & CONNECTORS,NUT M-8 SS	
420	90030-0098		6	ACCESSORIES, FERRULE 8	
460	342738-0208		10	ADJUSTABLE ELBOW CONNECTION,EXT 8-G1/4	
500	90030-0067		6	CONN. BULKHEAD SV 8-L/SY	
550	90330-0093		12	NUT, HEXAGON, G1/2	

Pos	Part No	UN	Qty	Description	Page No

Machine Type | Group Description | Used-In | Group Number | Page No

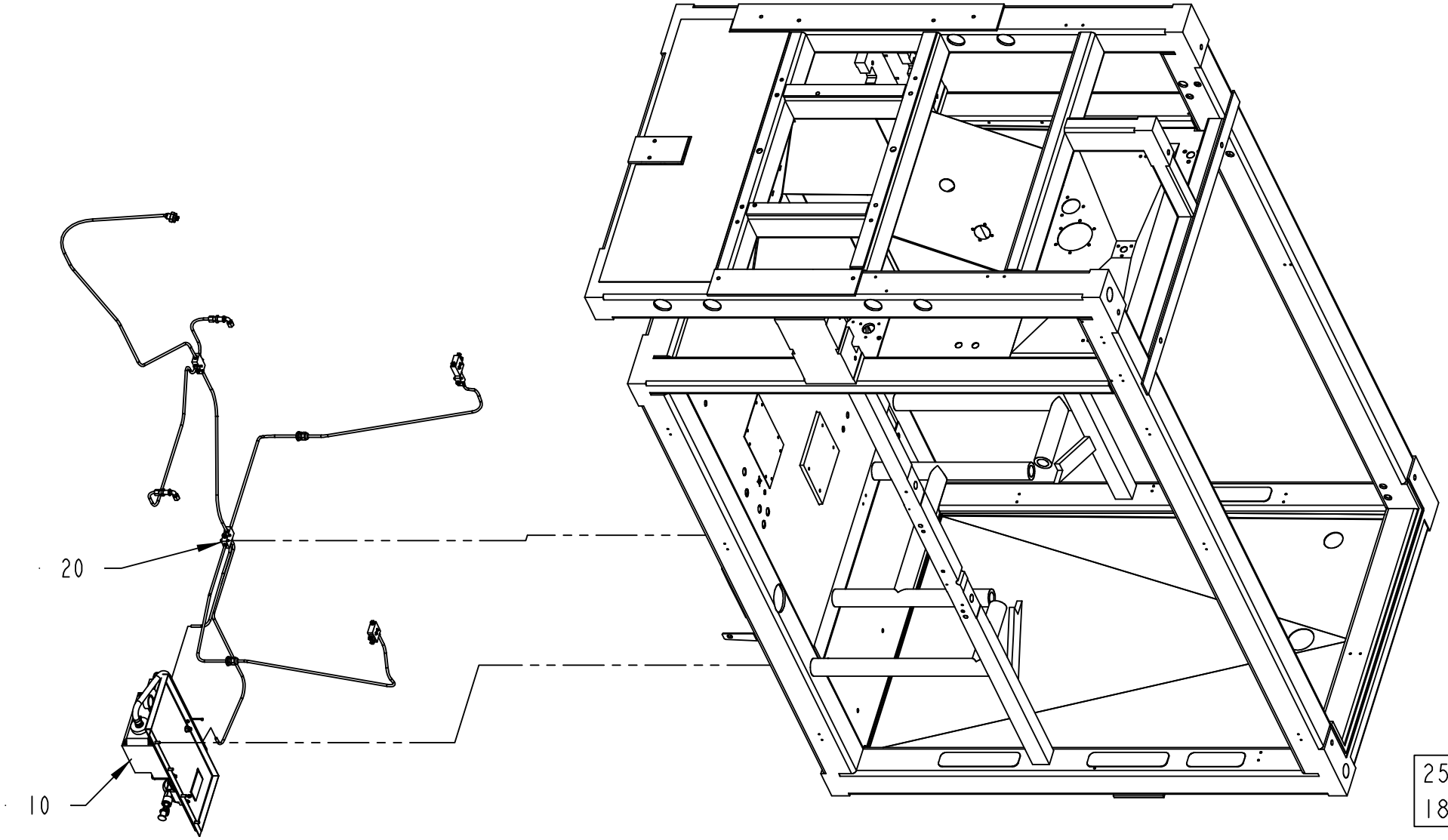
20
10
2529167-2
184089

ECM: 195317 - 20050620
Group number: 2529167-0200
Assembly Drawing: 2529167-2_1_AA

Pos	Part No	UN	Qty	Description	Page No
-					
010	2506776-0200		1	CENTRAL LUBRICATION	**2-87**
020	2504789-0100		1	LUBRICATION UNIT	**2-89**

Pos	Part No	UN	Qty	Description	Page No

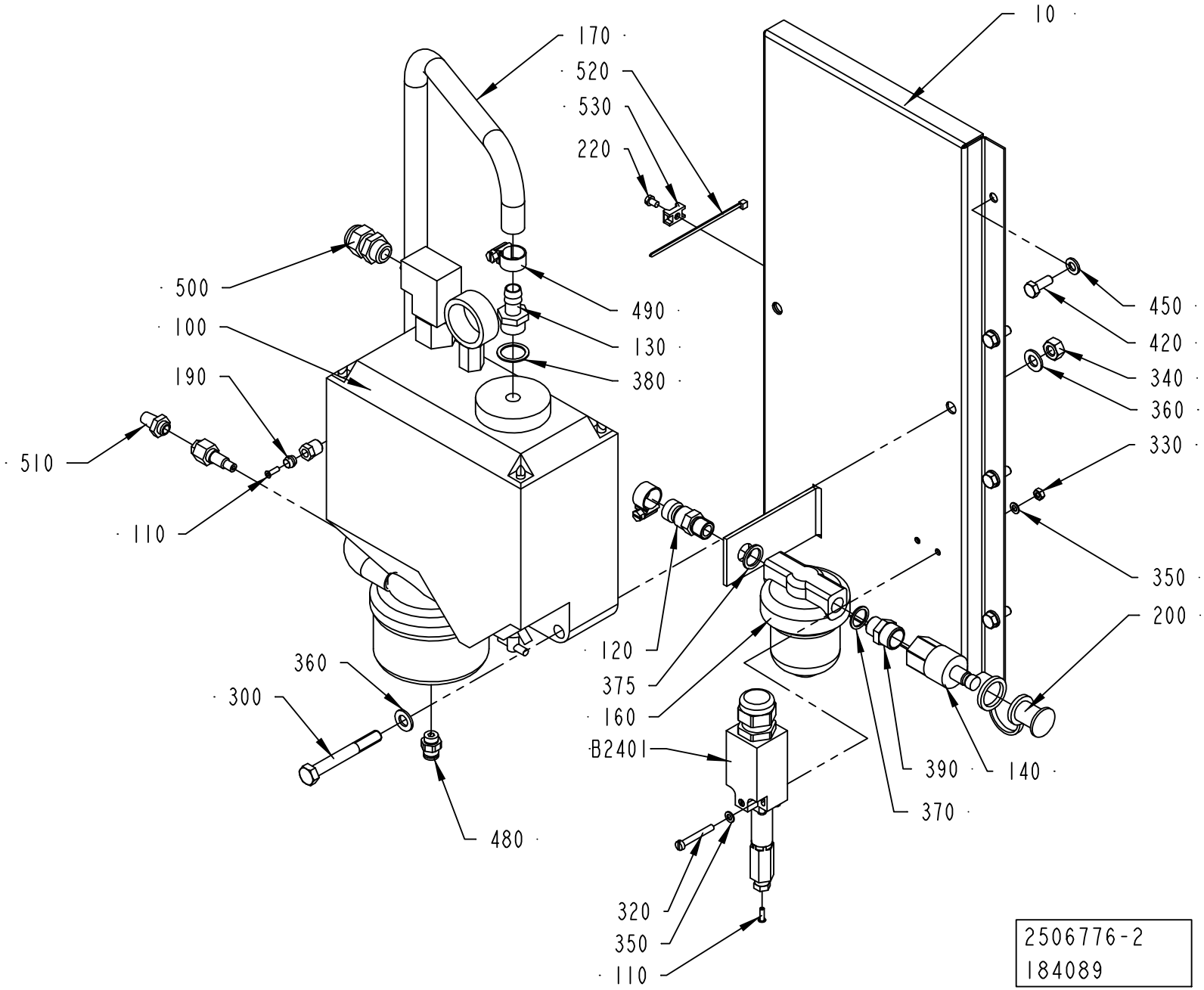
10
170
520
530
220
500
100
190
510
110
490
130
380
450
420
340
360
330
350
200
120
375
160
B2401
360
300
480
390
140
370
320
350
110
2506776-2
184089

ECM: 192974 - 20050620
Group number: 2506776-0200
Assembly Drawing: 2506776-2_1_AA

Pos	Part No	UN	Qty	Description	Page No
-					
010	2688066-0000		1	MOUNTING SHEET	
100	90048-0037		1	OIL PUMP INCL. CONTAINER 1,5 L	
110	90134-0030		2	SLEEVE FOR PLASTIC TUBE	
120	90163-0014		1	QUICK COUPLING, (M) LP-006-1-WR013	
130	90163-0041		1	HOSE NIPPLE, EXT.THR. 3/8-12 MM	
140	90163-0064		1	QUICK COUPLING, (M) LP-006-2-WR517	
160	90415-0033		1	OIL FILTER REFILLING UC-HP-1229-25	
	90415-0330		*1*	*FILTER INSERT ART.NO. HR-1229-25UCC*	
170	90166-0113	MM	850	HOSE	
190	90028-0022		1	CONE TUBE 6 MM	
200	90163-0304		1	QUICK COUPLING, LP-006-5-74-KU (DUST CAP	
220	312125-0285		1	SCREW ISO 1207 M4X6 A4	
300	312105-0464		2	SCREW M6S ISO 4014 M8X65 A480	
320	312125-0299		2	SCREW ISO 1207 M4X30 A4	
330	312605-0312		2	HEXAGON NUT, M6M M4 A280	
340	312605-0318		2	HEXAGON NUT, M6M M8 A280	
350	315105-0136		4	WASHER BRB 4,3X9 RFR	
360	315105-0165		4	WASHER BRB 8,4X16 RFR	
370	315233-0110		1	WASHER CAPTIVE SEALING G1/4	
375	315237-0110		1	WASHER,PL.RND.AL.13,5/18,H=1,5	
380	315233-0111		1	WASHER CAPTIVE SEALING G3/8	
390	342700-0203		1	NIPPLES,HEXAGON,EXT.G-THREAD G3/8"-G1/4"	
420	312105-0368		4	SCREW M6S ISO 4017 M6X16 A480	
450	315105-0153		4	WASHER BRB 6,4X12 RFR	
480	342722-0202		1	PIPE COUPLING 1/8" D=6MM	
490	342991-0101		2	HOSE CLIP,WORM DRIVE TYPE (13)-16	
500	352103-0101		1	CABLE GLAND, ST 9, PR15,2/PG9	
510	346800-0109		1	SILENCER FILTER R1/8"	
520	352113-0101		1	CABLE TIE, BLACK 92X2,5 MM	
530	352113-0205		1	ANCHOR PLATES FOR STRIPS, TYPE TM2S8-C10	
B2401	90274-0084		1	PRESSURE GUARD, 1800 KPA	

Pos	Part No	UN	Qty	Description	Page No

Machine Type | Group Description | Used-In | Group Number | Page No

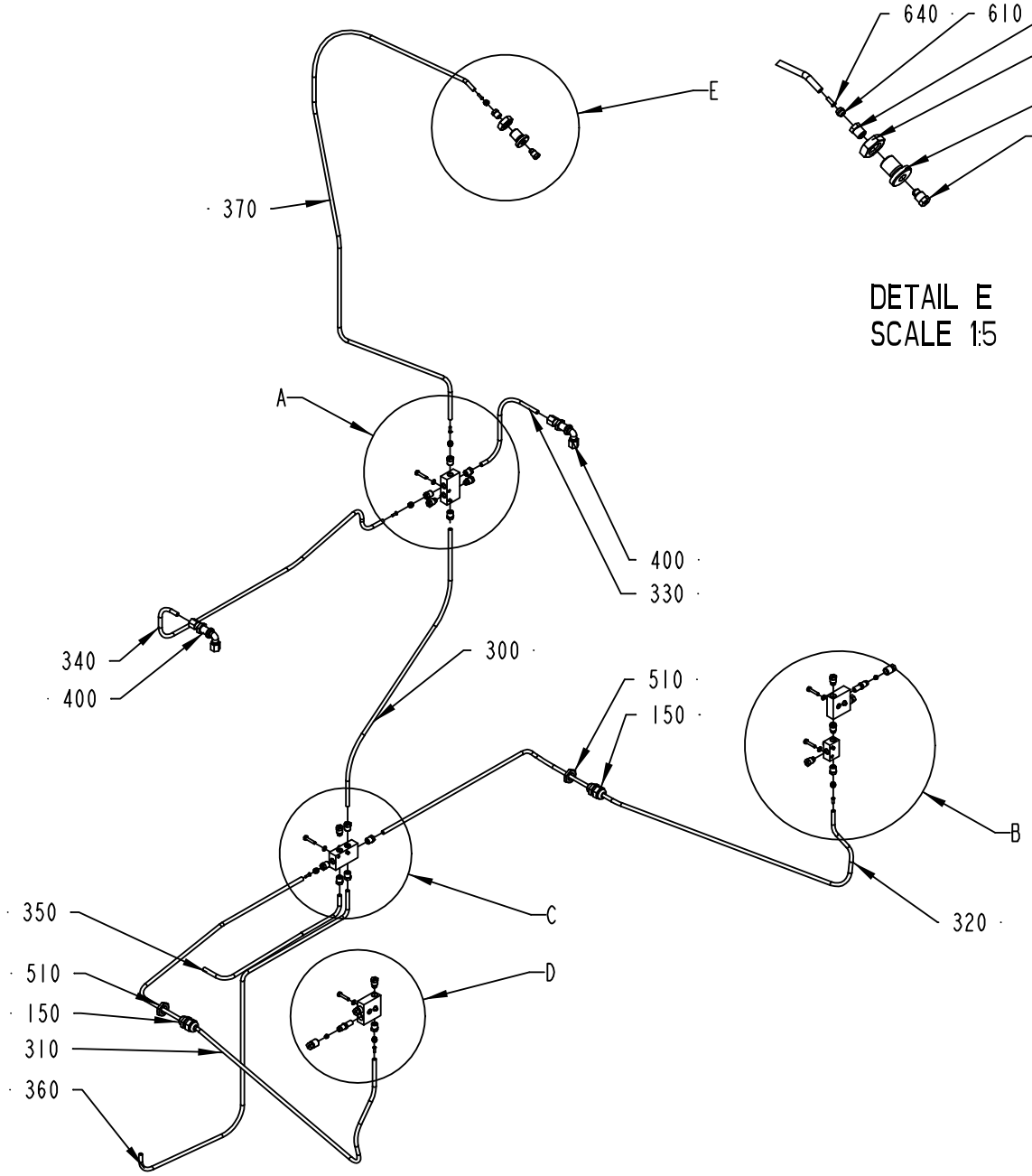

DETAIL E
SCALE 1:5

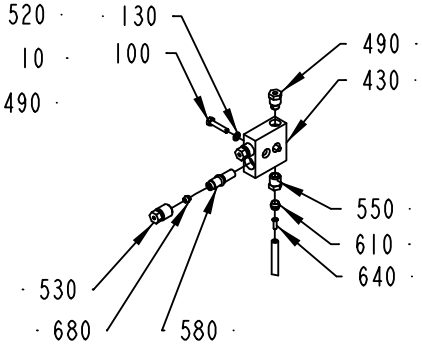

DETAIL D
SCALE 1:5

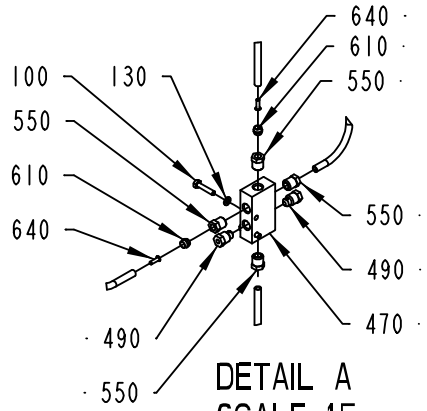

DETAIL A
SCALE 1:5

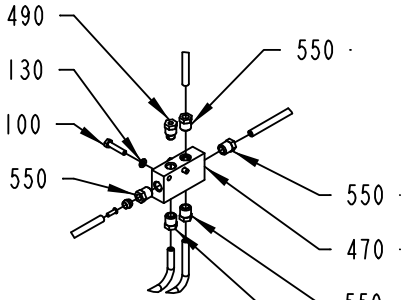

DETAIL C
SCALE 1:5

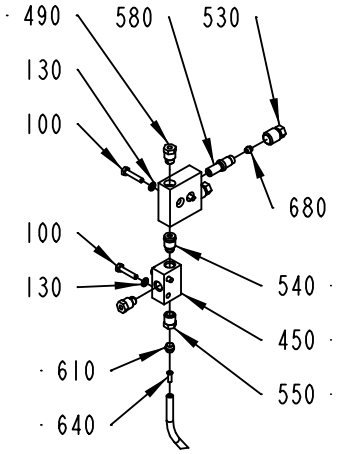

DETAIL B
SCALE 1:5

2504789-1
184089

ECM: 210342 - 20050621
Group number: 2504789-0100
Assembly Drawing: 2504789-1_1_AB

Pos	Part No	UN	Qty	Description	Page No
-					
010	2662012-0000		1	NIPPLE	
100	312105-0295		10	SCREW M6S ISO 4017 M4X20 A470	
130	315105-0136		10	WASHER BRB 4,3X9 RFR	
150	352103-0101		2	CABLE GLAND, ST 9, PR15,2/PG9	
300	90166-0108	MM	550	TUBE 6 MM PA,TRANSP.	
310	90166-0108	MM	1700	TUBE 6 MM PA,TRANSP.	
320	90166-0108	MM	1100	TUBE 6 MM PA,TRANSP.	
330	90166-0108	MM	400	TUBE 6 MM PA,TRANSP.	
340	90166-0108	MM	1000	TUBE 6 MM PA,TRANSP.	
350	90166-0108	MM	500	TUBE 6 MM PA,TRANSP.	
360	90166-0108	MM	1000	TUBE 6 MM PA,TRANSP.	
370	90166-0108	MM	1800	TUBE 6 MM PA,TRANSP.	
400	90030-0219		2	CONN. ELBOW BULKHEAD WSV 6	
430	90032-0038		2	BLOCK 2 WAYS	
450	90032-0043		1	DISTRIBUTION BLOCK 3 WAYS	
470	90032-0046		2	DISTRIBUTION BLOCK 6 WAYS	
490	90087-0019		7	PLUG M10X1 STAINLESS	
510	90099-0104		2	NUT, PR 15,2 (PG9)	
520	90099-0131		1	NUT HEX. M16X2 SS	
530	90134-0040		4	BUSHING VALVE CONNECTION 4 MM	
540	90134-0054		1	BLOCK CONNECTION M10X1	
550	90134-0055		12	BUSHING/NUT INLET/OUTLET 6 MM	
580	90092-0053		4	METERING VALVE 30 MM3	
610	90028-0022		12	CONE TUBE 6 MM	
640	90134-0030		12	SLEEVE FOR PLASTIC TUBE	
680	90028-0021		4	CONE TUBE 4 MM	

Pos	Part No	UN	Qty	Description	Page No

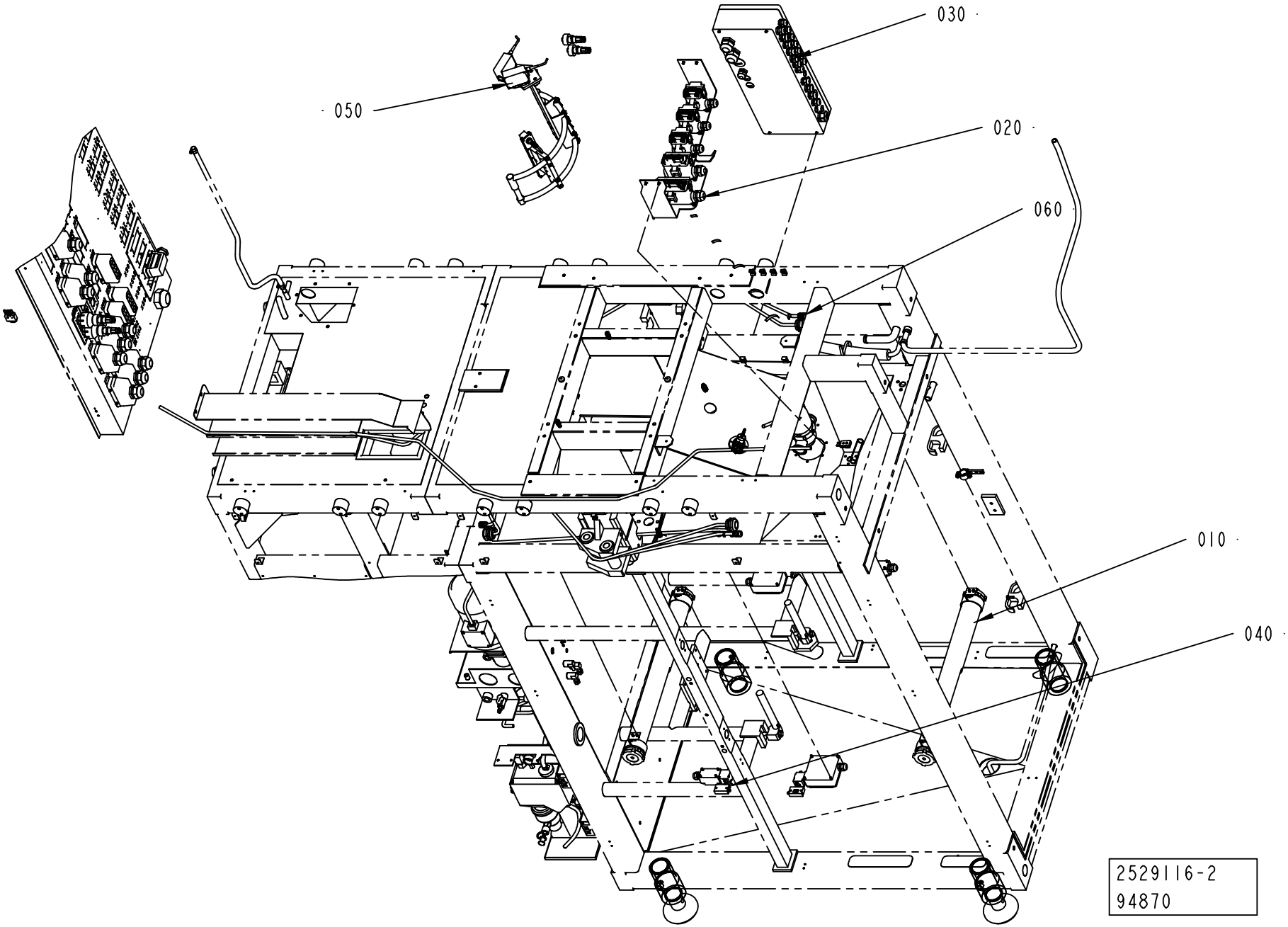
030
050
020
060
010
040
2529116-2
94870

ECM: 274232 - 20061101
Group number: 2529116-0150
Assembly Drawing: 2529116-2_1_AA

Pos	Part No	UN	Qty	Description	Page No
-					
010	2504790-0100		2	LIGHT FIXTURE	**2-93**
020	2506796-0100		1	CABLE CONNECTION	**2-95**
030	2527252-0100		1	CONNECTION BOX	**2-97**
040	2529117-0100		1	DOOR SAFETY SWITCH	**2-99**
050	1523216-0200		1	LEVEL CONTROL DEVICE	**2-101**
060	2529410-0150		1	CABLE HARNESS	**2-107, 2-109, 2-111**

Pos	Part No	UN	Qty	Description	Page No

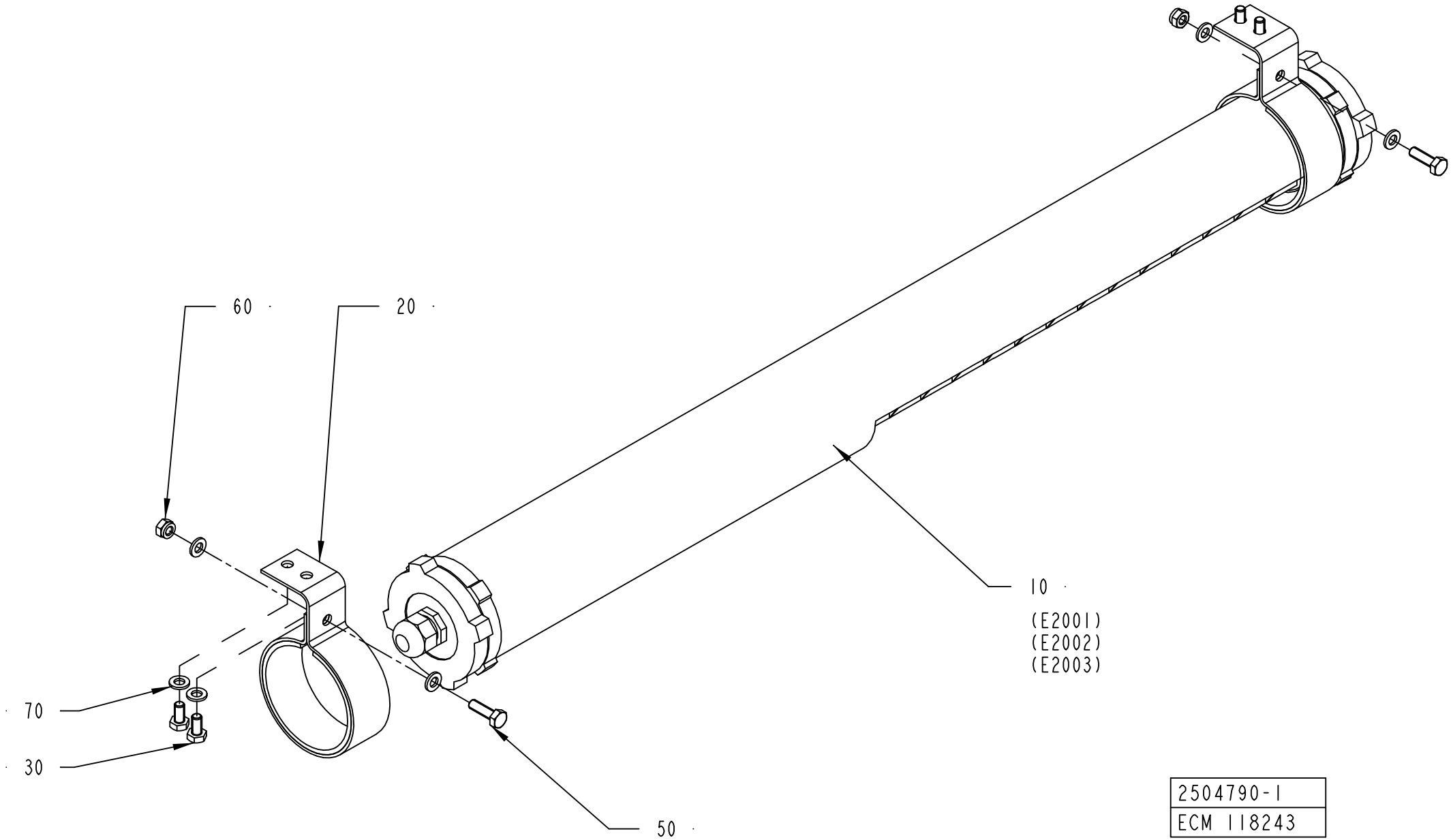
60
20
10
(E2001)
(E2002)
(E2003)
70
30
50
2504790-1
ECM 118243

ECM: 189766 - 20041104
Group number: 2504790-0100
Assembly Drawing: 2504790-1_1_AA

Pos	Part No	UN	Qty	Description	Page No
-					
010	90459-1000		1	LIGHT FIXTURE, RL 70CV-136	
020	1140129-0000		2	HOLDER	
030	312105-0366		4	SCREW M6S ISO 4017 M6X12 A480	
050	312105-0370		2	SCREW M6S ISO 4017 M6X20 A480	
060	312812-0316		2	HEXAGON NUT, NY-LOCK M6 A480	
070	315105-0153		8	WASHER BRB 6,4X12 RFR	

Pos	Part No	UN	Qty	Description	Page No

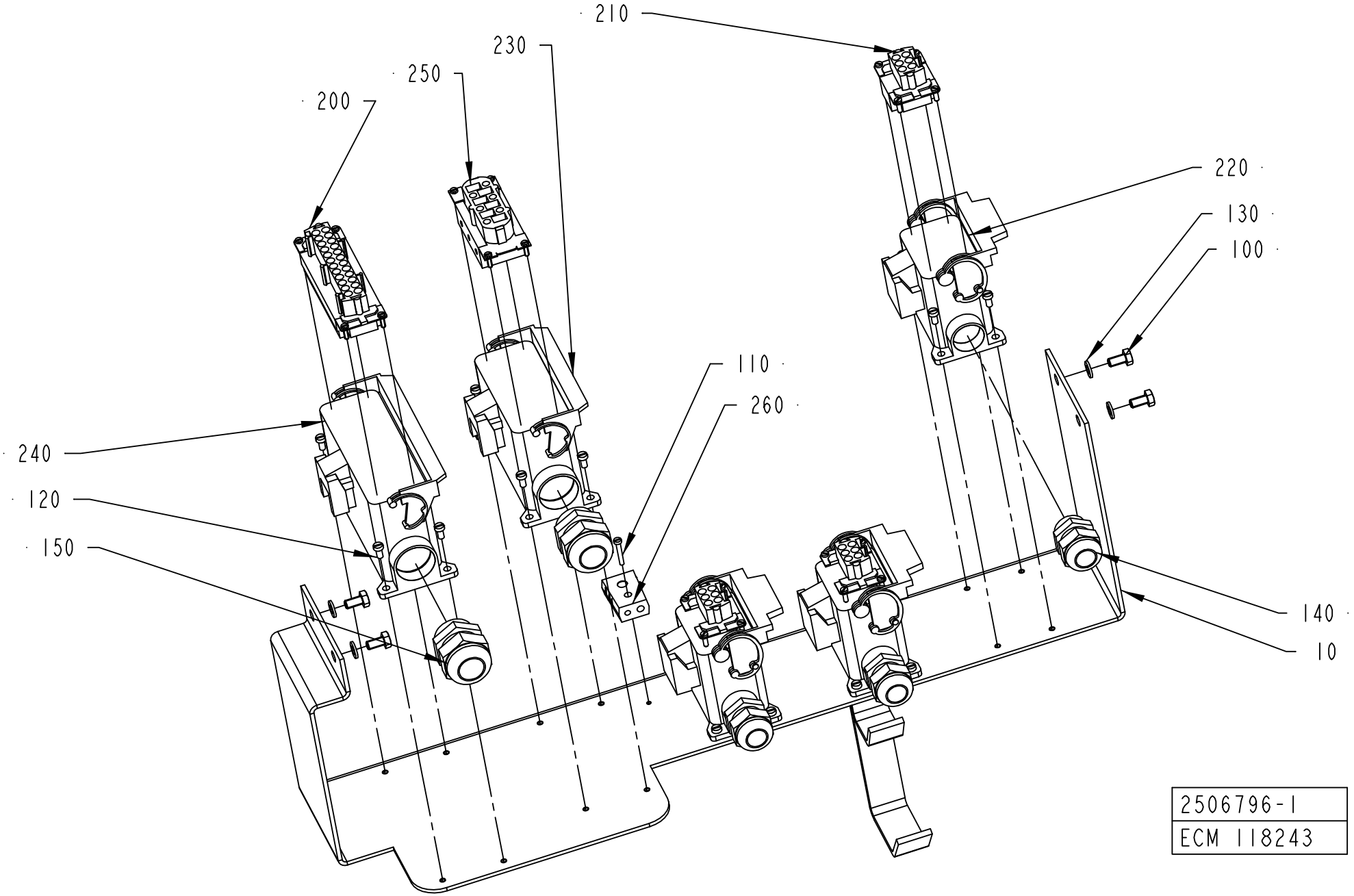
210
230
250
200
220
130
100
110
260
240
120
150
140
10
2506796-1
ECM 118243

ECM: 189767 - 20041104
Group number: 2506796-0100
Assembly Drawing: 2506796-1_1_AA

Pos	Part No	UN	Qty	Description	Page No
-					
010	2506920-0000		1	CANTILEVER	
100	312105-0366		4	SCREW M6S ISO 4017 M6X12 A480	
110	312125-0230		1	SCREW ISO 1207 M3X20 A4	
120	312125-0287		20	SCREW ISO 1207 M4X8 A4	
130	315105-0153		4	WASHER BRB 6,4X12 RFR	
140	352103-0111		3	CABLE GLAND, ST 16, PR22,5/PG16	
150	352103-0116		2	CABLE GLAND, ST 21, PR28,3/PG21	
200	90110-0151		1	FEMALE INSERT 24-POL 121130 0000	
210	90110-0163		3	FEMALE INSERT 70 300 0640 0	
220	90110-0221		3	CHASSIS HOUSING 310162-33	
230	90110-0224		1	CHASSIS HOUSING 310166-33	
240	90110-0225		1	CHASSIS HOUSING 310168-33	
250	90110-0247		1	FEMALE INSERT 70.200.0653.0	
260	90326-0020		1	PLUG, FEMALE YELLOW CR-AL	

Pos	Part No	UN	Qty	Description	Page No

CONNECTION BOX

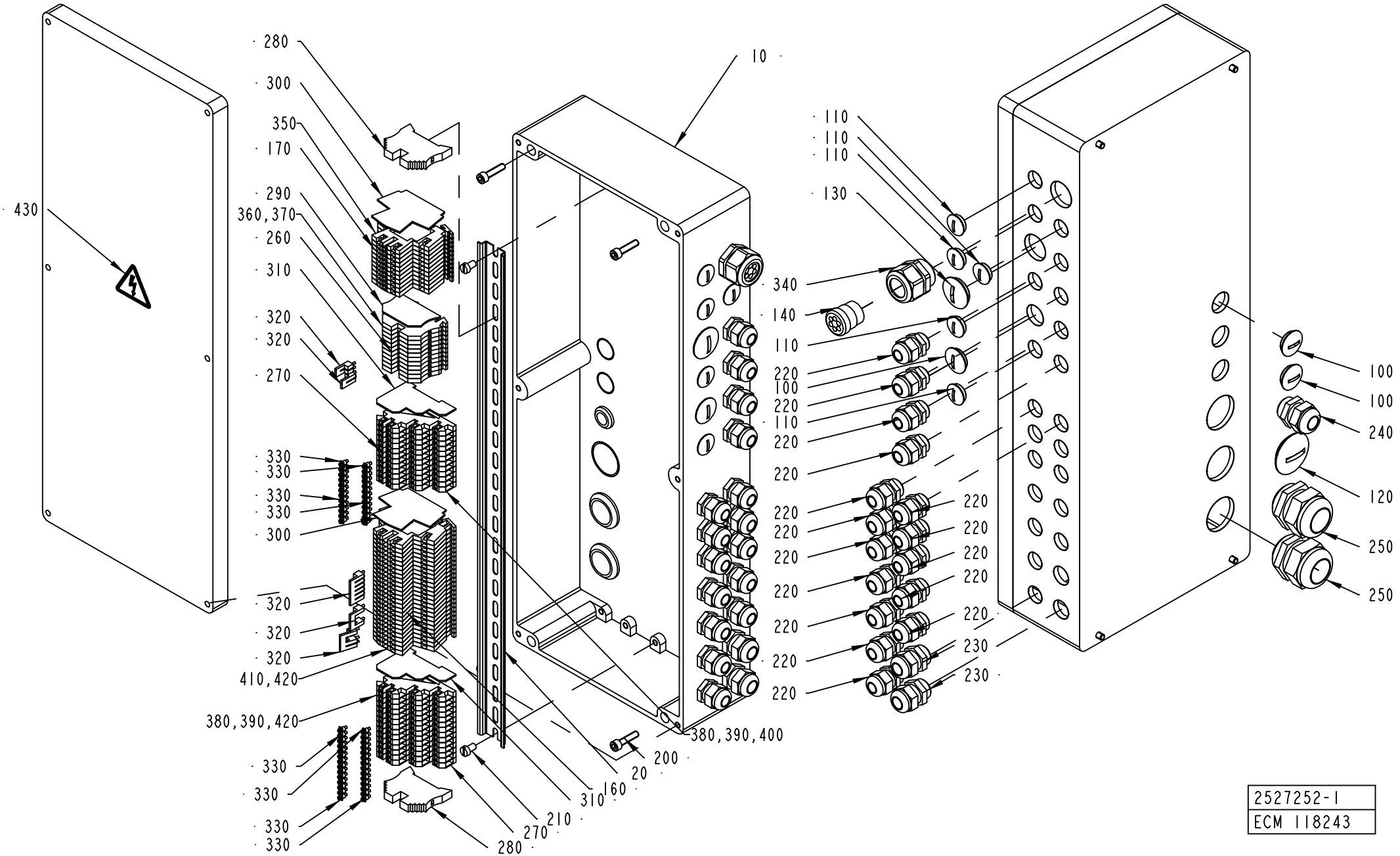

2527252-1
ECM 118243

ECM: 189768 - 20041104
Group number: 2527252-0100
Assembly Drawing: 2527252-1_1_AA

Pos	Part No	UN	Qty	Description	Page No
A3/FLEX					
100	90002-0004		3	BLANK-OFF PLUG, PR 22,5 SKINDICHT-BLK16	
110	90002-0009		5	BLANK-OFF PLUG, PR 18.6 SKINDICHT-BLK11	
200	312115-0372		4	SCREW ISO4762 M6X25 A4 80	
220	352103-0106		16	CABLE GLAND, ST 11, PR18,6/PG11	
240	352103-0110		1	CABLE GLAND, STR 16, PR22,5/PG16	
250	352103-0121		2	CABLE GLAND, ST 29, PR37,0/PG29	
270	353021-0301		26	TERMINALS,TRIPLE-LEVEL, DLI 2,5/35 PA	
400	359011-0811		2	MARKING PLATES 5-FW 201-2	
Common Parts					
010	2537111-0000		1	CONNECTION BOX	
020	1347878-0000		1	RAIL	
120	90002-0010		1	BLANK-OFF PLUG, PR 37 SKINDICHT-BLK29	
130	90002-0012		1	BLANK-OFF PLUG, PR 28,3 SKINDICHT-BLK21	
140	90012-0125		1	GLAND FITTING	
160	90077-0113		26	FEED THROUGH TERMINAL, 10-00102150-1	
170	90458-1136		11	TERMINAL BLOCK, 103630	
210	312121-0364		2	SCREW ISO 1207 M6X10 4.8 - 5.8 Z.PL.	
230	352103-0108		2	CABLE GLAND, ST 13,5 , PR20,4/PG13,5	
260	353021-0212		11	FEED THROUGH TERMINAL, 10200.0	
280	353031-0203		2	END SUPPORT, WEW 35/2	
290	353032-0004		1	END PLATE WAP 2,5-10 BEIGE	
300	353032-0009		2	END PLATE, WAP FOR WDK	
310	353032-0301		2	END PLATE WAP, 13132.6	
320	353034-0030		4	BRIDGE CONNECTOR WQV 2,5/10, 10544.6	
330	353034-0404		8	BRIDGE CONNECTOR Q10, 13131.0	
340	353240-0005		1	GLAND W/O INSERT PG21 NORMAL	
350	359011-0834		1	SET OF SIGNS 6-GW(EARTH)	
360	359011-0807		1	MARKING PLATES 5-FW 1-50	
370	359011-0807		1	MARKING PLATES 5-FW 1-50	
380	359011-0817		1	SYMBOL 5-GW (+) 50PC	
390	359011-0818		1	SYMBOL 5-GW (-) 50PC	
410	359011-0824		2	SET OF SIGNS 6-FW 151-200	
420	359012-0800		2	MARKING LABEL, WHITE, BSGW, 800	
430	359705-0015		1	WARNING SIGN ISO, RISK OF ELECTRIC SHOCK	

Pos	Part No	UN	Qty	Description	Page No

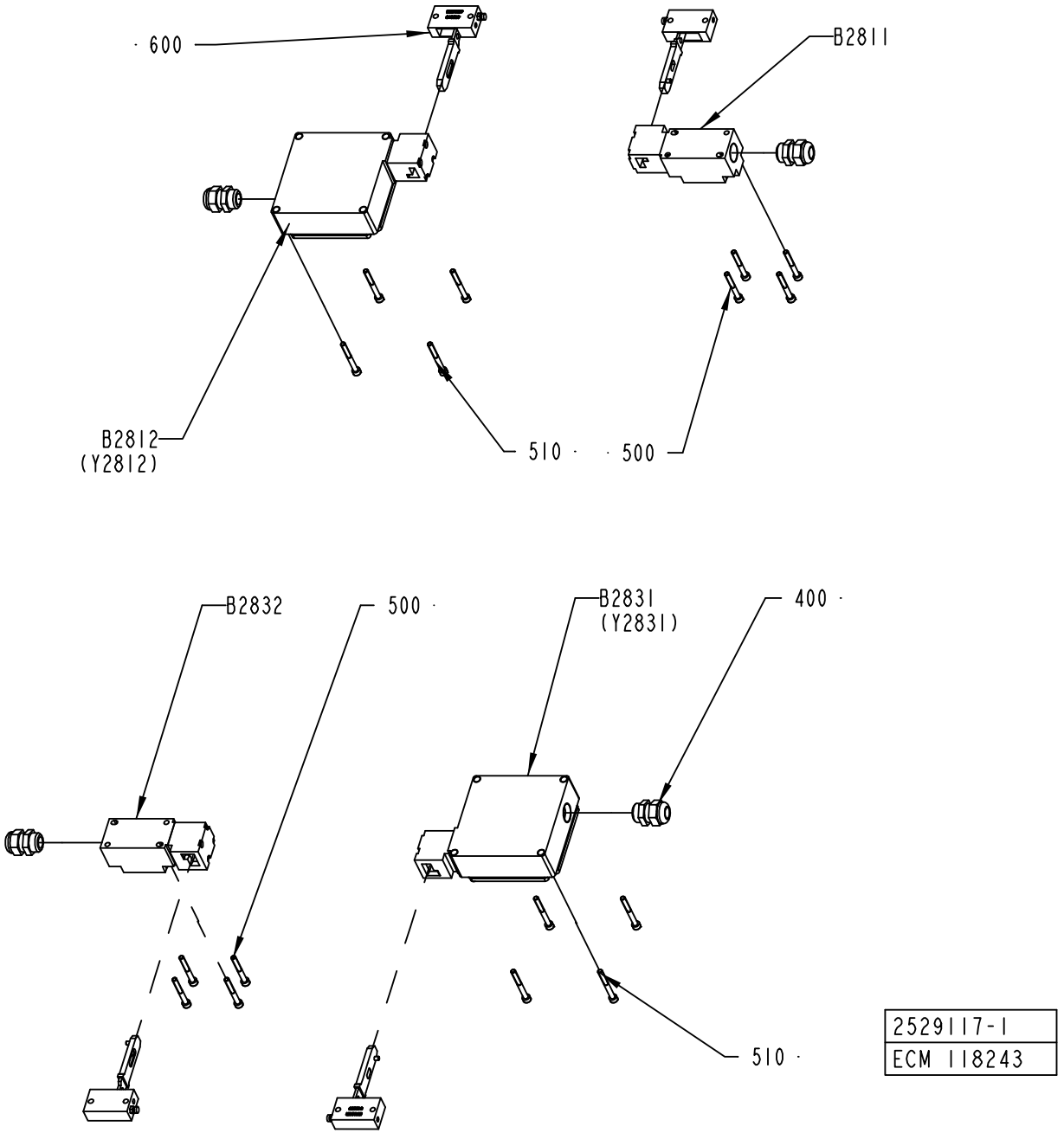

2529117-1
ECM 118243

ECM: 189769 - 20041104
Group number: 2529117-0100
Assembly Drawing: 2529117-1_1_AA

Pos	Part No	UN	Qty	Description	Page No
-					
400	352103-0108		4	CABLE GLAND, ST 13,5 , PR20,4/PG13,5	
500	312115-0339		8	SCREW ISO4762 M5X40 A4 80	
510	312115-0340		8	SCREW ISO4762 M5X45 A4 80	
600	90457-0194		4	KEY FOR SAF.SW.048850-C2052	
B2811	90044-0204		1	KEY SAF.SW. NZIVZ-538-E	
B2812	90457-0196		1	KEY SAF.SW. TZ2RE024PG RC1635	
B2831	90457-0196		1	KEY SAF.SW. TZ2RE024PG RC1635	
B2832	90044-0204		1	KEY SAF.SW. NZIVZ-538-E	

Pos	Part No	UN	Qty	Description	Page No

LEVEL CONTROL DEVICE

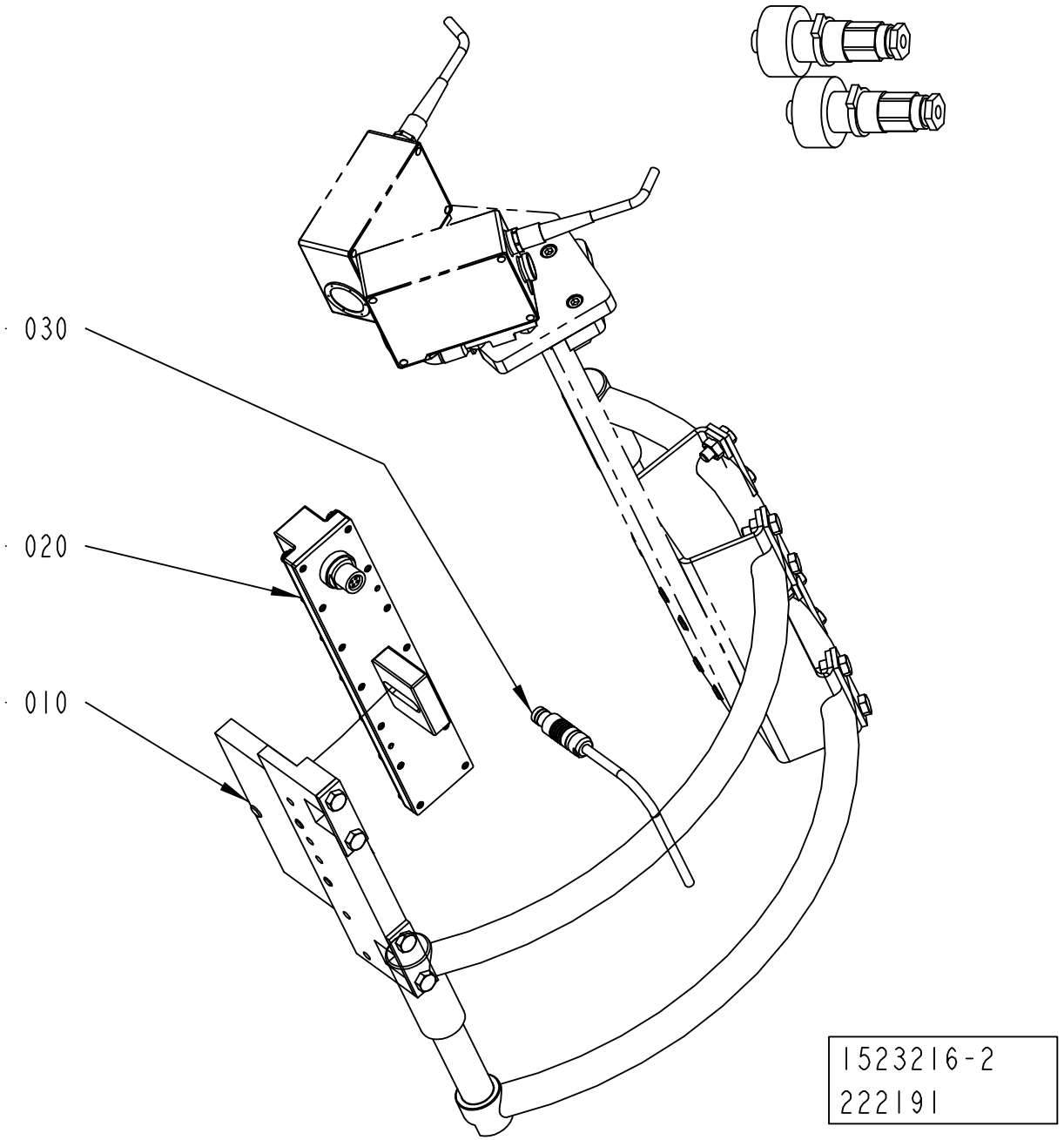

ECM: 273547 - 20060817
Group number: 1523216-0200
Assembly Drawing: 1523216-2_1_AB

Pos	Part No	UN	Qty	Description	Page No
-					
010	1487338-0200		1	SUPPORT LEVEL DETECTOR	**2-103, 2-105**
020	2697704-0000		1	LEVEL PROBE	
030	90459-4705		1	LOCKING PLUG, S 103 A 053-130+ AND 90220	
	90459-4707		*1*	*RECEPTACLE, MOD.DBEE 103 A 053-130*	

Pos	Part No	UN	Qty	Description	Page No

SUPPORT LEVEL DETECTOR

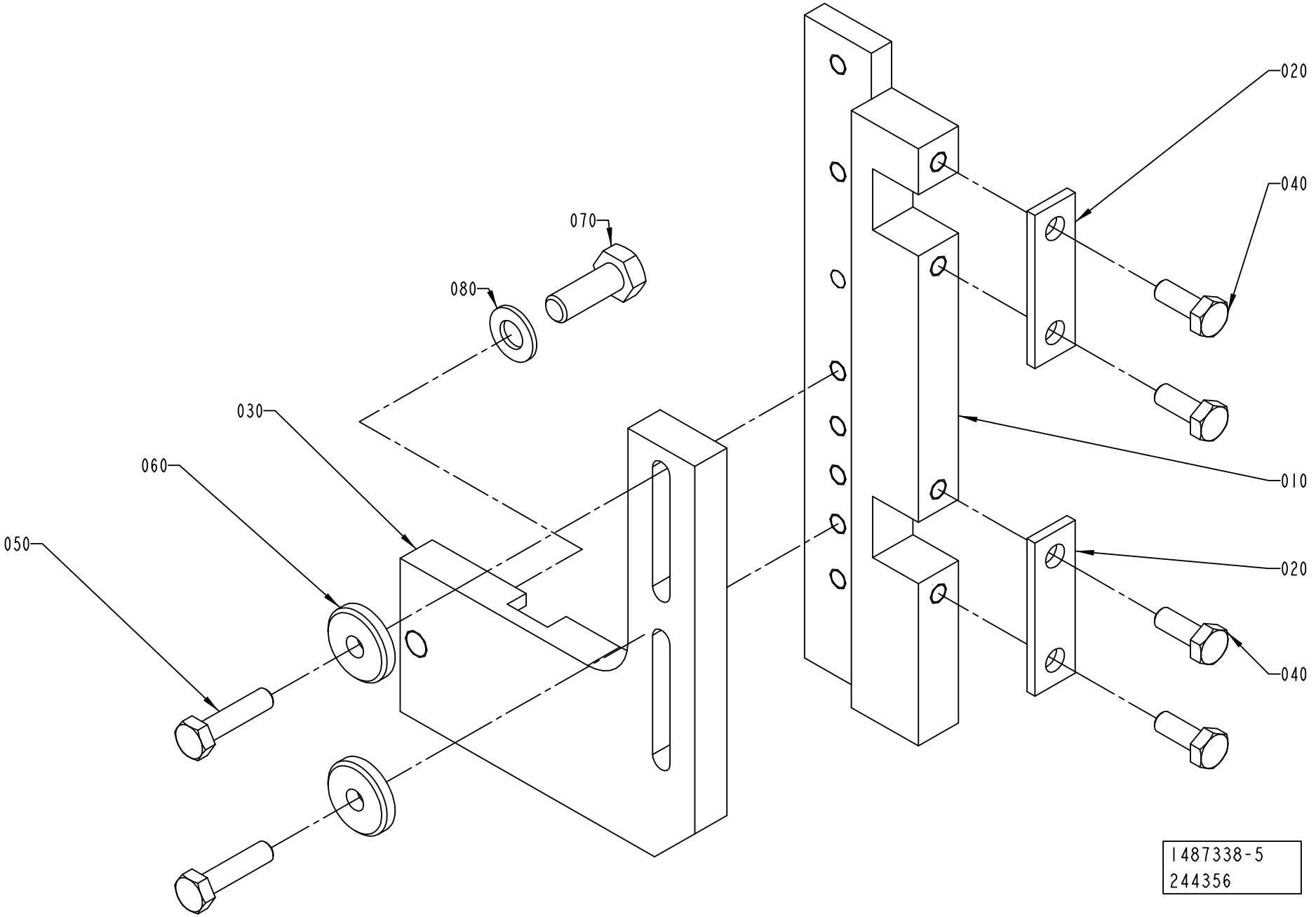

Pos	Part No	UN	Qty	Description	Page No
TBA 0330S, TBA 0200B, TBA 0250S, TBA 0200S, TBA 0200M, TBA 0250B, TBA 0200SQ, TPA 0250SQ, TPA 0330SQ, TPA 0200SQ, TPA 0500SQ, TBA 0250SQ (See drawing on page: 2-102)					
010	2715298-0000		1	BRACKET	
030	1348359-0000		1	BRACKET	
TBA 0500S, TBA 0500B, TBA 1000S, TBA 1000SQ, TBA 1000B, TBA 1500S, TPA 1000SQ NOQC (See drawing on page: 2-104)					
010	2715298-0000		1	BRACKET	
030	1317475-0000		1	BRACKET	
TBA 1890S, TBA 2000S, TBA 1400B (See drawing on page: 2-104)					
010	2715299-0000		1	BRACKET	
030	2656899-0000		1	BRACKET	
TPA 1000SQ QC, TPA 0750SQ QC (See drawing on page: 2-104)					
010	2715299-0000		1	BRACKET	
030	1317475-0000		1	BRACKET	
Common Parts					
020	1036673-0000		2	WASHER	
040	312105-0368		4	SCREW M6S ISO 4017 M6X16 A480	
050	312105-0372		2	SCREW M6S ISO 4017 M6X25 A480	
060	315125-0153		2	WASHER TBRSB 6,4X22X4 A4	
070	312105-0452		1	SCREW M6S ISO 4017 M8X22 A4 80	
080	315105-0165		1	WASHER BRB 8,4X16 RFR	

Pos	Part No	UN	Qty	Description	Page No

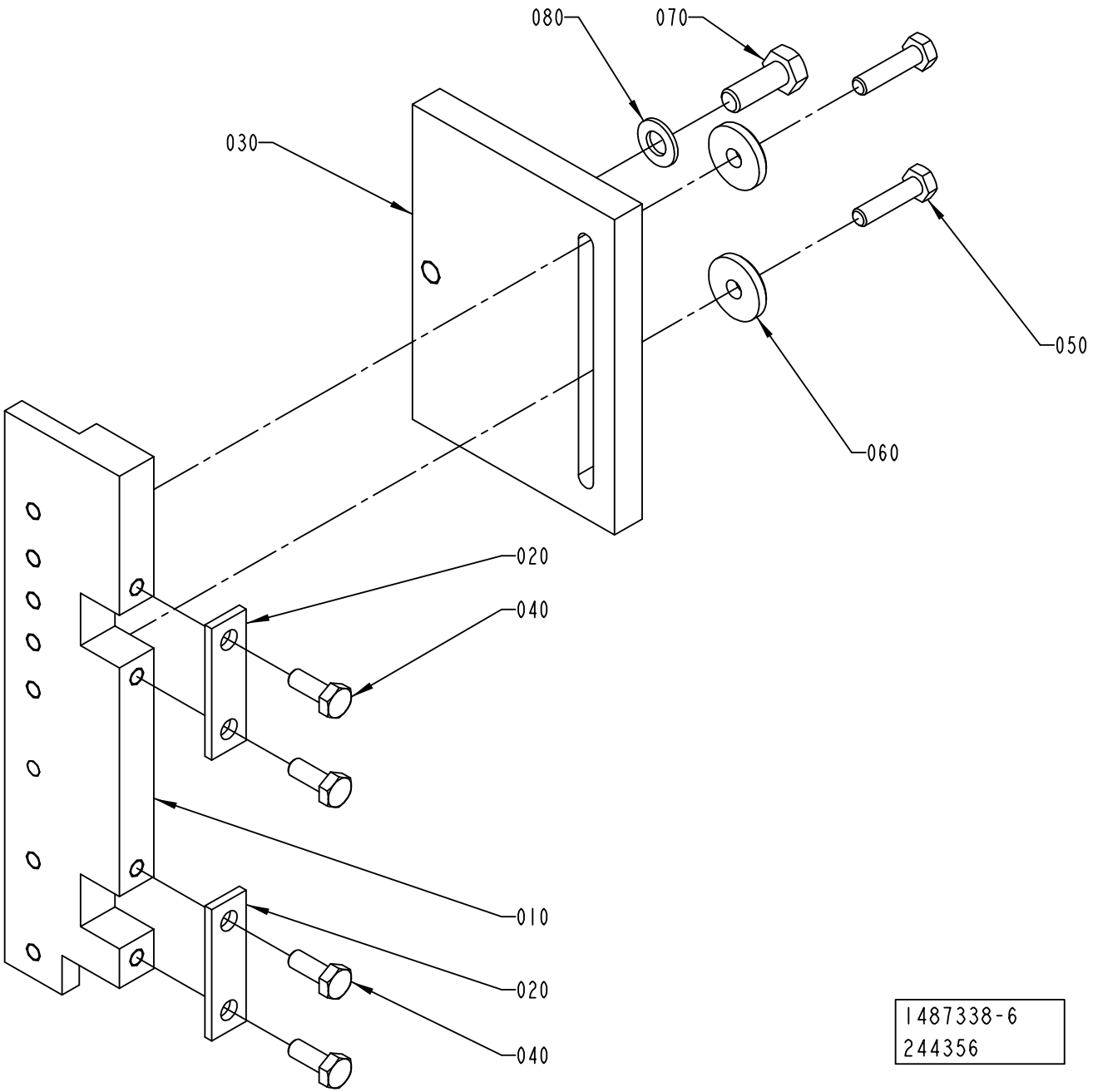
080
070
030
050
060
020
040
010
020
040
1487338-6
244356

Pos	Part No	UN	Qty	Description	Page No
TBA 0330S, TBA 0200B, TBA 0250S, TBA 0200S, TBA 0200M, TBA 0250B, TBA 0200SQ, TPA 0250SQ, TPA 0330SQ, TPA 0200SQ, TPA 0500SQ, TBA 0250SQ (See drawing on page: 2-102)					
010	2715298-0000		1	BRACKET	
030	1348359-0000		1	BRACKET	
TBA 0500S, TBA 0500B, TBA 1000S, TBA 1000SQ, TBA 1000B, TBA 1500S, TPA 1000SQ NOQC (See drawing on page: 2-104)					
010	2715298-0000		1	BRACKET	
030	1317475-0000		1	BRACKET	
TBA 1890S, TBA 2000S, TBA 1400B (See drawing on page: 2-104)					
010	2715299-0000		1	BRACKET	
030	2656899-0000		1	BRACKET	
TPA 1000SQ QC, TPA 0750SQ QC (See drawing on page: 2-104)					
010	2715299-0000		1	BRACKET	
030	1317475-0000		1	BRACKET	
Common Parts					
020	1036673-0000		2	WASHER	
040	312105-0368		4	SCREW M6S ISO 4017 M6X16 A480	
050	312105-0372		2	SCREW M6S ISO 4017 M6X25 A480	
060	315125-0153		2	WASHER TBRSB 6,4X22X4 A4	
070	312105-0452		1	SCREW M6S ISO 4017 M8X22 A4 80	
080	315105-0165		1	WASHER BRB 8,4X16 RFR	

Pos	Part No	UN	Qty	Description	Page No

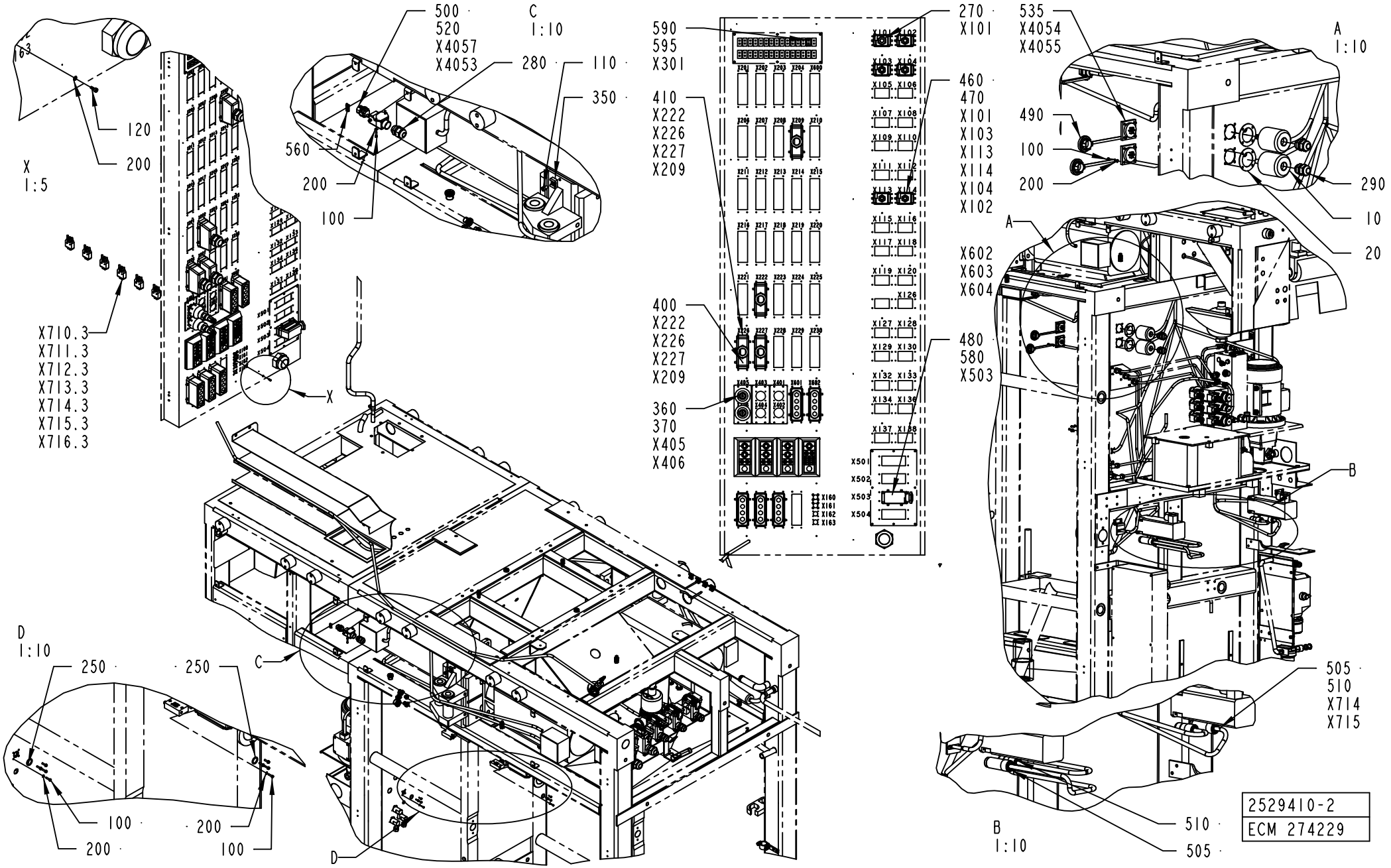
163
120
200
X
1:5
X710.3
X711.3
X712.3
X713.3
X714.3
X715.3
X716.3
500
520
X4057
X4053
C
1:10
280
110
350
560
200
100
590
595
X301
410
X222
X226
X227
X209
400
X222
X226
X227
X209
360
370
X405
X406
270
X101
460
470
X101
X103
X113
X114
X104
X102
480
580
X503
535
X4054
X4055
A
1:10
490
100
200
290
10
20
A
X602
X603
X604
B
505
510
X714
X715
B
1:10
510
505
D
1:10
250
250
100
200
200
100
C
D
2529410-2
ECM 274229

ECM: 274231 - 20061101
Group number: 2529410-0150
Assembly Drawing: 2529410-2_1_AA

This list covers pages from 2-106 to 2-111

Pos	Part No	UN	Qty	Description	Page No
-					
010	1037673-0000		2	SLEEVE	
020	2529498-0000		2	GASKET	
100	312125-0226		20	SCREW ISO 1207 M3X12 A4	
110	312125-0364		17	SCREW ISO 1207 M6X10 A4	
120	312115-0222		8	SCREW ISO4762 M3X8 A4 80	
200	315105-0124		28	WASHER BRB 3,2X7 RFR	
250	315202-0211		2	O-RING 13,3X2,4 MM	
270	352103-0110		1	CABLE GLAND, STR 16, PR22,5/PG16	
280	352103-0106		2	CABLE GLAND, ST 11, PR18,6/PG11	
290	352103-0108		8	CABLE GLAND, ST 13,5 , PR20,4/PG13,5	
300	352103-0120		6	CABLE GLAND, STR 29, PR37,0/PG29	
310	352103-0121		4	CABLE GLAND, ST 29, PR37,0/PG29	
350	352113-0204		17	ANCHOR PLATES FOR STRIPS, TYPE TM3S25-M	
360	90110-0235		2	CABLE CONTACT, PX0739/P	
370	90459-1501		2	CABLE SEALING, 12023/I, ELFA. 44-625-78	
400	90110-0150		4	MALE INSERT 121110 0000	
410	90110-0152		4	CABLE HOOD 24-POL 70.352.2428.1	
460	90110-0157		6	CABLE HOOD 6-POL 70.352.0628.1	
470	90110-0159		6	MALE INSERT 70.310.0640.0	
480	90110-0156		1	MALE INSERT 70.210.0653.0	
490	90110-0349		2	JD TAMPA DE PLASTICO	
500	90110-0296		2	FEMALE INSERT HDC-HA-4BS 149840-B/2	
520	90110-0370		2	BASE HOUSING	
535	90110-0236		2	CHASSIS CONTACT PX0767/S	
550	90110-0381		5	COVER, 310601-33 CYR24.4	
560	90110-0385		1	MARKING HOLDER, 4.242.3853.0	
580	90110-0244		1	CABLE HOOD 6-POL 70.350.1628.0	
590	90326-0022		2	PLUG, MALE YELLOW CR-AL	
595	90326-0020		2	PLUG, FEMALE YELLOW CR-AL	
600	90458-1175		2	MULTI DIAMETER MODULE, CM 15W40	
610	90458-1174		4	MULTI DIAMETER MODULE, CM 20W40	
620	90458-1173		7	MULTI DIAMETER MODULE, CM 30W40	
650	359005-0010		11	MARKING LABEL KIT 0 - 9, 04.841.2150.0	
660	359005-0050		11	MARKING LABEL KIT X, 04.841.4550.0	
670	90110-0385		12	MARKING HOLDER, 4.242.3853.0	
W2001	351150-0425	MM	5500	CABLE OLFLEX 25X0,75 MM2 LIGHT/GREY	
W2002	351150-0425	MM	5500	CABLE OLFLEX 25X0,75 MM2 LIGHT/GREY	
W2003	351150-0166	MM	4500	CABLE OLFLEX 4X4 MM2 LIGHT/GREY	
W2005	351150-0412	MM	7000	CABLE OLFLEX 3X1,5 MM2 LIGHT/GREY	
W2007	351150-0418	MM	6200	CABLE OLFLEX 4X2,5 MM2 LIGHT/GREY	
W2008	351150-0418	MM	6200	CABLE OLFLEX 4X2,5 MM2 LIGHT/GREY	
W2009	351150-0418	MM	7000	CABLE OLFLEX 4X2,5 MM2 LIGHT/GREY	
W2050	351150-0425	MM	5500	CABLE OLFLEX 25X0,75 MM2 LIGHT/GREY	
W2055	90220-0034	MM	7500	THERMOCABLE TEX/SITW-20F-KX 2X0,5MM2	
W2071	351150-0412	MM	4500	CABLE OLFLEX 3X1,5 MM2 LIGHT/GREY	
W2072	351150-0412	MM	4500	CABLE OLFLEX 3X1,5 MM2 LIGHT/GREY	
W2090	2540596-0003		1	COAXIAL CABLE	
W2091	2540596-0003		1	COAXIAL CABLE	
W2211	351150-0412	MM	6000	CABLE OLFLEX 3X1,5 MM2 LIGHT/GREY	
W2225	351150-0405	MM	6500	CABLE OLFLEX 5X0,75 MM2 LIGHT/GREY	
W2226	351150-0406	MM	6500	CABLE OLFLEX 7X0,75 MM2 LIGHT/GREY	
W2230	351150-0405	MM	7500	CABLE OLFLEX 5X0,75 MM2 LIGHT/GREY	
W2231	351150-0406	MM	7500	CABLE OLFLEX 7X0,75 MM2 LIGHT/GREY	
W2232	351150-0406	MM	8000	CABLE OLFLEX 7X0,75 MM2 LIGHT/GREY	
W2235	351150-0403	MM	2500	CABLE OLFLEX 3X0,75 MM2 LIGHT/GREY	
W2244	351150-0412	MM	6000	CABLE OLFLEX 3X1,5 MM2 LIGHT/GREY	
W2270	90220-0091	MM	7000	PAIR TWISTED CABLE 2X2X0,25MM2	
W2271	90220-0091	MM	7000	PAIR TWISTED CABLE 2X2X0,25MM2	
W2710	90459-7174		1	CABLE	
W2711	90459-7174		1	CABLE	
W2712	90459-7174		1	CABLE	
W2713	90459-7174		1	CABLE	
W2714	90459-2566		1	MOTOR CABLE 16 AWG 2090-XXNPMP-16S15	
W2715	90459-2566		1	MOTOR CABLE 16 AWG 2090-XXNPMP-16S15	
W2720	90459-7208	M	15	CABLE	
W2721	90459-7208	M	15	CABLE	
W2722	90459-7208	M	15	CABLE	
W2723	90459-7208	M	15	CABLE	
W2724	90459-7208	M	15	CABLE	
W2725	90459-7208	M	15	CABLE	
W2730	90459-2577		1	MOTOR BRAKE CABLE 2090-UXNBMP-18S15	
W2731	90459-2577		1	MOTOR BRAKE CABLE 2090-UXNBMP-18S15	
W2732	90459-2577		1	MOTOR BRAKE CABLE 2090-UXNBMP-18S15	
W2733	90459-2577		1	MOTOR BRAKE CABLE 2090-UXNBMP-18S15	
W2734	90459-2577		1	MOTOR BRAKE CABLE 2090-UXNBMP-18S15	
W2735	90459-2577		1	MOTOR BRAKE CABLE 2090-UXNBMP-18S15	
W4016	90220-0165	MM	8200	SCR. CABLE 5X0,34MM2	
W4017	90220-0165	MM	8200	SCR. CABLE 5X0,34MM2	
W4052	351150-0403	MM	3200	CABLE OLFLEX 3X0,75 MM2 LIGHT/GREY	
W4053	351150-0404	MM	3200	CABLE OLFLEX 4X0,75 MM2 LIGHT/GREY	
X610	90458-1178		1	FRAME CF 8	
X611	90458-1178		1	FRAME CF 8	
X612	90458-1178		1	FRAME CF 8	

Machine Type | Group Description | Used-In | Group Number | Page No

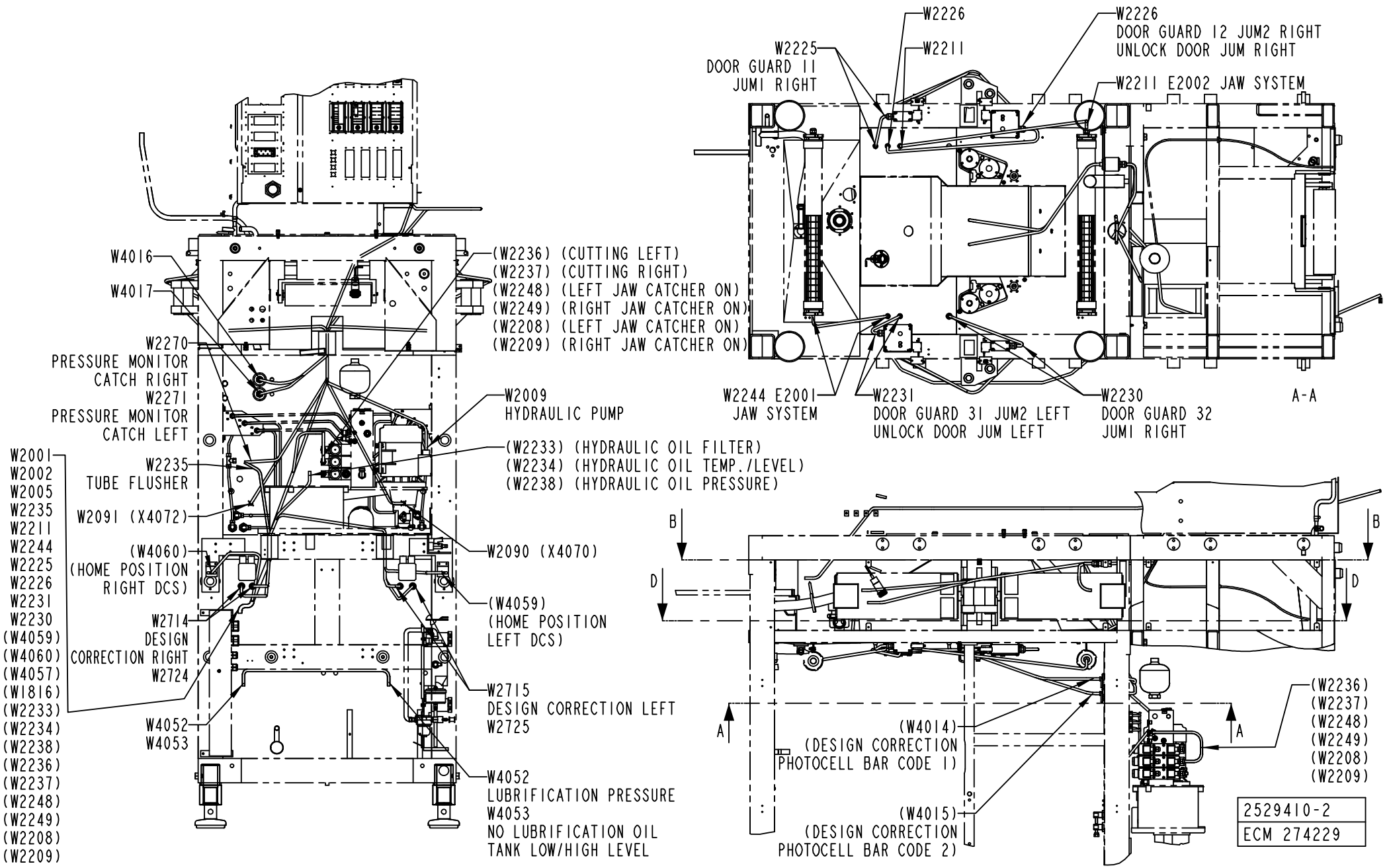
W2226
W2225
DOOR GUARD 11
JUM1 RIGHT
W2211
W2226
DOOR GUARD 12 JUM2 RIGHT
UNLOCK DOOR JUM RIGHT
W2211 E2002 JAW SYSTEM
W4016
W4017
W2270
PRESSURE MONITOR
CATCH RIGHT
W2271
PRESSURE MONITOR
CATCH LEFT
(W2236) (CUTTING LEFT)
(W2237) (CUTTING RIGHT)
(W2248) (LEFT JAW CATCHER ON)
(W2249) (RIGHT JAW CATCHER ON)
(W2208) (LEFT JAW CATCHER ON)
(W2209) (RIGHT JAW CATCHER ON)
W2009
HYDRAULIC PUMP
W2001
W2002
W2005
W2235
W2211
W2244
W2225
W2226
W2231
W2230
(W4059)
(W4060)
(W4057)
(W1816)
(W2233)
(W2234)
(W2238)
(W2236)
(W2237)
(W2248)
(W2249)
(W2208)
(W2209)
W2235
TUBE FLUSHER
W2091 (X4072)
(W4060)
(HOME POSITION
RIGHT DCS)
W2714
DESIGN
CORRECTION RIGHT
W2724
W4052
W4053
(W2233) (HYDRAULIC OIL FILTER)
(W2234) (HYDRAULIC OIL TEMP./LEVEL)
(W2238) (HYDRAULIC OIL PRESSURE)
W2090 (X4070)
(W4059)
(HOME POSITION
LEFT DCS)
W2715
DESIGN CORRECTION LEFT
W2725
W4052
LUBRIFICATION PRESSURE
W4053
NO LUBRIFICATION OIL
TANK LOW/HIGH LEVEL
W2244 E2001
JAW SYSTEM
W2231
DOOR GUARD 31 JUM2 LEFT
UNLOCK DOOR JUM LEFT
W2230
DOOR GUARD 32
JUM1 RIGHT
A-A
B
D
A
(W4014)
(DESIGN CORRECTION
PHOTOCELL BAR CODE 1)
(W4015)
(DESIGN CORRECTION
PHOTOCELL BAR CODE 2)
(W2236)
(W2237)
(W2248)
(W2249)
(W2208)
(W2209)
2529410-2
ECM 274229

Pos	Part No	UN	Qty	Description	Page No
- (Cont'd)					
X613	90458-1178		1	FRAME CF 8	
X710.3	90459-2551		1	CONNECTOR, MOTOR FEEDBACK 15 PIN MALE	
X711.3	90459-2551		1	CONNECTOR, MOTOR FEEDBACK 15 PIN MALE	
X712.3	90459-2551		1	CONNECTOR, MOTOR FEEDBACK 15 PIN MALE	
X713.3	90459-2551		1	CONNECTOR, MOTOR FEEDBACK 15 PIN MALE	
X714.3	90459-2551		1	CONNECTOR, MOTOR FEEDBACK 15 PIN MALE	
X715.3	90459-2551		1	CONNECTOR, MOTOR FEEDBACK 15 PIN MALE	
X716.3	90459-2551		1	CONNECTOR, MOTOR FEEDBACK 15 PIN MALE	

Pos	Part No	UN	Qty	Description	Page No

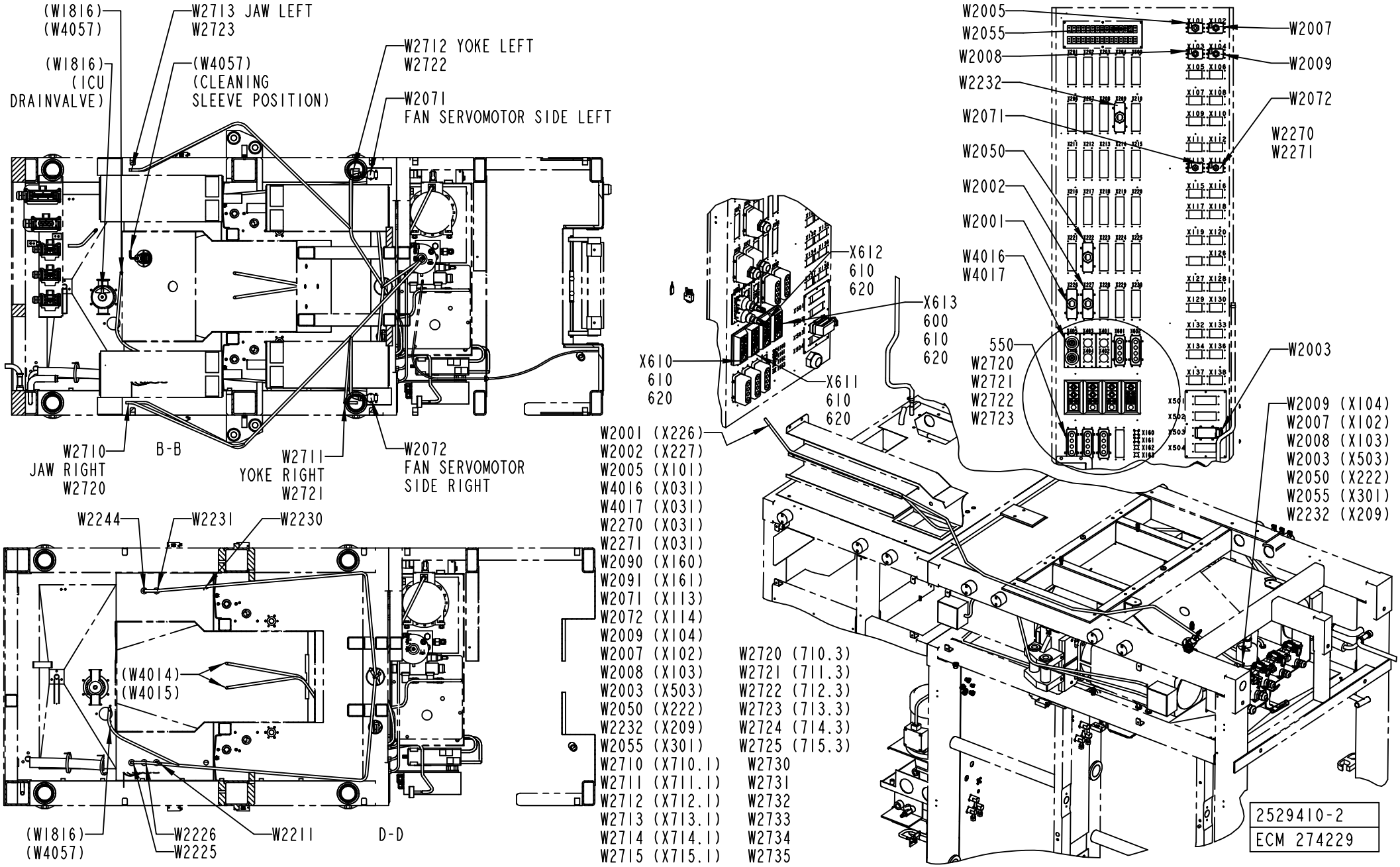
(W1816)
(W4057)
W2713 JAW LEFT
W2723
(W1816)
(ICU
DRAINVALVE)
(W4057)
(CLEANING
SLEEVE POSITION)
W2712 YOKE LEFT
W2722
W2071
FAN SERVOMOTOR SIDE LEFT
W2710
JAW RIGHT
W2720
B-B
W2711
YOKE RIGHT
W2721
W2072
FAN SERVOMOTOR
SIDE RIGHT
W2244
W2231
W2230
(W4014)
(W4015)
(W1816)
(W4057)
W2226
W2225
W2211
D-D
W2005
W2055
W2008
W2232
W2071
W2050
W2002
W2001
W4016
W4017
550
W2720
W2721
W2722
W2723
W2007
W2009
W2072
W2270
W2271
W2003
X612
610
620
X613
600
610
620
X610
610
620
X611
610
620
W2001 (X226)
W2002 (X227)
W2005 (X101)
W4016 (X031)
W4017 (X031)
W2270 (X031)
W2271 (X031)
W2090 (X160)
W2091 (X161)
W2071 (X113)
W2072 (X114)
W2009 (X104)
W2007 (X102)
W2008 (X103)
W2003 (X503)
W2050 (X222)
W2232 (X209)
W2055 (X301)
W2710 (X710.1)
W2711 (X711.1)
W2712 (X712.1)
W2713 (X713.1)
W2714 (X714.1)
W2715 (X715.1)
W2720 (710.3)
W2721 (711.3)
W2722 (712.3)
W2723 (713.3)
W2724 (714.3)
W2725 (715.3)
W2730
W2731
W2732
W2733
W2734
W2735
W2009 (X104)
W2007 (X102)
W2008 (X103)
W2003 (X503)
W2050 (X222)
W2055 (X301)
W2232 (X209)
2529410-2
ECM 274229

ECM: 274231 - 20061101
Group number: 2529410-0150
Assembly Drawing: 2529410-2_3_AA

This list covers pages from 2-106 to 2-111

Pos	Part No	UN	Qty	Description	Page No	Pos	Part No	UN	Qty	Description	Page No

SEE PREVIOUS LISTS PAGES: 2-107, 2-109.

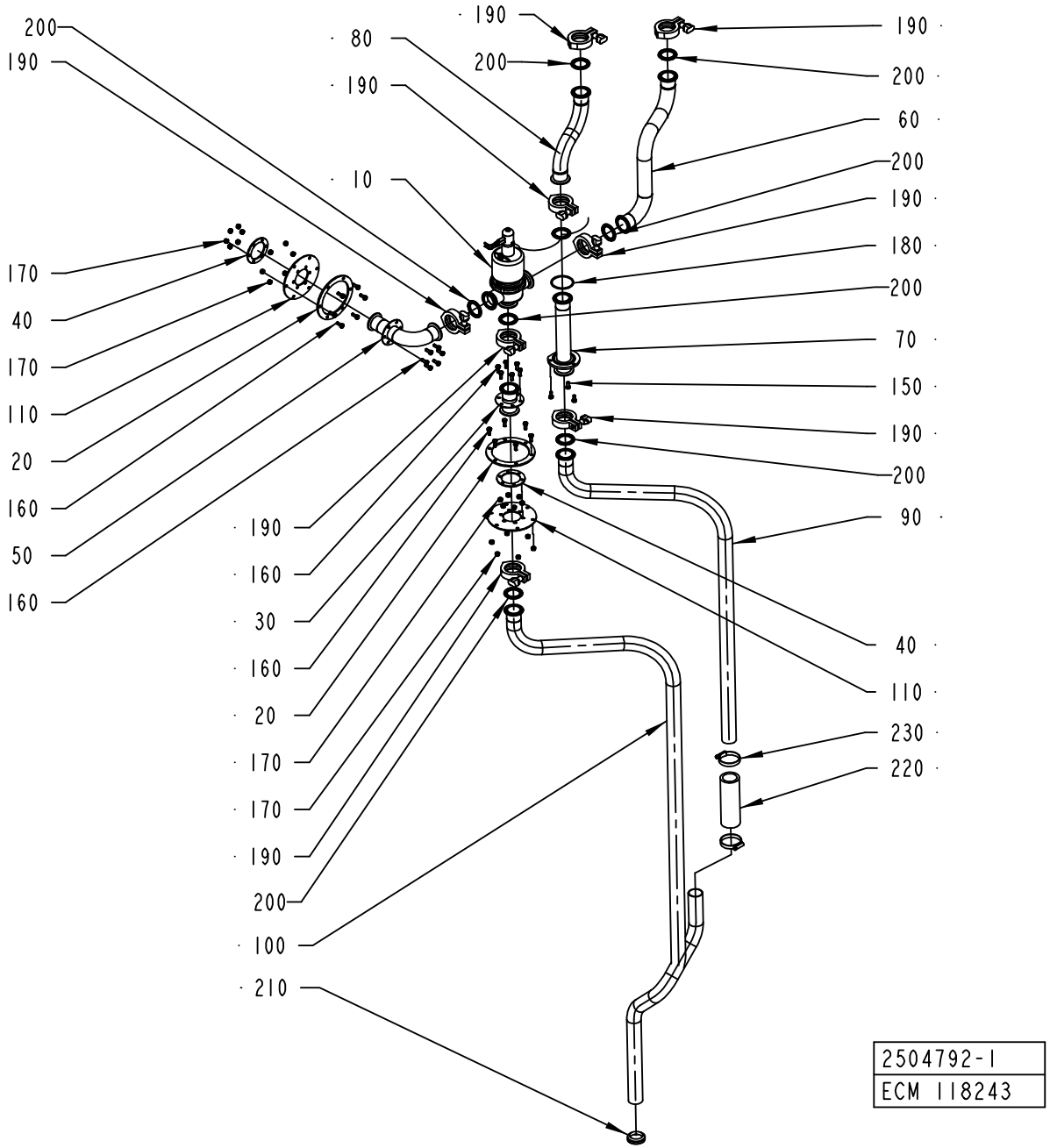
200
190
170
40
170
110
20
160
50
160
80
190
10
190
160
30
160
20
170
170
190
200
100
210
190
200
190
200
60
200
190
180
200
70
150
190
200
90
40
110
230
220
2504792-1
ECM 118243

ECM: 189851 - 20041104
Group number: 2504792-0100
Assembly Drawing: 2504792-1_1_AA

Pos	Part No	UN	Qty	Description	Page No
-					
010	2500088-0100		1	3-WAY VALVE	**2-115**
020	1498856-0000		2	FLANGE	
030	1498857-0000		1	CONNECTION	
040	1498858-0000		2	FLANGE	
050	2509544-0000		1	PIPE	
060	2509545-0000		1	PIPE	
070	2509546-0000		1	CONNECTION	
080	2509547-0000		1	PIPE	
090	2594647-0000		1	PIPE	
100	2594646-0000		1	PIPE	
110	1498855-0000		2	GASKET	
150	312105-0367		3	SCREW M6S ISO 4017 M6X14 A480	
160	312105-0368		24	SCREW M6S ISO 4017 M6X16 A480	
170	312812-0316		24	HEXAGON NUT, NY-LOCK M6 A480	
180	315202-0302		1	O-RING 54,5X3 MM	
190	342840-0103		8	CLAMPING PIECE	
200	342850-0304		8	GASKET 35,4X49,1X5,2 1"1/2 FDA	
210	315220-0183		1	V-RINGS 36X46X13 MM V-40S	
220	90166-0236	M		HOSE, 38/51 REINFORCED RUBBER	
230	342991-0109		2	HOSE CLIP,WORM DRIVE TYPE (48)-50	

Pos	Part No	UN	Qty	Description	Page No

Machine Type | Group Description | Used-In | Group Number | Page No

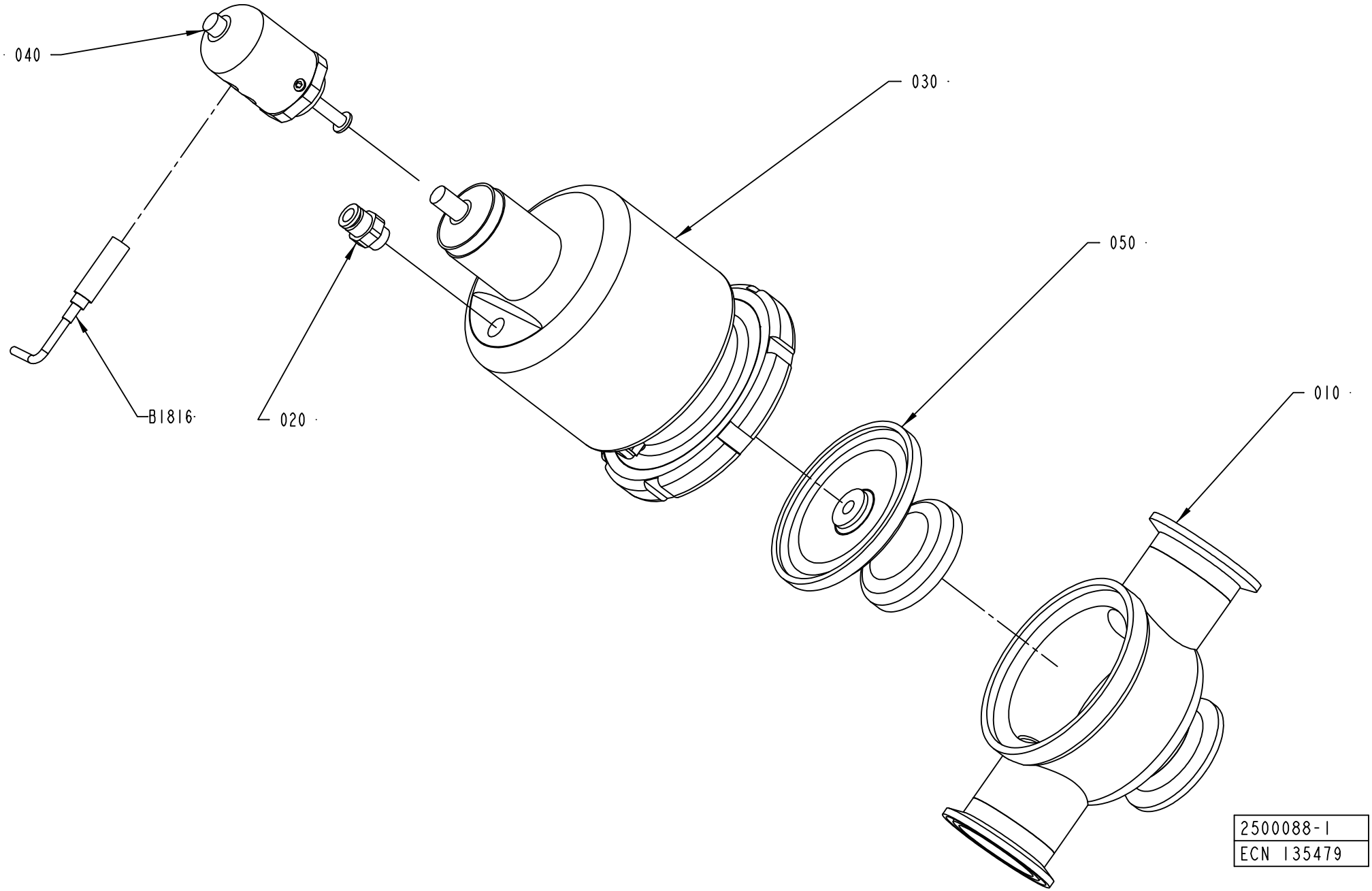
040
030
050
010
B1816
020
2500088-1
ECN 135479

ECM: 188843 - 20041104
Group number: 2500088-0100
Assembly Drawing: 2500088-1_1_AB

Pos	Part No	UN	Qty	Description	Page No
-					
010	2501292-0000		1	VALVE HOUSING	
020	342722-0202		1	PIPE COUPLING 1/8" D=6MM	
030	90458-1531		1	ACTUATOR, N.O., PA 38/100	
040	90458-1537		1	HOLDER, FOR INDUCTIVE SENSORS	
050	90458-1541		1	DIAPHRAGM, NA 38/25 PFTE	
B1816	90458-0138		1	PROX. SWITCH, E2EG-X1R5B1-5M	

Pos	Part No	UN	Qty	Description	Page No

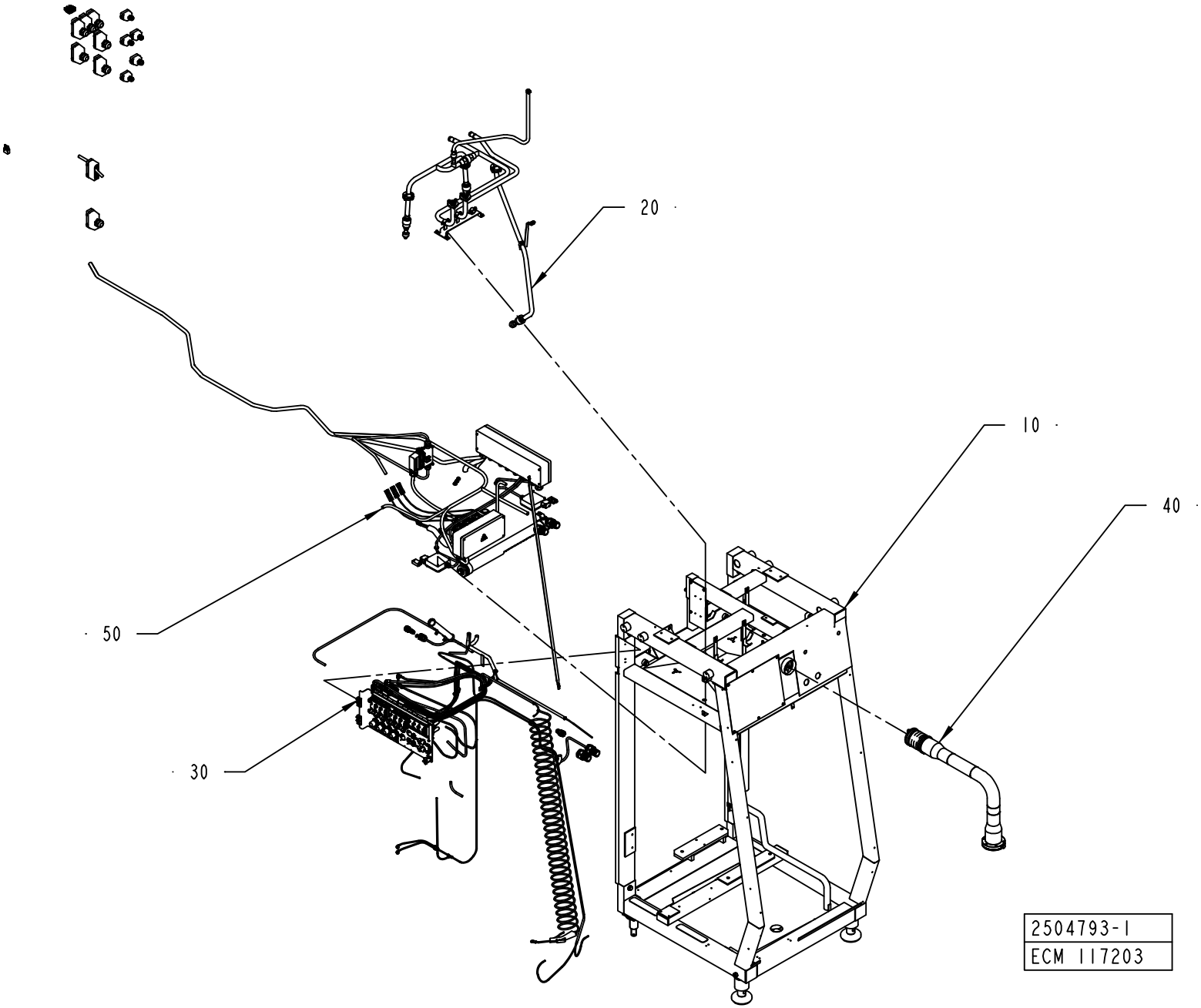
20
10
40
50
30
2504793-1
ECM 117203

ECM: 274236 - 20061101
Group number: 2504793-0150
Assembly Drawing: 2504793-1_1_AA

Pos	Part No	UN	Qty	Description	Page No
-					
010	2504794-0100		1	MACHINE BODY	**2-119**
020	2504795-0100		1	CLEANING SYSTEM	**2-121**
030	2528044-0100		1	PNEUMATIC SYSTEM	**2-123**
040	1095863-0200		1	PIVOT ARM	**2-143**
050	2527300-0150		1	ELECTRIC EQUIPMENT	**2-147**

Pos	Part No	UN	Qty	Description	Page No

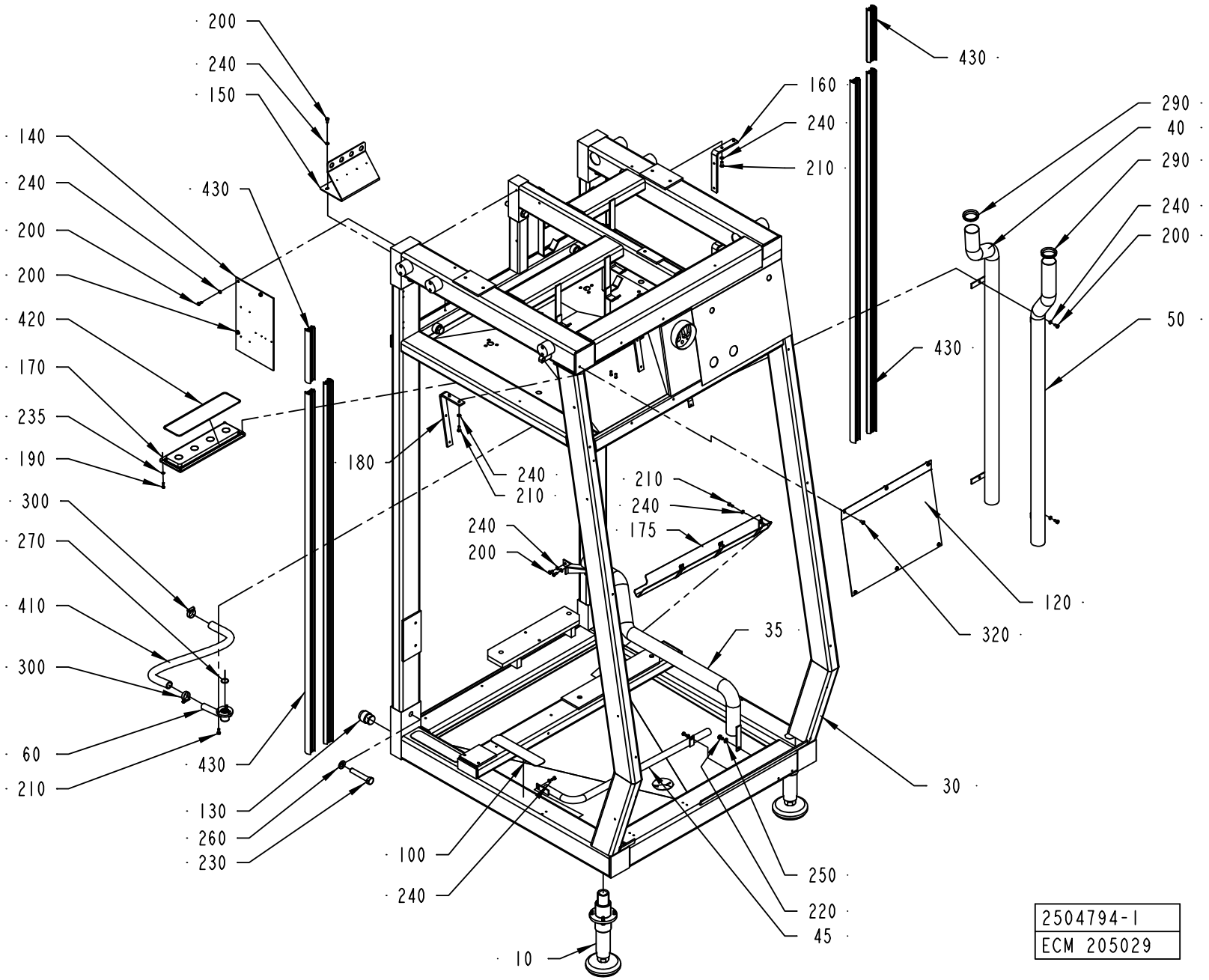
200
240
150
140
240
200
200
420
170
235
190
300
270
410
300
60
210
430
430
180
130
260
230
100
240
10
240
210
240
200
210
240
175
35
30
250
220
45
160
240
210
430
430
290
40
290
240
200
50
120
320
2504794-1
ECM 205029

ECM: 998708 - 20061104
Group number: 2504794-0100
Assembly Drawing: 2504794-1_1_AD

Pos	Part No	UN	Qty	Description	Page No
A3/FLEX TBA, A3/FLEX TPA					
030	2504437-0000		1	FRAME	
035	2530300-0000		1	PIPE	
040	2530301-0000		1	PIPE	
045	2530303-0000		1	PIPE	
050	2530302-0000		1	PIPE	
120	2510785-0000		1	COVER PLATE	
150	2509941-0000		1	SUPPORT	
160	2520431-0000		2	SUPPORT	
175	2529169-0000		1	HOLDER	
180	2520430-0000		2	HOLDER	
200	312105-0366		12	SCREW M6S ISO 4017 M6X12 A480	
210	312105-0368		14	SCREW M6S ISO 4017 M6X16 A480	
220	312105-0447		1	SCREW M6S ISO 4017 M8X12 A480	
240	315105-0153		23	WASHER BRB 6,4X12 RFR	
250	315105-0165		1	WASHER BRB 8,4X16 RFR	
290	315220-0198		2	V-RINGS 45X55X13 MM V-50S	
Common Parts					
010	2761766-0100		2	FOOT	**2-11**
060	2509552-0000		1	DRAINING	
100	1103300-0000		3	NON-SKID	
130	2506636-0000		2	PIN	
140	2506921-0000		1	SUPPORT	
170	2661082-0000		1	PLATE	
190	312105-0329		4	SCREW M6S ISO 4017 M5X16 A480	
230	312105-0638		7	SCREW M6S ISO 4014 M16X90 A480	
235	315105-0146		4	WASHER BRB 5,3X10 RFR	
260	315105-0186		7	WASHER BRB 17X30 RFR	
270	315202-0709		1	O-RING 23,52X1,78 MM	
300	342991-0105		2	HOSE CLIP,WORM DRIVE TYPE (27)-30	
320	90287-0075		6	SCREW SLOT. PAN HEAD LKCS M6X12	
410	90166-0151	MM	610	HOSE	
420	90161-0001	MM	800	O-RING MATERIAL 3 MM	
430	90459-1009	MM	7000	RUBBER STRIP, 1025088988	

Pos	Part No	UN	Qty	Description	Page No

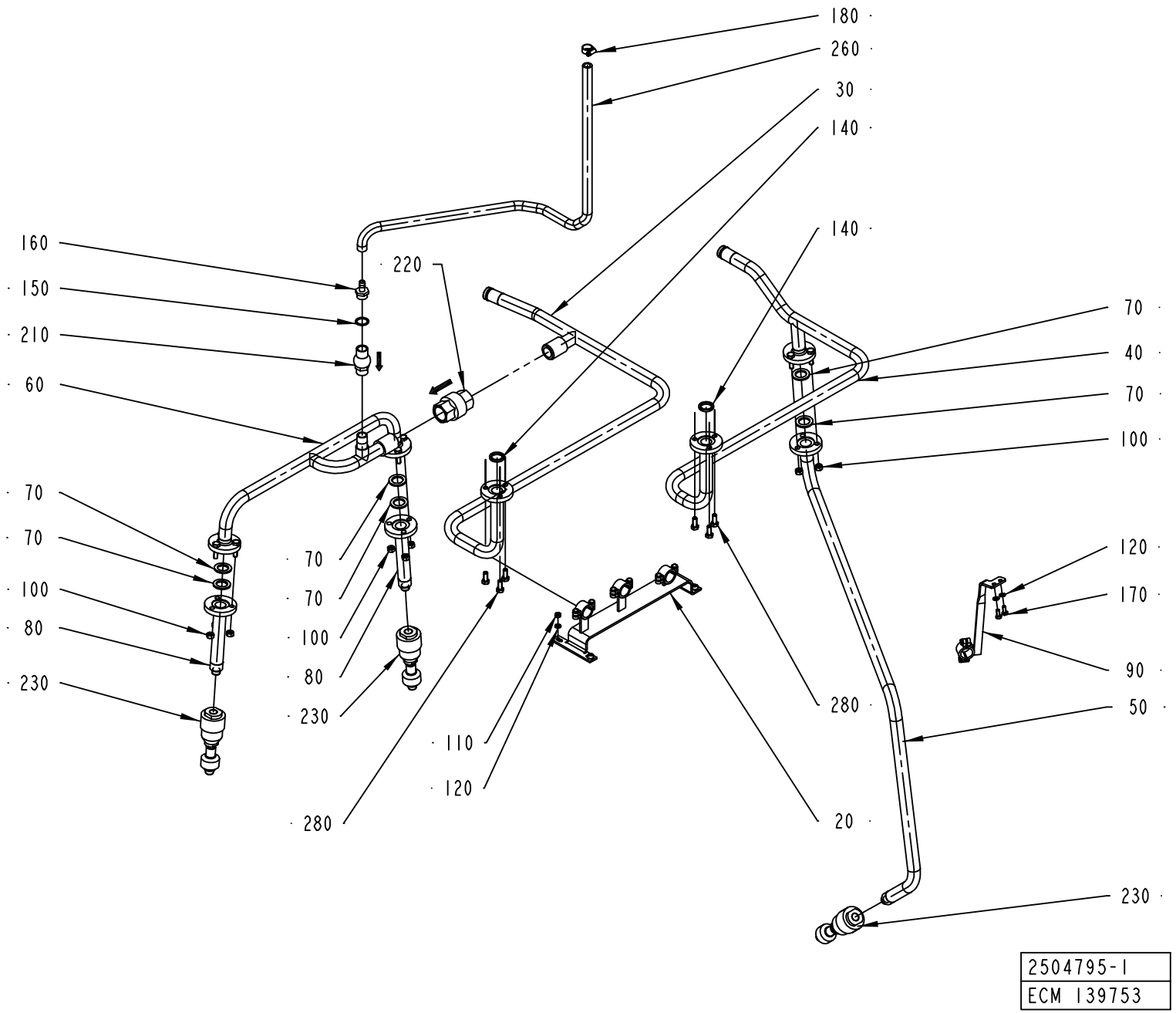
180
260
30
140
140
160
150
210
60
220
70
40
70
100
70
70
100
80
230
70
70
100
80
230
120
170
90
280
50
110
120
280
20
230
2504795-1
ECM 139753

ECM: 265998 - 20060702
Group number: 2504795-0100
Assembly Drawing: 2504795-1_1_AC

Pos	Part No	UN	Qty	Description	Page No
A3/FLEX TBA, A3/FLEX TPA					
030	2506922-0000		1	PIPE	
040	2506923-0000		1	PIPE	
050	2506924-0000		1	PIPE	
060	2506925-0000		1	PIPE	
080	2508425-0000		2	PIPE	
090	2519430-0000		1	BRACKET	
140	315229-0103		2	GASKETS, 23,1X30,1X3,7 MM 1" FDA	
230	90424-0066		3	ROT.SPRAY NOZZLE, D26984-B3/8"-PVDF/4.5	
280	312105-0451		6	SCREW M6S ISO 4017 M8X20 A480	
Common Parts					
020	2508426-0000		1	BRACKET	
070	1037443-0000		6	GASKET	
100	312605-0318		9	HEXAGON NUT, M6M M8 A280	
110	312605-0316		4	HEXAGON NUT, M6M M6 A280	
120	315105-0153		6	WASHER BRB 6,4X12 RFR	
150	315233-0113		1	WASHER CAPTIVE SEALING G1/2	
160	342901-0105		1	HOSE NIPPLE, EXT.THR. R1/2-12 MM	
170	312105-0367		2	SCREW M6S ISO 4017 M6X14 A480	
180	342991-0102		1	HOSE CLIP,WORM DRIVE TYPE (16)-19	
210	90230-0042		1	NON-RETURN VALVE 1/2"	
220	90230-0044		1	NON-RETURN VALVE 1"	
	90230-0308		*1*	*GASKET KIT*	
260	90166-0121	MM	1000	HOSE	

Pos	Part No	UN	Qty	Description	Page No

Machine Type | Group Description | Used-In | Group Number | Page No

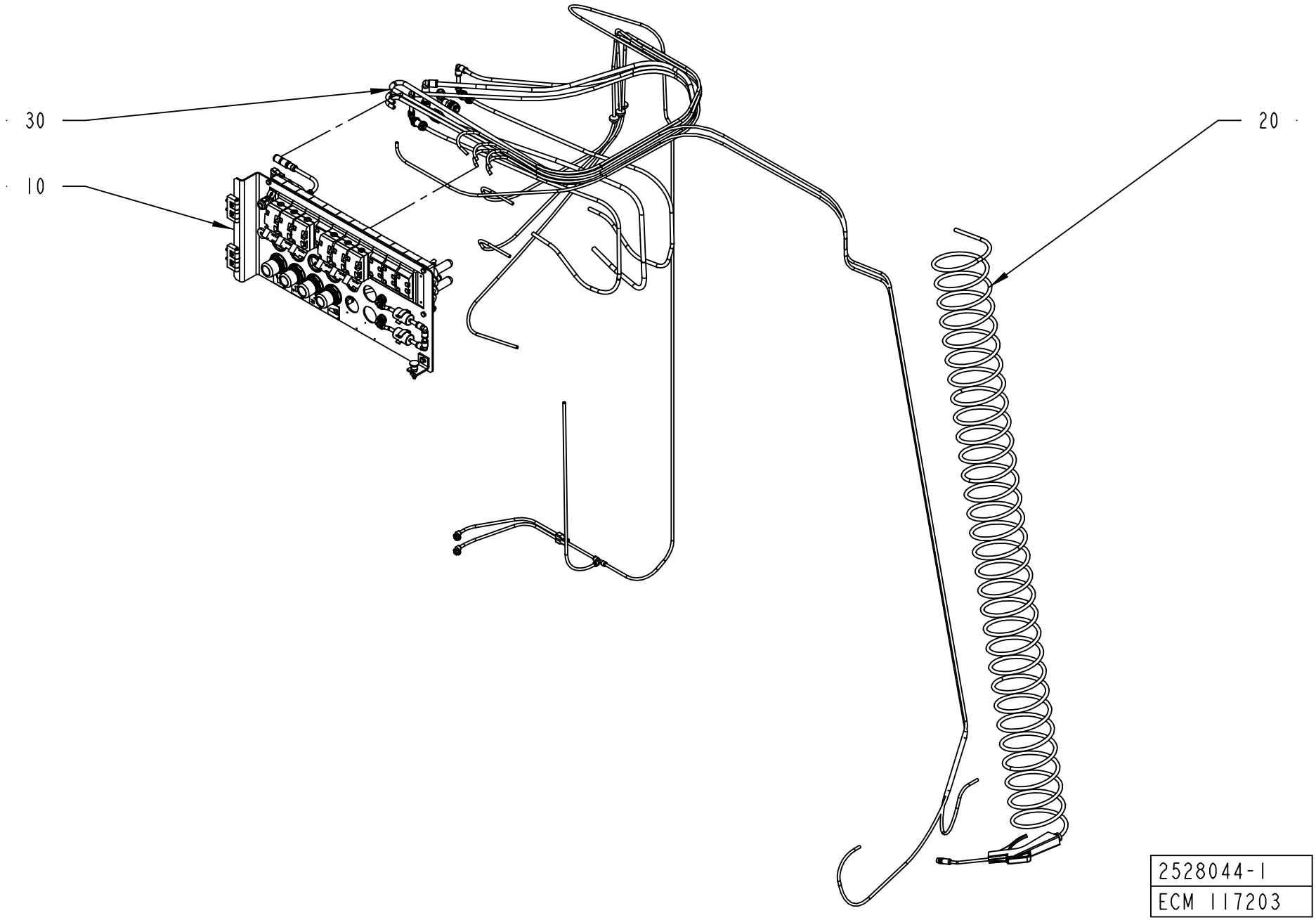
30
10
20
2528044-1
ECM 117203

ECM: 998704 - 20061104
Group number: 2528044-0100
Assembly Drawing: 2528044-1_1_AA

Pos	Part No	UN	Qty	Description	Page No
A3/FLEX TBA, A3/FLEX TPA					
030	2528046-0100		1	HOSE INSTALLATION	**2-125, 2-127, 2-129**
Common Parts					
010	2506362-0100		1	VALVE PANEL	**2-131, 2-133**
020	1095682-0100		1	AIR JET GUN	**2-141**

Pos	Part No	UN	Qty	Description	Page No

HOSE INSTALLATION

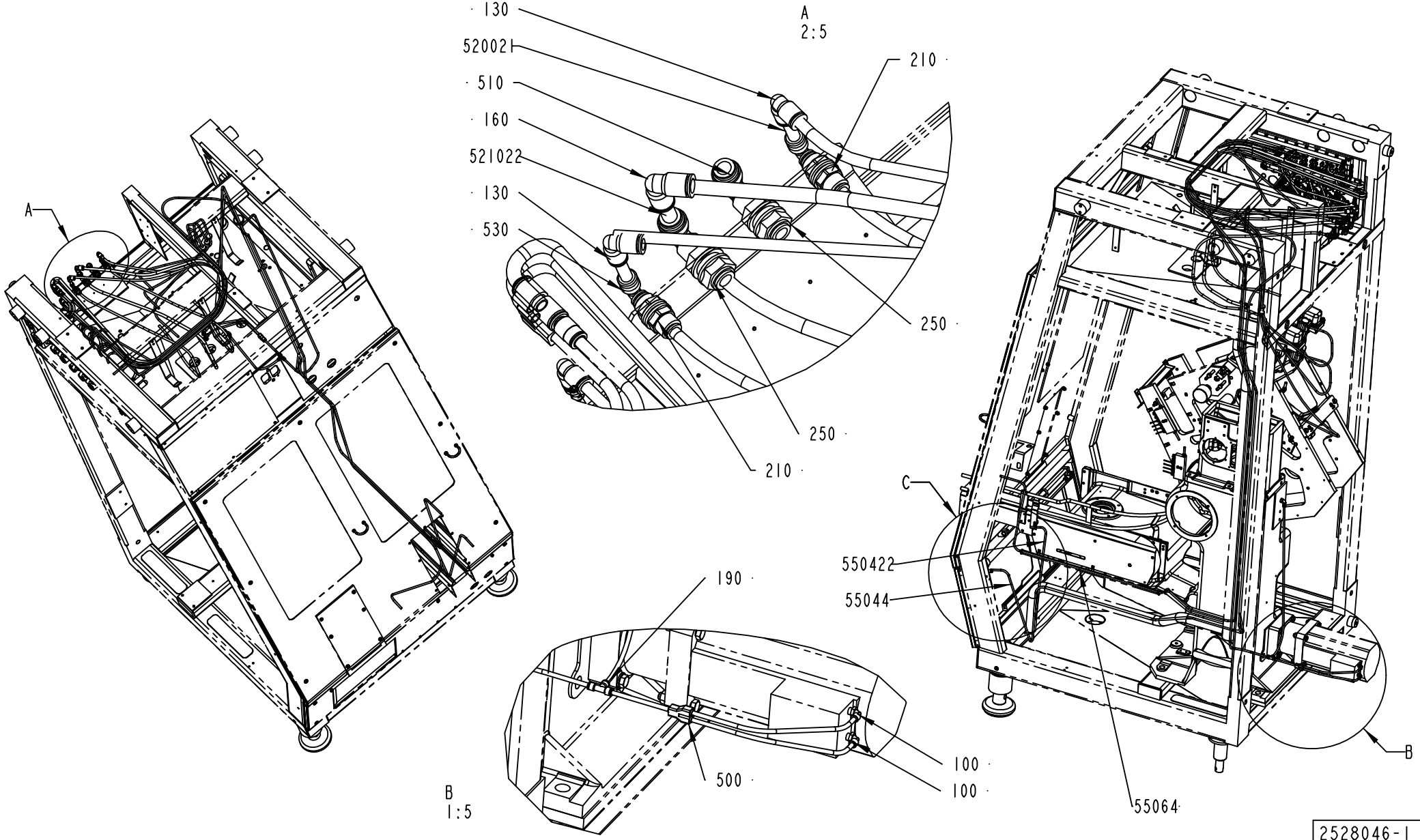

2528046-1
ECM 134706

ECM: 189859 - 20041104
Group number: 2528046-0100
Assembly Drawing: 2528046-1_1_AC

This list covers pages from 2-124 to 2-129

Pos	Part No	UN	Qty	Description	Page No
A3/FLEX DIMC/FLEX (See drawing on pages: 2-124, 2-126, 2-128)					
55064	90166-0081	MM	4300	TUBE 6 MM PA BLUE	
A3/FLEX QC (See drawing on pages: 2-124, 2-126, 2-128)					
55052	90166-0081	MM	2450	TUBE 6 MM PA BLUE	
55054	90166-0081	MM	2300	TUBE 6 MM PA BLUE	
Common Parts					
100	90458-2956		2	ELBOW PIPE JOINT, EXT.THREAD, D=6MM-G1/8	
130	342735-0103		2	ELBOW PIPE JOINT	
160	342735-0104		1	ELBOW PIPE JOINT	
190	342748-0102		1	T-CONNECTION 6MM	
210	342768-0103		2	BULKHEAD CONNECTOR, 8 MM	
250	342768-0104		2	BULKHEAD CONNECTOR, 10 MM	
300	90015-0020		3	LEAD-IN, TET5-7, E-1458016	
500	90055-0100		1	Y-CONNECTION, 6-6	
510	90055-0248		2	ELBOW WITH TAILPIECE 10/10 MM	
530	90055-0172		2	ELBOW WITH TAILPIECE 8/8 MM	
50011	90166-0081	MM	4200	TUBE 6 MM PA BLUE	
52102	90166-0216	MM	2600	TUBE 10 MM PUR BLUE	
53154	90166-0081	MM	2800	TUBE 6 MM PA BLUE	
55044	90166-0081	MM	4800	TUBE 6 MM PA BLUE	
500111	90166-0081	MM	760	TUBE 6 MM PA BLUE	
500112	90166-0081	MM	170	TUBE 6 MM PA BLUE	
500113	90166-0081	MM	310	TUBE 6 MM PA BLUE	
500114	90166-0081	MM	320	TUBE 6 MM PA BLUE	
520021	90166-0013	MM	140	TUBE 8 MM PA BLUE	
520022	90166-0013	MM	1960	TUBE 8 MM PA BLUE	
520023	90166-0013	MM	2050	TUBE 8 MM PA BLUE	
521021	90166-0216	MM	1150	TUBE 10 MM PUR BLUE	
521022	90166-0216	MM	70	TUBE 10 MM PUR BLUE	
550422	90166-0081	M	4800	TUBE 6 MM PA BLUE	
5200221	90166-0013	MM	1200	TUBE 8 MM PA BLUE	
5200231	90166-0013	MM	1200	TUBE 8 MM PA BLUE	

Pos	Part No	UN	Qty	Description	Page No

Machine Type | Group Description | Used-In | Group Number | Page No

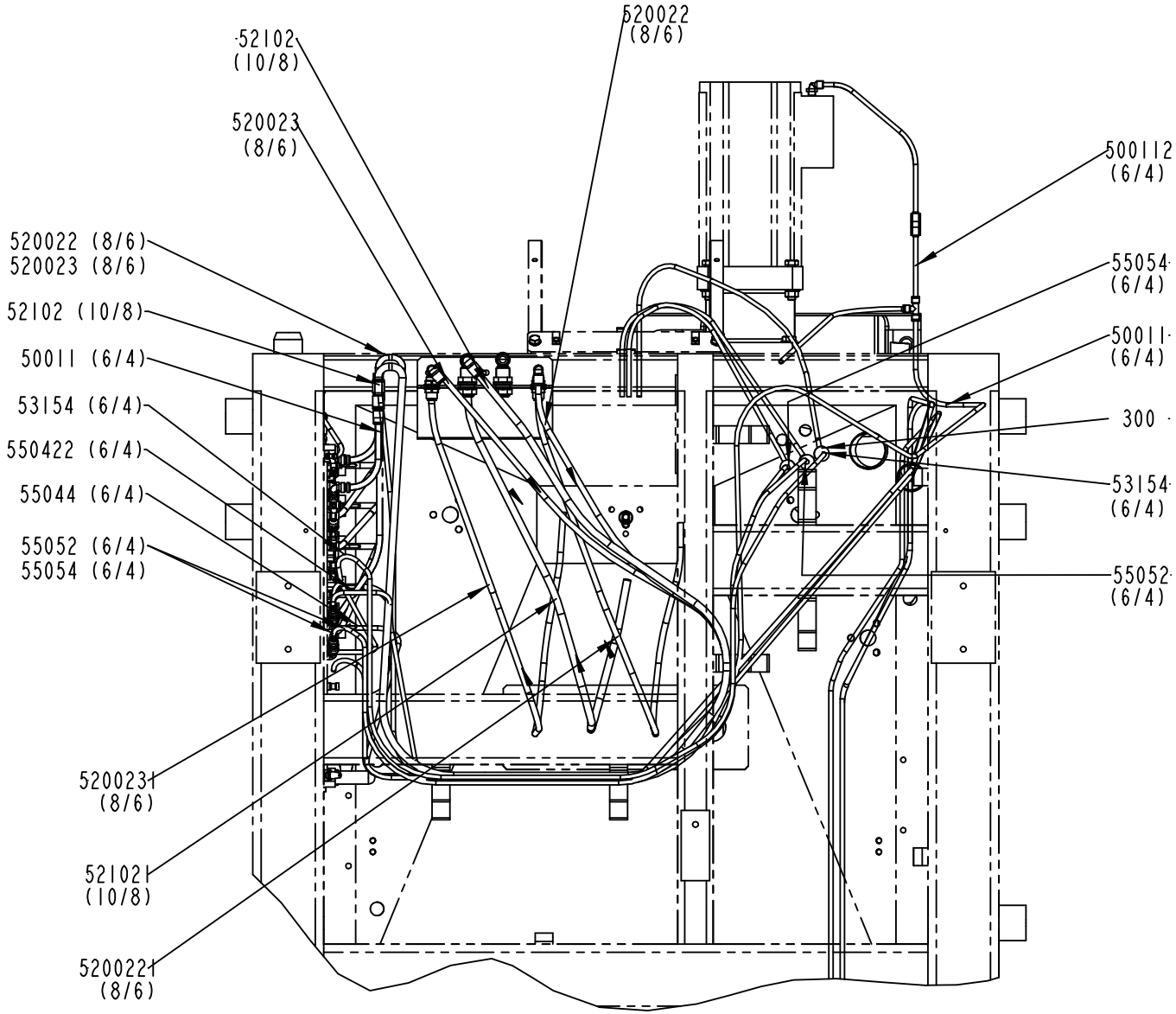

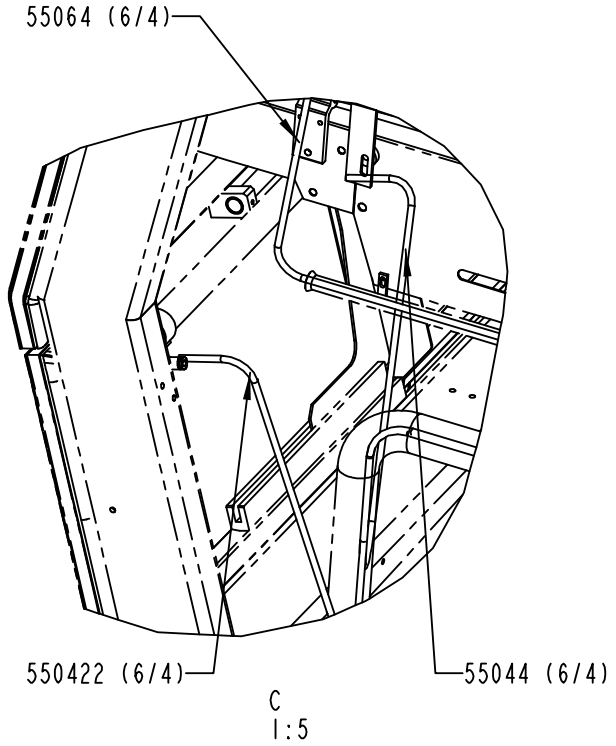

2528046-1
ECM 134706

ECM: 189859 - 20041104
Group number: 2528046-0100
Assembly Drawing: 2528046-1_2_AC

This list covers pages from 2-124 to 2-129

Pos	Part No	UN	Qty	Description	Page No
A3/FLEX DIMC/FLEX (See drawing on pages: 2-124, 2-126, 2-128)					
55064	90166-0081	MM	4300	TUBE 6 MM PA BLUE	
A3/FLEX QC (See drawing on pages: 2-124, 2-126, 2-128)					
55052	90166-0081	MM	2450	TUBE 6 MM PA BLUE	
55054	90166-0081	MM	2300	TUBE 6 MM PA BLUE	
Common Parts					
100	90458-2956		2	ELBOW PIPE JOINT, EXT.THREAD, D=6MM-G1/8	
130	342735-0103		2	ELBOW PIPE JOINT	
160	342735-0104		1	ELBOW PIPE JOINT	
190	342748-0102		1	T-CONNECTION 6MM	
210	342768-0103		2	BULKHEAD CONNECTOR, 8 MM	
250	342768-0104		2	BULKHEAD CONNECTOR, 10 MM	
300	90015-0020		3	LEAD-IN, TET5-7, E-1458016	
500	90055-0100		1	Y-CONNECTION, 6-6	
510	90055-0248		2	ELBOW WITH TAILPIECE 10/10 MM	
530	90055-0172		2	ELBOW WITH TAILPIECE 8/8 MM	
50011	90166-0081	MM	4200	TUBE 6 MM PA BLUE	
52102	90166-0216	MM	2600	TUBE 10 MM PUR BLUE	
53154	90166-0081	MM	2800	TUBE 6 MM PA BLUE	
55044	90166-0081	MM	4800	TUBE 6 MM PA BLUE	
500111	90166-0081	MM	760	TUBE 6 MM PA BLUE	
500112	90166-0081	MM	170	TUBE 6 MM PA BLUE	
500113	90166-0081	MM	310	TUBE 6 MM PA BLUE	
500114	90166-0081	MM	320	TUBE 6 MM PA BLUE	
520021	90166-0013	MM	140	TUBE 8 MM PA BLUE	
520022	90166-0013	MM	1960	TUBE 8 MM PA BLUE	
520023	90166-0013	MM	2050	TUBE 8 MM PA BLUE	
521021	90166-0216	MM	1150	TUBE 10 MM PUR BLUE	
521022	90166-0216	MM	70	TUBE 10 MM PUR BLUE	
550422	90166-0081	M	4800	TUBE 6 MM PA BLUE	
5200221	90166-0013	MM	1200	TUBE 8 MM PA BLUE	
5200231	90166-0013	MM	1200	TUBE 8 MM PA BLUE	

Pos	Part No	UN	Qty	Description	Page No

Machine Type | Group Description | Used-In | Group Number | Page No

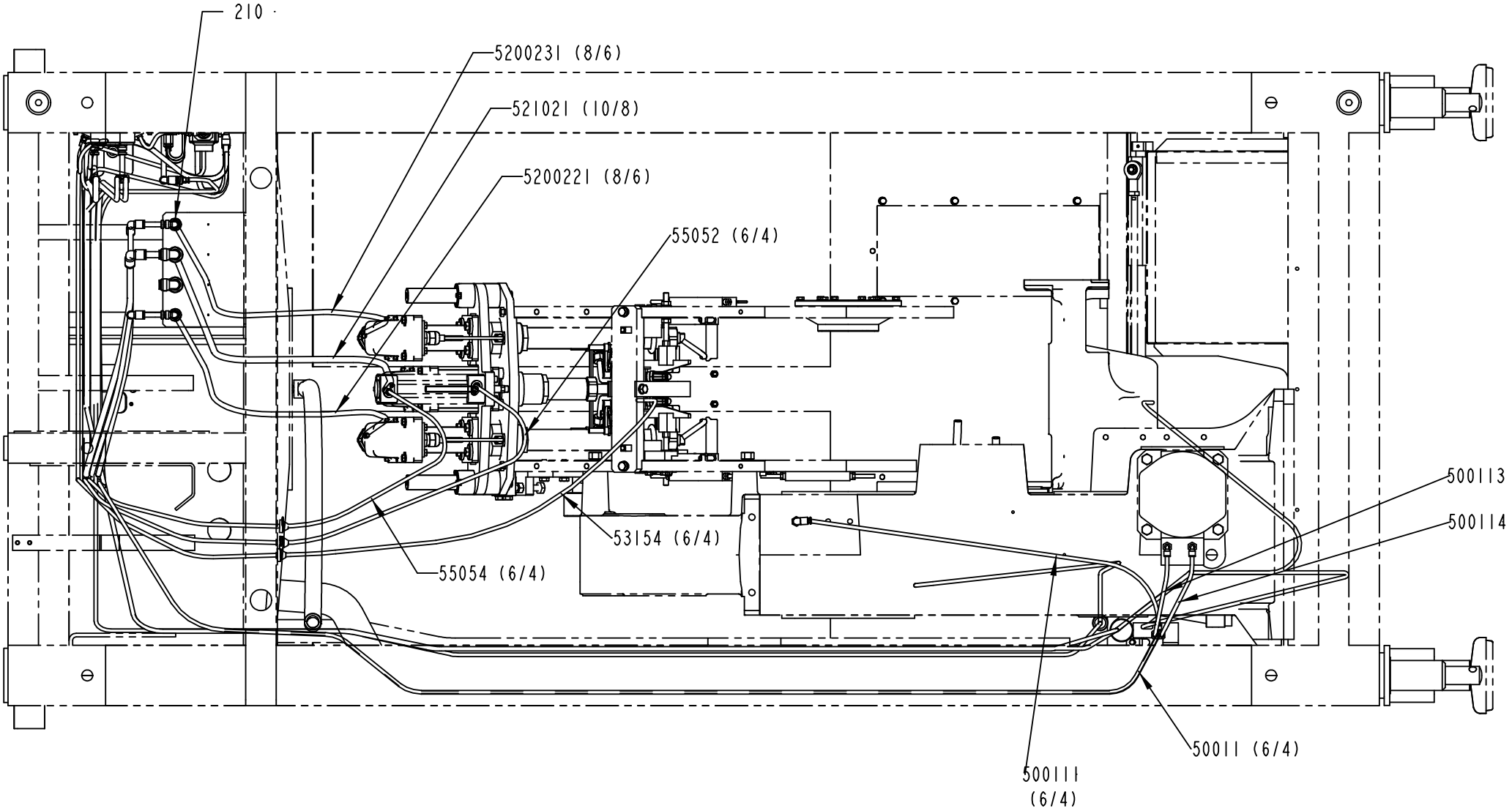

2528046-1
ECM 134706

ECM: 189859 - 20041104
Group number: 2528046-0100
Assembly Drawing: 2528046-1_3_AC

This list covers pages from 2-124 to 2-129

Pos	Part No	UN	Qty	Description	Page No
A3/FLEX DIMC/FLEX (See drawing on pages: 2-124, 2-126, 2-128)					
55064	90166-0081	MM	4300	TUBE 6 MM PA BLUE	
A3/FLEX QC (See drawing on pages: 2-124, 2-126, 2-128)					
55052	90166-0081	MM	2450	TUBE 6 MM PA BLUE	
55054	90166-0081	MM	2300	TUBE 6 MM PA BLUE	
Common Parts					
100	90458-2956		2	ELBOW PIPE JOINT, EXT.THREAD, D=6MM-G1/8	
130	342735-0103		2	ELBOW PIPE JOINT	
160	342735-0104		1	ELBOW PIPE JOINT	
190	342748-0102		1	T-CONNECTION 6MM	
210	342768-0103		2	BULKHEAD CONNECTOR, 8 MM	
250	342768-0104		2	BULKHEAD CONNECTOR, 10 MM	
300	90015-0020		3	LEAD-IN, TET5-7, E-1458016	
500	90055-0100		1	Y-CONNECTION, 6-6	
510	90055-0248		2	ELBOW WITH TAILPIECE 10/10 MM	
530	90055-0172		2	ELBOW WITH TAILPIECE 8/8 MM	
50011	90166-0081	MM	4200	TUBE 6 MM PA BLUE	
52102	90166-0216	MM	2600	TUBE 10 MM PUR BLUE	
53154	90166-0081	MM	2800	TUBE 6 MM PA BLUE	
55044	90166-0081	MM	4800	TUBE 6 MM PA BLUE	
500111	90166-0081	MM	760	TUBE 6 MM PA BLUE	
500112	90166-0081	MM	170	TUBE 6 MM PA BLUE	
500113	90166-0081	MM	310	TUBE 6 MM PA BLUE	
500114	90166-0081	MM	320	TUBE 6 MM PA BLUE	
520021	90166-0013	MM	140	TUBE 8 MM PA BLUE	
520022	90166-0013	MM	1960	TUBE 8 MM PA BLUE	
520023	90166-0013	MM	2050	TUBE 8 MM PA BLUE	
521021	90166-0216	MM	1150	TUBE 10 MM PUR BLUE	
521022	90166-0216	MM	70	TUBE 10 MM PUR BLUE	
550422	90166-0081	M	4800	TUBE 6 MM PA BLUE	
5200221	90166-0013	MM	1200	TUBE 8 MM PA BLUE	
5200231	90166-0013	MM	1200	TUBE 8 MM PA BLUE	

Pos	Part No	UN	Qty	Description	Page No

Machine Type | Group Description | Used-In | Group Number | Page No

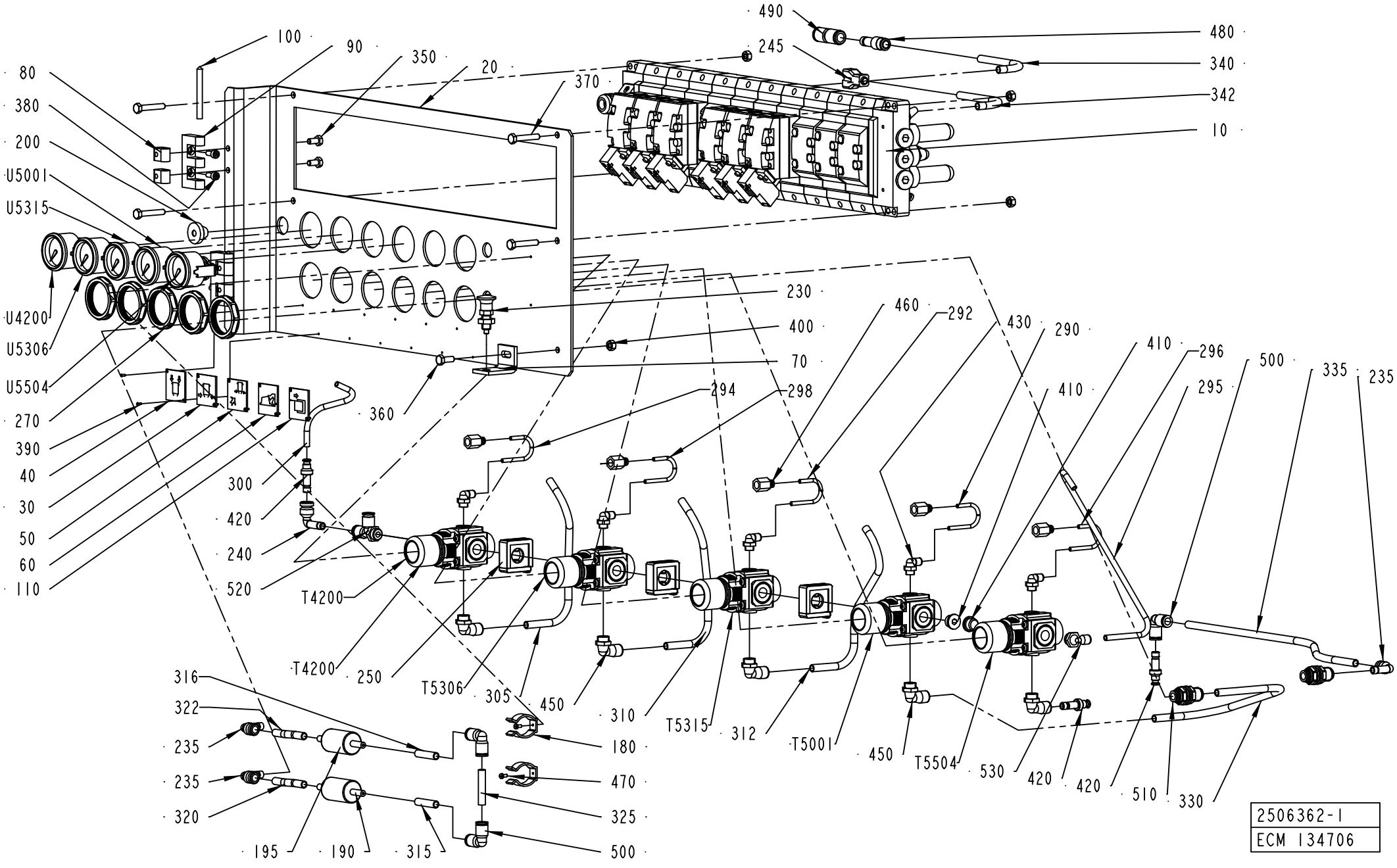
490
480
245
340
342
10
100
90
350
20
370
80
380
200
U5001
U5315
U4200
U5306
U5504
270
390
40
30
50
60
110
230
400
70
460
292
430
290
410
296
500
335
235
410
295
294
298
360
300
420
240
520
T4200
T4200
T4200
250
T5306
305
450
310
T5315
312
T5001
450
T5504
530
420
420
510
330
316
322
235
235
320
180
470
325
500
195
190
315
2506362-1
ECM 134706

ECM: 998705 - 20061104
Group number: 2506362-0100
Assembly Drawing: 2506362-1_1_AC

This list covers pages from 2-130 to 2-133

Pos	Part No	UN	Qty	Description	Page No
A3/FLEX TBA 0500B, A3/FLEX TBA 1000B, A3/FLEX TBA 1000S, A3/FLEX TBA 1000SQ, A3/FLEX TPA 1000SQ, A3/FLEX TBA 0200S, A3/FLEX TBA 1500S, A3/FLEX TBA 0200B, A3/FLEX TBA 0250B, A3/FLEX TBA 0330S, A3/FLEX TPA 0330SQ, A3/FLEX TPA 0500SQ, A3/FLEX TBA 0200M, A3/FLEX TBA 0250S, A3/FLEX TBA 0500S (See drawing on pages: 2-130, 2-132)					
	2512829-0000		1	PNEUMATIC DIAGRAM	
	2527368-0000		1	PNEUMATIC DIAGRAM	
030	1144607-0000		1	SIGN	
040	1144606-0000		1	SIGN	
050	1129370-0000		1	SIGN	
060	479964-0000		1	SIGN	
180	90165-0019		2	TOOL CLIP, 81/3, OPEN, 20 - 30 MM	
190	90277-0045		1	FILTER / 9900-05-BK	
195	90277-0046		1	FILTER / 9933-05-101	
235	90055-0172		3	ELBOW WITH TAILPIECE 8/8 MM	
245	90055-0100		1	Y-CONNECTION, 6-6	
295	90166-0081	MM	350	TUBE 6 MM PA BLUE	
315	90166-0013	MM	40	TUBE 8 MM PA BLUE	
316	90166-0013	MM	40	TUBE 8 MM PA BLUE	
320	90166-0013	MM	60	TUBE 8 MM PA BLUE	
322	90166-0013	MM	60	TUBE 8 MM PA BLUE	
325	90166-0013	MM	40	TUBE 8 MM PA BLUE	
330	90166-0013	MM	325	TUBE 8 MM PA BLUE	
335	90166-0013	MM	450	TUBE 8 MM PA BLUE	
340	90166-0013	MM	350	TUBE 8 MM PA BLUE	
342	90166-0013	MM	80	TUBE 8 MM PA BLUE	
470	312125-0220		2	SCREW ISO 1207 M3X6 A4	
480	342716-0206		1	REDUCER 8-10	
490	342728-0104		1	PIPE COUPLING 10 MM	
500	342735-0103		3	ELBOW PIPE JOINT	
510	342768-0103		2	BULKHEAD CONNECTOR, 8 MM	
T4200	90113-0469		1	MANIFOLD REGULATOR 4 BAR	
T5001	90457-0144		1	REGULATOR 0,3-2 BAR	
T5306	90113-0469		1	MANIFOLD REGULATOR 4 BAR	
T5315	90113-0469		1	MANIFOLD REGULATOR 4 BAR	
U4200	90043-0064		1	PRESSURE GAUGE, 2048 D=40 MM	
U5001	90043-0090		1	PRESSURE GAUGE, 2048 D=40 MM	
U5306	90043-0064		1	PRESSURE GAUGE, 2048 D=40 MM	
U5315	90043-0064		1	PRESSURE GAUGE, 2048 D=40 MM	
A3/FLEX TBA 1890S, A3/FLEX TBA 2000S, A3/FLEX TBA 1400B (See drawing on page: 2-132)					
	2527368-0000		1	PNEUMATIC DIAGRAM	
	2719737-0000		1	PNEUMATIC DIAGRAM	
030	1144607-0000		1	SIGN	
040	1144606-0000		1	SIGN	
050	1129370-0000		1	SIGN	
060	479964-0000		1	SIGN	
180	90165-0019		2	TOOL CLIP, 81/3, OPEN, 20 - 30 MM	
190	90277-0045		1	FILTER / 9900-05-BK	
195	90277-0046		1	FILTER / 9933-05-101	
235	90055-0172		3	ELBOW WITH TAILPIECE 8/8 MM	
245	90055-0100		1	Y-CONNECTION, 6-6	
295	90166-0081	MM	350	TUBE 6 MM PA BLUE	
315	90166-0013	MM	40	TUBE 8 MM PA BLUE	
316	90166-0013	MM	40	TUBE 8 MM PA BLUE	
320	90166-0013	MM	60	TUBE 8 MM PA BLUE	
322	90166-0013	MM	60	TUBE 8 MM PA BLUE	
325	90166-0013	MM	40	TUBE 8 MM PA BLUE	
330	90166-0013	MM	325	TUBE 8 MM PA BLUE	
335	90166-0013	MM	450	TUBE 8 MM PA BLUE	
340	90166-0013	MM	350	TUBE 8 MM PA BLUE	
342	90166-0013	MM	80	TUBE 8 MM PA BLUE	
470	312125-0220		2	SCREW ISO 1207 M3X6 A4	
480	342716-0206		1	REDUCER 8-10	
490	342728-0104		1	PIPE COUPLING 10 MM	
500	342735-0103		3	ELBOW PIPE JOINT	
510	342768-0103		2	BULKHEAD CONNECTOR, 8 MM	
T4200	90113-0469		1	MANIFOLD REGULATOR 4 BAR	
T5001	90457-0144		1	REGULATOR 0,3-2 BAR	
T5306	90113-0469		1	MANIFOLD REGULATOR 4 BAR	
T5315	90113-0469		1	MANIFOLD REGULATOR 4 BAR	
U4200	90043-0064		1	PRESSURE GAUGE, 2048 D=40 MM	
U5001	90043-0090		1	PRESSURE GAUGE, 2048 D=40 MM	
U5306	90043-0064		1	PRESSURE GAUGE, 2048 D=40 MM	
U5315	90043-0064		1	PRESSURE GAUGE, 2048 D=40 MM	
Common Parts					
010	2506363-0100		1	VALVE RAMP	**2-135, 2-137, 2-139**
020	2506364-0000		1	PLATE	
070	1348197-0000		1	HOLDER	
080	1129770-0000		4	BLOCKING PIECE	
090	1035792-0000		2	E-HINGE	
100	988685-0000		2	PIN	
110	2598025-0000		1	SIGN	
200	90015-0023		1	LEAD-IN, TET7-10, E-1458019	
230	90051-0112		1	LOCK KNOB, NO. GN 617 NIK5	
240	90055-0118		1	ELBOW WITH TAILPIECE 8/8 MM	

Machine Type | Group Description | Used-In | Group Number | Page No

VALVE PANEL

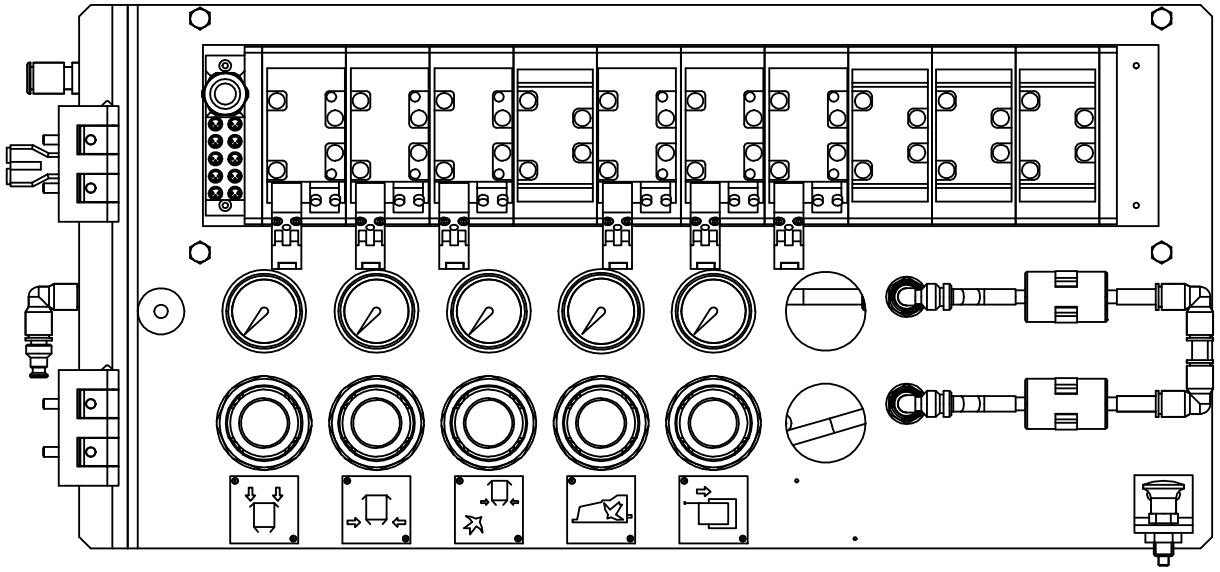

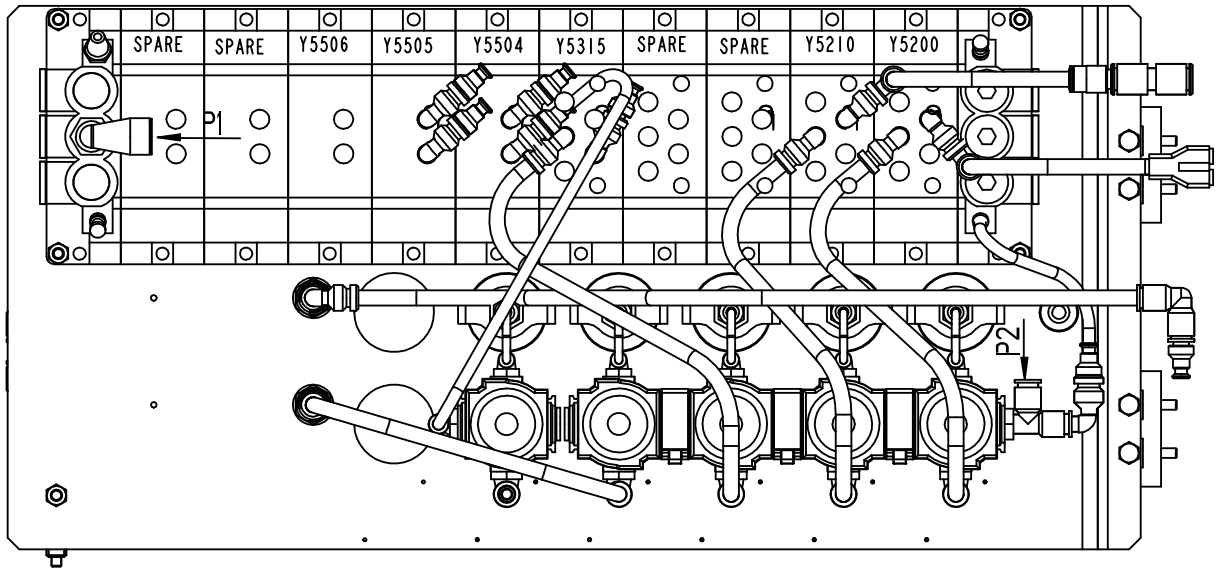

2506362-1
ECM 134706

ECM: 998705 - 20061104
Group number: 2506362-0100
Assembly Drawing: 2506362-1_2_AC

This list covers pages from 2-130 to 2-133

Pos	Part No	UN	Qty	Description	Page No
Common Parts (Cont'd)					
270	90457-0078		5	PANEL NUT	
290	90166-0095	MM	90	TUBE 4 MM PA BLUE (50M)	
292	90166-0095	MM	90	TUBE 4 MM PA BLUE (50M)	
294	90166-0095	MM	90	TUBE 4 MM PA BLUE (50M)	
296	90166-0095	MM	90	TUBE 4 MM PA BLUE (50M)	
298	90166-0095	MM	90	TUBE 4 MM PA BLUE (50M)	
300	90166-0081	MM	150	TUBE 6 MM PA BLUE	
305	90166-0013	MM	290	TUBE 8 MM PA BLUE	
310	90166-0013	MM	285	TUBE 8 MM PA BLUE	
312	90166-0013	MM	315	TUBE 8 MM PA BLUE	
350	312105-0366		4	SCREW M6S ISO 4017 M6X12 A480	
360	312105-0368		1	SCREW M6S ISO 4017 M6X16 A480	
370	312109-0376		4	SCREW M6S ISO 4017 M6X35 A480	
380	312115-0327		4	SCREW ISO4762 M5X12 A4 80	
390	312502-0120		10	DRIVE SCREW ROUND HEAD KDS 0X5	
400	312605-0316		5	HEXAGON NUT, M6M M6 A280	
410	342713-0210		2	PLUG,EXT THREAD HEX SOCKET(PAK OF 10 PCS	
430	90458-2955		5	ELBOW PIPE JOINT, EXT.THREAD,	
450	90458-2958		5	ELBOW PIPE JOINT, EXT.THREAD, D=8MM-G1/4	
460	342770-0101		5	STRAIGHT COUPLING INT, D=4 MM - G1/8	
520	342772-0122		1	ELBOW FITTING, 8 - G1/4	
530	90458-2957		1	ELBOW PIPE JOINT, EXT.THREAD, D=6MM-G1/4	
T5504	90113-0469		1	MANIFOLD REGULATOR 4 BAR	
U5215	90043-0064		1	PRESSURE GAUGE, 2048 D=40 MM	
U5504	90043-0064		1	PRESSURE GAUGE, 2048 D=40 MM	

Pos	Part No	UN	Qty	Description	Page No

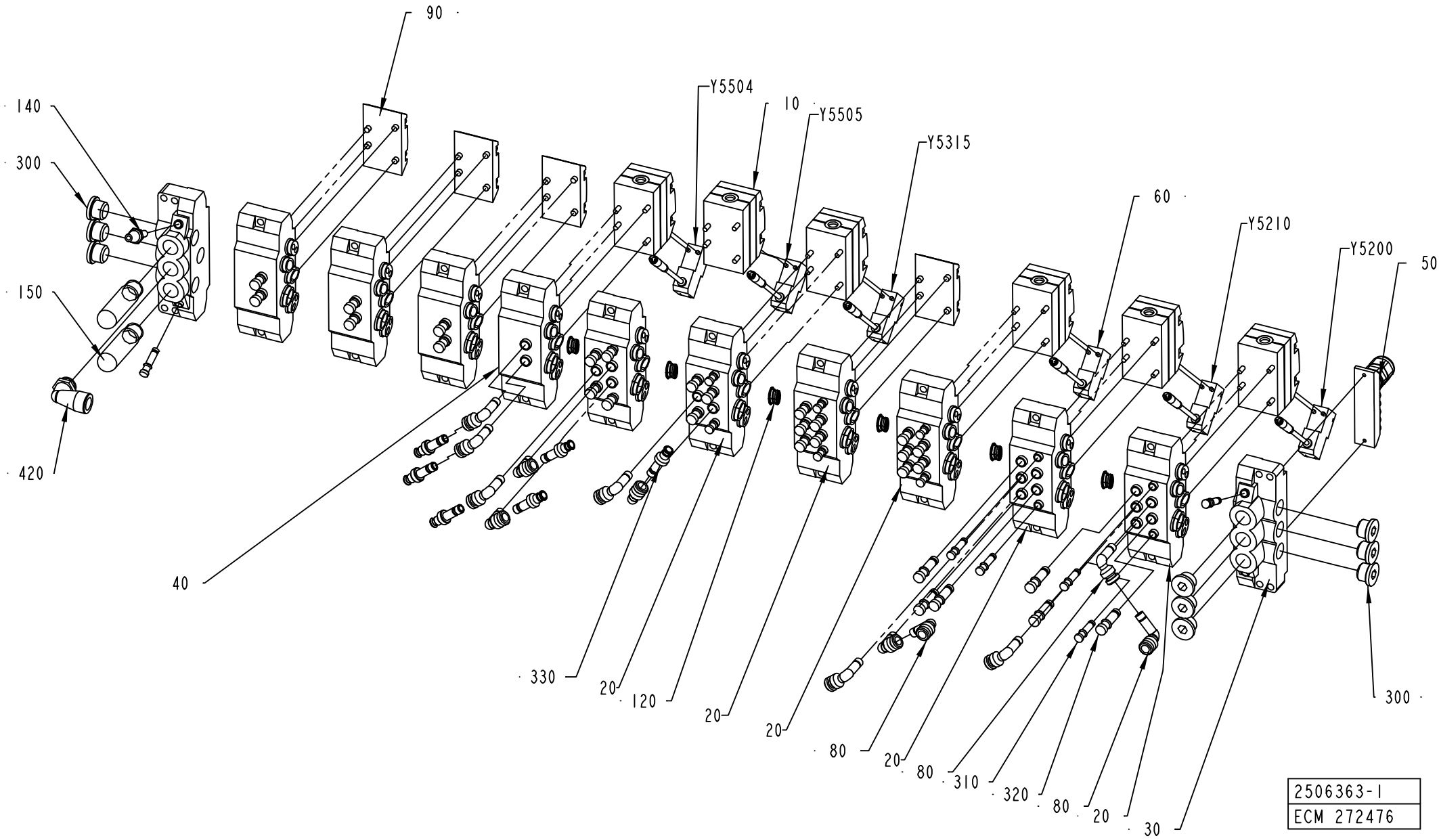
90
140
300
150
420
40
Y5504
10
Y5505
Y5315
60
Y5210
Y5200
50
330
20
120
20
20
80
20
80
310
320
80
20
30
300
2506363-1
ECM 272476

ECM: 275004 - 20061102
Group number: 2506363-0100
Assembly Drawing: 2506363-1_1_AB

This list covers pages from 2-134 to 2-139

Pos	Part No	UN	Qty	Description	Page No
A3/FLEX NOQC DIMC/FLEX (See drawing on page: 2-138)					
010	90042-0215		6	VALVE BODY 5/2 UNISTABLE	
060	90042-0538		1	PILOT VALVE L=500MM	
080	90055-0172		11	ELBOW WITH TAILPIECE 8/8 MM	
090	90042-0519		4	BLANK PLATE ISO SIZE 1	
320	342715-0103		26	BLIND PLUG 8 MM	
330	342716-0203		4	REDUCER 6-8	
Y5315	90042-0538		1	PILOT VALVE L=500MM	
Y5506	90042-0538		1	PILOT VALVE L=500MM	
A3/FLEX NOQC NODIMC (See drawing on page: 2-136)					
010	90042-0215		5	VALVE BODY 5/2 UNISTABLE	
060	90042-0538		1	PILOT VALVE L=500MM	
080	90055-0172		10	ELBOW WITH TAILPIECE 8/8 MM	
090	90042-0519		5	BLANK PLATE ISO SIZE 1	
320	342715-0103		27	BLIND PLUG 8 MM	
330	342716-0203		3	REDUCER 6-8	
Y5315	90042-0538		1	PILOT VALVE L=500MM	
A3/FLEX QC NODIMC (See drawing on page: 2-134)					
010	90042-0215		6	VALVE BODY 5/2 UNISTABLE	
060	90042-0538		1	PILOT VALVE L=500MM	
080	90055-0172		13	ELBOW WITH TAILPIECE 8/8 MM	
090	90042-0519		4	BLANK PLATE ISO SIZE 1	
320	342715-0103		29	BLIND PLUG 8 MM	
330	342716-0203		6	REDUCER 6-8	
Y5315	90042-0538		1	PILOT VALVE L=500MM	
Y5505	90042-0538		1	PILOT VALVE L=500MM	
Common Parts					
020	90042-0520		6	BASE PLATE ISO SIZE 1	
030	90042-0522		2	PORTED END PIECE ISO SIZE 1	
040	90042-0532		4	BASE PLATE ISO SIZE 1	
050	90042-0535		1	TERMINAL BOARD 19 CORDS	
120	90042-0528		6	BLANKING KIT SEALS ISO SIZE 1	
140	90328-0017		1	SILENCER, D=6 MM	
150	90328-0024		2	SILENCER G3/8"	
300	342713-0211		9	PLUG, EXT THREAD HEX SOCKET 8638-00-380	
310	342715-0102		12	BLIND PLUG 6 MM	
420	90458-2960		1	ELBOW PIPE JOINT, EXT.THREAD,D=12MM-G3/8	
Y5200	90042-0538		1	PILOT VALVE L=500MM	
Y5210	90042-0538		1	PILOT VALVE L=500MM	
Y5504	90042-0538		1	PILOT VALVE L=500MM	

Pos	Part No	UN	Qty	Description	Page No

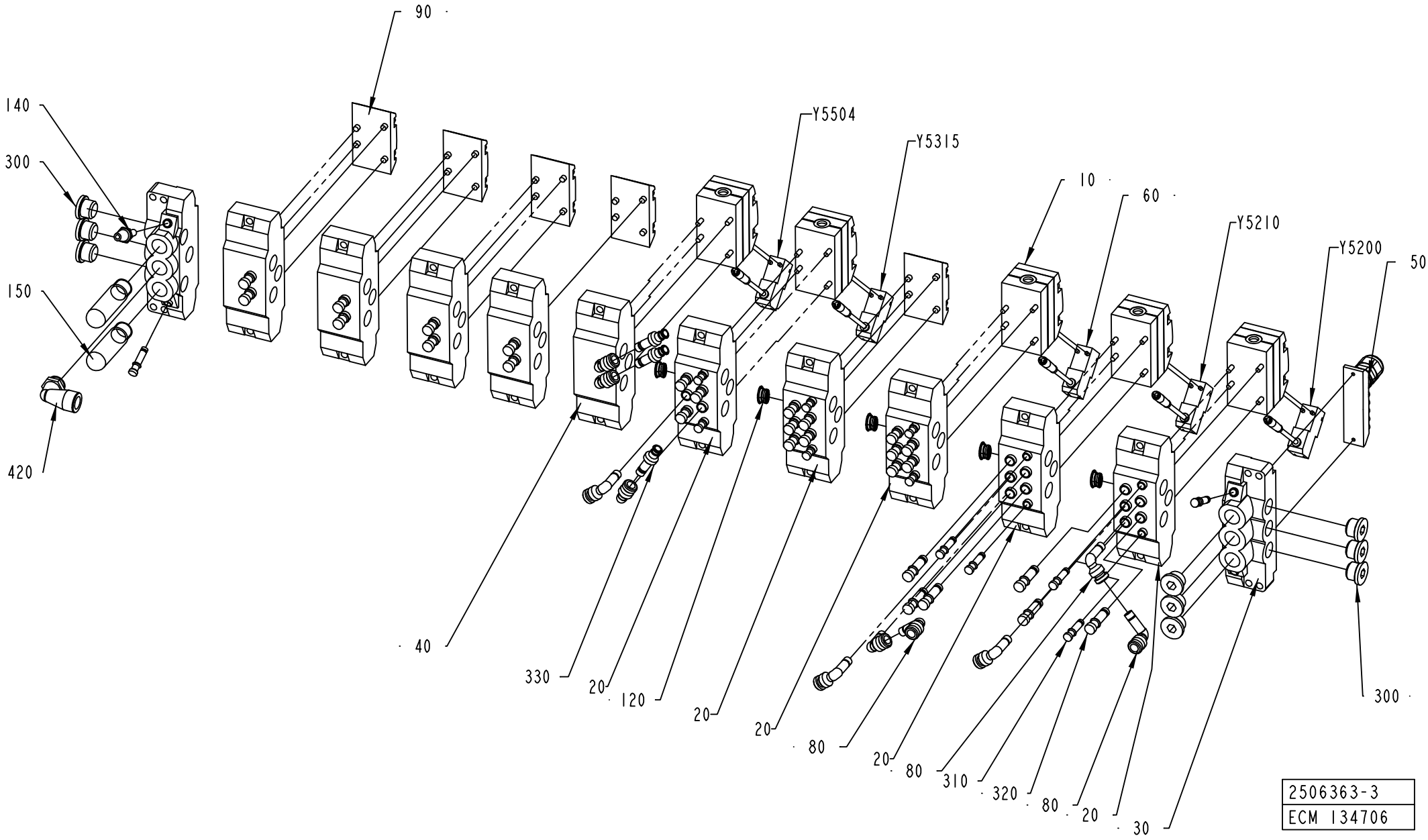
90
140
300
150
420
Y5504
Y5315
10
60
Y5210
Y5200
50
40
330
20
120
20
20
80
20
80
310
320
80
20
30
300
2506363-3
ECM 134706

ECM: 275004 - 20061102
Group number: 2506363-0100
Assembly Drawing: 2506363-3_1_AA

This list covers pages from 2-134 to 2-139

Pos	Part No	UN	Qty	Description	Page No
A3/FLEX NOQC DIMC/FLEX (See drawing on page: 2-138)					
010	90042-0215		6	VALVE BODY 5/2 UNISTABLE	
060	90042-0538		1	PILOT VALVE L=500MM	
080	90055-0172		11	ELBOW WITH TAILPIECE 8/8 MM	
090	90042-0519		4	BLANK PLATE ISO SIZE 1	
320	342715-0103		26	BLIND PLUG 8 MM	
330	342716-0203		4	REDUCER 6-8	
Y5315	90042-0538		1	PILOT VALVE L=500MM	
Y5506	90042-0538		1	PILOT VALVE L=500MM	
A3/FLEX NOQC NODIMC (See drawing on page: 2-136)					
010	90042-0215		5	VALVE BODY 5/2 UNISTABLE	
060	90042-0538		1	PILOT VALVE L=500MM	
080	90055-0172		10	ELBOW WITH TAILPIECE 8/8 MM	
090	90042-0519		5	BLANK PLATE ISO SIZE 1	
320	342715-0103		27	BLIND PLUG 8 MM	
330	342716-0203		3	REDUCER 6-8	
Y5315	90042-0538		1	PILOT VALVE L=500MM	
A3/FLEX QC NODIMC (See drawing on page: 2-134)					
010	90042-0215		6	VALVE BODY 5/2 UNISTABLE	
060	90042-0538		1	PILOT VALVE L=500MM	
080	90055-0172		13	ELBOW WITH TAILPIECE 8/8 MM	
090	90042-0519		4	BLANK PLATE ISO SIZE 1	
320	342715-0103		29	BLIND PLUG 8 MM	
330	342716-0203		6	REDUCER 6-8	
Y5315	90042-0538		1	PILOT VALVE L=500MM	
Y5505	90042-0538		1	PILOT VALVE L=500MM	
Common Parts					
020	90042-0520		6	BASE PLATE ISO SIZE 1	
030	90042-0522		2	PORTED END PIECE ISO SIZE 1	
040	90042-0532		4	BASE PLATE ISO SIZE 1	
050	90042-0535		1	TERMINAL BOARD 19 CORDS	
120	90042-0528		6	BLANKING KIT SEALS ISO SIZE 1	
140	90328-0017		1	SILENCER, D=6 MM	
150	90328-0024		2	SILENCER G3/8"	
300	342713-0211		9	PLUG, EXT THREAD HEX SOCKET 8638-00-380	
310	342715-0102		12	BLIND PLUG 6 MM	
420	90458-2960		1	ELBOW PIPE JOINT, EXT.THREAD,D=12MM-G3/8	
Y5200	90042-0538		1	PILOT VALVE L=500MM	
Y5210	90042-0538		1	PILOT VALVE L=500MM	
Y5504	90042-0538		1	PILOT VALVE L=500MM	

Pos	Part No	UN	Qty	Description	Page No

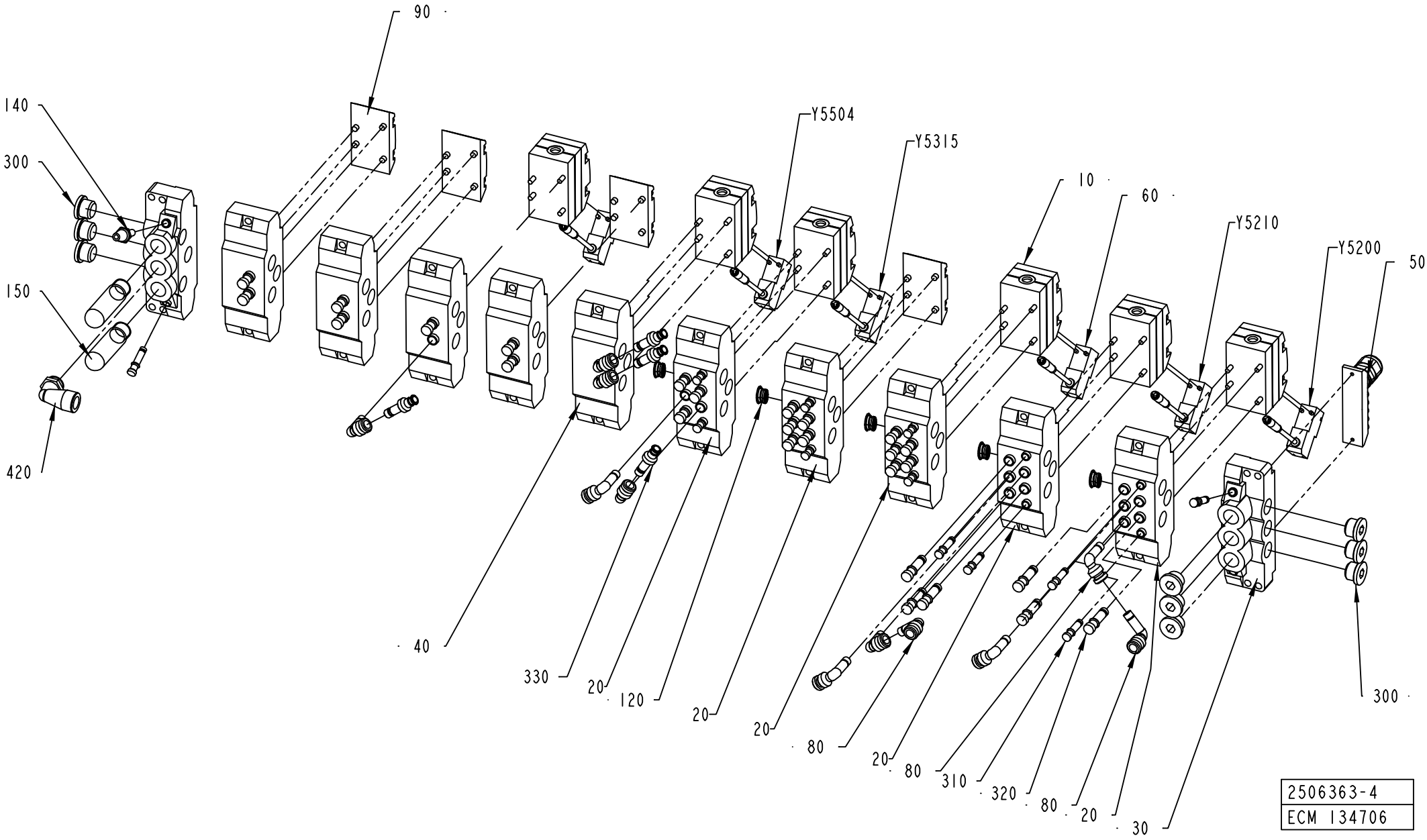
90
140
300
150
420
Y5504
Y5315
10
60
Y5210
Y5200
50
40
330
20
120
20
20
80
20
80
310
320
80
20
30
300
2506363-4
ECM 134706

ECM: 275004 - 20061102
Group number: 2506363-0100
Assembly Drawing: 2506363-4_1_AA

This list covers pages from 2-134 to 2-139

Pos	Part No	UN	Qty	Description	Page No
A3/FLEX NOQC DIMC/FLEX (See drawing on page: 2-138)					
010	90042-0215		6	VALVE BODY 5/2 UNISTABLE	
060	90042-0538		1	PILOT VALVE L=500MM	
080	90055-0172		11	ELBOW WITH TAILPIECE 8/8 MM	
090	90042-0519		4	BLANK PLATE ISO SIZE 1	
320	342715-0103		26	BLIND PLUG 8 MM	
330	342716-0203		4	REDUCER 6-8	
Y5315	90042-0538		1	PILOT VALVE L=500MM	
Y5506	90042-0538		1	PILOT VALVE L=500MM	
A3/FLEX NOQC NODIMC (See drawing on page: 2-136)					
010	90042-0215		5	VALVE BODY 5/2 UNISTABLE	
060	90042-0538		1	PILOT VALVE L=500MM	
080	90055-0172		10	ELBOW WITH TAILPIECE 8/8 MM	
090	90042-0519		5	BLANK PLATE ISO SIZE 1	
320	342715-0103		27	BLIND PLUG 8 MM	
330	342716-0203		3	REDUCER 6-8	
Y5315	90042-0538		1	PILOT VALVE L=500MM	
A3/FLEX QC NODIMC (See drawing on page: 2-134)					
010	90042-0215		6	VALVE BODY 5/2 UNISTABLE	
060	90042-0538		1	PILOT VALVE L=500MM	
080	90055-0172		13	ELBOW WITH TAILPIECE 8/8 MM	
090	90042-0519		4	BLANK PLATE ISO SIZE 1	
320	342715-0103		29	BLIND PLUG 8 MM	
330	342716-0203		6	REDUCER 6-8	
Y5315	90042-0538		1	PILOT VALVE L=500MM	
Y5505	90042-0538		1	PILOT VALVE L=500MM	
Common Parts					
020	90042-0520		6	BASE PLATE ISO SIZE 1	
030	90042-0522		2	PORTED END PIECE ISO SIZE 1	
040	90042-0532		4	BASE PLATE ISO SIZE 1	
050	90042-0535		1	TERMINAL BOARD 19 CORDS	
120	90042-0528		6	BLANKING KIT SEALS ISO SIZE 1	
140	90328-0017		1	SILENCER, D=6 MM	
150	90328-0024		2	SILENCER G3/8"	
300	342713-0211		9	PLUG, EXT THREAD HEX SOCKET 8638-00-380	
310	342715-0102		12	BLIND PLUG 6 MM	
420	90458-2960		1	ELBOW PIPE JOINT, EXT.THREAD,D=12MM-G3/8	
Y5200	90042-0538		1	PILOT VALVE L=500MM	
Y5210	90042-0538		1	PILOT VALVE L=500MM	
Y5504	90042-0538		1	PILOT VALVE L=500MM	

Pos	Part No	UN	Qty	Description	Page No

AIR JET GUN

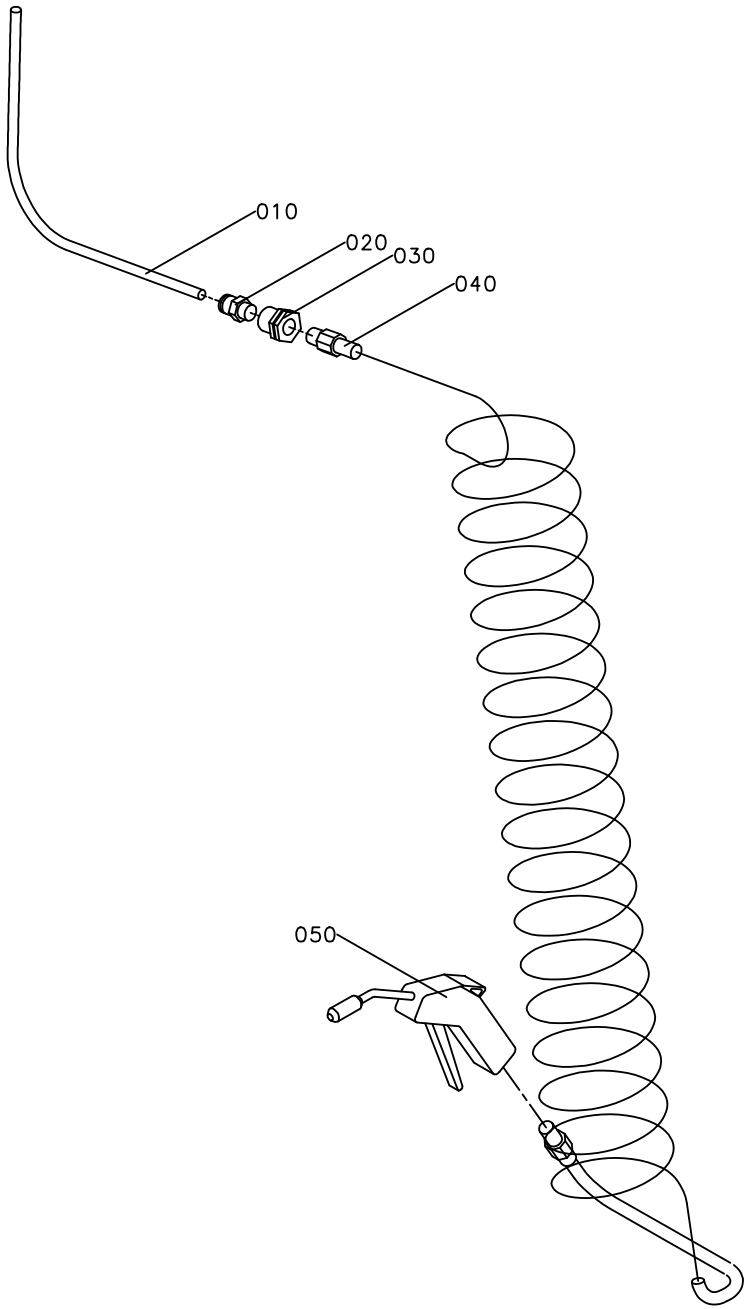

ECN 21193

ECM: 189858 - 20041104
Group number: 1095682-0100
Assembly Drawing: 1095682-1_1_AA

Pos	Part No	UN	Qty	Description	Page No
-					
010	90166-0013	MM	1800	TUBE 8 MM PA BLUE	
020	342920-0122		1	STRAIGHT COUPLING,EXT.THREADED 8/6-R1/4"	
030	342767-0104		1	CONN. BULKHEAD G1/4	
040	90152-0016		1	HOSE (SPIRAL)	
050	90243-0061		1	AIR GUN, CEJN SERIE 204 ED: 90459-0173	

Pos	Part No	UN	Qty	Description	Page No

PIVOT ARM

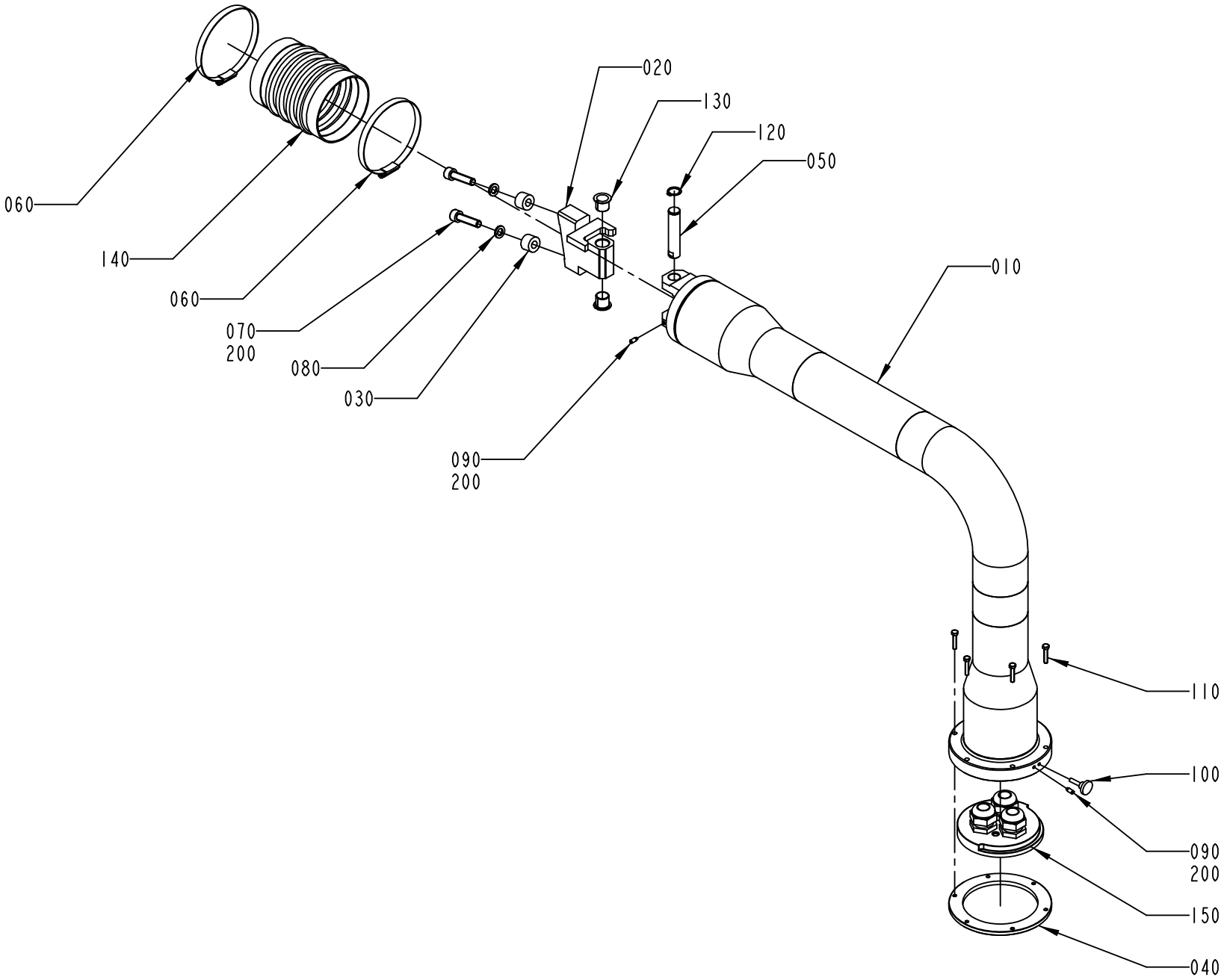

1095863-2
ECM 116300

ECM: 189861 - 20041104
Group number: 1095863-0200
Assembly Drawing: 1095863-2_1_AA

Pos	Part No	UN	Qty	Description	Page No
-					
010	1558974-0000		1	PIPE BRACKET	
020	1558975-0000		1	BLOCKING PIECE	
030	1254494-0000		1	SPACER	
040	1558949-0000		1	PLATE	
050	1558945-0000		1	PIVOT PIN	
060	342991-0114		2	HOSE CLIP,WORM DRIVE TYPE (93)-110	
070	312115-0499		2	SCREW ISO4762 M10X40 A4 80	
080	315402-0173		2	LOCK WASHER FBB 10,2	
090	312311-0327		2	SCREW ISO4028 M5X12 FZB	
100	318860-0106		1	KNOB, ADJUST.HI.EXT.THREAD, NO 8324-3674	
110	312105-0333		6	SCREW M6S ISO 4017 M5X25 A480	
120	315751-0113		1	RETAINING RING FOR SHAFT DIN 471 16 A2	
130	321161-0221		2	FLANGE BUSHING, 16X18X17 MM	
140	90342-0024		1	RUBBER BELLOWS, 100X100 MM	
150	2570616-0100		1	FASTENING PLATE	**2-145**
200	90157-0021	KG	1	LOCKING FLUID LOCTITE 270	

Pos	Part No	UN	Qty	Description	Page No

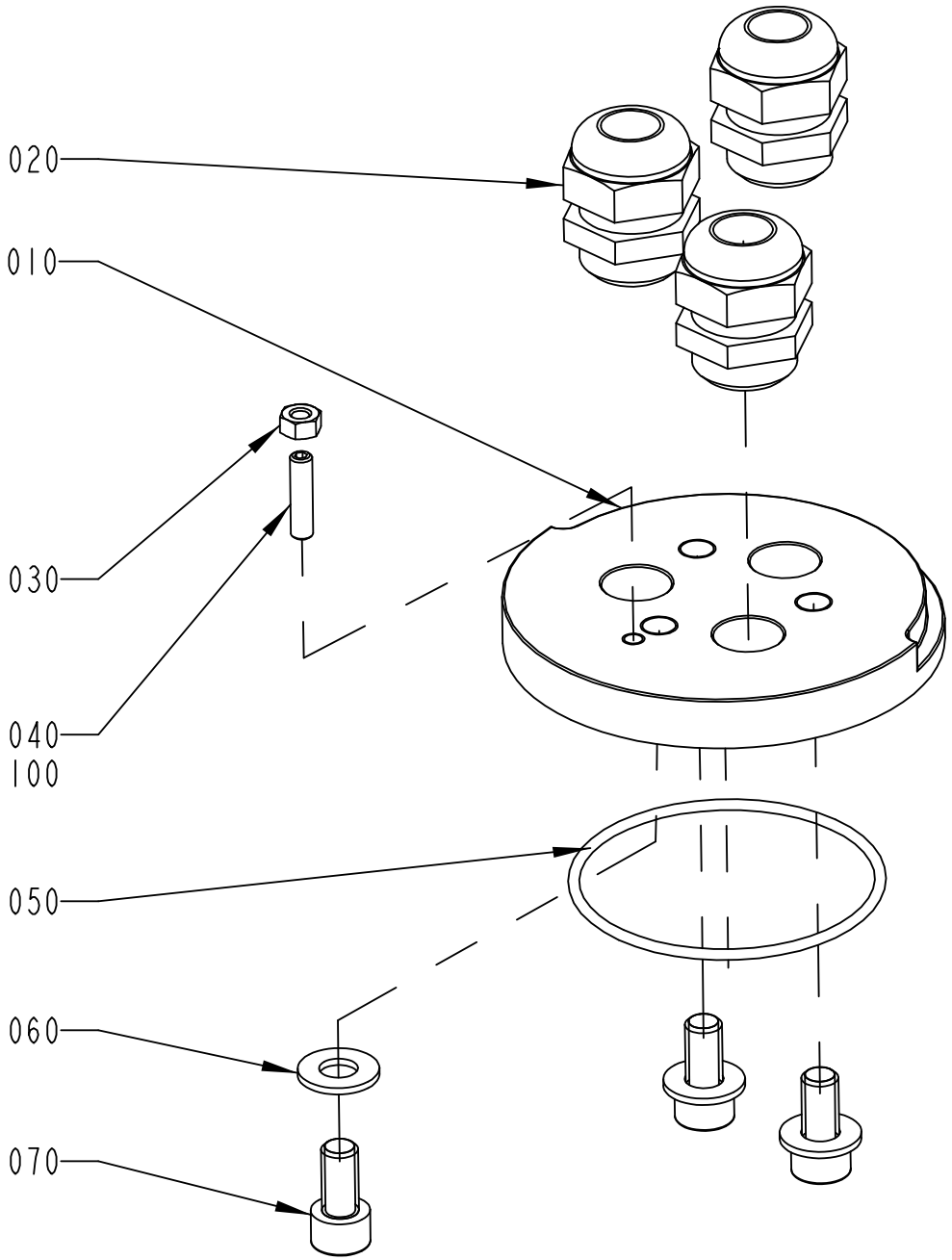

2570616-1
ECM 116300

ECM: 224853 - 20050831
Group number: 2570616-0100
Assembly Drawing: 2570616-1_1_AA

Pos	Part No	UN	Qty	Description	Page No
-					
010	1558948-0000		1	PLATE	
020	352103-0115		3	CABLE GLAND, STR 21, PR28,3/PG21	
030	312605-0316		1	HEXAGON NUT, M6M M6 A280	
040	312318-0372		1	SCREW ISO4029 M6X25 A4	
050	315202-0307		1	O-RING 79,5X3 MM	
060	315105-0173		3	WASHER BRB 10,5X20 RFR	
070	312115-0491		3	SCREW ISO4762 M10X20 A4 80	
100	90157-0021		1	LOCKING FLUID LOCTITE 270	

Pos	Part No	UN	Qty	Description	Page No

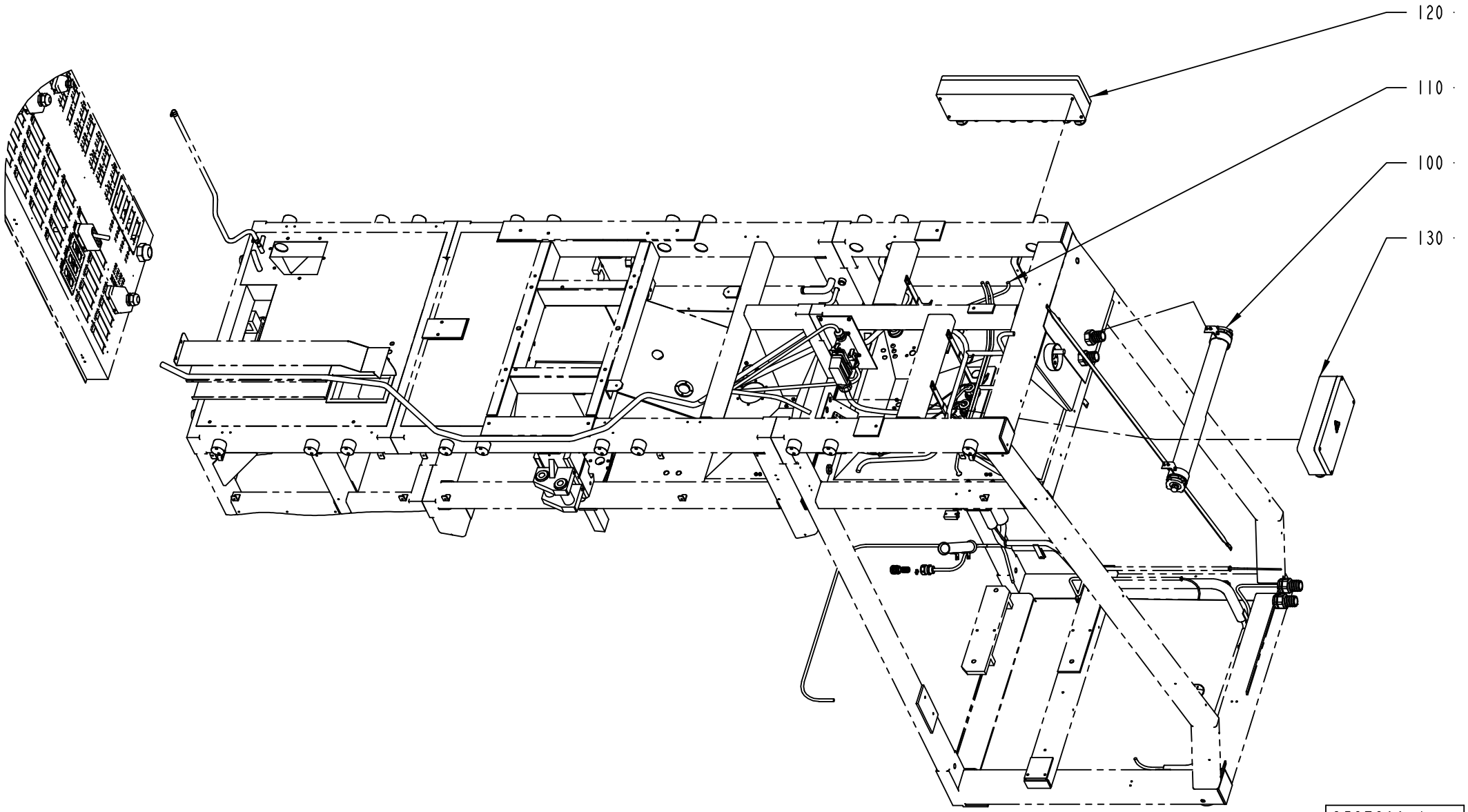
120
110
100
130
2527300-1
ECM 117203

ECM: 274235 - 20061101
Group number: 2527300-0150
Assembly Drawing: 2527300-1_1_AA

Pos	Part No	UN	Qty	Description	Page No
A3/FLEX TBA, A3/FLEX TPA					
110	2527295-0150		1	CABLE HARNESS	**2-149, 2-151, 2-153**
Common Parts					
100	2504790-0100		1	LIGHT FIXTURE	**2-93**
120	2527297-0100		1	CONNECTION BOX	**2-155**
130	2527299-0100		1	CONNECTION BOX	**2-157**

Pos	Part No	UN	Qty	Description	Page No

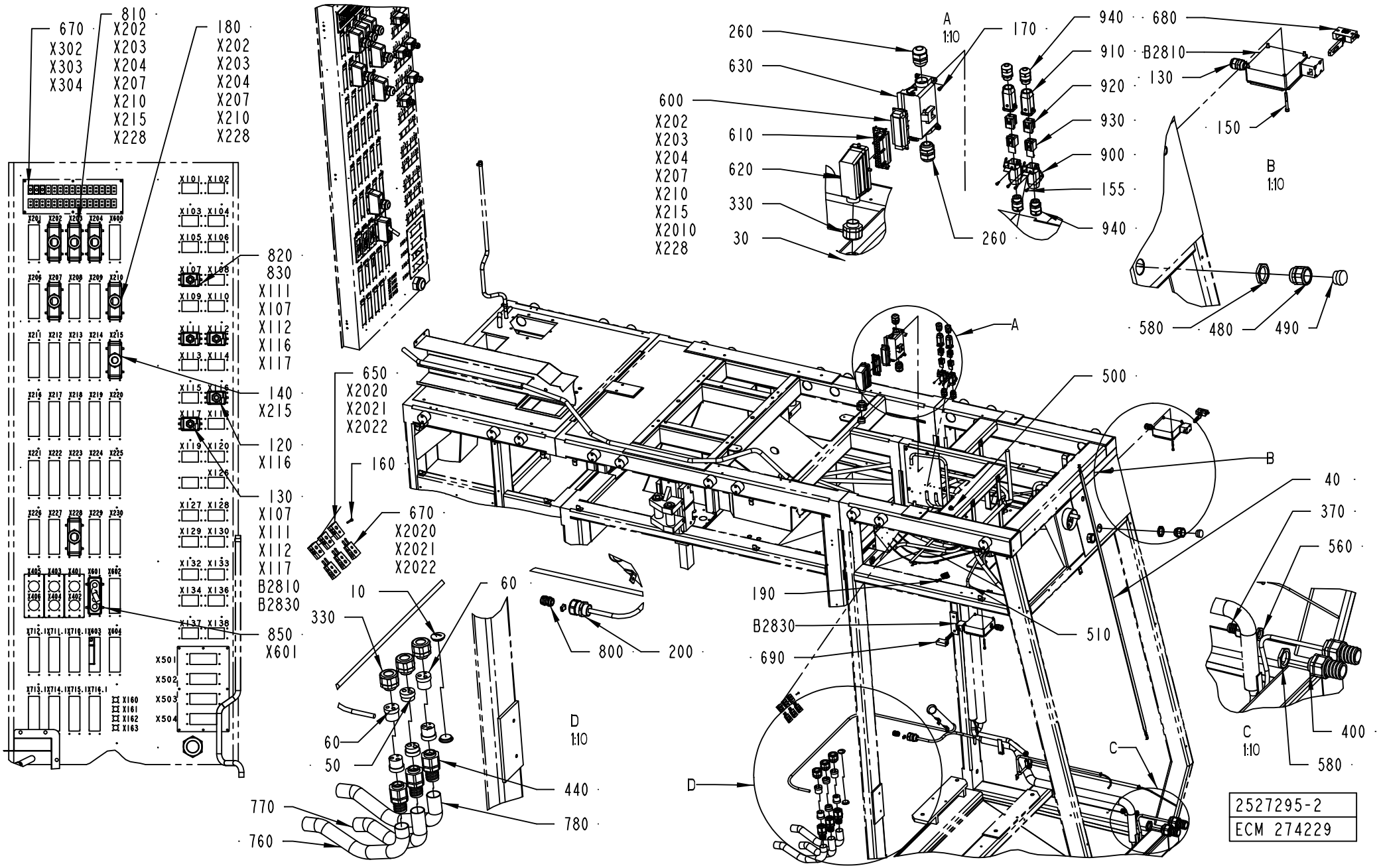
670
X302
X303
X304
810
X202
X203
X204
X207
X210
X215
X228
180
X202
X203
X204
X207
X210
X228
820
830
X111
X107
X112
X116
X117
140
X215
120
X116
130
X107
X111
X112
X117
B2810
B2830
850
X601
650
X2020
X2021
X2022
160
670
X2020
X2021
X2022
10
330
60
50
800
200
770
760
440
780
D
1:10
260
630
600
X202
X203
X204
X207
X210
X215
X2010
X228
610
620
330
30
A
1:10
170
260
940
910
920
930
900
155
940
680
B2810
130
150
B
1:10
580
480
490
A
500
B
190
B2830
690
510
C
D
40
370
560
400
580
C
1:10
2527295-2
ECM 274229

ECM: 274234 - 20061101
Group number: 2527295-0150
Assembly Drawing: 2527295-2_1_AA

This list covers pages from 2-148 to 2-153

Pos	Part No	UN	Qty	Description	Page No
-					
010	90002-0012		2	BLANK-OFF PLUG, PR 28,3 SKINDICHT-BLK21	
030	2527371-0000		1	INSERT	
040	1129600-0000		1	BRAID	
050	1484093-0000		2	INSERT	
060	1484379-0000		4	INSERT	
120	352103-0110		1	CABLE GLAND, STR 16, PR22,5/PG16	
130	352103-0108		6	CABLE GLAND, ST 13,5 , PR20,4/PG13,5	
140	352103-0120		1	CABLE GLAND, STR 29, PR37,0/PG29	
150	312115-0340		8	SCREW ISO4762 M5X45 A4 80	
155	312125-0222		4	SCREW ISO 1207 M3X8 A4	
160	312125-0228		3	SCREW ISO 1207 M3X16 A4	
170	312125-0287		4	SCREW ISO 1207 M4X8 A4	
180	352103-0121		6	CABLE GLAND, ST 29, PR37,0/PG29	
190	353101-0153		1	CABLE SHOE 4,0-6,0MM2 M6 YELLOW	
200	353245-0006		1	GLAND, EXTENDED WITH INSERT, PG21/PR28,3	
260	352103-0115		2	CABLE GLAND, STR 21, PR28,3/PG21	
330	353241-0003		4	GLAND W/O INSERT PG21 EXTENDED	
370	353243-0005		1	HOSE GLAND W/O INSERT PG16 EXTENDED	
400	353243-0008		2	HOSE GLAND W/O INSERT PG29 EXTENDED	
440	353247-0005		3	HOSE GLAND EMC PG21 EXTENDED	
480	353249-0049		2	INSERT, SOLID, EK155G	
490	353240-0006		2	GLAND W/O INSERT PG29 NORMAL	
500	90015-0020		3	LEAD-IN, TET5-7, E-1458016	
510	90015-0023		5	LEAD-IN, TET7-10, E-1458019	
560	90099-0110		1	NUT, PR 22,5 (PG16)	
580	90099-0120		4	NUT, PR 37 (PG29)	
600	90110-0150		8	MALE INSERT 121110 0000	
610	90110-0151		1	FEMALE INSERT 24-POL 121130 0000	
620	90110-0228		1	CABLE HOOD 24-POL 71.350.2428.0	
630	90110-0513		1	CHASSIS HOUSING, CHP 24L S2	
650	90326-0020		3	PLUG, FEMALE YELLOW CR-AL	
670	90326-0022		6	PLUG, MALE YELLOW CR-AL	
680	90457-0194		1	KEY FOR SAF.SW.048850-C2052	
690	90457-0195		1	KEY FOR SAF.SW.TZRE024PG RC1635-057950	
700	90459-2551		1	CONNECTOR, MOTOR FEEDBACK 15 PIN MALE	
760	90152-0070	MM	490	METAL HOSE, 32,5X26, UL 2621	
770	90152-0070	MM	360	METAL HOSE, 32,5X26, UL 2621	
780	90152-0070	MM	510	METAL HOSE, 32,5X26, UL 2621	
800	90100-0052		1	CONNECTOR KIT, FEEDBACK CABLE DRIVE END	
810	90110-0152		7	CABLE HOOD 24-POL 70.352.2428.1	
820	90110-0157		5	CABLE HOOD 6-POL 70.352.0628.1	
830	90110-0159		5	MALE INSERT 70.310.0640.0	
850	90110-0381		1	COVER, 310601-33 CYR24.4	
860	359005-0010		13	MARKING LABEL KIT 0 - 9, 04.841.2150.0	
870	359005-0050		12	MARKING LABEL KIT X, 04.841.4550.0	
890	90110-0385		12	MARKING HOLDER, 4.242.3853.0	
900	90459-3081		2	HOUSING HAN A 19 20 003 1250	
910	90459-3080		2	HOOD HAN-BRID 3A 19 20 003 1443	
920	90459-3082		2	MALE INSERT HAN-BRID RJ45 09 12 003 3001	
930	90459-3083		2	FEMALE INSERT HAN-BRID RJ45 09 120032790	
940	90458-0315		4	CABLE GLAND, M20X1,5, NO.5311 1120	
B2810	90457-0196		1	KEY SAF.SW. TZ2RE024PG RC1635	
B2830	90457-0196		1	KEY SAF.SW. TZ2RE024PG RC1635	
W0001	351150-0430	M	8	CABLE OLFLEX 5X35 MM2 LIGHT/GREY	
W2010	351150-0425	MM	7400	CABLE OLFLEX 25X0,75 MM2 LIGHT/GREY	
W2011	351150-0425	MM	7000	CABLE OLFLEX 25X0,75 MM2 LIGHT/GREY	
W2014	351150-0413	MM	7000	CABLE OLFLEX 4X1,5 MM2 LIGHT/GREY	
W2015	90220-0104	MM	6900	SCR. CABLE 4X1,5MM2	
W2016	351150-0412	MM	8000	CABLE OLFLEX 3X1,5 MM2 LIGHT/GREY	
W2017	351150-0412	MM	2000	CABLE OLFLEX 3X1,5 MM2 LIGHT/GREY	
W2018	351150-0412	MM	2000	CABLE OLFLEX 3X1,5 MM2 LIGHT/GREY	
W2019	351150-0412	MM	2000	CABLE OLFLEX 3X1,5 MM2 LIGHT/GREY	
W2021	90220-0034	MM	7500	THERMOCABLE TEX/SITW-20F-KX 2X0,5MM2	
W2022	90220-0034	MM	7500	THERMOCABLE TEX/SITW-20F-KX 2X0,5MM2	
W2023	90220-0034	MM	7500	THERMOCABLE TEX/SITW-20F-KX 2X0,5MM2	
W2030	351150-0425	MM	7500	CABLE OLFLEX 25X0,75 MM2 LIGHT/GREY	
W2066	90458-2557	MM	9100	CABLE OLFLEX 25X1 MM2	
W2067	90458-2557	MM	9100	CABLE OLFLEX 25X1 MM2	
W2068	1363297-0000		1	CABLE LVDS 10M	
W2212	351150-0405	MM	4000	CABLE OLFLEX 5X0,75 MM2 LIGHT/GREY	
W2224	351150-0406	MM	1500	CABLE OLFLEX 7X0,75 MM2 LIGHT/GREY	
W2228	351150-0406	MM	2500	CABLE OLFLEX 7X0,75 MM2 LIGHT/GREY	
W2716	90459-7175		1	CABLE	
W2726	90459-7176		1	CABLE	
W4005	351150-0414	MM	6500	CABLE OLFLEX 5X1,5 MM2 LIGHT/GREY	
W4006	351150-0417	MM	6500	CABLE OLFLEX 3X2,5 MM2 LIGHT/GREY	
W4502	2570004-0001		1	CABLE	
W4503	2570004-0001		1	CABLE	
W4505	90459-1812		1	CABLE, ETHERNET RJ 45 CONNECT. 8 M	
W4506	351150-0425	MM	7500	CABLE OLFLEX 25X0,75 MM2 LIGHT/GREY	
W4507	90459-1812		1	CABLE, ETHERNET RJ 45 CONNECT. 8 M	
W5002	351150-0413	MM	5000	CABLE OLFLEX 4X1,5 MM2 LIGHT/GREY	
W5003	90220-0104	MM	7500	SCR. CABLE 4X1,5MM2	

Machine Type | Group Description | Used-In | Group Number | Page No

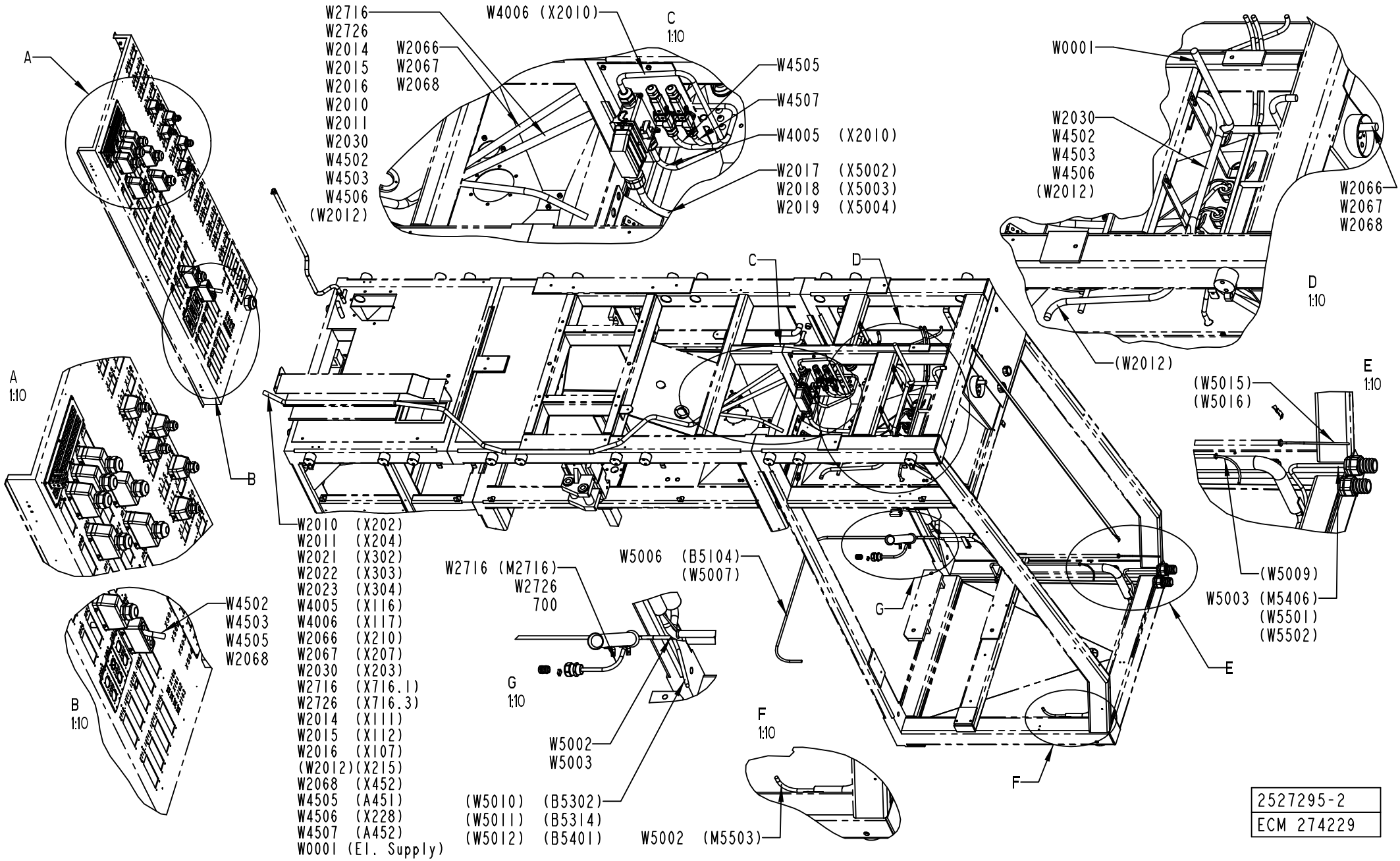
W2716
W2726
W2014
W2015
W2016
W2010
W2011
W2030
W4502
W4503
W4506
(W2012)
W2066
W2067
W2068
W4006 (X2010)
C
1:10
W4505
W4507
W4005 (X2010)
W2017 (X5002)
W2018 (X5003)
W2019 (X5004)
W0001
W2030
W4502
W4503
W4506
(W2012)
W2066
W2067
W2068
D
1:10
(W2012)
A
1:10
B
1:10
W4502
W4503
W4505
W2068
W2010 (X202)
W2011 (X204)
W2021 (X302)
W2022 (X303)
W2023 (X304)
W4005 (X116)
W4006 (X117)
W2066 (X210)
W2067 (X207)
W2030 (X203)
W2716 (X716.1)
W2726 (X716.3)
W2014 (X111)
W2015 (X112)
W2016 (X107)
(W2012)(X215)
W2068 (X452)
W4505 (A451)
W4506 (X228)
W4507 (A452)
W0001 (El. Supply)
W2716 (M2716)
W2726
700
G
1:10
W5002
W5003
W5006 (B5104)
(W5007)
G
E
1:10
(W5015)
(W5016)
(W5009)
W5003 (M5406)
(W5501)
(W5502)
E
F
1:10
F
(W5010) (B5302)
(W5011) (B5314)
(W5012) (B5401)
W5002 (M5503)
2527295-2
ECM 274229

Pos	Part No	UN	Qty	Description	Page No
- (Cont'd)					
W5004	351150-0412	MM	2500	CABLE OLFLEX 3X1,5 MM2 LIGHT/GREY	
W5021	90220-0034	M	2	THERMOCABLE TEX/SITW-20F-KX 2X0,5MM2	
W5022	90220-0034	M	2	THERMOCABLE TEX/SITW-20F-KX 2X0,5MM2	
W5023	90220-0034	M	2	THERMOCABLE TEX/SITW-20F-KX 2X0,5MM2	
W5700	351150-0403	MM	1500	CABLE OLFLEX 3X0,75 MM2 LIGHT/GREY	

Pos	Part No	UN	Qty	Description	Page No

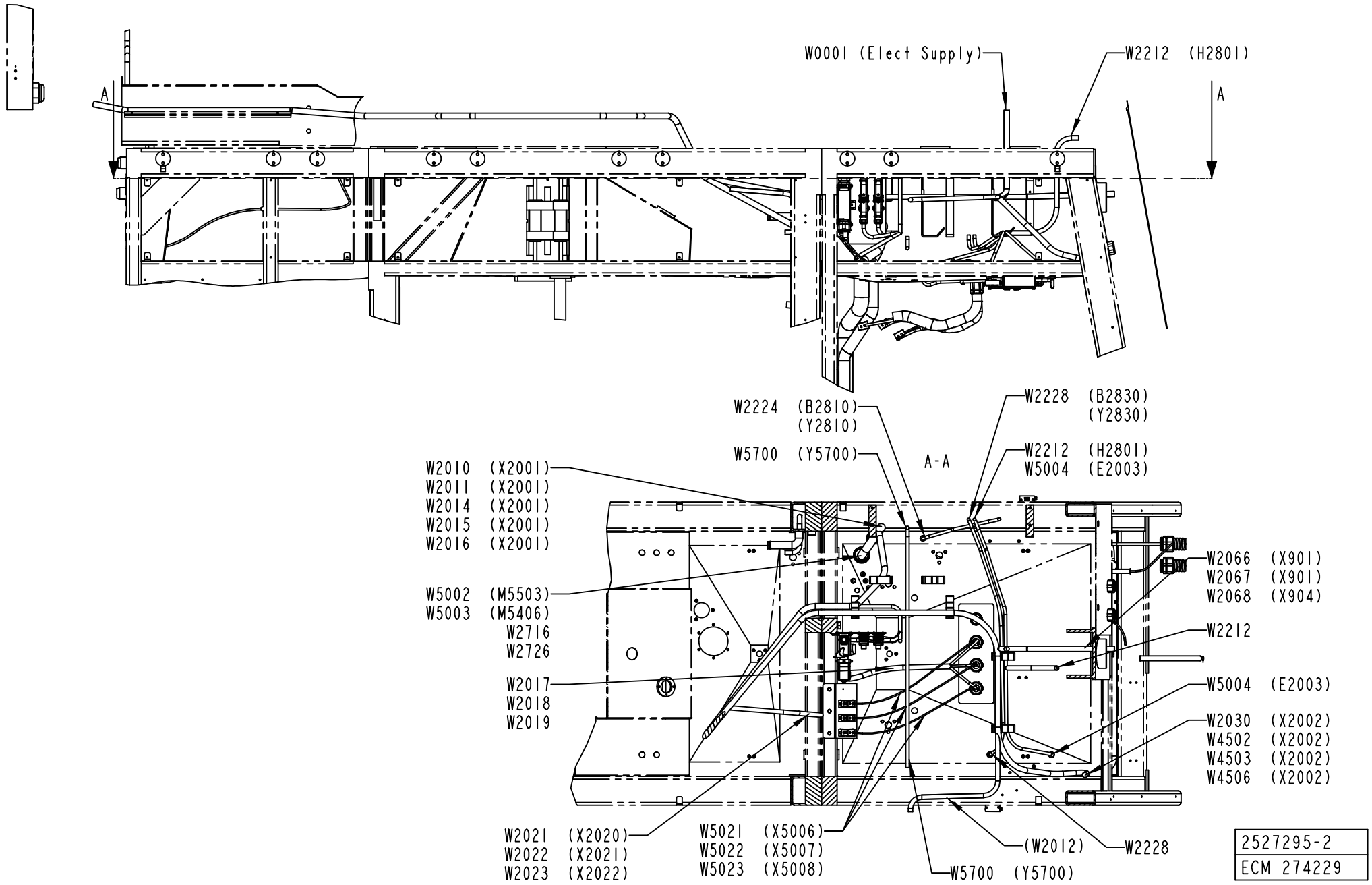

2527295-2
ECM 274229

Pos	Part No	UN	Qty	Description	Page No	Pos	Part No	UN	Qty	Description	Page No

SEE PREVIOUS LISTS PAGES: 2-149, 2-151.

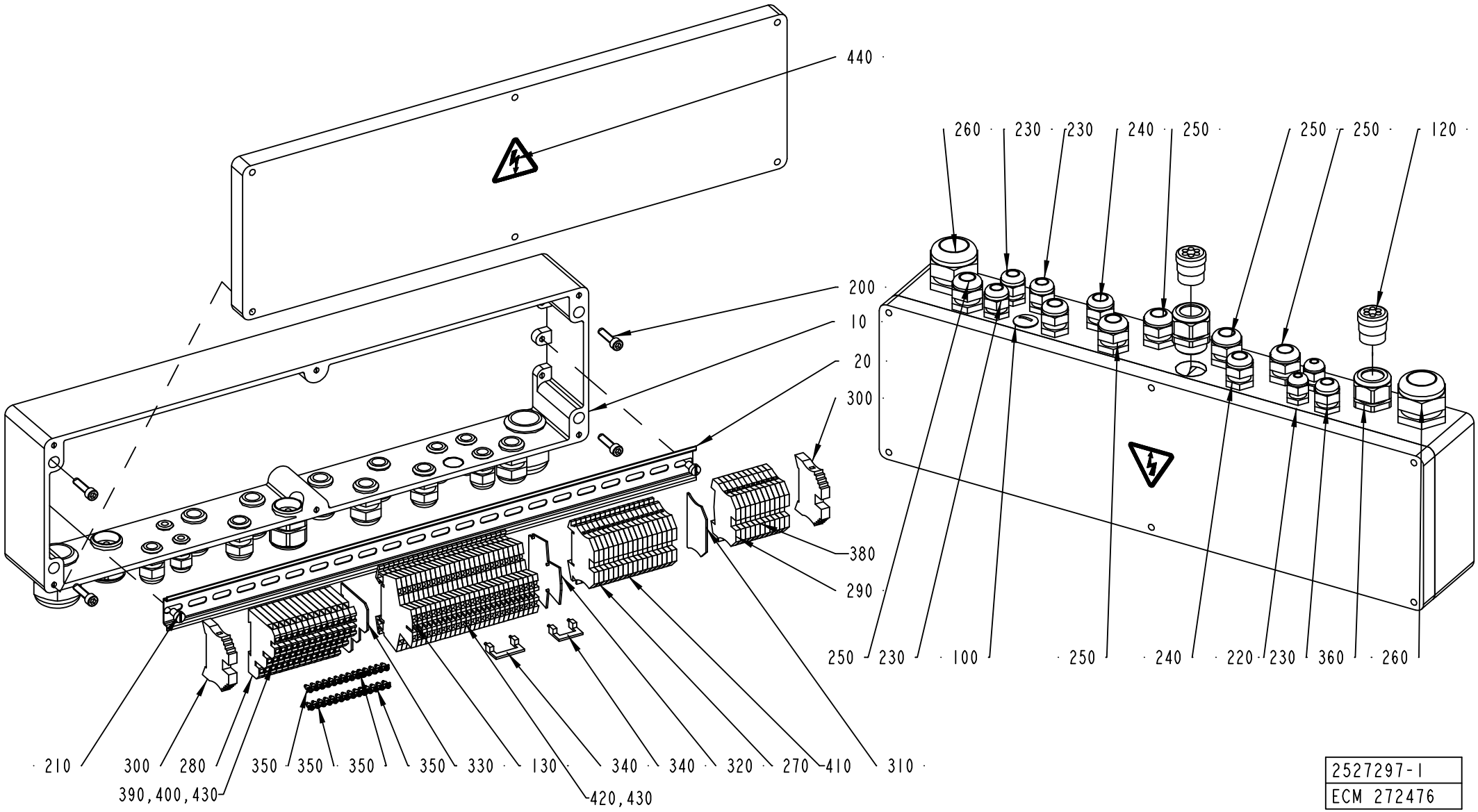

2527297-1
ECM 272476

ECM: 273131 - 20061101
Group number: 2527297-0100
Assembly Drawing: 2527297-1_1_AC

Pos	Part No	UN	Qty	Description	Page No
A3/FLEX					
100	90002-0009		1	BLANK-OFF PLUG, PR 18.6 SKINDICHT-BLK11	
230	352103-0106		4	CABLE GLAND, ST 11, PR18,6/PG11	
Common Parts					
010	2537113-0000		1	CONNECTION BOX	
020	1129504-0000		1	MOUNTING RAIL	
120	90012-0125		2	GLAND FITTING	
130	90077-0113		26	FEED THROUGH TERMINAL, 10-00102150-1	
200	312115-0372		4	SCREW ISO4762 M6X25 A4 80	
210	312121-0364		2	SCREW ISO 1207 M6X10 4.8 - 5.8 Z.PL.	
220	352103-0100		2	CABLE GLAND, STR 9, PR15,2/PG9	
240	352103-0108		3	CABLE GLAND, ST 13,5 , PR20,4/PG13,5	
250	352103-0110		5	CABLE GLAND, STR 16, PR22,5/PG16	
260	352103-0121		2	CABLE GLAND, ST 29, PR37,0/PG29	
270	353021-0212		17	FEED THROUGH TERMINAL, 10200.0	
280	353021-0301		14	TERMINALS,TRIPLE-LEVEL, DLI 2,5/35 PA	
290	353024-0204		11	EARTH TERMINAL WPE 2,5	
300	353031-0203		2	END SUPPORT, WEW 35/2	
310	353032-0004		1	END PLATE WAP 2,5-10 BEIGE	
320	353032-0009		1	END PLATE, WAP FOR WDK	
330	353032-0301		1	END PLATE WAP, 13132.6	
340	353034-0030		2	BRIDGE CONNECTOR WQV 2,5/10, 10544.6	
350	353034-0404		4	BRIDGE CONNECTOR Q10, 13131.0	
360	353240-0005		2	GLAND W/O INSERT PG21 NORMAL	
380	359011-0834		1	SET OF SIGNS 6-GW(EARTH)	
390	359011-0817		1	SYMBOL 5-GW (+) 50PC	
400	359011-0818		1	SYMBOL 5-GW (-) 50PC	
410	359011-0821		2	SET OF SIGNS 6-FW 1-50	
420	359011-0824		2	SET OF SIGNS 6-FW 151-200	
430	359012-0800		2	MARKING LABEL, WHITE, BSGW, 800	
440	359705-0015		1	WARNING SIGN ISO, RISK OF ELECTRIC SHOCK	

Pos	Part No	UN	Qty	Description	Page No

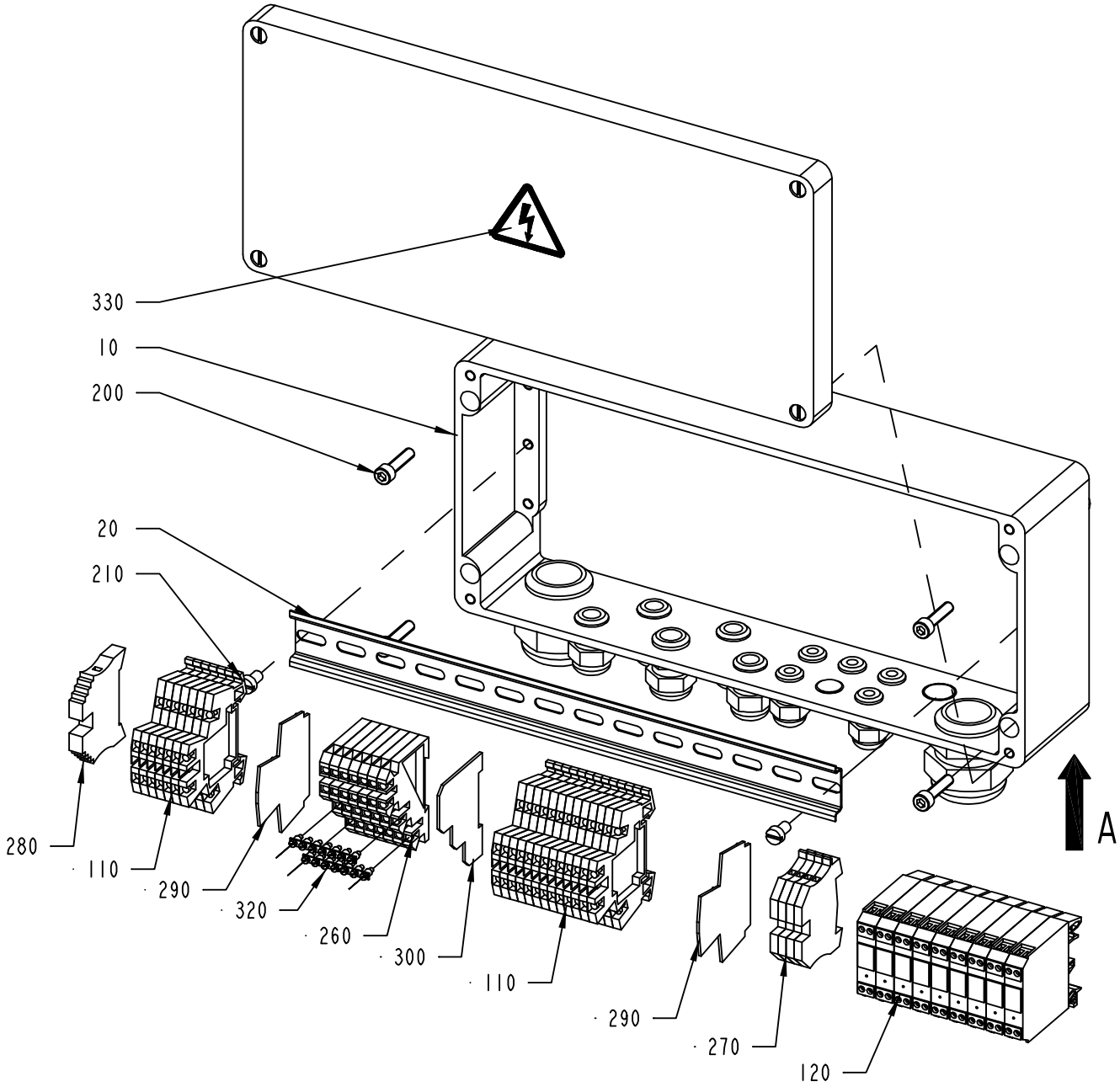

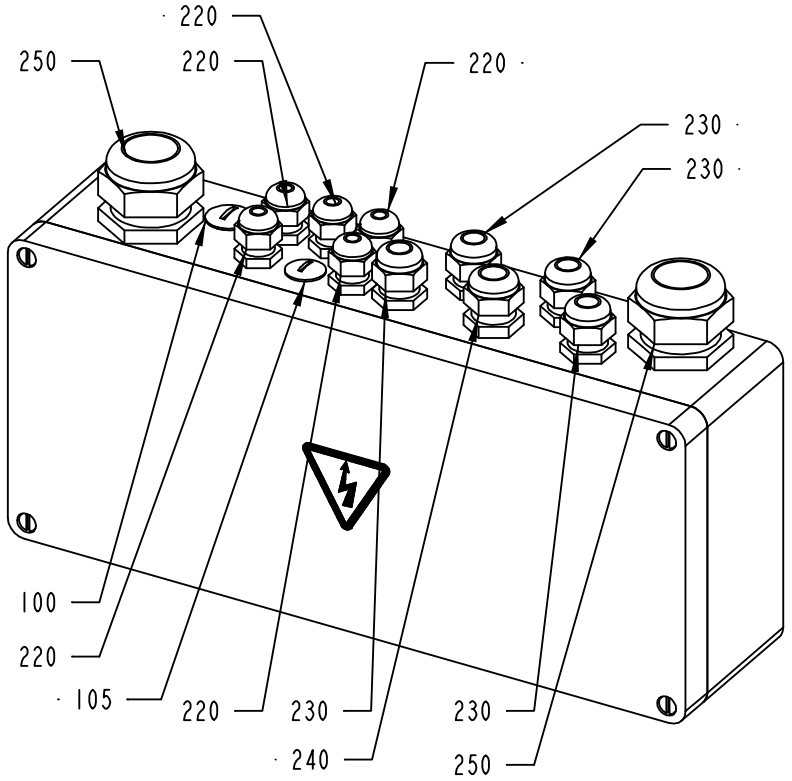

VIEW FROM A

2527299-1
ECM 133290

ECM: 210346 - 20050621
Group number: 2527299-0100
Assembly Drawing: 2527299-1_1_AB

Pos	Part No	UN	Qty	Description	Page No
A3/FLEX					
120	90119-0063		9	OPTO-RELAY, DC/DC AMMS-10-1/30VDC	
Common Parts					
010	2537114-0000		1	CONNECTION BOX	
020	2546496-0000		1	RAIL	
100	90002-0009		1	BLANK-OFF PLUG, PR 18.6 SKINDICHT-BLK11	
105	90002-0013		1	BLANK-OFF PLUG, PR 15,2 SKINDICHT-BLK9	
110	90077-0113		20	FEED THROUGH TERMINAL, 10-00102150-1	
130	90459-1617		1	TERMINAL BOX FL CAT5	
200	312115-0372		4	SCREW ISO4762 M6X25 A4 80	
210	312121-0364		2	SCREW ISO 1207 M6X10 4.8 - 5.8 Z.PL.	
220	352103-0100		5	CABLE GLAND, STR 9, PR15,2/PG9	
230	352103-0106		4	CABLE GLAND, ST 11, PR18,6/PG11	
240	352103-0108		1	CABLE GLAND, ST 13,5 , PR20,4/PG13,5	
250	352103-0121		2	CABLE GLAND, ST 29, PR37,0/PG29	
260	353021-0301		7	TERMINALS,TRIPLE-LEVEL, DLI 2,5/35 PA	
270	353024-0204		4	EARTH TERMINAL WPE 2,5	
280	353031-0203		1	END SUPPORT, WEW 35/2	
290	353032-0009		2	END PLATE, WAP FOR WDK	
300	353032-0301		1	END PLATE WAP, 13132.6	
310	353034-0030		1	BRIDGE CONNECTOR WQV 2,5/10, 10544.6	
320	353034-0404		2	BRIDGE CONNECTOR Q10, 13131.0	
330	359705-0015		1	WARNING SIGN ISO, RISK OF ELECTRIC SHOCK	
340	359011-0834		1	SET OF SIGNS 6-GW(EARTH)	
350	359012-0800		2	MARKING LABEL, WHITE, BSGW, 800	

Pos	Part No	UN	Qty	Description	Page No

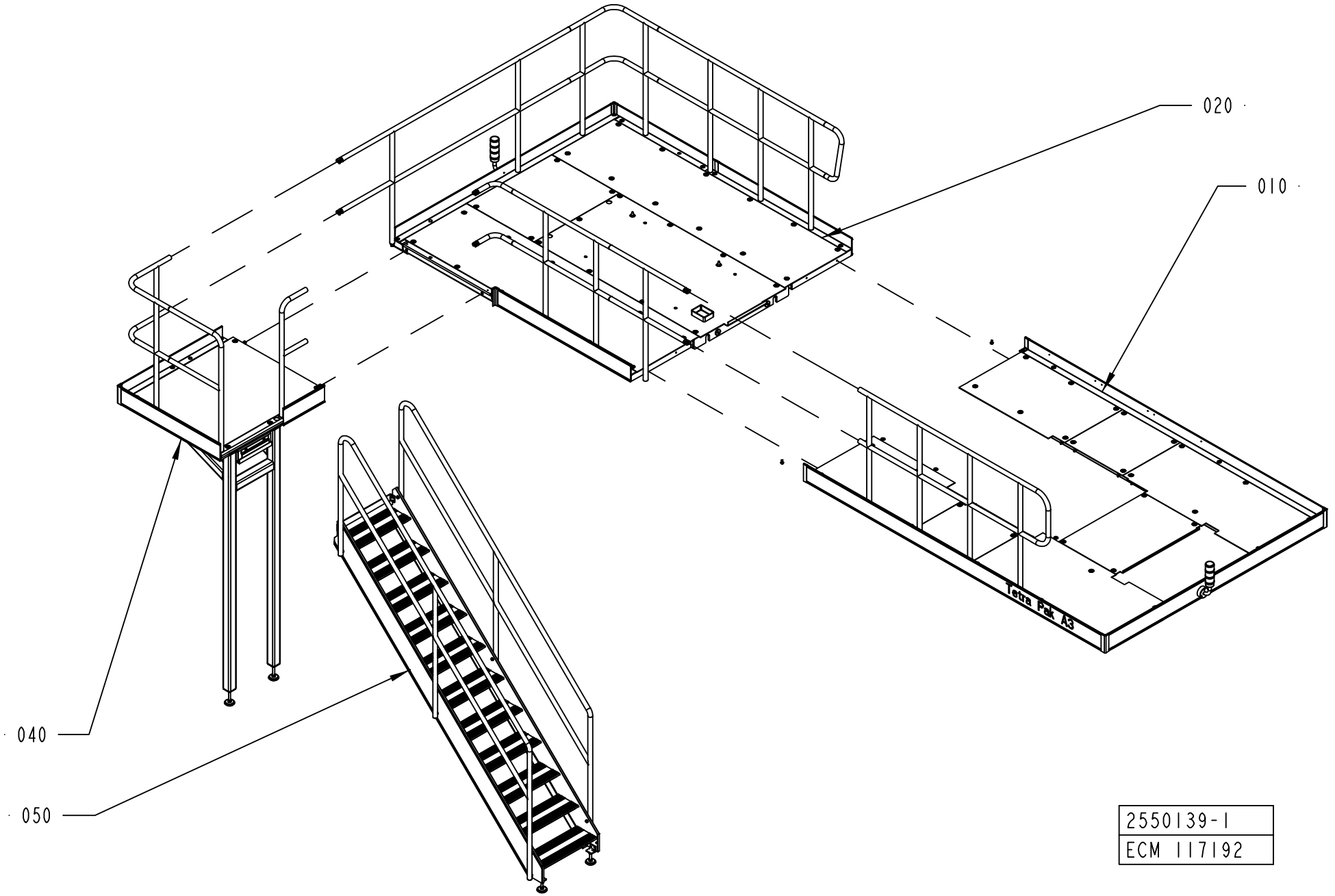
020
010
040
050
Tetra Pak A3
2550139-1
ECM 117192

ECM: 266298 - 20060702
Group number: 2550139-0100
Assembly Drawing: 2550139-1_1_AA

This list covers pages from 2-158 to 2-169

Pos	Part No	UN	Qty	Description	Page No
A3/FLEX DIMC/FLEX LEFTSTAIR (See drawing on page: 2-162)					
020	1528847-0100		1	PLATFORM	**2-171**
030	1528848-0100		1	PLATFORM	**2-173, 2-175**
A3/FLEX DIMC/FLEX RIGHTSTAIR (See drawing on page: 2-168)					
020	1528847-0100		1	PLATFORM	**2-171**
030	1528848-0100		1	PLATFORM	**2-173, 2-175**
A3/FLEX NOPT LEFTSTAIR, A3/FLEX NODIMC LEFTSTAIR (See drawing on page: 2-158)					
020	2550138-0100		1	PLATFORM	**2-179, 2-181, 2-183, 2-185**
A3/FLEX NOPT RIGHTSTAIR, A3/FLEX NODIMC RIGHTSTAIR (See drawing on page: 2-164)					
020	2550138-0100		1	PLATFORM	**2-179, 2-181, 2-183, 2-185**
A3/FLEX PT/FLEX LEFTSTAIR (See drawing on page: 2-160)					
020	2550138-0100		1	PLATFORM	**2-179, 2-181, 2-183, 2-185**
A3/FLEX PT/FLEX RIGHTSTAIR (See drawing on page: 2-166)					
020	2550138-0100		1	PLATFORM	**2-179, 2-181, 2-183, 2-185**
Common Parts					
010	2508369-0200		1	PLATFORM	**2-187**
040	2564546-0100		1	PLATFORM	**2-189, 2-191**
050	1523777-0100		1	STAIR CASE	**2-193**

Pos	Part No	UN	Qty	Description	Page No

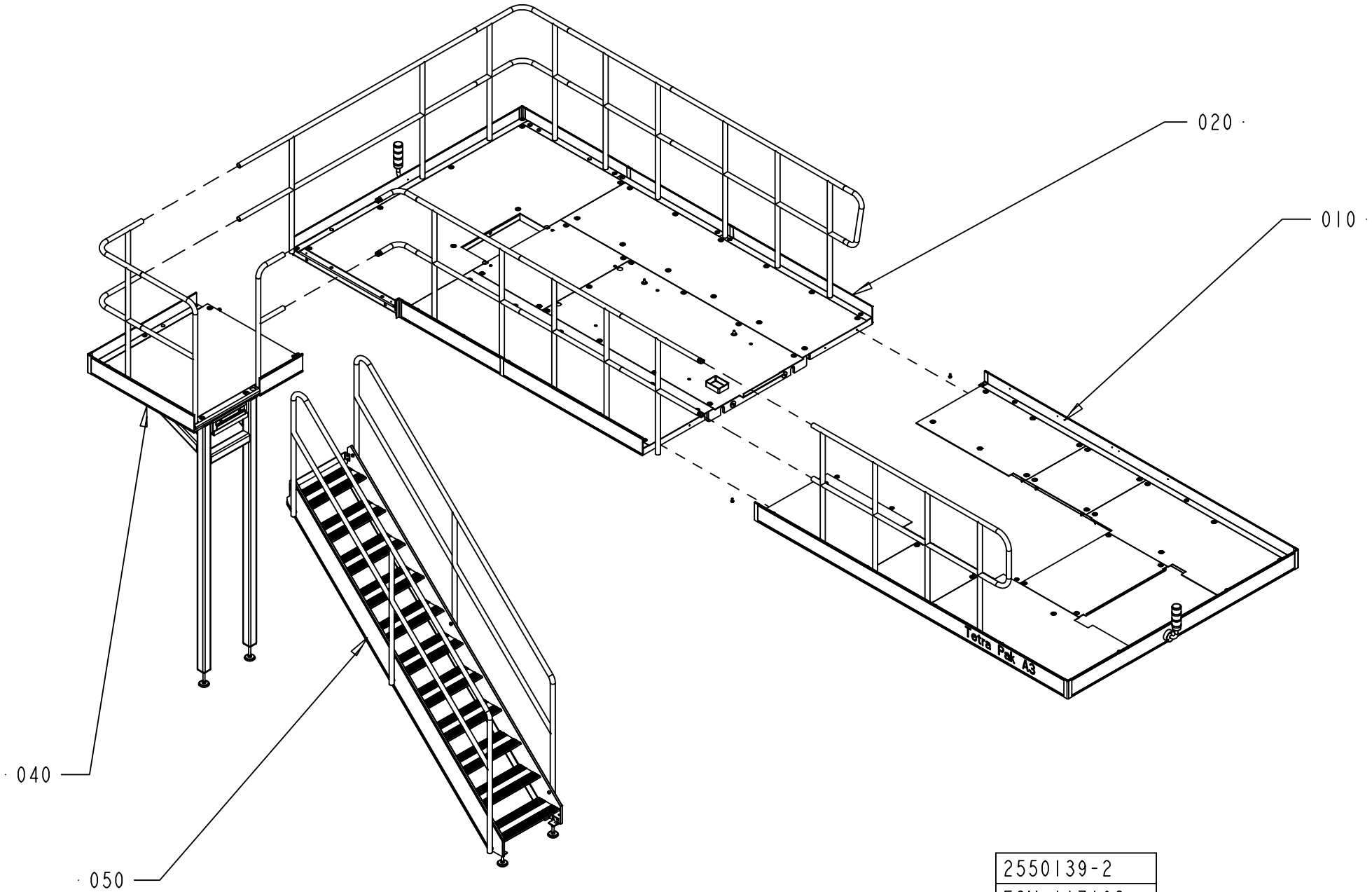

2550139-2
ECM 117192

ECM: 266298 - 20060702
Group number: 2550139-0100
Assembly Drawing: 2550139-2_1_AA

This list covers pages from 2-158 to 2-169

Pos	Part No	UN	Qty	Description	Page No
A3/FLEX DIMC/FLEX LEFTSTAIR (See drawing on page: 2-162)					
020	1528847-0100		1	PLATFORM	**2-171**
030	1528848-0100		1	PLATFORM	**2-173, 2-175**
A3/FLEX DIMC/FLEX RIGHTSTAIR (See drawing on page: 2-168)					
020	1528847-0100		1	PLATFORM	**2-171**
030	1528848-0100		1	PLATFORM	**2-173, 2-175**
A3/FLEX NOPT LEFTSTAIR, A3/FLEX NODIMC LEFTSTAIR (See drawing on page: 2-158)					
020	2550138-0100		1	PLATFORM	**2-179, 2-181, 2-183, 2-185**
A3/FLEX NOPT RIGHTSTAIR, A3/FLEX NODIMC RIGHTSTAIR (See drawing on page: 2-164)					
020	2550138-0100		1	PLATFORM	**2-179, 2-181, 2-183, 2-185**
A3/FLEX PT/FLEX LEFTSTAIR (See drawing on page: 2-160)					
020	2550138-0100		1	PLATFORM	**2-179, 2-181, 2-183, 2-185**
A3/FLEX PT/FLEX RIGHTSTAIR (See drawing on page: 2-166)					
020	2550138-0100		1	PLATFORM	**2-179, 2-181, 2-183, 2-185**
Common Parts					
010	2508369-0200		1	PLATFORM	**2-187**
040	2564546-0100		1	PLATFORM	**2-189, 2-191**
050	1523777-0100		1	STAIR CASE	**2-193**

Pos	Part No	UN	Qty	Description	Page No

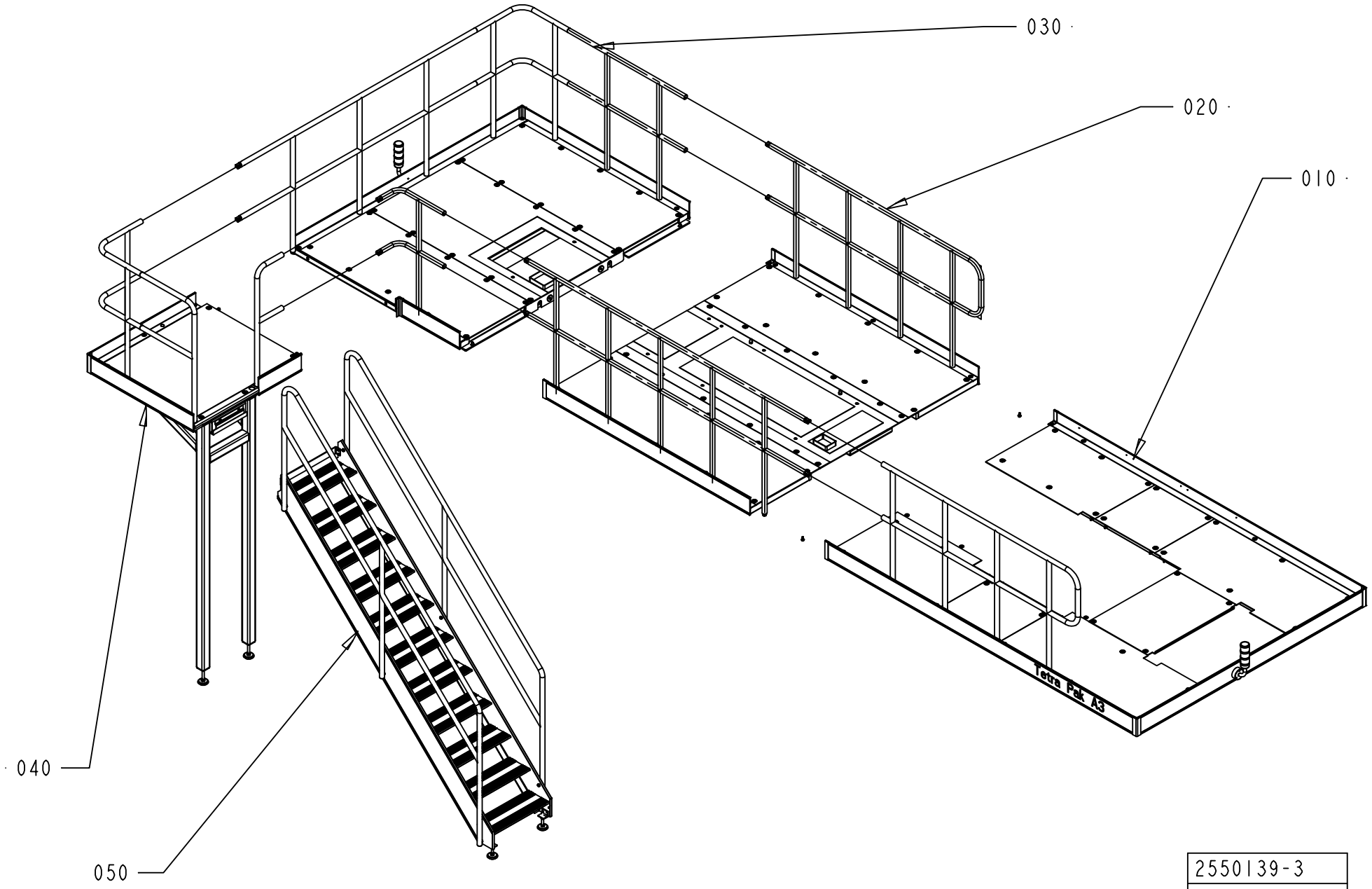

2550139-3
ECM 117192

ECM: 266298 - 20060702
Group number: 2550139-0100
Assembly Drawing: 2550139-3_1_AA

This list covers pages from 2-158 to 2-169

Pos	Part No	UN	Qty	Description	Page No
A3/FLEX DIMC/FLEX LEFTSTAIR (See drawing on page: 2-162)					
020	1528847-0100		1	PLATFORM	**2-171**
030	1528848-0100		1	PLATFORM	**2-173, 2-175**
A3/FLEX DIMC/FLEX RIGHTSTAIR (See drawing on page: 2-168)					
020	1528847-0100		1	PLATFORM	**2-171**
030	1528848-0100		1	PLATFORM	**2-173, 2-175**
A3/FLEX NOPT LEFTSTAIR, A3/FLEX NODIMC LEFTSTAIR (See drawing on page: 2-158)					
020	2550138-0100		1	PLATFORM	**2-179, 2-181, 2-183, 2-185**
A3/FLEX NOPT RIGHTSTAIR, A3/FLEX NODIMC RIGHTSTAIR (See drawing on page: 2-164)					
020	2550138-0100		1	PLATFORM	**2-179, 2-181, 2-183, 2-185**
A3/FLEX PT/FLEX LEFTSTAIR (See drawing on page: 2-160)					
020	2550138-0100		1	PLATFORM	**2-179, 2-181, 2-183, 2-185**
A3/FLEX PT/FLEX RIGHTSTAIR (See drawing on page: 2-166)					
020	2550138-0100		1	PLATFORM	**2-179, 2-181, 2-183, 2-185**
Common Parts					
010	2508369-0200		1	PLATFORM	**2-187**
040	2564546-0100		1	PLATFORM	**2-189, 2-191**
050	1523777-0100		1	STAIR CASE	**2-193**

Pos	Part No	UN	Qty	Description	Page No

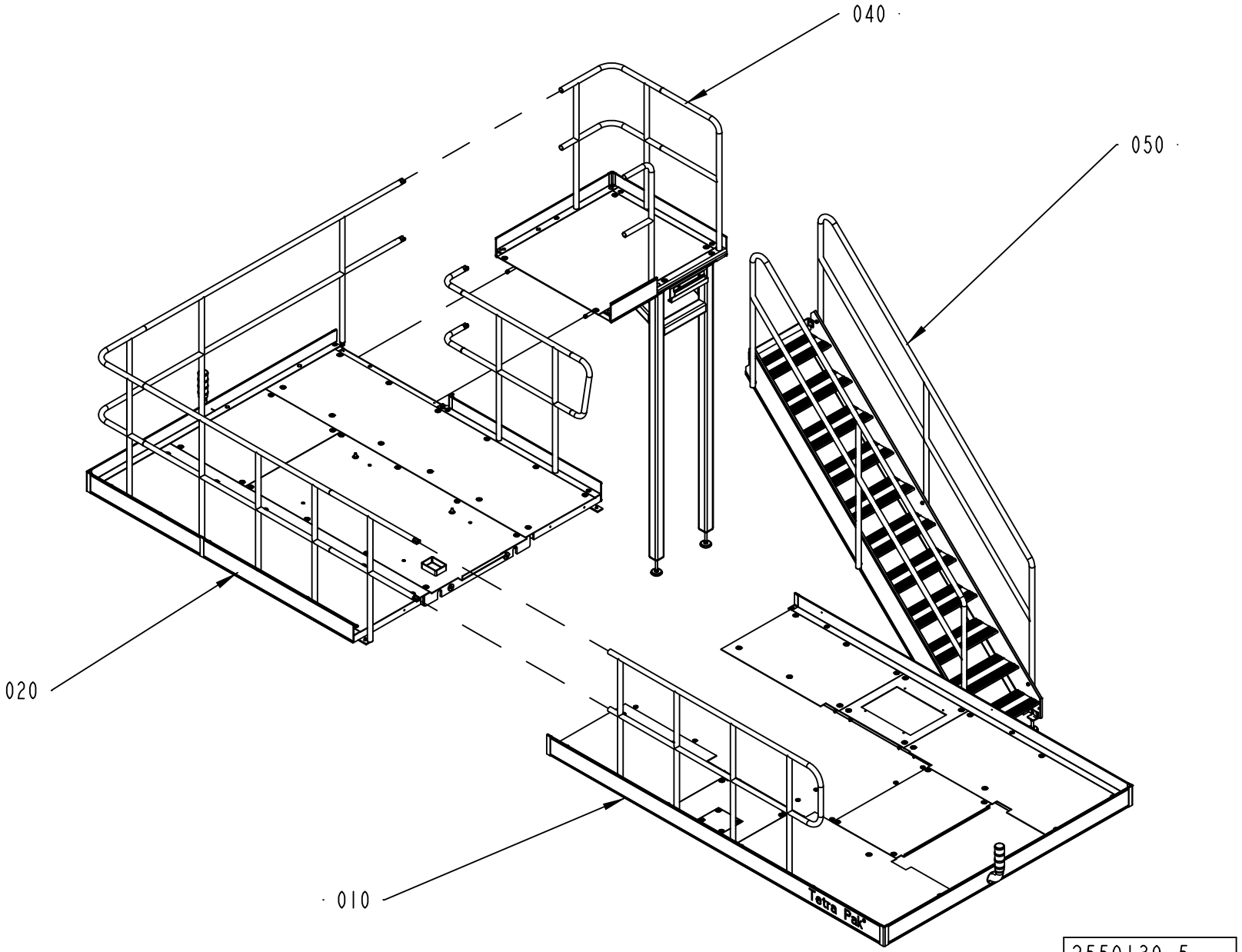

2550139-5
ECM 139753

ECM: 266298 - 20060702
Group number: 2550139-0100
Assembly Drawing: 2550139-5_1_AA

This list covers pages from 2-158 to 2-169

Pos	Part No	UN	Qty	Description	Page No
A3/FLEX DIMC/FLEX LEFTSTAIR (See drawing on page: 2-162)					
020	1528847-0100		1	PLATFORM	**2-171**
030	1528848-0100		1	PLATFORM	**2-173, 2-175**
A3/FLEX DIMC/FLEX RIGHTSTAIR (See drawing on page: 2-168)					
020	1528847-0100		1	PLATFORM	**2-171**
030	1528848-0100		1	PLATFORM	**2-173, 2-175**
A3/FLEX NOPT LEFTSTAIR, A3/FLEX NODIMC LEFTSTAIR (See drawing on page: 2-158)					
020	2550138-0100		1	PLATFORM	**2-179, 2-181, 2-183, 2-185**
A3/FLEX NOPT RIGHTSTAIR, A3/FLEX NODIMC RIGHTSTAIR (See drawing on page: 2-164)					
020	2550138-0100		1	PLATFORM	**2-179, 2-181, 2-183, 2-185**
A3/FLEX PT/FLEX LEFTSTAIR (See drawing on page: 2-160)					
020	2550138-0100		1	PLATFORM	**2-179, 2-181, 2-183, 2-185**
A3/FLEX PT/FLEX RIGHTSTAIR (See drawing on page: 2-166)					
020	2550138-0100		1	PLATFORM	**2-179, 2-181, 2-183, 2-185**
Common Parts					
010	2508369-0200		1	PLATFORM	**2-187**
040	2564546-0100		1	PLATFORM	**2-189, 2-191**
050	1523777-0100		1	STAIR CASE	**2-193**

Pos	Part No	UN	Qty	Description	Page No

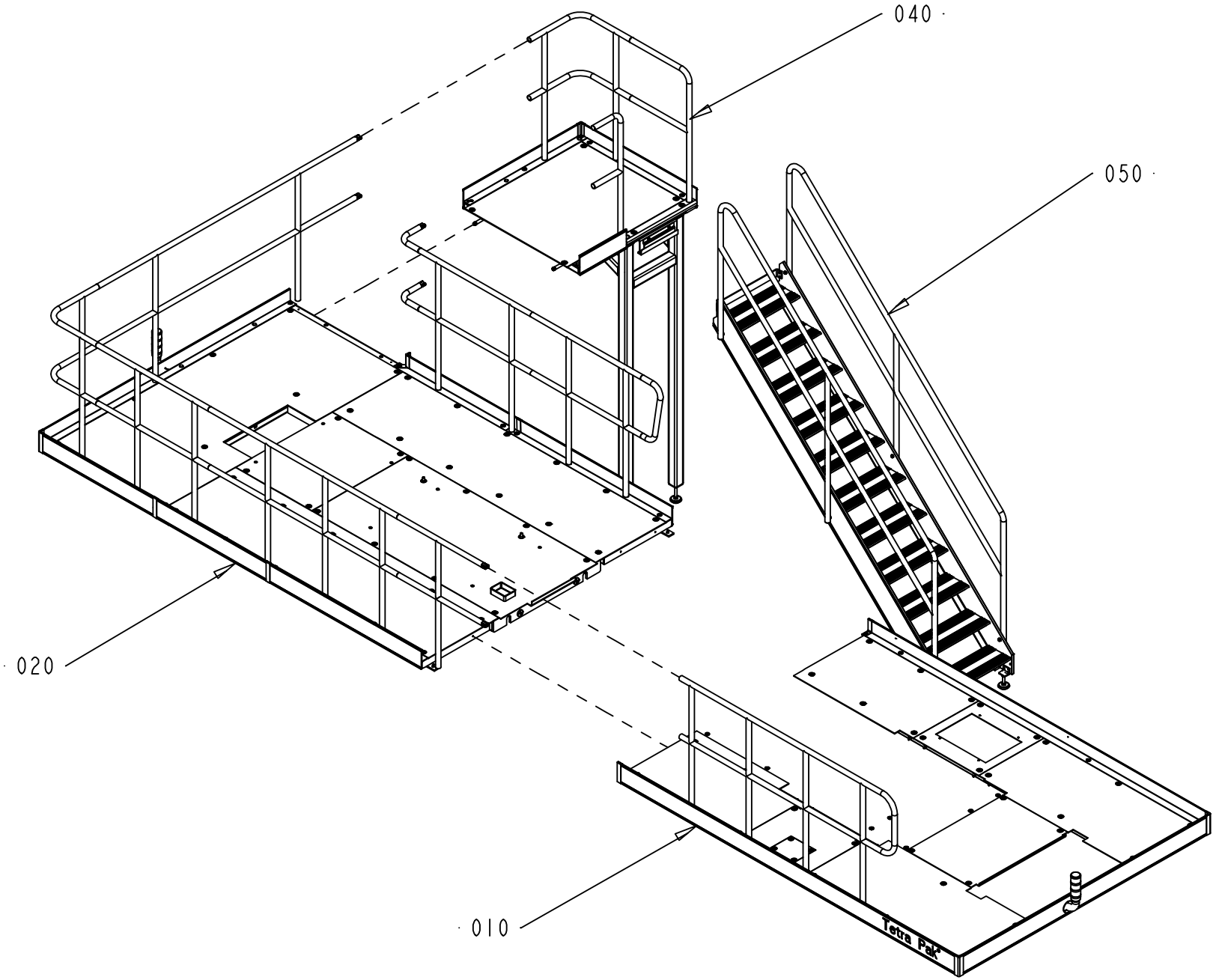

2550139-6
ECM 139753

ECM: 266298 - 20060702
Group number: 2550139-0100
Assembly Drawing: 2550139-6_1_AA

This list covers pages from 2-158 to 2-169

Pos	Part No	UN	Qty	Description	Page No
A3/FLEX DIMC/FLEX LEFTSTAIR (See drawing on page: 2-162)					
020	1528847-0100		1	PLATFORM	**2-171**
030	1528848-0100		1	PLATFORM	**2-173, 2-175**
A3/FLEX DIMC/FLEX RIGHTSTAIR (See drawing on page: 2-168)					
020	1528847-0100		1	PLATFORM	**2-171**
030	1528848-0100		1	PLATFORM	**2-173, 2-175**
A3/FLEX NOPT LEFTSTAIR, A3/FLEX NODIMC LEFTSTAIR (See drawing on page: 2-158)					
020	2550138-0100		1	PLATFORM	**2-179, 2-181, 2-183, 2-185**
A3/FLEX NOPT RIGHTSTAIR, A3/FLEX NODIMC RIGHTSTAIR (See drawing on page: 2-164)					
020	2550138-0100		1	PLATFORM	**2-179, 2-181, 2-183, 2-185**
A3/FLEX PT/FLEX LEFTSTAIR (See drawing on page: 2-160)					
020	2550138-0100		1	PLATFORM	**2-179, 2-181, 2-183, 2-185**
A3/FLEX PT/FLEX RIGHTSTAIR (See drawing on page: 2-166)					
020	2550138-0100		1	PLATFORM	**2-179, 2-181, 2-183, 2-185**
Common Parts					
010	2508369-0200		1	PLATFORM	**2-187**
040	2564546-0100		1	PLATFORM	**2-189, 2-191**
050	1523777-0100		1	STAIR CASE	**2-193**

Pos	Part No	UN	Qty	Description	Page No

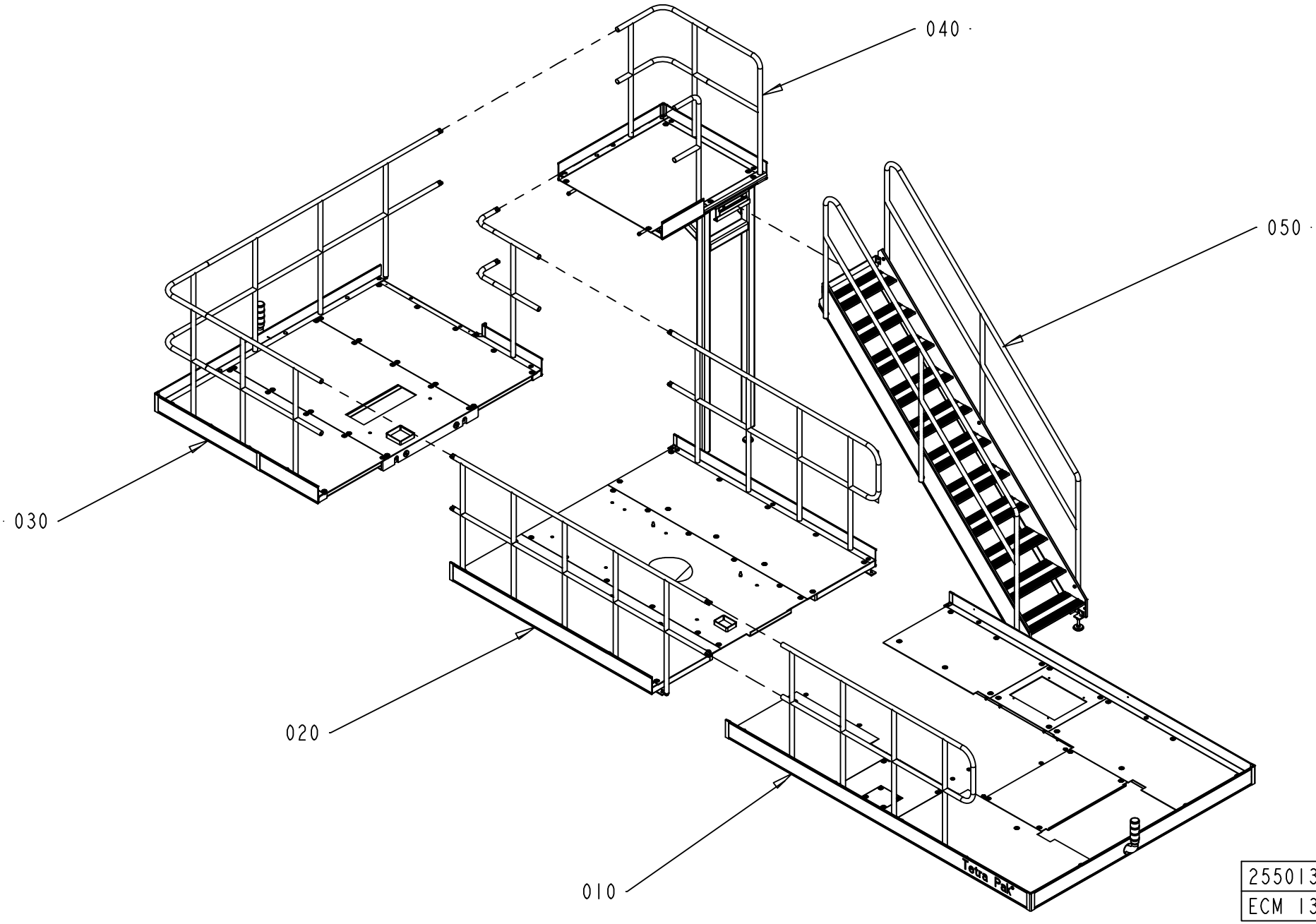

2550139-7
ECM 139753

ECM: 266298 - 20060702
Group number: 2550139-0100
Assembly Drawing: 2550139-7_1_AA

This list covers pages from 2-158 to 2-169

Pos	Part No	UN	Qty	Description	Page No
A3/FLEX DIMC/FLEX LEFTSTAIR (See drawing on page: 2-162)					
020	1528847-0100		1	PLATFORM	**2-171**
030	1528848-0100		1	PLATFORM	**2-173, 2-175**
A3/FLEX DIMC/FLEX RIGHTSTAIR (See drawing on page: 2-168)					
020	1528847-0100		1	PLATFORM	**2-171**
030	1528848-0100		1	PLATFORM	**2-173, 2-175**
A3/FLEX NOPT LEFTSTAIR, A3/FLEX NODIMC LEFTSTAIR (See drawing on page: 2-158)					
020	2550138-0100		1	PLATFORM	**2-179, 2-181, 2-183, 2-185**
A3/FLEX NOPT RIGHTSTAIR, A3/FLEX NODIMC RIGHTSTAIR (See drawing on page: 2-164)					
020	2550138-0100		1	PLATFORM	**2-179, 2-181, 2-183, 2-185**
A3/FLEX PT/FLEX LEFTSTAIR (See drawing on page: 2-160)					
020	2550138-0100		1	PLATFORM	**2-179, 2-181, 2-183, 2-185**
A3/FLEX PT/FLEX RIGHTSTAIR (See drawing on page: 2-166)					
020	2550138-0100		1	PLATFORM	**2-179, 2-181, 2-183, 2-185**
Common Parts					
010	2508369-0200		1	PLATFORM	**2-187**
040	2564546-0100		1	PLATFORM	**2-189, 2-191**
050	1523777-0100		1	STAIR CASE	**2-193**

Pos	Part No	UN	Qty	Description	Page No

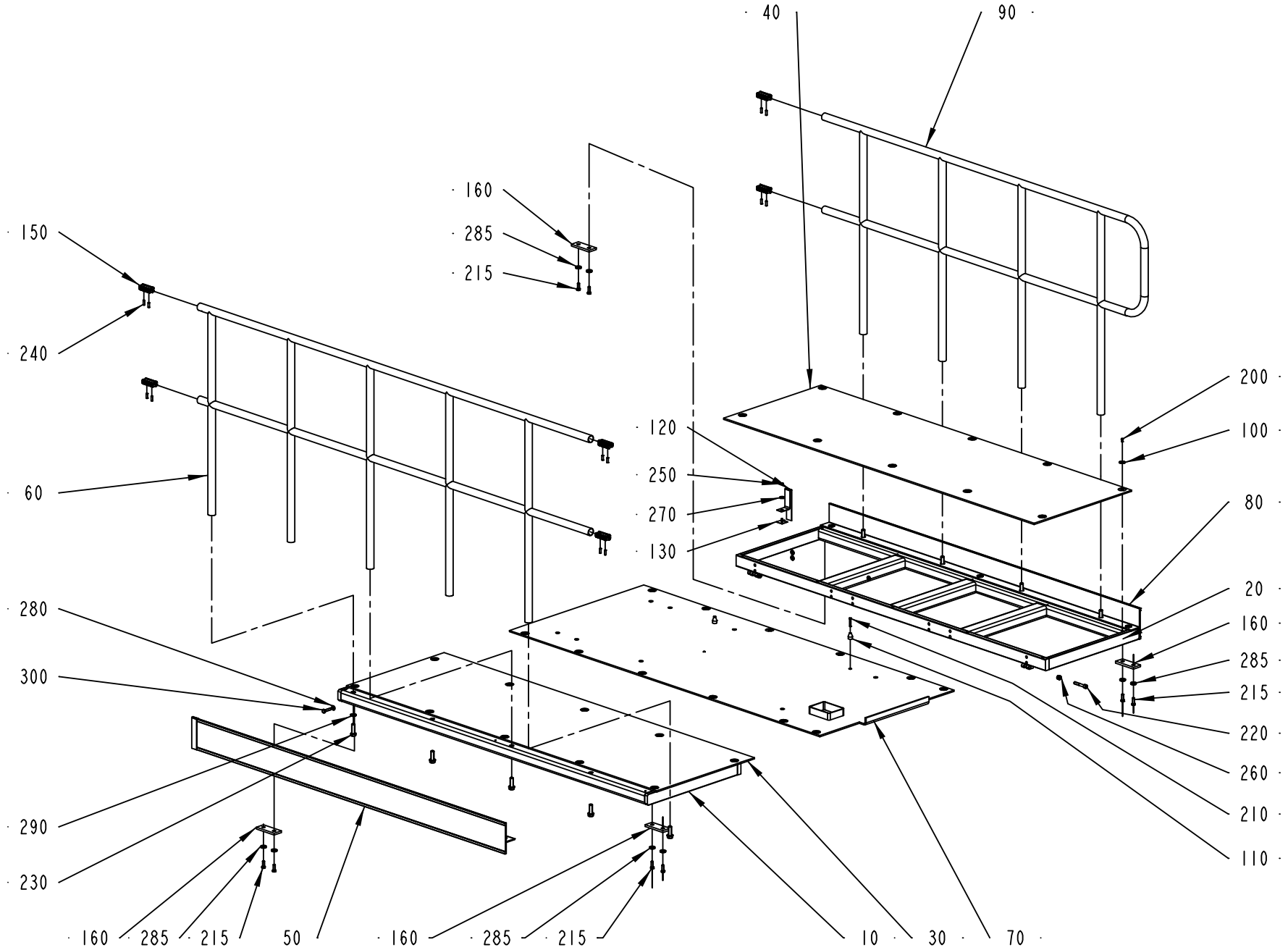

1528847-1
ECM 134426

ECM: 189872 - 20041104
Group number: 1528847-0100
Assembly Drawing: 1528847-1_1_AB

Pos	Part No	UN	Qty	Description	Page No
-					
010	1528552-0000		1	PLATFORM	
020	1528553-0000		1	PLATFORM	
030	1528850-0000		1	CHECKER PLATE	
040	1528855-0000		1	CHECKER PLATE	
050	1528856-0000		1	TOE PLATE	
060	1528858-0000		1	RAILING	
070	1528866-0000		1	CHECKER PLATE	
080	1528867-0000		1	TOE PLATE	
090	1528874-0000		1	RAILING	
100	90458-0073		38	WASHER 6,4/30, H=1,5	
110	1037571-0000		2	GUIDE BUSHING	
120	1254025-0000		2	STRIP	
130	1254028-0000		2	FASTENING PLATE	
150	985328-0000		6	CONNECTION	
160	2632578-0000		4	PLATE	
200	90458-0072		38	SCREW ISO 7380 S M6X12 A2	
210	312109-0378		2	SCREW M6S ISO 4017 M6X40 A480	
215	312105-0495		8	SCREW M6S ISO 4017 M10X30 A480	
220	312115-0546		4	SCREW ISO4762 M12X70 A4 80	
230	312111-0630		9	SCREW HEX.SOCK.HD.MC6S-TT 16X50 88 FZ	
240	312318-0453		12	SCREW ISO4029 M8X25 A4	
250	312605-0316		2	HEXAGON NUT, M6M M6 A280	
260	312812-0322		4	HEXAGON NUT, NY-LOCK M12 A480	
270	315125-0153		2	WASHER TBRSB 6,4X22X4 A4	
280	315105-0173		24	WASHER BRB 10,5X20 RFR	
285	315125-0173		8	WASHER TBRSB 10,5X28X6 A4	
290	315105-0186		9	WASHER BRB 17X30 RFR	
300	90458-2845		24	SCREW,HEXAGON HEAD M6S ISO 4017 M10X45	

Pos	Part No	UN	Qty	Description	Page No

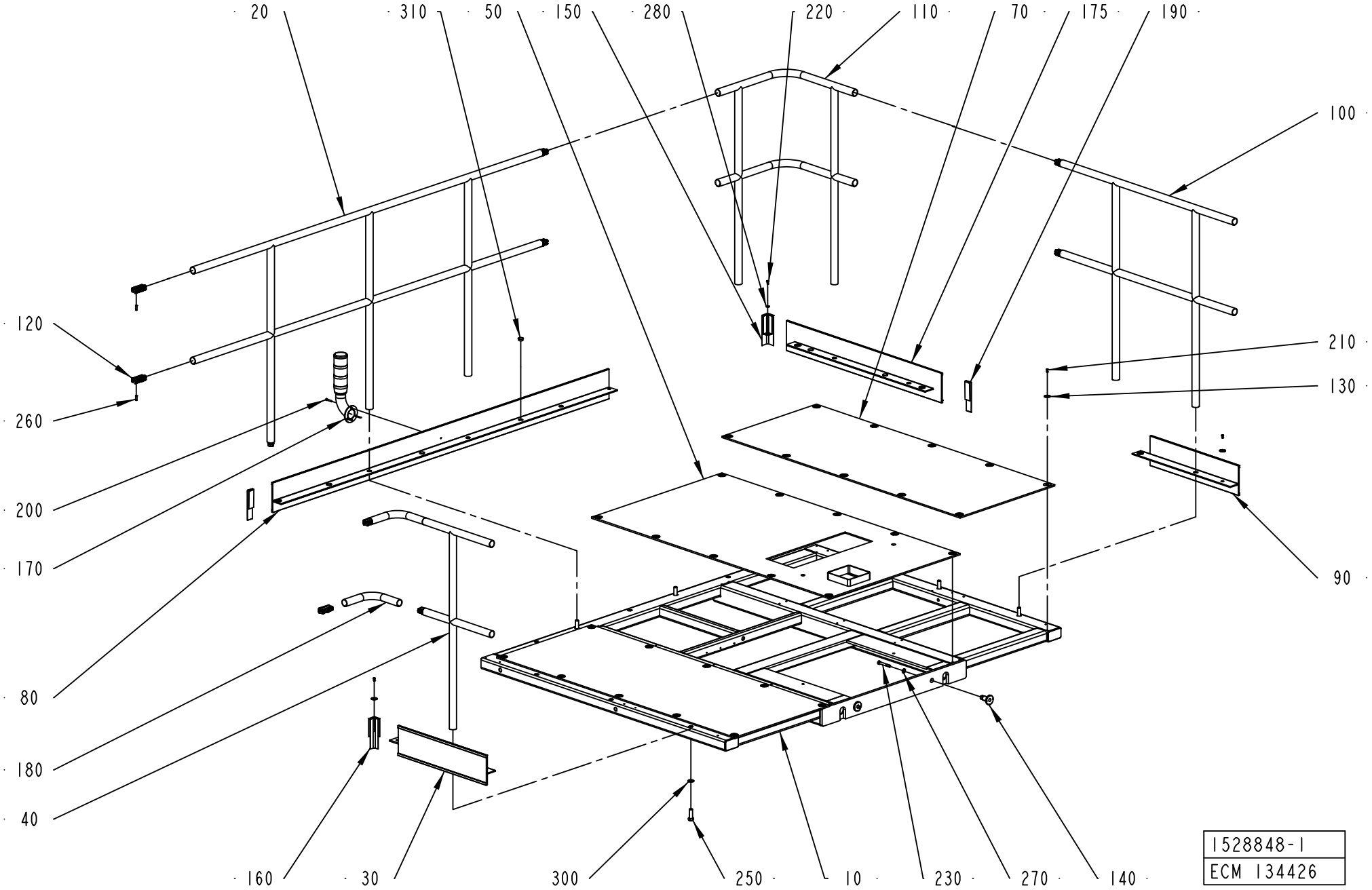
20
310
50
150
280
220
110
70
175
190
100
120
260
200
170
80
180
40
210
130
90
160
30
300
250
10
230
270
140
1528848-1
ECM 134426

ECM: 189873 - 20041104
Group number: 1528848-0100
Assembly Drawing: 1528848-1_1_AC

This list covers pages from 2-172 to 2-175

Pos	Part No	UN	Qty	Description	Page No
-					
010	598713-0000		1	PLATFORM	
020	1528849-0000		1	RAILING	
030	1528857-0000		1	TOE PLATE	
040	1528859-0000		1	RAILING	
050	1528868-0000		1	CHECKER PLATE	
070	1528870-0000		2	CHECKER PLATE	
080	1528871-0000		1	TOE PLATE	
090	1528872-0000		1	TOE PLATE	
100	1528873-0000		1	RAILING	
110	1010822-0000		1	RAILING	
120	985328-0000		10	CONNECTION	
130	90458-0073		37	WASHER 6,4/30, H=1,5	
140	2599941-0000		2	SPACER	
150	1524167-0000		1	CORNER STRIP	
160	1524168-0000		1	CORNER STRIP	
170	2540716-0100		1	SIGNAL LAMP	**2-177**
175	2553122-0000		1	PLATE	
180	2551951-0000		2	RAILING	
190	1558947-0000		2	STRIP	
200	312115-0337		3	SCREW ISO4762 M5X35 A4 80	
210	90458-0072		37	SCREW ISO 7380 S M6X12 A2	
220	312105-0366		1	SCREW M6S ISO 4017 M6X12 A480	
230	312105-0506		2	SCREW M6S ISO 4014 M10X75 A480	
250	312111-0630		8	SCREW HEX.SOCK.HD.MC6S-TT 16X50 88 FZ	
260	312318-0453		20	SCREW ISO4029 M8X25 A4	
270	315105-0173		2	WASHER BRB 10,5X20 RFR	
280	315105-0165		1	WASHER BRB 8,4X16 RFR	
300	315105-0186		8	WASHER BRB 17X30 RFR	
310	90261-0033		5	PLUG, BLIND, PLASTIC GPN300F182	

Pos	Part No	UN	Qty	Description	Page No

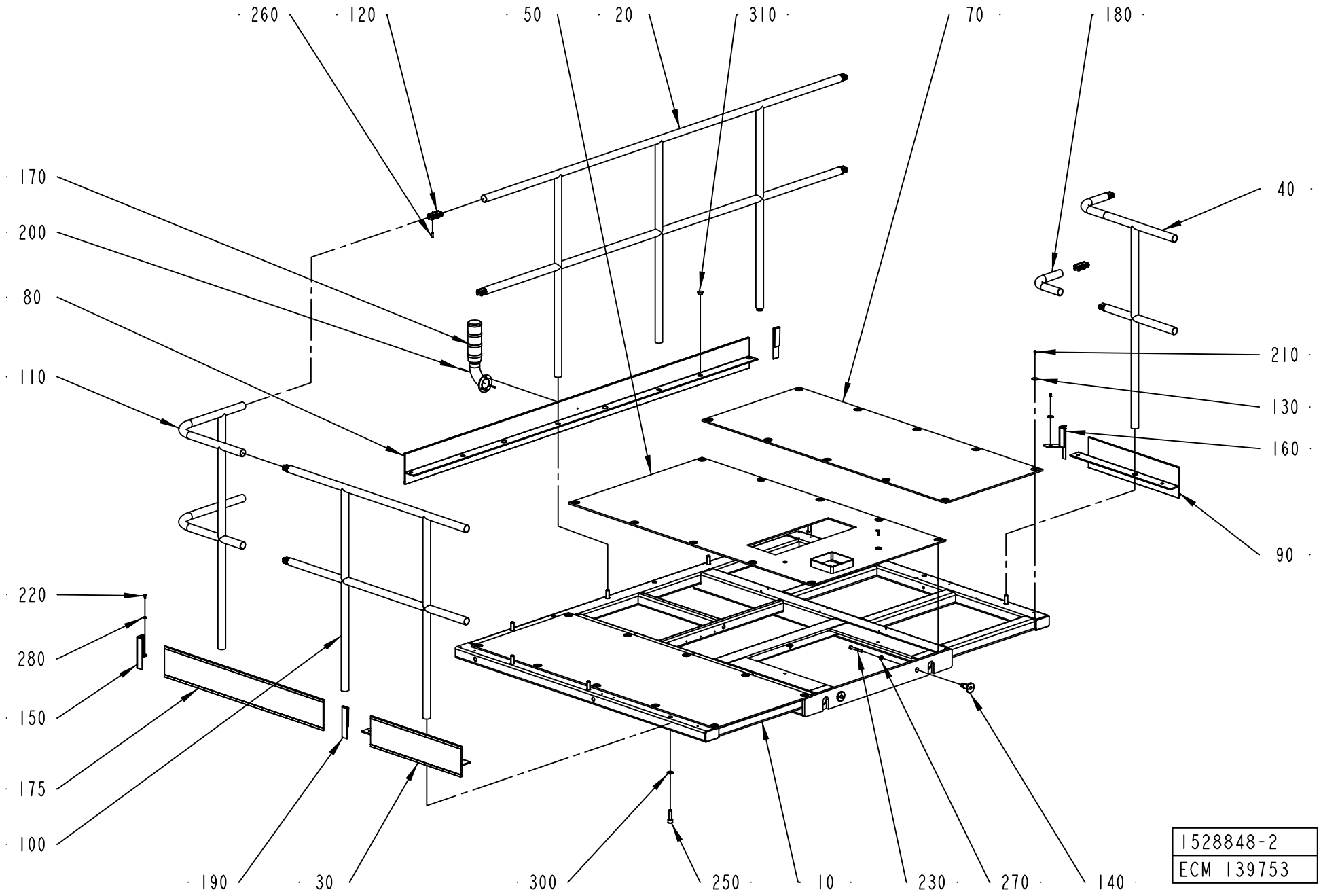
260
120
50
20
310
70
180
170
200
80
110
40
210
130
160
90
220
280
150
175
100
190
30
300
250
10
230
270
140
1528848-2
ECM 139753

ECM: 189873 - 20041104
Group number: 1528848-0100
Assembly Drawing: 1528848-2_1_AA

This list covers pages from 2-172 to 2-175

Pos	Part No	UN	Qty	Description	Page No
-					
010	598713-0000		1	PLATFORM	
020	1528849-0000		1	RAILING	
030	1528857-0000		1	TOE PLATE	
040	1528859-0000		1	RAILING	
050	1528868-0000		1	CHECKER PLATE	
070	1528870-0000		2	CHECKER PLATE	
080	1528871-0000		1	TOE PLATE	
090	1528872-0000		1	TOE PLATE	
100	1528873-0000		1	RAILING	
110	1010822-0000		1	RAILING	
120	985328-0000		10	CONNECTION	
130	90458-0073		37	WASHER 6,4/30, H=1,5	
140	2599941-0000		2	SPACER	
150	1524167-0000		1	CORNER STRIP	
160	1524168-0000		1	CORNER STRIP	
170	2540716-0100		1	SIGNAL LAMP	**2-177**
175	2553122-0000		1	PLATE	
180	2551951-0000		2	RAILING	
190	1558947-0000		2	STRIP	
200	312115-0337		3	SCREW ISO4762 M5X35 A4 80	
210	90458-0072		37	SCREW ISO 7380 S M6X12 A2	
220	312105-0366		1	SCREW M6S ISO 4017 M6X12 A480	
230	312105-0506		2	SCREW M6S ISO 4014 M10X75 A480	
250	312111-0630		8	SCREW HEX.SOCK.HD.MC6S-TT 16X50 88 FZ	
260	312318-0453		20	SCREW ISO4029 M8X25 A4	
270	315105-0173		2	WASHER BRB 10,5X20 RFR	
280	315105-0165		1	WASHER BRB 8,4X16 RFR	
300	315105-0186		8	WASHER BRB 17X30 RFR	
310	90261-0033		5	PLUG, BLIND, PLASTIC GPN300F182	

Pos	Part No	UN	Qty	Description	Page No

SIGNAL LAMP

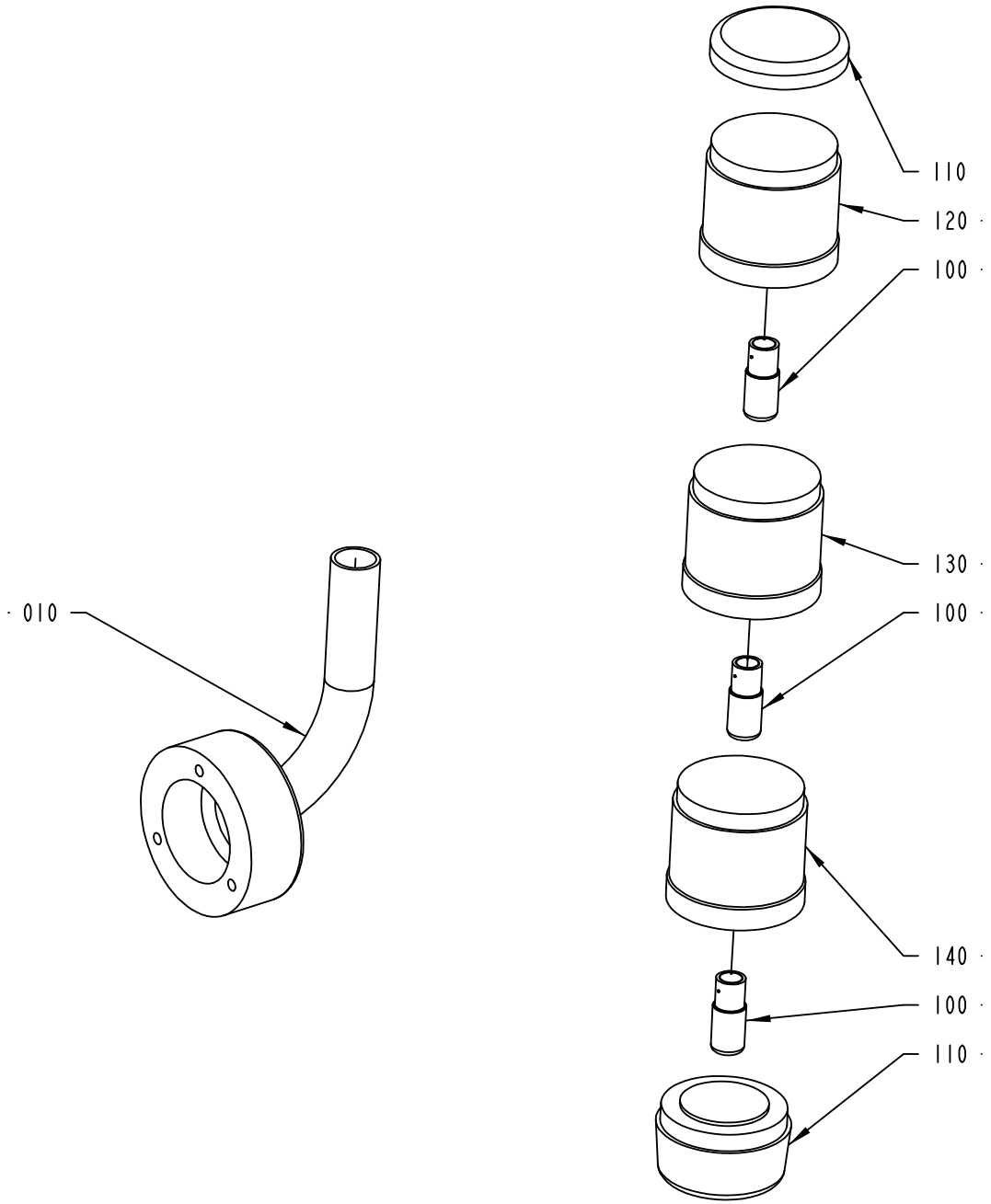

ECM: 189868 - 20041104
Group number: 2540716-0100
Assembly Drawing: 2540716-1_1_AA

Pos	Part No	UN	Qty	Description	Page No
-					
010	2540767-0000		1	PIPE	
100	90036-0068		3	BULB 6.5W 24V	
110	90458-0292		1	BASE, KT70-1001	
120	90458-0293		1	LIGHT ELEMENT, RED, KL70-401R	
130	90458-0294		1	LIGHT ELEMENT, YELLOW, KL70-401Y	
140	90458-0295		1	LIGHT ELEMENT, BLUE, KL70-401L	

Pos	Part No	UN	Qty	Description	Page No

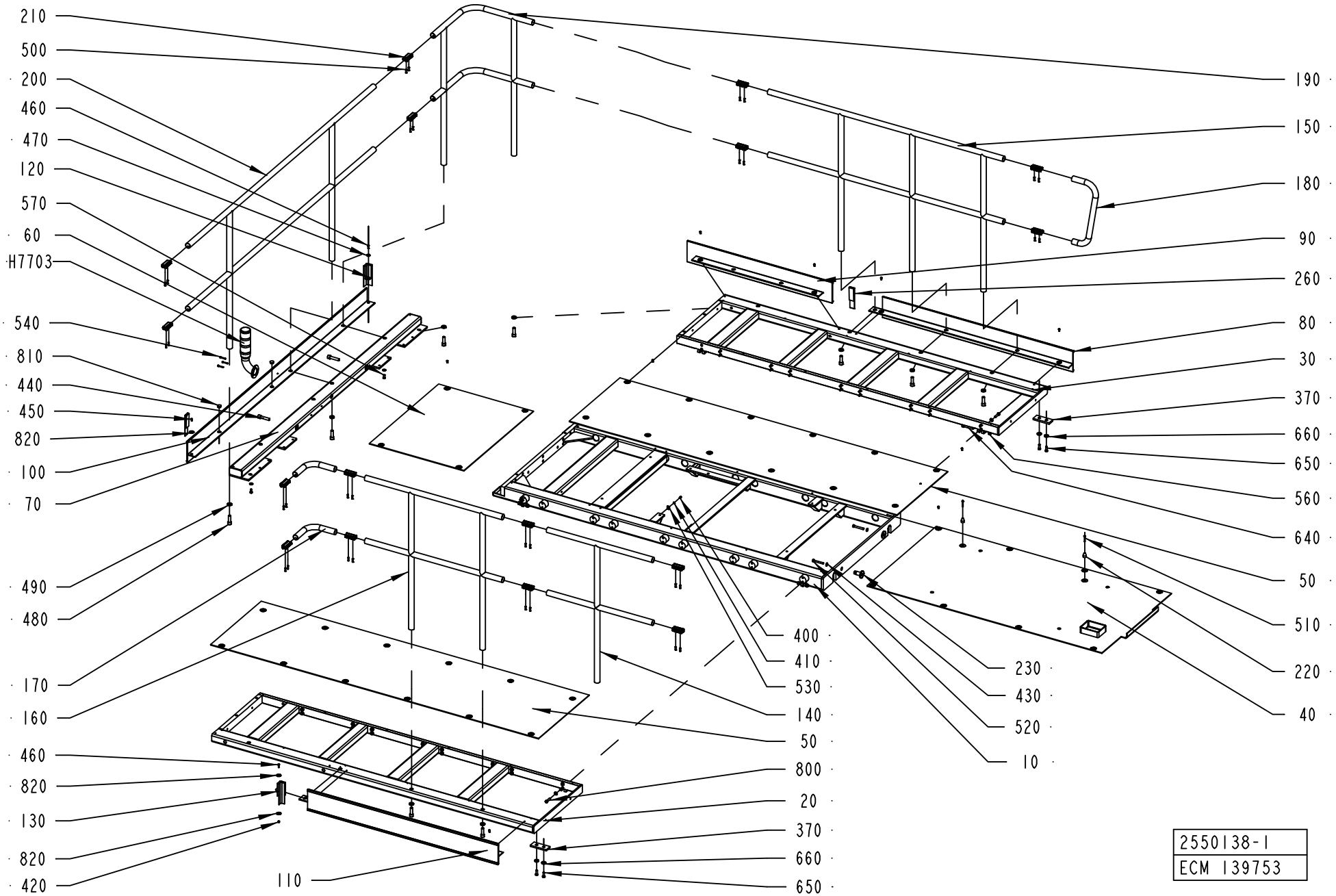
210
500
200
460
470
120
570
60
H7703
540
810
440
450
820
100
70
490
480
170
160
460
820
130
820
420
110
400
410
530
140
50
800
20
370
660
650
190
150
180
90
260
80
30
370
660
650
560
640
50
510
220
40
230
430
520
10
2550138-1
ECM 139753

ECM: 194467 - 20050125
Group number: 2550138-0100
Assembly Drawing: 2550138-1_1_AD

This list covers pages from 2-178 to 2-185

Pos	Part No	UN	Qty	Description	Page No
A3/FLEX NOPT LEFTSTAIR (See drawing on page: 2-178)					
060	2550145-0000		1	RAILING	
070	1524854-0000		1	BEAM	
090	2550193-0000		1	TOE PLATE	
210	985328-0000		16	CONNECTION	
260	1558947-0000		2	STRIP	
400	312125-0366		4	SCREW ISO 1207 M6X12 A4	
410	315105-0153		4	WASHER BRB 6,4X12 RFR	
420	312812-0316		1	HEXAGON NUT, NY-LOCK M6 A480	
430	315105-0173		40	WASHER BRB 10,5X20 RFR	
440	312115-0634		2	SCREW ISO4762 M16X70 A4 80	
450	90458-0072		43	SCREW ISO 7380 S M6X12 A2	
460	312105-0370		2	SCREW M6S ISO 4017 M6X20 A480	
470	315125-0153		1	WASHER TBRSB 6,4X22X4 A4	
480	312111-0630		9	SCREW HEX.SOCK.HD.MC6S-TT 16X50 88 FZ	
490	315111-0186		9	WASHER PLAIN, TBRB 17/30 H=6	
500	312318-0453		32	SCREW ISO4029 M8X25 A4	
530	352113-0204		4	ANCHOR PLATES FOR STRIPS, TYPE TM3S25-M	
570	312105-0491		2	SCREW M6S ISO 4017 M10X20 A480	
810	90261-0033		2	PLUG, BLIND, PLASTIC GPN300F182	
820	90458-0073		45	WASHER 6,4/30, H=1,5	
A3/FLEX NOPT RIGHTSTAIR (See drawing on page: 2-182)					
060	2550145-0000		1	RAILING	
070	1524854-0000		1	BEAM	
090	2550193-0000		1	TOE PLATE	
210	985328-0000		16	CONNECTION	
260	1558947-0000		2	STRIP	
400	312125-0366		4	SCREW ISO 1207 M6X12 A4	
410	315105-0153		4	WASHER BRB 6,4X12 RFR	
420	312812-0316		1	HEXAGON NUT, NY-LOCK M6 A480	
430	315105-0173		40	WASHER BRB 10,5X20 RFR	
440	312115-0634		2	SCREW ISO4762 M16X70 A4 80	
450	90458-0072		43	SCREW ISO 7380 S M6X12 A2	
460	312105-0370		2	SCREW M6S ISO 4017 M6X20 A480	
470	315125-0153		1	WASHER TBRSB 6,4X22X4 A4	
480	312111-0630		9	SCREW HEX.SOCK.HD.MC6S-TT 16X50 88 FZ	
490	315111-0186		9	WASHER PLAIN, TBRB 17/30 H=6	
500	312318-0453		32	SCREW ISO4029 M8X25 A4	
530	352113-0204		4	ANCHOR PLATES FOR STRIPS, TYPE TM3S25-M	
570	312105-0491		2	SCREW M6S ISO 4017 M10X20 A480	
810	90261-0033		2	PLUG, BLIND, PLASTIC GPN300F182	
820	90458-0073		45	WASHER 6,4/30, H=1,5	

Pos	Part No	UN	Qty	Description	Page No
A3/FLEX PT/FLEX LEFTSTAIR (See drawing on page: 2-180)					
090	2566258-0000		1	TOE PLATE	
210	985328-0000		20	CONNECTION	
260	1558947-0000		3	STRIP	
270	2553115-0000		1	PLATFORM	
280	2553116-0000		1	CHECKER PLATE	
290	2553118-0000		1	TOE PLATE	
300	2553119-0000		1	RAILING	
310	2553120-0000		1	RAILING	
330	2553122-0000		1	PLATE	
350	2553124-0000		2	PIN	
360	2553125-0000		1	CHECKER PLATE	
430	315105-0173		38	WASHER BRB 10,5X20 RFR	
450	90458-0072		56	SCREW ISO 7380 S M6X12 A2	
480	312111-0630		12	SCREW HEX.SOCK.HD.MC6S-TT 16X50 88 FZ	
490	315111-0186		12	WASHER PLAIN, TBRB 17/30 H=6	
500	312318-0453		40	SCREW ISO4029 M8X25 A4	
590	312105-0629		4	SCREW M6S ISO 4017 M16X45 A480	
600	312105-0633		14	SCREW M6S ISO 4014 M16X65 A480	
610	312105-0674		2	SCREW M6S ISO 4017 M20X50 A480	
620	312625-0326		2	HEXAGON THIN NUT, EN 24035 ML6M M20 A4	
630	315105-0186		18	WASHER BRB 17X30 RFR	
810	90261-0033		4	PLUG, BLIND, PLASTIC GPN300F182	
820	90458-0073		56	WASHER 6,4/30, H=1,5	
A3/FLEX PT/FLEX RIGHTSTAIR (See drawing on page: 2-184)					
090	2566258-0000		1	TOE PLATE	
210	985328-0000		20	CONNECTION	
260	1558947-0000		3	STRIP	
270	2553115-0000		1	PLATFORM	
280	2553116-0000		1	CHECKER PLATE	
290	2553118-0000		1	TOE PLATE	
300	2553119-0000		1	RAILING	
310	2553120-0000		1	RAILING	
330	2553122-0000		1	PLATE	
350	2553124-0000		2	PIN	
360	2553125-0000		1	CHECKER PLATE	
430	315105-0173		38	WASHER BRB 10,5X20 RFR	
450	90458-0072		56	SCREW ISO 7380 S M6X12 A2	
480	312111-0630		12	SCREW HEX.SOCK.HD.MC6S-TT 16X50 88 FZ	
490	315111-0186		12	WASHER PLAIN, TBRB 17/30 H=6	
500	312318-0453		40	SCREW ISO4029 M8X25 A4	
590	312105-0629		4	SCREW M6S ISO 4017 M16X45 A480	

Machine Type | Group Description | Used-In | Group Number | Page No

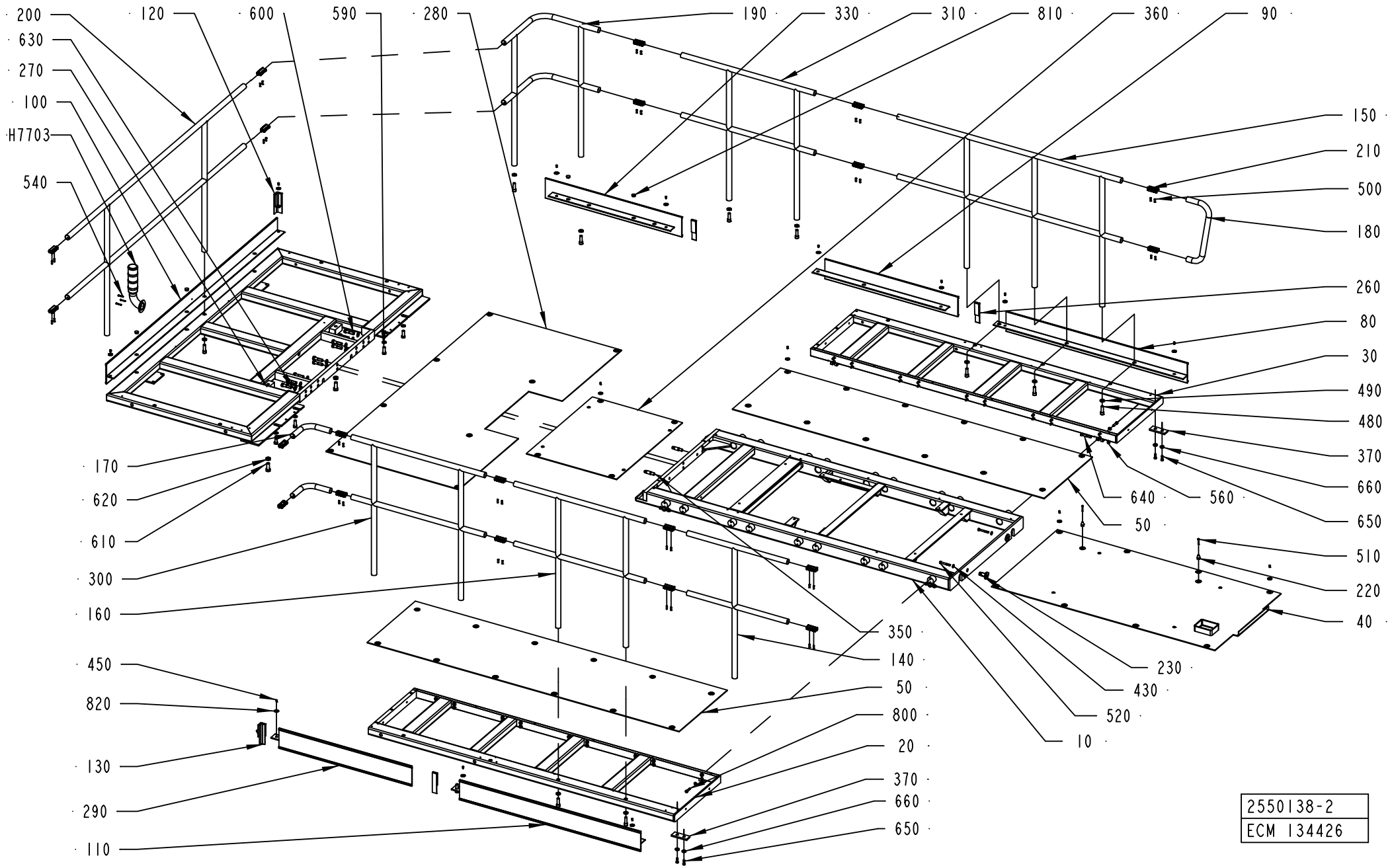
200
120
600
590
280
190
330
310
810
360
90
630
270
100
H7703
540
150
210
500
180
260
80
30
490
480
370
660
650
510
220
40
170
620
610
300
160
450
820
130
290
110
350
140
50
800
20
370
660
650
640
560
50
230
430
520
10
2550138-2
ECM 134426

Pos	Part No	UN	Qty	Description	Page No
A3/FLEX PT/FLEX RIGHTSTAIR (Cont'd) (See drawing on page: 2-184)					
600	312105-0633		14	SCREW M6S ISO 4014 M16X65 A480	
610	312105-0674		2	SCREW M6S ISO 4017 M20X50 A480	
620	312625-0326		2	HEXAGON THIN NUT, EN 24035 ML6M M20 A4	
630	315105-0186		18	WASHER BRB 17X30 RFR	
810	90261-0033		4	PLUG, BLIND, PLASTIC GPN300F182	
820	90458-0073		56	WASHER 6,4/30, H=1,5	
Common Parts					
010	2550144-0000		1	PLATFORM	
020	2550142-0000		1	PLATFORM	
030	2550143-0000		1	PLATFORM	
040	2550140-0000		1	CHECKER PLATE	
050	2550141-0000		2	CHECKER PLATE	
080	2550192-0000		1	TOE PLATE	
100	1523793-0000		1	TOE PLATE	
110	2550191-0000		1	TOE PLATE	
120	1524167-0000		1	CORNER STRIP	
130	1524168-0000		1	CORNER STRIP	
140	2550146-0000		1	RAILING	
150	2550189-0000		1	RAILING	
160	2550147-0000		1	RAILING	
170	2551951-0000		2	RAILING	
180	1558795-0000		1	RAILING	
190	1010822-0000		1	RAILING	
200	1548211-0000		1	RAILING	
220	1037571-0000		2	GUIDE BUSHING	
230	2599941-0000		2	SPACER	
370	1535036-0000		2	PLATE	
510	312109-0378		2	SCREW M6S ISO 4017 M6X40 A480	
520	312105-0506		2	SCREW M6S ISO 4014 M10X75 A480	
540	312115-0337		3	SCREW ISO4762 M5X35 A4 80	
560	312812-0322		4	HEXAGON NUT, NY-LOCK M12 A480	
640	312115-0546		4	SCREW ISO4762 M12X70 A4 80	
650	312105-0495		4	SCREW M6S ISO 4017 M10X30 A480	
660	315125-0173		4	WASHER TBRSB 10,5X28X6 A4	
800	90458-2845		36	SCREW,HEXAGON HEAD M6S ISO 4017 M10X45	
H7703	2540716-0100		1	SIGNAL LAMP	**2-177**

Pos	Part No	UN	Qty	Description	Page No

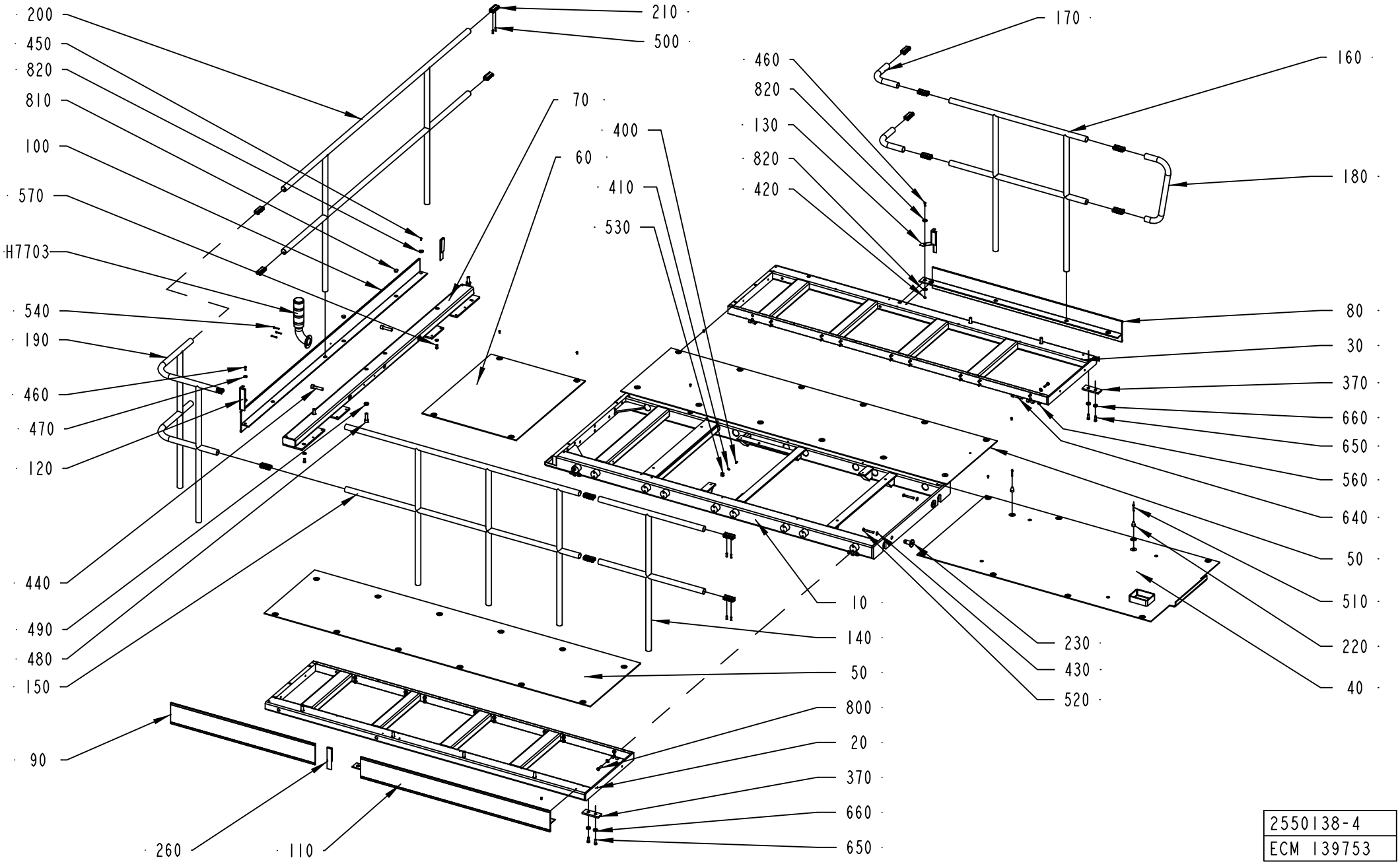
200
450
820
810
100
570
H7703
540
190
460
470
120
440
490
480
150
90
260
110
210
500
70
60
400
410
530
170
160
460
820
130
820
420
180
80
30
370
660
650
560
640
50
510
220
40
10
140
50
800
20
370
660
650
230
430
520
2550138-4
ECM 139753

ECM: 194467 - 20050125
Group number: 2550138-0100
Assembly Drawing: 2550138-4_1_AA

This list covers pages from 2-178 to 2-185

Pos	Part No	UN	Qty	Description	Page No	Pos	Part No	UN	Qty	Description	Page No

SEE PREVIOUS LISTS PAGES: 2-179, 2-181.

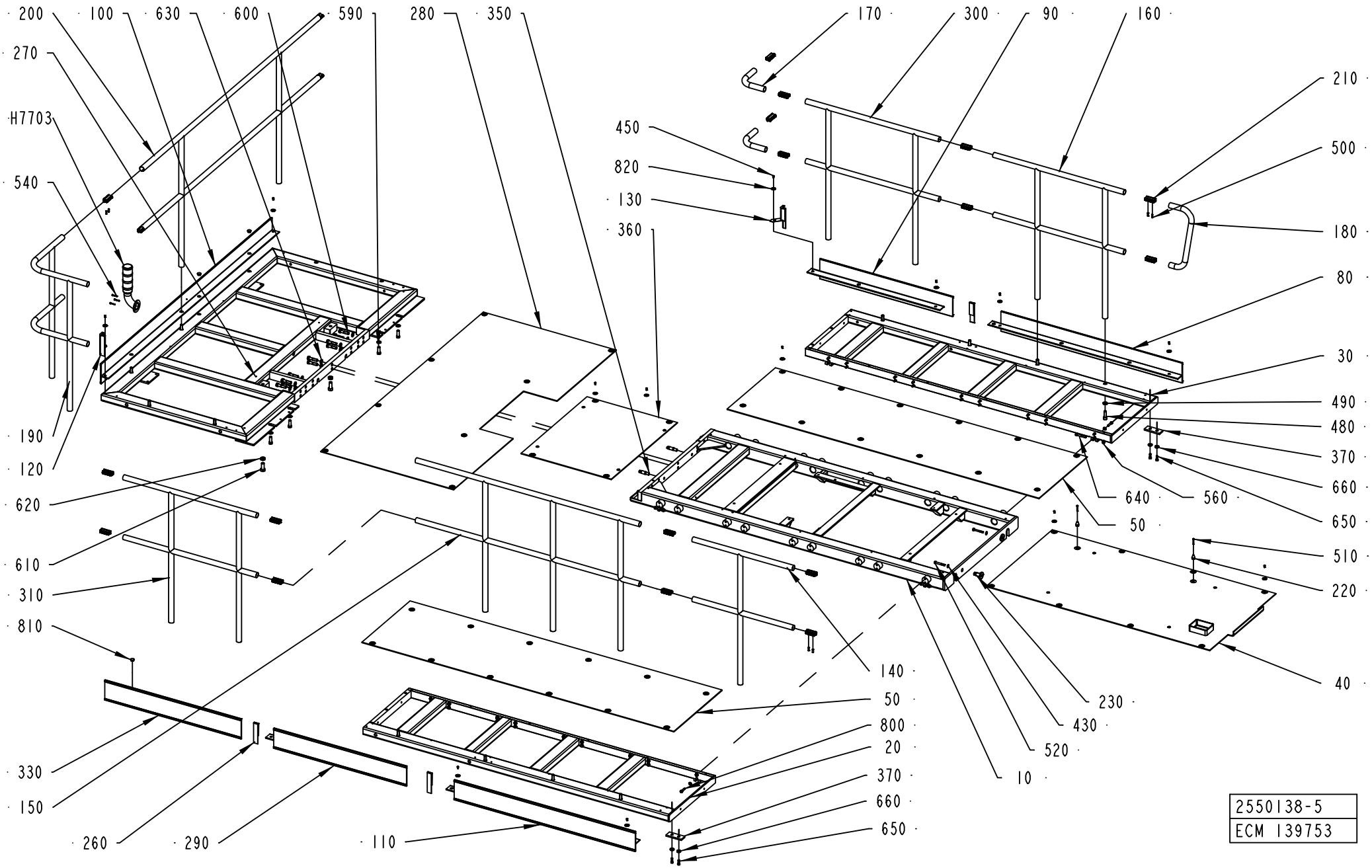
200
100
630
600
590
280
350
270
H7703
540
190
120
620
610
310
810
330
150
260
290
110
140
50
800
20
370
660
650
170
300
90
160
210
450
820
130
360
500
180
80
30
490
480
370
660
650
640
560
50
510
220
40
230
430
520
10
2550138-5
ECM 139753

Pos	Part No	UN	Qty	Description	Page No	Pos	Part No	UN	Qty	Description	Page No

SEE PREVIOUS LISTS PAGES: 2-179, 2-181.

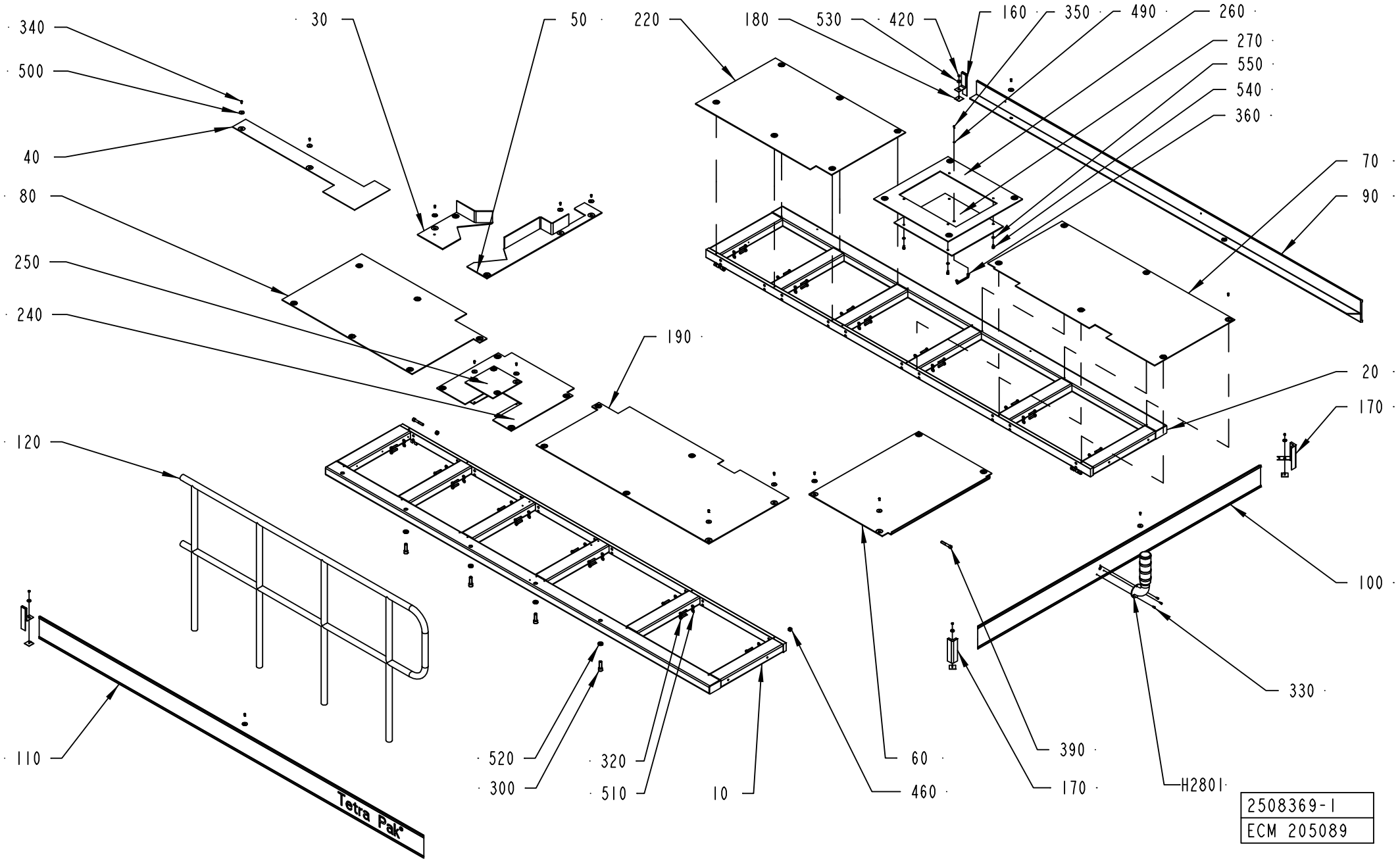
340
500
40
80
250
240
120
110
30
50
220
180
530
420
160
350
490
260
270
550
540
360
70
90
190
20
170
100
330
390
170
H2801
60
460
10
520
300
320
510
Tetra Pak
2508369-1
ECM 205089

ECM: 998711 - 20061104
Group number: 2508369-0200
Assembly Drawing: 2508369-1_1_AE

Pos	Part No	UN	Qty	Description	Page No
A3/FLEX TBA, A3/FLEX TPA					
010	2508370-0000		1	PLATFORM	
020	2508371-0000		1	PLATFORM	
030	2508385-0000		1	CHECKER PLATE	
040	2508380-0000		1	CHECKER PLATE	
050	2508381-0000		1	CHECKER PLATE	
060	1254030-0000		1	CHECKER PLATE	
080	2508379-0000		1	CHECKER PLATE	
090	2564565-0000		1	TOE PLATE	
110	2564566-0000		1	TOE PLATE	
120	1524870-0000		1	RAILING	
220	2508384-0000		1	CHECKER PLATE	
240	2587289-0000		1	CHECKER PLATE	
250	2587290-0000		1	CHECKER PLATE	
260	2587291-0000		1	CHECKER PLATE	
270	2587292-0000		1	CHECKER PLATE	
300	312111-0630		4	SCREW HEX.SOCK.HD.MC6S-TT 16X50 88 FZ	
340	90458-0072		51	SCREW ISO 7380 S M6X12 A2	
350	312105-0289		2	SCREW M6S ISO 4017 M4X10 A470	
360	90458-2633		1	HANDLE, 1045-05	
490	315105-0136		2	WASHER BRB 4,3X9 RFR	
500	90458-0073		51	WASHER 6,4/30, H=1,5	
520	315111-0186		4	WASHER PLAIN, TBRB 17/30 H=6	
540	312115-0447		4	SCREW ISO4762 M8X12 A4 80	
550	315105-0165		4	WASHER BRB 8,4X16 RFR	
Common Parts					
070	2508374-0000		1	CHECKER PLATE	
100	1523784-0000		1	TOE PLATE	
130	1036241-0000		52	WASHER	
160	1254025-0000		2	STRIP	
170	1254027-0000		2	CORNER STRIP	
180	1254028-0000		4	FASTENING PLATE	
190	2508375-0000		1	CHECKER PLATE	
320	90458-2845		40	SCREW,HEXAGON HEAD M6S ISO 4017 M10X45	
330	312115-0327		3	SCREW ISO4762 M5X12 A4 80	
390	312115-0546		4	SCREW ISO4762 M12X70 A4 80	
420	312605-0316		4	HEXAGON NUT, M6M M6 A280	
460	312812-0322		4	HEXAGON NUT, NY-LOCK M12 A480	
510	315105-0173		40	WASHER BRB 10,5X20 RFR	
530	315125-0153		4	WASHER TBRSB 6,4X22X4 A4	
H2801	2540716-0100		1	SIGNAL LAMP	**2-177**

Machine Type	Group Description	Used-In	Group Number	Page No

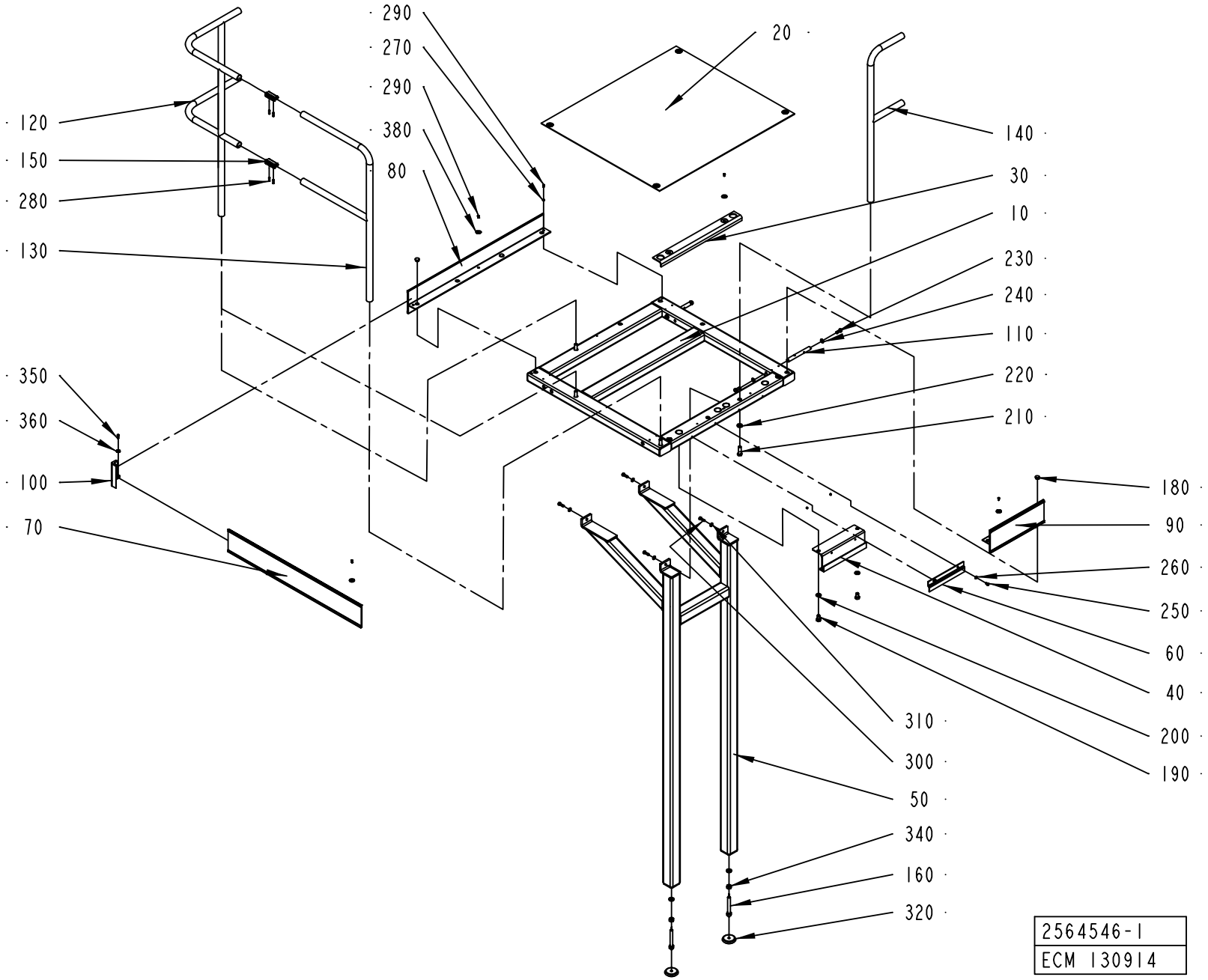
290
270
290
380
80
20
120
150
280
130
140
30
10
230
240
110
220
210
350
360
100
70
180
90
260
250
60
40
200
190
310
300
50
340
160
320
2564546-1
ECM 130914

ECM: 189874 - 20041104
Group number: 2564546-0100
Assembly Drawing: 2564546-1_1_AB

This list covers pages from 2-188 to 2-191

Pos	Part No	UN	Qty	Description	Page No
LEFTSTAIR (See drawing on page: 2-188)					
070	1524177-0000		1	TOE PLATE	
RIGHTSTAIR (See drawing on page: 2-190)					
070	1524180-0000		1	TOE PLATE	
Common Parts					
010	1524171-0000		1	FRAME	
020	1524172-0000		1	CHECKER PLATE	
030	1524173-0000		1	CHECKER PLATE	
040	1524174-0000		1	HOOK	
050	1524175-0000		1	LEG	
060	1524176-0000		1	CLAMP	
080	2564545-0000		1	PLATE	
090	1524179-0000		1	TOE PLATE	
100	1524167-0000		1	CORNER STRIP	
110	1524181-0000		2	PIN	
120	1010822-0000		1	RAILING	
130	1524182-0000		1	RAILING	
140	1524864-0000		1	RAILING	
150	985328-0000		2	CONNECTION	
160	1524185-0000		2	EXTENSION PIECE	
180	90261-0033		3	PLUG, BLIND, PLASTIC GPN300F182	
190	312105-0622		2	SCREW M6S ISO 4017 M16X25 A480	
200	315105-0186		2	WASHER BRB 17X30 RFR	
210	312111-0630		4	SCREW HEX.SOCK.HD.MC6S-TT 16X50 88 FZ	
220	315111-0186		6	WASHER PLAIN, TBRB 17/30 H=6	
230	312105-0536		4	SCREW M6S ISO 4017 M12X30 A480	
240	315105-0178		4	WASHER BRB 13X24 RFR	
250	312105-0447		2	SCREW M6S ISO 4017 M8X12 A480	
260	315101-0165		2	WASHER PLAIN, BRB, 8,4/16 H=1,5	
270	315101-0153		1	WASHER PLAIN, BRB, 6,4/12 H=1,5	
280	312318-0453		4	SCREW ISO4029 M8X25 A4	
290	90458-0072		12	SCREW ISO 7380 S M6X12 A2	
300	312105-0495		4	SCREW M6S ISO 4017 M10X30 A480	
310	315105-0173		4	WASHER BRB 10,5X20 RFR	
320	90347-0009		2	FLOOR PLATE, NO 1256730	
340	312605-0324		2	HEXAGON NUT, M6M M16 A280	
350	312105-0370		1	SCREW M6S ISO 4017 M6X20 A480	
360	315125-0153		1	WASHER TBRSB 6,4X22X4 A4	
380	90458-0073		11	WASHER 6,4/30, H=1,5	

Pos	Part No	UN	Qty	Description	Page No

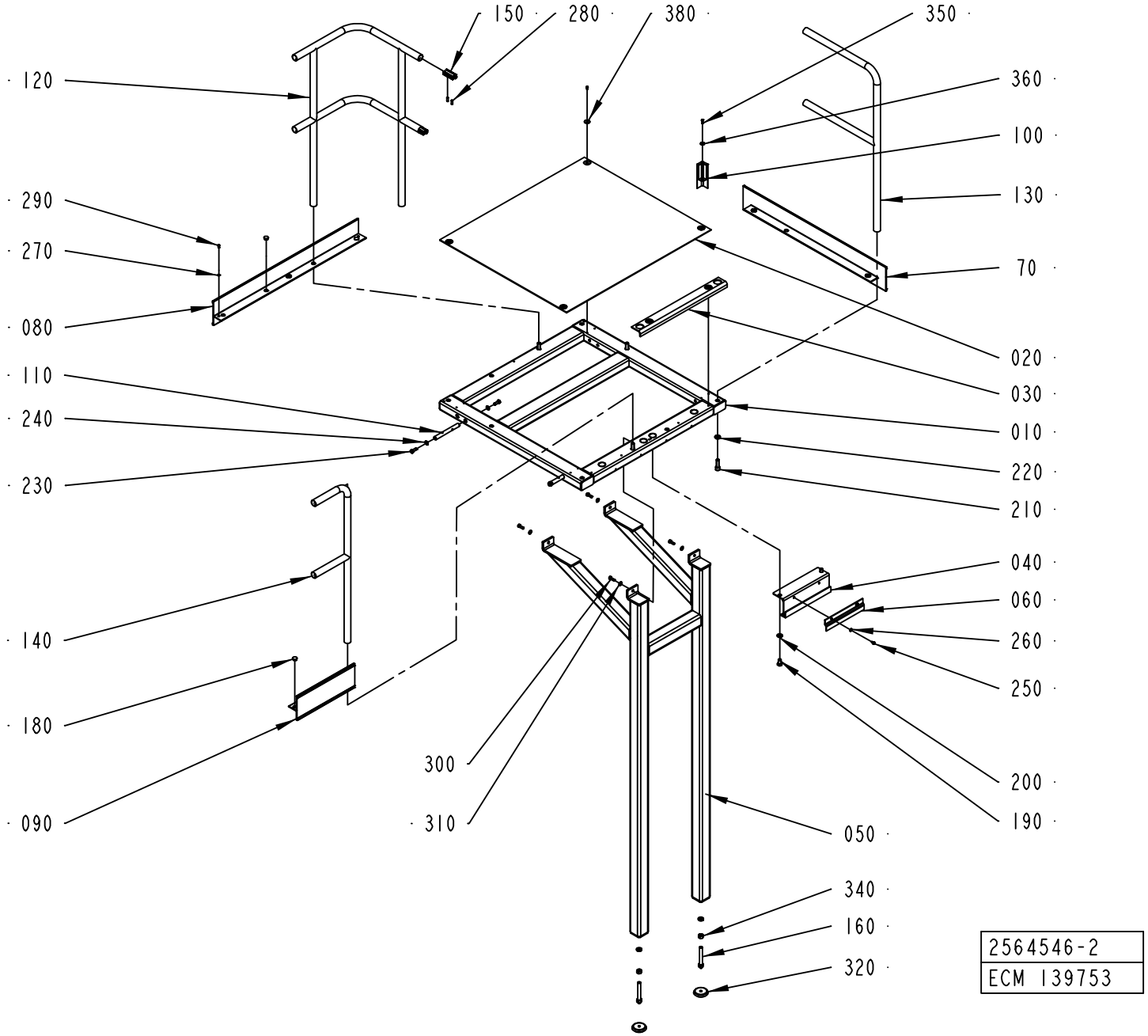
150
280
380
350
120
360
100
290
130
270
70
080
020
110
030
240
010
230
220
210
040
140
060
260
250
180
300
200
310
190
090
050
340
160
320
2564546-2
ECM 139753

Pos	Part No	UN	Qty	Description	Page No
LEFTSTAIR (See drawing on page: 2-188)					
070	1524177-0000		1	TOE PLATE	
RIGHTSTAIR (See drawing on page: 2-190)					
070	1524180-0000		1	TOE PLATE	
Common Parts					
010	1524171-0000		1	FRAME	
020	1524172-0000		1	CHECKER PLATE	
030	1524173-0000		1	CHECKER PLATE	
040	1524174-0000		1	HOOK	
050	1524175-0000		1	LEG	
060	1524176-0000		1	CLAMP	
080	2564545-0000		1	PLATE	
090	1524179-0000		1	TOE PLATE	
100	1524167-0000		1	CORNER STRIP	
110	1524181-0000		2	PIN	
120	1010822-0000		1	RAILING	
130	1524182-0000		1	RAILING	
140	1524864-0000		1	RAILING	
150	985328-0000		2	CONNECTION	
160	1524185-0000		2	EXTENSION PIECE	
180	90261-0033		3	PLUG, BLIND, PLASTIC GPN300F182	
190	312105-0622		2	SCREW M6S ISO 4017 M16X25 A480	
200	315105-0186		2	WASHER BRB 17X30 RFR	
210	312111-0630		4	SCREW HEX.SOCK.HD.MC6S-TT 16X50 88 FZ	
220	315111-0186		6	WASHER PLAIN, TBRB 17/30 H=6	
230	312105-0536		4	SCREW M6S ISO 4017 M12X30 A480	
240	315105-0178		4	WASHER BRB 13X24 RFR	
250	312105-0447		2	SCREW M6S ISO 4017 M8X12 A480	
260	315101-0165		2	WASHER PLAIN, BRB, 8,4/16 H=1,5	
270	315101-0153		1	WASHER PLAIN, BRB, 6,4/12 H=1,5	
280	312318-0453		4	SCREW ISO4029 M8X25 A4	
290	90458-0072		12	SCREW ISO 7380 S M6X12 A2	
300	312105-0495		4	SCREW M6S ISO 4017 M10X30 A480	
310	315105-0173		4	WASHER BRB 10,5X20 RFR	
320	90347-0009		2	FLOOR PLATE, NO 1256730	
340	312605-0324		2	HEXAGON NUT, M6M M16 A280	
350	312105-0370		1	SCREW M6S ISO 4017 M6X20 A480	
360	315125-0153		1	WASHER TBRSB 6,4X22X4 A4	
380	90458-0073		11	WASHER 6,4/30, H=1,5	

Pos	Part No	UN	Qty	Description	Page No

STAIR CASE

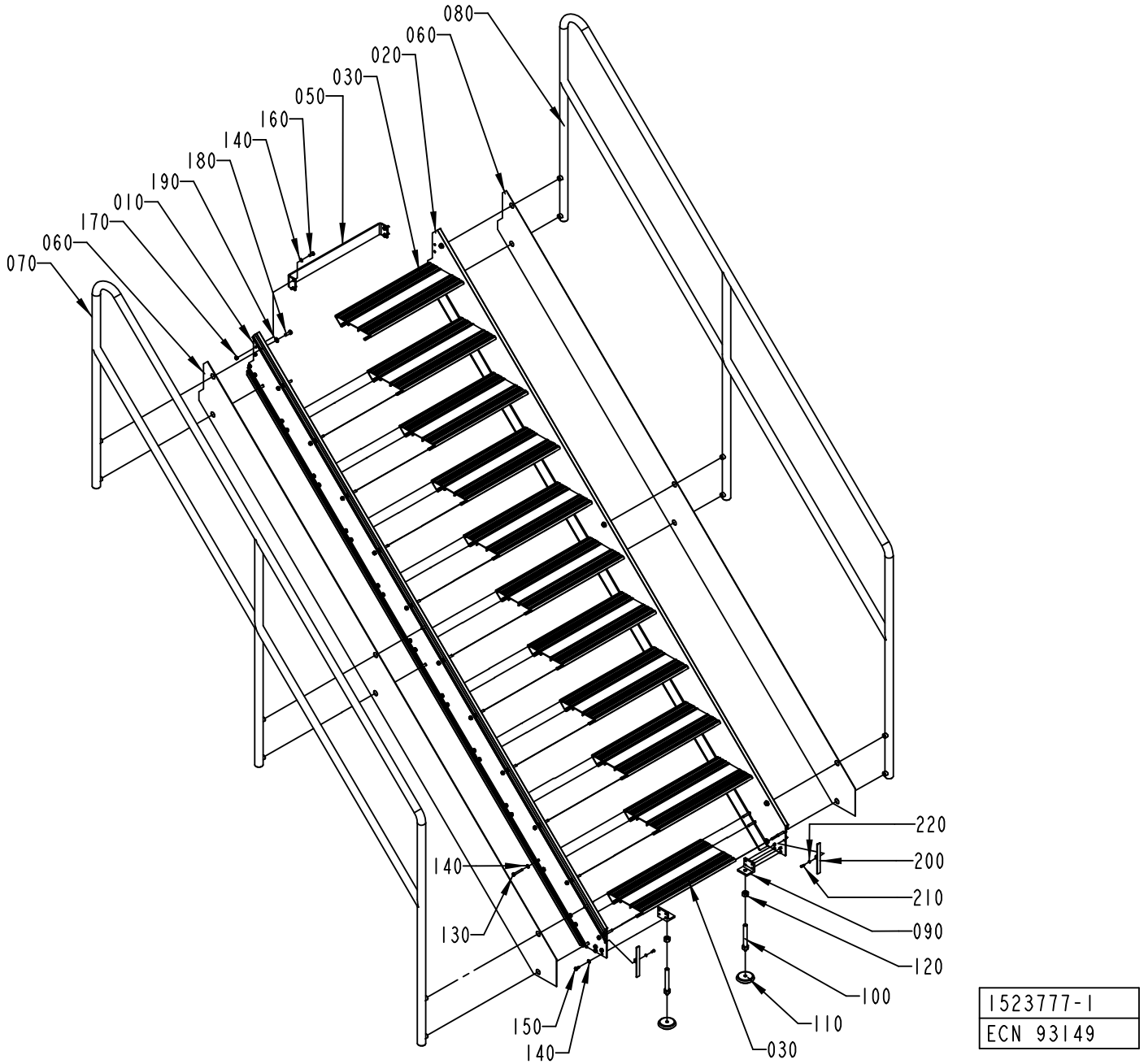

1523777-1
ECN 93149

ECM: 189875 - 20041104
Group number: 1523777-0100
Assembly Drawing: 1523777-1_1_AB

Pos	Part No	UN	Qty	Description	Page No
-					
010	1524186-0000		1	PROFILE	
020	1524187-0000		1	PROFILE	
030	1524188-0000		10	STAIR	
050	1524190-0000		1	BRACKET	
060	1524191-0000		2	RIM	
070	1524192-0000		1	RAILING	
080	1524193-0000		1	RAILING	
090	1037391-0000		2	CANTILEVER	
100	1524185-0000		2	EXTENSION PIECE	
110	90347-0009		2	FLOOR PLATE, NO 1256730	
120	312605-0324		2	HEXAGON NUT, M6M M16 A280	
130	312104-0461		88	SCREW M6S M8X50H FZB	
140	315105-0165		94	WASHER BRB 8,4X16 RFR	
150	312105-0449		8	SCREW M6S ISO 4017 M8X16 A480	
160	312105-0451		6	SCREW M6S ISO 4017 M8X20 A480	
170	312605-0318		4	HEXAGON NUT, M6M M8 A280	
180	312105-0495		12	SCREW M6S ISO 4017 M10X30 A480	
190	315105-0173		12	WASHER BRB 10,5X20 RFR	
200	1558946-0000		2	PLUG	
210	312115-0327		2	SCREW ISO4762 M5X12 A4 80	
220	315105-0146		2	WASHER BRB 5,3X10 RFR	

Pos	Part No	UN	Qty	Description	Page No

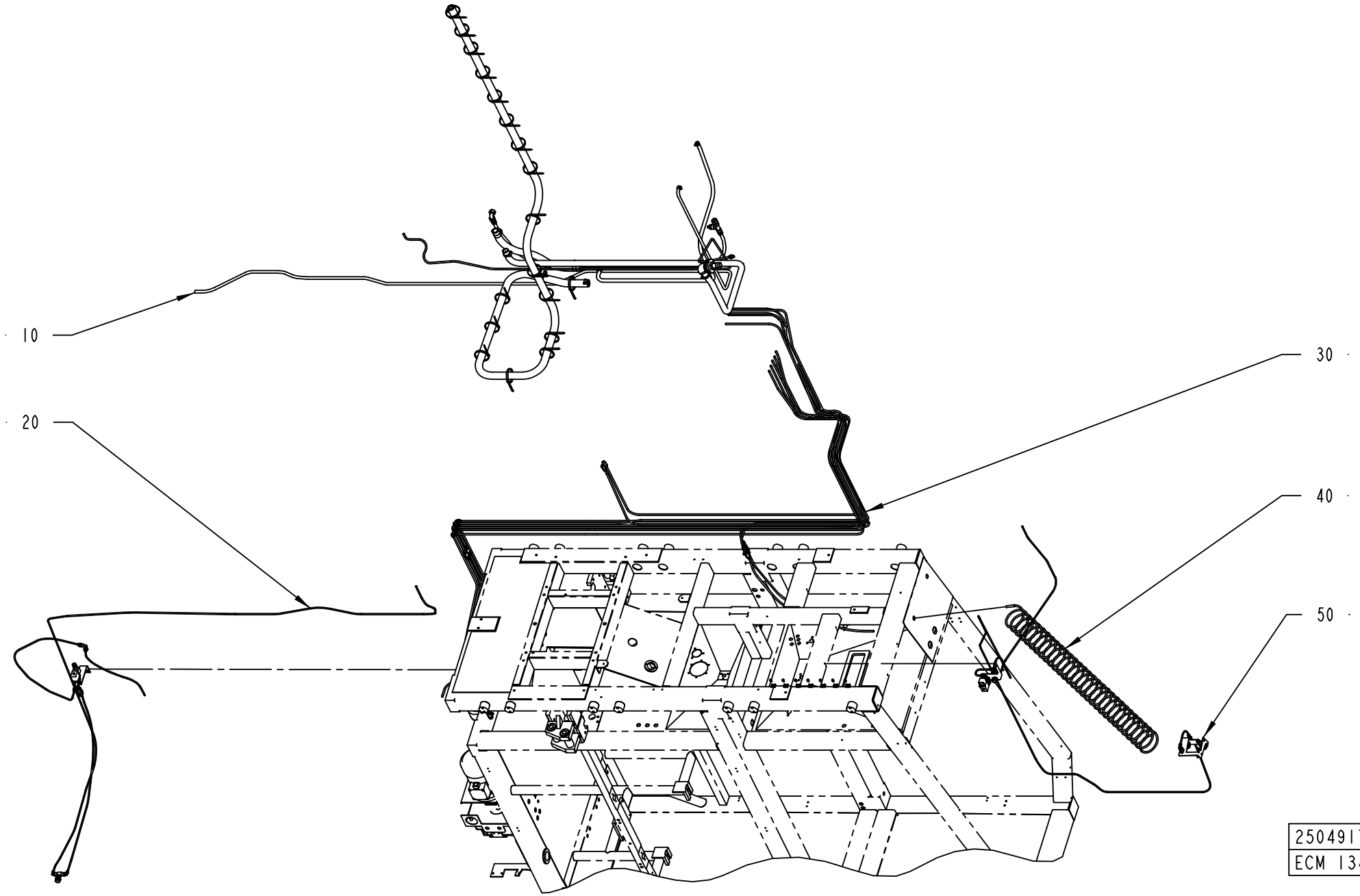
10
20
30
40
50
2504917-1
ECM 134706

ECM: 139369 - 20031007
Group number: 2504917-0100
Assembly Drawing: 2504917-1_1_AB

Pos	Part No	UN	Qty	Description	Page No
A3/FLEX DIMC/FLEX					
030	2514255-0100		1	PIPE WORK-WATER	**2-197, 2-199**
050	2615463-0100		1	FLUSHING DEVICE	**2-201, 2-203**
A3/FLEX NODIMC					
030	2514255-0100		1	PIPE WORK-WATER	**2-197, 2-199**
Common Parts					
010	2514205-0100		1	PIPE WORK-WATER	**2-205**
020	2514254-0100		1	TUBE FLUSHING	**2-207**
040	1095681-0100		1	SPRAY GUN	**2-209**

Pos	Part No	UN	Qty	Description	Page No

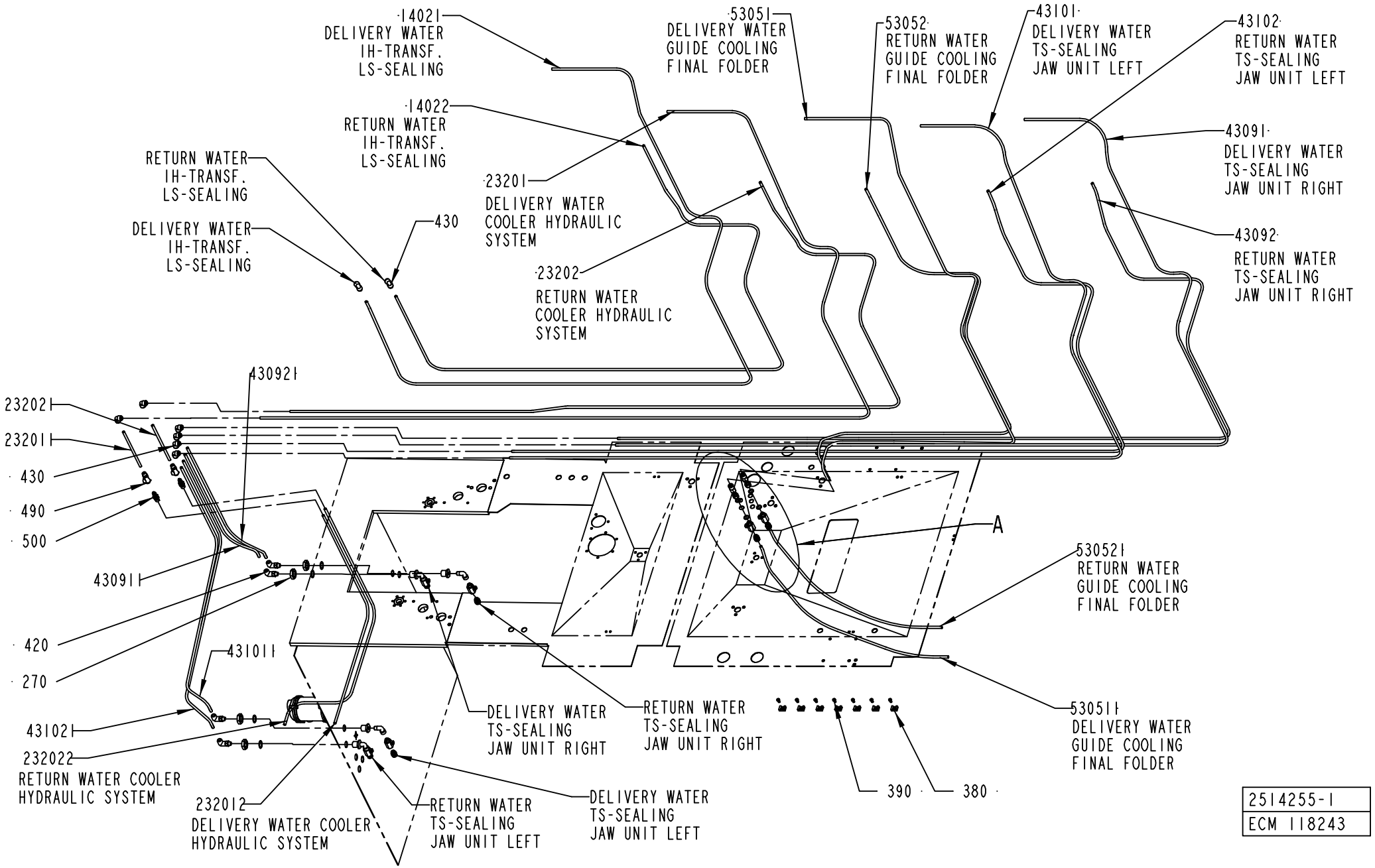
14021
DELIVERY WATER
IH-TRANSF.
LS-SEALING
14022
RETURN WATER
IH-TRANSF.
LS-SEALING
RETURN WATER
IH-TRANSF.
LS-SEALING
DELIVERY WATER
IH-TRANSF.
LS-SEALING
430
23201
DELIVERY WATER
COOLER HYDRAULIC
SYSTEM
23202
RETURN WATER
COOLER HYDRAULIC
SYSTEM
53051
DELIVERY WATER
GUIDE COOLING
FINAL FOLDER
53052
RETURN WATER
GUIDE COOLING
FINAL FOLDER
43101
DELIVERY WATER
TS-SEALING
JAW UNIT LEFT
43102
RETURN WATER
TS-SEALING
JAW UNIT LEFT
43091
DELIVERY WATER
TS-SEALING
JAW UNIT RIGHT
43092
RETURN WATER
TS-SEALING
JAW UNIT RIGHT
430921
23202
23201
430
490
500
43091
420
270
431011
43102
232022
RETURN WATER COOLER
HYDRAULIC SYSTEM
232012
DELIVERY WATER COOLER
HYDRAULIC SYSTEM
RETURN WATER
TS-SEALING
JAW UNIT LEFT
DELIVERY WATER
TS-SEALING
JAW UNIT LEFT
DELIVERY WATER
TS-SEALING
JAW UNIT RIGHT
RETURN WATER
TS-SEALING
JAW UNIT RIGHT
A
530521
RETURN WATER
GUIDE COOLING
FINAL FOLDER
530511
DELIVERY WATER
GUIDE COOLING
FINAL FOLDER
390
380
2514255-1
ECM 118243

ECM: 210344 - 20050621
Group number: 2514255-0100
Assembly Drawing: 2514255-1_1_AA

This list covers pages from 2-196 to 2-199

Pos	Part No	UN	Qty	Description	Page No
-					
010	276398-0000		4	HEXAGON NIPPLE	
100	90140-0013		4	ELBOW, 90 INT/EXT, 2020-1/4-1/4	
260	90187-0158		6	THROTTLE BALL VALVE G1/4, R1/4	
270	90330-0093		4	NUT, HEXAGON, G1/2	
280	90030-0166		2	NIPPLE,REDUCING G1/4"-G1/4"	
380	352113-0204		7	ANCHOR PLATES FOR STRIPS, TYPE TM3S25-M	
390	312125-0364		7	SCREW ISO 1207 M6X10 A4	
400	315237-0110		4	WASHER,PL.RND.AL.13,5/18,H=1,5	
410	315233-0113		4	WASHER CAPTIVE SEALING G1/2	
420	90055-0267		4	ELBOW PIPE JOINT,EXT.THREAD,D=8 MM G1/4	
430	90055-0269		8	ELBOW PIPE JOINT 8X8 MM	
440	90055-0266		2	STRAIGHT CONNECTION	
450	90055-0274		6	STRAIGHT COUPLING, D=8 MM - G1/4"	
490	90459-0941		2	QUICK COUPLING, PLCD 130-M8	
500	90459-0960		2	QUICK COUPLING, PLCD 200-M8	
14021	90166-0118	MM	3300	TUBE 8 MM PA BLACK	
14022	90166-0118	MM	3900	TUBE 8 MM PA BLACK	
23201	90166-0118	MM	4400	TUBE 8 MM PA BLACK	
23202	90166-0118	MM	4000	TUBE 8 MM PA BLACK	
43091	90166-0118	MM	4630	TUBE 8 MM PA BLACK	
43092	90166-0118	MM	4000	TUBE 8 MM PA BLACK	
43101	90166-0118	MM	5350	TUBE 8 MM PA BLACK	
43102	90166-0118	MM	4800	TUBE 8 MM PA BLACK	
53051	90166-0118	MM	3370	TUBE 8 MM PA BLACK	
53052	90166-0118	MM	2840	TUBE 8 MM PA BLACK	
232011	90166-0118	MM	200	TUBE 8 MM PA BLACK	
232012	90166-0118	MM	1100	TUBE 8 MM PA BLACK	
232021	90166-0118	MM	200	TUBE 8 MM PA BLACK	
232022	90166-0118	MM	1300	TUBE 8 MM PA BLACK	
430911	90166-0118	MM	650	TUBE 8 MM PA BLACK	
430921	90166-0118	MM	700	TUBE 8 MM PA BLACK	
431011	90166-0118	MM	650	TUBE 8 MM PA BLACK	
431021	90166-0118	MM	700	TUBE 8 MM PA BLACK	
530511	90166-0118	MM	980	TUBE 8 MM PA BLACK	
530521	90166-0118	MM	940	TUBE 8 MM PA BLACK	

Pos	Part No	UN	Qty	Description	Page No

Machine Type | Group Description | Used-In | Group Number | Page No

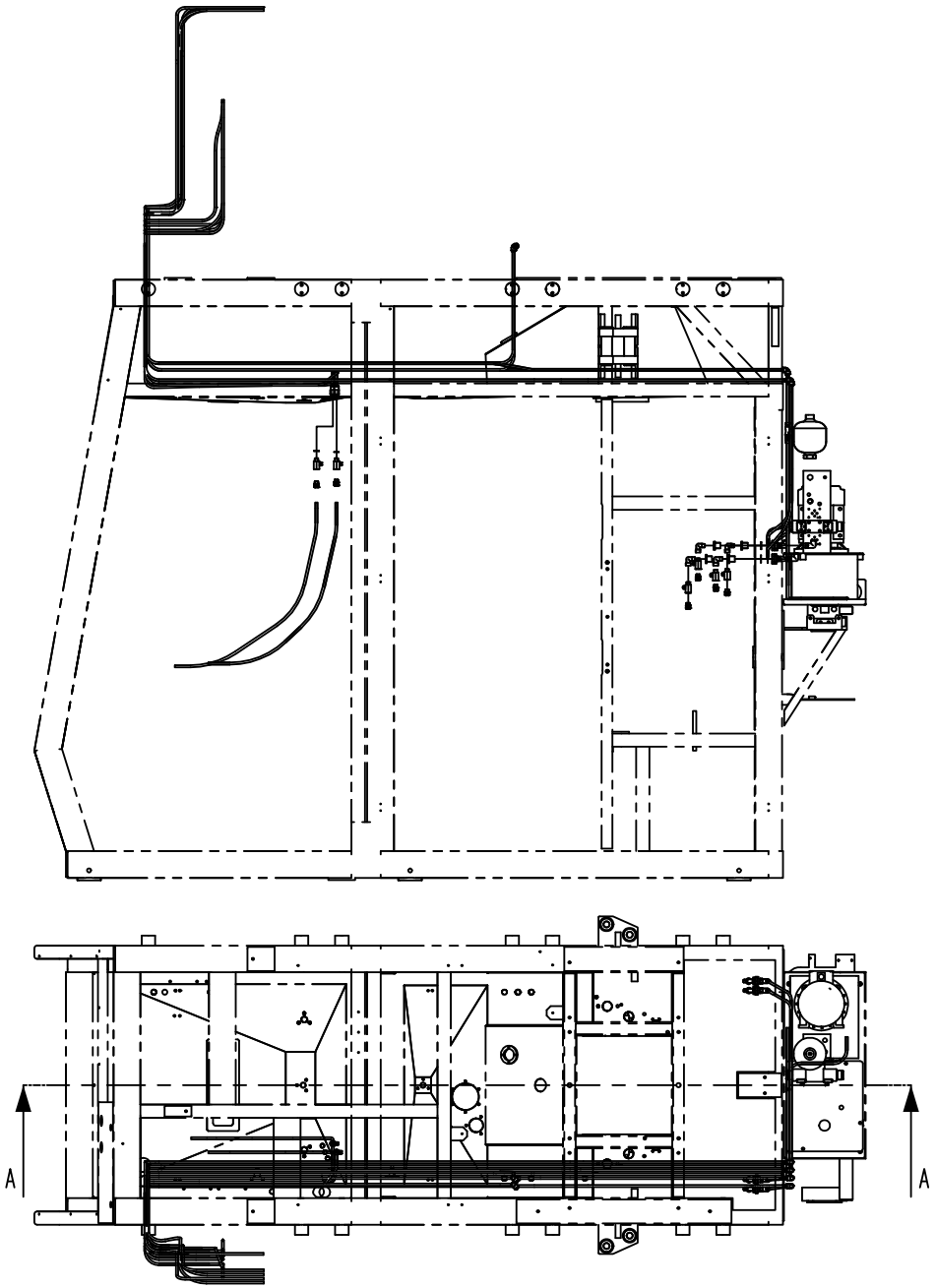

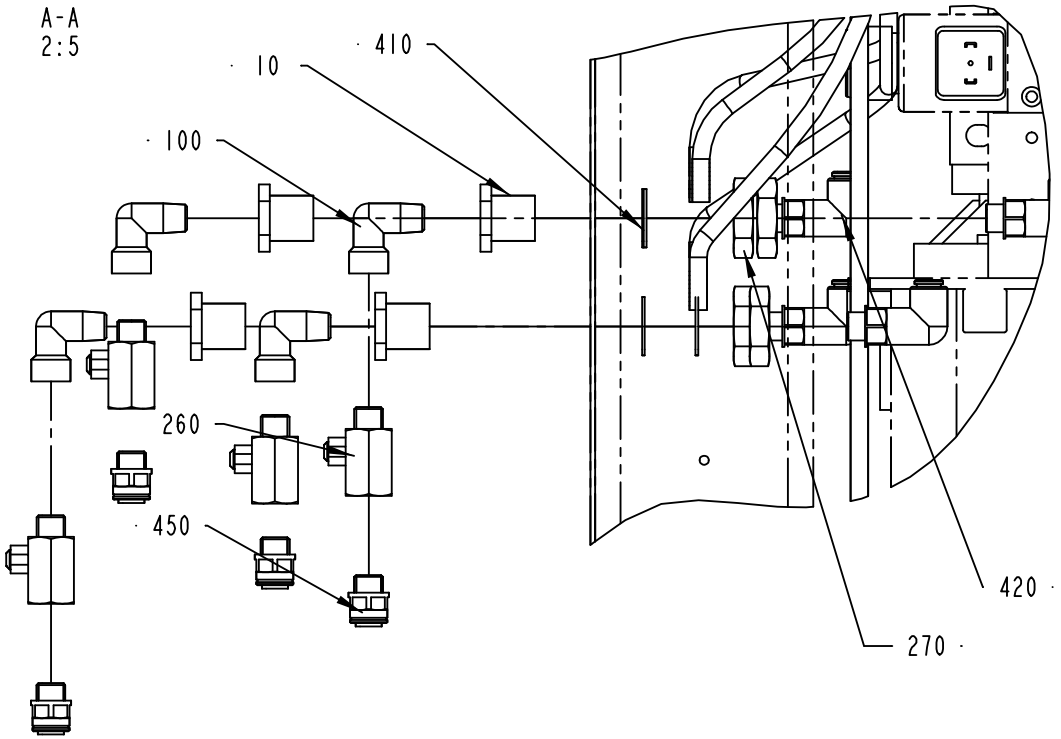

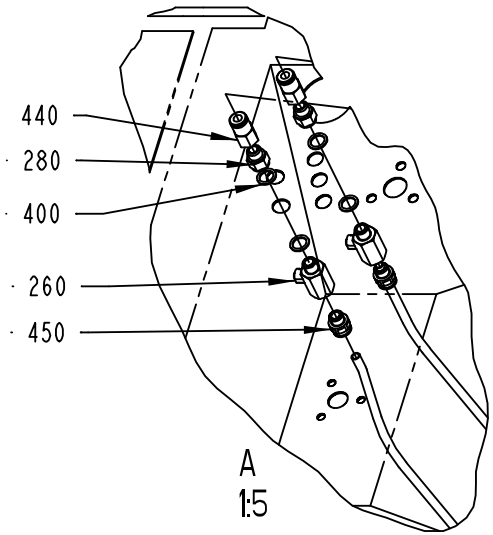

2514255-1
ECM 118243

ECM: 210344 - 20050621
Group number: 2514255-0100
Assembly Drawing: 2514255-1_2_AA

This list covers pages from 2-196 to 2-199

Pos	Part No	UN	Qty	Description	Page No
-					
010	276398-0000		4	HEXAGON NIPPLE	
100	90140-0013		4	ELBOW, 90 INT/EXT, 2020-1/4-1/4	
260	90187-0158		6	THROTTLE BALL VALVE G1/4, R1/4	
270	90330-0093		4	NUT, HEXAGON, G1/2	
280	90030-0166		2	NIPPLE,REDUCING G1/4"-G1/4"	
380	352113-0204		7	ANCHOR PLATES FOR STRIPS, TYPE TM3S25-M	
390	312125-0364		7	SCREW ISO 1207 M6X10 A4	
400	315237-0110		4	WASHER,PL.RND.AL.13,5/18,H=1,5	
410	315233-0113		4	WASHER CAPTIVE SEALING G1/2	
420	90055-0267		4	ELBOW PIPE JOINT,EXT.THREAD,D=8 MM G1/4	
430	90055-0269		8	ELBOW PIPE JOINT 8X8 MM	
440	90055-0266		2	STRAIGHT CONNECTION	
450	90055-0274		6	STRAIGHT COUPLING, D=8 MM - G1/4"	
490	90459-0941		2	QUICK COUPLING, PLCD 130-M8	
500	90459-0960		2	QUICK COUPLING, PLCD 200-M8	
14021	90166-0118	MM	3300	TUBE 8 MM PA BLACK	
14022	90166-0118	MM	3900	TUBE 8 MM PA BLACK	
23201	90166-0118	MM	4400	TUBE 8 MM PA BLACK	
23202	90166-0118	MM	4000	TUBE 8 MM PA BLACK	
43091	90166-0118	MM	4630	TUBE 8 MM PA BLACK	
43092	90166-0118	MM	4000	TUBE 8 MM PA BLACK	
43101	90166-0118	MM	5350	TUBE 8 MM PA BLACK	
43102	90166-0118	MM	4800	TUBE 8 MM PA BLACK	
53051	90166-0118	MM	3370	TUBE 8 MM PA BLACK	
53052	90166-0118	MM	2840	TUBE 8 MM PA BLACK	
232011	90166-0118	MM	200	TUBE 8 MM PA BLACK	
232012	90166-0118	MM	1100	TUBE 8 MM PA BLACK	
232021	90166-0118	MM	200	TUBE 8 MM PA BLACK	
232022	90166-0118	MM	1300	TUBE 8 MM PA BLACK	
430911	90166-0118	MM	650	TUBE 8 MM PA BLACK	
430921	90166-0118	MM	700	TUBE 8 MM PA BLACK	
431011	90166-0118	MM	650	TUBE 8 MM PA BLACK	
431021	90166-0118	MM	700	TUBE 8 MM PA BLACK	
530511	90166-0118	MM	980	TUBE 8 MM PA BLACK	
530521	90166-0118	MM	940	TUBE 8 MM PA BLACK	

Pos	Part No	UN	Qty	Description	Page No

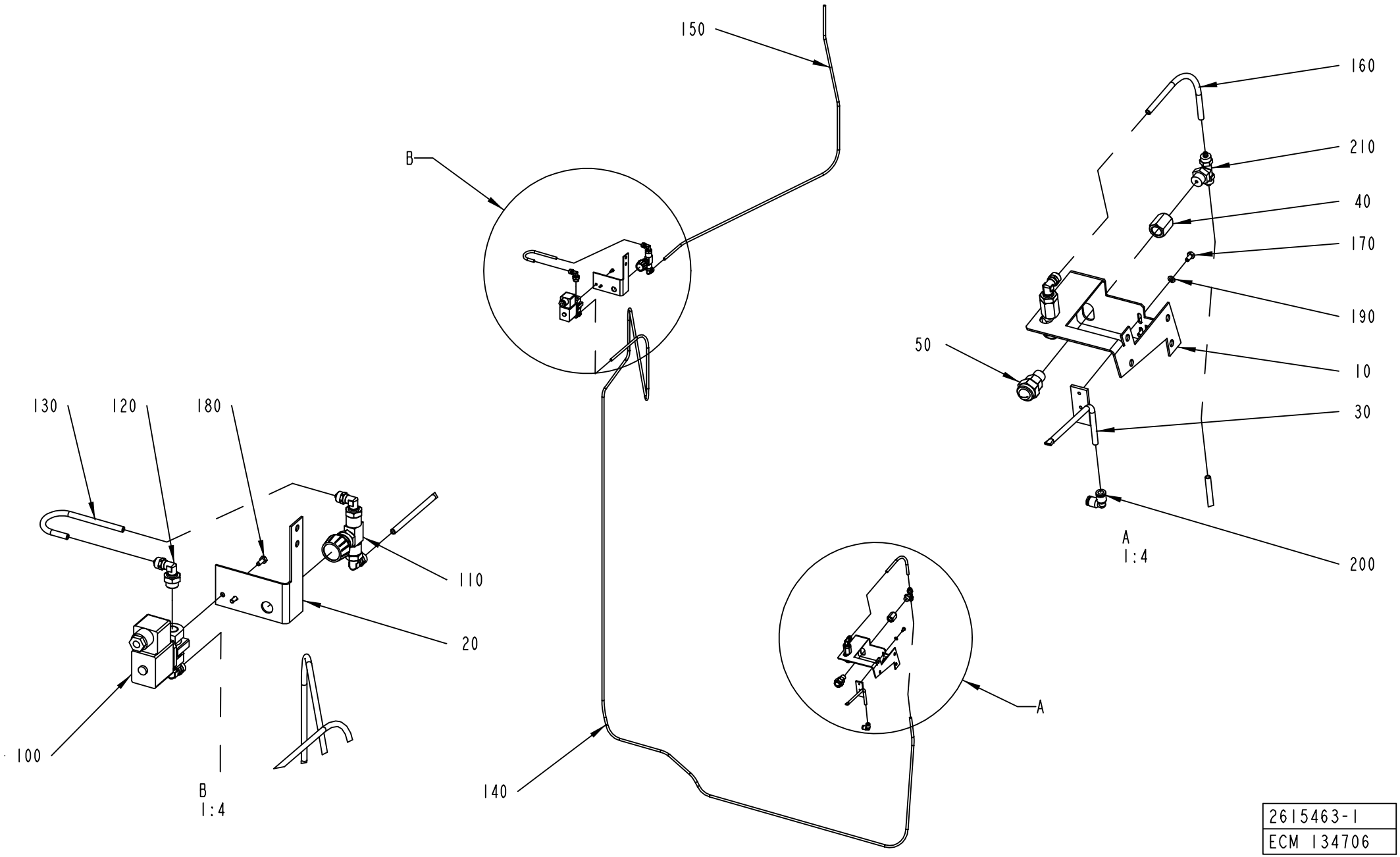

2615463-1
ECM 134706

ECM: 258274 - 20060702
Group number: 2615463-0100
Assembly Drawing: 2615463-1_1_AA

This list covers pages from 2-200 to 2-203

Pos	Part No	UN	Qty	Description	Page No
LIGHTCAP (See drawing on page: 2-202)					
230	2779660-0000		2	BRACKET	
240	2779661-0000		2	ANGLE	
250	2779662-0000		1	SUPPORT	
255	312105-0366		6	SCREW M6S ISO 4017 M6X12 A480	
260	2779663-0000		2	BRACKET	
270	315105-0153		6	WASHER BRB 6,4X12 RFR	
275	2779664-0000		1	SUPPORT	
290	90459-7280		1	AIR NOZZLE, 011	
350	350001-0006		1	PUSH-IN FITTING QS-F-G1/8-6	
360	350007-0006		1	PUSH-IN T-FITTING QST-F-G1/8-6	
410	342713-0209		1	PLUG (QUANT.MINIMA= 10PC).	
STDA7 CAP (See drawing on page: 2-200)					
010	2608273-0000		1	HOLDER	
030	2608274-0000		1	PIPE	
170	312105-0287		2	SCREW M6S ISO 4017 M4X8 A470	
190	315105-0136		2	WASHER BRB 4,3X9 RFR	
200	342735-0102		1	ELBOW PIPE JOINT	
Common Parts					
020	2609365-0000		1	HOLDER	
040	1523641-0000		2	SPACER	
050	1523645-0000		2	AIR NOZZLE	
100	90042-0248		1	SOLENOID VALVE OFFICIENE DI ENSINO	
110	90187-0149		1	THROTTLE VALVE, G1/4, G1/4, MALE	
120	90224-0329		5	ELBOW 90 COUPL.,EXT.THREAD 6/4-G1/4"	
130	90166-0266	MM	200	TUBE, 6 MM PA BLACK	
140	90166-0266	MM	4000	TUBE, 6 MM PA BLACK	
150	90166-0266	MM	1200	TUBE, 6 MM PA BLACK	
160	90166-0266	MM	200	TUBE, 6 MM PA BLACK	
180	312105-0289		2	SCREW M6S ISO 4017 M4X10 A470	
210	342941-0114		1	T-COUPLING,EXT.THREAD 6/4-G1/4"	

Pos	Part No	UN	Qty	Description	Page No

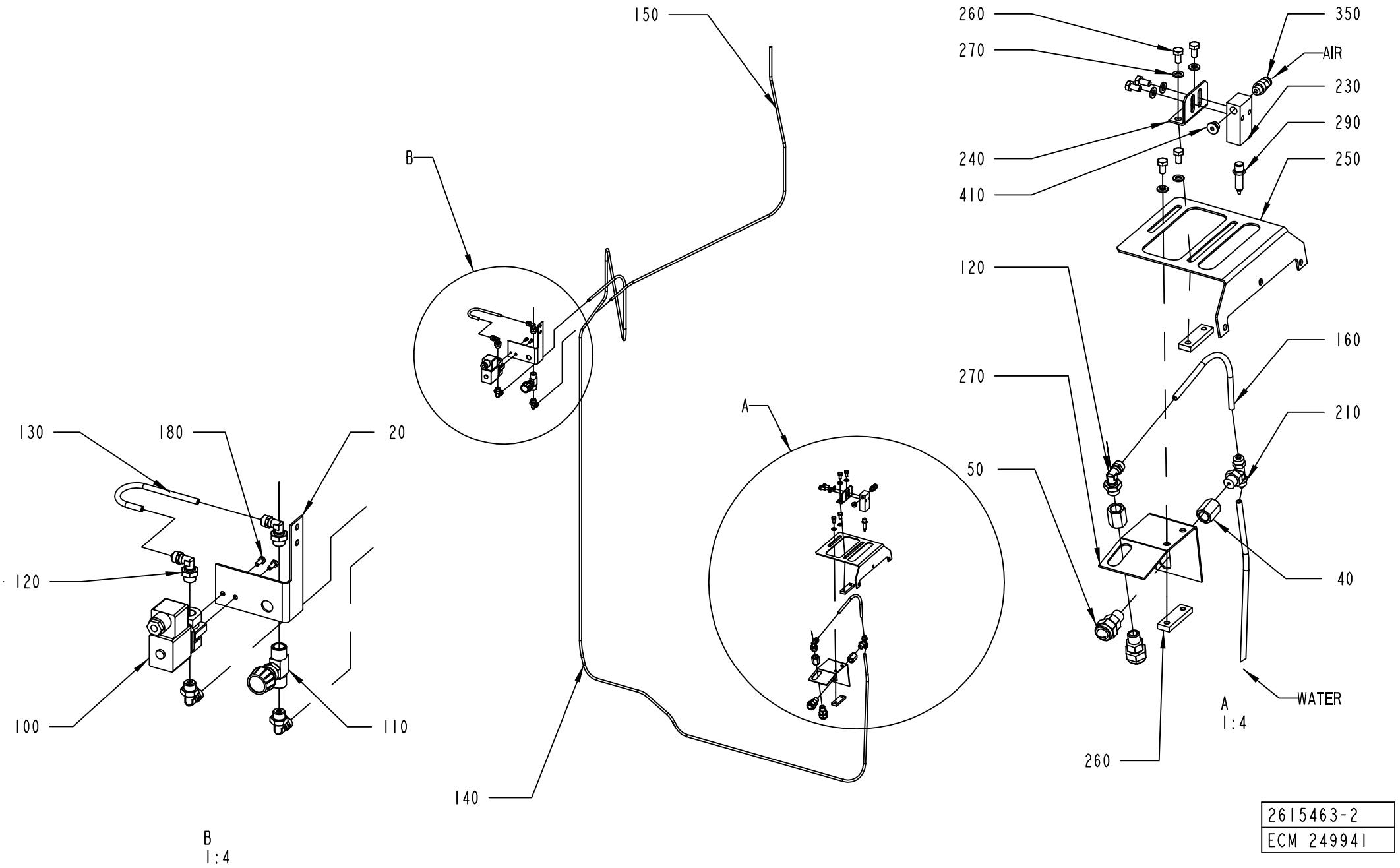

2615463-2
ECM 249941

ECM: 258274 - 20060702
Group number: 2615463-0100
Assembly Drawing: 2615463-2_1_AA

This list covers pages from 2-200 to 2-203

Pos	Part No	UN	Qty	Description	Page No
LIGHTCAP (See drawing on page: 2-202)					
230	2779660-0000		2	BRACKET	
240	2779661-0000		2	ANGLE	
250	2779662-0000		1	SUPPORT	
255	312105-0366		6	SCREW M6S ISO 4017 M6X12 A480	
260	2779663-0000		2	BRACKET	
270	315105-0153		6	WASHER BRB 6,4X12 RFR	
275	2779664-0000		1	SUPPORT	
290	90459-7280		1	AIR NOZZLE, 011	
350	350001-0006		1	PUSH-IN FITTING QS-F-G1/8-6	
360	350007-0006		1	PUSH-IN T-FITTING QST-F-G1/8-6	
410	342713-0209		1	PLUG (QUANT.MINIMA= 10PC).	
STDA7 CAP (See drawing on page: 2-200)					
010	2608273-0000		1	HOLDER	
030	2608274-0000		1	PIPE	
170	312105-0287		2	SCREW M6S ISO 4017 M4X8 A470	
190	315105-0136		2	WASHER BRB 4,3X9 RFR	
200	342735-0102		1	ELBOW PIPE JOINT	
Common Parts					
020	2609365-0000		1	HOLDER	
040	1523641-0000		2	SPACER	
050	1523645-0000		2	AIR NOZZLE	
100	90042-0248		1	SOLENOID VALVE OFFICIENE DI ENSINO	
110	90187-0149		1	THROTTLE VALVE, G1/4, G1/4, MALE	
120	90224-0329		5	ELBOW 90 COUPL.,EXT.THREAD 6/4-G1/4"	
130	90166-0266	MM	200	TUBE, 6 MM PA BLACK	
140	90166-0266	MM	4000	TUBE, 6 MM PA BLACK	
150	90166-0266	MM	1200	TUBE, 6 MM PA BLACK	
160	90166-0266	MM	200	TUBE, 6 MM PA BLACK	
180	312105-0289		2	SCREW M6S ISO 4017 M4X10 A470	
210	342941-0114		1	T-COUPLING,EXT.THREAD 6/4-G1/4"	

Pos	Part No	UN	Qty	Description	Page No

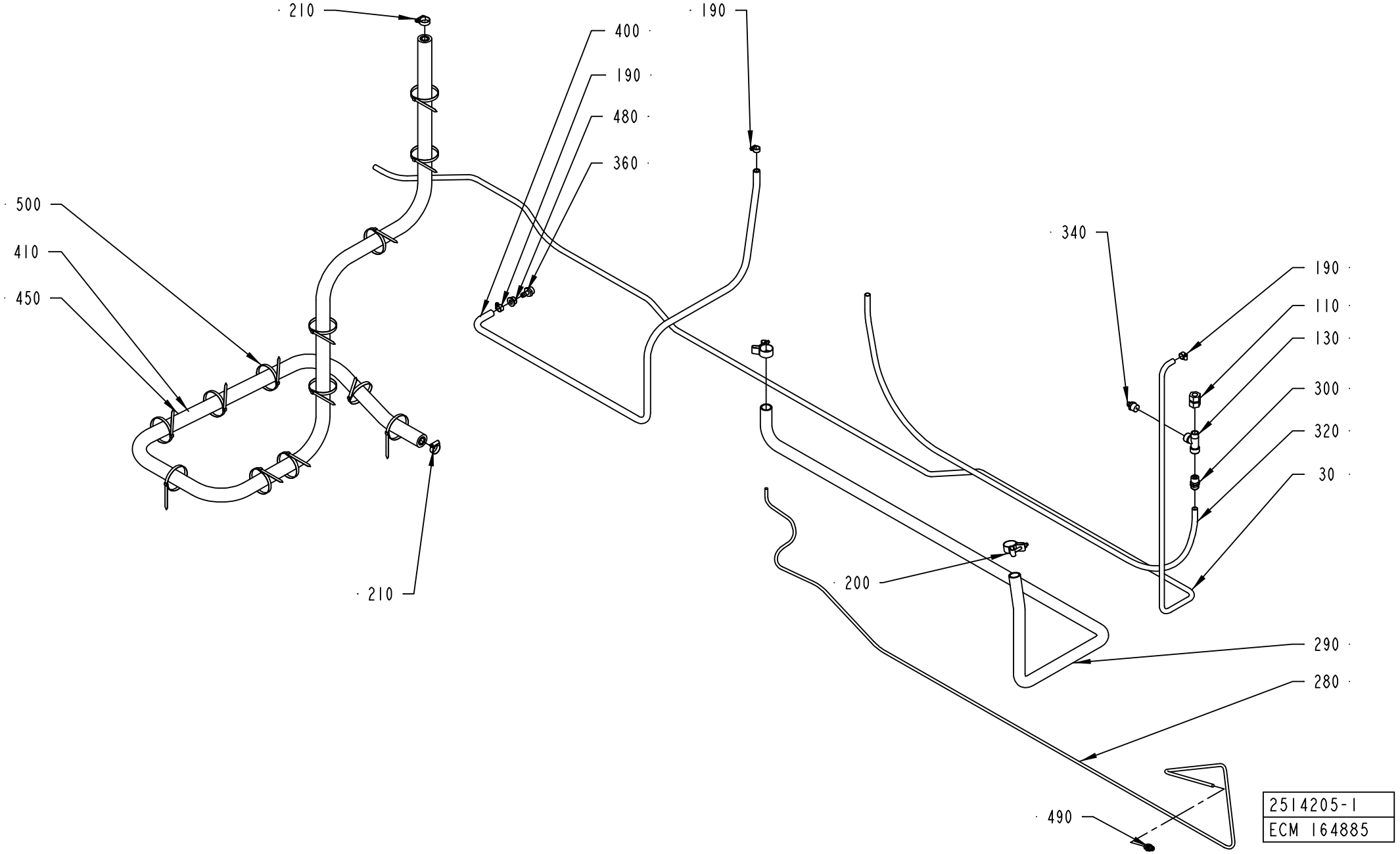
210
400
190
480
360
190
500
410
450
340
190
110
130
300
320
30
210
200
290
280
490
2514205-1
ECM 164885

ECM: 270926 - 20060628
Group number: 2514205-0100
Assembly Drawing: 2514205-1_1_AE

Pos	Part No	UN	Qty	Description	Page No
A3/FLEX					
200	90459-2366		2	HOSE CLIP, (32)-35	
290	90166-0049	MM	2500	HOSE PVC 25/33-34	
Common Parts					
030	90459-3164	MM	5000	TUBE 14MM PA BLACK	
110	342723-0114		1	CONN. STR. PIPE GI-15-G1/2	
130	90140-0011		1	T-PIPE, INT. THREAD, NO. 2070-1/2-1/2	
190	342991-0101		3	HOSE CLIP,WORM DRIVE TYPE (13)-16	
210	342991-0104		2	HOSE CLIP,WORM DRIVE TYPE (23)-27	
280	90166-0013	MM	5000	TUBE 8 MM PA BLUE	
300	342920-0151		1	STRAIGHT COUPL.,EXT.THREAD.15/12,5-R1/2"	
320	90166-0110	MM	2200	TUBE 15 MM PA,TRANSP.	
340	342920-0116		1	STRAIGHT COUPLING,EXT.THREADED 6/4-R1/2"	
360	342901-0105		1	HOSE NIPPLE, EXT.THR. R1/2-12 MM	
400	90166-0121	MM	1850	HOSE	
410	90166-0260	MM	3300	HOSE	
450	90411-0020	MM	3300	INSULATING TUBE	
480	342713-0213		1	PLUG, EXT THREAD HEX SOCKET 8638-00-120	
490	342921-0122		1	STRAIGHT COUPLING,EXT.THREADED 8/6-G1/4"	
500	352113-0104		13	CABLE TIE, BLACK 300X4,8 MM	

Pos	Part No	UN	Qty	Description	Page No

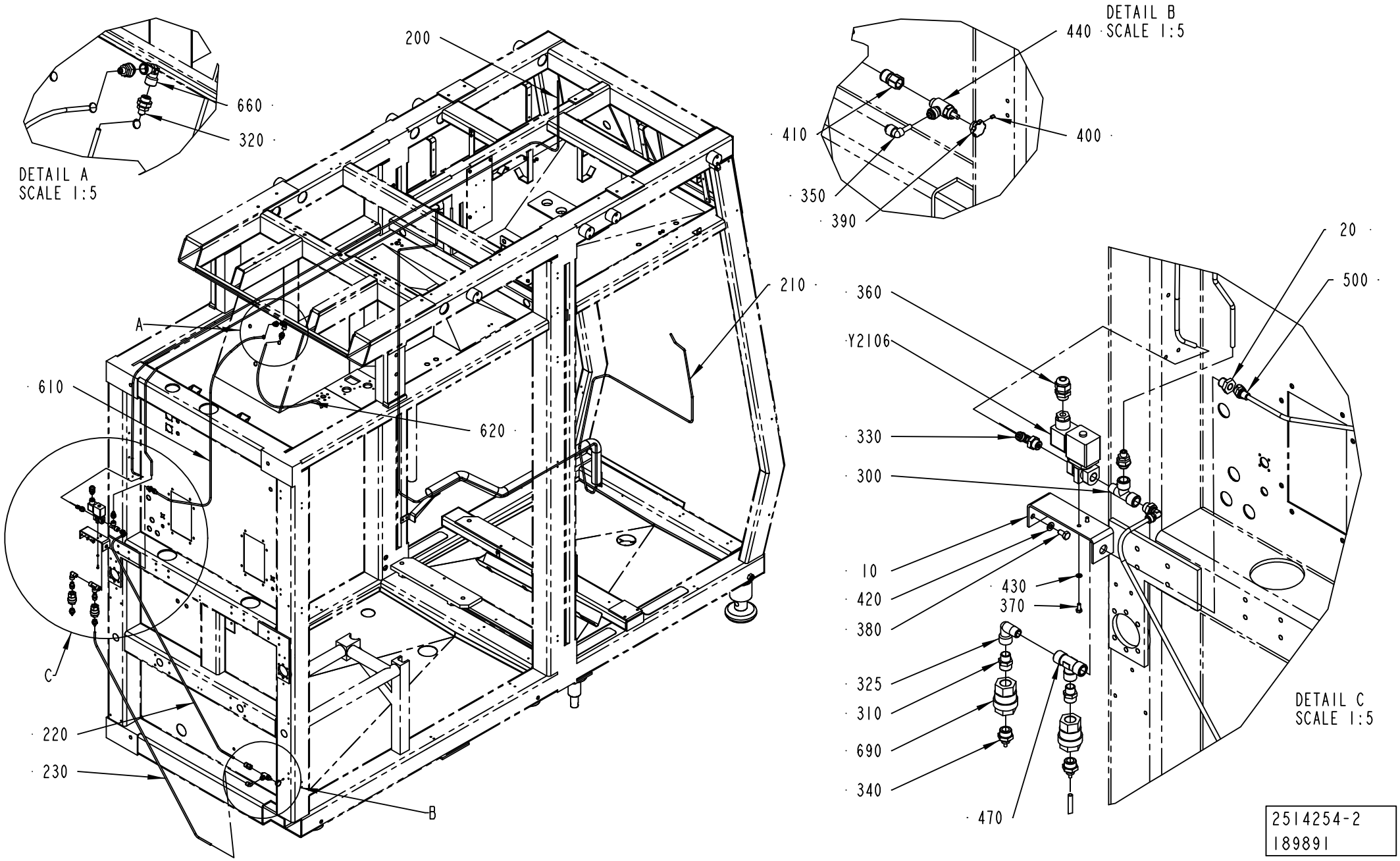
DETAIL A
SCALE 1:5
660
320
200
210
A
610
620
C
220
230
B
DETAIL B
SCALE 1:5
440
410
400
350
390
20
500
360
Y2106
330
300
10
420
380
430
370
325
310
690
340
470
DETAIL C
SCALE 1:5
2514254-2
189891

ECM: 257313 - 20060321
Group number: 2514254-0100
Assembly Drawing: 2514254-2_1_AA

Pos	Part No	UN	Qty	Description	Page No
A3/FLEX					
010	2721151-0000		1	CANTILEVER	
020	532413-0000		1	REDUCING NIPPLE	
210	90166-0132	MM	6630	TUBE 6 MM PA,TRANSP.	
230	90166-0132	MM	1200	TUBE 6 MM PA,TRANSP.	
300	342245-0102		1	T-PIPE, INT. THREAD, R1/4XKR1/4	
310	342700-0203		2	NIPPLES,HEXAGON,EXT.G-THREAD G3/8"-G1/4"	
320	342921-0114		4	STRAIGHT COUPLING,EXT.THREADED 6/4-G1/4"	
330	90224-0329		2	ELBOW 90 COUPL.,EXT.THREAD 6/4-G1/4"	
340	342921-0115		2	STRAIGHT COUPLING,EXT.THREADED 6/4-G3/8"	
470	90140-0018		1	T-PIPE, INT. THREAD, 2003-1/4	
500	342921-0113		1	STRAIGHT COUPLING,EXT.THREADED 6/4-G1/8"	
610	90166-0132	MM	1200	TUBE 6 MM PA,TRANSP.	
690	90230-0028		2	NON-RETURN VALVE H 151 R 3/8"	
Common Parts					
200	90166-0132	MM	3400	TUBE 6 MM PA,TRANSP.	
220	90166-0132	MM	1200	TUBE 6 MM PA,TRANSP.	
325	90140-0013		1	ELBOW, 90 INT/EXT, 2020-1/4-1/4	
350	90055-0268		1	ELBOW WITH TAILPIECE 6/6 MM	
360	352103-0101		1	CABLE GLAND, ST 9, PR15,2/PG9	
370	312105-0289		2	SCREW M6S ISO 4017 M4X10 A470	
380	312105-0366		2	SCREW M6S ISO 4017 M6X12 A480	
390	2710507-0000		1	KNOB	
400	90459-5076		1	SET SCREW ISO4026 M4X5 HRC 45	
410	90459-5471		1	STRAIGHT COUPLING INT, D=6 MM - G1/4	
420	315105-0153		2	WASHER BRB 6,4X12 RFR	
430	315105-0136		2	WASHER BRB 4,3X9 RFR	
440	90459-5472		1	FLOW CONTROL VALVE, CFM360612E	
620	90166-0132	MM	1000	TUBE 6 MM PA,TRANSP.	
660	90140-0019		1	ELBOW, 90, INT. THREAD, NO. 2013-1/4	
Y2106	90042-0248		1	SOLENOID VALVE OFFICIENE DI ENSINO	

Pos	Part No	UN	Qty	Description	Page No

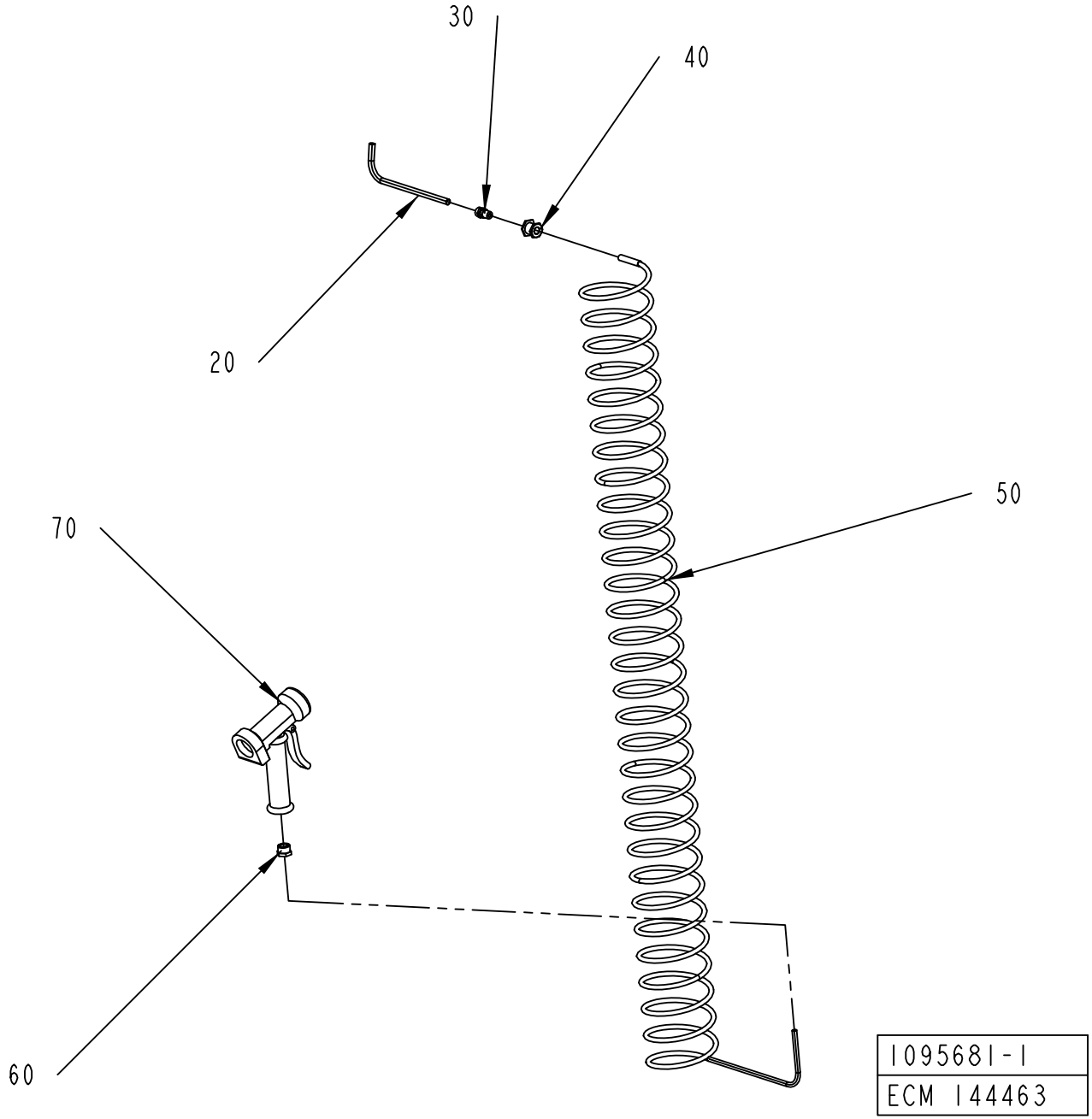
30
40
20
50
70
60
1095681-1
ECM 144463

ECM: 189878 - 20041104
Group number: 1095681-0100
Assembly Drawing: 1095681-1_1_AB

Pos	Part No	UN	Qty	Description	Page No
-					
020	90166-0141	MM	1600	TUBE 10 MM PA,TRANSP.	
030	342920-0132		1	STRAIGHT COUPL.,EXT.THREADED 10/8-R1/4"	
040	342767-0104		1	CONN. BULKHEAD G1/4	
050	90152-0017		1	HOSE (SPIRAL)	
060	342701-0205		1	BUSHING,INT./EXT.G-THREAD G1/2"-G1/4"	
070	90426-0003		1	HAND SHOWER	

Pos	Part No	UN	Qty	Description	Page No

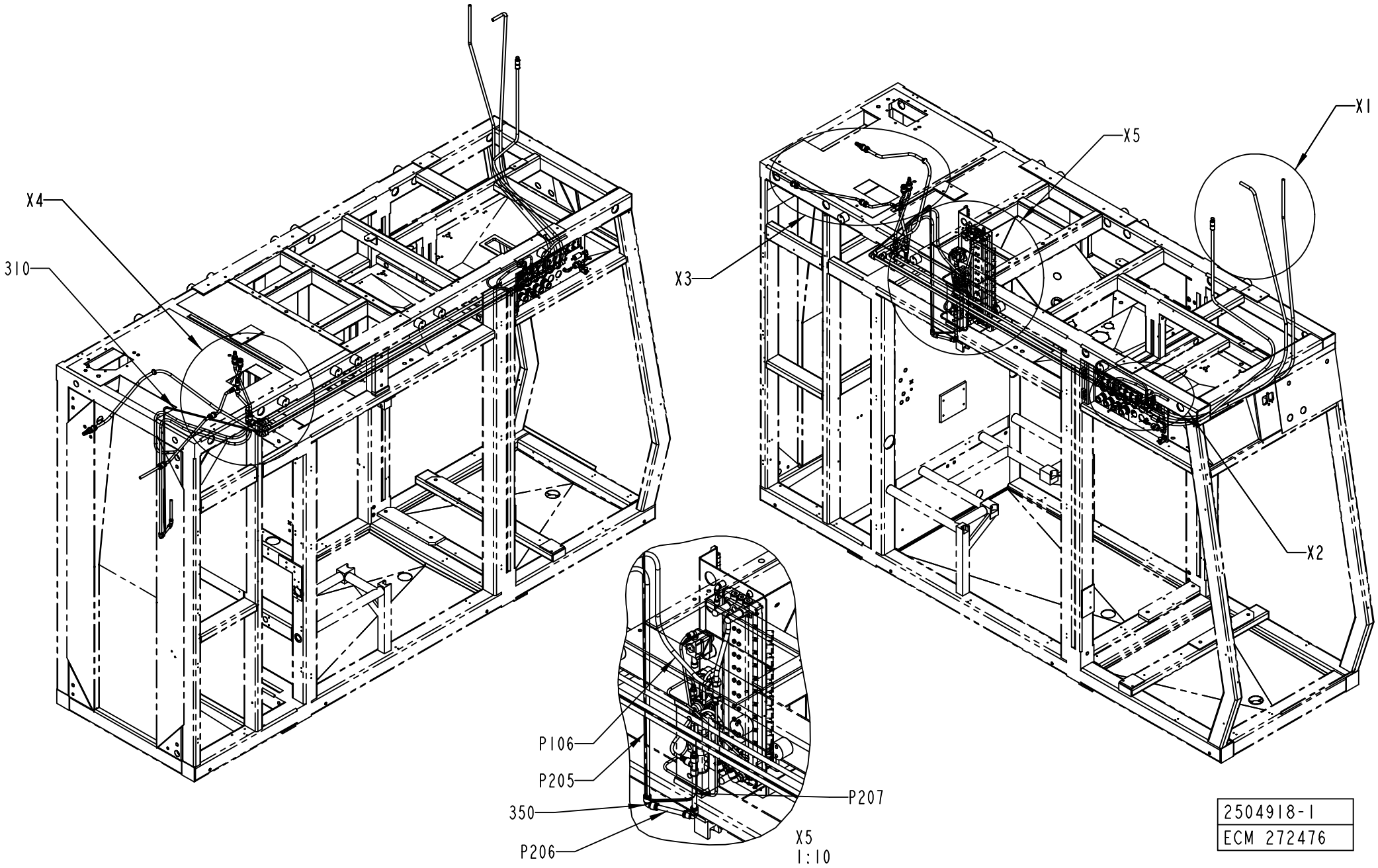
X4
310
X3
X5
X1
X2
P106
P205
350
P206
P207
X5
1:10
2504918-1
ECM 272476

ECM: 273130 - 20061101
Group number: 2504918-0100
Assembly Drawing: 2504918-1_1_AD

This list covers pages from 2-210 to 2-213

Pos	Part No	UN	Qty	Description	Page No
A3/FLEX NOQC (See drawing on pages: 2-210, 2-212)					
300	342715-0106		1	BLIND PLUG 14 MM	
305	342715-0105		1	BLIND PLUG 12 MM	
320	350009-0002		1	PUSH-IN FITTING QS-F-6	
325	350013-0002		1	PLUG QSC-6H	
340	342716-0211		8	REDUCER 12-14	
360	342735-0110		3	ELBOW PIPE	
P1ASU3	90166-0195	MM	3200	TUBE 12 MM PA BLUE	
P2PTDIMC1	90166-0196	MM	1440	TUBE 14MM PA BLUE	
P2PTDIMC	90166-0196	MM	4800	TUBE 14MM PA BLUE	
P103	90166-0196	MM	2350	TUBE 14MM PA BLUE	
P104	90166-0196	MM	120	TUBE 14MM PA BLUE	
P203	90166-0196	MM	2400	TUBE 14MM PA BLUE	
P204	90166-0195	MM	120	TUBE 12 MM PA BLUE	
A3/FLEX QC (See drawing on pages: 2-210, 2-212)					
300	342715-0106		1	BLIND PLUG 14 MM	
305	342715-0105		1	BLIND PLUG 12 MM	
340	342716-0211		8	REDUCER 12-14	
360	342735-0110		3	ELBOW PIPE	
P1ASU3	90166-0195	MM	3200	TUBE 12 MM PA BLUE	
P2PTDIMC1	90166-0196	MM	1440	TUBE 14MM PA BLUE	
P2PTDIMC	90166-0196	MM	4800	TUBE 14MM PA BLUE	
P103	90166-0196	MM	2350	TUBE 14MM PA BLUE	
P104	90166-0196	MM	120	TUBE 14MM PA BLUE	
P203	90166-0196	MM	2400	TUBE 14MM PA BLUE	
P204	90166-0195	MM	120	TUBE 12 MM PA BLUE	
Common Parts					
310	90166-0081	MM	6000	TUBE 6 MM PA BLUE	
330	342716-0209		2	REDUCER 8-12	
345	342728-0110		1	PIPE COUPLING 14 MM	
350	342735-0109		2	ELBOW PIPE JOINT	
440	342748-0110		5	T-CONNECTION 14MM	
500	90015-0021		1	LEAD-IN, TET10-14, E-1458023	
760	90458-2602		4	BULKHEAD CONNECTOR, 12 MM	
765	342768-0110		1	BULKHEAD CONNECTOR, 14 MM	
770	90055-0277		1	ELBOW WITH TAILPIECE 12/12 MM	
780	90157-0034		1	THREAD SEALANT LOCTITE 572 50 ML	
790	359000-0500		16	WIRE MARKING, YELLOW, PA3/6"0"	
800	359000-0501		16	WIRE MARKING, YELLOW, PA3/6"1"	
810	359000-0502		14	WIRE MARKING, YELLOW, PA3/6"2"	
820	359000-0503		4	WIRE MARKING, YELLOW, PA3/6"3"	
830	359000-0504		4	WIRE MARKING, YELLOW, PA3/6"4"	
840	359000-0505		4	WIRE MARKING, YELLOW, PA3/6"5"	
850	359000-0506		4	WIRE MARKING, YELLOW, PA3/6"6"	
860	359000-0507		2	WIRE MARKING, YELLOW, PA3/6"7"	
870	359000-0800		4	WIRE MARKING, YELLOW, PA3/6"A"	
880	359000-0802		4	WIRE MARKING, YELLOW, PA3/6"C"	
890	359000-0803		4	WIRE MARKING, YELLOW, PA3/6"D"	
900	359000-0808		4	WIRE MARKING, YELLOW, PA3/6"I"	
910	359000-0812		4	WIRE MARKING, YELLOW, PA3/6"M"	
920	359000-0815		30	WIRE MARKING, YELLOW, PA3/6"P"	
930	359000-0818		8	WIRE MARKING, YELLOW, PA3/6"S"	
940	359000-0819		4	WIRE MARKING, YELLOW, PA3/6"T"	
950	359000-0820		8	WIRE MARKING, YELLOW, PA3/6"U"	
960	359000-0025		30	WIRE MARKING, YELLOW, PA3/6"-"	
P1SUP	90166-0195	MM	100	TUBE 12 MM PA BLUE	
P1ASU2	90166-0195	MM	510	TUBE 12 MM PA BLUE	
P1ASU1	90166-0195	MM	230	TUBE 12 MM PA BLUE	
P2SUP	90166-0195	MM	370	TUBE 12 MM PA BLUE	
P101	90166-0196	MM	2410	TUBE 14MM PA BLUE	
P102	90166-0195	MM	2600	TUBE 12 MM PA BLUE	
P105	90166-0196	MM	240	TUBE 14MM PA BLUE	
P106	90166-0195	MM	1300	TUBE 12 MM PA BLUE	
P201	90166-0196	MM	2600	TUBE 14MM PA BLUE	
P202	90166-0013	MM	710	TUBE 8 MM PA BLUE	
P205	90166-0195	MM	1700	TUBE 12 MM PA BLUE	
P206	90166-0195	MM	150	TUBE 12 MM PA BLUE	
P207	90166-0195	MM	180	TUBE 12 MM PA BLUE	

Machine Type | Group Description | Used-In | Group Number | Page No

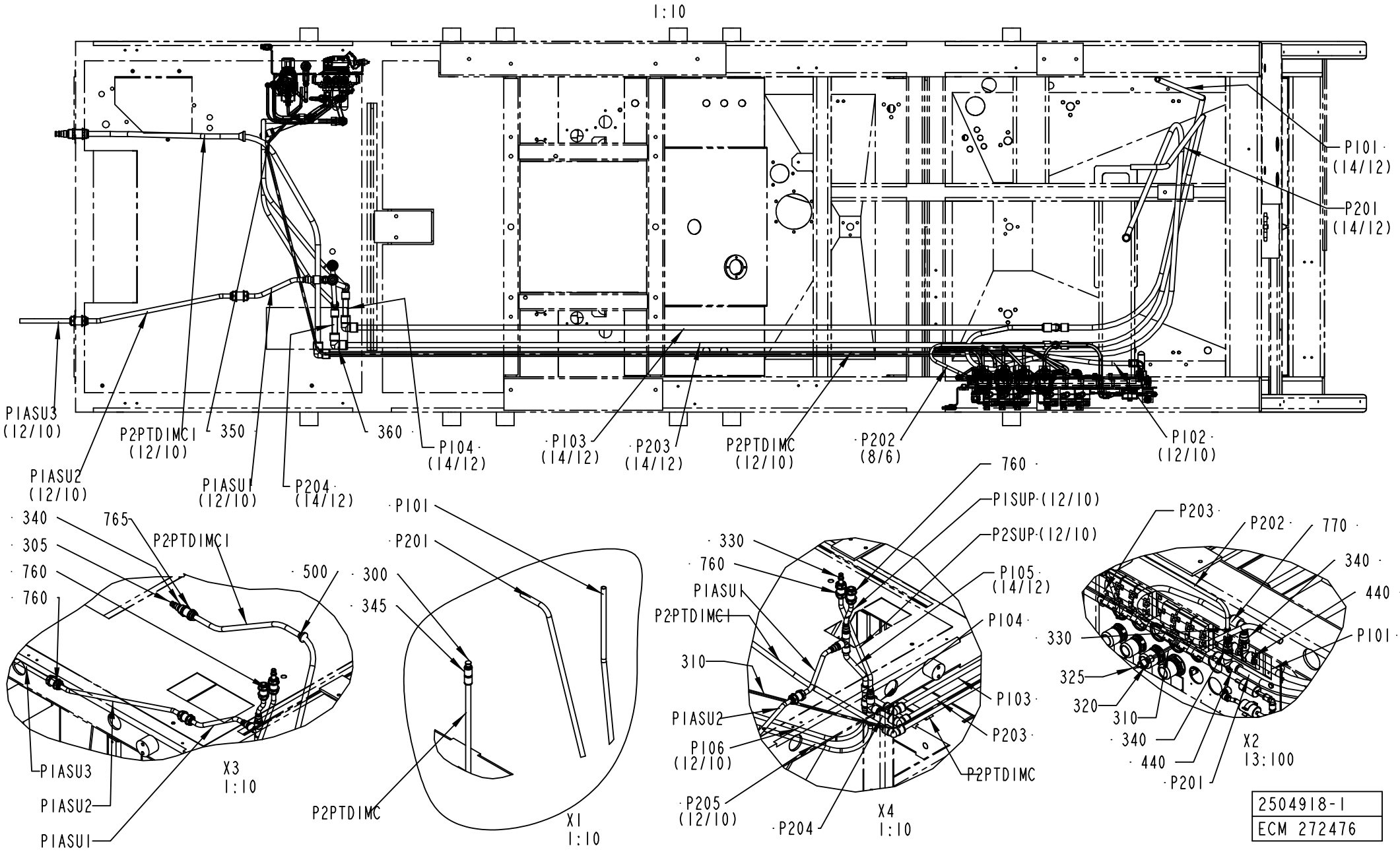

2504918-1
ECM 272476

ECM: 273130 - 20061101
Group number: 2504918-0100
Assembly Drawing: 2504918-1_2_AD

This list covers pages from 2-210 to 2-213

Pos	Part No	UN	Qty	Description	Page No
A3/FLEX NOQC (See drawing on pages: 2-210, 2-212)					
300	342715-0106		1	BLIND PLUG 14 MM	
305	342715-0105		1	BLIND PLUG 12 MM	
320	350009-0002		1	PUSH-IN FITTING QS-F-6	
325	350013-0002		1	PLUG QSC-6H	
340	342716-0211		8	REDUCER 12-14	
360	342735-0110		3	ELBOW PIPE	
P1ASU3	90166-0195	MM	3200	TUBE 12 MM PA BLUE	
P2PTDIMC1	90166-0196	MM	1440	TUBE 14MM PA BLUE	
P2PTDIMC	90166-0196	MM	4800	TUBE 14MM PA BLUE	
P103	90166-0196	MM	2350	TUBE 14MM PA BLUE	
P104	90166-0196	MM	120	TUBE 14MM PA BLUE	
P203	90166-0196	MM	2400	TUBE 14MM PA BLUE	
P204	90166-0195	MM	120	TUBE 12 MM PA BLUE	
A3/FLEX QC (See drawing on pages: 2-210, 2-212)					
300	342715-0106		1	BLIND PLUG 14 MM	
305	342715-0105		1	BLIND PLUG 12 MM	
340	342716-0211		8	REDUCER 12-14	
360	342735-0110		3	ELBOW PIPE	
P1ASU3	90166-0195	MM	3200	TUBE 12 MM PA BLUE	
P2PTDIMC1	90166-0196	MM	1440	TUBE 14MM PA BLUE	
P2PTDIMC	90166-0196	MM	4800	TUBE 14MM PA BLUE	
P103	90166-0196	MM	2350	TUBE 14MM PA BLUE	
P104	90166-0196	MM	120	TUBE 14MM PA BLUE	
P203	90166-0196	MM	2400	TUBE 14MM PA BLUE	
P204	90166-0195	MM	120	TUBE 12 MM PA BLUE	
Common Parts					
310	90166-0081	MM	6000	TUBE 6 MM PA BLUE	
330	342716-0209		2	REDUCER 8-12	
345	342728-0110		1	PIPE COUPLING 14 MM	
350	342735-0109		2	ELBOW PIPE JOINT	
440	342748-0110		5	T-CONNECTION 14MM	
500	90015-0021		1	LEAD-IN, TET10-14, E-1458023	
760	90458-2602		4	BULKHEAD CONNECTOR, 12 MM	
765	342768-0110		1	BULKHEAD CONNECTOR, 14 MM	
770	90055-0277		1	ELBOW WITH TAILPIECE 12/12 MM	
780	90157-0034		1	THREAD SEALANT LOCTITE 572 50 ML	
790	359000-0500		16	WIRE MARKING, YELLOW, PA3/6"0"	
800	359000-0501		16	WIRE MARKING, YELLOW, PA3/6"1"	
810	359000-0502		14	WIRE MARKING, YELLOW, PA3/6"2"	
820	359000-0503		4	WIRE MARKING, YELLOW, PA3/6"3"	
830	359000-0504		4	WIRE MARKING, YELLOW, PA3/6"4"	
840	359000-0505		4	WIRE MARKING, YELLOW, PA3/6"5"	
850	359000-0506		4	WIRE MARKING, YELLOW, PA3/6"6"	
860	359000-0507		2	WIRE MARKING, YELLOW, PA3/6"7"	
870	359000-0800		4	WIRE MARKING, YELLOW, PA3/6"A"	
880	359000-0802		4	WIRE MARKING, YELLOW, PA3/6"C"	
890	359000-0803		4	WIRE MARKING, YELLOW, PA3/6"D"	
900	359000-0808		4	WIRE MARKING, YELLOW, PA3/6"I"	
910	359000-0812		4	WIRE MARKING, YELLOW, PA3/6"M"	
920	359000-0815		30	WIRE MARKING, YELLOW, PA3/6"P"	
930	359000-0818		8	WIRE MARKING, YELLOW, PA3/6"S"	
940	359000-0819		4	WIRE MARKING, YELLOW, PA3/6"T"	
950	359000-0820		8	WIRE MARKING, YELLOW, PA3/6"U"	
960	359000-0025		30	WIRE MARKING, YELLOW, PA3/6"-"	
P1SUP	90166-0195	MM	100	TUBE 12 MM PA BLUE	
P1ASU2	90166-0195	MM	510	TUBE 12 MM PA BLUE	
P1ASU1	90166-0195	MM	230	TUBE 12 MM PA BLUE	
P2SUP	90166-0195	MM	370	TUBE 12 MM PA BLUE	
P101	90166-0196	MM	2410	TUBE 14MM PA BLUE	
P102	90166-0195	MM	2600	TUBE 12 MM PA BLUE	
P105	90166-0196	MM	240	TUBE 14MM PA BLUE	
P106	90166-0195	MM	1300	TUBE 12 MM PA BLUE	
P201	90166-0196	MM	2600	TUBE 14MM PA BLUE	
P202	90166-0013	MM	710	TUBE 8 MM PA BLUE	
P205	90166-0195	MM	1700	TUBE 12 MM PA BLUE	
P206	90166-0195	MM	150	TUBE 12 MM PA BLUE	
P207	90166-0195	MM	180	TUBE 12 MM PA BLUE	

Machine Type | Group Description | Used-In | Group Number | Page No

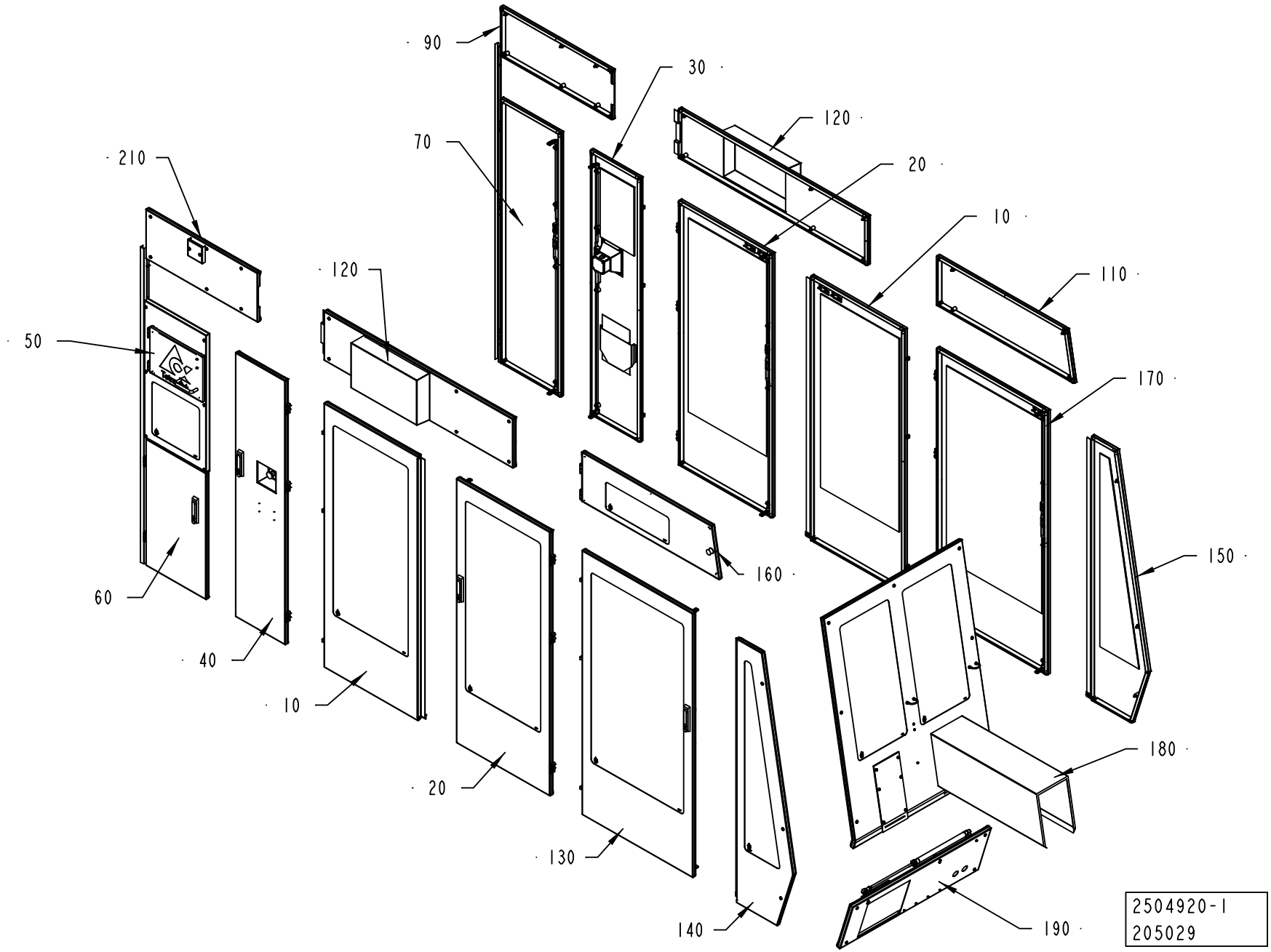
90
30
120
70
20
210
10
120
110
50
170
150
160
60
40
10
20
180
130
140
190
2504920-1
205029

ECM: 270375 - 20060704
Group number: 2504920-0100
Assembly Drawing: 2504920-1_1_AC

Pos	Part No	UN	Qty	Description	Page No
A3/FLEX TBA, A3/FLEX TPA					
010	2508129-0100		2	DOOR	**2-217**
020	2508135-0100		2	DOOR	**2-219**
040	2508141-0100		1	DOOR	**2-221**
050	2544310-0100		1	PROTECTIVE COVER	**2-225**
090	2508159-0100		1	COVER	**2-227**
110	2508165-0100		1	COVER	**2-229**
120	2508168-0100		2	COVER	**2-231**
140	2508177-0100		1	DOOR	**2-233**
150	2508181-0100		1	DOOR	**2-235**
160	2774454-0100		1	COVER	**2-237**
170	2530080-0100		1	DOOR	**2-239**
180	2512830-0100		1	FRONT COVER	**2-241**
190	2510347-0100		1	FRONT GUARD	**2-249**
Common Parts					
030	2508138-0100		1	DOOR	**2-251**
060	2508149-0200		1	DOOR	**2-255**
070	2529597-0200		1	DOOR	**2-257**
130	2508175-0100		1	DOOR	**2-259**
210	2544333-0100		1	DOOR	**2-261**

Pos	Part No	UN	Qty	Description	Page No

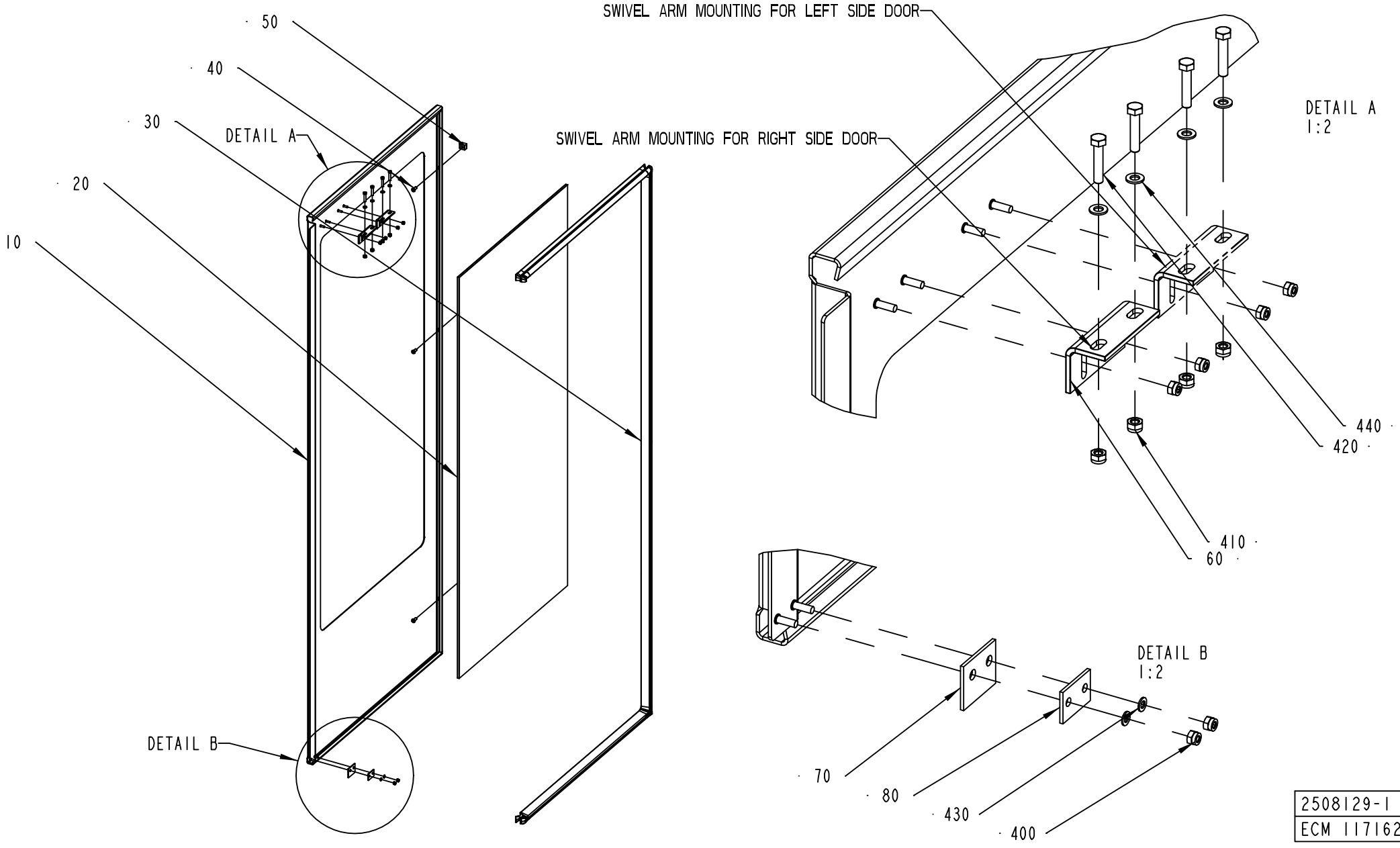

2508129-1
ECM 117162

ECM: 265694 - 20060702
Group number: 2508129-0100
Assembly Drawing: 2508129-1_1_AA

Pos	Part No	UN	Qty	Description	Page No
A3/FLEX					
010	2508130-0000		1	DOOR	
020	2508131-0000		1	GLASS PANE	
030	2508132-0000		1	RUBBER SEAL	
Common Parts					
040	1129767-0000		3	SCREW	
050	1129770-0000		3	BLOCKING PIECE	
060	1346885-0000		1	SUPPORT	
070	1129325-0000		1	SEALING FLANGE	
080	1129324-0000		1	WASHER	
300	90153-0049		1	ADHESIVE, LOCTITE 409 20G	
310	90157-0041		1	SEALING COMPOUND, RHODORSEAL 5651	
400	312812-0312		4	HEXAGON NUT, NY-LOCK M4 A480	
410	312812-0314		2	HEXAGON NUT, NY-LOCK M5 A480	
420	312105-0333		2	SCREW M6S ISO 4017 M5X25 A480	
430	315105-0136		2	WASHER BRB 4,3X9 RFR	
440	315105-0146		2	WASHER BRB 5,3X10 RFR	

Pos	Part No	UN	Qty	Description	Page No

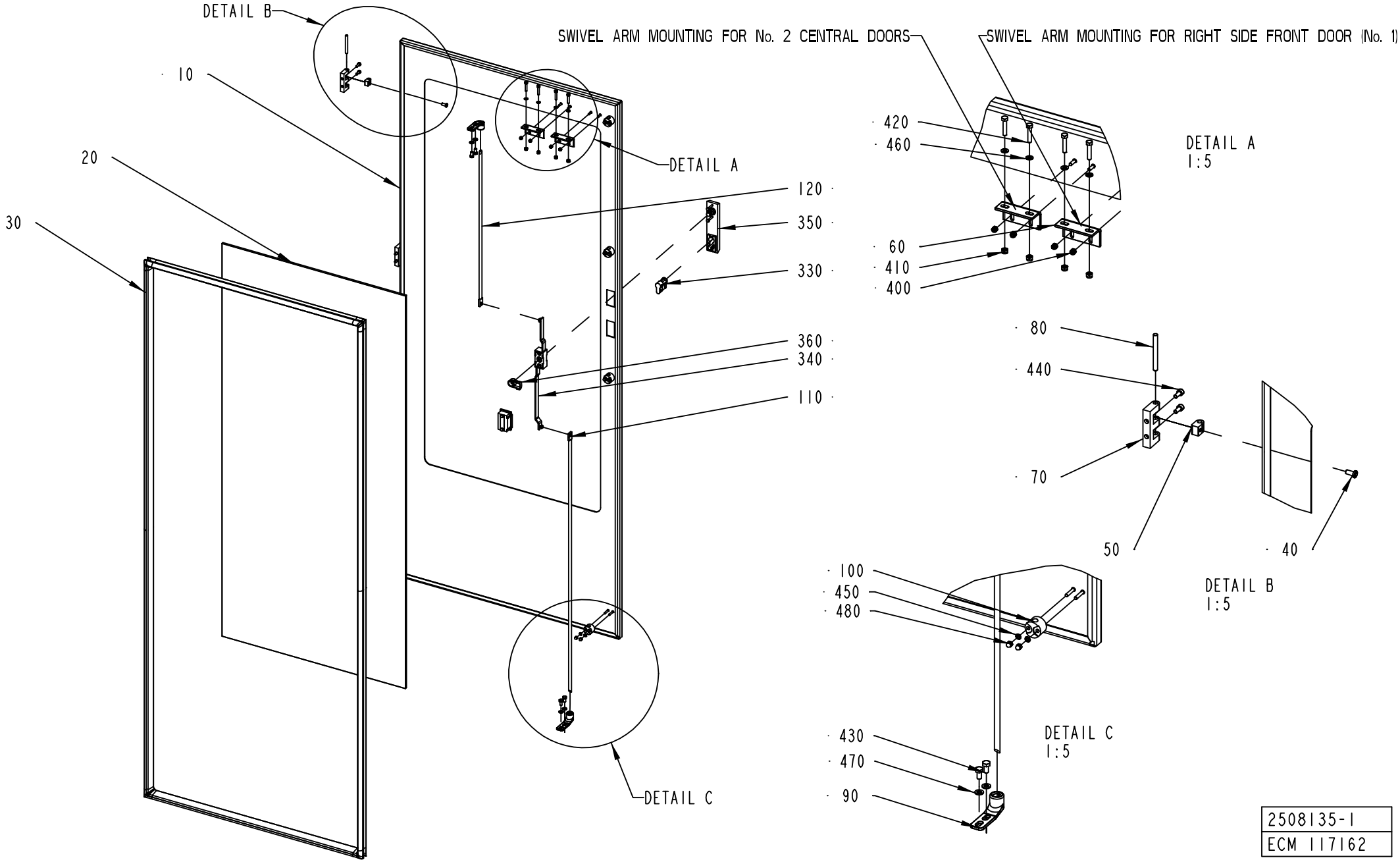
DETAIL B
10
20
30
DETAIL A
120
350
330
360
340
110
DETAIL C
SWIVEL ARM MOUNTING FOR No. 2 CENTRAL DOORS
SWIVEL ARM MOUNTING FOR RIGHT SIDE FRONT DOOR (No. 1)
420
460
60
410
400
DETAIL A
1:5
80
440
70
50
40
DETAIL B
1:5
100
450
480
430
470
90
DETAIL C
1:5
2508135-1
ECM 117162

ECM: 265693 - 20060702
Group number: 2508135-0100
Assembly Drawing: 2508135-1_1_AA

Pos	Part No	UN	Qty	Description	Page No
A3/FLEX					
010	2508136-0000		1	DOOR	
020	2508131-0000		1	GLASS PANE	
030	2508137-0000		1	RUBBER SEAL	
Common Parts					
040	1129767-0000		3	SCREW	
050	1129770-0000		3	BLOCKING PIECE	
060	1346885-0000		1	SUPPORT	
070	1035792-0000		3	E-HINGE	
080	988685-0000		3	PIN	
090	1538868-0000		2	BRACKET	
100	1129274-0000		4	GUIDE LUG	
110	2508133-0000		1	LOCKING ARM	
120	2508134-0000		1	LOCKING ARM	
300	90153-0049		1	ADHESIVE, LOCTITE 409 20G	
310	90157-0041		1	SEALING COMPOUND, RHODORSEAL 5651	
330	90237-0128		1	LOCK CYLINDER, 1109-U3	
340	90237-0153		1	LOCK HOUSING, 1121-U26-0B	
350	90237-0176		1	TURNING HANDLE, 1125-U190-A	
360	90237-0165		1	LATCH	
400	312812-0312		2	HEXAGON NUT, NY-LOCK M4 A480	
410	312812-0314		2	HEXAGON NUT, NY-LOCK M5 A480	
420	312105-0333		2	SCREW M6S ISO 4017 M5X25 A480	
430	312105-0366		4	SCREW M6S ISO 4017 M6X12 A480	
440	312115-0327		6	SCREW ISO4762 M5X12 A4 80	
450	315105-0136		8	WASHER BRB 4,3X9 RFR	
460	315105-0146		2	WASHER BRB 5,3X10 RFR	
470	315105-0153		4	WASHER BRB 6,4X12 RFR	
480	312705-0312		8	NUT HEX. DOMED CAP MHM-6 M4 A280	

Pos	Part No	UN	Qty	Description	Page No

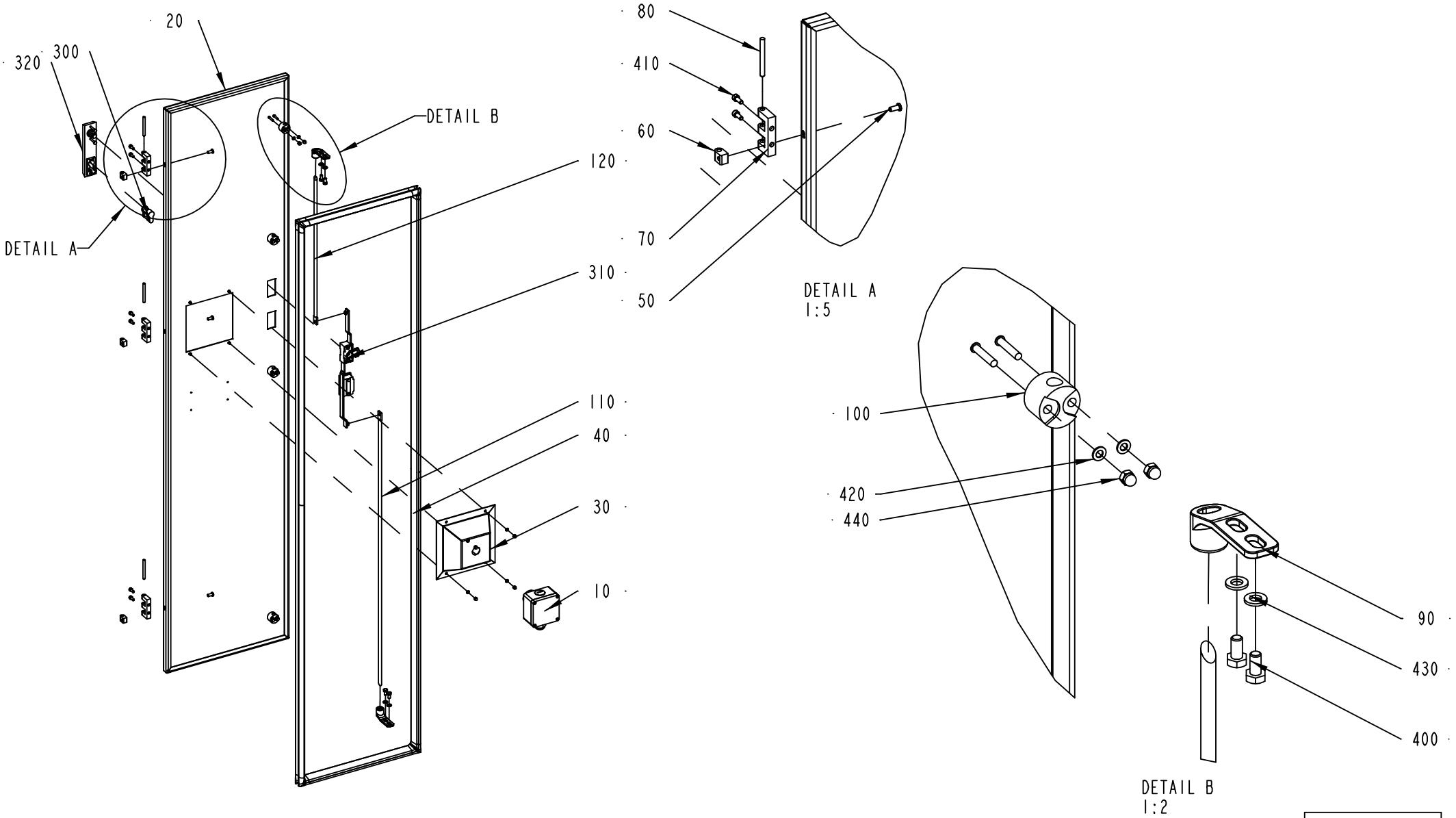

2508141-1
ECM 117162

ECM: 189909 - 20041104
Group number: 2508141-0100
Assembly Drawing: 2508141-1_1_AA

Pos	Part No	UN	Qty	Description	Page No
-					
010	2593851-0100		1	EMERGENCY STOP	**2-223**
020	2508142-0000		1	DOOR	
030	2532619-0000		1	COVER	
040	2508186-0000		1	RUBBER SEAL	
050	1129767-0000		3	SCREW	
060	1129770-0000		3	BLOCKING PIECE	
070	1035792-0000		3	E-HINGE	
080	988685-0000		3	PIN	
090	1538868-0000		2	BRACKET	
100	1129274-0000		4	GUIDE LUG	
110	2508133-0000		1	LOCKING ARM	
120	2508140-0000		1	LOCKING ARM	
300	90237-0128		1	LOCK CYLINDER, 1109-U3	
310	90237-0153		1	LOCK HOUSING, 1121-U26-0B	
320	90237-0176		1	TURNING HANDLE, 1125-U190-A	
400	312105-0366		4	SCREW M6S ISO 4017 M6X12 A480	
410	312115-0327		6	SCREW ISO4762 M5X12 A4 80	
420	315105-0136		12	WASHER BRB 4,3X9 RFR	
430	315105-0153		4	WASHER BRB 6,4X12 RFR	
440	312705-0312		12	NUT HEX. DOMED CAP MHM-6 M4 A280	

Pos	Part No	UN	Qty	Description	Page No

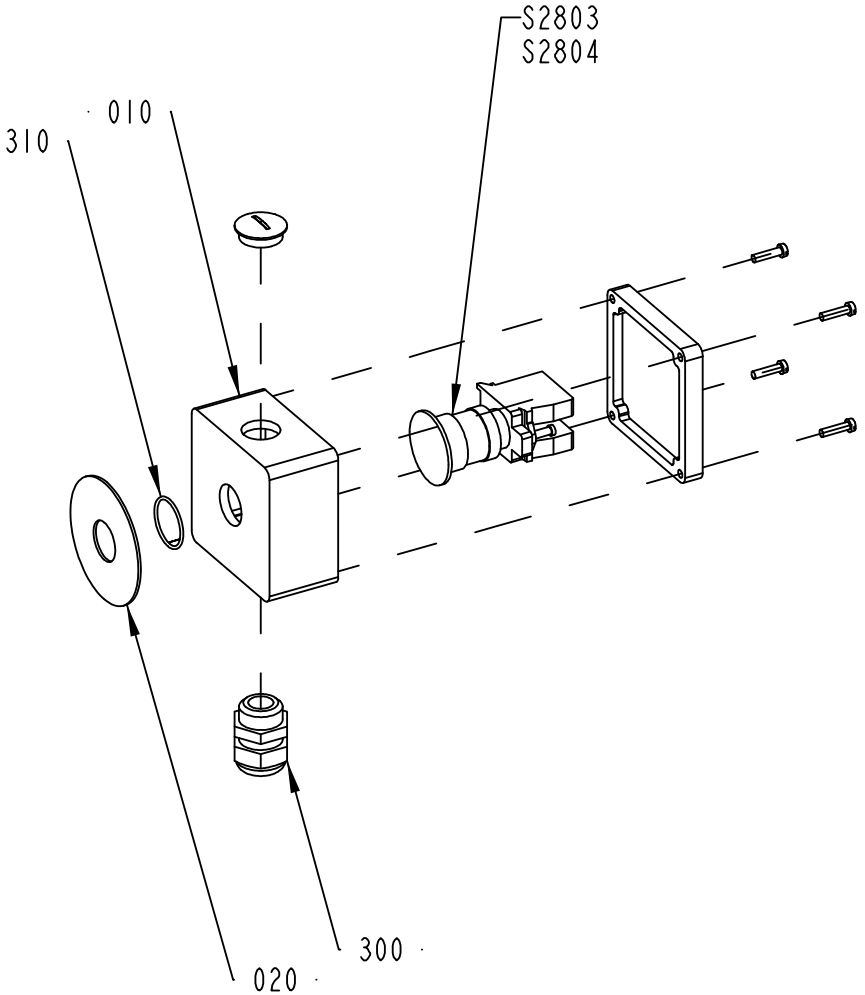

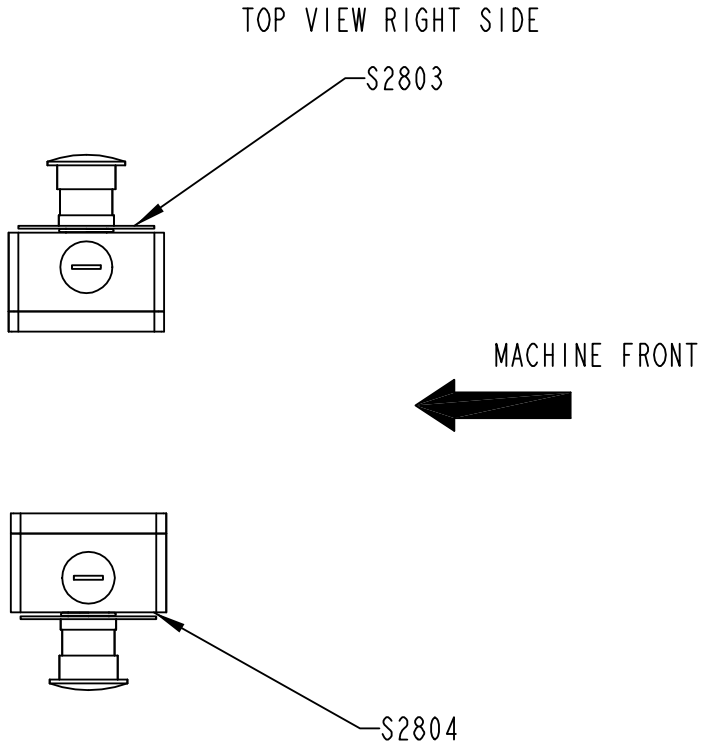

2593851-1
ECM 117744

ECM: 189908 - 20041104
Group number: 2593851-0100
Assembly Drawing: 2593851-1_1_AA

Pos	Part No	UN	Qty	Description	Page No
-					
010	1037130-0000		1	CONNECTION BOX	
020	486826-0001		1	SIGN "EMERGENCY STOP"	
300	352103-0110		1	CABLE GLAND, STR 16, PR22,5/PG16	
310	315202-0119		1	O-RING 25,1X1,6 MM	
S2803	90458-1651		1	EMERGENCY STOP, ZB4-BS-844 ZB4-BZ-104	

Pos	Part No	UN	Qty	Description	Page No

PROTECTIVE COVER

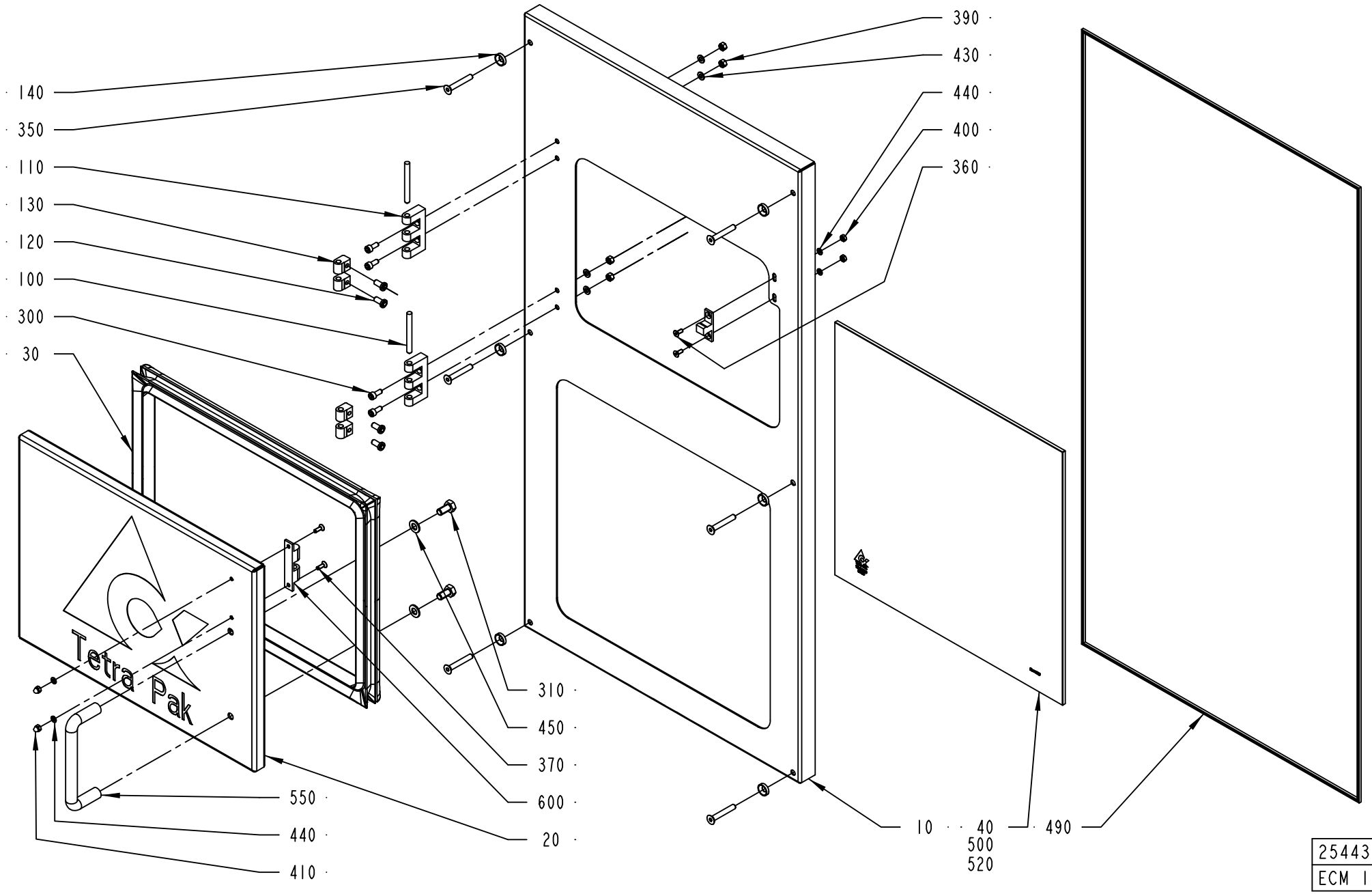

2544310-1
ECM 117744

ECM: 189911 - 20041104
Group number: 2544310-0100
Assembly Drawing: 2544310-1_1_AA

Pos	Part No	UN	Qty	Description	Page No
-					
010	2544305-0000		1	PROTECTION	
020	2544306-0000		1	DOOR	
030	2544307-0000		1	RUBBER SEAL	
040	2544308-0000		1	GLASS PANE	
100	988685-0000		2	PIN	
110	1035792-0000		2	E-HINGE	
120	1129767-0000		4	SCREW	
130	1129770-0000		4	BLOCKING PIECE	
140	1317228-0000		6	WASHER	
300	312115-0327		4	SCREW ISO4762 M5X12 A4 80	
310	312105-0449		2	SCREW M6S ISO 4017 M8X16 A480	
350	312155-0378		6	SCREW DIN 7991 MF6S M6X40 A4 70	
360	312155-0289		2	SCREW DIN 7991 MF6S M4X10 A4 70	
370	312155-0291		2	SCREW DIN 7991 MF6S M4X12 A4 70	
390	312605-0314		4	HEXAGON NUT, M6M M5 A280	
400	312605-0312		2	HEXAGON NUT, M6M M4 A280	
410	312705-0312		2	NUT HEX. DOMED CAP MHM-6 M4 A280	
430	315105-0146		4	WASHER BRB 5,3X10 RFR	
440	315105-0136		4	WASHER BRB 4,3X9 RFR	
450	315105-0165		2	WASHER BRB 8,4X16 RFR	
490	90143-0054	MM	2740	STRIP	
500	90153-0049		1	ADHESIVE, LOCTITE 409 20G	
520	90157-0041		1	SEALING COMPOUND, RHODORSEAL 5651	
550	90017-0016		1	HANDLE, NO. 14.4012.02.120	
600	90237-0070		1	SNAP-IN BALL LOCK, 69X19 MM	

Pos	Part No	UN	Qty	Description	Page No

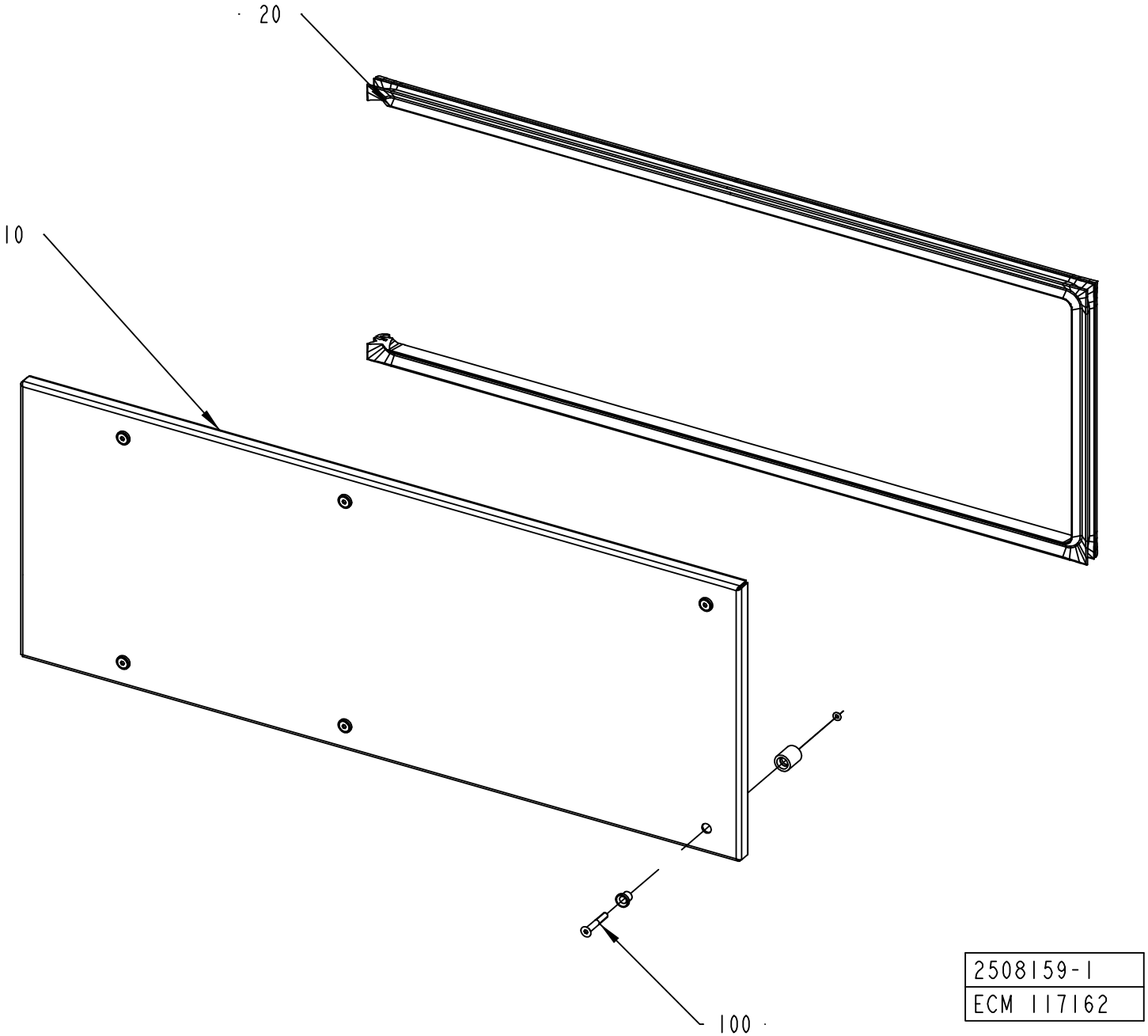

2508159-1
ECM 117162

ECM: 189915 - 20041104
Group number: 2508159-0100
Assembly Drawing: 2508159-1_1_AA

Pos	Part No	UN	Qty	Description	Page No
-					
010	2508160-0000		1	COVER	
020	2508161-0000		1	RUBBER SEAL	
100	90226-0458		6	MOUNTING SCREW	

Pos	Part No	UN	Qty	Description	Page No

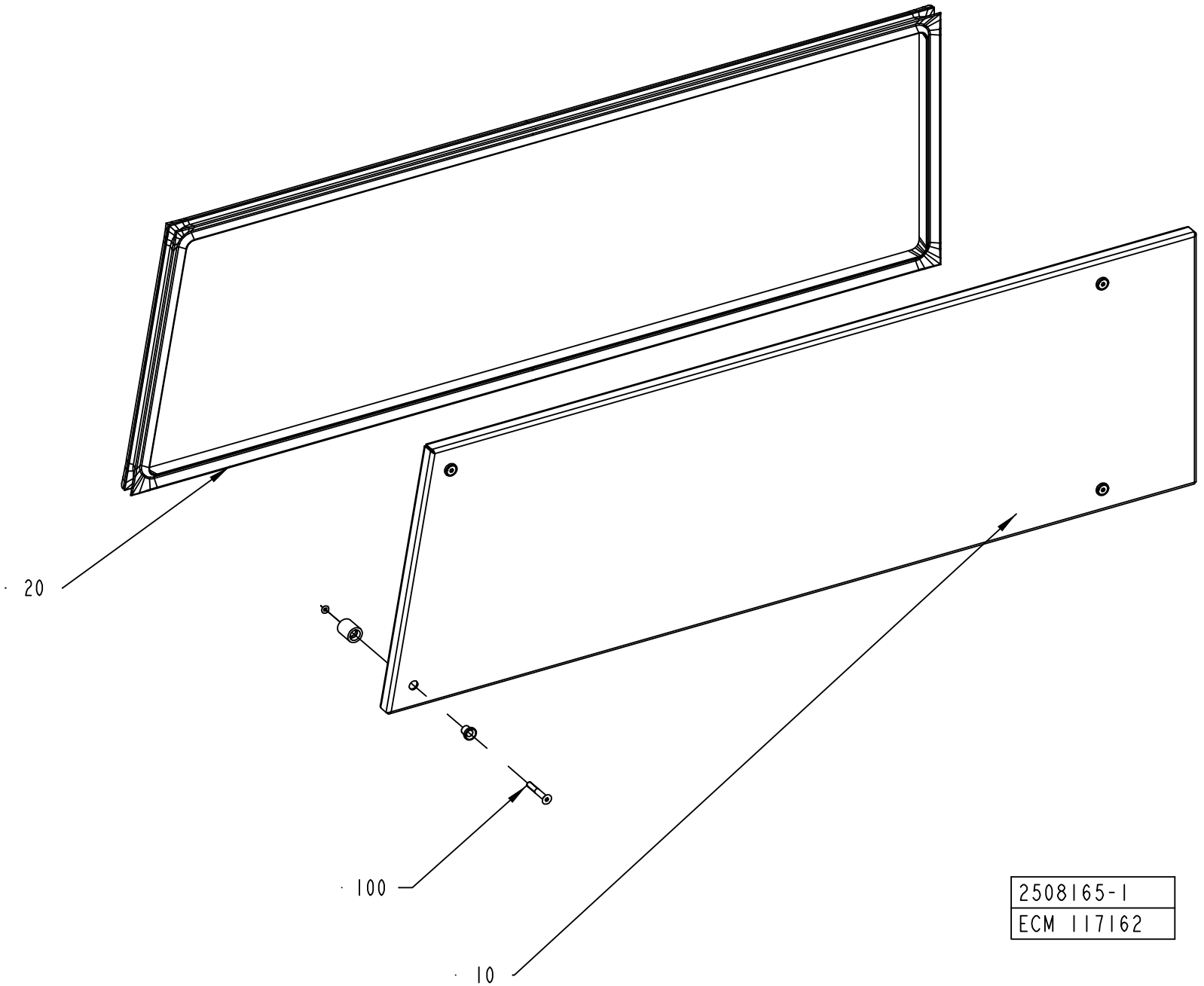
20
100
10
2508165-1
ECM 117162

ECM: 189919 - 20041104
Group number: 2508165-0100
Assembly Drawing: 2508165-1_1_AA

Pos	Part No	UN	Qty	Description	Page No
-					
010	2508166-0000		1	COVER	
020	2508167-0000		1	RUBBER SEAL	
100	90226-0458		4	MOUNTING SCREW	

Pos	Part No	UN	Qty	Description	Page No

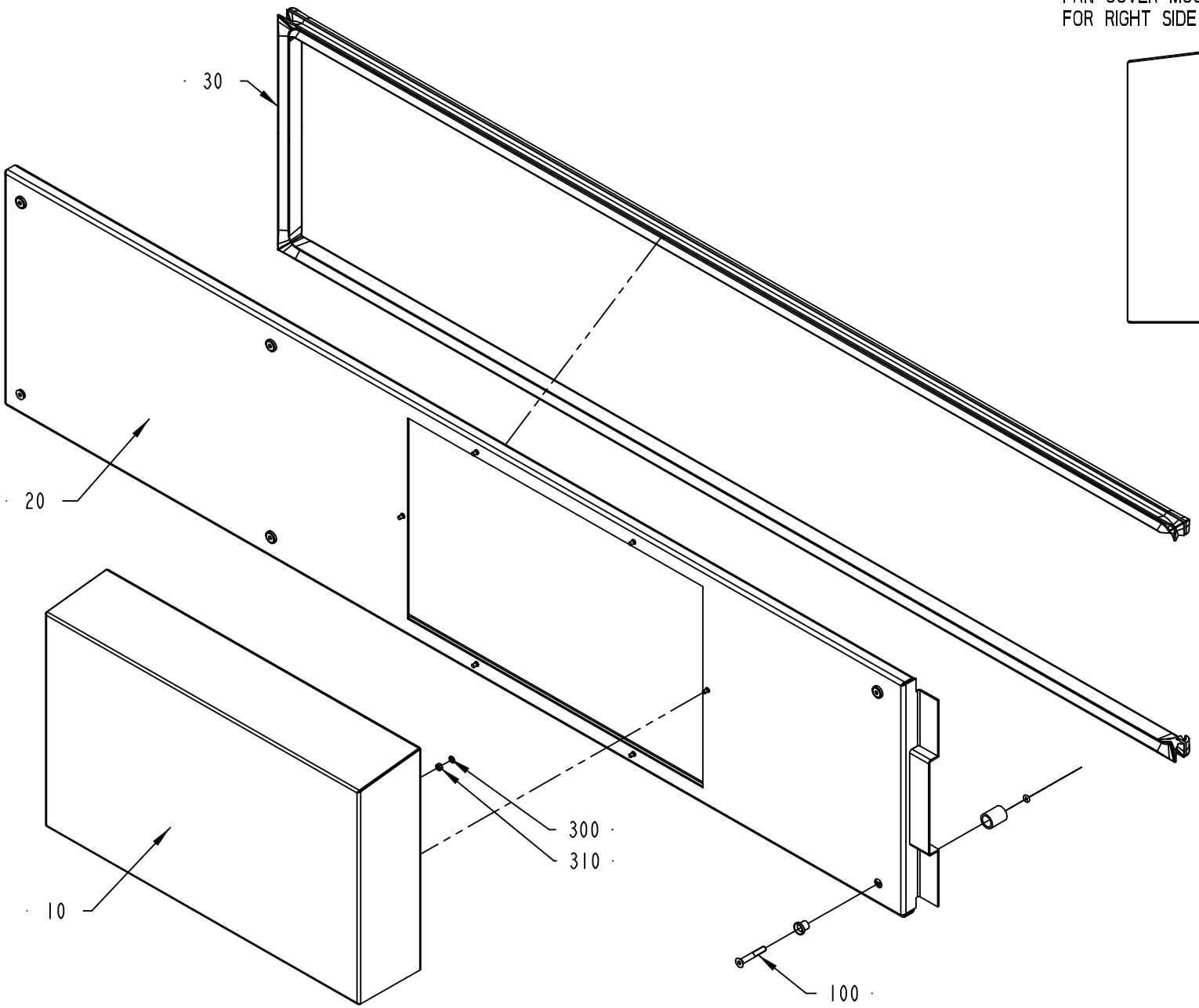

FAN COVER MOUNTING
FOR RIGHT SIDE COVER

FAN COVER MOUNTING
FOR LEFT SIDE COVER

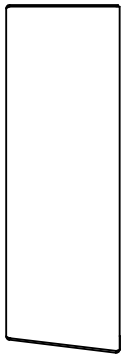

2508168-1
ECM 205029

ECM: 224422 - 20060701
Group number: 2508168-0100
Assembly Drawing: 2508168-1_1_AB

Pos	Part No	UN	Qty	Description	Page No
-					
010	2746721-0000		1	COVER	
020	2508169-0000		1	COVER	
030	2508171-0000		1	RUBBER SEAL	
100	90226-0458		6	MOUNTING SCREW	
300	315105-0136		4	WASHER BRB 4,3X9 RFR	
310	312605-0312		4	HEXAGON NUT, M6M M4 A280	

Pos	Part No	UN	Qty	Description	Page No

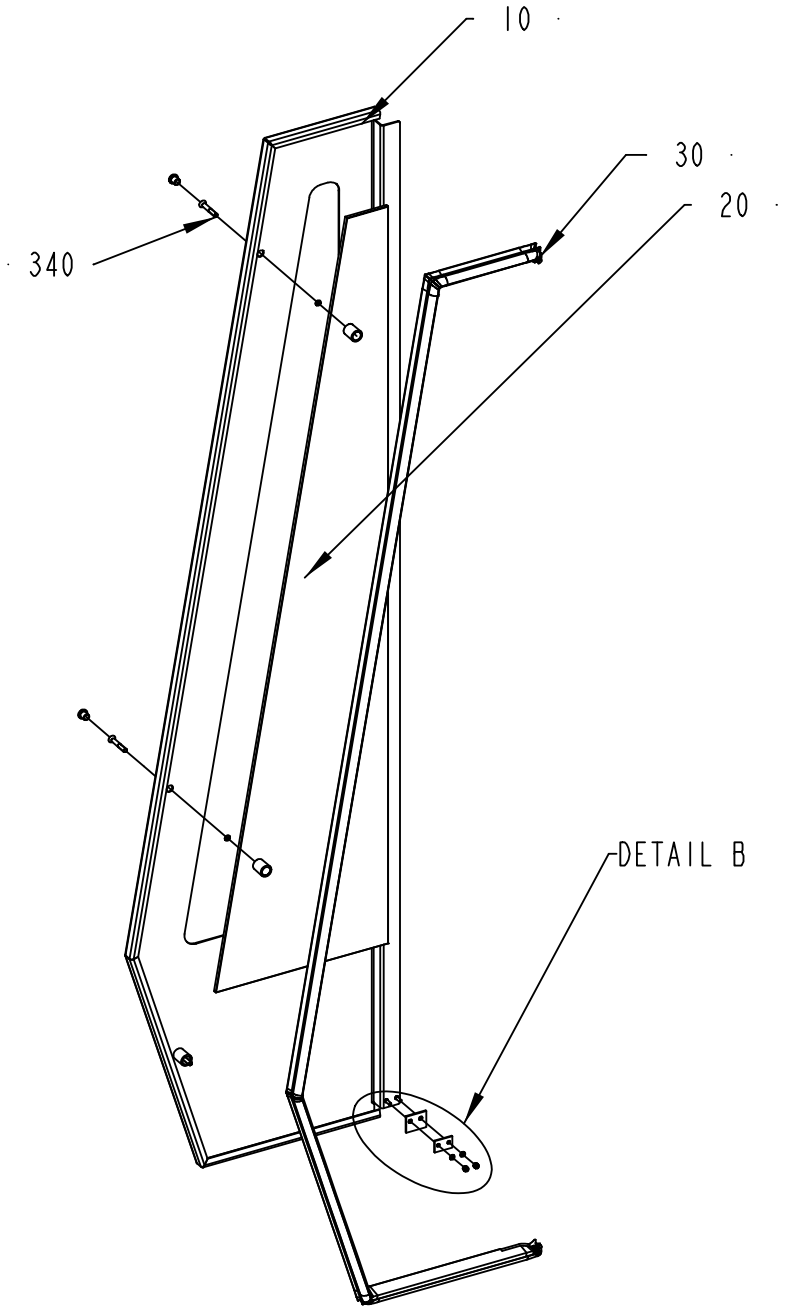

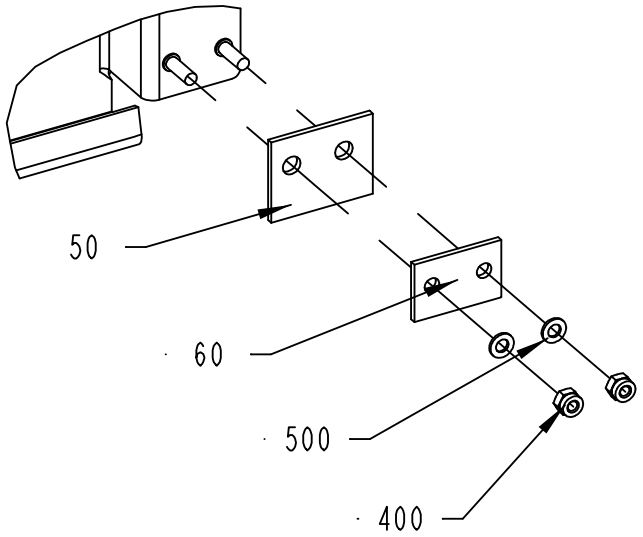

DETAIL B
1:2

2508177-1
ECM 117743

ECM: 265959 - 20060510
Group number: 2508177-0100
Assembly Drawing: 2508177-1_1_AA

Pos	Part No	UN	Qty	Description	Page No
A3/FLEX					
010	2508178-0000		1	DOOR	
020	2508180-0001		1	GLASS PANE	
030	2508179-0000		1	RUBBER SEAL	
Common Parts					
050	1129325-0000		1	SEALING FLANGE	
060	1129324-0000		1	WASHER	
300	90153-0049		1	ADHESIVE, LOCTITE 409 20G	
310	90157-0041		1	SEALING COMPOUND, RHODORSEAL 5651	
340	90226-0458		3	MOUNTING SCREW	
400	312812-0312		2	HEXAGON NUT, NY-LOCK M4 A480	
500	315105-0136		2	WASHER BRB 4,3X9 RFR	

Pos	Part No	UN	Qty	Description	Page No

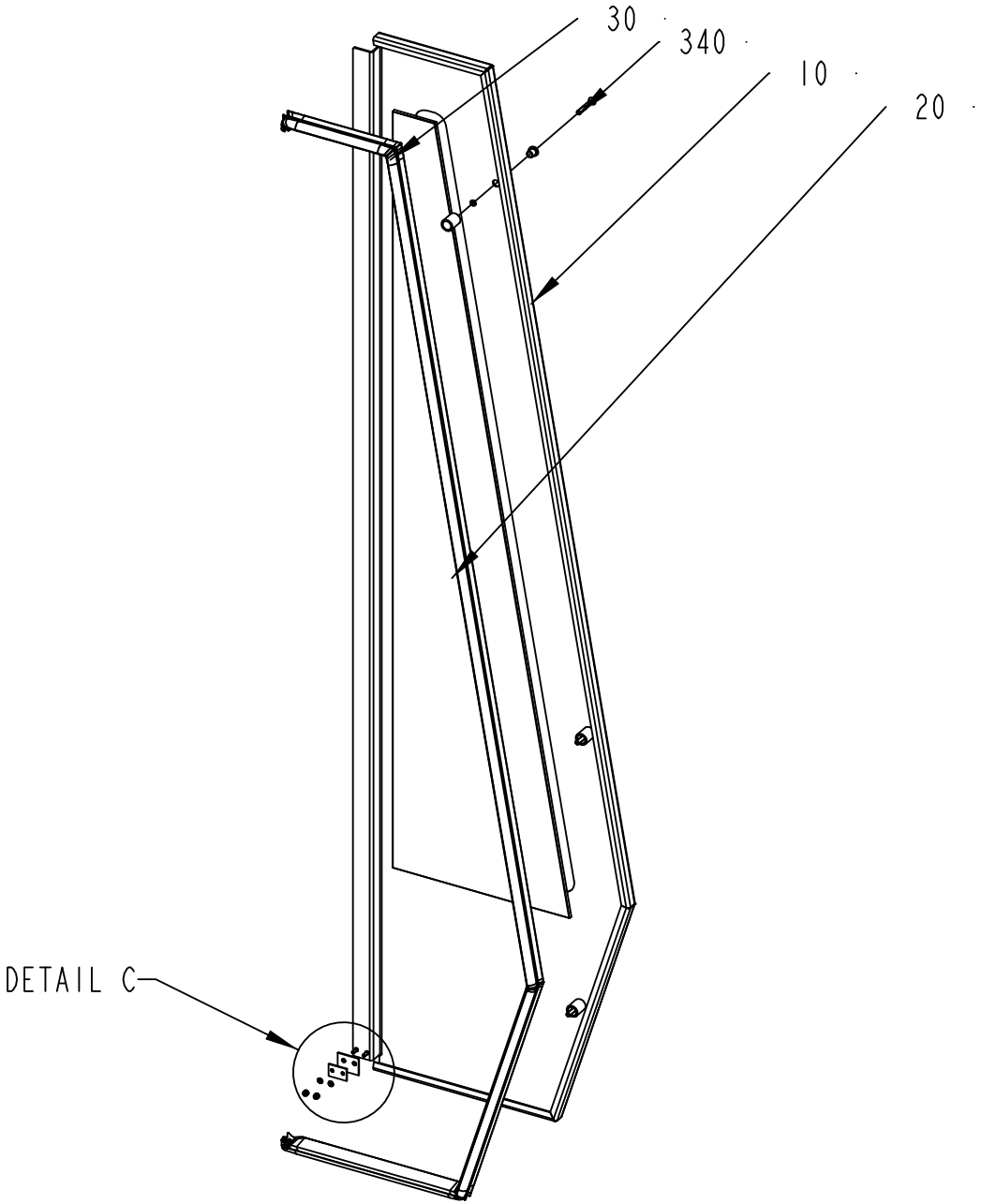

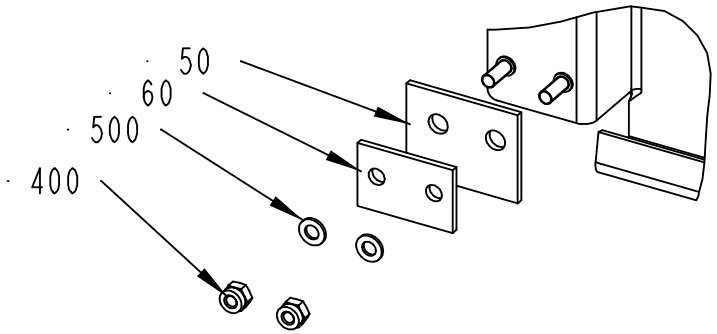

DETAIL C
1:2

2508181-1
ECM 117743

ECM: 265960 - 20060510
Group number: 2508181-0100
Assembly Drawing: 2508181-1_1_AA

Pos	Part No	UN	Qty	Description	Page No
A3/FLEX					
010	2508182-0000		1	DOOR	
020	2508180-0002		1	GLASS PANE	
030	2508183-0000		1	RUBBER SEAL	
Common Parts					
050	1129325-0000		1	SEALING FLANGE	
060	1129324-0000		1	WASHER	
300	90153-0049		1	ADHESIVE, LOCTITE 409 20G	
310	90157-0041		1	SEALING COMPOUND, RHODORSEAL 5651	
340	90226-0458		3	MOUNTING SCREW	
400	312812-0312		2	HEXAGON NUT, NY-LOCK M4 A480	
500	315105-0136		2	WASHER BRB 4,3X9 RFR	

Pos	Part No	UN	Qty	Description	Page No

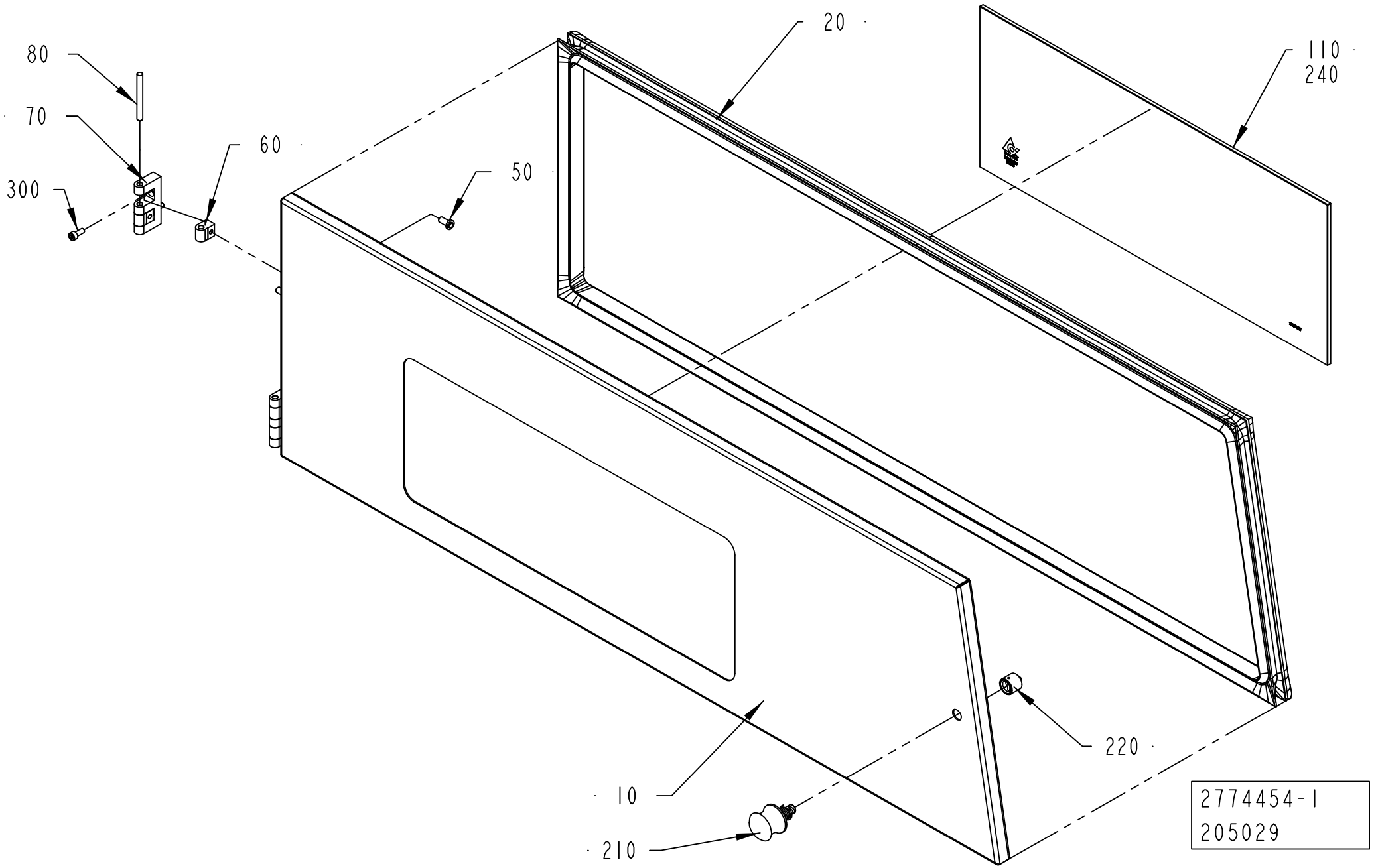
80
70
300
60
50
20
110
240
10
210
220
2774454-1
205029

ECM: 224420 - 20060701
Group number: 2774454-0100
Assembly Drawing: 2774454-1_1_AA

Pos	Part No	UN	Qty	Description	Page No
A3/FLEX					
010	2760963-0000		1	COVER	
110	2530082-0000		1	GLASS PANE	
Common Parts					
040	2760964-0000		1	RUBBER SEAL	
050	1129767-0000		4	SCREW	
060	1129770-0000		4	BLOCKING PIECE	
070	1035792-0000		2	E-HINGE	
080	988685-0000		2	PIN	
210	90237-0079		1	FAST LOCKING BOLT, FSQ -M8	
220	90237-0178		1	FAST LOCKING SOCKET,4-28599, M8	
300	312115-0327		4	SCREW ISO4762 M5X12 A4 80	

Pos	Part No	UN	Qty	Description	Page No

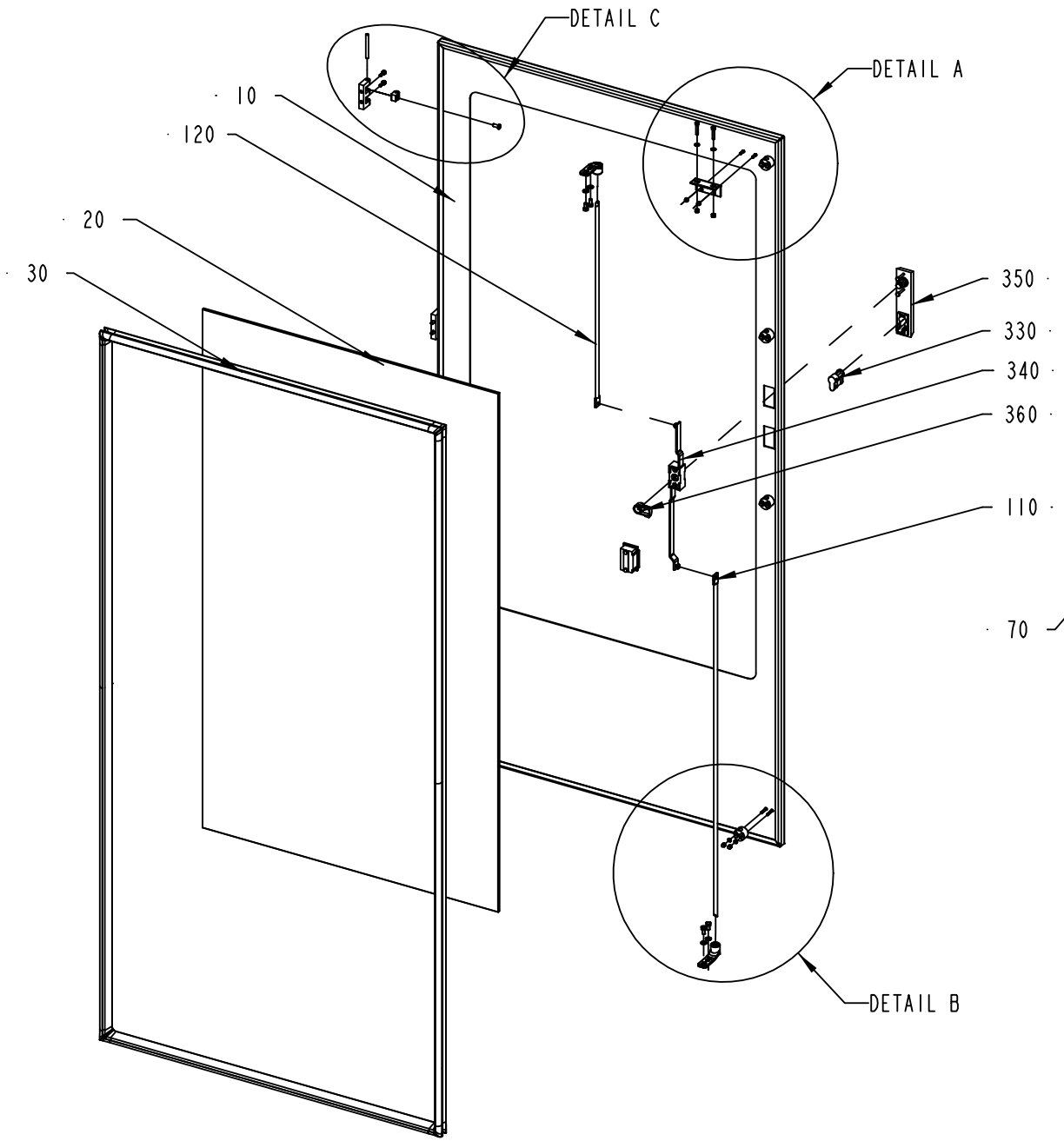

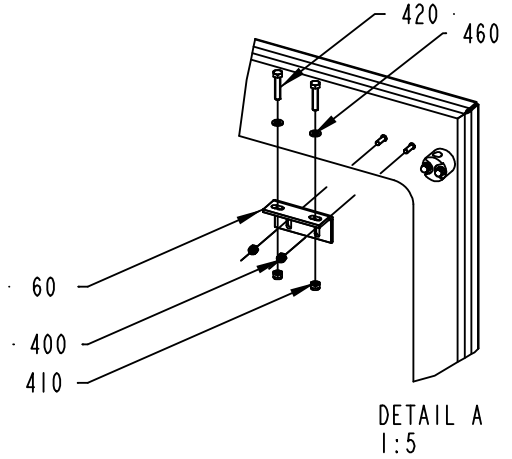

DETAIL A
1:5

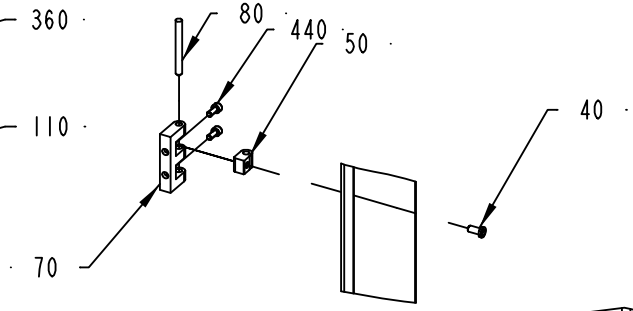

DETAIL C
1:5

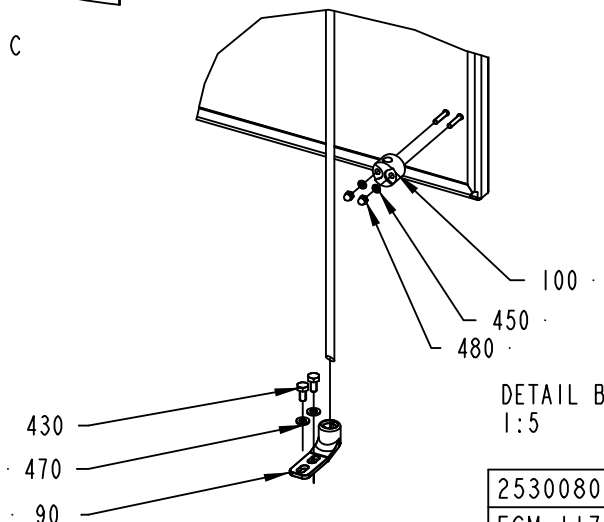

DETAIL B
1:5

2530080-1
ECM 117743

ECM: 265691 - 20060702
Group number: 2530080-0100
Assembly Drawing: 2530080-1_1_AA

Pos	Part No	UN	Qty	Description	Page No
A3/FLEX					
010	2530087-0000		1	DOOR	
020	2527640-0000		1	GLASS PANE	
030	2527639-0000		1	RUBBER SEAL	
Common Parts					
040	1129767-0000		3	SCREW	
050	1129770-0000		3	BLOCKING PIECE	
060	1346885-0000		1	SUPPORT	
070	1035792-0000		3	E-HINGE	
080	988685-0000		3	PIN	
090	1538868-0000		2	BRACKET	
100	1129274-0000		4	GUIDE LUG	
110	2508133-0000		1	LOCKING ARM	
120	2508134-0000		1	LOCKING ARM	
300	90153-0049		1	ADHESIVE, LOCTITE 409 20G	
310	90157-0041		1	SEALING COMPOUND, RHODORSEAL 5651	
330	90237-0128		1	LOCK CYLINDER, 1109-U3	
340	90237-0153		1	LOCK HOUSING, 1121-U26-0B	
350	90237-0176		1	TURNING HANDLE, 1125-U190-A	
360	90237-0165		1	LATCH	
400	312812-0312		2	HEXAGON NUT, NY-LOCK M4 A480	
410	312812-0314		2	HEXAGON NUT, NY-LOCK M5 A480	
420	312105-0333		2	SCREW M6S ISO 4017 M5X25 A480	
430	312105-0366		4	SCREW M6S ISO 4017 M6X12 A480	
440	312115-0327		6	SCREW ISO4762 M5X12 A4 80	
450	315105-0136		8	WASHER BRB 4,3X9 RFR	
460	315105-0146		2	WASHER BRB 5,3X10 RFR	
470	315105-0153		4	WASHER BRB 6,4X12 RFR	
480	312705-0312		8	NUT HEX. DOMED CAP MHM-6 M4 A280	

Pos	Part No	UN	Qty	Description	Page No

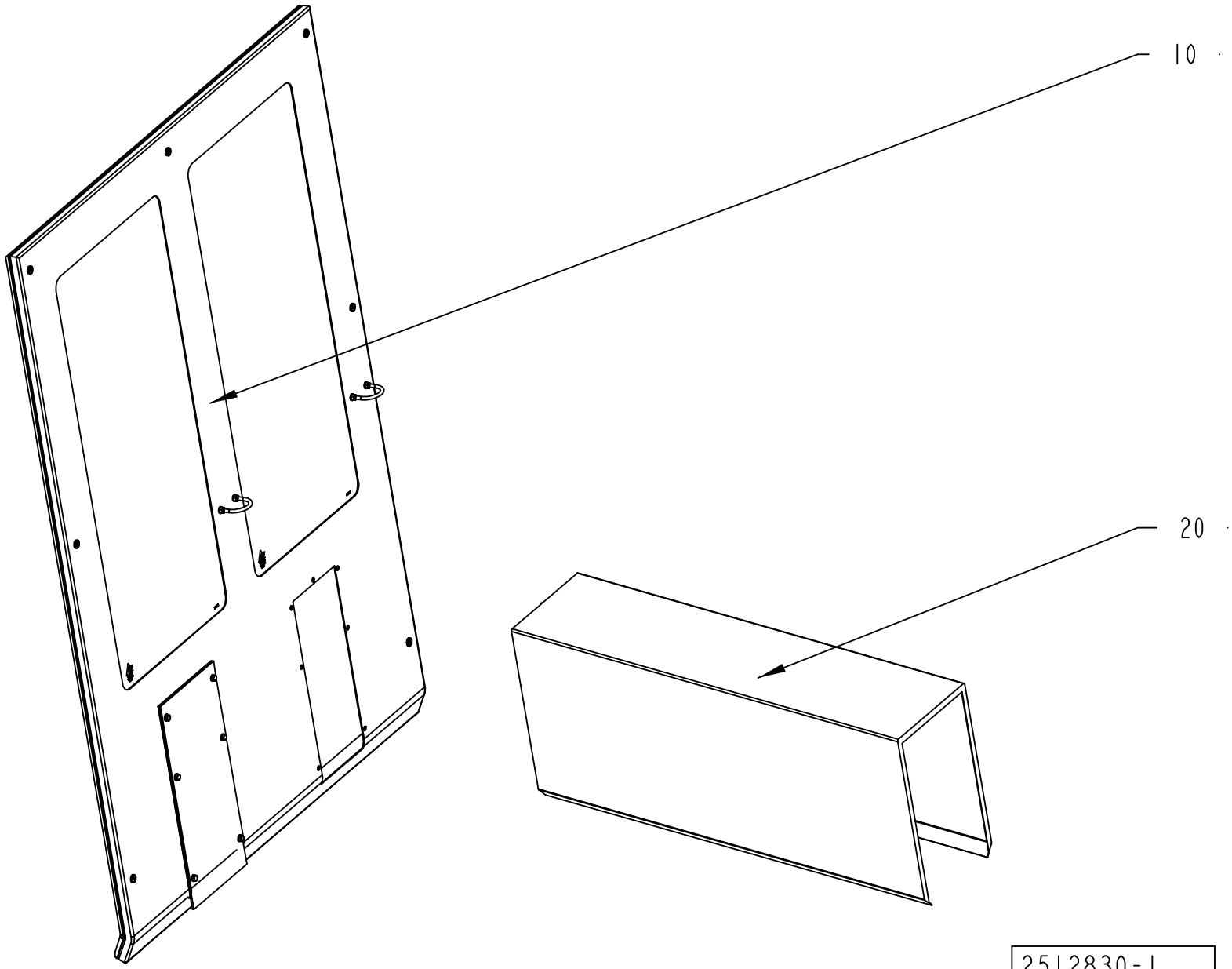
10
20
2512830-1
ECM 117743

ECM: 241432 - 20060102
Group number: 2512830-0100
Assembly Drawing: 2512830-1_1_AA

Pos	Part No	UN	Qty	Description	Page No
A3/FLEX					
020	1095738-0300		1	PROTECTIVE COVER	**2-243**
Common Parts					
010	2517062-0100		1	FRONT COVER	**2-245**

Pos	Part No	UN	Qty	Description	Page No

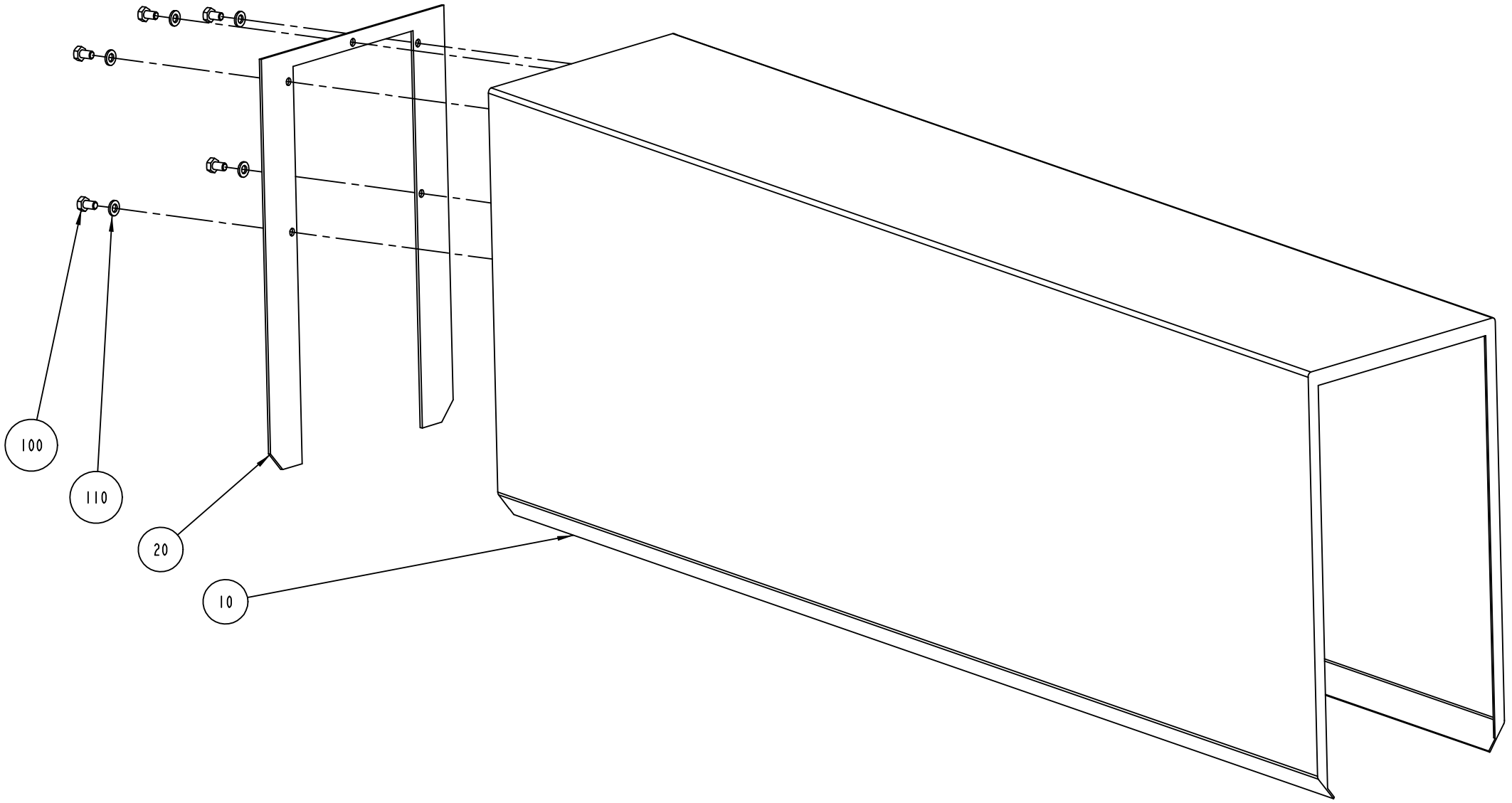

S-1095738-3
ECN 72400

ECM: 189928 - 20041104
Group number: 1095738-0300
Assembly Drawing: 1095738-3_1_AB

Pos	Part No	UN	Qty	Description	Page No
-					
010	1296289-0000		1	TUNNEL	
020	1296290-0000		1	GASKET	
100	312105-0364		5	SCREW M6S ISO 4017 M6X10 A480	
110	315105-0153		5	WASHER BRB 6,4X12 RFR	

Pos	Part No	UN	Qty	Description	Page No

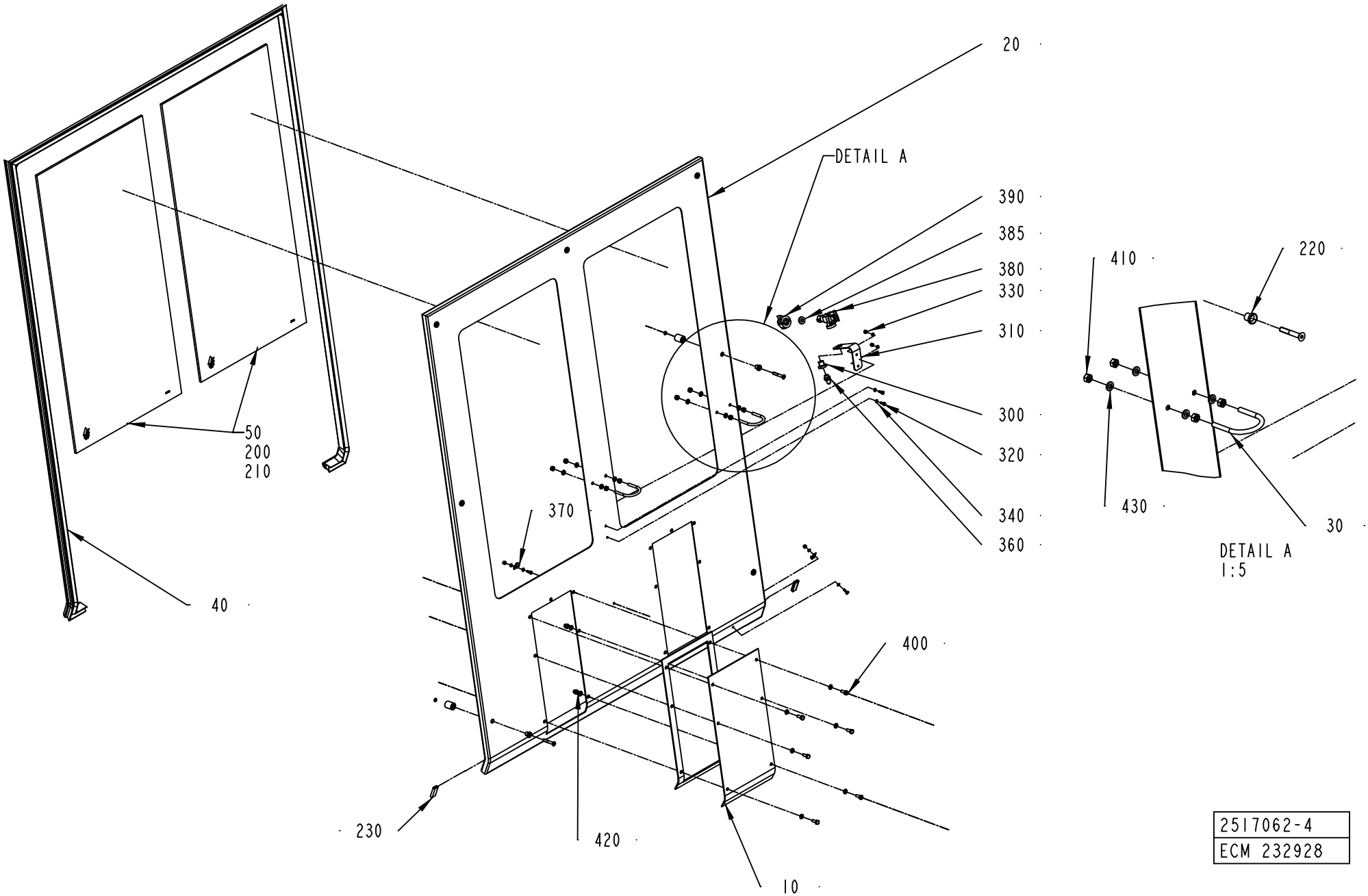

2517062-4
ECM 232928

ECM: 265962 - 20060510
Group number: 2517062-0100
Assembly Drawing: 2517062-4_1_AB

Pos	Part No	UN	Qty	Description	Page No
A3/FLEX					
010	1296218-0200		1	LID	**2-247**
020	2514830-0000		1	FRONT COVER	
040	2514831-0000		1	SEALING STRIP	
050	2514832-0000		2	GLASS PANE	
300	532413-0000		1	REDUCING NIPPLE	
310	2634536-0000		1	SUPPORT	
320	312105-0291		4	SCREW M6S ISO 4017 M4X12 A470	
330	312810-0312		4	HEXAGON NUT, NY-LOCK M4 FZB	
340	315105-0136		8	WASHER BRB 4,3X9 RFR	
360	342921-0113		1	STRAIGHT COUPLING,EXT.THREADED 6/4-G1/8"	
370	90165-0057		2	PIPE CLIP FOR TUBE D=6 MM	
380	90230-0027		1	NON-RETURN VALVE QJ 8355-1/4"	
	90230-0301		*1*	*DIAPHRAGM*	
	90230-0300		*1*	*STRAINER*	
385	90005-0094		1	GASKET C 19438-EPR	
390	534310-0001		1	NOZZLE	
400	312105-0368		6	SCREW M6S ISO 4017 M6X16 A480	
410	312605-0316		8	HEXAGON NUT, M6M M6 A280	
430	315105-0153		20	WASHER BRB 6,4X12 RFR	
Common Parts					
030	531616-0000		2	HOLDER	
200	90153-0049		1	ADHESIVE, LOCTITE 409 20G	
210	90157-0041	L	1	SEALING COMPOUND, RHODORSEAL 5651	
220	90226-0458		7	MOUNTING SCREW	
230	90143-0059	MM	70	SEAL STRIP 4610069	
420	312705-0316		6	NUT HEX. DOMED CAP MHM-6 M6 A280	

Pos	Part No	UN	Qty	Description	Page No

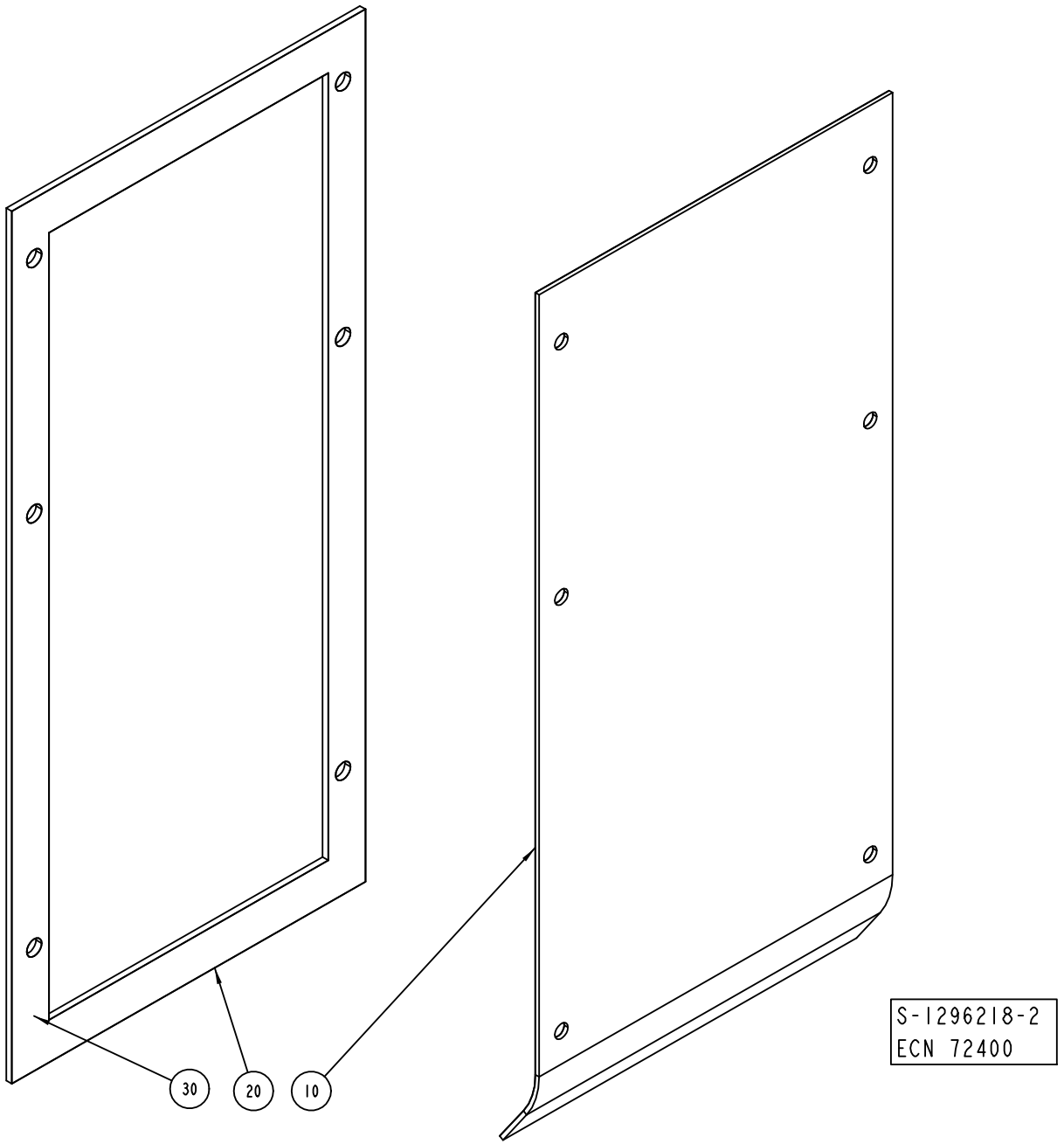
30
20
10
S-1296218-2
ECN 72400

ECM: 72400 - 19990430
Group number: 1296218-0200
Assembly Drawing: 1296218-2_1_AA

Pos	Part No	UN	Qty	Description	Page No
-					
010	1478389-0000		1	COVERING PLATE	
020	1478391-0000		1	GASKET	
030	90157-0041		1	SEALING COMPOUND, RHODORSEAL 5651	

Pos	Part No	UN	Qty	Description	Page No

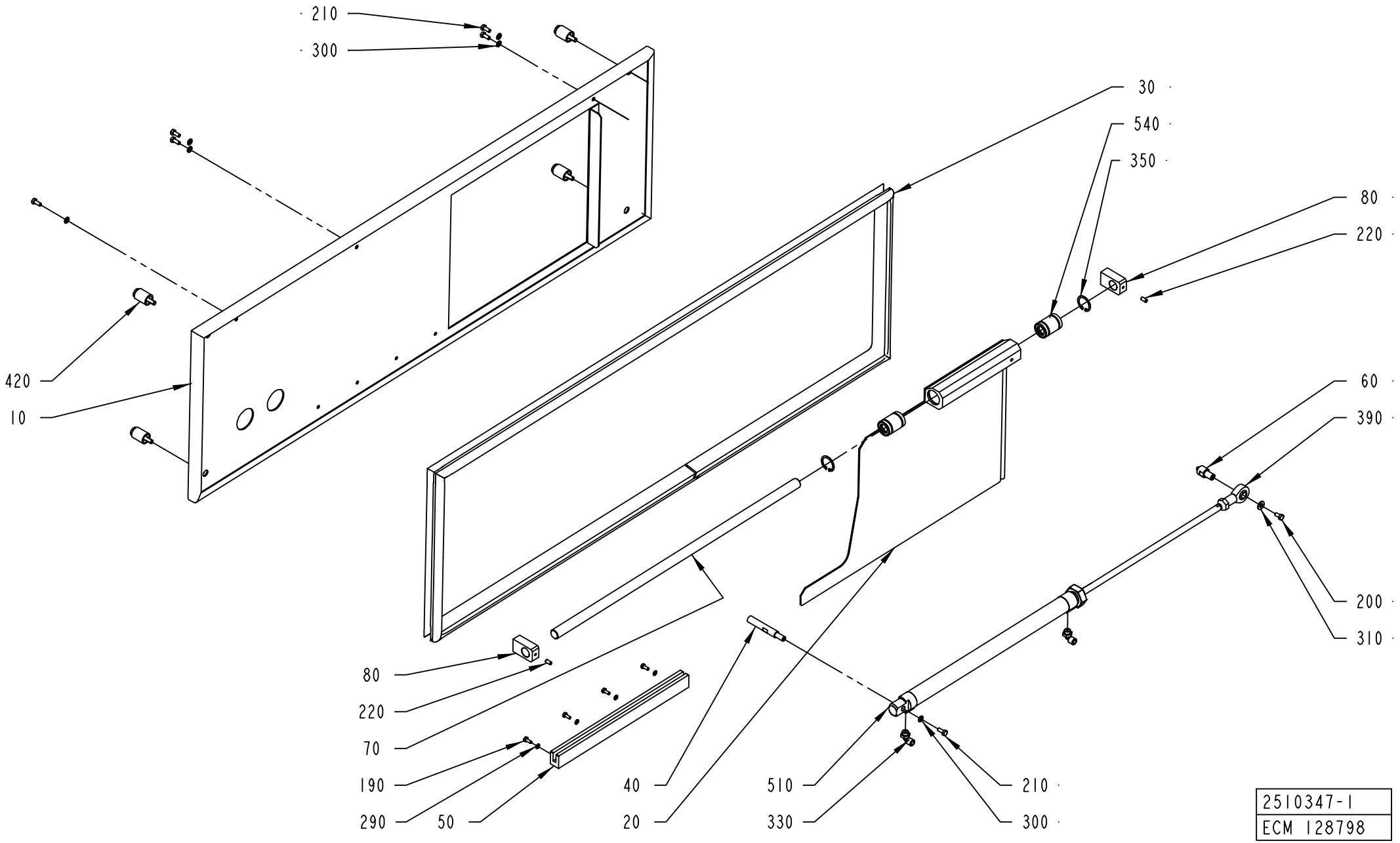
210
300
30
540
350
80
220
420
10
60
390
200
310
80
220
70
190
290
50
40
20
510
330
210
300
2510347-1
ECM 128798

ECM: 265964 - 20060510
Group number: 2510347-0100
Assembly Drawing: 2510347-1_1_AB

Pos	Part No	UN	Qty	Description	Page No
A3/FLEX					
030	2510349-0000		1	SEALING STRIP	
Common Parts					
010	2510348-0000		1	COVER	
020	2510352-0000		1	DOOR	
040	2510355-0000		1	SHAFT	
050	2510353-0000		1	GUIDE	
060	2510354-0000		1	PIN	
070	2510351-0000		1	SHAFT	
080	2510350-0000		2	SUPPORT	
190	312105-0289		4	SCREW M6S ISO 4017 M4X10 A470	
200	312101-0325		1	SCREW M6S M5X10 FZB	
210	312105-0327		6	SCREW M6S ISO 4017 M5X12 A480	
220	312318-0325		2	SCREW ISO4029 M5X10 A4	
290	315105-0136		4	WASHER BRB 4,3X9 RFR	
300	315105-0146		10	WASHER BRB 5,3X10 RFR	
310	315105-0156		1	WASHER BRB 6,7X14 RFR	
330	90458-2956		2	ELBOW PIPE JOINT, EXT.THREAD, D=6MM-G1/8	
350	90458-0506		2	RETAINING RING FOR BORE DIN 472 26 A2	
390	90115-0134		1	ROD END, ID=10 MM, M10X1,25	
420	90226-0458		4	MOUNTING SCREW	
510	90459-0401		1	DOUBLE ACTING, MINI-ISO, CYL. 25-320	
540	90189-0011		2	BALL BUSHING, 16X26X36 MM	

Pos	Part No	UN	Qty	Description	Page No

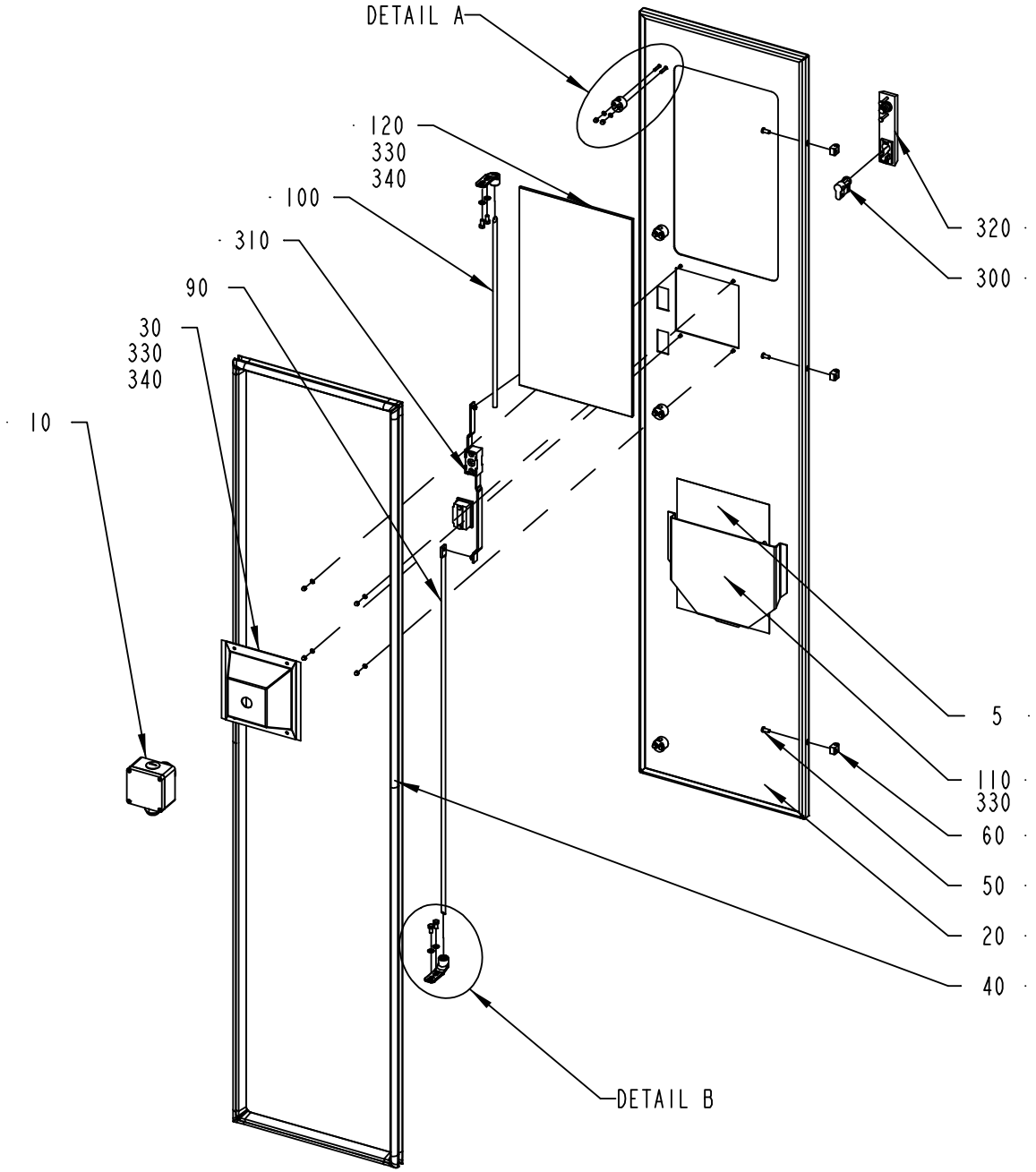

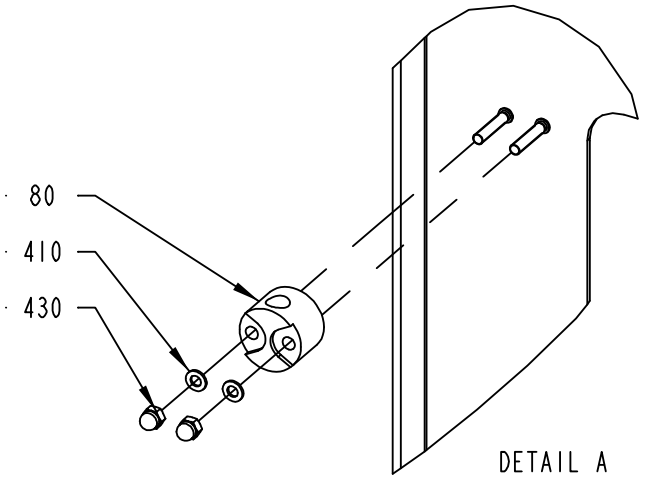

DETAIL A
1:2

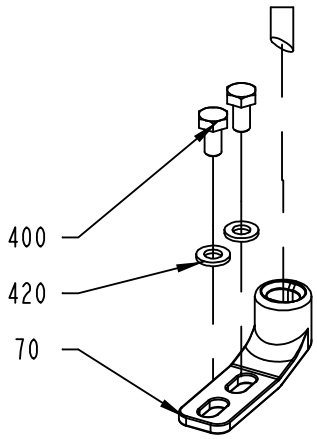

DETAIL B
1:2

2508138-1
ECM 133290

ECM: 265957 - 20060510
Group number: 2508138-0100
Assembly Drawing: 2508138-1_1_AB

Pos	Part No	UN	Qty	Description	Page No
A3/FLEX					
005	2508173-0100		1	DIAGRAM	**2-253**
020	2508139-0000		1	DOOR	
Common Parts					
010	2593851-0100		1	EMERGENCY STOP	**2-223**
030	2532619-0000		1	COVER	
040	2508186-0000		1	RUBBER SEAL	
050	1129767-0000		3	SCREW	
060	1129770-0000		3	BLOCKING PIECE	
070	1538868-0000		2	BRACKET	
080	1129274-0000		4	GUIDE LUG	
090	2508133-0000		1	LOCKING ARM	
100	2508140-0000		1	LOCKING ARM	
110	1129275-0000		1	BOX FOR DIAGRAM	
120	2532620-0000		1	GLASS PANE	
300	90237-0128		1	LOCK CYLINDER, 1109-U3	
310	90237-0153		1	LOCK HOUSING, 1121-U26-0B	
320	90237-0176		1	TURNING HANDLE, 1125-U190-A	
330	90157-0041		1	SEALING COMPOUND, RHODORSEAL 5651	
340	90153-0049		1	ADHESIVE, LOCTITE 409 20G	
400	312105-0366		4	SCREW M6S ISO 4017 M6X12 A480	
410	315105-0136		12	WASHER BRB 4,3X9 RFR	
420	315105-0153		4	WASHER BRB 6,4X12 RFR	
430	312705-0312		12	NUT HEX. DOMED CAP MHM-6 M4 A280	

Pos	Part No	UN	Qty	Description	Page No

This page is intentionally left blank.

ECM: 277395 - 20061103
Group number: 2508173-0100
Assembly Drawing:

Pos	Part No	UN	Qty	Description	Page No
A3/FLEX TBA 0500B, A3/FLEX TBA 1000B, A3/FLEX TBA 1000S, A3/FLEX TBA 1000SQ, A3/FLEX TPA 1000SQ, A3/FLEX TBA 0200S, A3/FLEX TBA 1500S, A3/FLEX TBA 0200B, A3/FLEX TBA 0250B, A3/FLEX TBA 0330S, A3/FLEX TPA 0330SQ, A3/FLEX TPA 0500SQ, A3/FLEX TBA 0200M, A3/FLEX TBA 0250S, A3/FLEX TBA 0500S					
010	2550944-0000		1	WATER DIAGRAM	
010	2550945-0000		1	WATER DIAGRAM	
020	2552001-0000		1	HYDRAULIC DIAGRAM	
030	2512829-0000		1	PNEUMATIC DIAGRAM	
030	2527509-0000		1	PNEUMATIC DIAGRAM	
030	2551119-0000		1	PNEUMATIC DIAGRAM	
030	2563276-0000		1	PNEUMATIC DIAGRAM	
030	2565493-0000		1	PNEUMATIC DIAGRAM	
040	2512821-0000		1	EXTERNAL CLEANING DIAGRAM	
050	2512826-0000		1	DIAGRAM	
050	2512825-0000		1	DIAGRAM	
A3/FLEX TBA 1890S, A3/FLEX TBA 2000S, A3/FLEX TBA 1400B					
010	2550944-0000		1	WATER DIAGRAM	
010	2550945-0000		1	WATER DIAGRAM	
020	2552001-0000		1	HYDRAULIC DIAGRAM	
030	2563276-0000		1	PNEUMATIC DIAGRAM	
030	2565493-0000		1	PNEUMATIC DIAGRAM	
030	2551119-0000		1	PNEUMATIC DIAGRAM	
030	2719738-0000		1	PNEUMATIC DIAGRAM	
030	2719737-0000		1	PNEUMATIC DIAGRAM	
040	2512821-0000		1	EXTERNAL CLEANING DIAGRAM	
050	2512825-0000		1	DIAGRAM	
050	2512826-0000		1	DIAGRAM	
Common Parts					
030	2594393-0000		1	PNEUMATIC DIAGRAM	
030	2527368-0000		1	PNEUMATIC DIAGRAM	

Pos	Part No	UN	Qty	Description	Page No

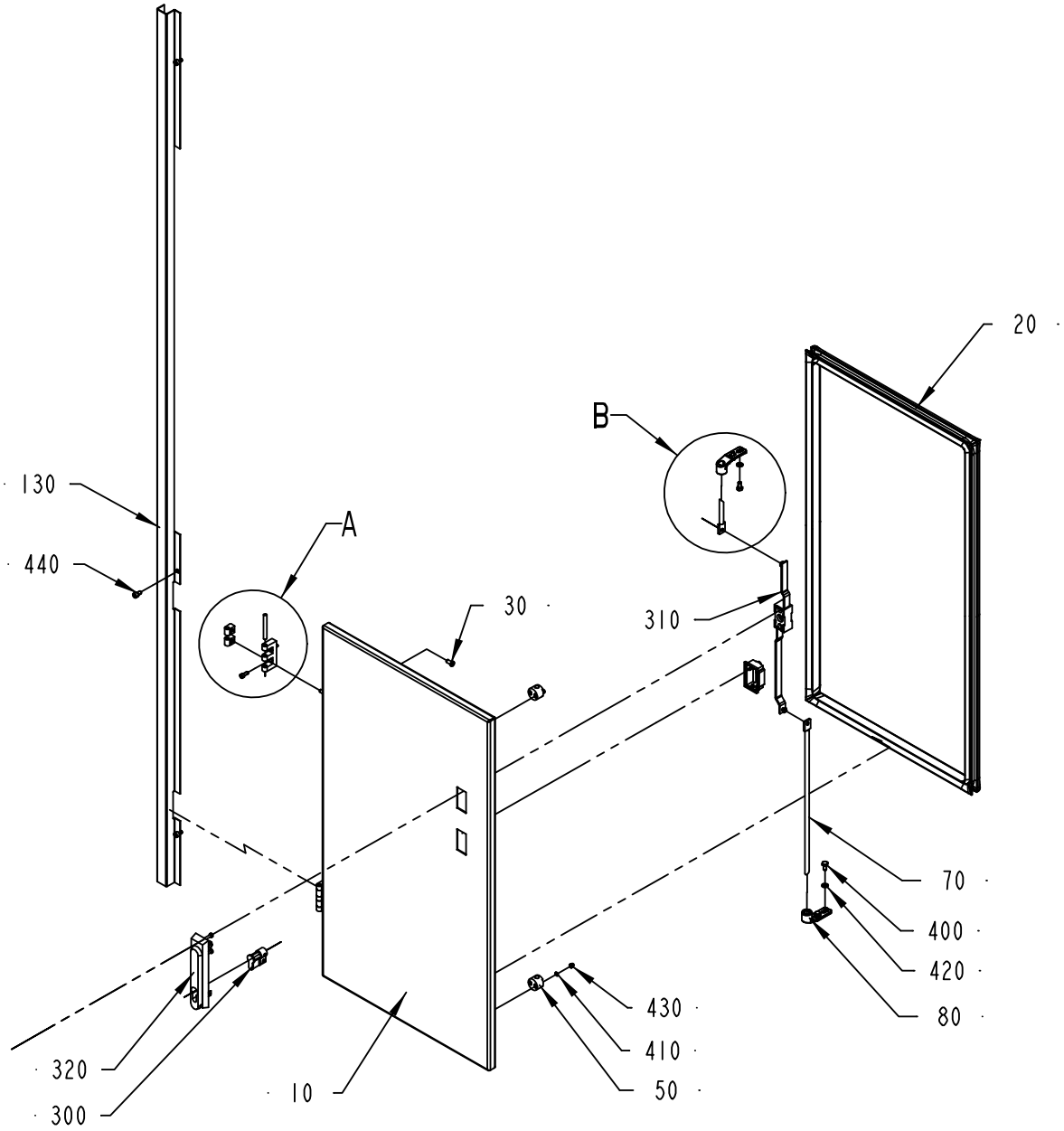

DETAIL A
SCALE 1:2

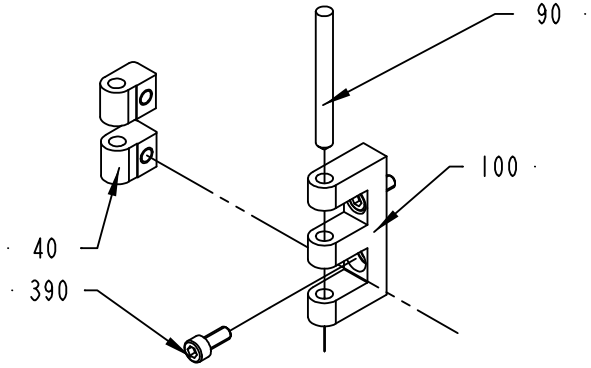

DETAIL B
SCALE 1:2

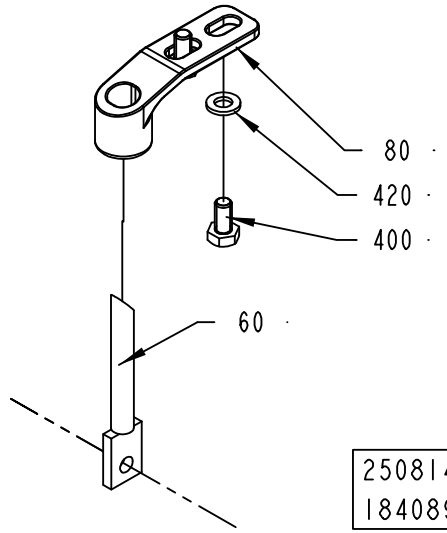

2508149-2
184089

ECM: 197124 - 20050620
Group number: 2508149-0200
Assembly Drawing: 2508149-2_1_AA

Pos	Part No	UN	Qty	Description	Page No
A3/FLEX DIMC/FLEX, A3/FLEX PT/FLEX					
130	2726296-0000		1	COVER STRIP	
A3/FLEX NOPT, A3/FLEX NODIMC					
130	2728140-0000		1	COVER STRIP	
Common Parts					
010	2508150-0000		1	DOOR	
020	2508151-0000		1	RUBBER SEAL	
030	1129767-0000		2	SCREW	
040	1129770-0000		2	BLOCKING PIECE	
050	1129274-0000		3	GUIDE LUG	
060	2508147-0000		1	LOCKING ARM	
070	2508152-0000		1	LOCKING ARM	
080	1538868-0000		2	BRACKET	
090	988685-0000		2	PIN	
100	1035792-0000		2	E-HINGE	
110	1129767-0000		2	SCREW	
120	1129770-0000		2	BLOCKING PIECE	
300	90237-0128		1	LOCK CYLINDER, 1109-U3	
310	90237-0153		1	LOCK HOUSING, 1121-U26-0B	
320	90237-0176		1	TURNING HANDLE, 1125-U190-A	
390	312115-0327		4	SCREW ISO4762 M5X12 A4 80	
400	312105-0366		4	SCREW M6S ISO 4017 M6X12 A480	
410	315105-0136		6	WASHER BRB 4,3X9 RFR	
420	315105-0153		4	WASHER BRB 6,4X12 RFR	
430	312705-0312		6	NUT HEX. DOMED CAP MHM-6 M4 A280	
440	312115-0362		3	SCREW ISO4762 M6X8 A4 80	

Pos	Part No	UN	Qty	Description	Page No

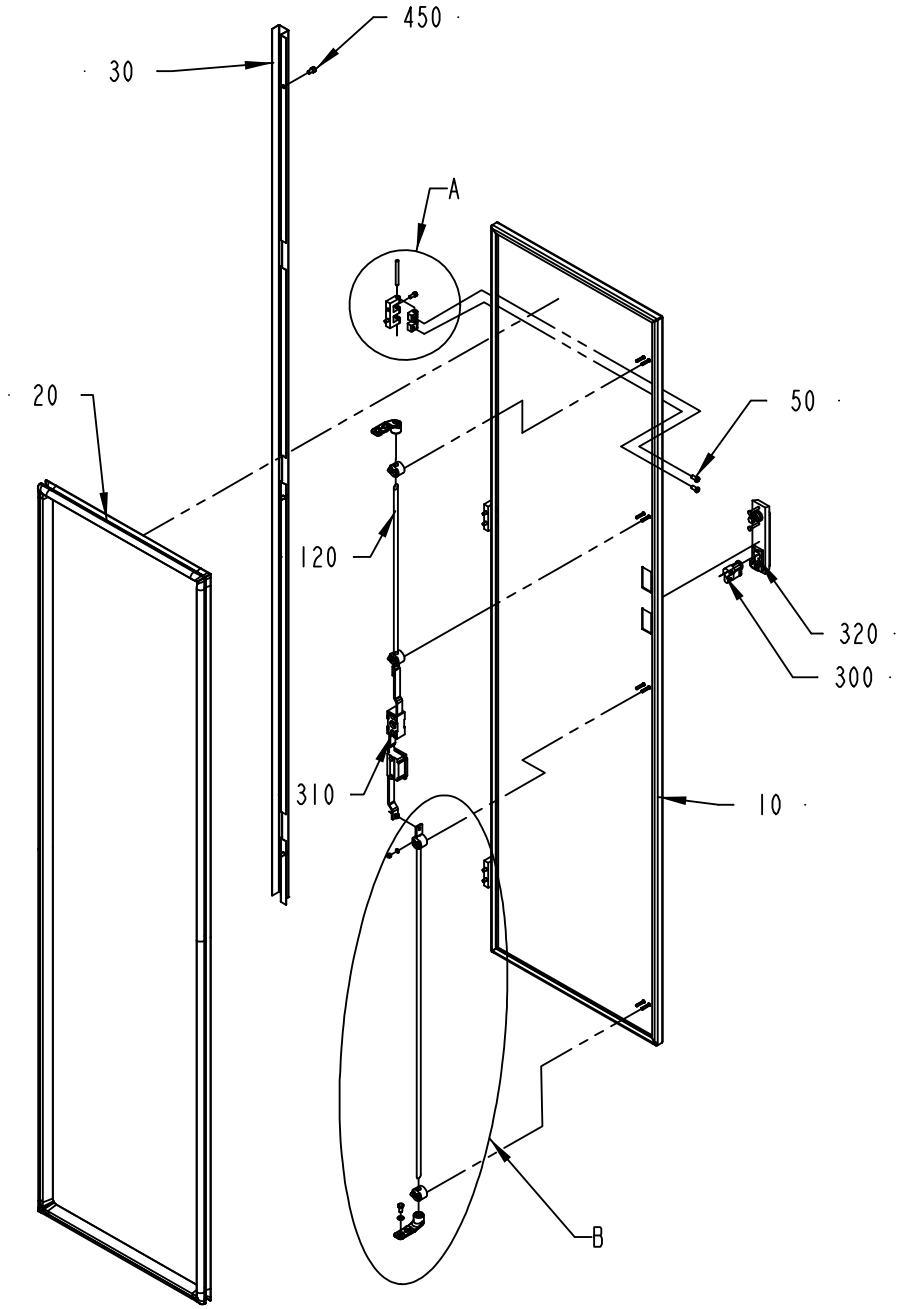

DETAIL A
SCALE 1:2

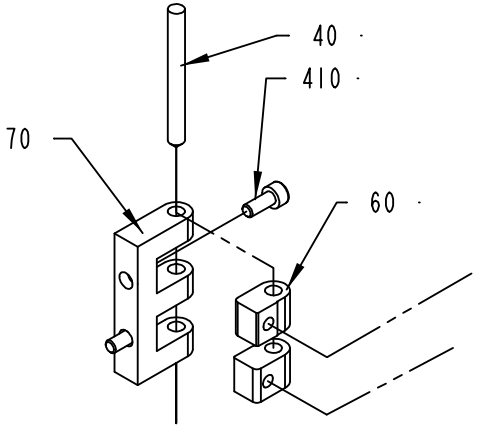

DETAIL B
SCALE 1:5

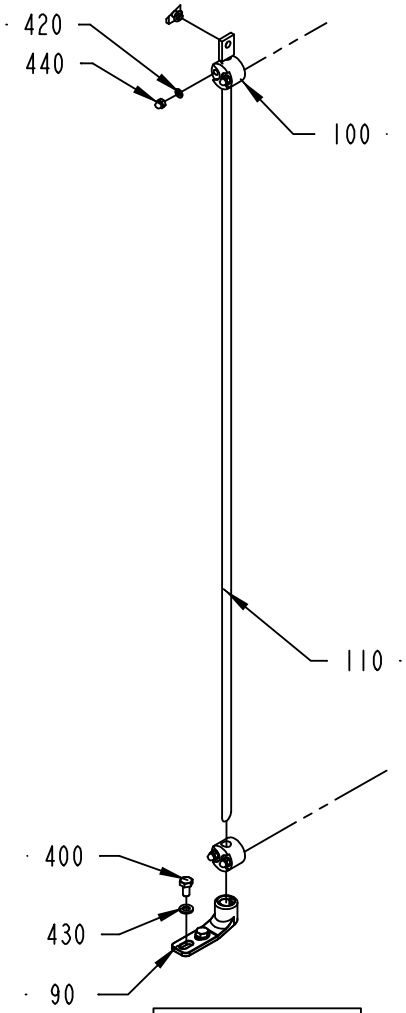

2529597-2
184089

ECM: 197125 - 20050620
Group number: 2529597-0200
Assembly Drawing: 2529597-2_1_AA

Pos	Part No	UN	Qty	Description	Page No
A3/FLEX DIMC/FLEX, A3/FLEX PT/FLEX					
030	2726295-0000		1	COVER STRIP	
A3/FLEX NOPT, A3/FLEX NODIMC					
030	2728139-0000		1	COVER STRIP	
Common Parts					
010	2529598-0000		1	DOOR	
020	2529599-0000		1	RUBBER SEAL	
040	988685-0000		3	PIN	
050	1129767-0000		6	SCREW	
060	1129770-0000		6	BLOCKING PIECE	
070	1035792-0000		3	E-HINGE	
090	1538868-0000		2	BRACKET	
100	1129274-0000		4	GUIDE LUG	
110	2508133-0000		1	LOCKING ARM	
120	2508140-0000		1	LOCKING ARM	
300	90237-0128		1	LOCK CYLINDER, 1109-U3	
310	90237-0153		1	LOCK HOUSING, 1121-U26-0B	
320	90237-0176		1	TURNING HANDLE, 1125-U190-A	
400	312115-0327		4	SCREW ISO4762 M5X12 A4 80	
410	312105-0366		6	SCREW M6S ISO 4017 M6X12 A480	
420	315105-0136		8	WASHER BRB 4,3X9 RFR	
430	315105-0153		4	WASHER BRB 6,4X12 RFR	
440	312705-0312		8	NUT HEX. DOMED CAP MHM-6 M4 A280	
450	312115-0362		3	SCREW ISO4762 M6X8 A4 80	

Pos	Part No	UN	Qty	Description	Page No

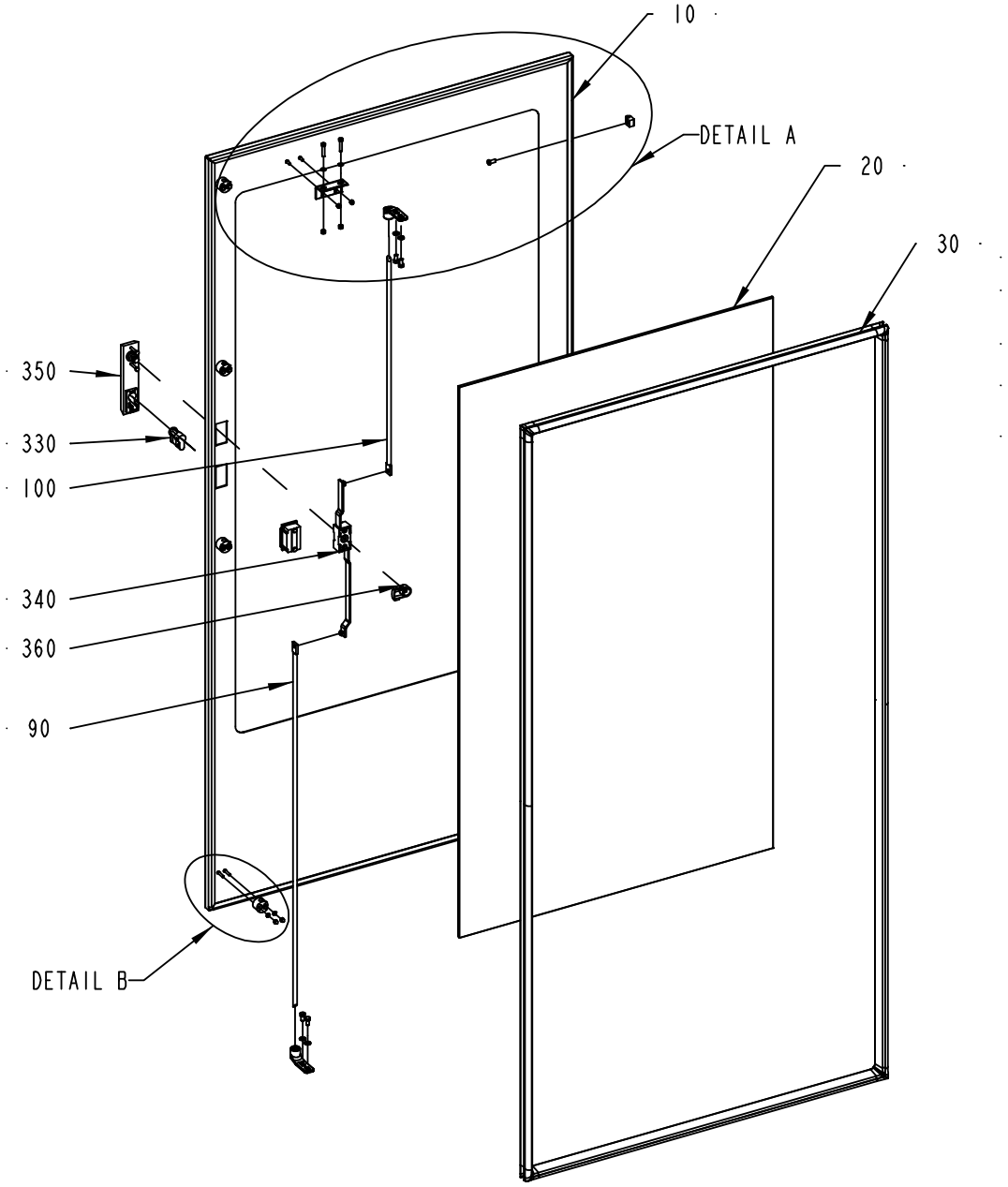

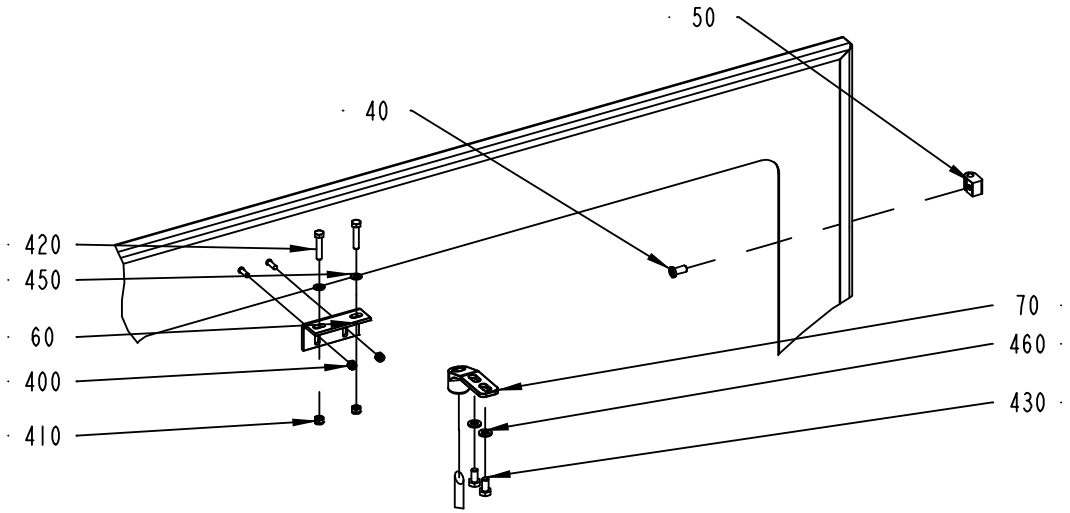

DETAIL A
1:5

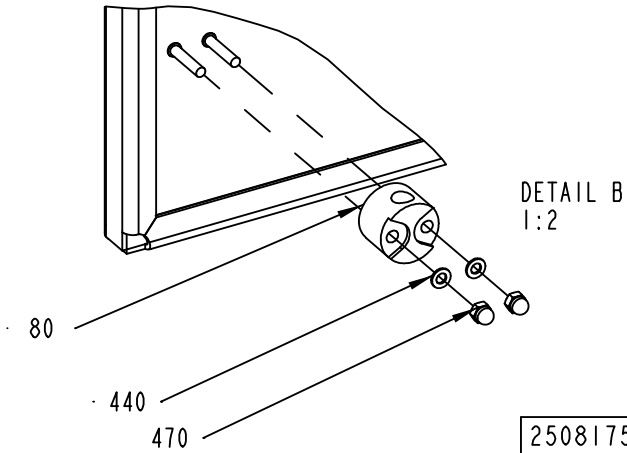

DETAIL B
1:2

2508175-1
ECM 117162

ECM: 265692 - 20060702
Group number: 2508175-0100
Assembly Drawing: 2508175-1_1_AA

Pos	Part No	UN	Qty	Description	Page No
A3/FLEX					
010	2508176-0000		1	DOOR	
020	2527640-0000		1	GLASS PANE	
030	2527639-0000		1	RUBBER SEAL	
Common Parts					
040	1129767-0000		3	SCREW	
050	1129770-0000		3	BLOCKING PIECE	
060	1346885-0000		1	SUPPORT	
070	1538868-0000		2	BRACKET	
080	1129274-0000		4	GUIDE LUG	
090	2508133-0000		1	LOCKING ARM	
100	2508134-0000		1	LOCKING ARM	
300	90153-0049		1	ADHESIVE, LOCTITE 409 20G	
310	90157-0041		1	SEALING COMPOUND, RHODORSEAL 5651	
330	90237-0128		1	LOCK CYLINDER, 1109-U3	
340	90237-0153		1	LOCK HOUSING, 1121-U26-0B	
350	90237-0176		1	TURNING HANDLE, 1125-U190-A	
360	90237-0165		1	LATCH	
400	312812-0312		2	HEXAGON NUT, NY-LOCK M4 A480	
410	312812-0314		2	HEXAGON NUT, NY-LOCK M5 A480	
420	312105-0333		2	SCREW M6S ISO 4017 M5X25 A480	
430	312105-0366		4	SCREW M6S ISO 4017 M6X12 A480	
440	315105-0136		8	WASHER BRB 4,3X9 RFR	
450	315105-0146		2	WASHER BRB 5,3X10 RFR	
460	315105-0153		4	WASHER BRB 6,4X12 RFR	
470	312705-0312		8	NUT HEX. DOMED CAP MHM-6 M4 A280	

Pos	Part No	UN	Qty	Description	Page No

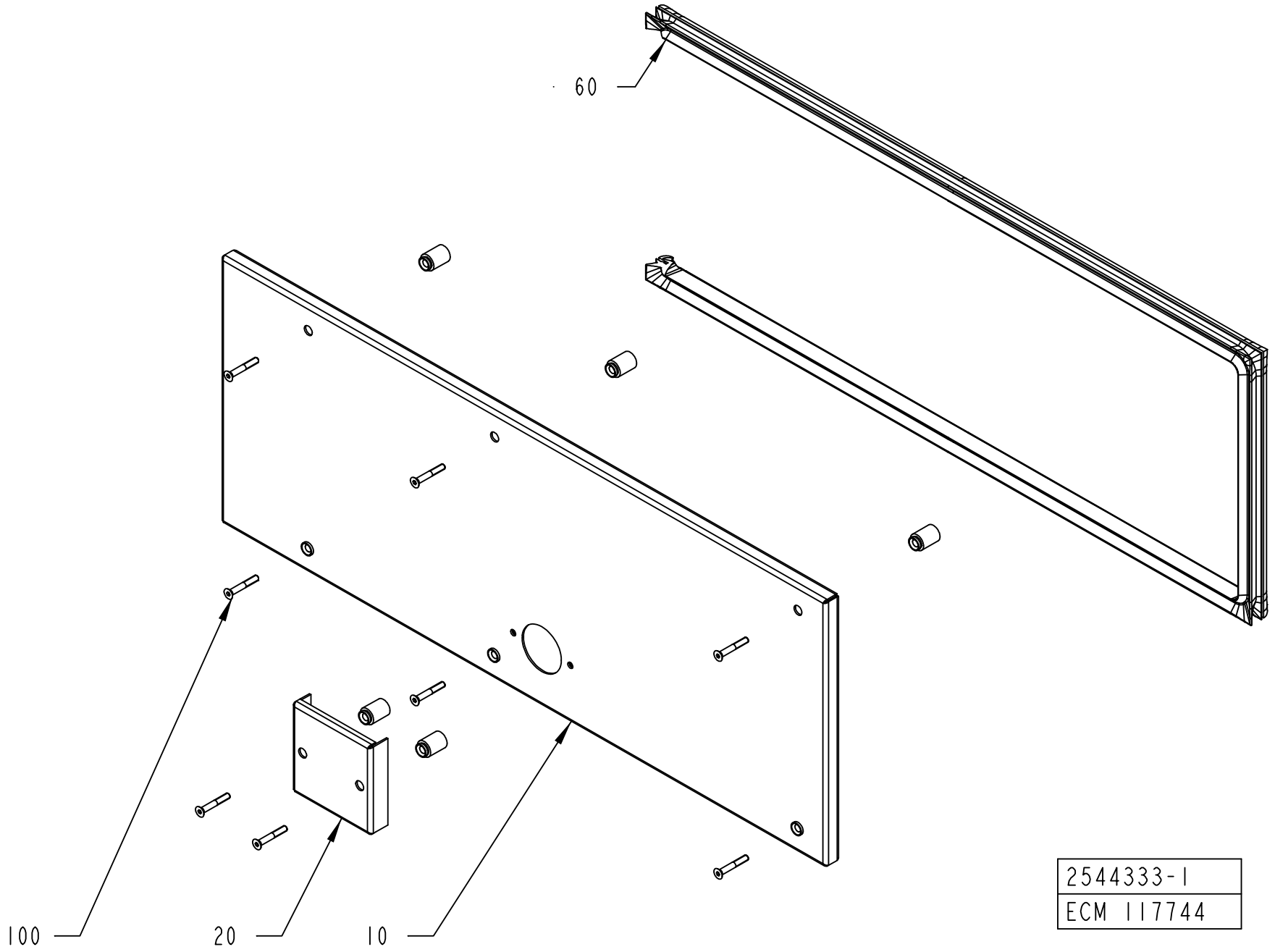
60
100
20
10
2544333-1
ECM 117744

ECM: 117744 - 20030403
Group number: 2544333-0100
Assembly Drawing: 2544333-1_1_AA

Pos	Part No	UN	Qty	Description	Page No
-					
010	2544331-0000		1	COVER	
020	2544332-0000		1	PROTECTION	
060	2508161-0000		1	RUBBER SEAL	
100	90226-0458		8	MOUNTING SCREW	

Pos	Part No	UN	Qty	Description	Page No

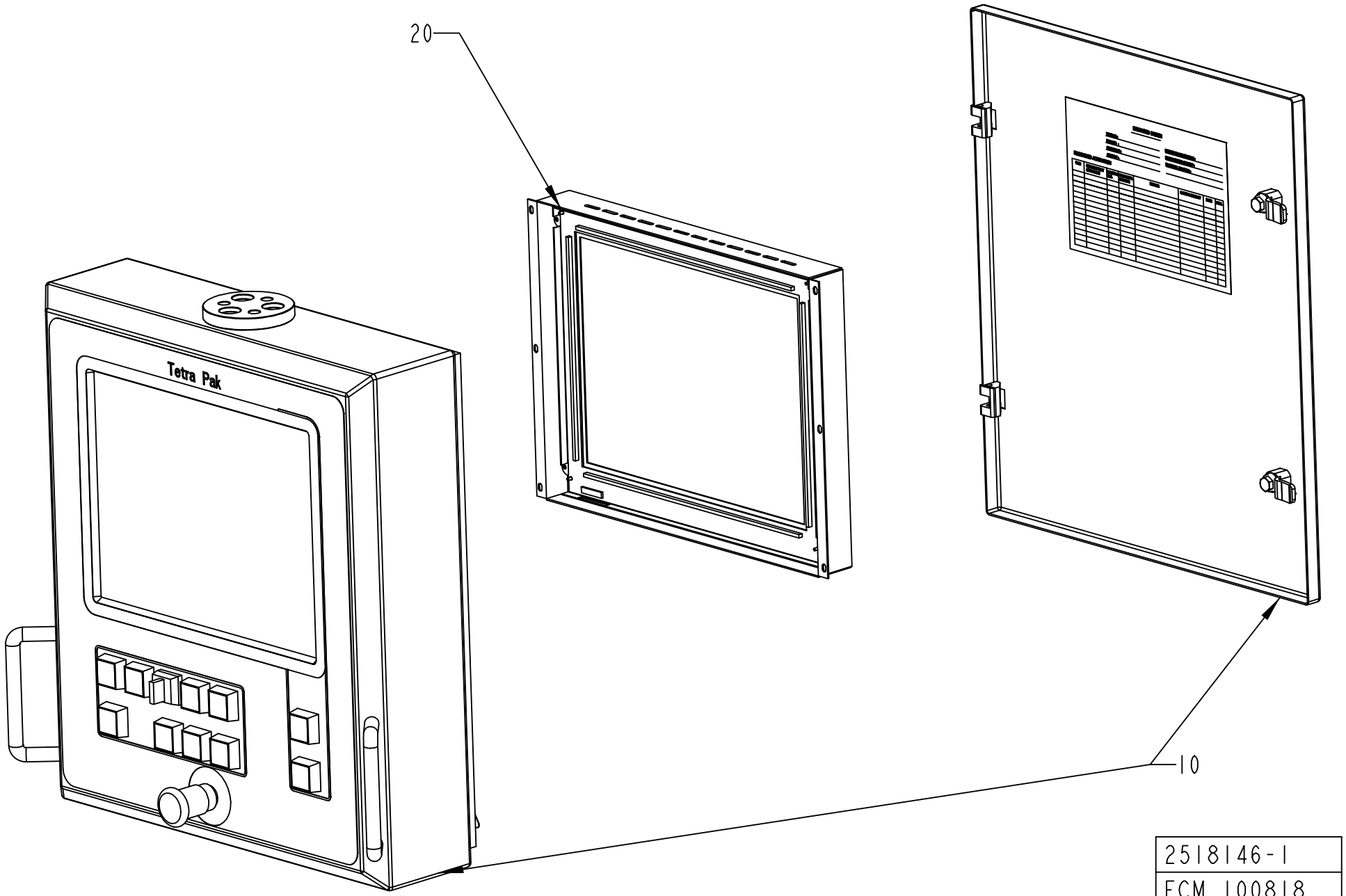
20
Tetra Pak
10
2518146-1
ECM 100818

ECM: 245343 - 20060124
Group number: 2518146-0100
Assembly Drawing: 2518146-1_1_AA

Pos	Part No	UN	Qty	Description	Page No
A3/FLEX					
0010	2518147-0101		1	PANEL UNIT 15"	**2-265**
Common Parts					
0020	90459-0287		1	DISPLAY UNIT 15", UO36419A	

Pos	Part No	UN	Qty	Description	Page No

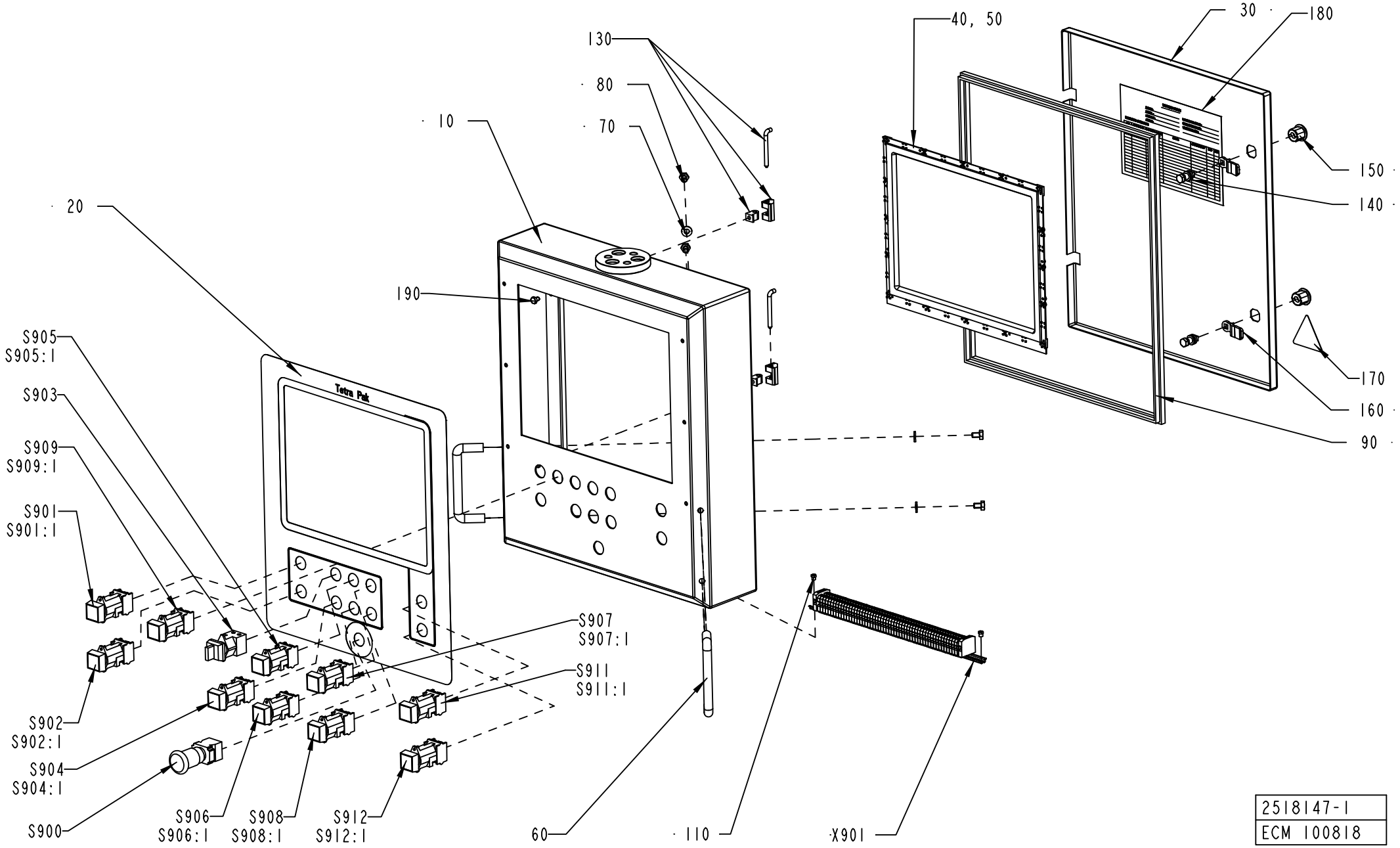

2518147-1
ECM 100818

ECM: 100818 -
Group number: 2518147-0101
Assembly Drawing: 2518147-1_1_AA

Pos	Part No	UN	Qty	Description	Page No
A3/FLEX					
S903	90111-0120		1	SWITCH, 2 POS.704.510 .0A+704.901.5/A	
S904:1	359301-0170		1	BUTTON SIGN, SPOOLING OF FINAL FOLDER	
S904	90064-0082		1	PUSH BUTTON, WHITE	
	90036-0057		*1*	*LIGHT BULB, BA9S 28V*	
S905:1	359301-0091		1	BUTTON SIGN, INCHING FINAL FOLDER	
S905	90064-0098		1	PUSH BUTTON, CLEAR	
Common Parts					
010	2518148-0000		1	PANEL	
020	2518149-0000		1	FOIL	
030	2518157-0000		1	DOOR	
040	90459-0288		1	SLIM LINE TOUCH BEZEL 15", 1511	
050	90153-0060		1	ADHESIVE, 3M DP-190 B/A	
060	90017-0016		2	HANDLE, NO. 14.4012.02.120	
070	90005-0077		4	WASHER PL.RND.NYL.8,4/7, H=2	
080	312105-0447		4	SCREW M6S ISO 4017 M8X12 A480	
090	90143-0057	MM	1800	STRIP EMKA 1011-05 21X11MM	
110	1041609-0000		2	NUT	
120	312605-0316		1	HEXAGON NUT, M6M M6 A280	
130	90248-0047		2	HINGE, 1150-U50	
140	90237-0320		2	LOCK HOUSING, 1000-U136	
150	90237-0319		2	LOCK HOUSING, 1000-U134	
160	90237-0157		2	LOCK BOLT, 1000-230	
170	359705-0015		1	WARNING SIGN ISO, RISK OF ELECTRIC SHOCK	
190	90194-0133		1	SIGN "DELIVERED DESIGN"	
220	312105-0362		2	SCREW M6S ISO 4017 M6X8 A480	
S900	90458-1651		1	EMERGENCY STOP, ZB4-BS-844 ZB4-BZ-104	
S901:1	359301-0519		1	SIGN "TPOP RESET"	
S901	90064-0082		1	PUSH BUTTON, WHITE	
	90036-0057		*1*	*LIGHT BULB, BA9S 28V*	
S902:1	359301-0130		1	BUTTON SIGN, LAMP TEST	
S902	90064-0082		1	PUSH BUTTON, WHITE	
	90036-0057		*1*	*LIGHT BULB, BA9S 28V*	
S906:1	359301-0050		1	BUTTON SIGN, DROP CHUTE BRIK	
S906	90064-0082		1	PUSH BUTTON, WHITE	
	90036-0057		*1*	*LIGHT BULB, BA9S 28V*	
S907:1	359301-0090		1	BUTTON SIGN, INCHING	
S907	90064-0098		1	PUSH BUTTON, CLEAR	
S908:1	359301-0110		1	BUTTON SIGN, SHORT STOP	
S908	90064-0084		1	PUSH BUTTON, YELLOW	
S909:1	359301-0160		1	BUTTON SIGN, DRAINAGE OF PRODUCT TUBE	
S909	90064-0086		1	PUSH BUTTON, WHITE	

Pos	Part No	UN	Qty	Description	Page No
	90036-0057		*1*	*LIGHT BULB, BA9S 28V*	
S911:1	359301-0001		1	BUTTON SIGN, UP	
S911	90064-0093		1	PUSH BUTTON, GREEN	
	90036-0057		*1*	*LIGHT BULB, BA9S 28V*	
S912:1	359301-0005		1	BUTTON SIGN, DOWN	
S912	90064-0082		1	PUSH BUTTON, WHITE	
	90036-0057		*1*	*LIGHT BULB, BA9S 28V*	
X901	1095597-0100		1	TERMINAL	**2-267**

Machine Type	Group Description	Used-In	Group Number	Page No

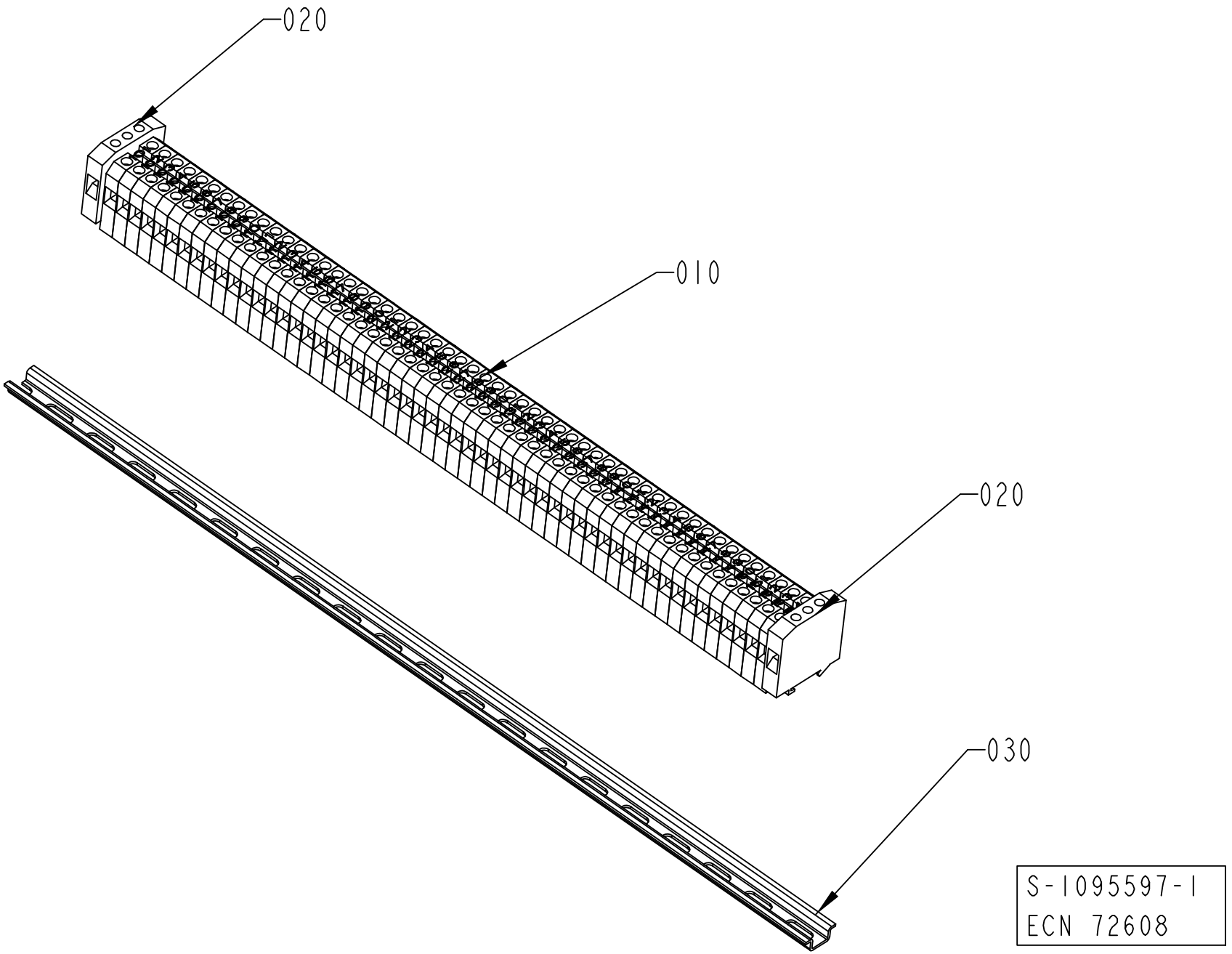
020
010
020
030
S-1095597-1
ECN 72608

ECM: 189931 - 20041104
Group number: 1095597-0100
Assembly Drawing: 1095597-1_1_AB

Pos	Part No	UN	Qty	Description	Page No
-					
010	90077-0079		56	FEED THROUGH TERMINAL, 02943.6	
020	90135-0026		2	EARTH TERMINAL, 3802.6	
030	90077-0328	MM	390	RAIL TS15/5	
040	359011-0821		2	SET OF SIGNS 6-FW 1-50	
050	359011-0819		1	MARKING PLATES 5-GW (EARTH)	

Pos	Part No	UN	Qty	Description	Page No

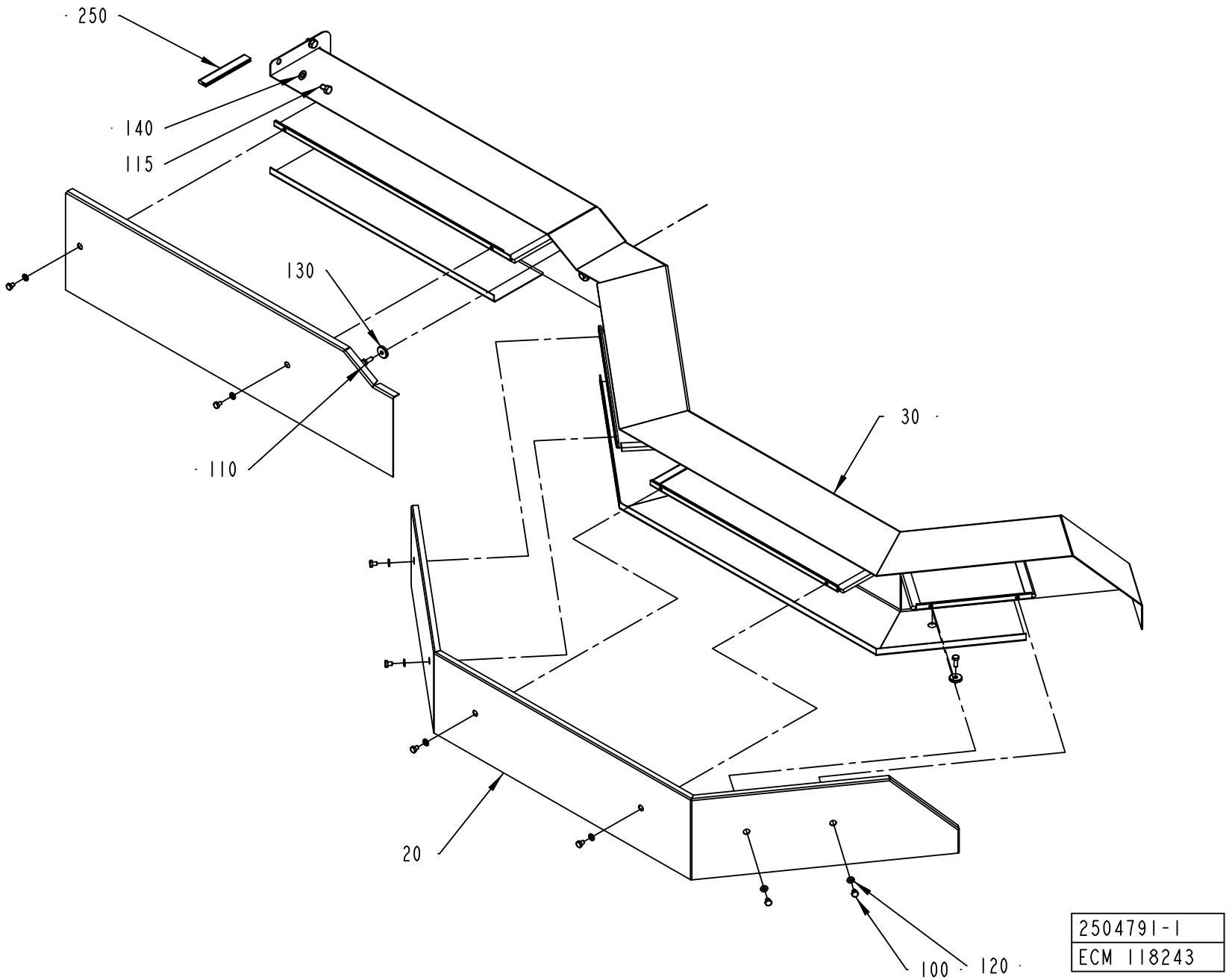
250
140
115
130
110
30
20
100
120
2504791-1
ECM 118243

ECM: 998703 - 20061104
Group number: 2504791-0100
Assembly Drawing: 2504791-1_1_AA

Pos	Part No	UN	Qty	Description	Page No
A3/FLEX TBA, A3/FLEX TPA					
010	2520181-0000		1	LID	
020	1512145-0000		1	LID	
030	2520180-0000		1	CABLE DUCT	
100	312105-0362		8	SCREW M6S ISO 4017 M6X8 A480	
115	312105-0447		4	SCREW M6S ISO 4017 M8X12 A480	
120	315105-0153		8	WASHER BRB 6,4X12 RFR	
140	315105-0165		4	WASHER BRB 8,4X16 RFR	
Common Parts					
110	312105-0368		3	SCREW M6S ISO 4017 M6X16 A480	
130	315125-0153		3	WASHER TBRSB 6,4X22X4 A4	
250	90143-0059	MM	1200	SEAL STRIP 4610069	

Pos	Part No	UN	Qty	Description	Page No

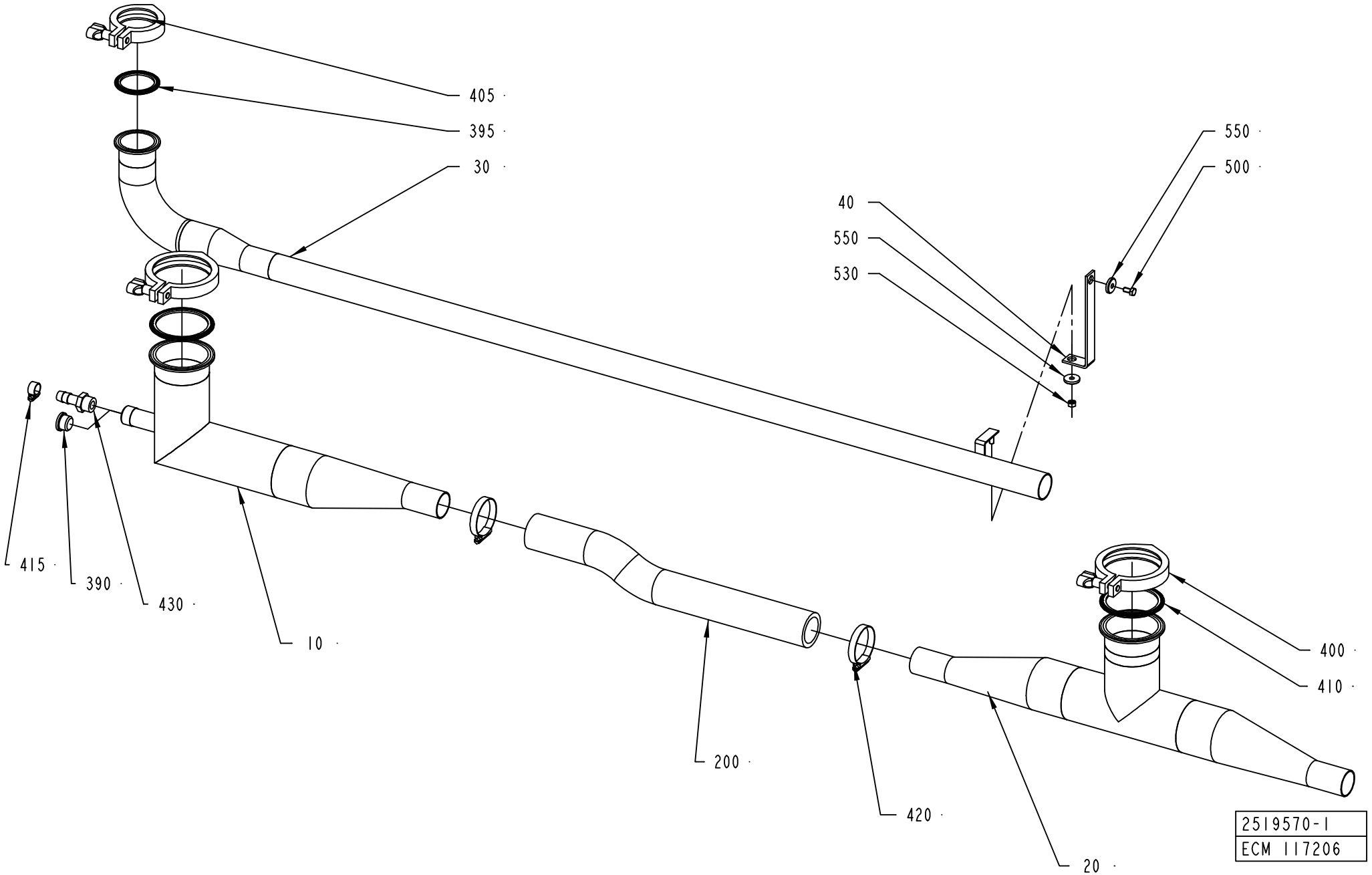
405
395
30
40
550
530
550
500
415
390
430
10
200
420
20
400
410
2519570-1
ECM 117206

ECM: 266356 - 20060702
Group number: 2519570-0100
Assembly Drawing: 2519570-1_1_AA

Pos	Part No	UN	Qty	Description	Page No
A3/FLEX TBA, A3/FLEX TPA					
010	2519571-0000		1	PIPE	
200	90166-0236	MM	500	HOSE, 38/51 REINFORCED RUBBER	
Common Parts					
020	2519572-0000		1	PIPE	
030	2594567-0000		1	PIPE	
040	2594589-0000		1	BRACKET	
390	342713-0213		1	PLUG, EXT THREAD HEX SOCKET 8638-00-120	
395	342850-0305		1	GASKET 47,8X62,6X5,2 MM 2" FDA	
400	342840-0107		2	CLAMPING PIECE	
405	342840-0105		1	CLAMPING PIECE	
410	342850-0107		2	GASKET, FDA, 3-A, 3	
415	342991-0101		1	HOSE CLIP,WORM DRIVE TYPE (13)-16	
420	342991-0109		2	HOSE CLIP,WORM DRIVE TYPE (48)-50	
430	90055-0033		1	HOSE NIPPLE, EXT.THR. R1/2-13 MM	
500	312105-0366		1	SCREW M6S ISO 4017 M6X12 A480	
530	312605-0316		1	HEXAGON NUT, M6M M6 A280	
550	315125-0153		2	WASHER TBRSB 6,4X22X4 A4	

Pos	Part No	UN	Qty	Description	Page No

WASTE CONVEYOR

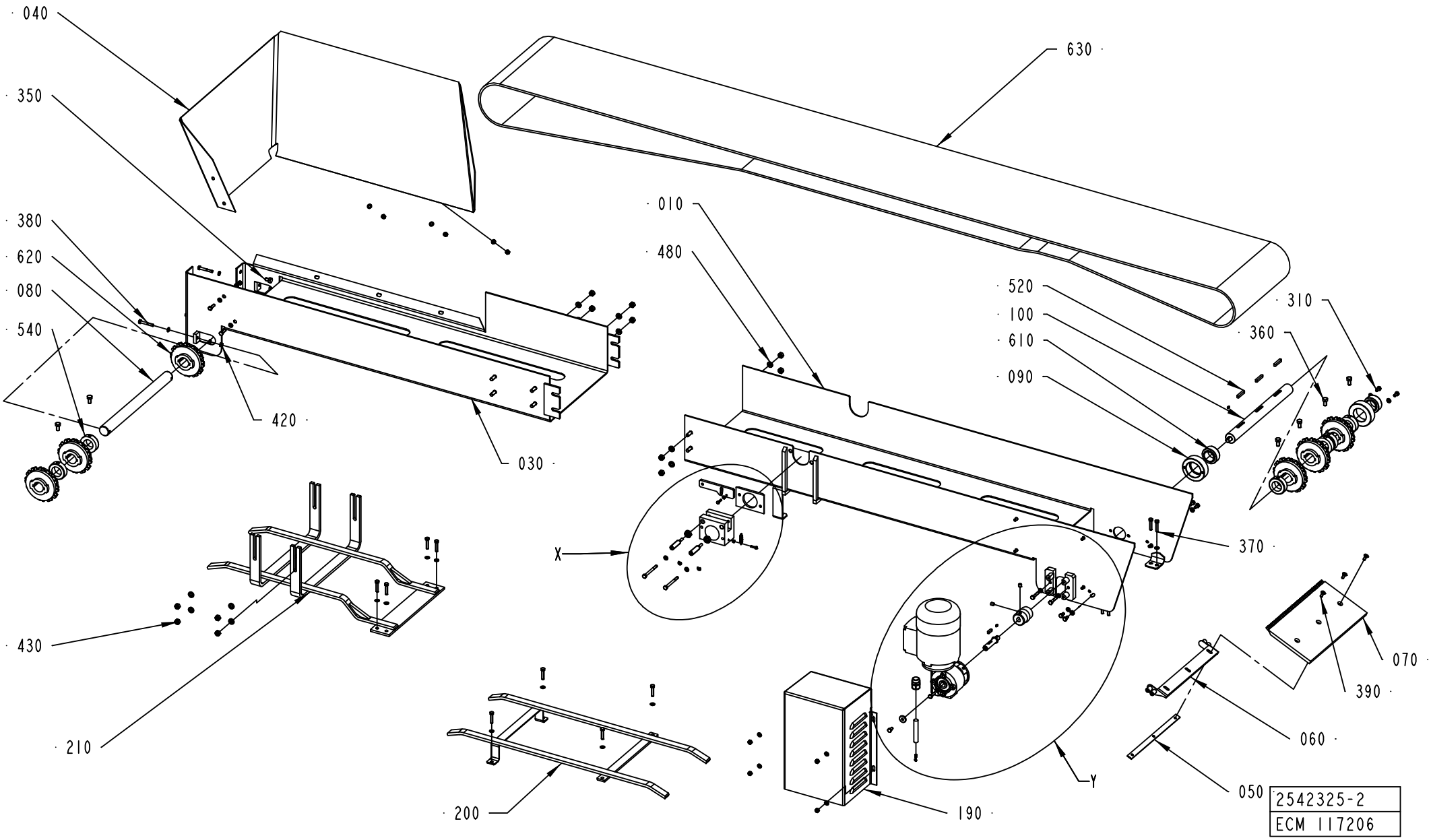

ECM: 998709 - 20061104
Group number: 2542325-0100
Assembly Drawing: 2542325-2_1_AA

This list covers pages from 2-272 to 2-275

Pos	Part No	UN	Qty	Description	Page No
A3/FLEX TBA 0500B, A3/FLEX TBA 1000B, A3/FLEX TBA 1000S, A3/FLEX TBA 1000SQ, A3/FLEX TPA 1000SQ, A3/FLEX TBA 0200S, A3/FLEX TBA 1500S, A3/FLEX TBA 0200B, A3/FLEX TBA 0250B, A3/FLEX TBA 0330S, A3/FLEX TPA 0330SQ, A3/FLEX TPA 0500SQ, A3/FLEX TBA 0200M, A3/FLEX TBA 0250S, A3/FLEX TBA 0500S, A3/FLEX TPA 0250SQ, A3/FLEX TPA 0200SQ, A3/FLEX TPA 0750SQ, A3/FLEX TBA 0200SQ, A3/FLEX TBA 0250SQ (See drawing on pages: 2-272, 2-274)					
010	2540817-0000		1	CHUTE	
030	2540813-0000		1	CHUTE	
040	2540814-0000		1	SPLASH PLATE	
110	2508390-0000		1	FASTENING PLATE	
120	1346313-0000		1	PLATE	
130	2508203-0000		1	HOLDER	
140	1349187-0000		1	SPRING	
150	1346312-0000		2	SCREW	
200	2540818-0000		1	BRACKET	
210	2540816-0000		1	BRACKET	
300	312105-0293		2	SCREW M6S ISO 4017 M4X16 A470	
310	312105-0366		7	SCREW M6S ISO 4017 M6X12 A480	
320	312105-0370		6	SCREW M6S ISO 4017 M6X20 A480	
340	312105-0383		2	SCREW M6S ISO 4014 M6X65 A480	
370	312109-0374		12	SCREW M6S ISO 4017 M6X30 A480	
410	312605-0312		2	HEXAGON NUT, M6M M4 A280	
420	312605-0316		11	HEXAGON NUT, M6M M6 A280	
430	312605-0318		12	HEXAGON NUT, M6M M8 A280	
440	312625-0322		2	HEXAGON THIN NUT, EN 24035 ML6M M12 A4	
460	315105-0153		39	WASHER BRB 6,4X12 RFR	
480	315115-0165		12	WASHER PLAIN, TBRB 8,4/16 H=3	
550	315755-0107		2	RETAINING RING SHAFT DIN 6799 5 A2	
630	2508201-0000		1	CONVEYOR CHAIN	
A3/FLEX TBA 1890S, A3/FLEX TBA 2000S, A3/FLEX TBA 1400B (See drawing on pages: 2-272, 2-274)					
010	2540817-0000		1	CHUTE	
030	2679599-0000		1	CHUTE	
040	2679598-0000		1	SPLASH PLATE	
110	2508390-0000		1	FASTENING PLATE	
120	1346313-0000		1	PLATE	
130	2508203-0000		1	HOLDER	
140	1349187-0000		1	SPRING	
150	1346312-0000		2	SCREW	
200	2540818-0000		1	BRACKET	
210	2540816-0000		1	BRACKET	
300	312105-0293		2	SCREW M6S ISO 4017 M4X16 A470	
310	312105-0366		7	SCREW M6S ISO 4017 M6X12 A480	
320	312105-0370		6	SCREW M6S ISO 4017 M6X20 A480	
340	312105-0383		2	SCREW M6S ISO 4014 M6X65 A480	
370	312109-0374		12	SCREW M6S ISO 4017 M6X30 A480	
410	312605-0312		2	HEXAGON NUT, M6M M4 A280	
420	312605-0316		11	HEXAGON NUT, M6M M6 A280	
430	312605-0318		12	HEXAGON NUT, M6M M8 A280	
440	312625-0322		2	HEXAGON THIN NUT, EN 24035 ML6M M12 A4	
460	315105-0153		39	WASHER BRB 6,4X12 RFR	
480	315115-0165		12	WASHER PLAIN, TBRB 8,4/16 H=3	
550	315755-0107		2	RETAINING RING SHAFT DIN 6799 5 A2	
630	2508201-0000		1	CONVEYOR CHAIN	
Common Parts					
050	1129253-0000		1	FASTENING PLATE	
060	1296845-0000		1	BRACKET	
070	2508192-0000		1	GUARD PLATE	
080	1037562-0000		1	SHAFT	
090	1348386-0000		2	BEARING HOUSING	
100	2508196-0000		1	DRIVE SHAFT	
160	445848-0000		1	ELASTIC COUPLING	
170	2508200-0000		1	SHAFT	
180	2529670-0000		1	WASHER	
190	2529579-0000		1	COVER	
330	312105-0374		2	SCREW M6S ISO 4014 M6X30 A480	
350	312105-0447		2	SCREW M6S ISO 4017 M8X12 A480	
360	312105-0449		6	SCREW M6S ISO 4017 M8X16 A480	
380	312109-0378		2	SCREW M6S ISO 4017 M6X40 A480	
390	312155-0368		3	SCREW DIN 7991 MF6S M6X16 A4 70	
400	312318-0443		2	SCREW ISO4029 M8X8 A4	
470	315115-0153		2	WASHER PLAIN, TBRB 6,4/12 H=3	
500	315705-0164		2	PARALLEL KEY W. ROUND ENDS 4X4X8 MM	
510	315705-0201		1	PARALLEL KEY W. ROUND ENDS 5X5X20 MM	
520	315705-0238		3	PARALLEL KEY W. ROUND ENDS 6X6X36 MM	
540	315742-0122		6	RETAINING RING 30 SMS 199	
580	353101-0130		1	CABLE SHOE 1,5-2,5MM2 M4 BLUE	
590	353240-0002		1	GLAND W/O INSERT PG11 NORMAL	
610	90240-0315		2	SPHER. BEARING, 30X47X22 PLASTIC MM	
620	90344-0073		6	TOOTHED WHEEL	
M5503	90459-1147		1	GEARS, WORM MOTOR VF30 F1-10 P63 B14 V6	

Machine Type | Group Description | Used-In | Group Number | Page No

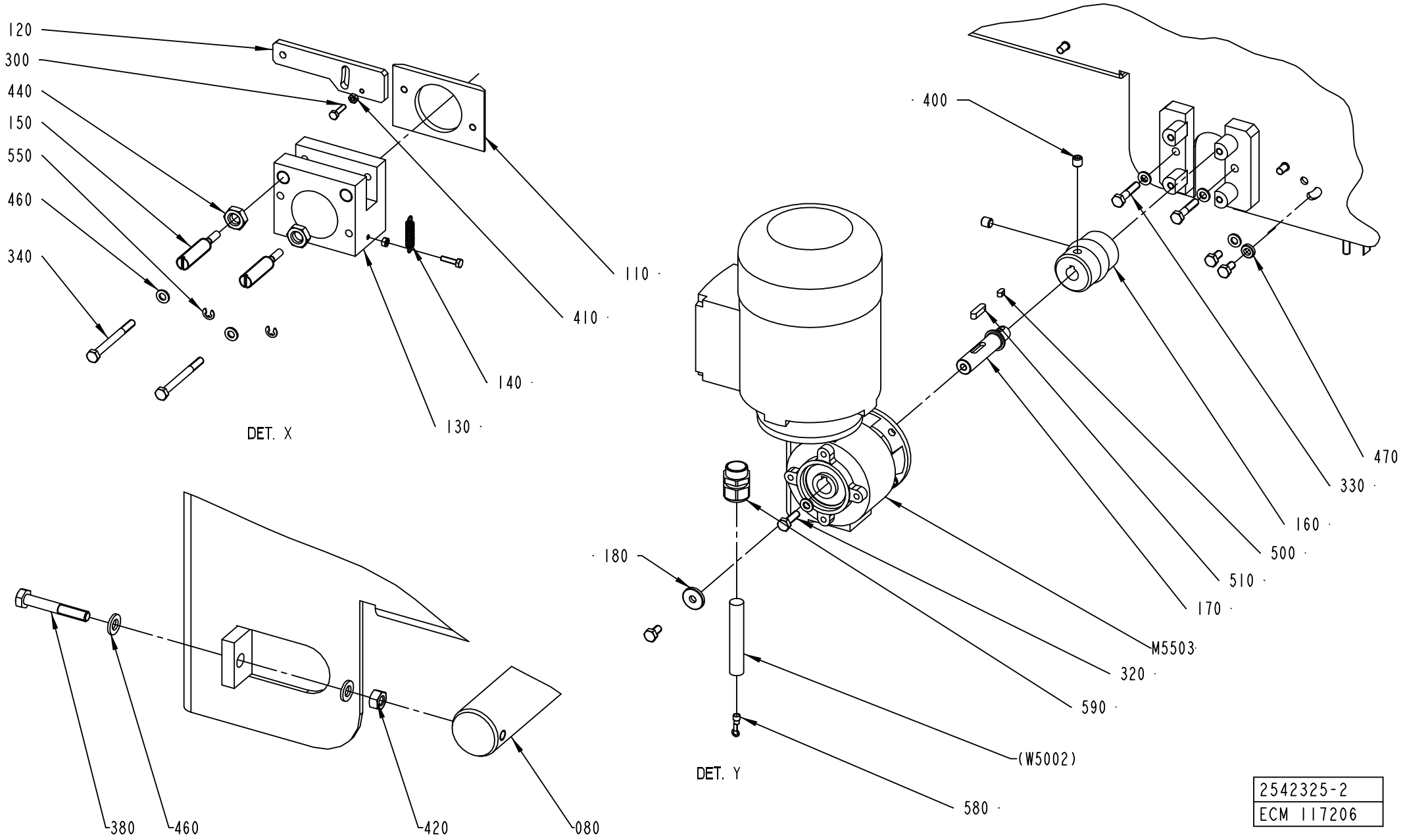

2542325-2
ECM 117206

ECM: 998709 - 20061104
Group number: 2542325-0100
Assembly Drawing: 2542325-2_2_AA

This list covers pages from 2-272 to 2-275

Pos	Part No	UN	Qty	Description	Page No
A3/FLEX TBA 0500B, A3/FLEX TBA 1000B, A3/FLEX TBA 1000S, A3/FLEX TBA 1000SQ, A3/FLEX TPA 1000SQ, A3/FLEX TBA 0200S, A3/FLEX TBA 1500S, A3/FLEX TBA 0200B, A3/FLEX TBA 0250B, A3/FLEX TBA 0330S, A3/FLEX TPA 0330SQ, A3/FLEX TPA 0500SQ, A3/FLEX TBA 0200M, A3/FLEX TBA 0250S, A3/FLEX TBA 0500S, A3/FLEX TPA 0250SQ, A3/FLEX TPA 0200SQ, A3/FLEX TPA 0750SQ, A3/FLEX TBA 0200SQ, A3/FLEX TBA 0250SQ (See drawing on pages: 2-272, 2-274)					
010	2540817-0000		1	CHUTE	
030	2540813-0000		1	CHUTE	
040	2540814-0000		1	SPLASH PLATE	
110	2508390-0000		1	FASTENING PLATE	
120	1346313-0000		1	PLATE	
130	2508203-0000		1	HOLDER	
140	1349187-0000		1	SPRING	
150	1346312-0000		2	SCREW	
200	2540818-0000		1	BRACKET	
210	2540816-0000		1	BRACKET	
300	312105-0293		2	SCREW M6S ISO 4017 M4X16 A470	
310	312105-0366		7	SCREW M6S ISO 4017 M6X12 A480	
320	312105-0370		6	SCREW M6S ISO 4017 M6X20 A480	
340	312105-0383		2	SCREW M6S ISO 4014 M6X65 A480	
370	312109-0374		12	SCREW M6S ISO 4017 M6X30 A480	
410	312605-0312		2	HEXAGON NUT, M6M M4 A280	
420	312605-0316		11	HEXAGON NUT, M6M M6 A280	
430	312605-0318		12	HEXAGON NUT, M6M M8 A280	
440	312625-0322		2	HEXAGON THIN NUT, EN 24035 ML6M M12 A4	
460	315105-0153		39	WASHER BRB 6,4X12 RFR	
480	315115-0165		12	WASHER PLAIN, TBRB 8,4/16 H=3	
550	315755-0107		2	RETAINING RING SHAFT DIN 6799 5 A2	
630	2508201-0000		1	CONVEYOR CHAIN	
A3/FLEX TBA 1890S, A3/FLEX TBA 2000S, A3/FLEX TBA 1400B (See drawing on pages: 2-272, 2-274)					
010	2540817-0000		1	CHUTE	
030	2679599-0000		1	CHUTE	
040	2679598-0000		1	SPLASH PLATE	
110	2508390-0000		1	FASTENING PLATE	
120	1346313-0000		1	PLATE	
130	2508203-0000		1	HOLDER	
140	1349187-0000		1	SPRING	
150	1346312-0000		2	SCREW	
200	2540818-0000		1	BRACKET	
210	2540816-0000		1	BRACKET	
300	312105-0293		2	SCREW M6S ISO 4017 M4X16 A470	
310	312105-0366		7	SCREW M6S ISO 4017 M6X12 A480	
320	312105-0370		6	SCREW M6S ISO 4017 M6X20 A480	
340	312105-0383		2	SCREW M6S ISO 4014 M6X65 A480	
370	312109-0374		12	SCREW M6S ISO 4017 M6X30 A480	
410	312605-0312		2	HEXAGON NUT, M6M M4 A280	
420	312605-0316		11	HEXAGON NUT, M6M M6 A280	
430	312605-0318		12	HEXAGON NUT, M6M M8 A280	
440	312625-0322		2	HEXAGON THIN NUT, EN 24035 ML6M M12 A4	
460	315105-0153		39	WASHER BRB 6,4X12 RFR	
480	315115-0165		12	WASHER PLAIN, TBRB 8,4/16 H=3	
550	315755-0107		2	RETAINING RING SHAFT DIN 6799 5 A2	
630	2508201-0000		1	CONVEYOR CHAIN	
Common Parts					
050	1129253-0000		1	FASTENING PLATE	
060	1296845-0000		1	BRACKET	
070	2508192-0000		1	GUARD PLATE	
080	1037562-0000		1	SHAFT	
090	1348386-0000		2	BEARING HOUSING	
100	2508196-0000		1	DRIVE SHAFT	
160	445848-0000		1	ELASTIC COUPLING	
170	2508200-0000		1	SHAFT	
180	2529670-0000		1	WASHER	
190	2529579-0000		1	COVER	
330	312105-0374		2	SCREW M6S ISO 4014 M6X30 A480	
350	312105-0447		2	SCREW M6S ISO 4017 M8X12 A480	
360	312105-0449		6	SCREW M6S ISO 4017 M8X16 A480	
380	312109-0378		2	SCREW M6S ISO 4017 M6X40 A480	
390	312155-0368		3	SCREW DIN 7991 MF6S M6X16 A4 70	
400	312318-0443		2	SCREW ISO4029 M8X8 A4	
470	315115-0153		2	WASHER PLAIN, TBRB 6,4/12 H=3	
500	315705-0164		2	PARALLEL KEY W. ROUND ENDS 4X4X8 MM	
510	315705-0201		1	PARALLEL KEY W. ROUND ENDS 5X5X20 MM	
520	315705-0238		3	PARALLEL KEY W. ROUND ENDS 6X6X36 MM	
540	315742-0122		6	RETAINING RING 30 SMS 199	
580	353101-0130		1	CABLE SHOE 1,5-2,5MM2 M4 BLUE	
590	353240-0002		1	GLAND W/O INSERT PG11 NORMAL	
610	90240-0315		2	SPHER. BEARING, 30X47X22 PLASTIC MM	
620	90344-0073		6	TOOTHED WHEEL	
M5503	90459-1147		1	GEARS, WORM MOTOR VF30 F1-10 P63 B14 V6	

Machine Type | Group Description | Used-In | Group Number | Page No

Tetra Pak

SPC
Spare Parts Catalogue

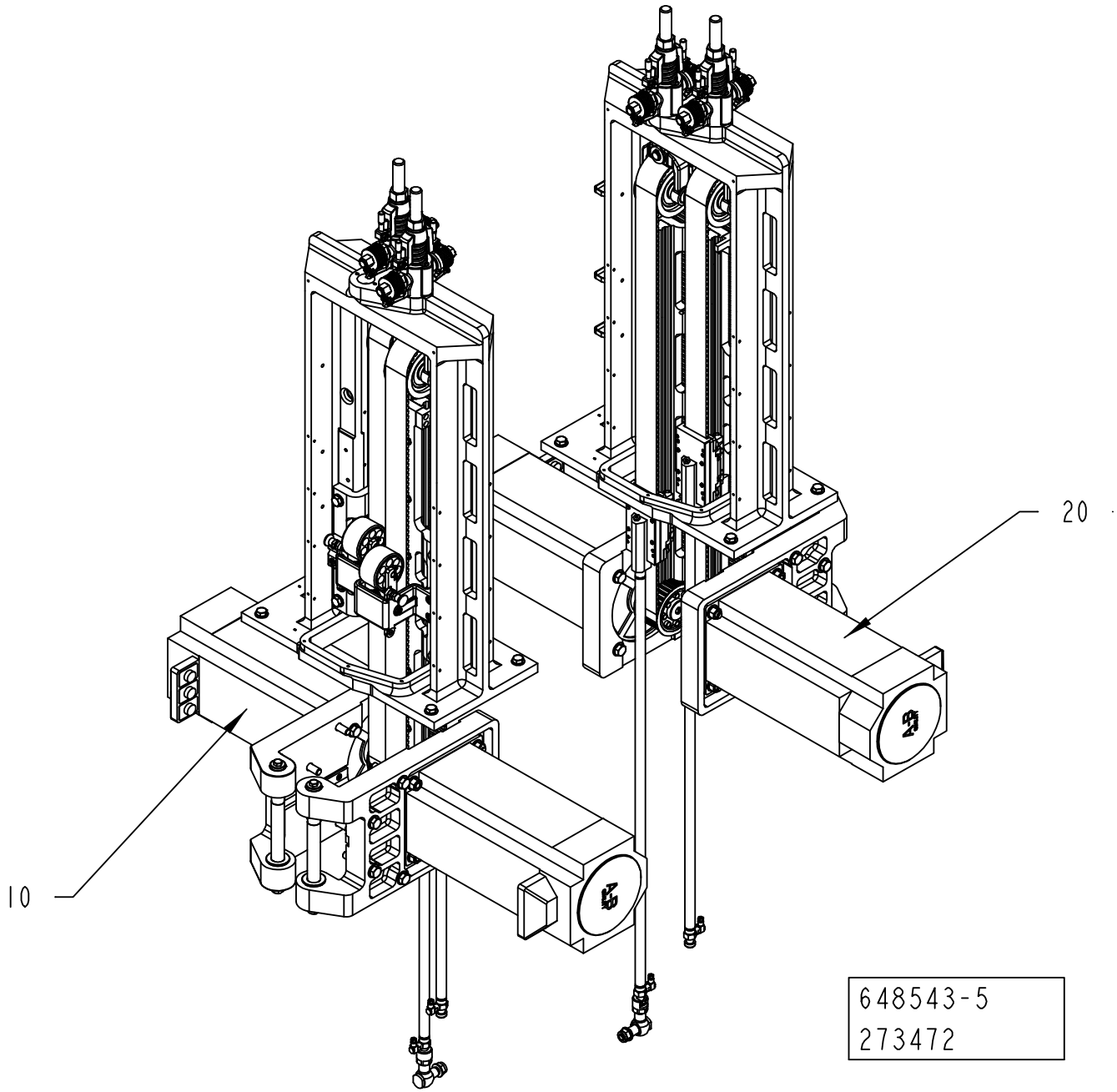
20
10
648543-5
273472

ECM: 273478 - 20061101
Group number: 648543-0450
Assembly Drawing: 648543-5_1_AA

Pos	Part No	UN	Qty	Description	Page No
-					
010	2552077-0250		1	DRIVE UNIT	**3-5**
020	2552078-0250		1	DRIVE UNIT	**3-27**

Pos	Part No	UN	Qty	Description	Page No

Machine Type	Group Description	Used-In	Group Number	Page No

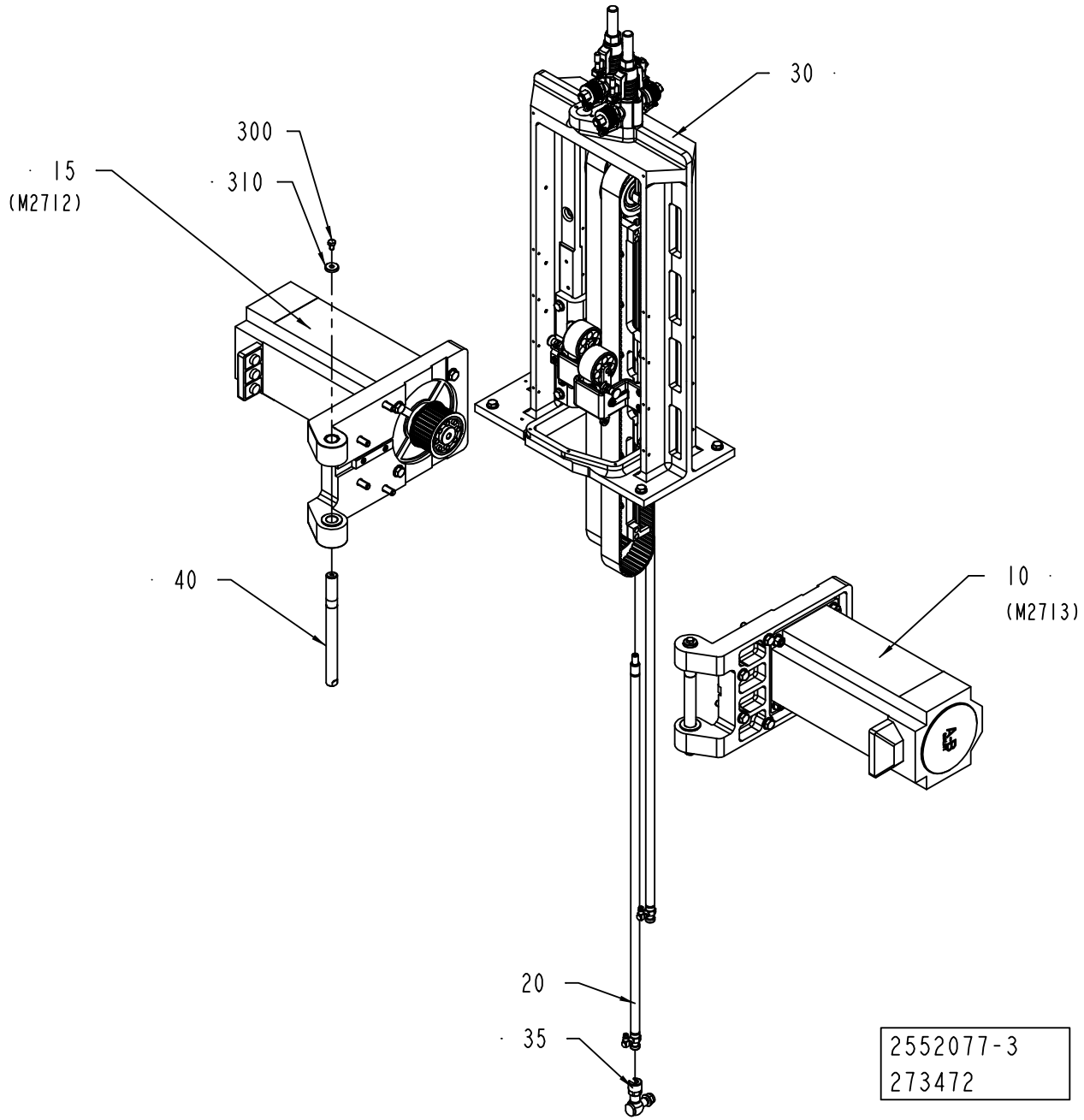
30
300
15
(M2712)
310
40
10
(M2713)
20
35
2552077-3
273472

ECM: 273990 - 20061101
Group number: 2552077-0250
Assembly Drawing: 2552077-3_1_AA

Pos	Part No	UN	Qty	Description	Page No
-					
010	2792661-0100		1	MOTOR UNIT	**3-7**
015	2792662-0100		1	MOTOR UNIT	**3-9**
020	2552080-0100		2	LINK	**3-11**
030	2552110-0150		1	SUPPORT	**3-13**
035	1490994-0100		1	LINK	**3-25**
040	2533638-0000		2	AXLE PIN	
300	312105-0447		2	SCREW M6S ISO 4017 M8X12 A480	
310	315125-0165		2	WASHER TBRSB 8,4X26X5 A4	

Pos	Part No	UN	Qty	Description	Page No

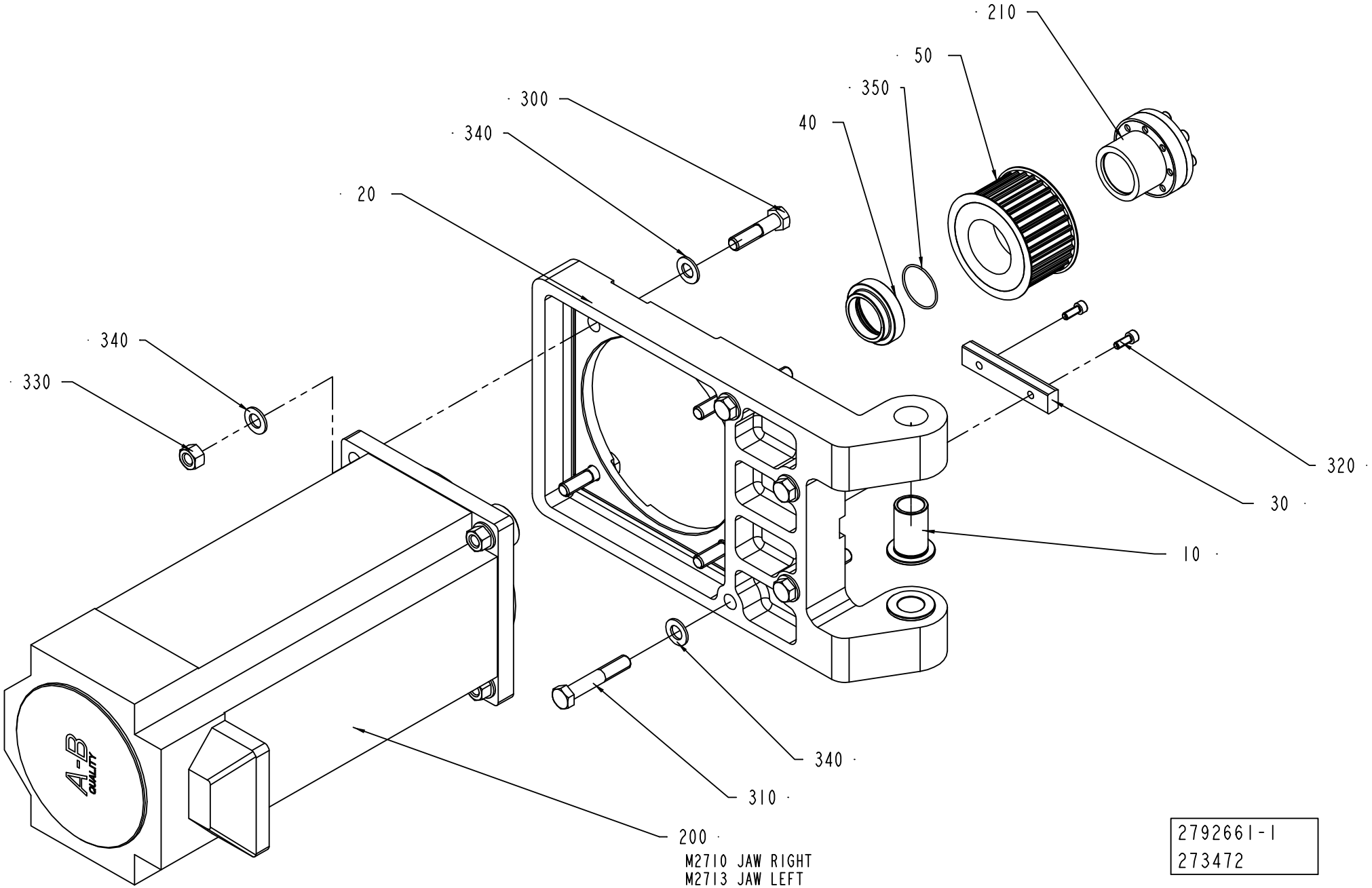
210
50
350
40
300
340
20
340
330
320
30
10
340
310
200
M2710 JAW RIGHT
M2713 JAW LEFT
2792661-1
273472

ECM: 273475 - 20061101
Group number: 2792661-0100
Assembly Drawing: 2792661-1_1_AA

Pos	Part No	UN	Qty	Description	Page No
-					
010	1255233-0000		2	BUSHING	
020	1255261-0000		1	FLANGE	
030	2545017-0000		1	PARALLEL KEYS WITH ROUND ENDS	
040	2730770-0000		1	SPACER	
050	1347839-0000		1	PULLEY	
200	90459-2594		1	SERVO MOTOR MPL-B680B-MX141	
210	90458-2303		1	CLAMPING ELEMENT WITH SLEEVE, 38X50 MM	
300	312105-0542		4	SCREW M6S ISO 4014 M12X50 A480	
310	312105-0546		4	SCREW M6S ISO 4014 M12X70 A480	
320	312115-0368		2	SCREW ISO4762 M6X16 A4 80	
330	312601-0322		4	HEXAGON NUT, DIN 934 M12 8 FZB	
340	315105-0178		12	WASHER BRB 13X24 RFR	
350	315202-0124		1	O-RING 37,1X1,6 MM	

Pos	Part No	UN	Qty	Description	Page No

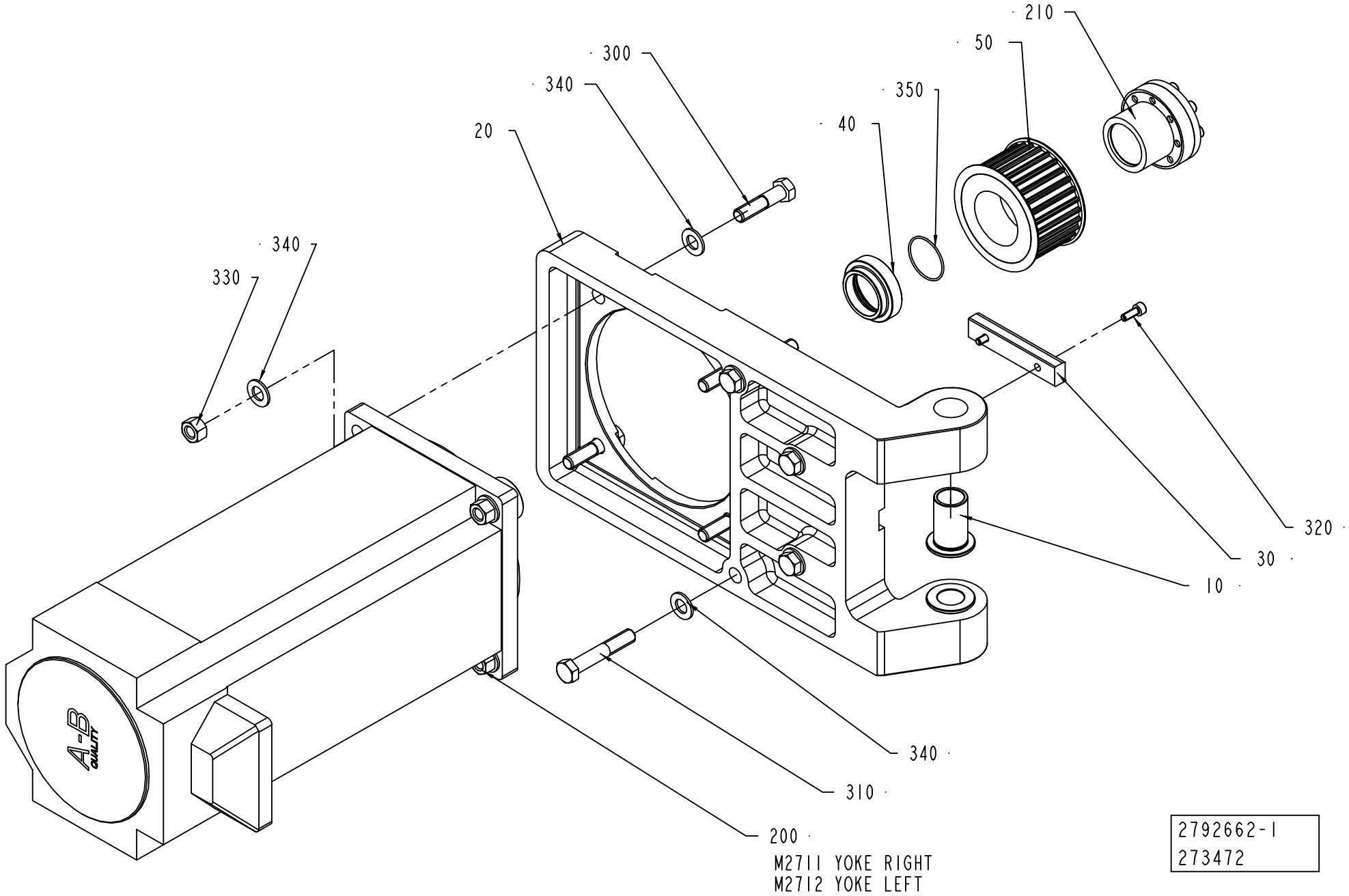
210
50
300
340
350
40
20
340
330
320
30
10
340
310
200
M2711 YOKE RIGHT
M2712 YOKE LEFT
2792662-1
273472

ECM: 273474 - 20061101
Group number: 2792662-0100
Assembly Drawing: 2792662-1_1_AA

Pos	Part No	UN	Qty	Description	Page No
-					
010	1255233-0000		2	BUSHING	
020	2686316-0000		1	FLANGE	
030	2545017-0000		1	PARALLEL KEYS WITH ROUND ENDS	
040	2730770-0000		1	SPACER	
050	1347839-0000		1	PULLEY	
200	90459-2594		1	SERVO MOTOR MPL-B680B-MX141	
210	90458-2303		1	CLAMPING ELEMENT WITH SLEEVE, 38X50 MM	
300	312105-0542		4	SCREW M6S ISO 4014 M12X50 A480	
310	312105-0546		4	SCREW M6S ISO 4014 M12X70 A480	
320	312115-0368		2	SCREW ISO4762 M6X16 A4 80	
330	312601-0322		4	HEXAGON NUT, DIN 934 M12 8 FZB	
340	315105-0178		12	WASHER BRB 13X24 RFR	
350	315202-0124		1	O-RING 37,1X1,6 MM	

Pos	Part No	UN	Qty	Description	Page No

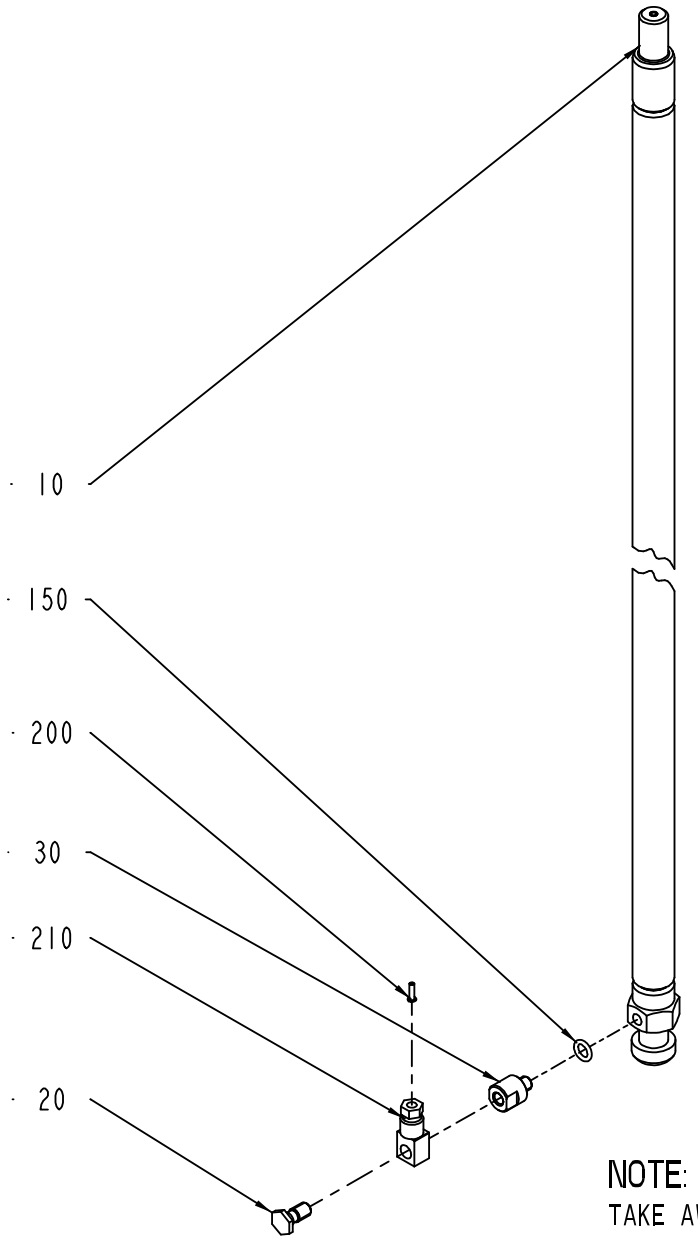

NOTE:
TAKE AWAY STANDARD SCREW
AND MOUNTED SCREW POS.20

2552080-1
ECM 106141

ECM: 189452 - 20041104
Group number: 2552080-0100
Assembly Drawing: 2552080-1_1_AA

Pos	Part No	UN	Qty	Description	Page No
-					
010	1334653-0000		1	LINK	
020	1334659-0000		1	SCREW	
030	2529187-0000		1	SPACER	
150	315202-0505		1	O-RING 6,07X1,78 MM	
200	90134-0031		1	SLEEVE FOR PLASTIC TUBE	
210	90134-0068		1	CONNECTION	

Pos	Part No	UN	Qty	Description	Page No

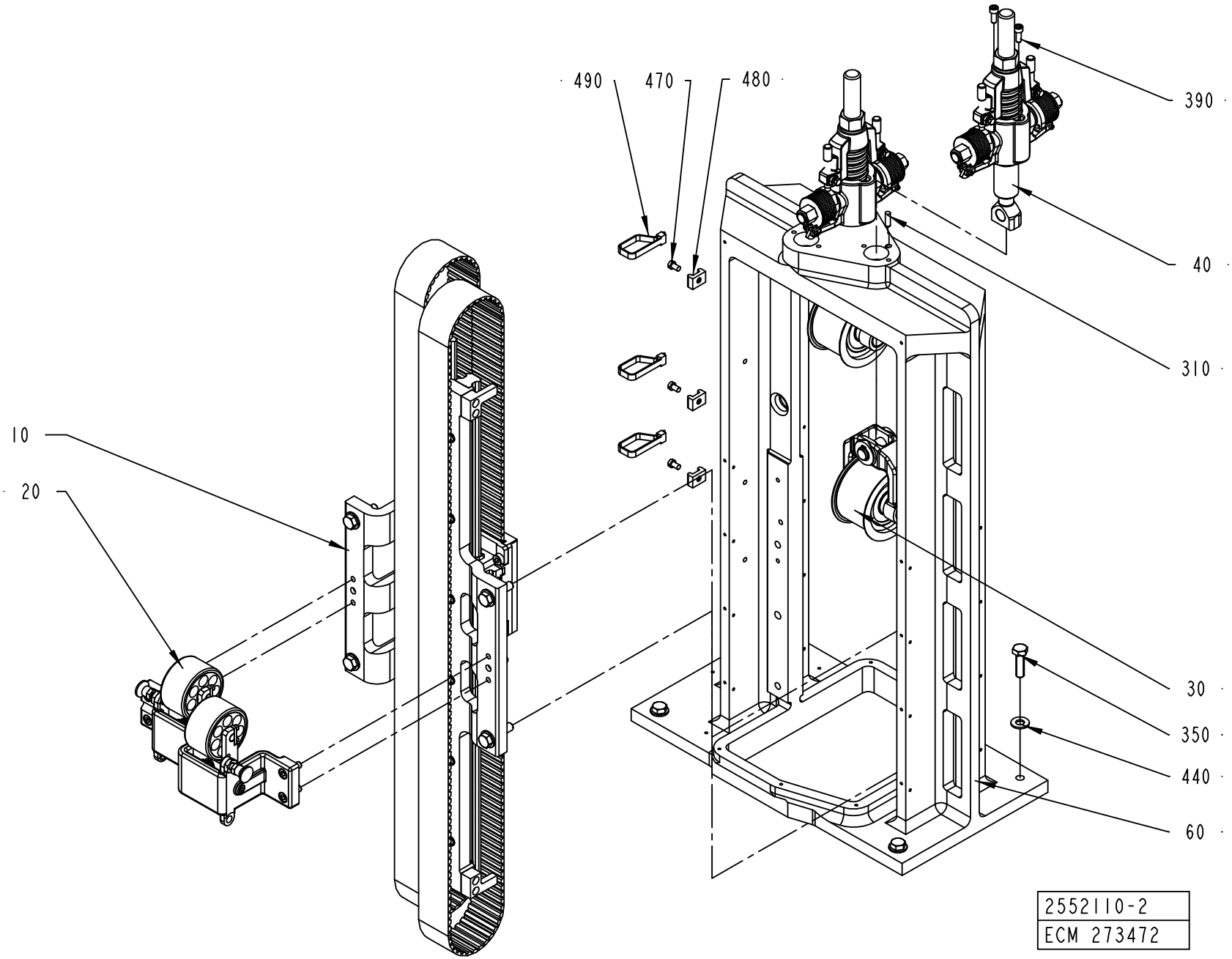
490
470
480
390
40
310
10
20
30
350
440
60
2552110-2
ECM 273472

ECM: 273974 - 20061101
Group number: 2552110-0150
Assembly Drawing: 2552110-2_1_AA

Pos	Part No	UN	Qty	Description	Page No
-					
010	1350217-0150		1	GUIDE	**3-15**
020	1487629-0100		1	DAMPER	**3-19**
030	1511197-0100		2	PULLEY	**3-21**
040	1511198-0100		2	BELT TENSIONER	**3-23**
060	1255222-0000		1	FRAME	
310	311103-0353		2	PARALLEL PIN ISO 2338 6M6X20 A1	
350	312105-0497		4	SCREW M6S ISO 4017 M10X35 A480	
390	312115-0368		4	SCREW ISO4762 M6X16 A4 80	
440	315105-0173		4	WASHER BRB 10,5X20 RFR	
470	312125-0364		3	SCREW ISO 1207 M6X10 A4	
480	352113-0204		3	ANCHOR PLATES FOR STRIPS, TYPE TM3S25-M	
490	352113-0103		3	CLIP STRIP, 290X7,6 MM	

Pos	Part No	UN	Qty	Description	Page No

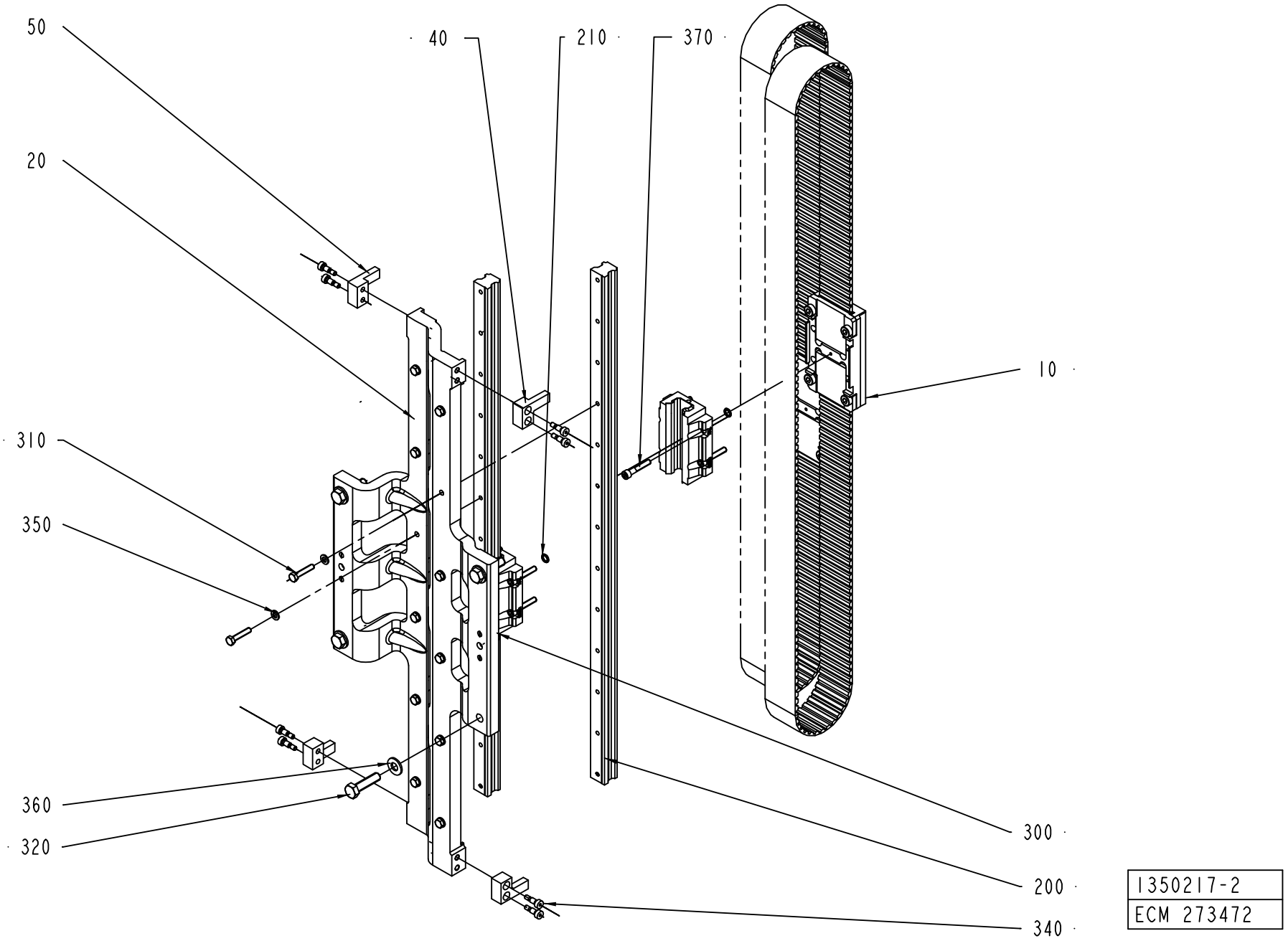
50
40
210
370
20
10
310
350
360
320
300
200
340
1350217-2
ECM 273472

ECM: 273973 - 20061101
Group number: 1350217-0150
Assembly Drawing: 1350217-2_1_AA

Pos	Part No	UN	Qty	Description	Page No
-					
010	1350210-0100		2	RUNNER	**3-17**
020	1255223-0000		1	HOLDER	
040	1350825-0000		2	LOCK	
050	1350826-0000		2	LOCK	
200	90458-2307		2	LINEAR UNIT HSR25	
210	90459-1411		2	O-RING 7,8X1,9 MM	
300	311103-1456		2	PARALLEL PIN ISO 2338 10M6X24 A1	
310	312109-0374		12	SCREW M6S ISO 4017 M6X30 A480	
320	312109-0499		4	SCREW M6S ISO 4017 M10X40 A480	
340	312180-0364		8	SCREW ISO7379 H6X10	
350	315105-0153		12	WASHER BRB 6,4X12 RFR	
360	315105-0173		4	WASHER BRB 10,5X20 RFR	
370	312115-0376		8	SCREW ISO4762 M6X35 A4 80	

Pos	Part No	UN	Qty	Description	Page No

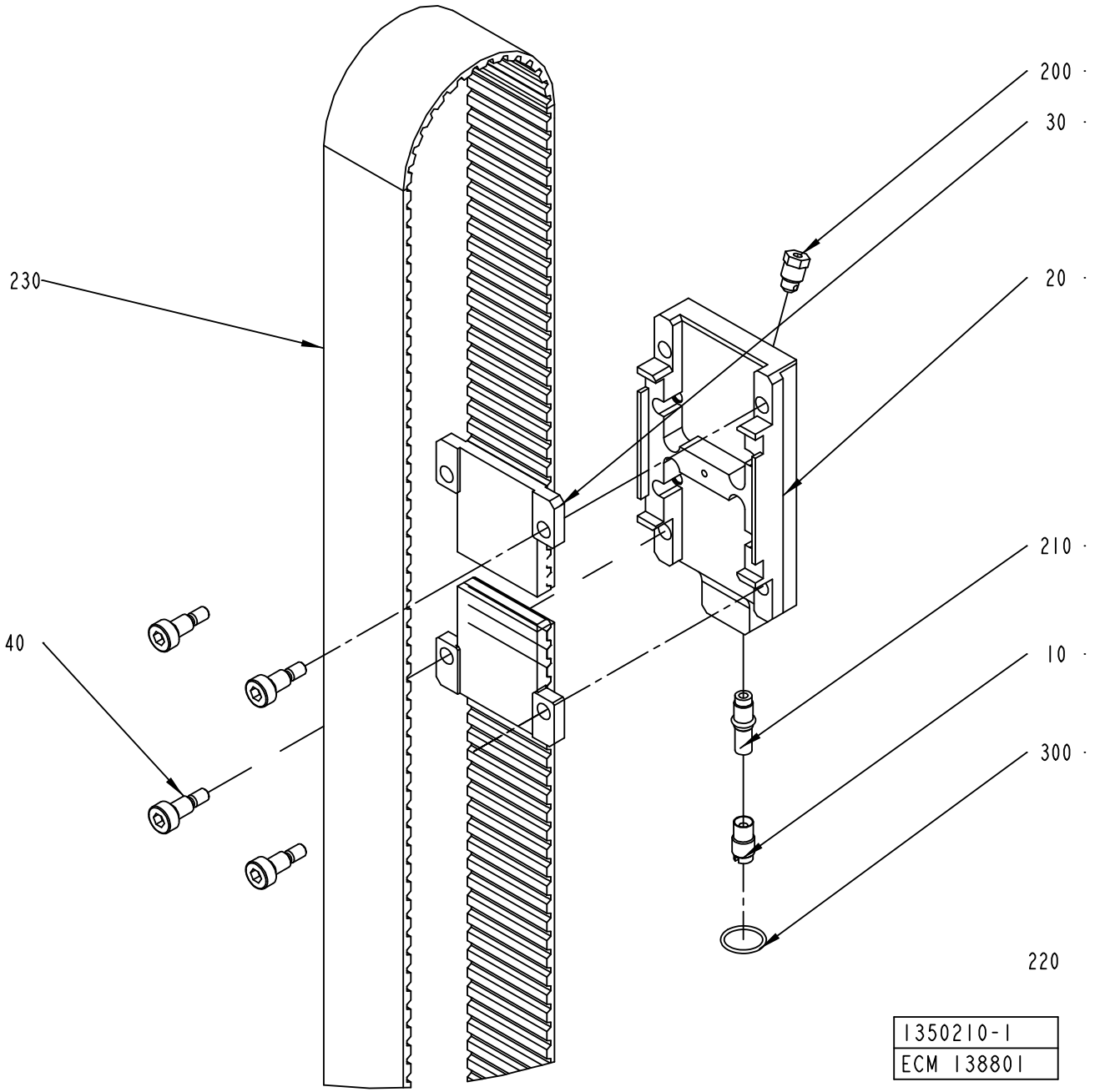
200
30
230
20
210
40
10
300
220
1350210-1
ECM 138801

ECM: 189455 - 20041104
Group number: 1350210-0100
Assembly Drawing: 1350210-1_1_AB

Pos	Part No	UN	Qty	Description	Page No
-					
010	1334939-0000		1	PLUG	
020	1346845-0000		1	PLATE	
030	1346846-0000		2	BELT HOLDER	
040	2640819-0000		4	SCREW	
200	90087-0019		1	PLUG M10X1 STAINLESS	
210	90092-0053		1	METERING VALVE 30 MM3	
220	90296-0068	G	5	SHELL ALVANIA GREASE EP 2	
230	90458-2306		1	TIMING BELT ATL10 2020X50 MM	
300	315202-0115		1	O-RING 17,1X1,6 MM	

Pos	Part No	UN	Qty	Description	Page No

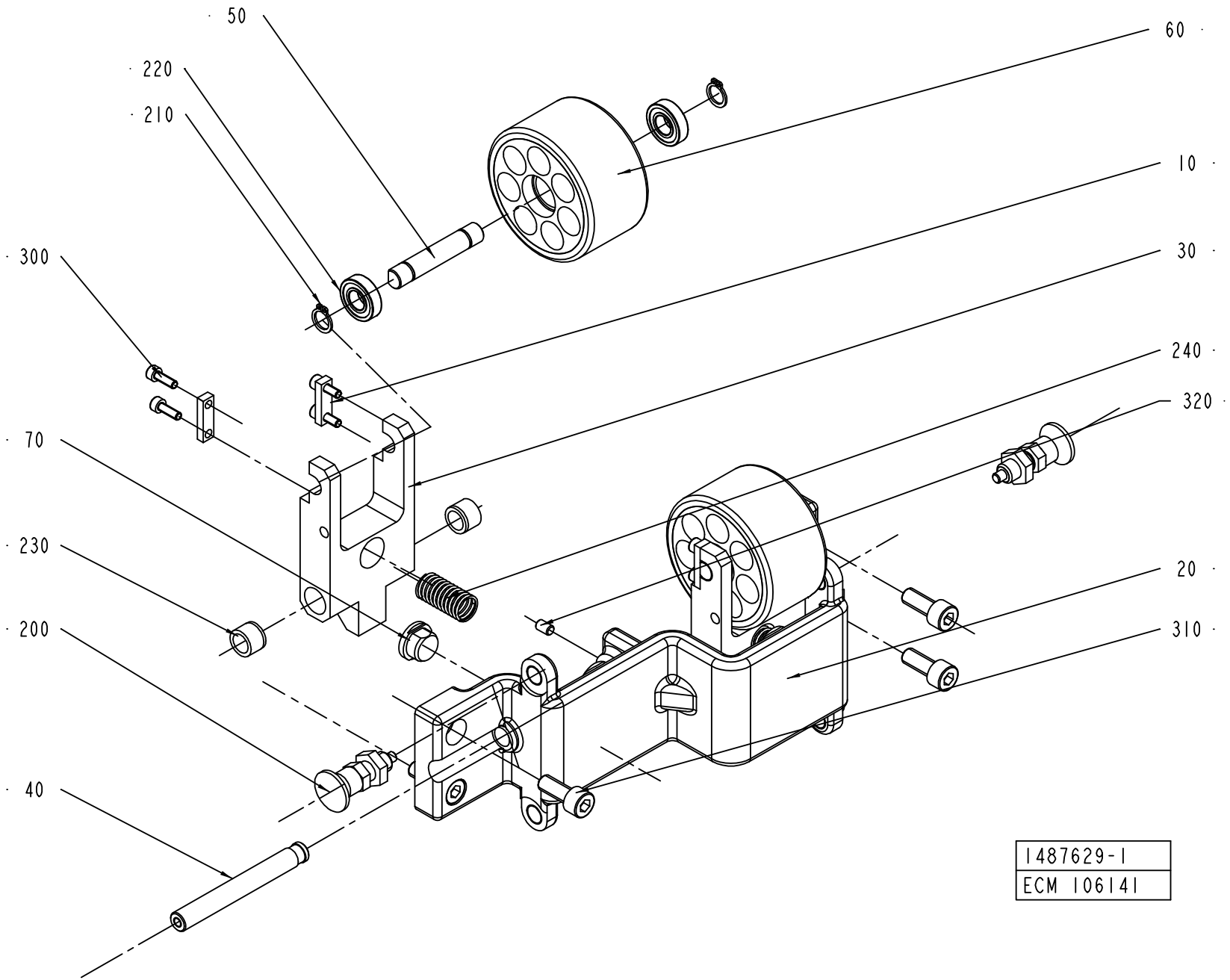
50
220
210
300
70
230
200
40
60
10
30
240
320
20
310
1487629-1
ECM 106141

ECM: 184628 - 20040916
Group number: 1487629-0100
Assembly Drawing: 1487629-1_1_AA

Pos	Part No	UN	Qty	Description	Page No
-					
010	1349266-0000		4	PLATE	
020	1487631-0000		1	BRACKET	
030	1487632-0000		2	FORK	
040	1487633-0000		2	AXLE PIN	
050	1487634-0000		2	AXLE PIN	
060	1487635-0000		2	WHEEL	
070	1487636-0000		2	STOPPER	
200	90051-0112		2	LOCK KNOB, NO. GN 617 NIK5	
210	90141-0016		4	RETAINING RING FOR SHAFT DIN 471 10 A2	
220	90214-0036		4	BALL BEARING, 10X22X6 MM	
230	90240-0119		4	BEAR. BUSHING WITHOUT FL	
240	90458-2305		2	COMP. SPRING D22280	
300	312115-0291		8	SCREW ISO4762 M4X12 A4 80	
310	312115-0451		4	SCREW ISO4762 M8X20 A4 80	
320	312318-0323		2	SCREW ISO4029 M5X8 A4	

Pos	Part No	UN	Qty	Description	Page No

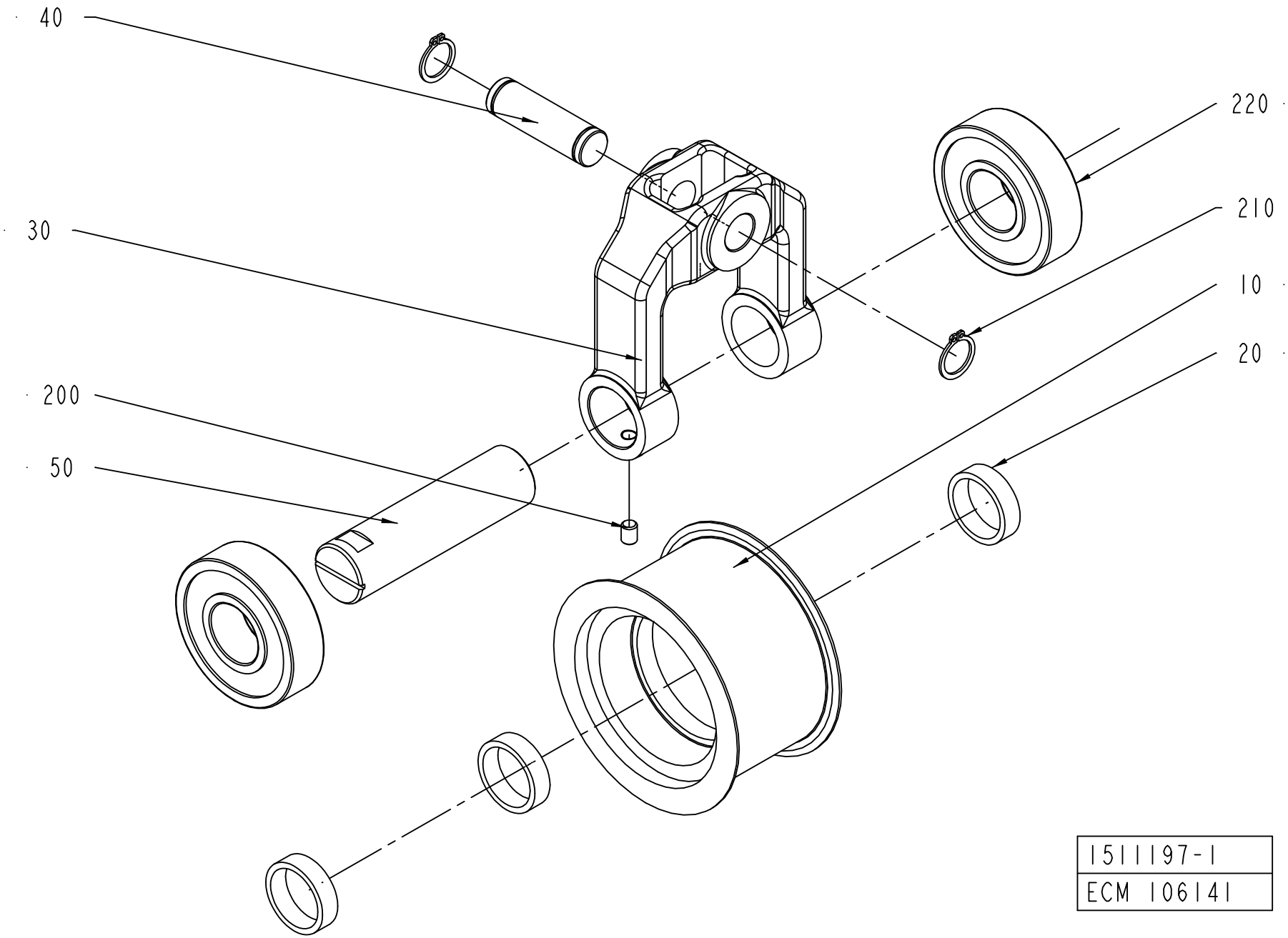
40
30
200
50
220
210
10
20
1511197-1
ECM 106141

ECM: 189456 - 20041104
Group number: 1511197-0100
Assembly Drawing: 1511197-1_1_AA

Pos	Part No	UN	Qty	Description	Page No
-					
010	1255228-0000		1	WHEEL	
020	1346890-0000		3	SPACER	
030	1511193-0000		1	SUPPORT PULLEY	
040	1511194-0000		1	AXLE PIN	
050	1511195-0000		1	SHAFT	
200	312318-0366		1	SCREW ISO4029 M6X12 A4	
210	315751-0112		2	RETAINING RING FOR SHAFT DIN 471 15 A2	
220	321316-0205		2	BALL BEARING, 25X62X17 MM	

Pos	Part No	UN	Qty	Description	Page No

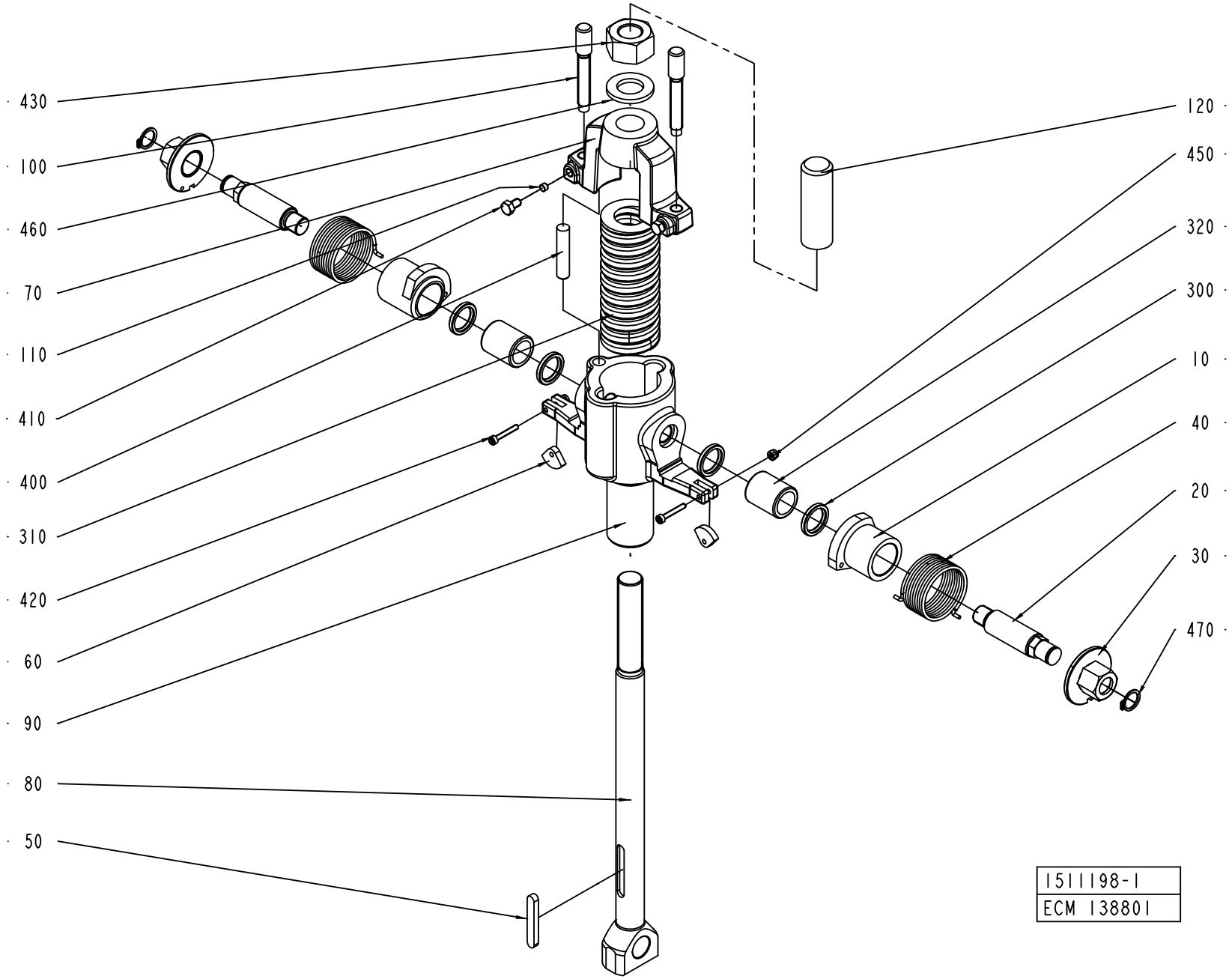
430
100
460
70
110
410
400
310
420
60
90
80
50
120
450
320
300
10
40
20
30
470
1511198-1
ECM 138801

ECM: 189457 - 20041104
Group number: 1511198-0100
Assembly Drawing: 1511198-1_1_AB

Pos	Part No	UN	Qty	Description	Page No
-					
010	1334928-0000		2	3AM	
020	1334929-0000		2	SHAFT	
030	1334932-0000		2	DISC	
040	1334941-0000		2	TORSION SPRING	
050	1334942-0000		1	WEDGE	
060	1334943-0000		2	STOP LUG	
070	1511192-0000		1	ROCKER	
080	1511196-0000		1	SHAFT	
090	1511209-0000		1	BUSHING	
100	1517350-0000		2	BULB	
110	1548454-0000		2	DISC	
120	2525570-0000		1	COVER	
300	90458-2300		4	V-RING 16X22X3 MM	
310	90458-2301		1	SPRING, YELLOW SPRING G40X115	
320	90458-2302		2	FREE-WHEEL COUPLING, 16X16 MM	
400	311103-0409		1	PARALLEL PIN ISO 2338 8M6X40 A1	
410	312105-0323		2	SCREW M6S ISO 4017 M5X8 A480	
420	312115-0230		2	SCREW ISO4762 M3X20 A4 80	
430	2640826-0000		1	NUT	
450	312810-0310		2	HEXAGON NUT, NY-LOCK M3 FZB	
460	315105-0186		1	WASHER BRB 17X30 RFR	
470	315751-0109		2	RETAINING RING FOR SHAFT DIN 471 12 A2	

Pos	Part No	UN	Qty	Description	Page No

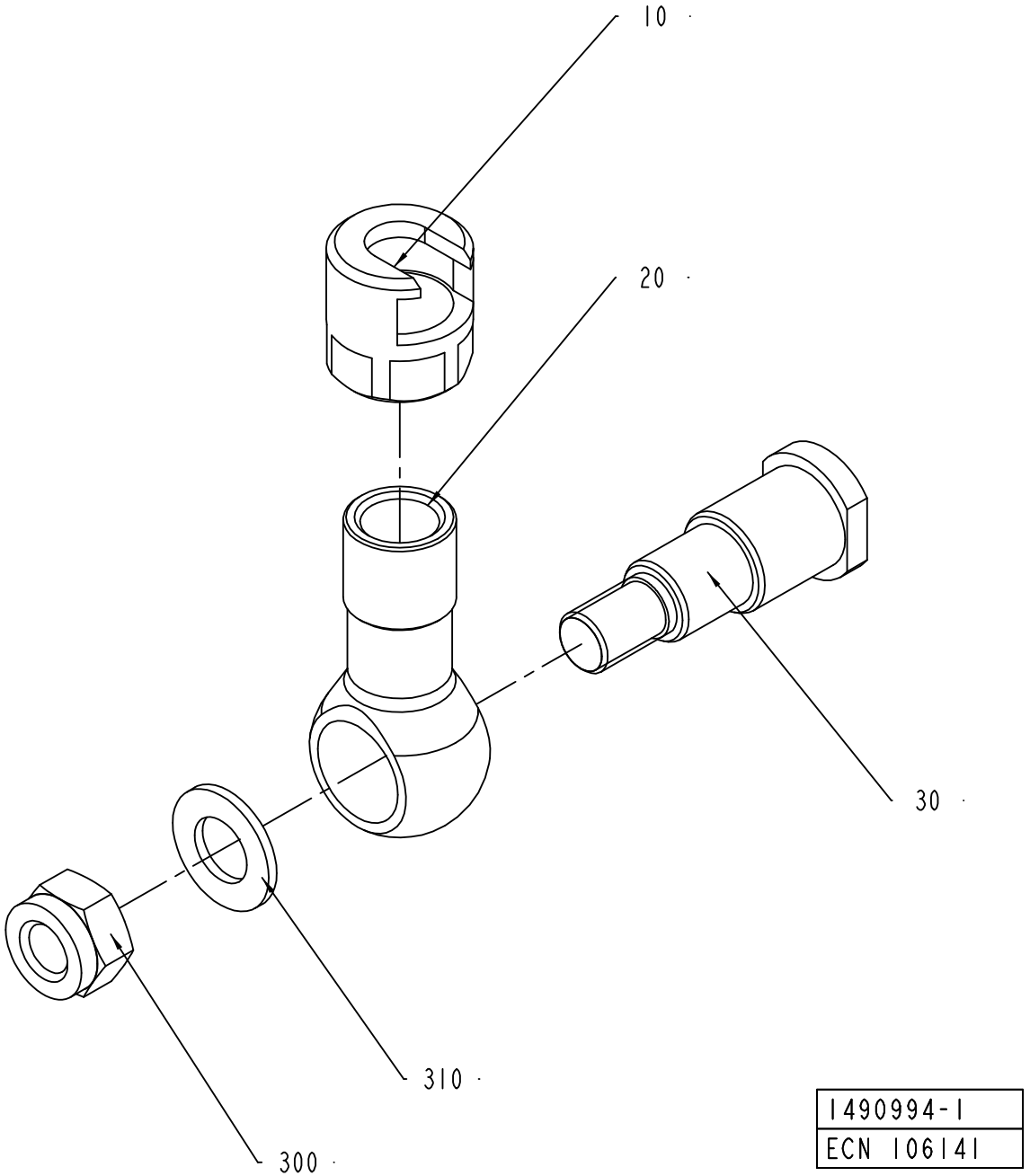
10
20
30
310
300
1490994-1
ECN 106141

ECM: 189458 - 20041104
Group number: 1490994-0100
Assembly Drawing: 1490994-1_1_AA

Pos	Part No	UN	Qty	Description	Page No
-					
010	1334654-0000		1	CONNECTION CLAMP	
020	1334655-0000		1	LINK ROD	
030	1350824-0000		1	AXLE PIN	
040	312812-0322		1	HEXAGON NUT, NY-LOCK M12 A480	
050	315105-0178		1	WASHER BRB 13X24 RFR	

Pos	Part No	UN	Qty	Description	Page No

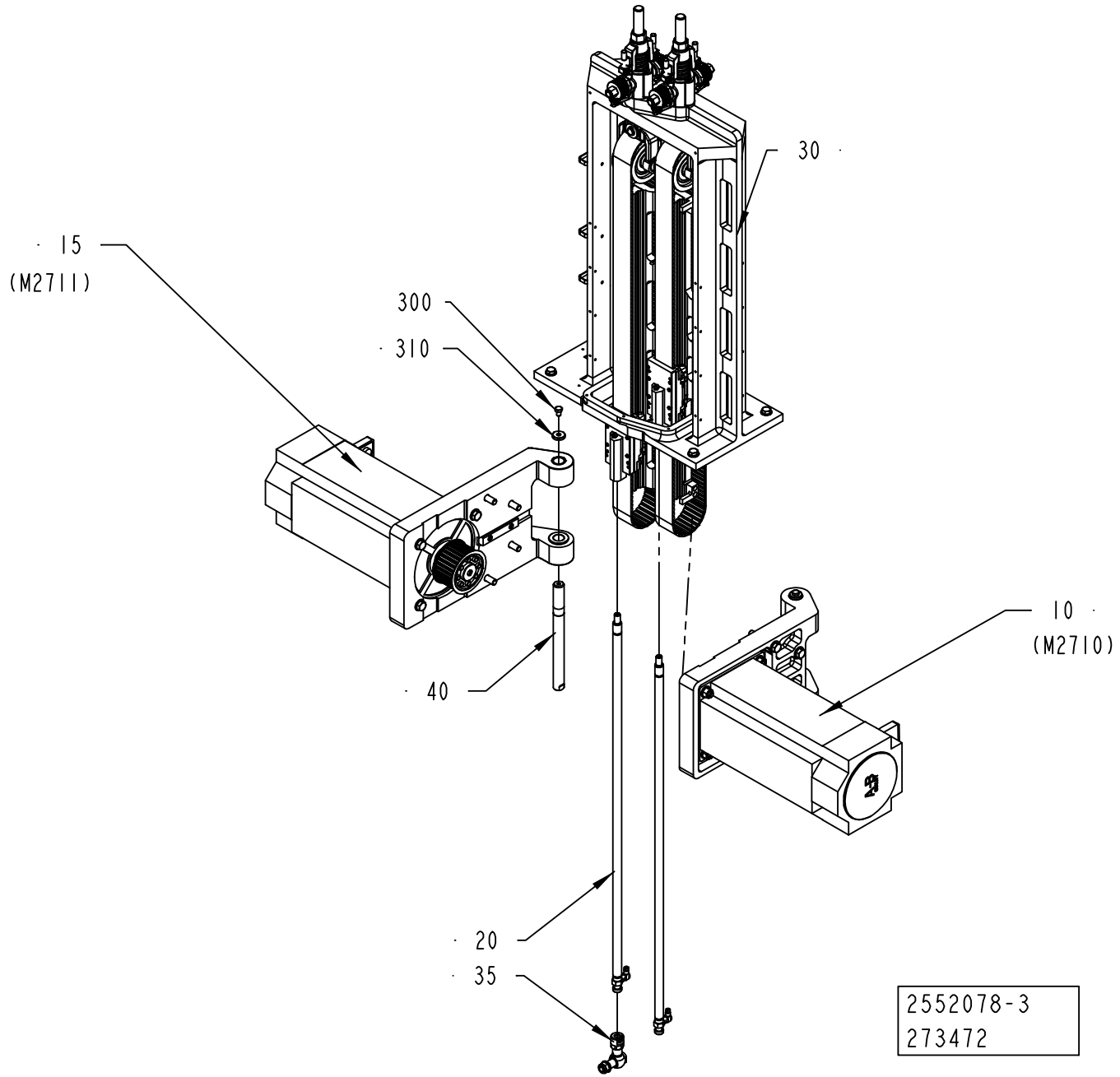
30
15
(M2711)
300
310
40
10
(M2710)
20
35
2552078-3
273472

ECM: 273991 - 20061101
Group number: 2552078-0250
Assembly Drawing: 2552078-3_1_AA

Pos	Part No	UN	Qty	Description	Page No
-					
010	2792661-0100		1	MOTOR UNIT	**3-7**
015	2792662-0100		1	MOTOR UNIT	**3-9**
020	2552080-0100		2	LINK	**3-11**
030	2552111-0150		1	SUPPORT	**3-29**
035	1490994-0100		1	LINK	**3-25**
040	2533638-0000		2	AXLE PIN	
300	312105-0447		2	SCREW M6S ISO 4017 M8X12 A480	
310	315125-0165		2	WASHER TBRSB 8,4X26X5 A4	

Pos	Part No	UN	Qty	Description	Page No

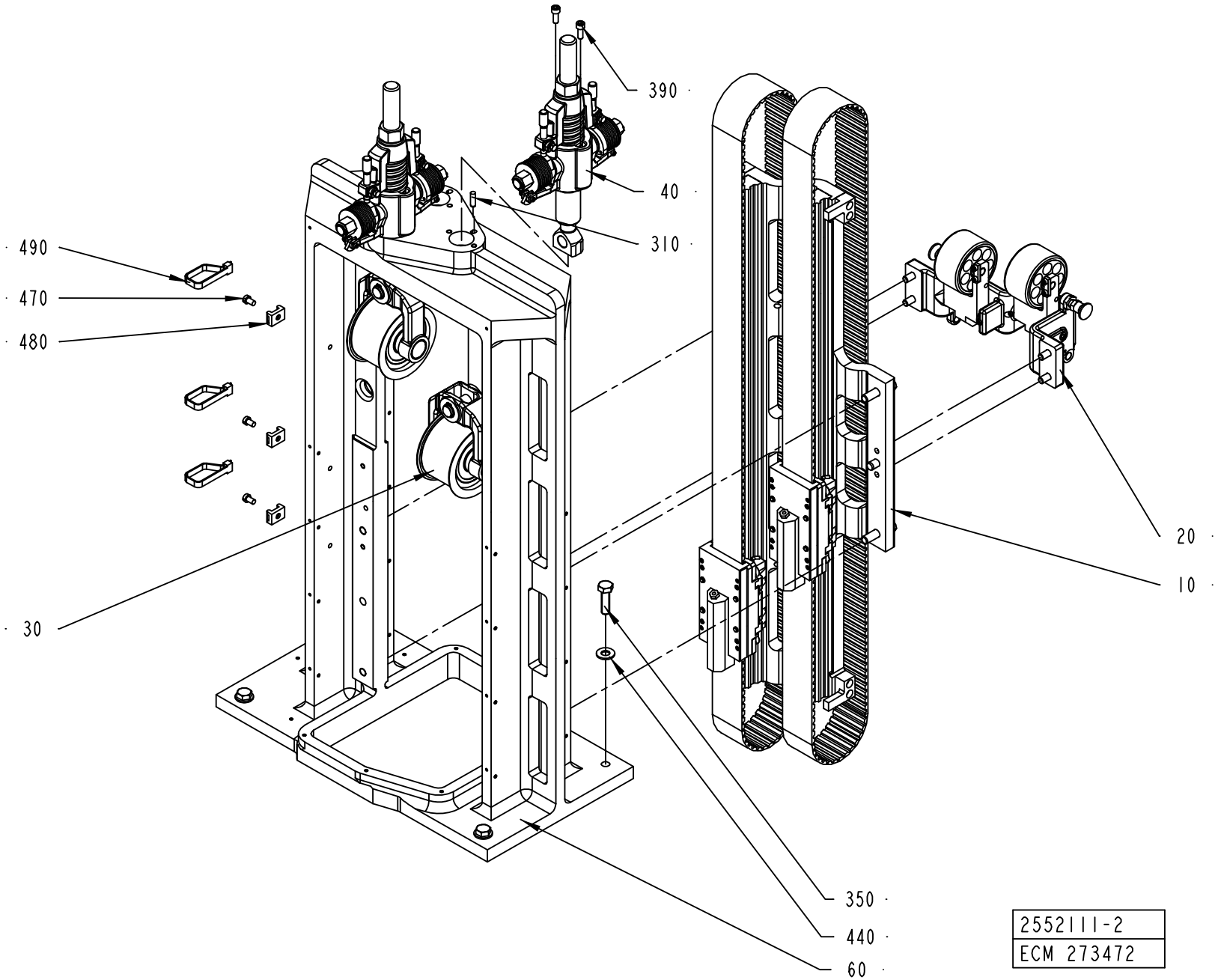
390
40
310
490
470
480
30
20
10
350
440
60
2552111-2
ECM 273472

ECM: 273976 - 20061101
Group number: 2552111-0150
Assembly Drawing: 2552111-2_1_AA

Pos	Part No	UN	Qty	Description	Page No
-					
010	1350218-0150		1	GUIDE	**3-31**
020	1487630-0100		1	DAMPER	**3-33**
030	1511197-0100		2	PULLEY	**3-21**
040	1511198-0100		2	BELT TENSIONER	**3-23**
060	1255222-0000		1	FRAME	
310	311103-0353		2	PARALLEL PIN ISO 2338 6M6X20 A1	
350	312105-0497		4	SCREW M6S ISO 4017 M10X35 A480	
390	312115-0368		4	SCREW ISO4762 M6X16 A4 80	
440	315105-0173		4	WASHER BRB 10,5X20 RFR	
470	312125-0364		3	SCREW ISO 1207 M6X10 A4	
480	352113-0204		3	ANCHOR PLATES FOR STRIPS, TYPE TM3S25-M	
490	352113-0103		3	CLIP STRIP, 290X7,6 MM	

Pos	Part No	UN	Qty	Description	Page No

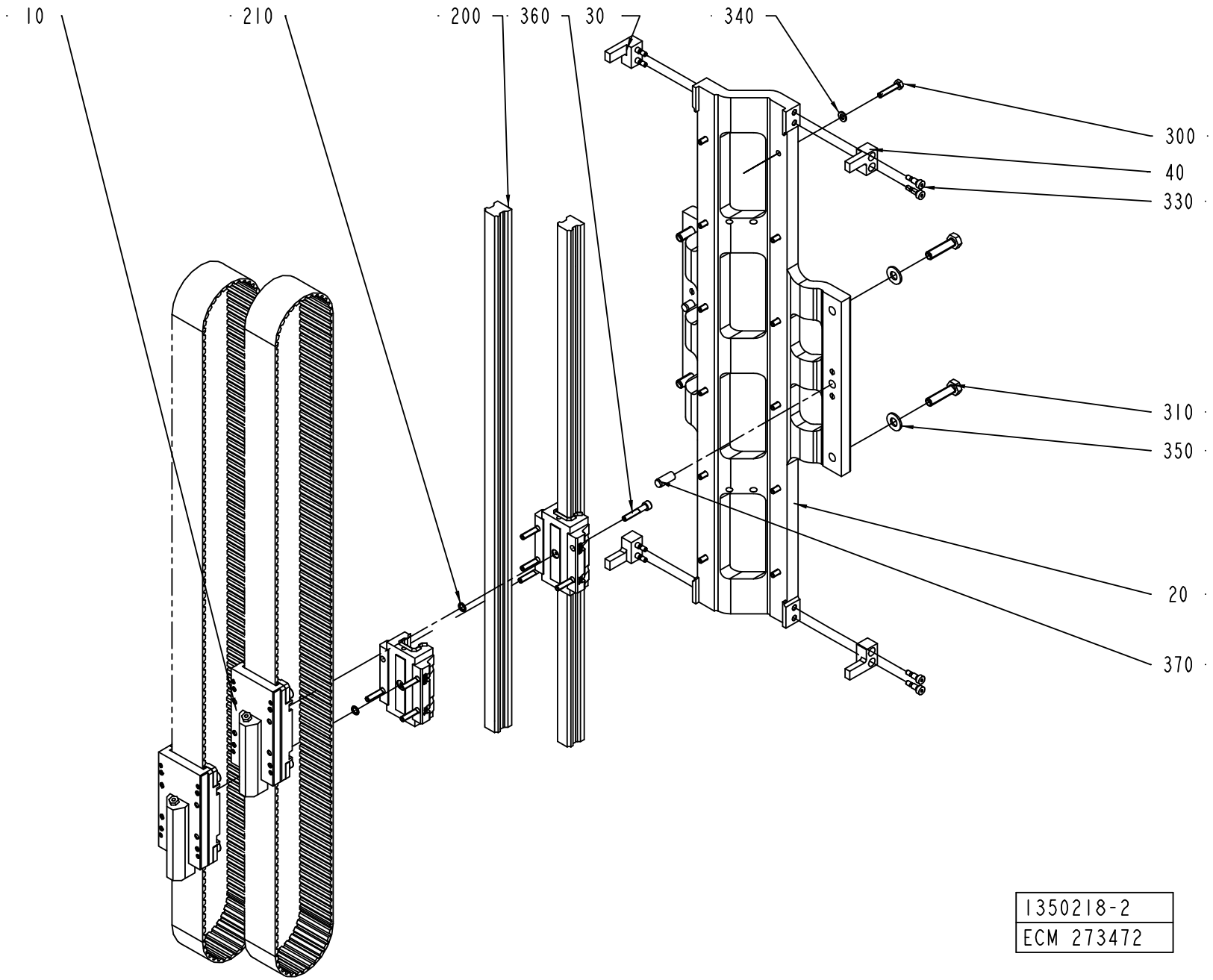
10
210
200
360
30
340
300
40
330
310
350
20
370
1350218-2
ECM 273472

ECM: 273975 - 20061101
Group number: 1350218-0150
Assembly Drawing: 1350218-2_1_AA

Pos	Part No	UN	Qty	Description	Page No
-					
010	1350210-0100		2	RUNNER	**3-17**
020	1255223-0000		1	HOLDER	
030	1350825-0000		2	LOCK	
040	1350826-0000		2	LOCK	
200	90458-2307		2	LINEAR UNIT HSR25	
210	90459-1411		2	O-RING 7,8X1,9 MM	
300	312109-0374		12	SCREW M6S ISO 4017 M6X30 A480	
310	312109-0499		4	SCREW M6S ISO 4017 M10X40 A480	
330	312180-0364		8	SCREW ISO7379 H6X10	
340	315105-0153		12	WASHER BRB 6,4X12 RFR	
350	315105-0173		4	WASHER BRB 10,5X20 RFR	
360	312115-0376		8	SCREW ISO4762 M6X35 A4 80	
370	311103-1456		2	PARALLEL PIN ISO 2338 10M6X24 A1	

Pos	Part No	UN	Qty	Description	Page No

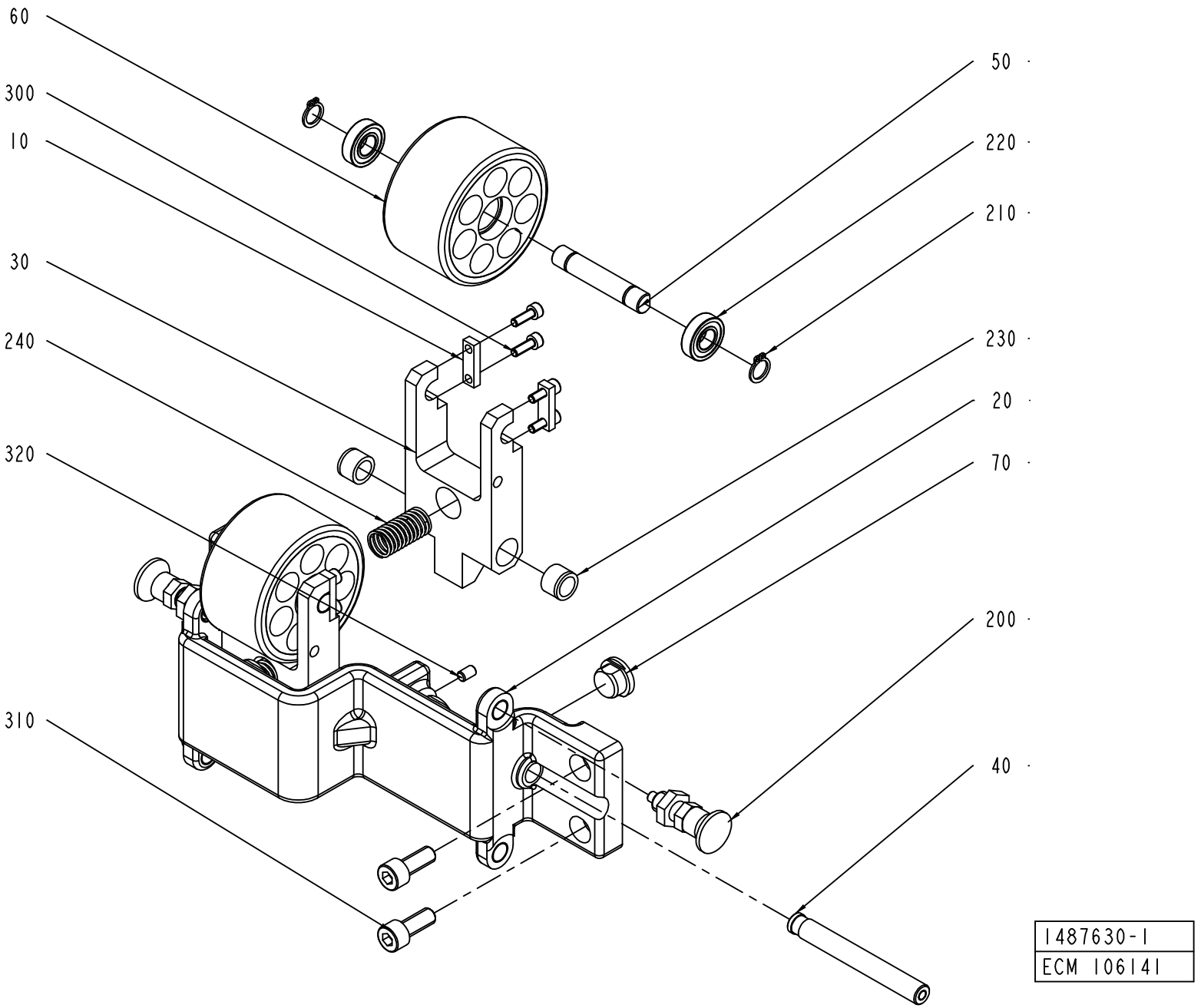
60
300
10
30
240
320
310
50
220
210
230
20
70
200
40
1487630-1
ECM 106141

ECM: 184629 - 20040916
Group number: 1487630-0100
Assembly Drawing: 1487630-1_1_AA

Pos	Part No	UN	Qty	Description	Page No
-					
010	1349266-0000		4	PLATE	
020	1487631-0000		1	BRACKET	
030	1487632-0000		2	FORK	
040	1487633-0000		2	AXLE PIN	
050	1487634-0000		2	AXLE PIN	
060	1487635-0000		2	WHEEL	
070	1487636-0000		2	STOPPER	
200	90051-0112		2	LOCK KNOB, NO. GN 617 NIK5	
210	90141-0016		4	RETAINING RING FOR SHAFT DIN 471 10 A2	
220	90214-0036		4	BALL BEARING, 10X22X6 MM	
230	90240-0119		4	BEAR. BUSHING WITHOUT FL	
240	90458-2305		2	COMP. SPRING D22280	
300	312115-0291		8	SCREW ISO4762 M4X12 A4 80	
310	312115-0451		4	SCREW ISO4762 M8X20 A4 80	
320	312318-0323		2	SCREW ISO4029 M5X8 A4	

Pos	Part No	UN	Qty	Description	Page No

Machine Type	Group Description	Used-In	Group Number	Page No

Tetra Pak

SPC
Spare Parts Catalogue

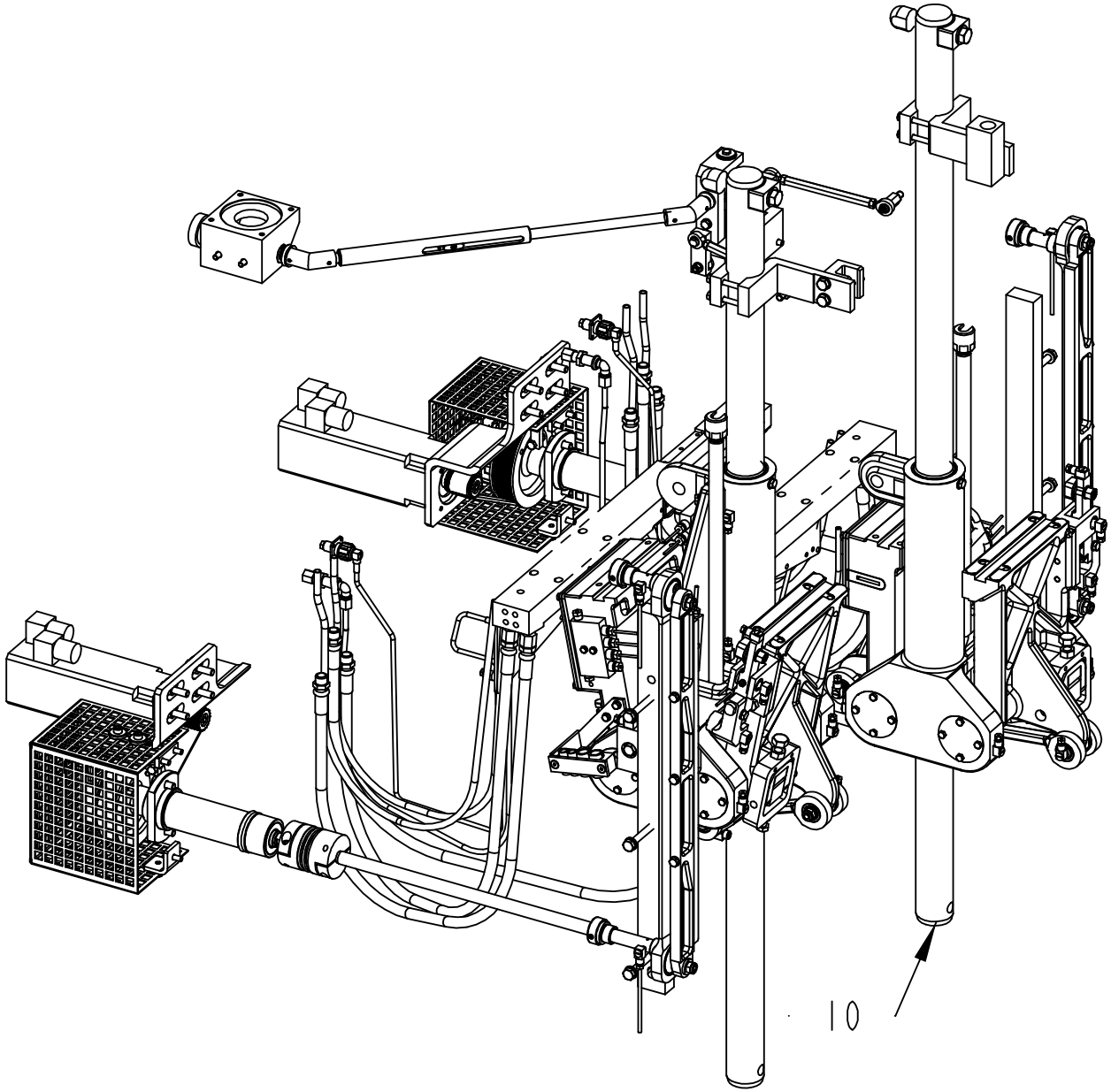

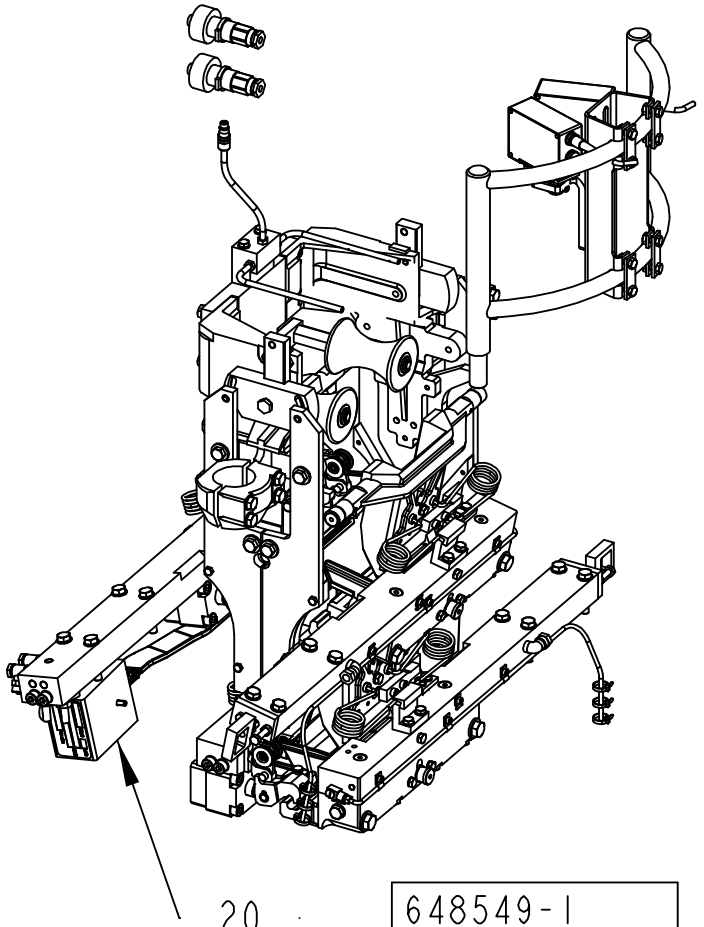

648549-1
ECM 120277

ECM: 273562 - 20061101
Group number: 648549-0350
Assembly Drawing: 648549-1_1_AA

Pos	Part No	UN	Qty	Description	Page No
A3/FLEX					
020	2552003-0100		1	FORMING UNIT	**4-5**
Common Parts					
010	2552002-0250		1	BASE UNIT	**4-199**

Pos	Part No	UN	Qty	Description	Page No

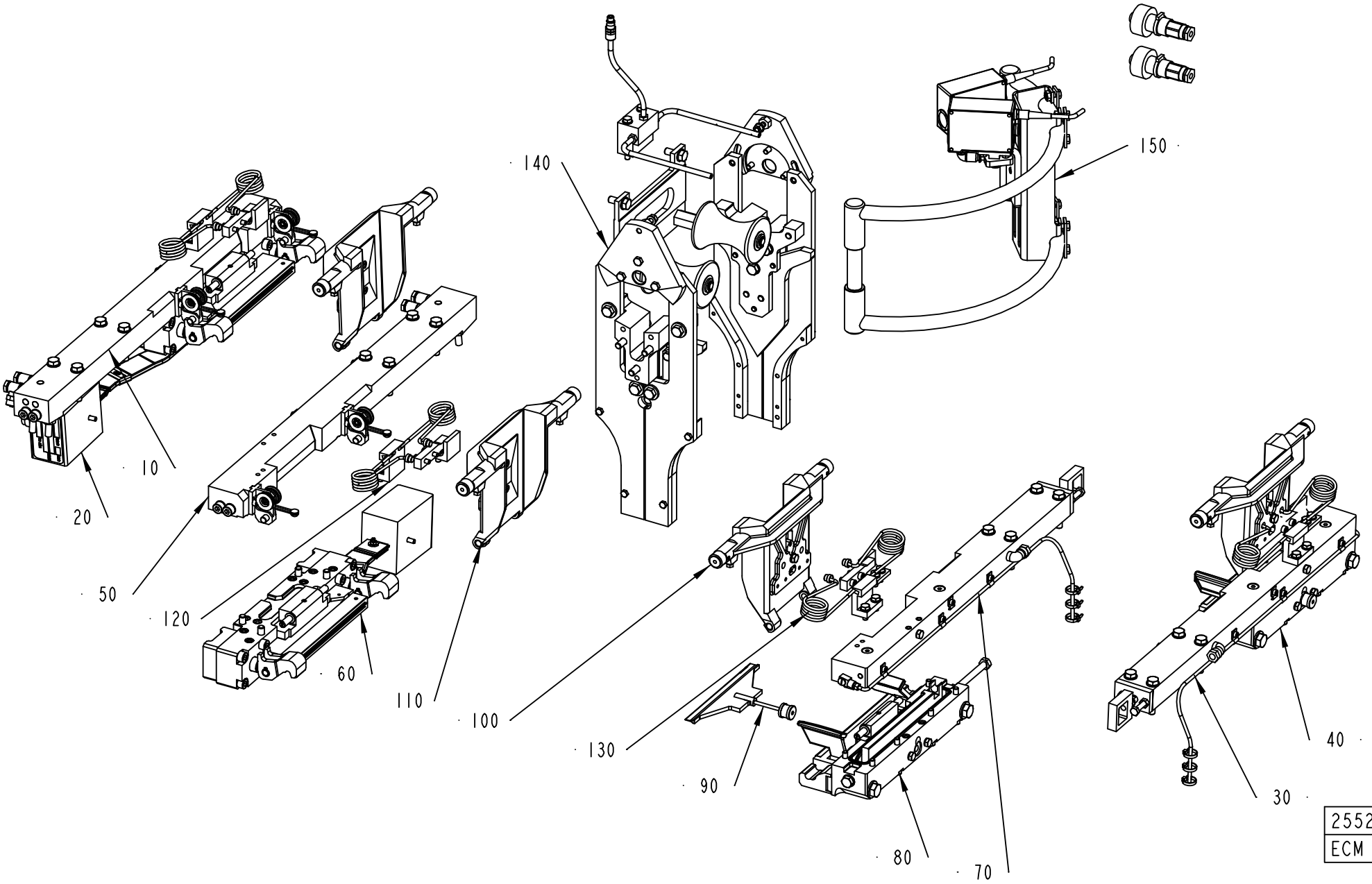
140
150
10
20
50
120
60
110
100
130
90
80
70
40
30
2552003-1
ECM 128689

ECM: 271555 - 20061101
Group number: 2552003-0100
Assembly Drawing: 2552003-1_1_AB

Pos	Part No	UN	Qty	Description	Page No
A3/FLEX NOQC					
100	1334633-0200		2	VOLUME FLAP CUTTING	**4-7, 4-9, 4-11, 4-13, 4-15**
110	1334634-0200		2	VOLUME FLAP PRESSURE ...	**4-17, 4-19, 4-21, 4-23, 4-25**
120	1334635-0200		2	SHOCK ABSORBER	**4-27, 4-29, 4-31, 4-33, 4-35, 4-37**
130	1334636-0200		2	SHOCK ABSORBER	**4-39, 4-41, 4-43, 4-45, 4-47, 4-49**
A3/FLEX TBA 0500B QC, A3/FLEX TBA 1000B QC, A3/FLEX TBA 0200B QC, A3/FLEX TBA 0250B QC, A3/FLEX TBA 0330S QC, A3/FLEX TBA 0250S QC, A3/FLEX TBA 0200M QC, A3/FLEX TPA 0750SQ QC, A3/FLEX TPA 1000SQ QC, A3/FLEX TPA 0200SQ QC, A3/FLEX TPA 0250SQ QC, A3/FLEX TBA 0250SQ QC, A3/FLEX TBA 0200SQ QC					
100	2594512-0200		2	VOLUME FLAP	**4-51, 4-53, 4-55, 4-57, 4-59**
110	1548460-0200		2	VOLUME FLAP	**4-63, 4-65, 4-67, 4-69, 4-71**
A3/FLEX TBA 1890S QC, A3/FLEX TBA 2000S QC					
100	2597325-0100		2	VOLUME FLAP	**4-75**
110	2597324-0100		2	VOLUME FLAP	**4-81**
120	1334635-0200		2	SHOCK ABSORBER	**4-27, 4-29, 4-31, 4-33, 4-35, 4-37**
130	1334636-0200		2	SHOCK ABSORBER	**4-39, 4-41, 4-43, 4-45, 4-47, 4-49**
Common Parts					
010	2514048-0200		1	CARRIER PRESSURE LEFT	**4-85, 4-87, 4-89**
020	1512563-0200		1	PRESSURE JAW LEFT	**4-91, 4-93**
030	1512564-0200		1	CARRIER CUTTING LEFT	**4-109, 4-111, 4-113, 4-115**
040	1512565-0300		1	CUTTING JAW LEFT	**4-117**
050	2514050-0200		1	CARRIER PRESSURE RIGHT	**4-133, 4-135, 4-137**
060	1512568-0200		1	PRESSURE JAW RIGHT	**4-139, 4-141**
070	1512569-0200		1	CARRIER CUTTING RIGHT	**4-153, 4-155, 4-157, 4-159**
080	1512570-0300		1	CUTTING JAW RIGHT	**4-161**
090	1478768-0200		2	KNIFE	**4-167**
140	2613647-0100		1	VOLUME CURVE PIECE	**4-169**
150	2616224-0200		1	PHOTOCELL UNIT	**4-191, 4-193, 4-195, 4-197**

Pos	Part No	UN	Qty	Description	Page No

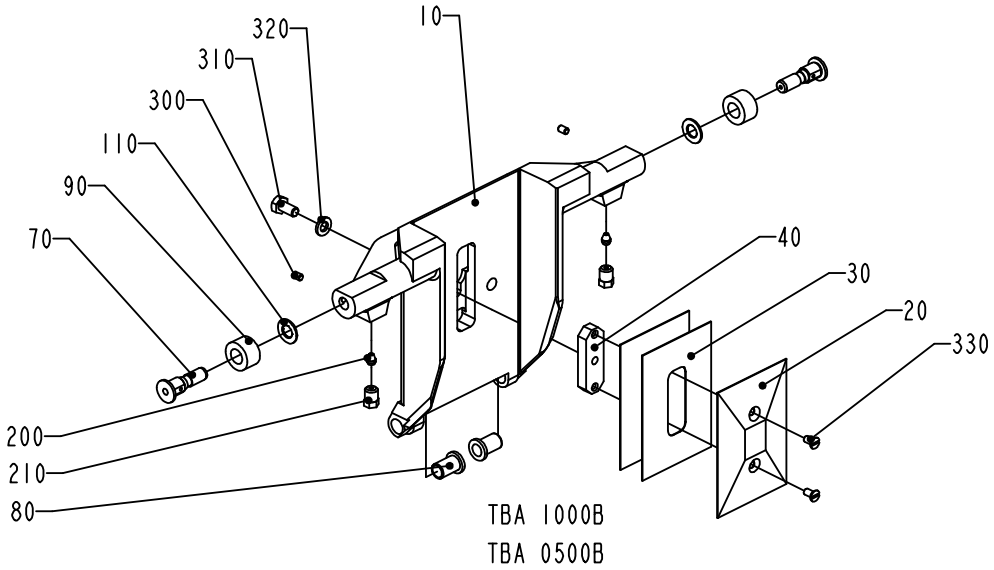

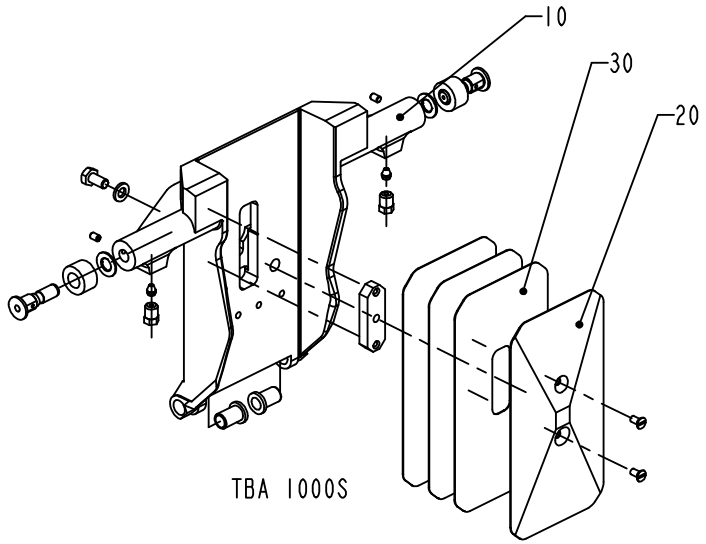

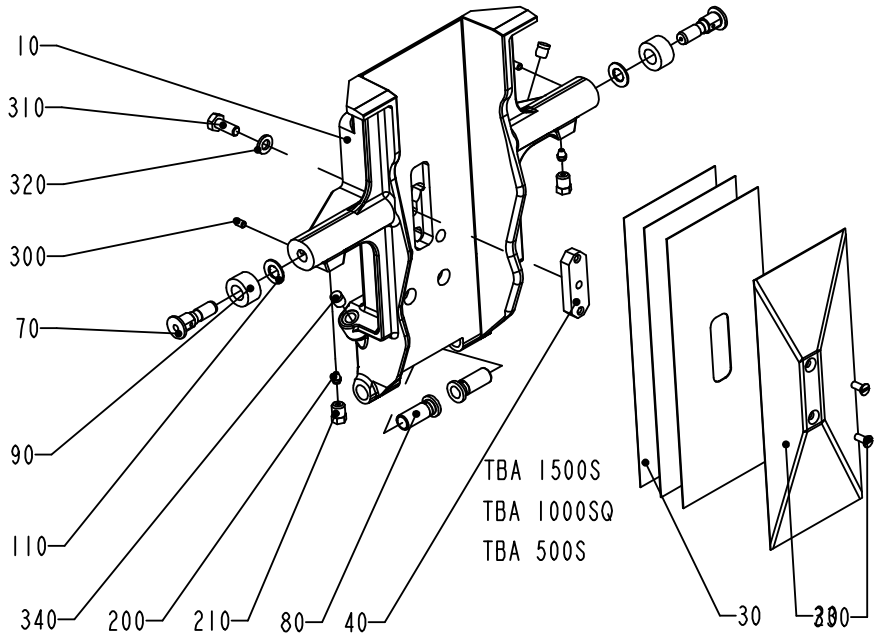

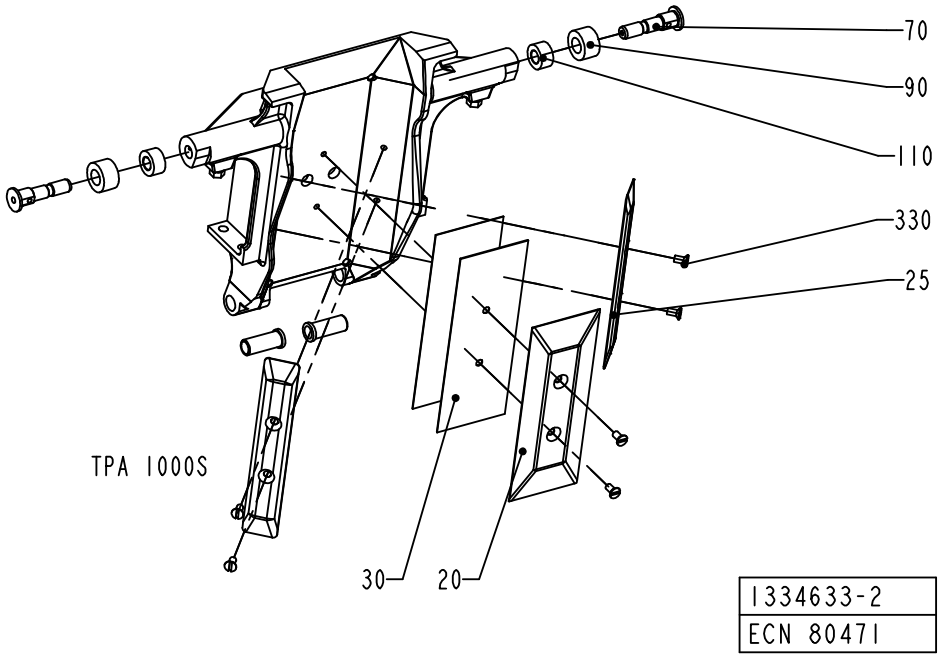

1334633-2
ECN 80471

ECM: 271729 - 20060831
Group number: 1334633-0200
Assembly Drawing: 1334633-2_1_AD

This list covers pages from 4-6 to 4-15

Pos	Part No	UN	Qty	Description	Page No
TBA 0200B (See drawing on page: 4-8)					
010	1499901-0000		1	VOLUME FLAP	
020	1038638-0000		1	VOLUME BULGE	
030	1038639-0000		2	VOLUME SHIM	
040	1038637-0000		1	WEDGE	
070	434320-0000		2	AXLE PIN	
080	1255541-0000		2	BUSHING	
090	436556-0000		2	CURVE ROLLER	
110	19972-0000		2	WASHER	
310	312105-0327		1	SCREW M6S ISO 4017 M5X12 A480	
320	315105-0146		1	WASHER BRB 5,3X10 RFR	
330	312145-0287		2	SCREW ISO 2009 MFS M4X8 A4	
TBA 0200S (See drawing on page: 4-8)					
010	1484866-0000		1	VOLUME FLAP	
020	1037733-0000		1	VOLUME BULGE	
030	1037735-0000		2	VOLUME SHIM	
040	1037734-0000		1	WEDGE	
070	434320-0000		2	AXLE PIN	
080	1255541-0000		2	BUSHING	
090	436556-0000		2	CURVE ROLLER	
110	19972-0000		2	WASHER	
310	312105-0327		1	SCREW M6S ISO 4017 M5X12 A480	
320	315105-0146		1	WASHER BRB 5,3X10 RFR	
330	312145-0287		2	SCREW ISO 2009 MFS M4X8 A4	
TBA 0250B (See drawing on page: 4-8)					
010	1484867-0000		1	VOLUME FLAP	
020	1346157-0000		1	VOLUME BULGE	
030	1346158-0000		2	VOLUME SHIM	
040	1037734-0000		1	WEDGE	
070	434320-0000		2	AXLE PIN	
080	1255541-0000		2	BUSHING	
090	436556-0000		2	CURVE ROLLER	
110	19972-0000		2	WASHER	
310	312105-0327		1	SCREW M6S ISO 4017 M5X12 A480	
320	315105-0146		1	WASHER BRB 5,3X10 RFR	
330	312145-0287		2	SCREW ISO 2009 MFS M4X8 A4	
TBA 0250S (See drawing on page: 4-8)					
010	2524388-0000		1	VOLUME FLAP	
020	2520473-0000		1	VOLUME BULGE	
030	2520474-0000		3	VOLUME SHIM	
040	1037734-0000		1	WEDGE	
070	434320-0000		2	AXLE PIN	
080	1255541-0000		2	BUSHING	
090	436556-0000		2	CURVE ROLLER	
110	19972-0000		2	WASHER	
310	312105-0328		1	SCREW M6S ISO 4017 M5X14 A480	
320	315105-0146		1	WASHER BRB 5,3X10 RFR	
330	312145-0287		2	SCREW ISO 2009 MFS M4X8 A4	
TBA 0330S (See drawing on page: 4-8)					
010	2544990-0000		1	VOLUME FLAP	
020	2544992-0000		1	VOLUME BULGE	
030	2544993-0000		3	VOLUME SHIM	
040	1037734-0000		1	WEDGE	
070	434320-0000		2	AXLE PIN	
080	1255541-0000		2	BUSHING	
090	436556-0000		2	CURVE ROLLER	
110	19972-0000		2	WASHER	
310	312105-0328		1	SCREW M6S ISO 4017 M5X14 A480	
320	315105-0146		1	WASHER BRB 5,3X10 RFR	
330	312145-0287		2	SCREW ISO 2009 MFS M4X8 A4	
TBA 0500B (See drawing on page: 4-6)					
010	1532287-0000		1	VOLUME FLAP	
020	1558817-0000		1	VOLUME BULGE	
030	1532293-0000		2	VOLUME SHIM	
070	434320-0000		2	AXLE PIN	
080	1255541-0000		2	BUSHING	
090	436556-0000		2	CURVE ROLLER	
110	19972-0000		2	WASHER	
310	312105-0327		1	SCREW M6S ISO 4017 M5X12 A480	
320	315105-0146		1	WASHER BRB 5,3X10 RFR	
TBA 0500S (See drawing on page: 4-6)					
010	1511250-0000		1	VOLUME FLAP	
020	1524035-0000		1	VOLUME BULGE	
030	1511253-0000		3	VOLUME SHIM	
040	1487628-0000		1	WEDGE	
070	434320-0000		2	AXLE PIN	
080	1511254-0000		2	BUSHING	
090	434321-0000		2	CURVE ROLLER	
110	19972-0000		2	WASHER	
310	312105-0368		1	SCREW M6S ISO 4017 M6X16 A480	
320	315105-0153		1	WASHER BRB 6,4X12 RFR	
330	312145-0289		2	SCREW ISO 2009 MFS M4X10 A4	
340	90261-0016		2	PLUG, BLIND, PLASTIC GPN300V2	
TBA 1000B (See drawing on page: 4-6)					

Machine Type | Group Description | Used-In | Group Number | Page No

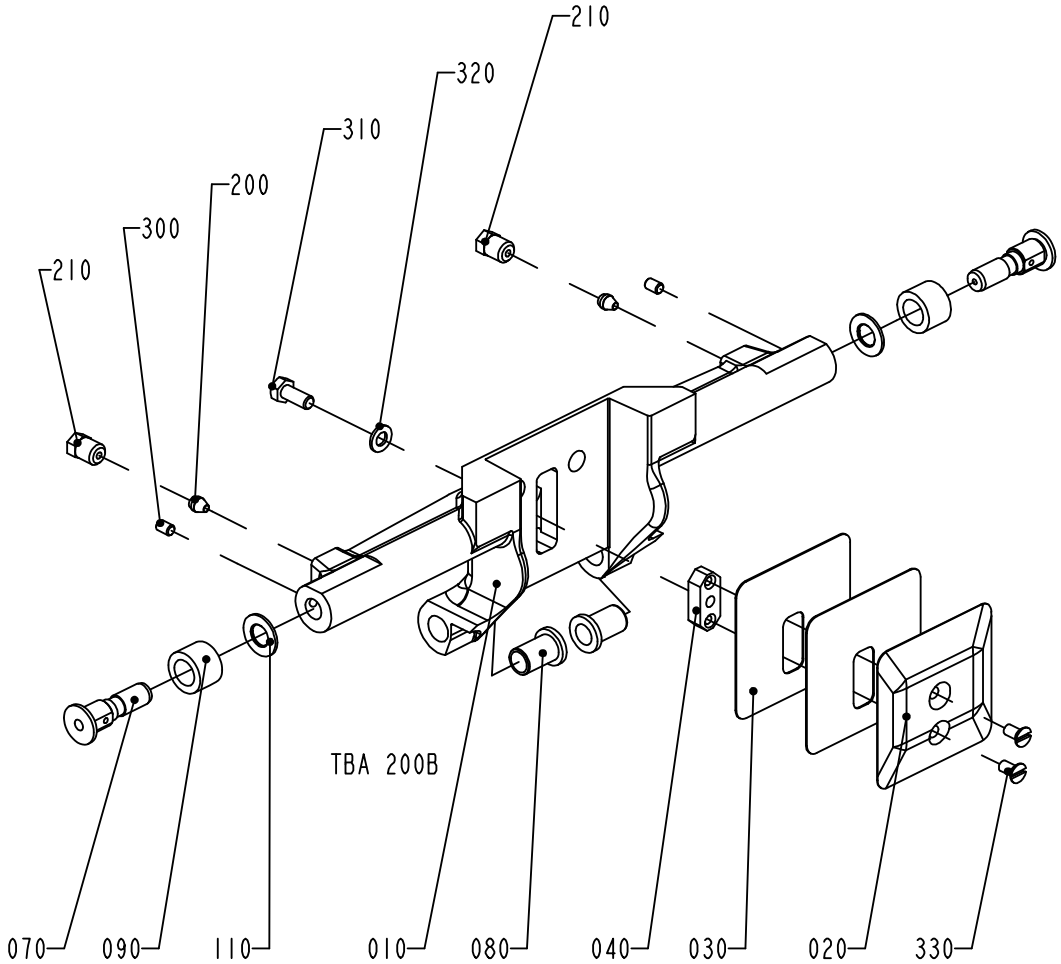

TBA 200B

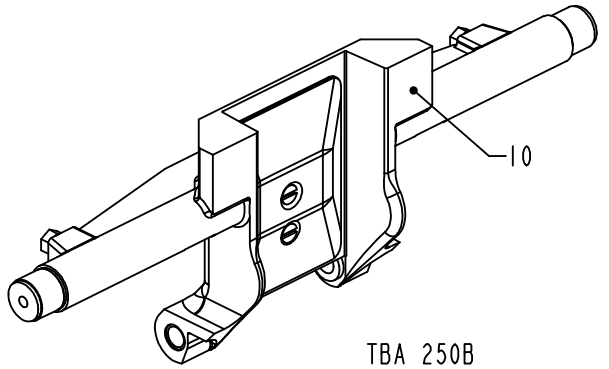

TBA 250B

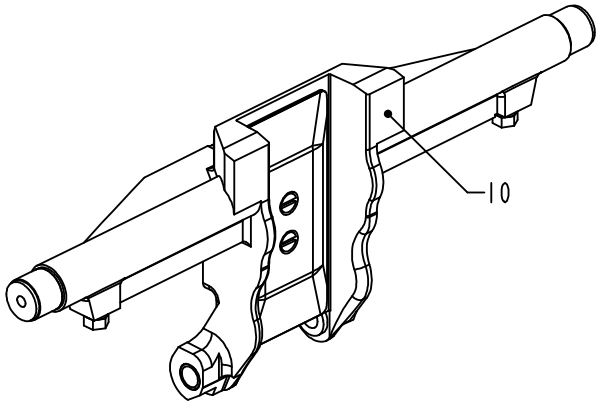

TBA 200S

1334633-3
ECN 72770

Pos	Part No	UN	Qty	Description	Page No
TBA 1000B (Cont'd) (See drawing on page: 4-6)					
010	1478358-0000		1	VOLUME FLAP	
020	1035828-0000		1	VOLUME BULGE	
030	1035831-0000		2	VOLUME SHIM	
040	1040756-0000		1	WEDGE	
070	434320-0000		2	AXLE PIN	
080	1255541-0000		2	BUSHING	
090	434321-0000		2	CURVE ROLLER	
110	19972-0000		2	WASHER	
310	312105-0366		1	SCREW M6S ISO 4017 M6X12 A480	
320	315105-0153		1	WASHER BRB 6,4X12 RFR	
330	312145-0287		2	SCREW ISO 2009 MFS M4X8 A4	
TBA 1000S (See drawing on page: 4-6)					
010	1040753-0000		1	VOLUME FLAP	
020	1040754-0000		1	VOLUME BULGE	
030	1040755-0000		3	VOLUME SHIM	
040	1040756-0000		1	WEDGE	
070	434320-0000		2	AXLE PIN	
080	1255541-0000		2	BUSHING	
090	434321-0000		2	CURVE ROLLER	
110	19972-0000		2	WASHER	
310	312105-0366		1	SCREW M6S ISO 4017 M6X12 A480	
320	315105-0153		1	WASHER BRB 6,4X12 RFR	
330	312145-0287		2	SCREW ISO 2009 MFS M4X8 A4	
TBA 1000SQ (See drawing on page: 4-6)					
010	2606305-0000		1	VOLUME FLAP	
020	1487626-0000		1	VOLUME BULGE	
030	1487627-0000		3	VOLUME SHIM	
040	1040756-0000		1	WEDGE	
070	434320-0000		2	AXLE PIN	
080	1558701-0000		2	BUSHING	
090	434321-0000		2	CURVE ROLLER	
110	19972-0000		2	WASHER	
310	312115-0367		1	SCREW ISO4762 M6X14 A4 80	
320	315105-0153		1	WASHER BRB 6,4X12 RFR	
330	312145-0291		2	SCREW ISO 2009 MFS M4X12 A4	
TBA 1500S (See drawing on page: 4-6)					
010	2587236-0000		1	VOLUME FLAP	
020	1499675-0000		1	VOLUME BULGE	
030	1349208-0000		3	VOLUME SHIM	
040	1040756-0000		1	WEDGE	
070	434320-0000		2	AXLE PIN	
080	1558701-0000		2	BUSHING	
090	434321-0000		2	CURVE ROLLER	
110	19972-0000		2	WASHER	
310	312105-0368		1	SCREW M6S ISO 4017 M6X16 A480	
320	315105-0153		1	WASHER BRB 6,4X12 RFR	
330	312145-0289		2	SCREW ISO 2009 MFS M4X10 A4	
340	90261-0016		2	PLUG, BLIND, PLASTIC GPN300V2	
TPA 0250SQ (See drawing on page: 4-12)					
010	2530256-0000		1	VOLUME FLAP	
020	2581994-0000		2	VOLUME BULGE	
030	1549594-0000		6	VOLUME SHIM	
070	434320-0000		2	AXLE PIN	
080	1255541-0000		2	BUSHING	
090	436556-0000		2	CURVE ROLLER	
110	19972-0000		2	WASHER	
320	315105-0146		2	WASHER BRB 5,3X10 RFR	
325	312705-0314		2	NUT HEX. DOMED CAP MHM-6 M5 A280	
TPA 0330SQ (See drawing on page: 4-10)					
010	1539904-0000		1	VOLUME FLAP	
020	1539903-0000		2	VOLUME BULGE	
030	1539902-0000		6	VOLUME SHIM	
070	434320-0000		2	AXLE PIN	
080	1255541-0000		2	BUSHING	
090	436556-0000		2	CURVE ROLLER	
110	19972-0000		2	WASHER	
320	315105-0146		2	WASHER BRB 5,3X10 RFR	
325	312105-0327		2	SCREW M6S ISO 4017 M5X12 A480	
TPA 0500SQ (See drawing on page: 4-14)					
010	1549836-0000		1	VOLUME FLAP	
025	1549829-0000		2	VOLUME BULGE	
035	1549830-0000		6	VOLUME SHIM	
040	1549831-0000		2	WEDGE	
050	1549832-0000		1	PLUG	
070	434320-0000		2	AXLE PIN	
080	2530313-0000		2	BUSHING	
090	434321-0000		2	CURVE ROLLER	
110	19972-0000		2	WASHER	
310	312105-0327		3	SCREW M6S ISO 4017 M5X12 A480	
320	315105-0146		3	WASHER BRB 5,3X10 RFR	
370	312155-0289		4	SCREW DIN 7991 MF6S M4X10 A4 70	
TPA 1000SQ (See drawing on page: 4-14)					
010	2547011-0000		1	VOLUME FLAP	

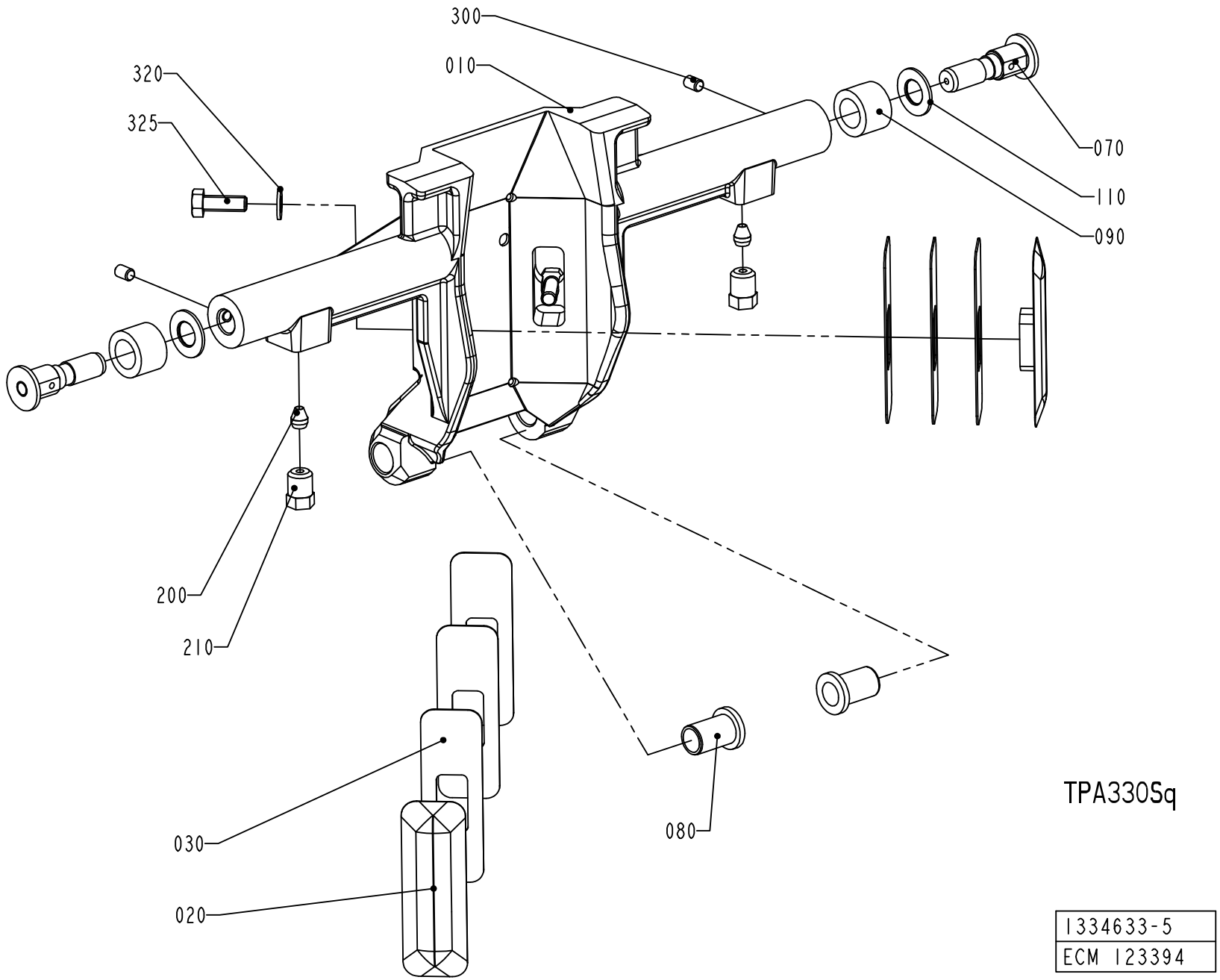
300
010
320
325
070
110
090
200
210
030
020
080
TPA330Sq
1334633-5
ECM 123394

ECM: 271729 - 20060831
Group number: 1334633-0200
Assembly Drawing: 1334633-5_1_AB

This list covers pages from 4-6 to 4-15

Pos	Part No	UN	Qty	Description	Page No
TPA 1000SQ (Cont'd) (See drawing on page: 4-14)					
020	1539840-0000		1	VOLUME BULGE	
025	1539841-0000		2	VOLUME BULGE	
030	1539842-0000		3	VOLUME SHIM	
035	1539843-0000		6	VOLUME SHIM	
040	1040756-0000		3	WEDGE	
060	2547010-0000		1	BRACKET	
070	434320-0000		2	AXLE PIN	
080	1255541-0000		2	BUSHING	
090	434321-0000		2	CURVE ROLLER	
110	19972-0000		2	WASHER	
320	315105-0153		3	WASHER BRB 6,4X12 RFR	
360	312105-0368		3	SCREW M6S ISO 4017 M6X16 A480	
370	312155-0289		6	SCREW DIN 7991 MF6S M4X10 A4 70	
Common Parts					
200	90028-0020		2	CONE TUBE 2,5MM	
210	90134-0063		2	BUSHING/NUT M8X1, D=2,5 MM	
300	312318-0285		2	SCREW ISO4029 M4X6 A4	

Pos	Part No	UN	Qty	Description	Page No

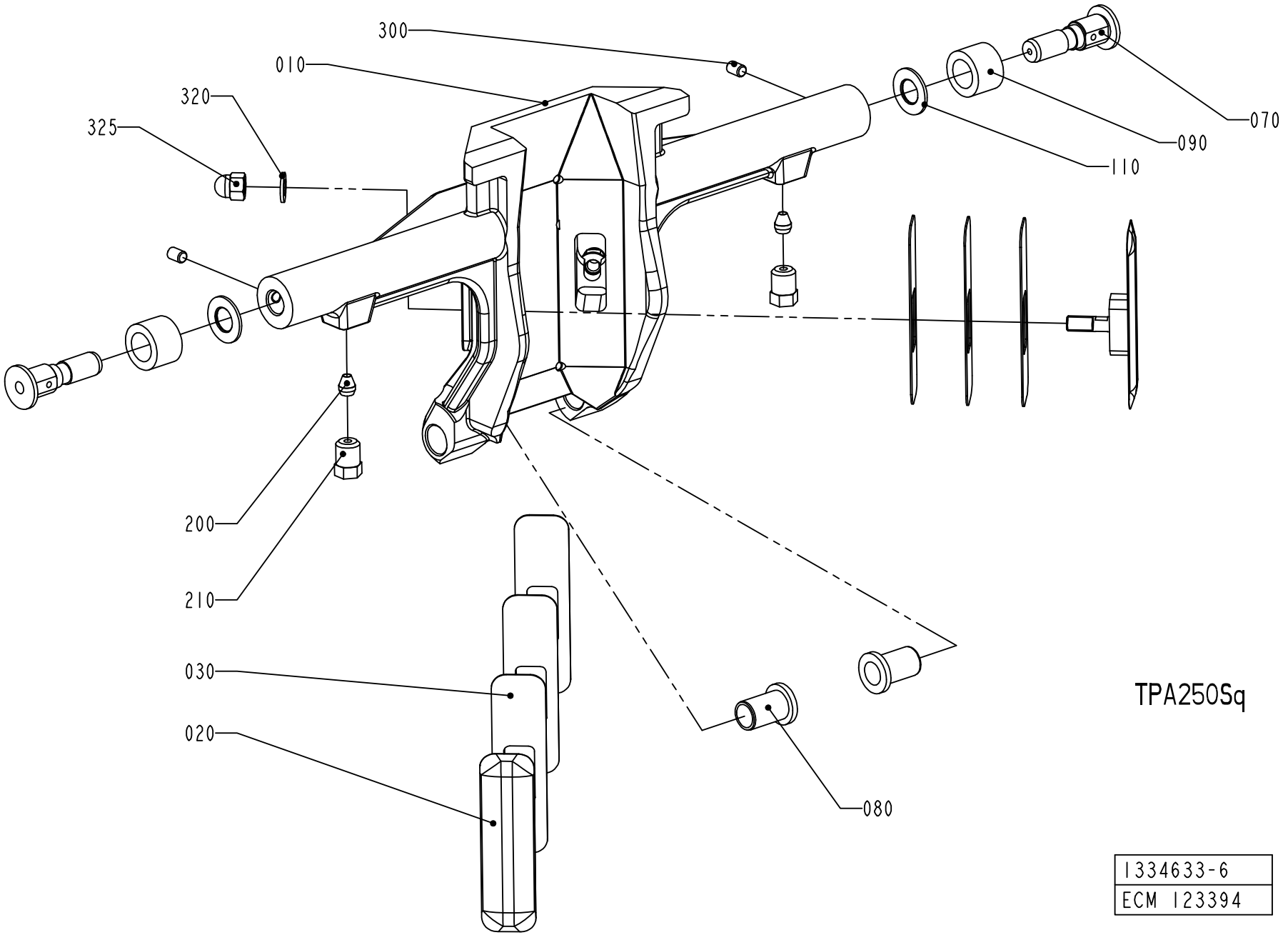
300
010
320
325
070
090
110
200
210
030
020
080
TPA250Sq
1334633-6
ECM 123394

ECM: 271729 - 20060831
Group number: 1334633-0200
Assembly Drawing: 1334633-6_1_AA

This list covers pages from 4-6 to 4-15

Pos	Part No	UN	Qty	Description	Page No
SEE PREVIOUS LISTS PAGES: 4-7, 4-9, 4-11.					

Pos	Part No	UN	Qty	Description	Page No

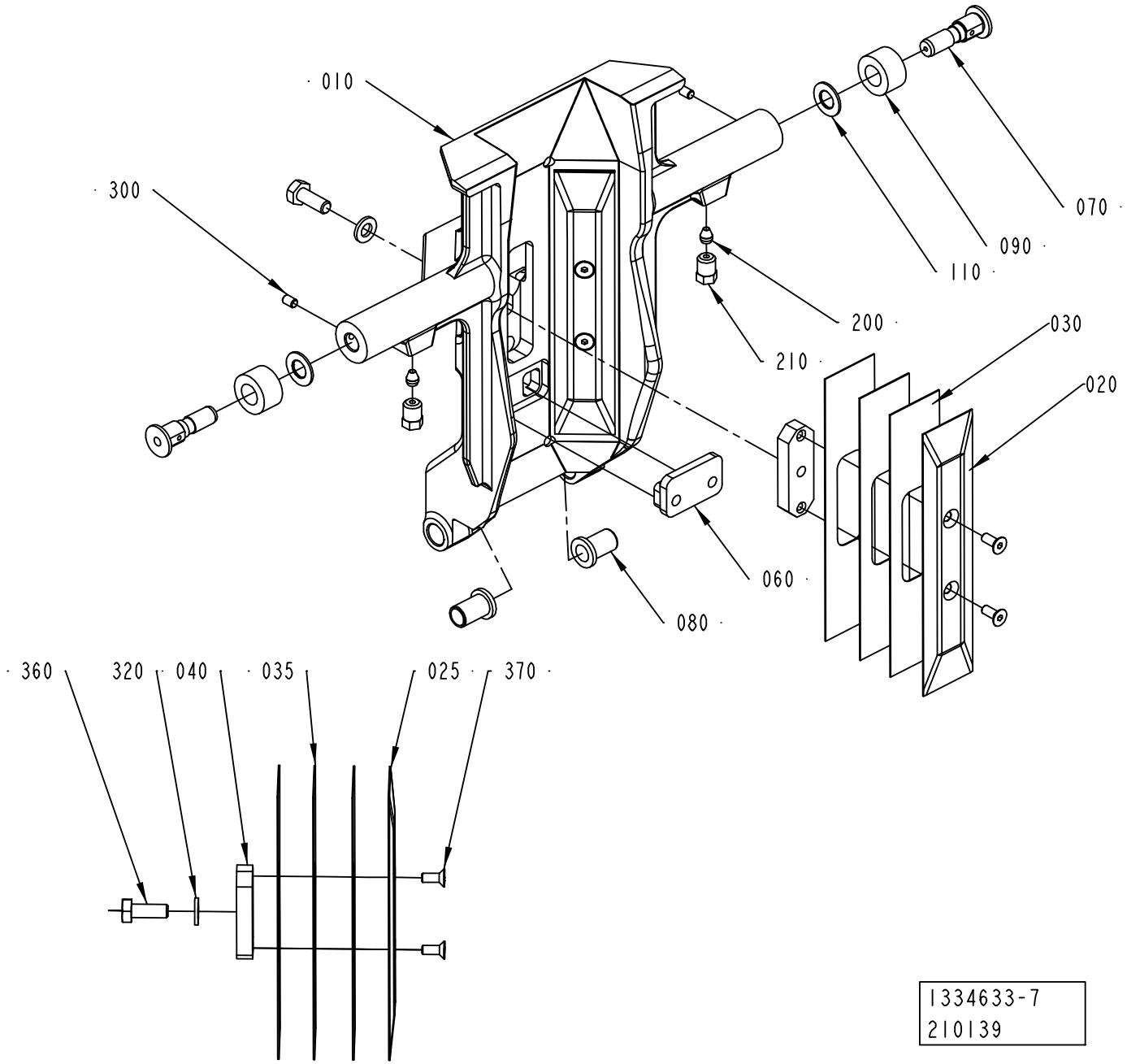
010
300
070
090
110
200
210
030
020
060
080
360
320
040
035
025
370
1334633-7
210139

ECM: 271729 - 20060831
Group number: 1334633-0200
Assembly Drawing: 1334633-7_1_AB

This list covers pages from 4-6 to 4-15

Pos	Part No	UN	Qty	Description	Page No	Pos	Part No	UN	Qty	Description	Page No

SEE PREVIOUS LISTS PAGES: 4-7, 4-9, 4-11.

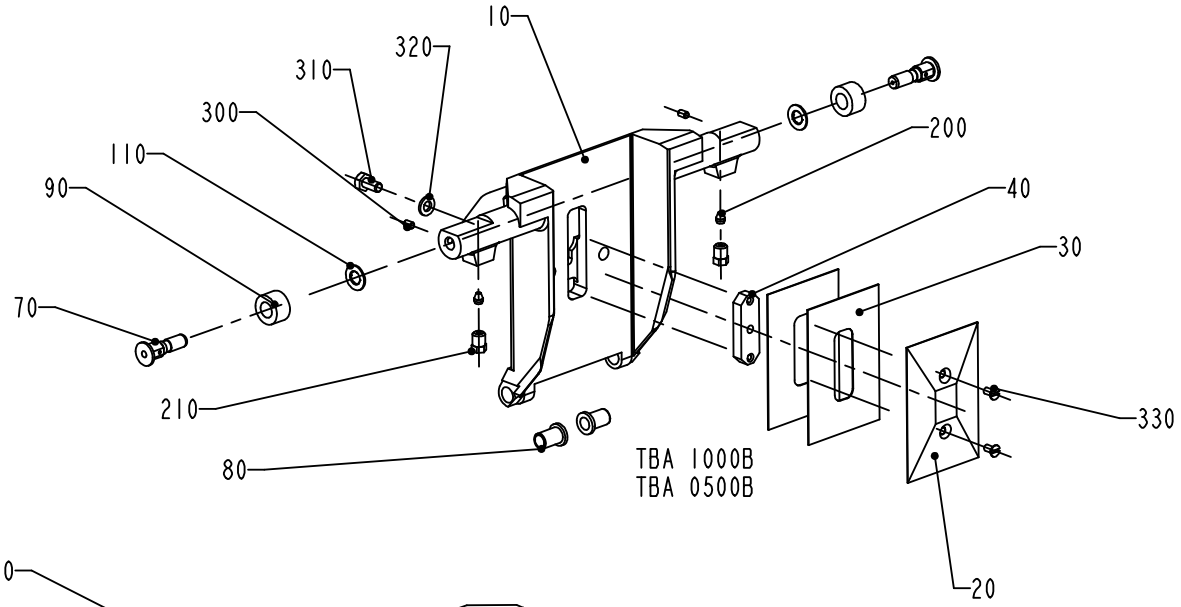

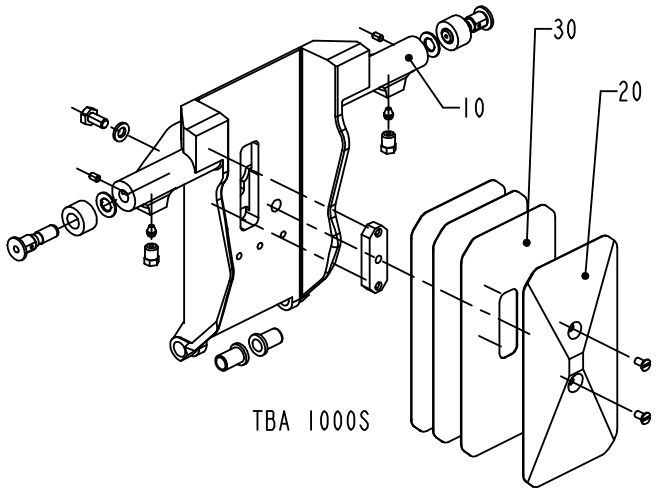

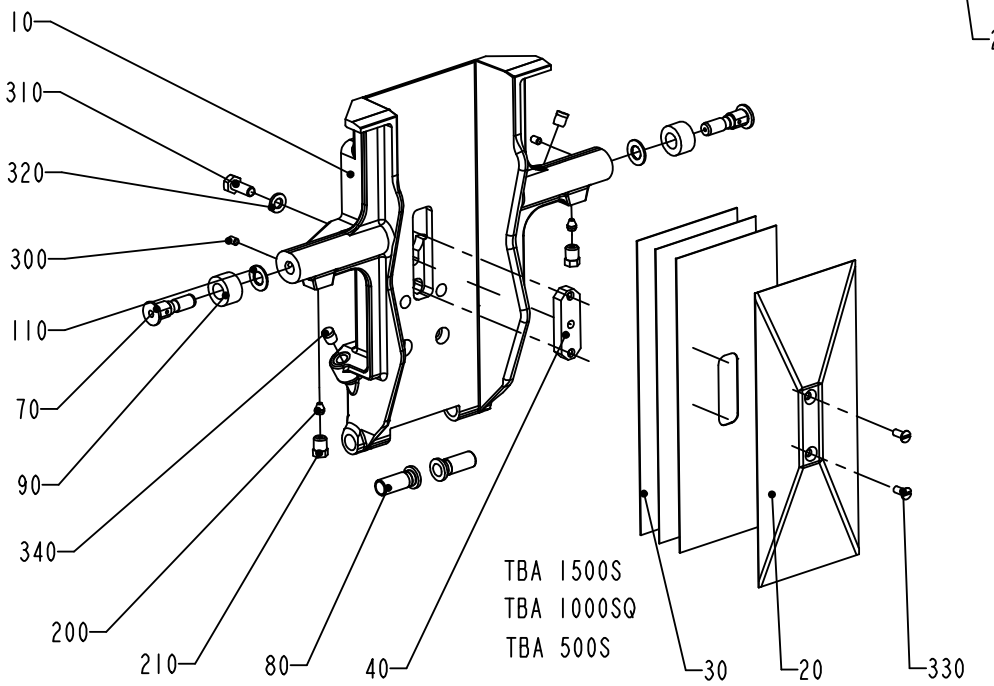

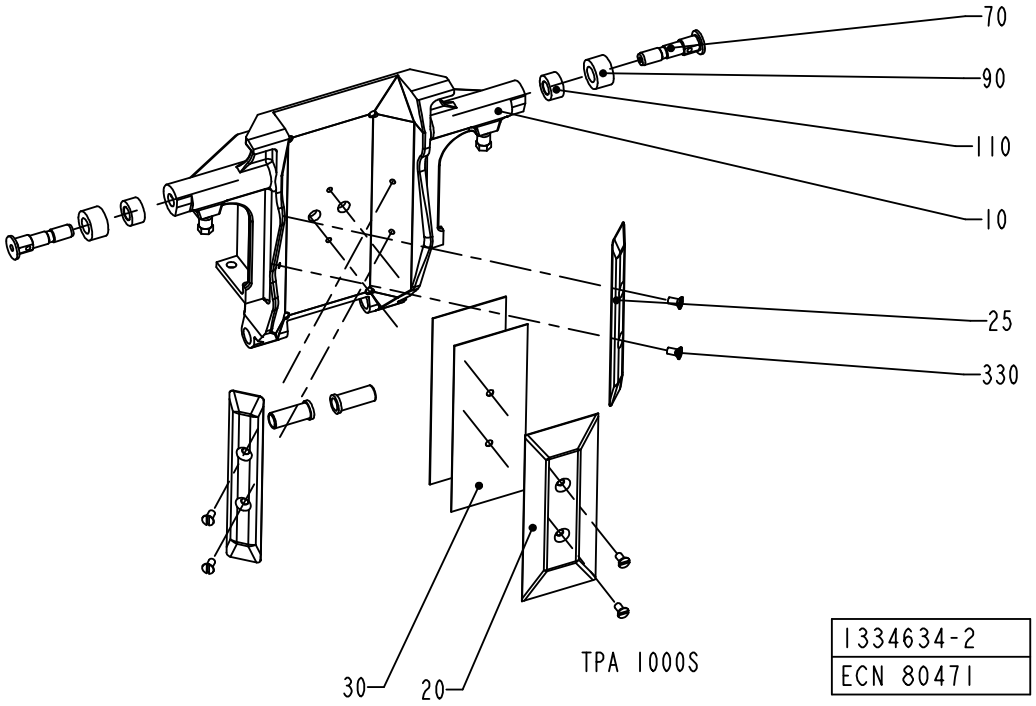

1334634-2
ECN 80471

ECM: 189486 - 20050103
Group number: 1334634-0200
Assembly Drawing: 1334634-2_1_AD

This list covers pages from 4-16 to 4-25

Pos	Part No	UN	Qty	Description	Page No
TPA 1000SQ SMILE (See drawing on page: 4-24)					
010	2582002-0000		1	VOLUME FLAP	
020	1539840-0000		1	VOLUME BULGE	
025	1539841-0000		2	VOLUME BULGE	
030	1539842-0000		3	VOLUME SHIM	
035	1539843-0000		6	VOLUME SHIM	
040	1040756-0000		3	WEDGE	
060	2547010-0000		1	BRACKET	
070	434320-0000		2	AXLE PIN	
080	1255541-0000		2	BUSHING	
090	434321-0000		2	CURVE ROLLER	
110	19972-0000		2	WASHER	
310	312105-0368		3	SCREW M6S ISO 4017 M6X16 A480	
320	315105-0153		3	WASHER BRB 6,4X12 RFR	
370	312155-0289		6	SCREW DIN 7991 MF6S M4X10 A4 70	
TBA 0200B (See drawing on page: 4-18)					
010	1499902-0000		1	VOLUME FLAP	
020	1038638-0000		1	VOLUME BULGE	
030	1038639-0000		2	VOLUME SHIM	
040	1038637-0000		1	WEDGE	
070	434320-0000		2	AXLE PIN	
080	1255541-0000		2	BUSHING	
090	436556-0000		2	CURVE ROLLER	
110	19972-0000		2	WASHER	
310	312105-0327		1	SCREW M6S ISO 4017 M5X12 A480	
320	315105-0146		1	WASHER BRB 5,3X10 RFR	
330	312145-0287		2	SCREW ISO 2009 MFS M4X8 A4	
TBA 0200S (See drawing on page: 4-18)					
010	1484865-0000		1	VOLUME FLAP	
020	1037733-0000		1	VOLUME BULGE	
030	1037735-0000		2	VOLUME SHIM	
040	1037734-0000		1	WEDGE	
070	434320-0000		2	AXLE PIN	
080	1255541-0000		2	BUSHING	
090	436556-0000		2	CURVE ROLLER	
110	19972-0000		2	WASHER	
310	312105-0327		1	SCREW M6S ISO 4017 M5X12 A480	
320	315105-0146		1	WASHER BRB 5,3X10 RFR	
330	312145-0287		2	SCREW ISO 2009 MFS M4X8 A4	
TBA 0250B (See drawing on page: 4-18)					
010	1484868-0000		1	VOLUME FLAP	
020	1346157-0000		1	VOLUME BULGE	
030	1346158-0000		2	VOLUME SHIM	
040	1037734-0000		1	WEDGE	
070	434320-0000		2	AXLE PIN	
080	1255541-0000		2	BUSHING	
090	436556-0000		2	CURVE ROLLER	
110	19972-0000		2	WASHER	
310	312105-0327		1	SCREW M6S ISO 4017 M5X12 A480	
320	315105-0146		1	WASHER BRB 5,3X10 RFR	
330	312145-0287		2	SCREW ISO 2009 MFS M4X8 A4	
TBA 0250S (See drawing on page: 4-18)					
010	2520472-0000		1	VOLUME FLAP	
020	2520473-0000		1	VOLUME BULGE	
030	2520474-0000		3	VOLUME SHIM	
040	1037734-0000		1	WEDGE	
070	434320-0000		2	AXLE PIN	
080	1255541-0000		2	BUSHING	
090	436556-0000		2	CURVE ROLLER	
110	19972-0000		2	WASHER	
310	312105-0328		1	SCREW M6S ISO 4017 M5X14 A480	
320	315105-0146		1	WASHER BRB 5,3X10 RFR	
330	312145-0287		2	SCREW ISO 2009 MFS M4X8 A4	
TBA 0330S (See drawing on page: 4-18)					
010	2544991-0000		1	VOLUME FLAP	
020	2544992-0000		1	VOLUME BULGE	
030	2544993-0000		3	VOLUME SHIM	
040	1037734-0000		1	WEDGE	
070	434320-0000		2	AXLE PIN	
080	1255541-0000		2	BUSHING	
090	436556-0000		2	CURVE ROLLER	
110	19972-0000		2	WASHER	
310	312105-0328		1	SCREW M6S ISO 4017 M5X14 A480	
320	315105-0146		1	WASHER BRB 5,3X10 RFR	
330	312145-0287		2	SCREW ISO 2009 MFS M4X8 A4	
TBA 0500B (See drawing on page: 4-16)					
010	1532287-0000		1	VOLUME FLAP	
020	1558817-0000		1	VOLUME BULGE	
030	1532293-0000		2	VOLUME SHIM	
070	434320-0000		2	AXLE PIN	
080	1255541-0000		2	BUSHING	
090	436556-0000		2	CURVE ROLLER	
110	19972-0000		2	WASHER	
310	312105-0327		1	SCREW M6S ISO 4017 M5X12 A480	

Machine Type | Group Description | Used-In | Group Number | Page No

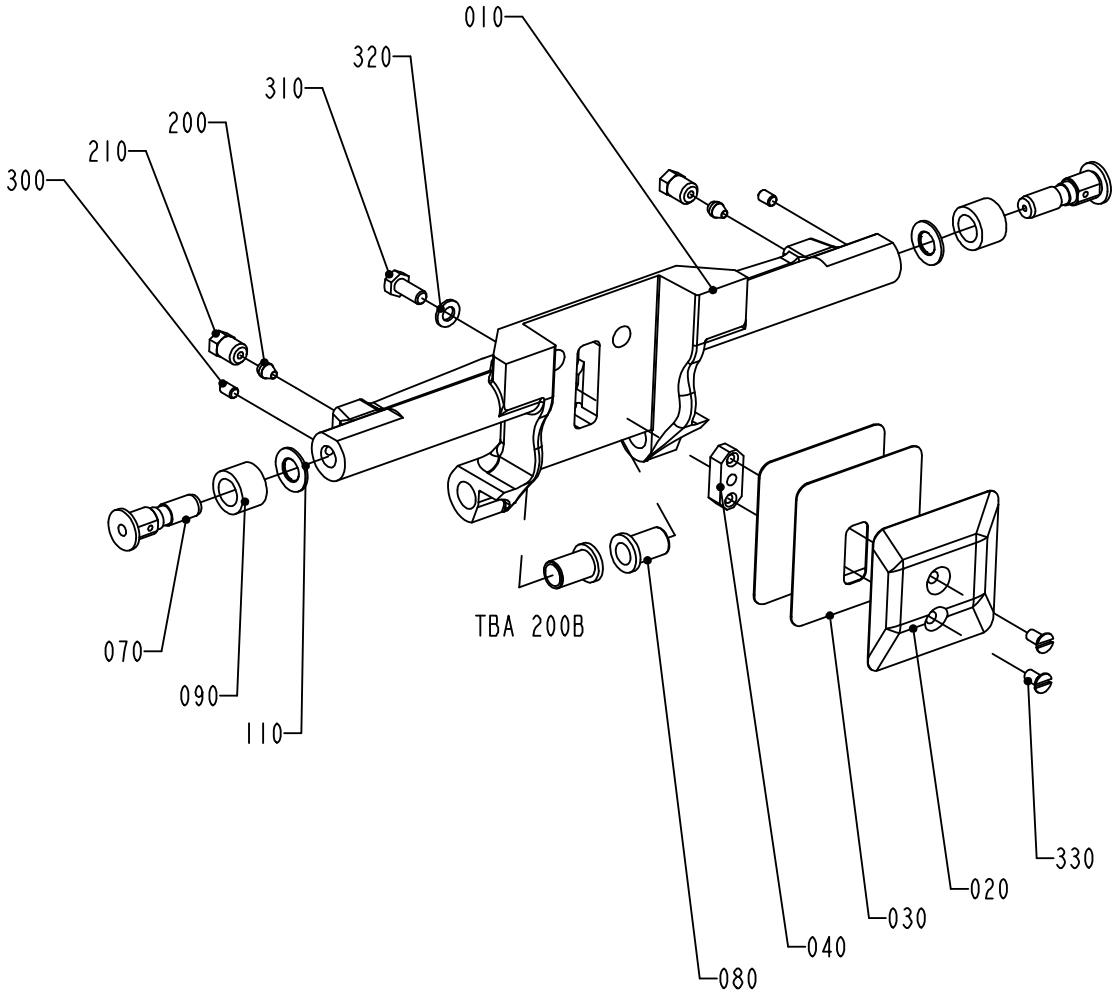

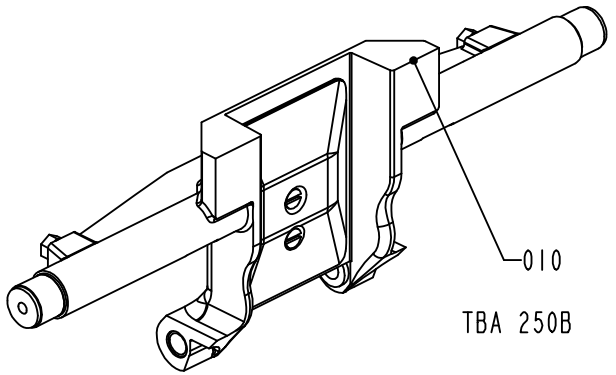

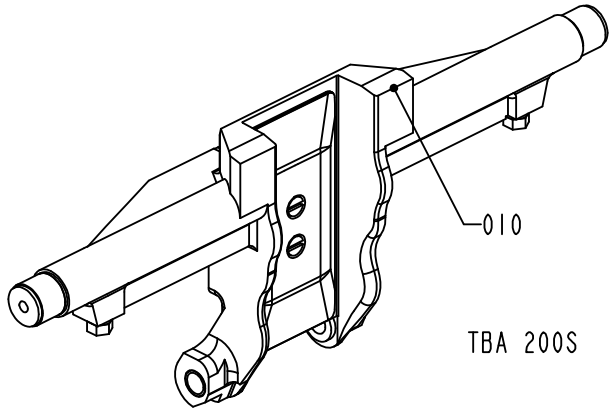

1334634-3
ECN 72770

ECM: 189486 - 20050103
Group number: 1334634-0200
Assembly Drawing: 1334634-3_1_AB

This list covers pages from 4-16 to 4-25

Pos	Part No	UN	Qty	Description	Page No
TBA 0500B (Cont'd) (See drawing on page: 4-16)					
320	315105-0146		1	WASHER BRB 5,3X10 RFR	
TBA 0500S (See drawing on page: 4-16)					
010	1511251-0000		1	VOLUME FLAP	
020	1524035-0000		1	VOLUME BULGE	
030	1511253-0000		3	VOLUME SHIM	
040	1487628-0000		1	WEDGE	
070	434320-0000		2	AXLE PIN	
080	1511254-0000		2	BUSHING	
090	434321-0000		2	CURVE ROLLER	
110	19972-0000		2	WASHER	
310	312105-0368		1	SCREW M6S ISO 4017 M6X16 A480	
320	315105-0153		1	WASHER BRB 6,4X12 RFR	
330	312145-0291		2	SCREW ISO 2009 MFS M4X12 A4	
340	90261-0016		2	PLUG, BLIND, PLASTIC GPN300V2	
TBA 1000B (See drawing on page: 4-16)					
010	1478358-0000		1	VOLUME FLAP	
020	1035828-0000		1	VOLUME BULGE	
030	1035831-0000		3	VOLUME SHIM	
040	1040756-0000		1	WEDGE	
070	434320-0000		2	AXLE PIN	
080	1255541-0000		2	BUSHING	
090	434321-0000		2	CURVE ROLLER	
110	19972-0000		2	WASHER	
310	312105-0366		1	SCREW M6S ISO 4017 M6X12 A480	
320	315105-0153		1	WASHER BRB 6,4X12 RFR	
330	312145-0287		2	SCREW ISO 2009 MFS M4X8 A4	
TBA 1000S (See drawing on page: 4-16)					
010	1040753-0000		1	VOLUME FLAP	
020	1040754-0000		1	VOLUME BULGE	
030	1040755-0000		3	VOLUME SHIM	
040	1040756-0000		1	WEDGE	
070	434320-0000		2	AXLE PIN	
080	1255541-0000		2	BUSHING	
090	434321-0000		2	CURVE ROLLER	
110	19972-0000		2	WASHER	
310	312105-0366		1	SCREW M6S ISO 4017 M6X12 A480	
320	315105-0153		1	WASHER BRB 6,4X12 RFR	
330	312145-0287		2	SCREW ISO 2009 MFS M4X8 A4	
TBA 1000SQ (See drawing on page: 4-16)					
010	2606306-0000		1	VOLUME FLAP	
020	1487626-0000		1	VOLUME BULGE	
030	1487627-0000		3	VOLUME SHIM	
040	1040756-0000		1	WEDGE	
070	434320-0000		2	AXLE PIN	
080	1558701-0000		2	BUSHING	
090	434321-0000		2	CURVE ROLLER	
110	19972-0000		2	WASHER	
310	312115-0367		1	SCREW ISO4762 M6X14 A4 80	
320	315105-0153		1	WASHER BRB 6,4X12 RFR	
330	312145-0291		2	SCREW ISO 2009 MFS M4X12 A4	
TBA 1500S (See drawing on page: 4-16)					
010	2587235-0000		1	VOLUME FLAP	
020	1499675-0000		1	VOLUME BULGE	
030	1349208-0000		3	VOLUME SHIM	
040	1040756-0000		1	WEDGE	
070	434320-0000		2	AXLE PIN	
080	1558701-0000		2	BUSHING	
090	434321-0000		2	CURVE ROLLER	
110	19972-0000		2	WASHER	
310	312105-0368		1	SCREW M6S ISO 4017 M6X16 A480	
320	315105-0153		1	WASHER BRB 6,4X12 RFR	
330	312145-0289		2	SCREW ISO 2009 MFS M4X10 A4	
340	90261-0016		2	PLUG, BLIND, PLASTIC GPN300V2	
TPA 0250SQ (See drawing on page: 4-22)					
010	2530257-0000		1	VOLUME FLAP	
020	2581994-0000		2	VOLUME BULGE	
030	1549594-0000		6	VOLUME SHIM	
070	434320-0000		2	AXLE PIN	
080	1255541-0000		2	BUSHING	
090	436556-0000		2	CURVE ROLLER	
110	19972-0000		2	WASHER	
320	315105-0146		2	WASHER BRB 5,3X10 RFR	
325	312705-0314		2	NUT HEX. DOMED CAP MHM-6 M5 A280	
TPA 0330SQ (See drawing on page: 4-20)					
010	1558123-0000		1	VOLUME FLAP	
020	1539903-0000		2	VOLUME BULGE	
030	1539902-0000		6	VOLUME SHIM	
070	434320-0000		2	AXLE PIN	
080	1255541-0000		2	BUSHING	
090	436556-0000		2	CURVE ROLLER	
110	19972-0000		2	WASHER	
320	315105-0146		2	WASHER BRB 5,3X10 RFR	
325	312105-0327		2	SCREW M6S ISO 4017 M5X12 A480	

Machine Type | Group Description | Used-In | Group Number | Page No

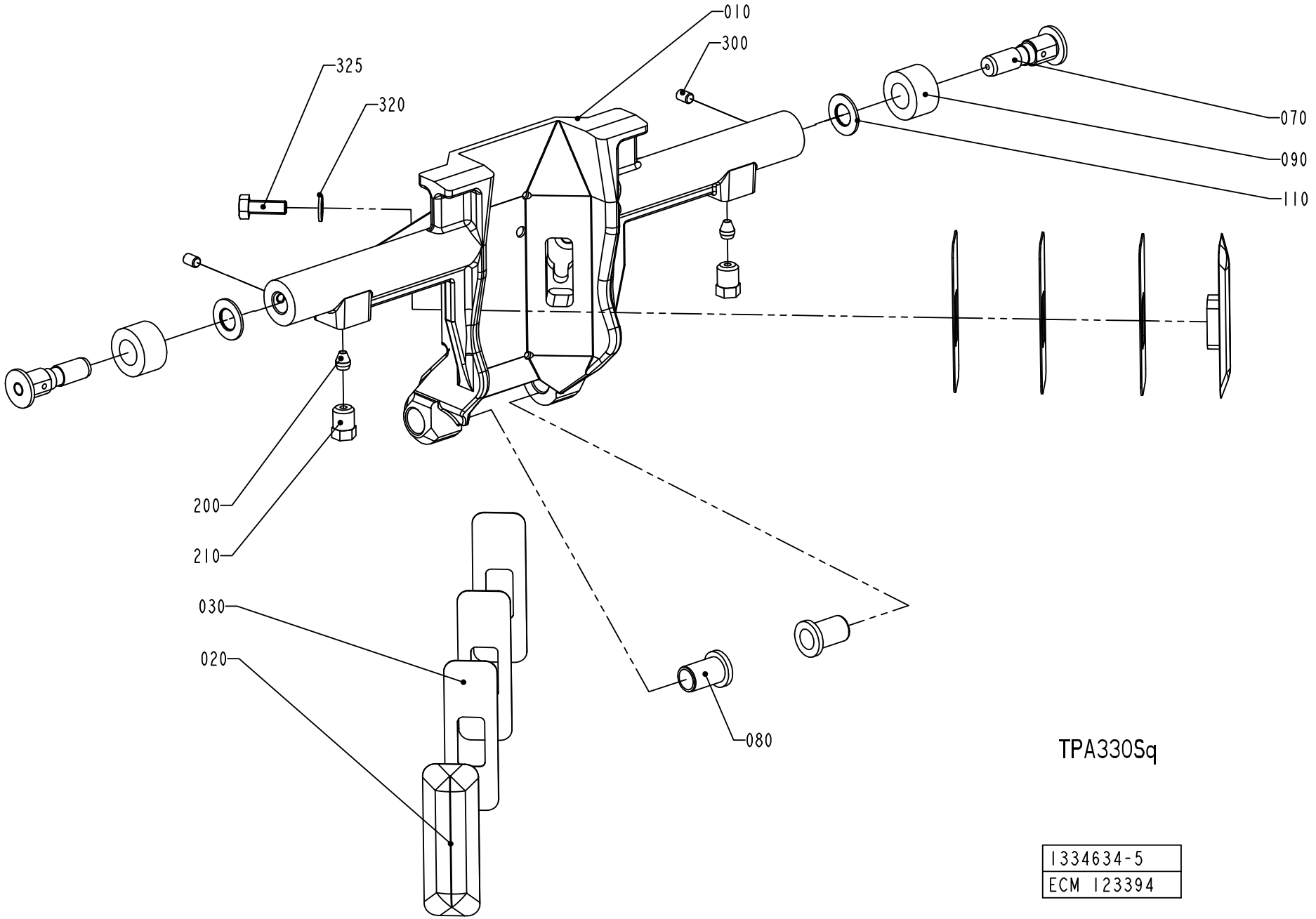
010
300
325
320
070
090
110
200
210
030
020
080
TPA330Sq
1334634-5
ECM 123394

ECM: 189486 - 20050103
Group number: 1334634-0200
Assembly Drawing: 1334634-5_1_AB

This list covers pages from 4-16 to 4-25

Pos	Part No	UN	Qty	Description	Page No
TPA 0500SQ SMILE (Cont'd) (See drawing on page: 4-24)					
010	1549837-0000		1	VOLUME FLAP	
020	1549829-0000		1	VOLUME BULGE	
025	1549829-0000		2	VOLUME BULGE	
030	1549830-0000		3	VOLUME SHIM	
035	1549830-0000		6	VOLUME SHIM	
040	1549831-0000		3	WEDGE	
070	434320-0000		2	AXLE PIN	
080	2530313-0000		2	BUSHING	
090	434321-0000		2	CURVE ROLLER	
110	19972-0000		2	WASHER	
310	312105-0327		3	SCREW M6S ISO 4017 M5X12 A480	
320	315105-0146		3	WASHER BRB 5,3X10 RFR	
370	312155-0289		6	SCREW DIN 7991 MF6S M4X10 A4 70	
TPA 1000SQ FT (See drawing on page: 4-24)					
010	2547012-0000		1	VOLUME FLAP	
020	1539840-0000		1	VOLUME BULGE	
025	1539841-0000		2	VOLUME BULGE	
030	1539842-0000		3	VOLUME SHIM	
035	1539843-0000		6	VOLUME SHIM	
040	1040756-0000		3	WEDGE	
060	2547010-0000		1	BRACKET	
070	434320-0000		2	AXLE PIN	
080	1255541-0000		2	BUSHING	
090	434321-0000		2	CURVE ROLLER	
110	19972-0000		2	WASHER	
320	315105-0153		3	WASHER BRB 6,4X12 RFR	
360	312105-0368		3	SCREW M6S ISO 4017 M6X16 A480	
370	312155-0289		6	SCREW DIN 7991 MF6S M4X10 A4 70	
Common Parts					
200	90028-0020		2	CONE TUBE 2,5MM	
210	90134-0063		2	BUSHING/NUT M8X1, D=2,5 MM	
300	312318-0285		2	SCREW ISO4029 M4X6 A4	

Pos	Part No	UN	Qty	Description	Page No

Machine Type | Group Description | Used-In | Group Number | Page No

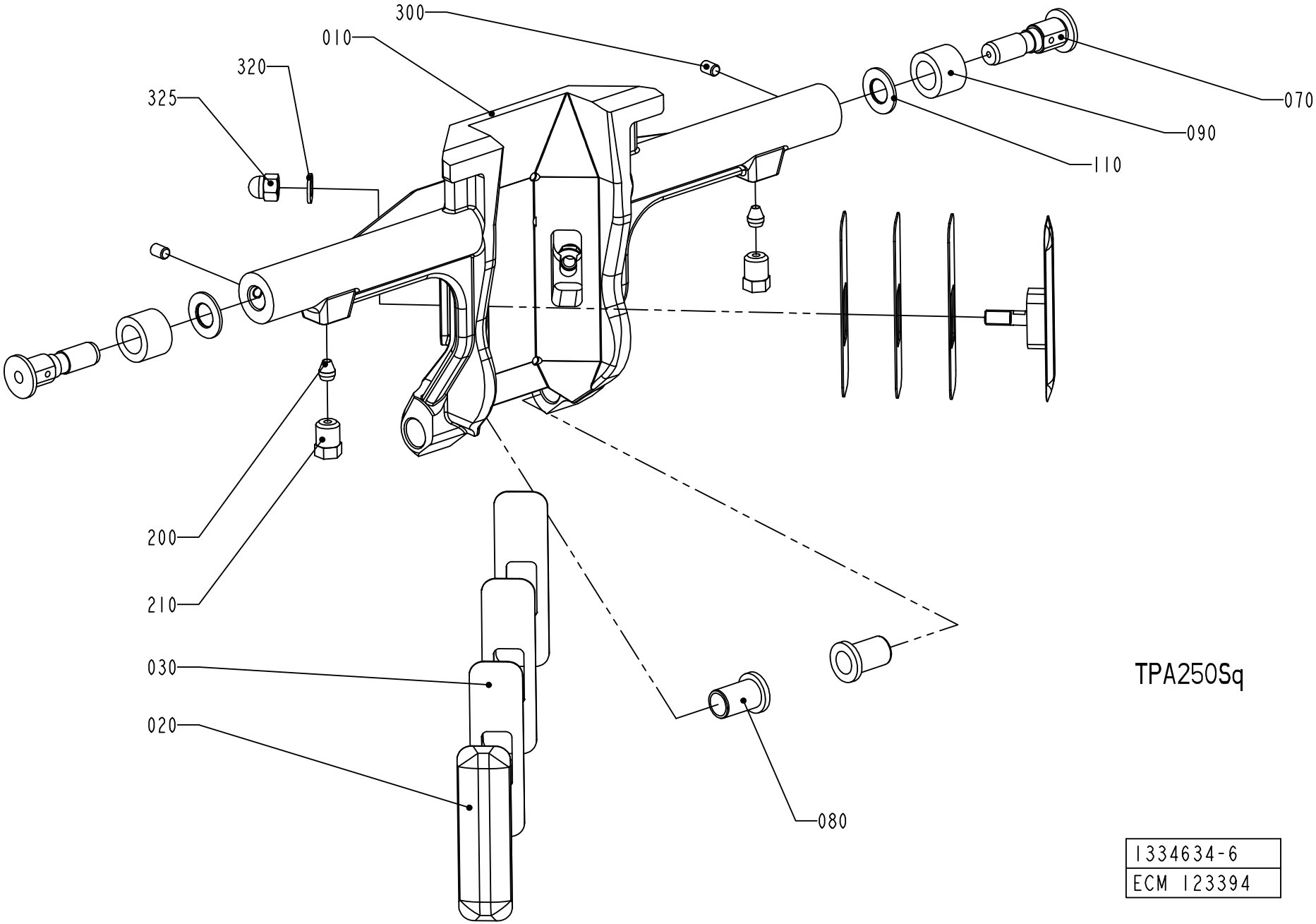
300
010
320
325
070
090
110
200
210
030
020
080
TPA250Sq
1334634-6
ECM 123394

ECM: 189486 - 20050103
Group number: 1334634-0200
Assembly Drawing: 1334634-6_1_AA

This list covers pages from 4-16 to 4-25

Pos	Part No	UN	Qty	Description	Page No	Pos	Part No	UN	Qty	Description	Page No

SEE PREVIOUS LISTS PAGES: 4-17, 4-19, 4-21.

Machine Type	Group Description	Used-In	Group Number	Page No

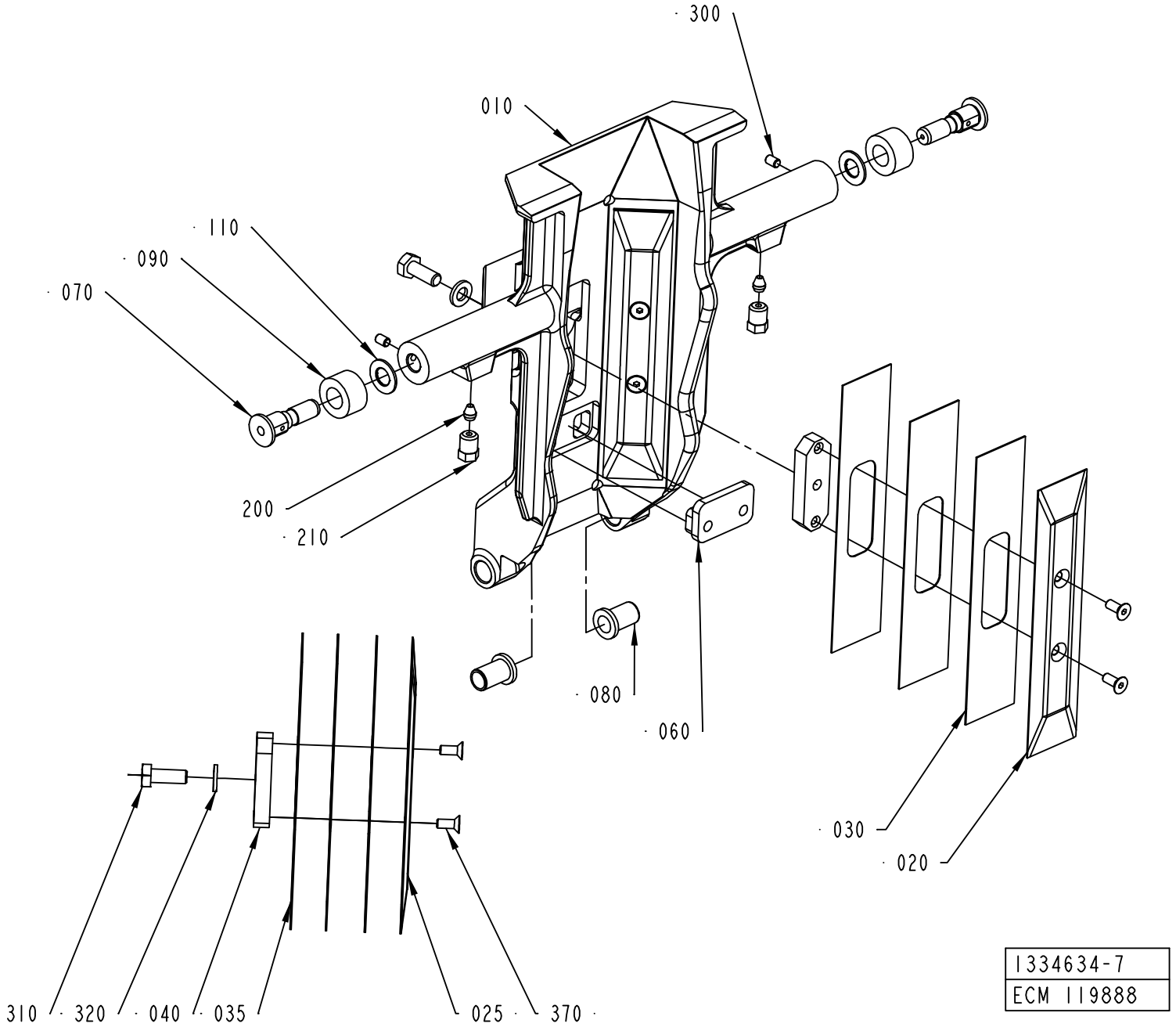
300
010
110
090
070
200
210
080
060
030
020
310
320
040
035
025
370
1334634-7
ECM 119888

ECM: 189486 - 20050103
Group number: 1334634-0200
Assembly Drawing: 1334634-7_1_AA

This list covers pages from 4-16 to 4-25

Pos	Part No	UN	Qty	Description	Page No	Pos	Part No	UN	Qty	Description	Page No

SEE PREVIOUS LISTS PAGES: 4-17, 4-19, 4-21.

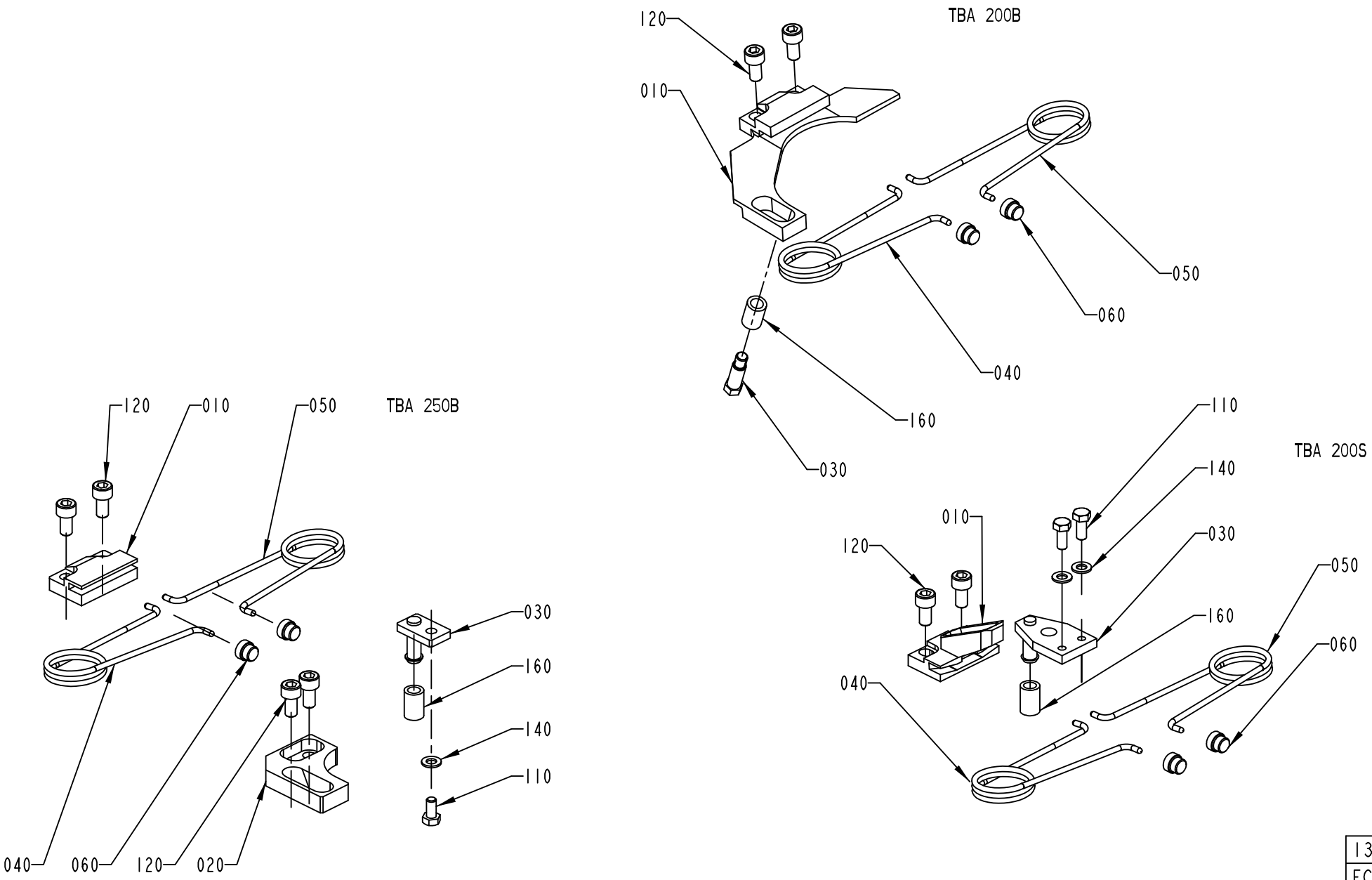

1334635-1
ECN 73647

ECM: 271731 - 20060831
Group number: 1334635-0200
Assembly Drawing: 1334635-1_1_AF

This list covers pages from 4-26 to 4-37

Pos	Part No	UN	Qty	Description	Page No
TBA 0200B (See drawing on page: 4-26)					
010	1512579-0000		1	BRACKET	
030	1346153-0000		1	STOP PIN	
040	1350263-0000		1	SPRING RIGHT	
050	1350264-0000		1	SPRING LEFT	
060	1144601-0000		2	GUIDE STUD	
120	312115-0366		2	SCREW ISO4762 M6X12 A4 80	
160	1317740-0000		1	RUBBER SLEEVE	
TBA 0200S (See drawing on page: 4-26)					
010	1317823-0000		1	CANTILEVER	
030	1317824-0000		1	CATCH	
040	1350263-0000		1	SPRING RIGHT	
050	1350264-0000		1	SPRING LEFT	
060	1144601-0000		2	GUIDE STUD	
110	312105-0327		2	SCREW M6S ISO 4017 M5X12 A480	
120	312115-0366		2	SCREW ISO4762 M6X12 A4 80	
140	315105-0146		2	WASHER BRB 5,3X10 RFR	
160	1317740-0000		1	RUBBER SLEEVE	
TBA 0250B (See drawing on page: 4-26)					
010	1317742-0000		1	CANTILEVER	
020	1317741-0000		1	CATCH	
030	1317440-0000		1	STOP PIN	
040	1350263-0000		1	SPRING RIGHT	
050	1350264-0000		1	SPRING LEFT	
060	1144601-0000		2	GUIDE STUD	
110	312105-0325		1	SCREW M6S ISO 4017 M5X10 A480	
120	312115-0366		4	SCREW ISO4762 M6X12 A4 80	
140	315105-0146		1	WASHER BRB 5,3X10 RFR	
160	1317740-0000		1	RUBBER SLEEVE	
TBA 0330S, TBA 0250S, TPA 0250SQ (See drawing on page: 4-30)					
010	1539172-0000		1	CANTILEVER	
030	2527725-0000		1	CATCH	
040	1350263-0000		1	SPRING RIGHT	
050	1350264-0000		1	SPRING LEFT	
060	1144601-0000		2	GUIDE STUD	
110	312105-0328		2	SCREW M6S ISO 4017 M5X14 A480	
120	312115-0368		2	SCREW ISO4762 M6X16 A4 80	
TBA 0500B (See drawing on page: 4-30)					
010	1539886-0000		1	CANTILEVER	
030	1539887-0000		1	CATCH	
040	1350263-0000		1	SPRING RIGHT	
050	1350264-0000		1	SPRING LEFT	
060	1144601-0000		2	GUIDE STUD	
110	312105-0327		2	SCREW M6S ISO 4017 M5X12 A480	
120	312115-0366		2	SCREW ISO4762 M6X12 A4 80	
TBA 0500S (See drawing on page: 4-28)					
010	1349319-0000		1	CANTILEVER	
030	1349320-0000		1	CATCH	
040	1143216-0000		1	SPRING	
050	1143215-0000		1	SPRING	
060	1144601-0000		2	GUIDE STUD	
110	312115-0372		2	SCREW ISO4762 M6X25 A4 80	
120	312115-0378		2	SCREW ISO4762 M6X40 A4 80	
170	1511556-0000		1	SET SCREW	
180	312605-0318		1	HEXAGON NUT, M6M M8 A280	
TBA 1000B (See drawing on page: 4-28)					
010	1347526-0000		1	BRACKET	
020	1478396-0000		1	STOP	
030	1478393-0000		1	CATCH	
040	1348483-0000		1	SPRING RIGHT	
050	1348484-0000		1	SPRING LEFT	
060	1144601-0000		2	GUIDE STUD	
100	312105-0368		4	SCREW M6S ISO 4017 M6X16 A480	
110	312115-0329		2	SCREW ISO4762 M5X16 A4 80	
130	315105-0153		4	WASHER BRB 6,4X12 RFR	
TBA 1000S (See drawing on page: 4-28)					
010	1347526-0000		1	BRACKET	
020	1478396-0000		1	STOP	
030	1478395-0000		1	CATCH	
040	1348483-0000		1	SPRING RIGHT	
050	1348484-0000		1	SPRING LEFT	
060	1144601-0000		2	GUIDE STUD	
100	312105-0368		4	SCREW M6S ISO 4017 M6X16 A480	
110	312115-0329		2	SCREW ISO4762 M5X16 A4 80	
130	315105-0153		4	WASHER BRB 6,4X12 RFR	
TBA 1000SQ (See drawing on page: 4-28)					
010	1349319-0000		1	CANTILEVER	
030	1349320-0000		1	CATCH	
040	1143216-0000		1	SPRING	
050	1143215-0000		1	SPRING	
060	1144601-0000		2	GUIDE STUD	
110	312105-0366		2	SCREW M6S ISO 4017 M6X12 A480	
120	312115-0378		2	SCREW ISO4762 M6X40 A4 80	
170	1511556-0000		1	SET SCREW	

Machine Type | Group Description | Used-In | Group Number | Page No

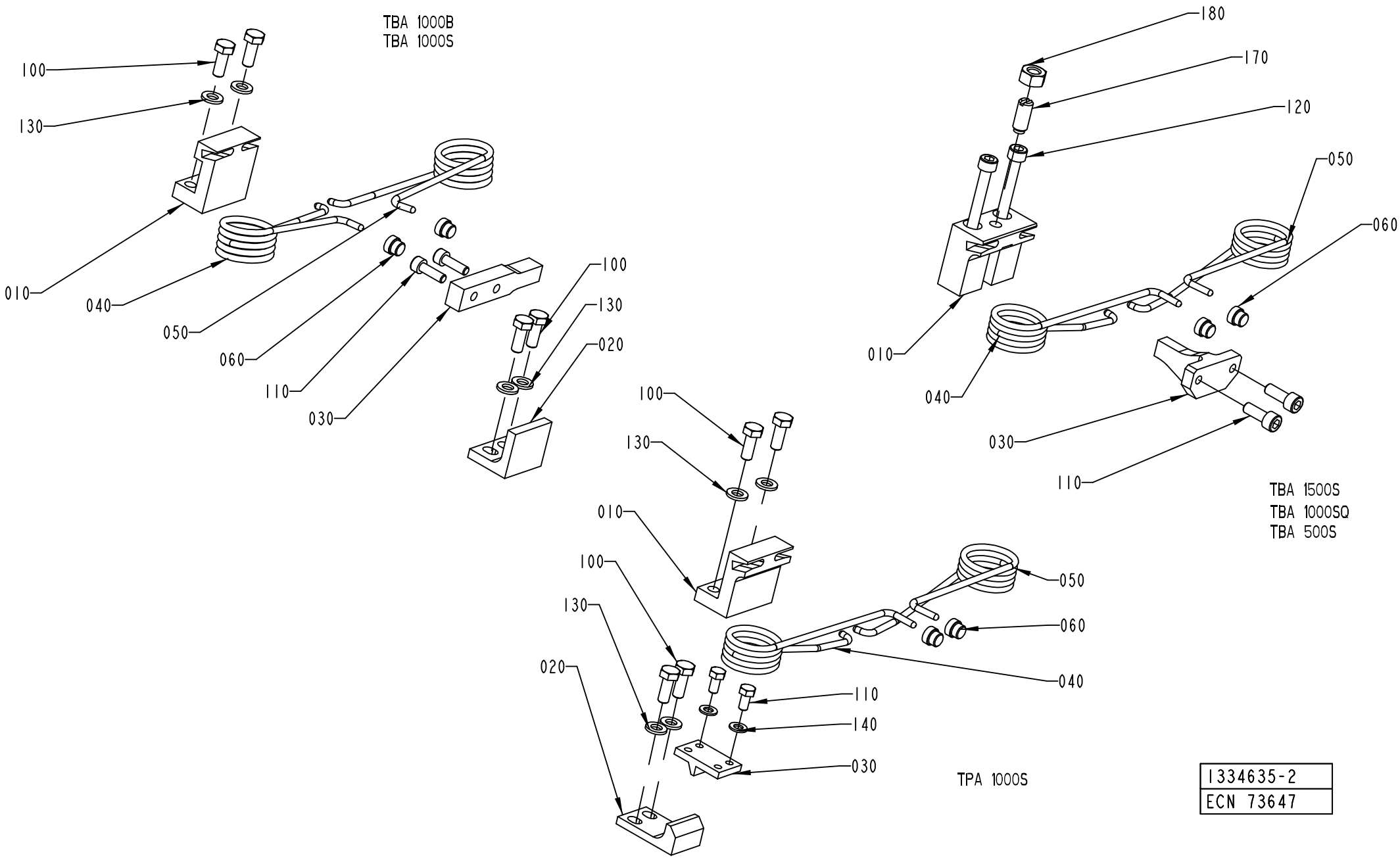

1334635-2
ECN 73647

Pos	Part No	UN	Qty	Description	Page No
TBA 1000SQ (Cont'd) (See drawing on page: 4-28)					
180	312605-0318		1	HEXAGON NUT, M6M M8 A280	
TBA 1500S (See drawing on page: 4-28)					
010	1349319-0000		1	CANTILEVER	
030	1349320-0000		1	CATCH	
040	1143216-0000		1	SPRING	
050	1143215-0000		1	SPRING	
060	1144601-0000		2	GUIDE STUD	
110	312115-0368		2	SCREW ISO4762 M6X16 A4 80	
120	312115-0378		2	SCREW ISO4762 M6X40 A4 80	
170	1511556-0000		1	SET SCREW	
180	312605-0318		1	HEXAGON NUT, M6M M8 A280	
TBA 1890S, TBA 2000S (See drawing on page: 4-36)					
010	2634515-0000		1	CANTILEVER	
040	2662165-0000		1	SPRING	
050	2662166-0000		1	SPRING	
075	2652896-0000		2	SHAFT	
080	2662167-0000		2	BUSHING	
090	2663376-0000		2	WASHER	
095	2663375-0000		2	WASHER	
100	312115-0367		2	SCREW ISO4762 M6X14 A4 80	
120	312105-0331		1	SCREW M6S ISO 4017 M5X20 A480	
125	312105-0341		2	SCREW M6S ISO 4014 M5X50 A480	
130	315105-0146		3	WASHER BRB 5,3X10 RFR	
190	312105-0367		2	SCREW M6S ISO 4017 M6X14 A480	
TPA 0330SQ (See drawing on page: 4-30)					
010	1539172-0000		1	CANTILEVER	
030	1539887-0000		1	CATCH	
040	1350263-0000		1	SPRING RIGHT	
050	1350264-0000		1	SPRING LEFT	
060	1144601-0000		2	GUIDE STUD	
110	312105-0325		2	SCREW M6S ISO 4017 M5X10 A480	
120	312115-0368		2	SCREW ISO4762 M6X16 A4 80	
TPA 0500SQ (See drawing on page: 4-32)					
010	2563666-0000		1	CANTILEVER	
030	2527725-0000		1	CATCH	
040	2679736-0000		1	SPRING	
050	2679735-0000		1	SPRING	
070	2563671-0000		1	SHAFT	
075	2563667-0000		2	SHAFT	
080	1538521-0000		2	BUSHING	
085	1539348-0000		2	HOLDER	
110	312105-0327		2	SCREW M6S ISO 4017 M5X12 A480	
120	312115-0366		2	SCREW ISO4762 M6X12 A4 80	
130	315105-0153		2	WASHER BRB 6,4X12 RFR	
190	312155-0339		2	SCREW DIN 7991 MF6S M5X40 A4 70	
200	312115-0367		2	SCREW ISO4762 M6X14 A4 80	
210	90005-0002		2	WASHER 16/6,7X1,5	
220	312105-0287		2	SCREW M6S ISO 4017 M4X8 A470	
TPA 1000SQ (See drawing on page: 4-34)					
010	1523475-0000		1	CANTILEVER	
020	2558921-0000		1	STOP	
025	2558923-0000		1	STOP	
040	2557613-0000		1	SPRING	
050	2557612-0000		1	SPRING	
060	1144601-0000		2	GUIDE STUD	
070	2558929-0000		1	BAR	
100	312105-0368		10	SCREW M6S ISO 4017 M6X16 A480	
120	312105-0364		2	SCREW M6S ISO 4017 M6X10 A480	
130	315105-0153		10	WASHER BRB 6,4X12 RFR	
150	90062-0061		2	LOCK WASHER NORD-LOCK,6,5/10,8, T=2,2	

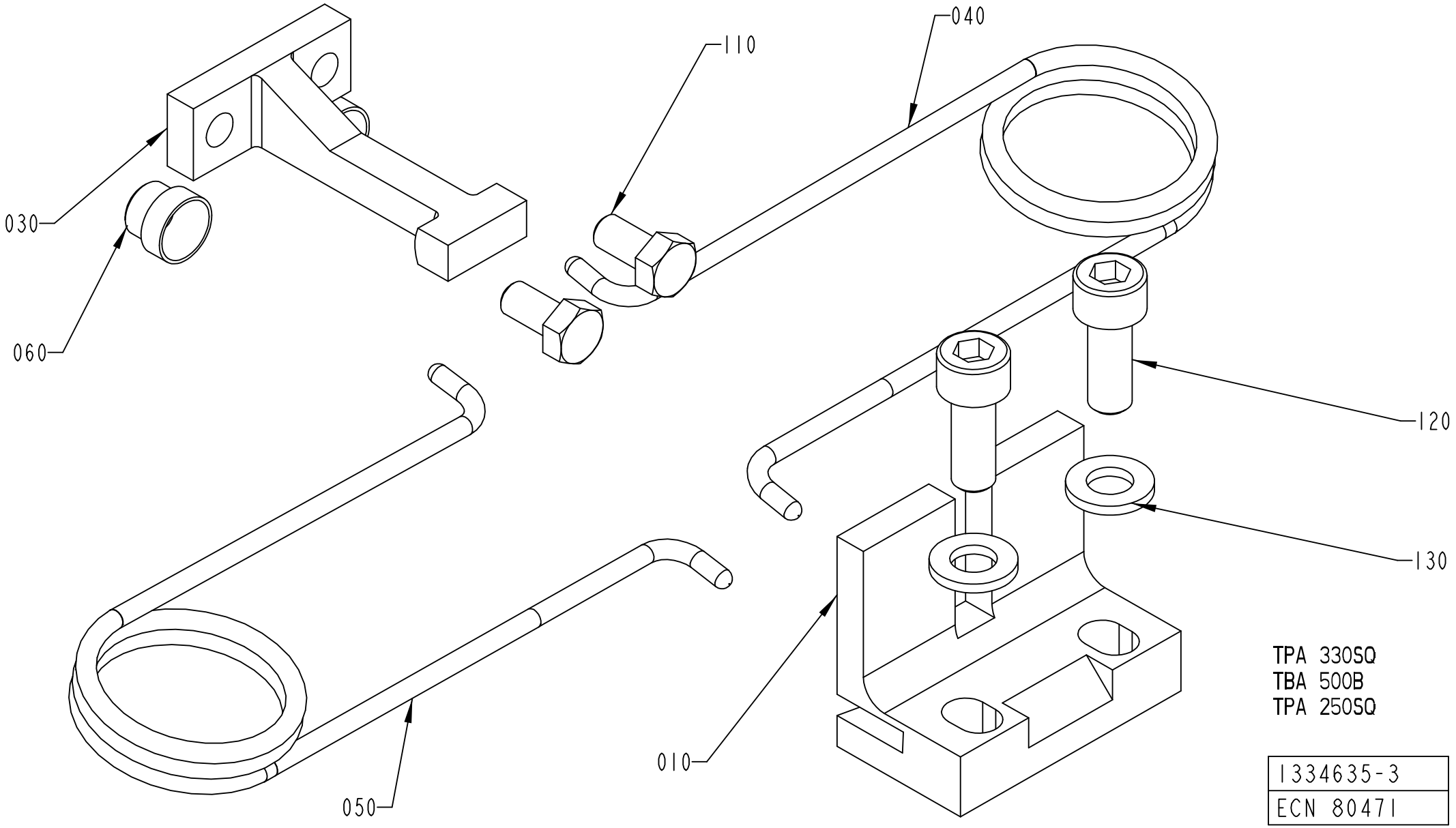
040
110
030
060
120
130
050
010
TPA 330SQ
TBA 500B
TPA 250SQ
1334635-3
ECN 80471

ECM: 271731 - 20060831
Group number: 1334635-0200
Assembly Drawing: 1334635-3_1_AA

This list covers pages from 4-26 to 4-37

Pos	Part No	UN	Qty	Description	Page No
SEE PREVIOUS LISTS PAGES: 4-27, 4-29.					

Pos	Part No	UN	Qty	Description	Page No

Machine Type | Group Description | Used-In | Group Number | Page No

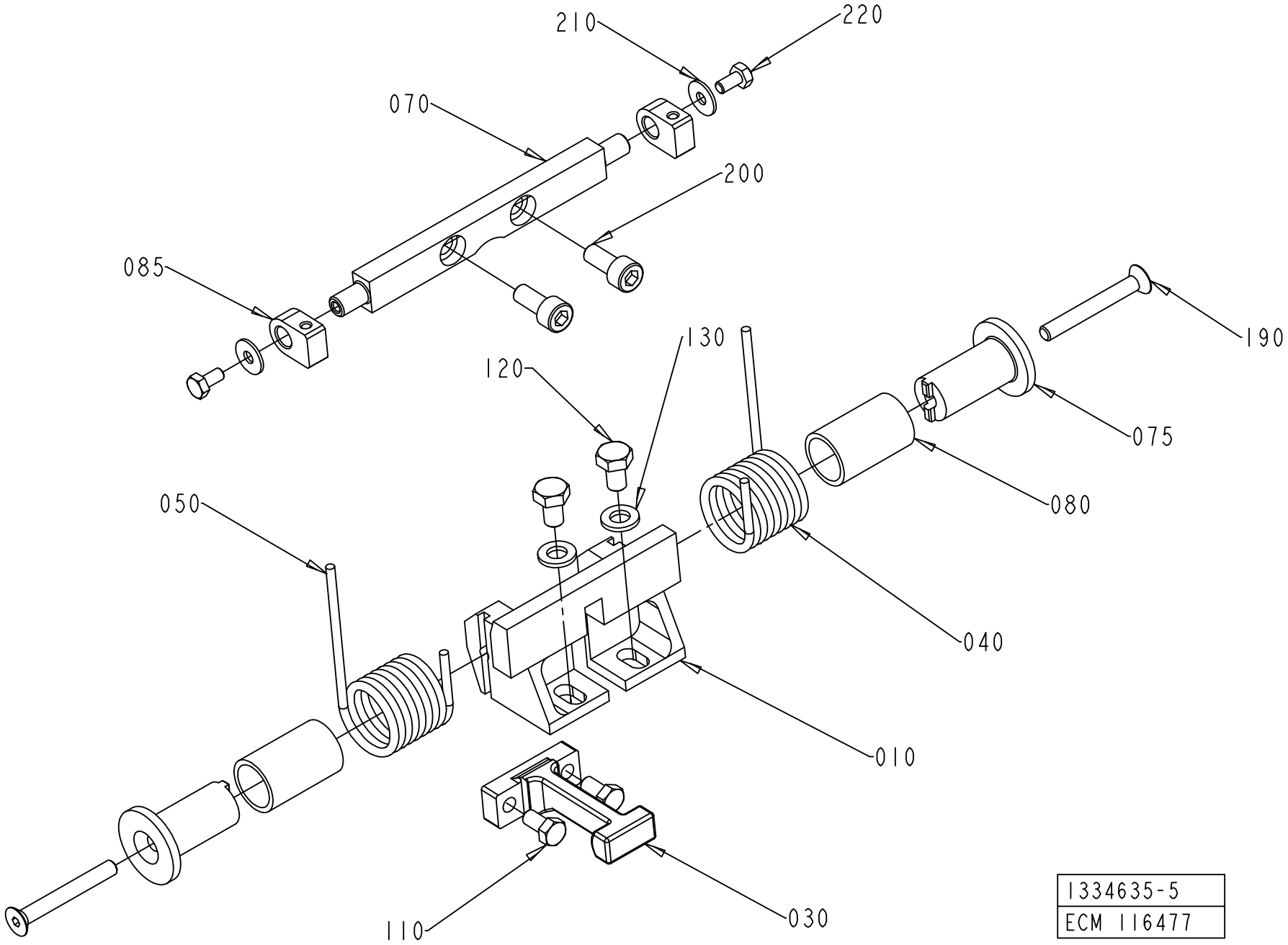

1334635-5
ECM 116477

ECM: 271731 - 20060831
Group number: 1334635-0200
Assembly Drawing: 1334635-5_1_AA

This list covers pages from 4-26 to 4-37

Pos	Part No	UN	Qty	Description	Page No	Pos	Part No	UN	Qty	Description	Page No

SEE PREVIOUS LISTS PAGES: 4-27, 4-29.

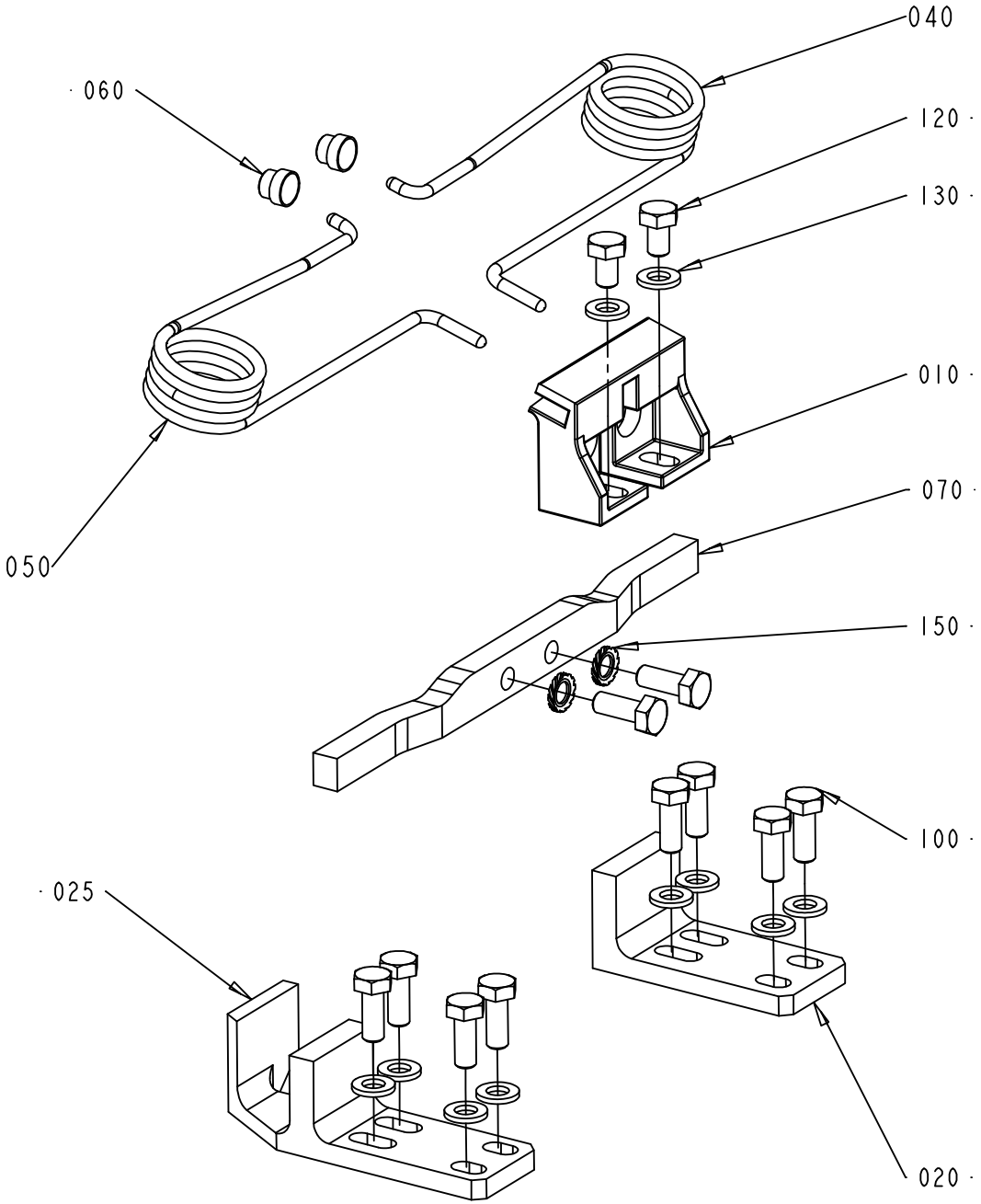

1334635-6
ECM 119888

ECM: 271731 - 20060831
Group number: 1334635-0200
Assembly Drawing: 1334635-6_1_AA

This list covers pages from 4-26 to 4-37

Pos	Part No	UN	Qty	Description	Page No
SEE PREVIOUS LISTS PAGES: 4-27, 4-29.					

Pos	Part No	UN	Qty	Description	Page No

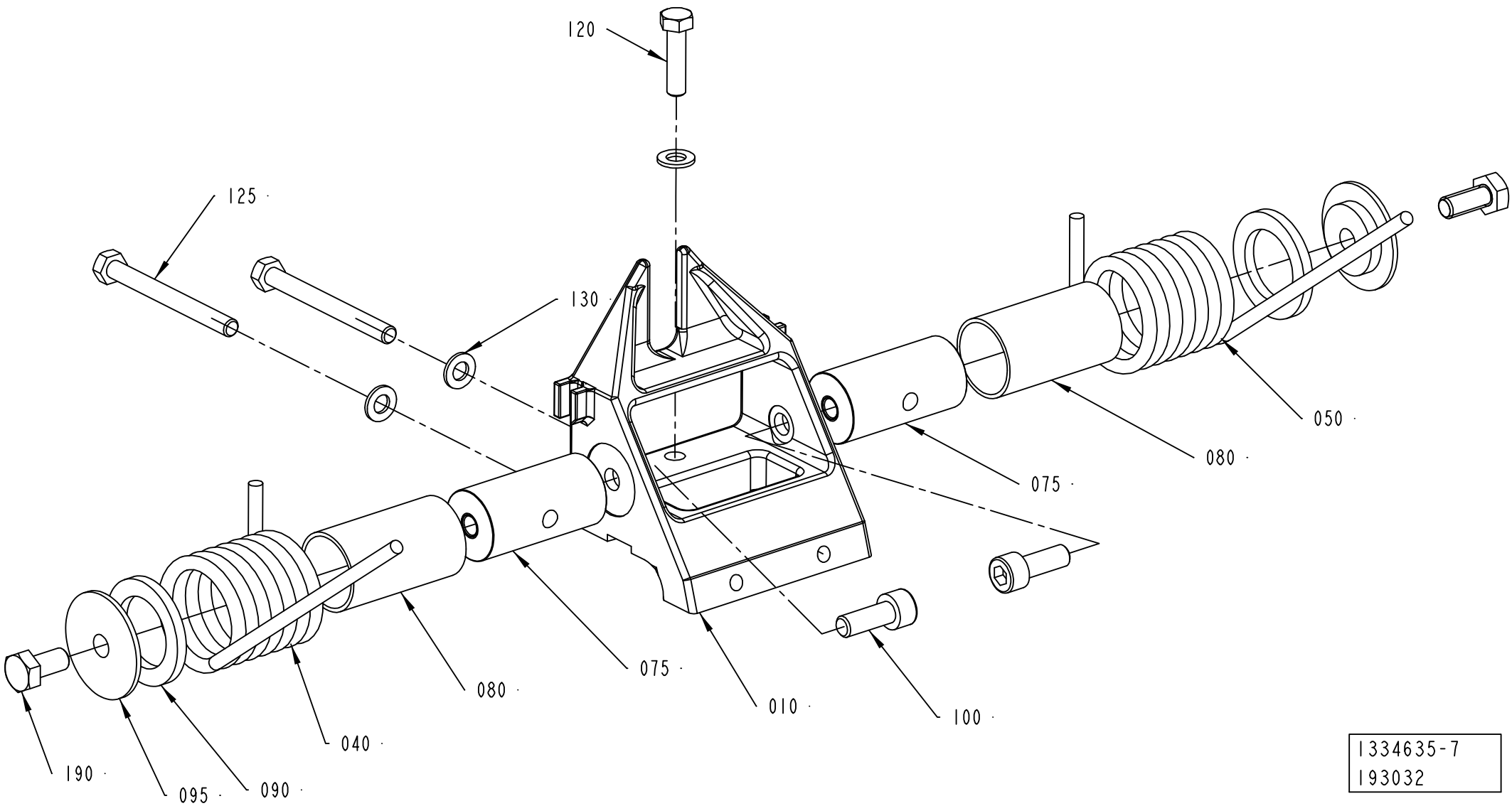
120
125
130
050
080
075
075
080
040
010
100
190
095
090
1334635-7
193032

Pos	Part No	UN	Qty	Description	Page No
SEE PREVIOUS LISTS PAGES: 4-27, 4-29.					

Pos	Part No	UN	Qty	Description	Page No

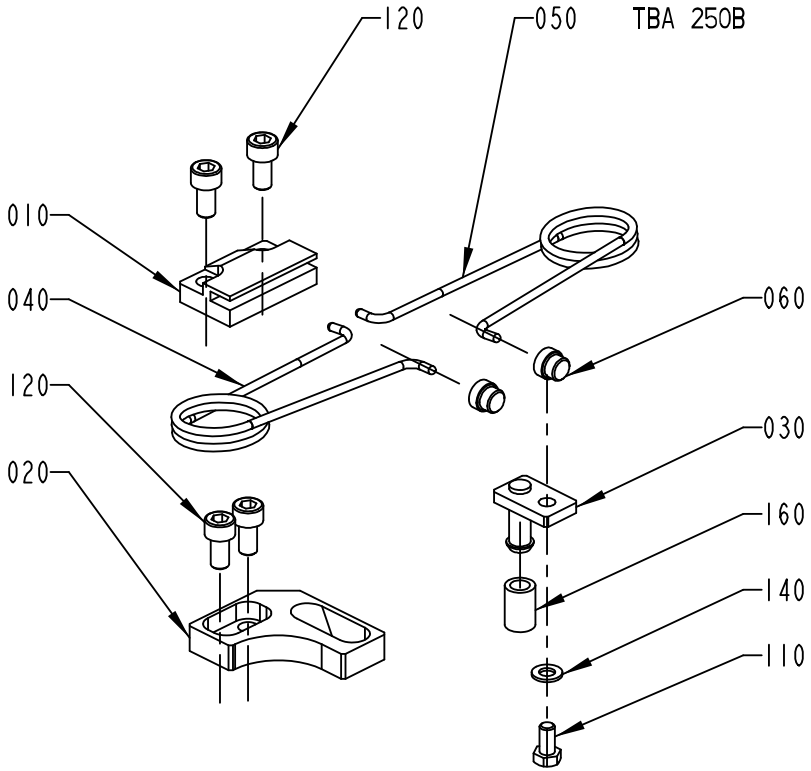

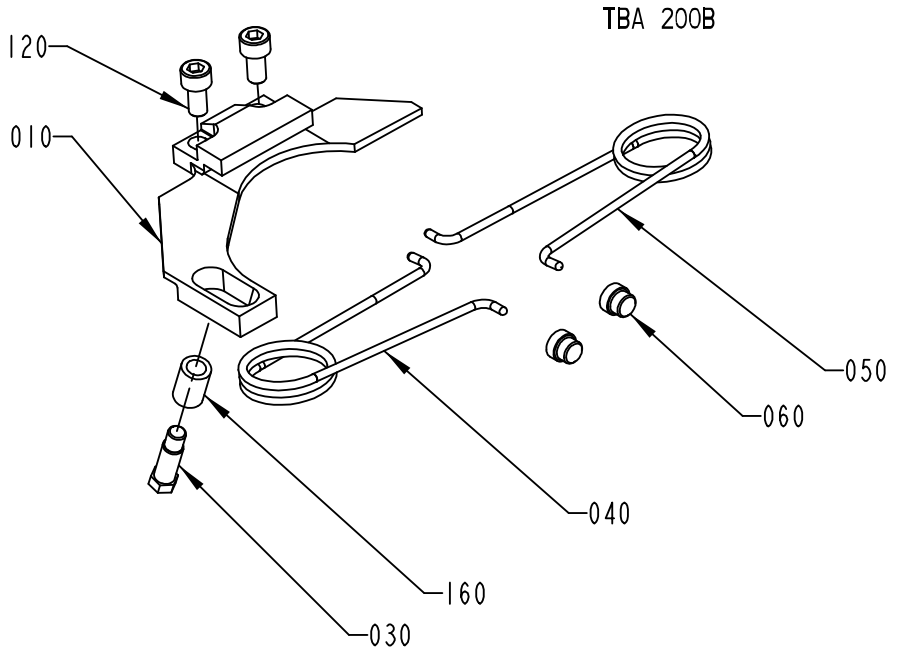

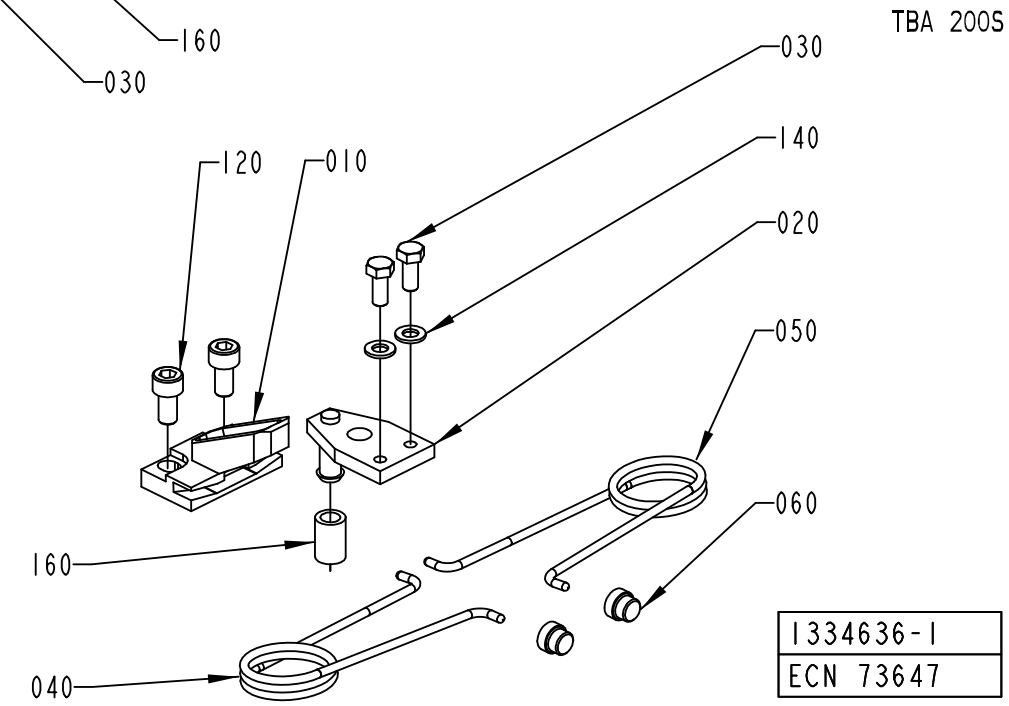

1334636-1
ECN 73647

ECM: 271732 - 20060831
Group number: 1334636-0200
Assembly Drawing: 1334636-1_1_AF

This list covers pages from 4-38 to 4-49

Pos	Part No	UN	Qty	Description	Page No
TBA 0200B (See drawing on page: 4-38)					
010	1512579-0000		1	BRACKET	
030	1346153-0000		1	STOP PIN	
040	1350263-0000		1	SPRING RIGHT	
050	1350264-0000		1	SPRING LEFT	
060	1144601-0000		2	GUIDE STUD	
120	312115-0366		2	SCREW ISO4762 M6X12 A4 80	
160	1317740-0000		1	RUBBER SLEEVE	
TBA 0200S (See drawing on page: 4-38)					
010	1317823-0000		1	CANTILEVER	
030	1317824-0000		1	CATCH	
040	1350263-0000		1	SPRING RIGHT	
050	1350264-0000		1	SPRING LEFT	
060	1144601-0000		2	GUIDE STUD	
110	312105-0327		2	SCREW M6S ISO 4017 M5X12 A480	
120	312115-0366		2	SCREW ISO4762 M6X12 A4 80	
140	315105-0146		2	WASHER BRB 5,3X10 RFR	
160	1317740-0000		1	RUBBER SLEEVE	
TBA 0250B (See drawing on page: 4-38)					
010	1317742-0000		1	CANTILEVER	
020	1317439-0000		1	CATCH	
030	1317440-0000		1	STOP PIN	
040	1350263-0000		1	SPRING RIGHT	
050	1350264-0000		1	SPRING LEFT	
060	1144601-0000		2	GUIDE STUD	
110	312105-0325		1	SCREW M6S ISO 4017 M5X10 A480	
120	312115-0366		4	SCREW ISO4762 M6X12 A4 80	
140	315105-0146		1	WASHER BRB 5,3X10 RFR	
160	1317740-0000		1	RUBBER SLEEVE	
TBA 0330S, TBA 0250S, TPA 0250SQ (See drawing on page: 4-42)					
010	1539172-0000		1	CANTILEVER	
030	2527725-0000		1	CATCH	
040	1350263-0000		1	SPRING RIGHT	
050	1350264-0000		1	SPRING LEFT	
060	1144601-0000		2	GUIDE STUD	
110	312105-0328		2	SCREW M6S ISO 4017 M5X14 A480	
120	312115-0368		2	SCREW ISO4762 M6X16 A4 80	
TBA 0500B (See drawing on page: 4-42)					
010	1539886-0000		1	CANTILEVER	
030	1539887-0000		1	CATCH	
040	1350263-0000		1	SPRING RIGHT	
050	1350264-0000		1	SPRING LEFT	
060	1144601-0000		2	GUIDE STUD	
110	312105-0327		2	SCREW M6S ISO 4017 M5X12 A480	
120	312115-0366		2	SCREW ISO4762 M6X12 A4 80	
170	1511556-0000		1	SET SCREW	
180	312605-0318		1	HEXAGON NUT, M6M M8 A280	
TBA 1000B (See drawing on page: 4-40)					
010	1347526-0000		1	BRACKET	
020	1478396-0000		1	STOP	
030	1478393-0000		1	CATCH	
040	1348483-0000		1	SPRING RIGHT	
050	1348484-0000		1	SPRING LEFT	
060	1144601-0000		2	GUIDE STUD	
100	312105-0368		4	SCREW M6S ISO 4017 M6X16 A480	
110	312115-0329		2	SCREW ISO4762 M5X16 A4 80	
130	315105-0153		4	WASHER BRB 6,4X12 RFR	
TBA 1000S (See drawing on page: 4-40)					
010	1347526-0000		1	BRACKET	
020	1478396-0000		1	STOP	
030	1478395-0000		1	CATCH	
040	1348483-0000		1	SPRING RIGHT	
050	1348484-0000		1	SPRING LEFT	
060	1144601-0000		2	GUIDE STUD	
100	312105-0368		4	SCREW M6S ISO 4017 M6X16 A480	
110	312115-0329		2	SCREW ISO4762 M5X16 A4 80	
130	315105-0153		4	WASHER BRB 6,4X12 RFR	
TBA 1000SQ (See drawing on page: 4-40)					
010	1349319-0000		1	CANTILEVER	
030	1349320-0000		1	CATCH	
040	1143216-0000		1	SPRING	
050	1143215-0000		1	SPRING	
060	1144601-0000		2	GUIDE STUD	
110	312115-0366		2	SCREW ISO4762 M6X12 A4 80	
120	312115-0378		2	SCREW ISO4762 M6X40 A4 80	
170	1511556-0000		1	SET SCREW	

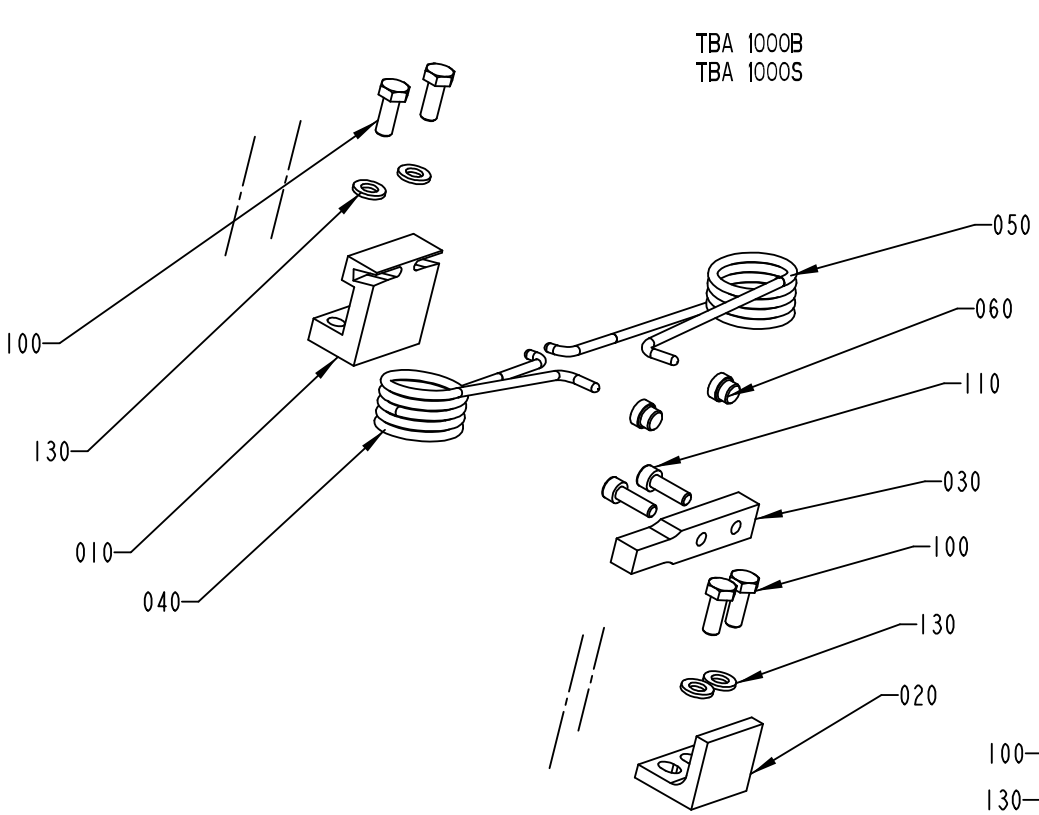

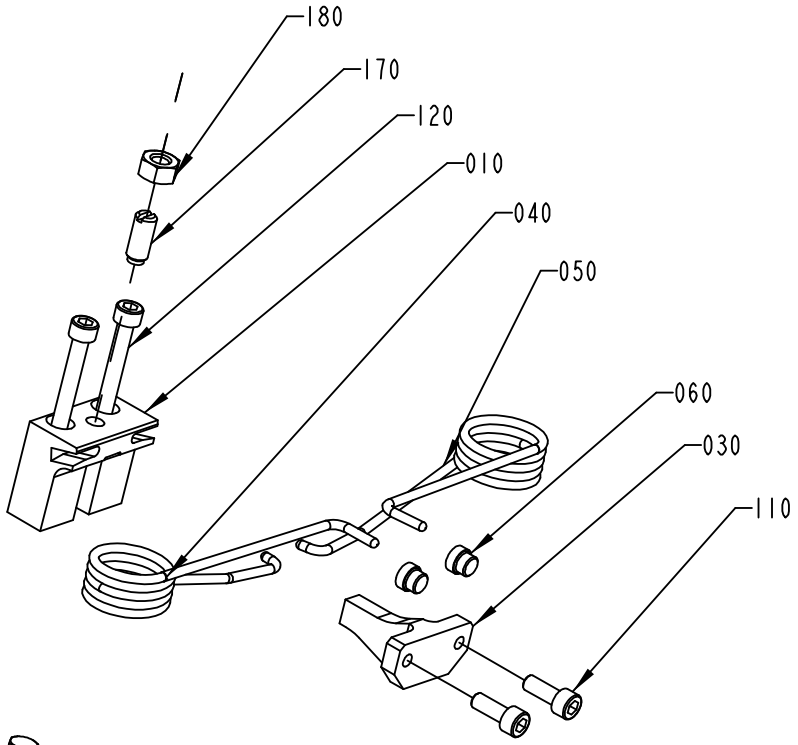

TBA 1500S
TBA 1000SQ
TBA 500S

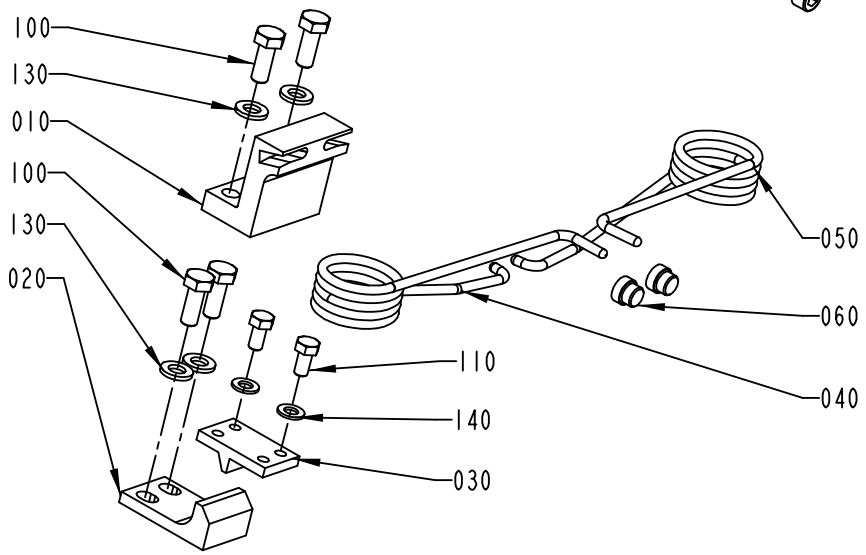

TPA 1000S

1334636-2
ECN 73647

Pos	Part No	UN	Qty	Description	Page No
TBA 1000SQ (Cont'd) (See drawing on page: 4-40)					
180	312605-0318		1	HEXAGON NUT, M6M M8 A280	
TBA 1500S (See drawing on page: 4-40)					
010	1349319-0000		1	CANTILEVER	
030	1349320-0000		1	CATCH	
040	1143216-0000		1	SPRING	
050	1143215-0000		1	SPRING	
060	1144601-0000		2	GUIDE STUD	
110	312115-0368		2	SCREW ISO4762 M6X16 A4 80	
120	312115-0378		2	SCREW ISO4762 M6X40 A4 80	
170	1511556-0000		1	SET SCREW	
180	312605-0318		1	HEXAGON NUT, M6M M8 A280	
TBA 1890S, TBA 2000S (See drawing on page: 4-48)					
010	2634515-0000		1	CANTILEVER	
040	2662165-0000		1	SPRING	
050	2662166-0000		1	SPRING	
075	2652896-0000		2	SHAFT	
080	2662167-0000		2	BUSHING	
090	2663376-0000		2	WASHER	
095	2663375-0000		2	WASHER	
100	312115-0367		2	SCREW ISO4762 M6X14 A4 80	
120	312105-0331		1	SCREW M6S ISO 4017 M5X20 A480	
125	312105-0341		2	SCREW M6S ISO 4014 M5X50 A480	
130	315105-0146		3	WASHER BRB 5,3X10 RFR	
190	312105-0367		2	SCREW M6S ISO 4017 M6X14 A480	
TPA 0330SQ (See drawing on page: 4-42)					
010	1539172-0000		1	CANTILEVER	
030	1539887-0000		1	CATCH	
040	1350263-0000		1	SPRING RIGHT	
050	1350264-0000		1	SPRING LEFT	
060	1144601-0000		2	GUIDE STUD	
110	312105-0325		2	SCREW M6S ISO 4017 M5X10 A480	
120	312115-0368		2	SCREW ISO4762 M6X16 A4 80	
TPA 0500SQ (See drawing on page: 4-44)					
010	2563666-0000		1	CANTILEVER	
030	2527725-0000		1	CATCH	
040	2679736-0000		1	SPRING	
050	2679735-0000		1	SPRING	
070	2563671-0000		1	SHAFT	
075	2563667-0000		2	SHAFT	
080	1538521-0000		2	BUSHING	
085	1539348-0000		2	HOLDER	
110	312105-0327		2	SCREW M6S ISO 4017 M5X12 A480	
120	312115-0366		2	SCREW ISO4762 M6X12 A4 80	
130	315105-0153		2	WASHER BRB 6,4X12 RFR	
190	312155-0339		2	SCREW DIN 7991 MF6S M5X40 A4 70	
200	312115-0367		2	SCREW ISO4762 M6X14 A4 80	
210	90005-0002		2	WASHER 16/6,7X1,5	
220	312105-0287		2	SCREW M6S ISO 4017 M4X8 A470	
TPA 1000SQ (See drawing on page: 4-46)					
010	1523475-0000		1	CANTILEVER	
020	2558920-0000		1	STOP	
025	2558922-0000		1	STOP	
040	2557613-0000		1	SPRING	
050	2557612-0000		1	SPRING	
060	1144601-0000		2	GUIDE STUD	
070	2558929-0000		1	BAR	
100	312105-0368		10	SCREW M6S ISO 4017 M6X16 A480	
120	312105-0364		2	SCREW M6S ISO 4017 M6X10 A480	
130	315105-0153		10	WASHER BRB 6,4X12 RFR	
150	90062-0061		2	LOCK WASHER NORD-LOCK,6,5/10,8, T=2,2	

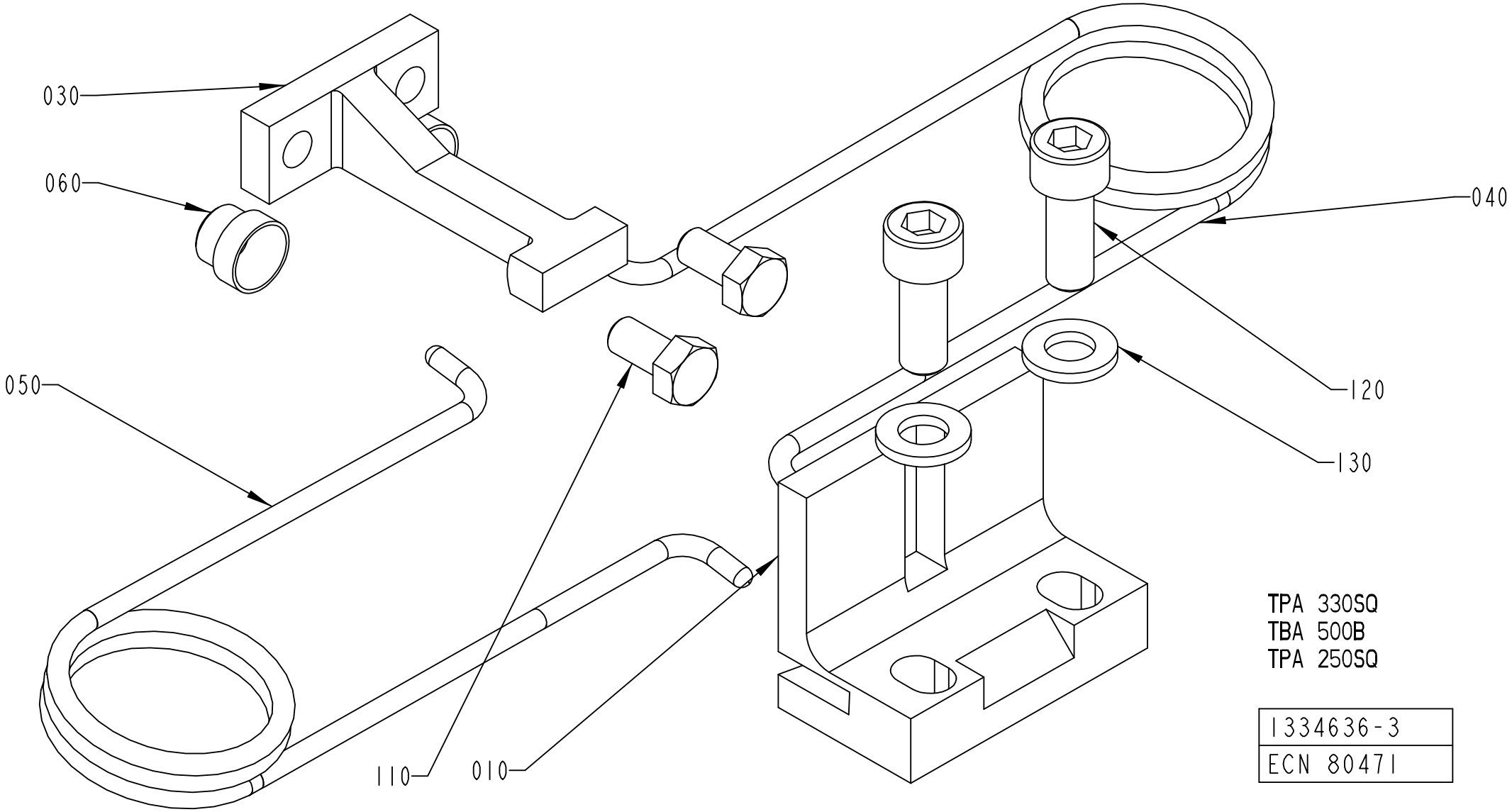
030
060
040
050
120
130
110
010
TPA 330SQ
TBA 500B
TPA 250SQ
1334636-3
ECN 80471

Pos	Part No	UN	Qty	Description	Page No	Pos	Part No	UN	Qty	Description	Page No

SEE PREVIOUS LISTS PAGES: 4-39, 4-41.

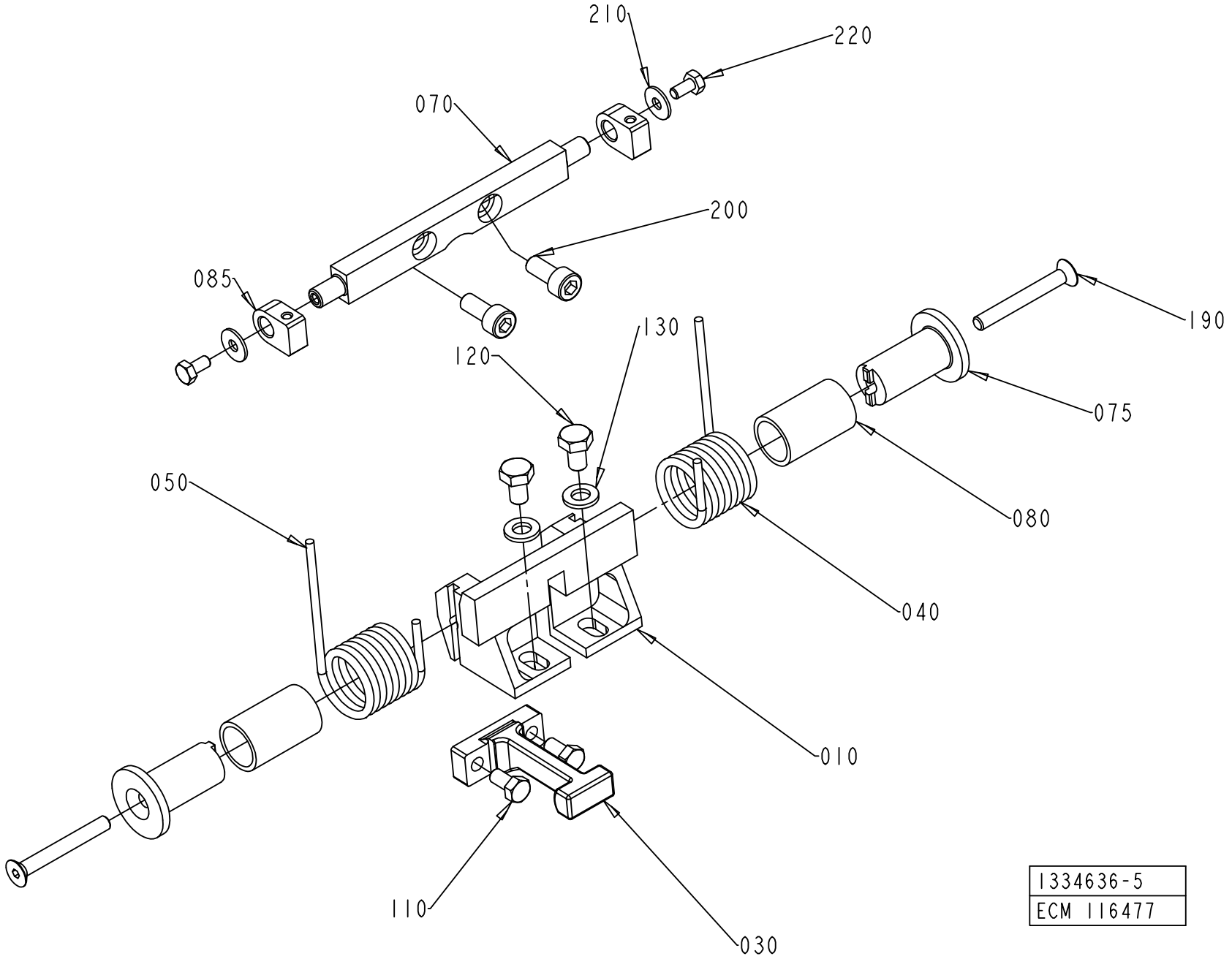
210
220
070
200
085
190
130
120
075
050
080
040
010
110
030
1334636-5
ECM 116477

Pos	Part No	UN	Qty	Description	Page No	Pos	Part No	UN	Qty	Description	Page No

SEE PREVIOUS LISTS PAGES: 4-39, 4-41.

SHOCK ABSORBER

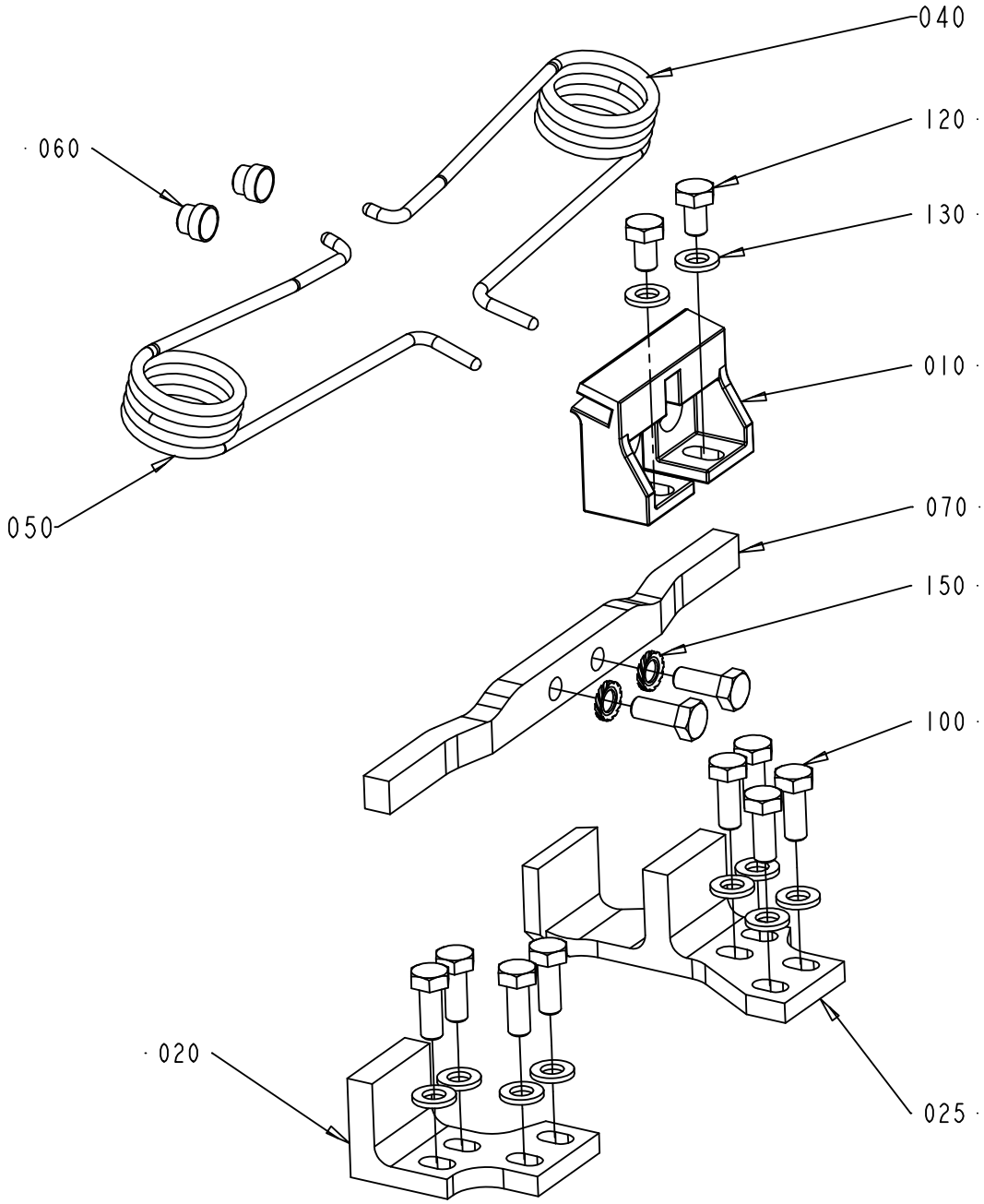

1334636-6
ECM 119888

ECM: 271732 - 20060831
Group number: 1334636-0200
Assembly Drawing: 1334636-6_1_AA

This list covers pages from 4-38 to 4-49

Pos	Part No	UN	Qty	Description	Page No	Pos	Part No	UN	Qty	Description	Page No

SEE PREVIOUS LISTS PAGES: 4-39, 4-41.

Machine Type	Group Description	Used-In	Group Number	Page No

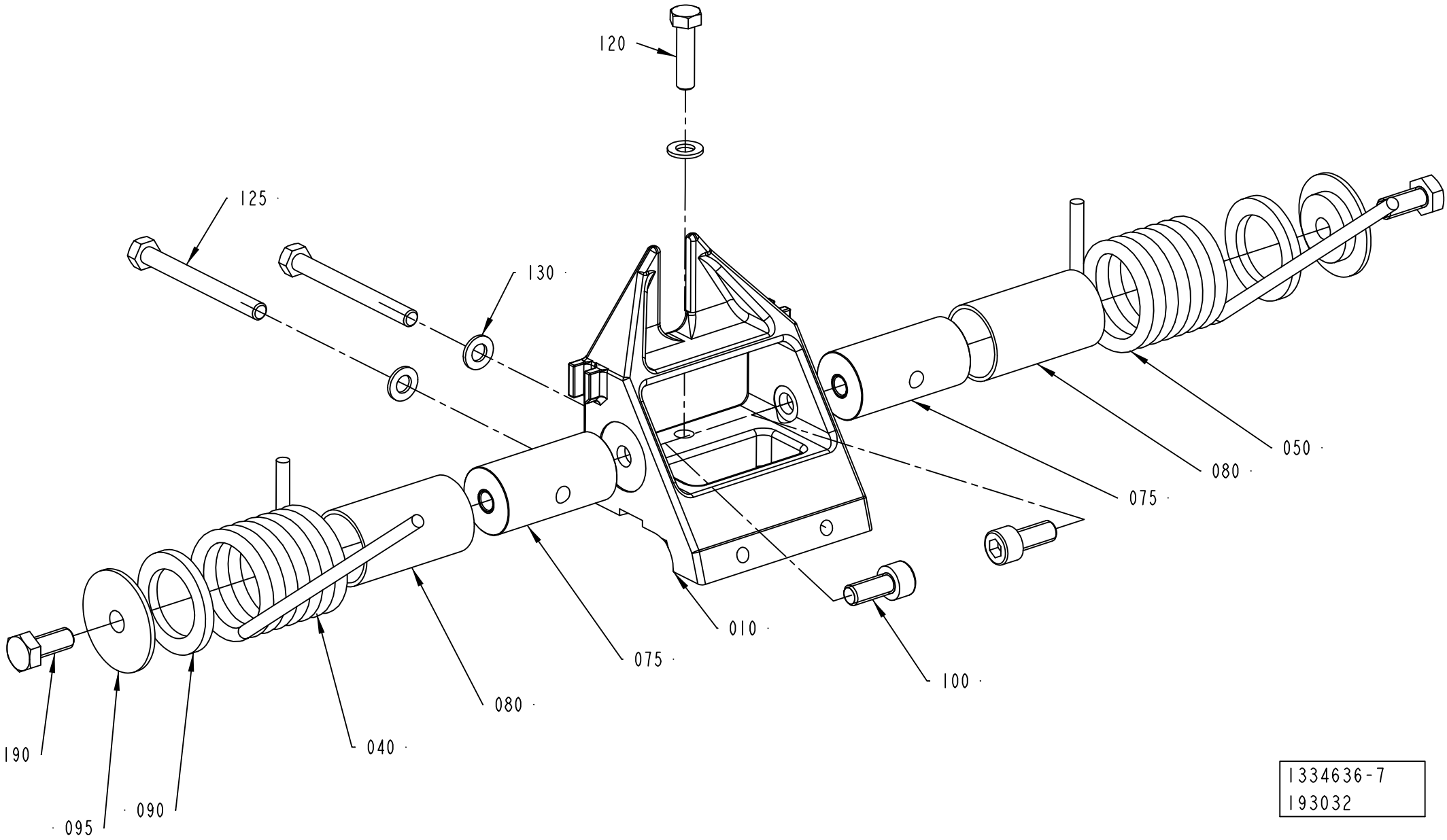

1334636-7
193032

Pos	Part No	UN	Qty	Description	Page No
SEE PREVIOUS LISTS PAGES: 4-39, 4-41.					

Pos	Part No	UN	Qty	Description	Page No

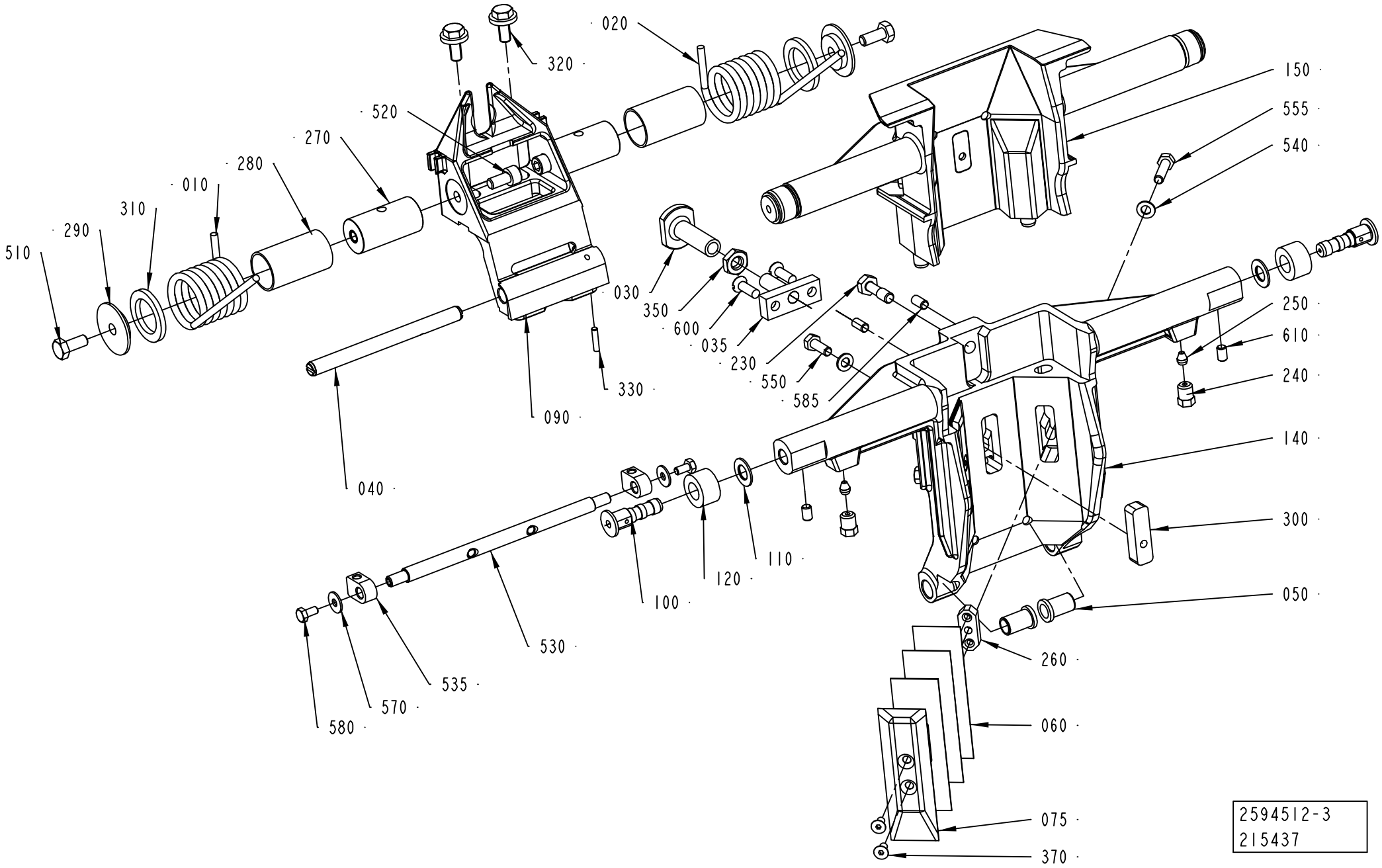
020
320
520
270
280
010
310
290
510
030
350
600
035
230
550
585
330
090
040
150
555
540
250
610
240
140
300
050
110
120
100
530
535
570
580
260
060
075
370
2594512-3
215437

ECM: 271554 - 20061101
Group number: 2594512-0200
Assembly Drawing: 2594512-3_1_AB

This list covers pages from 4-50 to 4-59

Pos	Part No	UN	Qty	Description	Page No
TBA 0200B (See drawing on page: 4-56)					
010	1350263-0000		1	SPRING RIGHT	
020	1350264-0000		1	SPRING LEFT	
030	1511339-0000		1	STOP	
040	1499327-0000		1	SHAFT	
050	2530313-0000		2	BUSHING	
063	1538637-0000		3	VOLUME SHIM	
065	1524310-0000		1	VOLUME BULGE	
070	1144601-0000		2	GUIDE STUD	
080	1499328-0000		1	STOPPER	
090	2605869-0000		1	FLAP HOLDER	
100	1512146-0000		2	AXLE PIN	
110	1512147-0000		2	WASHER	
120	1499355-0000		2	ROLLER	
130	2629237-0000		2	CAM	
140	2604493-0000		1	VOLUME FLAP	
320	312115-0368		2	SCREW ISO4762 M6X16 A4 80	
330	312318-0320		2	SCREW ISO4029 M5X5 A4	
340	312318-0323		2	SCREW ISO4029 M5X8 A4	
350	312812-0316		1	HEXAGON NUT, NY-LOCK M6 A480	
370	312155-0287		2	SCREW DIN 7991 MF6S M4X8 A4 70	
410	312155-0325		2	SCREW DIN 7991 MF6S M5X10 A4 70	
430	312115-0289		4	SCREW ISO4762 M4X10 A4 80	
500	321136-0140		2	BUSHING, 10X12X10 MM	
TBA 0200M (See drawing on page: 4-56)					
010	2771123-0000		1	SPRING	
010	1350263-0000		1	SPRING RIGHT	
020	2771122-0000		1	SPRING	
030	2768909-0000		1	STOP	
040	1499327-0000		1	SHAFT	
050	2530313-0000		2	BUSHING	
063	2640139-0000		3	VOLUME SHIM	
065	2640138-0000		1	VOLUME BULGE	
070	1144601-0000		2	GUIDE STUD	
080	2846670-0000		1	STOPPER	
090	2768910-0000		1	FLAP HOLDER	
100	1512146-0000		2	AXLE PIN	
110	1512147-0000		2	WASHER	
120	1499355-0000		2	ROLLER	
130	2649443-0000		2	CAM	
140	2639866-0000		1	VOLUME FLAP	
320	312115-0368		2	SCREW ISO4762 M6X16 A4 80	
330	312318-0320		2	SCREW ISO4029 M5X5 A4	
340	312318-0323		2	SCREW ISO4029 M5X8 A4	
350	312812-0318		1	HEXAGON NUT, NY-LOCK M8 A480	
370	312155-0287		2	SCREW DIN 7991 MF6S M4X8 A4 70	
410	312155-0325		2	SCREW DIN 7991 MF6S M5X10 A4 70	
430	312115-0291		4	SCREW ISO4762 M4X12 A4 80	
500	321136-0140		2	BUSHING, 10X12X10 MM	
TBA 0200SQ (See drawing on page: 4-58)					
010	2746136-0000		1	SPRING	
020	2746137-0000		1	SPRING	
030	2676934-0000		1	STOP	
040	2668315-0000		1	SHAFT	
050	2676933-0000		2	BUSHING	
063	2678717-0000		6	VOLUME SHIM	
065	2678838-0000		1	VOLUME BULGE	
070	1144601-0000		2	GUIDE STUD	
080	2773929-0000		1	STOPPER	
090	2668312-0000		1	FLAP HOLDER	
100	1512146-0000		2	AXLE PIN	
110	1512147-0000		2	WASHER	
120	1499355-0000		2	ROLLER	
130	2678713-0000		2	CAM	
140	2747138-0000		1	VOLUME FLAP	
320	312115-0368		2	SCREW ISO4762 M6X16 A4 80	
330	312318-0320		2	SCREW ISO4029 M5X5 A4	
340	312318-0320		2	SCREW ISO4029 M5X5 A4	
350	312812-0316		1	HEXAGON NUT, NY-LOCK M6 A480	
370	312155-0287		2	SCREW DIN 7991 MF6S M4X8 A4 70	
410	312155-0323		2	SCREW DIN 7991 MF6S M5X8 A4 70	
440	312115-0289		4	SCREW ISO4762 M4X10 A4 80	
500	321136-0140		2	BUSHING, 10X12X10 MM	
TBA 0250B (See drawing on page: 4-58)					
010	1350263-0000		1	SPRING RIGHT	
010	2771123-0000		1	SPRING	
020	2771122-0000		1	SPRING	
030	2768909-0000		1	STOP	
040	1499327-0000		1	SHAFT	
050	2530313-0000		2	BUSHING	
063	2605166-0000		4	VOLUME SHIM	
065	2609925-0000		1	VOLUME BULGE	
070	1144601-0000		2	GUIDE STUD	
080	2838351-0000		1	STOPPER	

Machine Type | Group Description | Used-In | Group Number | Page No

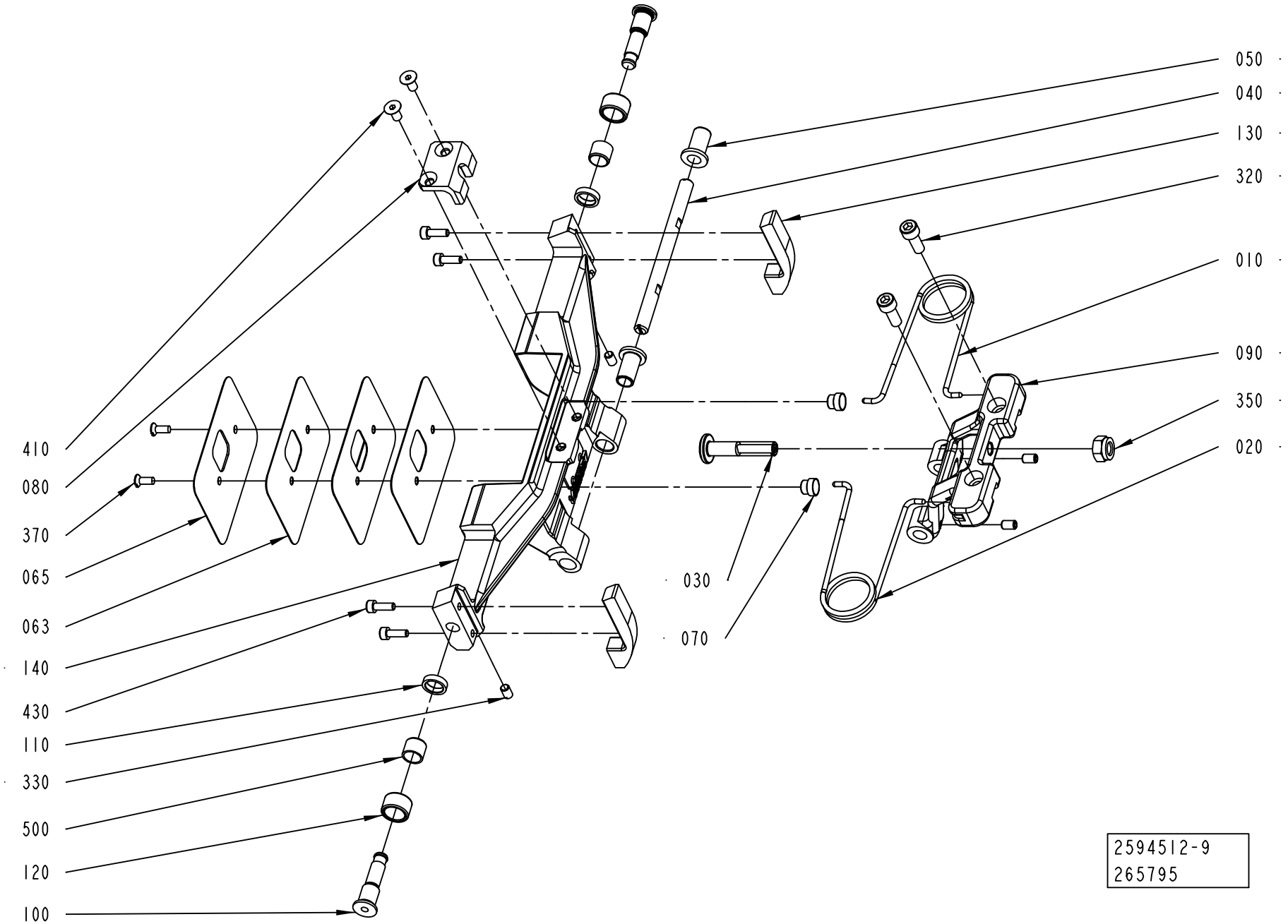
050
040
130
320
010
090
350
020
030
070
410
080
370
065
063
140
430
110
330
500
120
100
2594512-9
265795

ECM: 271554 - 20061101
Group number: 2594512-0200
Assembly Drawing: 2594512-9_1_AA

This list covers pages from 4-50 to 4-59

Pos	Part No	UN	Qty	Description	Page No
TBA 0250B (Cont'd) (See drawing on page: 4-58)					
090	2768910-0000		1	FLAP HOLDER	
100	1512146-0000		2	AXLE PIN	
110	1512147-0000		2	WASHER	
120	1499355-0000		2	ROLLER	
130	2606218-0000		2	CAM	
140	2605191-0000		1	VOLUME FLAP	
320	312115-0368		2	SCREW ISO4762 M6X16 A4 80	
330	312318-0320		2	SCREW ISO4029 M5X5 A4	
340	312318-0323		2	SCREW ISO4029 M5X8 A4	
350	312812-0318		1	HEXAGON NUT, NY-LOCK M8 A480	
370	312155-0287		2	SCREW DIN 7991 MF6S M4X8 A4 70	
410	312155-0327		2	SCREW DIN 7991 MF6S M5X12 A4 70	
440	312115-0287		4	SCREW ISO4762 M4X8 A4 80	
500	321136-0140		2	BUSHING, 10X12X10 MM	
TBA 0250S (See drawing on page: 4-56)					
010	2771123-0000		1	SPRING	
010	1350263-0000		1	SPRING RIGHT	
020	2771122-0000		1	SPRING	
030	2768909-0000		1	STOP	
040	1499327-0000		1	SHAFT	
050	2530313-0000		2	BUSHING	
063	2662169-0000		3	VOLUME SHIM	
065	2662168-0000		1	VOLUME BULGE	
070	1144601-0000		2	GUIDE STUD	
080	2768908-0000		1	STOPPER	
090	2768910-0000		1	FLAP HOLDER	
100	1512146-0000		2	AXLE PIN	
110	1512147-0000		2	WASHER	
120	1499355-0000		2	ROLLER	
130	2662431-0000		2	CAM	
140	2661451-0000		1	VOLUME FLAP	
320	312115-0368		2	SCREW ISO4762 M6X16 A4 80	
330	312318-0320		2	SCREW ISO4029 M5X5 A4	
340	312318-0323		2	SCREW ISO4029 M5X8 A4	
350	312812-0318		1	HEXAGON NUT, NY-LOCK M8 A480	
370	312155-0287		2	SCREW DIN 7991 MF6S M4X8 A4 70	
410	312155-0327		2	SCREW DIN 7991 MF6S M5X12 A4 70	
430	312115-0293		4	SCREW ISO4762 M4X16 A4 80	
500	321136-0140		2	BUSHING, 10X12X10 MM	
TBA 0250SQ (See drawing on page: 4-58)					
010	2746136-0000		1	SPRING	
020	2746137-0000		1	SPRING	
030	2839822-0000		1	STOP	
040	2668315-0000		1	SHAFT	
050	2676933-0000		2	BUSHING	
063	2678839-0000		6	VOLUME SHIM	
065	2678840-0000		1	VOLUME BULGE	
070	1144601-0000		2	GUIDE STUD	
080	2839679-0000		1	STOPPER	
090	2839678-0000		1	FLAP HOLDER	
100	1512146-0000		2	AXLE PIN	
110	1512147-0000		2	WASHER	
120	1499355-0000		2	ROLLER	
130	2678714-0000		2	CAM	
140	2747142-0000		1	VOLUME FLAP	
320	312115-0368		2	SCREW ISO4762 M6X16 A4 80	
330	312318-0320		2	SCREW ISO4029 M5X5 A4	
340	312318-0320		2	SCREW ISO4029 M5X5 A4	
350	312812-0318		1	HEXAGON NUT, NY-LOCK M8 A480	
370	312155-0287		2	SCREW DIN 7991 MF6S M4X8 A4 70	
410	312155-0323		2	SCREW DIN 7991 MF6S M5X8 A4 70	
440	312115-0289		4	SCREW ISO4762 M4X10 A4 80	
500	321136-0140		2	BUSHING, 10X12X10 MM	
TBA 0330S (See drawing on page: 4-56)					
010	1350263-0000		1	SPRING RIGHT	
010	2771123-0000		1	SPRING	
020	2771122-0000		1	SPRING	
030	2768909-0000		1	STOP	
040	1499327-0000		1	SHAFT	
050	2530313-0000		2	BUSHING	
063	2654290-0000		3	VOLUME SHIM	
065	979931-0000		1	VOLUME BULGE	
070	1144601-0000		2	GUIDE STUD	
080	2768908-0000		1	STOPPER	
090	2768910-0000		1	FLAP HOLDER	
100	1512146-0000		2	AXLE PIN	
110	1512147-0000		2	WASHER	
120	1499355-0000		2	ROLLER	
130	2629236-0000		2	CAM	
140	2604495-0000		1	VOLUME FLAP	
320	312115-0368		2	SCREW ISO4762 M6X16 A4 80	
330	312318-0320		2	SCREW ISO4029 M5X5 A4	
340	312318-0323		2	SCREW ISO4029 M5X8 A4	

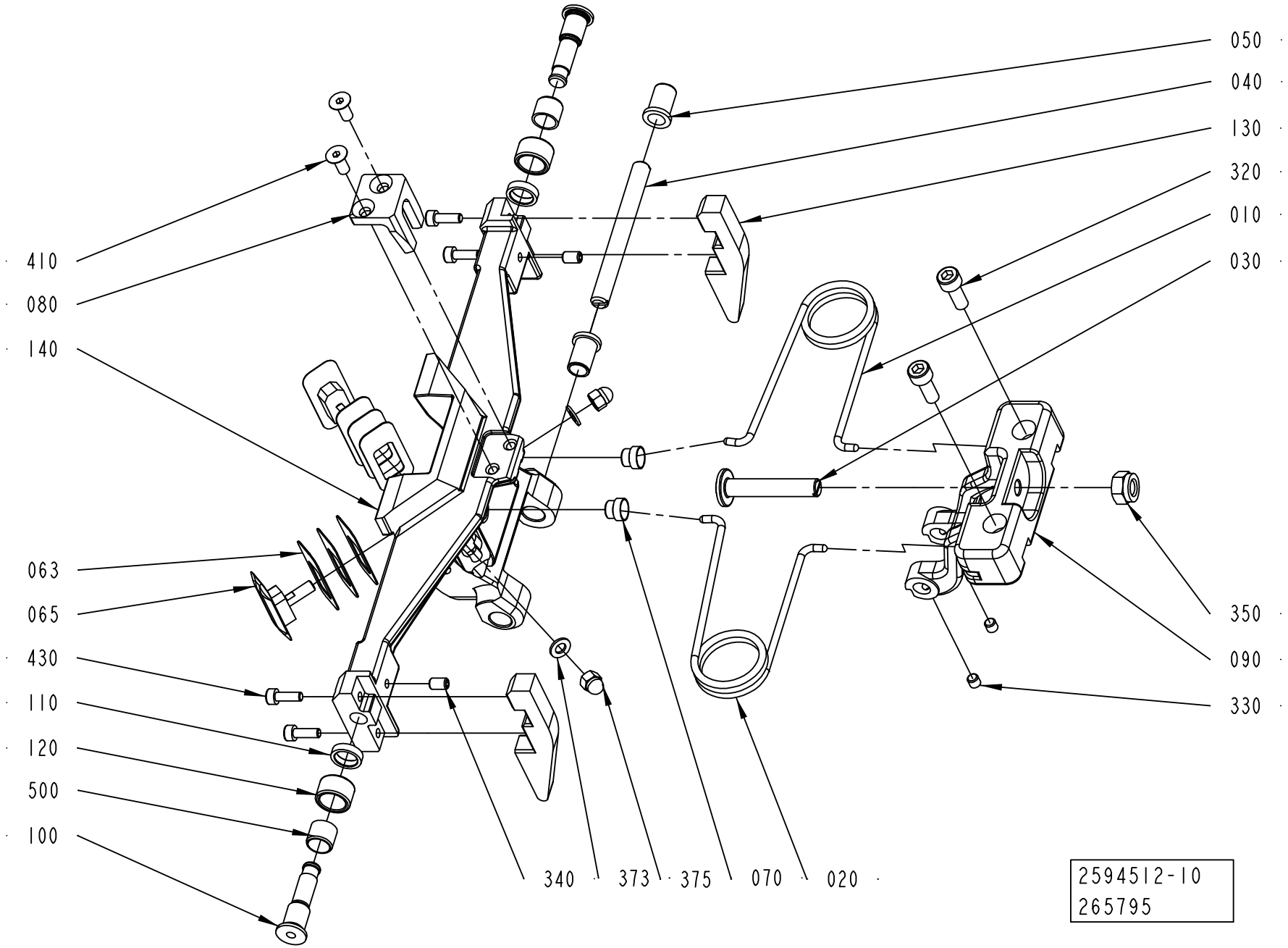
050
040
130
320
010
030
410
080
140
063
065
430
110
120
500
100
350
090
330
340
373
375
070
020
2594512-10
265795

ECM: 271554 - 20061101
Group number: 2594512-0200
Assembly Drawing: 2594512-10_1_AA

This list covers pages from 4-50 to 4-59

Pos	Part No	UN	Qty	Description	Page No
TBA 0330S (Cont'd) (See drawing on page: 4-56)					
350	312812-0318		1	HEXAGON NUT, NY-LOCK M8 A480	
370	312155-0287		2	SCREW DIN 7991 MF6S M4X8 A4 70	
410	312155-0327		2	SCREW DIN 7991 MF6S M5X12 A4 70	
430	312115-0293		4	SCREW ISO4762 M4X16 A4 80	
500	321136-0140		2	BUSHING, 10X12X10 MM	
TBA 0500B (See drawing on page: 4-52)					
010	1350263-0000		1	SPRING RIGHT	
020	1350264-0000		1	SPRING LEFT	
030	2725392-0000		1	STOP	
040	1487946-0000		1	SHAFT	
050	1487948-0000		2	BUSHING	
063	2844777-0000		3	VOLUME SHIM	
065	2844776-0000		1	VOLUME BULGE	
070	1144601-0000		2	GUIDE STUD	
080	2838629-0000		1	STOPPER	
090	2838479-0000		1	FLAP HOLDER	
100	1512146-0000		2	AXLE PIN	
110	1512147-0000		2	WASHER	
120	1499355-0000		2	ROLLER	
130	1499350-0000		2	CAM	
140	2839175-0000		1	VOLUME FLAP	
320	312115-0368		2	SCREW ISO4762 M6X16 A4 80	
330	312318-0323		2	SCREW ISO4029 M5X8 A4	
340	312318-0323		2	SCREW ISO4029 M5X8 A4	
350	312812-0318		1	HEXAGON NUT, NY-LOCK M8 A480	
370	312145-0289		2	SCREW ISO 2009 MFS M4X10 A4	
410	312155-0325		2	SCREW DIN 7991 MF6S M5X10 A4 70	
430	312115-0291		4	SCREW ISO4762 M4X12 A4 80	
500	321136-0140		2	BUSHING, 10X12X10 MM	
TBA 1000B (See drawing on page: 4-56)					
010	1348483-0000		1	SPRING RIGHT	
020	1348484-0000		1	SPRING LEFT	
030	2725392-0000		1	STOP	
040	1487946-0000		1	SHAFT	
050	1487948-0000		2	BUSHING	
063	1511337-0000		3	VOLUME SHIM	
065	26075-0000		1	VOLUME BULGE	
070	1144601-0000		2	GUIDE STUD	
080	2725393-0000		1	STOPPER	
090	1499345-0000		1	FLAP HOLDER	
090	2725394-0000		1	FLAP HOLDER	
100	1512146-0000		2	AXLE PIN	
110	1512147-0000		2	WASHER	
120	1499355-0000		2	ROLLER	
130	1499356-0000		2	CAM	
140	1499358-0000		1	VOLUME FLAP	
320	312115-0368		2	SCREW ISO4762 M6X16 A4 80	
330	312318-0323		2	SCREW ISO4029 M5X8 A4	
340	312318-0323		2	SCREW ISO4029 M5X8 A4	
350	312812-0318		1	HEXAGON NUT, NY-LOCK M8 A480	
370	312141-0222		2	SCREW ISO 2009 MFS M3X8 4.8 EL.PL	
410	312115-0331		1	SCREW ISO4762 M5X20 A4 80	
430	312115-0287		4	SCREW ISO4762 M4X8 A4 80	
500	321136-0140		2	BUSHING, 10X12X10 MM	
TPA 0200SQ (See drawing on page: 4-54)					
010	2771123-0000		1	SPRING	
010	1350263-0000		1	SPRING RIGHT	
020	2771122-0000		1	SPRING	
030	2843006-0000		1	STOP	
040	2674327-0000		1	SHAFT	
050	2530313-0000		2	BUSHING	
063	2674328-0000		6	VOLUME SHIM	
065	2674329-0000		2	VOLUME BULGE	
070	1144601-0000		2	GUIDE STUD	
080	2839410-0000		1	STOPPER	
090	2839411-0000		1	FLAP HOLDER	
100	1512146-0000		2	AXLE PIN	
110	1512147-0000		2	WASHER	
120	1499355-0000		2	ROLLER	
130	2674326-0000		2	CAM	
140	2674332-0000		1	VOLUME FLAP	
320	312115-0368		2	SCREW ISO4762 M6X16 A4 80	
330	312318-0320		2	SCREW ISO4029 M5X5 A4	
340	312318-0323		2	SCREW ISO4029 M5X8 A4	
350	312812-0318		1	HEXAGON NUT, NY-LOCK M8 A480	
373	315105-0146		2	WASHER BRB 5,3X10 RFR	
375	312705-0314		2	NUT HEX. DOMED CAP MHM-6 M5 A280	
410	312155-0327		2	SCREW DIN 7991 MF6S M5X12 A4 70	
430	312115-0291		4	SCREW ISO4762 M4X12 A4 80	
500	321136-0140		2	BUSHING, 10X12X10 MM	
TPA 0250SQ (See drawing on page: 4-54)					
010	1350263-0000		1	SPRING RIGHT	
010	2771123-0000		1	SPRING	

Machine Type | Group Description | Used-In | Group Number | Page No

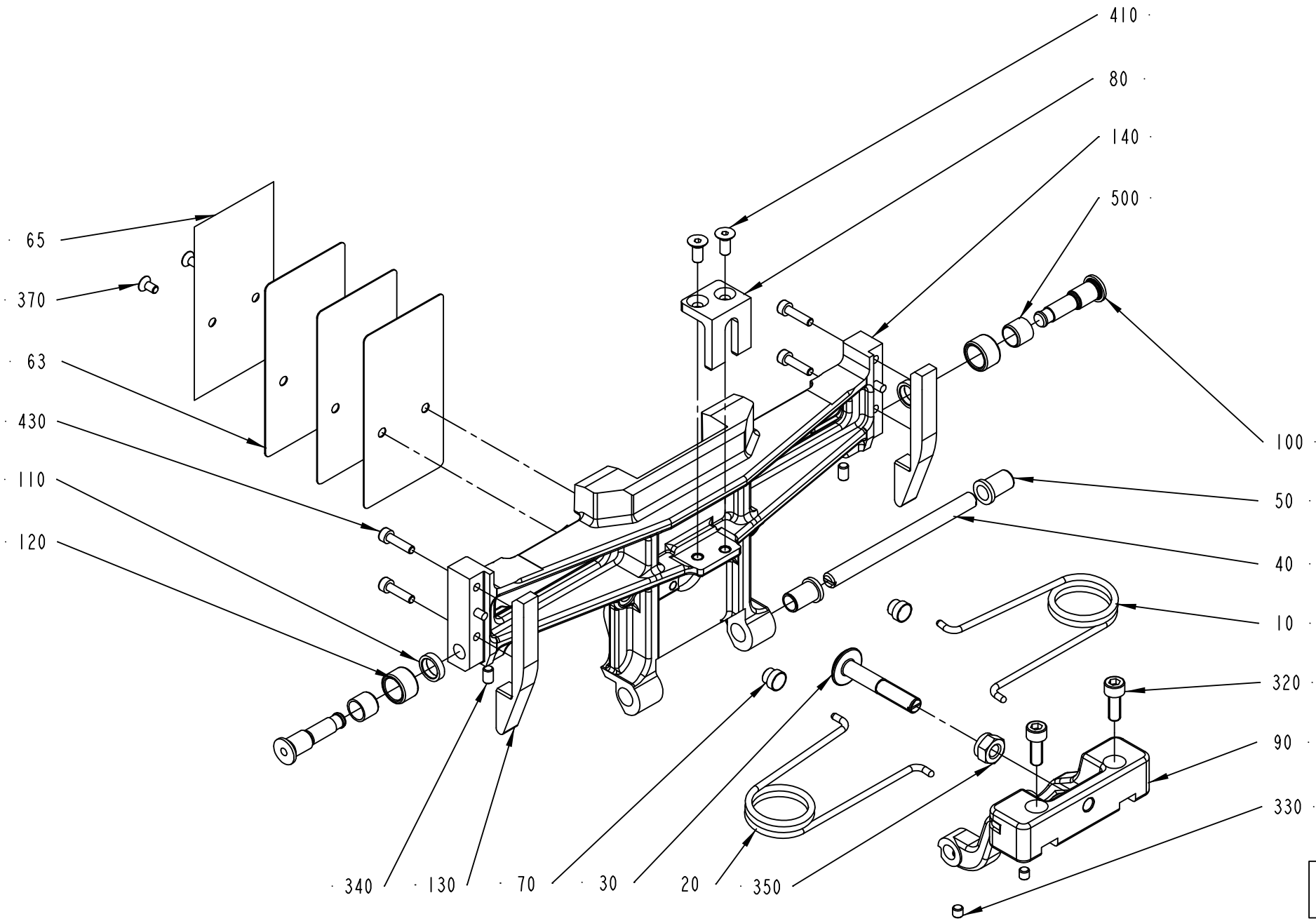
410
80
140
500
65
370
63
430
110
120
100
50
40
10
320
90
330
340
130
70
30
20
350
2594512-11
265795

Pos	Part No	UN	Qty	Description	Page No
TPA 0250SQ (Cont'd) (See drawing on page: 4-54)					
020	2771122-0000		1	SPRING	
030	2843006-0000		1	STOP	
040	2674327-0000		1	SHAFT	
050	2530313-0000		2	BUSHING	
063	1549594-0000		6	VOLUME SHIM	
065	2581994-0000		2	VOLUME BULGE	
070	1144601-0000		2	GUIDE STUD	
080	2839410-0000		1	STOPPER	
090	2839411-0000		1	FLAP HOLDER	
100	1512146-0000		2	AXLE PIN	
110	1512147-0000		2	WASHER	
120	1499355-0000		2	ROLLER	
130	2674325-0000		2	CAM	
140	2674334-0000		1	VOLUME FLAP	
320	312115-0368		2	SCREW ISO4762 M6X16 A4 80	
330	312318-0320		2	SCREW ISO4029 M5X5 A4	
340	312318-0323		2	SCREW ISO4029 M5X8 A4	
350	312812-0318		1	HEXAGON NUT, NY-LOCK M8 A480	
373	315105-0146		2	WASHER BRB 5,3X10 RFR	
375	312705-0314		2	NUT HEX. DOMED CAP MHM-6 M5 A280	
410	312155-0327		2	SCREW DIN 7991 MF6S M5X12 A4 70	
430	312115-0291		4	SCREW ISO4762 M4X12 A4 80	
500	321136-0140		2	BUSHING, 10X12X10 MM	
TPA 1000SQ, TPA 0750SQ (See drawing on page: 4-50)					
010	2663360-0000		1	SPRING	
020	2663361-0000		1	SPRING	
030	2660400-0000		1	STOP	
035	2660401-0000		1	CATCH	
040	2658258-0000		1	SHAFT	
050	2530313-0000		2	BUSHING	
060	2660393-0000		6	VOLUME SHIM	
075	2660392-0000		2	VOLUME BULGE	
090	2658257-0000		1	FLAP HOLDER	
100	2759331-0000		2	SHAFT	
110	19972-0000		2	WASHER	
120	434321-0000		2	CURVE ROLLER	
140	2660379-0000		1	VOLUME FLAP	
150	2705813-0100		1	VOLUME FLAP	**4-61**
230	2660391-0000		1	SCREW	
240	90134-0063		2	BUSHING/NUT M8X1, D=2,5 MM	
250	90028-0020		2	CONE TUBE 2,5MM	
260	1037734-0000		2	WEDGE	
270	2652896-0000		2	SHAFT	
280	2662167-0000		2	BUSHING	
290	2663375-0000		2	WASHER	
300	2660397-0000		1	WEDGE	
310	2663376-0000		2	WASHER	
320	2663372-0000		2	SCREW	
330	311103-0235		1	PARALLEL PIN ISO 2338 3M6X14 A1	
340	312318-0323		2	SCREW ISO4029 M5X8 A4	
350	312625-0318		1	HEXAGON THIN NUT, EN 24035 ML6M M8 A4	
370	312155-0287		4	SCREW DIN 7991 MF6S M4X8 A4 70	
510	312105-0367		2	SCREW M6S ISO 4017 M6X14 A480	
515	312318-0285		2	SCREW ISO4029 M4X6 A4	
520	312115-0366		2	SCREW ISO4762 M6X12 A4 80	
530	2566332-0000		1	SHAFT	
535	2566333-0000		2	HOLDER (STAFFA)	
540	315105-0146		3	WASHER BRB 5,3X10 RFR	
550	312105-0328		1	SCREW M6S ISO 4017 M5X14 A480	
555	312105-0331		2	SCREW M6S ISO 4017 M5X20 A480	
570	90005-0082		2	WASHER PLAIN ROUND 4,3(M4)/12,H=1	
580	312105-0287		2	SCREW M6S ISO 4017 M4X8 A470	
585	312318-0325		2	SCREW ISO4029 M5X10 A4	
600	312145-0329		2	SCREW ISO 2009 MFS M5X16 A4	
610	312318-0323		2	SCREW ISO4029 M5X8 A4	

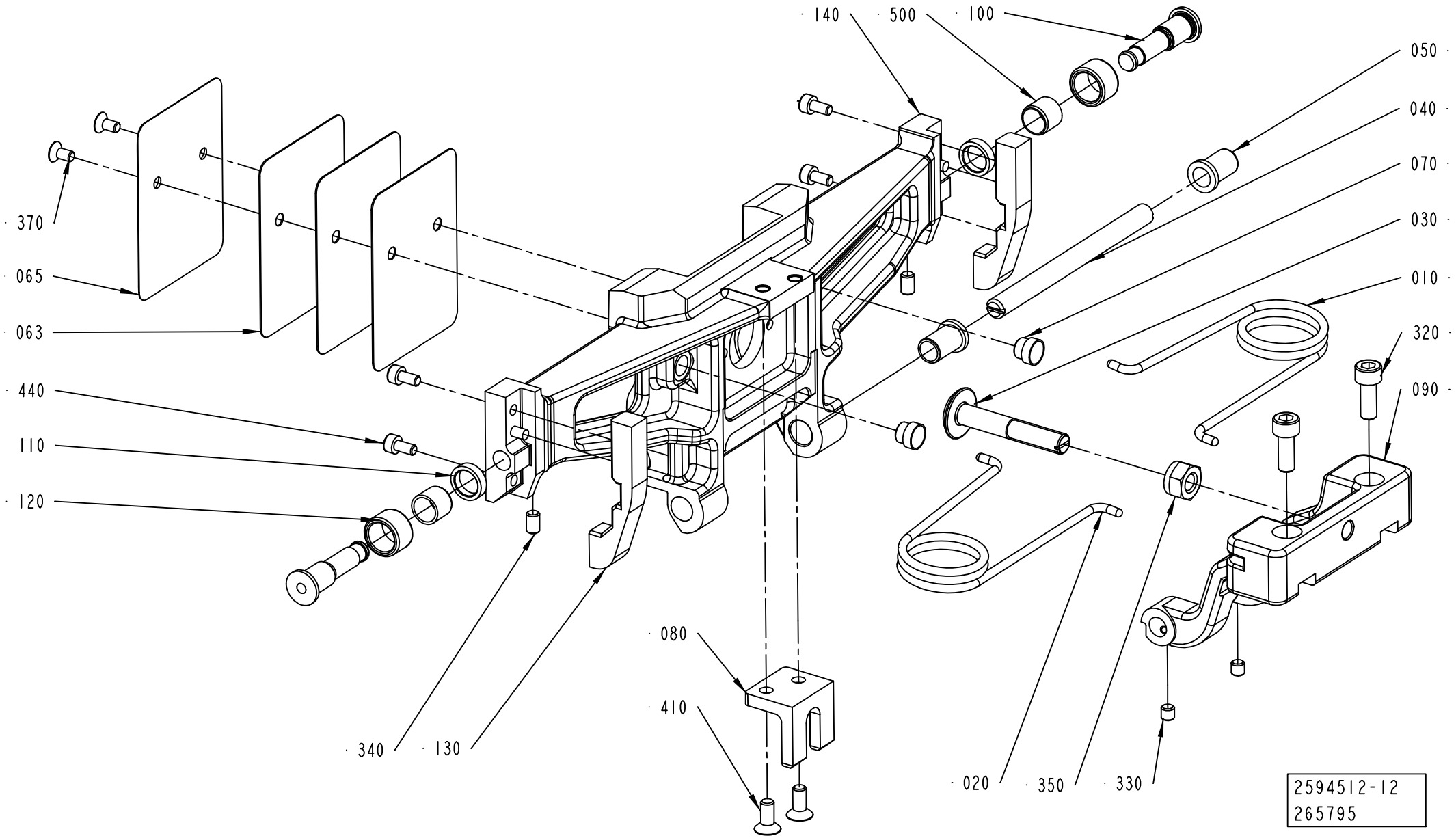
140
500
100
050
040
070
030
010
320
090
370
065
063
440
110
120
080
410
340
130
020
350
330
2594512-12
265795

ECM: 271554 - 20061101
Group number: 2594512-0200
Assembly Drawing: 2594512-12_1_AA

This list covers pages from 4-50 to 4-59

Pos	Part No	UN	Qty	Description	Page No	Pos	Part No	UN	Qty	Description	Page No

SEE PREVIOUS LISTS PAGES: 4-51, 4-53, 4-55, 4-57.

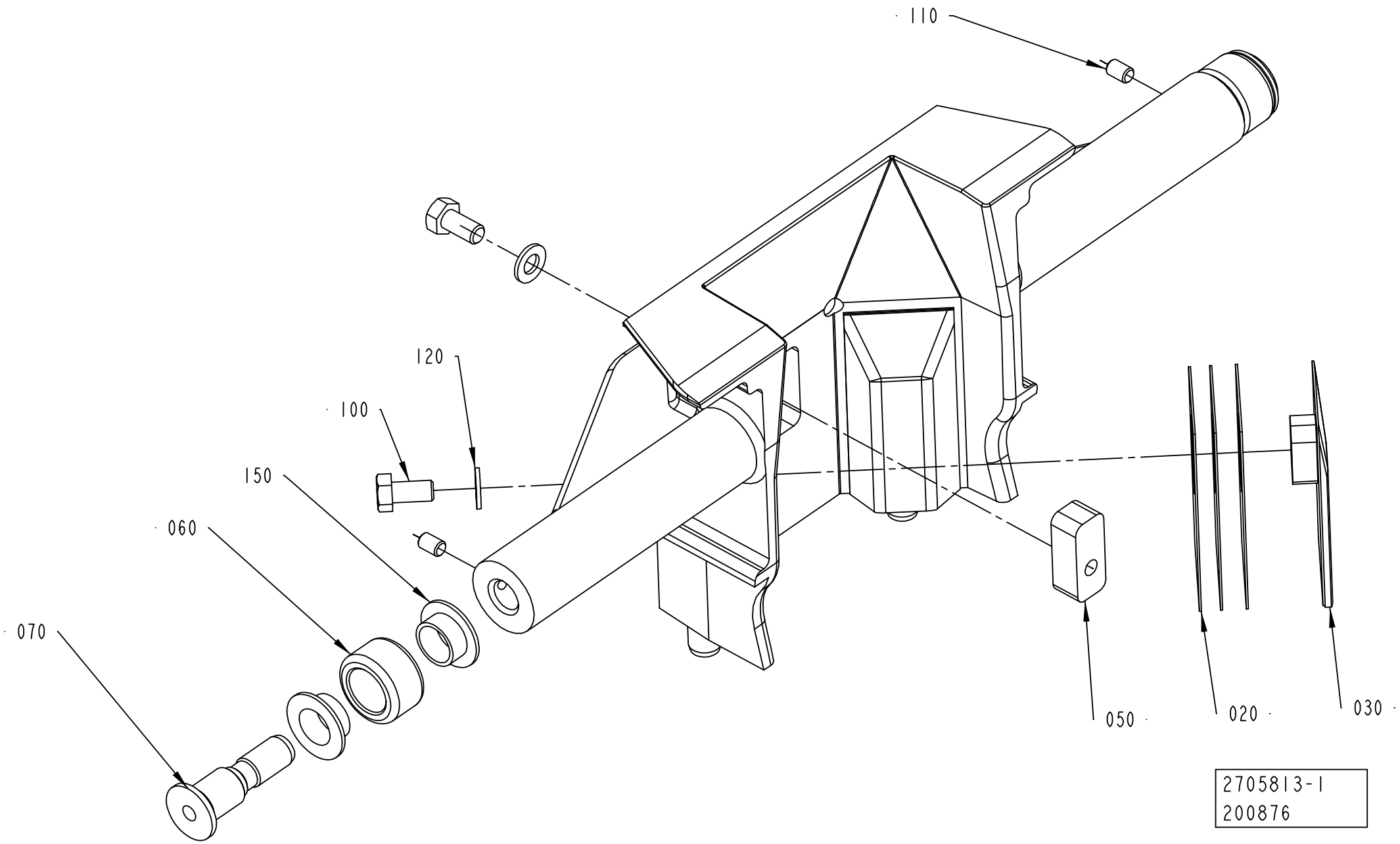
110
120
100
150
060
070
050
020
030
2705813-1
200876

ECM: 202683 - 20050402
Group number: 2705813-0100
Assembly Drawing: 2705813-1_1_AA

Pos	Part No	UN	Qty	Description	Page No
TPA 0750SQ					
010	2660384-0000		1	VOLUME FLAP	
TPA 1000SQ					
010	2660383-0000		1	VOLUME FLAP	
020	2660390-0000		6	VOLUME SHIM	
030	2660395-0000		2	VOLUME BULGE	
050	2660398-0000		1	WEDGE	
060	2660399-0000		2	ROLLER	
070	2594709-0000		2	AXLE PIN	
100	312105-0325		3	SCREW M6S ISO 4017 M5X10 A480	
110	312318-0285		2	SCREW ISO4029 M4X6 A4	
120	315105-0146		3	WASHER BRB 5,3X10 RFR	
150	90240-0289		4	FLANGE BUSHING, 10X12X6 MM	

Pos	Part No	UN	Qty	Description	Page No

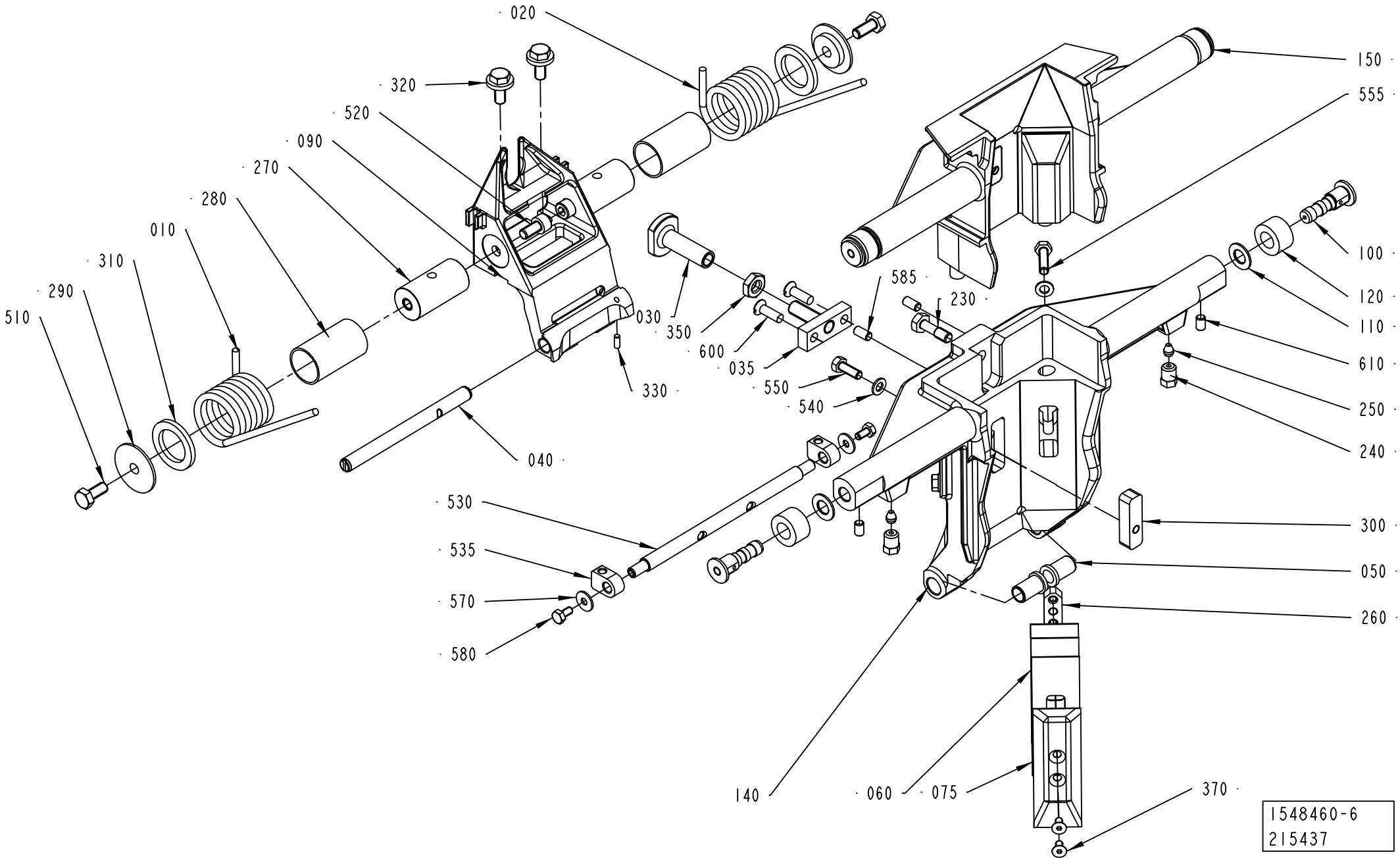
020
320
520
090
270
280
010
310
290
510
030
350
600
035
330
040
585
230
150
555
100
120
110
610
250
240
550
540
530
535
570
580
300
050
260
140
060
075
370
1548460-6
215437

ECM: 271553 - 20061101
Group number: 1548460-0200
Assembly Drawing: 1548460-6_1_AB

This list covers pages from 4-62 to 4-71

Pos	Part No	UN	Qty	Description	Page No
TBA 0200B (See drawing on page: 4-68)					
010	1350263-0000		1	SPRING RIGHT	
020	1350264-0000		1	SPRING LEFT	
030	1511339-0000		1	STOP	
040	1499327-0000		1	SHAFT	
050	2530313-0000		2	BUSHING	
063	1538637-0000		3	VOLUME SHIM	
065	1524310-0000		1	VOLUME BULGE	
070	1144601-0000		2	GUIDE STUD	
080	1499328-0000		1	STOPPER	
090	2605869-0000		1	FLAP HOLDER	
100	1512146-0000		2	AXLE PIN	
110	1512147-0000		2	WASHER	
120	1499355-0000		2	ROLLER	
130	2629237-0000		2	CAM	
140	2604494-0000		1	VOLUME FLAP	
320	312115-0368		2	SCREW ISO4762 M6X16 A4 80	
330	312318-0320		2	SCREW ISO4029 M5X5 A4	
340	312318-0323		2	SCREW ISO4029 M5X8 A4	
350	312812-0316		1	HEXAGON NUT, NY-LOCK M6 A480	
370	312155-0287		2	SCREW DIN 7991 MF6S M4X8 A4 70	
410	312155-0325		2	SCREW DIN 7991 MF6S M5X10 A4 70	
430	312115-0289		4	SCREW ISO4762 M4X10 A4 80	
500	321136-0140		2	BUSHING, 10X12X10 MM	
TBA 0200M (See drawing on page: 4-68)					
010	2771123-0000		1	SPRING	
020	2771122-0000		1	SPRING	
030	2768909-0000		1	STOP	
040	1499327-0000		1	SHAFT	
050	2530313-0000		2	BUSHING	
063	2640139-0000		3	VOLUME SHIM	
065	2640138-0000		1	VOLUME BULGE	
070	1144601-0000		2	GUIDE STUD	
080	2846670-0000		1	STOPPER	
090	2768910-0000		1	FLAP HOLDER	
100	1512146-0000		2	AXLE PIN	
110	1512147-0000		2	WASHER	
120	1499355-0000		2	ROLLER	
130	2649443-0000		2	CAM	
140	2639867-0000		1	VOLUME FLAP	
320	312115-0368		2	SCREW ISO4762 M6X16 A4 80	
330	312318-0320		2	SCREW ISO4029 M5X5 A4	
340	312318-0323		2	SCREW ISO4029 M5X8 A4	
350	312812-0318		1	HEXAGON NUT, NY-LOCK M8 A480	
370	312155-0287		2	SCREW DIN 7991 MF6S M4X8 A4 70	
410	312155-0325		2	SCREW DIN 7991 MF6S M5X10 A4 70	
430	312115-0291		4	SCREW ISO4762 M4X12 A4 80	
500	321136-0140		2	BUSHING, 10X12X10 MM	
TBA 0200SQ (See drawing on page: 4-70)					
010	2746136-0000		1	SPRING	
020	2746137-0000		1	SPRING	
030	2676934-0000		1	STOP	
040	2668315-0000		1	SHAFT	
050	2676933-0000		2	BUSHING	
063	2678717-0000		6	VOLUME SHIM	
065	2678838-0000		1	VOLUME BULGE	
070	1144601-0000		2	GUIDE STUD	
080	2773929-0000		1	STOPPER	
090	2668312-0000		1	FLAP HOLDER	
100	1512146-0000		2	AXLE PIN	
110	1512147-0000		2	WASHER	
120	1499355-0000		2	ROLLER	
130	2678713-0000		2	CAM	
140	2747138-0000		1	VOLUME FLAP	
320	312115-0368		2	SCREW ISO4762 M6X16 A4 80	
330	312318-0320		2	SCREW ISO4029 M5X5 A4	
340	312318-0320		2	SCREW ISO4029 M5X5 A4	
350	312812-0316		1	HEXAGON NUT, NY-LOCK M6 A480	
370	312155-0287		2	SCREW DIN 7991 MF6S M4X8 A4 70	
410	312155-0323		2	SCREW DIN 7991 MF6S M5X8 A4 70	
440	312115-0289		4	SCREW ISO4762 M4X10 A4 80	
500	321136-0140		2	BUSHING, 10X12X10 MM	
TBA 0250B (See drawing on page: 4-70)					
010	2771123-0000		1	SPRING	
020	2771122-0000		1	SPRING	
030	2768909-0000		1	STOP	
040	1499327-0000		1	SHAFT	
050	2530313-0000		2	BUSHING	
063	2605166-0000		4	VOLUME SHIM	
065	2609925-0000		1	VOLUME BULGE	
070	1144601-0000		2	GUIDE STUD	
080	2838351-0000		1	STOPPER	
090	2768910-0000		1	FLAP HOLDER	
100	1512146-0000		2	AXLE PIN	

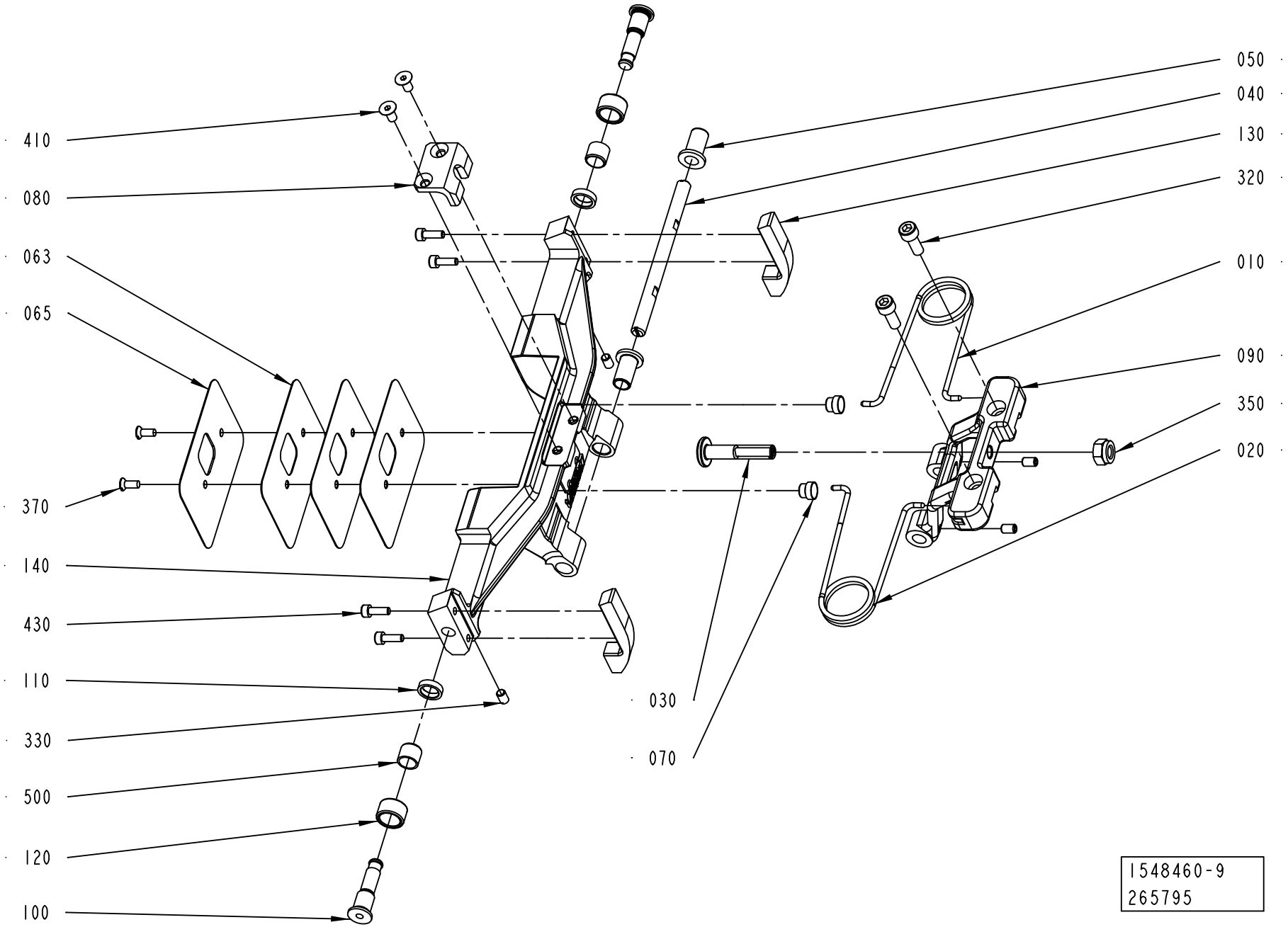
410
080
063
065
370
140
430
110
330
500
120
100
030
070
050
040
130
320
010
090
350
020
1548460-9
265795

Pos	Part No	UN	Qty	Description	Page No
TBA 0250B (Cont'd) (See drawing on page: 4-70)					
110	1512147-0000		2	WASHER	
120	1499355-0000		2	ROLLER	
130	2606218-0000		2	CAM	
140	2605192-0000		1	VOLUME FLAP	
320	312115-0368		2	SCREW ISO4762 M6X16 A4 80	
330	312318-0320		2	SCREW ISO4029 M5X5 A4	
340	312318-0323		2	SCREW ISO4029 M5X8 A4	
350	312812-0318		1	HEXAGON NUT, NY-LOCK M8 A480	
370	312155-0287		2	SCREW DIN 7991 MF6S M4X8 A4 70	
410	312155-0327		2	SCREW DIN 7991 MF6S M5X12 A4 70	
440	312115-0287		4	SCREW ISO4762 M4X8 A4 80	
500	321136-0140		2	BUSHING, 10X12X10 MM	
TBA 0250S (See drawing on page: 4-68)					
010	2771123-0000		1	SPRING	
020	2771122-0000		1	SPRING	
030	2768909-0000		1	STOP	
040	1499327-0000		1	SHAFT	
050	2530313-0000		2	BUSHING	
063	2662169-0000		3	VOLUME SHIM	
065	2662168-0000		1	VOLUME BULGE	
070	1144601-0000		2	GUIDE STUD	
080	2768908-0000		1	STOPPER	
090	2768910-0000		1	FLAP HOLDER	
100	1512146-0000		2	AXLE PIN	
110	1512147-0000		2	WASHER	
120	1499355-0000		2	ROLLER	
130	2662431-0000		2	CAM	
140	2661450-0000		1	VOLUME FLAP	
320	312115-0368		2	SCREW ISO4762 M6X16 A4 80	
330	312318-0320		2	SCREW ISO4029 M5X5 A4	
340	312318-0323		2	SCREW ISO4029 M5X8 A4	
350	312812-0318		1	HEXAGON NUT, NY-LOCK M8 A480	
370	312155-0287		2	SCREW DIN 7991 MF6S M4X8 A4 70	
410	312155-0327		2	SCREW DIN 7991 MF6S M5X12 A4 70	
430	312115-0293		4	SCREW ISO4762 M4X16 A4 80	
500	321136-0140		2	BUSHING, 10X12X10 MM	
TBA 0250SQ (See drawing on page: 4-70)					
010	2746136-0000		1	SPRING	
020	2746137-0000		1	SPRING	
030	2839822-0000		1	STOP	
040	2668315-0000		1	SHAFT	
050	2676933-0000		2	BUSHING	
063	2678839-0000		6	VOLUME SHIM	
065	2678840-0000		1	VOLUME BULGE	
070	1144601-0000		2	GUIDE STUD	
080	2839679-0000		1	STOPPER	
090	2839678-0000		1	FLAP HOLDER	
100	1512146-0000		2	AXLE PIN	
110	1512147-0000		2	WASHER	
120	1499355-0000		2	ROLLER	
130	2678714-0000		2	CAM	
140	2747142-0000		1	VOLUME FLAP	
320	312115-0368		2	SCREW ISO4762 M6X16 A4 80	
330	312318-0320		2	SCREW ISO4029 M5X5 A4	
340	312318-0320		2	SCREW ISO4029 M5X5 A4	
350	312812-0318		1	HEXAGON NUT, NY-LOCK M8 A480	
370	312155-0287		2	SCREW DIN 7991 MF6S M4X8 A4 70	
410	312155-0323		2	SCREW DIN 7991 MF6S M5X8 A4 70	
440	312115-0289		4	SCREW ISO4762 M4X10 A4 80	
500	321136-0140		2	BUSHING, 10X12X10 MM	
TBA 0330S (See drawing on page: 4-68)					
010	2771123-0000		1	SPRING	
020	2771122-0000		1	SPRING	
030	2768909-0000		1	STOP	
040	1499327-0000		1	SHAFT	
050	2530313-0000		2	BUSHING	
063	2654290-0000		3	VOLUME SHIM	
065	979931-0000		1	VOLUME BULGE	
070	1144601-0000		2	GUIDE STUD	
080	2768908-0000		1	STOPPER	
090	2768910-0000		1	FLAP HOLDER	
100	1512146-0000		2	AXLE PIN	
110	1512147-0000		2	WASHER	
120	1499355-0000		2	ROLLER	
130	2629236-0000		2	CAM	
140	2604496-0000		1	VOLUME FLAP	
320	312115-0368		2	SCREW ISO4762 M6X16 A4 80	
330	312318-0320		2	SCREW ISO4029 M5X5 A4	
340	312318-0323		2	SCREW ISO4029 M5X8 A4	
350	312812-0318		1	HEXAGON NUT, NY-LOCK M8 A480	
370	312155-0287		2	SCREW DIN 7991 MF6S M4X8 A4 70	
410	312155-0327		2	SCREW DIN 7991 MF6S M5X12 A4 70	
430	312115-0293		4	SCREW ISO4762 M4X16 A4 80	

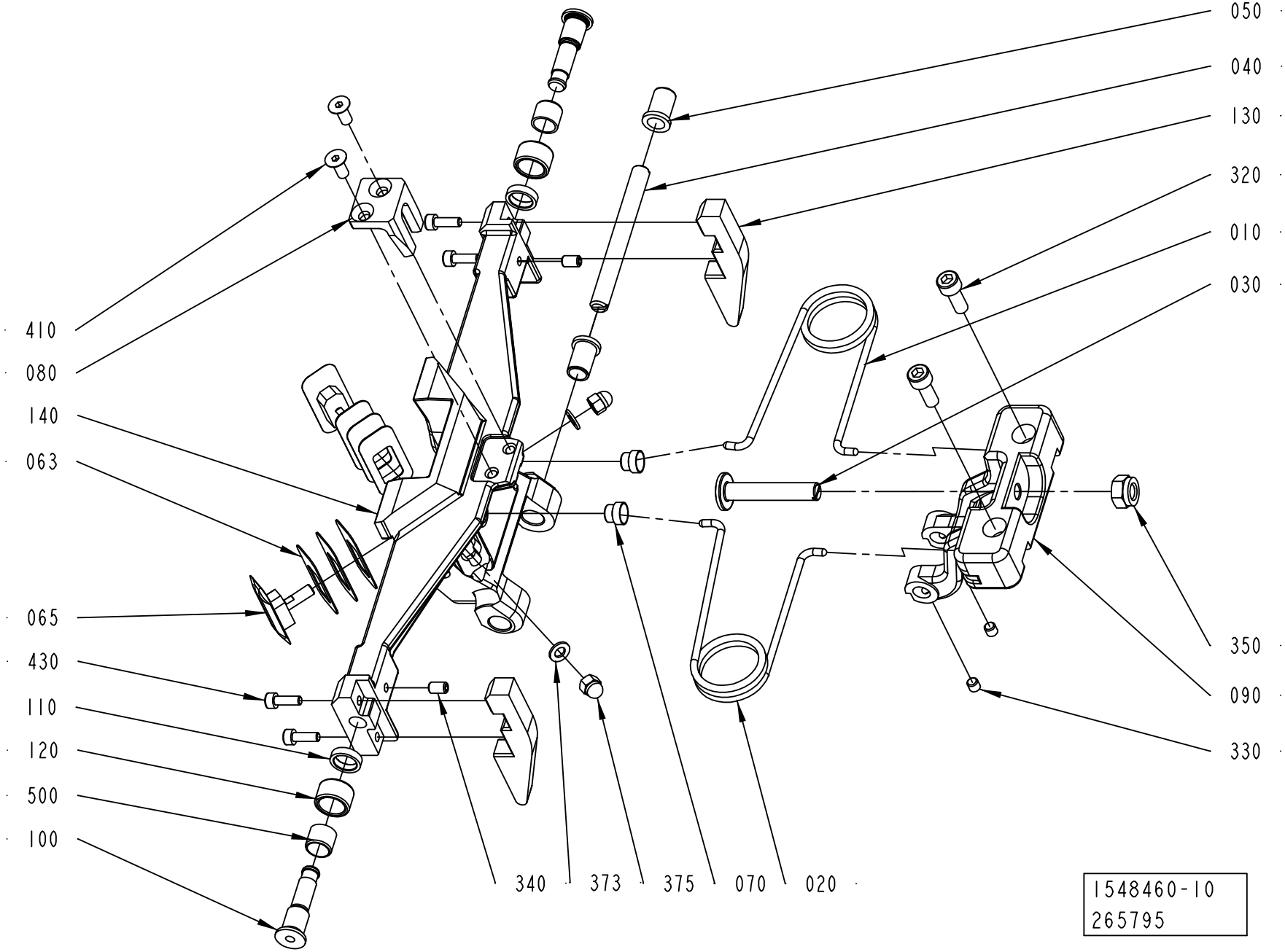
050
040
130
320
010
030
410
080
140
063
065
430
110
120
500
100
350
090
330
340
373
375
070
020
1548460-10
265795

Pos	Part No	UN	Qty	Description	Page No
TBA 0330S (Cont'd) (See drawing on page: 4-68)					
500	321136-0140		2	BUSHING, 10X12X10 MM	
TBA 0500B (See drawing on page: 4-64)					
010	1350263-0000		1	SPRING RIGHT	
020	1350264-0000		1	SPRING LEFT	
030	2725392-0000		1	STOP	
040	1487946-0000		1	SHAFT	
050	1487948-0000		2	BUSHING	
063	2844777-0000		3	VOLUME SHIM	
065	2844776-0000		1	VOLUME BULGE	
070	1144601-0000		2	GUIDE STUD	
080	2838629-0000		1	STOPPER	
090	2838479-0000		1	FLAP HOLDER	
100	1512146-0000		2	AXLE PIN	
110	1512147-0000		2	WASHER	
120	1499355-0000		2	ROLLER	
130	1499350-0000		2	CAM	
140	2839175-0000		1	VOLUME FLAP	
320	312115-0368		2	SCREW ISO4762 M6X16 A4 80	
330	312318-0323		2	SCREW ISO4029 M5X8 A4	
340	312318-0323		2	SCREW ISO4029 M5X8 A4	
350	312812-0318		1	HEXAGON NUT, NY-LOCK M8 A480	
370	312145-0289		2	SCREW ISO 2009 MFS M4X10 A4	
410	312155-0325		2	SCREW DIN 7991 MF6S M5X10 A4 70	
430	312115-0291		4	SCREW ISO4762 M4X12 A4 80	
500	321136-0140		2	BUSHING, 10X12X10 MM	
TBA 1000B (See drawing on page: 4-68)					
010	1348483-0000		1	SPRING RIGHT	
020	1348484-0000		1	SPRING LEFT	
030	2725392-0000		1	STOP	
040	1487946-0000		1	SHAFT	
050	1487948-0000		2	BUSHING	
063	1511337-0000		3	VOLUME SHIM	
065	26075-0000		1	VOLUME BULGE	
070	1144601-0000		2	GUIDE STUD	
080	2725393-0000		1	STOPPER	
090	2725394-0000		1	FLAP HOLDER	
100	1512146-0000		2	AXLE PIN	
110	1512147-0000		2	WASHER	
120	1499355-0000		2	ROLLER	
130	1499356-0000		2	CAM	
140	1499358-0000		1	VOLUME FLAP	
320	312115-0368		2	SCREW ISO4762 M6X16 A4 80	
330	312318-0323		2	SCREW ISO4029 M5X8 A4	
340	312318-0323		2	SCREW ISO4029 M5X8 A4	
350	312812-0318		1	HEXAGON NUT, NY-LOCK M8 A480	
370	312141-0222		2	SCREW ISO 2009 MFS M3X8 4.8 EL.PL	
410	312115-0331		1	SCREW ISO4762 M5X20 A4 80	
430	312115-0287		4	SCREW ISO4762 M4X8 A4 80	
500	321136-0140		2	BUSHING, 10X12X10 MM	
TPA 0200SQ (See drawing on page: 4-66)					
010	2771123-0000		1	SPRING	
020	2771122-0000		1	SPRING	
030	2843006-0000		1	STOP	
040	2674327-0000		1	SHAFT	
050	2530313-0000		2	BUSHING	
063	2674328-0000		6	VOLUME SHIM	
065	2674329-0000		2	VOLUME BULGE	
070	1144601-0000		2	GUIDE STUD	
080	2839410-0000		1	STOPPER	
090	2839411-0000		1	FLAP HOLDER	
100	1512146-0000		2	AXLE PIN	
110	1512147-0000		2	WASHER	
120	1499355-0000		2	ROLLER	
130	2674326-0000		2	CAM	
140	2674331-0000		1	VOLUME FLAP	
320	312115-0368		2	SCREW ISO4762 M6X16 A4 80	
330	312318-0320		2	SCREW ISO4029 M5X5 A4	
340	312318-0323		2	SCREW ISO4029 M5X8 A4	
350	312812-0318		1	HEXAGON NUT, NY-LOCK M8 A480	
373	315105-0146		2	WASHER BRB 5,3X10 RFR	
375	312705-0314		2	NUT HEX. DOMED CAP MHM-6 M5 A280	
410	312155-0327		2	SCREW DIN 7991 MF6S M5X12 A4 70	
430	312115-0291		4	SCREW ISO4762 M4X12 A4 80	
500	321136-0140		2	BUSHING, 10X12X10 MM	
TPA 0250SQ (See drawing on page: 4-66)					
010	2771123-0000		1	SPRING	
020	2771122-0000		1	SPRING	
030	2843006-0000		1	STOP	
040	2674327-0000		1	SHAFT	
050	2530313-0000		2	BUSHING	
063	1549594-0000		6	VOLUME SHIM	
065	2581994-0000		2	VOLUME BULGE	
070	1144601-0000		2	GUIDE STUD	

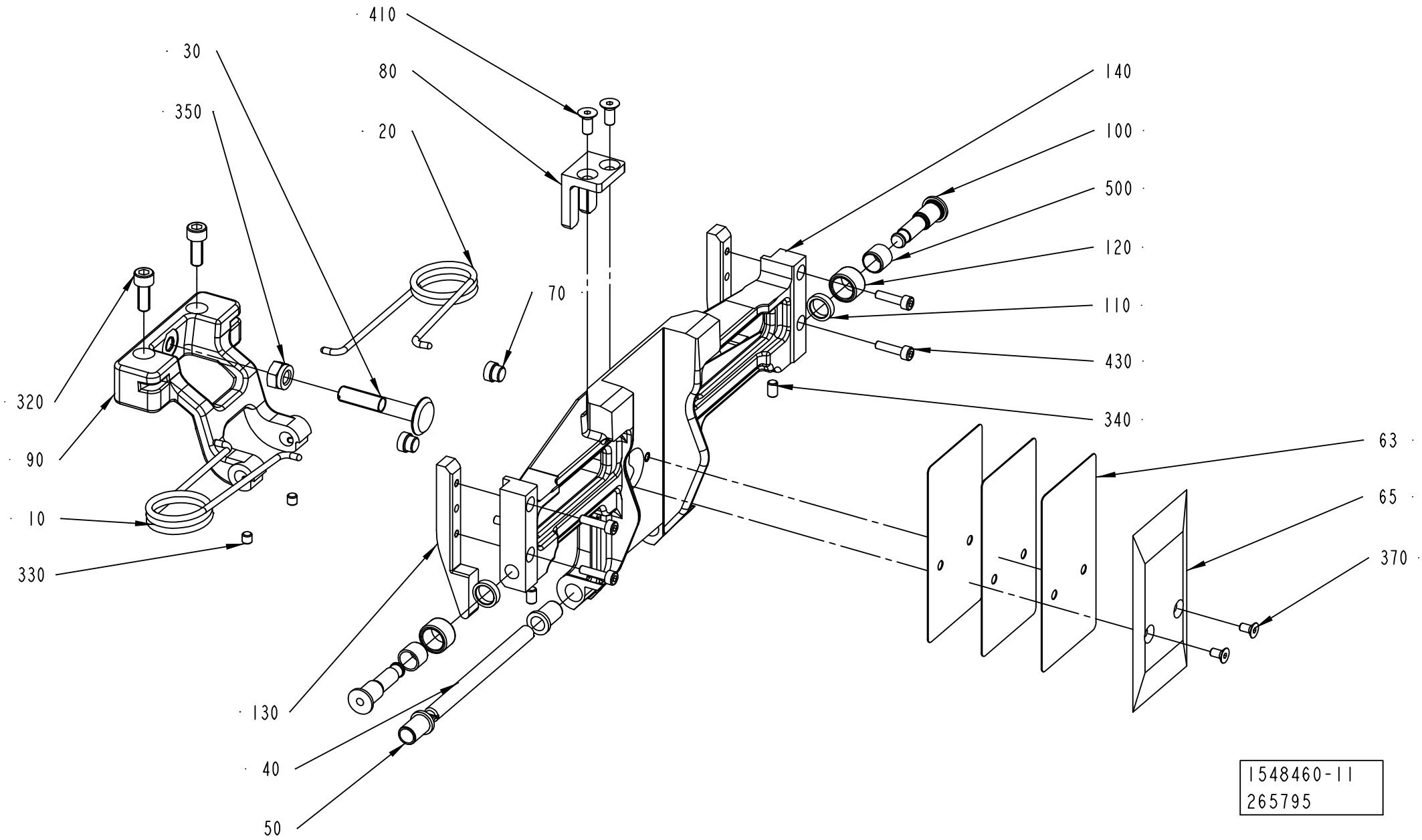
410
30
80
350
20
140
100
500
120
70
110
430
320
340
90
63
10
65
330
370
130
40
50
1548460-11
265795

ECM: 271553 - 20061101
Group number: 1548460-0200
Assembly Drawing: 1548460-11_1_AA

This list covers pages from 4-62 to 4-71

Pos	Part No	UN	Qty	Description	Page No
TPA 0250SQ (Cont'd) (See drawing on page: 4-66)					
090	2839411-0000		1	FLAP HOLDER	
100	1512146-0000		2	AXLE PIN	
110	1512147-0000		2	WASHER	
120	1499355-0000		2	ROLLER	
130	2674325-0000		2	CAM	
140	2674333-0000		1	VOLUME FLAP	
320	312115-0368		2	SCREW ISO4762 M6X16 A4 80	
330	312318-0320		2	SCREW ISO4029 M5X5 A4	
340	312318-0323		2	SCREW ISO4029 M5X8 A4	
350	312812-0318		1	HEXAGON NUT, NY-LOCK M8 A480	
373	315105-0146		2	WASHER BRB 5,3X10 RFR	
375	312705-0314		2	NUT HEX. DOMED CAP MHM-6 M5 A280	
410	312155-0327		2	SCREW DIN 7991 MF6S M5X12 A4 70	
430	312115-0291		4	SCREW ISO4762 M4X12 A4 80	
500	321136-0140		2	BUSHING, 10X12X10 MM	
TPA 1000SQ, TPA 0750SQ (See drawing on page: 4-62)					
010	2663360-0000		1	SPRING	
020	2663361-0000		1	SPRING	
030	2660400-0000		1	STOP	
035	2660401-0000		1	CATCH	
040	2658258-0000		1	SHAFT	
050	2530313-0000		2	BUSHING	
060	2660393-0000		6	VOLUME SHIM	
075	2660392-0000		2	VOLUME BULGE	
090	2658256-0000		1	FLAP HOLDER	
100	2759331-0000		2	SHAFT	
110	19972-0000		2	WASHER	
120	434321-0000		2	CURVE ROLLER	
140	2660380-0000		1	VOLUME FLAP	
150	2705812-0100		1	VOLUME FLAP	**4-73**
230	2660391-0000		1	SCREW	
240	90134-0063		2	BUSHING/NUT M8X1, D=2,5 MM	
250	90028-0020		2	CONE TUBE 2,5MM	
260	1037734-0000		2	WEDGE	
270	2652896-0000		2	SHAFT	
280	2662167-0000		2	BUSHING	
290	2663375-0000		2	WASHER	
300	2660397-0000		1	WEDGE	
310	2663376-0000		2	WASHER	
320	2663372-0000		2	SCREW	
330	311103-0232		1	PARALLEL PIN ISO 2338 3M6X8 A1	
340	312318-0323		2	SCREW ISO4029 M5X8 A4	
350	312625-0318		1	HEXAGON THIN NUT, EN 24035 ML6M M8 A4	
370	312155-0287		4	SCREW DIN 7991 MF6S M4X8 A4 70	
510	312105-0367		2	SCREW M6S ISO 4017 M6X14 A480	
515	312318-0285		2	SCREW ISO4029 M4X6 A4	
520	312115-0366		2	SCREW ISO4762 M6X12 A4 80	
530	2566332-0000		1	SHAFT	
535	2566333-0000		2	HOLDER (STAFFA)	
540	315105-0146		3	WASHER BRB 5,3X10 RFR	
550	312105-0328		1	SCREW M6S ISO 4017 M5X14 A480	
555	312105-0331		2	SCREW M6S ISO 4017 M5X20 A480	
570	90005-0082		2	WASHER PLAIN ROUND 4,3(M4)/12,H=1	
580	312105-0287		2	SCREW M6S ISO 4017 M4X8 A470	
585	312318-0325		2	SCREW ISO4029 M5X10 A4	
600	312145-0329		2	SCREW ISO 2009 MFS M5X16 A4	
610	312318-0323		2	SCREW ISO4029 M5X8 A4	

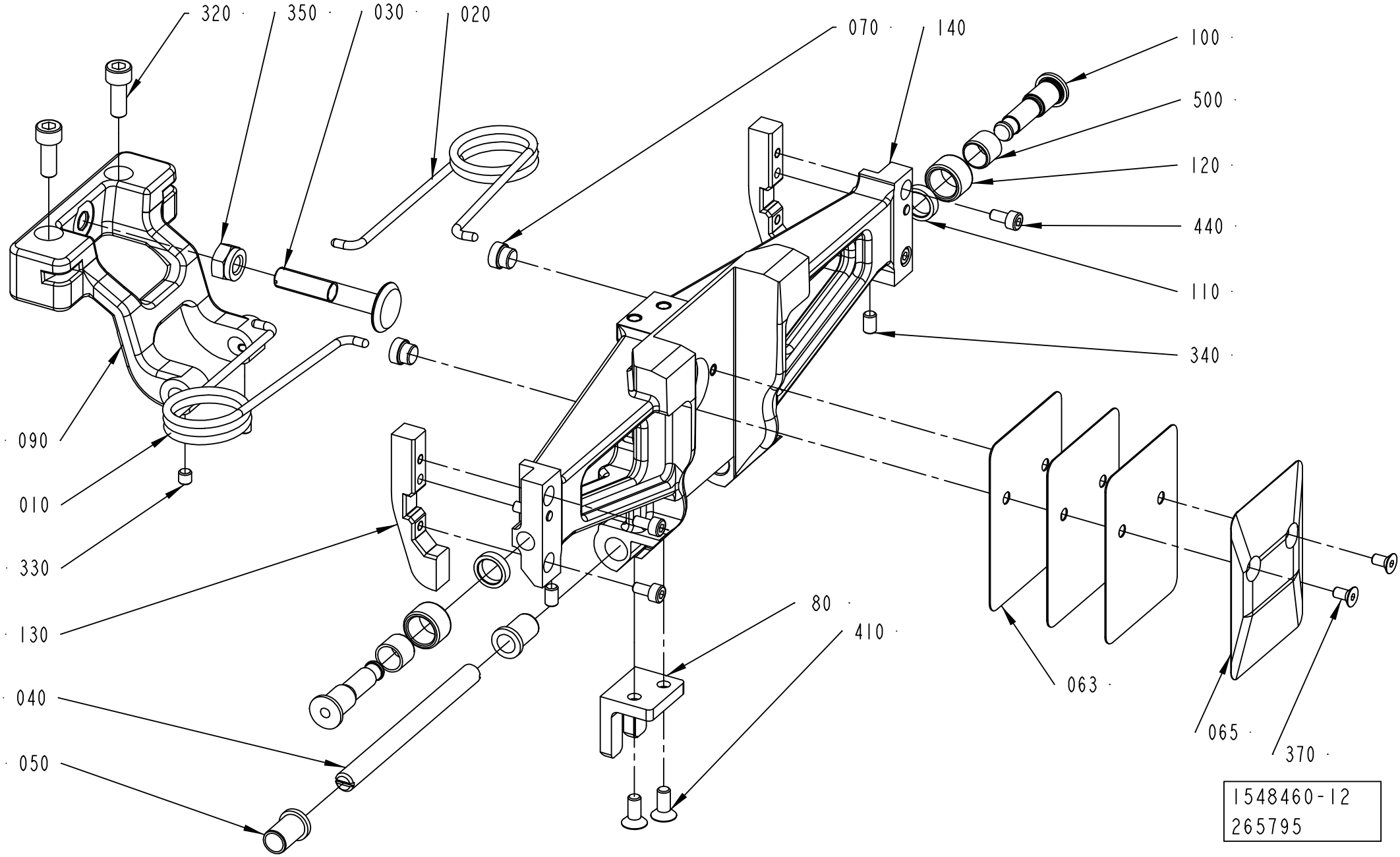
320
350
030
020
070
140
100
500
120
440
110
340
090
010
330
130
040
050
80
410
063
065
370
1548460-12
265795

ECM: 271553 - 20061101
Group number: 1548460-0200
Assembly Drawing: 1548460-12_1_AA

This list covers pages from 4-62 to 4-71

Pos	Part No	UN	Qty	Description	Page No
SEE PREVIOUS LISTS PAGES: 4-63, 4-65, 4-67, 4-69.					

Pos	Part No	UN	Qty	Description	Page No

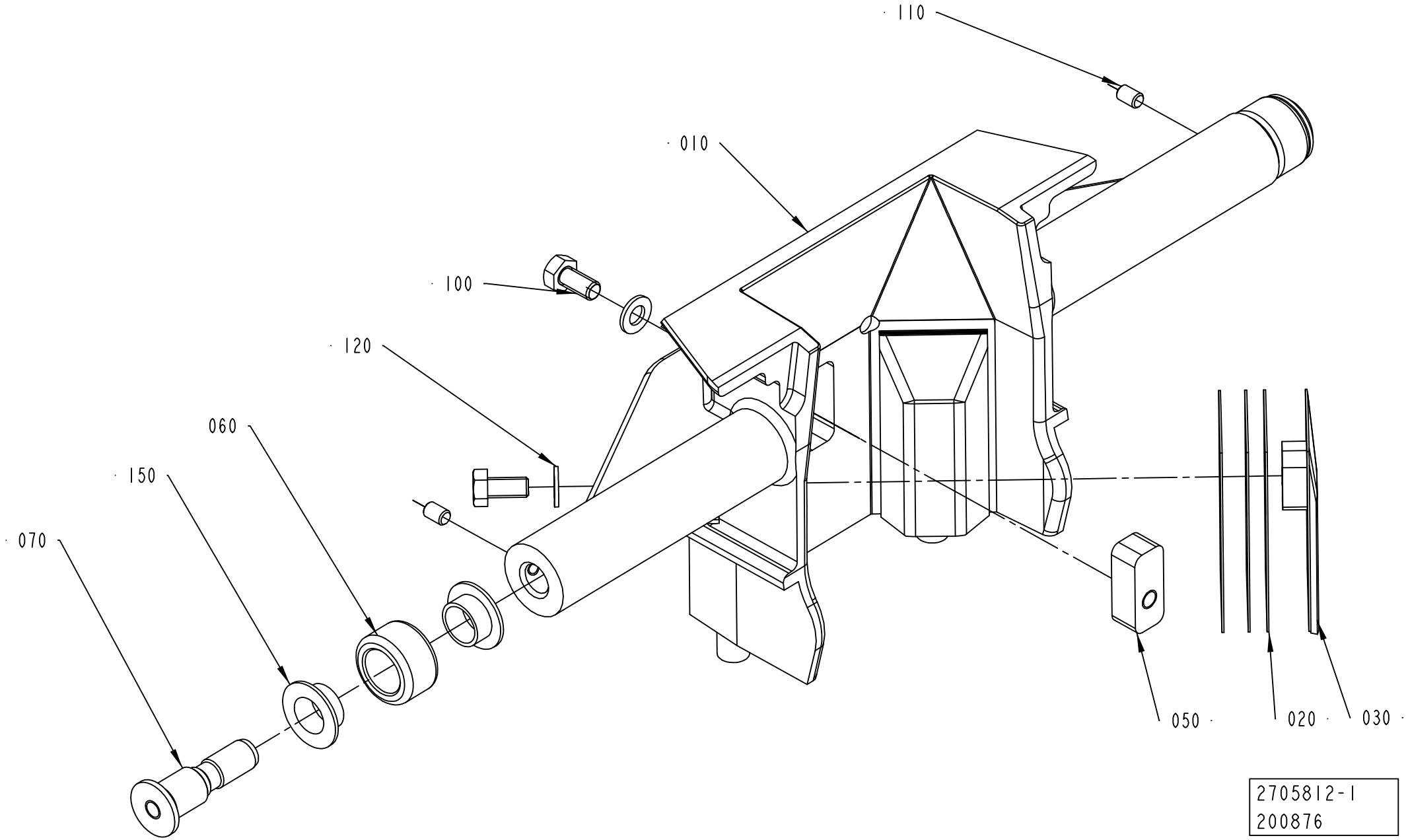
110
010
100
120
060
150
070
050
020
030
2705812-1
200876

ECM: 202682 - 20050402
Group number: 2705812-0100
Assembly Drawing: 2705812-1_1_AA

Pos	Part No	UN	Qty	Description	Page No
TPA 0750SQ					
010	2660382-0000		1	VOLUME FLAP	
TPA 1000SQ					
010	2660381-0000		1	VOLUME FLAP	
020	2660390-0000		6	VOLUME SHIM	
030	2660395-0000		2	VOLUME BULGE	
050	2660398-0000		1	WEDGE	
060	2660399-0000		2	ROLLER	
070	2594709-0000		2	AXLE PIN	
100	312105-0325		3	SCREW M6S ISO 4017 M5X10 A480	
110	312318-0285		2	SCREW ISO4029 M4X6 A4	
120	315105-0146		3	WASHER BRB 5,3X10 RFR	
150	90240-0289		4	FLANGE BUSHING, 10X12X6 MM	

Pos	Part No	UN	Qty	Description	Page No

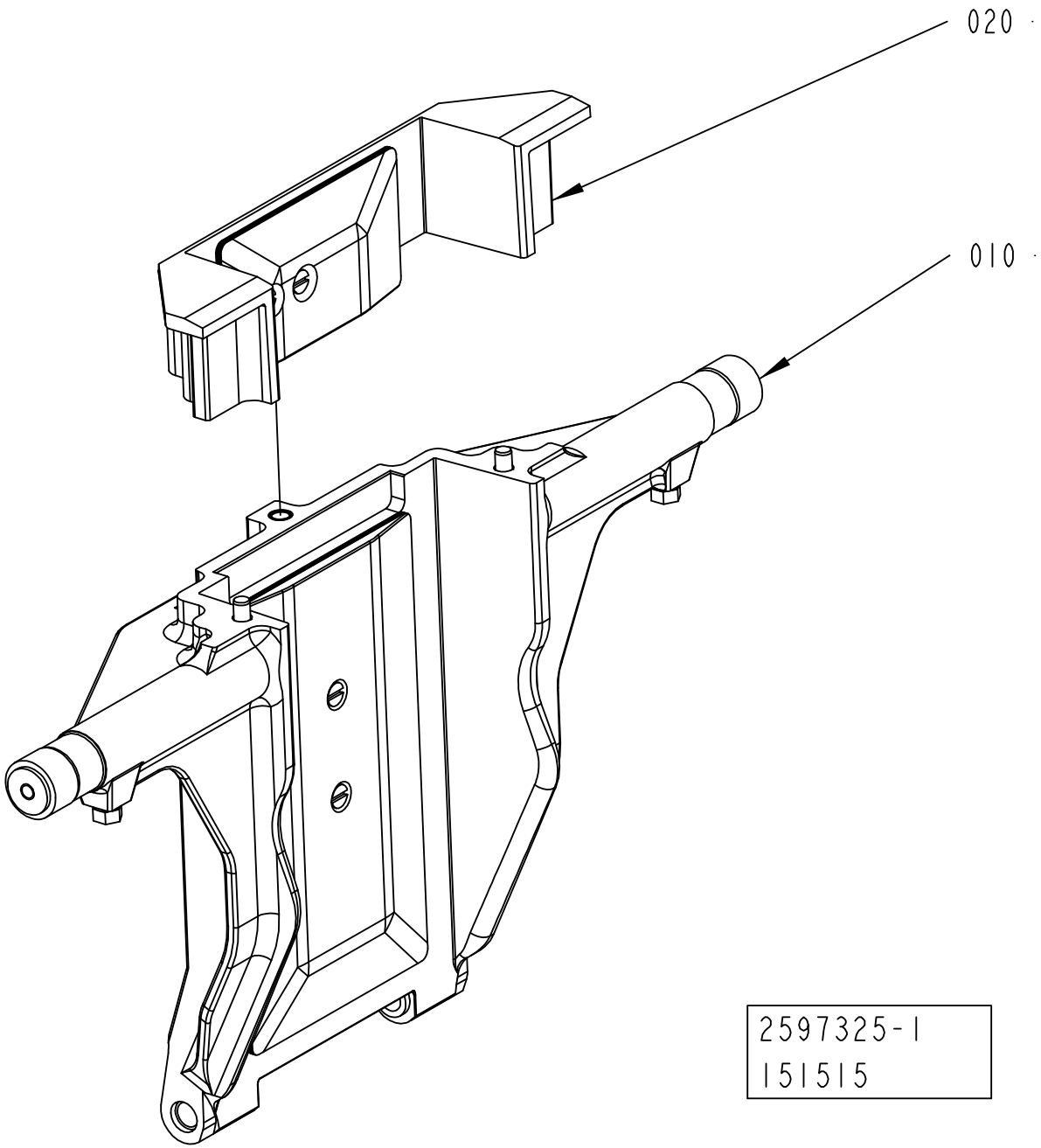
020
010
2597325-1
151515

ECM: 175826 - 20040923
Group number: 2597325-0100
Assembly Drawing: 2597325-1_1_AA

Pos	Part No	UN	Qty	Description	Page No
-					
010	2696182-0100		1	VOLUME FLAP	**4-77**
020	2695955-0100		1	VOLUME FLAP	**4-79**

Pos	Part No	UN	Qty	Description	Page No

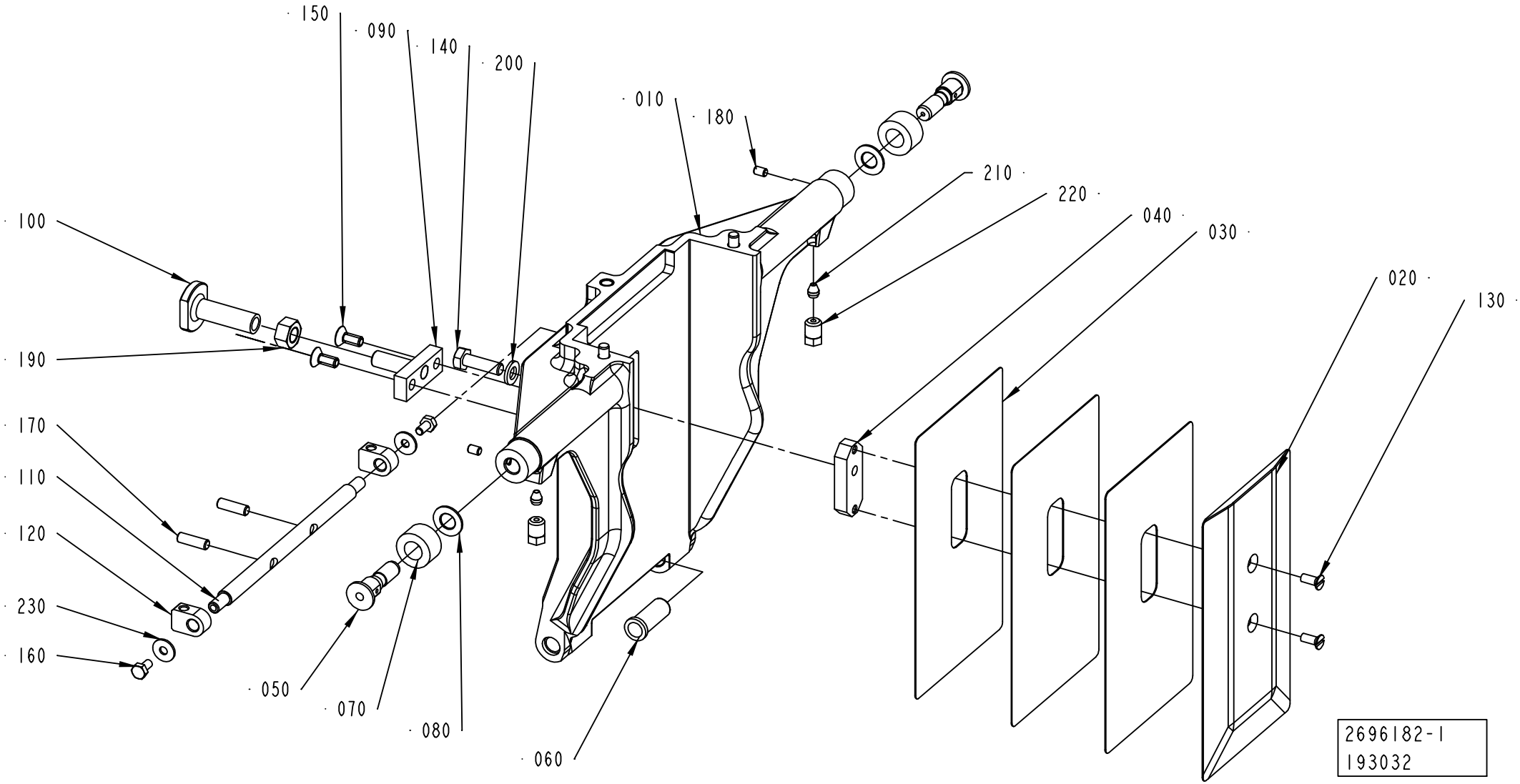
150
090
140
200
010
180
210
220
040
030
020
130
100
190
170
110
120
230
160
050
070
080
060
2696182-1
193032

ECM: 210190 - 20060509
Group number: 2696182-0100
Assembly Drawing: 2696182-1_1_AB

Pos	Part No	UN	Qty	Description	Page No
-					
010	2588304-0000		1	VOLUME FLAP	
020	2594888-0000		1	VOLUME BULGE	
030	2594890-0000		3	VOLUME SHIM	
040	2594893-0000		1	WEDGE	
050	434320-0000		2	AXLE PIN	
060	1255916-0000		2	BUSHING	
070	434321-0000		2	CURVE ROLLER	
080	19972-0000		2	WASHER	
090	2660401-0000		1	CATCH	
100	2660400-0000		1	STOP	
110	2566332-0000		1	SHAFT	
120	2566333-0000		2	HOLDER (STAFFA)	
130	312145-0289		2	SCREW ISO 2009 MFS M4X10 A4	
140	312105-0370		1	SCREW M6S ISO 4017 M6X20 A480	
150	312155-0327		2	SCREW DIN 7991 MF6S M5X12 A4 70	
160	312105-0287		2	SCREW M6S ISO 4017 M4X8 A470	
170	312318-0329		2	SCREW ISO4029 M5X16 A4	
180	312318-0285		2	SCREW ISO4029 M4X6 A4	
190	312607-0318		1	HEXAGON NUT, EN 24032 M6M M8 A480	
200	315105-0153		1	WASHER BRB 6,4X12 RFR	
210	90028-0020		2	CONE TUBE 2,5MM	
220	90134-0063		2	BUSHING/NUT M8X1, D=2,5 MM	
230	90005-0082		2	WASHER PLAIN ROUND 4,3(M4)/12,H=1	

Pos	Part No	UN	Qty	Description	Page No

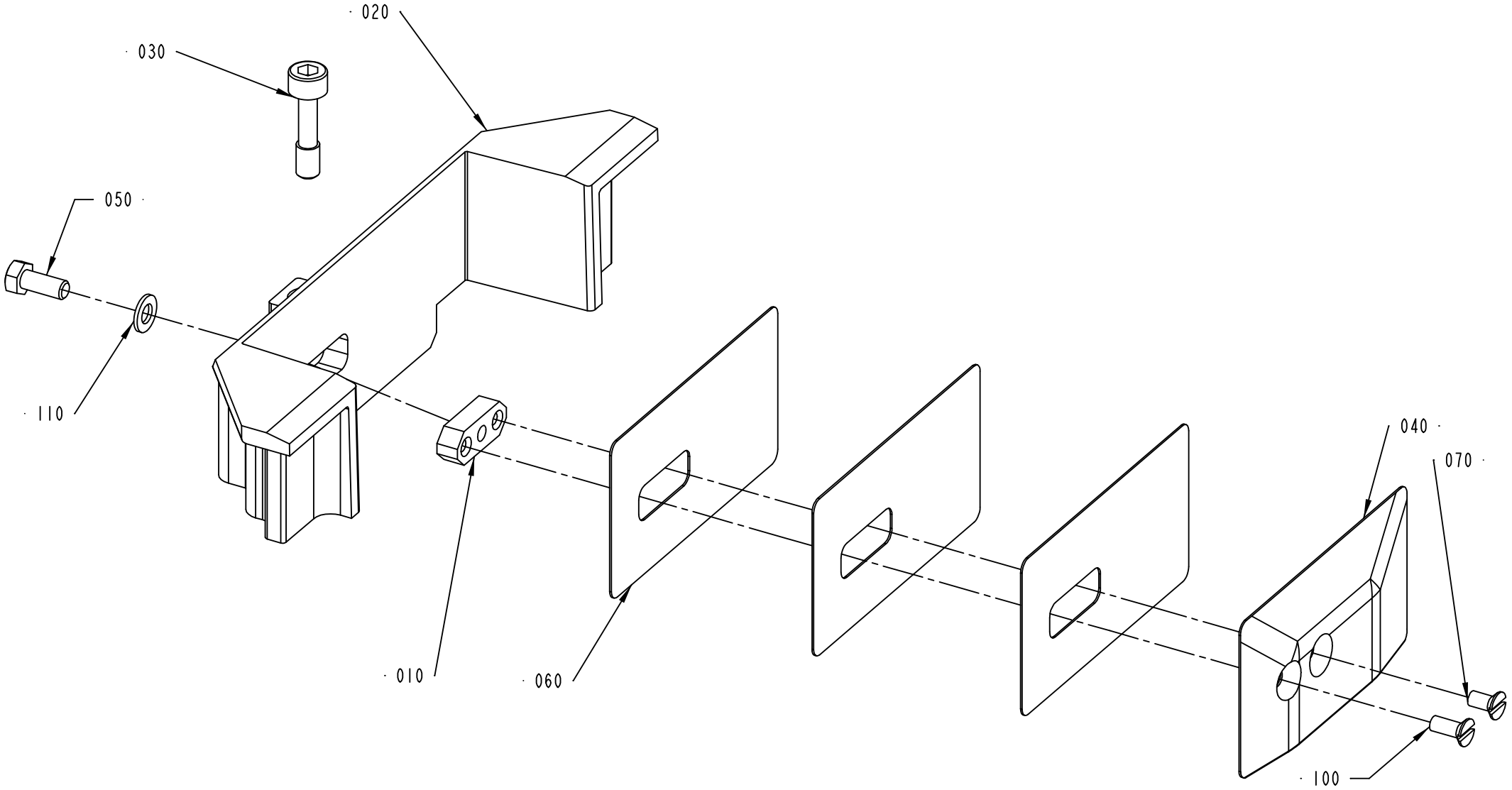
020
030
050
110
010
060
040
070
100
2695955-1
151514

ECM: 210192 - 20060509
Group number: 2695955-0100
Assembly Drawing: 2695955-1_1_AA

Pos	Part No	UN	Qty	Description	Page No
TBA 1890S					
020	2588306-0000		1	VOLUME FLAP	
040	2594889-0000		1	VOLUME BULGE	
060	2594891-0000		3	VOLUME SHIM	
TBA 2000S					
020	2588307-0000		1	VOLUME FLAP	
040	2672746-0000		1	VOLUME BULGE	
060	2672745-0000		3	VOLUME SHIM	
Common Parts					
010	1037734-0000		1	WEDGE	
030	2594896-0000		2	SCREW	
050	312105-0327		1	SCREW M6S ISO 4017 M5X12 A480	
070	312145-0287		1	SCREW ISO 2009 MFS M4X8 A4	
100	312145-0289		1	SCREW ISO 2009 MFS M4X10 A4	
110	315105-0146		1	WASHER BRB 5,3X10 RFR	

Pos	Part No	UN	Qty	Description	Page No

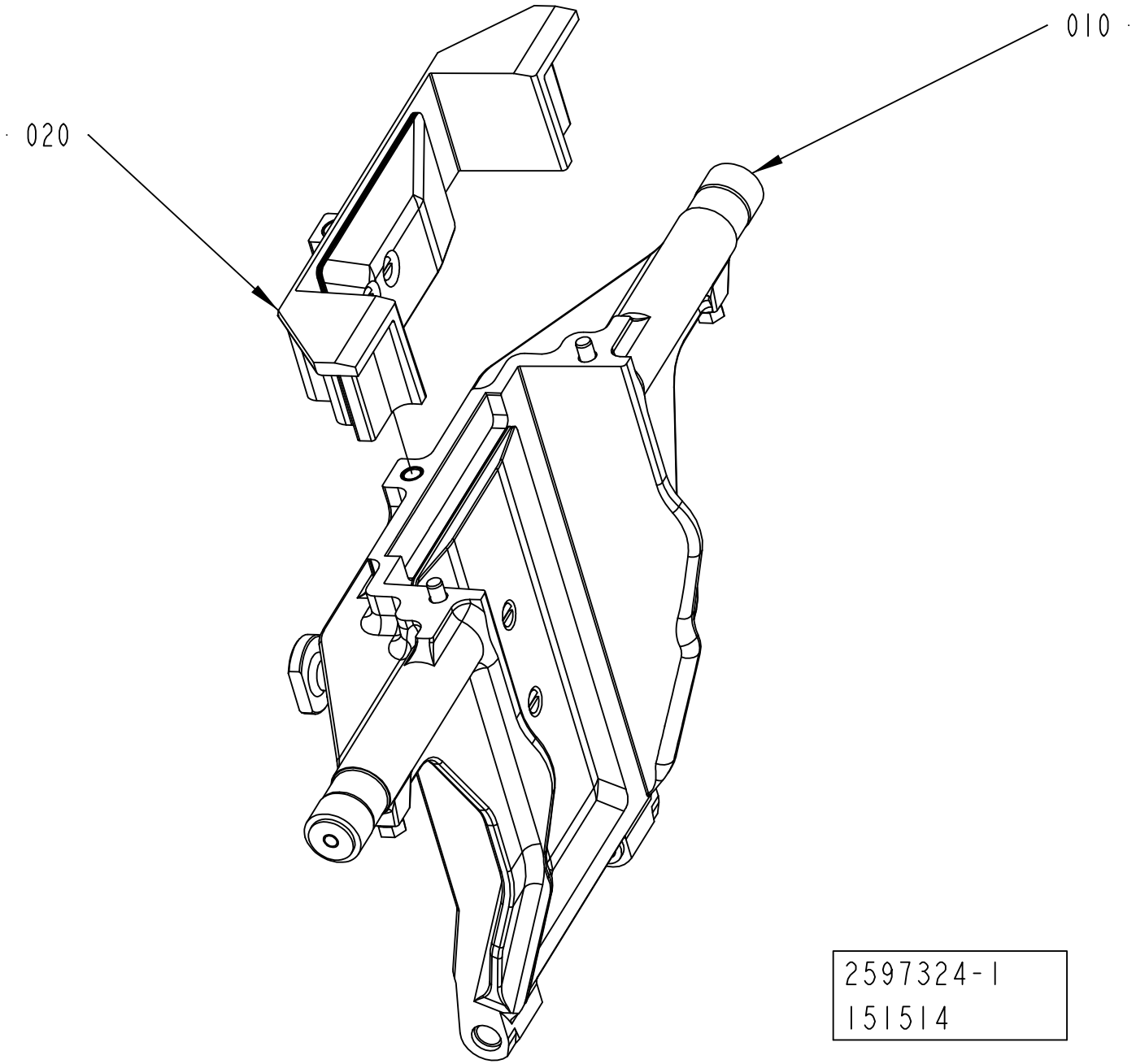
010
020
2597324-1
151514

ECM: 175825 - 20040923
Group number: 2597324-0100
Assembly Drawing: 2597324-1_1_AA

Pos	Part No	UN	Qty	Description	Page No
-					
010	2696156-0100		1	VOLUME FLAP	**4-83**
020	2695955-0100		1	VOLUME FLAP	**4-79**

Pos	Part No	UN	Qty	Description	Page No

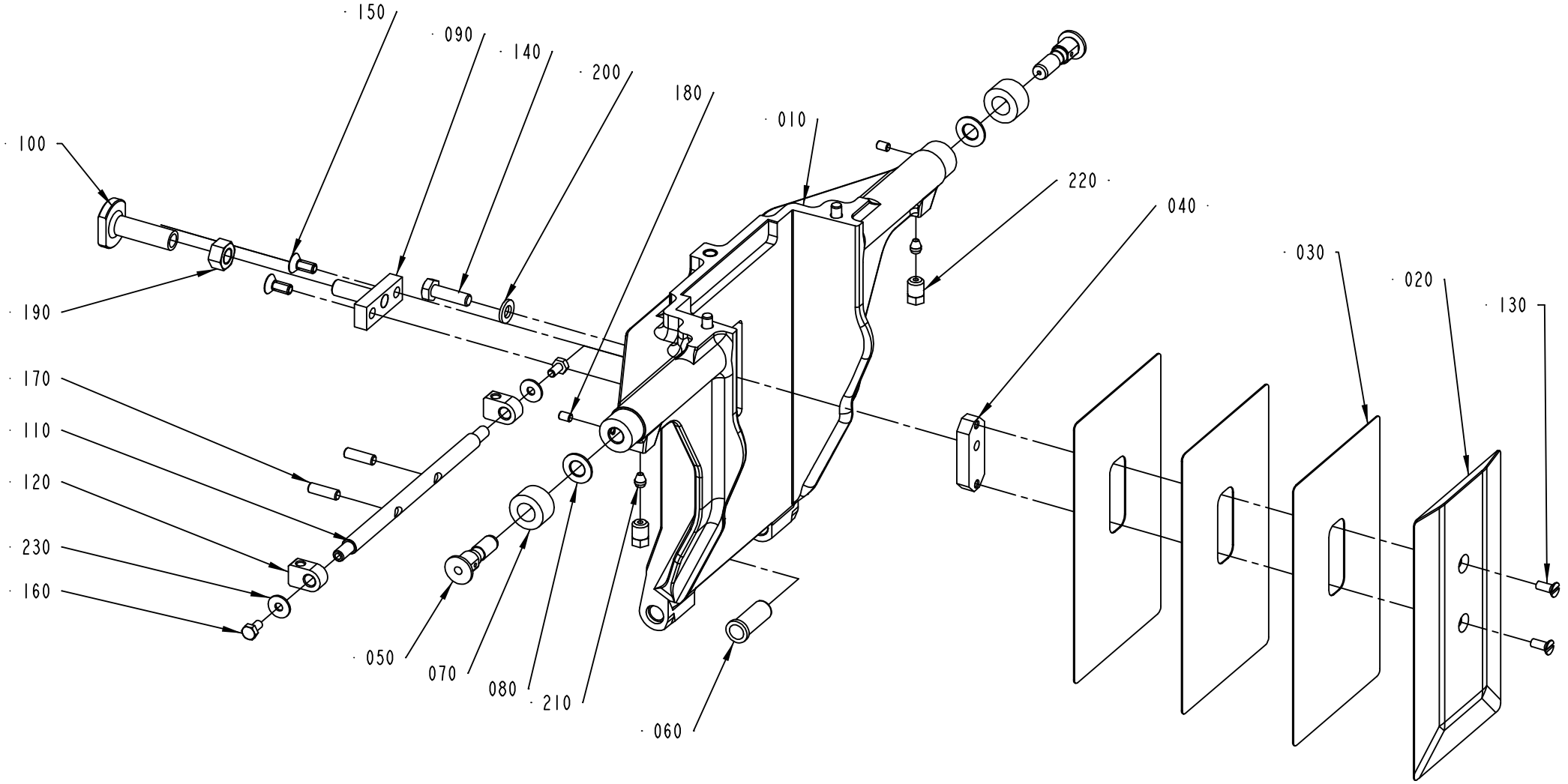

2696156-1
193032

ECM: 210189 - 20060509
Group number: 2696156-0100
Assembly Drawing: 2696156-1_1_AB

Pos	Part No	UN	Qty	Description	Page No
-					
010	2588305-0000		1	VOLUME FLAP	
020	2594888-0000		1	VOLUME BULGE	
030	2594890-0000		3	VOLUME SHIM	
040	2594893-0000		1	WEDGE	
050	434320-0000		2	AXLE PIN	
060	1255916-0000		2	BUSHING	
070	434321-0000		2	CURVE ROLLER	
080	19972-0000		2	WASHER	
090	2660401-0000		1	CATCH	
100	2660400-0000		1	STOP	
110	2566332-0000		1	SHAFT	
120	2566333-0000		2	HOLDER (STAFFA)	
130	312145-0289		2	SCREW ISO 2009 MFS M4X10 A4	
140	312105-0370		1	SCREW M6S ISO 4017 M6X20 A480	
150	312155-0327		2	SCREW DIN 7991 MF6S M5X12 A4 70	
160	312105-0287		2	SCREW M6S ISO 4017 M4X8 A470	
170	312318-0329		2	SCREW ISO4029 M5X16 A4	
180	312318-0285		2	SCREW ISO4029 M4X6 A4	
190	312607-0318		1	HEXAGON NUT, EN 24032 M6M M8 A480	
200	315105-0153		1	WASHER BRB 6,4X12 RFR	
210	90028-0020		2	CONE TUBE 2,5MM	
220	90134-0063		2	BUSHING/NUT M8X1, D=2,5 MM	
230	90005-0082		2	WASHER PLAIN ROUND 4,3(M4)/12,H=1	

Pos	Part No	UN	Qty	Description	Page No

CARRIER PRESSURE LEFT

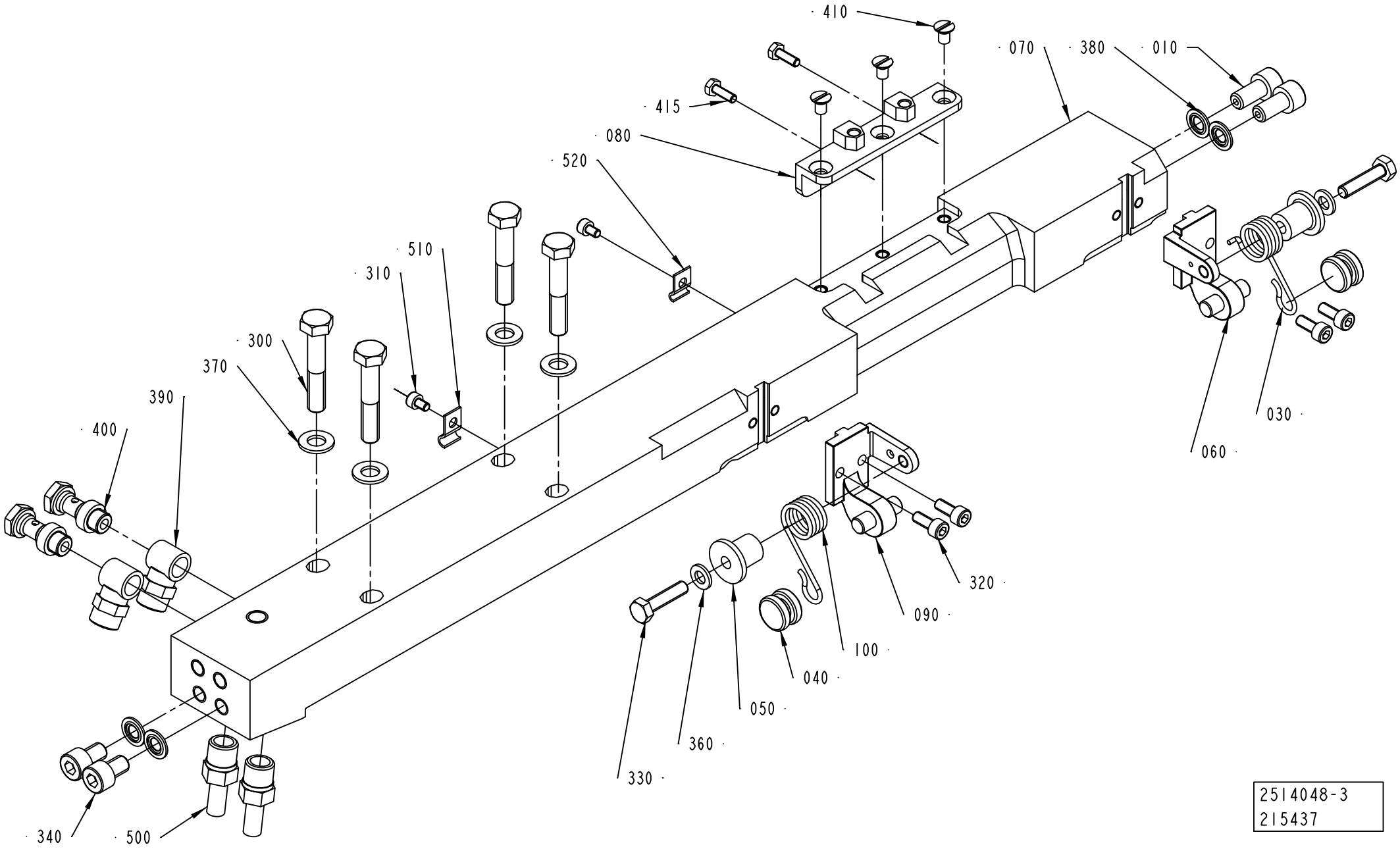

2514048-3
215437

ECM: 271965 - 20060831
Group number: 2514048-0200
Assembly Drawing: 2514048-3_1_AB

This list covers pages from 4-84 to 4-89

Pos	Part No	UN	Qty	Description	Page No
A3/FLEX NOQC (See drawing on page: 4-86)					
070	2514049-0000		1	CARRIER	
310	312115-0285		2	SCREW ISO4762 M4X6 A4 80	
510	90165-0056		1	PIPE CLIP FOR TUBE D=4 MM	
520	90165-0058		1	PIPE CLIP FOR TUBE D=2,5 MM	
A3/FLEX TBA 0250S QC, A3/FLEX TBA 0200M QC (See drawing on page: 4-88)					
070	2514045-0000		1	CARRIER	
080	2641225-0000		1	INSERT	
410	312155-0323		3	SCREW DIN 7991 MF6S M5X8 A4 70	
A3/FLEX TBA 0500B QC, A3/FLEX TBA 1000B QC, A3/FLEX TBA 0200B QC, A3/FLEX TBA 0250B QC, A3/FLEX TBA 0330S QC, A3/FLEX TPA 0200SQ QC, A3/FLEX TPA 0250SQ QC, A3/FLEX TBA 0250SQ QC, A3/FLEX TBA 0200SQ QC (See drawing on page: 4-88)					
070	2514045-0000		1	CARRIER	
080	1549312-0000		1	INSERT	
410	312155-0323		3	SCREW DIN 7991 MF6S M5X8 A4 70	
A3/FLEX TBA 1890S QC, A3/FLEX TBA 2000S QC (See drawing on page: 4-86)					
070	2566340-0000		1	CARRIER	
310	312115-0285		2	SCREW ISO4762 M4X6 A4 80	
510	90165-0056		1	PIPE CLIP FOR TUBE D=4 MM	
520	90165-0058		1	PIPE CLIP FOR TUBE D=2,5 MM	
A3/FLEX TPA 0750SQ QC, A3/FLEX TPA 1000SQ QC (See drawing on page: 4-84)					
070	2647115-0000		1	CARRIER	
080	2647114-0000		1	INSERT	
310	312115-0285		2	SCREW ISO4762 M4X6 A4 80	
410	312145-0323		3	SCREW ISO 2009 MFS M5X8 A4	
415	312105-0291		2	SCREW M6S ISO 4017 M4X12 A470	
510	90165-0056		1	PIPE CLIP FOR TUBE D=4 MM	
520	90165-0058		1	PIPE CLIP FOR TUBE D=2,5 MM	
Common Parts					
010	1036343-0000		2	SCREW	
030	2547589-0000		1	SPRING	
040	2530296-0000		2	ROLLER	
050	2532531-0000		2	ROLLER	
060	2530293-0000		1	BRACKET	
090	2530292-0000		1	BRACKET	
100	2547588-0000		1	SPRING	
300	312105-0460		4	SCREW M6S ISO 4014 M8X45 A480	
320	312115-0327		4	SCREW ISO4762 M5X12 A4 80	
330	312105-0372		2	SCREW M6S ISO 4017 M6X25 A480	
340	312115-0447		2	SCREW ISO4762 M8X12 A4 80	
360	315105-0153		2	WASHER BRB 6,4X12 RFR	
370	315105-0165		4	WASHER BRB 8,4X16 RFR	
380	315211-0104		4	BONDED SEAL SS/NBR90 M8	
390	342980-0121		2	BANJO-CONNECTION,RING 8/6-G1/8	
400	342980-0303		2	BANJO-HOLLOW BOLT COUPL,EXT.THR.01-G1/8	
500	90030-0065		2	PIPE CONNECTION	

Machine Type | Group Description | Used-In | Group Number | Page No

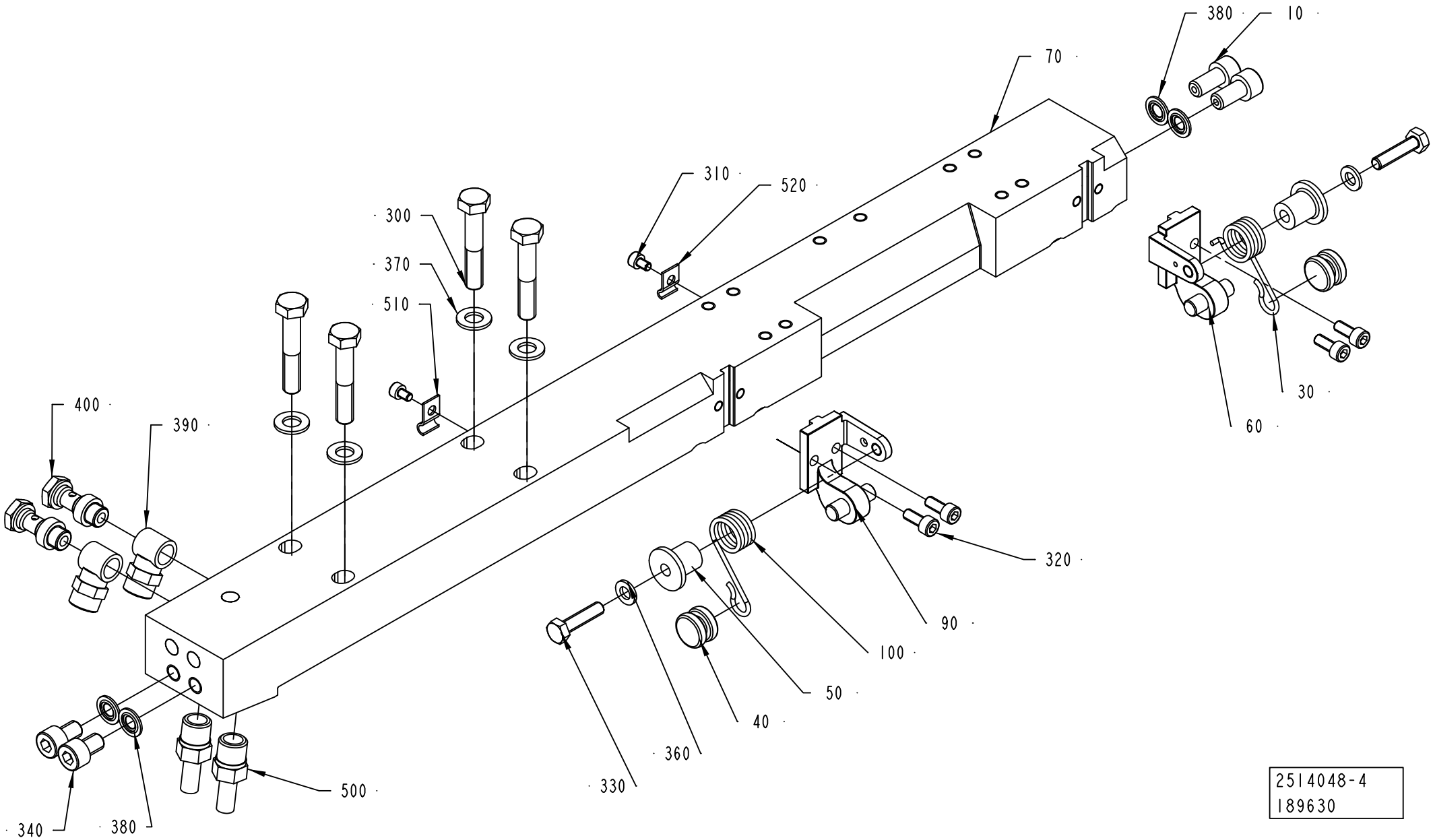
380
10
70
310
520
300
370
510
400
390
30
60
320
90
100
50
40
360
330
500
340
380
2514048-4
189630

ECM: 271965 - 20060831
Group number: 2514048-0200
Assembly Drawing: 2514048-4_1_AA

This list covers pages from 4-84 to 4-89

Pos	Part No	UN	Qty	Description	Page No
A3/FLEX NOQC (See drawing on page: 4-86)					
070	2514049-0000		1	CARRIER	
310	312115-0285		2	SCREW ISO4762 M4X6 A4 80	
510	90165-0056		1	PIPE CLIP FOR TUBE D=4 MM	
520	90165-0058		1	PIPE CLIP FOR TUBE D=2,5 MM	
A3/FLEX TBA 0250S QC, A3/FLEX TBA 0200M QC (See drawing on page: 4-88)					
070	2514045-0000		1	CARRIER	
080	2641225-0000		1	INSERT	
410	312155-0323		3	SCREW DIN 7991 MF6S M5X8 A4 70	
A3/FLEX TBA 0500B QC, A3/FLEX TBA 1000B QC, A3/FLEX TBA 0200B QC, A3/FLEX TBA 0250B QC, A3/FLEX TBA 0330S QC, A3/FLEX TPA 0200SQ QC, A3/FLEX TPA 0250SQ QC, A3/FLEX TBA 0250SQ QC, A3/FLEX TBA 0200SQ QC (See drawing on page: 4-88)					
070	2514045-0000		1	CARRIER	
080	1549312-0000		1	INSERT	
410	312155-0323		3	SCREW DIN 7991 MF6S M5X8 A4 70	
A3/FLEX TBA 1890S QC, A3/FLEX TBA 2000S QC (See drawing on page: 4-86)					
070	2566340-0000		1	CARRIER	
310	312115-0285		2	SCREW ISO4762 M4X6 A4 80	
510	90165-0056		1	PIPE CLIP FOR TUBE D=4 MM	
520	90165-0058		1	PIPE CLIP FOR TUBE D=2,5 MM	
A3/FLEX TPA 0750SQ QC, A3/FLEX TPA 1000SQ QC (See drawing on page: 4-84)					
070	2647115-0000		1	CARRIER	
080	2647114-0000		1	INSERT	
310	312115-0285		2	SCREW ISO4762 M4X6 A4 80	
410	312145-0323		3	SCREW ISO 2009 MFS M5X8 A4	
415	312105-0291		2	SCREW M6S ISO 4017 M4X12 A470	
510	90165-0056		1	PIPE CLIP FOR TUBE D=4 MM	
520	90165-0058		1	PIPE CLIP FOR TUBE D=2,5 MM	
Common Parts					
010	1036343-0000		2	SCREW	
030	2547589-0000		1	SPRING	
040	2530296-0000		2	ROLLER	
050	2532531-0000		2	ROLLER	
060	2530293-0000		1	BRACKET	
090	2530292-0000		1	BRACKET	
100	2547588-0000		1	SPRING	
300	312105-0460		4	SCREW M6S ISO 4014 M8X45 A480	
320	312115-0327		4	SCREW ISO4762 M5X12 A4 80	
330	312105-0372		2	SCREW M6S ISO 4017 M6X25 A480	
340	312115-0447		2	SCREW ISO4762 M8X12 A4 80	
360	315105-0153		2	WASHER BRB 6,4X12 RFR	
370	315105-0165		4	WASHER BRB 8,4X16 RFR	
380	315211-0104		4	BONDED SEAL SS/NBR90 M8	
390	342980-0121		2	BANJO-CONNECTION,RING 8/6-G1/8	
400	342980-0303		2	BANJO-HOLLOW BOLT COUPL,EXT.THR.01-G1/8	
500	90030-0065		2	PIPE CONNECTION	

Machine Type | Group Description | Used-In | Group Number | Page No

CARRIER PRESSURE LEFT

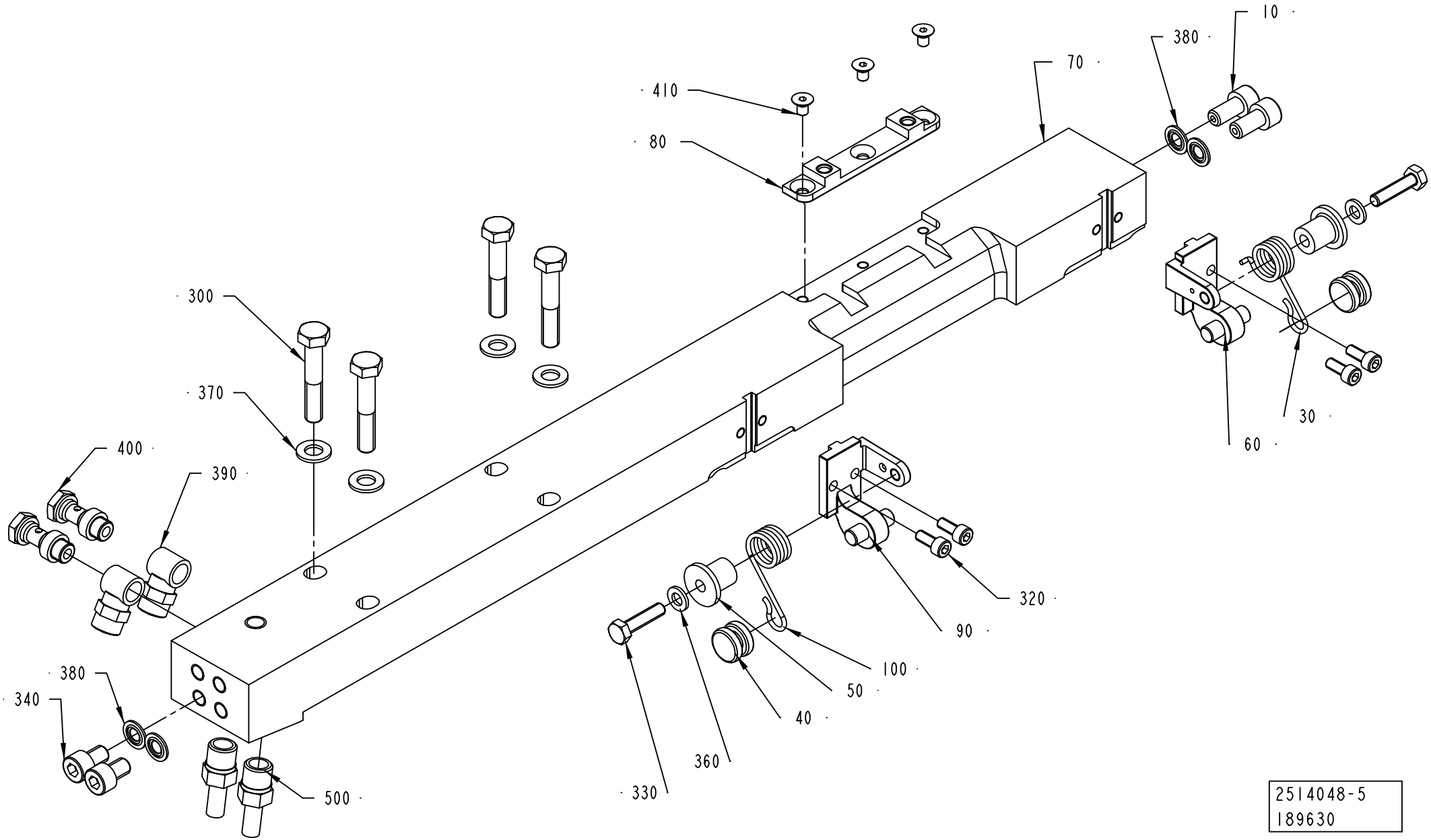

ECM: 271965 - 20060831
Group number: 2514048-0200
Assembly Drawing: 2514048-5_1_AA

This list covers pages from 4-84 to 4-89

Pos	Part No	UN	Qty	Description	Page No
A3/FLEX NOQC (See drawing on page: 4-86)					
070	2514049-0000		1	CARRIER	
310	312115-0285		2	SCREW ISO4762 M4X6 A4 80	
510	90165-0056		1	PIPE CLIP FOR TUBE D=4 MM	
520	90165-0058		1	PIPE CLIP FOR TUBE D=2,5 MM	
A3/FLEX TBA 0250S QC, A3/FLEX TBA 0200M QC (See drawing on page: 4-88)					
070	2514045-0000		1	CARRIER	
080	2641225-0000		1	INSERT	
410	312155-0323		3	SCREW DIN 7991 MF6S M5X8 A4 70	
A3/FLEX TBA 0500B QC, A3/FLEX TBA 1000B QC, A3/FLEX TBA 0200B QC, A3/FLEX TBA 0250B QC, A3/FLEX TBA 0330S QC, A3/FLEX TPA 0200SQ QC, A3/FLEX TPA 0250SQ QC, A3/FLEX TBA 0250SQ QC, A3/FLEX TBA 0200SQ QC (See drawing on page: 4-88)					
070	2514045-0000		1	CARRIER	
080	1549312-0000		1	INSERT	
410	312155-0323		3	SCREW DIN 7991 MF6S M5X8 A4 70	
A3/FLEX TBA 1890S QC, A3/FLEX TBA 2000S QC (See drawing on page: 4-86)					
070	2566340-0000		1	CARRIER	
310	312115-0285		2	SCREW ISO4762 M4X6 A4 80	
510	90165-0056		1	PIPE CLIP FOR TUBE D=4 MM	
520	90165-0058		1	PIPE CLIP FOR TUBE D=2,5 MM	
A3/FLEX TPA 0750SQ QC, A3/FLEX TPA 1000SQ QC (See drawing on page: 4-84)					
070	2647115-0000		1	CARRIER	
080	2647114-0000		1	INSERT	
310	312115-0285		2	SCREW ISO4762 M4X6 A4 80	
410	312145-0323		3	SCREW ISO 2009 MFS M5X8 A4	
415	312105-0291		2	SCREW M6S ISO 4017 M4X12 A470	
510	90165-0056		1	PIPE CLIP FOR TUBE D=4 MM	
520	90165-0058		1	PIPE CLIP FOR TUBE D=2,5 MM	
Common Parts					
010	1036343-0000		2	SCREW	
030	2547589-0000		1	SPRING	
040	2530296-0000		2	ROLLER	
050	2532531-0000		2	ROLLER	
060	2530293-0000		1	BRACKET	
090	2530292-0000		1	BRACKET	
100	2547588-0000		1	SPRING	
300	312105-0460		4	SCREW M6S ISO 4014 M8X45 A480	
320	312115-0327		4	SCREW ISO4762 M5X12 A4 80	
330	312105-0372		2	SCREW M6S ISO 4017 M6X25 A480	
340	312115-0447		2	SCREW ISO4762 M8X12 A4 80	
360	315105-0153		2	WASHER BRB 6,4X12 RFR	
370	315105-0165		4	WASHER BRB 8,4X16 RFR	
380	315211-0104		4	BONDED SEAL SS/NBR90 M8	
390	342980-0121		2	BANJO-CONNECTION,RING 8/6-G1/8	
400	342980-0303		2	BANJO-HOLLOW BOLT COUPL,EXT.THR.01-G1/8	
500	90030-0065		2	PIPE CONNECTION	

Machine Type | Group Description | Used-In | Group Number | Page No

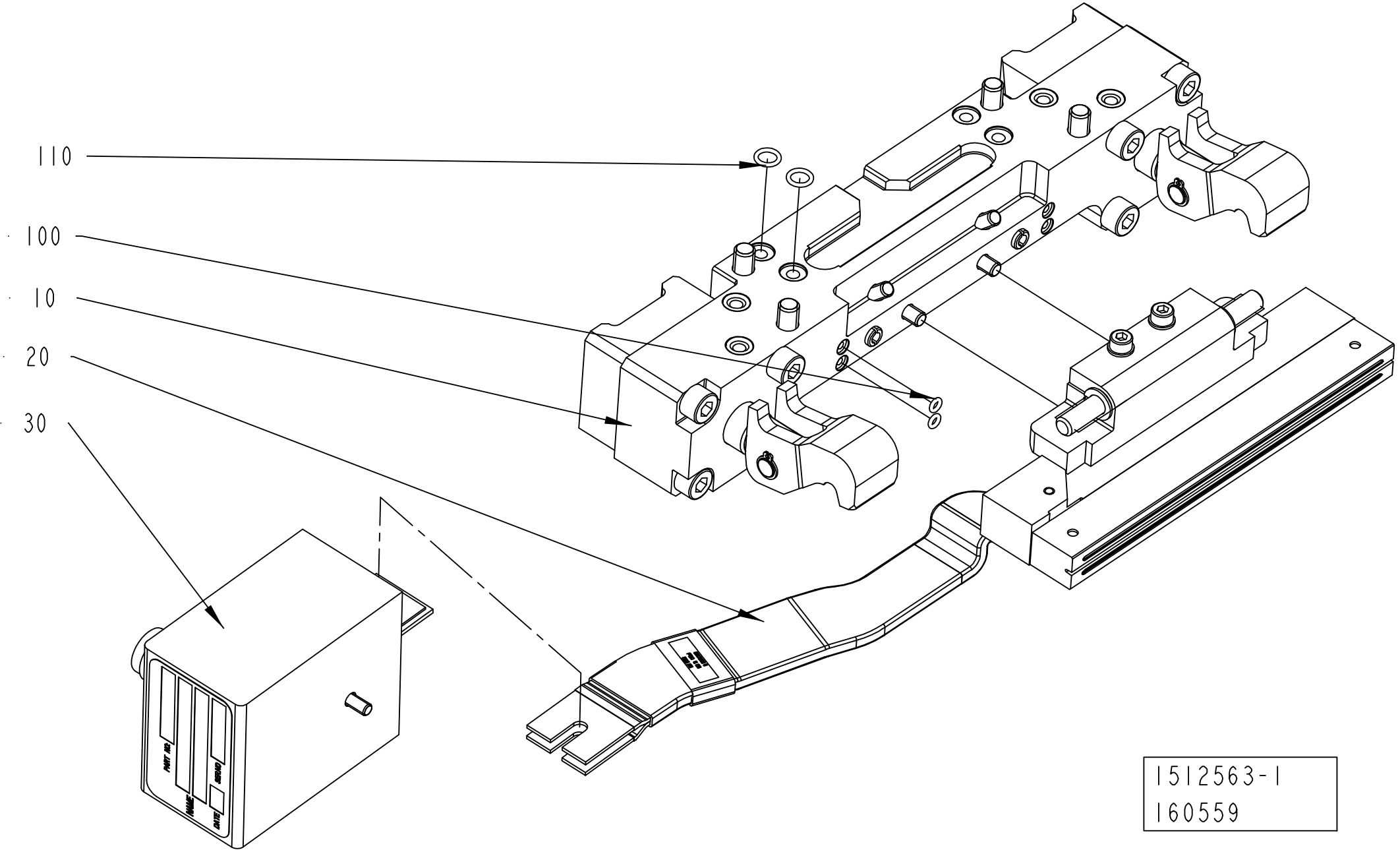

1512563-1
160559

Pos	Part No	UN	Qty	Description	Page No
TBA 1890S QC, TBA 2000S QC (See drawing on pages: 4-90, 4-92)					
120	311103-0267		1	PARALLEL PIN ISO 2338 4M6X10 A1	
Common Parts					
010	2552005-0100		1	PRESSURE JAW	**4-95**
020	2552006-0100		1	INDUCTOR LEFT	**4-97, 4-99, 4-101, 4-103, 4-105**
030	2546229-0100		1	ADAPTION TRANSFORMER	**4-107**
100	315202-0101		2	O-RING 3,1X1,6 MM	
110	315202-0105		2	O-RING 7,1X1,6 MM	

Pos	Part No	UN	Qty	Description	Page No

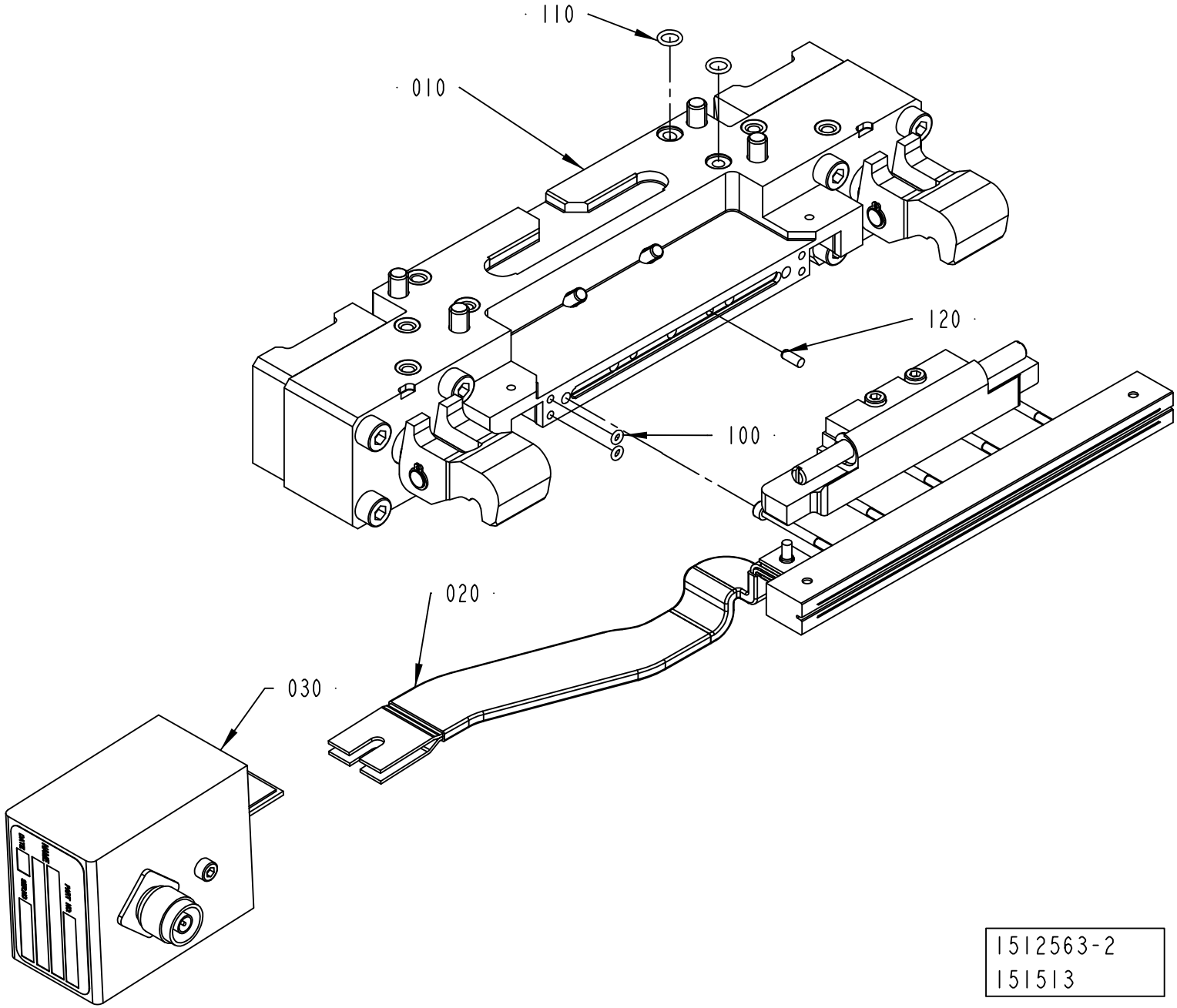
110
010
120
100
020
030
1512563-2
151513

Pos	Part No	UN	Qty	Description	Page No
TBA 1890S QC, TBA 2000S QC (See drawing on pages: 4-90, 4-92)					
120	311103-0267		1	PARALLEL PIN ISO 2338 4M6X10 A1	
Common Parts					
010	2552005-0100		1	PRESSURE JAW	**4-95**
020	2552006-0100		1	INDUCTOR LEFT	**4-97, 4-99, 4-101, 4-103, 4-105**
030	2546229-0100		1	ADAPTION TRANSFORMER	**4-107**
100	315202-0101		2	O-RING 3,1X1,6 MM	
110	315202-0105		2	O-RING 7,1X1,6 MM	

Pos	Part No	UN	Qty	Description	Page No

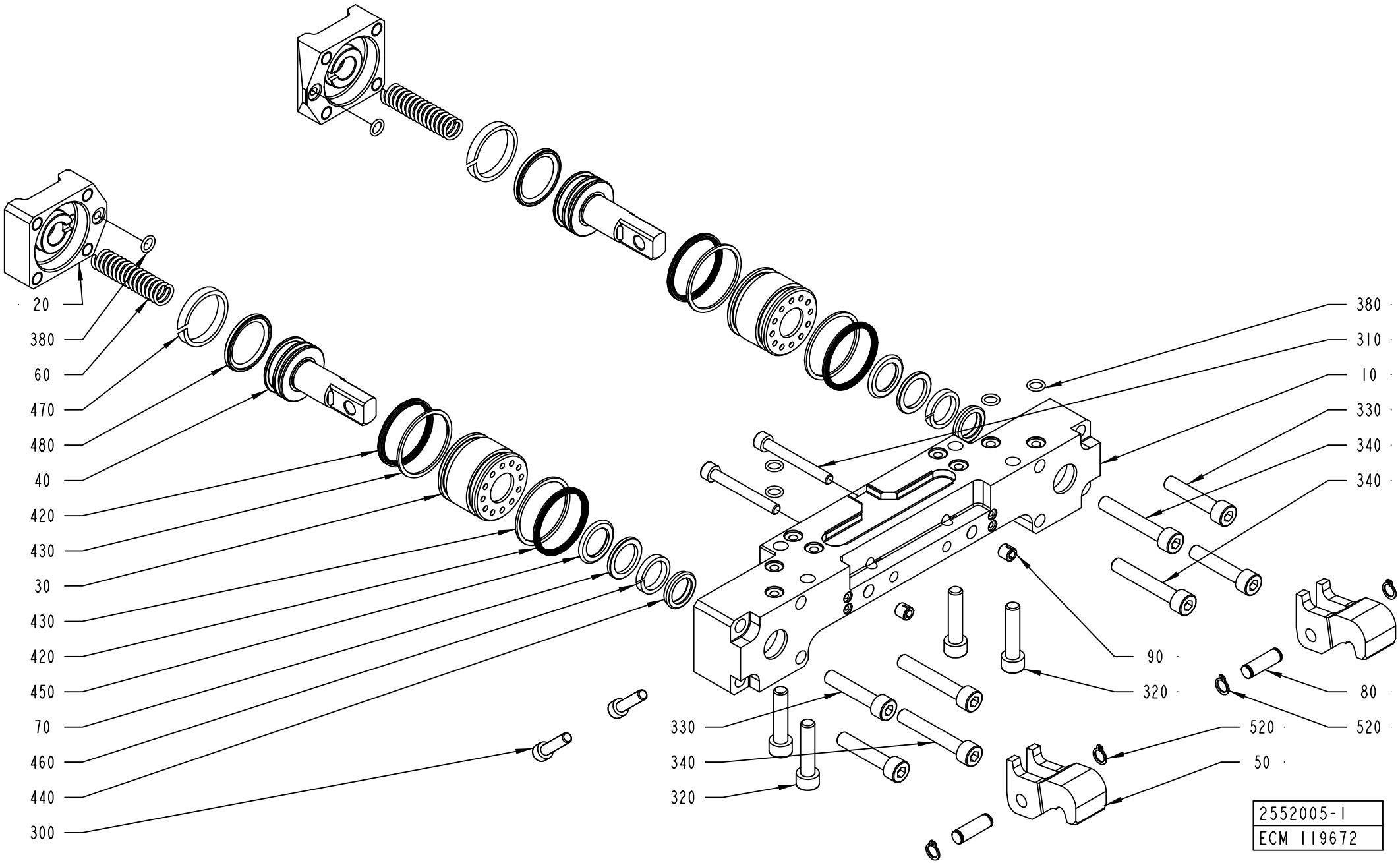
20
380
60
470
480
40
420
430
30
430
420
450
70
460
440
300
330
340
320
380
310
10
330
340
340
90
320
80
520
520
50
2552005-1
ECM 119672

ECM: 271967 - 20060831
Group number: 2552005-0100
Assembly Drawing: 2552005-1_1_AA

Pos	Part No	UN	Qty	Description	Page No
TBA 0330S, TBA 0200B, TBA 0250S, TBA 0200S, TBA 0200M, TBA 0250B, TBA 0200SQ, TPA 0250SQ, TPA 0330SQ, TPA 0200SQ, TBA 0250SQ					
010	2569908-0000		1	HOUSING	
020	2700151-0000		2	LID	
030	1349595-0000		2	SLEEVE	
040	929372-0000		2	PISTON	
050	1538349-0000		2	CATCH	
060	1260328-0000		2	SPRING	
080	950351-0000		2	SHAFT	
090	107426-0000		2	GUIDE SLEEVE	
300	312115-0372		2	SCREW ISO4762 M6X25 A4 80	
310	312115-0380		2	SCREW ISO4762 M6X50 A4 80	
330	312115-0459		4	SCREW ISO4762 M8X40 A4 80	
420	90091-0359		4	X-SEAL 36,17X2,62 MM	
430	90091-0360		4	BACK-UP RING 37,5X1,4 MM	
470	90091-0391		2	SEAL SLYDRING	
480	90091-0398		2	1PISTON SEAL GLIDE RING T 20,5X28X3,2 MM	
TBA 0500S, TBA 0500B, TBA 1000S, TBA 1000SQ, TBA 1000B, TBA 1500S, TPA 1000SQ, TPA 0500SQ, TPA 0750SQ					
010	2569908-0000		1	HOUSING	
020	2700151-0000		2	LID	
030	1348504-0000		2	SLEEVE	
040	1349612-0000		2	PISTON	
050	1538349-0000		2	CATCH	
060	1260328-0000		2	SPRING	
080	950351-0000		2	SHAFT	
090	107426-0000		2	GUIDE SLEEVE	
300	312115-0372		2	SCREW ISO4762 M6X25 A4 80	
310	312115-0380		2	SCREW ISO4762 M6X50 A4 80	
330	312115-0459		4	SCREW ISO4762 M8X40 A4 80	
420	90091-0359		4	X-SEAL 36,17X2,62 MM	
430	90091-0360		4	BACK-UP RING 37,5X1,4 MM	
470	90091-0368		2	WEAR RING 30X45X5,3 MM	
480	90091-0428		2	PISTON SEAL GLIDE RING T 27,5X34,5X3,2 M	
TBA 1890S, TBA 2000S					
010	2566336-0000		1	BEARING HOUSING	
020	2588294-0000		2	LID	
030	2588295-0000		2	SLEEVE	
040	2588296-0000		2	PISTON	
050	2566338-0000		2	CATCH	
060	2594892-0000		2	SPRING	
080	2588297-0000		2	SHAFT	
300	312115-0372		2	SCREW ISO4762 M6X25 A4 80	
420	90459-2146		4	X-SEAL 42,52X2,62 MM	
430	90459-2145		4	BACK-UP RING 43,5X1,4 MM	
470	90091-0074		2	6EAR RING 35X40X5,3 MM	
480	90459-2173		2	SEAL GLYDRING 32,5X40X3,2 MM	
Common Parts					
070	1038240-0000		2	SPACER	
320	312115-0457		4	SCREW ISO4762 M8X35 A4 80	
340	312115-0461		4	SCREW ISO4762 M8X50 A4 80	
380	315202-0105		6	O-RING 7,1X1,6 MM	
440	90091-0362		2	SCRAPER, EXCLUDER2 18X22,8X3,7 MM	
450	90091-0364		2	ROD SEAL, STEPSEAL 18X25,3X3,2 MM	
460	90091-0366		2	WEAR RING 18X23X3,9 MM	
520	90141-0015		4	RETAINING RING FOR SHAFT DIN 471 8 A2	

Machine Type | Group Description | Used-In | Group Number | Page No

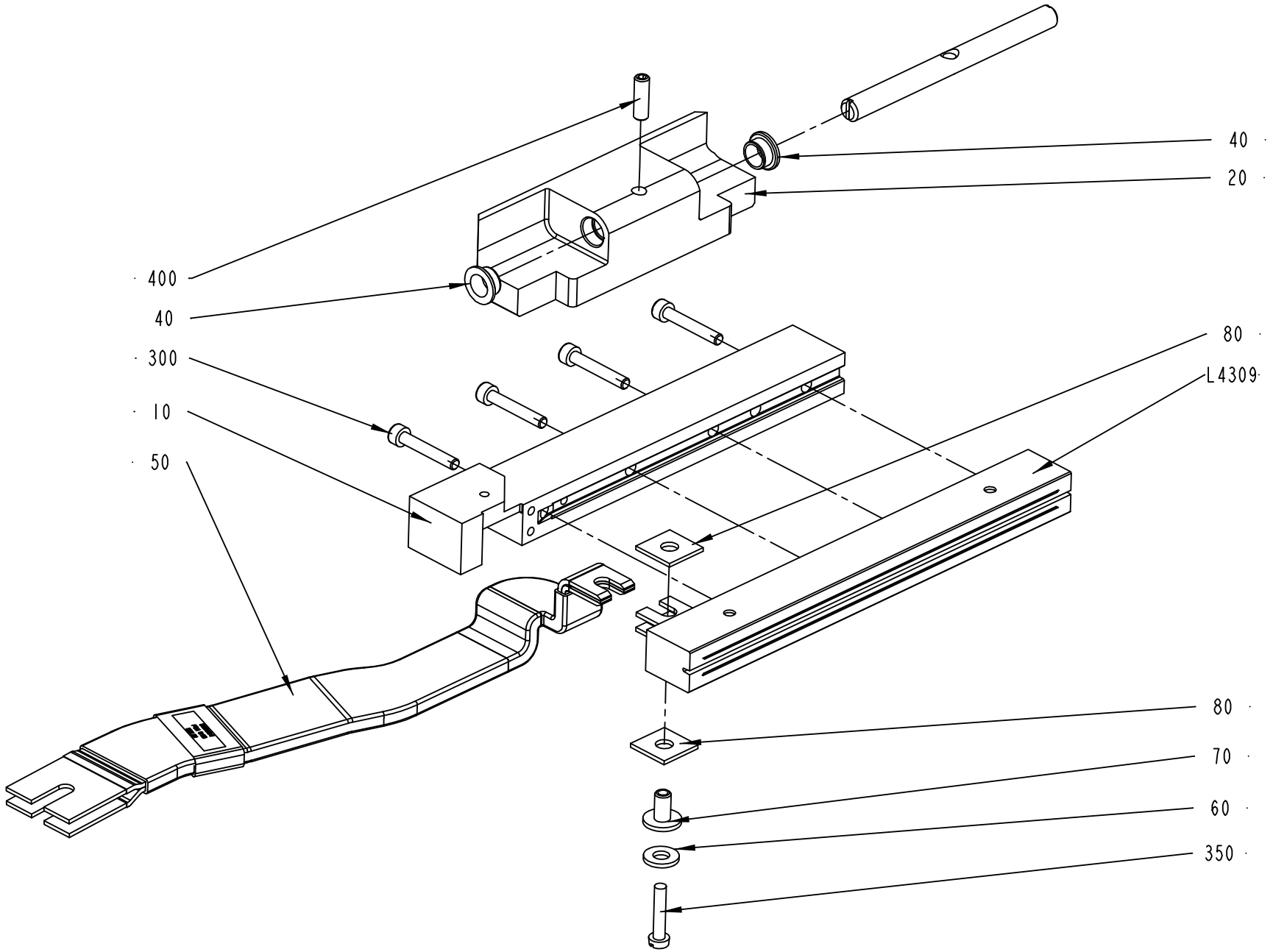

2552006-1
160559

ECM: 261760 - 20060702
Group number: 2552006-0100
Assembly Drawing: 2552006-1_1_AB

This list covers pages from 4-96 to 4-105

Pos	Part No	UN	Qty	Description	Page No
TPA 0250SQ QC, TPA 0200SQ QC (See drawing on page: 4-100)					
010	1348545-0000		1	RAIL	
020	2674335-0000		1	HOLDER	
050	1498849-0000		1	BUSBAR	
300	312115-0297		3	SCREW ISO4762 M4X25 A4 80	
L4309	1110930-0000		1	INDUCTOR	
TPA 0330SQ (See drawing on page: 4-102)					
010	1348545-0000		1	RAIL	
020	2611655-0000		1	CLAMP HOLDER	
030	2513013-0000		1	SHAFT	
040	2531703-0000		2	BUSHING	
050	1498849-0000		1	BUSBAR	
300	312115-0297		3	SCREW ISO4762 M4X25 A4 80	
400	312115-0327		2	SCREW ISO4762 M5X12 A4 80	
L4309	1520167-0000		1	INDUCTOR	
TPA 0500SQ SMILE (See drawing on page: 4-104)					
010	1558819-0000		1	RAIL	
020	2570848-0000		1	HOLDER	
030	2513013-0000		1	SHAFT	
040	2570849-0000		2	BUSHING	
050	1498849-0000		1	BUSBAR	
090	2503688-0000		1	VOLUME BULGE	
100	1549834-0000		1	VOLUME BULGE	
300	312115-0297		4	SCREW ISO4762 M4X25 A4 80	
360	311103-0234		1	PARALLEL PIN ISO 2338 3M6X12 A1	
370	312155-0287		2	SCREW DIN 7991 MF6S M4X8 A4 70	
380	312155-0325		2	SCREW DIN 7991 MF6S M5X10 A4 70	
400	312115-0329		2	SCREW ISO4762 M5X16 A4 80	
L4309	2587466-0000		1	INDUCTOR	
TPA 1000SQ FT NOQC (See drawing on page: 4-102)					
010	1558819-0000		1	RAIL	
020	2579989-0000		1	HOLDER	
030	2579990-0000		1	SHAFT	
040	2531703-0000		2	BUSHING	
050	1498849-0000		1	BUSBAR	
090	2503700-0000		1	VOLUME BULGE	
300	312115-0297		4	SCREW ISO4762 M4X25 A4 80	
370	312155-0287		2	SCREW DIN 7991 MF6S M4X8 A4 70	
400	312115-0327		2	SCREW ISO4762 M5X12 A4 80	
L4309	1520052-0000		1	INDUCTOR	
TPA 1000SQ SMILE NOQC (See drawing on page: 4-102)					
010	1558819-0000		1	RAIL	
020	2579991-0000		1	HOLDER	
030	2579990-0000		1	SHAFT	
040	2531703-0000		2	BUSHING	
050	1498849-0000		1	BUSBAR	
090	2503700-0000		1	VOLUME BULGE	
100	2500591-0000		1	VOLUME BULGE	
300	312115-0297		4	SCREW ISO4762 M4X25 A4 80	
370	312155-0287		2	SCREW DIN 7991 MF6S M4X8 A4 70	
380	312155-0325		2	SCREW DIN 7991 MF6S M5X10 A4 70	
400	312115-0327		2	SCREW ISO4762 M5X12 A4 80	
L4309	1520052-0000		1	INDUCTOR	
TPA 1000SQ SMILE QC, TPA 0750SQ SMILE QC (See drawing on page: 4-104)					
010	1558819-0000		1	RAIL	
020	2660404-0000		1	HOLDER	
050	1498849-0000		1	BUSBAR	
090	2503700-0000		1	VOLUME BULGE	
100	2500591-0000		1	VOLUME BULGE	
300	312115-0297		4	SCREW ISO4762 M4X25 A4 80	
360	311103-0234		1	PARALLEL PIN ISO 2338 3M6X12 A1	
370	312155-0287		2	SCREW DIN 7991 MF6S M4X8 A4 70	
380	312155-0325		2	SCREW DIN 7991 MF6S M5X10 A4 70	
L4309	2663378-0000		1	INDUCTOR	
TBA 0200B NOQC, TBA 0250B NOQC (See drawing on page: 4-96)					
010	1348545-0000		1	RAIL	
020	1349599-0000		1	HOLDER	
030	1349980-0000		1	SHAFT	
040	1349584-0000		2	BUSHING	
050	1498849-0000		1	BUSBAR	
300	312115-0297		3	SCREW ISO4762 M4X25 A4 80	
400	312318-0329		1	SCREW ISO4029 M5X16 A4	
L4309	1110932-0000		1	INDUCTOR	
TBA 0200B QC, TBA 0330S QC, TBA 0250B QC (See drawing on page: 4-98)					
010	1348545-0000		1	RAIL	
020	2604565-0000		1	HOLDER	
050	1498849-0000		1	BUSBAR	
300	312115-0297		3	SCREW ISO4762 M4X25 A4 80	
L4309	1110932-0000		1	INDUCTOR	
TBA 0200S (See drawing on page: 4-102)					
010	1348545-0000		1	RAIL	
020	2513015-0000		1	HOLDER	
030	2513013-0000		1	SHAFT	
040	2531703-0000		2	BUSHING	

Machine Type | Group Description | Used-In | Group Number | Page No

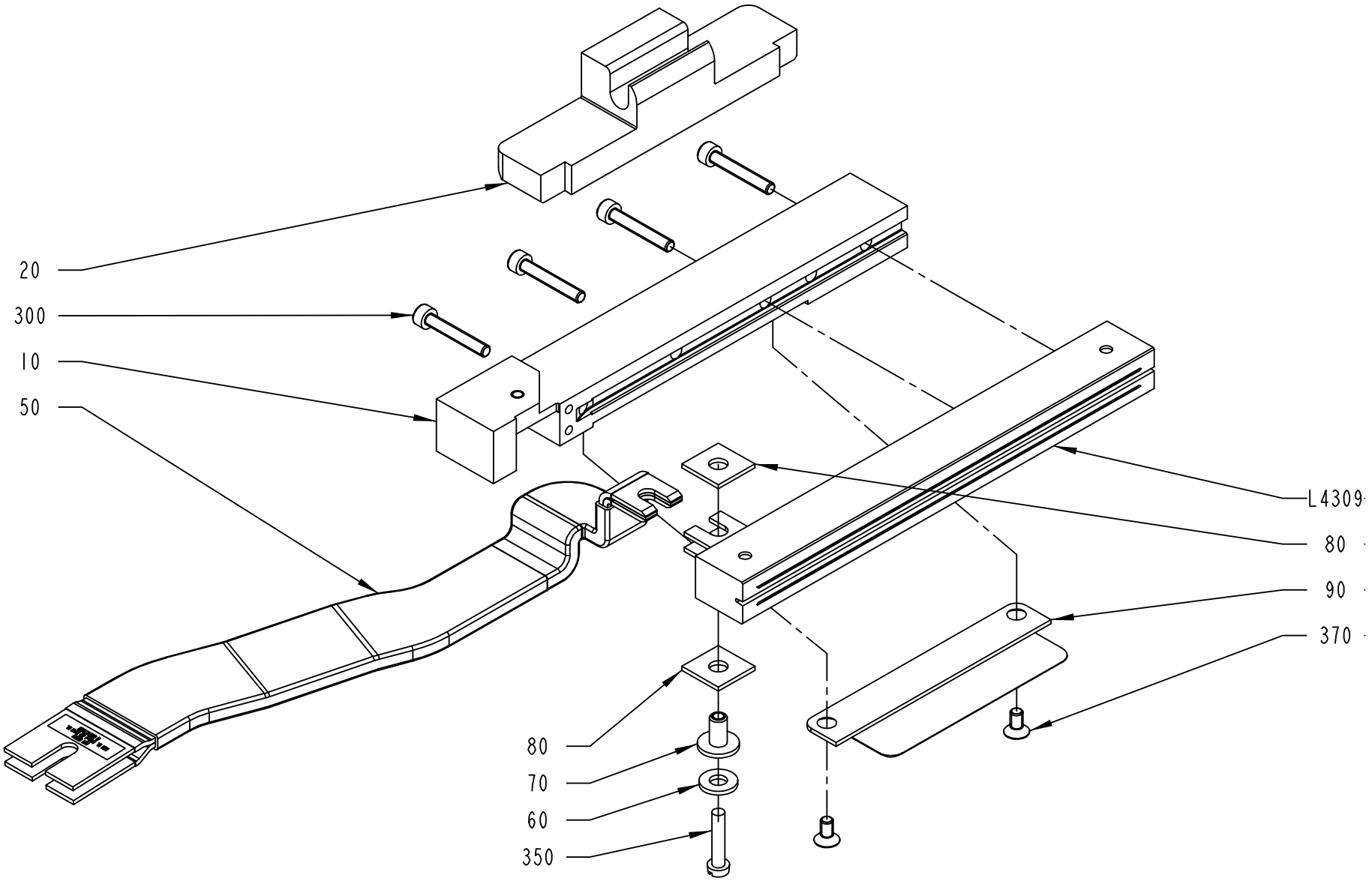

2552006-3
ECM 119672

Pos	Part No	UN	Qty	Description	Page No
TBA 0200S (Cont'd) (See drawing on page: 4-102)					
050	1498849-0000		1	BUSBAR	
300	312115-0297		3	SCREW ISO4762 M4X25 A4 80	
400	312115-0329		2	SCREW ISO4762 M5X16 A4 80	
L4309	1110930-0000		1	INDUCTOR	
TBA 0200SQ, TBA 0250SQ (See drawing on page: 4-98)					
010	1558819-0000		1	RAIL	
020	2668318-0000		1	HOLDER	
050	1498849-0000		1	BUSBAR	
090	2679953-0000		1	VOLUME BULGE	
300	312115-0297		3	SCREW ISO4762 M4X25 A4 80	
370	312155-0287		2	SCREW DIN 7991 MF6S M4X8 A4 70	
L4309	2767760-0000		1	INDUCTOR	
TBA 0250S QC, TBA 0200M QC (See drawing on page: 4-100)					
010	1348545-0000		1	RAIL	
020	2644397-0000		1	HOLDER	
050	1498849-0000		1	BUSBAR	
300	312115-0297		3	SCREW ISO4762 M4X25 A4 80	
L4309	1110931-0000		1	INDUCTOR	
TBA 0500B QC, TBA 1000B QC (See drawing on page: 4-98)					
010	1558819-0000		1	RAIL	
020	1487955-0000		1	HOLDER	
050	1498849-0000		1	BUSBAR	
090	1558734-0000		1	VOLUME BULGE	
300	312115-0297		4	SCREW ISO4762 M4X25 A4 80	
370	312155-0287		2	SCREW DIN 7991 MF6S M4X8 A4 70	
L4309	1110938-0000		1	INDUCTOR	
TBA 0500S (See drawing on page: 4-102)					
010	1348545-0000		1	RAIL	
020	2611001-0000		1	CLAMP HOLDER	
030	2579990-0000		1	SHAFT	
040	2531703-0000		2	BUSHING	
050	1498849-0000		1	BUSBAR	
300	312115-0297		4	SCREW ISO4762 M4X25 A4 80	
400	312115-0327		2	SCREW ISO4762 M5X12 A4 80	
L4309	1110934-0000		1	INDUCTOR	
TBA 1000B NOQC NOMOLDEDCAP (See drawing on page: 4-102)					
010	1348545-0000		1	RAIL	
020	2664280-0000		1	HOLDER	
030	2526812-0000		1	SHAFT	
040	2531703-0000		2	BUSHING	
050	1498849-0000		1	BUSBAR	
300	312115-0297		4	SCREW ISO4762 M4X25 A4 80	
410	315105-0146		2	WASHER BRB 5,3X10 RFR	
L4309	1110938-0000		1	INDUCTOR	
TBA 1000B NOQC STDA7 (See drawing on page: 4-102)					
010	2610954-0000		1	RAIL	
020	2664280-0000		1	HOLDER	
030	2526812-0000		1	SHAFT	
040	2531703-0000		2	BUSHING	
050	1498849-0000		1	BUSBAR	
300	312115-0297		4	SCREW ISO4762 M4X25 A4 80	
410	315105-0146		2	WASHER BRB 5,3X10 RFR	
L4309	2610956-0000		1	INDUCTOR	
TBA 1000S LIGHTCAP					
010	2766751-0000		1	RAIL	
020	2559425-0000		1	CLAMP HOLDER	
030	2526812-0000		1	SHAFT	
040	2531703-0000		2	BUSHING	
050	1498849-0000		1	BUSBAR	
300	312115-0297		4	SCREW ISO4762 M4X25 A4 80	
400	312115-0327		2	SCREW ISO4762 M5X12 A4 80	
L4309	2546474-0000		1	INDUCTOR	
TBA 1000S NOMOLDEDCAP (See drawing on page: 4-102)					
010	1348545-0000		1	RAIL	
020	2559425-0000		1	CLAMP HOLDER	
030	2526812-0000		1	SHAFT	
040	2531703-0000		2	BUSHING	
050	1498849-0000		1	BUSBAR	
300	312115-0297		4	SCREW ISO4762 M4X25 A4 80	
400	312115-0327		2	SCREW ISO4762 M5X12 A4 80	
L4309	1110937-0000		1	INDUCTOR	
TBA 1000S STDA7 (See drawing on page: 4-102)					
010	2546475-0000		1	RAIL	
020	2559425-0000		1	CLAMP HOLDER	
030	2526812-0000		1	SHAFT	
040	2531703-0000		2	BUSHING	
050	1498849-0000		1	BUSBAR	
300	312115-0297		4	SCREW ISO4762 M4X25 A4 80	
400	312115-0327		2	SCREW ISO4762 M5X12 A4 80	
L4309	2546474-0000		1	INDUCTOR	
TBA 1000SQ (See drawing on page: 4-102)					
010	1348545-0000		1	RAIL	
020	2526811-0000		1	310.54HOLDER	

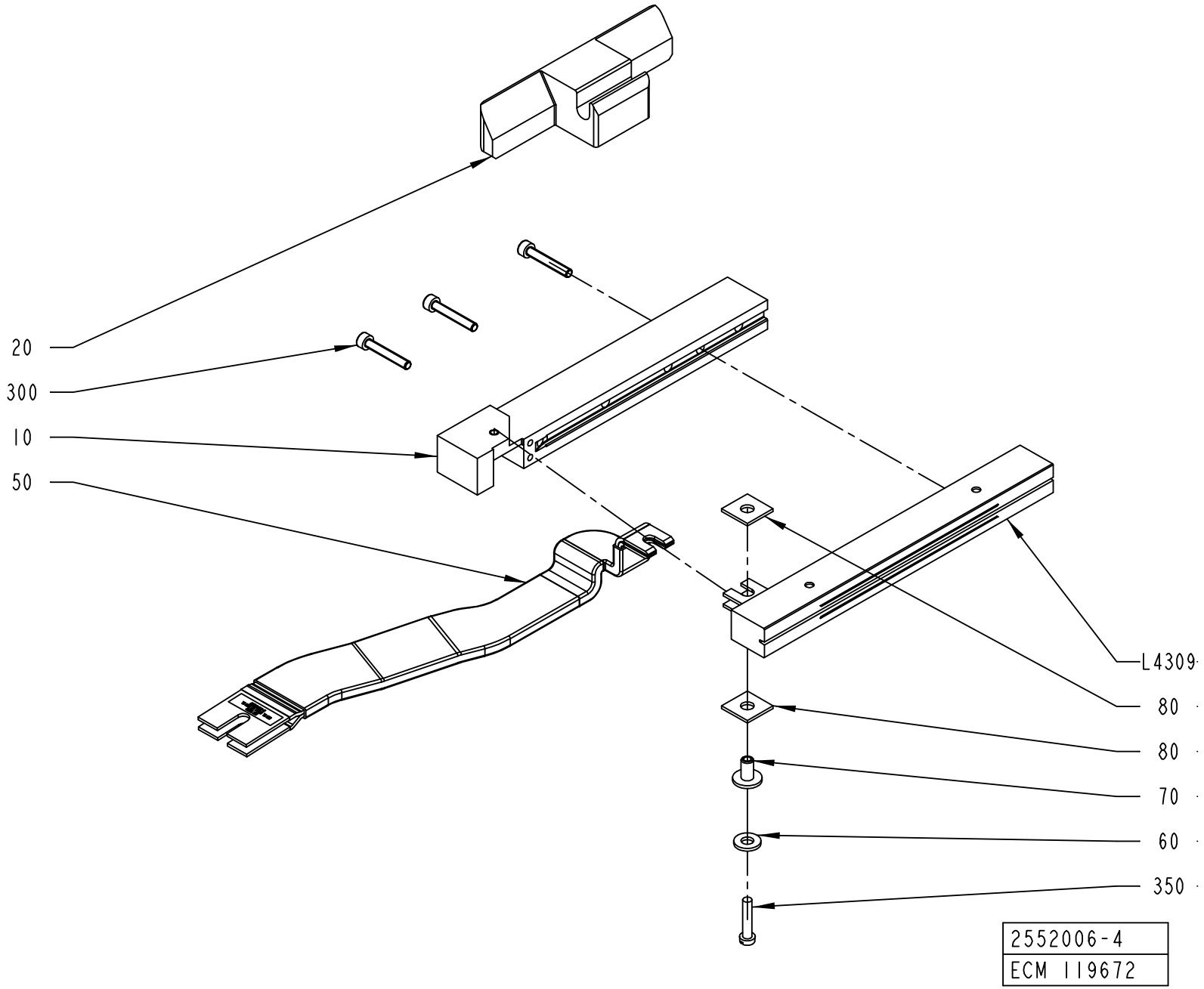
20
300
10
50
L4309
80
80
70
60
350
2552006-4
ECM 119672

Pos	Part No	UN	Qty	Description	Page No
TBA 1000SQ (Cont'd) (See drawing on page: 4-102)					
030	2526812-0000		1	SHAFT	
040	2531703-0000		2	BUSHING	
050	1498849-0000		1	BUSBAR	
300	312115-0297		4	SCREW ISO4762 M4X25 A4 80	
400	312115-0327		2	SCREW ISO4762 M5X12 A4 80	
L4309	1110936-0000		1	INDUCTOR	
TBA 1500S (See drawing on page: 4-102)					
010	1348545-0000		1	RAIL	
020	2570302-0000		1	CLAMP HOLDER	
030	2526812-0000		1	SHAFT	
040	2531703-0000		2	BUSHING	
050	1498849-0000		1	BUSBAR	
300	312115-0297		4	SCREW ISO4762 M4X25 A4 80	
400	312115-0327		2	SCREW ISO4762 M5X12 A4 80	
L4309	1110938-0000		1	INDUCTOR	
TBA 1890S QC, TBA 2000S QC (See drawing on page: 4-102)					
020	2588293-0000		1	HOLDER	
030	2686144-0000		1	SHAFT	
040	2531703-0000		2	BUSHING	
050	2698011-0000		1	BUSBAR	
300	312115-0305		5	SCREW ISO4762 M4X50 A4 80	
400	312115-0327		2	SCREW ISO4762 M5X12 A4 80	
L4309	1533046-0000		1	INDUCTOR	
Common Parts					
060	28509-0000		1	WASHER	
070	32544-0000		1	INSULATION NUT	
080	1036584-0000		2	WASHER	
350	312125-0295		1	SCREW ISO 1207 M4X20 A4	

Pos	Part No	UN	Qty	Description	Page No

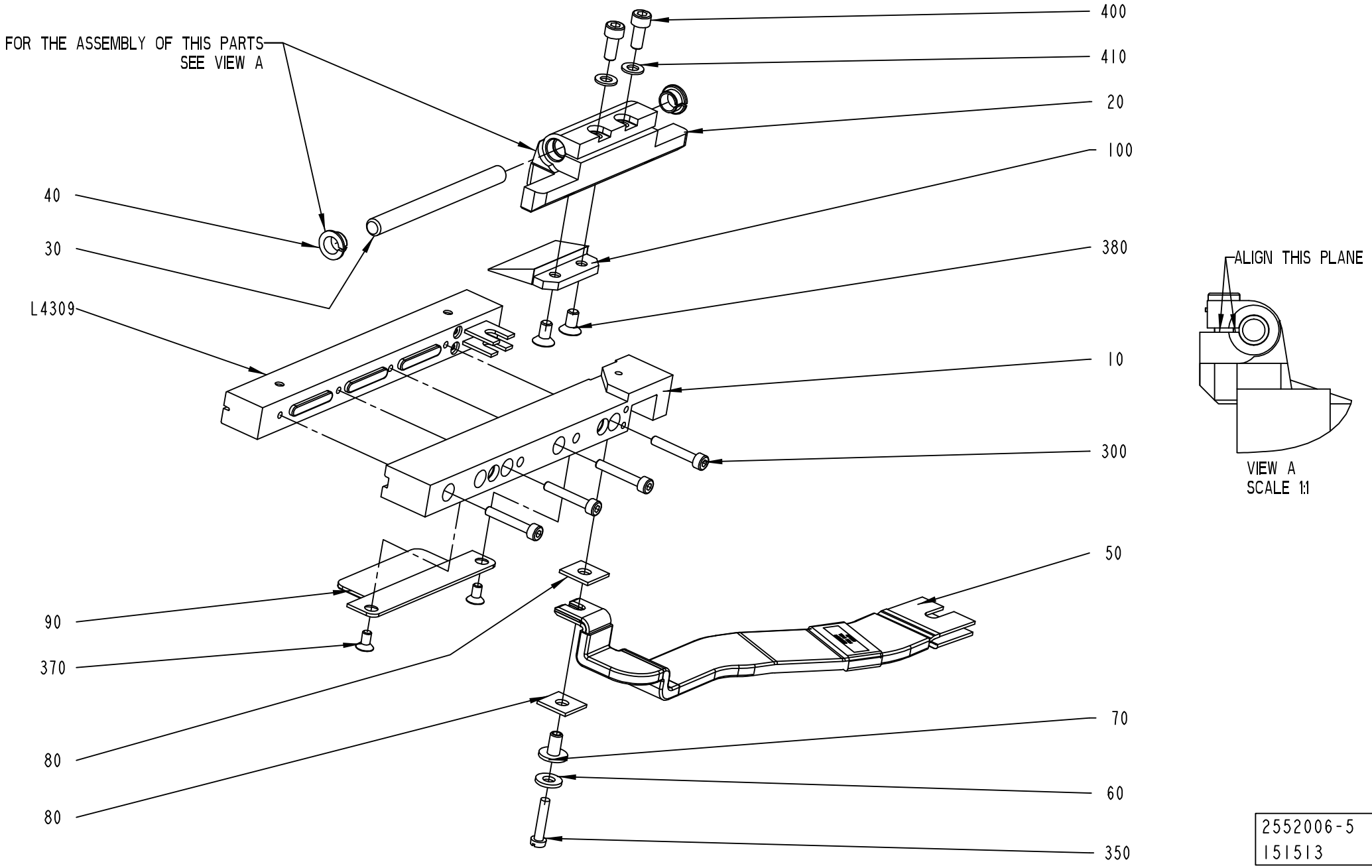

2552006-5
151513

ECM: 261760 - 20060702
Group number: 2552006-0100
Assembly Drawing: 2552006-5_1_AC

This list covers pages from 4-96 to 4-105

Pos	Part No	UN	Qty	Description	Page No	Pos	Part No	UN	Qty	Description	Page No

SEE PREVIOUS LISTS PAGES: 4-97, 4-99, 4-101.

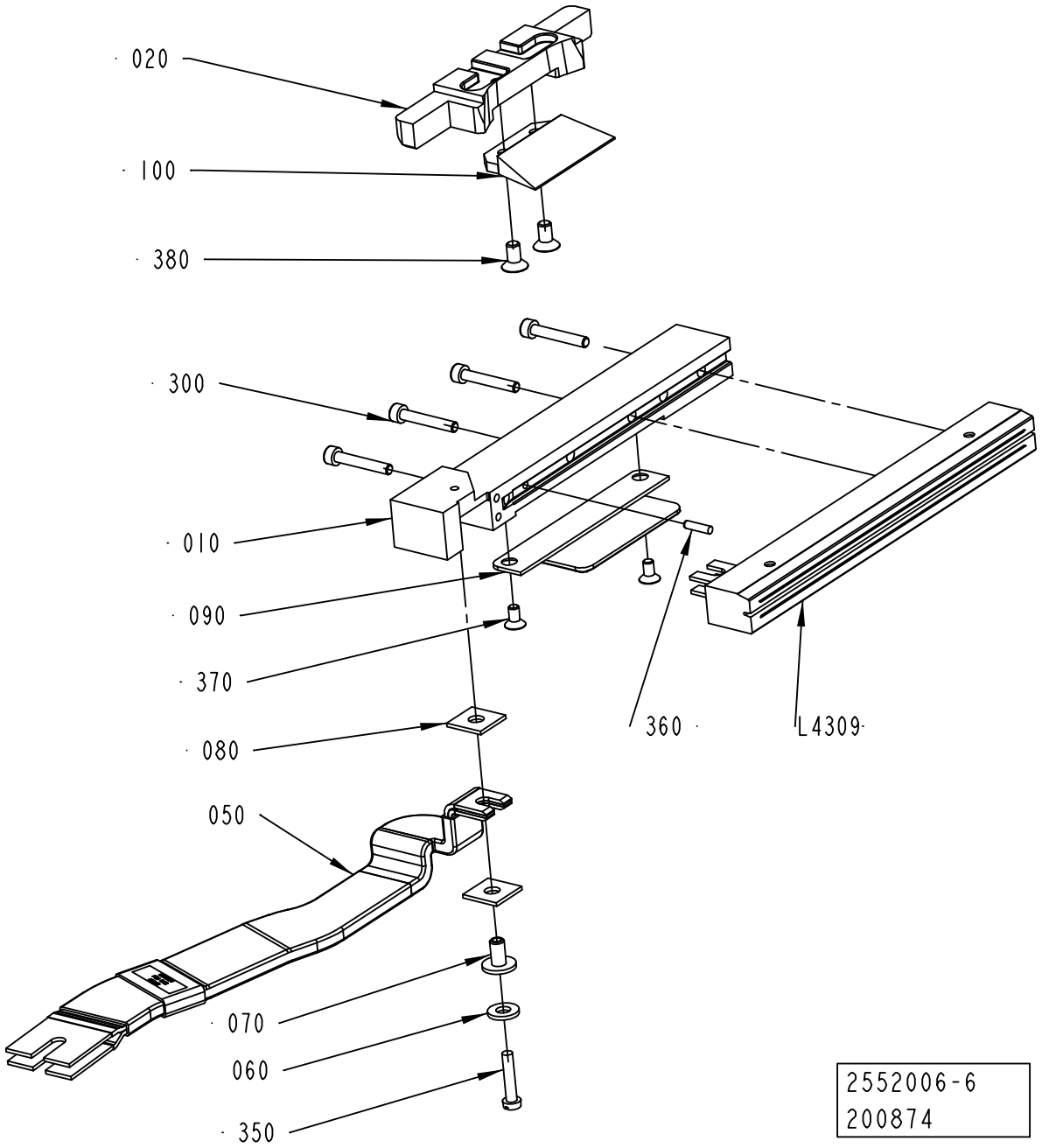
020
100
380
300
010
090
370
080
050
070
060
350
360
L4309
2552006-6
200874

ECM: 261760 - 20060702
Group number: 2552006-0100
Assembly Drawing: 2552006-6_1_AA

This list covers pages from 4-96 to 4-105

Pos	Part No	UN	Qty	Description	Page No	Pos	Part No	UN	Qty	Description	Page No

SEE PREVIOUS LISTS PAGES: 4-97, 4-99, 4-101.

ADAPTION TRANSFORMER

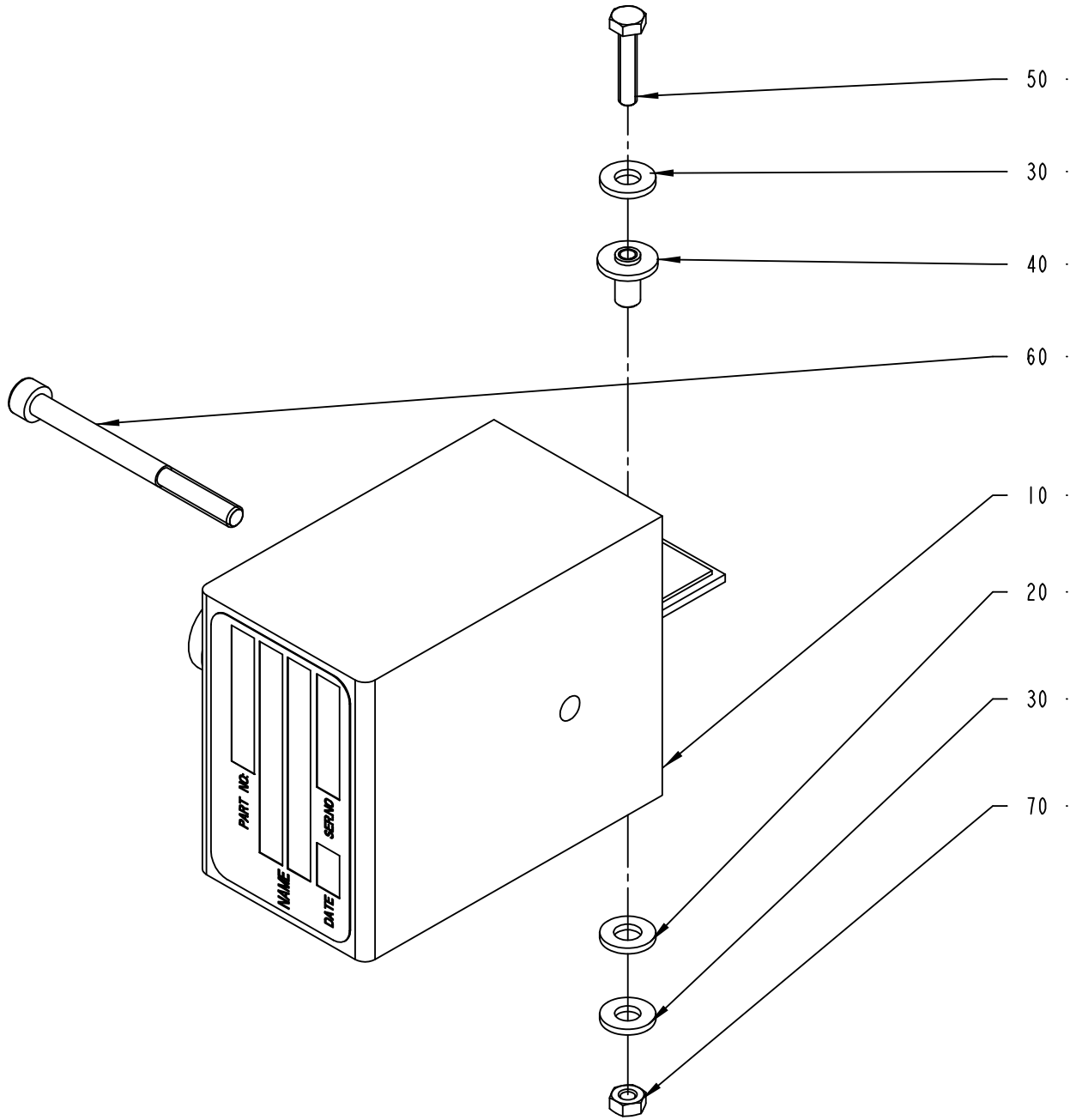

2546229-1
ECM 119672

ECM: 259125 - 20060704
Group number: 2546229-0100
Assembly Drawing: 2546229-1_1_AA

Pos	Part No	UN	Qty	Description	Page No
TBA 0200S					
010	67379-0105		1	TRANSFORMER	
TBA 0200SQ, TPA 0250SQ NOQC, TBA 0250SQ					
010	67379-0114		1	TRANSFORMER	
TBA 0250S, TBA 0200M, TPA 0200SQ, TPA 0500SQ, TPA 0250SQ QC					
010	67379-0206		1	TRANSFORMER	
TBA 0330S, TBA 0200B, TBA 0250B					
010	67379-0269		1	TRANSFORMER	
TBA 0500B, TBA 1000S, TBA 1000SQ, TBA 1000B, TBA 1500S					
010	67379-0101		1	TRANSFORMER	
TBA 0500S					
010	67379-0258		1	TRANSFORMER	
TPA 0330SQ					
010	67379-0269		1	TRANSFORMER	
TPA 1000SQ, TBA 1890S, TBA 2000S, TPA 0750SQ					
010	67379-0249		1	TRANSFORMER	
Common Parts					
020	32079-0000		1	WASHER	
030	28509-0000		2	WASHER	
040	32544-0000		2	INSULATION NUT	
050	312105-0295		1	SCREW M6S ISO 4017 M4X20 A470	
060	90458-0058		1	SCREW M5X60 A280	
070	312605-0312		2	HEXAGON NUT, M6M M4 A280	

Pos	Part No	UN	Qty	Description	Page No

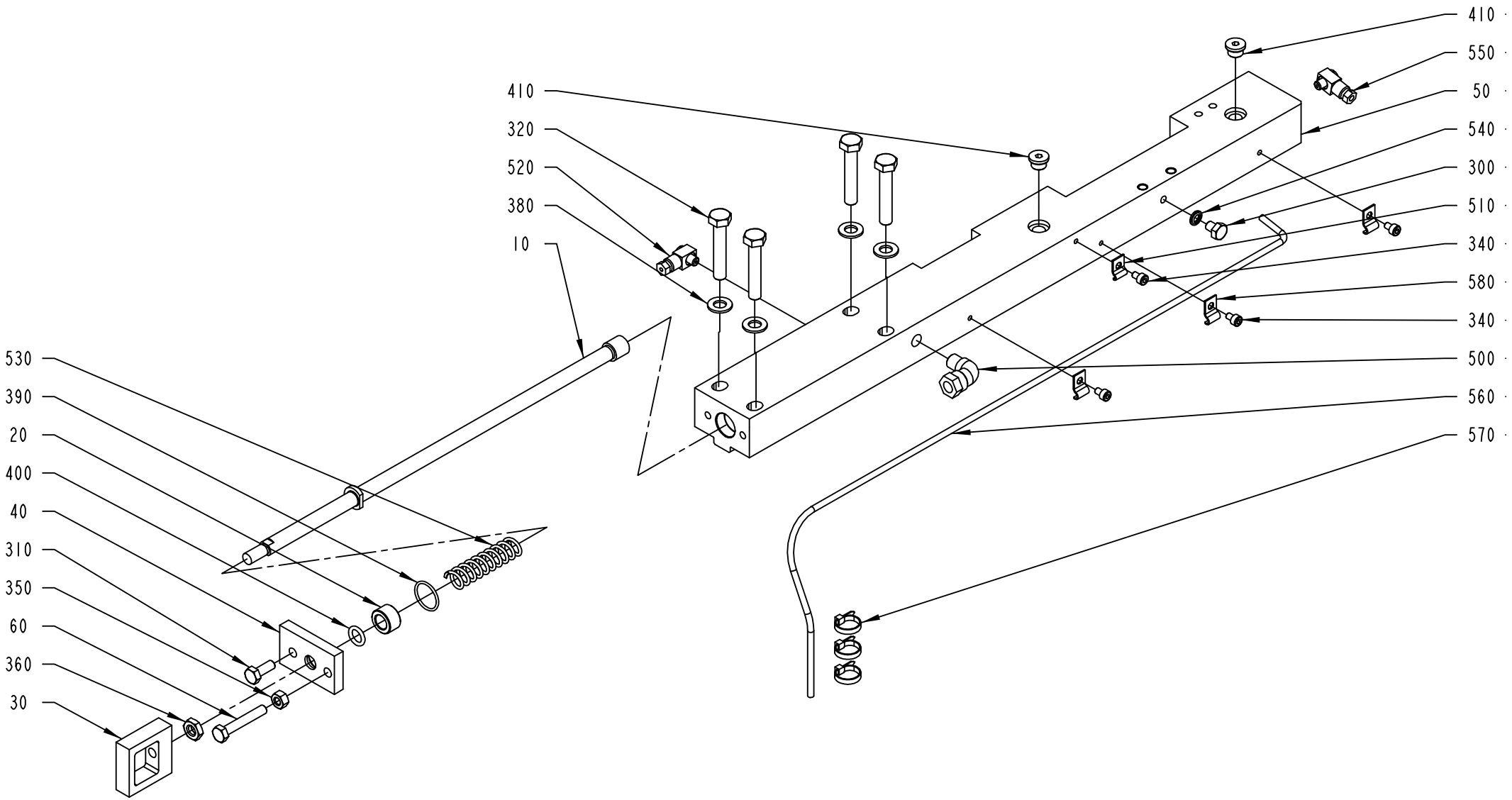

1512564-1
ECM 119672

ECM: 263537 - 20060702
Group number: 1512564-0200
Assembly Drawing: 1512564-1_1_AA

This list covers pages from 4-108 to 4-115

Pos	Part No	UN	Qty	Description	Page No
TBA 0200B QC, TBA 0330S QC, TBA 0250B QC, TPA 0250SQ QC, TPA 0200SQ QC (See drawing on page: 4-110)					
010	2530508-0000		1	TIE ROD	
050	2571843-0000		1	CARRIER	
070	1549312-0000		1	INSERT	
300	312105-0362		1	SCREW M6S ISO 4017 M6X8 A480	
345	312155-0323		3	SCREW DIN 7991 MF6S M5X8 A4 70	
400	315202-0208		1	O-RING 9,3X2,4 MM	
540	315211-0103		1	BONDED SEAL SS/NBR90 M6	
TBA 0200SQ QC, TBA 0250SQ QC (See drawing on page: 4-110)					
010	2737034-0000		1	TIE ROD	
050	2571843-0000		1	CARRIER	
070	1549312-0000		1	INSERT	
300	312105-0362		1	SCREW M6S ISO 4017 M6X8 A480	
345	312155-0323		3	SCREW DIN 7991 MF6S M5X8 A4 70	
400	315202-0208		1	O-RING 9,3X2,4 MM	
540	315211-0103		1	BONDED SEAL SS/NBR90 M6	
TBA 0250S, TBA 0200M (See drawing on page: 4-110)					
010	2530508-0000		1	TIE ROD	
050	2571843-0000		1	CARRIER	
070	2641225-0000		1	INSERT	
300	312105-0362		1	SCREW M6S ISO 4017 M6X8 A480	
345	312155-0323		3	SCREW DIN 7991 MF6S M5X8 A4 70	
400	315202-0208		1	O-RING 9,3X2,4 MM	
540	315211-0103		1	BONDED SEAL SS/NBR90 M6	
TBA 0500B QC, TBA 1000B QC (See drawing on page: 4-110)					
010	1499320-0000		1	TIE ROD	
050	2571843-0000		1	CARRIER	
070	1549312-0000		1	INSERT	
300	312105-0362		1	SCREW M6S ISO 4017 M6X8 A480	
345	312155-0323		3	SCREW DIN 7991 MF6S M5X8 A4 70	
400	315202-0208		1	O-RING 9,3X2,4 MM	
540	315211-0103		1	BONDED SEAL SS/NBR90 M6	
TBA 0500S, TBA 0200S, TPA 0330SQ, TPA 0500SQ, TBA 0200B NOQC, TBA 0250B NOQC (See drawing on page: 4-108)					
010	2530508-0000		1	TIE ROD	
050	2531114-0000		1	CARRIER	
300	312105-0362		1	SCREW M6S ISO 4017 M6X8 A480	
400	315202-0208		1	O-RING 9,3X2,4 MM	
540	315211-0103		1	BONDED SEAL SS/NBR90 M6	
TBA 1000S, TBA 1000SQ, TBA 1500S, TBA 1000B NOQC, TPA 1000SQ NOQC (See drawing on page: 4-108)					
010	1499320-0000		1	TIE ROD	
050	2531114-0000		1	CARRIER	
300	312105-0362		1	SCREW M6S ISO 4017 M6X8 A480	
400	315202-0208		1	O-RING 9,3X2,4 MM	
540	315211-0103		1	BONDED SEAL SS/NBR90 M6	
TBA 1890S QC, TBA 2000S QC (See drawing on page: 4-114)					
010	2588291-0000		1	TIE ROD	
050	2566329-0000		1	CARRIER	
070	2566328-0000		1	PLATE	
300	312105-0362		1	SCREW M6S ISO 4017 M6X8 A480	
400	315202-0208		1	O-RING 9,3X2,4 MM	
540	315211-0103		1	BONDED SEAL SS/NBR90 M6	
590	312155-0287		3	SCREW DIN 7991 MF6S M4X8 A4 70	
600	2603151-0000		1	SHIM	
TPA 1000SQ QC, TPA 0750SQ QC (See drawing on page: 4-112)					
010	2530508-0000		1	TIE ROD	
050	2647116-0000		1	CARRIER	
070	2647114-0000		1	INSERT	
290	312105-0291		2	SCREW M6S ISO 4017 M4X12 A470	
300	312105-0362		1	SCREW M6S ISO 4017 M6X8 A480	
345	312145-0323		3	SCREW ISO 2009 MFS M5X8 A4	
400	315202-0208		1	O-RING 9,3X2,4 MM	
540	315211-0103		1	BONDED SEAL SS/NBR90 M6	
Common Parts					
020	1036495-0000		1	BUSHING	
030	1036585-0000		1	EAR	
040	1036664-0000		1	LID	
060	1523162-0000		1	SCREW	
310	312105-0368		1	SCREW M6S ISO 4017 M6X16 A480	
320	312105-0460		4	SCREW M6S ISO 4014 M8X45 A480	
340	312115-0285		4	SCREW ISO4762 M4X6 A4 80	
350	312605-0316		1	HEXAGON NUT, M6M M6 A280	
360	312625-0318		1	HEXAGON THIN NUT, EN 24035 ML6M M8 A4	
380	315105-0165		4	WASHER BRB 8,4X16 RFR	
390	315202-0116		1	O-RING 18,1X1,6 MM	
410	342713-0209		2	PLUG (QUANT.MINIMA= 10PC).	
500	90030-0257		1	CONN. ELBOW, 8-R1/8, EXT.THREAD	
510	90165-0058		1	PIPE CLIP FOR TUBE D=2,5 MM	
520	90134-0058		1	CONNECTION	
530	1548940-0000		1	SPRING	
550	90134-0068		1	CONNECTION	
560	90266-0165	MM	800	BRASS PIPE	
570	352113-0101		3	CLIP STRIP, 92X2,5 MM	

CARRIER CUTTING LEFT

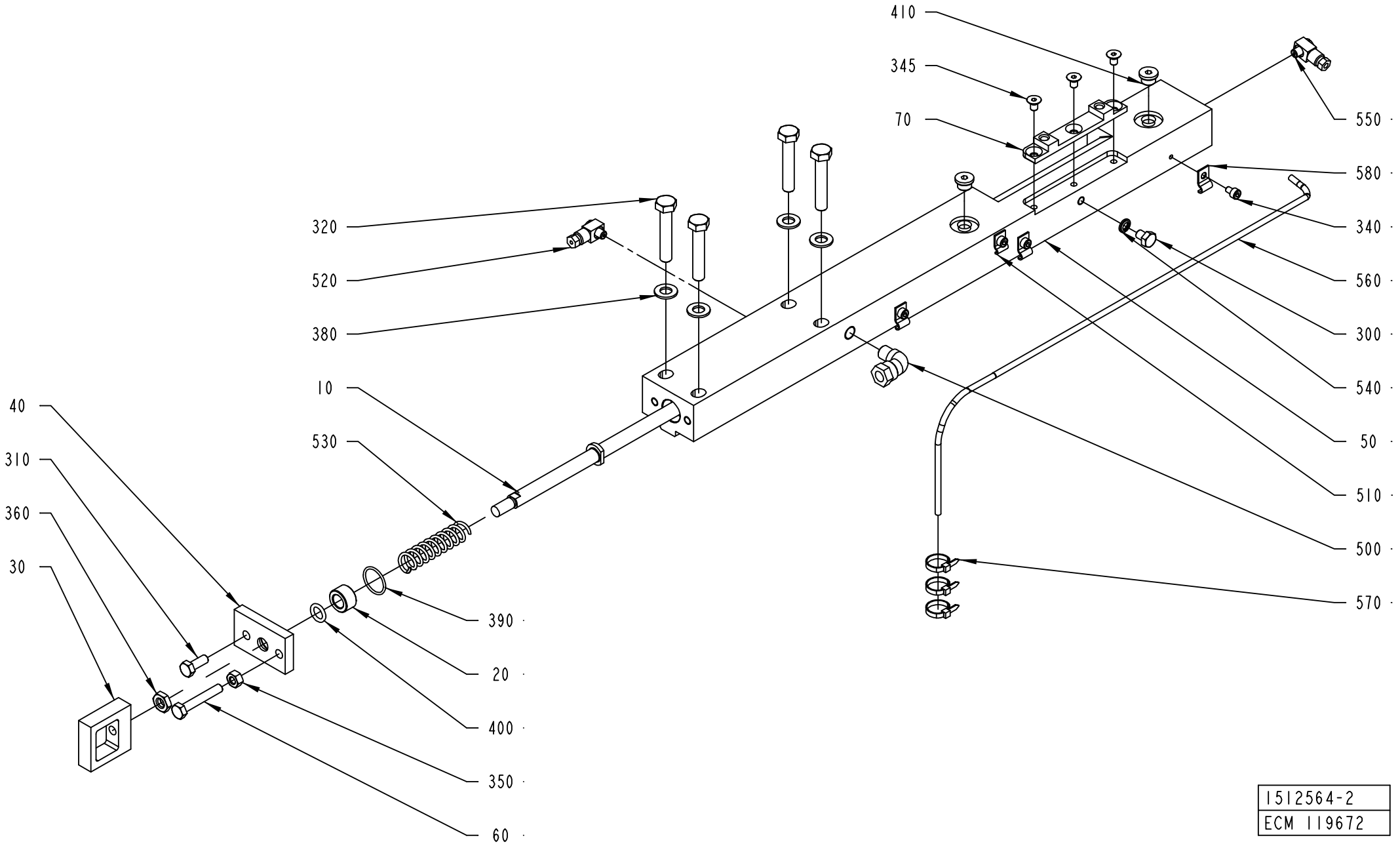

1512564-2
ECM 119672

ECM: 263537 - 20060702
Group number: 1512564-0200
Assembly Drawing: 1512564-2_1_AA

This list covers pages from 4-108 to 4-115

Pos	Part No	UN	Qty	Description	Page No
TBA 0200B QC, TBA 0330S QC, TBA 0250B QC, TPA 0250SQ QC, TPA 0200SQ QC (See drawing on page: 4-110)					
010	2530508-0000		1	TIE ROD	
050	2571843-0000		1	CARRIER	
070	1549312-0000		1	INSERT	
300	312105-0362		1	SCREW M6S ISO 4017 M6X8 A480	
345	312155-0323		3	SCREW DIN 7991 MF6S M5X8 A4 70	
400	315202-0208		1	O-RING 9,3X2,4 MM	
540	315211-0103		1	BONDED SEAL SS/NBR90 M6	
TBA 0200SQ QC, TBA 0250SQ QC (See drawing on page: 4-110)					
010	2737034-0000		1	TIE ROD	
050	2571843-0000		1	CARRIER	
070	1549312-0000		1	INSERT	
300	312105-0362		1	SCREW M6S ISO 4017 M6X8 A480	
345	312155-0323		3	SCREW DIN 7991 MF6S M5X8 A4 70	
400	315202-0208		1	O-RING 9,3X2,4 MM	
540	315211-0103		1	BONDED SEAL SS/NBR90 M6	
TBA 0250S, TBA 0200M (See drawing on page: 4-110)					
010	2530508-0000		1	TIE ROD	
050	2571843-0000		1	CARRIER	
070	2641225-0000		1	INSERT	
300	312105-0362		1	SCREW M6S ISO 4017 M6X8 A480	
345	312155-0323		3	SCREW DIN 7991 MF6S M5X8 A4 70	
400	315202-0208		1	O-RING 9,3X2,4 MM	
540	315211-0103		1	BONDED SEAL SS/NBR90 M6	
TBA 0500B QC, TBA 1000B QC (See drawing on page: 4-110)					
010	1499320-0000		1	TIE ROD	
050	2571843-0000		1	CARRIER	
070	1549312-0000		1	INSERT	
300	312105-0362		1	SCREW M6S ISO 4017 M6X8 A480	
345	312155-0323		3	SCREW DIN 7991 MF6S M5X8 A4 70	
400	315202-0208		1	O-RING 9,3X2,4 MM	
540	315211-0103		1	BONDED SEAL SS/NBR90 M6	
TBA 0500S, TBA 0200S, TPA 0330SQ, TPA 0500SQ, TBA 0200B NOQC, TBA 0250B NOQC (See drawing on page: 4-108)					
010	2530508-0000		1	TIE ROD	
050	2531114-0000		1	CARRIER	
300	312105-0362		1	SCREW M6S ISO 4017 M6X8 A480	
400	315202-0208		1	O-RING 9,3X2,4 MM	
540	315211-0103		1	BONDED SEAL SS/NBR90 M6	
TBA 1000S, TBA 1000SQ, TBA 1500S, TBA 1000B NOQC, TPA 1000SQ NOQC (See drawing on page: 4-108)					
010	1499320-0000		1	TIE ROD	
050	2531114-0000		1	CARRIER	
300	312105-0362		1	SCREW M6S ISO 4017 M6X8 A480	
400	315202-0208		1	O-RING 9,3X2,4 MM	
540	315211-0103		1	BONDED SEAL SS/NBR90 M6	
TBA 1890S QC, TBA 2000S QC (See drawing on page: 4-114)					
010	2588291-0000		1	TIE ROD	
050	2566329-0000		1	CARRIER	
070	2566328-0000		1	PLATE	
300	312105-0362		1	SCREW M6S ISO 4017 M6X8 A480	
400	315202-0208		1	O-RING 9,3X2,4 MM	
540	315211-0103		1	BONDED SEAL SS/NBR90 M6	
590	312155-0287		3	SCREW DIN 7991 MF6S M4X8 A4 70	
600	2603151-0000		1	SHIM	
TPA 1000SQ QC, TPA 0750SQ QC (See drawing on page: 4-112)					
010	2530508-0000		1	TIE ROD	
050	2647116-0000		1	CARRIER	
070	2647114-0000		1	INSERT	
290	312105-0291		2	SCREW M6S ISO 4017 M4X12 A470	
300	312105-0362		1	SCREW M6S ISO 4017 M6X8 A480	
345	312145-0323		3	SCREW ISO 2009 MFS M5X8 A4	
400	315202-0208		1	O-RING 9,3X2,4 MM	
540	315211-0103		1	BONDED SEAL SS/NBR90 M6	
Common Parts					
020	1036495-0000		1	BUSHING	
030	1036585-0000		1	EAR	
040	1036664-0000		1	LID	
060	1523162-0000		1	SCREW	
310	312105-0368		1	SCREW M6S ISO 4017 M6X16 A480	
320	312105-0460		4	SCREW M6S ISO 4014 M8X45 A480	
340	312115-0285		4	SCREW ISO4762 M4X6 A4 80	
350	312605-0316		1	HEXAGON NUT, M6M M6 A280	
360	312625-0318		1	HEXAGON THIN NUT, EN 24035 ML6M M8 A4	
380	315105-0165		4	WASHER BRB 8,4X16 RFR	
390	315202-0116		1	O-RING 18,1X1,6 MM	
410	342713-0209		2	PLUG (QUANT.MINIMA= 10PC).	
500	90030-0257		1	CONN. ELBOW, 8-R1/8, EXT.THREAD	
510	90165-0058		1	PIPE CLIP FOR TUBE D=2,5 MM	
520	90134-0058		1	CONNECTION	
530	1548940-0000		1	SPRING	
550	90134-0068		1	CONNECTION	
560	90266-0165	MM	800	BRASS PIPE	
570	352113-0101		3	CLIP STRIP, 92X2,5 MM	

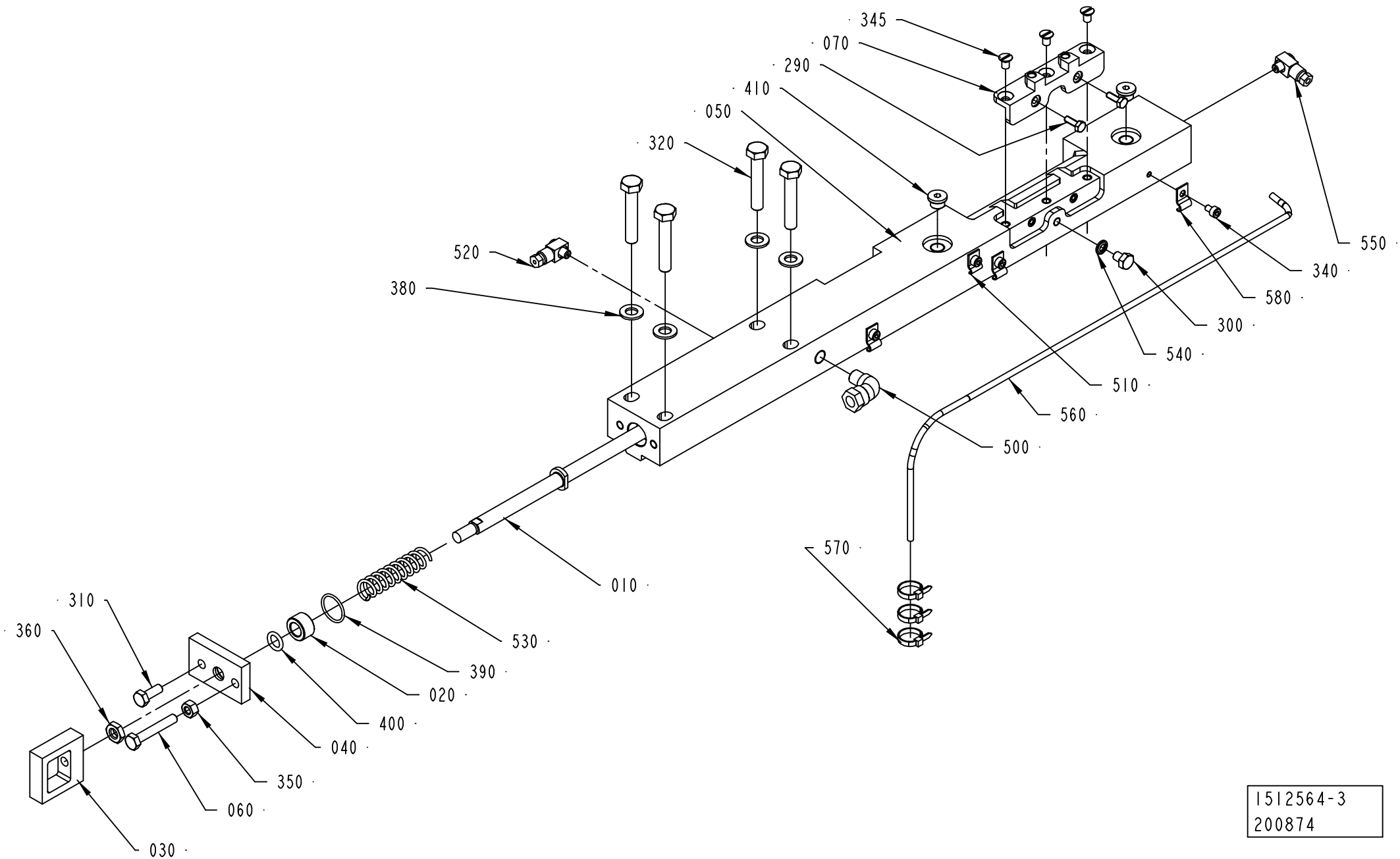

1512564-3
200874

ECM: 263537 - 20060702
Group number: 1512564-0200
Assembly Drawing: 1512564-3_1_AA

This list covers pages from 4-108 to 4-115

Pos	Part No	UN	Qty	Description	Page No
TBA 0200B QC, TBA 0330S QC, TBA 0250B QC, TPA 0250SQ QC, TPA 0200SQ QC (See drawing on page: 4-110)					
010	2530508-0000		1	TIE ROD	
050	2571843-0000		1	CARRIER	
070	1549312-0000		1	INSERT	
300	312105-0362		1	SCREW M6S ISO 4017 M6X8 A480	
345	312155-0323		3	SCREW DIN 7991 MF6S M5X8 A4 70	
400	315202-0208		1	O-RING 9,3X2,4 MM	
540	315211-0103		1	BONDED SEAL SS/NBR90 M6	
TBA 0200SQ QC, TBA 0250SQ QC (See drawing on page: 4-110)					
010	2737034-0000		1	TIE ROD	
050	2571843-0000		1	CARRIER	
070	1549312-0000		1	INSERT	
300	312105-0362		1	SCREW M6S ISO 4017 M6X8 A480	
345	312155-0323		3	SCREW DIN 7991 MF6S M5X8 A4 70	
400	315202-0208		1	O-RING 9,3X2,4 MM	
540	315211-0103		1	BONDED SEAL SS/NBR90 M6	
TBA 0250S, TBA 0200M (See drawing on page: 4-110)					
010	2530508-0000		1	TIE ROD	
050	2571843-0000		1	CARRIER	
070	2641225-0000		1	INSERT	
300	312105-0362		1	SCREW M6S ISO 4017 M6X8 A480	
345	312155-0323		3	SCREW DIN 7991 MF6S M5X8 A4 70	
400	315202-0208		1	O-RING 9,3X2,4 MM	
540	315211-0103		1	BONDED SEAL SS/NBR90 M6	
TBA 0500B QC, TBA 1000B QC (See drawing on page: 4-110)					
010	1499320-0000		1	TIE ROD	
050	2571843-0000		1	CARRIER	
070	1549312-0000		1	INSERT	
300	312105-0362		1	SCREW M6S ISO 4017 M6X8 A480	
345	312155-0323		3	SCREW DIN 7991 MF6S M5X8 A4 70	
400	315202-0208		1	O-RING 9,3X2,4 MM	
540	315211-0103		1	BONDED SEAL SS/NBR90 M6	
TBA 0500S, TBA 0200S, TPA 0330SQ, TPA 0500SQ, TBA 0200B NOQC, TBA 0250B NOQC (See drawing on page: 4-108)					
010	2530508-0000		1	TIE ROD	
050	2531114-0000		1	CARRIER	
300	312105-0362		1	SCREW M6S ISO 4017 M6X8 A480	
400	315202-0208		1	O-RING 9,3X2,4 MM	
540	315211-0103		1	BONDED SEAL SS/NBR90 M6	
TBA 1000S, TBA 1000SQ, TBA 1500S, TBA 1000B NOQC, TPA 1000SQ NOQC (See drawing on page: 4-108)					
010	1499320-0000		1	TIE ROD	
050	2531114-0000		1	CARRIER	
300	312105-0362		1	SCREW M6S ISO 4017 M6X8 A480	
400	315202-0208		1	O-RING 9,3X2,4 MM	
540	315211-0103		1	BONDED SEAL SS/NBR90 M6	
TBA 1890S QC, TBA 2000S QC (See drawing on page: 4-114)					
010	2588291-0000		1	TIE ROD	
050	2566329-0000		1	CARRIER	
070	2566328-0000		1	PLATE	
300	312105-0362		1	SCREW M6S ISO 4017 M6X8 A480	
400	315202-0208		1	O-RING 9,3X2,4 MM	
540	315211-0103		1	BONDED SEAL SS/NBR90 M6	
590	312155-0287		3	SCREW DIN 7991 MF6S M4X8 A4 70	
600	2603151-0000		1	SHIM	
TPA 1000SQ QC, TPA 0750SQ QC (See drawing on page: 4-112)					
010	2530508-0000		1	TIE ROD	
050	2647116-0000		1	CARRIER	
070	2647114-0000		1	INSERT	
290	312105-0291		2	SCREW M6S ISO 4017 M4X12 A470	
300	312105-0362		1	SCREW M6S ISO 4017 M6X8 A480	
345	312145-0323		3	SCREW ISO 2009 MFS M5X8 A4	
400	315202-0208		1	O-RING 9,3X2,4 MM	
540	315211-0103		1	BONDED SEAL SS/NBR90 M6	
Common Parts					
020	1036495-0000		1	BUSHING	
030	1036585-0000		1	EAR	
040	1036664-0000		1	LID	
060	1523162-0000		1	SCREW	
310	312105-0368		1	SCREW M6S ISO 4017 M6X16 A480	
320	312105-0460		4	SCREW M6S ISO 4014 M8X45 A480	
340	312115-0285		4	SCREW ISO4762 M4X6 A4 80	
350	312605-0316		1	HEXAGON NUT, M6M M6 A280	
360	312625-0318		1	HEXAGON THIN NUT, EN 24035 ML6M M8 A4	
380	315105-0165		4	WASHER BRB 8,4X16 RFR	
390	315202-0116		1	O-RING 18,1X1,6 MM	
410	342713-0209		2	PLUG (QUANT.MINIMA= 10PC).	
500	90030-0257		1	CONN. ELBOW, 8-R1/8, EXT.THREAD	
510	90165-0058		1	PIPE CLIP FOR TUBE D=2,5 MM	
520	90134-0058		1	CONNECTION	
530	1548940-0000		1	SPRING	
550	90134-0068		1	CONNECTION	
560	90266-0165	MM	800	BRASS PIPE	
570	352113-0101		3	CLIP STRIP, 92X2,5 MM	

CARRIER CUTTING LEFT

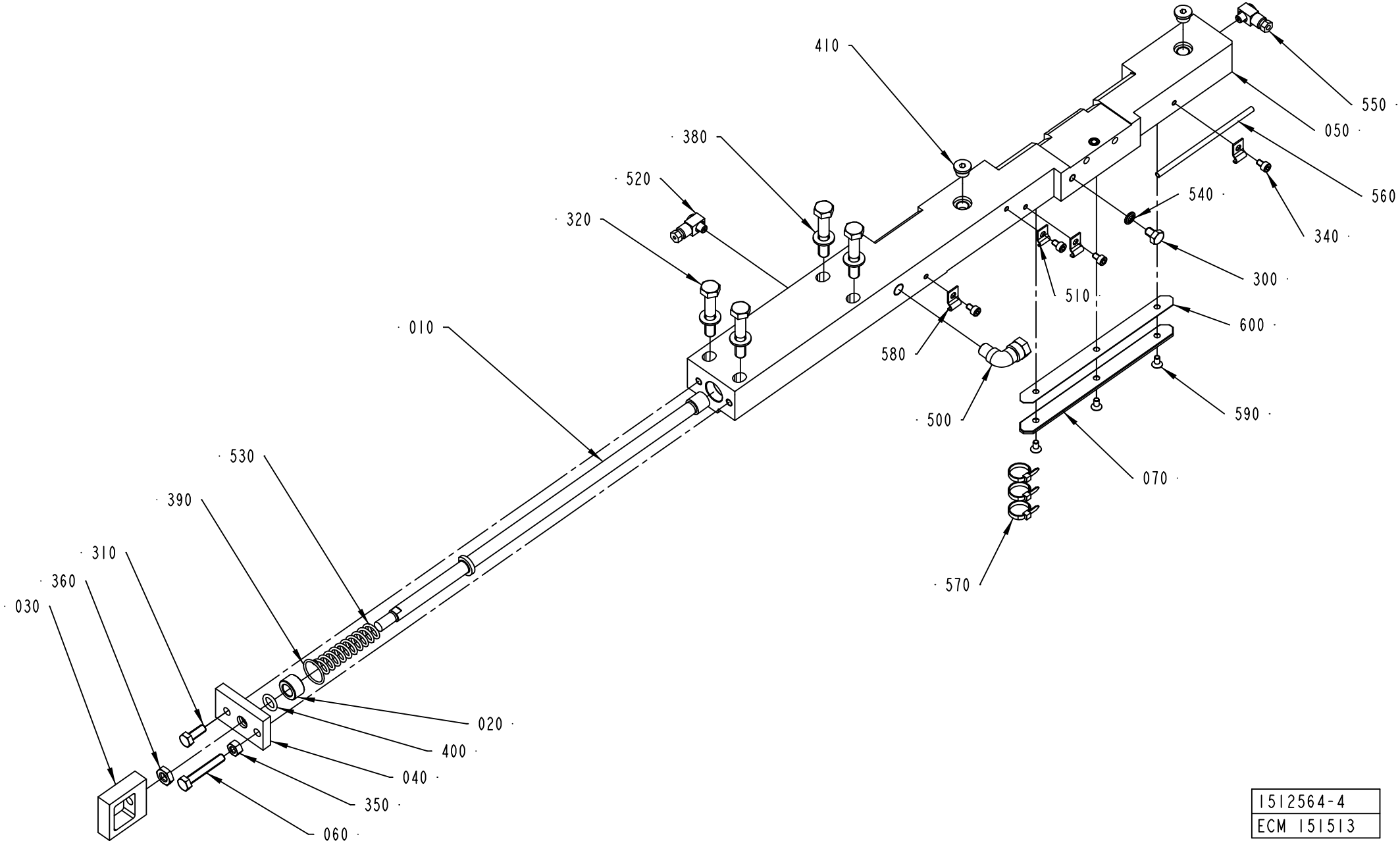

1512564-4
ECM 151513

ECM: 263537 - 20060702
Group number: 1512564-0200
Assembly Drawing: 1512564-4_1_AA

This list covers pages from 4-108 to 4-115

Pos	Part No	UN	Qty	Description	Page No
TBA 0200B QC, TBA 0330S QC, TBA 0250B QC, TPA 0250SQ QC, TPA 0200SQ QC (See drawing on page: 4-110)					
010	2530508-0000		1	TIE ROD	
050	2571843-0000		1	CARRIER	
070	1549312-0000		1	INSERT	
300	312105-0362		1	SCREW M6S ISO 4017 M6X8 A480	
345	312155-0323		3	SCREW DIN 7991 MF6S M5X8 A4 70	
400	315202-0208		1	O-RING 9,3X2,4 MM	
540	315211-0103		1	BONDED SEAL SS/NBR90 M6	
TBA 0200SQ QC, TBA 0250SQ QC (See drawing on page: 4-110)					
010	2737034-0000		1	TIE ROD	
050	2571843-0000		1	CARRIER	
070	1549312-0000		1	INSERT	
300	312105-0362		1	SCREW M6S ISO 4017 M6X8 A480	
345	312155-0323		3	SCREW DIN 7991 MF6S M5X8 A4 70	
400	315202-0208		1	O-RING 9,3X2,4 MM	
540	315211-0103		1	BONDED SEAL SS/NBR90 M6	
TBA 0250S, TBA 0200M (See drawing on page: 4-110)					
010	2530508-0000		1	TIE ROD	
050	2571843-0000		1	CARRIER	
070	2641225-0000		1	INSERT	
300	312105-0362		1	SCREW M6S ISO 4017 M6X8 A480	
345	312155-0323		3	SCREW DIN 7991 MF6S M5X8 A4 70	
400	315202-0208		1	O-RING 9,3X2,4 MM	
540	315211-0103		1	BONDED SEAL SS/NBR90 M6	
TBA 0500B QC, TBA 1000B QC (See drawing on page: 4-110)					
010	1499320-0000		1	TIE ROD	
050	2571843-0000		1	CARRIER	
070	1549312-0000		1	INSERT	
300	312105-0362		1	SCREW M6S ISO 4017 M6X8 A480	
345	312155-0323		3	SCREW DIN 7991 MF6S M5X8 A4 70	
400	315202-0208		1	O-RING 9,3X2,4 MM	
540	315211-0103		1	BONDED SEAL SS/NBR90 M6	
TBA 0500S, TBA 0200S, TPA 0330SQ, TPA 0500SQ, TBA 0200B NOQC, TBA 0250B NOQC (See drawing on page: 4-108)					
010	2530508-0000		1	TIE ROD	
050	2531114-0000		1	CARRIER	
300	312105-0362		1	SCREW M6S ISO 4017 M6X8 A480	
400	315202-0208		1	O-RING 9,3X2,4 MM	
540	315211-0103		1	BONDED SEAL SS/NBR90 M6	
TBA 1000S, TBA 1000SQ, TBA 1500S, TBA 1000B NOQC, TPA 1000SQ NOQC (See drawing on page: 4-108)					
010	1499320-0000		1	TIE ROD	
050	2531114-0000		1	CARRIER	
300	312105-0362		1	SCREW M6S ISO 4017 M6X8 A480	
400	315202-0208		1	O-RING 9,3X2,4 MM	
540	315211-0103		1	BONDED SEAL SS/NBR90 M6	
TBA 1890S QC, TBA 2000S QC (See drawing on page: 4-114)					
010	2588291-0000		1	TIE ROD	
050	2566329-0000		1	CARRIER	
070	2566328-0000		1	PLATE	
300	312105-0362		1	SCREW M6S ISO 4017 M6X8 A480	
400	315202-0208		1	O-RING 9,3X2,4 MM	
540	315211-0103		1	BONDED SEAL SS/NBR90 M6	
590	312155-0287		3	SCREW DIN 7991 MF6S M4X8 A4 70	
600	2603151-0000		1	SHIM	
TPA 1000SQ QC, TPA 0750SQ QC (See drawing on page: 4-112)					
010	2530508-0000		1	TIE ROD	
050	2647116-0000		1	CARRIER	
070	2647114-0000		1	INSERT	
290	312105-0291		2	SCREW M6S ISO 4017 M4X12 A470	
300	312105-0362		1	SCREW M6S ISO 4017 M6X8 A480	
345	312145-0323		3	SCREW ISO 2009 MFS M5X8 A4	
400	315202-0208		1	O-RING 9,3X2,4 MM	
540	315211-0103		1	BONDED SEAL SS/NBR90 M6	
Common Parts					
020	1036495-0000		1	BUSHING	
030	1036585-0000		1	EAR	
040	1036664-0000		1	LID	
060	1523162-0000		1	SCREW	
310	312105-0368		1	SCREW M6S ISO 4017 M6X16 A480	
320	312105-0460		4	SCREW M6S ISO 4014 M8X45 A480	
340	312115-0285		4	SCREW ISO4762 M4X6 A4 80	
350	312605-0316		1	HEXAGON NUT, M6M M6 A280	
360	312625-0318		1	HEXAGON THIN NUT, EN 24035 ML6M M8 A4	
380	315105-0165		4	WASHER BRB 8,4X16 RFR	
390	315202-0116		1	O-RING 18,1X1,6 MM	
410	342713-0209		2	PLUG (QUANT.MINIMA= 10PC).	
500	90030-0257		1	CONN. ELBOW, 8-R1/8, EXT.THREAD	
510	90165-0058		1	PIPE CLIP FOR TUBE D=2,5 MM	
520	90134-0058		1	CONNECTION	
530	1548940-0000		1	SPRING	
550	90134-0068		1	CONNECTION	
560	90266-0165	MM	800	BRASS PIPE	
570	352113-0101		3	CLIP STRIP, 92X2,5 MM	

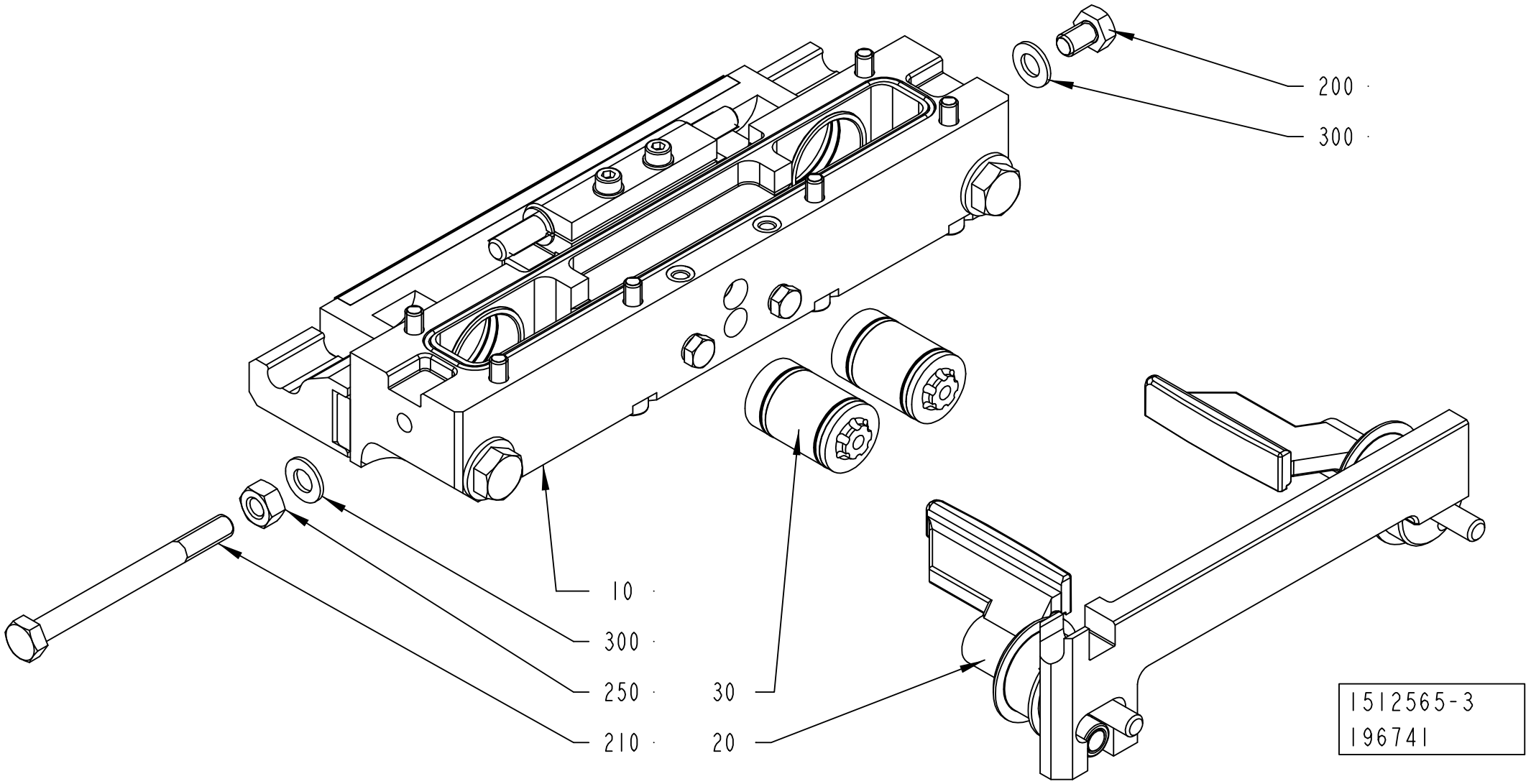
200
300
10
300
250
210
30
20
1512565-3
196741

ECM: 272004 - 20060831
Group number: 1512565-0300
Assembly Drawing: 1512565-3_1_AA

Pos	Part No	UN	Qty	Description	Page No
-					
010	2552008-0200		1	CUTTING JAW	**4-119, 4-121, 4-123, 4-125**
020	2552009-0100		1	FOLDING FLAP LEFT	**4-127, 4-129**
030	2552010-0200		2	PISTON	**4-131**
200	312105-0447		1	SCREW M6S ISO 4017 M8X12 A480	
210	312105-0469		1	SCREW M6S ISO 4014 M8X90 A480	
250	312605-0318		1	HEXAGON NUT, M6M M8 A280	
300	315105-0165		2	WASHER BRB 8,4X16 RFR	

Pos	Part No	UN	Qty	Description	Page No

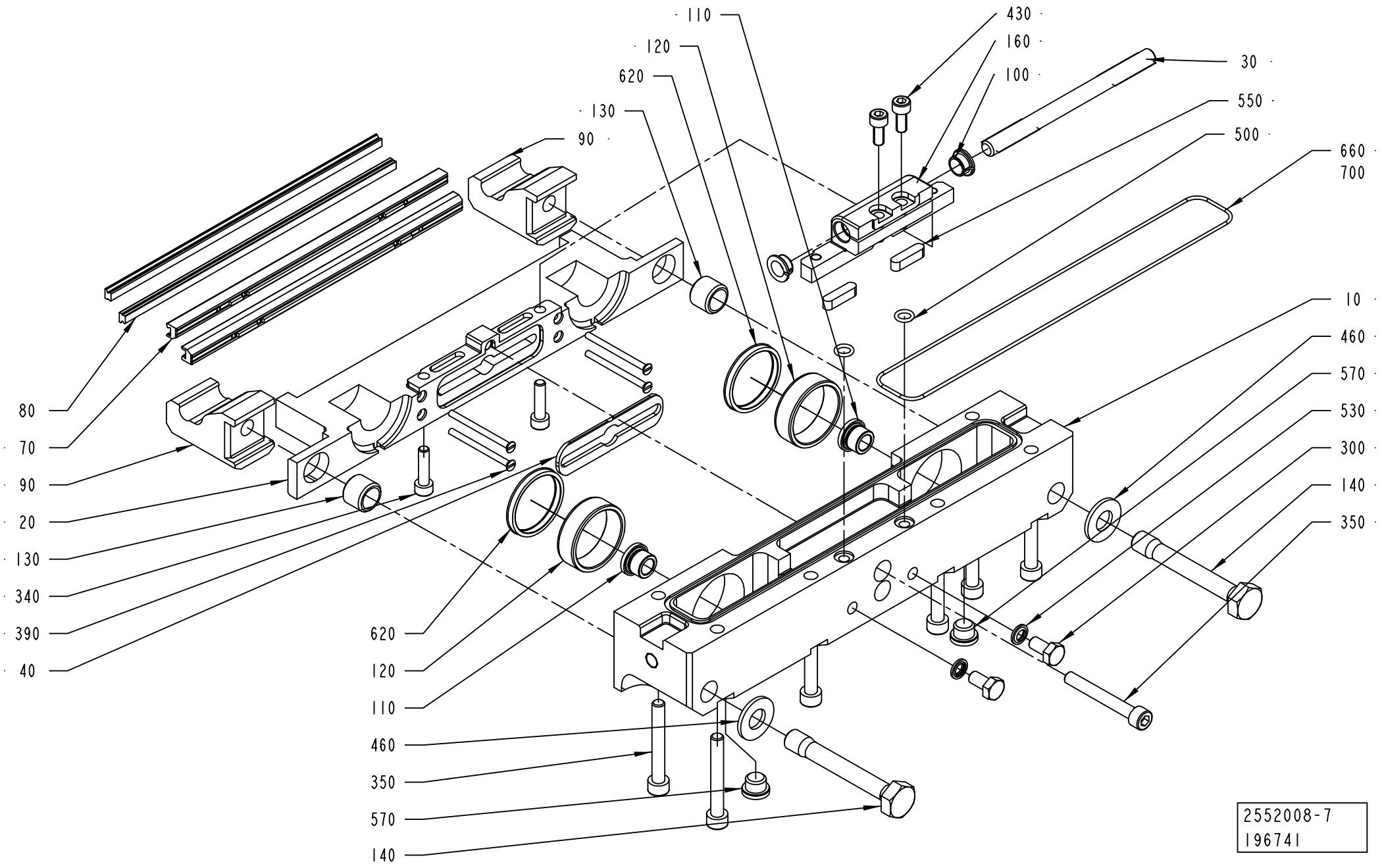
110
120
620
130
90
430
160
100
30
550
500
660
700
10
460
570
530
300
140
350
80
70
90
20
130
340
390
40
620
120
110
460
350
570
140
2552008-7
196741

ECM: 271968 - 20060831
Group number: 2552008-0200
Assembly Drawing: 2552008-7_1_AA

This list covers pages from 4-118 to 4-125

Pos	Part No	UN	Qty	Description	Page No
TPA 1000SQ QC, TPA 0750SQ QC (See drawing on page: 4-122)					
010	2775285-0000		1	BEARING HOUSING	
020	2658265-0000		1	CUTTING JAW	
040	1487619-0000		1	PLATE	
070	1520494-0000		2	CUTTING RAIL	
080	1520633-0002		2	DOLLY	
090	1538348-0000		2	CATCH	
120	1255389-0000		2	BUSHING	
140	1035871-0000		2	SCREW	
390	312145-0238		2	SCREW ISO 2009 MFS M3X40 A4	
400	1523827-0000		2	SCREW	
500	315202-0104		2	O-RING 6,1X1,6 MM	
620	90091-0361		2	SCRAPER, EXCLUDER2 30X34,8X3,7 MM	
660	90242-0093	MM	550	O-RING MATERIAL 1,5 MM	
TBA 0200B QC, TBA 0330S QC, TBA 0250B QC (See drawing on page: 4-120)					
010	2774548-0000		1	BEARING HOUSING	
020	2604564-0000		1	CUTTING JAW	
050	1484002-0000		1	PLATE	
060	1484003-0000		1	PLATE	
070	1520493-0000		2	CUTTING RAIL	
080	1110083-0002		2	DOLLY	
090	1538348-0000		2	CATCH	
120	1255389-0000		2	BUSHING	
140	1035871-0000		2	SCREW	
390	312145-0234		4	SCREW ISO 2009 MFS M3X30 A4	
500	315202-0104		2	O-RING 6,1X1,6 MM	
620	90091-0361		2	SCRAPER, EXCLUDER2 30X34,8X3,7 MM	
660	90242-0093	MM	550	O-RING MATERIAL 1,5 MM	
TBA 0200S (See drawing on page: 4-122)					
010	2775290-0000		1	BEARING HOUSING	
020	2513014-0000		1	CUTTING JAW	
030	2513013-0000		1	SHAFT	
050	1484002-0000		1	PLATE	
060	1484003-0000		1	PLATE	
070	1520493-0000		2	CUTTING RAIL	
080	1110083-0002		2	DOLLY	
090	1538348-0000		2	CATCH	
100	2531703-0000		2	BUSHING	
120	1255389-0000		2	BUSHING	
140	1035871-0000		2	SCREW	
390	312145-0234		4	SCREW ISO 2009 MFS M3X30 A4	
430	312115-0329		2	SCREW ISO4762 M5X16 A4 80	
500	315202-0104		2	O-RING 6,1X1,6 MM	
620	90091-0361		2	SCRAPER, EXCLUDER2 30X34,8X3,7 MM	
TBA 0200SQ QC, TBA 0250SQ QC (See drawing on page: 4-120)					
010	2774548-0000		1	BEARING HOUSING	
020	2668319-0000		1	CUTTING JAW	
050	1484002-0000		1	PLATE	
060	1484003-0000		1	PLATE	
070	1520493-0000		2	CUTTING RAIL	
080	1566845-0002		2	DOLLY	
090	1538348-0000		2	CATCH	
120	1255389-0000		2	BUSHING	
140	1035871-0000		2	SCREW	
150	2679952-0000		1	VOLUME BULGE	
390	312145-0234		4	SCREW ISO 2009 MFS M3X30 A4	
410	90287-0295		2	SCREW HEX.SOCK.COUNT.MF6S M3X8 A280	
500	315202-0104		2	O-RING 6,1X1,6 MM	
620	90091-0361		2	SCRAPER, EXCLUDER2 30X34,8X3,7 MM	
660	90242-0093	MM	550	O-RING MATERIAL 1,5 MM	
TBA 0250S QC, TBA 0200M QC (See drawing on page: 4-124)					
010	2775286-0000		1	BEARING HOUSING	
020	2645568-0000		1	CUTTING JAW	
050	1484002-0000		1	PLATE	
060	1484003-0000		1	PLATE	
070	1520493-0000		2	CUTTING RAIL	
080	1110083-0002		2	DOLLY	
090	1538348-0000		2	CATCH	
390	312145-0234		4	SCREW ISO 2009 MFS M3X30 A4	
TBA 0500B QC, TBA 1000B QC (See drawing on page: 4-120)					
010	2775287-0000		1	BEARING HOUSING	
020	1487954-0000		1	CUTTING JAW	
040	1349925-0000		1	PLATE	
070	1520455-0000		2	CUTTING RAIL	
080	1110083-0002		2	DOLLY	
090	1538348-0000		2	CATCH	
120	1255389-0000		2	BUSHING	
140	1035871-0000		2	SCREW	
150	1558733-0000		1	VOLUME BULGE	
390	312145-0238		4	SCREW ISO 2009 MFS M3X40 A4	
410	312155-0285		2	SCREW DIN 7991 MF6S M4X6 A4 70	
500	315202-0104		2	O-RING 6,1X1,6 MM	
620	90091-0361		2	SCRAPER, EXCLUDER2 30X34,8X3,7 MM	
660	90242-0093	MM	550	O-RING MATERIAL 1,5 MM	

Machine Type | Group Description | Used-In | Group Number | Page No

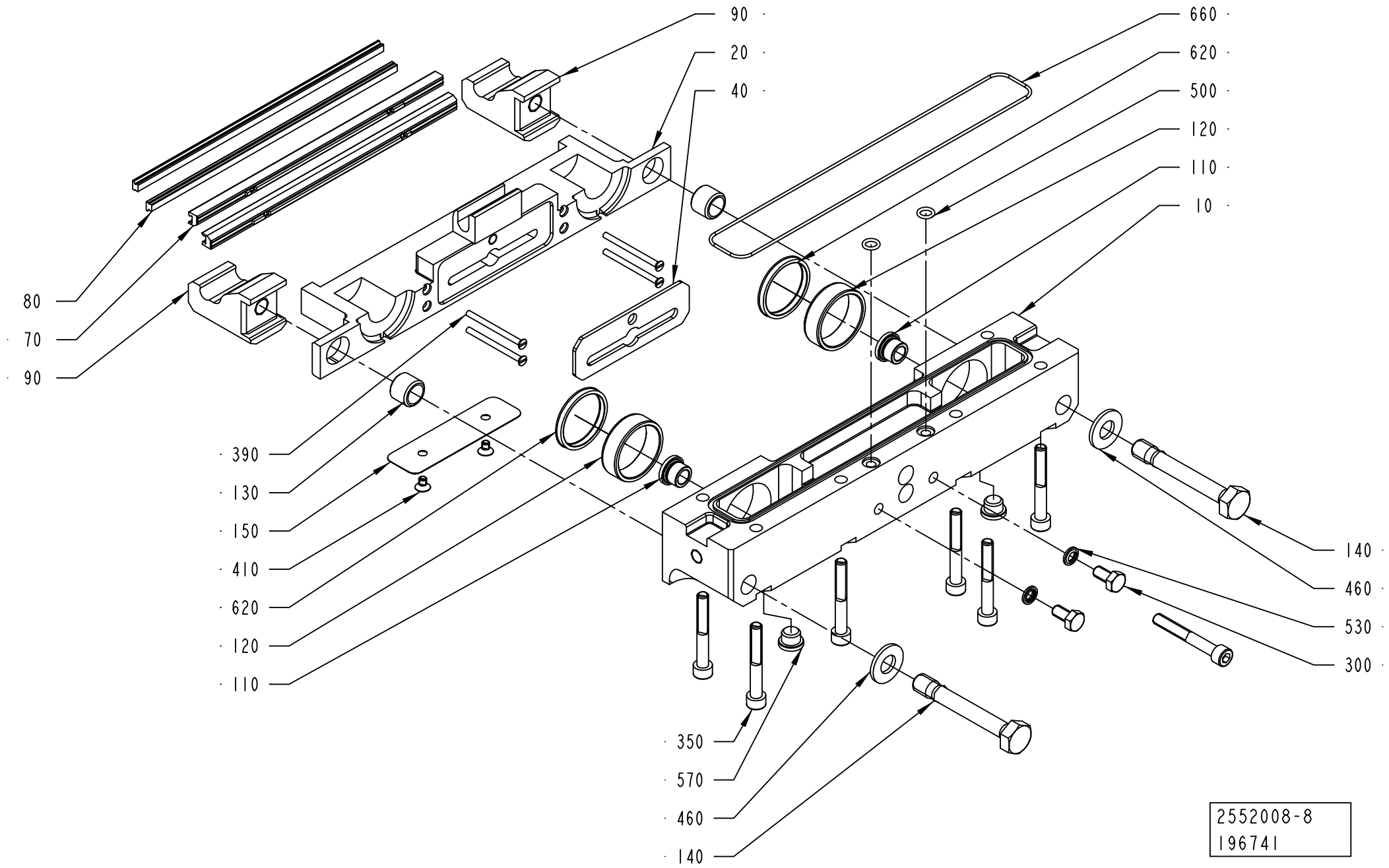
90
20
40
660
620
500
120
110
10
80
70
90
390
130
150
410
620
120
110
140
460
530
300
350
570
460
140
2552008-8
196741

Pos	Part No	UN	Qty	Description	Page No
TBA 0500S (Cont'd) (See drawing on page: 4-122)					
010	2775292-0000		1	BEARING HOUSING	
020	2611000-0000		1	CUTTING JAW	
030	2579990-0000		1	SHAFT	
040	1487619-0000		1	PLATE	
070	1520494-0000		2	CUTTING RAIL	
080	1110083-0002		2	DOLLY	
090	1538348-0000		2	CATCH	
100	2531703-0000		2	BUSHING	
120	1255389-0000		2	BUSHING	
140	1035871-0000		2	SCREW	
390	312145-0234		4	SCREW ISO 2009 MFS M3X30 A4	
430	312115-0327		2	SCREW ISO4762 M5X12 A4 80	
500	315202-0104		2	O-RING 6,1X1,6 MM	
620	90091-0361		2	SCRAPER, EXCLUDER2 30X34,8X3,7 MM	
660	90242-0093	MM	550	O-RING MATERIAL 1,5 MM	
TBA 1000B NOQC (See drawing on page: 4-122)					
010	2775287-0000		1	BEARING HOUSING	
020	2665188-0000		1	CUTTING JAW	
030	2526812-0000		1	SHAFT	
040	1349925-0000		1	PLATE	
070	1520455-0000		2	CUTTING RAIL	
080	1110083-0002		2	DOLLY	
090	1538348-0000		2	CATCH	
100	2531703-0000		2	BUSHING	
120	1255389-0000		2	BUSHING	
140	1035871-0000		2	SCREW	
390	312145-0238		4	SCREW ISO 2009 MFS M3X40 A4	
430	312115-0329		2	SCREW ISO4762 M5X16 A4 80	
440	315105-0146		2	WASHER BRB 5,3X10 RFR	
500	315202-0104		2	O-RING 6,1X1,6 MM	
620	90091-0361		2	SCRAPER, EXCLUDER2 30X34,8X3,7 MM	
660	90242-0093	MM	550	O-RING MATERIAL 1,5 MM	
TBA 1000S (See drawing on page: 4-122)					
010	2775288-0000		1	BEARING HOUSING	
020	2559424-0000		1	CUTTING JAW	
030	2526812-0000		1	SHAFT	
040	1349925-0000		1	PLATE	
070	1520455-0000		2	CUTTING RAIL	
080	1110083-0002		2	DOLLY	
090	1538348-0000		2	CATCH	
100	2531703-0000		2	BUSHING	
120	1255389-0000		2	BUSHING	
140	1035871-0000		2	SCREW	
390	312145-0238		4	SCREW ISO 2009 MFS M3X40 A4	
430	312115-0327		2	SCREW ISO4762 M5X12 A4 80	
500	315202-0104		2	O-RING 6,1X1,6 MM	
620	90091-0361		2	SCRAPER, EXCLUDER2 30X34,8X3,7 MM	
660	90242-0093	MM	550	O-RING MATERIAL 1,5 MM	
TBA 1000SQ (See drawing on page: 4-118)					
010	2774547-0000		1	BEARING HOUSING	
020	1487618-0000		1	CUTTING JAW	
030	2526812-0000		1	SHAFT	
040	1487619-0000		1	PLATE	
070	1520494-0000		2	CUTTING RAIL	
080	1110083-0002		2	DOLLY	
090	1538348-0000		2	CATCH	
100	2531703-0000		2	BUSHING	
120	1255389-0000		2	BUSHING	
140	1035871-0000		2	SCREW	
160	2526810-0000		1	HOLDER	
340	312115-0331		2	SCREW ISO4762 M5X20 A4 80	
390	312145-0238		4	SCREW ISO 2009 MFS M3X40 A4	
430	312115-0327		2	SCREW ISO4762 M5X12 A4 80	
500	315202-0104		2	O-RING 6,1X1,6 MM	
550	315705-0201		2	PARALLEL KEY W. ROUND ENDS 5X5X20 MM	
620	90091-0361		2	SCRAPER, EXCLUDER2 30X34,8X3,7 MM	
660	90242-0093	MM	550	O-RING MATERIAL 1,5 MM	
TBA 1500S (See drawing on page: 4-122)					
010	2775287-0000		1	BEARING HOUSING	
020	2570301-0000		1	CUTTING JAW	
030	2526812-0000		1	SHAFT	
040	1349925-0000		1	PLATE	
070	1520455-0000		2	CUTTING RAIL	
080	1110083-0002		2	DOLLY	
090	1538348-0000		2	CATCH	
100	2531703-0000		2	BUSHING	
120	1255389-0000		2	BUSHING	
140	1035871-0000		2	SCREW	
390	312145-0238		4	SCREW ISO 2009 MFS M3X40 A4	
430	312115-0327		2	SCREW ISO4762 M5X12 A4 80	
500	315202-0104		2	O-RING 6,1X1,6 MM	
620	90091-0361		2	SCRAPER, EXCLUDER2 30X34,8X3,7 MM	
660	90242-0093	MM	550	O-RING MATERIAL 1,5 MM	

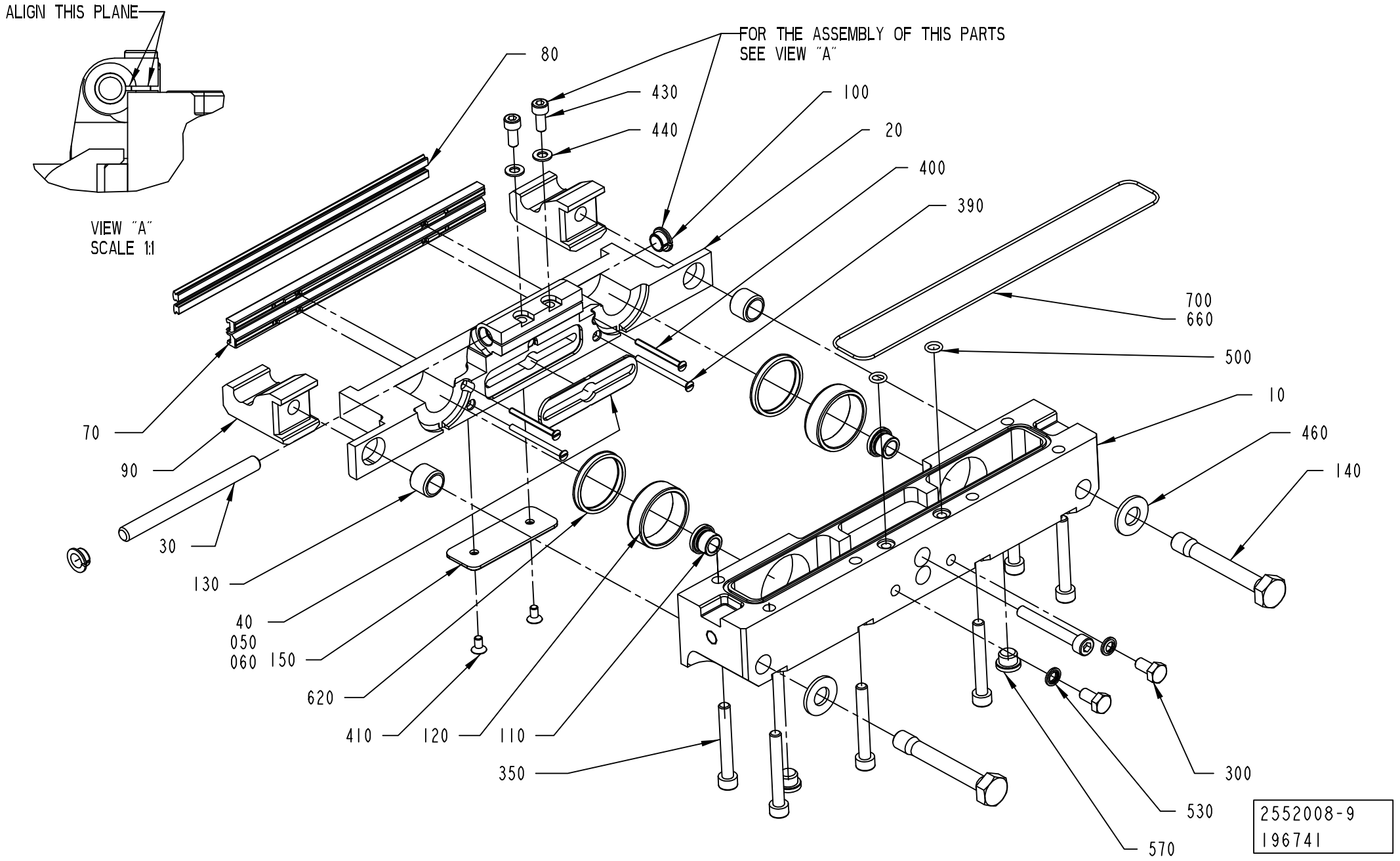
ALIGN THIS PLANE
VIEW "A"
SCALE 1:1
FOR THE ASSEMBLY OF THIS PARTS
SEE VIEW "A"
80
430
440
100
20
400
390
700
660
500
10
460
140
70
90
30
130
40
050
060
150
620
410
120
110
350
300
530
570
2552008-9
196741

ECM: 271968 - 20060831
Group number: 2552008-0200
Assembly Drawing: 2552008-9_1_AA

This list covers pages from 4-118 to 4-125

Pos	Part No	UN	Qty	Description	Page No
TBA 1890S QC, TBA 2000S QC (Cont'd) (See drawing on page: 4-122)					
010	2775283-0000		1	BEARING HOUSING	
020	2664762-0000		1	CUTTING JAW	
030	2686144-0000		1	SHAFT	
040	2588292-0000		1	PLATE	
070	1533051-0000		2	CUTTING RAIL	
080	1520633-0005		2	DOLLY	
090	2566339-0000		2	CATCH	
100	2531703-0000		2	BUSHING	
120	2588299-0000		2	BUSHING	
140	2588303-0000		2	SCREW	
390	312145-0238		8	SCREW ISO 2009 MFS M3X40 A4	
430	312115-0325		2	SCREW ISO4762 M5X10 A4 80	
500	315204-0105		2	O-RING 7,1X1,6 MM	
620	90091-0361		2	SCRAPER, EXCLUDER2 30X34,8X3,7 MM	
660	90459-2363		1	O-RING MATERIAL 1,78 MM	
TPA 0250SQ QC, TPA 0200SQ QC (See drawing on page: 4-120)					
010	2775290-0000		1	BEARING HOUSING	
020	2674336-0000		1	CUTTING JAW	
050	1484002-0000		1	PLATE	
060	1484003-0000		1	PLATE	
070	1520493-0000		2	CUTTING RAIL	
080	1110083-0002		2	DOLLY	
090	1538348-0000		2	CATCH	
120	1255389-0000		2	BUSHING	
140	1035871-0000		2	SCREW	
390	312145-0234		4	SCREW ISO 2009 MFS M3X30 A4	
500	315202-0104		2	O-RING 6,1X1,6 MM	
620	90091-0361		2	SCRAPER, EXCLUDER2 30X34,8X3,7 MM	
660	90242-0093	MM	550	O-RING MATERIAL 1,5 MM	
TPA 0330SQ (See drawing on page: 4-122)					
010	2775293-0000		1	BEARING HOUSING	
020	2611710-0000		1	CUTTING JAW	
030	2513013-0000		1	SHAFT	
050	1484002-0000		1	PLATE	
060	1484003-0000		1	PLATE	
070	1520493-0000		2	CUTTING RAIL	
080	1110083-0002		2	DOLLY	
090	1538348-0000		2	CATCH	
100	2531703-0000		2	BUSHING	
120	1255389-0000		2	BUSHING	
140	1035871-0000		2	SCREW	
390	312145-0234		4	SCREW ISO 2009 MFS M3X30 A4	
430	312115-0327		2	SCREW ISO4762 M5X12 A4 80	
500	315202-0104		2	O-RING 6,1X1,6 MM	
620	90091-0361		2	SCRAPER, EXCLUDER2 30X34,8X3,7 MM	
660	90242-0093	MM	550	O-RING MATERIAL 1,5 MM	
TPA 0500SQ (See drawing on page: 4-122)					
010	2775284-0000		1	BEARING HOUSING	
020	2570850-0000		1	CUTTING JAW	
030	2513013-0000		1	SHAFT	
050	1484002-0000		1	PLATE	
060	1484003-0000		1	PLATE	
070	1520493-0000		2	CUTTING RAIL	
080	1110083-0002		2	DOLLY	
090	1538348-0000		2	CATCH	
100	2570849-0000		2	BUSHING	
120	1255389-0000		2	BUSHING	
140	1035871-0000		2	SCREW	
150	2503689-0000		1	VOLUME BULGE	
390	312145-0238		4	SCREW ISO 2009 MFS M3X40 A4	
410	312155-0287		2	SCREW DIN 7991 MF6S M4X8 A4 70	
430	312115-0327		2	SCREW ISO4762 M5X12 A4 80	
500	315202-0104		2	O-RING 6,1X1,6 MM	
620	90091-0361		2	SCRAPER, EXCLUDER2 30X34,8X3,7 MM	
660	90242-0093	MM	550	O-RING MATERIAL 1,5 MM	
TPA 1000SQ NOQC (See drawing on page: 4-122)					
010	2775285-0000		1	BEARING HOUSING	
020	2579988-0000		1	CUTTING JAW	
030	2579990-0000		1	SHAFT	
040	1487619-0000		1	PLATE	
070	1520494-0000		2	CUTTING RAIL	
080	1520633-0002		2	DOLLY	
090	1538348-0000		2	CATCH	
100	2531703-0000		2	BUSHING	
120	1255389-0000		2	BUSHING	
140	1035871-0000		2	SCREW	
150	2503699-0000		1	VOLUME BULGE	
390	312145-0238		2	SCREW ISO 2009 MFS M3X40 A4	
400	1523827-0000		2	SCREW	
410	312155-0287		2	SCREW DIN 7991 MF6S M4X8 A4 70	
430	312115-0327		2	SCREW ISO4762 M5X12 A4 80	
500	315202-0104		2	O-RING 6,1X1,6 MM	
620	90091-0361		2	SCRAPER, EXCLUDER2 30X34,8X3,7 MM	

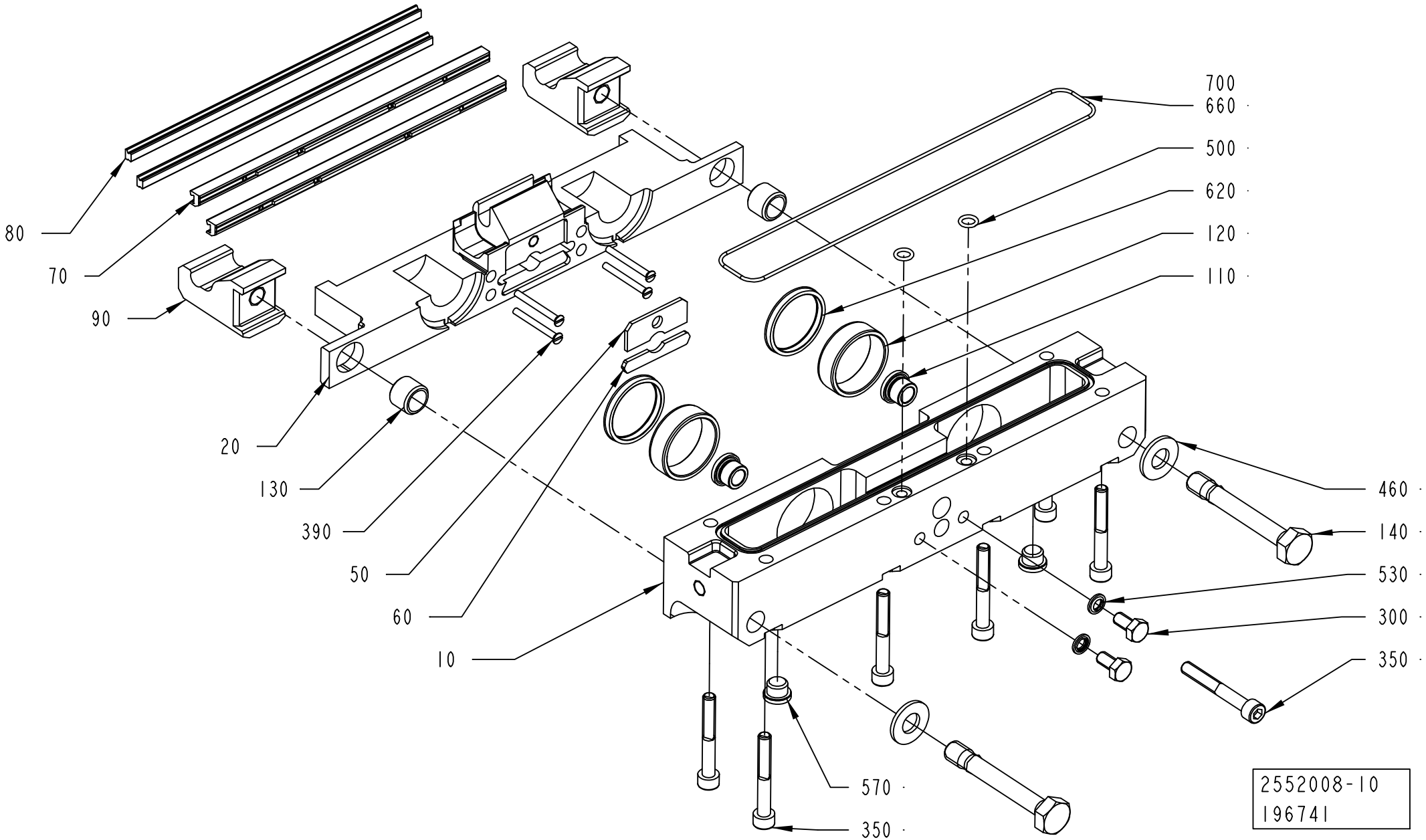
700
660
500
620
120
110
80
70
90
20
130
390
50
60
10
460
140
530
300
350
570
350
2552008-10
196741

Pos	Part No	UN	Qty	Description	Page No
TPA 1000SQ NOQC (Cont'd) (See drawing on page: 4-122)					
660	90242-0093	MM	550	O-RING MATERIAL 1,5 MM	
Common Parts					
110	1255390-0000		2	BUSHING	
130	1036494-0000		2	GUIDE BUSHING	
300	312105-0366		2	SCREW M6S ISO 4017 M6X12 A480	
350	312115-0379		7	SCREW ISO4762 M6X45 A4 80	
460	315105-0173		2	WASHER BRB 10,5X20 RFR	
530	315211-0103		2	BONDED SEAL SS/NBR90 M6	
570	342713-0209		2	PLUG (QUANT.MINIMA= 10PC).	
700	90153-0015		1	ADHESIVE,LOCTITE IS 496/CYANOLOT 303	

Pos	Part No	UN	Qty	Description	Page No

FOLDING FLAP LEFT

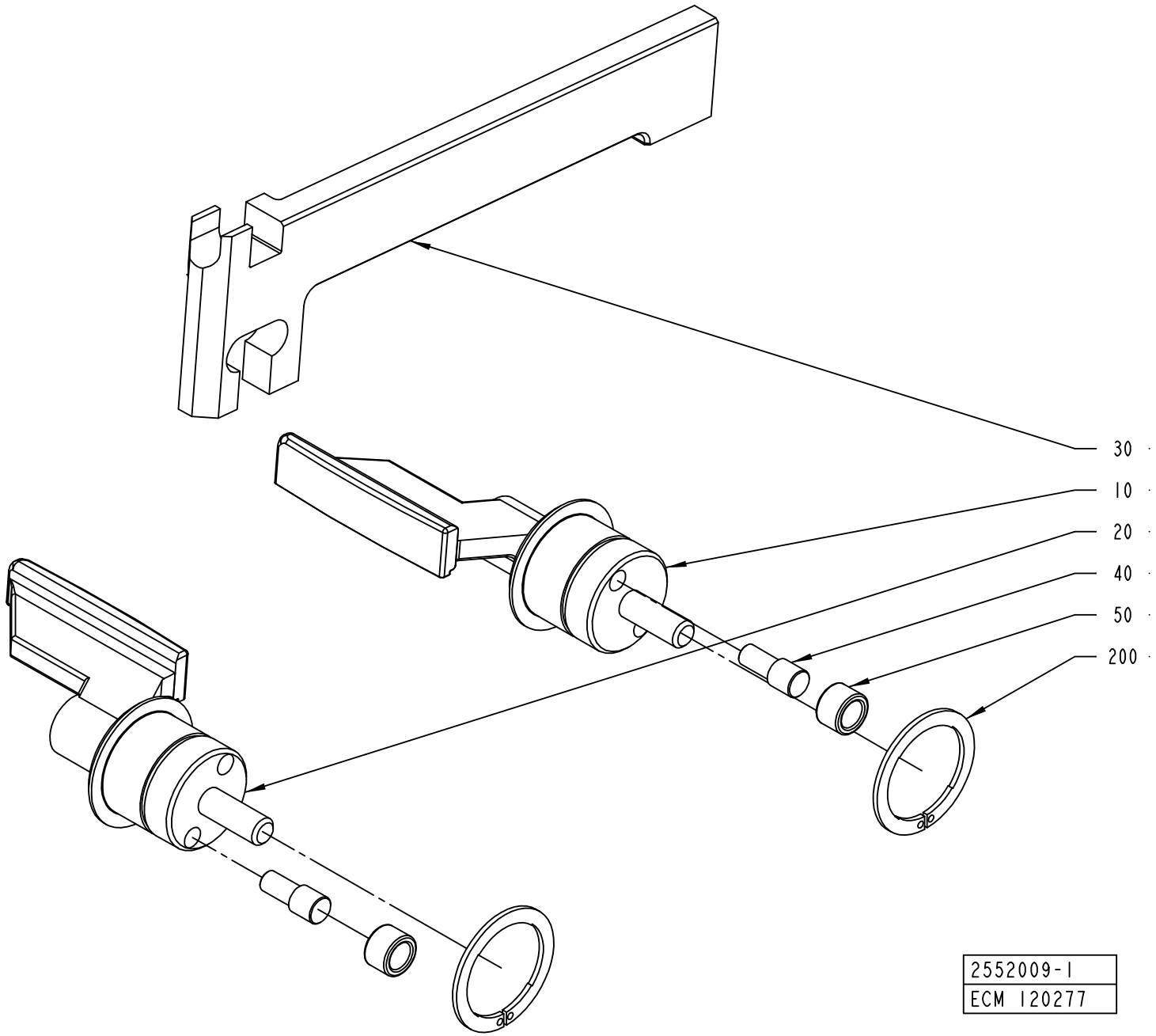

ECM: 271969 - 20060831
Group number: 2552009-0100
Assembly Drawing: 2552009-1_1_AA

This list covers pages from 4-126 to 4-129

Pos	Part No	UN	Qty	Description	Page No
TPA 0330SQ (See drawing on page: 4-126)					
010	2507096-0000		1	FOLDING FLAP	
020	2507097-0000		1	FOLDING FLAP	
030	1538256-0000		1	CARRIER RULER	
TPA 0500SQ (See drawing on page: 4-126)					
010	1549822-0000		1	FOLDING FLAP	
020	1549823-0000		1	FOLDING FLAP	
030	1549824-0000		1	CARRIER RULER	
TPA 1000SQ NOQC, TPA 1000SQ QC, TPA 0750SQ QC (See drawing on page: 4-126)					
010	1523146-0000		1	FOLDING FLAP	
020	1523147-0000		1	FOLDING FLAP	
030	1523177-0000		1	CARRIER RULER	
TBA 0200B QC, TBA 0330S QC (See drawing on page: 4-126)					
010	2605875-0000		1	FOLDING FLAP	
020	2605876-0000		1	FOLDING FLAP	
030	1255459-0000		1	CARRIER RULER	
TBA 0200S (See drawing on page: 4-126)					
010	2624554-0000		1	FOLDING FLAP	
020	2624555-0000		1	FOLDING FLAP	
030	1255458-0000		1	CARRIER RULER	
TBA 0200SQ QC, TBA 0250SQ QC (See drawing on page: 4-126)					
010	2668313-0000		1	FOLDING FLAP	
020	2668314-0000		1	FOLDING FLAP	
030	2736138-0000		1	CARRIER RULER	
TBA 0250B QC					
010	2605875-0000		1	FOLDING FLAP	
020	2605876-0000		1	FOLDING FLAP	
030	1255459-0000		1	CARRIER RULER	
TBA 0250S QC, TBA 0200M QC					
010	2624554-0000		1	FOLDING FLAP	
020	2624555-0000		1	FOLDING FLAP	
030	2520470-0000		1	CARRIER RULER	
TBA 0500B NOQC, TBA 1000B NOQC NOMOLDEDCAP (See drawing on page: 4-126)					
010	1511697-0000		1	.FOLDING FLAP	
020	1511698-0000		1	FOLDING FLAP	
030	1255457-0000		1	CARRIER RULER	
TBA 0500B QC, TBA 1000B QC (See drawing on page: 4-126)					
010	1511352-0000		1	FOLDING FLAP	
020	1511351-0000		1	FOLDING FLAP	
030	1255457-0000		1	CARRIER RULER	
TBA 0500S (See drawing on page: 4-126)					
010	2507085-0000		1	FOLDING FLAP	
020	2507086-0000		1	FOLDING FLAP	
030	1511067-0000		1	CARRIER RULER	
TBA 1000B NOQC STDA7 (See drawing on page: 4-126)					
010	1511697-0000		1	.FOLDING FLAP	
020	1511698-0000		1	FOLDING FLAP	
030	1255457-0000		1	CARRIER RULER	
TBA 1000S NOMOLDEDCAP (See drawing on page: 4-126)					
010	1511699-0000		1	FOLDING FLAP	
020	1511700-0000		1	FOLDING FLAP	
030	1255460-0000		1	CARRIER RULER	
TBA 1000S STDA7, TBA 1000S LIGHTCAP (See drawing on page: 4-126)					
010	1511699-0000		1	FOLDING FLAP	
020	2546501-0000		1	FOLDING FLAP	
030	1255460-0000		1	CARRIER RULER	
TBA 1000SQ (See drawing on page: 4-126)					
010	2507076-0000		1	FOLDING FLAP	
020	2507077-0000		1	FOLDING FLAP	
030	1360318-0000		1	CARRIER RULER	
TBA 1500S (See drawing on page: 4-126)					
010	2507092-0000		1	FOLDING FLAP	
020	2507093-0000		1	FOLDING FLAP	
030	1255457-0000		1	CARRIER RULER	
TBA 1890S QC, TBA 2000S QC (See drawing on page: 4-128)					
010	2566319-0000		1	FOLDING FLAP	
020	2566320-0000		1	FOLDING FLAP	
030	2566318-0000		1	CARRIER RULER	
210	90459-2258		2	SEAL GLYDRING 25,1X30X2,2 MM	
TPA 0250SQ QC, TPA 0200SQ QC					
010	2728883-0000		1	FOLDING FLAP	
020	2728884-0000		1	FOLDING FLAP	
030	1255458-0000		1	CARRIER RULER	
Common Parts					
040	22462-0000		2	SHAFT	
050	22463-0000		2	ROLL	
200	90141-0029		2	CIRCLIP	

Machine Type | Group Description | Used-In | Group Number | Page No

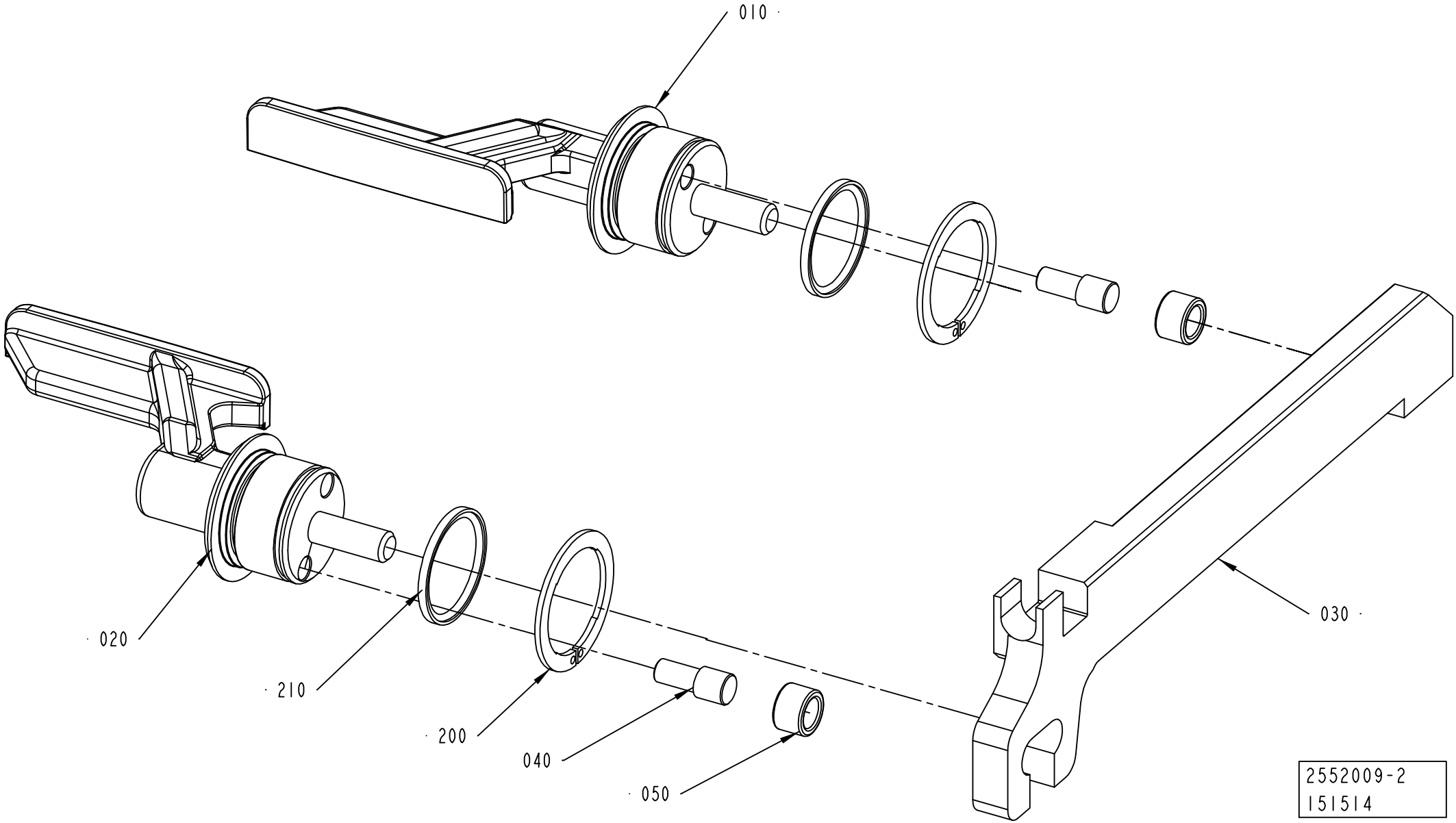
010
020
210
200
040
050
030
2552009-2
151514

ECM: 271969 - 20060831
Group number: 2552009-0100
Assembly Drawing: 2552009-2_1_AA

This list covers pages from 4-126 to 4-129

Pos	Part No	UN	Qty	Description	Page No
TPA 0330SQ (See drawing on page: 4-126)					
010	2507096-0000		1	FOLDING FLAP	
020	2507097-0000		1	FOLDING FLAP	
030	1538256-0000		1	CARRIER RULER	
TPA 0500SQ (See drawing on page: 4-126)					
010	1549822-0000		1	FOLDING FLAP	
020	1549823-0000		1	FOLDING FLAP	
030	1549824-0000		1	CARRIER RULER	
TPA 1000SQ NOQC, TPA 1000SQ QC, TPA 0750SQ QC (See drawing on page: 4-126)					
010	1523146-0000		1	FOLDING FLAP	
020	1523147-0000		1	FOLDING FLAP	
030	1523177-0000		1	CARRIER RULER	
TBA 0200B QC, TBA 0330S QC (See drawing on page: 4-126)					
010	2605875-0000		1	FOLDING FLAP	
020	2605876-0000		1	FOLDING FLAP	
030	1255459-0000		1	CARRIER RULER	
TBA 0200S (See drawing on page: 4-126)					
010	2624554-0000		1	FOLDING FLAP	
020	2624555-0000		1	FOLDING FLAP	
030	1255458-0000		1	CARRIER RULER	
TBA 0200SQ QC, TBA 0250SQ QC (See drawing on page: 4-126)					
010	2668313-0000		1	FOLDING FLAP	
020	2668314-0000		1	FOLDING FLAP	
030	2736138-0000		1	CARRIER RULER	
TBA 0250B QC					
010	2605875-0000		1	FOLDING FLAP	
020	2605876-0000		1	FOLDING FLAP	
030	1255459-0000		1	CARRIER RULER	
TBA 0250S QC, TBA 0200M QC					
010	2624554-0000		1	FOLDING FLAP	
020	2624555-0000		1	FOLDING FLAP	
030	2520470-0000		1	CARRIER RULER	
TBA 0500B NOQC, TBA 1000B NOQC NOMOLDEDCAP (See drawing on page: 4-126)					
010	1511697-0000		1	.FOLDING FLAP	
020	1511698-0000		1	FOLDING FLAP	
030	1255457-0000		1	CARRIER RULER	
TBA 0500B QC, TBA 1000B QC (See drawing on page: 4-126)					
010	1511352-0000		1	FOLDING FLAP	
020	1511351-0000		1	FOLDING FLAP	
030	1255457-0000		1	CARRIER RULER	
TBA 0500S (See drawing on page: 4-126)					
010	2507085-0000		1	FOLDING FLAP	
020	2507086-0000		1	FOLDING FLAP	
030	1511067-0000		1	CARRIER RULER	
TBA 1000B NOQC STDA7 (See drawing on page: 4-126)					
010	1511697-0000		1	.FOLDING FLAP	
020	1511698-0000		1	FOLDING FLAP	
030	1255457-0000		1	CARRIER RULER	
TBA 1000S NOMOLDEDCAP (See drawing on page: 4-126)					
010	1511699-0000		1	FOLDING FLAP	
020	1511700-0000		1	FOLDING FLAP	
030	1255460-0000		1	CARRIER RULER	
TBA 1000S STDA7, TBA 1000S LIGHTCAP (See drawing on page: 4-126)					
010	1511699-0000		1	FOLDING FLAP	
020	2546501-0000		1	FOLDING FLAP	
030	1255460-0000		1	CARRIER RULER	
TBA 1000SQ (See drawing on page: 4-126)					
010	2507076-0000		1	FOLDING FLAP	
020	2507077-0000		1	FOLDING FLAP	
030	1360318-0000		1	CARRIER RULER	
TBA 1500S (See drawing on page: 4-126)					
010	2507092-0000		1	FOLDING FLAP	
020	2507093-0000		1	FOLDING FLAP	
030	1255457-0000		1	CARRIER RULER	
TBA 1890S QC, TBA 2000S QC (See drawing on page: 4-128)					
010	2566319-0000		1	FOLDING FLAP	
020	2566320-0000		1	FOLDING FLAP	
030	2566318-0000		1	CARRIER RULER	
210	90459-2258		2	SEAL GLYDRING 25,1X30X2,2 MM	
TPA 0250SQ QC, TPA 0200SQ QC					
010	2728883-0000		1	FOLDING FLAP	
020	2728884-0000		1	FOLDING FLAP	
030	1255458-0000		1	CARRIER RULER	
Common Parts					
040	22462-0000		2	SHAFT	
050	22463-0000		2	ROLL	
200	90141-0029		2	CIRCLIP	

Machine Type | Group Description | Used-In | Group Number | Page No

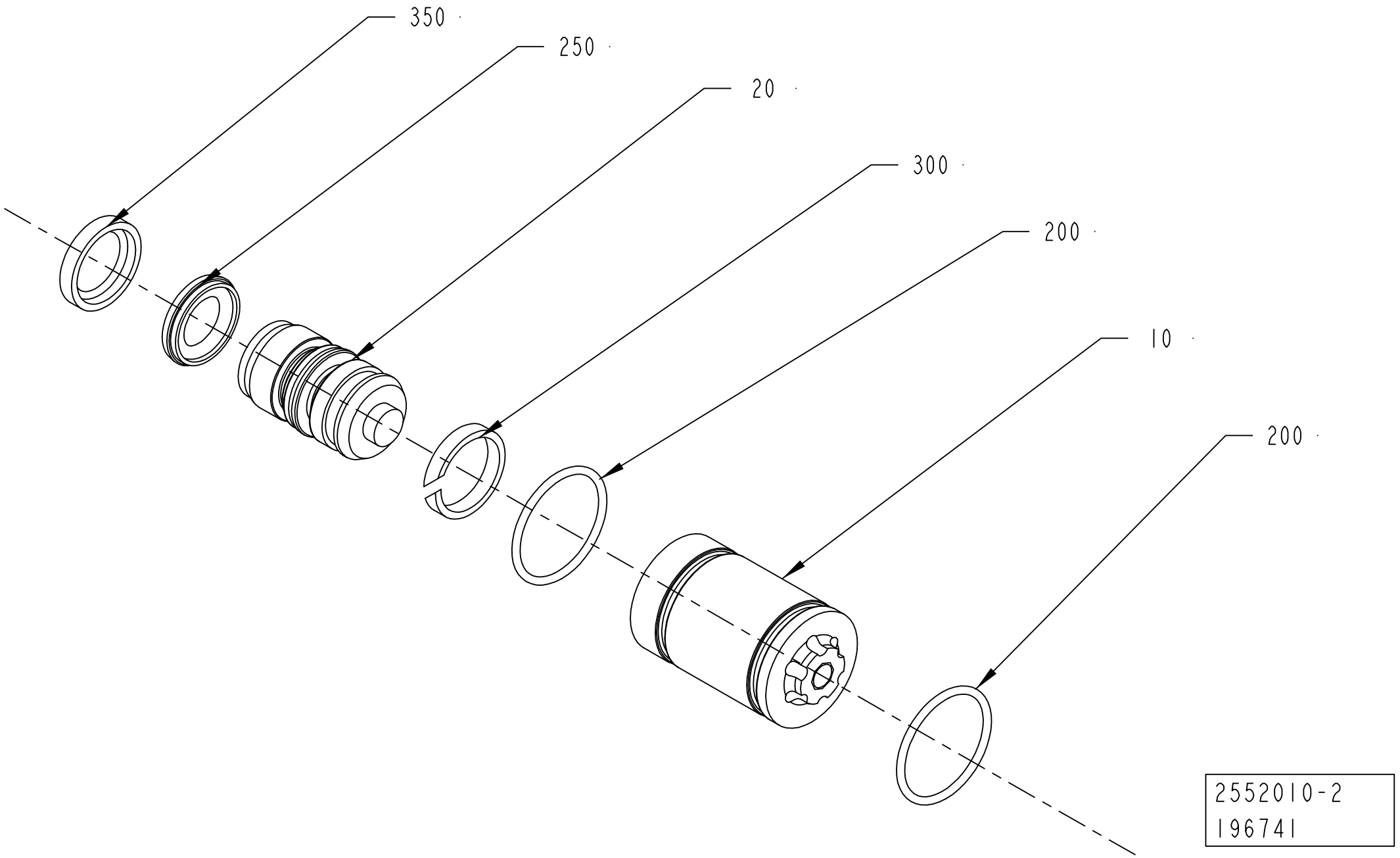
350
250
20
300
200
10
200
2552010-2
196741

ECM: 258793 - 20060704
Group number: 2552010-0200
Assembly Drawing: 2552010-2_1_AA

Pos	Part No	UN	Qty	Description	Page No
TBA 0330S, TBA 0200B, TBA 0250S, TBA 0200S, TBA 0200M, TBA 0250B, TBA 0200SQ, TPA 0250SQ, TPA 0330SQ, TPA 0200SQ, TBA 0250SQ					
010	752288-0000		1	SLEEVE	
020	2737771-0000		1	PLUNGER	
200	315202-0110		1	O-RING 12,1X1,6 MM	
250	90459-6021		1	PISTON SEAL STEPSEAL 7,2X12X2,2 MM	
300	90459-6027		1	WEAR RING 9X12X3,2 MM	
350	90459-6025		1	PISTON SEAL 6,2X12X3,2 MM	
TBA 0500S, TBA 0500B, TBA 1000S, TBA 1000SQ, TBA 1000B, TBA 1500S, TPA 1000SQ, TPA 0500SQ					
010	1036278-0000		1	SLEEVE	
020	2737773-0000		1	PLUNGER	
200	315202-0118		2	O-RING 22,1X1,6 MM	
250	90459-6019		1	PISTON SEAL STEPSEAL 11,5X19X3,2 MM	
300	90459-6026		1	WEAR RING 16X19X3,2 MM	
350	90459-6023		1	PISTON SEAL 13X19X3,2 MM	
TBA 1890S, TBA 2000S					
010	2566330-0000		1	SLEEVE	
020	2737772-0000		1	PLUNGER	
200	315202-0119		2	O-RING 25,1X1,6 MM	
250	90459-6022		1	PISTON SEAL STEPSEAL 14,5X22X3,2 MM	
300	90459-5968		1	WEAR RING 19X22X3,2 MM	
350	90459-6024		1	PISTON SEAL 16X22X3,2 MM	

Pos	Part No	UN	Qty	Description	Page No

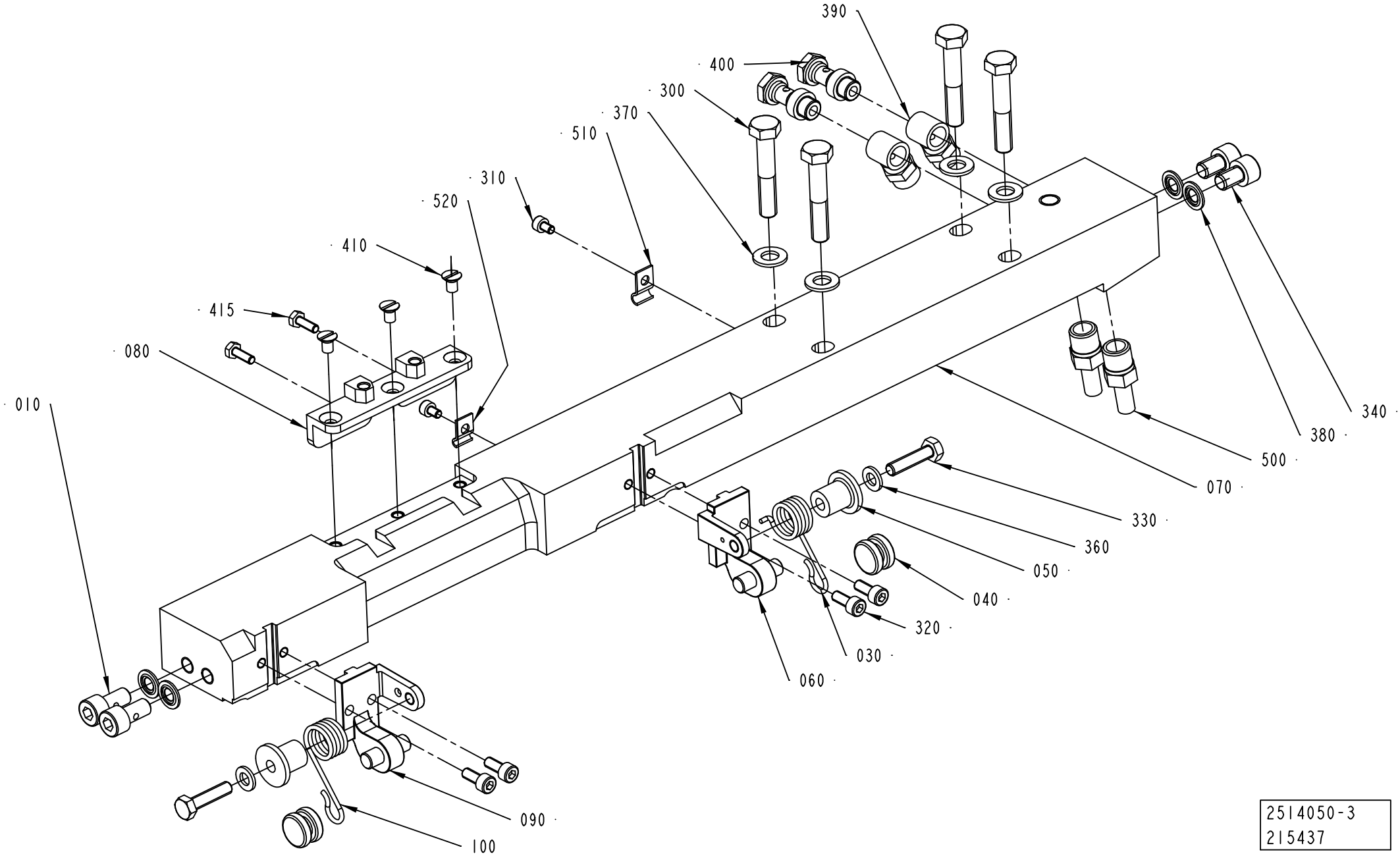

2514050-3
215437

ECM: 271966 - 20060831
Group number: 2514050-0200
Assembly Drawing: 2514050-3_1_AB

This list covers pages from 4-132 to 4-137

Pos	Part No	UN	Qty	Description	Page No
A3/FLEX NOQC (See drawing on page: 4-134)					
070	2514051-0000		1	CARRIER	
310	312115-0285		2	SCREW ISO4762 M4X6 A4 80	
510	90165-0056		1	PIPE CLIP FOR TUBE D=4 MM	
520	90165-0058		1	PIPE CLIP FOR TUBE D=2,5 MM	
A3/FLEX TBA 0250S QC, A3/FLEX TBA 0200M QC (See drawing on page: 4-136)					
070	2514047-0000		1	CARRIER	
080	2641225-0000		1	INSERT	
410	312155-0323		3	SCREW DIN 7991 MF6S M5X8 A4 70	
A3/FLEX TBA 0500B QC, A3/FLEX TBA 1000B QC, A3/FLEX TBA 0200B QC, A3/FLEX TBA 0250B QC, A3/FLEX TBA 0330S QC, A3/FLEX TPA 0200SQ QC, A3/FLEX TPA 0250SQ QC, A3/FLEX TBA 0250SQ QC, A3/FLEX TBA 0200SQ QC (See drawing on page: 4-136)					
070	2514047-0000		1	CARRIER	
080	1549312-0000		1	INSERT	
410	312155-0323		3	SCREW DIN 7991 MF6S M5X8 A4 70	
A3/FLEX TBA 1890S QC, A3/FLEX TBA 2000S QC (See drawing on page: 4-134)					
070	2566341-0000		1	CARRIER	
310	312115-0285		2	SCREW ISO4762 M4X6 A4 80	
510	90165-0056		1	PIPE CLIP FOR TUBE D=4 MM	
520	90165-0058		1	PIPE CLIP FOR TUBE D=2,5 MM	
A3/FLEX TPA 0750SQ QC, A3/FLEX TPA 1000SQ QC (See drawing on page: 4-132)					
070	2647117-0000		1	CARRIER	
080	2647114-0000		1	INSERT	
310	312115-0285		2	SCREW ISO4762 M4X6 A4 80	
410	312145-0323		3	SCREW ISO 2009 MFS M5X8 A4	
415	312105-0291		2	SCREW M6S ISO 4017 M4X12 A470	
510	90165-0056		1	PIPE CLIP FOR TUBE D=4 MM	
520	90165-0058		1	PIPE CLIP FOR TUBE D=2,5 MM	
Common Parts					
010	1036343-0000		2	SCREW	
030	2547589-0000		1	SPRING	
040	2530296-0000		2	ROLLER	
050	2532531-0000		2	ROLLER	
060	2530293-0000		1	BRACKET	
090	2530292-0000		1	BRACKET	
100	2547588-0000		1	SPRING	
300	312105-0460		4	SCREW M6S ISO 4014 M8X45 A480	
320	312115-0327		4	SCREW ISO4762 M5X12 A4 80	
330	312105-0372		2	SCREW M6S ISO 4017 M6X25 A480	
340	312115-0447		2	SCREW ISO4762 M8X12 A4 80	
360	315105-0153		2	WASHER BRB 6,4X12 RFR	
370	315105-0165		4	WASHER BRB 8,4X16 RFR	
380	315211-0104		4	BONDED SEAL SS/NBR90 M8	
390	342980-0121		2	BANJO-CONNECTION,RING 8/6-G1/8	
400	342980-0303		2	BANJO-HOLLOW BOLT COUPL,EXT.THR.01-G1/8	
500	90030-0065		2	PIPE CONNECTION	

Machine Type | Group Description | Used-In | Group Number | Page No

CARRIER PRESSURE RIGHT

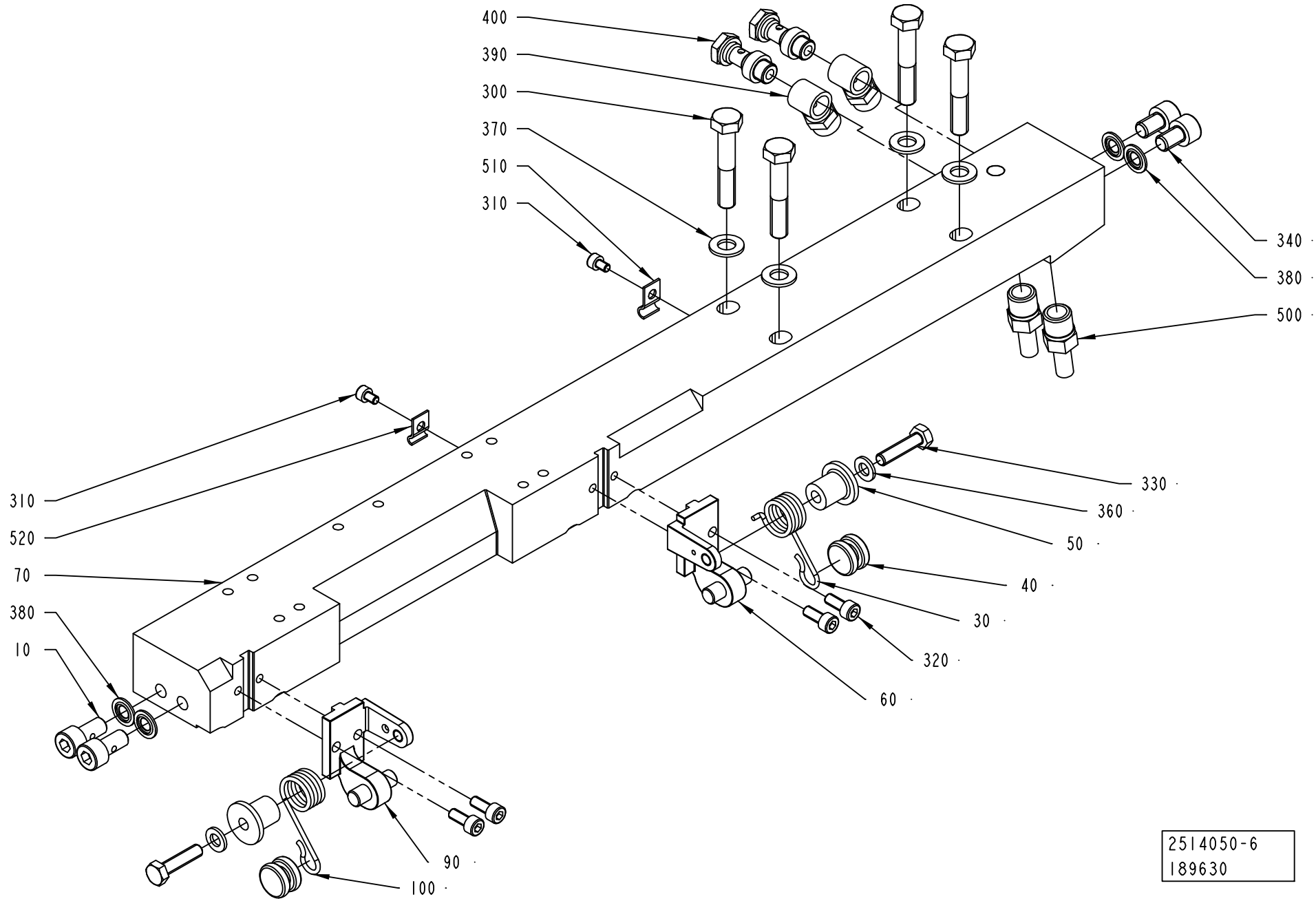

ECM: 271966 - 20060831
Group number: 2514050-0200
Assembly Drawing: 2514050-6_1_AA

This list covers pages from 4-132 to 4-137

Pos	Part No	UN	Qty	Description	Page No
A3/FLEX NOQC (See drawing on page: 4-134)					
070	2514051-0000		1	CARRIER	
310	312115-0285		2	SCREW ISO4762 M4X6 A4 80	
510	90165-0056		1	PIPE CLIP FOR TUBE D=4 MM	
520	90165-0058		1	PIPE CLIP FOR TUBE D=2,5 MM	
A3/FLEX TBA 0250S QC, A3/FLEX TBA 0200M QC (See drawing on page: 4-136)					
070	2514047-0000		1	CARRIER	
080	2641225-0000		1	INSERT	
410	312155-0323		3	SCREW DIN 7991 MF6S M5X8 A4 70	
A3/FLEX TBA 0500B QC, A3/FLEX TBA 1000B QC, A3/FLEX TBA 0200B QC, A3/FLEX TBA 0250B QC, A3/FLEX TBA 0330S QC, A3/FLEX TPA 0200SQ QC, A3/FLEX TPA 0250SQ QC, A3/FLEX TBA 0250SQ QC, A3/FLEX TBA 0200SQ QC (See drawing on page: 4-136)					
070	2514047-0000		1	CARRIER	
080	1549312-0000		1	INSERT	
410	312155-0323		3	SCREW DIN 7991 MF6S M5X8 A4 70	
A3/FLEX TBA 1890S QC, A3/FLEX TBA 2000S QC (See drawing on page: 4-134)					
070	2566341-0000		1	CARRIER	
310	312115-0285		2	SCREW ISO4762 M4X6 A4 80	
510	90165-0056		1	PIPE CLIP FOR TUBE D=4 MM	
520	90165-0058		1	PIPE CLIP FOR TUBE D=2,5 MM	
A3/FLEX TPA 0750SQ QC, A3/FLEX TPA 1000SQ QC (See drawing on page: 4-132)					
070	2647117-0000		1	CARRIER	
080	2647114-0000		1	INSERT	
310	312115-0285		2	SCREW ISO4762 M4X6 A4 80	
410	312145-0323		3	SCREW ISO 2009 MFS M5X8 A4	
415	312105-0291		2	SCREW M6S ISO 4017 M4X12 A470	
510	90165-0056		1	PIPE CLIP FOR TUBE D=4 MM	
520	90165-0058		1	PIPE CLIP FOR TUBE D=2,5 MM	
Common Parts					
010	1036343-0000		2	SCREW	
030	2547589-0000		1	SPRING	
040	2530296-0000		2	ROLLER	
050	2532531-0000		2	ROLLER	
060	2530293-0000		1	BRACKET	
090	2530292-0000		1	BRACKET	
100	2547588-0000		1	SPRING	
300	312105-0460		4	SCREW M6S ISO 4014 M8X45 A480	
320	312115-0327		4	SCREW ISO4762 M5X12 A4 80	
330	312105-0372		2	SCREW M6S ISO 4017 M6X25 A480	
340	312115-0447		2	SCREW ISO4762 M8X12 A4 80	
360	315105-0153		2	WASHER BRB 6,4X12 RFR	
370	315105-0165		4	WASHER BRB 8,4X16 RFR	
380	315211-0104		4	BONDED SEAL SS/NBR90 M8	
390	342980-0121		2	BANJO-CONNECTION,RING 8/6-G1/8	
400	342980-0303		2	BANJO-HOLLOW BOLT COUPL,EXT.THR.01-G1/8	
500	90030-0065		2	PIPE CONNECTION	

Machine Type | Group Description | Used-In | Group Number | Page No

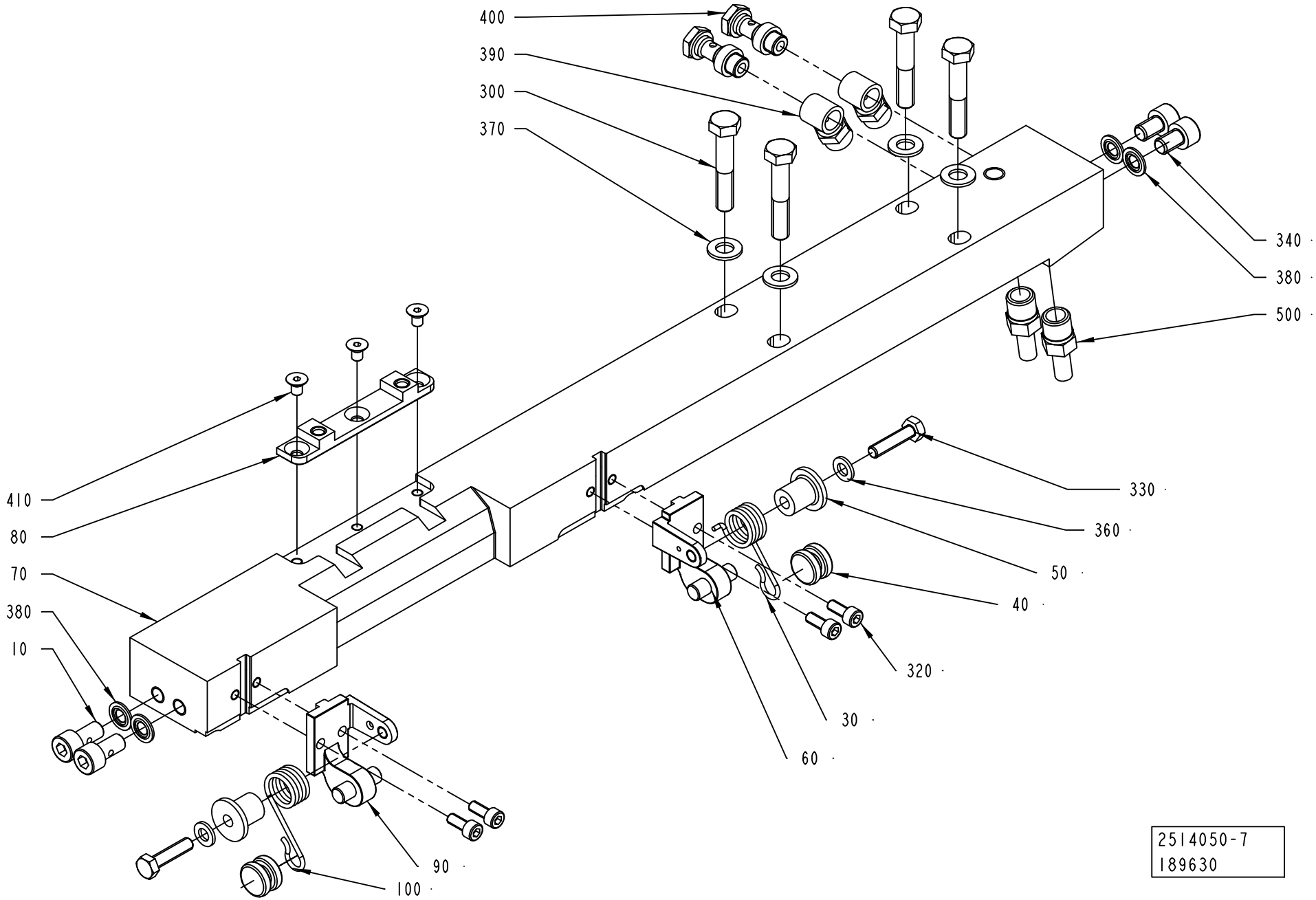
400
390
300
370
340
380
500
410
80
70
380
10
330
360
50
40
320
30
60
90
100
2514050-7
189630

ECM: 271966 - 20060831
Group number: 2514050-0200
Assembly Drawing: 2514050-7_1_AA

This list covers pages from 4-132 to 4-137

Pos	Part No	UN	Qty	Description	Page No
A3/FLEX NOQC (See drawing on page: 4-134)					
070	2514051-0000		1	CARRIER	
310	312115-0285		2	SCREW ISO4762 M4X6 A4 80	
510	90165-0056		1	PIPE CLIP FOR TUBE D=4 MM	
520	90165-0058		1	PIPE CLIP FOR TUBE D=2,5 MM	
A3/FLEX TBA 0250S QC, A3/FLEX TBA 0200M QC (See drawing on page: 4-136)					
070	2514047-0000		1	CARRIER	
080	2641225-0000		1	INSERT	
410	312155-0323		3	SCREW DIN 7991 MF6S M5X8 A4 70	
A3/FLEX TBA 0500B QC, A3/FLEX TBA 1000B QC, A3/FLEX TBA 0200B QC, A3/FLEX TBA 0250B QC, A3/FLEX TBA 0330S QC, A3/FLEX TPA 0200SQ QC, A3/FLEX TPA 0250SQ QC, A3/FLEX TBA 0250SQ QC, A3/FLEX TBA 0200SQ QC (See drawing on page: 4-136)					
070	2514047-0000		1	CARRIER	
080	1549312-0000		1	INSERT	
410	312155-0323		3	SCREW DIN 7991 MF6S M5X8 A4 70	
A3/FLEX TBA 1890S QC, A3/FLEX TBA 2000S QC (See drawing on page: 4-134)					
070	2566341-0000		1	CARRIER	
310	312115-0285		2	SCREW ISO4762 M4X6 A4 80	
510	90165-0056		1	PIPE CLIP FOR TUBE D=4 MM	
520	90165-0058		1	PIPE CLIP FOR TUBE D=2,5 MM	
A3/FLEX TPA 0750SQ QC, A3/FLEX TPA 1000SQ QC (See drawing on page: 4-132)					
070	2647117-0000		1	CARRIER	
080	2647114-0000		1	INSERT	
310	312115-0285		2	SCREW ISO4762 M4X6 A4 80	
410	312145-0323		3	SCREW ISO 2009 MFS M5X8 A4	
415	312105-0291		2	SCREW M6S ISO 4017 M4X12 A470	
510	90165-0056		1	PIPE CLIP FOR TUBE D=4 MM	
520	90165-0058		1	PIPE CLIP FOR TUBE D=2,5 MM	
Common Parts					
010	1036343-0000		2	SCREW	
030	2547589-0000		1	SPRING	
040	2530296-0000		2	ROLLER	
050	2532531-0000		2	ROLLER	
060	2530293-0000		1	BRACKET	
090	2530292-0000		1	BRACKET	
100	2547588-0000		1	SPRING	
300	312105-0460		4	SCREW M6S ISO 4014 M8X45 A480	
320	312115-0327		4	SCREW ISO4762 M5X12 A4 80	
330	312105-0372		2	SCREW M6S ISO 4017 M6X25 A480	
340	312115-0447		2	SCREW ISO4762 M8X12 A4 80	
360	315105-0153		2	WASHER BRB 6,4X12 RFR	
370	315105-0165		4	WASHER BRB 8,4X16 RFR	
380	315211-0104		4	BONDED SEAL SS/NBR90 M8	
390	342980-0121		2	BANJO-CONNECTION,RING 8/6-G1/8	
400	342980-0303		2	BANJO-HOLLOW BOLT COUPL,EXT.THR.01-G1/8	
500	90030-0065		2	PIPE CONNECTION	

Machine Type | Group Description | Used-In | Group Number | Page No

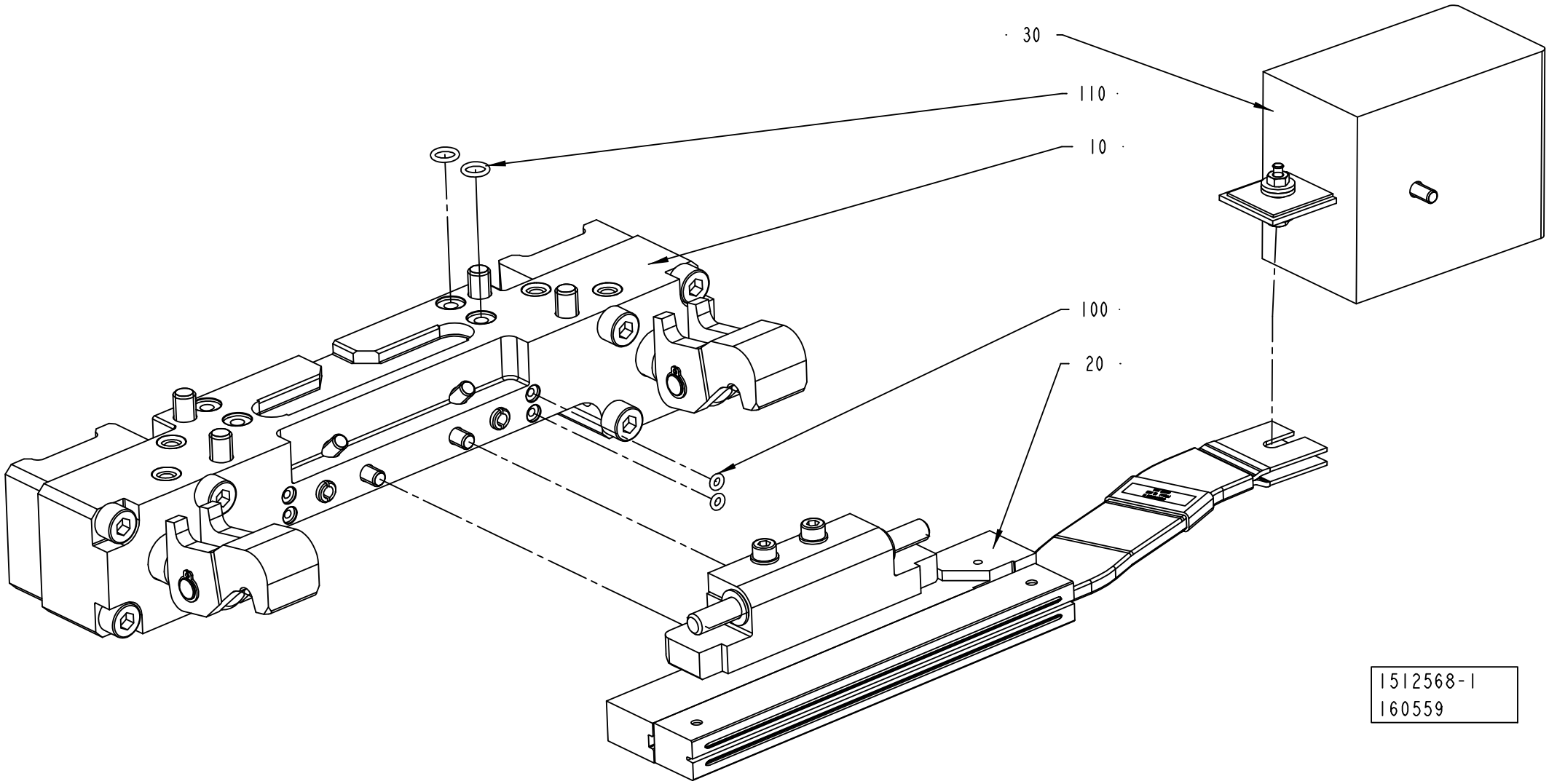
30
110
10
100
20
1512568-1
160559

ECM: 272005 - 20060831
Group number: 1512568-0200
Assembly Drawing: 1512568-1_1_AB

This list covers pages from 4-138 to 4-141

Pos	Part No	UN	Qty	Description	Page No
TBA 1890S QC, TBA 2000S QC (See drawing on pages: 4-138, 4-140)					
120	311103-0267		1	PARALLEL PIN ISO 2338 4M6X10 A1	
Common Parts					
010	2552005-0100		1	PRESSURE JAW	**4-95**
020	2552007-0100		1	INDUCTOR RIGHT	**4-143, 4-145, 4-147, 4-149, 4-151**
030	2546229-0100		1	ADAPTION TRANSFORMER	**4-107**
100	315202-0101		2	O-RING 3,1X1,6 MM	
110	315202-0105		2	O-RING 7,1X1,6 MM	

Pos	Part No	UN	Qty	Description	Page No

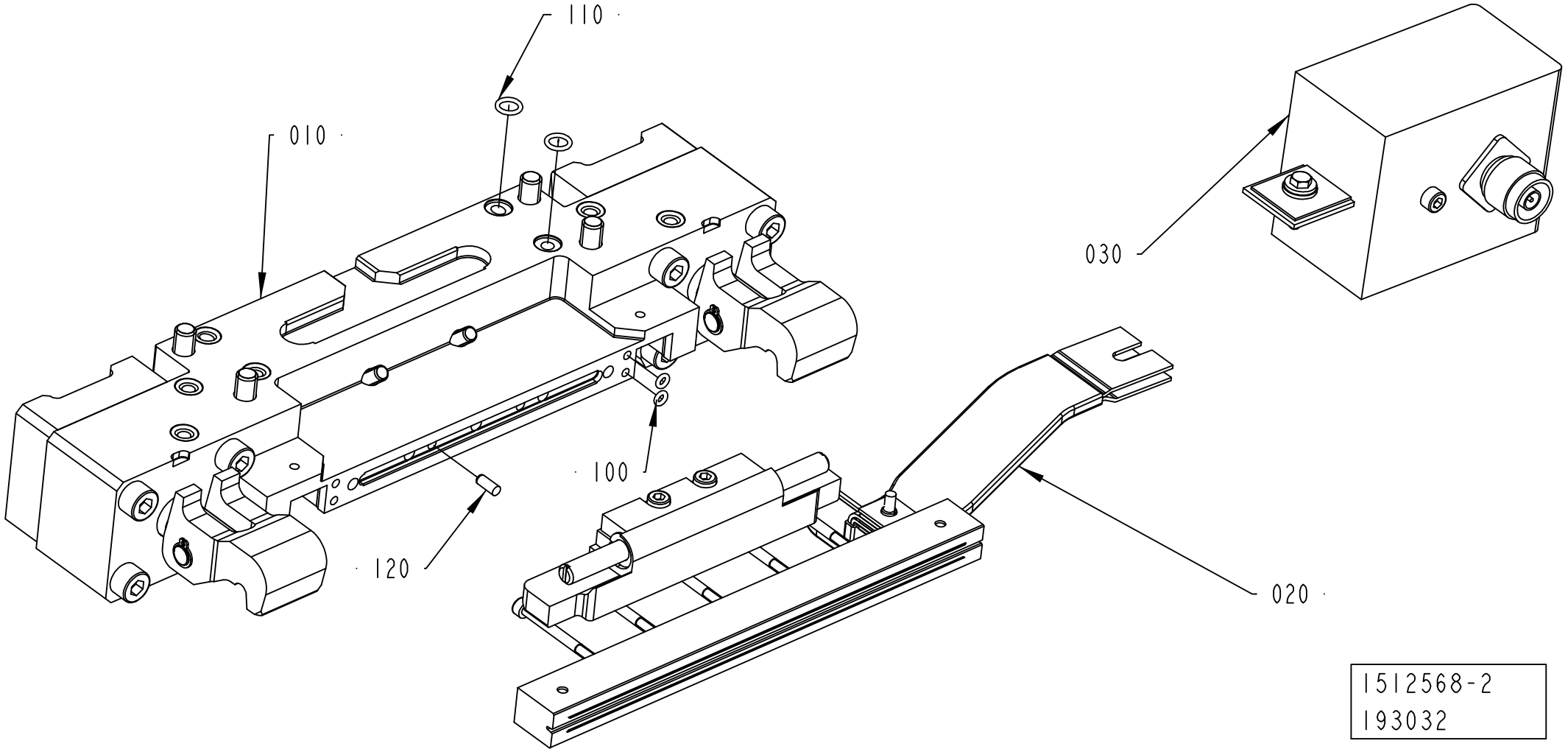
110
010
030
100
120
020
1512568-2
193032

ECM: 272005 - 20060831
Group number: 1512568-0200
Assembly Drawing: 1512568-2_1_AB

This list covers pages from 4-138 to 4-141

Pos	Part No	UN	Qty	Description	Page No
TBA 1890S QC, TBA 2000S QC (See drawing on pages: 4-138, 4-140)					
120	311103-0267		1	PARALLEL PIN ISO 2338 4M6X10 A1	
Common Parts					
010	2552005-0100		1	PRESSURE JAW	**4-95**
020	2552007-0100		1	INDUCTOR RIGHT	**4-143, 4-145, 4-147, 4-149, 4-151**
030	2546229-0100		1	ADAPTION TRANSFORMER	**4-107**
100	315202-0101		2	O-RING 3,1X1,6 MM	
110	315202-0105		2	O-RING 7,1X1,6 MM	

Pos	Part No	UN	Qty	Description	Page No

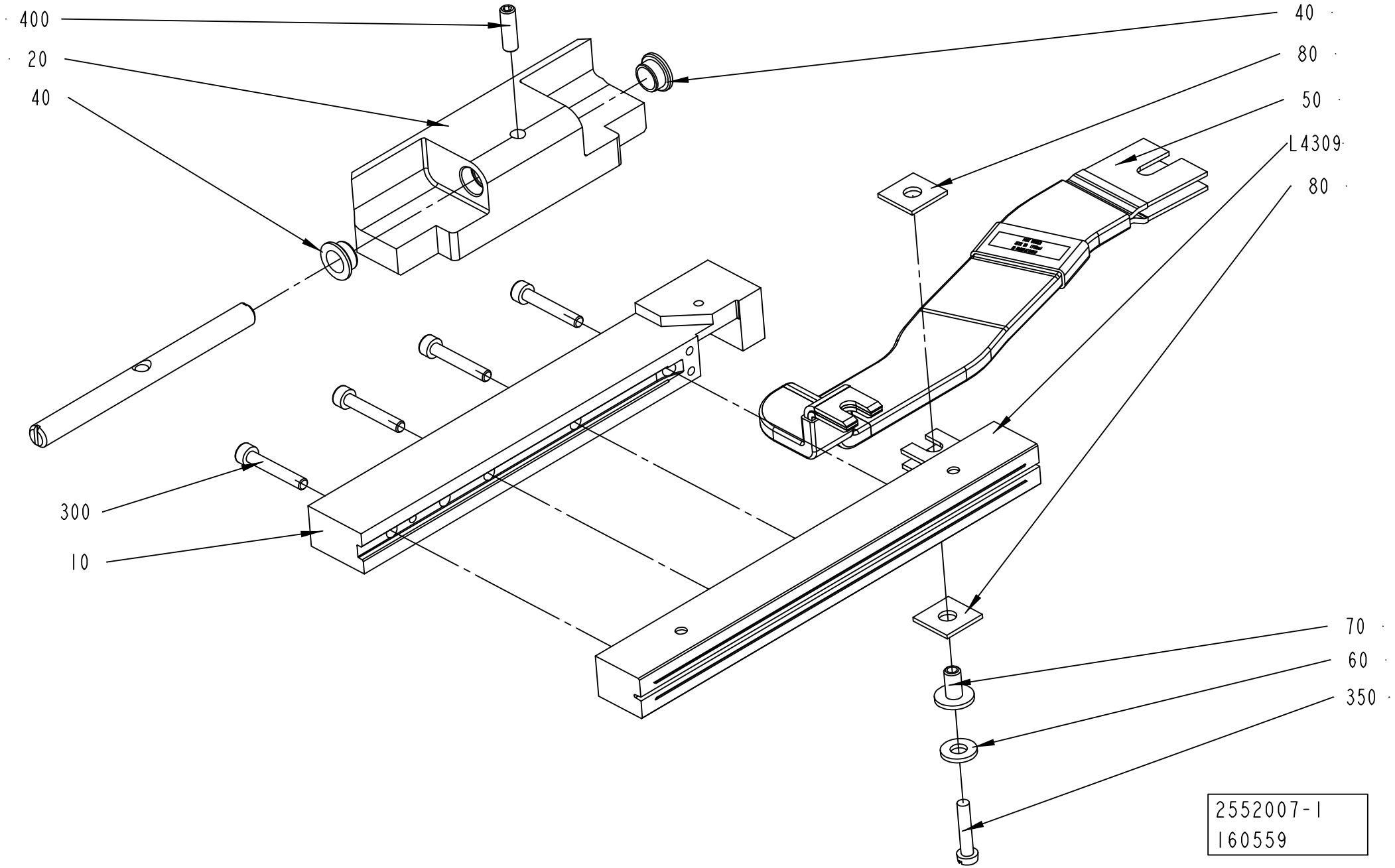
400
20
40
300
10
40
80
50
L4309
80
70
60
350
2552007-1
160559

ECM: 261760 - 20060702
Group number: 2552007-0100
Assembly Drawing: 2552007-1_1_AB

This list covers pages from 4-142 to 4-151

Pos	Part No	UN	Qty	Description	Page No
TPA 0250SQ QC, TPA 0200SQ QC (See drawing on page: 4-146)					
010	1348546-0000		1	RAIL	
020	2674335-0000		1	HOLDER	
050	1498850-0000		1	BUSBAR	
300	312115-0297		3	SCREW ISO4762 M4X25 A4 80	
L4309	1110930-0000		1	INDUCTOR	
TPA 0330SQ (See drawing on page: 4-148)					
010	1348546-0000		1	RAIL	
020	2611655-0000		1	CLAMP HOLDER	
030	2513013-0000		1	SHAFT	
040	2531703-0000		2	BUSHING	
050	1498850-0000		1	BUSBAR	
300	312115-0297		3	SCREW ISO4762 M4X25 A4 80	
400	312115-0327		2	SCREW ISO4762 M5X12 A4 80	
L4309	1520167-0000		1	INDUCTOR	
TPA 0500SQ SMILE (See drawing on page: 4-150)					
010	1558820-0000		1	RAIL	
020	2570848-0000		1	HOLDER	
030	2513013-0000		1	SHAFT	
040	2570849-0000		1	BUSHING	
050	1498850-0000		1	BUSBAR	
090	2503688-0000		1	VOLUME BULGE	
100	1549834-0000		1	VOLUME BULGE	
300	312115-0297		4	SCREW ISO4762 M4X25 A4 80	
360	311103-0234		1	PARALLEL PIN ISO 2338 3M6X12 A1	
370	312155-0287		2	SCREW DIN 7991 MF6S M4X8 A4 70	
380	312155-0325		2	SCREW DIN 7991 MF6S M5X10 A4 70	
400	312115-0329		2	SCREW ISO4762 M5X16 A4 80	
L4309	2587467-0000		1	INDUCTOR	
TPA 1000SQ FT NOQC (See drawing on page: 4-148)					
010	1558820-0000		1	RAIL	
020	2579989-0000		1	HOLDER	
030	2579990-0000		1	SHAFT	
040	2531703-0000		2	BUSHING	
050	1498850-0000		1	BUSBAR	
090	2503700-0000		1	VOLUME BULGE	
300	312115-0297		4	SCREW ISO4762 M4X25 A4 80	
370	312155-0287		2	SCREW DIN 7991 MF6S M4X8 A4 70	
400	312115-0327		2	SCREW ISO4762 M5X12 A4 80	
L4309	1520052-0000		1	INDUCTOR	
TPA 1000SQ SMILE NOQC (See drawing on page: 4-148)					
010	1558820-0000		1	RAIL	
020	2579991-0000		1	HOLDER	
030	2579990-0000		1	SHAFT	
040	2531703-0000		2	BUSHING	
050	1498850-0000		1	BUSBAR	
090	2503700-0000		1	VOLUME BULGE	
100	2500591-0000		1	VOLUME BULGE	
300	312115-0297		4	SCREW ISO4762 M4X25 A4 80	
370	312155-0287		2	SCREW DIN 7991 MF6S M4X8 A4 70	
380	312155-0325		2	SCREW DIN 7991 MF6S M5X10 A4 70	
400	312115-0327		2	SCREW ISO4762 M5X12 A4 80	
L4309	1520052-0000		1	INDUCTOR	
TPA 1000SQ SMILE QC, TPA 0750SQ SMILE QC (See drawing on page: 4-150)					
010	1558820-0000		1	RAIL	
020	2660404-0000		1	HOLDER	
050	1498850-0000		1	BUSBAR	
090	2503700-0000		1	VOLUME BULGE	
100	2500591-0000		1	VOLUME BULGE	
300	312115-0297		4	SCREW ISO4762 M4X25 A4 80	
360	311103-0234		1	PARALLEL PIN ISO 2338 3M6X12 A1	
370	312155-0287		2	SCREW DIN 7991 MF6S M4X8 A4 70	
380	312155-0325		2	SCREW DIN 7991 MF6S M5X10 A4 70	
L4309	2663377-0000		1	INDUCTOR	
TBA 0200B NOQC, TBA 0250B NOQC (See drawing on page: 4-142)					
010	1348546-0000		1	RAIL	
020	1349599-0000		1	HOLDER	
030	1349980-0000		1	SHAFT	
040	1349584-0000		2	BUSHING	
050	1498850-0000		1	BUSBAR	
300	312115-0297		3	SCREW ISO4762 M4X25 A4 80	
400	312318-0329		1	SCREW ISO4029 M5X16 A4	
L4309	1110932-0000		1	INDUCTOR	
TBA 0200B QC, TBA 0250B QC (See drawing on page: 4-144)					
010	1348546-0000		1	RAIL	
020	2604565-0000		1	HOLDER	
050	1498850-0000		1	BUSBAR	
300	312115-0297		3	SCREW ISO4762 M4X25 A4 80	
TBA 0200S (See drawing on page: 4-148)					
010	1348546-0000		1	RAIL	
020	2513015-0000		1	HOLDER	
030	2513013-0000		1	SHAFT	
040	2531703-0000		2	BUSHING	
050	1498850-0000		1	BUSBAR	

Machine Type | Group Description | Used-In | Group Number | Page No

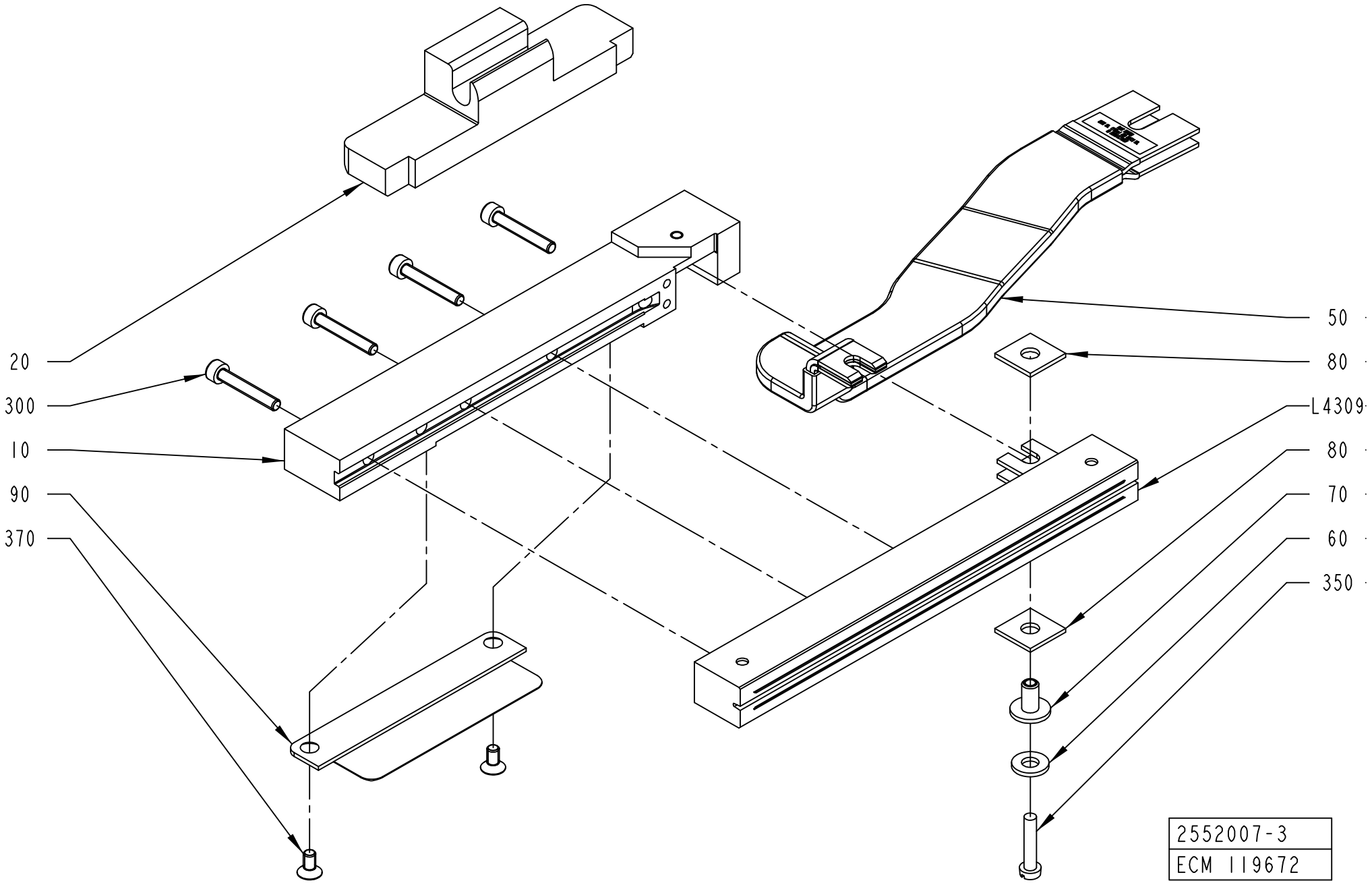
20
300
10
90
370
50
80
L4309
80
70
60
350
2552007-3
ECM 119672

Pos	Part No	UN	Qty	Description	Page No
TBA 0200S (Cont'd) (See drawing on page: 4-148)					
300	312115-0297		3	SCREW ISO4762 M4X25 A4 80	
400	312115-0329		2	SCREW ISO4762 M5X16 A4 80	
L4309	1110930-0000		1	INDUCTOR	
TBA 0200SQ, TBA 0250SQ (See drawing on page: 4-144)					
010	1558820-0000		1	RAIL	
020	2668318-0000		1	HOLDER	
050	1498850-0000		1	BUSBAR	
090	2679953-0000		1	VOLUME BULGE	
300	312115-0297		3	SCREW ISO4762 M4X25 A4 80	
370	312155-0287		2	SCREW DIN 7991 MF6S M4X8 A4 70	
L4309	2767760-0000		1	INDUCTOR	
TBA 0250S QC, TBA 0200M QC (See drawing on page: 4-146)					
010	1348546-0000		1	RAIL	
020	2644397-0000		1	HOLDER	
050	1498850-0000		1	BUSBAR	
300	312115-0297		3	SCREW ISO4762 M4X25 A4 80	
L4309	1110931-0000		1	INDUCTOR	
TBA 0330S QC (See drawing on page: 4-144)					
010	1348546-0000		1	RAIL	
020	2604565-0000		1	HOLDER	
050	1498850-0000		1	BUSBAR	
300	312115-0297		3	SCREW ISO4762 M4X25 A4 80	
L4309	1110932-0000		1	INDUCTOR	
TBA 0500B QC, TBA 1000B QC (See drawing on page: 4-144)					
010	1558820-0000		1	RAIL	
020	1487955-0000		1	HOLDER	
050	1498850-0000		1	BUSBAR	
090	1558734-0000		1	VOLUME BULGE	
300	312115-0297		4	SCREW ISO4762 M4X25 A4 80	
370	312155-0287		2	SCREW DIN 7991 MF6S M4X8 A4 70	
L4309	1110938-0000		1	INDUCTOR	
TBA 0500S (See drawing on page: 4-148)					
010	1348546-0000		1	RAIL	
020	2611001-0000		1	CLAMP HOLDER	
030	2579990-0000		1	SHAFT	
040	2531703-0000		2	BUSHING	
050	1498850-0000		1	BUSBAR	
300	312115-0297		4	SCREW ISO4762 M4X25 A4 80	
400	312115-0327		2	SCREW ISO4762 M5X12 A4 80	
L4309	1110934-0000		1	INDUCTOR	
TBA 1000B NOQC NOMOLDEDCAP (See drawing on page: 4-148)					
010	1348546-0000		1	RAIL	
020	2664280-0000		1	HOLDER	
030	2526812-0000		1	SHAFT	
040	2531703-0000		2	BUSHING	
050	1498850-0000		1	BUSBAR	
300	312115-0297		4	SCREW ISO4762 M4X25 A4 80	
400	312115-0329		2	SCREW ISO4762 M5X16 A4 80	
410	315105-0146		2	WASHER BRB 5,3X10 RFR	
L4309	1110938-0000		1	INDUCTOR	
TBA 1000B NOQC STDA7 (See drawing on page: 4-148)					
010	2610955-0000		1	RAIL	
020	2664280-0000		1	HOLDER	
030	2526812-0000		1	SHAFT	
040	2531703-0000		2	BUSHING	
050	1498850-0000		1	BUSBAR	
300	312115-0297		4	SCREW ISO4762 M4X25 A4 80	
400	312115-0329		2	SCREW ISO4762 M5X16 A4 80	
410	315105-0146		2	WASHER BRB 5,3X10 RFR	
L4309	2610956-0000		1	INDUCTOR	
TBA 1000S LIGHTCAP					
010	2766752-0000		1	RAIL	
020	2559425-0000		1	CLAMP HOLDER	
030	2526812-0000		1	SHAFT	
040	2531703-0000		2	BUSHING	
050	1498850-0000		1	BUSBAR	
300	312115-0297		4	SCREW ISO4762 M4X25 A4 80	
400	312115-0327		2	SCREW ISO4762 M5X12 A4 80	
L4309	2546474-0000		1	INDUCTOR	
TBA 1000S NOMOLDEDCAP (See drawing on page: 4-148)					
010	1348546-0000		1	RAIL	
020	2559425-0000		1	CLAMP HOLDER	
030	2526812-0000		1	SHAFT	
040	2531703-0000		2	BUSHING	
050	1498850-0000		1	BUSBAR	
300	312115-0297		4	SCREW ISO4762 M4X25 A4 80	
400	312115-0327		2	SCREW ISO4762 M5X12 A4 80	
L4309	1110937-0000		1	INDUCTOR	
TBA 1000S STDA7 (See drawing on page: 4-148)					
010	2546476-0000		1	RAIL	
020	2559425-0000		1	CLAMP HOLDER	
030	2526812-0000		1	SHAFT	
040	2531703-0000		2	BUSHING	

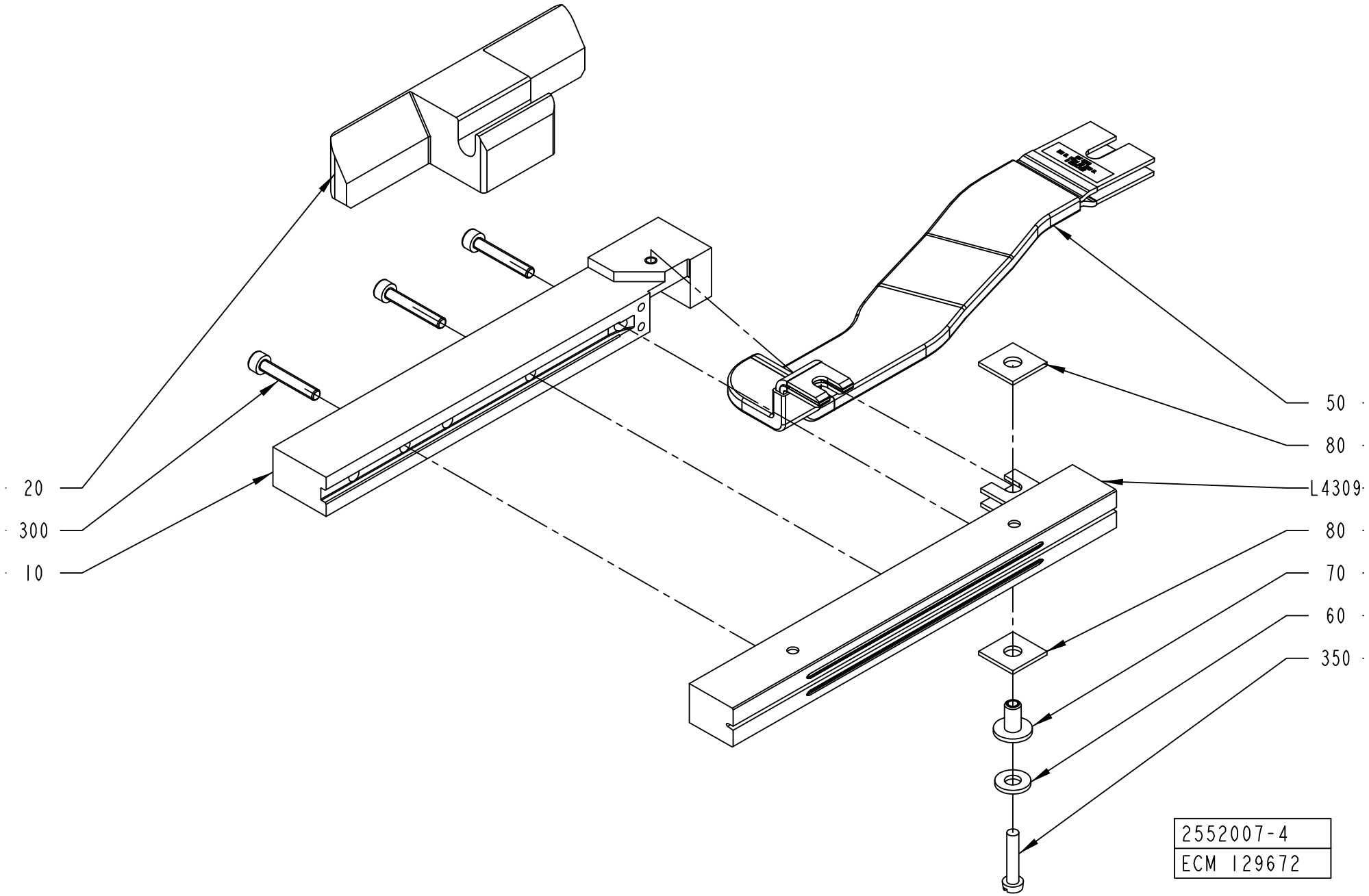
20
300
10
50
80
L4309
80
70
60
350
2552007-4
ECM 129672

ECM: 261760 - 20060702
Group number: 2552007-0100
Assembly Drawing: 2552007-4_1_AA

This list covers pages from 4-142 to 4-151

Pos	Part No	UN	Qty	Description	Page No
TBA 1000S STDA7 (Cont'd) (See drawing on page: 4-148)					
050	1498850-0000		1	BUSBAR	
300	312115-0297		4	SCREW ISO4762 M4X25 A4 80	
400	312115-0327		2	SCREW ISO4762 M5X12 A4 80	
L4309	2546474-0000		1	INDUCTOR	
TBA 1000SQ (See drawing on page: 4-148)					
010	1348546-0000		1	RAIL	
020	2526811-0000		1	310.54HOLDER	
030	2526812-0000		1	SHAFT	
040	2531703-0000		2	BUSHING	
050	1498850-0000		1	BUSBAR	
300	312115-0297		4	SCREW ISO4762 M4X25 A4 80	
400	312115-0327		2	SCREW ISO4762 M5X12 A4 80	
L4309	1110936-0000		1	INDUCTOR	
TBA 1500S (See drawing on page: 4-148)					
010	1348546-0000		1	RAIL	
020	2570302-0000		1	CLAMP HOLDER	
030	2526812-0000		1	SHAFT	
040	2531703-0000		2	BUSHING	
050	1498850-0000		1	BUSBAR	
300	312115-0297		4	SCREW ISO4762 M4X25 A4 80	
400	312115-0327		2	SCREW ISO4762 M5X12 A4 80	
L4309	1110938-0000		1	INDUCTOR	
TBA 1890S QC, TBA 2000S QC (See drawing on page: 4-148)					
020	2588293-0000		1	HOLDER	
030	2686144-0000		1	SHAFT	
040	2531703-0000		2	BUSHING	
050	2698012-0000		1	BUSBAR	
300	312115-0305		5	SCREW ISO4762 M4X50 A4 80	
400	312115-0327		2	SCREW ISO4762 M5X12 A4 80	
L4309	1533046-0000		1	INDUCTOR	
Common Parts					
060	28509-0000		1	WASHER	
070	32544-0000		1	INSULATION NUT	
080	1036584-0000		2	WASHER	
350	312125-0295		1	SCREW ISO 1207 M4X20 A4	

Pos	Part No	UN	Qty	Description	Page No

Machine Type	Group Description	Used-In	Group Number	Page No

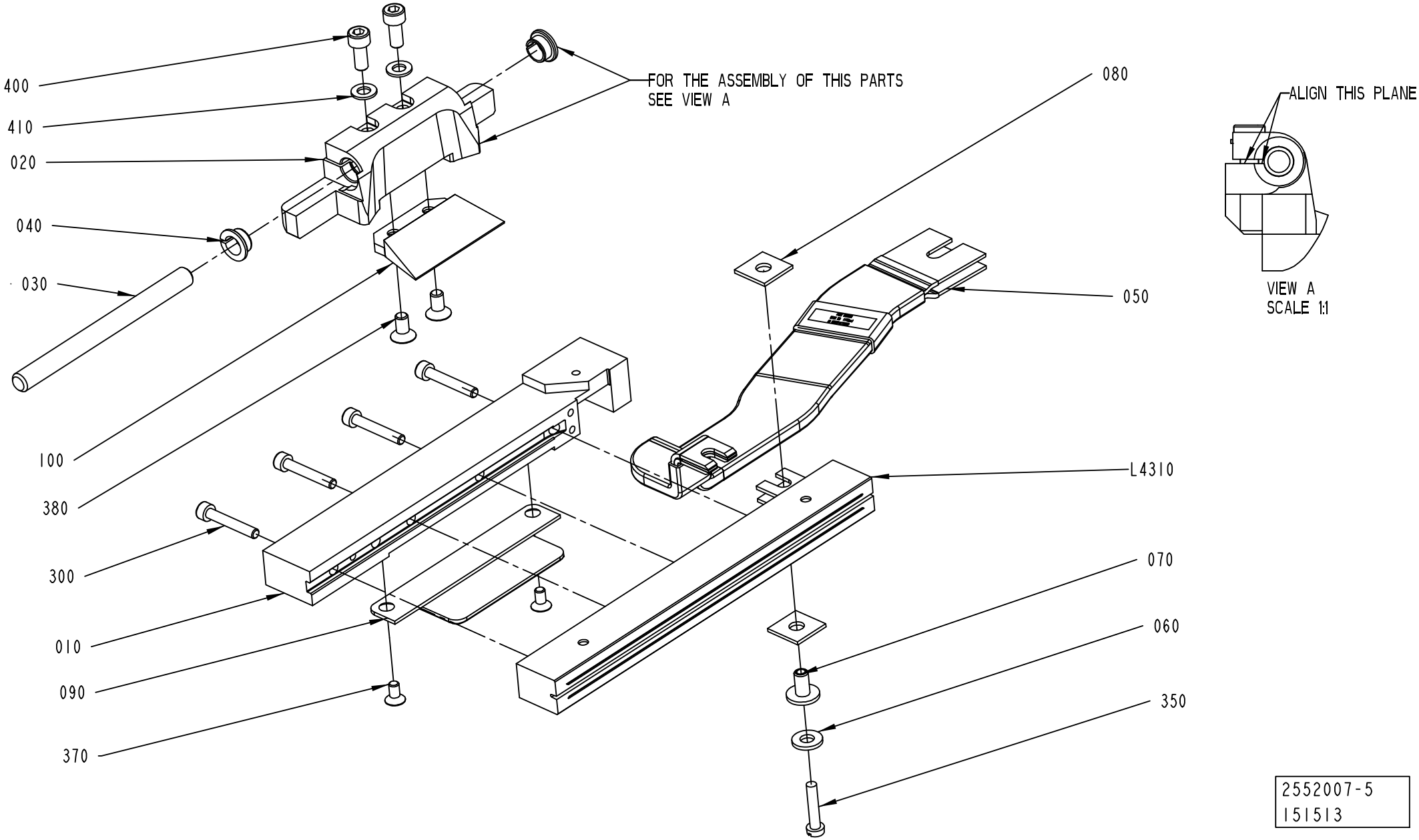
400
410
020
040
030
100
380
300
010
090
370
FOR THE ASSEMBLY OF THIS PARTS
SEE VIEW A
080
050
L4310
070
060
350
ALIGN THIS PLANE
VIEW A
SCALE 1:1
2552007-5
151513

ECM: 261760 - 20060702
Group number: 2552007-0100
Assembly Drawing: 2552007-5_1_AC

This list covers pages from 4-142 to 4-151

Pos	Part No	UN	Qty	Description	Page No
SEE PREVIOUS LISTS PAGES: 4-143, 4-145, 4-147.					

Pos	Part No	UN	Qty	Description	Page No

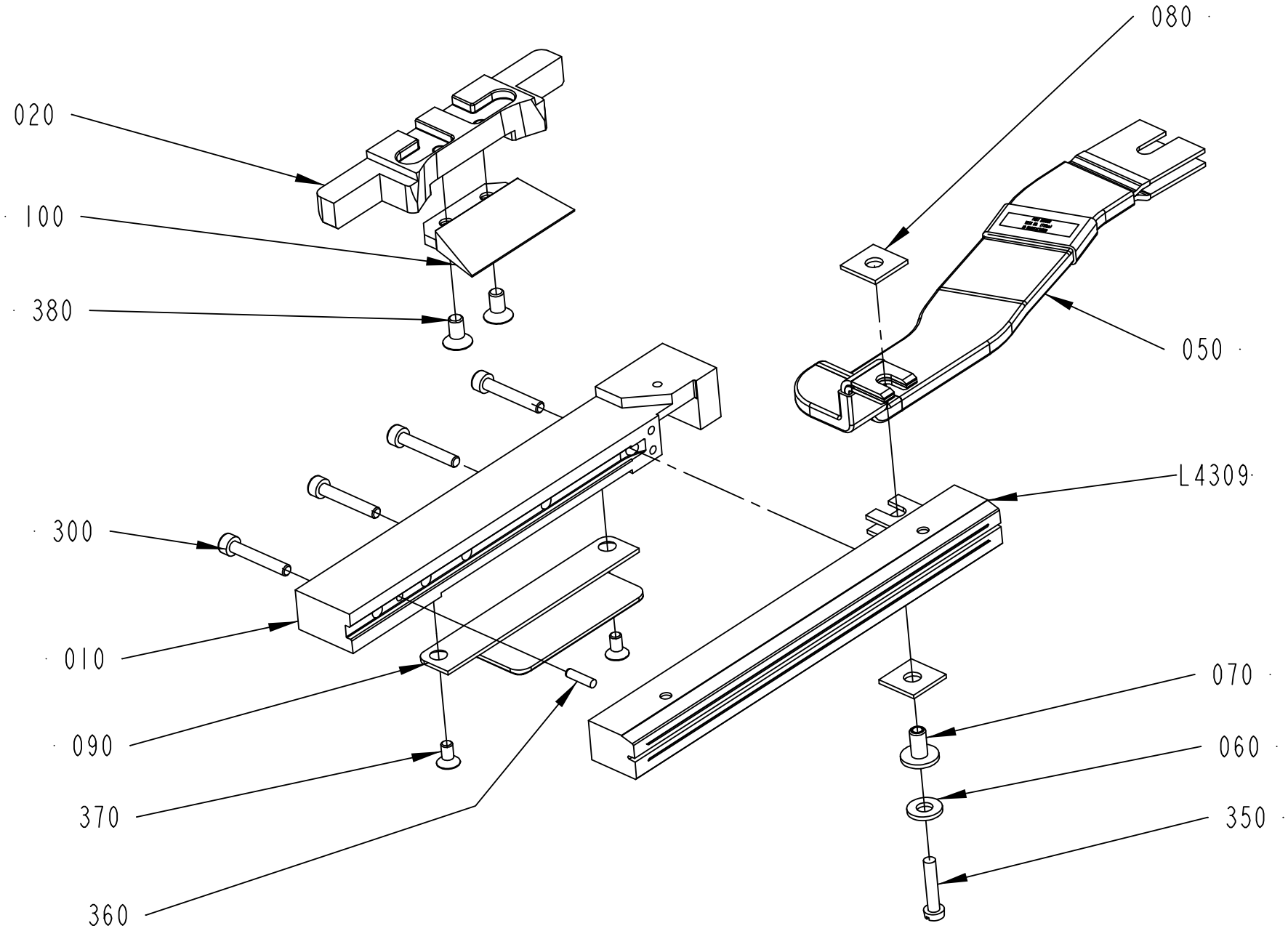

2552007-6
200874

ECM: 261760 - 20060702
Group number: 2552007-0100
Assembly Drawing: 2552007-6_1_AA

This list covers pages from 4-142 to 4-151

Pos	Part No	UN	Qty	Description	Page No	Pos	Part No	UN	Qty	Description	Page No

SEE PREVIOUS LISTS PAGES: 4-143, 4-145, 4-147.

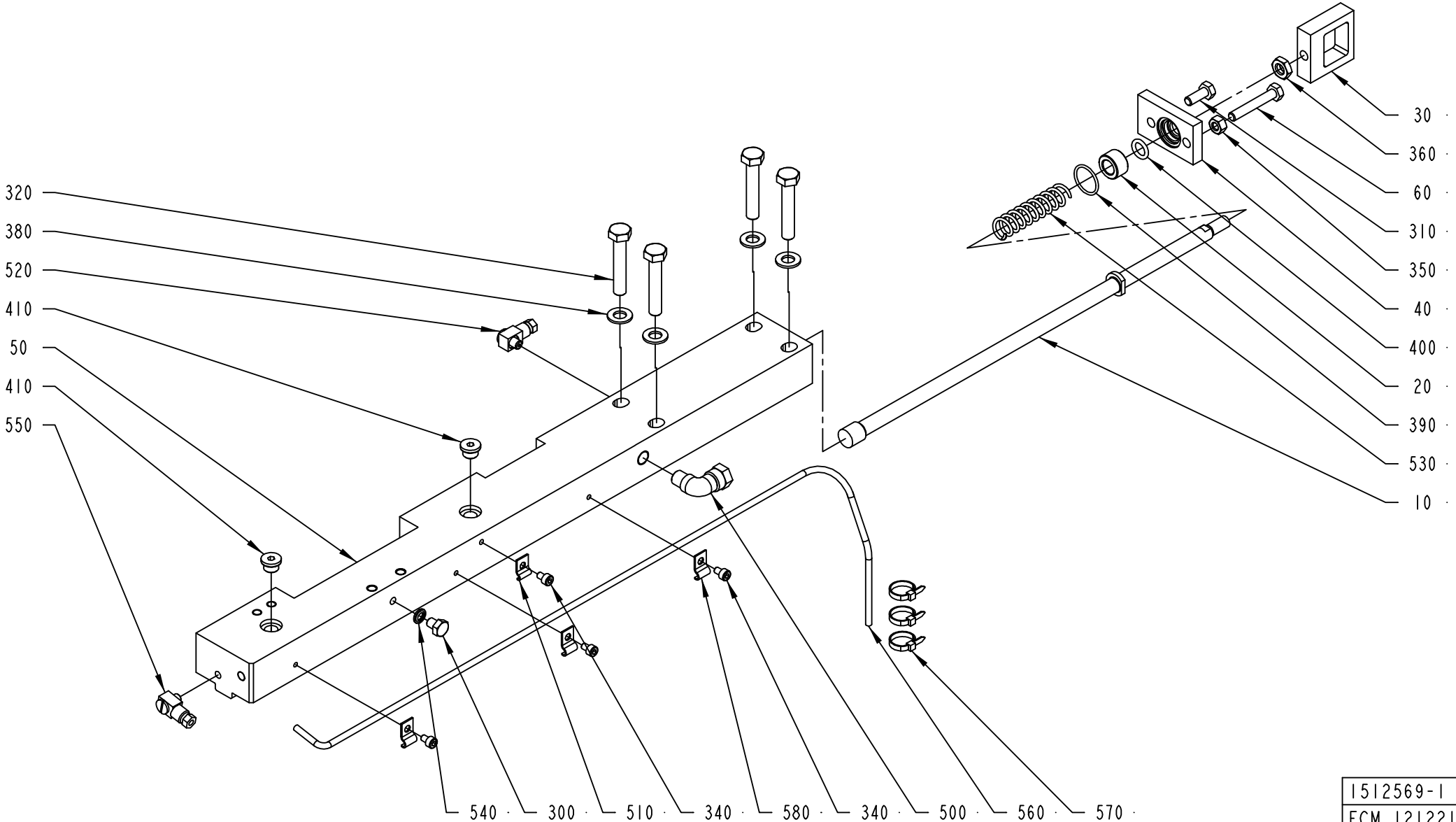

1512569-1
ECM 121221

ECM: 263538 - 20060702
Group number: 1512569-0200
Assembly Drawing: 1512569-1_1_AA

This list covers pages from 4-152 to 4-159

Pos	Part No	UN	Qty	Description	Page No
TBA 0200B QC, TBA 0330S QC, TBA 0250B QC, TPA 0250SQ QC, TPA 0200SQ QC (See drawing on page: 4-154)					
010	2530508-0000		1	TIE ROD	
050	2572248-0000		1	CARRIER	
070	1549312-0000		1	INSERT	
300	312105-0362		1	SCREW M6S ISO 4017 M6X8 A480	
345	312155-0323		3	SCREW DIN 7991 MF6S M5X8 A4 70	
400	315202-0208		1	O-RING 9,3X2,4 MM	
540	315211-0103		1	BONDED SEAL SS/NBR90 M6	
TBA 0200SQ QC, TBA 0250SQ QC (See drawing on page: 4-154)					
010	2737034-0000		1	TIE ROD	
050	2572248-0000		1	CARRIER	
070	1549312-0000		1	INSERT	
300	312105-0362		1	SCREW M6S ISO 4017 M6X8 A480	
345	312155-0323		3	SCREW DIN 7991 MF6S M5X8 A4 70	
400	315202-0208		1	O-RING 9,3X2,4 MM	
540	315211-0103		1	BONDED SEAL SS/NBR90 M6	
TBA 0250S QC, TBA 0200M QC (See drawing on page: 4-154)					
010	2530508-0000		1	TIE ROD	
050	2572248-0000		1	CARRIER	
070	2641225-0000		1	INSERT	
300	312105-0362		1	SCREW M6S ISO 4017 M6X8 A480	
345	312155-0323		3	SCREW DIN 7991 MF6S M5X8 A4 70	
400	315202-0208		1	O-RING 9,3X2,4 MM	
540	315211-0103		1	BONDED SEAL SS/NBR90 M6	
TBA 0500B QC, TBA 1000B QC (See drawing on page: 4-154)					
010	1499320-0000		1	TIE ROD	
050	2572248-0000		1	CARRIER	
070	1549312-0000		1	INSERT	
300	312105-0362		1	SCREW M6S ISO 4017 M6X8 A480	
345	312155-0323		3	SCREW DIN 7991 MF6S M5X8 A4 70	
400	315202-0208		1	O-RING 9,3X2,4 MM	
540	315211-0103		1	BONDED SEAL SS/NBR90 M6	
TBA 0500S, TBA 0200S, TPA 0330SQ, TPA 0500SQ, TBA 0200B NOQC, TBA 0250B NOQC (See drawing on page: 4-152)					
010	2530508-0000		1	TIE ROD	
050	2536026-0000		1	CARRIER	
300	312105-0362		1	SCREW M6S ISO 4017 M6X8 A480	
400	315202-0208		1	O-RING 9,3X2,4 MM	
540	315211-0103		1	BONDED SEAL SS/NBR90 M6	
TBA 1000S, TBA 1000SQ, TBA 1500S, TBA 1000B NOQC, TPA 1000SQ NOQC (See drawing on page: 4-152)					
010	1499320-0000		1	TIE ROD	
050	2536026-0000		1	CARRIER	
300	312105-0362		1	SCREW M6S ISO 4017 M6X8 A480	
400	315202-0208		1	O-RING 9,3X2,4 MM	
540	315211-0103		1	BONDED SEAL SS/NBR90 M6	
TBA 1890S QC, TBA 2000S QC (See drawing on page: 4-158)					
010	2588291-0000		1	TIE ROD	
050	2566327-0000		1	CARRIER	
070	2566328-0000		1	PLATE	
300	312105-0362		1	SCREW M6S ISO 4017 M6X8 A480	
400	315202-0208		1	O-RING 9,3X2,4 MM	
540	315211-0103		1	BONDED SEAL SS/NBR90 M6	
590	312155-0287		3	SCREW DIN 7991 MF6S M4X8 A4 70	
600	2603151-0000		1	SHIM	
TPA 1000SQ QC, TPA 0750SQ QC (See drawing on page: 4-156)					
010	2530508-0000		1	TIE ROD	
050	2647118-0000		1	CARRIER	
070	2647114-0000		1	INSERT	
290	312105-0291		2	SCREW M6S ISO 4017 M4X12 A470	
300	312105-0362		1	SCREW M6S ISO 4017 M6X8 A480	
345	312145-0323		3	SCREW ISO 2009 MFS M5X8 A4	
400	315202-0208		1	O-RING 9,3X2,4 MM	
540	315211-0103		1	BONDED SEAL SS/NBR90 M6	
Common Parts					
020	1036495-0000		1	BUSHING	
030	1036585-0000		1	EAR	
040	1036389-0000		1	LID	
060	1523162-0000		1	SCREW	
310	312105-0368		1	SCREW M6S ISO 4017 M6X16 A480	
320	312105-0460		4	SCREW M6S ISO 4014 M8X45 A480	
340	312115-0285		4	SCREW ISO4762 M4X6 A4 80	
350	312605-0316		1	HEXAGON NUT, M6M M6 A280	
360	312625-0318		1	HEXAGON THIN NUT, EN 24035 ML6M M8 A4	
380	315105-0165		4	WASHER BRB 8,4X16 RFR	
390	315202-0116		1	O-RING 18,1X1,6 MM	
410	342713-0209		2	PLUG (QUANT.MINIMA= 10PC).	
500	90030-0257		1	CONN. ELBOW, 8-R1/8, EXT.THREAD	
510	90165-0058		1	PIPE CLIP FOR TUBE D=2,5 MM	
520	90134-0058		1	CONNECTION	
530	1548940-0000		1	SPRING	
550	90134-0068		1	CONNECTION	
560	90266-0165	MM	800	BRASS PIPE	
570	352113-0101		3	CLIP STRIP, 92X2,5 MM	

Machine Type | Group Description | Used-In | Group Number | Page No

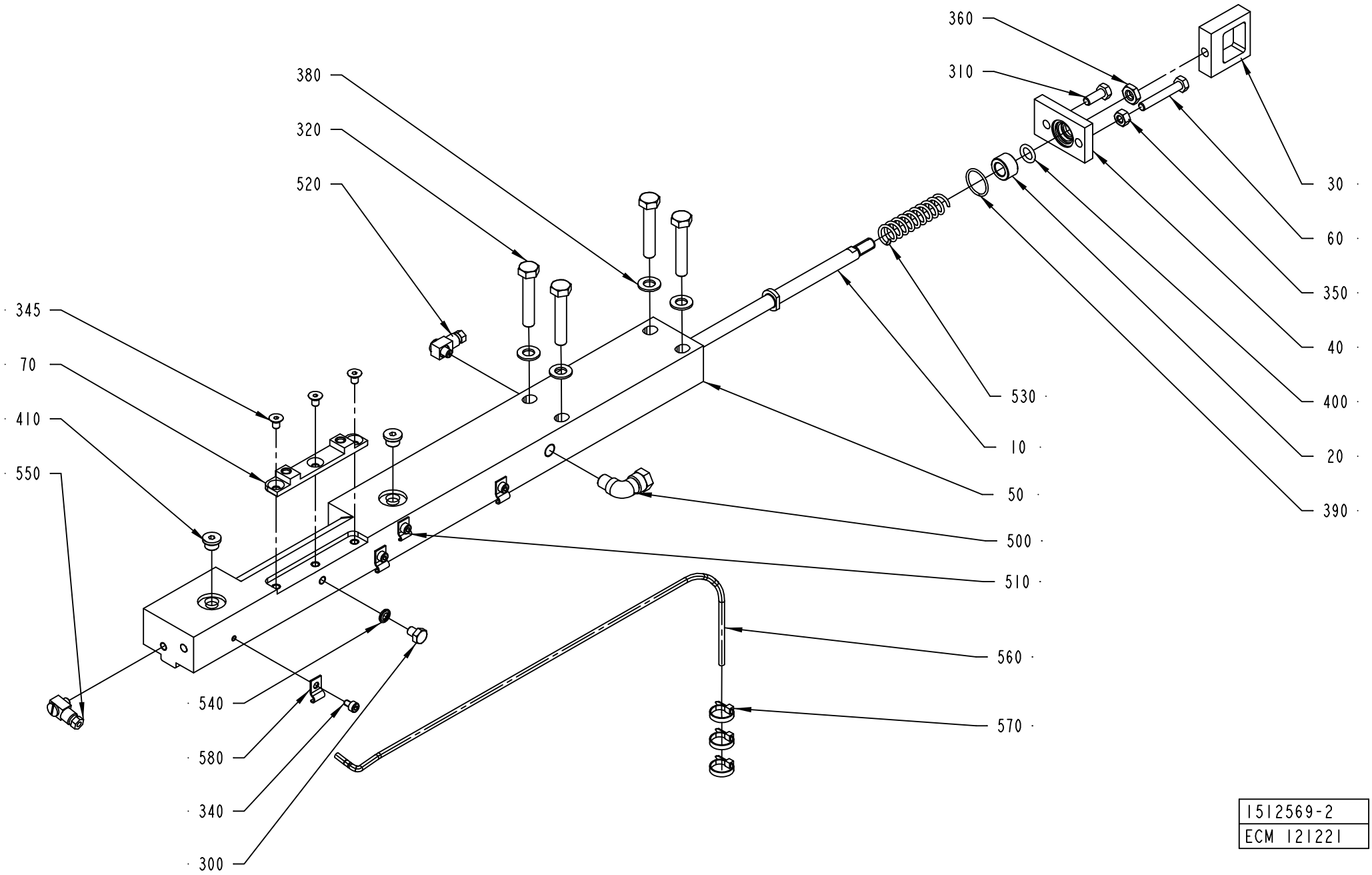

1512569-2
ECM 121221

ECM: 263538 - 20060702
Group number: 1512569-0200
Assembly Drawing: 1512569-2_1_AA

This list covers pages from 4-152 to 4-159

Pos	Part No	UN	Qty	Description	Page No
TBA 0200B QC, TBA 0330S QC, TBA 0250B QC, TPA 0250SQ QC, TPA 0200SQ QC (See drawing on page: 4-154)					
010	2530508-0000		1	TIE ROD	
050	2572248-0000		1	CARRIER	
070	1549312-0000		1	INSERT	
300	312105-0362		1	SCREW M6S ISO 4017 M6X8 A480	
345	312155-0323		3	SCREW DIN 7991 MF6S M5X8 A4 70	
400	315202-0208		1	O-RING 9,3X2,4 MM	
540	315211-0103		1	BONDED SEAL SS/NBR90 M6	
TBA 0200SQ QC, TBA 0250SQ QC (See drawing on page: 4-154)					
010	2737034-0000		1	TIE ROD	
050	2572248-0000		1	CARRIER	
070	1549312-0000		1	INSERT	
300	312105-0362		1	SCREW M6S ISO 4017 M6X8 A480	
345	312155-0323		3	SCREW DIN 7991 MF6S M5X8 A4 70	
400	315202-0208		1	O-RING 9,3X2,4 MM	
540	315211-0103		1	BONDED SEAL SS/NBR90 M6	
TBA 0250S QC, TBA 0200M QC (See drawing on page: 4-154)					
010	2530508-0000		1	TIE ROD	
050	2572248-0000		1	CARRIER	
070	2641225-0000		1	INSERT	
300	312105-0362		1	SCREW M6S ISO 4017 M6X8 A480	
345	312155-0323		3	SCREW DIN 7991 MF6S M5X8 A4 70	
400	315202-0208		1	O-RING 9,3X2,4 MM	
540	315211-0103		1	BONDED SEAL SS/NBR90 M6	
TBA 0500B QC, TBA 1000B QC (See drawing on page: 4-154)					
010	1499320-0000		1	TIE ROD	
050	2572248-0000		1	CARRIER	
070	1549312-0000		1	INSERT	
300	312105-0362		1	SCREW M6S ISO 4017 M6X8 A480	
345	312155-0323		3	SCREW DIN 7991 MF6S M5X8 A4 70	
400	315202-0208		1	O-RING 9,3X2,4 MM	
540	315211-0103		1	BONDED SEAL SS/NBR90 M6	
TBA 0500S, TBA 0200S, TPA 0330SQ, TPA 0500SQ, TBA 0200B NOQC, TBA 0250B NOQC (See drawing on page: 4-152)					
010	2530508-0000		1	TIE ROD	
050	2536026-0000		1	CARRIER	
300	312105-0362		1	SCREW M6S ISO 4017 M6X8 A480	
400	315202-0208		1	O-RING 9,3X2,4 MM	
540	315211-0103		1	BONDED SEAL SS/NBR90 M6	
TBA 1000S, TBA 1000SQ, TBA 1500S, TBA 1000B NOQC, TPA 1000SQ NOQC (See drawing on page: 4-152)					
010	1499320-0000		1	TIE ROD	
050	2536026-0000		1	CARRIER	
300	312105-0362		1	SCREW M6S ISO 4017 M6X8 A480	
400	315202-0208		1	O-RING 9,3X2,4 MM	
540	315211-0103		1	BONDED SEAL SS/NBR90 M6	
TBA 1890S QC, TBA 2000S QC (See drawing on page: 4-158)					
010	2588291-0000		1	TIE ROD	
050	2566327-0000		1	CARRIER	
070	2566328-0000		1	PLATE	
300	312105-0362		1	SCREW M6S ISO 4017 M6X8 A480	
400	315202-0208		1	O-RING 9,3X2,4 MM	
540	315211-0103		1	BONDED SEAL SS/NBR90 M6	
590	312155-0287		3	SCREW DIN 7991 MF6S M4X8 A4 70	
600	2603151-0000		1	SHIM	
TPA 1000SQ QC, TPA 0750SQ QC (See drawing on page: 4-156)					
010	2530508-0000		1	TIE ROD	
050	2647118-0000		1	CARRIER	
070	2647114-0000		1	INSERT	
290	312105-0291		2	SCREW M6S ISO 4017 M4X12 A470	
300	312105-0362		1	SCREW M6S ISO 4017 M6X8 A480	
345	312145-0323		3	SCREW ISO 2009 MFS M5X8 A4	
400	315202-0208		1	O-RING 9,3X2,4 MM	
540	315211-0103		1	BONDED SEAL SS/NBR90 M6	
Common Parts					
020	1036495-0000		1	BUSHING	
030	1036585-0000		1	EAR	
040	1036389-0000		1	LID	
060	1523162-0000		1	SCREW	
310	312105-0368		1	SCREW M6S ISO 4017 M6X16 A480	
320	312105-0460		4	SCREW M6S ISO 4014 M8X45 A480	
340	312115-0285		4	SCREW ISO4762 M4X6 A4 80	
350	312605-0316		1	HEXAGON NUT, M6M M6 A280	
360	312625-0318		1	HEXAGON THIN NUT, EN 24035 ML6M M8 A4	
380	315105-0165		4	WASHER BRB 8,4X16 RFR	
390	315202-0116		1	O-RING 18,1X1,6 MM	
410	342713-0209		2	PLUG (QUANT.MINIMA= 10PC).	
500	90030-0257		1	CONN. ELBOW, 8-R1/8, EXT.THREAD	
510	90165-0058		1	PIPE CLIP FOR TUBE D=2,5 MM	
520	90134-0058		1	CONNECTION	
530	1548940-0000		1	SPRING	
550	90134-0068		1	CONNECTION	
560	90266-0165	MM	800	BRASS PIPE	
570	352113-0101		3	CLIP STRIP, 92X2,5 MM	

CARRIER CUTTING RIGHT

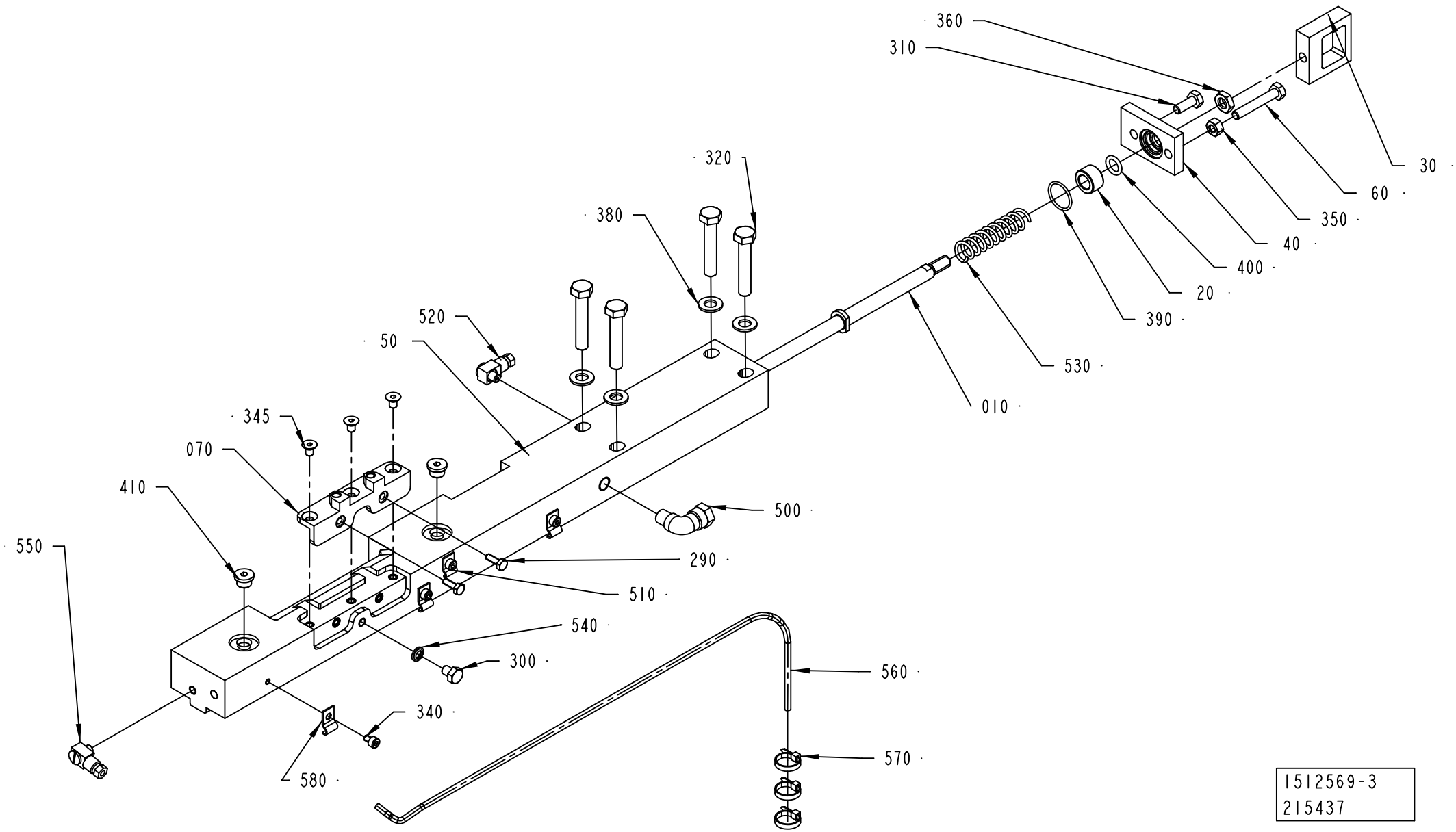

1512569-3
215437

ECM: 263538 - 20060702
Group number: 1512569-0200
Assembly Drawing: 1512569-3_1_AB

This list covers pages from 4-152 to 4-159

Pos	Part No	UN	Qty	Description	Page No
TBA 0200B QC, TBA 0330S QC, TBA 0250B QC, TPA 0250SQ QC, TPA 0200SQ QC (See drawing on page: 4-154)					
010	2530508-0000		1	TIE ROD	
050	2572248-0000		1	CARRIER	
070	1549312-0000		1	INSERT	
300	312105-0362		1	SCREW M6S ISO 4017 M6X8 A480	
345	312155-0323		3	SCREW DIN 7991 MF6S M5X8 A4 70	
400	315202-0208		1	O-RING 9,3X2,4 MM	
540	315211-0103		1	BONDED SEAL SS/NBR90 M6	
TBA 0200SQ QC, TBA 0250SQ QC (See drawing on page: 4-154)					
010	2737034-0000		1	TIE ROD	
050	2572248-0000		1	CARRIER	
070	1549312-0000		1	INSERT	
300	312105-0362		1	SCREW M6S ISO 4017 M6X8 A480	
345	312155-0323		3	SCREW DIN 7991 MF6S M5X8 A4 70	
400	315202-0208		1	O-RING 9,3X2,4 MM	
540	315211-0103		1	BONDED SEAL SS/NBR90 M6	
TBA 0250S QC, TBA 0200M QC (See drawing on page: 4-154)					
010	2530508-0000		1	TIE ROD	
050	2572248-0000		1	CARRIER	
070	2641225-0000		1	INSERT	
300	312105-0362		1	SCREW M6S ISO 4017 M6X8 A480	
345	312155-0323		3	SCREW DIN 7991 MF6S M5X8 A4 70	
400	315202-0208		1	O-RING 9,3X2,4 MM	
540	315211-0103		1	BONDED SEAL SS/NBR90 M6	
TBA 0500B QC, TBA 1000B QC (See drawing on page: 4-154)					
010	1499320-0000		1	TIE ROD	
050	2572248-0000		1	CARRIER	
070	1549312-0000		1	INSERT	
300	312105-0362		1	SCREW M6S ISO 4017 M6X8 A480	
345	312155-0323		3	SCREW DIN 7991 MF6S M5X8 A4 70	
400	315202-0208		1	O-RING 9,3X2,4 MM	
540	315211-0103		1	BONDED SEAL SS/NBR90 M6	
TBA 0500S, TBA 0200S, TPA 0330SQ, TPA 0500SQ, TBA 0200B NOQC, TBA 0250B NOQC (See drawing on page: 4-152)					
010	2530508-0000		1	TIE ROD	
050	2536026-0000		1	CARRIER	
300	312105-0362		1	SCREW M6S ISO 4017 M6X8 A480	
400	315202-0208		1	O-RING 9,3X2,4 MM	
540	315211-0103		1	BONDED SEAL SS/NBR90 M6	
TBA 1000S, TBA 1000SQ, TBA 1500S, TBA 1000B NOQC, TPA 1000SQ NOQC (See drawing on page: 4-152)					
010	1499320-0000		1	TIE ROD	
050	2536026-0000		1	CARRIER	
300	312105-0362		1	SCREW M6S ISO 4017 M6X8 A480	
400	315202-0208		1	O-RING 9,3X2,4 MM	
540	315211-0103		1	BONDED SEAL SS/NBR90 M6	
TBA 1890S QC, TBA 2000S QC (See drawing on page: 4-158)					
010	2588291-0000		1	TIE ROD	
050	2566327-0000		1	CARRIER	
070	2566328-0000		1	PLATE	
300	312105-0362		1	SCREW M6S ISO 4017 M6X8 A480	
400	315202-0208		1	O-RING 9,3X2,4 MM	
540	315211-0103		1	BONDED SEAL SS/NBR90 M6	
590	312155-0287		3	SCREW DIN 7991 MF6S M4X8 A4 70	
600	2603151-0000		1	SHIM	
TPA 1000SQ QC, TPA 0750SQ QC (See drawing on page: 4-156)					
010	2530508-0000		1	TIE ROD	
050	2647118-0000		1	CARRIER	
070	2647114-0000		1	INSERT	
290	312105-0291		2	SCREW M6S ISO 4017 M4X12 A470	
300	312105-0362		1	SCREW M6S ISO 4017 M6X8 A480	
345	312145-0323		3	SCREW ISO 2009 MFS M5X8 A4	
400	315202-0208		1	O-RING 9,3X2,4 MM	
540	315211-0103		1	BONDED SEAL SS/NBR90 M6	
Common Parts					
020	1036495-0000		1	BUSHING	
030	1036585-0000		1	EAR	
040	1036389-0000		1	LID	
060	1523162-0000		1	SCREW	
310	312105-0368		1	SCREW M6S ISO 4017 M6X16 A480	
320	312105-0460		4	SCREW M6S ISO 4014 M8X45 A480	
340	312115-0285		4	SCREW ISO4762 M4X6 A4 80	
350	312605-0316		1	HEXAGON NUT, M6M M6 A280	
360	312625-0318		1	HEXAGON THIN NUT, EN 24035 ML6M M8 A4	
380	315105-0165		4	WASHER BRB 8,4X16 RFR	
390	315202-0116		1	O-RING 18,1X1,6 MM	
410	342713-0209		2	PLUG (QUANT.MINIMA= 10PC).	
500	90030-0257		1	CONN. ELBOW, 8-R1/8, EXT.THREAD	
510	90165-0058		1	PIPE CLIP FOR TUBE D=2,5 MM	
520	90134-0058		1	CONNECTION	
530	1548940-0000		1	SPRING	
550	90134-0068		1	CONNECTION	
560	90266-0165	MM	800	BRASS PIPE	
570	352113-0101		3	CLIP STRIP, 92X2,5 MM	

Machine Type | Group Description | Used-In | Group Number | Page No

CARRIER CUTTING RIGHT

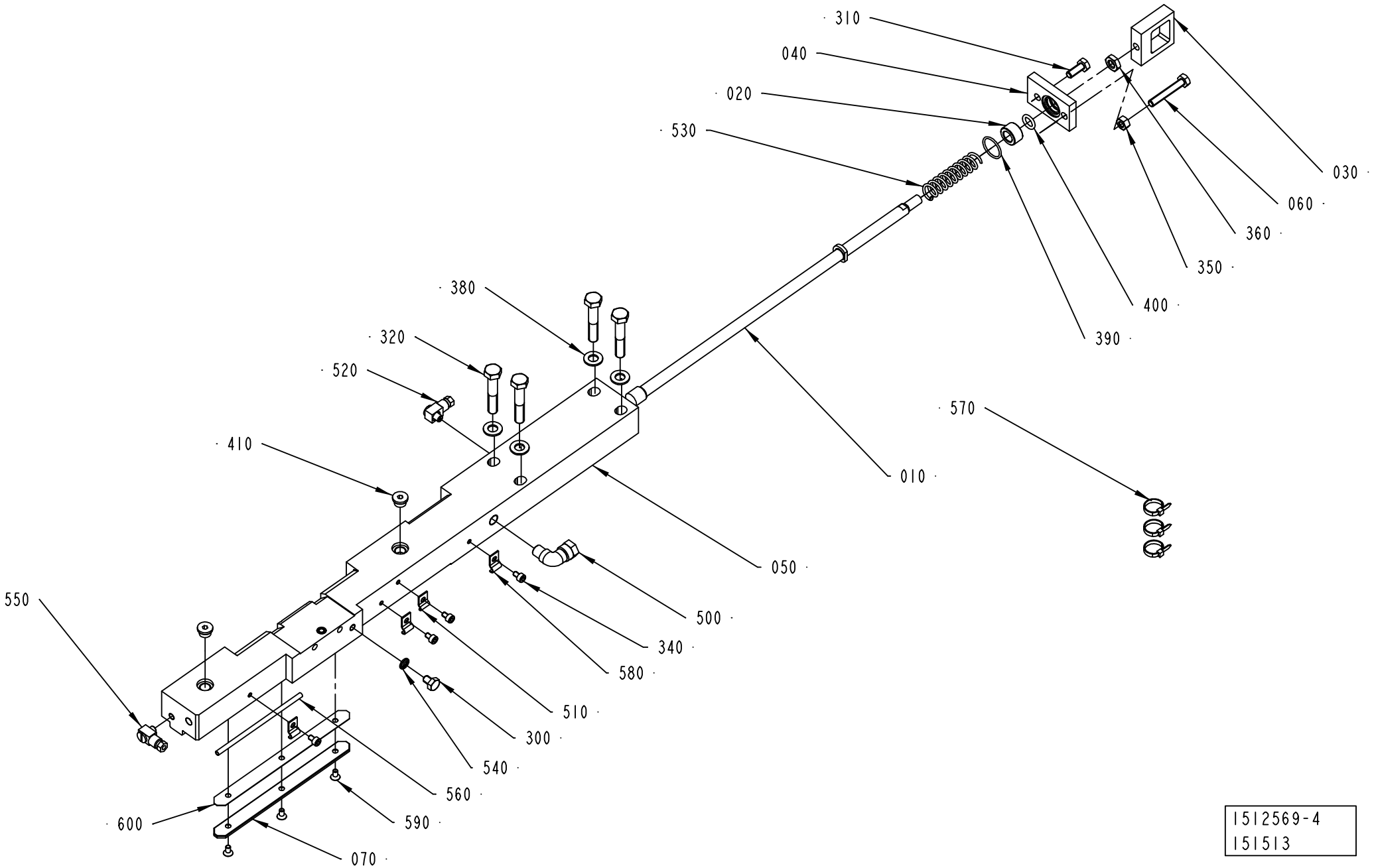

1512569-4
151513

ECM: 263538 - 20060702
Group number: 1512569-0200
Assembly Drawing: 1512569-4_1_AA

This list covers pages from 4-152 to 4-159

Pos	Part No	UN	Qty	Description	Page No
TBA 0200B QC, TBA 0330S QC, TBA 0250B QC, TPA 0250SQ QC, TPA 0200SQ QC (See drawing on page: 4-154)					
010	2530508-0000		1	TIE ROD	
050	2572248-0000		1	CARRIER	
070	1549312-0000		1	INSERT	
300	312105-0362		1	SCREW M6S ISO 4017 M6X8 A480	
345	312155-0323		3	SCREW DIN 7991 MF6S M5X8 A4 70	
400	315202-0208		1	O-RING 9,3X2,4 MM	
540	315211-0103		1	BONDED SEAL SS/NBR90 M6	
TBA 0200SQ QC, TBA 0250SQ QC (See drawing on page: 4-154)					
010	2737034-0000		1	TIE ROD	
050	2572248-0000		1	CARRIER	
070	1549312-0000		1	INSERT	
300	312105-0362		1	SCREW M6S ISO 4017 M6X8 A480	
345	312155-0323		3	SCREW DIN 7991 MF6S M5X8 A4 70	
400	315202-0208		1	O-RING 9,3X2,4 MM	
540	315211-0103		1	BONDED SEAL SS/NBR90 M6	
TBA 0250S QC, TBA 0200M QC (See drawing on page: 4-154)					
010	2530508-0000		1	TIE ROD	
050	2572248-0000		1	CARRIER	
070	2641225-0000		1	INSERT	
300	312105-0362		1	SCREW M6S ISO 4017 M6X8 A480	
345	312155-0323		3	SCREW DIN 7991 MF6S M5X8 A4 70	
400	315202-0208		1	O-RING 9,3X2,4 MM	
540	315211-0103		1	BONDED SEAL SS/NBR90 M6	
TBA 0500B QC, TBA 1000B QC (See drawing on page: 4-154)					
010	1499320-0000		1	TIE ROD	
050	2572248-0000		1	CARRIER	
070	1549312-0000		1	INSERT	
300	312105-0362		1	SCREW M6S ISO 4017 M6X8 A480	
345	312155-0323		3	SCREW DIN 7991 MF6S M5X8 A4 70	
400	315202-0208		1	O-RING 9,3X2,4 MM	
540	315211-0103		1	BONDED SEAL SS/NBR90 M6	
TBA 0500S, TBA 0200S, TPA 0330SQ, TPA 0500SQ, TBA 0200B NOQC, TBA 0250B NOQC (See drawing on page: 4-152)					
010	2530508-0000		1	TIE ROD	
050	2536026-0000		1	CARRIER	
300	312105-0362		1	SCREW M6S ISO 4017 M6X8 A480	
400	315202-0208		1	O-RING 9,3X2,4 MM	
540	315211-0103		1	BONDED SEAL SS/NBR90 M6	
TBA 1000S, TBA 1000SQ, TBA 1500S, TBA 1000B NOQC, TPA 1000SQ NOQC (See drawing on page: 4-152)					
010	1499320-0000		1	TIE ROD	
050	2536026-0000		1	CARRIER	
300	312105-0362		1	SCREW M6S ISO 4017 M6X8 A480	
400	315202-0208		1	O-RING 9,3X2,4 MM	
540	315211-0103		1	BONDED SEAL SS/NBR90 M6	
TBA 1890S QC, TBA 2000S QC (See drawing on page: 4-158)					
010	2588291-0000		1	TIE ROD	
050	2566327-0000		1	CARRIER	
070	2566328-0000		1	PLATE	
300	312105-0362		1	SCREW M6S ISO 4017 M6X8 A480	
400	315202-0208		1	O-RING 9,3X2,4 MM	
540	315211-0103		1	BONDED SEAL SS/NBR90 M6	
590	312155-0287		3	SCREW DIN 7991 MF6S M4X8 A4 70	
600	2603151-0000		1	SHIM	
TPA 1000SQ QC, TPA 0750SQ QC (See drawing on page: 4-156)					
010	2530508-0000		1	TIE ROD	
050	2647118-0000		1	CARRIER	
070	2647114-0000		1	INSERT	
290	312105-0291		2	SCREW M6S ISO 4017 M4X12 A470	
300	312105-0362		1	SCREW M6S ISO 4017 M6X8 A480	
345	312145-0323		3	SCREW ISO 2009 MFS M5X8 A4	
400	315202-0208		1	O-RING 9,3X2,4 MM	
540	315211-0103		1	BONDED SEAL SS/NBR90 M6	
Common Parts					
020	1036495-0000		1	BUSHING	
030	1036585-0000		1	EAR	
040	1036389-0000		1	LID	
060	1523162-0000		1	SCREW	
310	312105-0368		1	SCREW M6S ISO 4017 M6X16 A480	
320	312105-0460		4	SCREW M6S ISO 4014 M8X45 A480	
340	312115-0285		4	SCREW ISO4762 M4X6 A4 80	
350	312605-0316		1	HEXAGON NUT, M6M M6 A280	
360	312625-0318		1	HEXAGON THIN NUT, EN 24035 ML6M M8 A4	
380	315105-0165		4	WASHER BRB 8,4X16 RFR	
390	315202-0116		1	O-RING 18,1X1,6 MM	
410	342713-0209		2	PLUG (QUANT.MINIMA= 10PC).	
500	90030-0257		1	CONN. ELBOW, 8-R1/8, EXT.THREAD	
510	90165-0058		1	PIPE CLIP FOR TUBE D=2,5 MM	
520	90134-0058		1	CONNECTION	
530	1548940-0000		1	SPRING	
550	90134-0068		1	CONNECTION	
560	90266-0165	MM	800	BRASS PIPE	
570	352113-0101		3	CLIP STRIP, 92X2,5 MM	

Machine Type | Group Description | Used-In | Group Number | Page No

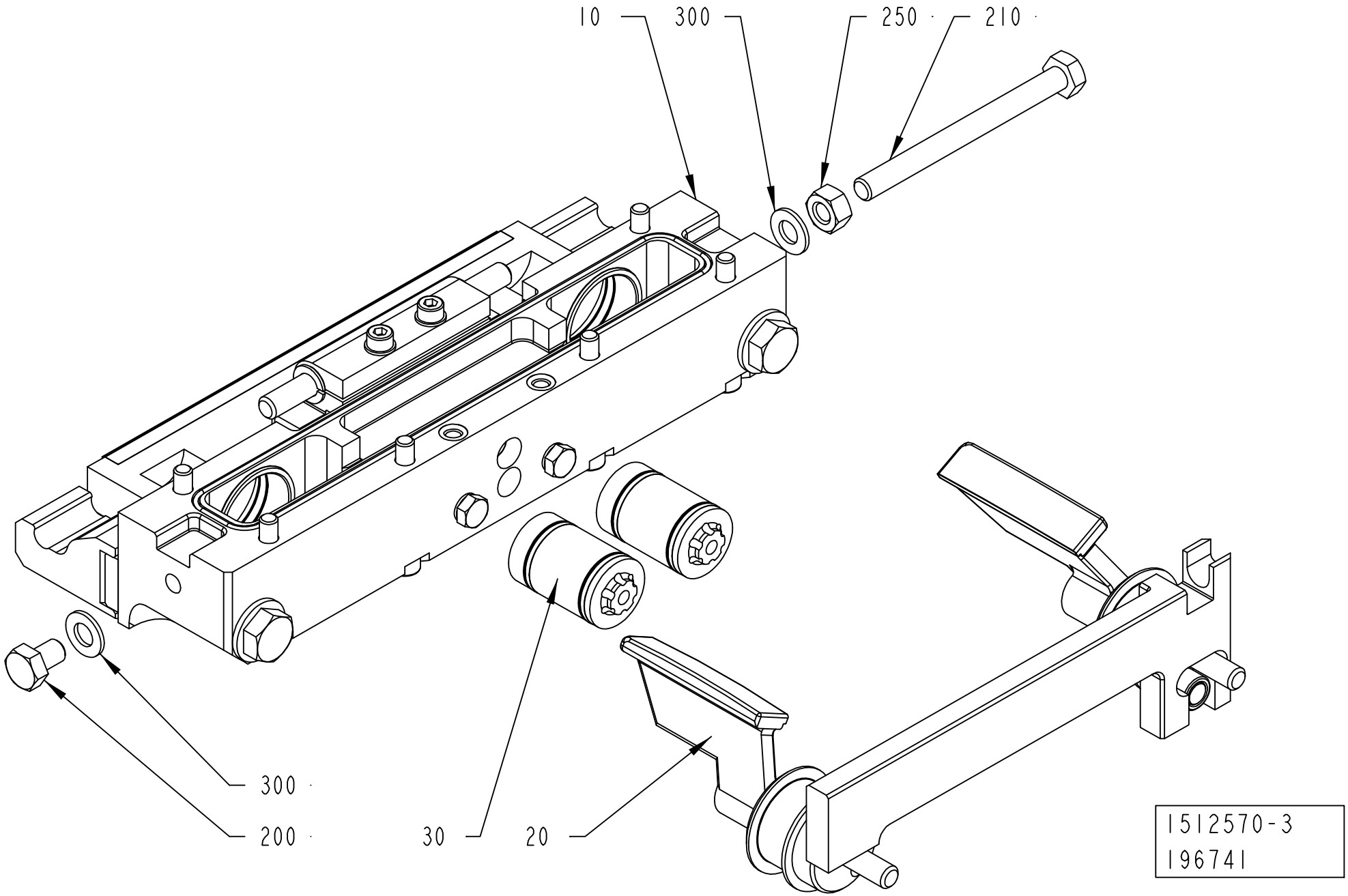
10
300
250
210
300
200
30
20
1512570-3
196741

ECM: 235785 - 20060101
Group number: 1512570-0300
Assembly Drawing: 1512570-3_1_AA

Pos	Part No	UN	Qty	Description	Page No
-					
010	2552008-0200		1	CUTTING JAW	**4-119, 4-121, 4-123, 4-125**
020	2552011-0100		1	FOLDING FLAP RIGHT	**4-163, 4-165**
030	2552010-0200		2	PISTON	**4-131**
200	312105-0447		1	SCREW M6S ISO 4017 M8X12 A480	
210	312105-0469		1	SCREW M6S ISO 4014 M8X90 A480	
250	312605-0318		1	HEXAGON NUT, M6M M8 A280	
300	315105-0165		2	WASHER BRB 8,4X16 RFR	

Pos	Part No	UN	Qty	Description	Page No

FOLDING FLAP RIGHT

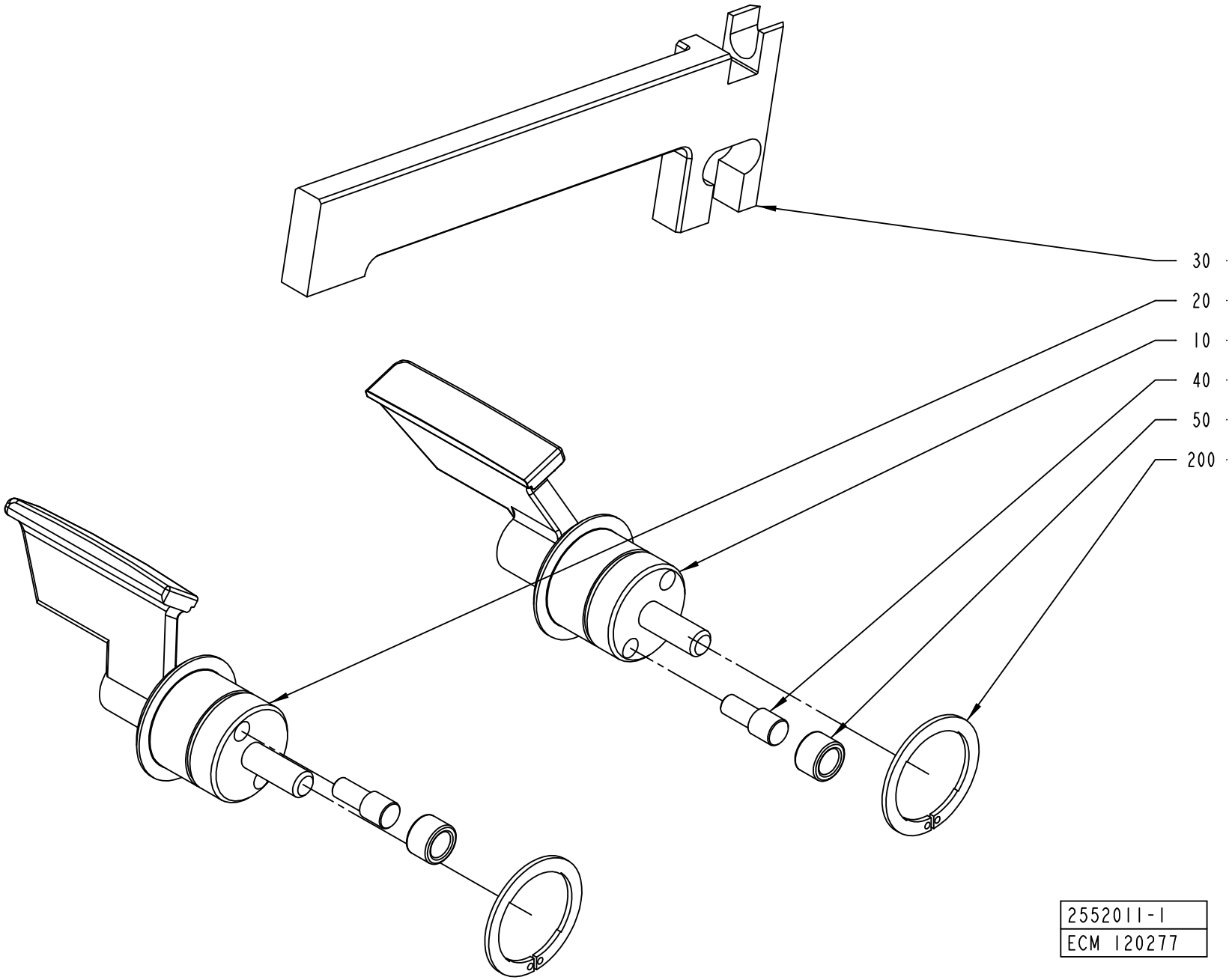

ECM: 272006 - 20060831
Group number: 2552011-0100
Assembly Drawing: 2552011-1_1_AA

This list covers pages from 4-162 to 4-165

Pos	Part No	UN	Qty	Description	Page No
TPA 0500SQ (See drawing on page: 4-162)					
010	1549822-0000		1	FOLDING FLAP	
020	1549823-0000		1	FOLDING FLAP	
030	1549825-0000		1	CARRIER RULER	
TPA 1000SQ NOQC, TPA 1000SQ QC, TPA 0750SQ QC (See drawing on page: 4-162)					
010	1523146-0000		1	FOLDING FLAP	
020	1523147-0000		1	FOLDING FLAP	
030	1523148-0000		1	CARRIER RULER	
TBA 0200B QC, TBA 0330S QC, TBA 0250B QC (See drawing on page: 4-162)					
010	2605875-0000		1	FOLDING FLAP	
020	2605876-0000		1	FOLDING FLAP	
030	1255463-0000		1	CARRIER RULER	
TBA 0200S (See drawing on page: 4-162)					
010	2624554-0000		1	FOLDING FLAP	
020	2624555-0000		1	FOLDING FLAP	
030	1255462-0000		1	CARRIER RULER	
TBA 0200SQ QC, TBA 0250SQ QC (See drawing on page: 4-162)					
010	2668313-0000		1	FOLDING FLAP	
020	2668314-0000		1	FOLDING FLAP	
030	2736139-0000		1	CARRIER RULER	
TBA 0250S QC, TBA 0200M QC					
010	2624554-0000		1	FOLDING FLAP	
020	2624555-0000		1	FOLDING FLAP	
030	2520471-0000		1	CARRIER RULER	
TBA 0500B NOQC, TBA 1000B NOQC NOMOLDEDCAP (See drawing on page: 4-162)					
010	1511697-0000		1	.FOLDING FLAP	
020	1511698-0000		1	FOLDING FLAP	
030	1255461-0000		1	CARRIER RULER	
TBA 0500B QC, TBA 1000B QC (See drawing on page: 4-162)					
010	1511352-0000		1	FOLDING FLAP	
020	1511351-0000		1	FOLDING FLAP	
030	1255461-0000		1	CARRIER RULER	
TBA 0500S (See drawing on page: 4-162)					
010	2507085-0000		1	FOLDING FLAP	
020	2507086-0000		1	FOLDING FLAP	
030	1511188-0000		1	CARRIER RULER	
TBA 1000B NOQC STDA7 (See drawing on page: 4-162)					
010	1511697-0000		1	.FOLDING FLAP	
020	1511698-0000		1	FOLDING FLAP	
030	1255461-0000		1	CARRIER RULER	
TBA 1000S NOMOLDEDCAP (See drawing on page: 4-162)					
010	1511699-0000		1	FOLDING FLAP	
020	1511700-0000		1	FOLDING FLAP	
030	1255464-0000		1	CARRIER RULER	
TBA 1000S STDA7, TBA 1000S LIGHTCAP (See drawing on page: 4-162)					
010	1511699-0000		1	FOLDING FLAP	
020	2546501-0000		1	FOLDING FLAP	
030	1255464-0000		1	CARRIER RULER	
TBA 1000SQ (See drawing on page: 4-162)					
010	2507076-0000		1	FOLDING FLAP	
020	2507077-0000		1	FOLDING FLAP	
030	1360319-0000		1	CARRIER RULER	
TBA 1500S (See drawing on page: 4-162)					
010	2507092-0000		1	FOLDING FLAP	
020	2507093-0000		1	FOLDING FLAP	
030	1255461-0000		1	CARRIER RULER	
TBA 1890S QC, TBA 2000S QC (See drawing on page: 4-164)					
010	2566319-0000		1	FOLDING FLAP	
020	2566320-0000		1	FOLDING FLAP	
030	2566317-0000		1	CARRIER RULER	
210	90459-2258		2	SEAL GLYDRING 25,1X30X2,2 MM	
TPA 0250SQ QC, TPA 0200SQ QC					
010	2728883-0000		1	FOLDING FLAP	
020	2728884-0000		1	FOLDING FLAP	
030	1255462-0000		1	CARRIER RULER	
TPA 0330SQ (See drawing on page: 4-162)					
010	2507096-0000		1	FOLDING FLAP	
020	2507097-0000		1	FOLDING FLAP	
030	1538769-0000		1	CARRIER RULER	
Common Parts					
040	22462-0000		2	SHAFT	
050	22463-0000		2	ROLL	
200	90141-0029		2	CIRCLIP	

Machine Type | Group Description | Used-In | Group Number | Page No

FOLDING FLAP RIGHT

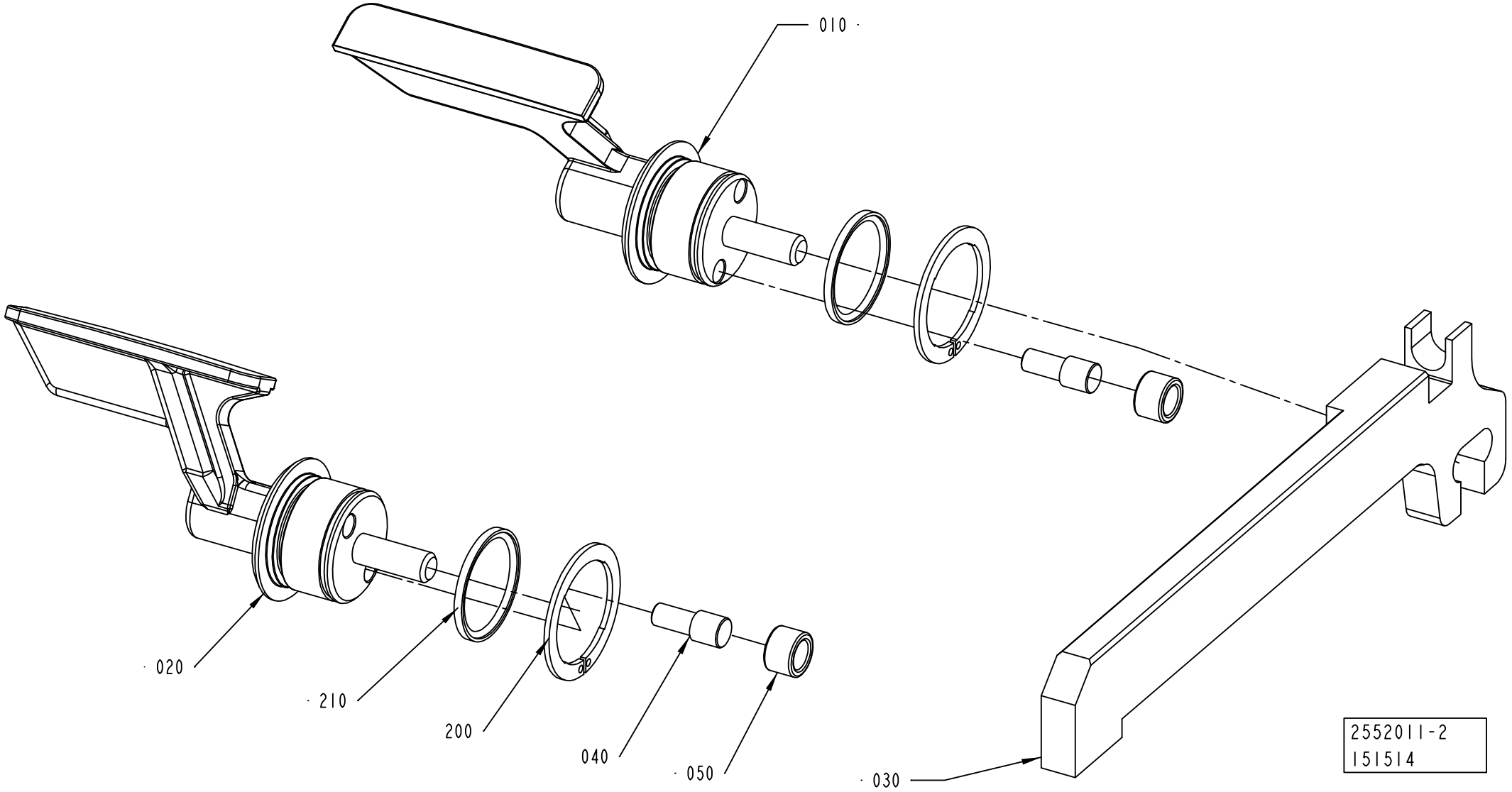

ECM: 272006 - 20060831
Group number: 2552011-0100
Assembly Drawing: 2552011-2_1_AA

This list covers pages from 4-162 to 4-165

Pos	Part No	UN	Qty	Description	Page No
TPA 0500SQ (See drawing on page: 4-162)					
010	1549822-0000		1	FOLDING FLAP	
020	1549823-0000		1	FOLDING FLAP	
030	1549825-0000		1	CARRIER RULER	
TPA 1000SQ NOQC, TPA 1000SQ QC, TPA 0750SQ QC (See drawing on page: 4-162)					
010	1523146-0000		1	FOLDING FLAP	
020	1523147-0000		1	FOLDING FLAP	
030	1523148-0000		1	CARRIER RULER	
TBA 0200B QC, TBA 0330S QC, TBA 0250B QC (See drawing on page: 4-162)					
010	2605875-0000		1	FOLDING FLAP	
020	2605876-0000		1	FOLDING FLAP	
030	1255463-0000		1	CARRIER RULER	
TBA 0200S (See drawing on page: 4-162)					
010	2624554-0000		1	FOLDING FLAP	
020	2624555-0000		1	FOLDING FLAP	
030	1255462-0000		1	CARRIER RULER	
TBA 0200SQ QC, TBA 0250SQ QC (See drawing on page: 4-162)					
010	2668313-0000		1	FOLDING FLAP	
020	2668314-0000		1	FOLDING FLAP	
030	2736139-0000		1	CARRIER RULER	
TBA 0250S QC, TBA 0200M QC					
010	2624554-0000		1	FOLDING FLAP	
020	2624555-0000		1	FOLDING FLAP	
030	2520471-0000		1	CARRIER RULER	
TBA 0500B NOQC, TBA 1000B NOQC NOMOLDEDCAP (See drawing on page: 4-162)					
010	1511697-0000		1	.FOLDING FLAP	
020	1511698-0000		1	FOLDING FLAP	
030	1255461-0000		1	CARRIER RULER	
TBA 0500B QC, TBA 1000B QC (See drawing on page: 4-162)					
010	1511352-0000		1	FOLDING FLAP	
020	1511351-0000		1	FOLDING FLAP	
030	1255461-0000		1	CARRIER RULER	
TBA 0500S (See drawing on page: 4-162)					
010	2507085-0000		1	FOLDING FLAP	
020	2507086-0000		1	FOLDING FLAP	
030	1511188-0000		1	CARRIER RULER	
TBA 1000B NOQC STDA7 (See drawing on page: 4-162)					
010	1511697-0000		1	.FOLDING FLAP	
020	1511698-0000		1	FOLDING FLAP	
030	1255461-0000		1	CARRIER RULER	
TBA 1000S NOMOLDEDCAP (See drawing on page: 4-162)					
010	1511699-0000		1	FOLDING FLAP	
020	1511700-0000		1	FOLDING FLAP	
030	1255464-0000		1	CARRIER RULER	
TBA 1000S STDA7, TBA 1000S LIGHTCAP (See drawing on page: 4-162)					
010	1511699-0000		1	FOLDING FLAP	
020	2546501-0000		1	FOLDING FLAP	
030	1255464-0000		1	CARRIER RULER	
TBA 1000SQ (See drawing on page: 4-162)					
010	2507076-0000		1	FOLDING FLAP	
020	2507077-0000		1	FOLDING FLAP	
030	1360319-0000		1	CARRIER RULER	
TBA 1500S (See drawing on page: 4-162)					
010	2507092-0000		1	FOLDING FLAP	
020	2507093-0000		1	FOLDING FLAP	
030	1255461-0000		1	CARRIER RULER	
TBA 1890S QC, TBA 2000S QC (See drawing on page: 4-164)					
010	2566319-0000		1	FOLDING FLAP	
020	2566320-0000		1	FOLDING FLAP	
030	2566317-0000		1	CARRIER RULER	
210	90459-2258		2	SEAL GLYDRING 25,1X30X2,2 MM	
TPA 0250SQ QC, TPA 0200SQ QC					
010	2728883-0000		1	FOLDING FLAP	
020	2728884-0000		1	FOLDING FLAP	
030	1255462-0000		1	CARRIER RULER	
TPA 0330SQ (See drawing on page: 4-162)					
010	2507096-0000		1	FOLDING FLAP	
020	2507097-0000		1	FOLDING FLAP	
030	1538769-0000		1	CARRIER RULER	
Common Parts					
040	22462-0000		2	SHAFT	
050	22463-0000		2	ROLL	
200	90141-0029		2	CIRCLIP	

Machine Type | Group Description | Used-In | Group Number | Page No

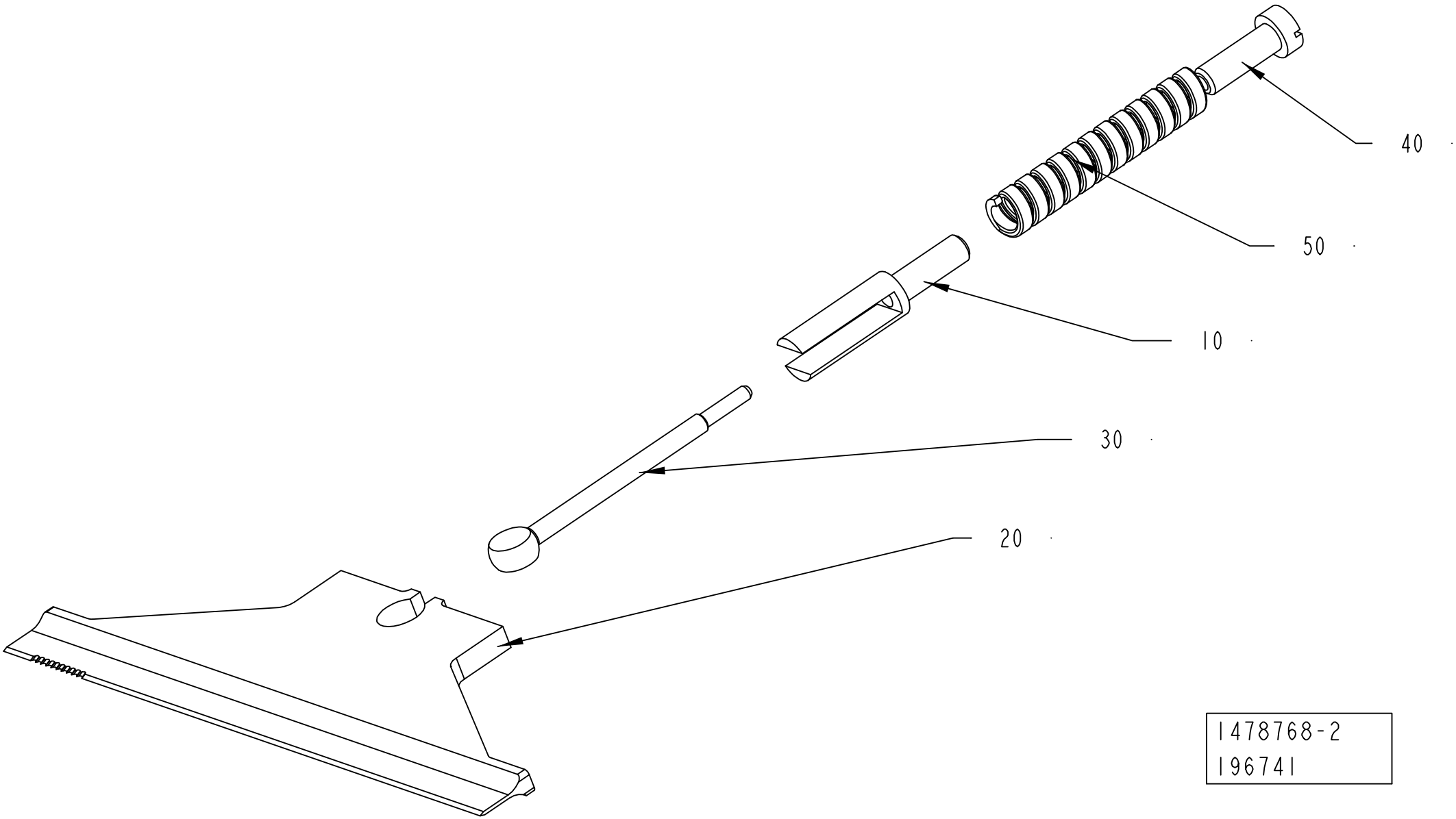
40
50
10
30
20
1478768-2
196741

ECM: 271962 - 20060831
Group number: 1478768-0200
Assembly Drawing: 1478768-2_1_AA

Pos	Part No	UN	Qty	Description	Page No
TBA 0330S, TBA 0200B, TBA 0250S, TBA 0200S, TBA 0200M, TBA 0250B, TBA 0200SQ, TPA 0250SQ, TPA 0330SQ, TPA 0200SQ, TBA 0250SQ					
020	1348966-0000		1	KNIFE	
050	2774493-0000		1	COMPRESSION SPRING	
TBA 0500B, TBA 1000S, TBA 1000SQ, TBA 1000B, TBA 1500S					
020	1348955-0000		1	KNIFE	
050	1538109-0000		1	COMPRESSION SPRING	
TBA 0500S, TPA 1000SQ, TPA 0750SQ					
020	1348956-0000		1	KNIFE	
050	1538109-0000		1	COMPRESSION SPRING	
TBA 1890S, TBA 2000S					
020	2664761-0000		1	KNIFE	
050	1538109-0000		1	COMPRESSION SPRING	
TPA 0500SQ					
020	1549828-0000		1	KNIFE	
050	1538109-0000		1	COMPRESSION SPRING	
Common Parts					
010	1285006-0000		1	SPACER	
030	1285003-0000		1	LINK	
040	1285005-0000		1	NUT	

Pos	Part No	UN	Qty	Description	Page No

VOLUME CURVE PIECE

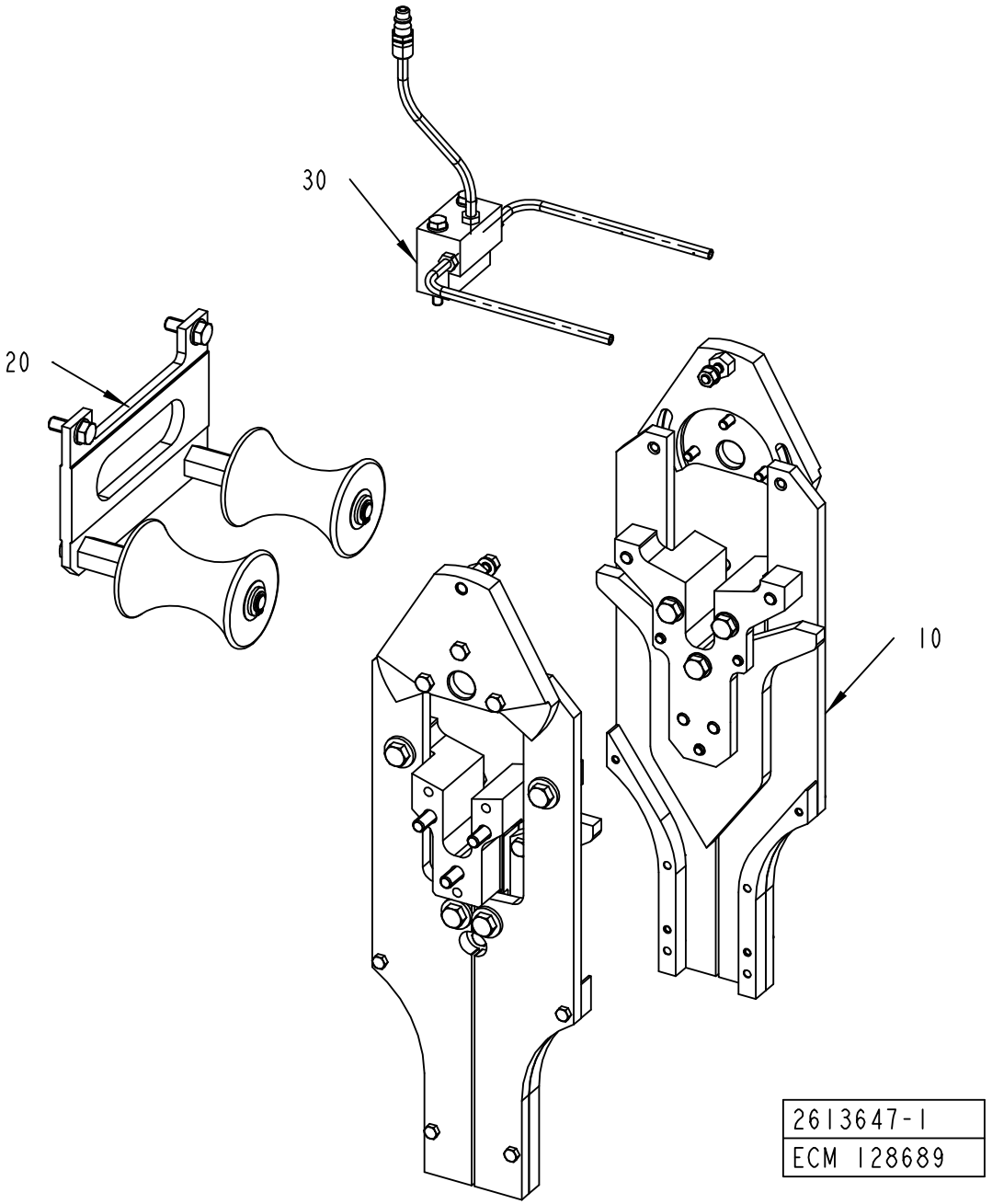

ECM: 258785 - 20060704
Group number: 2613647-0100
Assembly Drawing: 2613647-1_1_AA

Pos	Part No	UN	Qty	Description	Page No
TBA 0330S, TBA 0200B, TBA 0250B, TBA 0500B QC, TBA 1000B QC, TBA 0250S QC, TBA 0200M QC, TPA 0250SQ QC, TPA 0200SQ QC, TBA 0200SQ QC, TBA 0250SQ QC					
010	2613645-0100		1	CURVE UNIT	**4-171, 4-173**
TBA 0500S, TBA 1000SQ, TBA 0200S, TBA 1500S, TPA 0330SQ, TPA 0500SQ, TBA 1000S STDA7, TBA 1000S NOMOLDEDCAP, TBA 1000B NOQC NOMOLDEDCAP, TBA 1000B NOQC STDA7, TBA 1890S QC, TBA 2000S QC, TPA 1000SQ NOQC, TPA 1000SQ QC, TPA 0750SQ QC, TBA 1000S LIGHTCAP					
010	2597329-0100		1	CURVE UNIT	**4-179, 4-181, 4-183**
Common Parts					
020	2613648-0100		1	SUPPORT ROLLER	**4-185, 4-187**
030	2556893-0100		1	TUBE FLUSHING	**4-189**

Pos	Part No	UN	Qty	Description	Page No

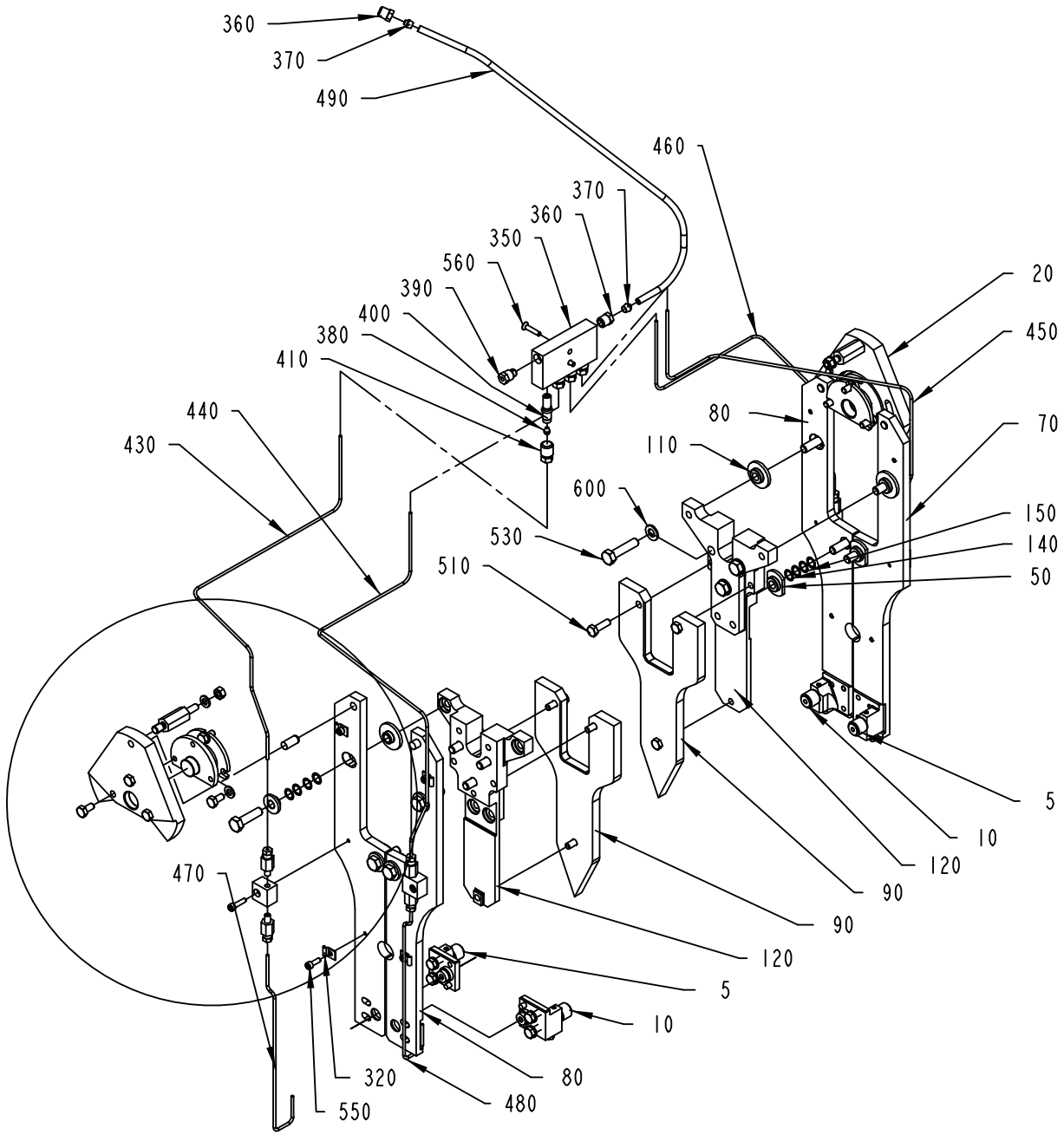

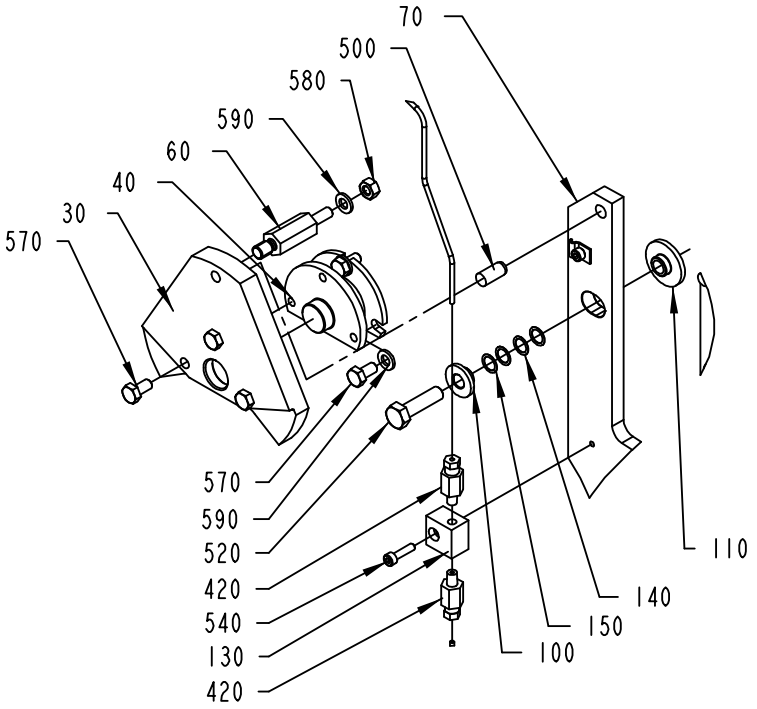

2613645-1
265795

ECM: 271552 - 20061101
Group number: 2613645-0100
Assembly Drawing: 2613645-1_1_AE

This list covers pages from 4-170 to 4-173

Pos	Part No	UN	Qty	Description	Page No
TBA 0200SQ, TBA 0250SQ (See drawing on page: 4-170)					
020	2618377-0000		1	ECCENTRIC	
030	2618378-0000		1	ECCENTRIC	
060	2618302-0000		2	PIVOT PIN	
090	2747139-0000		2	CAM	
360	90134-0038		1	BUSHING/NUT INLET/OUTLET 4 MM	
370	90028-0024		1	CONE TUBE 4 MM	
470	90266-0019	MM	290	PIPE	
480	90266-0019	MM	290	PIPE	
570	312105-0366		12	SCREW M6S ISO 4017 M6X12 A480	
590	315105-0153		8	WASHER BRB 6,4X12 RFR	
TBA 0250S, TBA 0200M (See drawing on page: 4-172)					
020	2618377-0000		1	ECCENTRIC	
030	2618378-0000		1	ECCENTRIC	
060	2618302-0000		2	PIVOT PIN	
090	2769340-0000		2	CAM	
115	2769546-0000		6	SPACER	
360	90134-0055		2	BUSHING/NUT INLET/OUTLET 6 MM	
370	90028-0025		2	CONE TUBE 6 MM	
470	90266-0019	MM	260	PIPE	
480	90266-0019	MM	260	PIPE	
490	90166-0108	MM	500	TUBE 6 MM PA,TRANSP.	
570	312105-0366		12	SCREW M6S ISO 4017 M6X12 A480	
590	315105-0153		8	WASHER BRB 6,4X12 RFR	
TBA 0330S, TBA 0200B, TBA 0250B (See drawing on page: 4-172)					
020	2618377-0000		1	ECCENTRIC	
030	2618378-0000		1	ECCENTRIC	
060	2618302-0000		2	PIVOT PIN	
090	2771550-0000		2	CAM	
115	2769546-0000		6	SPACER	
360	90134-0055		2	BUSHING/NUT INLET/OUTLET 6 MM	
370	90028-0025		2	CONE TUBE 6 MM	
470	90266-0019	MM	260	PIPE	
480	90266-0019	MM	260	PIPE	
490	90166-0108	MM	500	TUBE 6 MM PA,TRANSP.	
570	312105-0366		12	SCREW M6S ISO 4017 M6X12 A480	
590	315105-0153		8	WASHER BRB 6,4X12 RFR	
TBA 0500B, TBA 1000B (See drawing on page: 4-170)					
020	2618377-0000		1	ECCENTRIC	
030	2618378-0000		1	ECCENTRIC	
060	2618302-0000		2	PIVOT PIN	
090	2605066-0000		2	CURVE	
360	90134-0055		2	BUSHING/NUT INLET/OUTLET 6 MM	
370	90028-0025		2	CONE TUBE 6 MM	
470	90266-0019	MM	260	PIPE	
480	90266-0019	MM	260	PIPE	
490	90166-0108	MM	500	TUBE 6 MM PA,TRANSP.	
570	312105-0366		12	SCREW M6S ISO 4017 M6X12 A480	
590	315105-0153		8	WASHER BRB 6,4X12 RFR	
TPA 0250SQ, TPA 0200SQ (See drawing on page: 4-172)					
020	2618377-0000		1	ECCENTRIC	
030	2618378-0000		1	ECCENTRIC	
060	2618302-0000		2	PIVOT PIN	
090	2771551-0000		2	CAM	
115	2769546-0000		6	SPACER	
360	90134-0055		2	BUSHING/NUT INLET/OUTLET 6 MM	
370	90028-0025		2	CONE TUBE 6 MM	
470	90266-0019	MM	260	PIPE	
480	90266-0019	MM	260	PIPE	
490	90166-0108	MM	500	TUBE 6 MM PA,TRANSP.	
570	312105-0366		12	SCREW M6S ISO 4017 M6X12 A480	
590	315105-0153		8	WASHER BRB 6,4X12 RFR	
Common Parts					
005	2605226-0200		2	ROLLER UNIT	**4-175**
010	1499351-0200		2	ROLLER UNIT	**4-177**
040	2618259-0000		2	SPACER	
050	2613763-0000		4	SLEEVE	
070	2614371-0000		2	ROLLER BRACKET	
080	2614373-0000		2	ROLLER BRACKET	
100	2614372-0000		8	SLEEVE	
110	2613764-0000		4	SLEEVE	
120	2613809-0000		2	SPACER	
130	2610793-0000		4	BLOCK	
140	2614376-0001		16	WASHER	
150	2614376-0002		16	WASHER	
320	90165-0058		8	PIPE CLIP FOR TUBE D=2,5 MM	
350	90032-0039		1	BLOCK 4 WAYS	
380	90028-0020		4	CONE TUBE 2,5MM	
390	90087-0019		1	PLUG M10X1 STAINLESS	
400	90092-0052		4	METERING VALVE 10 MM3	
410	90134-0039		4	BUSHING VALVE CONNECTION 2,5 MM	
420	90134-0065		8	CONNECTION M6 TUBE 2,5 MM	
430	90166-0143	MM	550	TUBE 2,5 MM PA,TRANSP.	
440	90166-0143	MM	650	TUBE 2,5 MM PA,TRANSP.	

Machine Type | Group Description | Used-In | Group Number | Page No

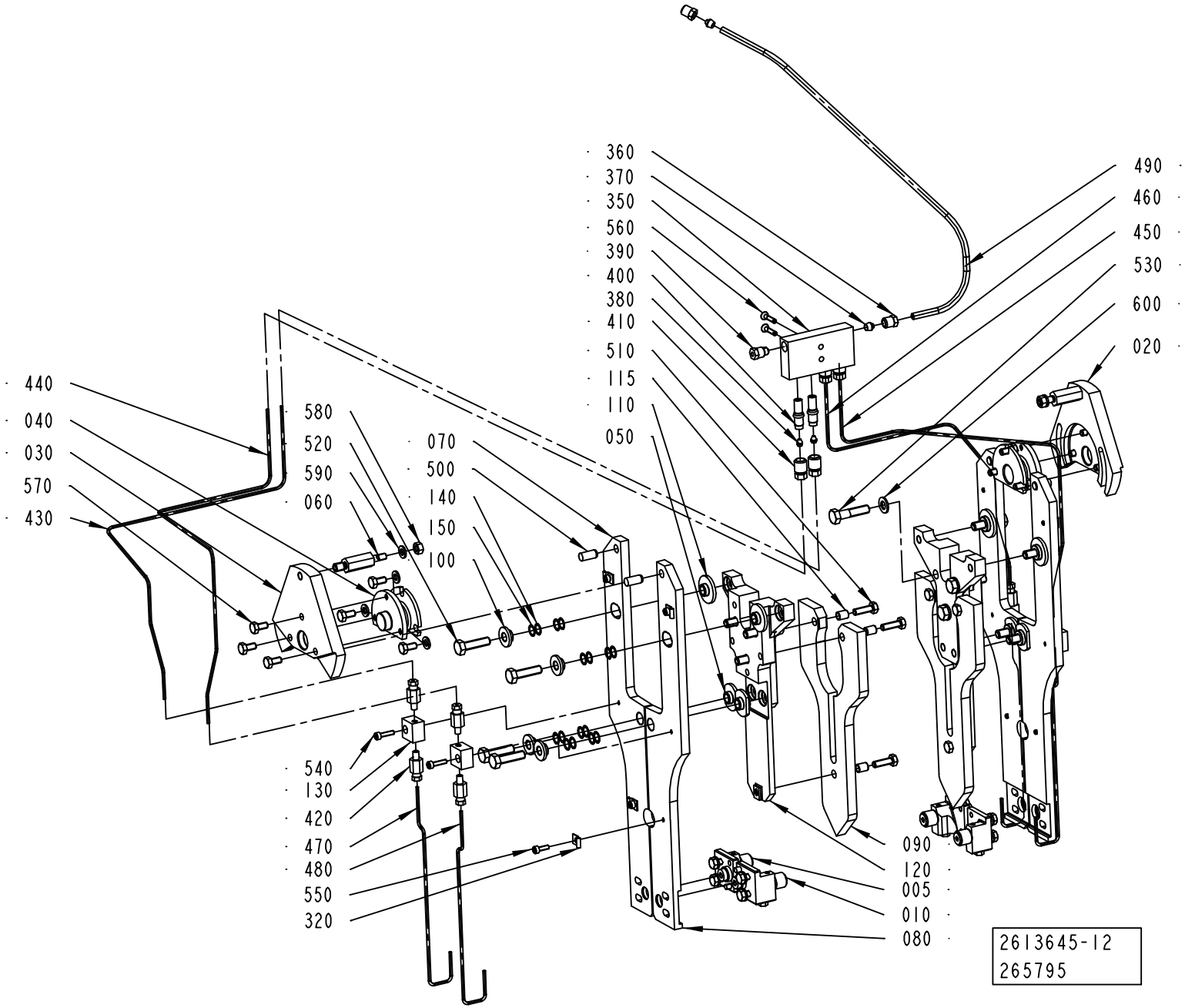
360
370
350
560
390
400
380
410
510
115
110
050
490
460
450
530
600
020
440
040
030
570
430
580
520
590
060
070
500
140
150
100
540
130
420
470
480
550
320
090
120
005
010
080
2613645-12
265795

Pos	Part No	UN	Qty	Description	Page No
Common Parts (Cont'd)					
450	90166-0143	MM	600	TUBE 2,5 MM PA,TRANSP.	
460	90166-0143	MM	500	TUBE 2,5 MM PA,TRANSP.	
500	311103-0400		4	PARALLEL PIN ISO 2338 8M6X18 A	
510	312105-0370		6	SCREW M6S ISO 4017 M6X20 A480	
520	312105-0455		8	SCREW M6S ISO 4017 M8X30 A480	
530	312105-0457		6	SCREW M6S ISO 4014 M8X35 A480	
540	312115-0293		4	SCREW ISO4762 M4X16 A4 80	
550	312115-0291		8	SCREW ISO4762 M4X12 A4 80	
560	312155-0295		2	SCREW DIN 7991 MF6S M4X20 A4 70	
580	312605-0316		2	HEXAGON NUT, M6M M6 A280	
600	315105-0165		6	WASHER BRB 8,4X16 RFR	

Pos	Part No	UN	Qty	Description	Page No

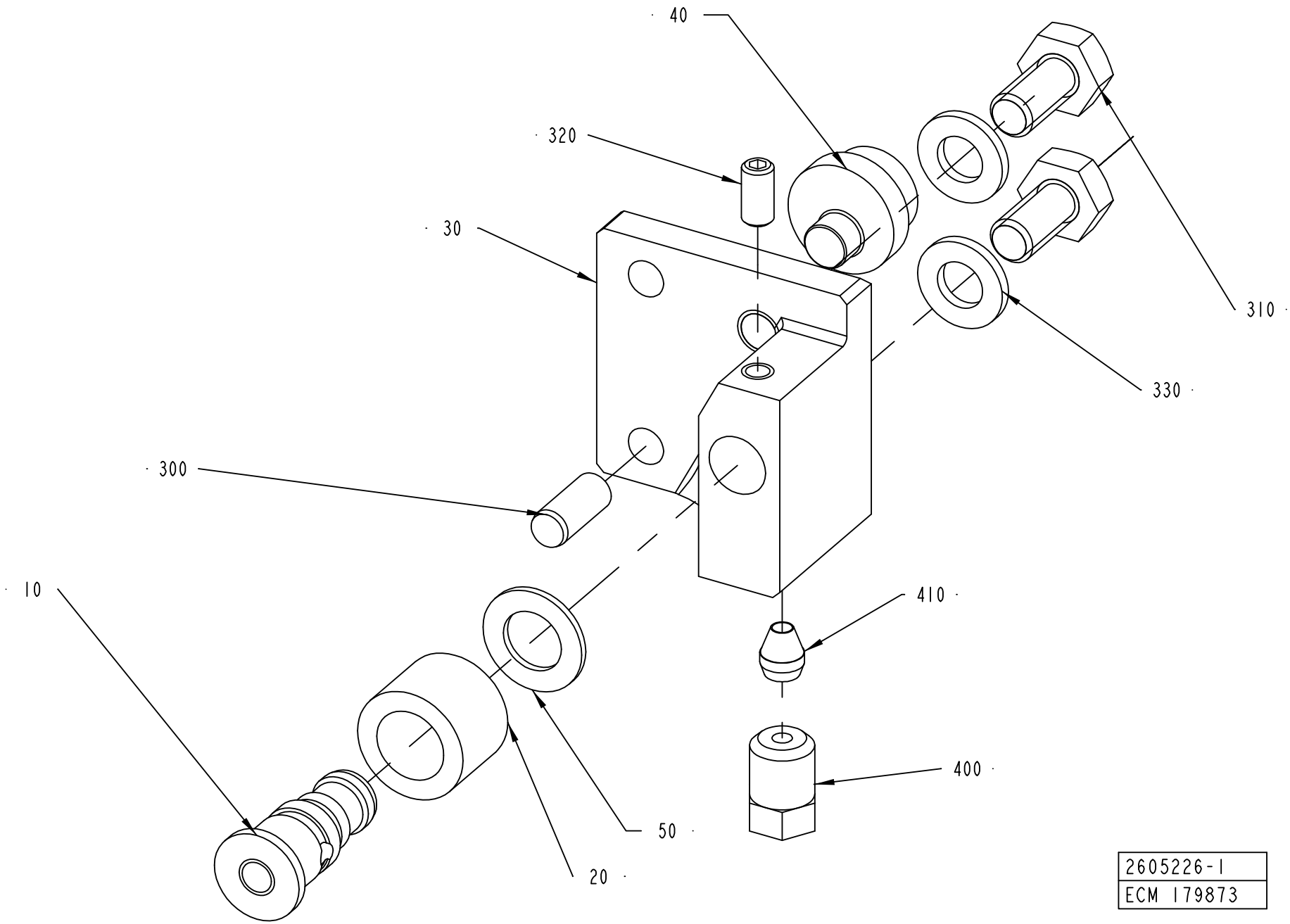
40
320
30
310
330
300
10
410
400
50
20
2605226-1
ECM 179873

ECM: 257618 - 20060303
Group number: 2605226-0200
Assembly Drawing: 2605226-1_1_AB

Pos	Part No	UN	Qty	Description	Page No
TBA 0500B, TBA 0330S, TBA 1000B, TBA 0200B, TBA 0250S, TBA 0200M, TBA 0250B, TBA 0200SQ, TPA 0250SQ, TPA 0200SQ, TBA 0250SQ					
030	2695409-0000		1	HOLDER	
Common Parts					
010	2603376-0000		1	AXLE PIN	
020	2603378-0000		1	ROLLER	
040	2603374-0000		1	ECCENTRIC	
050	2609923-0000		1	WASHER	
300	311103-0306		1	PARALLEL PIN ISO 2338 5M6X12 A1	
310	312105-0366		2	SCREW M6S ISO 4017 M6X12 A480	
320	312318-0287		1	SCREW ISO4029 M4X8 A4	
330	315105-0153		2	WASHER BRB 6,4X12 RFR	
400	90134-0063		1	BUSHING/NUT M8X1, D=2,5 MM	
410	90028-0020		1	CONE TUBE 2,5MM	

Pos	Part No	UN	Qty	Description	Page No

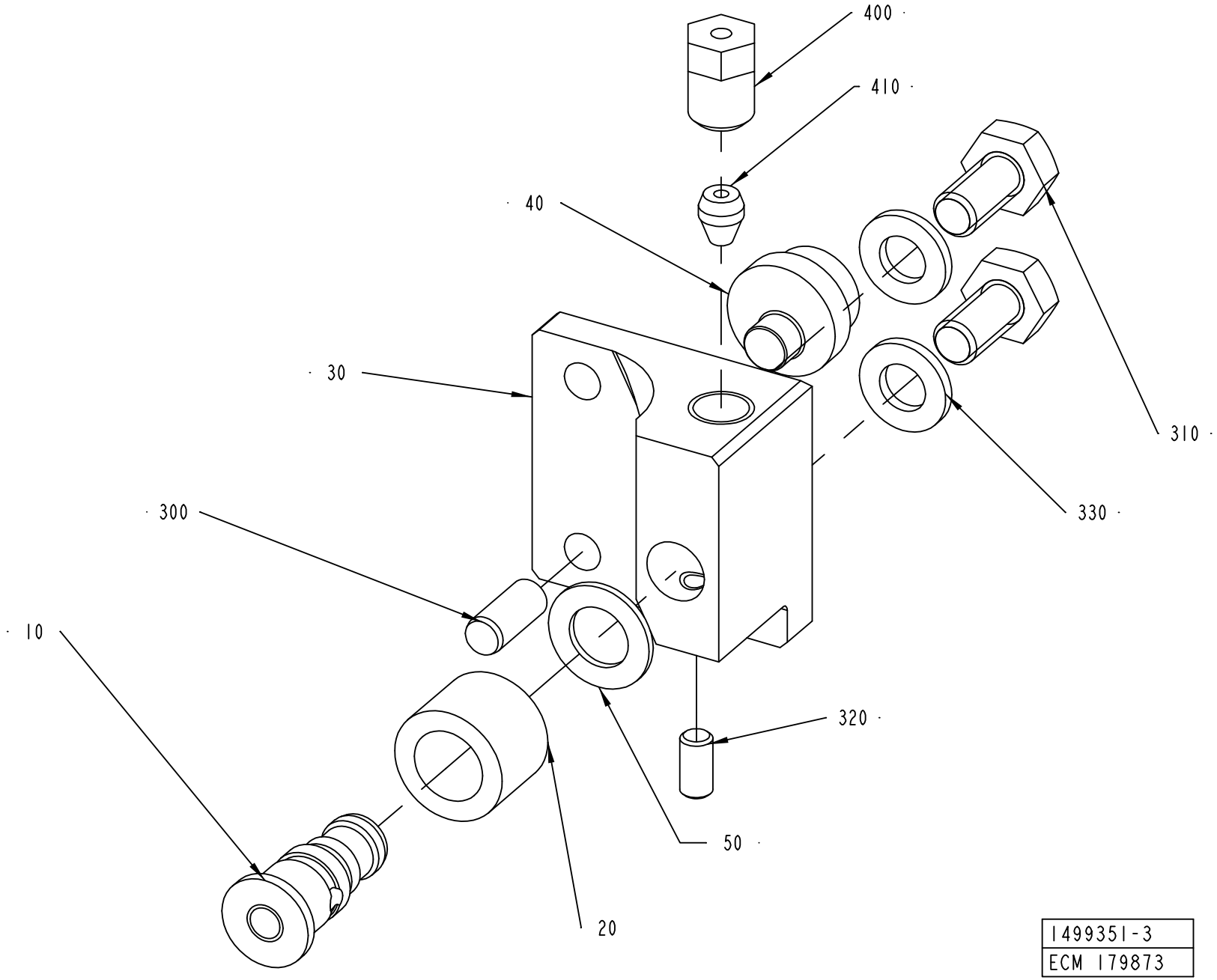
400
410
40
30
310
330
300
10
320
50
20
1499351-3
ECM 179873

ECM: 257619 - 20060303
Group number: 1499351-0200
Assembly Drawing: 1499351-3_1_AB

Pos	Part No	UN	Qty	Description	Page No
TBA 0500B, TBA 0330S, TBA 1000B, TBA 0200B, TBA 0250S, TBA 0200M, TBA 0250B, TBA 0200SQ, TPA 0250SQ, TPA 0200SQ, TBA 0250SQ					
030	2695408-0000		1	HOLDER	
Common Parts					
010	2603376-0000		1	AXLE PIN	
020	2603378-0000		1	ROLLER	
040	2603374-0000		1	ECCENTRIC	
050	2609923-0000		1	WASHER	
300	311103-0306		1	PARALLEL PIN ISO 2338 5M6X12 A1	
310	312105-0366		2	SCREW M6S ISO 4017 M6X12 A480	
320	312318-0287		1	SCREW ISO4029 M4X8 A4	
330	315105-0153		2	WASHER BRB 6,4X12 RFR	
400	90134-0063		1	BUSHING/NUT M8X1, D=2,5 MM	
410	90028-0020		1	CONE TUBE 2,5MM	

Pos	Part No	UN	Qty	Description	Page No

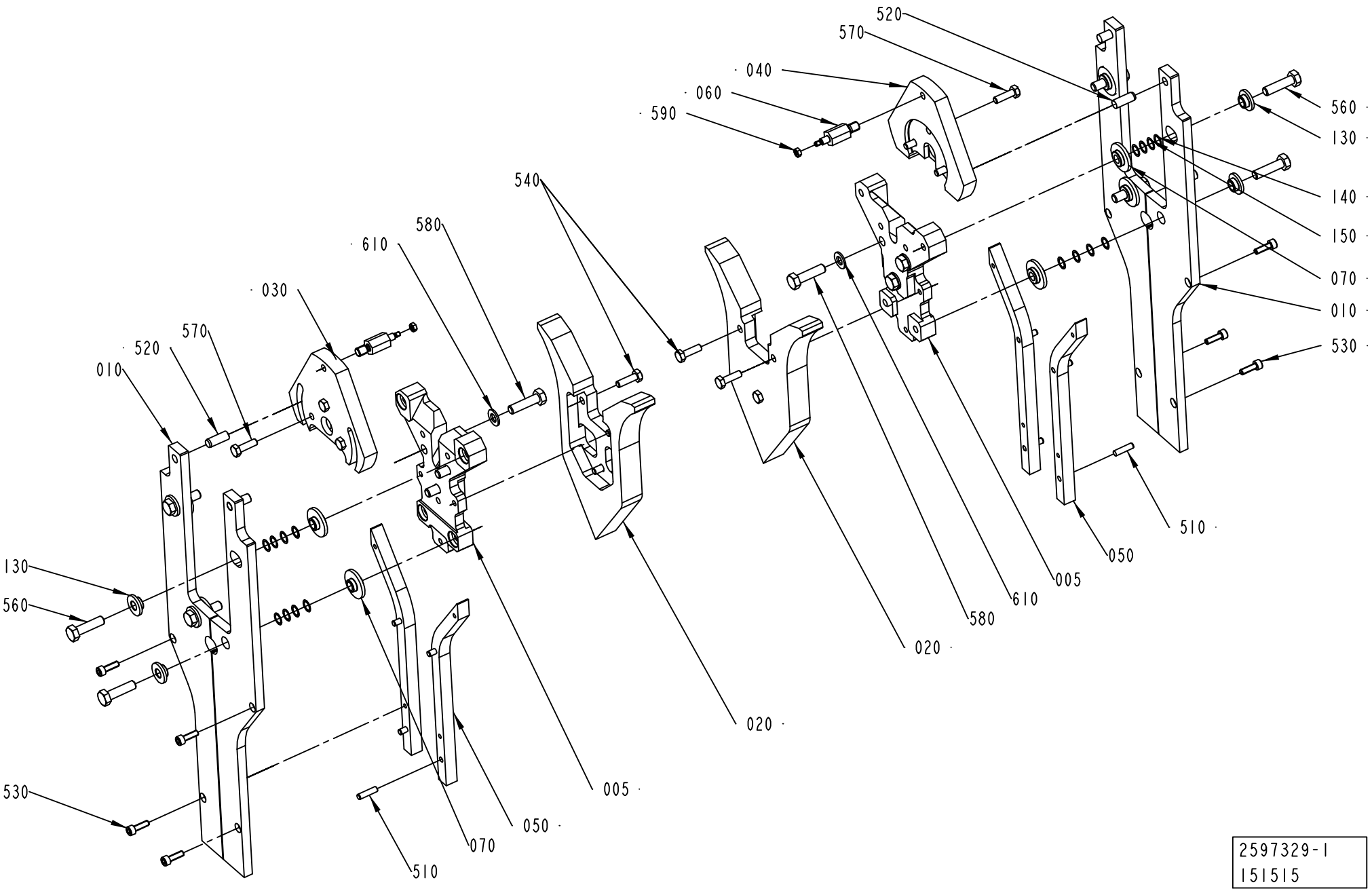

2597329-1
151515

ECM: 271970 - 20060831
Group number: 2597329-0100
Assembly Drawing: 2597329-1_1_AA

This list covers pages from 4-178 to 4-183

Pos	Part No	UN	Qty	Description	Page No
TBA 0200S (See drawing on page: 4-180)					
005	2628598-0000		2	SPACER	
010	2533740-0000		4	RAIL BRACKET	
020	1334081-0000		2	CURVE	
030	2606891-0000		1	ECCENTRIC	
040	2606892-0000		1	ECCENTRIC	
050	1478497-0000		4	VOLUME CAM	
060	2624544-0000		2	PIVOT PIN	
070	2533736-0000		8	SLEEVE	
120	321120-0108		4	BEARING BUSH W/O FLANGE, 12X14X8 MM	
130	1487504-0000		8	WASHER	
140	1487505-0001		16	WASHER	
150	1487505-0002		16	WASHER	
520	311103-0399		4	PARALLEL PIN ISO 2338 8M6X16 A1	
530	312105-0331		8	SCREW M6S ISO 4017 M5X20 A480	
560	312105-0457		8	SCREW M6S ISO 4014 M8X35 A480	
570	312105-0368		6	SCREW M6S ISO 4017 M6X16 A480	
580	312105-0464		6	SCREW M6S ISO 4014 M8X65 A480	
590	312605-0316		2	HEXAGON NUT, M6M M6 A280	
600	315105-0153		2	WASHER BRB 6,4X12 RFR	
TBA 0500S (See drawing on page: 4-180)					
005	2624543-0000		2	SPACER	
010	2533745-0000		4	RAIL BRACKET	
020	1512324-0000		2	CURVE	
030	2618378-0000		1	ECCENTRIC	
040	2618377-0000		1	ECCENTRIC	
050	1512325-0000		4	VOLUME CAM	
060	2624544-0000		2	PIVOT PIN	
070	2533736-0000		8	SLEEVE	
120	321120-0108		4	BEARING BUSH W/O FLANGE, 12X14X8 MM	
130	1487504-0000		8	WASHER	
140	1487505-0001		16	WASHER	
150	1487505-0002		16	WASHER	
520	311103-0399		4	PARALLEL PIN ISO 2338 8M6X16 A1	
530	312105-0331		8	SCREW M6S ISO 4017 M5X20 A480	
560	312105-0457		8	SCREW M6S ISO 4014 M8X35 A480	
570	312105-0368		6	SCREW M6S ISO 4017 M6X16 A480	
580	312105-0464		6	SCREW M6S ISO 4014 M8X65 A480	
590	312605-0316		2	HEXAGON NUT, M6M M6 A280	
600	315105-0153		2	WASHER BRB 6,4X12 RFR	
TBA 1000B (See drawing on page: 4-180)					
005	2624543-0000		2	SPACER	
010	2533741-0000		4	RAIL BRACKET	
020	1348808-0000		2	CURVE	
030	2618378-0000		1	ECCENTRIC	
040	2618377-0000		1	ECCENTRIC	
050	1484250-0000		4	VOLUME CAM	
060	2624544-0000		2	PIVOT PIN	
070	2533736-0000		8	SLEEVE	
120	321120-0108		4	BEARING BUSH W/O FLANGE, 12X14X8 MM	
130	1487504-0000		8	WASHER	
140	1487505-0001		16	WASHER	
150	1487505-0002		16	WASHER	
520	311103-0399		4	PARALLEL PIN ISO 2338 8M6X16 A1	
530	312105-0331		8	SCREW M6S ISO 4017 M5X20 A480	
560	312105-0457		8	SCREW M6S ISO 4014 M8X35 A480	
570	312105-0368		6	SCREW M6S ISO 4017 M6X16 A480	
580	312105-0464		6	SCREW M6S ISO 4014 M8X65 A480	
590	312605-0316		2	HEXAGON NUT, M6M M6 A280	
600	315105-0153		2	WASHER BRB 6,4X12 RFR	
TBA 1000S (See drawing on page: 4-180)					
005	2624543-0000		2	SPACER	
010	2533742-0000		4	RAIL BRACKET	
020	1348809-0000		2	CURVE	
030	2618378-0000		1	ECCENTRIC	
040	2618377-0000		1	ECCENTRIC	
050	1484251-0000		4	VOLUME CAM	
060	2624544-0000		2	PIVOT PIN	
070	2533736-0000		8	SLEEVE	
120	321120-0108		4	BEARING BUSH W/O FLANGE, 12X14X8 MM	
130	1487504-0000		8	WASHER	
140	1487505-0001		16	WASHER	
150	1487505-0002		16	WASHER	
520	311103-0399		4	PARALLEL PIN ISO 2338 8M6X16 A1	
530	312105-0331		8	SCREW M6S ISO 4017 M5X20 A480	
560	312105-0457		8	SCREW M6S ISO 4014 M8X35 A480	
570	312105-0368		6	SCREW M6S ISO 4017 M6X16 A480	
580	312105-0464		6	SCREW M6S ISO 4014 M8X65 A480	
590	312605-0316		2	HEXAGON NUT, M6M M6 A280	
600	315105-0153		2	WASHER BRB 6,4X12 RFR	
TBA 1000SQ (See drawing on page: 4-180)					
005	2624543-0000		2	SPACER	
010	2533744-0000		4	RAIL BRACKET	
020	2501851-0000		2	CURVE	

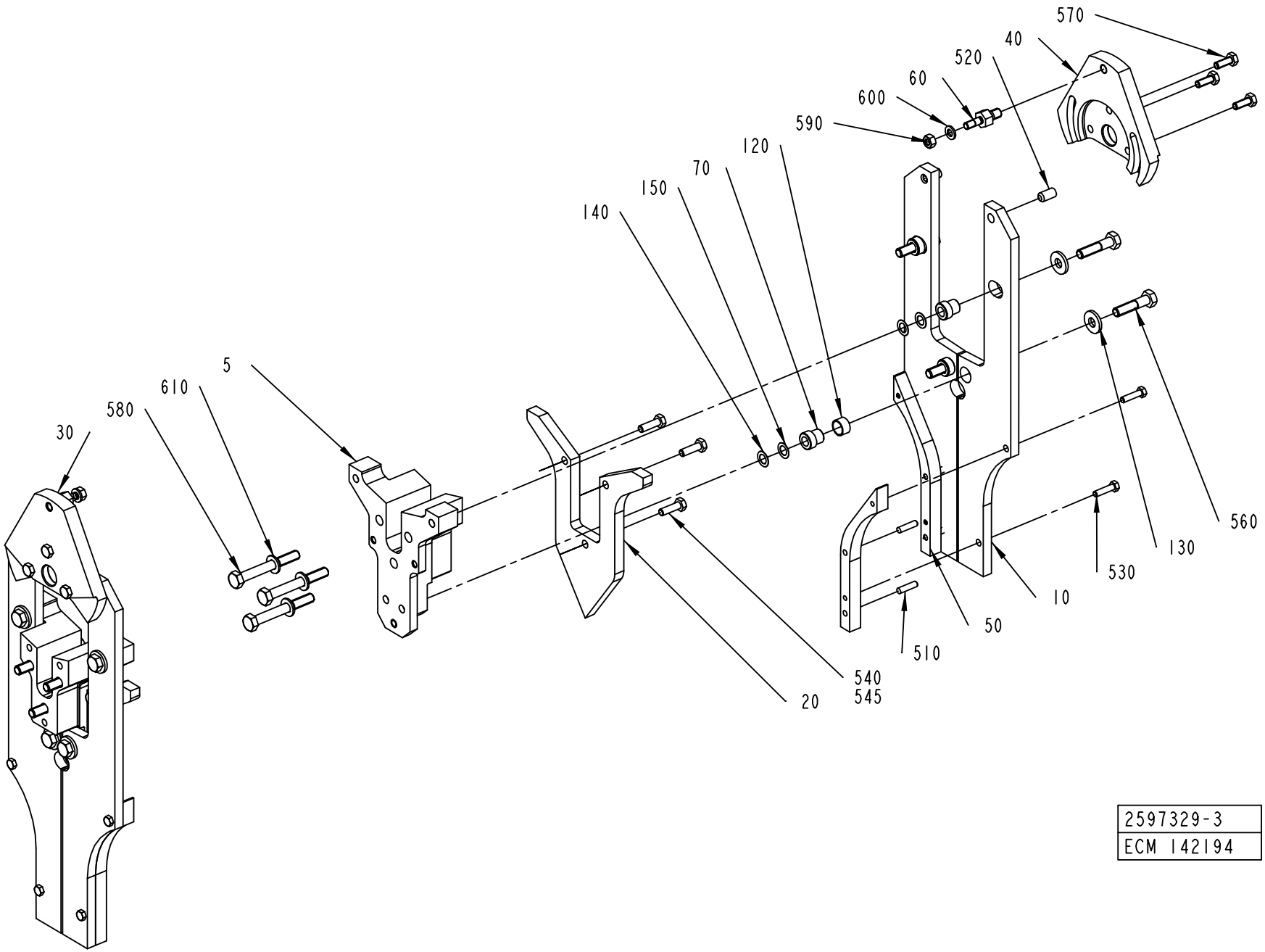

2597329-3
ECM 142194

ECM: 271970 - 20060831
Group number: 2597329-0100
Assembly Drawing: 2597329-3_1_AB

This list covers pages from 4-178 to 4-183

Pos	Part No	UN	Qty	Description	Page No
TBA 1000SQ (Cont'd) (See drawing on page: 4-180)					
030	2618378-0000		1	ECCENTRIC	
040	2618377-0000		1	ECCENTRIC	
050	1499594-0000		4	VOLUME CAM	
060	2624544-0000		2	PIVOT PIN	
070	2533736-0000		8	SLEEVE	
120	321120-0108		4	BEARING BUSH W/O FLANGE, 12X14X8 MM	
130	1487504-0000		8	WASHER	
140	1487505-0001		16	WASHER	
150	1487505-0002		16	WASHER	
520	311103-0399		4	PARALLEL PIN ISO 2338 8M6X16 A1	
530	312105-0331		8	SCREW M6S ISO 4017 M5X20 A480	
560	312105-0457		8	SCREW M6S ISO 4014 M8X35 A480	
570	312105-0368		6	SCREW M6S ISO 4017 M6X16 A480	
580	312105-0464		6	SCREW M6S ISO 4014 M8X65 A480	
590	312605-0316		2	HEXAGON NUT, M6M M6 A280	
600	315105-0153		2	WASHER BRB 6,4X12 RFR	
TBA 1500S (See drawing on page: 4-180)					
005	2633438-0000		2	SPACER	
010	2533737-0000		4	RAIL BRACKET	
020	1349741-0000		2	CURVE	
030	2618378-0000		1	ECCENTRIC	
040	2618377-0000		1	ECCENTRIC	
050	1349744-0000		4	VOLUME CAM	
060	2624544-0000		2	PIVOT PIN	
070	2533736-0000		8	SLEEVE	
120	321120-0108		4	BEARING BUSH W/O FLANGE, 12X14X8 MM	
130	1487504-0000		8	WASHER	
140	1487505-0001		16	WASHER	
150	1487505-0002		16	WASHER	
520	311103-0399		4	PARALLEL PIN ISO 2338 8M6X16 A1	
530	312105-0331		8	SCREW M6S ISO 4017 M5X20 A480	
560	312105-0457		8	SCREW M6S ISO 4014 M8X35 A480	
570	312105-0368		6	SCREW M6S ISO 4017 M6X16 A480	
580	312105-0464		6	SCREW M6S ISO 4014 M8X65 A480	
590	312605-0316		2	HEXAGON NUT, M6M M6 A280	
600	315105-0153		2	WASHER BRB 6,4X12 RFR	
TBA 1890S QC, TBA 2000S QC (See drawing on page: 4-178)					
005	2594887-0000		2	SPACER	
010	2588300-0000		4	RAIL BRACKET	
020	2588301-0000		2	CURVE	
030	2599739-0000		1	ECCENTRIC	
040	2599738-0000		1	ECCENTRIC	
050	2588302-0000		4	VOLUME CAM	
060	2535443-0000		2	PIVOT PIN	
070	2613764-0000		8	SLEEVE	
130	2614372-0000		8	SLEEVE	
140	2614376-0001		32	WASHER	
150	2614376-0002		32	WASHER	
520	311103-0402		4	PARALLEL PIN ISO 2338 8M6X22 A1	
530	312105-0329		8	SCREW M6S ISO 4017 M5X16 A480	
545	90157-0021		1	LOCKING FLUID LOCTITE 270	
560	312105-0455		8	SCREW M6S ISO 4017 M8X30 A480	
570	312105-0370		6	SCREW M6S ISO 4017 M6X20 A480	
580	312105-0455		6	SCREW M6S ISO 4017 M8X30 A480	
590	312605-0312		2	HEXAGON NUT, M6M M4 A280	
TPA 0330SQ (See drawing on page: 4-180)					
005	2628598-0000		2	SPACER	
010	2533747-0000		4	RAIL BRACKET	
020	1538264-0000		2	CURVE	
030	2606891-0000		1	ECCENTRIC	
040	2606892-0000		1	ECCENTRIC	
050	1538265-0000		4	VOLUME CAM	
060	2624544-0000		2	PIVOT PIN	
070	2533736-0000		8	SLEEVE	
120	321120-0108		4	BEARING BUSH W/O FLANGE, 12X14X8 MM	
130	1487504-0000		8	WASHER	
140	1487505-0001		16	WASHER	
150	1487505-0002		16	WASHER	
520	311103-0399		4	PARALLEL PIN ISO 2338 8M6X16 A1	
530	312105-0331		8	SCREW M6S ISO 4017 M5X20 A480	
560	312105-0457		8	SCREW M6S ISO 4014 M8X35 A480	
570	312105-0368		6	SCREW M6S ISO 4017 M6X16 A480	
580	312105-0464		6	SCREW M6S ISO 4014 M8X65 A480	
590	312605-0316		2	HEXAGON NUT, M6M M6 A280	
600	315105-0153		2	WASHER BRB 6,4X12 RFR	
TPA 0500SQ (See drawing on page: 4-180)					
005	2624543-0000		2	SPACER	
010	2582020-0000		4	RAIL BRACKET	
020	2697307-0000		2	CURVE	
030	2618378-0000		1	ECCENTRIC	
040	2618377-0000		1	ECCENTRIC	
050	1549843-0000		4	VOLUME CAM	
060	2624544-0000		2	PIVOT PIN	

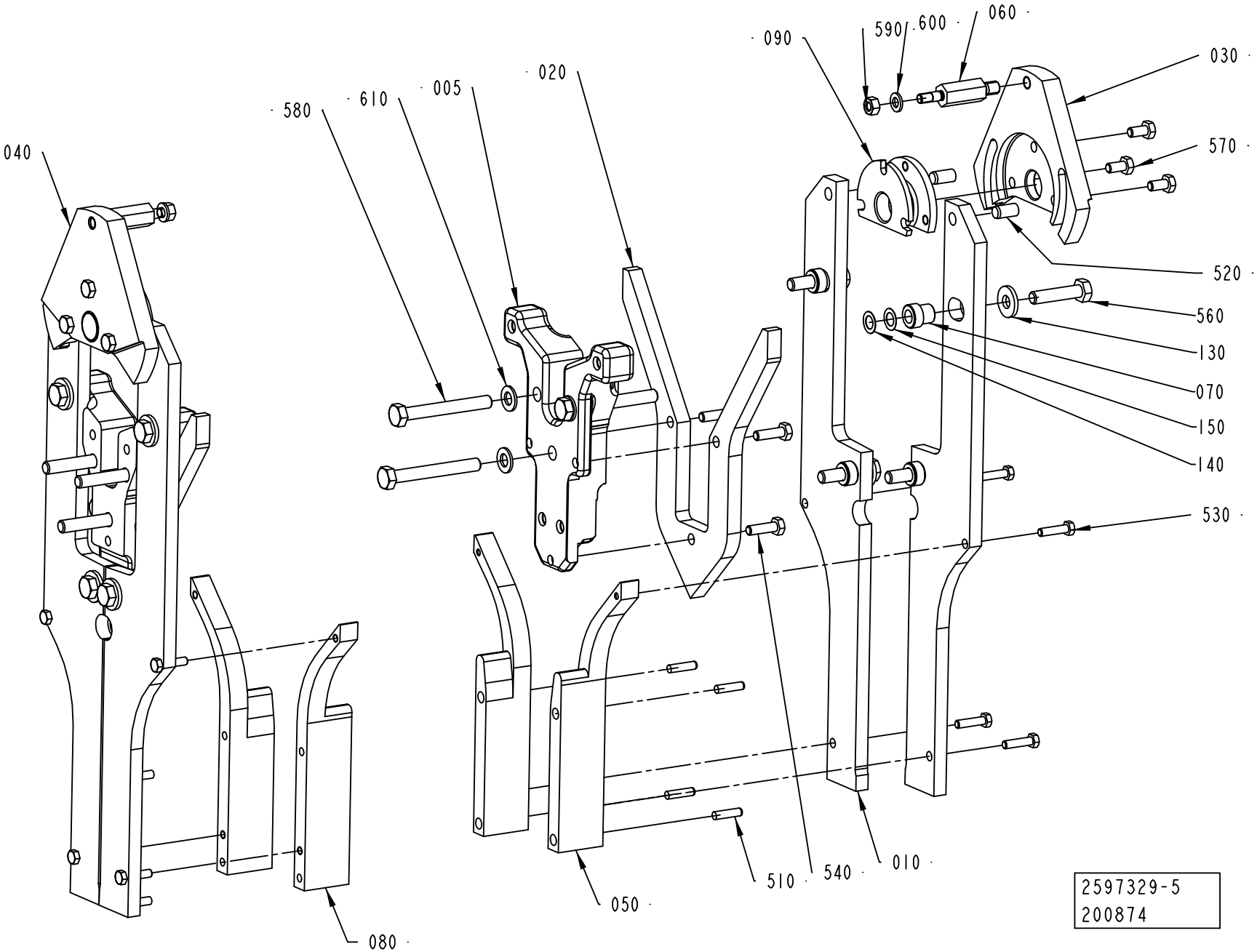
040
580
610
005
020
090
590
600
060
030
570
520
560
130
070
150
140
530
080
050
510
540
010
2597329-5
200874

Pos	Part No	UN	Qty	Description	Page No
TPA 0500SQ (Cont'd) (See drawing on page: 4-180)					
070	2533736-0000		8	SLEEVE	
120	321120-0108		4	BEARING BUSH W/O FLANGE, 12X14X8 MM	
130	1487504-0000		8	WASHER	
140	1487505-0001		16	WASHER	
150	1487505-0002		16	WASHER	
520	311103-0399		4	PARALLEL PIN ISO 2338 8M6X16 A1	
530	312105-0331		8	SCREW M6S ISO 4017 M5X20 A480	
560	312105-0457		8	SCREW M6S ISO 4014 M8X35 A480	
570	312105-0368		6	SCREW M6S ISO 4017 M6X16 A480	
580	312105-0464		6	SCREW M6S ISO 4014 M8X65 A480	
590	312605-0316		2	HEXAGON NUT, M6M M6 A280	
600	315105-0153		2	WASHER BRB 6,4X12 RFR	
TPA 1000SQ NOQC (See drawing on page: 4-180)					
005	2633438-0000		2	SPACER	
010	2575631-0000		4	RAIL BRACKET	
020	2564683-0000		2	CURVE	
030	2618378-0000		1	ECCENTRIC	
040	2618377-0000		1	ECCENTRIC	
050	1523490-0000		4	VOLUME BULGE	
060	2624544-0000		2	PIVOT PIN	
070	2533736-0000		8	SLEEVE	
120	321120-0108		4	BEARING BUSH W/O FLANGE, 12X14X8 MM	
130	1487504-0000		8	WASHER	
140	1487505-0001		16	WASHER	
150	1487505-0002		16	WASHER	
520	311103-0399		4	PARALLEL PIN ISO 2338 8M6X16 A1	
530	312105-0331		8	SCREW M6S ISO 4017 M5X20 A480	
560	312105-0457		8	SCREW M6S ISO 4014 M8X35 A480	
570	312105-0368		6	SCREW M6S ISO 4017 M6X16 A480	
580	312105-0464		6	SCREW M6S ISO 4014 M8X65 A480	
590	312605-0316		2	HEXAGON NUT, M6M M6 A280	
600	315105-0153		2	WASHER BRB 6,4X12 RFR	
TPA 1000SQ QC, TPA 0750SQ QC (See drawing on page: 4-182)					
005	2658251-0000		2	SPACER	
010	2658252-0000		4	RAIL BRACKET	
020	2658253-0000		2	CURVE	
030	2606891-0000		1	ECCENTRIC	
040	2606892-0000		1	ECCENTRIC	
050	2662640-0000		2	VOLUME CAM	
060	2618302-0000		2	PIVOT PIN	
070	2533736-0000		8	SLEEVE	
080	2662641-0000		2	VOLUME CAM	
090	2618259-0000		2	SPACER	
120	321120-0108		4	BEARING BUSH W/O FLANGE, 12X14X8 MM	
130	1487504-0000		8	WASHER	
140	1487505-0001		16	WASHER	
150	1487505-0002		16	WASHER	
520	311103-0399		4	PARALLEL PIN ISO 2338 8M6X16 A1	
530	312105-0331		8	SCREW M6S ISO 4017 M5X20 A480	
560	312105-0457		8	SCREW M6S ISO 4014 M8X35 A480	
570	312105-0366		6	SCREW M6S ISO 4017 M6X12 A480	
580	312105-0464		6	SCREW M6S ISO 4014 M8X65 A480	
590	312605-0316		2	HEXAGON NUT, M6M M6 A280	
600	315105-0153		2	WASHER BRB 6,4X12 RFR	
Common Parts					
510	311103-0310		8	PARALLEL PIN ISO 2338 5M6X20 A1	
540	312105-0370		6	SCREW M6S ISO 4017 M6X20 A480	
610	315105-0165		6	WASHER BRB 8,4X16 RFR	

SUPPORT ROLLER

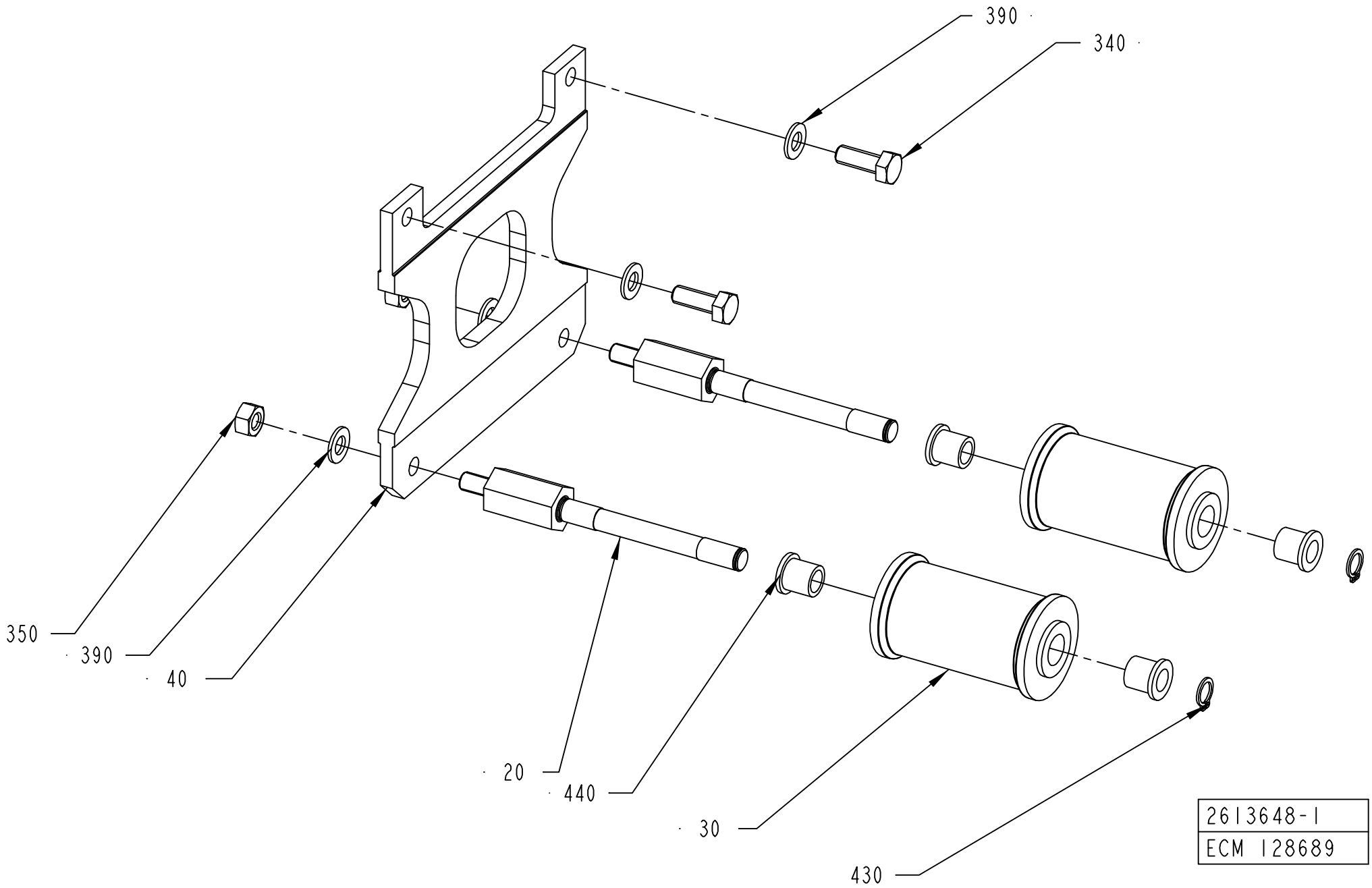

ECM: 272007 - 20060831
Group number: 2613648-0100
Assembly Drawing: 2613648-1_1_AA

This list covers pages from 4-184 to 4-187

Pos	Part No	UN	Qty	Description	Page No
TBA 1000SQ (See drawing on page: 4-184)					
020	2619198-0000		2	SHAFT	
030	1499678-0000		2	ROLLER	
040	2623783-0000		1	PLATE	
350	312605-0318		2	HEXAGON NUT, M6M M8 A280	
390	315105-0165		4	WASHER BRB 8,4X16 RFR	
430	90141-0016		2	RETAINING RING FOR SHAFT DIN 471 10 A2	
440	90240-0180		4	FLANGE BUSHING 10X14X15MM	
TBA 1500S (See drawing on page: 4-184)					
020	2648846-0000		2	SHAFT	
030	560122-0000		2	SUPPORT ROLLER	
040	2648847-0000		1	PLATE	
390	315105-0165		2	WASHER BRB 8,4X16 RFR	
430	90141-0016		2	RETAINING RING FOR SHAFT DIN 471 10 A2	
440	90240-0180		4	FLANGE BUSHING 10X14X15MM	
TBA 1890S QC, TBA 2000S QC (See drawing on page: 4-184)					
020	2650812-0000		2	SHAFT	
030	2602655-0000		2	ROLLER	
040	2652892-0000		1	PLATE	
350	312605-0318		2	HEXAGON NUT, M6M M8 A280	
390	315105-0165		4	WASHER BRB 8,4X16 RFR	
430	90141-0016		2	RETAINING RING FOR SHAFT DIN 471 10 A2	
440	90240-0180		4	FLANGE BUSHING 10X14X15MM	
TPA 0250SQ QC, TPA 0200SQ QC (See drawing on page: 4-184)					
020	2646345-0000		2	SHAFT	
030	978760-0000		2	ROLLER TBA200SL	
040	2674323-0000		1	PLATE	
350	312605-0318		2	HEXAGON NUT, M6M M8 A280	
390	315105-0165		4	WASHER BRB 8,4X16 RFR	
TPA 0330SQ (See drawing on page: 4-184)					
020	2619319-0000		2	SHAFT	
030	929355-0000		2	ROLLER TPA 330	
040	2664779-0000		1	PLATE	
350	312605-0318		2	HEXAGON NUT, M6M M8 A280	
390	315105-0165		4	WASHER BRB 8,4X16 RFR	
430	90141-0016		2	RETAINING RING FOR SHAFT DIN 471 10 A2	
440	90240-0180		4	FLANGE BUSHING 10X14X15MM	
TPA 0500SQ (See drawing on page: 4-184)					
020	2619198-0000		2	SHAFT	
030	2688917-0000		2	ROLLER	
040	2664780-0000		1	PLATE	
350	312605-0318		2	HEXAGON NUT, M6M M8 A280	
390	315105-0165		4	WASHER BRB 8,4X16 RFR	
430	90141-0016		2	RETAINING RING FOR SHAFT DIN 471 10 A2	
440	90240-0180		4	FLANGE BUSHING 10X14X15MM	
TPA 1000SQ NOQC, TPA 1000SQ QC, TPA 0750SQ QC (See drawing on page: 4-184)					
020	2648846-0000		2	SHAFT	
030	1524421-0000		2	ROLLER	
040	2642097-0000		1	PLATE	
390	315105-0165		2	WASHER BRB 8,4X16 RFR	
430	90141-0016		2	RETAINING RING FOR SHAFT DIN 471 10 A2	
440	90240-0180		4	FLANGE BUSHING 10X14X15MM	
TBA 1000B NOQC NOMOLDEDCAP (See drawing on page: 4-184)					
020	2619198-0000		2	SHAFT	
030	560122-0000		2	SUPPORT ROLLER	
040	2623783-0000		1	PLATE	
350	312605-0318		2	HEXAGON NUT, M6M M8 A280	
390	315105-0165		4	WASHER BRB 8,4X16 RFR	
430	90141-0016		2	RETAINING RING FOR SHAFT DIN 471 10 A2	
440	90240-0180		4	FLANGE BUSHING 10X14X15MM	
TBA 0200B QC, TBA 0330S QC, TBA 0250B QC (See drawing on page: 4-184)					
020	2646345-0000		2	SHAFT	
030	978757-0000		2	ROLLER 180-284ML	
040	2646344-0000		1	PLATE	
350	312605-0318		2	HEXAGON NUT, M6M M8 A280	
390	315105-0165		4	WASHER BRB 8,4X16 RFR	
430	90141-0016		2	RETAINING RING FOR SHAFT DIN 471 10 A2	
440	90240-0180		4	FLANGE BUSHING 10X14X15MM	
TBA 0200S					
020	2632818-0000		2	SHAFT	
030	978760-0000		2	ROLLER TBA200SL	
040	2632817-0000		1	PLATE	
350	312605-0318		2	HEXAGON NUT, M6M M8 A280	
390	315105-0165		4	WASHER BRB 8,4X16 RFR	
430	90141-0016		2	RETAINING RING FOR SHAFT DIN 471 10 A2	
440	90240-0180		4	FLANGE BUSHING 10X14X15MM	
TPA 0200SQ QC, TPA 0250SQ QC (See drawing on page: 4-184)					
020	2646345-0000		2	SHAFT	
030	2696806-0000		2	ROLLER	
040	2681244-0000		1	PLATE	
350	312605-0318		2	HEXAGON NUT, M6M M8 A280	
390	315105-0165		4	WASHER BRB 8,4X16 RFR	
430	90141-0016		2	RETAINING RING FOR SHAFT DIN 471 10 A2	
440	90240-0180		4	FLANGE BUSHING 10X14X15MM	

Machine Type | Group Description | Used-In | Group Number | Page No

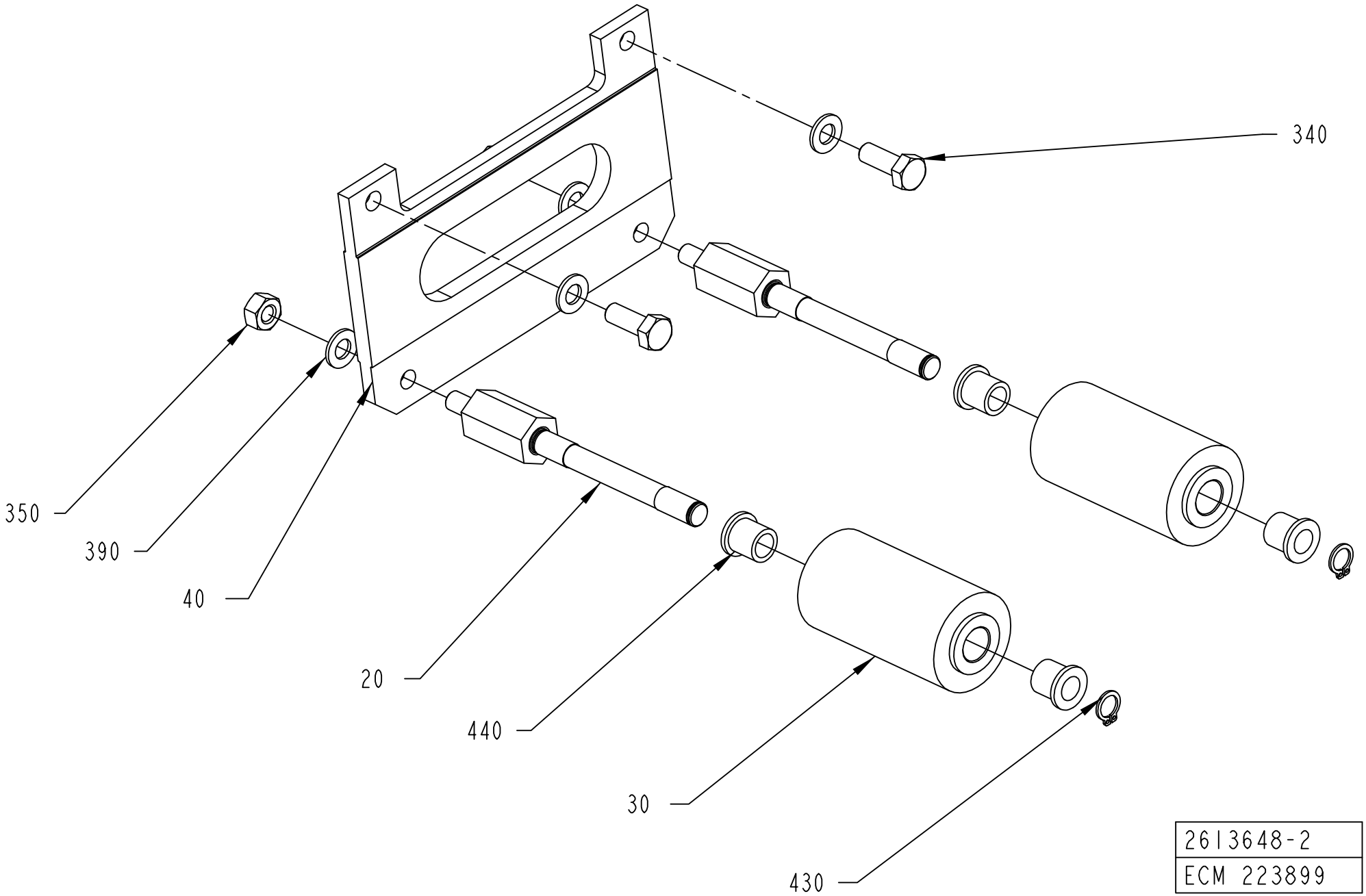
340
350
390
40
20
440
30
430
2613648-2
ECM 223899

ECM: 272007 - 20060831
Group number: 2613648-0100
Assembly Drawing: 2613648-2_1_AB

This list covers pages from 4-184 to 4-187

Pos	Part No	UN	Qty	Description	Page No
TBA 0250S QC, TBA 0200M QC (Cont'd) (See drawing on page: 4-184)					
020	2649441-0000		2	SHAFT	
030	2530124-0000		2	ROLLER	
040	2649442-0000		1	PLATE	
350	312605-0318		2	HEXAGON NUT, M6M M8 A280	
390	315105-0165		4	WASHER BRB 8,4X16 RFR	
430	90141-0016		2	RETAINING RING FOR SHAFT DIN 471 10 A2	
440	90240-0180		4	FLANGE BUSHING 10X14X15MM	
TBA 0500B QC, TBA 1000B QC (See drawing on page: 4-184)					
020	2619198-0000		2	SHAFT	
030	2619199-0000		2	ROLLER	
040	2619200-0000		1	PLATE	
350	312605-0318		2	HEXAGON NUT, M6M M8 A280	
390	315105-0165		4	WASHER BRB 8,4X16 RFR	
430	90141-0016		2	RETAINING RING FOR SHAFT DIN 471 10 A2	
440	90240-0180		4	FLANGE BUSHING 10X14X15MM	
TBA 0500S (See drawing on page: 4-184)					
020	2619198-0000		2	SHAFT	
030	1512484-0000		2	ROLLER	
040	2664780-0000		1	PLATE	
350	312605-0318		2	HEXAGON NUT, M6M M8 A280	
390	315105-0165		6	WASHER BRB 8,4X16 RFR	
430	90141-0016		2	RETAINING RING FOR SHAFT DIN 471 10 A2	
440	90240-0180		4	FLANGE BUSHING 10X14X15MM	
TBA 1000B NOQC STDA7 (See drawing on page: 4-186)					
020	2619198-0000		2	SHAFT	
030	2767478-0001		2	ROLLER	
040	2623783-0000		1	PLATE	
350	312605-0318		2	HEXAGON NUT, M6M M8 A280	
390	315105-0165		4	WASHER BRB 8,4X16 RFR	
430	90141-0016		2	RETAINING RING FOR SHAFT DIN 471 10 A2	
440	90240-0180		4	FLANGE BUSHING 10X14X15MM	
TBA 1000S NOMOLDEDCAP (See drawing on page: 4-184)					
020	2619198-0000		2	SHAFT	
030	569058-0000		2	SUPPORT ROLLER	
040	2623783-0000		1	PLATE	
350	312605-0318		2	HEXAGON NUT, M6M M8 A280	
390	315105-0165		4	WASHER BRB 8,4X16 RFR	
430	90141-0016		2	RETAINING RING FOR SHAFT DIN 471 10 A2	
440	90240-0180		4	FLANGE BUSHING 10X14X15MM	
TBA 1000S STDA7, TBA 1000S LIGHTCAP (See drawing on page: 4-186)					
020	2619198-0000		2	SHAFT	
030	2767478-0002		2	ROLLER	
040	2623783-0000		1	PLATE	
350	312605-0318		2	HEXAGON NUT, M6M M8 A280	
390	315105-0165		4	WASHER BRB 8,4X16 RFR	
430	90141-0016		2	RETAINING RING FOR SHAFT DIN 471 10 A2	
440	90240-0180		4	FLANGE BUSHING 10X14X15MM	
Common Parts					
340	312105-0452		2	SCREW M6S ISO 4017 M8X22 A4 80	

Machine Type | Group Description | Used-In | Group Number | Page No

TUBE FLUSHING

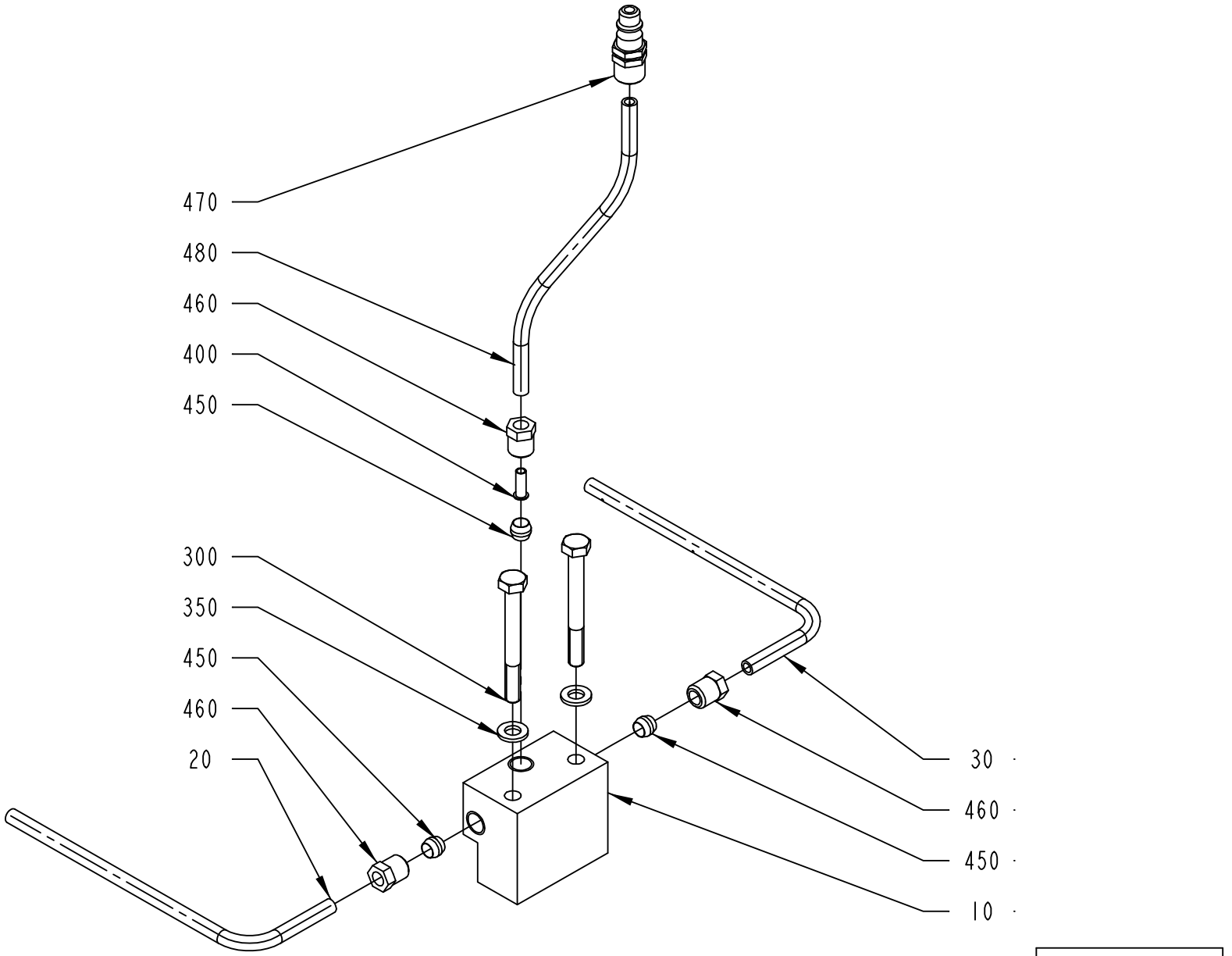

ECM: 258787 - 20060704
Group number: 2556893-0100
Assembly Drawing: 2556893-1_1_AA

Pos	Part No	UN	Qty	Description	Page No
TBA 0500B, TBA 1000S, TBA 1000SQ, TBA 1000B, TBA 1500S, TPA 1000SQ					
020	2532837-0000		1	TUBE FLUSHING DEVICE	
030	2532838-0000		1	TUBE FLUSHING DEVICE	
TBA 0500S, TBA 0330S, TBA 0200B, TBA 0250S, TBA 0200S, TBA 0200M, TBA 0250B, TBA 0200SQ, TPA 0250SQ, TPA 0330SQ, TPA 0200SQ, TPA 0500SQ, TBA 0250SQ					
020	2556894-0000		1	TUBE FLUSHING DEVICE	
030	2556895-0000		1	TUBE FLUSHING DEVICE	
TBA 1890S, TBA 2000S					
020	2629240-0000		1	TUBE FLUSHING DEVICE	
030	2629239-0000		1	TUBE FLUSHING DEVICE	
TPA 0750SQ					
020	2658298-0000		1	TUBE FLUSHING DEVICE	
030	2658299-0000		1	TUBE FLUSHING DEVICE	
Common Parts					
010	2556615-0000		1	PIPE CONNECTION	
300	312105-0381		2	SCREW M6S ISO 4014 M6X55 A480	
350	315105-0153		2	WASHER BRB 6,4X12 RFR	
400	342706-0130		1	ACCESSORIES, INSERT SLEEVE 6 MM	
450	90028-0022		3	CONE TUBE 6 MM	
460	90134-0055		3	BUSHING/NUT INLET/OUTLET 6 MM	
470	90163-0063		1	QUICK COUPLING, (M) 5450-6/4	
480	90166-0132	MM	1500	TUBE 6 MM PA,TRANSP.	

Pos	Part No	UN	Qty	Description	Page No

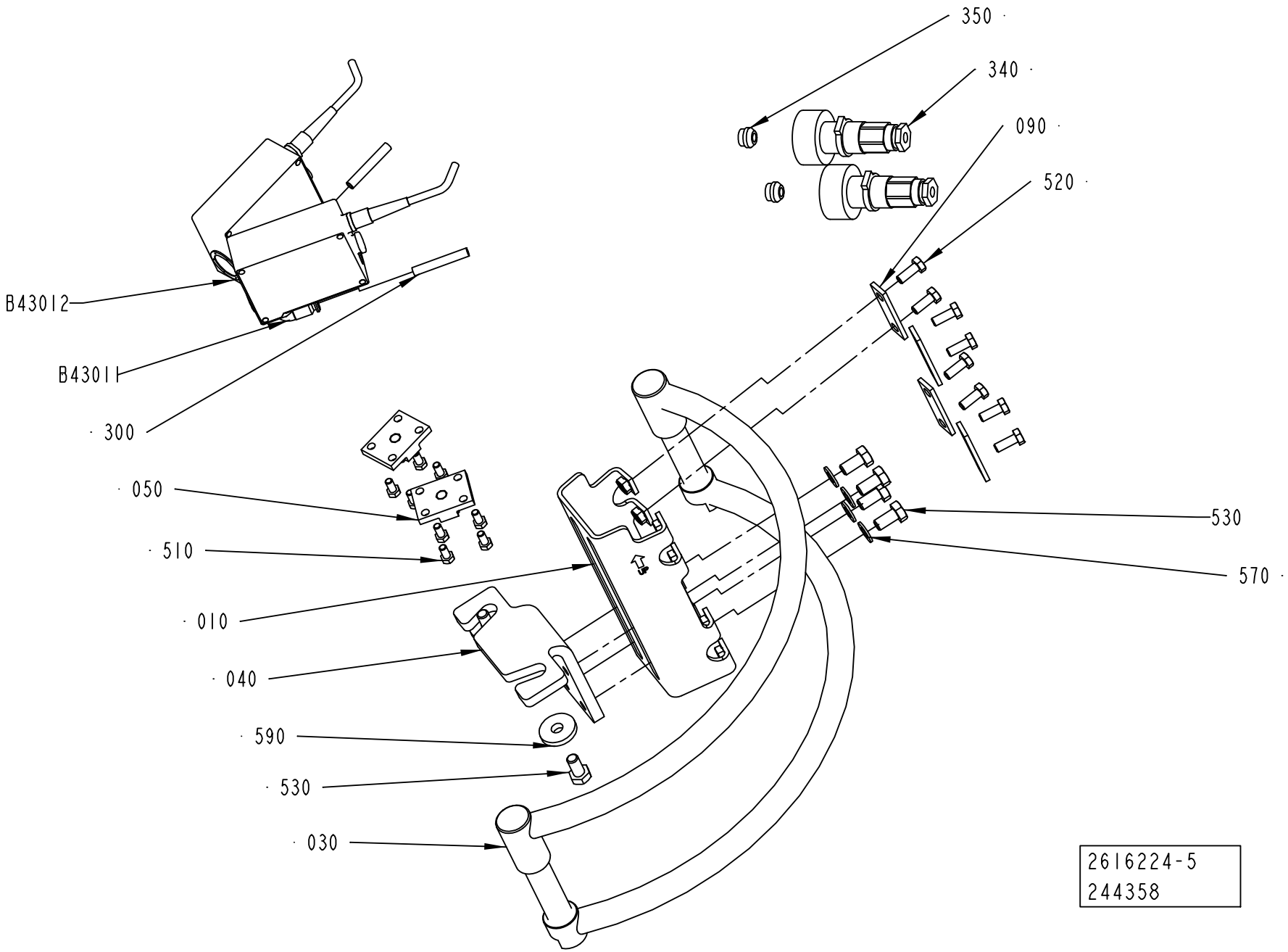
350
340
090
520
B43012
B43011
300
050
510
010
040
590
530
030
530
570
2616224-5
244358

ECM: 273541 - 20060817
Group number: 2616224-0200
Assembly Drawing: 2616224-5_1_AA

This list covers pages from 4-190 to 4-197

Pos	Part No	UN	Qty	Description	Page No
TPA 0330SQ (See drawing on page: 4-190)					
010	2715295-0000		1	BRACKET	
040	1254111-0000		1	BRACKET	
340	90110-0235		2	CABLE CONTACT, PX0739/P	
350	90459-1501		2	CABLE SEALING, 12023/I, ELFA. 44-625-78	
590	315125-0165		2	WASHER TBRSB 8,4X26X5 A4	
TPA 0500SQ (See drawing on page: 4-194)					
010	2715295-0000		1	BRACKET	
040	1254111-0000		1	BRACKET	
340	90110-0235		2	CABLE CONTACT, PX0739/P	
350	90459-1501		2	CABLE SEALING, 12023/I, ELFA. 44-625-78	
590	315125-0165		2	WASHER TBRSB 8,4X26X5 A4	
TBA 0200S (See drawing on page: 4-190)					
010	2715295-0000		1	BRACKET	
040	1254110-0000		1	BRACKET	
340	90110-0235		2	CABLE CONTACT, PX0739/P	
350	90459-1501		2	CABLE SEALING, 12023/I, ELFA. 44-625-78	
590	315125-0165		2	WASHER TBRSB 8,4X26X5 A4	
TBA 0200SQ, TBA 0250SQ (See drawing on page: 4-196)					
010	2715296-0000		1	BRACKET	
020	2735474-0000		1	SLIDE	
040	2735473-0000		1	BRACKET	
060	2724929-0000		1	KNOB	
065	2724932-0000		1	NUT	
070	2724930-0000		1	SCREW	
080	90335-0024		1	COMP. SPRING 22250, 1,25X13,75X27	
100	90287-0148		4	SCREW SPRINGLOAD. SLOTTED HEAD M5X12	
590	315125-0165		2	WASHER TBRSB 8,4X26X5 A4	
TBA 0250S, TBA 0200M (See drawing on page: 4-192)					
010	2715296-0000		1	BRACKET	
020	2679885-0000		1	SLIDE	
040	2679884-0000		1	BRACKET	
060	2679886-0000		1	KNOB	
070	2655098-0000		1	SHAFT	
080	90335-0024		1	COMP. SPRING 22250, 1,25X13,75X27	
100	90287-0148		4	SCREW SPRINGLOAD. SLOTTED HEAD M5X12	
110	312318-0323		4	SCREW ISO4029 M5X8 A4	
340	90110-0235		2	CABLE CONTACT, PX0739/P	
350	90459-1501		2	CABLE SEALING, 12023/I, ELFA. 44-625-78	
TBA 0330S, TBA 0200B, TBA 0250B (See drawing on page: 4-192)					
010	2715296-0000		1	BRACKET	
020	2655096-0000		1	SLIDE	
040	2655095-0000		1	BRACKET	
060	2655097-0000		1	KNOB	
070	2655098-0000		1	SHAFT	
080	90335-0024		1	COMP. SPRING 22250, 1,25X13,75X27	
100	90287-0148		4	SCREW SPRINGLOAD. SLOTTED HEAD M5X12	
110	312318-0323		4	SCREW ISO4029 M5X8 A4	
340	90110-0235		2	CABLE CONTACT, PX0739/P	
350	90459-1501		2	CABLE SEALING, 12023/I, ELFA. 44-625-78	
590	315125-0165		2	WASHER TBRSB 8,4X26X5 A4	
TBA 0500B, TBA 1000B, TBA 1500S (See drawing on page: 4-190)					
010	2715295-0000		1	BRACKET	
040	1254109-0000		1	BRACKET	
340	90110-0235		2	CABLE CONTACT, PX0739/P	
350	90459-1501		2	CABLE SEALING, 12023/I, ELFA. 44-625-78	
590	315125-0165		2	WASHER TBRSB 8,4X26X5 A4	
TBA 0500S, TPA 1000SQ NOQC, TPA 1000SQ QC, TPA 0750SQ QC (See drawing on page: 4-190)					
010	2715295-0000		1	BRACKET	
040	2719081-0000		1	BRACKET	
340	90110-0235		2	CABLE CONTACT, PX0739/P	
350	90459-1501		2	CABLE SEALING, 12023/I, ELFA. 44-625-78	
590	315125-0165		2	WASHER TBRSB 8,4X26X5 A4	
TBA 1000S, TBA 1000SQ (See drawing on page: 4-190)					
010	2715295-0000		1	BRACKET	
040	2694095-0000		1	BRACKET	
340	90110-0235		2	CABLE CONTACT, PX0739/P	
350	90459-1501		2	CABLE SEALING, 12023/I, ELFA. 44-625-78	
590	315125-0165		2	WASHER TBRSB 8,4X26X5 A4	
TBA 1890S, TBA 2000S (See drawing on page: 4-190)					
010	2715295-0000		1	BRACKET	
040	2715302-0000		1	BRACKET	
340	90110-0235		2	CABLE CONTACT, PX0739/P	
350	90459-1501		2	CABLE SEALING, 12023/I, ELFA. 44-625-78	
590	2677899-0000		2	WASHER	
TPA 0250SQ, TPA 0200SQ (See drawing on page: 4-196)					
010	2715296-0000		1	BRACKET	
020	2724928-0000		1	SLIDE	
040	2724927-0000		1	BRACKET	
060	2724929-0000		1	KNOB	
065	2724932-0000		1	NUT	
070	2724930-0000		1	SCREW	
080	90335-0024		1	COMP. SPRING 22250, 1,25X13,75X27	
100	90287-0148		4	SCREW SPRINGLOAD. SLOTTED HEAD M5X12	

Machine Type | Group Description | Used-In | Group Number | Page No

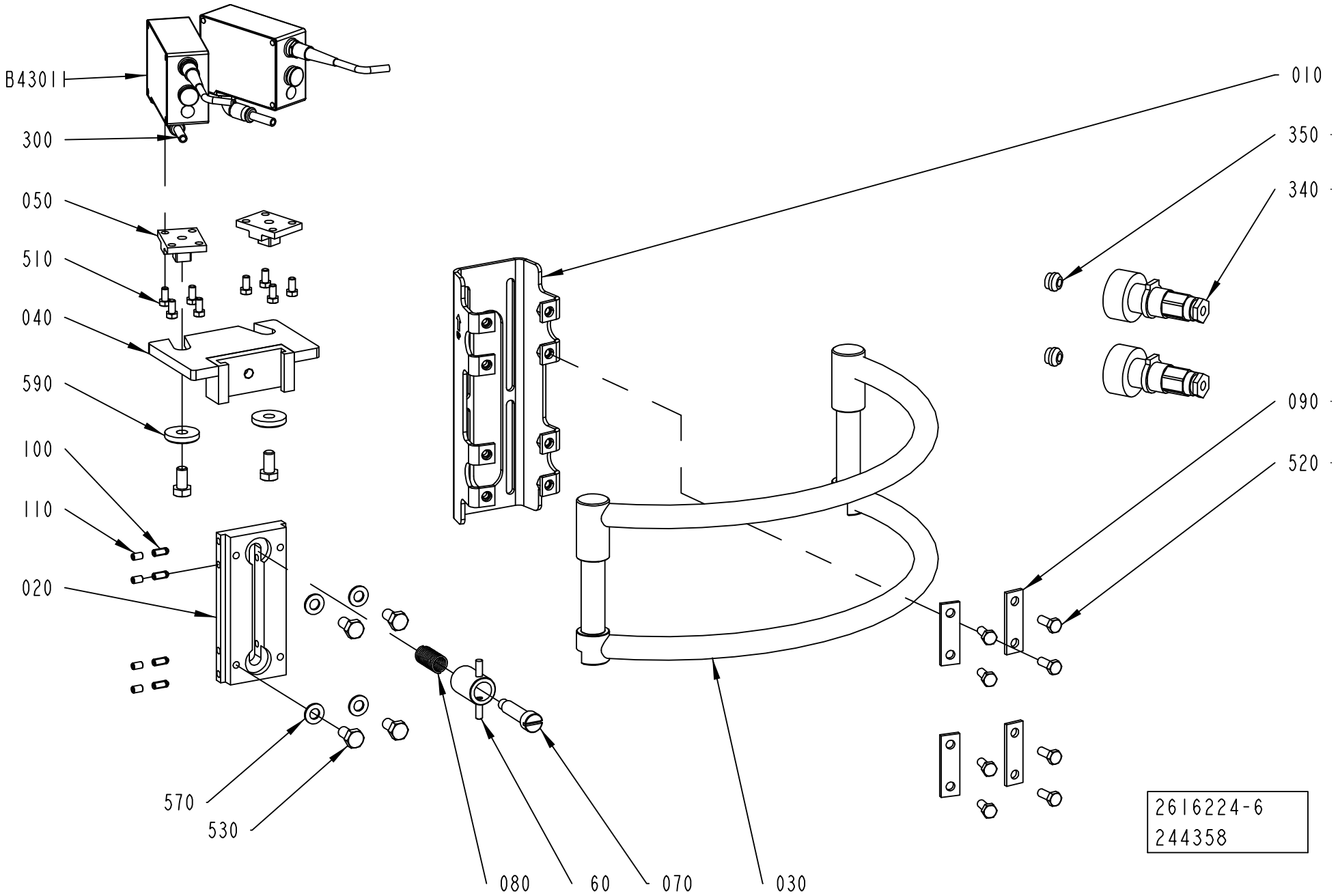
B43011
300
050
510
040
590
100
110
020
570
530
080
60
070
030
010
350
340
090
520
2616224-6
244358

Pos	Part No	UN	Qty	Description	Page No
TPA 0250SQ, TPA 0200SQ (Cont'd) (See drawing on page: 4-196)					
110	312318-0323		4	SCREW ISO4029 M5X8 A4	
340	90110-0235		2	CABLE CONTACT, PX0739/P	
350	90459-1501		2	CABLE SEALING, 12023/I, ELFA. 44-625-78	
590	315125-0165		2	WASHER TBRSB 8,4X26X5 A4	
Common Parts					
030	2715297-0000		1	BOW CLAMP	
050	1036674-0000		2	FASTENING PLATE	
090	1036673-0000		4	WASHER	
300	90166-0081	MM	1500	TUBE 6 MM PA BLUE	
510	312105-0325		8	SCREW M6S ISO 4017 M5X10 A480	
520	312105-0368		8	SCREW M6S ISO 4017 M6X16 A480	
530	312105-0449		6	SCREW M6S ISO 4017 M8X16 A480	
570	315105-0165		4	WASHER BRB 8,4X16 RFR	
B43011	90458-0601		1	CONTRAST SCANNER, KT15W-P2110S01	
	342732-0102		*1*	*ELBOW PIPE JOINT, EXT.THREAD, D=6MM-G1/8*	
B43012	90458-0601		1	CONTRAST SCANNER, KT15W-P2110S01	
	342732-0102		*1*	*ELBOW PIPE JOINT, EXT.THREAD, D=6MM-G1/8*	

Pos	Part No	UN	Qty	Description	Page No

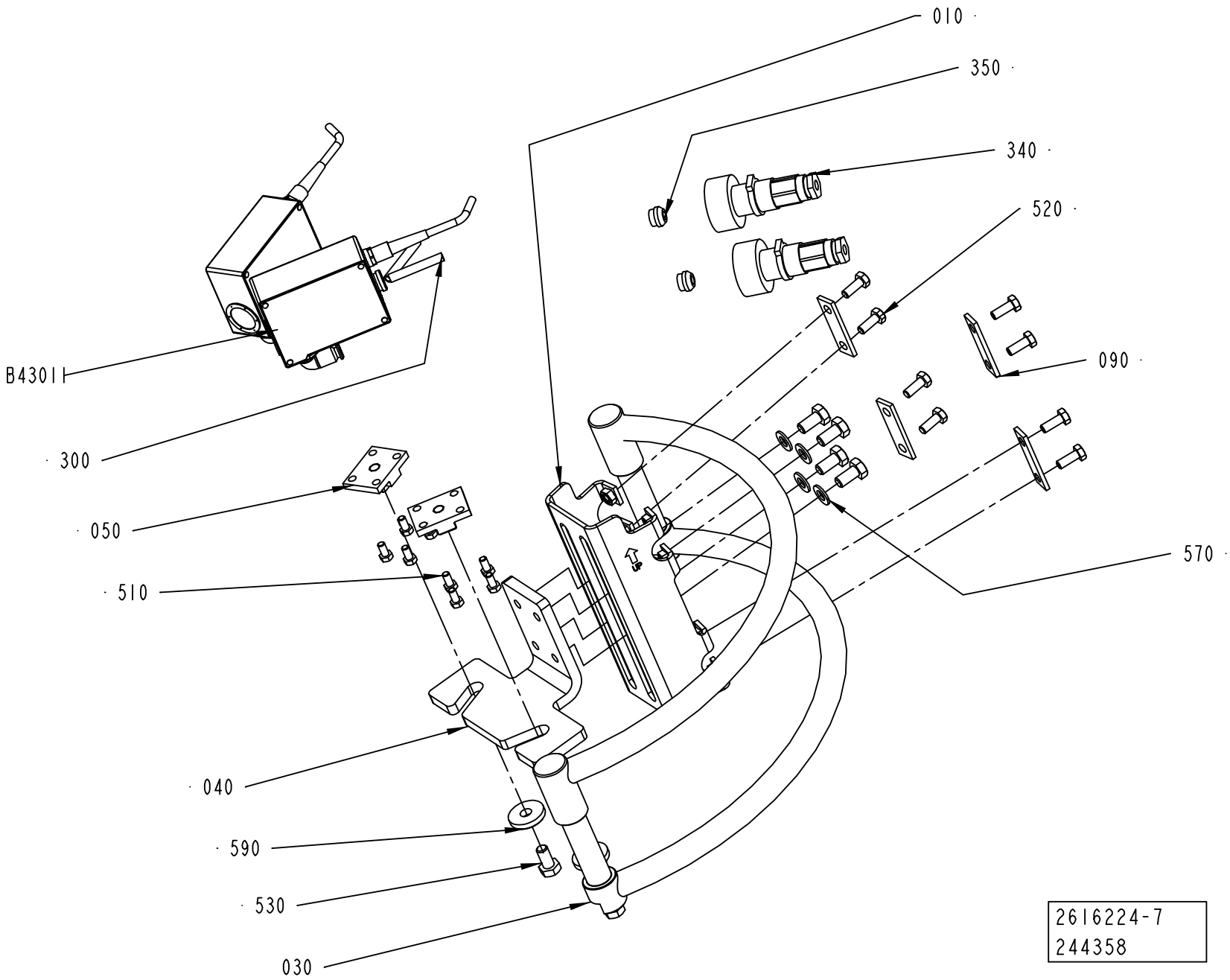
010
350
340
520
090
570
B4301
300
050
510
040
590
530
030
2616224-7
244358

ECM: 273541 - 20060817
Group number: 2616224-0200
Assembly Drawing: 2616224-7_1_AA

This list covers pages from 4-190 to 4-197

Pos	Part No	UN	Qty	Description	Page No	Pos	Part No	UN	Qty	Description	Page No

SEE PREVIOUS LISTS PAGES: 4-191, 4-193.

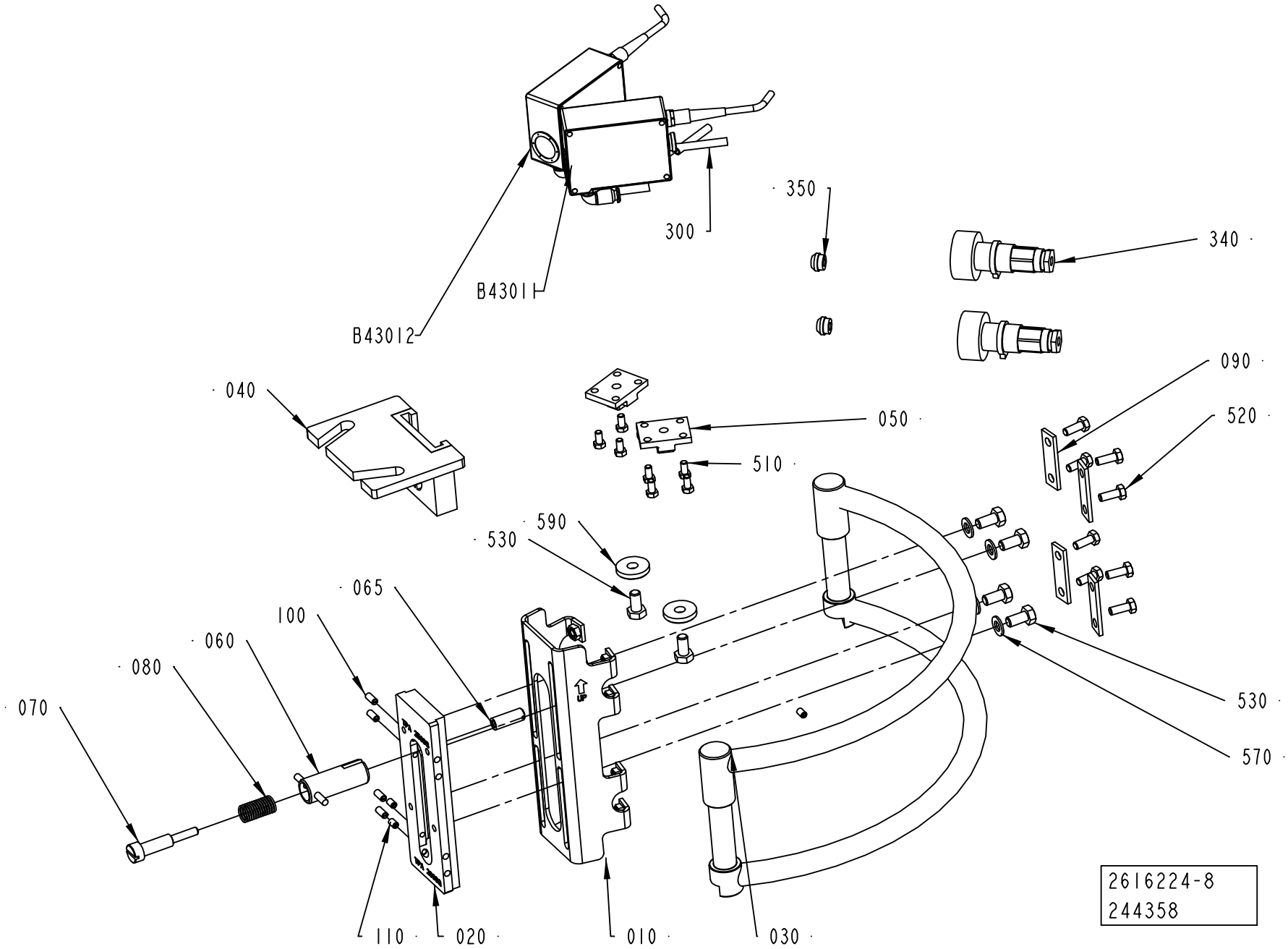
B43012
B43011
300
350
340
040
050
510
090
520
530
590
065
100
060
080
070
530
570
110
020
010
030
2616224-8
244358

ECM: 273541 - 20060817
Group number: 2616224-0200
Assembly Drawing: 2616224-8_1_AA

This list covers pages from 4-190 to 4-197

Pos	Part No	UN	Qty	Description	Page No	Pos	Part No	UN	Qty	Description	Page No

SEE PREVIOUS LISTS PAGES: 4-191, 4-193.

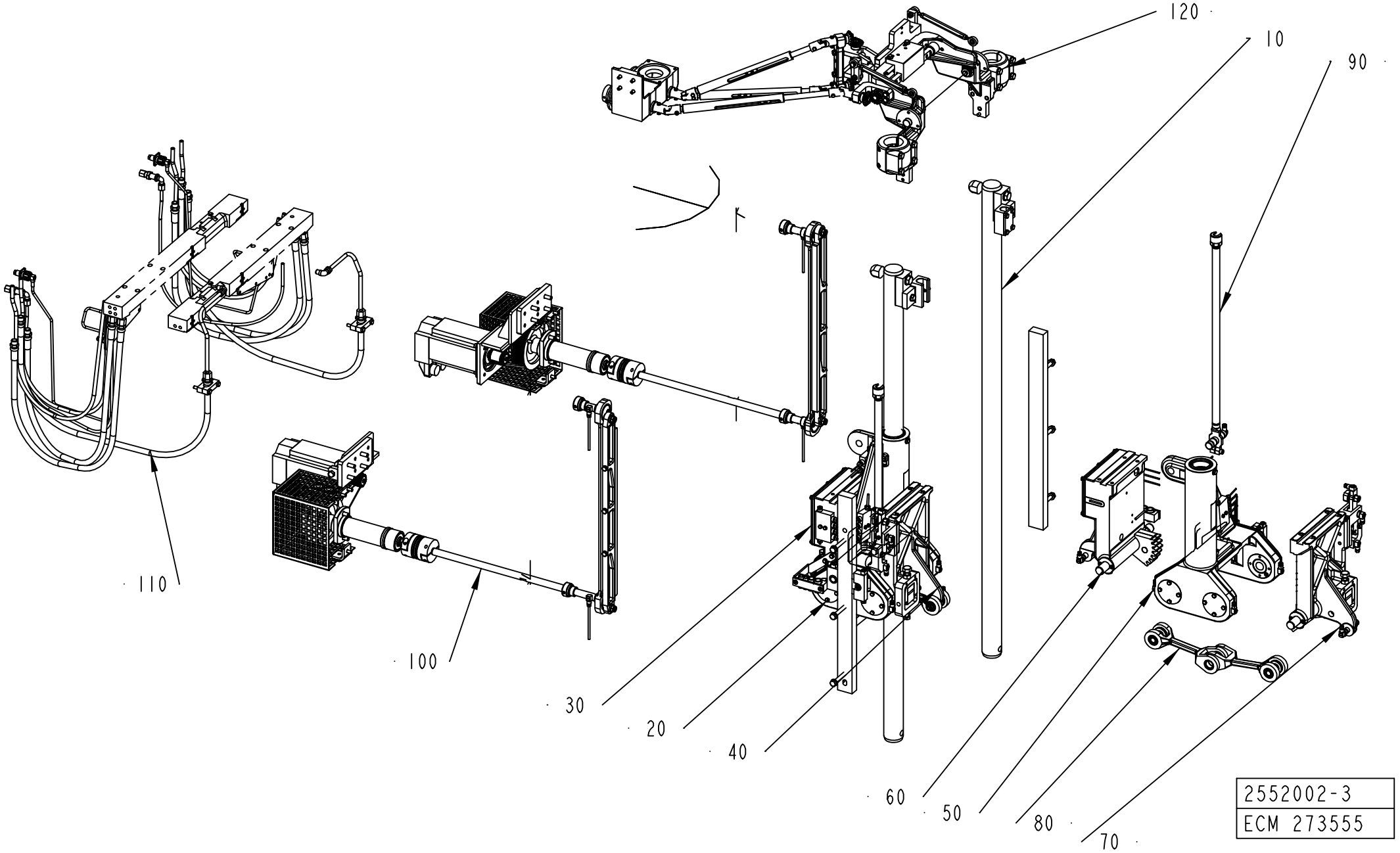
120
10
90
110
100
30
20
40
60
50
80
70
2552002-3
ECM 273555

ECM: 290719 - 20061201
Group number: 2552002-0250
Assembly Drawing: 2552002-3_1_AA

Pos	Part No	UN	Qty	Description	Page No
-					
010	2542489-0200		1	GUIDE	**4-201**
020	1348455-0200		1	YOKE LEFT	**4-203**
030	1348456-0200		1	PRESSURE ARM LEFT	**4-205, 4-207**
040	1348457-0200		1	CUTTING ARM LEFT	**4-209, 4-211**
050	1348460-0200		1	YOKE RIGHT	**4-213**
060	1348461-0200		1	PRESSURE ARM RIGHT	**4-215, 4-217**
070	1348462-0200		1	CUTTING ARM RIGHT	**4-219, 4-221**
080	1348466-0100		4	SCISSOR ARM LINK	**4-223**
090	1334651-0100		2	LINK	**4-225**
100	2792300-0100		1	DESIGN CORRECTION	**4-227**
110	2503661-0100		1	CABLE CONNECTION	**4-237**
120	2613646-0100		1	VOLUME ADJUSTER	**4-239**

Pos	Part No	UN	Qty	Description	Page No

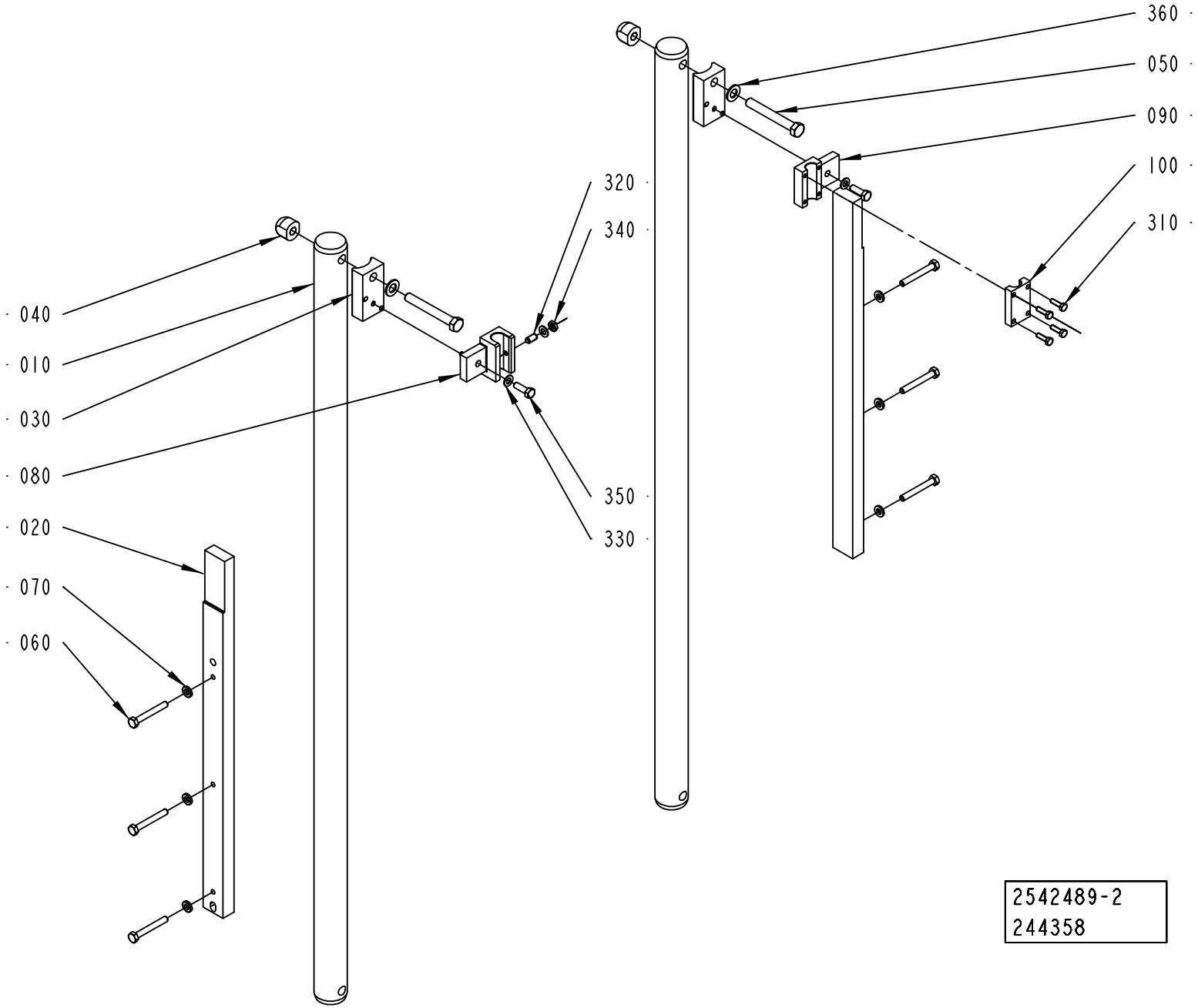
360
050
090
100
310
320
340
040
010
030
080
350
330
020
070
060
2542489-2
244358

ECM: 244367 - 20060701
Group number: 2542489-0200
Assembly Drawing: 2542489-2_1_AA

Pos	Part No	UN	Qty	Description	Page No
-					
010	2640831-0000		2	GUIDE	
020	2698628-0000		2	RULER	
030	2616225-0000		2	CLAMP	
040	2542488-0000		2	NUT	
050	312105-0550		2	SCREW M6S ISO 4014 M12X90 A480	
060	312105-0463		6	SCREW M6S ISO 4014 M8X60 A480	
070	315115-0165		6	WASHER PLAIN, TBRB 8,4/16 H=3	
080	2616221-0000		1	BRACKET	
090	2715300-0000		1	BRACKET	
100	2715301-0000		1	SUPPORT	
310	312105-0370		4	SCREW M6S ISO 4017 M6X20 A480	
320	90287-0112		1	SCREW SPRINGLOAD. SLOTTED HEAD M8X16	
330	315105-0165		3	WASHER BRB 8,4X16 RFR	
340	312625-0318		1	HEXAGON THIN NUT, EN 24035 ML6M M8 A4	
350	312105-0453		2	SCREW M6S ISO 4017 M8X25 A480	
360	315105-0178		2	WASHER BRB 13X24 RFR	

Pos	Part No	UN	Qty	Description	Page No

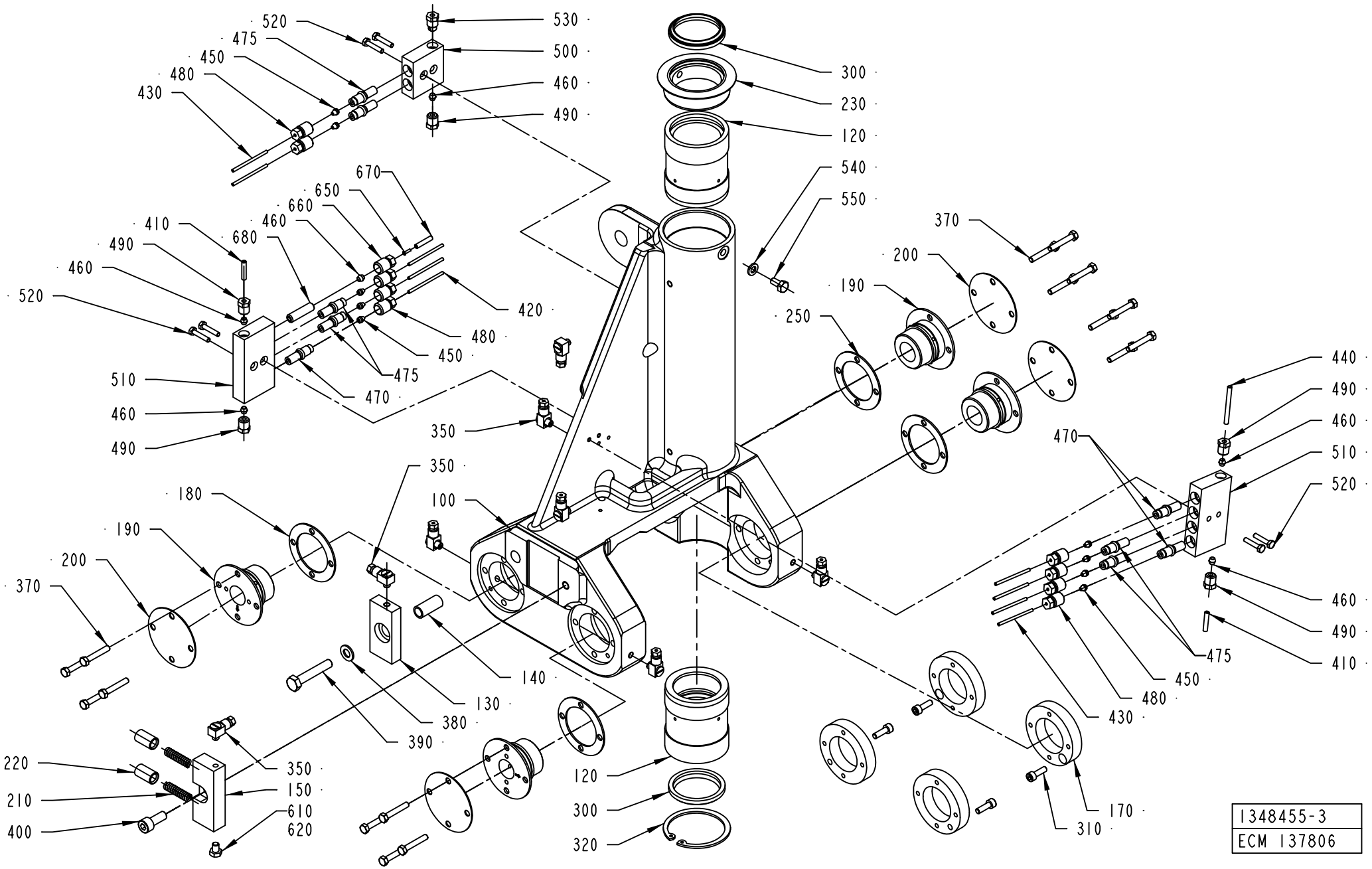
520
475
450
480
430
530
500
460
490
300
230
120
540
550
370
200
190
250
440
490
460
510
520
470
460
490
410
475
450
480
430
170
310
670
650
660
460
410
680
490
460
520
420
480
450
475
470
510
460
490
350
350
180
190
200
370
100
140
130
380
390
220
210
400
350
150
610
620
120
300
320
1348455-3
ECM 137806

ECM: 271733 - 20060831
Group number: 1348455-0200
Assembly Drawing: 1348455-3_1_AB

Pos	Part No	UN	Qty	Description	Page No
A3/FLEX					
450	90028-0020		9	CONE TUBE 2,5MM	
460	90028-0021		6	CONE TUBE 4 MM	
470	90092-0052		3	METERING VALVE 10 MM3	
480	90134-0039		9	BUSHING VALVE CONNECTION 2,5 MM	
650	90134-0031		1	SLEEVE FOR PLASTIC TUBE	
660	90134-0040		1	BUSHING VALVE CONNECTION 4 MM	
670	90166-0109	MM	1000	TUBE 4 MM PA,TRANSP.	
680	90134-0051		1	SPACING COLLAR DOSING BLOCK	
Common Parts					
100	1195360-0000		1	YOKE LEFT	
120	1035954-0000		2	BUSHING	
130	1037104-0000		1	LOCATING PIECE	
140	1037106-0000		1	SLEEVE	
150	1349972-0000		1	SPRING HOUSING	
170	36753-0000		4	RING	
180	29886-0000		2	LACE	
190	246513-0000		4	BEARING	
200	239874-0000		4	WASHER	
210	20494-0000		2	COMPRESSION SPRING	
220	31838-0000		2	PLUNGER	
230	1349780-0000		1	LID	
250	1038509-0000		2	WASHER	
300	90091-0358		2	SCRAPER, ASOB 45X53X7 MM	
310	312115-0329		4	SCREW ISO4762 M5X16 A4 80	
320	315753-0135		1	RETAINING RING FOR BORE DIN 472 60 A2	
350	90134-0058		8	CONNECTION	
370	312105-0335		16	SCREW M6S ISO 4014 M5X30 A480	
380	315105-0165		1	WASHER BRB 8,4X16 RFR	
390	312109-0460		1	SCREW M6S ISO 4017 M8X45 A480	
400	312115-0451		1	SCREW ISO4762 M8X20 A4 80	
410	90166-0109	MM	500	TUBE 4 MM PA,TRANSP.	
420	90166-0143	MM	500	TUBE 2,5 MM PA,TRANSP.	
430	90266-0019	MM	300	PIPE	
440	90266-0165	MM	500	BRASS PIPE	
475	90092-0054		6	METERING VALVE 50 MM3	
490	90134-0038		5	BUSHING/NUT INLET/OUTLET 4 MM	
500	90032-0038		1	BLOCK 2 WAYS	
510	90032-0039		2	BLOCK 4 WAYS	
520	312105-0295		6	SCREW M6S ISO 4017 M4X20 A470	
530	90087-0019		1	PLUG M10X1 STAINLESS	
540	315105-0153		1	WASHER BRB 6,4X12 RFR	
550	312105-0366		1	SCREW M6S ISO 4017 M6X12 A480	
610	312105-0362		1	SCREW M6S ISO 4017 M6X8 A480	
620	90157-0021		1	LOCKING FLUID LOCTITE 270	

Machine Type | Group Description | Used-In | Group Number | Page No

PRESSURE ARM LEFT

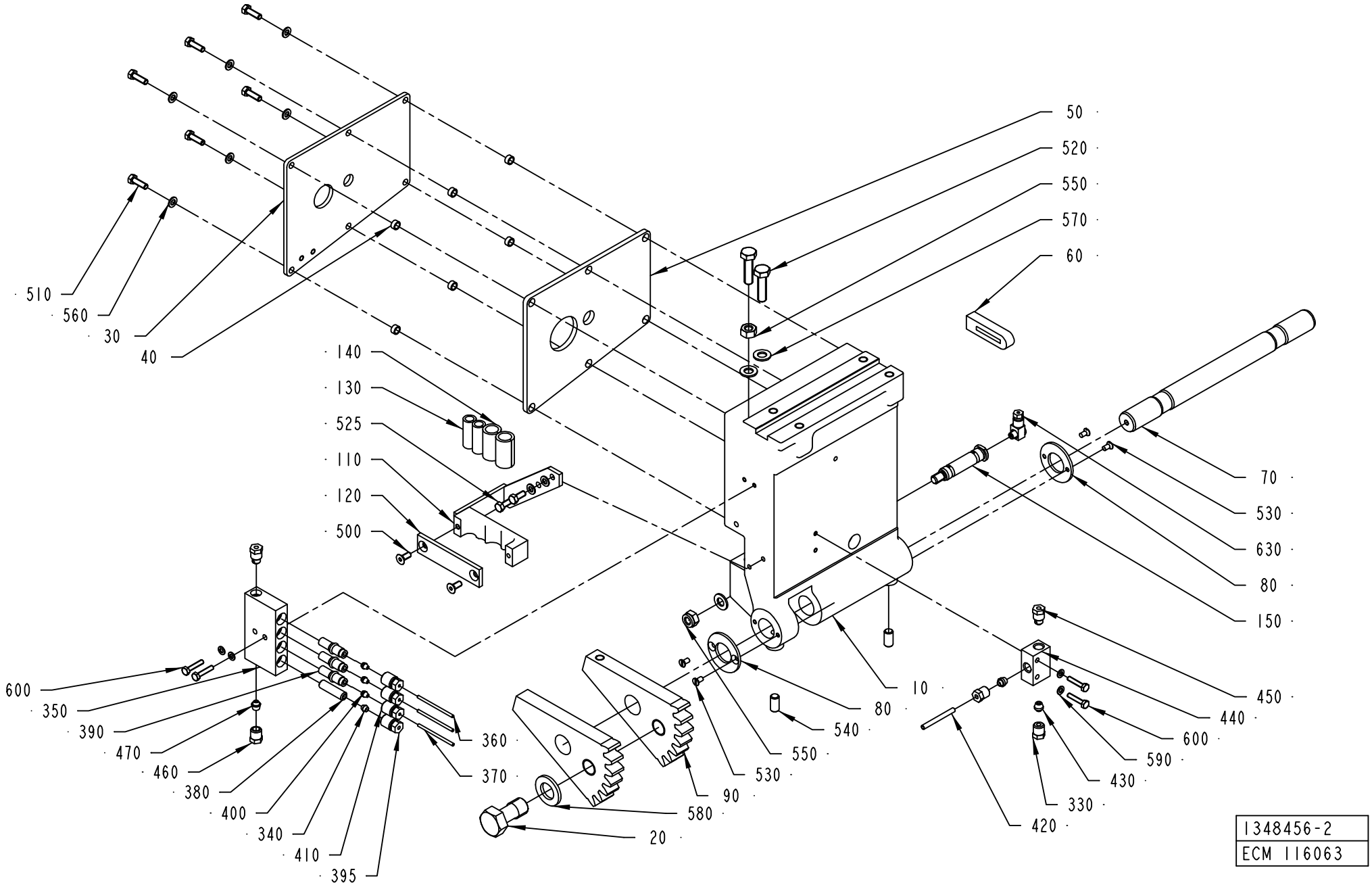

ECM: 271734 - 20060831
Group number: 1348456-0200
Assembly Drawing: 1348456-2_1_AA

This list covers pages from 4-204 to 4-207

Pos	Part No	UN	Qty	Description	Page No
A3/FLEX QC (See drawing on page: 4-206)					
030	1036485-0000		1	COVERING PLATE	
040	1036501-0000		6	SPACER	
050	1036484-0000		1	GASKET	
060	1036483-0000		1	SEAL	
390	90092-0052		1	METERING VALVE 10 MM3	
400	90028-0020		1	CONE TUBE 2,5MM	
510	312105-0329		6	SCREW M6S ISO 4017 M5X16 A480	
560	315105-0146		8	WASHER BRB 5,3X10 RFR	
650	90134-0052		2	PLUG DOSING BLOCK	
A3/FLEX NOQC (See drawing on page: 4-204)					
030	1036485-0000		1	COVERING PLATE	
040	1036501-0000		6	SPACER	
050	1036484-0000		1	GASKET	
060	1036483-0000		1	SEAL	
390	90092-0052		3	METERING VALVE 10 MM3	
400	90028-0020		3	CONE TUBE 2,5MM	
510	312105-0329		6	SCREW M6S ISO 4017 M5X16 A480	
560	315105-0146		8	WASHER BRB 5,3X10 RFR	
Common Parts					
010	1035877-0000		1	ARM LEFT	
020	1037069-0000		1	SCREW	
070	1035788-0000		1	SHAFT	
080	536704-0000		2	WASHER	
090	1036156-0000		2	TOOTH PART	
110	1349867-0000		1	FASTENING PLATE	
120	1349868-0000		1	FASTENING PLATE	
130	1478000-0000		2	HOSE	
140	1478001-0000		2	HOSE	
150	1037853-0000		1	SHAFT	
330	90134-0038		2	BUSHING/NUT INLET/OUTLET 4 MM	
340	90028-0021		1	CONE TUBE 4 MM	
350	90032-0039		1	BLOCK 4 WAYS	
360	90166-0143	MM	1500	TUBE 2,5 MM PA,TRANSP.	
370	90266-0019	MM	500	PIPE	
380	90134-0051		1	SPACING COLLAR DOSING BLOCK	
395	90134-0040		1	BUSHING VALVE CONNECTION 4 MM	
400	90028-0020		1	CONE TUBE 2,5MM	
410	90134-0039		3	BUSHING VALVE CONNECTION 2,5 MM	
420	90266-0165	MM	200	BRASS PIPE	
430	90028-0024		2	CONE TUBE 4 MM	
440	90032-0043		1	DISTRIBUTION BLOCK 3 WAYS	
450	90087-0019		2	PLUG M10X1 STAINLESS	
460	90134-0055		1	BUSHING/NUT INLET/OUTLET 6 MM	
470	90028-0025		1	CONE TUBE 6 MM	
500	312155-0327		2	SCREW DIN 7991 MF6S M5X12 A4 70	
520	312105-0455		2	SCREW M6S ISO 4017 M8X30 A480	
525	312105-0327		2	SCREW M6S ISO 4017 M5X12 A480	
530	312145-0287		4	SCREW ISO 2009 MFS M4X8 A4	
540	312318-0449		2	SCREW ISO4029 M8X16 A4	
550	312605-0318		1	HEXAGON NUT, M6M M8 A280	
570	315105-0165		1	WASHER BRB 8,4X16 RFR	
580	315105-0186		1	WASHER BRB 17X30 RFR	
590	315105-0136		4	WASHER BRB 4,3X9 RFR	
600	312105-0295		4	SCREW M6S ISO 4017 M4X20 A470	
630	90134-0058		1	CONNECTION	
640	312812-0318		1	HEXAGON NUT, NY-LOCK M8 A480	

PRESSURE ARM LEFT

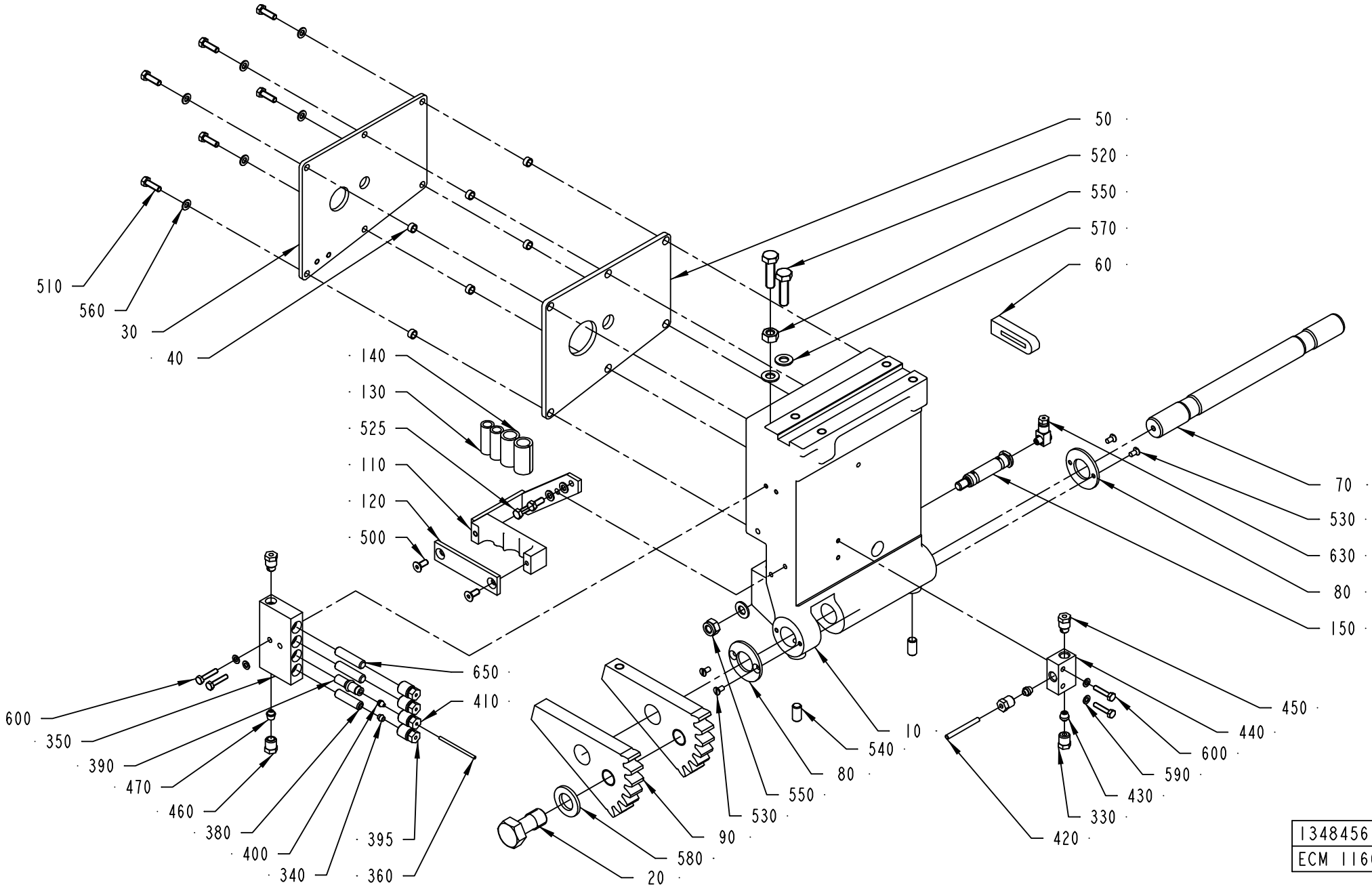

1348456-3
ECM 116063

ECM: 271734 - 20060831
Group number: 1348456-0200
Assembly Drawing: 1348456-3_1_AA

This list covers pages from 4-204 to 4-207

Pos	Part No	UN	Qty	Description	Page No
A3/FLEX QC (See drawing on page: 4-206)					
030	1036485-0000		1	COVERING PLATE	
040	1036501-0000		6	SPACER	
050	1036484-0000		1	GASKET	
060	1036483-0000		1	SEAL	
390	90092-0052		1	METERING VALVE 10 MM3	
400	90028-0020		1	CONE TUBE 2,5MM	
510	312105-0329		6	SCREW M6S ISO 4017 M5X16 A480	
560	315105-0146		8	WASHER BRB 5,3X10 RFR	
650	90134-0052		2	PLUG DOSING BLOCK	
A3/FLEX NOQC (See drawing on page: 4-204)					
030	1036485-0000		1	COVERING PLATE	
040	1036501-0000		6	SPACER	
050	1036484-0000		1	GASKET	
060	1036483-0000		1	SEAL	
390	90092-0052		3	METERING VALVE 10 MM3	
400	90028-0020		3	CONE TUBE 2,5MM	
510	312105-0329		6	SCREW M6S ISO 4017 M5X16 A480	
560	315105-0146		8	WASHER BRB 5,3X10 RFR	
Common Parts					
010	1035877-0000		1	ARM LEFT	
020	1037069-0000		1	SCREW	
070	1035788-0000		1	SHAFT	
080	536704-0000		2	WASHER	
090	1036156-0000		2	TOOTH PART	
110	1349867-0000		1	FASTENING PLATE	
120	1349868-0000		1	FASTENING PLATE	
130	1478000-0000		2	HOSE	
140	1478001-0000		2	HOSE	
150	1037853-0000		1	SHAFT	
330	90134-0038		2	BUSHING/NUT INLET/OUTLET 4 MM	
340	90028-0021		1	CONE TUBE 4 MM	
350	90032-0039		1	BLOCK 4 WAYS	
360	90166-0143	MM	1500	TUBE 2,5 MM PA,TRANSP.	
370	90266-0019	MM	500	PIPE	
380	90134-0051		1	SPACING COLLAR DOSING BLOCK	
395	90134-0040		1	BUSHING VALVE CONNECTION 4 MM	
400	90028-0020		1	CONE TUBE 2,5MM	
410	90134-0039		3	BUSHING VALVE CONNECTION 2,5 MM	
420	90266-0165	MM	200	BRASS PIPE	
430	90028-0024		2	CONE TUBE 4 MM	
440	90032-0043		1	DISTRIBUTION BLOCK 3 WAYS	
450	90087-0019		2	PLUG M10X1 STAINLESS	
460	90134-0055		1	BUSHING/NUT INLET/OUTLET 6 MM	
470	90028-0025		1	CONE TUBE 6 MM	
500	312155-0327		2	SCREW DIN 7991 MF6S M5X12 A4 70	
520	312105-0455		2	SCREW M6S ISO 4017 M8X30 A480	
525	312105-0327		2	SCREW M6S ISO 4017 M5X12 A480	
530	312145-0287		4	SCREW ISO 2009 MFS M4X8 A4	
540	312318-0449		2	SCREW ISO4029 M8X16 A4	
550	312605-0318		1	HEXAGON NUT, M6M M8 A280	
570	315105-0165		1	WASHER BRB 8,4X16 RFR	
580	315105-0186		1	WASHER BRB 17X30 RFR	
590	315105-0136		4	WASHER BRB 4,3X9 RFR	
600	312105-0295		4	SCREW M6S ISO 4017 M4X20 A470	
630	90134-0058		1	CONNECTION	
640	312812-0318		1	HEXAGON NUT, NY-LOCK M8 A480	

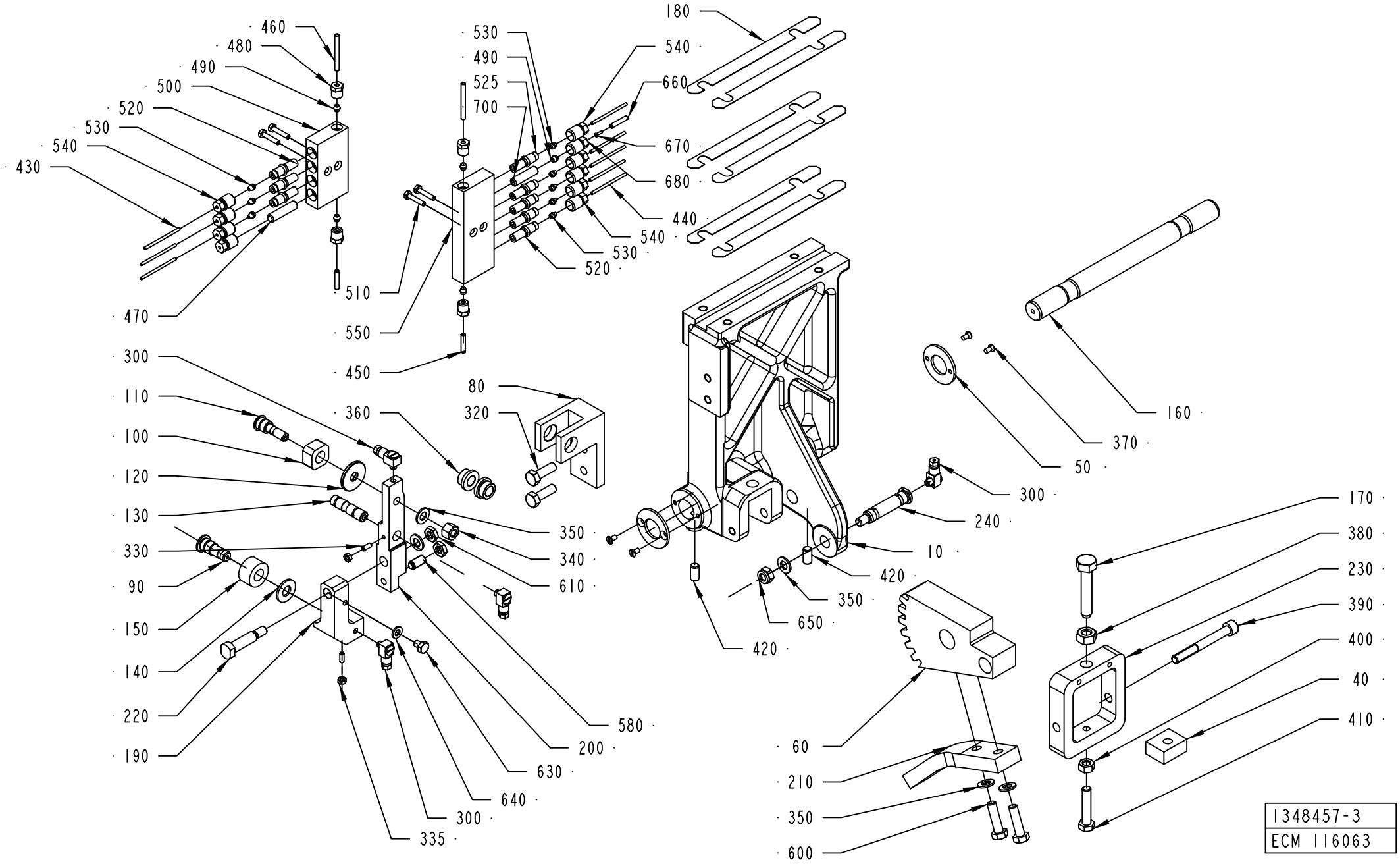
460
480
490
500
520
530
540
430
470
510
550
450
530
490
525
700
180
540
660
670
680
440
540
530
520
300
110
100
120
130
330
90
150
140
220
190
360
80
320
350
340
610
580
200
630
640
300
335
50
370
160
300
240
10
420
350
650
420
60
210
350
600
170
380
230
390
400
40
410
1348457-3
ECM 116063

ECM: 271735 - 20060831
Group number: 1348457-0200
Assembly Drawing: 1348457-3_1_AA

This list covers pages from 4-208 to 4-211

Pos	Part No	UN	Qty	Description	Page No
A3/FLEX NOQC (See drawing on page: 4-208)					
080	1036617-0000		1	BRACKET	
090	1036620-0000		1	SHAFT	
100	256628-0000		1	PIECE	
110	256629-0001		1	AXLE PIN	
120	441706-0000		1	WASHER	
130	1036615-0000		1	SHAFT	
140	1036616-0000		1	WASHER	
150	1036618-0000		1	ROLL	
190	1348671-0000		1	JOINT LEFT	
200	1512316-0000		1	ARM LEFT	
220	1348669-0000		1	SCREW	
300	90134-0058		4	CONNECTION	
320	312105-0453		2	SCREW M6S ISO 4017 M8X25 A480	
330	312318-0289		2	SCREW ISO4029 M4X10 A4	
335	312605-0312		2	HEXAGON NUT, M6M M4 A280	
340	312811-0318		1	NUT HEX.LOCK HELI COIL M8 SS	
350	315105-0165		5	WASHER BRB 8,4X16 RFR	
360	321101-0163		2	FLANGE BUSHING, 10X16X10 MM	
450	90166-0109	MM	600	TUBE 4 MM PA,TRANSP.	
470	90134-0052		1	PLUG DOSING BLOCK	
490	90028-0021		5	CONE TUBE 4 MM	
520	90092-0052		7	METERING VALVE 10 MM3	
525	90092-0054		1	METERING VALVE 50 MM3	
530	90028-0020		8	CONE TUBE 2,5MM	
540	90134-0039		9	BUSHING VALVE CONNECTION 2,5 MM	
580	90287-0112		1	SCREW SPRINGLOAD. SLOTTED HEAD M8X16	
610	312625-0318		2	HEXAGON THIN NUT, EN 24035 ML6M M8 A4	
630	312105-0362		1	SCREW M6S ISO 4017 M6X8 A480	
640	315105-0153		1	WASHER BRB 6,4X12 RFR	
660	90166-0109	MM	1000	TUBE 4 MM PA,TRANSP.	
670	90134-0031		1	SLEEVE FOR PLASTIC TUBE	
680	90134-0040		1	BUSHING VALVE CONNECTION 4 MM	
700	90134-0051		1	SPACING COLLAR DOSING BLOCK	
A3/FLEX TBA 0250SQ QC, A3/FLEX TBA 0200SQ QC (See drawing on page: 4-210)					
080	1338793-0000		1	BRACKET	
090	1036620-0000		1	SHAFT	
100	256628-0000		1	PIECE	
110	256629-0001		1	AXLE PIN	
120	441706-0000		1	WASHER	
130	1036615-0000		1	SHAFT	
140	1036616-0000		1	WASHER	
150	1036618-0000		1	ROLL	
190	1348671-0000		1	JOINT LEFT	
200	1512316-0000		1	ARM LEFT	
220	1348669-0000		1	SCREW	
300	90134-0058		4	CONNECTION	
320	312105-0453		2	SCREW M6S ISO 4017 M8X25 A480	
330	312318-0289		2	SCREW ISO4029 M4X10 A4	
335	312605-0312		2	HEXAGON NUT, M6M M4 A280	
340	312811-0318		1	NUT HEX.LOCK HELI COIL M8 SS	
350	315105-0165		5	WASHER BRB 8,4X16 RFR	
360	321101-0163		2	FLANGE BUSHING, 10X16X10 MM	
450	90166-0109	MM	600	TUBE 4 MM PA,TRANSP.	
470	90134-0052		3	PLUG DOSING BLOCK	
490	90028-0021		5	CONE TUBE 4 MM	
520	90092-0052		5	METERING VALVE 10 MM3	
525	90092-0054		1	METERING VALVE 50 MM3	
530	90028-0020		6	CONE TUBE 2,5MM	
540	90134-0039		9	BUSHING VALVE CONNECTION 2,5 MM	
580	90287-0112		1	SCREW SPRINGLOAD. SLOTTED HEAD M8X16	
610	312625-0318		2	HEXAGON THIN NUT, EN 24035 ML6M M8 A4	
630	312105-0362		1	SCREW M6S ISO 4017 M6X8 A480	
640	315105-0153		1	WASHER BRB 6,4X12 RFR	
660	90166-0109	MM	1000	TUBE 4 MM PA,TRANSP.	
670	90134-0031		1	SLEEVE FOR PLASTIC TUBE	
680	90134-0040		1	BUSHING VALVE CONNECTION 4 MM	
700	90134-0051		1	SPACING COLLAR DOSING BLOCK	
A3/FLEX TBA 0500B QC, A3/FLEX TBA 1000B QC, A3/FLEX TBA 0200B QC, A3/FLEX TBA 0250B QC, A3/FLEX TBA 0330S QC, A3/FLEX TBA 1890S QC, A3/FLEX TBA 2000S QC, A3/FLEX TBA 0250S QC, A3/FLEX TBA 0200M QC, A3/FLEX TPA 0750SQ QC, A3/FLEX TPA 1000SQ QC, A3/FLEX TPA 0200SQ QC, A3/FLEX TPA 0250SQ QC (See drawing on page: 4-210)					
080	1036617-0000		1	BRACKET	
090	1036620-0000		1	SHAFT	
100	256628-0000		1	PIECE	
110	256629-0001		1	AXLE PIN	
120	441706-0000		1	WASHER	
130	1036615-0000		1	SHAFT	
140	1036616-0000		1	WASHER	
150	1036618-0000		1	ROLL	
190	1348671-0000		1	JOINT LEFT	
200	1512316-0000		1	ARM LEFT	
220	1348669-0000		1	SCREW	
300	90134-0058		4	CONNECTION	

Machine Type | Group Description | Used-In | Group Number | Page No

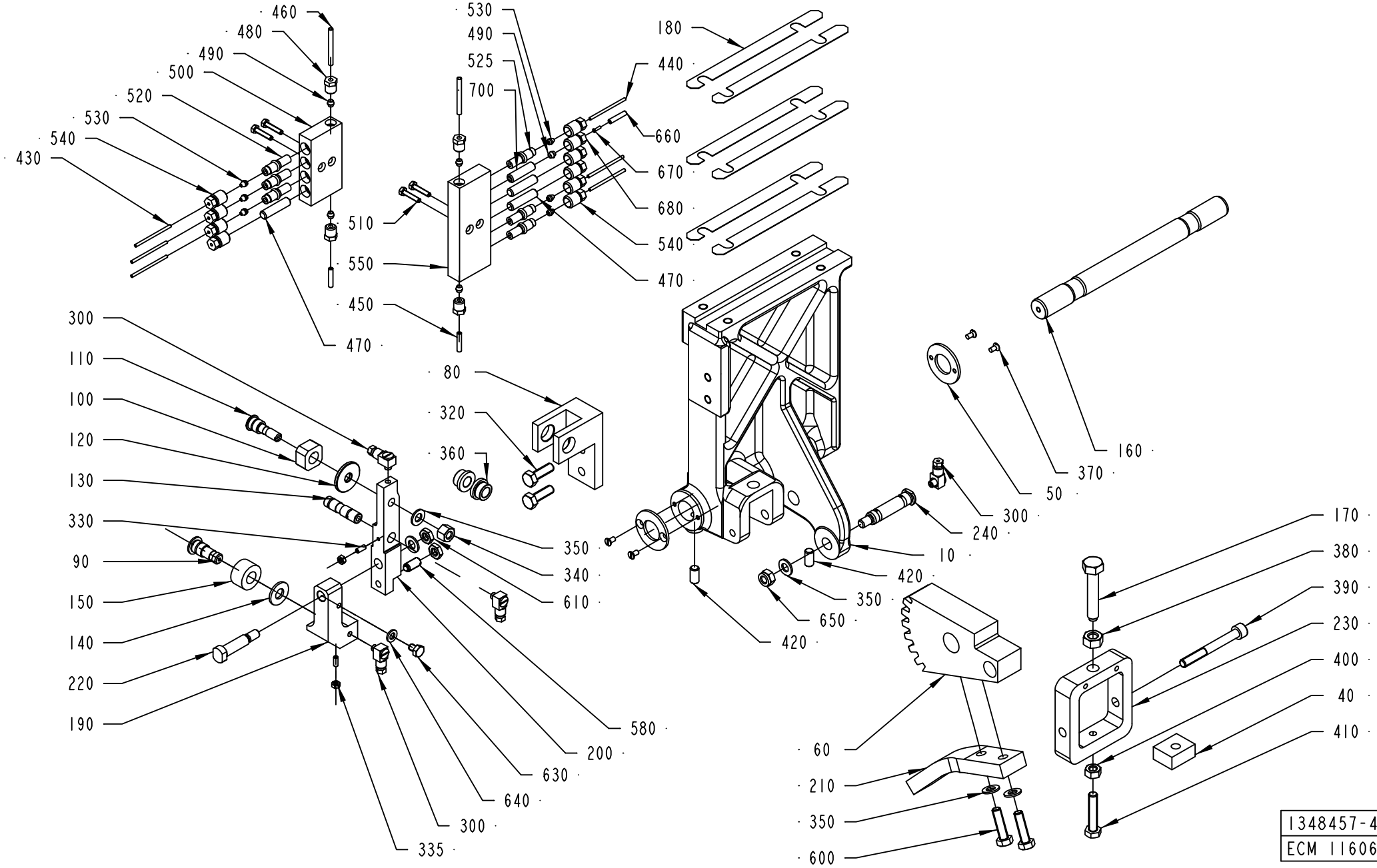
460
480
490
500
520
530
540
430
530
490
525
700
180
440
660
670
680
540
470
510
550
450
470
300
110
100
120
130
330
90
150
140
220
190
80
320
360
350
340
610
580
200
630
640
300
335
420
650
420
350
10
240
300
50
370
160
170
380
390
230
400
40
410
60
210
350
600
1348457-4
ECM 116063

ECM: 271735 - 20060831
Group number: 1348457-0200
Assembly Drawing: 1348457-4_1_AA

This list covers pages from 4-208 to 4-211

Pos	Part No	UN	Qty	Description	Page No
A3/FLEX TBA 0500B QC, A3/FLEX TBA 1000B QC, A3/FLEX TBA 0200B QC, A3/FLEX TBA 0250B QC,					
A3/FLEX TBA 0330S QC, A3/FLEX TBA 1890S QC, A3/FLEX TBA 2000S QC, A3/FLEX TBA 0250S QC,					
A3/FLEX TBA 0200M QC, A3/FLEX TPA 0750SQ QC, A3/FLEX TPA 1000SQ QC, A3/FLEX TPA 0200SQ QC,					
A3/FLEX TPA 0250SQ QC (Cont'd) (See drawing on page: 4-210)					
330	312318-0289		2	SCREW ISO4029 M4X10 A4	
335	312605-0312		2	HEXAGON NUT, M6M M4 A280	
340	312811-0318		1	NUT HEX.LOCK HELI COIL M8 SS	
350	315105-0165		5	WASHER BRB 8,4X16 RFR	
360	321101-0163		2	FLANGE BUSHING, 10X16X10 MM	
450	90166-0109	MM	600	TUBE 4 MM PA,TRANSP.	
470	90134-0052		3	PLUG DOSING BLOCK	
490	90028-0021		5	CONE TUBE 4 MM	
520	90092-0052		5	METERING VALVE 10 MM3	
525	90092-0054		1	METERING VALVE 50 MM3	
530	90028-0020		6	CONE TUBE 2,5MM	
540	90134-0039		9	BUSHING VALVE CONNECTION 2,5 MM	
580	90287-0112		1	SCREW SPRINGLOAD. SLOTTED HEAD M8X16	
610	312625-0318		2	HEXAGON THIN NUT, EN 24035 ML6M M8 A4	
630	312105-0362		1	SCREW M6S ISO 4017 M6X8 A480	
640	315105-0153		1	WASHER BRB 6,4X12 RFR	
660	90166-0109	MM	1000	TUBE 4 MM PA,TRANSP.	
670	90134-0031		1	SLEEVE FOR PLASTIC TUBE	
680	90134-0040		1	BUSHING VALVE CONNECTION 4 MM	
700	90134-0051		1	SPACING COLLAR DOSING BLOCK	
Common Parts					
010	2536048-0000		1	ARM	
040	14729-0000		1	NUT	
050	536704-0000		2	WASHER	
060	1036155-0000		1	TOOTH PART	
160	1035788-0000		1	SHAFT	
170	32957-0000		1	SCREW	
180	1037254-0000		6	SHIM	
210	1484320-0000		1	ROD	
230	1038867-0000		1	BOW CLAMP	
240	1037853-0000		1	SHAFT	
370	312145-0287		4	SCREW ISO 2009 MFS M4X8 A4	
380	312635-0320		1	NUT M6M 10X1 STAINLESS A2 80	
390	312115-0465		1	SCREW ISO4762 M8X70 A4 80	
400	312605-0318		1	HEXAGON NUT, M6M M8 A280	
410	312109-0459		1	SCREW M6S ISO 4017 M8X40 A480	
420	312318-0449		2	SCREW ISO4029 M8X16 A4	
430	90166-0143	M	3	TUBE 2,5 MM PA,TRANSP.	
440	90266-0019	MM	200	PIPE	
460	90266-0165	MM	100	BRASS PIPE	
480	90134-0038		4	BUSHING/NUT INLET/OUTLET 4 MM	
500	90032-0039		1	BLOCK 4 WAYS	
510	312105-0295		4	SCREW M6S ISO 4017 M4X20 A470	
550	90032-0040		1	BLOCK 6 WAYS	
600	312105-0455		2	SCREW M6S ISO 4017 M8X30 A480	
650	312812-0318		1	HEXAGON NUT, NY-LOCK M8 A480	

Machine Type | Group Description | Used-In | Group Number | Page No

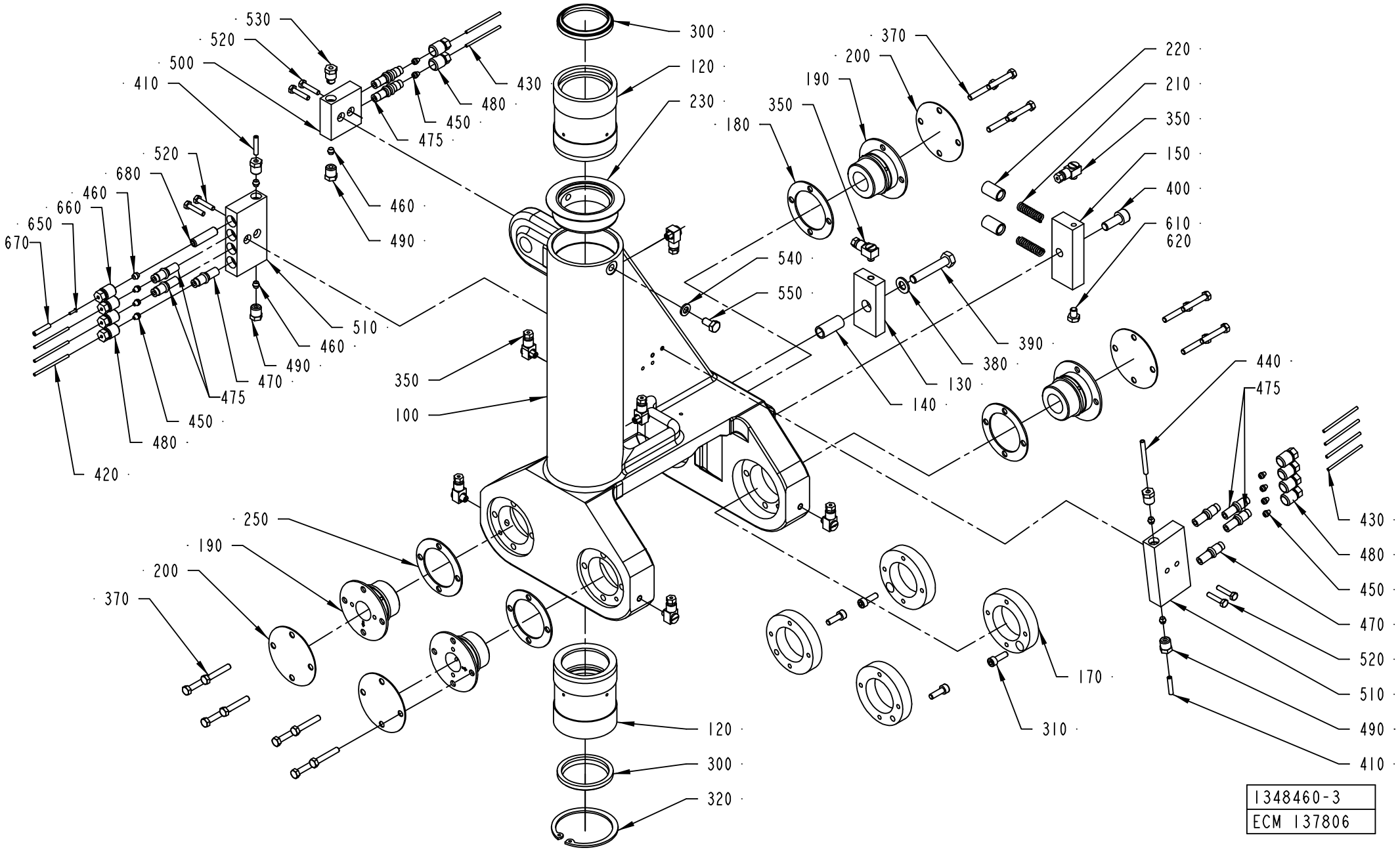
530
520
500
410
520
680
460
660
650
670
460
490
510
460
490
470
475
450
480
420
430
480
450
475
300
120
230
350
100
370
200
190
180
350
540
550
220
210
350
150
400
610
620
390
380
130
140
440
475
430
480
450
470
520
510
490
410
250
190
200
370
120
300
320
170
310
1348460-3
ECM 137806

ECM: 271736 - 20060831
Group number: 1348460-0200
Assembly Drawing: 1348460-3_1_AB

Pos	Part No	UN	Qty	Description	Page No
A3/FLEX					
450	90028-0020		9	CONE TUBE 2,5MM	
460	90028-0021		6	CONE TUBE 4 MM	
470	90092-0052		3	METERING VALVE 10 MM3	
480	90134-0039		9	BUSHING VALVE CONNECTION 2,5 MM	
650	90134-0031		1	SLEEVE FOR PLASTIC TUBE	
660	90134-0040		1	BUSHING VALVE CONNECTION 4 MM	
670	90166-0109	MM	1000	TUBE 4 MM PA,TRANSP.	
680	90134-0051		1	SPACING COLLAR DOSING BLOCK	
Common Parts					
100	1195361-0000		1	YOKE RIGHT	
120	1035954-0000		2	BUSHING	
130	1037104-0000		1	LOCATING PIECE	
140	1037106-0000		1	SLEEVE	
150	1349972-0000		1	SPRING HOUSING	
170	36753-0000		4	RING	
180	29886-0000		2	LACE	
190	246513-0000		4	BEARING	
200	239874-0000		4	WASHER	
210	20494-0000		2	COMPRESSION SPRING	
220	31838-0000		2	PLUNGER	
230	1349780-0000		1	LID	
250	1038509-0000		2	WASHER	
300	90091-0358		2	SCRAPER, ASOB 45X53X7 MM	
310	312115-0329		4	SCREW ISO4762 M5X16 A4 80	
320	315753-0135		1	RETAINING RING FOR BORE DIN 472 60 A2	
350	90134-0058		8	CONNECTION	
370	312105-0335		16	SCREW M6S ISO 4014 M5X30 A480	
380	315105-0165		1	WASHER BRB 8,4X16 RFR	
390	312109-0460		1	SCREW M6S ISO 4017 M8X45 A480	
400	312115-0451		1	SCREW ISO4762 M8X20 A4 80	
410	90166-0109	MM	500	TUBE 4 MM PA,TRANSP.	
420	90166-0143	MM	500	TUBE 2,5 MM PA,TRANSP.	
430	90266-0019	MM	300	PIPE	
440	90266-0165	MM	500	BRASS PIPE	
475	90092-0054		6	METERING VALVE 50 MM3	
490	90134-0038		5	BUSHING/NUT INLET/OUTLET 4 MM	
500	90032-0038		1	BLOCK 2 WAYS	
510	90032-0039		2	BLOCK 4 WAYS	
520	312105-0295		6	SCREW M6S ISO 4017 M4X20 A470	
530	90087-0019		1	PLUG M10X1 STAINLESS	
540	315105-0153		1	WASHER BRB 6,4X12 RFR	
550	312105-0366		1	SCREW M6S ISO 4017 M6X12 A480	
610	312105-0362		1	SCREW M6S ISO 4017 M6X8 A480	
620	90157-0021		1	LOCKING FLUID LOCTITE 270	

Machine Type | Group Description | Used-In | Group Number | Page No

PRESSURE ARM RIGHT

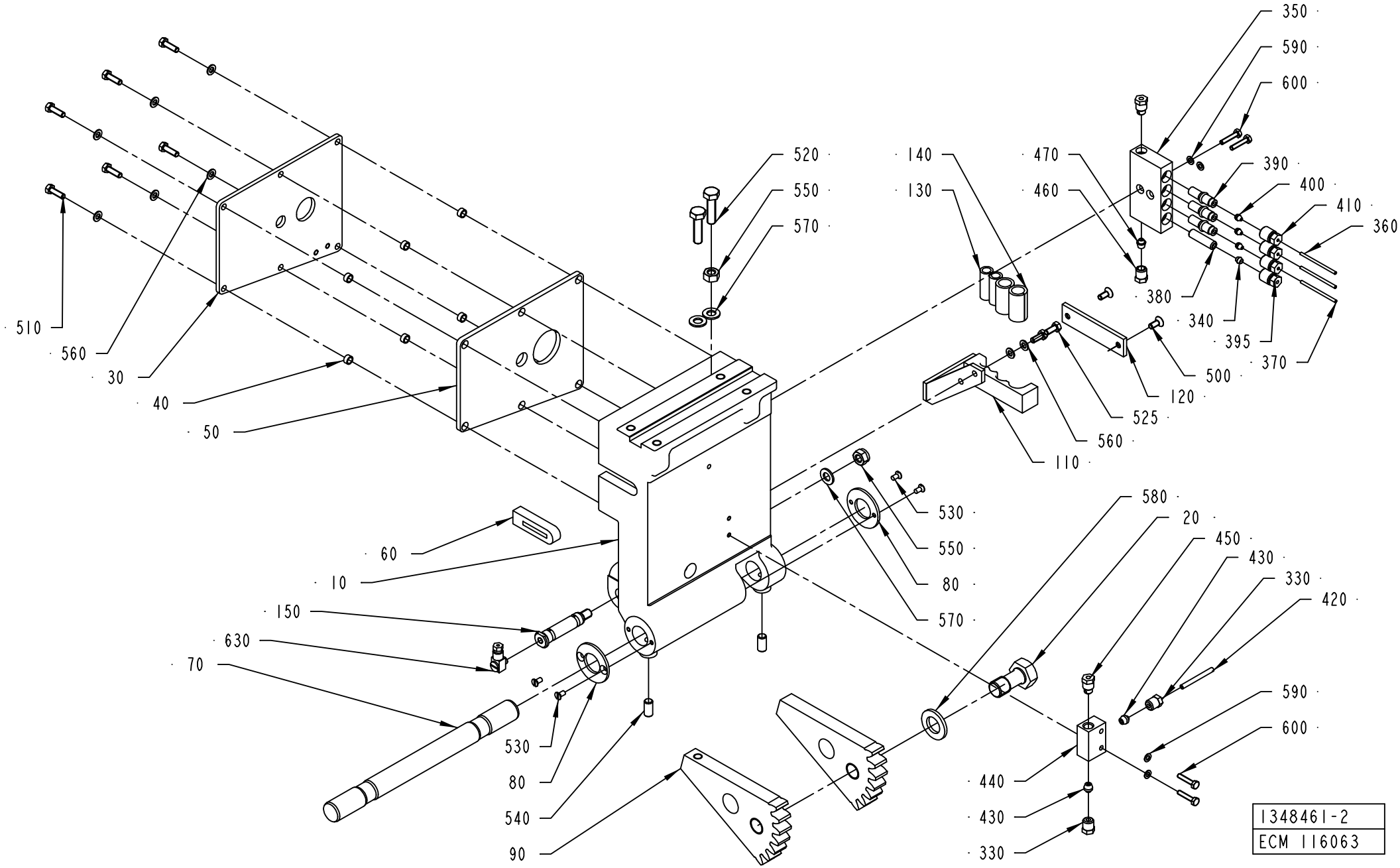

ECM: 271737 - 20060831
Group number: 1348461-0200
Assembly Drawing: 1348461-2_1_AA

This list covers pages from 4-214 to 4-217

Pos	Part No	UN	Qty	Description	Page No
A3/FLEX QC (See drawing on page: 4-216)					
030	1036485-0000		1	COVERING PLATE	
040	1036501-0000		6	SPACER	
050	1036484-0000		1	GASKET	
060	1036483-0000		1	SEAL	
390	90092-0052		1	METERING VALVE 10 MM3	
400	90028-0020		1	CONE TUBE 2,5MM	
510	312105-0329		6	SCREW M6S ISO 4017 M5X16 A480	
560	315105-0146		8	WASHER BRB 5,3X10 RFR	
650	90134-0052		2	PLUG DOSING BLOCK	
A3/FLEX NOQC (See drawing on page: 4-214)					
030	1036485-0000		1	COVERING PLATE	
040	1036501-0000		6	SPACER	
050	1036484-0000		1	GASKET	
060	1036483-0000		1	SEAL	
390	90092-0052		3	METERING VALVE 10 MM3	
400	90028-0020		3	CONE TUBE 2,5MM	
510	312105-0329		6	SCREW M6S ISO 4017 M5X16 A480	
560	315105-0146		8	WASHER BRB 5,3X10 RFR	
Common Parts					
010	1035878-0000		1	ARM RIGHT	
020	1037069-0000		1	SCREW	
070	1035788-0000		1	SHAFT	
080	536704-0000		2	WASHER	
090	1036156-0000		2	TOOTH PART	
110	1348196-0000		1	FASTENING PLATE	
120	1349868-0000		1	FASTENING PLATE	
130	1478000-0000		2	HOSE	
140	1478001-0000		2	HOSE	
150	1037853-0000		1	SHAFT	
330	90134-0038		2	BUSHING/NUT INLET/OUTLET 4 MM	
340	90028-0021		1	CONE TUBE 4 MM	
350	90032-0039		1	BLOCK 4 WAYS	
360	90166-0143	MM	1500	TUBE 2,5 MM PA,TRANSP.	
370	90266-0019	MM	500	PIPE	
380	90134-0051		1	SPACING COLLAR DOSING BLOCK	
395	90134-0040		1	BUSHING VALVE CONNECTION 4 MM	
410	90134-0039		3	BUSHING VALVE CONNECTION 2,5 MM	
420	90266-0165	MM	200	BRASS PIPE	
430	90028-0024		2	CONE TUBE 4 MM	
440	90032-0043		1	DISTRIBUTION BLOCK 3 WAYS	
450	90087-0019		2	PLUG M10X1 STAINLESS	
460	90134-0055		1	BUSHING/NUT INLET/OUTLET 6 MM	
470	90028-0025		1	CONE TUBE 6 MM	
500	312155-0327		2	SCREW DIN 7991 MF6S M5X12 A4 70	
520	312105-0455		2	SCREW M6S ISO 4017 M8X30 A480	
525	312105-0327		2	SCREW M6S ISO 4017 M5X12 A480	
530	312145-0287		4	SCREW ISO 2009 MFS M4X8 A4	
540	312318-0449		2	SCREW ISO4029 M8X16 A4	
550	312605-0318		1	HEXAGON NUT, M6M M8 A280	
570	315105-0165		1	WASHER BRB 8,4X16 RFR	
580	315105-0186		1	WASHER BRB 17X30 RFR	
590	315105-0136		4	WASHER BRB 4,3X9 RFR	
600	312105-0295		4	SCREW M6S ISO 4017 M4X20 A470	
630	90134-0058		1	CONNECTION	
640	312812-0318		1	HEXAGON NUT, NY-LOCK M8 A480	

PRESSURE ARM RIGHT

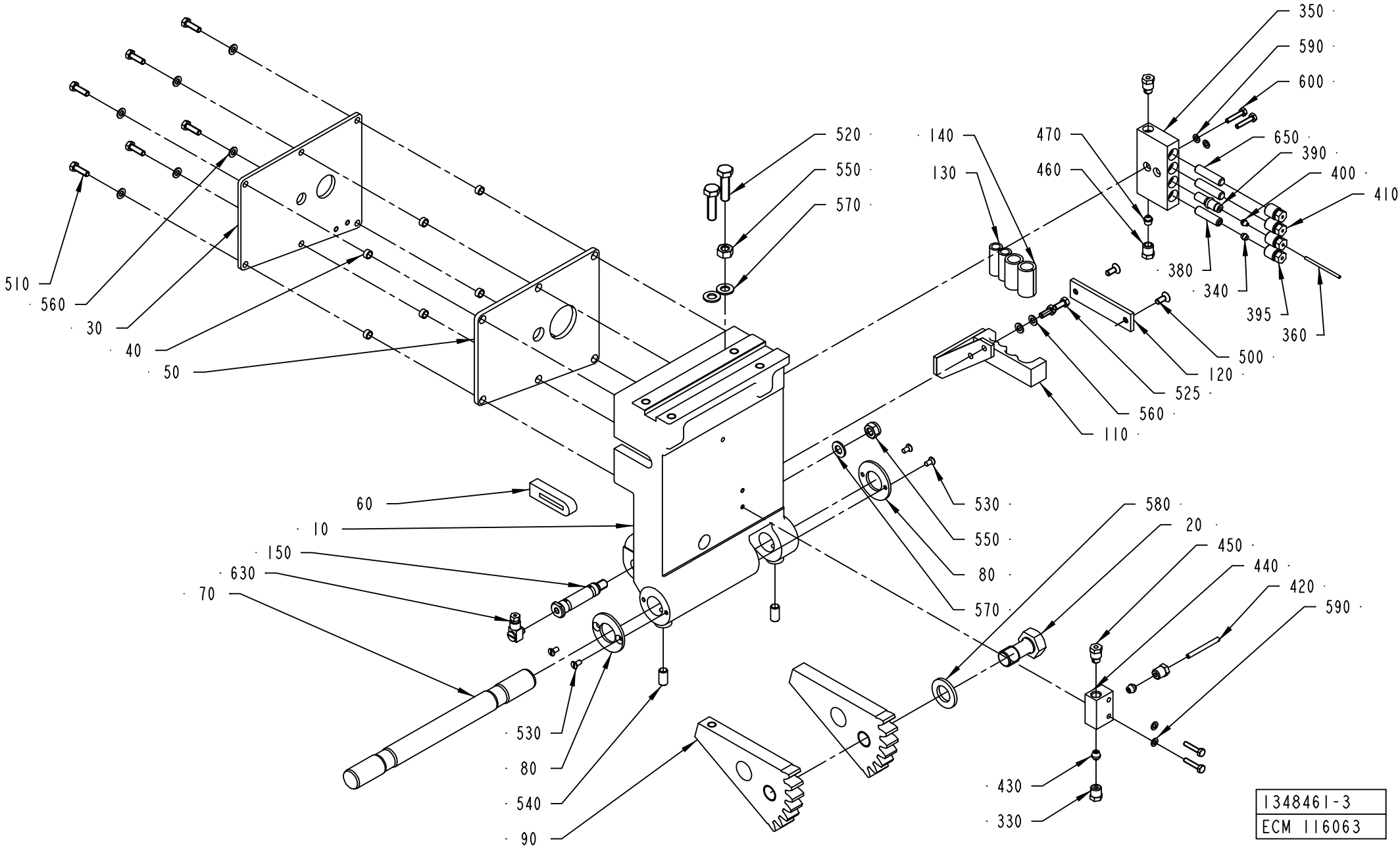

ECM: 271737 - 20060831
Group number: 1348461-0200
Assembly Drawing: 1348461-3_1_AA

This list covers pages from 4-214 to 4-217

Pos	Part No	UN	Qty	Description	Page No
A3/FLEX QC (See drawing on page: 4-216)					
030	1036485-0000		1	COVERING PLATE	
040	1036501-0000		6	SPACER	
050	1036484-0000		1	GASKET	
060	1036483-0000		1	SEAL	
390	90092-0052		1	METERING VALVE 10 MM3	
400	90028-0020		1	CONE TUBE 2,5MM	
510	312105-0329		6	SCREW M6S ISO 4017 M5X16 A480	
560	315105-0146		8	WASHER BRB 5,3X10 RFR	
650	90134-0052		2	PLUG DOSING BLOCK	
A3/FLEX NOQC (See drawing on page: 4-214)					
030	1036485-0000		1	COVERING PLATE	
040	1036501-0000		6	SPACER	
050	1036484-0000		1	GASKET	
060	1036483-0000		1	SEAL	
390	90092-0052		3	METERING VALVE 10 MM3	
400	90028-0020		3	CONE TUBE 2,5MM	
510	312105-0329		6	SCREW M6S ISO 4017 M5X16 A480	
560	315105-0146		8	WASHER BRB 5,3X10 RFR	
Common Parts					
010	1035878-0000		1	ARM RIGHT	
020	1037069-0000		1	SCREW	
070	1035788-0000		1	SHAFT	
080	536704-0000		2	WASHER	
090	1036156-0000		2	TOOTH PART	
110	1348196-0000		1	FASTENING PLATE	
120	1349868-0000		1	FASTENING PLATE	
130	1478000-0000		2	HOSE	
140	1478001-0000		2	HOSE	
150	1037853-0000		1	SHAFT	
330	90134-0038		2	BUSHING/NUT INLET/OUTLET 4 MM	
340	90028-0021		1	CONE TUBE 4 MM	
350	90032-0039		1	BLOCK 4 WAYS	
360	90166-0143	MM	1500	TUBE 2,5 MM PA,TRANSP.	
370	90266-0019	MM	500	PIPE	
380	90134-0051		1	SPACING COLLAR DOSING BLOCK	
395	90134-0040		1	BUSHING VALVE CONNECTION 4 MM	
410	90134-0039		3	BUSHING VALVE CONNECTION 2,5 MM	
420	90266-0165	MM	200	BRASS PIPE	
430	90028-0024		2	CONE TUBE 4 MM	
440	90032-0043		1	DISTRIBUTION BLOCK 3 WAYS	
450	90087-0019		2	PLUG M10X1 STAINLESS	
460	90134-0055		1	BUSHING/NUT INLET/OUTLET 6 MM	
470	90028-0025		1	CONE TUBE 6 MM	
500	312155-0327		2	SCREW DIN 7991 MF6S M5X12 A4 70	
520	312105-0455		2	SCREW M6S ISO 4017 M8X30 A480	
525	312105-0327		2	SCREW M6S ISO 4017 M5X12 A480	
530	312145-0287		4	SCREW ISO 2009 MFS M4X8 A4	
540	312318-0449		2	SCREW ISO4029 M8X16 A4	
550	312605-0318		1	HEXAGON NUT, M6M M8 A280	
570	315105-0165		1	WASHER BRB 8,4X16 RFR	
580	315105-0186		1	WASHER BRB 17X30 RFR	
590	315105-0136		4	WASHER BRB 4,3X9 RFR	
600	312105-0295		4	SCREW M6S ISO 4017 M4X20 A470	
630	90134-0058		1	CONNECTION	
640	312812-0318		1	HEXAGON NUT, NY-LOCK M8 A480	

CUTTING ARM RIGHT

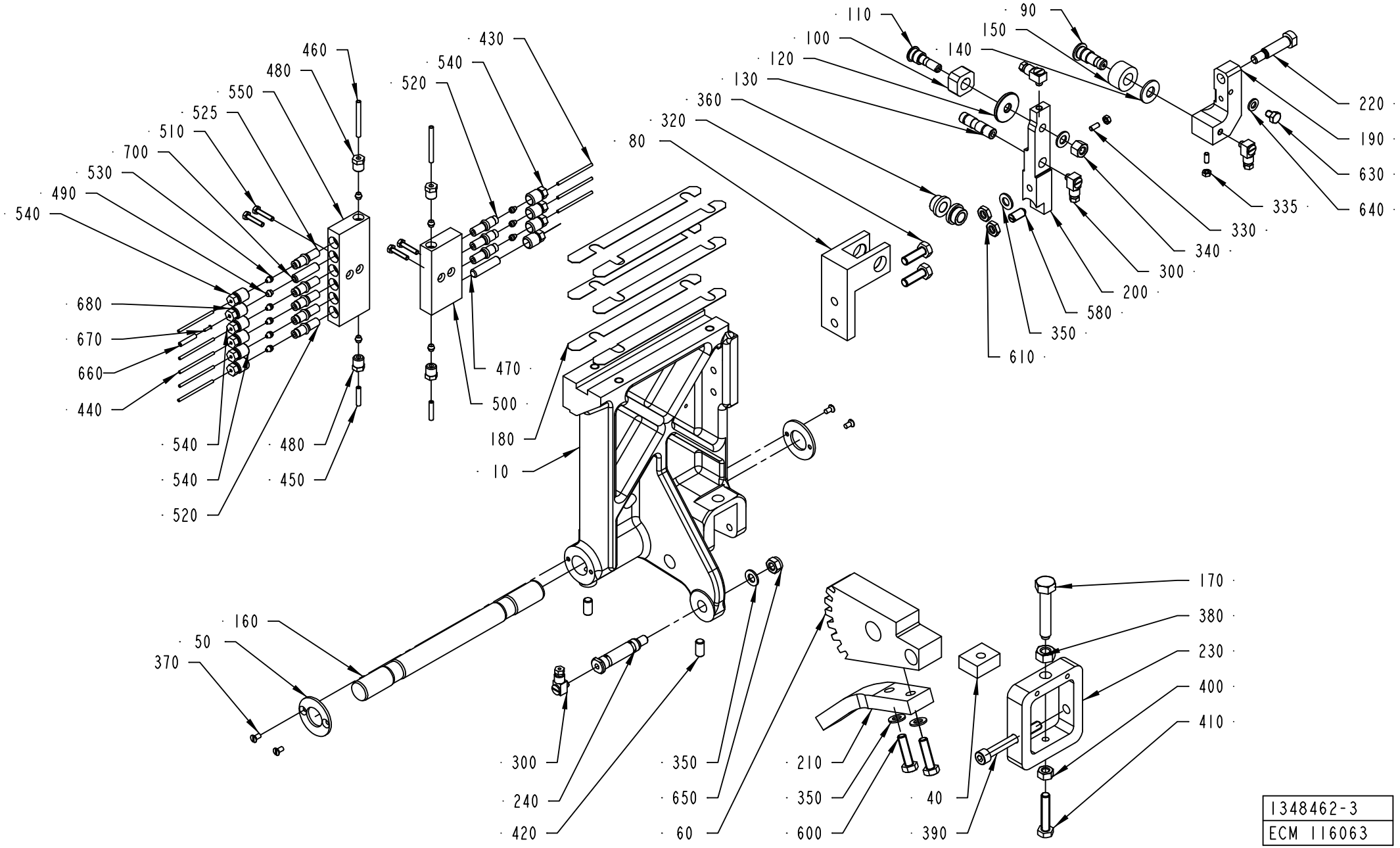

1348462-3
ECM 116063

ECM: 271738 - 20060831
Group number: 1348462-0200
Assembly Drawing: 1348462-3_1_AA

This list covers pages from 4-218 to 4-221

Pos	Part No	UN	Qty	Description	Page No
A3/FLEX NOQC (See drawing on page: 4-218)					
080	1036617-0000		1	BRACKET	
090	1036620-0000		1	SHAFT	
100	256628-0000		1	PIECE	
110	256629-0001		1	AXLE PIN	
120	441706-0000		1	WASHER	
130	1036615-0000		1	SHAFT	
140	1036616-0000		1	WASHER	
150	1036618-0000		1	ROLL	
190	1348672-0000		1	JOINT RIGHT	
200	1512315-0000		1	ARM RIGHT	
220	1348669-0000		1	SCREW	
300	90134-0058		4	CONNECTION	
320	312105-0453		2	SCREW M6S ISO 4017 M8X25 A480	
330	312318-0289		2	SCREW ISO4029 M4X10 A4	
335	312605-0312		2	HEXAGON NUT, M6M M4 A280	
340	312811-0318		1	NUT HEX.LOCK HELI COIL M8 SS	
350	315105-0165		5	WASHER BRB 8,4X16 RFR	
360	321101-0163		2	FLANGE BUSHING, 10X16X10 MM	
450	90166-0109	MM	600	TUBE 4 MM PA,TRANSP.	
470	90134-0052		1	PLUG DOSING BLOCK	
490	90028-0021		5	CONE TUBE 4 MM	
520	90092-0052		7	METERING VALVE 10 MM3	
525	90092-0054		1	METERING VALVE 50 MM3	
530	90028-0020		8	CONE TUBE 2,5MM	
540	90134-0039		9	BUSHING VALVE CONNECTION 2,5 MM	
580	90287-0112		1	SCREW SPRINGLOAD. SLOTTED HEAD M8X16	
610	312625-0318		2	HEXAGON THIN NUT, EN 24035 ML6M M8 A4	
630	312105-0362		1	SCREW M6S ISO 4017 M6X8 A480	
640	315105-0153		1	WASHER BRB 6,4X12 RFR	
660	90166-0109	MM	1000	TUBE 4 MM PA,TRANSP.	
670	90134-0031		1	SLEEVE FOR PLASTIC TUBE	
680	90134-0040		1	BUSHING VALVE CONNECTION 4 MM	
700	90134-0051		1	SPACING COLLAR DOSING BLOCK	
A3/FLEX TBA 0250SQ QC, A3/FLEX TBA 0200SQ QC (See drawing on page: 4-220)					
080	1338793-0000		1	BRACKET	
090	1036620-0000		1	SHAFT	
100	256628-0000		1	PIECE	
110	256629-0001		1	AXLE PIN	
120	441706-0000		1	WASHER	
130	1036615-0000		1	SHAFT	
140	1036616-0000		1	WASHER	
150	1036618-0000		1	ROLL	
190	1348672-0000		1	JOINT RIGHT	
200	1512315-0000		1	ARM RIGHT	
220	1348669-0000		1	SCREW	
300	90134-0058		4	CONNECTION	
320	312105-0453		2	SCREW M6S ISO 4017 M8X25 A480	
330	312318-0289		2	SCREW ISO4029 M4X10 A4	
335	312605-0312		2	HEXAGON NUT, M6M M4 A280	
340	312811-0318		1	NUT HEX.LOCK HELI COIL M8 SS	
350	315105-0165		5	WASHER BRB 8,4X16 RFR	
360	321101-0163		2	FLANGE BUSHING, 10X16X10 MM	
450	90166-0109	MM	600	TUBE 4 MM PA,TRANSP.	
470	90134-0052		3	PLUG DOSING BLOCK	
490	90028-0021		5	CONE TUBE 4 MM	
520	90092-0052		5	METERING VALVE 10 MM3	
525	90092-0054		1	METERING VALVE 50 MM3	
530	90028-0020		6	CONE TUBE 2,5MM	
540	90134-0039		9	BUSHING VALVE CONNECTION 2,5 MM	
580	90287-0112		1	SCREW SPRINGLOAD. SLOTTED HEAD M8X16	
610	312625-0318		2	HEXAGON THIN NUT, EN 24035 ML6M M8 A4	
630	312105-0362		1	SCREW M6S ISO 4017 M6X8 A480	
640	315105-0153		1	WASHER BRB 6,4X12 RFR	
660	90166-0109	MM	1000	TUBE 4 MM PA,TRANSP.	
670	90134-0031		1	SLEEVE FOR PLASTIC TUBE	
680	90134-0040		1	BUSHING VALVE CONNECTION 4 MM	
700	90134-0051		1	SPACING COLLAR DOSING BLOCK	
A3/FLEX TBA 0500B QC, A3/FLEX TBA 1000B QC, A3/FLEX TBA 0200B QC, A3/FLEX TBA 0250B QC, A3/FLEX TBA 0330S QC, A3/FLEX TBA 1890S QC, A3/FLEX TBA 2000S QC, A3/FLEX TBA 0250S QC, A3/FLEX TBA 0200M QC, A3/FLEX TPA 0750SQ QC, A3/FLEX TPA 1000SQ QC, A3/FLEX TPA 0200SQ QC, A3/FLEX TPA 0250SQ QC (See drawing on page: 4-220)					
080	1036617-0000		1	BRACKET	
090	1036620-0000		1	SHAFT	
100	256628-0000		1	PIECE	
110	256629-0001		1	AXLE PIN	
120	441706-0000		1	WASHER	
130	1036615-0000		1	SHAFT	
140	1036616-0000		1	WASHER	
150	1036618-0000		1	ROLL	
190	1348672-0000		1	JOINT RIGHT	
200	1512315-0000		1	ARM RIGHT	
220	1348669-0000		1	SCREW	
300	90134-0058		4	CONNECTION	

Machine Type | Group Description | Used-In | Group Number | Page No

CUTTING ARM RIGHT

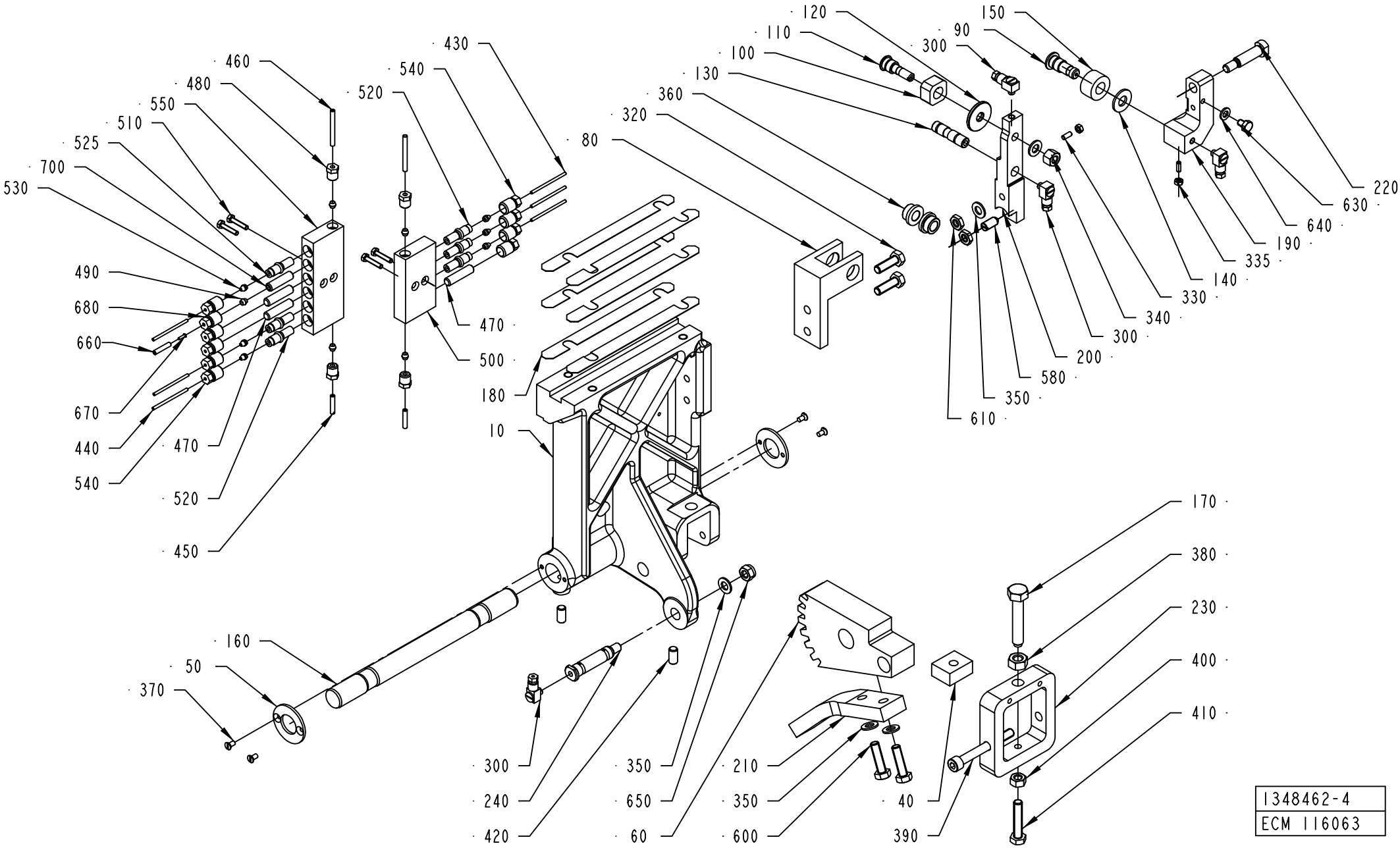

1348462-4
ECM 116063

ECM: 271738 - 20060831
Group number: 1348462-0200
Assembly Drawing: 1348462-4_1_AA

This list covers pages from 4-218 to 4-221

Pos	Part No	UN	Qty	Description	Page No
A3/FLEX TBA 0500B QC, A3/FLEX TBA 1000B QC, A3/FLEX TBA 0200B QC, A3/FLEX TBA 0250B QC,					
A3/FLEX TBA 0330S QC, A3/FLEX TBA 1890S QC, A3/FLEX TBA 2000S QC, A3/FLEX TBA 0250S QC,					
A3/FLEX TBA 0200M QC, A3/FLEX TPA 0750SQ QC, A3/FLEX TPA 1000SQ QC, A3/FLEX TPA 0200SQ QC,					
A3/FLEX TPA 0250SQ QC (Cont'd) (See drawing on page: 4-220)					
330	312318-0289		2	SCREW ISO4029 M4X10 A4	
335	312605-0312		2	HEXAGON NUT, M6M M4 A280	
340	312811-0318		1	NUT HEX.LOCK HELI COIL M8 SS	
350	315105-0165		5	WASHER BRB 8,4X16 RFR	
360	321101-0163		2	FLANGE BUSHING, 10X16X10 MM	
450	90166-0109	MM	600	TUBE 4 MM PA,TRANSP.	
470	90134-0052		3	PLUG DOSING BLOCK	
490	90028-0021		5	CONE TUBE 4 MM	
520	90092-0052		5	METERING VALVE 10 MM3	
525	90092-0054		1	METERING VALVE 50 MM3	
530	90028-0020		6	CONE TUBE 2,5MM	
540	90134-0039		9	BUSHING VALVE CONNECTION 2,5 MM	
580	90287-0112		1	SCREW SPRINGLOAD. SLOTTED HEAD M8X16	
610	312625-0318		2	HEXAGON THIN NUT, EN 24035 ML6M M8 A4	
630	312105-0362		1	SCREW M6S ISO 4017 M6X8 A480	
640	315105-0153		1	WASHER BRB 6,4X12 RFR	
660	90166-0109	MM	1000	TUBE 4 MM PA,TRANSP.	
670	90134-0031		1	SLEEVE FOR PLASTIC TUBE	
680	90134-0040		1	BUSHING VALVE CONNECTION 4 MM	
700	90134-0051		1	SPACING COLLAR DOSING BLOCK	
Common Parts					
010	2536047-0000		1	ARM	
040	14729-0000		1	NUT	
050	536704-0000		2	WASHER	
060	1036155-0000		1	TOOTH PART	
160	1035788-0000		1	SHAFT	
170	32957-0000		1	SCREW	
180	1037254-0000		6	SHIM	
210	1484320-0000		1	ROD	
230	1038867-0000		1	BOW CLAMP	
240	1037853-0000		1	SHAFT	
370	312145-0287		4	SCREW ISO 2009 MFS M4X8 A4	
380	312635-0320		1	NUT M6M 10X1 STAINLESS A2 80	
390	312115-0465		1	SCREW ISO4762 M8X70 A4 80	
400	312605-0318		1	HEXAGON NUT, M6M M8 A280	
410	312109-0459		1	SCREW M6S ISO 4017 M8X40 A480	
420	312318-0449		2	SCREW ISO4029 M8X16 A4	
430	90166-0143	M	3	TUBE 2,5 MM PA,TRANSP.	
440	90266-0019	MM	200	PIPE	
460	90266-0165	MM	100	BRASS PIPE	
480	90134-0038		4	BUSHING/NUT INLET/OUTLET 4 MM	
500	90032-0039		1	BLOCK 4 WAYS	
510	312105-0295		4	SCREW M6S ISO 4017 M4X20 A470	
550	90032-0040		1	BLOCK 6 WAYS	
600	312105-0455		2	SCREW M6S ISO 4017 M8X30 A480	
650	312812-0318		1	HEXAGON NUT, NY-LOCK M8 A480	

Machine Type | Group Description | Used-In | Group Number | Page No

SCISSOR ARM LINK

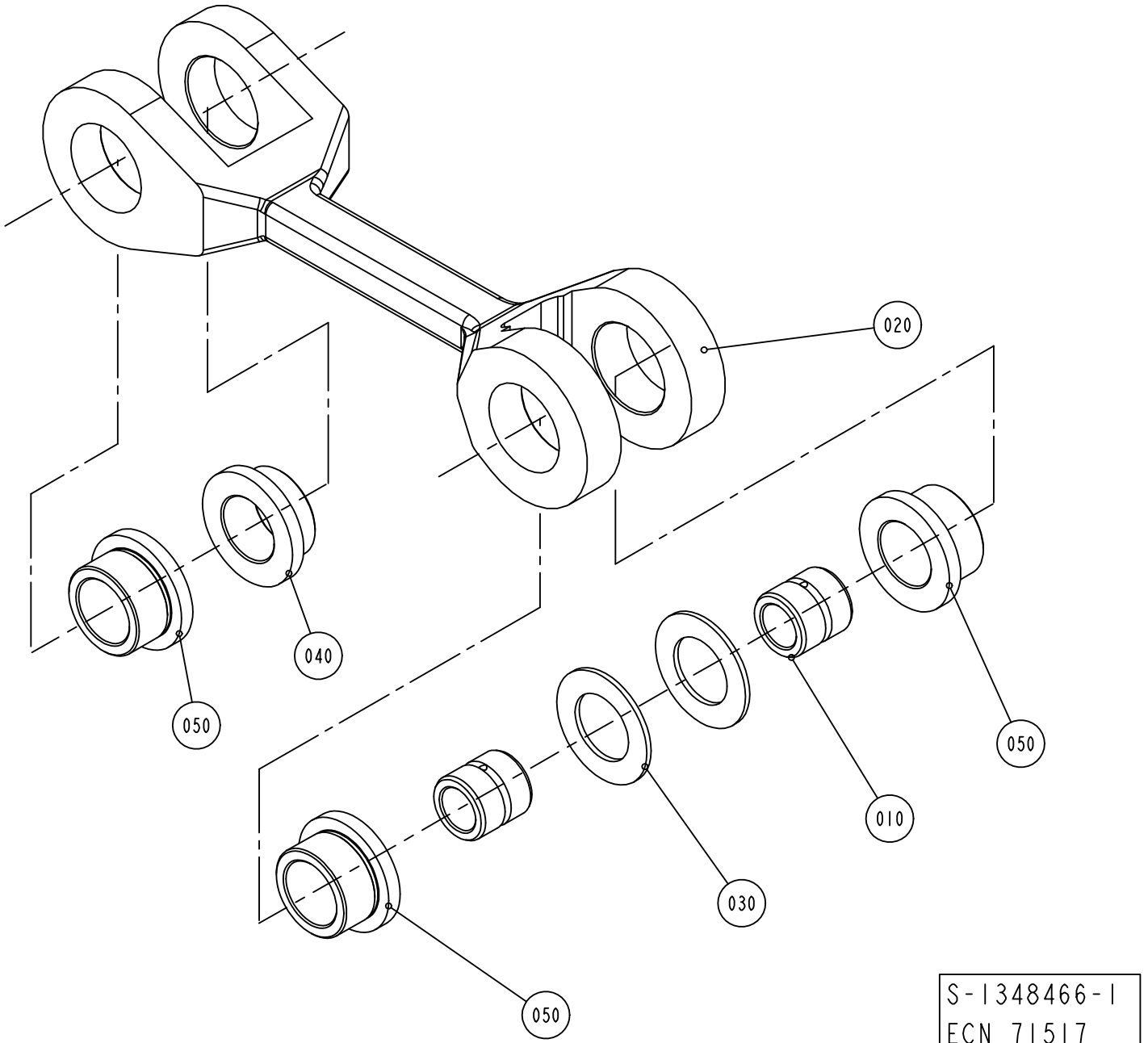

ECM: 191287 - 20041104
Group number: 1348466-0100
Assembly Drawing: 1348466-1_1_AA

Pos	Part No	UN	Qty	Description	Page No
-					
010	1037849-0000		2	SLEEVE	
020	1037851-0000		1	LINK	
030	1038021-0000		2	WASHER	
040	321101-0222		1	FLANGE BUSHING, 18X25X12	
050	321101-0223		3	FLANGE BUSHING, 18X25X16	

Pos	Part No	UN	Qty	Description	Page No

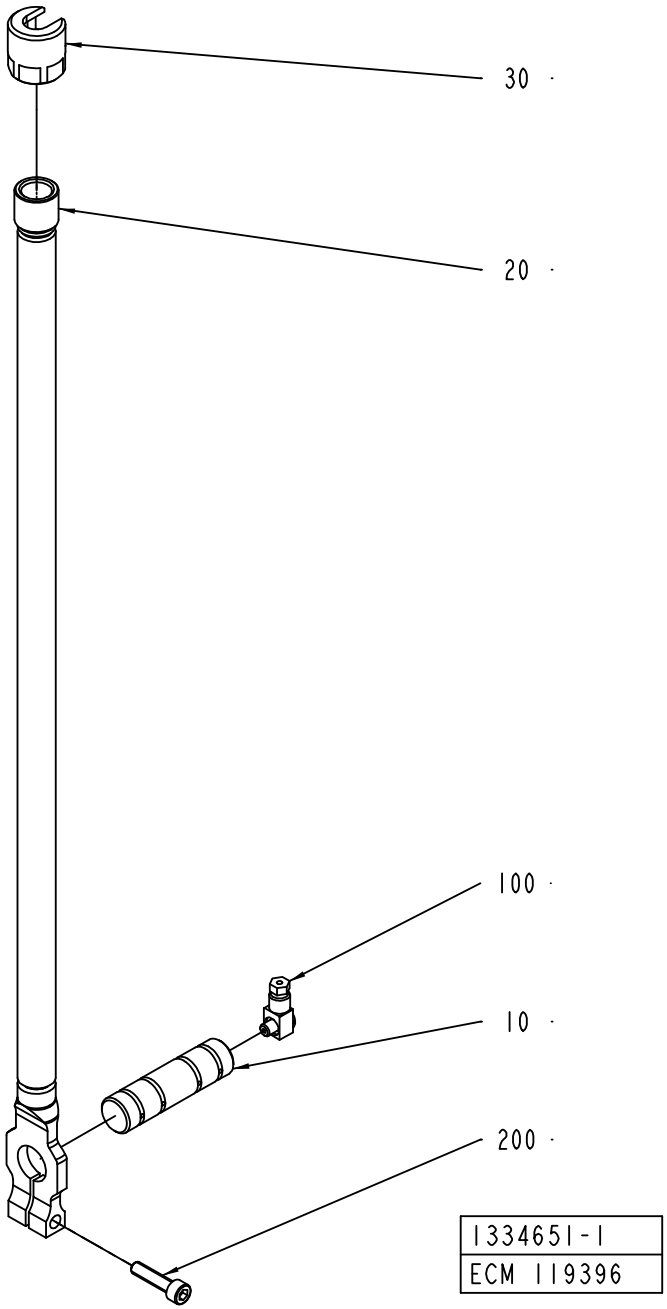
30
20
100
10
200
1334651-1
ECM 119396

ECM: 189466 - 20050103
Group number: 1334651-0100
Assembly Drawing: 1334651-1_1_AA

Pos	Part No	UN	Qty	Description	Page No
-					
010	1037852-0000		1	SHAFT	
020	1334652-0000		1	LINK	
030	1334654-0000		1	CONNECTION CLAMP	
040	312115-0372		1	SCREW ISO4762 M6X25 A4 80	
050	90134-0058		1	CONNECTION	

Pos	Part No	UN	Qty	Description	Page No

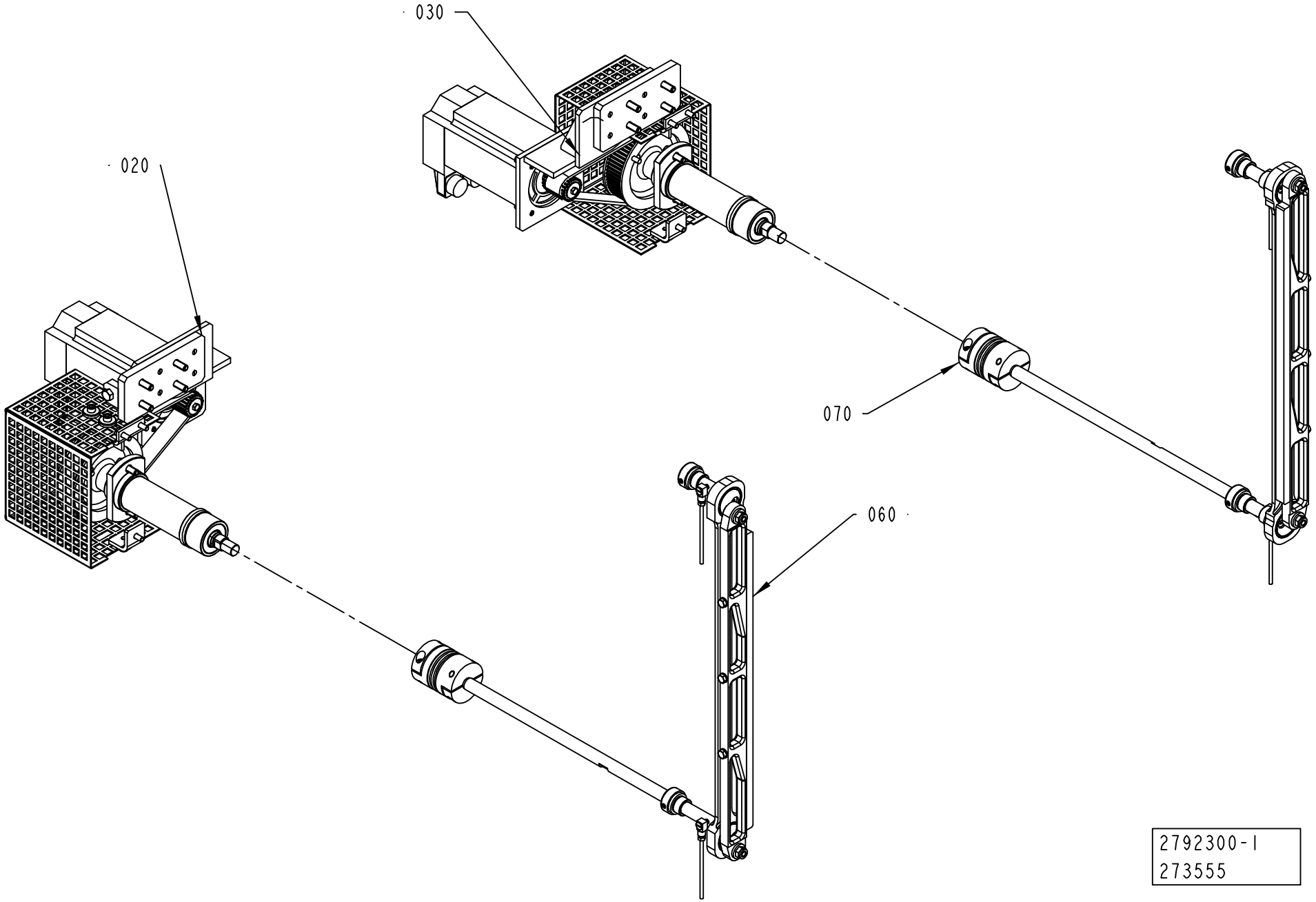
030
020
070
060
2792300-1
273555

ECM: 273560 - 20061101
Group number: 2792300-0100
Assembly Drawing: 2792300-1_1_AA

Pos	Part No	UN	Qty	Description	Page No
-					
020	2792301-0100		1	DRIVE UNIT	**4-229**
030	2792302-0100		1	DRIVE UNIT	**4-231**
060	2503665-0100		1	DESIGN CORRECTION DEVICE LEFT	**4-233**
070	2503666-0100		1	DESIGN CORRECTION DEVICE RIGHT	**4-235**

Pos	Part No	UN	Qty	Description	Page No

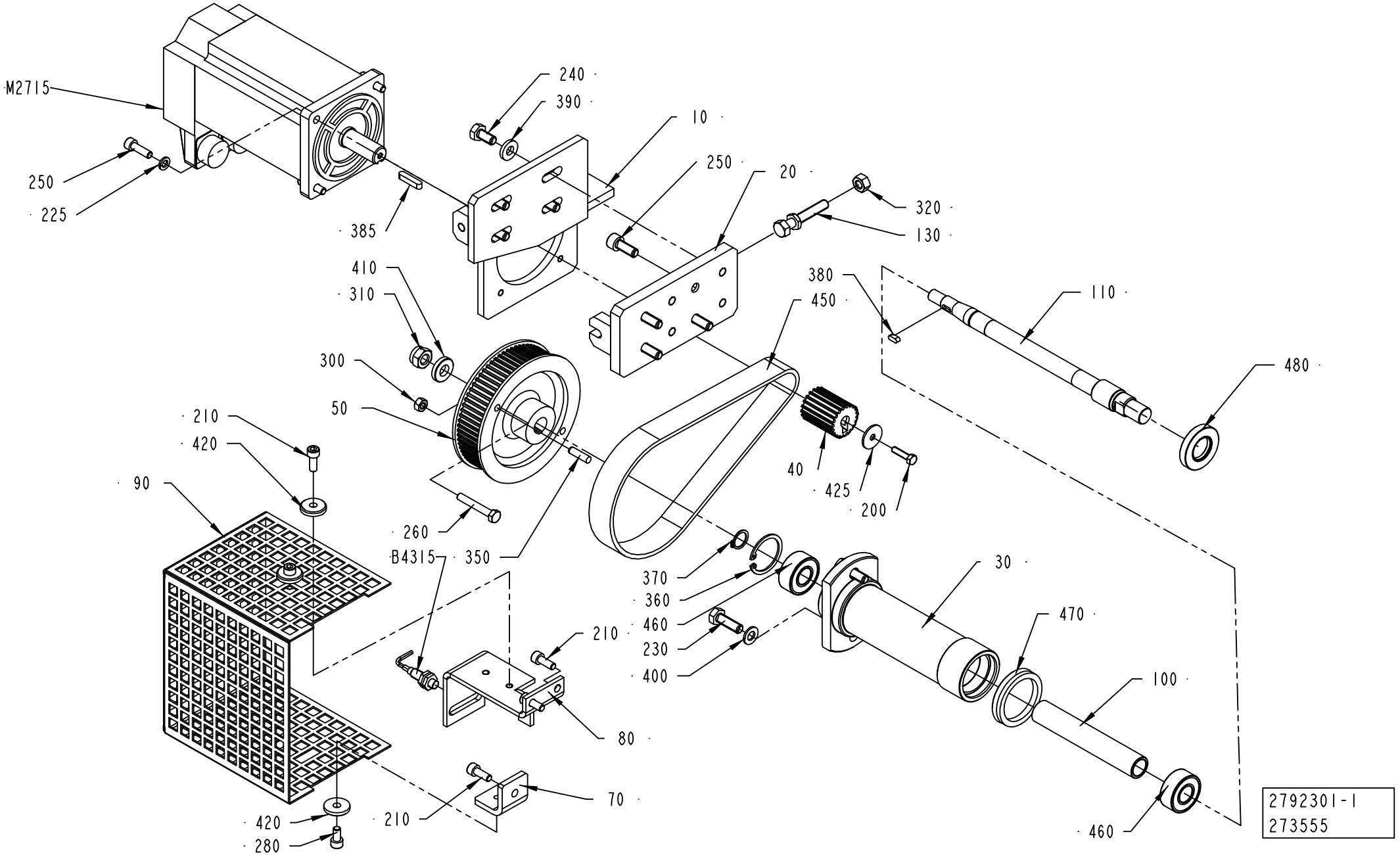
M2715
250
225
240
390
385
10
250
20
320
130
410
310
300
50
380
450
110
480
210
420
90
260
B4315
350
40
425
200
370
360
460
230
400
30
470
100
210
80
70
420
280
210
460
2792301-1
273555

ECM: 273558 - 20061101
Group number: 2792301-0100
Assembly Drawing: 2792301-1_1_AA

Pos	Part No	UN	Qty	Description	Page No
-					
010	2792304-0000		1	PLATE	
020	2650713-0000		1	PLATE	
030	2506334-0000		1	SUPPORT	
040	2792306-0000		1	TOOTHED PULLEY	
050	2652891-0000		1	TOOTHED PULLEY	
070	2506337-0000		1	ANGLE BRACKET	
080	2683976-0000		1	SUPPORT	
090	2506336-0000		1	PROTECTIVE COVER	
100	2506392-0000		1	SPACER	
110	2506338-0000		1	SHAFT	
130	2650717-0000		1	SCREW	
200	312105-0331		1	SCREW M6S ISO 4017 M5X20 A480	
210	312115-0368		5	SCREW ISO4762 M6X16 A4 80	
225	315402-0156		4	LOCK WASHER FBB 6,5	
230	312105-0453		2	SCREW M6S ISO 4017 M8X25 A480	
240	312105-0449		8	SCREW M6S ISO 4017 M8X16 A480	
250	312115-0370		4	SCREW ISO4762 M6X20 A4 80	
260	312109-0378		1	SCREW M6S ISO 4017 M6X40 A480	
280	312115-0366		2	SCREW ISO4762 M6X12 A4 80	
300	312605-0316		1	HEXAGON NUT, M6M M6 A280	
310	312812-0320		1	HEXAGON NUT, NY-LOCK M10 A480	
320	312605-0318		1	HEXAGON NUT, M6M M8 A280	
350	311103-0354		1	PARALLEL PIN ISO 2338 6M6X22 A1	
360	315753-0124		1	RETAINING RING FOR BORE DIN 472 35 A2	
370	315751-0112		1	RETAINING RING FOR SHAFT DIN 471 15 A2	
380	315701-0165		1	PARALLEL KEY W. ROUND ENDS 4X4X10 MM	
385	315701-0205		1	PARALLEL KEY W. ROUND ENDS 5X5X30 MM	
390	1558447-0000		4	SPACER	
400	315105-0165		2	WASHER BRB 8,4X16 RFR	
410	315115-0173		1	WASHER PLAIN, TBRB 10,5/22 H=4	
420	315125-0153		3	WASHER TBRSB 6,4X22X4 A4	
425	90005-0125		1	WASHER PLAIN ROUND 5,5/22, H=1,5 FZB	
450	90459-3759		1	TIMING BELT 5MR-550-25	
460	90214-0194		2	SPHERICAL BALL BEARING, 15X35X1 MM	
470	90091-0138		1	V-RINGS 40X50X9 MM V-45A	
480	90091-0436		1	RADIAL SEAL 20X40X7 MM DUST LIP	
B4315	90458-0138		1	PROX. SWITCH, E2EG-X1R5B1-5M	
M2715	90459-7178		1	SERVO MOTOR	

Pos	Part No	UN	Qty	Description	Page No

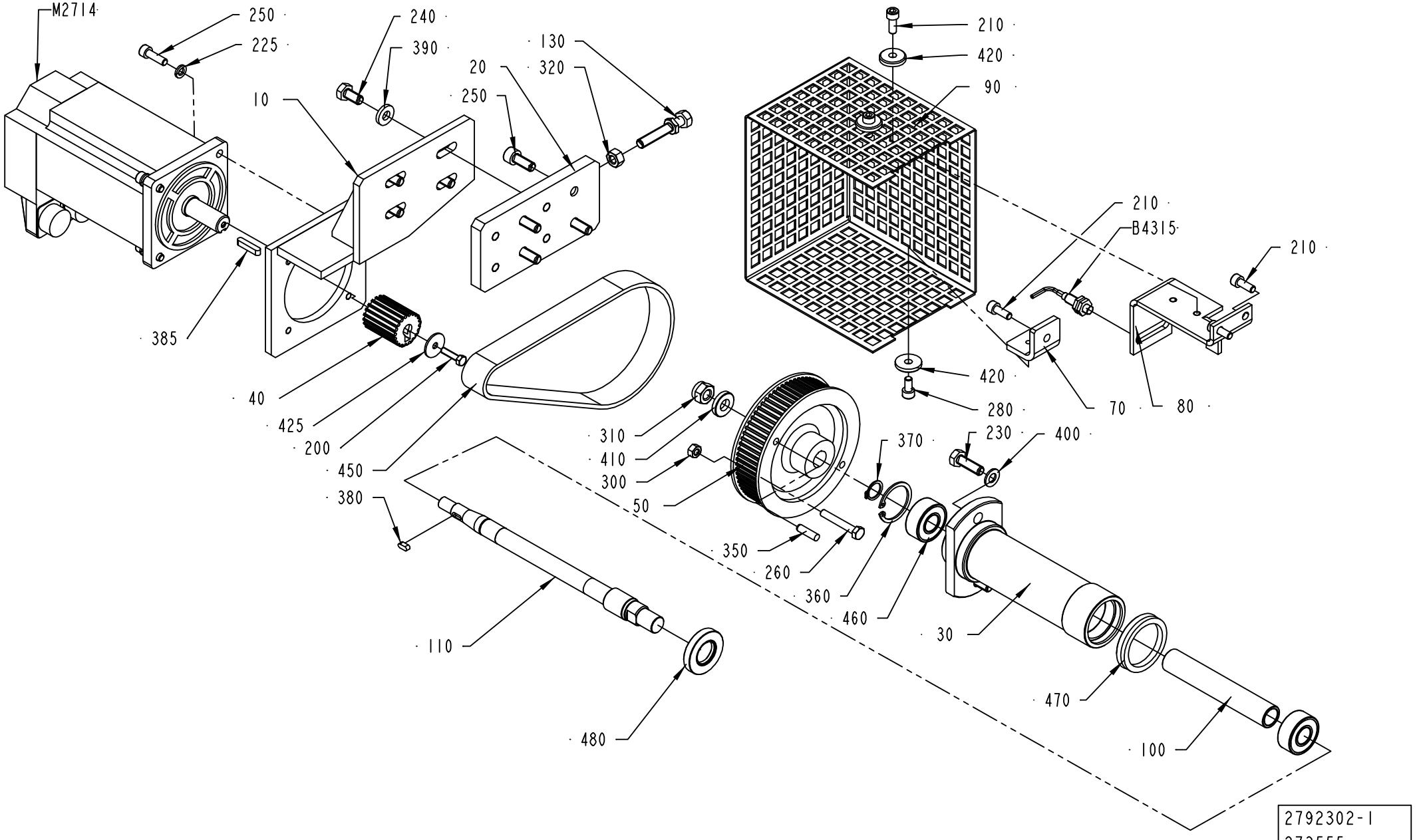
M2714
250
225
240
390
130
320
20
250
10
385
40
425
200
450
380
110
480
310
410
300
50
350
260
360
460
370
230
400
30
470
100
210
420
90
210
B4315
210
420
280
70
80
2792302-1
273555

ECM: 273559 - 20061101
Group number: 2792302-0100
Assembly Drawing: 2792302-1_1_AA

Pos	Part No	UN	Qty	Description	Page No
-					
010	2792305-0000		1	PLATE	
020	2650713-0000		1	PLATE	
030	2506334-0000		1	SUPPORT	
040	2792306-0000		1	TOOTHED PULLEY	
050	2652891-0000		1	TOOTHED PULLEY	
070	2506337-0000		1	ANGLE BRACKET	
080	2683976-0000		1	SUPPORT	
090	2506336-0000		1	PROTECTIVE COVER	
100	2506392-0000		1	SPACER	
110	2506338-0000		1	SHAFT	
130	2650717-0000		1	SCREW	
200	312105-0331		1	SCREW M6S ISO 4017 M5X20 A480	
210	312115-0368		5	SCREW ISO4762 M6X16 A4 80	
225	315402-0156		4	LOCK WASHER FBB 6,5	
230	312105-0453		2	SCREW M6S ISO 4017 M8X25 A480	
240	312105-0449		4	SCREW M6S ISO 4017 M8X16 A480	
250	312115-0370		8	SCREW ISO4762 M6X20 A4 80	
260	312109-0378		1	SCREW M6S ISO 4017 M6X40 A480	
280	312115-0366		2	SCREW ISO4762 M6X12 A4 80	
300	312605-0316		1	HEXAGON NUT, M6M M6 A280	
310	312812-0320		1	HEXAGON NUT, NY-LOCK M10 A480	
320	312605-0318		1	HEXAGON NUT, M6M M8 A280	
350	311103-0354		1	PARALLEL PIN ISO 2338 6M6X22 A1	
360	315753-0124		1	RETAINING RING FOR BORE DIN 472 35 A2	
370	315751-0112		1	RETAINING RING FOR SHAFT DIN 471 15 A2	
380	315701-0165		1	PARALLEL KEY W. ROUND ENDS 4X4X10 MM	
385	315701-0203		1	PARALLEL KEY W. ROUND ENDS 5X5X25 MM	
390	1558447-0000		4	SPACER	
400	315105-0165		2	WASHER BRB 8,4X16 RFR	
410	315115-0173		1	WASHER PLAIN, TBRB 10,5/22 H=4	
420	315125-0153		3	WASHER TBRSB 6,4X22X4 A4	
425	90005-0125		1	WASHER PLAIN ROUND 5,5/22, H=1,5 FZB	
450	90459-3759		1	TIMING BELT 5MR-550-25	
460	90214-0194		2	SPHERICAL BALL BEARING, 15X35X1 MM	
470	90091-0138		1	V-RINGS 40X50X9 MM V-45A	
480	90091-0436		1	RADIAL SEAL 20X40X7 MM DUST LIP	
B4315	90458-0138		1	PROX. SWITCH, E2EG-X1R5B1-5M	
M2714	90459-7178		1	SERVO MOTOR	

Pos	Part No	UN	Qty	Description	Page No

DESIGN CORRECTION DEVICE LEFT

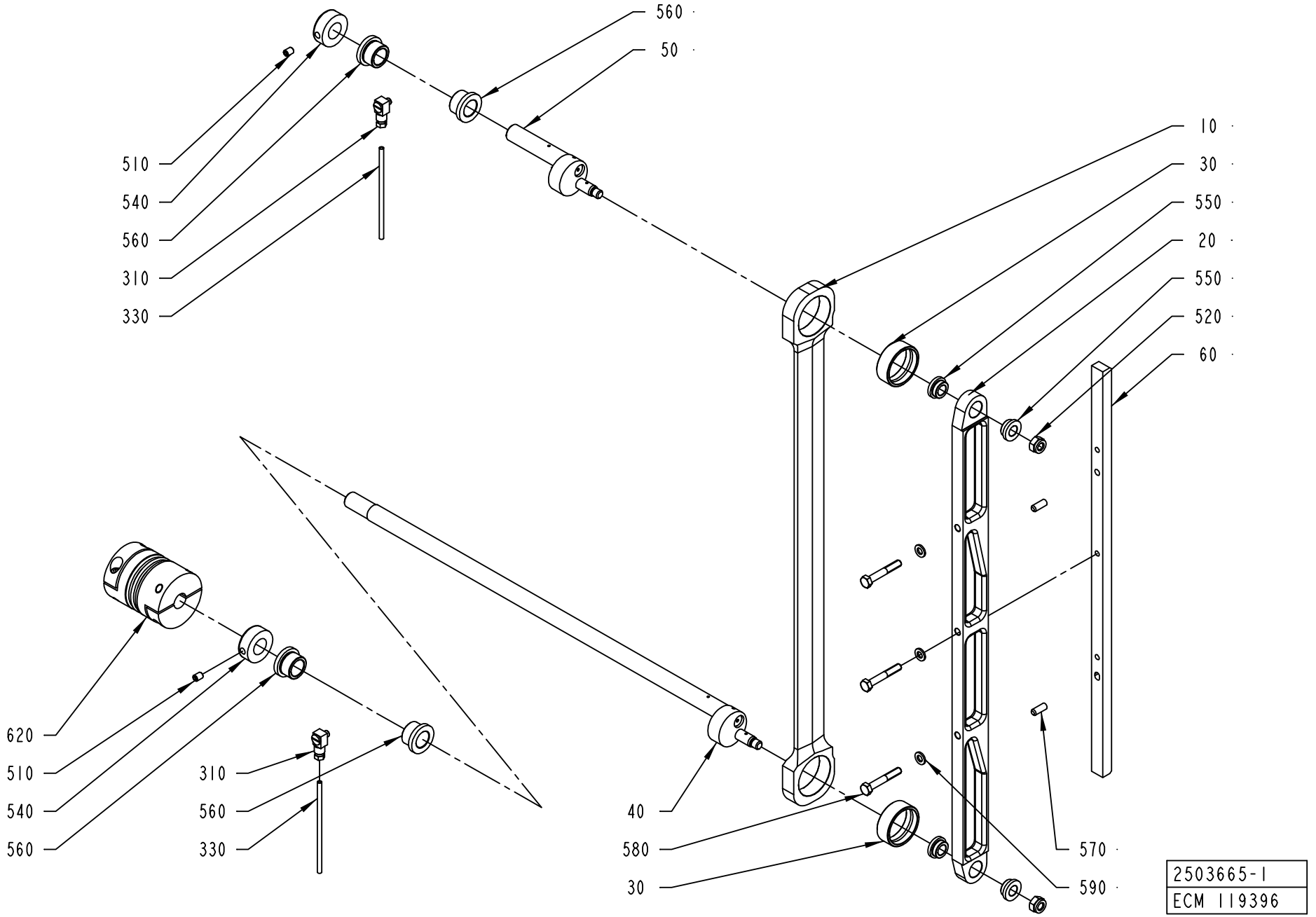

ECM: 189467 - 20050103
Group number: 2503665-0100
Assembly Drawing: 2503665-1_1_AA

Pos	Part No	UN	Qty	Description	Page No
-					
010	2508406-0000		1	STRUT	
020	2534851-0000		1	BAR	
030	1255117-0000		2	PLAIN BEARING	
040	2503669-0000		1	ECCENTRIC SHAFT	
050	2506340-0000		1	ECCENTRIC SHAFT	
060	1512998-0000		1	FOLDING FLAP CAM	
310	90134-0068		2	CONNECTION	
330	90266-0165	MM	1300	BRASS PIPE	
510	312318-0362		2	SCREW ISO4029 M6X8 A4	
520	312812-0318		2	HEXAGON NUT, NY-LOCK M8 A480	
540	315742-0112		2	RETAINING RING 16 SMS 199 RFR	
550	321101-0162		4	FLANGE BUSHING, 10X16X8 MM	
560	321101-0203		4	FLANGE BUSHING, 16X22X16 MM	
570	311103-0351		2	PARALLEL PIN ISO 2338 6M6X16 A1	
580	312105-0378		3	SCREW M6S ISO 4014 M6X40 A480	
590	315105-0153		3	WASHER BRB 6,4X12 RFR	
620	90459-1733		1	BELLOW COUPLING, 15X15 MM	

Pos	Part No	UN	Qty	Description	Page No

DESIGN CORRECTION DEVICE RIGHT

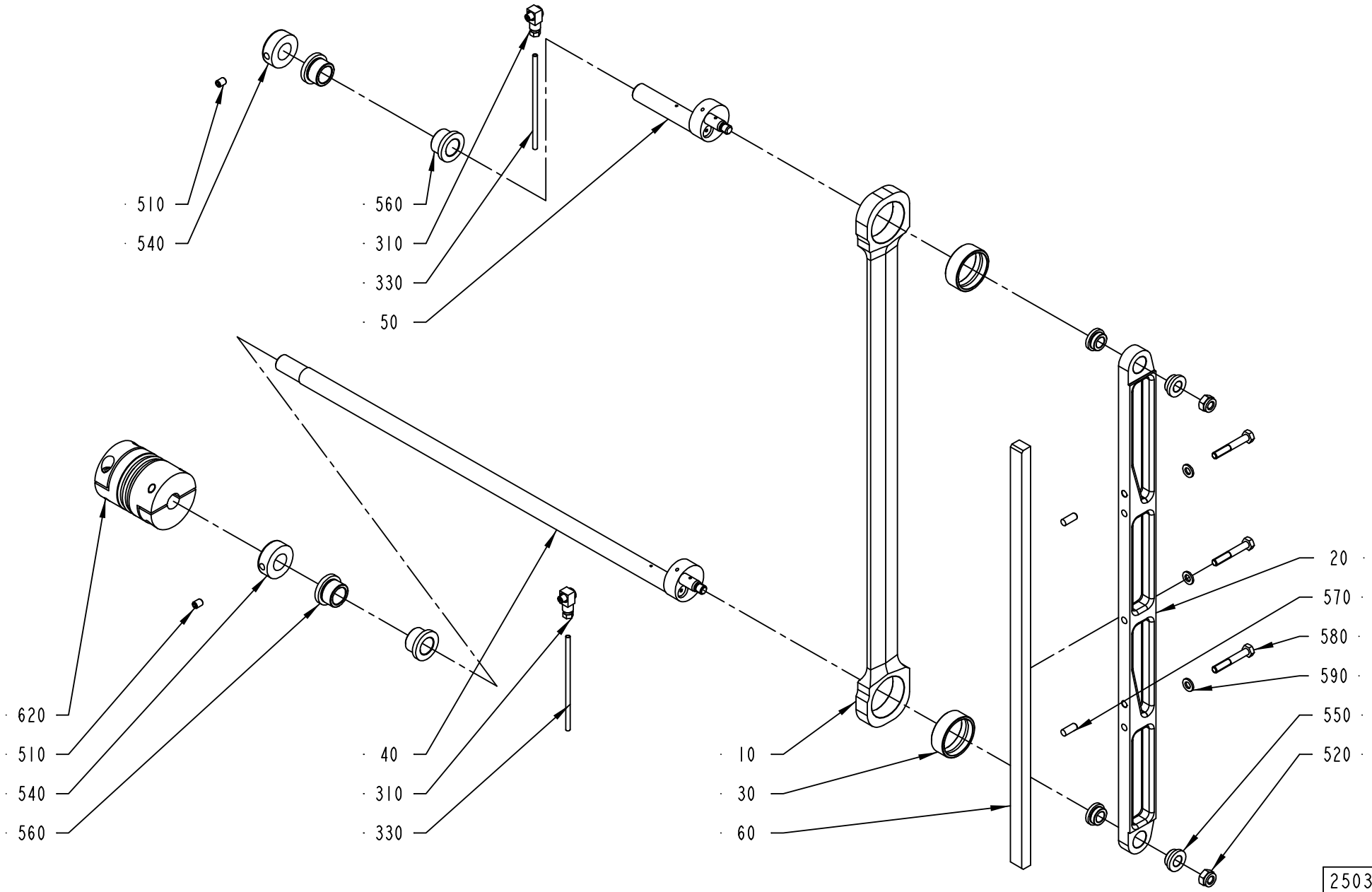

2503666-1
ECM 119396

ECM: 189481 - 20050103
Group number: 2503666-0100
Assembly Drawing: 2503666-1_1_AA

Pos	Part No	UN	Qty	Description	Page No
-					
010	2508406-0000		1	STRUT	
020	2534851-0000		1	BAR	
030	1255117-0000		2	PLAIN BEARING	
040	2503669-0000		1	ECCENTRIC SHAFT	
050	2506340-0000		1	ECCENTRIC SHAFT	
060	1512998-0000		1	FOLDING FLAP CAM	
310	90134-0068		2	CONNECTION	
330	90266-0165	MM	1300	BRASS PIPE	
510	312318-0362		2	SCREW ISO4029 M6X8 A4	
520	312812-0318		2	HEXAGON NUT, NY-LOCK M8 A480	
540	315742-0112		2	RETAINING RING 16 SMS 199 RFR	
550	321101-0162		4	FLANGE BUSHING, 10X16X8 MM	
560	321101-0203		4	FLANGE BUSHING, 16X22X16 MM	
570	311103-0351		2	PARALLEL PIN ISO 2338 6M6X16 A1	
580	312105-0378		3	SCREW M6S ISO 4014 M6X40 A480	
590	315105-0153		3	WASHER BRB 6,4X12 RFR	
620	90459-1733		1	BELLOW COUPLING, 15X15 MM	

Pos	Part No	UN	Qty	Description	Page No

Machine Type | Group Description | Used-In | Group Number | Page No

CABLE CONNECTION

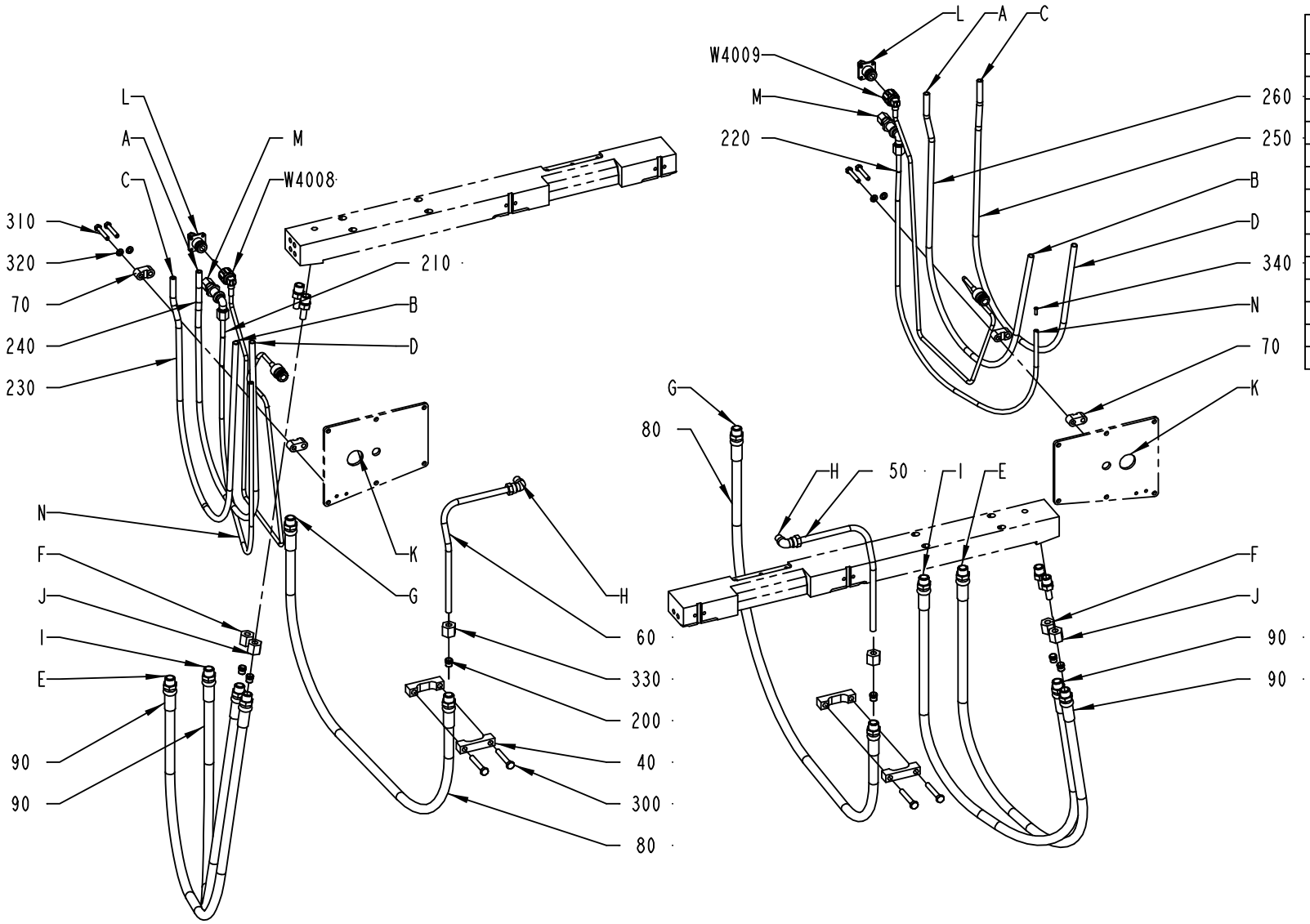

	CONNECTIONS
A	WATER OUT FRAME
B	WATER IN CARRIER
C	WATER IN FRAME
D	WATER OUT CARRIER
E	HYDRAULIC OIL FRAME PRESSURE SIDE
F	HYDRAULIC OIL CARRIER PRESSURE SIDE (CATCH OPEN)
G	HYDRAULIC OIL FRAME CUT SIDE
H	HYDRAULIC OIL CARRIER CUT SIDE
I	HYDRAULIC OIL FRAME PRESSURE SIDE
J	HYDRAULIC OIL CARRIER PRESSURE SIDE (CATCH CLOSE)
K	CONNECTION TRANSFORMER
L	CONNECTION SUPPLY FRAME
M	CENTRAL LUBRIFICATION OUT FRAME
N	CENTRAL LUBRIFICATION IN PRESSURE ARM

2503661-1
ECM 119396

ECM: 261259 - 20060704
Group number: 2503661-0100
Assembly Drawing: 2503661-1_1_AA

Pos	Part No	UN	Qty	Description	Page No
A3/FLEX					
070	464368-0000		4	CRAMP	
090	1517348-0000		4	HOSE	
200	90030-0098		12	ACCESSORIES, FERRULE 8	
230	90166-0123	MM	1440	HOSE	
240	90166-0123	MM	1390	HOSE	
250	90166-0123	MM	1440	HOSE	
260	90166-0123	MM	1390	HOSE	
310	312109-0335		4	SCREW M6S ISO 4017 M5X30 A480	
320	315105-0146		4	WASHER BRB 5,3X10 RFR	
330	342703-0208		12	NUT, PIPES & CONNECTORS,NUT M-8 SS	
W4008	2562736-0001		1	COAXIAL CABLE	
W4009	2562736-0001		1	COAXIAL CABLE	
Common Parts					
040	1129599-0000		4	CRAMP	
050	1038828-0000		1	PIPE	
060	1038829-0000		1	PIPE	
080	2510787-0000		2	HOSE	
210	90166-0108	MM	960	TUBE 6 MM PA,TRANSP.	
220	90166-0108	MM	960	TUBE 6 MM PA,TRANSP.	
300	312105-0378		4	SCREW M6S ISO 4014 M6X40 A480	
340	90134-0030		4	SLEEVE FOR PLASTIC TUBE	
350	352113-0101		12	CLIP STRIP, 92X2,5 MM	

Pos	Part No	UN	Qty	Description	Page No

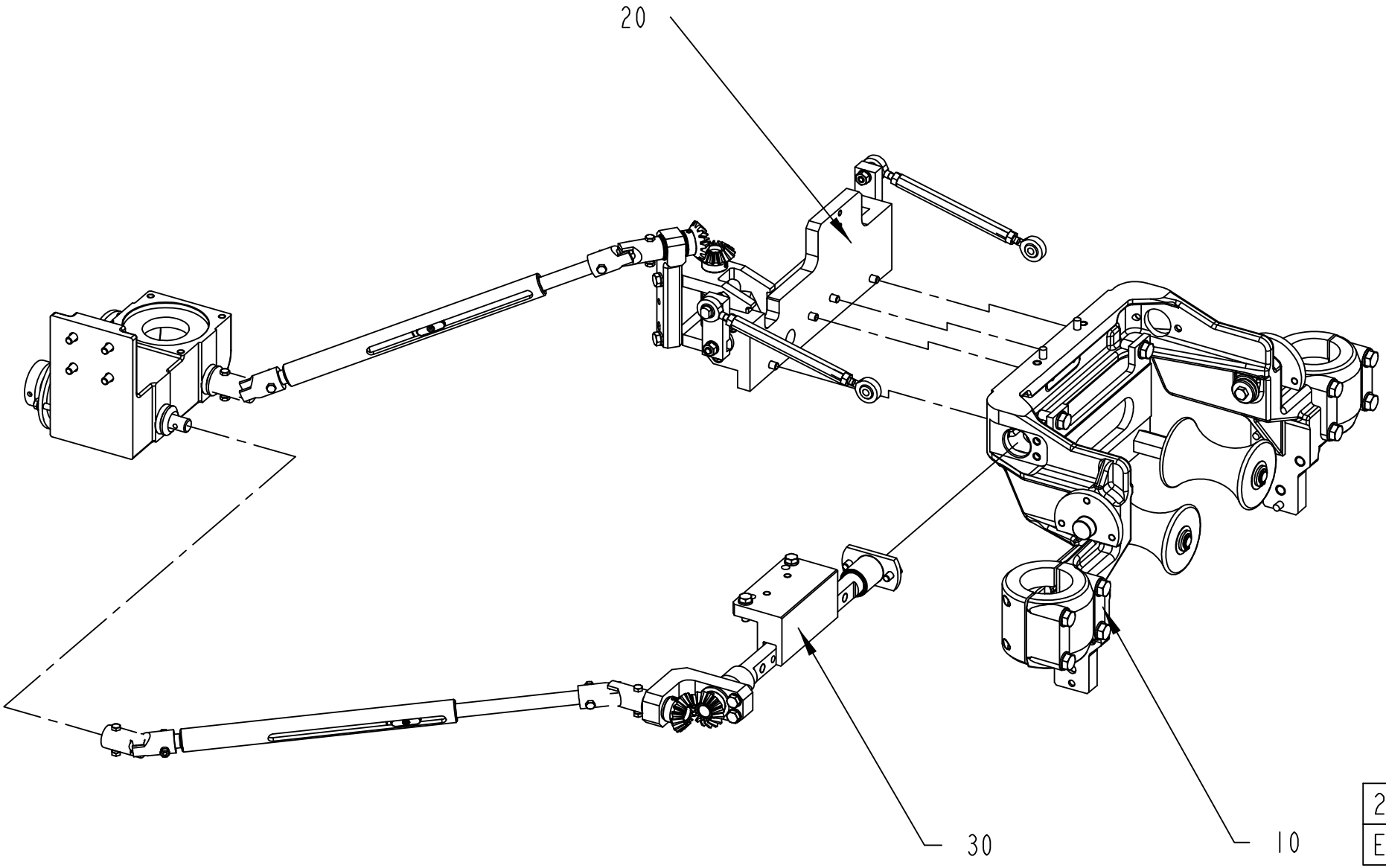
20
30
10
2613646-1
ECM 163206

ECM: 163211 - 20050101
Group number: 2613646-0100
Assembly Drawing: 2613646-1_1_AB

Pos	Part No	UN	Qty	Description	Page No
-					
10	2613644-0100		1	CANTILEVER	**4-241**
20	2597330-0100		1	CONTROL UNIT	**4-243, 4-245**
30	2597331-0100		1	CENTERING UNIT	**4-247**

Pos	Part No	UN	Qty	Description	Page No

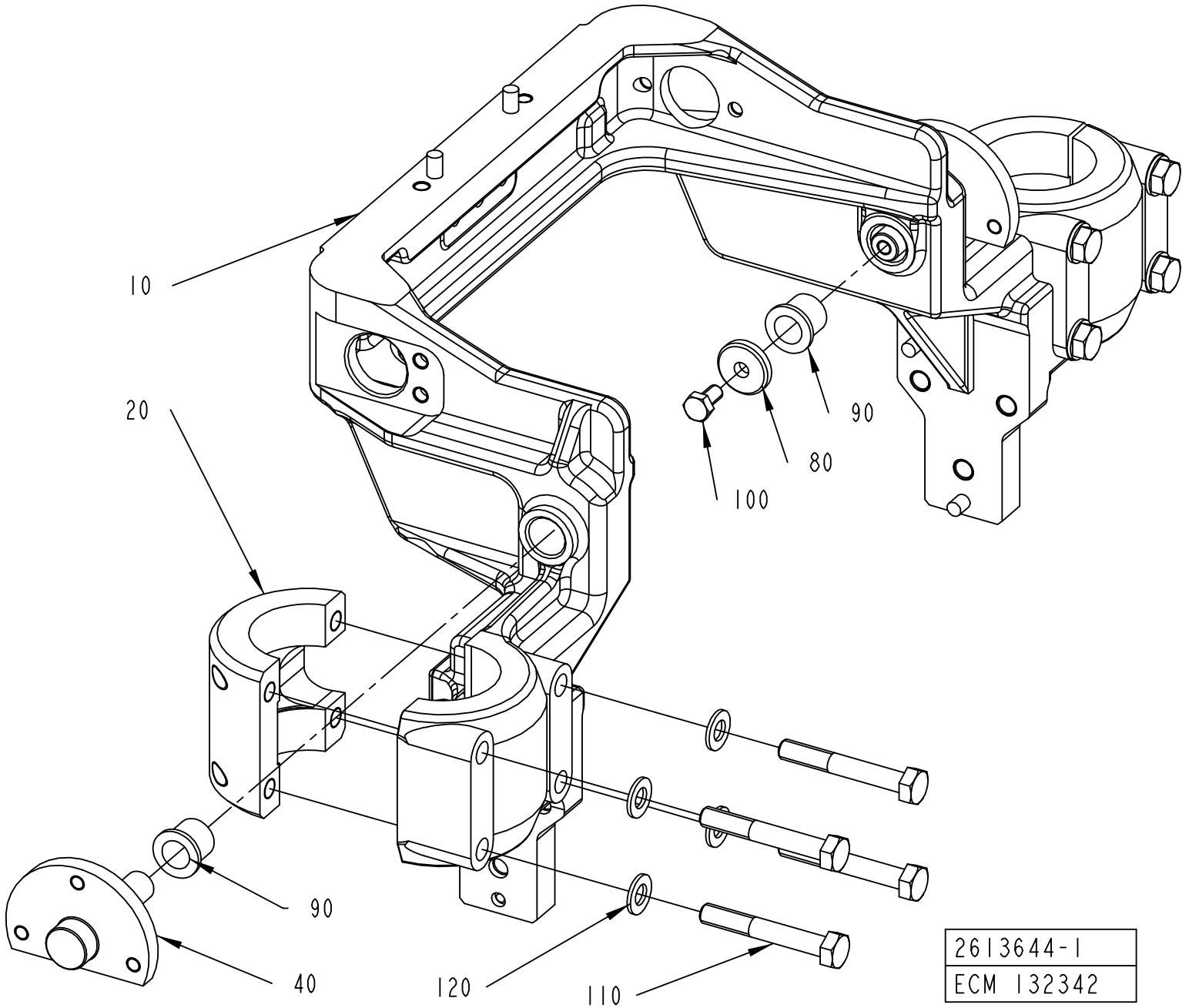
10
20
90
80
100
90
40
120
110
2613644-1
ECM 132342

ECM: 189482 - 20050103
Group number: 2613644-0100
Assembly Drawing: 2613644-1_1_AA

Pos	Part No	UN	Qty	Description	Page No
-					
010	2587464-0000		1	CANTILEVER	
020	2614039-0000		2	CLAMP	
040	2598065-0000		2	SUPPORT	
080	315125-0153		2	WASHER TBRSB 6,4X22X4 A4	
090	90458-1404		4	FLANGE BUSHING, 12X16X16 MM	
100	312105-0366		2	SCREW M6S ISO 4017 M6X12 A480	
110	312105-0462		8	SCREW M6S ISO 4014 M8X55 A480	
120	315105-0165		8	WASHER BRB 8,4X16 RFR	

Pos	Part No	UN	Qty	Description	Page No

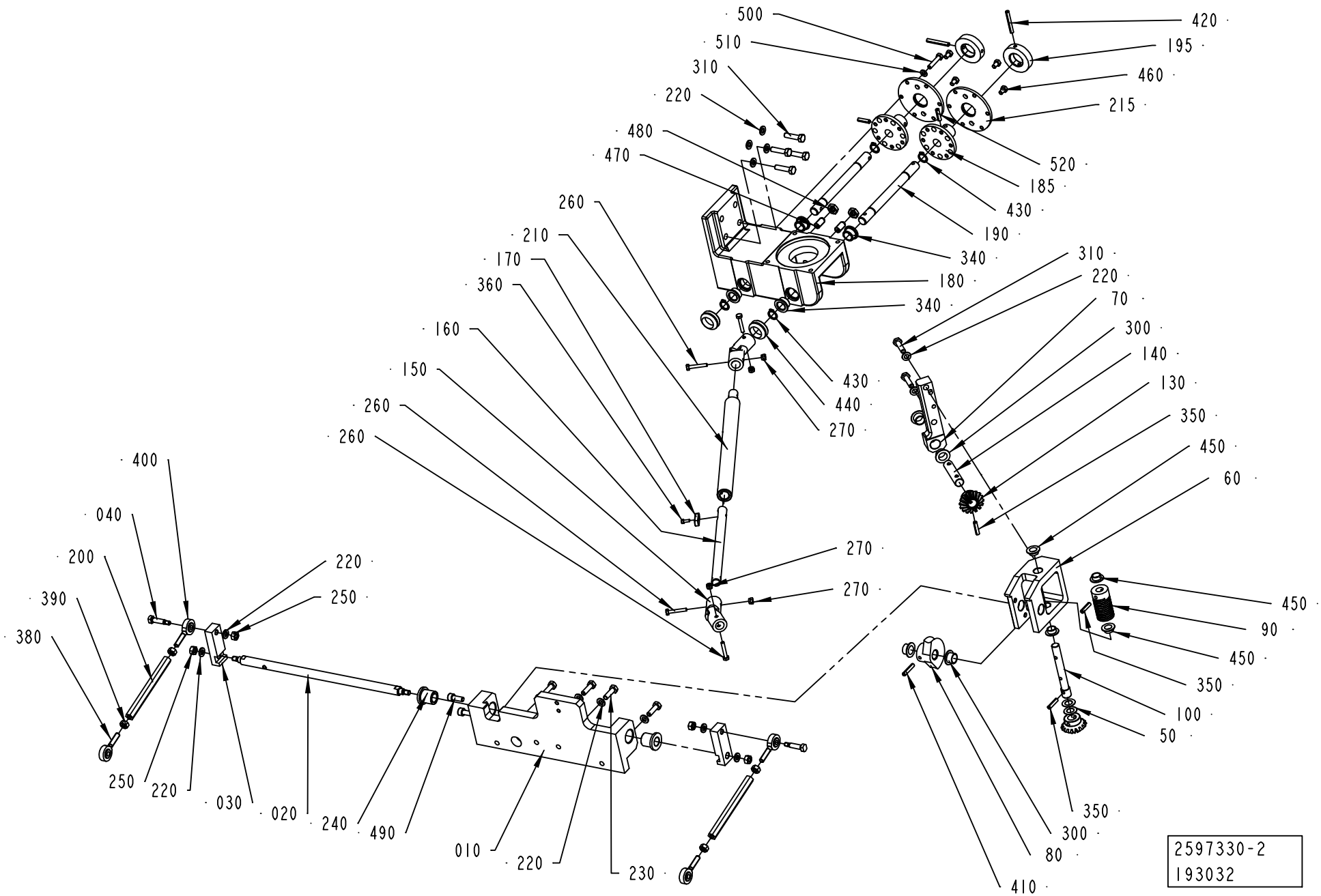
500
510
310
220
480
470
260
210
170
360
160
150
260
260
400
040
200
390
380
250
220
250
220
030
020
240
490
010
220
230
420
195
460
215
520
185
430
190
340
180
340
310
220
70
300
140
130
350
450
60
430
440
270
270
270
450
90
450
350
100
50
350
300
80
410
2597330-2
193032

ECM: 210185 - 20060509
Group number: 2597330-0100
Assembly Drawing: 2597330-2_1_AB

This list covers pages from 4-242 to 4-245

Pos	Part No	UN	Qty	Description	Page No
-					
010	2602657-0000		1	LOCK PLATE	
020	2602658-0000		1	SHAFT	
030	2535441-0000		2	LEVER	
040	2535442-0000		2	PIVOT PIN	
050	2691421-0000		2	SHIM	
060	2665720-0000		1	SUPPORT	
070	2665722-0000		1	SUPPORT	
080	2681618-0000		1	WORM WHEEL	
090	2681619-0000		1	WORM GEAR	
100	2665721-0000		1	SHAFT	
130	2681617-0000		2	GEAR WHEEL	
140	2599742-0000		1	SHAFT	
150	2535455-0000		2	LINK	
160	2602652-0000		1	SHAFT	
170	2535457-0000		1	WOODRUFF KEY	
180	2598502-0000		1	SUPPORT	
185	2618333-0000		2	PLATE	
190	2618332-0000		2	SHAFT	
195	2618330-0000		2	HANDLE	
200	2535461-0000		2	CONNECTING ROD	
210	2535458-0000		1	SHAFT	
215	2618329-0000		2	PLATE	
220	315105-0153		14	WASHER BRB 6,4X12 RFR	
230	312105-0370		4	SCREW M6S ISO 4017 M6X20 A480	
240	321111-0163		2	FLANGE BUSHING, 12X18X20 MM	
250	312605-0316		6	HEXAGON NUT, M6M M6 A280	
260	312105-0297		4	SCREW M6S ISO 4017 M4X25 A470	
270	312812-0312		4	HEXAGON NUT, NY-LOCK M4 A480	
300	90240-0261		4	FLANGE BUSHING, 12X14X9 MM	
310	312105-0372		6	SCREW M6S ISO 4017 M6X25 A480	
340	90240-0165		4	FLANGE BUSHING, 12X16X10 MM	
350	311112-0256		3	SPRING PIN, ISO 8752 4X20-C	
360	312115-0222		1	SCREW ISO4762 M3X8 A4 80	
380	90459-4505		2	ROD END, ID=6MM, M6X1 LH	
390	312902-0316		2	NUT HEX. LEFT THREAD, M6 A280	
400	90459-4504		2	ROD END, ID=6MM, M6X1	
410	311112-0258		1	SPRING PIN, ISO 8752 4X24-C	
420	311112-0263		2	SPRING PIN, ISO 8752 4X35-C	
430	315751-0109		4	RETAINING RING FOR SHAFT DIN 471 12 A2	
440	315220-0143		2	V-RINGS 18X26X10,5 MM V-20S	
450	90240-0289		4	FLANGE BUSHING, 10X12X6 MM	
460	312105-0323		4	SCREW M6S ISO 4017 M5X8 A480	
470	90287-0112		2	SCREW SPRINGLOAD. SLOTTED HEAD M8X16	
480	312625-0318		2	HEXAGON THIN NUT, EN 24035 ML6M M8 A4	
490	312115-0368		2	SCREW ISO4762 M6X16 A4 80	
500	312105-0333		1	SCREW M6S ISO 4017 M5X25 A480	
510	315105-0146		1	WASHER BRB 5,3X10 RFR	
520	311112-0255		2	SPRING PIN, ISO 8752 4X18-C	

Machine Type | Group Description | Used-In | Group Number | Page No

STANDARD MOUNTING SOLUTION

A-A
1:1

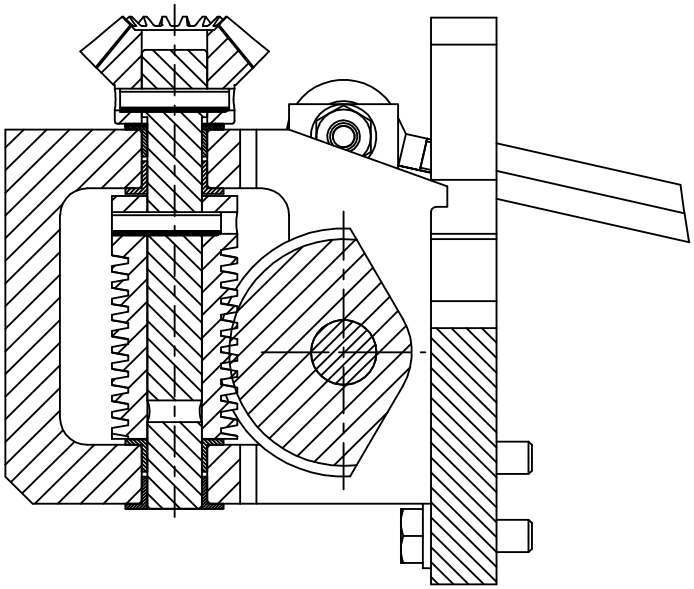

MOUNTING SOLUTION ONLY
FOR :
TBA 2000S QC
TBA 1890S QC
TBA 1500S

A-A
1:1

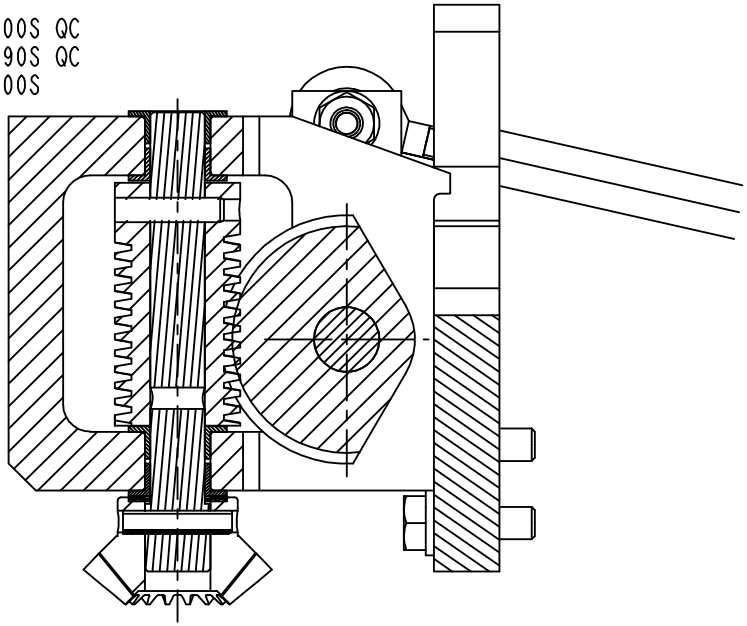

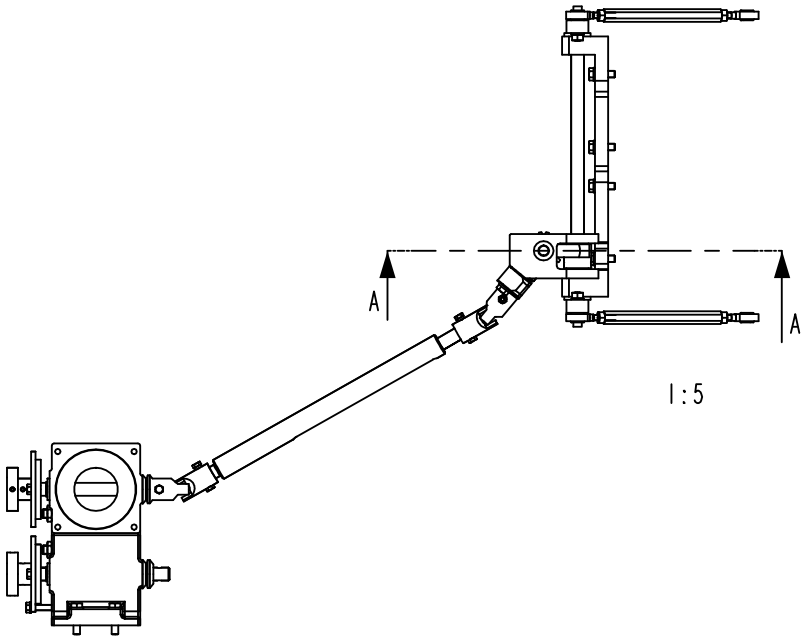

1:5

2597330-2
193032

ECM: 210185 - 20060509
Group number: 2597330-0100
Assembly Drawing: 2597330-2_2_AB

This list covers pages from 4-242 to 4-245

Pos	Part No	UN	Qty	Description	Page No
-					
010	2602657-0000		1	LOCK PLATE	
020	2602658-0000		1	SHAFT	
030	2535441-0000		2	LEVER	
040	2535442-0000		2	PIVOT PIN	
050	2691421-0000		2	SHIM	
060	2665720-0000		1	SUPPORT	
070	2665722-0000		1	SUPPORT	
080	2681618-0000		1	WORM WHEEL	
090	2681619-0000		1	WORM GEAR	
100	2665721-0000		1	SHAFT	
130	2681617-0000		2	GEAR WHEEL	
140	2599742-0000		1	SHAFT	
150	2535455-0000		2	LINK	
160	2602652-0000		1	SHAFT	
170	2535457-0000		1	WOODRUFF KEY	
180	2598502-0000		1	SUPPORT	
185	2618333-0000		2	PLATE	
190	2618332-0000		2	SHAFT	
195	2618330-0000		2	HANDLE	
200	2535461-0000		2	CONNECTING ROD	
210	2535458-0000		1	SHAFT	
215	2618329-0000		2	PLATE	
220	315105-0153		14	WASHER BRB 6,4X12 RFR	
230	312105-0370		4	SCREW M6S ISO 4017 M6X20 A480	
240	321111-0163		2	FLANGE BUSHING, 12X18X20 MM	
250	312605-0316		6	HEXAGON NUT, M6M M6 A280	
260	312105-0297		4	SCREW M6S ISO 4017 M4X25 A470	
270	312812-0312		4	HEXAGON NUT, NY-LOCK M4 A480	
300	90240-0261		4	FLANGE BUSHING, 12X14X9 MM	
310	312105-0372		6	SCREW M6S ISO 4017 M6X25 A480	
340	90240-0165		4	FLANGE BUSHING, 12X16X10 MM	
350	311112-0256		3	SPRING PIN, ISO 8752 4X20-C	
360	312115-0222		1	SCREW ISO4762 M3X8 A4 80	
380	90459-4505		2	ROD END, ID=6MM, M6X1 LH	
390	312902-0316		2	NUT HEX. LEFT THREAD, M6 A280	
400	90459-4504		2	ROD END, ID=6MM, M6X1	
410	311112-0258		1	SPRING PIN, ISO 8752 4X24-C	
420	311112-0263		2	SPRING PIN, ISO 8752 4X35-C	
430	315751-0109		4	RETAINING RING FOR SHAFT DIN 471 12 A2	
440	315220-0143		2	V-RINGS 18X26X10,5 MM V-20S	
450	90240-0289		4	FLANGE BUSHING, 10X12X6 MM	
460	312105-0323		4	SCREW M6S ISO 4017 M5X8 A480	
470	90287-0112		2	SCREW SPRINGLOAD. SLOTTED HEAD M8X16	
480	312625-0318		2	HEXAGON THIN NUT, EN 24035 ML6M M8 A4	
490	312115-0368		2	SCREW ISO4762 M6X16 A4 80	
500	312105-0333		1	SCREW M6S ISO 4017 M5X25 A480	
510	315105-0146		1	WASHER BRB 5,3X10 RFR	
520	311112-0255		2	SPRING PIN, ISO 8752 4X18-C	

Machine Type | Group Description | Used-In | Group Number | Page No

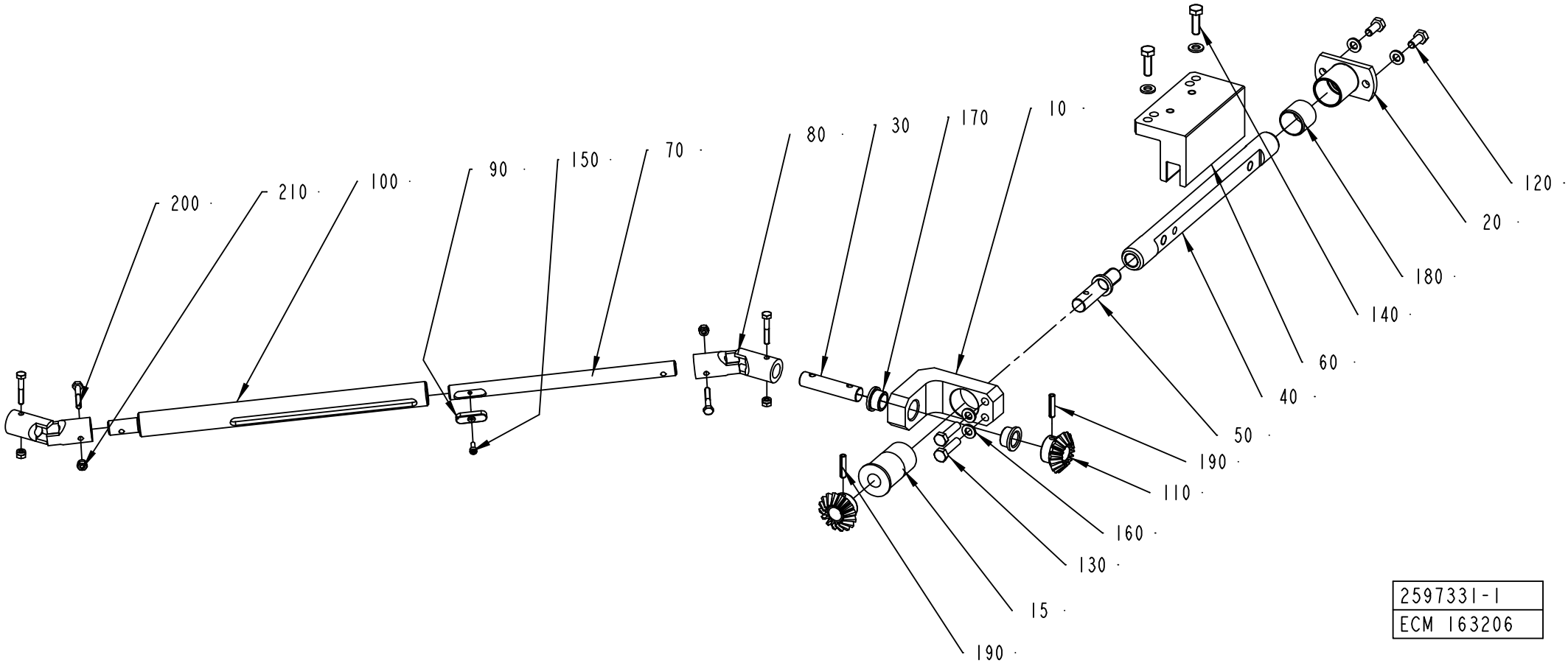
200
210
100
90
150
70
80
30
170
10
120
20
180
140
60
40
50
190
110
160
130
15
190
2597331-1
ECM 163206

ECM: 210186 - 20060509
Group number: 2597331-0100
Assembly Drawing: 2597331-1_1_AC

Pos	Part No	UN	Qty	Description	Page No
-					
010	2711289-0000		1	SUPPORT	
015	2623513-0000		1	BUSHING	
020	2599741-0000		1	SUPPORT	
030	2599742-0000		1	SHAFT	
040	2599743-0000		1	SHAFT	
050	2598067-0000		1	SHAFT	
060	2614038-0000		1	SPACER	
070	2602652-0000		1	SHAFT	
080	2535455-0000		2	LINK	
090	2535457-0000		1	WOODRUFF KEY	
100	2535458-0000		1	SHAFT	
110	2681617-0000		2	GEAR WHEEL	
120	312105-0367		2	SCREW M6S ISO 4017 M6X14 A480	
130	312105-0372		2	SCREW M6S ISO 4017 M6X25 A480	
140	312105-0370		2	SCREW M6S ISO 4017 M6X20 A480	
150	312115-0222		1	SCREW ISO4762 M3X8 A4 80	
160	315105-0153		6	WASHER BRB 6,4X12 RFR	
170	90240-0261		2	FLANGE BUSHING, 12X14X9 MM	
180	321133-0260		1	BUSHING, 20X23X20 MM	
190	311112-0256		2	SPRING PIN, ISO 8752 4X20-C	
200	312105-0297		4	SCREW M6S ISO 4017 M4X25 A470	
210	312812-0312		4	HEXAGON NUT, NY-LOCK M4 A480	

Pos	Part No	UN	Qty	Description	Page No

Tetra Pak

SPC
Spare Parts Catalogue

Tetra Pak A3/Flex

648575-0150

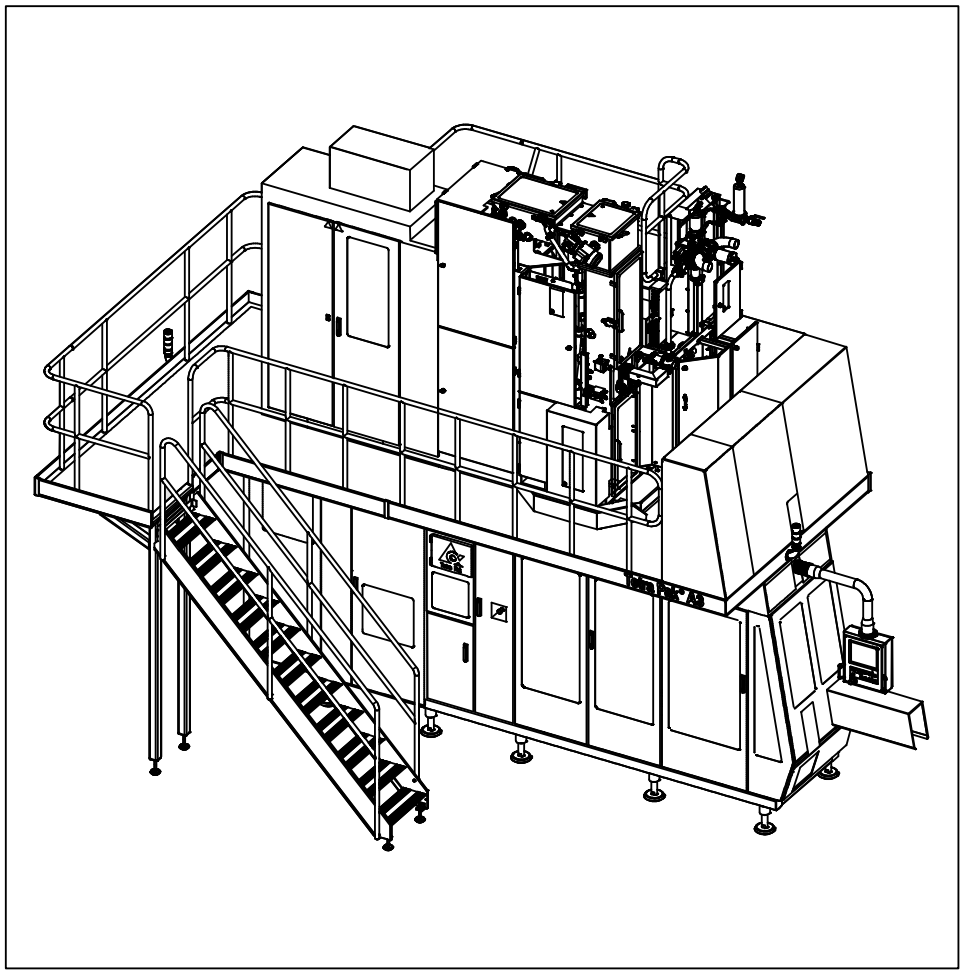

Tetra Pak

Doc. No: SPC-2851301-0101

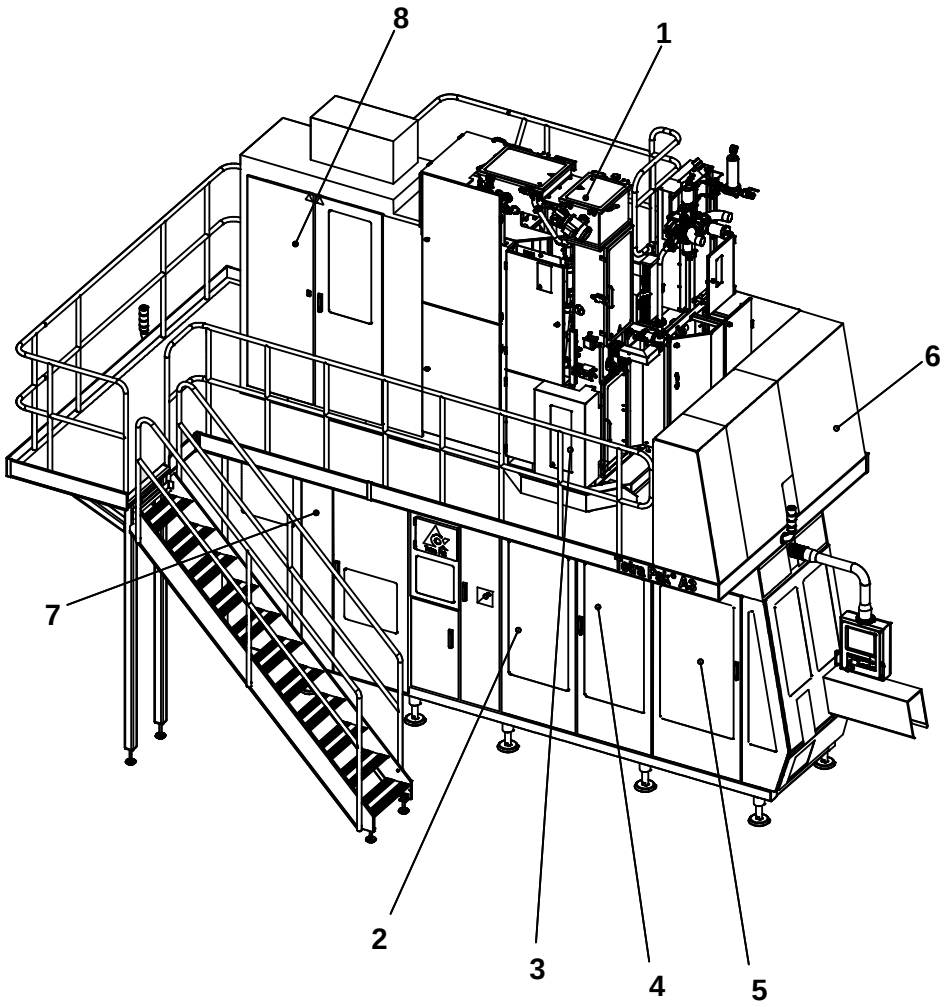

The position numbers in the illustration correspond with the chapter numbers listed on the next page.

Copyright © 2006 Tetra Pak Group

All rights reserved. No part of this document may be reproduced or copied in any form or by any means without written permission from Tetra Pak Carton Ambient S.p.A..

Tetra Pak and all Tetra Pak products are trademarks belonging to the Tetra Pak Group.

The content of this manual is in accordance with the design and construction of the machine or equipment at the time of publishing. Tetra Pak reserves the right to introduce design modifications without prior notice.

This document was produced by:

Tetra Pak Carton Ambient S.p.A.
Technical Publications
Via Delfini 1
41100 Modena /Italy

This Tetra Pak equipment was manufactured by:

Tetra Pak Carton Ambient S.p.A.
Via Delfini 1
41100 Modena /Italy

Additional copies can be ordered from Tetra Pak Parts or the nearest Tetra Pak office. When ordering additional copies, always provide the document number. This can be found in the machine specification document. It is also printed on the front cover and in the footer on each page of the manual.

Doc. No. SPC-2851301-0101

Issue 2006-10

This document is valid from:

21211/00001

Series No/Machine No Sign.

SPC

Spare Parts Catalogue

Tetra Pak A3/Flex
648575-0150

BINDER 1

i Introduction

1 Superstructure
B-648555-0100

2 Machine Body
B-648559-0250

3 Drive Unit
B-648543-0450

4 Jaw System
B-648549-0350

BINDER 2

5 Final Folder
B-648552-0150

6 Service Unit
B-648506-0400

7 Automatic Splicing Unit
B-648528-0200

8 Electrical Cabinet
B-648539-0250

9 Regular Accessories
B-648561-0100

10 Optional Accessories
B-648564-0100

ii Part Number Index

iii Electrical Parts Index

A list of all optional equipment, optional kits, and rebuilding kits that this catalogue is valid for is found on the next page.

Doc. No: SPC-2851301-0101

Issue 2006-10

Tetra Pak

Tetra Pak Carton Ambient S.p.A.

Valid for:

HI - Headspace by Injection
2636960-0100

Stair on RH side
2564231-0100

Tetra Pak DIMC
648553-0100

Tetra Pak PT/Flex
648556-0100

SPC
Spare Parts Catalogue

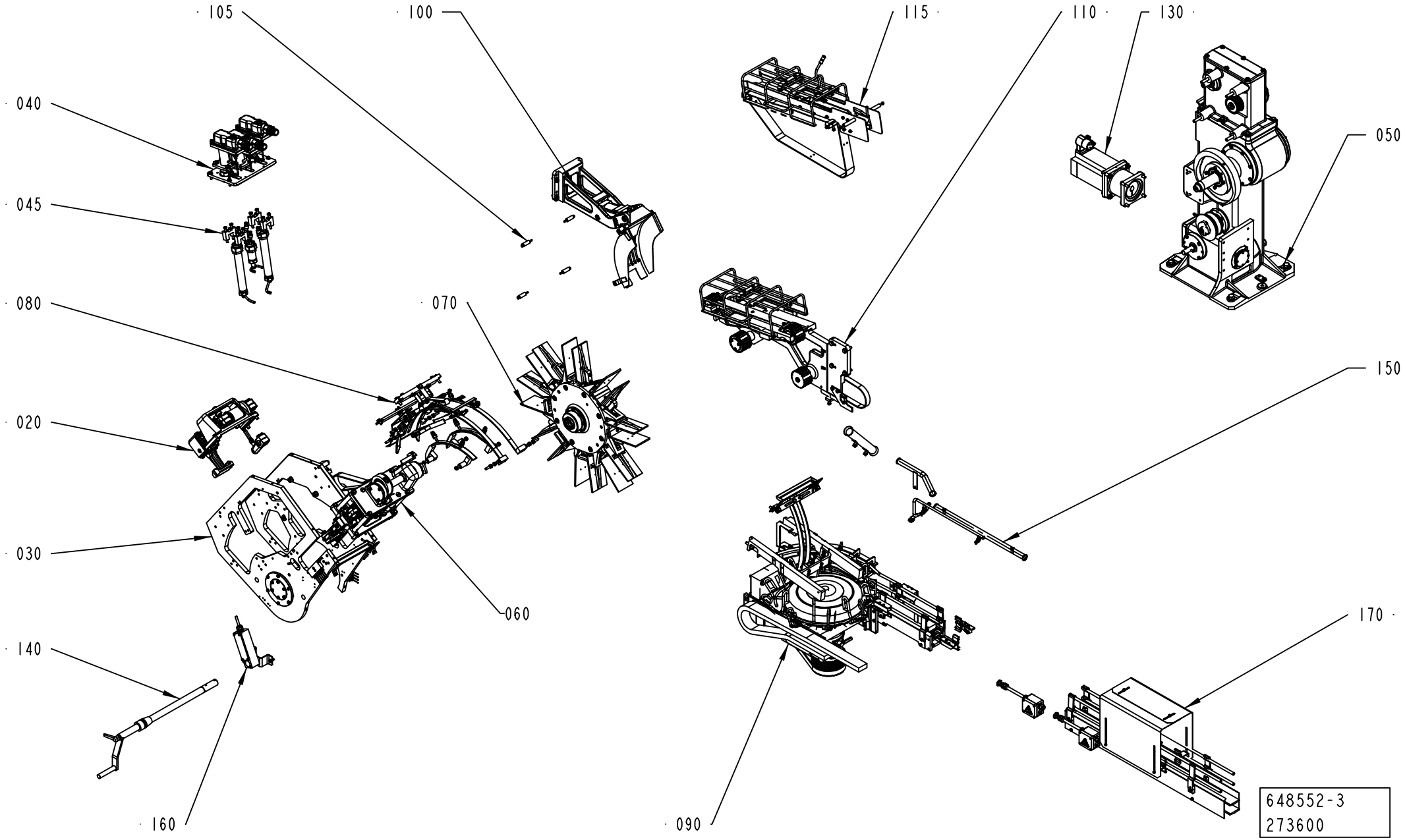
105
100
115
110
130
040
050
045
080
070
150
020
030
060
140
170
160
090
648552-3
273600

ECM: 273603 - 20061101
Group number: 648552-0150
Assembly Drawing: 648552-3_1_AA

Pos	Part No	UN	Qty	Description	Page No
A3/FLEX NOQC					
020	1144329-0300		1	PULL-DOWN DEVICE	**5-5, 5-7, 5-9**
070	1361918-0300		1	WHEEL	**5-23, 5-25**
080	1285012-0300		1	FOLDING PART	**5-27**
090	1285260-0400		1	OUT FEED	**5-57**
105	1361922-0200		1	DROP CHUTE VARIANT	**5-101**
115	1361923-0200		1	INFEED CONVEYOR VARIANT	**5-103, 5-105, 5-107, 5-109, 5-111**
A3/FLEX QC					
020	1144329-0300		1	PULL-DOWN DEVICE	**5-5, 5-7, 5-9**
070	2523811-0100		1	WHEEL	**5-113, 5-115, 5-117**
080	2543480-0100		1	FOLDING PART	**5-127**
090	1285260-0400		1	OUT FEED	**5-57**
105	2537128-0100		1	DROP CHUTE VARIANT	**5-161, 5-163**
115	2522129-0100		1	INFEED CONVEYOR VARIANT	**5-165, 5-167, 5-169**
Common Parts					
030	1144324-0300		1	FRAMEWORK	**5-185**
040	2524509-0100		1	FLAP HEATER BODY	**5-187, 5-189, 5-191**
045	1487158-0300		1	FLAP HEATER VARIANT	**5-209, 5-211, 5-213, 5-215, 5-217, 5-219**
050	2594054-0100		1	INDEXING UNIT	**5-221**
060	1144331-0300		1	PRESSURE DEVICE	**5-241, 5-243, 5-245, 5-247, 5-249, 5-251**
100	2541714-0100		1	DROP CHUTE CRADLE	**5-257, 5-259**
110	1517298-0250		1	INFEED CONVEYOR	**5-261**
130	2522128-0150		1	MOTOR UNIT	**5-273**
140	1260883-0200		1	CRANK	**5-275**
150	2531274-0100		1	ELECTRICAL CONNECTION	**5-277, 5-279**
160	1279677-0100		1	CRANK GUARD	**5-281**
170	2579995-0100		1	LAST POINT DE	**5-283**

Pos	Part No	UN	Qty	Description	Page No

PULL-DOWN DEVICE

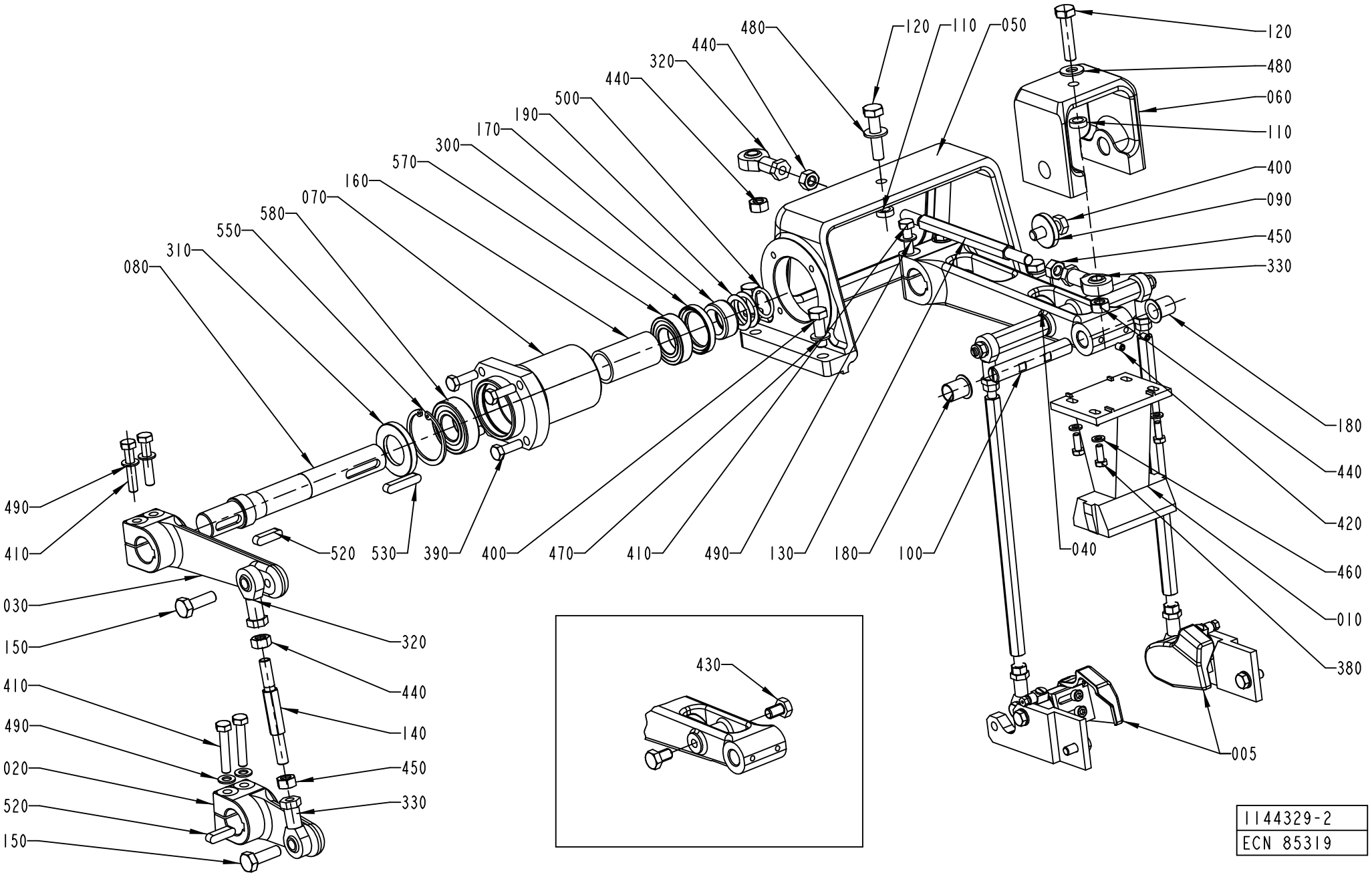

ECM: 258278 - 20060702
Group number: 1144329-0300
Assembly Drawing: 1144329-2_1_AB

This list covers pages from 5-4 to 5-9

Pos	Part No	UN	Qty	Description	Page No
TPA 0330SQ (See drawing on page: 5-4)					
005	1348056-0300		1	FOLDING PART	**5-11, 5-13**
010	1532266-0000		1	BLOCK	
TPA 0500SQ (See drawing on page: 5-6)					
005	1348056-0300		1	FOLDING PART	**5-11, 5-13**
010	2610779-0000		1	BLOCK	
200	2598706-0000		2	BAR	
430	312105-0489		2	SCREW M6S ISO 4017 M10X16 A480	
590	312125-0230		4	SCREW ISO 1207 M3X20 A4	
600	315105-0124		4	WASHER BRB 3,2X7 RFR	
TPA 1000SQ NOQC (See drawing on page: 5-4)					
005	1348056-0300		1	FOLDING PART	**5-11, 5-13**
010	1519341-0000		1	BLOCK	
TPA 1000SQ QC, TPA 0750SQ QC (See drawing on page: 5-8)					
005	2588130-0100		1	FOLDING FIN DEVICE	**5-15**
010	2647110-0000		1	BLOCK	
610	342748-0102		1	T-CONNECTION 6MM	
620	350002-0006		2	PUSH-IN L-FITTING QSL-F-G1/8-6	
630	315400-0001	MM	1500	TUBE PUN-H-6X1-BL	
TBA 0200B NOQC, TBA 0330S NOQC, TBA 0250B NOQC (See drawing on page: 5-4)					
010	1350808-0000		1	BLOCK	
430	312105-0489		2	SCREW M6S ISO 4017 M10X16 A480	
TBA 0200B QC, TBA 0330S QC, TBA 0250B QC (See drawing on page: 5-4)					
010	2591790-0000		1	BLOCK	
430	312105-0489		2	SCREW M6S ISO 4017 M10X16 A480	
TBA 0200S (See drawing on page: 5-4)					
010	1260887-0000		1	BLOCK	
430	312105-0489		2	SCREW M6S ISO 4017 M10X16 A480	
TBA 0200SQ, TBA 0250SQ (See drawing on page: 5-8)					
005	2588130-0100		1	FOLDING FIN DEVICE	**5-15**
010	2668239-0000		1	BLOCK	
610	342748-0102		1	T-CONNECTION 6MM	
620	350002-0006		2	PUSH-IN L-FITTING QSL-F-G1/8-6	
630	315400-0001	MM	1500	TUBE PUN-H-6X1-BL	
TBA 0250S, TBA 0200M (See drawing on page: 5-4)					
010	2522199-0000		1	BLOCK	
430	312105-0489		2	SCREW M6S ISO 4017 M10X16 A480	
TBA 0500B, TBA 1000B NOMOLDEDCAP (See drawing on page: 5-4)					
010	1260700-0000		1	BLOCK	
430	312105-0489		2	SCREW M6S ISO 4017 M10X16 A480	
TBA 0500S (See drawing on page: 5-4)					
010	1499139-0000		1	BLOCK	
430	312105-0489		2	SCREW M6S ISO 4017 M10X16 A480	
TBA 1000B STDA7 (See drawing on page: 5-4)					
005	1348056-0300		1	FOLDING PART	**5-11, 5-13**
010	1260700-0000		1	BLOCK	
TBA 1000S NOMOLDEDCAP (See drawing on page: 5-4)					
010	1144933-0000		1	BLOCK	
430	312105-0489		2	SCREW M6S ISO 4017 M10X16 A480	
TBA 1000S STDA7, TBA 1000S LIGHTCAP (See drawing on page: 5-6)					
005	1348056-0300		1	FOLDING PART	**5-11, 5-13**
010	1144933-0000		1	BLOCK	
TBA 1000SQ (See drawing on page: 5-6)					
005	1348056-0300		1	FOLDING PART	**5-11, 5-13**
010	1558008-0000		1	BLOCK	
200	1558020-0000		2	ROD	
590	312125-0234		4	SCREW ISO 1207 M3X30 A4	
600	315105-0124		4	WASHER BRB 3,2X7 RFR	
TBA 1500S (See drawing on page: 5-4)					
010	1317789-0000		1	BLOCK	
430	312105-0489		2	SCREW M6S ISO 4017 M10X16 A480	
TBA 1890S QC, TBA 2000S QC (See drawing on page: 5-6)					
010	2616229-0000		1	BLOCK	
430	312105-0489		2	SCREW M6S ISO 4017 M10X16 A480	
590	312125-0234		4	SCREW ISO 1207 M3X30 A4	
600	315105-0124		4	WASHER BRB 3,2X7 RFR	
TPA 0250SQ NOQC (See drawing on page: 5-4)					
005	1348056-0300		1	FOLDING PART	**5-11, 5-13**
010	1549846-0000		1	BLOCK	
TPA 0250SQ QC, TPA 0200SQ QC (See drawing on page: 5-8)					
005	2588130-0100		1	FOLDING FIN DEVICE	**5-15**
010	2674253-0000		1	BLOCK	
Common Parts					
020	1144472-0000		1	LEVER	
030	1144473-0000		1	LEVER	
040	1499635-0000		1	LEVER	
050	1144475-0000		1	BRACKET	
060	1144476-0000		1	BRACKET	
070	1144566-0000		1	FLANGE	
080	1144678-0000		1	SHAFT	
090	1144681-0000		1	WASHER	
100	1144683-0000		1	AXLE PIN	
110	1144684-0000		2	SPACER	
120	1144685-0000		2	SCREW	

PULL-DOWN DEVICE

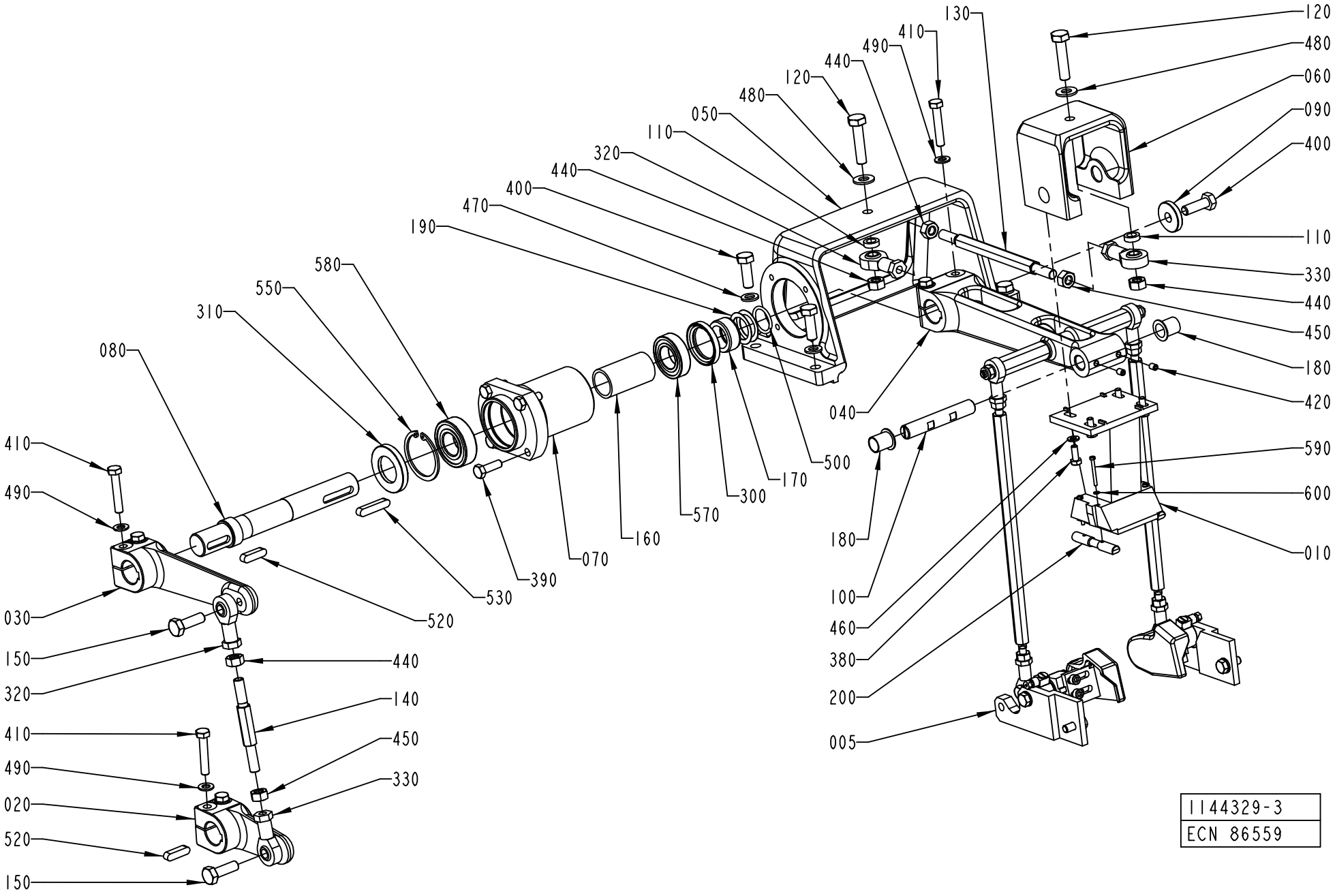

1144329-3
ECN 86559

Pos	Part No	UN	Qty	Description	Page No
Common Parts (Cont'd)					
130	1144686-0000		1	TIE ROD	
140	1144687-0000		1	TIE ROD	
150	1144688-0000		2	SCREW	
160	1260824-0000		1	SPACER RING	
170	1334328-0000		1	SPACER	
180	1260944-0000		2	BUSHING	
190	1334018-0000		4	SHIM	
300	90091-0297		1	RADIAL SEAL 35X47X7 MM DUST LIP	
310	90091-0299		1	RADIAL SEAL 30X52X7 MM DUST LIP	
320	90115-0181		2	ROD END, ID=10 MM M10X1,5	
330	90115-0182		2	ROD END, ID=10 MM M10X1,5LH	
380	312105-0368		4	SCREW M6S ISO 4017 M6X16 A480	
390	312105-0453		4	SCREW M6S ISO 4017 M8X25 A480	
400	312105-0495		5	SCREW M6S ISO 4017 M10X30 A480	
410	312109-0460		6	SCREW M6S ISO 4017 M8X45 A480	
420	312318-0362		2	SCREW ISO4029 M6X8 A4	
440	312605-0320		4	HEXAGON NUT, M6M M10 A280	
450	312902-0320		2	NUT HEX. LEFT THREAD, M10 A280	
460	315105-0153		4	WASHER BRB 6,4X12 RFR	
470	315105-0171		4	WASHER BRB 10X18 RFR	
480	315105-0173		2	WASHER BRB 10,5X20 RFR	
490	315105-0165		6	WASHER BRB 8,4X16 RFR	
500	315202-0217		1	O-RING 24,2X3 MM	
520	315705-0267		1	PARALLEL KEY W. ROUND ENDS 8X7X30 MM	
530	315705-0270		1	PARALLEL KEY W. ROUND ENDS 8X7X40 MM	
550	315753-0132		1	RETAINING RING FOR BORE DIN 472 52 A2	
570	321308-0205		1	BALL BEARING, 25X47X12MM	
580	321313-0105		1	BALL BEARING, 25X52X15MM	

Pos	Part No	UN	Qty	Description	Page No

PULL-DOWN DEVICE

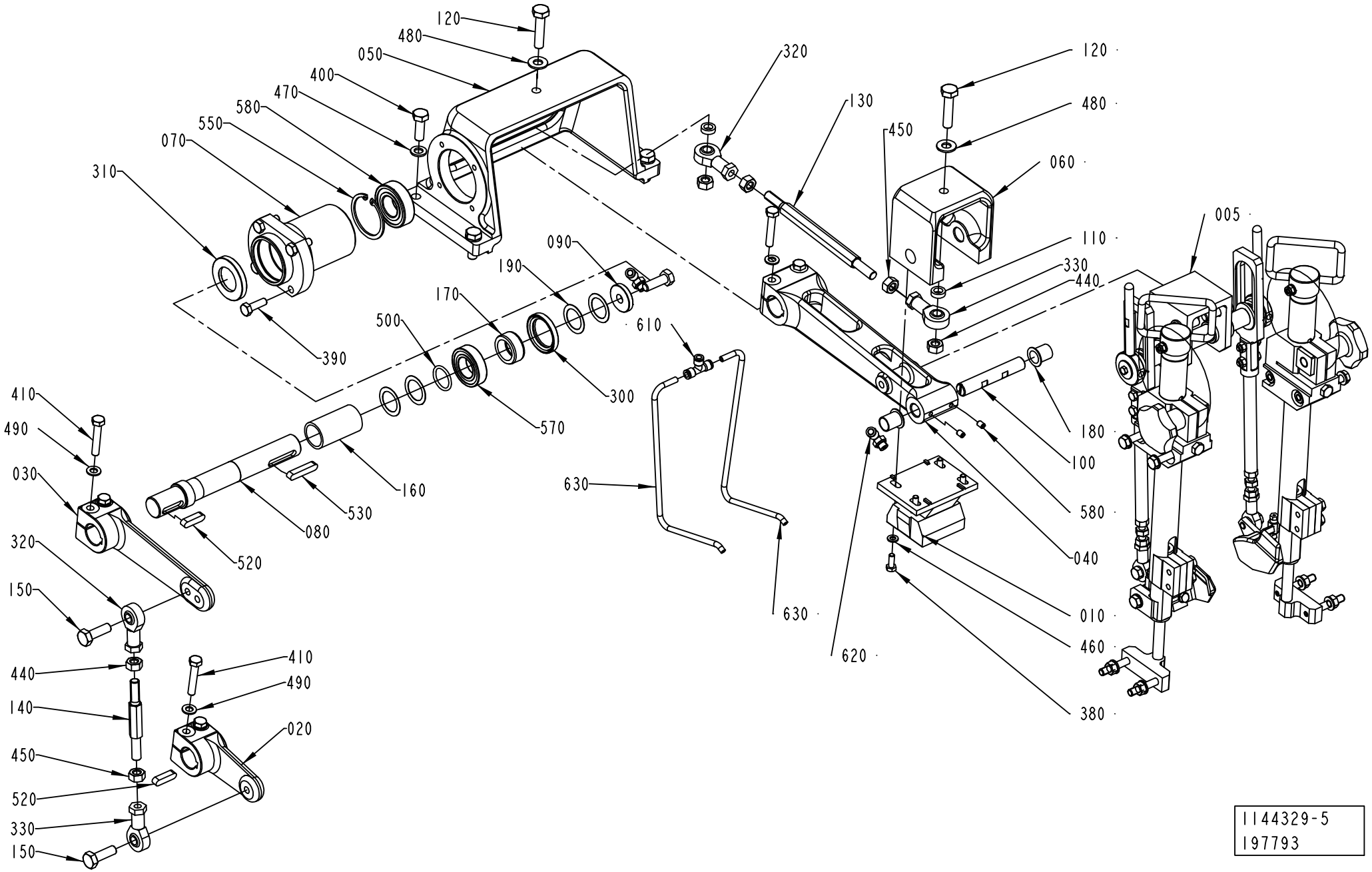

1144329-5
197793

ECM: 258278 - 20060702
Group number: 1144329-0300
Assembly Drawing: 1144329-5_1_AA

This list covers pages from 5-4 to 5-9

Pos	Part No	UN	Qty	Description	Page No
SEE PREVIOUS LISTS PAGES: 5-5, 5-7.					

Pos	Part No	UN	Qty	Description	Page No

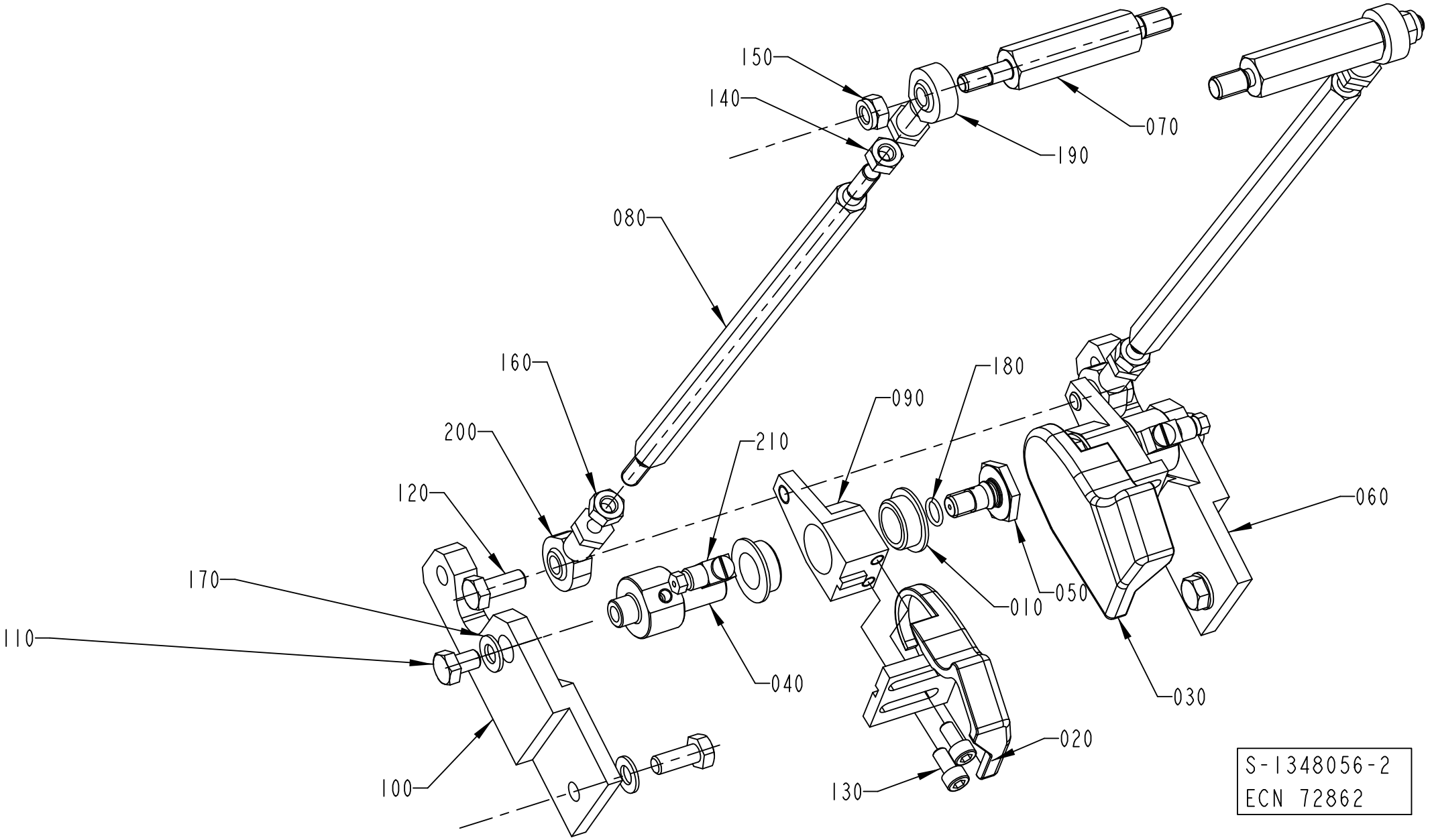
150
140
070
190
080
160
180
090
200
210
120
060
170
010
050
110
040
030
020
100
130
S-1348056-2
ECN 72862

ECM: 258279 - 20060702
Group number: 1348056-0300
Assembly Drawing: 1348056-2_1_AA

This list covers pages from 5-10 to 5-13

Pos	Part No	UN	Qty	Description	Page No
TBA 1000B STDA7 (See drawing on page: 5-10)					
020	1487922-0000		1	FOLDING DEVICE	
030	1487923-0000		1	FOLDING DEVICE	
060	1347600-0000		1	SUPPORT	
070	1499765-0000		2	AXLE LINK	
080	2609368-0000		2	TIE ROD	
090	1350440-0000		2	LEVER	
100	1350441-0000		1	SUPPORT	
TBA 1000SQ, TBA 1000S STDA7, TBA 1000S LIGHTCAP (See drawing on page: 5-10)					
020	1487922-0000		1	FOLDING DEVICE	
030	1487923-0000		1	FOLDING DEVICE	
060	1347600-0000		1	SUPPORT	
070	1499765-0000		2	AXLE LINK	
080	1499103-0000		2	TIE ROD	
090	1350440-0000		2	LEVER	
100	1350441-0000		1	SUPPORT	
TPA 0250SQ (See drawing on page: 5-10)					
020	1296180-0000		1	FOLDING DEVICE	
030	1296181-0000		1	FOLDING DEVICE	
060	1532267-0000		1	SUPPORT	
070	1532268-0000		2	AXLE LINK	
080	1532269-0000		2	TIE ROD	
090	1350440-0000		2	LEVER	
100	1532270-0000		1	SUPPORT	
TPA 0330SQ (See drawing on page: 5-10)					
020	1296180-0000		1	FOLDING DEVICE	
030	1296181-0000		1	FOLDING DEVICE	
060	1532267-0000		1	SUPPORT	
070	1532268-0000		2	AXLE LINK	
080	1532269-0000		2	TIE ROD	
090	1350440-0000		2	LEVER	
100	1532270-0000		1	SUPPORT	
TPA 0500SQ SMILE (See drawing on page: 5-12)					
020	2606277-0000		1	FOLDING DEVICE	
030	2606278-0000		1	FOLDING DEVICE	
060	2529673-0000		1	SUPPORT	
070	1532268-0000		2	AXLE LINK	
080	2527531-0000		2	TIE ROD	
090	2529676-0000		1	LEVER	
100	2529674-0000		1	SUPPORT	
220	2529675-0000		1	LEVER	
TPA 1000SQ (See drawing on page: 5-10)					
020	1296180-0000		1	FOLDING DEVICE	
030	1296181-0000		1	FOLDING DEVICE	
060	1347600-0000		1	SUPPORT	
070	1499765-0000		2	AXLE LINK	
080	1519340-0000		2	TIE ROD	
090	1350440-0000		2	LEVER	
100	1350441-0000		1	SUPPORT	
TPA 1000SQ SMILE (See drawing on page: 5-12)					
020	2529671-0000		1	FOLDING DEVICE	
030	2529672-0000		1	FOLDING DEVICE	
060	2553343-0000		1	SUPPORT	
070	2553346-0000		2	AXLE LINK	
080	2553345-0000		2	TIE ROD	
090	2529676-0000		1	LEVER	
100	2553344-0000		1	SUPPORT	
220	2529675-0000		1	LEVER	
Common Parts					
010	1282708-0000		4	BUSHING	
040	1347495-0000		2	AXLE PIN	
050	1347496-0000		2	SCREW	
110	312105-0447		2	SCREW M6S ISO 4017 M8X12 A480	
120	312105-0451		4	SCREW M6S ISO 4017 M8X20 A480	
130	312115-0366		4	SCREW ISO4762 M6X12 A4 80	
140	312605-0318		2	HEXAGON NUT, M6M M8 A280	
150	312812-0318		2	HEXAGON NUT, NY-LOCK M8 A480	
160	312902-0318		2	NUT HEX. LEFT THREAD, M8 A280	
170	315105-0165		4	WASHER BRB 8,4X16 RFR	
180	315202-0107		2	O-RING 9,1X1,6 MM	
190	90115-0139		2	ROD END, ID=8 MM, M8X1,25	
200	90115-0180		2	ROD END, ID=8 MM, M8X1,25 LH	
210	90134-0058		2	CONNECTION	

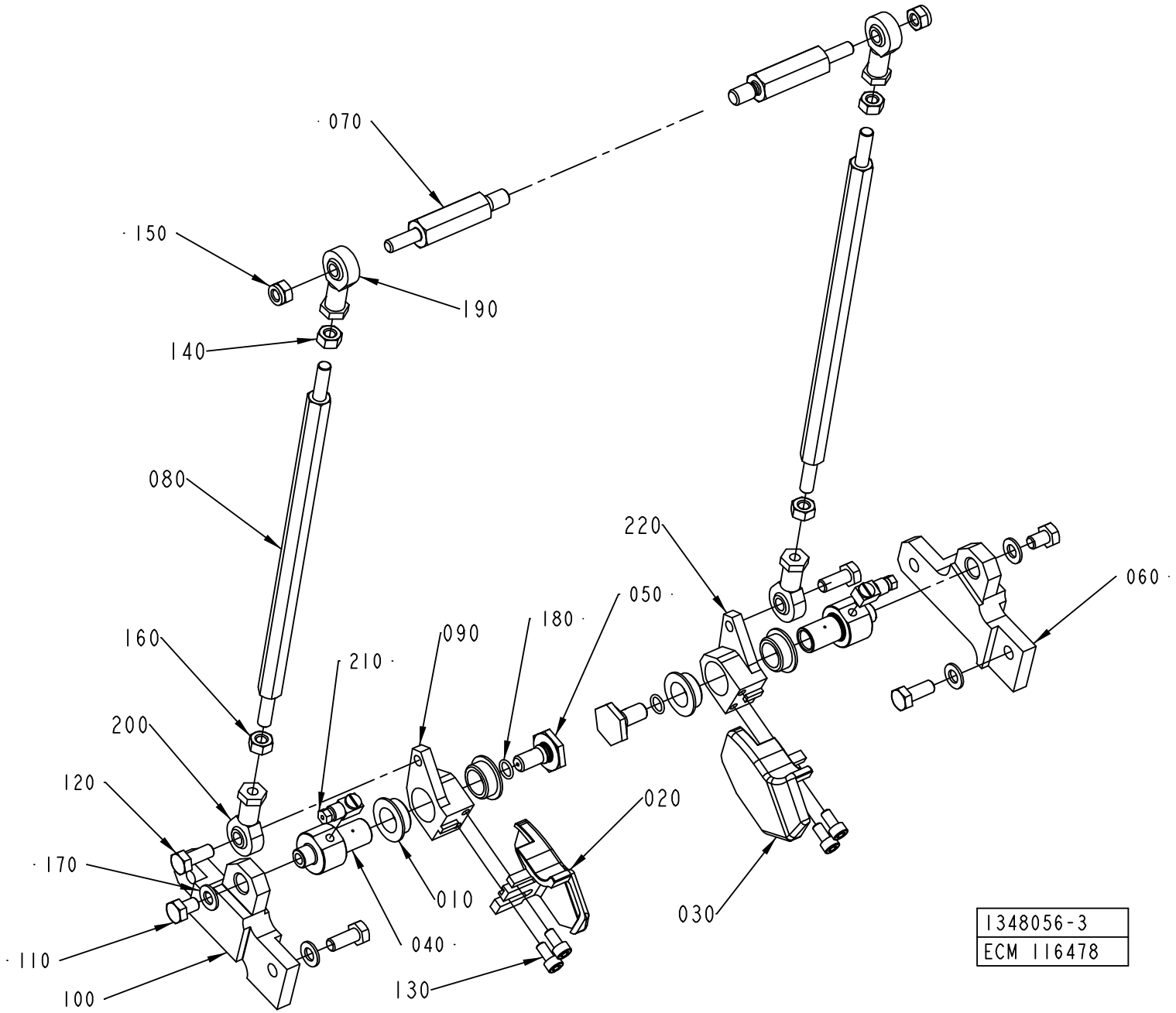
070
150
190
140
080
160
210
090
180
050
220
060
200
120
170
110
100
040
010
020
030
130
1348056-3
ECM 116478

ECM: 258279 - 20060702
Group number: 1348056-0300
Assembly Drawing: 1348056-3_1_AA

This list covers pages from 5-10 to 5-13

Pos	Part No	UN	Qty	Description	Page No
TBA 1000B STDA7 (See drawing on page: 5-10)					
020	1487922-0000		1	FOLDING DEVICE	
030	1487923-0000		1	FOLDING DEVICE	
060	1347600-0000		1	SUPPORT	
070	1499765-0000		2	AXLE LINK	
080	2609368-0000		2	TIE ROD	
090	1350440-0000		2	LEVER	
100	1350441-0000		1	SUPPORT	
TBA 1000SQ, TBA 1000S STDA7, TBA 1000S LIGHTCAP (See drawing on page: 5-10)					
020	1487922-0000		1	FOLDING DEVICE	
030	1487923-0000		1	FOLDING DEVICE	
060	1347600-0000		1	SUPPORT	
070	1499765-0000		2	AXLE LINK	
080	1499103-0000		2	TIE ROD	
090	1350440-0000		2	LEVER	
100	1350441-0000		1	SUPPORT	
TPA 0250SQ (See drawing on page: 5-10)					
020	1296180-0000		1	FOLDING DEVICE	
030	1296181-0000		1	FOLDING DEVICE	
060	1532267-0000		1	SUPPORT	
070	1532268-0000		2	AXLE LINK	
080	1532269-0000		2	TIE ROD	
090	1350440-0000		2	LEVER	
100	1532270-0000		1	SUPPORT	
TPA 0330SQ (See drawing on page: 5-10)					
020	1296180-0000		1	FOLDING DEVICE	
030	1296181-0000		1	FOLDING DEVICE	
060	1532267-0000		1	SUPPORT	
070	1532268-0000		2	AXLE LINK	
080	1532269-0000		2	TIE ROD	
090	1350440-0000		2	LEVER	
100	1532270-0000		1	SUPPORT	
TPA 0500SQ SMILE (See drawing on page: 5-12)					
020	2606277-0000		1	FOLDING DEVICE	
030	2606278-0000		1	FOLDING DEVICE	
060	2529673-0000		1	SUPPORT	
070	1532268-0000		2	AXLE LINK	
080	2527531-0000		2	TIE ROD	
090	2529676-0000		1	LEVER	
100	2529674-0000		1	SUPPORT	
220	2529675-0000		1	LEVER	
TPA 1000SQ (See drawing on page: 5-10)					
020	1296180-0000		1	FOLDING DEVICE	
030	1296181-0000		1	FOLDING DEVICE	
060	1347600-0000		1	SUPPORT	
070	1499765-0000		2	AXLE LINK	
080	1519340-0000		2	TIE ROD	
090	1350440-0000		2	LEVER	
100	1350441-0000		1	SUPPORT	
TPA 1000SQ SMILE (See drawing on page: 5-12)					
020	2529671-0000		1	FOLDING DEVICE	
030	2529672-0000		1	FOLDING DEVICE	
060	2553343-0000		1	SUPPORT	
070	2553346-0000		2	AXLE LINK	
080	2553345-0000		2	TIE ROD	
090	2529676-0000		1	LEVER	
100	2553344-0000		1	SUPPORT	
220	2529675-0000		1	LEVER	
Common Parts					
010	1282708-0000		4	BUSHING	
040	1347495-0000		2	AXLE PIN	
050	1347496-0000		2	SCREW	
110	312105-0447		2	SCREW M6S ISO 4017 M8X12 A480	
120	312105-0451		4	SCREW M6S ISO 4017 M8X20 A480	
130	312115-0366		4	SCREW ISO4762 M6X12 A4 80	
140	312605-0318		2	HEXAGON NUT, M6M M8 A280	
150	312812-0318		2	HEXAGON NUT, NY-LOCK M8 A480	
160	312902-0318		2	NUT HEX. LEFT THREAD, M8 A280	
170	315105-0165		4	WASHER BRB 8,4X16 RFR	
180	315202-0107		2	O-RING 9,1X1,6 MM	
190	90115-0139		2	ROD END, ID=8 MM, M8X1,25	
200	90115-0180		2	ROD END, ID=8 MM, M8X1,25 LH	
210	90134-0058		2	CONNECTION	

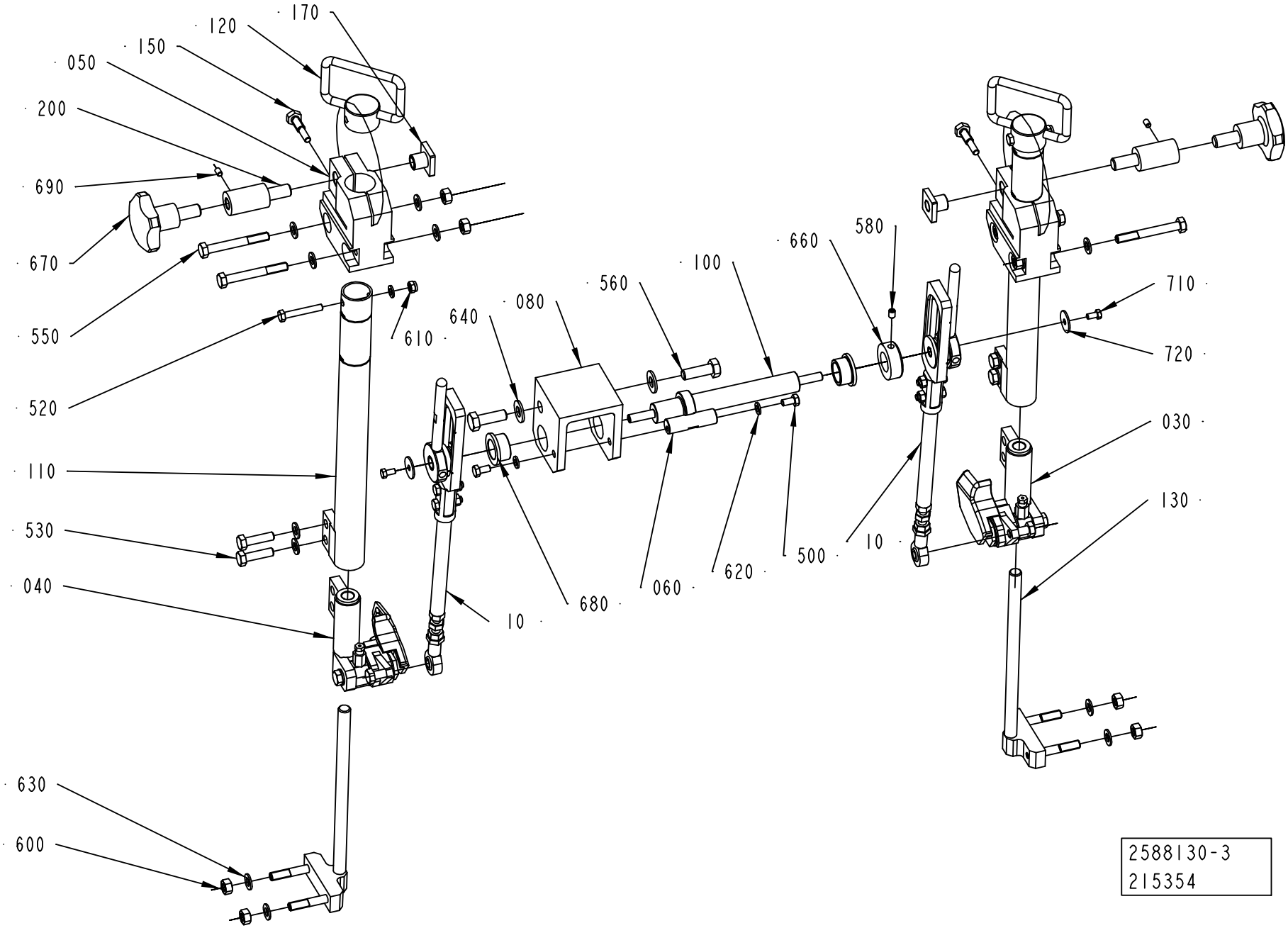
170
120
150
050
200
690
670
550
520
110
530
040
630
600
610
640
080
560
100
660
580
710
720
030
130
10
680
060
620
500
10
2588130-3
215354

ECM: 245046 - 20060208
Group number: 2588130-0100
Assembly Drawing: 2588130-3_1_AB

Pos	Part No	UN	Qty	Description	Page No
TBA 0200SQ, TBA 0250SQ (See drawing on page: 5-14)					
010	2619584-0100		2	STRUT	**5-17**
045	2668238-0000		2	PIPE	
055	2663367-0000		2	NUT	
100	2647103-0000		1	SHAFT	
110	2619588-0000		2	PIPE	
140	2663371-0000		2	SCREW	
200	2739682-0000		2	SPACER SCREW	
300	312105-0366		4	SCREW M6S ISO 4017 M6X12 A480	
320	312105-0378		2	SCREW M6S ISO 4014 M6X40 A480	
337	312105-0464		4	SCREW M6S ISO 4014 M8X65 A480	
340	312105-0495		2	SCREW M6S ISO 4017 M10X30 A480	
380	312318-0362		1	SCREW ISO4029 M6X8 A4	
400	312605-0318		8	HEXAGON NUT, M6M M8 A280	
405	315105-0153		2	WASHER BRB 6,4X12 RFR	
410	315105-0153		8	WASHER BRB 6,4X12 RFR	
420	315105-0165		16	WASHER BRB 8,4X16 RFR	
430	315105-0173		2	WASHER BRB 10,5X20 RFR	
470	315742-0116		2	RETAINING RING 20 SMS 199 RFR	
475	318856-0115		2	KNOB, EXTERNAL THREAD. NO. 8306-0278	
510	312105-0325		2	SCREW M6S ISO 4017 M5X10 A480	
520	90005-0125		2	WASHER PLAIN ROUND 5,5/22, H=1,5 FZB	
530	312105-0455		4	SCREW M6S ISO 4017 M8X30 A480	
690	312318-0323		2	SCREW ISO4029 M5X8 A4	
TPA 0250SQ, TPA 0200SQ (See drawing on page: 5-14)					
010	2619584-0100		2	STRUT	**5-17**
100	2647103-0000		1	SHAFT	
110	2674257-0000		2	PIPE	
120	2619589-0000		2	HANDLE	
150	2663371-0000		2	SCREW	
170	2663367-0000		2	NUT	
200	2739682-0000		2	SPACER SCREW	
500	312105-0366		2	SCREW M6S ISO 4017 M6X12 A480	
520	312105-0378		2	SCREW M6S ISO 4014 M6X40 A480	
530	312105-0455		4	SCREW M6S ISO 4017 M8X30 A480	
550	312105-0464		4	SCREW M6S ISO 4014 M8X65 A480	
580	312318-0362		5	SCREW ISO4029 M6X8 A4	
600	312605-0318		9	HEXAGON NUT, M6M M8 A280	
610	312812-0316		2	HEXAGON NUT, NY-LOCK M6 A480	
620	315105-0153		4	WASHER BRB 6,4X12 RFR	
630	315105-0165		16	WASHER BRB 8,4X16 RFR	
640	315105-0173		2	WASHER BRB 10,5X20 RFR	
660	315742-0116		1	RETAINING RING 20 SMS 199 RFR	
670	318856-0115		2	KNOB, EXTERNAL THREAD. NO. 8306-0278	
680	321111-0302		2	FLANGE BUSHING, 20X26X15 MM	
690	312318-0323		2	SCREW ISO4029 M5X8 A4	
710	312105-0325		2	SCREW M6S ISO 4017 M5X10 A480	
720	90005-0125		2	WASHER PLAIN ROUND 5,5/22, H=1,5 FZB	
TPA 1000SQ, TPA 0750SQ (See drawing on page: 5-14)					
010	2619584-0100		2	STRUT	**5-17**
045	2647102-0000		2	PIPE	
100	2647103-0000		1	SHAFT	
120	2619589-0000		2	HANDLE	
150	2663371-0000		2	SCREW	
170	2663367-0000		2	NUT	
200	2739682-0000		2	SPACER SCREW	
500	312105-0366		2	SCREW M6S ISO 4017 M6X12 A480	
520	312105-0378		2	SCREW M6S ISO 4014 M6X40 A480	
550	312105-0464		4	SCREW M6S ISO 4014 M8X65 A480	
560	312105-0495		2	SCREW M6S ISO 4017 M10X30 A480	
580	312318-0362		5	SCREW ISO4029 M6X8 A4	
600	312605-0318		8	HEXAGON NUT, M6M M8 A280	
610	312812-0316		2	HEXAGON NUT, NY-LOCK M6 A480	
620	315105-0153		8	WASHER BRB 6,4X12 RFR	
630	315105-0165		16	WASHER BRB 8,4X16 RFR	
640	315105-0173		2	WASHER BRB 10,5X20 RFR	
660	315742-0116		1	RETAINING RING 20 SMS 199 RFR	
670	318856-0115		2	KNOB, EXTERNAL THREAD. NO. 8306-0278	
680	321111-0302		2	FLANGE BUSHING, 20X26X15 MM	
690	312318-0323		2	SCREW ISO4029 M5X8 A4	
710	312105-0325		2	SCREW M6S ISO 4017 M5X10 A480	
720	90005-0125		2	WASHER PLAIN ROUND 5,5/22, H=1,5 FZB	
730	312105-0455		4	SCREW M6S ISO 4017 M8X30 A480	
Common Parts					
030	2619597-0100		1	FLAP GUIDE	**5-19**
040	2619598-0100		1	FLAP GUIDE	**5-21**
050	2663369-0000		2	BLOCK	
060	2588127-0000		1	AXLE PIN	
080	2588134-0000		1	YOKE	
130	2663370-0000		2	SUPPORT	

Machine Type | Group Description | Used-In | Group Number | Page No

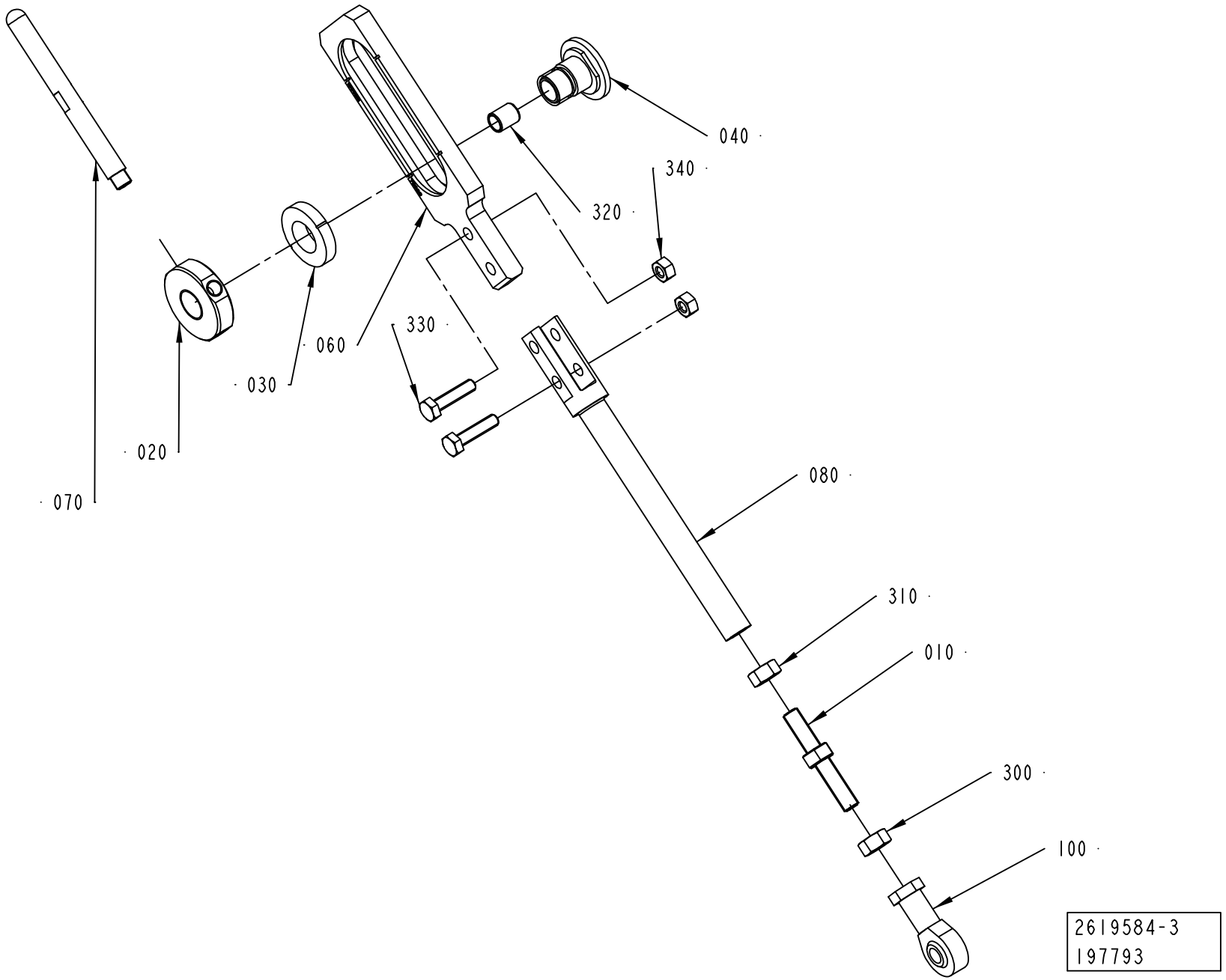
040
340
320
330
060
030
020
070
080
310
010
300
100
2619584-3
197793

ECM: 210089 - 20050520
Group number: 2619584-0100
Assembly Drawing: 2619584-3_1_AA

Pos	Part No	UN	Qty	Description	Page No
TBA 0200SQ, TBA 0250SQ (See drawing on page: 5-16)					
060	2668236-0000		1	LEVER	
080	2668237-0000		1	SHAFT	
200	90115-0021		1	ROD END, ID=8 MM, M8X1,25 LH	
330	312105-0372		2	SCREW M6S ISO 4017 M6X25 A480	
340	312605-0316		2	HEXAGON NUT, M6M M6 A280	
TPA 0250SQ, TPA 0200SQ (See drawing on page: 5-16)					
060	2674255-0000		1	STRUT	
080	2674256-0000		1	SHAFT	
200	90115-0021		1	ROD END, ID=8 MM, M8X1,25 LH	
330	312105-0372		2	SCREW M6S ISO 4017 M6X25 A480	
340	312605-0316		2	HEXAGON NUT, M6M M6 A280	
TPA 1000SQ, TPA 0750SQ (See drawing on page: 5-16)					
060	2647108-0000		1	STRUT	
080	2647109-0000		1	SHAFT	
200	90115-0021		1	ROD END, ID=8 MM, M8X1,25 LH	
330	312105-0372		2	SCREW M6S ISO 4017 M6X25 A480	
340	312605-0316		2	HEXAGON NUT, M6M M6 A280	
Common Parts					
010	2598880-0000		1	SETTING SCREW	
020	2619528-0000		1	LOCKING CIRCLIP	
030	2619529-0000		1	SLEEVE	
040	2619530-0000		1	SLEEVE	
070	2619596-0000		1	HANDLE	
300	312605-0318		1	HEXAGON NUT, M6M M8 A280	
310	312902-0318		1	NUT HEX. LEFT THREAD, M8 A280	
320	321141-0104		1	BEARING BUSH W/O FLANGE, 8X10X12 MM	

Pos	Part No	UN	Qty	Description	Page No

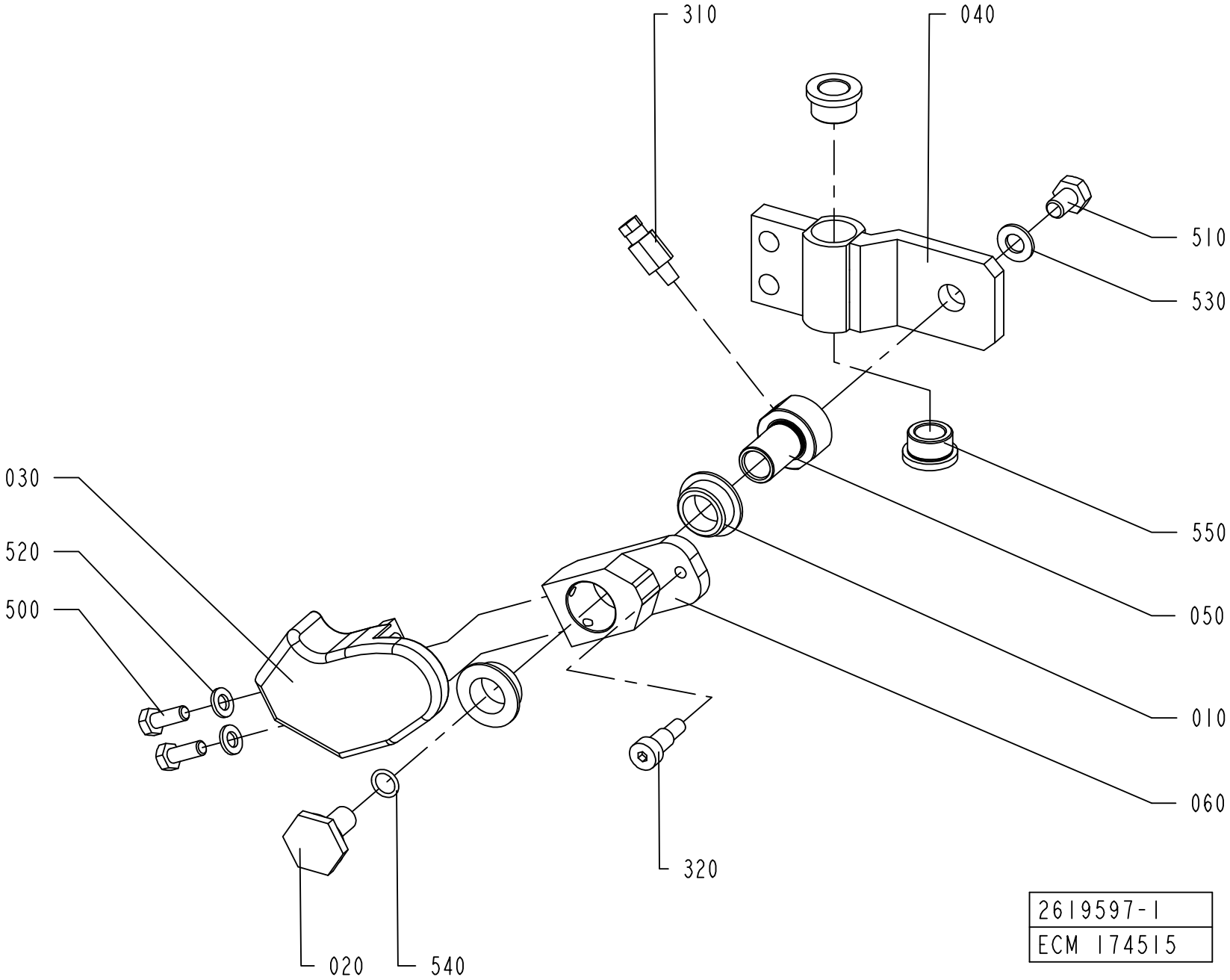
310
040
510
530
030
520
500
550
050
010
060
320
020
540
2619597-1
ECM 174515

ECM: 213700 - 20050520
Group number: 2619597-0100
Assembly Drawing: 2619597-1_1_AA

Pos	Part No	UN	Qty	Description	Page No
TBA 0200SQ, TBA 0250SQ					
030	2746790-0000		1	FOLDING DEVICE	
040	2668245-0000		1	SLIDER	
050	2647105-0000		1	AXLE PIN	
060	1350440-0000		1	LEVER	
320	312151-0451		1	SCREW EN 10642 MF6S M8X20 10.9 EL.PL	
500	312105-0367		2	SCREW M6S ISO 4017 M6X14 A480	
510	312105-0451		1	SCREW M6S ISO 4017 M8X20 A480	
TPA 0250SQ, TPA 0200SQ					
030	2698293-0000		1	FOLDING DEVICE	
040	2674258-0000		1	SLIDER	
050	2647105-0000		1	AXLE PIN	
060	1350440-0000		1	LEVER	
320	312151-0451		1	SCREW EN 10642 MF6S M8X20 10.9 EL.PL	
500	312105-0367		2	SCREW M6S ISO 4017 M6X14 A480	
510	312105-0449		1	SCREW M6S ISO 4017 M8X16 A480	
TPA 1000SQ, TPA 0750SQ					
030	2529671-0000		1	FOLDING DEVICE	
040	2647107-0000		1	SLIDER	
050	2647105-0000		1	AXLE PIN	
060	2647104-0000		1	LEVER	
320	312105-0451		1	SCREW M6S ISO 4017 M8X20 A480	
500	312105-0367		2	SCREW M6S ISO 4017 M6X14 A480	
510	312105-0447		1	SCREW M6S ISO 4017 M8X12 A480	
Common Parts					
010	1282708-0000		2	BUSHING	
020	1347496-0000		1	SCREW	
310	90134-0065		1	CONNECTION M6 TUBE 2,5 MM	
520	315101-0153		2	WASHER PLAIN, BRB, 6,4/12 H=1,5	
530	315105-0165		1	WASHER BRB 8,4X16 RFR	
540	315202-0107		1	O-RING 9,1X1,6 MM	
550	321101-0173		2	FLANGE BUSHING, 12X18X12 MM	

Pos	Part No	UN	Qty	Description	Page No

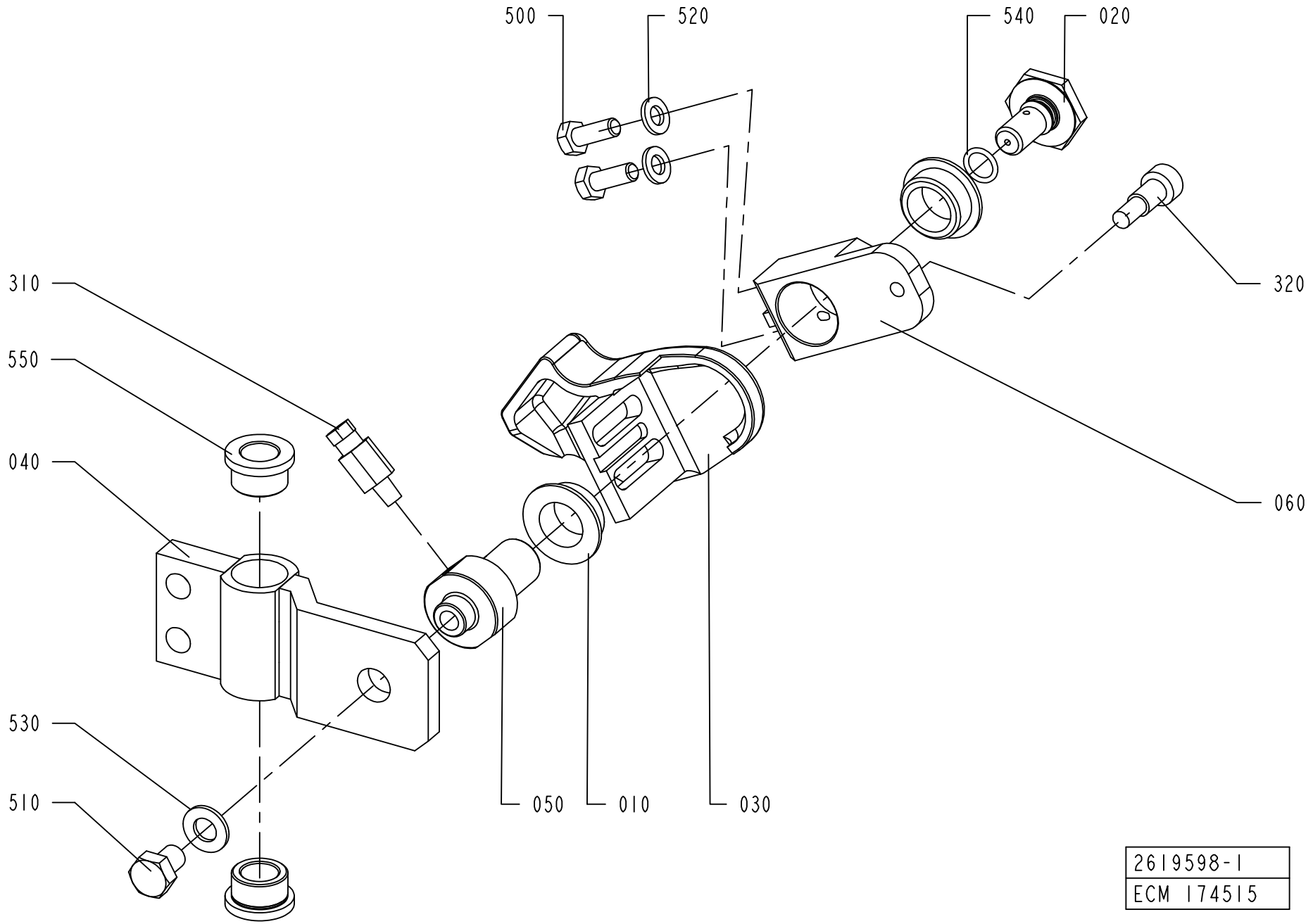
500
520
540
020
320
310
550
040
060
530
510
050
010
030
2619598-1
ECM 174515

ECM: 213701 - 20050520
Group number: 2619598-0100
Assembly Drawing: 2619598-1_1_AA

Pos	Part No	UN	Qty	Description	Page No
TBA 0200SQ, TBA 0250SQ					
030	2746791-0000		1	FOLDING DEVICE	
040	2668246-0000		1	SLIDER	
050	2647105-0000		1	AXLE PIN	
060	1350440-0000		1	LEVER	
320	312105-0451		1	SCREW M6S ISO 4017 M8X20 A480	
500	312105-0367		2	SCREW M6S ISO 4017 M6X14 A480	
510	312105-0451		1	SCREW M6S ISO 4017 M8X20 A480	
TPA 0250SQ, TPA 0200SQ					
030	2698294-0000		1	FOLDING DEVICE	
040	2674254-0000		1	SLIDER	
050	2647105-0000		1	AXLE PIN	
060	1350440-0000		1	LEVER	
320	312105-0451		1	SCREW M6S ISO 4017 M8X20 A480	
500	312105-0367		2	SCREW M6S ISO 4017 M6X14 A480	
510	312105-0449		1	SCREW M6S ISO 4017 M8X16 A480	
TPA 1000SQ, TPA 0750SQ					
030	2529672-0000		1	FOLDING DEVICE	
040	2647106-0000		1	SLIDER	
050	2647105-0000		1	AXLE PIN	
060	2647104-0000		1	LEVER	
320	312105-0451		1	SCREW M6S ISO 4017 M8X20 A480	
500	312105-0367		2	SCREW M6S ISO 4017 M6X14 A480	
510	312105-0447		1	SCREW M6S ISO 4017 M8X12 A480	
Common Parts					
010	1282708-0000		2	BUSHING	
020	1347496-0000		1	SCREW	
310	90134-0065		1	CONNECTION M6 TUBE 2,5 MM	
520	315101-0153		2	WASHER PLAIN, BRB, 6,4/12 H=1,5	
530	315105-0165		1	WASHER BRB 8,4X16 RFR	
540	315202-0107		1	O-RING 9,1X1,6 MM	
550	321101-0173		2	FLANGE BUSHING, 12X18X12 MM	

Pos	Part No	UN	Qty	Description	Page No

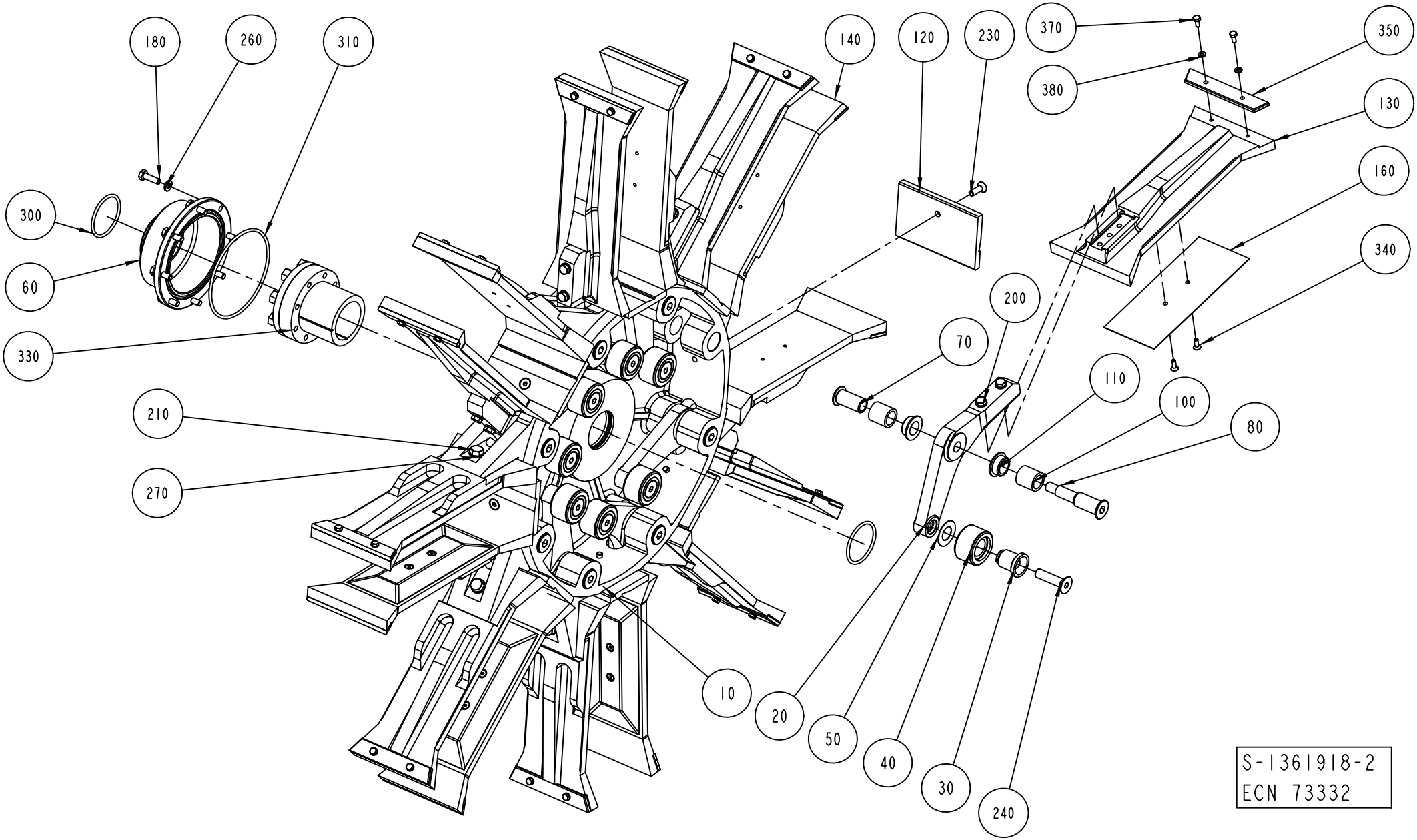
180
260
310
140
120
230
370
350
380
130
160
300
340
60
200
70
330
110
100
210
80
270
10
20
50
40
30
240
S-1361918-2
ECN 73332

ECM: 272092 - 20061101
Group number: 1361918-0300
Assembly Drawing: 1361918-2_1_AB

This list covers pages from 5-22 to 5-25

Pos	Part No	UN	Qty	Description	Page No
A3/FLEX TPA 0330SQ					
010	1144264-0000		1	HUB	
130	1532297-0000		8	FLAP	
140	1532298-0000		8	FLAP	
200	312105-0376		16	SCREW M6S ISO 4014 M6X35 A480	
210	312105-0453		8	SCREW M6S ISO 4017 M8X25 A480	
260	315105-0153		24	WASHER BRB 6,4X12 RFR	
A3/FLEX TPA 1000SQ					
010	1144264-0000		1	HUB	
120	1538770-0000		8	BOTTOM	
130	2555404-0000		8	FLAP	
140	1524484-0000		8	FLAP	
160	1523467-0000		8	VOLUME BULGE	
200	312105-0378		16	SCREW M6S ISO 4014 M6X40 A480	
210	312105-0453		8	SCREW M6S ISO 4017 M8X25 A480	
230	312155-0378		8	SCREW DIN 7991 MF6S M6X40 A4 70	
260	315105-0153		24	WASHER BRB 6,4X12 RFR	
340	312155-0289		16	SCREW DIN 7991 MF6S M4X10 A4 70	
A3/FLEX TBA 1000B STDA7					
010	1144264-0000		1	HUB	
120	2606289-0000		8	BOTTOM	
130	1260704-0000		8	FLAP	
140	1260705-0000		8	FLAP	
200	312105-0376		16	SCREW M6S ISO 4014 M6X35 A480	
210	312105-0453		8	SCREW M6S ISO 4017 M8X25 A480	
230	312155-0380		8	SCREW DIN 7991 MF6S M6X50 A4 70	
260	315105-0153		24	WASHER BRB 6,4X12 RFR	
A3/FLEX TBA 1000S LIGHTCAP					
010	1144264-0000		1	HUB	
120	2727874-0000		8	BOTTOM	
130	1144926-0000		8	FLAP	
140	1144927-0000		8	FLAP	
160	2550211-0000		8	VOLUME BULGE	
200	312105-0376		16	SCREW M6S ISO 4014 M6X35 A480	
210	312105-0453		8	SCREW M6S ISO 4017 M8X25 A480	
230	312155-0370		8	SCREW DIN 7991 MF6S M6X20 A4 70	
260	315105-0153		24	WASHER BRB 6,4X12 RFR	
340	312155-0287		16	SCREW DIN 7991 MF6S M4X8 A4 70	
A3/FLEX TBA 1000S STDA7					
010	1144264-0000		1	HUB	
120	2509938-0000		8	BOTTOM	
130	1144926-0000		8	FLAP	
140	1144927-0000		8	FLAP	
160	2550211-0000		8	VOLUME BULGE	
200	312105-0376		16	SCREW M6S ISO 4014 M6X35 A480	
210	312105-0453		8	SCREW M6S ISO 4017 M8X25 A480	
230	312155-0370		8	SCREW DIN 7991 MF6S M6X20 A4 70	
260	315105-0153		24	WASHER BRB 6,4X12 RFR	
340	312155-0287		16	SCREW DIN 7991 MF6S M4X8 A4 70	
A3/FLEX TPA 0500SQ SMILE					
010	1144264-0000		1	HUB	
120	2602614-0000		8	BOTTOM	
130	1549844-0000		8	FLAP	
140	2564347-0000		8	FLAP	
200	312105-0376		16	SCREW M6S ISO 4014 M6X35 A480	
210	312105-0453		8	SCREW M6S ISO 4017 M8X25 A480	
230	312105-0368		8	SCREW M6S ISO 4017 M6X16 A480	
260	315103-0153		32	WASHER, BRB, 6,4/12,H=1,5 NIPL BR	
A3/FLEX TPA 1000SQ SMILE					
010	1144264-0000		1	HUB	
120	2802612-0000		8	BOTTOM	
130	2558145-0000		8	FLAP	
140	1524484-0000		8	FLAP	
160	1523467-0000		8	VOLUME BULGE	
210	312105-0453		8	SCREW M6S ISO 4017 M8X25 A480	
230	312105-0368		8	SCREW M6S ISO 4017 M6X16 A480	
260	315103-0153		32	WASHER, BRB, 6,4/12,H=1,5 NIPL BR	
340	312155-0289		16	SCREW DIN 7991 MF6S M4X10 A4 70	
A3/FLEX TBA 0200S					
010	1144264-0000		1	HUB	
130	1260885-0000		8	FLAP	
140	1260886-0000		8	FLAP	
200	312105-0376		16	SCREW M6S ISO 4014 M6X35 A480	
210	312105-0453		8	SCREW M6S ISO 4017 M8X25 A480	
260	315105-0153		24	WASHER BRB 6,4X12 RFR	
A3/FLEX TBA 0500S					
010	1144264-0000		1	HUB	
130	1499141-0000		8	FLAP	
140	1499142-0000		8	FLAP	
160	1524035-0000		8	VOLUME BULGE	
200	312105-0376		16	SCREW M6S ISO 4014 M6X35 A480	
210	312105-0453		8	SCREW M6S ISO 4017 M8X25 A480	
260	315105-0153		24	WASHER BRB 6,4X12 RFR	
340	312155-0289		16	SCREW DIN 7991 MF6S M4X10 A4 70	

Machine Type | Group Description | Used-In | Group Number | Page No

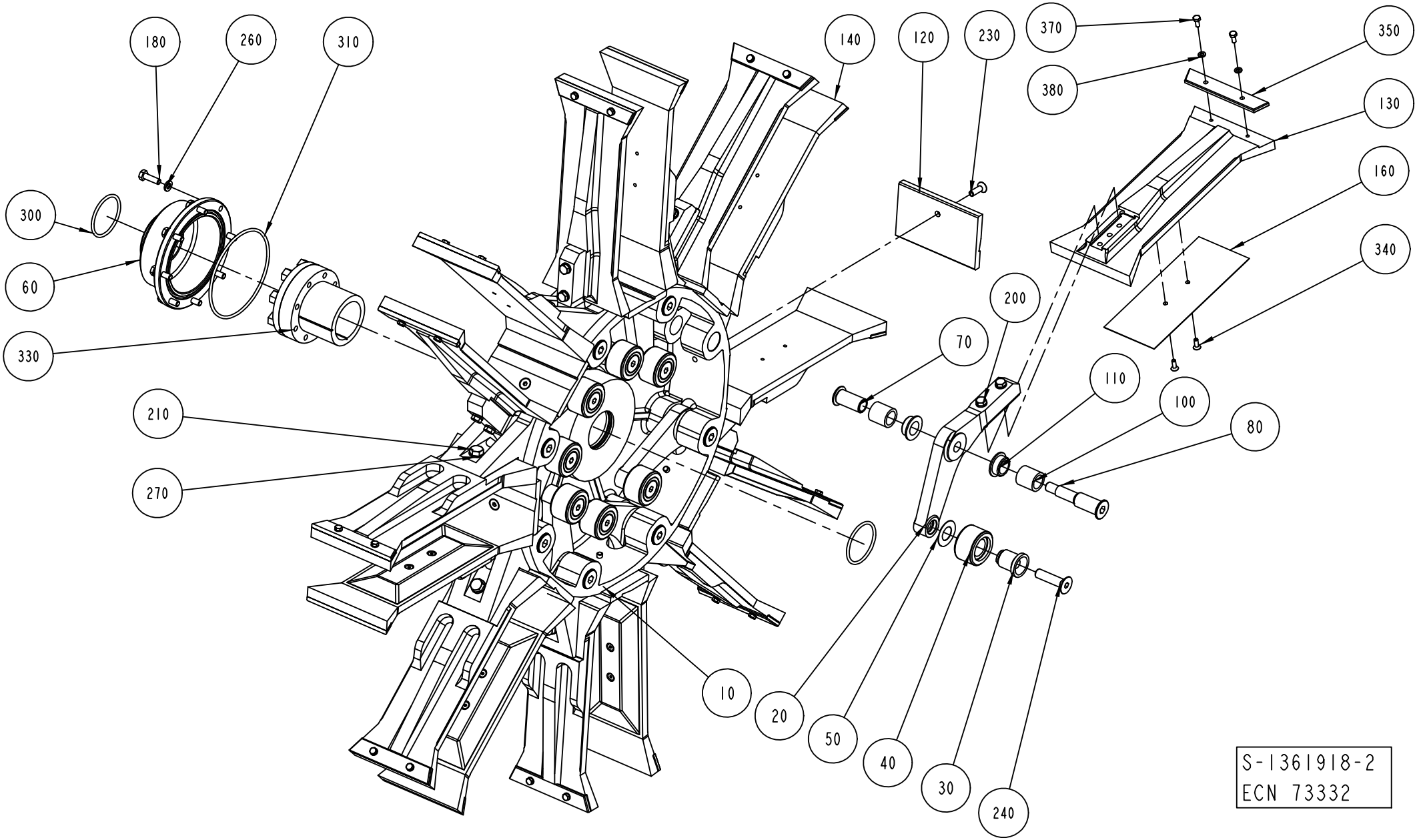
180
260
310
140
120
230
370
350
380
130
160
300
340
60
200
70
330
110
100
210
80
270
10
20
50
40
30
240
S-1361918-2
ECN 73332

Pos	Part No	UN	Qty	Description	Page No
A3/FLEX TBA 1000B NOMOLDEDCAP (Cont'd)					
010	1144264-0000		1	HUB	
120	1260703-0000		8	BOTTOM	
130	1260704-0000		8	FLAP	
140	1260705-0000		8	FLAP	
200	312105-0376		16	SCREW M6S ISO 4014 M6X35 A480	
210	312105-0453		8	SCREW M6S ISO 4017 M8X25 A480	
230	312155-0380		8	SCREW DIN 7991 MF6S M6X50 A4 70	
260	315105-0153		24	WASHER BRB 6,4X12 RFR	
A3/FLEX TBA 1000S NOMOLDEDCAP					
010	1144264-0000		1	HUB	
120	1144924-0000		8	BOTTOM	
130	1144926-0000		8	FLAP	
140	1144927-0000		8	FLAP	
160	2550211-0000		8	VOLUME BULGE	
200	312105-0376		16	SCREW M6S ISO 4014 M6X35 A480	
210	312105-0453		8	SCREW M6S ISO 4017 M8X25 A480	
230	312155-0370		8	SCREW DIN 7991 MF6S M6X20 A4 70	
260	315105-0153		24	WASHER BRB 6,4X12 RFR	
340	312155-0287		16	SCREW DIN 7991 MF6S M4X8 A4 70	
A3/FLEX TBA 1000SQ					
010	1144264-0000		1	HUB	
120	1511558-0000		8	BOTTOM	
130	1487739-0000		8	FLAP	
140	1487738-0000		8	FLAP	
200	312105-0376		16	SCREW M6S ISO 4014 M6X35 A480	
210	312105-0453		8	SCREW M6S ISO 4017 M8X25 A480	
230	312155-0370		8	SCREW DIN 7991 MF6S M6X20 A4 70	
260	315105-0153		24	WASHER BRB 6,4X12 RFR	
A3/FLEX TBA 1500S					
010	1144264-0000		1	HUB	
120	1317556-0000		8	BOTTOM	
130	1317554-0000		8	FLAP	
140	1317555-0000		8	FLAP	
200	312105-0376		16	SCREW M6S ISO 4014 M6X35 A480	
210	312105-0453		8	SCREW M6S ISO 4017 M8X25 A480	
230	312155-0376		8	SCREW DIN 7991 MF6S M6X35 A4 70	
260	315105-0153		24	WASHER BRB 6,4X12 RFR	
350	1317656-0000		16	INSERT	
370	312105-0289		32	SCREW M6S ISO 4017 M4X10 A470	
380	315105-0136		32	WASHER BRB 4,3X9 RFR	
Common Parts					

Pos	Part No	UN	Qty	Description	Page No
020	1279559-0000		8	ARM	
030	1144312-0000		8	AXLE PIN	
040	1144335-0000		8	ROLLER	
050	1144354-0000		8	WASHER	
060	1144356-0000		1	COVER	
070	1296970-0000		8	SCREW BUSHING	
080	1296969-0000		8	SCREW HOLDER	
100	1144417-0000		16	BUSHING	
110	1282708-0000		16	BUSHING	
180	312105-0370		8	SCREW M6S ISO 4017 M6X20 A480	
240	312155-0499		8	SCREW DIN 7991 MF6S M10X40 A4 70	
270	315105-0165		8	WASHER BRB 8,4X16 RFR	
300	315202-0225		2	O-RING 44,2X3 MM	
310	315202-0311		1	O-RING 99,5X3 MM	
330	90208-0087		1	CLAMPING ELEMENT WITH SLEEVE, 45X59 MM	

Machine Type | Group Description | Used-In | Group Number | Page No

FOLDING PART

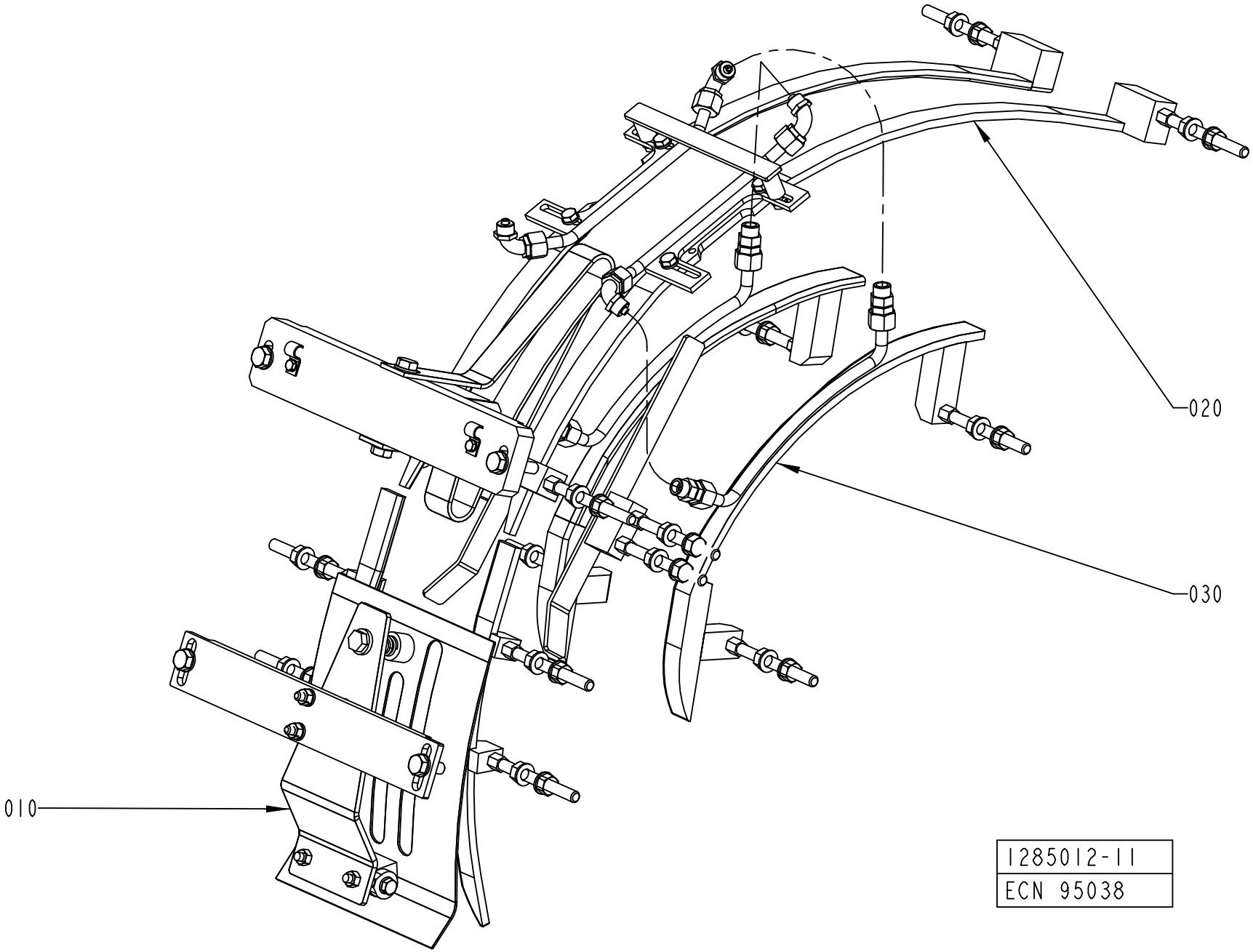

ECM: 110175 - 20030403
Group number: 1285012-0300
Assembly Drawing: 1285012-11_1_AA

Pos	Part No	UN	Qty	Description	Page No
-					
010	1558932-0100		1	TOP SECTION	**5-29, 5-31, 5-33**
020	1558935-0100		1	TOP RAIL	**5-35, 5-37, 5-39, 5-41, 5-43**
030	1558940-0200		1	FLAP GUIDE	**5-45, 5-47, 5-49, 5-51, 5-53, 5-55**

Pos	Part No	UN	Qty	Description	Page No

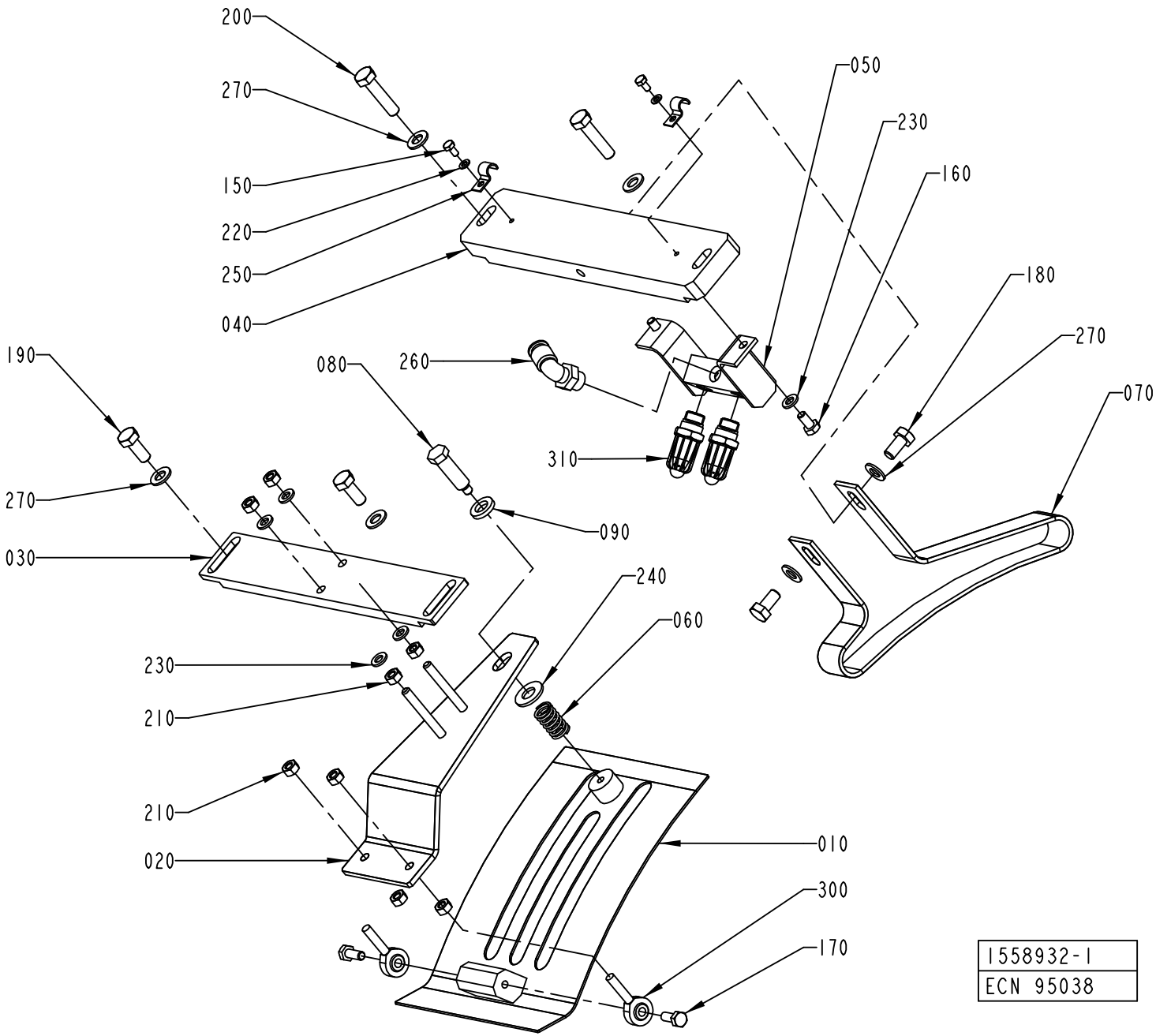
200
270
150
220
250
040
050
230
160
180
270
070
190
080
260
310
270
090
030
240
060
230
210
210
020
010
300
170
1558932-1
ECN 95038

ECM: 213808 - 20060101
Group number: 1558932-0100
Assembly Drawing: 1558932-1_1_AA

This list covers pages from 5-28 to 5-33

Pos	Part No	UN	Qty	Description	Page No
TBA 0200B, TBA 0250B (See drawing on page: 5-28)					
010	1317211-0000		1	COVERING PLATE	
020	1317213-0000		1	ADJUSTING PLATE	
030	1144975-0000		1	ATTACHMENT PLATE	
040	1144902-0000		1	SUPPORT	
060	1317633-0000		1	SPRING	
150	312105-0287		2	SCREW M6S ISO 4017 M4X8 A470	
190	312105-0451		2	SCREW M6S ISO 4017 M8X20 A480	
210	312605-0316		8	HEXAGON NUT, M6M M6 A280	
220	315105-0136		2	WASHER BRB 4,3X9 RFR	
230	315105-0153		4	WASHER BRB 6,4X12 RFR	
250	90165-0057		2	PIPE CLIP FOR TUBE D=6 MM	
270	315105-0165		4	WASHER BRB 8,4X16 RFR	
TBA 0200S (See drawing on page: 5-28)					
010	1317211-0000		1	COVERING PLATE	
020	1317213-0000		1	ADJUSTING PLATE	
030	1144975-0000		1	ATTACHMENT PLATE	
040	1144902-0000		1	SUPPORT	
060	1317633-0000		1	SPRING	
070	1144901-0000		1	GUIDE	
150	312105-0287		2	SCREW M6S ISO 4017 M4X8 A470	
180	312105-0449		2	SCREW M6S ISO 4017 M8X16 A480	
190	312105-0451		2	SCREW M6S ISO 4017 M8X20 A480	
210	312605-0316		8	HEXAGON NUT, M6M M6 A280	
220	315105-0136		2	WASHER BRB 4,3X9 RFR	
230	315105-0153		4	WASHER BRB 6,4X12 RFR	
250	90165-0057		2	PIPE CLIP FOR TUBE D=6 MM	
270	315105-0165		6	WASHER BRB 8,4X16 RFR	
TBA 0250S (See drawing on page: 5-32)					
010	1317211-0000		1	COVERING PLATE	
020	1317213-0000		1	ADJUSTING PLATE	
030	1144975-0000		1	ATTACHMENT PLATE	
040	1144902-0000		1	SUPPORT	
060	90335-0036		1	COMP. SPRING 22450, 1,6X14,1X24	
070	2555637-0000		1	GUIDE	
150	312105-0287		2	SCREW M6S ISO 4017 M4X8 A470	
180	312105-0451		1	SCREW M6S ISO 4017 M8X20 A480	
190	312105-0451		2	SCREW M6S ISO 4017 M8X20 A480	
210	312605-0316		8	HEXAGON NUT, M6M M6 A280	
220	315105-0136		2	WASHER BRB 4,3X9 RFR	
230	315105-0153		4	WASHER BRB 6,4X12 RFR	
250	90165-0057		2	PIPE CLIP FOR TUBE D=6 MM	
270	315105-0165		6	WASHER BRB 8,4X16 RFR	
TBA 0330S (See drawing on page: 5-32)					
010	1317211-0000		1	COVERING PLATE	
020	1317213-0000		1	ADJUSTING PLATE	
030	1144975-0000		1	ATTACHMENT PLATE	
040	1144902-0000		1	SUPPORT	
050	1349087-0000		1	DISTRIBUTOR	
060	90335-0036		1	COMP. SPRING 22450, 1,6X14,1X24	
070	2552022-0000		1	GUIDE	
150	312105-0287		2	SCREW M6S ISO 4017 M4X8 A470	
160	312105-0366		2	SCREW M6S ISO 4017 M6X12 A480	
180	312105-0451		1	SCREW M6S ISO 4017 M8X20 A480	
190	312105-0451		2	SCREW M6S ISO 4017 M8X20 A480	
210	312605-0316		8	HEXAGON NUT, M6M M6 A280	
220	315105-0136		2	WASHER BRB 4,3X9 RFR	
230	315105-0153		6	WASHER BRB 6,4X12 RFR	
250	90165-0057		2	PIPE CLIP FOR TUBE D=6 MM	
260	342732-0104		1	ELBOW PIPE JOINT, EXT.THREAD, D=8MM-G1/4	
270	315105-0165		6	WASHER BRB 8,4X16 RFR	
310	90424-0068		1	AIR NOZZLE, G1/4, MOD. 216 BSP	
320	2553284-0000		1	BLOCK	
TBA 0500S, TBA 0500B, TBA 1000S, TBA 1000B (See drawing on page: 5-28)					
010	1144941-0000		1	COVERING PLATE	
020	1144974-0000		1	ADJUSTING PLATE	
030	1144975-0000		1	ATTACHMENT PLATE	
040	1144902-0000		1	SUPPORT	
050	1285014-0000		1	DISTRIBUTOR	
060	90335-0036		1	COMP. SPRING 22450, 1,6X14,1X24	
070	1144901-0000		1	GUIDE	
150	312105-0287		2	SCREW M6S ISO 4017 M4X8 A470	
160	312105-0366		2	SCREW M6S ISO 4017 M6X12 A480	
180	312105-0449		2	SCREW M6S ISO 4017 M8X16 A480	
190	312105-0451		2	SCREW M6S ISO 4017 M8X20 A480	
210	312605-0316		8	HEXAGON NUT, M6M M6 A280	
220	315105-0136		2	WASHER BRB 4,3X9 RFR	
230	315105-0153		6	WASHER BRB 6,4X12 RFR	
250	90165-0057		2	PIPE CLIP FOR TUBE D=6 MM	
260	342732-0104		1	ELBOW PIPE JOINT, EXT.THREAD, D=8MM-G1/4	
270	315105-0165		6	WASHER BRB 8,4X16 RFR	
310	90424-0068		2	AIR NOZZLE, G1/4, MOD. 216 BSP	
TBA 1000SQ (See drawing on page: 5-28)					
010	1144941-0000		1	COVERING PLATE	

Machine Type | Group Description | Used-In | Group Number | Page No

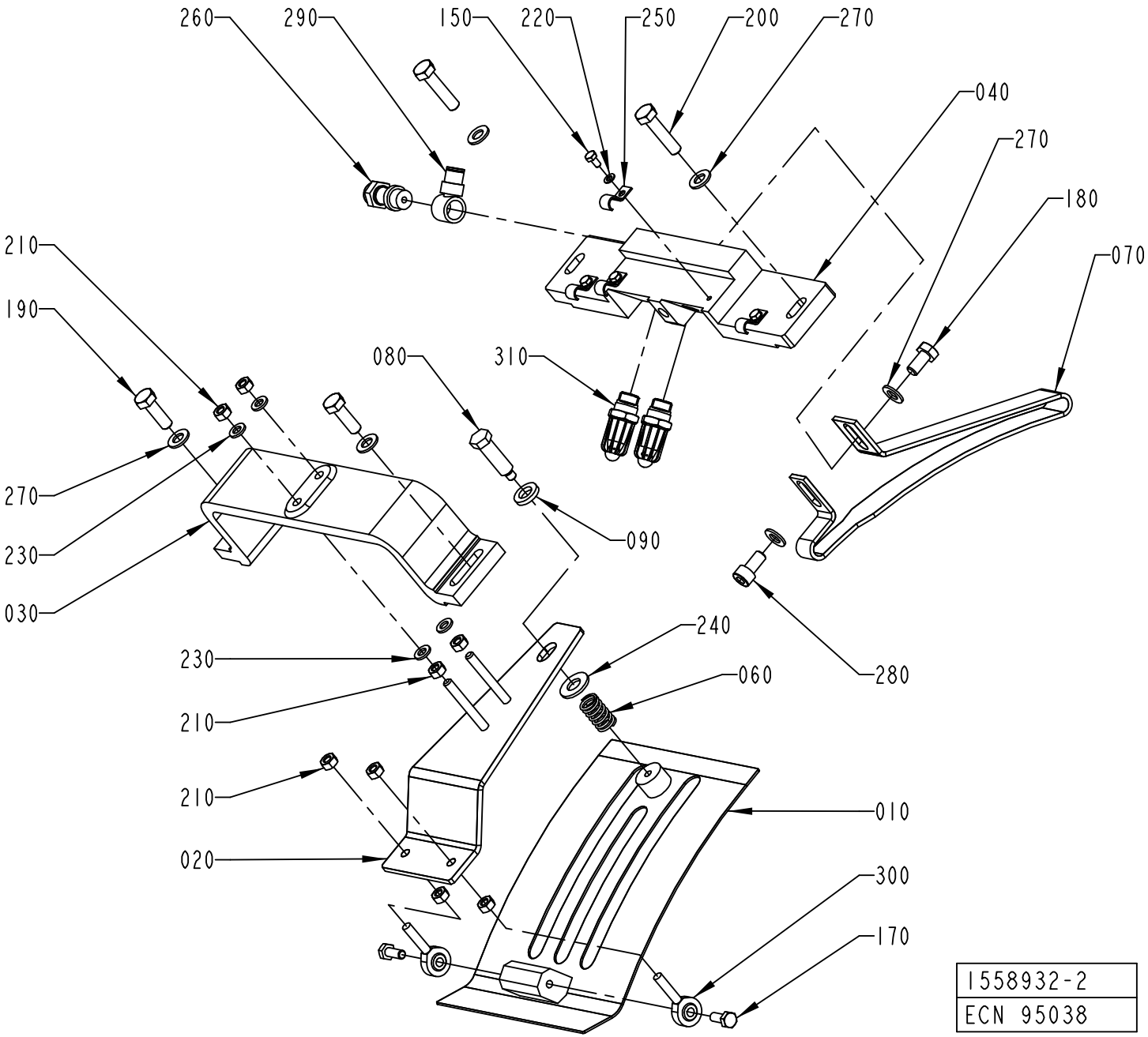
260
290
150
220
250
200
270
040
270
180
070
210
190
080
310
270
230
030
090
240
230
060
280
210
210
020
010
300
170
1558932-2
ECN 95038

Pos	Part No	UN	Qty	Description	Page No
TBA 1000SQ (Cont'd) (See drawing on page: 5-28)					
020	1144974-0000		1	ADJUSTING PLATE	
030	1144975-0000		1	ATTACHMENT PLATE	
040	1144902-0000		1	SUPPORT	
050	1349087-0000		1	DISTRIBUTOR	
060	90335-0036		1	COMP. SPRING 22450, 1,6X14,1X24	
150	312105-0287		2	SCREW M6S ISO 4017 M4X8 A470	
160	312105-0366		2	SCREW M6S ISO 4017 M6X12 A480	
190	312105-0451		2	SCREW M6S ISO 4017 M8X20 A480	
210	312605-0316		8	HEXAGON NUT, M6M M6 A280	
220	315105-0136		2	WASHER BRB 4,3X9 RFR	
230	315105-0153		6	WASHER BRB 6,4X12 RFR	
250	90165-0057		2	PIPE CLIP FOR TUBE D=6 MM	
260	342732-0104		1	ELBOW PIPE JOINT, EXT.THREAD, D=8MM-G1/4	
270	315105-0165		4	WASHER BRB 8,4X16 RFR	
310	90424-0068		1	AIR NOZZLE, G1/4, MOD. 216 BSP	
TPA 0250SQ (See drawing on page: 5-28)					
010	1317211-0000		1	COVERING PLATE	
020	1317213-0000		1	ADJUSTING PLATE	
030	1144975-0000		1	ATTACHMENT PLATE	
040	1144902-0000		1	SUPPORT	
060	90335-0036		1	COMP. SPRING 22450, 1,6X14,1X24	
070	2555637-0000		1	GUIDE	
150	312105-0287		2	SCREW M6S ISO 4017 M4X8 A470	
180	312105-0449		2	SCREW M6S ISO 4017 M8X16 A480	
190	312105-0451		2	SCREW M6S ISO 4017 M8X20 A480	
210	312605-0316		8	HEXAGON NUT, M6M M6 A280	
220	315105-0136		2	WASHER BRB 4,3X9 RFR	
230	315105-0153		4	WASHER BRB 6,4X12 RFR	
250	90165-0057		2	PIPE CLIP FOR TUBE D=6 MM	
270	315105-0165		6	WASHER BRB 8,4X16 RFR	
TPA 0330SQ (See drawing on page: 5-28)					
010	1317211-0000		1	COVERING PLATE	
020	1317213-0000		1	ADJUSTING PLATE	
030	1144975-0000		1	ATTACHMENT PLATE	
040	1144902-0000		1	SUPPORT	
050	1349087-0000		1	DISTRIBUTOR	
060	90335-0036		1	COMP. SPRING 22450, 1,6X14,1X24	
070	1558934-0000		1	GUIDE	
150	312105-0287		2	SCREW M6S ISO 4017 M4X8 A470	
160	312105-0366		2	SCREW M6S ISO 4017 M6X12 A480	
180	312105-0449		1	SCREW M6S ISO 4017 M8X16 A480	
190	312105-0451		2	SCREW M6S ISO 4017 M8X20 A480	
210	312605-0316		8	HEXAGON NUT, M6M M6 A280	
220	315105-0136		2	WASHER BRB 4,3X9 RFR	
230	315105-0153		6	WASHER BRB 6,4X12 RFR	
250	90165-0057		2	PIPE CLIP FOR TUBE D=6 MM	
260	342732-0104		1	ELBOW PIPE JOINT, EXT.THREAD, D=8MM-G1/4	
270	315105-0165		5	WASHER BRB 8,4X16 RFR	
310	90424-0068		1	AIR NOZZLE, G1/4, MOD. 216 BSP	
TPA 0500SQ (See drawing on page: 5-32)					
010	1548612-0000		1	COVERING PLATE	
020	1144974-0000		1	ADJUSTING PLATE	
030	1144975-0000		1	ATTACHMENT PLATE	
040	1144902-0000		1	SUPPORT	
050	1349087-0000		1	DISTRIBUTOR	
060	90335-0036		1	COMP. SPRING 22450, 1,6X14,1X24	
070	2552022-0000		1	GUIDE	
150	312105-0287		2	SCREW M6S ISO 4017 M4X8 A470	
160	312105-0366		2	SCREW M6S ISO 4017 M6X12 A480	
180	312105-0451		1	SCREW M6S ISO 4017 M8X20 A480	
190	312105-0451		2	SCREW M6S ISO 4017 M8X20 A480	
210	312605-0316		8	HEXAGON NUT, M6M M6 A280	
220	315105-0136		2	WASHER BRB 4,3X9 RFR	
230	315105-0153		6	WASHER BRB 6,4X12 RFR	
250	90165-0057		2	PIPE CLIP FOR TUBE D=6 MM	
260	342732-0104		1	ELBOW PIPE JOINT, EXT.THREAD, D=8MM-G1/4	
270	315105-0165		6	WASHER BRB 8,4X16 RFR	
310	90424-0068		1	AIR NOZZLE, G1/4, MOD. 216 BSP	
320	2553284-0000		1	BLOCK	
TPA 1000SQ (See drawing on page: 5-30)					
010	1548612-0000		1	COVERING PLATE	
020	1144974-0000		1	ADJUSTING PLATE	
030	1285299-0000		1	BRACKET	
040	2618424-0000		1	SUPPORT	
060	90335-0036		1	COMP. SPRING 22450, 1,6X14,1X24	
070	2618425-0000		1	GUIDE	
150	312105-0287		4	SCREW M6S ISO 4017 M4X8 A470	
180	312105-0449		1	SCREW M6S ISO 4017 M8X16 A480	
190	312105-0453		2	SCREW M6S ISO 4017 M8X25 A480	
210	312605-0316		10	HEXAGON NUT, M6M M6 A280	
220	315105-0136		4	WASHER BRB 4,3X9 RFR	
230	315105-0153		4	WASHER BRB 6,4X12 RFR	
250	90165-0057		4	PIPE CLIP FOR TUBE D=6 MM	

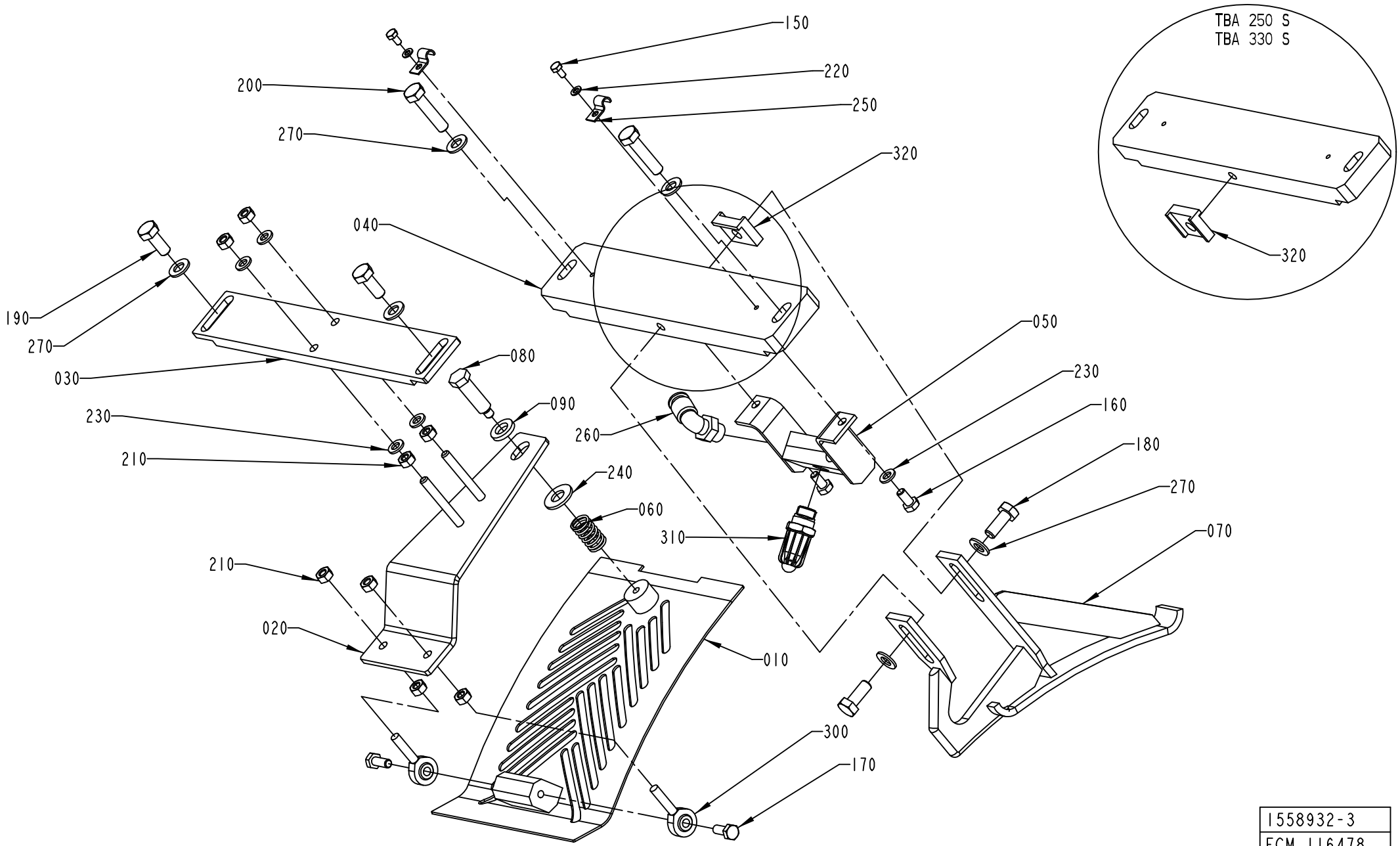

1558932-3
ECM 116478

Pos	Part No	UN	Qty	Description	Page No
TPA 1000SQ (Cont'd) (See drawing on page: 5-30)					
260	90235-0731		1	THROTTLE CHECK VALVE, G1/4", SCO-606-1/4	
270	315105-0165		5	WASHER BRB 8,4X16 RFR	
280	312115-0449		1	SCREW ISO4762 M8X16 A4 80	
290	342981-0122		1	BANJO CONNEC,RING,FOR PLAST.TUBE 8-G1/4"	
310	90424-0068		2	AIR NOZZLE, G1/4, MOD. 216 BSP	
TBA 1500S (See drawing on page: 5-30)					
010	1144941-0000		1	COVERING PLATE	
020	1144974-0000		1	ADJUSTING PLATE	
030	1285299-0000		1	BRACKET	
040	1334480-0000		1	SUPPORT	
060	90335-0036		1	COMP. SPRING 22450, 1,6X14,1X24	
070	1347057-0000		1	GUIDE	
150	312105-0287		4	SCREW M6S ISO 4017 M4X8 A470	
180	312105-0449		1	SCREW M6S ISO 4017 M8X16 A480	
190	312105-0453		2	SCREW M6S ISO 4017 M8X25 A480	
210	312605-0316		8	HEXAGON NUT, M6M M6 A280	
220	315105-0136		4	WASHER BRB 4,3X9 RFR	
230	315105-0153		4	WASHER BRB 6,4X12 RFR	
250	90165-0057		4	PIPE CLIP FOR TUBE D=6 MM	
260	90235-0731		1	THROTTLE CHECK VALVE, G1/4", SCO-606-1/4	
270	315105-0165		6	WASHER BRB 8,4X16 RFR	
280	312115-0449		1	SCREW ISO4762 M8X16 A4 80	
290	342981-0122		1	BANJO CONNEC,RING,FOR PLAST.TUBE 8-G1/4"	
310	90424-0068		2	AIR NOZZLE, G1/4, MOD. 216 BSP	
Common Parts					
080	1144976-0000		1	STOP SCREW	
090	1144979-0000		1	WASHER	
170	312105-0368		2	SCREW M6S ISO 4017 M6X16 A480	
200	312105-0457		2	SCREW M6S ISO 4014 M8X35 A480	
240	315105-0173		1	WASHER BRB 10,5X20 RFR	
300	90115-0137		2	ROD END, ID=6 MM, M6X1	

Pos	Part No	UN	Qty	Description	Page No

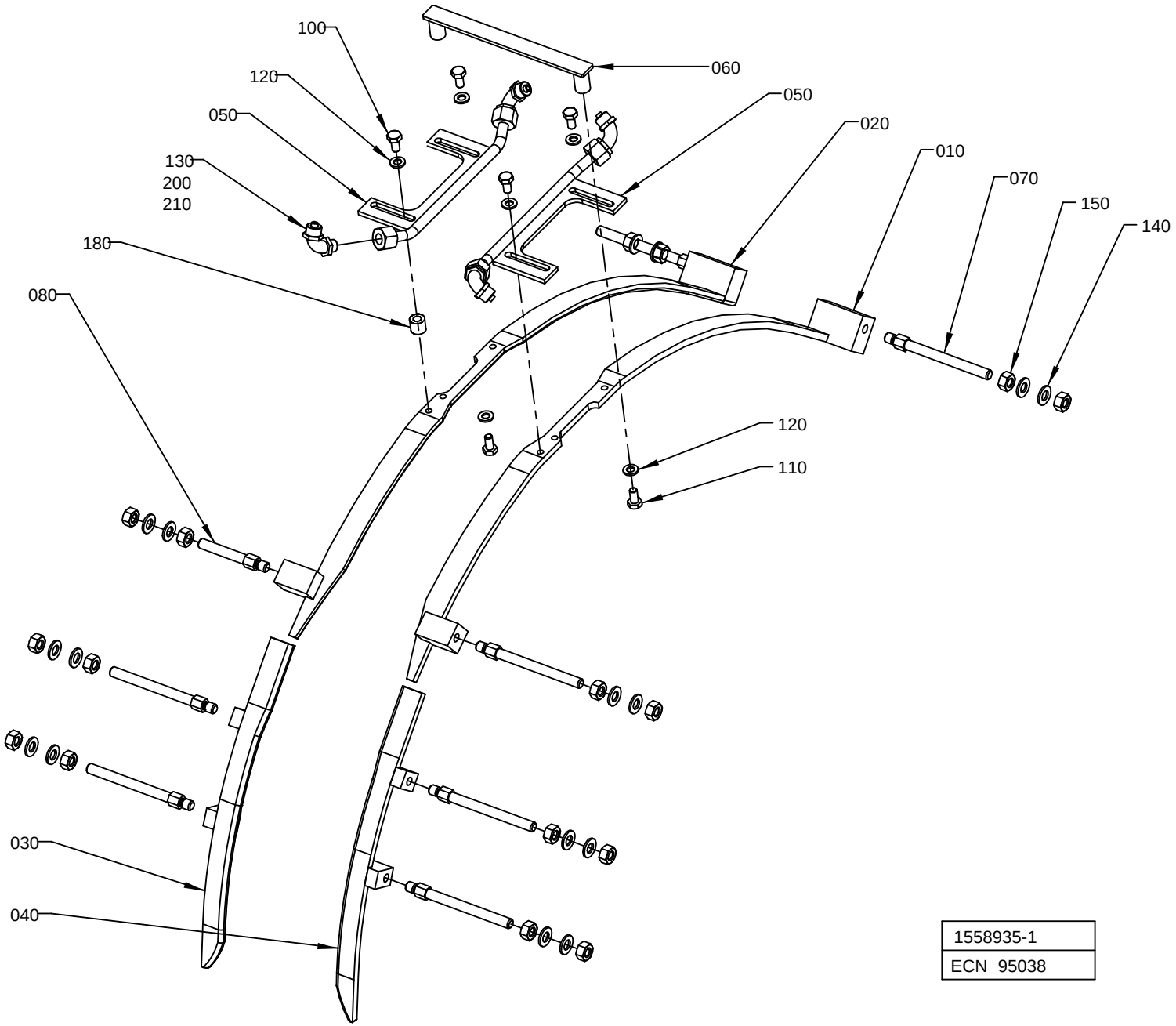

1558935-1
ECN 95038

ECM: 189494 - 20041104
Group number: 1558935-0100
Assembly Drawing: 1558935-1_1_AA

This list covers pages from 5-34 to 5-43

Pos	Part No	UN	Qty	Description	Page No
TPA 1000SQ (See drawing on page: 5-36)					
010	1350424-0000		1	GUIDE RIGHT	
020	1350425-0000		1	GUIDE LEFT	
030	1519358-0000		1	GUIDE	
040	1519359-0000		1	GUIDE	
060	1346340-0000		1	BRACKET	
090	1523926-0000		8	SPACER	
100	312105-0368		4	SCREW M6S ISO 4017 M6X16 A480	
140	315105-0165		8	WASHER BRB 8,4X16 RFR	
160	2541125-0000		8	SCREW	
180	1282705-0000		4	SUPPORT	
TBA 0200B, TBA 0200S, TBA 0250B (See drawing on page: 5-34)					
010	1478926-0000		1	GUIDE RIGHT	
020	1478927-0000		1	GUIDE LEFT	
030	1334013-0000		1	GUIDE UPPER R	
040	1334012-0000		1	GUIDE UPPER L	
060	1346340-0000		1	BRACKET	
070	1144555-0000		7	STUD SCREW	
080	1334523-0000		1	SUPPORT	
100	312105-0366		4	SCREW M6S ISO 4017 M6X12 A480	
140	315105-0165		16	WASHER BRB 8,4X16 RFR	
150	312605-0318		16	HEXAGON NUT, M6M M8 A280	
TBA 0250S (See drawing on page: 5-34)					
010	1478926-0000		1	GUIDE RIGHT	
020	1478927-0000		1	GUIDE LEFT	
030	1539900-0000		1	RIGHT UPPER GUIDE	
040	1549614-0000		1	LEFT UPPER GUIDE	
060	1346340-0000		1	BRACKET	
070	1144555-0000		7	STUD SCREW	
080	1334523-0000		1	SUPPORT	
100	312105-0366		4	SCREW M6S ISO 4017 M6X12 A480	
140	315105-0165		16	WASHER BRB 8,4X16 RFR	
150	312605-0318		16	HEXAGON NUT, M6M M8 A280	
TBA 0330S (See drawing on page: 5-34)					
010	1144892-0000		1	GUIDE RIGHT	
020	1144893-0000		1	GUIDE LEFT	
030	1539900-0000		1	RIGHT UPPER GUIDE	
040	1549614-0000		1	LEFT UPPER GUIDE	
060	1346340-0000		1	BRACKET	
070	1144555-0000		8	STUD SCREW	
100	312105-0366		4	SCREW M6S ISO 4017 M6X12 A480	
140	315105-0165		16	WASHER BRB 8,4X16 RFR	
150	312605-0318		16	HEXAGON NUT, M6M M8 A280	
TBA 0500B (See drawing on page: 5-38)					
010	1144892-0000		1	GUIDE RIGHT	
020	1144893-0000		1	GUIDE LEFT	
030	1539900-0000		1	RIGHT UPPER GUIDE	
040	1549614-0000		1	LEFT UPPER GUIDE	
060	1144905-0000		1	SUPPORT	
090	1539871-0000		4	SPACER	
095	1334447-0000		4	SPACER	
140	315105-0165		8	WASHER BRB 8,4X16 RFR	
160	312105-0465		8	SCREW M6S ISO 4014 M8X70 A480	
TBA 0500S (See drawing on page: 5-38)					
010	1144892-0000		1	GUIDE RIGHT	
020	1144893-0000		1	GUIDE LEFT	
030	1260709-0000		1	GUIDE UPPER R	
040	1260710-0000		1	GUIDE UPPER L	
060	1144905-0000		1	SUPPORT	
090	1499071-0000		4	SPACER	
095	1523498-0000		4	SPACER	
100	312105-0366		4	SCREW M6S ISO 4017 M6X12 A480	
140	315105-0165		8	WASHER BRB 8,4X16 RFR	
160	312105-0466		8	SCREW M6S ISO 4014 M8X75 A480	
TBA 1000B (See drawing on page: 5-36)					
010	1144892-0000		1	GUIDE RIGHT	
020	1144893-0000		1	GUIDE LEFT	
030	1260709-0000		1	GUIDE UPPER R	
040	1260710-0000		1	GUIDE UPPER L	
060	1144905-0000		1	SUPPORT	
090	2603663-0000		8	SPACER	
100	312105-0366		4	SCREW M6S ISO 4017 M6X12 A480	
140	315105-0165		8	WASHER BRB 8,4X16 RFR	
160	312105-0465		8	SCREW M6S ISO 4014 M8X70 A480	
TBA 1000S (See drawing on page: 5-34)					
010	1144892-0000		1	GUIDE RIGHT	
020	1144893-0000		1	GUIDE LEFT	
030	1260709-0000		1	GUIDE UPPER R	
040	1260710-0000		1	GUIDE UPPER L	
060	1144905-0000		1	SUPPORT	
070	1144555-0000		7	STUD SCREW	
080	1350721-0000		1	STUD SCREW	
100	312105-0366		4	SCREW M6S ISO 4017 M6X12 A480	
140	315105-0165		16	WASHER BRB 8,4X16 RFR	

Machine Type | Group Description | Used-In | Group Number | Page No

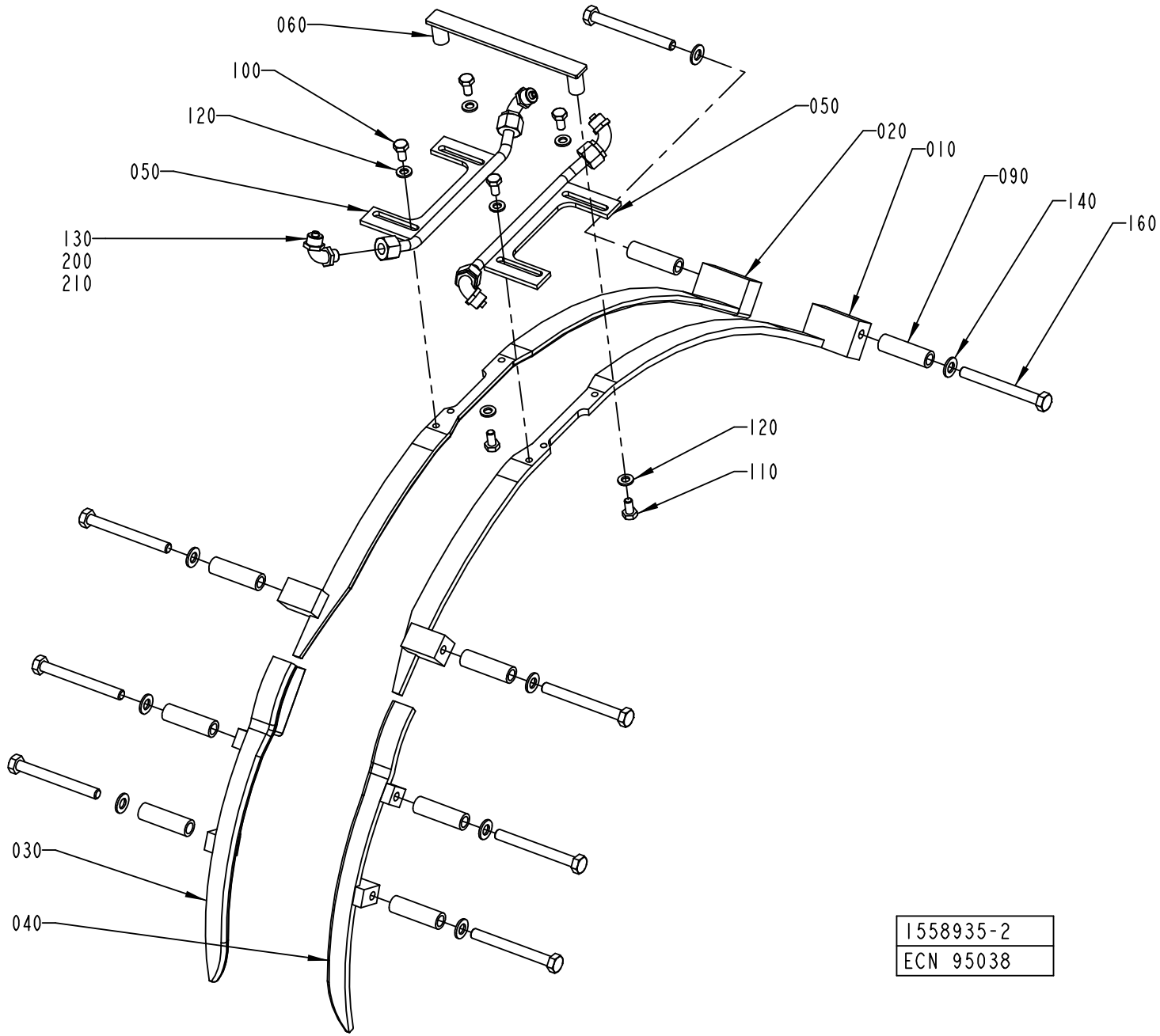
060
100
120
050
130
200
210
050
020
010
090
140
160
120
110
030
040
1558935-2
ECN 95038

ECM: 189494 - 20041104
Group number: 1558935-0100
Assembly Drawing: 1558935-2_1_AA

This list covers pages from 5-34 to 5-43

Pos	Part No	UN	Qty	Description	Page No
TBA 1000S (Cont'd) (See drawing on page: 5-34)					
150	312605-0318		16	HEXAGON NUT, M6M M8 A280	
TBA 1000SQ (See drawing on page: 5-36)					
010	1144892-0000		1	GUIDE RIGHT	
020	1144893-0000		1	GUIDE LEFT	
030	1549411-0000		1	PACKAGE GUIDE	
040	1549406-0000		1	PACKAGE GUIDE	
060	1498161-0000		1	SUPPORT	
090	1499071-0000		8	SPACER	
100	312105-0366		4	SCREW M6S ISO 4017 M6X12 A480	
140	315105-0165		8	WASHER BRB 8,4X16 RFR	
160	312105-0466		8	SCREW M6S ISO 4014 M8X75 A480	
TBA 1500S (See drawing on page: 5-40)					
010	1350424-0000		1	GUIDE RIGHT	
020	1350425-0000		1	GUIDE LEFT	
030	1334559-0000		1	GUIDE UPPER R	
040	1334560-0000		1	GUIDE UPPER L	
060	1285267-0000		1	SUPPORT	
090	1317088-0000		4	SPACER	
095	1348041-0000		2	SPACER	
098	1317088-0000		2	SPACER	
100	312105-0368		4	SCREW M6S ISO 4017 M6X16 A480	
140	315105-0165		8	WASHER BRB 8,4X16 RFR	
160	312105-0465		4	SCREW M6S ISO 4014 M8X70 A480	
165	312105-0465		2	SCREW M6S ISO 4014 M8X70 A480	
170	312105-0467		2	SCREW M6S ISO 4014 M8X80 A480	
180	1282705-0000		4	SUPPORT	
TPA 0250SQ (See drawing on page: 5-40)					
010	1144892-0000		1	GUIDE RIGHT	
020	1144893-0000		1	GUIDE LEFT	
030	1539900-0000		1	RIGHT UPPER GUIDE	
040	1549614-0000		1	LEFT UPPER GUIDE	
060	1346340-0000		1	BRACKET	
090	1539898-0000		4	SPACER	
095	1558526-0000		2	SPACER	
098	1558735-0000		2	SPACER	
100	312105-0366		4	SCREW M6S ISO 4017 M6X12 A480	
140	315105-0165		8	WASHER BRB 8,4X16 RFR	
160	312105-0469		4	SCREW M6S ISO 4014 M8X90 A480	
165	312105-0467		2	SCREW M6S ISO 4014 M8X80 A480	
170	312105-0469		2	SCREW M6S ISO 4014 M8X90 A480	
TPA 0330SQ (See drawing on page: 5-40)					
010	1144892-0000		1	GUIDE RIGHT	
020	1144893-0000		1	GUIDE LEFT	
030	1539900-0000		1	RIGHT UPPER GUIDE	
040	1549614-0000		1	LEFT UPPER GUIDE	
060	1346340-0000		1	BRACKET	
090	1558735-0000		4	SPACER	
095	1558736-0000		2	SPACER	
098	1558910-0000		2	SPACER	
100	312105-0366		4	SCREW M6S ISO 4017 M6X12 A480	
140	315105-0165		8	WASHER BRB 8,4X16 RFR	
160	312105-0469		4	SCREW M6S ISO 4014 M8X90 A480	
165	312105-0467		2	SCREW M6S ISO 4014 M8X80 A480	
170	312105-0469		2	SCREW M6S ISO 4014 M8X90 A480	
TPA 0500SQ (See drawing on page: 5-42)					
010	1144892-0000		1	GUIDE RIGHT	
020	1144893-0000		1	GUIDE LEFT	
030	2527530-0000		1	GUIDE UPPER R	
040	2527529-0000		1	GUIDE UPPER L	
060	1346340-0000		1	BRACKET	
070	1144555-0000		3	STUD SCREW	
080	1334523-0000		1	SUPPORT	
090	1558910-0000		4	SPACER	
100	312105-0366		4	SCREW M6S ISO 4017 M6X12 A480	
140	315105-0165		12	WASHER BRB 8,4X16 RFR	
150	312605-0318		8	HEXAGON NUT, M6M M8 A280	
160	312105-0467		4	SCREW M6S ISO 4014 M8X80 A480	
Common Parts					
050	1350423-0000		2	FOLDING BAR	
110	312105-0366		2	SCREW M6S ISO 4017 M6X12 A480	
120	315105-0153		6	WASHER BRB 6,4X12 RFR	
130	342931-0121		4	ELBOW 90 COUPL.,EXT.THREAD 8/6-G1/8"	
200	90166-0118	MM	1500	TUBE 8 MM PA BLACK	
210	352113-0102		10	CLIP-STRIP, BLACK 188X4,8 MM	

Machine Type | Group Description | Used-In | Group Number | Page No

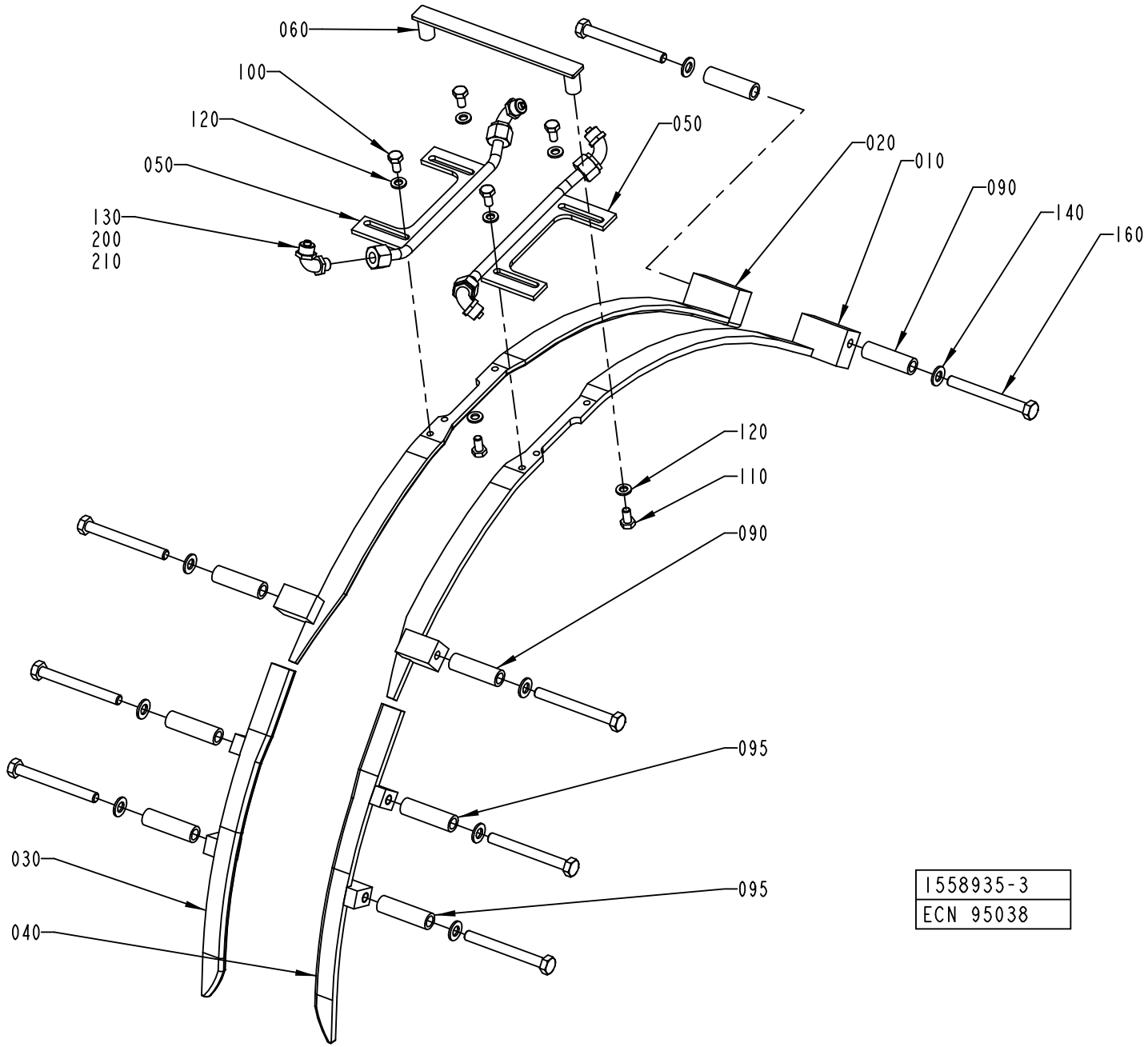
060
100
120
050
130
200
210
050
020
010
090
140
160
120
110
090
095
095
030
040
1558935-3
ECN 95038

Pos	Part No	UN	Qty	Description	Page No	Pos	Part No	UN	Qty	Description	Page No

SEE PREVIOUS LISTS PAGES: 5-35, 5-37.

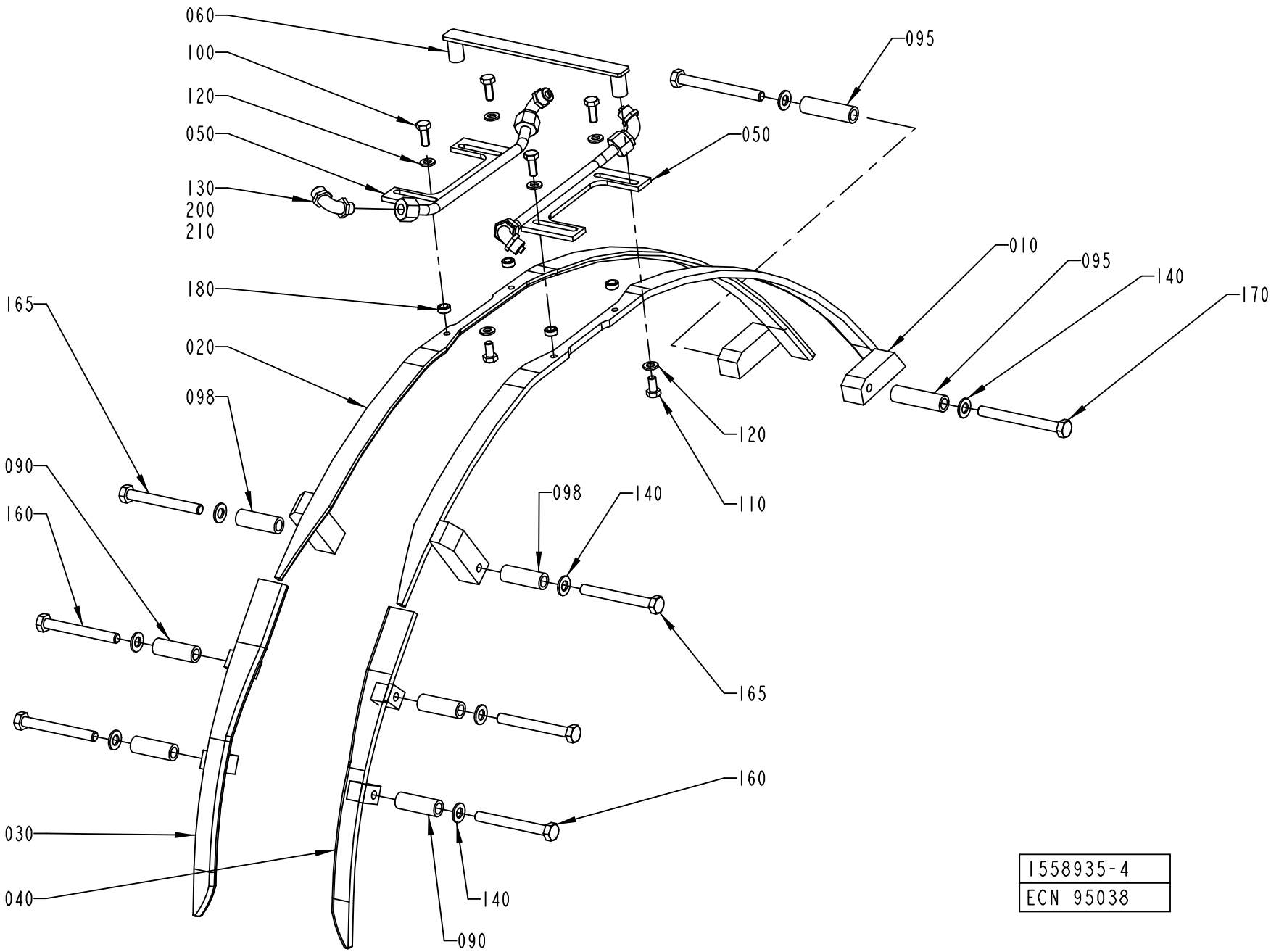
060
100
120
050
130
200
210
180
165
020
098
090
160
030
040
095
050
010
095
140
170
120
110
098
140
165
160
140
090
1558935-4
ECN 95038

Pos	Part No	UN	Qty	Description	Page No	Pos	Part No	UN	Qty	Description	Page No

SEE PREVIOUS LISTS PAGES: 5-35, 5-37.

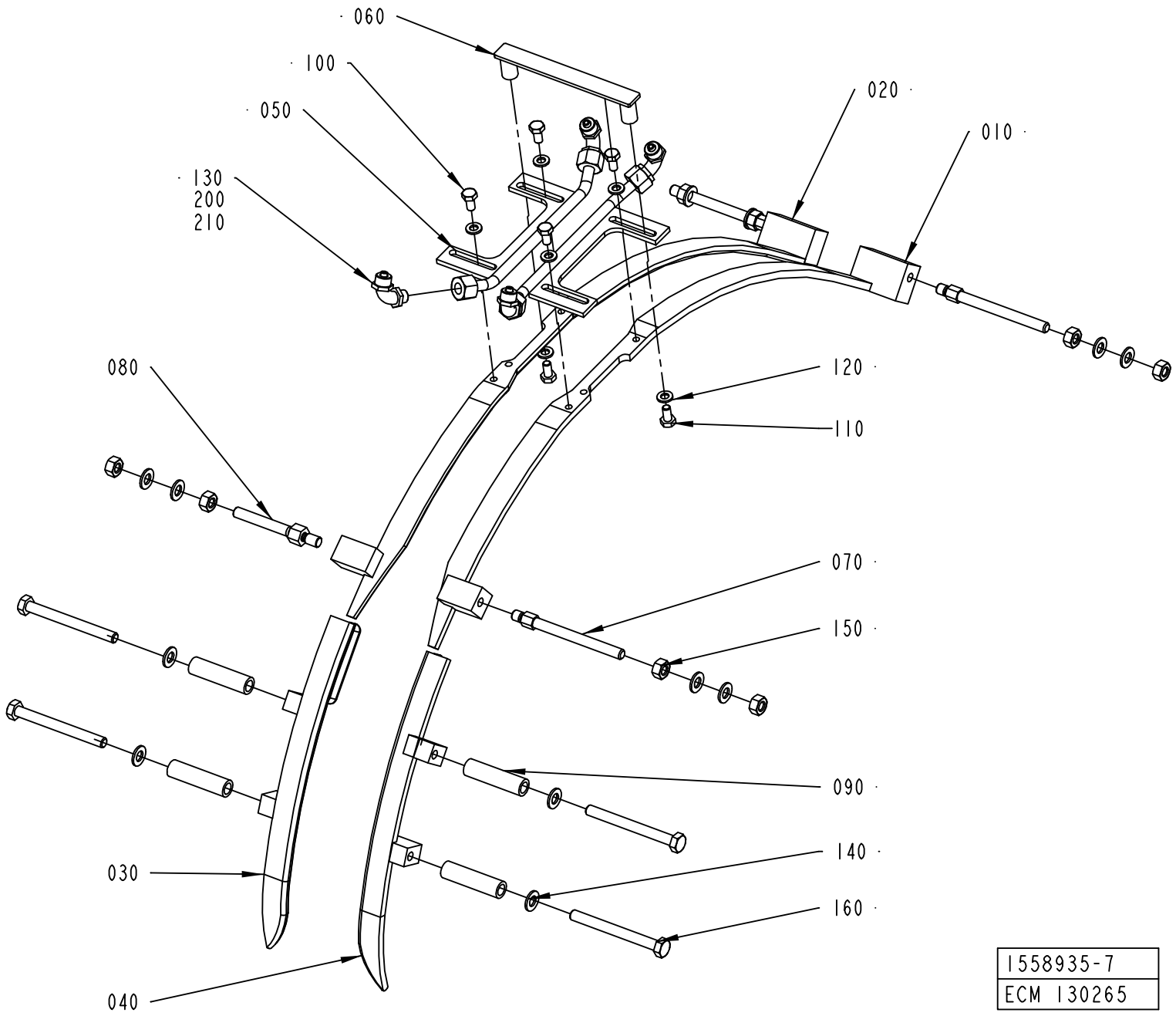
060
100
050
130
200
210
020
010
080
120
110
070
150
090
140
160
030
040
1558935-7
ECM 130265

Pos	Part No	UN	Qty	Description	Page No	Pos	Part No	UN	Qty	Description	Page No

SEE PREVIOUS LISTS PAGES: 5-35, 5-37.

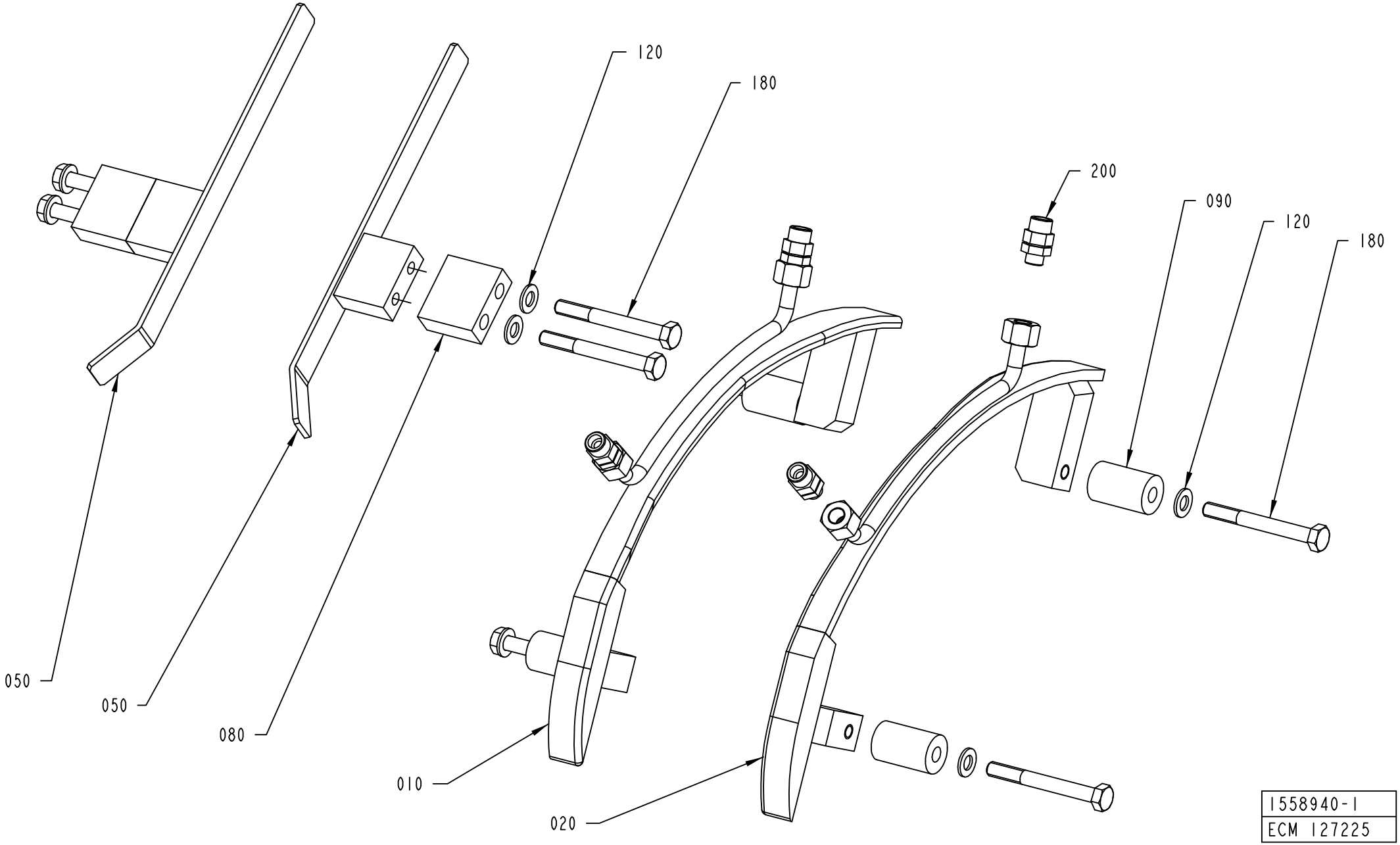
120
180
200
090
120
180
050
050
080
010
020
1558940-1
ECM 127225

ECM: 272974 - 20061101
Group number: 1558940-0200
Assembly Drawing: 1558940-1_1_AB

This list covers pages from 5-44 to 5-55

Pos	Part No	UN	Qty	Description	Page No
TPA 1000SQ, TPA 1000SQ SMILE (See drawing on page: 5-52)					
010	2553347-0000		1	FOLDING BAR	
020	2553348-0000		1	FOLDING BAR	
030	1317043-0000		2	SUPPORT	
040	1499150-0000		1	RAIL	
050	1499151-0000		1	RAIL	
060	1523927-0000		2	SPACER SCREW	
080	1519355-0000		4	SPACER	
090	1523926-0000		2	SPACER	
100	312109-0457		4	SCREW M6S ISO 4017 M8X35 A480	
110	312105-0462		4	SCREW M6S ISO 4014 M8X55 A480	
120	315105-0165		20	WASHER BRB 8,4X16 RFR	
130	312605-0318		2	HEXAGON NUT, M6M M8 A280	
160	312155-0459		2	SCREW DIN 7991 MF6S M8X40 A4 70	
170	312105-0453		2	SCREW M6S ISO 4017 M8X25 A480	
180	312105-0467		2	SCREW M6S ISO 4014 M8X80 A480	
200	342921-0121		4	STRAIGHT CPLNG,EXT.THREADED 8/6-G1/8INCH	
210	1538890-0000		1	RAIL	
220	1538891-0000		1	RAIL	
230	1519355-0000		4	SPACER	
240	1538186-0000		2	BRACKET	
250	312105-0462		4	SCREW M6S ISO 4014 M8X55 A480	
260	312105-0455		2	SCREW M6S ISO 4017 M8X30 A480	
TBA 0200B (See drawing on page: 5-46)					
010	1346149-0000		1	FOLDING BAR	
020	1346150-0000		1	FOLDING BAR	
040	1346343-0000		1	RAIL	
050	1346344-0000		1	RAIL	
060	1144555-0000		7	STUD SCREW	
065	1350721-0000		1	STUD SCREW	
070	1144990-0000		2	FOLDING BAR	
120	315105-0165		16	WASHER BRB 8,4X16 RFR	
130	312605-0318		16	HEXAGON NUT, M6M M8 A280	
140	315105-0153		4	WASHER BRB 6,4X12 RFR	
150	312105-0364		4	SCREW M6S ISO 4017 M6X10 A480	
200	342931-0121		4	ELBOW 90 COUPL.,EXT.THREAD 8/6-G1/8"	
TBA 0200S (See drawing on page: 5-46)					
010	1282294-0000		1	FOLDING BAR	
020	1282295-0000		1	FOLDING BAR	
040	1346343-0000		1	RAIL	
050	1346344-0000		1	RAIL	
060	1144555-0000		7	STUD SCREW	
065	1350721-0000		1	STUD SCREW	
070	1144990-0000		2	FOLDING BAR	
120	315105-0165		16	WASHER BRB 8,4X16 RFR	
130	312605-0318		16	HEXAGON NUT, M6M M8 A280	
140	315105-0153		4	WASHER BRB 6,4X12 RFR	
150	312105-0364		4	SCREW M6S ISO 4017 M6X10 A480	
200	342931-0121		4	ELBOW 90 COUPL.,EXT.THREAD 8/6-G1/8"	
TBA 0250B (See drawing on page: 5-46)					
010	1317217-0000		1	FOLDING BAR	
020	1317216-0000		1	FOLDING BAR	
040	1346343-0000		1	RAIL	
050	1346344-0000		1	RAIL	
060	1144555-0000		7	STUD SCREW	
065	1350721-0000		1	STUD SCREW	
070	1144990-0000		2	FOLDING BAR	
120	315105-0165		16	WASHER BRB 8,4X16 RFR	
130	312605-0318		16	HEXAGON NUT, M6M M8 A280	
140	315105-0153		4	WASHER BRB 6,4X12 RFR	
150	312105-0364		4	SCREW M6S ISO 4017 M6X10 A480	
200	342931-0121		4	ELBOW 90 COUPL.,EXT.THREAD 8/6-G1/8"	
TBA 0500B (See drawing on page: 5-50)					
010	1539881-0000		1	FOLDING BAR	
020	1539882-0000		1	FOLDING BAR	
040	1346343-0000		1	RAIL	
050	1346344-0000		1	RAIL	
060	1558713-0000		2	SPACER SCREW	
080	1539873-0000		4	SPACER	
090	1539871-0000		2	SPACER	
110	312109-0461		4	SCREW M6S ISO 4017 M8X50 A480	
120	315105-0165		8	WASHER BRB 8,4X16 RFR	
130	312605-0318		2	HEXAGON NUT, M6M M8 A280	
180	312105-0464		2	SCREW M6S ISO 4014 M8X65 A480	
200	342921-0121		4	STRAIGHT CPLNG,EXT.THREADED 8/6-G1/8INCH	
TBA 0500S (See drawing on page: 5-48)					
010	1519770-0000		1	FOLDING BAR	
020	1519769-0000		1	FOLDING BAR	
030	1317043-0000		2	SUPPORT	
040	1499150-0000		1	RAIL	
050	1499151-0000		1	RAIL	
060	1499402-0000		2	SPACER	
080	1499072-0000		4	SPACER	
090	1499071-0000		2	SPACER	

Machine Type | Group Description | Used-In | Group Number | Page No

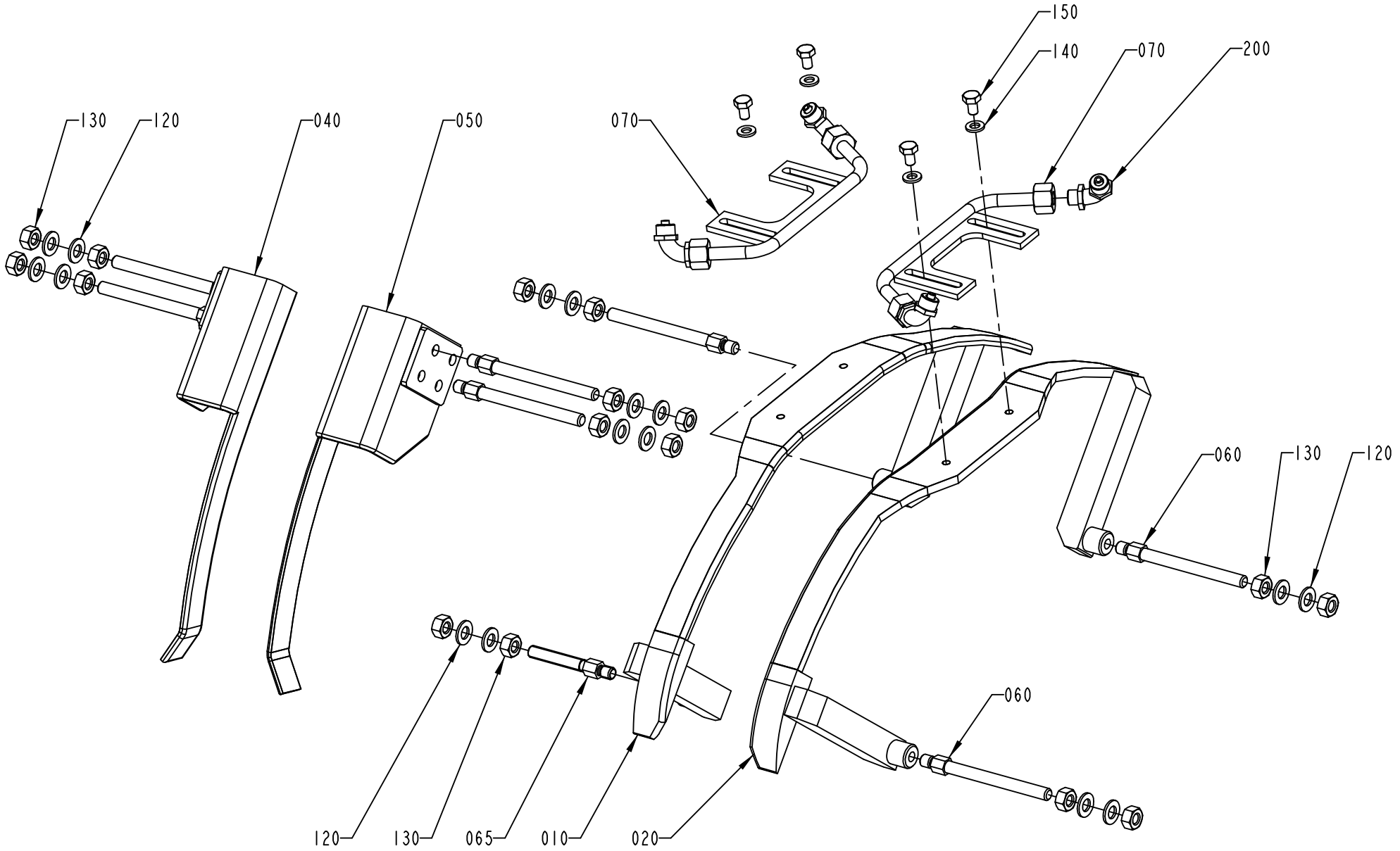

1558940-3
ECN 95038

ECM: 272974 - 20061101
Group number: 1558940-0200
Assembly Drawing: 1558940-3_1_AA

This list covers pages from 5-44 to 5-55

Pos	Part No	UN	Qty	Description	Page No
TBA 0500S (Cont'd) (See drawing on page: 5-48)					
100	312109-0457		4	SCREW M6S ISO 4017 M8X35 A480	
110	312105-0463		4	SCREW M6S ISO 4014 M8X60 A480	
120	315105-0165		12	WASHER BRB 8,4X16 RFR	
130	312605-0318		2	HEXAGON NUT, M6M M8 A280	
180	312105-0466		2	SCREW M6S ISO 4014 M8X75 A480	
200	342921-0121		4	STRAIGHT CPLNG,EXT.THREADED 8/6-G1/8INCH	
TBA 1000B NOMOLDEDCAP (See drawing on page: 5-44)					
010	2639127-0000		1	FOLDING BAR	
020	2639128-0000		1	FOLDING BAR	
050	1144719-0000		2	RAIL	
080	2639393-0000		2	SPACER	
090	2603663-0000		4	SPACER	
120	315105-0165		8	WASHER BRB 8,4X16 RFR	
180	312105-0465		8	SCREW M6S ISO 4014 M8X70 A480	
200	342921-0121		4	STRAIGHT CPLNG,EXT.THREADED 8/6-G1/8INCH	
TBA 1000B STDA7 (See drawing on page: 5-48)					
010	2609370-0000		1	FOLDING BAR	
020	2609369-0000		1	FOLDING BAR	
030	1317043-0000		2	SUPPORT	
040	1499150-0000		1	RAIL	
050	1499151-0000		1	RAIL	
060	2509936-0000		2	SPACER SCREW	
080	2609371-0000		4	SPACER	
090	2603663-0000		2	SPACER	
100	312109-0457		4	SCREW M6S ISO 4017 M8X35 A480	
120	315105-0165		14	WASHER BRB 8,4X16 RFR	
130	312605-0318		2	HEXAGON NUT, M6M M8 A280	
160	312155-0459		2	SCREW DIN 7991 MF6S M8X40 A4 70	
170	312105-0453		2	SCREW M6S ISO 4017 M8X25 A480	
180	312105-0466		2	SCREW M6S ISO 4014 M8X75 A480	
200	342931-0121		4	ELBOW 90 COUPL.,EXT.THREAD 8/6-G1/8"	
250	312105-0462		4	SCREW M6S ISO 4014 M8X55 A480	
TBA 1000S NOMOLDEDCAP (See drawing on page: 5-54)					
010	1144897-0000		1	FOLDING BAR	
020	1144898-0000		1	FOLDING BAR	
050	1144719-0000		2	RAIL	
060	1144555-0000		8	STUD SCREW	
120	315105-0165		16	WASHER BRB 8,4X16 RFR	
130	312605-0318		16	HEXAGON NUT, M6M M8 A280	
200	342921-0121		4	STRAIGHT CPLNG,EXT.THREADED 8/6-G1/8INCH	
TBA 1000S STDA7, TBA 1000S LIGHTCAP (See drawing on page: 5-48)					
010	1498827-0000		1	FOLDING BAR	
020	1498828-0000		1	FOLDING BAR	
030	1317043-0000		2	SUPPORT	
050	1317047-0000		1	RAIL	
060	2509936-0000		2	SPACER SCREW	
080	2509937-0000		4	SPACER	
090	2509935-0000		2	SPACER	
100	312109-0457		4	SCREW M6S ISO 4017 M8X35 A480	
110	312105-0461		4	SCREW M6S ISO 4014 M8X50 A480	
120	315105-0165		14	WASHER BRB 8,4X16 RFR	
130	312605-0318		2	HEXAGON NUT, M6M M8 A280	
160	312155-0459		2	SCREW DIN 7991 MF6S M8X40 A4 70	
170	312105-0451		2	SCREW M6S ISO 4017 M8X20 A480	
180	312105-0464		2	SCREW M6S ISO 4014 M8X65 A480	
200	342931-0121		4	ELBOW 90 COUPL.,EXT.THREAD 8/6-G1/8"	
TBA 1000SQ (See drawing on page: 5-48)					
010	1498827-0000		1	FOLDING BAR	
020	1498828-0000		1	FOLDING BAR	
030	1317043-0000		2	SUPPORT	
040	1317042-0000		1	RAIL	
050	1317047-0000		1	RAIL	
060	1499094-0000		2	SPACER SCREW	
080	1499072-0000		4	SPACER	
090	1499071-0000		2	SPACER	
100	312109-0457		4	SCREW M6S ISO 4017 M8X35 A480	
110	312105-0463		4	SCREW M6S ISO 4014 M8X60 A480	
120	315105-0165		14	WASHER BRB 8,4X16 RFR	
130	312605-0318		2	HEXAGON NUT, M6M M8 A280	
160	312155-0459		2	SCREW DIN 7991 MF6S M8X40 A4 70	
170	312105-0451		2	SCREW M6S ISO 4017 M8X20 A480	
180	312105-0466		2	SCREW M6S ISO 4014 M8X75 A480	
200	342931-0121		4	ELBOW 90 COUPL.,EXT.THREAD 8/6-G1/8"	
TBA 1500S (See drawing on page: 5-48)					
010	1317653-0000		1	FOLDING BAR	
020	1317652-0000		1	FOLDING BAR	
030	1317043-0000		2	SUPPORT	
040	1317042-0000		1	RAIL	
050	1317047-0000		1	RAIL	
060	1348042-0000		2	SPACER	
080	1334718-0000		4	SPACER	
090	1317088-0000		2	SPACER	
100	312109-0457		4	SCREW M6S ISO 4017 M8X35 A480	

FLAP GUIDE

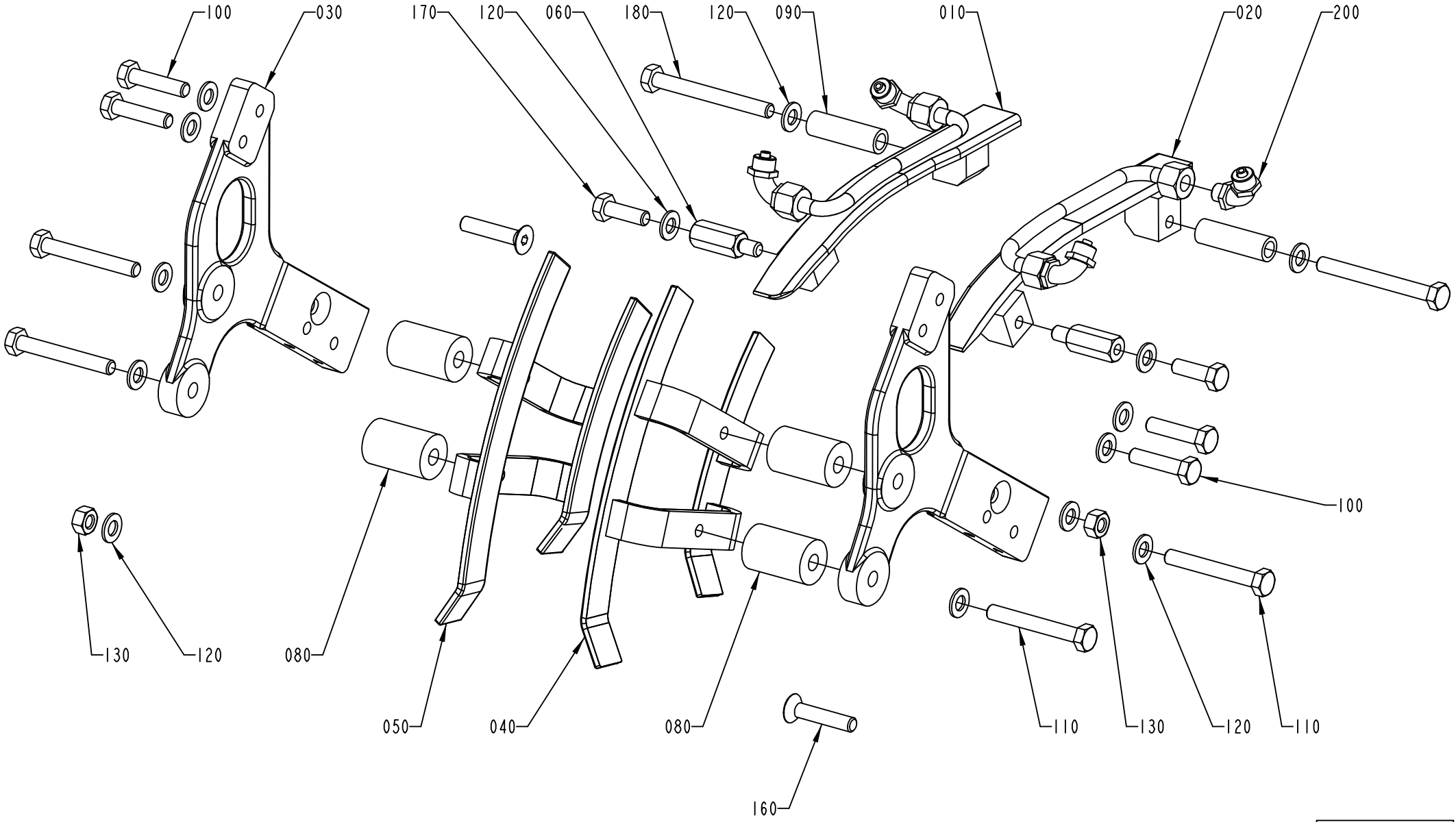

1558940-4
ECN 95038

Pos	Part No	UN	Qty	Description	Page No
TBA 1500S (Cont'd) (See drawing on page: 5-48)					
110	312109-0461		4	SCREW M6S ISO 4017 M8X50 A480	
120	315105-0165		12	WASHER BRB 8,4X16 RFR	
130	312605-0318		2	HEXAGON NUT, M6M M8 A280	
180	312105-0465		2	SCREW M6S ISO 4014 M8X70 A480	
200	342931-0121		4	ELBOW 90 COUPL.,EXT.THREAD 8/6-G1/8"	
TPA 0250SQ (See drawing on page: 5-48)					
010	1532275-0000		1	FOLDING BAR	
020	1532276-0000		1	FOLDING BAR	
030	1317043-0000		2	SUPPORT	
040	1532281-0000		1	RAIL	
050	1532280-0000		1	RAIL	
060	1558889-0000		2	SPACER SCREW	
080	1558527-0000		4	SPACER	
090	1539898-0000		2	SPACER	
100	312109-0457		4	SCREW M6S ISO 4017 M8X35 A480	
110	312105-0464		4	SCREW M6S ISO 4014 M8X65 A480	
120	315105-0165		14	WASHER BRB 8,4X16 RFR	
130	312605-0318		2	HEXAGON NUT, M6M M8 A280	
160	312155-0459		2	SCREW DIN 7991 MF6S M8X40 A4 70	
170	312105-0453		2	SCREW M6S ISO 4017 M8X25 A480	
180	312105-0469		2	SCREW M6S ISO 4014 M8X90 A480	
200	342921-0121		4	STRAIGHT CPLNG,EXT.THREADED 8/6-G1/8INCH	
TPA 0330SQ (See drawing on page: 5-48)					
010	1532275-0000		1	FOLDING BAR	
020	1532276-0000		1	FOLDING BAR	
030	1317043-0000		2	SUPPORT	
040	1532281-0000		1	RAIL	
050	1532280-0000		1	RAIL	
060	1499094-0000		2	SPACER SCREW	
080	1499072-0000		4	SPACER	
090	1558735-0000		2	SPACER	
100	312109-0457		4	SCREW M6S ISO 4017 M8X35 A480	
110	312105-0463		4	SCREW M6S ISO 4014 M8X60 A480	
120	315105-0165		14	WASHER BRB 8,4X16 RFR	
130	312605-0318		2	HEXAGON NUT, M6M M8 A280	
160	312155-0459		2	SCREW DIN 7991 MF6S M8X40 A4 70	
170	312105-0453		2	SCREW M6S ISO 4017 M8X25 A480	
180	312105-0469		2	SCREW M6S ISO 4014 M8X90 A480	
200	342921-0121		4	STRAIGHT CPLNG,EXT.THREADED 8/6-G1/8INCH	
TPA 0500SQ SMILE (See drawing on page: 5-48)					
010	2529910-0000		1	FOLDING BAR	
020	2529909-0000		1	FOLDING BAR	
030	1317043-0000		2	SUPPORT	
040	1499150-0000		1	RAIL	
050	1499151-0000		1	RAIL	
060	2530201-0000		2	SPACER SCREW	
080	1549508-0000		4	SPACER SCREW	
100	312109-0457		4	SCREW M6S ISO 4017 M8X35 A480	
110	312105-0451		4	SCREW M6S ISO 4017 M8X20 A480	
120	315105-0165		14	WASHER BRB 8,4X16 RFR	
130	312605-0318		2	HEXAGON NUT, M6M M8 A280	
160	312155-0459		2	SCREW DIN 7991 MF6S M8X40 A4 70	
170	312105-0453		2	SCREW M6S ISO 4017 M8X25 A480	
180	312105-0467		2	SCREW M6S ISO 4014 M8X80 A480	
200	342921-0121		4	STRAIGHT CPLNG,EXT.THREADED 8/6-G1/8INCH	

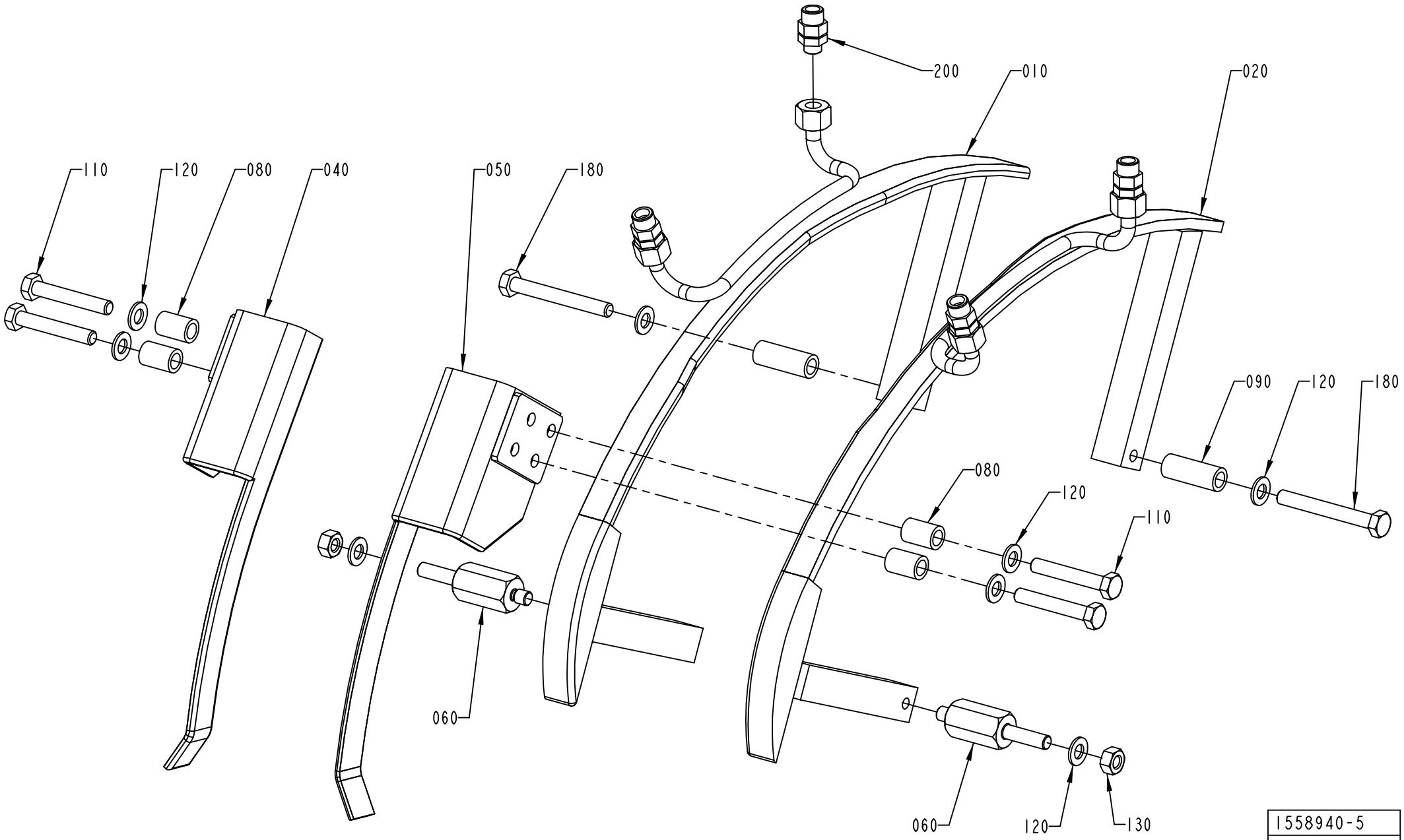

1558940-5
ECN 95038

Pos	Part No	UN	Qty	Description	Page No	Pos	Part No	UN	Qty	Description	Page No

SEE PREVIOUS LISTS PAGES: 5-45, 5-47, 5-49.

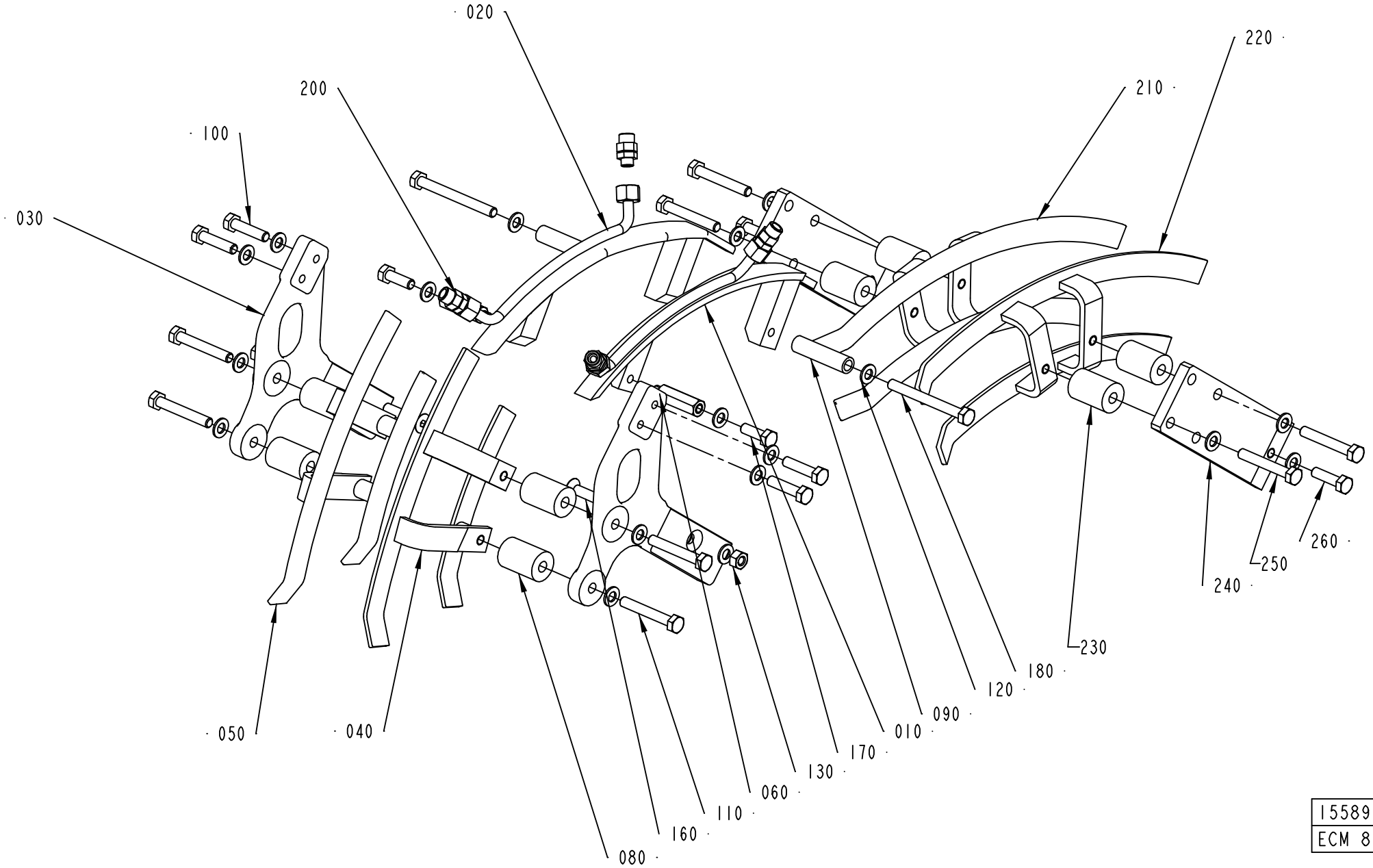

1558940-6
ECM 80646

Pos	Part No	UN	Qty	Description	Page No	Pos	Part No	UN	Qty	Description	Page No

SEE PREVIOUS LISTS PAGES: 5-45, 5-47, 5-49.

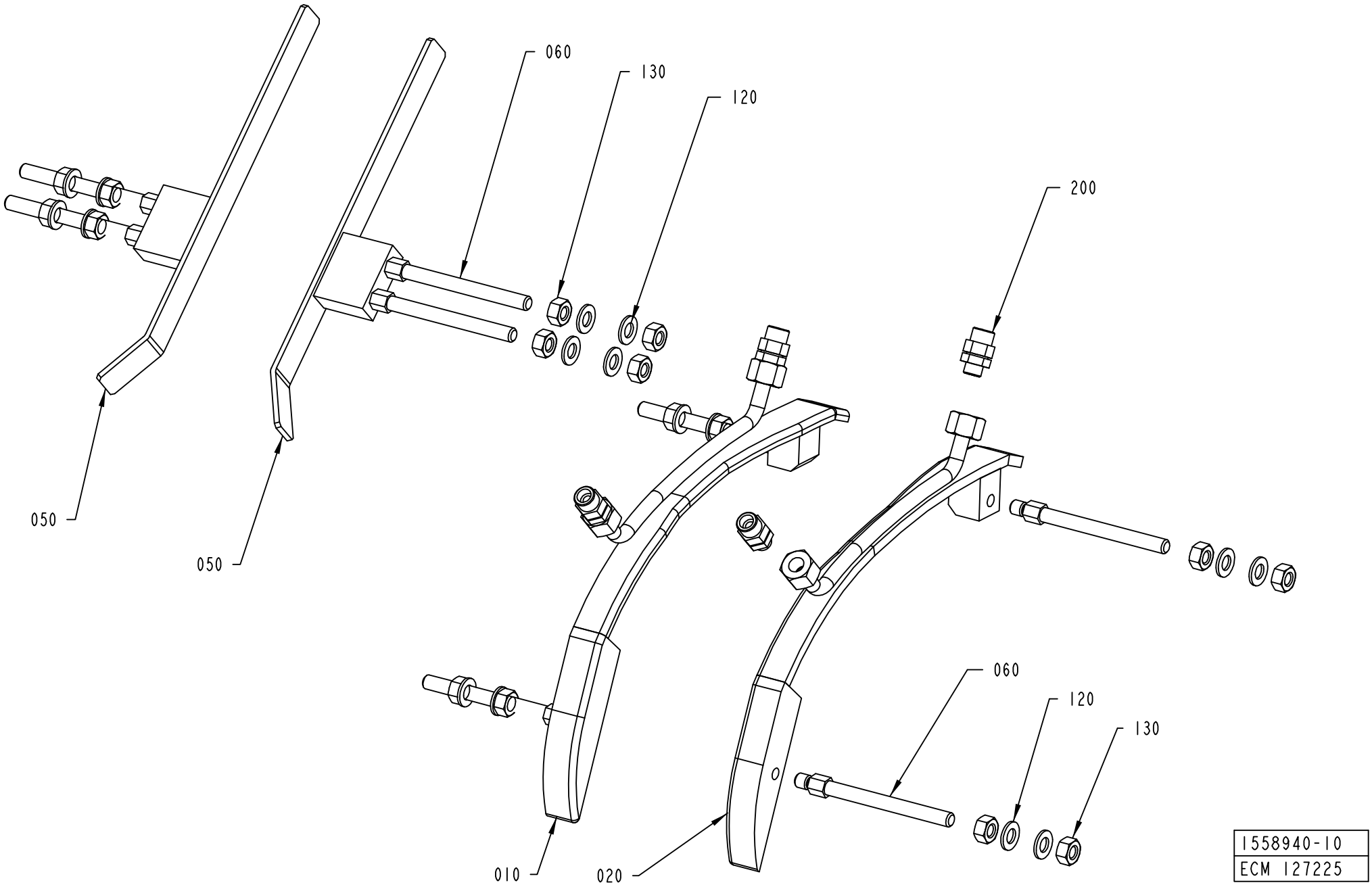
060
130
120
200
050
050
060
120
130
010
020
1558940-10
ECM 127225

ECM: 272974 - 20061101
Group number: 1558940-0200
Assembly Drawing: 1558940-10_1_AA

This list covers pages from 5-44 to 5-55

Pos	Part No	UN	Qty	Description	Page No	Pos	Part No	UN	Qty	Description	Page No

SEE PREVIOUS LISTS PAGES: 5-45, 5-47, 5-49.

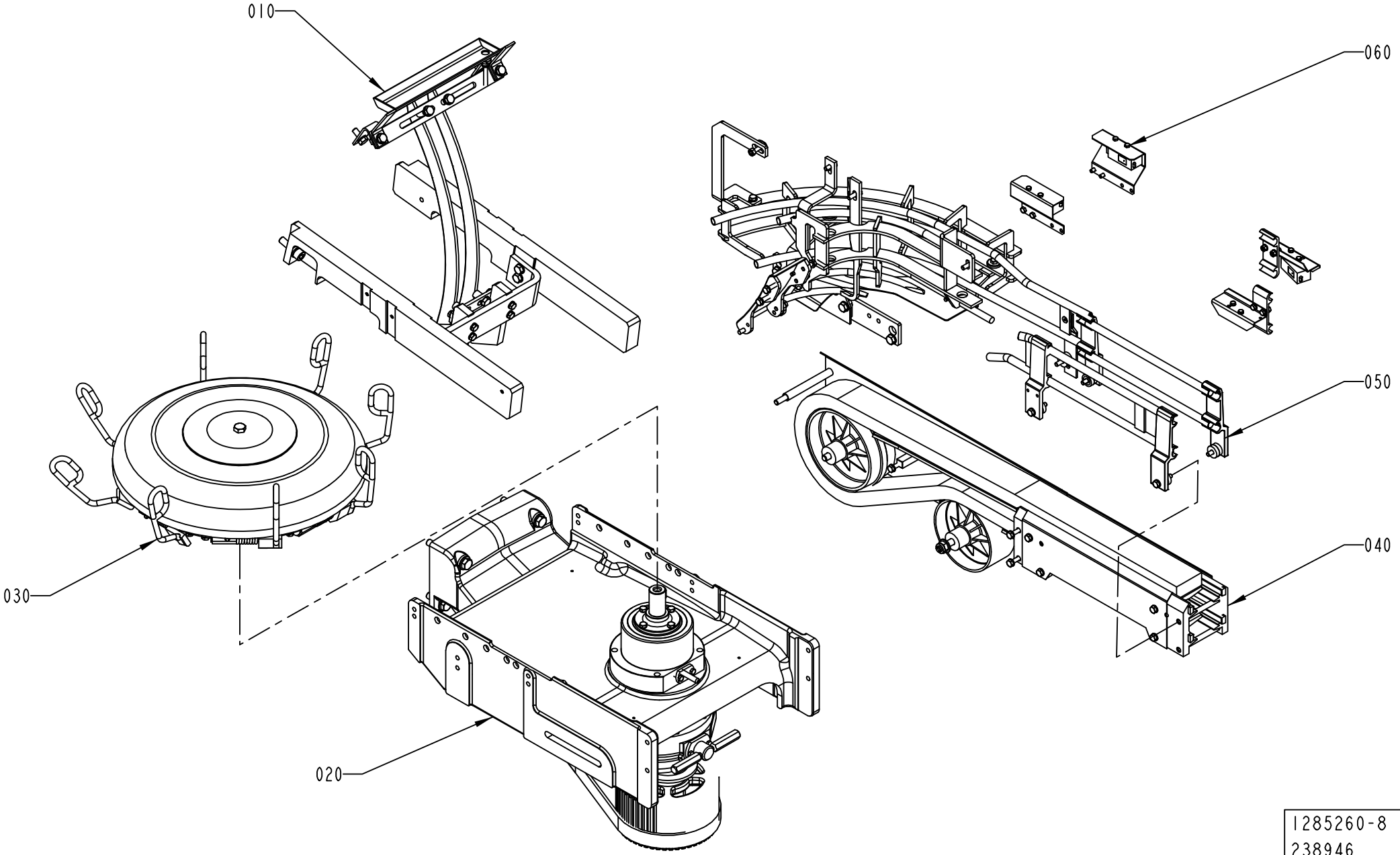

1285260-8
238946

ECM: 242274 - 20060701
Group number: 1285260-0400
Assembly Drawing: 1285260-8_1_AA

Pos	Part No	UN	Qty	Description	Page No
A3/FLEX TBA 0500B, A3/FLEX TBA 1000B, A3/FLEX TBA 1000S, A3/FLEX TBA 1000SQ, A3/FLEX TPA 1000SQ, A3/FLEX TBA 0200S, A3/FLEX TBA 1500S, A3/FLEX TBA 0200B, A3/FLEX TBA 0250B, A3/FLEX TBA 0330S, A3/FLEX TPA 0330SQ, A3/FLEX TPA 0500SQ, A3/FLEX TBA 0200M, A3/FLEX TBA 0250S, A3/FLEX TBA 0500S, A3/FLEX TPA 0250SQ, A3/FLEX TPA 0200SQ, A3/FLEX TPA 0750SQ, A3/FLEX TBA 0200SQ, A3/FLEX TBA 0250SQ					
040	1490112-0100		1	OUTFEED CONVEYOR	**5-59, 5-61**
A3/FLEX TBA 1890S, A3/FLEX TBA 2000S					
040	2598508-0100		1	INFEED/OUTFEED CONVEYOR	**5-63**
Common Parts					
010	2732825-0100		1	RAIL	**5-65, 5-67**
020	1484210-0200		1	OUT FEED DRIVING SYSTEM	**5-69**
030	1487038-0200		1	OUTFEED WHEEL	**5-75, 5-77, 5-79, 5-81**
050	2732820-0100		1	RAIL OUT FEED	**5-83, 5-85, 5-87, 5-89, 5-91**
060	1512339-0100		1	PHOTOCELL OUTFEED	**5-97, 5-99**

Pos	Part No	UN	Qty	Description	Page No

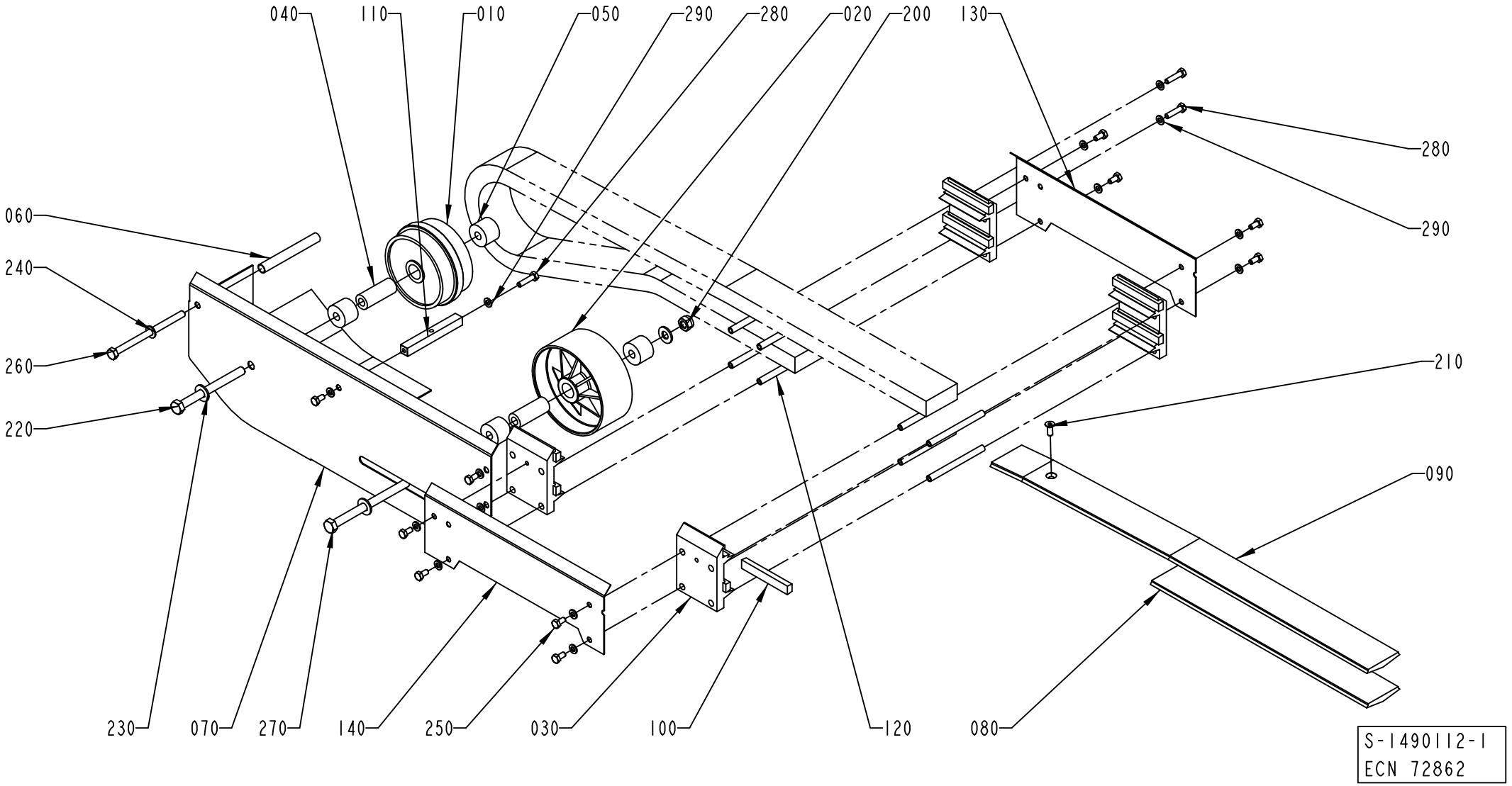
040
110
010
050
290
280
020
200
130
280
290
060
240
260
220
210
090
230
070
270
140
250
030
100
120
080
S-1490112-1
ECN 72862

Pos	Part No	UN	Qty	Description	Page No
TBA 0200SQ, TPA 0250SQ, TPA 0200SQ, TPA 1000SQ, TPA 0500SQ, TPA 0750SQ, TBA 0250SQ (See drawing on page: 5-58)					
010	2678417-0000		1	WHEEL	
070	1548354-0000		1	COVER	
090	1548353-0000		1	SLIDE RAIL	
TBA 0500S, TBA 0500B, TBA 0330S, TBA 1000S, TBA 1000B, TBA 0200B, TBA 0250S, TBA 0200S, TBA 0200M, TBA 0250B, TBA 1500S (See drawing on page: 5-60)					
010	245039-0000		1	GUIDE WHEEL	
070	1285265-0000		1	PLATE	
090	1279573-0000		1	SLIDE RAIL UPPER	
TBA 1000SQ, TPA 0330SQ (See drawing on page: 5-58)					
010	2678417-0000		1	WHEEL	
070	1296081-0000		1	PLATE	
090	1279573-0000		1	SLIDE RAIL UPPER	
Common Parts					
020	476975-0000		1	WHEEL	
030	457696-0001		4	JOINT PIECE	
040	229207-0000		2	BEARING SLEEVE	
050	1144943-0000		4	SPACER	
060	1285306-0000		1	SPACER	
080	1279587-0000		1	SLIDE RAIL UPPER	
100	466074-0002		8	SLIDER	
110	1285266-0000		1	SPACER	
120	476220-0000		8	SPACER	
130	1279585-0000		1	SUPPORT	
140	1279586-0000		1	SUPPORT	
150	90165-0056		3	PIPE CLIP FOR TUBE D=4 MM	
200	312812-0320		1	HEXAGON NUT, NY-LOCK M10 A480	
210	312155-0368		1	SCREW DIN 7991 MF6S M6X16 A4 70	
220	312105-0513		1	SCREW M6S ISO 4014 M10X110 A480	
230	315105-0173		3	WASHER BRB 10,5X20 RFR	
240	315105-0165		1	WASHER BRB 8,4X16 RFR	
250	312105-0366		11	SCREW M6S ISO 4017 M6X12 A480	
260	312105-0475		1	SCREW M6S ISO 4014 M8X120 A480	
270	312105-0517		1	SCREW M6S ISO 4014 M10X130 A480	
280	312105-0372		3	SCREW M6S ISO 4017 M6X25 A480	
285	312105-0323		3	SCREW M6S ISO 4017 M5X8 A480	
290	315105-0153		14	WASHER BRB 6,4X12 RFR	
300	315105-0146		3	WASHER BRB 5,3X10 RFR	
310	312605-0314		3	HEXAGON NUT, M6M M5 A280	

Pos	Part No	UN	Qty	Description	Page No

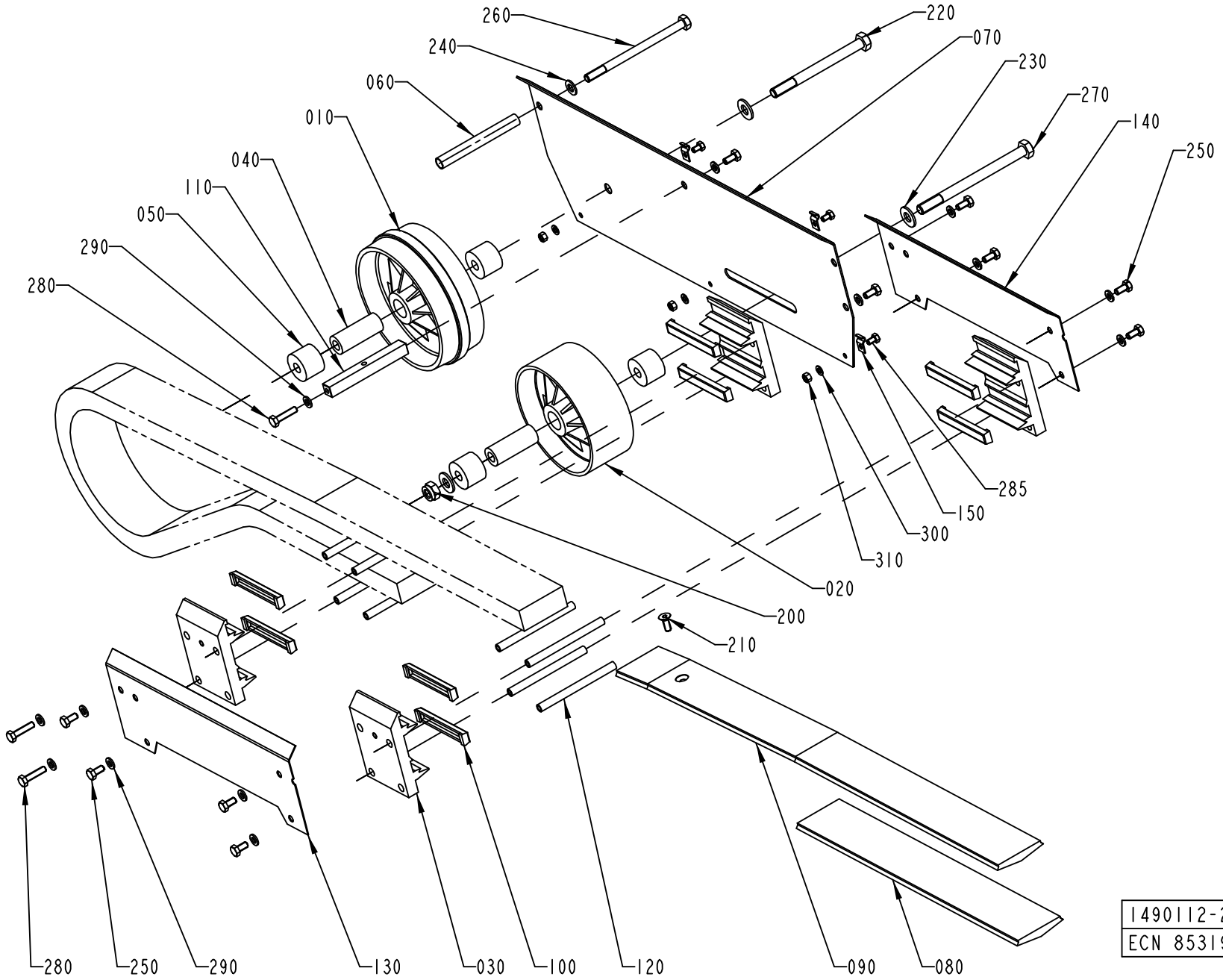
260
240
060
010
040
110
050
290
280
220
070
230
270
140
250
285
150
300
310
020
200
210
280
250
290
130
030
100
120
090
080
1490112-2
ECN 85319

Pos	Part No	UN	Qty	Description	Page No
TBA 0200SQ, TPA 0250SQ, TPA 0200SQ, TPA 1000SQ, TPA 0500SQ, TPA 0750SQ, TBA 0250SQ (See drawing on page: 5-58)					
010	2678417-0000		1	WHEEL	
070	1548354-0000		1	COVER	
090	1548353-0000		1	SLIDE RAIL	
TBA 0500S, TBA 0500B, TBA 0330S, TBA 1000S, TBA 1000B, TBA 0200B, TBA 0250S, TBA 0200S, TBA 0200M, TBA 0250B, TBA 1500S (See drawing on page: 5-60)					
010	245039-0000		1	GUIDE WHEEL	
070	1285265-0000		1	PLATE	
090	1279573-0000		1	SLIDE RAIL UPPER	
TBA 1000SQ, TPA 0330SQ (See drawing on page: 5-58)					
010	2678417-0000		1	WHEEL	
070	1296081-0000		1	PLATE	
090	1279573-0000		1	SLIDE RAIL UPPER	
Common Parts					
020	476975-0000		1	WHEEL	
030	457696-0001		4	JOINT PIECE	
040	229207-0000		2	BEARING SLEEVE	
050	1144943-0000		4	SPACER	
060	1285306-0000		1	SPACER	
080	1279587-0000		1	SLIDE RAIL UPPER	
100	466074-0002		8	SLIDER	
110	1285266-0000		1	SPACER	
120	476220-0000		8	SPACER	
130	1279585-0000		1	SUPPORT	
140	1279586-0000		1	SUPPORT	
150	90165-0056		3	PIPE CLIP FOR TUBE D=4 MM	
200	312812-0320		1	HEXAGON NUT, NY-LOCK M10 A480	
210	312155-0368		1	SCREW DIN 7991 MF6S M6X16 A4 70	
220	312105-0513		1	SCREW M6S ISO 4014 M10X110 A480	
230	315105-0173		3	WASHER BRB 10,5X20 RFR	
240	315105-0165		1	WASHER BRB 8,4X16 RFR	
250	312105-0366		11	SCREW M6S ISO 4017 M6X12 A480	
260	312105-0475		1	SCREW M6S ISO 4014 M8X120 A480	
270	312105-0517		1	SCREW M6S ISO 4014 M10X130 A480	
280	312105-0372		3	SCREW M6S ISO 4017 M6X25 A480	
285	312105-0323		3	SCREW M6S ISO 4017 M5X8 A480	
290	315105-0153		14	WASHER BRB 6,4X12 RFR	
300	315105-0146		3	WASHER BRB 5,3X10 RFR	
310	312605-0314		3	HEXAGON NUT, M6M M5 A280	

Pos	Part No	UN	Qty	Description	Page No

INFEED/OUTFEED CONVEYOR

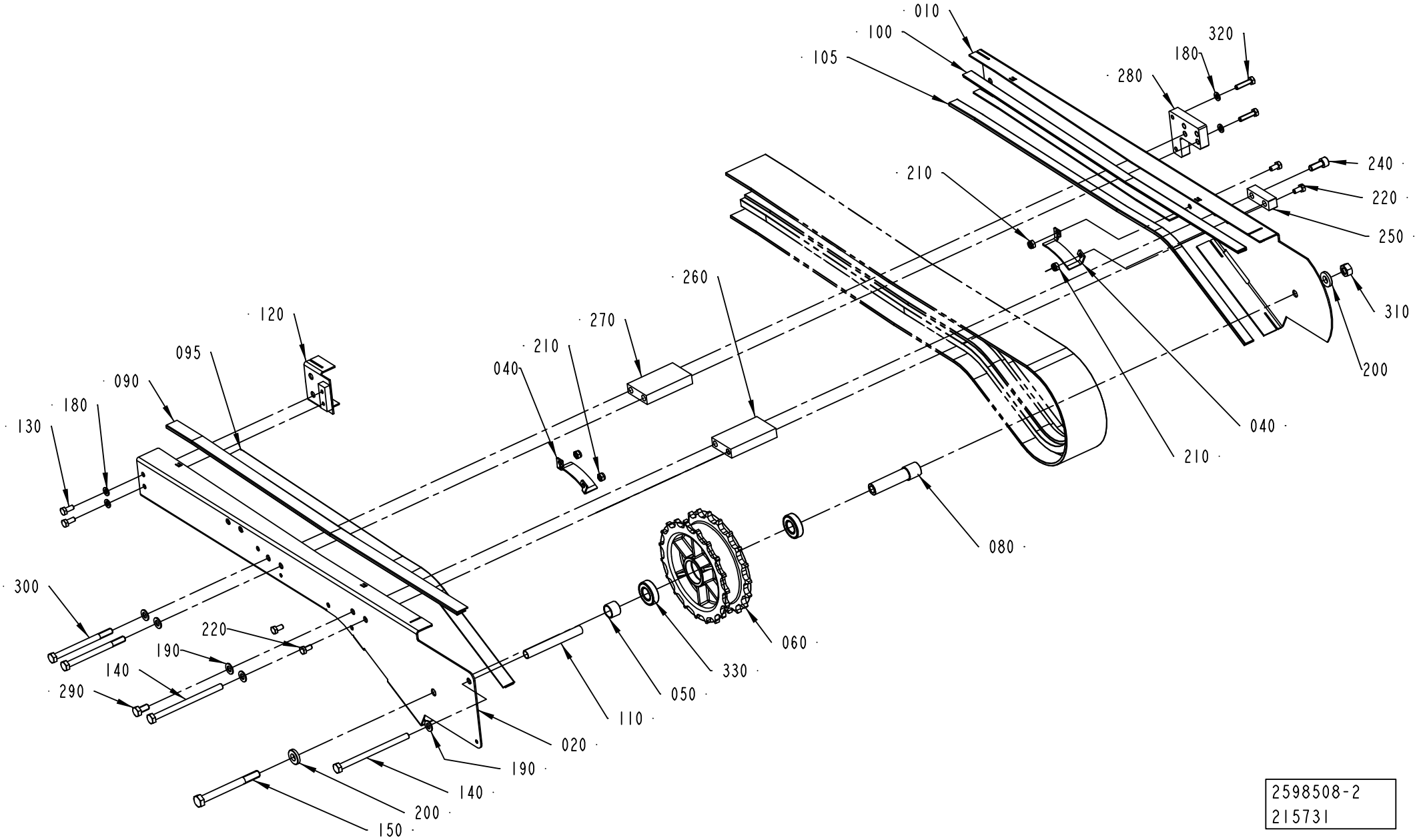

2598508-2
215731

ECM: 215731 - 20050527
Group number: 2598508-0100
Assembly Drawing: 2598508-2_1_AC

Pos	Part No	UN	Qty	Description	Page No
-					
010	2699107-0000		1	SIDE PLATE	
020	2699106-0000		1	SIDE PLATE	
040	2652311-0000		1	PLATE	
050	2699109-0000		1	SPACER	
060	2656672-0000		1	SPROCKET	
080	2699108-0000		1	SHAFT	
090	1550595-6600		1	SLIDING STRIP	
095	1550595-6700		1	SLIDING STRIP	
100	1550595-7000		1	SLIDING STRIP	
105	1550595-7110		1	SLIDING STRIP	
110	2598513-0000		2	SPACER	
120	2598514-0000		1	COVER	
130	312105-0367		2	SCREW M6S ISO 4017 M6X14 A480	
140	312105-0475		2	SCREW M6S ISO 4014 M8X120 A480	
150	312105-0511		1	SCREW M6S ISO 4014 M10X100 A480	
180	315105-0153		4	WASHER BRB 6,4X12 RFR	
190	315105-0165		5	WASHER BRB 8,4X16 RFR	
200	315111-0173		2	WASHER PLAIN, TBRB 10,5/22 H=4	
210	312812-0316		4	HEXAGON NUT, NY-LOCK M6 A480	
220	312105-0366		4	SCREW M6S ISO 4017 M6X12 A480	
240	312115-0451		1	SCREW ISO4762 M8X20 A4 80	
250	2619210-0000		1	SPACER	
260	2619211-0000		1	SPACER	
270	2619212-0000		1	SPACER	
280	2619213-0000		1	SPACER	
290	312105-0449		1	SCREW M6S ISO 4017 M8X16 A480	
300	312105-0471		2	SCREW M6S ISO 4014 M8X100 A480	
310	312605-0320		1	HEXAGON NUT, M6M M10 A280	
320	312105-0372		2	SCREW M6S ISO 4017 M6X25 A480	
330	1550348-0002		2	BEARING	

Pos	Part No	UN	Qty	Description	Page No

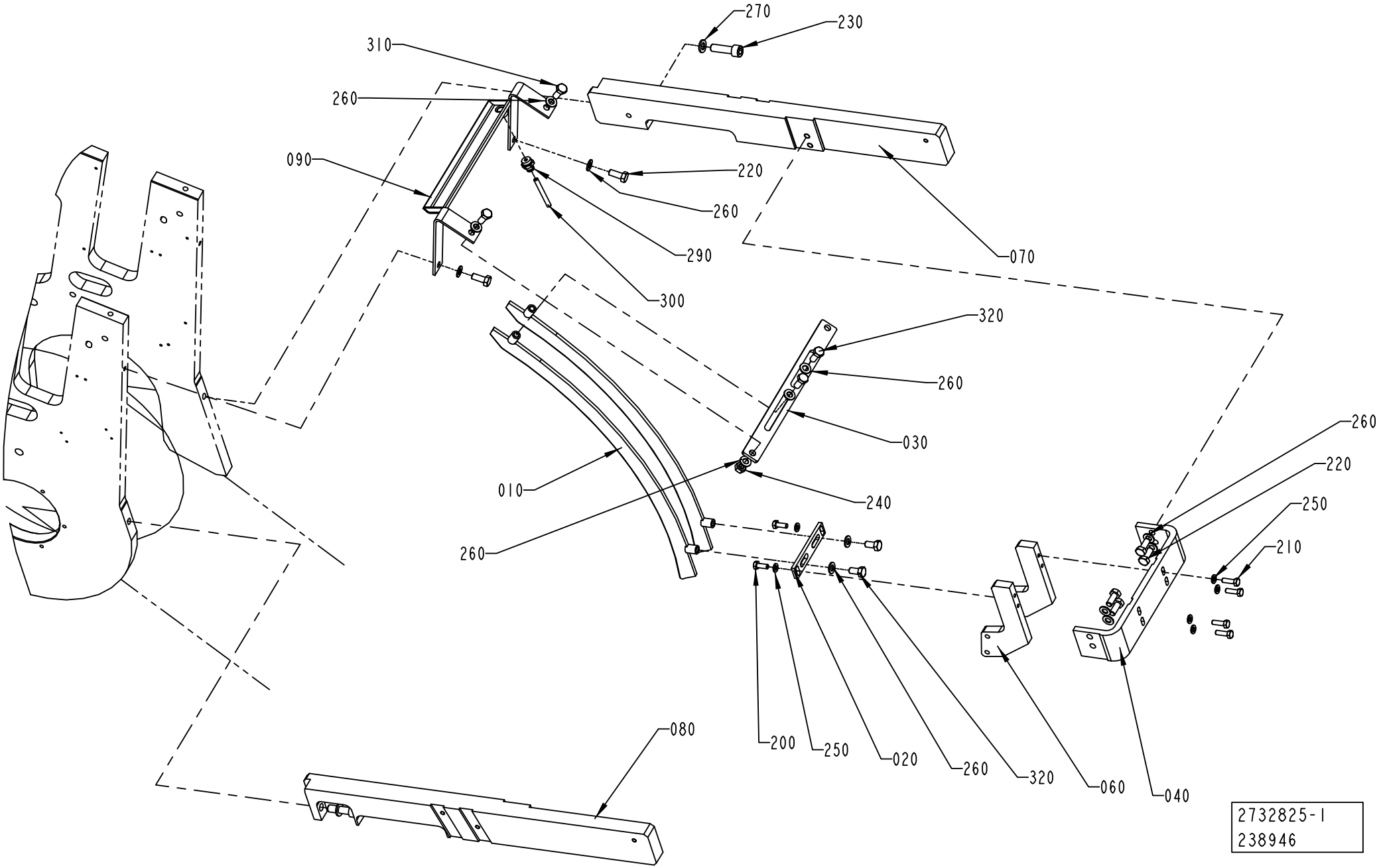
270
230
310
260
090
220
260
290
070
300
320
260
030
260
220
250
210
010
240
260
200
250
020
260
320
060
040
080
2732825-1
238946

ECM: 242275 - 20060701
Group number: 2732825-0100
Assembly Drawing: 2732825-1_1_AA

This list covers pages from 5-64 to 5-67

Pos	Part No	UN	Qty	Description	Page No
TBA 0500S, TBA 0500B, TBA 0330S, TBA 1000S, TBA 1000SQ, TBA 1000B, TBA 0200B, TBA 0250S, TBA 0200S, TBA 0200M, TBA 0250B, TBA 0200SQ, TPA 0250SQ, TPA 0330SQ, TPA 0200SQ, TBA 0250SQ (See drawing on page: 5-66)					
010	1558941-0000		2	RAIL	
050	1144899-0000		2	SUPPORT	
070	2724937-0000		1	SUPPORTING ARM	
080	2715499-0000		1	SUPPORTING ARM	
090	1478127-0000		1	DRIP PLATE	
220	312105-0451		6	SCREW M6S ISO 4017 M8X20 A480	
240	312605-0318		2	HEXAGON NUT, M6M M8 A280	
260	315105-0165		14	WASHER BRB 8,4X16 RFR	
310	312105-0453		2	SCREW M6S ISO 4017 M8X25 A480	
320	312105-0449		4	SCREW M6S ISO 4017 M8X16 A480	
TBA 1500S, TPA 1000SQ, TBA 1890S, TBA 2000S, TPA 0750SQ (See drawing on page: 5-64)					
010	1538963-0000		2	RAIL	
050	1346588-0000		1	DRIP PLATE	
070	2724952-0000		1	SUPPORTING ARM	
080	2715502-0000		1	SUPPORTING ARM	
220	312105-0451		10	SCREW M6S ISO 4017 M8X20 A480	
240	312605-0318		2	HEXAGON NUT, M6M M8 A280	
260	315105-0165		14	WASHER BRB 8,4X16 RFR	
320	312105-0449		2	SCREW M6S ISO 4017 M8X16 A480	
TPA 0500SQ (See drawing on page: 5-66)					
010	1558941-0000		2	RAIL	
050	1144899-0000		1	SUPPORT	
080	2715499-0000		1	SUPPORTING ARM	
090	1478127-0000		1	DRIP PLATE	
220	312105-0451		5	SCREW M6S ISO 4017 M8X20 A480	
240	312605-0318		1	HEXAGON NUT, M6M M8 A280	
260	315105-0165		12	WASHER BRB 8,4X16 RFR	
310	312105-0453		2	SCREW M6S ISO 4017 M8X25 A480	
320	312105-0449		4	SCREW M6S ISO 4017 M8X16 A480	
Common Parts					
020	1517567-0000		1	PLATE	
030	1144552-0000		1	PLATE	
040	1517563-0000		1	BRACKET	
060	1517302-0000		2	SUPPORT PLATE	
200	312105-0368		2	SCREW M6S ISO 4017 M6X16 A480	
210	312105-0370		4	SCREW M6S ISO 4017 M6X20 A480	
230	312115-0497		2	SCREW ISO4762 M10X35 A4 80	
250	315105-0153		6	WASHER BRB 6,4X12 RFR	
270	315105-0171		2	WASHER BRB 10X18 RFR	
290	342722-0203		1	STRAIGHT COUPLING	
300	90166-0132	MM	2000	TUBE 6 MM PA,TRANSP.	

Machine Type | Group Description | Used-In | Group Number | Page No

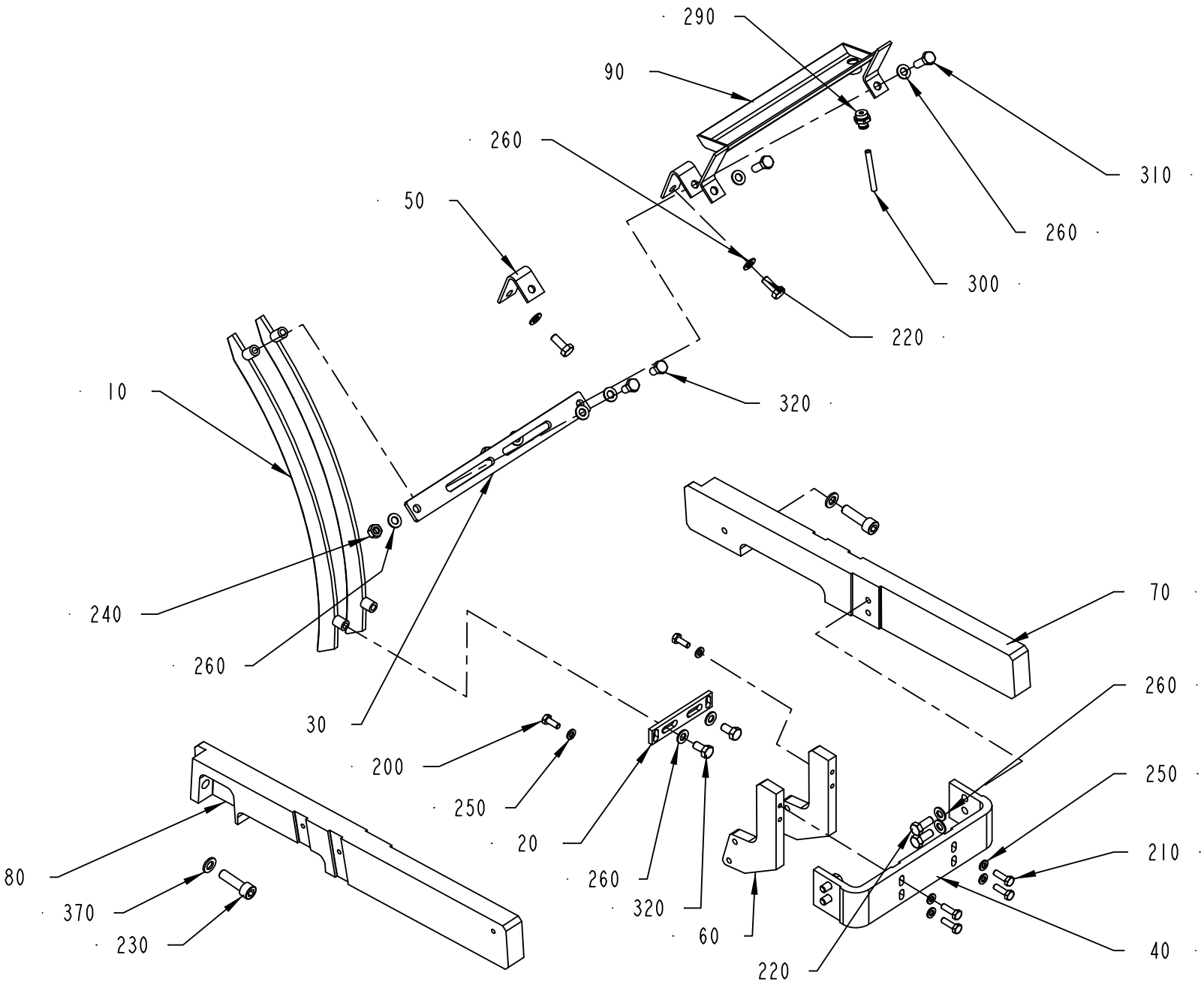

2732825-2
238946

ECM: 242275 - 20060701
Group number: 2732825-0100
Assembly Drawing: 2732825-2_1_AA

This list covers pages from 5-64 to 5-67

Pos	Part No	UN	Qty	Description	Page No
TBA 0500S, TBA 0500B, TBA 0330S, TBA 1000S, TBA 1000SQ, TBA 1000B, TBA 0200B, TBA 0250S, TBA 0200S, TBA 0200M, TBA 0250B, TBA 0200SQ, TPA 0250SQ, TPA 0330SQ, TPA 0200SQ, TBA 0250SQ (See drawing on page: 5-66)					
010	1558941-0000		2	RAIL	
050	1144899-0000		2	SUPPORT	
070	2724937-0000		1	SUPPORTING ARM	
080	2715499-0000		1	SUPPORTING ARM	
090	1478127-0000		1	DRIP PLATE	
220	312105-0451		6	SCREW M6S ISO 4017 M8X20 A480	
240	312605-0318		2	HEXAGON NUT, M6M M8 A280	
260	315105-0165		14	WASHER BRB 8,4X16 RFR	
310	312105-0453		2	SCREW M6S ISO 4017 M8X25 A480	
320	312105-0449		4	SCREW M6S ISO 4017 M8X16 A480	
TBA 1500S, TPA 1000SQ, TBA 1890S, TBA 2000S, TPA 0750SQ (See drawing on page: 5-64)					
010	1538963-0000		2	RAIL	
050	1346588-0000		1	DRIP PLATE	
070	2724952-0000		1	SUPPORTING ARM	
080	2715502-0000		1	SUPPORTING ARM	
220	312105-0451		10	SCREW M6S ISO 4017 M8X20 A480	
240	312605-0318		2	HEXAGON NUT, M6M M8 A280	
260	315105-0165		14	WASHER BRB 8,4X16 RFR	
320	312105-0449		2	SCREW M6S ISO 4017 M8X16 A480	
TPA 0500SQ (See drawing on page: 5-66)					
010	1558941-0000		2	RAIL	
050	1144899-0000		1	SUPPORT	
080	2715499-0000		1	SUPPORTING ARM	
090	1478127-0000		1	DRIP PLATE	
220	312105-0451		5	SCREW M6S ISO 4017 M8X20 A480	
240	312605-0318		1	HEXAGON NUT, M6M M8 A280	
260	315105-0165		12	WASHER BRB 8,4X16 RFR	
310	312105-0453		2	SCREW M6S ISO 4017 M8X25 A480	
320	312105-0449		4	SCREW M6S ISO 4017 M8X16 A480	
Common Parts					
020	1517567-0000		1	PLATE	
030	1144552-0000		1	PLATE	
040	1517563-0000		1	BRACKET	
060	1517302-0000		2	SUPPORT PLATE	
200	312105-0368		2	SCREW M6S ISO 4017 M6X16 A480	
210	312105-0370		4	SCREW M6S ISO 4017 M6X20 A480	
230	312115-0497		2	SCREW ISO4762 M10X35 A4 80	
250	315105-0153		6	WASHER BRB 6,4X12 RFR	
270	315105-0171		2	WASHER BRB 10X18 RFR	

Pos	Part No	UN	Qty	Description	Page No
290	342722-0203		1	STRAIGHT COUPLING	
300	90166-0132	MM	2000	TUBE 6 MM PA,TRANSP.	

Machine Type	Group Description	Used-In	Group Number	Page No

OUT FEED DRIVING SYSTEM

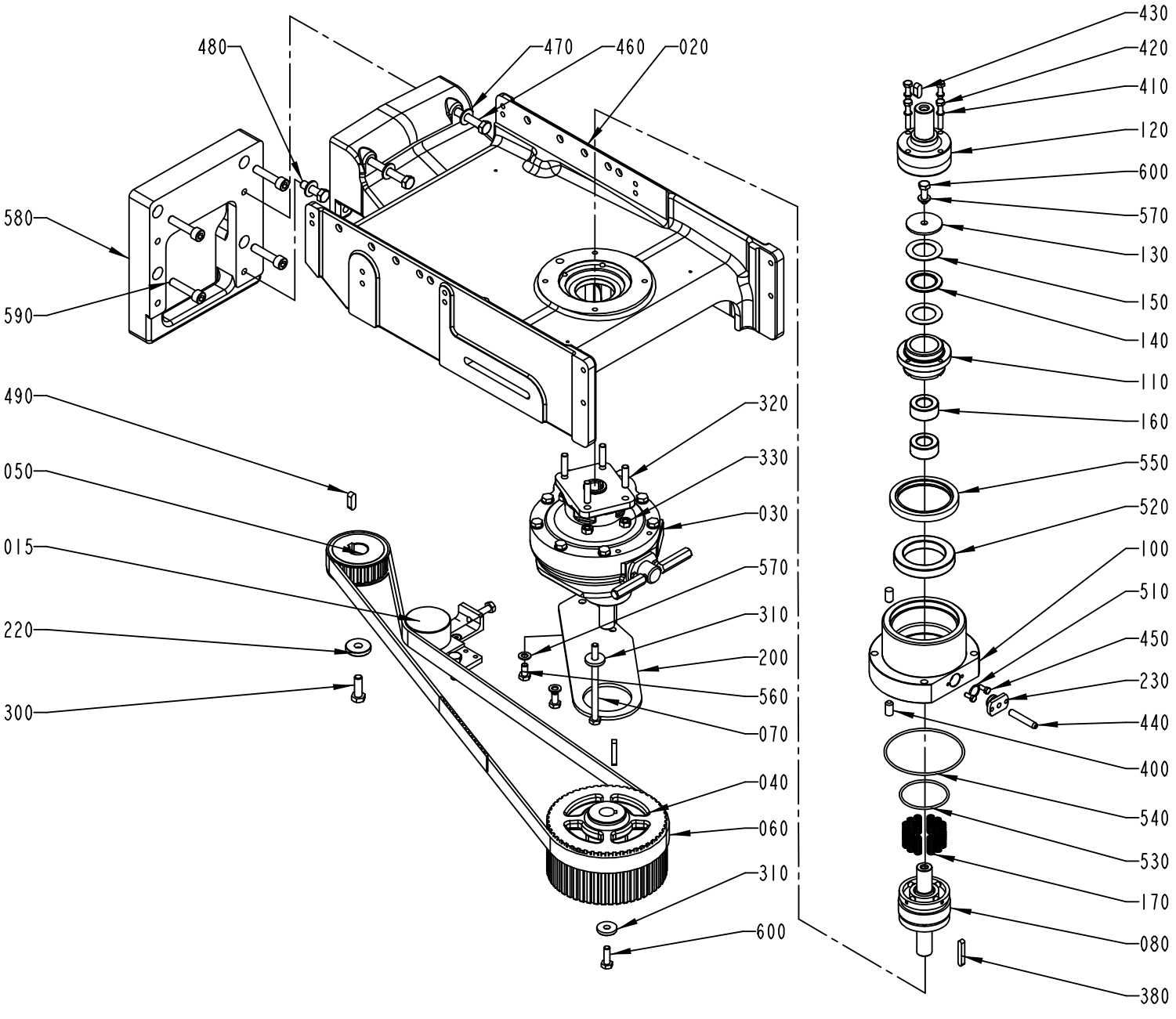

1484210-4
ECM 95375

ECM: 272390 - 20060626
Group number: 1484210-0200
Assembly Drawing: 1484210-4_1_AA

Pos	Part No	UN	Qty	Description	Page No
TBA 0250S, TBA 0200S, TBA 0200M, TBA 0200SQ, TPA 0250SQ, TPA 0330SQ, TPA 0200SQ, TBA 0250SQ					
040	1499064-0000		1	PULLEY	
050	1144802-0000		1	PULLEY	
060	1499059-0000		1	TIMING BELT	
080	1282343-0000		1	BLOCK	
110	1350564-0000		1	CLAMP HUB	
TBA 0500S, TBA 0500B, TBA 0330S, TBA 1000S, TBA 1000SQ, TBA 1000B, TBA 0200B, TBA 0250B, TPA 0500SQ					
040	1498620-0000		1	PULLEY	
050	1144802-0000		1	PULLEY	
060	1498529-0000		1	TIMING BELT	
080	1282343-0000		1	BLOCK	
110	1350564-0000		1	CLAMP HUB	
TBA 1500S, TPA 1000SQ, TPA 0750SQ					
040	1498620-0000		1	PULLEY	
050	1144802-0000		1	PULLEY	
060	1498528-0000		1	TIMING BELT	
080	1282343-0000		1	BLOCK	
110	1350564-0000		1	CLAMP HUB	
580	1349160-0000		1	SPACER	
590	312115-0500		4	SCREW ISO4762 M10X45 A4 80	
TBA 1890S, TBA 2000S					
040	2588329-0000		1	PULLEY	
050	2588328-0000		1	PULLEY	
060	2616227-0000		1	TIMING BELT	
080	2644178-0000		1	BLOCK	
110	2644177-0000		1	CLAMP HUB	
580	1349160-0000		1	SPACER	
590	312115-0500		4	SCREW ISO4762 M10X45 A4 80	
Common Parts					
015	1285875-0200		1	BELT TENSIONER	**5-71**
020	1478908-0000		1	SUPPORT	
030	1490085-0000		1	GEAR BOX	**5-73**
070	312105-0475		1	SCREW M6S ISO 4014 M8X120 A480	
100	1478905-0000		1	FLANGE	
120	1478753-0000		1	SHAFT	
130	1260832-0000		1	WASHER	
140	90083-0052		1	NEEDLE ROLLER THRUST BEARING, 30X47X2 MM	
150	90083-0053		2	SHAFT LOCATING WASHER, 30X47X1MM	
160	1484448-0000		2	ROLLER BEARING	
170	1282345-0000		12	SPRING	
200	1499043-0000		1	BRACKET	
220	1144681-0000		1	WASHER	
230	1282335-0000		1	FLANGE	
300	312105-0495		1	SCREW M6S ISO 4017 M10X30 A480	
310	315125-0165		2	WASHER TBRSB 8,4X26X5 A4	
320	1490442-0000		4	STUD SCREW 8X20	
330	312605-0318		4	HEXAGON NUT, M6M M8 A280	
380	315705-0239		2	PARALLEL KEY W. ROUND ENDS 6X6X40 MM	
400	311103-0454		2	PARALLEL PIN ISO 2338 10M6X20 A1	
410	315211-0103		4	BONDED SEAL SS/NBR90 M6	
420	312109-0378		4	SCREW M6S ISO 4017 M6X40 A480	
430	315705-0263		1	PARALLEL KEY W. ROUND ENDS 8X7X20 MM	
440	90044-0117		1	PROX.SW. IX 0208	
450	312105-0327		2	SCREW M6S ISO 4017 M5X12 A480	
460	312105-0507		2	SCREW M6S ISO 4014 M10X80 A480	
470	315105-0173		4	WASHER BRB 10,5X20 RFR	
480	312115-0497		2	SCREW ISO4762 M10X35 A4 80	
490	315705-0265		1	PARALLEL KEY W. ROUND ENDS 8X7X25 MM	
510	315202-0113		1	O-RING 15,1X1,6 MM	
520	1484447-0000		1	BALL BEARING	
530	315202-0303		1	O-RING 59,5X3 MM	
540	315202-0311		1	O-RING 99,5X3 MM	
550	90091-0416		1	RADIAL SEAL 70X90X10 MM DUST LIP	
560	312105-0449		2	SCREW M6S ISO 4017 M8X16 A480	
570	315105-0165		3	WASHER BRB 8,4X16 RFR	
600	312105-0453		2	SCREW M6S ISO 4017 M8X25 A480	

Machine Type | Group Description | Used-In | Group Number | Page No

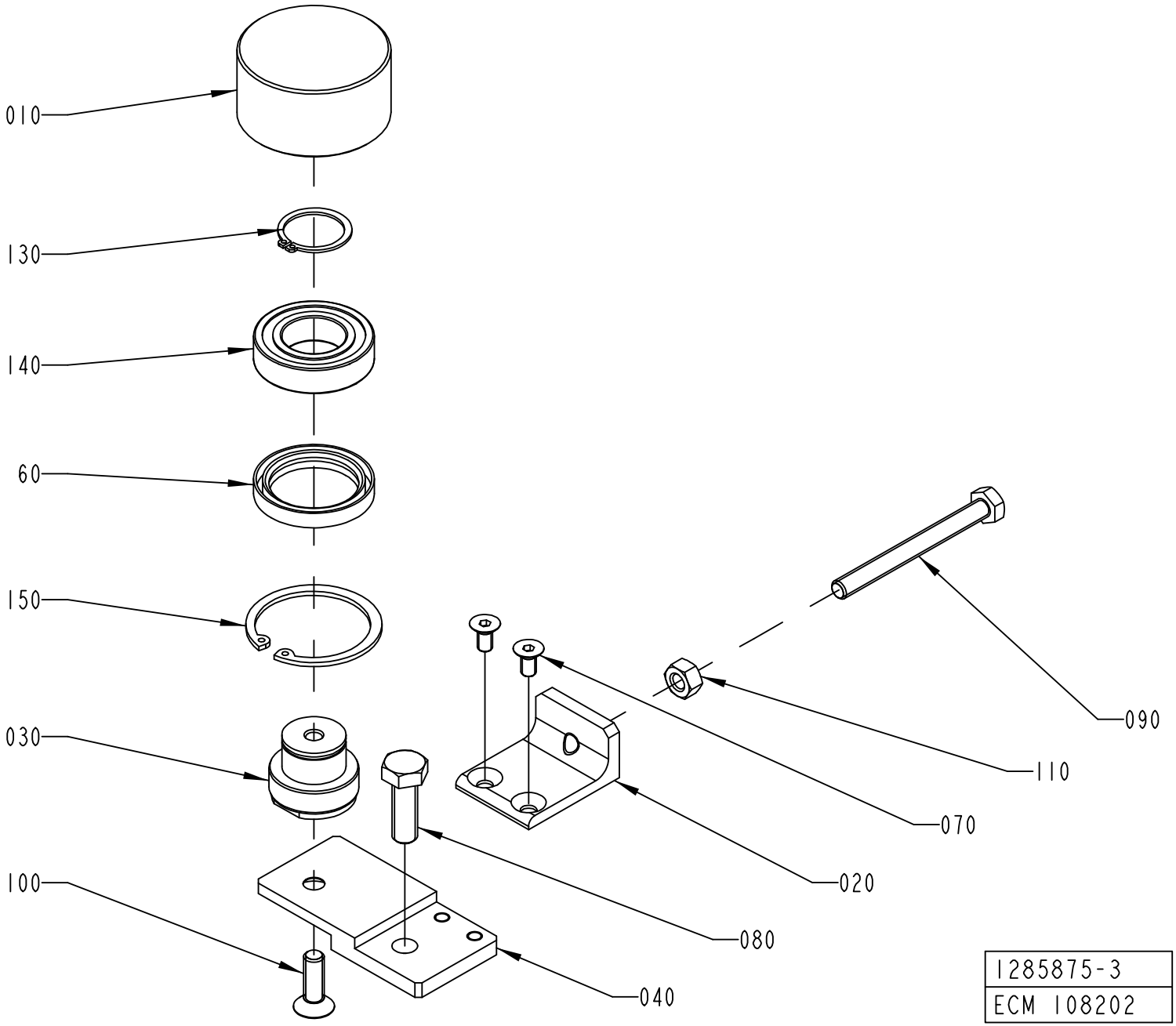
010
130
140
60
150
030
100
040
080
020
070
110
090
1285875-3
ECM 108202

ECM: 181279 - 20041104
Group number: 1285875-0200
Assembly Drawing: 1285875-3_1_AA

Pos	Part No	UN	Qty	Description	Page No
-					
010	1144581-0000		1	ROLLER	
020	1498064-0000		1	BLOCK	
030	1478302-0000		1	AXLE BOLT	
040	1498067-0000		1	PLATE	
060	1350305-0000		1	SEALING RING	
070	312155-0366		2	SCREW DIN 7991 MF6S M6X12 A4 70	
080	312105-0495		1	SCREW M6S ISO 4017 M10X30 A480	
090	1498066-0000		1	SCREW	
100	312155-0453		1	SCREW DIN 7991 MF6S M8X25 A4 70	
110	312605-0318		1	HEXAGON NUT, M6M M8 A280	
130	315751-0119		1	RETAINING RING FOR SHAFT DIN 471 25 A2	
140	321308-0205		1	BALL BEARING, 25X47X12MM	
150	90141-0019		1	RETAINING RING FOR BORE DIN 472 50 A2	

Pos	Part No	UN	Qty	Description	Page No

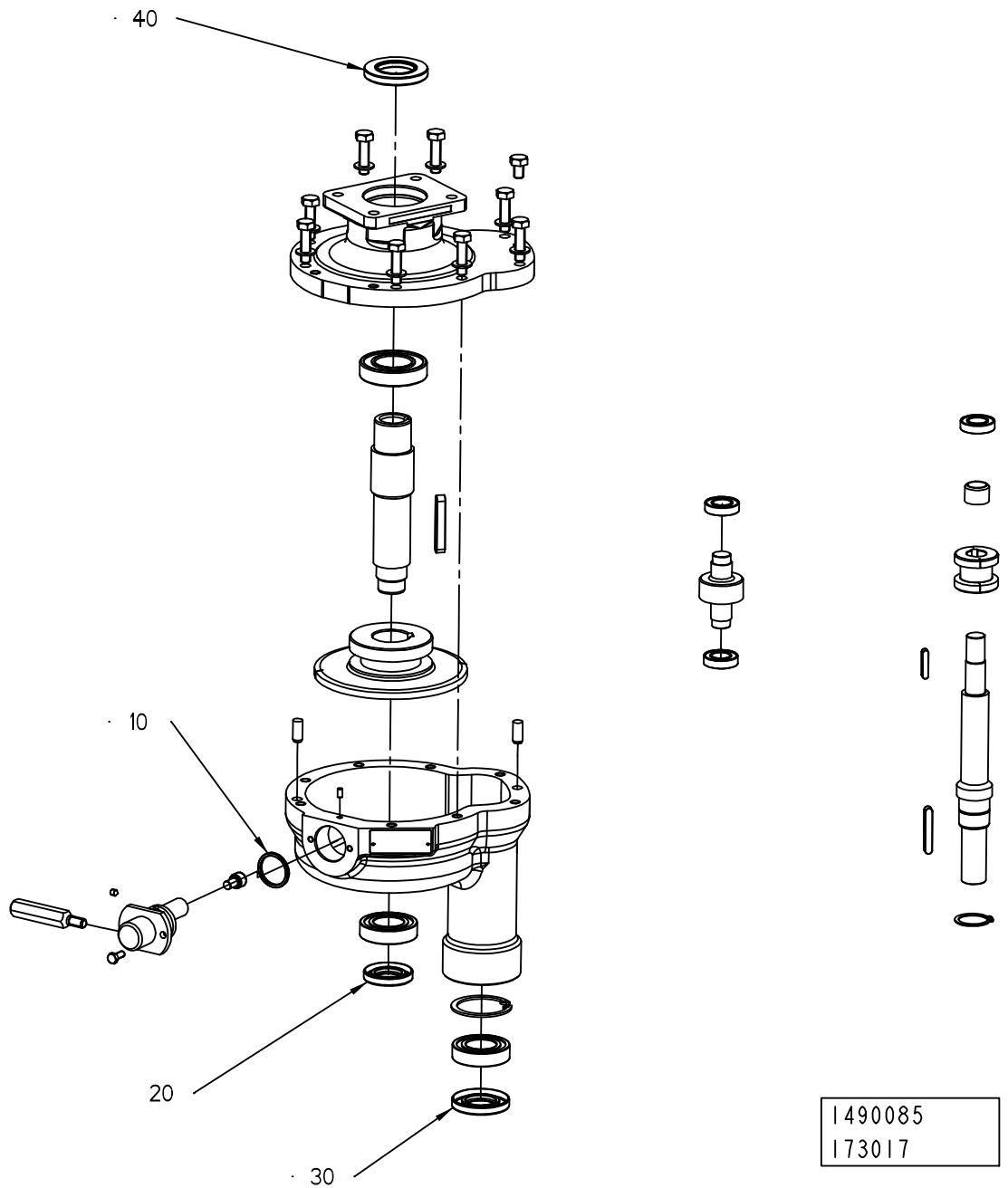
· 40
· 10
20
· 30
1490085
173017

ECM: 190921 - 20041104
Group number: 1490085-0000
Assembly Drawing: 1490085_2_AB

Pos	Part No	UN	Qty	Description	Page No
-					
010	315202-0217		1	O-RING 24,2X3 MM	
020	90091-0404		1	RADIAL SEAL 22X40X7 MM DUST LIP	
030	90091-0148		1	RADIAL SEAL 25X47X7 MM DUST LIP	
040	90091-0299		1	RADIAL SEAL 30X52X7 MM DUST LIP	

Pos	Part No	UN	Qty	Description	Page No

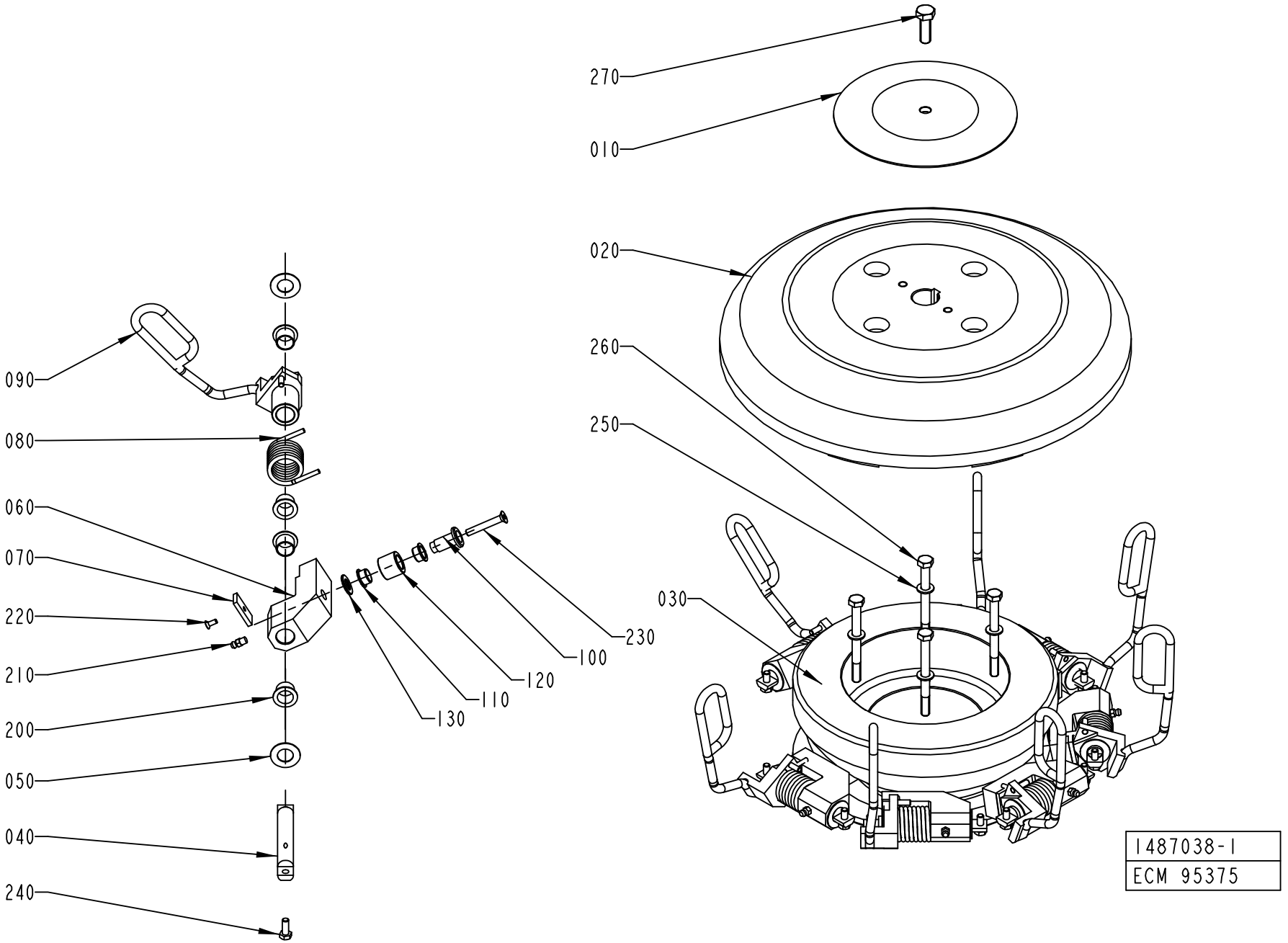
270
010
020
260
250
090
080
060
070
220
210
200
050
040
240
230
100
120
110
130
030
1487038-1
ECM 95375

ECM: 270840 - 20060626
Group number: 1487038-0200
Assembly Drawing: 1487038-1_1_AB

This list covers pages from 5-74 to 5-81

Pos	Part No	UN	Qty	Description	Page No
TBA 0200B QC, TBA 0330S QC, TBA 0330S NOQC, TBA 0250B QC (See drawing on page: 5-80)					
020	2532580-0000		1	HATCH	
030	2540593-0000		1	CAM	
040	1350543-0000		8	AXLE PIN	
050	1260852-0000		16	WASHER	
060	2556526-0000		8	LEVER	
080	1349985-0000		8	SPRING	
090	2563274-0000		8	CARRIER	
100	1260851-0000		8	AXLE PIN	
110	1144662-0000		16	BUSHING	
120	1260853-0000		8	RING	
130	1285254-0000		8	WASHER	
200	90240-0263		16	FLANGE BUSHING, 15X17X12 MM	
210	344502-0021		8	GREASE NIPPLE STRAIGHT M6	
230	312155-0378		8	SCREW DIN 7991 MF6S M6X40 A4 70	
240	312105-0368		16	SCREW M6S ISO 4017 M6X16 A480	
280	2545245-0000		8	BUSHING	
290	90240-0258		8	BUSHING, 15X17X15 MM	
TBA 0200B NOQC, TBA 0250B NOQC (See drawing on page: 5-76)					
020	1484289-0000		1	HATCH	
030	1478228-0000		1	CAM	
040	1348540-0000		8	PIVOT AXLE	
050	1260852-0000		16	WASHER	
060	1348538-0000		8	LEVER	
070	1348631-0000		8	PLATE	
080	1282864-0000		8	SPRING	
090	1532516-0000		8	CARRIER	
100	1260851-0000		8	AXLE PIN	
110	1144662-0000		16	BUSHING	
120	1260853-0000		8	RING	
130	1285254-0000		8	WASHER	
200	90240-0263		32	FLANGE BUSHING, 15X17X12 MM	
210	344502-0021		8	GREASE NIPPLE STRAIGHT M6	
220	312155-0289		8	SCREW DIN 7991 MF6S M4X10 A4 70	
230	312155-0378		8	SCREW DIN 7991 MF6S M6X40 A4 70	
240	312105-0368		16	SCREW M6S ISO 4017 M6X16 A480	
TBA 0200SQ QC, TBA 0250SQ QC (See drawing on page: 5-78)					
020	1478925-0000		1	HATCH	
030	2540594-0000		1	CAM	
040	1350543-0000		12	AXLE PIN	
050	1260852-0000		24	WASHER	
060	2556525-0000		12	LEVER	
080	1549615-0000		12	SPRING	
090	2682222-0000		12	CARRIER	
100	1260851-0000		12	AXLE PIN	
110	1144662-0000		24	BUSHING	
120	1260853-0000		12	RING	
130	1285254-0000		12	WASHER	
200	90240-0263		24	FLANGE BUSHING, 15X17X12 MM	
210	344502-0021		12	GREASE NIPPLE STRAIGHT M6	
230	312155-0378		12	SCREW DIN 7991 MF6S M6X40 A4 70	
240	312105-0368		12	SCREW M6S ISO 4017 M6X16 A480	
280	2545245-0000		12	BUSHING	
290	90240-0258		12	BUSHING, 15X17X15 MM	
TBA 0250S, TBA 0200S, TBA 0200M (See drawing on page: 5-78)					
020	1478925-0000		1	HATCH	
030	2540593-0000		1	CAM	
040	1350543-0000		12	AXLE PIN	
050	1260852-0000		24	WASHER	
060	2556526-0000		12	LEVER	
080	1349985-0000		12	SPRING	
090	2563274-0000		12	CARRIER	
100	1260851-0000		12	AXLE PIN	
110	1144662-0000		24	BUSHING	
120	1260853-0000		12	RING	
130	1285254-0000		12	WASHER	
200	90240-0263		24	FLANGE BUSHING, 15X17X12 MM	
210	344502-0021		12	GREASE NIPPLE STRAIGHT M6	
230	312155-0378		12	SCREW DIN 7991 MF6S M6X40 A4 70	
240	312105-0368		12	SCREW M6S ISO 4017 M6X16 A480	
280	2545245-0000		12	BUSHING	
290	90240-0258		12	BUSHING, 15X17X15 MM	
TBA 0500S, TBA 0500B, TBA 1000S, TBA 1000B (See drawing on page: 5-76)					
020	1484289-0000		1	HATCH	
030	1478228-0000		1	CAM	
040	1348540-0000		8	PIVOT AXLE	
050	1260852-0000		16	WASHER	
060	1348538-0000		8	LEVER	
070	1348631-0000		8	PLATE	
080	1282864-0000		8	SPRING	
090	1511225-0000		8	CARRIER	
100	1260851-0000		8	AXLE PIN	
110	1144662-0000		16	BUSHING	
120	1260853-0000		8	RING	

Machine Type | Group Description | Used-In | Group Number | Page No

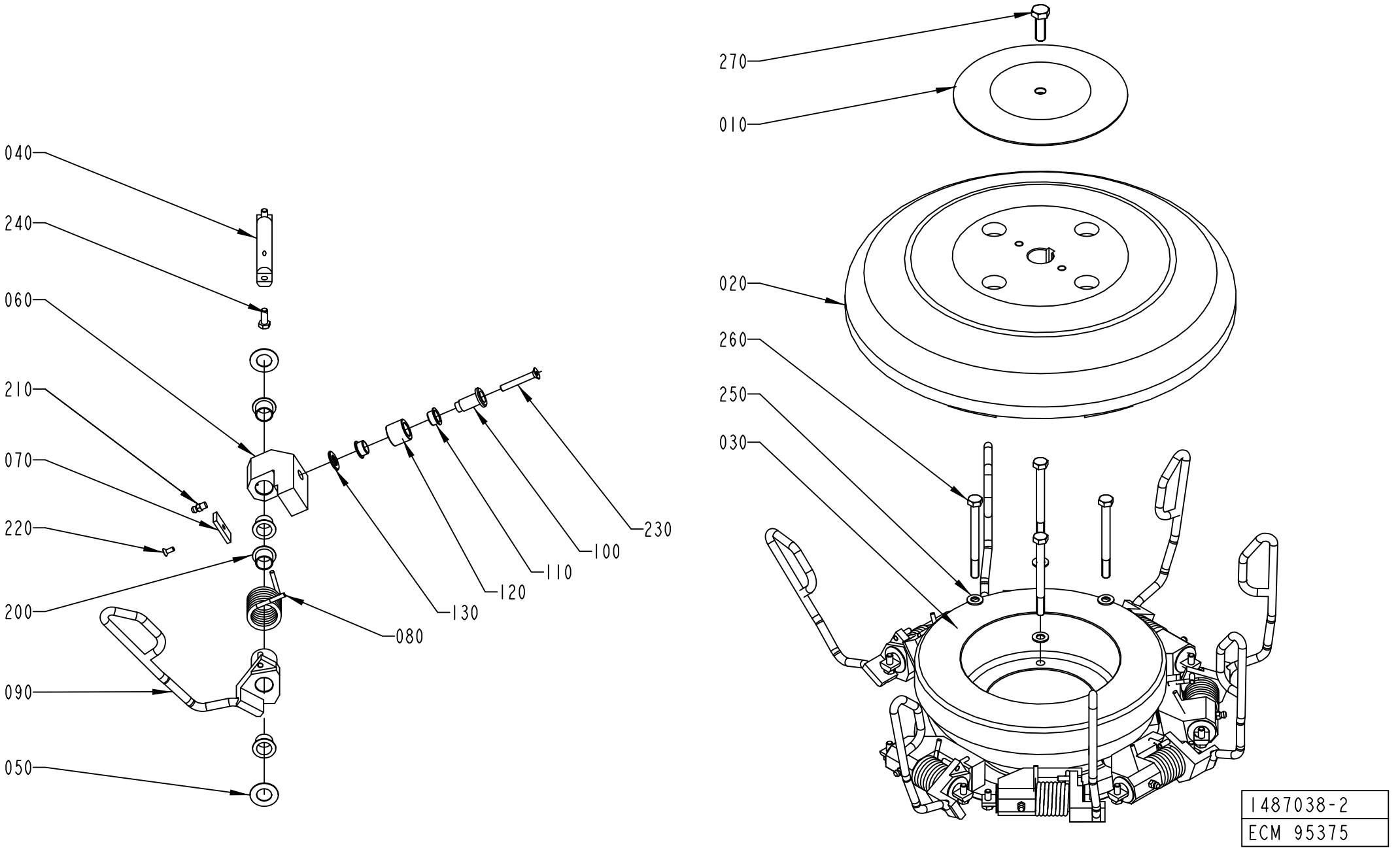
270
010
020
260
250
030
040
240
060
210
070
220
200
090
050
080
130
120
110
100
230
1487038-2
ECM 95375

ECM: 270840 - 20060626
Group number: 1487038-0200
Assembly Drawing: 1487038-2_1_AB

This list covers pages from 5-74 to 5-81

Pos	Part No	UN	Qty	Description	Page No
TBA 0500S, TBA 0500B, TBA 1000S, TBA 1000B (Cont'd) (See drawing on page: 5-76)					
130	1285254-0000		8	WASHER	
200	90240-0263		32	FLANGE BUSHING, 15X17X12 MM	
210	344502-0021		8	GREASE NIPPLE STRAIGHT M6	
220	312155-0289		8	SCREW DIN 7991 MF6S M4X10 A4 70	
230	312155-0378		8	SCREW DIN 7991 MF6S M6X40 A4 70	
240	312105-0368		16	SCREW M6S ISO 4017 M6X16 A480	
TBA 1000SQ (See drawing on page: 5-74)					
020	1484289-0000		1	HATCH	
030	1478228-0000		1	CAM	
040	1348540-0000		8	PIVOT AXLE	
050	1260852-0000		16	WASHER	
060	1348538-0000		8	LEVER	
070	1348631-0000		8	PLATE	
080	1296176-0000		8	SPRING	
090	1478227-0000		8	CARRIER	
100	1260851-0000		8	AXLE PIN	
110	1144662-0000		16	BUSHING	
120	1260853-0000		8	RING	
130	1285254-0000		8	WASHER	
200	90240-0263		32	FLANGE BUSHING, 15X17X12 MM	
210	344502-0021		8	GREASE NIPPLE STRAIGHT M6	
220	312155-0289		8	SCREW DIN 7991 MF6S M4X10 A4 70	
230	312155-0378		8	SCREW DIN 7991 MF6S M6X40 A4 70	
240	312105-0368		16	SCREW M6S ISO 4017 M6X16 A480	
TBA 1500S (See drawing on page: 5-76)					
020	1484289-0000		1	HATCH	
030	1478228-0000		1	CAM	
040	1348540-0000		8	PIVOT AXLE	
050	1260852-0000		16	WASHER	
060	1348538-0000		8	LEVER	
070	1348631-0000		8	PLATE	
080	1282864-0000		8	SPRING	
090	1487159-0000		8	CARRIER	
100	1260851-0000		8	AXLE PIN	
110	1144662-0000		16	BUSHING	
120	1260853-0000		8	RING	
130	1285254-0000		8	WASHER	
200	90240-0263		32	FLANGE BUSHING, 15X17X12 MM	
210	344502-0021		8	GREASE NIPPLE STRAIGHT M6	
220	312155-0289		8	SCREW DIN 7991 MF6S M4X10 A4 70	
230	312155-0378		8	SCREW DIN 7991 MF6S M6X40 A4 70	
240	312105-0368		16	SCREW M6S ISO 4017 M6X16 A480	
TBA 1890S QC, TBA 2000S QC (See drawing on page: 5-80)					
020	2594911-0000		1	HATCH	
030	2540593-0000		1	CAM	
040	1348540-0000		6	PIVOT AXLE	
050	1260852-0000		12	WASHER	
060	2594910-0000		6	LEVER	
080	1349985-0000		6	SPRING	
090	2664596-0000		6	CARRIER	
100	1260851-0000		6	AXLE PIN	
110	1144662-0000		12	BUSHING	
120	1260853-0000		6	RING	
130	1285254-0000		6	WASHER	
200	90240-0263		12	FLANGE BUSHING, 15X17X12 MM	
210	344502-0021		6	GREASE NIPPLE STRAIGHT M6	
230	312155-0378		6	SCREW DIN 7991 MF6S M6X40 A4 70	
240	312105-0368		12	SCREW M6S ISO 4017 M6X16 A480	
280	2545245-0000		6	BUSHING	
290	90240-0258		6	BUSHING, 15X17X15 MM	
TPA 0250SQ QC, TPA 0200SQ QC, TPA 0250SQ NOQC (See drawing on page: 5-78)					
020	1478925-0000		1	HATCH	
030	2540594-0000		1	CAM	
040	1350543-0000		12	AXLE PIN	
050	1260852-0000		24	WASHER	
060	2556525-0000		12	LEVER	
080	1549615-0000		12	SPRING	
090	2552018-0000		12	CARRIER	
100	1260851-0000		12	AXLE PIN	
110	1144662-0000		24	BUSHING	
120	1260853-0000		12	RING	
130	1285254-0000		12	WASHER	
200	90240-0263		24	FLANGE BUSHING, 15X17X12 MM	
210	344502-0021		12	GREASE NIPPLE STRAIGHT M6	
230	312155-0378		12	SCREW DIN 7991 MF6S M6X40 A4 70	
240	312105-0368		12	SCREW M6S ISO 4017 M6X16 A480	
280	2545245-0000		12	BUSHING	
290	90240-0258		12	BUSHING, 15X17X15 MM	
TPA 0330SQ (See drawing on page: 5-78)					
020	1478925-0000		1	HATCH	
030	1478228-0000		1	CAM	
040	1350543-0000		12	AXLE PIN	
050	1260852-0000		24	WASHER	

Machine Type | Group Description | Used-In | Group Number | Page No

OUTFEED WHEEL

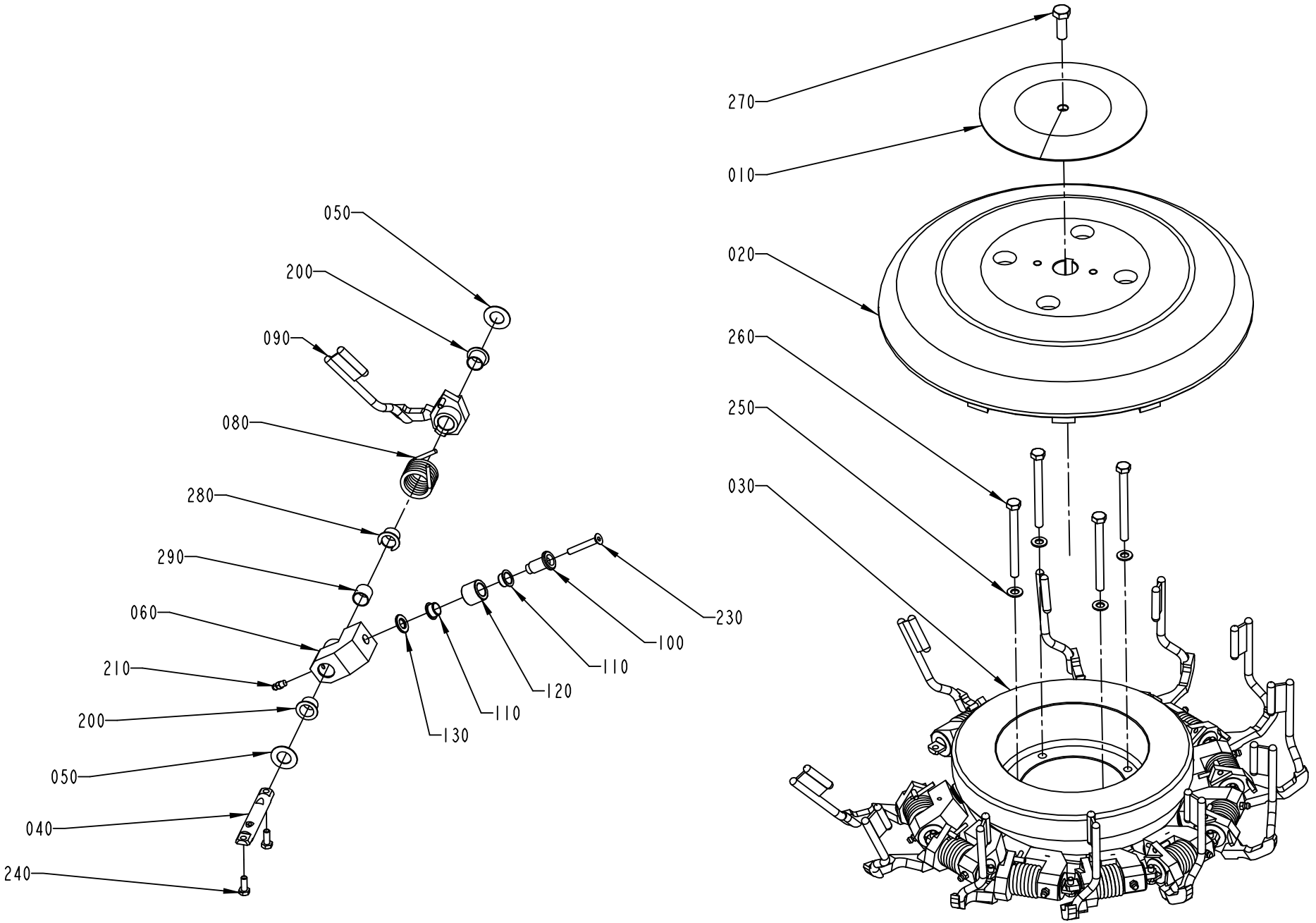

1487038-3
ECM 95375

Pos	Part No	UN	Qty	Description	Page No
TPA 0330SQ (Cont'd) (See drawing on page: 5-78)					
060	2556525-0000		12	LEVER	
080	1549615-0000		12	SPRING	
090	2545382-0000		12	CARRIER	
100	1260851-0000		12	AXLE PIN	
110	1144662-0000		24	BUSHING	
120	1260853-0000		12	RING	
130	1285254-0000		12	WASHER	
200	90240-0263		24	FLANGE BUSHING, 15X17X12 MM	
210	344502-0021		12	GREASE NIPPLE STRAIGHT M6	
230	312155-0378		12	SCREW DIN 7991 MF6S M6X40 A4 70	
240	312105-0368		12	SCREW M6S ISO 4017 M6X16 A480	
280	2545245-0000		12	BUSHING	
290	90240-0258		12	BUSHING, 15X17X15 MM	
TPA 0500SQ (See drawing on page: 5-80)					
020	2532580-0000		1	HATCH	
030	2540594-0000		1	CAM	
040	1350543-0000		8	AXLE PIN	
050	1260852-0000		16	WASHER	
060	2556525-0000		8	LEVER	
080	1549615-0000		8	SPRING	
090	2529664-0000		8	CARRIER	
100	1260851-0000		8	AXLE PIN	
110	1144662-0000		16	BUSHING	
120	1260853-0000		8	RING	
130	1285254-0000		8	WASHER	
200	90240-0263		16	FLANGE BUSHING, 15X17X12 MM	
210	344502-0021		8	GREASE NIPPLE STRAIGHT M6	
230	312155-0378		8	SCREW DIN 7991 MF6S M6X40 A4 70	
240	312105-0368		16	SCREW M6S ISO 4017 M6X16 A480	
280	2545245-0000		8	BUSHING	
290	90240-0258		8	BUSHING, 15X17X15 MM	
TPA 1000SQ NOQC, TPA 1000SQ QC, TPA 0750SQ QC (See drawing on page: 5-80)					
020	2532580-0000		1	HATCH	
030	2540594-0000		1	CAM	
040	1350543-0000		8	AXLE PIN	
050	1260852-0000		16	WASHER	
060	2556525-0000		8	LEVER	
080	1549615-0000		8	SPRING	
090	2543231-0000		8	CARRIER	
100	1260851-0000		8	AXLE PIN	
110	1144662-0000		16	BUSHING	
120	1260853-0000		8	RING	
130	1285254-0000		8	WASHER	
200	90240-0263		16	FLANGE BUSHING, 15X17X12 MM	
210	344502-0021		8	GREASE NIPPLE STRAIGHT M6	
230	312155-0378		8	SCREW DIN 7991 MF6S M6X40 A4 70	
240	312105-0368		16	SCREW M6S ISO 4017 M6X16 A480	
280	2545245-0000		8	BUSHING	
290	90240-0258		8	BUSHING, 15X17X15 MM	
Common Parts					
010	1478558-0000		1	WASHER	
250	315105-0165		4	WASHER BRB 8,4X16 RFR	
260	312105-0469		4	SCREW M6S ISO 4014 M8X90 A480	
270	312105-0495		1	SCREW M6S ISO 4017 M10X30 A480	

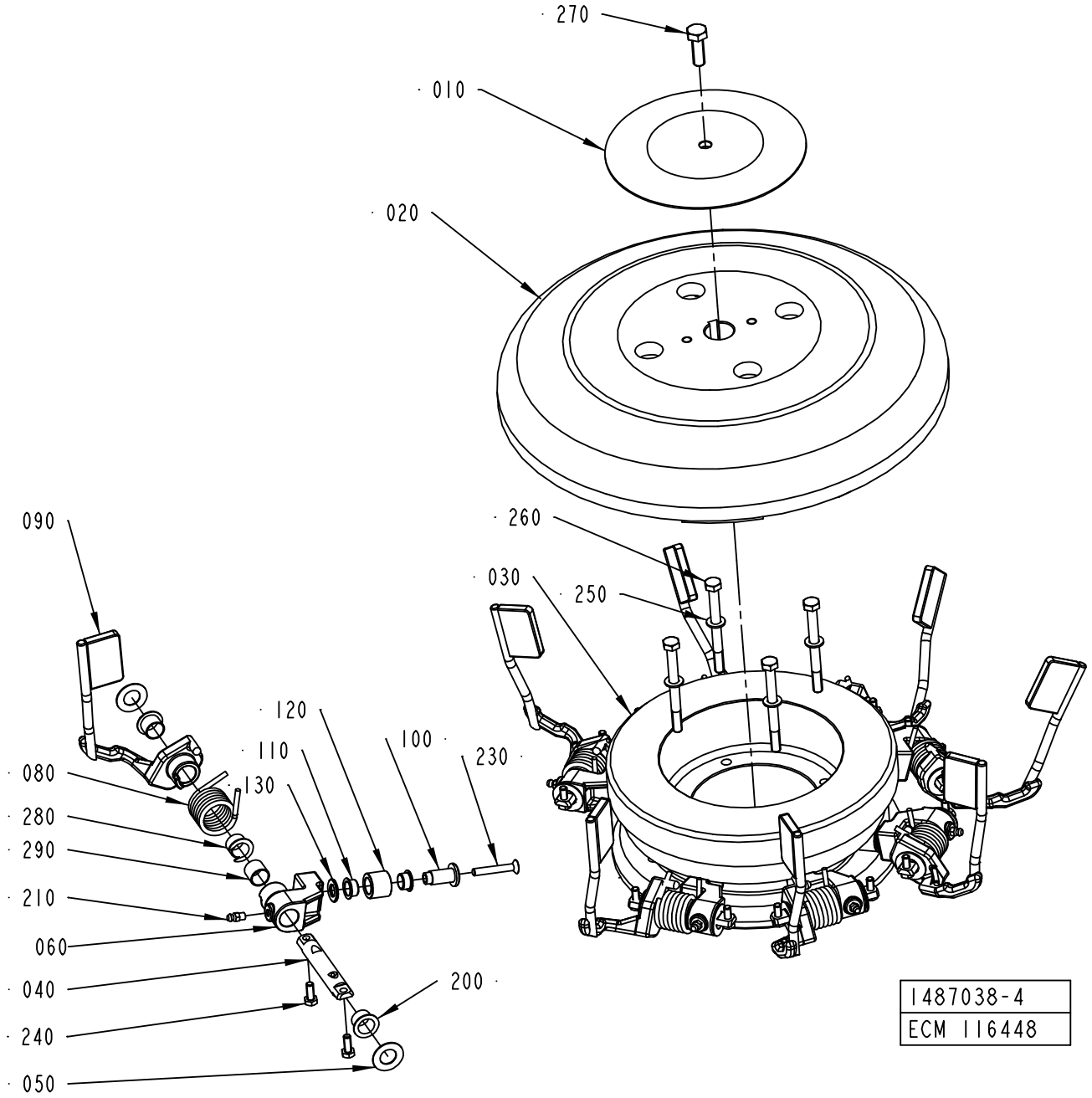
270
010
020
090
260
030
250
120
110
100
230
080
130
280
290
210
060
040
200
240
050
1487038-4
ECM 116448

ECM: 270840 - 20060626
Group number: 1487038-0200
Assembly Drawing: 1487038-4_1_AA

This list covers pages from 5-74 to 5-81

Pos	Part No	UN	Qty	Description	Page No
SEE PREVIOUS LISTS PAGES: 5-75, 5-77, 5-79.					

Pos	Part No	UN	Qty	Description	Page No

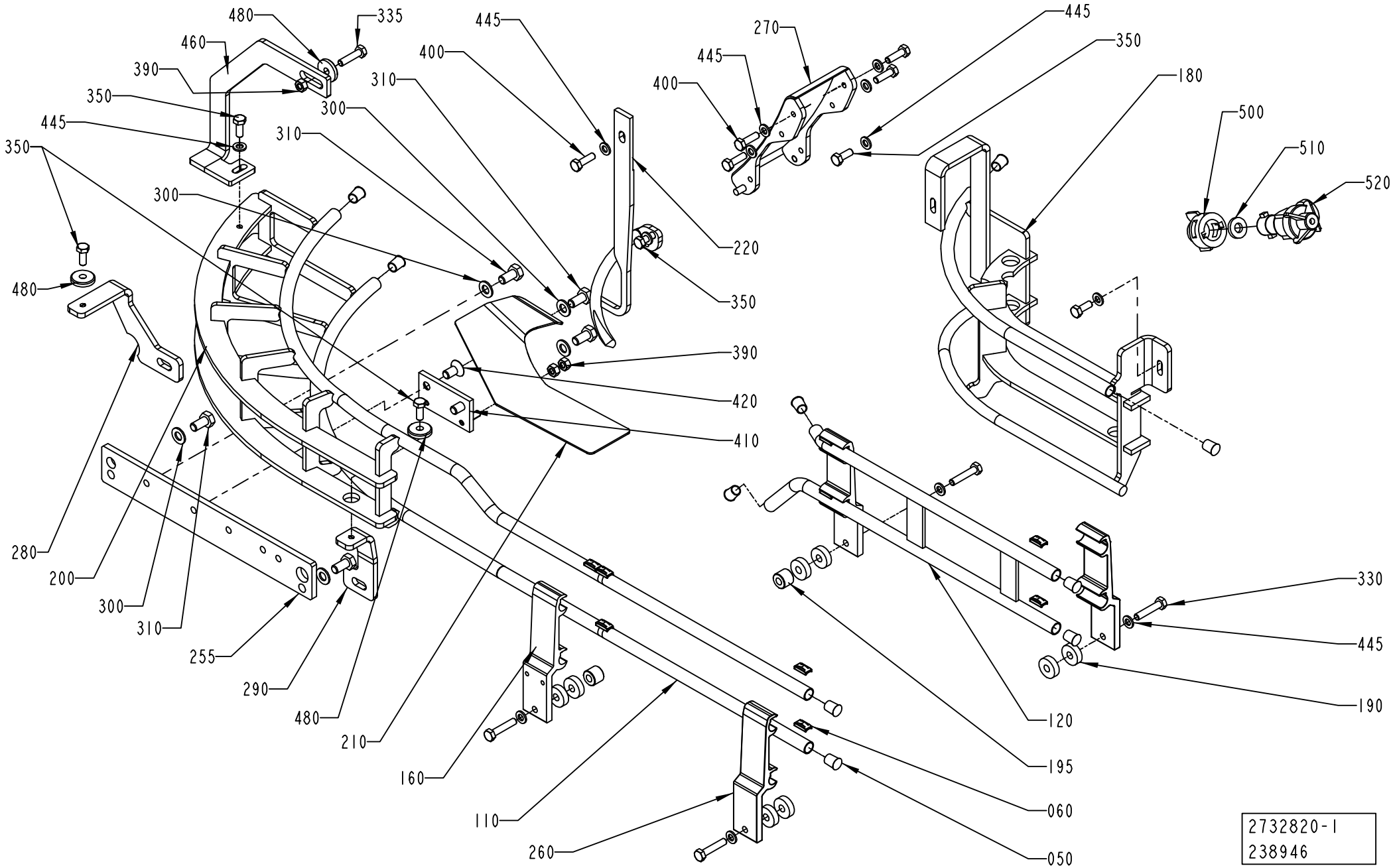
480
335
460
390
350
445
350
445
310
300
310
300
400
445
270
400
445
350
180
500
510
520
220
350
390
420
410
480
280
200
300
310
255
290
480
210
160
110
260
120
195
060
050
330
445
190
2732820-1
238946

ECM: 242276 - 20060701
Group number: 2732820-0100
Assembly Drawing: 2732820-1_1_AA

This list covers pages from 5-82 to 5-91

Pos	Part No	UN	Qty	Description	Page No
TBA 0200B QC, TBA 0330S QC, TBA 0250B QC (See drawing on page: 5-84)					
050	484701-0000		13	SHUTTER	
060	1020146-0000		10	LOCKING BLOCK REPL BY 1020290-101	
110	1279582-0000		2	RAIL	
120	2558754-0000		1	RAIL	
160	1285009-0000		2	HOLDER	
180	2752760-0000		1	RAIL	
200	2732826-0000		1	RAIL	
210	2538110-0000		1	RAIL	
220	2732811-0000		1	RAIL	
260	1020142-0002		2	RAIL HOLDER, B55 WIDTH 30 MM	
270	2523480-0000		1	SLIDE	
280	2804308-0000		1	BRACKET	
300	315105-0165		5	WASHER BRB 8,4X16 RFR	
310	312105-0449		5	SCREW M6S ISO 4017 M8X16 A480	
330	312105-0370		4	SCREW M6S ISO 4017 M6X20 A480	
350	312105-0368		4	SCREW M6S ISO 4017 M6X16 A480	
390	312605-0316		1	HEXAGON NUT, M6M M6 A280	
400	312105-0370		5	SCREW M6S ISO 4017 M6X20 A480	
445	315105-0153		13	WASHER BRB 6,4X12 RFR	
460	2732827-0000		1	BRACKET	
TBA 0200S (See drawing on page: 5-84)					
050	484701-0000		14	SHUTTER	
060	1020146-0000		10	LOCKING BLOCK REPL BY 1020290-101	
110	1279582-0000		2	RAIL	
120	1487684-0000		1	RAIL	
160	1285009-0000		2	HOLDER	
180	2732812-0000		1	RAIL	
200	2715497-0000		1	RAIL	
210	2538110-0000		1	RAIL	
220	2732811-0000		1	RAIL	
260	1020142-0002		2	RAIL HOLDER, B55 WIDTH 30 MM	
270	2523480-0000		1	SLIDE	
280	2804301-0000		1	BRACKET	
290	2804302-0000		1	BRACKET	
300	315105-0165		5	WASHER BRB 8,4X16 RFR	
310	312105-0449		5	SCREW M6S ISO 4017 M8X16 A480	
330	312105-0370		4	SCREW M6S ISO 4017 M6X20 A480	
350	312105-0368		4	SCREW M6S ISO 4017 M6X16 A480	
390	312605-0316		1	HEXAGON NUT, M6M M6 A280	
400	312105-0370		5	SCREW M6S ISO 4017 M6X20 A480	
445	315105-0153		13	WASHER BRB 6,4X12 RFR	

Pos	Part No	UN	Qty	Description	Page No
TBA 0200SQ QC, TBA 0250SQ QC (See drawing on page: 5-82)					
050	484701-0000		10	SHUTTER	
060	1020146-0000		6	LOCKING BLOCK REPL BY 1020290-101	
120	1548550-0000		1	RAIL	
160	1285009-0000		2	HOLDER	
180	2752758-0000		1	RAIL	
190	315105-0153		2	WASHER BRB 6,4X12 RFR	
195	315105-0153		2	WASHER BRB 6,4X12 RFR	
200	2752756-0000		1	RAIL	
220	2752757-0000		1	RAIL	
260	1285009-0000		2	HOLDER	
270	2523480-0000		1	SLIDE	
280	2804311-0000		1	BRACKET	
290	2804312-0000		1	BRACKET	
300	315105-0165		3	WASHER BRB 8,4X16 RFR	
310	312105-0449		3	SCREW M6S ISO 4017 M8X16 A480	
330	312105-0374		4	SCREW M6S ISO 4014 M6X30 A480	
390	312605-0316		1	HEXAGON NUT, M6M M6 A280	
400	312105-0370		5	SCREW M6S ISO 4017 M6X20 A480	
445	315105-0153		13	WASHER BRB 6,4X12 RFR	
460	2752759-0000		1	BRACKET	
TBA 0250S, TBA 0200M (See drawing on page: 5-84)					
050	484701-0000		13	SHUTTER	
060	1020146-0000		10	LOCKING BLOCK REPL BY 1020290-101	
110	1279582-0000		2	RAIL	
120	2558754-0000		1	RAIL	
160	1285009-0000		2	HOLDER	
180	2732812-0000		1	RAIL	
200	2678414-0000		1	RAIL	
210	2538110-0000		1	RAIL	
260	1020142-0002		2	RAIL HOLDER, B55 WIDTH 30 MM	
270	2523480-0000		1	SLIDE	
300	315105-0165		5	WASHER BRB 8,4X16 RFR	
330	312105-0370		4	SCREW M6S ISO 4017 M6X20 A480	
350	312105-0368		4	SCREW M6S ISO 4017 M6X16 A480	
390	312605-0316		1	HEXAGON NUT, M6M M6 A280	
400	312105-0370		5	SCREW M6S ISO 4017 M6X20 A480	
445	315105-0153		13	WASHER BRB 6,4X12 RFR	
TBA 0250S QC, TBA 0200M QC					
220	2732811-0000		1	RAIL	
280	2804303-0000		1	BRACKET	
460	2732814-0000		1	BRACKET	

Machine Type | Group Description | Used-In | Group Number | Page No

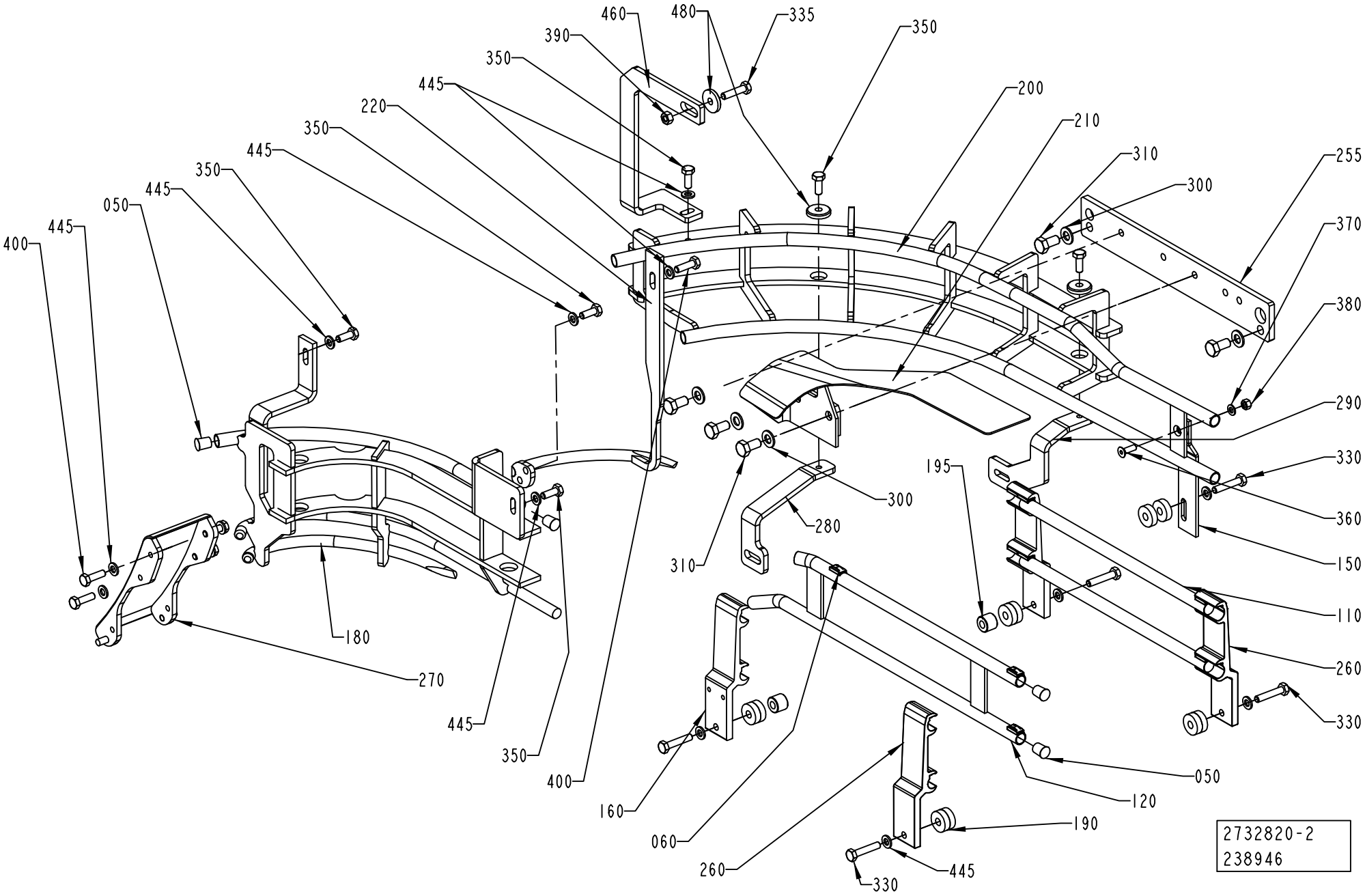
460
480
335
350
390
350
445
200
220
210
350
310
445
255
350
300
445
050
370
400
445
380
290
330
195
300
280
310
360
150
180
110
270
260
445
350
400
330
160
050
060
120
260
190
445
330
2732820-2
238946

Pos	Part No	UN	Qty	Description	Page No
TBA 0500B QC, TBA 1000B QC (Cont'd) (See drawing on page: 5-84)					
050	484701-0000		14	SHUTTER	
060	1020146-0000		10	LOCKING BLOCK REPL BY 1020290-101	
110	1279582-0000		2	RAIL	
120	1487684-0000		1	RAIL	
150	1499413-0000		1	HOLDER	
160	1285009-0000		2	HOLDER	
180	2724944-0000		1	RAIL	
190	1285253-0000		10	SPACER	
200	2693463-0000		1	RAIL	
210	1487177-0000		1	GUIDE	
220	2724951-0000		1	RAIL	
260	1020142-0002		2	RAIL HOLDER, B55 WIDTH 30 MM	
270	1538970-0000		1	SLIDE	
280	2804298-0000		1	BRACKET	
300	315105-0165		5	WASHER BRB 8,4X16 RFR	
310	312105-0449		5	SCREW M6S ISO 4017 M8X16 A480	
330	312105-0374		5	SCREW M6S ISO 4014 M6X30 A480	
350	312105-0368		4	SCREW M6S ISO 4017 M6X16 A480	
360	312155-0329		1	SCREW DIN 7991 MF6S M5X16 A4 70	
370	315105-0146		1	WASHER BRB 5,3X10 RFR	
380	312605-0314		1	HEXAGON NUT, M6M M5 A280	
390	312605-0316		1	HEXAGON NUT, M6M M6 A280	
400	312105-0370		5	SCREW M6S ISO 4017 M6X20 A480	
445	315105-0153		14	WASHER BRB 6,4X12 RFR	
460	2732810-0000		1	BRACKET	
TBA 0500S (See drawing on page: 5-84)					
050	484701-0000		10	SHUTTER	
060	1020146-0000		10	LOCKING BLOCK REPL BY 1020290-101	
110	1279582-0000		2	RAIL	
120	1487684-0000		1	RAIL	
160	1285009-0000		2	HOLDER	
180	2732821-0000		1	RAIL	
200	2732819-0000		1	RAIL	
210	1487177-0000		1	GUIDE	
220	2724951-0000		1	RAIL	
260	1020142-0002		2	RAIL HOLDER, B55 WIDTH 30 MM	
270	1538970-0000		1	SLIDE	
280	2804304-0000		1	BRACKET	
290	2804305-0000		1	BRACKET	
300	315105-0165		5	WASHER BRB 8,4X16 RFR	
310	312105-0449		5	SCREW M6S ISO 4017 M8X16 A480	
350	312105-0368		4	SCREW M6S ISO 4017 M6X16 A480	
390	312605-0316		1	HEXAGON NUT, M6M M6 A280	
400	312105-0370		9	SCREW M6S ISO 4017 M6X20 A480	
445	315105-0153		13	WASHER BRB 6,4X12 RFR	
460	2732822-0000		1	BRACKET	
TBA 1000S, TBA 1000B NOQC (See drawing on page: 5-84)					
050	484701-0000		14	SHUTTER	
060	1020146-0000		10	LOCKING BLOCK REPL BY 1020290-101	
110	1279582-0000		2	RAIL	
120	1487684-0000		1	RAIL	
150	1499413-0000		1	HOLDER	
160	1285009-0000		2	HOLDER	
180	2724944-0000		1	RAIL	
190	1285253-0000		10	SPACER	
200	2693462-0000		1	RAIL	
210	1487177-0000		1	GUIDE	
220	2724951-0000		1	RAIL	
260	1020142-0002		2	RAIL HOLDER, B55 WIDTH 30 MM	
270	1538970-0000		1	SLIDE	
280	2804290-0000		1	BRACKET	
290	2804291-0000		1	BRACKET	
300	315105-0165		5	WASHER BRB 8,4X16 RFR	
310	312105-0449		5	SCREW M6S ISO 4017 M8X16 A480	
330	312105-0374		5	SCREW M6S ISO 4014 M6X30 A480	
350	312105-0368		4	SCREW M6S ISO 4017 M6X16 A480	
360	312155-0329		1	SCREW DIN 7991 MF6S M5X16 A4 70	
370	315105-0146		1	WASHER BRB 5,3X10 RFR	
380	312605-0314		1	HEXAGON NUT, M6M M5 A280	
390	312605-0316		1	HEXAGON NUT, M6M M6 A280	
400	312105-0370		5	SCREW M6S ISO 4017 M6X20 A480	
445	315105-0153		14	WASHER BRB 6,4X12 RFR	
460	2732810-0000		1	BRACKET	
TBA 1000SQ (See drawing on page: 5-82)					
050	484701-0000		14	SHUTTER	
060	1020146-0000		10	LOCKING BLOCK REPL BY 1020290-101	
110	1279582-0000		2	RAIL	
120	1296079-0000		1	RAIL	
160	1285009-0000		2	HOLDER	
180	2715500-0000		1	RAIL	
190	1285253-0000		8	SPACER	
200	2693457-0000		1	RAIL	
210	1349806-0000		1	GUIDE	

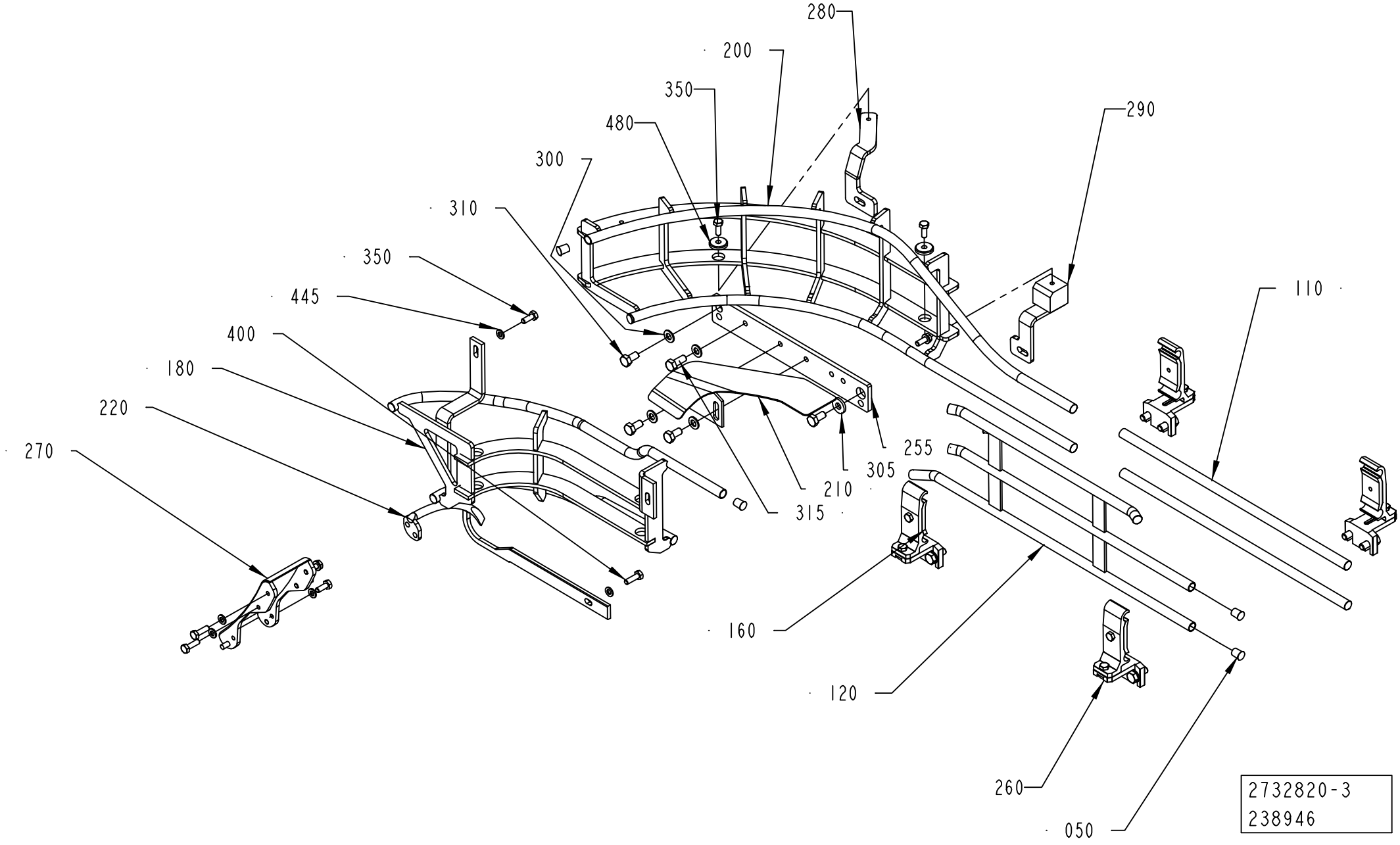
280
200
350
480
290
300
310
350
445
110
400
180
220
270
255
305
210
315
160
120
260
050
2732820-3
238946

Pos	Part No	UN	Qty	Description	Page No
TBA 1000SQ (Cont'd) (See drawing on page: 5-82)					
220	2715498-0000		1	RAIL	
260	1020142-0002		2	RAIL HOLDER, B55 WIDTH 30 MM	
270	1538970-0000		1	SLIDE	
280	2804288-0000		1	BRACKET	
290	2804289-0000		1	BRACKET	
300	315105-0165		5	WASHER BRB 8,4X16 RFR	
310	312105-0449		5	SCREW M6S ISO 4017 M8X16 A480	
330	312105-0374		4	SCREW M6S ISO 4014 M6X30 A480	
350	312105-0368		4	SCREW M6S ISO 4017 M6X16 A480	
390	312605-0316		1	HEXAGON NUT, M6M M6 A280	
400	312105-0370		5	SCREW M6S ISO 4017 M6X20 A480	
445	315105-0153		13	WASHER BRB 6,4X12 RFR	
460	2732815-0000		1	BRACKET	
TBA 1500S (See drawing on page: 5-84)					
050	484701-0000		16	SHUTTER	
060	1020146-0000		10	LOCKING BLOCK REPL BY 1020290-101	
110	1279582-0000		2	RAIL	
120	1487684-0000		1	RAIL	
150	1499413-0000		1	HOLDER	
160	1285009-0000		2	HOLDER	
180	2724949-0000		1	RAIL	
190	1317218-0000		5	SPACER	
200	2693462-0000		1	RAIL	
210	1487177-0000		1	GUIDE	
220	2724950-0000		1	RAIL	
260	1020142-0002		2	RAIL HOLDER, B55 WIDTH 30 MM	
270	1538970-0000		1	SLIDE	
280	2804290-0000		1	BRACKET	
290	2804291-0000		1	BRACKET	
300	315105-0165		5	WASHER BRB 8,4X16 RFR	
310	312105-0449		5	SCREW M6S ISO 4017 M8X16 A480	
330	312105-0374		5	SCREW M6S ISO 4014 M6X30 A480	
350	312105-0368		4	SCREW M6S ISO 4017 M6X16 A480	
360	312155-0329		1	SCREW DIN 7991 MF6S M5X16 A4 70	
370	315105-0146		1	WASHER BRB 5,3X10 RFR	
380	312605-0314		1	HEXAGON NUT, M6M M5 A280	
390	312605-0316		1	HEXAGON NUT, M6M M6 A280	
400	312105-0370		5	SCREW M6S ISO 4017 M6X20 A480	
445	315105-0153		14	WASHER BRB 6,4X12 RFR	
460	2724936-0000		1	BRACKET	
TBA 1890S QC, TBA 2000S QC (See drawing on page: 5-86)					
050	484701-0000		18	SHUTTER	
110	2640076-0000		2	RAIL	
120	2639832-0000		1	RAIL	
160	1550743-0100		2	RAIL HOLDER	**5-93**
180	2724940-0000		1	RAIL	
200	2693464-0000		1	RAIL	
210	2652206-0000		1	GUIDE	
220	2724941-0000		1	RAIL	
260	1550743-0100		2	RAIL HOLDER	**5-93**
270	1538970-0000		1	SLIDE	
280	2804292-0000		1	BRACKET	
290	2804293-0000		1	BRACKET	
300	315105-0165		4	WASHER BRB 8,4X16 RFR	
305	2655500-0000		1	WASHER	
310	312105-0449		4	SCREW M6S ISO 4017 M8X16 A480	
315	312105-0451		1	SCREW M6S ISO 4017 M8X20 A480	
350	312105-0368		3	SCREW M6S ISO 4017 M6X16 A480	
390	312605-0316		1	HEXAGON NUT, M6M M6 A280	
400	312105-0370		5	SCREW M6S ISO 4017 M6X20 A480	
445	315105-0153		9	WASHER BRB 6,4X12 RFR	
TPA 0250SQ QC, TPA 0200SQ QC (See drawing on page: 5-82)					
050	484701-0000		10	SHUTTER	
060	1020146-0000		6	LOCKING BLOCK REPL BY 1020290-101	
120	1548550-0000		1	RAIL	
160	1285009-0000		2	HOLDER	
180	2724942-0000		1	RAIL	
200	2732824-0000		1	RAIL	
220	2724943-0000		1	RAIL	
260	1366777-0101		2	ANGLED RAIL HOLDER TPC21	**5-95**
270	2523480-0000		1	SLIDE	
280	2804306-0000		1	BRACKET	
290	2804307-0000		1	BRACKET	
300	315105-0165		3	WASHER BRB 8,4X16 RFR	
310	312105-0449		3	SCREW M6S ISO 4017 M8X16 A480	
335	312105-0372		1	SCREW M6S ISO 4017 M6X25 A480	
390	312605-0316		2	HEXAGON NUT, M6M M6 A280	
400	312105-0370		9	SCREW M6S ISO 4017 M6X20 A480	
445	315105-0153		14	WASHER BRB 6,4X12 RFR	
460	2543234-0000		1	BRACKET	
460	2693459-0000		1	BRACKET	
480	315125-0153		1	WASHER TBRSB 6,4X22X4 A4	
TPA 0330SQ (See drawing on page: 5-82)					

See previous drawings pages: 5-82, 5-84, 5-86.

Pos	Part No	UN	Qty	Description	Page No
TPA 0330SQ (Cont'd) (See drawing on page: 5-82)					
050	484701-0000		10	SHUTTER	
060	1020146-0000		6	LOCKING BLOCK REPL BY 1020290-101	
110	1279582-0000		2	RAIL	
120	1296079-0000		1	RAIL	
160	1285009-0000		2	HOLDER	
180	2724948-0000		1	RAIL	
190	1285253-0000		2	SPACER	
200	2693461-0000		1	RAIL	
220	2724947-0000		1	RAIL	
260	1366777-0101		2	ANGLED RAIL HOLDER TPC21	**5-95**
270	2523480-0000		1	SLIDE	
280	2804294-0000		1	BRACKET	
290	2804295-0000		1	BRACKET	
300	315105-0165		3	WASHER BRB 8,4X16 RFR	
310	312105-0449		3	SCREW M6S ISO 4017 M8X16 A480	
330	312105-0370		4	SCREW M6S ISO 4017 M6X20 A480	
350	312105-0368		4	SCREW M6S ISO 4017 M6X16 A480	
390	312605-0316		1	HEXAGON NUT, M6M M6 A280	
400	312105-0370		9	SCREW M6S ISO 4017 M6X20 A480	
445	315105-0153		13	WASHER BRB 6,4X12 RFR	
460	2724934-0000		1	BRACKET	
TPA 0500SQ (See drawing on page: 5-82)					
050	484701-0000		8	SHUTTER	
110	1279582-0000		2	RAIL	
120	1296079-0000		1	RAIL	
160	1334113-0000		2	HOLDER	
180	2529115-0000		1	RAIL	
190	1285253-0000		4	SPACER	
200	2652893-0000		1	RAIL	
220	2724933-0000		1	RAIL	
260	1366777-0101		2	ANGLED RAIL HOLDER TPC21	**5-95**
270	1538970-0000		1	SLIDE	
280	2804299-0000		1	BRACKET	
290	2804300-0000		1	BRACKET	
300	315105-0165		3	WASHER BRB 8,4X16 RFR	
310	312105-0449		3	SCREW M6S ISO 4017 M8X16 A480	
330	312105-0370		4	SCREW M6S ISO 4017 M6X20 A480	
335	312105-0372		1	SCREW M6S ISO 4017 M6X25 A480	
350	312105-0368		3	SCREW M6S ISO 4017 M6X16 A480	
390	312605-0316		2	HEXAGON NUT, M6M M6 A280	
400	312105-0370		6	SCREW M6S ISO 4017 M6X20 A480	
445	315105-0153		14	WASHER BRB 6,4X12 RFR	
460	2554263-0000		1	BRACKET	
480	315125-0153		1	WASHER TBRSB 6,4X22X4 A4	
500	534310-0001		1	NOZZLE	
510	90005-0095		1	WASHER PLAIN BLACK PVC, (M)6X14 H=3	
520	90230-0027		1	NON-RETURN VALVE QJ 8355-1/4"	
	90230-0301		*1*	*DIAPHRAGM*	
	90230-0300		*1*	*STRAINER*	
TPA 1000SQ NOQC (See drawing on page: 5-82)					
050	484701-0000		10	SHUTTER	
060	1020146-0000		6	LOCKING BLOCK REPL BY 1020290-101	
110	1279582-0000		2	RAIL	
120	1548550-0000		1	RAIL	
160	1334113-0000		2	HOLDER	
180	2715503-0000		1	RAIL	
190	1285253-0000		2	SPACER	
195	1317218-0000		2	SPACER	
200	2687787-0000		1	RAIL	
210	1548348-0000		1	GUIDE	
220	2715504-0000		1	RAIL	
260	1366777-0101		2	ANGLED RAIL HOLDER TPC21	**5-95**
270	1538970-0000		1	SLIDE	
280	2804313-0000		1	BRACKET	
290	2804314-0000		1	BRACKET	
300	315105-0165		3	WASHER BRB 8,4X16 RFR	
310	312105-0449		3	SCREW M6S ISO 4017 M8X16 A480	
330	312105-0374		2	SCREW M6S ISO 4014 M6X30 A480	
335	312105-0372		3	SCREW M6S ISO 4017 M6X25 A480	
350	312105-0368		4	SCREW M6S ISO 4017 M6X16 A480	
390	312605-0316		6	HEXAGON NUT, M6M M6 A280	
400	312105-0370		5	SCREW M6S ISO 4017 M6X20 A480	
410	1548551-0000		1	SPACER	
420	312155-0449		2	SCREW DIN 7991 MF6S M8X16 A4 70	
445	315105-0153		14	WASHER BRB 6,4X12 RFR	
460	2532864-0000		1	BRACKET	
460	2693460-0000		1	BRACKET	
480	315125-0153		1	WASHER TBRSB 6,4X22X4 A4	
500	534310-0001		1	NOZZLE	
510	90005-0095		1	WASHER PLAIN BLACK PVC, (M)6X14 H=3	
520	90230-0027		1	NON-RETURN VALVE QJ 8355-1/4"	
	90230-0301		*1*	*DIAPHRAGM*	
	90230-0300		*1*	*STRAINER*	

See previous drawings pages: 5-82, 5-84, 5-86.

Pos	Part No	UN	Qty	Description	Page No
TPA 1000SQ QC, TPA 0750SQ QC (Cont'd) (See drawing on page: 5-82)					
050	484701-0000		10	SHUTTER	
060	1020146-0000		6	LOCKING BLOCK REPL BY 1020290-101	
110	1279582-0000		2	RAIL	
120	1548550-0000		1	RAIL	
160	1334113-0000		2	HOLDER	
180	2752754-0000		1	RAIL	
190	1285253-0000		2	SPACER	
195	1317218-0000		2	SPACER	
200	2732828-0000		1	RAIL	
210	1548348-0000		1	GUIDE	
220	2715504-0000		1	RAIL	
260	1366777-0101		2	ANGLED RAIL HOLDER TPC21	**5-95**
270	1538970-0000		1	SLIDE	
280	2804309-0000		1	BRACKET	
290	2804310-0000		1	BRACKET	
300	315105-0165		3	WASHER BRB 8,4X16 RFR	
310	312105-0449		3	SCREW M6S ISO 4017 M8X16 A480	
330	312105-0374		2	SCREW M6S ISO 4014 M6X30 A480	
335	312105-0372		3	SCREW M6S ISO 4017 M6X25 A480	
350	312105-0368		4	SCREW M6S ISO 4017 M6X16 A480	
390	312605-0316		6	HEXAGON NUT, M6M M6 A280	
400	312105-0370		5	SCREW M6S ISO 4017 M6X20 A480	
410	1548551-0000		1	SPACER	
420	312155-0449		2	SCREW DIN 7991 MF6S M8X16 A4 70	
445	315105-0153		14	WASHER BRB 6,4X12 RFR	
460	2532864-0000		1	BRACKET	
480	315125-0153		1	WASHER TBRSB 6,4X22X4 A4	
500	534310-0001		1	NOZZLE	
510	90005-0095		1	WASHER PLAIN BLACK PVC, (M)6X14 H=3	
520	90230-0027		1	NON-RETURN VALVE QJ 8355-1/4"	
	90230-0301		*1*	*DIAPHRAGM*	
	90230-0300		*1*	*STRAINER*	
Common Parts					
255	1478235-0000		1	PLATE	

Pos	Part No	UN	Qty	Description	Page No

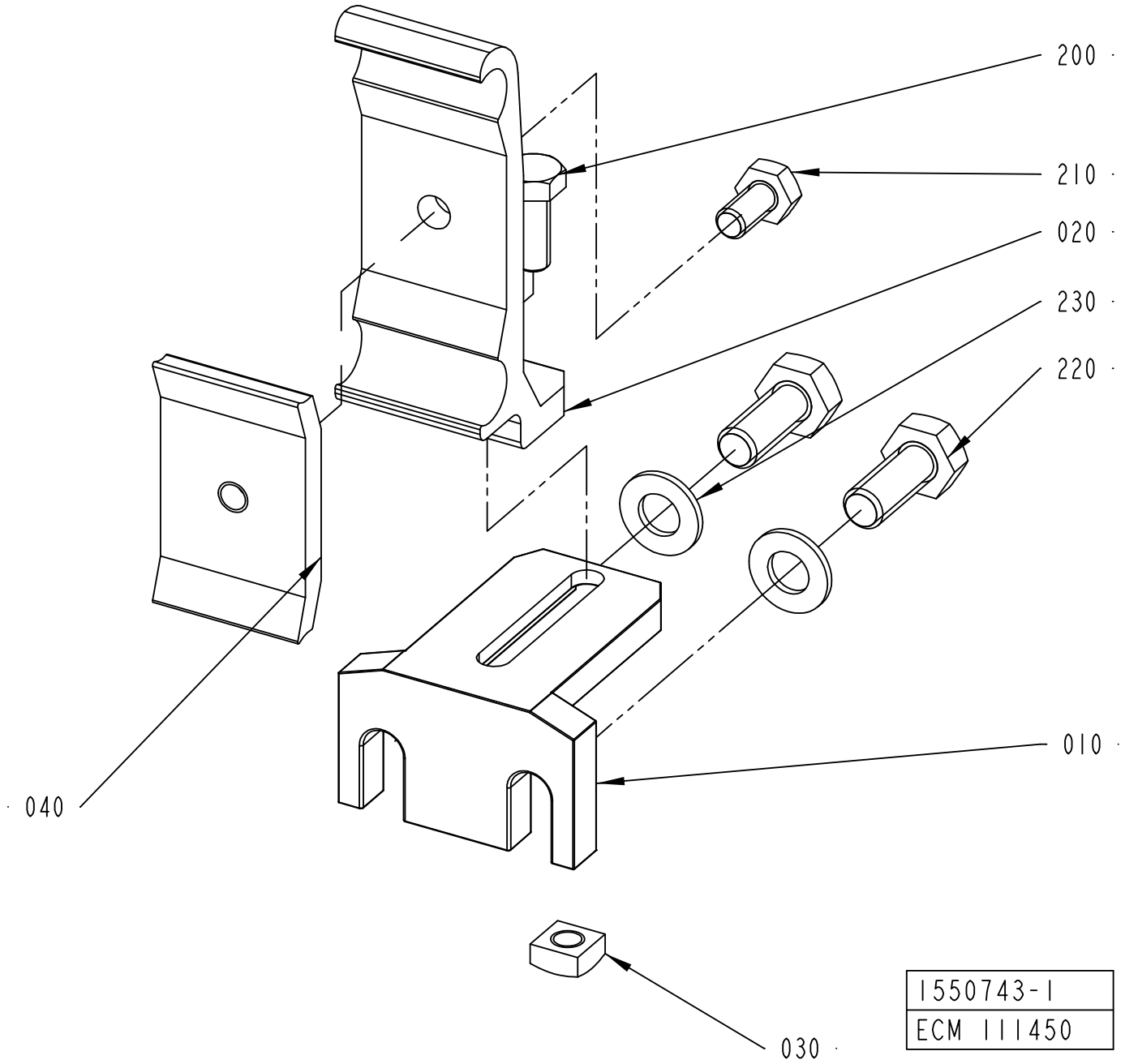
200
210
020
230
220
040
010
030
1550743-1
ECM 111450

ECM: 129860 - 20031113
Group number: 1550743-0100
Assembly Drawing: 1550743-1_1_AB

Pos	Part No	UN	Qty	Description	Page No
-					
010	1550772-0000		1	HOLDER	
020	1550773-0000		1	RAIL HOLDER	
030	1359565-0000		1	NUT	
040	1366727-0000		1	CLAMP	
200	312105-0368		1	SCREW M6S ISO 4017 M6X16 A480	
210	312105-0366		1	SCREW M6S ISO 4017 M6X12 A480	
220	312105-0451		2	SCREW M6S ISO 4017 M8X20 A480	
230	315105-0165		2	WASHER BRB 8,4X16 RFR	

Pos	Part No	UN	Qty	Description	Page No

ANGLED RAIL HOLDER TPC21

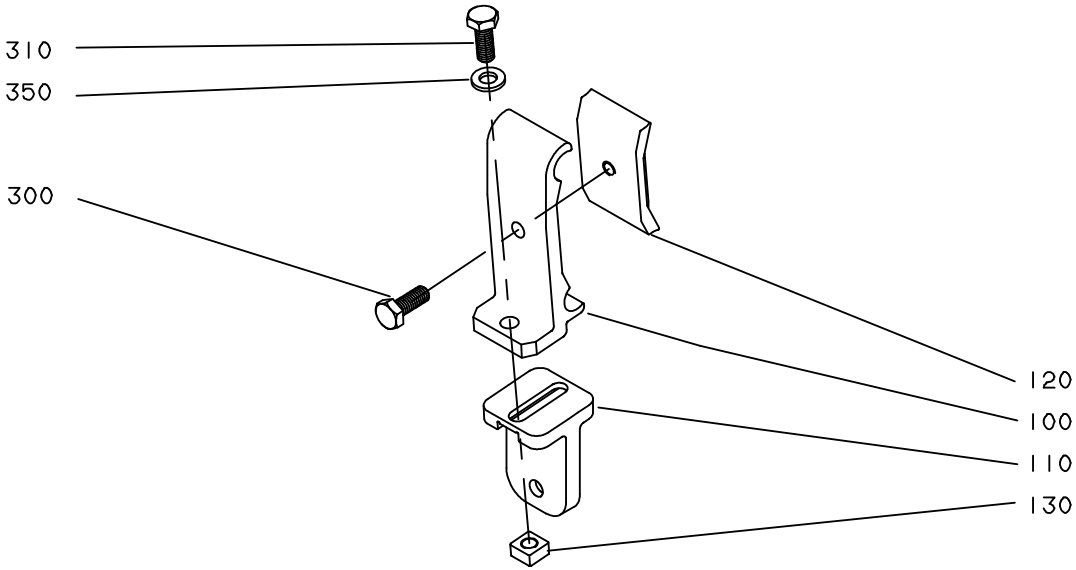

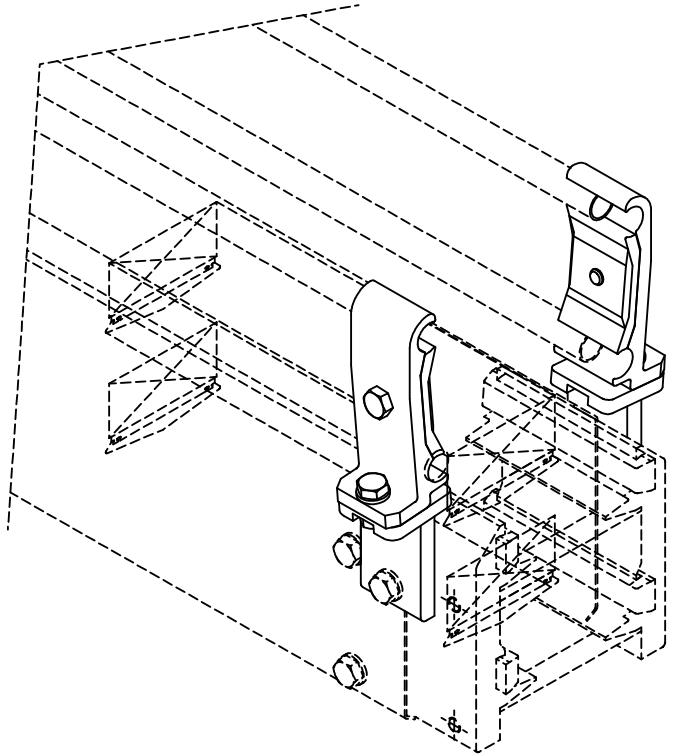

S-1366777-1
ECN 81455

ECM: 189515 - 20041104
Group number: 1366777-0101
Assembly Drawing: 1366777-1_1_AA

Pos	Part No	UN	Qty	Description	Page No
-					
100	1366726-0000		1	HOLDER	
110	1359085-0000		1	T-HOLDER	
120	1366727-0000		1	CLAMP	
130	1359565-0000		1	NUT	
300	312105-0366		1	SCREW M6S ISO 4017 M6X12 A480	
310	312105-0368		1	SCREW M6S ISO 4017 M6X16 A480	
350	315105-0153		1	WASHER BRB 6,4X12 RFR	

Pos	Part No	UN	Qty	Description	Page No

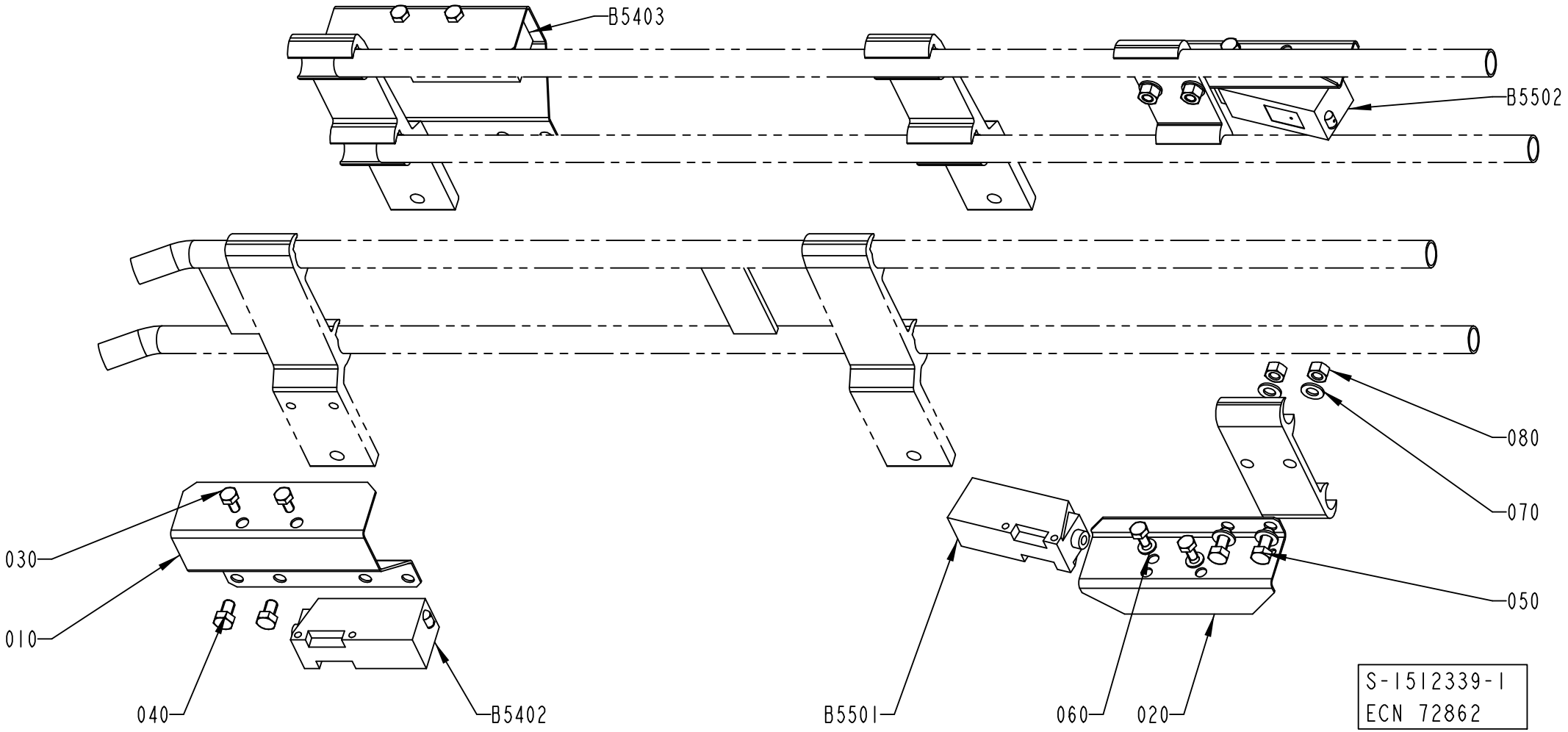
B5403
B5502
080
070
050
030
010
040
B5402
B5501
060
020
S-1512339-1
ECN 72862

Pos	Part No	UN	Qty	Description	Page No
A3/FLEX TBA 1890S, A3/FLEX TBA 2000S (See drawing on page: 5-98)					
010	1285010-0000		2	HOLDER	
020	1086889-0000		2	COVER	
025	1020637-0000		4	HOLDER	
A3/FLEX TBA 0500B, A3/FLEX TBA 1000B, A3/FLEX TBA 1000S, A3/FLEX TBA 1000SQ, A3/FLEX TPA 1000SQ, A3/FLEX TBA 0200S, A3/FLEX TBA 1500S, A3/FLEX TBA 0200B, A3/FLEX TBA 0250B, A3/FLEX TBA 0330S, A3/FLEX TPA 0330SQ, A3/FLEX TPA 0500SQ, A3/FLEX TBA 0200M, A3/FLEX TBA 0250S, A3/FLEX TBA 0500S, A3/FLEX TPA 0250SQ, A3/FLEX TPA 0200SQ, A3/FLEX TPA 0750SQ, A3/FLEX TBA 0200SQ, A3/FLEX TBA 0250SQ (See drawing on page: 5-96)					
010	1285010-0000		2	HOLDER	
020	1086889-0000		2	COVER	
025	1020637-0000		2	HOLDER	
Common Parts					
030	312105-0287		8	SCREW M6S ISO 4017 M4X8 A470	
040	312105-0323		4	SCREW M6S ISO 4017 M5X8 A480	
050	312105-0327		4	SCREW M6S ISO 4017 M5X12 A480	
060	315105-0136		4	WASHER BRB 4,3X9 RFR	
070	315105-0146		8	WASHER BRB 5,3X10 RFR	
080	312605-0314		4	HEXAGON NUT, M6M M5 A280	
B5402	90232-0104		1	PH.CELL E3S-CT61-D-5M	
B5403	90232-0103		1	PH.CELL E3S-CT61-L-5M	
B5501	90232-0104		1	PH.CELL E3S-CT61-D-5M	
B5502	90232-0103		1	PH.CELL E3S-CT61-L-5M	

Pos	Part No	UN	Qty	Description	Page No

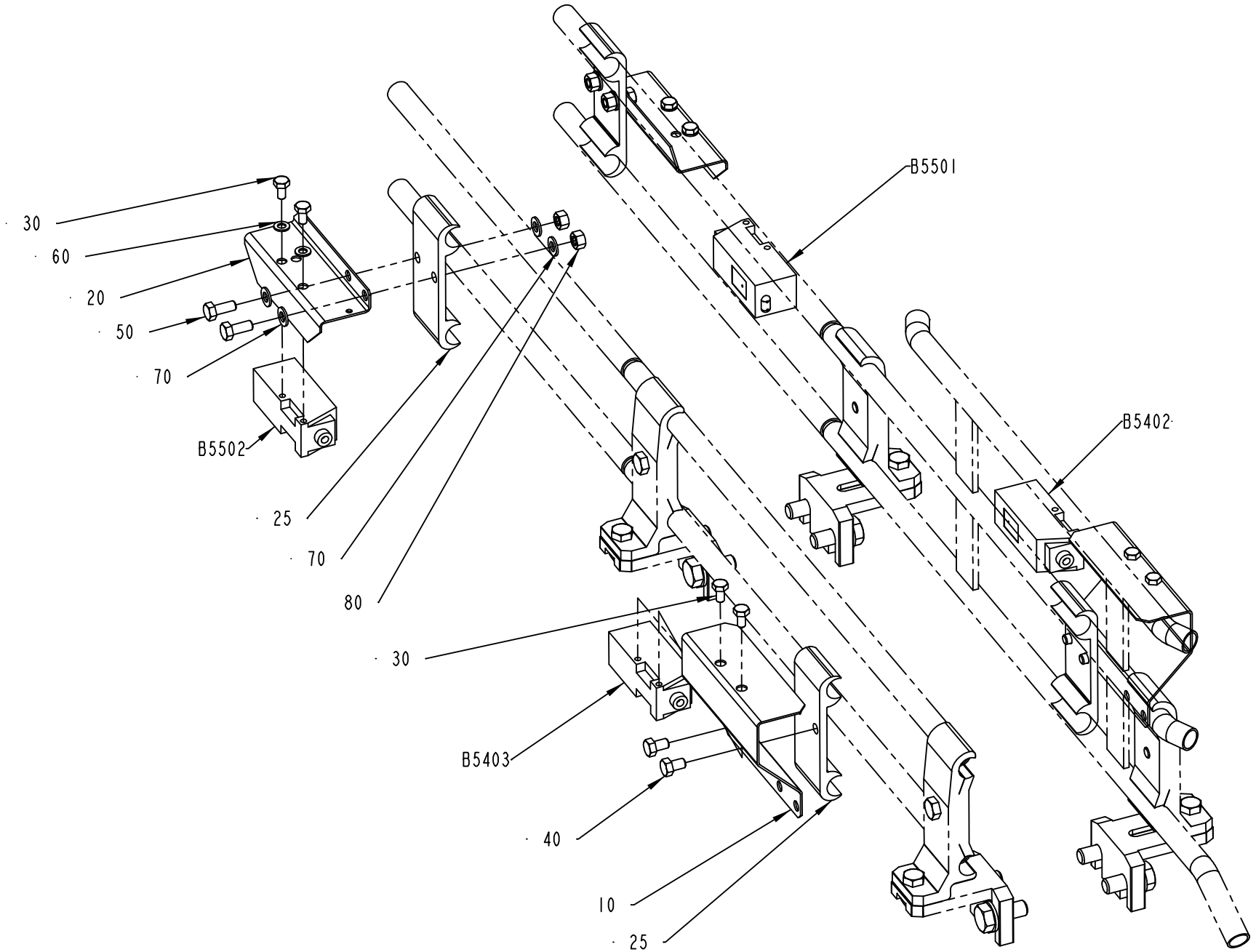

1512339-3
193145

Pos	Part No	UN	Qty	Description	Page No
A3/FLEX TBA 1890S, A3/FLEX TBA 2000S (See drawing on page: 5-98)					
010	1285010-0000		2	HOLDER	
020	1086889-0000		2	COVER	
025	1020637-0000		4	HOLDER	
A3/FLEX TBA 0500B, A3/FLEX TBA 1000B, A3/FLEX TBA 1000S, A3/FLEX TBA 1000SQ, A3/FLEX TPA 1000SQ, A3/FLEX TBA 0200S, A3/FLEX TBA 1500S, A3/FLEX TBA 0200B, A3/FLEX TBA 0250B, A3/FLEX TBA 0330S, A3/FLEX TPA 0330SQ, A3/FLEX TPA 0500SQ, A3/FLEX TBA 0200M, A3/FLEX TBA 0250S, A3/FLEX TBA 0500S, A3/FLEX TPA 0250SQ, A3/FLEX TPA 0200SQ, A3/FLEX TPA 0750SQ, A3/FLEX TBA 0200SQ, A3/FLEX TBA 0250SQ (See drawing on page: 5-96)					
010	1285010-0000		2	HOLDER	
020	1086889-0000		2	COVER	
025	1020637-0000		2	HOLDER	
Common Parts					
030	312105-0287		8	SCREW M6S ISO 4017 M4X8 A470	
040	312105-0323		4	SCREW M6S ISO 4017 M5X8 A480	
050	312105-0327		4	SCREW M6S ISO 4017 M5X12 A480	
060	315105-0136		4	WASHER BRB 4,3X9 RFR	
070	315105-0146		8	WASHER BRB 5,3X10 RFR	
080	312605-0314		4	HEXAGON NUT, M6M M5 A280	
B5402	90232-0104		1	PH.CELL E3S-CT61-D-5M	
B5403	90232-0103		1	PH.CELL E3S-CT61-L-5M	
B5501	90232-0104		1	PH.CELL E3S-CT61-D-5M	
B5502	90232-0103		1	PH.CELL E3S-CT61-L-5M	

Pos	Part No	UN	Qty	Description	Page No

DROP CHUTE VARIANT

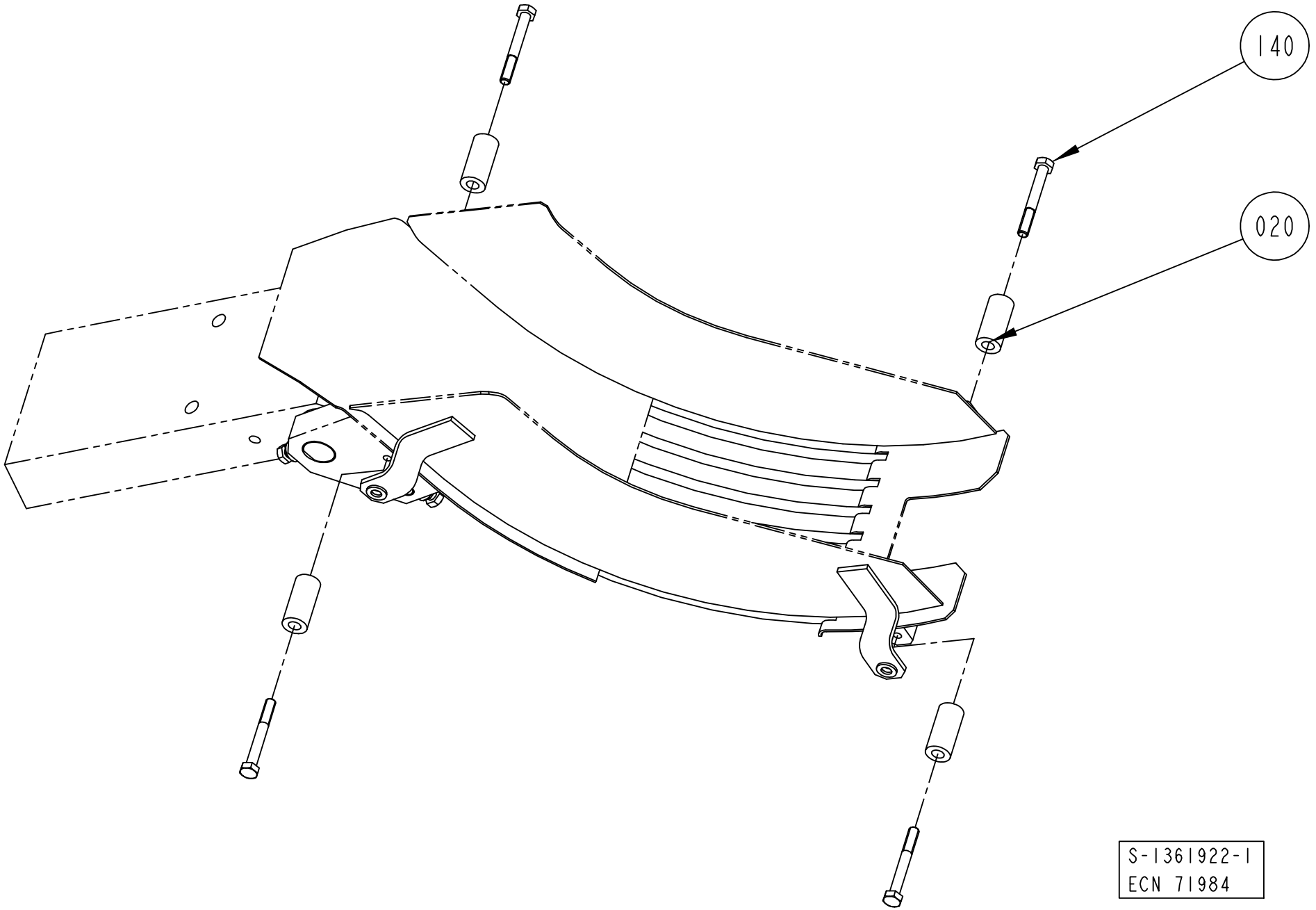

ECM: 189517 - 20041104
Group number: 1361922-0200
Assembly Drawing: 1361922-1_1_AC

Pos	Part No	UN	Qty	Description	Page No
TBA 0200S					
020	315115-0153		4	WASHER PLAIN, TBRB 6,4/12 H=3	
140	312105-0370		4	SCREW M6S ISO 4017 M6X20 A480	
TBA 0250S					
020	2522202-0000		4	SPACER	
140	312105-0374		4	SCREW M6S ISO 4014 M6X30 A480	
TBA 0330S, TBA 0200B, TBA 0250B					
020	1317218-0000		4	SPACER	
140	312105-0374		4	SCREW M6S ISO 4014 M6X30 A480	
TBA 0500B, TBA 1000B					
020	1260714-0000		4	SPACER	
140	312105-0382		4	SCREW M6S ISO 4014 M6X60 A480	
TBA 0500S					
020	1499140-0000		4	SPACER	
140	312105-0379		4	SCREW M6S ISO 4014 M6X45 A480	
TBA 1000S					
020	1279670-0000		4	SPACER	
140	312105-0382		4	SCREW M6S ISO 4014 M6X60 A480	
TBA 1000SQ					
020	1487929-0000		4	SPACER	
140	312105-0379		4	SCREW M6S ISO 4014 M6X45 A480	
TBA 1500S					
140	312105-0366		4	SCREW M6S ISO 4017 M6X12 A480	
TPA 0250SQ					
020	315115-0153		4	WASHER PLAIN, TBRB 6,4/12 H=3	
140	312105-0370		4	SCREW M6S ISO 4017 M6X20 A480	
TPA 0330SQ					
020	1532254-0000		4	SPACER	
140	312105-0374		4	SCREW M6S ISO 4014 M6X30 A480	
TPA 0500SQ					
020	1549512-0000		4	SPACER	
140	312105-0374		4	SCREW M6S ISO 4014 M6X30 A480	
TPA 1000SQ					
140	312105-0366		4	SCREW M6S ISO 4017 M6X12 A480	

Pos	Part No	UN	Qty	Description	Page No

INFEED CONVEYOR VARIANT

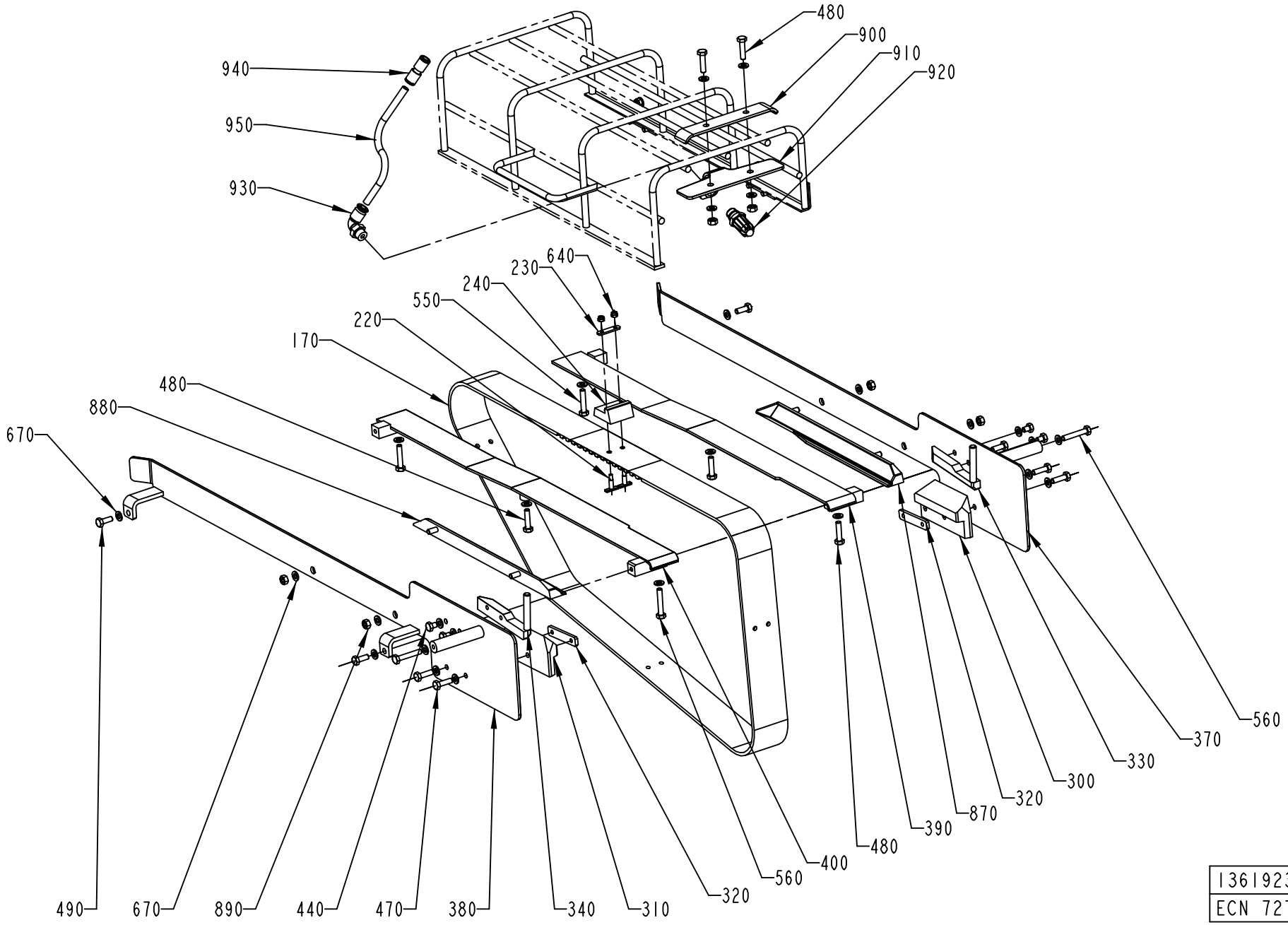

1361923-2
ECN 72769

ECM: 213807 - 20060101
Group number: 1361923-0200
Assembly Drawing: 1361923-2_1_AC

This list covers pages from 5-102 to 5-111

Pos	Part No	UN	Qty	Description	Page No
TPA 1000SQ (See drawing on page: 5-102)					
170	1519338-0000		1	TIMING BELT	
220	1517476-0000		6	WEDGE	
230	1517477-0000		3	PLATE	
240	1519344-0000		3	CARRIER	
300	1517481-0000		1	SLIDE	
310	1517480-0000		1	SLIDE	
320	2543242-0000		2	ANGLE BLOCK	
330	1517478-0000		1	BAR	
340	1517479-0000		1	BAR	
370	1517474-0000		1	GUIDE	
380	1517475-0000		1	GUIDE	
390	1519345-0000		1	GUIDE	
400	1519346-0000		1	GUIDE	
440	312105-0366		4	SCREW M6S ISO 4017 M6X12 A480	
470	312105-0368		4	SCREW M6S ISO 4017 M6X16 A480	
480	312105-0372		3	SCREW M6S ISO 4017 M6X25 A480	
500	312105-0364		4	SCREW M6S ISO 4017 M6X10 A480	
550	312109-0376		2	SCREW M6S ISO 4017 M6X35 A480	
560	312105-0376		3	SCREW M6S ISO 4014 M6X35 A480	
640	312812-0312		6	HEXAGON NUT, NY-LOCK M4 A480	
670	315105-0153		20	WASHER BRB 6,4X12 RFR	
870	2637665-0000		1	GUIDE	
880	2637666-0000		1	GUIDE	
TBA 0200B (See drawing on page: 5-102)					
170	1144783-0000		1	TIMING BELT	
220	1346736-0000		8	WEDGE	
230	1144918-0000		4	PLATE	
240	1282287-0000		4	CARRIER	
300	1348136-0000		1	SLIDE	
310	1348142-0000		1	SLIDE	
320	1348169-0000		2	PLATE	
330	1348148-0000		1	BAR	
340	1348154-0000		1	BAR	
370	1499427-0000		1	GUIDE	
380	1499426-0000		1	GUIDE	
390	1282290-0000		1	GUIDE	
400	1282291-0000		1	GUIDE	
440	312105-0362		4	SCREW M6S ISO 4017 M6X8 A480	
470	312105-0370		4	SCREW M6S ISO 4017 M6X20 A480	
480	312105-0372		5	SCREW M6S ISO 4017 M6X25 A480	
550	312109-0374		2	SCREW M6S ISO 4017 M6X30 A480	
560	312105-0376		3	SCREW M6S ISO 4014 M6X35 A480	
640	312812-0312		8	HEXAGON NUT, NY-LOCK M4 A480	
670	315105-0153		28	WASHER BRB 6,4X12 RFR	
870	1517526-0000		1	GUIDE	
880	1517527-0000		1	GUIDE	
890	312605-0316		6	HEXAGON NUT, M6M M6 A280	
900	1499476-0000		1	HOLDER	
910	1499475-0000		1	HOLDER	
920	90424-0068		1	AIR NOZZLE, G1/4, MOD. 216 BSP	
930	342732-0104		1	ELBOW PIPE JOINT, EXT.THREAD, D=8MM-G1/4	
940	342728-0103		1	PIPE COUPLING 8 MM	
950	90166-0013	MM	700	TUBE 8 MM PA BLUE	
TBA 0200S (See drawing on page: 5-102)					
170	1144783-0000		1	TIMING BELT	
220	1346736-0000		8	WEDGE	
230	1144918-0000		4	PLATE	
240	1282287-0000		4	CARRIER	
300	1348134-0000		1	SLIDE	
310	1348140-0000		1	SLIDE	
320	1348169-0000		2	PLATE	
330	1348146-0000		1	BAR	
340	1348152-0000		1	BAR	
370	1499136-0000		1	GUIDE	
380	1499135-0000		1	GUIDE	
390	1282290-0000		1	GUIDE	
400	1282291-0000		1	GUIDE	
440	312105-0362		4	SCREW M6S ISO 4017 M6X8 A480	
470	312105-0370		4	SCREW M6S ISO 4017 M6X20 A480	
480	312105-0372		5	SCREW M6S ISO 4017 M6X25 A480	
550	312109-0374		2	SCREW M6S ISO 4017 M6X30 A480	
560	312105-0376		3	SCREW M6S ISO 4014 M6X35 A480	
640	312812-0312		8	HEXAGON NUT, NY-LOCK M4 A480	
670	315105-0153		28	WASHER BRB 6,4X12 RFR	
870	1517524-0000		1	GUIDE	
880	1517525-0000		1	GUIDE	
890	312605-0316		6	HEXAGON NUT, M6M M6 A280	
900	1499476-0000		1	HOLDER	
910	1499475-0000		1	HOLDER	
920	90424-0068		1	AIR NOZZLE, G1/4, MOD. 216 BSP	
930	342732-0104		1	ELBOW PIPE JOINT, EXT.THREAD, D=8MM-G1/4	
940	342728-0103		1	PIPE COUPLING 8 MM	
950	90166-0013	MM	700	TUBE 8 MM PA BLUE	

Machine Type | Group Description | Used-In | Group Number | Page No

INFEED CONVEYOR VARIANT

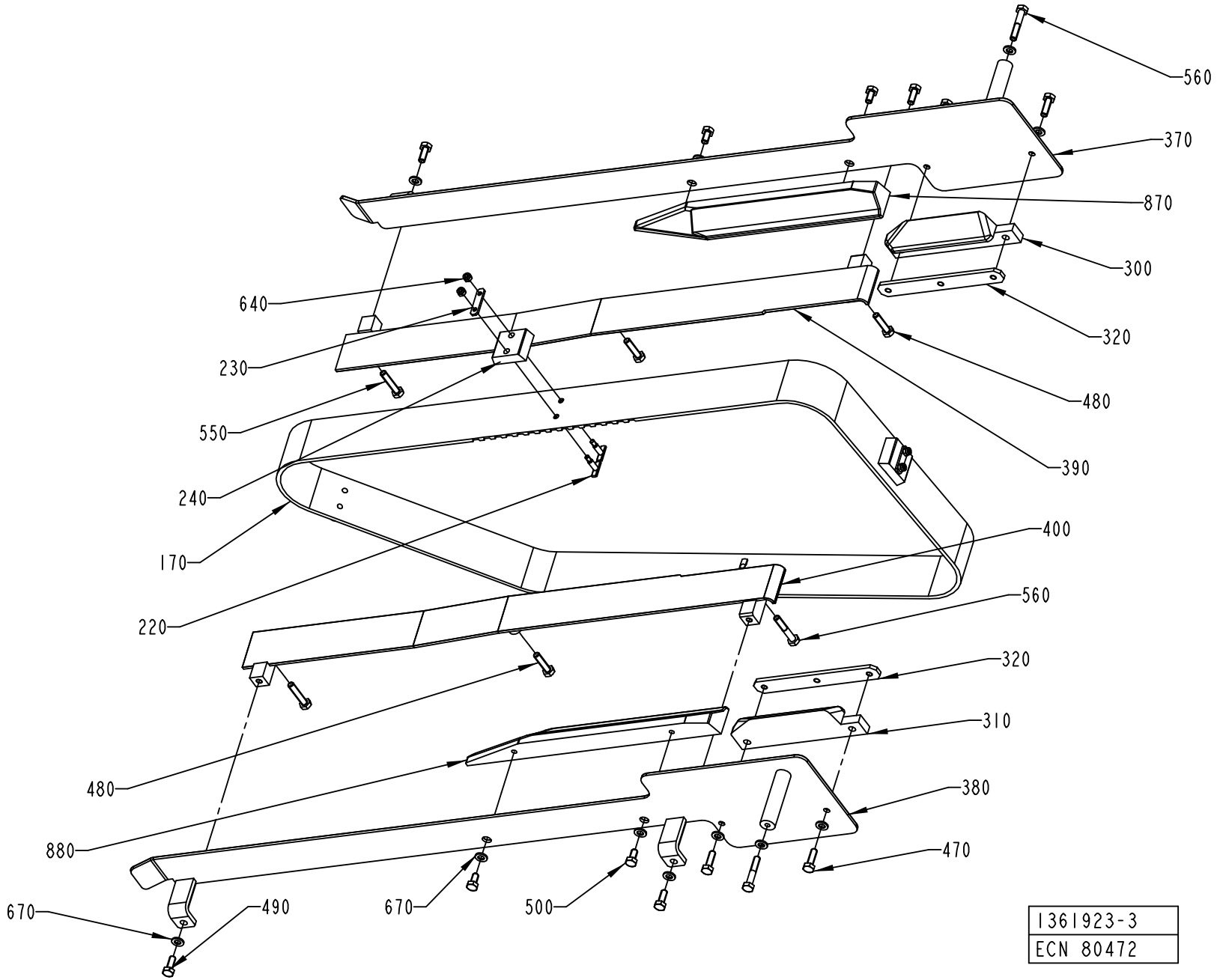

Pos	Part No	UN	Qty	Description	Page No
TBA 0250B (Cont'd) (See drawing on page: 5-102)					
170	1144783-0000		1	TIMING BELT	
220	1346736-0000		8	WEDGE	
230	1144918-0000		4	PLATE	
240	1282287-0000		4	CARRIER	
300	1348135-0000		1	SLIDE	
310	1348141-0000		1	SLIDE	
320	1348169-0000		2	PLATE	
330	1348147-0000		1	BAR	
340	1348153-0000		1	BAR	
370	1499427-0000		1	GUIDE	
380	1499426-0000		1	GUIDE	
390	1282290-0000		1	GUIDE	
400	1282291-0000		1	GUIDE	
440	312105-0362		4	SCREW M6S ISO 4017 M6X8 A480	
470	312105-0370		4	SCREW M6S ISO 4017 M6X20 A480	
480	312105-0372		5	SCREW M6S ISO 4017 M6X25 A480	
550	312109-0374		2	SCREW M6S ISO 4017 M6X30 A480	
560	312105-0376		3	SCREW M6S ISO 4014 M6X35 A480	
640	312812-0312		8	HEXAGON NUT, NY-LOCK M4 A480	
670	315105-0153		28	WASHER BRB 6,4X12 RFR	
870	1517526-0000		1	GUIDE	
880	1517527-0000		1	GUIDE	
890	312605-0316		6	HEXAGON NUT, M6M M6 A280	
900	1499476-0000		1	HOLDER	
910	1499475-0000		1	HOLDER	
920	90424-0068		1	AIR NOZZLE, G1/4, MOD. 216 BSP	
930	342732-0104		1	ELBOW PIPE JOINT, EXT.THREAD, D=8MM-G1/4	
940	342728-0103		1	PIPE COUPLING 8 MM	
950	90166-0013	MM	700	TUBE 8 MM PA BLUE	
TBA 0250S (See drawing on page: 5-102)					
170	1144783-0000		1	TIMING BELT	
220	1346736-0000		8	WEDGE	
230	1144918-0000		4	PLATE	
240	2551120-0000		4	CARRIER	
300	2529605-0000		1	SLIDE	
310	2529606-0000		1	SLIDE	
320	1279409-0000		2	PLATE	
330	2529608-0000		1	BAR	
340	2529607-0000		1	BAR	
370	2529603-0000		1	GUIDE	
380	2529604-0000		1	GUIDE	
390	1282290-0000		1	GUIDE	
400	1282291-0000		1	GUIDE	
440	312105-0362		4	SCREW M6S ISO 4017 M6X8 A480	
470	312105-0370		4	SCREW M6S ISO 4017 M6X20 A480	
480	312105-0372		5	SCREW M6S ISO 4017 M6X25 A480	
640	312812-0312		8	HEXAGON NUT, NY-LOCK M4 A480	
670	315105-0153		28	WASHER BRB 6,4X12 RFR	
870	1517524-0000		1	GUIDE	
880	1517525-0000		1	GUIDE	
890	312605-0316		6	HEXAGON NUT, M6M M6 A280	
900	1499476-0000		1	HOLDER	
910	1499475-0000		1	HOLDER	
920	90424-0068		1	AIR NOZZLE, G1/4, MOD. 216 BSP	
930	342732-0104		1	ELBOW PIPE JOINT, EXT.THREAD, D=8MM-G1/4	
940	342728-0103		1	PIPE COUPLING 8 MM	
950	90166-0013	MM	700	TUBE 8 MM PA BLUE	
TBA 0330S (See drawing on page: 5-102)					
170	1144783-0000		1	TIMING BELT	
230	1144918-0000		4	PLATE	
240	1282287-0000		4	CARRIER	
300	2544997-0000		1	SLIDE	
310	2544998-0000		1	SLIDE	
320	1279409-0000		2	PLATE	
330	2545000-0000		1	BAR	
340	2544999-0000		1	BAR	
370	2544996-0000		1	GUIDE	
380	2544995-0000		1	GUIDE	
390	2529610-0000		1	GUIDE	
400	2529609-0000		1	GUIDE	
440	312105-0362		4	SCREW M6S ISO 4017 M6X8 A480	
470	312105-0370		4	SCREW M6S ISO 4017 M6X20 A480	
480	312105-0372		3	SCREW M6S ISO 4017 M6X25 A480	
550	312109-0374		2	SCREW M6S ISO 4017 M6X30 A480	
560	312105-0376		3	SCREW M6S ISO 4014 M6X35 A480	
640	312812-0312		8	HEXAGON NUT, NY-LOCK M4 A480	
670	315105-0153		16	WASHER BRB 6,4X12 RFR	
890	312605-0316		2	HEXAGON NUT, M6M M6 A280	
TBA 0500B (See drawing on page: 5-102)					
170	1144783-0000		1	TIMING BELT	
220	1346471-0000		8	WEDGE	
230	1144918-0000		4	PLATE	
240	1558700-0000		4	CARRIER	
300	1539874-0000		1	SLIDE	

INFEED CONVEYOR VARIANT

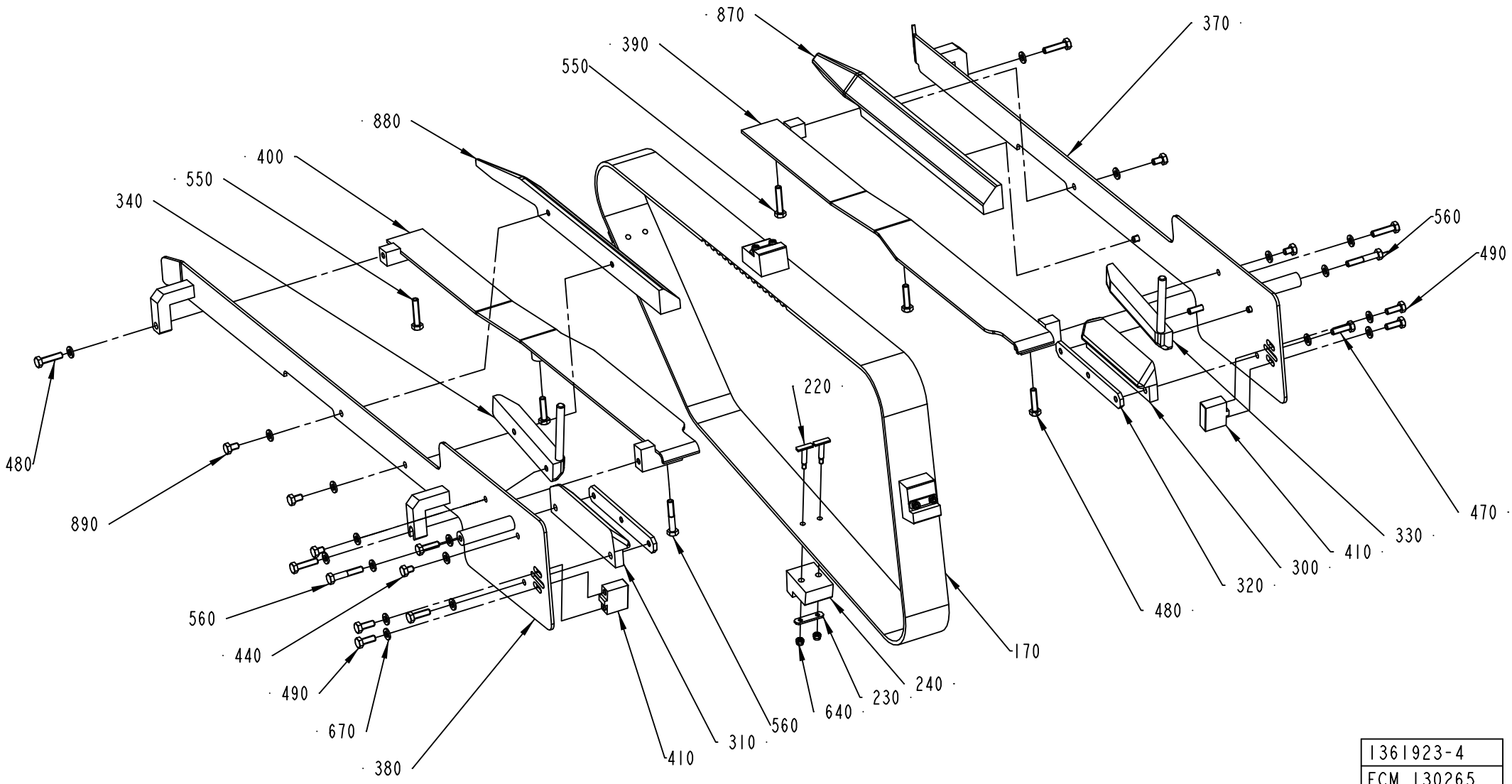

1361923-4
ECM 130265

ECM: 213807 - 20060101
Group number: 1361923-0200
Assembly Drawing: 1361923-4_1_AB

This list covers pages from 5-102 to 5-111

Pos	Part No	UN	Qty	Description	Page No
TBA 0500B (Cont'd) (See drawing on page: 5-102)					
310	1539875-0000		1	SLIDE	
320	1539876-0000		2	PLATE	
330	1539877-0000		1	BAR	
340	1539878-0000		1	BAR	
370	1539879-0000		1	GUIDE	
380	1539880-0000		1	GUIDE	
390	1317651-0000		1	GUIDE	
400	1317650-0000		1	GUIDE	
470	312105-0370		4	SCREW M6S ISO 4017 M6X20 A480	
480	312105-0372		3	SCREW M6S ISO 4017 M6X25 A480	
550	312109-0374		2	SCREW M6S ISO 4017 M6X30 A480	
560	312105-0376		3	SCREW M6S ISO 4014 M6X35 A480	
640	312812-0312		8	HEXAGON NUT, NY-LOCK M4 A480	
670	315105-0153		20	WASHER BRB 6,4X12 RFR	
TBA 0500S (See drawing on page: 5-102)					
170	1144783-0000		1	TIMING BELT	
220	1346736-0000		8	WEDGE	
230	1144918-0000		4	PLATE	
240	1282287-0000		4	CARRIER	
300	1499418-0000		1	SLIDE	
310	1499422-0000		1	SLIDE	
320	1144621-0000		2	PLATE	
330	1499417-0000		1	BAR	
340	1499423-0000		1	BAR	
370	1499401-0000		1	GUIDE	
380	1499400-0000		1	GUIDE	
390	1317651-0000		1	GUIDE	
400	1317650-0000		1	GUIDE	
440	312105-0362		4	SCREW M6S ISO 4017 M6X8 A480	
470	312105-0370		4	SCREW M6S ISO 4017 M6X20 A480	
480	312105-0372		3	SCREW M6S ISO 4017 M6X25 A480	
550	312109-0374		2	SCREW M6S ISO 4017 M6X30 A480	
560	312105-0376		3	SCREW M6S ISO 4014 M6X35 A480	
640	312812-0312		8	HEXAGON NUT, NY-LOCK M4 A480	
670	315105-0153		20	WASHER BRB 6,4X12 RFR	
TBA 1000B (See drawing on page: 5-102)					
170	1144783-0000		1	TIMING BELT	
220	1346471-0000		8	WEDGE	
230	1144918-0000		4	PLATE	
240	1144919-0000		4	CARRIER	
300	1348133-0000		1	SLIDE	
310	1348139-0000		1	SLIDE	
320	1279409-0000		2	PLATE	
330	1348144-0000		1	BAR	
340	1348150-0000		1	BAR	
370	1519089-0000		1	GUIDE	
380	1519090-0000		1	GUIDE	
390	1282290-0000		1	GUIDE	
400	1282291-0000		1	GUIDE	
440	312105-0362		4	SCREW M6S ISO 4017 M6X8 A480	
470	312105-0370		4	SCREW M6S ISO 4017 M6X20 A480	
480	312105-0372		3	SCREW M6S ISO 4017 M6X25 A480	
550	312109-0374		2	SCREW M6S ISO 4017 M6X30 A480	
560	312105-0376		3	SCREW M6S ISO 4014 M6X35 A480	
640	312812-0312		8	HEXAGON NUT, NY-LOCK M4 A480	
670	315105-0153		20	WASHER BRB 6,4X12 RFR	
TBA 1000S (See drawing on page: 5-102)					
170	1144783-0000		1	TIMING BELT	
220	1346471-0000		8	WEDGE	
230	1144918-0000		4	PLATE	
240	1144919-0000		4	CARRIER	
300	1348132-0000		1	SLIDE	
310	1348138-0000		1	SLIDE	
320	1279409-0000		2	PLATE	
330	1348145-0000		1	BAR	
340	1348151-0000		1	BAR	
370	1517242-0000		1	GUIDE	
380	1517243-0000		1	GUIDE	
390	1317651-0000		1	GUIDE	
400	1317650-0000		1	GUIDE	
440	312105-0362		4	SCREW M6S ISO 4017 M6X8 A480	
470	312105-0370		4	SCREW M6S ISO 4017 M6X20 A480	
480	312105-0372		3	SCREW M6S ISO 4017 M6X25 A480	
550	312109-0374		2	SCREW M6S ISO 4017 M6X30 A480	
560	312105-0376		3	SCREW M6S ISO 4014 M6X35 A480	
640	312812-0312		8	HEXAGON NUT, NY-LOCK M4 A480	
670	315105-0153		20	WASHER BRB 6,4X12 RFR	
TBA 1000SQ (See drawing on page: 5-102)					
170	1144783-0000		1	TIMING BELT	
220	1346471-0000		8	WEDGE	
230	1144918-0000		4	PLATE	
240	1282848-0000		4	CARRIER	
300	1490033-0000		1	SLIDE	

Machine Type | Group Description | Used-In | Group Number | Page No

See previous drawings pages: 5-102, 5-104, 5-106.

Pos	Part No	UN	Qty	Description	Page No
TBA 1000SQ (Cont'd) (See drawing on page: 5-102)					
310	1490034-0000		1	SLIDE	
320	1144621-0000		2	PLATE	
330	1490035-0000		1	BAR	
340	1490036-0000		1	BAR	
370	1512308-0000		1	GUIDE	
380	1512307-0000		1	GUIDE	
390	1317651-0000		1	GUIDE	
400	1317650-0000		1	GUIDE	
440	312105-0362		4	SCREW M6S ISO 4017 M6X8 A480	
470	312105-0370		4	SCREW M6S ISO 4017 M6X20 A480	
480	312105-0372		3	SCREW M6S ISO 4017 M6X25 A480	
550	312109-0374		2	SCREW M6S ISO 4017 M6X30 A480	
560	312105-0376		3	SCREW M6S ISO 4014 M6X35 A480	
640	312812-0312		8	HEXAGON NUT, NY-LOCK M4 A480	
670	315105-0153		20	WASHER BRB 6,4X12 RFR	
TBA 1500S (See drawing on page: 5-102)					
170	1349152-0000		1	TIMING BELT	
220	1346471-0000		6	WEDGE	
230	1144918-0000		3	PLATE	
240	1282848-0000		3	CARRIER	
300	1334561-0000		1	SLIDE	
310	1334562-0000		1	SLIDE	
320	1144621-0000		2	PLATE	
330	1317805-0000		1	BAR	
340	1334271-0000		1	BAR	
370	1519093-0000		1	GUIDE	
380	1519094-0000		1	GUIDE	
390	1478215-0000		1	SLIDE	
400	1478214-0000		1	SLIDE	
440	312105-0362		4	SCREW M6S ISO 4017 M6X8 A480	
470	312105-0370		4	SCREW M6S ISO 4017 M6X20 A480	
480	312105-0372		3	SCREW M6S ISO 4017 M6X25 A480	
550	312109-0374		2	SCREW M6S ISO 4017 M6X30 A480	
560	312105-0376		3	SCREW M6S ISO 4014 M6X35 A480	
640	312812-0312		6	HEXAGON NUT, NY-LOCK M4 A480	
670	315105-0153		20	WASHER BRB 6,4X12 RFR	
TPA 0250SQ (See drawing on page: 5-102)					
170	1144783-0000		1	TIMING BELT	
220	1346736-0000		8	WEDGE	
230	1144918-0000		4	PLATE	
240	1558864-0000		4	CARRIER	
300	1549852-0000		1	SLIDE	
310	1549853-0000		1	SLIDE	
320	1144621-0000		2	PLATE	
330	1549854-0000		1	BAR	
340	1549855-0000		1	BAR	
370	1549856-0000		1	GUIDE	
380	1549857-0000		1	GUIDE	
390	1317651-0000		1	GUIDE	
400	1317650-0000		1	GUIDE	
440	312105-0362		4	SCREW M6S ISO 4017 M6X8 A480	
480	312105-0372		5	SCREW M6S ISO 4017 M6X25 A480	
500	312105-0364		4	SCREW M6S ISO 4017 M6X10 A480	
550	312109-0374		2	SCREW M6S ISO 4017 M6X30 A480	
640	312812-0312		8	HEXAGON NUT, NY-LOCK M4 A480	
670	315105-0153		24	WASHER BRB 6,4X12 RFR	
870	1539894-0000		1	GUIDE	
880	1539895-0000		1	GUIDE	
890	312605-0316		2	HEXAGON NUT, M6M M6 A280	
900	1499476-0000		1	HOLDER	
910	1499475-0000		1	HOLDER	
920	90424-0068		1	AIR NOZZLE, G1/4, MOD. 216 BSP	
930	342732-0104		1	ELBOW PIPE JOINT, EXT.THREAD, D=8MM-G1/4	
940	342728-0103		1	PIPE COUPLING 8 MM	
950	90166-0013	MM	700	TUBE 8 MM PA BLUE	
TPA 0330SQ (See drawing on page: 5-104)					
170	1144783-0000		1	TIMING BELT	
220	1346736-0000		8	WEDGE	
230	1144918-0000		4	PLATE	
240	1558864-0000		4	CARRIER	
300	1532257-0000		1	SLIDE	
310	1532258-0000		1	SLIDE	
320	1144621-0000		2	PLATE	
370	1532261-0000		1	GUIDE	
380	1532262-0000		1	GUIDE	
390	1317651-0000		1	GUIDE	
400	1317650-0000		1	GUIDE	
470	312105-0370		4	SCREW M6S ISO 4017 M6X20 A480	
480	312105-0372		3	SCREW M6S ISO 4017 M6X25 A480	
500	312105-0366		4	SCREW M6S ISO 4017 M6X12 A480	
550	312109-0374		2	SCREW M6S ISO 4017 M6X30 A480	
560	312105-0376		3	SCREW M6S ISO 4014 M6X35 A480	
640	312812-0312		8	HEXAGON NUT, NY-LOCK M4 A480	

See previous drawings pages: 5-102, 5-104, 5-106.

Pos	Part No	UN	Qty	Description	Page No
TPA 0330SQ (Cont'd) (See drawing on page: 5-104)					
670	315105-0153		20	WASHER BRB 6,4X12 RFR	
870	1532263-0000		1	GUIDE	
880	1532264-0000		1	GUIDE	
TPA 0500SQ (See drawing on page: 5-106)					
170	1144783-0000		1	TIMING BELT	
220	1346471-0000		8	WEDGE	
230	1144918-0000		4	PLATE	
240	1532256-0000		4	CARRIER	
300	1549513-0000		1	SLIDE	
310	1549514-0000		1	SLIDE	
320	1144621-0000		2	PLATE	
330	1549515-0000		1	BAR	
340	1549516-0000		1	BAR	
370	1549517-0000		1	GUIDE	
380	1549518-0000		1	GUIDE	
390	1549523-0000		1	GUIDE	
400	1549522-0000		1	GUIDE	
410	2545545-0000		2	INSERT	
440	312105-0362		4	SCREW M6S ISO 4017 M6X8 A480	
470	312105-0370		4	SCREW M6S ISO 4017 M6X20 A480	
480	312105-0372		7	SCREW M6S ISO 4017 M6X25 A480	
550	312109-0374		2	SCREW M6S ISO 4017 M6X30 A480	
560	312105-0376		3	SCREW M6S ISO 4014 M6X35 A480	
640	312812-0312		8	HEXAGON NUT, NY-LOCK M4 A480	
670	315105-0153		28	WASHER BRB 6,4X12 RFR	
870	1539983-0000		1	GUIDE	
880	1539984-0000		1	GUIDE	
890	312105-0364		4	SCREW M6S ISO 4017 M6X10 A480	
Common Parts					
490	312105-0368		4	SCREW M6S ISO 4017 M6X16 A480	

Pos	Part No	UN	Qty	Description	Page No

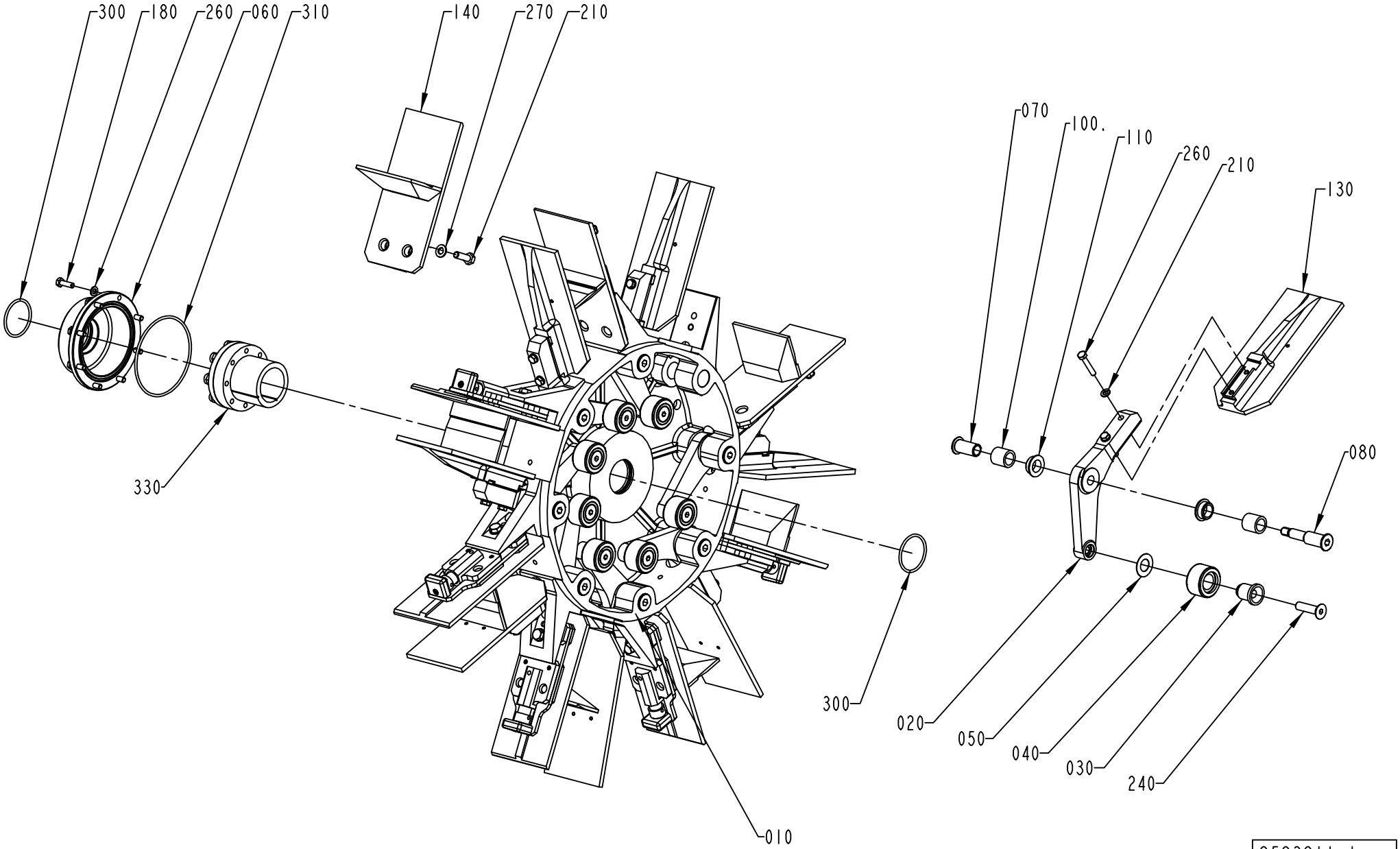

2523811-1
ECM 110155

ECM: 272093 - 20061101
Group number: 2523811-0100
Assembly Drawing: 2523811-1_1_AA

This list covers pages from 5-112 to 5-117

Pos	Part No	UN	Qty	Description	Page No
1000SQ NODIMC (See drawing on page: 5-114)					
010	1144264-0000		1	HUB	
120	2539277-0000		8	SHIM	
130	2518035-0000		8	FLAP	
140	2523812-0100		8	FLAP	**5-119, 5-121**
160	1511558-0000		8	BOTTOM	
190	312155-0370		8	SCREW DIN 7991 MF6S M6X20 A4 70	
200	312105-0376		16	SCREW M6S ISO 4014 M6X35 A480	
260	315105-0153		24	WASHER BRB 6,4X12 RFR	
0500SQ NODIMC (See drawing on page: 5-114)					
010	1144264-0000		1	HUB	
120	2539277-0000		8	SHIM	
130	2518035-0000		8	FLAP	
140	2523812-0100		8	FLAP	**5-119, 5-121**
200	312105-0376		16	SCREW M6S ISO 4014 M6X35 A480	
260	315105-0153		24	WASHER BRB 6,4X12 RFR	
0500B NODIMC, 1000B NODIMC (See drawing on page: 5-114)					
010	1144264-0000		1	HUB	
120	2539277-0000		8	SHIM	
130	1260704-0000		8	FLAP	
140	2523812-0100		8	FLAP	**5-119, 5-121**
200	312105-0376		16	SCREW M6S ISO 4014 M6X35 A480	
260	315105-0153		24	WASHER BRB 6,4X12 RFR	
TBA 0200SQ, TBA 0250SQ (See drawing on page: 5-112)					
010	1144264-0000		1	HUB	
130	2668223-0000		8	FLAP	
140	2523812-0100		8	FLAP	**5-119, 5-121**
190	312155-0370		8	SCREW DIN 7991 MF6S M6X20 A4 70	
200	312105-0376		16	SCREW M6S ISO 4014 M6X35 A480	
260	315105-0153		24	WASHER BRB 6,4X12 RFR	
TBA 0250S, TBA 0200M (See drawing on page: 5-112)					
010	1144264-0000		1	HUB	
130	2522201-0000		8	FLAP	
140	2523812-0100		8	FLAP	**5-119, 5-121**
190	312155-0370		8	SCREW DIN 7991 MF6S M6X20 A4 70	
TBA 0330S, TBA 0200B, TBA 0250B (See drawing on page: 5-112)					
010	1144264-0000		1	HUB	
130	2651146-0000		8	FLAP	
140	2523812-0100		8	FLAP	**5-119, 5-121**
190	312155-0370		8	SCREW DIN 7991 MF6S M6X20 A4 70	
200	312105-0376		16	SCREW M6S ISO 4014 M6X35 A480	
260	315105-0153		24	WASHER BRB 6,4X12 RFR	
TBA 0500B, TBA 1000B (See drawing on page: 5-114)					
010	1144264-0000		1	HUB	
130	1260704-0000		8	FLAP	
140	2523812-0100		8	FLAP	**5-119, 5-121**
200	312105-0376		16	SCREW M6S ISO 4014 M6X35 A480	
260	315105-0153		24	WASHER BRB 6,4X12 RFR	
TBA 1890S, TBA 2000S (See drawing on page: 5-116)					
010	1144264-0000		1	HUB	
090	2693197-0000		32	INSERT	
130	2566321-0000		8	FLAP	
140	2566323-0000		8	FLAP	
150	2638180-0000		16	INSERT	
160	2658390-0100		8	BOTTOM	**5-123**
170	2588327-0000		8	INSERT	
190	312115-0370		8	SCREW ISO4762 M6X20 A4 80	
200	2693200-0000		16	SCREW	
205	315115-0153		16	WASHER PLAIN, TBRB 6,4/12 H=3	
250	312155-0287		32	SCREW DIN 7991 MF6S M4X8 A4 70	
260	315105-0153		8	WASHER BRB 6,4X12 RFR	
TPA 0250SQ, TPA 0200SQ (See drawing on page: 5-112)					
010	1558737-0000		1	HUB	
130	2658237-0100		8	FLAP	**5-125**
140	2523812-0100		8	FLAP	**5-119, 5-121**
200	312105-0376		16	SCREW M6S ISO 4014 M6X35 A480	
260	315105-0153		24	WASHER BRB 6,4X12 RFR	
TPA 1000SQ, TPA 0750SQ (See drawing on page: 5-112)					
010	1144264-0000		1	HUB	
130	2658237-0100		8	FLAP	**5-125**
140	2523812-0100		8	FLAP	**5-119, 5-121**
160	2802612-0000		8	BOTTOM	
190	312155-0379		8	SCREW DIN 7991 MF6S M6X45 A4 70	
200	312105-0378		16	SCREW M6S ISO 4014 M6X40 A480	
260	315105-0153		24	WASHER BRB 6,4X12 RFR	
Common Parts					
020	1279559-0000		8	ARM	
030	1144312-0000		8	AXLE PIN	
040	1144335-0000		8	ROLLER	
050	1144354-0000		8	WASHER	
060	1144356-0000		1	COVER	
070	1296970-0000		8	SCREW BUSHING	
080	1296969-0000		8	SCREW HOLDER	
100	1144417-0000		16	BUSHING	

Machine Type | Group Description | Used-In | Group Number | Page No

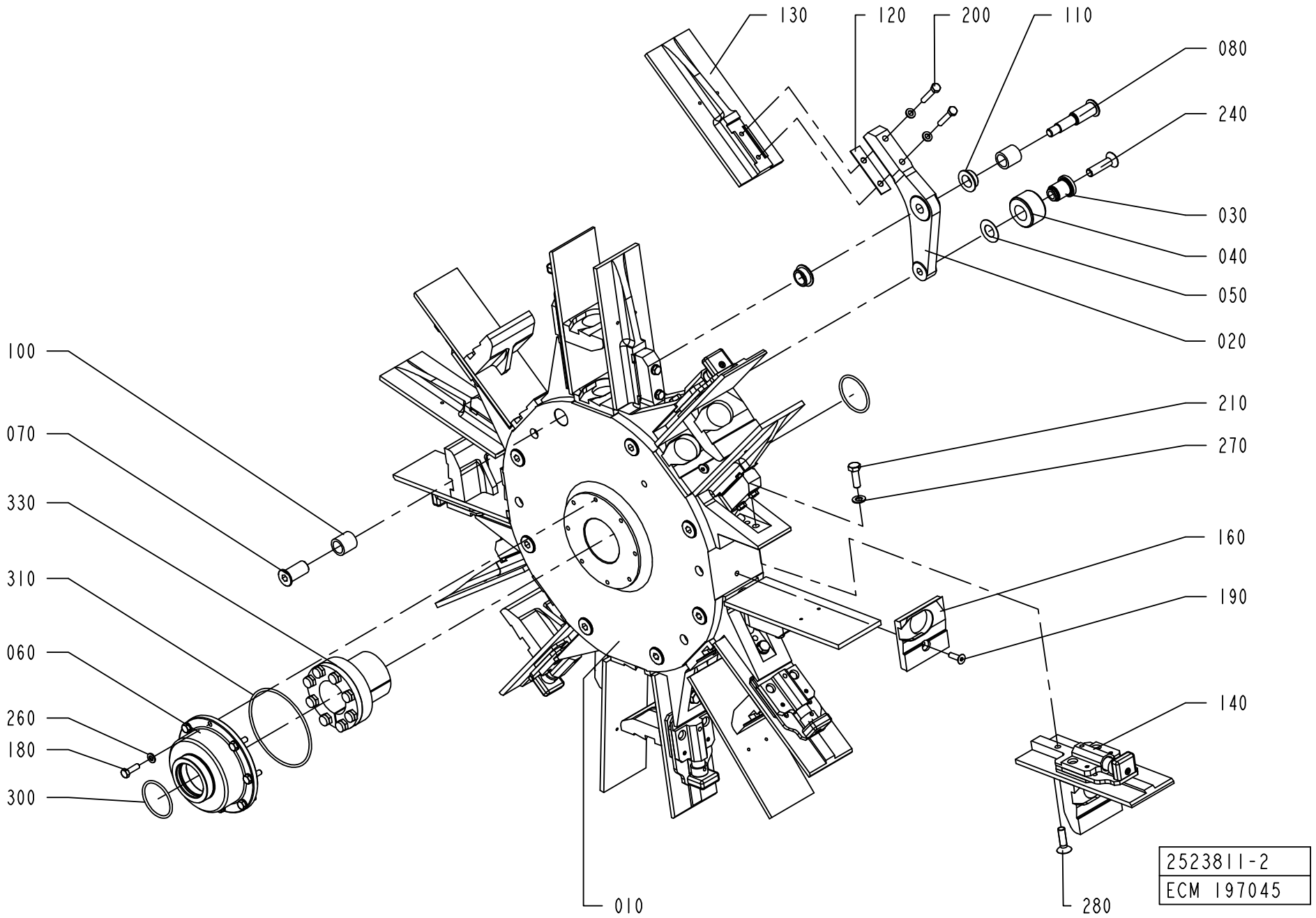
130
120
200
110
080
240
030
040
050
020
100
070
330
310
060
260
180
300
210
270
160
190
140
010
280
2523811-2
ECM 197045

Pos	Part No	UN	Qty	Description	Page No
Common Parts (Cont'd)					
110	1282708-0000		16	BUSHING	
180	312105-0370		8	SCREW M6S ISO 4017 M6X20 A480	
210	312105-0453		8	SCREW M6S ISO 4017 M8X25 A480	
240	312155-0499		8	SCREW DIN 7991 MF6S M10X40 A4 70	
270	315105-0165		8	WASHER BRB 8,4X16 RFR	
300	315202-0225		2	O-RING 44,2X3 MM	
310	315202-0311		1	O-RING 99,5X3 MM	
330	90208-0087		1	CLAMPING ELEMENT WITH SLEEVE, 45X59 MM	

Pos	Part No	UN	Qty	Description	Page No

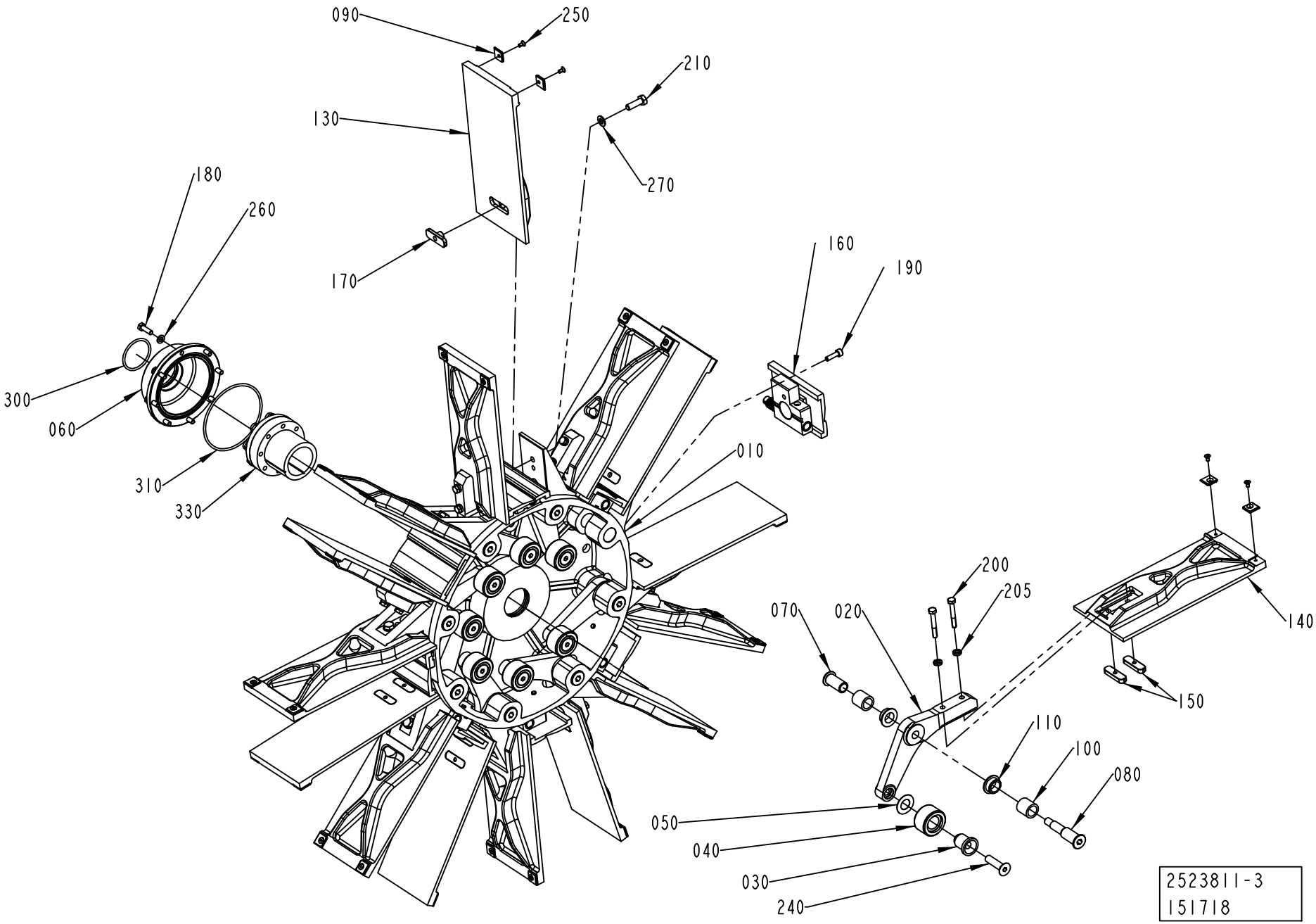
090
250
210
130
270
180
260
170
160
190
300
060
310
330
010
200
205
070
020
140
150
110
100
080
050
040
030
240
2523811-3
151718

ECM: 272093 - 20061101
Group number: 2523811-0100
Assembly Drawing: 2523811-3_1_AA

This list covers pages from 5-112 to 5-117

Pos	Part No	UN	Qty	Description	Page No	Pos	Part No	UN	Qty	Description	Page No

SEE PREVIOUS LISTS PAGES: 5-113, 5-115.

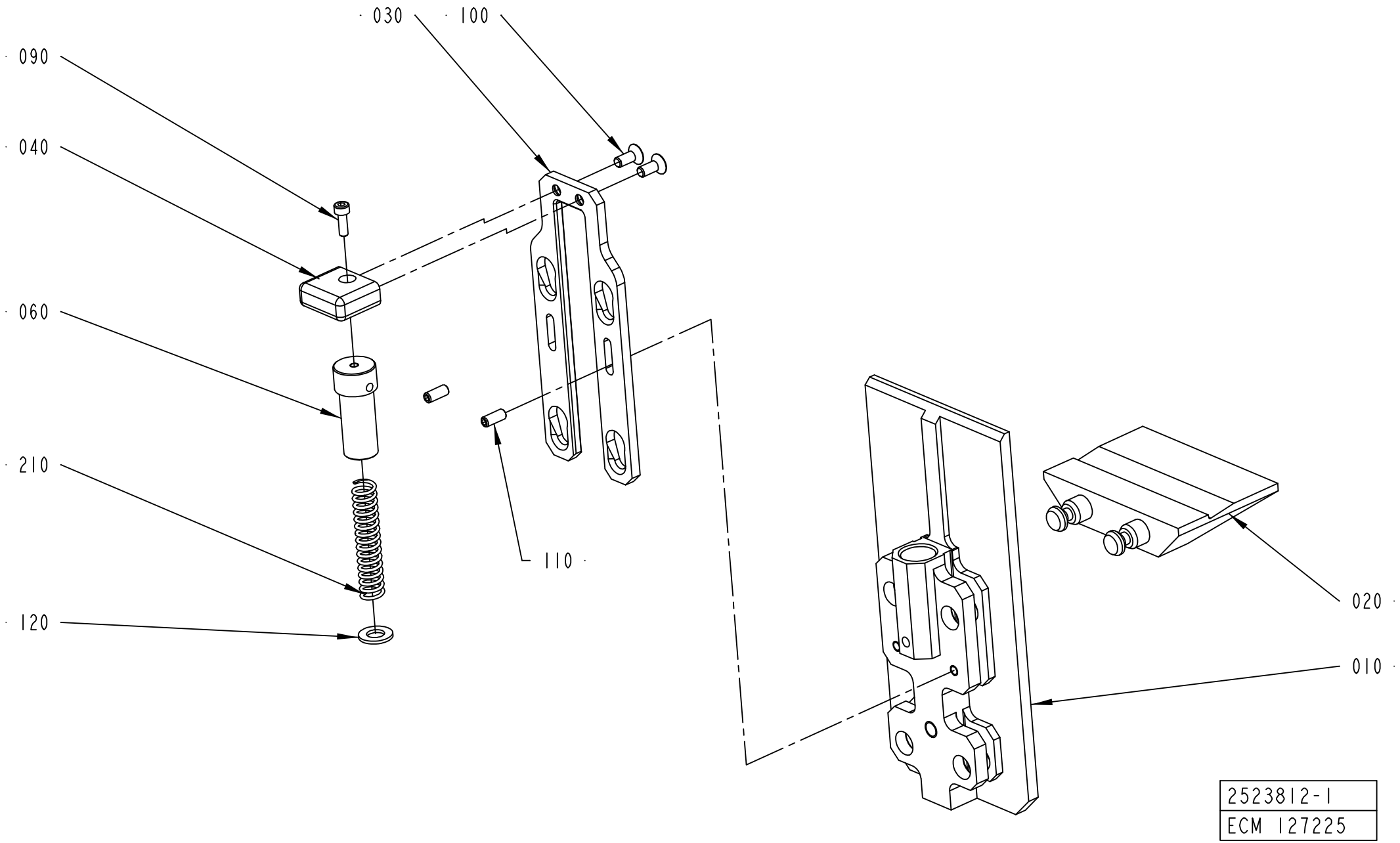
030
100
090
040
060
210
120
110
020
010
2523812-1
ECM 127225

ECM: 251561 - 20060222
Group number: 2523812-0100
Assembly Drawing: 2523812-1_1_AB

This list covers pages from 5-118 to 5-121

Pos	Part No	UN	Qty	Description	Page No
TPA 0250SQ, TPA 0200SQ (See drawing on page: 5-118)					
010	2674240-0000		1	FLAP	
020	2674241-0000		1	BOTTOM	
030	2674239-0000		1	SLIDE	
100	312155-0327		2	SCREW DIN 7991 MF6S M5X12 A4 70	
110	312318-0325		2	SCREW ISO4029 M5X10 A4	
120	315105-0165		1	WASHER BRB 8,4X16 RFR	
TPA 0750SQ (See drawing on page: 5-120)					
010	2658242-0000		1	FLAP	
020	2663373-0000		1	BOTTOM	
030	2658241-0000		1	SLIDE	
100	312155-0327		2	SCREW DIN 7991 MF6S M5X12 A4 70	
110	312318-0327		2	SCREW ISO4029 M5X12 A4	
120	315105-0165		1	WASHER BRB 8,4X16 RFR	
200	90157-0021		1	LOCKING FLUID LOCTITE 270	
TPA 1000SQ (See drawing on page: 5-120)					
010	2658242-0000		1	FLAP	
020	2658240-0000		1	BOTTOM	
030	2658241-0000		1	SLIDE	
100	312155-0327		2	SCREW DIN 7991 MF6S M5X12 A4 70	
110	312318-0327		2	SCREW ISO4029 M5X12 A4	
120	315105-0165		1	WASHER BRB 8,4X16 RFR	
200	90157-0021		1	LOCKING FLUID LOCTITE 270	
0500B NODIMC, 1000B NODIMC (See drawing on page: 5-118)					
010	2598805-0000		1	FLAP	
020	2629336-0000		1	BOTTOM	
030	2598807-0000		1	SLIDE	
100	312155-0327		2	SCREW DIN 7991 MF6S M5X12 A4 70	
110	312318-0327		2	SCREW ISO4029 M5X12 A4	
120	315105-0165		1	WASHER BRB 8,4X16 RFR	
0500SQ NODIMC (See drawing on page: 5-118)					
010	2553615-0000		1	FLAP	
020	2796652-0000		1	BOTTOM	
030	2553617-0000		1	SLIDE	
100	312155-0327		2	SCREW DIN 7991 MF6S M5X12 A4 70	
110	312318-0327		2	SCREW ISO4029 M5X12 A4	
120	315105-0165		1	WASHER BRB 8,4X16 RFR	
1000SQ NODIMC					
010	2553615-0000		1	FLAP	
020	1511558-0000		1	BOTTOM	
030	2553617-0000		1	SLIDE	
100	312155-0327		2	SCREW DIN 7991 MF6S M5X12 A4 70	
110	312318-0327		2	SCREW ISO4029 M5X12 A4	
120	315105-0165		1	WASHER BRB 8,4X16 RFR	
TBA 0200SQ, TBA 0250SQ (See drawing on page: 5-118)					
010	2668221-0000		1	FLAP	
020	2668220-0000		1	BOTTOM	
030	2668222-0000		1	SLIDE	
100	312155-0327		2	SCREW DIN 7991 MF6S M5X12 A4 70	
110	312318-0327		2	SCREW ISO4029 M5X12 A4	
120	315105-0165		1	WASHER BRB 8,4X16 RFR	
TBA 0250S, TBA 0200M (See drawing on page: 5-118)					
010	2636399-0000		1	FLAP	
020	2636400-0000		1	BOTTOM	
030	2636401-0000		1	SLIDE	
100	312155-0327		2	SCREW DIN 7991 MF6S M5X12 A4 70	
110	312318-0327		2	SCREW ISO4029 M5X12 A4	
120	315105-0165		1	WASHER BRB 8,4X16 RFR	
TBA 0330S, TBA 0200B, TBA 0250B (See drawing on page: 5-118)					
010	2603488-0000		1	FLAP	
020	2603489-0000		1	BOTTOM	
030	2603490-0000		1	SLIDE	
100	312155-0327		16	SCREW DIN 7991 MF6S M5X12 A4 70	
110	312318-0327		16	SCREW ISO4029 M5X12 A4	
120	315105-0165		8	WASHER BRB 8,4X16 RFR	
TBA 0500B, TBA 1000B (See drawing on page: 5-118)					
010	2520170-0000		1	FLAP	
020	2629336-0000		1	BOTTOM	
030	2520168-0000		1	SLIDE	
100	312155-0327		2	SCREW DIN 7991 MF6S M5X12 A4 70	
110	312318-0327		2	SCREW ISO4029 M5X12 A4	
120	315105-0165		1	WASHER BRB 8,4X16 RFR	
Common Parts					
040	2526563-0000		1	HANDLE	
060	2526567-0000		1	CYLINDER	
090	312115-0291		1	SCREW ISO4762 M4X12 A4 80	
210	90459-0969		1	COMP. SPRING A D22430, 1,6X11,6X58,5	

Machine Type | Group Description | Used-In | Group Number | Page No

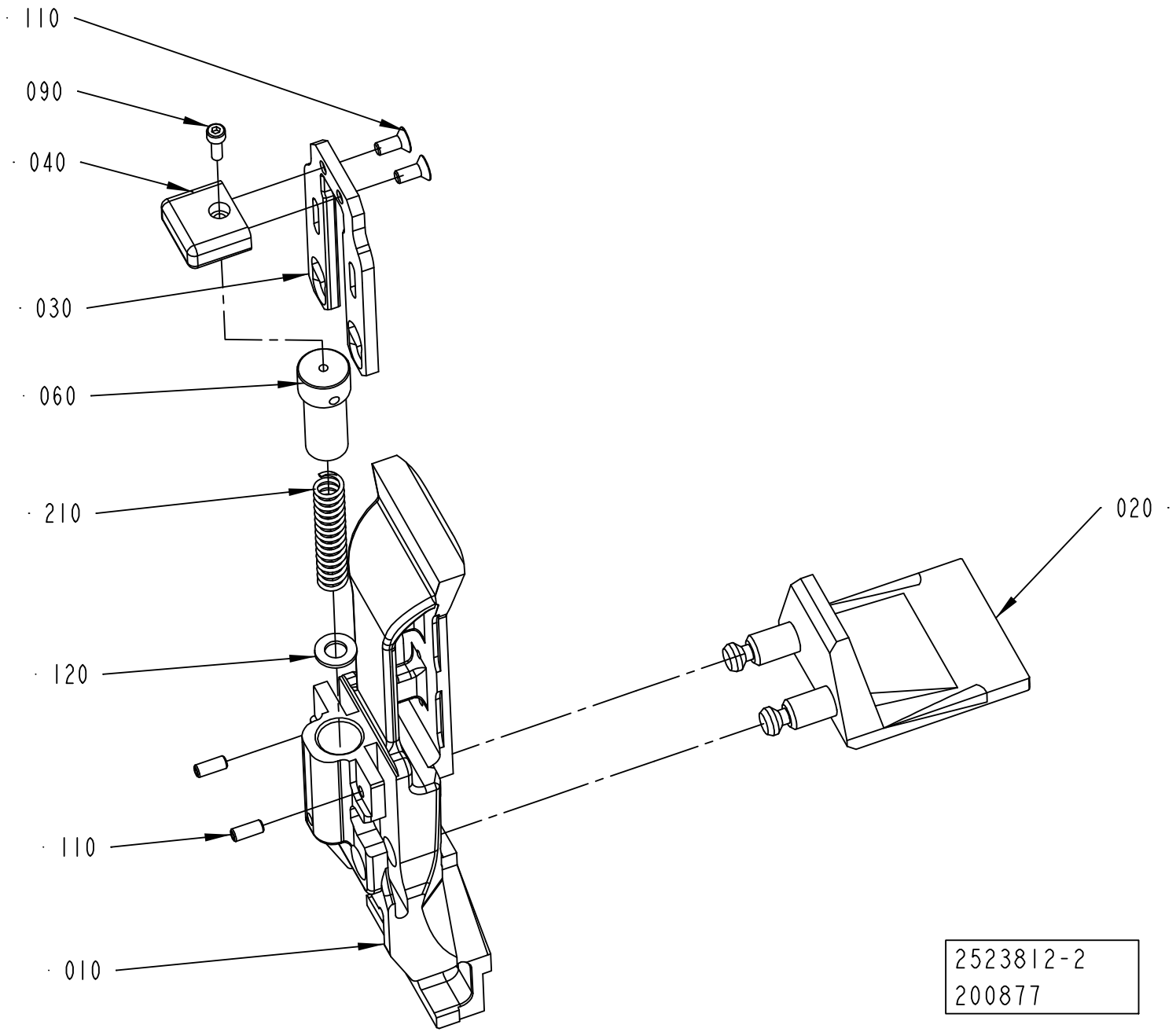
110
090
040
030
060
210
020
120
110
010
2523812-2
200877

ECM: 251561 - 20060222
Group number: 2523812-0100
Assembly Drawing: 2523812-2_1_AA

This list covers pages from 5-118 to 5-121

Pos	Part No	UN	Qty	Description	Page No
TPA 0250SQ, TPA 0200SQ (See drawing on page: 5-118)					
010	2674240-0000		1	FLAP	
020	2674241-0000		1	BOTTOM	
030	2674239-0000		1	SLIDE	
100	312155-0327		2	SCREW DIN 7991 MF6S M5X12 A4 70	
110	312318-0325		2	SCREW ISO4029 M5X10 A4	
120	315105-0165		1	WASHER BRB 8,4X16 RFR	
TPA 0750SQ (See drawing on page: 5-120)					
010	2658242-0000		1	FLAP	
020	2663373-0000		1	BOTTOM	
030	2658241-0000		1	SLIDE	
100	312155-0327		2	SCREW DIN 7991 MF6S M5X12 A4 70	
110	312318-0327		2	SCREW ISO4029 M5X12 A4	
120	315105-0165		1	WASHER BRB 8,4X16 RFR	
200	90157-0021		1	LOCKING FLUID LOCTITE 270	
TPA 1000SQ (See drawing on page: 5-120)					
010	2658242-0000		1	FLAP	
020	2658240-0000		1	BOTTOM	
030	2658241-0000		1	SLIDE	
100	312155-0327		2	SCREW DIN 7991 MF6S M5X12 A4 70	
110	312318-0327		2	SCREW ISO4029 M5X12 A4	
120	315105-0165		1	WASHER BRB 8,4X16 RFR	
200	90157-0021		1	LOCKING FLUID LOCTITE 270	
0500B NODIMC, 1000B NODIMC (See drawing on page: 5-118)					
010	2598805-0000		1	FLAP	
020	2629336-0000		1	BOTTOM	
030	2598807-0000		1	SLIDE	
100	312155-0327		2	SCREW DIN 7991 MF6S M5X12 A4 70	
110	312318-0327		2	SCREW ISO4029 M5X12 A4	
120	315105-0165		1	WASHER BRB 8,4X16 RFR	
0500SQ NODIMC (See drawing on page: 5-118)					
010	2553615-0000		1	FLAP	
020	2796652-0000		1	BOTTOM	
030	2553617-0000		1	SLIDE	
100	312155-0327		2	SCREW DIN 7991 MF6S M5X12 A4 70	
110	312318-0327		2	SCREW ISO4029 M5X12 A4	
120	315105-0165		1	WASHER BRB 8,4X16 RFR	
1000SQ NODIMC					
010	2553615-0000		1	FLAP	
020	1511558-0000		1	BOTTOM	
030	2553617-0000		1	SLIDE	
100	312155-0327		2	SCREW DIN 7991 MF6S M5X12 A4 70	
110	312318-0327		2	SCREW ISO4029 M5X12 A4	
120	315105-0165		1	WASHER BRB 8,4X16 RFR	
TBA 0200SQ, TBA 0250SQ (See drawing on page: 5-118)					
010	2668221-0000		1	FLAP	
020	2668220-0000		1	BOTTOM	
030	2668222-0000		1	SLIDE	
100	312155-0327		2	SCREW DIN 7991 MF6S M5X12 A4 70	
110	312318-0327		2	SCREW ISO4029 M5X12 A4	
120	315105-0165		1	WASHER BRB 8,4X16 RFR	
TBA 0250S, TBA 0200M (See drawing on page: 5-118)					
010	2636399-0000		1	FLAP	
020	2636400-0000		1	BOTTOM	
030	2636401-0000		1	SLIDE	
100	312155-0327		2	SCREW DIN 7991 MF6S M5X12 A4 70	
110	312318-0327		2	SCREW ISO4029 M5X12 A4	
120	315105-0165		1	WASHER BRB 8,4X16 RFR	
TBA 0330S, TBA 0200B, TBA 0250B (See drawing on page: 5-118)					
010	2603488-0000		1	FLAP	
020	2603489-0000		1	BOTTOM	
030	2603490-0000		1	SLIDE	
100	312155-0327		16	SCREW DIN 7991 MF6S M5X12 A4 70	
110	312318-0327		16	SCREW ISO4029 M5X12 A4	
120	315105-0165		8	WASHER BRB 8,4X16 RFR	
TBA 0500B, TBA 1000B (See drawing on page: 5-118)					
010	2520170-0000		1	FLAP	
020	2629336-0000		1	BOTTOM	
030	2520168-0000		1	SLIDE	
100	312155-0327		2	SCREW DIN 7991 MF6S M5X12 A4 70	
110	312318-0327		2	SCREW ISO4029 M5X12 A4	
120	315105-0165		1	WASHER BRB 8,4X16 RFR	
Common Parts					
040	2526563-0000		1	HANDLE	
060	2526567-0000		1	CYLINDER	
090	312115-0291		1	SCREW ISO4762 M4X12 A4 80	
210	90459-0969		1	COMP. SPRING A D22430, 1,6X11,6X58,5	

Machine Type | Group Description | Used-In | Group Number | Page No

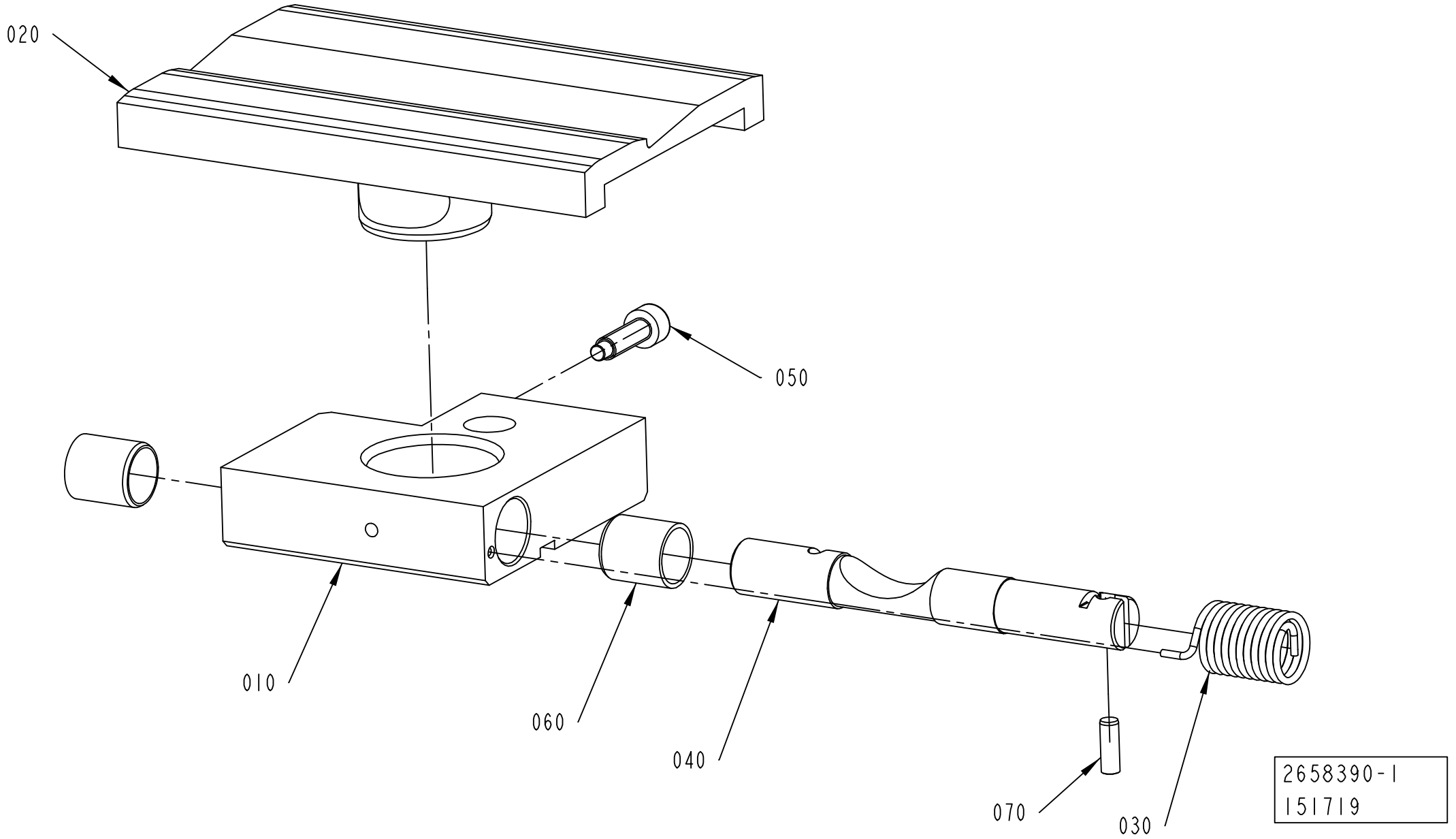
020
050
010
060
040
070
030
2658390-1
151719

ECM: 190929 - 20041104
Group number: 2658390-0100
Assembly Drawing: 2658390-1_1_AA

Pos	Part No	UN	Qty	Description	Page No
TBA 1890S					
020	2616218-0000		1	BOTTOM	
TBA 2000S					
020	2616219-0000		1	BOTTOM	
Common Parts					
010	2616217-0000		1	BOTTOM	
030	2650817-0000		1	SPRING	
040	2652888-0000		1	SHAFT	
050	2652889-0000		1	SCREW	
060	321138-0183		2	BUSHING, 12X14X15 MM	
070	311103-0268		1	PARALLEL PIN ISO 2338 4M6X12 A1	

Pos	Part No	UN	Qty	Description	Page No

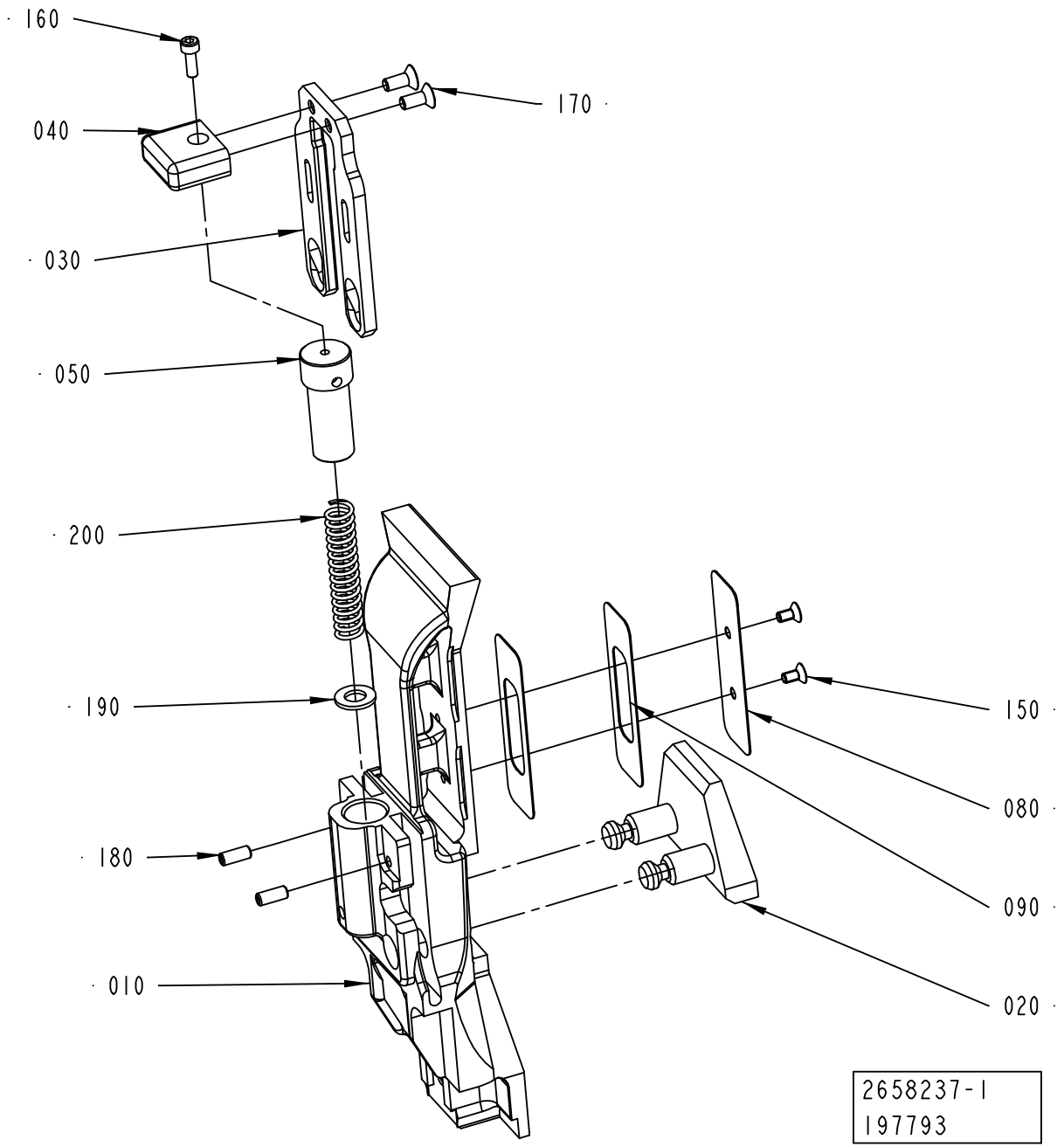
160
170
040
030
050
200
190
150
080
180
090
010
020
2658237-1
197793

ECM: 202650 - 20050224
Group number: 2658237-0100
Assembly Drawing: 2658237-1_1_AA

Pos	Part No	UN	Qty	Description	Page No
TPA 0250SQ, TPA 0200SQ					
010	2674237-0000		1	FLAP	
020	2674238-0000		1	BOTTOM	
030	2674239-0000		1	SLIDE	
TPA 0750SQ					
010	2658238-0000		1	FLAP	
020	2658239-0000		1	BOTTOM	
030	2658241-0000		1	SLIDE	
080	1549829-0000		1	VOLUME BULGE	
090	1549830-0000		2	VOLUME SHIM	
150	312155-0287		2	SCREW DIN 7991 MF6S M4X8 A4 70	
TPA 1000SQ					
010	2658238-0000		1	FLAP	
020	2658240-0000		1	BOTTOM	
030	2658241-0000		1	SLIDE	
080	1549829-0000		1	VOLUME BULGE	
090	1549830-0000		2	VOLUME SHIM	
150	312155-0287		2	SCREW DIN 7991 MF6S M4X8 A4 70	
Common Parts					
040	2526563-0000		1	HANDLE	
050	2526567-0000		1	CYLINDER	
160	312115-0291		1	SCREW ISO4762 M4X12 A4 80	
170	312155-0327		2	SCREW DIN 7991 MF6S M5X12 A4 70	
180	312318-0323		2	SCREW ISO4029 M5X8 A4	
190	315105-0165		1	WASHER BRB 8,4X16 RFR	
200	90459-0969		1	COMP. SPRING A D22430, 1,6X11,6X58,5	

Pos	Part No	UN	Qty	Description	Page No

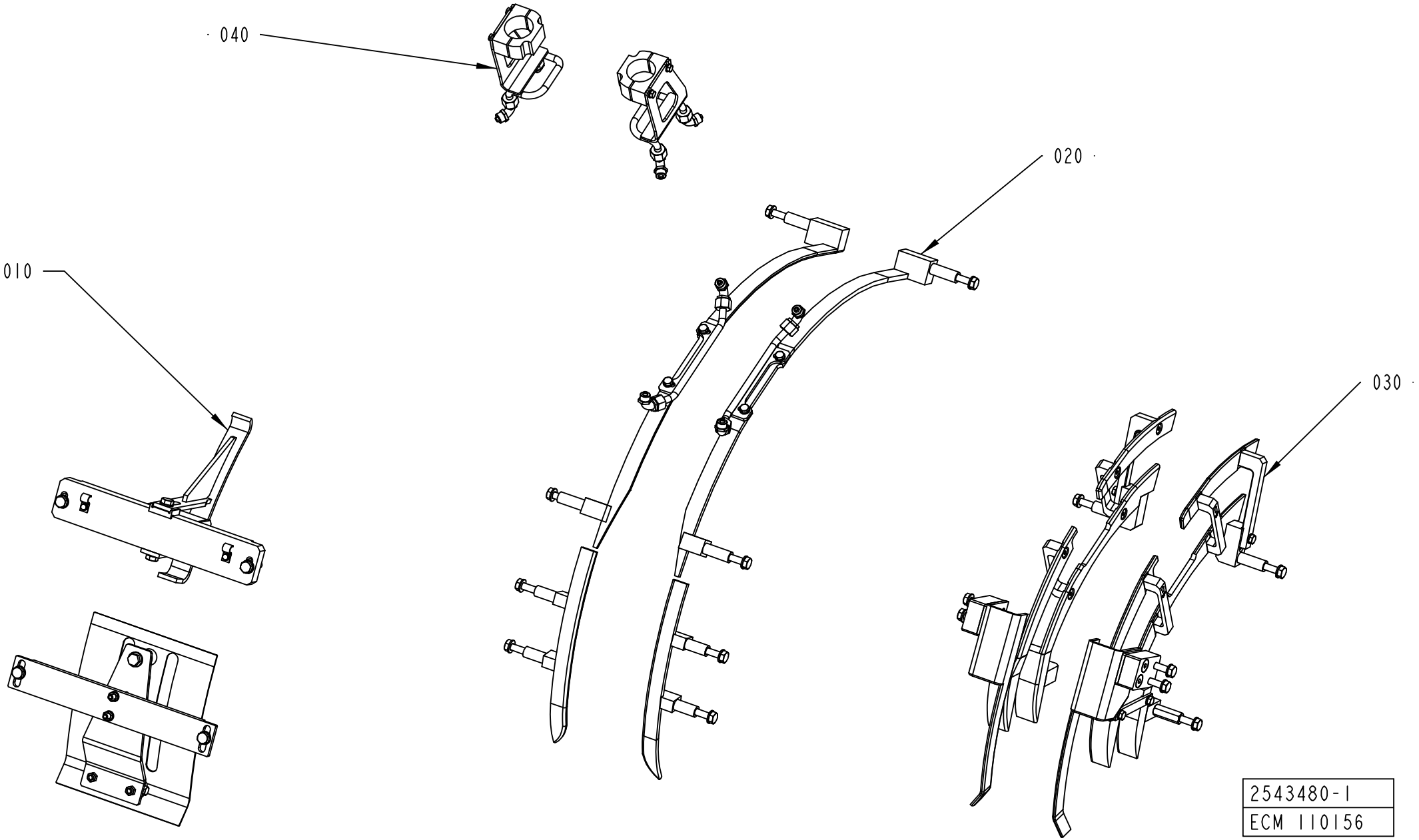
040
020
010
030
2543480-1
ECM 110156

ECM: 127231 - 20031103
Group number: 2543480-0100
Assembly Drawing: 2543480-1_1_AA

Pos	Part No	UN	Qty	Description	Page No
-					
010	2543481-0100		1	TOP SECTION	**5-129, 5-131, 5-133, 5-135**
020	2543482-0100		1	TOP RAIL	**5-137, 5-139, 5-141, 5-143**
030	2603827-0100		1	FLAP GUIDE	**5-145, 5-147, 5-149, 5-151, 5-153, 5-155**
040	2603826-0100		1	FOLDING PART	**5-157, 5-159**

Pos	Part No	UN	Qty	Description	Page No

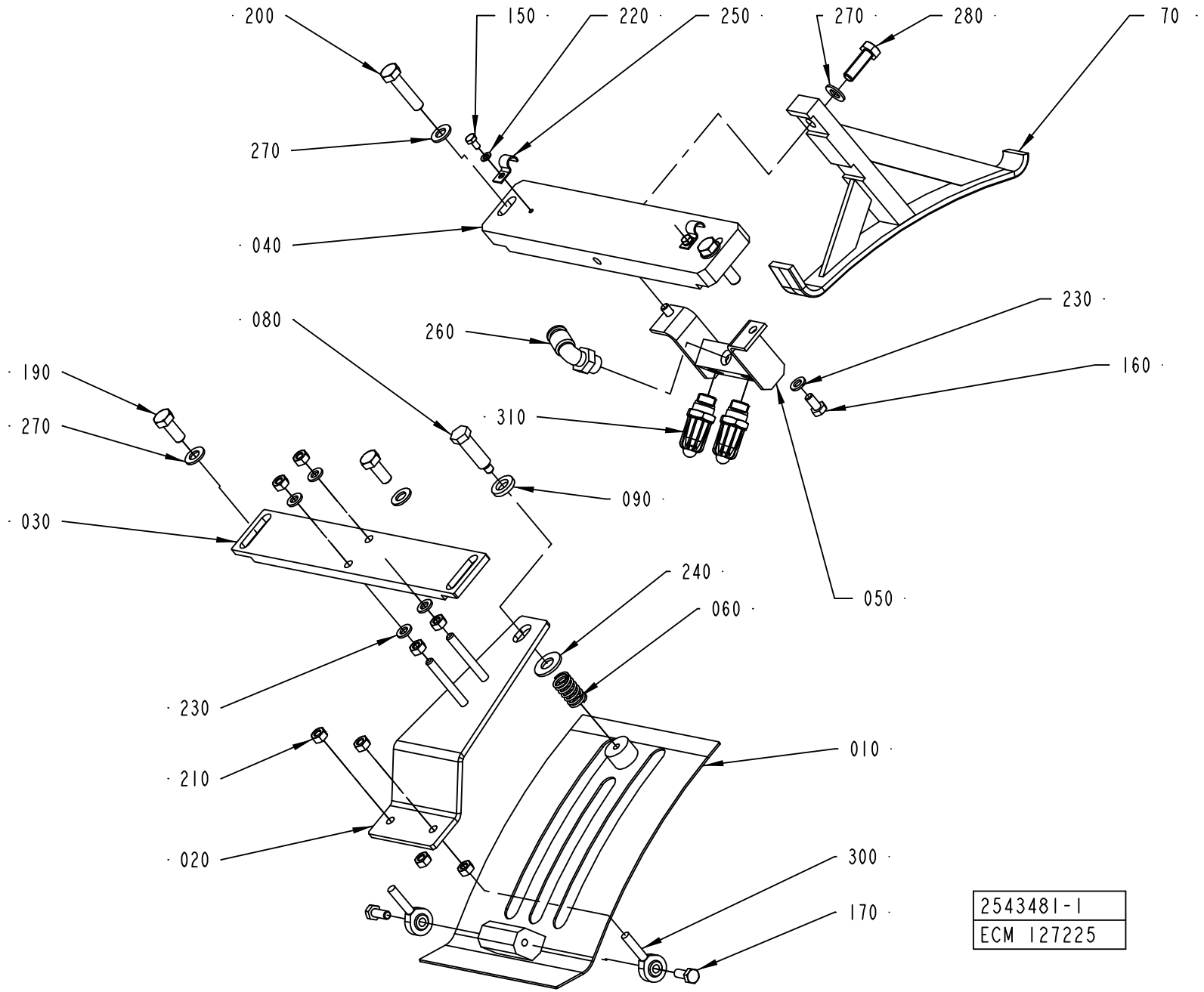
200
150
220
250
270
280
70
270
040
080
260
230
160
190
270
310
090
030
240
060
050
230
210
010
020
300
170
2543481-1
ECM 127225

ECM: 210086 - 20050520
Group number: 2543481-0100
Assembly Drawing: 2543481-1_1_AB

This list covers pages from 5-128 to 5-135

Pos	Part No	UN	Qty	Description	Page No
TBA 0200SQ, TPA 0250SQ, TPA 0200SQ, TBA 0250SQ (See drawing on page: 5-132)					
010	1317211-0000		1	COVERING PLATE	
020	1317213-0000		1	ADJUSTING PLATE	
030	1144975-0000		1	ATTACHMENT PLATE	
040	2647111-0000		1	SUPPORT	
070	2668243-0000		1	GUIDE	
100	2668242-0000		1	BLOCK	
150	312105-0287		2	SCREW M6S ISO 4017 M4X8 A470	
190	312105-0451		2	SCREW M6S ISO 4017 M8X20 A480	
220	315105-0136		2	WASHER BRB 4,3X9 RFR	
230	315105-0153		4	WASHER BRB 6,4X12 RFR	
250	90165-0057		2	PIPE CLIP FOR TUBE D=6 MM	
270	315105-0165		6	WASHER BRB 8,4X16 RFR	
280	312105-0451		2	SCREW M6S ISO 4017 M8X20 A480	
TBA 0250S, TBA 0200M (See drawing on page: 5-134)					
010	1317211-0000		1	COVERING PLATE	
020	1317213-0000		1	ADJUSTING PLATE	
030	1144975-0000		1	ATTACHMENT PLATE	
040	1144902-0000		1	SUPPORT	
070	2555637-0000		1	GUIDE	
150	312105-0287		2	SCREW M6S ISO 4017 M4X8 A470	
190	312105-0451		4	SCREW M6S ISO 4017 M8X20 A480	
220	315105-0136		2	WASHER BRB 4,3X9 RFR	
230	315105-0153		4	WASHER BRB 6,4X12 RFR	
250	90165-0057		2	PIPE CLIP FOR TUBE D=6 MM	
270	315105-0165		6	WASHER BRB 8,4X16 RFR	
TBA 0330S, TBA 0200B, TBA 0250B (See drawing on page: 5-132)					
010	1317211-0000		1	COVERING PLATE	
020	1317213-0000		1	ADJUSTING PLATE	
030	1144975-0000		1	ATTACHMENT PLATE	
040	1144902-0000		1	SUPPORT	
050	1349087-0000		1	DISTRIBUTOR	
070	2552022-0000		1	GUIDE	
100	2553284-0000		1	BLOCK	
150	312105-0287		2	SCREW M6S ISO 4017 M4X8 A470	
160	312105-0366		2	SCREW M6S ISO 4017 M6X12 A480	
190	312105-0451		2	SCREW M6S ISO 4017 M8X20 A480	
220	315105-0136		2	WASHER BRB 4,3X9 RFR	
230	315105-0153		6	WASHER BRB 6,4X12 RFR	
250	90165-0057		2	PIPE CLIP FOR TUBE D=6 MM	
260	90458-2958		1	ELBOW PIPE JOINT, EXT.THREAD, D=8MM-G1/4	
270	315105-0165		6	WASHER BRB 8,4X16 RFR	
280	312105-0451		2	SCREW M6S ISO 4017 M8X20 A480	
310	90424-0068		1	AIR NOZZLE, G1/4, MOD. 216 BSP	
TBA 0500B, TBA 1000B (See drawing on page: 5-128)					
010	1144941-0000		1	COVERING PLATE	
020	1144974-0000		1	ADJUSTING PLATE	
030	1144975-0000		1	ATTACHMENT PLATE	
040	1144902-0000		1	SUPPORT	
050	1285014-0000		1	DISTRIBUTOR	
070	2609372-0000		1	GUIDE	
150	312105-0287		2	SCREW M6S ISO 4017 M4X8 A470	
160	312105-0366		2	SCREW M6S ISO 4017 M6X12 A480	
180	312105-0449		1	SCREW M6S ISO 4017 M8X16 A480	
190	312105-0451		2	SCREW M6S ISO 4017 M8X20 A480	
220	315105-0136		2	WASHER BRB 4,3X9 RFR	
230	315105-0153		6	WASHER BRB 6,4X12 RFR	
250	90165-0057		2	PIPE CLIP FOR TUBE D=6 MM	
260	90458-2958		1	ELBOW PIPE JOINT, EXT.THREAD, D=8MM-G1/4	
270	315105-0165		5	WASHER BRB 8,4X16 RFR	
280	312105-0453		1	SCREW M6S ISO 4017 M8X25 A480	
310	90424-0068		2	AIR NOZZLE, G1/4, MOD. 216 BSP	
TBA 1890S, TBA 2000S (See drawing on page: 5-130)					
010	1548612-0000		1	COVERING PLATE	
020	1144974-0000		1	ADJUSTING PLATE	
030	1285299-0000		1	BRACKET	
040	1334480-0000		1	SUPPORT	
070	1347057-0000		1	GUIDE	
150	312105-0287		4	SCREW M6S ISO 4017 M4X8 A470	
180	312105-0449		1	SCREW M6S ISO 4017 M8X16 A480	
190	312105-0453		2	SCREW M6S ISO 4017 M8X25 A480	
220	315105-0136		4	WASHER BRB 4,3X9 RFR	
230	315105-0153		4	WASHER BRB 6,4X12 RFR	
250	316810-0106		4	PIPE CLIP FOR TUBE D=8 MM	
270	315105-0165		6	WASHER BRB 8,4X16 RFR	
280	312115-0449		1	SCREW ISO4762 M8X16 A4 80	
310	90424-0068		2	AIR NOZZLE, G1/4, MOD. 216 BSP	
320	342981-0122		1	BANJO CONNEC,RING,FOR PLAST.TUBE 8-G1/4"	
330	90235-0731		1	THROTTLE CHECK VALVE, G1/4", SCO-606-1/4	
TPA 1000SQ, TPA 0750SQ (See drawing on page: 5-130)					
010	2629303-0000		1	COVERING PLATE	
020	1144974-0000		1	ADJUSTING PLATE	
030	1285299-0000		1	BRACKET	
040	2647111-0000		1	SUPPORT	

Machine Type | Group Description | Used-In | Group Number | Page No

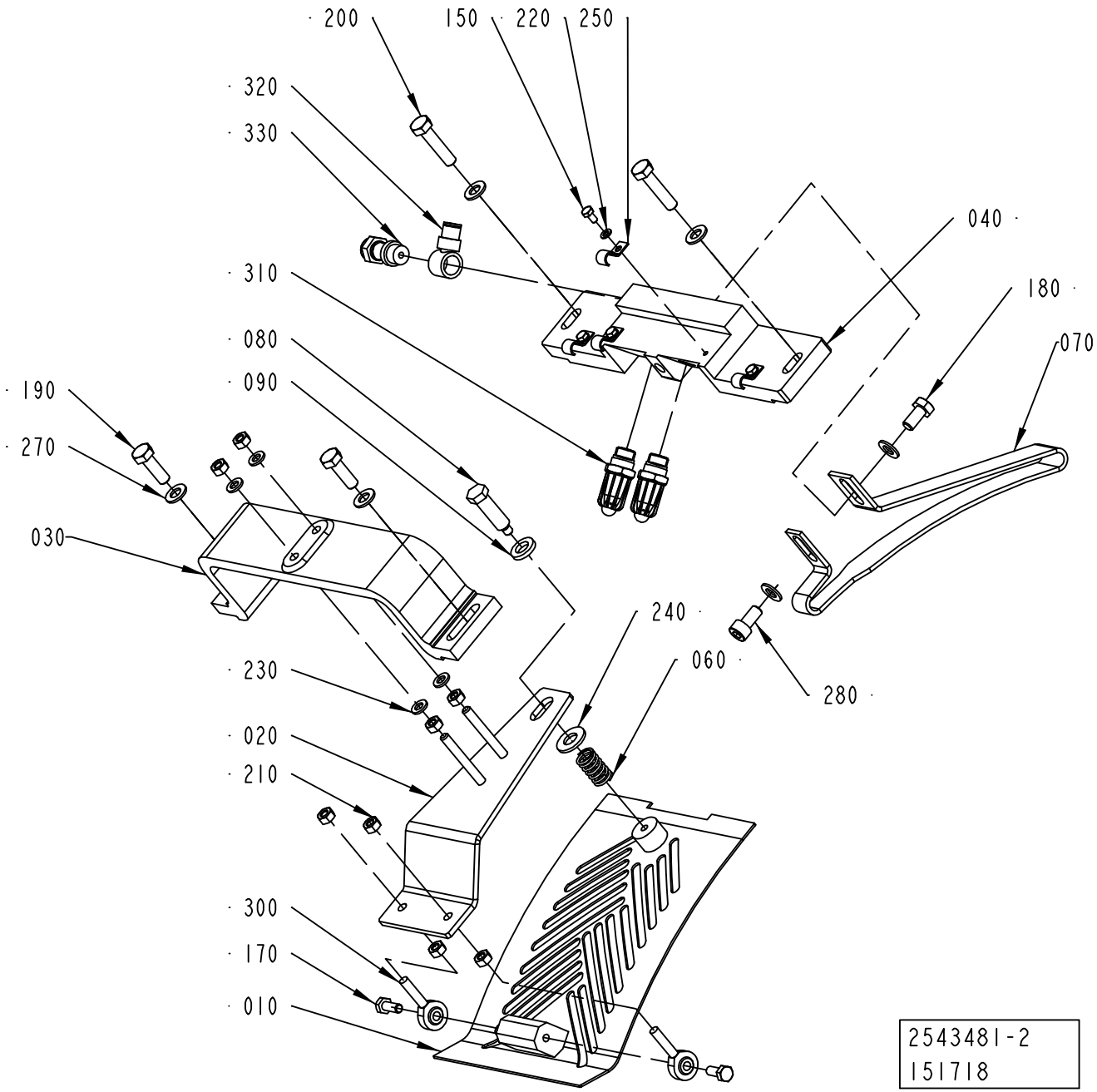
200
150
220
250
320
330
310
080
090
190
270
030
040
180
070
240
060
280
230
020
210
300
170
010
2543481-2
151718

Pos	Part No	UN	Qty	Description	Page No
TPA 1000SQ, TPA 0750SQ (Cont'd) (See drawing on page: 5-130)					
070	2647112-0000		1	GUIDE	
150	312105-0287		2	SCREW M6S ISO 4017 M4X8 A470	
180	312105-0449		1	SCREW M6S ISO 4017 M8X16 A480	
190	312105-0453		2	SCREW M6S ISO 4017 M8X25 A480	
220	315105-0136		2	WASHER BRB 4,3X9 RFR	
230	315105-0153		4	WASHER BRB 6,4X12 RFR	
250	90165-0057		2	PIPE CLIP FOR TUBE D=6 MM	
270	315105-0165		6	WASHER BRB 8,4X16 RFR	
280	312105-0449		1	SCREW M6S ISO 4017 M8X16 A480	
Common Parts					
060	90335-0036		1	COMP. SPRING 22450, 1,6X14,1X24	
080	1144976-0000		1	STOP SCREW	
090	1144979-0000		1	WASHER	
170	312105-0368		2	SCREW M6S ISO 4017 M6X16 A480	
200	312105-0457		2	SCREW M6S ISO 4014 M8X35 A480	
210	312605-0316		8	HEXAGON NUT, M6M M6 A280	
240	315105-0173		1	WASHER BRB 10,5X20 RFR	
300	90115-0137		2	ROD END, ID=6 MM, M6X1	

Pos	Part No	UN	Qty	Description	Page No

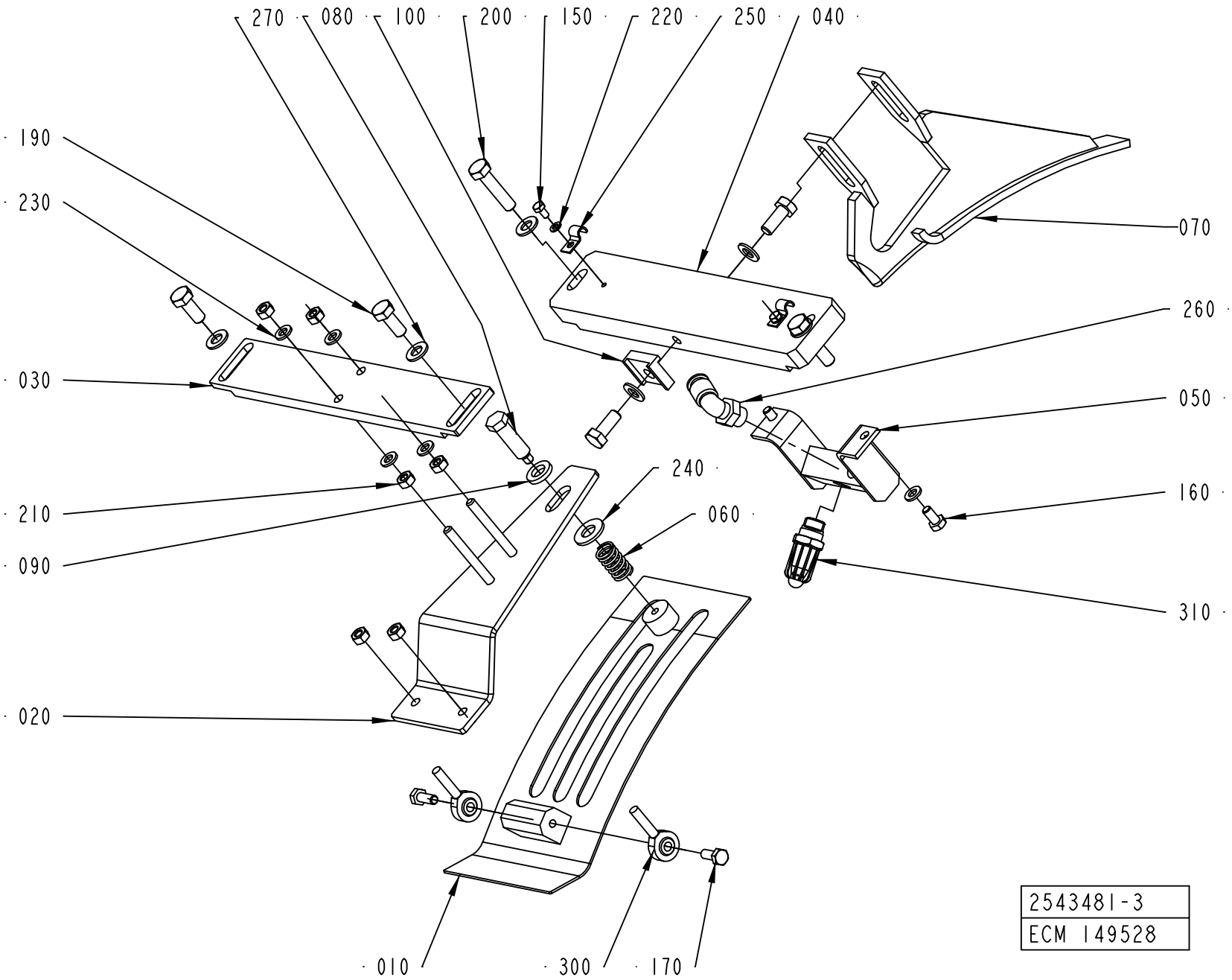
270
080
100
200
150
220
250
040
190
230
070
260
030
050
240
160
060
210
090
310
020
010
300
170
2543481-3
ECM 149528

Pos	Part No	UN	Qty	Description	Page No	Pos	Part No	UN	Qty	Description	Page No

SEE PREVIOUS LISTS PAGES: 5-129, 5-131.

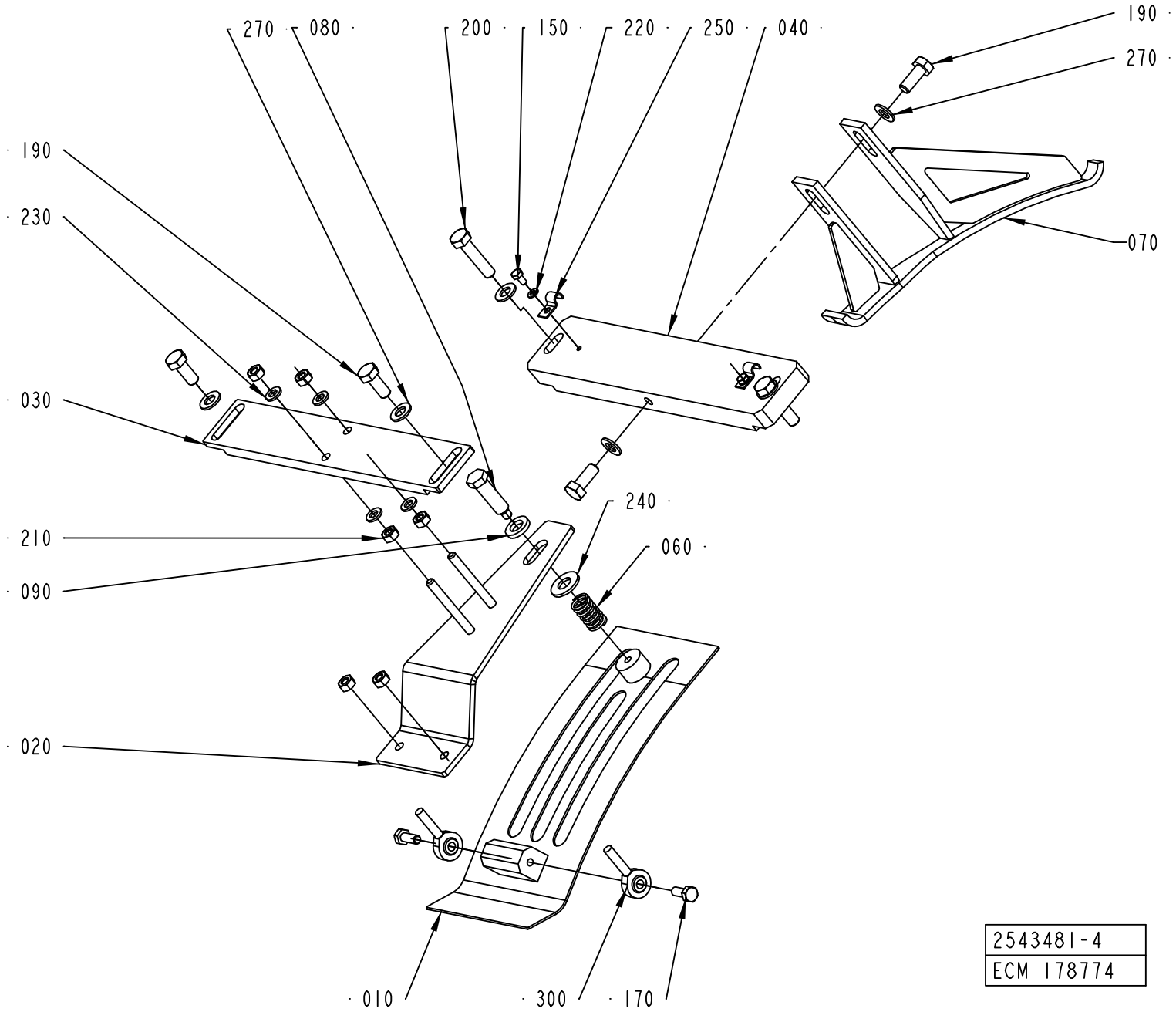
270
080
200
150
220
250
040
190
270
190
230
070
030
240
060
210
090
020
010
300
170
2543481-4
ECM 178774

Pos	Part No	UN	Qty	Description	Page No	Pos	Part No	UN	Qty	Description	Page No

SEE PREVIOUS LISTS PAGES: 5-129, 5-131.

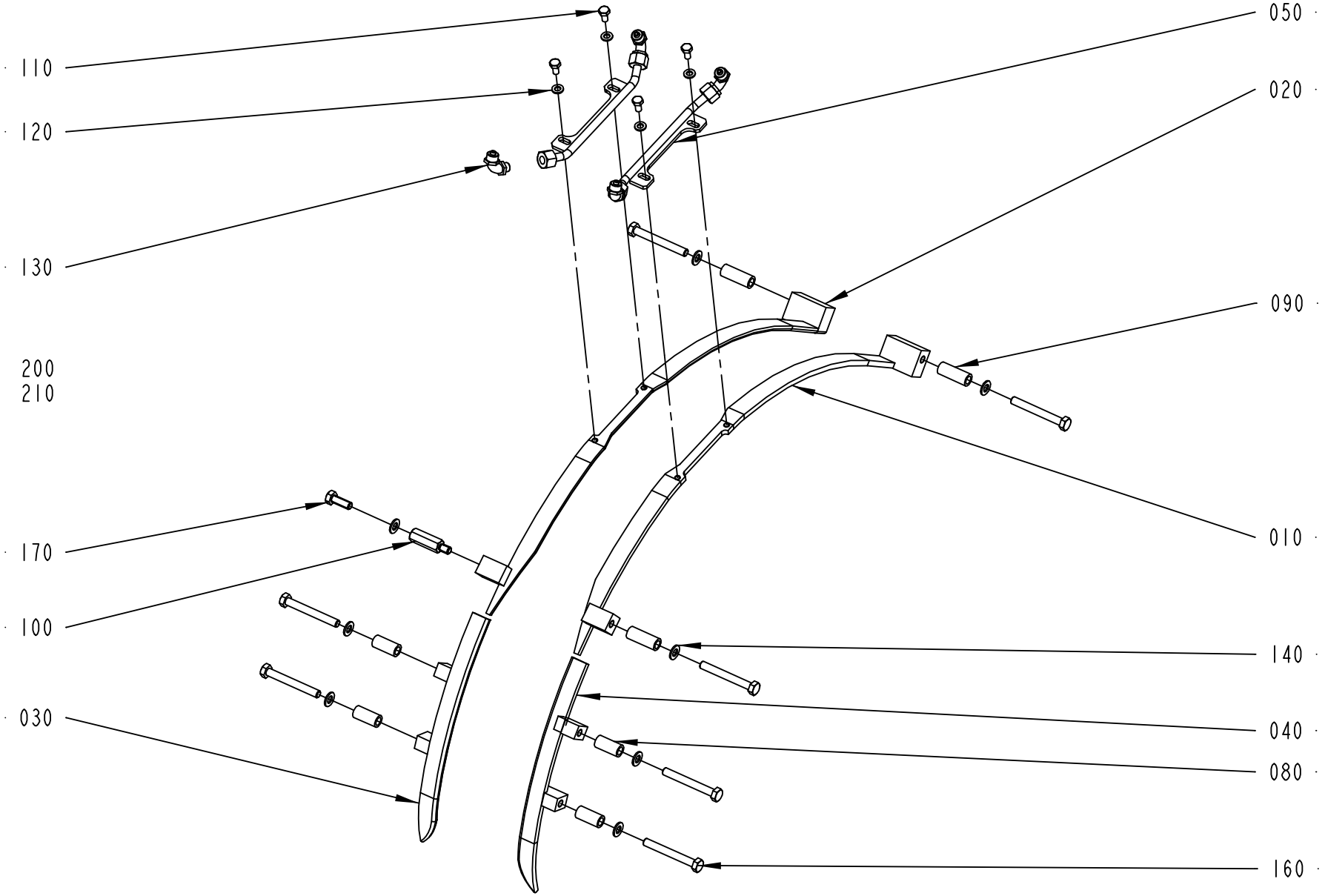

2543482-1
ECM 110156

ECM: 245134 - 20060208
Group number: 2543482-0100
Assembly Drawing: 2543482-1_1_AA

This list covers pages from 5-136 to 5-143

Pos	Part No	UN	Qty	Description	Page No
TBA 0200SQ, TBA 0250SQ (See drawing on page: 5-142)					
010	1144892-0000		1	GUIDE RIGHT	
020	1144893-0000		1	GUIDE LEFT	
030	2558704-0000		1	GUIDE UPPER R	
040	2558703-0000		1	GUIDE UPPER L	
050	2676815-0000		1	FOLDING BAR	
055	2676816-0000		1	FOLDING BAR	
060	1346340-0000		1	BRACKET	
080	2750544-0000		4	SPACER	
090	1539898-0000		2	SPACER	
110	312105-0366		6	SCREW M6S ISO 4017 M6X12 A480	
120	315105-0153		6	WASHER BRB 6,4X12 RFR	
140	315105-0165		8	WASHER BRB 8,4X16 RFR	
160	312105-0467		6	SCREW M6S ISO 4014 M8X80 A480	
170	312105-0451		1	SCREW M6S ISO 4017 M8X20 A480	
175	312155-0449		2	SCREW DIN 7991 MF6S M8X16 A4 70	
180	2698299-0000		2	BRACKET	
190	312105-0455		1	SCREW M6S ISO 4017 M8X30 A480	
TBA 0250S, TBA 0200M (See drawing on page: 5-140)					
010	1478926-0000		1	GUIDE RIGHT	
020	1478927-0000		1	GUIDE LEFT	
030	1539900-0000		1	RIGHT UPPER GUIDE	
040	1549614-0000		1	LEFT UPPER GUIDE	
050	2676815-0000		1	FOLDING BAR	
055	2676816-0000		1	FOLDING BAR	
060	1346340-0000		1	BRACKET	
070	1144555-0000		7	STUD SCREW	
075	1334523-0000		1	SUPPORT	
110	312105-0366		6	SCREW M6S ISO 4017 M6X12 A480	
120	315105-0153		6	WASHER BRB 6,4X12 RFR	
140	315105-0165		16	WASHER BRB 8,4X16 RFR	
150	312605-0318		16	HEXAGON NUT, M6M M8 A280	
TBA 0330S, TBA 0200B, TBA 0250B (See drawing on page: 5-140)					
010	1144892-0000		1	GUIDE RIGHT	
020	1144893-0000		1	GUIDE LEFT	
030	2558704-0000		1	GUIDE UPPER R	
040	2558703-0000		1	GUIDE UPPER L	
050	2676815-0000		1	FOLDING BAR	
055	2676816-0000		1	FOLDING BAR	
060	1346340-0000		1	BRACKET	
070	1144555-0000		7	STUD SCREW	
075	1334523-0000		1	SUPPORT	
110	312105-0366		6	SCREW M6S ISO 4017 M6X12 A480	
120	315105-0153		6	WASHER BRB 6,4X12 RFR	
140	315105-0165		16	WASHER BRB 8,4X16 RFR	
150	312605-0318		16	HEXAGON NUT, M6M M8 A280	
TBA 0500B, TBA 1000B (See drawing on page: 5-136)					
010	2520178-0000		1	GUIDE	
020	2520179-0000		1	GUIDE	
030	1539900-0000		1	RIGHT UPPER GUIDE	
040	1549614-0000		1	LEFT UPPER GUIDE	
050	2526575-0000		2	FOLDING BAR	
080	1334447-0000		4	SPACER	
090	2603663-0000		3	SPACER	
100	2555082-0000		1	SPACER SCREW	
110	312105-0366		4	SCREW M6S ISO 4017 M6X12 A480	
120	315105-0153		4	WASHER BRB 6,4X12 RFR	
140	315105-0165		8	WASHER BRB 8,4X16 RFR	
160	312105-0464		7	SCREW M6S ISO 4014 M8X65 A480	
170	312105-0452		1	SCREW M6S ISO 4017 M8X22 A4 80	
TBA 1890S, TBA 2000S (See drawing on page: 5-138)					
010	1350424-0000		1	GUIDE RIGHT	
020	1350425-0000		1	GUIDE LEFT	
030	1334559-0000		1	GUIDE UPPER R	
040	1334560-0000		1	GUIDE UPPER L	
050	1350423-0000		2	FOLDING BAR	
080	1334447-0000		4	SPACER	
090	2752533-0000		4	SPACER	
110	312105-0368		4	SCREW M6S ISO 4017 M6X16 A480	
120	315105-0153		6	WASHER BRB 6,4X12 RFR	
140	315105-0165		8	WASHER BRB 8,4X16 RFR	
160	312105-0463		8	SCREW M6S ISO 4014 M8X60 A480	
220	1282705-0000		4	SUPPORT	
230	1285267-0000		1	SUPPORT	
240	312105-0366		2	SCREW M6S ISO 4017 M6X12 A480	
TPA 0250SQ, TPA 0200SQ (See drawing on page: 5-142)					
010	1144892-0000		1	GUIDE RIGHT	
020	1144893-0000		1	GUIDE LEFT	
030	2735125-0000		1	GUIDE UPPER	
040	2735126-0000		1	GUIDE UPPER	
050	2676815-0000		1	FOLDING BAR	
055	2676816-0000		1	FOLDING BAR	
060	1346340-0000		1	BRACKET	
080	1558910-0000		4	SPACER	

Machine Type | Group Description | Used-In | Group Number | Page No

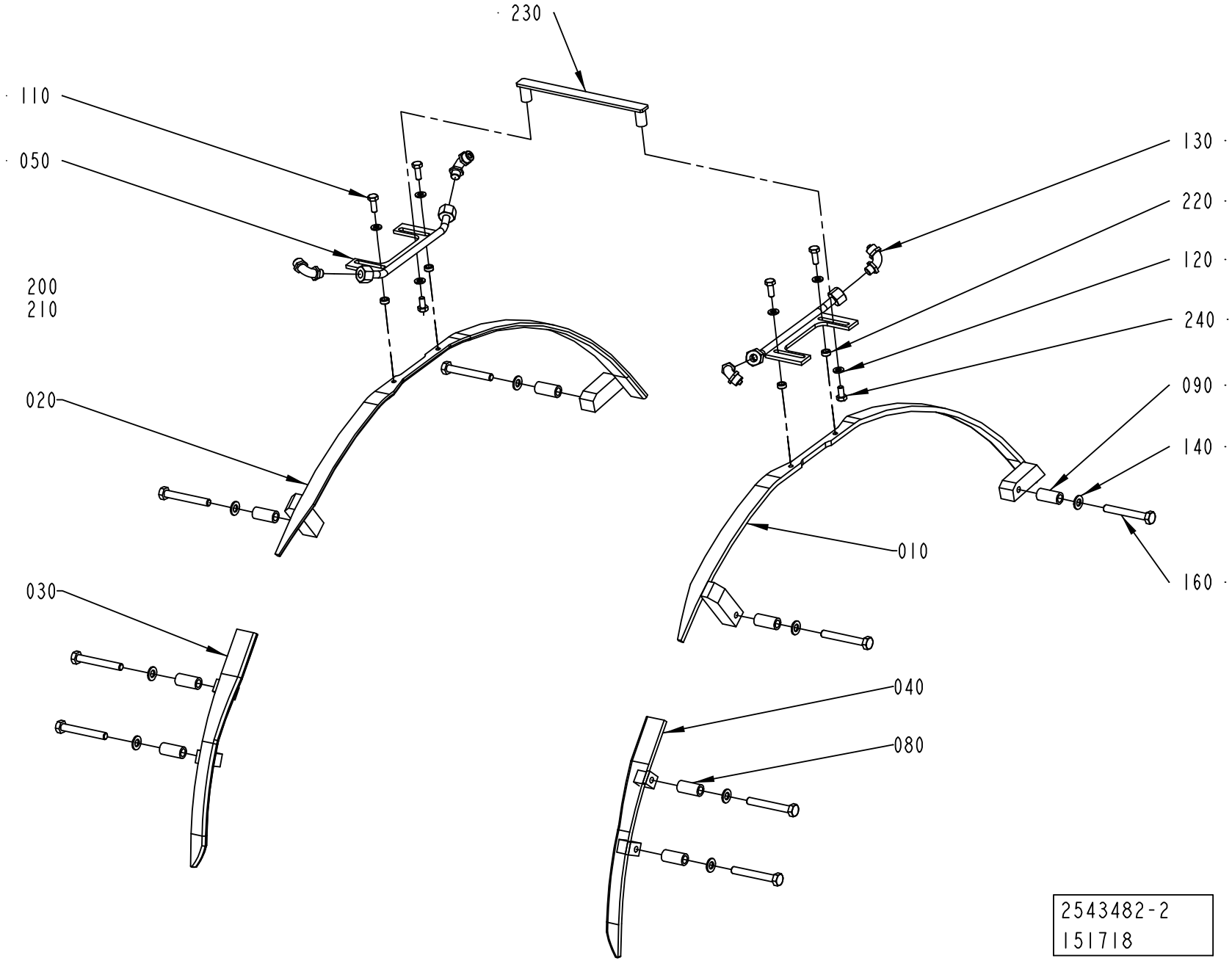
230
110
050
200
210
020
030
130
220
120
240
090
140
010
160
040
080
2543482-2
151718

Pos	Part No	UN	Qty	Description	Page No
TPA 0250SQ, TPA 0200SQ (Cont'd) (See drawing on page: 5-142)					
090	1558526-0000		2	SPACER	
110	312105-0366		4	SCREW M6S ISO 4017 M6X12 A480	
120	315105-0153		6	WASHER BRB 6,4X12 RFR	
140	315105-0165		8	WASHER BRB 8,4X16 RFR	
160	312105-0469		6	SCREW M6S ISO 4014 M8X90 A480	
170	312105-0451		1	SCREW M6S ISO 4017 M8X20 A480	
175	312105-0449		2	SCREW M6S ISO 4017 M8X16 A480	
180	2698299-0000		2	BRACKET	
190	312105-0455		1	SCREW M6S ISO 4017 M8X30 A480	
TPA 1000SQ, TPA 0750SQ (See drawing on page: 5-138)					
010	2647120-0000		1	GUIDE	
020	2647119-0000		1	GUIDE	
030	2642178-0000		1	GUIDE UPPER	
040	2642177-0000		1	GUIDE UPPER	
050	1350423-0000		2	FOLDING BAR	
090	1539898-0000		8	SPACER	
110	312105-0368		4	SCREW M6S ISO 4017 M6X16 A480	
120	315105-0153		6	WASHER BRB 6,4X12 RFR	
140	315105-0165		8	WASHER BRB 8,4X16 RFR	
160	2541125-0000		8	SCREW	
220	1282705-0000		4	SUPPORT	
230	1346340-0000		1	BRACKET	
240	312105-0366		2	SCREW M6S ISO 4017 M6X12 A480	
Common Parts					
130	342931-0121		4	ELBOW 90 COUPL.,EXT.THREAD 8/6-G1/8"	
200	90166-0118	MM	1500	TUBE 8 MM PA BLACK	
210	352113-0102		10	CLIP-STRIP, BLACK 188X4,8 MM	

Pos	Part No	UN	Qty	Description	Page No

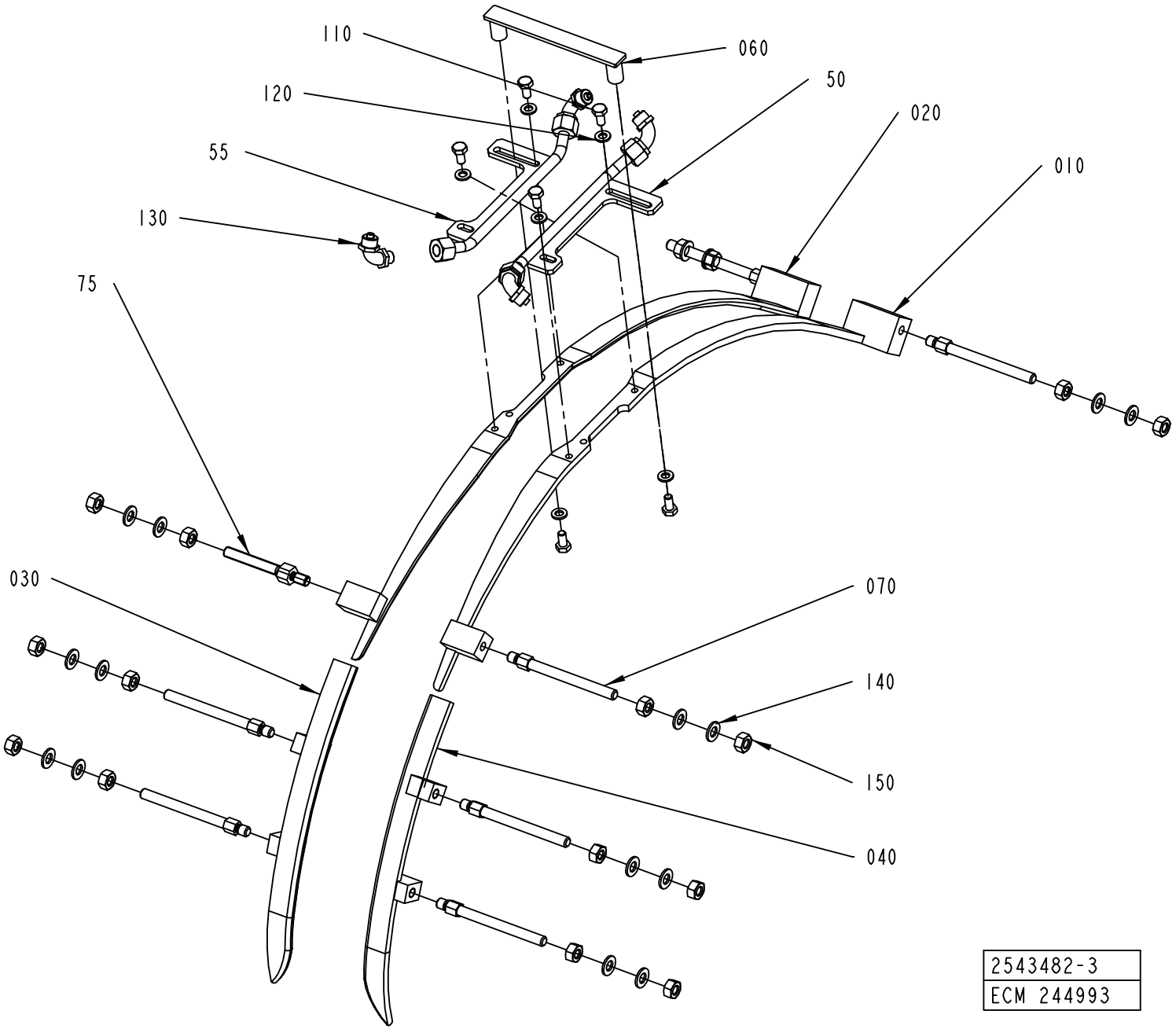
110
060
120
50
020
55
010
130
75
030
070
140
150
040
2543482-3
ECM 244993

Pos	Part No	UN	Qty	Description	Page No	Pos	Part No	UN	Qty	Description	Page No

SEE PREVIOUS LISTS PAGES: 5-137, 5-139.

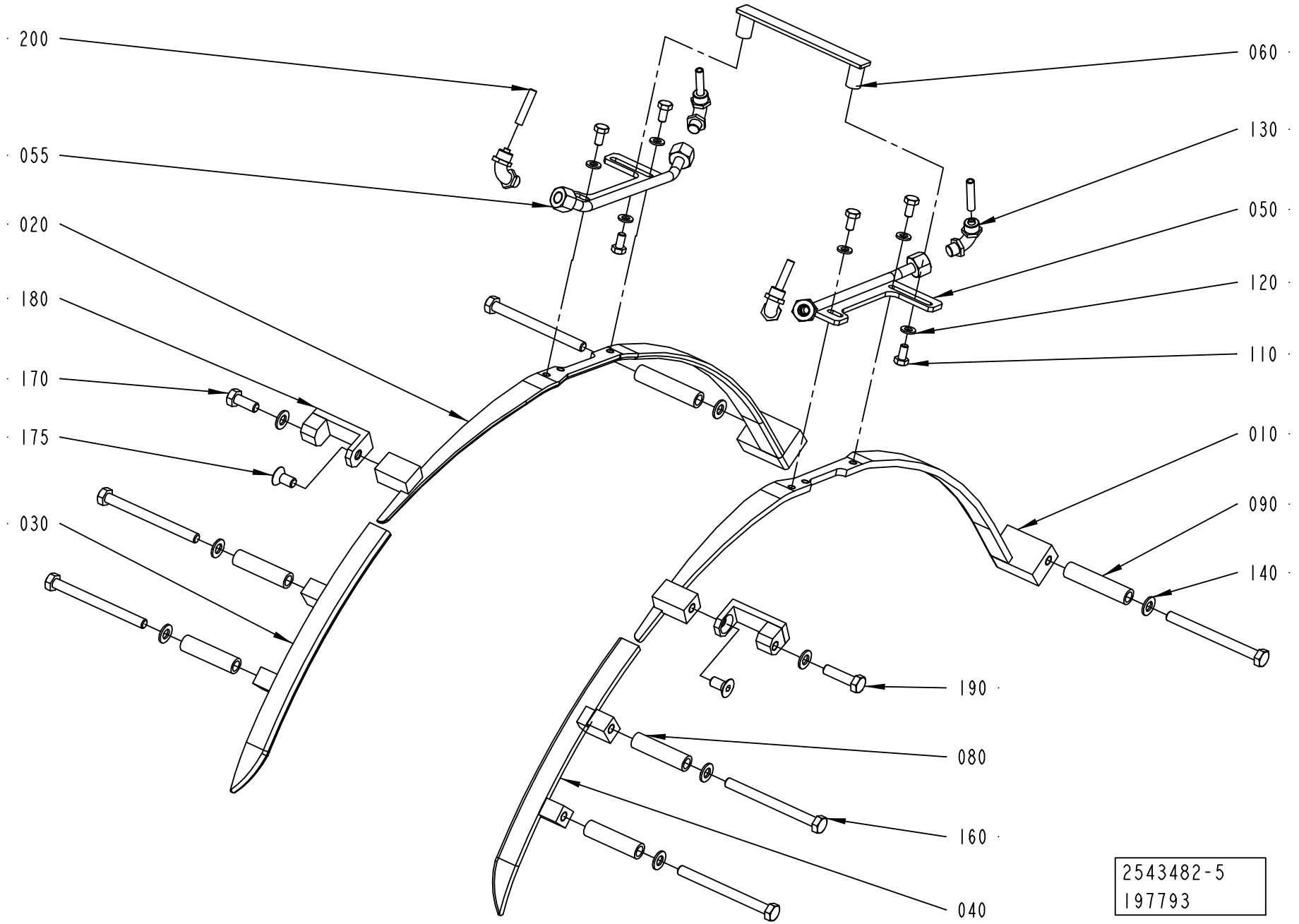
200
055
020
180
170
175
030
060
130
050
120
110
010
090
140
190
080
160
040
2543482-5
197793

Pos	Part No	UN	Qty	Description	Page No	Pos	Part No	UN	Qty	Description	Page No

SEE PREVIOUS LISTS PAGES: 5-137, 5-139.

FLAP GUIDE

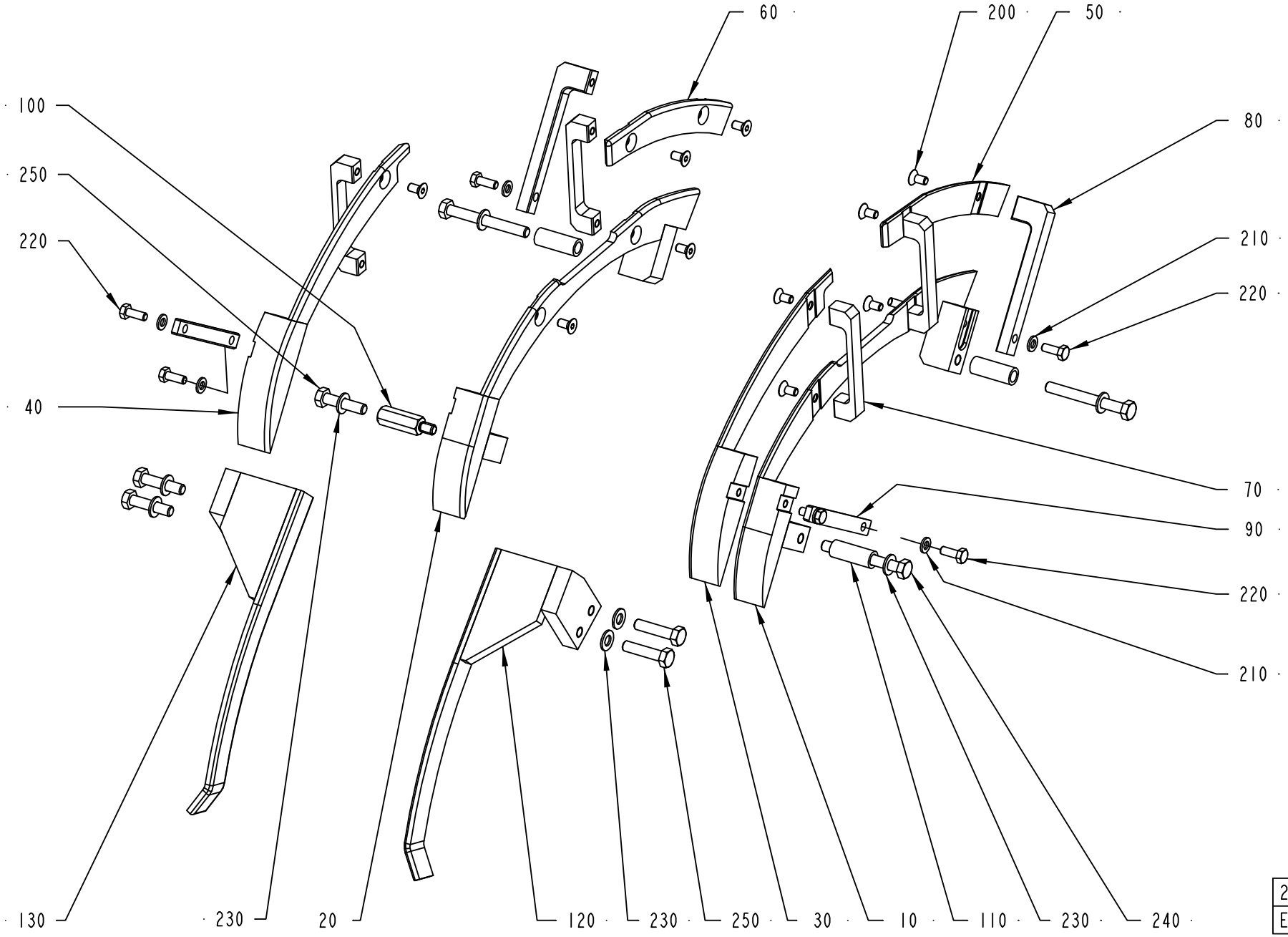

2603827-1
ECM 127225

ECM: 255432 - 20060310
Group number: 2603827-0100
Assembly Drawing: 2603827-1_1_AA

This list covers pages from 5-144 to 5-155

Pos	Part No	UN	Qty	Description	Page No
TBA 0200SQ, TBA 0250SQ (See drawing on page: 5-154)					
010	2668248-0000		1	FOLDING PART	
020	2668251-0000		1	FOLDING PART	
030	2668250-0000		1	GUIDE RAIL	
040	2668252-0000		1	GUIDE RAIL	
050	2668249-0000		1	GUIDE RAIL	
060	2668253-0000		1	GUIDE RAIL	
090	2647126-0000		2	BRACKET	
110	2674267-0000		2	SPACER	
115	2752534-0000		4	SPACER	
120	2708323-0000		1	RAIL	
130	2708322-0000		1	RAIL	
180	2668254-0000		2	BRACKET	
190	2674266-0000		2	SPACER	
210	315105-0153		8	WASHER BRB 6,4X12 RFR	
220	312105-0370		8	SCREW M6S ISO 4017 M6X20 A480	
230	315105-0165		12	WASHER BRB 8,4X16 RFR	
240	312105-0469		2	SCREW M6S ISO 4014 M8X90 A480	
250	312105-0455		4	SCREW M6S ISO 4017 M8X30 A480	
260	312105-0466		4	SCREW M6S ISO 4014 M8X75 A480	
270	312105-0465		2	SCREW M6S ISO 4014 M8X70 A480	
TBA 0250S, TBA 0200M (See drawing on page: 5-152)					
010	2595707-0000		1	FOLDING PART	
020	2601445-0000		1	FOLDING PART	
030	2649130-0000		1	GUIDE RAIL	
040	2649132-0000		1	GUIDE RAIL	
050	2649131-0000		1	GUIDE RAIL	
060	2649133-0000		1	GUIDE RAIL	
070	2649134-0000		1	BRACKET	
110	2804857-0000		4	SPACER SCREW	
120	1346344-0000		1	RAIL	
130	1346343-0000		1	RAIL	
180	2649139-0000		2	SPACER	
210	315105-0153		16	WASHER BRB 6,4X12 RFR	
220	312105-0370		16	SCREW M6S ISO 4017 M6X20 A480	
230	315105-0165		8	WASHER BRB 8,4X16 RFR	
240	312105-0457		4	SCREW M6S ISO 4014 M8X35 A480	
250	312105-0457		4	SCREW M6S ISO 4014 M8X35 A480	
260	312155-0461		4	SCREW DIN 7991 MF6S M8X50A4 70	
TBA 0330S, TBA 0200B, TBA 0250B (See drawing on page: 5-148)					
010	2595707-0000		1	FOLDING PART	
020	2601445-0000		1	FOLDING PART	
030	2595704-0000		1	FOLDING PART	
040	2601455-0000		1	FOLDING PART	
050	2595705-0000		1	FOLDING PART	
060	2601465-0000		1	FOLDING PART	
070	2595706-0000		8	BRACKET	
110	2599847-0000		3	SPACER	
120	1346344-0000		1	RAIL	
130	1346343-0000		1	RAIL	
140	2595708-0000		1	FOLDING PART	
150	2602592-0000		1	FOLDING PART	
160	2595709-0000		1	FOLDING PART	
170	2601464-0000		1	FOLDING PART	
180	2558127-0000		2	SPACER	
190	2664035-0000		1	SPACER SCREW	
210	315105-0153		24	WASHER BRB 6,4X12 RFR	
220	312105-0370		24	SCREW M6S ISO 4017 M6X20 A480	
230	315105-0165		8	WASHER BRB 8,4X16 RFR	
240	312105-0467		3	SCREW M6S ISO 4014 M8X80 A480	
250	312105-0457		4	SCREW M6S ISO 4014 M8X35 A480	
260	312155-0461		4	SCREW DIN 7991 MF6S M8X50A4 70	
270	312105-0455		1	SCREW M6S ISO 4017 M8X30 A480	
TBA 0500B, TBA 1000B (See drawing on page: 5-144)					
010	2520175-0000		1	FOLDING PART	
020	2520172-0000		1	FOLDING PART	
030	2603659-0000		1	FOLDING PART	
040	2603660-0000		1	FOLDING PART	
050	2603548-0000		1	FOLDING PART	
060	2603547-0000		1	FOLDING PART	
070	2603662-0000		4	BRACKET	
080	2603661-0000		2	BRACKET	
090	2544342-0000		2	BRACKET	
100	2555082-0000		1	SPACER SCREW	
110	1539871-0000		3	SPACER	
120	2603664-0000		1	RAIL	
130	2605213-0000		1	RAIL	
200	312155-0366		10	SCREW DIN 7991 MF6S M6X12 A4 70	
210	315105-0153		6	WASHER BRB 6,4X12 RFR	
220	312105-0368		6	SCREW M6S ISO 4017 M6X16 A480	
230	315105-0165		8	WASHER BRB 8,4X16 RFR	
240	312105-0465		3	SCREW M6S ISO 4014 M8X70 A480	
250	312105-0457		5	SCREW M6S ISO 4014 M8X35 A480	
TBA 1890S, TBA 2000S (See drawing on page: 5-146)					

Machine Type | Group Description | Used-In | Group Number | Page No

FLAP GUIDE

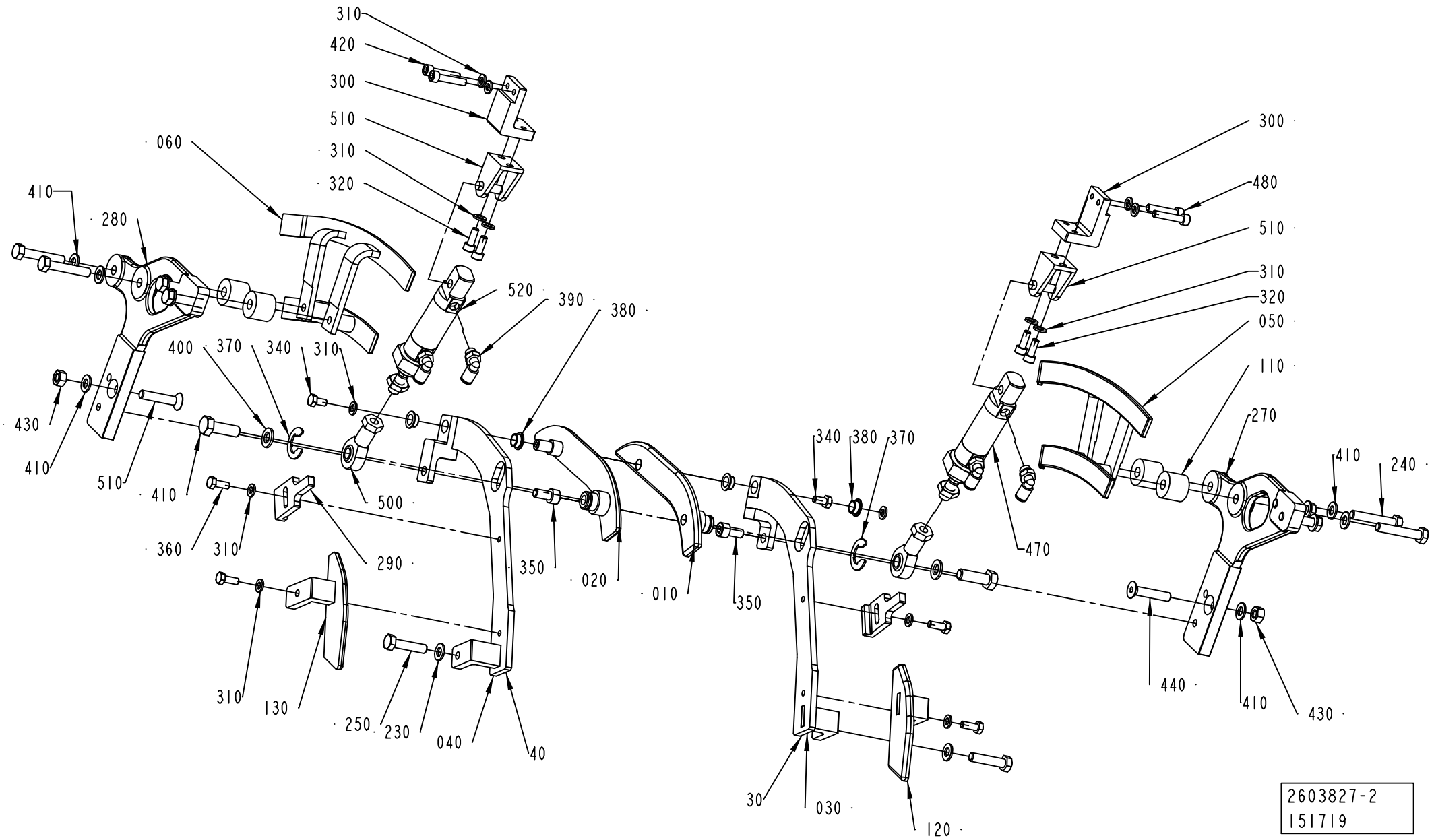
310
420
300
510
310
320
060
410
280
520
390
380
400
370
340
310
430
410
510
410
500
360
310
290
350
020
010
350
340
380
370
470
300
480
510
310
320
050
110
270
410
240
440
410
430
310
130
250
230
040
40
30
030
120
2603827-2
151719

ECM: 255432 - 20060310
Group number: 2603827-0100
Assembly Drawing: 2603827-2_1_AA

This list covers pages from 5-144 to 5-155

Pos	Part No	UN	Qty	Description	Page No
TBA 1890S, TBA 2000S (Cont'd) (See drawing on page: 5-146)					
010	2598497-0000		1	FOLDING PART	
020	2598496-0000		1	FOLDING PART	
030	2598495-0000		1	FOLDING PART	
040	2598494-0000		1	FOLDING PART	
050	1499151-0000		1	RAIL	
060	1499150-0000		1	RAIL	
110	2629344-0000		4	SPACER	
120	2598492-0000		1	FOLDING PART	
130	2598491-0000		1	FOLDING PART	
230	315105-0165		12	WASHER BRB 8,4X16 RFR	
240	312109-0460		4	SCREW M6S ISO 4017 M8X45 A480	
250	312109-0457		6	SCREW M6S ISO 4017 M8X35 A480	
280	1317043-0000		2	SUPPORT	
290	2603147-0000		2	PLATE	
300	2598493-0000		2	BRACKET	
310	315105-0153		14	WASHER BRB 6,4X12 RFR	
320	312115-0368		4	SCREW ISO4762 M6X16 A4 80	
340	312105-0366		2	SCREW M6S ISO 4017 M6X12 A480	
350	312115-0449		2	SCREW ISO4762 M8X16 A4 80	
360	312105-0368		4	SCREW M6S ISO 4017 M6X16 A480	
370	315755-0113		2	RETAINING RING SHAFT DIN 6799 15 A2	
380	321153-0136		4	FLANGE BUSHING, 10X12X6 MM	
390	350002-0006		4	PUSH-IN L-FITTING QSL-F-G1/8-6	
400	315105-0171		2	WASHER BRB 10X18 RFR	
410	312105-0495		2	SCREW M6S ISO 4017 M10X30 A480	
420	312115-0374		4	SCREW ISO4762 M6X30 A4 80	
430	312605-0318		2	HEXAGON NUT, M6M M8 A280	
440	312155-0459		2	SCREW DIN 7991 MF6S M8X40 A4 70	
500	90115-0134		2	ROD END, ID=10 MM, M10X1,25	
510	90459-4932		2	REAR CLEVIS FOOT MOUNTING , CRLBN-20/25	
520	90459-1953		2	DOUBLE ACTING, MINI-ISO, CYL. 25-10	
TPA 0250SQ, TPA 0200SQ (See drawing on page: 5-154)					
010	2674260-0000		1	FOLDING PART	
020	2674261-0000		1	FOLDING PART	
030	2674262-0000		1	FOLDING PART	
040	2674263-0000		1	FOLDING PART	
050	2674264-0000		1	FOLDING PART	
060	2674265-0000		1	FOLDING PART	
090	2647126-0000		2	BRACKET	
110	2674267-0000		2	SPACER	
120	2735128-0000		1	RAIL	
130	2735127-0000		1	RAIL	
180	2674268-0000		2	SPACER	
190	2674266-0000		2	SPACER	
210	315105-0153		8	WASHER BRB 6,4X12 RFR	
220	312105-0370		8	SCREW M6S ISO 4017 M6X20 A480	
230	315105-0165		8	WASHER BRB 8,4X16 RFR	
240	312105-0469		2	SCREW M6S ISO 4014 M8X90 A480	
250	312105-0455		4	SCREW M6S ISO 4017 M8X30 A480	
260	312155-0455		4	SCREW DIN 7991 MF6S M8X30 A4 70	
270	312105-0465		2	SCREW M6S ISO 4014 M8X70 A480	
TPA 1000SQ, TPA 0750SQ (See drawing on page: 5-150)					
010	2647128-0000		1	FOLDING PART	
020	2647127-0000		1	FOLDING PART	
030	2647122-0000		1	FOLDING PART	
040	2647121-0000		1	FOLDING PART	
050	2647130-0000		1	FOLDING PART	
060	2647129-0000		1	FOLDING PART	
070	2647126-0000		2	BRACKET	
080	2644368-0000		2	BRACKET	
110	1519355-0000		12	SPACER	
220	312105-0455		6	SCREW M6S ISO 4017 M8X30 A480	
230	315105-0165		18	WASHER BRB 8,4X16 RFR	
240	312105-0462		12	SCREW M6S ISO 4014 M8X55 A480	

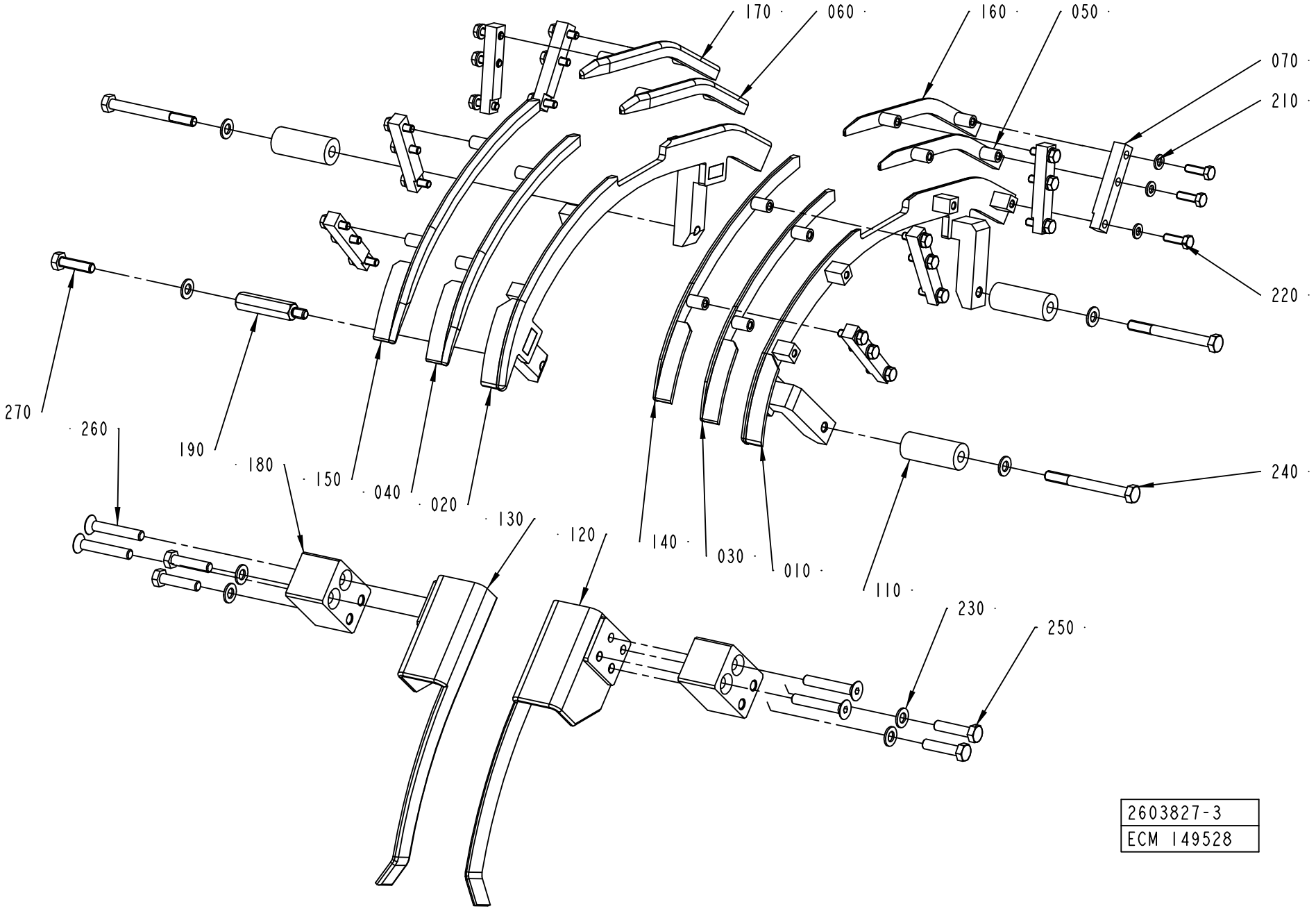
170
060
160
050
070
210
220
240
270
260
190
180
150
040
020
130
120
140
030
010
110
230
250
2603827-3
ECM 149528

Pos	Part No	UN	Qty	Description	Page No	Pos	Part No	UN	Qty	Description	Page No

SEE PREVIOUS LISTS PAGES: 5-145, 5-147.

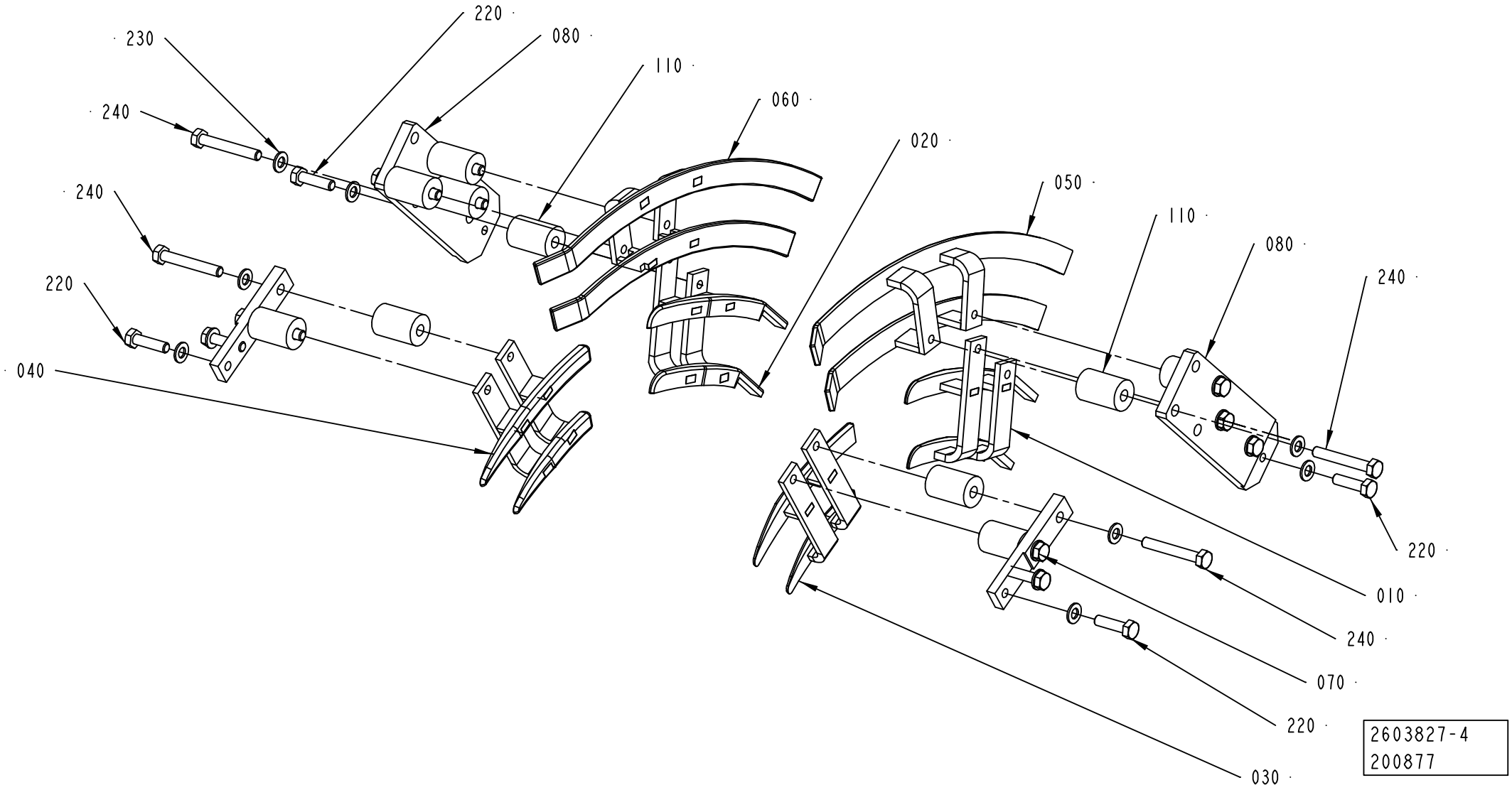
220
230
080
110
060
240
020
240
050
110
220
080
240
040
220
010
240
070
220
030
2603827-4
200877

Pos	Part No	UN	Qty	Description	Page No	Pos	Part No	UN	Qty	Description	Page No

SEE PREVIOUS LISTS PAGES: 5-145, 5-147.

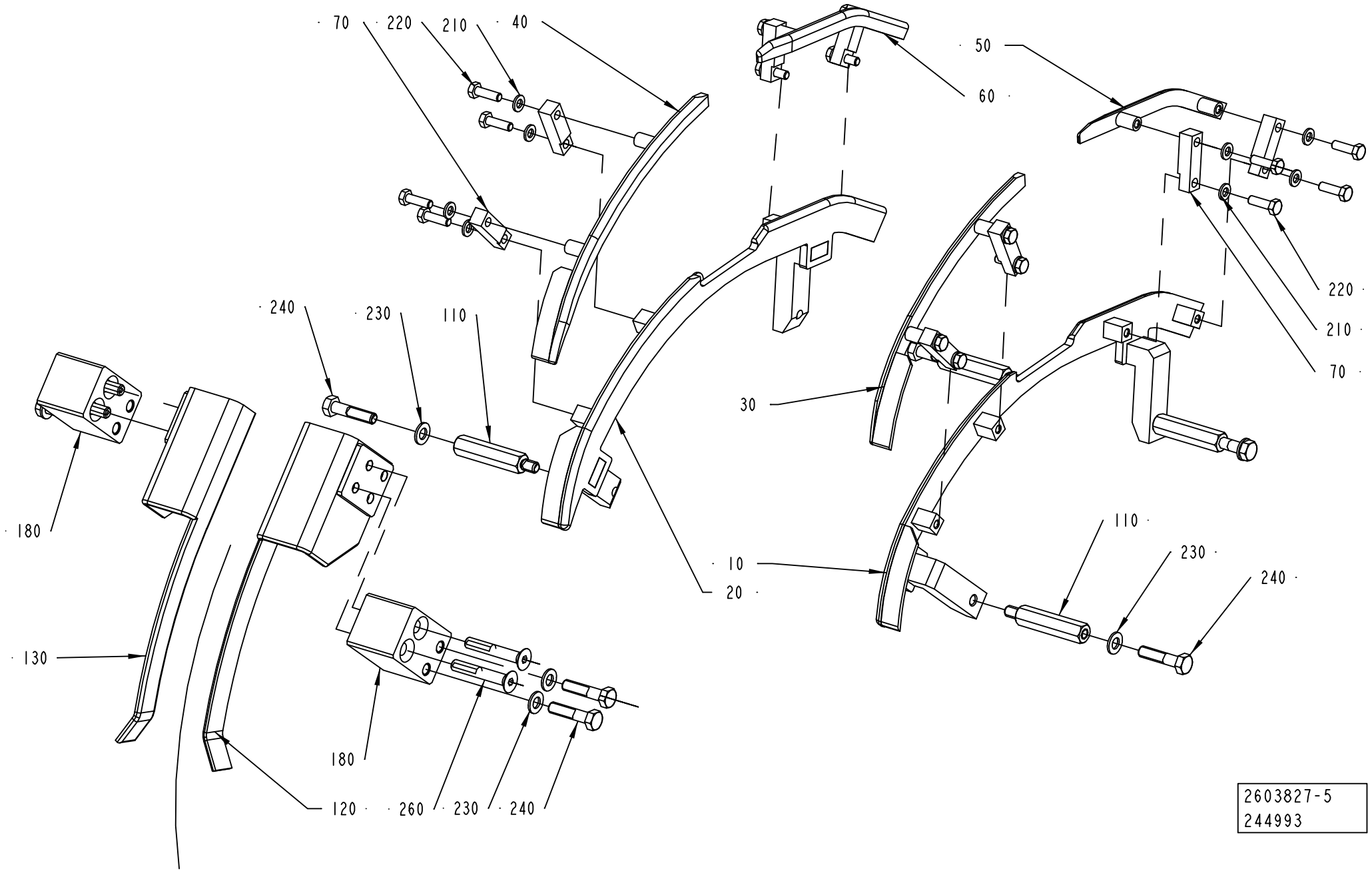
70
220
210
40
50
60
240
230
110
220
210
70
30
180
10
20
110
230
240
130
180
120
260
230
240
2603827-5
244993

Pos	Part No	UN	Qty	Description	Page No
SEE PREVIOUS LISTS PAGES: 5-145, 5-147.					

Pos	Part No	UN	Qty	Description	Page No

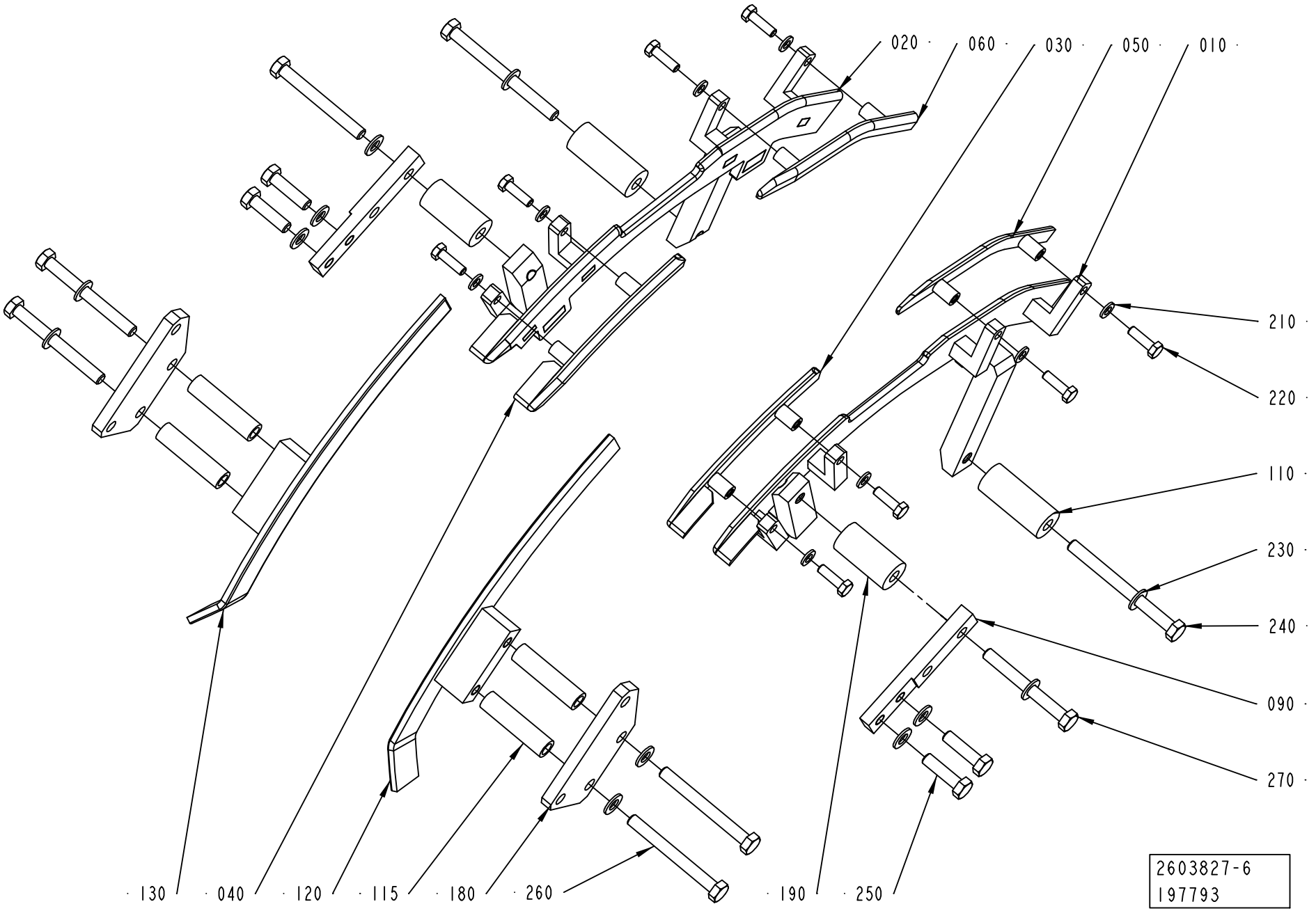
020
060
030
050
010
210
220
110
230
240
090
270
130
040
120
115
180
260
190
250
2603827-6
197793

Pos	Part No	UN	Qty	Description	Page No
SEE PREVIOUS LISTS PAGES: 5-145, 5-147.					

Pos	Part No	UN	Qty	Description	Page No

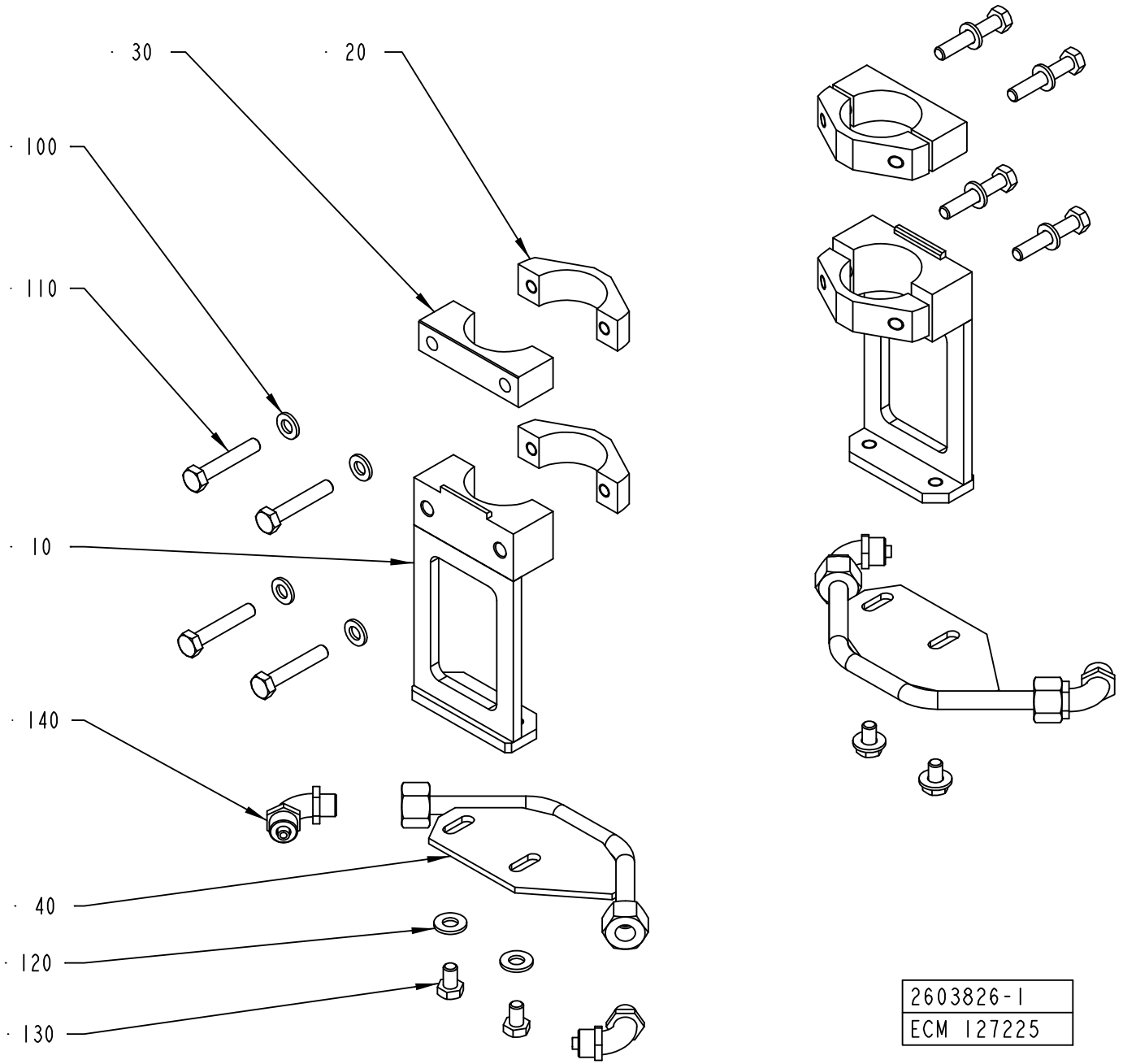

2603826-1
ECM 127225

ECM: 255433 - 20060310
Group number: 2603826-0100
Assembly Drawing: 2603826-1_1_AA

This list covers pages from 5-156 to 5-159

Pos	Part No	UN	Qty	Description	Page No
TBA 0200SQ, TBA 0250SQ (See drawing on page: 5-156)					
010	2599044-0000		2	BRACKET	
020	2598486-0000		4	CLAMP	
030	2598485-0000		2	CLAMP	
040	2668247-0000		2	GUIDE	
100	315105-0153		8	WASHER BRB 6,4X12 RFR	
110	312105-0376		8	SCREW M6S ISO 4014 M6X35 A480	
120	315105-0156		4	WASHER BRB 6,7X14 RFR	
130	312105-0364		4	SCREW M6S ISO 4017 M6X10 A480	
TBA 0330S, TBA 0200B, TBA 0250S, TBA 0200M, TBA 0250B (See drawing on page: 5-156)					
010	2599044-0000		2	BRACKET	
020	2598486-0000		4	CLAMP	
030	2598485-0000		2	CLAMP	
040	2594058-0000		2	GUIDE	
100	315105-0153		8	WASHER BRB 6,4X12 RFR	
110	312105-0376		8	SCREW M6S ISO 4014 M6X35 A480	
120	315105-0156		4	WASHER BRB 6,7X14 RFR	
130	312105-0364		4	SCREW M6S ISO 4017 M6X10 A480	
TBA 0500B, TBA 1000B (See drawing on page: 5-156)					
010	2597768-0000		2	BRACKET	
020	2598486-0000		4	CLAMP	
030	2598485-0000		2	CLAMP	
040	2597769-0000		2	GUIDE	
100	315105-0153		8	WASHER BRB 6,4X12 RFR	
110	312105-0376		8	SCREW M6S ISO 4014 M6X35 A480	
120	315105-0156		4	WASHER BRB 6,7X14 RFR	
130	312105-0364		4	SCREW M6S ISO 4017 M6X10 A480	
TBA 1890S, TBA 2000S (See drawing on page: 5-156)					
010	2603138-0000		2	BRACKET	
020	2603148-0000		2	CLAMP	
040	2603140-0000		2	GUIDE	
110	312115-0333		4	SCREW ISO4762 M5X25 A4 80	
120	315105-0146		4	WASHER BRB 5,3X10 RFR	
130	312115-0327		4	SCREW ISO4762 M5X12 A4 80	
TPA 0250SQ, TPA 0200SQ (See drawing on page: 5-158)					
010	2599044-0000		2	BRACKET	
020	2598486-0000		4	CLAMP	
030	2598485-0000		2	CLAMP	
040	2674259-0000		2	GUIDE	
100	315105-0153		4	WASHER BRB 6,4X12 RFR	
110	312105-0376		4	SCREW M6S ISO 4014 M6X35 A480	
130	312105-0325		4	SCREW M6S ISO 4017 M5X10 A480	
150	312115-0372		4	SCREW ISO4762 M6X25 A4 80	
TPA 1000SQ, TPA 0750SQ (See drawing on page: 5-156)					
010	2597768-0000		2	BRACKET	
020	2598486-0000		4	CLAMP	
030	2598485-0000		2	CLAMP	
040	2647131-0000		2	GUIDE	
100	315105-0153		8	WASHER BRB 6,4X12 RFR	
110	312105-0376		8	SCREW M6S ISO 4014 M6X35 A480	
120	315105-0156		4	WASHER BRB 6,7X14 RFR	
130	312105-0364		4	SCREW M6S ISO 4017 M6X10 A480	
Common Parts					
140	342931-0121		4	ELBOW 90 COUPL.,EXT.THREAD 8/6-G1/8"	

Machine Type | Group Description | Used-In | Group Number | Page No

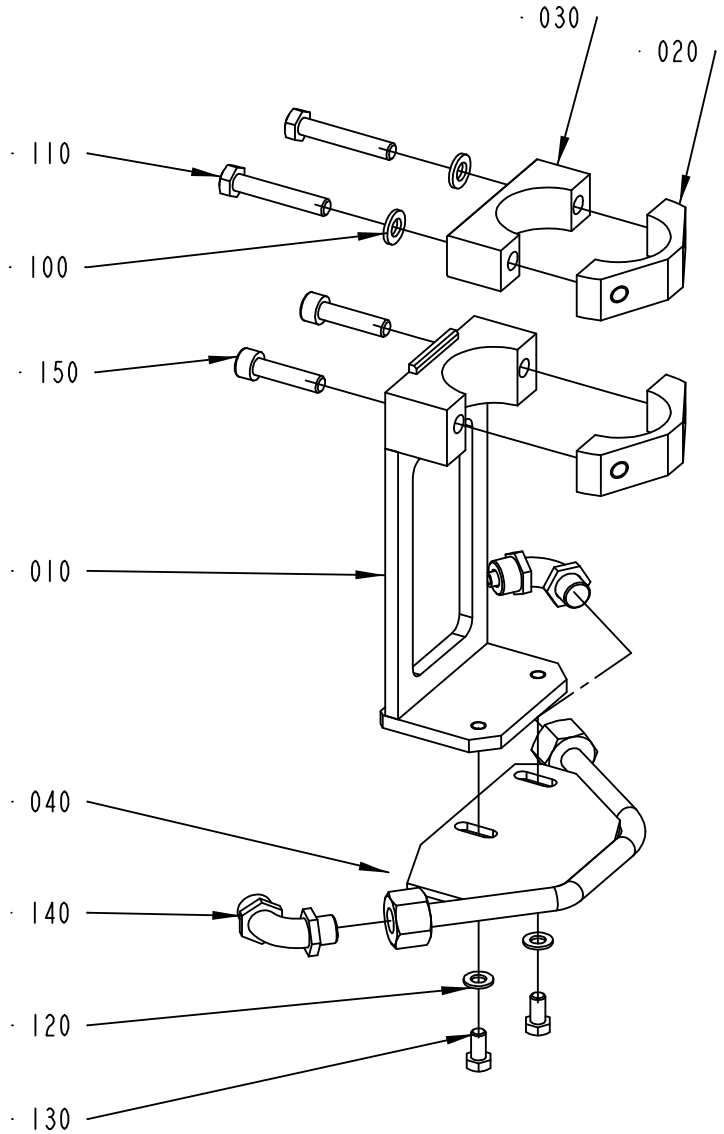
030
020
110
100
150
010
040
140
120
130

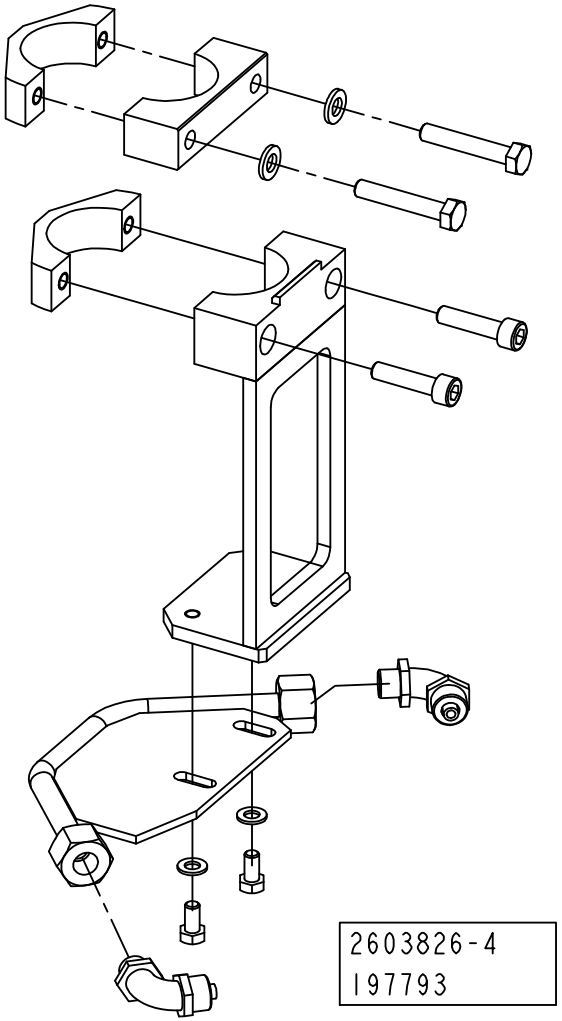
2603826-4
197793

Pos	Part No	UN	Qty	Description	Page No
TBA 0200SQ, TBA 0250SQ (See drawing on page: 5-156)					
010	2599044-0000		2	BRACKET	
020	2598486-0000		4	CLAMP	
030	2598485-0000		2	CLAMP	
040	2668247-0000		2	GUIDE	
100	315105-0153		8	WASHER BRB 6,4X12 RFR	
110	312105-0376		8	SCREW M6S ISO 4014 M6X35 A480	
120	315105-0156		4	WASHER BRB 6,7X14 RFR	
130	312105-0364		4	SCREW M6S ISO 4017 M6X10 A480	
TBA 0330S, TBA 0200B, TBA 0250S, TBA 0200M, TBA 0250B (See drawing on page: 5-156)					
010	2599044-0000		2	BRACKET	
020	2598486-0000		4	CLAMP	
030	2598485-0000		2	CLAMP	
040	2594058-0000		2	GUIDE	
100	315105-0153		8	WASHER BRB 6,4X12 RFR	
110	312105-0376		8	SCREW M6S ISO 4014 M6X35 A480	
120	315105-0156		4	WASHER BRB 6,7X14 RFR	
130	312105-0364		4	SCREW M6S ISO 4017 M6X10 A480	
TBA 0500B, TBA 1000B (See drawing on page: 5-156)					
010	2597768-0000		2	BRACKET	
020	2598486-0000		4	CLAMP	
030	2598485-0000		2	CLAMP	
040	2597769-0000		2	GUIDE	
100	315105-0153		8	WASHER BRB 6,4X12 RFR	
110	312105-0376		8	SCREW M6S ISO 4014 M6X35 A480	
120	315105-0156		4	WASHER BRB 6,7X14 RFR	
130	312105-0364		4	SCREW M6S ISO 4017 M6X10 A480	
TBA 1890S, TBA 2000S (See drawing on page: 5-156)					
010	2603138-0000		2	BRACKET	
020	2603148-0000		2	CLAMP	
040	2603140-0000		2	GUIDE	
110	312115-0333		4	SCREW ISO4762 M5X25 A4 80	
120	315105-0146		4	WASHER BRB 5,3X10 RFR	
130	312115-0327		4	SCREW ISO4762 M5X12 A4 80	
TPA 0250SQ, TPA 0200SQ (See drawing on page: 5-158)					
010	2599044-0000		2	BRACKET	
020	2598486-0000		4	CLAMP	
030	2598485-0000		2	CLAMP	
040	2674259-0000		2	GUIDE	
100	315105-0153		4	WASHER BRB 6,4X12 RFR	
110	312105-0376		4	SCREW M6S ISO 4014 M6X35 A480	
130	312105-0325		4	SCREW M6S ISO 4017 M5X10 A480	
150	312115-0372		4	SCREW ISO4762 M6X25 A4 80	
TPA 1000SQ, TPA 0750SQ (See drawing on page: 5-156)					
010	2597768-0000		2	BRACKET	
020	2598486-0000		4	CLAMP	
030	2598485-0000		2	CLAMP	
040	2647131-0000		2	GUIDE	
100	315105-0153		8	WASHER BRB 6,4X12 RFR	
110	312105-0376		8	SCREW M6S ISO 4014 M6X35 A480	
120	315105-0156		4	WASHER BRB 6,7X14 RFR	
130	312105-0364		4	SCREW M6S ISO 4017 M6X10 A480	
Common Parts					
140	342931-0121		4	ELBOW 90 COUPL.,EXT.THREAD 8/6-G1/8"	

DROP CHUTE VARIANT

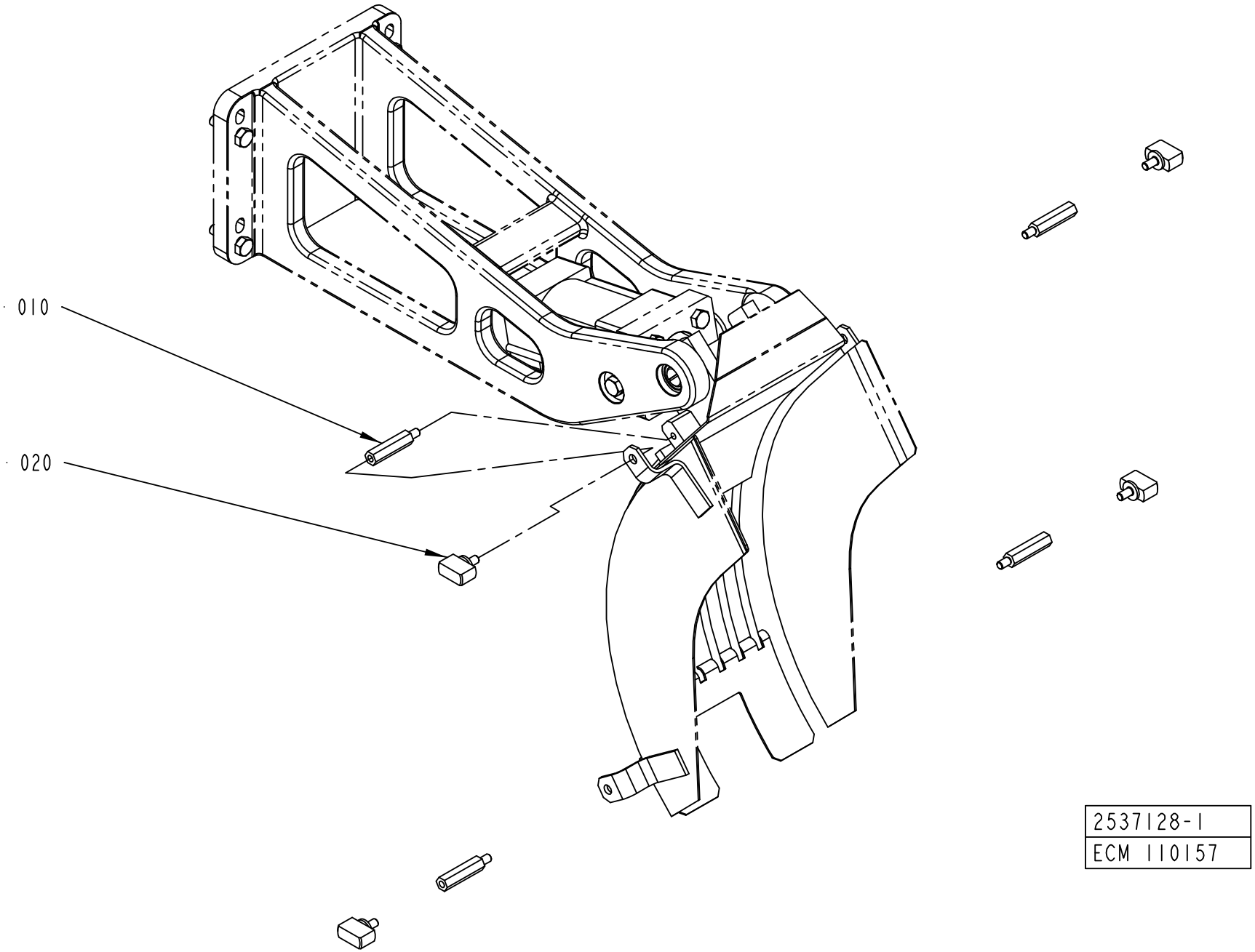

2537128-1
ECM 110157

ECM: 272802 - 20060626
Group number: 2537128-0100
Assembly Drawing: 2537128-1_1_AA

This list covers pages from 5-160 to 5-163

Pos	Part No	UN	Qty	Description	Page No
TBA 0200SQ, TBA 0250SQ (See drawing on page: 5-160)					
010	1317218-0000		4	SPACER	
020	2652191-0000		4	KNOB	
TBA 0250S, TBA 0200M					
010	2522202-0000		4	SPACER	
020	2652191-0000		4	KNOB	
TBA 0330S, TBA 0200B, TBA 0250B (See drawing on page: 5-160)					
010	1317218-0000		4	SPACER	
020	2540609-0000		4	KNOB	
TBA 0500B, TBA 1000B (See drawing on page: 5-160)					
010	2537129-0000		4	SPACER	
020	2540609-0000		4	KNOB	
TBA 1000SQ (See drawing on page: 5-162)					
010	2598820-0000		2	SPACER	
020	2540609-0000		4	KNOB	
030	2619574-0000		2	SPACER	
TBA 1890S, TBA 2000S (See drawing on page: 5-160)					
010	2661153-0000		4	SPACER	
020	2540609-0000		4	KNOB	
TPA 0250SQ, TPA 0200SQ (See drawing on page: 5-160)					
010	2598819-0000		4	SPACER	
020	2652191-0000		4	KNOB	
TPA 1000SQ, TPA 0750SQ (See drawing on page: 5-160)					
020	2540609-0000		4	KNOB	

Pos	Part No	UN	Qty	Description	Page No

DROP CHUTE VARIANT

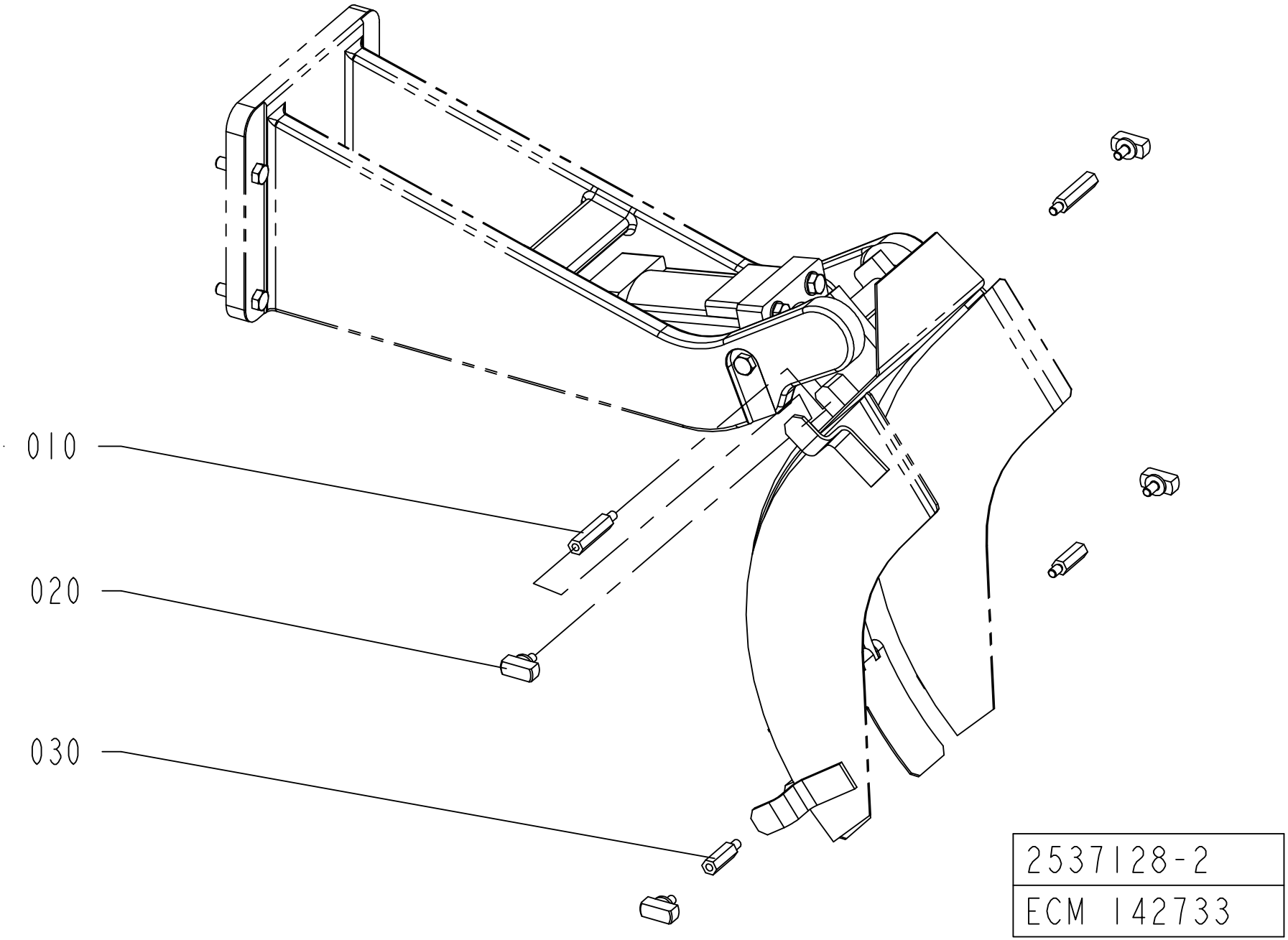

Pos	Part No	UN	Qty	Description	Page No
TBA 0200SQ, TBA 0250SQ (See drawing on page: 5-160)					
010	1317218-0000		4	SPACER	
020	2652191-0000		4	KNOB	
TBA 0250S, TBA 0200M					
010	2522202-0000		4	SPACER	
020	2652191-0000		4	KNOB	
TBA 0330S, TBA 0200B, TBA 0250B (See drawing on page: 5-160)					
010	1317218-0000		4	SPACER	
020	2540609-0000		4	KNOB	
TBA 0500B, TBA 1000B (See drawing on page: 5-160)					
010	2537129-0000		4	SPACER	
020	2540609-0000		4	KNOB	
TBA 1000SQ (See drawing on page: 5-162)					
010	2598820-0000		2	SPACER	
020	2540609-0000		4	KNOB	
030	2619574-0000		2	SPACER	
TBA 1890S, TBA 2000S (See drawing on page: 5-160)					
010	2661153-0000		4	SPACER	
020	2540609-0000		4	KNOB	
TPA 0250SQ, TPA 0200SQ (See drawing on page: 5-160)					
010	2598819-0000		4	SPACER	
020	2652191-0000		4	KNOB	
TPA 1000SQ, TPA 0750SQ (See drawing on page: 5-160)					
020	2540609-0000		4	KNOB	

Pos	Part No	UN	Qty	Description	Page No

INFEED CONVEYOR VARIANT

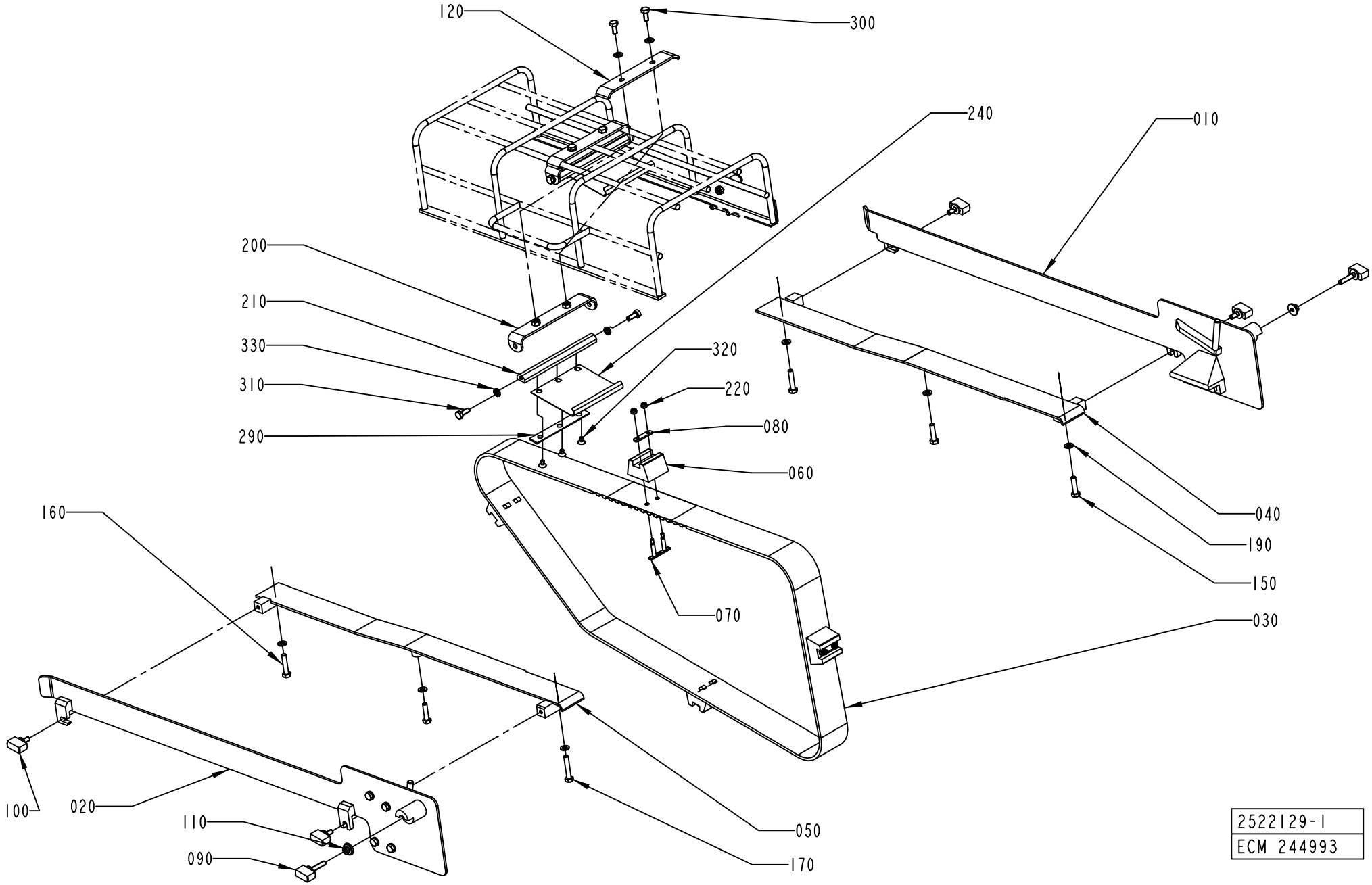

ECM: 272803 - 20060626
Group number: 2522129-0100
Assembly Drawing: 2522129-1_1_AB

This list covers pages from 5-164 to 5-169

Pos	Part No	UN	Qty	Description	Page No
TBA 0200SQ, TBA 0250SQ (See drawing on page: 5-168)					
030	1144783-0000		1	TIMING BELT	
040	1317651-0000		1	GUIDE	
050	1317650-0000		1	GUIDE	
060	1282287-0000		4	CARRIER	
070	1346471-0000		8	WEDGE	
080	1144918-0000		4	PLATE	
090	2652191-0000		2	KNOB	
100	2529786-0000		4	KNOB	
110	2725826-0000		2	CLAMP	
115	2725827-0000		2	SPACER	
120	2668244-0000		1	HOLDER	
120	1499476-0000		1	HOLDER	
150	312105-0372		3	SCREW M6S ISO 4017 M6X25 A480	
160	312109-0374		2	SCREW M6S ISO 4017 M6X30 A480	
190	315105-0153		6	WASHER BRB 6,4X12 RFR	
220	312812-0312		8	HEXAGON NUT, NY-LOCK M4 A480	
230	312605-0316		2	HEXAGON NUT, M6M M6 A280	
250	90424-0068		1	AIR NOZZLE, G1/4, MOD. 216 BSP	
260	342732-0104		1	ELBOW PIPE JOINT, EXT.THREAD, D=8MM-G1/4	
270	342728-0102		1	PIPE COUPLING 6 MM	
275	350015-0001		1	Y-FITTING QSY-F-6	
280	315400-0001	MM	700	TUBE PUN-H-6X1-BL	
285	342716-0200		1	REDUCER 4-5	
TBA 0250S, TBA 0200M (See drawing on page: 5-168)					
030	1144783-0000		1	TIMING BELT	
040	1282290-0000		1	GUIDE	
050	1282291-0000		1	GUIDE	
060	1282287-0000		4	CARRIER	
070	1346736-0000		8	WEDGE	
080	1144918-0000		4	PLATE	
090	2652191-0000		2	KNOB	
100	2529786-0000		4	KNOB	
110	2520160-0000		2	CLAMP	
120	1499476-0000		1	HOLDER	
130	1499475-0000		1	HOLDER	
150	312105-0372		5	SCREW M6S ISO 4017 M6X25 A480	
160	312109-0374		2	SCREW M6S ISO 4017 M6X30 A480	
190	315105-0153		10	WASHER BRB 6,4X12 RFR	
220	312812-0312		8	HEXAGON NUT, NY-LOCK M4 A480	
230	312605-0316		2	HEXAGON NUT, M6M M6 A280	
250	90424-0068		1	AIR NOZZLE, G1/4, MOD. 216 BSP	
260	90458-2958		1	ELBOW PIPE JOINT, EXT.THREAD, D=8MM-G1/4	
270	342728-0102		1	PIPE COUPLING 6 MM	
275	350015-0001		1	Y-FITTING QSY-F-6	
280	315400-0001	MM	700	TUBE PUN-H-6X1-BL	
285	342716-0200		1	REDUCER 4-5	
TBA 0330S, TBA 0200B, TBA 0250B (See drawing on page: 5-168)					
030	1144783-0000		1	TIMING BELT	
040	1282290-0000		1	GUIDE	
050	1282291-0000		1	GUIDE	
060	1282287-0000		4	CARRIER	
070	1346736-0000		8	WEDGE	
080	1144918-0000		4	PLATE	
090	2652191-0000		2	KNOB	
110	2520160-0000		2	CLAMP	
120	1499476-0000		1	HOLDER	
130	1499475-0000		1	HOLDER	
150	312105-0372		5	SCREW M6S ISO 4017 M6X25 A480	
160	312109-0374		2	SCREW M6S ISO 4017 M6X30 A480	
190	315105-0153		10	WASHER BRB 6,4X12 RFR	
220	312812-0312		8	HEXAGON NUT, NY-LOCK M4 A480	
230	312605-0316		2	HEXAGON NUT, M6M M6 A280	
250	90424-0068		1	AIR NOZZLE, G1/4, MOD. 216 BSP	
260	90458-2958		1	ELBOW PIPE JOINT, EXT.THREAD, D=8MM-G1/4	
270	342728-0102		1	PIPE COUPLING 6 MM	
275	350015-0001		1	Y-FITTING QSY-F-6	
280	315400-0001	MM	700	TUBE PUN-H-6X1-BL	
285	342716-0200		1	REDUCER 4-5	
TBA 0500B (See drawing on page: 5-164)					
030	1144783-0000		1	TIMING BELT	
040	2779739-0000		1	GUIDE	
050	2779738-0000		1	GUIDE	
060	1144919-0000		4	CARRIER	
070	1346471-0000		8	WEDGE	
080	1144918-0000		4	PLATE	
090	2529785-0000		2	KNOB	
090	2619737-0000		2	KNOB	
110	2520160-0000		2	CLAMP	
120	1499476-0000		1	HOLDER	
150	312105-0372		3	SCREW M6S ISO 4017 M6X25 A480	
160	312109-0374		2	SCREW M6S ISO 4017 M6X30 A480	
190	315105-0153		10	WASHER BRB 6,4X12 RFR	
200	2527792-0000		1	SUPPORT	

Machine Type | Group Description | Used-In | Group Number | Page No

INFEED CONVEYOR VARIANT

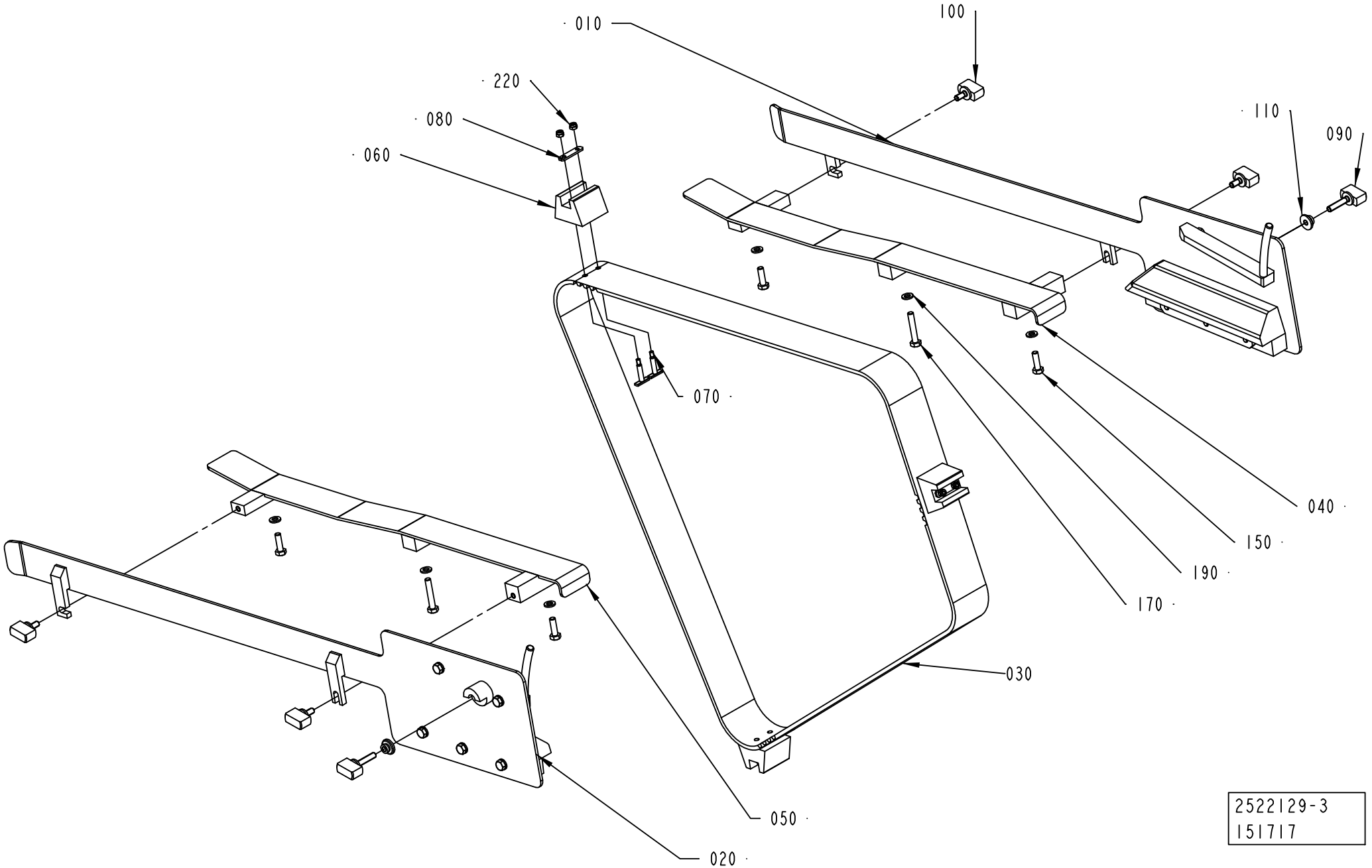

Pos	Part No	UN	Qty	Description	Page No
TBA 0500B (Cont'd) (See drawing on page: 5-164)					
210	2527793-0000		1	SHAFT	
220	312812-0312		8	HEXAGON NUT, NY-LOCK M4 A480	
240	2530418-0000		1	SPRING	
290	2540612-0000		1	PLATE	
300	312105-0367		2	SCREW M6S ISO 4017 M6X14 A480	
310	312105-0368		2	SCREW M6S ISO 4017 M6X16 A480	
320	312155-0323		3	SCREW DIN 7991 MF6S M5X8 A4 70	
330	90062-0061		2	LOCK WASHER NORD-LOCK,6,5/10,8, T=2,2	
TBA 1000B (See drawing on page: 5-164)					
030	1144783-0000		1	TIMING BELT	
040	2779739-0000		1	GUIDE	
050	2779738-0000		1	GUIDE	
060	1144919-0000		4	CARRIER	
070	1346471-0000		8	WEDGE	
080	1144918-0000		4	PLATE	
090	2529785-0000		2	KNOB	
090	2619737-0000		2	KNOB	
110	2520160-0000		2	CLAMP	
150	312105-0372		3	SCREW M6S ISO 4017 M6X25 A480	
160	312109-0374		2	SCREW M6S ISO 4017 M6X30 A480	
190	315105-0153		6	WASHER BRB 6,4X12 RFR	
220	312812-0312		8	HEXAGON NUT, NY-LOCK M4 A480	
TBA 1890S, TBA 2000S (See drawing on page: 5-166)					
030	1349152-0000		1	TIMING BELT	
040	2665201-0000		1	GUIDE	
050	2665200-0000		1	GUIDE	
060	1282848-0000		3	CARRIER	
070	1346471-0000		6	WEDGE	
080	1144918-0000		3	PLATE	
090	2529785-0000		2	KNOB	
100	2529786-0000		4	KNOB	
110	2520160-0000		2	CLAMP	
150	312105-0370		4	SCREW M6S ISO 4017 M6X20 A480	
190	315105-0153		6	WASHER BRB 6,4X12 RFR	
220	312812-0312		6	HEXAGON NUT, NY-LOCK M4 A480	
TPA 0250SQ, TPA 0200SQ (See drawing on page: 5-168)					
030	1144783-0000		1	TIMING BELT	
040	1317651-0000		1	GUIDE	
050	1317650-0000		1	GUIDE	
060	1282287-0000		4	CARRIER	
070	1346736-0000		8	WEDGE	
080	1144918-0000		4	PLATE	
090	2652191-0000		2	KNOB	
100	2529786-0000		4	KNOB	
110	2725826-0000		2	CLAMP	
115	2725827-0000		2	SPACER	
120	2668244-0000		1	HOLDER	
120	1499476-0000		1	HOLDER	
130	1499475-0000		1	HOLDER	
150	312105-0372		5	SCREW M6S ISO 4017 M6X25 A480	
160	312109-0374		2	SCREW M6S ISO 4017 M6X30 A480	
190	315105-0153		10	WASHER BRB 6,4X12 RFR	
220	312812-0312		8	HEXAGON NUT, NY-LOCK M4 A480	
230	312605-0316		2	HEXAGON NUT, M6M M6 A280	
250	90424-0068		1	AIR NOZZLE, G1/4, MOD. 216 BSP	
260	90458-2958		1	ELBOW PIPE JOINT, EXT.THREAD, D=8MM-G1/4	
270	342728-0102		1	PIPE COUPLING 6 MM	
275	350015-0001		1	Y-FITTING QSY-F-6	
280	315400-0001	MM	700	TUBE PUN-H-6X1-BL	
285	342716-0200		1	REDUCER 4-5	
TPA 1000SQ, TPA 0750SQ (See drawing on page: 5-164)					
030	1519338-0000		1	TIMING BELT	
040	1519346-0000		1	GUIDE	
050	1519345-0000		1	GUIDE	
060	1519344-0000		3	CARRIER	
070	1517476-0000		6	WEDGE	
080	1517477-0000		3	PLATE	
090	2529785-0000		2	KNOB	
100	2529786-0000		4	KNOB	
110	2520160-0000		2	CLAMP	
150	312105-0372		3	SCREW M6S ISO 4017 M6X25 A480	
160	312109-0374		2	SCREW M6S ISO 4017 M6X30 A480	
190	315105-0153		6	WASHER BRB 6,4X12 RFR	
220	312812-0312		6	HEXAGON NUT, NY-LOCK M4 A480	
Common Parts					
010	2527704-0100		1	GUIDE	**5-171, 5-173, 5-175**
020	2527703-0100		1	GUIDE	**5-177, 5-179, 5-181, 5-183**
170	312109-0376		1	SCREW M6S ISO 4017 M6X35 A480	
190	315105-0153		12	WASHER BRB 6,4X12 RFR	

Machine Type | Group Description | Used-In | Group Number | Page No

INFEED CONVEYOR VARIANT

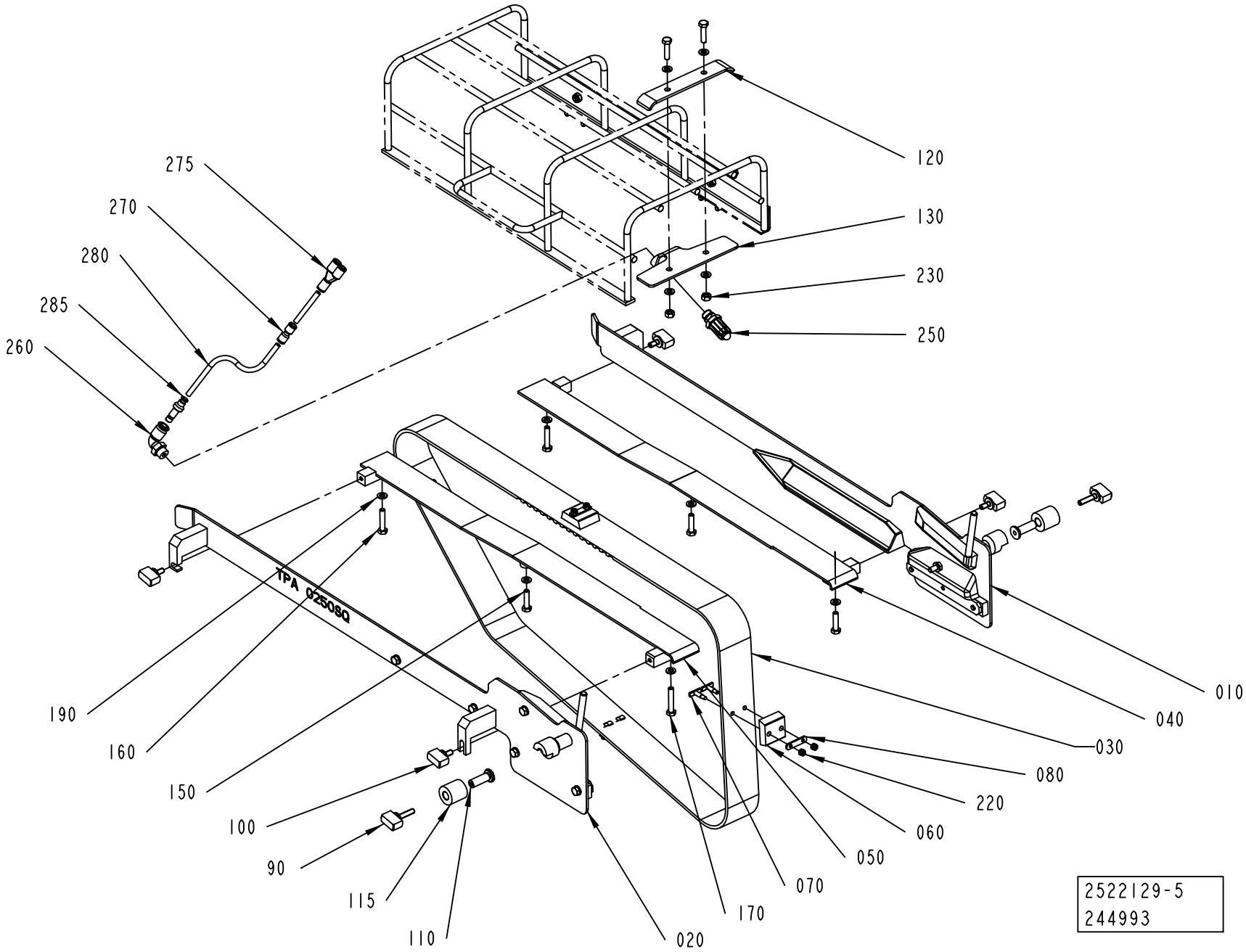

Pos	Part No	UN	Qty	Description	Page No	Pos	Part No	UN	Qty	Description	Page No

SEE PREVIOUS LISTS PAGES: 5-165, 5-167.

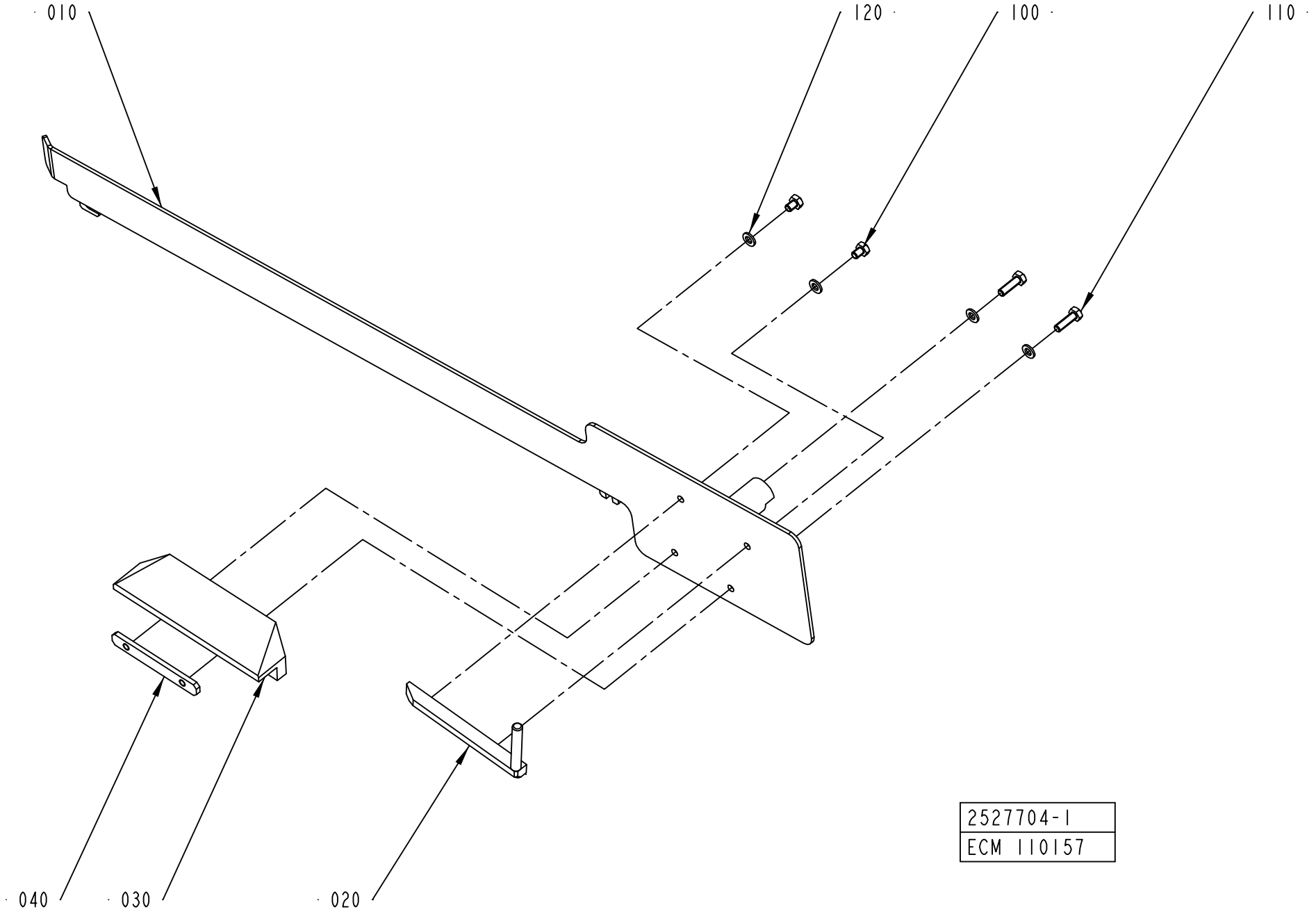
010
120
100
110
040
030
020
2527704-1
ECM 110157

ECM: 272805 - 20060626
Group number: 2527704-0100
Assembly Drawing: 2527704-1_1_AA

This list covers pages from 5-170 to 5-175

Pos	Part No	UN	Qty	Description	Page No
TBA 0250SQ (See drawing on page: 5-174)					
010	2668224-0000		1	GUIDE	
020	2668232-0000		1	BAR	
030	2668233-0000		1	SLIDE	
040	1348169-0000		1	PLATE	
050	2668225-0000		1	GUIDE	
100	312105-0364		2	SCREW M6S ISO 4017 M6X10 A480	
110	312105-0370		2	SCREW M6S ISO 4017 M6X20 A480	
120	315105-0153		6	WASHER BRB 6,4X12 RFR	
140	312105-0364		2	SCREW M6S ISO 4017 M6X10 A480	
TBA 0330S (See drawing on page: 5-172)					
010	2526578-0000		1	GUIDE	
020	2545000-0000		1	BAR	
030	2544997-0000		1	SLIDE	
040	1279409-0000		1	PLATE	
050	2664200-0000		1	GUIDE	
100	312105-0362		2	SCREW M6S ISO 4017 M6X8 A480	
120	315105-0153		6	WASHER BRB 6,4X12 RFR	
130	312605-0316		2	HEXAGON NUT, M6M M6 A280	
TBA 0500B (See drawing on page: 5-170)					
010	2522166-0000		1	GUIDE	
020	1539877-0000		1	BAR	
030	1539874-0000		1	SLIDE	
040	1539876-0000		1	PLATE	
100	312105-0362		2	SCREW M6S ISO 4017 M6X8 A480	
110	312105-0370		2	SCREW M6S ISO 4017 M6X20 A480	
120	315105-0153		6	WASHER BRB 6,4X12 RFR	
TBA 1000B (See drawing on page: 5-170)					
010	2518129-0000		1	GUIDE	
020	1348144-0000		1	BAR	
030	1348133-0000		1	SLIDE	
040	1279409-0000		1	PLATE	
100	312105-0362		2	SCREW M6S ISO 4017 M6X8 A480	
110	312105-0370		2	SCREW M6S ISO 4017 M6X20 A480	
120	315105-0153		6	WASHER BRB 6,4X12 RFR	
TBA 1890S (See drawing on page: 5-170)					
010	2665202-0000		1	GUIDE	
020	1317805-0000		1	BAR	
030	2594905-0000		1	SLIDE	
040	1144621-0000		1	PLATE	
100	312105-0362		2	SCREW M6S ISO 4017 M6X8 A480	
110	312109-0374		3	SCREW M6S ISO 4017 M6X30 A480	
120	315105-0153		5	WASHER BRB 6,4X12 RFR	
TBA 2000S (See drawing on page: 5-170)					
010	2678622-0000		1	GUIDE	
020	1317805-0000		1	BAR	
030	2598487-0000		1	SLIDE	
040	1144621-0000		1	PLATE	
100	312105-0362		2	SCREW M6S ISO 4017 M6X8 A480	
110	312109-0374		3	SCREW M6S ISO 4017 M6X30 A480	
120	315105-0153		5	WASHER BRB 6,4X12 RFR	
TPA 0200SQ (See drawing on page: 5-172)					
010	2674250-0000		1	GUIDE	
020	2674251-0000		1	BAR	
030	2674252-0000		1	SLIDE	
040	2674248-0000		1	PLATE	
050	1539894-0000		1	GUIDE	
100	312105-0366		2	SCREW M6S ISO 4017 M6X12 A480	
110	312105-0370		2	SCREW M6S ISO 4017 M6X20 A480	
120	315105-0153		6	WASHER BRB 6,4X12 RFR	
130	312105-0366		2	SCREW M6S ISO 4017 M6X12 A480	
TPA 0250SQ (See drawing on page: 5-172)					
010	2674249-0000		1	GUIDE	
020	1549854-0000		1	BAR	
030	1549852-0000		1	SLIDE	
040	1144621-0000		1	PLATE	
050	1539894-0000		1	GUIDE	
100	312105-0366		2	SCREW M6S ISO 4017 M6X12 A480	
110	312105-0370		2	SCREW M6S ISO 4017 M6X20 A480	
120	315105-0153		6	WASHER BRB 6,4X12 RFR	
130	312105-0366		2	SCREW M6S ISO 4017 M6X12 A480	
TPA 0750SQ (See drawing on page: 5-174)					
010	2647087-0000		1	GUIDE	
020	2647088-0000		1	BAR	
030	2647090-0000		1	SLIDE	
040	2647092-0000		1	ANGLE BLOCK	
050	2637665-0000		1	GUIDE	
100	312105-0364		2	SCREW M6S ISO 4017 M6X10 A480	
110	312105-0368		4	SCREW M6S ISO 4017 M6X16 A480	
120	315105-0153		6	WASHER BRB 6,4X12 RFR	
TPA 1000SQ (See drawing on page: 5-174)					
010	2647083-0000		1	GUIDE	
020	2647084-0000		1	BAR	
030	2675323-0000		1	SLIDE	

Machine Type | Group Description | Used-In | Group Number | Page No

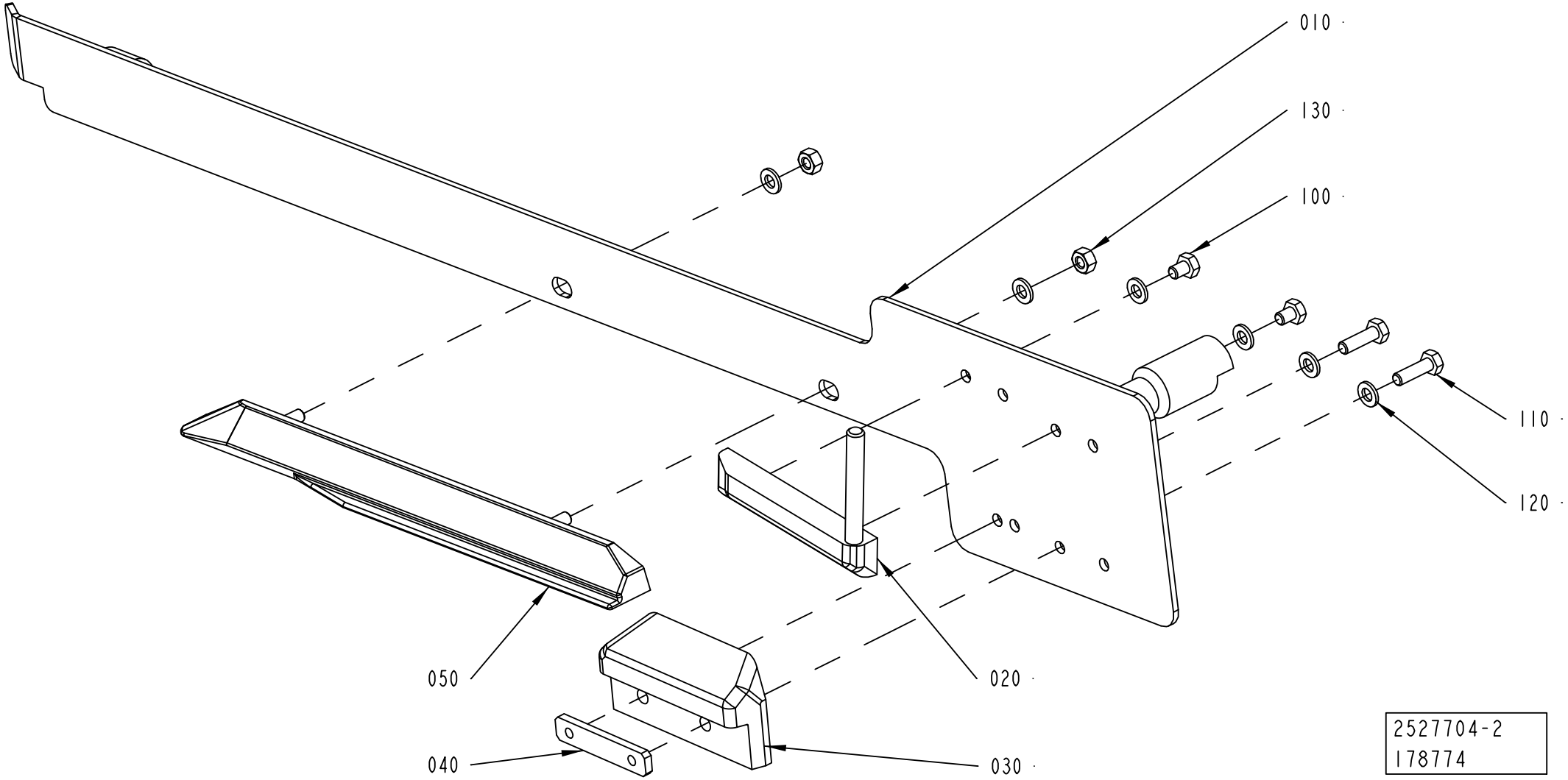
010
130
100
110
120
050
020
040
030
2527704-2
178774

Pos	Part No	UN	Qty	Description	Page No
TPA 1000SQ (Cont'd) (See drawing on page: 5-174)					
040	2543242-0000		1	ANGLE BLOCK	
050	2637665-0000		1	GUIDE	
100	312105-0364		2	SCREW M6S ISO 4017 M6X10 A480	
110	312105-0368		4	SCREW M6S ISO 4017 M6X16 A480	
120	315105-0153		6	WASHER BRB 6,4X12 RFR	
TBA 0200B (See drawing on page: 5-172)					
010	2526578-0000		1	GUIDE	
020	1348148-0000		1	BAR	
030	1348136-0000		1	SLIDE	
040	1348169-0000		1	PLATE	
050	2664200-0000		1	GUIDE	
100	312105-0362		2	SCREW M6S ISO 4017 M6X8 A480	
120	315105-0153		6	WASHER BRB 6,4X12 RFR	
130	312605-0316		2	HEXAGON NUT, M6M M6 A280	
TBA 0200M (See drawing on page: 5-172)					
010	2657937-0000		1	GUIDE	
020	2657932-0000		1	BAR	
030	2657935-0000		1	SLIDE	
040	1348169-0000		1	PLATE	
050	1517526-0000		1	GUIDE	
100	312105-0362		2	SCREW M6S ISO 4017 M6X8 A480	
110	312105-0370		2	SCREW M6S ISO 4017 M6X20 A480	
120	315105-0153		6	WASHER BRB 6,4X12 RFR	
130	312605-0316		2	HEXAGON NUT, M6M M6 A280	
TBA 0200SQ (See drawing on page: 5-174)					
010	2752647-0000		1	GUIDE	
020	2668226-0000		1	BAR	
030	2668227-0000		1	SLIDE	
040	1348169-0000		1	PLATE	
050	2668225-0000		1	GUIDE	
100	312105-0364		2	SCREW M6S ISO 4017 M6X10 A480	
110	312105-0370		2	SCREW M6S ISO 4017 M6X20 A480	
120	315105-0153		6	WASHER BRB 6,4X12 RFR	
140	312105-0364		2	SCREW M6S ISO 4017 M6X10 A480	
TBA 0250B (See drawing on page: 5-172)					
010	2526578-0000		1	GUIDE	
020	1348147-0000		1	BAR	
030	1348135-0000		1	SLIDE	
040	1348169-0000		1	PLATE	
050	2664200-0000		1	GUIDE	
100	312105-0362		2	SCREW M6S ISO 4017 M6X8 A480	
120	315105-0153		6	WASHER BRB 6,4X12 RFR	
130	312605-0316		2	HEXAGON NUT, M6M M6 A280	
TBA 0250S (See drawing on page: 5-172)					
010	2657937-0000		1	GUIDE	
020	2529608-0000		1	BAR	
030	2529605-0000		1	SLIDE	
040	1279409-0000		1	PLATE	
050	1517526-0000		1	GUIDE	
100	312105-0362		2	SCREW M6S ISO 4017 M6X8 A480	
110	312105-0370		2	SCREW M6S ISO 4017 M6X20 A480	
120	315105-0153		6	WASHER BRB 6,4X12 RFR	
130	312605-0316		2	HEXAGON NUT, M6M M6 A280	

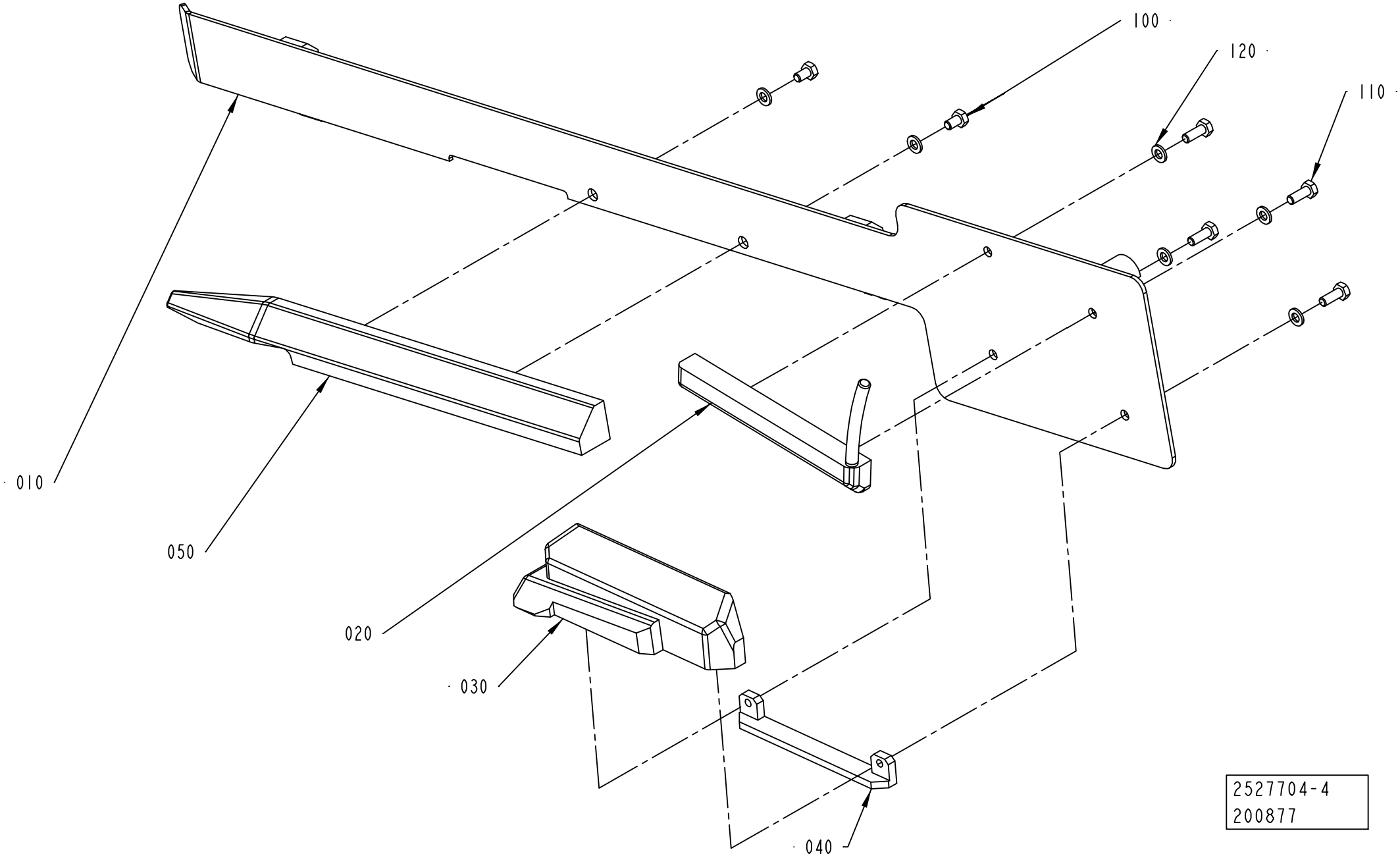
100
120
110
010
050
020
030
040
2527704-4
200877

Pos	Part No	UN	Qty	Description	Page No	Pos	Part No	UN	Qty	Description	Page No

SEE PREVIOUS LISTS PAGES: 5-171, 5-173.

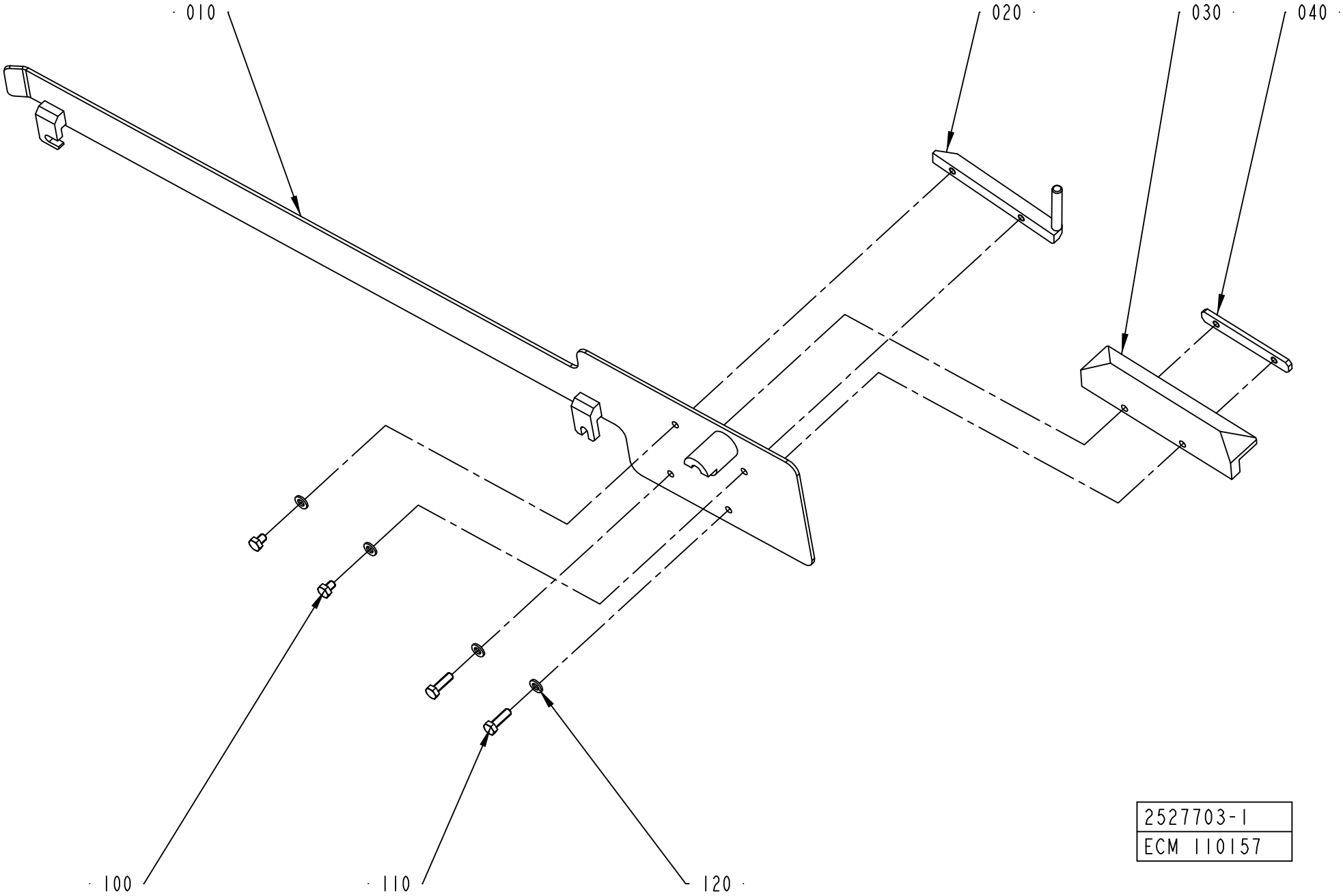
010
020
030
040
100
110
120
2527703-1
ECM 110157

ECM: 272804 - 20060626
Group number: 2527703-0100
Assembly Drawing: 2527703-1_1_AA

This list covers pages from 5-176 to 5-183

Pos	Part No	UN	Qty	Description	Page No
TBA 0250S (See drawing on page: 5-178)					
010	2657936-0000		1	GUIDE	
020	2529607-0000		1	BAR	
030	2529606-0000		1	SLIDE	
040	1279409-0000		1	PLATE	
050	1517527-0000		1	GUIDE	
100	312105-0362		2	SCREW M6S ISO 4017 M6X8 A480	
110	312105-0370		2	SCREW M6S ISO 4017 M6X20 A480	
120	315105-0153		6	WASHER BRB 6,4X12 RFR	
130	312605-0316		2	HEXAGON NUT, M6M M6 A280	
TBA 0250SQ (See drawing on page: 5-182)					
010	2668228-0000		1	GUIDE	
020	2668234-0000		1	BAR	
030	2668235-0000		1	SLIDE	
040	1348169-0000		1	PLATE	
050	2668229-0000		1	GUIDE	
100	312105-0366		2	SCREW M6S ISO 4017 M6X12 A480	
110	312105-0370		2	SCREW M6S ISO 4017 M6X20 A480	
120	315105-0153		6	WASHER BRB 6,4X12 RFR	
140	312105-0364		2	SCREW M6S ISO 4017 M6X10 A480	
TBA 0330S (See drawing on page: 5-178)					
010	2526579-0000		1	GUIDE	
020	2544999-0000		1	BAR	
030	2544998-0000		1	SLIDE	
040	1279409-0000		1	PLATE	
050	2664201-0000		1	GUIDE	
100	312105-0362		2	SCREW M6S ISO 4017 M6X8 A480	
110	312105-0370		2	SCREW M6S ISO 4017 M6X20 A480	
120	315105-0153		6	WASHER BRB 6,4X12 RFR	
130	312605-0316		2	HEXAGON NUT, M6M M6 A280	
TBA 0500B (See drawing on page: 5-176)					
010	2522167-0000		1	GUIDE	
020	1539878-0000		1	BAR	
030	1539875-0000		1	SLIDE	
040	1539876-0000		1	PLATE	
100	312105-0362		2	SCREW M6S ISO 4017 M6X8 A480	
110	312105-0370		2	SCREW M6S ISO 4017 M6X20 A480	
120	315105-0153		6	WASHER BRB 6,4X12 RFR	
TBA 1000B (See drawing on pages: 5-176, 5-180)					
010	2518130-0000		1	GUIDE	
020	1348150-0000		1	BAR	
030	1348139-0000		1	SLIDE	
040	1279409-0000		1	PLATE	
100	312105-0362		2	SCREW M6S ISO 4017 M6X8 A480	
110	312105-0370		2	SCREW M6S ISO 4017 M6X20 A480	
120	315105-0153		6	WASHER BRB 6,4X12 RFR	
TBA 1000SQ					
100	312105-0362		2	SCREW M6S ISO 4017 M6X8 A480	
120	315105-0153		7	WASHER BRB 6,4X12 RFR	
TBA 1890S (See drawing on page: 5-176)					
010	2665203-0000		1	GUIDE	
020	1334271-0000		1	BAR	
030	2594906-0000		1	SLIDE	
040	1144621-0000		1	PLATE	
100	312105-0362		2	SCREW M6S ISO 4017 M6X8 A480	
110	312109-0374		3	SCREW M6S ISO 4017 M6X30 A480	
120	315105-0153		5	WASHER BRB 6,4X12 RFR	
TBA 2000S (See drawing on page: 5-176)					
010	2678621-0000		1	GUIDE	
020	1334271-0000		1	BAR	
030	2598488-0000		1	SLIDE	
040	1144621-0000		1	PLATE	
100	312105-0362		2	SCREW M6S ISO 4017 M6X8 A480	
110	312109-0374		3	SCREW M6S ISO 4017 M6X30 A480	
120	315105-0153		5	WASHER BRB 6,4X12 RFR	
TPA 0200SQ (See drawing on page: 5-178)					
010	2674245-0000		1	GUIDE	
020	2674246-0000		1	BAR	
030	2674247-0000		1	SLIDE	
040	2674248-0000		1	PLATE	
050	1539895-0000		1	GUIDE	
100	312105-0366		2	SCREW M6S ISO 4017 M6X12 A480	
110	312105-0370		2	SCREW M6S ISO 4017 M6X20 A480	
120	315105-0153		6	WASHER BRB 6,4X12 RFR	
130	312105-0366		2	SCREW M6S ISO 4017 M6X12 A480	
TPA 0250SQ (See drawing on page: 5-178)					
010	2674244-0000		1	GUIDE	
020	1549855-0000		1	BAR	
030	1549853-0000		1	SLIDE	
040	1144621-0000		1	PLATE	
050	1539895-0000		1	GUIDE	
100	312105-0366		2	SCREW M6S ISO 4017 M6X12 A480	
110	312105-0370		2	SCREW M6S ISO 4017 M6X20 A480	
120	315105-0153		6	WASHER BRB 6,4X12 RFR	

Machine Type | Group Description | Used-In | Group Number | Page No

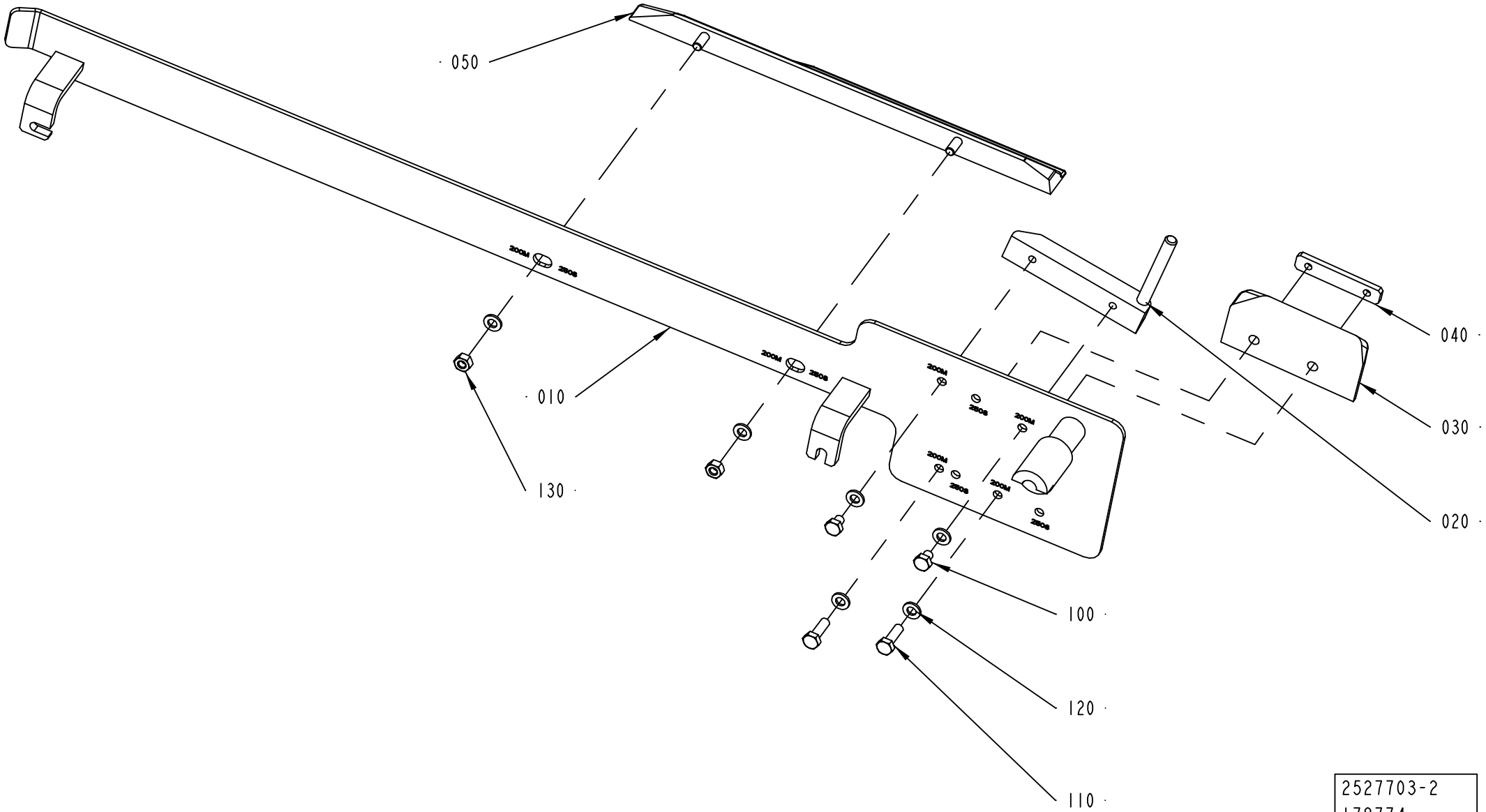
050
010
130
040
030
020
100
120
110
2527703-2
178774

Pos	Part No	UN	Qty	Description	Page No
TPA 0250SQ (Cont'd) (See drawing on page: 5-178)					
130	312105-0366		2	SCREW M6S ISO 4017 M6X12 A480	
TPA 0750SQ (See drawing on page: 5-182)					
010	2647086-0000		1	GUIDE	
020	2647089-0000		1	BAR	
030	2647091-0000		1	SLIDE	
040	2647092-0000		1	ANGLE BLOCK	
050	2637666-0000		1	GUIDE	
100	312105-0364		2	SCREW M6S ISO 4017 M6X10 A480	
110	312105-0368		4	SCREW M6S ISO 4017 M6X16 A480	
120	315105-0153		6	WASHER BRB 6,4X12 RFR	
TPA 1000SQ (See drawing on page: 5-182)					
010	2647082-0000		1	GUIDE	
020	2647085-0000		1	BAR	
030	2675322-0000		1	SLIDE	
040	2543242-0000		1	ANGLE BLOCK	
050	2637666-0000		1	GUIDE	
100	312105-0364		2	SCREW M6S ISO 4017 M6X10 A480	
110	312105-0368		4	SCREW M6S ISO 4017 M6X16 A480	
120	315105-0153		6	WASHER BRB 6,4X12 RFR	
TBA 0200B (See drawing on page: 5-178)					
010	2526579-0000		1	GUIDE	
020	1348154-0000		1	BAR	
030	1348142-0000		1	SLIDE	
040	1348169-0000		1	PLATE	
050	2664201-0000		1	GUIDE	
100	312105-0362		2	SCREW M6S ISO 4017 M6X8 A480	
110	312105-0370		2	SCREW M6S ISO 4017 M6X20 A480	
120	315105-0153		6	WASHER BRB 6,4X12 RFR	
130	312605-0316		2	HEXAGON NUT, M6M M6 A280	
TBA 0200M (See drawing on page: 5-178)					
010	2657936-0000		1	GUIDE	
020	2657933-0000		1	BAR	
030	2657934-0000		1	SLIDE	
040	1348169-0000		1	PLATE	
050	1517527-0000		1	GUIDE	
100	312105-0362		2	SCREW M6S ISO 4017 M6X8 A480	
110	312105-0370		2	SCREW M6S ISO 4017 M6X20 A480	
120	315105-0153		6	WASHER BRB 6,4X12 RFR	
130	312605-0316		2	HEXAGON NUT, M6M M6 A280	
TBA 0200SQ (See drawing on page: 5-182)					
010	2752648-0000		1	GUIDE	
020	2668230-0000		1	BAR	
030	2668231-0000		1	SLIDE	
040	1348169-0000		1	PLATE	
050	2668229-0000		1	GUIDE	
100	312105-0366		2	SCREW M6S ISO 4017 M6X12 A480	
110	312105-0370		2	SCREW M6S ISO 4017 M6X20 A480	
120	315105-0153		6	WASHER BRB 6,4X12 RFR	
140	312105-0364		2	SCREW M6S ISO 4017 M6X10 A480	
TBA 0250B (See drawing on page: 5-178)					
010	2526579-0000		1	GUIDE	
020	1348153-0000		1	BAR	
030	1348141-0000		1	SLIDE	
040	1348169-0000		1	PLATE	
050	2664201-0000		1	GUIDE	
100	312105-0362		2	SCREW M6S ISO 4017 M6X8 A480	
110	312105-0370		2	SCREW M6S ISO 4017 M6X20 A480	
120	315105-0153		6	WASHER BRB 6,4X12 RFR	
130	312605-0316		2	HEXAGON NUT, M6M M6 A280	

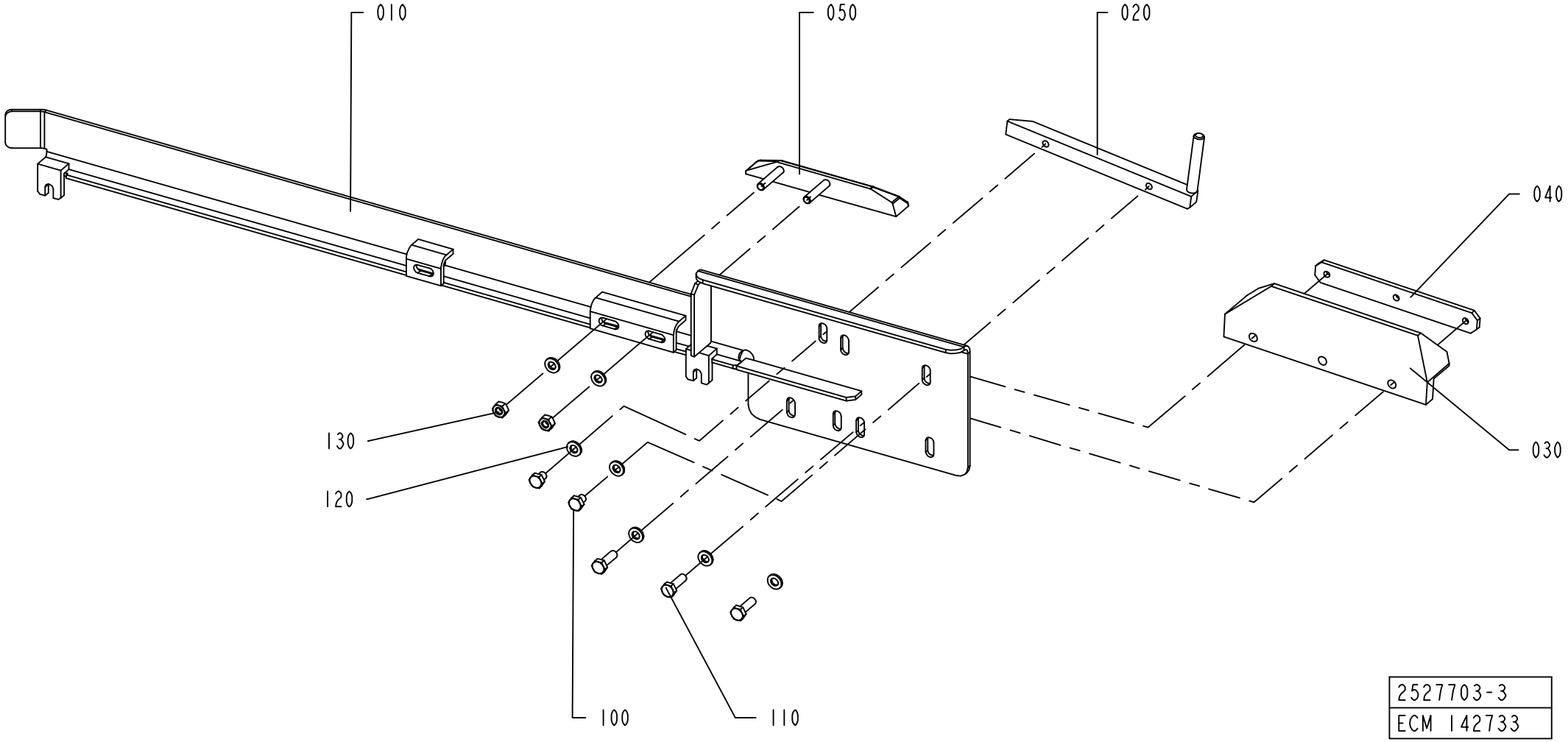

2527703-3
ECM 142733

Pos	Part No	UN	Qty	Description	Page No	Pos	Part No	UN	Qty	Description	Page No

SEE PREVIOUS LISTS PAGES: 5-177, 5-179.

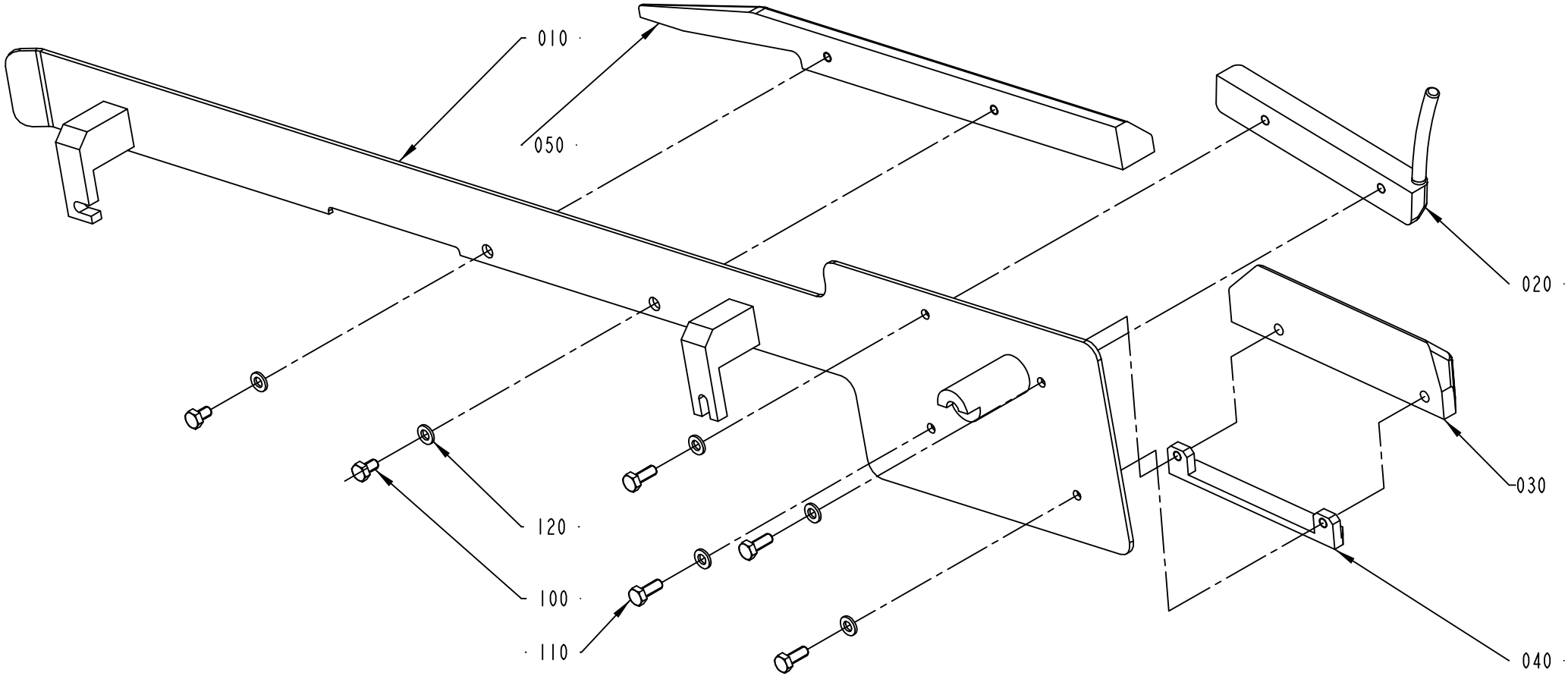

2527703-4
200877

Pos	Part No	UN	Qty	Description	Page No
SEE PREVIOUS LISTS PAGES: 5-177, 5-179.					

Pos	Part No	UN	Qty	Description	Page No

FRAMEWORK

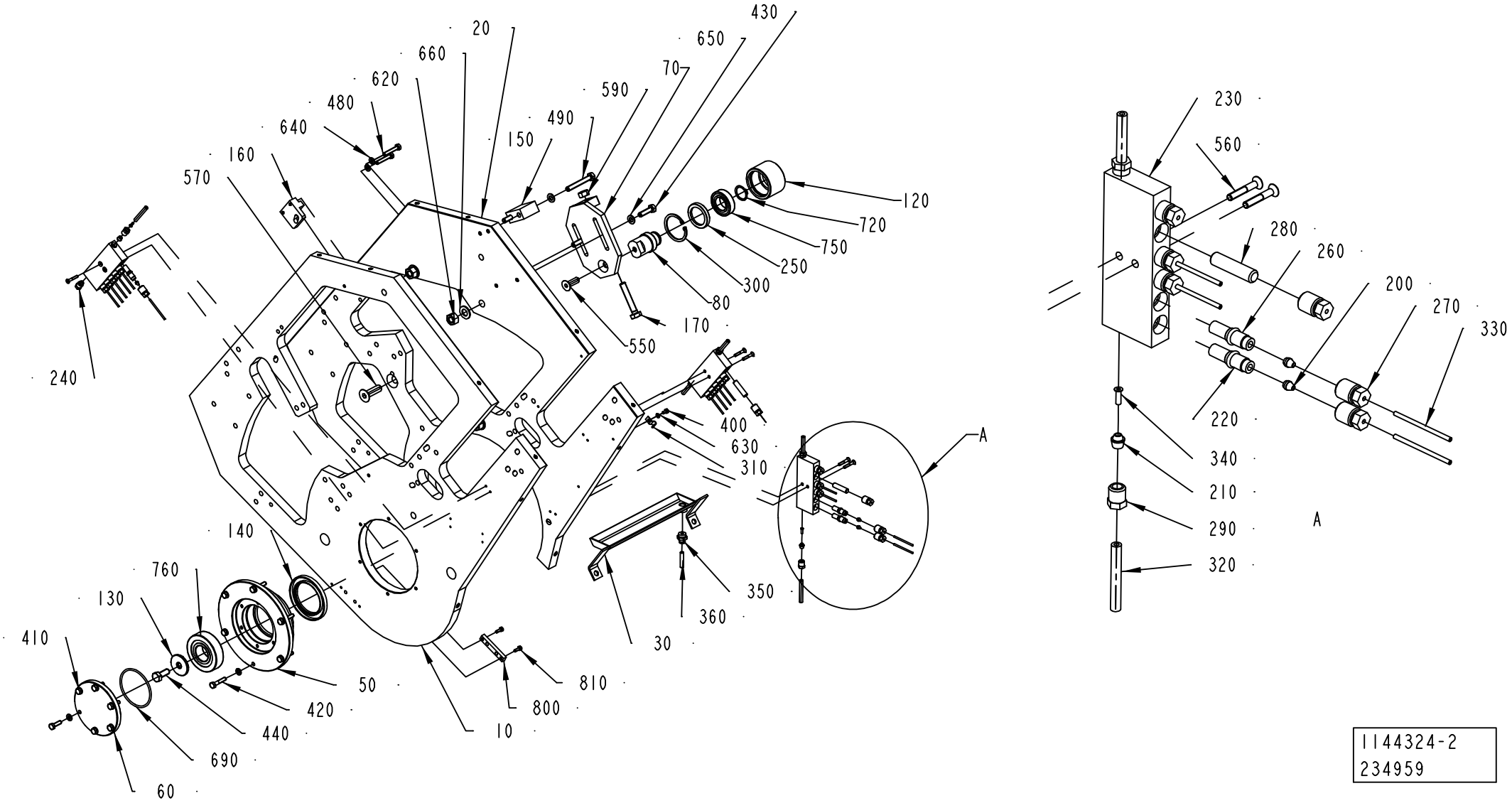

1144324-2
234959

ECM: 272391 - 20060626
Group number: 1144324-0300
Assembly Drawing: 1144324-2_1_AD

Pos	Part No	UN	Qty	Description	Page No
A3/FLEX TBA 1890S QC, A3/FLEX TBA 2000S QC (See drawing on page: 5-184)					
160	1282844-0000		1	SUPPORT	
260	90092-0052		13	METERING VALVE 10 MM3	
270	90134-0039		18	BUSHING VALVE CONNECTION 2,5 MM	
280	90134-0052		4	PLUG DOSING BLOCK	
A3/FLEX TBA 1000B, A3/FLEX TBA 1000S, A3/FLEX TBA 0200S, A3/FLEX TBA 1500S, A3/FLEX TBA 0200B QC, A3/FLEX TBA 0250B QC, A3/FLEX TBA 0330S QC, A3/FLEX TBA 0250S QC, A3/FLEX TBA 0200M QC (See drawing on page: 5-184)					
160	1144900-0000		1	SUPPORT	
260	90092-0052		14	METERING VALVE 10 MM3	
270	90134-0039		18	BUSHING VALVE CONNECTION 2,5 MM	
280	90134-0052		4	PLUG DOSING BLOCK	
A3/FLEX TBA 1000SQ, A3/FLEX TPA 0330SQ, A3/FLEX TPA 0500SQ, A3/FLEX TPA 0750SQ QC, A3/FLEX TPA 1000SQ QC, A3/FLEX TPA 0200SQ QC, A3/FLEX TPA 0250SQ QC, A3/FLEX TPA 1000SQ NOQC, A3/FLEX TBA 0250SQ QC, A3/FLEX TBA 0200SQ QC (See drawing on page: 5-184)					
160	1282844-0000		1	SUPPORT	
260	90092-0052		16	METERING VALVE 10 MM3	
270	90134-0039		18	BUSHING VALVE CONNECTION 2,5 MM	
280	90134-0052		2	PLUG DOSING BLOCK	
A3/FLEX TBA 0500B QC, A3/FLEX TBA 1000B QC, A3/FLEX TBA 0500S (See drawing on page: 5-184)					
160	1282844-0000		1	SUPPORT	
260	90092-0052		14	METERING VALVE 10 MM3	
270	90134-0039		18	BUSHING VALVE CONNECTION 2,5 MM	
280	90134-0052		4	PLUG DOSING BLOCK	
Common Parts					
010	1347109-0000		1	PLATE	
020	1347108-0000		1	PLATE	
050	598101-0000		1	BEARING HOUSING	
060	1144618-0000		1	FLANGE	
070	1144797-0000		1	SUPPORT	
080	1478418-0000		1	AXLE BOLT	
120	1478417-0000		1	ROLLER	
130	1144620-0000		1	WASHER	
140	1144665-0000		1	SEAL RING	
150	1144839-0000		1	BLOCK	
170	1260931-0000		1	SCREW	
180	2727659-0000		1	PROTECTION PLATE	
190	2767105-0000		1	PROTECTION PLATE	
200	90028-0020		14	CONE TUBE 2,5MM	
210	90028-0025		5	CONE TUBE 6 MM	
220	90092-0054		1	METERING VALVE 50 MM3	
230	90032-0040		3	BLOCK 6 WAYS	
240	90087-0019		1	PLUG M10X1 STAINLESS	
250	90091-0297		1	RADIAL SEAL 35X47X7 MM DUST LIP	
290	90134-0055		5	BUSHING/NUT INLET/OUTLET 6 MM	
300	90141-0019		1	RETAINING RING FOR BORE DIN 472 50 A2	
310	316810-0106		5	PIPE CLIP FOR TUBE D=8 MM	
320	90166-0108	M	4	TUBE 6 MM PA,TRANSP.	
330	90166-0143	M	4	TUBE 2,5 MM PA,TRANSP.	
340	90134-0030		5	SLEEVE FOR PLASTIC TUBE	
400	312105-0287		5	SCREW M6S ISO 4017 M4X8 A470	
410	312105-0370		6	SCREW M6S ISO 4017 M6X20 A480	
420	312105-0374		6	SCREW M6S ISO 4014 M6X30 A480	
430	312105-0455		2	SCREW M6S ISO 4017 M8X30 A480	
440	312105-0493		1	SCREW M6S ISO 4017 M10X25 A480	
480	312109-0376		2	SCREW M6S ISO 4017 M6X35 A480	
490	312109-0463		2	SCREW M6S ISO 4017 M8X60 A480	
550	312155-0495		1	SCREW DIN 7991 MF6S M10X30 A4 70	
560	312155-0297		6	SCREW DIN 7991 MF6S M4X25 A4 70	
570	312155-0540		1	SCREW DIN 7991 MF6S M12X40 A4 70	
590	312605-0320		1	HEXAGON NUT, M6M M10 A280	
620	312605-0322		3	HEXAGON NUT, M6M M12 A280	
630	315105-0136		5	WASHER BRB 4,3X9 RFR	
640	315105-0153		14	WASHER BRB 6,4X12 RFR	
650	315105-0165		4	WASHER BRB 8,4X16 RFR	
660	315105-0178		3	WASHER BRB 13X24 RFR	
690	315202-0305		1	O-RING 69,5X3 MM	
720	315751-0119		1	RETAINING RING FOR SHAFT DIN 471 25 A2	
750	321308-0205		1	BALL BEARING, 25X47X12MM	
760	321316-0206		1	BALL BEARING, 30X72X19 MM	
780	352113-0102		3	CLIP-STRIP, BLACK 188X4,8 MM	
790	352113-0101		7	CLIP STRIP, 92X2,5 MM	
800	1487821-0000		1	SPACER	
810	312105-0291		2	SCREW M6S ISO 4017 M4X12 A470	

Machine Type | Group Description | Used-In | Group Number | Page No

FLAP HEATER BODY

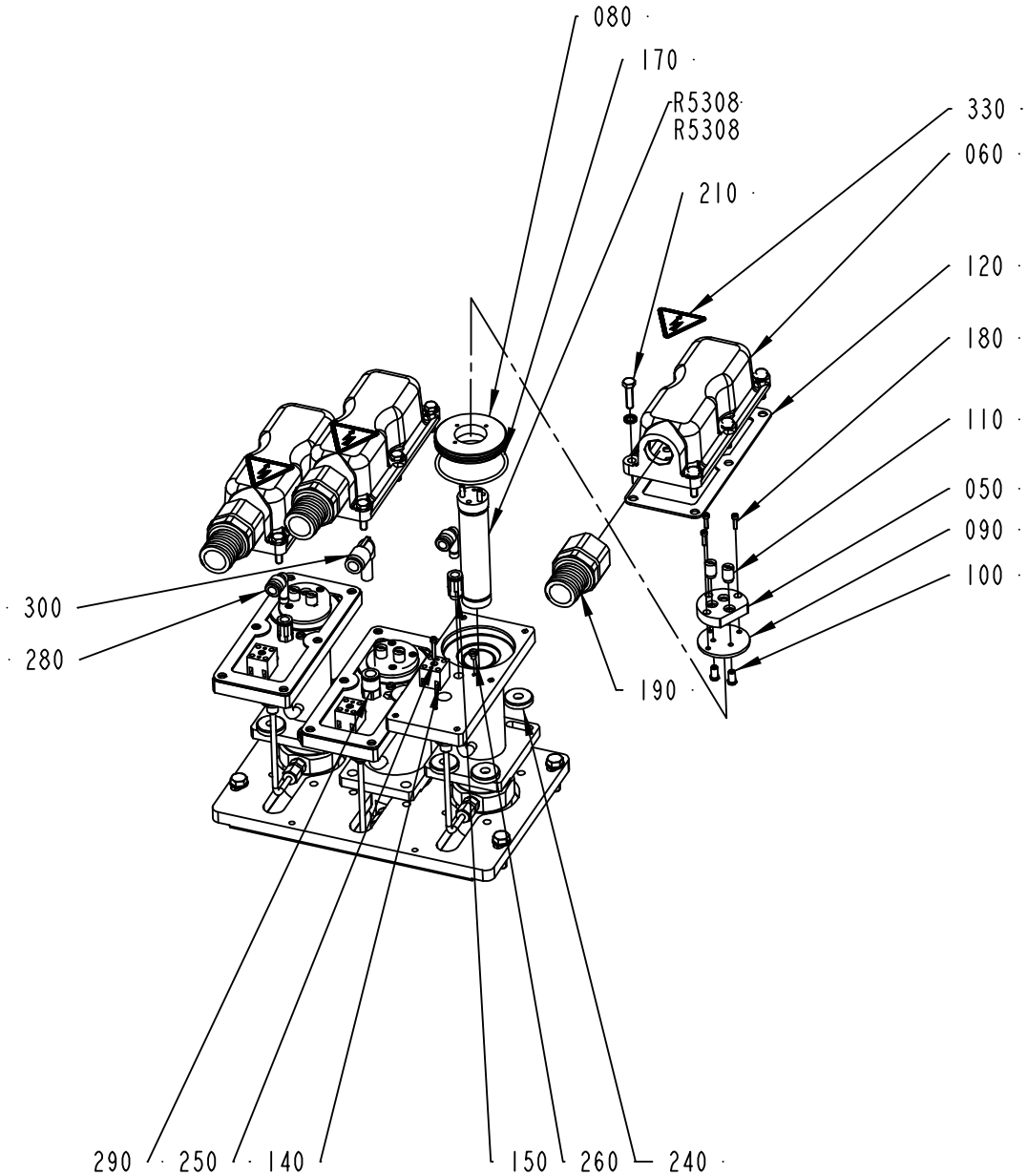

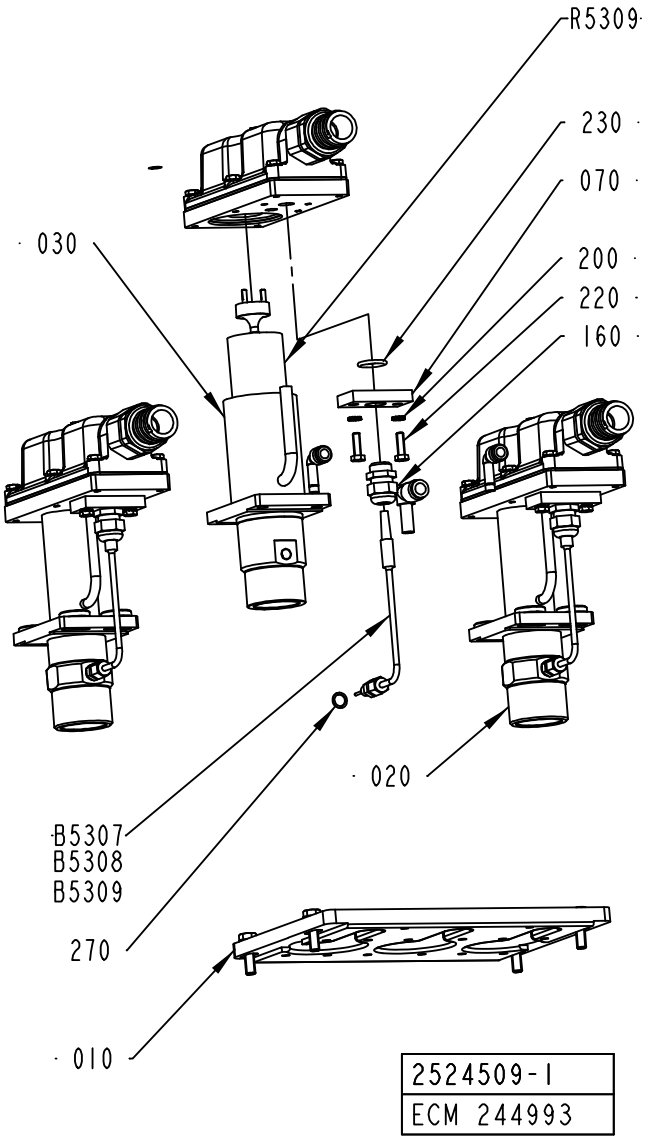

2524509-1
ECM 244993

ECM: 273459 - 20061101
Group number: 2524509-0100
Assembly Drawing: 2524509-1_1_AB

This list covers pages from 5-186 to 5-191

Pos	Part No	UN	Qty	Description	Page No
A3/FLEX NOQC (See drawing on page: 5-186)					
010	2544339-0100		1	FRAME	**5-193**
020	1296070-0000		2	HEATING PIPE	
A3/FLEX TBA 0500B QC, A3/FLEX TBA 1000B QC, A3/FLEX TBA 0200B QC, A3/FLEX TBA 0250B QC, A3/FLEX TBA 0330S QC, A3/FLEX TBA 0250S QC, A3/FLEX TBA 0200M QC, A3/FLEX TPA 0200SQ QC, A3/FLEX TPA 0250SQ QC, A3/FLEX TBA 0250SQ QC, A3/FLEX TBA 0200SQ QC (See drawing on pages: 5-188, 5-190)					
010	2535538-0200		1	FRAME	**5-195, 5-197, 5-199, 5-201, 5-203, 5-205, 5-207**
020	1296070-0000		2	HEATING PIPE	
A3/FLEX TBA 1890S QC, A3/FLEX TBA 2000S QC (See drawing on pages: 5-188, 5-190)					
010	2535538-0200		1	FRAME	**5-195, 5-197, 5-199, 5-201, 5-203, 5-205, 5-207**
020	1296070-0000		2	HEATING PIPE	
A3/FLEX TPA 0750SQ QC, A3/FLEX TPA 1000SQ QC (See drawing on pages: 5-188, 5-190)					
010	2535538-0200		1	FRAME	**5-195, 5-197, 5-199, 5-201, 5-203, 5-205, 5-207**
020	1296070-0000		2	HEATING PIPE	
Common Parts					
030	1285293-0000		1	HEATING PIPE	
050	294464-0000		3	BASE PLATE	
060	1484096-0000		3	COVER	
070	1285311-0000		3	PLATE	
080	1285307-0000		3	SPACER	
090	1285308-0000		3	GASKET	
100	270927-0000		6	SCREW	
110	266739-0000		6	CABLE GLAND	
120	1285312-0000		3	GASKET	
140	90195-0020		3	TERMINAL BLOCK, 1977.2	
150	342722-0204		2	PIPE COUPLING	
160	352103-0106		3	CABLE GLAND, ST 11, PR18,6/PG11	
170	315204-0303		3	O-RING 59,5X3 MM	
180	312115-0226		9	SCREW ISO4762 M3X12 A4 80	
190	353247-0005		3	HOSE GLAND EMC PG21 EXTENDED	
200	90062-0015		24	LOCK WASHER SERRAT.EXT.GEAR,6,4/11 H=0,7	
210	312105-0372		18	SCREW M6S ISO 4017 M6X25 A480	
220	312105-0370		6	SCREW M6S ISO 4017 M6X20 A480	
230	315204-0215		3	O-RING 19,2X3 MM	
240	315125-0165		8	WASHER TBRSB 8,4X26X5 A4	
250	312115-0230		3	SCREW ISO4762 M3X20 A4 80	
260	312132-0284		3	SCREW SLOT. PAN HEAD MSCS M4X5	
270	315234-0109		3	WASHER,PL.RND.CU.10,3/13,5 H=1,0	
280	90055-0204		2	ELBOW WITH TAILPIECE 8/8 MM LONG	
290	342722-0211		1	STRAIGHT COUPLING D=10-G1/4"	
300	90459-1506		1	ELBOW WITH TAILPIECE 10/10 MM	
330	359705-0015		3	WARNING SIGN ISO, RISK OF ELECTRIC SHOCK	
B5307	90326-0081		1	THERMOCOUPLE, ISA TYPE K.	
B5308	90326-0081		1	THERMOCOUPLE, ISA TYPE K.	
B5309	90326-0081		1	THERMOCOUPLE, ISA TYPE K.	
R5307	2514149-0000		1	HEATING ELEMENT	
R5308	2514149-0000		1	HEATING ELEMENT	
R5309	90206-0030		1	HEATING ELEMENT 3000W, 220V	

Machine Type | Group Description | Used-In | Group Number | Page No

FLAP HEATER BODY

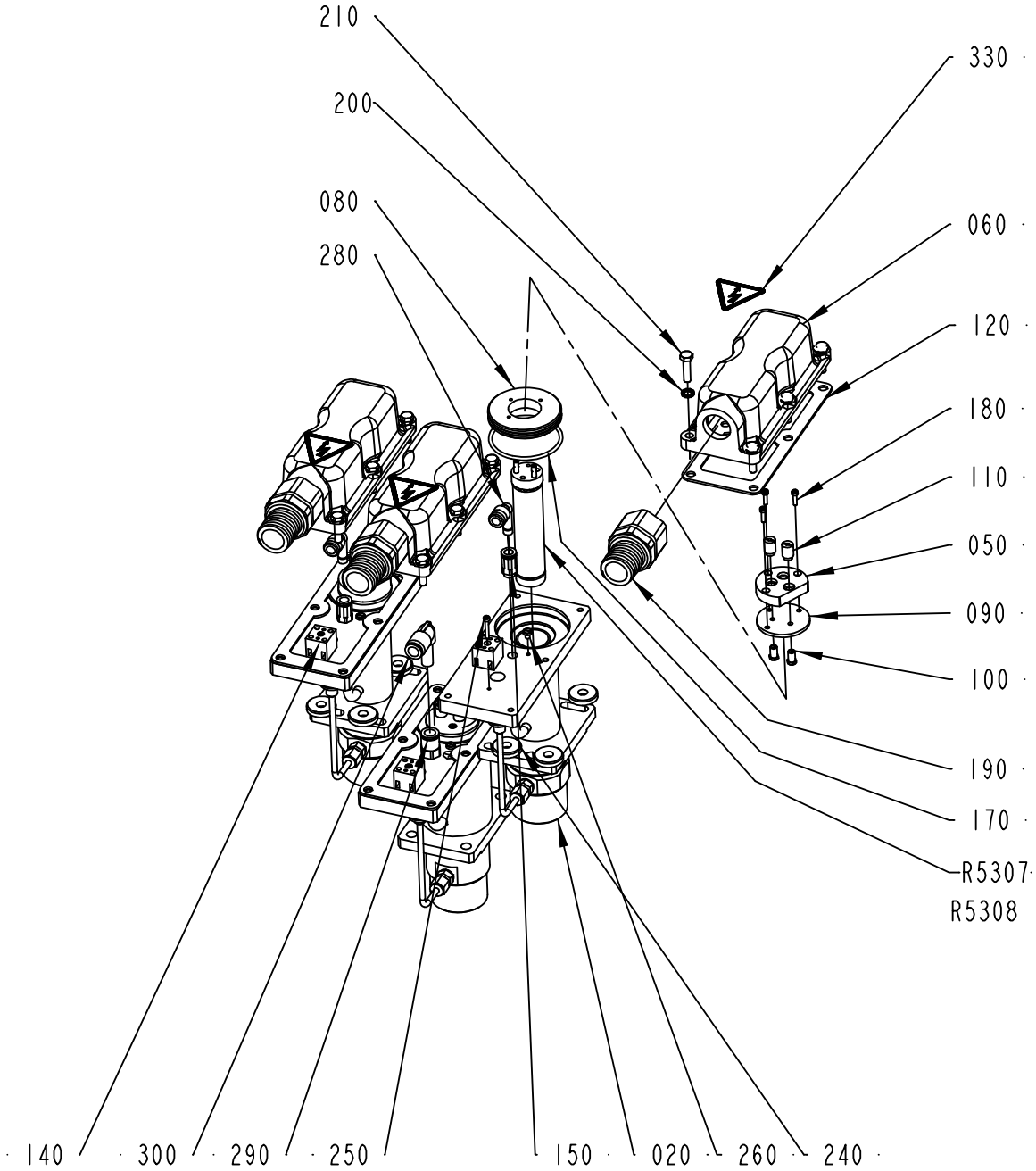

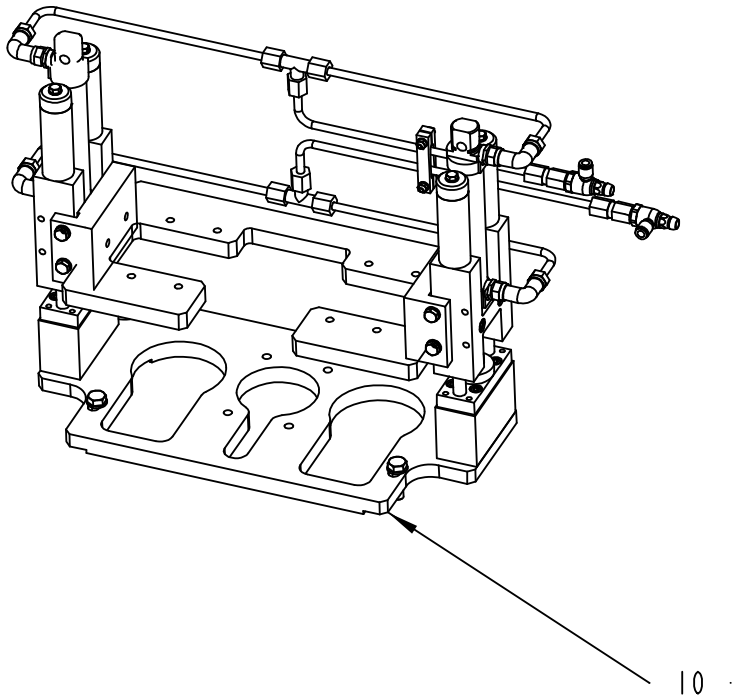

2524509-2
ECM 244993

ECM: 273459 - 20061101
Group number: 2524509-0100
Assembly Drawing: 2524509-2_1_AC

This list covers pages from 5-186 to 5-191

Pos	Part No	UN	Qty	Description	Page No
A3/FLEX NOQC (See drawing on page: 5-186)					
010	2544339-0100		1	FRAME	**5-193**
020	1296070-0000		2	HEATING PIPE	
A3/FLEX TBA 0500B QC, A3/FLEX TBA 1000B QC, A3/FLEX TBA 0200B QC, A3/FLEX TBA 0250B QC, A3/FLEX TBA 0330S QC, A3/FLEX TBA 0250S QC, A3/FLEX TBA 0200M QC, A3/FLEX TPA 0200SQ QC, A3/FLEX TPA 0250SQ QC, A3/FLEX TBA 0250SQ QC, A3/FLEX TBA 0200SQ QC (See drawing on pages: 5-188, 5-190)					
010	2535538-0200		1	FRAME	**5-195, 5-197, 5-199, 5-201, 5-203, 5-205, 5-207**
020	1296070-0000		2	HEATING PIPE	
A3/FLEX TBA 1890S QC, A3/FLEX TBA 2000S QC (See drawing on pages: 5-188, 5-190)					
010	2535538-0200		1	FRAME	**5-195, 5-197, 5-199, 5-201, 5-203, 5-205, 5-207**
020	1296070-0000		2	HEATING PIPE	
A3/FLEX TPA 0750SQ QC, A3/FLEX TPA 1000SQ QC (See drawing on pages: 5-188, 5-190)					
010	2535538-0200		1	FRAME	**5-195, 5-197, 5-199, 5-201, 5-203, 5-205, 5-207**
020	1296070-0000		2	HEATING PIPE	
Common Parts					
030	1285293-0000		1	HEATING PIPE	
050	294464-0000		3	BASE PLATE	
060	1484096-0000		3	COVER	
070	1285311-0000		3	PLATE	
080	1285307-0000		3	SPACER	
090	1285308-0000		3	GASKET	
100	270927-0000		6	SCREW	
110	266739-0000		6	CABLE GLAND	
120	1285312-0000		3	GASKET	
140	90195-0020		3	TERMINAL BLOCK, 1977.2	
150	342722-0204		2	PIPE COUPLING	
160	352103-0106		3	CABLE GLAND, ST 11, PR18,6/PG11	
170	315204-0303		3	O-RING 59,5X3 MM	
180	312115-0226		9	SCREW ISO4762 M3X12 A4 80	
190	353247-0005		3	HOSE GLAND EMC PG21 EXTENDED	
200	90062-0015		24	LOCK WASHER SERRAT.EXT.GEAR,6,4/11 H=0,7	
210	312105-0372		18	SCREW M6S ISO 4017 M6X25 A480	
220	312105-0370		6	SCREW M6S ISO 4017 M6X20 A480	
230	315204-0215		3	O-RING 19,2X3 MM	
240	315125-0165		8	WASHER TBRSB 8,4X26X5 A4	
250	312115-0230		3	SCREW ISO4762 M3X20 A4 80	
260	312132-0284		3	SCREW SLOT. PAN HEAD MSCS M4X5	
270	315234-0109		3	WASHER,PL.RND.CU.10,3/13,5 H=1,0	
280	90055-0204		2	ELBOW WITH TAILPIECE 8/8 MM LONG	
290	342722-0211		1	STRAIGHT COUPLING D=10-G1/4"	
300	90459-1506		1	ELBOW WITH TAILPIECE 10/10 MM	
330	359705-0015		3	WARNING SIGN ISO, RISK OF ELECTRIC SHOCK	
B5307	90326-0081		1	THERMOCOUPLE, ISA TYPE K.	
B5308	90326-0081		1	THERMOCOUPLE, ISA TYPE K.	
B5309	90326-0081		1	THERMOCOUPLE, ISA TYPE K.	
R5307	2514149-0000		1	HEATING ELEMENT	
R5308	2514149-0000		1	HEATING ELEMENT	
R5309	90206-0030		1	HEATING ELEMENT 3000W, 220V	

Machine Type | Group Description | Used-In | Group Number | Page No

FLAP HEATER BODY

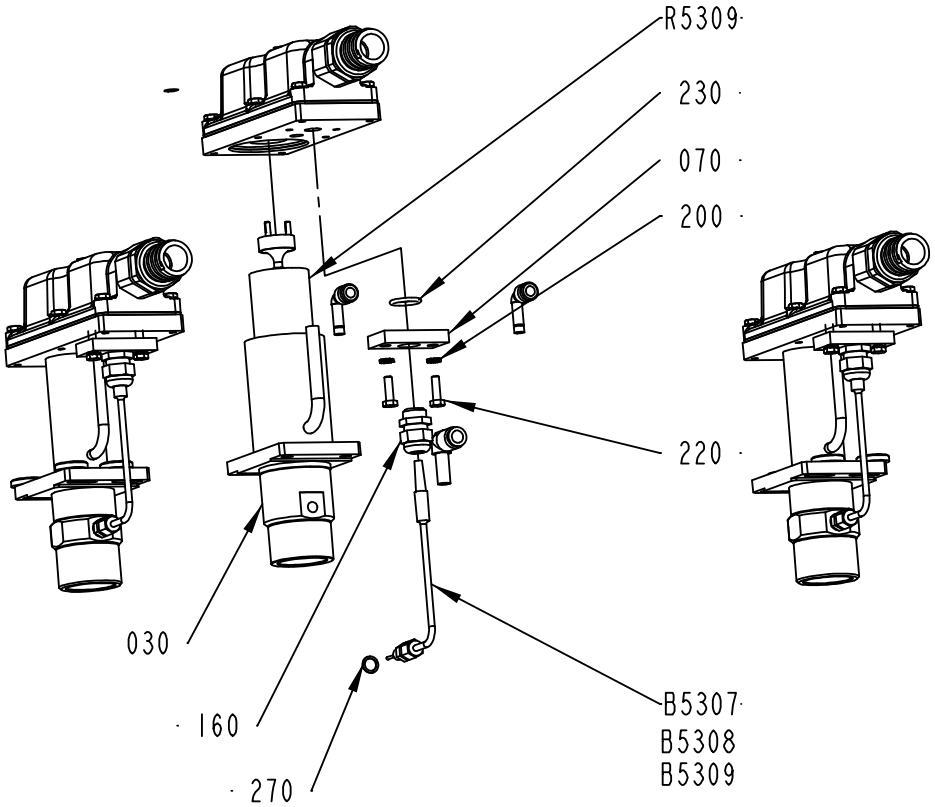

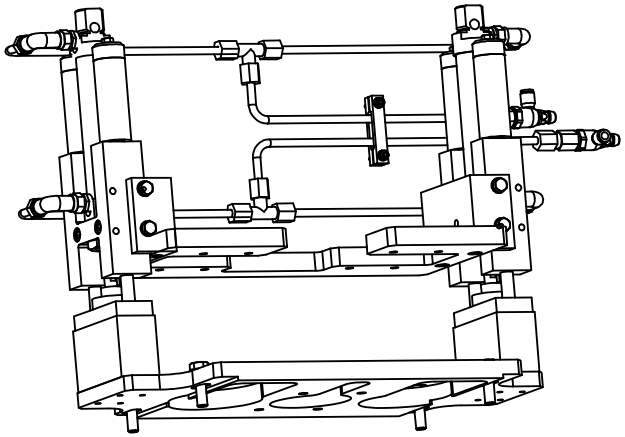

2524509-2
ECM 244993

ECM: 273459 - 20061101
Group number: 2524509-0100
Assembly Drawing: 2524509-2_2_AC

This list covers pages from 5-186 to 5-191

Pos	Part No	UN	Qty	Description	Page No
A3/FLEX NOQC (See drawing on page: 5-186)					
010	2544339-0100		1	FRAME	**5-193**
020	1296070-0000		2	HEATING PIPE	
A3/FLEX TBA 0500B QC, A3/FLEX TBA 1000B QC, A3/FLEX TBA 0200B QC, A3/FLEX TBA 0250B QC, A3/FLEX TBA 0330S QC, A3/FLEX TBA 0250S QC, A3/FLEX TBA 0200M QC, A3/FLEX TPA 0200SQ QC, A3/FLEX TPA 0250SQ QC, A3/FLEX TBA 0250SQ QC, A3/FLEX TBA 0200SQ QC (See drawing on pages: 5-188, 5-190)					
010	2535538-0200		1	FRAME	**5-195, 5-197, 5-199, 5-201, 5-203, 5-205, 5-207**
020	1296070-0000		2	HEATING PIPE	
A3/FLEX TBA 1890S QC, A3/FLEX TBA 2000S QC (See drawing on pages: 5-188, 5-190)					
010	2535538-0200		1	FRAME	**5-195, 5-197, 5-199, 5-201, 5-203, 5-205, 5-207**
020	1296070-0000		2	HEATING PIPE	
A3/FLEX TPA 0750SQ QC, A3/FLEX TPA 1000SQ QC (See drawing on pages: 5-188, 5-190)					
010	2535538-0200		1	FRAME	**5-195, 5-197, 5-199, 5-201, 5-203, 5-205, 5-207**
020	1296070-0000		2	HEATING PIPE	
Common Parts					
030	1285293-0000		1	HEATING PIPE	
050	294464-0000		3	BASE PLATE	
060	1484096-0000		3	COVER	
070	1285311-0000		3	PLATE	
080	1285307-0000		3	SPACER	
090	1285308-0000		3	GASKET	
100	270927-0000		6	SCREW	
110	266739-0000		6	CABLE GLAND	
120	1285312-0000		3	GASKET	
140	90195-0020		3	TERMINAL BLOCK, 1977.2	
150	342722-0204		2	PIPE COUPLING	
160	352103-0106		3	CABLE GLAND, ST 11, PR18,6/PG11	
170	315204-0303		3	O-RING 59,5X3 MM	
180	312115-0226		9	SCREW ISO4762 M3X12 A4 80	
190	353247-0005		3	HOSE GLAND EMC PG21 EXTENDED	
200	90062-0015		24	LOCK WASHER SERRAT.EXT.GEAR,6,4/11 H=0,7	
210	312105-0372		18	SCREW M6S ISO 4017 M6X25 A480	
220	312105-0370		6	SCREW M6S ISO 4017 M6X20 A480	
230	315204-0215		3	O-RING 19,2X3 MM	
240	315125-0165		8	WASHER TBRSB 8,4X26X5 A4	
250	312115-0230		3	SCREW ISO4762 M3X20 A4 80	
260	312132-0284		3	SCREW SLOT. PAN HEAD MSCS M4X5	
270	315234-0109		3	WASHER,PL.RND.CU.10,3/13,5 H=1,0	
280	90055-0204		2	ELBOW WITH TAILPIECE 8/8 MM LONG	
290	342722-0211		1	STRAIGHT COUPLING D=10-G1/4"	
300	90459-1506		1	ELBOW WITH TAILPIECE 10/10 MM	
330	359705-0015		3	WARNING SIGN ISO, RISK OF ELECTRIC SHOCK	
B5307	90326-0081		1	THERMOCOUPLE, ISA TYPE K.	
B5308	90326-0081		1	THERMOCOUPLE, ISA TYPE K.	
B5309	90326-0081		1	THERMOCOUPLE, ISA TYPE K.	
R5307	2514149-0000		1	HEATING ELEMENT	
R5308	2514149-0000		1	HEATING ELEMENT	
R5309	90206-0030		1	HEATING ELEMENT 3000W, 220V	

Machine Type | Group Description | Used-In | Group Number | Page No

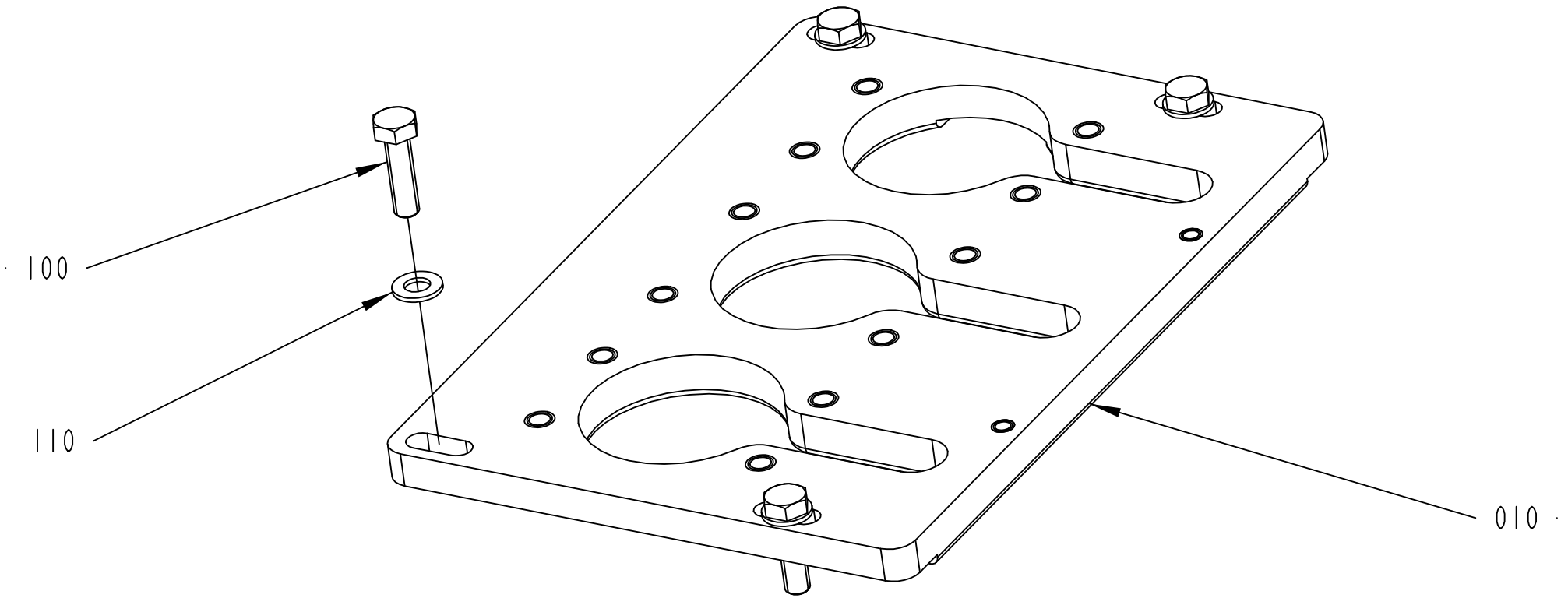

2544339-1
ECM 116811

ECM: 189491 - 20041104
Group number: 2544339-0100
Assembly Drawing: 2544339-1_1_AA

Pos	Part No	UN	Qty	Description	Page No
-					
010	1285291-0000		1	PLATE	
100	315105-0165		4	WASHER BRB 8,4X16 RFR	
110	312105-0453		4	SCREW M6S ISO 4017 M8X25 A480	

Pos	Part No	UN	Qty	Description	Page No

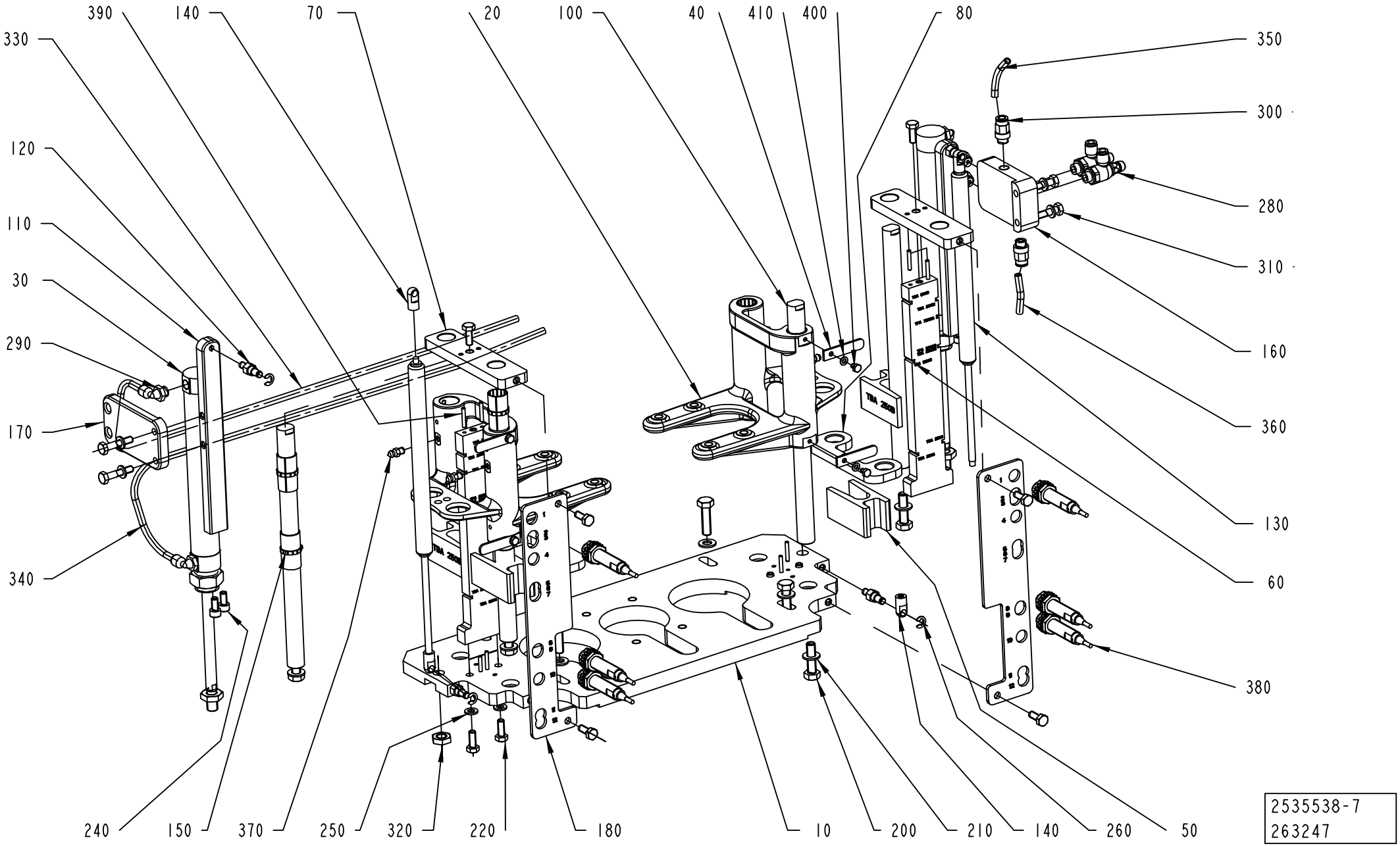

2535538-7
263247

ECM: 263247 - 20061101
Group number: 2535538-0200
Assembly Drawing: 2535538-7_1_AA

This list covers pages from 5-194 to 5-207

Pos	Part No	UN	Qty	Description	Page No
TBA 0200SQ, TBA 0250SQ (See drawing on page: 5-206)					
020	2815309-0000		2	PLATE	
060	2764474-0000		2	PLATE	
080	2829663-0000		2	STOP	
180	2778547-0000		2	BRACKET	
380	90458-1624		4	PROXIMITY SENSOR, E2E2-X2B1-5M	
410	315101-0136		4	WASHER BRB, 4,3/8 H=0,8	
TBA 0250S, TBA 0200M (See drawing on page: 5-200)					
020	2815309-0000		2	PLATE	
060	2764474-0000		2	PLATE	
080	2760089-0000		4	STOP	
180	2778547-0000		2	BRACKET	
380	90458-1624		4	PROXIMITY SENSOR, E2E2-X2B1-5M	
410	315101-0136		4	WASHER BRB, 4,3/8 H=0,8	
TBA 0330S, TBA 0200B, TBA 0250B (See drawing on page: 5-194)					
020	2815309-0000		2	PLATE	
050	2756349-0000		4	SPACER	
060	2764474-0000		2	PLATE	
080	2760089-0000		2	STOP	
180	2778547-0000		2	BRACKET	
380	90458-1624		6	PROXIMITY SENSOR, E2E2-X2B1-5M	
410	315101-0136		4	WASHER BRB, 4,3/8 H=0,8	
TBA 0500B, TBA 1000B (See drawing on page: 5-198)					
020	2815309-0000		2	PLATE	
060	2764474-0000		2	PLATE	
080	2760089-0000		2	STOP	
180	2778547-0000		2	BRACKET	
380	90458-1624		4	PROXIMITY SENSOR, E2E2-X2B1-5M	
410	315101-0136		4	WASHER BRB, 4,3/8 H=0,8	
TBA 1890S, TBA 2000S (See drawing on page: 5-202)					
020	2815309-0000		2	PLATE	
060	2764474-0000		2	PLATE	
080	2829630-0000		4	STOP	
080	2760089-0000		2	STOP	
180	2778547-0000		2	BRACKET	
380	90458-1624		4	PROXIMITY SENSOR, E2E2-X2B1-5M	
410	315101-0136		8	WASHER BRB, 4,3/8 H=0,8	
420	312105-0293		4	SCREW M6S ISO 4017 M4X16 A470	
TPA 0250SQ, TPA 0200SQ (See drawing on page: 5-196)					
020	2815309-0000		2	PLATE	
060	2764474-0000		2	PLATE	
080	2760089-0000		2	STOP	
180	2778547-0000		2	BRACKET	
380	90458-1624		4	PROXIMITY SENSOR, E2E2-X2B1-5M	
410	315101-0136		4	WASHER BRB, 4,3/8 H=0,8	
TPA 1000SQ, TPA 0750SQ (See drawing on page: 5-204)					
020	2815309-0000		2	PLATE	
060	2764474-0000		2	PLATE	
080	2760089-0000		2	STOP	
180	2778547-0000		2	BRACKET	
380	90458-1624		4	PROXIMITY SENSOR, E2E2-X2B1-5M	
410	315101-0136		4	WASHER BRB, 4,3/8 H=0,8	
Common Parts					
010	2760313-0000		1	PLATE	
030	90459-5268		2	DOUBLE ACTING, MINI-ISO, CYL. 25-130	
040	2829385-0000		4	PLATE	
070	2760126-0000		2	SPACER	
100	2760121-0000		4	BAR	
110	2760120-0000		2	PLATE	
120	2761004-0000		4	SCREW	
130	90459-4538		2	GAS SPRING G15-150-150N STAINLESS STEEL	
140	90459-3182		4	GAS SPRING FITTNG, AU16 STAINLESS STEEL	
150	90459-2920		8	BACK-UP RING 110X? MM	
160	2772921-0000		1	PLATE	
170	2773080-0000		1	PLATE	
200	312105-0455		8	SCREW M6S ISO 4017 M8X30 A480	
210	315105-0165		8	WASHER BRB 8,4X16 RFR	
220	312105-0368		10	SCREW M6S ISO 4017 M6X16 A480	
240	312115-0366		4	SCREW ISO4762 M6X12 A4 80	
250	315105-0153		8	WASHER BRB 6,4X12 RFR	
260	315755-0107		4	RETAINING RING SHAFT DIN 6799 5 A2	
280	90235-0846		2	THROTTLE CHECK VALVE G1/8", MANUAL, 6	
290	90458-2956		6	ELBOW PIPE JOINT, EXT.THREAD, D=6MM-G1/8	
300	350001-0006		2	PUSH-IN FITTING QS-F-G1/8-6	
310	312105-0374		4	SCREW M6S ISO 4014 M6X30 A480	
320	312632-0320		2	HEX.TH.NUT FINE,EN24035 ML6M M10X1,25 A4	
330	90166-0013	MM	400	TUBE 8 MM PA BLUE	
340	90166-0013	MM	400	TUBE 8 MM PA BLUE	
350	90166-0013	MM	70	TUBE 8 MM PA BLUE	
360	90166-0013	MM	70	TUBE 8 MM PA BLUE	
370	90286-0013		4	GREASE NIPPLE STRAIGHT, H1 M6X1 2346	
390	311102-0238		8	PARALLEL PIN ISO 2338 3M6X20 ST	
400	312105-0285		4	SCREW M6S ISO 4017 M4X6 A470	

Machine Type	Group Description	Used-In	Group Number	Page No

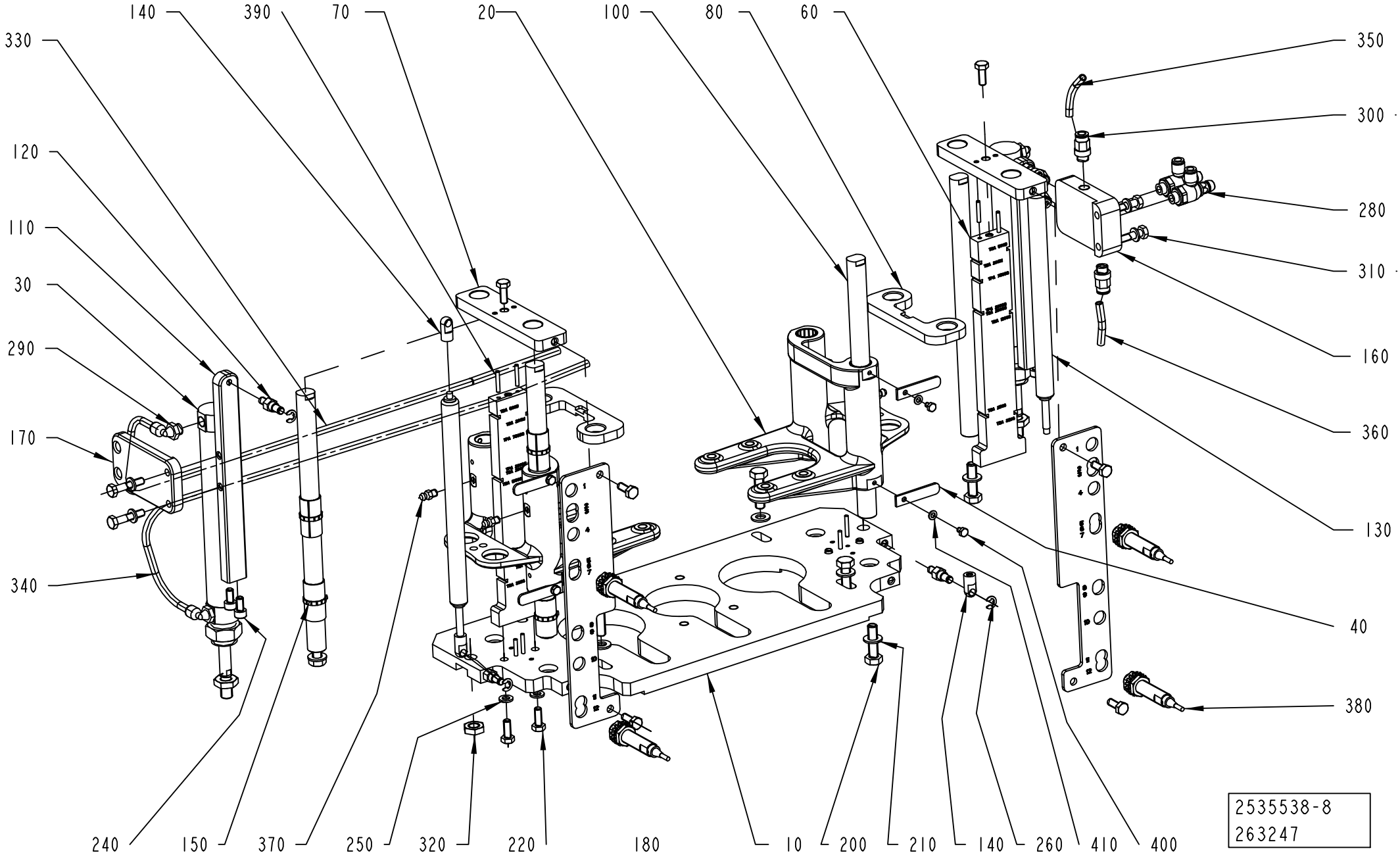
140
390
70
20
100
80
60
330
350
300
120
280
110
310
30
160
290
360
170
130
340
40
380
240
150
370
250
320
220
180
10
200
210
140
260
410
400
2535538-8
263247

ECM: 263247 - 20061101
Group number: 2535538-0200
Assembly Drawing: 2535538-8_1_AA

This list covers pages from 5-194 to 5-207

Pos	Part No	UN	Qty	Description	Page No
TBA 0200SQ, TBA 0250SQ (See drawing on page: 5-206)					
020	2815309-0000		2	PLATE	
060	2764474-0000		2	PLATE	
080	2829663-0000		2	STOP	
180	2778547-0000		2	BRACKET	
380	90458-1624		4	PROXIMITY SENSOR, E2E2-X2B1-5M	
410	315101-0136		4	WASHER BRB, 4,3/8 H=0,8	
TBA 0250S, TBA 0200M (See drawing on page: 5-200)					
020	2815309-0000		2	PLATE	
060	2764474-0000		2	PLATE	
080	2760089-0000		4	STOP	
180	2778547-0000		2	BRACKET	
380	90458-1624		4	PROXIMITY SENSOR, E2E2-X2B1-5M	
410	315101-0136		4	WASHER BRB, 4,3/8 H=0,8	
TBA 0330S, TBA 0200B, TBA 0250B (See drawing on page: 5-194)					
020	2815309-0000		2	PLATE	
050	2756349-0000		4	SPACER	
060	2764474-0000		2	PLATE	
080	2760089-0000		2	STOP	
180	2778547-0000		2	BRACKET	
380	90458-1624		6	PROXIMITY SENSOR, E2E2-X2B1-5M	
410	315101-0136		4	WASHER BRB, 4,3/8 H=0,8	
TBA 0500B, TBA 1000B (See drawing on page: 5-198)					
020	2815309-0000		2	PLATE	
060	2764474-0000		2	PLATE	
080	2760089-0000		2	STOP	
180	2778547-0000		2	BRACKET	
380	90458-1624		4	PROXIMITY SENSOR, E2E2-X2B1-5M	
410	315101-0136		4	WASHER BRB, 4,3/8 H=0,8	
TBA 1890S, TBA 2000S (See drawing on page: 5-202)					
020	2815309-0000		2	PLATE	
060	2764474-0000		2	PLATE	
080	2829630-0000		4	STOP	
080	2760089-0000		2	STOP	
180	2778547-0000		2	BRACKET	
380	90458-1624		4	PROXIMITY SENSOR, E2E2-X2B1-5M	
410	315101-0136		8	WASHER BRB, 4,3/8 H=0,8	
420	312105-0293		4	SCREW M6S ISO 4017 M4X16 A470	
TPA 0250SQ, TPA 0200SQ (See drawing on page: 5-196)					
020	2815309-0000		2	PLATE	
060	2764474-0000		2	PLATE	
080	2760089-0000		2	STOP	
180	2778547-0000		2	BRACKET	
380	90458-1624		4	PROXIMITY SENSOR, E2E2-X2B1-5M	
410	315101-0136		4	WASHER BRB, 4,3/8 H=0,8	
TPA 1000SQ, TPA 0750SQ (See drawing on page: 5-204)					
020	2815309-0000		2	PLATE	
060	2764474-0000		2	PLATE	
080	2760089-0000		2	STOP	
180	2778547-0000		2	BRACKET	
380	90458-1624		4	PROXIMITY SENSOR, E2E2-X2B1-5M	
410	315101-0136		4	WASHER BRB, 4,3/8 H=0,8	
Common Parts					
010	2760313-0000		1	PLATE	
030	90459-5268		2	DOUBLE ACTING, MINI-ISO, CYL. 25-130	
040	2829385-0000		4	PLATE	
070	2760126-0000		2	SPACER	
100	2760121-0000		4	BAR	
110	2760120-0000		2	PLATE	
120	2761004-0000		4	SCREW	
130	90459-4538		2	GAS SPRING G15-150-150N STAINLESS STEEL	
140	90459-3182		4	GAS SPRING FITTNG, AU16 STAINLESS STEEL	
150	90459-2920		8	BACK-UP RING 110X? MM	
160	2772921-0000		1	PLATE	
170	2773080-0000		1	PLATE	
200	312105-0455		8	SCREW M6S ISO 4017 M8X30 A480	
210	315105-0165		8	WASHER BRB 8,4X16 RFR	
220	312105-0368		10	SCREW M6S ISO 4017 M6X16 A480	
240	312115-0366		4	SCREW ISO4762 M6X12 A4 80	
250	315105-0153		8	WASHER BRB 6,4X12 RFR	
260	315755-0107		4	RETAINING RING SHAFT DIN 6799 5 A2	
280	90235-0846		2	THROTTLE CHECK VALVE G1/8", MANUAL, 6	
290	90458-2956		6	ELBOW PIPE JOINT, EXT.THREAD, D=6MM-G1/8	
300	350001-0006		2	PUSH-IN FITTING QS-F-G1/8-6	
310	312105-0374		4	SCREW M6S ISO 4014 M6X30 A480	
320	312632-0320		2	HEX.TH.NUT FINE,EN24035 ML6M M10X1,25 A4	
330	90166-0013	MM	400	TUBE 8 MM PA BLUE	
340	90166-0013	MM	400	TUBE 8 MM PA BLUE	
350	90166-0013	MM	70	TUBE 8 MM PA BLUE	
360	90166-0013	MM	70	TUBE 8 MM PA BLUE	
370	90286-0013		4	GREASE NIPPLE STRAIGHT, H1 M6X1 2346	
390	311102-0238		8	PARALLEL PIN ISO 2338 3M6X20 ST	
400	312105-0285		4	SCREW M6S ISO 4017 M4X6 A470	

Machine Type	Group Description	Used-In	Group Number	Page No

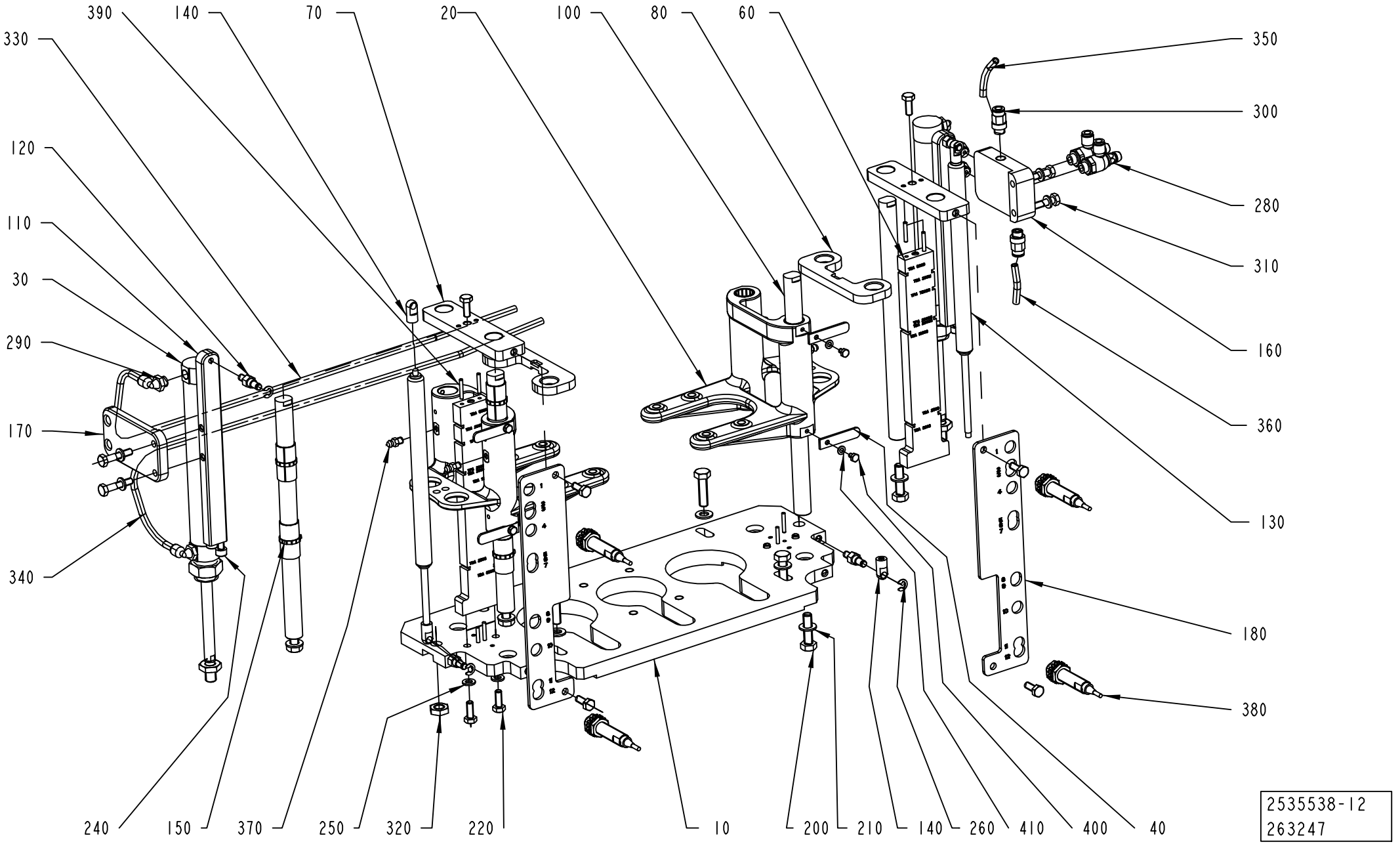

2535538-12
263247

ECM: 263247 - 20061101
Group number: 2535538-0200
Assembly Drawing: 2535538-12_1_AA

This list covers pages from 5-194 to 5-207

Pos	Part No	UN	Qty	Description	Page No
TBA 0200SQ, TBA 0250SQ (See drawing on page: 5-206)					
020	2815309-0000		2	PLATE	
060	2764474-0000		2	PLATE	
080	2829663-0000		2	STOP	
180	2778547-0000		2	BRACKET	
380	90458-1624		4	PROXIMITY SENSOR, E2E2-X2B1-5M	
410	315101-0136		4	WASHER BRB, 4,3/8 H=0,8	
TBA 0250S, TBA 0200M (See drawing on page: 5-200)					
020	2815309-0000		2	PLATE	
060	2764474-0000		2	PLATE	
080	2760089-0000		4	STOP	
180	2778547-0000		2	BRACKET	
380	90458-1624		4	PROXIMITY SENSOR, E2E2-X2B1-5M	
410	315101-0136		4	WASHER BRB, 4,3/8 H=0,8	
TBA 0330S, TBA 0200B, TBA 0250B (See drawing on page: 5-194)					
020	2815309-0000		2	PLATE	
050	2756349-0000		4	SPACER	
060	2764474-0000		2	PLATE	
080	2760089-0000		2	STOP	
180	2778547-0000		2	BRACKET	
380	90458-1624		6	PROXIMITY SENSOR, E2E2-X2B1-5M	
410	315101-0136		4	WASHER BRB, 4,3/8 H=0,8	
TBA 0500B, TBA 1000B (See drawing on page: 5-198)					
020	2815309-0000		2	PLATE	
060	2764474-0000		2	PLATE	
080	2760089-0000		2	STOP	
180	2778547-0000		2	BRACKET	
380	90458-1624		4	PROXIMITY SENSOR, E2E2-X2B1-5M	
410	315101-0136		4	WASHER BRB, 4,3/8 H=0,8	
TBA 1890S, TBA 2000S (See drawing on page: 5-202)					
020	2815309-0000		2	PLATE	
060	2764474-0000		2	PLATE	
080	2829630-0000		4	STOP	
080	2760089-0000		2	STOP	
180	2778547-0000		2	BRACKET	
380	90458-1624		4	PROXIMITY SENSOR, E2E2-X2B1-5M	
410	315101-0136		8	WASHER BRB, 4,3/8 H=0,8	
420	312105-0293		4	SCREW M6S ISO 4017 M4X16 A470	
TPA 0250SQ, TPA 0200SQ (See drawing on page: 5-196)					
020	2815309-0000		2	PLATE	
060	2764474-0000		2	PLATE	
080	2760089-0000		2	STOP	
180	2778547-0000		2	BRACKET	
380	90458-1624		4	PROXIMITY SENSOR, E2E2-X2B1-5M	
410	315101-0136		4	WASHER BRB, 4,3/8 H=0,8	
TPA 1000SQ, TPA 0750SQ (See drawing on page: 5-204)					
020	2815309-0000		2	PLATE	
060	2764474-0000		2	PLATE	
080	2760089-0000		2	STOP	
180	2778547-0000		2	BRACKET	
380	90458-1624		4	PROXIMITY SENSOR, E2E2-X2B1-5M	
410	315101-0136		4	WASHER BRB, 4,3/8 H=0,8	
Common Parts					
010	2760313-0000		1	PLATE	
030	90459-5268		2	DOUBLE ACTING, MINI-ISO, CYL. 25-130	
040	2829385-0000		4	PLATE	
070	2760126-0000		2	SPACER	
100	2760121-0000		4	BAR	
110	2760120-0000		2	PLATE	
120	2761004-0000		4	SCREW	
130	90459-4538		2	GAS SPRING G15-150-150N STAINLESS STEEL	
140	90459-3182		4	GAS SPRING FITTNG, AU16 STAINLESS STEEL	
150	90459-2920		8	BACK-UP RING 110X? MM	
160	2772921-0000		1	PLATE	
170	2773080-0000		1	PLATE	
200	312105-0455		8	SCREW M6S ISO 4017 M8X30 A480	
210	315105-0165		8	WASHER BRB 8,4X16 RFR	
220	312105-0368		10	SCREW M6S ISO 4017 M6X16 A480	
240	312115-0366		4	SCREW ISO4762 M6X12 A4 80	
250	315105-0153		8	WASHER BRB 6,4X12 RFR	
260	315755-0107		4	RETAINING RING SHAFT DIN 6799 5 A2	
280	90235-0846		2	THROTTLE CHECK VALVE G1/8", MANUAL, 6	
290	90458-2956		6	ELBOW PIPE JOINT, EXT.THREAD, D=6MM-G1/8	
300	350001-0006		2	PUSH-IN FITTING QS-F-G1/8-6	
310	312105-0374		4	SCREW M6S ISO 4014 M6X30 A480	
320	312632-0320		2	HEX.TH.NUT FINE,EN24035 ML6M M10X1,25 A4	
330	90166-0013	MM	400	TUBE 8 MM PA BLUE	
340	90166-0013	MM	400	TUBE 8 MM PA BLUE	
350	90166-0013	MM	70	TUBE 8 MM PA BLUE	
360	90166-0013	MM	70	TUBE 8 MM PA BLUE	
370	90286-0013		4	GREASE NIPPLE STRAIGHT, H1 M6X1 2346	
390	311102-0238		8	PARALLEL PIN ISO 2338 3M6X20 ST	
400	312105-0285		4	SCREW M6S ISO 4017 M4X6 A470	

Machine Type	Group Description	Used-In	Group Number	Page No

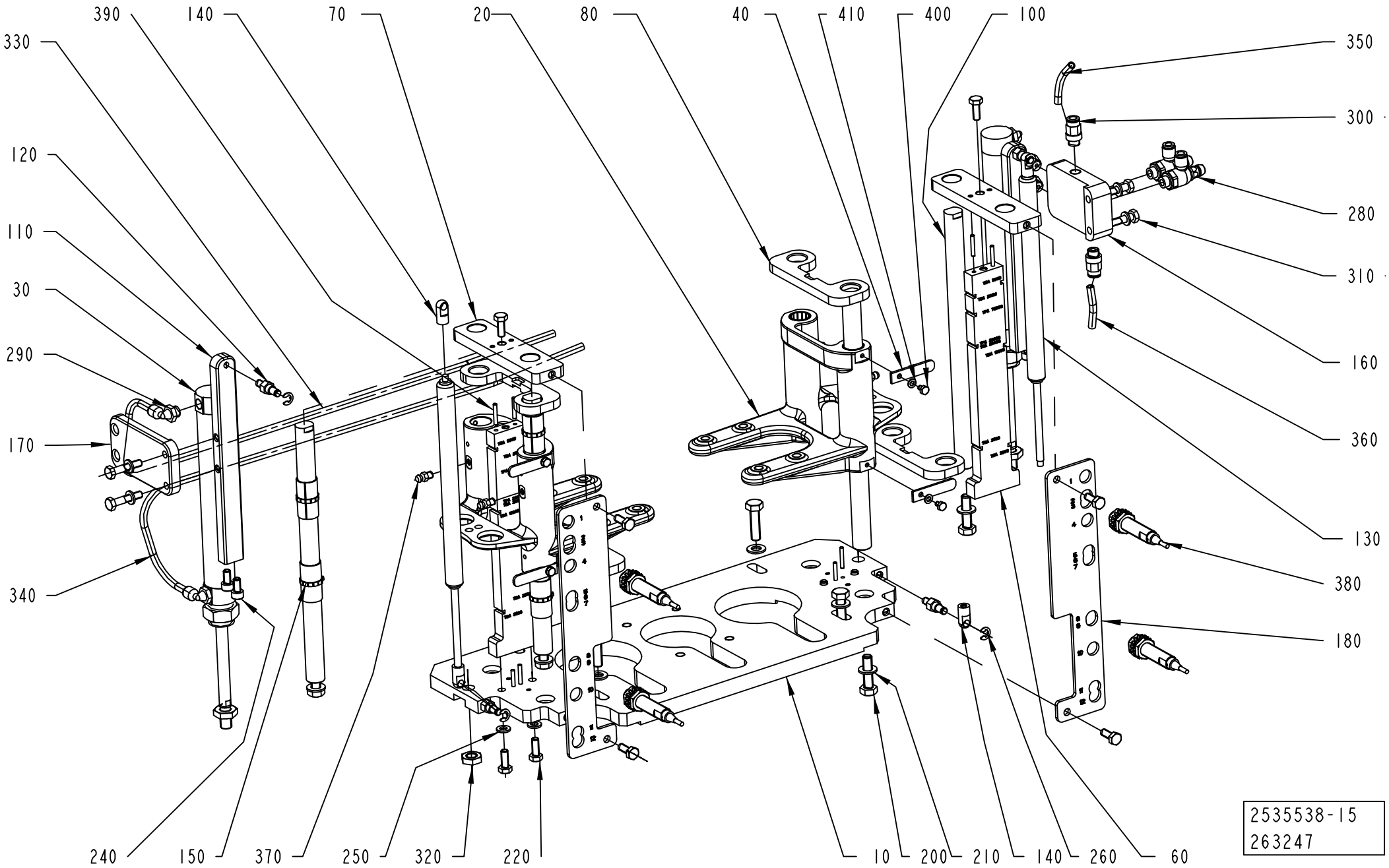
390
140
70
20
80
40
410
400
100
330
350
300
120
280
110
310
30
160
290
360
170
130
380
340
180
240
150
370
250
320
220
10
200
210
140
260
60
2535538-15
263247

ECM: 263247 - 20061101
Group number: 2535538-0200
Assembly Drawing: 2535538-15_1_AA

This list covers pages from 5-194 to 5-207

Pos	Part No	UN	Qty	Description	Page No
TBA 0200SQ, TBA 0250SQ (See drawing on page: 5-206)					
020	2815309-0000		2	PLATE	
060	2764474-0000		2	PLATE	
080	2829663-0000		2	STOP	
180	2778547-0000		2	BRACKET	
380	90458-1624		4	PROXIMITY SENSOR, E2E2-X2B1-5M	
410	315101-0136		4	WASHER BRB, 4,3/8 H=0,8	
TBA 0250S, TBA 0200M (See drawing on page: 5-200)					
020	2815309-0000		2	PLATE	
060	2764474-0000		2	PLATE	
080	2760089-0000		4	STOP	
180	2778547-0000		2	BRACKET	
380	90458-1624		4	PROXIMITY SENSOR, E2E2-X2B1-5M	
410	315101-0136		4	WASHER BRB, 4,3/8 H=0,8	
TBA 0330S, TBA 0200B, TBA 0250B (See drawing on page: 5-194)					
020	2815309-0000		2	PLATE	
050	2756349-0000		4	SPACER	
060	2764474-0000		2	PLATE	
080	2760089-0000		2	STOP	
180	2778547-0000		2	BRACKET	
380	90458-1624		6	PROXIMITY SENSOR, E2E2-X2B1-5M	
410	315101-0136		4	WASHER BRB, 4,3/8 H=0,8	
TBA 0500B, TBA 1000B (See drawing on page: 5-198)					
020	2815309-0000		2	PLATE	
060	2764474-0000		2	PLATE	
080	2760089-0000		2	STOP	
180	2778547-0000		2	BRACKET	
380	90458-1624		4	PROXIMITY SENSOR, E2E2-X2B1-5M	
410	315101-0136		4	WASHER BRB, 4,3/8 H=0,8	
TBA 1890S, TBA 2000S (See drawing on page: 5-202)					
020	2815309-0000		2	PLATE	
060	2764474-0000		2	PLATE	
080	2829630-0000		4	STOP	
080	2760089-0000		2	STOP	
180	2778547-0000		2	BRACKET	
380	90458-1624		4	PROXIMITY SENSOR, E2E2-X2B1-5M	
410	315101-0136		8	WASHER BRB, 4,3/8 H=0,8	
420	312105-0293		4	SCREW M6S ISO 4017 M4X16 A470	
TPA 0250SQ, TPA 0200SQ (See drawing on page: 5-196)					
020	2815309-0000		2	PLATE	
060	2764474-0000		2	PLATE	
080	2760089-0000		2	STOP	
180	2778547-0000		2	BRACKET	
380	90458-1624		4	PROXIMITY SENSOR, E2E2-X2B1-5M	
410	315101-0136		4	WASHER BRB, 4,3/8 H=0,8	
TPA 1000SQ, TPA 0750SQ (See drawing on page: 5-204)					
020	2815309-0000		2	PLATE	
060	2764474-0000		2	PLATE	
080	2760089-0000		2	STOP	
180	2778547-0000		2	BRACKET	
380	90458-1624		4	PROXIMITY SENSOR, E2E2-X2B1-5M	
410	315101-0136		4	WASHER BRB, 4,3/8 H=0,8	
Common Parts					
010	2760313-0000		1	PLATE	
030	90459-5268		2	DOUBLE ACTING, MINI-ISO, CYL. 25-130	
040	2829385-0000		4	PLATE	
070	2760126-0000		2	SPACER	
100	2760121-0000		4	BAR	
110	2760120-0000		2	PLATE	
120	2761004-0000		4	SCREW	
130	90459-4538		2	GAS SPRING G15-150-150N STAINLESS STEEL	
140	90459-3182		4	GAS SPRING FITTNG, AU16 STAINLESS STEEL	
150	90459-2920		8	BACK-UP RING 110X? MM	
160	2772921-0000		1	PLATE	
170	2773080-0000		1	PLATE	
200	312105-0455		8	SCREW M6S ISO 4017 M8X30 A480	
210	315105-0165		8	WASHER BRB 8,4X16 RFR	
220	312105-0368		10	SCREW M6S ISO 4017 M6X16 A480	
240	312115-0366		4	SCREW ISO4762 M6X12 A4 80	
250	315105-0153		8	WASHER BRB 6,4X12 RFR	
260	315755-0107		4	RETAINING RING SHAFT DIN 6799 5 A2	
280	90235-0846		2	THROTTLE CHECK VALVE G1/8", MANUAL, 6	
290	90458-2956		6	ELBOW PIPE JOINT, EXT.THREAD, D=6MM-G1/8	
300	350001-0006		2	PUSH-IN FITTING QS-F-G1/8-6	
310	312105-0374		4	SCREW M6S ISO 4014 M6X30 A480	
320	312632-0320		2	HEX.TH.NUT FINE,EN24035 ML6M M10X1,25 A4	
330	90166-0013	MM	400	TUBE 8 MM PA BLUE	
340	90166-0013	MM	400	TUBE 8 MM PA BLUE	
350	90166-0013	MM	70	TUBE 8 MM PA BLUE	
360	90166-0013	MM	70	TUBE 8 MM PA BLUE	
370	90286-0013		4	GREASE NIPPLE STRAIGHT, H1 M6X1 2346	
390	311102-0238		8	PARALLEL PIN ISO 2338 3M6X20 ST	
400	312105-0285		4	SCREW M6S ISO 4017 M4X6 A470	

Machine Type | Group Description | Used-In | Group Number | Page No

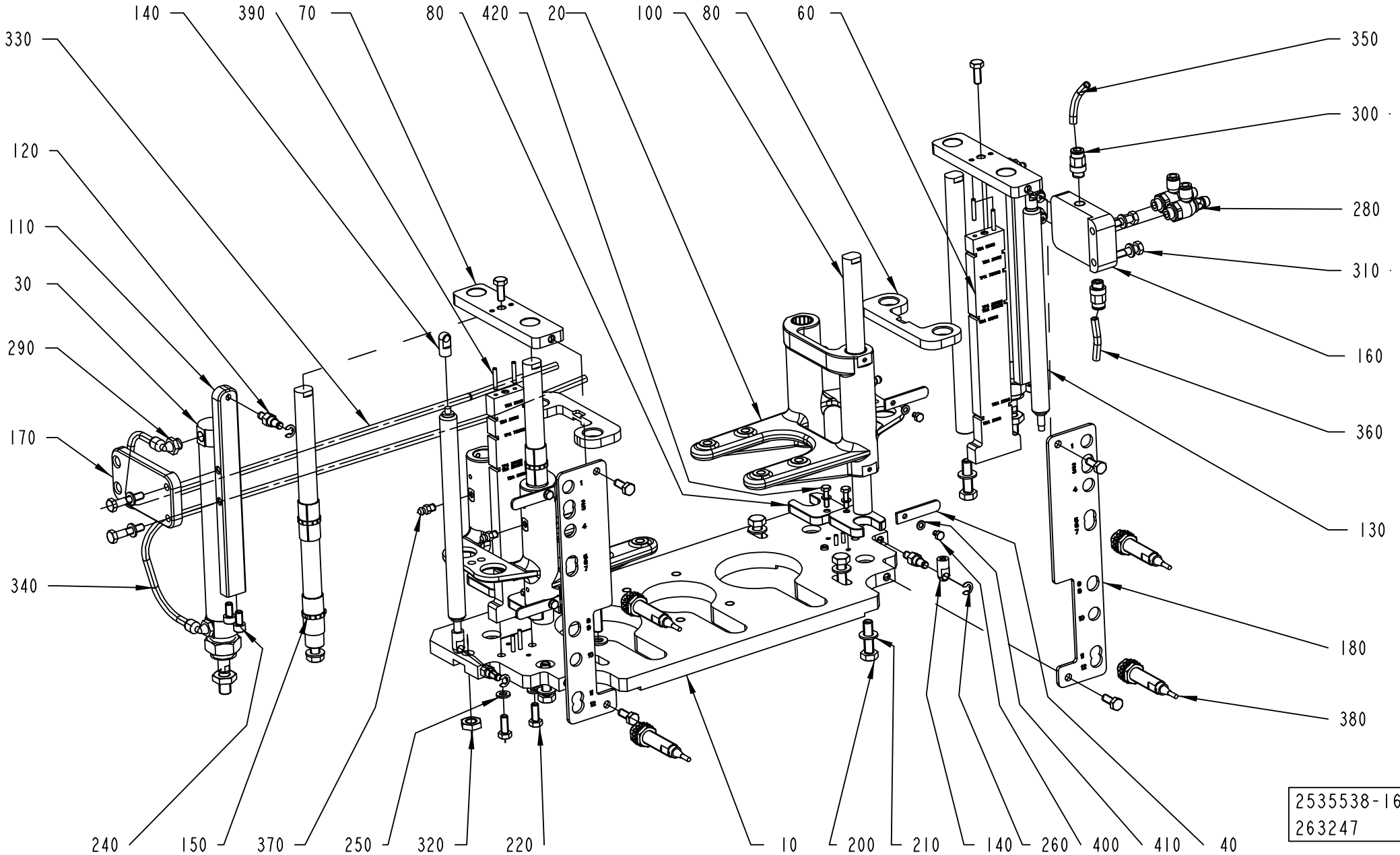
140
390
70
80
420
20
100
80
60
330
120
110
30
290
170
340
350
300
280
310
160
360
130
180
380
240
150
370
250
320
220
10
200
210
140
260
400
410
40
2535538-16
263247

ECM: 263247 - 20061101
Group number: 2535538-0200
Assembly Drawing: 2535538-16_1_AA

This list covers pages from 5-194 to 5-207

Pos	Part No	UN	Qty	Description	Page No
TBA 0200SQ, TBA 0250SQ (See drawing on page: 5-206)					
020	2815309-0000		2	PLATE	
060	2764474-0000		2	PLATE	
080	2829663-0000		2	STOP	
180	2778547-0000		2	BRACKET	
380	90458-1624		4	PROXIMITY SENSOR, E2E2-X2B1-5M	
410	315101-0136		4	WASHER BRB, 4,3/8 H=0,8	
TBA 0250S, TBA 0200M (See drawing on page: 5-200)					
020	2815309-0000		2	PLATE	
060	2764474-0000		2	PLATE	
080	2760089-0000		4	STOP	
180	2778547-0000		2	BRACKET	
380	90458-1624		4	PROXIMITY SENSOR, E2E2-X2B1-5M	
410	315101-0136		4	WASHER BRB, 4,3/8 H=0,8	
TBA 0330S, TBA 0200B, TBA 0250B (See drawing on page: 5-194)					
020	2815309-0000		2	PLATE	
050	2756349-0000		4	SPACER	
060	2764474-0000		2	PLATE	
080	2760089-0000		2	STOP	
180	2778547-0000		2	BRACKET	
380	90458-1624		6	PROXIMITY SENSOR, E2E2-X2B1-5M	
410	315101-0136		4	WASHER BRB, 4,3/8 H=0,8	
TBA 0500B, TBA 1000B (See drawing on page: 5-198)					
020	2815309-0000		2	PLATE	
060	2764474-0000		2	PLATE	
080	2760089-0000		2	STOP	
180	2778547-0000		2	BRACKET	
380	90458-1624		4	PROXIMITY SENSOR, E2E2-X2B1-5M	
410	315101-0136		4	WASHER BRB, 4,3/8 H=0,8	
TBA 1890S, TBA 2000S (See drawing on page: 5-202)					
020	2815309-0000		2	PLATE	
060	2764474-0000		2	PLATE	
080	2829630-0000		4	STOP	
080	2760089-0000		2	STOP	
180	2778547-0000		2	BRACKET	
380	90458-1624		4	PROXIMITY SENSOR, E2E2-X2B1-5M	
410	315101-0136		8	WASHER BRB, 4,3/8 H=0,8	
420	312105-0293		4	SCREW M6S ISO 4017 M4X16 A470	
TPA 0250SQ, TPA 0200SQ (See drawing on page: 5-196)					
020	2815309-0000		2	PLATE	
060	2764474-0000		2	PLATE	
080	2760089-0000		2	STOP	
180	2778547-0000		2	BRACKET	
380	90458-1624		4	PROXIMITY SENSOR, E2E2-X2B1-5M	
410	315101-0136		4	WASHER BRB, 4,3/8 H=0,8	
TPA 1000SQ, TPA 0750SQ (See drawing on page: 5-204)					
020	2815309-0000		2	PLATE	
060	2764474-0000		2	PLATE	
080	2760089-0000		2	STOP	
180	2778547-0000		2	BRACKET	
380	90458-1624		4	PROXIMITY SENSOR, E2E2-X2B1-5M	
410	315101-0136		4	WASHER BRB, 4,3/8 H=0,8	
Common Parts					
010	2760313-0000		1	PLATE	
030	90459-5268		2	DOUBLE ACTING, MINI-ISO, CYL. 25-130	
040	2829385-0000		4	PLATE	
070	2760126-0000		2	SPACER	
100	2760121-0000		4	BAR	
110	2760120-0000		2	PLATE	
120	2761004-0000		4	SCREW	
130	90459-4538		2	GAS SPRING G15-150-150N STAINLESS STEEL	
140	90459-3182		4	GAS SPRING FITTNG, AU16 STAINLESS STEEL	
150	90459-2920		8	BACK-UP RING 110X? MM	
160	2772921-0000		1	PLATE	
170	2773080-0000		1	PLATE	
200	312105-0455		8	SCREW M6S ISO 4017 M8X30 A480	
210	315105-0165		8	WASHER BRB 8,4X16 RFR	
220	312105-0368		10	SCREW M6S ISO 4017 M6X16 A480	
240	312115-0366		4	SCREW ISO4762 M6X12 A4 80	
250	315105-0153		8	WASHER BRB 6,4X12 RFR	
260	315755-0107		4	RETAINING RING SHAFT DIN 6799 5 A2	
280	90235-0846		2	THROTTLE CHECK VALVE G1/8", MANUAL, 6	
290	90458-2956		6	ELBOW PIPE JOINT, EXT.THREAD, D=6MM-G1/8	
300	350001-0006		2	PUSH-IN FITTING QS-F-G1/8-6	
310	312105-0374		4	SCREW M6S ISO 4014 M6X30 A480	
320	312632-0320		2	HEX.TH.NUT FINE,EN24035 ML6M M10X1,25 A4	
330	90166-0013	MM	400	TUBE 8 MM PA BLUE	
340	90166-0013	MM	400	TUBE 8 MM PA BLUE	
350	90166-0013	MM	70	TUBE 8 MM PA BLUE	
360	90166-0013	MM	70	TUBE 8 MM PA BLUE	
370	90286-0013		4	GREASE NIPPLE STRAIGHT, H1 M6X1 2346	
390	311102-0238		8	PARALLEL PIN ISO 2338 3M6X20 ST	
400	312105-0285		4	SCREW M6S ISO 4017 M4X6 A470	

Machine Type	Group Description	Used-In	Group Number	Page No

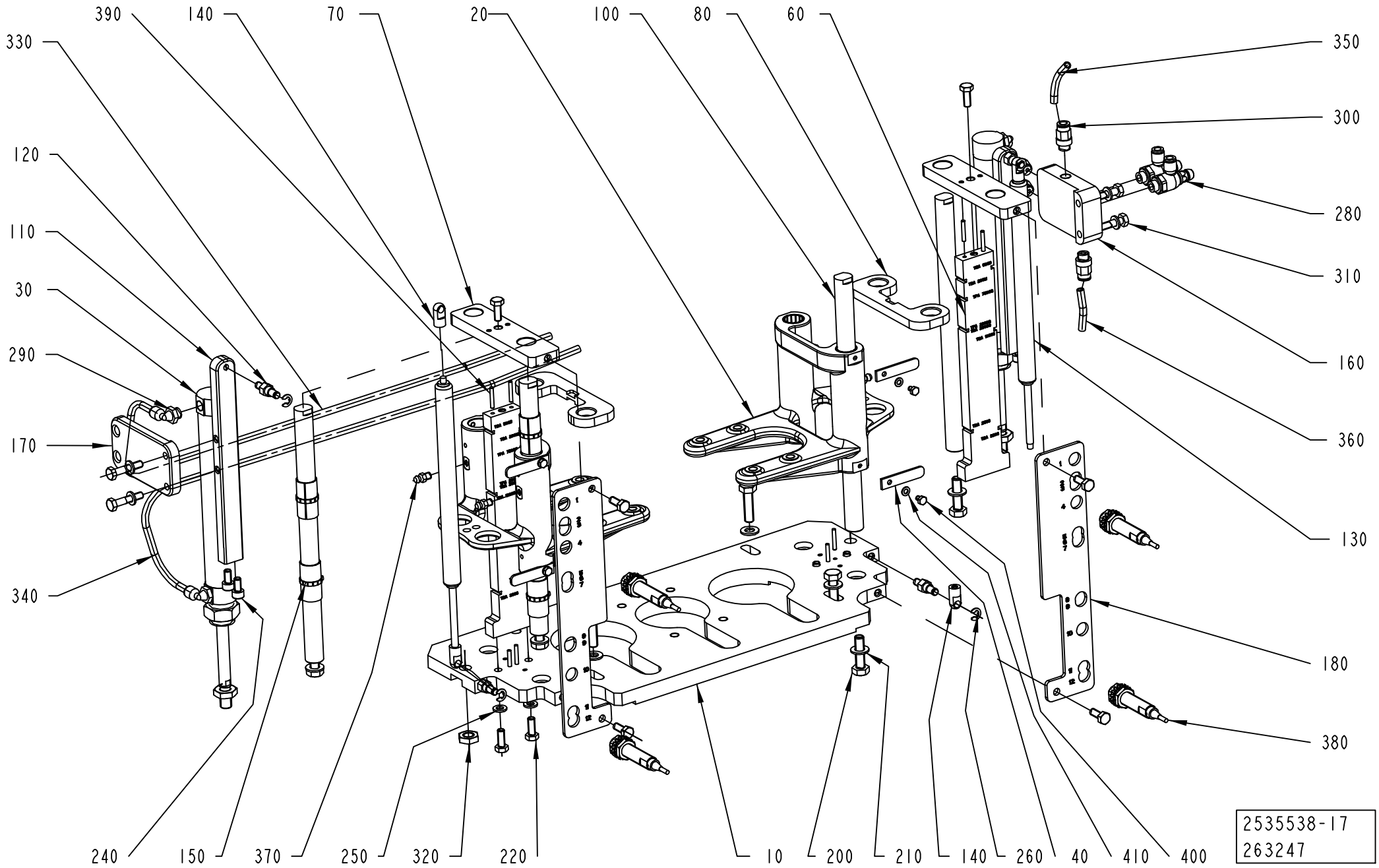
390
140
70
20
100
80
60
330
350
300
120
280
110
310
30
160
290
360
170
130
340
180
380
240
150
370
250
320
220
10
200
210
140
260
40
410
400
2535538-17
263247

ECM: 263247 - 20061101
Group number: 2535538-0200
Assembly Drawing: 2535538-17_1_AA

This list covers pages from 5-194 to 5-207

Pos	Part No	UN	Qty	Description	Page No
TBA 0200SQ, TBA 0250SQ (See drawing on page: 5-206)					
020	2815309-0000		2	PLATE	
060	2764474-0000		2	PLATE	
080	2829663-0000		2	STOP	
180	2778547-0000		2	BRACKET	
380	90458-1624		4	PROXIMITY SENSOR, E2E2-X2B1-5M	
410	315101-0136		4	WASHER BRB, 4,3/8 H=0,8	
TBA 0250S, TBA 0200M (See drawing on page: 5-200)					
020	2815309-0000		2	PLATE	
060	2764474-0000		2	PLATE	
080	2760089-0000		4	STOP	
180	2778547-0000		2	BRACKET	
380	90458-1624		4	PROXIMITY SENSOR, E2E2-X2B1-5M	
410	315101-0136		4	WASHER BRB, 4,3/8 H=0,8	
TBA 0330S, TBA 0200B, TBA 0250B (See drawing on page: 5-194)					
020	2815309-0000		2	PLATE	
050	2756349-0000		4	SPACER	
060	2764474-0000		2	PLATE	
080	2760089-0000		2	STOP	
180	2778547-0000		2	BRACKET	
380	90458-1624		6	PROXIMITY SENSOR, E2E2-X2B1-5M	
410	315101-0136		4	WASHER BRB, 4,3/8 H=0,8	
TBA 0500B, TBA 1000B (See drawing on page: 5-198)					
020	2815309-0000		2	PLATE	
060	2764474-0000		2	PLATE	
080	2760089-0000		2	STOP	
180	2778547-0000		2	BRACKET	
380	90458-1624		4	PROXIMITY SENSOR, E2E2-X2B1-5M	
410	315101-0136		4	WASHER BRB, 4,3/8 H=0,8	
TBA 1890S, TBA 2000S (See drawing on page: 5-202)					
020	2815309-0000		2	PLATE	
060	2764474-0000		2	PLATE	
080	2829630-0000		4	STOP	
080	2760089-0000		2	STOP	
180	2778547-0000		2	BRACKET	
380	90458-1624		4	PROXIMITY SENSOR, E2E2-X2B1-5M	
410	315101-0136		8	WASHER BRB, 4,3/8 H=0,8	
420	312105-0293		4	SCREW M6S ISO 4017 M4X16 A470	
TPA 0250SQ, TPA 0200SQ (See drawing on page: 5-196)					
020	2815309-0000		2	PLATE	
060	2764474-0000		2	PLATE	
080	2760089-0000		2	STOP	
180	2778547-0000		2	BRACKET	
380	90458-1624		4	PROXIMITY SENSOR, E2E2-X2B1-5M	
410	315101-0136		4	WASHER BRB, 4,3/8 H=0,8	
TPA 1000SQ, TPA 0750SQ (See drawing on page: 5-204)					
020	2815309-0000		2	PLATE	
060	2764474-0000		2	PLATE	
080	2760089-0000		2	STOP	
180	2778547-0000		2	BRACKET	
380	90458-1624		4	PROXIMITY SENSOR, E2E2-X2B1-5M	
410	315101-0136		4	WASHER BRB, 4,3/8 H=0,8	
Common Parts					
010	2760313-0000		1	PLATE	
030	90459-5268		2	DOUBLE ACTING, MINI-ISO, CYL. 25-130	
040	2829385-0000		4	PLATE	
070	2760126-0000		2	SPACER	
100	2760121-0000		4	BAR	
110	2760120-0000		2	PLATE	
120	2761004-0000		4	SCREW	
130	90459-4538		2	GAS SPRING G15-150-150N STAINLESS STEEL	
140	90459-3182		4	GAS SPRING FITTNG, AU16 STAINLESS STEEL	
150	90459-2920		8	BACK-UP RING 110X? MM	
160	2772921-0000		1	PLATE	
170	2773080-0000		1	PLATE	
200	312105-0455		8	SCREW M6S ISO 4017 M8X30 A480	
210	315105-0165		8	WASHER BRB 8,4X16 RFR	
220	312105-0368		10	SCREW M6S ISO 4017 M6X16 A480	
240	312115-0366		4	SCREW ISO4762 M6X12 A4 80	
250	315105-0153		8	WASHER BRB 6,4X12 RFR	
260	315755-0107		4	RETAINING RING SHAFT DIN 6799 5 A2	
280	90235-0846		2	THROTTLE CHECK VALVE G1/8", MANUAL, 6	
290	90458-2956		6	ELBOW PIPE JOINT, EXT.THREAD, D=6MM-G1/8	
300	350001-0006		2	PUSH-IN FITTING QS-F-G1/8-6	
310	312105-0374		4	SCREW M6S ISO 4014 M6X30 A480	
320	312632-0320		2	HEX.TH.NUT FINE,EN24035 ML6M M10X1,25 A4	
330	90166-0013	MM	400	TUBE 8 MM PA BLUE	
340	90166-0013	MM	400	TUBE 8 MM PA BLUE	
350	90166-0013	MM	70	TUBE 8 MM PA BLUE	
360	90166-0013	MM	70	TUBE 8 MM PA BLUE	
370	90286-0013		4	GREASE NIPPLE STRAIGHT, H1 M6X1 2346	
390	311102-0238		8	PARALLEL PIN ISO 2338 3M6X20 ST	
400	312105-0285		4	SCREW M6S ISO 4017 M4X6 A470	

Machine Type	Group Description	Used-In	Group Number	Page No

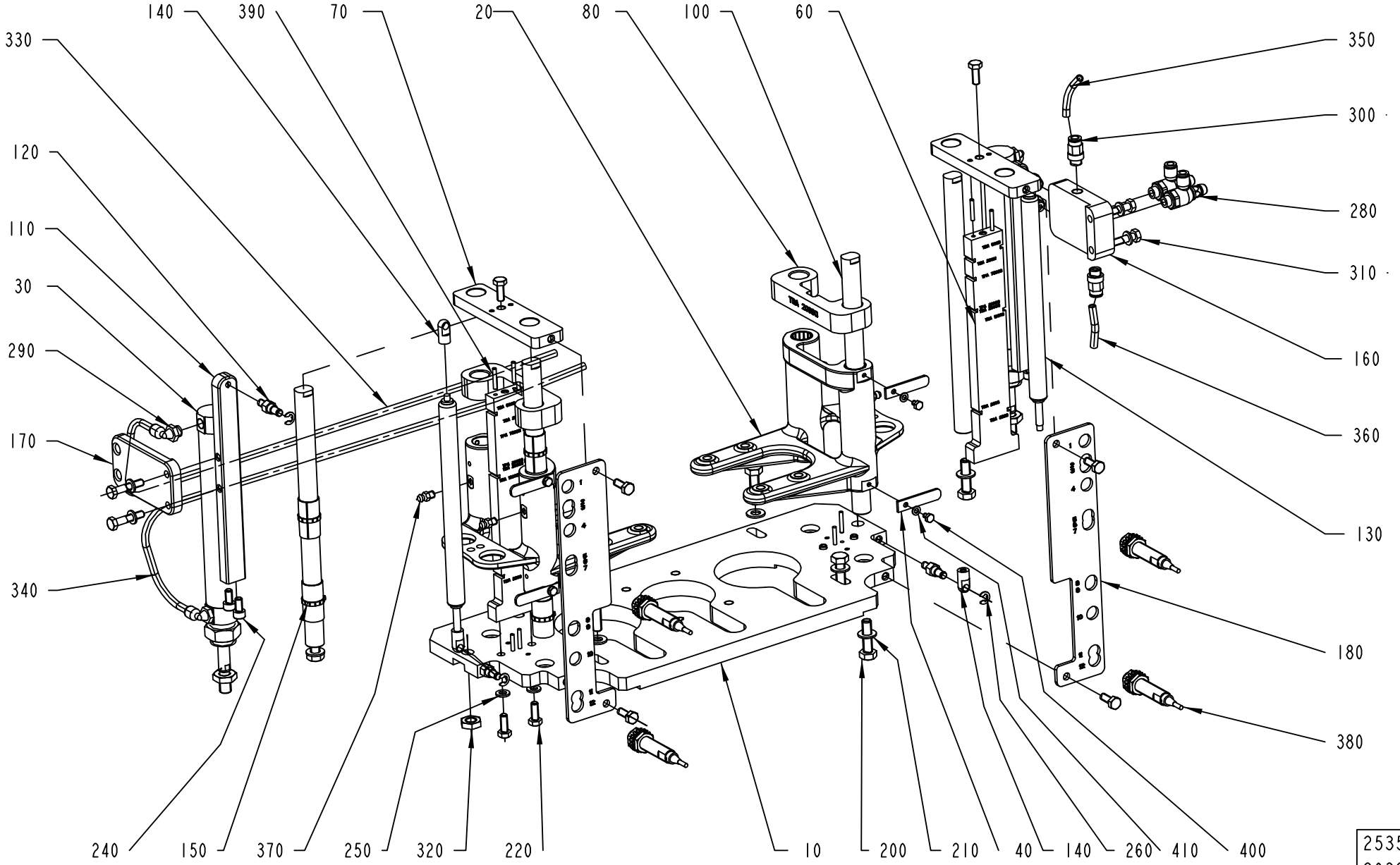

2535538-18
263247

ECM: 263247 - 20061101
Group number: 2535538-0200
Assembly Drawing: 2535538-18_1_AA

This list covers pages from 5-194 to 5-207

Pos	Part No	UN	Qty	Description	Page No
TBA 0200SQ, TBA 0250SQ (See drawing on page: 5-206)					
020	2815309-0000		2	PLATE	
060	2764474-0000		2	PLATE	
080	2829663-0000		2	STOP	
180	2778547-0000		2	BRACKET	
380	90458-1624		4	PROXIMITY SENSOR, E2E2-X2B1-5M	
410	315101-0136		4	WASHER BRB, 4,3/8 H=0,8	
TBA 0250S, TBA 0200M (See drawing on page: 5-200)					
020	2815309-0000		2	PLATE	
060	2764474-0000		2	PLATE	
080	2760089-0000		4	STOP	
180	2778547-0000		2	BRACKET	
380	90458-1624		4	PROXIMITY SENSOR, E2E2-X2B1-5M	
410	315101-0136		4	WASHER BRB, 4,3/8 H=0,8	
TBA 0330S, TBA 0200B, TBA 0250B (See drawing on page: 5-194)					
020	2815309-0000		2	PLATE	
050	2756349-0000		4	SPACER	
060	2764474-0000		2	PLATE	
080	2760089-0000		2	STOP	
180	2778547-0000		2	BRACKET	
380	90458-1624		6	PROXIMITY SENSOR, E2E2-X2B1-5M	
410	315101-0136		4	WASHER BRB, 4,3/8 H=0,8	
TBA 0500B, TBA 1000B (See drawing on page: 5-198)					
020	2815309-0000		2	PLATE	
060	2764474-0000		2	PLATE	
080	2760089-0000		2	STOP	
180	2778547-0000		2	BRACKET	
380	90458-1624		4	PROXIMITY SENSOR, E2E2-X2B1-5M	
410	315101-0136		4	WASHER BRB, 4,3/8 H=0,8	
TBA 1890S, TBA 2000S (See drawing on page: 5-202)					
020	2815309-0000		2	PLATE	
060	2764474-0000		2	PLATE	
080	2829630-0000		4	STOP	
080	2760089-0000		2	STOP	
180	2778547-0000		2	BRACKET	
380	90458-1624		4	PROXIMITY SENSOR, E2E2-X2B1-5M	
410	315101-0136		8	WASHER BRB, 4,3/8 H=0,8	
420	312105-0293		4	SCREW M6S ISO 4017 M4X16 A470	
TPA 0250SQ, TPA 0200SQ (See drawing on page: 5-196)					
020	2815309-0000		2	PLATE	
060	2764474-0000		2	PLATE	
080	2760089-0000		2	STOP	
180	2778547-0000		2	BRACKET	
380	90458-1624		4	PROXIMITY SENSOR, E2E2-X2B1-5M	
410	315101-0136		4	WASHER BRB, 4,3/8 H=0,8	
TPA 1000SQ, TPA 0750SQ (See drawing on page: 5-204)					
020	2815309-0000		2	PLATE	
060	2764474-0000		2	PLATE	
080	2760089-0000		2	STOP	
180	2778547-0000		2	BRACKET	
380	90458-1624		4	PROXIMITY SENSOR, E2E2-X2B1-5M	
410	315101-0136		4	WASHER BRB, 4,3/8 H=0,8	
Common Parts					
010	2760313-0000		1	PLATE	
030	90459-5268		2	DOUBLE ACTING, MINI-ISO, CYL. 25-130	
040	2829385-0000		4	PLATE	
070	2760126-0000		2	SPACER	
100	2760121-0000		4	BAR	
110	2760120-0000		2	PLATE	
120	2761004-0000		4	SCREW	
130	90459-4538		2	GAS SPRING G15-150-150N STAINLESS STEEL	
140	90459-3182		4	GAS SPRING FITTNG, AU16 STAINLESS STEEL	
150	90459-2920		8	BACK-UP RING 110X? MM	
160	2772921-0000		1	PLATE	
170	2773080-0000		1	PLATE	
200	312105-0455		8	SCREW M6S ISO 4017 M8X30 A480	
210	315105-0165		8	WASHER BRB 8,4X16 RFR	
220	312105-0368		10	SCREW M6S ISO 4017 M6X16 A480	
240	312115-0366		4	SCREW ISO4762 M6X12 A4 80	
250	315105-0153		8	WASHER BRB 6,4X12 RFR	
260	315755-0107		4	RETAINING RING SHAFT DIN 6799 5 A2	
280	90235-0846		2	THROTTLE CHECK VALVE G1/8", MANUAL, 6	
290	90458-2956		6	ELBOW PIPE JOINT, EXT.THREAD, D=6MM-G1/8	
300	350001-0006		2	PUSH-IN FITTING QS-F-G1/8-6	
310	312105-0374		4	SCREW M6S ISO 4014 M6X30 A480	
320	312632-0320		2	HEX.TH.NUT FINE,EN24035 ML6M M10X1,25 A4	
330	90166-0013	MM	400	TUBE 8 MM PA BLUE	
340	90166-0013	MM	400	TUBE 8 MM PA BLUE	
350	90166-0013	MM	70	TUBE 8 MM PA BLUE	
360	90166-0013	MM	70	TUBE 8 MM PA BLUE	
370	90286-0013		4	GREASE NIPPLE STRAIGHT, H1 M6X1 2346	
390	311102-0238		8	PARALLEL PIN ISO 2338 3M6X20 ST	
400	312105-0285		4	SCREW M6S ISO 4017 M4X6 A470	

Machine Type	Group Description	Used-In	Group Number	Page No

FLAP HEATER VARIANT

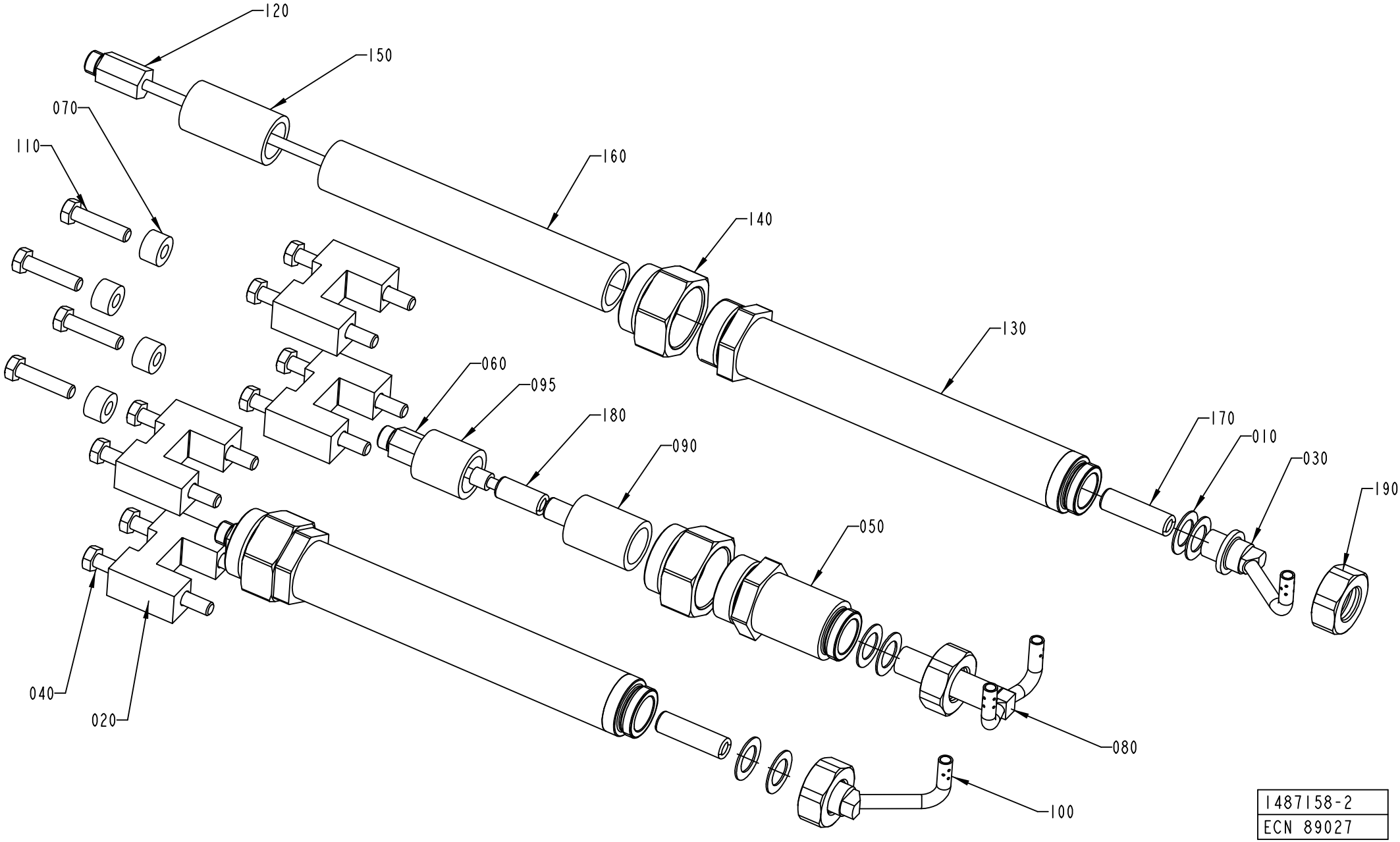

1487158-2
ECN 89027

ECM: 270841 - 20060626
Group number: 1487158-0300
Assembly Drawing: 1487158-2_1_AA

This list covers pages from 5-208 to 5-219

Pos	Part No	UN	Qty	Description	Page No
TBA 1000S (See drawing on page: 5-208)					
010	263673-0000		6	GASKET	
020	1348043-0000		8	SPACER	
030	1296068-0000		1	NOZZLE	
040	312109-0460		8	SCREW M6S ISO 4017 M8X45 A480	
050	1549389-0000		1	SPACER	
060	1296072-0000		1	EXTENSION	
080	1296066-0000		1	NOZZLE	
090	23765-0004		1	INSULATING PIPE	
095	23765-0005		1	INSULATING PIPE	
100	1296067-0000		1	NOZZLE	
110	312109-0457		4	SCREW M6S ISO 4017 M8X35 A480	
120	1285310-0000		2	EXTENSION	
130	2545135-0000		2	SPACER	
140	1549390-0000		3	NUT	
150	23765-0003		2	INSULATING PIPE	
160	23765-0001		2	INSULATING PIPE	
170	252766-0002		2	INSULATING PIPE	
180	252766-0001		2	INSULATING PIPE	
190	1317085-0000		2	NUT	
200	359710-0001		3	WARNING SIGN ISO, HOT SURFACE	
TBA 1000SQ (See drawing on page: 5-208)					
010	263673-0000		6	GASKET	
020	1285874-0000		8	SPACER	
030	1498147-0000		1	NOZZLE	
040	312109-0457		8	SCREW M6S ISO 4017 M8X35 A480	
050	1549389-0000		1	SPACER	
060	1296072-0000		1	EXTENSION	
070	1285874-0000		4	SPACER	
080	1490039-0000		1	NOZZLE	
090	23765-0004		1	INSULATING PIPE	
095	23765-0005		1	INSULATING PIPE	
100	1498146-0000		1	NOZZLE	
110	312109-0457		4	SCREW M6S ISO 4017 M8X35 A480	
120	1285310-0000		2	EXTENSION	
130	2545135-0000		2	SPACER	
140	1549390-0000		3	NUT	
150	23765-0003		2	INSULATING PIPE	
160	23765-0001		2	INSULATING PIPE	
170	252766-0002		2	INSULATING PIPE	
180	252766-0001		2	INSULATING PIPE	
190	1317085-0000		2	NUT	
200	359710-0001		3	WARNING SIGN ISO, HOT SURFACE	
TBA 1500S (See drawing on page: 5-208)					
010	263673-0000		9	GASKET	
020	1317804-0000		8	SPACER	
030	1317802-0000		1	NOZZLE	
040	312109-0461		8	SCREW M6S ISO 4017 M8X50 A480	
050	2545433-0000		1	SPACER	
060	1285870-0000		1	EXTENSION	
070	2545537-0000		4	SPACER	
080	1317801-0000		1	NOZZLE	
095	23765-0005		1	INSULATING PIPE	
100	1317803-0000		1	NOZZLE	
110	312109-0463		4	SCREW M6S ISO 4017 M8X60 A480	
120	1285310-0000		2	EXTENSION	
130	2545135-0000		2	SPACER	
140	1549390-0000		3	NUT	
150	23765-0003		2	INSULATING PIPE	
160	23765-0001		2	INSULATING PIPE	
170	252766-0002		2	INSULATING PIPE	
180	252766-0001		2	INSULATING PIPE	
190	1317085-0000		2	NUT	
200	359710-0001		3	WARNING SIGN ISO, HOT SURFACE	
TBA 1890S QC, TBA 2000S QC (See drawing on page: 5-210)					
010	263673-0000		9	GASKET	
030	2598500-0000		1	NOZZLE	
050	2545433-0000		1	SPACER	
060	1296072-0000		1	EXTENSION	
070	2618683-0000		4	SPACER	
075	1498163-0000		8	SPACER	
080	2598498-0000		1	NOZZLE	
090	23765-0004		1	INSULATING PIPE	
100	2598499-0000		1	NOZZLE	
110	312109-0463		4	SCREW M6S ISO 4017 M8X60 A480	
115	312109-0459		8	SCREW M6S ISO 4017 M8X40 A480	
120	2598503-0000		2	EXTENSION	
130	2545135-0000		2	SPACER	
140	1549390-0000		3	NUT	
150	23765-0003		2	INSULATING PIPE	
160	23765-0001		2	INSULATING PIPE	
170	252766-0002		2	INSULATING PIPE	
180	252766-0004		1	INSULATING PIPE	
190	1317085-0000		2	NUT	

Machine Type | Group Description | Used-In | Group Number | Page No

FLAP HEATER VARIANT

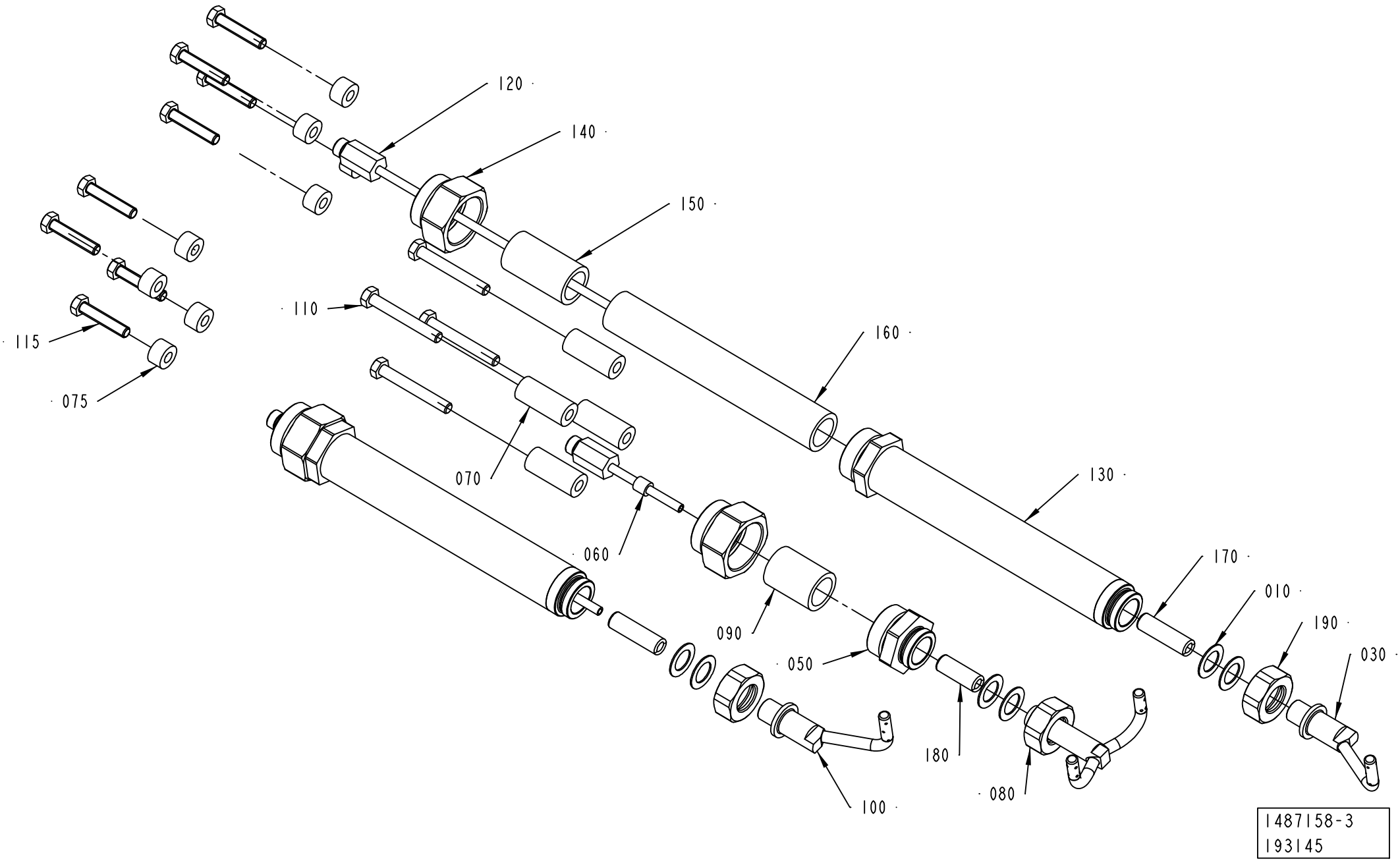

ECM: 270841 - 20060626
Group number: 1487158-0300
Assembly Drawing: 1487158-3_1_AB

This list covers pages from 5-208 to 5-219

Pos	Part No	UN	Qty	Description	Page No
TPA 0250SQ NOQC (Cont'd) (See drawing on page: 5-208)					
010	263673-0000		6	GASKET	
020	1558447-0000		8	SPACER	
030	1346679-0000		1	NOZZLE	
040	312105-0455		4	SCREW M6S ISO 4017 M8X30 A480	
050	1549389-0000		1	SPACER	
060	1296072-0000		1	EXTENSION	
070	2543240-0000		4	SPACER	
080	2524339-0000		1	NOZZLE	
090	23765-0005		1	INSULATING PIPE	
095	23765-0004		1	INSULATING PIPE	
100	1346678-0000		1	NOZZLE	
110	312109-0457		4	SCREW M6S ISO 4017 M8X35 A480	
120	1346646-0000		2	EXTENSION	
130	1549388-0000		2	SPACER	
140	1549390-0000		3	NUT	
150	23765-0003		2	INSULATING PIPE	
160	23765-0002		2	INSULATING PIPE	
170	252766-0001		2	INSULATING PIPE	
180	252766-0001		1	INSULATING PIPE	
200	359710-0001		3	WARNING SIGN ISO, HOT SURFACE	
TPA 0250SQ QC, TPA 0200SQ QC (See drawing on page: 5-208)					
010	263673-0000		6	GASKET	
020	2674242-0000		8	SPACER	
030	1346679-0000		1	NOZZLE	
040	312105-0467		8	SCREW M6S ISO 4014 M8X80 A480	
050	1549389-0000		1	SPACER	
060	1296072-0000		1	EXTENSION	
070	2543240-0000		4	SPACER	
080	2524339-0000		1	NOZZLE	
090	23765-0005		1	INSULATING PIPE	
095	23765-0004		1	INSULATING PIPE	
100	1346678-0000		1	NOZZLE	
110	312109-0457		4	SCREW M6S ISO 4017 M8X35 A480	
120	1285310-0000		2	EXTENSION	
130	2545135-0000		2	SPACER	
140	1549390-0000		3	NUT	
160	23765-0001		2	INSULATING PIPE	
170	252766-0001		2	INSULATING PIPE	
180	252766-0001		1	INSULATING PIPE	
190	1317085-0000		2	NUT	
TPA 0330SQ (See drawing on page: 5-208)					
010	263673-0000		6	GASKET	
020	1498163-0000		8	SPACER	
030	1532284-0000		1	NOZZLE	
040	312109-0460		8	SCREW M6S ISO 4017 M8X45 A480	
050	1549389-0000		1	SPACER	
060	1296072-0000		1	EXTENSION	
070	1285874-0000		4	SPACER	
080	1532285-0000		1	NOZZLE	
090	23765-0005		1	INSULATING PIPE	
095	23765-0004		1	INSULATING PIPE	
100	1532286-0000		1	NOZZLE	
110	312109-0457		4	SCREW M6S ISO 4017 M8X35 A480	
120	1346646-0000		2	EXTENSION	
130	1549388-0000		2	SPACER	
140	1549390-0000		3	NUT	
150	23765-0003		2	INSULATING PIPE	
160	23765-0002		2	INSULATING PIPE	
170	252766-0001		2	INSULATING PIPE	
180	252766-0001		2	INSULATING PIPE	
190	1317085-0000		2	NUT	
200	359710-0001		3	WARNING SIGN ISO, HOT SURFACE	
TPA 0500SQ (See drawing on page: 5-208)					
010	263673-0000		6	GASKET	
020	1285874-0000		8	SPACER	
030	1558328-0000		1	NOZZLE	
040	312109-0457		8	SCREW M6S ISO 4017 M8X35 A480	
050	1549389-0000		1	SPACER	
060	1296072-0000		1	EXTENSION	
070	1285874-0000		4	SPACER	
080	2501612-0000		1	NOZZLE	
090	23765-0004		1	INSULATING PIPE	
095	23765-0005		1	INSULATING PIPE	
100	1558329-0000		1	NOZZLE	
110	312109-0457		4	SCREW M6S ISO 4017 M8X35 A480	
120	1346646-0000		2	EXTENSION	
130	1549388-0000		2	SPACER	
140	1549390-0000		3	NUT	
150	23765-0003		2	INSULATING PIPE	
160	23765-0002		2	INSULATING PIPE	
170	252766-0002		2	INSULATING PIPE	
180	252766-0001		2	INSULATING PIPE	
190	1317085-0000		2	NUT	

Machine Type | Group Description | Used-In | Group Number | Page No

FLAP HEATER VARIANT

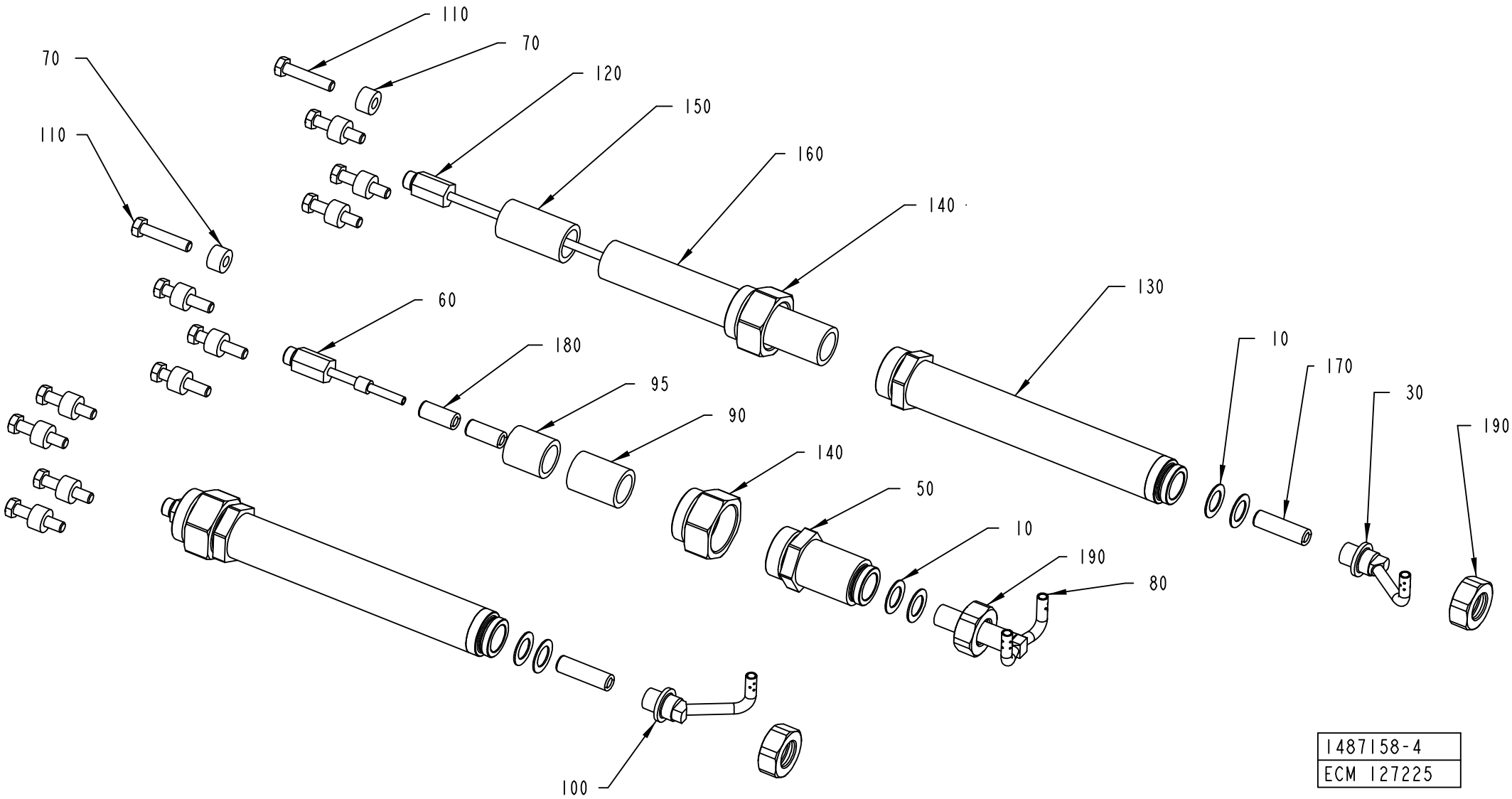

Pos	Part No	UN	Qty	Description	Page No
TPA 0500SQ (Cont'd) (See drawing on page: 5-208)					
200	359710-0001		3	WARNING SIGN ISO, HOT SURFACE	
TPA 1000SQ NOQC (See drawing on page: 5-208)					
010	263673-0000		9	GASKET	
020	1519339-0000		8	SPACER	
030	1549127-0000		1	NOZZLE	
040	312105-0465		8	SCREW M6S ISO 4014 M8X70 A480	
050	2545433-0000		1	SPACER	
060	1285870-0000		1	EXTENSION	
070	1334632-0000		4	SPACER	
080	1519336-0000		1	NOZZLE	
095	23765-0005		1	INSULATING PIPE	
100	1549126-0000		1	NOZZLE	
110	312109-0461		4	SCREW M6S ISO 4017 M8X50 A480	
120	1285310-0000		2	EXTENSION	
130	2545135-0000		2	SPACER	
140	1549390-0000		3	NUT	
150	23765-0003		2	INSULATING PIPE	
160	23765-0001		2	INSULATING PIPE	
170	252766-0002		2	INSULATING PIPE	
180	252766-0002		1	INSULATING PIPE	
190	1317085-0000		2	NUT	
200	359710-0001		3	WARNING SIGN ISO, HOT SURFACE	
TPA 1000SQ QC, TPA 0750SQ QC (See drawing on page: 5-210)					
010	263673-0000		9	GASKET	
020	2522196-0000		8	SPACER	
030	1549127-0000		1	NOZZLE	
040	312109-0460		8	SCREW M6S ISO 4017 M8X45 A480	
050	2545433-0000		1	SPACER	
060	1285870-0000		1	EXTENSION	
070	1334632-0000		4	SPACER	
080	1519336-0000		1	NOZZLE	
095	23765-0005		1	INSULATING PIPE	
100	1549126-0000		1	NOZZLE	
110	312109-0461		4	SCREW M6S ISO 4017 M8X50 A480	
120	1285310-0000		2	EXTENSION	
130	2545135-0000		2	SPACER	
140	1549390-0000		3	NUT	
150	23765-0003		2	INSULATING PIPE	
160	23765-0001		2	INSULATING PIPE	
170	252766-0002		2	INSULATING PIPE	
180	252766-0002		1	INSULATING PIPE	
190	1317085-0000		2	NUT	
200	359710-0001		3	WARNING SIGN ISO, HOT SURFACE	
TBA 0200B NOQC (See drawing on page: 5-208)					
010	263673-0000		6	GASKET	
020	1346642-0000		4	SPACER	
030	1346644-0000		1	NOZZLE	
040	312105-0471		8	SCREW M6S ISO 4014 M8X100 A480	
050	1549389-0000		1	SPACER	
060	1296072-0000		1	EXTENSION	
070	1285874-0000		4	SPACER	
080	1346581-0000		1	NOZZLE	
090	23765-0005		1	INSULATING PIPE	
095	23765-0004		1	INSULATING PIPE	
100	1346643-0000		1	NOZZLE	
110	312109-0457		4	SCREW M6S ISO 4017 M8X35 A480	
120	1346646-0000		2	EXTENSION	
130	1549388-0000		2	SPACER	
140	1549390-0000		3	NUT	
150	23765-0003		2	INSULATING PIPE	
160	23765-0002		2	INSULATING PIPE	
170	252766-0001		2	INSULATING PIPE	
180	252766-0001		2	INSULATING PIPE	
190	1317085-0000		2	NUT	
200	359710-0001		3	WARNING SIGN ISO, HOT SURFACE	
TBA 0200B QC, TBA 0330S QC, TBA 0250B QC (See drawing on page: 5-208)					
010	263673-0000		6	GASKET	
020	1285874-0000		8	SPACER	
030	1346644-0000		1	NOZZLE	
040	312105-0457		4	SCREW M6S ISO 4014 M8X35 A480	
050	1549389-0000		1	SPACER	
060	1296072-0000		1	EXTENSION	
070	2545006-0000		4	SPACER	
080	1346581-0000		1	NOZZLE	
090	23765-0005		1	INSULATING PIPE	
095	23765-0004		1	INSULATING PIPE	
100	1346643-0000		1	NOZZLE	
110	312105-0459		8	SCREW M6S ISO 4014 M8X40 A480	
120	1285310-0000		2	EXTENSION	
130	2545135-0000		2	SPACER	
140	1549390-0000		3	NUT	
150	23765-0003		2	INSULATING PIPE	
160	23765-0001		2	INSULATING PIPE	

FLAP HEATER VARIANT

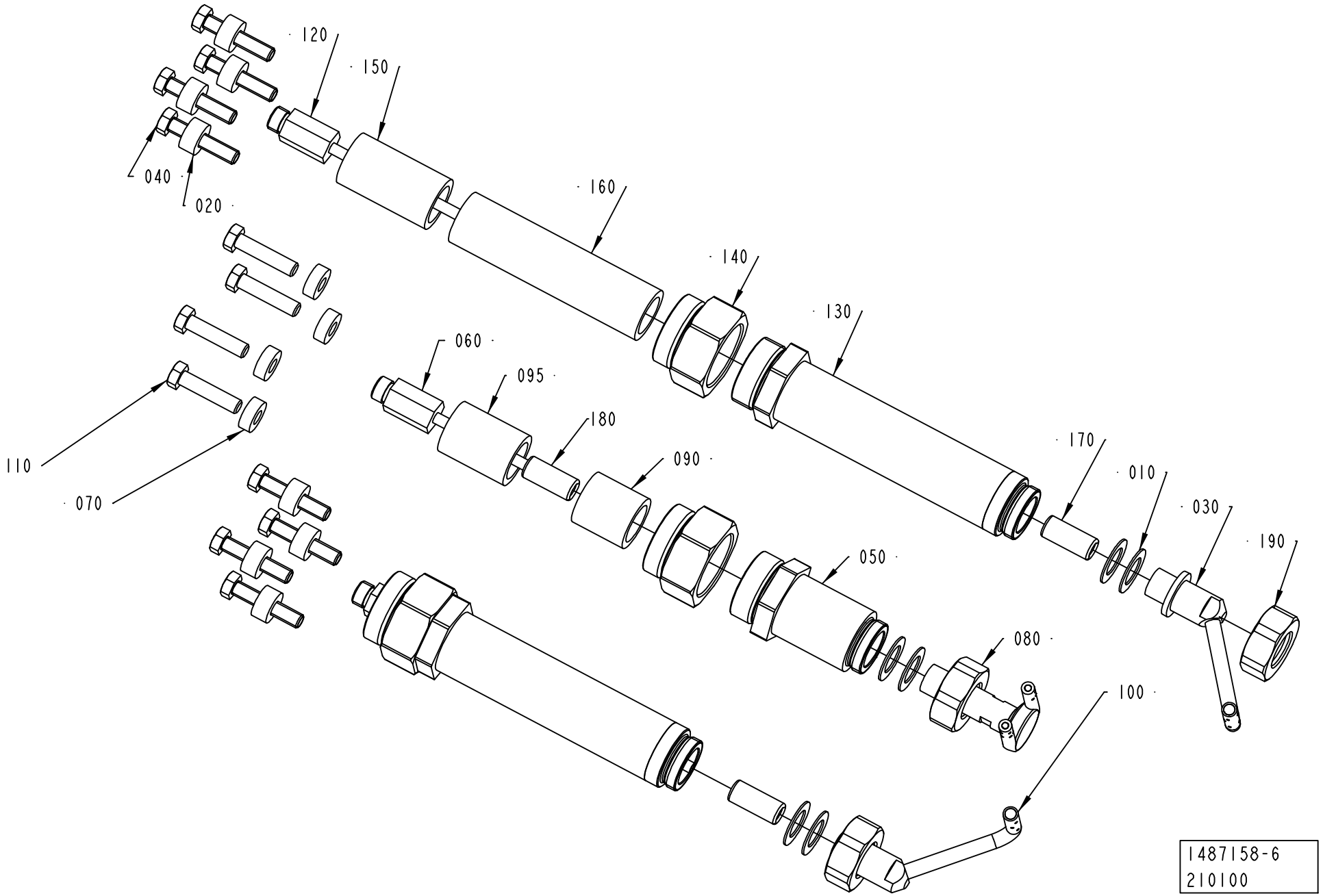

Pos	Part No	UN	Qty	Description	Page No
TBA 0200B QC, TBA 0330S QC, TBA 0250B QC (Cont'd) (See drawing on page: 5-208)					
180	252766-0001		2	INSULATING PIPE	
190	1317085-0000		2	NUT	
200	359710-0001		3	WARNING SIGN ISO, HOT SURFACE	
TBA 0200S (See drawing on page: 5-208)					
010	263673-0000		6	GASKET	
020	1285874-0000		8	SPACER	
030	1346679-0000		1	NOZZLE	
040	312109-0457		8	SCREW M6S ISO 4017 M8X35 A480	
050	1549389-0000		1	SPACER	
060	1296072-0000		1	EXTENSION	
070	1285874-0000		4	SPACER	
080	1346580-0000		1	NOZZLE	
090	23765-0005		1	INSULATING PIPE	
095	23765-0004		1	INSULATING PIPE	
100	1346678-0000		1	NOZZLE	
110	312109-0457		4	SCREW M6S ISO 4017 M8X35 A480	
120	1346646-0000		2	EXTENSION	
130	1549388-0000		2	SPACER	
140	1549390-0000		3	NUT	
150	23765-0003		2	INSULATING PIPE	
160	23765-0002		2	INSULATING PIPE	
170	252766-0001		2	INSULATING PIPE	
180	252766-0001		1	INSULATING PIPE	
190	1317085-0000		2	NUT	
200	359710-0001		3	WARNING SIGN ISO, HOT SURFACE	
TBA 0200SQ QC, TBA 0250SQ QC (See drawing on page: 5-214)					
010	263673-0000		6	GASKET	
020	2545006-0000		8	SPACER	
030	2676617-0000		1	NOZZLE	
040	312109-0459		8	SCREW M6S ISO 4017 M8X40 A480	
050	1549389-0000		1	SPACER	
060	1296072-0000		1	EXTENSION	
070	1523497-0000		4	SPACER	
080	2676616-0000		1	NOZZLE	
090	23765-0005		1	INSULATING PIPE	
095	23765-0004		1	INSULATING PIPE	
100	2676615-0000		1	NOZZLE	
110	312109-0457		4	SCREW M6S ISO 4017 M8X35 A480	
120	1346646-0000		2	EXTENSION	
130	1549388-0000		2	SPACER	
140	1549390-0000		3	NUT	
150	23765-0003		2	INSULATING PIPE	
160	23765-0002		2	INSULATING PIPE	
180	252766-0001		1	INSULATING PIPE	
190	1317085-0000		2	NUT	
200	359710-0001		3	WARNING SIGN ISO, HOT SURFACE	
TBA 0250B NOQC (See drawing on page: 5-208)					
010	263673-0000		6	GASKET	
020	1346641-0000		4	SPACER	
030	1346644-0000		1	NOZZLE	
040	312105-0466		8	SCREW M6S ISO 4014 M8X75 A480	
050	1549389-0000		1	SPACER	
060	1296072-0000		1	EXTENSION	
070	1285874-0000		4	SPACER	
080	1346581-0000		1	NOZZLE	
090	23765-0005		1	INSULATING PIPE	
095	23765-0004		1	INSULATING PIPE	
100	1346643-0000		1	NOZZLE	
110	312109-0457		4	SCREW M6S ISO 4017 M8X35 A480	
120	1346646-0000		2	EXTENSION	
130	1549388-0000		2	SPACER	
140	1549390-0000		3	NUT	
150	23765-0003		2	INSULATING PIPE	
160	23765-0002		2	INSULATING PIPE	
170	252766-0001		2	INSULATING PIPE	
180	252766-0001		2	INSULATING PIPE	
190	1317085-0000		2	NUT	
200	359710-0001		3	WARNING SIGN ISO, HOT SURFACE	
TBA 0250S QC, TBA 0200M QC (See drawing on page: 5-208)					
010	263673-0000		6	GASKET	
020	1498163-0000		8	SPACER	
030	1346644-0000		1	NOZZLE	
040	312105-0457		4	SCREW M6S ISO 4014 M8X35 A480	
050	1549389-0000		1	SPACER	
060	1296072-0000		1	EXTENSION	
070	1285874-0000		4	SPACER	
080	2545236-0000		1	NOZZLE	
090	23765-0005		1	INSULATING PIPE	
100	1346643-0000		1	NOZZLE	
110	312105-0459		8	SCREW M6S ISO 4014 M8X40 A480	
120	1285310-0000		2	EXTENSION	
130	2545135-0000		2	SPACER	
140	1549390-0000		3	NUT	

See previous drawings pages: 5-208, 5-210, 5-212, 5-214.

ECM: 270841 - 20060626
Group number: 1487158-0300
Assembly Drawing: 1487158-6_1_AA

This list covers pages from 5-208 to 5-219

Pos	Part No	UN	Qty	Description	Page No
TBA 0250S QC, TBA 0200M QC (Cont'd) (See drawing on page: 5-208)					
160	23765-0001		2	INSULATING PIPE	
170	252766-0002		2	INSULATING PIPE	
180	252766-0001		1	INSULATING PIPE	
190	1317085-0000		2	NUT	
TBA 0500B NOQC (See drawing on page: 5-208)					
010	263673-0000		6	GASKET	
020	1296153-0000		4	GUIDE	
030	1350422-0000		1	NOZZLE	
040	312105-0466		8	SCREW M6S ISO 4014 M8X75 A480	
050	1549389-0000		1	SPACER	
060	1296072-0000		1	EXTENSION	
080	1296387-0000		1	NOZZLE	
090	23765-0004		1	INSULATING PIPE	
095	23765-0005		1	INSULATING PIPE	
100	1350421-0000		1	NOZZLE	
110	312109-0457		4	SCREW M6S ISO 4017 M8X35 A480	
120	1346646-0000		2	EXTENSION	
130	1549388-0000		2	SPACER	
140	1549390-0000		3	NUT	
150	23765-0003		2	INSULATING PIPE	
160	23765-0002		2	INSULATING PIPE	
170	252766-0001		2	INSULATING PIPE	
180	252766-0001		2	INSULATING PIPE	
190	1317085-0000		2	NUT	
200	359710-0001		3	WARNING SIGN ISO, HOT SURFACE	
TBA 0500B QC, TBA 1000B QC (See drawing on page: 5-212)					
010	263673-0000		6	GASKET	
030	1350422-0000		1	NOZZLE	
050	1549389-0000		1	SPACER	
060	1296072-0000		1	EXTENSION	
070	1498163-0000		12	SPACER	
080	1296387-0000		1	NOZZLE	
090	23765-0004		1	INSULATING PIPE	
095	23765-0005		1	INSULATING PIPE	
100	1350421-0000		1	NOZZLE	
110	312105-0459		12	SCREW M6S ISO 4014 M8X40 A480	
120	1285310-0000		2	EXTENSION	
130	2545135-0000		2	SPACER	
140	1549390-0000		3	NUT	
150	23765-0003		2	INSULATING PIPE	
160	23765-0001		2	INSULATING PIPE	
170	252766-0002		2	INSULATING PIPE	
180	252766-0001		2	INSULATING PIPE	
190	1317085-0000		2	NUT	
200	359710-0001		3	WARNING SIGN ISO, HOT SURFACE	
TBA 0500S (See drawing on page: 5-208)					
010	263673-0000		6	GASKET	
020	1511692-0000		8	SPACER	
030	1499446-0000		1	NOZZLE	
040	312105-0464		8	SCREW M6S ISO 4014 M8X65 A480	
050	1549389-0000		1	SPACER	
060	1296072-0000		1	EXTENSION	
070	1523497-0000		4	SPACER	
080	1499445-0000		1	NOZZLE	
090	23765-0004		1	INSULATING PIPE	
095	23765-0005		1	INSULATING PIPE	
100	1499444-0000		1	NOZZLE	
110	312109-0457		4	SCREW M6S ISO 4017 M8X35 A480	
120	1285310-0000		2	EXTENSION	
130	2545135-0000		2	SPACER	
140	1549390-0000		3	NUT	
150	23765-0003		2	INSULATING PIPE	
160	23765-0001		2	INSULATING PIPE	
170	252766-0002		2	INSULATING PIPE	
180	252766-0001		2	INSULATING PIPE	
190	1317085-0000		2	NUT	
200	359710-0001		3	WARNING SIGN ISO, HOT SURFACE	
TBA 1000B NOQC (See drawing on page: 5-208)					
010	263673-0000		6	GASKET	
020	1296153-0000		4	GUIDE	
030	1350422-0000		1	NOZZLE	
040	312105-0466		8	SCREW M6S ISO 4014 M8X75 A480	
050	1549389-0000		1	SPACER	
060	1296072-0000		1	EXTENSION	
080	1296387-0000		1	NOZZLE	
090	23765-0004		1	INSULATING PIPE	
095	23765-0005		1	INSULATING PIPE	
100	1350421-0000		1	NOZZLE	
110	312109-0457		4	SCREW M6S ISO 4017 M8X35 A480	
120	1285310-0000		2	EXTENSION	
130	2545135-0000		2	SPACER	
140	1549390-0000		3	NUT	
150	23765-0003		2	INSULATING PIPE	

See previous drawings pages: 5-208, 5-210, 5-212, 5-214.

Pos	Part No	UN	Qty	Description	Page No
TBA 1000B NOQC (Cont'd) (See drawing on page: 5-208)					
160	23765-0001		2	INSULATING PIPE	
170	252766-0002		2	INSULATING PIPE	
180	252766-0001		2	INSULATING PIPE	
190	1317085-0000		2	NUT	
200	359710-0001		3	WARNING SIGN ISO, HOT SURFACE	

Pos	Part No	UN	Qty	Description	Page No

INDEXING UNIT

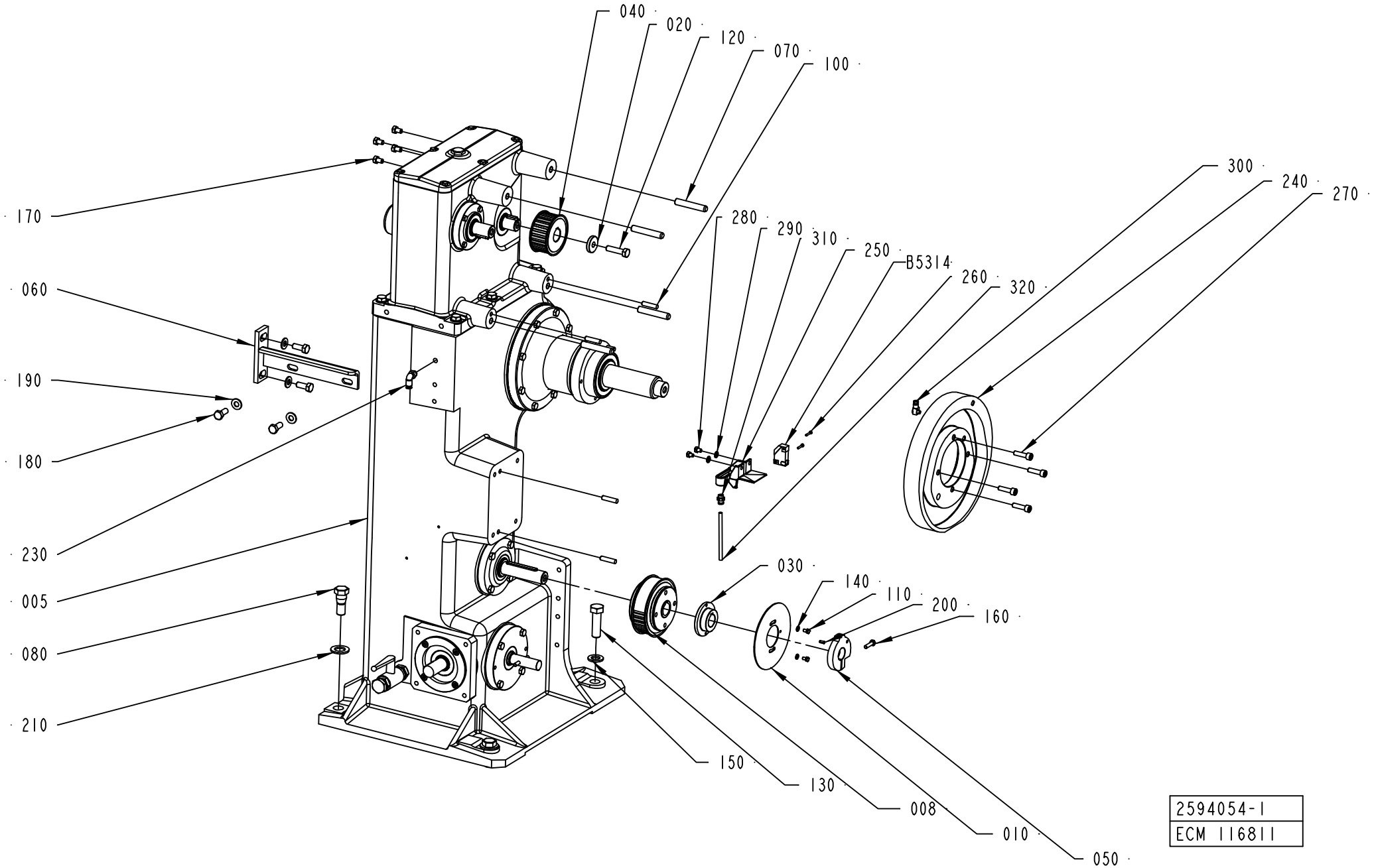

ECM: 177677 - 20040705
Group number: 2594054-0100
Assembly Drawing: 2594054-1_1_AA

Pos	Part No	UN	Qty	Description	Page No
-					
005	2680390-0000		1	INDEXING DEVICE	**5-223, 5-225, 5-227, 5-229, 5-231** **5-233**
008	2552794-0000		1	PULLEY	
010	2604539-0000		1	PROTRACTOR	
020	1144681-0000		1	WASHER	
030	2634894-0000		1	FLANGE	
040	1347017-0000		1	PULLEY	
050	1144849-0000		1	SWITCH	
060	2544902-0000		1	BRACKET	
070	1348303-0000		4	STUD SCREW	
080	598549-0000		2	SCREW	
100	311103-0407		4	PARALLEL PIN ISO 2338 8M6X35 A1	
110	90287-0199		2	SCREW M6S ISO 4017 M5X6 A480	
120	312105-0499		1	SCREW M6S ISO 4014 M10X40 A480	
130	312105-0631		2	SCREW M6S ISO 4014 M16X55 A480	
140	315105-0146		2	WASHER BRB 5,3X10 RFR	
150	315105-0186		2	WASHER BRB 17X30 RFR	
160	312105-0370		1	SCREW M6S ISO 4017 M6X20 A480	
170	312105-0451		4	SCREW M6S ISO 4017 M8X20 A480	
180	312105-0453		4	SCREW M6S ISO 4017 M8X25 A480	
190	315105-0165		8	WASHER BRB 8,4X16 RFR	
200	311112-0251		1	SPRING PIN, ISO 8752 4X10-C	
210	315105-0192		2	WASHER BRB 21X37 RFR	
230	90458-2956		1	ELBOW PIPE JOINT, EXT.THREAD, D=6MM-G1/8	
240	1548002-0000		1	CAM	
250	1348072-0000		1	DRIP PLATE	
260	312125-0228		2	SCREW ISO 1207 M3X16 A4	
270	312115-0455		4	SCREW ISO4762 M8X30 A4 80	
280	312105-0362		2	SCREW M6S ISO 4017 M6X8 A480	
290	315105-0153		2	WASHER BRB 6,4X12 RFR	
300	90134-0058		1	CONNECTION	
310	342722-0202		1	PIPE COUPLING 1/8" D=6MM	
320	90266-0166	MM	1500	PIPE	
B5314	90044-0194		1	PROX.SW. IN5329/IN3002-BPKG(EX90044-104)	

Pos	Part No	UN	Qty	Description	Page No

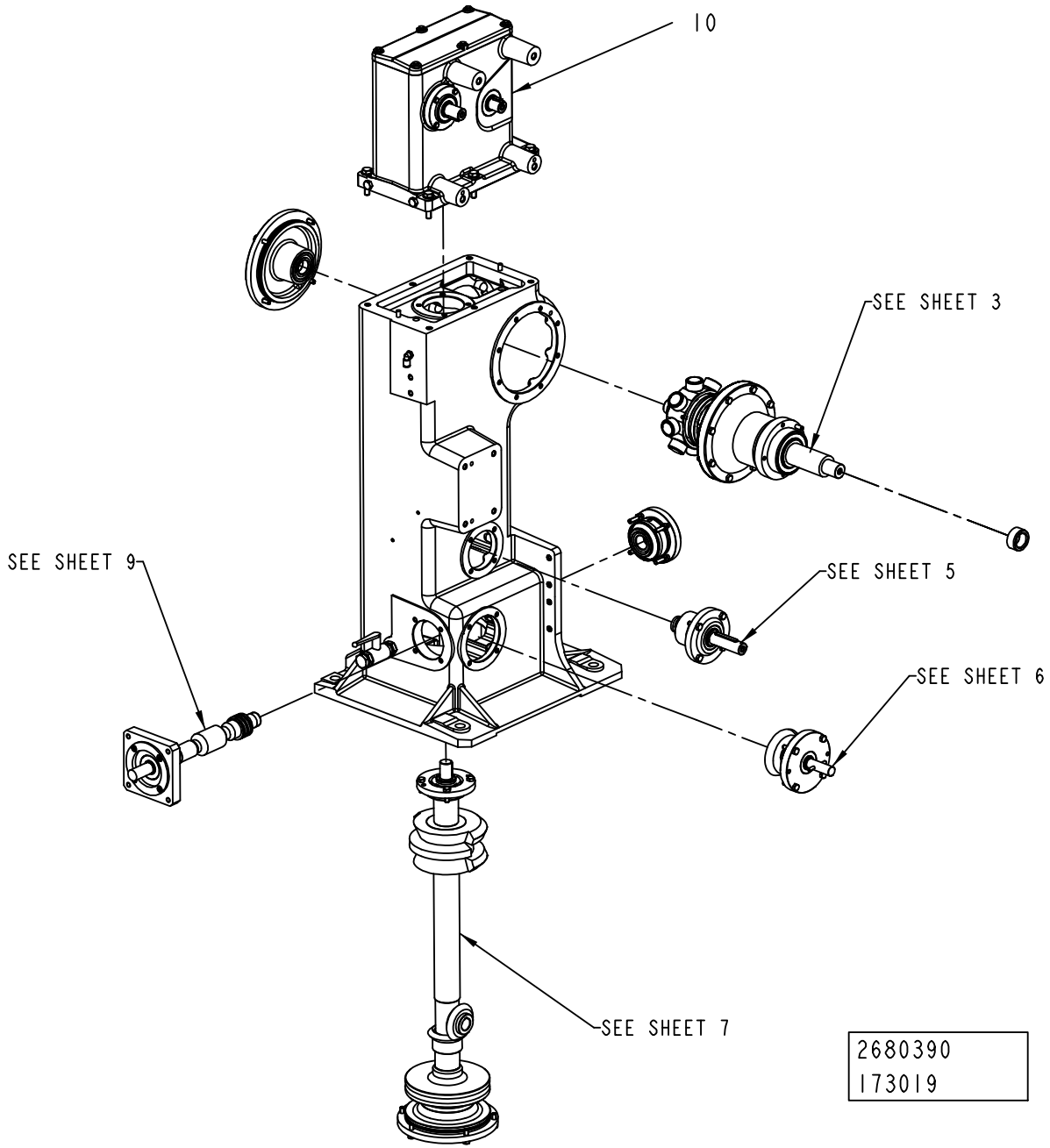
10
SEE SHEET 3
SEE SHEET 9
SEE SHEET 5
SEE SHEET 6
SEE SHEET 7
2680390
173019

ECM: 190932 - 20041104
Group number: 2680390-0000
Assembly Drawing: 2680390_2_AA

This list covers pages from 5-222 to 5-233

Pos	Part No	UN	Qty	Description	Page No
-					
010	2680391-0000		1	HEAD	**5-235, 5-237, 5-239**
020	315202-0225		1	O-RING 44,2X3 MM	
030	90459-4580		3	O-RING 165X4 MM	
040	90459-4588		1	RADIAL SEAL 60X85X8 MM DUST LIP	
050	1498929-0000		12	SPRING	
060	312805-0107		1	NUT ROUND WITH SLOTS M35X1,5 FE	
070	312805-0110		1	NUT ROUND WITH SLOTS M50X1,5 FE	
080	2687110-0000		1	LOCK WASHER	
090	2687111-0000		1	LOCK WASHER	
100	90459-4578		3	O-RING 78X3 MM	
110	90459-4587		1	RADIAL SEAL 35X52X7 MM DUST LIP	
120	90459-4579		1	O-RING 94X3 MM	
130	90091-0148		1	RADIAL SEAL 25X47X7 MM DUST LIP	
140	2680401-0000		1	SPRING	
150	90459-4577		1	O-RING 64X3 MM	
160	90091-0306		1	RADIAL SEAL 30X47X7 MM DUST LIP	
170	90459-4585		1	RADIAL SEAL 25X52X7 MM DUST LIP	
180	315202-0302		1	O-RING 54,5X3 MM	

Pos	Part No	UN	Qty	Description	Page No

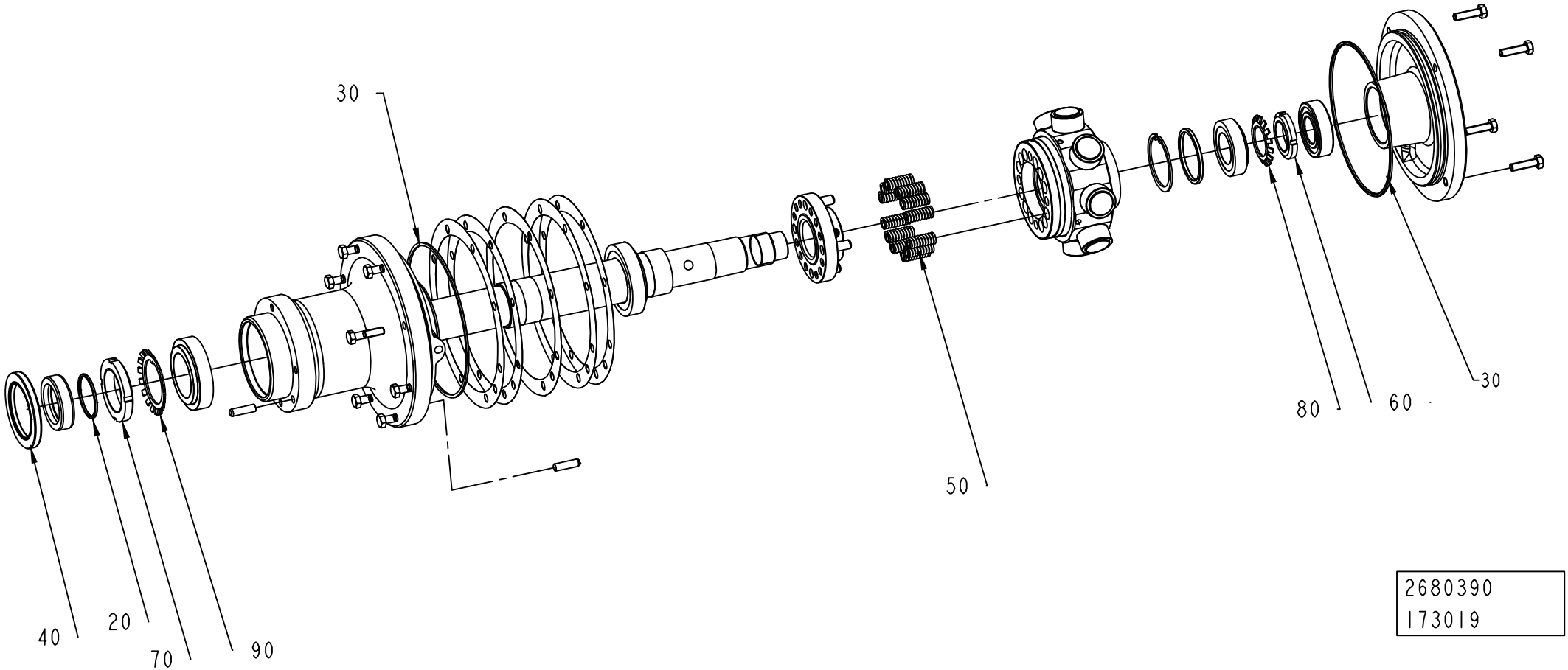

2680390
173019

ECM: 190932 - 20041104
Group number: 2680390-0000
Assembly Drawing: 2680390_3_AA

This list covers pages from 5-222 to 5-233

Pos	Part No	UN	Qty	Description	Page No
-					
010	2680391-0000		1	HEAD	**5-235, 5-237, 5-239**
020	315202-0225		1	O-RING 44,2X3 MM	
030	90459-4580		3	O-RING 165X4 MM	
040	90459-4588		1	RADIAL SEAL 60X85X8 MM DUST LIP	
050	1498929-0000		12	SPRING	
060	312805-0107		1	NUT ROUND WITH SLOTS M35X1,5 FE	
070	312805-0110		1	NUT ROUND WITH SLOTS M50X1,5 FE	
080	2687110-0000		1	LOCK WASHER	
090	2687111-0000		1	LOCK WASHER	
100	90459-4578		3	O-RING 78X3 MM	
110	90459-4587		1	RADIAL SEAL 35X52X7 MM DUST LIP	
120	90459-4579		1	O-RING 94X3 MM	
130	90091-0148		1	RADIAL SEAL 25X47X7 MM DUST LIP	
140	2680401-0000		1	SPRING	
150	90459-4577		1	O-RING 64X3 MM	
160	90091-0306		1	RADIAL SEAL 30X47X7 MM DUST LIP	
170	90459-4585		1	RADIAL SEAL 25X52X7 MM DUST LIP	
180	315202-0302		1	O-RING 54,5X3 MM	

Pos	Part No	UN	Qty	Description	Page No

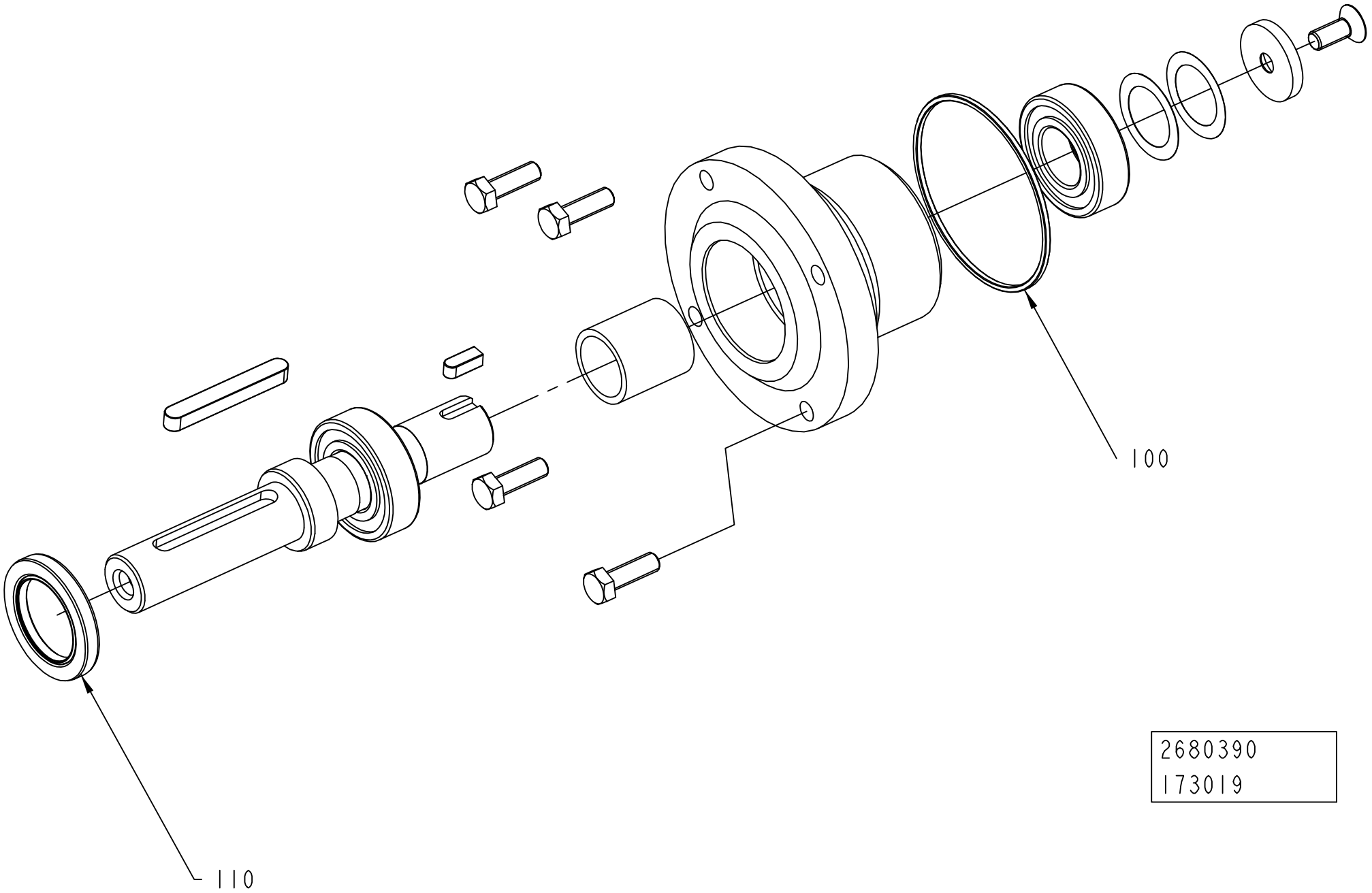
100
110
2680390
173019

ECM: 190932 - 20041104
Group number: 2680390-0000
Assembly Drawing: 2680390_5_AA

This list covers pages from 5-222 to 5-233

Pos	Part No	UN	Qty	Description	Page No
-					
010	2680391-0000		1	HEAD	**5-235, 5-237, 5-239**
020	315202-0225		1	O-RING 44,2X3 MM	
030	90459-4580		3	O-RING 165X4 MM	
040	90459-4588		1	RADIAL SEAL 60X85X8 MM DUST LIP	
050	1498929-0000		12	SPRING	
060	312805-0107		1	NUT ROUND WITH SLOTS M35X1,5 FE	
070	312805-0110		1	NUT ROUND WITH SLOTS M50X1,5 FE	
080	2687110-0000		1	LOCK WASHER	
090	2687111-0000		1	LOCK WASHER	
100	90459-4578		3	O-RING 78X3 MM	
110	90459-4587		1	RADIAL SEAL 35X52X7 MM DUST LIP	
120	90459-4579		1	O-RING 94X3 MM	
130	90091-0148		1	RADIAL SEAL 25X47X7 MM DUST LIP	
140	2680401-0000		1	SPRING	
150	90459-4577		1	O-RING 64X3 MM	
160	90091-0306		1	RADIAL SEAL 30X47X7 MM DUST LIP	
170	90459-4585		1	RADIAL SEAL 25X52X7 MM DUST LIP	
180	315202-0302		1	O-RING 54,5X3 MM	

Pos	Part No	UN	Qty	Description	Page No

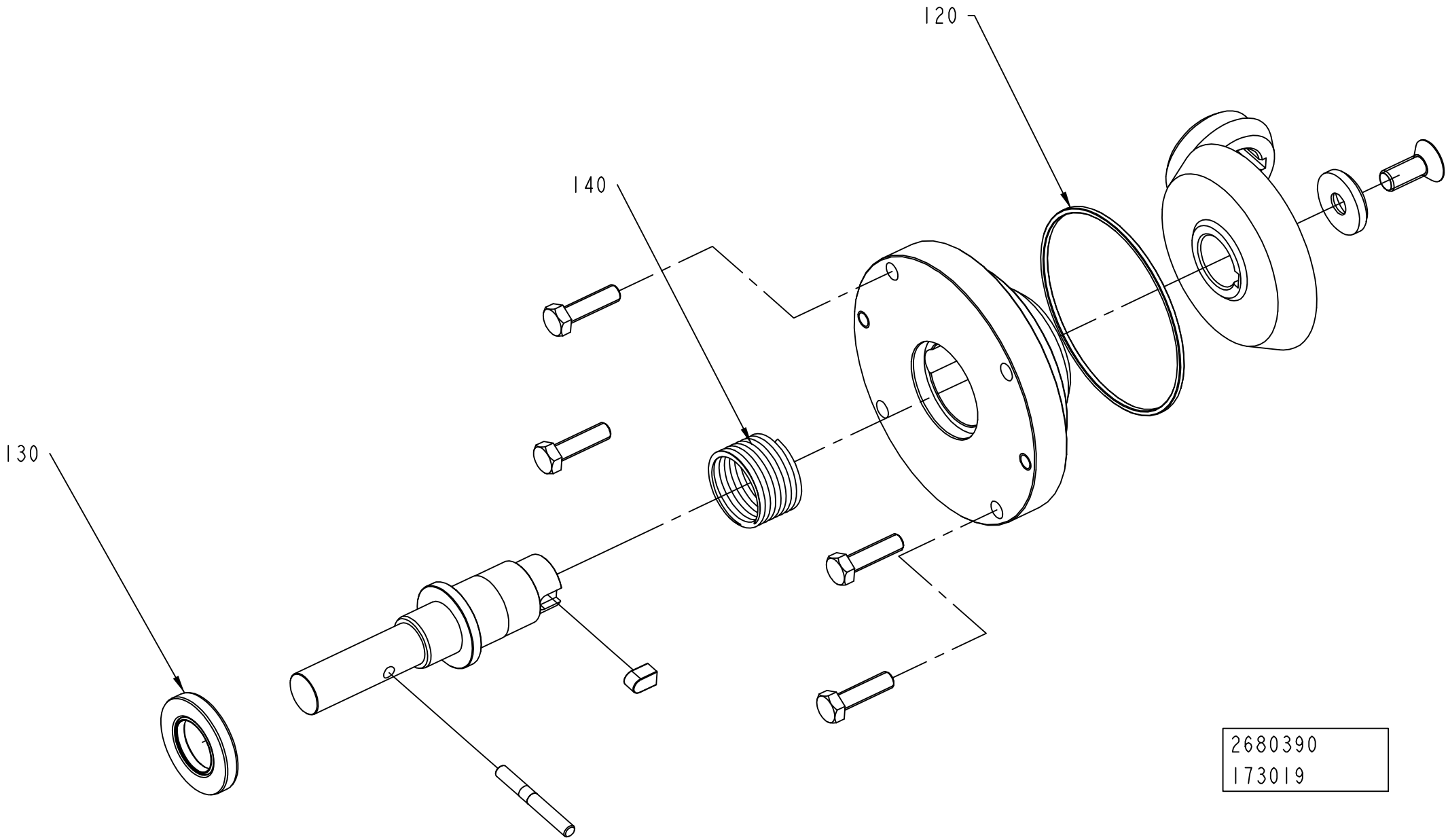
120
140
130
2680390
173019

ECM: 190932 - 20041104
Group number: 2680390-0000
Assembly Drawing: 2680390_6_AA

This list covers pages from 5-222 to 5-233

Pos	Part No	UN	Qty	Description	Page No
-					
010	2680391-0000		1	HEAD	**5-235, 5-237, 5-239**
020	315202-0225		1	O-RING 44,2X3 MM	
030	90459-4580		3	O-RING 165X4 MM	
040	90459-4588		1	RADIAL SEAL 60X85X8 MM DUST LIP	
050	1498929-0000		12	SPRING	
060	312805-0107		1	NUT ROUND WITH SLOTS M35X1,5 FE	
070	312805-0110		1	NUT ROUND WITH SLOTS M50X1,5 FE	
080	2687110-0000		1	LOCK WASHER	
090	2687111-0000		1	LOCK WASHER	
100	90459-4578		3	O-RING 78X3 MM	
110	90459-4587		1	RADIAL SEAL 35X52X7 MM DUST LIP	
120	90459-4579		1	O-RING 94X3 MM	
130	90091-0148		1	RADIAL SEAL 25X47X7 MM DUST LIP	
140	2680401-0000		1	SPRING	
150	90459-4577		1	O-RING 64X3 MM	
160	90091-0306		1	RADIAL SEAL 30X47X7 MM DUST LIP	
170	90459-4585		1	RADIAL SEAL 25X52X7 MM DUST LIP	
180	315202-0302		1	O-RING 54,5X3 MM	

Pos	Part No	UN	Qty	Description	Page No

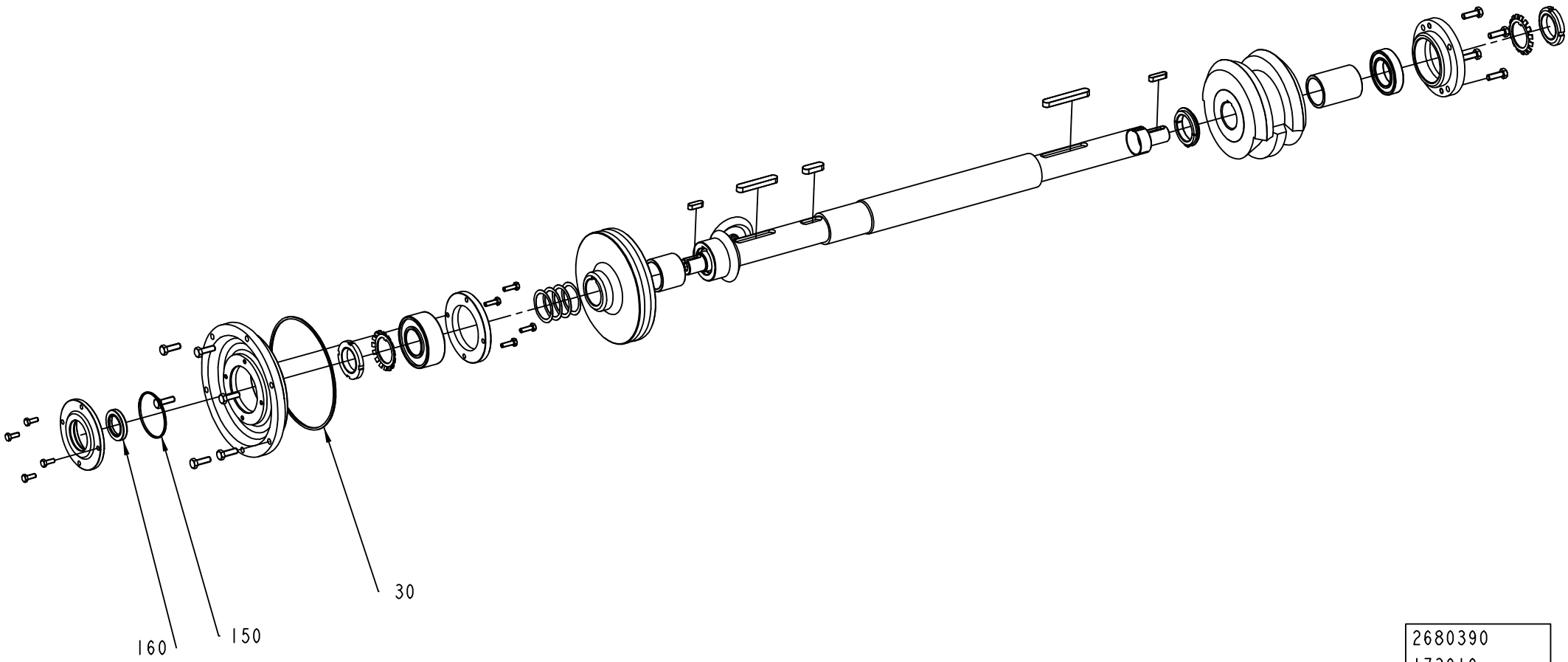

2680390
173019

ECM: 190932 - 20041104
Group number: 2680390-0000
Assembly Drawing: 2680390_7_AA

This list covers pages from 5-222 to 5-233

Pos	Part No	UN	Qty	Description	Page No
-					
010	2680391-0000		1	HEAD	**5-235, 5-237, 5-239**
020	315202-0225		1	O-RING 44,2X3 MM	
030	90459-4580		3	O-RING 165X4 MM	
040	90459-4588		1	RADIAL SEAL 60X85X8 MM DUST LIP	
050	1498929-0000		12	SPRING	
060	312805-0107		1	NUT ROUND WITH SLOTS M35X1,5 FE	
070	312805-0110		1	NUT ROUND WITH SLOTS M50X1,5 FE	
080	2687110-0000		1	LOCK WASHER	
090	2687111-0000		1	LOCK WASHER	
100	90459-4578		3	O-RING 78X3 MM	
110	90459-4587		1	RADIAL SEAL 35X52X7 MM DUST LIP	
120	90459-4579		1	O-RING 94X3 MM	
130	90091-0148		1	RADIAL SEAL 25X47X7 MM DUST LIP	
140	2680401-0000		1	SPRING	
150	90459-4577		1	O-RING 64X3 MM	
160	90091-0306		1	RADIAL SEAL 30X47X7 MM DUST LIP	
170	90459-4585		1	RADIAL SEAL 25X52X7 MM DUST LIP	
180	315202-0302		1	O-RING 54,5X3 MM	

Pos	Part No	UN	Qty	Description	Page No

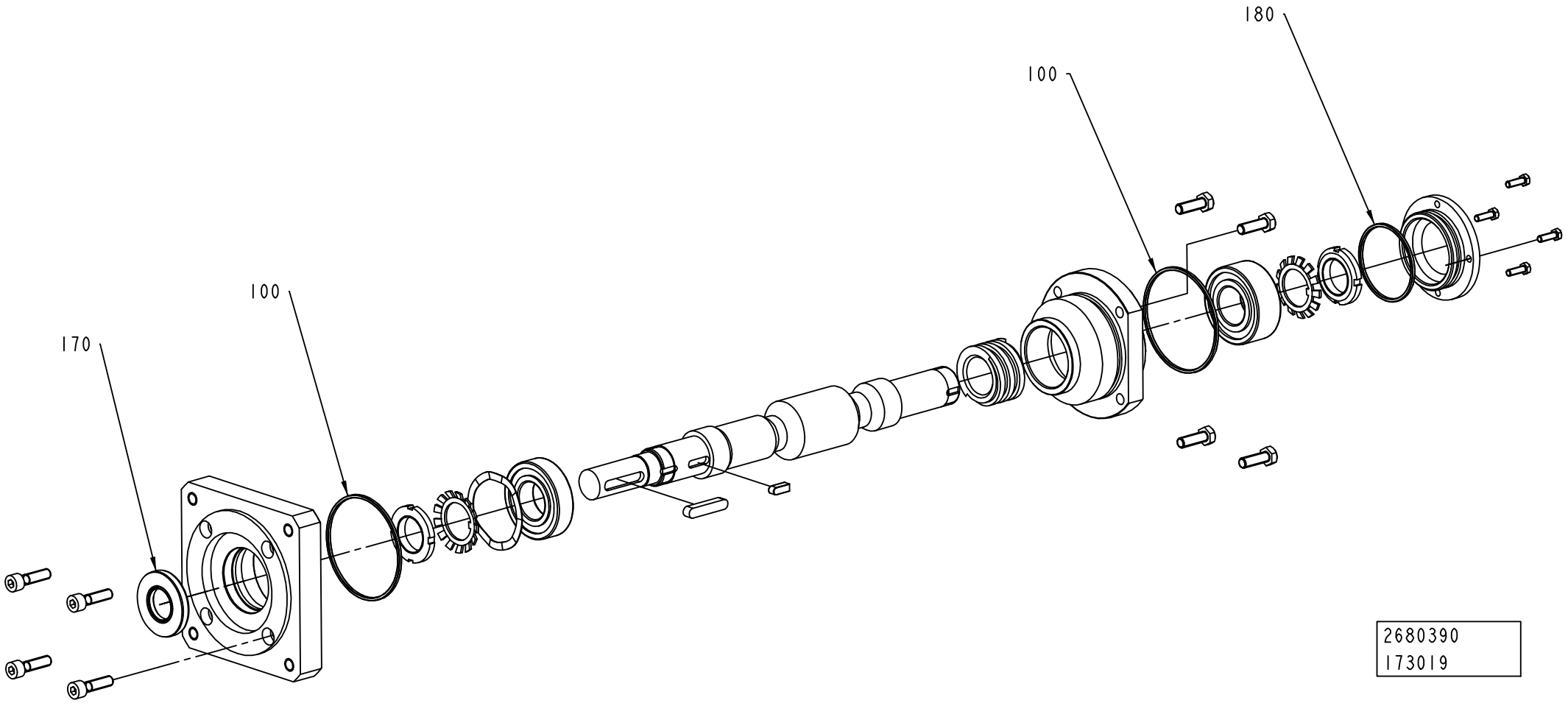
180
100
100
170
2680390
173019

ECM: 190932 - 20041104
Group number: 2680390-0000
Assembly Drawing: 2680390_9_AA

This list covers pages from 5-222 to 5-233

Pos	Part No	UN	Qty	Description	Page No
-					
010	2680391-0000		1	HEAD	**5-235, 5-237, 5-239**
020	315202-0225		1	O-RING 44,2X3 MM	
030	90459-4580		3	O-RING 165X4 MM	
040	90459-4588		1	RADIAL SEAL 60X85X8 MM DUST LIP	
050	1498929-0000		12	SPRING	
060	312805-0107		1	NUT ROUND WITH SLOTS M35X1,5 FE	
070	312805-0110		1	NUT ROUND WITH SLOTS M50X1,5 FE	
080	2687110-0000		1	LOCK WASHER	
090	2687111-0000		1	LOCK WASHER	
100	90459-4578		3	O-RING 78X3 MM	
110	90459-4587		1	RADIAL SEAL 35X52X7 MM DUST LIP	
120	90459-4579		1	O-RING 94X3 MM	
130	90091-0148		1	RADIAL SEAL 25X47X7 MM DUST LIP	
140	2680401-0000		1	SPRING	
150	90459-4577		1	O-RING 64X3 MM	
160	90091-0306		1	RADIAL SEAL 30X47X7 MM DUST LIP	
170	90459-4585		1	RADIAL SEAL 25X52X7 MM DUST LIP	
180	315202-0302		1	O-RING 54,5X3 MM	

Pos	Part No	UN	Qty	Description	Page No

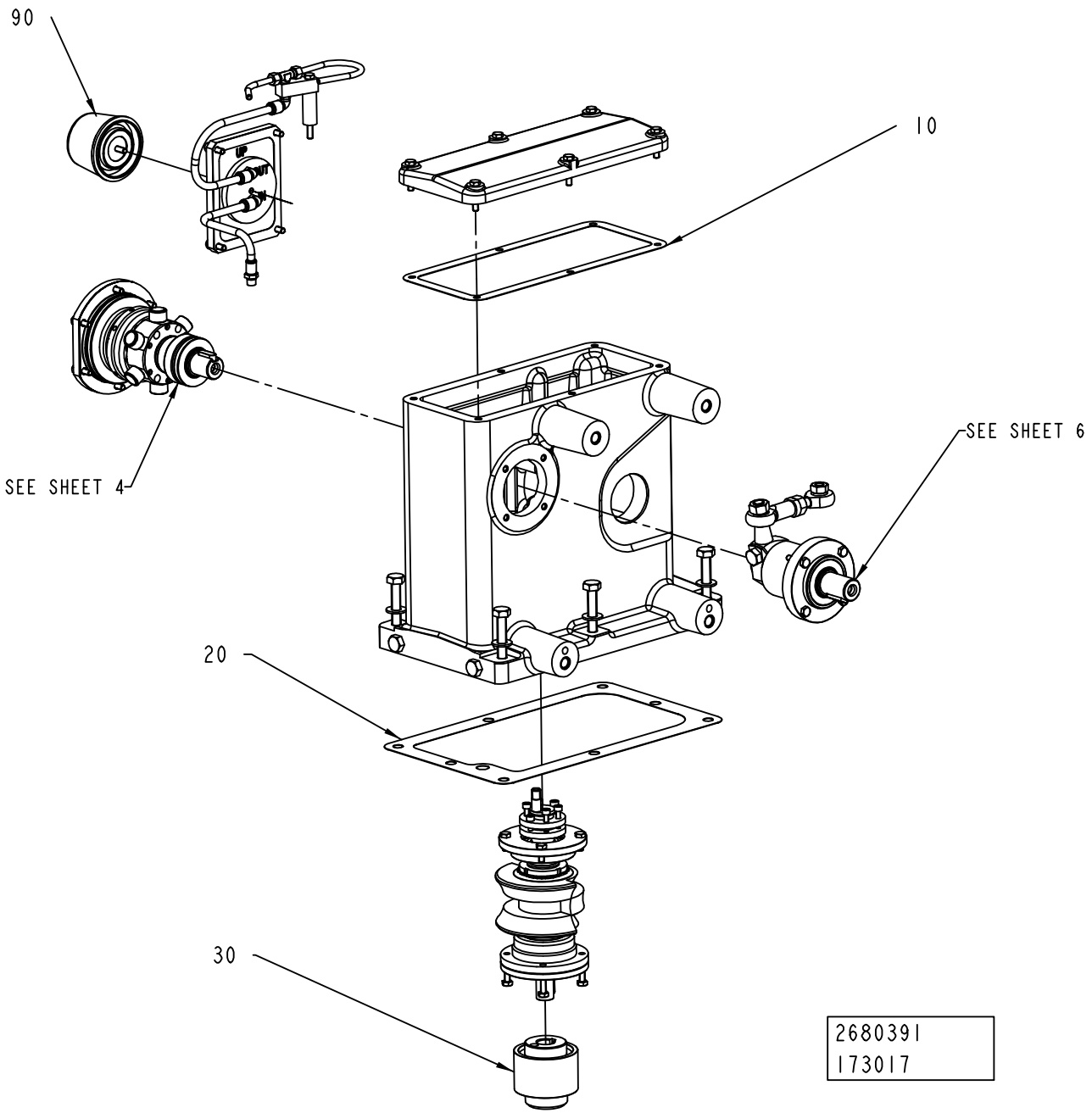
90
10
SEE SHEET 4
SEE SHEET 6
20
30
2680391
173017

ECM: 190933 - 20041104
Group number: 2680391-0000
Assembly Drawing: 2680391_3_AA

This list covers pages from 5-234 to 5-239

Pos	Part No	UN	Qty	Description	Page No
-					
010	1350042-0000		1	GASKET	
020	2680394-0000		1	GASKET	
030	2687109-0000		1	COUPLING	
040	90459-4576		1	O-RING 55X3 MM	
050	90459-4586		1	RADIAL SEAL 30X55X7 MM DUST LIP	
060	2680393-0000		1	LEVER	
070	90242-0281		1	O-RING 58X3 MM	
080	90091-0299		1	RADIAL SEAL 30X52X7 MM DUST LIP	
090	2680392-0000		1	FILTER	

Pos	Part No	UN	Qty	Description	Page No

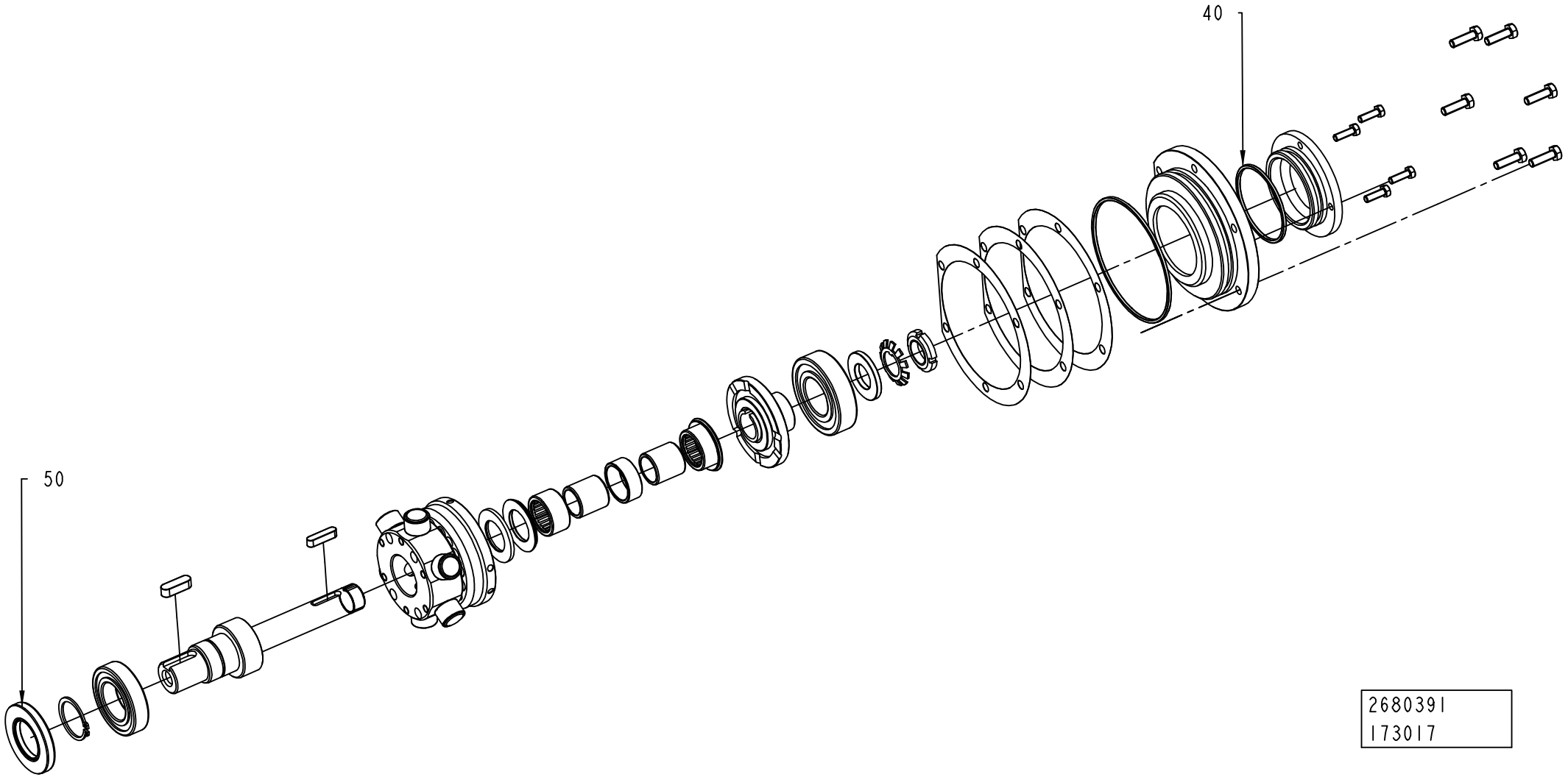
40
50
2680391
173017

ECM: 190933 - 20041104
Group number: 2680391-0000
Assembly Drawing: 2680391_4_AA

This list covers pages from 5-234 to 5-239

Pos	Part No	UN	Qty	Description	Page No
-					
010	1350042-0000		1	GASKET	
020	2680394-0000		1	GASKET	
030	2687109-0000		1	COUPLING	
040	90459-4576		1	O-RING 55X3 MM	
050	90459-4586		1	RADIAL SEAL 30X55X7 MM DUST LIP	
060	2680393-0000		1	LEVER	
070	90242-0281		1	O-RING 58X3 MM	
080	90091-0299		1	RADIAL SEAL 30X52X7 MM DUST LIP	
090	2680392-0000		1	FILTER	

Pos	Part No	UN	Qty	Description	Page No

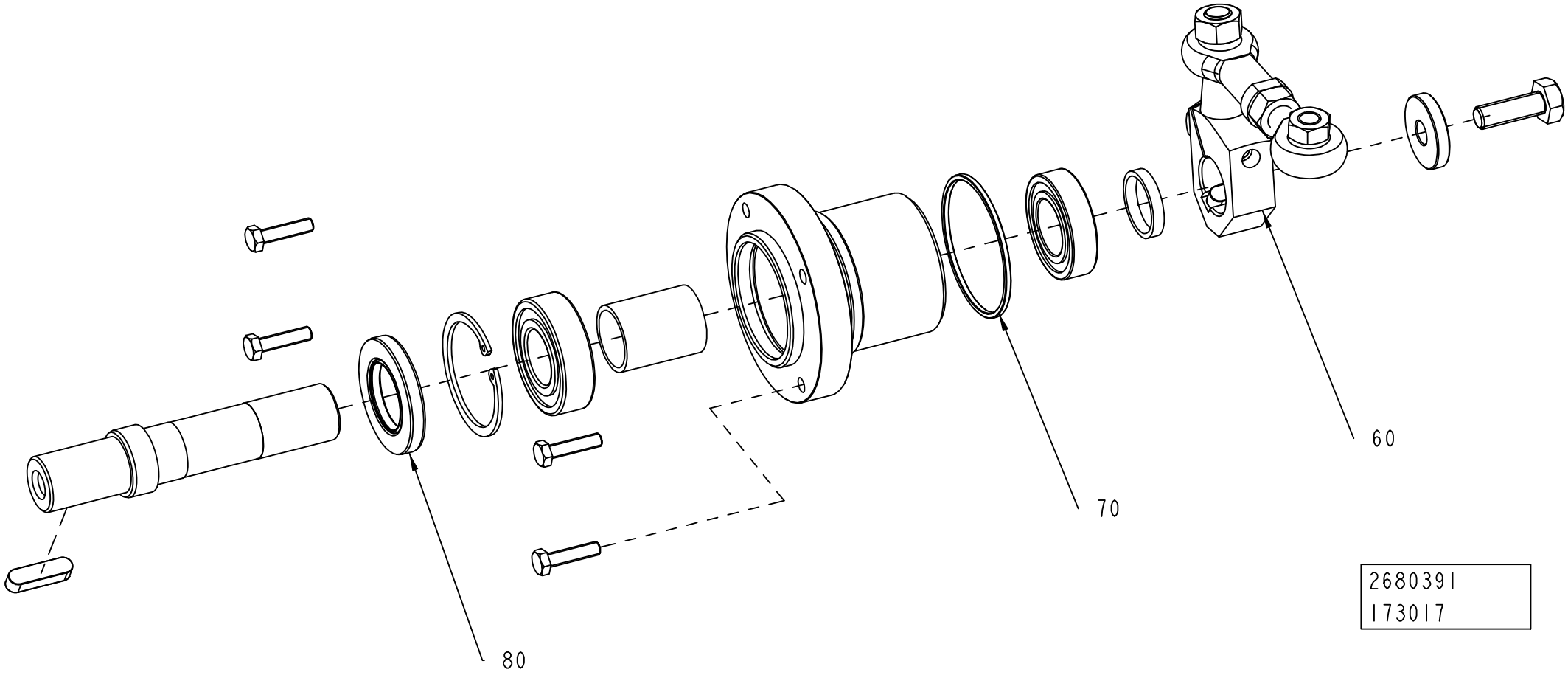
60
70
80
2680391
173017

ECM: 190933 - 20041104
Group number: 2680391-0000
Assembly Drawing: 2680391_6_AA

This list covers pages from 5-234 to 5-239

Pos	Part No	UN	Qty	Description	Page No
-					
010	1350042-0000		1	GASKET	
020	2680394-0000		1	GASKET	
030	2687109-0000		1	COUPLING	
040	90459-4576		1	O-RING 55X3 MM	
050	90459-4586		1	RADIAL SEAL 30X55X7 MM DUST LIP	
060	2680393-0000		1	LEVER	
070	90242-0281		1	O-RING 58X3 MM	
080	90091-0299		1	RADIAL SEAL 30X52X7 MM DUST LIP	
090	2680392-0000		1	FILTER	

Pos	Part No	UN	Qty	Description	Page No

PRESSURE DEVICE

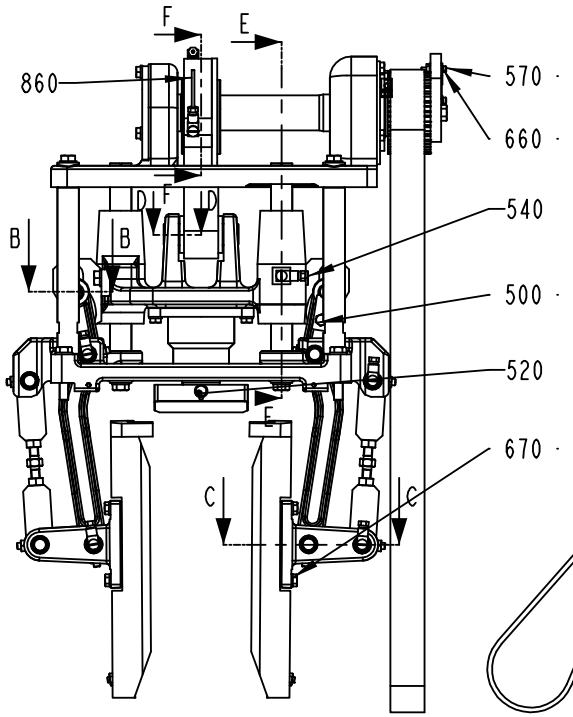

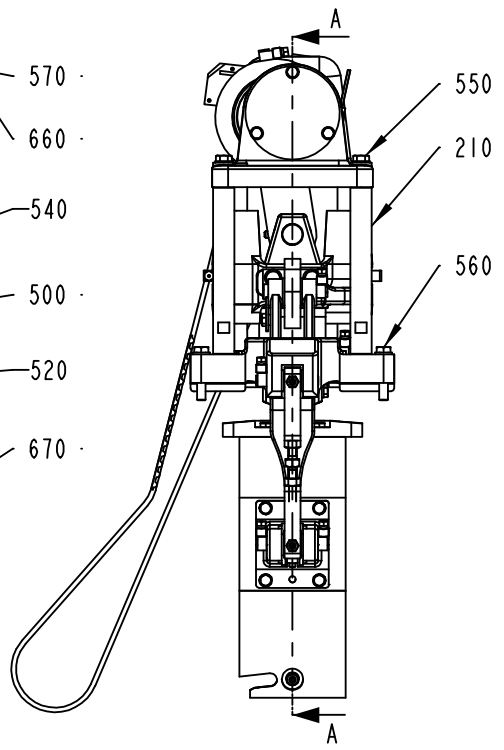

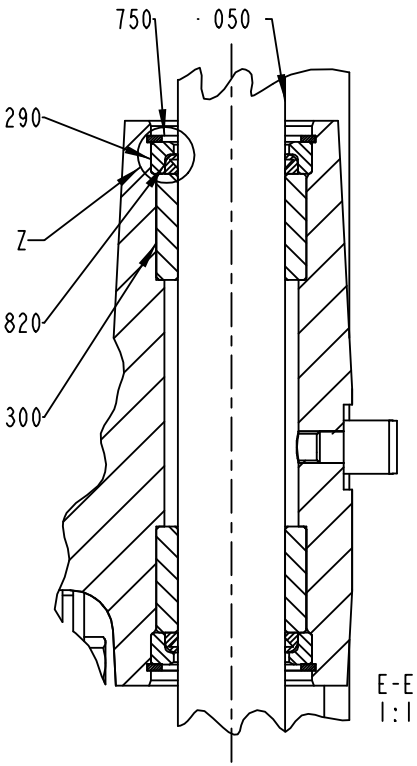

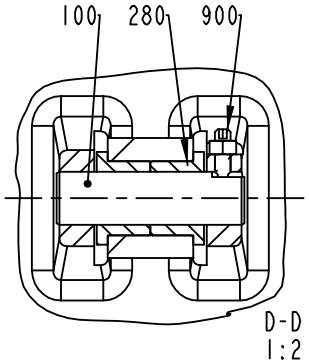

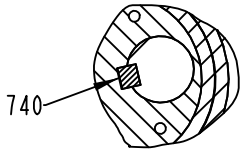

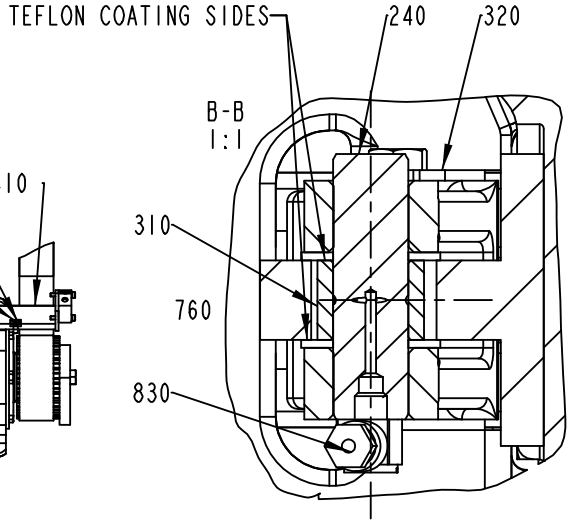

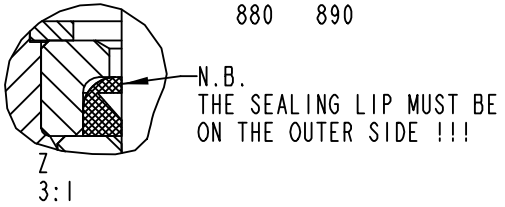

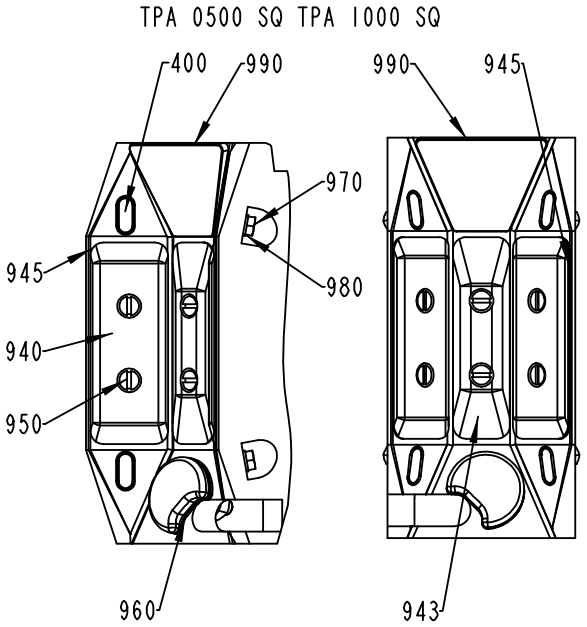

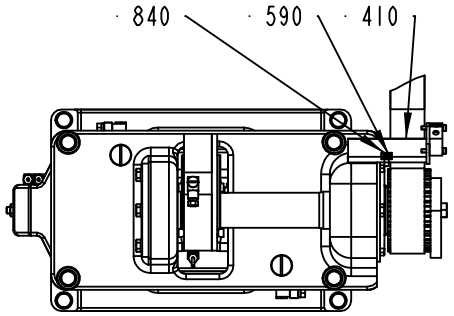

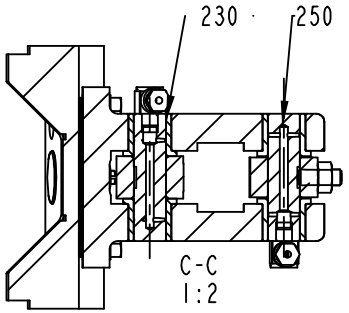

1144331-4
ECM 210141

ECM: 272740 - 20061101
Group number: 1144331-0300
Assembly Drawing: 1144331-4_1_AH

This list covers pages from 5-240 to 5-251

Pos	Part No	UN	Qty	Description	Page No
TBA 1000B NOQC (See drawing on pages: 5-240, 5-242)					
010	1144482-0000		2	SUPPORT	
080	1144492-0000		1	SPRING	
260	1144511-0000		6	SHIM	
350	1349519-0000		1	ACTIVATOR	
360	90240-0317		1	BUSHING, 35X39X30 MM	
450	1144978-0000		2	CAM	
470	1260701-0000		1	PUSHER	
475	1260701-0000		1	PUSHER	
480	1260702-0000		1	PLATE	
500	312105-0366		8	SCREW M6S ISO 4017 M6X12 A480	
520	312105-0370		11	SCREW M6S ISO 4017 M6X20 A480	
530	312105-0372		8	SCREW M6S ISO 4017 M6X25 A480	
580	312115-0370		1	SCREW ISO4762 M6X20 A4 80	
630	312605-0316		9	HEXAGON NUT, M6M M6 A280	
650	315103-0153		3	WASHER, BRB, 6,4/12,H=1,5 NIPL BR	
670	315105-0153		15	WASHER BRB 6,4X12 RFR	
TBA 1000S (See drawing on pages: 5-240, 5-242)					
010	1144482-0000		2	SUPPORT	
080	1144492-0000		1	SPRING	
260	1144511-0000		6	SHIM	
350	1349519-0000		1	ACTIVATOR	
360	90240-0317		1	BUSHING, 35X39X30 MM	
450	1144978-0000		2	CAM	
470	1144928-0000		1	PUSHER	
475	1144928-0000		1	PUSHER	
480	1144932-0000		1	PLATE	
500	312105-0366		8	SCREW M6S ISO 4017 M6X12 A480	
520	312105-0370		11	SCREW M6S ISO 4017 M6X20 A480	
530	312105-0372		8	SCREW M6S ISO 4017 M6X25 A480	
580	312115-0370		1	SCREW ISO4762 M6X20 A4 80	
630	312605-0316		9	HEXAGON NUT, M6M M6 A280	
650	315103-0153		3	WASHER, BRB, 6,4/12,H=1,5 NIPL BR	
670	315105-0153		15	WASHER BRB 6,4X12 RFR	
TBA 1000SQ (See drawing on pages: 5-240, 5-242)					
010	1144482-0000		2	SUPPORT	
080	1144492-0000		1	SPRING	
260	1144511-0000		6	SHIM	
350	1349519-0000		1	ACTIVATOR	
360	90240-0317		1	BUSHING, 35X39X30 MM	
450	1144978-0000		2	CAM	
470	1490032-0000		2	PUSHER	
475	1490032-0000		1	PUSHER	
480	1490031-0000		1	PLATE	
480	1549940-0000		1	PUSHER	
500	312105-0366		8	SCREW M6S ISO 4017 M6X12 A480	
520	312105-0370		14	SCREW M6S ISO 4017 M6X20 A480	
530	312105-0372		8	SCREW M6S ISO 4017 M6X25 A480	
580	312115-0370		1	SCREW ISO4762 M6X20 A4 80	
630	312605-0316		9	HEXAGON NUT, M6M M6 A280	
650	315103-0153		3	WASHER, BRB, 6,4/12,H=1,5 NIPL BR	
670	315105-0153		15	WASHER BRB 6,4X12 RFR	
TBA 1500S (See drawing on pages: 5-240, 5-242)					
010	1144482-0000		2	SUPPORT	
080	1144492-0000		1	SPRING	
260	1144511-0000		6	SHIM	
350	1349519-0000		1	ACTIVATOR	
360	90240-0317		1	BUSHING, 35X39X30 MM	
450	1144978-0000		2	CAM	
470	1317654-0000		1	PUSHER	
475	1317654-0000		1	PUSHER	
480	1317655-0000		1	PLATE	
500	312105-0366		8	SCREW M6S ISO 4017 M6X12 A480	
520	312105-0370		15	SCREW M6S ISO 4017 M6X20 A480	
530	312105-0372		8	SCREW M6S ISO 4017 M6X25 A480	
580	312115-0370		1	SCREW ISO4762 M6X20 A4 80	
630	312605-0316		9	HEXAGON NUT, M6M M6 A280	
650	315103-0153		3	WASHER, BRB, 6,4/12,H=1,5 NIPL BR	
655	1317787-0000		2	CATCH	
670	315105-0153		15	WASHER BRB 6,4X12 RFR	
TBA 1890S QC, TBA 2000S QC (See drawing on pages: 5-240, 5-242)					
010	1144482-0000		2	SUPPORT	
080	2662142-0000		1	SPRING	
260	1144511-0000		6	SHIM	
350	1349519-0000		1	ACTIVATOR	
360	90240-0317		1	BUSHING, 35X39X30 MM	
450	1144978-0000		2	CAM	
470	2661429-0000		1	PUSHER	
475	2661429-0000		1	PUSHER	
480	2660841-0000		1	PUSHER	
500	312105-0366		7	SCREW M6S ISO 4017 M6X12 A480	
520	312105-0370		3	SCREW M6S ISO 4017 M6X20 A480	
530	312605-0316		8	HEXAGON NUT, M6M M6 A280	
580	312115-0370		5	SCREW ISO4762 M6X20 A4 80	

Machine Type | Group Description | Used-In | Group Number | Page No

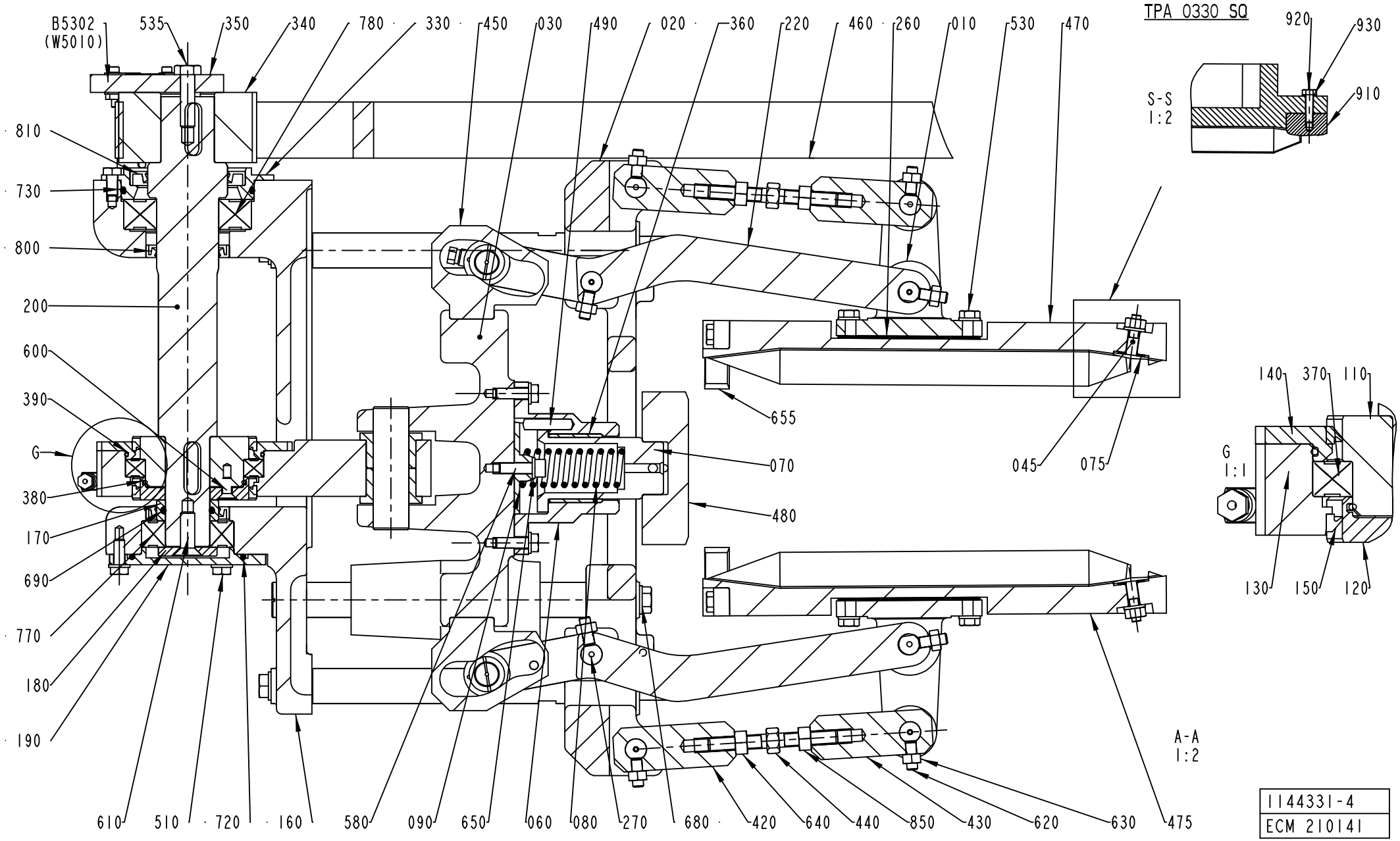

1144331-4
ECM 210141

Pos	Part No	UN	Qty	Description	Page No
TBA 1890S QC, TBA 2000S QC (Cont'd) (See drawing on pages: 5-240, 5-242)					
630	312605-0316		9	HEXAGON NUT, M6M M6 A280	
650	315103-0153		3	WASHER, BRB, 6,4/12,H=1,5 NIPL BR	
655	2594902-0000		2	CATCH	
670	315105-0153		14	WASHER BRB 6,4X12 RFR	
TPA 0250SQ NOQC (See drawing on pages: 5-240, 5-242)					
010	1144482-0000		2	SUPPORT	
080	1144492-0000		1	SPRING	
260	1144511-0000		6	SHIM	
350	1349519-0000		1	ACTIVATOR	
360	90240-0317		1	BUSHING, 35X39X30 MM	
450	1144486-0000		2	CAM	
470	1549847-0000		1	PUSHER	
475	1549848-0000		1	PUSHER	
480	1549849-0000		1	PLATE	
500	312105-0366		8	SCREW M6S ISO 4017 M6X12 A480	
520	312105-0370		11	SCREW M6S ISO 4017 M6X20 A480	
530	312105-0372		8	SCREW M6S ISO 4017 M6X25 A480	
580	312115-0370		1	SCREW ISO4762 M6X20 A4 80	
630	312605-0316		9	HEXAGON NUT, M6M M6 A280	
650	315103-0153		3	WASHER, BRB, 6,4/12,H=1,5 NIPL BR	
670	315105-0153		15	WASHER BRB 6,4X12 RFR	
TPA 0250SQ QC, TPA 0200SQ QC (See drawing on pages: 5-244, 5-246)					
010	2647101-0000		2	SUPPORT	
080	1144492-0000		1	SPRING	
260	2658249-0000		6	SHIM	
350	1349519-0000		1	ACTIVATOR	
360	90240-0317		1	BUSHING, 35X39X30 MM	
450	1144486-0000		2	CAM	
470	2705814-0100		1	PUSHER	**5-253, 5-255**
480	1549849-0000		1	PLATE	
500	312105-0366		7	SCREW M6S ISO 4017 M6X12 A480	
520	312105-0370		3	SCREW M6S ISO 4017 M6X20 A480	
530	312105-0372		4	SCREW M6S ISO 4017 M6X25 A480	
580	312115-0370		1	SCREW ISO4762 M6X20 A4 80	
630	312605-0316		9	HEXAGON NUT, M6M M6 A280	
650	315103-0153		3	WASHER, BRB, 6,4/12,H=1,5 NIPL BR	
670	315105-0153		14	WASHER BRB 6,4X12 RFR	
1000	2647099-0000		2	GUIDE	
1010	312105-0368		4	SCREW M6S ISO 4017 M6X16 A480	
1020	90459-3940		2	LEVER, GN 612-6-M16X1.5-A-NI	
TPA 0330SQ (See drawing on pages: 5-240, 5-242)					
010	1144482-0000		2	SUPPORT	
080	1260895-0000		1	SPRING	
260	1144511-0000		6	SHIM	
350	1349519-0000		1	ACTIVATOR	
360	90240-0317		1	BUSHING, 35X39X30 MM	
450	1144486-0000		2	CAM	
470	1532289-0000		1	PUSHER	
475	1532290-0000		1	PUSHER	
480	1532291-0000		1	PLATE	
500	312105-0366		8	SCREW M6S ISO 4017 M6X12 A480	
520	312105-0370		11	SCREW M6S ISO 4017 M6X20 A480	
530	312105-0372		8	SCREW M6S ISO 4017 M6X25 A480	
580	312115-0370		1	SCREW ISO4762 M6X20 A4 80	
630	312605-0316		9	HEXAGON NUT, M6M M6 A280	
650	315103-0153		3	WASHER, BRB, 6,4/12,H=1,5 NIPL BR	
670	315105-0153		15	WASHER BRB 6,4X12 RFR	
910	1558821-0000		2	VOLUME BULGE	
920	312105-0293		2	SCREW M6S ISO 4017 M4X16 A470	
930	315105-0136		2	WASHER BRB 4,3X9 RFR	
TPA 0500SQ (See drawing on pages: 5-240, 5-242)					
010	1144482-0000		2	SUPPORT	
045	2541877-0000		2	NAIL	
080	1144492-0000		1	SPRING	
260	1144511-0000		6	SHIM	
350	1349519-0000		1	ACTIVATOR	
360	90240-0317		1	BUSHING, 35X39X30 MM	
400	2635167-0000		8	VOLUME BULGE	
450	1144486-0000		2	CAM	
470	1558178-0000		1	PUSHER	
475	1558047-0000		1	PUSHER	
480	1558184-0000		1	PLATE	
500	312105-0366		8	SCREW M6S ISO 4017 M6X12 A480	
520	312105-0370		3	SCREW M6S ISO 4017 M6X20 A480	
530	312105-0372		8	SCREW M6S ISO 4017 M6X25 A480	
580	312115-0370		1	SCREW ISO4762 M6X20 A4 80	
630	312605-0316		11	HEXAGON NUT, M6M M6 A280	
650	315103-0153		5	WASHER, BRB, 6,4/12,H=1,5 NIPL BR	
670	315105-0153		15	WASHER BRB 6,4X12 RFR	
940	2602613-0000		4	VOLUME BULGE	
943	2559008-0000		2	VOLUME BULGE	
945	2611875-0000		2	SHIM	
950	312145-0289		12	SCREW ISO 2009 MFS M4X10 A4	

PRESSURE DEVICE

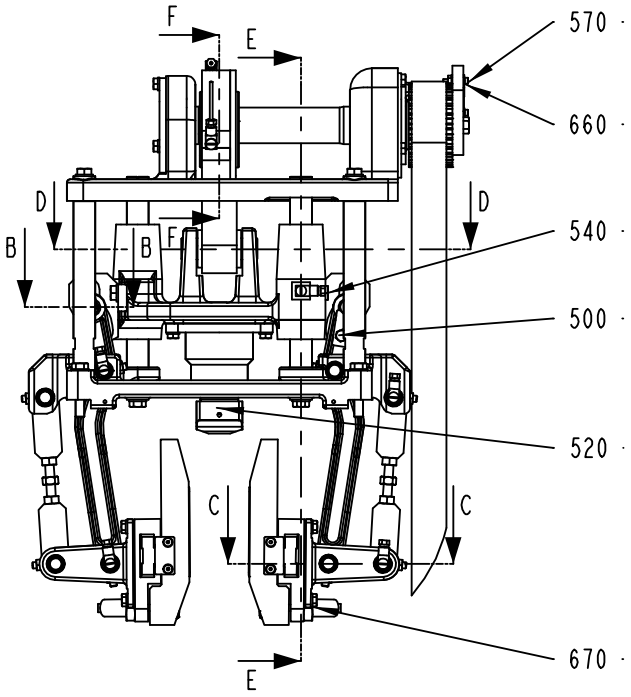

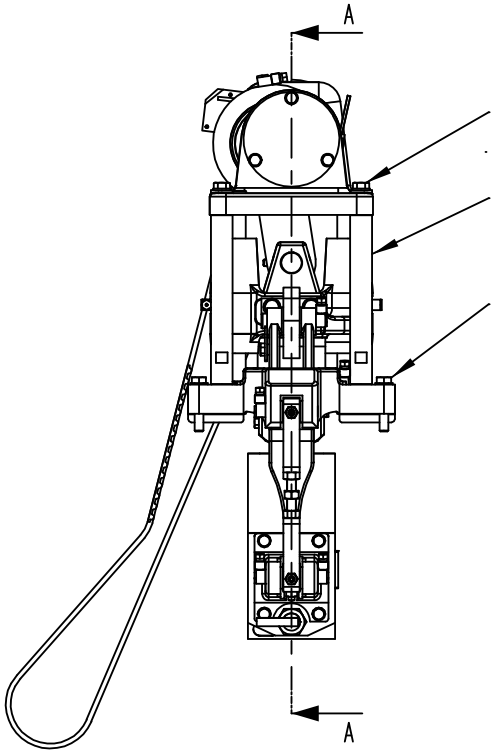

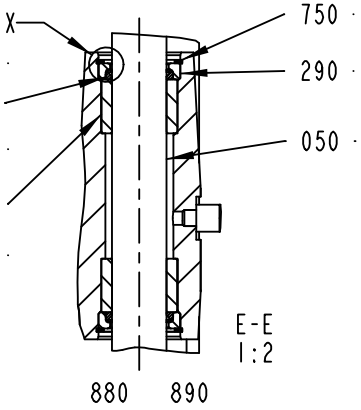

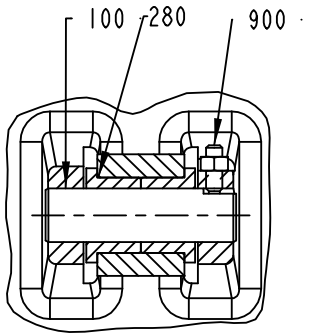

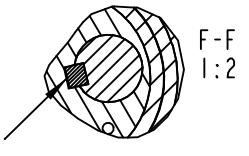

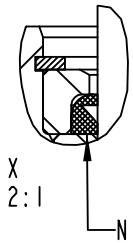

N.B.
THE SEALING LIP MUST BE
ON THE OUTER SIDE!!

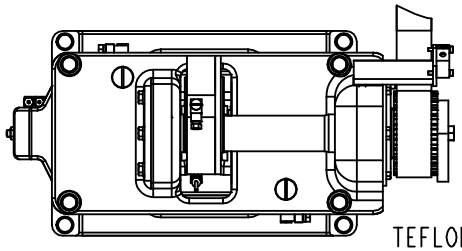

TEFLON COATING SIDES

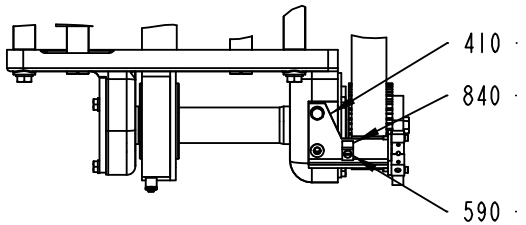

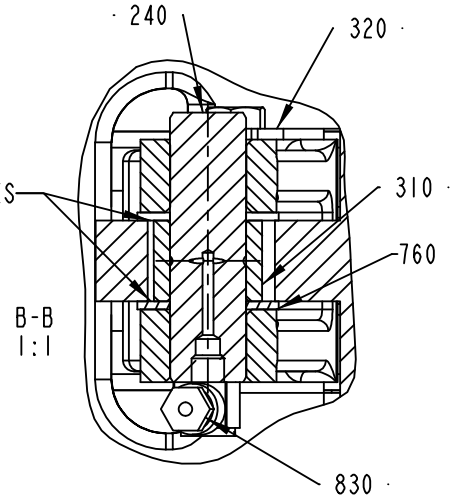

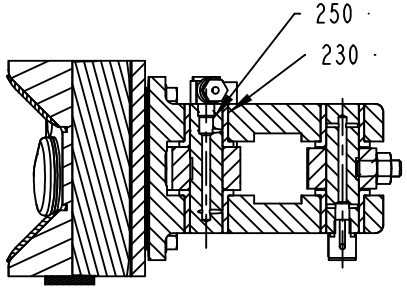

1144331-6
197793

ECM: 272740 - 20061101
Group number: 1144331-0300
Assembly Drawing: 1144331-6_1_AA

This list covers pages from 5-240 to 5-251

Pos	Part No	UN	Qty	Description	Page No
TPA 0500SQ (Cont'd) (See drawing on pages: 5-240, 5-242)					
960	2541878-0000		6	WASHER	
970	312105-0287		10	SCREW M6S ISO 4017 M4X8 A470	
980	315105-0136		10	WASHER BRB 4,3X9 RFR	
990	2640075-0000		2	VOLUME BULGE	
TPA 1000SQ NOQC (See drawing on pages: 5-240, 5-242)					
010	1144482-0000		2	SUPPORT	
045	2541877-0000		2	NAIL	
080	1143530-0000		1	SPRING	
260	1144511-0000		6	SHIM	
350	1349519-0000		1	ACTIVATOR	
360	90240-0317		1	BUSHING, 35X39X30 MM	
450	1144486-0000		2	CAM	
470	1523884-0000		1	FLAP	
470	2698264-0000		1	FLAP	
475	1523885-0000		1	PUSHER	
480	1523826-0000		1	PUSHER	
500	312105-0366		8	SCREW M6S ISO 4017 M6X12 A480	
520	312105-0370		3	SCREW M6S ISO 4017 M6X20 A480	
530	312105-0372		8	SCREW M6S ISO 4017 M6X25 A480	
580	312115-0370		1	SCREW ISO4762 M6X20 A4 80	
630	312605-0316		11	HEXAGON NUT, M6M M6 A280	
650	315103-0153		3	WASHER, BRB, 6,4/12,H=1,5 NIPL BR	
670	315105-0153		15	WASHER BRB 6,4X12 RFR	
940	2698262-0000		4	VOLUME BULGE	
940	1523467-0000		4	VOLUME BULGE	
943	2698261-0000		2	VOLUME BULGE	
945	2698260-0000		2	VOLUME SHIM	
950	312155-0289		8	SCREW DIN 7991 MF6S M4X10 A4 70	
950	312145-0289		12	SCREW ISO 2009 MFS M4X10 A4	
960	2541878-0000		6	WASHER	
970	312105-0287		2	SCREW M6S ISO 4017 M4X8 A470	
980	315105-0136		2	WASHER BRB 4,3X9 RFR	
990	2698263-0000		2	VOLUME BULGE	
TPA 1000SQ QC, TPA 0750SQ QC (See drawing on pages: 5-244, 5-246)					
010	2647101-0000		2	SUPPORT	
080	1143530-0000		1	SPRING	
260	2658249-0000		6	SHIM	
350	1349519-0000		1	ACTIVATOR	
360	90240-0317		1	BUSHING, 35X39X30 MM	
450	1144486-0000		2	CAM	
470	2705814-0100		1	PUSHER	**5-253, 5-255**
480	2698300-0000		1	PLATE	
500	312105-0366		7	SCREW M6S ISO 4017 M6X12 A480	
520	312105-0370		3	SCREW M6S ISO 4017 M6X20 A480	
530	312105-0372		4	SCREW M6S ISO 4017 M6X25 A480	
580	312115-0370		1	SCREW ISO4762 M6X20 A4 80	
630	312605-0316		9	HEXAGON NUT, M6M M6 A280	
650	315103-0153		3	WASHER, BRB, 6,4/12,H=1,5 NIPL BR	
670	315105-0153		14	WASHER BRB 6,4X12 RFR	
1000	2647099-0000		2	GUIDE	
1010	312105-0368		4	SCREW M6S ISO 4017 M6X16 A480	
1020	90459-3940		2	LEVER, GN 612-6-M16X1.5-A-NI	
TBA 0200B NOQC (See drawing on pages: 5-240, 5-242)					
010	1144482-0000		2	SUPPORT	
080	1260895-0000		1	SPRING	
260	1144511-0000		6	SHIM	
350	1349519-0000		1	ACTIVATOR	
360	90240-0317		1	BUSHING, 35X39X30 MM	
450	1144978-0000		2	CAM	
470	1334999-0000		1	PUSHER	
475	1334999-0000		1	PUSHER	
480	1350809-0000		1	BLOCK	
500	312105-0366		8	SCREW M6S ISO 4017 M6X12 A480	
520	312105-0370		11	SCREW M6S ISO 4017 M6X20 A480	
530	312105-0372		8	SCREW M6S ISO 4017 M6X25 A480	
580	312115-0370		1	SCREW ISO4762 M6X20 A4 80	
630	312605-0316		9	HEXAGON NUT, M6M M6 A280	
650	315103-0153		3	WASHER, BRB, 6,4/12,H=1,5 NIPL BR	
670	315105-0153		15	WASHER BRB 6,4X12 RFR	
TBA 0200B QC, TBA 0330S QC, TBA 0250B QC (See drawing on pages: 5-240, 5-242)					
010	1144482-0000		2	SUPPORT	
080	1144492-0000		1	SPRING	
260	1144511-0000		6	SHIM	
350	1349519-0000		1	ACTIVATOR	
360	90240-0317		1	BUSHING, 35X39X30 MM	
450	1144978-0000		2	CAM	
470	2605125-0000		1	PUSHER	
475	2605125-0000		1	PUSHER	
480	2651145-0000		1	BLOCK	
500	312105-0366		8	SCREW M6S ISO 4017 M6X12 A480	
520	312105-0370		11	SCREW M6S ISO 4017 M6X20 A480	
530	312105-0372		8	SCREW M6S ISO 4017 M6X25 A480	
580	312115-0370		1	SCREW ISO4762 M6X20 A4 80	

Machine Type | Group Description | Used-In | Group Number | Page No

PRESSURE DEVICE

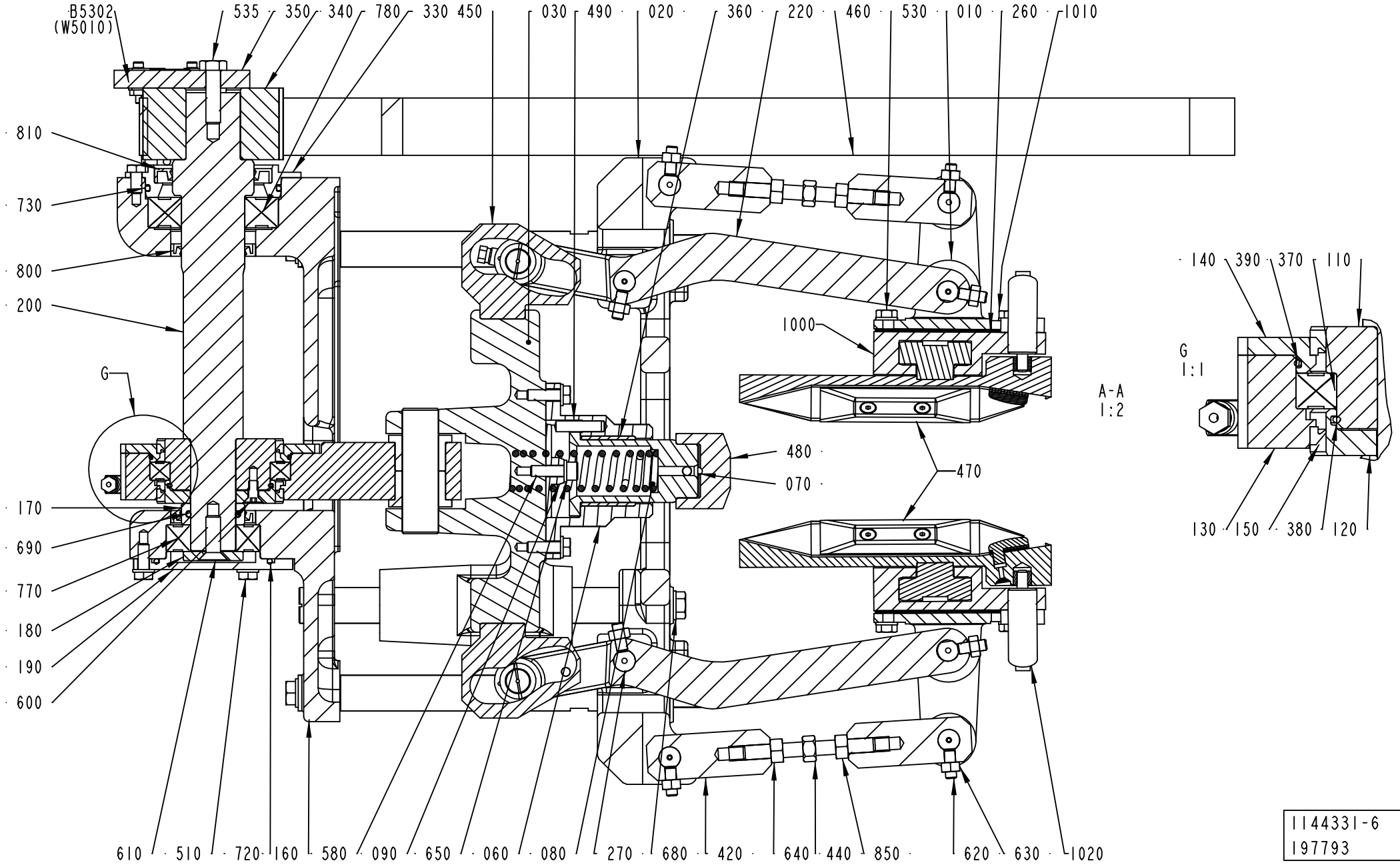

1144331-6
197793

Pos	Part No	UN	Qty	Description	Page No
TBA 0200B QC, TBA 0330S QC, TBA 0250B QC (Cont'd) (See drawing on pages: 5-240, 5-242)					
630	312605-0316		9	HEXAGON NUT, M6M M6 A280	
650	315103-0153		3	WASHER, BRB, 6,4/12,H=1,5 NIPL BR	
670	315105-0153		15	WASHER BRB 6,4X12 RFR	
TBA 0200S (See drawing on pages: 5-240, 5-242)					
010	1144482-0000		2	SUPPORT	
080	1260895-0000		1	SPRING	
260	1144511-0000		6	SHIM	
350	1349519-0000		1	ACTIVATOR	
360	90240-0317		1	BUSHING, 35X39X30 MM	
450	1144978-0000		2	CAM	
470	1260889-0000		1	PUSHER	
475	1260889-0000		1	PUSHER	
480	1260888-0000		1	BLOCK	
500	312105-0366		8	SCREW M6S ISO 4017 M6X12 A480	
520	312105-0370		11	SCREW M6S ISO 4017 M6X20 A480	
530	312105-0372		8	SCREW M6S ISO 4017 M6X25 A480	
580	312115-0370		1	SCREW ISO4762 M6X20 A4 80	
630	312605-0316		9	HEXAGON NUT, M6M M6 A280	
650	315103-0153		3	WASHER, BRB, 6,4/12,H=1,5 NIPL BR	
670	315105-0153		15	WASHER BRB 6,4X12 RFR	
TBA 0200SQ QC, TBA 0250SQ QC (See drawing on pages: 5-240, 5-242)					
010	1144482-0000		2	SUPPORT	
080	1144492-0000		1	SPRING	
260	1144511-0000		6	SHIM	
350	1349519-0000		1	ACTIVATOR	
360	90240-0317		1	BUSHING, 35X39X30 MM	
450	1144978-0000		2	CAM	
470	2757847-0000		1	PUSHER	
475	2757847-0000		1	PUSHER	
480	2668240-0000		1	BLOCK	
500	312105-0366		8	SCREW M6S ISO 4017 M6X12 A480	
520	312105-0370		11	SCREW M6S ISO 4017 M6X20 A480	
530	312105-0372		8	SCREW M6S ISO 4017 M6X25 A480	
580	312115-0370		1	SCREW ISO4762 M6X20 A4 80	
630	312605-0316		9	HEXAGON NUT, M6M M6 A280	
650	315103-0153		3	WASHER, BRB, 6,4/12,H=1,5 NIPL BR	
670	315105-0153		15	WASHER BRB 6,4X12 RFR	
TBA 0250B NOQC (See drawing on pages: 5-240, 5-242)					
010	1144482-0000		2	SUPPORT	
080	1260895-0000		1	SPRING	
260	1144511-0000		6	SHIM	
350	1349519-0000		1	ACTIVATOR	
360	90240-0317		1	BUSHING, 35X39X30 MM	
450	1144978-0000		2	CAM	
470	1350810-0000		1	PUSHER	
475	1350810-0000		1	PUSHER	
480	1350809-0000		1	BLOCK	
500	312105-0366		8	SCREW M6S ISO 4017 M6X12 A480	
520	312105-0370		11	SCREW M6S ISO 4017 M6X20 A480	
530	312105-0372		8	SCREW M6S ISO 4017 M6X25 A480	
580	312115-0370		1	SCREW ISO4762 M6X20 A4 80	
630	312605-0316		9	HEXAGON NUT, M6M M6 A280	
650	315103-0153		3	WASHER, BRB, 6,4/12,H=1,5 NIPL BR	
670	315105-0153		15	WASHER BRB 6,4X12 RFR	
TBA 0250S, TBA 0200M (See drawing on pages: 5-240, 5-242)					
010	1144482-0000		2	SUPPORT	
080	1144492-0000		1	SPRING	
260	1144511-0000		6	SHIM	
350	1349519-0000		1	ACTIVATOR	
360	90240-0317		1	BUSHING, 35X39X30 MM	
450	1144978-0000		2	CAM	
470	2686876-0000		1	PUSHER	
475	2686876-0000		1	PUSHER	
480	2522197-0000		1	PLATE	
520	312105-0370		3	SCREW M6S ISO 4017 M6X20 A480	
530	312105-0372		8	SCREW M6S ISO 4017 M6X25 A480	
630	312605-0316		9	HEXAGON NUT, M6M M6 A280	
650	315103-0153		3	WASHER, BRB, 6,4/12,H=1,5 NIPL BR	
TBA 0500B NOQC (See drawing on pages: 5-240, 5-242)					
010	1144482-0000		2	SUPPORT	
080	1144492-0000		1	SPRING	
260	1144511-0000		6	SHIM	
350	1349519-0000		1	ACTIVATOR	
360	90240-0317		1	BUSHING, 35X39X30 MM	
450	1144978-0000		2	CAM	
470	1539872-0000		1	PUSHER	
475	1539872-0000		1	PUSHER	
480	1260702-0000		1	PLATE	
500	312105-0366		8	SCREW M6S ISO 4017 M6X12 A480	
520	312105-0370		11	SCREW M6S ISO 4017 M6X20 A480	
530	312105-0372		8	SCREW M6S ISO 4017 M6X25 A480	
580	312115-0370		1	SCREW ISO4762 M6X20 A4 80	
630	312605-0316		9	HEXAGON NUT, M6M M6 A280	

Machine Type | Group Description | Used-In | Group Number | Page No

See previous drawings pages: 5-240, 5-242, 5-244, 5-246.

ECM: 272740 - 20061101
Group number: 1144331-0300
Assembly Drawing: 1144331-6_2_AA

This list covers pages from 5-240 to 5-251

Pos	Part No	UN	Qty	Description	Page No
TBA 0500B NOQC (Cont'd) (See drawing on pages: 5-240, 5-242)					
650	315103-0153		3	WASHER, BRB, 6,4/12,H=1,5 NIPL BR	
670	315105-0153		15	WASHER BRB 6,4X12 RFR	
TBA 0500B QC, TBA 1000B QC (See drawing on pages: 5-240, 5-242)					
010	1144482-0000		2	SUPPORT	
080	1144492-0000		1	SPRING	
260	1144511-0000		6	SHIM	
350	1349519-0000		1	ACTIVATOR	
360	90240-0317		1	BUSHING, 35X39X30 MM	
450	1144978-0000		2	CAM	
470	2524512-0000		1	PUSHER	
475	2524512-0000		1	PUSHER	
480	1260702-0000		1	PLATE	
500	312105-0366		8	SCREW M6S ISO 4017 M6X12 A480	
520	312105-0370		11	SCREW M6S ISO 4017 M6X20 A480	
530	312105-0372		8	SCREW M6S ISO 4017 M6X25 A480	
580	312115-0370		1	SCREW ISO4762 M6X20 A4 80	
630	312605-0316		9	HEXAGON NUT, M6M M6 A280	
650	315103-0153		3	WASHER, BRB, 6,4/12,H=1,5 NIPL BR	
670	315105-0153		15	WASHER BRB 6,4X12 RFR	
TBA 0500S (See drawing on pages: 5-240, 5-242)					
010	1144482-0000		2	SUPPORT	
080	1144492-0000		1	SPRING	
260	1144511-0000		6	SHIM	
350	1349519-0000		1	ACTIVATOR	
360	90240-0317		1	BUSHING, 35X39X30 MM	
450	1144978-0000		2	CAM	
470	1499144-0000		2	PUSHER	
475	1499144-0000		1	PUSHER	
480	1499143-0000		1	PLATE	
500	312105-0366		8	SCREW M6S ISO 4017 M6X12 A480	
520	312105-0370		11	SCREW M6S ISO 4017 M6X20 A480	
530	312105-0372		8	SCREW M6S ISO 4017 M6X25 A480	
580	312115-0370		1	SCREW ISO4762 M6X20 A4 80	
630	312605-0316		9	HEXAGON NUT, M6M M6 A280	
650	315103-0153		3	WASHER, BRB, 6,4/12,H=1,5 NIPL BR	
670	315105-0153		15	WASHER BRB 6,4X12 RFR	
Common Parts					
020	1144483-0000		1	PLATE	
030	1144485-0000		1	SUPPORT	
050	1144488-0000		2	COLUMN	
060	1144489-0000		1	FLANGE	
070	1478189-0000		1	SUPPORT	
090	1144493-0000		1	WASHER	
100	1144494-0000		1	AXLE PIN	
110	1144495-0000		1	ECCENTRIC	
120	1144496-0000		1	ECCENTRIC	
130	1346539-0000		1	CONNECTING ROD	
140	1144498-0000		1	FLANGE	
150	90091-0408		2	BEARING SEAL 70X78X5 MM	
160	1144500-0000		1	SUPPORT	
170	1144501-0000		1	SPACER	
180	1144502-0000		1	WASHER	
190	1144503-0000		1	FLANGE	
200	1349516-0000		1	SHAFT	
210	1144505-0000		4	COLUMN	
220	1144506-0000		2	LEVER	
230	1144507-0000		16	BUSHING	
240	1144508-0000		2	AXLE PIN	
250	1317362-0000		6	SHAFT	
270	1317363-0000		2	SHAFT	
280	1144514-0000		2	BUSHING	
290	1144515-0000		4	INSERT	
300	1144517-0000		4	BUSHING	
310	1144520-0000		2	ROLLER	
320	1144521-0000		2	CLAMP	
330	1347018-0000		1	PLUG	
340	1349517-0000		1	TOOTHED PULLEY	
370	90214-0229		1	BALL BEARING, 65X85X10 MM	
380	90242-0271		1	O-RING 63,22X1,78 MM	
390	90242-0270		1	O-RING 82,27X1,78 MM	
410	1349518-0000		1	SUPPORT	
420	1144914-0000		2	LEVER	
430	1144915-0000		2	LEVER	
440	1144916-0000		2	ADJUSTING SCREW	
460	1348537-0000		1	TIMING BELT	
490	1498029-0000		1	PIN	
510	312105-0368		3	SCREW M6S ISO 4017 M6X16 A480	
535	312105-0455		1	SCREW M6S ISO 4017 M8X30 A480	
540	312105-0451		4	SCREW M6S ISO 4017 M8X20 A480	
550	312105-0457		6	SCREW M6S ISO 4014 M8X35 A480	
560	312109-0460		4	SCREW M6S ISO 4017 M8X45 A480	
570	312115-0230		2	SCREW ISO4762 M3X20 A4 80	
590	312125-0287		1	SCREW ISO 1207 M4X8 A4	

Machine Type | Group Description | Used-In | Group Number | Page No

See previous drawings pages: 5-240, 5-242, 5-244, 5-246.

Pos	Part No	UN	Qty	Description	Page No
Common Parts (Cont'd)					
600	312155-0327		6	SCREW DIN 7991 MF6S M5X12 A4 70	
610	312155-0453		1	SCREW DIN 7991 MF6S M8X25 A4 70	
620	312318-0368		9	SCREW ISO4029 M6X16 A4	
640	312605-0318		2	HEXAGON NUT, M6M M8 A280	
660	315105-0124		2	WASHER BRB 3,2X7 RFR	
680	315105-0165		14	WASHER BRB 8,4X16 RFR	
690	315202-0217		1	O-RING 24,2X3 MM	
720	315202-0303		1	O-RING 59,5X3 MM	
730	315202-0305		1	O-RING 69,5X3 MM	
740	315705-0267		2	PARALLEL KEY W. ROUND ENDS 8X7X30 MM	
750	315753-0122		4	RETAINING RING FOR BORE DIN 472 30 A2	
760	321130-0200		4	THRUST WASHER, 14X26X1,5 MM	
770	321313-0105		1	BALL BEARING, 25X52X15MM	
780	321313-0107		1	BALL BEARING, 35X72X17MM	
800	90091-0297		2	RADIAL SEAL 35X47X7 MM DUST LIP	
810	90091-0298		1	RADIAL SEAL 45X65X8 MM DUST LIP	
820	90091-0380		4	SCRAPER, EXCLUDER 20X24,8X3,7 MM	
830	90134-0058		14	CONNECTION	
840	90165-0056		1	PIPE CLIP FOR TUBE D=4 MM	
850	312902-0318		2	NUT HEX. LEFT THREAD, M8 A280	
880	352113-0102		5	CLIP-STRIP, BLACK 188X4,8 MM	
890	352113-0101		8	CLIP STRIP, 92X2,5 MM	
900	312311-0370		1	SCREW ISO4028 M6X20 FZB	
B5302	90044-0194		1	PROX.SW. IN5329/IN3002-BPKG(EX90044-104)	

Pos	Part No	UN	Qty	Description	Page No

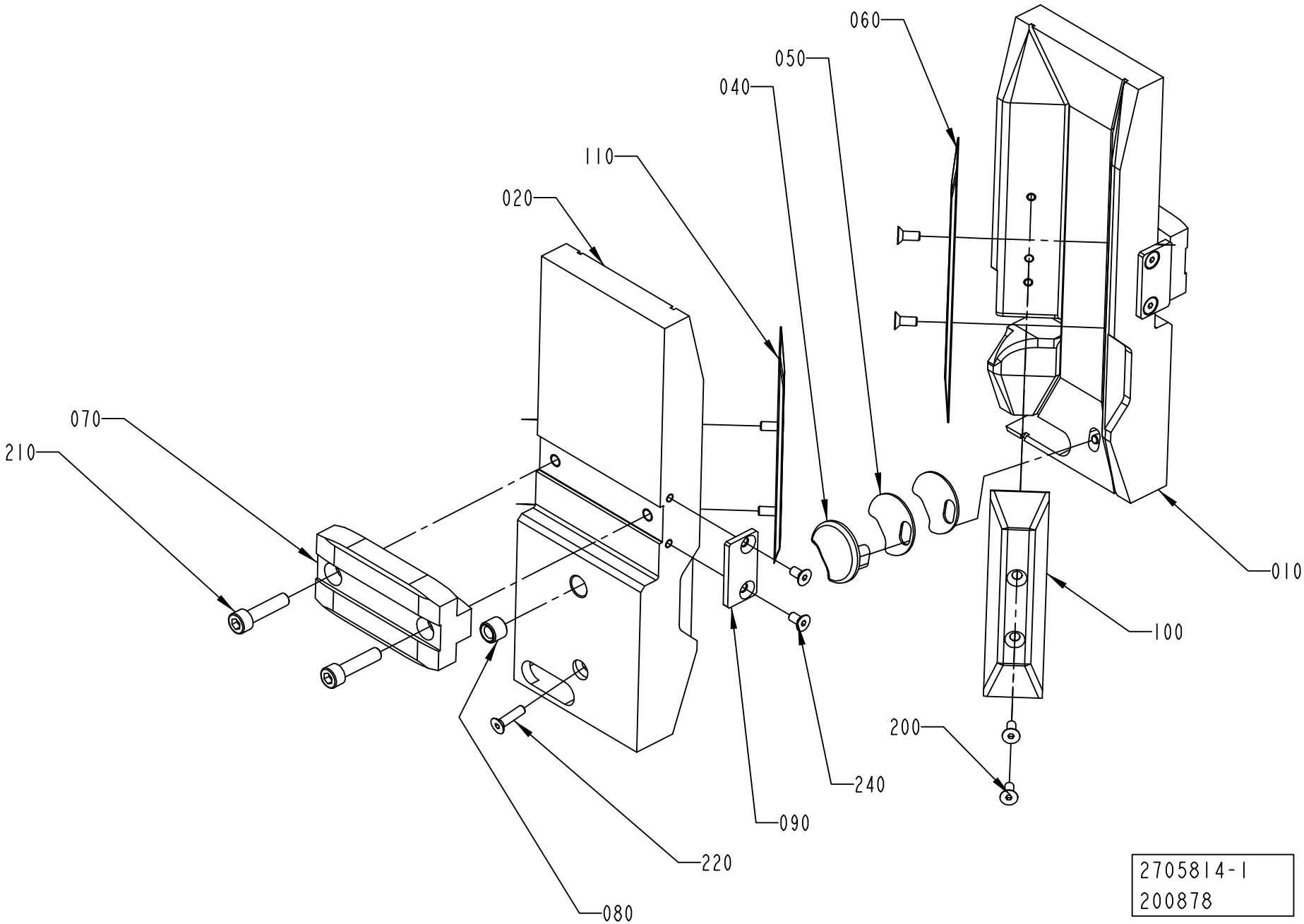
060
050
040
110
020
070
210
010
100
200
240
090
220
080
2705814-1
200878

ECM: 202651 - 20050224
Group number: 2705814-0100
Assembly Drawing: 2705814-1_1_AA

This list covers pages from 5-252 to 5-255

Pos	Part No	UN	Qty	Description	Page No
TPA 0200SQ (See drawing on page: 5-254)					
010	2674272-0000		1	PUSHER	
020	2674273-0000		1	PUSHER	
040	2674269-0000		2	NAIL	
220	312115-0297		2	SCREW ISO4762 M4X25 A4 80	
250	315105-0136		2	WASHER BRB 4,3X9 RFR	
TPA 0250SQ (See drawing on page: 5-254)					
010	2674271-0000		1	PUSHER	
020	2674270-0000		1	PUSHER	
040	2674269-0000		2	NAIL	
220	312105-0295		2	SCREW M6S ISO 4017 M4X20 A470	
250	315105-0136		2	WASHER BRB 4,3X9 RFR	
TPA 0750SQ (See drawing on page: 5-252)					
010	2647094-0000		1	PUSHER	
020	2647093-0000		1	PUSHER	
040	2647097-0000		2	NAIL	
050	2658247-0000		6	WASHER	
060	2647100-0000		4	VOLUME BULGE	
090	2698319-0000		2	BLOCK	
200	312155-0289		8	SCREW DIN 7991 MF6S M4X10 A4 70	
220	312155-0293		2	SCREW DIN 7991 MF6S M4X16 A4 70	
240	312155-0287		4	SCREW DIN 7991 MF6S M4X8 A4 70	
TPA 1000SQ (See drawing on page: 5-252)					
010	2647096-0000		1	PUSHER	
020	2647095-0000		1	PUSHER	
040	2647097-0000		2	NAIL	
050	2658247-0000		6	WASHER	
060	1523467-0000		2	VOLUME BULGE	
090	2698319-0000		2	BLOCK	
100	2658263-0000		1	VOLUME BULGE	
110	2658264-0000		1	VOLUME BULGE	
200	312155-0289		8	SCREW DIN 7991 MF6S M4X10 A4 70	
220	312155-0293		2	SCREW DIN 7991 MF6S M4X16 A4 70	
240	312155-0287		4	SCREW DIN 7991 MF6S M4X8 A4 70	
Common Parts					
070	2647098-0000		2	BLOCK	
080	2647113-0000		2	BUSHING	
210	312115-0372		4	SCREW ISO4762 M6X25 A4 80	

Pos	Part No	UN	Qty	Description	Page No

Machine Type | Group Description | Used-In | Group Number | Page No

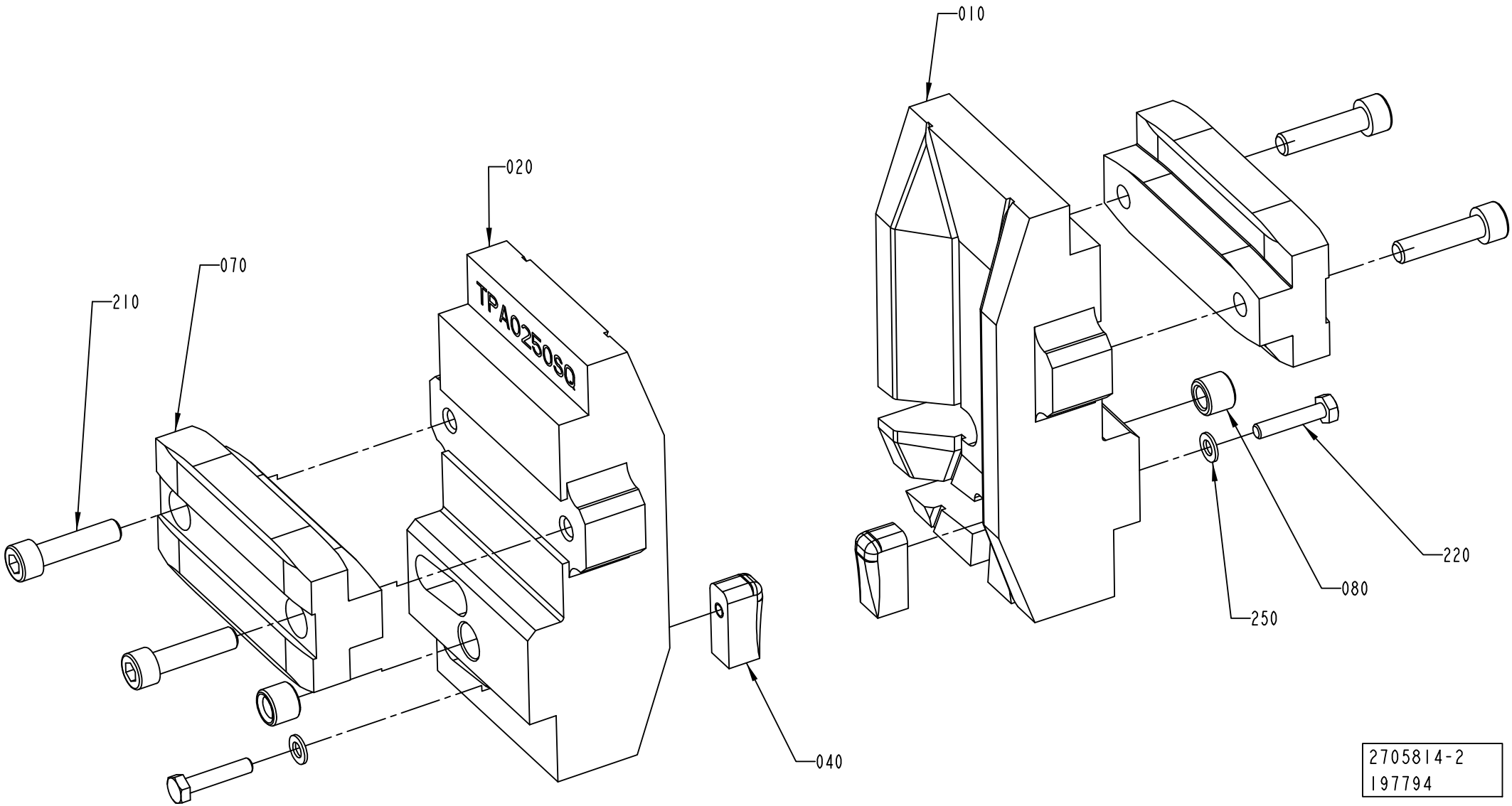

2705814-2
197794

ECM: 202651 - 20050224
Group number: 2705814-0100
Assembly Drawing: 2705814-2_1_AA

This list covers pages from 5-252 to 5-255

Pos	Part No	UN	Qty	Description	Page No
TPA 0200SQ (See drawing on page: 5-254)					
010	2674272-0000		1	PUSHER	
020	2674273-0000		1	PUSHER	
040	2674269-0000		2	NAIL	
220	312115-0297		2	SCREW ISO4762 M4X25 A4 80	
250	315105-0136		2	WASHER BRB 4,3X9 RFR	
TPA 0250SQ (See drawing on page: 5-254)					
010	2674271-0000		1	PUSHER	
020	2674270-0000		1	PUSHER	
040	2674269-0000		2	NAIL	
220	312105-0295		2	SCREW M6S ISO 4017 M4X20 A470	
250	315105-0136		2	WASHER BRB 4,3X9 RFR	
TPA 0750SQ (See drawing on page: 5-252)					
010	2647094-0000		1	PUSHER	
020	2647093-0000		1	PUSHER	
040	2647097-0000		2	NAIL	
050	2658247-0000		6	WASHER	
060	2647100-0000		4	VOLUME BULGE	
090	2698319-0000		2	BLOCK	
200	312155-0289		8	SCREW DIN 7991 MF6S M4X10 A4 70	
220	312155-0293		2	SCREW DIN 7991 MF6S M4X16 A4 70	
240	312155-0287		4	SCREW DIN 7991 MF6S M4X8 A4 70	
TPA 1000SQ (See drawing on page: 5-252)					
010	2647096-0000		1	PUSHER	
020	2647095-0000		1	PUSHER	
040	2647097-0000		2	NAIL	
050	2658247-0000		6	WASHER	
060	1523467-0000		2	VOLUME BULGE	
090	2698319-0000		2	BLOCK	
100	2658263-0000		1	VOLUME BULGE	
110	2658264-0000		1	VOLUME BULGE	
200	312155-0289		8	SCREW DIN 7991 MF6S M4X10 A4 70	
220	312155-0293		2	SCREW DIN 7991 MF6S M4X16 A4 70	
240	312155-0287		4	SCREW DIN 7991 MF6S M4X8 A4 70	
Common Parts					
070	2647098-0000		2	BLOCK	
080	2647113-0000		2	BUSHING	
210	312115-0372		4	SCREW ISO4762 M6X25 A4 80	

Pos	Part No	UN	Qty	Description	Page No

Machine Type | Group Description | Used-In | Group Number | Page No

DROP CHUTE CRADLE

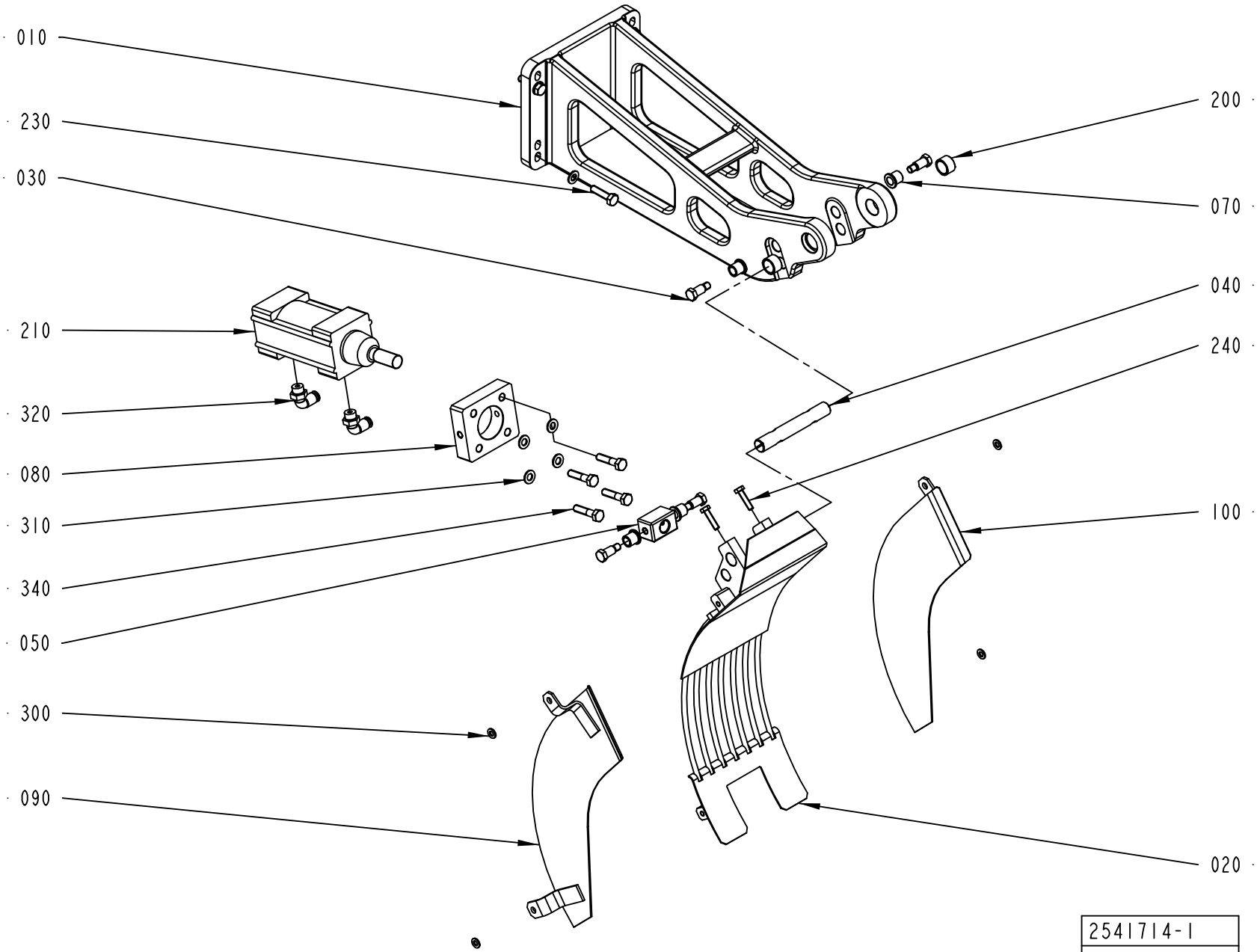

ECM: 272748 - 20061101
Group number: 2541714-0100
Assembly Drawing: 2541714-1_1_AA

This list covers pages from 5-256 to 5-259

Pos	Part No	UN	Qty	Description	Page No
TPA 1000SQ NOQC (See drawing on page: 5-256)					
020	2558146-0000		1	CRADLE	
TPA 1000SQ QC, TPA 0750SQ QC (See drawing on page: 5-256)					
020	1348920-0000		1	CRADLE	
090	1517472-0000		1	SIDE PLATE	
100	1517473-0000		1	SIDE PLATE	
300	315105-0153		4	WASHER BRB 6,4X12 RFR	
TBA 0200B QC, TBA 0330S QC, TBA 0250B QC (See drawing on page: 5-256)					
020	2751788-0000		1	CRADLE	
090	2650807-0000		1	SIDE PLATE	
100	2650808-0000		1	SIDE PLATE	
300	315105-0153		4	WASHER BRB 6,4X12 RFR	
TBA 0200SQ, TBA 0250SQ (See drawing on page: 5-258)					
020	2751788-0000		1	CRADLE	
030	449190-0000		4	SHAFT	
070	1478928-0000		4	BUSHING	
090	1285023-0000		1	SIDE PLATE	
100	1285022-0000		1	SIDE PLATE	
TBA 0500B QC (See drawing on pages: 5-256)					
020	2751788-0000		1	CRADLE	
090	2605993-0000		1	SIDE PLATE	
100	2605994-0000		1	SIDE PLATE	
TBA 0500S, TBA 1000SQ, TBA 0250S, TBA 0200S, TBA 0200M, TPA 0330SQ, TPA 0500SQ, TBA 0500B NOQC, TBA 1000B NOQC, TBA 1000S STDA7, TBA 1000S NOMOLDEDCAP, TBA 0200B NOQC, TBA 0330S NOQC, TBA 0250B NOQC, TPA 0200SQ QC, TPA 0250SQ NOQC (See drawing on page: 5-256)					
020	2751788-0000		1	CRADLE	
030	449190-0000		4	SHAFT	
070	1478928-0000		4	BUSHING	
090	1285023-0000		1	SIDE PLATE	
100	1285022-0000		1	SIDE PLATE	
300	315105-0153		4	WASHER BRB 6,4X12 RFR	
TBA 1000B QC (See drawing on page: 5-256)					
020	2751788-0000		1	CRADLE	
090	1285023-0000		1	SIDE PLATE	
100	1285022-0000		1	SIDE PLATE	
TBA 1000S LIGHTCAP (See drawing on page: 5-256)					
020	2748115-0000		1	CRADLE	
030	449190-0000		4	SHAFT	
070	1478928-0000		4	BUSHING	
090	1285023-0000		1	SIDE PLATE	
100	1285022-0000		1	SIDE PLATE	
300	315105-0153		4	WASHER BRB 6,4X12 RFR	
TBA 1500S (See drawing on page: 5-256)					
020	1348920-0000		1	CRADLE	
090	1348854-0000		1	PLATE	
100	1349017-0000		1	PLATE	
300	315105-0153		4	WASHER BRB 6,4X12 RFR	
TBA 1890S QC, TBA 2000S QC (See drawing on page: 5-256)					
020	2665204-0000		1	CRADLE	
090	2665205-0000		1	PLATE	
100	2665206-0000		1	PLATE	
TPA 0250SQ QC (See drawing on page: 5-256)					
020	2751788-0000		1	CRADLE	
090	1285023-0000		1	SIDE PLATE	
100	1285022-0000		1	SIDE PLATE	
300	315105-0153		4	WASHER BRB 6,4X12 RFR	
Common Parts					
010	2540823-0000		1	BRACKET	
040	1144579-0000		1	AXLE	
050	1144577-0000		1	BLOCK	
080	2594886-0000		1	PLATE	
200	321116-0234		2	BEARING BUSH W/O FLANGE, 16X20X12 MM	
210	90450-0504		1	DOUBLE ACTING, PROFILE, CYL 50-25	
230	312105-0455		4	SCREW M6S ISO 4017 M8X30 A480	
240	312105-0372		2	SCREW M6S ISO 4017 M6X25 A480	
310	315105-0165		8	WASHER BRB 8,4X16 RFR	
320	90458-2957		2	ELBOW PIPE JOINT, EXT.THREAD, D=6MM-G1/4	
340	312105-0457		4	SCREW M6S ISO 4014 M8X35 A480	

DROP CHUTE CRADLE

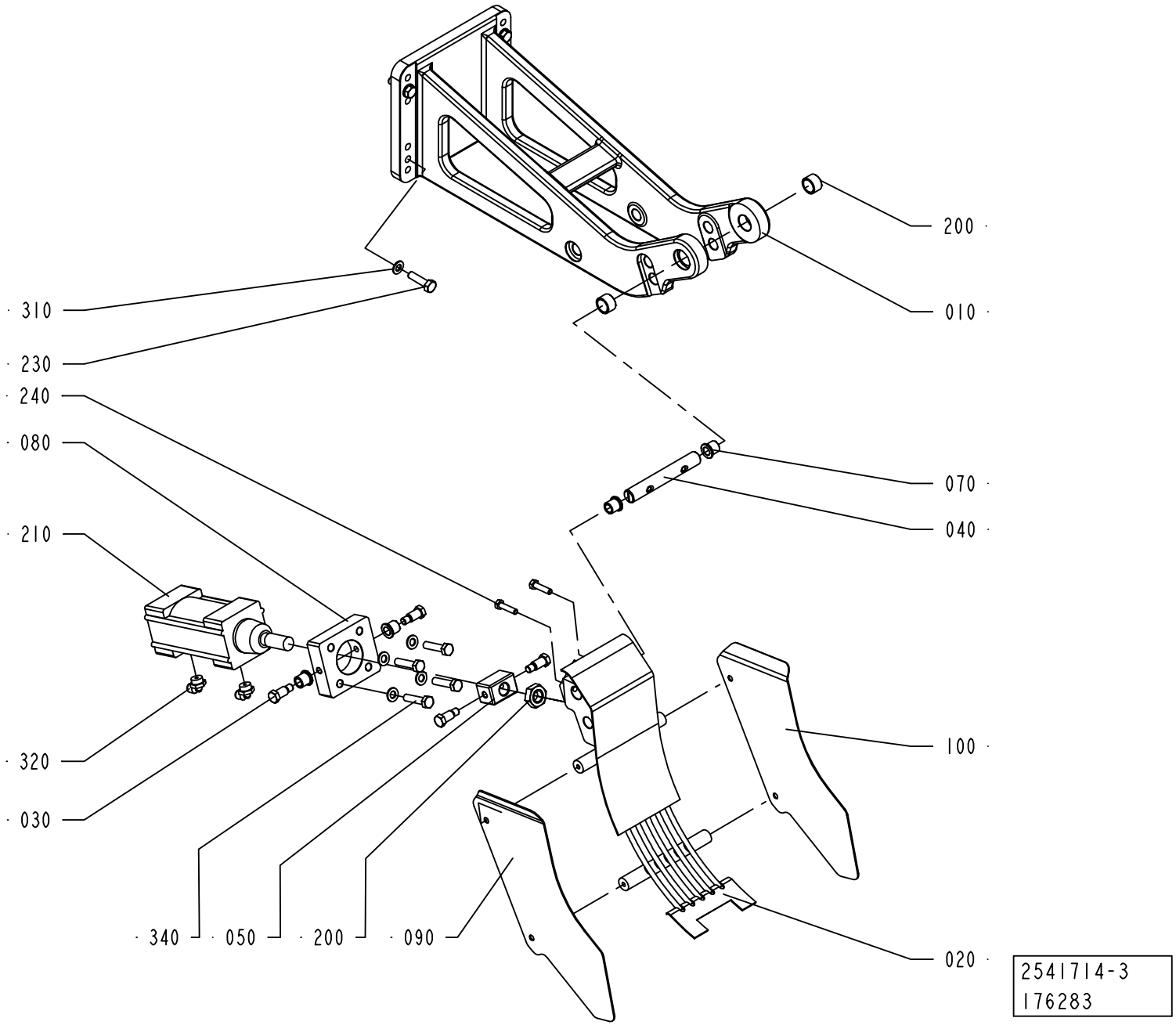

ECM: 272748 - 20061101
Group number: 2541714-0100
Assembly Drawing: 2541714-3_1_AA

This list covers pages from 5-256 to 5-259

Pos	Part No	UN	Qty	Description	Page No
TPA 1000SQ NOQC (See drawing on page: 5-256)					
020	2558146-0000		1	CRADLE	
TPA 1000SQ QC, TPA 0750SQ QC (See drawing on page: 5-256)					
020	1348920-0000		1	CRADLE	
090	1517472-0000		1	SIDE PLATE	
100	1517473-0000		1	SIDE PLATE	
300	315105-0153		4	WASHER BRB 6,4X12 RFR	
TBA 0200B QC, TBA 0330S QC, TBA 0250B QC (See drawing on page: 5-256)					
020	2751788-0000		1	CRADLE	
090	2650807-0000		1	SIDE PLATE	
100	2650808-0000		1	SIDE PLATE	
300	315105-0153		4	WASHER BRB 6,4X12 RFR	
TBA 0200SQ, TBA 0250SQ (See drawing on page: 5-258)					
020	2751788-0000		1	CRADLE	
030	449190-0000		4	SHAFT	
070	1478928-0000		4	BUSHING	
090	1285023-0000		1	SIDE PLATE	
100	1285022-0000		1	SIDE PLATE	
TBA 0500B QC (See drawing on pages: 5-256)					
020	2751788-0000		1	CRADLE	
090	2605993-0000		1	SIDE PLATE	
100	2605994-0000		1	SIDE PLATE	
TBA 0500S, TBA 1000SQ, TBA 0250S, TBA 0200S, TBA 0200M, TPA 0330SQ, TPA 0500SQ, TBA 0500B NOQC, TBA 1000B NOQC, TBA 1000S STDA7, TBA 1000S NOMOLDEDCAP, TBA 0200B NOQC, TBA 0330S NOQC, TBA 0250B NOQC, TPA 0200SQ QC, TPA 0250SQ NOQC (See drawing on page: 5-256)					
020	2751788-0000		1	CRADLE	
030	449190-0000		4	SHAFT	
070	1478928-0000		4	BUSHING	
090	1285023-0000		1	SIDE PLATE	
100	1285022-0000		1	SIDE PLATE	
300	315105-0153		4	WASHER BRB 6,4X12 RFR	
TBA 1000B QC (See drawing on page: 5-256)					
020	2751788-0000		1	CRADLE	
090	1285023-0000		1	SIDE PLATE	
100	1285022-0000		1	SIDE PLATE	
TBA 1000S LIGHTCAP (See drawing on page: 5-256)					
020	2748115-0000		1	CRADLE	
030	449190-0000		4	SHAFT	
070	1478928-0000		4	BUSHING	
090	1285023-0000		1	SIDE PLATE	
100	1285022-0000		1	SIDE PLATE	
300	315105-0153		4	WASHER BRB 6,4X12 RFR	
TBA 1500S (See drawing on page: 5-256)					
020	1348920-0000		1	CRADLE	
090	1348854-0000		1	PLATE	
100	1349017-0000		1	PLATE	
300	315105-0153		4	WASHER BRB 6,4X12 RFR	
TBA 1890S QC, TBA 2000S QC (See drawing on page: 5-256)					
020	2665204-0000		1	CRADLE	
090	2665205-0000		1	PLATE	
100	2665206-0000		1	PLATE	
TPA 0250SQ QC (See drawing on page: 5-256)					
020	2751788-0000		1	CRADLE	
090	1285023-0000		1	SIDE PLATE	
100	1285022-0000		1	SIDE PLATE	
300	315105-0153		4	WASHER BRB 6,4X12 RFR	
Common Parts					
010	2540823-0000		1	BRACKET	
040	1144579-0000		1	AXLE	
050	1144577-0000		1	BLOCK	
080	2594886-0000		1	PLATE	
200	321116-0234		2	BEARING BUSH W/O FLANGE, 16X20X12 MM	
210	90450-0504		1	DOUBLE ACTING, PROFILE, CYL 50-25	
230	312105-0455		4	SCREW M6S ISO 4017 M8X30 A480	
240	312105-0372		2	SCREW M6S ISO 4017 M6X25 A480	
310	315105-0165		8	WASHER BRB 8,4X16 RFR	
320	90458-2957		2	ELBOW PIPE JOINT, EXT.THREAD, D=6MM-G1/4	
340	312105-0457		4	SCREW M6S ISO 4014 M8X35 A480	

This page is intentionally left blank.

ECM: 274151 - 20061101
Group number: 1517298-0250
Assembly Drawing:

Pos	Part No	UN	Qty	Description	Page No
TBA 0500S, TBA 0500B, TBA 1000S, TBA 1000SQ, TBA 1000B, TBA 0200B, TBA 0250S, TBA 0200S, TBA 0200M, TBA 0250B, TBA 0200SQ, TPA 0250SQ, TPA 0330SQ, TPA 0200SQ, TPA 0500SQ, TBA 0250SQ					
010	1517299-0250		1	INFEED CONVEYOR LONG	**5-263**
TBA 1500S, TPA 1000SQ, TPA 0750SQ					
020	1517300-0350		1	INFEED CONVEYOR SHORT	**5-267**
TBA 1890S, TBA 2000S					
030	2678710-0150		1	INFEED CONVEYOR SHORT	**5-269**

Pos	Part No	UN	Qty	Description	Page No

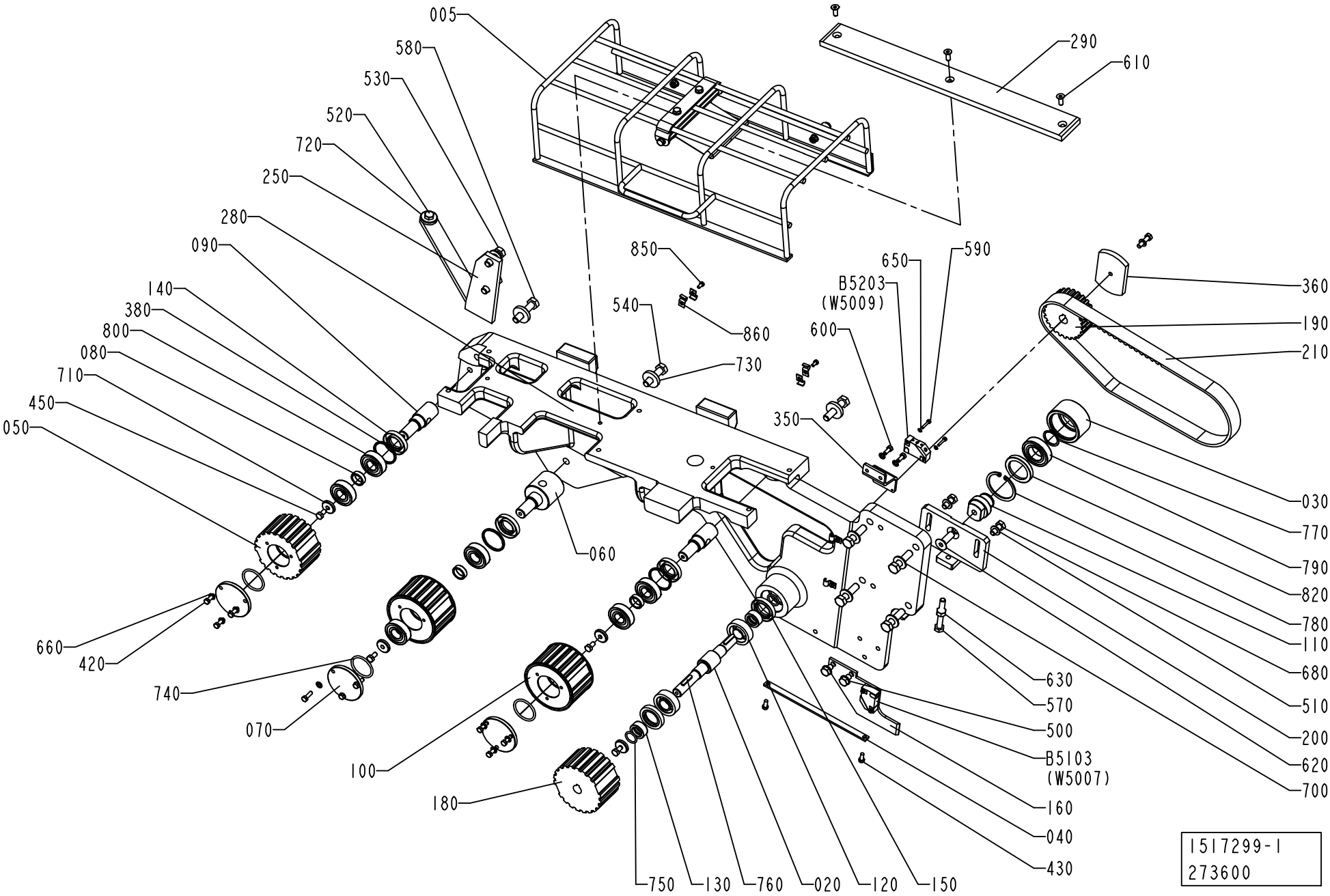
005
580
530
520
720
250
280
090
140
380
800
080
710
450
050
660
420
740
070
100
180
060
850
540
860
730
650
590
B5203
(W5009)
600
350
290
610
360
190
210
030
770
790
820
780
110
680
510
200
620
700
630
570
500
B5103
(W5007)
160
040
430
750
130
760
020
120
150
1517299-1
273600

ECM: 273602 - 20061101
Group number: 1517299-0250
Assembly Drawing: 1517299-1_1_AB

Pos	Part No	UN	Qty	Description	Page No
A3/FLEX TBA, A3/FLEX TPA					
005	1144645-0200		1	PROTECTIVE COVER	**5-265**
040	1144593-0000		1	PLATE	
160	1144760-0000		1	PLATE	
190	1144788-0000		1	TOOTHED PULLEY	
200	1144794-0000		1	SUPPORT	
210	1144841-0000		1	TIMING BELT	
250	2552445-0000		1	SUPPORT	
290	1260941-0000		1	SLIDE	
350	1279688-0000		1	SUPPORT	
360	1347410-0000		1	ACTIVATOR	
430	312105-0327		2	SCREW M6S ISO 4017 M5X12 A480	
500	312105-0447		2	SCREW M6S ISO 4017 M8X12 A480	
510	312105-0451		2	SCREW M6S ISO 4017 M8X20 A480	
520	312105-0453		1	SCREW M6S ISO 4017 M8X25 A480	
530	312105-0495		2	SCREW M6S ISO 4017 M10X30 A480	
540	312109-0499		5	SCREW M6S ISO 4017 M10X40 A480	
570	312109-0463		1	SCREW M6S ISO 4017 M8X60 A480	
580	312109-0500		4	SCREW M6S ISO 4017 M10X45 A480	
590	312115-0228		2	SCREW ISO4762 M3X16 A4 80	
600	312125-0327		2	SCREW ISO 1207 M5X12 A4	
610	312151-0368		3	SCREW EN 10642 MF6S M6X16 10.9 EL.PL	
620	312155-0495		1	SCREW DIN 7991 MF6S M10X30 A4 70	
630	312605-0318		1	HEXAGON NUT, M6M M8 A280	
650	315105-0124		2	WASHER BRB 3,2X7 RFR	
660	315105-0146		11	WASHER BRB 5,3X10 RFR	
680	315105-0165		4	WASHER BRB 8,4X16 RFR	
700	315105-0173		6	WASHER BRB 10,5X20 RFR	
710	315125-0153		4	WASHER TBRSB 6,4X22X4 A4	
720	315125-0165		1	WASHER TBRSB 8,4X26X5 A4	
B5203	90044-0194		1	PROX.SW. IN5329/IN3002-BPKG(EX90044-104)	
Common Parts					
020	1144470-0000		1	SHAFT	
030	1144581-0000		1	ROLLER	
050	1348921-0000		1	TOOTHED PULLEY	
060	2852228-0000		1	ECCENTRIC SHAFT	
070	1144596-0000		3	PLUG	
080	1144597-0000		3	SPACER	
090	1484620-0000		2	SHAFT	
100	1348922-0000		2	TOOTHED PULLEY	
110	1144619-0000		1	SHAFT	
120	90214-0219		2	CYL.ROLLER BEARING, 17X40X12 MM	
130	1144625-0000		2	SPACER	
140	90091-0440		3	RADIAL SEAL 22X40X7 MM DUST LIP	
150	1498068-0000		2	SEAL RING	
180	1144784-0000		1	TOOTHED PULLEY	
280	1347699-0000		1	PLATE	
380	2850481-0000		3	SPACER	
420	312105-0329		9	SCREW M6S ISO 4017 M5X16 A480	
450	312105-0366		4	SCREW M6S ISO 4017 M6X12 A480	
730	315125-0173		3	WASHER TBRSB 10,5X28X6 A4	
740	315202-0221		3	O-RING 34,2X3 MM	
750	315202-0267		2	O-RING 16,3X2,4 MM	
760	315705-0202		2	PARALLEL KEY W ROUND ENDS 5X5X25MM	
770	315751-0119		1	RETAINING RING FOR SHAFT DIN 471 25 A2	
780	90141-0019		1	RETAINING RING FOR BORE DIN 472 50 A2	
790	321308-0205		1	BALL BEARING, 25X47X12MM	
800	321313-0103		6	BALL BEARING, 17X40X12MM	
820	90091-0297		1	RADIAL SEAL 35X47X7 MM DUST LIP	
850	312125-0287		4	SCREW ISO 1207 M4X8 A4	
860	90165-0057		6	PIPE CLIP FOR TUBE D=6 MM	

Machine Type | Group Description | Used-In | Group Number | Page No

PROTECTIVE COVER

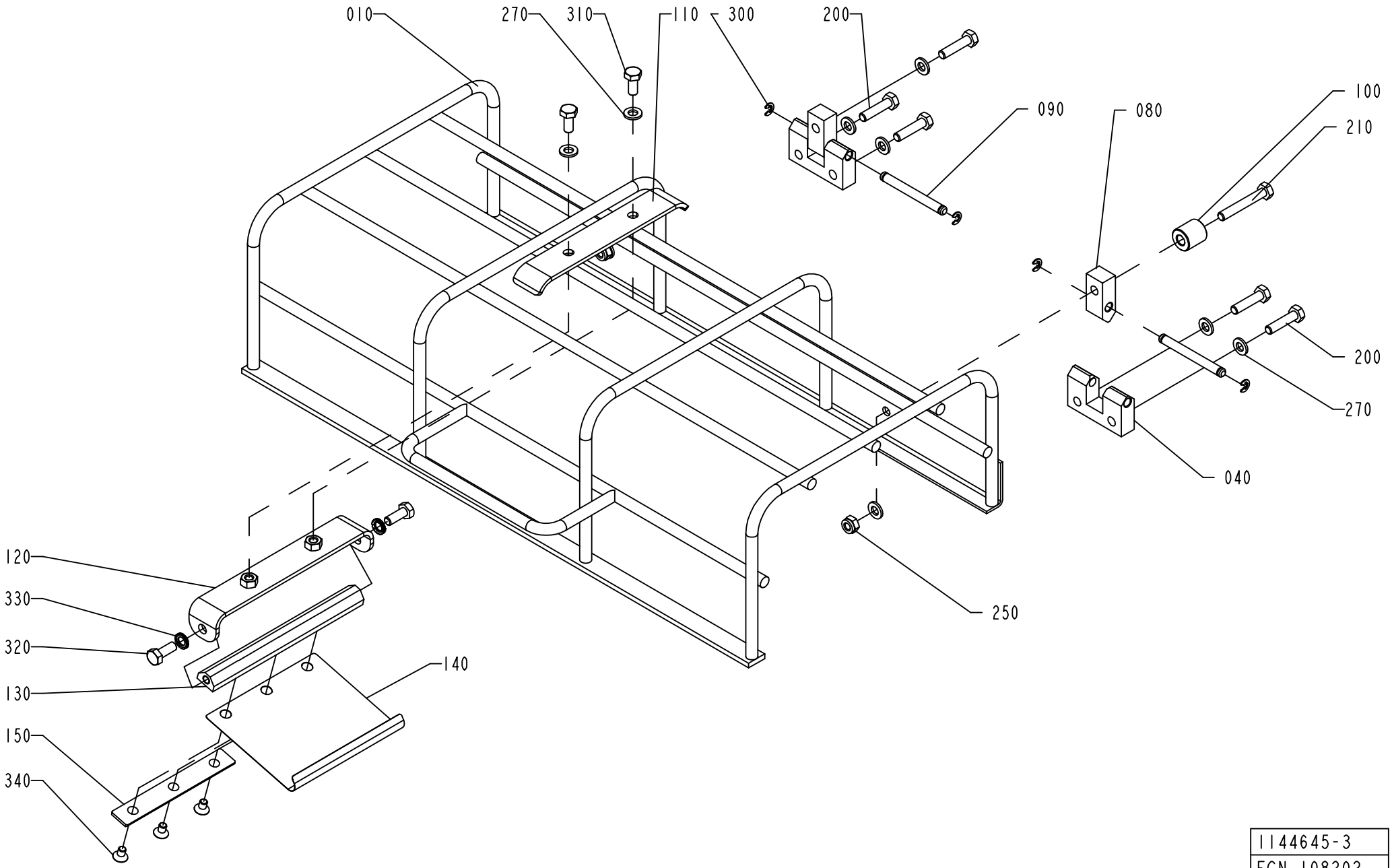

1144645-3
ECN 108202

ECM: 270838 - 20060626
Group number: 1144645-0200
Assembly Drawing: 1144645-3_1_AC

Pos	Part No	UN	Qty	Description	Page No
A3/FLEX					
110	1499476-0000		1	HOLDER	
120	2527792-0000		1	SUPPORT	
130	2527793-0000		1	SHAFT	
140	2530418-0000		1	SPRING	
150	2540612-0000		1	PLATE	
270	315105-0153		9	WASHER BRB 6,4X12 RFR	
310	312105-0367		2	SCREW M6S ISO 4017 M6X14 A480	
320	312105-0368		2	SCREW M6S ISO 4017 M6X16 A480	
330	90062-0061		2	LOCK WASHER NORD-LOCK,6,5/10,8, T=2,2	
340	312155-0323		3	SCREW DIN 7991 MF6S M5X8 A4 70	
Common Parts					
010	1260894-0000		1	PROTECTION	
040	1144667-0000		2	HINGE	
080	1144668-0000		2	HINGE	
090	1144669-0000		2	PIN	
100	1360149-0000		1	SPACER	
200	312105-0372		5	SCREW M6S ISO 4017 M6X25 A480	
210	312105-0378		1	SCREW M6S ISO 4014 M6X40 A480	
250	312812-0316		2	HEXAGON NUT, NY-LOCK M6 A480	
300	315755-0106		4	RETAINING RING SHAFT DIN 6799 4 A2	

Pos	Part No	UN	Qty	Description	Page No

INFEED CONVEYOR SHORT

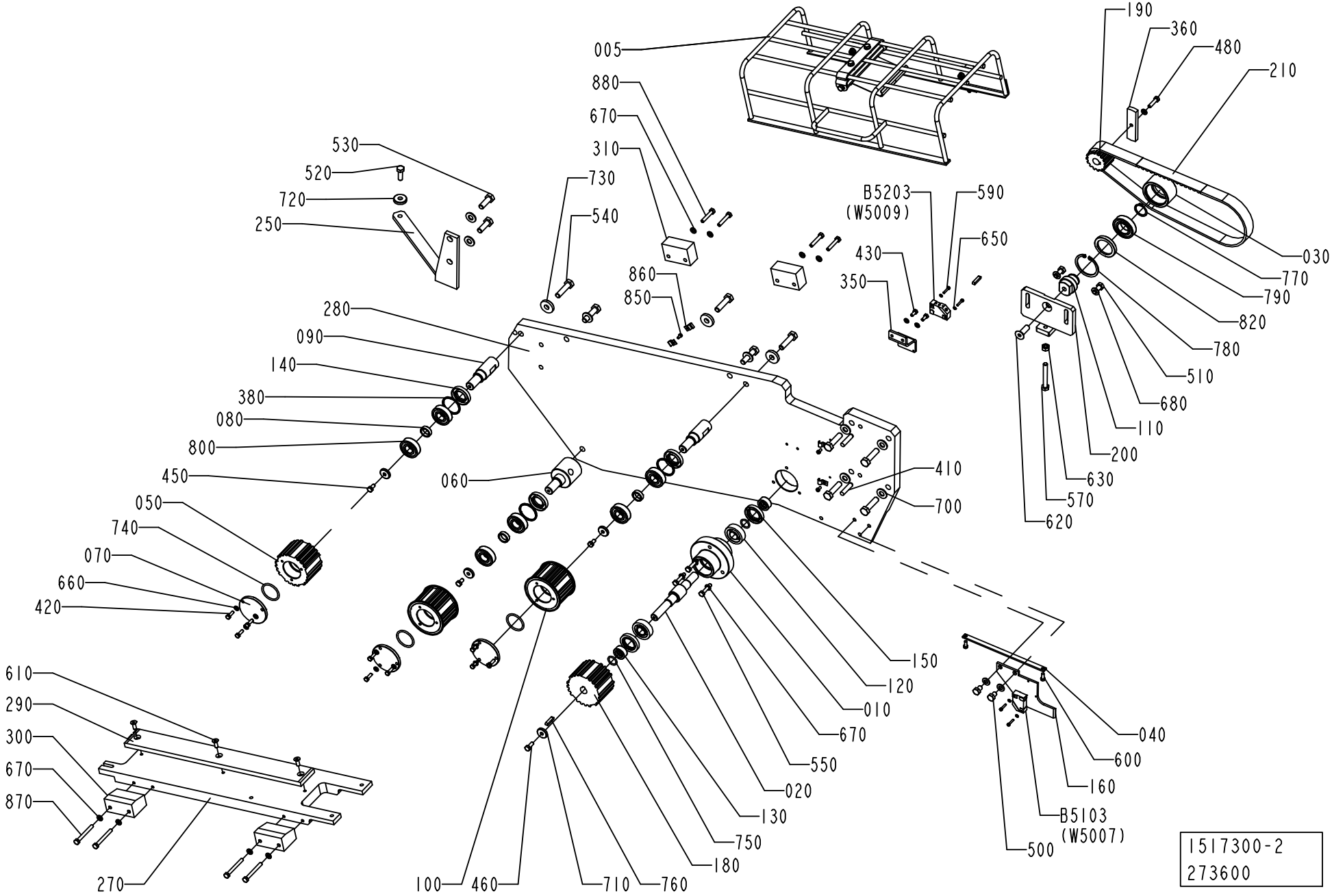

ECM: 274153 - 20061101
Group number: 1517300-0350
Assembly Drawing: 1517300-2_1_AB

Pos	Part No	UN	Qty	Description	Page No
A3/FLEX					
250	2572563-0000		1	SUPPORT	
590	312115-0228		2	SCREW ISO4762 M3X16 A4 80	
650	315105-0124		2	WASHER BRB 3,2X7 RFR	
Common Parts					
005	1144645-0200		1	PROTECTIVE COVER	**5-265**
010	1144468-0000		1	BEARING HOUSING	
020	1144470-0000		1	SHAFT	
030	1144581-0000		1	ROLLER	
040	1144593-0000		1	PLATE	
050	2547015-0000		1	TOOTHED PULLEY	
060	2852228-0000		1	ECCENTRIC SHAFT	
070	1144596-0000		3	PLUG	
080	1144597-0000		3	SPACER	
090	1144598-0000		2	SHAFT	
100	2547017-0000		2	TOOTHED PULLEY	
110	1144619-0000		1	SHAFT	
120	90214-0219		2	CYL.ROLLER BEARING, 17X40X12 MM	
130	1144625-0000		2	SPACER	
140	90091-0440		3	RADIAL SEAL 22X40X7 MM DUST LIP	
150	1498068-0000		2	SEAL RING	
160	1144760-0000		1	PLATE	
180	927859-0000		1	TOOTHED PULLY	
190	1282681-0000		1	TOOTHED PULLEY	
200	1144794-0000		1	SUPPORT	
210	1144841-0000		1	TIMING BELT	
270	1348957-0000		1	BRACKET	
280	2547187-0000		1	PLATE	
290	1348963-0000		1	SLIDE	
300	1285956-0000		2	BLOCK	
310	1285955-0000		2	PLATE	
350	1279688-0000		1	SUPPORT	
360	1279689-0000		1	ACTIVATOR	
380	2850481-0000		3	SPACER	
410	311103-0407		2	PARALLEL PIN ISO 2338 8M6X35 A1	
420	312105-0329		9	SCREW M6S ISO 4017 M5X16 A480	
430	312105-0327		2	SCREW M6S ISO 4017 M5X12 A480	
450	312105-0366		3	SCREW M6S ISO 4017 M6X12 A480	
460	312105-0368		1	SCREW M6S ISO 4017 M6X16 A480	
480	312105-0372		1	SCREW M6S ISO 4017 M6X25 A480	
500	312105-0447		2	SCREW M6S ISO 4017 M8X12 A480	
510	312105-0451		2	SCREW M6S ISO 4017 M8X20 A480	
520	312105-0453		1	SCREW M6S ISO 4017 M8X25 A480	
530	312105-0495		2	SCREW M6S ISO 4017 M10X30 A480	
540	312109-0499		9	SCREW M6S ISO 4017 M10X40 A480	
550	312109-0374		3	SCREW M6S ISO 4017 M6X30 A480	
570	312109-0463		1	SCREW M6S ISO 4017 M8X60 A480	
600	312125-0327		2	SCREW ISO 1207 M5X12 A4	
610	312151-0368		3	SCREW EN 10642 MF6S M6X16 10.9 EL.PL	
620	312155-0495		1	SCREW DIN 7991 MF6S M10X30 A4 70	
630	312605-0318		1	HEXAGON NUT, M6M M8 A280	
660	315105-0146		11	WASHER BRB 5,3X10 RFR	
670	315105-0153		12	WASHER BRB 6,4X12 RFR	
680	315105-0165		4	WASHER BRB 8,4X16 RFR	
700	315105-0173		8	WASHER BRB 10,5X20 RFR	
710	315125-0153		4	WASHER TBRSB 6,4X22X4 A4	
720	315125-0165		1	WASHER TBRSB 8,4X26X5 A4	
730	315125-0173		3	WASHER TBRSB 10,5X28X6 A4	
740	315202-0221		3	O-RING 34,2X3 MM	
750	315202-0267		2	O-RING 16,3X2,4 MM	
760	315705-0202		2	PARALLEL KEY W ROUND ENDS 5X5X25MM	
770	315751-0119		1	RETAINING RING FOR SHAFT DIN 471 25 A2	
780	90141-0019		1	RETAINING RING FOR BORE DIN 472 50 A2	
790	321308-0205		1	BALL BEARING, 25X47X12MM	
800	321313-0103		6	BALL BEARING, 17X40X12MM	
820	90091-0297		1	RADIAL SEAL 35X47X7 MM DUST LIP	
850	312125-0287		4	SCREW ISO 1207 M4X8 A4	
860	90165-0057		6	PIPE CLIP FOR TUBE D=6 MM	
870	312105-0381		4	SCREW M6S ISO 4014 M6X55 A480	
880	312105-0376		4	SCREW M6S ISO 4014 M6X35 A480	
B5203	90044-0194		1	PROX.SW. IN5329/IN3002-BPKG(EX90044-104)	

Machine Type | Group Description | Used-In | Group Number | Page No

INFEED CONVEYOR SHORT

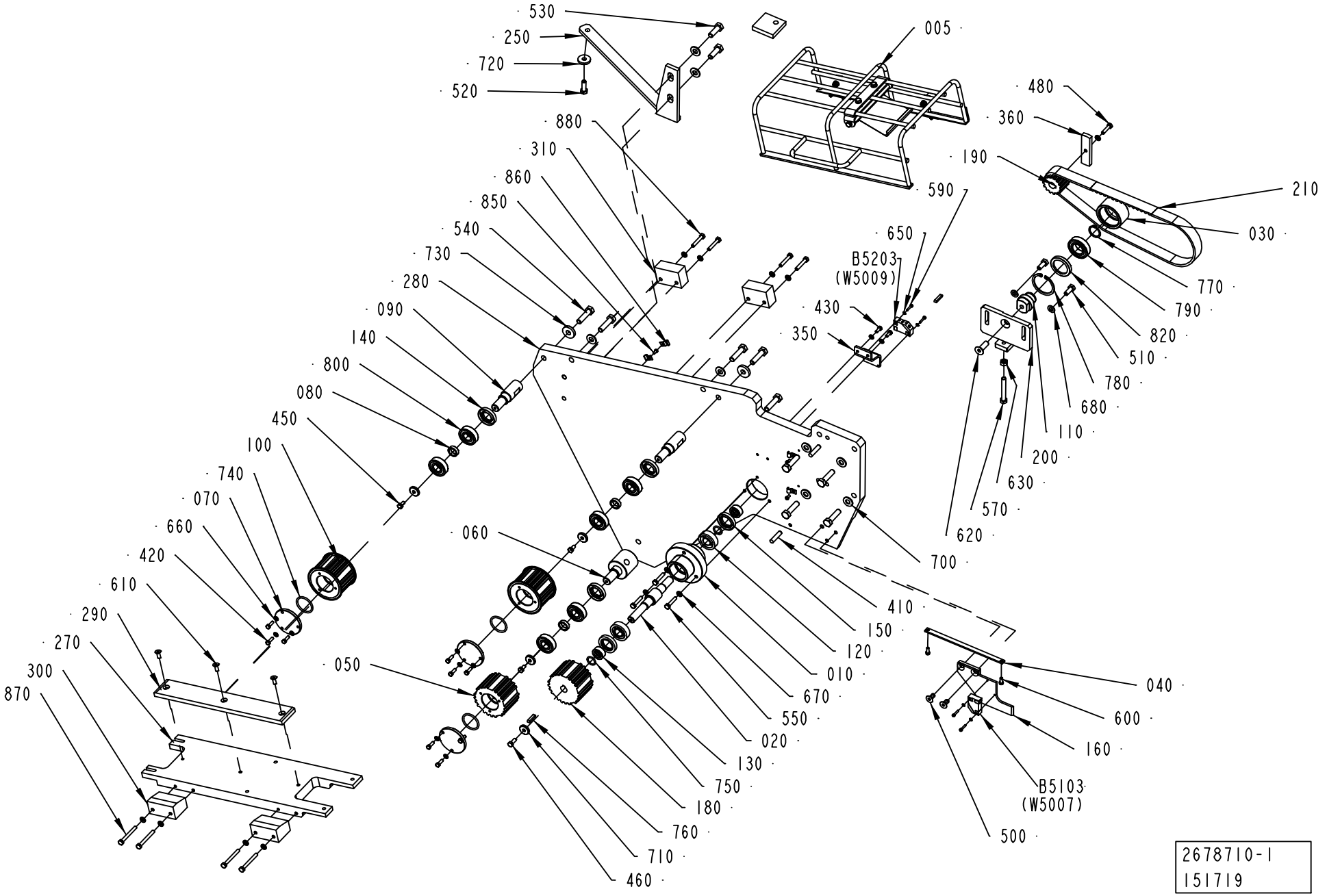

ECM: 274152 - 20061101
Group number: 2678710-0150
Assembly Drawing: 2678710-1_1_AA

Pos	Part No	UN	Qty	Description	Page No
A3/FLEX					
250	2678708-0000		1	SUPPORT	
590	312115-0228		2	SCREW ISO4762 M3X16 A4 80	
650	315105-0124		2	WASHER BRB 3,2X7 RFR	
Common Parts					
005	2678709-0100		1	PROTECTIVE COVER	**5-271**
010	1144468-0000		1	BEARING HOUSING	
020	1144470-0000		1	SHAFT	
030	1144581-0000		1	ROLLER	
040	1144593-0000		1	PLATE	
050	2547015-0000		1	TOOTHED PULLEY	
060	2852228-0000		1	ECCENTRIC SHAFT	
070	1144596-0000		3	PLUG	
080	1144597-0000		3	SPACER	
090	1144598-0000		2	SHAFT	
100	2547017-0000		2	TOOTHED PULLEY	
110	1144619-0000		1	SHAFT	
120	90214-0219		2	CYL.ROLLER BEARING, 17X40X12 MM	
130	1144625-0000		2	SPACER	
140	90091-0440		3	RADIAL SEAL 22X40X7 MM DUST LIP	
150	1498068-0000		2	SEAL RING	
160	2610764-0000		1	PLATE	
180	927859-0000		1	TOOTHED PULLY	
190	1282681-0000		1	TOOTHED PULLEY	
200	1144794-0000		1	SUPPORT	
210	1144841-0000		1	TIMING BELT	
270	2665197-0000		1	BRACKET	
280	2678753-0000		1	PLATE	
290	2665199-0000		1	SLIDE	
300	1285956-0000		2	BLOCK	
310	1285955-0000		2	PLATE	
350	1279688-0000		1	SUPPORT	
360	1279689-0000		1	ACTIVATOR	
380	2850481-0000		3	SPACER	
410	311103-0407		2	PARALLEL PIN ISO 2338 8M6X35 A1	
420	312105-0329		9	SCREW M6S ISO 4017 M5X16 A480	
430	312105-0327		2	SCREW M6S ISO 4017 M5X12 A480	
450	312105-0366		3	SCREW M6S ISO 4017 M6X12 A480	
460	312105-0368		1	SCREW M6S ISO 4017 M6X16 A480	
480	312105-0372		1	SCREW M6S ISO 4017 M6X25 A480	
500	312155-0449		2	SCREW DIN 7991 MF6S M8X16 A4 70	
510	312105-0451		2	SCREW M6S ISO 4017 M8X20 A480	
520	312105-0453		1	SCREW M6S ISO 4017 M8X25 A480	
530	312105-0495		2	SCREW M6S ISO 4017 M10X30 A480	
540	312109-0499		9	SCREW M6S ISO 4017 M10X40 A480	
550	312109-0374		3	SCREW M6S ISO 4017 M6X30 A480	
570	312109-0463		1	SCREW M6S ISO 4017 M8X60 A480	
600	312125-0327		2	SCREW ISO 1207 M5X12 A4	
610	312151-0368		3	SCREW EN 10642 MF6S M6X16 10.9 EL.PL	
620	312155-0495		1	SCREW DIN 7991 MF6S M10X30 A4 70	
630	312605-0318		1	HEXAGON NUT, M6M M8 A280	
660	315105-0146		11	WASHER BRB 5,3X10 RFR	
670	315105-0153		12	WASHER BRB 6,4X12 RFR	
680	315105-0165		2	WASHER BRB 8,4X16 RFR	
700	315105-0173		8	WASHER BRB 10,5X20 RFR	
710	315125-0153		4	WASHER TBRSB 6,4X22X4 A4	
720	315125-0165		1	WASHER TBRSB 8,4X26X5 A4	
730	315125-0173		3	WASHER TBRSB 10,5X28X6 A4	
740	315202-0221		3	O-RING 34,2X3 MM	
750	315202-0267		2	O-RING 16,3X2,4 MM	
760	315705-0202		2	PARALLEL KEY W ROUND ENDS 5X5X25MM	
770	315751-0119		1	RETAINING RING FOR SHAFT DIN 471 25 A2	
780	90141-0019		1	RETAINING RING FOR BORE DIN 472 50 A2	
790	321308-0205		1	BALL BEARING, 25X47X12MM	
800	321313-0103		6	BALL BEARING, 17X40X12MM	
820	90091-0297		1	RADIAL SEAL 35X47X7 MM DUST LIP	
850	312125-0287		4	SCREW ISO 1207 M4X8 A4	
860	90165-0057		6	PIPE CLIP FOR TUBE D=6 MM	
870	312105-0381		4	SCREW M6S ISO 4014 M6X55 A480	
880	312105-0376		4	SCREW M6S ISO 4014 M6X35 A480	
B5203	90044-0194		1	PROX.SW. IN5329/IN3002-BPKG(EX90044-104)	

Machine Type | Group Description | Used-In | Group Number | Page No

PROTECTIVE COVER

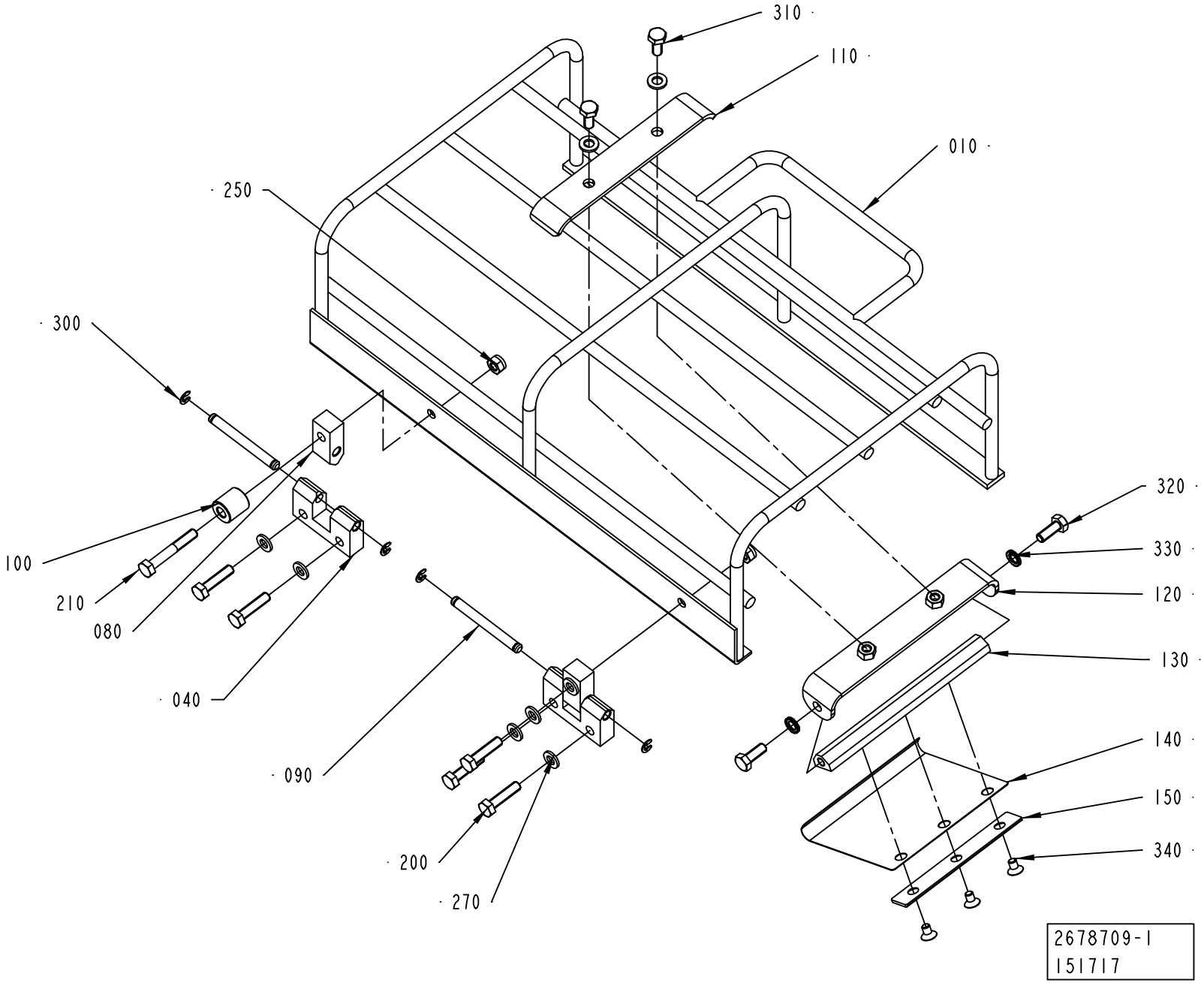

ECM: 190930 - 20041104
Group number: 2678709-0100
Assembly Drawing: 2678709-1_1_AA

Pos	Part No	UN	Qty	Description	Page No
-					
010	2665198-0000		1	PROTECTION	
040	1144667-0000		2	HINGE	
080	1144668-0000		2	HINGE	
090	1144669-0000		2	PIN	
100	1360149-0000		1	SPACER	
110	1499476-0000		1	HOLDER	
120	2527792-0000		1	SUPPORT	
130	2527793-0000		1	SHAFT	
140	2530418-0000		1	SPRING	
150	2540612-0000		1	PLATE	
200	312105-0372		5	SCREW M6S ISO 4017 M6X25 A480	
210	312105-0378		1	SCREW M6S ISO 4014 M6X40 A480	
250	312812-0316		2	HEXAGON NUT, NY-LOCK M6 A480	
270	315105-0153		9	WASHER BRB 6,4X12 RFR	
300	315755-0106		4	RETAINING RING SHAFT DIN 6799 4 A2	
310	312105-0367		2	SCREW M6S ISO 4017 M6X14 A480	
320	312105-0368		2	SCREW M6S ISO 4017 M6X16 A480	
330	90062-0061		2	LOCK WASHER NORD-LOCK,6,5/10,8, T=2,2	
340	312155-0323		3	SCREW DIN 7991 MF6S M5X8 A4 70	

Pos	Part No	UN	Qty	Description	Page No

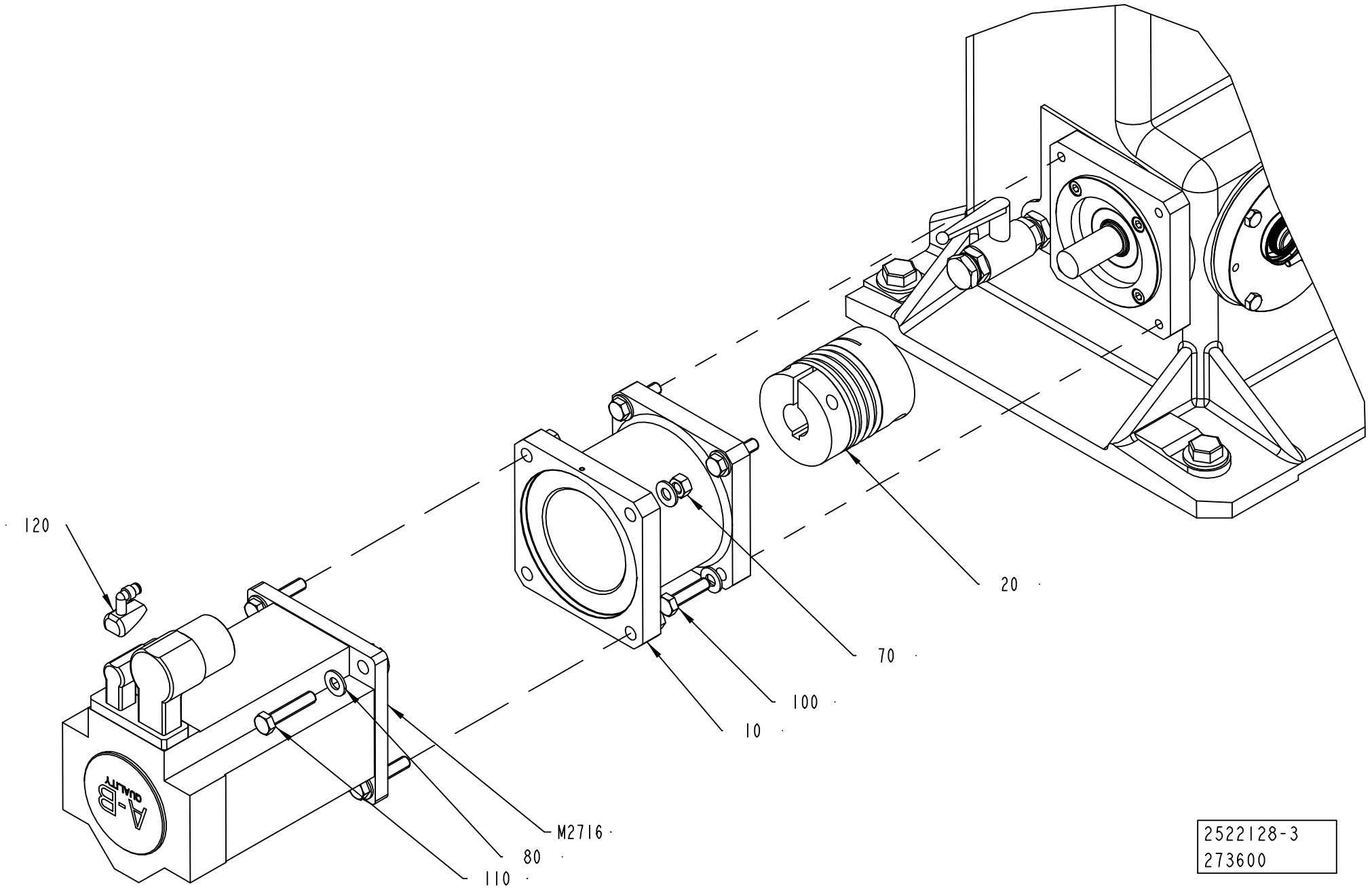
120
20
70
100
10
M2716
80
110
2522128-3
273600

ECM: 273604 - 20061101
Group number: 2522128-0150
Assembly Drawing: 2522128-3_1_AA

Pos	Part No	UN	Qty	Description	Page No
-					
010	2705896-0000		1	FLANGE	
020	90459-5278		1	BELLOW COUPLING, 24X28 MM	
070	312605-0320		4	HEXAGON NUT, M6M M10 A280	
080	315105-0173		12	WASHER BRB 10,5X20 RFR	
100	312109-0499		4	SCREW M6S ISO 4017 M10X40 A480	
110	312109-0501		4	SCREW M6S ISO 4017 M10X50 A480	
120	90459-5720		1	MPF-AIR-PURGE CONNECTOR	
M2716	90459-7172		1	SERVO MOTOR MPF-B540K-MJ22AA	

Pos	Part No	UN	Qty	Description	Page No

CRANK

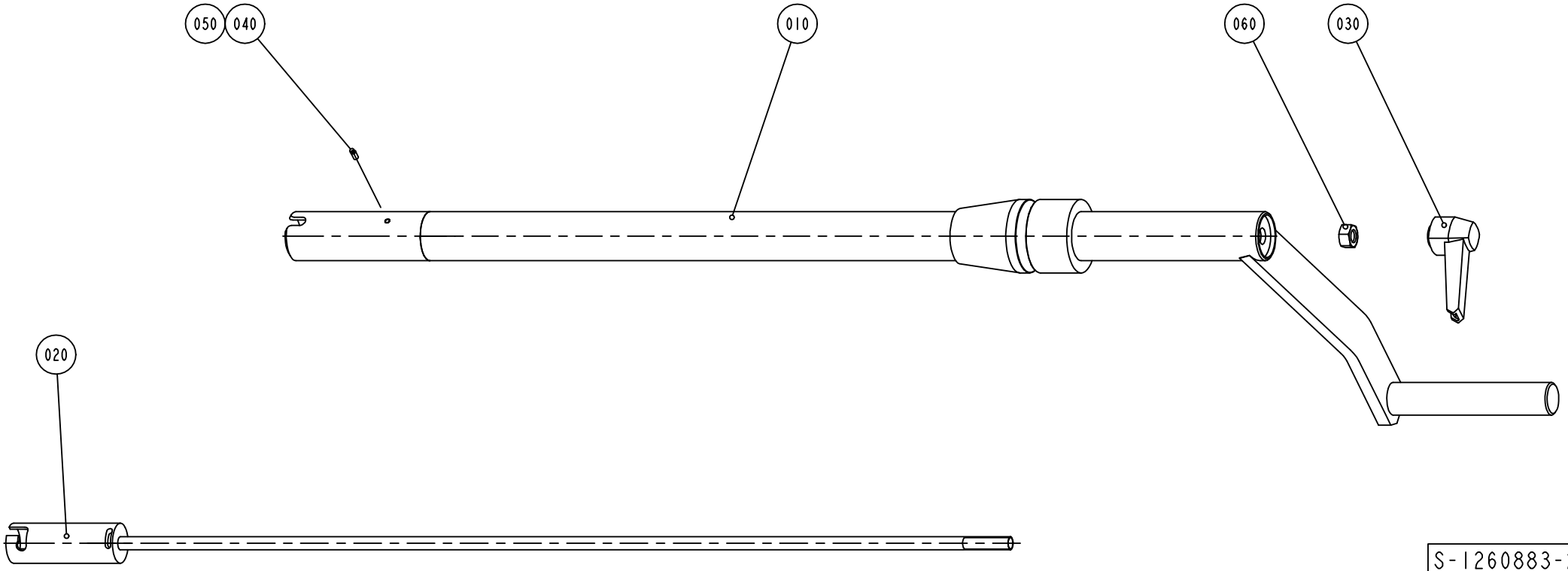

S-1260883-2
ECN 72704

ECM: 181277 - 20041104
Group number: 1260883-0200
Assembly Drawing: 1260883-2_1_AA

Pos	Part No	UN	Qty	Description	Page No
-					
010	1260712-0000		1	CRANK	
020	1140082-0000		1	LOCK SHAFT	
030	90117-0030		1	LOCKING HANDLE, M8/F	
040	90157-0016		1	LOCKING FLUID LOCTITE 242 50 ML	
050	312318-0220		1	SCREW ISO4029 M3X6 A4	
060	312605-0318		1	HEXAGON NUT, M6M M8 A280	

Pos	Part No	UN	Qty	Description	Page No

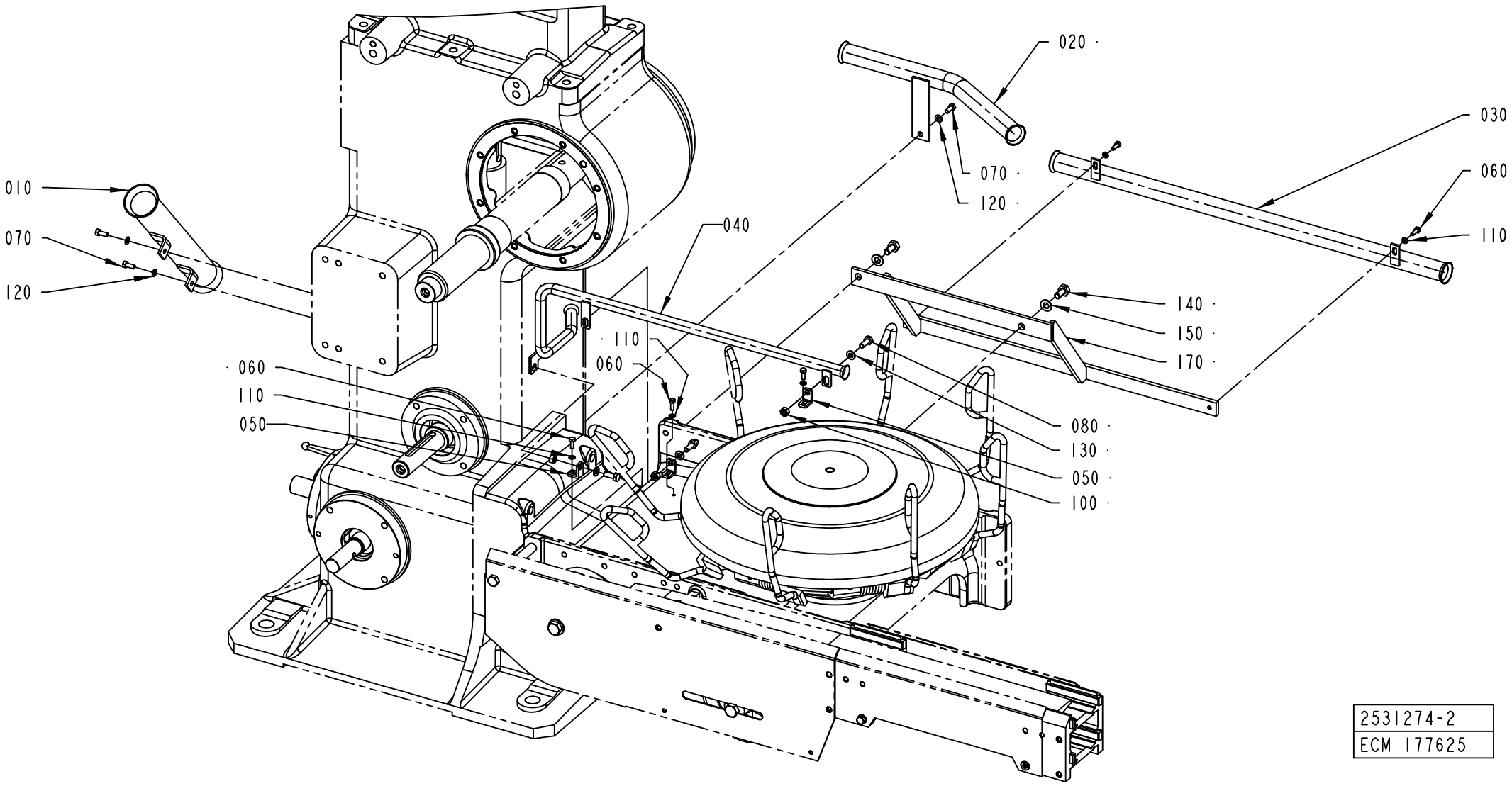
020
030
070
120
060
110
010
070
120
040
140
150
170
110
060
060
110
050
080
130
050
100
2531274-2
ECM 177625

ECM: 272800 - 20060626
Group number: 2531274-0100
Assembly Drawing: 2531274-2_1_AC

This list covers pages from 5-276 to 5-279

Pos	Part No	UN	Qty	Description	Page No
TBA 0500S, TBA 0500B, TBA 0330S, TBA 1000S, TBA 1000B, TBA 0200B, TBA 0250S, TBA 0200S, TBA 0200M, TBA 0250B, TBA 1500S (See drawing on page: 5-276)					
010	1279680-0000		1	PIPE	
020	2633439-0000		1	PIPE	
030	2633440-0000		1	PIPE	
040	2693322-0000		1	PIPE	
050	2531276-0000		3	BRACKET	
060	312105-0291		5	SCREW M6S ISO 4017 M4X12 A470	
070	312105-0327		3	SCREW M6S ISO 4017 M5X12 A480	
080	312105-0368		3	SCREW M6S ISO 4017 M6X16 A480	
090	312605-0312		2	HEXAGON NUT, M6M M4 A280	
100	312605-0316		3	HEXAGON NUT, M6M M6 A280	
110	315105-0136		5	WASHER BRB 4,3X9 RFR	
120	315105-0146		3	WASHER BRB 5,3X10 RFR	
130	315105-0153		3	WASHER BRB 6,4X12 RFR	
TBA 1000SQ, TBA 0200SQ, TPA 0250SQ, TPA 0330SQ, TPA 0200SQ, TPA 1000SQ, TPA 0500SQ, TPA 0750SQ, TBA 0250SQ (See drawing on page: 5-276)					
010	1279680-0000		1	PIPE	
020	2633439-0000		1	PIPE	
030	2633440-0000		1	PIPE	
040	2693322-0000		1	PIPE	
050	2531276-0000		3	BRACKET	
060	312105-0291		5	SCREW M6S ISO 4017 M4X12 A470	
070	312105-0327		3	SCREW M6S ISO 4017 M5X12 A480	
080	312105-0368		3	SCREW M6S ISO 4017 M6X16 A480	
100	312605-0316		3	HEXAGON NUT, M6M M6 A280	
110	315105-0136		5	WASHER BRB 4,3X9 RFR	
120	315105-0146		3	WASHER BRB 5,3X10 RFR	
130	315105-0153		3	WASHER BRB 6,4X12 RFR	
140	312105-0449		2	SCREW M6S ISO 4017 M8X16 A480	
150	315105-0165		2	WASHER BRB 8,4X16 RFR	
170	2633441-0000		1	BRACKET	
TBA 1890S, TBA 2000S (See drawing on page: 5-278)					
010	1279680-0000		1	PIPE	
020	2633439-0000		1	PIPE	
030	2633440-0000		1	PIPE	
040	2693322-0000		1	PIPE	
050	2531276-0000		3	BRACKET	
060	312105-0291		6	SCREW M6S ISO 4017 M4X12 A470	
070	312105-0327		3	SCREW M6S ISO 4017 M5X12 A480	
080	312105-0368		3	SCREW M6S ISO 4017 M6X16 A480	
090	312605-0312		1	HEXAGON NUT, M6M M4 A280	
100	312605-0316		3	HEXAGON NUT, M6M M6 A280	
110	315105-0136		7	WASHER BRB 4,3X9 RFR	
120	315105-0146		3	WASHER BRB 5,3X10 RFR	
130	315105-0153		6	WASHER BRB 6,4X12 RFR	
170	2728241-0000		1	BRACKET	

ELECTRICAL CONNECTION

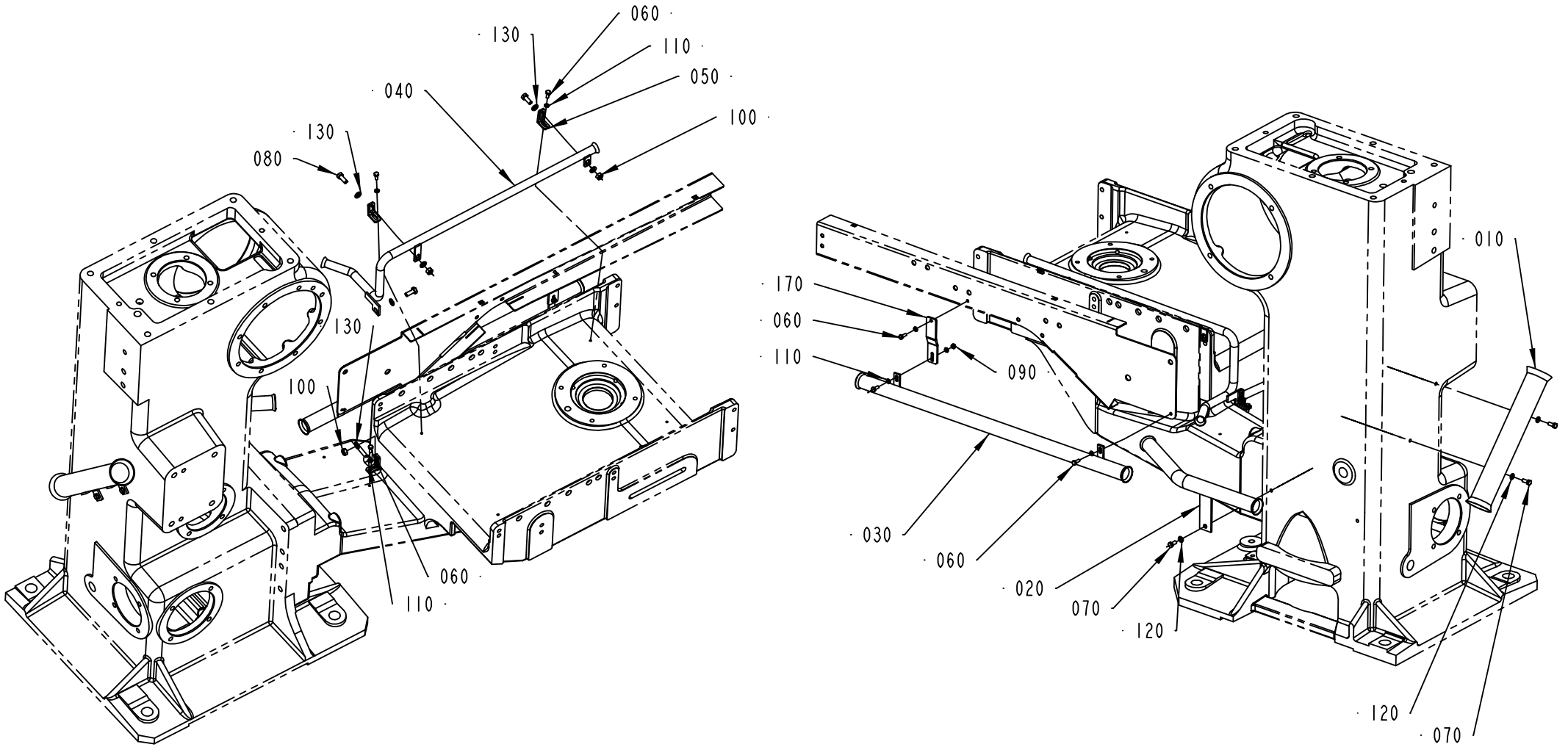

2531274-3
215731

ECM: 272800 - 20060626
Group number: 2531274-0100
Assembly Drawing: 2531274-3_1_AB

This list covers pages from 5-276 to 5-279

Pos	Part No	UN	Qty	Description	Page No
TBA 0500S, TBA 0500B, TBA 0330S, TBA 1000S, TBA 1000B, TBA 0200B, TBA 0250S, TBA 0200S, TBA 0200M, TBA 0250B, TBA 1500S (See drawing on page: 5-276)					
010	1279680-0000		1	PIPE	
020	2633439-0000		1	PIPE	
030	2633440-0000		1	PIPE	
040	2693322-0000		1	PIPE	
050	2531276-0000		3	BRACKET	
060	312105-0291		5	SCREW M6S ISO 4017 M4X12 A470	
070	312105-0327		3	SCREW M6S ISO 4017 M5X12 A480	
080	312105-0368		3	SCREW M6S ISO 4017 M6X16 A480	
090	312605-0312		2	HEXAGON NUT, M6M M4 A280	
100	312605-0316		3	HEXAGON NUT, M6M M6 A280	
110	315105-0136		5	WASHER BRB 4,3X9 RFR	
120	315105-0146		3	WASHER BRB 5,3X10 RFR	
130	315105-0153		3	WASHER BRB 6,4X12 RFR	
TBA 1000SQ, TBA 0200SQ, TPA 0250SQ, TPA 0330SQ, TPA 0200SQ, TPA 1000SQ, TPA 0500SQ, TPA 0750SQ, TBA 0250SQ (See drawing on page: 5-276)					
010	1279680-0000		1	PIPE	
020	2633439-0000		1	PIPE	
030	2633440-0000		1	PIPE	
040	2693322-0000		1	PIPE	
050	2531276-0000		3	BRACKET	
060	312105-0291		5	SCREW M6S ISO 4017 M4X12 A470	
070	312105-0327		3	SCREW M6S ISO 4017 M5X12 A480	
080	312105-0368		3	SCREW M6S ISO 4017 M6X16 A480	
100	312605-0316		3	HEXAGON NUT, M6M M6 A280	
110	315105-0136		5	WASHER BRB 4,3X9 RFR	
120	315105-0146		3	WASHER BRB 5,3X10 RFR	
130	315105-0153		3	WASHER BRB 6,4X12 RFR	
140	312105-0449		2	SCREW M6S ISO 4017 M8X16 A480	
150	315105-0165		2	WASHER BRB 8,4X16 RFR	
170	2633441-0000		1	BRACKET	
TBA 1890S, TBA 2000S (See drawing on page: 5-278)					
010	1279680-0000		1	PIPE	
020	2633439-0000		1	PIPE	
030	2633440-0000		1	PIPE	
040	2693322-0000		1	PIPE	
050	2531276-0000		3	BRACKET	
060	312105-0291		6	SCREW M6S ISO 4017 M4X12 A470	
070	312105-0327		3	SCREW M6S ISO 4017 M5X12 A480	
080	312105-0368		3	SCREW M6S ISO 4017 M6X16 A480	
090	312605-0312		1	HEXAGON NUT, M6M M4 A280	
100	312605-0316		3	HEXAGON NUT, M6M M6 A280	
110	315105-0136		7	WASHER BRB 4,3X9 RFR	
120	315105-0146		3	WASHER BRB 5,3X10 RFR	
130	315105-0153		6	WASHER BRB 6,4X12 RFR	
170	2728241-0000		1	BRACKET	

CRANK GUARD

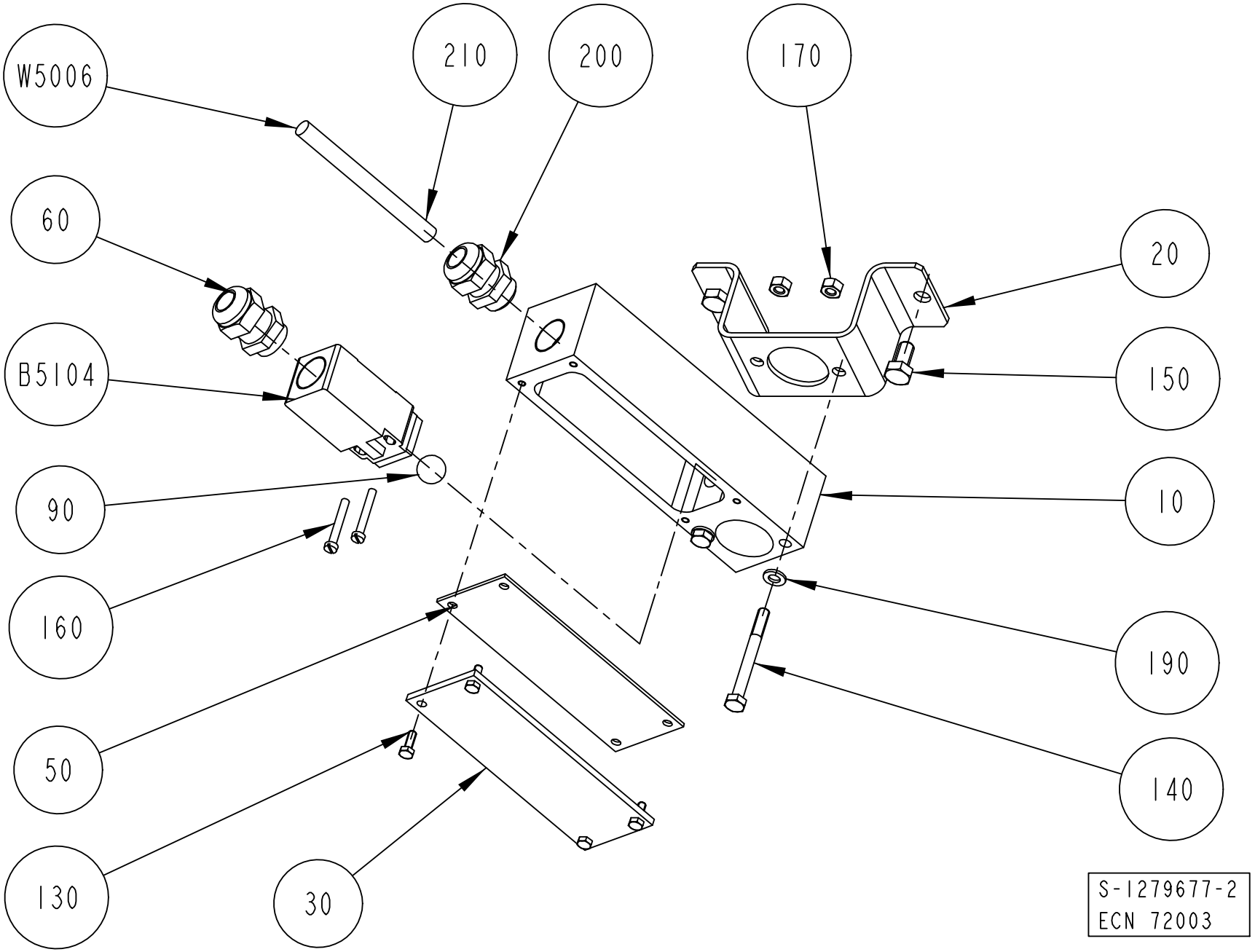
W5006
210
200
170
60
20
B5104
150
90
10
160
190
50
140
130
30
S-1279677-2
ECN 72003

ECM: 181278 - 20041104
Group number: 1279677-0100
Assembly Drawing: 1279677-2_1_AB

Pos	Part No	UN	Qty	Description	Page No
-					
010	1346307-0000		1	HOLDER	
020	1348990-0000		1	SUPPORT	
030	1348663-0000		1	PLATE	
050	1348635-0000		1	RUBBER SEAL	
060	1349020-0000		1	GLAND FITTING	
090	90090-0016		1	BALL, D=15 MM	
130	312105-0291		4	SCREW M6S ISO 4017 M4X12 A470	
140	312105-0382		2	SCREW M6S ISO 4014 M6X60 A480	
150	312105-0449		2	SCREW M6S ISO 4017 M8X16 A480	
160	312125-0299		2	SCREW ISO 1207 M4X30 A4	
170	312605-0316		2	HEXAGON NUT, M6M M6 A280	
190	315105-0153		2	WASHER BRB 6,4X12 RFR	
200	352103-0108		1	CABLE GLAND, ST 13,5 , PR20,4/PG13,5	
210	353001-0103		4	END SLEEVE 0,75 MM2	
B 5104	1144653-0000		1	SWITCH	
W 5006	351150-0405	MM	5000	CABLE OLFLEX 5X0,75 MM2 LIGHT/GREY	

Pos	Part No	UN	Qty	Description	Page No

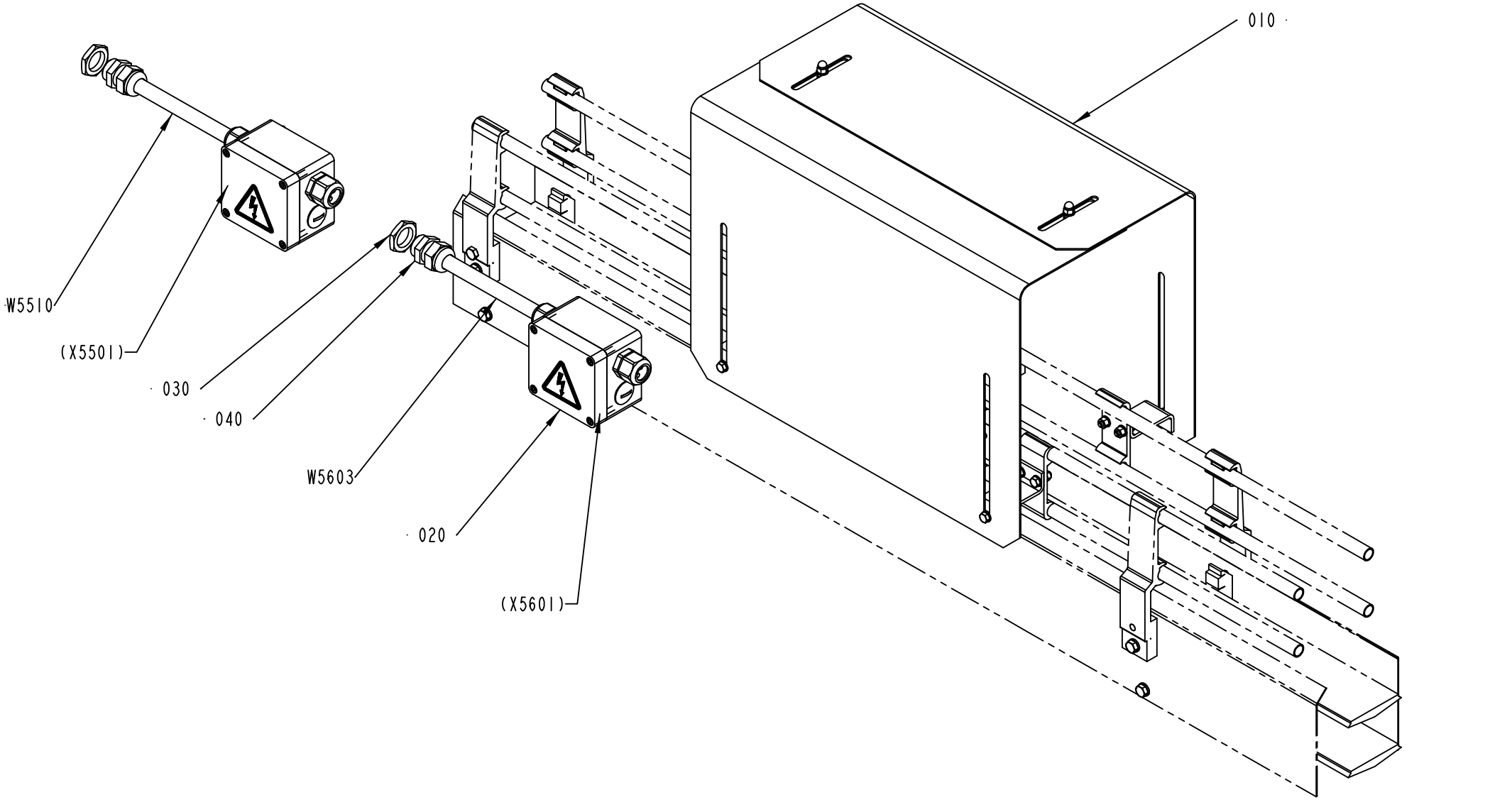

2579995-1
ECM 116811

ECM: 189522 - 20041104
Group number: 2579995-0100
Assembly Drawing: 2579995-1_1_AA

Pos	Part No	UN	Qty	Description	Page No
-					
010	1484196-0100		1	PACK COUNTER	**5-285**
020	1484197-0100		2	CONNECTION BOX	**5-287**
030	90099-0118		2	NUT, PR 20,4 (PG13,5)	
040	352103-0108		2	CABLE GLAND, ST 13,5 , PR20,4/PG13,5	
W5510	351150-0405	M	10	CABLE OLFLEX 5X0,75 MM2 LIGHT/GREY	
W5603	351150-0405	M	100	CABLE OLFLEX 5X0,75 MM2 LIGHT/GREY	

Pos	Part No	UN	Qty	Description	Page No

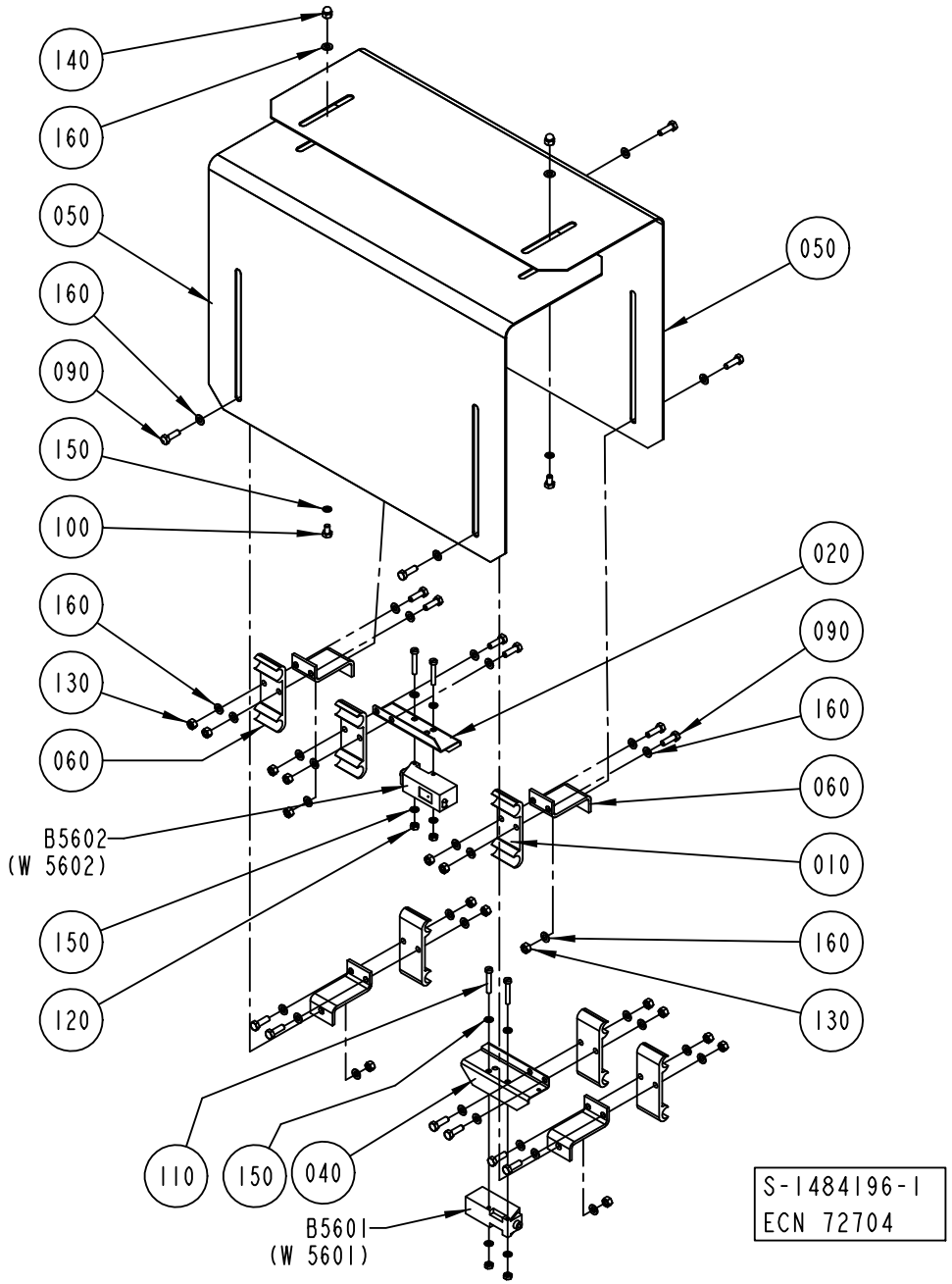
140
160
050
160
090
150
100
160
130
060
B5602
(W 5602)
150
120
110
150
040
B5601
(W 5601)
050
020
090
160
060
010
160
130
S-1484196-1
ECN 72704

ECM: 189523 - 20041104
Group number: 1484196-0100
Assembly Drawing: 1484196-1_1_AA

Pos	Part No	UN	Qty	Description	Page No
-					
010	1020637-0000		6	HOLDER	
020	1086889-0000		1	COVER	
030	1020638-0000		6	HOLDER	
040	1086888-0000		1	COVER	
050	1349566-0000		2	COVER	
060	1478659-0000		4	BRACKET	
090	312105-0329		16	SCREW M6S ISO 4017 M5X16 A480	
100	312105-0323		2	SCREW M6S ISO 4017 M5X8 A480	
110	312125-0297		4	SCREW ISO 1207 M4X25 A4	
120	312605-0312		4	HEXAGON NUT, M6M M4 A280	
130	312605-0314		16	HEXAGON NUT, M6M M5 A280	
140	312705-0314		2	NUT HEX. DOMED CAP MHM-6 M5 A280	
150	315105-0136		8	WASHER BRB 4,3X9 RFR	
160	315105-0146		42	WASHER BRB 5,3X10 RFR	
B5601	90232-0103		1	PH.CELL E3S-CT61-L-5M	
B5602	90232-0104		1	PH.CELL E3S-CT61-D-5M	

Pos	Part No	UN	Qty	Description	Page No

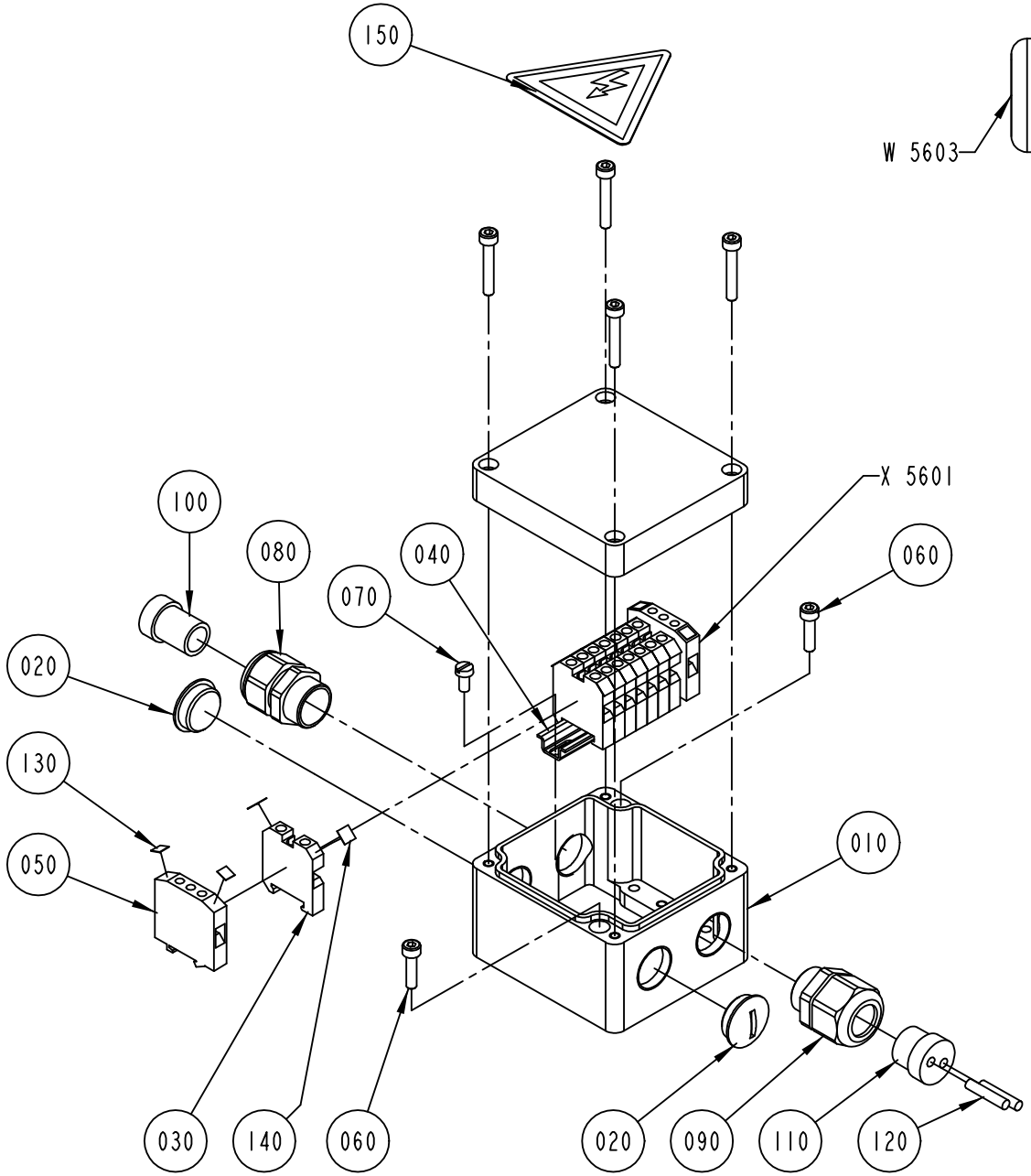

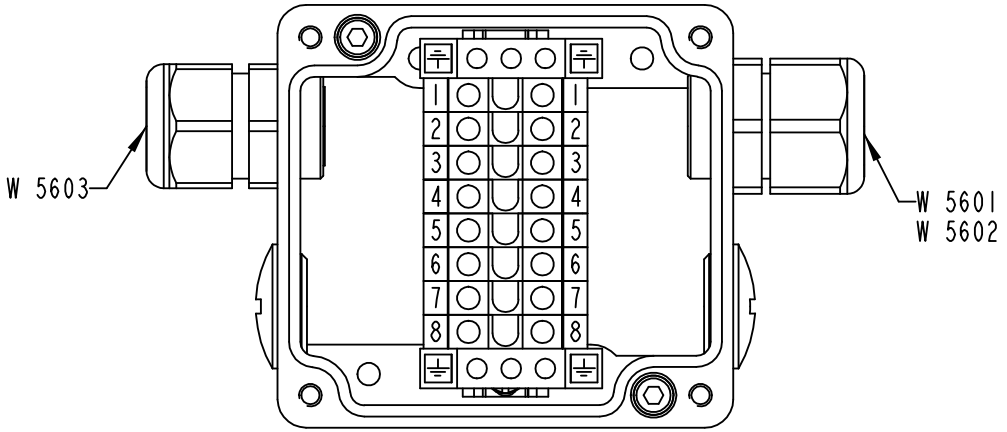

S-1484197-1
ECN 72704

ECM: 189524 - 20041104
Group number: 1484197-0100
Assembly Drawing: 1484197-1_1_AA

Pos	Part No	UN	Qty	Description	Page No
-					
010	1349568-0000		1	CONNECTION BOX	
020	90002-0009		2	BLANK-OFF PLUG, PR 18.6 SKINDICHT-BLK11	
030	90077-0079		8	FEED THROUGH TERMINAL, 02943.6	
040	90077-0328	MM	65	RAIL TS15/5	
050	90135-0026		2	EARTH TERMINAL, 3802.6	
060	312115-0293		2	SCREW ISO4762 M4X16 A4 80	
070	312125-0287		2	SCREW ISO 1207 M4X8 A4	
080	353240-0002		1	GLAND W/O INSERT PG11 NORMAL	
090	353241-0002		1	GLAND W/O INSERT PG11 EXTENDED	
100	353249-0003		1	INSERT, SINGEL HOLE, E151/11	
110	353249-0036		1	INSERT, MULTI HOLE, EK152 M 2X4	
120	353249-0301		2	SEALING PIN, 4X20	
130	359011-0819		4	MARKING PLATES 5-GW (EARTH)	
140	359011-0821		2	SET OF SIGNS 6-FW 1-50	
150	359705-0015		1	WARNING SIGN ISO, RISK OF ELECTRIC SHOCK	

Pos	Part No	UN	Qty	Description	Page No

Tetra Pak

SPC
Spare Parts Catalogue

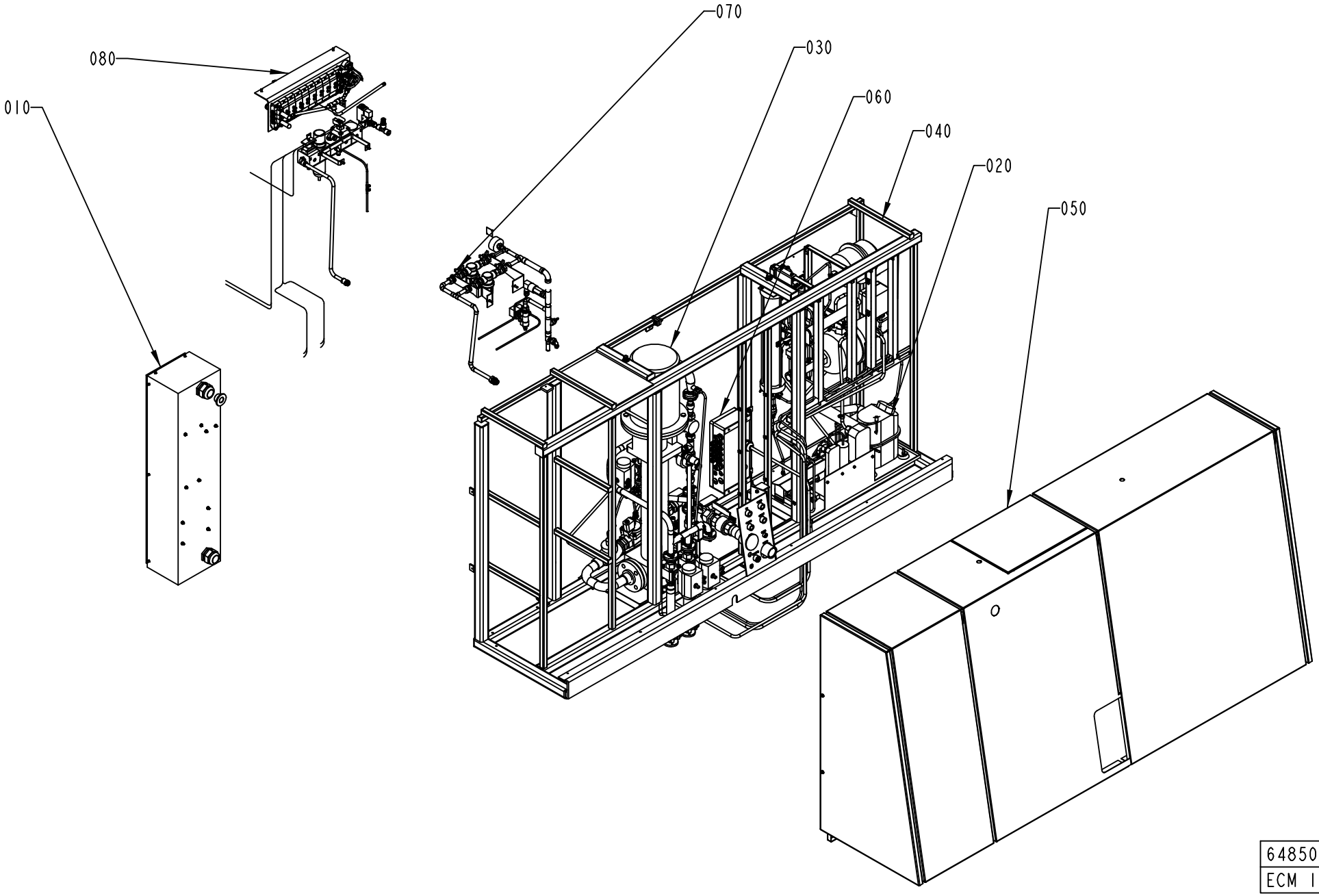
070
030
060
040
020
050
080
010
648506-2
ECM 139813

ECM: 268357 - 20060703
Group number: 648506-0400
Assembly Drawing: 648506-2_1_AD

This list covers pages from 6-2 to 6-5

Pos	Part No	UN	Qty	Description	Page No
A3/FLEX DIMC/FLEX, A3/FLEX TBA 2000S NODIMC, A3/FLEX TBA 1890S NODIMC, A3/FLEX TBA 1400B NODIMC (See drawing on page: 6-4)					
090	2623714-0100		1	PEROXIDE REDUCER	**6-7**
100	2623718-0100		1	PEROXIDE REDUCER	**6-9**
Common Parts					
010	1095610-0300		1	MAIN SWITCH	**6-11**
020	1095612-0300		1	COOLING WATER SYSTEM	**6-13, 6-15**
030	1095627-0300		1	FOAM CLEANING UNIT	**6-33**
040	2613034-0100		1	MACHINE BODY	**6-49**
050	1095607-0200		1	COVERING PANEL	**6-51**
060	1095630-0200		1	CONNECTION BOX	**6-67**
070	1095608-0100		1	WATER PANEL	**6-69, 6-71**
080	1095714-0300		1	SUPPLY SYSTEM	**6-73**

Pos	Part No	UN	Qty	Description	Page No

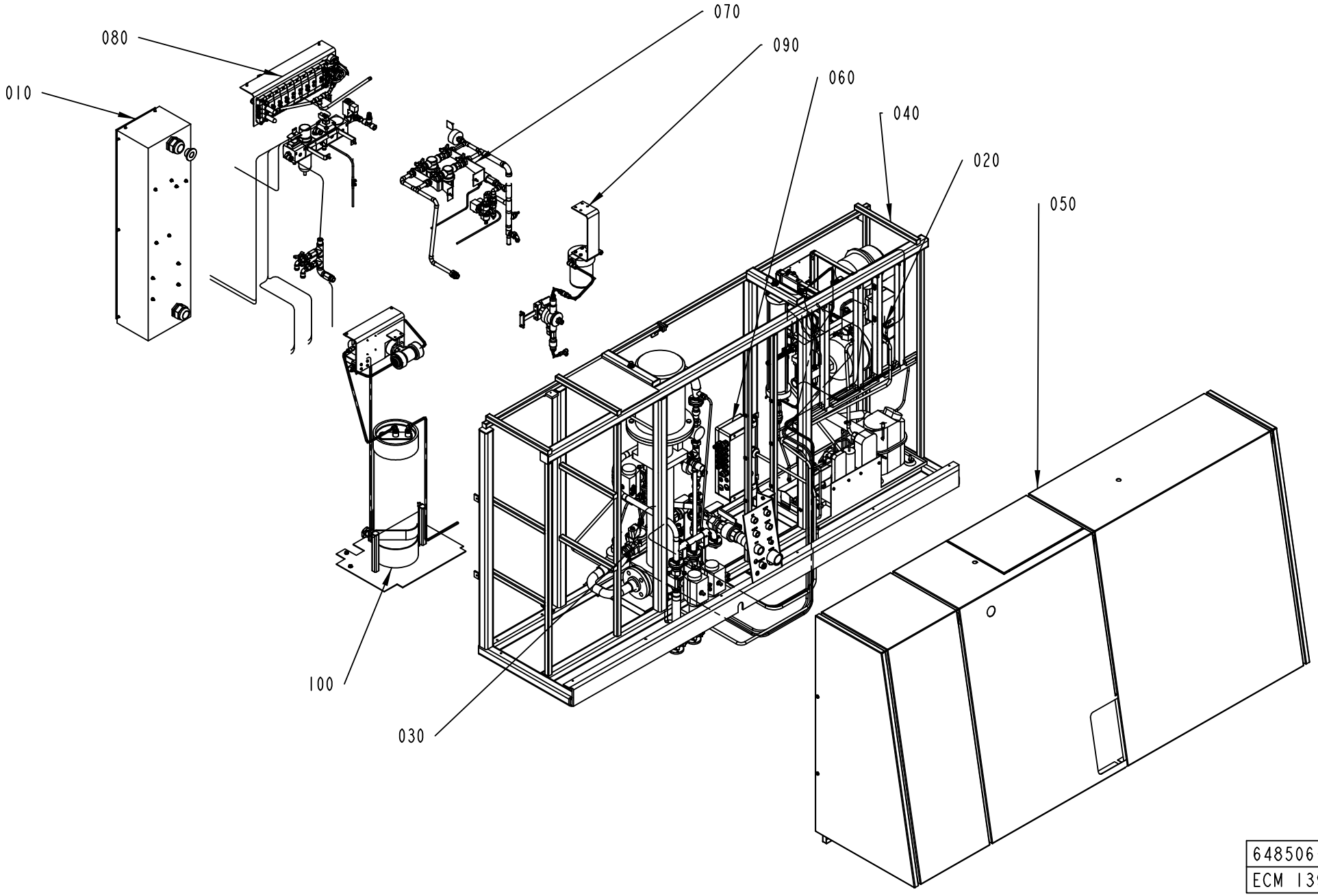
070
080
090
060
040
010
020
050
100
030
648506-3
ECM 139813

Pos	Part No	UN	Qty	Description	Page No
A3/FLEX DIMC/FLEX, A3/FLEX TBA 2000S NODIMC, A3/FLEX TBA 1890S NODIMC, A3/FLEX TBA 1400B NODIMC (See drawing on page: 6-4)					
090	2623714-0100		1	PEROXIDE REDUCER	**6-7**
100	2623718-0100		1	PEROXIDE REDUCER	**6-9**
Common Parts					
010	1095610-0300		1	MAIN SWITCH	**6-11**
020	1095612-0300		1	COOLING WATER SYSTEM	**6-13, 6-15**
030	1095627-0300		1	FOAM CLEANING UNIT	**6-33**
040	2613034-0100		1	MACHINE BODY	**6-49**
050	1095607-0200		1	COVERING PANEL	**6-51**
060	1095630-0200		1	CONNECTION BOX	**6-67**
070	1095608-0100		1	WATER PANEL	**6-69, 6-71**
080	1095714-0300		1	SUPPLY SYSTEM	**6-73**

Pos	Part No	UN	Qty	Description	Page No

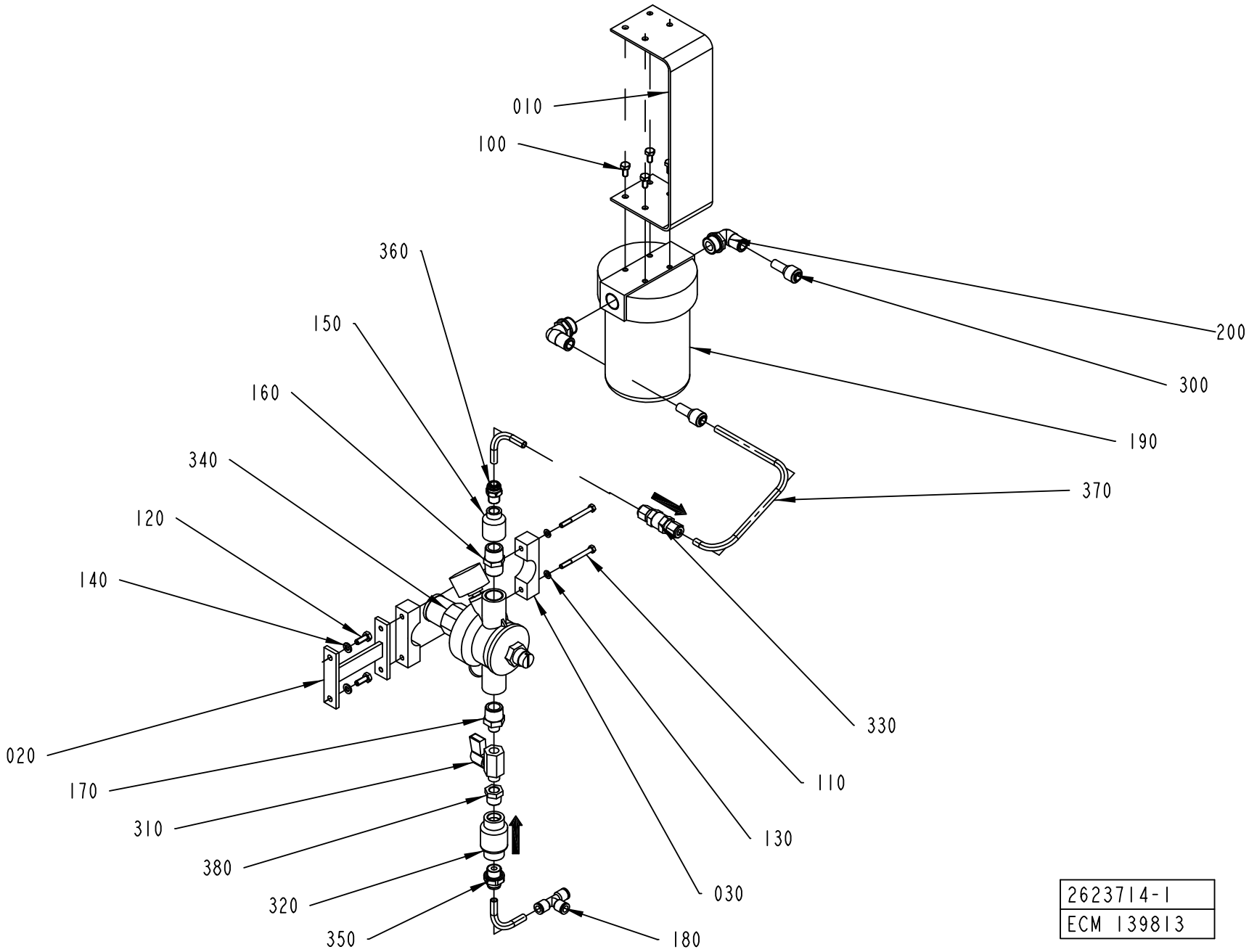

2623714-1
ECM 139813

ECM: 189445 - 20041104
Group number: 2623714-0100
Assembly Drawing: 2623714-1_1_AB

Pos	Part No	UN	Qty	Description	Page No
-					
010	2604069-0000		1	BRACKET	
020	2623715-0000		1	HOLDER	
030	2623717-0000		2	HOLDER	
100	312105-0366		4	SCREW M6S ISO 4017 M6X12 A480	
110	312105-0341		2	SCREW M6S ISO 4014 M5X50 A480	
120	312105-0368		2	SCREW M6S ISO 4017 M6X16 A480	
130	315105-0146		2	WASHER BRB 5,3X10 RFR	
140	315105-0153		2	WASHER BRB 6,4X12 RFR	
150	342217-0103		1	SLEEVE, REDUCTION, INT, R-2021/2X1/4	
160	90330-0021		1	NIPPLES, EXT. THREAD. R-207R1/2	
170	342203-0107		1	NIPPLES, EXT. THREAD, HEXAGON,ÿNO. 209	
180	90055-0276		1	T-CONNECTION 8 MM	
190	90415-0065		1	FILTER	
010	*90415-0357*		*1*	*FILTER INSERT*	
200	90459-2769		2	ELBOW PIPE JOINT, EXT.THREAD,D=10MM-G1/2	
300	90055-0249		2	REDUCER 8-10	
310	90187-0045		1	BALL VALVE G1/4 CR PL	
320	90230-0040		1	NON-RETURN VALVE, R3/8, L=55	
330	90230-0032		1	NON-RETURN VALVE, 8MM, L=63,25	
340	90458-0201		1	FLUID AUT. FEEDER, ALINOX 1/2 46.04.00	
350	90458-1963		1	STRAIGHT COUPLING D=8-G3/8"	
360	90459-0997		1	STRAIGHT COUPLING D=8-R1/4"	
370	90166-0188	MM	700	PLASTIC HOSE	
380	90330-0042		1	BUSHING, INT/EXT. THR. R3/8-RP1/4	

Pos	Part No	UN	Qty	Description	Page No

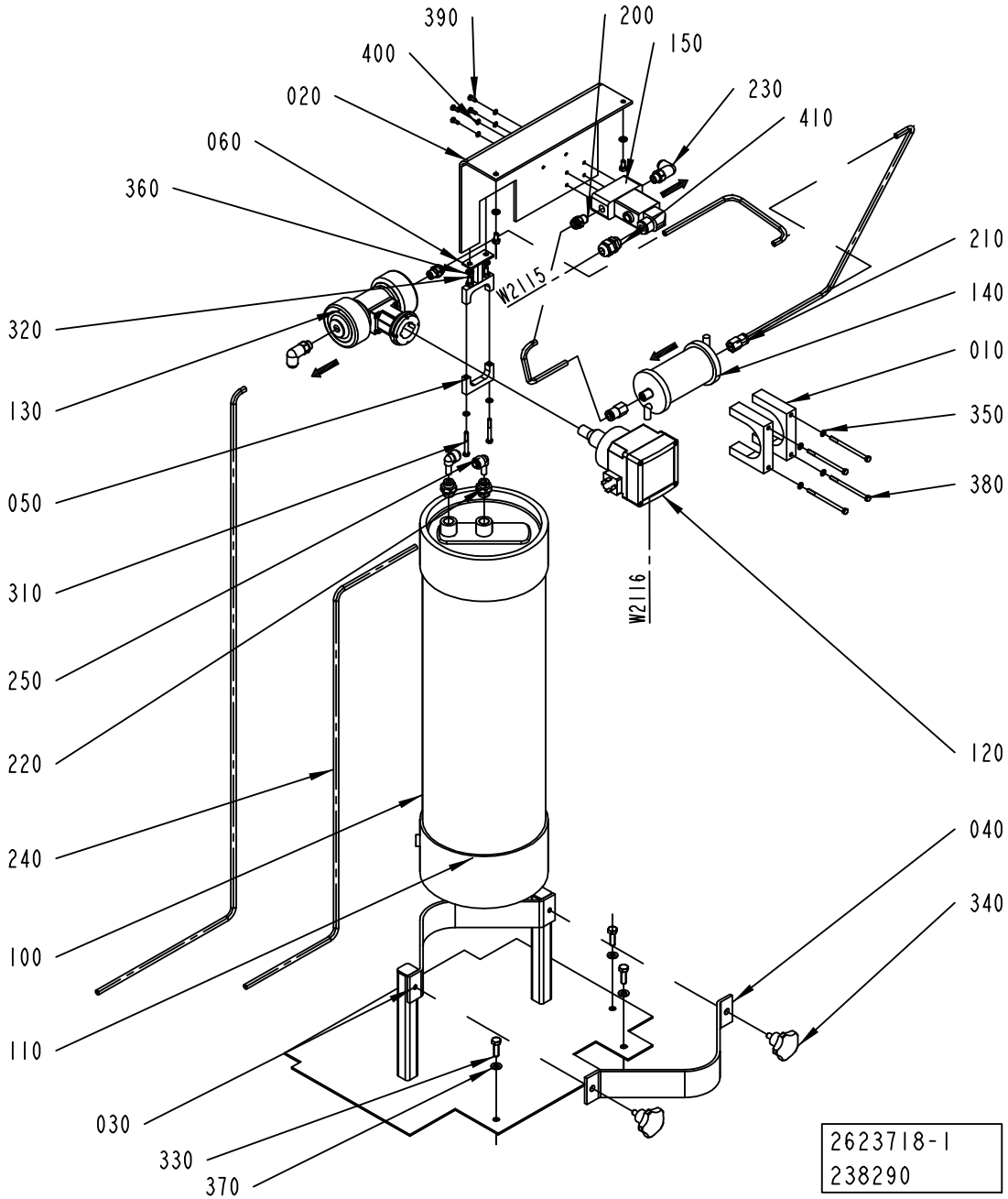
390
200
400
150
020
230
060
410
360
210
W2115
140
320
010
130
350
050
380
310
W2116
250
120
220
040
240
340
100
110
030
330
370
2623718-1
238290

ECM: 243415 - 20051220
Group number: 2623718-0100
Assembly Drawing: 2623718-1_1_AC

Pos	Part No	UN	Qty	Description	Page No
-					
010	2623712-0000		2	HANGER	
020	2623713-0000		1	HOLDER	
030	2623719-0000		1	HOLDER	
040	2623720-0000		1	HOLDER	
050	1549344-0000		1	HOLDER	
060	2510755-0000		1	BRACKET	
100	90459-1996		1	FILTER CULLIGAN REFILL LINE 10 760665	
	90459-2004		*1*	*FILTER CARTRIDGE ION-EXCHANGE, 759807*	
110	90459-2004		1	FILTER CARTRIDGE ION-EXCHANGE, 759807	
120	90458-2174		1	CONDUCTIVITY TRANSMITTER, 418962Z	
130	90458-2173		1	PIPE CONNECTION, 552608M	
140	90459-1472		1	FILTER, KW0604NP3	
150	90042-0170		1	SOLENOID VALVE BüRKERT	
200	90459-0997		2	STRAIGHT COUPLING D=8-R1/4"	
210	90055-0266		2	STRAIGHT CONNECTION	
220	90458-1963		2	STRAIGHT COUPLING D=8-G3/8"	
230	90055-0267		2	ELBOW PIPE JOINT,EXT.THREAD,D=8 MM G1/4	
240	90166-0118	M	10	TUBE 8 MM PA BLACK	
250	90055-0250		2	ELBOW WITH TAILPIECE 8/8 MM	
310	312105-0339		2	SCREW M6S ISO 4014 M5X40 A480	
320	312105-0366		4	SCREW M6S ISO 4017 M6X12 A480	
330	312105-0453		3	SCREW M6S ISO 4017 M8X25 A480	
340	318856-0112		2	KNOB, EXTERNAL THREAD. NO. 8306-0227	
350	315105-0146		6	WASHER BRB 5,3X10 RFR	
360	315105-0153		4	WASHER BRB 6,4X12 RFR	
370	315105-0165		3	WASHER BRB 8,4X16 RFR	
380	90458-1614		4	SCREW M6S ISO 4014 M5X80 A480	
390	312105-0289		4	SCREW M6S ISO 4017 M4X10 A470	
400	315105-0136		4	WASHER BRB 4,3X9 RFR	
410	352103-0106		1	CABLE GLAND, ST 11, PR18,6/PG11	

Pos	Part No	UN	Qty	Description	Page No

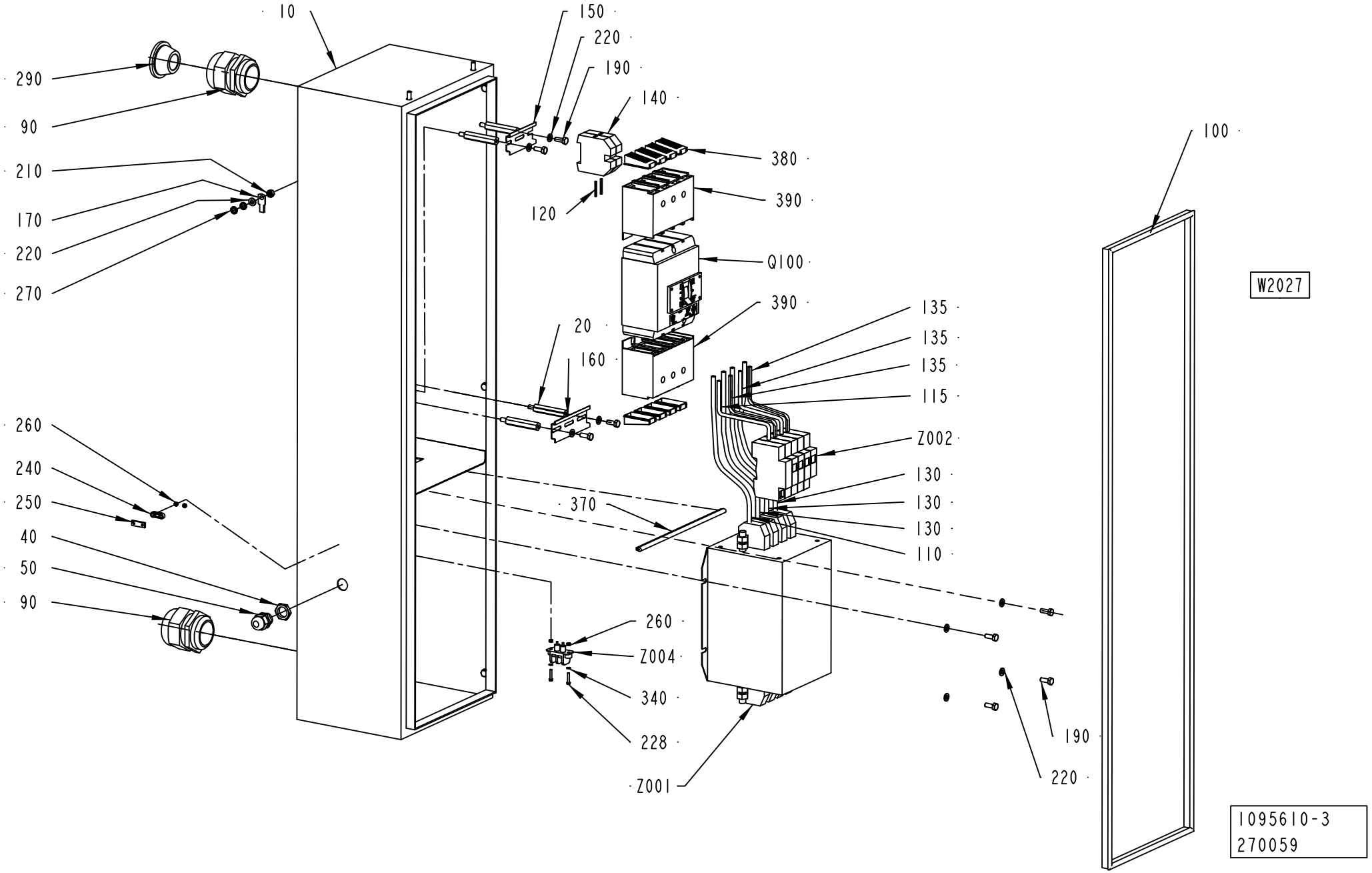
10
150
220
190
140
380
390
120
Q100
390
20
160
135
135
135
115
Z002
130
130
130
110
370
260
Z004
340
228
Z001
290
90
210
170
220
270
260
240
250
40
50
90
100
W2027
190
220
1095610-3
270059

ECM: 271182 - 20060807
Group number: 1095610-0300
Assembly Drawing: 1095610-3_1_AD

Pos	Part No	UN	Qty	Description	Page No
-					
010	2842999-0000		1	CABINET	
020	1037184-0000		4	SPACER SCREW	
040	90099-0117		1	NUT, PR 18,6 (PG11)	
050	352103-0106		1	CABLE GLAND, ST 11, PR18,6/PG11	
060	90099-0085		1	NUT	
070	90099-0096		1	NUT	
090	352103-0123		2	CABLE GLAND, ST 42, PR54,0/PG42	
100	90143-0057	MM	2600	STRIP EMKA 1011-05 21X11MM	
110	351161-0110	MM	2400	CABLE AWM 1X25 MM2 LIGHTBLUE	
115	351161-0111	MM	240	CABLE AWM 1X35 MM2 LIGHTBLUE	
120	351162-0109	MM	850	CABLE AWM 1X16 MM2 YELLOW-GREEN	
130	351164-0111	MM	6000	CABLE AWM 1X35 MM2 BLACK	
135	351164-0111	MM	600	CABLE AWM 1X35 MM2 BLACK	
140	353024-0209		2	EARTH TERMINAL, 1010.5	
150	353042-0005	MM	75	RAIL TS 35/7.5	
160	353042-0005	MM	100	RAIL TS 35/7.5	
170	353104-0168		1	CABLE SHOE, RING UNINS., YAV 16 M 6	
180	353105-0200		9	PIN CABLE SHOE A4630SR	
190	312105-0368		13	SCREW M6S ISO 4017 M6X16 A480	
210	312605-0316		1	HEXAGON NUT, M6M M6 A280	
220	315105-0153		16	WASHER BRB 6,4X12 RFR	
230	90143-0060	MM	600	EDGE STRIP 9,5X6,3MM BLACK PVC	
240	90220-0303		1	CLAMP FOR SCR.CABLE, 10MM, 55-016-22	
250	90220-0305		1	CLAMP FOR SCR.CABLE, 16MM,	
260	312605-0310		2	HEXAGON NUT, M6M M3 A280	
270	90062-0015		2	LOCK WASHER SERRAT.EXT.GEAR,6,4/11 H=0,7	
280	90166-0232	MM	500	SHRINKABLE HOSE	
290	90015-0025		1	LEAD-IN, TET26-35, E-1458041	
300	1129402-0000		4	SPACER SCREW	
340	315105-0124		4	WASHER BRB 3,2X7 RFR	
370	90143-0060	MM	250	EDGE STRIP 9,5X6,3MM BLACK PVC	
W2027	90220-0095	MM	3000	SCR. CABLE 3X0,75MM2	
Z001	90024-0060		1	POWER LINE FILTER, 80 A 250/440 VAC	
Z002	90082-0013		1	OVER VOLT. PROTECT. PU 4C-R 230 VAC	
	90082-0301		*3*	*OVER VOLT. PROTECT. PU 0 C 833951*	
Z004	90024-0036		1	FILTERED TERMINAL BLOCK	

Pos	Part No	UN	Qty	Description	Page No

Machine Type | Group Description | Used-In | Group Number | Page No

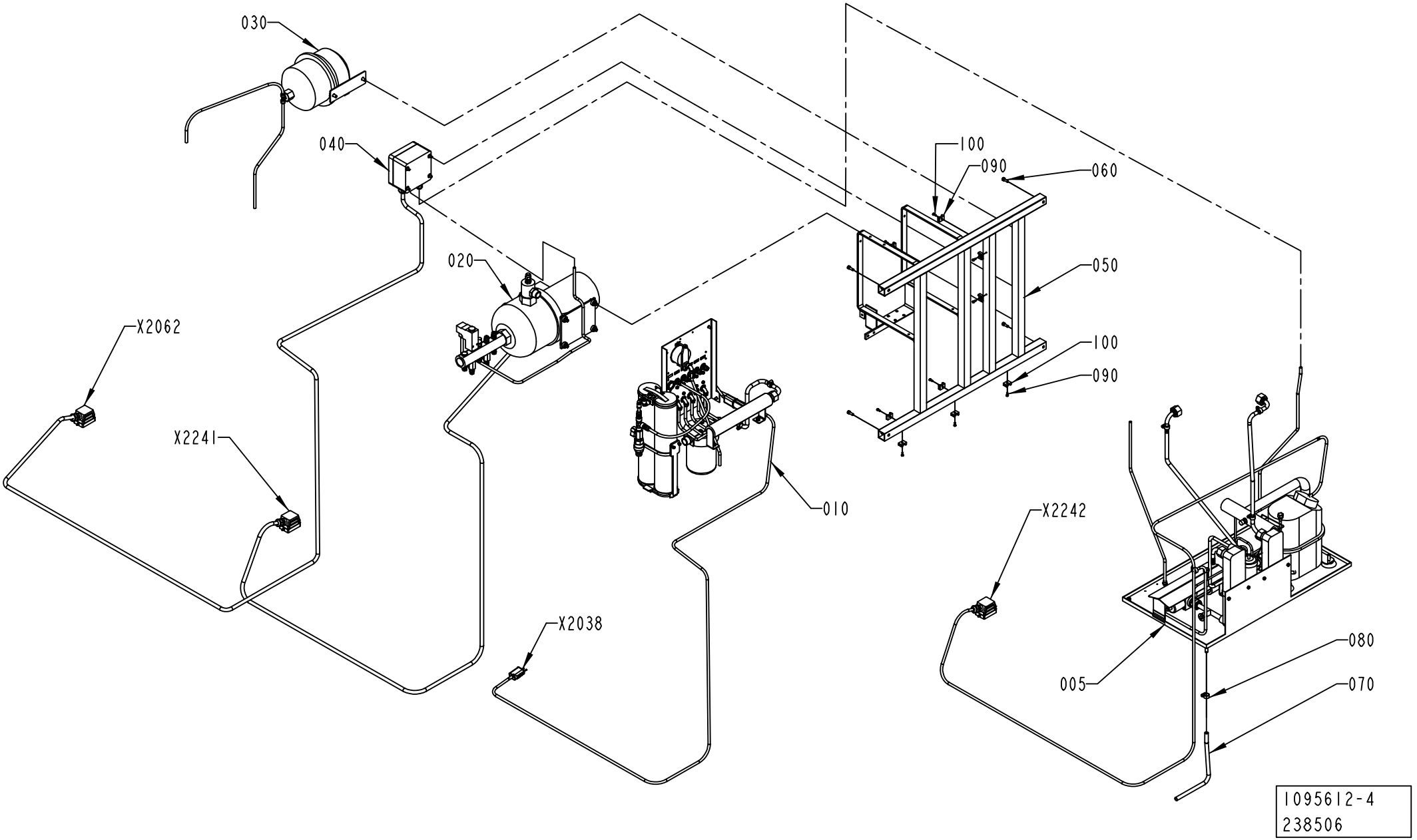
030
040
020
X2062
X2241
010
X2038
100
090
060
050
100
090
X2242
005
080
070
1095612-4
238506

ECM: 256723 - 20060313
Group number: 1095612-0300
Assembly Drawing: 1095612-4_1_AD

This list covers pages from 6-12 to 6-15

Pos	Part No	UN	Qty	Description	Page No
A3/FLEX COMPRESSOR (See drawing on page: 6-12)					
005	1095710-0300		1	COMPRESSOR UNIT	**6-17**
010	2552113-0100		1	FLOW METER	**6-19**
A3/FLEX ICE-WATER (See drawing on page: 6-14)					
007	1260547-0100		1	ICE WATER UNIT	**6-23**
010	2552113-0100		1	FLOW METER	**6-19**
Common Parts					
020	1095706-0300		1	COOLING WATER PUMP	**6-27**
030	2514077-0100		1	EXPANSION VESSEL	**6-29**
040	1095709-0200		1	CONNECTION BOX	**6-31**
050	1129141-0000		1	MACHINE BODY	
060	312115-0368		4	SCREW ISO4762 M6X16 A4 80	
070	90166-0121	MM	1000	HOSE	
080	342991-0101		1	HOSE CLIP,WORM DRIVE TYPE (13)-16	
090	352113-0203		9	ANCHOR PLATES FOR STRIPS, TYPE TM3S8-M0	
100	312125-0289		9	SCREW ISO 1207 M4X10 A4	

Pos	Part No	UN	Qty	Description	Page No

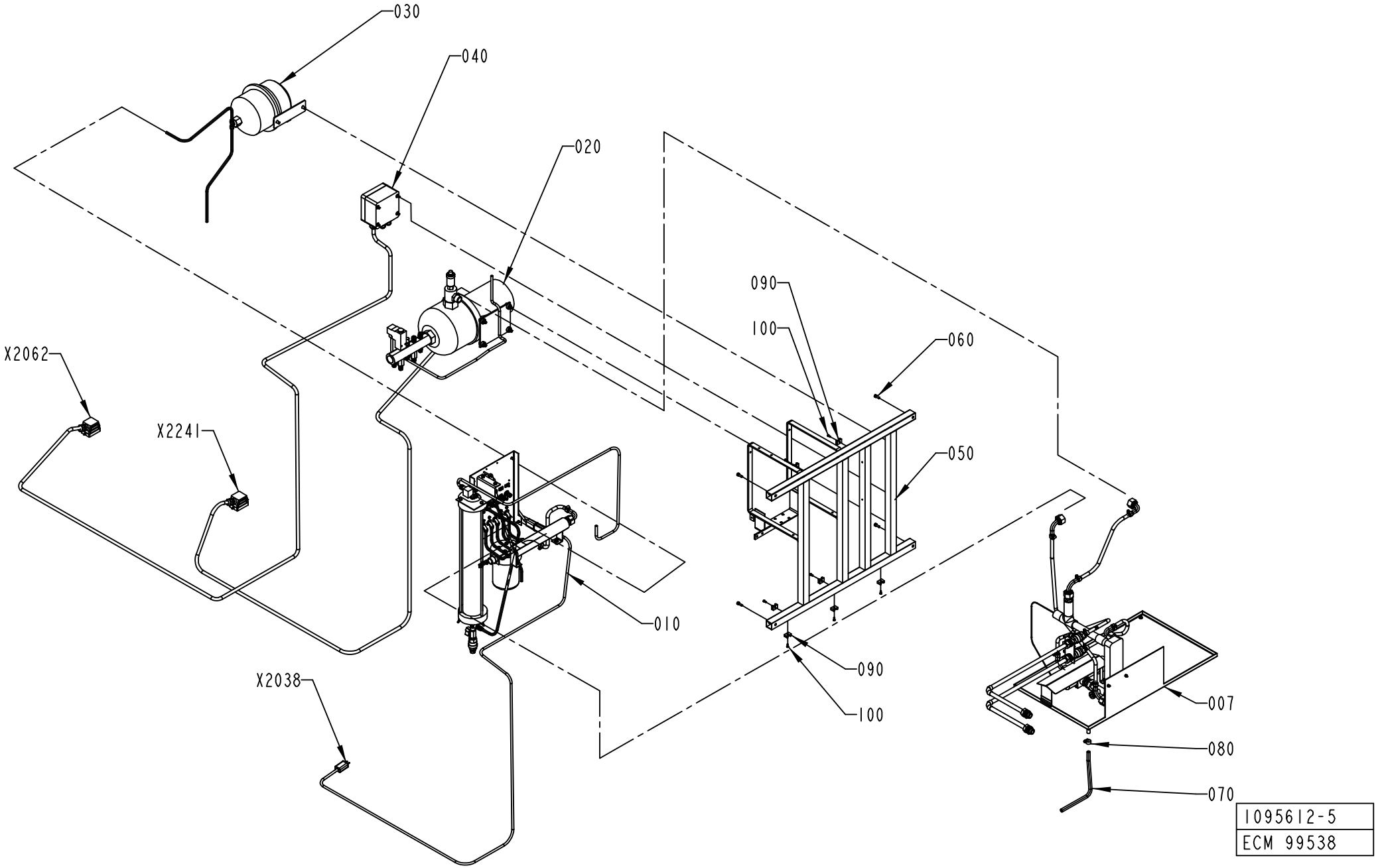
030
040
020
090
100
060
X2062
X2241
050
010
090
100
X2038
007
080
070
1095612-5
ECM 99538

ECM: 256723 - 20060313
Group number: 1095612-0300
Assembly Drawing: 1095612-5_1_AC

This list covers pages from 6-12 to 6-15

Pos	Part No	UN	Qty	Description	Page No
A3/FLEX COMPRESSOR (See drawing on page: 6-12)					
005	1095710-0300		1	COMPRESSOR UNIT	**6-17**
010	2552113-0100		1	FLOW METER	**6-19**
A3/FLEX ICE-WATER (See drawing on page: 6-14)					
007	1260547-0100		1	ICE WATER UNIT	**6-23**
010	2552113-0100		1	FLOW METER	**6-19**
Common Parts					
020	1095706-0300		1	COOLING WATER PUMP	**6-27**
030	2514077-0100		1	EXPANSION VESSEL	**6-29**
040	1095709-0200		1	CONNECTION BOX	**6-31**
050	1129141-0000		1	MACHINE BODY	
060	312115-0368		4	SCREW ISO4762 M6X16 A4 80	
070	90166-0121	MM	1000	HOSE	
080	342991-0101		1	HOSE CLIP,WORM DRIVE TYPE (13)-16	
090	352113-0203		9	ANCHOR PLATES FOR STRIPS, TYPE TM3S8-M0	
100	312125-0289		9	SCREW ISO 1207 M4X10 A4	

Pos	Part No	UN	Qty	Description	Page No

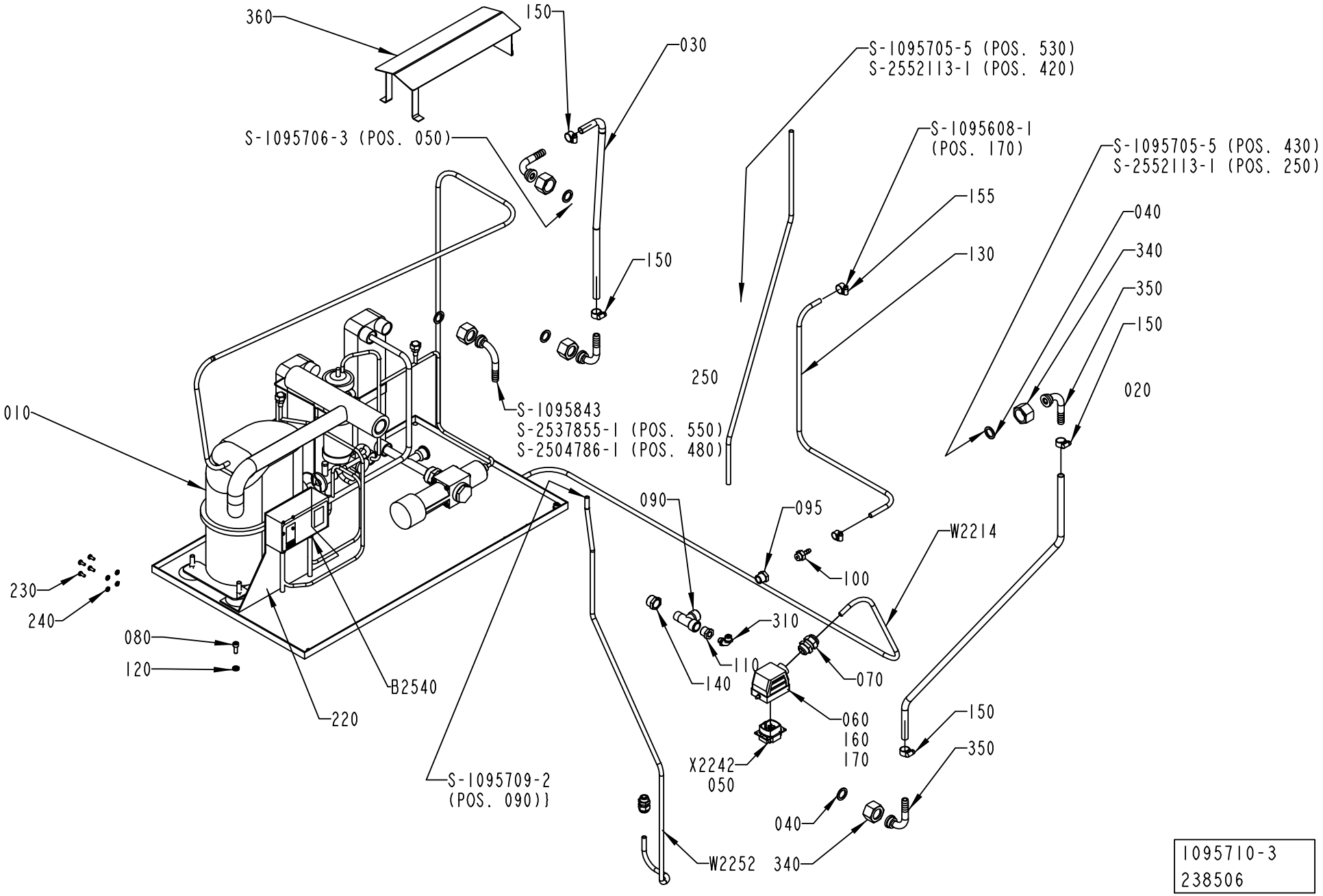

1095710-3
238506

ECM: 254525 - 20060221
Group number: 1095710-0300
Assembly Drawing: 1095710-3_1_AF

Pos	Part No	UN	Qty	Description	Page No
A3/FLEX					
010	1140603-0000		1	COMPRESSOR UNIT	
	342713-0213		*1*	*PLUG, EXT THREAD HEX SOCKET 8638-00-120*	
	90459-6809		*1*	*EXP. VALVE TUB ORIF 5 R134A, 068U2004*	
	90459-6804		*1*	*CONDENSER, B8/14 CONNECTION 2/22U + 2/1/*	
	90459-6802		*1*	*COMPRESSOR, TAJ4511Y*	
	90459-6800		*1*	*CAPACITY REGULATOR, KVP 12*	
	90459-6799		*1*	*THERMOST. VALVE,WVFX 15 3.5-16 BAR 1/2"*	
	90459-6798		*1*	*DRYING FILTER, DMC 2032S*	
	90422-0037		*1*	*HEAT EXCHANGER*	
	90274-0123		*1*	*PRESSURE SWITCH, KP 1560-1254*	
W 2214	351150-0418	MM	4000	CABLE OLFLEX 4X2,5 MM2 LIGHT/GREY	
Common Parts					
020	90166-0121	MM	930	HOSE	
030	90166-0121	MM	840	HOSE	
040	90459-3339		5	GASKET NBR/PTFE 17X24X2 MM 3/4"	
050	90110-0159		1	MALE INSERT 70.310.0640.0	
060	90110-0226		1	CABLE HOOD 6-POL 70.350.0628.0	
070	352103-0108		1	CABLE GLAND, ST 13,5 , PR20,4/PG13,5	
080	312115-0368		2	SCREW ISO4762 M6X16 A4 80	
090	90140-0023		1	T-PIPE, INT. THREAD, NO. 2070-3/8-3/8	
095	90330-0042		1	BUSHING, INT/EXT. THR. R3/8-RP1/4	
100	342901-0102		1	HOSE NIPPLE, EXT.THR. R1/4-7 MM	
110	342701-0202		1	BUSHING,INT./EXT.G-THREAD G3/8"-G1/8"	
120	315115-0153		2	WASHER PLAIN, TBRB 6,4/12 H=3	
130	90166-0045	MM	705	HOSE PVC TRANSP. 6/12	
140	342701-0206		1	BUSHING,INT./EXT.G-THREAD G1/2"-G3/8"	
150	342991-0101		4	HOSE CLIP,WORM DRIVE TYPE (13)-16	
155	342991-0100		2	HOSE CLIP,WORM DRIVE TYPE 10-13	
160	359005-0050		1	MARKING LABEL KIT X, 04.841.4550.0	
170	359005-0010		1	MARKING LABEL KIT 0 - 9, 04.841.2150.0	
220	1361560-0000		1	PLATE	
230	312132-0289		4	SCREW SLOT. PAN HEAD MSCS M4X10	
240	90062-0029		4	LOCK WASHER 5,1X 8,6, T= 1,5 DIN 7980	
250	90166-0118	MM	500	TUBE 8 MM PA BLACK	
310	342931-0121		1	ELBOW 90 COUPL.,EXT.THREAD 8/6-G1/8"	
340	2531423-0000		5	NUT	
350	2531245-0000		5	HOSE NIPPLE	
360	2532574-0000		1	COVER	
B2540	90274-0108		1	DUAL PRESSURE GUARD, -20 - 2800 KPA	
W2252	351150-0431	MM	1000	CABLE OLFLEX 2X0,75 MM2 LIGHT/GREY	

Pos	Part No	UN	Qty	Description	Page No

Machine Type | Group Description | Used-In | Group Number | Page No

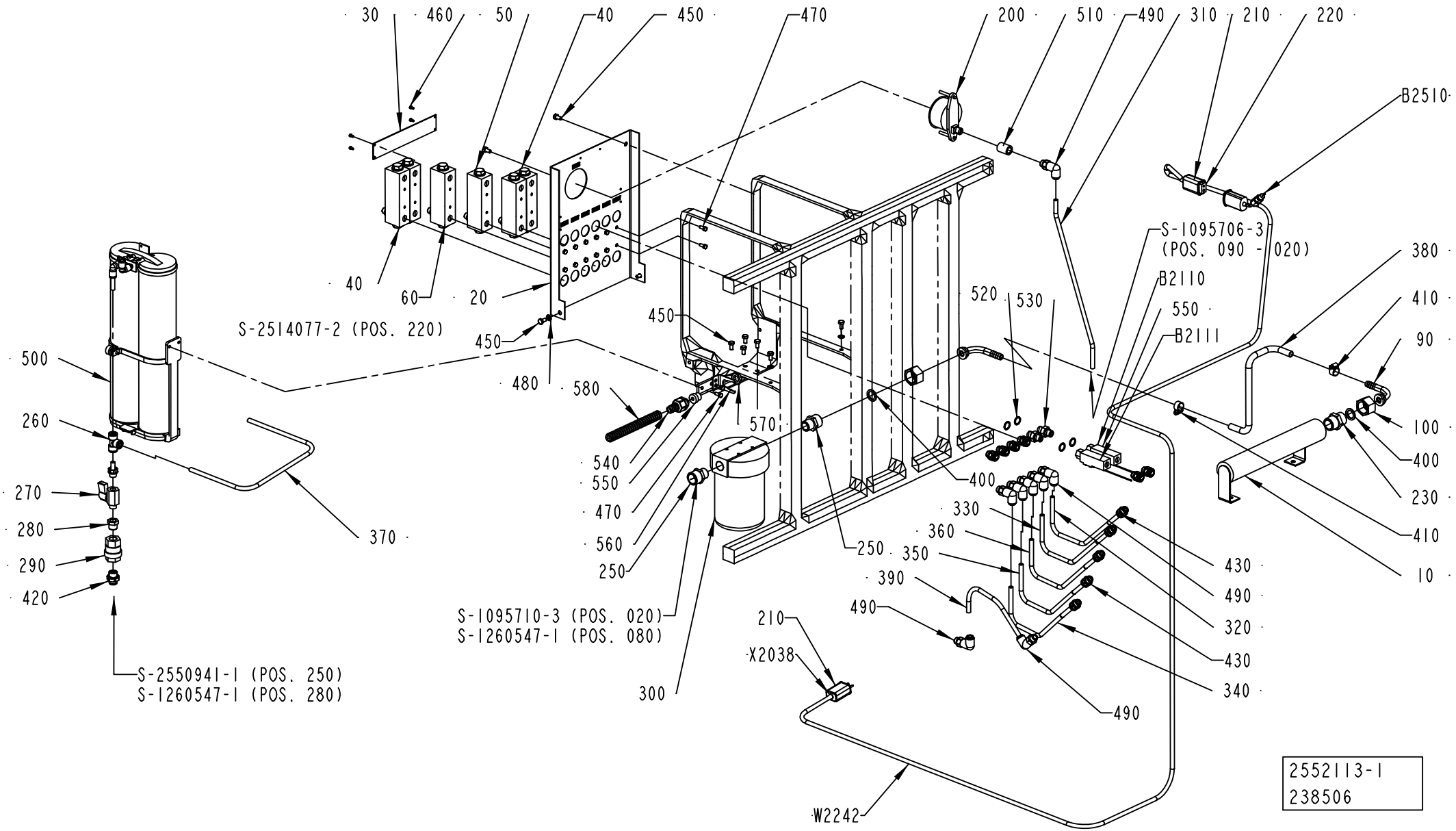
30
460
50
40
450
470
200
510
490
310
210
220
B2510
S-1095706-3
(POS. 090 - 020)
380
410
90
100
400
230
410
10
B2110
550
B2111
520
530
40
60
20
S-2514077-2 (POS. 220)
450
450
480
580
570
500
260
270
280
290
420
370
540
550
470
560
250
400
330
360
350
390
490
250
430
490
320
430
340
490
S-1095710-3 (POS. 020)
S-1260547-1 (POS. 080)
300
210
X2038
W2242
S-2550941-1 (POS. 250)
S-1260547-1 (POS. 280)
2552113-1
238506

ECM: 272754 - 20060711
Group number: 2552113-0100
Assembly Drawing: 2552113-1_1_AD

Pos	Part No	UN	Qty	Description	Page No
A3/FLEX					
020	2579861-0003		1	PIVOT BRACKET	
030	2547474-0000		1	SIGN LANGUAGE INDEPENDENT	
040	1129079-0000		4	FLOW METER	
050	1041046-0000		1	FLOW METER	
060	1129079-0000		1	FLOW METER	
320	90166-0118	MM	255	TUBE 8 MM PA BLACK	
330	90166-0118	MM	255	TUBE 8 MM PA BLACK	
450	312105-0366		10	SCREW M6S ISO 4017 M6X12 A480	
470	312105-0327		14	SCREW M6S ISO 4017 M5X12 A480	
490	90055-0267		8	ELBOW PIPE JOINT,EXT.THREAD,D=8 MM G1/4	
520	315233-0110		4	WASHER CAPTIVE SEALING G1/4	
530	90055-0042		2	NIPPLES, EXT. THREAD, HEXAGON, NO. 6835-	
540	353242-0005		1	HOSE GLAND W/O INSERT PG9 NORMAL	
550	353249-0067		1	INSERT, SINGEL HOLE, E150/7	
560	977527-0000		1	BRACKET	
570	90099-0104		1	NUT, PR 15,2 (PG9)	
580	90152-0058	M	1	SPIRAL CONDUIT, 15X9, UL 0909	
B2110	90459-0180		1	FLOW SWITCH, 0,1 - 2,5 L/MIN	
B2111	90459-0180		1	FLOW SWITCH, 0,1 - 2,5 L/MIN	
Common Parts					
010	1041984-0000		1	ATTACHMENT PIPE	
090	2531245-0000		2	HOSE NIPPLE	
100	2531423-0000		2	NUT	
200	90043-0100		1	PRESSURE GAUGE, 2948 D=63 MM	
210	90326-0012		2	PROTECTIVE COVER, T31A4618	
220	90326-0020		1	PLUG, FEMALE YELLOW CR-AL	
230	90330-0004		1	NIPPLES,HEXAGON,EXT.R-THREAD R3/4"-R3/4"	
250	90358-0091		2	REDUCING NIPPLE	
260	90055-0276		1	T-CONNECTION 8 MM	
270	90187-0045		1	BALL VALVE G1/4 CR PL	
280	90330-0042		1	BUSHING, INT/EXT. THR. R3/8-RP1/4	
290	90230-0028		1	NON-RETURN VALVE H 151 R 3/8"	
300	90415-0065		1	FILTER	
010	*90415-0357*		*1*	*FILTER INSERT*	
310	90166-0118	MM	490	TUBE 8 MM PA BLACK	
340	90166-0118	MM	255	TUBE 8 MM PA BLACK	
350	90166-0118	MM	255	TUBE 8 MM PA BLACK	
360	90166-0118	MM	255	TUBE 8 MM PA BLACK	
370	90166-0118	MM	800	TUBE 8 MM PA BLACK	
380	90166-0121	MM	400	HOSE	
390	90166-0118	MM	700	TUBE 8 MM PA BLACK	
400	315229-0102		2	GASKETS, 16,8X23,8X3,7 MM 3/4" FDA	
410	342991-0101		2	HOSE CLIP,WORM DRIVE TYPE (13)-16	
420	90458-1963		1	STRAIGHT COUPLING D=8-G3/8"	
430	90055-0274		11	STRAIGHT COUPLING, D=8 MM - G1/4"	
460	312125-0220		4	SCREW ISO 1207 M3X6 A4	
480	315105-0153		4	WASHER BRB 6,4X12 RFR	
500	2792119-0100		1	FILTER	**6-21**
510	90330-0102		1	SLEEVE, INT, THREAD, NO., R-201R1/4	
B2510	90326-0057		1	THERMOCOUPLE, CR-AL	
W2242	90220-0034	MM	3700	THERMOCABLE TEX/SITW-20F-KX 2X0,5MM2	
X2038	90326-0022		1	PLUG, MALE YELLOW CR-AL	

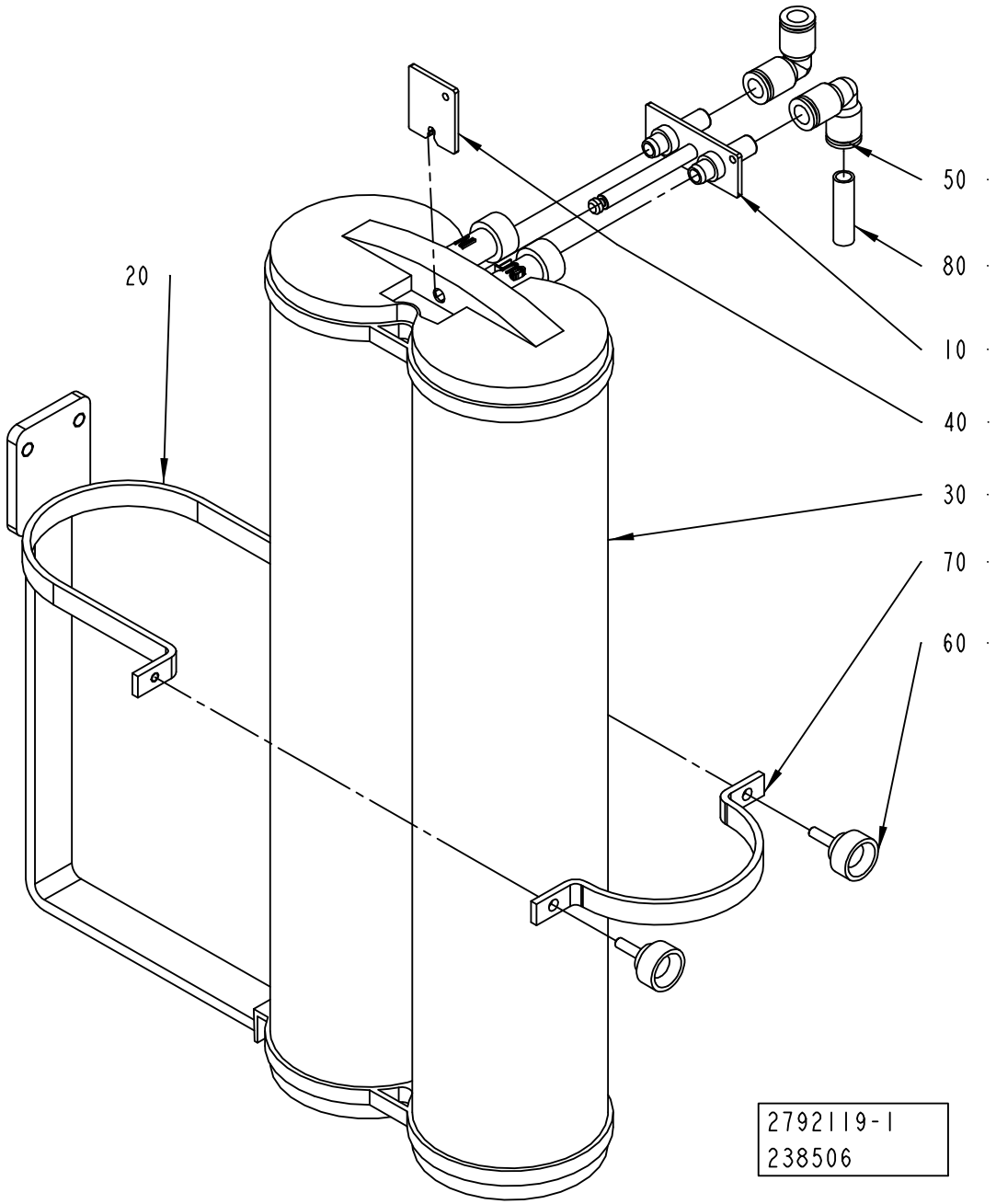
50
80
10
40
30
70
60
20
2792119-1
238506

ECM: 272753 - 20060711
Group number: 2792119-0100
Assembly Drawing: 2792119-1_1_AA

Pos	Part No	UN	Qty	Description	Page No
-					
010	2793908-0000		1	CONNECTOR	
020	2792118-0000		1	SUPPORT	
030	90459-7084		1	FILTER, CPDI000M1	
040	2793907-0000		1	FASTENING PLATE	
050	342735-0103		2	ELBOW PIPE JOINT	
060	318856-0101		2	KNOB, EXTERNAL THREAD. NO. 8308-1011	
070	2792120-0000		1	SUPPORT	
080	90166-0118	MM	200	TUBE 8 MM PA BLACK	

Pos	Part No	UN	Qty	Description	Page No

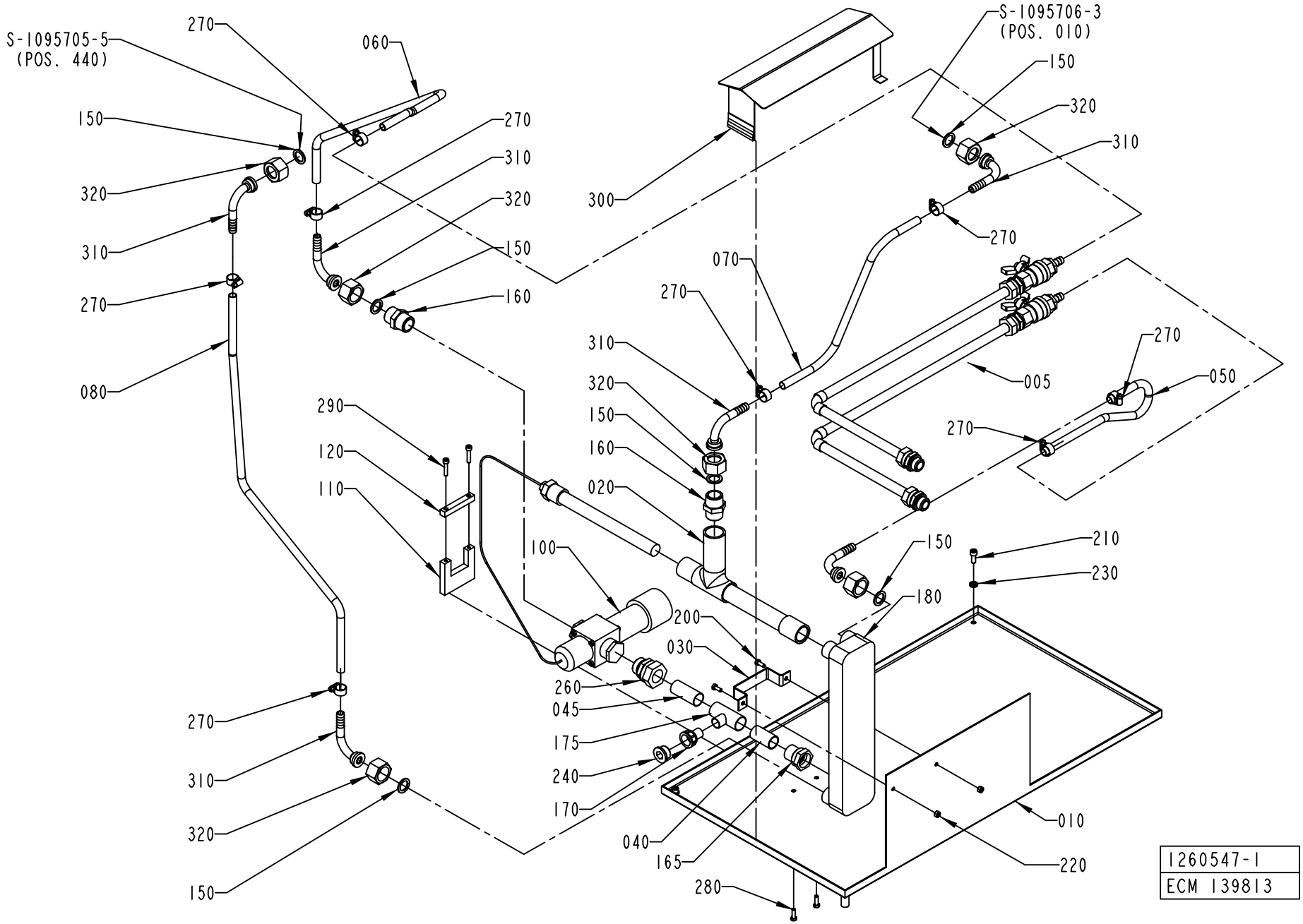
S-1095705-5
(POS. 440)
270
060
150
320
310
270
080
270
310
320
150
160
300
S-1095706-3
(POS. 010)
150
320
310
270
070
270
310
320
150
160
020
005
270
050
270
290
120
110
100
150
210
230
180
200
030
260
045
175
240
170
040
165
280
270
310
320
150
010
220
1260547-1
ECM 139813

ECM: 189412 - 20041104
Group number: 1260547-0100
Assembly Drawing: 1260547-1_1_AG

Pos	Part No	UN	Qty	Description	Page No
-					
005	1095715-0100		1	ICE WATER	**6-25**
010	1255365-0000		1	MOUNTING PLATE	
020	1511680-0000		1	TUBE	
030	1260247-0000		1	CLIP	
040	1260327-0000		1	TUBE	
045	1285363-0000		1	TUBE	
050	90166-0121	MM	400	HOSE	
060	90166-0121	MM	550	HOSE	
070	90166-0121	MM	600	HOSE	
080	90166-0121	MM	850	HOSE	
100	90187-0130		1	TEMP. CONTR. VALVE, R3/4 0-30øC	
110	1511615-0000		1	BRACKET	
120	1511616-0000		1	BRACKET	
150	90459-3339		6	GASKET NBR/PTFE 17X24X2 MM 3/4"	
160	90330-0004		2	NIPPLES,HEXAGON,EXT.R-THREAD R3/4"-R3/4"	
165	90418-0045		1	ADAPTER, INT. CONN. NO. 7272CU/22-G3/4	
170	90418-0057		1	ADAPTER, EXT. CONN. NO. 7276CU / 15-G1/2	
175	90418-0062		1	T-PIPE, REDUCTION, INT, NO. 7130-22X15X2	
180	90422-0037		1	HEAT EXCHANGER	
200	312105-0327		2	SCREW M6S ISO 4017 M5X12 A480	
210	312105-0368		2	SCREW M6S ISO 4017 M6X16 A480	
220	312605-0314		2	HEXAGON NUT, M6M M5 A280	
230	315115-0153		2	WASHER PLAIN, TBRB 6,4/12 H=3	
240	342713-0213		1	PLUG, EXT THREAD HEX SOCKET 8638-00-120	
260	342720-0119		1	CONN. STR., GA-22-G3/4	
270	342991-0101		8	HOSE CLIP,WORM DRIVE TYPE (13)-16	
280	312105-0329		2	SCREW M6S ISO 4017 M5X16 A480	
290	312115-0333		2	SCREW ISO4762 M5X25 A4 80	
300	2532574-0000		1	COVER	
310	2531245-0000		6	HOSE NIPPLE	
320	2531423-0000		6	NUT	

Pos	Part No	UN	Qty	Description	Page No

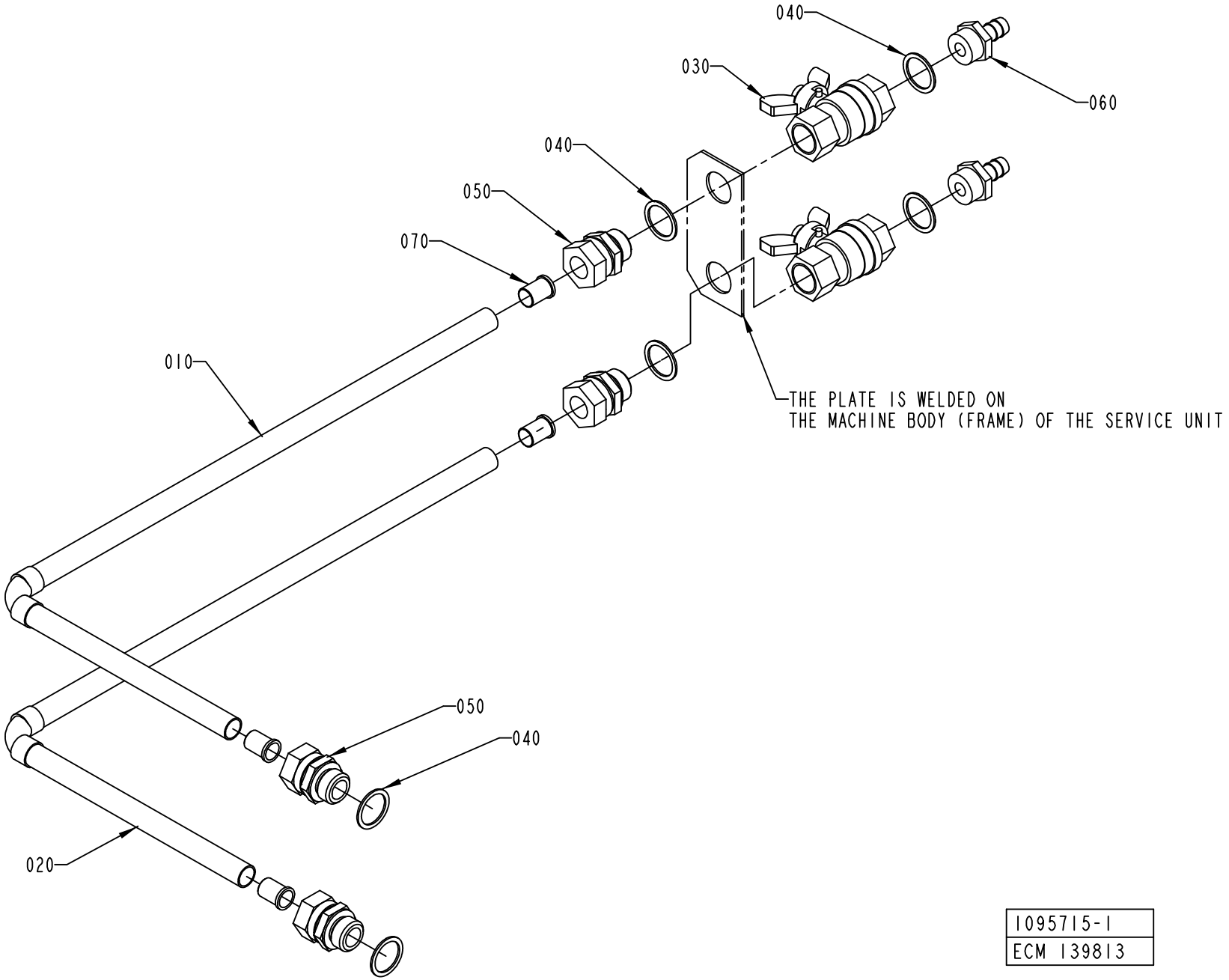

1095715-1
ECM 139813

ECM: 224833 - 20050831
Group number: 1095715-0100
Assembly Drawing: 1095715-1_1_AD

Pos	Part No	UN	Qty	Description	Page No
-					
010	1041930-0000		1	PIPE	
020	1041931-0000		1	PIPE	
030	90187-0029		2	BALL VALVE G1/2, NPBR	
040	315233-0113		6	WASHER CAPTIVE SEALING G1/2	
050	342720-0114		4	CONN. STR. GA-15-G1/2	
060	342901-0105		2	HOSE NIPPLE, EXT.THR. R1/2-12 MM	
070	342708-0109		4	REINFORCING RING VSH 15X1 MM	

Pos	Part No	UN	Qty	Description	Page No

COOLING WATER PUMP

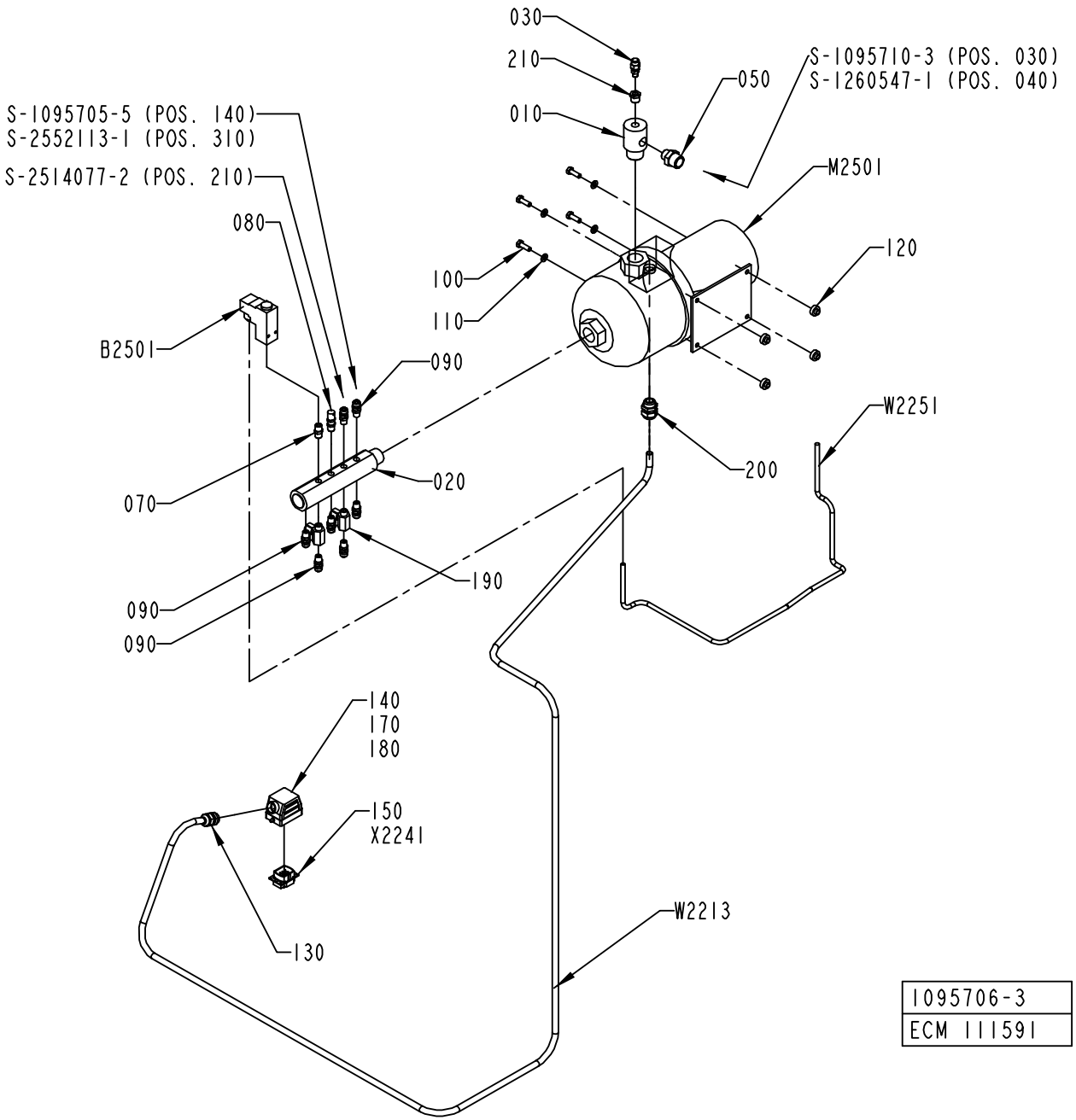

1095706-3
ECM 111591

ECM: 224832 - 20050831
Group number: 1095706-0300
Assembly Drawing: 1095706-3_1_AD

Pos	Part No	UN	Qty	Description	Page No
A3/FLEX					
090	90055-0274		7	STRAIGHT COUPLING, D=8 MM - G1/4"	
190	90187-0045		2	BALL VALVE G1/4 CR PL	
220	90330-0026		1	PLUG, EXT. G-THREAD, G1/4	
W 2213	351150-0418	MM	3500	CABLE OLFLEX 4X2,5 MM2 LIGHT/GREY	
Common Parts					
010	2532806-0000		1	ATTACHMENT PIPE	
020	1129066-0000		1	RETURN PIPE	
030	90459-1736		1	PURGE VALVE, 2RM-PG4L-SS	
050	90330-0080		1	NIPPLES, EXT. THREAD. R3/4-R1/2	
070	90330-0043		1	NIPPLES, EXT. THREAD. R-207R1/4	
080	90230-0041		1	OVERPRESSURE VALVE SS-4 CPA2-RTDG-3	
100	312105-0453		4	SCREW M6S ISO 4017 M8X25 A480	
110	315105-0165		4	WASHER BRB 8,4X16 RFR	
120	90015-0037		4	RUBBER BUSHING	
130	352103-0108		1	CABLE GLAND, ST 13,5 , PR20,4/PG13,5	
140	90110-0226		1	CABLE HOOD 6-POL 70.350.0628.0	
150	90110-0159		1	MALE INSERT 70.310.0640.0	
170	359005-0050		1	MARKING LABEL KIT X, 04.841.4550.0	
180	359005-0010		1	MARKING LABEL KIT 0 - 9, 04.841.2150.0	
200	352103-0110		1	CABLE GLAND, STR 16, PR22,5/PG16	
210	342701-0202		1	BUSHING,INT./EXT.G-THREAD G3/8"-G1/8"	
B 2501	90274-0056		1	PRESSURE SWITCH, 100 - 1200 KPA	
M 2501	90321-0116		1	PUMP GRUNDFOS CHI 2-60	
	90321-0618		*1*	*SEAL KIT FOR REPAIR OF PUMP*	
W 2251	351150-0431	MM	1000	CABLE OLFLEX 2X0,75 MM2 LIGHT/GREY	

Pos	Part No	UN	Qty	Description	Page No

Machine Type | Group Description | Used-In | Group Number | Page No

EXPANSION VESSEL

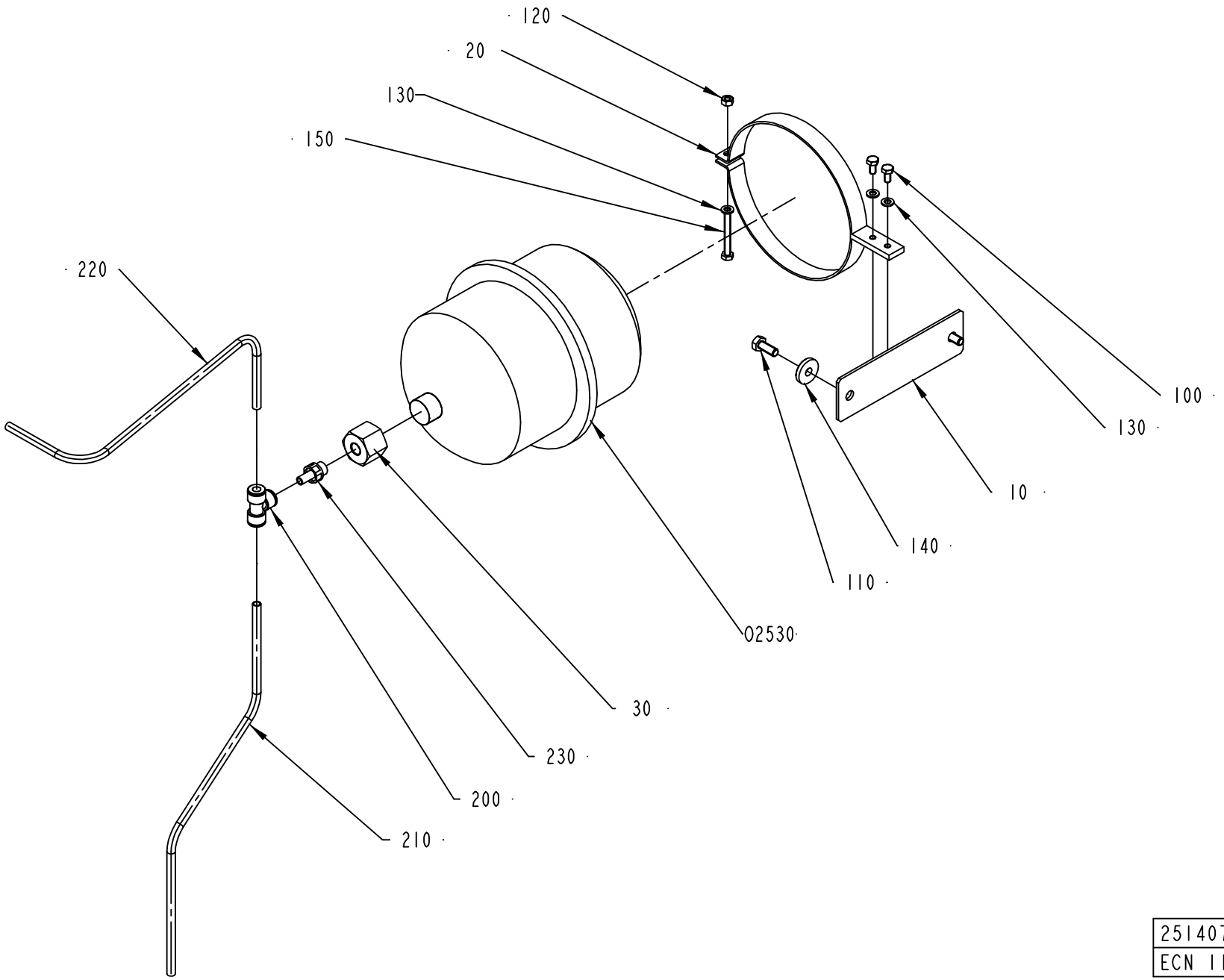

2514077-2
ECN 111591

ECM: 189417 - 20041104
Group number: 2514077-0100
Assembly Drawing: 2514077-2_1_AA

Pos	Part No	UN	Qty	Description	Page No
A3/FLEX					
200	90055-0276		1	T-CONNECTION 8 MM	
230	90055-0260		1	NIPPLE-8 MM G1/4"	
Common Parts					
010	2514087-0000		1	PLATE	
020	1484081-0000		1	BRACKET	
030	2514083-0000		1	REDUCTION NIPPLE	
100	312105-0366		2	SCREW M6S ISO 4017 M6X12 A480	
110	312105-0451		2	SCREW M6S ISO 4017 M8X20 A480	
120	312605-0316		1	HEXAGON NUT, M6M M6 A280	
130	315105-0153		3	WASHER BRB 6,4X12 RFR	
140	315125-0165		2	WASHER TBRSB 8,4X26X5 A4	
150	312109-0380		1	SCREW M6S ISO 4017 M6X50 A480	
210	90166-0118	MM	450	TUBE 8 MM PA BLACK	
220	90166-0118	MM	500	TUBE 8 MM PA BLACK	
O2530	90304-0020		1	LIQUID CONTAINER	

Pos	Part No	UN	Qty	Description	Page No

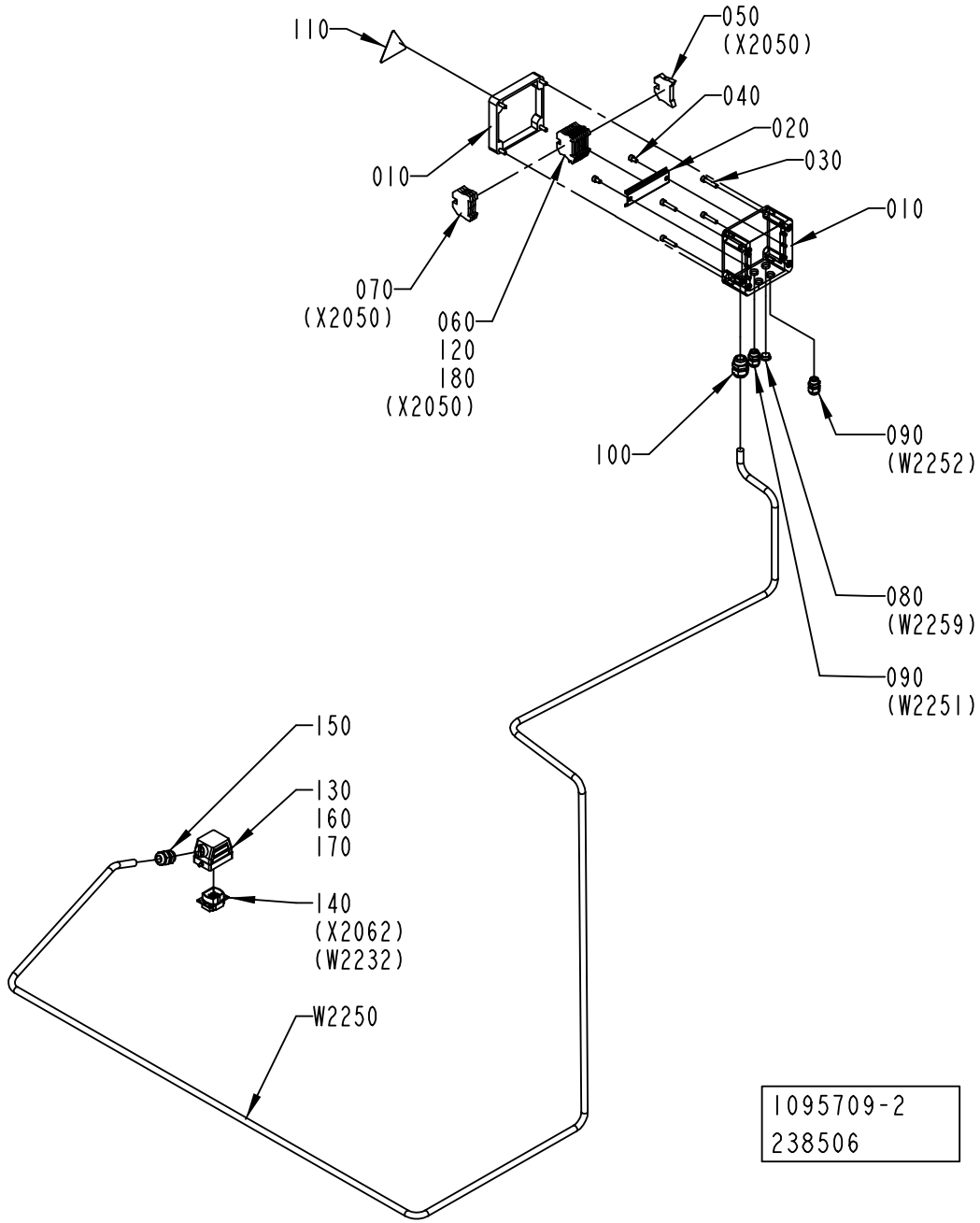
110
050
(X2050)
040
020
030
010
010
070
(X2050)
060
120
180
(X2050)
100
090
(W2252)
080
(W2259)
090
(W2251)
150
130
160
170
140
(X2062)
(W2232)
W2250
1095709-2
238506

ECM: 247180 - 20060220
Group number: 1095709-0200
Assembly Drawing: 1095709-2_1_AC

Pos	Part No	UN	Qty	Description	Page No
A3/FLEX					
W2250	351150-0406	MM	4000	CABLE OLFLEX 7X0,75 MM2 LIGHT/GREY	
Common Parts					
010	1041943-0000		1	CONNECTION BOX	
020	1129210-0000		1	MOUNTING RAIL	
030	312115-0374		4	SCREW ISO4762 M6X30 A4 80	
040	312115-0364		2	SCREW ISO4762 M6X10 A4 80	
050	353031-0203		1	END SUPPORT, WEW 35/2	
060	353021-0216		8	FEED THROUGH TERMINAL, 10200.8	
070	353024-0205		3	EARTH TERMINAL, 1010.1	
080	90002-0013		2	BLANK-OFF PLUG, PR 15,2 SKINDICHT-BLK9	
090	352103-0101		2	CABLE GLAND, ST 9, PR15,2/PG9	
100	352103-0110		1	CABLE GLAND, STR 16, PR22,5/PG16	
110	90194-0016		1	WARNING SIGN, RISK OF ELECTRIC SHOCK	
120	359011-0809		1	MARKING PLATES 5-FW 101-150	
130	90110-0226		1	CABLE HOOD 6-POL 70.350.0628.0	
140	90110-0159		1	MALE INSERT 70.310.0640.0	
150	352103-0108		1	CABLE GLAND, ST 13,5 , PR20,4/PG13,5	
160	359005-0050		1	MARKING LABEL KIT X, 04.841.4550.0	
170	359005-0010		1	MARKING LABEL KIT 0 - 9, 04.841.2150.0	
180	353034-0030		1	BRIDGE CONNECTOR WQV 2,5/10, 10544.6	

Pos	Part No	UN	Qty	Description	Page No

FOAM CLEANING UNIT

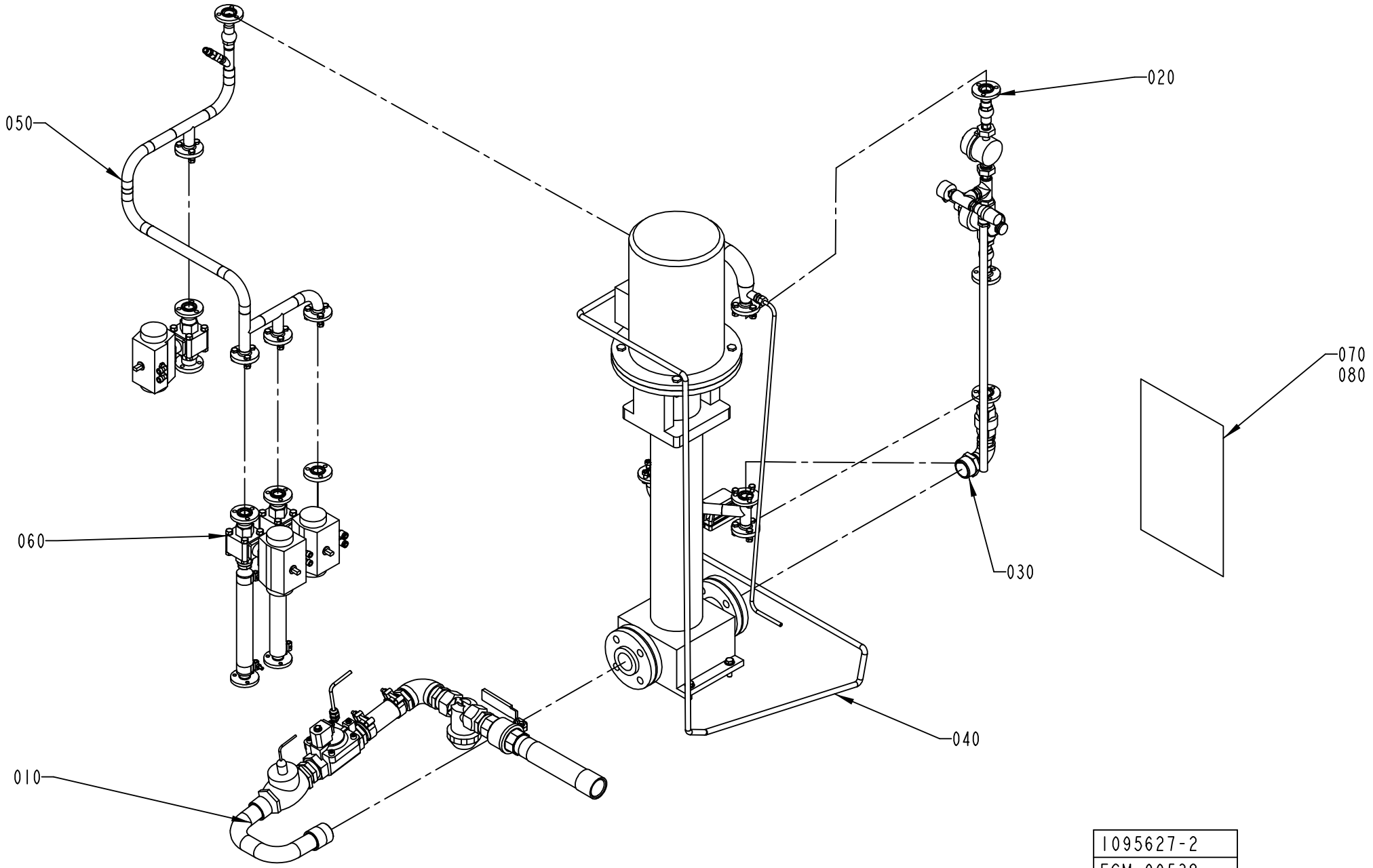

ECM: 139558 - 20030711
Group number: 1095627-0300
Assembly Drawing: 1095627-2_1_AB

Pos	Part No	UN	Qty	Description	Page No
A3/FLEX 50HZ					
080	2512821-0000		1	EXTERNAL CLEANING DIAGRAM	
A3/FLEX 60HZ					
080	2512821-0000		1	EXTERNAL CLEANING DIAGRAM	
Common Parts					
010	1095672-0100		1	PIPE	**6-35**
020	1095673-0100		1	SIDE	**6-37**
030	1095675-0100		1	PIPE	**6-39**
040	1095676-0100		1	PUMP	**6-41, 6-43**
050	1095677-0100		1	BRANCHING PIPE	**6-45**
060	1095678-0300		1	BALL VALVE	**6-47**

Pos	Part No	UN	Qty	Description	Page No

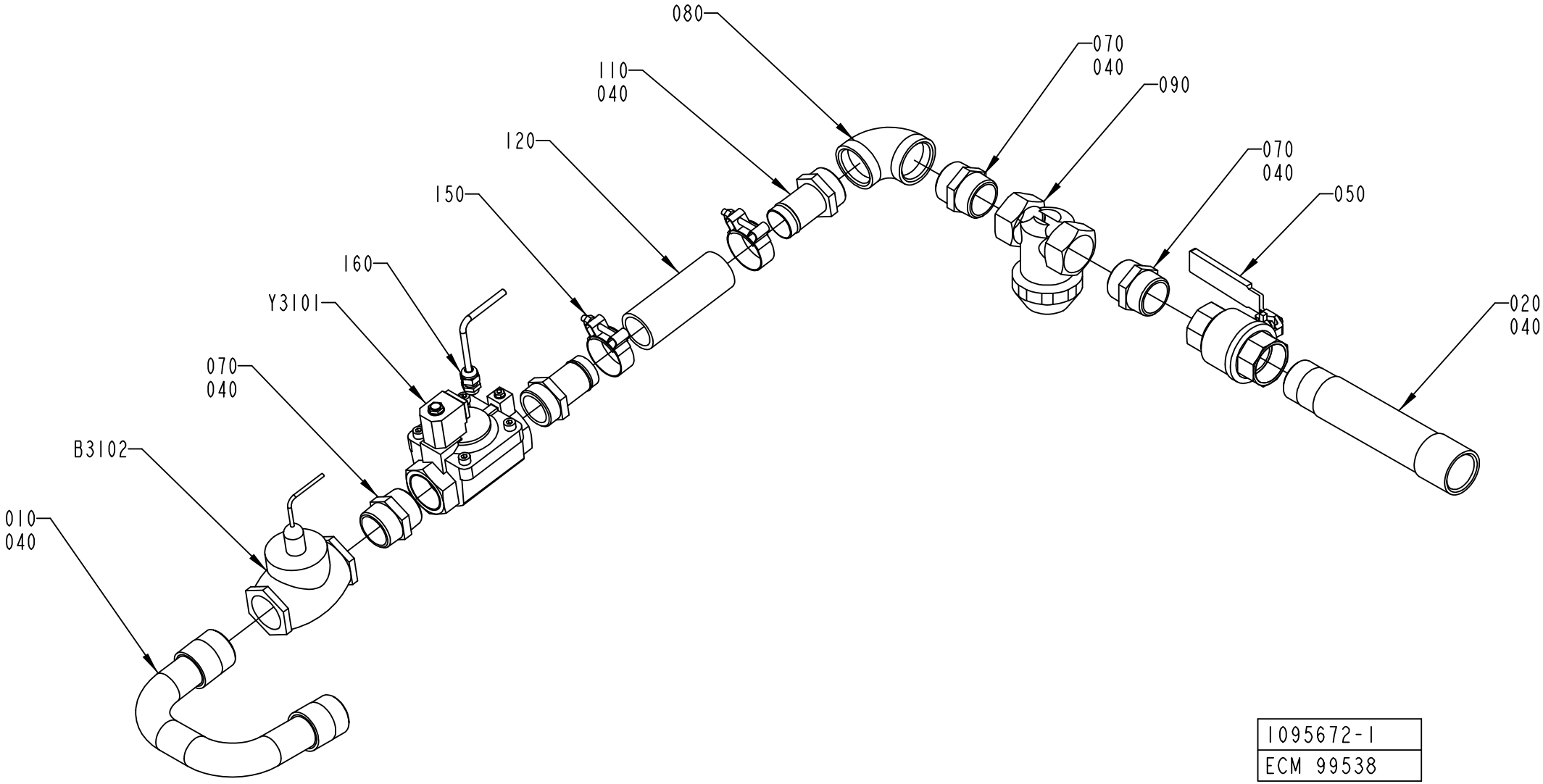

1095672-1
ECM 99538

ECM: 224829 - 20050831
Group number: 1095672-0100
Assembly Drawing: 1095672-1_1_AD

Pos	Part No	UN	Qty	Description	Page No
-					
010	1041925-0000		1	PIPE	
020	1041926-0000		1	PIPE	
040	90144-0007	MM	1	TAPE	
050	90187-0147		1	BALL VALVE G11/2	
070	90330-0056		3	NIPPLES, EXT. THREAD. R-207 KR11/2	
080	90330-0057		1	ELBOW, 90 INT. THREAD, R-222R11/2	
090	90415-0032		1	FILTER / 3-02-00-1 1/2"	
	90415-0328		*1*	*FILTER INSERT*	
110	90055-0166		2	HOSE NIPPLE, EXT.THR. R11/2X38 MM	
120	90166-0236	MM	150	HOSE, 38/51 REINFORCED RUBBER	
150	90458-2850		2	HOSE CLIP , 51 MM	
160	352103-0101		1	CABLE GLAND, ST 9, PR15,2/PG9	
B3102	90274-0082		1	FLOW SWITCH, 2 - 3 L/MIN	
	90274-0322		*1*	*SPARE PART KIT*	
W2222	351150-0403	M	2	CABLE OLFLEX 3X0,75 MM2 LIGHT/GREY	
Y3101	90042-0254		1	SOLENOID VALVE, R1 1/2	
	90458-2575		*1*	*DIAPHRAGM, R450466/B FOR 90042-0254*	
	90042-0557		*1*	*COIL V24DC-N3*	

Pos	Part No	UN	Qty	Description	Page No

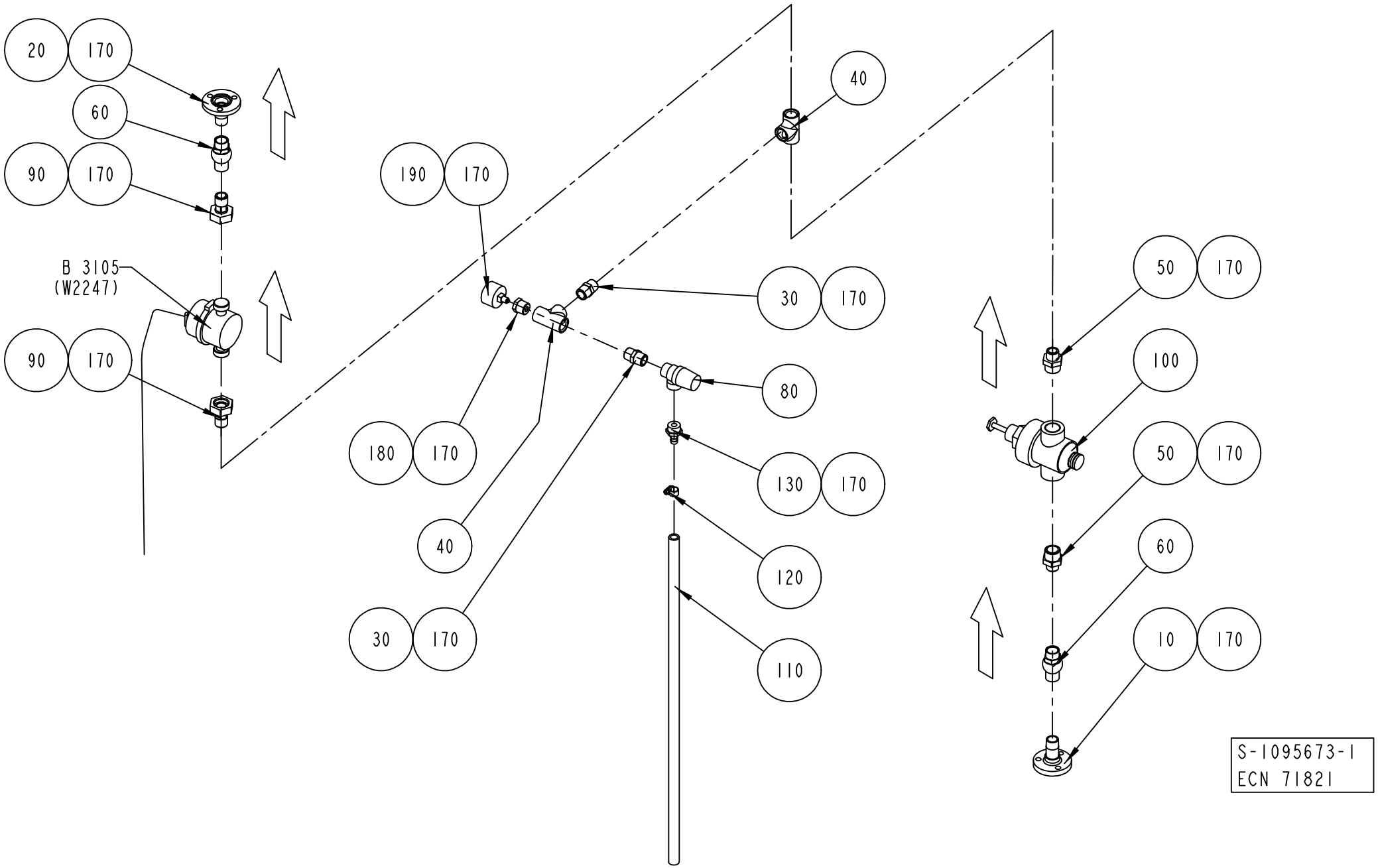
20
170
60
90
170
B 3105
(W2247)
90
170
190
170
40
30
170
80
180
170
130
170
40
120
30
170
110
50
170
100
50
170
60
10
170
S-1095673-1
ECN 71821

ECM: 224830 - 20050831
Group number: 1095673-0100
Assembly Drawing: 1095673-1_1_AD

Pos	Part No	UN	Qty	Description	Page No
-					
010	1036826-0000		1	PIPE	
020	1036827-0000		1	PIPE	
030	90330-0021		2	NIPPLES, EXT. THREAD. R-207R1/2	
040	90330-0049		2	T-PIPE, INT. THREAD, R-221R1/2	
050	90330-0080		2	NIPPLES, EXT. THREAD. R3/4-R1/2	
060	90230-0042		2	NON-RETURN VALVE 1/2"	
080	90187-0133		1	SAFETY VALVE, 10 BARS, R1/2, R1/2	
090	90030-0465		2	STRAIGHT CONNECTION, MAD DN 15	
	90005-0156		*1*	*WASHER PLAIN ROUND 16/24, H=1,5*	
100	90113-0098		1	PRESSURE REGULATOR	
110	90166-0121	MM	700	HOSE	
120	342991-0100		1	HOSE CLIP,WORM DRIVE TYPE 10-13	
130	342901-0105		1	HOSE NIPPLE, EXT.THR. R1/2-12 MM	
170	90144-0007	MM	1	TAPE	
180	90330-0036		1	BUSHING, INT/EXT. THR. RP1/8-RP1/2	
190	90043-0043		1	PRESSURE GAUGE 0-10 BAR 1/8"	
B3105	90243-0245		1	MEASURING INSTRUMENT	

Pos	Part No	UN	Qty	Description	Page No

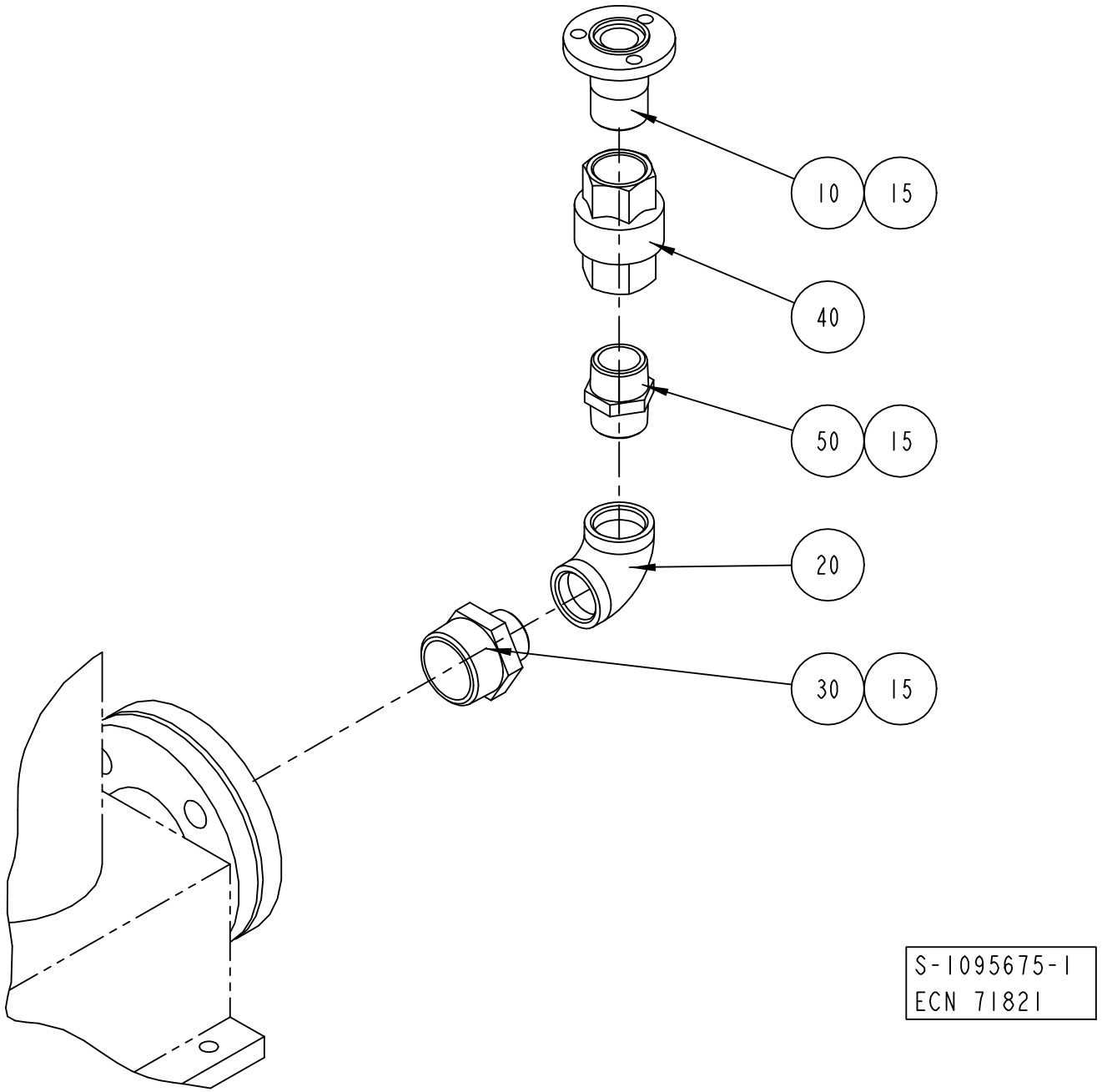
10
15
40
50
15
20
30
15
S-1095675-1
ECN 71821

ECM: 189421 - 20041104
Group number: 1095675-0100
Assembly Drawing: 1095675-1_1_AB

Pos	Part No	UN	Qty	Description	Page No
-					
010	1036794-0000		1	PIPE	
015	90144-0007	MM	1	TAPE	
020	90330-0014		1	ELBOW, 90 INT. THREAD, R-222R1	
030	90330-0045		1	NIPPLES, EXT. THREAD. R-209 KR11/2- KR1	
040	90230-0044		1	NON-RETURN VALVE 1"	
	90230-0308		*1*	*GASKET KIT*	
050	342203-0120		1	NIPPLES, EXT. THREAD, HEXAGON,ÿNO. 209	

Pos	Part No	UN	Qty	Description	Page No

Machine Type | Group Description | Used-In | Group Number | Page No

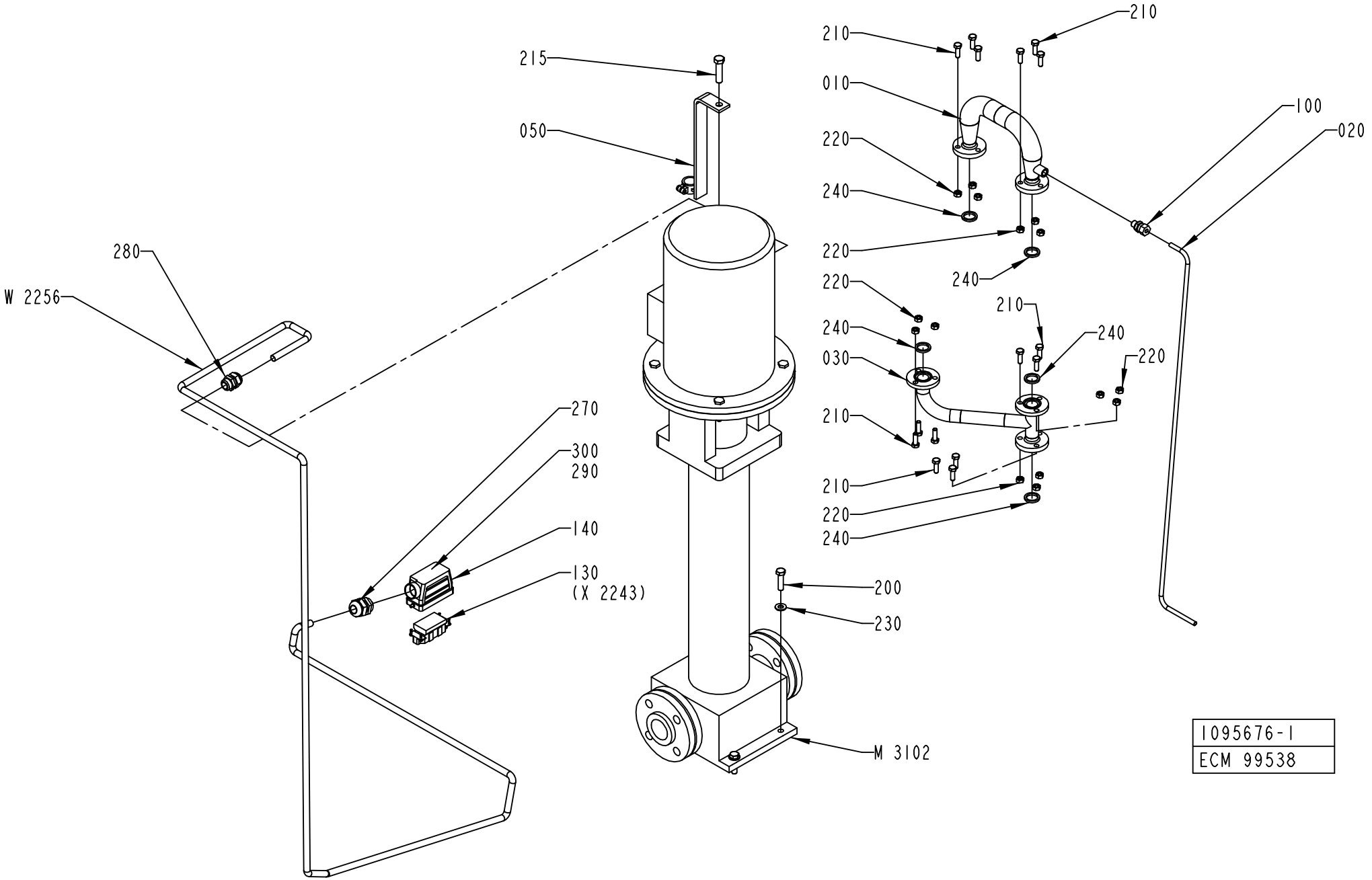
210
210
215
010
050
220
240
100
020
220
240
280
W 2256
220
240
210
240
030
220
210
270
300
290
140
130
(X 2243)
210
220
240
200
230
M 3102
1095676-1
ECM 99538

ECM: 189422 - 20041104
Group number: 1095676-0100
Assembly Drawing: 1095676-1_1_AC

This list covers pages from 6-40 to 6-43

Pos	Part No	UN	Qty	Description	Page No
A3/FLEX 50HZ (See drawing on page: 6-40)					
020	1140642-0000		1	PIPE	
050	1140670-0000		1	BRACKET	
M3102	90321-0117		1	PUMP LOWARA SV8-14 F75T	
	90321-0593		*1*	*SEAL*	
W2256	351150-0166	MM	4000	CABLE OLFLEX 4X4 MM2 LIGHT/GREY	
A3/FLEX 60HZ (See drawing on page: 6-42)					
020	1140642-0000		1	PIPE	
050	1499786-0000		1	BRACKET	
M3102	90321-0120		1	PUMP SV8-09 F756T, 380V60HZ	
	90321-0593		*1*	*SEAL*	
W2256	351150-0166	MM	4000	CABLE OLFLEX 4X4 MM2 LIGHT/GREY	
Common Parts					
010	1036828-0000		1	TANK	
030	1041946-0000		1	PIPE	
100	90030-0185		1	CONN. STR. GA-8-G1/4	
130	90110-0156		1	MALE INSERT 70.210.0653.0	
140	90110-0227		1	CABLE HOOD 6-16-POL 71.350.1628.0	
200	312105-0499		4	SCREW M6S ISO 4014 M10X40 A480	
210	312105-0453		15	SCREW M6S ISO 4017 M8X25 A480	
215	312105-0542		1	SCREW M6S ISO 4014 M12X50 A480	
220	312605-0318		15	HEXAGON NUT, M6M M8 A280	
230	315105-0173		4	WASHER BRB 10,5X20 RFR	
240	315229-0103		5	GASKETS, 23,1X30,1X3,7 MM 1" FDA	
270	352103-0115		1	CABLE GLAND, STR 21, PR28,3/PG21	
280	352103-0111		1	CABLE GLAND, ST 16, PR22,5/PG16	
290	359005-0010		2	MARKING LABEL KIT 0 - 9, 04.841.2150.0	
300	359005-0050		1	MARKING LABEL KIT X, 04.841.4550.0	

Pos	Part No	UN	Qty	Description	Page No

Machine Type | Group Description | Used-In | Group Number | Page No

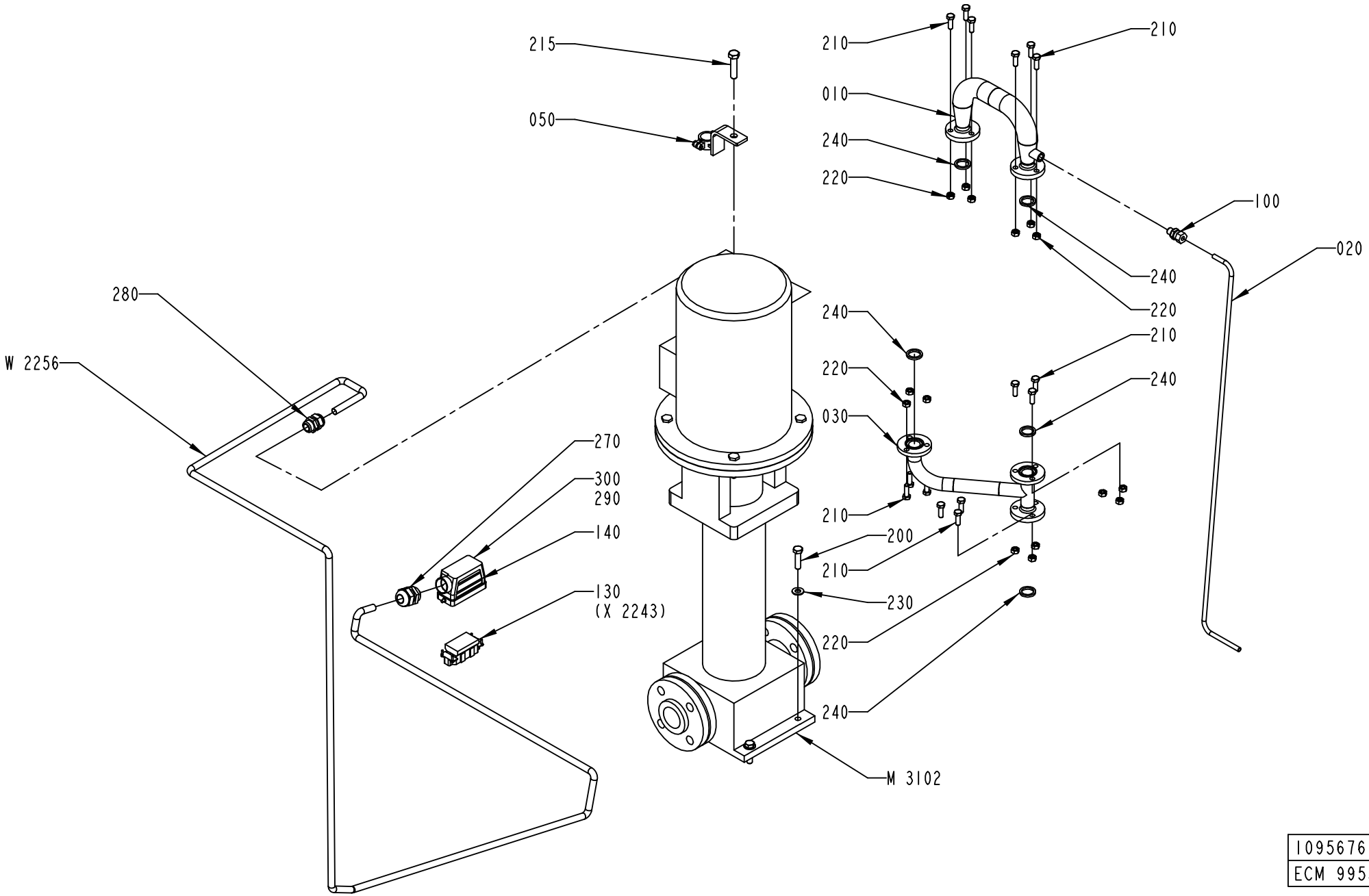

1095676-2
ECM 99538

ECM: 189422 - 20041104
Group number: 1095676-0100
Assembly Drawing: 1095676-2_1_AA

This list covers pages from 6-40 to 6-43

Pos	Part No	UN	Qty	Description	Page No
A3/FLEX 50HZ (See drawing on page: 6-40)					
020	1140642-0000		1	PIPE	
050	1140670-0000		1	BRACKET	
M3102	90321-0117		1	PUMP LOWARA SV8-14 F75T	
	90321-0593		*1*	*SEAL*	
W2256	351150-0166	MM	4000	CABLE OLFLEX 4X4 MM2 LIGHT/GREY	
A3/FLEX 60HZ (See drawing on page: 6-42)					
020	1140642-0000		1	PIPE	
050	1499786-0000		1	BRACKET	
M3102	90321-0120		1	PUMP SV8-09 F756T, 380V60HZ	
	90321-0593		*1*	*SEAL*	
W2256	351150-0166	MM	4000	CABLE OLFLEX 4X4 MM2 LIGHT/GREY	
Common Parts					
010	1036828-0000		1	TANK	
030	1041946-0000		1	PIPE	
100	90030-0185		1	CONN. STR. GA-8-G1/4	
130	90110-0156		1	MALE INSERT 70.210.0653.0	
140	90110-0227		1	CABLE HOOD 6-16-POL 71.350.1628.0	
200	312105-0499		4	SCREW M6S ISO 4014 M10X40 A480	
210	312105-0453		15	SCREW M6S ISO 4017 M8X25 A480	
215	312105-0542		1	SCREW M6S ISO 4014 M12X50 A480	
220	312605-0318		15	HEXAGON NUT, M6M M8 A280	
230	315105-0173		4	WASHER BRB 10,5X20 RFR	
240	315229-0103		5	GASKETS, 23,1X30,1X3,7 MM 1" FDA	
270	352103-0115		1	CABLE GLAND, STR 21, PR28,3/PG21	
280	352103-0111		1	CABLE GLAND, ST 16, PR22,5/PG16	
290	359005-0010		2	MARKING LABEL KIT 0 - 9, 04.841.2150.0	
300	359005-0050		1	MARKING LABEL KIT X, 04.841.4550.0	

Pos	Part No	UN	Qty	Description	Page No

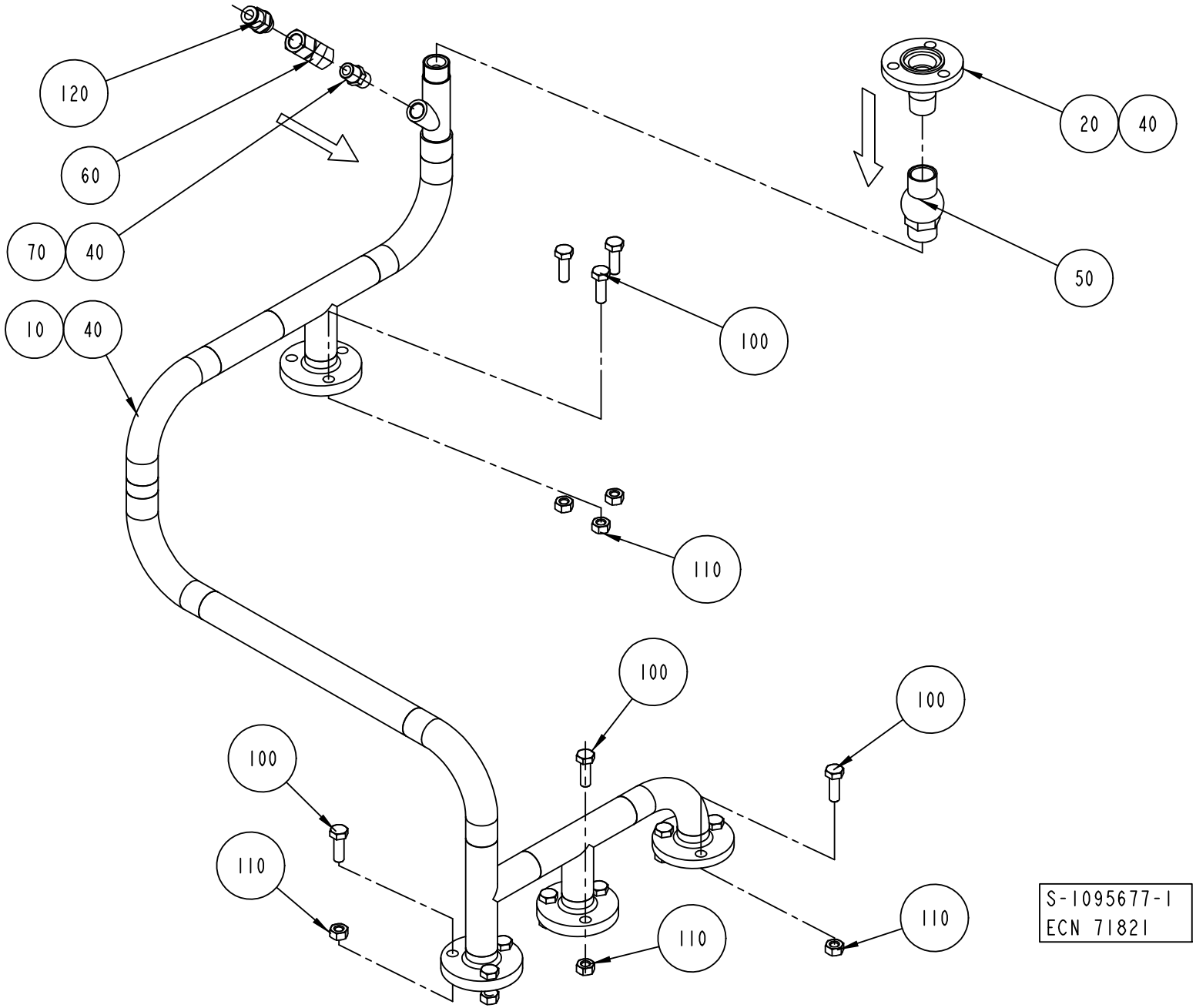
120
60
70
40
10
40
20
40
50
100
110
100
100
100
110
110
110
S-1095677-1
ECN 71821

ECM: 224831 - 20050831
Group number: 1095677-0100
Assembly Drawing: 1095677-1_1_AB

Pos	Part No	UN	Qty	Description	Page No
-					
010	1041934-0000		1	PIPE	
020	1036827-0000		1	PIPE	
040	90144-0007	MM	1	TAPE	
050	90230-0042		1	NON-RETURN VALVE 1/2"	
060	90235-0151		1	NON-RETURN VALVE, 534 098 110 0	
070	90330-0043		1	NIPPLES, EXT. THREAD. R-207R1/4	
100	312115-0453		12	SCREW ISO4762 M8X25 A4 80	
110	312605-0318		12	HEXAGON NUT, M6M M8 A280	
120	342722-0205		1	STRAIGHT COUPLING D=8-G1/4"	

Pos	Part No	UN	Qty	Description	Page No

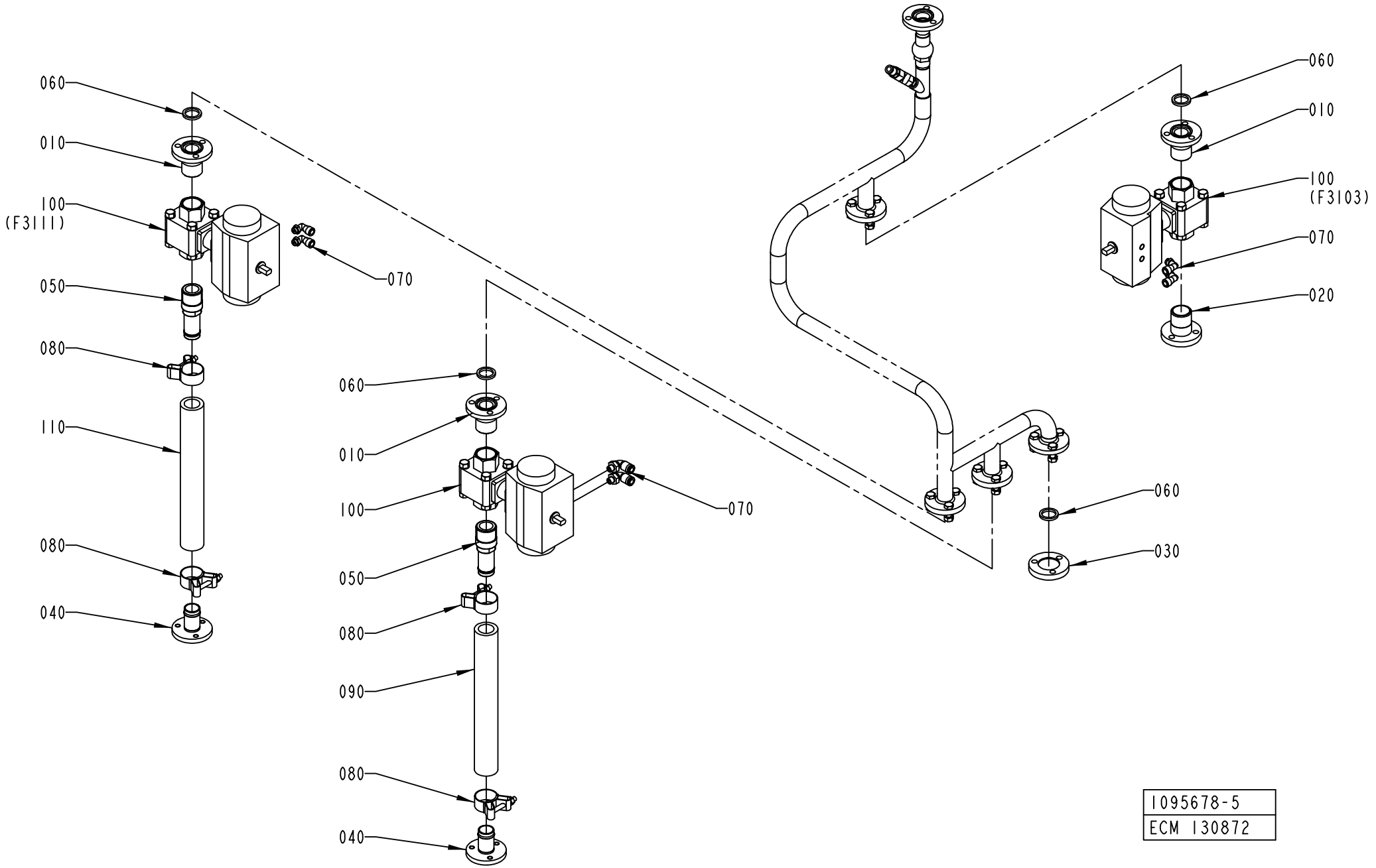
060
010
100
(F3111)
050
080
110
080
040
070
060
010
100
050
080
090
080
040
070
060
010
100
(F3103)
070
020
060
030
1095678-5
ECM 130872

ECM: 189424 - 20041104
Group number: 1095678-0300
Assembly Drawing: 1095678-5_1_AC

Pos	Part No	UN	Qty	Description	Page No
A3/FLEX					
010	2522148-0000		3	PIPE	
020	2522184-0000		1	PIPE	
030	1037129-0000		1	LID	
040	1195466-0000		2	PIPE	
050	1487023-0000		2	PIPE	
070	90458-2964		6	ELBOW PIPE JOINT, EXT.THREAD, D=8MM-G1/8	
080	90459-2366		4	HOSE CLIP, (32)-35	
100	90187-0148		3	BALL VALVE G1	
	90187-0319		*1*	*GASKET UNIT*	
Common Parts					
060	315229-0103		4	GASKETS, 23,1X30,1X3,7 MM 1" FDA	
090	90166-0233	MM	300	HOSE	
110	90166-0233	MM	300	HOSE	

Pos	Part No	UN	Qty	Description	Page No

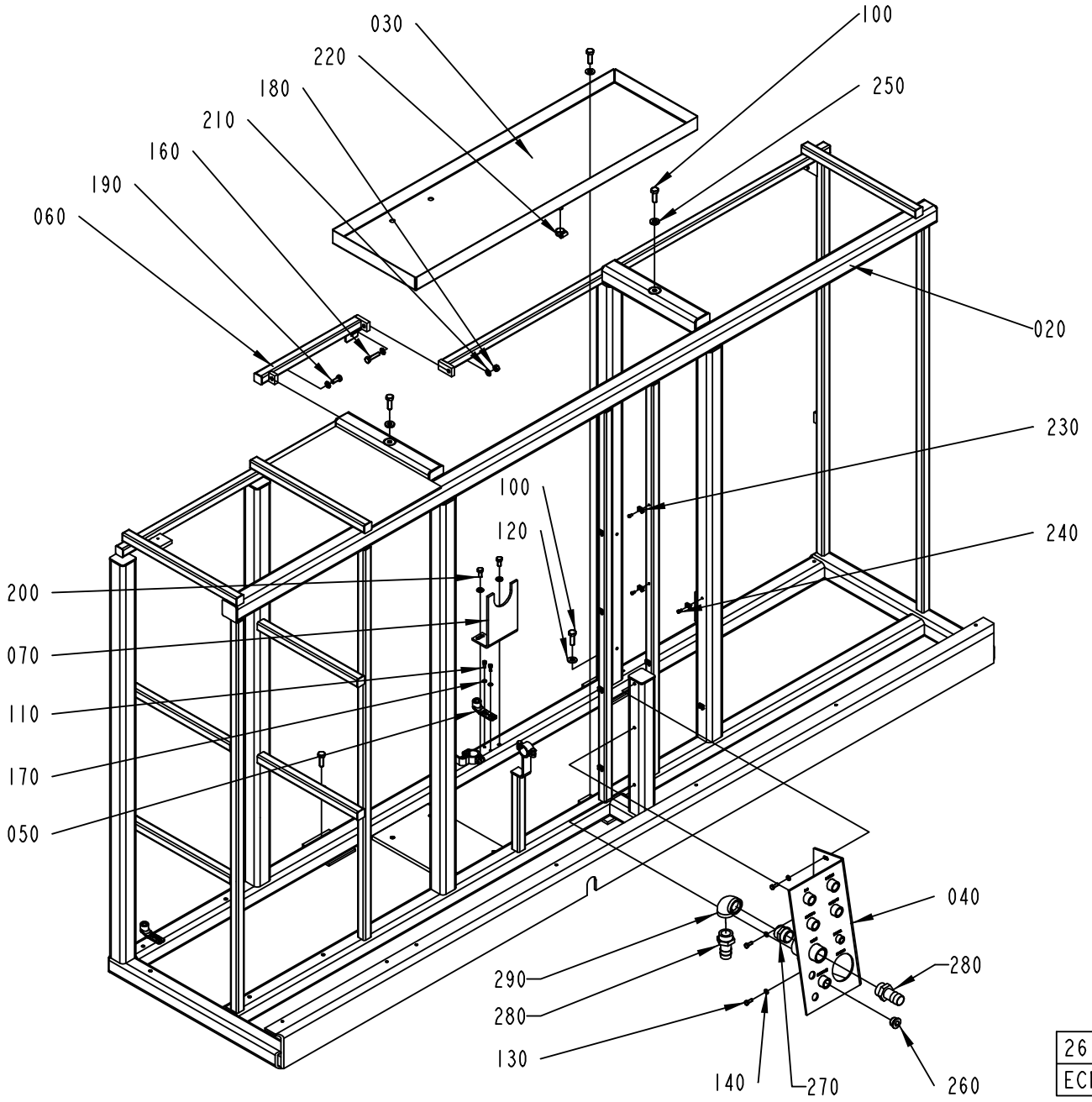

2613034-2
ECM 164885

ECM: 189425 - 20041104
Group number: 2613034-0100
Assembly Drawing: 2613034-2_1_AA

Pos	Part No	UN	Qty	Description	Page No
A3/FLEX					
270	342700-0116		1	NIPPLES,HEXAGON,EXT.G-THREAD G1"-G1"	
280	90055-0053		2	HOSE NIPPLE, EXT.THR. R1-25 MM	
290	90330-0014		1	ELBOW, 90 INT. THREAD, R-222R1	
Common Parts					
020	2613033-0000		1	MACHINE BODY	
030	1041963-0000		1	WASTE BOX	
040	1129387-0000		1	CONNECTION TABLE	
050	1538868-0000		3	BRACKET	
060	1255293-0000		1	CROSS BAR	
070	2524363-0000		1	HANGER	
100	312105-0495		5	SCREW M6S ISO 4017 M10X30 A480	
110	312115-0327		6	SCREW ISO4762 M5X12 A4 80	
120	315105-0173		3	WASHER BRB 10,5X20 RFR	
130	312105-0368		3	SCREW M6S ISO 4017 M6X16 A480	
140	315105-0153		3	WASHER BRB 6,4X12 RFR	
150	90261-0069		1	PLUG, BLIND, PLASTIC, NO. 055-0615	
160	312109-0457		1	SCREW M6S ISO 4017 M8X35 A480	
170	315105-0146		6	WASHER BRB 5,3X10 RFR	
180	312605-0318		1	HEXAGON NUT, M6M M8 A280	
190	312105-0451		1	SCREW M6S ISO 4017 M8X20 A480	
200	312105-0449		2	SCREW M6S ISO 4017 M8X16 A480	
210	315105-0165		5	WASHER BRB 8,4X16 RFR	
220	342991-0102		1	HOSE CLIP,WORM DRIVE TYPE (16)-19	
230	352113-0205		15	ANCHOR PLATES FOR STRIPS, TYPE TM2S8-C10	
240	312125-0287		15	SCREW ISO 1207 M4X8 A4	
250	315115-0173		2	WASHER PLAIN, TBRB 10,5/22 H=4	
260	342713-0213		1	PLUG, EXT THREAD HEX SOCKET 8638-00-120	

Pos	Part No	UN	Qty	Description	Page No

COVERING PANEL

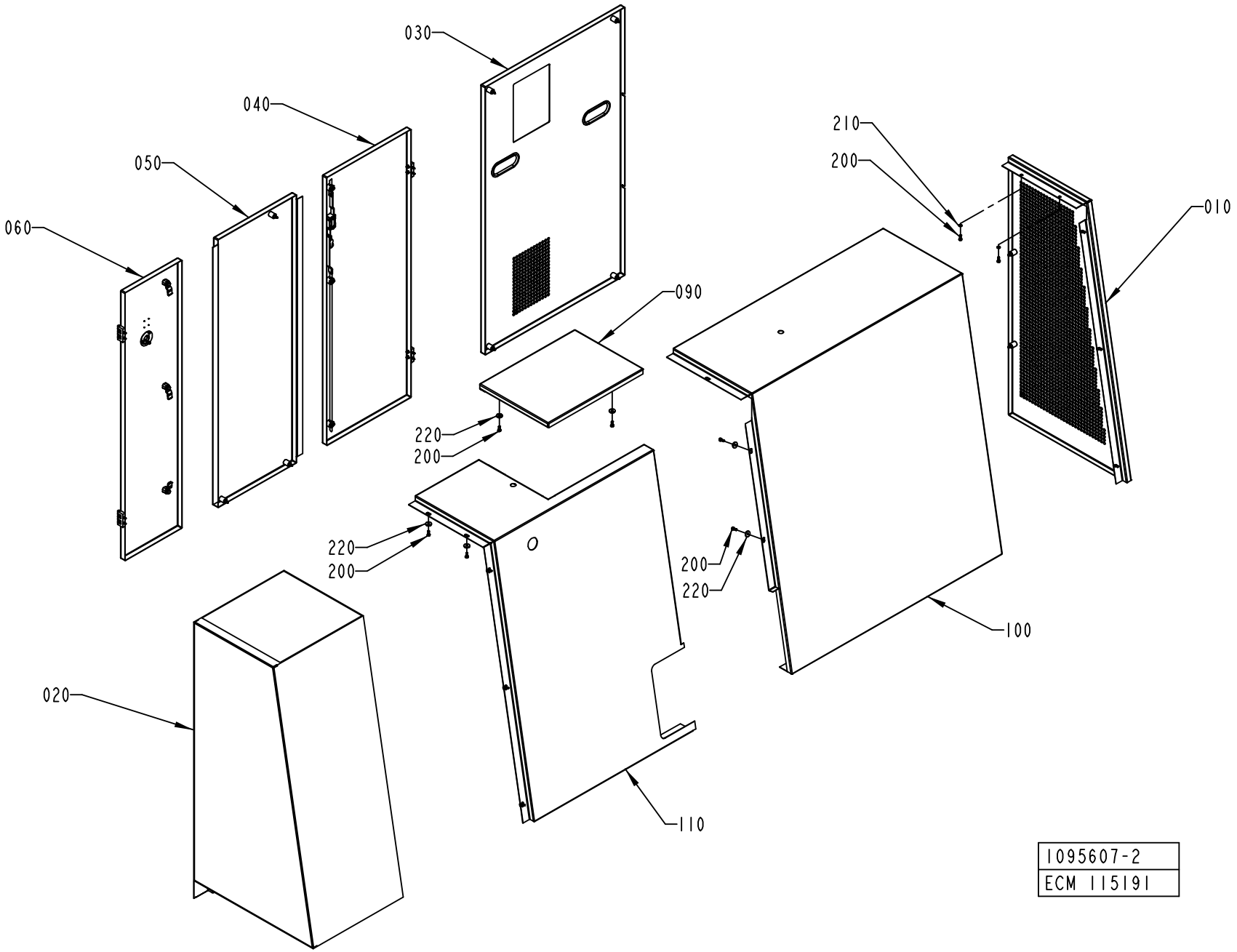

ECM: 189432 - 20041104
Group number: 1095607-0200
Assembly Drawing: 1095607-2_1_AC

Pos	Part No	UN	Qty	Description	Page No
-					
010	1095883-0200		1	GABLE PLATE	**6-53**
020	1095886-0200		1	COVERING PANEL	**6-55**
030	1095888-0200		1	HATCH	**6-59**
040	1095889-0100		1	DOOR	**6-61**
050	1095890-0200		1	HATCH	**6-63**
060	1095891-0200		1	DOOR	**6-65**
090	1255637-0000		1	COVER	
100	1255636-0000		1	COVERING PANEL	
110	1255638-0000		1	COVERING PANEL	
200	312105-0368		19	SCREW M6S ISO 4017 M6X16 A480	
210	315105-0153		5	WASHER BRB 6,4X12 RFR	
220	315125-0153		14	WASHER TBRSB 6,4X22X4 A4	

Pos	Part No	UN	Qty	Description	Page No

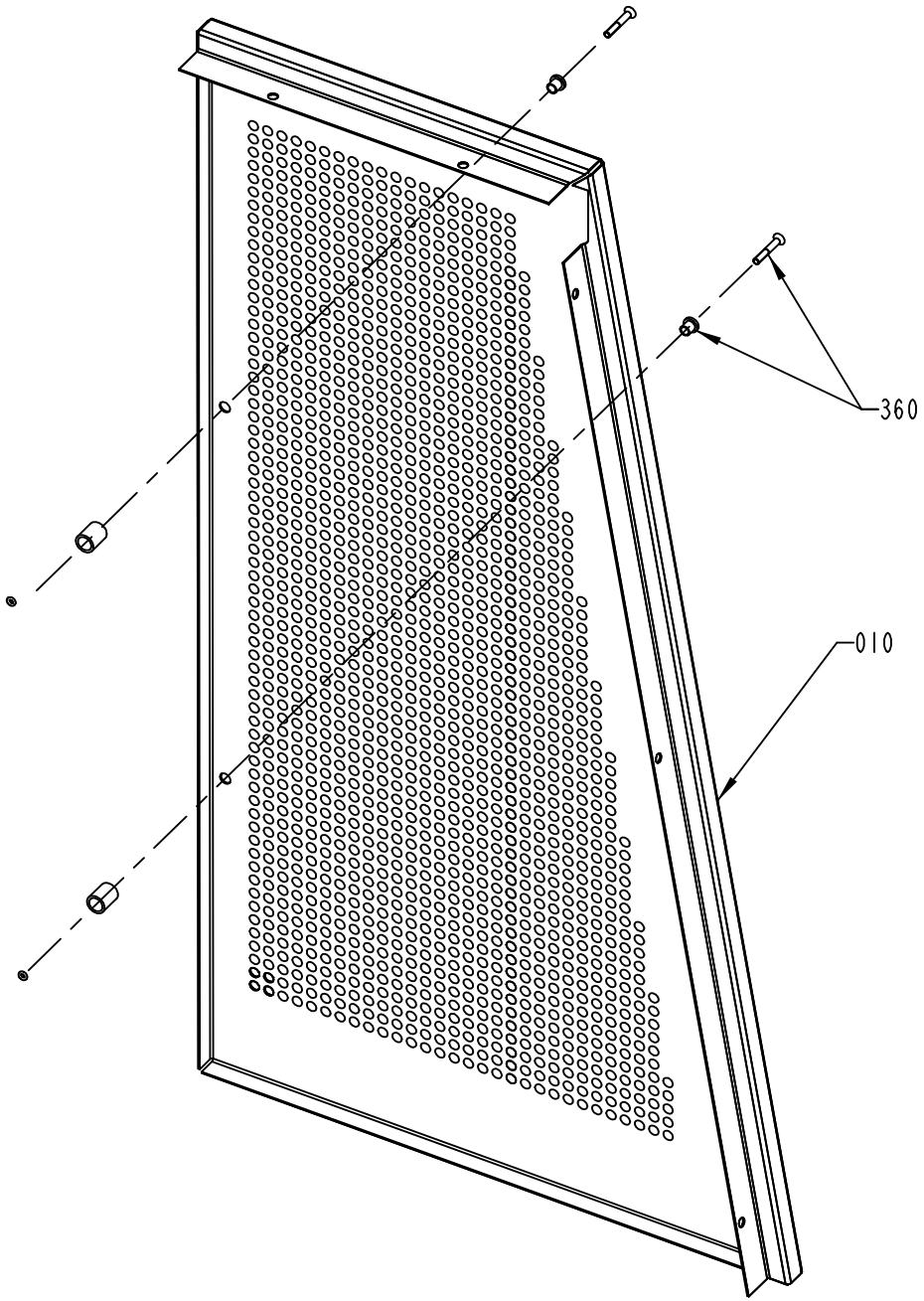
360
010

ECM: 189435 - 20041104
Group number: 1095883-0200
Assembly Drawing: 1095883-2_1_AA

Pos	Part No	UN	Qty	Description	Page No
-					
010	1255671-0000		1	GABLE PLATE	
360	90226-0458		2	MOUNTING SCREW	

Pos	Part No	UN	Qty	Description	Page No

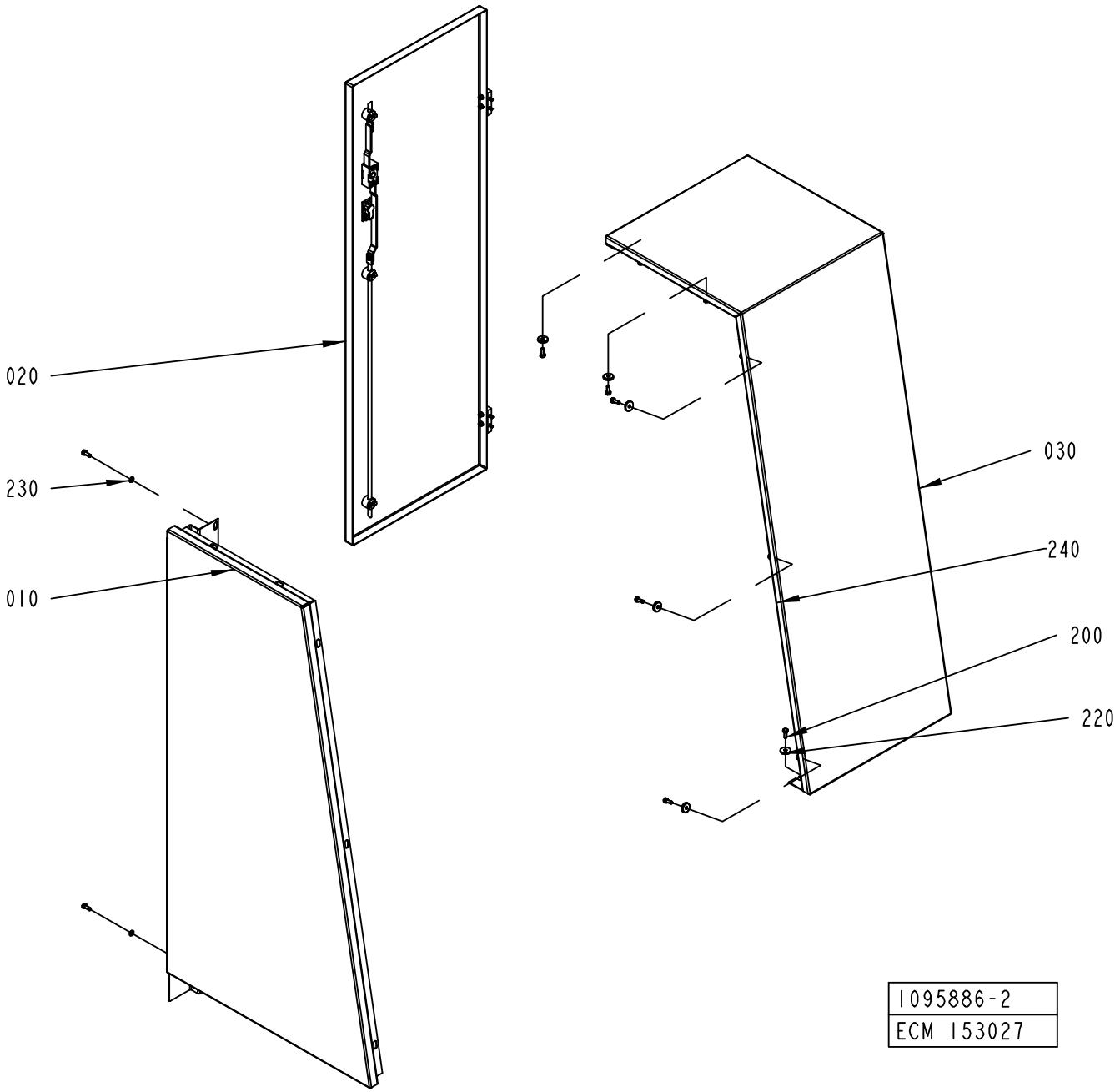
020
230
010
030
240
200
220
1095886-2
ECM 153027

ECM: 189436 - 20041104
Group number: 1095886-0200
Assembly Drawing: 1095886-2_1_AF

Pos	Part No	UN	Qty	Description	Page No
-					
010	2665129-0000		1	GABLE PLATE	
020	1484889-0100		1	DOOR	**6-57**
030	1041967-0000		1	COVERING PANEL	
200	312105-0368		7	SCREW M6S ISO 4017 M6X16 A480	
220	315125-0153		7	WASHER TBRSB 6,4X22X4 A4	
230	315105-0153		2	WASHER BRB 6,4X12 RFR	
240	90143-0060	MM	1120	EDGE STRIP 9,5X6,3MM BLACK PVC	

Pos	Part No	UN	Qty	Description	Page No

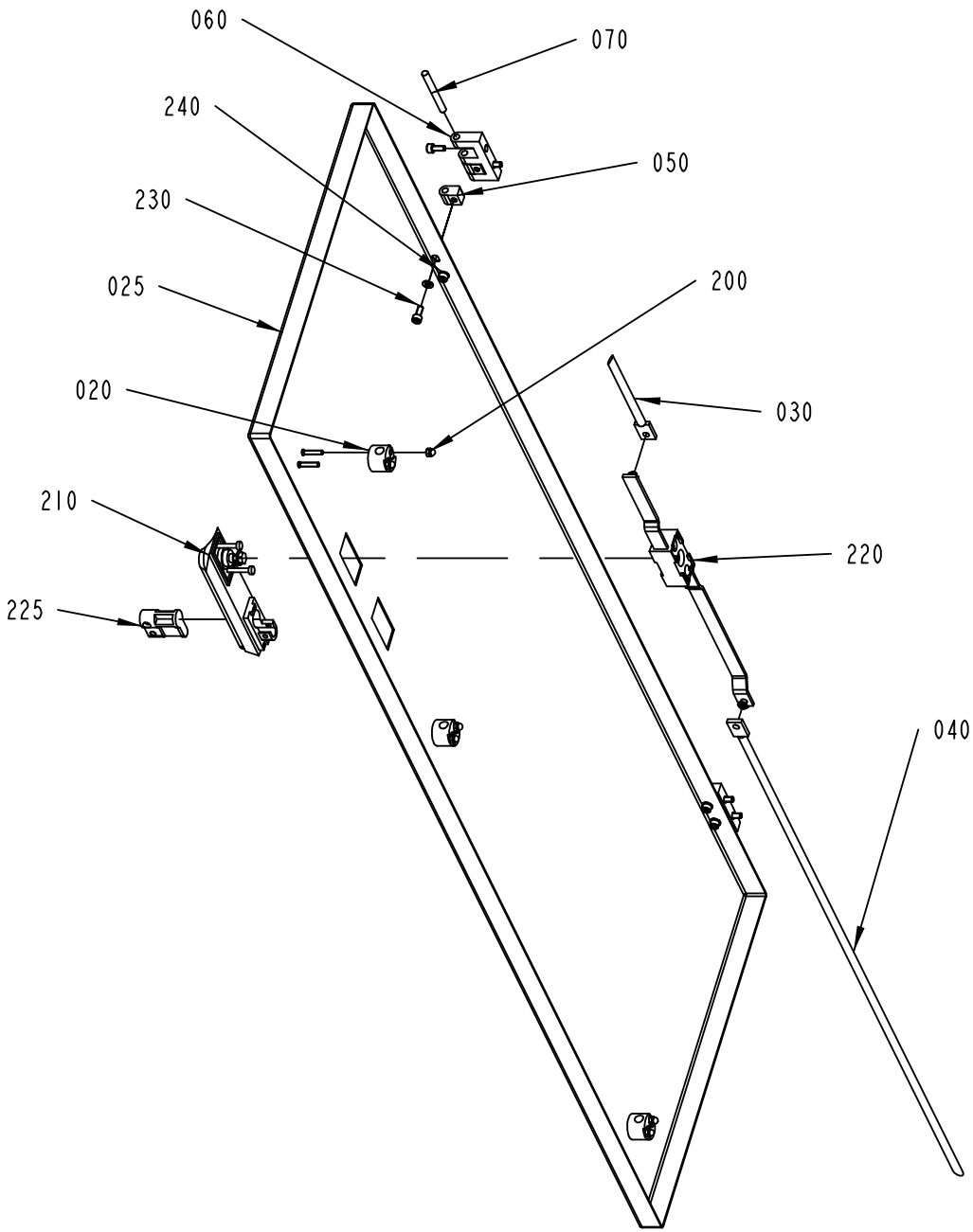

1484889-1
ECM 153027

ECM: 189437 - 20041104
Group number: 1484889-0100
Assembly Drawing: 1484889-1_1_AB

Pos	Part No	UN	Qty	Description	Page No
-					
020	1129274-0000		3	GUIDE LUG	
025	1484890-0000		1	DOOR	
030	2665132-0000		1	LOCKING ARM	
040	2665131-0000		1	LOCKING ARM	
050	1035794-0000		4	BLOCKING PIECE	
060	1035792-0000		2	E-HINGE	
070	988685-0000		2	PIN	
200	312705-0312		6	NUT HEX. DOMED CAP MHM-6 M4 A280	
210	90237-0126		1	TURNING HANDLE "REPBY 90237-175"	
220	90237-0153		1	LOCK HOUSING, 1121-U26-0B	
225	90237-0128		1	LOCK CYLINDER, 1109-U3	
230	312115-0327		8	SCREW ISO4762 M5X12 A4 80	
240	315105-0146		4	WASHER BRB 5,3X10 RFR	

Pos	Part No	UN	Qty	Description	Page No

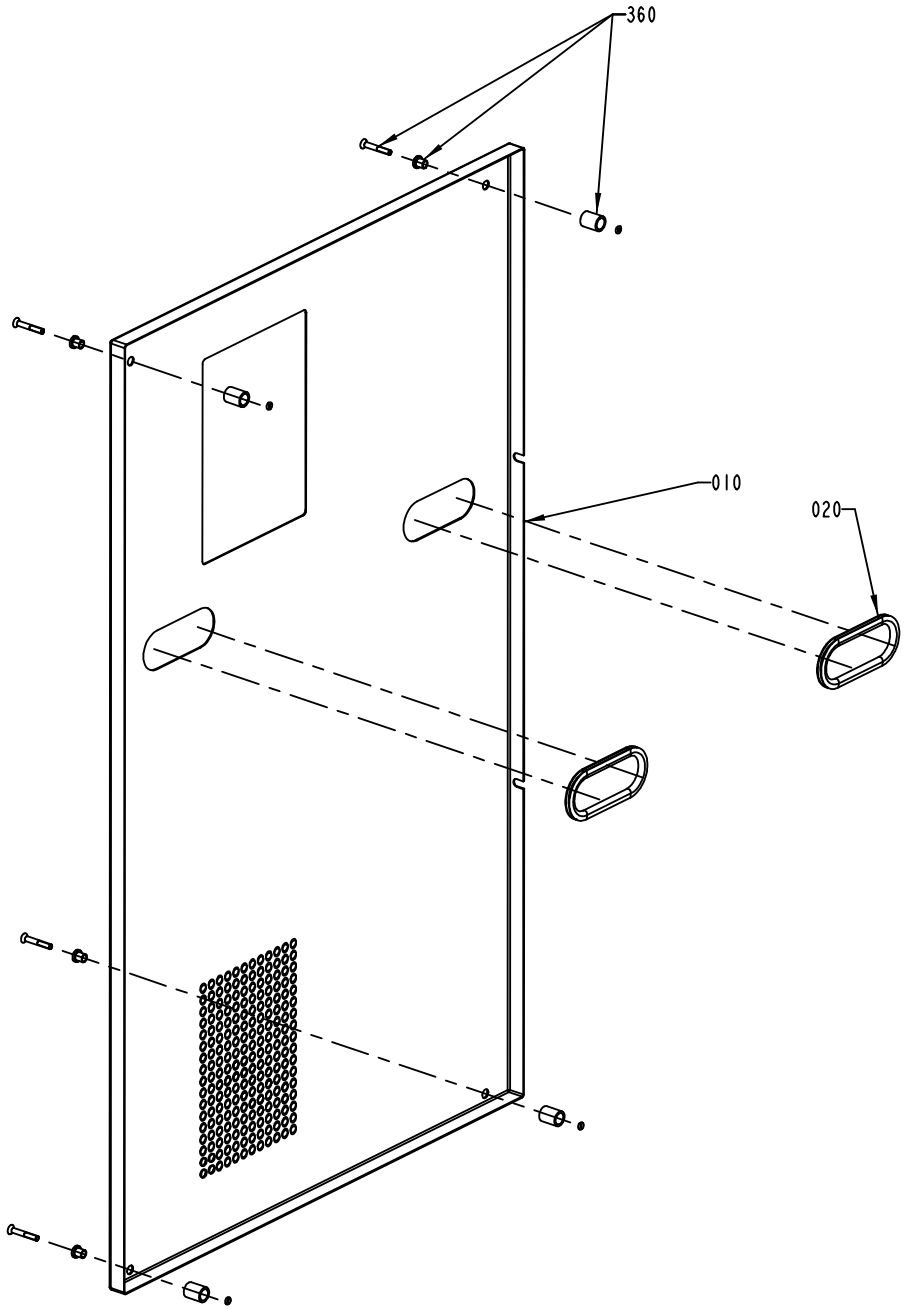
360
010
020

ECM: 189438 - 20041104
Group number: 1095888-0200
Assembly Drawing: 1095888-2_1_AB

Pos	Part No	UN	Qty	Description	Page No
-					
010	1255633-0000		1	HATCH	
020	90143-0060	M	1	EDGE STRIP 9,5X6,3MM BLACK PVC	
360	90226-0458		4	MOUNTING SCREW	

Pos	Part No	UN	Qty	Description	Page No

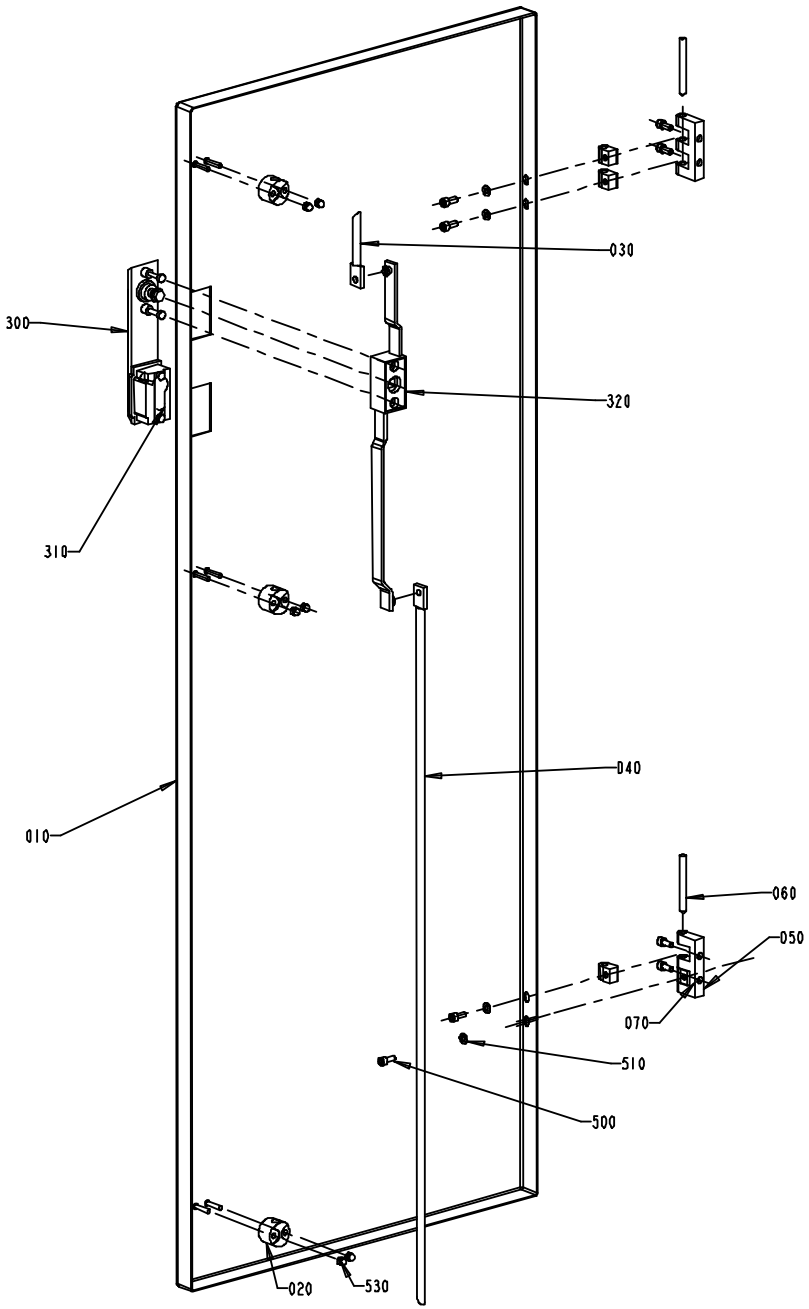
030
300
320
310
040
010
060
050
070
510
500
020
530

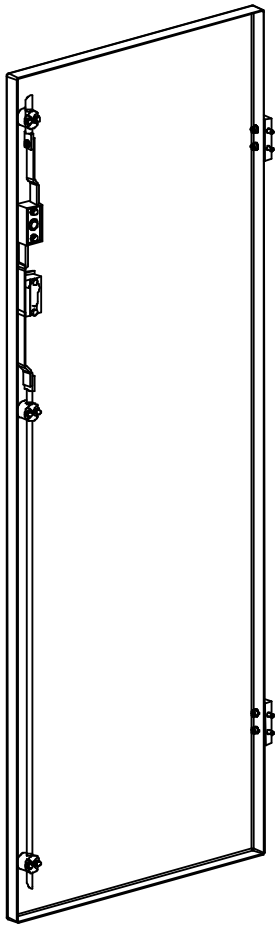

ECM: 189433 - 20041104
Group number: 1095889-0100
Assembly Drawing: 1095889-1_1_AA

Pos	Part No	UN	Qty	Description	Page No
-					
010	1041970-0000		1	DOOR	
020	1129274-0000		1	GUIDE LUG	
030	1036304-0001		1	LOCKING ARM	
040	1036304-0014		1	LOCKING ARM	
050	1035792-0000		2	E-HINGE	
060	988685-0000		2	PIN	
070	1035794-0000		4	BLOCKING PIECE	
300	90237-0126		1	TURNING HANDLE "REPBY 90237-175"	
310	90237-0128		1	LOCK CYLINDER, 1109-U3	
320	90237-0153		1	LOCK HOUSING, 1121-U26-0B	
500	312115-0327		8	SCREW ISO4762 M5X12 A4 80	
510	315105-0146		4	WASHER BRB 5,3X10 RFR	
530	312705-0312		6	NUT HEX. DOMED CAP MHM-6 M4 A280	

Pos	Part No	UN	Qty	Description	Page No

Machine Type | Group Description | Used-In | Group Number | Page No

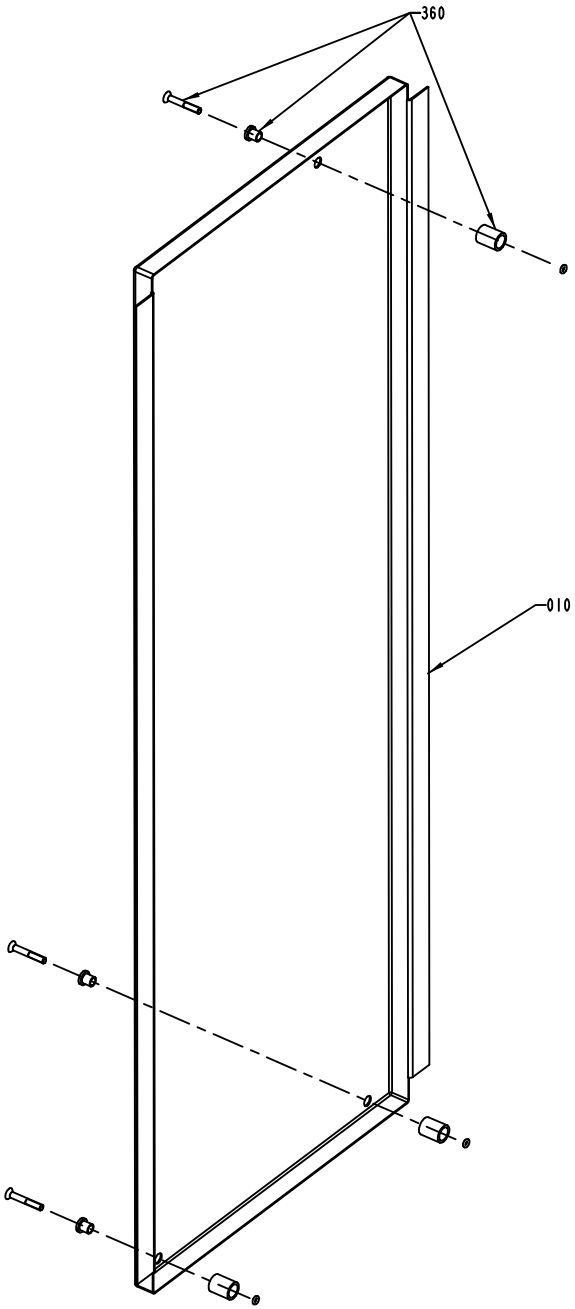
360
010

ECM: 189439 - 20041104
Group number: 1095890-0200
Assembly Drawing: 1095890-2_1_AA

Pos	Part No	UN	Qty	Description	Page No	Pos	Part No	UN	Qty	Description	Page No
-											
010	1255635-0000		1	HATCH							
360	90226-0458		3	MOUNTING SCREW							

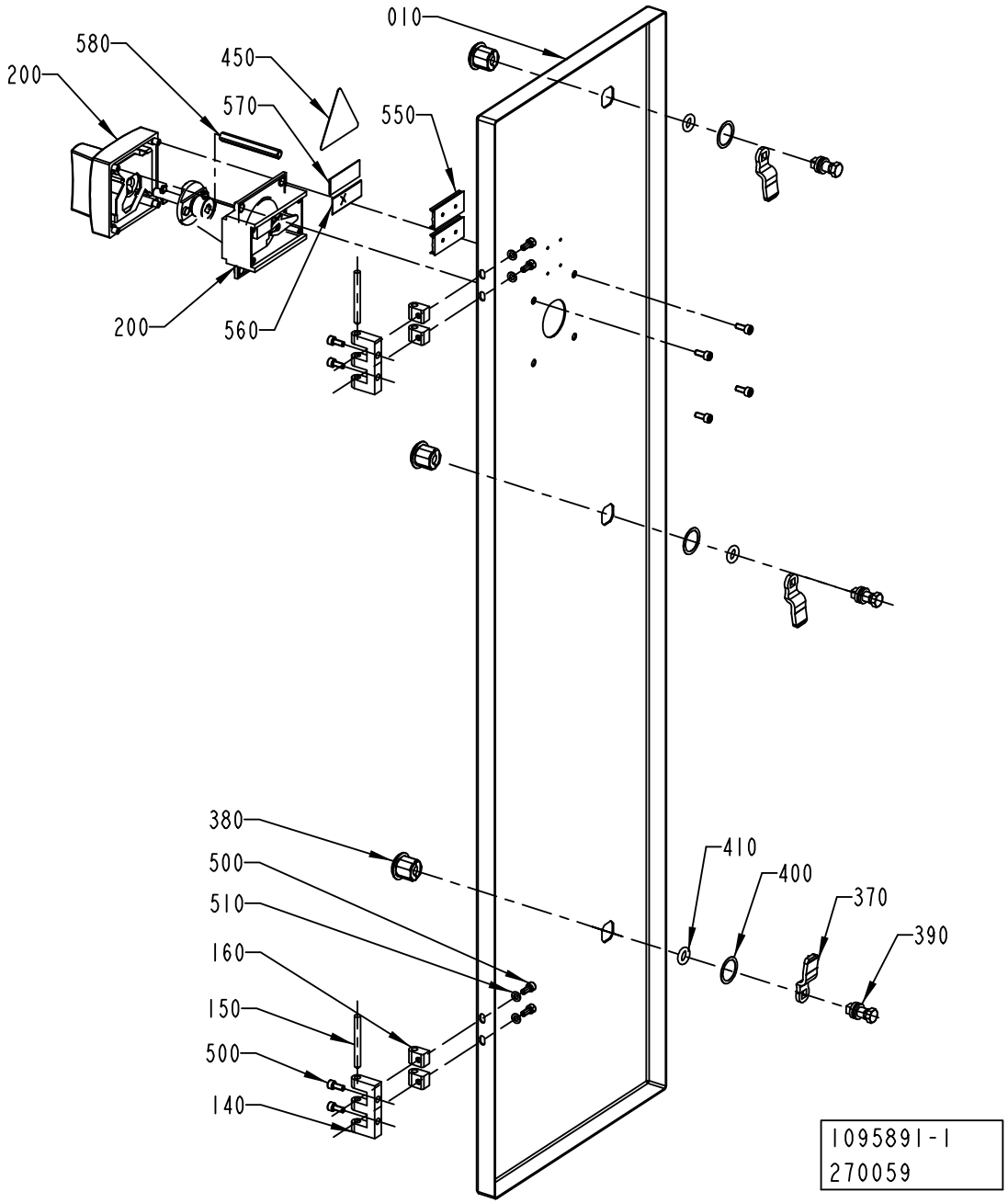
010
580
450
200
570
550
200
560
380
500
510
160
150
500
140
410
400
370
390
1095891-1
270059

ECM: 271183 - 20060807
Group number: 1095891-0200
Assembly Drawing: 1095891-1_1_AC

Pos	Part No	UN	Qty	Description	Page No
50HZ					
570	359243-0917		1	SIGN"400V, 50HZ, 100A"	
60HZ					
570	359243-0918		1	SIGN"400V, 60HZ, 100A"	
Common Parts					
010	2843000-0000		1	DOOR	
140	1035792-0000		2	E-HINGE	
150	988685-0000		2	PIN	
160	1035794-0000		4	BLOCKING PIECE	
370	90237-0157		3	LOCK BOLT, 1000-230	
380	90237-0319		3	LOCK HOUSING, 1000-U134	
390	90237-0320		3	LOCK HOUSING, 1000-U136	
400	90237-0322		3	LOCK GASKET, 1000-U137	
410	90237-0323		3	LOCK O-RING, 1000-24	
450	90194-0016		1	WARNING SIGN, RISK OF ELECTRIC SHOCK	
490	311520-0329		4	RIVET, BLANK 2,4X8	
500	312115-0327		8	SCREW ISO4762 M5X12 A4 80	
510	315105-0146		4	WASHER BRB 5,3X10 RFR	
550	359240-0100		2	SIGN HOLDER FOR 359240-0001	
560	359241-0431		1	SIGN: " MAIN SWITCH"	
580	2774348-0000		1	EXTENSION SHAFT	

Pos	Part No	UN	Qty	Description	Page No

CONNECTION BOX

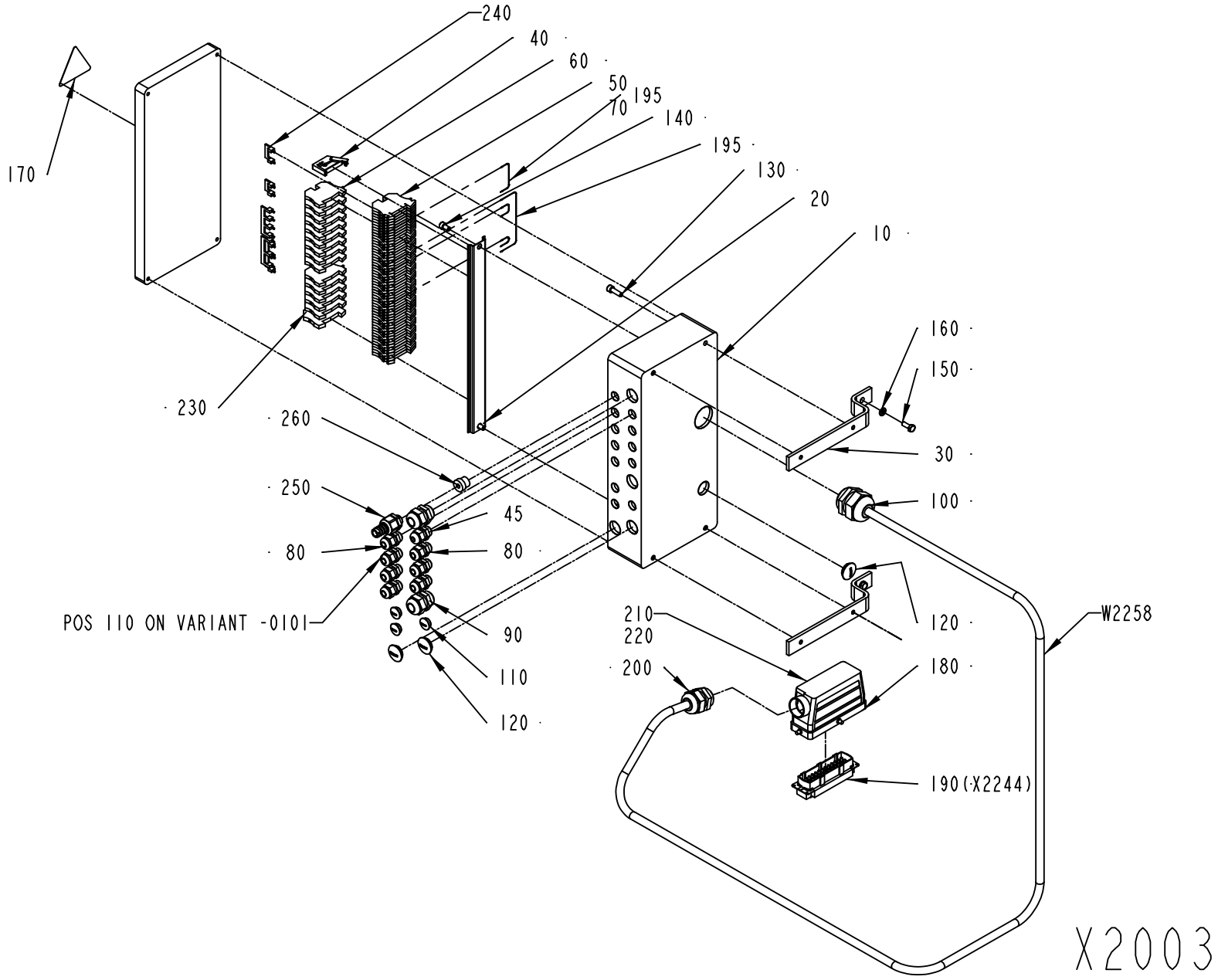

1095630-3
ECM 139813

ECM: 189440 - 20041104
Group number: 1095630-0200
Assembly Drawing: 1095630-3_1_AC

Pos	Part No	UN	Qty	Description	Page No
A3/FLEX					
080	352103-0101		7	CABLE GLAND, ST 9, PR15,2/PG9	
110	90002-0013		3	BLANK-OFF PLUG, PR 15,2 SKINDICHT-BLK9	
250	353242-0005		1	HOSE GLAND W/O INSERT PG9 NORMAL	
260	353249-0067		1	INSERT, SINGEL HOLE, E150/7	
W2258	351150-0425	MM	3000	CABLE OLFLEX 25X0,75 MM2 LIGHT/GREY	
Common Parts					
010	1129202-0000		1	CONNECTION BOX	
020	1129209-0000		1	MOUNTING RAIL	
030	1129182-0000		2	BRACKET	
040	353031-0201		1	END BRACKET EW35	
045	352103-0100		1	CABLE GLAND, STR 9, PR15,2/PG9	
050	353021-0216		40	FEED THROUGH TERMINAL, 10200.8	
060	353024-0204		14	EARTH TERMINAL WPE 2,5	
070	359011-0809		2	MARKING PLATES 5-FW 101-150	
090	352103-0110		2	CABLE GLAND, STR 16, PR22,5/PG16	
100	352103-0120		1	CABLE GLAND, STR 29, PR37,0/PG29	
120	90002-0004		3	BLANK-OFF PLUG, PR 22,5 SKINDICHT-BLK16	
130	312115-0370		4	SCREW ISO4762 M6X20 A4 80	
140	312115-0364		2	SCREW ISO4762 M6X10 A4 80	
150	312105-0368		2	SCREW M6S ISO 4017 M6X16 A480	
160	315105-0153		2	WASHER BRB 6,4X12 RFR	
170	90194-0016		1	WARNING SIGN, RISK OF ELECTRIC SHOCK	
180	90110-0228		1	CABLE HOOD 24-POL 71.350.2428.0	
190	90110-0150		1	MALE INSERT 121110 0000	
195	351172-0102	M	1	CABLE AWM 1X 0,75 MM2 DARKBLUE	
200	352103-0116		1	CABLE GLAND, ST 21, PR28,3/PG21	
210	359005-0050		1	MARKING LABEL KIT X, 04.841.4550.0	
220	359005-0010		1	MARKING LABEL KIT 0 - 9, 04.841.2150.0	
230	353024-0205		1	EARTH TERMINAL, 1010.1	
240	353034-0030		4	BRIDGE CONNECTOR WQV 2,5/10, 10544.6	

Pos	Part No	UN	Qty	Description	Page No

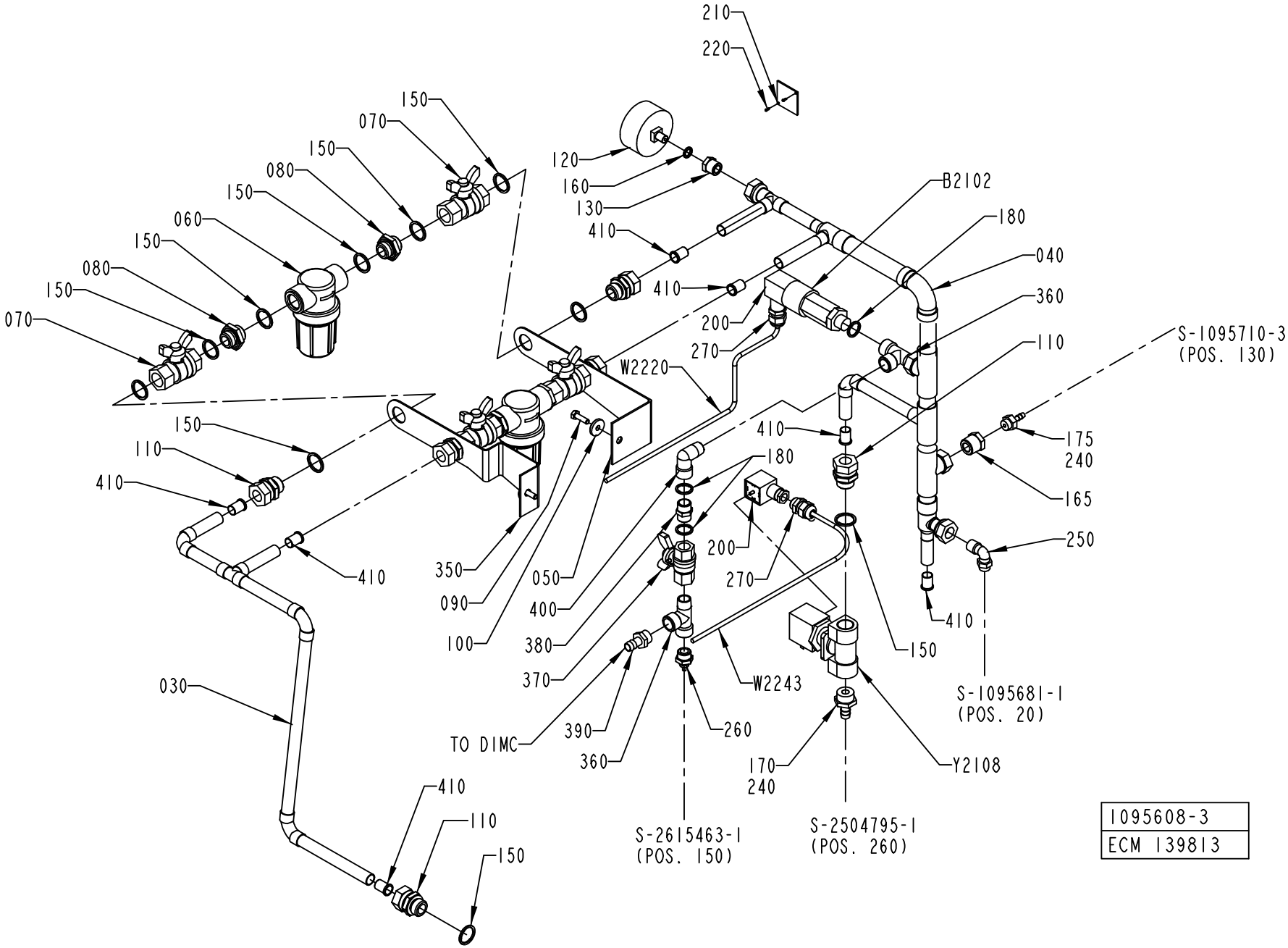

1095608-3
ECM 139813

ECM: 244165 - 20051128
Group number: 1095608-0100
Assembly Drawing: 1095608-3_1_AC

This list covers pages from 6-68 to 6-71

Pos	Part No	UN	Qty	Description	Page No
A3/FLEX COMPRESSOR (See drawing on page: 6-68)					
165	342901-0102		1	HOSE NIPPLE, EXT.THR. R1/4-7 MM	
175	90330-0085		1	BUSHING, INT/EXT. THR. R1/2-RP1/4	
180	315239-0111		3	NYLON WASHER G3/8	
260	342921-0115		1	STRAIGHT COUPLING,EXT.THREADED 6/4-G3/8"	
330	2550944-0000		1	WATER DIAGRAM	
360	90140-0023		2	T-PIPE, INT. THREAD, NO. 2070-3/8-3/8	
370	90187-0089		1	BALL VALVE G3/8, NPBR	
380	342700-0111		1	NIPPLES,HEXAGON,EXT.G-THREAD G3/8"-G3/8"	
390	90163-0041		1	HOSE NIPPLE, EXT.THR. 3/8-12 MM	
400	90140-0020		1	ELBOW, 90, INT/EXT. THREAD, NO. 2020-3/8	
A3/FLEX ICE-WATER (See drawing on page: 6-70)					
180	315239-0111		3	NYLON WASHER G3/8	
235	342920-0124		1	STRAIGHT COUPLING,EXT.THREADED 8/6-R1/2"	
260	342921-0115		1	STRAIGHT COUPLING,EXT.THREADED 6/4-G3/8"	
320	90166-0118	MM	900	TUBE 8 MM PA BLACK	
330	2550945-0000		1	WATER DIAGRAM	
360	90140-0023		2	T-PIPE, INT. THREAD, NO. 2070-3/8-3/8	
370	90187-0089		1	BALL VALVE G3/8, NPBR	
380	342700-0111		1	NIPPLES,HEXAGON,EXT.G-THREAD G3/8"-G3/8"	
390	90163-0041		1	HOSE NIPPLE, EXT.THR. 3/8-12 MM	
400	90140-0020		1	ELBOW, 90, INT/EXT. THREAD, NO. 2020-3/8	
Common Parts					
030	1041932-0000		1	PIPE	
040	1041933-0000		1	PIPE	
050	1037583-0000		1	HOLDER	
060	90458-0921		2	FILTER SP 122-200	
	90458-2541		*1*	*FILTER, CP23174-7-304SS*	
070	90187-0029		4	BALL VALVE G1/2, NPBR	
080	479261-0000		4	NIPPLE	
090	312105-0370		2	SCREW M6S ISO 4017 M6X20 A480	
100	315125-0153		2	WASHER TBRSB 6,4X22X4 A4	
110	342720-0114		6	CONN. STR. GA-15-G1/2	
120	90043-0006		1	PRESSURE GAUGE, 2041 D=63 MM	
130	342701-0202		1	BUSHING,INT./EXT.G-THREAD G3/8"-G1/8"	
150	315239-0113		18	NYLON WASHER G1/2	
160	315239-0109		1	NYLON WASHER G1/8	
170	342901-0105		1	HOSE NIPPLE, EXT.THR. R1/2-12 MM	
200	90110-0095		1	CONNECTOR 3 POLE + EARTH	
210	273455-0000		1	SIGN, COLD WATER	
220	312502-0120		2	DRIVE SCREW ROUND HEAD KDS 0X5	
240	90157-0016		1	LOCKING FLUID LOCTITE 242 50 ML	
250	342930-0133		1	ELBOW 90 COUPL.,EXT.THREADED 10/8-R3/8"	
270	352103-0101		2	CABLE GLAND, ST 9, PR15,2/PG9	
350	2547061-0000		1	HOLDER	
410	342708-0109		7	REINFORCING RING VSH 15X1 MM	
B 2102	90274-0042		1	PRESSURE GUARD, 200 KPA	
W 2220	351150-0403	MM	2000	CABLE OLFLEX 3X0,75 MM2 LIGHT/GREY	
W 2243	351150-0403	MM	2000	CABLE OLFLEX 3X0,75 MM2 LIGHT/GREY	
Y 2108	90042-0249		1	SOLENOID VALVE OFFICINE DI ENSINO	

Machine Type | Group Description | Used-In | Group Number | Page No

WATER PANEL

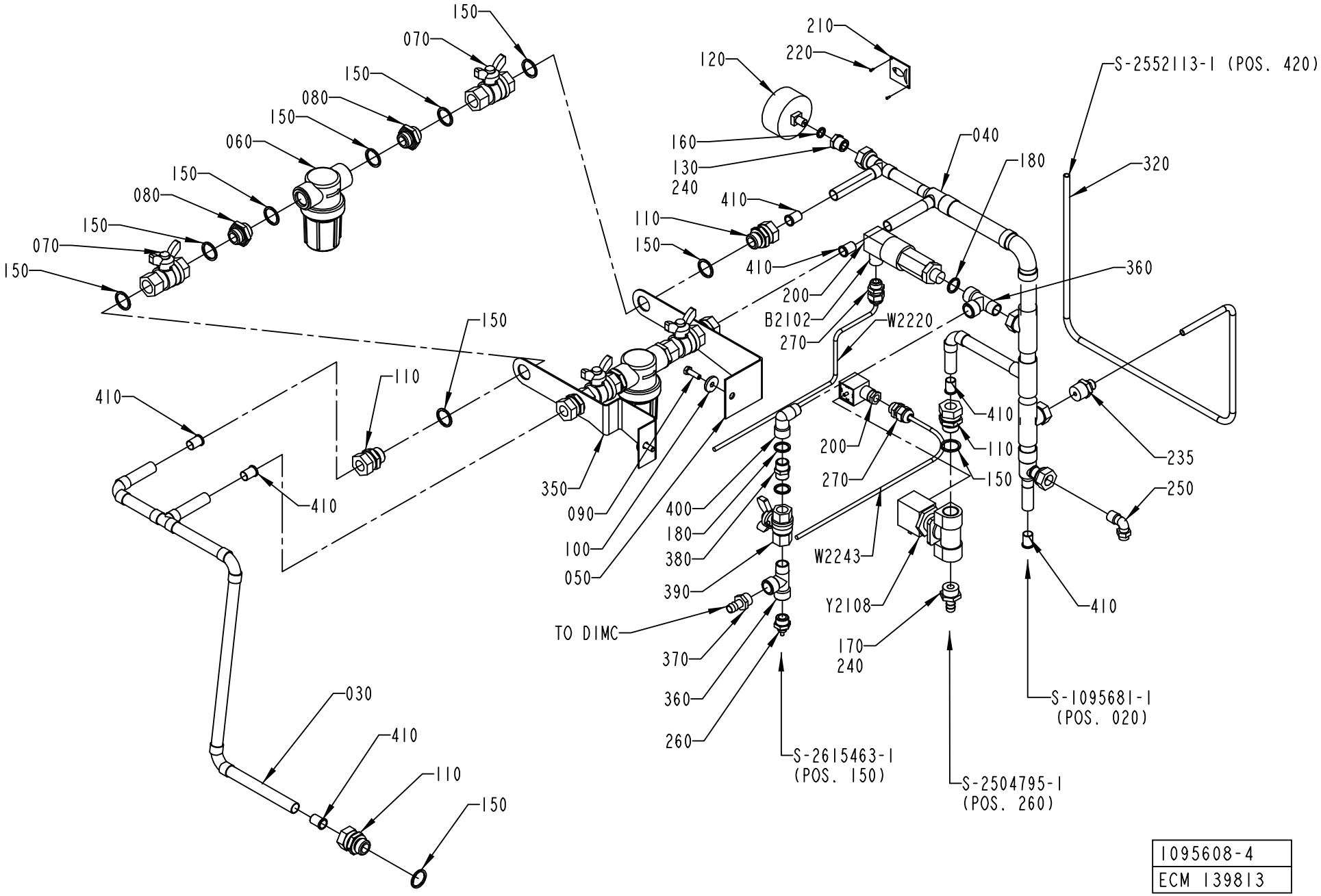

1095608-4
ECM 139813

ECM: 244165 - 20051128
Group number: 1095608-0100
Assembly Drawing: 1095608-4_1_AC

This list covers pages from 6-68 to 6-71

Pos	Part No	UN	Qty	Description	Page No
A3/FLEX COMPRESSOR (See drawing on page: 6-68)					
165	342901-0102		1	HOSE NIPPLE, EXT.THR. R1/4-7 MM	
175	90330-0085		1	BUSHING, INT/EXT. THR. R1/2-RP1/4	
180	315239-0111		3	NYLON WASHER G3/8	
260	342921-0115		1	STRAIGHT COUPLING,EXT.THREADED 6/4-G3/8"	
330	2550944-0000		1	WATER DIAGRAM	
360	90140-0023		2	T-PIPE, INT. THREAD, NO. 2070-3/8-3/8	
370	90187-0089		1	BALL VALVE G3/8, NPBR	
380	342700-0111		1	NIPPLES,HEXAGON,EXT.G-THREAD G3/8"-G3/8"	
390	90163-0041		1	HOSE NIPPLE, EXT.THR. 3/8-12 MM	
400	90140-0020		1	ELBOW, 90, INT/EXT. THREAD, NO. 2020-3/8	
A3/FLEX ICE-WATER (See drawing on page: 6-70)					
180	315239-0111		3	NYLON WASHER G3/8	
235	342920-0124		1	STRAIGHT COUPLING,EXT.THREADED 8/6-R1/2"	
260	342921-0115		1	STRAIGHT COUPLING,EXT.THREADED 6/4-G3/8"	
320	90166-0118	MM	900	TUBE 8 MM PA BLACK	
330	2550945-0000		1	WATER DIAGRAM	
360	90140-0023		2	T-PIPE, INT. THREAD, NO. 2070-3/8-3/8	
370	90187-0089		1	BALL VALVE G3/8, NPBR	
380	342700-0111		1	NIPPLES,HEXAGON,EXT.G-THREAD G3/8"-G3/8"	
390	90163-0041		1	HOSE NIPPLE, EXT.THR. 3/8-12 MM	
400	90140-0020		1	ELBOW, 90, INT/EXT. THREAD, NO. 2020-3/8	
Common Parts					
030	1041932-0000		1	PIPE	
040	1041933-0000		1	PIPE	
050	1037583-0000		1	HOLDER	
060	90458-0921		2	FILTER SP 122-200	
	90458-2541		*1*	*FILTER, CP23174-7-304SS*	
070	90187-0029		4	BALL VALVE G1/2, NPBR	
080	479261-0000		4	NIPPLE	
090	312105-0370		2	SCREW M6S ISO 4017 M6X20 A480	
100	315125-0153		2	WASHER TBRSB 6,4X22X4 A4	
110	342720-0114		6	CONN. STR. GA-15-G1/2	
120	90043-0006		1	PRESSURE GAUGE, 2041 D=63 MM	
130	342701-0202		1	BUSHING,INT./EXT.G-THREAD G3/8"-G1/8"	
150	315239-0113		18	NYLON WASHER G1/2	
160	315239-0109		1	NYLON WASHER G1/8	
170	342901-0105		1	HOSE NIPPLE, EXT.THR. R1/2-12 MM	
200	90110-0095		1	CONNECTOR 3 POLE + EARTH	
210	273455-0000		1	SIGN, COLD WATER	
220	312502-0120		2	DRIVE SCREW ROUND HEAD KDS 0X5	
240	90157-0016		1	LOCKING FLUID LOCTITE 242 50 ML	
250	342930-0133		1	ELBOW 90 COUPL.,EXT.THREADED 10/8-R3/8"	
270	352103-0101		2	CABLE GLAND, ST 9, PR15,2/PG9	
350	2547061-0000		1	HOLDER	
410	342708-0109		7	REINFORCING RING VSH 15X1 MM	
B 2102	90274-0042		1	PRESSURE GUARD, 200 KPA	
W 2220	351150-0403	MM	2000	CABLE OLFLEX 3X0,75 MM2 LIGHT/GREY	
W 2243	351150-0403	MM	2000	CABLE OLFLEX 3X0,75 MM2 LIGHT/GREY	
Y 2108	90042-0249		1	SOLENOID VALVE OFFICINE DI ENSINO	

Machine Type | Group Description | Used-In | Group Number | Page No

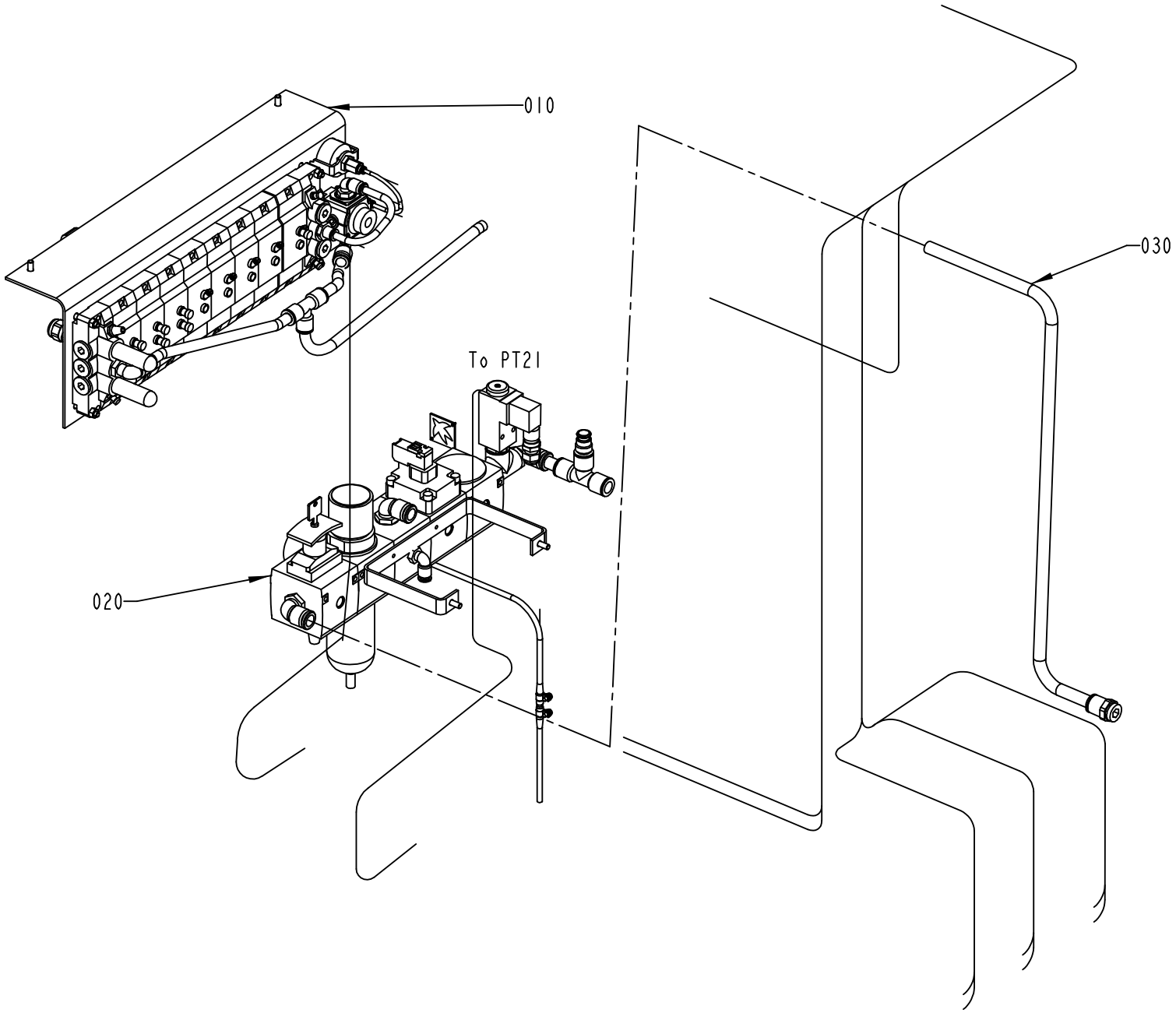

1095714-2
ECM 115191

ECM: 139561 - 20030711
Group number: 1095714-0300
Assembly Drawing: 1095714-2_1_AD

Pos	Part No	UN	Qty	Description	Page No
-					
010	1095611-0300		1	VALVE PANEL	**6-75**
020	1095609-0200		1	PNEUMATIC UNIT	**6-77**
030	1095716-0100		1	PIPE WORK-AIR	**6-79**

Pos	Part No	UN	Qty	Description	Page No

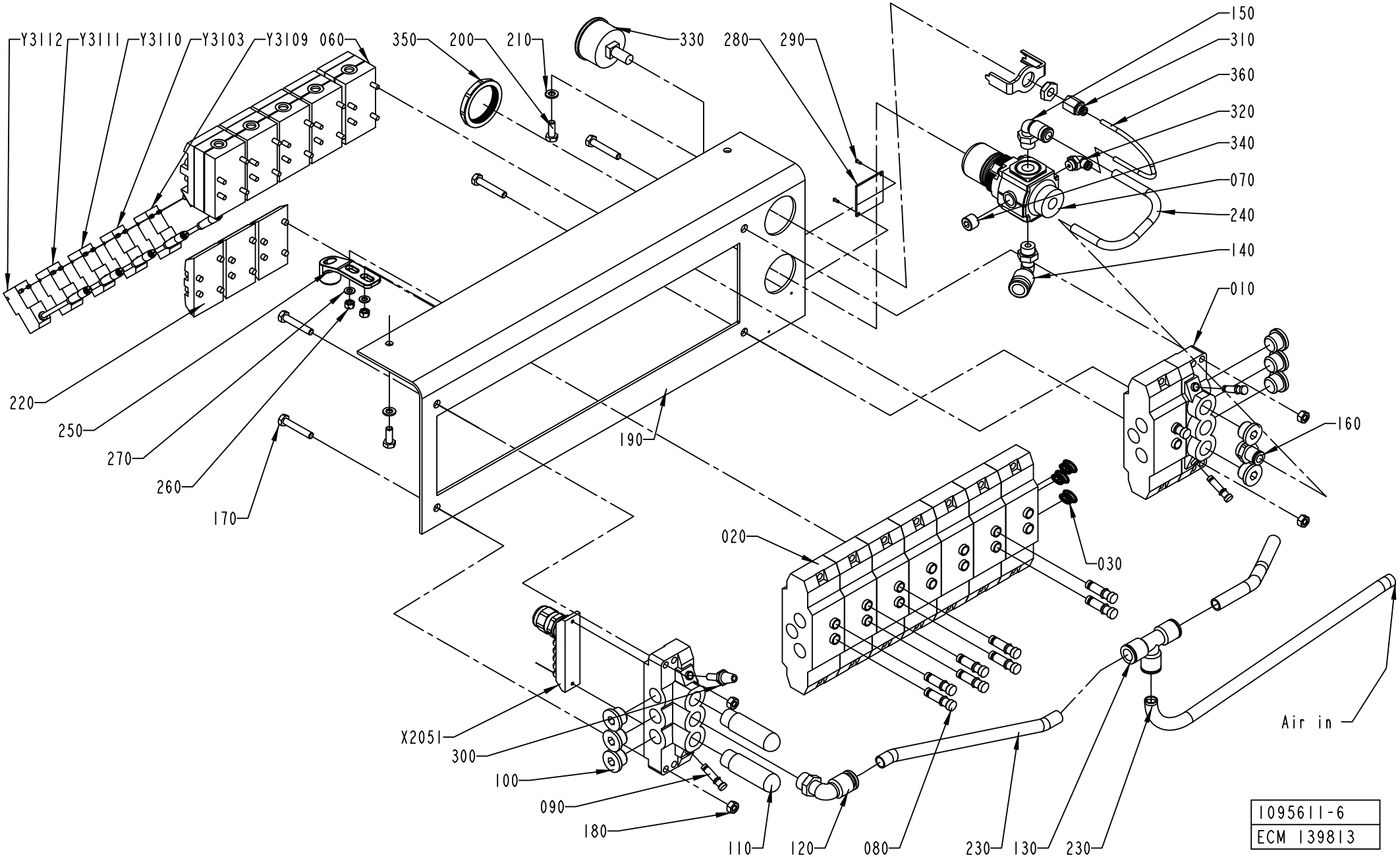
Y3112
Y3111
Y3110
Y3103
Y3109
060
350
200
210
330
280
290
150
310
360
320
340
070
240
140
010
160
220
250
270
260
170
190
020
030
X2051
300
100
090
180
110
120
080
230
130
230
Air in
1095611-6
ECM 139813

ECM: 189442 - 20041104
Group number: 1095611-0300
Assembly Drawing: 1095611-6_1_AC

Pos	Part No	UN	Qty	Description	Page No
A3/FLEX					
005	2551119-0000		1	PNEUMATIC DIAGRAM	
060	90042-0215		5	VALVE BODY 5/2 UNISTABLE	
080	342715-0103		11	BLIND PLUG 8 MM	
220	90042-0519		3	BLANK PLATE ISO SIZE 1	
250	1538868-0000		1	BRACKET	
Y3110	90042-0538		1	PILOT VALVE L=500MM	
Common Parts					
010	90042-0522		2	PORTED END PIECE ISO SIZE 1	
020	90042-0532		8	BASE PLATE ISO SIZE 1	
030	90042-0528		1	BLANKING KIT SEALS ISO SIZE 1	
050	90042-0526		5	PROTECTIVE SLEEVE MECMAN, 04938 294 08	
070	90113-0470		1	MANIFOLD REGULATOR 10 BAR	
090	342715-0102		3	BLIND PLUG 6 MM	
100	342713-0211		8	PLUG, EXT THREAD HEX SOCKET 8638-00-380	
110	90328-0024		2	SILENCER G3/8"	
120	342732-0110		1	ELBOW PIPE JOINT, EXT.THREAD,D=12MM-G3/8	
130	342748-0109		1	T-CONNECTION 12MM	
140	342732-0109		1	ELBOW PIPE JOINT, EXT.THREAD, D=1MM-G1/4	
150	342732-0104		1	ELBOW PIPE JOINT, EXT.THREAD, D=8MM-G1/4	
160	342722-0206		1	STRAIGHT COUPLING D=8-G3/8"	
170	312105-0376		4	SCREW M6S ISO 4014 M6X35 A480	
180	312605-0316		4	HEXAGON NUT, M6M M6 A280	
190	1517295-0000		1	SHEET	
200	312105-0368		2	SCREW M6S ISO 4017 M6X16 A480	
210	315105-0153		2	WASHER BRB 6,4X12 RFR	
230	90166-0068	MM	1000	TUBE 12 MM PA BLUE	
240	90166-0194	MM	400	TUBE 8 MM PUR BLUE	
260	312605-0314		2	HEXAGON NUT, M6M M5 A280	
270	315105-0146		2	WASHER BRB 5,3X10 RFR	
280	1041938-0000		1	SIGN	
290	312502-0120		2	DRIVE SCREW ROUND HEAD KDS 0X5	
300	90328-0017		1	SILENCER, D=6 MM	
310	342770-0101		1	STRAIGHT COUPLING INT, D=4 MM - G1/8	
320	342732-0100		1	ELBOW PIPE JOINT, EXT.THREAD, D=4MM-G1/8	
330	90043-0065		1	MKC NEW FILL PUMP VACUUM PRESSURE GAUGE	
340	90087-0036		1	PLUG, KR 1/4	
350	90457-0078		1	PANEL NUT	
360	90166-0095	MM	200	TUBE 4 MM PA BLUE (50M)	
X2051	90042-0535		1	TERMINAL BOARD 19 CORDS	
Y3103	90042-0538		1	PILOT VALVE L=500MM	
Y3109	90042-0538		1	PILOT VALVE L=500MM	
Y3111	90042-0538		1	PILOT VALVE L=500MM	
Y3112	90042-0538		1	PILOT VALVE L=500MM	

Machine Type	Group Description	Used-In	Group Number	Page No

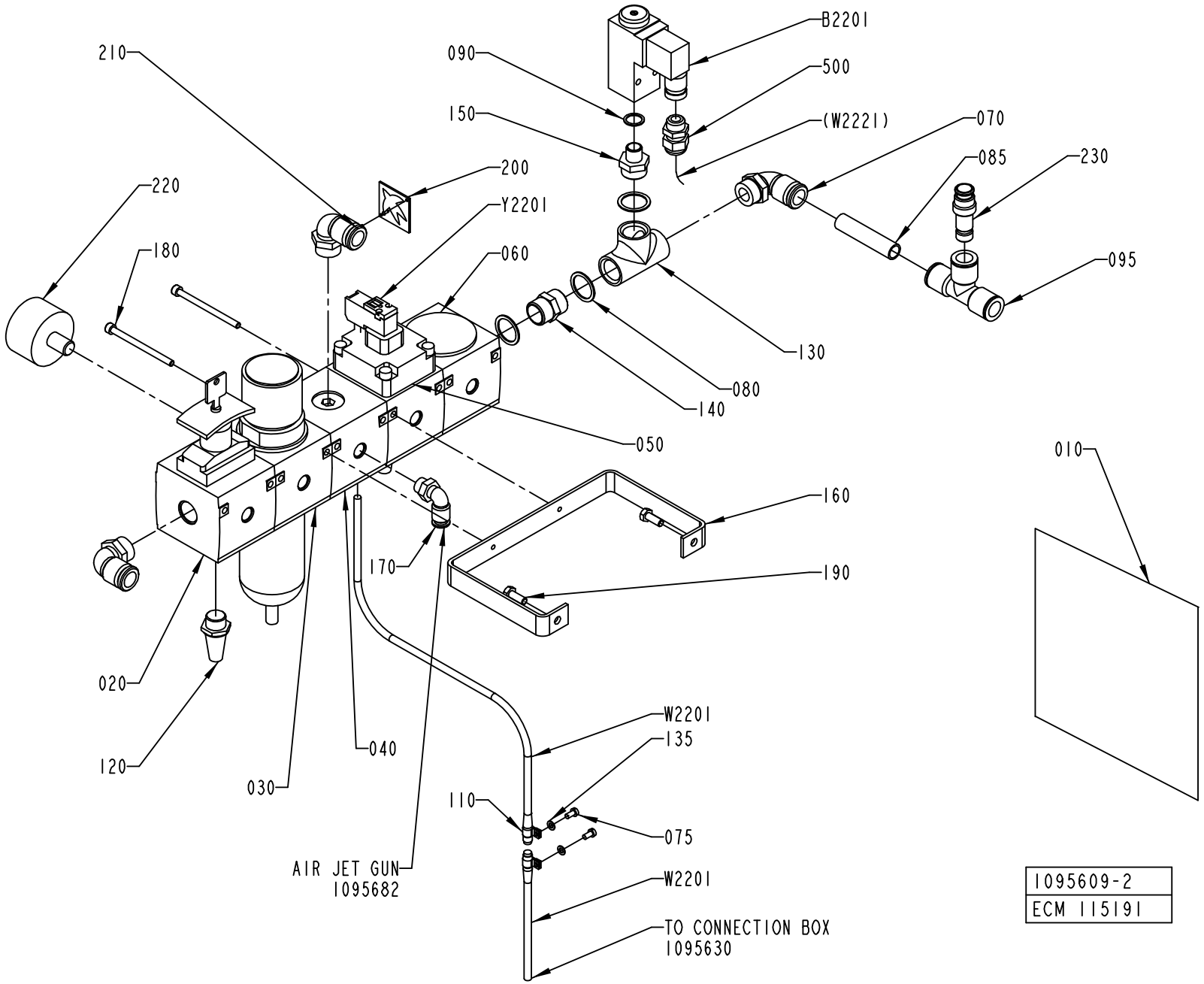
B2201
210
090
500
150
(W2221)
070
085
230
200
220
Y2201
180
060
095
130
080
140
050
160
010
170
190
020
W2201
135
040
120
030
110
075
AIR JET GUN
1095682
W2201
TO CONNECTION BOX
1095630
1095609-2
ECM 115191

ECM: 224828 - 20050831
Group number: 1095609-0200
Assembly Drawing: 1095609-2_1_AF

Pos	Part No	UN	Qty	Description	Page No
A3/FLEX					
010	2527368-0000		1	PNEUMATIC DIAGRAM	
Common Parts					
020	90113-0377		1	SHUT OFF VALVE G1/2, 915-331053	
030	90113-0072		1	FILTER REGULATOR 40µ, 915-331242	
	90113-0459		*1*	*O-RING*	
	90113-0387		*1*	*FILTER ELEMENT 40UM FOR 90113-0094*	
040	90113-0375		1	PRESSURE DISTRIBUTION	
050	90113-0423		1	HIGH SPEED VENTING VALVE G1/2, R40403053	
060	90113-0374		1	SLOW STARTING VALVE	
070	342732-0161		3	ELBOW PIPE JOINT,EXT.THREAD,D=14 MM-G1/2	
075	312125-0287		2	SCREW ISO 1207 M4X8 A4	
080	315233-0113		3	WASHER CAPTIVE SEALING G1/2	
085	90166-0196	MM	70	TUBE 14MM PA BLUE	
090	315233-0110		1	WASHER CAPTIVE SEALING G1/4	
095	342748-0110		1	T-CONNECTION 14MM	
110	90074-0025		2	CLIPS, CABLE CLIPS DI=8 MM	
120	90328-0007		1	SILENCER, 338/125 B140-00-380	
130	90330-0049		1	T-PIPE, INT. THREAD, R-221R1/2	
135	315105-0136		2	WASHER BRB 4,3X9 RFR	
140	342700-0113		1	NIPPLES,HEXAGON,EXT.G-THREAD G1/2"-G1/2"	
150	342700-0205		1	NIPPLES,HEXAGON,EXT.G-THREAD G1/2"-G1/4"	
160	1041921-0000		1	HOLDER	
170	342732-0104		1	ELBOW PIPE JOINT, EXT.THREAD, D=8MM-G1/4	
180	90287-0073		2	SCREW MC6S M5X70 129	
190	312105-0368		2	SCREW M6S ISO 4017 M6X16 A480	
200	273458-0000		1	SIGN, AIR	
210	312502-0120		2	DRIVE SCREW ROUND HEAD KDS 0X5	
220	90043-0107		1	PRESSURE GAUGE	
230	342716-0211		1	REDUCER 12-14	
500	352103-0101		1	CABLE GLAND, ST 9, PR15,2/PG9	
B2201	90274-0074		1	PRESSURE GUARD, 530 KPA	
W2201	90042-0583		1	CABLE MECMAN 440-827 000-1	
Y2201	90042-0585		1	PILOT VALVE L=5M	

Pos	Part No	UN	Qty	Description	Page No

Machine Type	Group Description	Used-In	Group Number	Page No

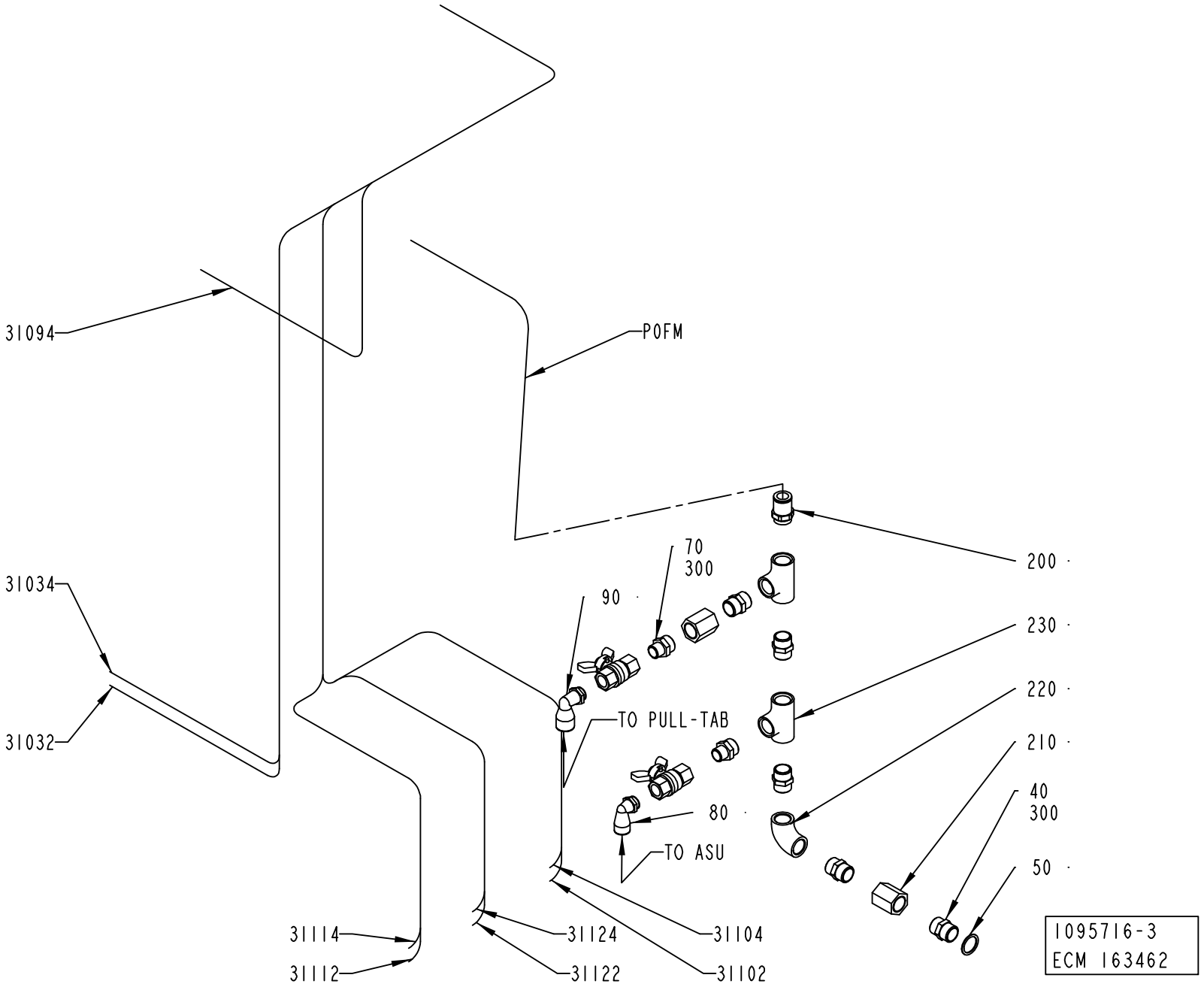
31094
P0FM
31034
31032
70
300
90
200
230
220
210
40
300
50
80
TO PULL-TAB
TO ASU
31114
31112
31124
31122
31104
31102
1095716-3
ECM 163462

ECM: 189444 - 20041104
Group number: 1095716-0100
Assembly Drawing: 1095716-3_1_AB

Pos	Part No	UN	Qty	Description	Page No
A3/FLEX					
040	342700-0113		5	NIPPLES,HEXAGON,EXT.G-THREAD G1/2"-G1/2"	
050	315233-0113		1	WASHER CAPTIVE SEALING G1/2	
070	342700-0206		2	NIPPLES,HEXAGON,EXT.G-THREAD G1/2"-G3/8"	
080	90458-2960		1	ELBOW PIPE JOINT, EXT.THREAD,D=12MM-G3/8	
090	90458-2963		1	ELBOW PIPE JOINT, EXT.THREAD,D=14MM-G3/8	
200	90055-0097		1	STRAIGHT COUPLING	
210	90140-0079		2	SLEEVE, INT. THREAD, NO. 501-08	
220	90330-0020		1	ELBOW, 90 INT. THREAD, R-2221/2	
230	90330-0049		2	T-PIPE, INT. THREAD, R-221R1/2	
300	90144-0007		1	TAPE	
P0FM	90166-0196	MM	770	TUBE 14MM PA BLUE	
Common Parts					
31032	90166-0013	MM	1400	TUBE 8 MM PA BLUE	
31034	90166-0013	MM	1400	TUBE 8 MM PA BLUE	
31094	90166-0013	MM	1400	TUBE 8 MM PA BLUE	
31112	90166-0013	MM	1500	TUBE 8 MM PA BLUE	
31114	90166-0013	MM	1500	TUBE 8 MM PA BLUE	
31122	90166-0013	MM	1500	TUBE 8 MM PA BLUE	
31124	90166-0013	MM	1500	TUBE 8 MM PA BLUE	

Pos	Part No	UN	Qty	Description	Page No

Tetra Pak

SPC
Spare Parts Catalogue

Automatic Splicing Unit

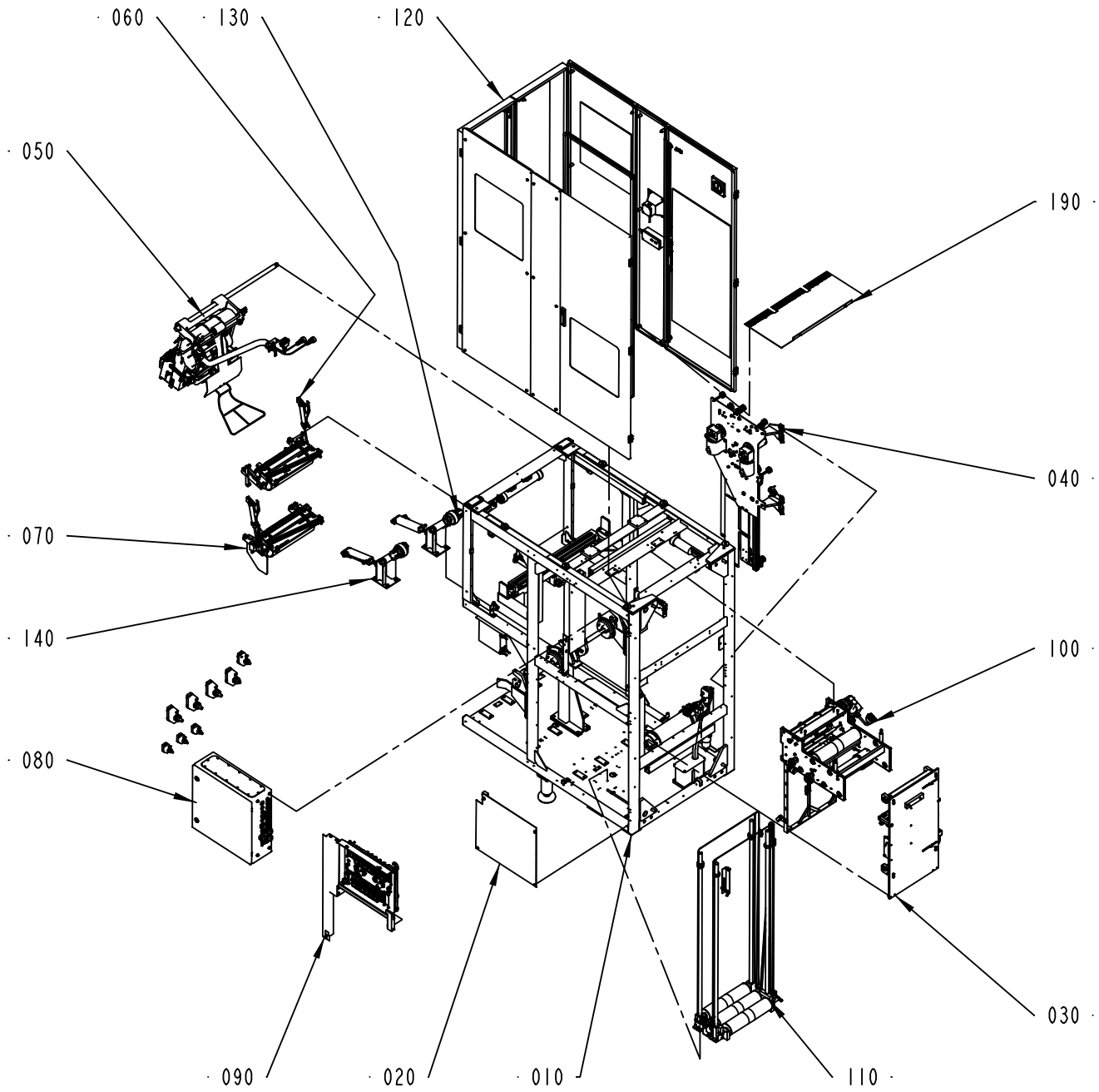

ECM: 274055 - 20061102
Group number: 648528-0200
Assembly Drawing: 648528-5_1_AD

This list covers pages from 7-2 to 7-9

Pos	Part No	UN	Qty	Description	Page No
A3/FLEX SEPROOM WITH ARL (See drawing on page: 7-8)					
020	2832865-0100		1	COVER	**7-11**
030	2506668-0200		1	STRIP APPLICATOR	**7-13**
190	2613749-0100		1	COVER	**7-33**
200	2760125-0100		1	SEPARATE ROOM	**7-35, 7-37**
210	2538072-0100		1	AUTOMATIC REEL LOADING	**7-79**
A3/FLEX SEPROOM WITHOUT ARL (See drawing on page: 7-6)					
020	2832865-0100		1	COVER	**7-11**
030	2506668-0200		1	STRIP APPLICATOR	**7-13**
130	2506614-0100		1	BOBBIN BRAKE	**7-89**
140	2506615-0100		1	BOBBIN BRAKE	**7-91**
190	2613749-0100		1	COVER	**7-33**
200	2760125-0100		1	SEPARATE ROOM	**7-35, 7-37**
A3/FLEX ASU WITH ARL (See drawing on page: 7-4)					
020	2832865-0100		1	COVER	**7-11**
030	2506668-0200		1	STRIP APPLICATOR	**7-13**
190	2613749-0100		1	COVER	**7-33**
210	2538072-0100		1	AUTOMATIC REEL LOADING	**7-79**
A3/FLEX ASU WITHOUT ARL (See drawing on page: 7-2)					
020	2832865-0100		1	COVER	**7-11**
030	2506668-0200		1	STRIP APPLICATOR	**7-13**
130	2506614-0100		1	BOBBIN BRAKE	**7-89**
140	2506615-0100		1	BOBBIN BRAKE	**7-91**
190	2613749-0100		1	COVER	**7-33**
C3/FLEX SEPROOM IH					
020	2832865-0100		1	COVER	**7-11**
030	2506668-0200		1	STRIP APPLICATOR	**7-13**
130	2506614-0100		1	BOBBIN BRAKE	**7-89**
140	2506615-0100		1	BOBBIN BRAKE	**7-91**
190	2613749-0100		1	COVER	**7-33**
200	2760125-0100		1	SEPARATE ROOM	**7-35, 7-37**
Common Parts					
010	1487560-0200		1	MACHINE BODY	**7-93, 7-95, 7-97, 7-99**
040	1484707-0200		1	STRIP MAGAZINE	**7-121**
050	2588946-0100		1	SPLICING DEVICE	**7-137, 7-139**
060	2588422-0100		1	MATERIAL HOLDER L1	**7-165**
070	2588423-0100		1	MATERIAL HOLDER L2	**7-173**
080	1548491-0200		1	ELECTRICAL CABINET	**7-181, 7-183, 7-185, 7-187, 7-189**
090	2564633-0100		1	VALVE PANEL	**7-203, 7-205**
100	1487808-0200		1	BRACKET	**7-221**
110	1490831-0200		1	MAGAZINE	**7-231, 7-233**
120	1490215-0200		1	COVERING PANEL	**7-237, 7-239, 7-241, 7-243**

Pos	Part No	UN	Qty	Description	Page No

Machine Type	Group Description	Used-In	Group Number	Page No

Automatic Splicing Unit

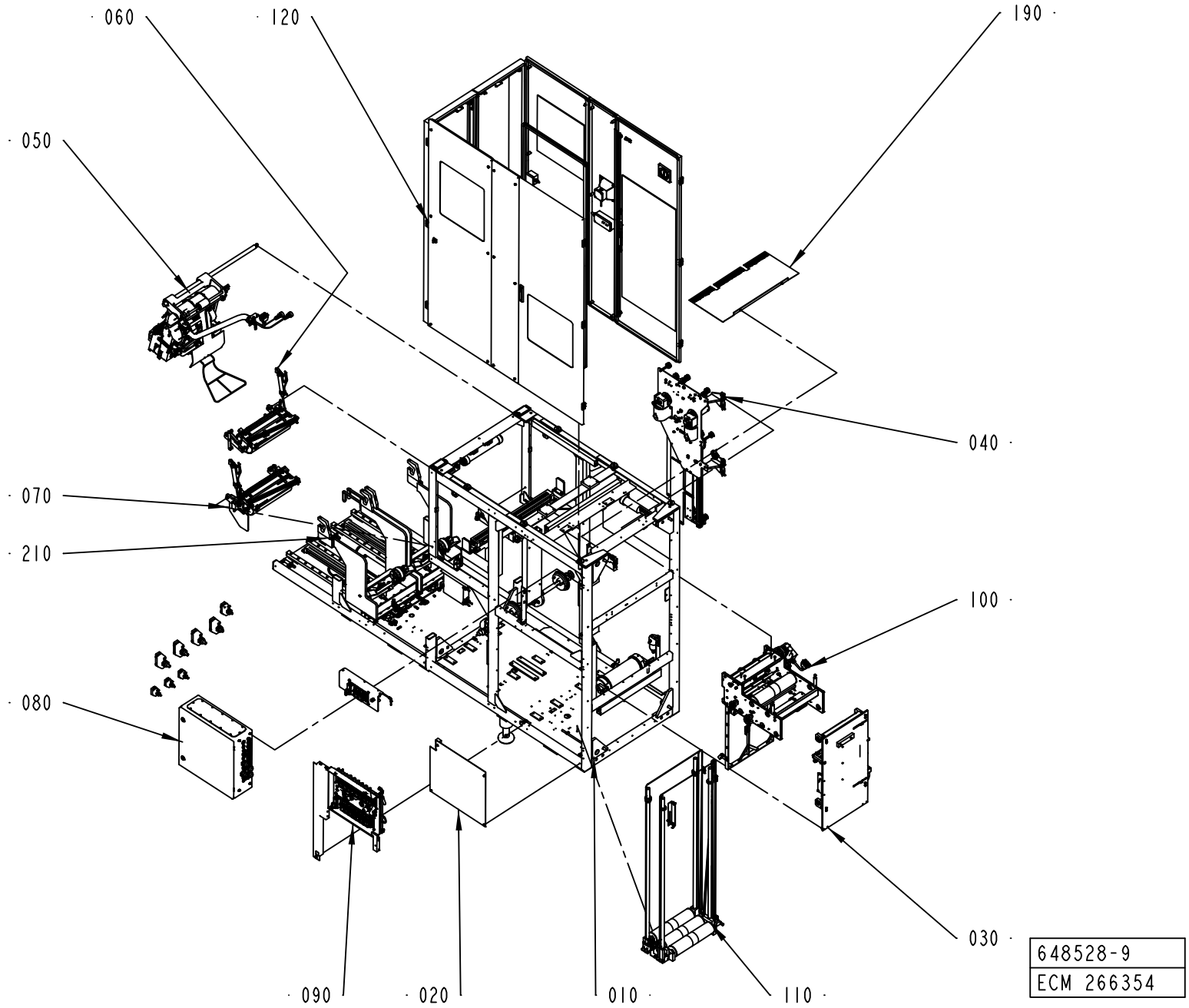

ECM: 274055 - 20061102
Group number: 648528-0200
Assembly Drawing: 648528-9_1_AB

This list covers pages from 7-2 to 7-9

Pos	Part No	UN	Qty	Description	Page No
A3/FLEX SEPROOM WITH ARL (See drawing on page: 7-8)					
020	2832865-0100		1	COVER	**7-11**
030	2506668-0200		1	STRIP APPLICATOR	**7-13**
190	2613749-0100		1	COVER	**7-33**
200	2760125-0100		1	SEPARATE ROOM	**7-35, 7-37**
210	2538072-0100		1	AUTOMATIC REEL LOADING	**7-79**
A3/FLEX SEPROOM WITHOUT ARL (See drawing on page: 7-6)					
020	2832865-0100		1	COVER	**7-11**
030	2506668-0200		1	STRIP APPLICATOR	**7-13**
130	2506614-0100		1	BOBBIN BRAKE	**7-89**
140	2506615-0100		1	BOBBIN BRAKE	**7-91**
190	2613749-0100		1	COVER	**7-33**
200	2760125-0100		1	SEPARATE ROOM	**7-35, 7-37**
A3/FLEX ASU WITH ARL (See drawing on page: 7-4)					
020	2832865-0100		1	COVER	**7-11**
030	2506668-0200		1	STRIP APPLICATOR	**7-13**
190	2613749-0100		1	COVER	**7-33**
210	2538072-0100		1	AUTOMATIC REEL LOADING	**7-79**
A3/FLEX ASU WITHOUT ARL (See drawing on page: 7-2)					
020	2832865-0100		1	COVER	**7-11**
030	2506668-0200		1	STRIP APPLICATOR	**7-13**
130	2506614-0100		1	BOBBIN BRAKE	**7-89**
140	2506615-0100		1	BOBBIN BRAKE	**7-91**
190	2613749-0100		1	COVER	**7-33**
C3/FLEX SEPROOM IH					
020	2832865-0100		1	COVER	**7-11**
030	2506668-0200		1	STRIP APPLICATOR	**7-13**
130	2506614-0100		1	BOBBIN BRAKE	**7-89**
140	2506615-0100		1	BOBBIN BRAKE	**7-91**
190	2613749-0100		1	COVER	**7-33**
200	2760125-0100		1	SEPARATE ROOM	**7-35, 7-37**
Common Parts					
010	1487560-0200		1	MACHINE BODY	**7-93, 7-95, 7-97, 7-99**
040	1484707-0200		1	STRIP MAGAZINE	**7-121**
050	2588946-0100		1	SPLICING DEVICE	**7-137, 7-139**
060	2588422-0100		1	MATERIAL HOLDER L1	**7-165**
070	2588423-0100		1	MATERIAL HOLDER L2	**7-173**
080	1548491-0200		1	ELECTRICAL CABINET	**7-181, 7-183, 7-185, 7-187, 7-189**
090	2564633-0100		1	VALVE PANEL	**7-203, 7-205**
100	1487808-0200		1	BRACKET	**7-221**
110	1490831-0200		1	MAGAZINE	**7-231, 7-233**
120	1490215-0200		1	COVERING PANEL	**7-237, 7-239, 7-241, 7-243**

Pos	Part No	UN	Qty	Description	Page No

Machine Type	Group Description	Used-In	Group Number	Page No

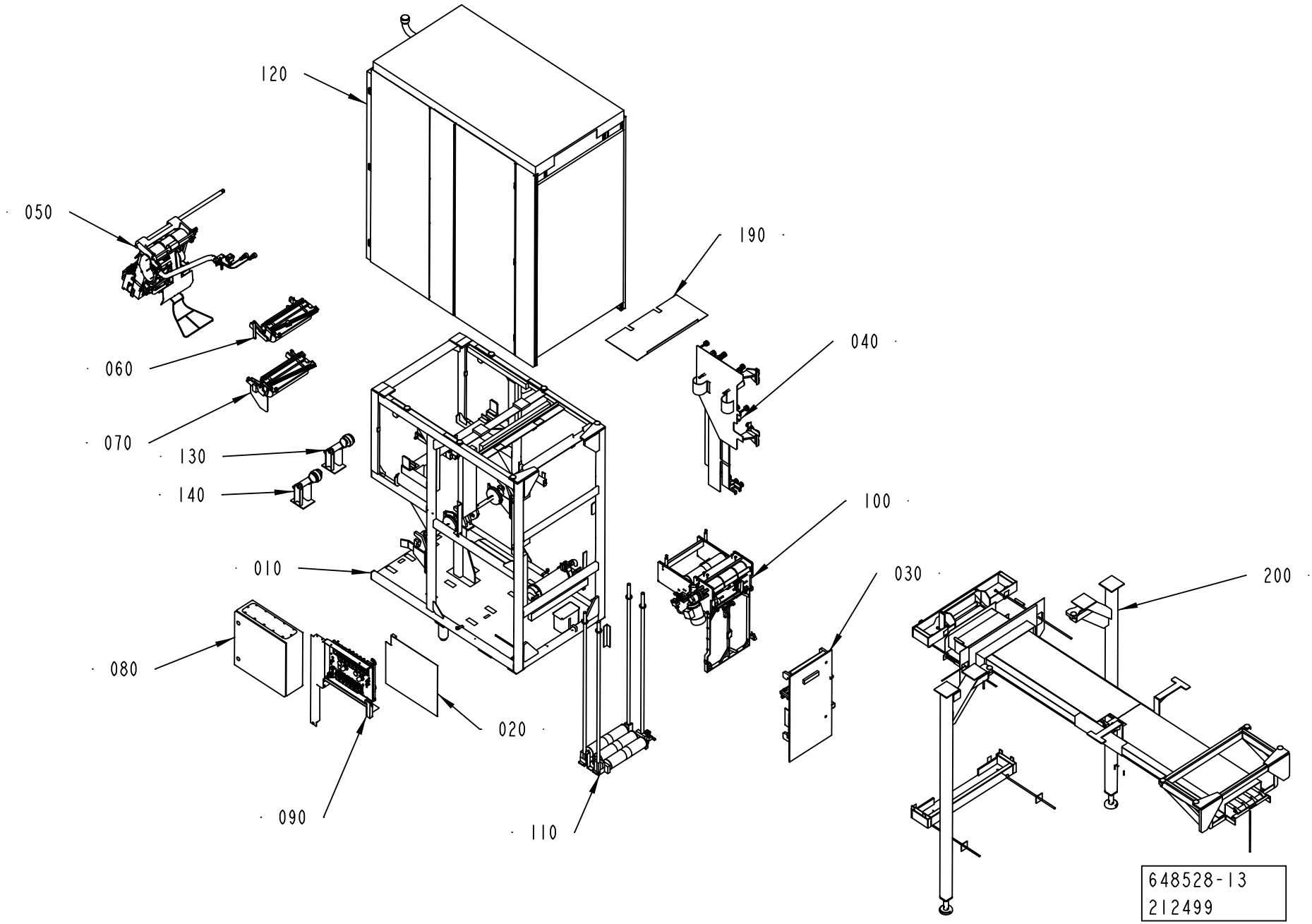
120
050
190
040
060
070
130
140
100
010
030
200
080
020
090
110
648528-13
212499

ECM: 274055 - 20061102
Group number: 648528-0200
Assembly Drawing: 648528-13_1_AA

This list covers pages from 7-2 to 7-9

Pos	Part No	UN	Qty	Description	Page No
A3/FLEX SEPROOM WITH ARL (See drawing on page: 7-8)					
020	2832865-0100		1	COVER	**7-11**
030	2506668-0200		1	STRIP APPLICATOR	**7-13**
190	2613749-0100		1	COVER	**7-33**
200	2760125-0100		1	SEPARATE ROOM	**7-35, 7-37**
210	2538072-0100		1	AUTOMATIC REEL LOADING	**7-79**
A3/FLEX SEPROOM WITHOUT ARL (See drawing on page: 7-6)					
020	2832865-0100		1	COVER	**7-11**
030	2506668-0200		1	STRIP APPLICATOR	**7-13**
130	2506614-0100		1	BOBBIN BRAKE	**7-89**
140	2506615-0100		1	BOBBIN BRAKE	**7-91**
190	2613749-0100		1	COVER	**7-33**
200	2760125-0100		1	SEPARATE ROOM	**7-35, 7-37**
A3/FLEX ASU WITH ARL (See drawing on page: 7-4)					
020	2832865-0100		1	COVER	**7-11**
030	2506668-0200		1	STRIP APPLICATOR	**7-13**
190	2613749-0100		1	COVER	**7-33**
210	2538072-0100		1	AUTOMATIC REEL LOADING	**7-79**
A3/FLEX ASU WITHOUT ARL (See drawing on page: 7-2)					
020	2832865-0100		1	COVER	**7-11**
030	2506668-0200		1	STRIP APPLICATOR	**7-13**
130	2506614-0100		1	BOBBIN BRAKE	**7-89**
140	2506615-0100		1	BOBBIN BRAKE	**7-91**
190	2613749-0100		1	COVER	**7-33**
C3/FLEX SEPROOM IH					
020	2832865-0100		1	COVER	**7-11**
030	2506668-0200		1	STRIP APPLICATOR	**7-13**
130	2506614-0100		1	BOBBIN BRAKE	**7-89**
140	2506615-0100		1	BOBBIN BRAKE	**7-91**
190	2613749-0100		1	COVER	**7-33**
200	2760125-0100		1	SEPARATE ROOM	**7-35, 7-37**
Common Parts					
010	1487560-0200		1	MACHINE BODY	**7-93, 7-95, 7-97, 7-99**
040	1484707-0200		1	STRIP MAGAZINE	**7-121**
050	2588946-0100		1	SPLICING DEVICE	**7-137, 7-139**
060	2588422-0100		1	MATERIAL HOLDER L1	**7-165**
070	2588423-0100		1	MATERIAL HOLDER L2	**7-173**
080	1548491-0200		1	ELECTRICAL CABINET	**7-181, 7-183, 7-185, 7-187, 7-189**
090	2564633-0100		1	VALVE PANEL	**7-203, 7-205**
100	1487808-0200		1	BRACKET	**7-221**
110	1490831-0200		1	MAGAZINE	**7-231, 7-233**
120	1490215-0200		1	COVERING PANEL	**7-237, 7-239, 7-241, 7-243**

Pos	Part No	UN	Qty	Description	Page No

Machine Type | Group Description | Used-In | Group Number | Page No

Automatic Splicing Unit

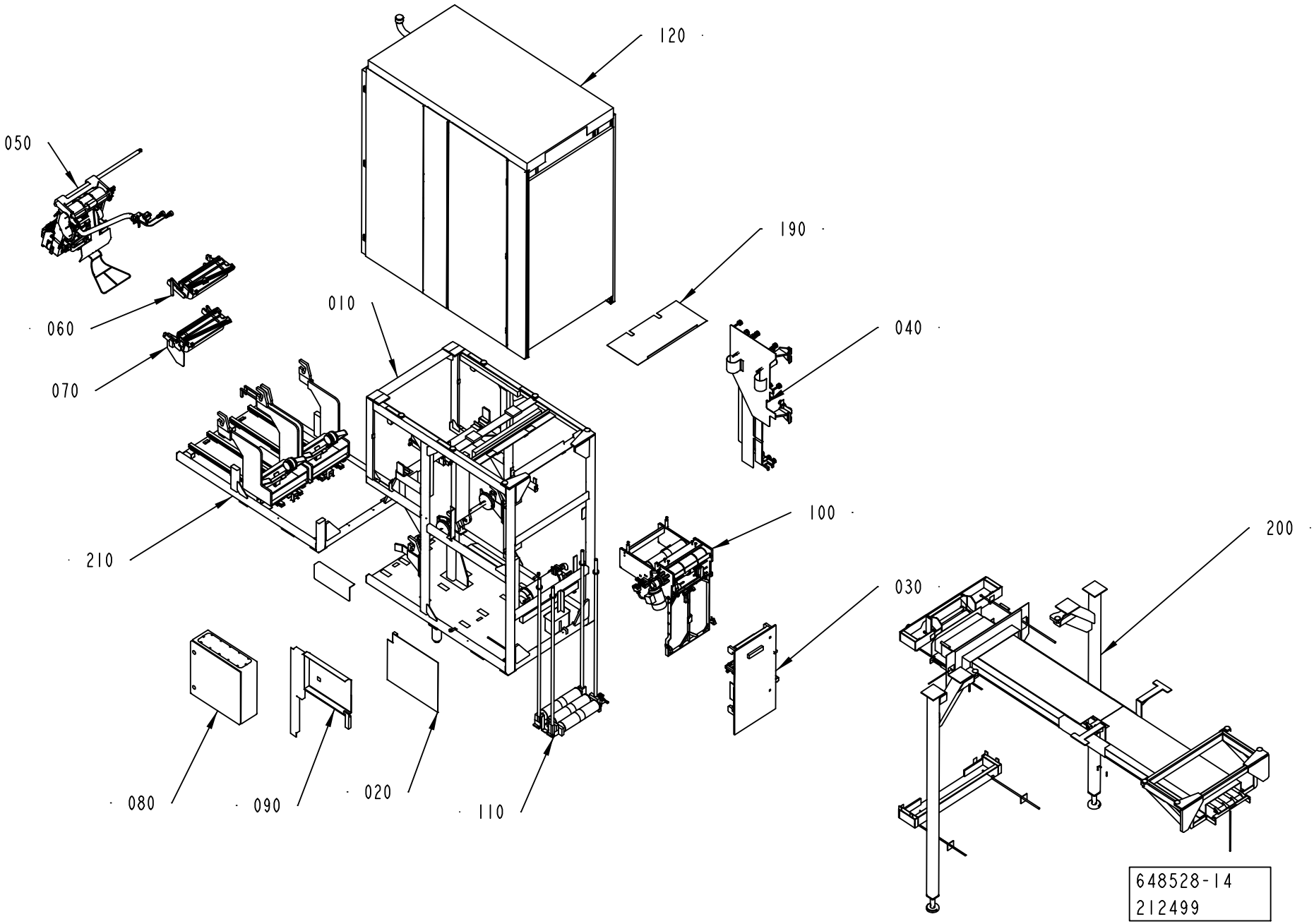

ECM: 274055 - 20061102
Group number: 648528-0200
Assembly Drawing: 648528-14_1_AA

This list covers pages from 7-2 to 7-9

Pos	Part No	UN	Qty	Description	Page No
A3/FLEX SEPROOM WITH ARL (See drawing on page: 7-8)					
020	2832865-0100		1	COVER	**7-11**
030	2506668-0200		1	STRIP APPLICATOR	**7-13**
190	2613749-0100		1	COVER	**7-33**
200	2760125-0100		1	SEPARATE ROOM	**7-35, 7-37**
210	2538072-0100		1	AUTOMATIC REEL LOADING	**7-79**
A3/FLEX SEPROOM WITHOUT ARL (See drawing on page: 7-6)					
020	2832865-0100		1	COVER	**7-11**
030	2506668-0200		1	STRIP APPLICATOR	**7-13**
130	2506614-0100		1	BOBBIN BRAKE	**7-89**
140	2506615-0100		1	BOBBIN BRAKE	**7-91**
190	2613749-0100		1	COVER	**7-33**
200	2760125-0100		1	SEPARATE ROOM	**7-35, 7-37**
A3/FLEX ASU WITH ARL (See drawing on page: 7-4)					
020	2832865-0100		1	COVER	**7-11**
030	2506668-0200		1	STRIP APPLICATOR	**7-13**
190	2613749-0100		1	COVER	**7-33**
210	2538072-0100		1	AUTOMATIC REEL LOADING	**7-79**
A3/FLEX ASU WITHOUT ARL (See drawing on page: 7-2)					
020	2832865-0100		1	COVER	**7-11**
030	2506668-0200		1	STRIP APPLICATOR	**7-13**
130	2506614-0100		1	BOBBIN BRAKE	**7-89**
140	2506615-0100		1	BOBBIN BRAKE	**7-91**
190	2613749-0100		1	COVER	**7-33**
C3/FLEX SEPROOM IH					
020	2832865-0100		1	COVER	**7-11**
030	2506668-0200		1	STRIP APPLICATOR	**7-13**
130	2506614-0100		1	BOBBIN BRAKE	**7-89**
140	2506615-0100		1	BOBBIN BRAKE	**7-91**
190	2613749-0100		1	COVER	**7-33**
200	2760125-0100		1	SEPARATE ROOM	**7-35, 7-37**
Common Parts					
010	1487560-0200		1	MACHINE BODY	**7-93, 7-95, 7-97, 7-99**
040	1484707-0200		1	STRIP MAGAZINE	**7-121**
050	2588946-0100		1	SPLICING DEVICE	**7-137, 7-139**
060	2588422-0100		1	MATERIAL HOLDER L1	**7-165**
070	2588423-0100		1	MATERIAL HOLDER L2	**7-173**
080	1548491-0200		1	ELECTRICAL CABINET	**7-181, 7-183, 7-185, 7-187, 7-189**
090	2564633-0100		1	VALVE PANEL	**7-203, 7-205**
100	1487808-0200		1	BRACKET	**7-221**
110	1490831-0200		1	MAGAZINE	**7-231, 7-233**
120	1490215-0200		1	COVERING PANEL	**7-237, 7-239, 7-241, 7-243**

Pos	Part No	UN	Qty	Description	Page No

Machine Type	Group Description	Used-In	Group Number	Page No

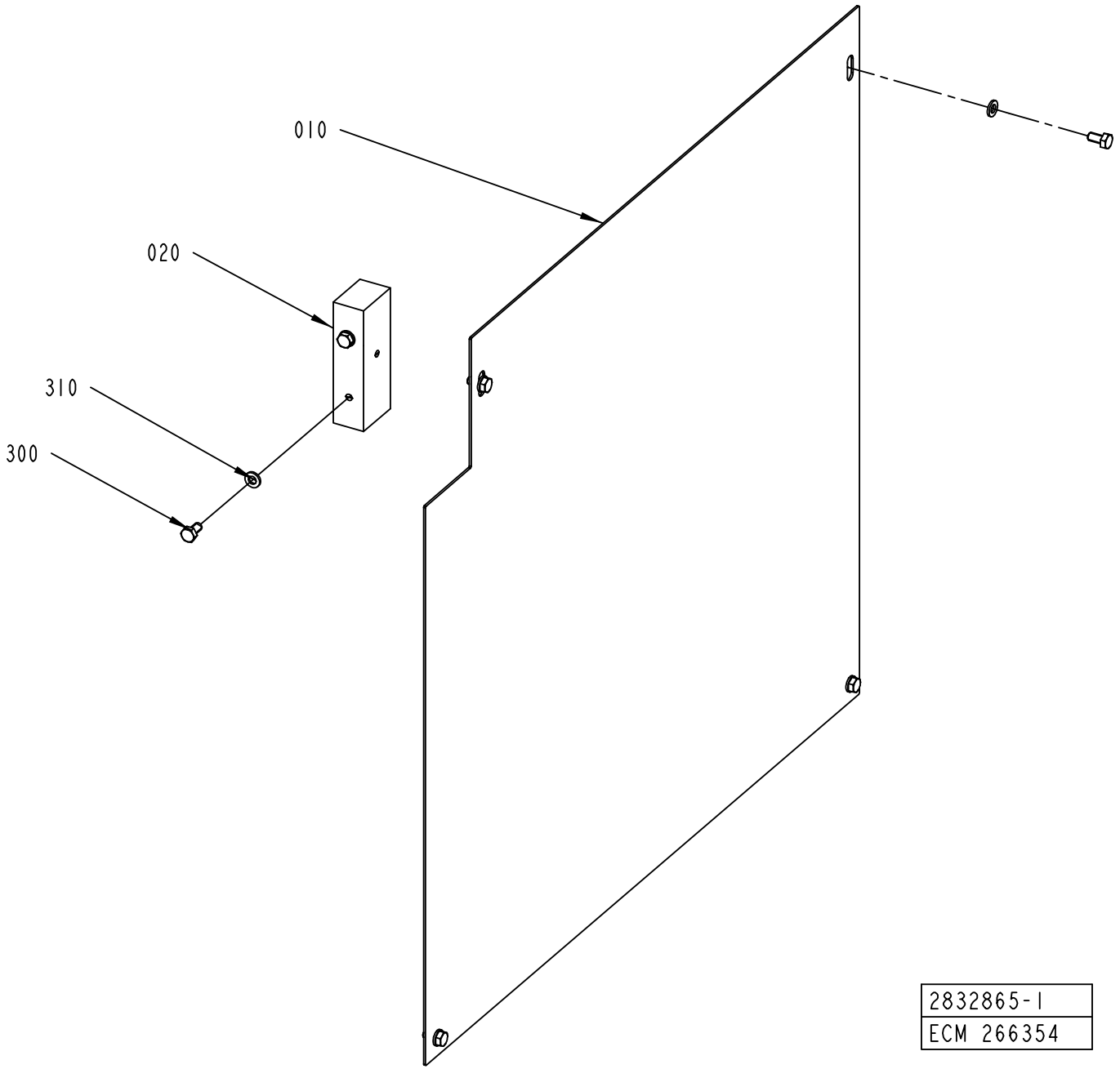
010
020
310
300
2832865-1
ECM 266354

ECM: 266854 - 20061101
Group number: 2832865-0100
Assembly Drawing: 2832865-1_1_AA

Pos	Part No	UN	Qty	Description	Page No
-					
010	2832866-0000		1	COVER	
020	2833334-0000		1	BRACKET	
300	312105-0366		6	SCREW M6S ISO 4017 M6X12 A480	
310	315105-0153		6	WASHER BRB 6,4X12 RFR	

Pos	Part No	UN	Qty	Description	Page No

STRIP APPLICATOR

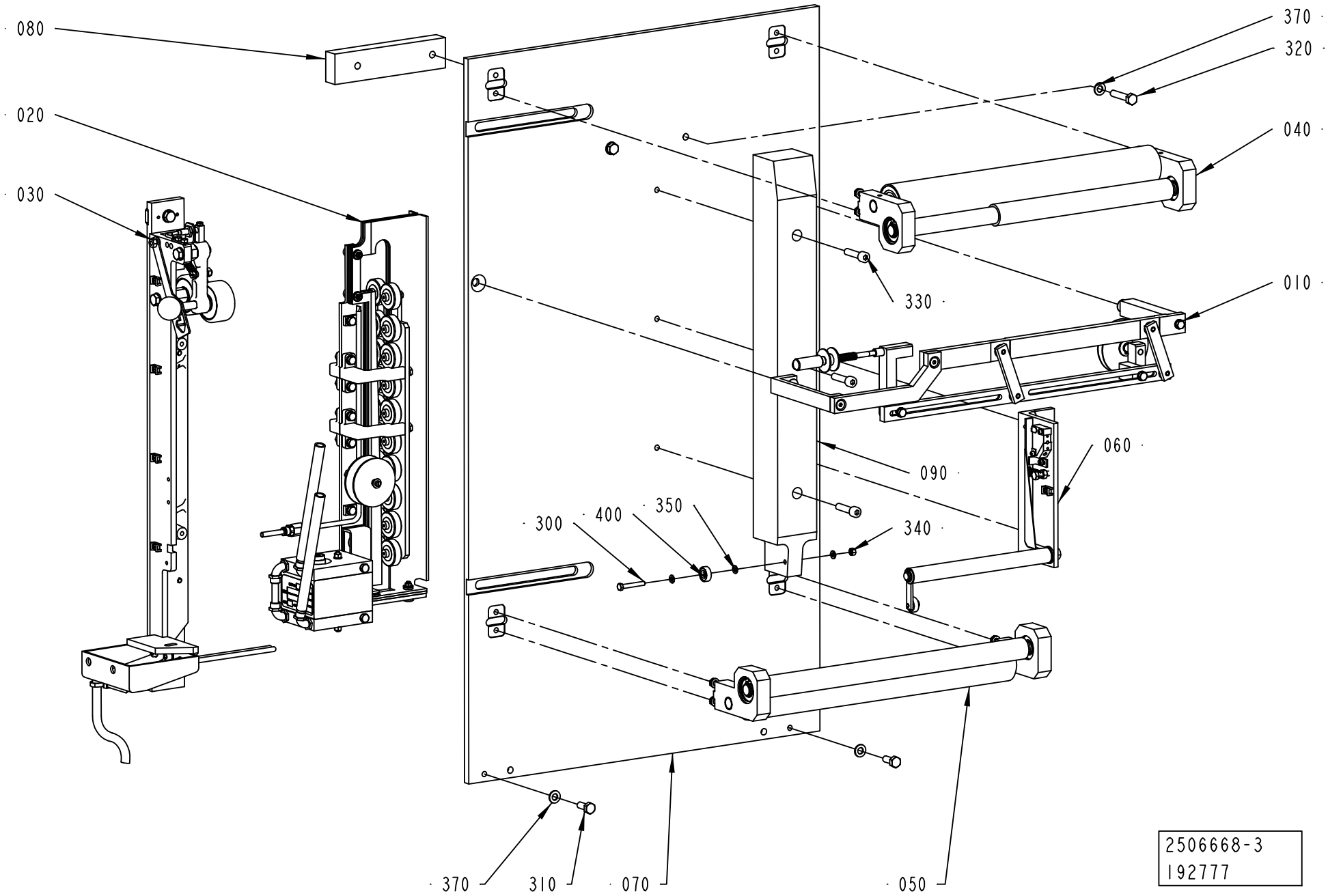

ECM: 272345 - 20060712
Group number: 2506668-0200
Assembly Drawing: 2506668-3_1_AB

Pos	Part No	UN	Qty	Description	Page No
-					
010	2530410-0200		1	STRIP GUIDE	**7-15**
020	2529569-0100		1	INDUCTOR	**7-17**
030	2529571-0100		1	PRESSURE ROLLER	**7-25**
040	2507019-0100		1	ROLLER	**7-27**
050	2507020-0100		1	ROLLER	**7-29**
060	2507022-0200		1	SPLICE DETECTOR	**7-31**
070	2602990-0000		1	SHEET	
080	2506660-0000		1	SPACER	
090	2506664-0000		1	STEERING	
300	312105-0337		1	SCREW M6S ISO 4014 M5X35 A480	
310	312105-0451		2	SCREW M6S ISO 4017 M8X20 A480	
320	312109-0459		2	SCREW M6S ISO 4017 M8X40 A480	
330	312115-0457		3	SCREW ISO4762 M8X35 A4 80	
340	312605-0314		1	HEXAGON NUT, M6M M5 A280	
350	315105-0146		3	WASHER BRB 5,3X10 RFR	
370	315105-0165		4	WASHER BRB 8,4X16 RFR	
400	90214-0138		1	BALL BEARING, 5X19X6 MM	

Pos	Part No	UN	Qty	Description	Page No

STRIP GUIDE

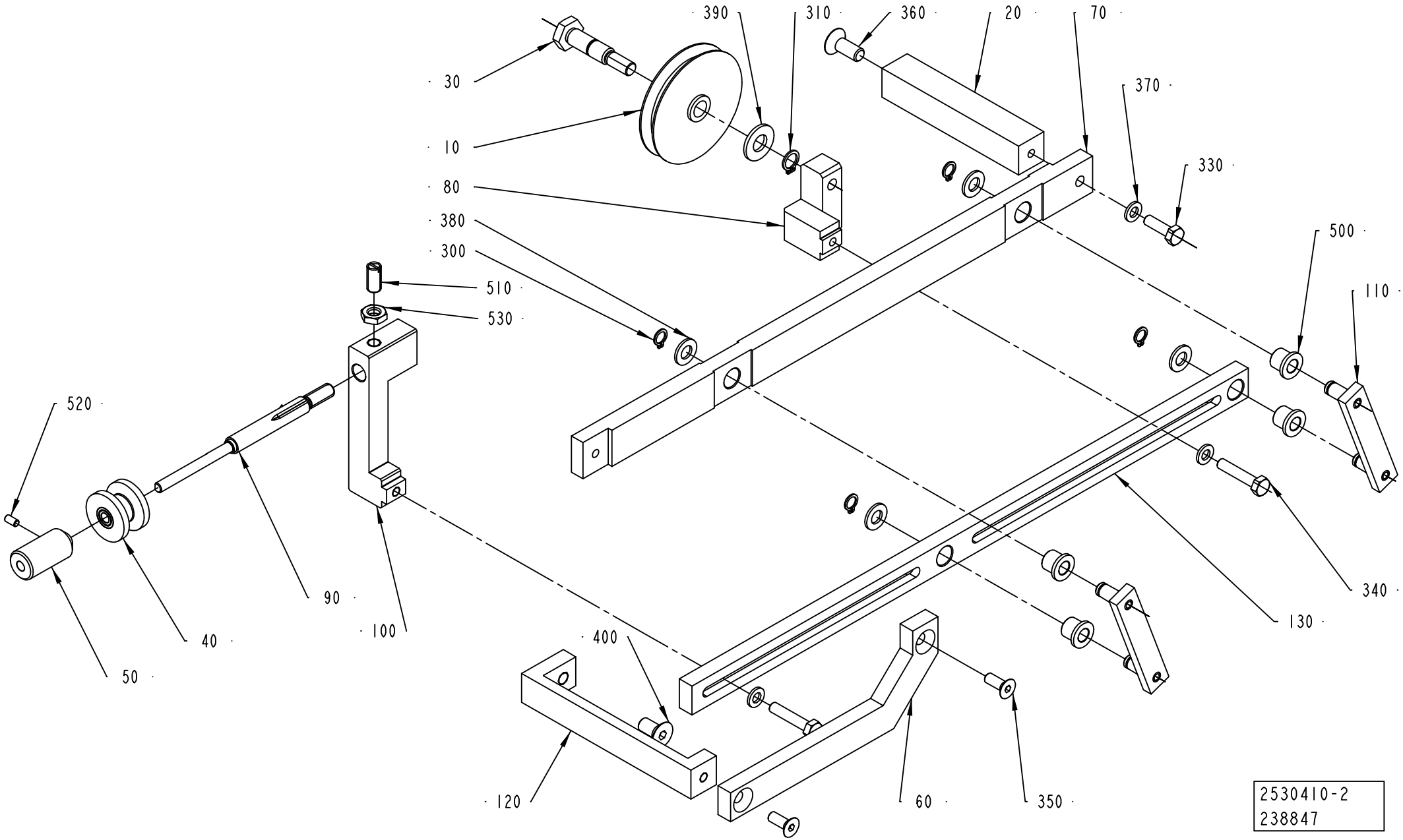
390
310
360
20
70
30
370
10
330
80
380
500
300
110
510
530
520
340
130
90
100
40
400
50
120
60
350
2530410-2
238847

ECM: 272341 - 20060712
Group number: 2530410-0200
Assembly Drawing: 2530410-2_1_AC

Pos	Part No	UN	Qty	Description	Page No
-					
010	282635-0000		1	GUIDE WHEEL	
020	2504801-0000		1	BRACKET	
030	2504807-0000		1	AXLE PIN	
040	2774708-0000		1	ROLLER	
050	2748699-0000		1	KNOB	
060	2530399-0000		1	HANGER	
070	2602992-0000		1	ROD	
080	2530405-0000		1	BRACKET	
090	2748698-0000		1	ADJUSTING SCREW	
100	2748697-0000		1	BRACKET	
110	2530408-0000		2	LEVER	
120	2504808-0000		1	BRACKET	
130	2602991-0000		1	ROD	
300	90141-0015		4	RETAINING RING FOR SHAFT DIN 471 8 A2	
310	90141-0016		1	RETAINING RING FOR SHAFT DIN 471 10 A2	
330	312105-0370		1	SCREW M6S ISO 4017 M6X20 A480	
340	312109-0374		2	SCREW M6S ISO 4017 M6X30 A480	
350	312155-0368		2	SCREW DIN 7991 MF6S M6X16 A4 70	
360	312155-0451		1	SCREW DIN 7991 MF6S M8X20 A4 70	
370	315105-0153		4	WASHER BRB 6,4X12 RFR	
380	315105-0165		4	WASHER BRB 8,4X16 RFR	
390	315105-0173		1	WASHER BRB 10,5X20 RFR	
400	312155-0449		1	SCREW DIN 7991 MF6S M8X16 A4 70	
500	321111-0097		4	FLANGE BUSHING, 8X12X12 MM	
510	90287-0334		1	SCREW SPRINGLOAD. SLOTTED HEAD M8X16	
520	312318-0287		1	SCREW ISO4029 M4X8 A4	
530	312625-0318		1	HEXAGON THIN NUT, EN 24035 ML6M M8 A4	

Pos	Part No	UN	Qty	Description	Page No

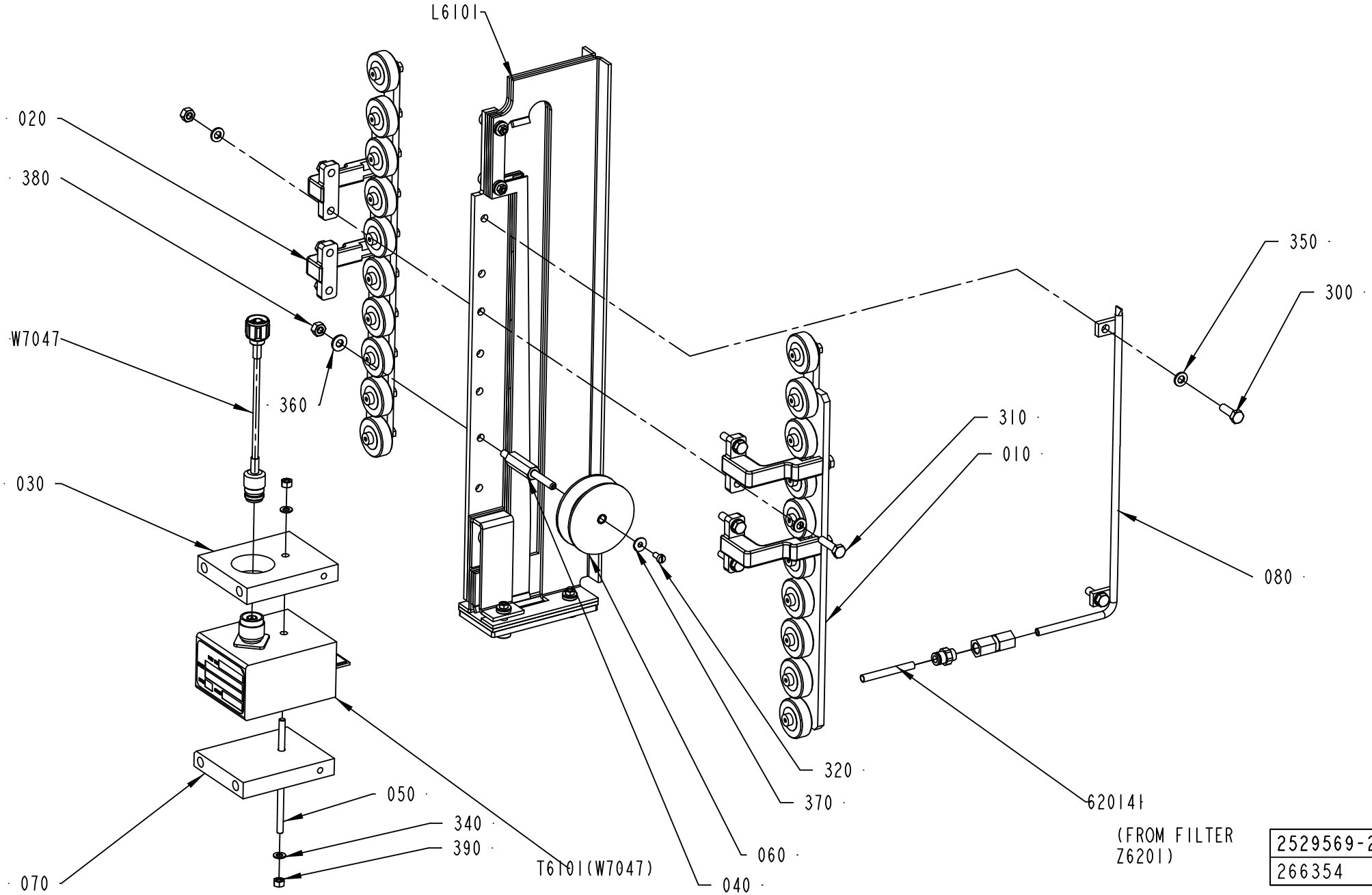

2529569-2
266354

ECM: 266856 - 20061101
Group number: 2529569-0100
Assembly Drawing: 2529569-2_1_AB

Pos	Part No	UN	Qty	Description	Page No
A3/FLEX TBA 0200B, A3/FLEX TBA 0250B, A3/FLEX TBA 0330S (See drawing on page: 7-16)					
T6101	67380-0214		1	TRANSFORMER	
W7047	2540595-0007		1	COAXIAL CABLE	
A3/FLEX TBA 0500B, A3/FLEX TBA 1000B, A3/FLEX TBA 1000S, A3/FLEX TBA 1000SQ, A3/FLEX TPA 1000SQ, A3/FLEX TBA 0200S, A3/FLEX TBA 1500S, A3/FLEX TPA 0330SQ, A3/FLEX TPA 0500SQ, A3/FLEX TBA 1890S, A3/FLEX TBA 2000S, A3/FLEX TBA 0200M, A3/FLEX TBA 0250S, A3/FLEX TBA 0500S, A3/FLEX TPA 0250SQ, A3/FLEX TPA 0200SQ, A3/FLEX TPA 0750SQ, A3/FLEX TBA 0200SQ, A3/FLEX TBA 0250SQ, A3/FLEX TBA 1400B (See drawing on page: 7-16)					
T6101	67380-0207		1	TRANSFORMER	
W7047	2540595-0007		1	COAXIAL CABLE	
Common Parts					
010	2506496-0100		1	PRESSURE ROLLER	**7-19**
020	2506497-0100		1	PRESSURE ROLLER	**7-21**
030	1129839-0000		1	COOLING PLATE	
040	2510366-0000		1	SHAFT	
050	1498430-0000		1	ROD	
060	2510365-0000		1	ROLLER	
070	1129869-0000		1	COOLING PLATE	
080	2529930-0000		1	AIR NOZZLE	
300	312105-0370		2	SCREW M6S ISO 4017 M6X20 A480	
310	312105-0372		4	SCREW M6S ISO 4017 M6X25 A480	
320	312125-0287		1	SCREW ISO 1207 M4X8 A4	
340	315105-0146		2	WASHER BRB 5,3X10 RFR	
350	315105-0153		10	WASHER BRB 6,4X12 RFR	
360	315105-0156		1	WASHER BRB 6,7X14 RFR	
370	90005-0082		1	WASHER PLAIN ROUND 4,3(M4)/12,H=1	
380	312605-0316		5	HEXAGON NUT, M6M M6 A280	
390	312605-0314		2	HEXAGON NUT, M6M M5 A280	
650	342722-0202		1	PIPE COUPLING 1/8" D=6MM	
660	342725-0102		1	CONN. STR. PIPE GI-6-G1/8	
620141	90166-0193	MM	850	TUBE 6 MM PUR BLUE	
L6101	2509617-0100		1	INDUCTOR	**7-23**

Pos	Part No	UN	Qty	Description	Page No

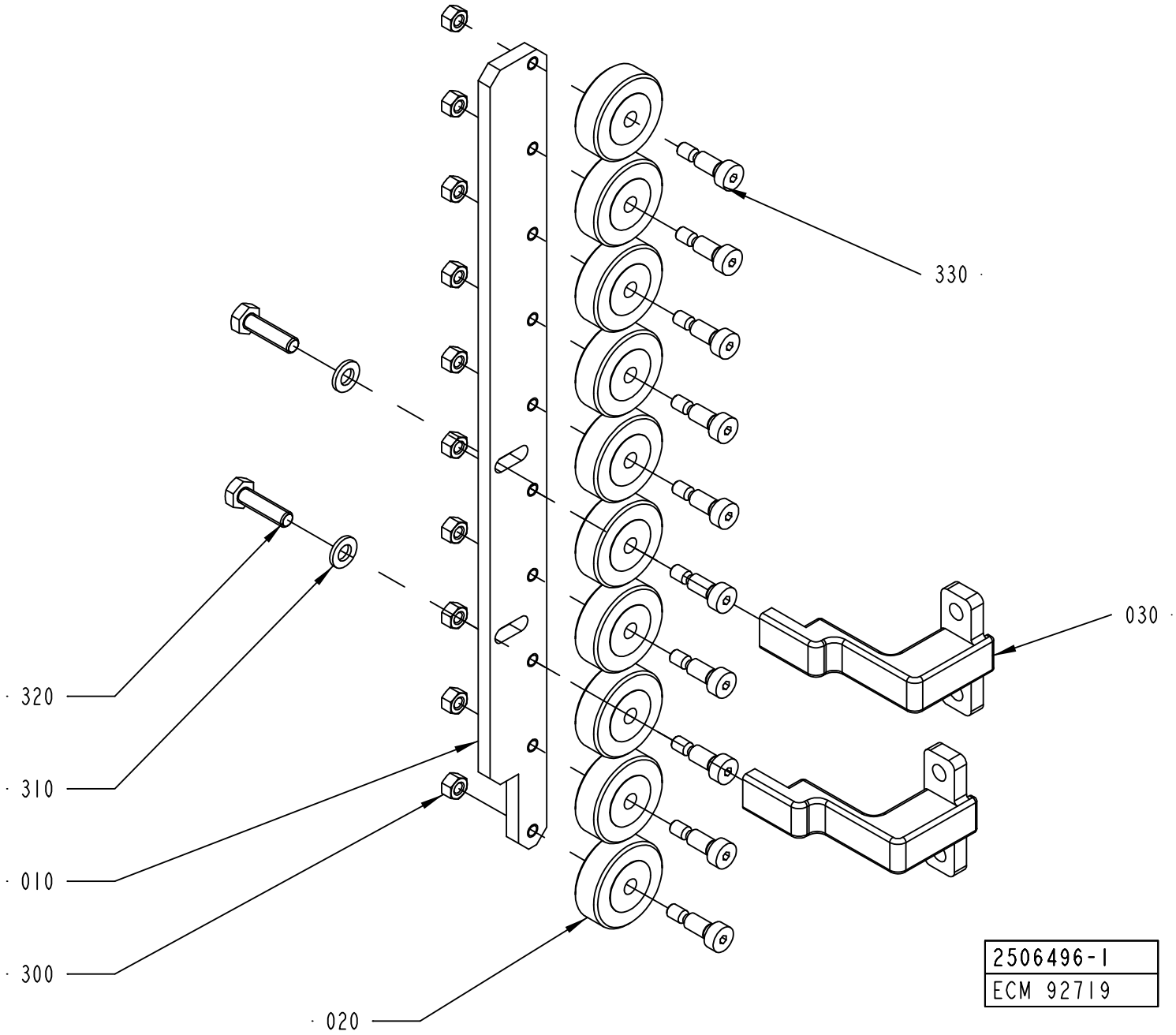
330
030
320
310
010
300
020
2506496-1
ECM 92719

ECM: 257596 - 20060419
Group number: 2506496-0100
Assembly Drawing: 2506496-1_1_AA

Pos	Part No	UN	Qty	Description	Page No
-					
010	1558914-0000		1	ROLLER BRACKET	
020	1558911-0000		10	PRESSURE ROLLER	
030	2529573-0000		2	BRACKET	
300	312605-0314		10	HEXAGON NUT, M6M M5 A280	
310	315105-0153		2	WASHER BRB 6,4X12 RFR	
320	312105-0371		2	SCREW M6S ISO 4017 M6X22 A480	
330	312180-0366		10	SCREW ISO7379 H6X12	

Pos	Part No	UN	Qty	Description	Page No

PRESSURE ROLLER

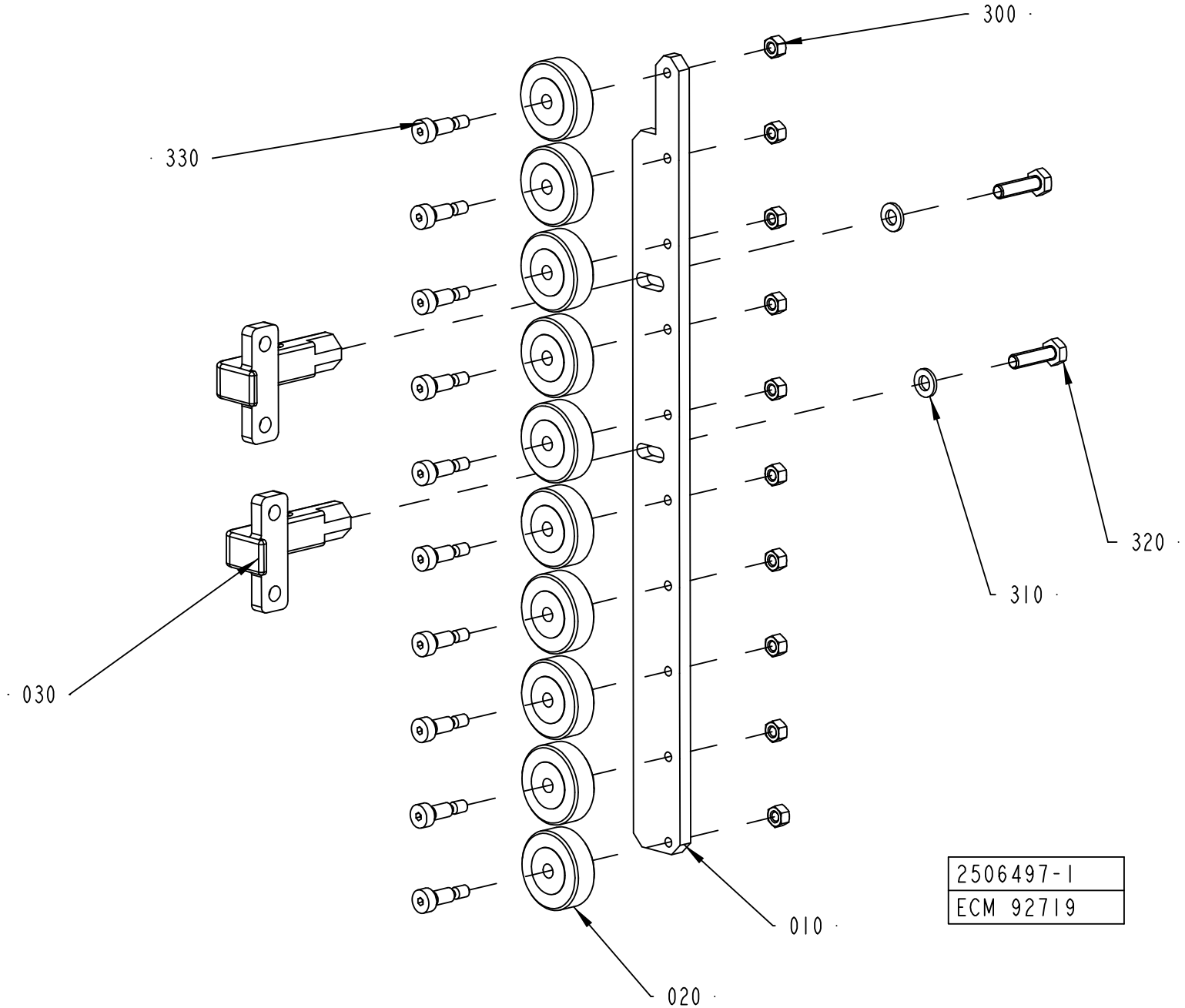

ECM: 257597 - 20060419
Group number: 2506497-0100
Assembly Drawing: 2506497-1_1_AA

Pos	Part No	UN	Qty	Description	Page No
-					
010	1558914-0000		1	ROLLER BRACKET	
020	1558911-0000		10	PRESSURE ROLLER	
030	2529572-0000		2	BRACKET	
300	312605-0314		10	HEXAGON NUT, M6M M5 A280	
310	315105-0153		2	WASHER BRB 6,4X12 RFR	
320	312105-0371		2	SCREW M6S ISO 4017 M6X22 A480	
330	312180-0366		10	SCREW ISO7379 H6X12	

Pos	Part No	UN	Qty	Description	Page No

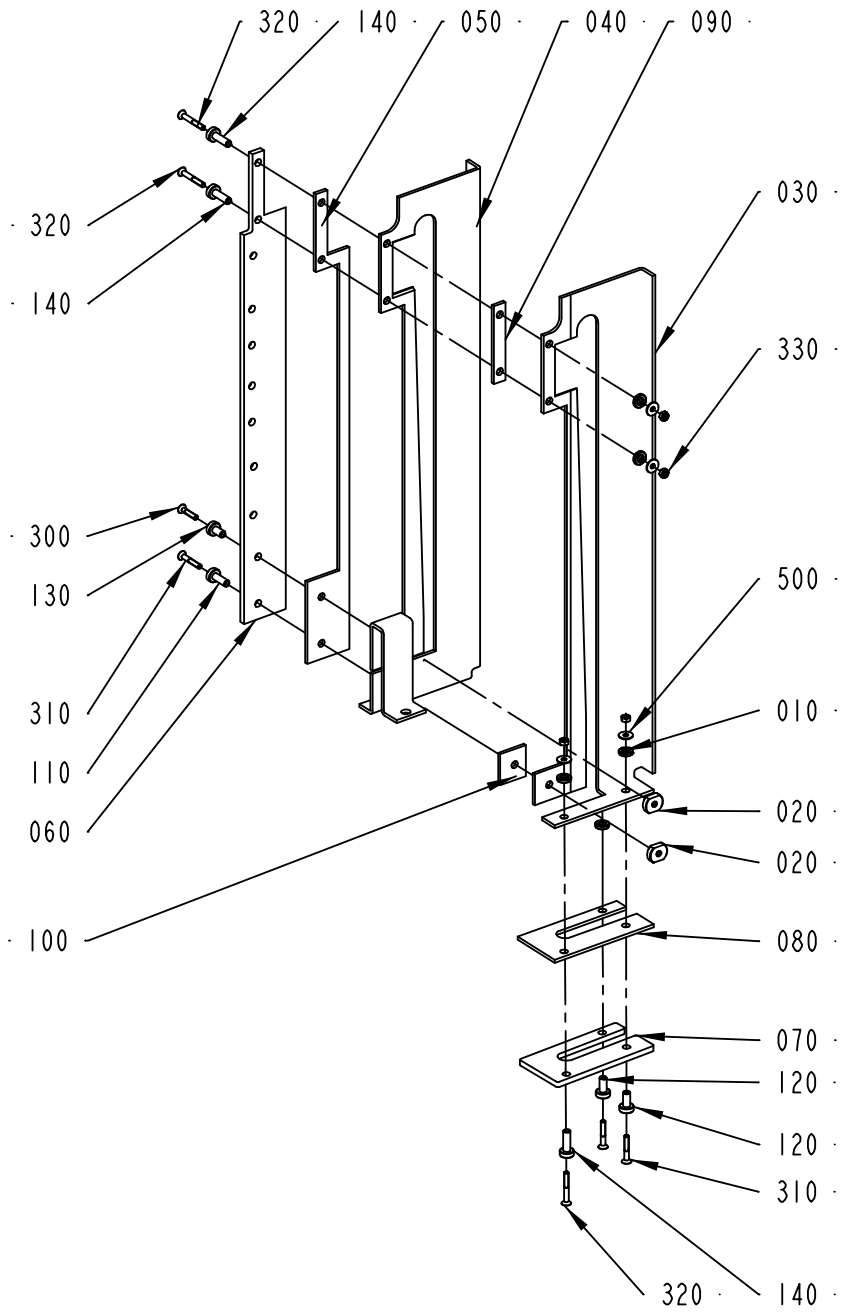

2509617-1
ECM 124683

ECM: 240441 - 20060419
Group number: 2509617-0100
Assembly Drawing: 2509617-1_1_AB

Pos	Part No	UN	Qty	Description	Page No
-					
010	1558917-0000		5	SPACER DISC	
020	1558918-0000		2	TIGHTENING NUT	
030	2506498-0000		1	SEALING PLATE	
040	2506499-0000		1	SEALING PLATE	
050	2506500-0000		1	PLATE	
060	2506501-0000		1	PLATE	
070	2506502-0000		1	PLATE	
080	2506503-0000		1	PLATE	
090	2506504-0000		1	PLATE	
100	2506505-0000		1	PLATE	
110	2509613-0000		1	BUSHING	
120	2509614-0000		2	BUSHING	
130	2529578-0000		1	BUSHING	
140	2597600-0000		3	BUSHING	
300	312155-0295		1	SCREW DIN 7991 MF6S M4X20 A4 70	
310	312155-0297		3	SCREW DIN 7991 MF6S M4X25 A4 70	
320	312155-0299		3	SCREW DIN 7991 MF6S M4X30 A4 70	
330	312605-0312		5	HEXAGON NUT, M6M M4 A280	
500	90005-0082		5	WASHER PLAIN ROUND 4,3(M4)/12,H=1	

Pos	Part No	UN	Qty	Description	Page No

PRESSURE ROLLER

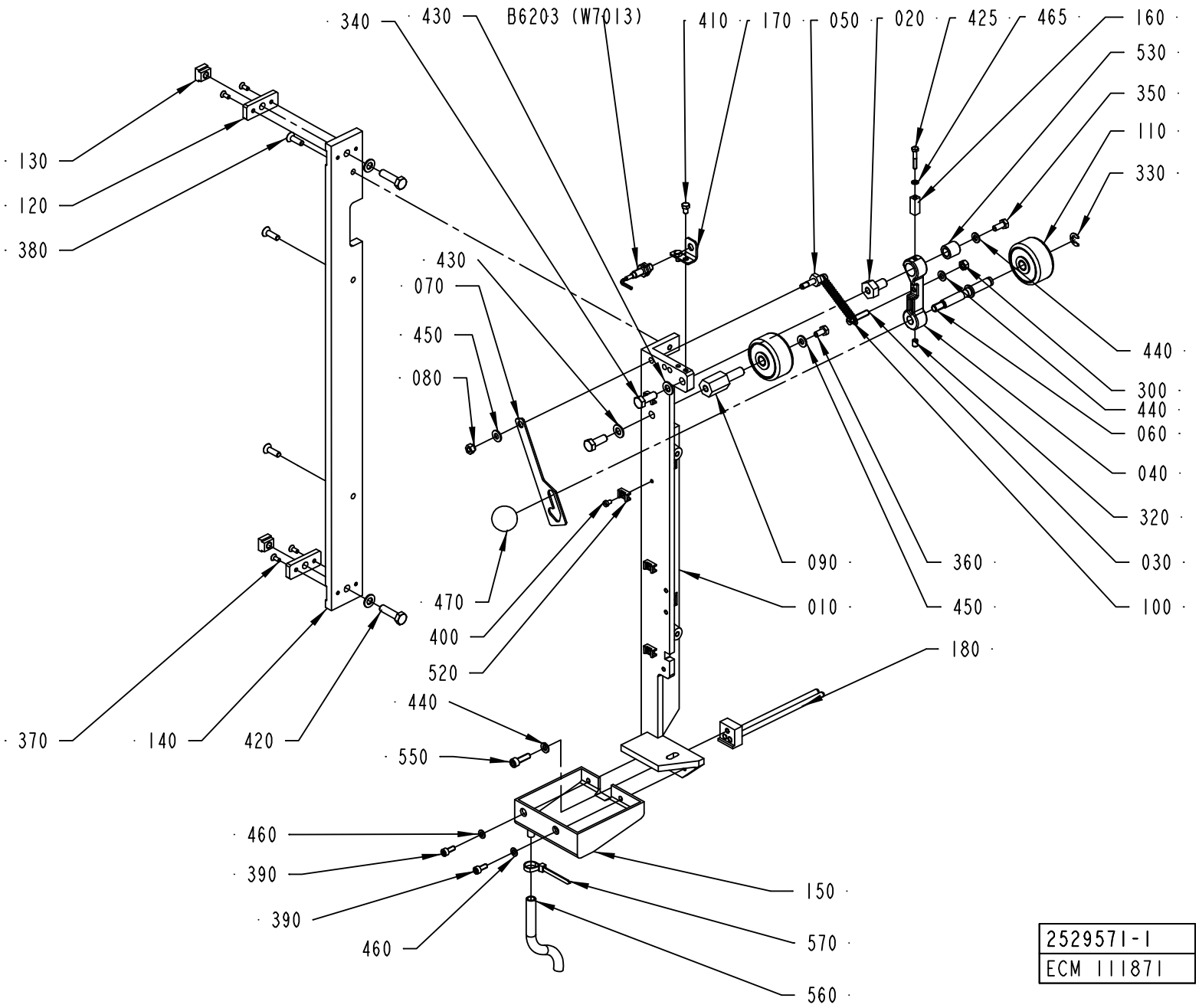

ECM: 235324 - 20060419
Group number: 2529571-0100
Assembly Drawing: 2529571-1_1_AB

Pos	Part No	UN	Qty	Description	Page No
-					
010	2510359-0000		1	FASTENING BRACKET	
020	2510360-0000		1	SHAFT	
030	2510362-0000		1	SHAFT	
040	2510361-0000		1	CONNECTING ROD	
050	2510363-0000		1	SHAFT	
060	2510364-0000		1	SHAFT	
070	1349432-0000		1	CATCH	
080	1349994-0000		1	NUT	
090	1035895-0000		1	SHAFT	
100	1478303-0000		1	TENSION SPRING	
110	1346988-0000		2	ROLL	
010	*90166-0056*	*MM*	*40*	*SHRINKABLE HOSE (2,5")*	
020	*321120-0104*		*2*	*BEARING BUSH W/O FLANGE, 10X12X10 MM*	
120	2506656-0000		2	PLATE	
130	2506654-0000		2	BLOCK	
140	2506657-0000		1	SPACER	
150	2529550-0000		1	SUPPORT	
160	2535932-0000		1	CAM	
170	2564504-0000		1	SUPPORT	
180	1349672-0000		1	GUIDE	
300	312605-0316		1	HEXAGON NUT, M6M M6 A280	
320	312318-0362		1	SCREW ISO4029 M6X8 A4	
330	315755-0801		1	RETAINING RING SHAFT DIN 6799 8 A2	
340	312105-0452		2	SCREW M6S ISO 4017 M8X22 A4 80	
350	312105-0367		1	SCREW M6S ISO 4017 M6X14 A480	
360	312105-0366		1	SCREW M6S ISO 4017 M6X12 A480	
370	312155-0289		4	SCREW DIN 7991 MF6S M4X10 A4 70	
380	312155-0370		3	SCREW DIN 7991 MF6S M6X20 A4 70	
390	312115-0327		2	SCREW ISO4762 M5X12 A4 80	
400	312125-0285		4	SCREW ISO 1207 M4X6 A4	
410	312105-0323		2	SCREW M6S ISO 4017 M5X8 A480	
420	312105-0455		2	SCREW M6S ISO 4017 M8X30 A480	
425	312105-0297		1	SCREW M6S ISO 4017 M4X25 A470	
430	315105-0165		4	WASHER BRB 8,4X16 RFR	
440	315105-0153		3	WASHER BRB 6,4X12 RFR	
450	315105-0156		2	WASHER BRB 6,7X14 RFR	
460	315105-0146		2	WASHER BRB 5,3X10 RFR	
465	315105-0136		1	WASHER BRB 4,3X9 RFR	
470	318800-0104		1	HANDLE,SPHERICAL KNOB,INT.THRE.,D.30-M8	
520	352113-0205		4	ANCHOR PLATES FOR STRIPS, TYPE TM2S8-C10	
530	321105-0164		1	BEARING BUSH W/O FLANGE, 10X16X16 MM	
550	312115-0370		1	SCREW ISO4762 M6X20 A4 80	
560	90459-1126	MM	3000	PLASTIC HOSE PVC TRANSPARENT, 8X11MM	
570	352113-0102		1	CABLE TIE, BLACK 188X4,8 MM	
B6203	90458-0138		1	PROX. SWITCH, E2EG-X1R5B1-5M	

Machine Type | Group Description | Used-In | Group Number | Page No

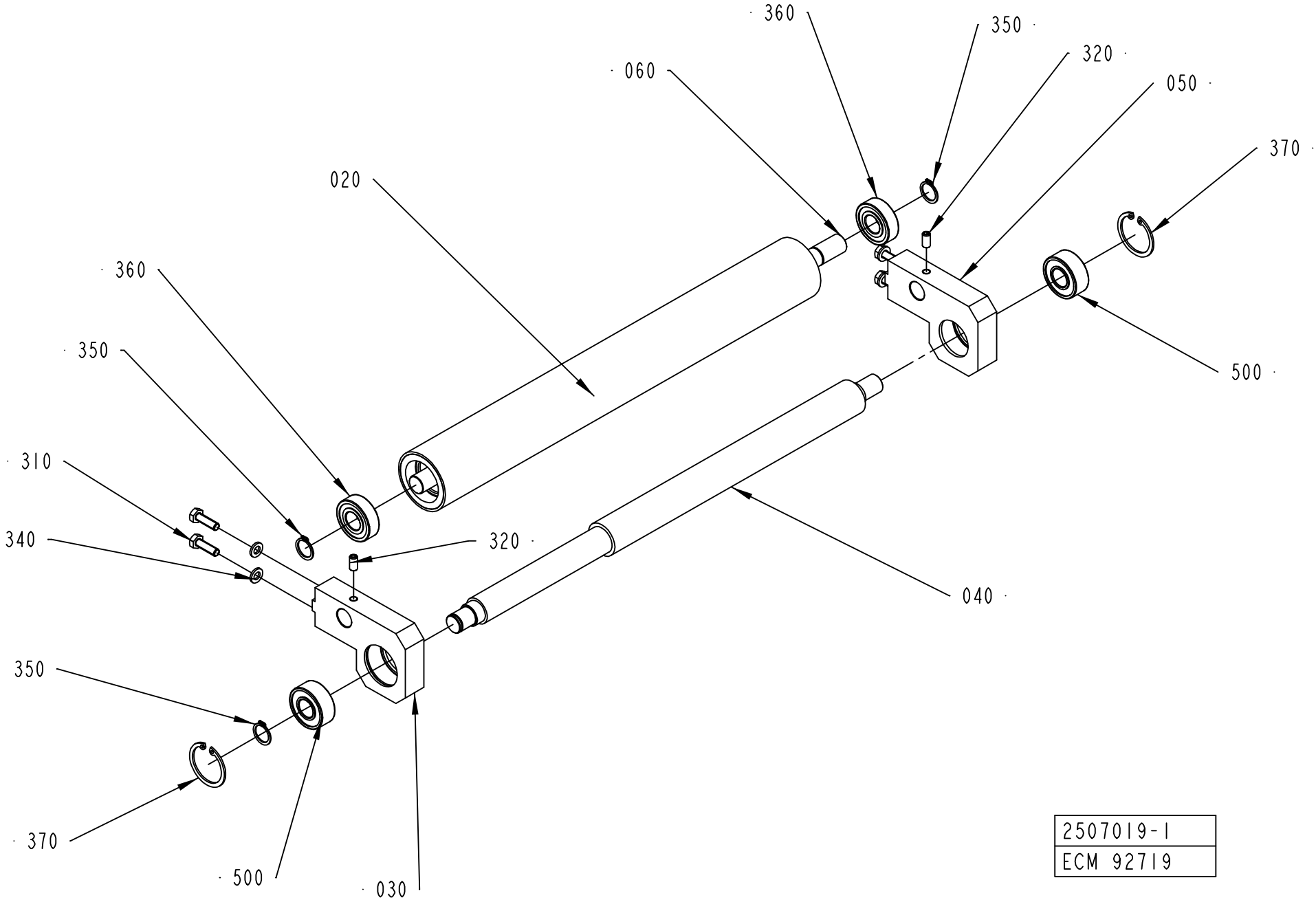
360
350
320
060
050
370
020
360
350
500
310
340
320
040
350
370
500
030
2507019-1
ECM 92719

ECM: 272335 - 20060712
Group number: 2507019-0100
Assembly Drawing: 2507019-1_1_AA

Pos	Part No	UN	Qty	Description	Page No
-					
020	2506661-0000		1	ROLLER	
030	2510404-0000		1	SUPPORT	
040	2506663-0000		1	SUPPORT	
050	2510405-0000		1	SUPPORT	
060	2506666-0000		1	AXEL	
310	312105-0370		4	SCREW M6S ISO 4017 M6X20 A480	
320	312318-0366		2	SCREW ISO4029 M6X12 A4	
340	315105-0153		4	WASHER BRB 6,4X12 RFR	
350	315751-0112		3	RETAINING RING FOR SHAFT DIN 471 15 A2	
360	321313-0102		2	BALL BEARING, 15X35X11 MM	
370	315753-0124		2	RETAINING RING FOR BORE DIN 472 35 A2	
500	90458-2737		2	SPHERICAL BALL BEARING, 15X35X14 MM	

Pos	Part No	UN	Qty	Description	Page No

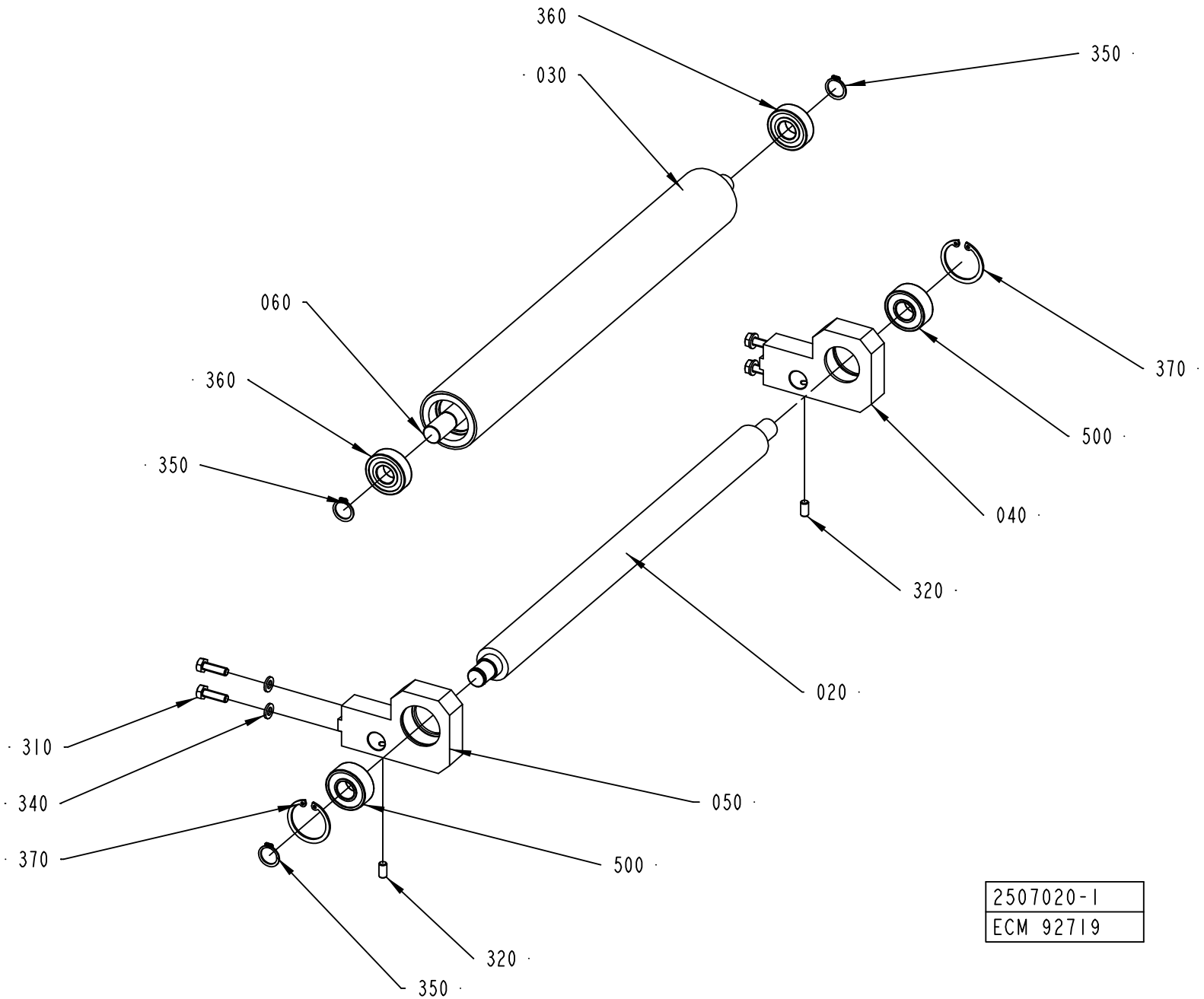
360
030
350
060
360
350
370
500
040
320
020
310
340
370
050
500
320
350
2507020-1
ECM 92719

ECM: 272336 - 20060712
Group number: 2507020-0100
Assembly Drawing: 2507020-1_1_AA

Pos	Part No	UN	Qty	Description	Page No
-					
020	2506659-0000		1	ROLLER	
030	2506661-0000		1	ROLLER	
040	2510404-0000		1	SUPPORT	
050	2510405-0000		1	SUPPORT	
060	2506666-0000		1	AXEL	
310	312105-0370		4	SCREW M6S ISO 4017 M6X20 A480	
320	312318-0366		2	SCREW ISO4029 M6X12 A4	
340	315105-0153		4	WASHER BRB 6,4X12 RFR	
350	315751-0112		3	RETAINING RING FOR SHAFT DIN 471 15 A2	
360	321313-0102		2	BALL BEARING, 15X35X11 MM	
370	315753-0124		2	RETAINING RING FOR BORE DIN 472 35 A2	
500	90458-2737		2	SPHERICAL BALL BEARING, 15X35X14 MM	

Pos	Part No	UN	Qty	Description	Page No

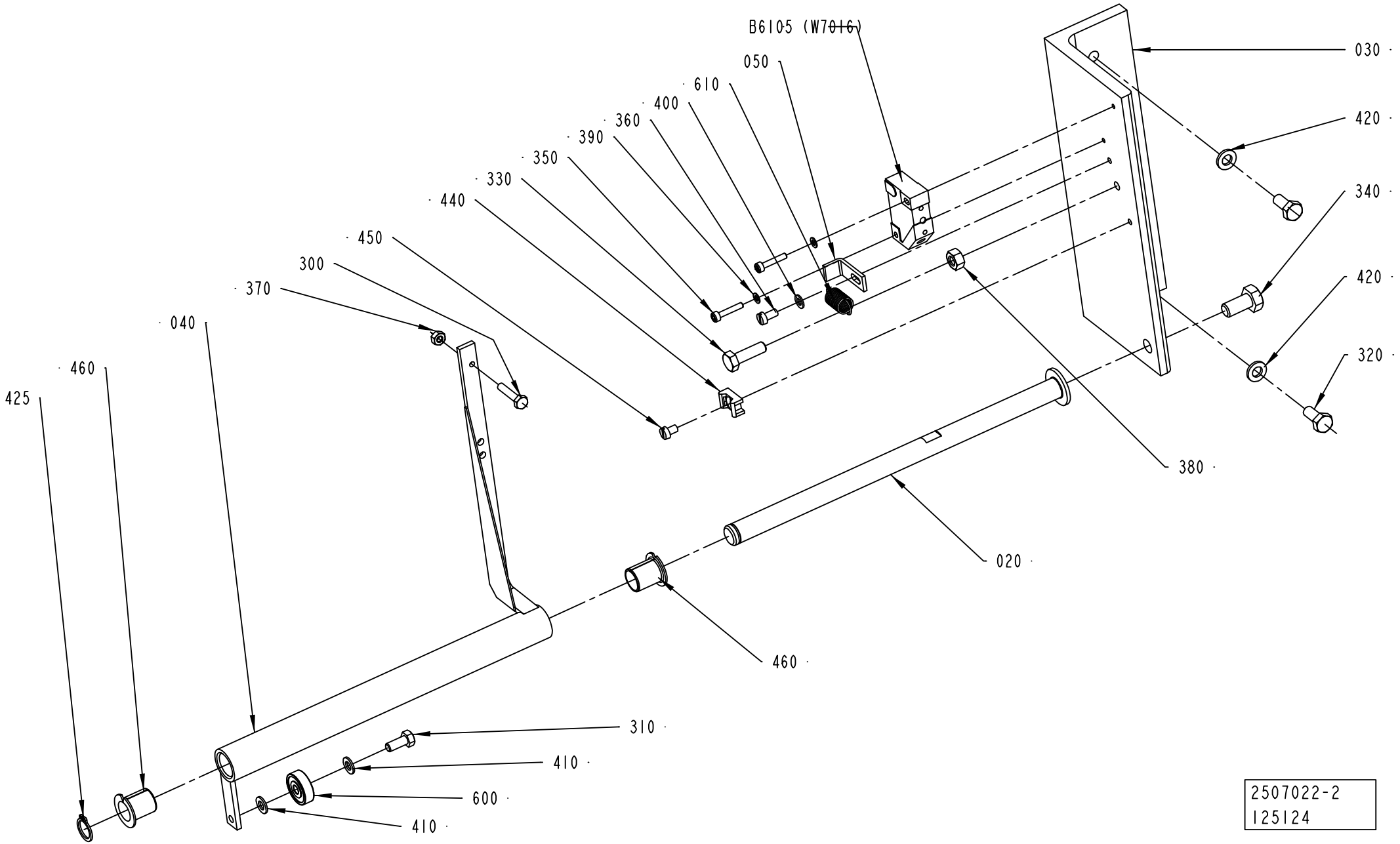
B6105 (W7016)
050
610
400
360
390
350
330
440
450
300
370
040
460
425
030
420
340
420
320
380
020
460
310
410
600
410
2507022-2
125124

ECM: 272337 - 20060712
Group number: 2507022-0200
Assembly Drawing: 2507022-2_1_AA

Pos	Part No	UN	Qty	Description	Page No
-					
020	2602995-0000		1	AXLE	
030	2602994-0000		1	BRACKET	
040	2602993-0000		1	LEVER	
050	2504812-0000		1	BLOCK	
300	312105-0295		1	SCREW M6S ISO 4017 M4X20 A470	
310	312105-0327		1	SCREW M6S ISO 4017 M5X12 A480	
320	312105-0367		2	SCREW M6S ISO 4017 M6X14 A480	
330	312105-0370		1	SCREW M6S ISO 4017 M6X20 A480	
340	312105-0449		1	SCREW M6S ISO 4017 M8X16 A480	
350	312115-0228		2	SCREW ISO4762 M3X16 A4 80	
360	312125-0287		1	SCREW ISO 1207 M4X8 A4	
370	312605-0312		1	HEXAGON NUT, M6M M4 A280	
380	312605-0316		1	HEXAGON NUT, M6M M6 A280	
390	315105-0124		2	WASHER BRB 3,2X7 RFR	
400	315105-0136		1	WASHER BRB 4,3X9 RFR	
410	315105-0146		2	WASHER BRB 5,3X10 RFR	
420	315105-0153		2	WASHER BRB 6,4X12 RFR	
425	315751-0109		1	RETAINING RING FOR SHAFT DIN 471 12 A2	
440	352113-0205		1	ANCHOR PLATES FOR STRIPS, TYPE TM2S8-C10	
450	312121-0285		1	SCREW ISO 1207 M4X6 4.8 - 5.8 Z.PL.	
460	321161-0185		2	FLANGE BUSHING, 12X14X17 MM	
600	90214-0138		1	BALL BEARING, 5X19X6 MM	
610	90335-0089		1	TENSION SPRING 41490, 0,9X10X23	
B6105	90044-0194		1	PROX.SW. IN5329/IN3002-BPKG(EX90044-104)	

Pos	Part No	UN	Qty	Description	Page No

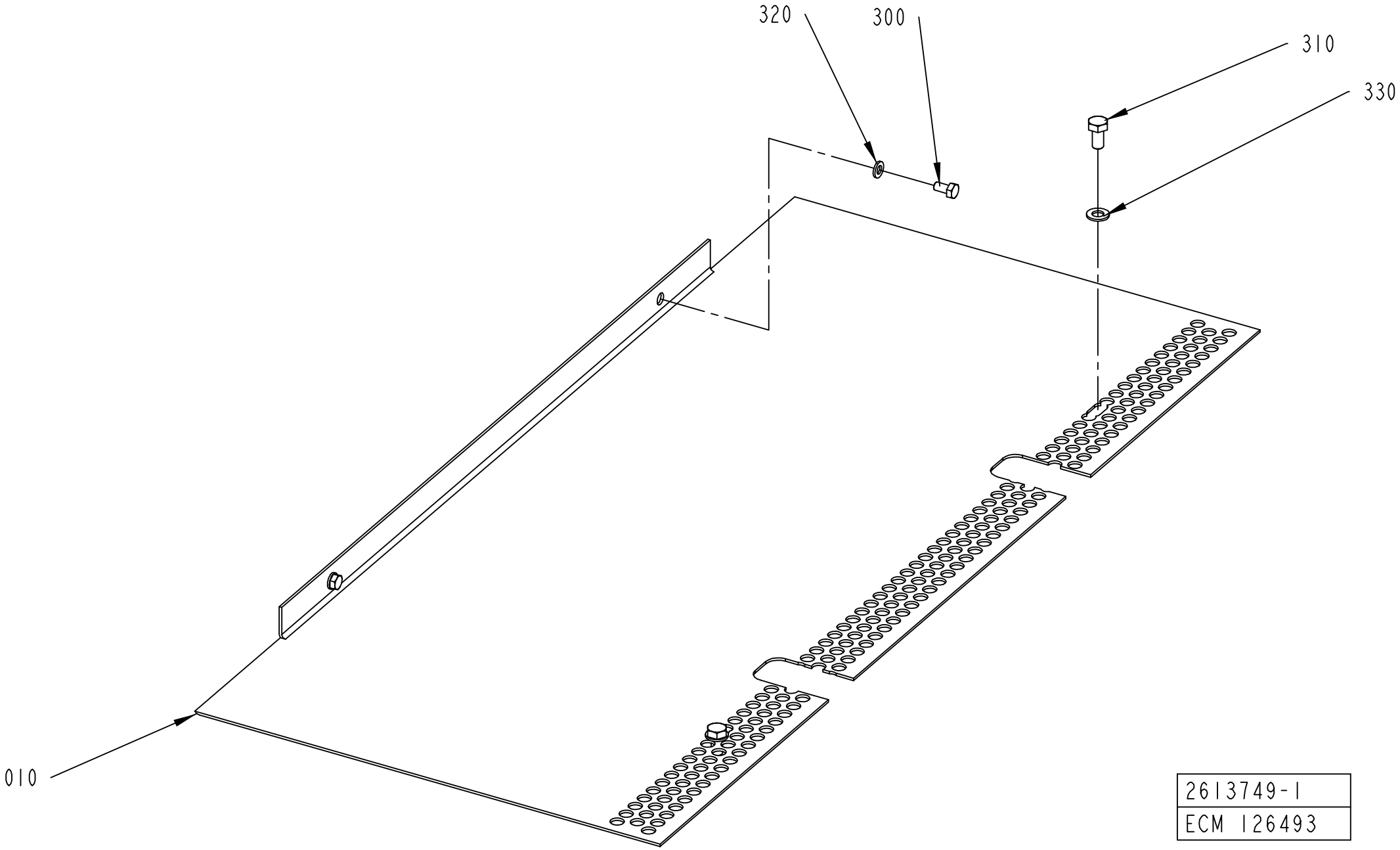
320
300
310
330
010
2613749-1
ECM 126493

ECM: 177222 - 20041005
Group number: 2613749-0100
Assembly Drawing: 2613749-1_1_AA

Pos	Part No	UN	Qty	Description	Page No
-					
010	2579996-0000		1	PLATE	
300	312105-0366		2	SCREW M6S ISO 4017 M6X12 A480	
310	312105-0449		2	SCREW M6S ISO 4017 M8X16 A480	
320	315105-0153		2	WASHER BRB 6,4X12 RFR	
330	315105-0165		2	WASHER BRB 8,4X16 RFR	

Pos	Part No	UN	Qty	Description	Page No

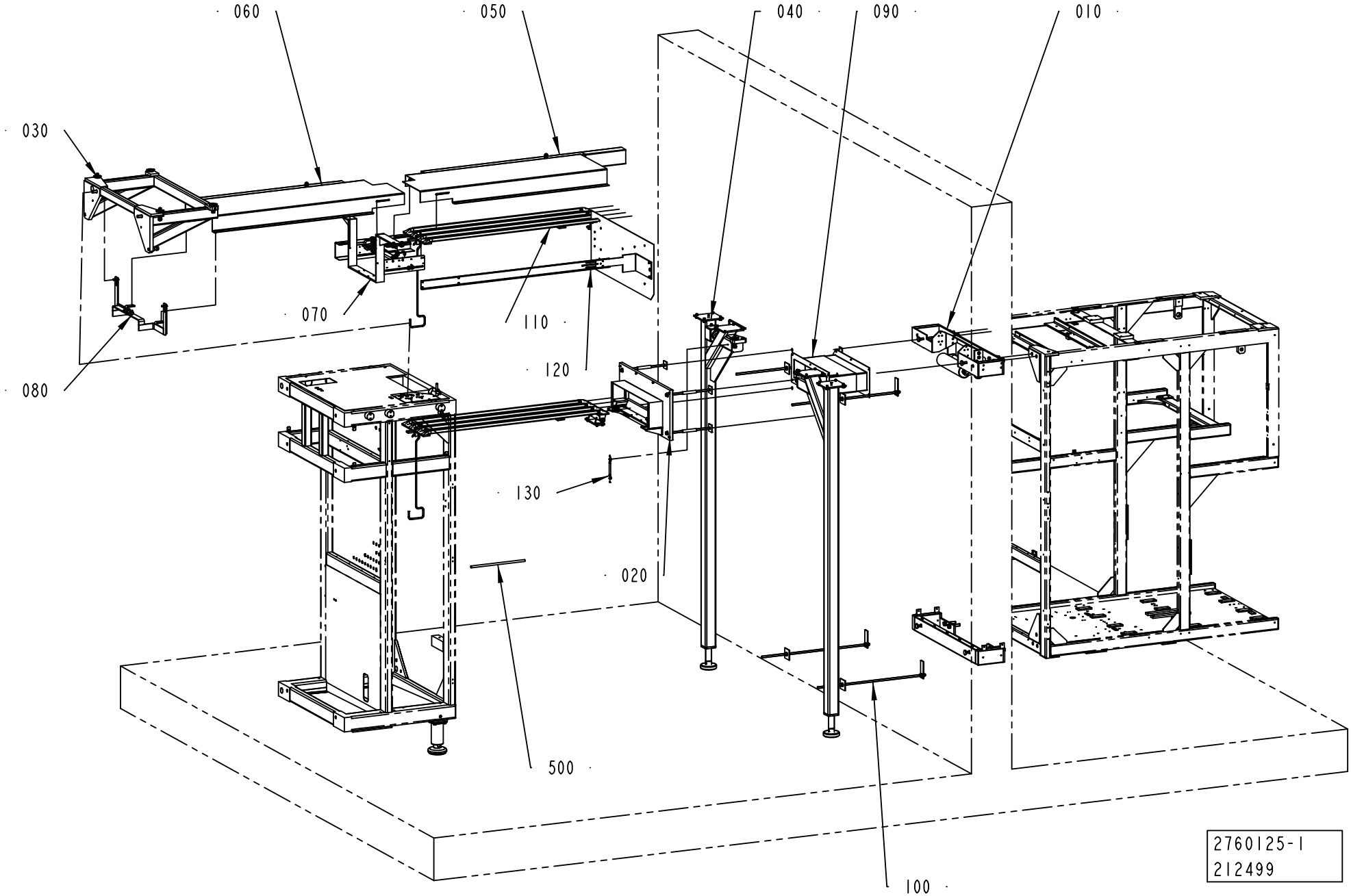
060
050
040
090
010
030
070
110
120
080
130
020
500
100
2760125-1
212499

ECM: 213511 - 20061102
Group number: 2760125-0100
Assembly Drawing: 2760125-1_1_AA

This list covers pages from 7-34 to 7-37

Pos	Part No	UN	Qty	Description	Page No
NO DIMC NO PT (See drawing on page: 7-34)					
030	2734982-0100		1	BRACKET	**7-39**
040	2734985-0100		1	LEG	**7-41**
NO DIMC PT/FLEX (See drawing on page: 7-36)					
040	2564232-0100		1	LEG	**7-43, 7-45, 10-7, 10-9**
150	2791432-0100		1	COVER	**7-47**
160	2789083-0100		1	GUIDE ROLLER	**7-49**
200	2764297-0100		1	CABLE DUCT	**7-51**
Common Parts					
010	1346429-0300		1	BRACKET	**7-53**
020	1346431-0100		1	HOLDER	**7-55**
050	2748625-0100		1	COVER	**7-57**
060	2750805-0100		1	COVER	**7-59**
070	2755890-0100		1	SUPPORT	**7-61**
080	2755892-0100		1	SUPPORT	**7-65, 7-67**
090	2755893-0100		1	COVER	**7-69**
100	2812397-0100		1	FIXING UNIT	**7-71**
110	1346430-0100		2	SUPPORT	**7-73**
120	2764295-0100		1	TOOLS AND TEMPLATES	**7-75**
130	2850064-0100		1	ELECTRICAL CONNECTION	**7-77**
500	90166-0068	MM	4000	TUBE 12 MM PA BLUE	

Pos	Part No	UN	Qty	Description	Page No

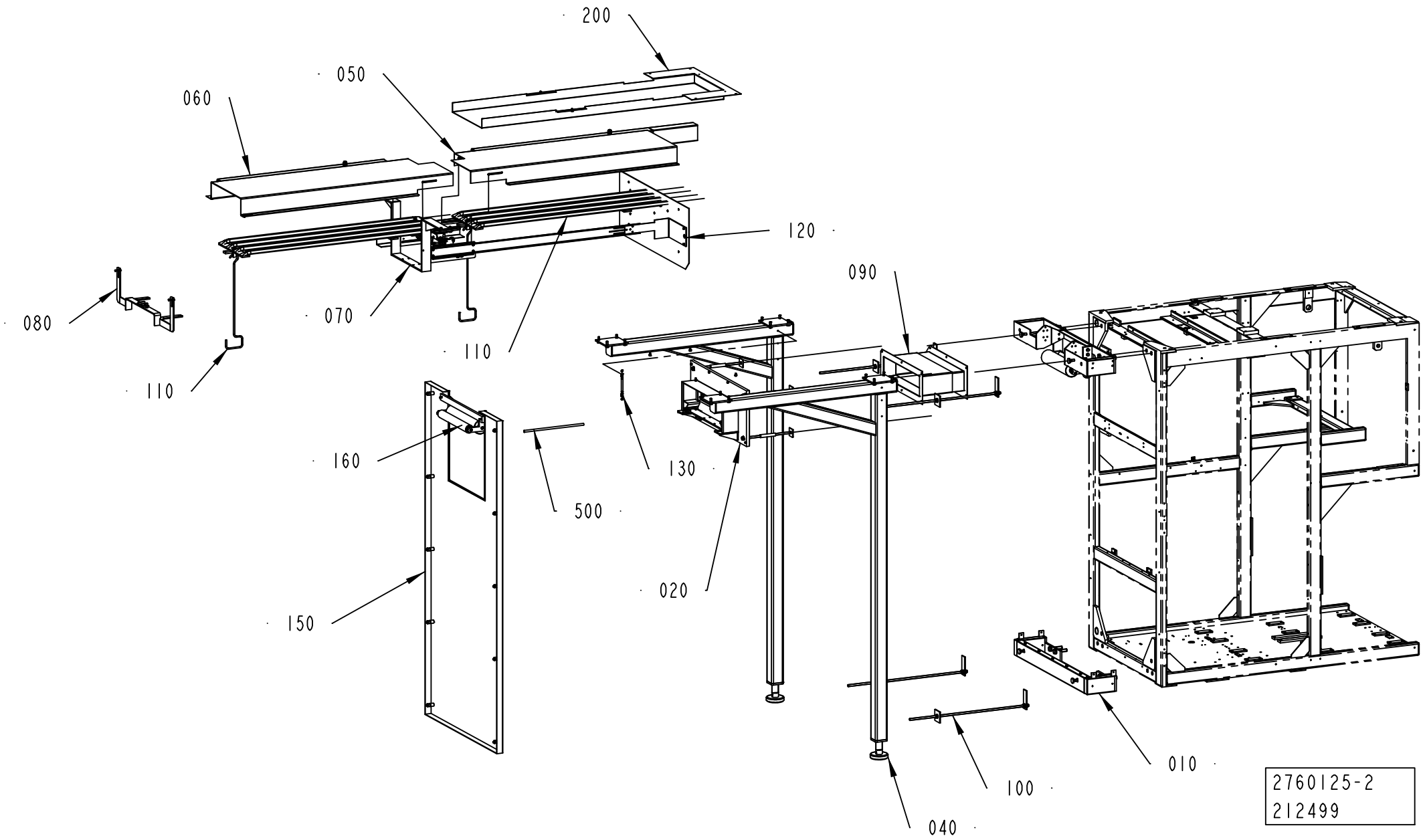
200
050
060
120
090
080
070
110
110
160
500
130
020
150
010
100
040
2760125-2
212499

ECM: 213511 - 20061102
Group number: 2760125-0100
Assembly Drawing: 2760125-2_1_AA

This list covers pages from 7-34 to 7-37

Pos	Part No	UN	Qty	Description	Page No
NO DIMC NO PT (See drawing on page: 7-34)					
030	2734982-0100		1	BRACKET	**7-39**
040	2734985-0100		1	LEG	**7-41**
NO DIMC PT/FLEX (See drawing on page: 7-36)					
040	2564232-0100		1	LEG	**7-43, 7-45, 10-7, 10-9**
150	2791432-0100		1	COVER	**7-47**
160	2789083-0100		1	GUIDE ROLLER	**7-49**
200	2764297-0100		1	CABLE DUCT	**7-51**
Common Parts					
010	1346429-0300		1	BRACKET	**7-53**
020	1346431-0100		1	HOLDER	**7-55**
050	2748625-0100		1	COVER	**7-57**
060	2750805-0100		1	COVER	**7-59**
070	2755890-0100		1	SUPPORT	**7-61**
080	2755892-0100		1	SUPPORT	**7-65, 7-67**
090	2755893-0100		1	COVER	**7-69**
100	2812397-0100		1	FIXING UNIT	**7-71**
110	1346430-0100		2	SUPPORT	**7-73**
120	2764295-0100		1	TOOLS AND TEMPLATES	**7-75**
130	2850064-0100		1	ELECTRICAL CONNECTION	**7-77**
500	90166-0068	MM	4000	TUBE 12 MM PA BLUE	

Pos	Part No	UN	Qty	Description	Page No

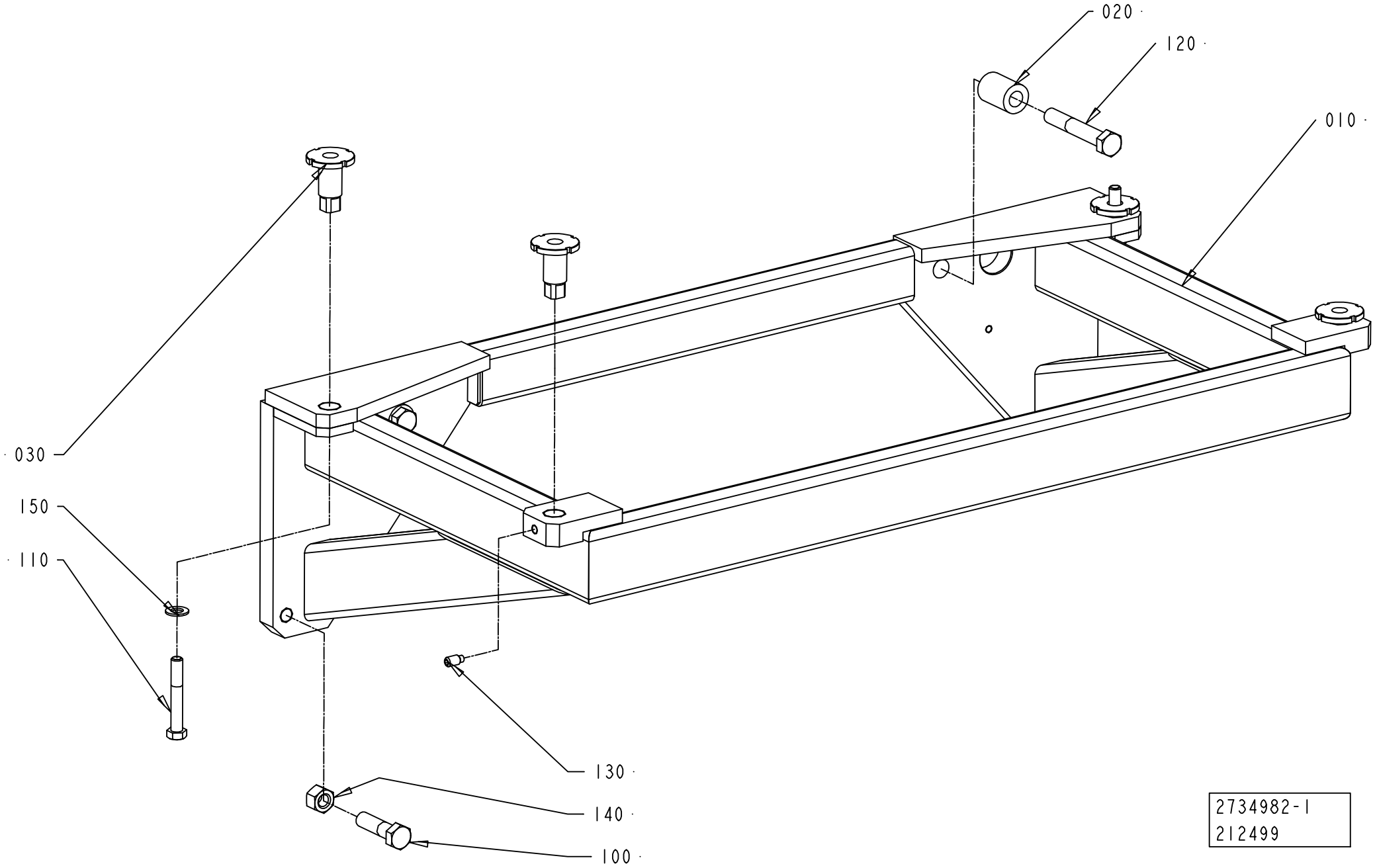
020
120
010
030
150
110
130
140
100
2734982-1
212499

ECM: 212825 - 20061102
Group number: 2734982-0100
Assembly Drawing: 2734982-1_1_AA

Pos	Part No	UN	Qty	Description	Page No
-					
010	2734983-0000		1	BRACKET	
020	2734984-0000		2	SPACER DISC	
030	2599941-0000		4	SPACER	
100	312101-0632		2	SCREW M6S M16X60 FZB	
110	312105-0548		2	SCREW M6S ISO 4014 M12X80 A480	
120	312105-0640		2	SCREW M6S ISO 4014 M16X100 A480	
130	312311-0491		2	SCREW ISO4028 M10X20 FZB	
140	312601-0324		2	HEXAGON NUT, DIN 934 M16 8 FZB	
150	315105-0178		2	WASHER BRB 13X24 RFR	

Pos	Part No	UN	Qty	Description	Page No

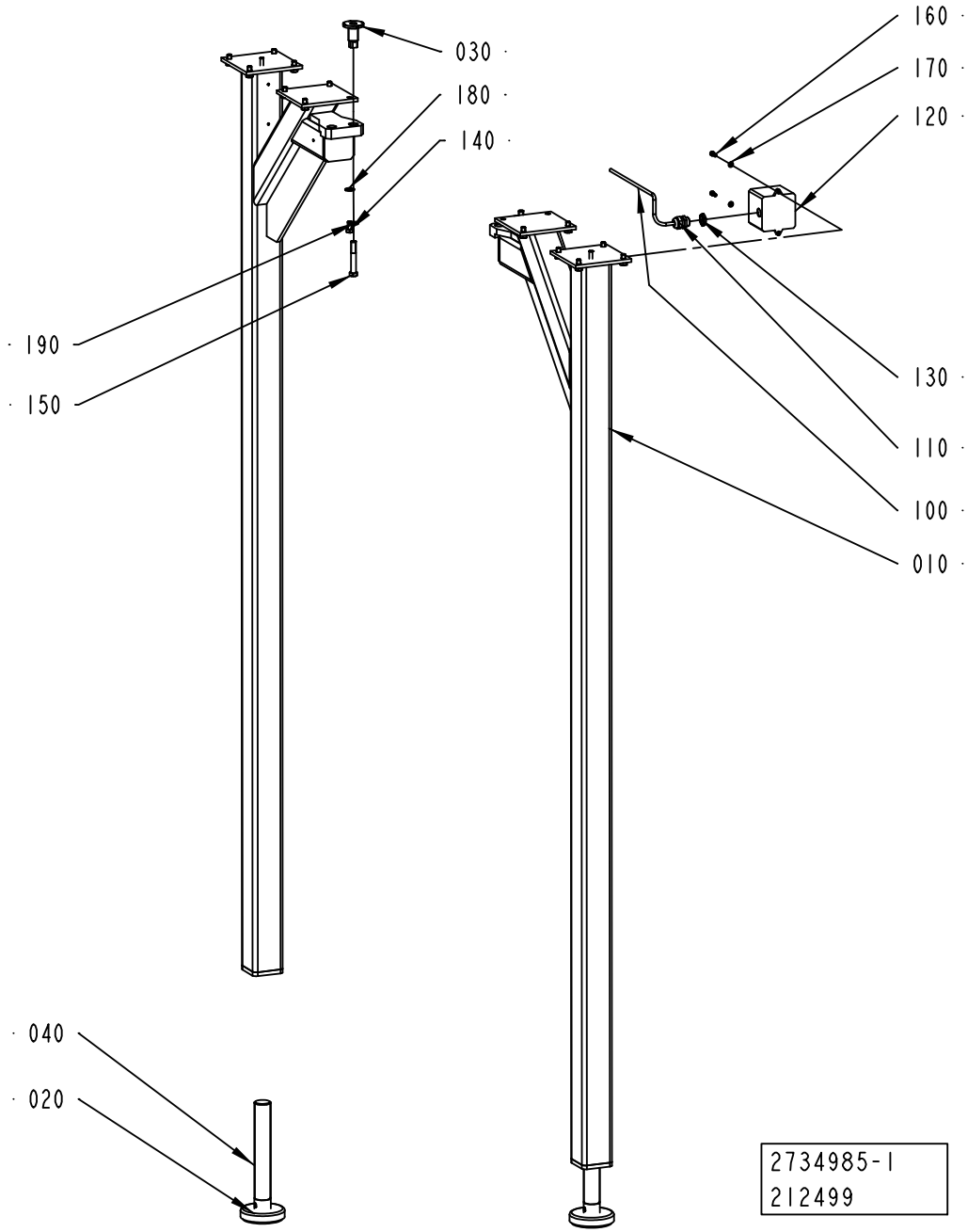
030
180
140
190
150
160
170
120
130
110
100
010
040
020
2734985-1
212499

ECM: 212824 - 20061102
Group number: 2734985-0100
Assembly Drawing: 2734985-1_1_AA

Pos	Part No	UN	Qty	Description	Page No
-					
010	2734986-0000		2	LEG	
020	90347-0080		2	DAMPER TFE 1201	
030	2599941-0000		2	SPACER	
040	905373-0000		2	SCREW - LEG	
100	351150-0431	M	13	CABLE OLFLEX 2X0,75 MM2 LIGHT/GREY	
110	352103-0110		1	CABLE GLAND, STR 16, PR22,5/PG16	
120	90052-0011		1	HORN HOOTERT 24:48VDC.PT NO.1YA030221	
130	90099-0118		1	NUT, PR 20,4 (PG13,5)	
140	312105-0491		16	SCREW M6S ISO 4017 M10X20 A480	
150	312105-0548		2	SCREW M6S ISO 4014 M12X80 A480	
160	312115-0368		2	SCREW ISO4762 M6X16 A4 80	
170	315105-0153		2	WASHER BRB 6,4X12 RFR	
180	315105-0173		16	WASHER BRB 10,5X20 RFR	
190	315105-0178		2	WASHER BRB 13X24 RFR	

Pos	Part No	UN	Qty	Description	Page No

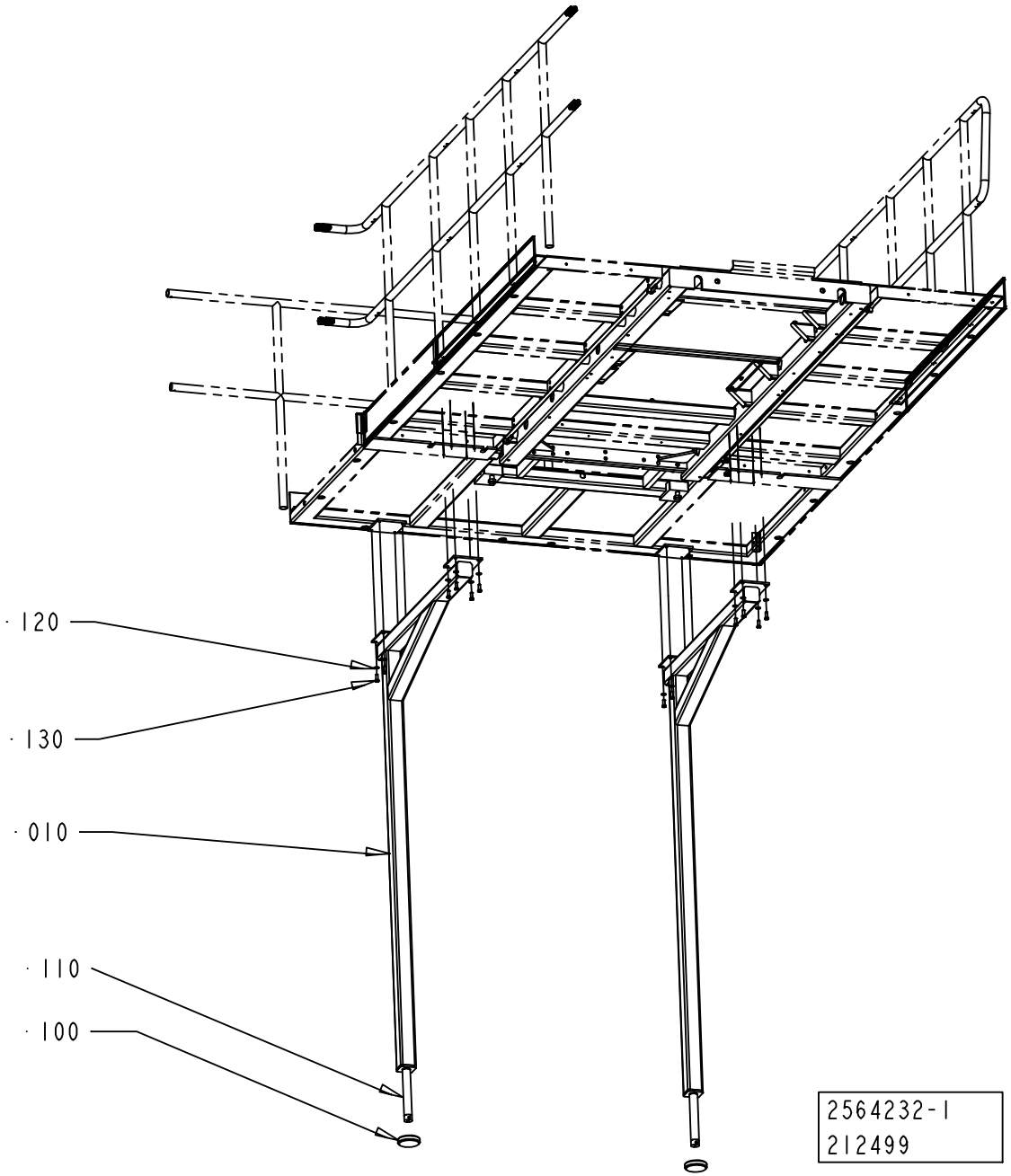
120
130
010
110
100
2564232-1
212499

ECM: 274029 - 20061102
Group number: 2564232-0100
Assembly Drawing: 2564232-1_1_AB

This list covers pages from 7-42 to 7-45

Pos	Part No	UN	Qty	Description	Page No
-					
010	2837177-0000		2	LEG	
10	2553117-0000		2	LEG	
100	90347-0080		2	DAMPER TFE 1201	
110	905373-0000		2	SCREW - LEG	
120	315105-0173		16	WASHER BRB 10,5X20 RFR	
130	312105-0495		16	SCREW M6S ISO 4017 M10X30 A480	

Pos	Part No	UN	Qty	Description	Page No

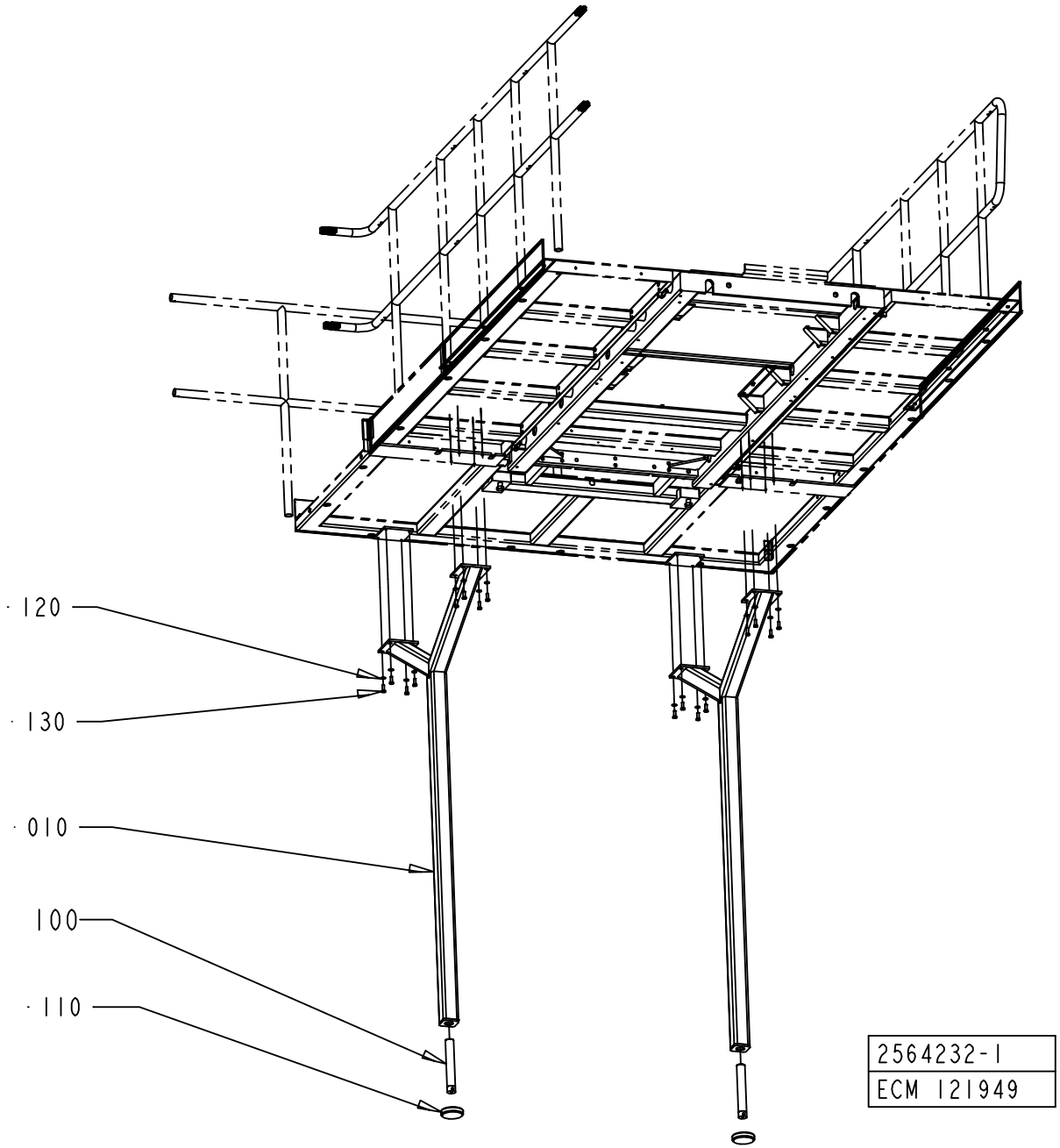
120
130
010
100
110
2564232-1
ECM 121949

ECM: 274029 - 20061102
Group number: 2564232-0100
Assembly Drawing: 2564232-1_1_AA

This list covers pages from 7-42 to 7-45

Pos	Part No	UN	Qty	Description	Page No
-					
010	2837177-0000		2	LEG	
10	2553117-0000		2	LEG	
100	90347-0080		2	DAMPER TFE 1201	
110	905373-0000		2	SCREW - LEG	
120	315105-0173		16	WASHER BRB 10,5X20 RFR	
130	312105-0495		16	SCREW M6S ISO 4017 M10X30 A480	

Pos	Part No	UN	Qty	Description	Page No

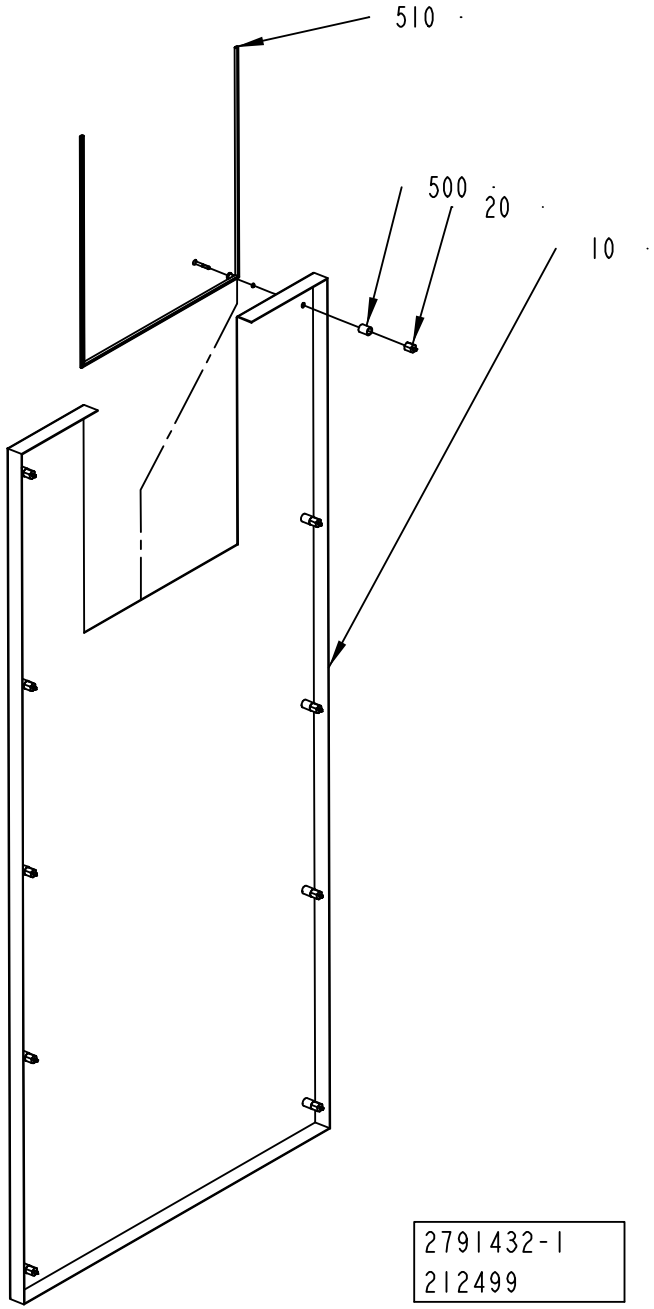
510
500
20
10
2791432-1
212499

ECM: 258554 - 20061102
Group number: 2791432-0100
Assembly Drawing: 2791432-1_1_AA

Pos	Part No	UN	Qty	Description	Page No
-					
010	2791090-0000		1	COVER	
020	2791162-0000		10	SPACER SCREW	
500	90226-0458		10	MOUNTING SCREW	
510	90143-0060	MM	850	EDGE STRIP 9,5X6,3MM BLACK PVC	

Pos	Part No	UN	Qty	Description	Page No

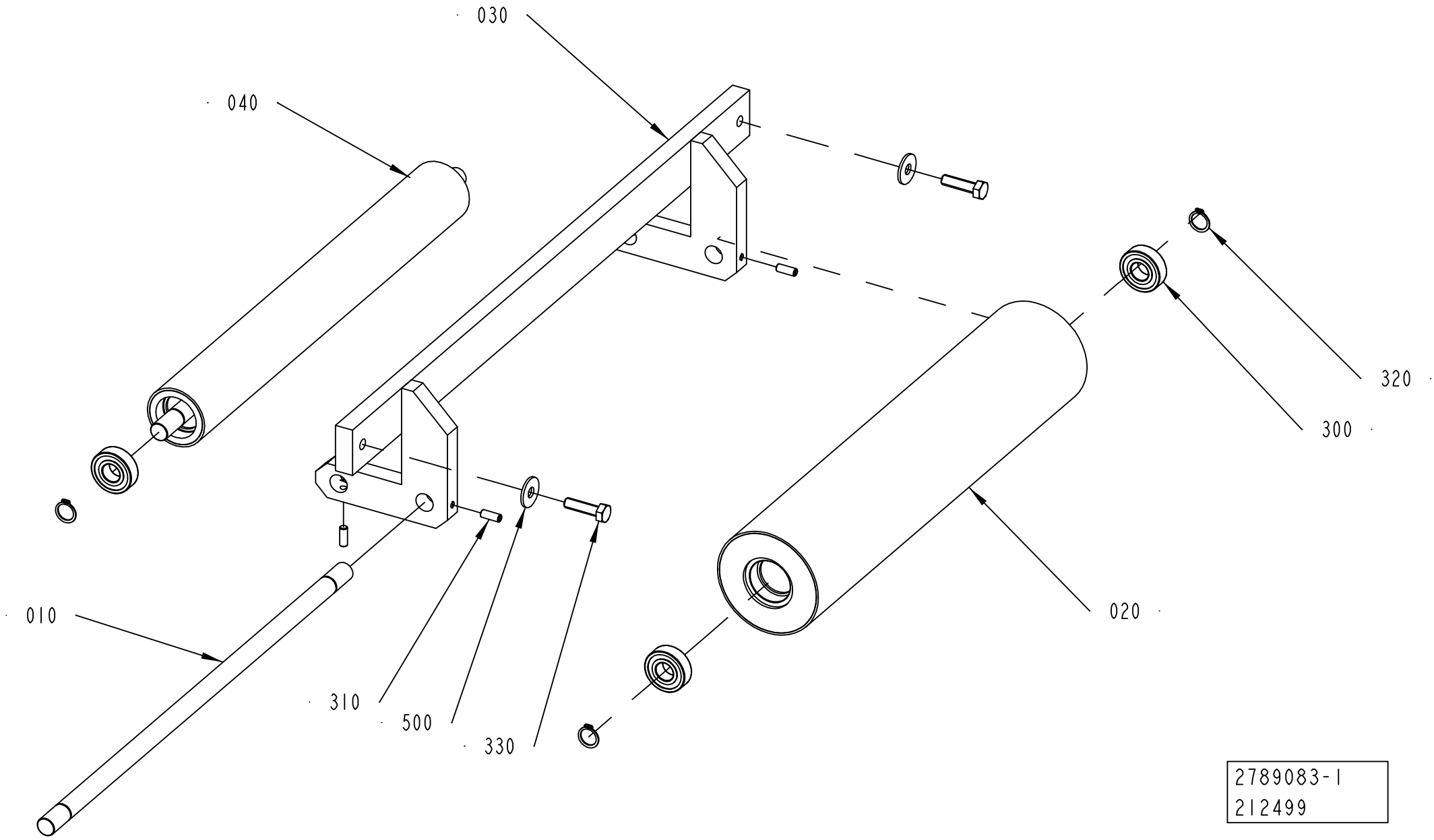
030
040
320
300
020
010
310
500
330
2789083-1
212499

ECM: 237036 - 20061102
Group number: 2789083-0100
Assembly Drawing: 2789083-1_1_AA

Pos	Part No	UN	Qty	Description	Page No
-					
010	2506666-0000		2	AXEL	
020	2605877-0000		1	BENDING ROLLER	
030	2789084-0000		1	ROLLER BRACKET	
040	2506661-0000		1	ROLLER	
300	321313-0102		4	BALL BEARING, 15X35X11 MM	
310	312318-0368		4	SCREW ISO4029 M6X16 A4	
320	315751-0112		4	RETAINING RING FOR SHAFT DIN 471 15 A2	
330	312105-0455		2	SCREW M6S ISO 4017 M8X30 A480	
500	90005-0116		2	WASHER PLAIN ROUND 8,4(M8)/24, H=2	

Pos	Part No	UN	Qty	Description	Page No

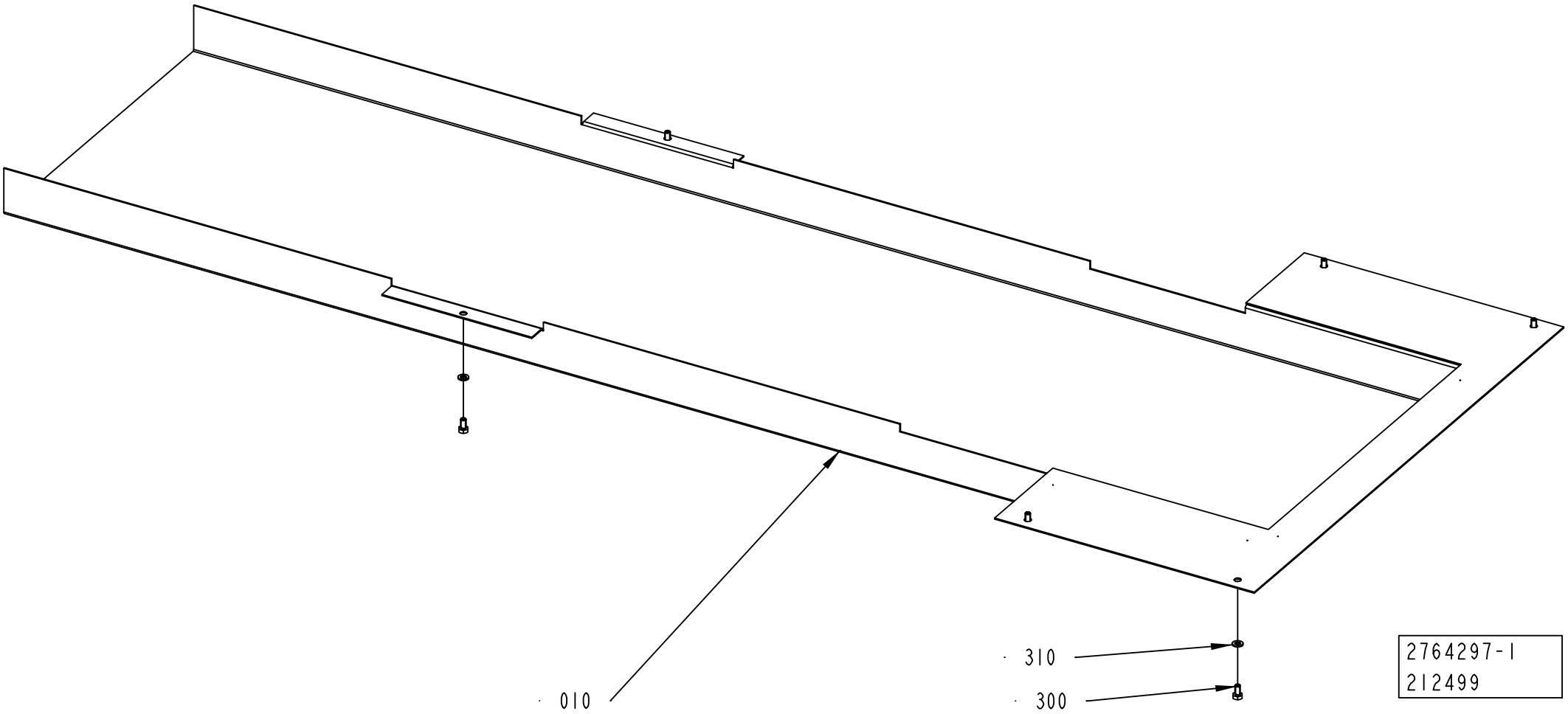
010
310
300
2764297-1
212499

ECM: 274013 - 20061102
Group number: 2764297-0100
Assembly Drawing: 2764297-1_1_AA

Pos	Part No	UN	Qty	Description	Page No
-					
010	2764286-0000		1	CABLE DUCT	
300	312105-0366		6	SCREW M6S ISO 4017 M6X12 A480	
310	315105-0153		6	WASHER BRB 6,4X12 RFR	

Pos	Part No	UN	Qty	Description	Page No

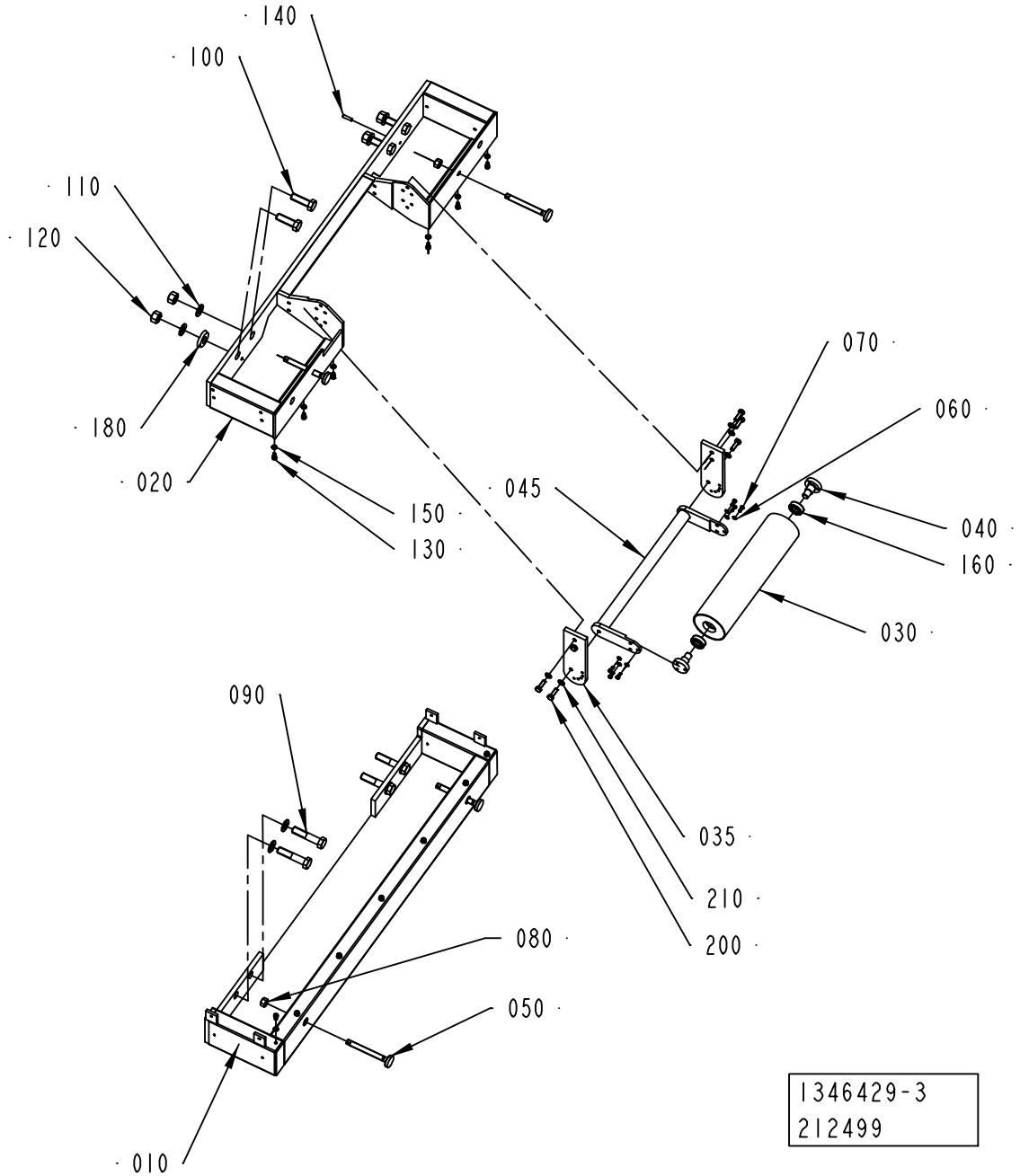
140
100
110
120
180
020
150
130
045
070
060
040
160
030
090
035
210
200
080
050
010
1346429-3
212499

ECM: 213435 - 20061102
Group number: 1346429-0300
Assembly Drawing: 1346429-3_1_AA

Pos	Part No	UN	Qty	Description	Page No
-					
010	1346421-0000		1	FRAME	
020	1346418-0000		1	FRAME	
030	1035882-0000		1	BENDING ROLLER	
035	2748621-0000		2	BRACKET	
040	1346401-0000		2	HOLDER	
045	2748618-0000		1	REEL HOLDER	
050	1346399-0000		4	DISTANCE	
060	315105-0146		6	WASHER BRB 5,3X10 RFR	
070	312105-0327		6	SCREW M6S ISO 4017 M5X12 A480	
080	312605-0322		4	HEXAGON NUT, M6M M12 A280	
090	312105-0635		4	SCREW M6S ISO 4014 M16X75 A480	
100	312105-0630		4	SCREW M6S ISO 4017 M16X50 A480	
110	315105-0186		8	WASHER BRB 17X30 RFR	
120	312605-0324		4	HEXAGON NUT, M6M M16 A280	
130	312115-0366		13	SCREW ISO4762 M6X12 A4 80	
140	311103-0355		2	PARALLEL PIN ISO 2338 6M6X25 A1	
150	315105-0153		13	WASHER BRB 6,4X12 RFR	
160	321313-0102		2	BALL BEARING, 15X35X11 MM	
180	1548199-0000		1	WASHER	
200	312105-0453		6	SCREW M6S ISO 4017 M8X25 A480	
210	315105-0165		6	WASHER BRB 8,4X16 RFR	

Pos	Part No	UN	Qty	Description	Page No

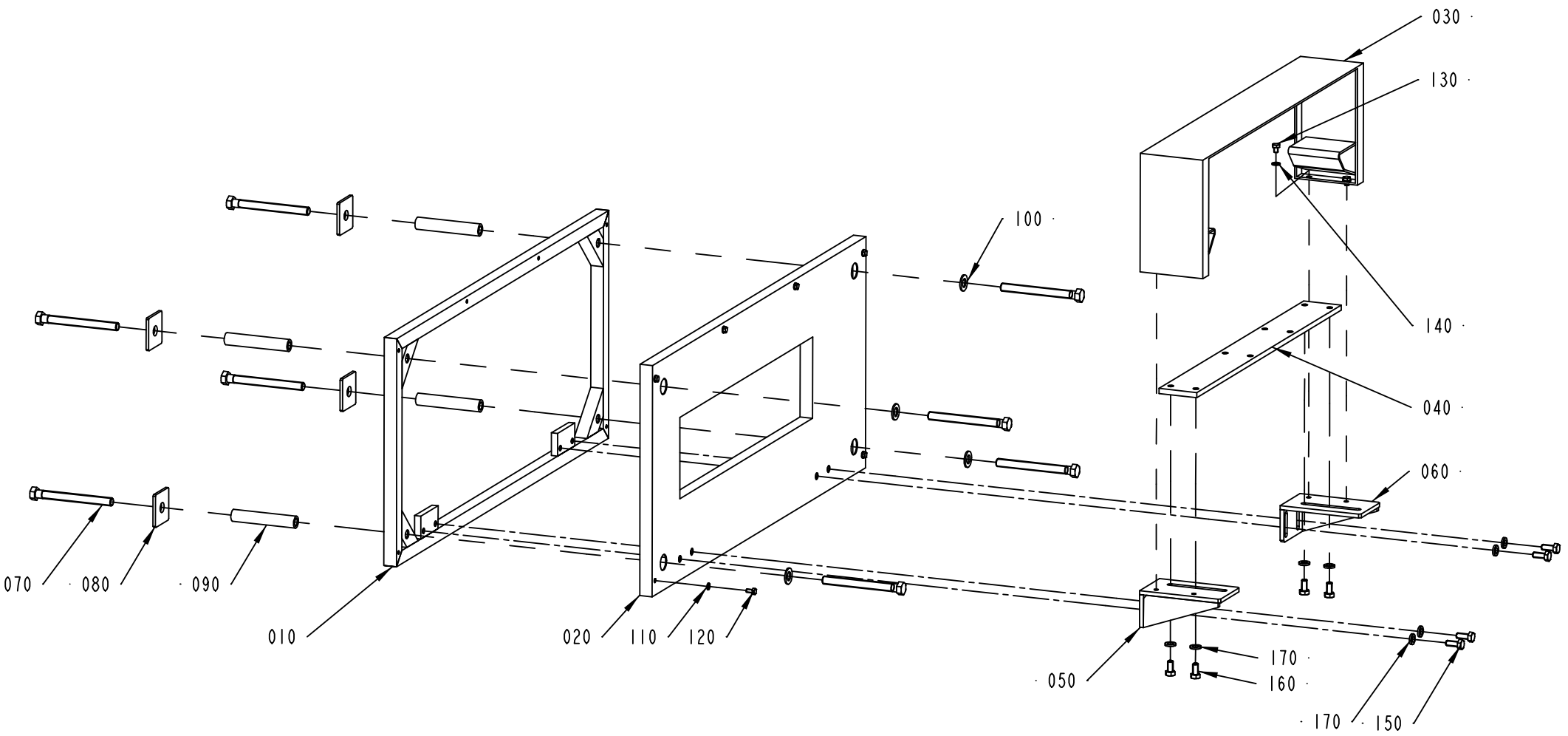

1346431-1
ECN 84465

ECM: 177923 - 20041005
Group number: 1346431-0100
Assembly Drawing: 1346431-1_1_AB

Pos	Part No	UN	Qty	Description	Page No
-					
010	1346417-0000		1	FRAME	
020	1346406-0000		1	COVER PLATE	
030	1346407-0000		1	COVER	
040	1346402-0000		1	PLATE	
050	1346410-0000		1	BRACKET	
060	1346411-0000		1	BRACKET	
070	476202-0000		8	SCREW	
080	1346405-0000		4	WASHER	
090	476201-0000		4	SLEEVE	
100	315105-0178		4	WASHER BRB 13X24 RFR	
110	315105-0146		6	WASHER BRB 5,3X10 RFR	
120	312105-0325		6	SCREW M6S ISO 4017 M5X10 A480	
130	312105-0364		4	SCREW M6S ISO 4017 M6X10 A480	
140	315105-0153		4	WASHER BRB 6,4X12 RFR	
150	312105-0451		4	SCREW M6S ISO 4017 M8X20 A480	
160	312105-0449		4	SCREW M6S ISO 4017 M8X16 A480	
170	315115-0165		8	WASHER PLAIN, TBRB 8,4/16 H=3	

Pos	Part No	UN	Qty	Description	Page No

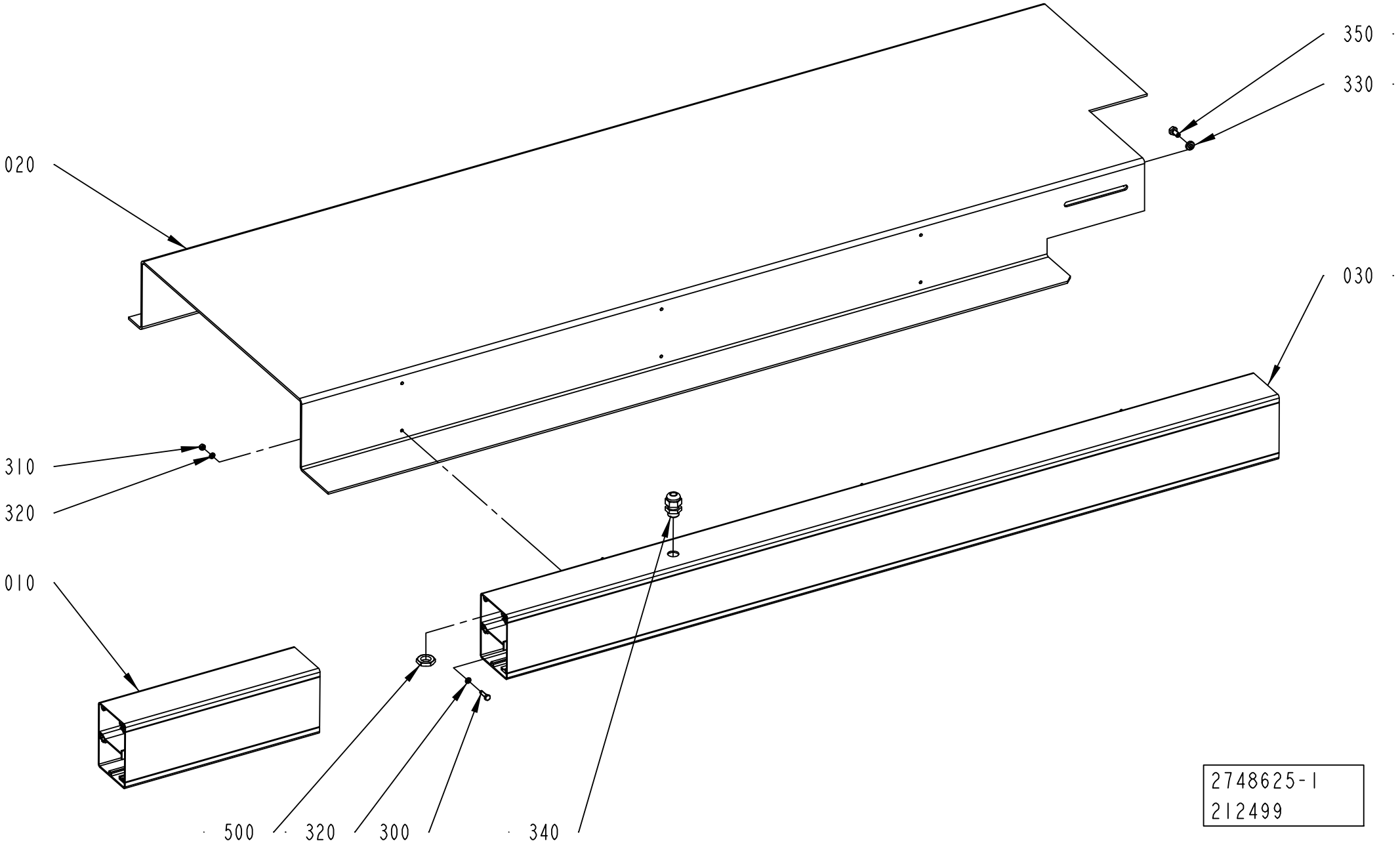
350
330
020
030
310
320
010
500
320
300
340
2748625-1
212499

ECM: 212822 - 20061102
Group number: 2748625-0100
Assembly Drawing: 2748625-1_1_AA

Pos	Part No	UN	Qty	Description	Page No
-					
010	1346400-0000		1	CABLE DUCT	
020	2748626-0000		1	COVER	
030	2748627-0000		1	CABLE DUCT	
300	312105-0293		6	SCREW M6S ISO 4017 M4X16 A470	
310	312605-0312		6	HEXAGON NUT, M6M M4 A280	
320	315105-0136		12	WASHER BRB 4,3X9 RFR	
330	315115-0153		2	WASHER PLAIN, TBRB 6,4/12 H=3	
340	352103-0101		1	CABLE GLAND, ST 9, PR15,2/PG9	
350	312105-0366		2	SCREW M6S ISO 4017 M6X12 A480	
500	90099-0104		1	NUT, PR 15,2 (PG9)	

Pos	Part No	UN	Qty	Description	Page No

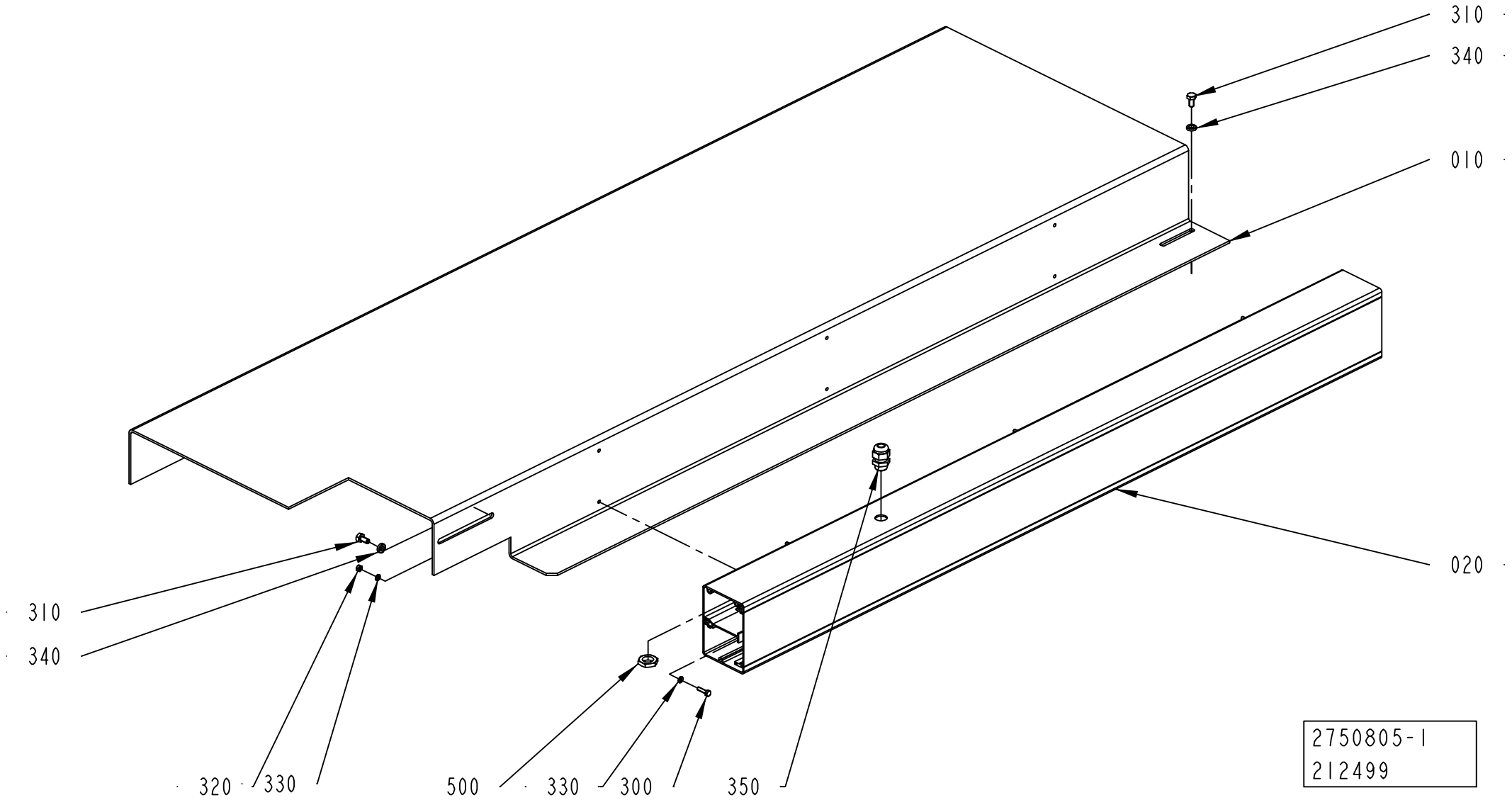
310
340
010
020
310
340
320
330
500
330
300
350
2750805-1
212499

ECM: 212821 - 20061102
Group number: 2750805-0100
Assembly Drawing: 2750805-1_1_AA

Pos	Part No	UN	Qty	Description	Page No
-					
010	2750806-0000		1	COVER	
020	2750807-0000		1	CABLE DUCT	
300	312105-0293		6	SCREW M6S ISO 4017 M4X16 A470	
310	312105-0366		4	SCREW M6S ISO 4017 M6X12 A480	
320	312605-0312		6	HEXAGON NUT, M6M M4 A280	
330	315105-0136		12	WASHER BRB 4,3X9 RFR	
340	315115-0153		4	WASHER PLAIN, TBRB 6,4/12 H=3	
350	352103-0101		1	CABLE GLAND, ST 9, PR15,2/PG9	
500	90099-0104		1	NUT, PR 15,2 (PG9)	

Pos	Part No	UN	Qty	Description	Page No

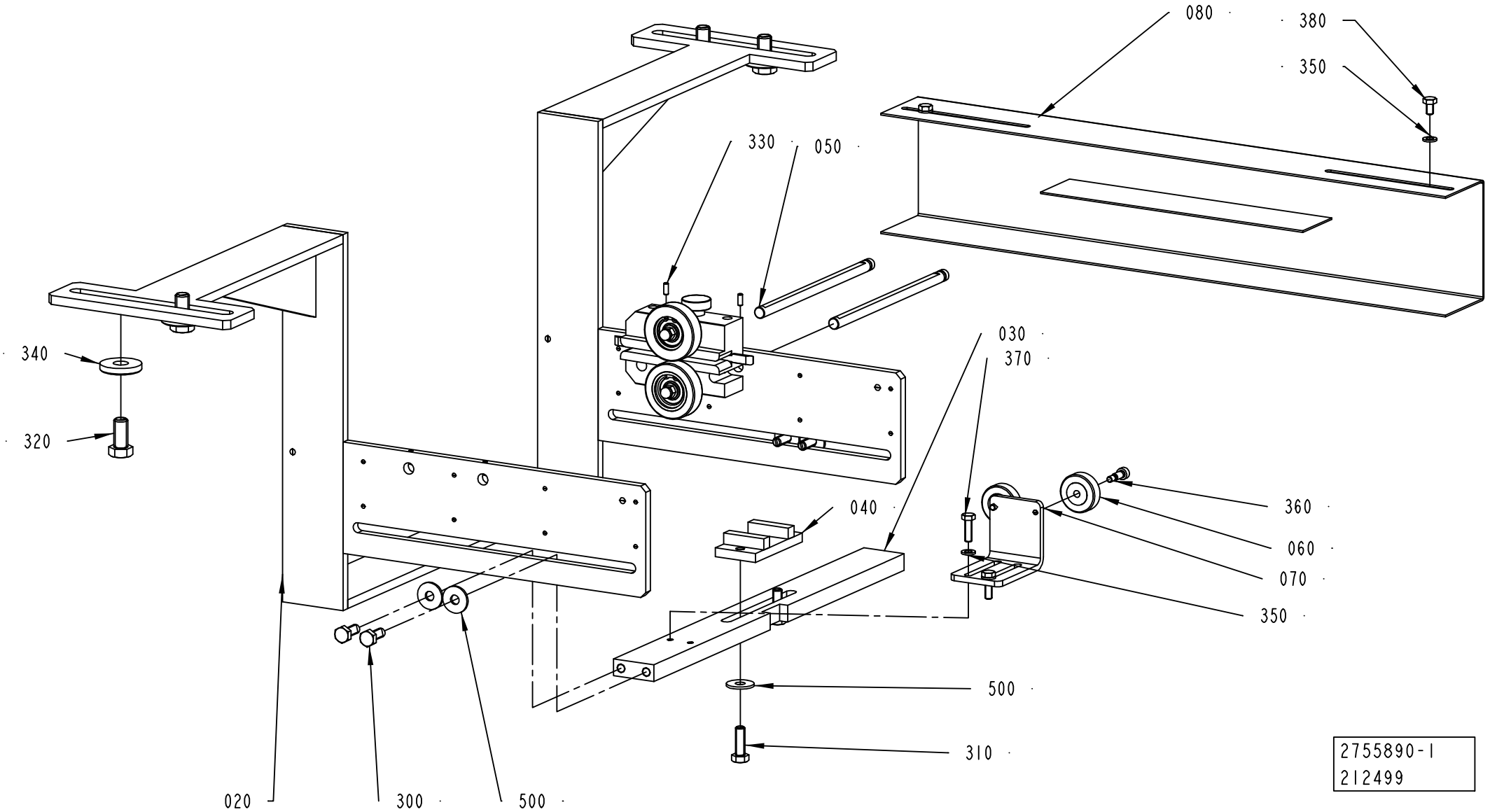
080
380
350
330
050
340
320
030
370
040
360
060
070
350
500
310
020
300
500
2755890-1
212499

ECM: 213434 - 20061102
Group number: 2755890-0100
Assembly Drawing: 2755890-1_1_AA

Pos	Part No	UN	Qty	Description	Page No
-					
010	2764290-0100		1	WEB GUIDE	**7-63**
020	2745172-0000		1	BRACKET	
030	2745173-0000		1	BAR	
040	2745231-0000		1	GUIDE	
050	2748619-0000		2	SHAFT	
060	1558911-0000		2	PRESSURE ROLLER	
070	2764291-0000		1	BRACKET	
080	2764292-0000		1	CABLE DUCT	
300	312105-0451		4	SCREW M6S ISO 4017 M8X20 A480	
310	312105-0453		2	SCREW M6S ISO 4017 M8X25 A480	
320	312105-0534		4	SCREW M6S ISO 4017 M12X25 A480	
330	312318-0289		2	SCREW ISO4029 M4X10 A4	
340	315121-0178		4	WASHER PLAIN, TBRSB 13/36 H=6	
350	315105-0153		4	WASHER BRB 6,4X12 RFR	
360	312180-0366		2	SCREW ISO7379 H6X12	
370	312105-0370		2	SCREW M6S ISO 4017 M6X20 A480	
380	312105-0364		2	SCREW M6S ISO 4017 M6X10 A480	
500	90005-0116		6	WASHER PLAIN ROUND 8,4(M8)/24, H=2	

Pos	Part No	UN	Qty	Description	Page No

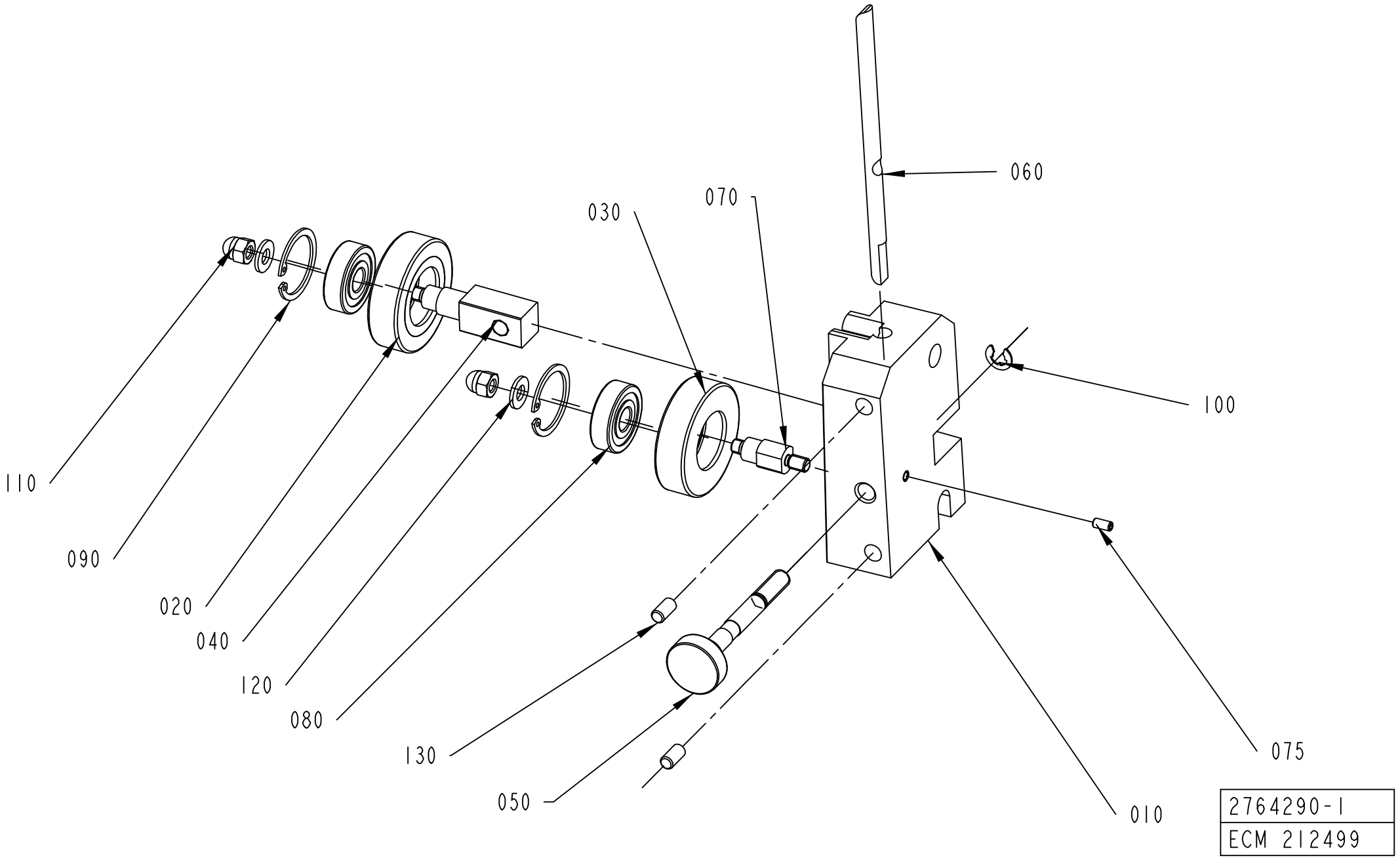
060
070
030
100
110
090
020
040
120
080
130
050
075
010
2764290-1
ECM 212499

ECM: 274033 - 20061102
Group number: 2764290-0100
Assembly Drawing: 2764290-1_1_AA

Pos	Part No	UN	Qty	Description	Page No
-					
010	1524375-0000		1	BRACKET	
020	1036623-0000		1	GUIDE ROLLER	
030	1036622-0000		1	GUIDE ROLLER	
040	1317711-0000		1	SHAFT	
050	1317712-0000		1	SHAFT	
060	1512526-0000		1	STEERING	
070	583727-0000		1	SHAFT	
075	312318-0287		1	SCREW ISO4029 M4X8 A4	
080	321313-0100		2	BALL BEARING, 10X30X9 MM	
090	315753-0122		2	RETAINING RING FOR BORE DIN 472 30 A2	
100	315755-0108		1	RETAINING RING SHAFT DIN 6799 6 A2	
110	312705-0316		2	NUT HEX. DOMED CAP MHM-6 M6 A280	
120	315105-0156		2	WASHER BRB 6,7X14 RFR	
130	312318-0366		2	SCREW ISO4029 M6X12 A4	

Pos	Part No	UN	Qty	Description	Page No

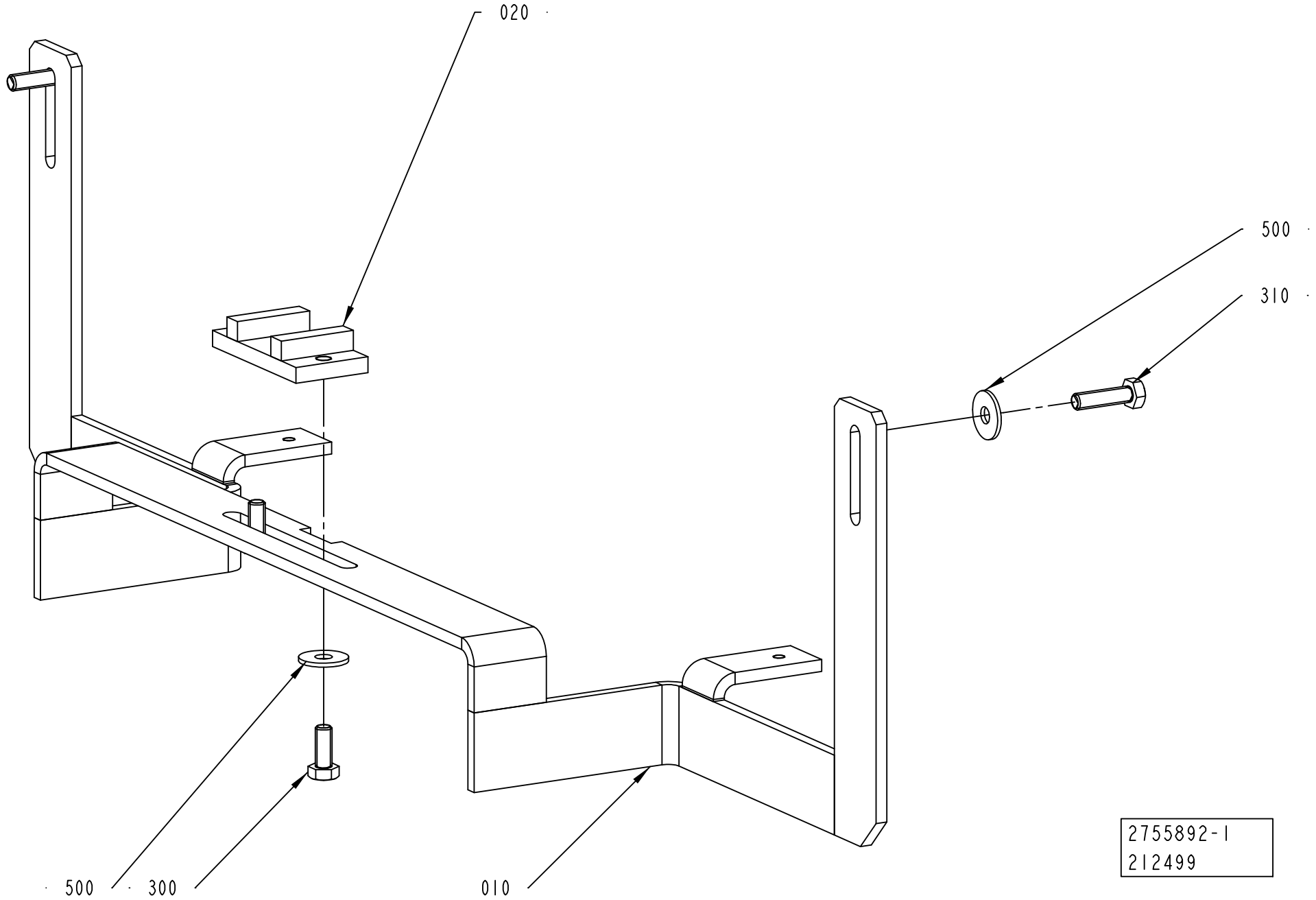
020
500
310
500
300
010
2755892-1
212499

ECM: 213432 - 20061102
Group number: 2755892-0100
Assembly Drawing: 2755892-1_1_AA

This list covers pages from 7-64 to 7-67

Pos	Part No	UN	Qty	Description	Page No
NO DIMC NO PT (See drawing on page: 7-64)					
010	2745174-0000		1	BRACKET	
NO DIMC PT/FLEX (See drawing on page: 7-66)					
010	2789112-0000		1	BRACKET	
Common Parts					
020	2745231-0000		1	GUIDE	
300	312105-0451		2	SCREW M6S ISO 4017 M8X20 A480	
310	312105-0455		2	SCREW M6S ISO 4017 M8X30 A480	
500	90005-0116		4	WASHER PLAIN ROUND 8,4(M8)/24, H=2	

Pos	Part No	UN	Qty	Description	Page No

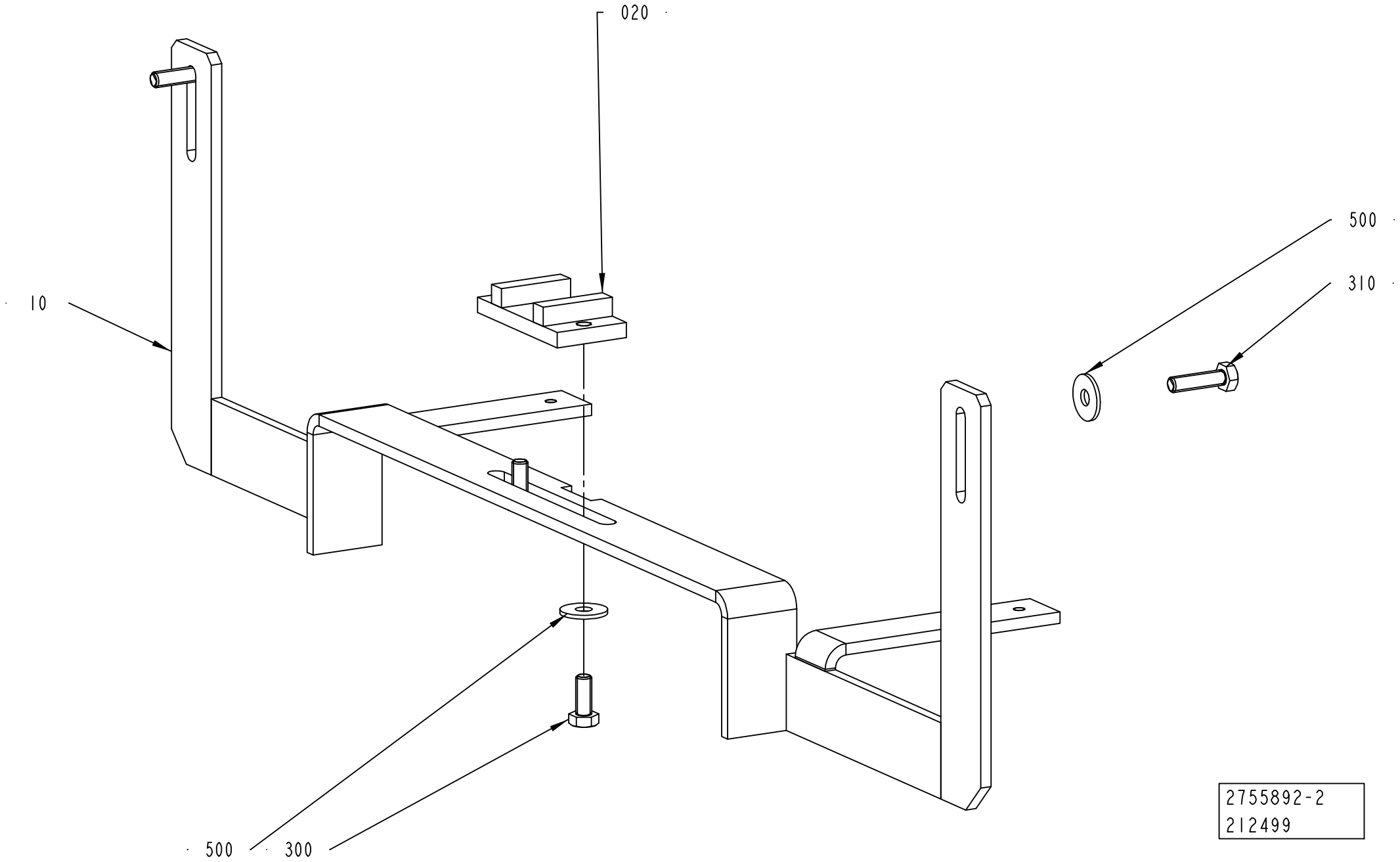
020
500
310
10
500
300
2755892-2
212499

ECM: 213432 - 20061102
Group number: 2755892-0100
Assembly Drawing: 2755892-2_1_AA

This list covers pages from 7-64 to 7-67

Pos	Part No	UN	Qty	Description	Page No
NO DIMC NO PT (See drawing on page: 7-64)					
010	2745174-0000		1	BRACKET	
NO DIMC PT/FLEX (See drawing on page: 7-66)					
010	2789112-0000		1	BRACKET	
Common Parts					
020	2745231-0000		1	GUIDE	
300	312105-0451		2	SCREW M6S ISO 4017 M8X20 A480	
310	312105-0455		2	SCREW M6S ISO 4017 M8X30 A480	
500	90005-0116		4	WASHER PLAIN ROUND 8,4(M8)/24, H=2	

Pos	Part No	UN	Qty	Description	Page No

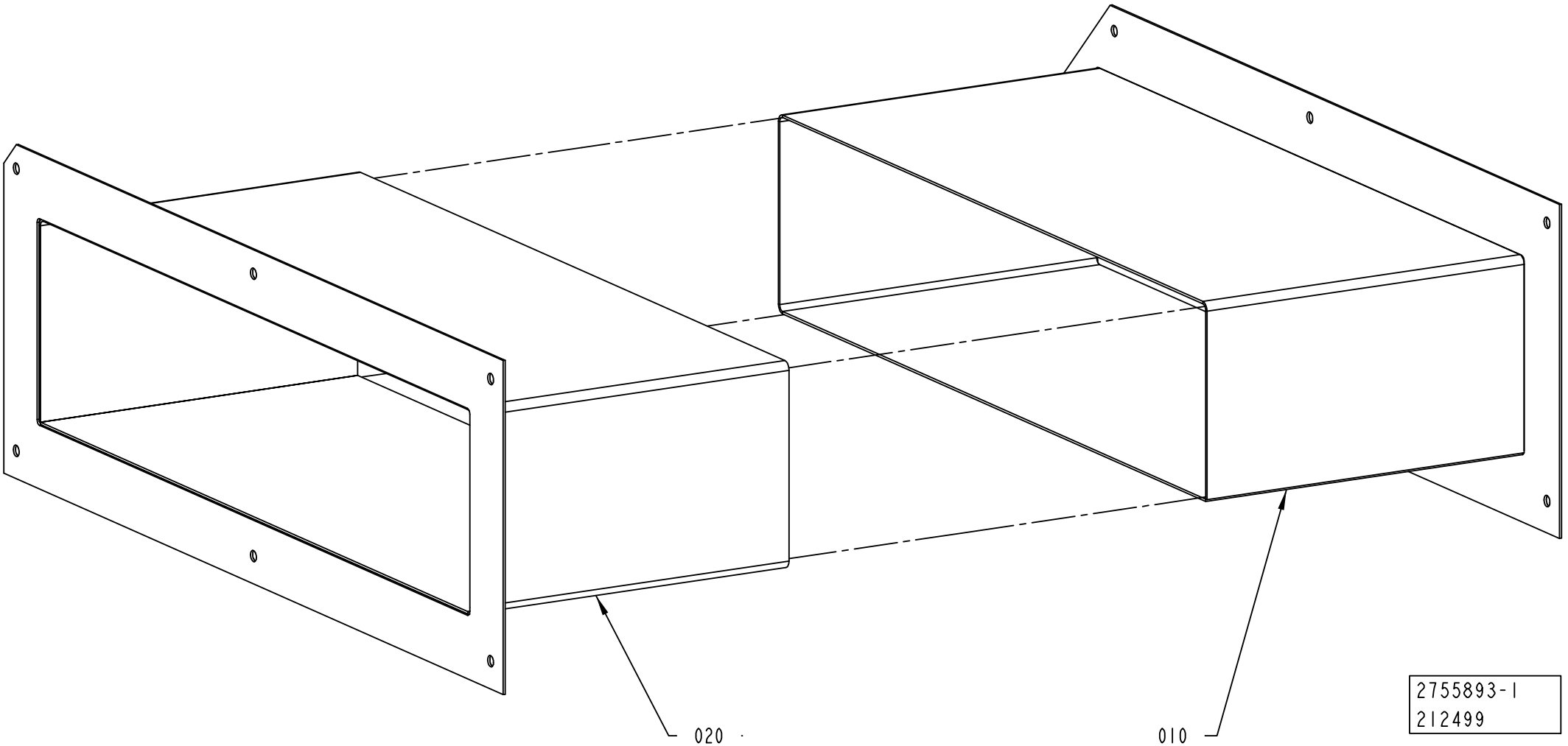
020
010
2755893-1
212499

ECM: 213368 - 20061102
Group number: 2755893-0100
Assembly Drawing: 2755893-1_1_AA

Pos	Part No	UN	Qty	Description	Page No
-					
010	2748623-0000		1	COVER	
020	2748624-0000		1	COVER	

Pos	Part No	UN	Qty	Description	Page No

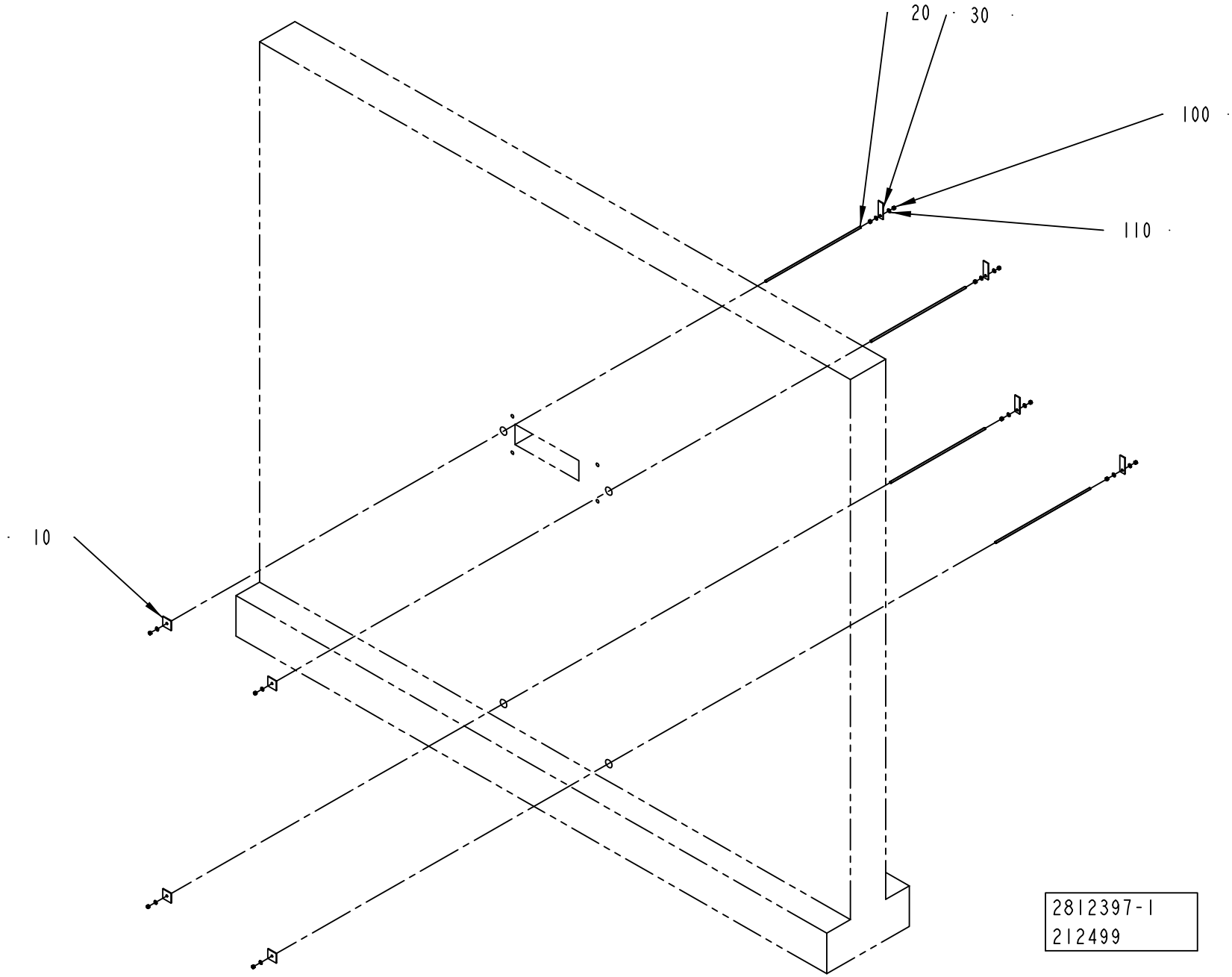
20
30
100
110
10
2812397-1
212499

ECM: 252614 - 20061102
Group number: 2812397-0100
Assembly Drawing: 2812397-1_1_AA

Pos	Part No	UN	Qty	Description	Page No
-					
010	2812398-0000		4	PLATE	
020	2812399-0000		4	MOUNTING BAR	
030	2812400-0000		4	PLATE	
100	312605-0322		12	HEXAGON NUT, M6M M12 A280	
110	315105-0178		12	WASHER BRB 13X24 RFR	

Pos	Part No	UN	Qty	Description	Page No

Machine Type | Group Description | Used-In | Group Number | Page No

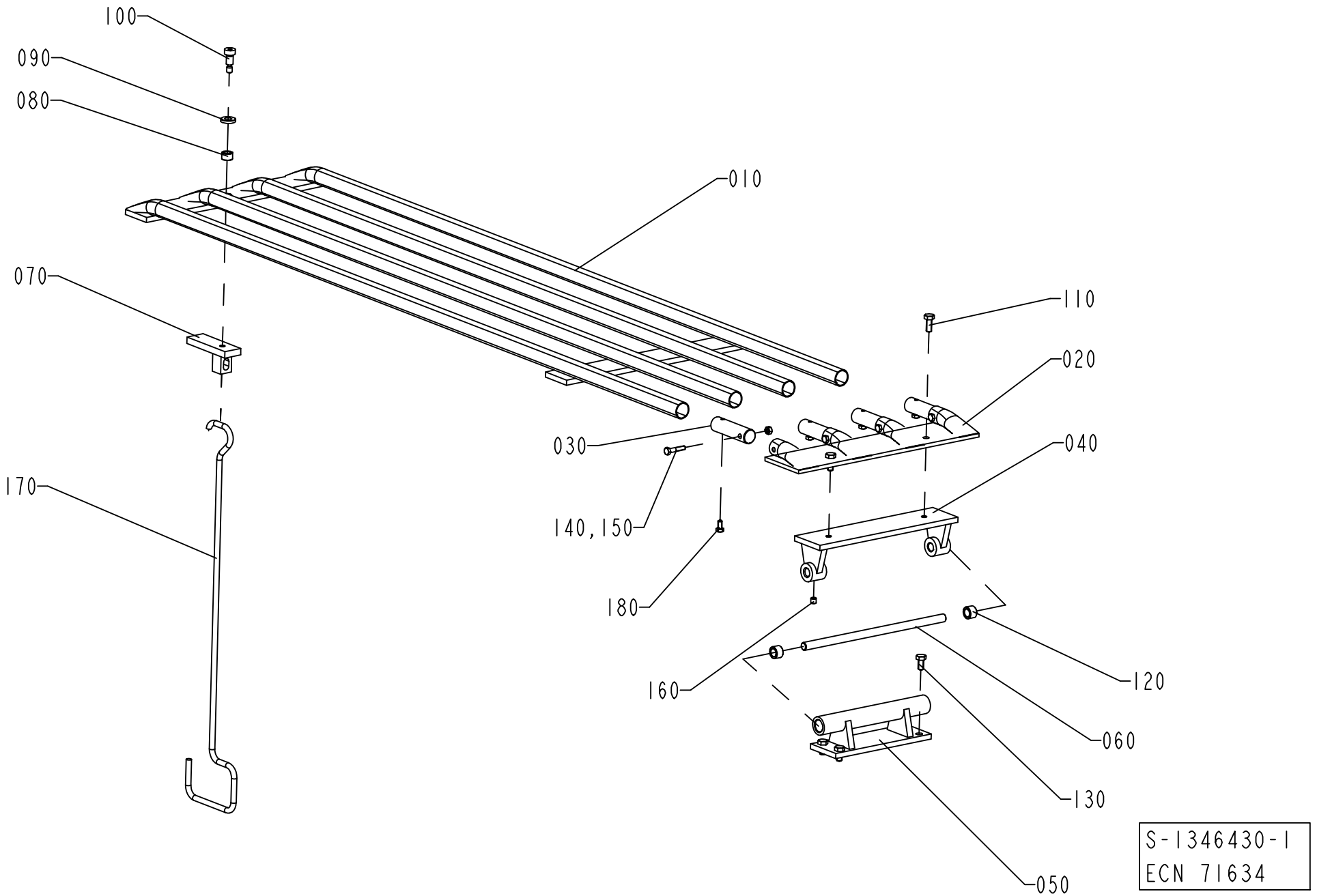
100
090
080
010
070
110
020
030
040
170
140,150
180
160
120
060
130
050
S-1346430-1
ECN 71634

ECM: 190941 - 20041104
Group number: 1346430-0100
Assembly Drawing: 1346430-1_1_AA

Pos	Part No	UN	Qty	Description	Page No
-					
010	1346408-0000		1	SUPPORT	
020	530775-0000		1	END PIECE	
030	1346409-0000		4	SHAFT	
040	1346404-0000		1	BRACKET	
050	1346403-0000		1	BRACKET	
060	236634-0000		1	SHAFT	
070	1346395-0000		1	LOCKING ARM	
080	321105-0163		1	BEARING BUSH W/O FLANGE, 10X16X10 MM	
090	315111-0173		1	WASHER PLAIN, TBRB 10,5/22 H=4	
100	312180-0489		1	SCREW ISO7379 H10X16	
110	312105-0449		2	SCREW M6S ISO 4017 M8X16 A480	
120	321105-0173		2	BEARING BUSH W/O FLANGE, 12X18X12 MM	
130	312105-0449		4	SCREW M6S ISO 4017 M8X16 A480	
140	312605-0316		4	HEXAGON NUT, M6M M6 A280	
150	312105-0374		4	SCREW M6S ISO 4014 M6X30 A480	
160	312318-0443		1	SCREW ISO4029 M8X8 A4	
170	236631-0000		1	HANDLE	
180	312105-0366		4	SCREW M6S ISO 4017 M6X12 A480	

Pos	Part No	UN	Qty	Description	Page No

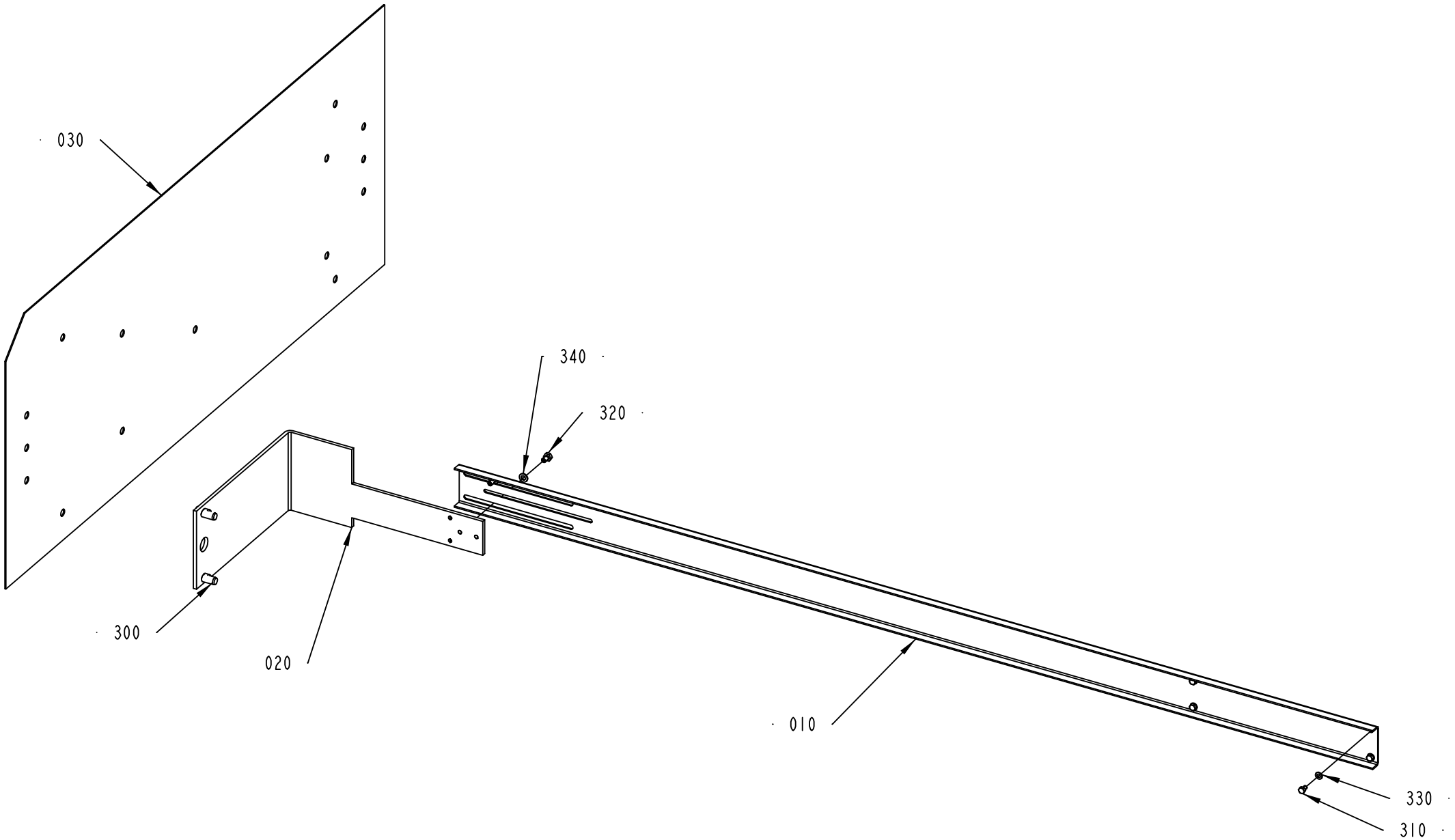
030
340
320
300
020
010
330
310

ECM: 273618 - 20061102
Group number: 2764295-0100
Assembly Drawing: 2764295-1_1_AA

Pos	Part No	UN	Qty	Description	Page No
-					
010	2764294-0000		1	TEMPLATE	
020	2764293-0000		1	TEMPLATE	
030	2750808-0000		1	TEMPLATE	
300	311103-0454		2	PARALLEL PIN ISO 2338 10M6X20 A1	
310	312105-0323		4	SCREW M6S ISO 4017 M5X8 A480	
320	312105-0364		2	SCREW M6S ISO 4017 M6X10 A480	
330	315105-0146		4	WASHER BRB 5,3X10 RFR	
340	315105-0153		2	WASHER BRB 6,4X12 RFR	

Pos	Part No	UN	Qty	Description	Page No

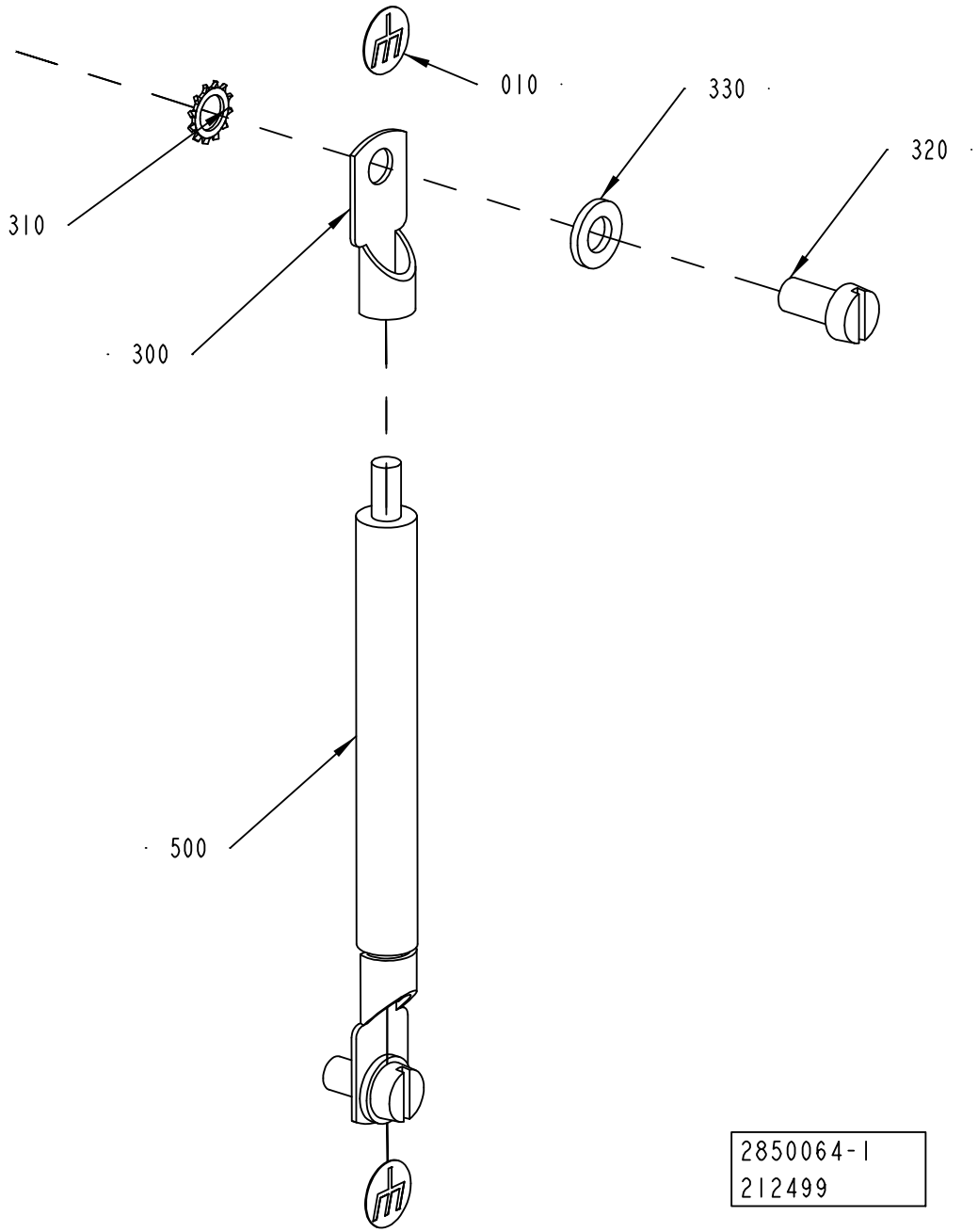
010
330
320
310
300
500
2850064-1
212499

ECM: 273797 - 20061102
Group number: 2850064-0100
Assembly Drawing: 2850064-1_1_AA

Pos	Part No	UN	Qty	Description	Page No
-					
010	2608177-0000		2	SIGN	
300	353104-0175		2	CABLE SHOE, RING UNINS., YAV 25 M 6	
310	90062-0022		2	LOCKING WASHER D=6,4/11	
320	312125-0366		2	SCREW ISO 1207 M6X12 A4	
330	315105-0153		2	WASHER BRB 6,4X12 RFR	
500	351162-0110	MM	5000	CABLE AWM 1X25 MM2 YELLOW-GREEN	

Pos	Part No	UN	Qty	Description	Page No

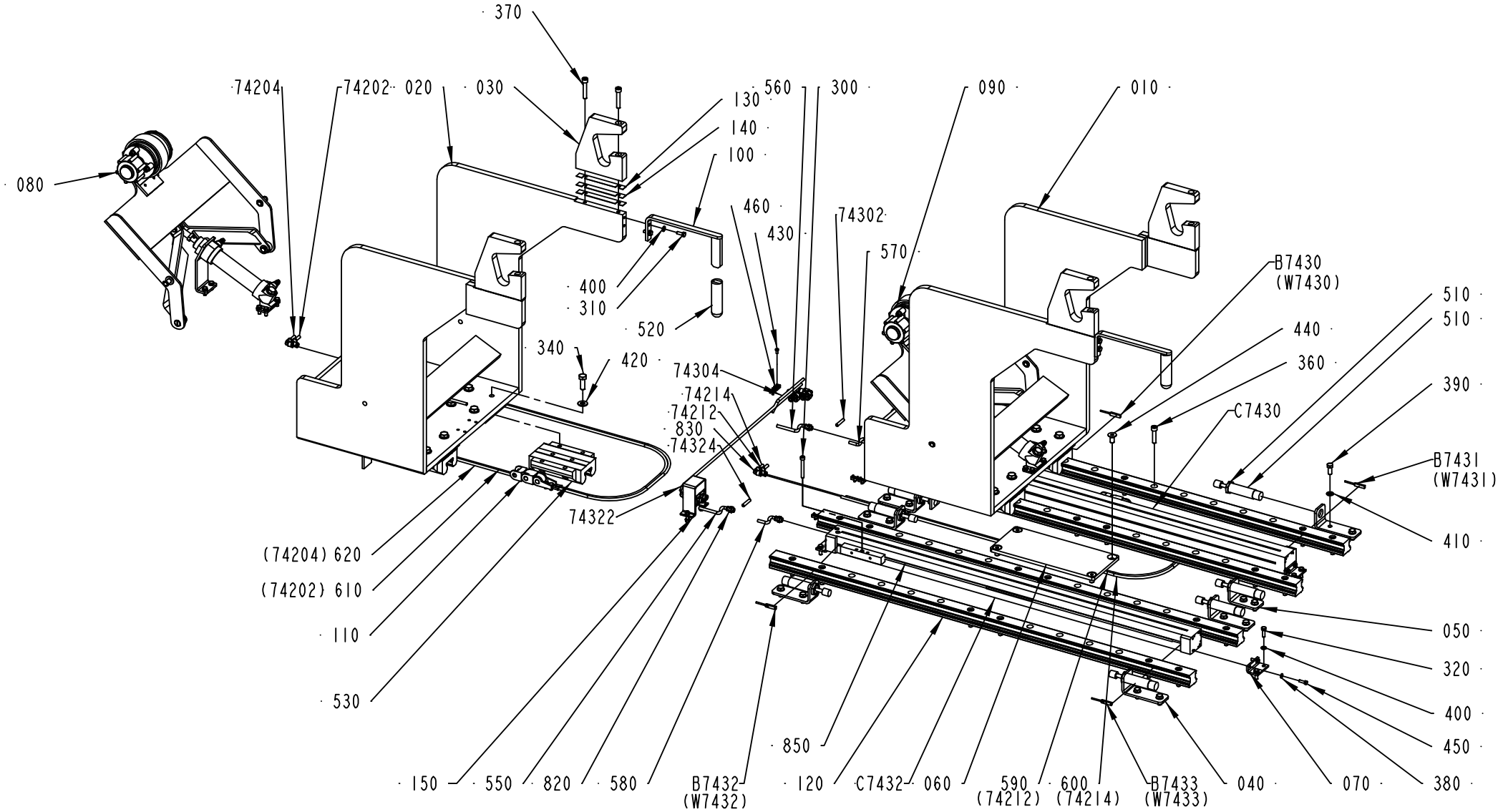

2538072-1
196210

ECM: 196222 - 20051128
Group number: 2538072-0100
Assembly Drawing: 2538072-1_1_AC

Pos	Part No	UN	Qty	Description	Page No
-					
010	2556496-0000		1	CARRIAGE	
020	2556497-0000		1	CARRIAGE	
030	2660776-0000		4	BEARING BLOCK	
040	2556499-0000		7	BRACKET	
050	2623883-0000		1	BRACKET	
060	2623884-0000		1	PLATE	
070	2556512-0000		4	BRACKET	
080	2629315-0100		1	PAPER BRAKE	**7-81**
090	2556503-0100		1	PAPER BRAKE	**7-83**
100	2564623-0000		2	HANDLE	
110	2564630-0100		2	CABLE DRAG CHAIN	**7-85**
120	2629338-0000		4	GUIDE RAIL	
130	2731880-0001		4	SHIM	
140	2731880-0002		8	SHIM	
150	2711993-0100		2	AIR SUPPLY	**7-87**
300	312115-0380		2	SCREW ISO4762 M6X50 A4 80	
310	312105-0368		4	SCREW M6S ISO 4017 M6X16 A480	
320	312105-0370		8	SCREW M6S ISO 4017 M6X20 A480	
340	312105-0495		32	SCREW M6S ISO 4017 M10X30 A480	
360	312115-0457		24	SCREW ISO4762 M8X35 A4 80	
370	312115-0460		8	SCREW ISO4762 M8X45 A4 80	
380	315105-0146		8	WASHER BRB 5,3X10 RFR	
390	312105-0451		16	SCREW M6S ISO 4017 M8X20 A480	
400	315105-0153		12	WASHER BRB 6,4X12 RFR	
410	315105-0165		16	WASHER BRB 8,4X16 RFR	
420	315105-0173		32	WASHER BRB 10,5X20 RFR	
430	312125-0287		11	SCREW ISO 1207 M4X8 A4	
440	312155-0491		4	SCREW DIN 7991 MF6S M10X20 A4 70	
450	312105-0329		8	SCREW M6S ISO 4017 M5X16 A480	
460	352113-0205		11	ANCHOR PLATES FOR STRIPS, TYPE TM2S8-C10	
510	90347-0182		8	SHOCK ABSORBER, YSR-16-20-C	
520	90459-1544		2	HANDLE, GR/10	
530	90459-1545		8	CARRIAGE, 1653-314-20	
550	90166-0193	MM	500	TUBE 6 MM PUR BLUE	
560	90166-0193	MM	500	TUBE 6 MM PUR BLUE	
570	90166-0193	MM	500	TUBE 6 MM PUR BLUE	
580	90166-0193	MM	500	TUBE 6 MM PUR BLUE	
590	90166-0193	MM	1800	TUBE 6 MM PUR BLUE	
600	90166-0193	MM	1800	TUBE 6 MM PUR BLUE	
610	90166-0193	MM	1800	TUBE 6 MM PUR BLUE	
620	90166-0193	MM	1800	TUBE 6 MM PUR BLUE	
810	90235-0846		4	THROTTLE CHECK VALVE G1/8", MANUAL, 6	
820	342722-0202		4	PIPE COUPLING 1/8" D=6MM	
830	342735-0102		12	ELBOW PIPE JOINT	
840	342770-0105		4	STRAIGHT COUPLING INT, D=6 MM - G1/8	
850	90458-0273		4	COVER STRIP	
74202	90166-0193	MM	4000	TUBE 6 MM PUR BLUE	
74204	90166-0193	MM	4000	TUBE 6 MM PUR BLUE	
74212	90166-0193	MM	4000	TUBE 6 MM PUR BLUE	
74214	90166-0193	MM	4000	TUBE 6 MM PUR BLUE	
74302	90166-0193	MM	4000	TUBE 6 MM PUR BLUE	
74304	90166-0193	MM	4000	TUBE 6 MM PUR BLUE	
74322	90166-0193	MM	4000	TUBE 6 MM PUR BLUE	
74324	90166-0193	MM	4000	TUBE 6 MM PUR BLUE	
B7430	90044-0165		1	PROXIMITY SENSOR, SME-8-K5-LED-24	
B7431	90044-0165		1	PROXIMITY SENSOR, SME-8-K5-LED-24	
B7432	90044-0165		1	PROXIMITY SENSOR, SME-8-K5-LED-24	
B7433	90044-0165		1	PROXIMITY SENSOR, SME-8-K5-LED-24	
C7430	90459-2647		1	DOUBLE ACTING, SHUTTLE, CYL. 25-780	
C7432	90459-2647		1	DOUBLE ACTING, SHUTTLE, CYL. 25-780	

Machine Type | Group Description | Used-In | Group Number | Page No

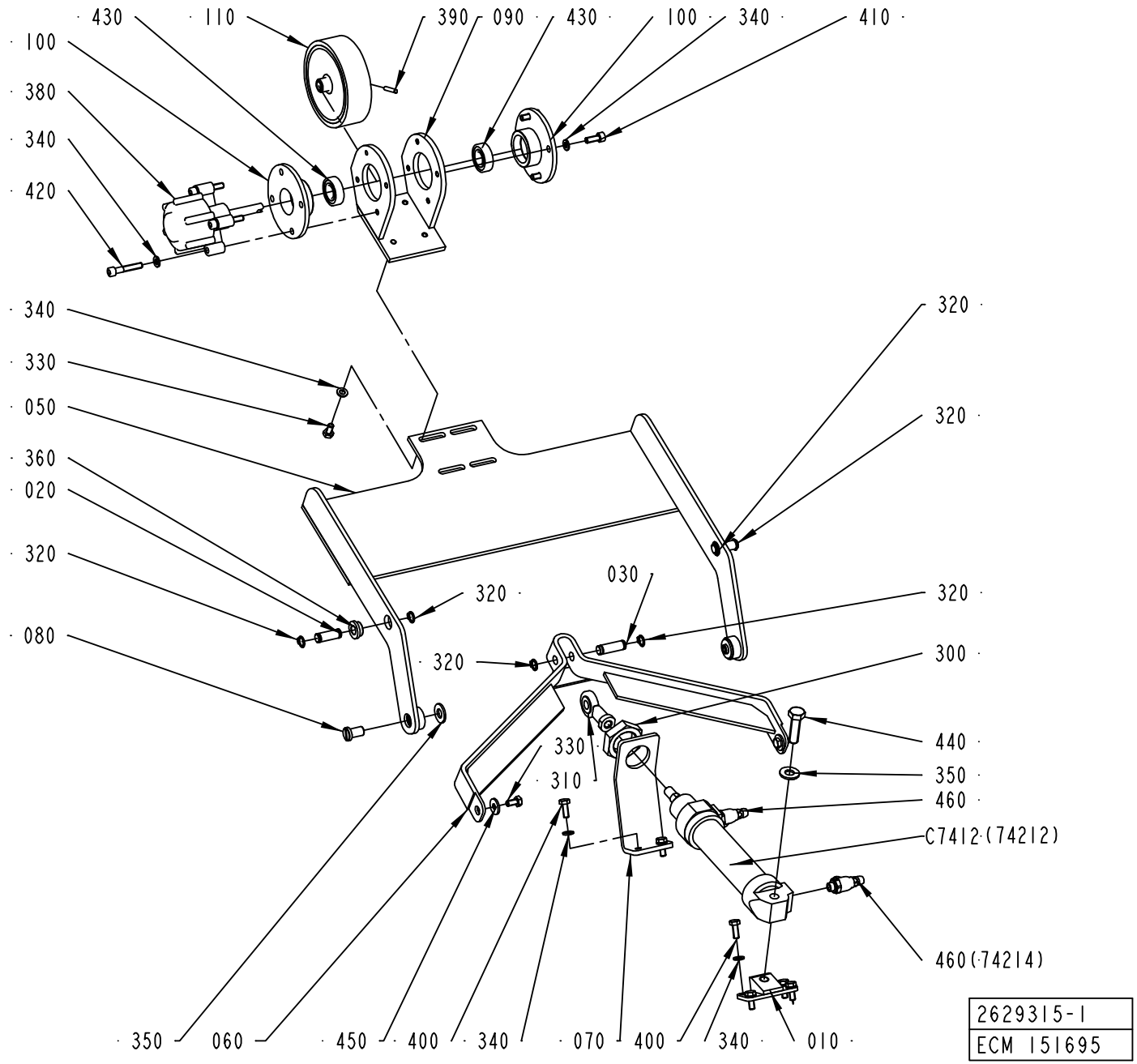
430
110
390
090
430
100
340
410
100
380
340
420
340
330
050
360
020
320
080
320
320
320
320
320
030
300
440
350
460
C7412 (74212)
460 (74214)
330
310
350
060
450
400
340
070
400
340
010
2629315-1
ECM 151695

ECM: 177928 - 20041005
Group number: 2629315-0100
Assembly Drawing: 2629315-1_1_AA

Pos	Part No	UN	Qty	Description	Page No
-					
010	2556504-0000		1	BRACKET	
020	2556505-0002		2	PIN	
030	2556505-0003		1	PIN	
050	2556507-0000		1	LEVER	
060	2556506-0000		1	LINK	
070	2556508-0000		1	BRACKET	
080	2556509-0000		2	SHAFT	
090	2556510-0000		1	BRACKET	
100	1512363-0000		2	BEARING HOUSING	
110	1523483-0000		1	ROLLER	
310	90239-0405		1	ROD END,BALL JOINT EYE M10X1,25	
320	90141-0016		6	RETAINING RING FOR SHAFT DIN 471 10 A2	
330	312105-0366		6	SCREW M6S ISO 4017 M6X12 A480	
340	315105-0153		18	WASHER BRB 6,4X12 RFR	
350	315105-0173		3	WASHER BRB 10,5X20 RFR	
360	321101-0162		2	FLANGE BUSHING, 10X16X8 MM	
380	90347-0054		1	DAMPER	
390	311103-1274		1	PARALLEL PIN ISO 2338 4M6X24 A1	
400	312105-0368		6	SCREW M6S ISO 4017 M6X16 A480	
410	312115-0368		4	SCREW ISO4762 M6X16 A4 80	
420	312115-0376		4	SCREW ISO4762 M6X35 A4 80	
430	321308-0202		2	BALL BEARING, 15X32X9 MM	
440	312105-0497		1	SCREW M6S ISO 4017 M10X35 A480	
450	6278-0000		2	WASHER	
460	90235-0846		2	THROTTLE CHECK VALVE G1/8", MANUAL, 6	
C7412	90239-0861		1	DOUBLE ACTING, MINI-ISO, CYL. 32-125	

Pos	Part No	UN	Qty	Description	Page No

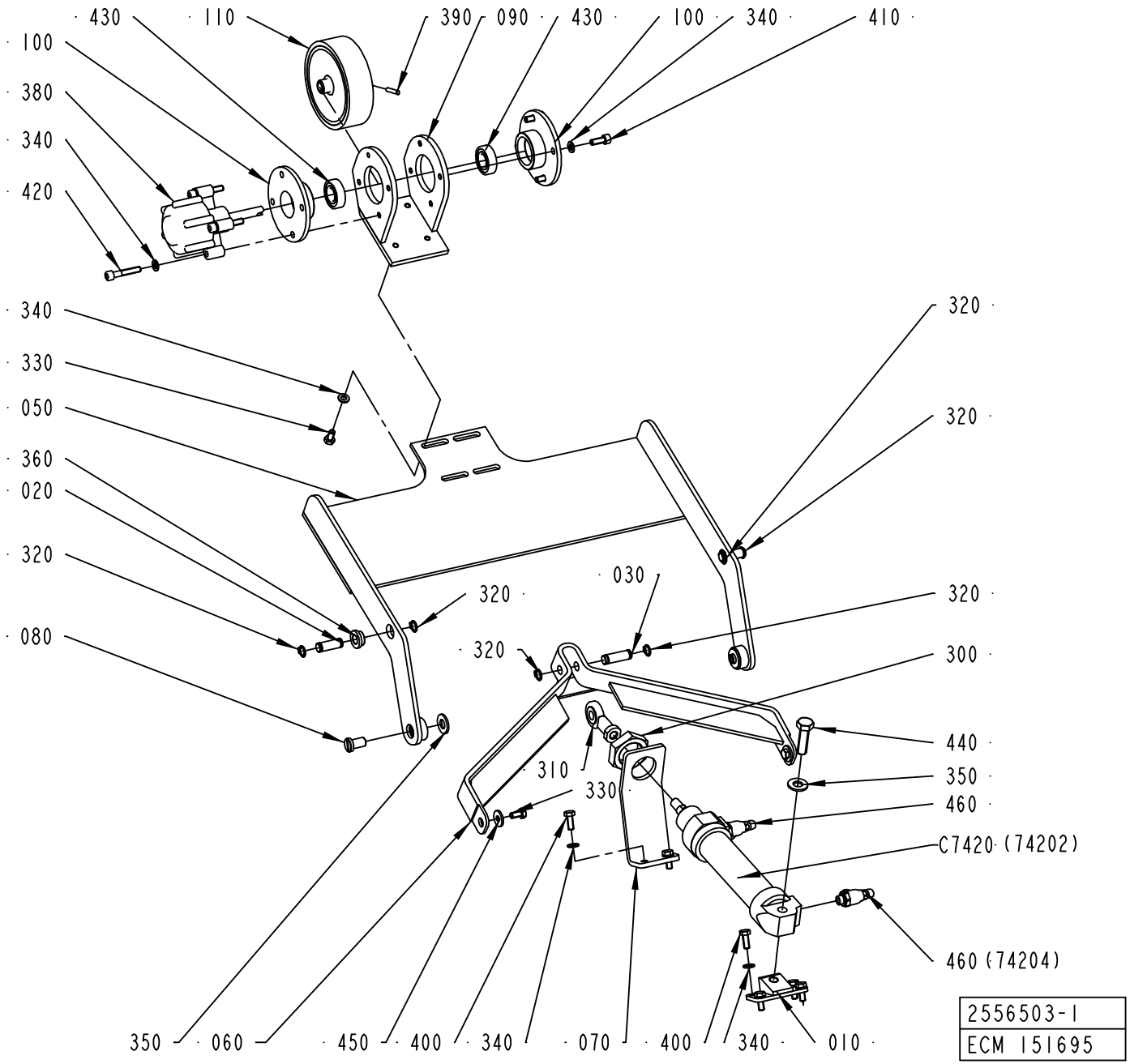
430
110
390
090
430
100
340
410
100
380
340
420
340
330
050
360
020
320
080
320
320
320
320
320
030
320
300
440
350
460
C7420 (74202)
460 (74204)
310
330
350
060
450
400
340
070
400
340
010
2556503-1
ECM 151695

ECM: 177929 - 20041005
Group number: 2556503-0100
Assembly Drawing: 2556503-1_1_AA

Pos	Part No	UN	Qty	Description	Page No
-					
010	2556504-0000		1	BRACKET	
020	2556505-0002		2	PIN	
030	2556505-0003		1	PIN	
050	2556507-0000		1	LEVER	
060	2556506-0000		1	LINK	
070	2556508-0000		1	BRACKET	
080	2556509-0000		2	SHAFT	
090	2556510-0000		1	BRACKET	
100	1512363-0000		2	BEARING HOUSING	
110	1523483-0000		1	ROLLER	
310	90239-0405		1	ROD END,BALL JOINT EYE M10X1,25	
320	90141-0016		6	RETAINING RING FOR SHAFT DIN 471 10 A2	
330	312105-0366		6	SCREW M6S ISO 4017 M6X12 A480	
340	315105-0153		18	WASHER BRB 6,4X12 RFR	
350	315105-0173		3	WASHER BRB 10,5X20 RFR	
360	321101-0162		2	FLANGE BUSHING, 10X16X8 MM	
380	90347-0054		1	DAMPER	
390	311103-1274		4	PARALLEL PIN ISO 2338 4M6X24 A1	
400	312105-0368		6	SCREW M6S ISO 4017 M6X16 A480	
410	312115-0368		4	SCREW ISO4762 M6X16 A4 80	
420	312115-0376		4	SCREW ISO4762 M6X35 A4 80	
430	321308-0202		2	BALL BEARING, 15X32X9 MM	
440	312105-0497		1	SCREW M6S ISO 4017 M10X35 A480	
450	6278-0000		2	WASHER	
460	90235-0846		2	THROTTLE CHECK VALVE G1/8", MANUAL, 6	
C7420	90239-0861		1	DOUBLE ACTING, MINI-ISO, CYL. 32-125	

Pos	Part No	UN	Qty	Description	Page No

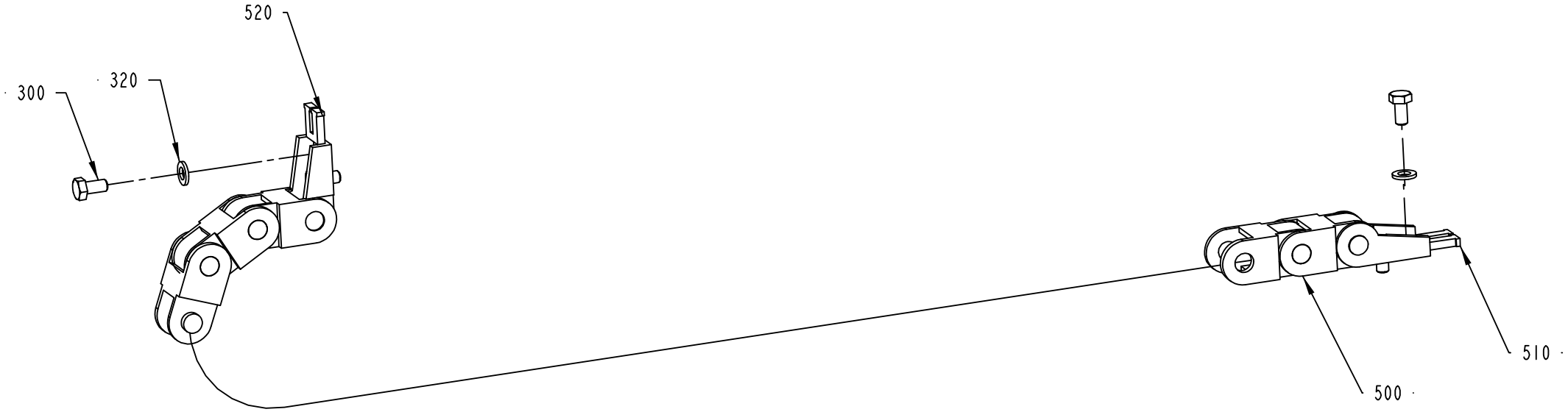

2564630-1
ECM 151695

ECM: 177930 - 20041025
Group number: 2564630-0100
Assembly Drawing: 2564630-1_1_AA

Pos	Part No	UN	Qty	Description	Page No
-					
300	312105-0366		4	SCREW M6S ISO 4017 M6X12 A480	
310	312115-0378		2	SCREW ISO4762 M6X40 A4 80	
320	315105-0153		4	WASHER BRB 6,4X12 RFR	
500	90181-0199		1	FLEXIBLE CHAIN, LINK 15	
510	90181-0202		1	FLEXIBLE CHAIN, BRACKET 1015. 1PZ	
520	90181-0203		1	FLEXIBLE CHAIN, BRACKET 1015. 2PZ	

Pos	Part No	UN	Qty	Description	Page No

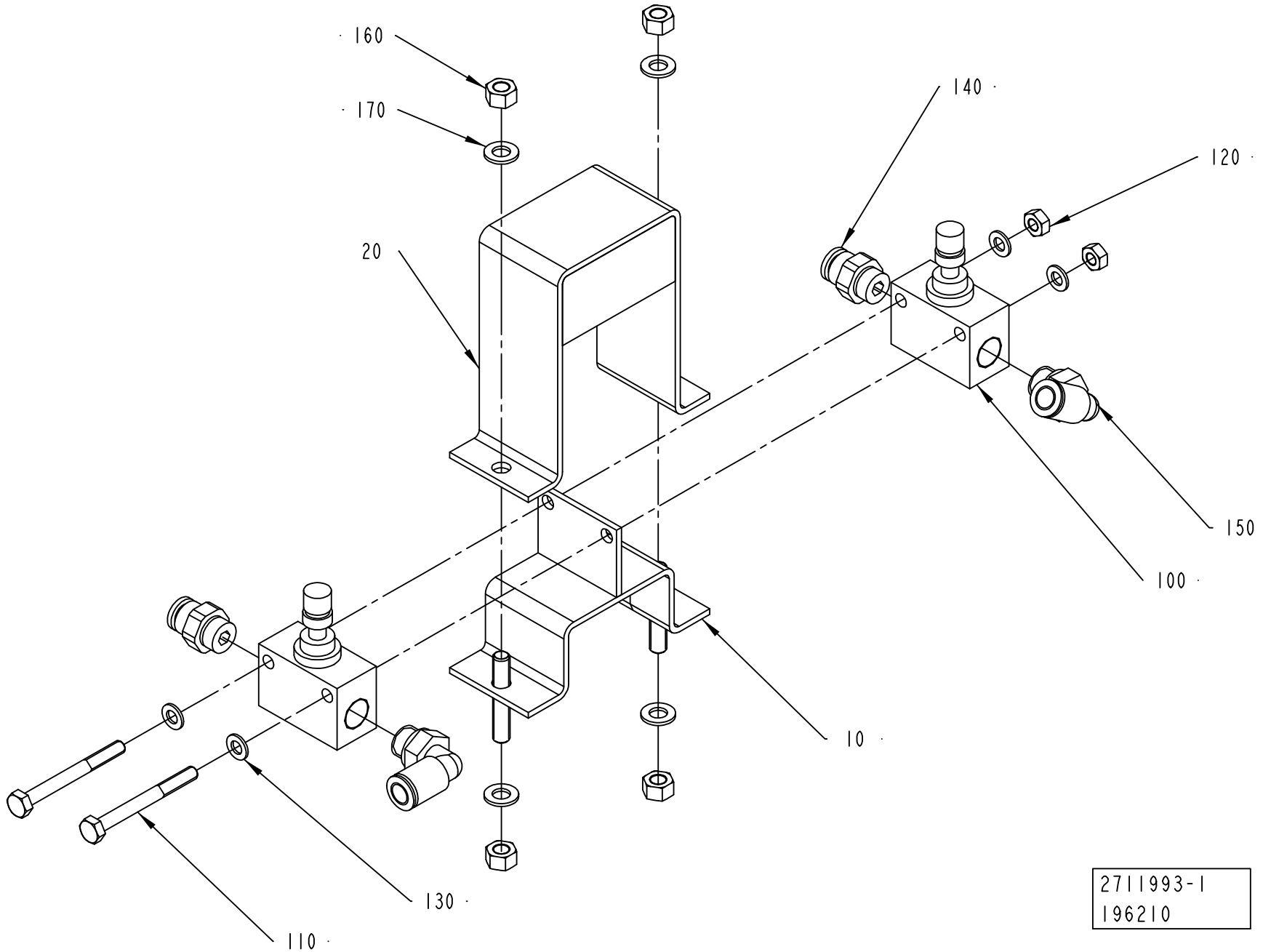
160
170
20
140
120
150
100
10
130
110
2711993-1
196210

ECM: 196221 - 20051128
Group number: 2711993-0100
Assembly Drawing: 2711993-1_1_AA

Pos	Part No	UN	Qty	Description	Page No
-					
010	2711991-0000		1	SUPPORT	
020	2711992-0000		1	COVER	
100	90235-0250		2	THROTTLE CHECK VALVE, GR-1/8-B FESTO	
	90235-0401		*1*	*PROTECTIVE COVER*	
110	312105-0303		2	SCREW M6S ISO 4017 M4X40 A470	
120	312607-0312		2	HEXAGON NUT, EN 24032 M6M M4 A480	
130	315105-0136		4	WASHER BRB 4,3X9 RFR	
140	342722-0202		2	PIPE COUPLING 1/8" D=6MM	
150	350002-0006		2	PUSH-IN L-FITTING QSL-F-G1/8-6	
160	312607-0314		4	HEXAGON NUT, EN 24032 M6M M5 A480	
170	315105-0146		4	WASHER BRB 5,3X10 RFR	

Pos	Part No	UN	Qty	Description	Page No

BOBBIN BRAKE

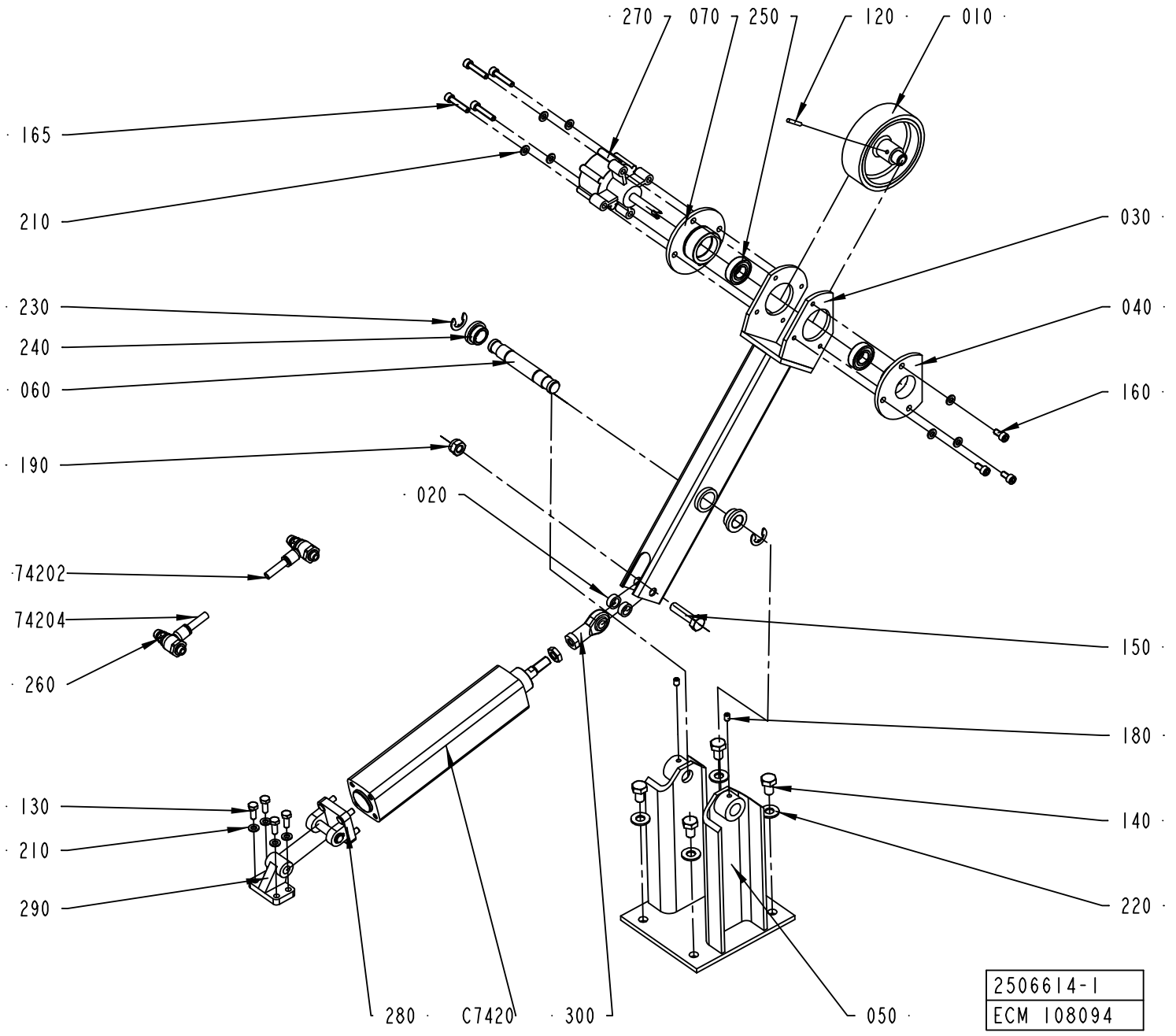

ECM: 272280 - 20060712
Group number: 2506614-0100
Assembly Drawing: 2506614-1_1_AB

Pos	Part No	UN	Qty	Description	Page No
-					
010	1523483-0000		1	ROLLER	
020	1523486-0000		2	SPACER	
030	2506647-0000		1	LEVER	
040	2506649-0000		1	BEARING FLANGE	
050	2506650-0000		1	FRAME	
060	2506652-0000		1	AXLE PIN	
070	2507103-0000		1	BEARING FLANGE	
120	311103-1274		1	PARALLEL PIN ISO 2338 4M6X24 A1	
130	312105-0370		4	SCREW M6S ISO 4017 M6X20 A480	
140	312105-0491		4	SCREW M6S ISO 4017 M10X20 A480	
150	312105-0499		1	SCREW M6S ISO 4014 M10X40 A480	
160	312115-0366		3	SCREW ISO4762 M6X12 A4 80	
165	312115-0374		4	SCREW ISO4762 M6X30 A4 80	
180	312318-0362		2	SCREW ISO4029 M6X8 A4	
190	312812-0320		1	HEXAGON NUT, NY-LOCK M10 A480	
210	315105-0153		11	WASHER BRB 6,4X12 RFR	
220	315105-0173		4	WASHER BRB 10,5X20 RFR	
230	315755-0112		2	RETAINING RING SHAFT DIN 6799 12 A2	
240	321101-0202		2	FLANGE BUSHING, 16X22X12 MM	
250	321308-0202		2	BALL BEARING, 15X32X9 MM	
260	90235-0848		2	THROTTLE CHECK VALVE, G1/8", MANUAL,8	
270	90347-0054		1	DAMPER	
280	90450-0654		1	BRACKET,REAR,EYE WITH AXLE 32	
290	90450-0655		1	BRACKET,REAR,CLEVIS FLANGE WITH FOOT 32	
300	90450-0723		1	ROD END,BALL JOINT EYE M10X1,25	
74202	90166-0194	MM	7000	TUBE 8 MM PUR BLUE	
74204	90166-0194	MM	7000	TUBE 8 MM PUR BLUE	
C7420	90459-3370		1	DOUBLE ACTING, PROFILE,CYL 32-140	

Pos	Part No	UN	Qty	Description	Page No

BOBBIN BRAKE

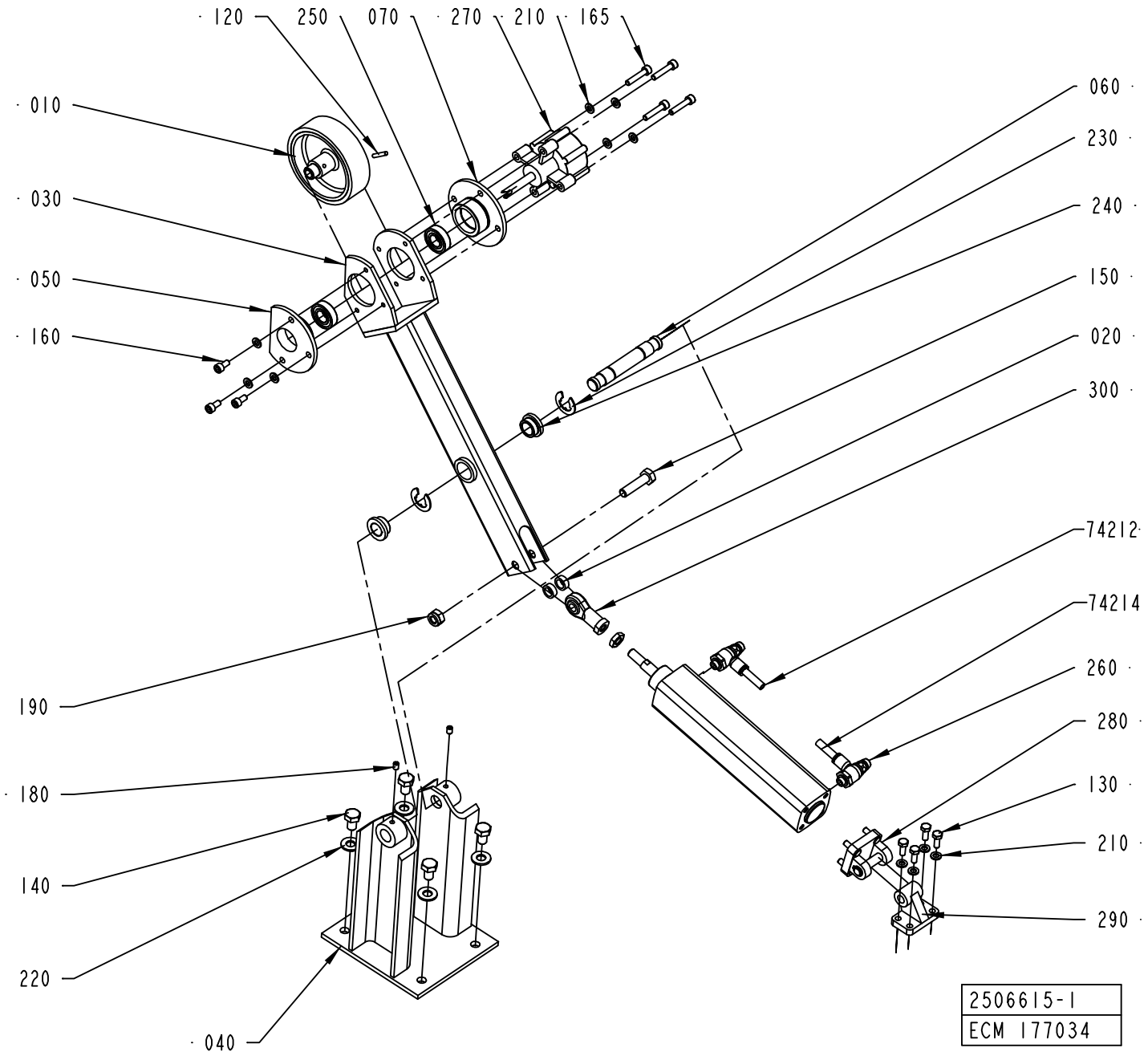

ECM: 272281 - 20060712
Group number: 2506615-0100
Assembly Drawing: 2506615-1_1_AC

Pos	Part No	UN	Qty	Description	Page No
-					
010	1523483-0000		1	ROLLER	
020	1523486-0000		2	SPACER	
030	2506648-0000		1	LEVER	
040	2506650-0000		1	FRAME	
050	2506651-0000		1	BEARING FLANGE	
060	2506652-0000		1	AXLE PIN	
070	2507103-0000		1	BEARING FLANGE	
120	311103-1274		1	PARALLEL PIN ISO 2338 4M6X24 A1	
130	312105-0370		4	SCREW M6S ISO 4017 M6X20 A480	
140	312105-0491		4	SCREW M6S ISO 4017 M10X20 A480	
150	312105-0499		1	SCREW M6S ISO 4014 M10X40 A480	
160	312115-0366		3	SCREW ISO4762 M6X12 A4 80	
165	312115-0374		4	SCREW ISO4762 M6X30 A4 80	
180	312318-0362		2	SCREW ISO4029 M6X8 A4	
190	312812-0320		1	HEXAGON NUT, NY-LOCK M10 A480	
210	315105-0153		11	WASHER BRB 6,4X12 RFR	
220	315105-0173		4	WASHER BRB 10,5X20 RFR	
230	315755-0112		2	RETAINING RING SHAFT DIN 6799 12 A2	
240	321101-0202		2	FLANGE BUSHING, 16X22X12 MM	
250	321308-0202		2	BALL BEARING, 15X32X9 MM	
260	90235-0848		2	THROTTLE CHECK VALVE, G1/8", MANUAL,8	
270	90347-0054		1	DAMPER	
280	90450-0654		1	BRACKET,REAR,EYE WITH AXLE 32	
290	90450-0655		1	BRACKET,REAR,CLEVIS FLANGE WITH FOOT 32	
300	90450-0723		1	ROD END,BALL JOINT EYE M10X1,25	
74212	90166-0194	MM	7000	TUBE 8 MM PUR BLUE	
74214	90166-0194	MM	7000	TUBE 8 MM PUR BLUE	
C7421	90459-3370		1	DOUBLE ACTING, PROFILE,CYL 32-140	

Pos	Part No	UN	Qty	Description	Page No

Machine Type	Group Description	Used-In	Group Number	Page No

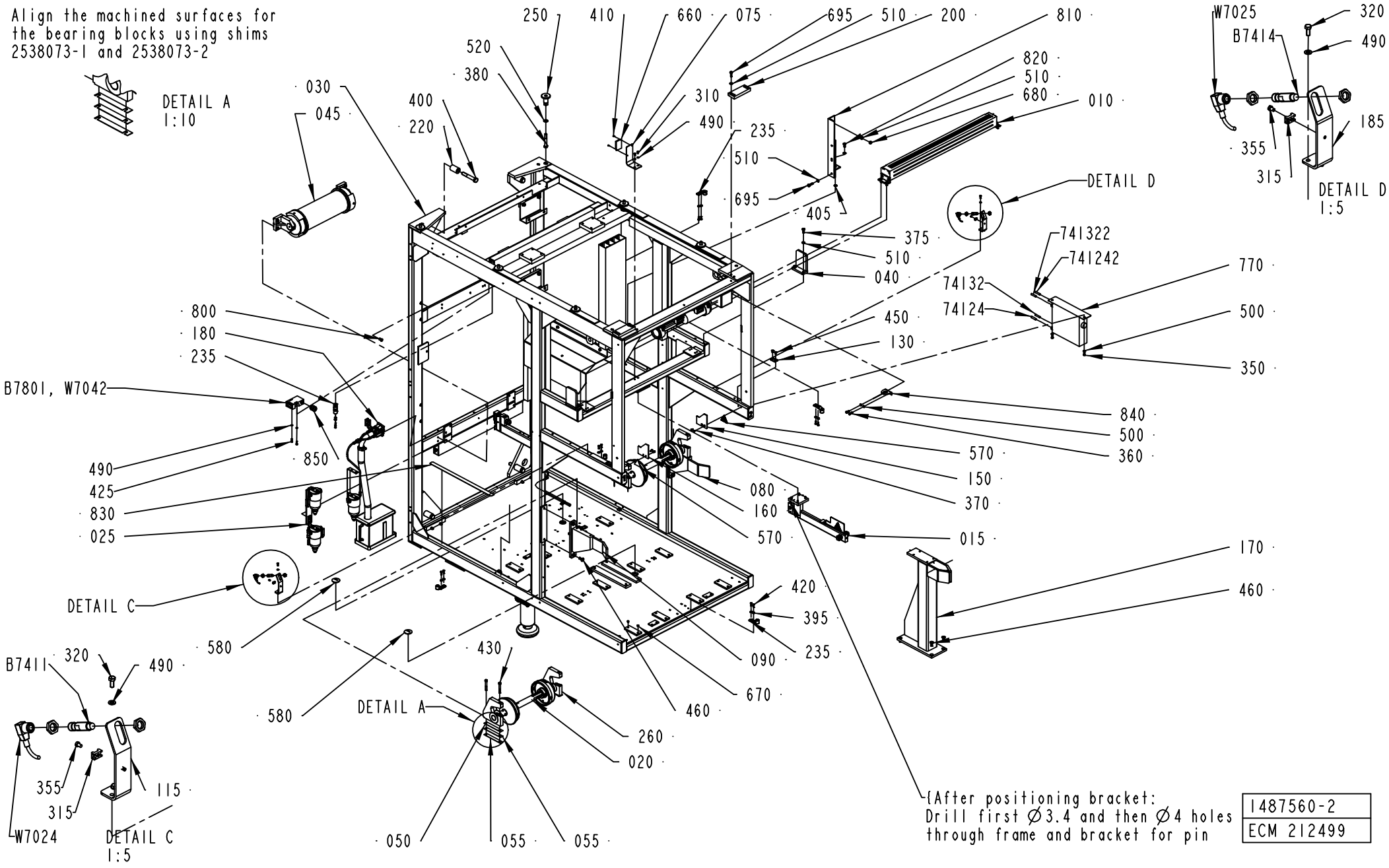
Align the machined surfaces for the bearing blocks using shims 2538073-1 and 2538073-2
DETAIL A 1:10
250
410
660
075
695
510
200
810
520
380
030
045
400
220
310
490
235
510
695
405
820
510
680
010
DETAIL D
375
510
040
741322
741242
74132
74124
770
500
350
450
130
800
180
235
B7801, W7042
490
425
830
025
850
840
500
360
570
150
370
080
160
570
015
170
460
420
395
235
090
670
460
DETAIL C
580
430
580
DETAIL A
260
020
050
055
055
B7411
320
490
355
315
115
W7024
DETAIL C 1:5
W7025
B7414
320
490
185
355
315
DETAIL D 1:5
{After positioning bracket: Drill first Ø3.4 and then Ø4 holes through frame and bracket for pin
1487560-2
ECM 212499

ECM: 274254 - 20061102
Group number: 1487560-0200
Assembly Drawing: 1487560-2_1_AK

This list covers pages from 7-92 to 7-99

Pos	Part No	UN	Qty	Description	Page No
A3/FLEX ASU WITH ARL (See drawing on pages: 7-96, 7-98)					
025	2541891-0100		1	FILTER	**7-101**
045	2541083-0100		1	BENDING ROLLER	**7-103**
200	985756-0000		2	KEY	
250	2599941-0000		6	SPACER	
360	312105-0368		8	SCREW M6S ISO 4017 M6X16 A480	
380	312105-0548		6	SCREW M6S ISO 4014 M12X80 A480	
500	315105-0153		16	WASHER BRB 6,4X12 RFR	
510	315105-0165		14	WASHER BRB 8,4X16 RFR	
520	315105-0178		6	WASHER BRB 13X24 RFR	
695	312105-0452		2	SCREW M6S ISO 4017 M8X22 A4 80	
780	2693153-0100		2	FOOT	**7-105**
860	2690494-0100		1	PNEUMATIC SYSTEM	**7-107**
A3/FLEX SEPROOM WITH ARL (See drawing on pages: 7-96, 7-98)					
025	2541891-0100		1	FILTER	**7-101**
045	2541083-0100		1	BENDING ROLLER	**7-103**
200	985756-0000		2	KEY	
250	2599941-0000		6	SPACER	
360	312105-0368		8	SCREW M6S ISO 4017 M6X16 A480	
380	312105-0548		6	SCREW M6S ISO 4014 M12X80 A480	
500	315105-0153		16	WASHER BRB 6,4X12 RFR	
510	315105-0165		14	WASHER BRB 8,4X16 RFR	
520	315105-0178		6	WASHER BRB 13X24 RFR	
695	312105-0452		2	SCREW M6S ISO 4017 M8X22 A4 80	
780	2693153-0100		4	FOOT	**7-105**
860	2690494-0100		1	PNEUMATIC SYSTEM	**7-107**
A3/FLEX SEPROOM WITHOUT ARL (See drawing on pages: 7-92, 7-94)					
025	2541891-0100		1	FILTER	**7-101**
045	2541083-0100		1	BENDING ROLLER	**7-103**
050	2538073-0001		4	SHIMS	
055	2538073-0002		8	SHIMS	
080	2553107-0000		1	HOLDER	
090	2553108-0000		1	HOLDER	
170	2553109-0000		1	HOLDER	
200	985756-0000		2	KEY	
250	2599941-0000		6	SPACER	
360	312105-0368		8	SCREW M6S ISO 4017 M6X16 A480	
380	312105-0548		6	SCREW M6S ISO 4014 M12X80 A480	
460	312155-0493		8	SCREW DIN 7991 MF6S M10X25 A4 70	
500	315105-0153		16	WASHER BRB 6,4X12 RFR	
510	315105-0165		14	WASHER BRB 8,4X16 RFR	
520	315105-0178		6	WASHER BRB 13X24 RFR	
695	312105-0452		2	SCREW M6S ISO 4017 M8X22 A4 80	
780	2693153-0100		4	FOOT	**7-105**
A3/FLEX ASU WITHOUT ARL (See drawing on pages: 7-92, 7-94)					
025	2541891-0100		1	FILTER	**7-101**
045	2541083-0100		1	BENDING ROLLER	**7-103**
050	2538073-0001		4	SHIMS	
055	2538073-0002		8	SHIMS	
080	2553107-0000		1	HOLDER	
090	2553108-0000		1	HOLDER	
170	2553109-0000		1	HOLDER	
200	985756-0000		2	KEY	
250	2599941-0000		6	SPACER	
360	312105-0368		8	SCREW M6S ISO 4017 M6X16 A480	
380	312105-0548		6	SCREW M6S ISO 4014 M12X80 A480	
460	312155-0493		8	SCREW DIN 7991 MF6S M10X25 A4 70	
500	315105-0153		16	WASHER BRB 6,4X12 RFR	
510	315105-0165		14	WASHER BRB 8,4X16 RFR	
520	315105-0178		6	WASHER BRB 13X24 RFR	
695	312105-0452		2	SCREW M6S ISO 4017 M8X22 A4 80	
780	2693153-0100		2	FOOT	**7-105**
Common Parts					
010	1487544-0200		1	SIDE FEEDER	**7-113**
015	2541890-0100		1	BRACKET	**7-115**
020	1499571-0100		2	PAPER REEL HOLDER	**7-117**
030	1512279-0200		1	MACHINE BODY	**7-119**
040	2552821-0000		2	BRACKET	
070	1558487-0000		2	SUPPORT	
075	1548200-0000		1	BRACKET	
100	1499570-0000		1	HOLDER	
115	2538076-0000		1	BRACKET	
130	1512420-0000		2	PLATE	
140	1517101-0000		1	PIPE	
150	1558484-0000		1	PROTECTION PLATE	
160	2529551-0000		1	PROTECTION PLATE	
185	2538075-0000		1	BRACKET	
190	1519588-0000		1	PROTECTION PLATE	
220	1038865-0000		4	SPACER DISC	
235	1538868-0000		6	BRACKET	
260	1488005-0000		4	BEARING BLOCK	
310	312105-0323		5	SCREW M6S ISO 4017 M5X8 A480	
315	352113-0205		2	ANCHOR PLATES FOR STRIPS, TYPE TM2S8-C10	
320	312105-0327		4	SCREW M6S ISO 4017 M5X12 A480	

Machine Type | Group Description | Used-In | Group Number | Page No

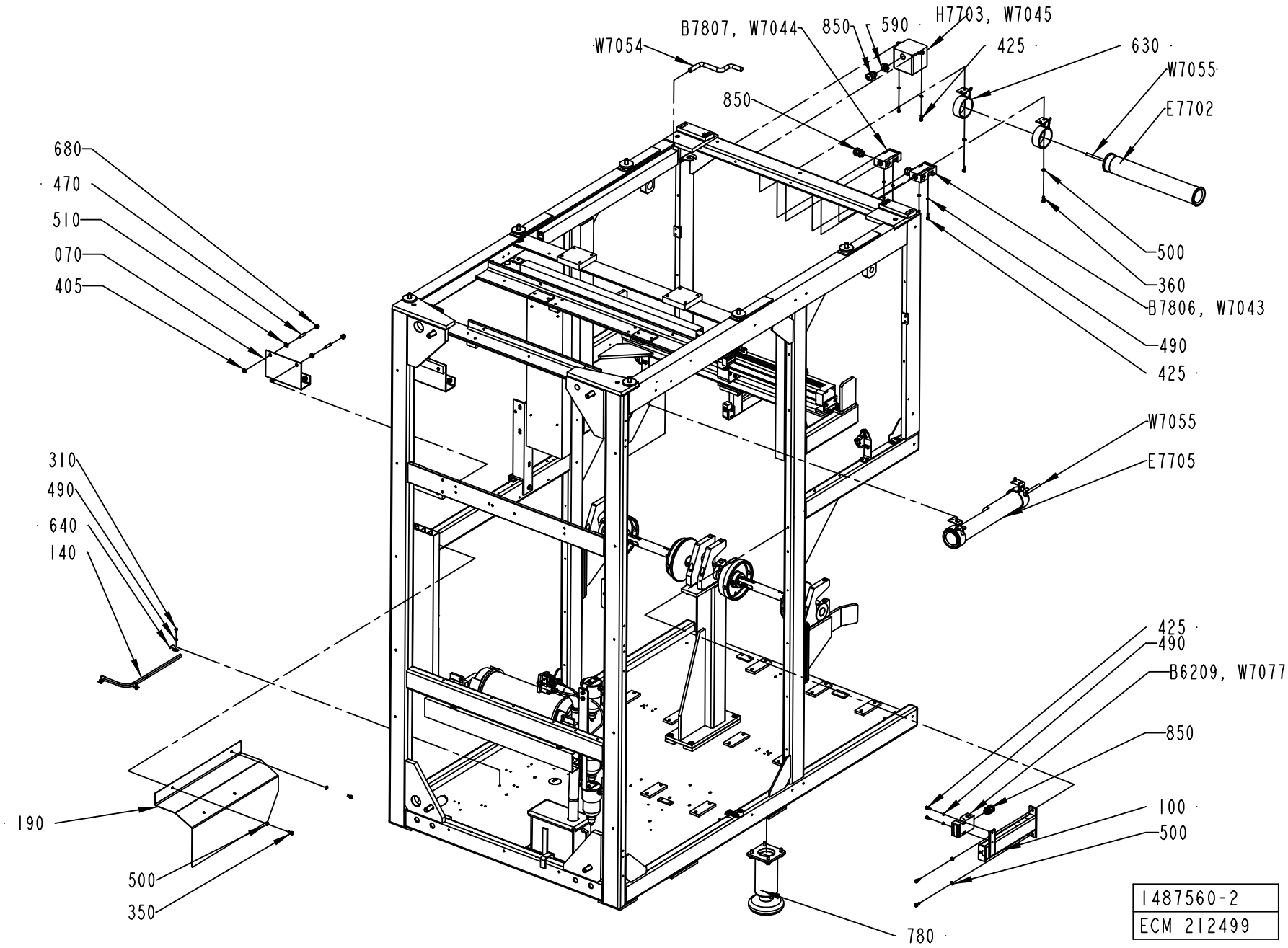
B7807, W7044
850
590
H7703, W7045
W7054
425
630
W7055
850
E7702
680
470
510
070
405
500
360
B7806, W7043
490
425
W7055
E7705
310
490
640
140
425
490
B6209, W7077
850
190
100
500
500
350
780
1487560-2
ECM 212499

Pos	Part No	UN	Qty	Description	Page No
Common Parts (Cont'd)					
350	312105-0366		4	SCREW M6S ISO 4017 M6X12 A480	
355	312125-0285		2	SCREW ISO 1207 M4X6 A4	
370	312145-0327		4	SCREW ISO 2009 MFS M5X12 A4	
375	312105-0451		4	SCREW M6S ISO 4017 M8X20 A480	
385	312105-0453		1	SCREW M6S ISO 4017 M8X25 A480	
395	315115-0153		12	WASHER PLAIN, TBRB 6,4/12 H=3	
400	312105-0640		4	SCREW M6S ISO 4014 M16X100 A480	
405	90062-0016		5	LOCK WASHER SERRAT.EXT.GEAR,8,4/15 H=0,8	
410	312125-0220		2	SCREW ISO 1207 M3X6 A4	
420	312105-0329		12	SCREW M6S ISO 4017 M5X16 A480	
425	312115-0329		10	SCREW ISO4762 M5X16 A4 80	
430	312115-0463		8	SCREW ISO4762 M8X60 A4 80	
450	312155-0366		4	SCREW DIN 7991 MF6S M6X12 A4 70	
470	312318-0455		4	SCREW ISO4029 M8X30 A4	
490	315105-0146		19	WASHER BRB 5,3X10 RFR	
570	359705-0005		2	WARNING SIGN ISO, MOVING PART	
580	90002-0010		2	BLANK-OFF PLUG, PR 37 SKINDICHT-BLK29	
590	90458-0323		1	NUT, M20X1,5	
630	90164-0303		4	BRACKET SK2202 WALDMANN	
640	90165-0009		3	PIPE CLIP FOR TUBE D=12 MM	
660	90232-0333		1	REFLECTOR E39-R1	
670	90261-0016		24	PLUG, BLIND, PLASTIC GPN300V2	
680	312605-0318		6	HEXAGON NUT, M6M M8 A280	
770	90459-3832		1	VENTING BOX, P9852	
800	312927-0150		4	RIVET NUT M8, CLAMP. LENGTH 3,0 - 4,5	
810	1549324-0000		1	BRACKET	
820	312105-0449		1	SCREW M6S ISO 4017 M8X16 A480	
830	90459-1848		1	TAPE, SAFETY WALK R25MM X 18,3M	
840	1558798-0000		1	BRACKET	
850	90458-0315		5	CABLE GLAND, M20X1,5, NO.5311 1120	
74124	90166-0194	MM	3000	TUBE 8 MM PUR BLUE	
74132	90166-0194	MM	3000	TUBE 8 MM PUR BLUE	
741242	90166-0194	MM	1500	TUBE 8 MM PUR BLUE	
741322	90166-0194	MM	1500	TUBE 8 MM PUR BLUE	
B6209	90459-0472		1	KEY SAF.SW. AZ 16 02ZVRK-M20-2152-2254	
B7411	90458-0677		1	PROXIMITY SWITCH, E2EG-X5MB1-M1	
B7414	90458-0677		1	PROXIMITY SWITCH, E2EG-X5MB1-M1	
B7801	90459-0472		1	KEY SAF.SW. AZ 16 02ZVRK-M20-2152-2254	
B7806	90459-0472		1	KEY SAF.SW. AZ 16 02ZVRK-M20-2152-2254	
B7807	90459-0472		1	KEY SAF.SW. AZ 16 02ZVRK-M20-2152-2254	
E7702	90164-0015		1	LIGHT FIXTURE, RL70CV-111 / 230V 50HZ	
	90297-0007		*1*	*FLUORESCENT TUBE, PLS 11*	
E7705	90164-0015		1	LIGHT FIXTURE, RL70CV-111 / 230V 50HZ	
	90297-0007		*1*	*FLUORESCENT TUBE, PLS 11*	
H7703	90052-0011		1	HORN HOOTERT 24:48VDC.PT NO.1YA030221	
W7014	351150-0412	MM	4000	CABLE OLFLEX 3X1,5 MM2 LIGHT/GREY	
W7024	90458-1076		1	L-SHAPED CONNECTOR CABLE 933 235-042	
W7025	90458-1076		1	L-SHAPED CONNECTOR CABLE 933 235-042	
W7042	351150-0405	MM	4000	CABLE OLFLEX 5X0,75 MM2 LIGHT/GREY	
W7043	351150-0405	MM	4000	CABLE OLFLEX 5X0,75 MM2 LIGHT/GREY	
W7044	351150-0405	MM	4000	CABLE OLFLEX 5X0,75 MM2 LIGHT/GREY	
W7045	351150-0431	MM	4000	CABLE OLFLEX 2X0,75 MM2 LIGHT/GREY	
W7054	351150-0406	MM	8000	CABLE OLFLEX 7X0,75 MM2 LIGHT/GREY	
W7055	351150-0412	MM	4000	CABLE OLFLEX 3X1,5 MM2 LIGHT/GREY	
W7077	351150-0405	MM	5000	CABLE OLFLEX 5X0,75 MM2 LIGHT/GREY	

MACHINE BODY

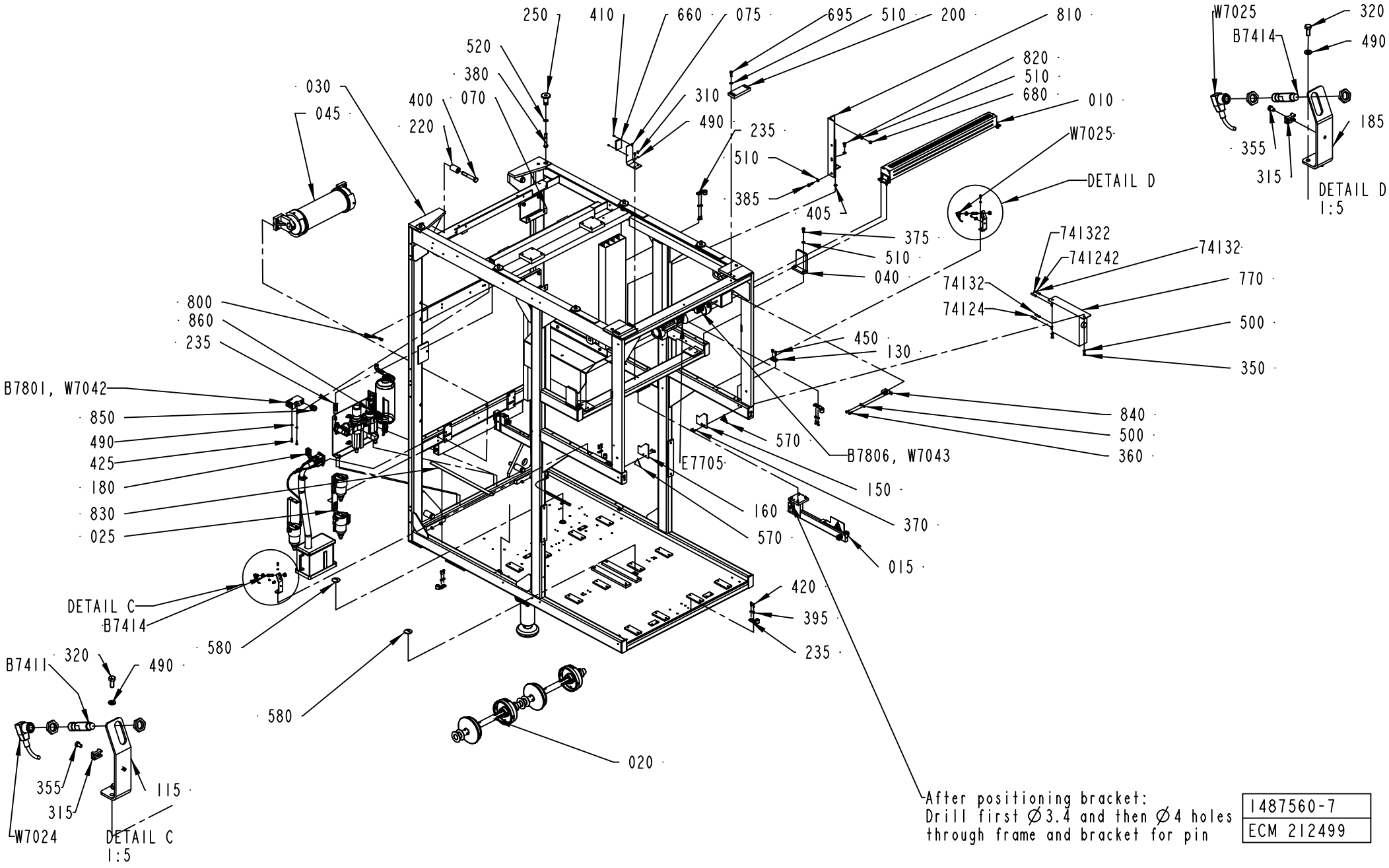

Pos	Part No	UN	Qty	Description	Page No
SEE PREVIOUS LISTS PAGES: 7-93, 7-95.					

Pos	Part No	UN	Qty	Description	Page No

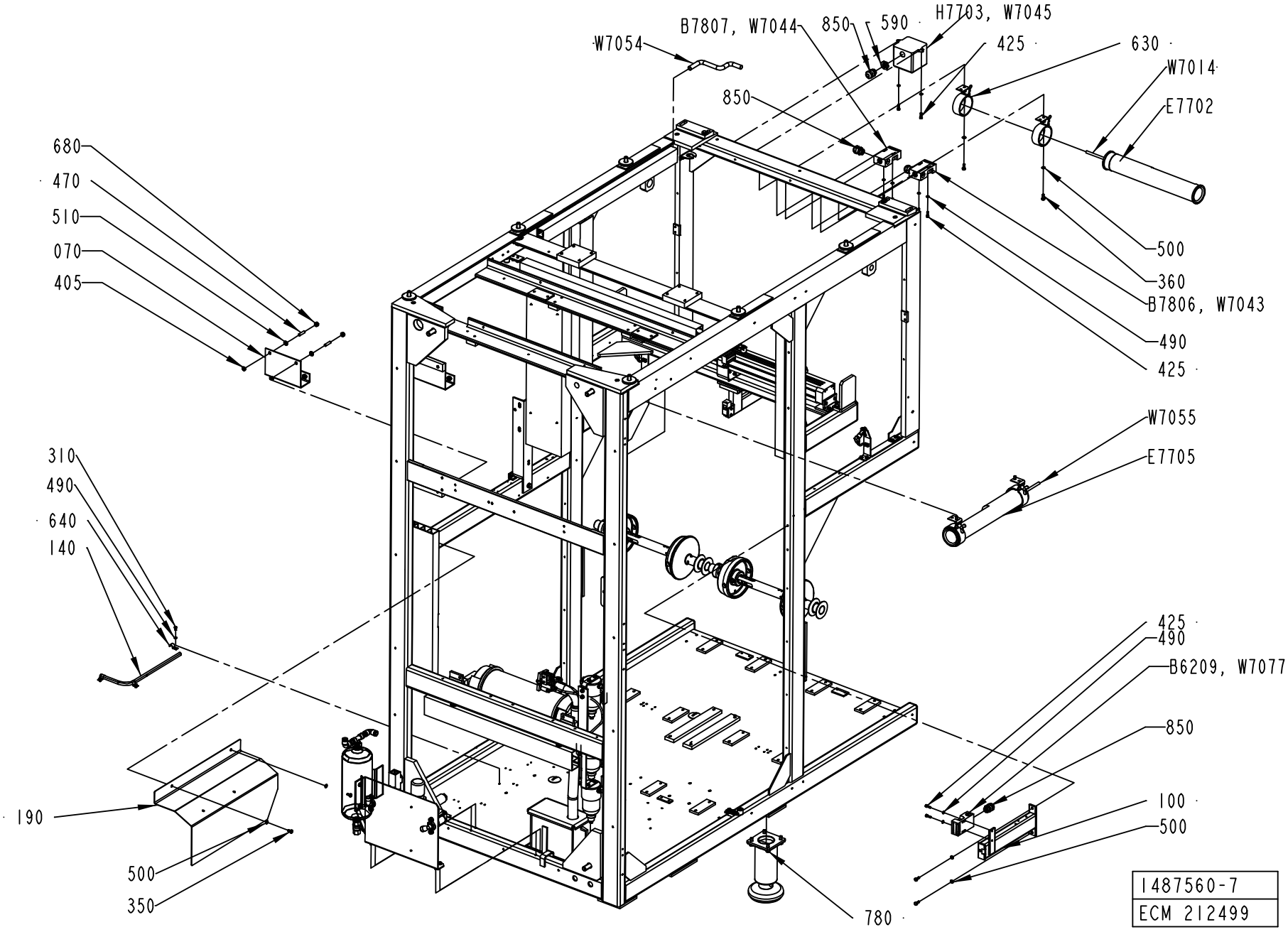
W7054
B7807, W7044
850
590
H7703, W7045
425
630
W7014
E7702
850
680
470
510
070
405
500
360
B7806, W7043
490
425
W7055
E7705
310
490
640
140
425
490
B6209, W7077
850
100
500
190
500
350
780
1487560-7
ECM 212499

Pos	Part No	UN	Qty	Description	Page No	Pos	Part No	UN	Qty	Description	Page No

SEE PREVIOUS LISTS PAGES: 7-93, 7-95.

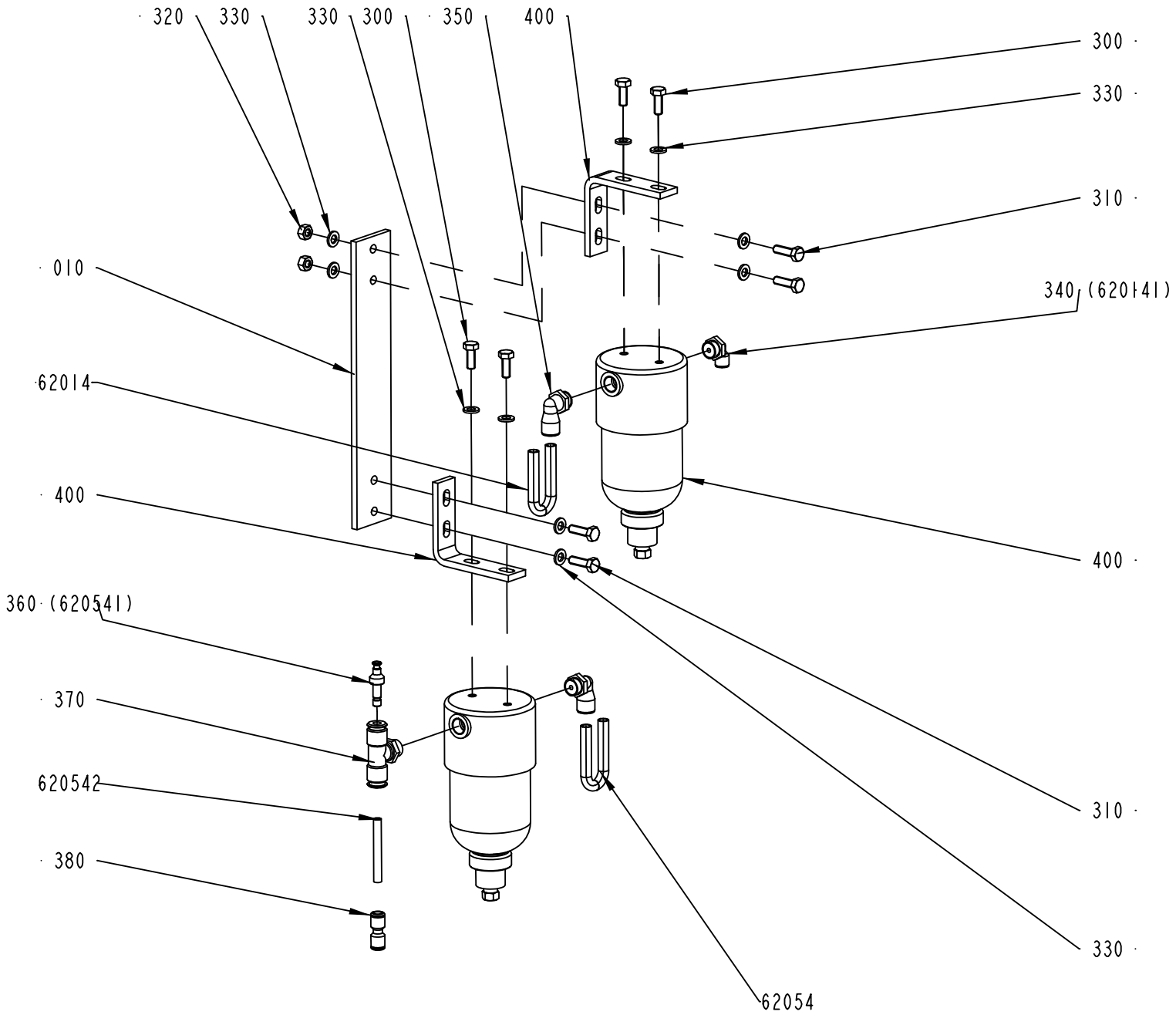
320
330
330
300
350
400
300
330
310
340 (620141)
010
62014
400
400
360 (620541)
370
620542
380
310
330
62054
2541891-1
ECM 177034

ECM: 178372 - 20041025
Group number: 2541891-0100
Assembly Drawing: 2541891-1_1_AC

Pos	Part No	UN	Qty	Description	Page No
-					
010	2518119-0000		1	PLATE	
300	312105-0368		4	SCREW M6S ISO 4017 M6X16 A480	
310	312105-0370		4	SCREW M6S ISO 4017 M6X20 A480	
320	312605-0316		2	HEXAGON NUT, M6M M6 A280	
330	315105-0153		10	WASHER BRB 6,4X12 RFR	
340	90458-2957		1	ELBOW PIPE JOINT, EXT.THREAD, D=6MM-G1/4	
350	90458-2958		2	ELBOW PIPE JOINT, EXT.THREAD, D=8MM-G1/4	
360	342716-0202		1	REDUCER 4-6	
370	342742-0103		1	T-COUPLING,ADJUST,F.PLASTIC TUBE 6-G1/4"	
380	342728-0102		1	PIPE COUPLING 6 MM	
400	90277-0116		2	FILTER HOUSING / ART.NO FILTER 58P-S5430	
	90277-0406		*1*	*CARTRIDGE 100-12-BX*	
62014	90166-0194	MM	3500	TUBE 8 MM PUR BLUE	
62054	90166-0194	MM	3500	TUBE 8 MM PUR BLUE	
620542	90166-0193	MM	2000	TUBE 6 MM PUR BLUE	

Pos	Part No	UN	Qty	Description	Page No

BENDING ROLLER

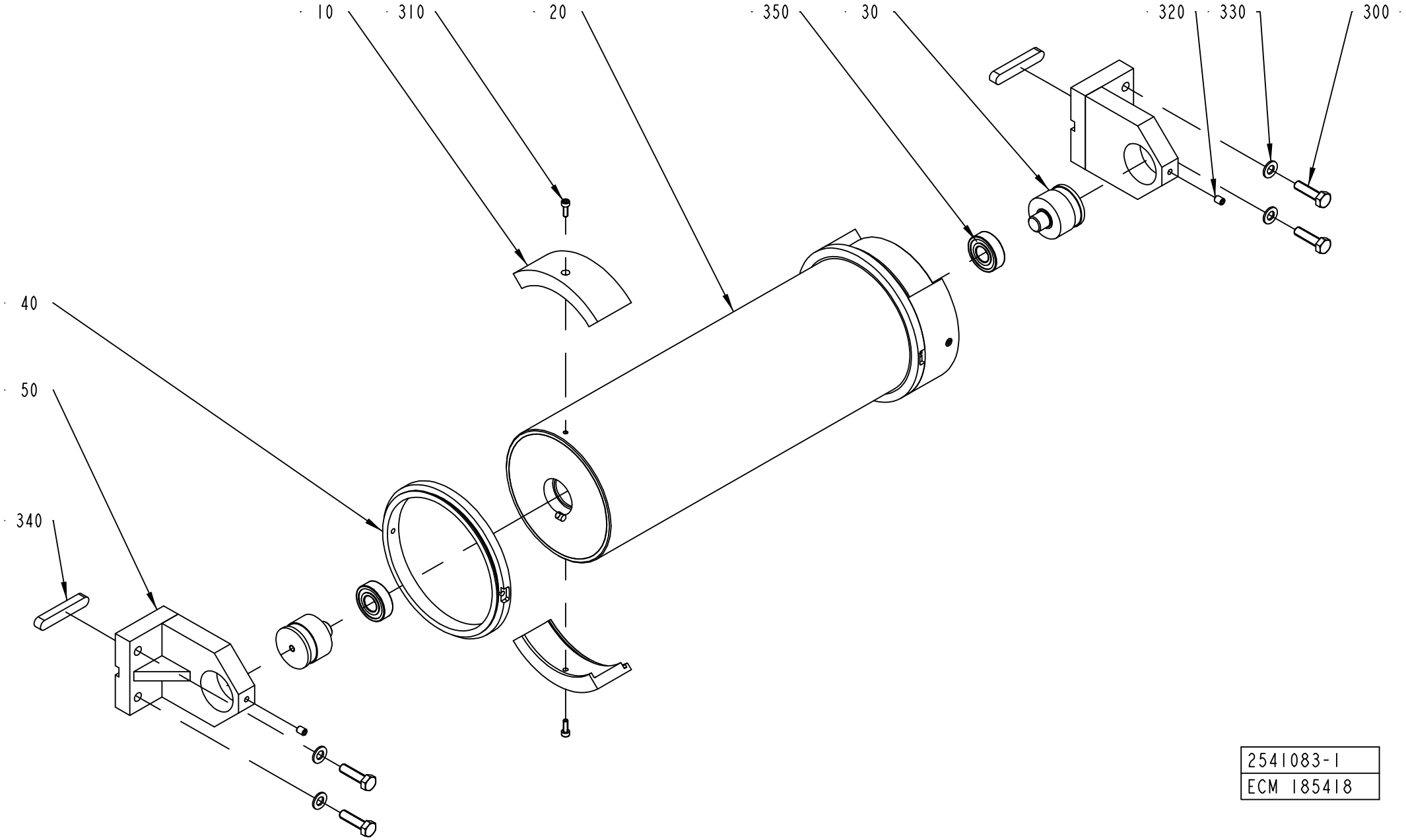

2541083-1
ECM 185418

ECM: 272113 - 20060814
Group number: 2541083-0100
Assembly Drawing: 2541083-1_1_AB

Pos	Part No	UN	Qty	Description	Page No
TBA 0200S, TPA 0250SQ, TPA 0200SQ (See drawing on page: 7-102)					
010	2523766-0010		4	BRACKET	
TBA 0250S, TBA 0200M (See drawing on page: 7-102)					
010	2523766-0009		4	BRACKET	
TBA 0330S, TBA 0200B, TBA 0250B, TBA 0200SQ, TBA 0250SQ (See drawing on page: 7-102)					
010	2523766-0007		4	BRACKET	
TPA 0500SQ (See drawing on page: 7-102)					
010	2523766-0006		4	BRACKET	
TBA 0500S (See drawing on page: 7-102)					
010	2523766-0005		4	BRACKET	
TBA 1000SQ (See drawing on page: 7-102)					
010	2523766-0003		4	BRACKET	
TBA 1000B, TBA 1500S (See drawing on page: 7-102)					
010	2523766-0001		4	BRACKET	
TBA 1000S (See drawing on page: 7-102)					
010	2523766-0002		4	BRACKET	
TBA 1890S, TBA 2000S, TBA 1400B (See drawing on page: 7-102)					
010	2701881-0000		4	BRACKET	
TPA 0330SQ (See drawing on page: 7-102)					
010	2523766-0008		4	BRACKET	
TPA 1000SQ, TPA 0750SQ (See drawing on page: 7-102)					
010	2523766-0012		4	BRACKET	
Common Parts					
020	2523765-0000		1	BENDING ROLLER	
030	1499584-0000		2	AXLE PIN	
040	2701880-0000		2	FLANGE	
050	2506328-0000		2	BRACKET	
300	312105-0455		4	SCREW M6S ISO 4017 M8X30 A480	
310	312115-0291		4	SCREW ISO4762 M4X12 A4 80	
320	312318-0362		2	SCREW ISO4029 M6X8 A4	
330	315105-0165		4	WASHER BRB 8,4X16 RFR	
340	315705-0305		2	PARALLEL KEY W. ROUND ENDS 10X8X60 MM	
350	321313-0102		2	BALL BEARING, 15X35X11 MM	

Pos	Part No	UN	Qty	Description	Page No

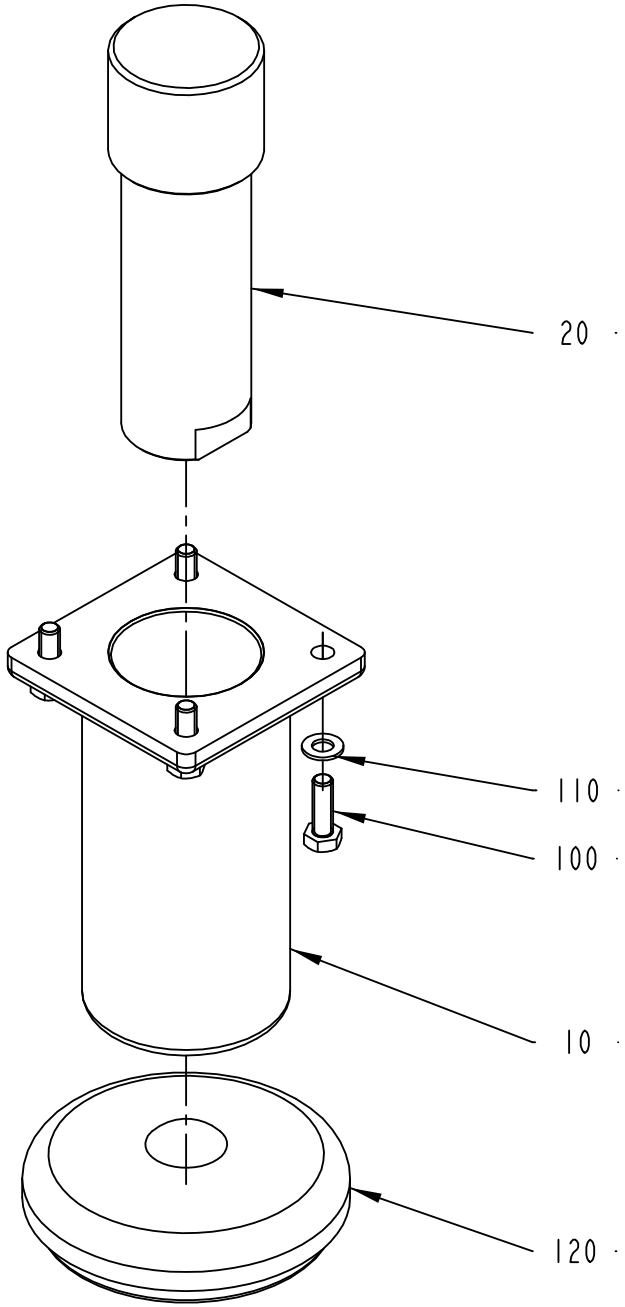

2693153-1
186851

ECM: 210987 - 20050808
Group number: 2693153-0100
Assembly Drawing: 2693153-1_1_AA

Pos	Part No	UN	Qty	Description	Page No
-					
010	2698383-0000		1	SLEEVE	
020	2693155-0000		1	LEG	
100	312105-0453		4	SCREW M6S ISO 4017 M8X25 A480	
110	315105-0165		4	WASHER BRB 8,4X16 RFR	
120	90347-0175		1	MACHINE SHOE BRIK T 125	

Pos	Part No	UN	Qty	Description	Page No

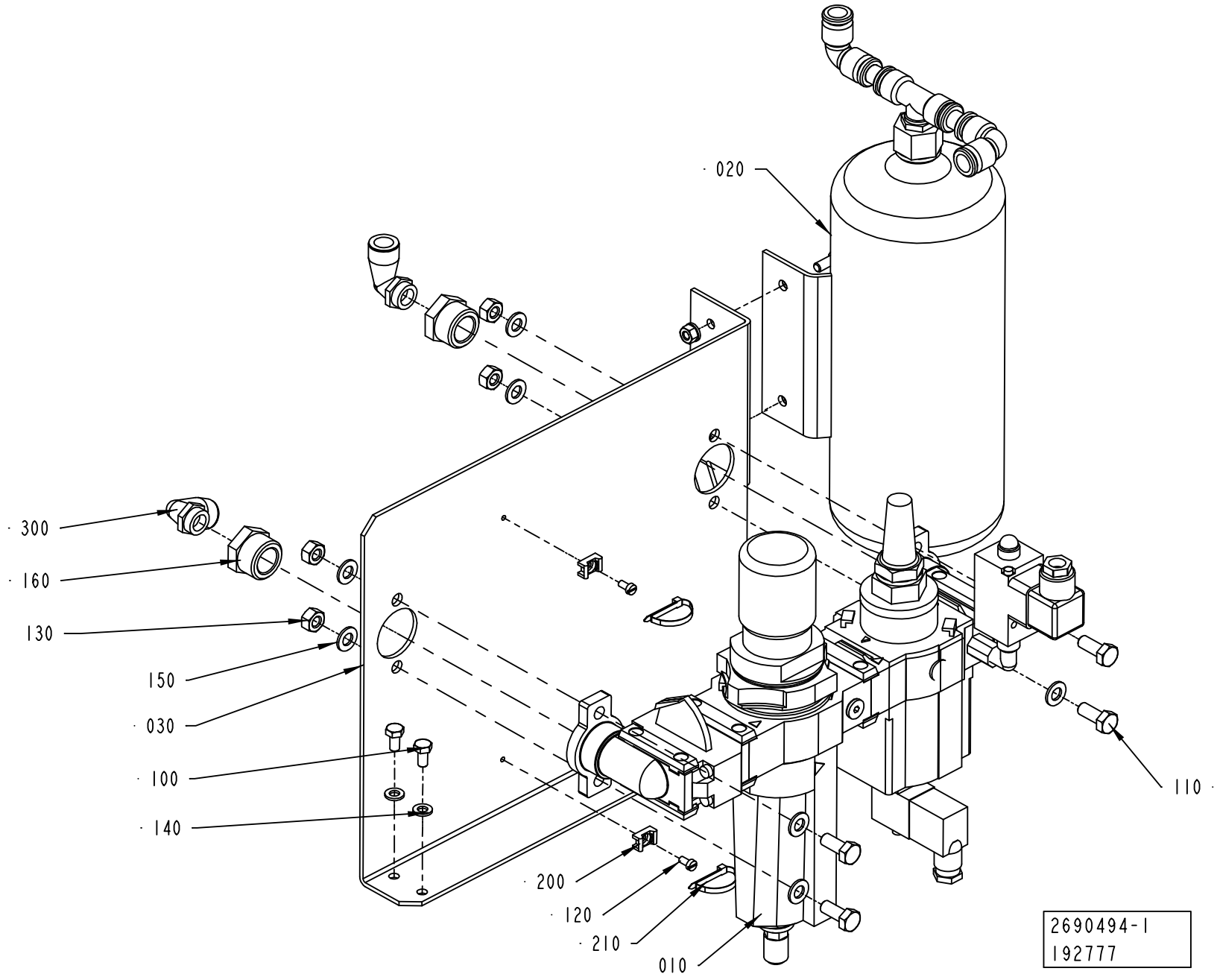
020
300
160
130
150
030
100
140
110
200
120
210
010
2690494-1
192777

ECM: 267386 - 20060702
Group number: 2690494-0100
Assembly Drawing: 2690494-1_1_AB

Pos	Part No	UN	Qty	Description	Page No
TBA 1890S, TBA 2000S, TBA 1400B					
010	2564054-0100		1	AIR INLET	**7-109**
020	2506578-0100		1	TANK	**7-111**
030	1558221-0000		1	BRACKET	
100	312105-0366		4	SCREW M6S ISO 4017 M6X12 A480	
110	312105-0451		4	SCREW M6S ISO 4017 M8X20 A480	
120	312125-0287		2	SCREW ISO 1207 M4X8 A4	
130	312605-0318		4	HEXAGON NUT, M6M M8 A280	
140	315105-0153		4	WASHER BRB 6,4X12 RFR	
150	315105-0165		8	WASHER BRB 8,4X16 RFR	
160	342701-0209		2	BUSHING,INT./EXT.G-THREAD G3/4"-G3/8"	
200	352113-0205		2	ANCHOR PLATES FOR STRIPS, TYPE TM2S8-C10	
210	352113-0102		2	CABLE TIE, BLACK 188X4,8 MM	
300	90458-2960		2	ELBOW PIPE JOINT, EXT.THREAD,D=12MM-G3/8	

Pos	Part No	UN	Qty	Description	Page No

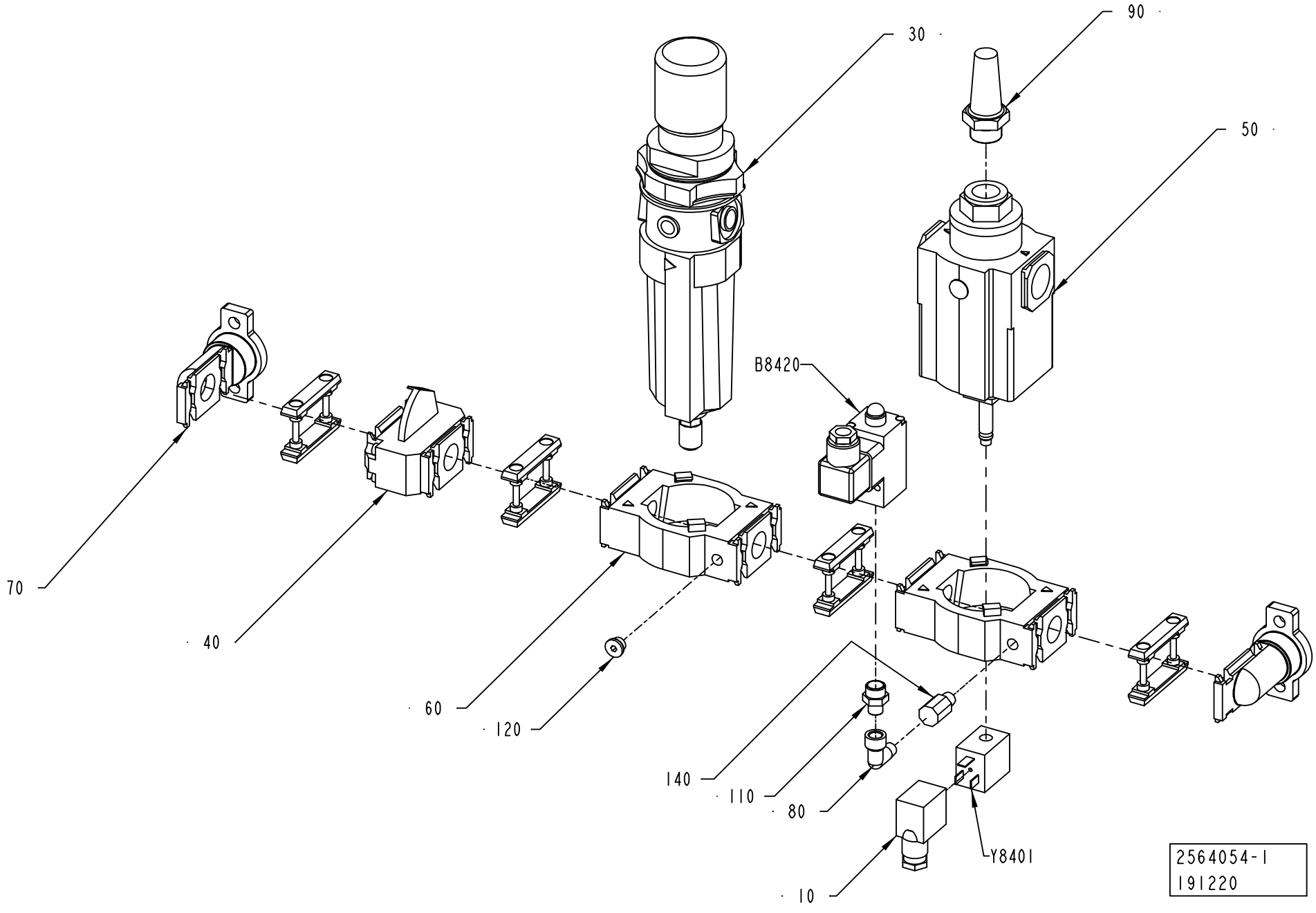
30
90
50
B8420
70
40
60
120
140
110
80
10
Y8401
2564054-1
191220

ECM: 191371 - 20041214
Group number: 2564054-0100
Assembly Drawing: 2564054-1_1_AD

Pos	Part No	UN	Qty	Description	Page No
-					
010	90042-0392		1	CONTACT 2 POLE + EARTH	
030	90113-0113		1	FILTER REGULATOR, B64G-NNK-AD3-RMN	
040	90113-0427		1	SHUT OFF VALVE G1/8, T64T-NNS-001	
050	90113-0155		1	SOFT START VALVE	
060	90113-0407		2	YOKE SINGLE, Y64A-4GA-N1N	
070	90113-0413		2	END CONNECTOR G3/4, 18-026-981	
080	90140-0021		1	ELBOW, 90 INT/EXT, 20201/8-1/8	
090	90328-0001		1	SILENCER, 338/130 B140-00-120	
110	342700-0201		1	NIPPLES,HEXAGON,EXT.G-THREAD G1/4"-G1/8"	
120	342713-0209		1	PLUG (QUANT.MINIMA= 10PC).	
140	90330-0185		1	NIPPLES,REDUCING,INT THR, RC1/8 - R 1/8	
B8420	90458-2241		1	PRESSURE SWITCH 0,5-10 BAR ADJUSTABLE	
Y8401	90042-0582		1	COIL NORGREN QM/48/127/21	

Pos	Part No	UN	Qty	Description	Page No

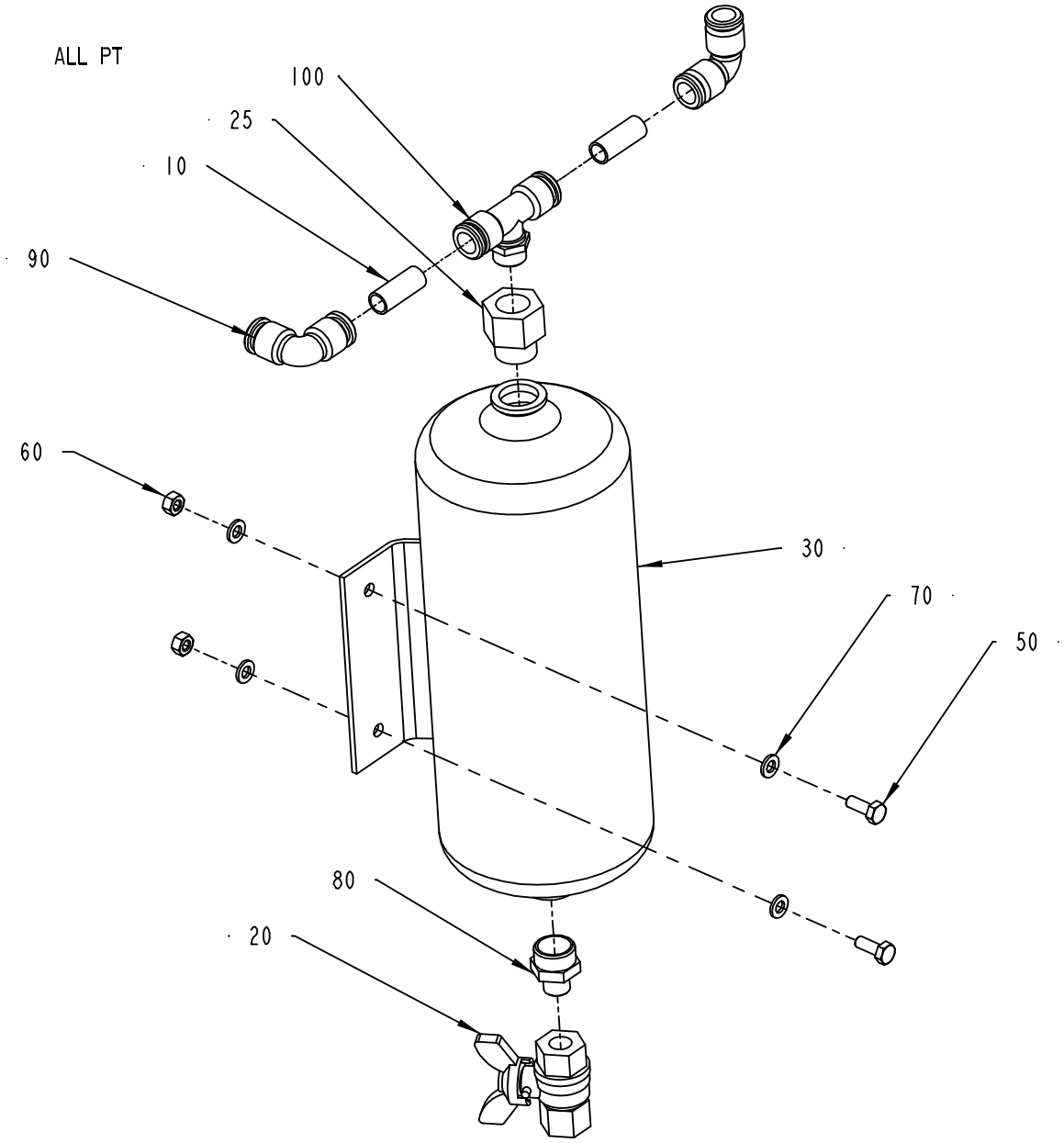

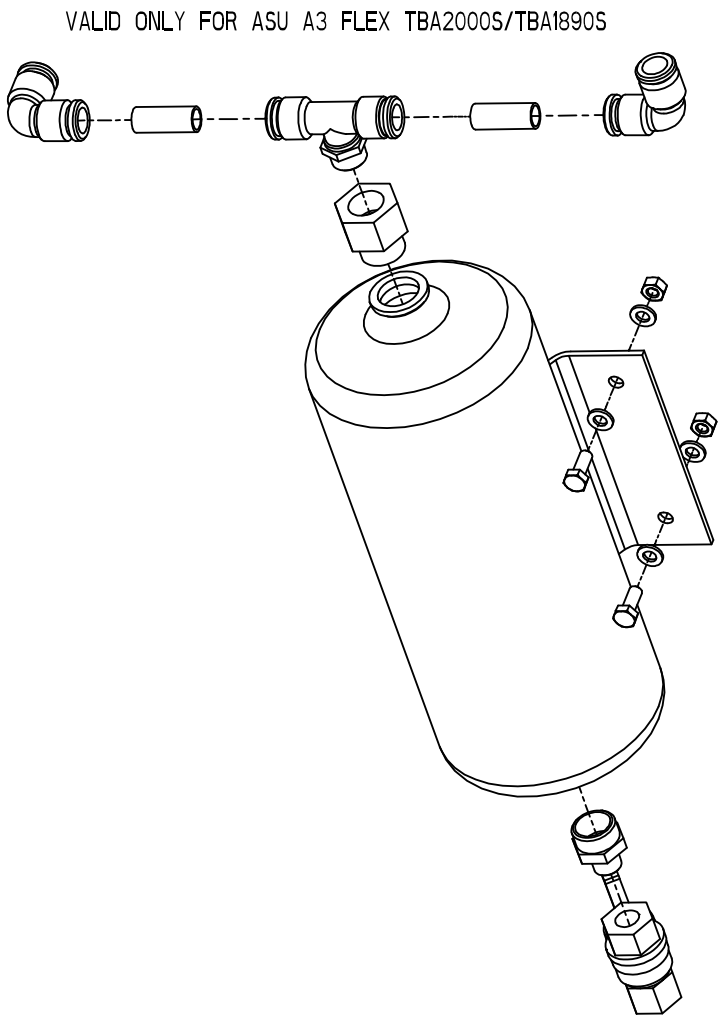

2506578-1
192777

ECM: 195228 - 20041203
Group number: 2506578-0100
Assembly Drawing: 2506578-1_1_AB

Pos	Part No	UN	Qty	Description	Page No
-					
010	90166-0068	MM	150	TUBE 12 MM PA BLUE	
020	90187-0088		1	BALL VALVE G1/4, NPBR	
025	90224-0229		1	REDUCER, ART.NO RMM 1238	
030	90457-0100		1	RESERVOIR, CRVZS-2	
050	312105-0368		2	SCREW M6S ISO 4017 M6X16 A480	
060	312605-0316		2	HEXAGON NUT, M6M M6 A280	
070	315105-0153		4	WASHER BRB 6,4X12 RFR	
080	342700-0205		1	NIPPLES,HEXAGON,EXT.G-THREAD G1/2"-G1/4"	
090	342735-0109		2	ELBOW PIPE JOINT	
100	342742-0110		1	T-COUPLING,ADJUST,F.PLAST.TUBE 12-G3/8"	

Pos	Part No	UN	Qty	Description	Page No

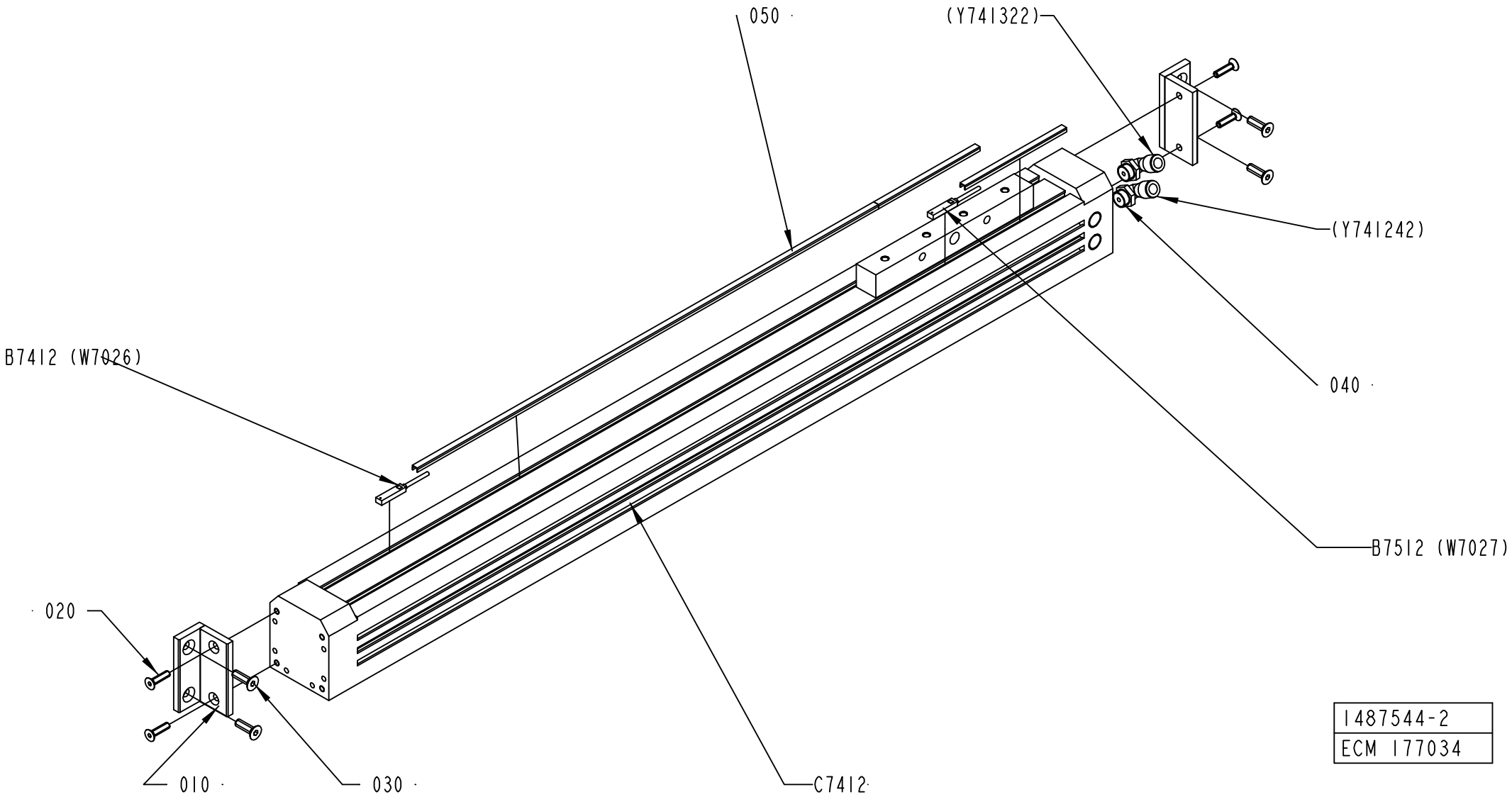
050
(Y741322)
(Y741242)
040
B7412 (W7026)
B7512 (W7027)
020
010
030
C7412
1487544-2
ECM 177034

ECM: 177932 - 20041025
Group number: 1487544-0200
Assembly Drawing: 1487544-2_1_AB

Pos	Part No	UN	Qty	Description	Page No
-					
010	1498457-0000		2	BRACKET	
020	312155-0331		4	SCREW DIN 7991 MF6S M5X20 A4 70	
030	312155-0370		4	SCREW DIN 7991 MF6S M6X20 A4 70	
040	90458-2958		2	ELBOW PIPE JOINT, EXT.THREAD, D=8MM-G1/4	
050	90458-0273		1	COVER STRIP	
B7412	90044-0165		1	PROXIMITY SENSOR, SME-8-K5-LED-24	
B7512	90044-0165		1	PROXIMITY SENSOR, SME-8-K5-LED-24	
C7412	90459-1849		1	DOUBLE ACTING SHUTTLE CYL. 40-550 MM	

Pos	Part No	UN	Qty	Description	Page No

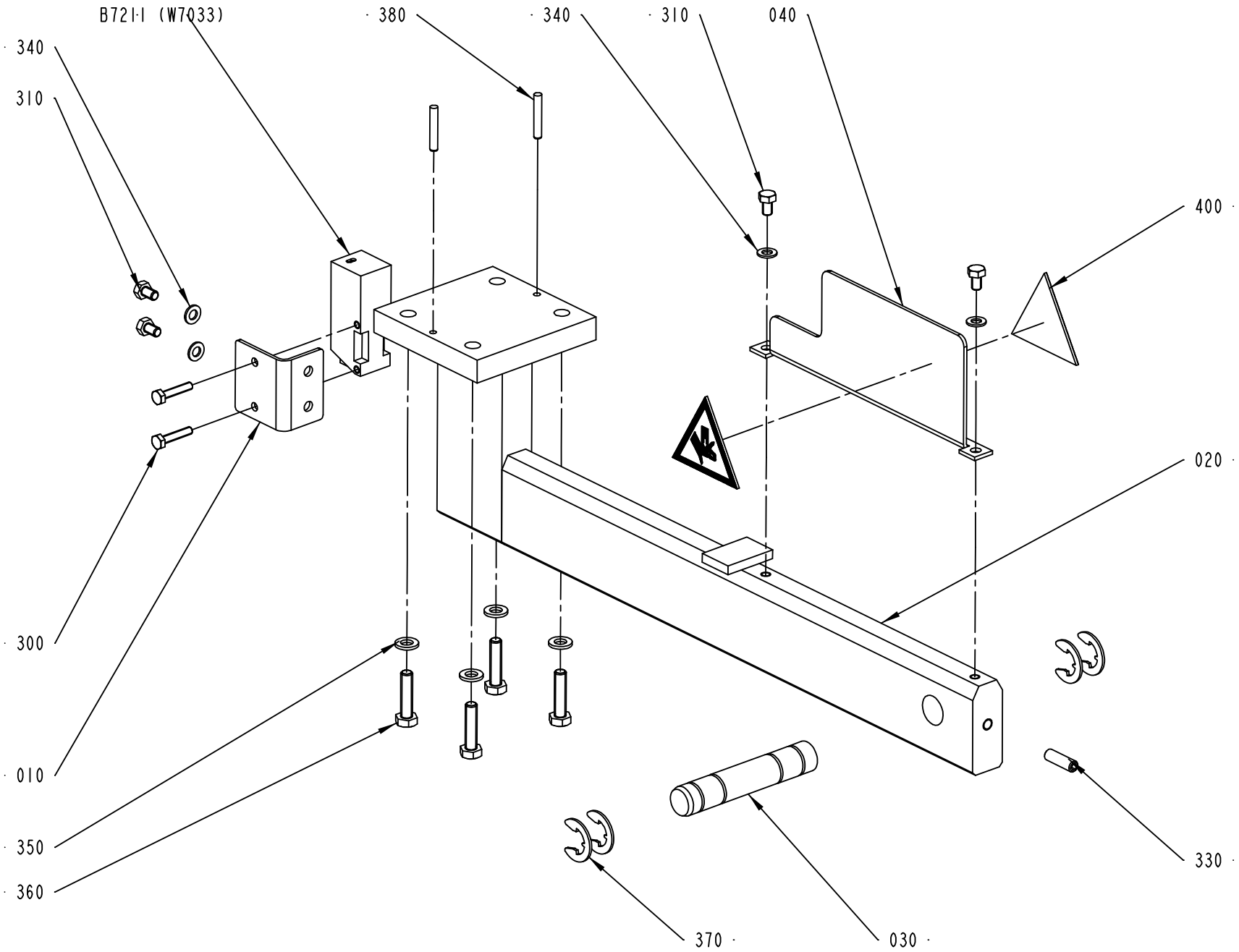

2541890-1
ECM 121839

ECM: 178370 - 20041005
Group number: 2541890-0100
Assembly Drawing: 2541890-1_1_AB

Pos	Part No	UN	Qty	Description	Page No
-					
010	1490210-0000		1	PLATE	
020	1490219-0000		1	BRACKET	
030	1499573-0000		1	PIN	
040	1512275-0000		1	PROTECTION PLATE	
300	312105-0295		2	SCREW M6S ISO 4017 M4X20 A470	
310	312105-0323		4	SCREW M6S ISO 4017 M5X8 A480	
330	312318-0370		1	SCREW ISO4029 M6X20 A4	
340	315105-0146		4	WASHER BRB 5,3X10 RFR	
350	315105-0153		4	WASHER BRB 6,4X12 RFR	
360	312105-0372		4	SCREW M6S ISO 4017 M6X25 A480	
370	315755-0112		4	RETAINING RING SHAFT DIN 6799 12 A2	
380	311103-0274		2	PARALLEL PIN ISO 2338 4M6X25 A1	
400	359705-0005		2	WARNING SIGN ISO, MOVING PART	
B7211	90232-0129		1	PH.CELL E3S-CR61-5M	

Pos	Part No	UN	Qty	Description	Page No

PAPER REEL HOLDER

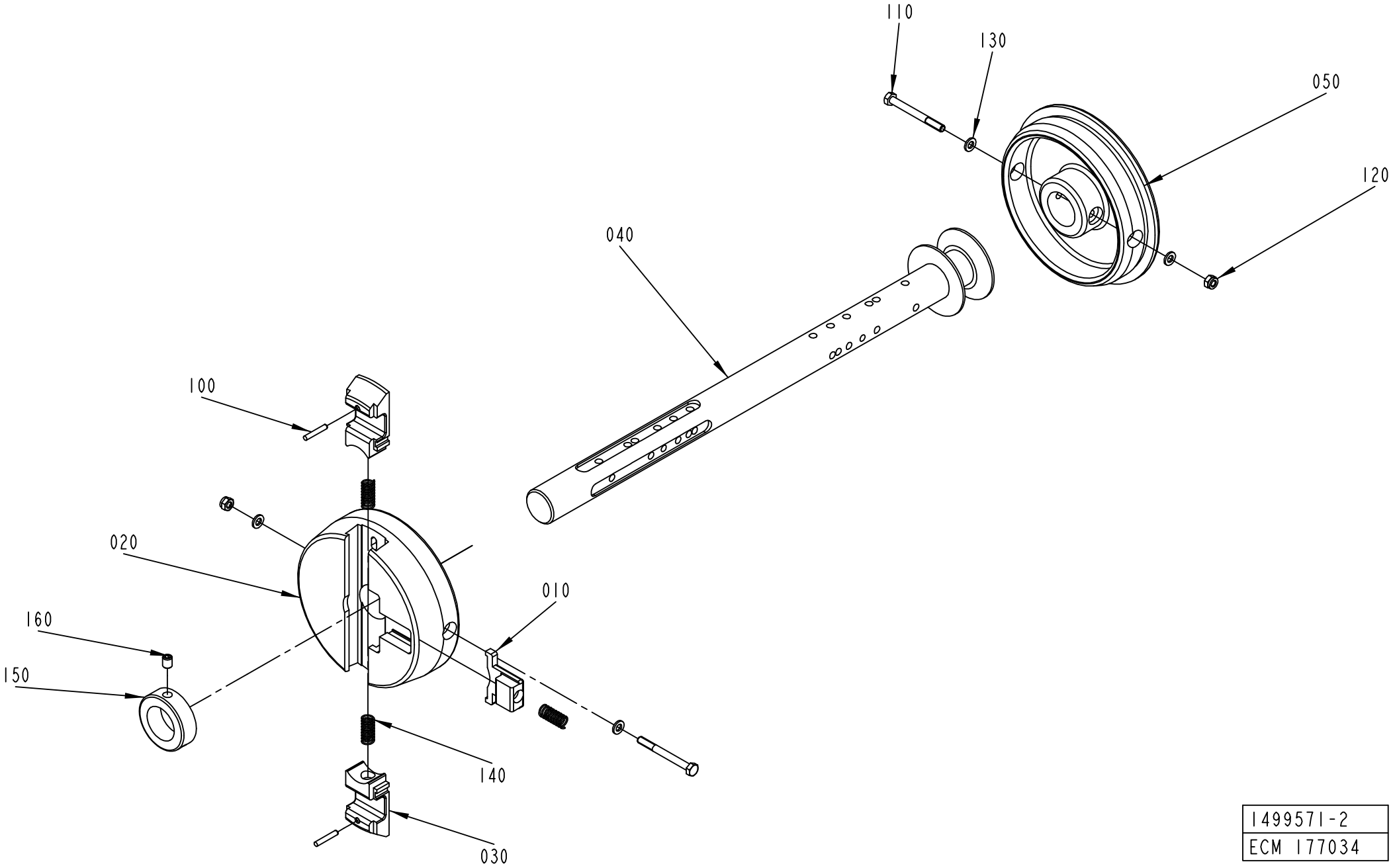

1499571-2
ECM 177034

ECM: 210983 - 20050808
Group number: 1499571-0100
Assembly Drawing: 1499571-2_1_AF

Pos	Part No	UN	Qty	Description	Page No
A3/FLEX					
040	2656299-0000		1	SHAFT	
150	315742-0123		1	RETAINING RING 32 SMS 199 RFR	
160	312318-0445		1	SCREW ISO4029 M8X10 A4	
Common Parts					
010	272728-0000		1	BARRIER	
020	1512265-0000		1	SLEEVE	
030	575002-0000		2	PLUNGER	
050	1512266-0000		1	SLEEVE	
100	311103-0274		2	PARALLEL PIN ISO 2338 4M6X25 A1	
110	312105-0382		2	SCREW M6S ISO 4014 M6X60 A480	
120	312812-0316		2	HEXAGON NUT, NY-LOCK M6 A480	
130	315105-0153		4	WASHER BRB 6,4X12 RFR	
140	90335-0025		3	COMP. SPRING 22010, 1X11X26	

Pos	Part No	UN	Qty	Description	Page No

MACHINE BODY

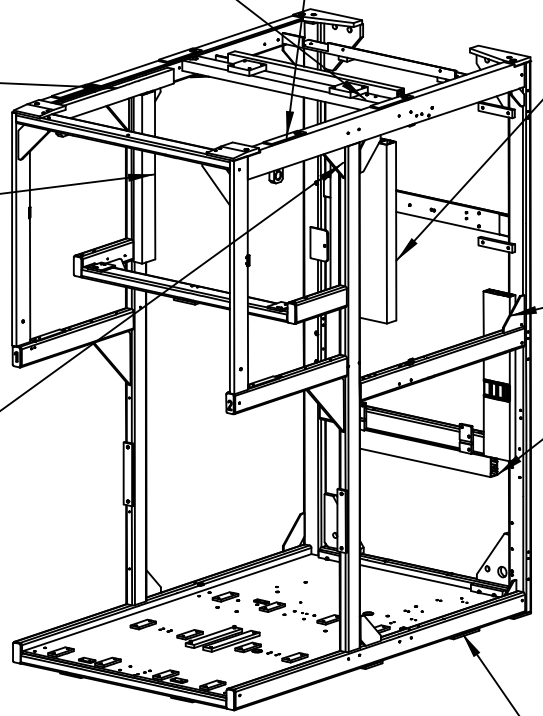

080
W7011
W7020
W7024
W7028
W7031
W7042
W7055
W7077
74202
74204
73032
73034
74142
74144

050
W7014
W7025
W7026
W7027
W7029
W7033
W7043
W7044
W7045
W7054
74154
74152
73154
73152

030

W7010	W7028	W7042	74204	74074
W7011	W7029	W7043	74202	74084
W7014	W7030	W7044	74154	74104
W7020	W7031	W7045	74152	74142
W7023	W7033	W7054	73034	74144
W7024	W7035	W7055	73032	74072
W7025	W7036	W7077	73154	74102
W7026	W7040	W7304	73152	620542
W7027	W7041	W7305		

040
W7024
W7028
W7031
W7077
73034
73032
74204
74202
74144
74142

060
W7024
W7028
W7031
W7077
74204
74202

060
W7025
W7026
W7027
W7033

100
W7046 62034
W7049 62032
W7013 62054
W7012 62014
W7015 MAIN AIR
W7017 620542
W7018
W7022
W7038
W7034
W7039
W7050
W7056
W7072
W7073
W7019
W7417

020
W7013
W7046
W7049
W7017
W7018
W7022
W7050
W7047
W7072
W7073
W7019
62034
62032
62054
62014
620542

010

INSIDE CABLE CONDUIT:

620542	W7010
74072	W7040
74074	W7041
74102	W7304
74104	W7305
74084	

1512279-2
ECM 177034

ECM: 178375 - 20041025
Group number: 1512279-0200
Assembly Drawing: 1512279-2_1_AD

Pos	Part No	UN	Qty	Description	Page No
-					
010	2529990-0000		1	FRAME	
020	1512421-0000		1	CABLE DUCT	
030	2524606-0000		1	CABLE DUCT	
040	1512423-0000		1	CABLE DUCT	
050	2524607-0000		1	CABLE DUCT	
060	1512425-0000		2	CABLE DUCT	
080	1512426-0000		1	CABLE DUCT	
100	2529544-0000		1	CABLE DUCT	
110	312105-0364		2	SCREW M6S ISO 4017 M6X10 A480	
120	312115-0364		16	SCREW ISO4762 M6X10 A4 80	
130	312503-0275		4	TAPPING SCREW ISO 7049-ST3,5X6,5-C-Z	
150	90143-0060	MM	2600	EDGE STRIP 9,5X6,3MM BLACK PVC	
160	315125-0153		2	WASHER TBRSB 6,4X22X4 A4	
170	352113-0205		25	ANCHOR PLATES FOR STRIPS, TYPE TM2S8-C10	
180	312125-0285		25	SCREW ISO 1207 M4X6 A4	
190	352113-0102		25	CABLE TIE, BLACK 188X4,8 MM	

Pos	Part No	UN	Qty	Description	Page No

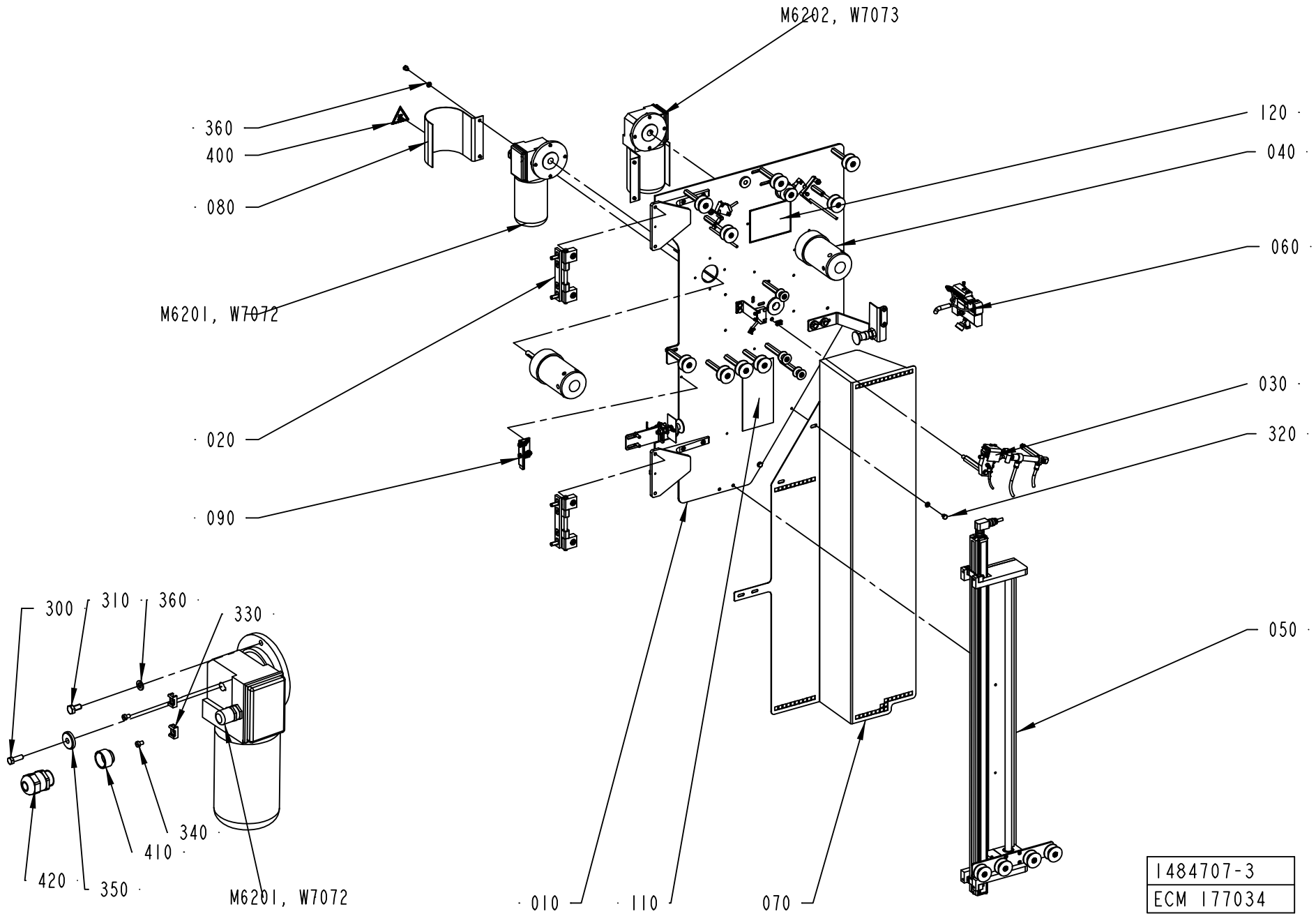
M6202, W7073
360
400
080
M6201, W7072
020
090
120
040
060
030
320
050
300
310
360
330
340
410
420
350
M6201, W7072
010
110
070
1484707-3
ECM 177034

ECM: 178402 - 20041025
Group number: 1484707-0200
Assembly Drawing: 1484707-3_1_AE

Pos	Part No	UN	Qty	Description	Page No
-					
010	1512428-0200		1	MOUNTING SHEET	**7-123**
020	1484720-0100		2	HINGE	**7-125**
030	1490806-0200		1	HEATING DEVICE	**7-127**
040	1484725-0100		2	HUB	**7-129**
050	1511585-0200		1	STRIP GUIDE	**7-131**
060	1524477-0200		1	CUTTING TABLE	**7-133**
070	1517107-0000		1	PROTECTION	
080	1498445-0000		2	COVER	
090	2510401-0100		1	HOLDER	**7-135**
110	2558879-0000		1	SIGN	
120	2558878-0000		1	SIGN	
300	312105-0329		2	SCREW M6S ISO 4017 M5X16 A480	
310	312105-0366		8	SCREW M6S ISO 4017 M6X12 A480	
320	312105-0362		6	SCREW M6S ISO 4017 M6X8 A480	
330	352113-0205		4	ANCHOR PLATES FOR STRIPS, TYPE TM2S8-C10	
340	312125-0285		4	SCREW ISO 1207 M4X6 A4	
350	315125-0153		2	WASHER TBRSB 6,4X22X4 A4	
360	315105-0153		14	WASHER BRB 6,4X12 RFR	
400	359705-0007		2	WARNING SIGN ISO, HOT SURFACE	
410	90458-1155		2	ENLARGING SLEEVE, 7216220	
420	90458-0307		2	CABLE GLAND, M20X1,5, NO.5311 1020	
430	312125-0285		4	SCREW ISO 1207 M4X6 A4	
440	352113-0205		4	ANCHOR PLATES FOR STRIPS, TYPE TM2S8-C10	
M6201	90069-0614		1	GEARS, WORM MOTOR MC320P2T	
M6202	90457-0921		1	WORM GEAR MOTOR MC320P2TB5/D	
W7072	90220-0104	MM	4000	SCR. CABLE 4X1,5MM2	
W7073	90220-0104	MM	4000	SCR. CABLE 4X1,5MM2	

Pos	Part No	UN	Qty	Description	Page No

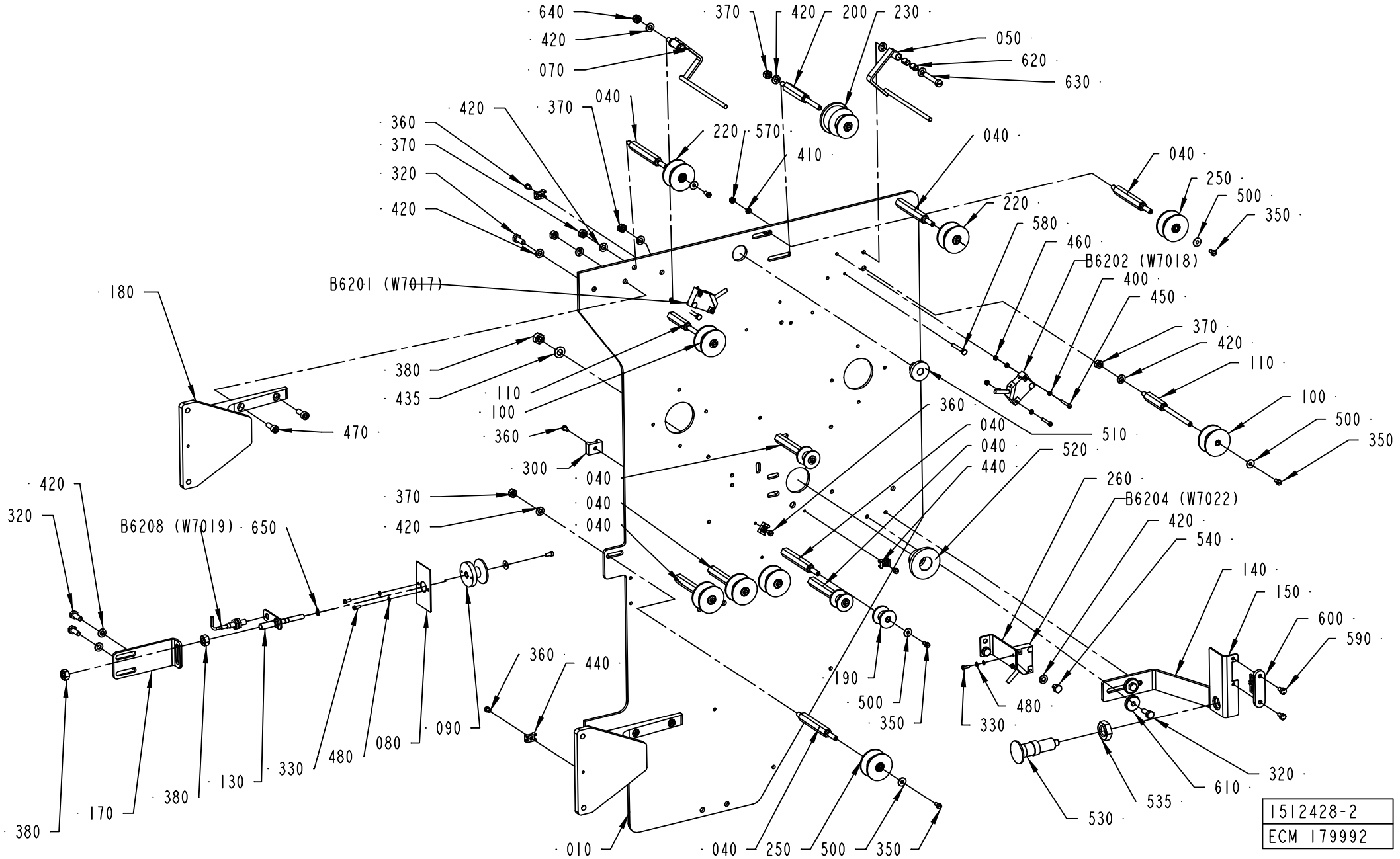
640
420
070
370
420
200
230
050
620
630
040
220
570
410
040
250
500
350
580
460
B6202 (W7018)
400
450
370
420
110
100
500
350
510
520
260
B6204 (W7022)
540
140
150
600
590
480
330
610
320
535
530
360
370
320
420
040
370
420
180
B6201 (W7017)
380
435
110
100
470
360
300
040
040
040
040
440
360
440
190
500
350
420
320
B6208 (W7019)
650
380
170
380
130
330
480
080
090
010
040
250
500
350
1512428-2
ECM 179992

ECM: 272111 - 20060814
Group number: 1512428-0200
Assembly Drawing: 1512428-2_1_AD

Pos	Part No	UN	Qty	Description	Page No
A3/FLEX					
170	2525339-0000		1	BRACKET	
Common Parts					
010	1484708-0000		1	MOUNTING PLATE	
040	536916-0000		10	AXLE PIN	
050	1490818-0000		1	ARM	
070	1490187-0000		1	ROCKER ARM	
080	1349581-0000		1	FLAG	
090	1349986-0000		1	ROLLER	
100	583986-0000		2	ROLL	
110	544725-0000		2	AXLE PIN	
130	1484718-0000		1	AXLE PIN	
140	1499569-0000		1	BRACKET	
150	1484740-0000		1	BRACKET	
180	1517087-0000		2	HINGE	
190	1548197-0000		3	ROLL	
200	1538202-0000		1	AXLE PIN	
220	1548195-0000		2	ROLL	
230	2675238-0000		1	ROLLER	
250	1523487-0000		5	ROLL	
260	2515289-0000		1	BRACKET	
300	352113-0203		4	ANCHOR PLATES FOR STRIPS, TYPE TM3S8-M0	
320	312105-0366		6	SCREW M6S ISO 4017 M6X12 A480	
330	312125-0222		4	SCREW ISO 1207 M3X8 A4	
350	312125-0287		14	SCREW ISO 1207 M4X8 A4	
360	312125-0285		8	SCREW ISO 1207 M4X6 A4	
370	312605-0316		16	HEXAGON NUT, M6M M6 A280	
380	312605-0318		3	HEXAGON NUT, M6M M8 A280	
400	315103-0124		8	WASHER, BRB, 3,2/6,H=0,5 NI PL BR	
410	315105-0136		2	WASHER BRB 4,3X9 RFR	
420	315105-0153		28	WASHER BRB 6,4X12 RFR	
435	315105-0165		1	WASHER BRB 8,4X16 RFR	
440	352113-0205		4	ANCHOR PLATES FOR STRIPS, TYPE TM2S8-C10	
450	312125-0230		4	SCREW ISO 1207 M3X20 A4	
460	312605-0310		4	HEXAGON NUT, M6M M3 A280	
470	312115-0368		4	SCREW ISO4762 M6X16 A4 80	
480	315105-0124		6	WASHER BRB 3,2X7 RFR	
500	90005-0082		14	WASHER PLAIN ROUND 4,3(M4)/12,H=1	
510	90015-0021		1	LEAD-IN, TET10-14, E-1458023	
520	90015-0024		1	LEAD-IN, TET20-26, E-1458035	
530	90051-0088		1	ADJUSTMENT SCREW	
535	90099-0131		1	NUT HEX. M16X2 SS	
540	312105-0362		2	SCREW M6S ISO 4017 M6X8 A480	
570	312605-0312		2	HEXAGON NUT, M6M M4 A280	
580	312105-0299		2	SCREW M6S ISO 4017 M4X30 A470	
590	1539387-0000		2	SCREW	
600	90044-0310		1	KEY FOR SAFETY SWITCH AZ 15/16 B1	
610	315125-0153		2	WASHER TBRSB 6,4X22X4 A4	
620	321141-0064		4	BEARING BUSH W/O FLANGE, 6X8X10 MM	
630	312125-0376		2	SCREW ISO 1207 M6X35 A4	
640	312812-0316		2	HEXAGON NUT, NY-LOCK M6 A480	
650	315751-0103		1	RETAINING RING FOR SHAFT DIN 471 6 A2	
B6201	90044-0194		1	PROX.SW. IN5329/IN3002-BPKG(EX90044-104)	
B6202	90044-0194		1	PROX.SW. IN5329/IN3002-BPKG(EX90044-104)	
B6204	90044-0194		1	PROX.SW. IN5329/IN3002-BPKG(EX90044-104)	
B6208	90458-0138		1	PROX. SWITCH, E2EG-X1R5B1-5M	

Machine Type	Group Description	Used-In	Group Number	Page No

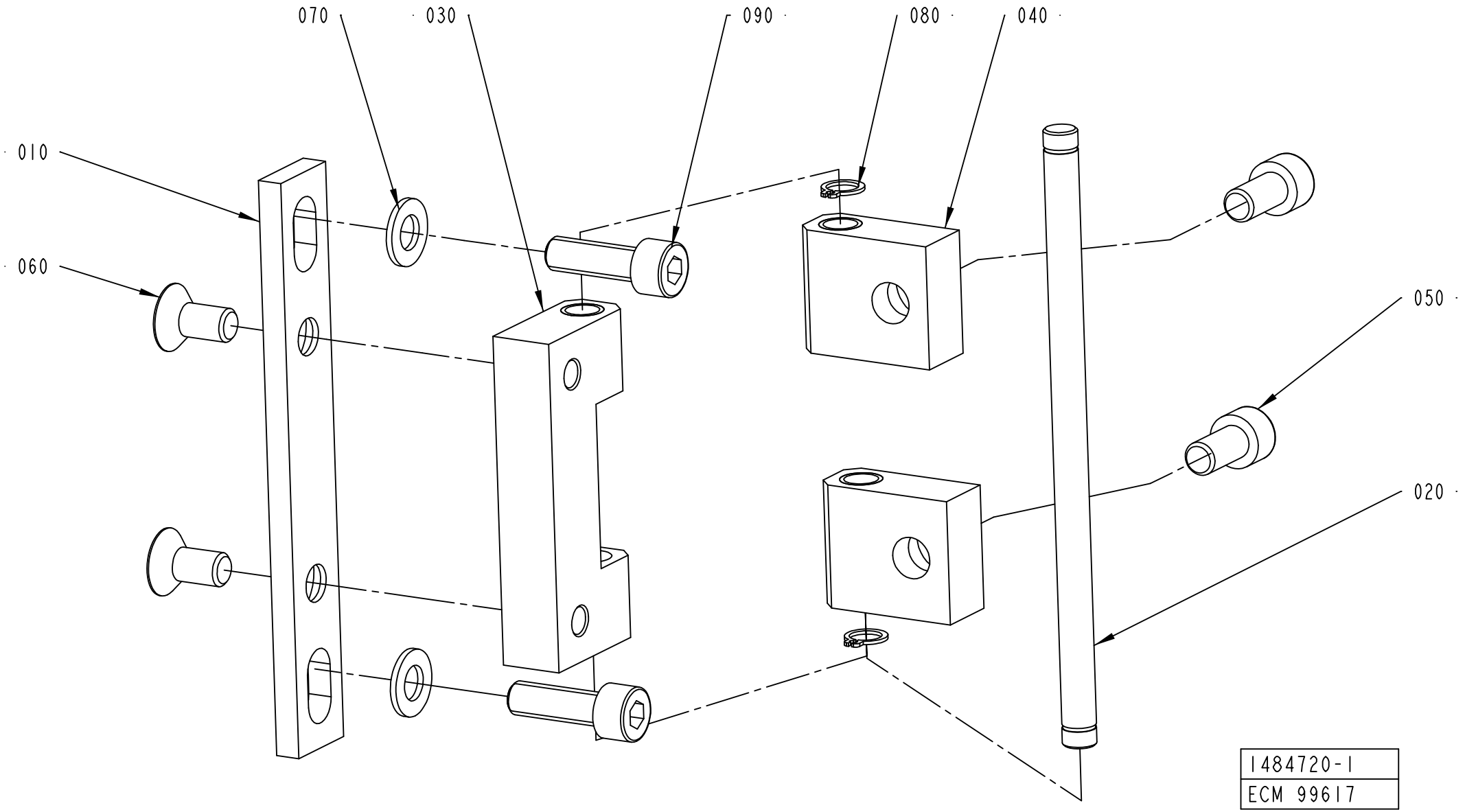
070
030
090
080
040
010
060
050
020
1484720-1
ECM 99617

ECM: 178404 - 20041005
Group number: 1484720-0100
Assembly Drawing: 1484720-1_1_AB

Pos	Part No	UN	Qty	Description	Page No
-					
010	1334187-0000		1	PLATE	
020	1334188-0000		1	AXLE PIN	
030	1334189-0000		1	BLOCK	
040	1334190-0000		2	BLOCK	
050	312115-0449		2	SCREW ISO4762 M8X16 A4 80	
060	312155-0449		2	SCREW DIN 7991 MF6S M8X16 A4 70	
070	315105-0165		2	WASHER BRB 8,4X16 RFR	
080	90141-0015		2	RETAINING RING FOR SHAFT DIN 471 8 A2	
090	312115-0453		2	SCREW ISO4762 M8X25 A4 80	

Pos	Part No	UN	Qty	Description	Page No

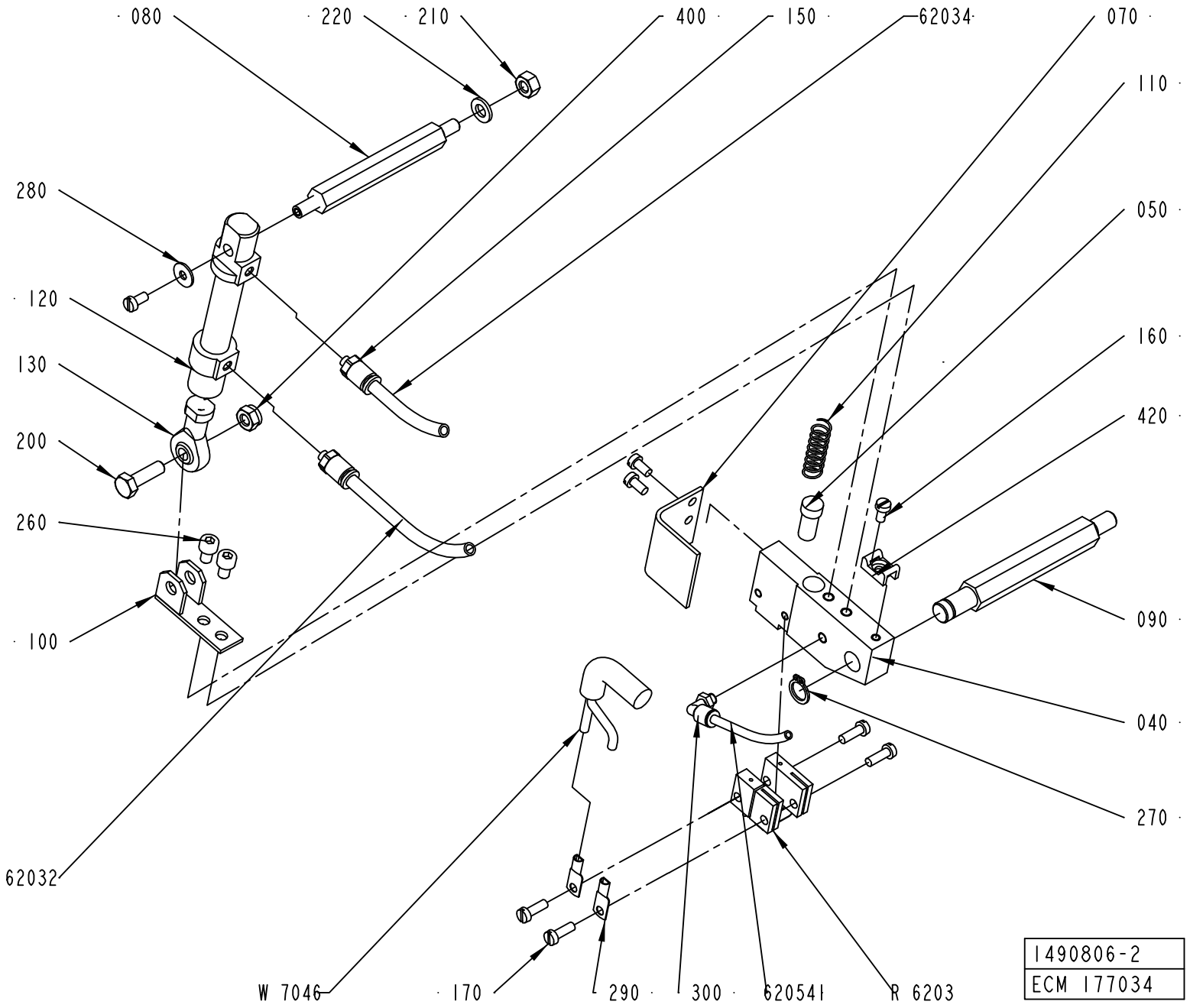
080
220
210
400
150
62034
070
110
280
050
120
160
130
420
200
260
090
100
040
270
62032
W 7046
170
290
300
620541
R 6203
1490806-2
ECM 177034

ECM: 257589 - 20060419
Group number: 1490806-0200
Assembly Drawing: 1490806-2_1_AC

Pos	Part No	UN	Qty	Description	Page No
-					
040	1490804-0000		1	HOLDER	
050	400833-0000		1	PLUNGER	
070	1349181-0000		1	TOUCH GUARD	
080	1037121-0000		1	SHAFT	
090	1037120-0000		1	SHAFT	
100	1037124-0000		1	HOLDER	
110	400828-0000		1	SPRING	
120	90450-0306		1	DOUBLE ACTING, MINI-ISO, CYL. 12-25	
130	90239-0491		1	ROD END,BALL JOINT EYE,MINI-ISO M6	
150	342722-0197		2	STRAIGHT COUPLING	
160	312125-0287		4	SCREW ISO 1207 M4X8 A4	
170	312125-0291		4	SCREW ISO 1207 M4X12 A4	
200	312105-0370		1	SCREW M6S ISO 4017 M6X20 A480	
210	312605-0316		1	HEXAGON NUT, M6M M6 A280	
220	315105-0153		1	WASHER BRB 6,4X12 RFR	
260	312115-0323		2	SCREW ISO4762 M5X8 A4 80	
270	90141-0016		1	RETAINING RING FOR SHAFT DIN 471 10 A2	
280	90005-0082		1	WASHER PLAIN ROUND 4,3(M4)/12,H=1	
290	353104-0140		2	CABLE SHOE, RING UNINS., YAV 06 M 4	
300	90458-2954		1	ELBOW PIPE JOINT, EXT.THREAD, D=4MM M5	
400	312812-0316		1	HEXAGON NUT, NY-LOCK M6 A480	
420	352113-0205		1	ANCHOR PLATES FOR STRIPS, TYPE TM2S8-C10	
62032	90166-0193	MM	4500	TUBE 6 MM PUR BLUE	
62034	90166-0193	MM	4500	TUBE 6 MM PUR BLUE	
620541	90166-0095	MM	1500	TUBE 4 MM PA BLUE (50M)	
R6203	1498047-0000		1	SEALING BLOCK	
W7046	351120-0126	MM	4000	CABLE SILFLEX SIHF 2X4 0046025	

Pos	Part No	UN	Qty	Description	Page No

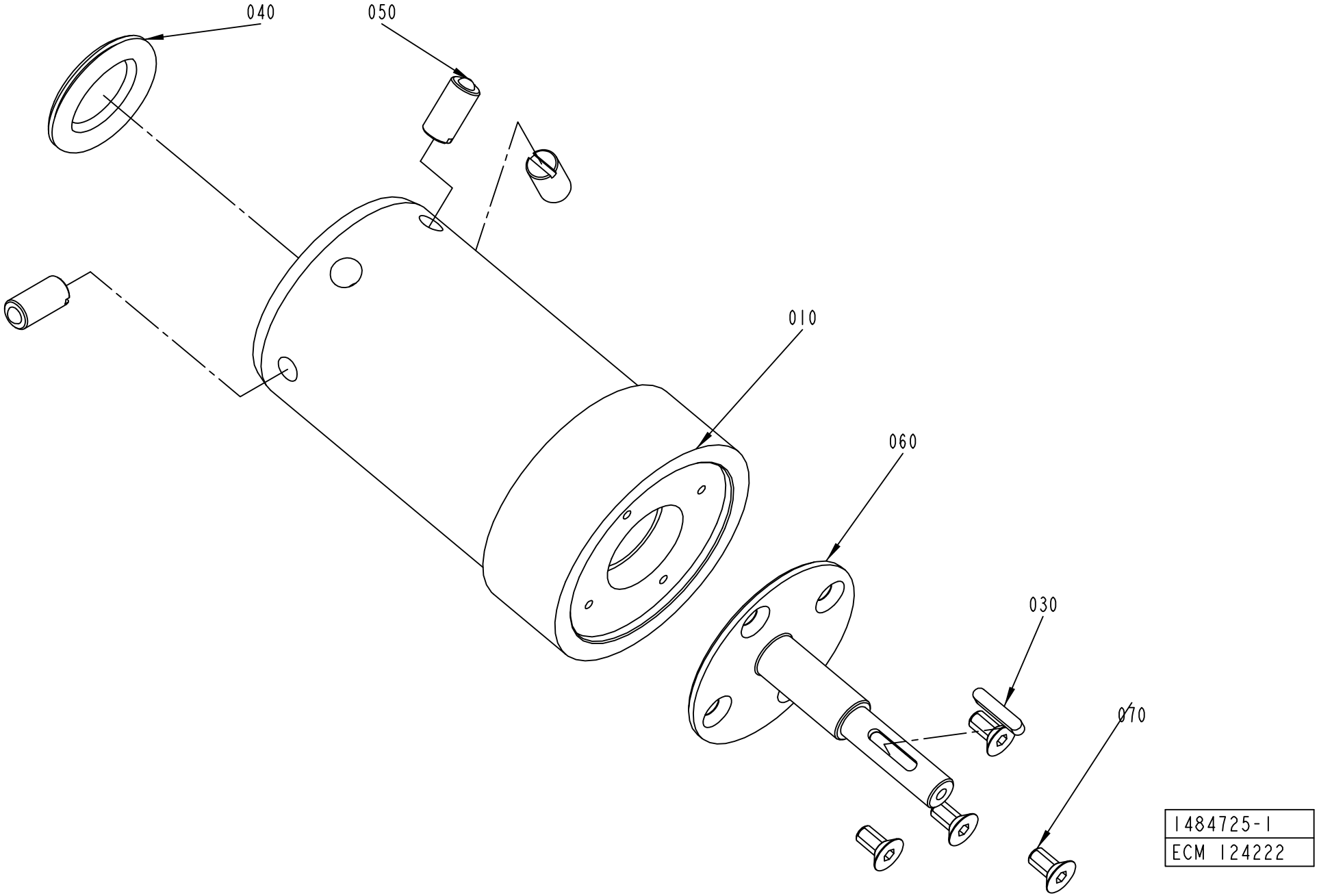
040
050
010
060
030
070
1484725-1
ECM 124222

ECM: 178406 - 20041005
Group number: 1484725-0100
Assembly Drawing: 1484725-1_1_AD

Pos	Part No	UN	Qty	Description	Page No
-					
010	1484724-0000		1	HUB	
030	315701-0170		1	PARALLEL KEY W. ROUND ENDS 4X4X20 MM	
040	90261-0049		1	PLUG, BLIND, PLASTIC, NO. SR1750	
050	90287-0106		3	SCREW SPRINGLOAD. SLOTTED HEAD M10X21	
060	1484726-0000		1	SHAFT	
070	312155-0366		4	SCREW DIN 7991 MF6S M6X12 A4 70	

Pos	Part No	UN	Qty	Description	Page No

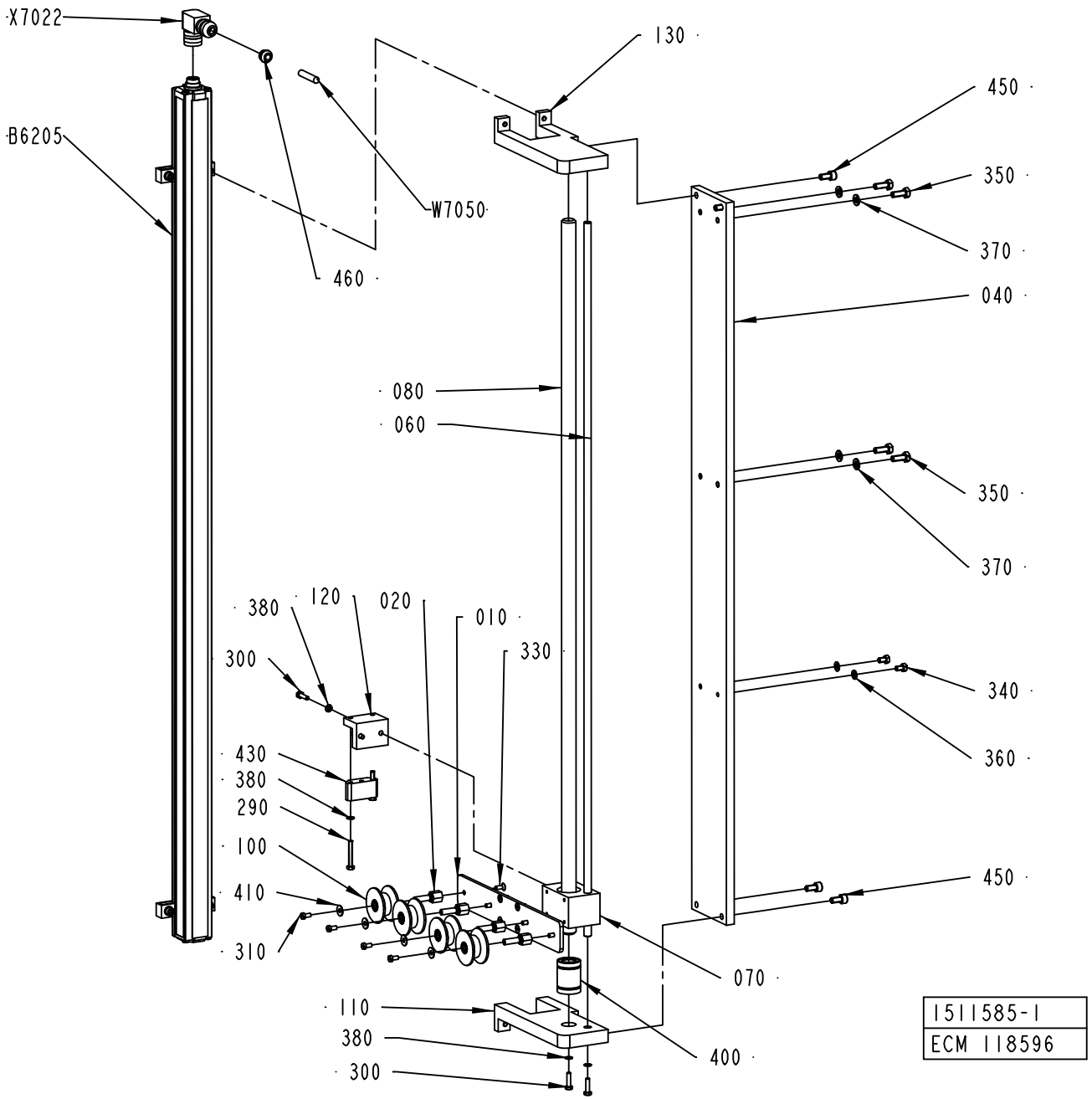
X7022
B6205
W7050
460
130
450
350
370
040
080
060
350
370
380
120
020
010
330
300
340
360
430
380
290
100
410
310
450
070
110
380
300
400
1511585-1
ECM 118596

ECM: 257591 - 20060419
Group number: 1511585-0200
Assembly Drawing: 1511585-1_1_AB

Pos	Part No	UN	Qty	Description	Page No
-					
010	1484711-0000		1	BRACKET	
020	1484719-0000		4	AXLE PIN	
040	1498450-0001		1	PLATE	
060	1498451-0001		1	SHAFT	
070	1511587-0000		1	BUSHING BLOCK	
080	1511586-0001		1	BAR	
100	1523487-0000		4	ROLL	
110	2501220-0000		1	BRACKET	
120	2501221-0000		1	BRACKET	
130	2501219-0000		1	BRACKET	
290	312105-0299		2	SCREW M6S ISO 4017 M4X30 A470	
300	312105-0293		4	SCREW M6S ISO 4017 M4X16 A470	
310	312125-0287		4	SCREW ISO 1207 M4X8 A4	
330	312155-0289		8	SCREW DIN 7991 MF6S M4X10 A4 70	
340	312105-0323		2	SCREW M6S ISO 4017 M5X8 A480	
350	312105-0368		4	SCREW M6S ISO 4017 M6X16 A480	
360	315105-0146		2	WASHER BRB 5,3X10 RFR	
370	315105-0153		4	WASHER BRB 6,4X12 RFR	
380	315105-0136		6	WASHER BRB 4,3X9 RFR	
400	90189-0011		1	BALL BUSHING, 16X26X36 MM	
410	90005-0082		4	WASHER PLAIN ROUND 4,3(M4)/12,H=1	
430	90458-1592		1	FLOATING MAGNET, BTL5-P-3800-2	
450	312115-0366		4	SCREW ISO4762 M6X12 A4 80	
460	90459-1501		1	CABLE SEALING, 12023/I, ELFA. 44-625-78	
B6205	90458-1535		1	TRANSDUCER, BTL5-A11-M0850-P-S32	
W7050	90220-0092	MM	4000	PAIR TWISTED CABLE 3X2X0,25MM2	
X7022	90458-1595		1	CONNECTION, BKS-S 33M-00	

Pos	Part No	UN	Qty	Description	Page No

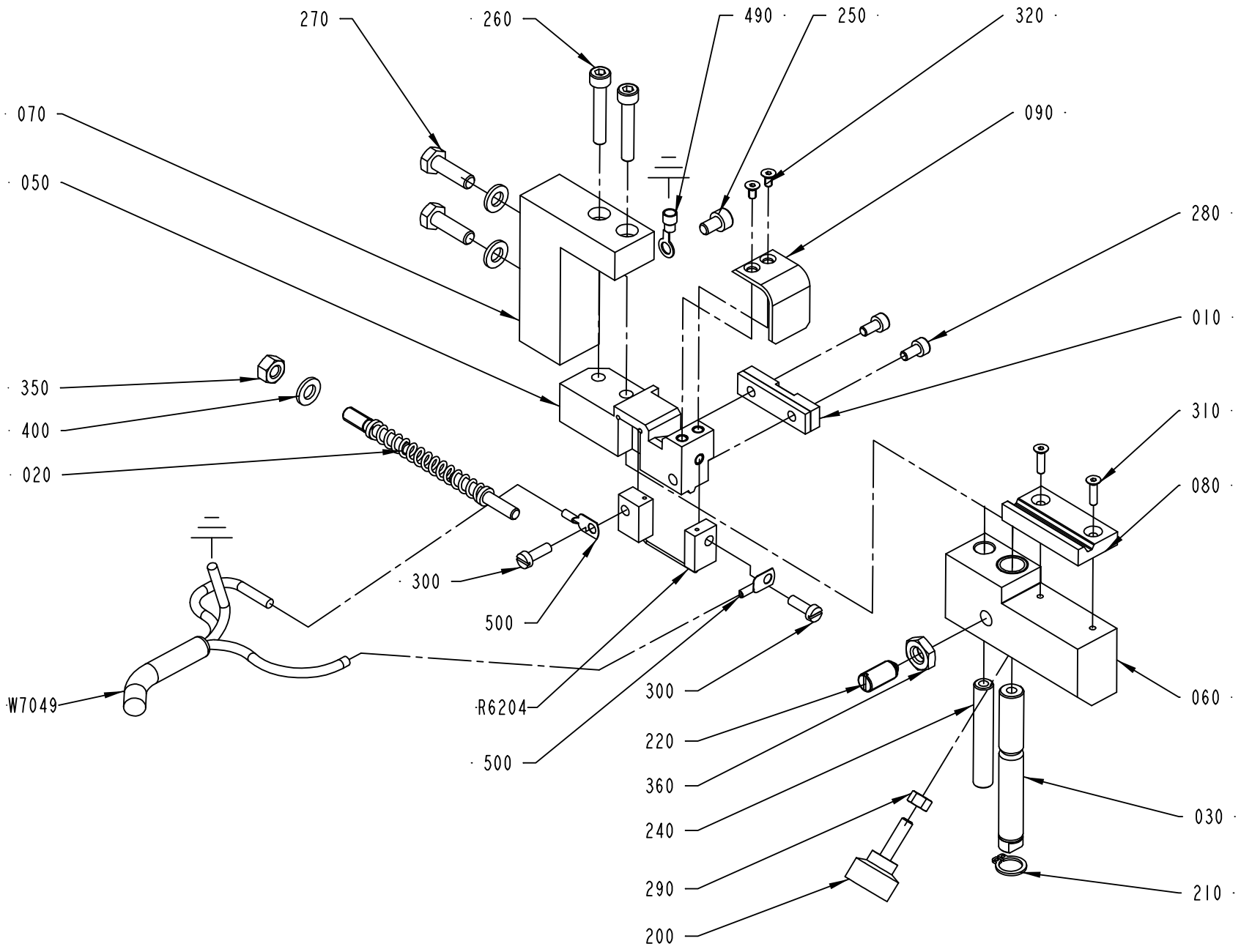

1524477-2
ECM 118596

ECM: 257593 - 20060419
Group number: 1524477-0200
Assembly Drawing: 1524477-2_1_AB

Pos	Part No	UN	Qty	Description	Page No
-					
010	1349014-0000		1	PAD	
020	1538194-0000		1	FINGER	
030	1517751-0000		1	SHAFT	
050	2523598-0000		1	84LICING TABLE	
060	2523597-0000		1	SLIDER	
070	2531493-0000		1	BRACKET	
080	2523601-0000		1	PAD	
090	2579838-0000		1	TOUCH GUARD	
200	90051-0035		1	KNOB, EXTERNAL THREAD. NO. 8308-1135	
210	90141-0016		1	RETAINING RING FOR SHAFT DIN 471 10 A2	
220	90287-0112		1	SCREW SPRINGLOAD. SLOTTED HEAD M8X16	
240	2523600-0000		1	PIN	
250	312115-0323		1	SCREW ISO4762 M5X8 A4 80	
260	312115-0335		2	SCREW ISO4762 M5X30 A4 80	
270	312105-0370		2	SCREW M6S ISO 4017 M6X20 A480	
280	312115-0287		2	SCREW ISO4762 M4X8 A4 80	
290	312605-0314		1	HEXAGON NUT, M6M M5 A280	
300	312125-0291		2	SCREW ISO 1207 M4X12 A4	
310	312155-0226		2	SCREW DIN 7991 MF6S M3X12 A4 70	
320	312155-0220		2	SCREW DIN 7991 MF6S M3X6 A4 70	
350	312605-0316		1	HEXAGON NUT, M6M M6 A280	
360	312625-0318		1	HEXAGON THIN NUT, EN 24035 ML6M M8 A4	
400	315105-0153		3	WASHER BRB 6,4X12 RFR	
490	353101-0132		1	CABLE SHOE 1,5-2,5MM2 M5 BLUE	
500	353104-0130		2	CABLE SHOE, RING UNINS., YAV 025 M 4	
R6204	1524481-0000		1	SEALING BLOCK	
W7049	351120-0145	MM	4000	CABLE SILFLEX SIHF 3X2,5 0046020	

Pos	Part No	UN	Qty	Description	Page No

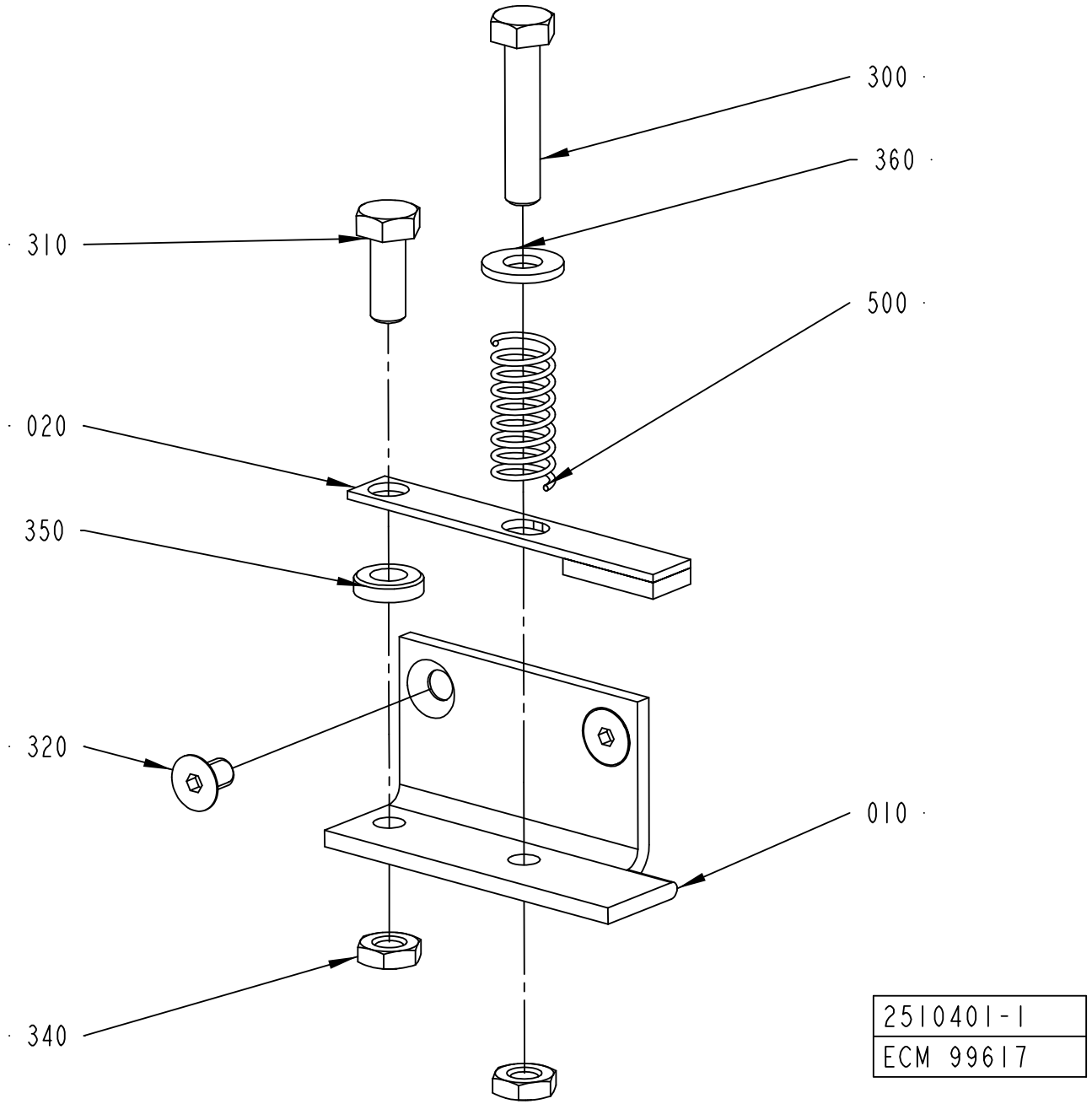
300
360
310
500
020
350
320
010
340
2510401-1
ECM 99617

ECM: 178408 - 20041005
Group number: 2510401-0100
Assembly Drawing: 2510401-1_1_AA

Pos	Part No	UN	Qty	Description	Page No
-					
010	2510399-0000		1	BRACKET	
020	2510400-0000		1	HOLDER	
300	312109-0374		1	SCREW M6S ISO 4017 M6X30 A480	
310	312105-0368		1	SCREW M6S ISO 4017 M6X16 A480	
320	312155-0323		2	SCREW DIN 7991 MF6S M5X8 A4 70	
340	312625-0316		2	HEXAGON THIN NUT, EN 24035 ML6M M6 A4	
350	315115-0153		1	WASHER PLAIN, TBRB 6,4/12 H=3	
360	315105-0156		1	WASHER BRB 6,7X14 RFR	
500	90335-0025		1	COMP. SPRING 22010, 1X11X26	

Pos	Part No	UN	Qty	Description	Page No

SPLICING DEVICE

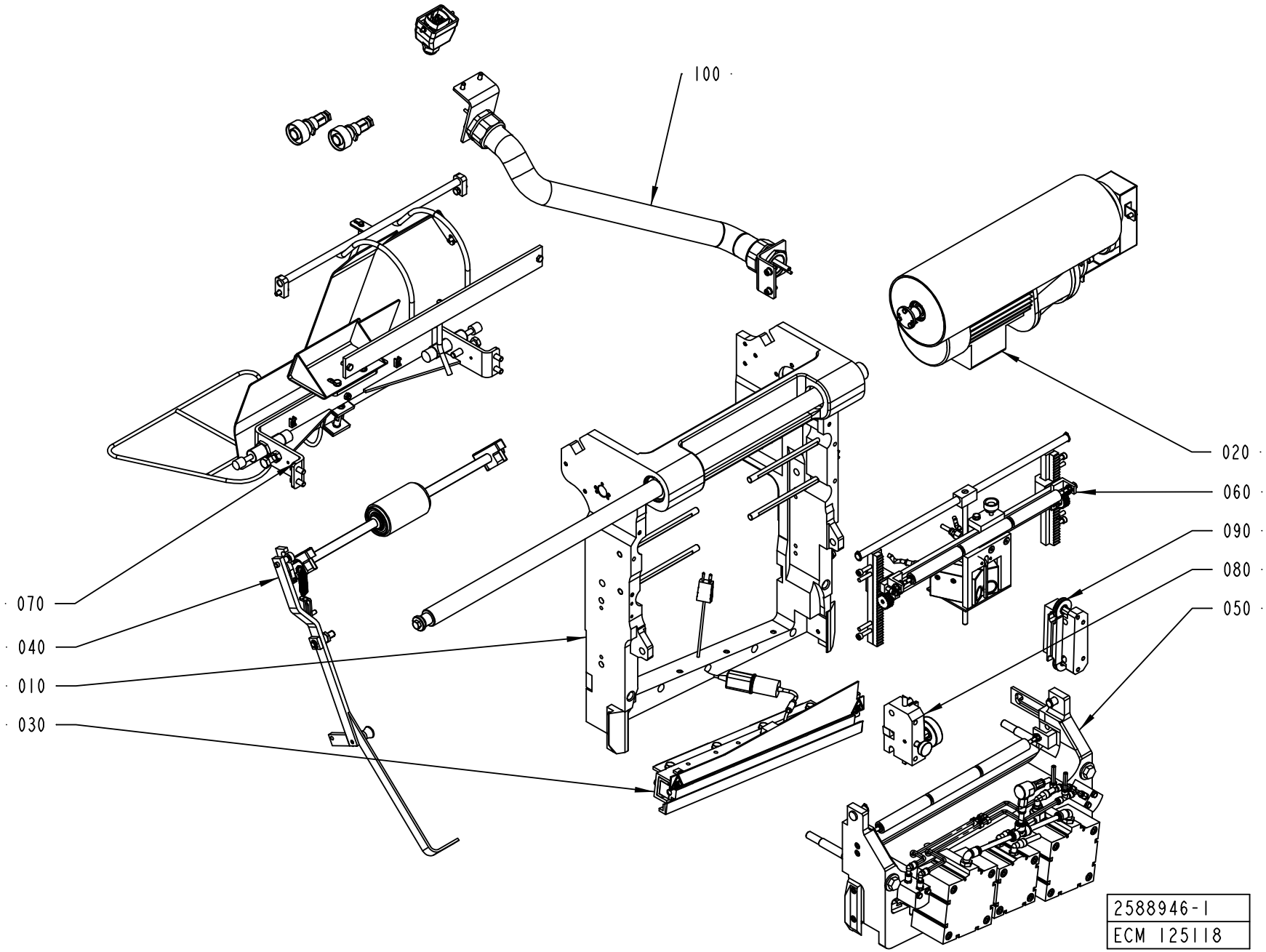

ECM: 267383 - 20060702
Group number: 2588946-0100
Assembly Drawing: 2588946-1_1_AB

This list covers pages from 7-136 to 7-139

Pos	Part No	UN	Qty	Description	Page No
A3/FLEX TBA 1890S, A3/FLEX TBA 2000S, A3/FLEX TBA 1400B (See drawing on page: 7-138)					
080	1484745-0100		1	WEB GUIDE	**7-141**
A3/FLEX TBA 0500B, A3/FLEX TBA 1000B, A3/FLEX TBA 1000S, A3/FLEX TBA 1000SQ, A3/FLEX TPA 1000SQ, A3/FLEX TBA 0200S, A3/FLEX TBA 1500S, A3/FLEX TBA 0200B, A3/FLEX TBA 0250B, A3/FLEX TBA 0330S, A3/FLEX TPA 0330SQ, A3/FLEX TPA 0500SQ, A3/FLEX TBA 0200M, A3/FLEX TBA 0250S, A3/FLEX TBA 0500S, A3/FLEX TPA 0250SQ, A3/FLEX TPA 0200SQ, A3/FLEX TPA 0750SQ, A3/FLEX TBA 0200SQ, A3/FLEX TBA 0250SQ (See drawing on page: 7-136)					
080	1484745-0100		1	WEB GUIDE	**7-141**
Common Parts					
010	2589104-0100		1	FRAME	**7-143**
020	2589105-0100		1	DRIVE UNIT	**7-145**
030	2589106-0100		1	HEATING UNIT	**7-147**
040	2524600-0100		1	PRESSURE ROLLER	**7-149, 7-151**
050	2592567-0100		1	PRESSURE JAW	**7-153**
060	2592568-0100		1	BAR CODE READER	**7-155**
070	2582003-0100		1	GUIDE RAIL	**7-157, 7-159**
090	2529547-0100		1	PAPER GUIDE	**7-161**
100	1499578-0300		1	CABLE CONDUIT	**7-163**

Pos	Part No	UN	Qty	Description	Page No

SPLICING DEVICE

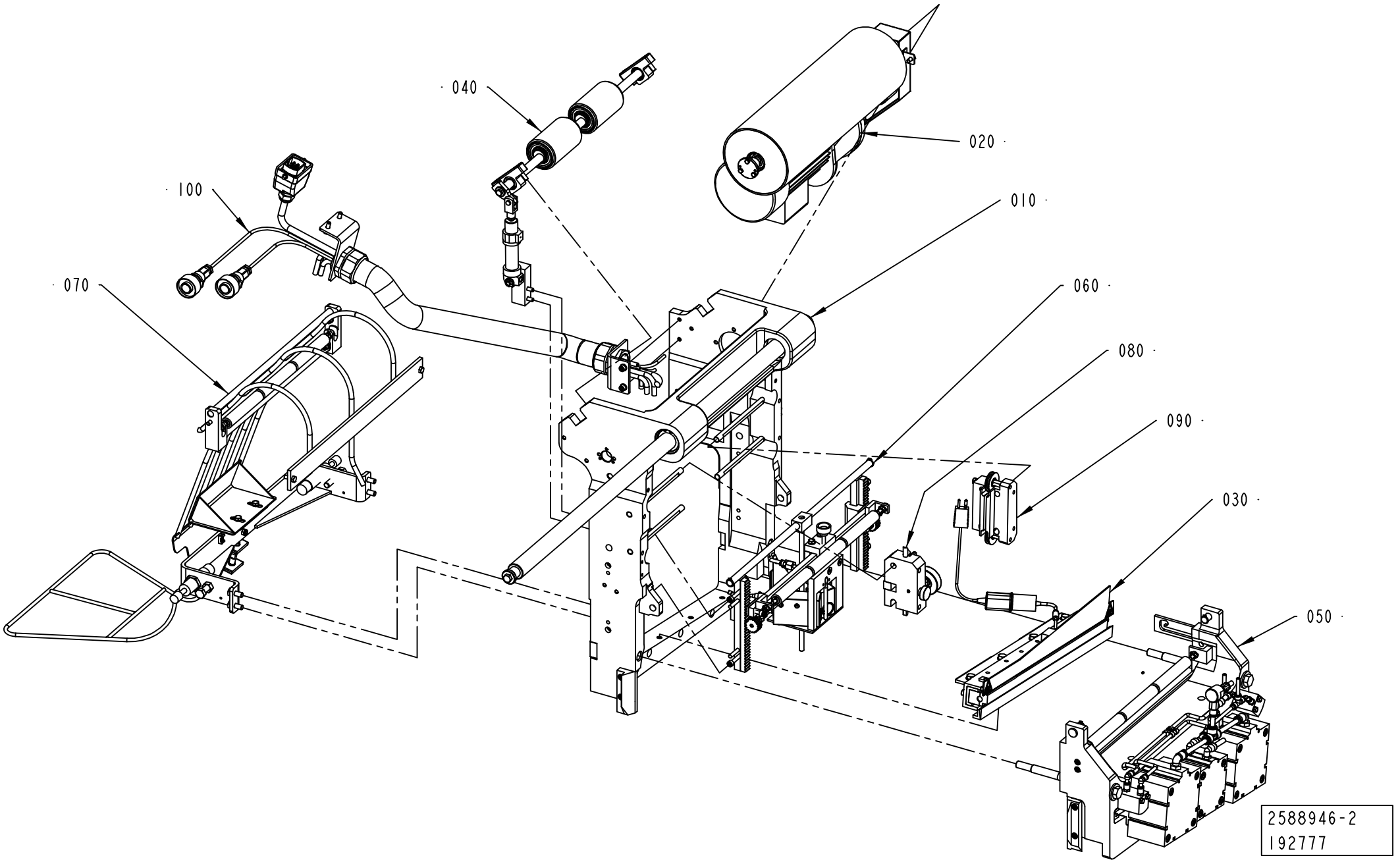

ECM: 267383 - 20060702
Group number: 2588946-0100
Assembly Drawing: 2588946-2_1_AB

This list covers pages from 7-136 to 7-139

Pos	Part No	UN	Qty	Description	Page No
A3/FLEX TBA 1890S, A3/FLEX TBA 2000S, A3/FLEX TBA 1400B (See drawing on page: 7-138)					
080	1484745-0100		1	WEB GUIDE	**7-141**
A3/FLEX TBA 0500B, A3/FLEX TBA 1000B, A3/FLEX TBA 1000S, A3/FLEX TBA 1000SQ, A3/FLEX TPA 1000SQ, A3/FLEX TBA 0200S, A3/FLEX TBA 1500S, A3/FLEX TBA 0200B, A3/FLEX TBA 0250B, A3/FLEX TBA 0330S, A3/FLEX TPA 0330SQ, A3/FLEX TPA 0500SQ, A3/FLEX TBA 0200M, A3/FLEX TBA 0250S, A3/FLEX TBA 0500S, A3/FLEX TPA 0250SQ, A3/FLEX TPA 0200SQ, A3/FLEX TPA 0750SQ, A3/FLEX TBA 0200SQ, A3/FLEX TBA 0250SQ (See drawing on page: 7-136)					
080	1484745-0100		1	WEB GUIDE	**7-141**
Common Parts					
010	2589104-0100		1	FRAME	**7-143**
020	2589105-0100		1	DRIVE UNIT	**7-145**
030	2589106-0100		1	HEATING UNIT	**7-147**
040	2524600-0100		1	PRESSURE ROLLER	**7-149, 7-151**
050	2592567-0100		1	PRESSURE JAW	**7-153**
060	2592568-0100		1	BAR CODE READER	**7-155**
070	2582003-0100		1	GUIDE RAIL	**7-157, 7-159**
090	2529547-0100		1	PAPER GUIDE	**7-161**
100	1499578-0300		1	CABLE CONDUIT	**7-163**

Pos	Part No	UN	Qty	Description	Page No

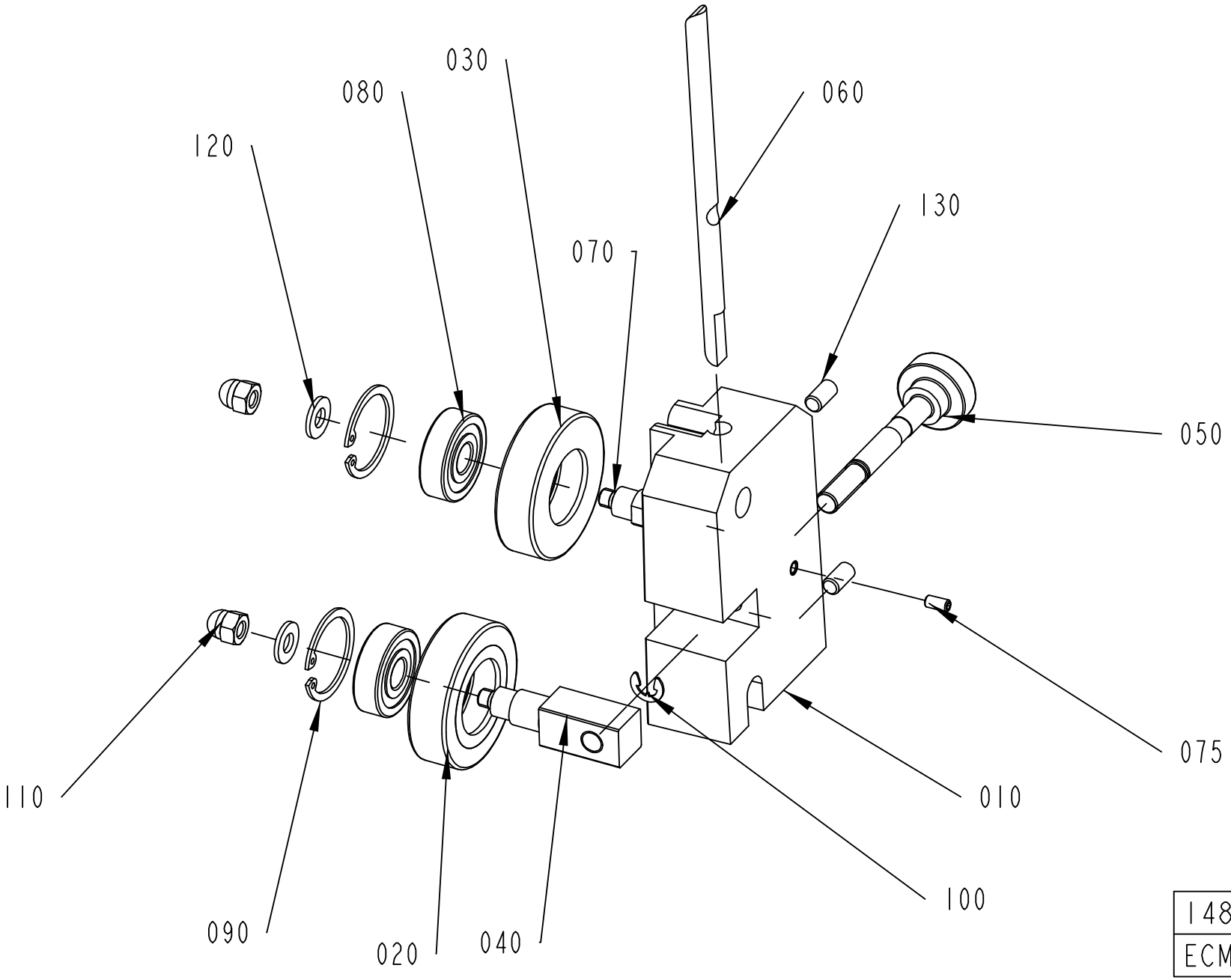
030
080
120
060
130
070
050
075
110
010
090
020
040
100
1484745-1
ECM 124748

ECM: 267377 - 20060702
Group number: 1484745-0100
Assembly Drawing: 1484745-1_1_AD

Pos	Part No	UN	Qty	Description	Page No
A3/FLEX TBA 1890S, A3/FLEX TBA 2000S, A3/FLEX TBA 1400B					
010	2713376-0000		1	BRACKET	
A3/FLEX TBA 0500B, A3/FLEX TBA 1000B, A3/FLEX TBA 1000S, A3/FLEX TBA 1000SQ, A3/FLEX TPA 1000SQ, A3/FLEX TBA 0200S, A3/FLEX TBA 1500S, A3/FLEX TBA 0200B, A3/FLEX TBA 0250B, A3/FLEX TBA 0330S, A3/FLEX TPA 0330SQ, A3/FLEX TPA 0500SQ, A3/FLEX TBA 0200M, A3/FLEX TBA 0250S, A3/FLEX TBA 0500S, A3/FLEX TPA 0250SQ, A3/FLEX TPA 0200SQ, A3/FLEX TPA 0750SQ, A3/FLEX TBA 0200SQ, A3/FLEX TBA 0250SQ					
010	1484750-0000		1	BRACKET	
Common Parts					
020	1036623-0000		1	GUIDE ROLLER	
030	1036622-0000		1	GUIDE ROLLER	
040	1317711-0000		1	SHAFT	
050	1317712-0000		1	SHAFT	
060	1512526-0000		1	STEERING	
070	583727-0000		1	SHAFT	
075	312318-0287		1	SCREW ISO4029 M4X8 A4	
080	321313-0100		2	BALL BEARING, 10X30X9 MM	
090	315753-0122		2	RETAINING RING FOR BORE DIN 472 30 A2	
100	315755-0108		1	RETAINING RING SHAFT DIN 6799 6 A2	
110	312705-0316		2	NUT HEX. DOMED CAP MHM-6 M6 A280	
120	315105-0156		2	WASHER BRB 6,7X14 RFR	
130	312318-0366		2	SCREW ISO4029 M6X12 A4	

Pos	Part No	UN	Qty	Description	Page No

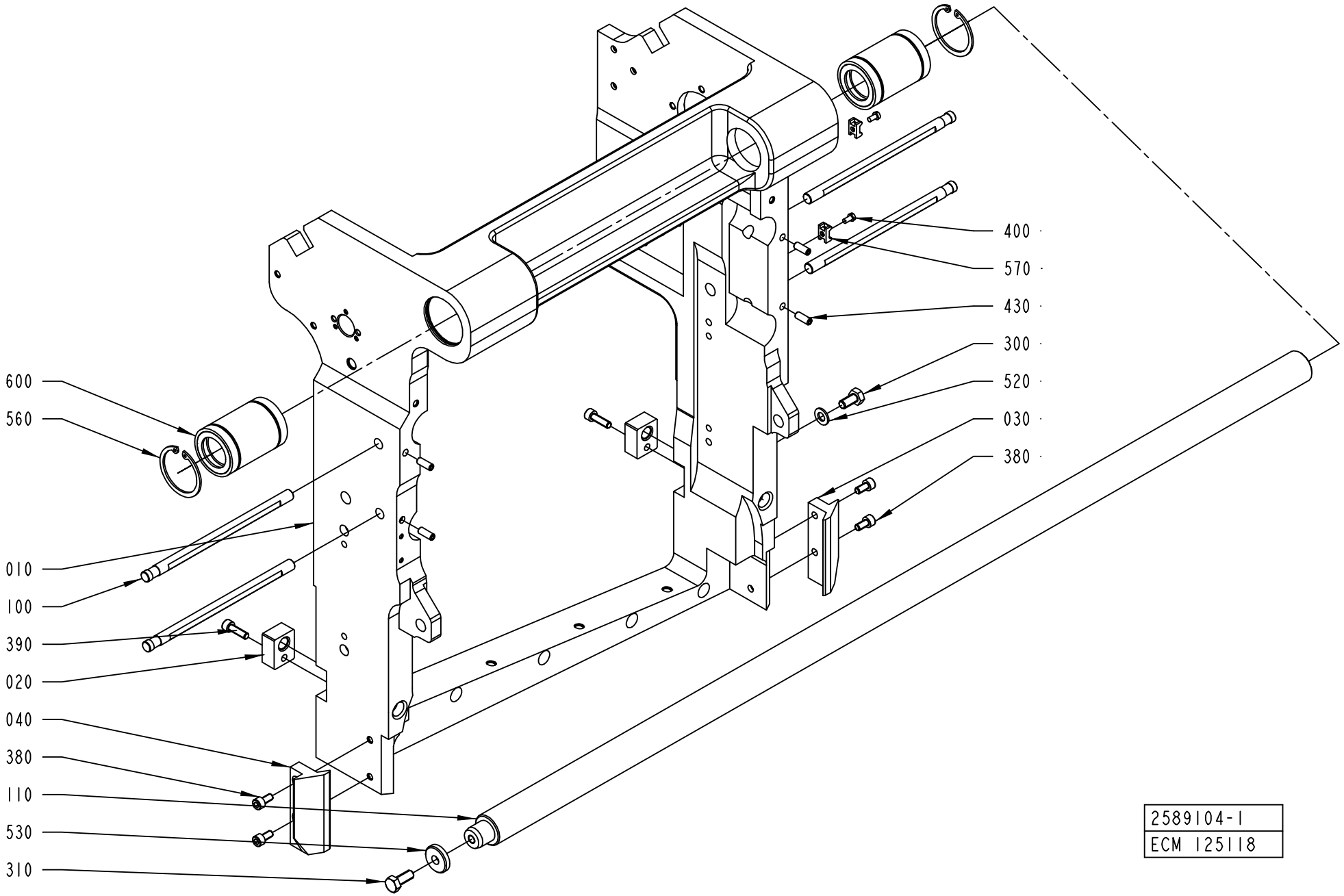
400
570
430
300
520
030
380
600
560
010
100
390
020
040
380
110
530
310
2589104-1
ECM 125118

ECM: 272115 - 20060814
Group number: 2589104-0100
Assembly Drawing: 2589104-1_1_AB

Pos	Part No	UN	Qty	Description	Page No
A3/FLEX TBA 1890S, A3/FLEX TBA 2000S, A3/FLEX TBA 1400B (See drawing on page: 7-142)					
010	2687960-0000		1	FRAME	
100	1484704-0000		4	SHAFT	
A3/FLEX TPA 0750SQ					
010	2574401-0000		1	FRAME	
A3/FLEX TBA 0500B, A3/FLEX TBA 1000B, A3/FLEX TBA 1000S, A3/FLEX TBA 1000SQ, A3/FLEX TPA 1000SQ, A3/FLEX TBA 0200S, A3/FLEX TBA 1500S, A3/FLEX TBA 0200B, A3/FLEX TBA 0250B, A3/FLEX TBA 0330S, A3/FLEX TPA 0330SQ, A3/FLEX TPA 0500SQ, A3/FLEX TBA 0200M, A3/FLEX TBA 0250S, A3/FLEX TBA 0500S, A3/FLEX TPA 0250SQ, A3/FLEX TPA 0200SQ, A3/FLEX TBA 0200SQ, A3/FLEX TBA 0250SQ (See drawing on page: 7-142)					
010	2574401-0000		1	FRAME	
100	1484704-0000		4	SHAFT	
Common Parts					
020	2589119-0000		2	NUT	
030	2562551-0000		1	SLIDE PLANE	
040	2562552-0000		1	SLIDE PLANE	
110	1490820-0000		1	SHAFT	
300	312105-0449		1	SCREW M6S ISO 4017 M8X16 A480	
310	312105-0451		1	SCREW M6S ISO 4017 M8X20 A480	
380	312115-0366		4	SCREW ISO4762 M6X12 A4 80	
390	312115-0370		2	SCREW ISO4762 M6X20 A4 80	
400	312125-0287		2	SCREW ISO 1207 M4X8 A4	
430	312318-0368		4	SCREW ISO4029 M6X16 A4	
520	315105-0165		1	WASHER BRB 8,4X16 RFR	
530	315125-0165		1	WASHER TBRSB 8,4X26X5 A4	
560	315753-0130		2	RETAINING RING FOR BORE DIN 472 47 A2	
570	352113-0205		2	ANCHOR PLATES FOR STRIPS, TYPE TM2S8-C10	
600	90189-0005		2	BALL BUSHING, 30X47X68 MM	

Pos	Part No	UN	Qty	Description	Page No

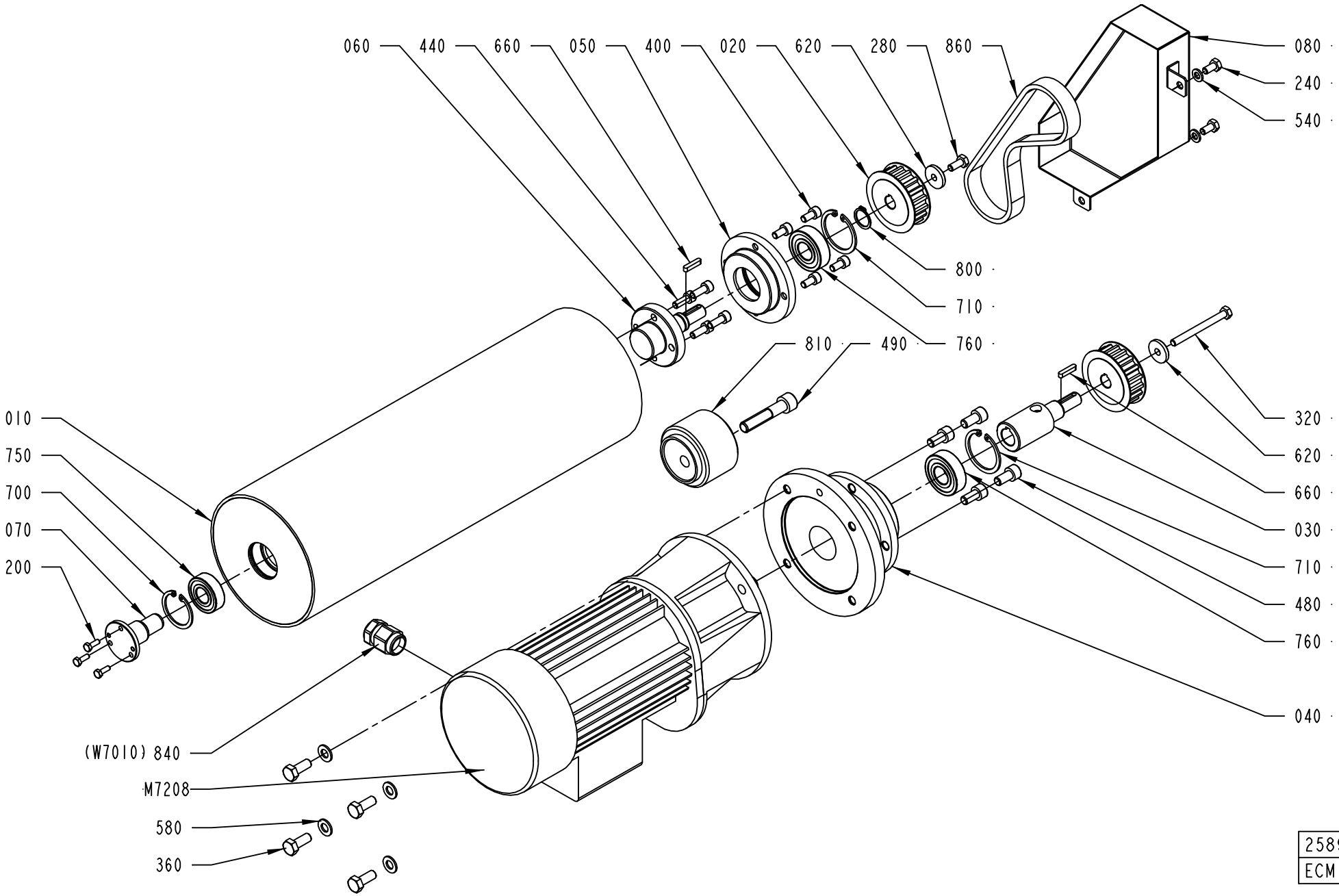

2589105-2
ECM 125118

ECM: 272271 - 20060712
Group number: 2589105-0100
Assembly Drawing: 2589105-2_1_AA

Pos	Part No	UN	Qty	Description	Page No
A3/FLEX TBA 1890S, A3/FLEX TBA 2000S, A3/FLEX TBA 1400B					
010	2665624-0000		1	BENDING ROLLER	
A3/FLEX TBA 0500B, A3/FLEX TBA 1000B, A3/FLEX TBA 1000S, A3/FLEX TBA 1000SQ, A3/FLEX TPA 1000SQ, A3/FLEX TBA 0200S, A3/FLEX TBA 1500S, A3/FLEX TBA 0200B, A3/FLEX TBA 0250B, A3/FLEX TBA 0330S, A3/FLEX TPA 0330SQ, A3/FLEX TPA 0500SQ, A3/FLEX TBA 0200M, A3/FLEX TBA 0250S, A3/FLEX TBA 0500S, A3/FLEX TPA 0250SQ, A3/FLEX TPA 0200SQ, A3/FLEX TPA 0750SQ, A3/FLEX TBA 0200SQ, A3/FLEX TBA 0250SQ					
010	2589108-0000		1	BENDING ROLLER	
Common Parts					
020	2589109-0000		2	TOOTHED PULLEY	
030	2589110-0000		1	SHAFT	
040	2589111-0000		1	FLANGE	
050	2589112-0000		1	FLANGE	
060	2589113-0000		1	SHAFT	
070	2589114-0000		1	SHAFT	
080	2589115-0000		1	COVER	
200	312105-0291		3	SCREW M6S ISO 4017 M4X12 A470	
240	312105-0366		2	SCREW M6S ISO 4017 M6X12 A480	
280	312105-0367		1	SCREW M6S ISO 4017 M6X14 A480	
320	312105-0383		1	SCREW M6S ISO 4014 M6X65 A480	
360	312105-0451		4	SCREW M6S ISO 4017 M8X20 A480	
400	312115-0366		4	SCREW ISO4762 M6X12 A4 80	
440	312115-0368		4	SCREW ISO4762 M6X16 A4 80	
480	312115-0449		4	SCREW ISO4762 M8X16 A4 80	
490	312115-0501		1	SCREW ISO4762 M10X50 A4 80	
540	315105-0153		2	WASHER BRB 6,4X12 RFR	
580	315105-0165		4	WASHER BRB 8,4X16 RFR	
620	315125-0153		2	WASHER TBRSB 6,4X22X4 A4	
660	315701-0170		2	PARALLEL KEY W. ROUND ENDS 4X4X20 MM	
700	315753-0124		1	RETAINING RING FOR BORE DIN 472 35 A2	
710	315753-0127		2	RETAINING RING FOR BORE DIN 472 40 A2	
750	321313-0102		1	BALL BEARING, 15X35X11 MM	
760	321313-0103		2	BALL BEARING, 17X40X12MM	
800	90141-0017		1	RETAINING RING FOR SHAFT DIN 471 17 A2	
810	90344-0078		1	PULLEY	
840	90458-0438		1	GLAND, EXTENDED WITH INSERT, M20X1,5	
860	90459-2198		1	TIMING BELT T10X480X16 POLYURETHANE	
M7208	90459-2826		1	GEARS, HELICAL MOTOR ME0102210012	

Pos	Part No	UN	Qty	Description	Page No

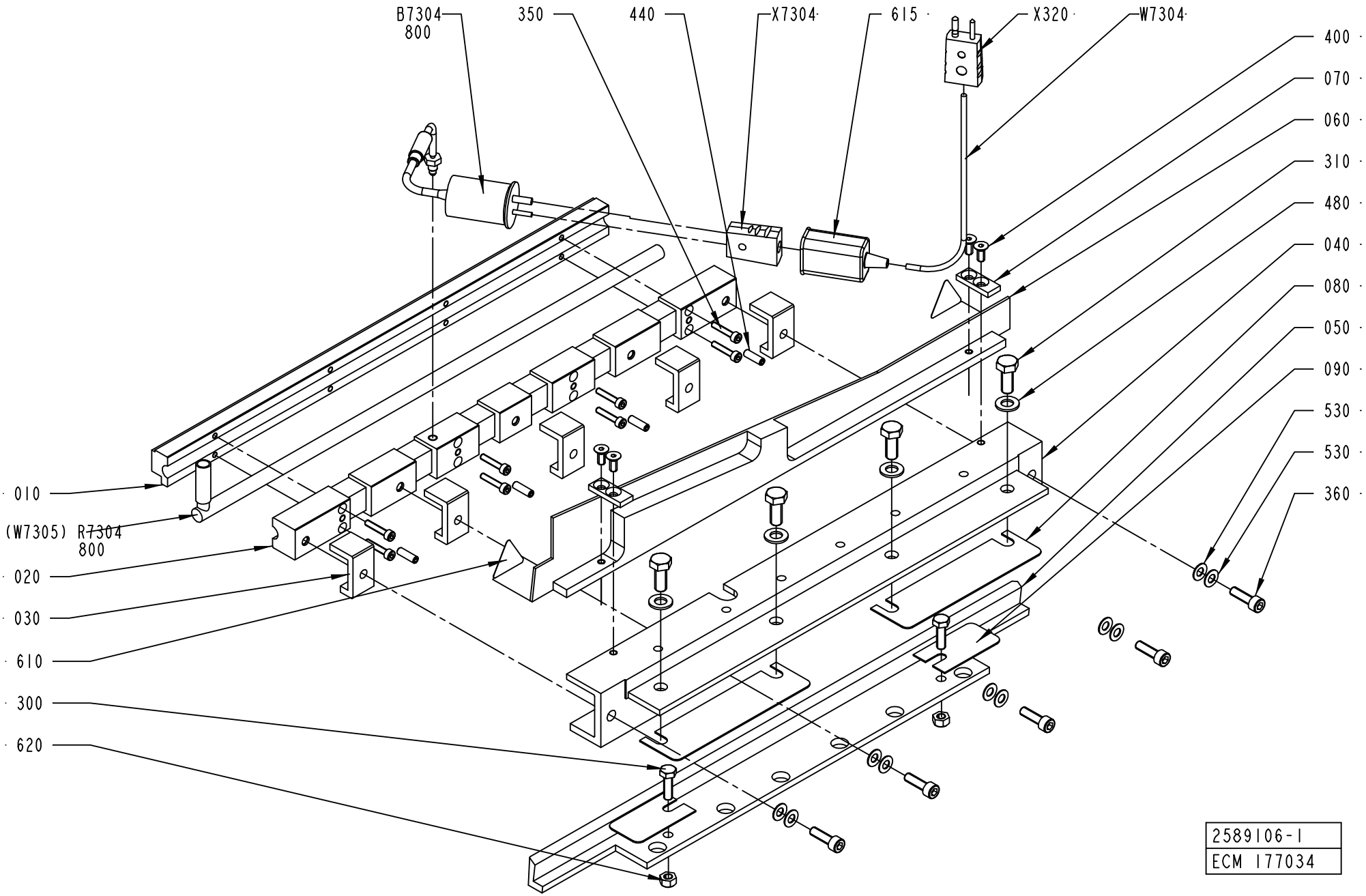
B7304
800
350
440
X7304
615
X320
W7304
400
070
060
310
480
040
080
050
090
530
530
360
010
(W7305) R7304
800
020
030
610
300
620
2589106-1
ECM 177034

ECM: 178410 - 20041025
Group number: 2589106-0100
Assembly Drawing: 2589106-1_1_AD

Pos	Part No	UN	Qty	Description	Page No
A3/FLEX					
X320	90326-0022		1	PLUG, MALE YELLOW CR-AL	
Common Parts					
010	2559986-0000		1	SEALING PLATE	
020	2559987-0000		1	SEALING PLATE	
030	2566127-0000		5	SPACER	
040	2566128-0000		1	HOUSING	
050	2566129-0000		1	ADJUSTMENT ANGLE	
060	2566130-0000		1	PLATE	
070	2576396-0000		2	PLATE	
080	2588947-0000		2	SHIMS	
090	2588948-0000		2	SHIMS	
300	312105-0370		2	SCREW M6S ISO 4017 M6X20 A480	
310	312105-0451		4	SCREW M6S ISO 4017 M8X20 A480	
350	312115-0295		8	SCREW ISO4762 M4X20 A4 80	
360	312115-0370		5	SCREW ISO4762 M6X20 A4 80	
400	312155-0327		4	SCREW DIN 7991 MF6S M5X12 A4 70	
440	312318-0329		4	SCREW ISO4029 M5X16 A4	
480	315105-0165		4	WASHER BRB 8,4X16 RFR	
530	319030-0125		10	DISC SPRING, CONICAL 12,5X6,2X0,5 MM	
610	90194-0143		2	WARNING SIGN ISO, HOT SURFACE	
615	90326-0012		1	PROTECTIVE COVER, T31A4618	
620	90459-2635		2	NUT, HEX.LOCK "CONELOCK" M6 DIN 980V	
800	90296-0051	G	1	PASTE	
B7304	90326-0054		1	THERMOCOUPLE, CR-AL STD.GR, 12826-36	
R7304	90459-2843		1	HEATING CARTRIDGE, 800W 240V	
W7304	90220-0034	MM	9500	THERMOCABLE TEX/SITW-20F-KX 2X0,5MM2	
X7304	90326-0020		1	PLUG, FEMALE YELLOW CR-AL	

Pos	Part No	UN	Qty	Description	Page No

PRESSURE ROLLER

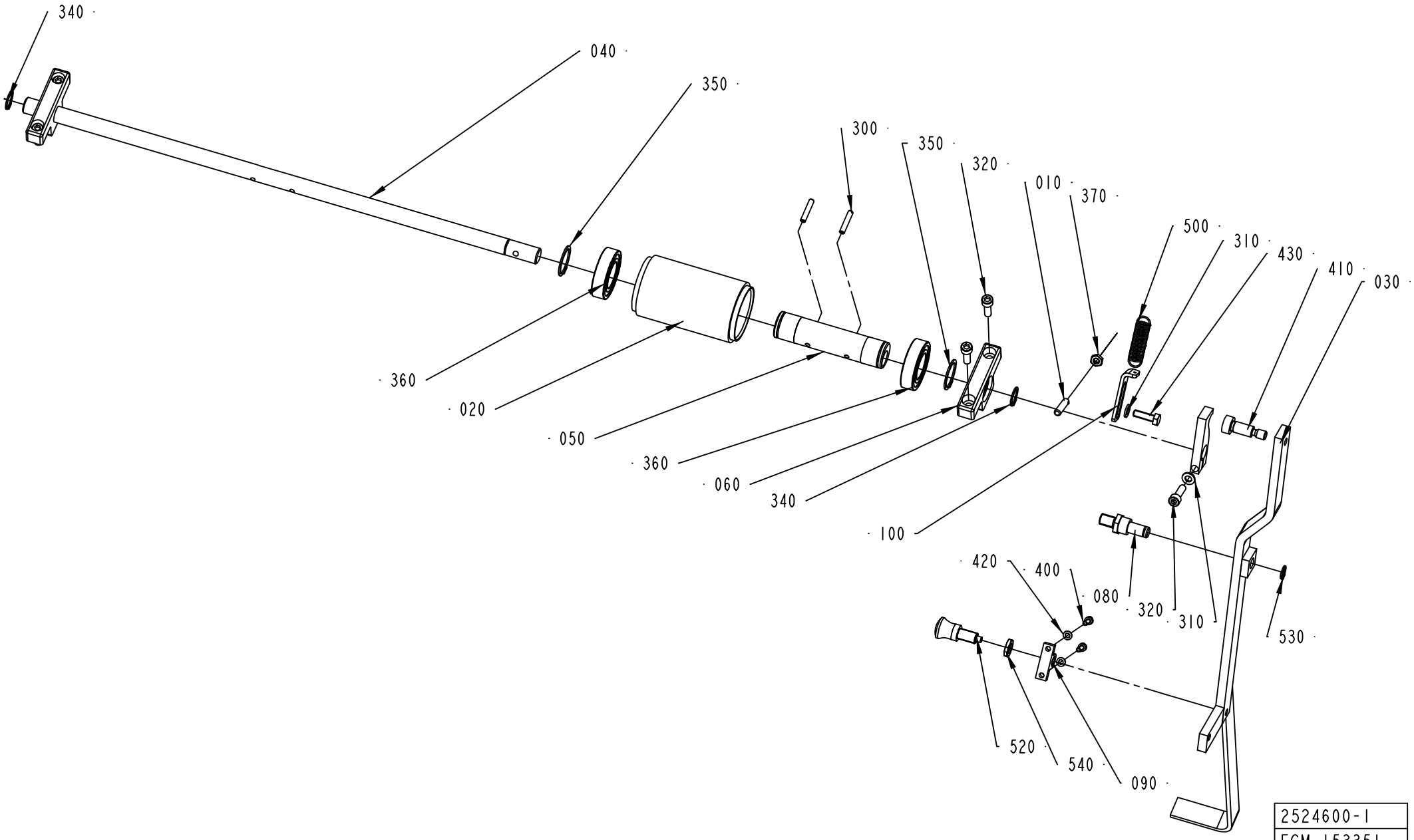

ECM: 272338 - 20060712
Group number: 2524600-0100
Assembly Drawing: 2524600-1_1_AB

This list covers pages from 7-148 to 7-151

Pos	Part No	UN	Qty	Description	Page No
A3/FLEX TBA 1890S, A3/FLEX TBA 2000S, A3/FLEX TBA 1400B (See drawing on page: 7-150)					
020	906254-0000		2	ROLLER	
030	90450-0003		1	SINGLE ACTING, MINI-ISO, CYL 20-25	
040	2681261-0000		1	SHAFT	
050	1512267-0000		2	ECCENTRIC BUSHING	
060	2681262-0000		2	BRACKET	
070	2703095-0000		1	ROCKER ARM	
080	2703096-0000		1	SUPPORT	
090	2681263-0000		2	BUSHING	
100	2681266-0000		1	WASHER	
300	311112-0258		4	SPRING PIN, ISO 8752 4X24-C	
310	315755-0109		1	RETAINING RING SHAFT DIN 6799 7 A2	
320	312115-0374		2	SCREW ISO4762 M6X30 A4 80	
350	315751-0119		4	RETAINING RING FOR SHAFT DIN 471 25 A2	
360	321308-0205		4	BALL BEARING, 25X47X12MM	
370	315105-0165		1	WASHER BRB 8,4X16 RFR	
400	312105-0367		1	SCREW M6S ISO 4017 M6X14 A480	
410	90459-2590		1	ROD END, CLEVIS WITH AXLE M8	
420	312115-0370		4	SCREW ISO4762 M6X20 A4 80	
560	350002-0006		1	PUSH-IN L-FITTING QSL-F-G1/8-6	
A3/FLEX TBA 0500B, A3/FLEX TBA 1000B, A3/FLEX TBA 1000S, A3/FLEX TBA 1000SQ, A3/FLEX TPA 1000SQ, A3/FLEX TBA 0200S, A3/FLEX TBA 1500S, A3/FLEX TBA 0200B, A3/FLEX TBA 0250B, A3/FLEX TBA 0330S, A3/FLEX TPA 0330SQ, A3/FLEX TPA 0500SQ, A3/FLEX TBA 0200M, A3/FLEX TBA 0250S, A3/FLEX TBA 0500S, A3/FLEX TPA 0250SQ, A3/FLEX TPA 0200SQ, A3/FLEX TPA 0750SQ, A3/FLEX TBA 0200SQ, A3/FLEX TBA 0250SQ (See drawing on page: 7-148)					
010	578684-0000		1	SPRING BRACKET	
020	906254-0000		1	ROLLER	
030	2524602-0000		1	HANDLE	
040	1487763-0000		1	SHAFT	
050	1512267-0000		1	ECCENTRIC BUSHING	
060	1519583-0000		2	BRACKET	
070	2524604-0000		1	ROCKER ARM	
080	2524601-0000		1	AXLE PIN	
090	2524603-0000		1	HOLDER	
100	2529549-0000		1	PLATE	
300	311112-0258		2	SPRING PIN, ISO 8752 4X24-C	
310	315105-0153		2	WASHER BRB 6,4X12 RFR	
320	312115-0370		5	SCREW ISO4762 M6X20 A4 80	
350	315751-0119		2	RETAINING RING FOR SHAFT DIN 471 25 A2	
360	321308-0205		2	BALL BEARING, 25X47X12MM	
370	312625-0316		1	HEXAGON THIN NUT, EN 24035 ML6M M6 A4	
400	312115-0291		2	SCREW ISO4762 M4X12 A4 80	
410	312180-0491		1	SCREW ISO7379 H10X20	
420	315105-0136		2	WASHER BRB 4,3X9 RFR	
430	312105-0370		1	SCREW M6S ISO 4017 M6X20 A480	
500	90335-0091		1	TENSION SPRING 41890, 1,2X13X48,2	
520	90051-0087		1	LOCK KNOB, NO. GN 617 A5	
530	90141-0016		1	RETAINING RING FOR SHAFT DIN 471 10 A2	
540	90099-0007		1	HEXAGON NUT, M10X1, E 63 137 10	
Common Parts					
340	315751-0112		2	RETAINING RING FOR SHAFT DIN 471 15 A2	

Machine Type | Group Description | Used-In | Group Number | Page No

PRESSURE ROLLER

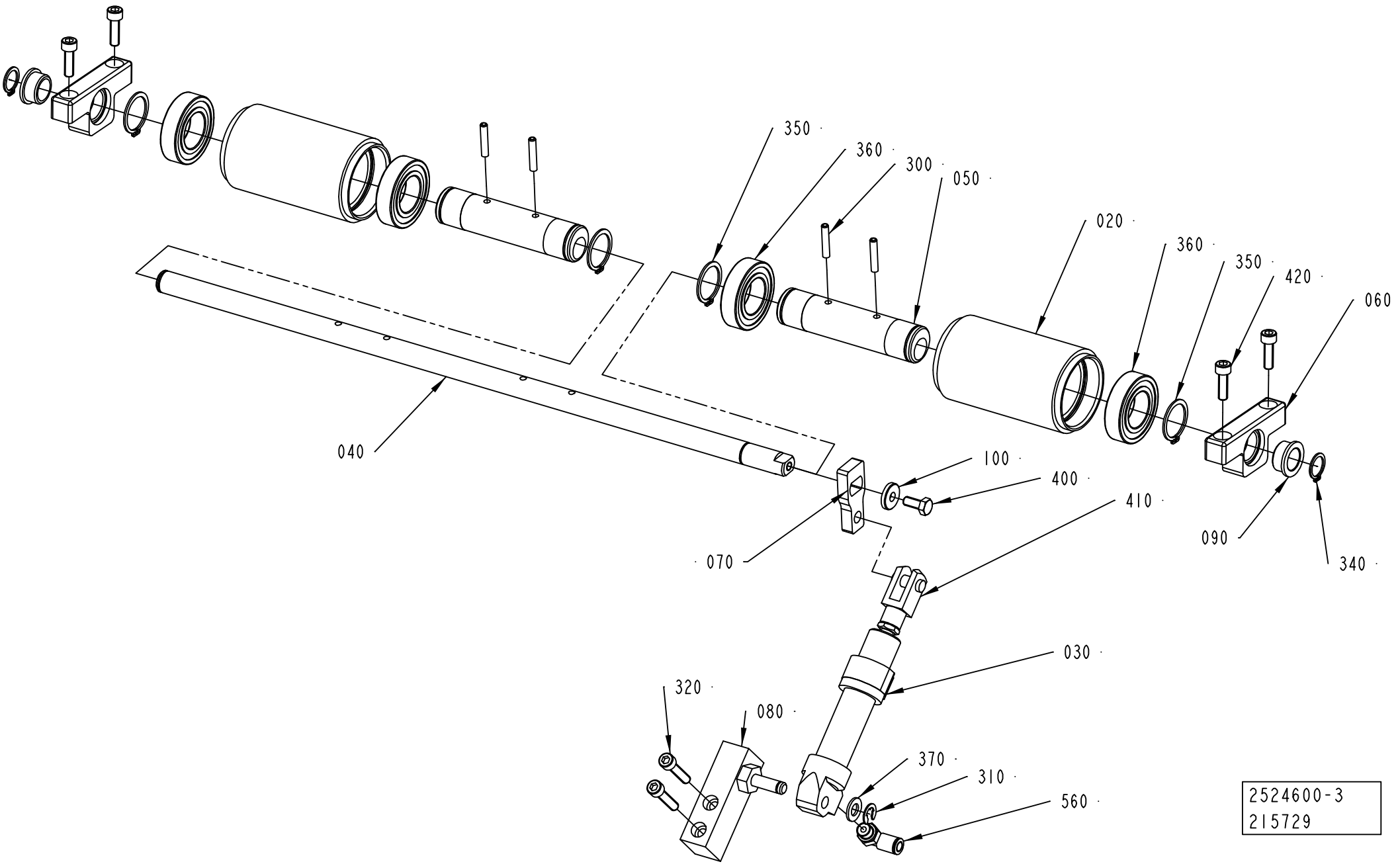

ECM: 272338 - 20060712
Group number: 2524600-0100
Assembly Drawing: 2524600-3_1_AC

This list covers pages from 7-148 to 7-151

Pos	Part No	UN	Qty	Description	Page No
A3/FLEX TBA 1890S, A3/FLEX TBA 2000S, A3/FLEX TBA 1400B (See drawing on page: 7-150)					
020	906254-0000		2	ROLLER	
030	90450-0003		1	SINGLE ACTING, MINI-ISO, CYL 20-25	
040	2681261-0000		1	SHAFT	
050	1512267-0000		2	ECCENTRIC BUSHING	
060	2681262-0000		2	BRACKET	
070	2703095-0000		1	ROCKER ARM	
080	2703096-0000		1	SUPPORT	
090	2681263-0000		2	BUSHING	
100	2681266-0000		1	WASHER	
300	311112-0258		4	SPRING PIN, ISO 8752 4X24-C	
310	315755-0109		1	RETAINING RING SHAFT DIN 6799 7 A2	
320	312115-0374		2	SCREW ISO4762 M6X30 A4 80	
350	315751-0119		4	RETAINING RING FOR SHAFT DIN 471 25 A2	
360	321308-0205		4	BALL BEARING, 25X47X12MM	
370	315105-0165		1	WASHER BRB 8,4X16 RFR	
400	312105-0367		1	SCREW M6S ISO 4017 M6X14 A480	
410	90459-2590		1	ROD END, CLEVIS WITH AXLE M8	
420	312115-0370		4	SCREW ISO4762 M6X20 A4 80	
560	350002-0006		1	PUSH-IN L-FITTING QSL-F-G1/8-6	
A3/FLEX TBA 0500B, A3/FLEX TBA 1000B, A3/FLEX TBA 1000S, A3/FLEX TBA 1000SQ, A3/FLEX TPA 1000SQ, A3/FLEX TBA 0200S, A3/FLEX TBA 1500S, A3/FLEX TBA 0200B, A3/FLEX TBA 0250B, A3/FLEX TBA 0330S, A3/FLEX TPA 0330SQ, A3/FLEX TPA 0500SQ, A3/FLEX TBA 0200M, A3/FLEX TBA 0250S, A3/FLEX TBA 0500S, A3/FLEX TPA 0250SQ, A3/FLEX TPA 0200SQ, A3/FLEX TPA 0750SQ, A3/FLEX TBA 0200SQ, A3/FLEX TBA 0250SQ (See drawing on page: 7-148)					
010	578684-0000		1	SPRING BRACKET	
020	906254-0000		1	ROLLER	
030	2524602-0000		1	HANDLE	
040	1487763-0000		1	SHAFT	
050	1512267-0000		1	ECCENTRIC BUSHING	
060	1519583-0000		2	BRACKET	
070	2524604-0000		1	ROCKER ARM	
080	2524601-0000		1	AXLE PIN	
090	2524603-0000		1	HOLDER	
100	2529549-0000		1	PLATE	
300	311112-0258		2	SPRING PIN, ISO 8752 4X24-C	
310	315105-0153		2	WASHER BRB 6,4X12 RFR	
320	312115-0370		5	SCREW ISO4762 M6X20 A4 80	
350	315751-0119		2	RETAINING RING FOR SHAFT DIN 471 25 A2	
360	321308-0205		2	BALL BEARING, 25X47X12MM	
370	312625-0316		1	HEXAGON THIN NUT, EN 24035 ML6M M6 A4	
400	312115-0291		2	SCREW ISO4762 M4X12 A4 80	
410	312180-0491		1	SCREW ISO7379 H10X20	
420	315105-0136		2	WASHER BRB 4,3X9 RFR	
430	312105-0370		1	SCREW M6S ISO 4017 M6X20 A480	
500	90335-0091		1	TENSION SPRING 41890, 1,2X13X48,2	
520	90051-0087		1	LOCK KNOB, NO. GN 617 A5	
530	90141-0016		1	RETAINING RING FOR SHAFT DIN 471 10 A2	
540	90099-0007		1	HEXAGON NUT, M10X1, E 63 137 10	
Common Parts					
340	315751-0112		2	RETAINING RING FOR SHAFT DIN 471 15 A2	

Machine Type | Group Description | Used-In | Group Number | Page No

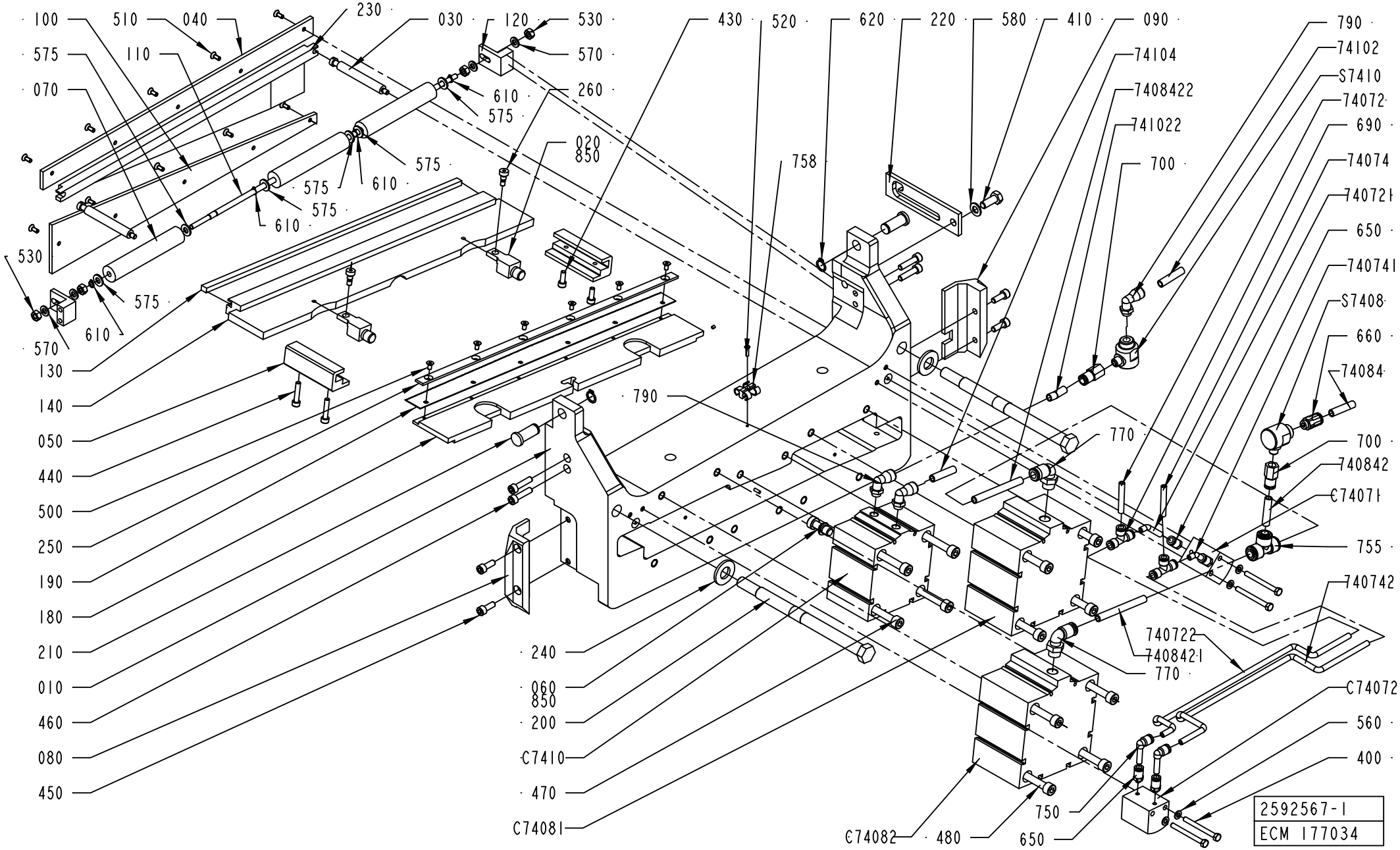
100
510
040
230
030
120
530
575
110
570
070
610
260
575
020
850
575
758
575
610
575
610
530
575
610
570
130
140
050
440
500
250
190
180
210
010
460
080
450
240
060
850
200
C7410
470
C74081
790
430
520
620
220
580
410
090
790
74102
74104
S7410
7408422
74072
741022
690
700
74074
740721
650
740741
S7408
660
74084
770
700
740842
C74071
755
740742
740722
740842-1
770
C74072
560
400
750
650
C74082
480
2592567-1
ECM 177034

ECM: 235321 - 20060419
Group number: 2592567-0100
Assembly Drawing: 2592567-1_1_AE

Pos	Part No	UN	Qty	Description	Page No
-					
010	2574402-0000		1	PRESSURE JAW	
020	2549829-0000		2	SPACER	
030	2552798-0000		2	COMPRESSION ROD	
040	2552802-0000		1	SLIDE PLATE	
050	2558148-0000		2	SLIDING STRIP	
060	2559439-0000		1	COUPLING BOLT	
070	2564562-0000		3	ROLLER	
080	2566123-0000		1	SLIDE PLANE	
090	2566124-0000		1	SLIDE PLANE	
100	2566125-0000		1	SLIDE PLATE	
110	2588046-0000		1	SHAFT	
120	2588290-0000		2	BRACKET	
130	2592780-0000		1	DOLLY	
140	2546463-0000		1	PRESSURE RAIL	
180	1484693-0000		1	KNIFE HOLDER	
190	1484695-0000		1	KNIFE	
200	1484703-0000		2	TIE ROD	
210	1484781-0000		2	PIN	
220	1487517-0000		1	CATCH	
230	2658058-0000		1	RAIL	
240	1519955-0000		2	WASHER	
250	1519967-0000		1	CLAMP	
260	1558801-0000		2	SHOULDER SCREW	
400	312105-0341		4	SCREW M6S ISO 4014 M5X50 A480	
410	312105-0451		1	SCREW M6S ISO 4017 M8X20 A480	
430	312115-0328		2	SCREW ISO4762 M5X14 A4	
440	312115-0333		2	SCREW ISO4762 M5X25 A4 80	
450	312115-0368		4	SCREW ISO4762 M6X16 A4 80	
460	312115-0372		4	SCREW ISO4762 M6X25 A4 80	
470	312115-0465		4	SCREW ISO4762 M8X70 A4 80	
480	312115-0467		8	SCREW ISO4762 M8X80 A4 80	
500	312155-0287		6	SCREW DIN 7991 MF6S M4X8 A4 70	
510	312155-0289		10	SCREW DIN 7991 MF6S M4X10 A4 70	
520	312145-0226		1	SCREW ISO 2009 MFS M3X12 A4	
530	312605-0316		4	HEXAGON NUT, M6M M6 A280	
560	315105-0146		4	WASHER BRB 5,3X10 RFR	
570	315105-0153		4	WASHER BRB 6,4X12 RFR	
575	315105-0156		6	WASHER BRB 6,7X14 RFR	
580	315105-0165		1	WASHER BRB 8,4X16 RFR	
610	315751-0103		4	RETAINING RING FOR SHAFT DIN 471 6 A2	
620	315751-0109		2	RETAINING RING FOR SHAFT DIN 471 12 A2	
650	342722-0197		4	STRAIGHT COUPLING	
660	342722-0204		1	PIPE COUPLING	
690	342748-0102		2	T-CONNECTION 6MM	
700	342770-0107		2	STRAIGHT COUPLING INT, D=8 MM - G1/8	
750	90055-0217		2	ELBOW PIPE JOINT	
755	90055-0276		1	T-CONNECTION 8 MM	
758	90165-0087		1	T-CLIP T6 FOR TUBE D=6 - 7 MM	
770	90458-2448		2	ELBOW PIPE JOINT,EXT.THREAD,D=8 MM G1/4	
790	90458-2964		3	ELBOW PIPE JOINT, EXT.THREAD, D=8MM-G1/8	
850	90157-0016	ML	1	LOCKING FLUID LOCTITE 242 50 ML	
74072	90166-0193	MM	5000	TUBE 6 MM PUR BLUE	
74074	90166-0193	MM	5000	TUBE 6 MM PUR BLUE	
74084	90166-0194	MM	5000	TUBE 8 MM PUR BLUE	
74102	90166-0194	MM	5000	TUBE 8 MM PUR BLUE	
74104	90166-0194	MM	5000	TUBE 8 MM PUR BLUE	
740721	90166-0193	MM	60	TUBE 6 MM PUR BLUE	
740722	90166-0193	MM	400	TUBE 6 MM PUR BLUE	
740741	90166-0193	MM	80	TUBE 6 MM PUR BLUE	
740742	90166-0193	MM	400	TUBE 6 MM PUR BLUE	
740842	90166-0194	MM	40	TUBE 8 MM PUR BLUE	
741022	90166-0194	MM	200	TUBE 8 MM PUR BLUE	
7408421	90166-0194	MM	150	TUBE 8 MM PUR BLUE	
7408422	90166-0194	MM	150	TUBE 8 MM PUR BLUE	
C7410	90459-2101		1	CYLINDER, ADVC-80-25-I-P	
C74071	90459-1509		1	CYLINDER, ADVC-20-20-I-P	
C74072	90459-1509		1	CYLINDER, ADVC-20-20-I-P	
C74081	90459-2102		1	CYLINDER, AEVC 100-25-I-P	
C74082	90459-2102		1	CYLINDER, AEVC 100-25-I-P	
S7408	90235-0206		1	QUICK EXHAUST VALVE, SEU-1/8	
S7410	90235-0206		1	QUICK EXHAUST VALVE, SEU-1/8	

Machine Type	Group Description	Used-In	Group Number	Page No

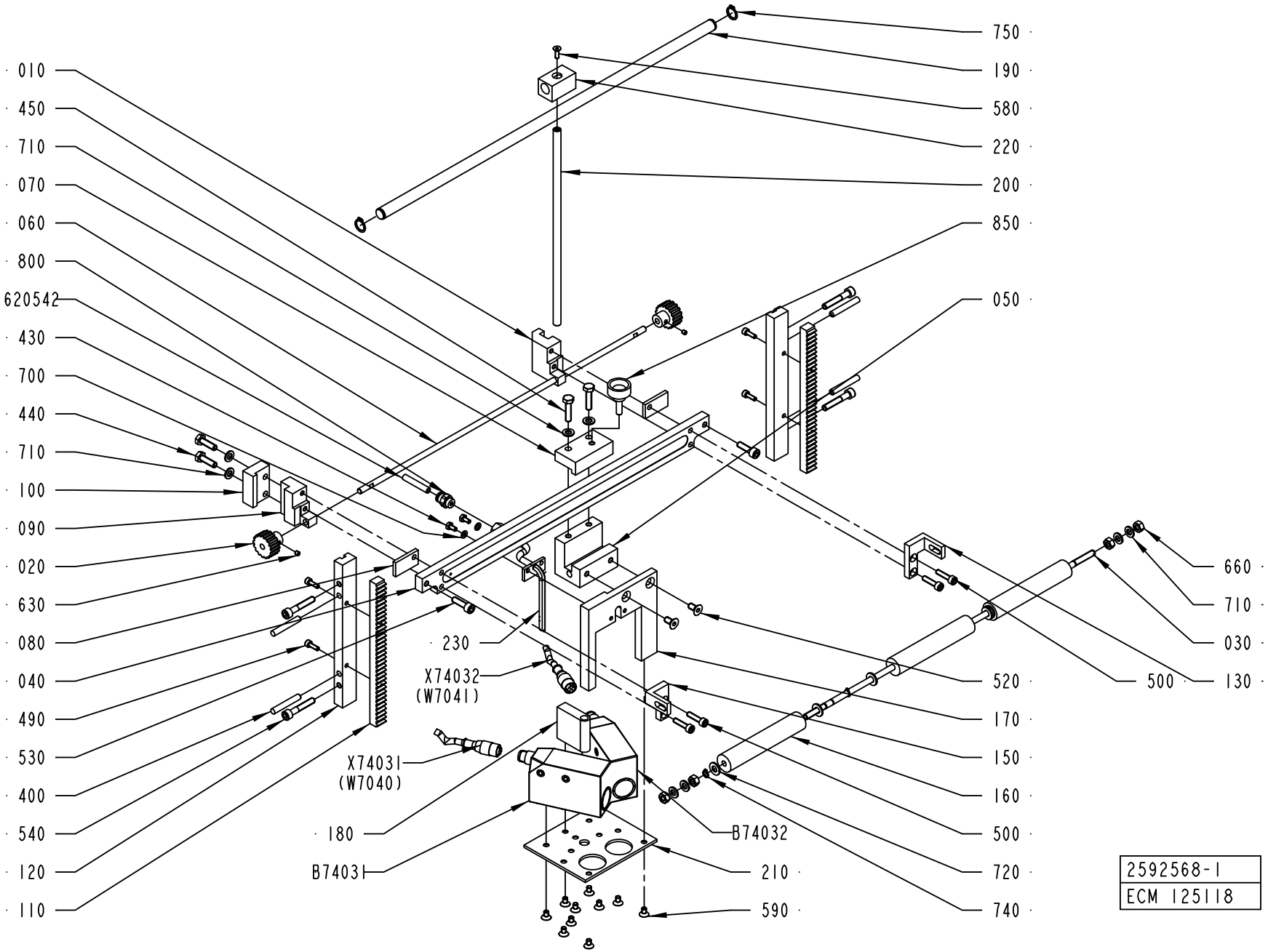
010
450
710
070
060
800
620542
430
700
440
710
100
090
020
630
080
040
490
530
400
540
120
110
750
190
580
220
200
850
050
660
710
030
130
500
520
170
150
160
500
720
740
230
X74032
(W7041)
X74031
(W7040)
180
B74031
B74032
210
590
2592568-1
ECM 125118

ECM: 190961 - 20041104
Group number: 2592568-0100
Assembly Drawing: 2592568-1_1_AB

Pos	Part No	UN	Qty	Description	Page No
A3/FLEX					
X74031	90458-0603		1	CONNECTOR FEMALE 5 PINS	
X74032	90458-0603		1	CONNECTOR FEMALE 5 PINS	
Common Parts					
010	1484705-0000		1	SLIDER	
020	1484706-0000		2	GEAR WHEEL	
030	2588046-0000		1	SHAFT	
040	1484776-0000		1	RAIL	
050	1484777-0000		1	SLIDER	
060	1484779-0000		1	ROD	
070	1484782-0000		1	CLAMP BLOCK	
080	1484783-0000		2	CLAMPING ELEMENT	
090	1484784-0000		1	LOCATING PIECE	
100	1484785-0000		1	LOCATING PIECE	
110	1487510-0000		2	RACK GEAR	
120	1487511-0000		2	BRACKET	
130	2588044-0000		1	BRACKET	
150	2588045-0000		1	BRACKET	
160	2564562-0000		3	ROLLER	
170	1487554-0000		1	BRACKET	
180	1487555-0000		1	BUSHING	
190	1487556-0000		1	BAR	
200	1487557-0000		1	BAR	
210	1487558-0000		1	FASTENING PLATE	
220	1487559-0000		1	SLIDER	
230	1519580-0000		1	GUIDE FINGER	
400	311103-0361		4	PARALLEL PIN ISO 2338 6M6X40 A1	
430	312105-0287		2	SCREW M6S ISO 4017 M4X8 A470	
440	312105-0370		2	SCREW M6S ISO 4017 M6X20 A480	
450	312105-0372		2	SCREW M6S ISO 4017 M6X25 A480	
490	312115-0291		4	SCREW ISO4762 M4X12 A4 80	
500	312115-0331		4	SCREW ISO4762 M5X20 A4 80	
520	312155-0366		2	SCREW DIN 7991 MF6S M6X12 A4 70	
530	312115-0370		2	SCREW ISO4762 M6X20 A4 80	
540	312115-0376		4	SCREW ISO4762 M6X35 A4 80	
580	312155-0291		1	SCREW DIN 7991 MF6S M4X12 A4 70	
590	312155-0323		10	SCREW DIN 7991 MF6S M5X8 A4 70	
630	312318-0283		2	SCREW ISO4029 M4X4 A4	
660	312605-0316		4	HEXAGON NUT, M6M M6 A280	
700	315105-0136		2	WASHER BRB 4,3X9 RFR	
710	315105-0153		8	WASHER BRB 6,4X12 RFR	
720	315105-0156		6	WASHER BRB 6,7X14 RFR	
740	315751-0103		4	RETAINING RING FOR SHAFT DIN 471 6 A2	
750	315751-0109		2	RETAINING RING FOR SHAFT DIN 471 12 A2	
800	342722-0202		1	PIPE COUPLING 1/8" D=6MM	
850	90051-0083		1	KNOB, EXTERNAL THREAD. NO. 8308-1321	
620542	90166-0193	MM	4500	TUBE 6 MM PUR BLUE	
B74031	90458-0602		1	CONTRAST SCANNER, KT15W-P2110S01	
B74032	90458-0602		1	CONTRAST SCANNER, KT15W-P2110S01	

Machine Type	Group Description	Used-In	Group Number	Page No

GUIDE RAIL

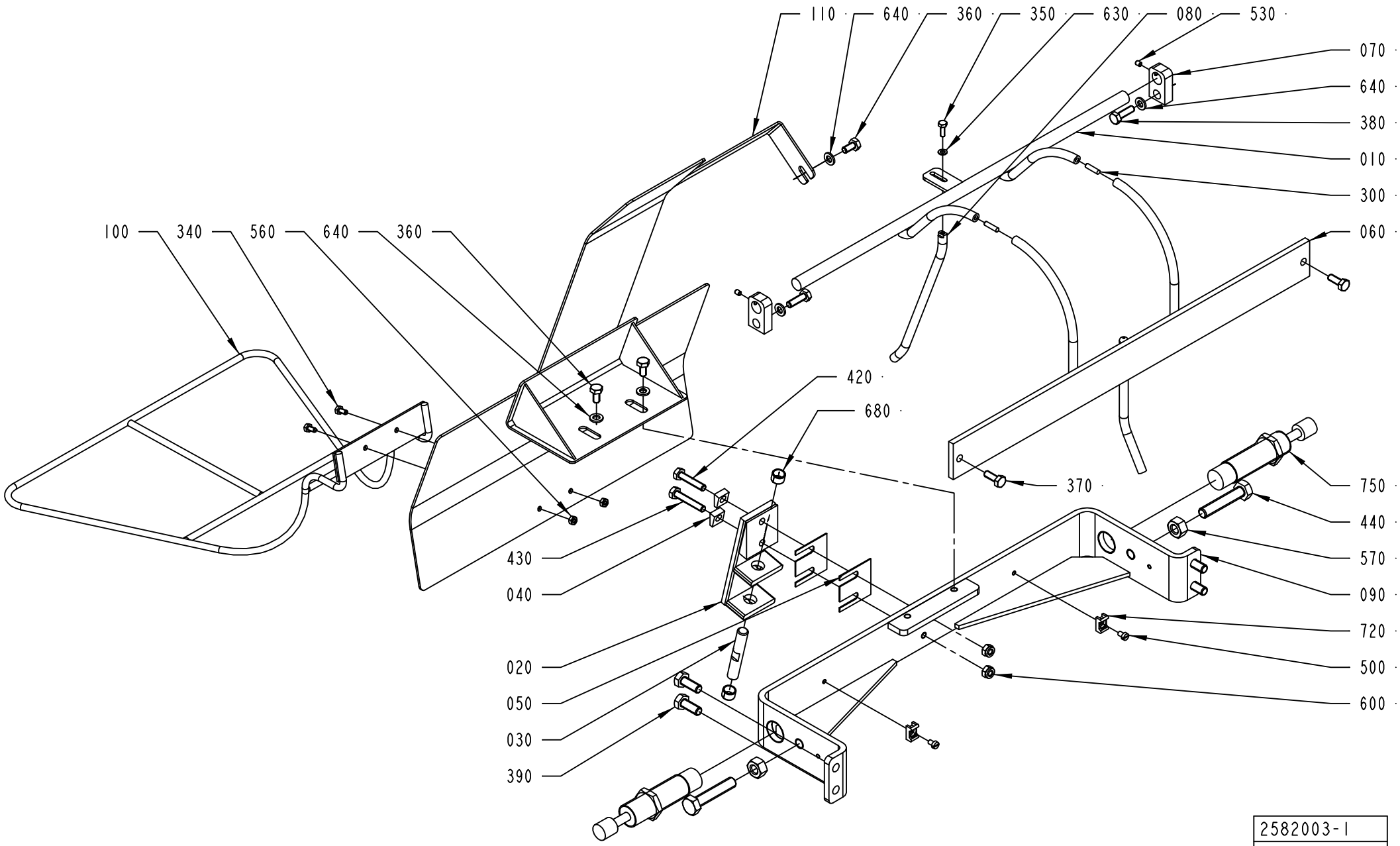

2582003-1
ECM 125118

ECM: 267382 - 20060702
Group number: 2582003-0100
Assembly Drawing: 2582003-1_1_AB

This list covers pages from 7-156 to 7-159

Pos	Part No	UN	Qty	Description	Page No
A3/FLEX TBA 1890S, A3/FLEX TBA 2000S, A3/FLEX TBA 1400B (See drawing on page: 7-158)					
010	2681260-0000		1	RAIL	
060	2681259-0000		1	RAIL	
070	2689138-0000		1	MOUNTING BLOCK	
080	2689173-0000		1	MOUNTING BLOCK	
110	2681267-0000		1	PLATE	
130	2564562-0000		3	ROLLER	
170	2693199-0000		2	PLATE	
180	2681535-0000		1	SHAFT	
300	311103-0270		3	PARALLEL PIN ISO 2338 4M6X16 A1	
310	315105-0156		6	WASHER BRB 6,7X14 RFR	
330	315751-0103		4	RETAINING RING FOR SHAFT DIN 471 6 A2	
350	312605-0316		4	HEXAGON NUT, M6M M6 A280	
360	312115-0366		2	SCREW ISO4762 M6X12 A4 80	
400	312105-0366		2	SCREW M6S ISO 4017 M6X12 A480	
640	315105-0153		8	WASHER BRB 6,4X12 RFR	
A3/FLEX TBA 0500B, A3/FLEX TBA 1000B, A3/FLEX TBA 1000S, A3/FLEX TBA 1000SQ, A3/FLEX TPA 1000SQ, A3/FLEX TBA 0200S, A3/FLEX TBA 1500S, A3/FLEX TBA 0200B, A3/FLEX TBA 0250B, A3/FLEX TBA 0330S, A3/FLEX TPA 0330SQ, A3/FLEX TPA 0500SQ, A3/FLEX TBA 0200M, A3/FLEX TBA 0250S, A3/FLEX TBA 0500S, A3/FLEX TPA 0250SQ, A3/FLEX TPA 0200SQ, A3/FLEX TPA 0750SQ, A3/FLEX TBA 0200SQ, A3/FLEX TBA 0250SQ (See drawing on page: 7-156)					
010	1484697-0000		1	RAIL	
060	1517113-0000		1	RAIL	
070	1519578-0000		2	MOUNTING BLOCK	
080	1519591-0000		1	RAIL PIN	
110	2582668-0000		1	PLATE	
300	311103-0270		2	PARALLEL PIN ISO 2338 4M6X16 A1	
350	312105-0291		1	SCREW M6S ISO 4017 M4X12 A470	
360	312105-0366		3	SCREW M6S ISO 4017 M6X12 A480	
630	315105-0136		1	WASHER BRB 4,3X9 RFR	
640	315105-0153		5	WASHER BRB 6,4X12 RFR	
Common Parts					
020	1490220-0000		1	ANGLE BRACKET	
030	1494664-0000		1	AXLE LINK	
040	1499566-0000		2	WASHER	
050	1512430-0000		2	VOLUME SHIM	
090	1519944-0000		1	BRACKET	
100	2563183-0000		1	GUIDE RAIL	
340	312105-0287		2	SCREW M6S ISO 4017 M4X8 A470	
370	312105-0368		4	SCREW M6S ISO 4017 M6X16 A480	
380	312105-0370		2	SCREW M6S ISO 4017 M6X20 A480	
390	312105-0451		4	SCREW M6S ISO 4017 M8X20 A480	
420	312109-0374		1	SCREW M6S ISO 4017 M6X30 A480	
430	312109-0376		1	SCREW M6S ISO 4017 M6X35 A480	
440	312109-0501		2	SCREW M6S ISO 4017 M10X50 A480	
500	312125-0285		2	SCREW ISO 1207 M4X6 A4	
530	312318-0284		2	SCREW ISO4029 M4X5 A4	
560	312605-0312		2	HEXAGON NUT, M6M M4 A280	
570	312605-0320		2	HEXAGON NUT, M6M M10 A280	
600	312812-0316		2	HEXAGON NUT, NY-LOCK M6 A480	
680	321141-0138		2	BEARING BUSH W/O FLANGE, 10X12X8 MM	
720	352113-0205		2	ANCHOR PLATES FOR STRIPS, TYPE TM2S8-C10	
750	90347-0182		2	SHOCK ABSORBER, YSR-16-20-C	

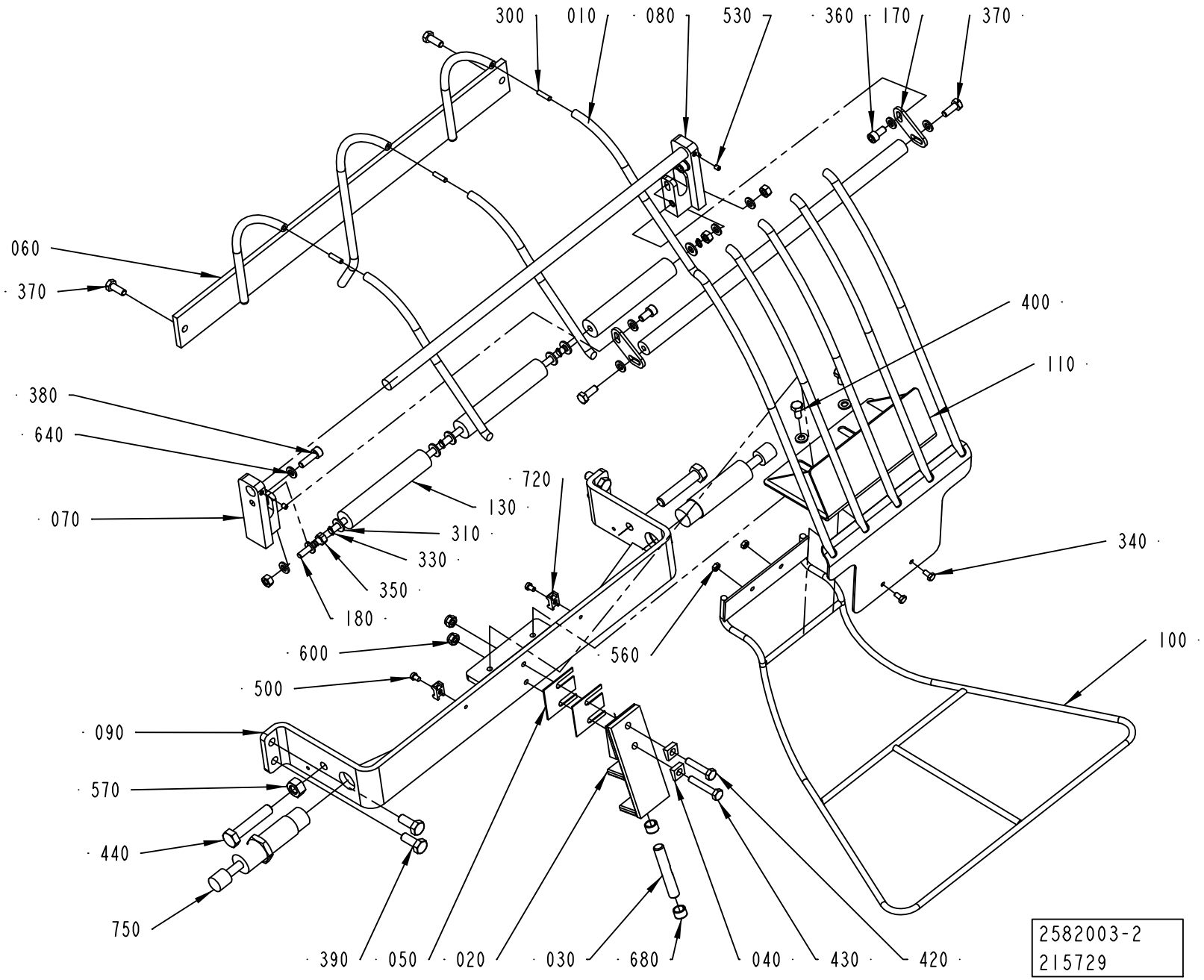
300
010
080
530
360
170
370
060
370
400
110
380
640
720
130
070
310
330
340
350
180
100
600
560
500
090
570
440
750
390
050
020
030
680
040
430
420
2582003-2
215729

ECM: 267382 - 20060702
Group number: 2582003-0100
Assembly Drawing: 2582003-2_1_AB

This list covers pages from 7-156 to 7-159

Pos	Part No	UN	Qty	Description	Page No
A3/FLEX TBA 1890S, A3/FLEX TBA 2000S, A3/FLEX TBA 1400B (See drawing on page: 7-158)					
010	2681260-0000		1	RAIL	
060	2681259-0000		1	RAIL	
070	2689138-0000		1	MOUNTING BLOCK	
080	2689173-0000		1	MOUNTING BLOCK	
110	2681267-0000		1	PLATE	
130	2564562-0000		3	ROLLER	
170	2693199-0000		2	PLATE	
180	2681535-0000		1	SHAFT	
300	311103-0270		3	PARALLEL PIN ISO 2338 4M6X16 A1	
310	315105-0156		6	WASHER BRB 6,7X14 RFR	
330	315751-0103		4	RETAINING RING FOR SHAFT DIN 471 6 A2	
350	312605-0316		4	HEXAGON NUT, M6M M6 A280	
360	312115-0366		2	SCREW ISO4762 M6X12 A4 80	
400	312105-0366		2	SCREW M6S ISO 4017 M6X12 A480	
640	315105-0153		8	WASHER BRB 6,4X12 RFR	
A3/FLEX TBA 0500B, A3/FLEX TBA 1000B, A3/FLEX TBA 1000S, A3/FLEX TBA 1000SQ, A3/FLEX TPA 1000SQ, A3/FLEX TBA 0200S, A3/FLEX TBA 1500S, A3/FLEX TBA 0200B, A3/FLEX TBA 0250B, A3/FLEX TBA 0330S, A3/FLEX TPA 0330SQ, A3/FLEX TPA 0500SQ, A3/FLEX TBA 0200M, A3/FLEX TBA 0250S, A3/FLEX TBA 0500S, A3/FLEX TPA 0250SQ, A3/FLEX TPA 0200SQ, A3/FLEX TPA 0750SQ, A3/FLEX TBA 0200SQ, A3/FLEX TBA 0250SQ (See drawing on page: 7-156)					
010	1484697-0000		1	RAIL	
060	1517113-0000		1	RAIL	
070	1519578-0000		2	MOUNTING BLOCK	
080	1519591-0000		1	RAIL PIN	
110	2582668-0000		1	PLATE	
300	311103-0270		2	PARALLEL PIN ISO 2338 4M6X16 A1	
350	312105-0291		1	SCREW M6S ISO 4017 M4X12 A470	
360	312105-0366		3	SCREW M6S ISO 4017 M6X12 A480	
630	315105-0136		1	WASHER BRB 4,3X9 RFR	
640	315105-0153		5	WASHER BRB 6,4X12 RFR	
Common Parts					
020	1490220-0000		1	ANGLE BRACKET	
030	1494664-0000		1	AXLE LINK	
040	1499566-0000		2	WASHER	
050	1512430-0000		2	VOLUME SHIM	
090	1519944-0000		1	BRACKET	
100	2563183-0000		1	GUIDE RAIL	
340	312105-0287		2	SCREW M6S ISO 4017 M4X8 A470	
370	312105-0368		4	SCREW M6S ISO 4017 M6X16 A480	
380	312105-0370		2	SCREW M6S ISO 4017 M6X20 A480	
390	312105-0451		4	SCREW M6S ISO 4017 M8X20 A480	
420	312109-0374		1	SCREW M6S ISO 4017 M6X30 A480	
430	312109-0376		1	SCREW M6S ISO 4017 M6X35 A480	
440	312109-0501		2	SCREW M6S ISO 4017 M10X50 A480	
500	312125-0285		2	SCREW ISO 1207 M4X6 A4	
530	312318-0284		2	SCREW ISO4029 M4X5 A4	
560	312605-0312		2	HEXAGON NUT, M6M M4 A280	
570	312605-0320		2	HEXAGON NUT, M6M M10 A280	
600	312812-0316		2	HEXAGON NUT, NY-LOCK M6 A480	
680	321141-0138		2	BEARING BUSH W/O FLANGE, 10X12X8 MM	
720	352113-0205		2	ANCHOR PLATES FOR STRIPS, TYPE TM2S8-C10	
750	90347-0182		2	SHOCK ABSORBER, YSR-16-20-C	

PAPER GUIDE

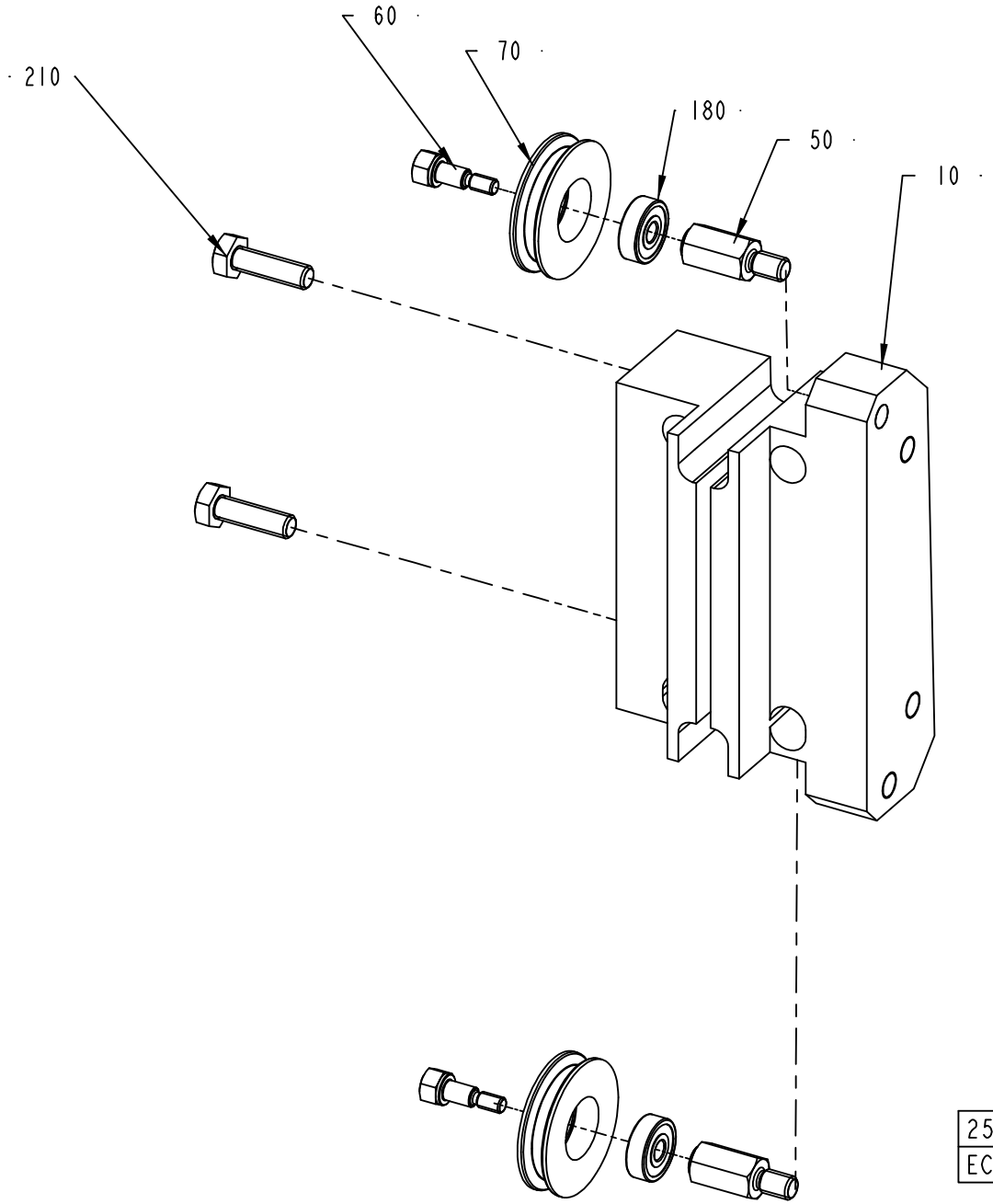

ECM: 272339 - 20060712
Group number: 2529547-0100
Assembly Drawing: 2529547-1_1_AB

Pos	Part No	UN	Qty	Description	Page No
A3/FLEX TBA 1890S, A3/FLEX TBA 2000S, A3/FLEX TBA 1400B					
010	2713377-0000		1	SUPPORT	
A3/FLEX TBA 0500B, A3/FLEX TBA 1000B, A3/FLEX TBA 1000S, A3/FLEX TBA 1000SQ, A3/FLEX TPA 1000SQ, A3/FLEX TBA 0200S, A3/FLEX TBA 1500S, A3/FLEX TBA 0200B, A3/FLEX TBA 0250B, A3/FLEX TPA 0330SQ, A3/FLEX TPA 0500SQ, A3/FLEX TBA 0200M, A3/FLEX TBA 0250S, A3/FLEX TBA 0500S, A3/FLEX TPA 0250SQ, A3/FLEX TPA 0200SQ, A3/FLEX TPA 0750SQ, A3/FLEX TBA 0200SQ, A3/FLEX TBA 0250SQ					
010	2529546-0000		1	SUPPORT	
Common Parts					
050	1558251-0000		2	SHAFT	
060	1558252-0000		2	SCREW	
070	1558253-0000		2	ROLLER	
180	90458-2950		2	BALL BEARING, 5X16X5 MM	
210	312105-0370		2	SCREW M6S ISO 4017 M6X20 A480	

Pos	Part No	UN	Qty	Description	Page No

CABLE CONDUIT

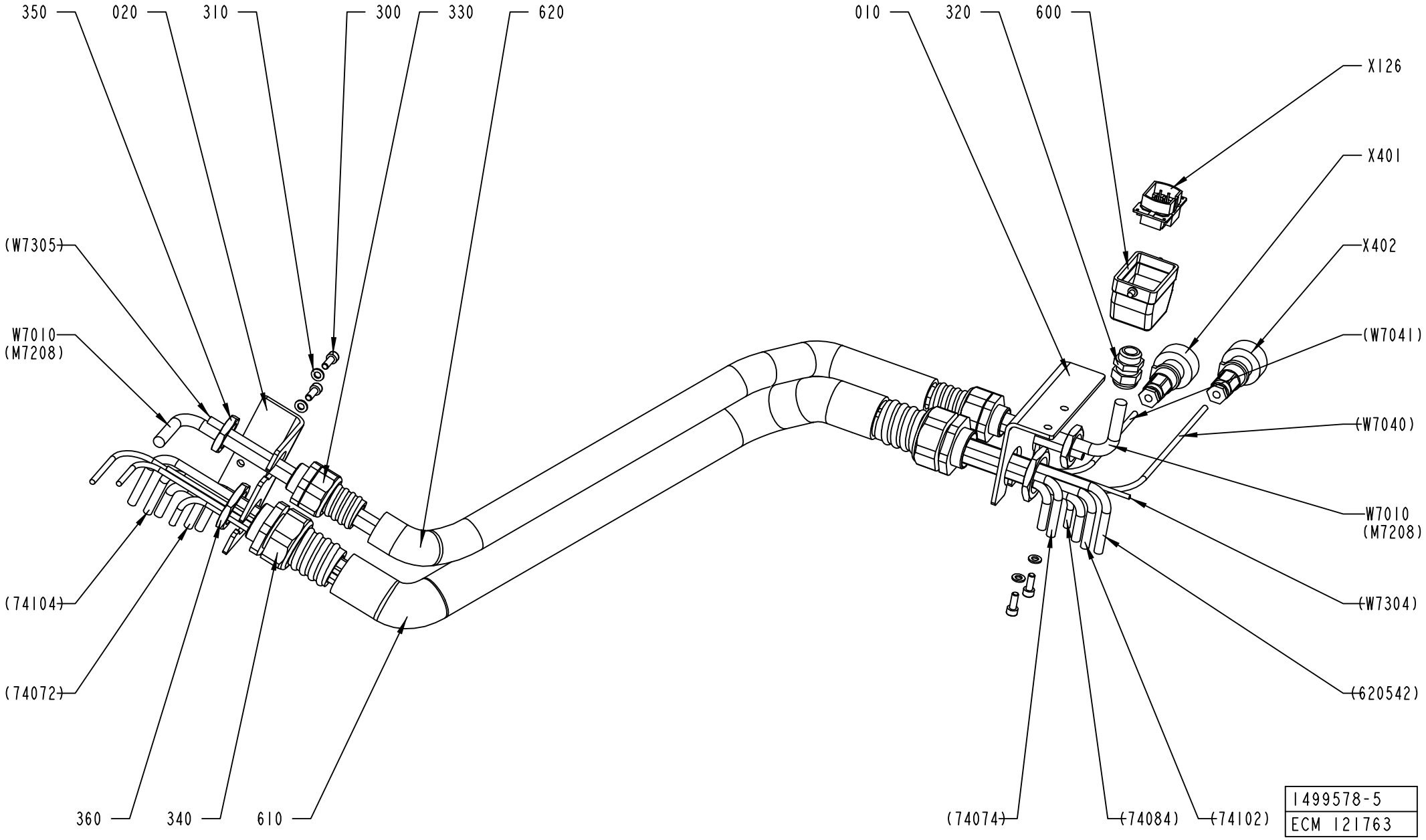

ECM: 195268 - 20041207
Group number: 1499578-0300
Assembly Drawing: 1499578-5_1_AA

Pos	Part No	UN	Qty	Description	Page No
A3/FLEX					
W7010	90220-0104	M	9	SCR. CABLE 4X1,5MM2	
Common Parts					
010	2628989-0000		1	BRACKET	
020	2628990-0000		1	BRACKET	
300	312115-0368		4	SCREW ISO4762 M6X16 A4 80	
310	315105-0153		4	WASHER BRB 6,4X12 RFR	
320	352103-0108		1	CABLE GLAND, ST 13,5 , PR20,4/PG13,5	
330	353243-0007		2	HOSE GLAND W/O INSERT PG21 EXTENDED	
340	353243-0008		2	HOSE GLAND W/O INSERT PG29 EXTENDED	
350	90099-0119		2	NUT, PR 28,3 (PG21)	
360	90099-0120		2	NUT, PR 37 (PG29)	
600	90110-0157		1	CABLE HOOD 6-POL 70.352.0628.1	
610	90152-0060	MM	850	SPIRAL CONDUIT, 42X35, UL3529	
620	90152-0070	MM	850	METAL HOSE, 32,5X26, UL 2621	
X126	90110-0159		1	MALE INSERT 70.310.0640.0	
X401	90110-0235		1	CABLE CONTACT, PX0739/P	
X402	90110-0235		1	CABLE CONTACT, PX0739/P	

Pos	Part No	UN	Qty	Description	Page No

MATERIAL HOLDER L1

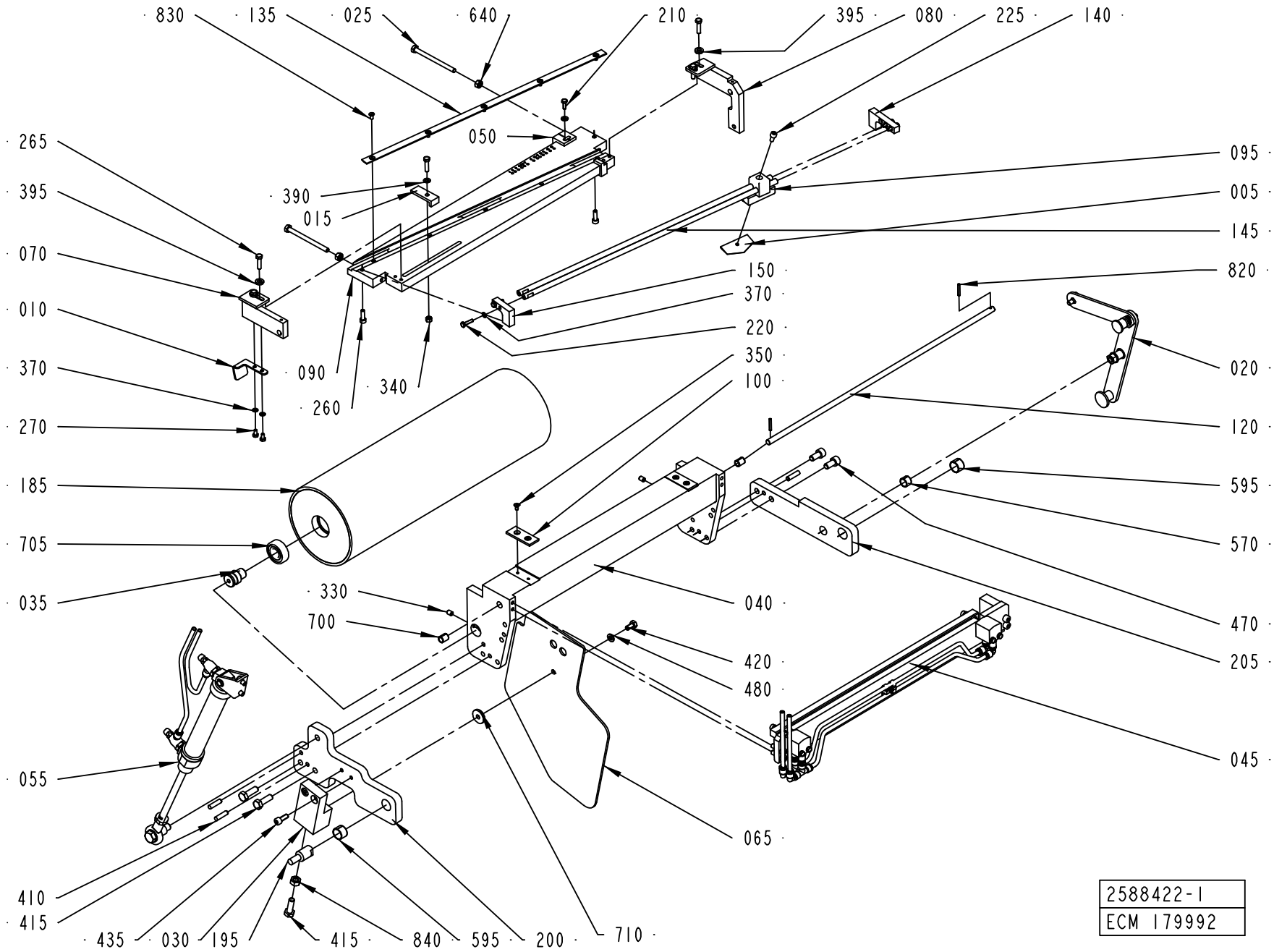

ECM: 274048 - 20060814
Group number: 2588422-0100
Assembly Drawing: 2588422-1_1_AE

Pos	Part No	UN	Qty	Description	Page No
A3/FLEX TBA WITH ARL, A3/FLEX TPA WITH ARL, A3/FLEX TPA WITH ARL, A3/FLEX TBA WITH ARL					
005	596678-0000		1	KNIFE	
050	2587251-0000		1	ANGLE PIECE	
090	2566117-0000		1	CUTTING TABLE	
095	2589791-0000		1	KNIFE HOLDER	
140	1487781-0000		1	BRACKET	
145	1487782-0000		2	SHAFT	
150	2566118-0000		1	BRACKET	
220	312105-0293		4	SCREW M6S ISO 4017 M4X16 A470	
225	312115-0327		1	SCREW ISO4762 M5X12 A4 80	
260	312115-0329		2	SCREW ISO4762 M5X16 A4 80	
370	315105-0136		6	WASHER BRB 4,3X9 RFR	
Common Parts					
010	2538065-0000		1	REFLECTOR	
015	1490821-0000		1	ANGLE PIECE	
020	1524398-0100		1	HANDLE	**7-167**
025	312109-0386		2	SCREW M6S ISO 4017 M6X80 A480	
030	2699996-0000		1	BLOCK	
035	1499582-0000		2	AXLE PIN	
040	1487770-0000		1	BRACKET	
045	2588383-0100		1	MATERIAL HOLDER	**7-169**
055	1524394-0100		1	CYLINDER	**7-171**
065	1512276-0000		1	PROTECTION PLATE	
070	2700019-0000		1	ROCKER ARM	
080	2700030-0000		1	ROCKER ARM	
100	2553275-0000		2	SLIDE PLATE	
120	1487779-0000		1	SHAFT	
135	1487518-0000		1	RULER	
185	1499588-0000		1	BENDING ROLLER	
195	1511568-0000		1	PIN	
200	2587250-0000		1	ARM	
205	1511575-0000		1	ARM	
210	312105-0291		1	SCREW M6S ISO 4017 M4X12 A470	
265	312105-0331		5	SCREW M6S ISO 4017 M5X20 A480	
270	312105-0287		2	SCREW M6S ISO 4017 M4X8 A470	
330	312318-0362		2	SCREW ISO4029 M6X8 A4	
340	312605-0314		1	HEXAGON NUT, M6M M5 A280	
350	312155-0287		4	SCREW DIN 7991 MF6S M4X8 A4 70	
390	315105-0146		2	WASHER BRB 5,3X10 RFR	
395	315115-0153		4	WASHER PLAIN, TBRB 6,4/12 H=3	
410	311103-1355		3	PARALLEL PIN ISO 2338 6M6X24 A1	
415	312105-0453		3	SCREW M6S ISO 4017 M8X25 A480	
420	312105-0366		1	SCREW M6S ISO 4017 M6X12 A480	
435	312105-0368		2	SCREW M6S ISO 4017 M6X16 A480	
470	312115-0449		2	SCREW ISO4762 M8X16 A4 80	
480	315105-0153		1	WASHER BRB 6,4X12 RFR	
570	321141-0178		1	BEARING BUSH W/O FLANGE, 12X14X10 MM	
595	321141-0216		2	BEARING BUSH W/O FLANGE, 16X18X12 MM	
640	312605-0316		2	HEXAGON NUT, M6M M6 A280	
700	321141-0104		2	BEARING BUSH W/O FLANGE, 8X10X12 MM	
705	321313-0102		2	BALL BEARING, 15X35X11 MM	
710	315125-0153		1	WASHER TBRSB 6,4X22X4 A4	
820	90258-0031		2	PIN, STRAIGHT SLOTTED SPRING FRP 3X20	
830	312145-0287		5	SCREW ISO 2009 MFS M4X8 A4	
840	312605-0318		1	HEXAGON NUT, M6M M8 A280	

Machine Type	Group Description	Used-In	Group Number	Page No

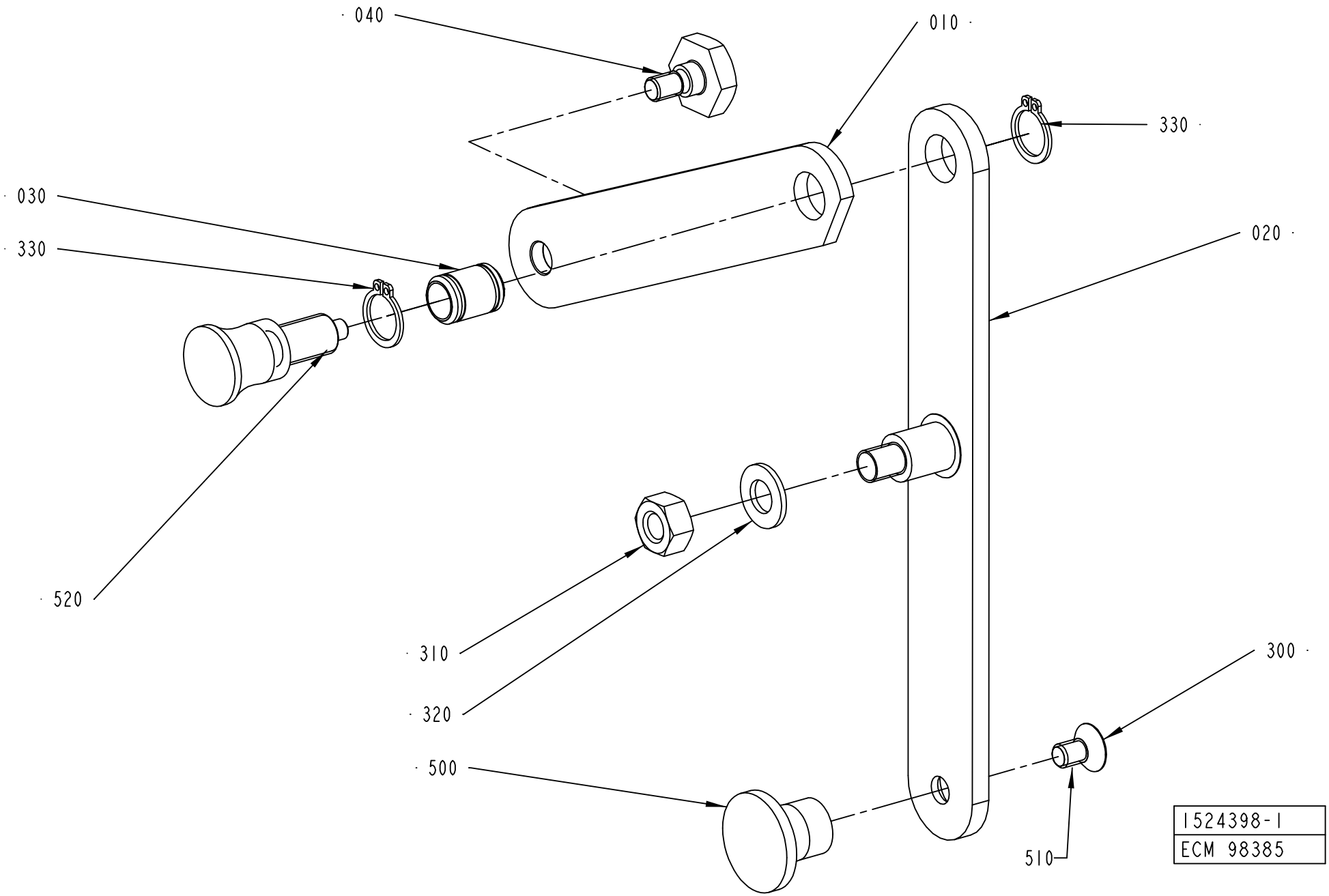
040
010
330
030
330
020
520
310
320
300
500
510
1524398-1
ECM 98385

ECM: 180696 - 20040910
Group number: 1524398-0100
Assembly Drawing: 1524398-1_1_AC

Pos	Part No	UN	Qty	Description	Page No
-					
010	1490809-0000		1	ARM	
020	1490810-0000		1	ARM	
030	1490812-0000		1	AXLE	
040	1490813-0000		1	SCREW	
300	312155-0364		1	SCREW DIN 7991 MF6S M6X10 A4 70	
310	312605-0318		1	HEXAGON NUT, M6M M8 A280	
320	315105-0165		1	WASHER BRB 8,4X16 RFR	
330	315751-0109		2	RETAINING RING FOR SHAFT DIN 471 12 A2	
500	90051-0082		1	KNOB, CIRCUL, THREADED BUSH, M6 25X21 MM	
510	90157-0016		1	LOCKING FLUID LOCTITE 242 50 ML	
520	90051-0087		1	LOCK KNOB, NO. GN 617 A5	

Pos	Part No	UN	Qty	Description	Page No

MATERIAL HOLDER

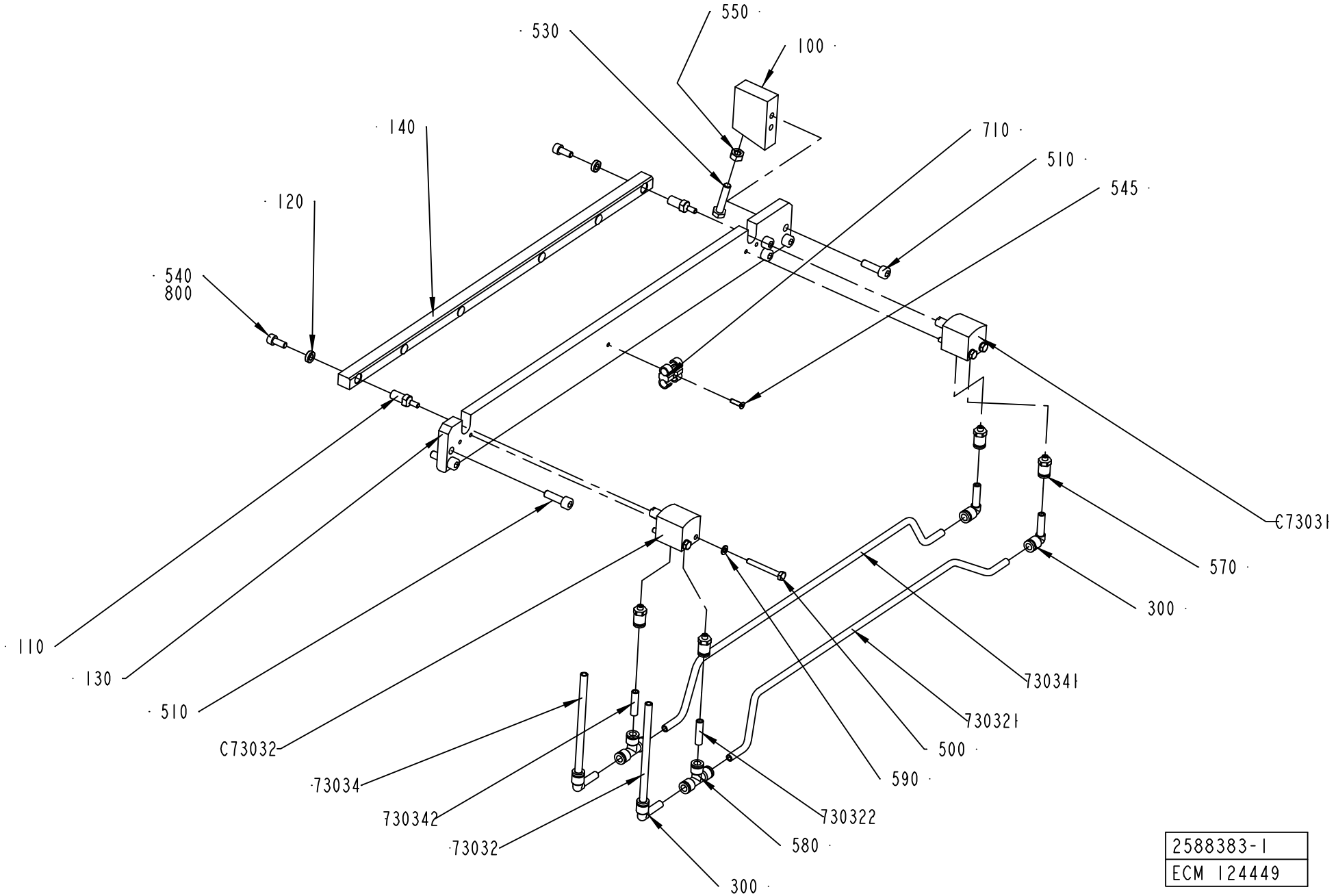

2588383-1
ECM 124449

ECM: 180657 - 20041005
Group number: 2588383-0100
Assembly Drawing: 2588383-1_1_AC

Pos	Part No	UN	Qty	Description	Page No
-					
100	2553272-0000		1	SUPPORT BLOCK	
110	2553273-0000		2	AXLE PIN	
120	2553799-0000		2	WASHER	
130	2582558-0000		1	BASE PLATE	
140	2582559-0000		1	RAIL	
300	90055-0217		4	ELBOW PIPE JOINT	
500	312105-0301		4	SCREW M6S ISO 4017 M4X35 A470	
510	312115-0370		6	SCREW ISO4762 M6X20 A4 80	
530	312109-0374		1	SCREW M6S ISO 4017 M6X30 A480	
540	312115-0327		2	SCREW ISO4762 M5X12 A4 80	
545	312155-0226		1	SCREW DIN 7991 MF6S M3X12 A4 70	
550	312605-0316		1	HEXAGON NUT, M6M M6 A280	
570	342722-0197		4	STRAIGHT COUPLING	
580	342748-0102		2	T-CONNECTION 6MM	
590	315105-0136		4	WASHER BRB 4,3X9 RFR	
710	90165-0087		1	T-CLIP T6 FOR TUBE D=6 - 7 MM	
800	90157-0016	ML	1	LOCKING FLUID LOCTITE 242 50 ML	
73032	90166-0193	MM	6500	TUBE 6 MM PUR BLUE	
73034	90166-0193	MM	6500	TUBE 6 MM PUR BLUE	
730321	90166-0193	MM	400	TUBE 6 MM PUR BLUE	
730322	90166-0193	MM	30	TUBE 6 MM PUR BLUE	
730341	90166-0193	MM	400	TUBE 6 MM PUR BLUE	
730342	90166-0193	MM	30	TUBE 6 MM PUR BLUE	
C73031	90459-0503		1	CYLINDER, ADVC-16-10-I-P	
C73032	90459-0503		1	CYLINDER, ADVC-16-10-I-P	

Pos	Part No	UN	Qty	Description	Page No

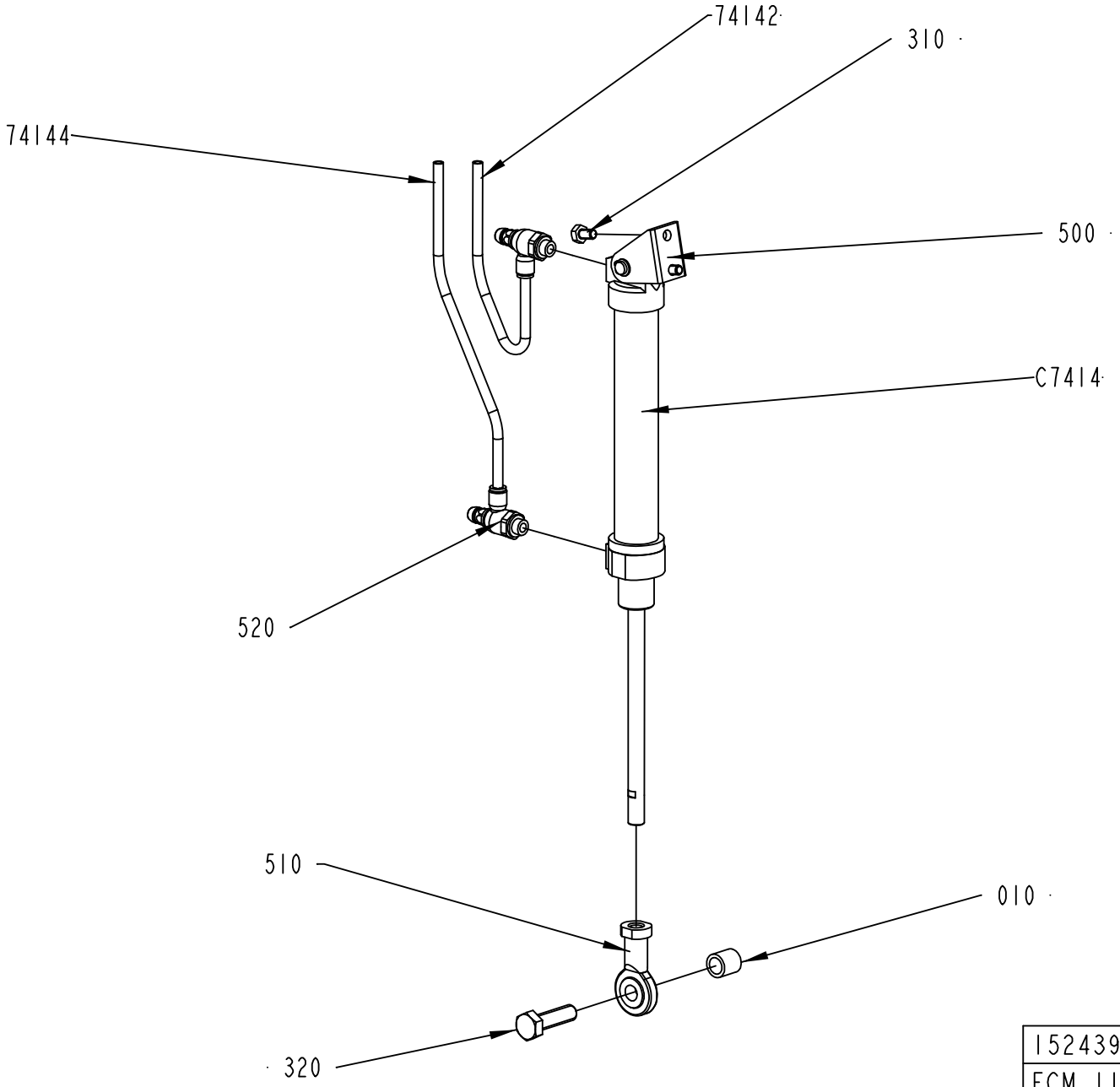
74142
310
74144
500
C7414
520
510
010
320
1524394-1
ECM 111238

ECM: 252903 - 20060303
Group number: 1524394-0100
Assembly Drawing: 1524394-1_1_AE

Pos	Part No	UN	Qty	Description	Page No
A3/FLEX					
74142	90166-0193	MM	6000	TUBE 6 MM PUR BLUE	
74144	90166-0193	MM	6000	TUBE 6 MM PUR BLUE	
C7414	90239-0832		1	DOUBLE ACTING, MINI-ISO, CYL. 25-125	
Common Parts					
010	1511569-0000		1	SPACER	
310	312105-0364		2	SCREW M6S ISO 4017 M6X10 A480	
320	312105-0497		1	SCREW M6S ISO 4017 M10X35 A480	
500	90239-0487		1	REAR,CLEVIS,MINI-ISO 20-25	
510	90239-0405		1	ROD END,BALL JOINT EYE M10X1,25	
520	90235-0846		2	THROTTLE CHECK VALVE G1/8", MANUAL, 6	

Pos	Part No	UN	Qty	Description	Page No

MATERIAL HOLDER L2

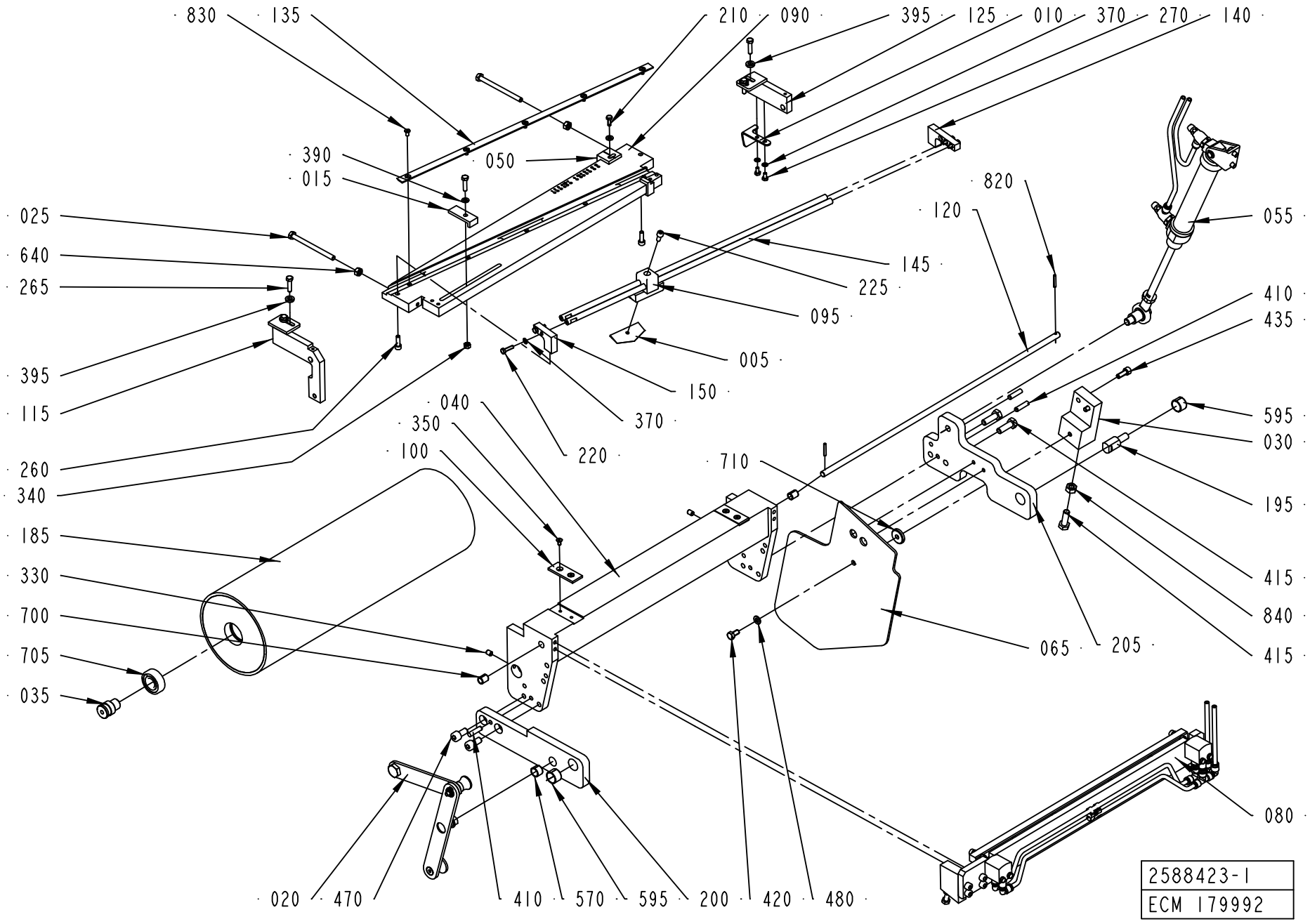

ECM: 274049 - 20060814
Group number: 2588423-0100
Assembly Drawing: 2588423-1_1_AE

Pos	Part No	UN	Qty	Description	Page No
A3/FLEX TBA WITH ARL, A3/FLEX TPA WITH ARL, A3/FLEX TPA WITH ARL, A3/FLEX TBA WITH ARL					
005	596678-0000		1	KNIFE	
050	2587251-0000		1	ANGLE PIECE	
090	2566117-0000		1	CUTTING TABLE	
095	2589791-0000		1	KNIFE HOLDER	
140	1487781-0000		1	BRACKET	
145	1487782-0000		2	SHAFT	
150	2566118-0000		1	BRACKET	
220	312105-0293		4	SCREW M6S ISO 4017 M4X16 A470	
225	312115-0327		1	SCREW ISO4762 M5X12 A4 80	
260	312115-0329		2	SCREW ISO4762 M5X16 A4 80	
370	315105-0136		6	WASHER BRB 4,3X9 RFR	
Common Parts					
010	2538064-0000		1	REFLECTOR	
015	1490821-0000		1	ANGLE PIECE	
020	1519589-0100		1	HANDLE	**7-175**
025	312109-0386		2	SCREW M6S ISO 4017 M6X80 A480	
030	2699996-0000		1	BLOCK	
035	1499582-0000		2	AXLE PIN	
040	1487770-0000		1	BRACKET	
055	1487528-0100		1	CYLINDER	**7-177**
065	1512276-0000		1	PROTECTION PLATE	
080	2588379-0100		1	MATERIAL HOLDER	**7-179**
100	2553275-0000		2	SLIDE PLATE	
115	2700034-0000		1	ROCKER ARM	
120	1487779-0000		1	SHAFT	
125	2700035-0000		1	ROCKER ARM	
135	1487518-0000		1	RULER	
185	1499588-0000		1	BENDING ROLLER	
195	1511568-0000		1	PIN	
200	1499577-0000		1	ARM	
205	2587250-0000		1	ARM	
210	312105-0291		1	SCREW M6S ISO 4017 M4X12 A470	
265	312105-0331		5	SCREW M6S ISO 4017 M5X20 A480	
270	312105-0287		2	SCREW M6S ISO 4017 M4X8 A470	
330	312318-0362		2	SCREW ISO4029 M6X8 A4	
340	312605-0314		1	HEXAGON NUT, M6M M5 A280	
350	312155-0287		4	SCREW DIN 7991 MF6S M4X8 A4 70	
390	315105-0146		2	WASHER BRB 5,3X10 RFR	
395	315115-0153		4	WASHER PLAIN, TBRB 6,4/12 H=3	
410	311103-1355		3	PARALLEL PIN ISO 2338 6M6X24 A1	
415	312105-0453		3	SCREW M6S ISO 4017 M8X25 A480	

Pos	Part No	UN	Qty	Description	Page No
420	312105-0366		1	SCREW M6S ISO 4017 M6X12 A480	
435	312105-0368		2	SCREW M6S ISO 4017 M6X16 A480	
470	312115-0449		2	SCREW ISO4762 M8X16 A4 80	
480	315105-0153		1	WASHER BRB 6,4X12 RFR	
570	321141-0178		1	BEARING BUSH W/O FLANGE, 12X14X10 MM	
595	321141-0216		2	BEARING BUSH W/O FLANGE, 16X18X12 MM	
640	312605-0316		2	HEXAGON NUT, M6M M6 A280	
700	321141-0104		2	BEARING BUSH W/O FLANGE, 8X10X12 MM	
705	321313-0102		2	BALL BEARING, 15X35X11 MM	
710	315125-0153		1	WASHER TBRSB 6,4X22X4 A4	
820	90258-0031		2	PIN, STRAIGHT SLOTTED SPRING FRP 3X20	
830	312145-0287		5	SCREW ISO 2009 MFS M4X8 A4	
840	312605-0318		1	HEXAGON NUT, M6M M8 A280	

Machine Type | Group Description | Used-In | Group Number | Page No

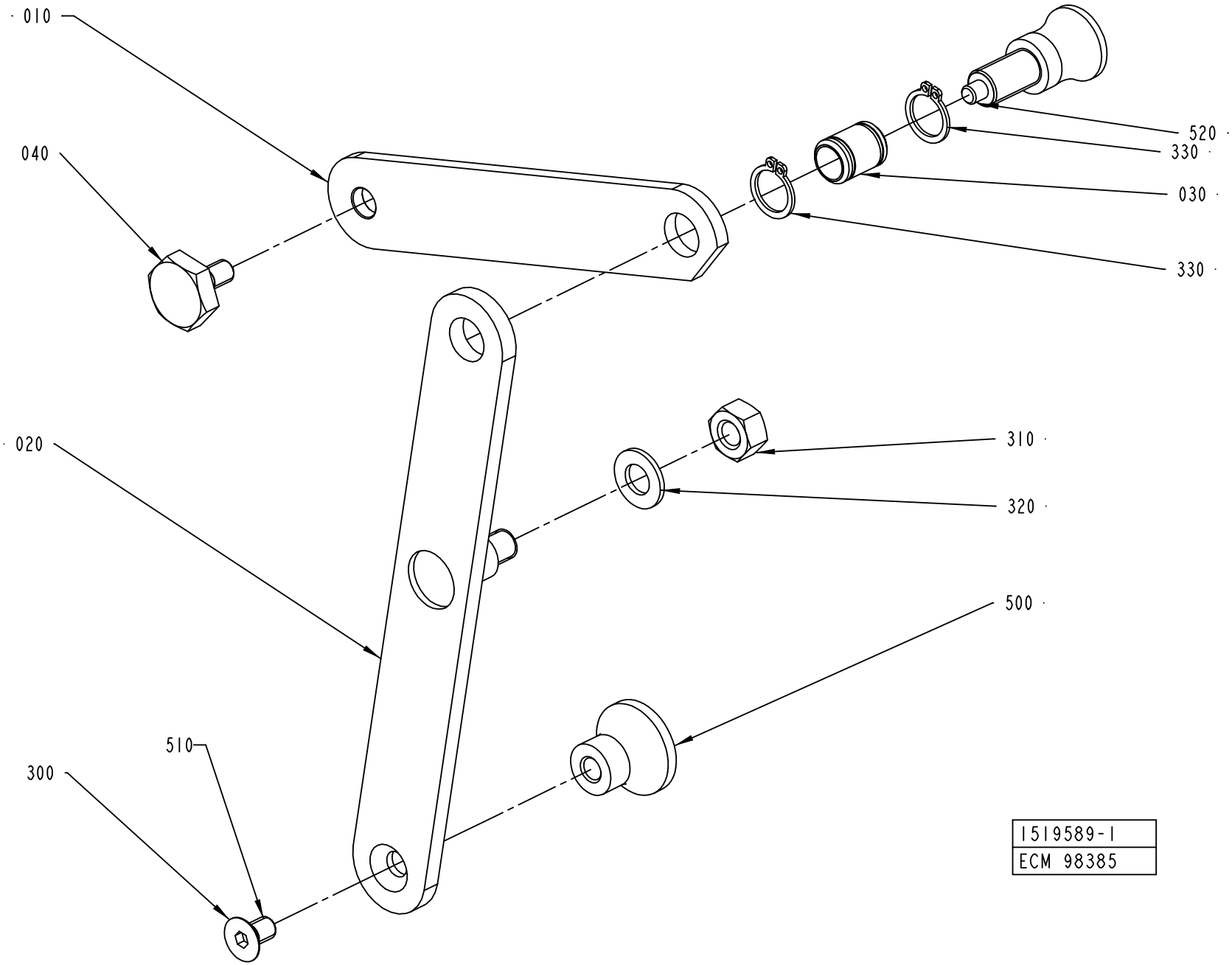
010
040
020
300
510
520
330
030
330
310
320
500
1519589-1
ECM 98385

ECM: 180681 - 20040910
Group number: 1519589-0100
Assembly Drawing: 1519589-1_1_AC

Pos	Part No	UN	Qty	Description	Page No
-					
010	1490809-0000		1	ARM	
020	1490810-0000		1	ARM	
030	1490812-0000		1	AXLE	
040	1490813-0000		1	SCREW	
300	312155-0364		1	SCREW DIN 7991 MF6S M6X10 A4 70	
310	312605-0318		1	HEXAGON NUT, M6M M8 A280	
320	315105-0165		1	WASHER BRB 8,4X16 RFR	
330	315751-0109		2	RETAINING RING FOR SHAFT DIN 471 12 A2	
500	90051-0082		1	KNOB, CIRCUL, THREADED BUSH, M6 25X21 MM	
510	90157-0016		1	LOCKING FLUID LOCTITE 242 50 ML	
520	90051-0087		1	LOCK KNOB, NO. GN 617 A5	

Pos	Part No	UN	Qty	Description	Page No

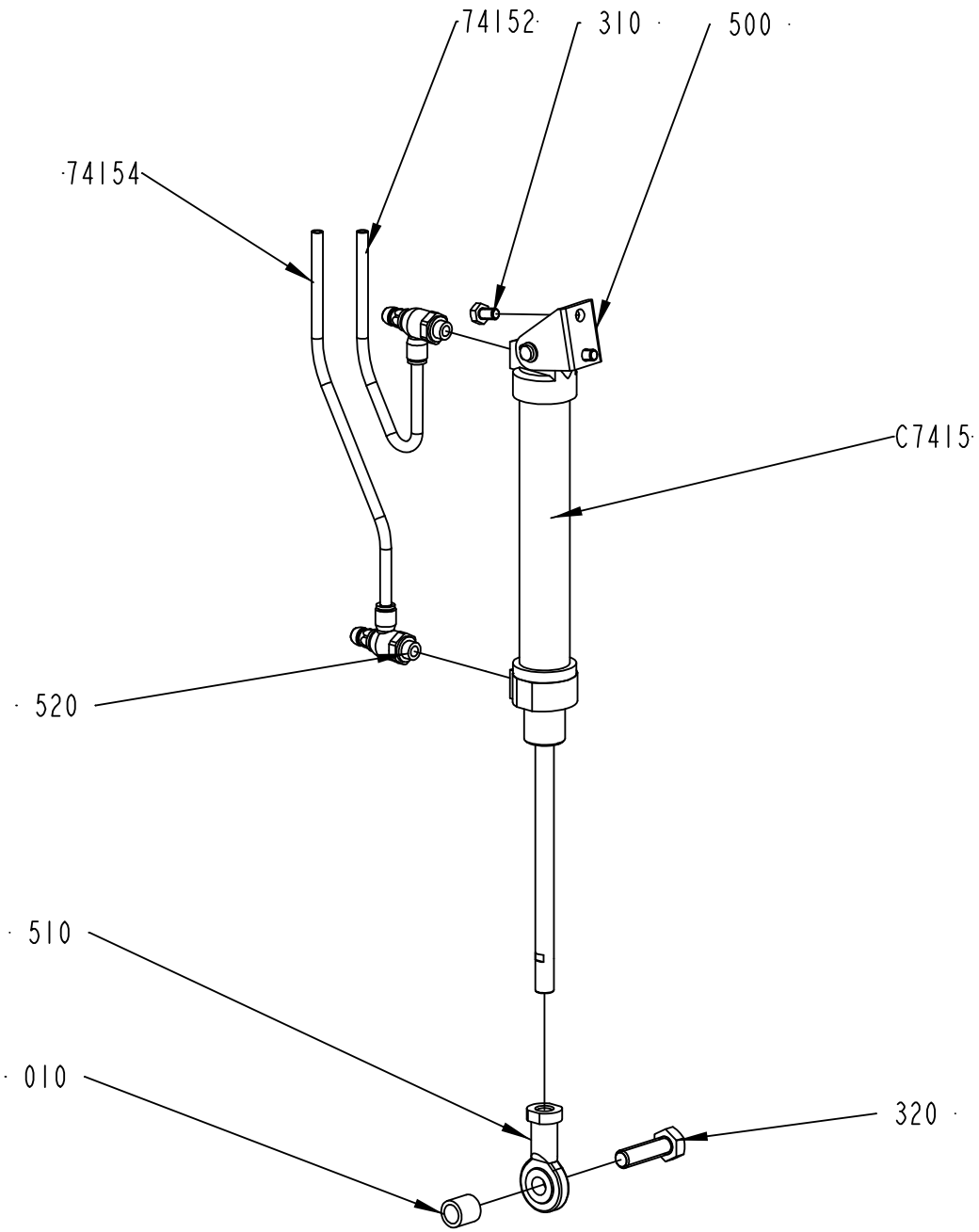

1487528-1
ECM 111238

ECM: 252904 - 20060303
Group number: 1487528-0100
Assembly Drawing: 1487528-1_1_AE

Pos	Part No	UN	Qty	Description	Page No
A3/FLEX					
74152	90166-0193	MM	5000	TUBE 6 MM PUR BLUE	
74154	90166-0193	MM	5000	TUBE 6 MM PUR BLUE	
C7415	90239-0832		1	DOUBLE ACTING, MINI-ISO, CYL. 25-125	
Common Parts					
010	1511569-0000		1	SPACER	
310	312105-0364		2	SCREW M6S ISO 4017 M6X10 A480	
320	312105-0497		1	SCREW M6S ISO 4017 M10X35 A480	
500	90239-0487		1	REAR,CLEVIS,MINI-ISO 20-25	
510	90239-0405		1	ROD END,BALL JOINT EYE M10X1,25	
520	90235-0846		2	THROTTLE CHECK VALVE G1/8", MANUAL, 6	

Pos	Part No	UN	Qty	Description	Page No

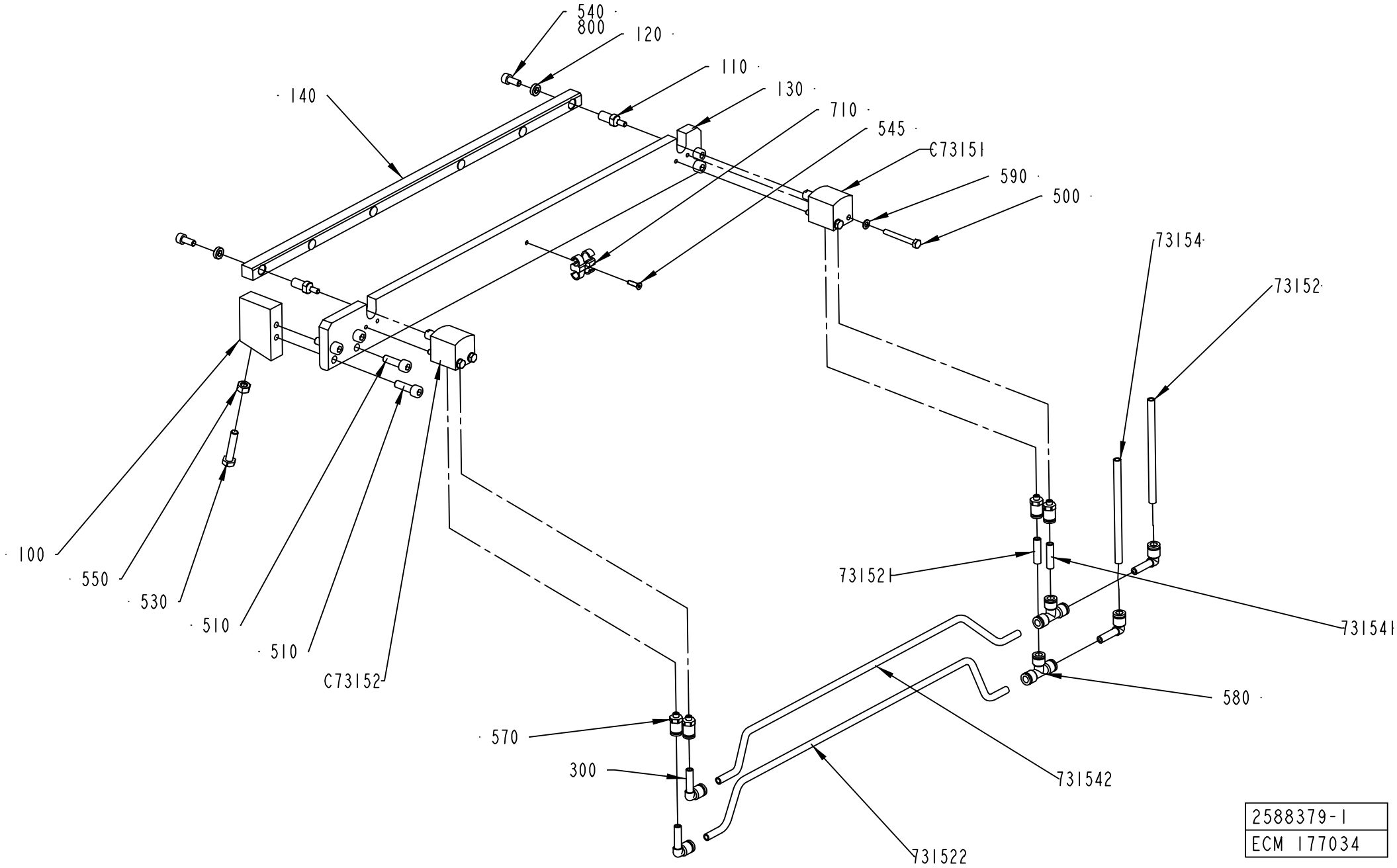
540
800
120
110
130
710
545
C73151
590
500
140
73154
73152
100
550
530
510
510
C73152
73152I
731541
580
570
300
731542
731522
2588379-1
ECM 177034

ECM: 180663 - 20041025
Group number: 2588379-0100
Assembly Drawing: 2588379-1_1_AD

Pos	Part No	UN	Qty	Description	Page No
-					
100	2553272-0000		1	SUPPORT BLOCK	
110	2553273-0000		2	AXLE PIN	
120	2553799-0000		2	WASHER	
130	2582558-0000		1	BASE PLATE	
140	2582559-0000		1	RAIL	
300	90055-0217		4	ELBOW PIPE JOINT	
500	312105-0301		4	SCREW M6S ISO 4017 M4X35 A470	
510	312115-0370		6	SCREW ISO4762 M6X20 A4 80	
530	312109-0374		1	SCREW M6S ISO 4017 M6X30 A480	
540	312115-0327		2	SCREW ISO4762 M5X12 A4 80	
545	312155-0226		1	SCREW DIN 7991 MF6S M3X12 A4 70	
550	312605-0316		1	HEXAGON NUT, M6M M6 A280	
570	342722-0197		4	STRAIGHT COUPLING	
580	342748-0102		2	T-CONNECTION 6MM	
590	315105-0136		4	WASHER BRB 4,3X9 RFR	
710	90165-0087		1	T-CLIP T6 FOR TUBE D=6 - 7 MM	
800	90157-0016	ML	1	LOCKING FLUID LOCTITE 242 50 ML	
73152	90166-0193	MM	5500	TUBE 6 MM PUR BLUE	
73154	90166-0193	MM	5500	TUBE 6 MM PUR BLUE	
731521	90166-0193	MM	30	TUBE 6 MM PUR BLUE	
731522	90166-0193	MM	400	TUBE 6 MM PUR BLUE	
731541	90166-0193	MM	30	TUBE 6 MM PUR BLUE	
731542	90166-0193	MM	400	TUBE 6 MM PUR BLUE	
C73151	90459-0503		1	CYLINDER, ADVC-16-10-I-P	
C73152	90459-0503		1	CYLINDER, ADVC-16-10-I-P	

Pos	Part No	UN	Qty	Description	Page No

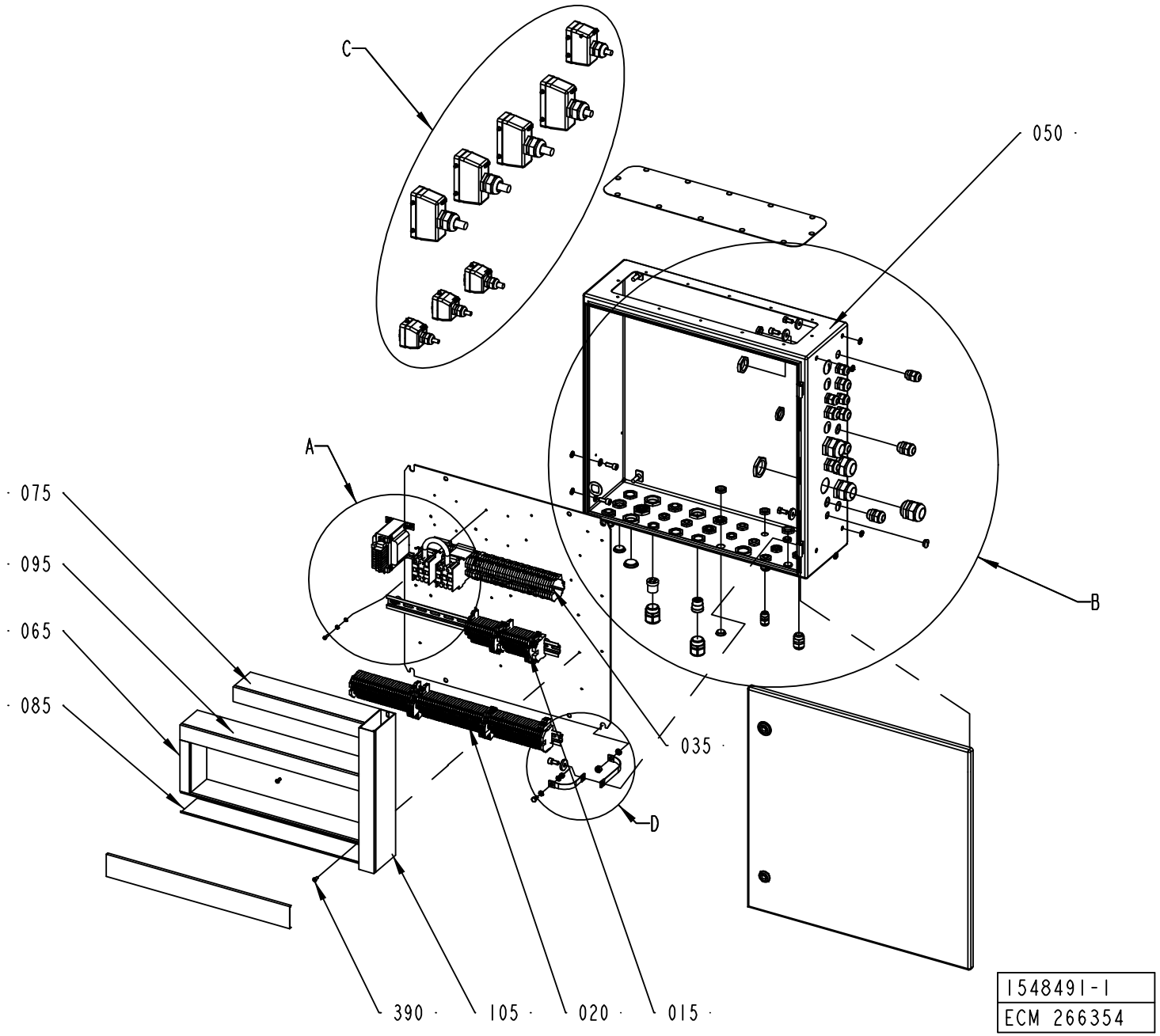
C
050
A
075
095
065
085
035
B
D
390
105
020
015
1548491-1
ECM 266354

ECM: 273734 - 20061102
Group number: 1548491-0200
Assembly Drawing: 1548491-1_1_AE

This list covers pages from 7-180 to 7-189

Pos	Part No	UN	Qty	Description	Page No
A3/FLEX SEPROOM (See drawing on pages: 7-180, 7-182, 7-184, 7-186, 7-188)					
180	352103-0101		3	CABLE GLAND, ST 9, PR15,2/PG9	
200	352103-0111		9	CABLE GLAND, ST 16, PR22,5/PG16	
210	352103-0115		1	CABLE GLAND, STR 21, PR28,3/PG21	
250	90002-0004		6	BLANK-OFF PLUG, PR 22,5 SKINDICHT-BLK16	
270	90002-0012		3	BLANK-OFF PLUG, PR 28,3 SKINDICHT-BLK21	
280	90002-0013		2	BLANK-OFF PLUG, PR 15,2 SKINDICHT-BLK9	
W7004	351150-0413	M	10	CABLE OLFLEX 4X1,5 MM2 LIGHT/GREY	
W7005	351150-0412	M	10	CABLE OLFLEX 3X1,5 MM2 LIGHT/GREY	
W7006	351150-0425	M	11	CABLE OLFLEX 25X0,75 MM2 LIGHT/GREY	
W7007	351150-0425	M	11	CABLE OLFLEX 25X0,75 MM2 LIGHT/GREY	
W7008	351150-0425	M	11	CABLE OLFLEX 25X0,75 MM2 LIGHT/GREY	
W7009	351150-0425	M	11	CABLE OLFLEX 25X0,75 MM2 LIGHT/GREY	
W7037	351150-0415	M	11	CABLE OLFLEX 7X1,5 MM2 LIGHT/GREY	
W7076	90220-0104	M	11	SCR. CABLE 4X1,5MM2	
X134	90110-0159		1	MALE INSERT 70.310.0640.0	
X213	90110-0150		1	MALE INSERT 121110 0000	
X214	90110-0150		1	MALE INSERT 121110 0000	
X220	90110-0150		1	MALE INSERT 121110 0000	
A3/FLEX ASU (See drawing on pages: 7-180, 7-182, 7-184, 7-186, 7-188)					
180	352103-0101		3	CABLE GLAND, ST 9, PR15,2/PG9	
200	352103-0111		9	CABLE GLAND, ST 16, PR22,5/PG16	
210	352103-0115		1	CABLE GLAND, STR 21, PR28,3/PG21	
250	90002-0004		6	BLANK-OFF PLUG, PR 22,5 SKINDICHT-BLK16	
270	90002-0012		3	BLANK-OFF PLUG, PR 28,3 SKINDICHT-BLK21	
280	90002-0013		2	BLANK-OFF PLUG, PR 15,2 SKINDICHT-BLK9	
W7004	351150-0413	M	5	CABLE OLFLEX 4X1,5 MM2 LIGHT/GREY	
W7005	351150-0412	M	5	CABLE OLFLEX 3X1,5 MM2 LIGHT/GREY	
W7006	351150-0425	M	6	CABLE OLFLEX 25X0,75 MM2 LIGHT/GREY	
W7007	351150-0425	M	6	CABLE OLFLEX 25X0,75 MM2 LIGHT/GREY	
W7008	351150-0425	M	6	CABLE OLFLEX 25X0,75 MM2 LIGHT/GREY	
W7009	351150-0425	M	6	CABLE OLFLEX 25X0,75 MM2 LIGHT/GREY	
W7037	351150-0415	M	6	CABLE OLFLEX 7X1,5 MM2 LIGHT/GREY	
W7076	90220-0104	M	6	SCR. CABLE 4X1,5MM2	
X134	90110-0159		1	MALE INSERT 70.310.0640.0	
X213	90110-0150		1	MALE INSERT 121110 0000	
X214	90110-0150		1	MALE INSERT 121110 0000	
X220	90110-0150		1	MALE INSERT 121110 0000	
Common Parts					
015	2611462-0100		1	TERMINAL BLOCK	**7-191, 7-193**
020	1548496-0100		1	TERMINAL	**7-195, 7-197**
035	2611463-0100		1	TERMINAL BLOCK	**7-199, 7-201**

Pos	Part No	UN	Qty	Description	Page No
050	1548492-0000		1	ELECTRICAL CABINET	
065	2611461-0000		1	CABLE DUCT	
075	2611458-0000		1	CABLE DUCT	
085	2611460-0000		1	CABLE DUCT	
095	2611459-0000		1	CABLE DUCT	
105	2611457-0000		1	CABLE DUCT	
115	312115-0449		2	SCREW ISO4762 M8X16 A4 80	
120	312115-0291		4	SCREW ISO4762 M4X12 A4 80	
135	312105-0449		2	SCREW M6S ISO 4017 M8X16 A480	
145	312115-0451		2	SCREW ISO4762 M8X20 A4 80	
150	312605-0318		1	HEXAGON NUT, M6M M8 A280	
160	315105-0136		4	WASHER BRB 4,3X9 RFR	
165	315105-0153		1	WASHER BRB 6,4X12 RFR	
170	315105-0165		2	WASHER BRB 8,4X16 RFR	
175	315125-0165		4	WASHER TBRSB 8,4X26X5 A4	
190	352103-0106		12	CABLE GLAND, ST 11, PR18,6/PG11	
195	352103-0108		4	CABLE GLAND, ST 13,5 , PR20,4/PG13,5	
220	352103-0121		8	CABLE GLAND, ST 29, PR37,0/PG29	
230	353240-0005		3	GLAND W/O INSERT PG21 NORMAL	
240	353249-0051		1	INSERT, MULTI HOLE, E154M4X6	
260	90002-0009		4	BLANK-OFF PLUG, PR 18.6 SKINDICHT-BLK11	
290	90012-0125		2	GLAND FITTING	
310	90062-0016		7	LOCK WASHER SERRAT.EXT.GEAR,8,4/15 H=0,8	
320	90062-0059		4	LOCK WASKER SERRAT.EXT.GEAR,4,3/8 H=0,5	
330	90099-0104		5	NUT, PR 15,2 (PG9)	
340	90099-0110		18	NUT, PR 22,5 (PG16)	
350	90099-0117		12	NUT, PR 18,6 (PG11)	
355	90099-0118		2	NUT, PR 20,4 (PG13,5)	
360	90099-0119		6	NUT, PR 28,3 (PG21)	
370	90099-0120		4	NUT, PR 37 (PG29)	
380	90135-0040		2	EARTH WIRE, L=150 MM 16 MM2	
390	90181-0313		12	RIVET DUCTAFIX R4	
400	359005-0010		9	MARKING LABEL KIT 0 - 9, 04.841.2150.0	
410	359005-0050		1	MARKING LABEL KIT X, 04.841.4550.0	
440	90110-0152		4	CABLE HOOD 24-POL 70.352.2428.1	
450	90110-0157		3	CABLE HOOD 6-POL 70.352.0628.1	
460	90110-0385		8	MARKING HOLDER, 4.242.3853.0	
470	90110-0160		1	CABLE HOOD 6-16-POL 70.352.1628.1	
490	312605-0316		1	HEXAGON NUT, M6M M6 A280	
500	312105-0366		1	SCREW M6S ISO 4017 M6X12 A480	
510	90062-0015		1	LOCK WASHER SERRAT.EXT.GEAR,6,4/11 H=0,7	
T6203	90458-0258		1	TRANSFORMER, 220VAC/6-9-12VAC	

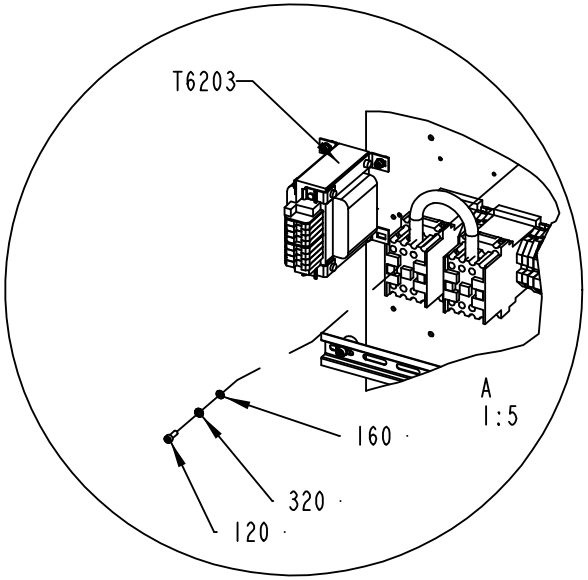
T6203
A
1:5
160
320
120

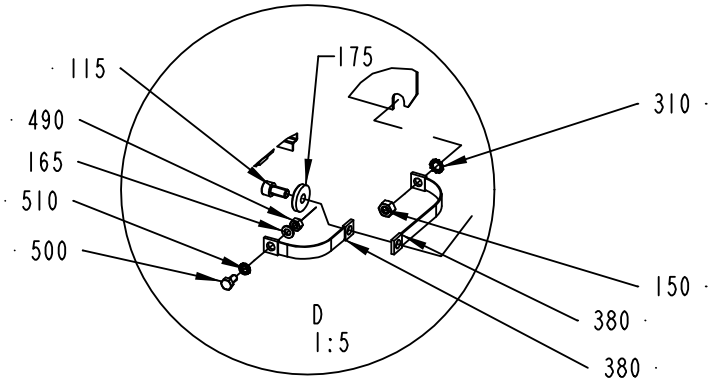
115
175
310
490
165
510
500
150
380
380
D
1:5

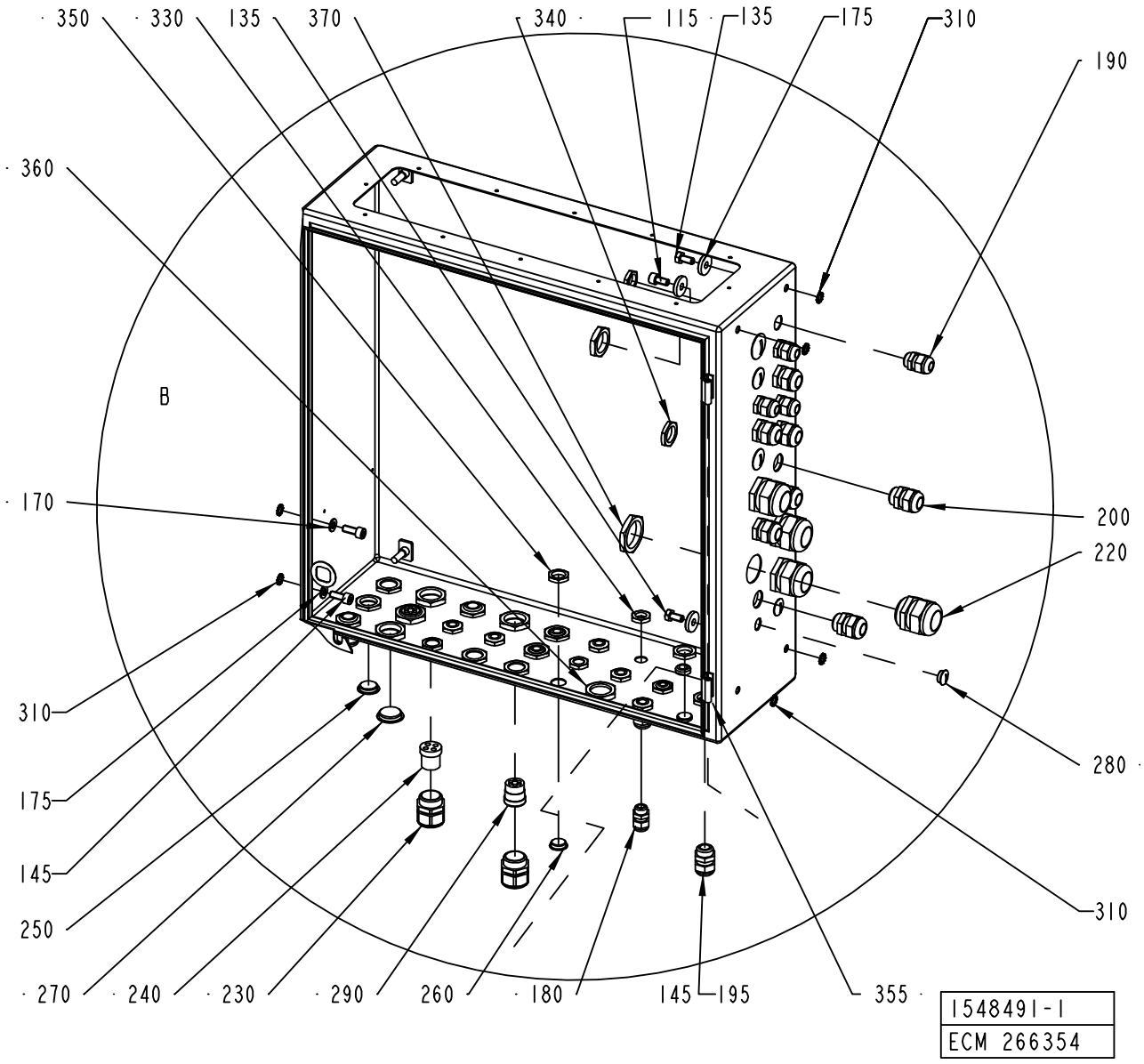
350
330
135
370
340
115
135
175
310
190
360
B
170
200
220
310
280
175
145
250
310
270
240
230
290
260
180
145
195
355
1548491-1
ECM 266354

Pos	Part No	UN	Qty	Description	Page No
Common Parts (Cont'd)					
X132	90110-0159		1	MALE INSERT 70.310.0640.0	
X133	90110-0159		1	MALE INSERT 70.310.0640.0	
X219	90110-0150		1	MALE INSERT 121110 0000	
X504	90110-0156		1	MALE INSERT 70.210.0653.0	

Pos	Part No	UN	Qty	Description	Page No

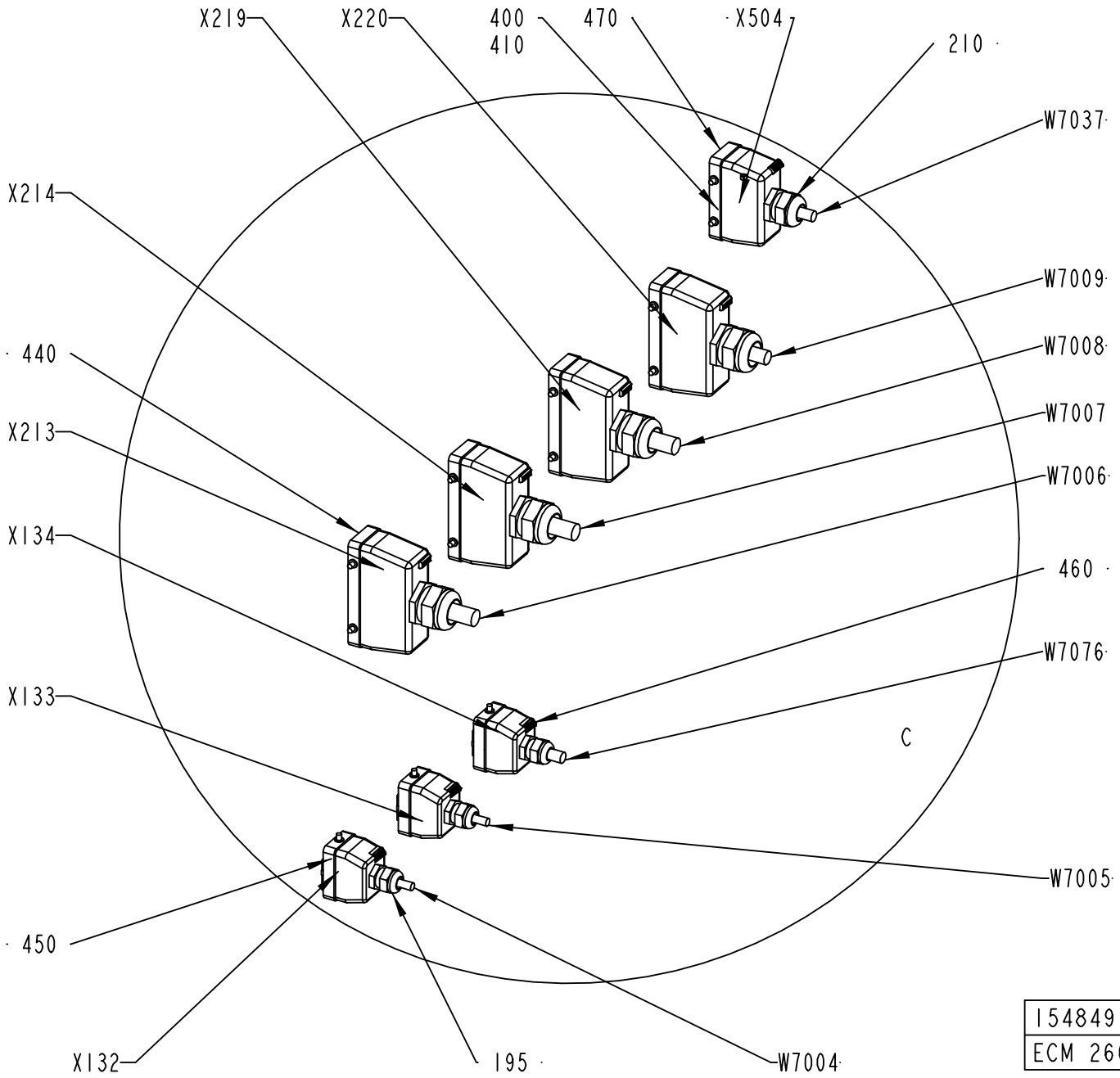

1548491-1
ECM 266354

ECM: 273734 - 20061102
Group number: 1548491-0200
Assembly Drawing: 1548491-1_3_AE

This list covers pages from 7-180 to 7-189

Pos	Part No	UN	Qty	Description	Page No
SEE PREVIOUS LISTS PAGES: 7-181, 7-183.					

Pos	Part No	UN	Qty	Description	Page No

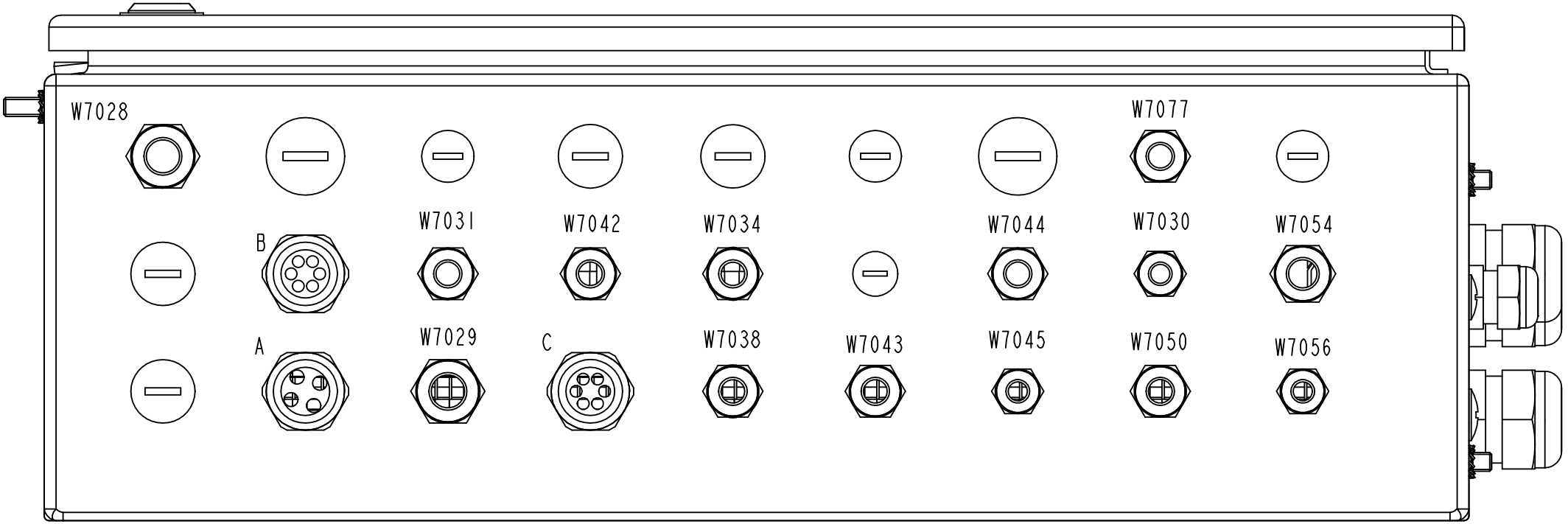

A*	B*	C*
W7016	W7020	W7015
W7017	W7023	W7019
W7018	W7024	W7013
W7022	W7025	W7033
	W7026	W7035
	W7027	W7036

1548491-1
ECM 266354

Pos	Part No	UN	Qty	Description	Page No	Pos	Part No	UN	Qty	Description	Page No

SEE PREVIOUS LISTS PAGES: 7-181, 7-183.

ELECTRICAL CABINET

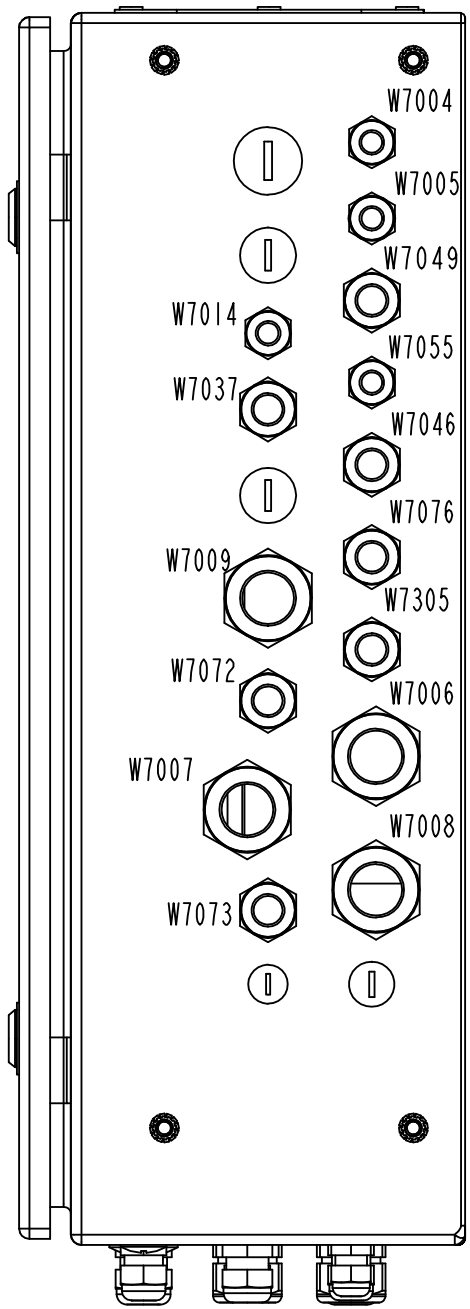

1548491-1
ECM 266354

ECM: 273734 - 20061102
Group number: 1548491-0200
Assembly Drawing: 1548491-1_5_AE

This list covers pages from 7-180 to 7-189

Pos	Part No	UN	Qty	Description	Page No	Pos	Part No	UN	Qty	Description	Page No

SEE PREVIOUS LISTS PAGES: 7-181, 7-183.

TERMINAL BLOCK

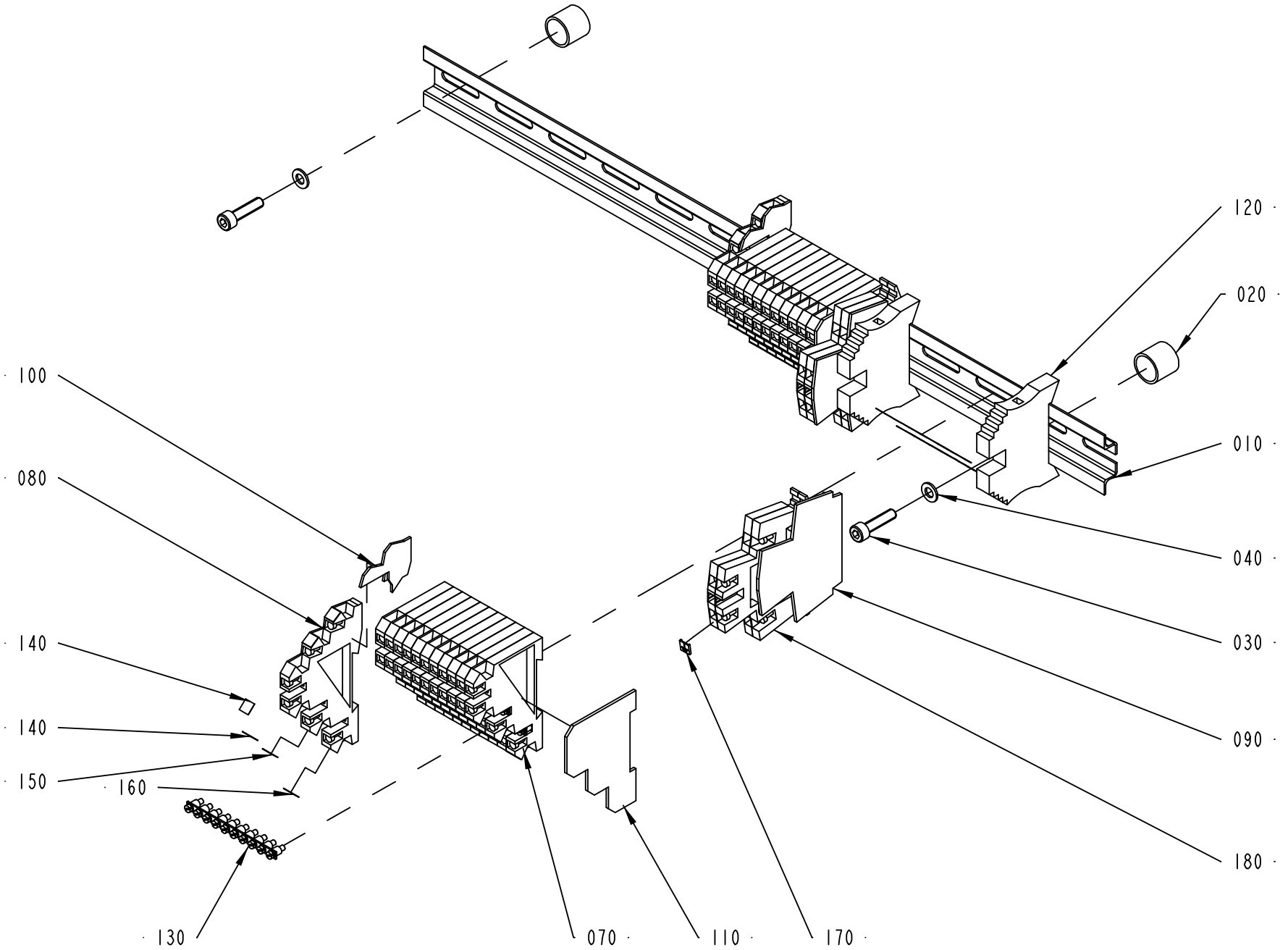

2611462-1
ECM 130325

ECM: 180665 - 20041005
Group number: 2611462-0100
Assembly Drawing: 2611462-1_1_AA

This list covers pages from 7-190 to 7-193

Pos	Part No	UN	Qty	Description	Page No
-					
010	2611464-0000		1	RAIL	
020	495118-0014		2	DISTANCE PIPE L=14 MM	
030	312115-0331		2	SCREW ISO4762 M5X20 A4 80	
040	315105-0146		2	WASHER BRB 5,3X10 RFR	
070	353021-0301		22	TERMINALS,TRIPLE-LEVEL, DLI 2,5/35 PA	
080	353021-0302		2	TERMINALS,TRIPLE-LEVEL, DLD 2,5/35 PA	
090	353032-0009		2	END PLATE, WAP FOR WDK	
100	353032-0013		2	END PLATE, 13818.6	
110	353032-0301		2	END PLATE WAP, 13132.6	
120	353031-0203		2	END SUPPORT, WEW 35/2	
130	353034-0404		4	BRIDGE CONNECTOR Q10, 13131.0	
140	359011-0824		2	SET OF SIGNS 6-FW 151-200	
150	359011-0832		26	SET OF SIGNS 6-GW (+)	
160	359011-0833		26	SET OF SIGNS 6-GW (-)	
170	359011-0834		1	SET OF SIGNS 6-GW(EARTH)	
180	90458-1136		4	TERMINAL BLOCK, 103630	
190	359011-0825		2	SET OF SIGNS 6-FW 201-250	

Pos	Part No	UN	Qty	Description	Page No

TERMINAL BLOCK

Drawing file: 2611462-1_2_AA.hpgl

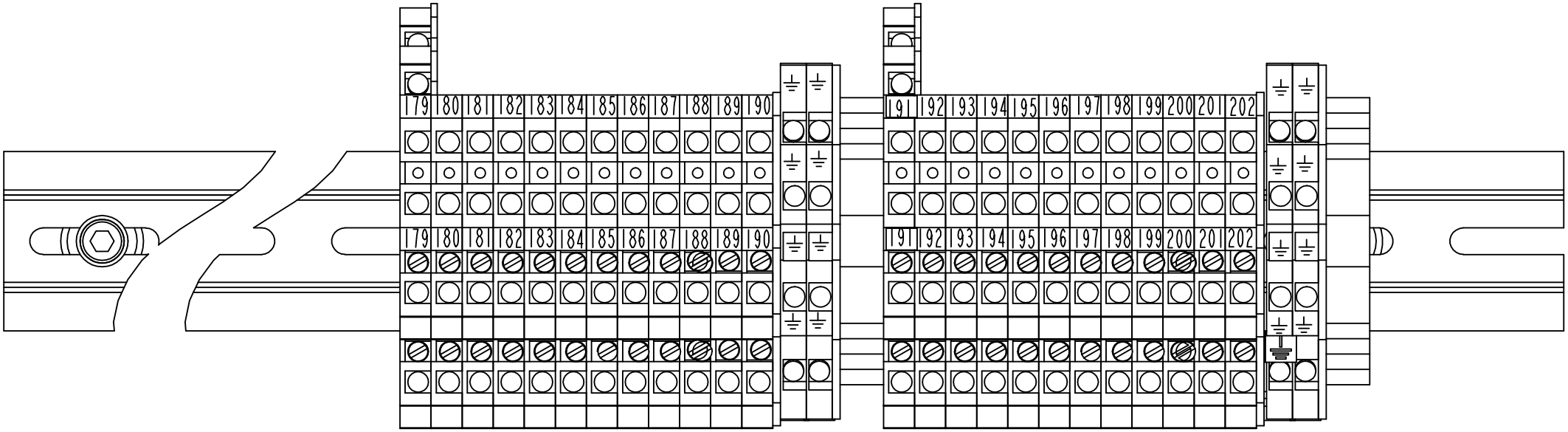

2611462-1
ECM 130325

ECM: 180665 - 20041005
Group number: 2611462-0100
Assembly Drawing: 2611462-1_2_AA

This list covers pages from 7-190 to 7-193

Pos	Part No	UN	Qty	Description	Page No
-					
010	2611464-0000		1	RAIL	
020	495118-0014		2	DISTANCE PIPE L=14 MM	
030	312115-0331		2	SCREW ISO4762 M5X20 A4 80	
040	315105-0146		2	WASHER BRB 5,3X10 RFR	
070	353021-0301		22	TERMINALS,TRIPLE-LEVEL, DLI 2,5/35 PA	
080	353021-0302		2	TERMINALS,TRIPLE-LEVEL, DLD 2,5/35 PA	
090	353032-0009		2	END PLATE, WAP FOR WDK	
100	353032-0013		2	END PLATE, 13818.6	
110	353032-0301		2	END PLATE WAP, 13132.6	
120	353031-0203		2	END SUPPORT, WEW 35/2	
130	353034-0404		4	BRIDGE CONNECTOR Q10, 13131.0	
140	359011-0824		2	SET OF SIGNS 6-FW 151-200	
150	359011-0832		26	SET OF SIGNS 6-GW (+)	
160	359011-0833		26	SET OF SIGNS 6-GW (-)	
170	359011-0834		1	SET OF SIGNS 6-GW(EARTH)	
180	90458-1136		4	TERMINAL BLOCK, 103630	
190	359011-0825		2	SET OF SIGNS 6-FW 201-250	

Pos	Part No	UN	Qty	Description	Page No

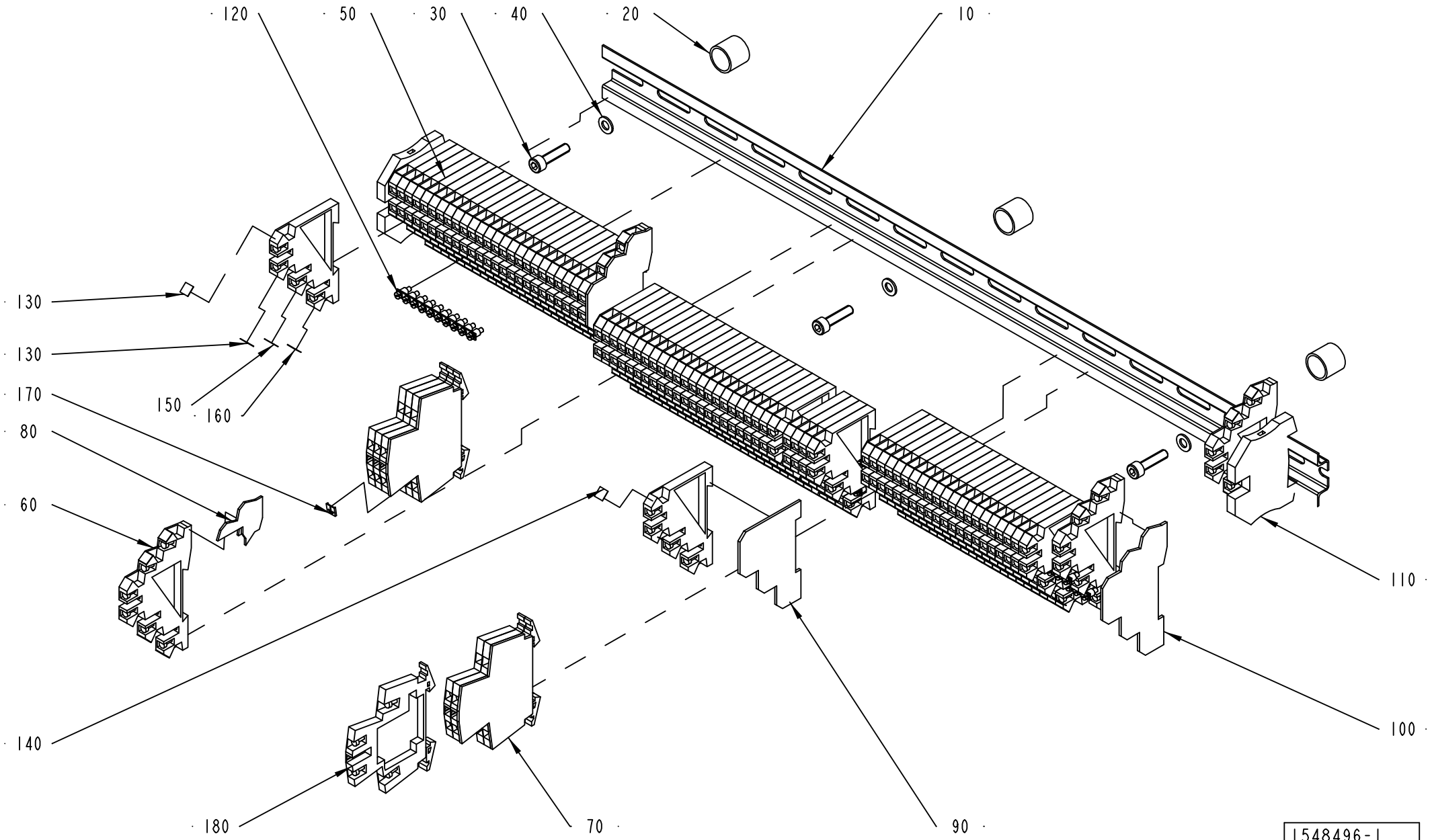

1548496-1
ECM 130325

ECM: 224785 - 20050831
Group number: 1548496-0100
Assembly Drawing: 1548496-1_1_AB

This list covers pages from 7-194 to 7-197

Pos	Part No	UN	Qty	Description	Page No
-					
010	2503654-0000		1	RAIL	
020	495118-0014		3	DISTANCE PIPE L=14 MM	
030	312115-0331		3	SCREW ISO4762 M5X20 A4 80	
040	315105-0146		3	WASHER BRB 5,3X10 RFR	
050	353021-0301		74	TERMINALS,TRIPLE-LEVEL, DLI 2,5/35 PA	
060	353021-0302		4	TERMINALS,TRIPLE-LEVEL, DLD 2,5/35 PA	
070	353032-0009		2	END PLATE, WAP FOR WDK	
080	353032-0013		1	END PLATE, 13818.6	
090	353032-0301		1	END PLATE WAP, 13132.6	
100	353032-0302		2	END PLATE WAP, 13176.6	
110	353024-0205		2	EARTH TERMINAL, 1010.1	
120	353034-0404		17	BRIDGE CONNECTOR Q10, 13131.0	
130	359011-0823		2	SET OF SIGNS 6-FW 101-150	
140	359011-0824		2	SET OF SIGNS 6-FW 151-200	
150	359011-0832		2	SET OF SIGNS 6-GW (+)	
160	359011-0833		2	SET OF SIGNS 6-GW (-)	
170	359011-0834		1	SET OF SIGNS 6-GW(EARTH)	
180	90458-1136		6	TERMINAL BLOCK, 103630	

Pos	Part No	UN	Qty	Description	Page No

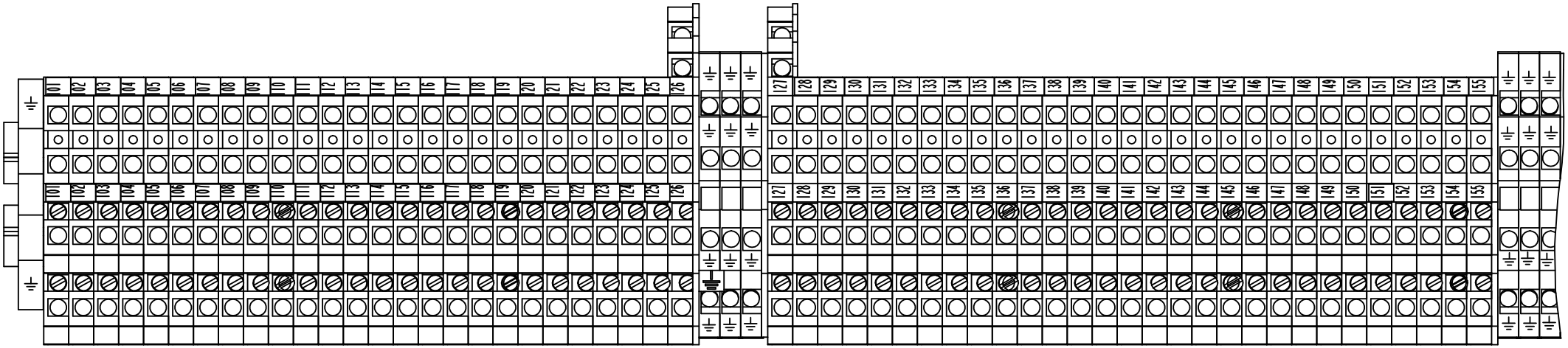

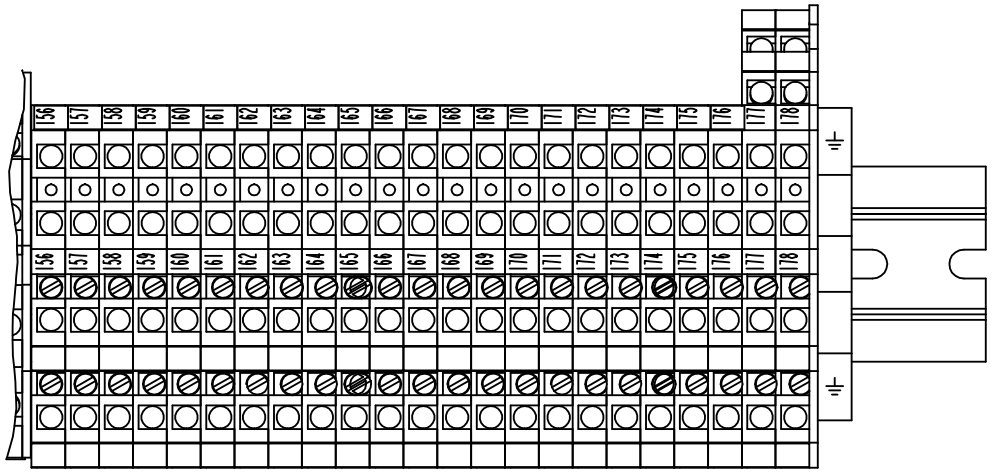

1548496-1
ECM 130325

ECM: 224785 - 20050831
Group number: 1548496-0100
Assembly Drawing: 1548496-1_2_AB

This list covers pages from 7-194 to 7-197

Pos	Part No	UN	Qty	Description	Page No
-					
010	2503654-0000		1	RAIL	
020	495118-0014		3	DISTANCE PIPE L=14 MM	
030	312115-0331		3	SCREW ISO4762 M5X20 A4 80	
040	315105-0146		3	WASHER BRB 5,3X10 RFR	
050	353021-0301		74	TERMINALS,TRIPLE-LEVEL, DLI 2,5/35 PA	
060	353021-0302		4	TERMINALS,TRIPLE-LEVEL, DLD 2,5/35 PA	
070	353032-0009		2	END PLATE, WAP FOR WDK	
080	353032-0013		1	END PLATE, 13818.6	
090	353032-0301		1	END PLATE WAP, 13132.6	
100	353032-0302		2	END PLATE WAP, 13176.6	
110	353024-0205		2	EARTH TERMINAL, 1010.1	
120	353034-0404		17	BRIDGE CONNECTOR Q10, 13131.0	
130	359011-0823		2	SET OF SIGNS 6-FW 101-150	
140	359011-0824		2	SET OF SIGNS 6-FW 151-200	
150	359011-0832		2	SET OF SIGNS 6-GW (+)	
160	359011-0833		2	SET OF SIGNS 6-GW (-)	
170	359011-0834		1	SET OF SIGNS 6-GW(EARTH)	
180	90458-1136		6	TERMINAL BLOCK, 103630	

Pos	Part No	UN	Qty	Description	Page No

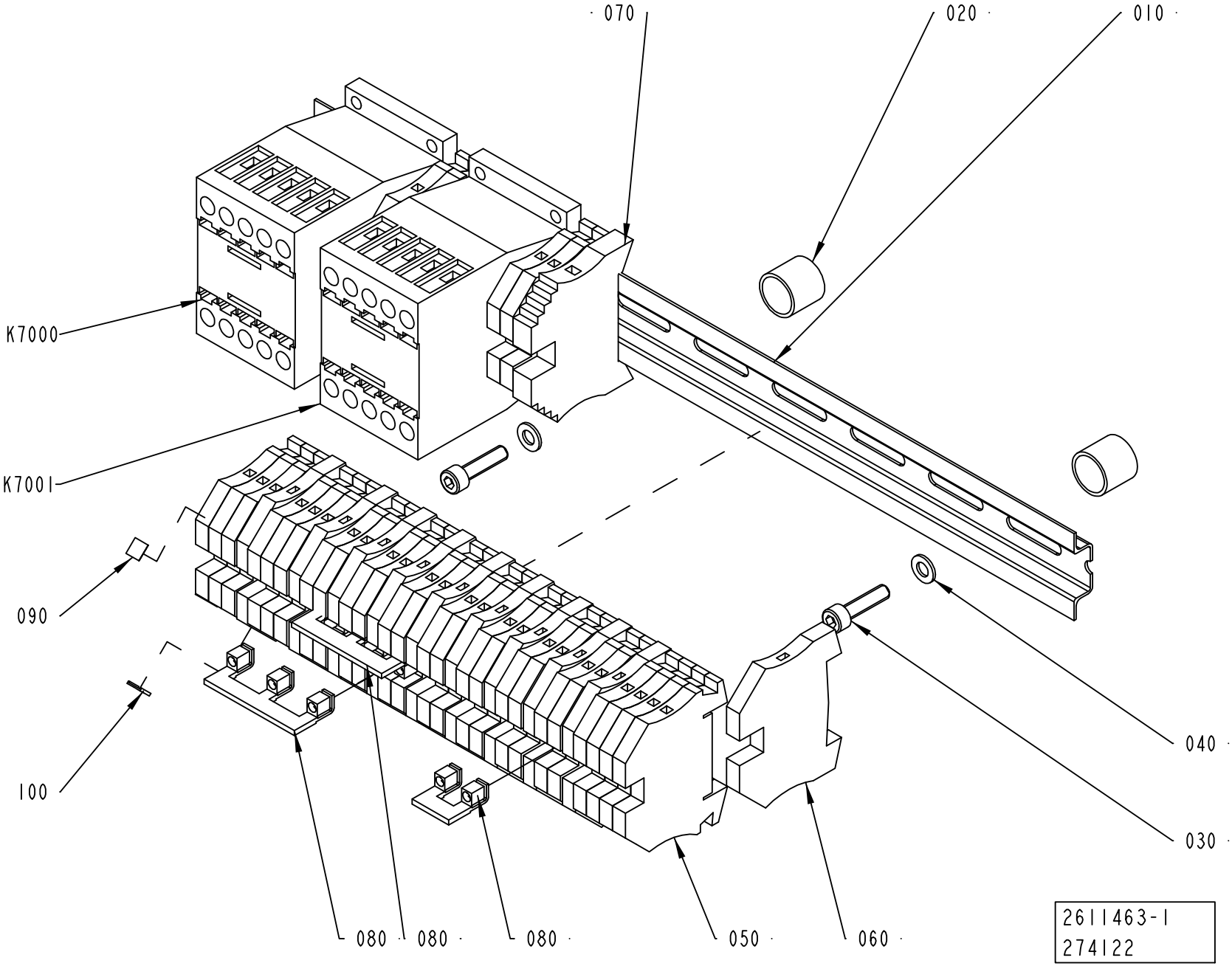
070
020
010
K7000
K7001
090
100
040
030
080
080
080
050
060
2611463-1
274122

ECM: 274124 - 20061101
Group number: 2611463-0100
Assembly Drawing: 2611463-1_1_AC

This list covers pages from 7-198 to 7-201

Pos	Part No	UN	Qty	Description	Page No
-					
010	2611465-0000		1	RAIL	
020	495118-0014		2	DISTANCE PIPE L=14 MM	
030	312115-0331		2	SCREW ISO4762 M5X20 A4 80	
040	315105-0146		2	WASHER BRB 5,3X10 RFR	
050	353021-0213		28	FEED THROUGH TERMINAL, 10201.0	
060	353024-0205		10	EARTH TERMINAL, 1010.1	
070	353031-0203		1	END SUPPORT, WEW 35/2	
080	353034-0031		3	BRIDGE CONNECTOR, WQV 4/10, 10520.6	
090	359011-0821		2	SET OF SIGNS 6-FW 1-50	
100	359011-0834		1	SET OF SIGNS 6-GW(EARTH)	
K7000	90459-5440		1	CONTACTOR 4KW 24VDC, DILM9-01	
K7001	90459-5440		1	CONTACTOR 4KW 24VDC, DILM9-01	

Pos	Part No	UN	Qty	Description	Page No

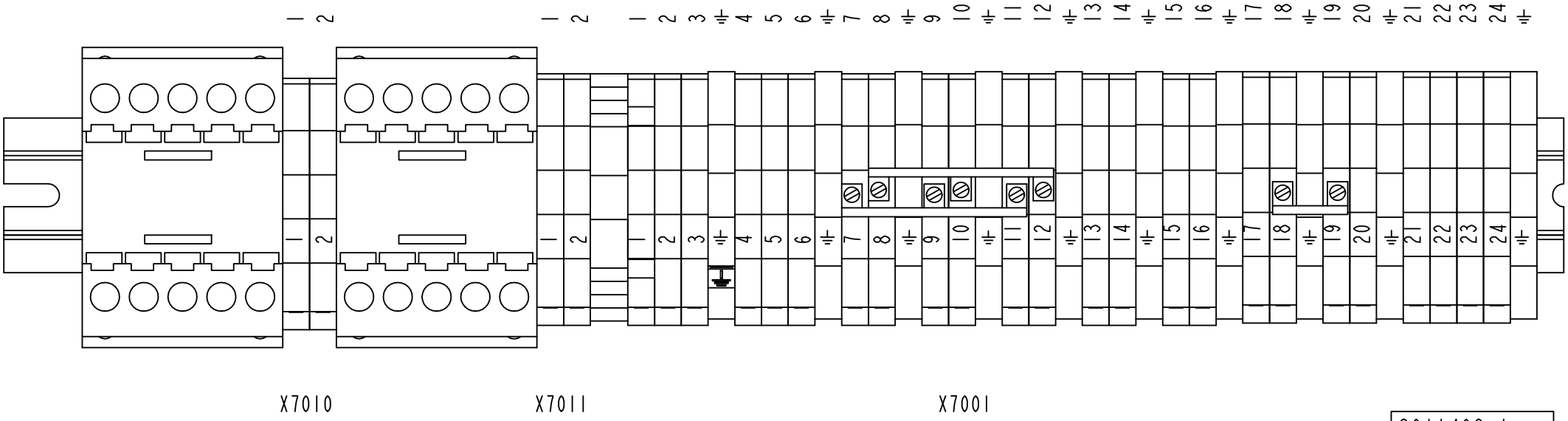

2611463-1
274122

ECM: 274124 - 20061101
Group number: 2611463-0100
Assembly Drawing: 2611463-1_2_AC

This list covers pages from 7-198 to 7-201

Pos	Part No	UN	Qty	Description	Page No
-					
010	2611465-0000		1	RAIL	
020	495118-0014		2	DISTANCE PIPE L=14 MM	
030	312115-0331		2	SCREW ISO4762 M5X20 A4 80	
040	315105-0146		2	WASHER BRB 5,3X10 RFR	
050	353021-0213		28	FEED THROUGH TERMINAL, 10201.0	
060	353024-0205		10	EARTH TERMINAL, 1010.1	
070	353031-0203		1	END SUPPORT, WEW 35/2	
080	353034-0031		3	BRIDGE CONNECTOR, WQV 4/10, 10520.6	
090	359011-0821		2	SET OF SIGNS 6-FW 1-50	
100	359011-0834		1	SET OF SIGNS 6-GW(EARTH)	
K7000	90459-5440		1	CONTACTOR 4KW 24VDC, DILM9-01	
K7001	90459-5440		1	CONTACTOR 4KW 24VDC, DILM9-01	

Pos	Part No	UN	Qty	Description	Page No

VALVE PANEL

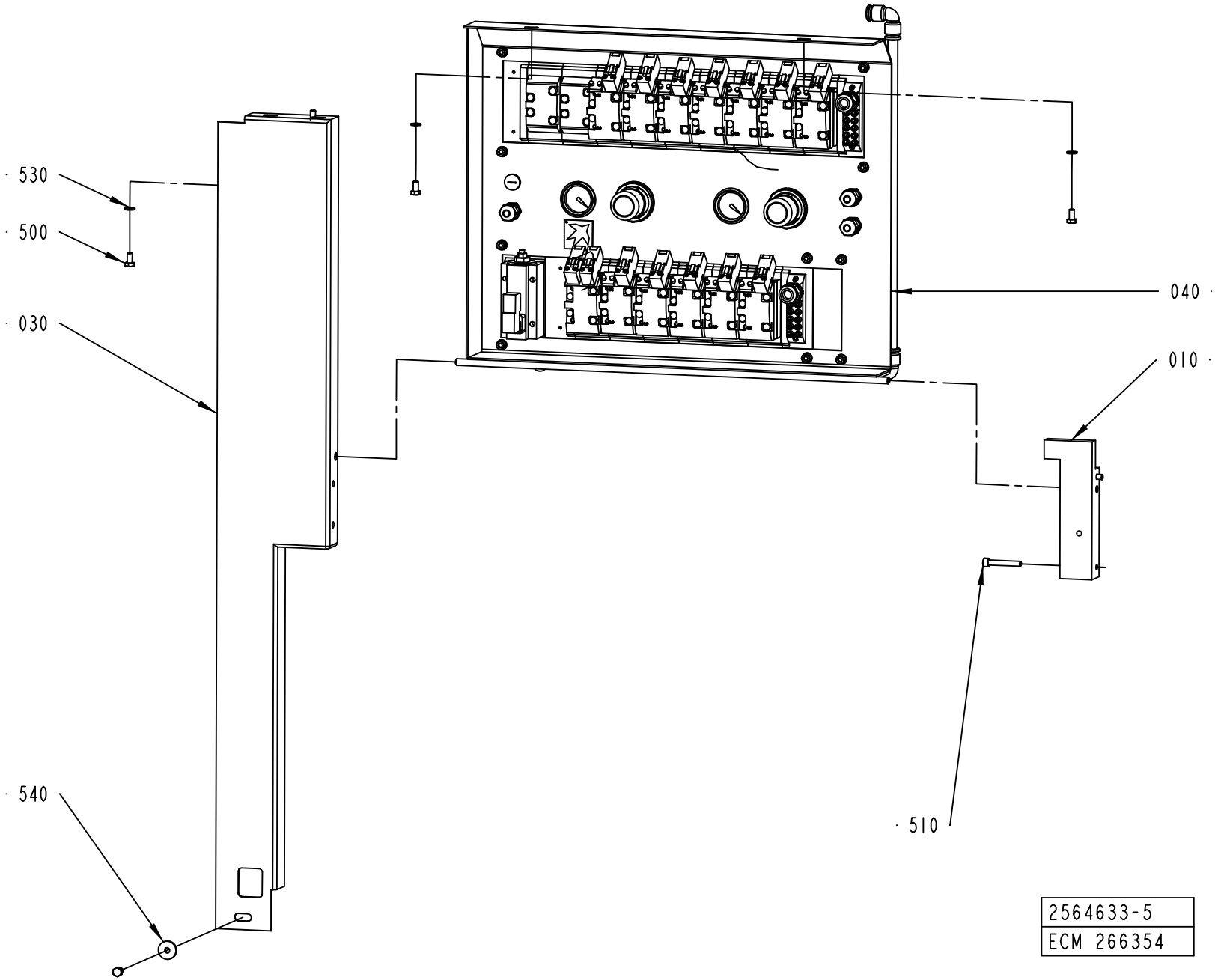

ECM: 267322 - 20061101
Group number: 2564633-0100
Assembly Drawing: 2564633-5_1_AA

This list covers pages from 7-202 to 7-205

Pos	Part No	UN	Qty	Description	Page No
A3/FLEX WITH ARL (See drawing on page: 7-204)					
050	2742200-0100		1	VALVE PANEL	**7-207**
500	312105-0366		5	SCREW M6S ISO 4017 M6X12 A480	
530	315105-0153		4	WASHER BRB 6,4X12 RFR	
A3/FLEX WITHOUT ARL (See drawing on page: 7-202)					
500	312105-0366		5	SCREW M6S ISO 4017 M6X12 A480	
530	315105-0153		4	WASHER BRB 6,4X12 RFR	
Common Parts					
010	2564634-0000		1	BEARING BLOCK	
030	2570836-0000		1	PROTECTION PLATE	
040	2564632-0100		1	VALVE PANEL	**7-209, 7-211, 7-213, 7-215, 7-217, 7-219**
510	312115-0378		2	SCREW ISO4762 M6X40 A4 80	
540	315125-0153		1	WASHER TBRSB 6,4X22X4 A4	

Pos	Part No	UN	Qty	Description	Page No

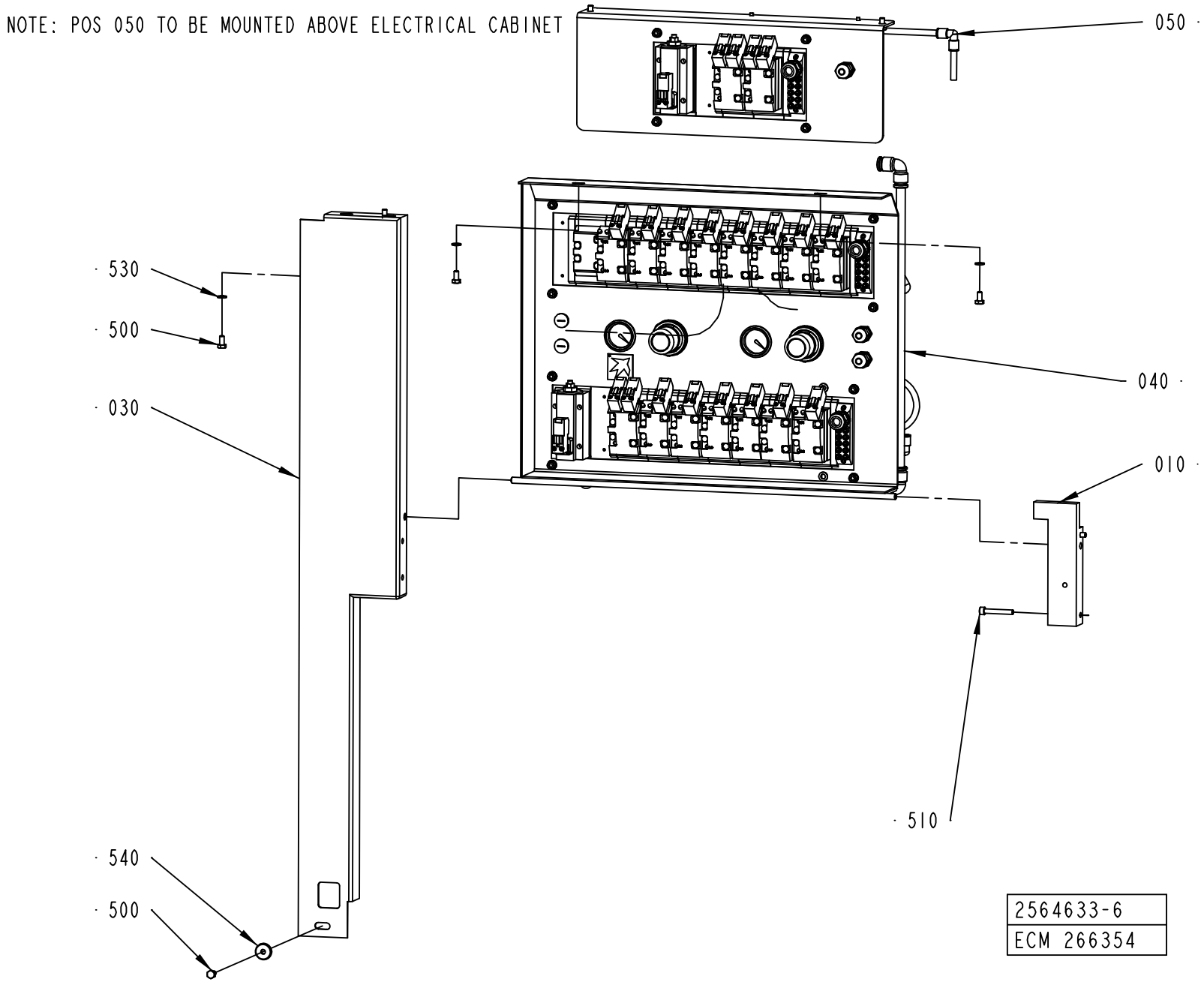
NOTE: POS 050 TO BE MOUNTED ABOVE ELECTRICAL CABINET
050
530
500
040
030
010
510
540
500
2564633-6
ECM 266354

ECM: 267322 - 20061101
Group number: 2564633-0100
Assembly Drawing: 2564633-6_1_AA

This list covers pages from 7-202 to 7-205

Pos	Part No	UN	Qty	Description	Page No
A3/FLEX WITH ARL (See drawing on page: 7-204)					
050	2742200-0100		1	VALVE PANEL	**7-207**
500	312105-0366		5	SCREW M6S ISO 4017 M6X12 A480	
530	315105-0153		4	WASHER BRB 6,4X12 RFR	
A3/FLEX WITHOUT ARL (See drawing on page: 7-202)					
500	312105-0366		5	SCREW M6S ISO 4017 M6X12 A480	
530	315105-0153		4	WASHER BRB 6,4X12 RFR	
Common Parts					
010	2564634-0000		1	BEARING BLOCK	
030	2570836-0000		1	PROTECTION PLATE	
040	2564632-0100		1	VALVE PANEL	**7-209, 7-211, 7-213, 7-215, 7-217, 7-219**
510	312115-0378		2	SCREW ISO4762 M6X40 A4 80	
540	315125-0153		1	WASHER TBRSB 6,4X22X4 A4	

Pos	Part No	UN	Qty	Description	Page No

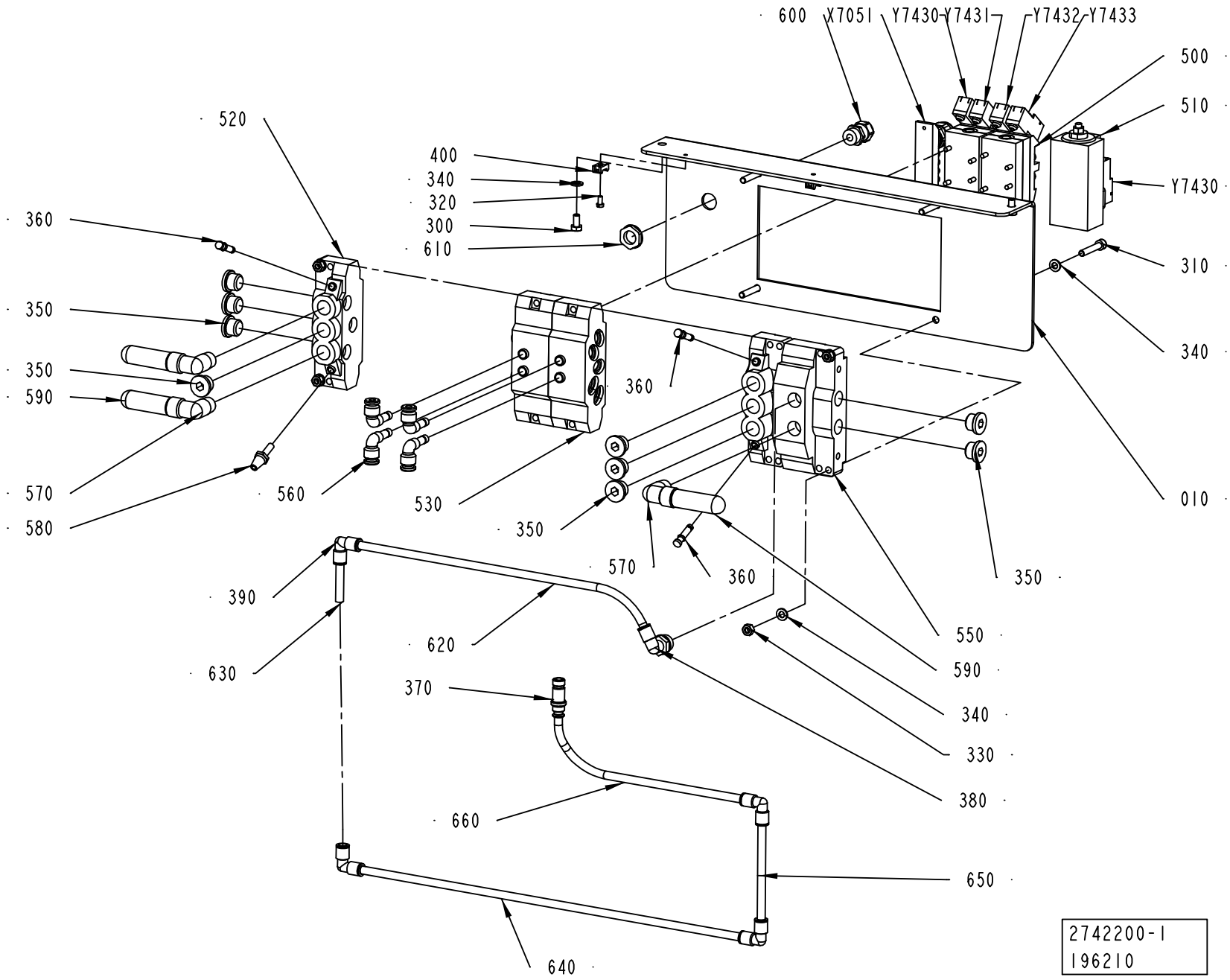
600
X7051
Y7430
Y7431
Y7432
Y7433
500
510
Y7430
310
340
010
520
400
340
320
300
610
360
350
350
590
570
580
560
530
360
350
570
360
350
390
620
630
550
590
340
330
380
370
660
650
640
2742200-1
196210

ECM: 196210 - 20051128
Group number: 2742200-0100
Assembly Drawing: 2742200-1_1_AA

Pos	Part No	UN	Qty	Description	Page No
-					
010	2742199-0000		1	BRACKET	
300	312105-0366		2	SCREW M6S ISO 4017 M6X12 A480	
310	312115-0376		4	SCREW ISO4762 M6X35 A4 80	
320	312125-0287		2	SCREW ISO 1207 M4X8 A4	
330	312605-0316		4	HEXAGON NUT, M6M M6 A280	
340	315105-0153		10	WASHER BRB 6,4X12 RFR	
350	342713-0211		9	PLUG, EXT THREAD HEX SOCKET 8638-00-380	
360	342715-0102		3	BLIND PLUG 6 MM	
370	342716-0209		1	REDUCER 8-12	
380	350002-0012		1	PUSH-IN L-FITTING QSL-F-G3/8-8	
390	350004-0003		4	PUSH-IN L-FITTING QSL-F-8	
400	352113-0205		2	ANCHOR PLATES FOR STRIPS, TYPE TM2S8-C10	
500	90042-0230		2	VALVE BODY 5/3 OPEN CENTRE	
510	90042-0265		1	HIGH SPEED VENTING VALVE 583-590-000-1	
520	90042-0522		2	PORTED END PIECE ISO SIZE 1	
530	90042-0532		2	BASE PLATE ISO SIZE 1	
550	90042-0545		1	SUB-BASE SOFT START ISO 1 AND VDMA 01	
560	90055-0173		4	ELBOW WITH TAILPIECE 8/6 MM	
570	90140-0020		3	ELBOW, 90, INT/EXT. THREAD, NO. 2020-3/8	
580	90328-0017		1	SILENCER, D=6 MM	
590	90328-0024		3	SILENCER G3/8"	
600	90458-0306		1	CABLE GLAND, M16X1,5, NO.5311 1010	
610	90458-0322		1	NUT, M16X1,5	
620	90166-0194	MM	1000	TUBE 8 MM PUR BLUE	
630	90166-0194	MM	1400	TUBE 8 MM PUR BLUE	
640	90166-0194	MM	1400	TUBE 8 MM PUR BLUE	
650	90166-0194	MM	350	TUBE 8 MM PUR BLUE	
660	90166-0068	MM	400	TUBE 12 MM PA BLUE	
X7051	90042-0535		1	TERMINAL BOARD 19 CORDS	
Y7430	90042-0539		1	PILOT VALVE L=350MM	
Y7431	90042-0539		1	PILOT VALVE L=350MM	
Y7432	90042-0539		1	PILOT VALVE L=350MM	
Y7433	90042-0539		1	PILOT VALVE L=350MM	
Y7435	90042-0539		1	PILOT VALVE L=350MM	

Pos	Part No	UN	Qty	Description	Page No

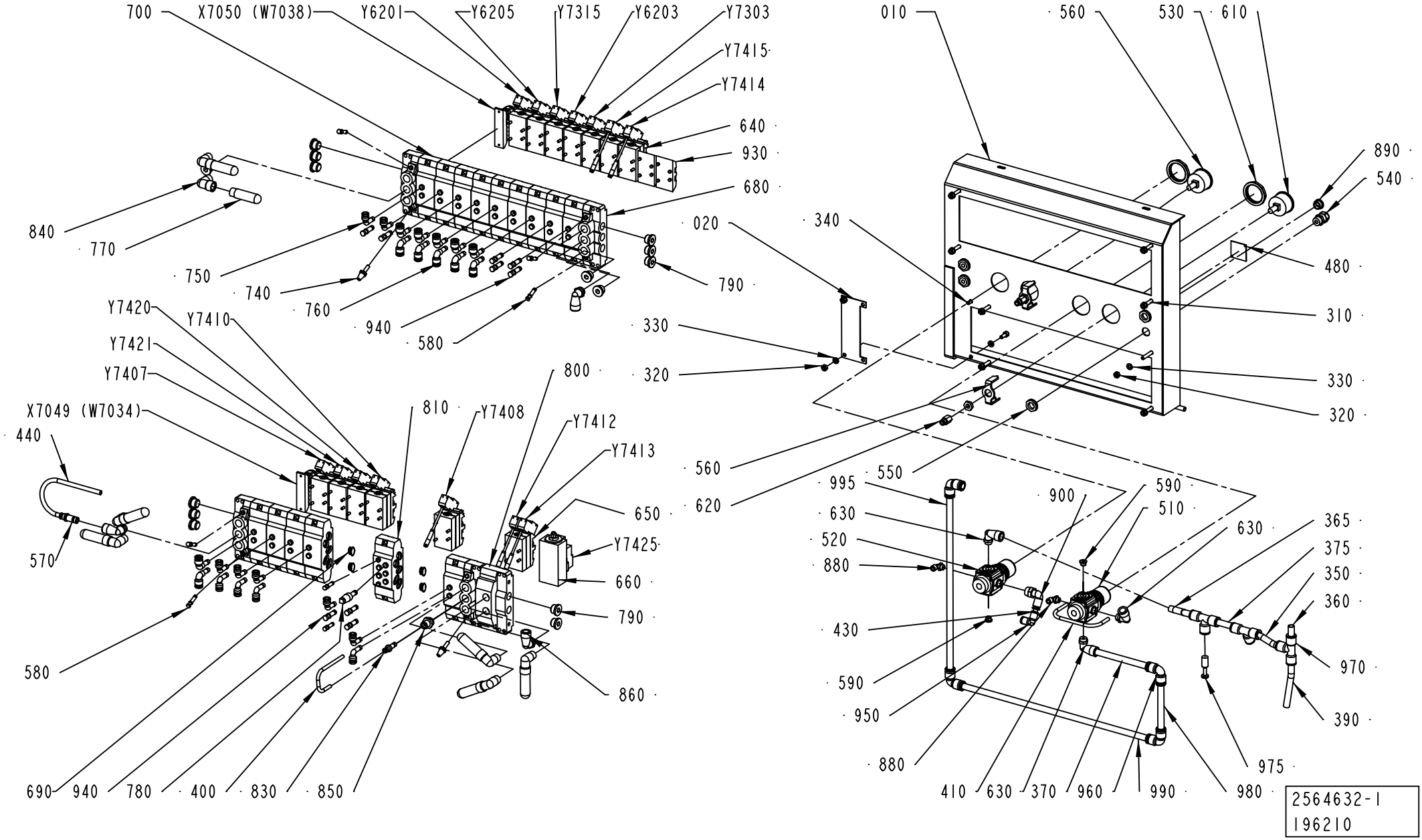
700
X7050 (W7038)
Y6201
Y6205
Y7315
Y6203
Y7303
Y7415
Y7414
640
930
680
840
770
750
740
760
940
580
020
790
010
560
530
610
890
540
340
480
310
330
320
Y7420
Y7410
Y7421
Y7407
X7049 (W7034)
440
570
580
690
940
780
400
830
850
800
810
Y7408
Y7412
Y7413
650
Y7425
660
790
860
995
630
520
880
430
590
950
880
900
590
510
630
365
375
350
360
970
390
975
410
630
370
960
990
980
2564632-1
196210

ECM: 272114 - 20060814
Group number: 2564632-0100
Assembly Drawing: 2564632-1_1_AD

This list covers pages from 7-208 to 7-219

Pos	Part No	UN	Qty	Description	Page No
A3/FLEX TBA 0200B WITH ARL, A3/FLEX TBA 0200S WITH ARL, A3/FLEX TBA 0200M WITH ARL, A3/FLEX TBA 0250B WITH ARL, A3/FLEX TBA 0250S WITH ARL, A3/FLEX TBA 0330S WITH ARL, A3/FLEX TBA 0500B WITH ARL, A3/FLEX TBA 0500S WITH ARL, A3/FLEX TBA 1000B WITH ARL, A3/FLEX TBA 1000S WITH ARL, A3/FLEX TBA 1000SQ WITH ARL, A3/FLEX TBA 1500S WITH ARL, A3/FLEX TBA 0200SQ WITH ARL, A3/FLEX TBA 0250SQ WITH ARL (See drawing on pages: 7-212, 7-214)					
020	2616034-0000		1	COVER PLATE	
100	2633328-0000		1	PNEUMATIC DIAGRAM	
320	312605-0316		10	HEXAGON NUT, M6M M6 A280	
330	315105-0153		20	WASHER BRB 6,4X12 RFR	
340	312115-0367		2	SCREW ISO4762 M6X14 A4 80	
370	90166-0068	MM	200	TUBE 12 MM PA BLUE	
410	90166-0117	MM	220	HOSE 4/6 PVC BLUE	
450	90166-0068	MM	30	TUBE 12 MM PA BLUE	
510	90113-0470		1	MANIFOLD REGULATOR 10 BAR	
520	90457-0144		1	REGULATOR 0,3-2 BAR	
530	90457-0078		2	PANEL NUT	
540	90458-0306		3	CABLE GLAND, M16X1,5, NO.5311 1010	
560	90043-0064		1	PRESSURE GAUGE, 2048 D=40 MM	
570	342716-0209		1	REDUCER 8-12	
580	342715-0102		7	BLIND PLUG 6 MM	
590	342713-0209		2	PLUG (QUANT.MINIMA= 10PC).	
610	90043-0065		1	MKC NEW FILL PUMP VACUUM PRESSURE GAUGE	
630	90458-2959		3	ELBOW PIPE JOINT, EXT.THREAD,D=12MM-G1/4	
640	90042-0215		12	VALVE BODY 5/2 UNISTABLE	
690	90042-0528		4	BLANKING KIT SEALS ISO SIZE 1	
750	90055-0172		11	ELBOW WITH TAILPIECE 8/8 MM	
760	90055-0173		12	ELBOW WITH TAILPIECE 8/6 MM	
790	342713-0211		14	PLUG, EXT THREAD HEX SOCKET 8638-00-380	
810	90042-0520		1	BASE PLATE ISO SIZE 1	
860	90458-2960		3	ELBOW PIPE JOINT, EXT.THREAD,D=12MM-G3/8	
880	90458-2956		2	ELBOW PIPE JOINT, EXT.THREAD, D=6MM-G1/8	
890	90458-1307		1	BLIND PLUG CIRCULAR, M16X1,5 514GFK/216	
900	350002-0009		1	PUSH-IN L-FITTING QSL-F-G1/4-8	
930	90042-0519		2	BLANK PLATE ISO SIZE 1	
940	342715-0103		9	BLIND PLUG 8 MM	
960	342735-0109		4	ELBOW PIPE JOINT	
970	342748-0109		3	T-CONNECTION 12MM	
990	90166-0068	MM	600	TUBE 12 MM PA BLUE	
995	90166-0068	MM	2000	TUBE 12 MM PA BLUE	
Y6201	90042-0591		1	PILOT VALVE, 04938-333-08	
Y7415	90042-0538		1	PILOT VALVE L=500MM	
Y7425	90042-0585		1	PILOT VALVE L=5M	

Pos	Part No	UN	Qty	Description	Page No
A3/FLEX TBA 1400B WITH ARL (See drawing on pages: 7-216, 7-218)					
020	2616034-0000		1	COVER PLATE	
100	2691105-0000		1	PNEUMATIC DIAGRAM	
320	312605-0316		10	HEXAGON NUT, M6M M6 A280	
330	315105-0153		20	WASHER BRB 6,4X12 RFR	
340	312115-0367		2	SCREW ISO4762 M6X14 A4 80	
370	90166-0068	MM	300	TUBE 12 MM PA BLUE	
410	90166-0117	MM	120	HOSE 4/6 PVC BLUE	
450	90166-0068	MM	260	TUBE 12 MM PA BLUE	
510	90002-0010		1	BLANK-OFF PLUG, PR 37 SKINDICHT-BLK29	
520	90457-0144		1	REGULATOR 0,3-2 BAR	
530	90457-0078		1	PANEL NUT	
540	90458-0306		3	CABLE GLAND, M16X1,5, NO.5311 1010	
560	90043-0064		1	PRESSURE GAUGE, 2048 D=40 MM	
570	342716-0209		1	REDUCER 8-12	
580	342715-0102		7	BLIND PLUG 6 MM	
590	342713-0209		1	PLUG (QUANT.MINIMA= 10PC).	
610	90043-0065		1	MKC NEW FILL PUMP VACUUM PRESSURE GAUGE	
630	90458-2959		1	ELBOW PIPE JOINT, EXT.THREAD,D=12MM-G1/4	
640	90042-0215		13	VALVE BODY 5/2 UNISTABLE	
690	90042-0528		5	BLANKING KIT SEALS ISO SIZE 1	
750	90055-0172		11	ELBOW WITH TAILPIECE 8/8 MM	
760	90055-0173		14	ELBOW WITH TAILPIECE 8/6 MM	
790	342713-0211		14	PLUG, EXT THREAD HEX SOCKET 8638-00-380	
810	90042-0520		1	BASE PLATE ISO SIZE 1	
860	90458-2960		3	ELBOW PIPE JOINT, EXT.THREAD,D=12MM-G3/8	
880	90458-2956		1	ELBOW PIPE JOINT, EXT.THREAD, D=6MM-G1/8	
890	90458-1307		1	BLIND PLUG CIRCULAR, M16X1,5 514GFK/216	
900	350002-0009		1	PUSH-IN L-FITTING QSL-F-G1/4-8	
930	90042-0519		1	BLANK PLATE ISO SIZE 1	
940	342715-0103		7	BLIND PLUG 8 MM	
960	342735-0109		3	ELBOW PIPE JOINT	
970	342748-0109		4	T-CONNECTION 12MM	
1010	350005-0002		1	PUSH-IN T-FITTING QST-F-6	
1020	350006-0007		1	PUSH-IN FITTING QS-F-12H-6	
1030	90166-0117	MM	220	HOSE 4/6 PVC BLUE	
1040	90166-0117	MM	310	HOSE 4/6 PVC BLUE	
Y6201	90042-0591		1	PILOT VALVE, 04938-333-08	
Y7402	90042-0591		1	PILOT VALVE, 04938-333-08	
Y7415	90042-0538		1	PILOT VALVE L=500MM	
Y7425	90042-0585		1	PILOT VALVE L=5M	
A3/FLEX TBA 1890S WITH ARL, A3/FLEX TBA 2000S WITH ARL (See drawing on pages: 7-216, 7-218)					

Machine Type	Group Description	Used-In	Group Number	Page No

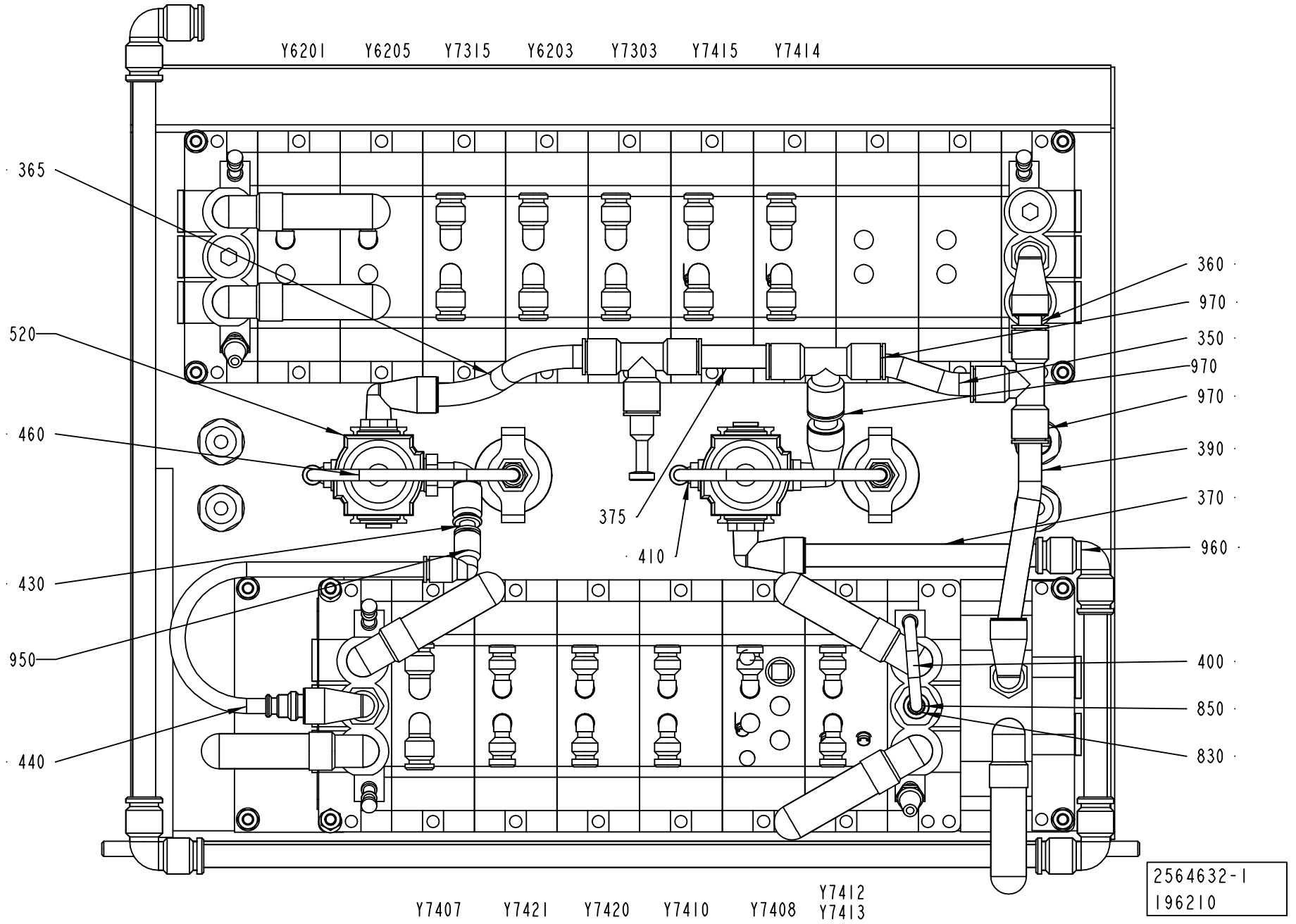
Y6201
Y6205
Y7315
Y6203
Y7303
Y7415
Y7414
365
520
460
430
950
440
360
970
350
970
970
390
370
960
400
850
830
375
410
Y7407
Y7421
Y7420
Y7410
Y7408
Y7412
Y7413
2564632-1
196210

ECM: 272114 - 20060814
Group number: 2564632-0100
Assembly Drawing: 2564632-1_2_AD

This list covers pages from 7-208 to 7-219

Pos	Part No	UN	Qty	Description	Page No
A3/FLEX TBA 1890S WITH ARL, A3/FLEX TBA 2000S WITH ARL (Cont'd) (See drawing on pages: 7-216, 7-218)					
020	2616034-0000		1	COVER PLATE	
100	2691105-0000		1	PNEUMATIC DIAGRAM	
320	312605-0316		10	HEXAGON NUT, M6M M6 A280	
330	315105-0153		20	WASHER BRB 6,4X12 RFR	
340	312115-0367		2	SCREW ISO4762 M6X14 A4 80	
370	90166-0068	MM	300	TUBE 12 MM PA BLUE	
390	90166-0068	MM	160	TUBE 12 MM PA BLUE	
410	90166-0117	MM	120	HOSE 4/6 PVC BLUE	
450	90166-0068	MM	260	TUBE 12 MM PA BLUE	
510	90002-0010		1	BLANK-OFF PLUG, PR 37 SKINDICHT-BLK29	
520	90457-0144		1	REGULATOR 0,3-2 BAR	
530	90457-0078		1	PANEL NUT	
540	90458-0306		3	CABLE GLAND, M16X1,5, NO.5311 1010	
560	90043-0064		1	PRESSURE GAUGE, 2048 D=40 MM	
570	342716-0209		1	REDUCER 8-12	
580	342715-0102		7	BLIND PLUG 6 MM	
590	342713-0209		1	PLUG (QUANT.MINIMA= 10PC).	
610	90043-0065		1	MKC NEW FILL PUMP VACUUM PRESSURE GAUGE	
630	90458-2959		1	ELBOW PIPE JOINT, EXT.THREAD,D=12MM-G1/4	
640	90042-0215		13	VALVE BODY 5/2 UNISTABLE	
690	90042-0528		5	BLANKING KIT SEALS ISO SIZE 1	
750	90055-0172		11	ELBOW WITH TAILPIECE 8/8 MM	
760	90055-0173		14	ELBOW WITH TAILPIECE 8/6 MM	
790	342713-0211		14	PLUG, EXT THREAD HEX SOCKET 8638-00-380	
810	90042-0520		1	BASE PLATE ISO SIZE 1	
860	90458-2960		3	ELBOW PIPE JOINT, EXT.THREAD,D=12MM-G3/8	
880	90458-2956		1	ELBOW PIPE JOINT, EXT.THREAD, D=6MM-G1/8	
890	90458-1307		1	BLIND PLUG CIRCULAR, M16X1,5 514GFK/216	
900	350002-0009		1	PUSH-IN L-FITTING QSL-F-G1/4-8	
930	90042-0519		1	BLANK PLATE ISO SIZE 1	
940	342715-0103		7	BLIND PLUG 8 MM	
960	342735-0109		3	ELBOW PIPE JOINT	
970	342748-0109		4	T-CONNECTION 12MM	
1010	350005-0002		1	PUSH-IN T-FITTING QST-F-6	
1020	350006-0007		1	PUSH-IN FITTING QS-F-12H-6	
1030	90166-0117	MM	220	HOSE 4/6 PVC BLUE	
1040	90166-0117	MM	310	HOSE 4/6 PVC BLUE	
Y6201	90042-0591		1	PILOT VALVE, 04938-333-08	
Y7402	90042-0591		1	PILOT VALVE, 04938-333-08	
Y7415	90042-0538		1	PILOT VALVE L=500MM	
Y7425	90042-0585		1	PILOT VALVE L=5M	
A3/FLEX WITHOUT ARL (See drawing on pages: 7-208, 7-210)					
020	2616034-0000		1	COVER PLATE	
100	2594393-0000		1	PNEUMATIC DIAGRAM	
320	312605-0316		10	HEXAGON NUT, M6M M6 A280	
330	315105-0153		20	WASHER BRB 6,4X12 RFR	
340	312115-0367		2	SCREW ISO4762 M6X14 A4 80	
370	90166-0068	MM	200	TUBE 12 MM PA BLUE	
390	90166-0068	MM	160	TUBE 12 MM PA BLUE	
410	90166-0117	MM	220	HOSE 4/6 PVC BLUE	
450	90166-0068	MM	30	TUBE 12 MM PA BLUE	
510	90113-0470		1	MANIFOLD REGULATOR 10 BAR	
520	90457-0144		1	REGULATOR 0,3-2 BAR	
530	90457-0078		2	PANEL NUT	
540	90458-0306		3	CABLE GLAND, M16X1,5, NO.5311 1010	
560	90043-0064		1	PRESSURE GAUGE, 2048 D=40 MM	
570	342716-0209		1	REDUCER 8-12	
580	342715-0102		7	BLIND PLUG 6 MM	
590	342713-0209		2	PLUG (QUANT.MINIMA= 10PC).	
610	90043-0065		1	MKC NEW FILL PUMP VACUUM PRESSURE GAUGE	
630	90458-2959		3	ELBOW PIPE JOINT, EXT.THREAD,D=12MM-G1/4	
640	90042-0215		12	VALVE BODY 5/2 UNISTABLE	
690	90042-0528		4	BLANKING KIT SEALS ISO SIZE 1	
750	90055-0172		11	ELBOW WITH TAILPIECE 8/8 MM	
760	90055-0173		12	ELBOW WITH TAILPIECE 8/6 MM	
790	342713-0211		14	PLUG, EXT THREAD HEX SOCKET 8638-00-380	
810	90042-0520		1	BASE PLATE ISO SIZE 1	
860	90458-2960		3	ELBOW PIPE JOINT, EXT.THREAD,D=12MM-G3/8	
880	90458-2956		2	ELBOW PIPE JOINT, EXT.THREAD, D=6MM-G1/8	
890	90458-1307		1	BLIND PLUG CIRCULAR, M16X1,5 514GFK/216	
900	350002-0009		1	PUSH-IN L-FITTING QSL-F-G1/4-8	
930	90042-0519		2	BLANK PLATE ISO SIZE 1	
940	342715-0103		9	BLIND PLUG 8 MM	
960	342735-0109		4	ELBOW PIPE JOINT	
970	342748-0109		3	T-CONNECTION 12MM	
975	350013-0005		1	PLUG QSC-12H	
990	90166-0068	MM	600	TUBE 12 MM PA BLUE	
995	90166-0068	MM	2000	TUBE 12 MM PA BLUE	
Y6201	90042-0591		1	PILOT VALVE, 04938-333-08	
Y7415	90042-0538		1	PILOT VALVE L=500MM	
Y7425	90042-0585		1	PILOT VALVE L=5M	
A3/FLEX TPA 0330SQ WITH ARL, A3/FLEX TPA 0500SQ WITH ARL, A3/FLEX TPA 1000SQ WITH ARL,					

Machine Type | Group Description | Used-In | Group Number | Page No

VALVE PANEL

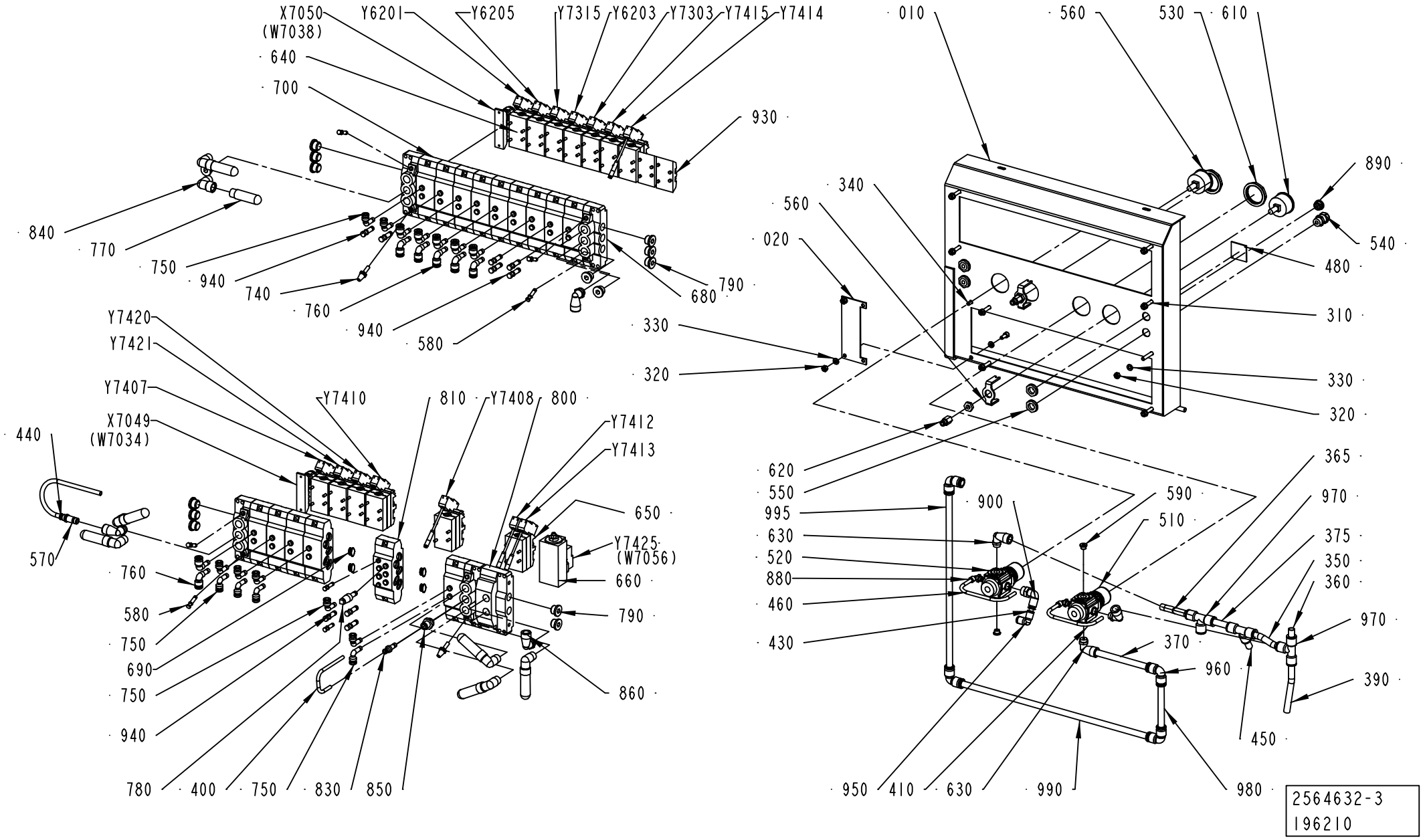
X7050
(W7038)
Y6201
Y6205
Y7315
Y6203
Y7303
Y7415
Y7414
640
700
930
840
770
750
940
740
760
940
580
680
790
010
560
530
610
890
340
560
020
540
480
310
330
320
620
550
995
630
520
880
460
430
900
590
510
365
970
375
350
360
970
370
960
390
450
950
410
630
990
980
Y7420
Y7421
Y7407
X7049
(W7034)
Y7410
810
Y7408
800
Y7412
Y7413
440
650
Y7425
(W7056)
660
790
860
570
760
580
750
690
750
940
780
400
750
830
850
2564632-3
196210

Pos	Part No	UN	Qty	Description	Page No
A3/FLEX TPA 0330SQ WITH ARL, A3/FLEX TPA 0500SQ WITH ARL, A3/FLEX TPA 1000SQ WITH ARL,					
A3/FLEX TPA 0200SQ WITH ARL, A3/FLEX TPA 0250SQ WITH ARL, A3/FLEX TPA 0750SQ WITH ARL					
(Cont'd) (See drawing on pages: 7-212, 7-214)					
020	2616034-0000		1	COVER PLATE	
100	2633328-0000		1	PNEUMATIC DIAGRAM	
320	312605-0316		10	HEXAGON NUT, M6M M6 A280	
330	315105-0153		20	WASHER BRB 6,4X12 RFR	
340	312115-0367		2	SCREW ISO4762 M6X14 A4 80	
370	90166-0068	MM	200	TUBE 12 MM PA BLUE	
390	90166-0068	MM	160	TUBE 12 MM PA BLUE	
410	90166-0117	MM	220	HOSE 4/6 PVC BLUE	
450	90166-0068	MM	30	TUBE 12 MM PA BLUE	
510	90113-0470		1	MANIFOLD REGULATOR 10 BAR	
520	90457-0144		1	REGULATOR 0,3-2 BAR	
530	90457-0078		2	PANEL NUT	
540	90458-0306		3	CABLE GLAND, M16X1,5, NO.5311 1010	
560	90043-0064		1	PRESSURE GAUGE, 2048 D=40 MM	
570	342716-0209		1	REDUCER 8-12	
580	342715-0102		7	BLIND PLUG 6 MM	
590	342713-0209		2	PLUG (QUANT.MINIMA= 10PC).	
610	90043-0065		1	MKC NEW FILL PUMP VACUUM PRESSURE GAUGE	
630	90458-2959		3	ELBOW PIPE JOINT, EXT.THREAD,D=12MM-G1/4	
640	90042-0215		12	VALVE BODY 5/2 UNISTABLE	
690	90042-0528		4	BLANKING KIT SEALS ISO SIZE 1	
750	90055-0172		11	ELBOW WITH TAILPIECE 8/8 MM	
760	90055-0173		12	ELBOW WITH TAILPIECE 8/6 MM	
790	342713-0211		14	PLUG, EXT THREAD HEX SOCKET 8638-00-380	
810	90042-0520		1	BASE PLATE ISO SIZE 1	
860	90458-2960		3	ELBOW PIPE JOINT, EXT.THREAD,D=12MM-G3/8	
880	90458-2956		2	ELBOW PIPE JOINT, EXT.THREAD, D=6MM-G1/8	
890	90458-1307		1	BLIND PLUG CIRCULAR, M16X1,5 514GFK/216	
900	350002-0009		1	PUSH-IN L-FITTING QSL-F-G1/4-8	
930	90042-0519		2	BLANK PLATE ISO SIZE 1	
940	342715-0103		9	BLIND PLUG 8 MM	
960	342735-0109		4	ELBOW PIPE JOINT	
970	342748-0109		3	T-CONNECTION 12MM	
990	90166-0068	MM	600	TUBE 12 MM PA BLUE	
995	90166-0068	MM	2000	TUBE 12 MM PA BLUE	
Y6201	90042-0591		1	PILOT VALVE, 04938-333-08	
Y7415	90042-0538		1	PILOT VALVE L=500MM	
Y7425	90042-0585		1	PILOT VALVE L=5M	
Common Parts					
010	2570821-0000		1	SHEET	
310	312115-0376		8	SCREW ISO4762 M6X35 A4 80	
350	90166-0068	MM	100	TUBE 12 MM PA BLUE	
360	90166-0068	MM	30	TUBE 12 MM PA BLUE	
365	90166-0068	MM	120	TUBE 12 MM PA BLUE	
375	90166-0068	MM	50	TUBE 12 MM PA BLUE	
400	90166-0117	MM	200	HOSE 4/6 PVC BLUE	
430	90166-0194	MM	30	TUBE 8 MM PUR BLUE	
440	90166-0194	MM	270	TUBE 8 MM PUR BLUE	
460	90166-0117	MM	220	HOSE 4/6 PVC BLUE	
480	273458-0000		1	SIGN, AIR	
550	90458-0322		4	NUT, M16X1,5	
620	342770-0105		2	STRAIGHT COUPLING INT, D=6 MM - G1/8	
650	90042-0221		1	VALVE BODY 5/2 BISTABLE	
660	90042-0265		1	HIGH SPEED VENTING VALVE 583-590-000-1	
680	90042-0522		4	PORTED END PIECE ISO SIZE 1	
700	90042-0532		14	BASE PLATE ISO SIZE 1	
740	90328-0017		2	SILENCER, D=6 MM	
770	90328-0024		7	SILENCER G3/8"	
780	90328-0038		1	SILENCER, D=8 MM	
800	90042-0545		1	SUB-BASE SOFT START ISO 1 AND VDMA 01	
830	342716-0203		1	REDUCER 6-8	
840	90140-0020		7	ELBOW, 90, INT/EXT. THREAD, NO. 2020-3/8	
850	342722-0206		1	STRAIGHT COUPLING D=8-G3/8"	
950	342735-0103		1	ELBOW PIPE JOINT	
980	90166-0068	MM	200	TUBE 12 MM PA BLUE	
X7049	90042-0535		1	TERMINAL BOARD 19 CORDS	
X7050	90042-0535		1	TERMINAL BOARD 19 CORDS	
Y6203	90042-0539		1	PILOT VALVE L=350MM	
Y6205	90042-0591		1	PILOT VALVE, 04938-333-08	
Y7303	90042-0539		1	PILOT VALVE L=350MM	
Y7315	90042-0591		1	PILOT VALVE, 04938-333-08	
Y7407	90042-0591		1	PILOT VALVE, 04938-333-08	
Y7408	90042-0538		1	PILOT VALVE L=500MM	
Y7410	90042-0539		1	PILOT VALVE L=350MM	
Y7412	90042-0538		1	PILOT VALVE L=500MM	
Y7413	90042-0538		1	PILOT VALVE L=500MM	
Y7414	90042-0538		1	PILOT VALVE L=500MM	
Y7420	90042-0591		1	PILOT VALVE, 04938-333-08	
Y7421	90042-0591		1	PILOT VALVE, 04938-333-08	

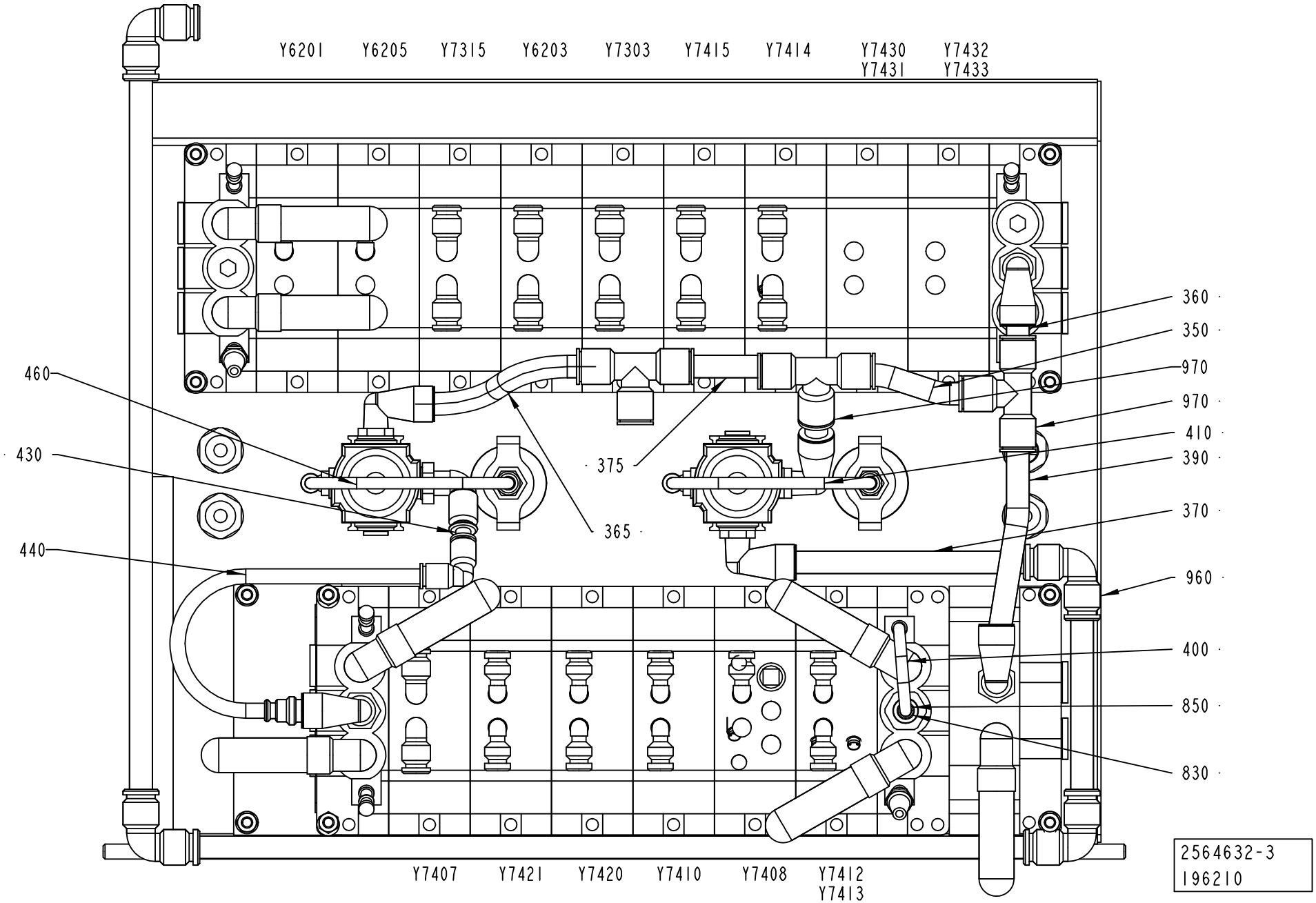
Y6201
Y6205
Y7315
Y6203
Y7303
Y7415
Y7414
Y7430
Y7431
Y7432
Y7433
360
350
970
970
410
390
370
960
400
850
830
460
430
440
375
365
Y7407
Y7421
Y7420
Y7410
Y7408
Y7412
Y7413
2564632-3
196210

ECM: 272114 - 20060814
Group number: 2564632-0100
Assembly Drawing: 2564632-3_2_AC

This list covers pages from 7-208 to 7-219

Pos	Part No	UN	Qty	Description	Page No
SEE PREVIOUS LISTS PAGES: 7-209, 7-211, 7-213.					

Pos	Part No	UN	Qty	Description	Page No

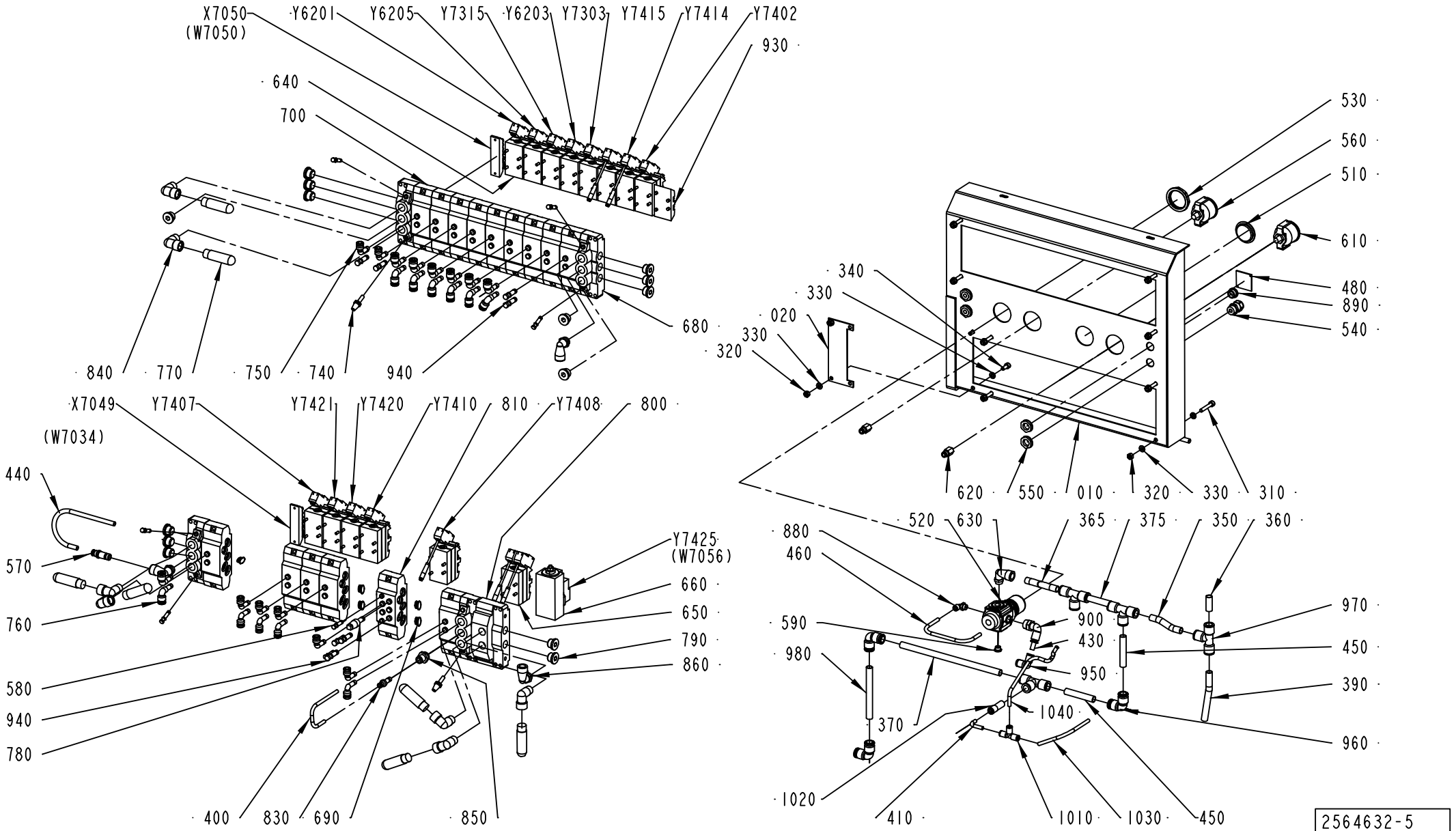
X7050
(W7050)
Y6201
Y6205
Y7315
Y6203
Y7303
Y7415
Y7414
Y7402
930
640
700
680
840
770
750
740
940
X7049
(W7034)
Y7407
Y7421
Y7420
Y7410
810
Y7408
800
440
570
760
580
940
780
Y7425
(W7056)
660
650
790
860
400
830
690
850
530
560
510
610
480
890
540
340
330
020
330
320
620
550
010
320
330
310
520
630
365
375
350
360
880
460
590
980
370
900
430
950
1040
970
450
390
960
1020
410
1010
1030
450
2564632-5
196210

ECM: 272114 - 20060814
Group number: 2564632-0100
Assembly Drawing: 2564632-5_1_AB

This list covers pages from 7-208 to 7-219

Pos	Part No	UN	Qty	Description	Page No
SEE PREVIOUS LISTS PAGES: 7-209, 7-211, 7-213.					

Pos	Part No	UN	Qty	Description	Page No

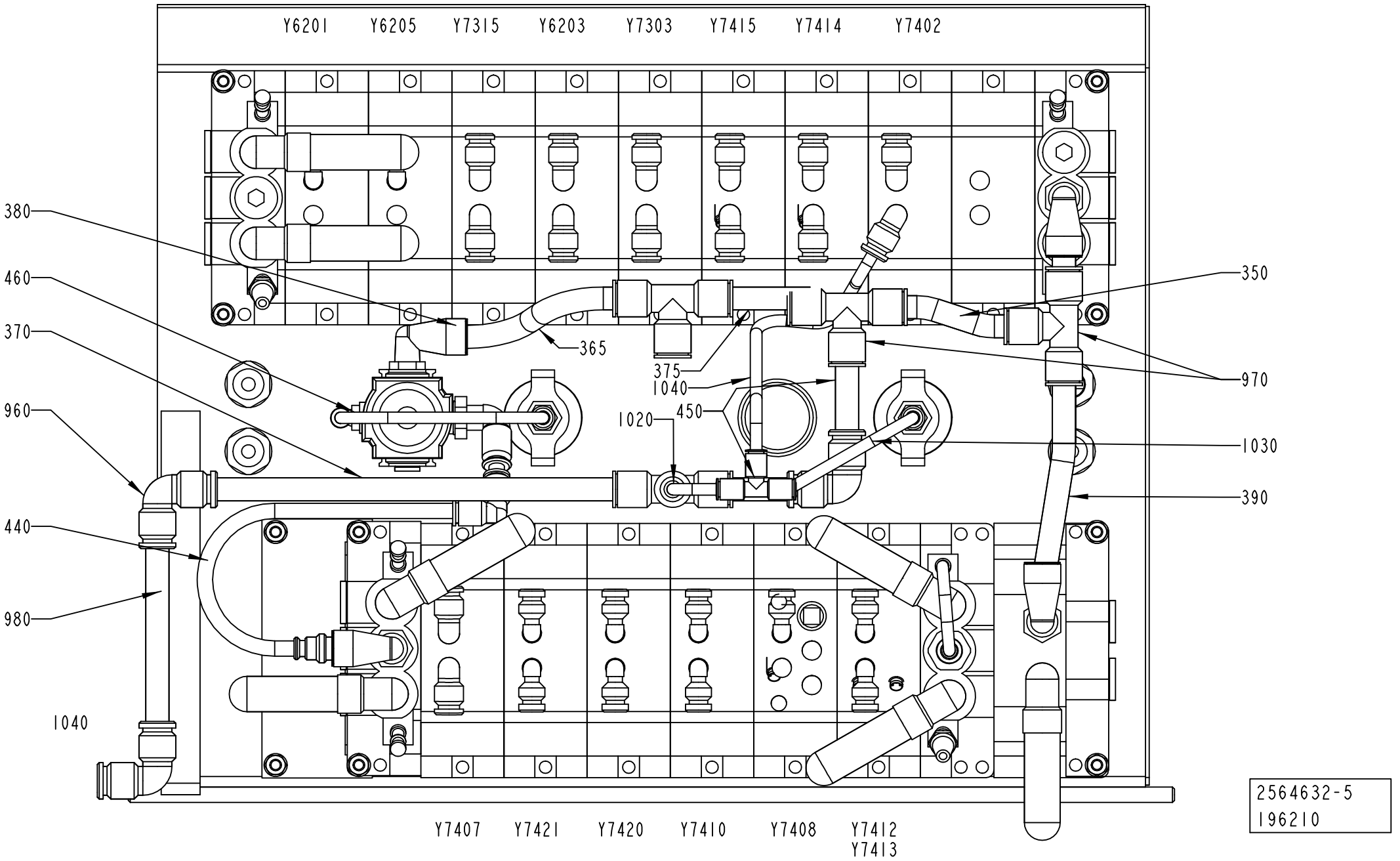
Y6201
Y6205
Y7315
Y6203
Y7303
Y7415
Y7414
Y7402
380
460
370
960
440
980
1040
365
375
1040
1020
450
350
970
1030
390
Y7407
Y7421
Y7420
Y7410
Y7408
Y7412
Y7413
2564632-5
196210

Pos	Part No	UN	Qty	Description	Page No
SEE PREVIOUS LISTS PAGES: 7-209, 7-211, 7-213.					

Pos	Part No	UN	Qty	Description	Page No

BRACKET

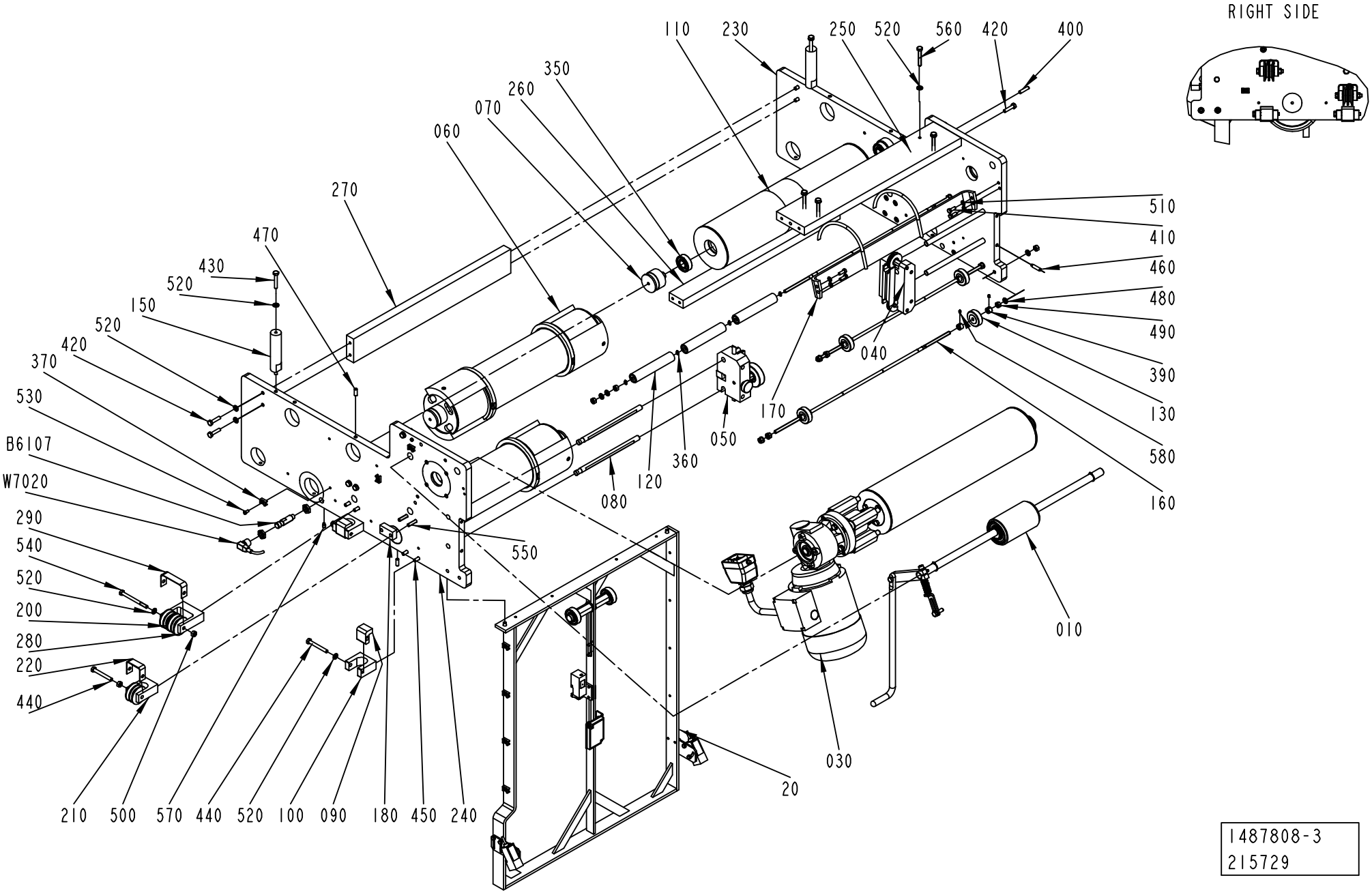

1487808-3
215729

ECM: 272110 - 20060814
Group number: 1487808-0200
Assembly Drawing: 1487808-3_1_AE

Pos	Part No	UN	Qty	Description	Page No
A3/FLEX					
040	2529547-0100		1	PAPER GUIDE	**7-161**
050	1484745-0100		1	WEB GUIDE	**7-141**
070	1499584-0000		2	AXLE PIN	
080	1484704-0000		4	SHAFT	
350	321313-0102		2	BALL BEARING, 15X35X11 MM	
Common Parts					
010	1512429-0100		1	PRESSURE ROLLER	**7-223**
020	1524731-0300		1	BRACKET	**7-225**
030	1524732-0200		1	DRIVE UNIT	**7-227**
060	2605228-0100		2	BENDING ROLLER	**7-229**
090	1484728-0000		4	BRACKET	
100	1484738-0000		4	BRACKET	
110	1484766-0000		1	DANCE ROLLER	
120	1145391-0000		3	ROLLER	
130	1558911-0000		4	PRESSURE ROLLER	
150	1487802-0000		2	SPACER	
160	2701319-0000		3	GUIDE PIN	
170	2550896-0000		1	RAIL	
180	1519960-0000		1	SPACER	
200	1519581-0000		5	ROLLER BAR	
210	1519586-0000		3	BRACKET	
220	1519592-0000		4	BOW	
230	1490814-0000		1	PLATE	
240	1490815-0000		1	PLATE	
250	1487795-0000		1	PLATE	
260	1487796-0000		1	PLATE	
270	1487800-0000		1	PLATE	
280	1538192-0000		1	BRACKET	
290	1539396-0000		1	BOW CLAMP	
360	315751-0103		4	RETAINING RING FOR SHAFT DIN 471 6 A2	
370	352113-0205		6	ANCHOR PLATES FOR STRIPS, TYPE TM2S8-C10	
390	315741-0102		8	RETAINING RING DIN 705 A2 6	
400	311103-0355		2	PARALLEL PIN ISO 2338 6M6X25 A1	
410	312105-0328		4	SCREW M6S ISO 4017 M5X14 A480	
420	312105-0372		11	SCREW M6S ISO 4017 M6X25 A480	
430	312105-0376		2	SCREW M6S ISO 4014 M6X35 A480	
440	312105-0380		8	SCREW M6S ISO 4014 M6X50 A480	
450	312115-0370		14	SCREW ISO4762 M6X20 A4 80	
460	312311-0372		4	SCREW ISO4028 M6X25 FZB	
470	312318-0368		5	SCREW ISO4029 M6X16 A4	
480	315103-0153		12	WASHER, BRB, 6,4/12,H=1,5 NIPL BR	
490	312607-0316		12	HEXAGON NUT, EN 24032 M6M M6 A480	
500	312605-0316		5	HEXAGON NUT, M6M M6 A280	
510	315105-0146		4	WASHER BRB 5,3X10 RFR	
520	315105-0153		25	WASHER BRB 6,4X12 RFR	
530	312125-0287		6	SCREW ISO 1207 M4X8 A4	
540	312105-0384		1	SCREW M6S ISO 4014 M6X70 A480	
550	312115-0374		2	SCREW ISO4762 M6X30 A4 80	
560	312109-0378		4	SCREW M6S ISO 4017 M6X40 A480	
570	90287-0154		1	SCREW, SOCK.SET DOGPOINT M6X10	
580	312318-0283		8	SCREW ISO4029 M4X4 A4	
B6107	90458-0677		1	PROXIMITY SWITCH, E2EG-X5MB1-M1	
W7020	90458-1076		1	L-SHAPED CONNECTOR CABLE 933 235-042	

PRESSURE ROLLER

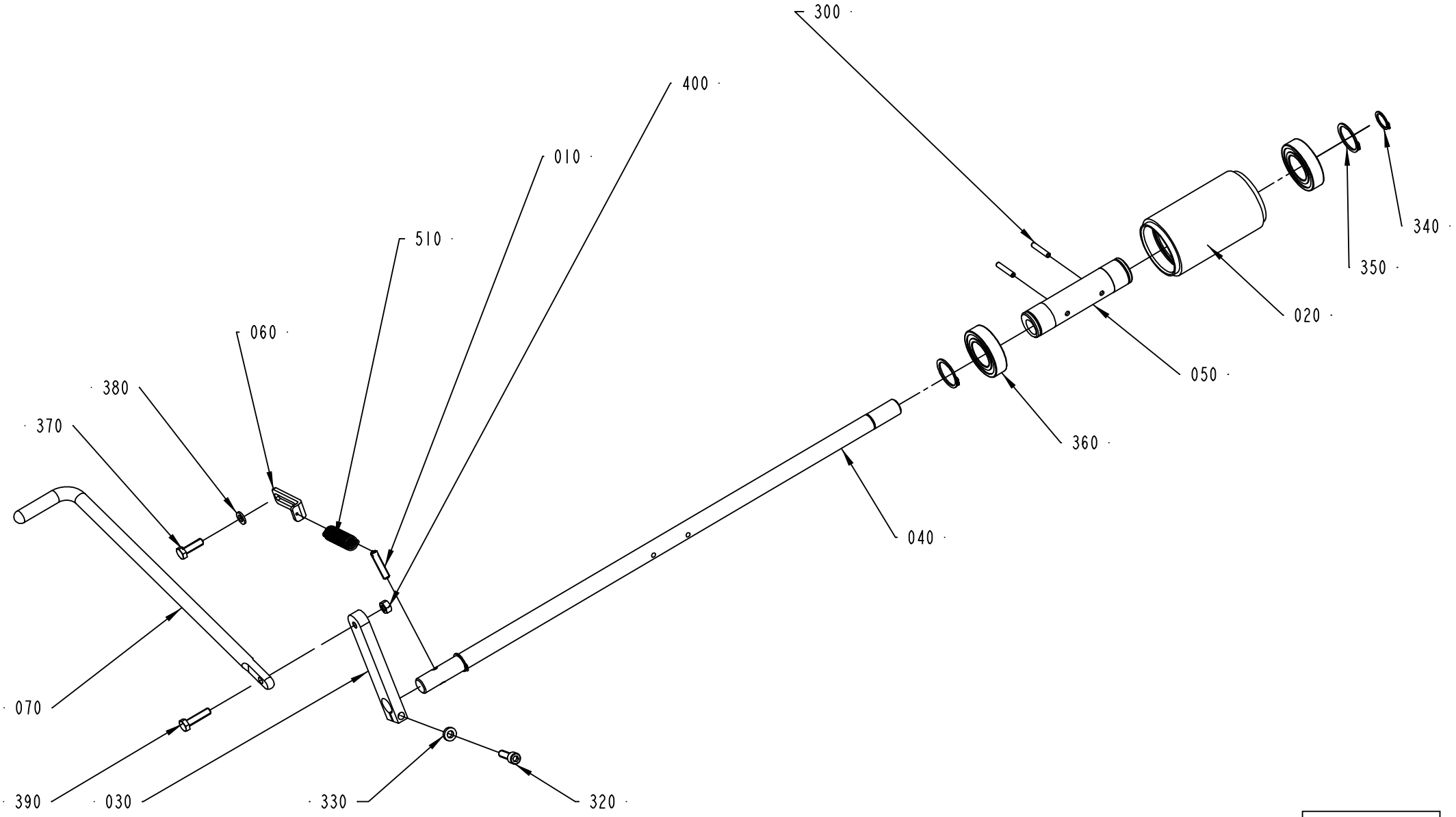

1512429-1
ECM 118625

ECM: 180671 - 20041005
Group number: 1512429-0100
Assembly Drawing: 1512429-1_1_AC

Pos	Part No	UN	Qty	Description	Page No
-					
010	578684-0000		1	SPRING BRACKET	
020	906254-0000		1	ROLLER	
030	2576379-0000		1	ROCKER ARM	
040	1487521-0000		1	SHAFT	
050	1512267-0000		1	ECCENTRIC BUSHING	
060	2529549-0000		1	PLATE	
070	2578455-0000		1	LIFTING HANDLE	
300	311112-0258		2	SPRING PIN, ISO 8752 4X24-C	
310	312105-0368		1	SCREW M6S ISO 4017 M6X16 A480	
320	312115-0370		1	SCREW ISO4762 M6X20 A4 80	
330	315115-0153		1	WASHER PLAIN, TBRB 6,4/12 H=3	
340	315751-0112		2	RETAINING RING FOR SHAFT DIN 471 15 A2	
350	315751-0119		2	RETAINING RING FOR SHAFT DIN 471 25 A2	
360	321308-0205		2	BALL BEARING, 25X47X12MM	
370	312105-0370		1	SCREW M6S ISO 4017 M6X20 A480	
380	315105-0153		1	WASHER BRB 6,4X12 RFR	
390	312105-0372		1	SCREW M6S ISO 4017 M6X25 A480	
400	312605-0316		1	HEXAGON NUT, M6M M6 A280	
500	90051-0082		1	KNOB, CIRCUL, THREADED BUSH, M6 25X21 MM	
510	90335-0091		1	TENSION SPRING 41890, 1,2X13X48,2	

Pos	Part No	UN	Qty	Description	Page No

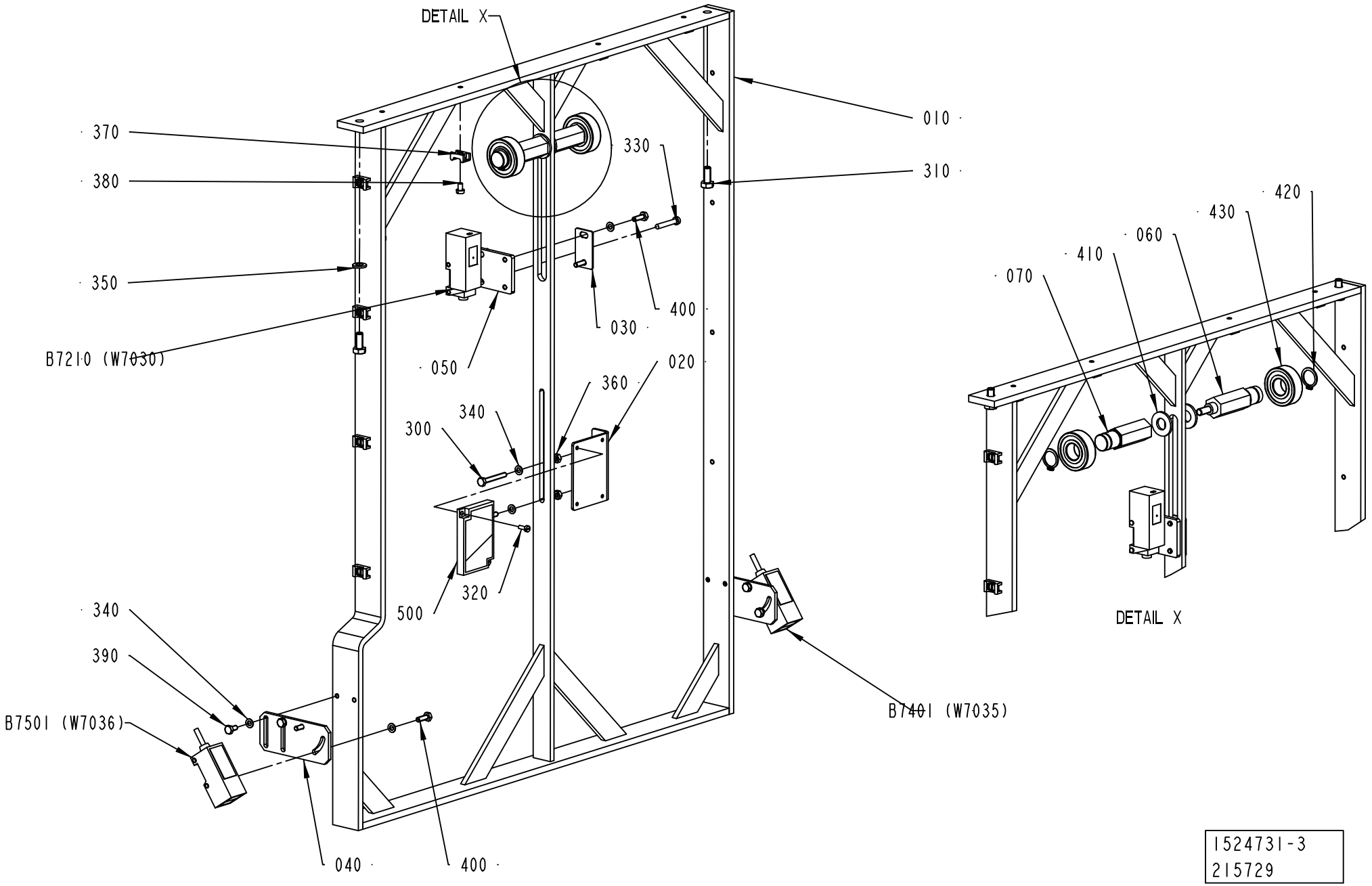

1524731-3
215729

ECM: 272278 - 20060712
Group number: 1524731-0300
Assembly Drawing: 1524731-3_1_AA

Pos	Part No	UN	Qty	Description	Page No
-					
010	2541942-0000		1	BRACKET	
020	1487784-0000		1	BRACKET	
030	1517105-0000		1	PLATE	
040	2542496-0000		2	BRACKET	
050	2651925-0000		1	PLATE	
060	2737841-0000		1	BRACKET	
070	2737842-0000		1	BRACKET	
300	312105-0299		2	SCREW M6S ISO 4017 M4X30 A470	
310	312105-0367		2	SCREW M6S ISO 4017 M6X14 A480	
320	312125-0222		2	SCREW ISO 1207 M3X8 A4	
330	312125-0297		2	SCREW ISO 1207 M4X25 A4	
340	315105-0136		14	WASHER BRB 4,3X9 RFR	
350	315105-0153		2	WASHER BRB 6,4X12 RFR	
360	312605-0312		4	HEXAGON NUT, M6M M4 A280	
370	352113-0205		12	ANCHOR PLATES FOR STRIPS, TYPE TM2S8-C10	
380	312125-0285		12	SCREW ISO 1207 M4X6 A4	
390	312105-0287		4	SCREW M6S ISO 4017 M4X8 A470	
400	312105-0291		6	SCREW M6S ISO 4017 M4X12 A470	
410	315105-0173		2	WASHER BRB 10,5X20 RFR	
420	315750-0112		2	RETAINING RING SHAFT DIN 471 ST 15	
430	321313-0102		2	BALL BEARING, 15X35X11 MM	
500	90232-0333		1	REFLECTOR E39-R1	
B7210	90232-0129		1	PH.CELL E3S-CR61-5M	
B7401	90232-0106		1	PH.CELL E3S-CR11-5M	
B7501	90232-0106		1	PH.CELL E3S-CR11-5M	

Pos	Part No	UN	Qty	Description	Page No

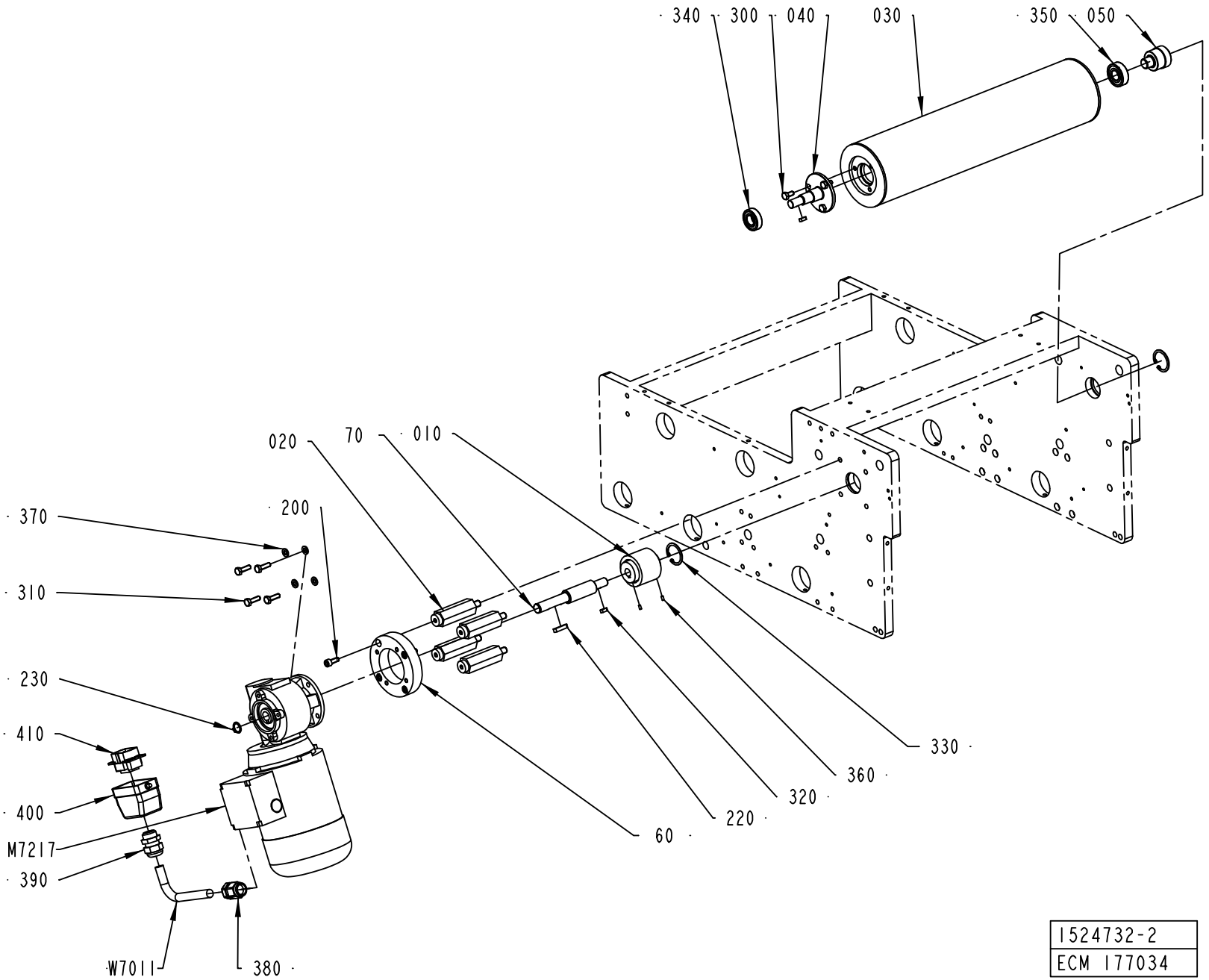

1524732-2
ECM 177034

ECM: 272279 - 20060712
Group number: 1524732-0200
Assembly Drawing: 1524732-2_1_AD

Pos	Part No	UN	Qty	Description	Page No
A3/FLEX					
030	2523497-0000		1	BENDING ROLLER	
W7011	90220-0104	M	9	SCR. CABLE 4X1,5MM2	
Common Parts					
010	979847-0000		1	SHAFT COUPLING	
020	1487788-0000		4	SPACER	
040	2523499-0000		1	SHAFT	
050	2523500-0000		1	AXLE PIN	
060	2532561-0000		1	SPACER	
070	2588067-0000		1	SHAFT	
200	312115-0368		4	SCREW ISO4762 M6X16 A4 80	
220	315705-0202		1	PARALLEL KEY W ROUND ENDS 5X5X25MM	
230	315751-0111		1	RETAINING RING FOR SHAFT DIN 471 14 A2	
300	312105-0366		3	SCREW M6S ISO 4017 M6X12 A480	
310	312105-0370		4	SCREW M6S ISO 4017 M6X20 A480	
320	315701-0166		2	PARALLEL KEY W. ROUND ENDS 4X4X12 MM	
330	315753-0123		2	RETAINING RING FOR BORE DIN 472 32 A2	
340	321308-0202		1	BALL BEARING, 15X32X9 MM	
350	321313-0102		1	BALL BEARING, 15X35X11 MM	
360	312318-0220		2	SCREW ISO4029 M3X6 A4	
370	315105-0153		4	WASHER BRB 6,4X12 RFR	
380	90458-0438		1	GLAND, EXTENDED WITH INSERT, M20X1,5	
390	352103-0108		1	CABLE GLAND, ST 13,5 , PR20,4/PG13,5	
400	90110-0157		1	CABLE HOOD 6-POL 70.352.0628.1	
410	90110-0159		1	MALE INSERT 70.310.0640.0	
M7217	90459-2096		1	GEARS, WORM MOTOR F2 15 P63 B14 B8 PV 75	

Pos	Part No	UN	Qty	Description	Page No

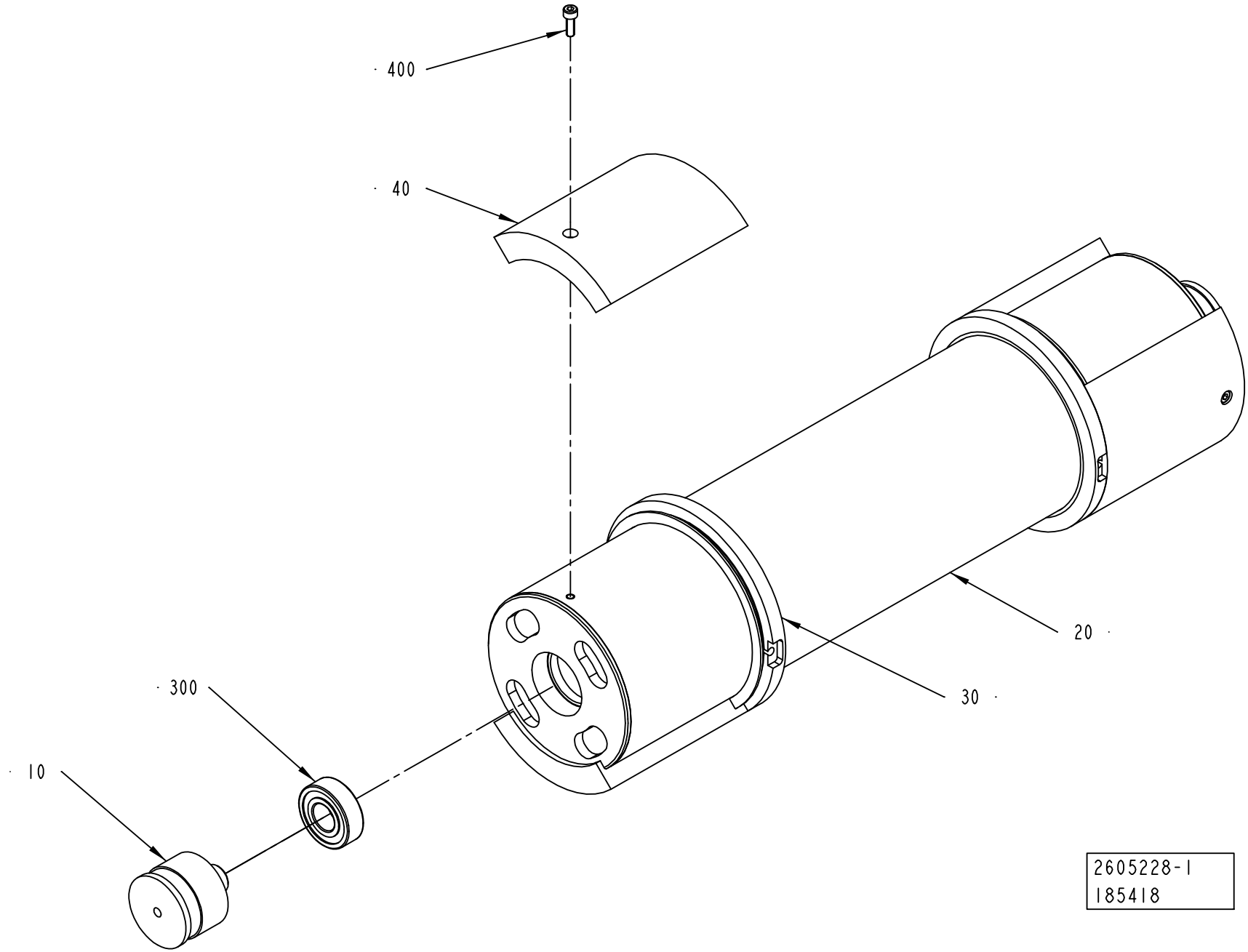
400
40
20
30
300
10
2605228-1
185418

ECM: 272116 - 20060814
Group number: 2605228-0100
Assembly Drawing: 2605228-1_1_AB

Pos	Part No	UN	Qty	Description	Page No
TPA 0330SQ (See drawing on page: 7-228)					
040	2508205-0008		4	BRACKET	
TPA 1000SQ, TPA 0750SQ (See drawing on page: 7-228)					
040	2508205-0012		4	BRACKET	
TBA 0200S, TPA 0250SQ, TPA 0200SQ (See drawing on page: 7-228)					
040	2508205-0010		4	BRACKET	
TBA 0250S, TBA 0200M (See drawing on page: 7-228)					
040	2508205-0009		4	BRACKET	
TBA 0330S, TBA 0200B, TBA 0250B, TBA 0200SQ, TBA 0250SQ (See drawing on page: 7-228)					
040	2508205-0007		4	BRACKET	
TPA 0500SQ (See drawing on page: 7-228)					
040	2508205-0006		4	BRACKET	
TBA 0500S (See drawing on page: 7-228)					
040	2508205-0005		4	BRACKET	
TBA 1000SQ (See drawing on page: 7-228)					
040	2508205-0003		4	BRACKET	
TBA 1000B, TBA 1500S (See drawing on page: 7-228)					
040	2508205-0001		4	BRACKET	
TBA 1000S (See drawing on page: 7-228)					
040	2508205-0002		4	BRACKET	
TBA 1890S, TBA 2000S, TBA 1400B (See drawing on page: 7-228)					
040	2701847-0000		4	BRACKET	
Common Parts					
010	1499584-0000		2	AXLE PIN	
020	2508206-0000		1	BENDING ROLLER	
030	2701846-0000		2	FLANGE	
300	321313-0102		2	BALL BEARING, 15X35X11 MM	
400	312115-0291		4	SCREW ISO4762 M4X12 A4 80	

Pos	Part No	UN	Qty	Description	Page No

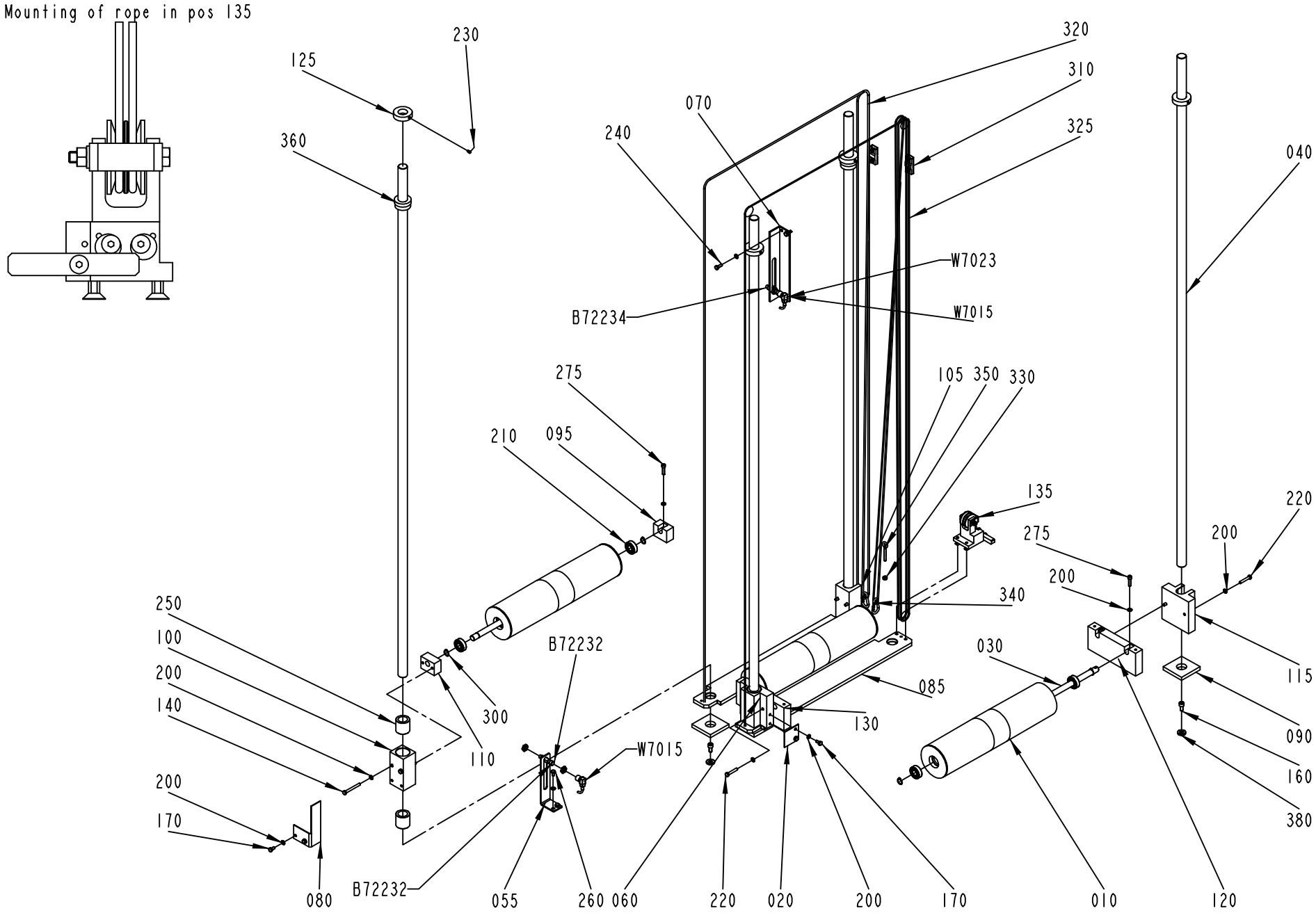

1490831-2
ECM 172866

ECM: 272272 - 20060712
Group number: 1490831-0200
Assembly Drawing: 1490831-2_1_AD

This list covers pages from 7-230 to 7-233

Pos	Part No	UN	Qty	Description	Page No
TBA 1890S, TBA 2000S, TBA 1400B (See drawing on pages: 7-230, 7-232)					
150	2609303-0000		2	WEIGHT	
290	90287-0261		4	SCREW MC6S M5X55 A270	
Common Parts					
010	1484766-0000		3	DANCE ROLLER	
020	1484778-0000		1	PLATE	
030	1487519-0000		3	SHAFT	
040	1487530-0001		4	GUIDE ROD	
055	1484761-0000		1	ANGLE BRACKET	
060	1487536-0000		1	GUIDE BRACKET	
070	1487550-0000		1	ANGLE BRACKET	
080	1487551-0000		1	PLATE	
085	1519942-0000		2	PLATE	
090	1487765-0000		4	SPACER	
095	1511579-0000		1	BRACKET	
100	1484752-0000		1	SLIDER	
105	1484760-0000		1	SLIDER	
110	1490183-0000		1	BRACKET	
115	1511564-0000		1	BRACKET	
120	1487537-0000		1	BRACKET	
125	1487769-0000		4	SPACER	
130	1487538-0000		1	BRACKET	
135	1548210-0100		1	LOCKING DEVICE	**7-235**
140	312105-0381		4	SCREW M6S ISO 4014 M6X55 A480	
160	312115-0489		4	SCREW ISO4762 M10X16 A4 80	
170	312105-0366		4	SCREW M6S ISO 4017 M6X12 A480	
200	315105-0153		19	WASHER BRB 6,4X12 RFR	
210	321313-0102		6	BALL BEARING, 15X35X11 MM	
220	312105-0376		4	SCREW M6S ISO 4014 M6X35 A480	
230	90287-0154		4	SCREW, SOCK.SET DOGPOINT M6X10	
240	312105-0368		2	SCREW M6S ISO 4017 M6X16 A480	
250	90189-0025		4	BALL BUSHING, 25X37X37 MM	
260	312105-0364		2	SCREW M6S ISO 4017 M6X10 A480	
275	312115-0372		3	SCREW ISO4762 M6X25 A4 80	
300	315751-0112		6	RETAINING RING FOR SHAFT DIN 471 15 A2	
310	90211-0002		2	WIRE LOCK, 5 MM	
320	90319-0013	M	12	ROPE 4MM BLUE 3700N	
325	90319-0013	M	8	ROPE 4MM BLUE 3700N	
330	312605-0316		1	HEXAGON NUT, M6M M6 A280	
340	90459-2704		2	SNAP HOOK STAINLESS 50X5MM	
350	90459-2705		1	LIFTING EYE BOLT, M6X40MM	
360	353249-0054		2	INSERT, SINGEL HOLE, EK 156/25	
380	315115-0173		4	WASHER PLAIN, TBRB 10,5/22 H=4	
B72232	90458-0677		1	PROXIMITY SWITCH, E2EG-X5MB1-M1	
B72234	90458-0677		1	PROXIMITY SWITCH, E2EG-X5MB1-M1	
W7015	90458-1076		1	L-SHAPED CONNECTOR CABLE 933 235-042	
W7023	90458-1076		1	L-SHAPED CONNECTOR CABLE 933 235-042	

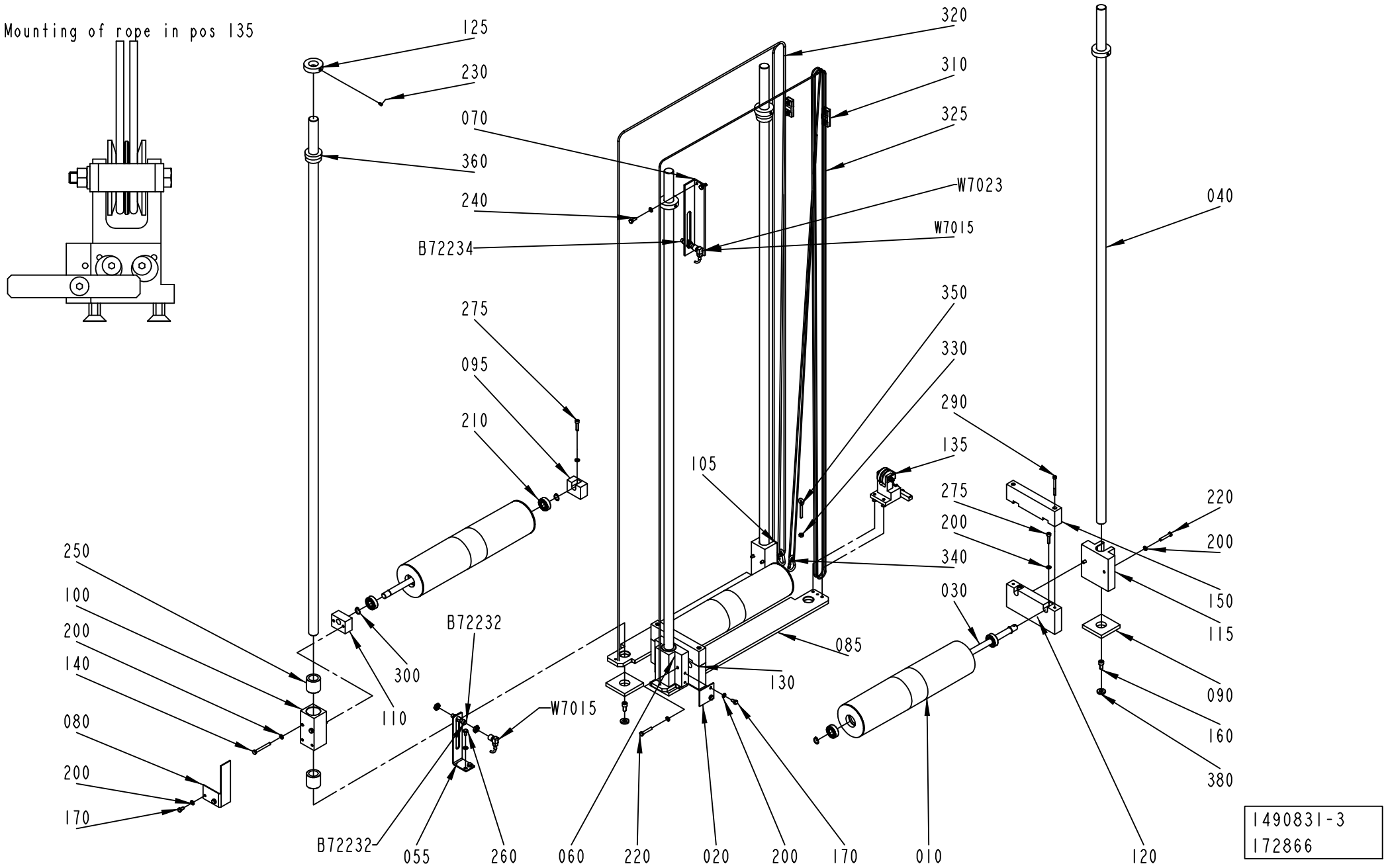

1490831-3
172866

ECM: 272272 - 20060712
Group number: 1490831-0200
Assembly Drawing: 1490831-3_1_AA

This list covers pages from 7-230 to 7-233

Pos	Part No	UN	Qty	Description	Page No
TBA 1890S, TBA 2000S, TBA 1400B (See drawing on pages: 7-230, 7-232)					
150	2609303-0000		2	WEIGHT	
290	90287-0261		4	SCREW MC6S M5X55 A270	
Common Parts					
010	1484766-0000		3	DANCE ROLLER	
020	1484778-0000		1	PLATE	
030	1487519-0000		3	SHAFT	
040	1487530-0001		4	GUIDE ROD	
055	1484761-0000		1	ANGLE BRACKET	
060	1487536-0000		1	GUIDE BRACKET	
070	1487550-0000		1	ANGLE BRACKET	
080	1487551-0000		1	PLATE	
085	1519942-0000		2	PLATE	
090	1487765-0000		4	SPACER	
095	1511579-0000		1	BRACKET	
100	1484752-0000		1	SLIDER	
105	1484760-0000		1	SLIDER	
110	1490183-0000		1	BRACKET	
115	1511564-0000		1	BRACKET	
120	1487537-0000		1	BRACKET	
125	1487769-0000		4	SPACER	
130	1487538-0000		1	BRACKET	
135	1548210-0100		1	LOCKING DEVICE	**7-235**
140	312105-0381		4	SCREW M6S ISO 4014 M6X55 A480	
160	312115-0489		4	SCREW ISO4762 M10X16 A4 80	
170	312105-0366		4	SCREW M6S ISO 4017 M6X12 A480	
200	315105-0153		19	WASHER BRB 6,4X12 RFR	
210	321313-0102		6	BALL BEARING, 15X35X11 MM	
220	312105-0376		4	SCREW M6S ISO 4014 M6X35 A480	
230	90287-0154		4	SCREW, SOCK.SET DOGPOINT M6X10	
240	312105-0368		2	SCREW M6S ISO 4017 M6X16 A480	
250	90189-0025		4	BALL BUSHING, 25X37X37 MM	
260	312105-0364		2	SCREW M6S ISO 4017 M6X10 A480	
275	312115-0372		3	SCREW ISO4762 M6X25 A4 80	
300	315751-0112		6	RETAINING RING FOR SHAFT DIN 471 15 A2	
310	90211-0002		2	WIRE LOCK, 5 MM	
320	90319-0013	M	12	ROPE 4MM BLUE 3700N	
325	90319-0013	M	8	ROPE 4MM BLUE 3700N	
330	312605-0316		1	HEXAGON NUT, M6M M6 A280	
340	90459-2704		2	SNAP HOOK STAINLESS 50X5MM	
350	90459-2705		1	LIFTING EYE BOLT, M6X40MM	
360	353249-0054		2	INSERT, SINGEL HOLE, EK 156/25	
380	315115-0173		4	WASHER PLAIN, TBRB 10,5/22 H=4	
B72232	90458-0677		1	PROXIMITY SWITCH, E2EG-X5MB1-M1	
B72234	90458-0677		1	PROXIMITY SWITCH, E2EG-X5MB1-M1	
W7015	90458-1076		1	L-SHAPED CONNECTOR CABLE 933 235-042	
W7023	90458-1076		1	L-SHAPED CONNECTOR CABLE 933 235-042	

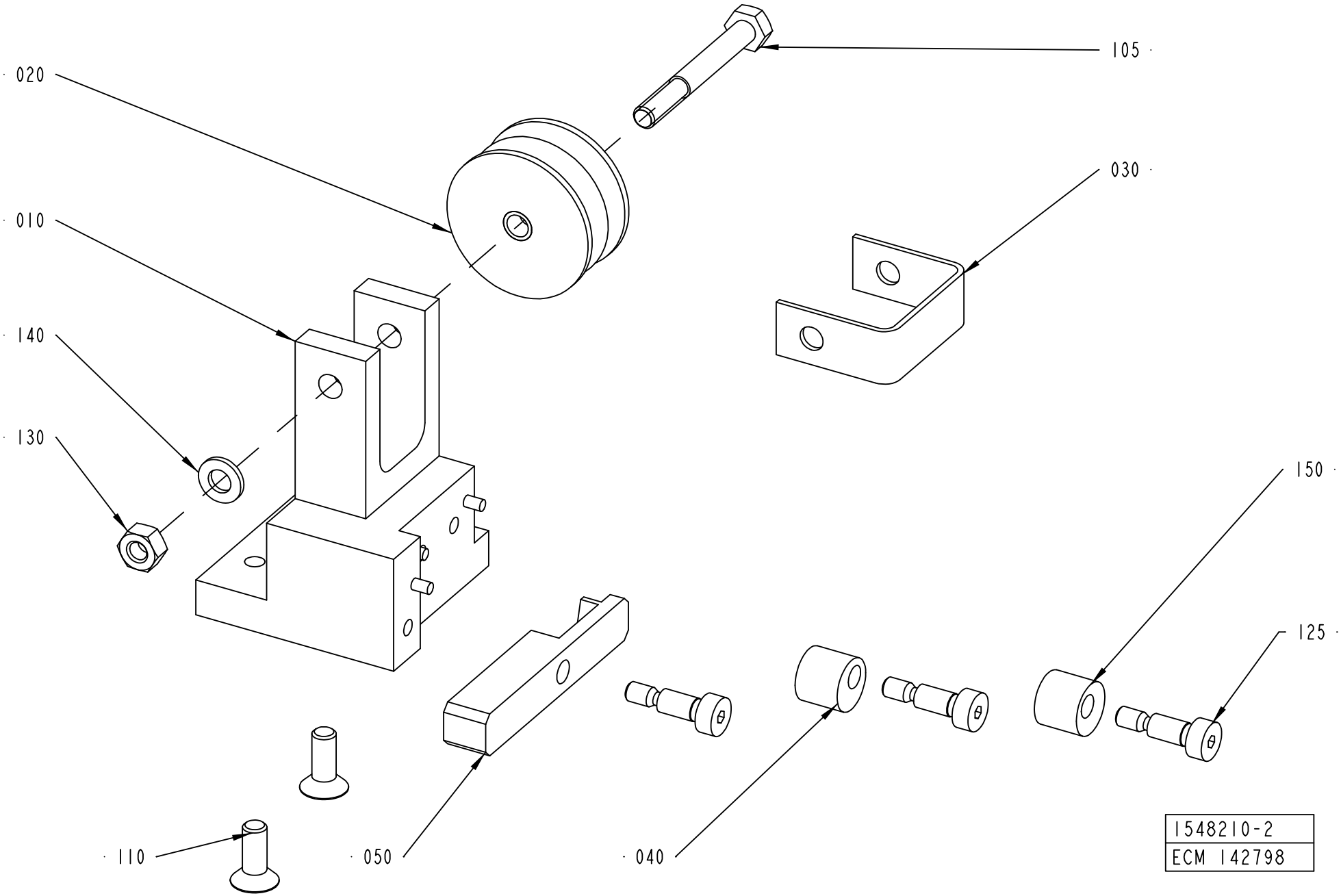
020
105
030
010
140
130
150
125
110
050
040
1548210-2
ECM 142798

ECM: 181010 - 20041005
Group number: 1548210-0100
Assembly Drawing: 1548210-2_1_AB

Pos	Part No	UN	Qty	Description	Page No
-					
010	2576244-0000		1	BRACKET	
020	1519581-0000		1	ROLLER BAR	
030	1519592-0000		1	BOW	
040	1539397-0000		1	ROLLER	
050	2576245-0000		1	ARM	
105	312105-0380		1	SCREW M6S ISO 4014 M6X50 A480	
110	312155-0368		2	SCREW DIN 7991 MF6S M6X16 A4 70	
125	312180-0366		3	SCREW ISO7379 H6X12	
130	312605-0316		1	HEXAGON NUT, M6M M6 A280	
140	315105-0153		1	WASHER BRB 6,4X12 RFR	
150	1549332-0000		1	ROLLER	

Pos	Part No	UN	Qty	Description	Page No

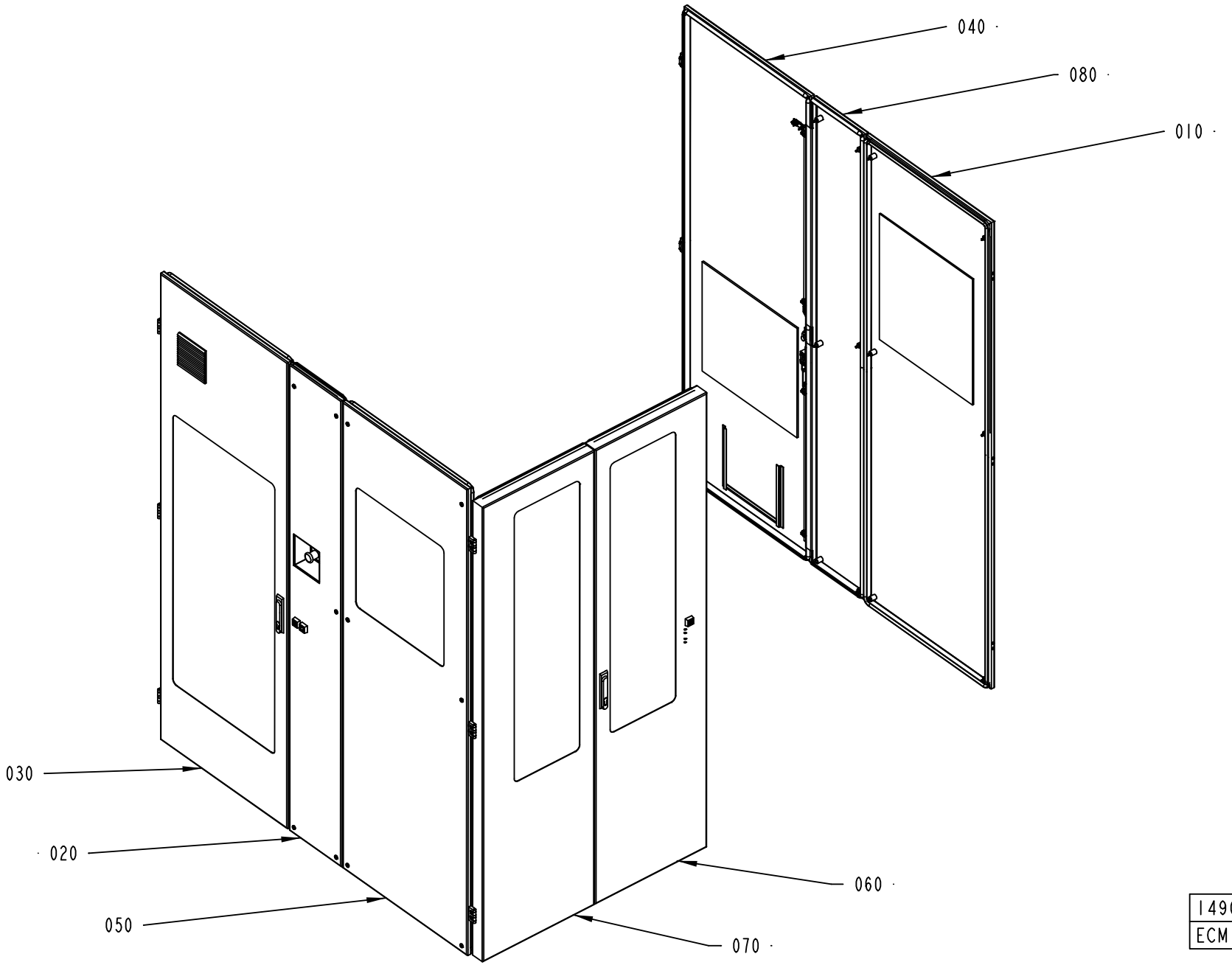

1490215-1
ECM 115190

ECM: 273552 - 20061102
Group number: 1490215-0200
Assembly Drawing: 1490215-1_1_AC

This list covers pages from 7-236 to 7-243

Pos	Part No	UN	Qty	Description	Page No
A3/FLEX SEPROOM WITH ARL (See drawing on page: 7-242)					
085	2591680-0100		1	HOLDER	**7-245**
110	1524404-0100		2	COVER	**7-247**
120	1519599-0100		1	ROOF	**7-249**
130	2755891-0100		1	COVER	**7-253**
A3/FLEX ASU WITH ARL (See drawing on page: 7-240)					
085	2591680-0100		1	HOLDER	**7-245**
A3/FLEX SEPROOM WITHOUT ARL (See drawing on pages: 7-236, 7-238)					
110	1524404-0100		2	COVER	**7-247**
120	1519599-0100		1	ROOF	**7-249**
130	2755891-0100		1	COVER	**7-253**
Common Parts					
010	1499564-0100		1	COVER	**7-255, 7-257**
020	1490190-0200		1	HATCH	**7-261, 7-263**
030	1490191-0100		1	DOOR	**7-273**
040	1558988-0100		1	DOOR	**7-275**
050	1490193-0100		1	COVER	**7-277, 7-279**
060	1498453-0200		1	DOOR	**7-283**
070	1498454-0200		1	DOOR	**7-287**
080	1490188-0100		1	COVER	**7-289**

Pos	Part No	UN	Qty	Description	Page No

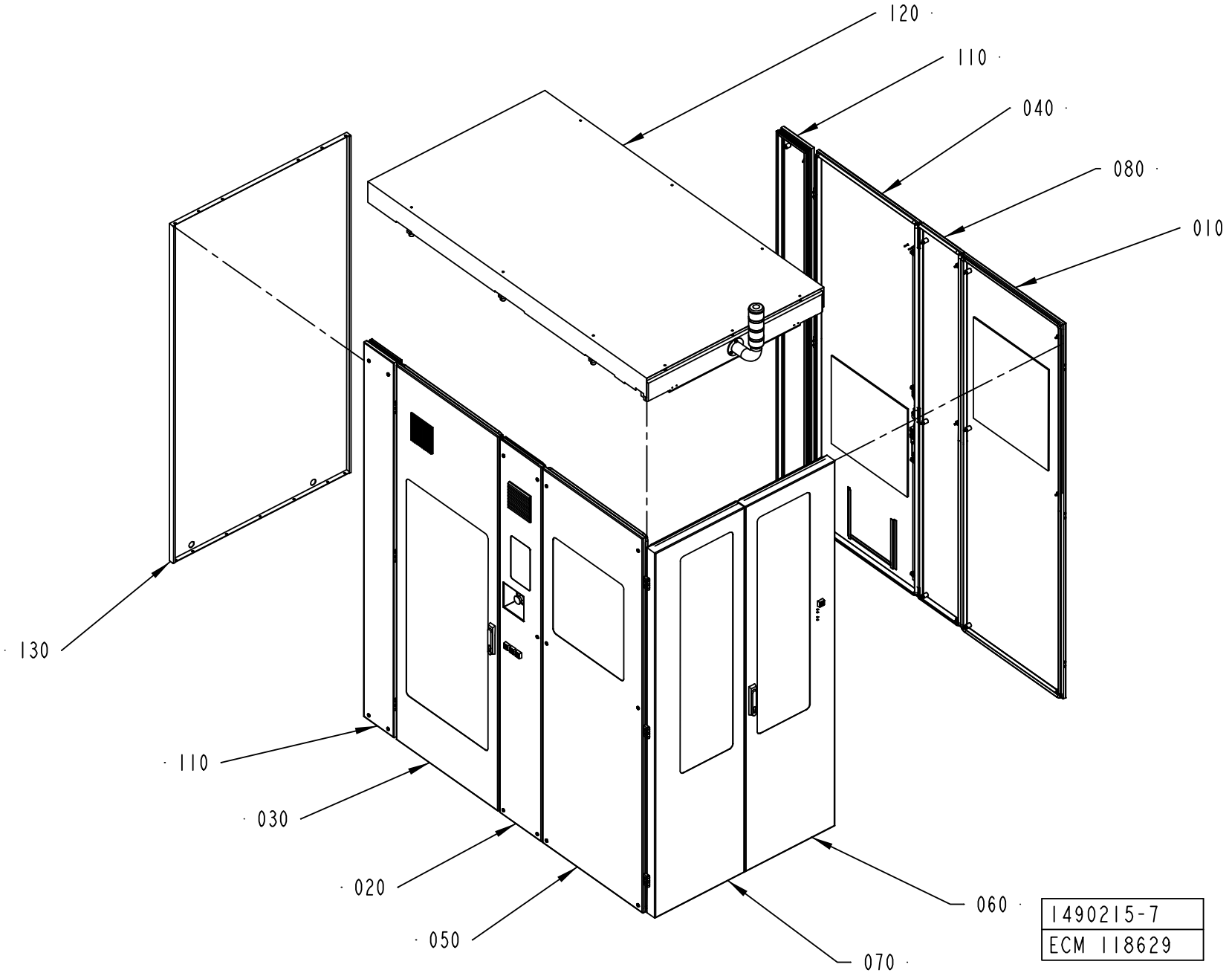
120
110
040
080
010
130
110
030
020
050
060
070
1490215-7
ECM 118629

ECM: 273552 - 20061102
Group number: 1490215-0200
Assembly Drawing: 1490215-7_1_AA

This list covers pages from 7-236 to 7-243

Pos	Part No	UN	Qty	Description	Page No
A3/FLEX SEPROOM WITH ARL (See drawing on page: 7-242)					
085	2591680-0100		1	HOLDER	**7-245**
110	1524404-0100		2	COVER	**7-247**
120	1519599-0100		1	ROOF	**7-249**
130	2755891-0100		1	COVER	**7-253**
A3/FLEX ASU WITH ARL (See drawing on page: 7-240)					
085	2591680-0100		1	HOLDER	**7-245**
A3/FLEX SEPROOM WITHOUT ARL (See drawing on pages: 7-236, 7-238)					
110	1524404-0100		2	COVER	**7-247**
120	1519599-0100		1	ROOF	**7-249**
130	2755891-0100		1	COVER	**7-253**
Common Parts					
010	1499564-0100		1	COVER	**7-255, 7-257**
020	1490190-0200		1	HATCH	**7-261, 7-263**
030	1490191-0100		1	DOOR	**7-273**
040	1558988-0100		1	DOOR	**7-275**
050	1490193-0100		1	COVER	**7-277, 7-279**
060	1498453-0200		1	DOOR	**7-283**
070	1498454-0200		1	DOOR	**7-287**
080	1490188-0100		1	COVER	**7-289**

Pos	Part No	UN	Qty	Description	Page No

COVERING PANEL

Drawing file: 1490215-10_1_AA.hpgl

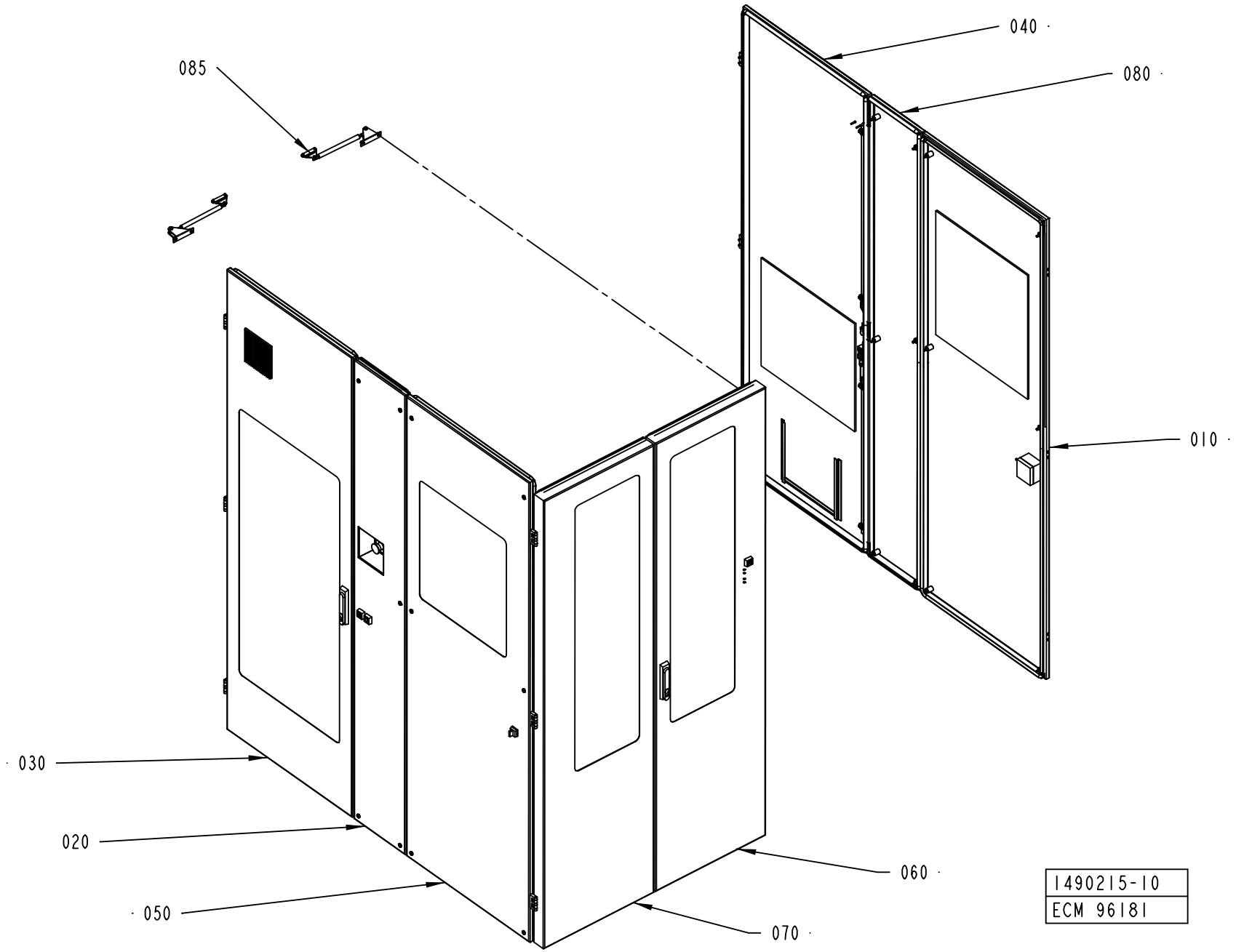

ECM: 273552 - 20061102
Group number: 1490215-0200
Assembly Drawing: 1490215-10_1_AA

This list covers pages from 7-236 to 7-243

Pos	Part No	UN	Qty	Description	Page No
A3/FLEX SEPROOM WITH ARL (See drawing on page: 7-242)					
085	2591680-0100		1	HOLDER	**7-245**
110	1524404-0100		2	COVER	**7-247**
120	1519599-0100		1	ROOF	**7-249**
130	2755891-0100		1	COVER	**7-253**
A3/FLEX ASU WITH ARL (See drawing on page: 7-240)					
085	2591680-0100		1	HOLDER	**7-245**
A3/FLEX SEPROOM WITHOUT ARL (See drawing on pages: 7-236, 7-238)					
110	1524404-0100		2	COVER	**7-247**
120	1519599-0100		1	ROOF	**7-249**
130	2755891-0100		1	COVER	**7-253**
Common Parts					
010	1499564-0100		1	COVER	**7-255, 7-257**
020	1490190-0200		1	HATCH	**7-261, 7-263**
030	1490191-0100		1	DOOR	**7-273**
040	1558988-0100		1	DOOR	**7-275**
050	1490193-0100		1	COVER	**7-277, 7-279**
060	1498453-0200		1	DOOR	**7-283**
070	1498454-0200		1	DOOR	**7-287**
080	1490188-0100		1	COVER	**7-289**

Pos	Part No	UN	Qty	Description	Page No

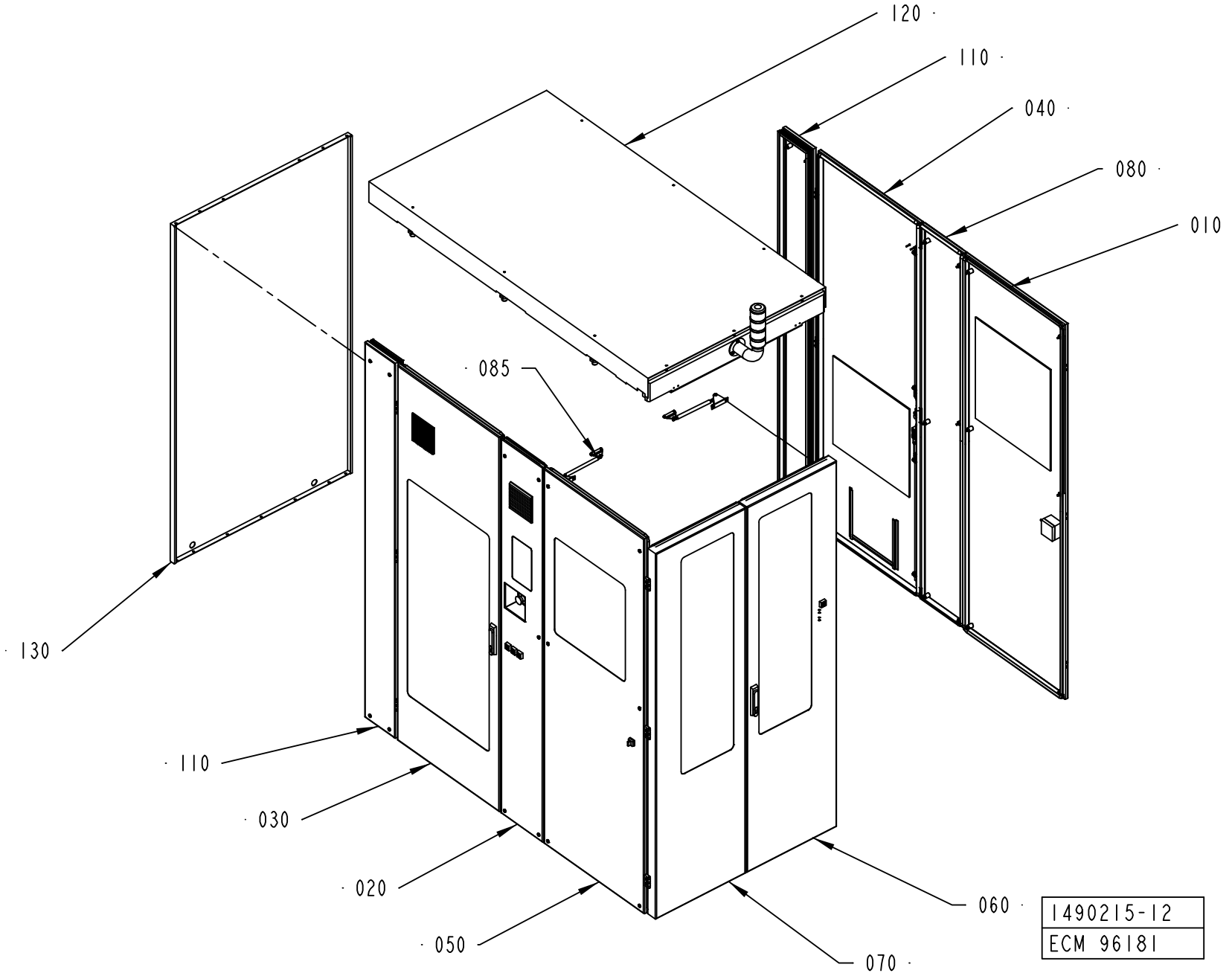
120
110
040
080
010
085
130
110
030
020
050
060
070
1490215-12
ECM 96181

ECM: 273552 - 20061102
Group number: 1490215-0200
Assembly Drawing: 1490215-12_1_AA

This list covers pages from 7-236 to 7-243

Pos	Part No	UN	Qty	Description	Page No
A3/FLEX SEPROOM WITH ARL (See drawing on page: 7-242)					
085	2591680-0100		1	HOLDER	**7-245**
110	1524404-0100		2	COVER	**7-247**
120	1519599-0100		1	ROOF	**7-249**
130	2755891-0100		1	COVER	**7-253**
A3/FLEX ASU WITH ARL (See drawing on page: 7-240)					
085	2591680-0100		1	HOLDER	**7-245**
A3/FLEX SEPROOM WITHOUT ARL (See drawing on pages: 7-236, 7-238)					
110	1524404-0100		2	COVER	**7-247**
120	1519599-0100		1	ROOF	**7-249**
130	2755891-0100		1	COVER	**7-253**
Common Parts					
010	1499564-0100		1	COVER	**7-255, 7-257**
020	1490190-0200		1	HATCH	**7-261, 7-263**
030	1490191-0100		1	DOOR	**7-273**
040	1558988-0100		1	DOOR	**7-275**
050	1490193-0100		1	COVER	**7-277, 7-279**
060	1498453-0200		1	DOOR	**7-283**
070	1498454-0200		1	DOOR	**7-287**
080	1490188-0100		1	COVER	**7-289**

Pos	Part No	UN	Qty	Description	Page No

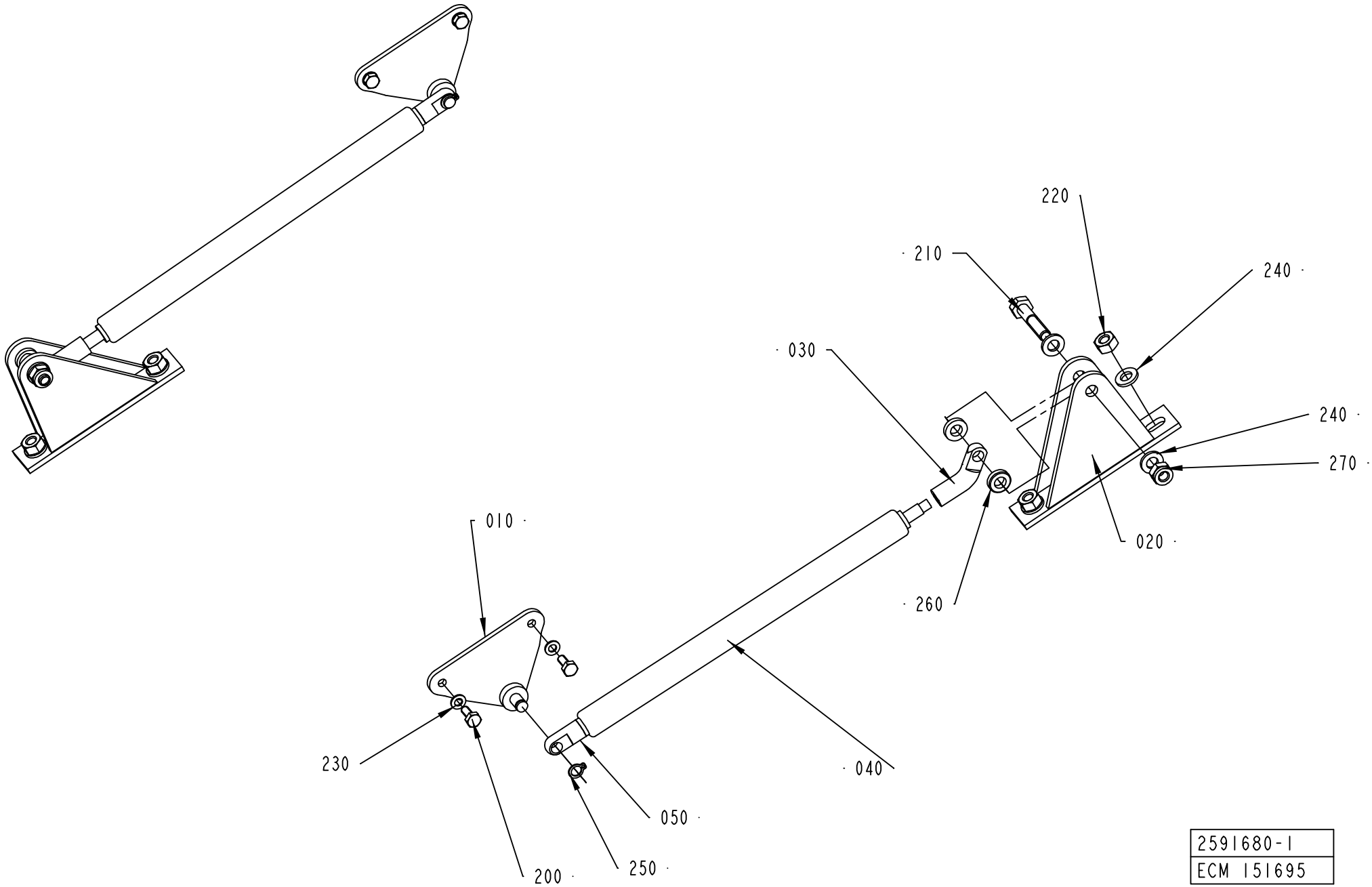

2591680-1
ECM 151695

ECM: 181166 - 20041005
Group number: 2591680-0100
Assembly Drawing: 2591680-1_1_AA

Pos	Part No	UN	Qty	Description	Page No
-					
010	90459-3179		2	GAS SPRING BRACKET, BES/AUG/06/001	
020	2589786-0000		2	BRACKET	
030	2589787-0000		2	FITTING	
040	90459-3181		2	GAS SPRING, G15-150-50N STAINLESS STEEL	
050	90459-3182		2	GAS SPRING FITTNG, AU16 STAINLESS STEEL	
200	312105-0289		4	SCREW M6S ISO 4017 M4X10 A470	
210	312105-0374		2	SCREW M6S ISO 4014 M6X30 A480	
220	312605-0316		4	HEXAGON NUT, M6M M6 A280	
230	315105-0136		4	WASHER BRB 4,3X9 RFR	
240	315105-0153		8	WASHER BRB 6,4X12 RFR	
250	315751-0103		2	RETAINING RING FOR SHAFT DIN 471 6 A2	
260	315115-0153		4	WASHER PLAIN, TBRB 6,4/12 H=3	
270	312812-0316		2	HEXAGON NUT, NY-LOCK M6 A480	

Pos	Part No	UN	Qty	Description	Page No

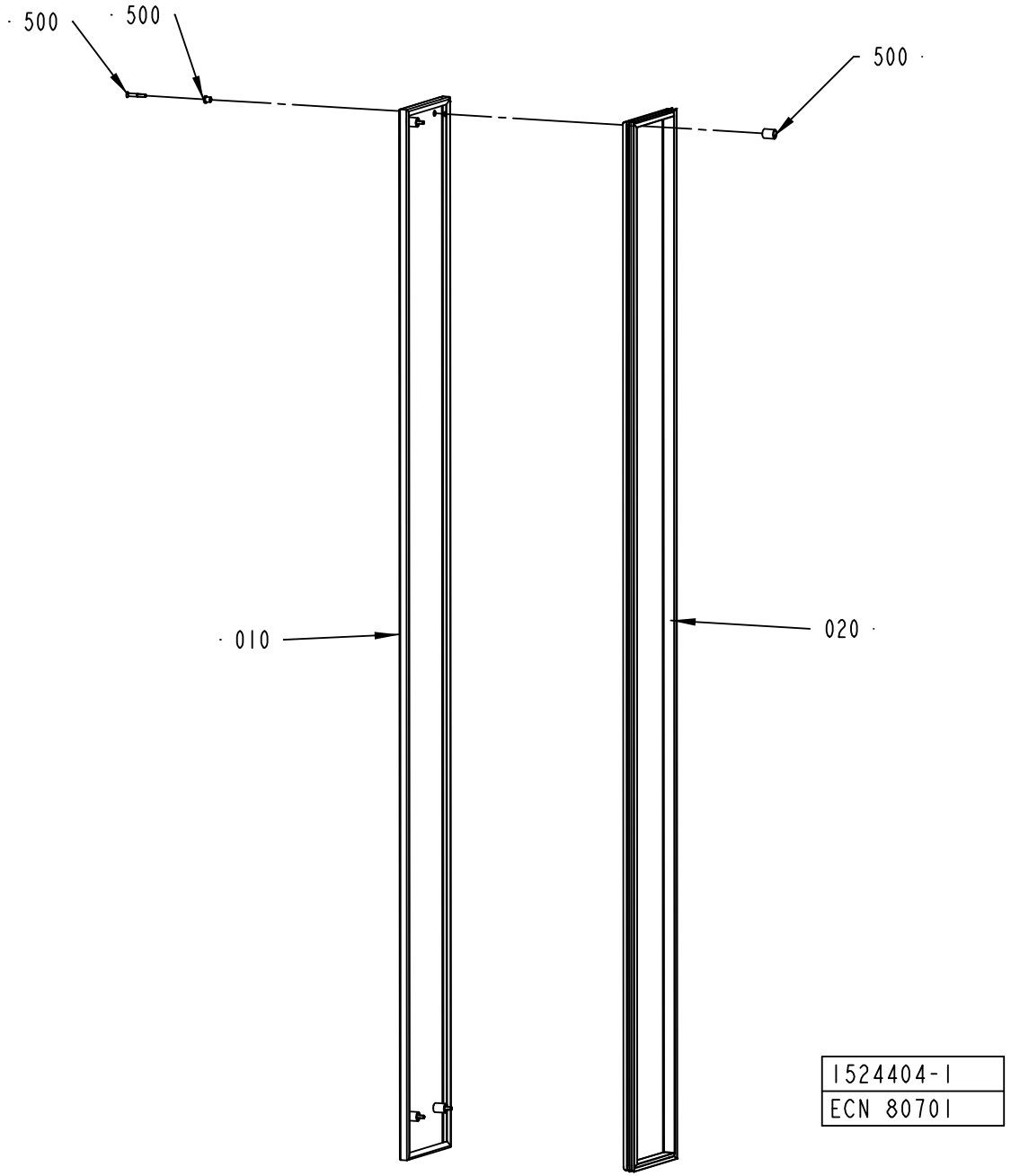
500
500
500
010
020
1524404-1
ECN 80701

ECM: 181165 - 20041005
Group number: 1524404-0100
Assembly Drawing: 1524404-1_1_AA

Pos	Part No	UN	Qty	Description	Page No
-					
010	1524405-0000		1	COVER PLATE	
020	1524406-0000		1	SEALING STRIP	
500	90226-0458		4	MOUNTING SCREW	

Pos	Part No	UN	Qty	Description	Page No

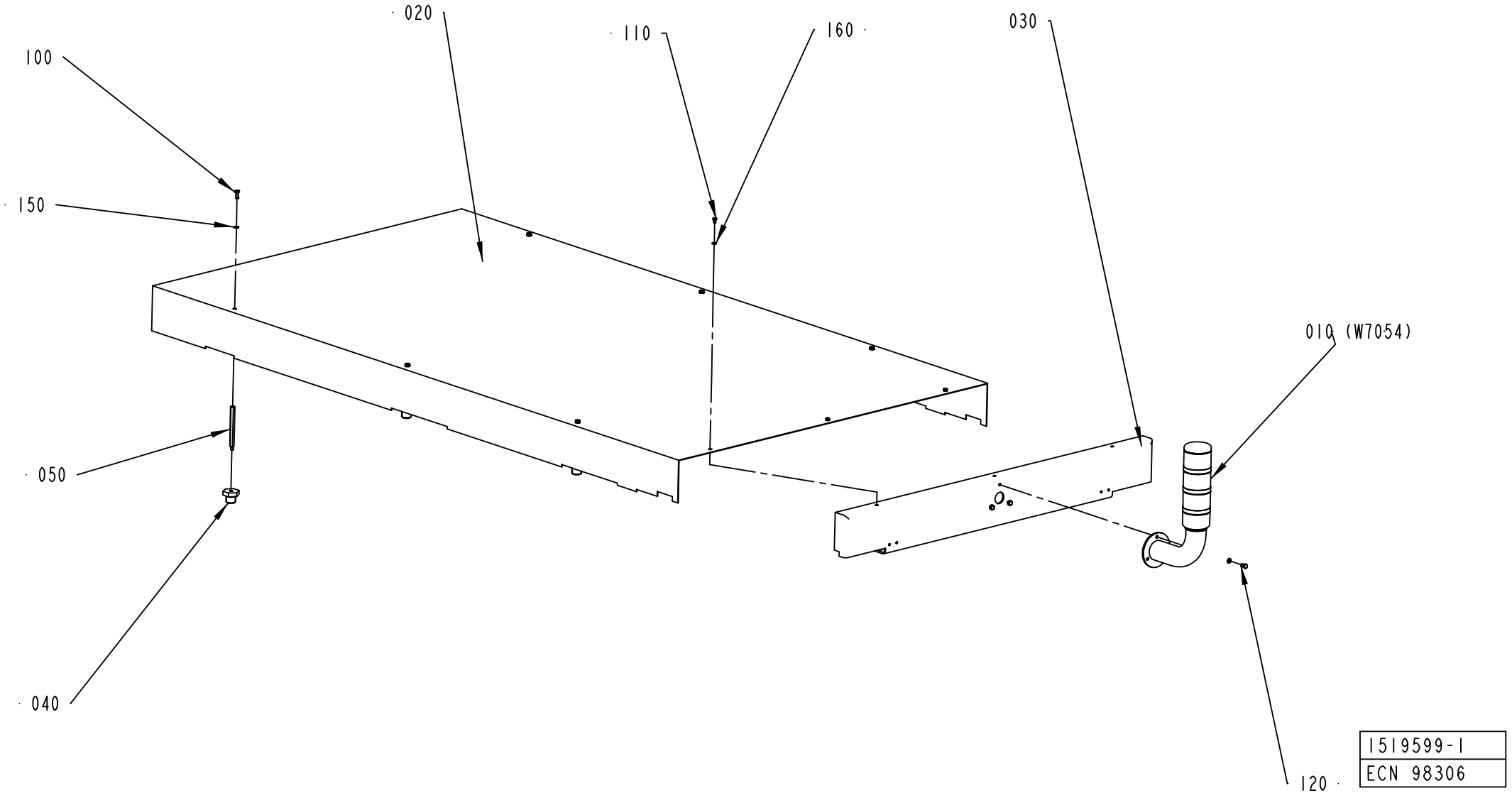
020
110
160
030
100
150
010 (W7054)
050
040
120
1519599-1
ECN 98306

ECM: 190948 - 20041104
Group number: 1519599-0100
Assembly Drawing: 1519599-1_1_AD

Pos	Part No	UN	Qty	Description	Page No
-					
010	1317983-0100		1	ALARM BEACON	**7-251**
020	1519600-0000		1	COVER PLATE	
030	1519950-0000		1	HOLDER	
040	1346427-0000		6	DISTANCE	
050	1348918-0000		6	DISTANCE	
100	312105-0368		6	SCREW M6S ISO 4017 M6X16 A480	
110	312105-0323		3	SCREW M6S ISO 4017 M5X8 A480	
120	312105-0366		3	SCREW M6S ISO 4017 M6X12 A480	
150	315105-0153		9	WASHER BRB 6,4X12 RFR	
160	315105-0146		3	WASHER BRB 5,3X10 RFR	

Pos	Part No	UN	Qty	Description	Page No

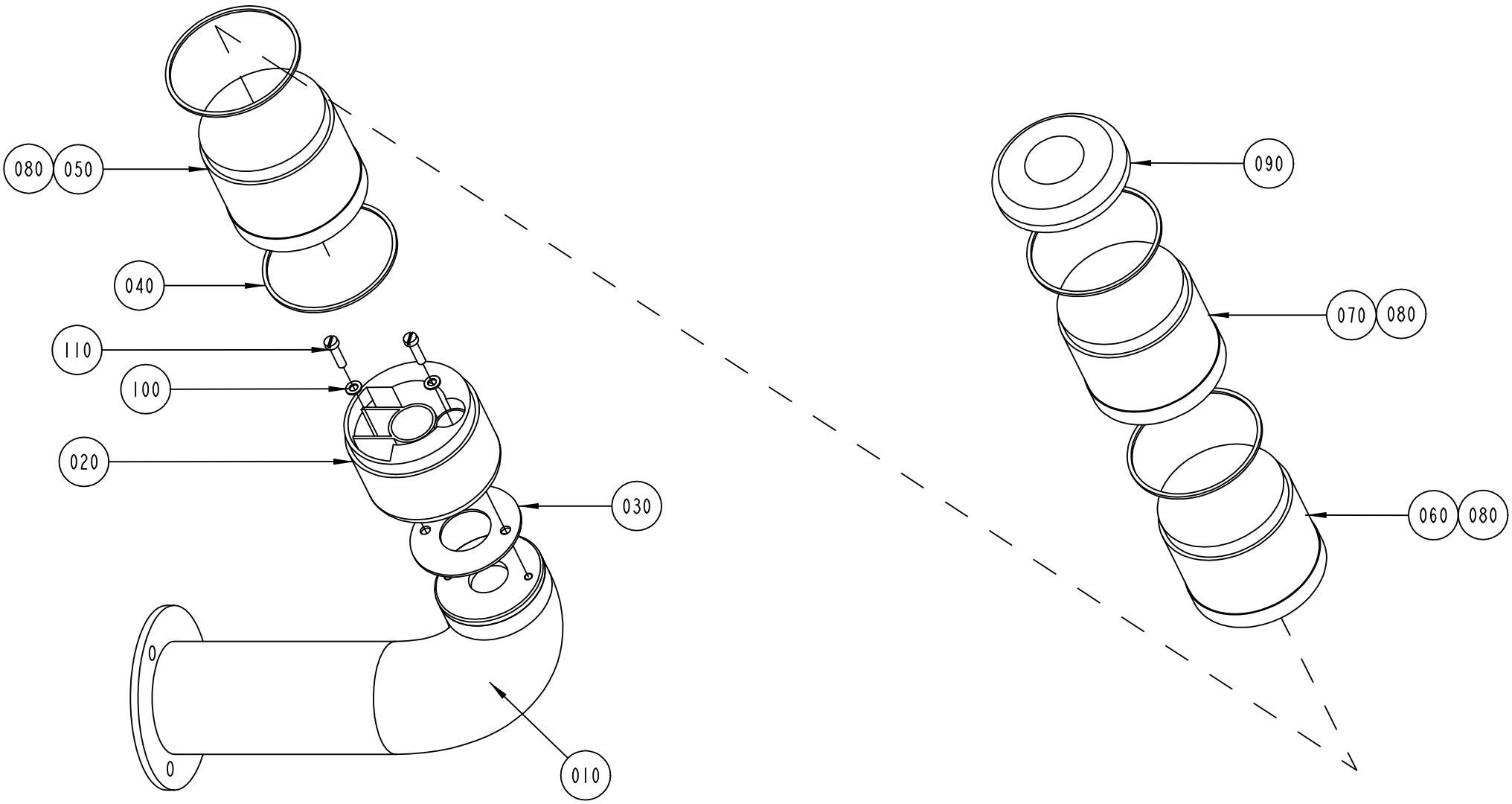

S-1317983-1
ECN 71634

ECM: 181164 - 20041005
Group number: 1317983-0100
Assembly Drawing: 1317983-1_1_AA

Pos	Part No	UN	Qty	Description	Page No
-					
010	1317793-0000		1	BASE	
020	1317794-0000		1	BASE	
030	90419-0310		1	GASKET	
040	90419-0307		4	GASKET	
050	90419-0013		1	LIGHT ELEMENT, BLUE	
060	90419-0014		1	LIGHT ELEMENT, YELLOW	
070	90419-0012		1	LIGHT ELEMENT, RED	
080	90036-0068		3	BULB 6.5W 24V	
090	90419-0017		1	BASE	
100	315105-0136		2	WASHER BRB 4,3X9 RFR	
110	312125-0293		2	SCREW ISO 1207 M4X16 A4	

Pos	Part No	UN	Qty	Description	Page No

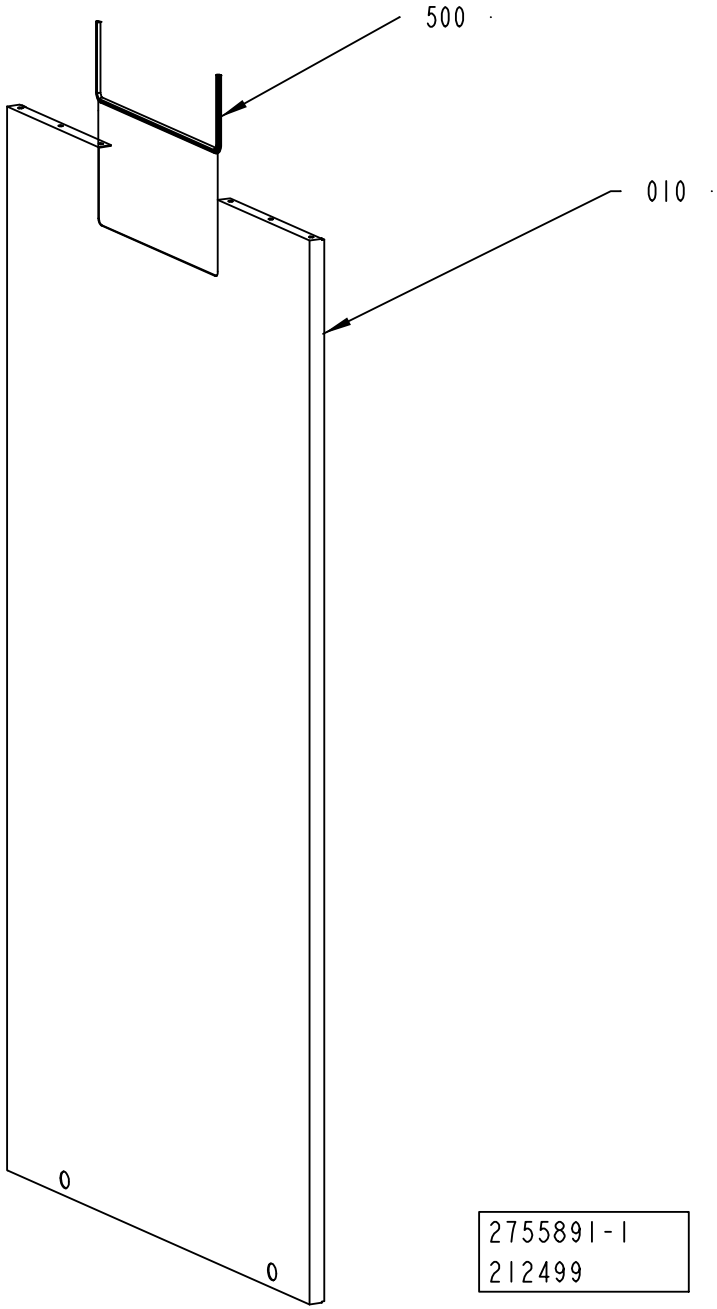
500
010
0
0
2755891-1
212499

ECM: 213433 - 20061102
Group number: 2755891-0100
Assembly Drawing: 2755891-1_1_AA

Pos	Part No	UN	Qty	Description	Page No
-					
010	2748622-0000		1	COVER PLATE	
500	90143-0060	MM	850	EDGE STRIP 9,5X6,3MM BLACK PVC	

Pos	Part No	UN	Qty	Description	Page No

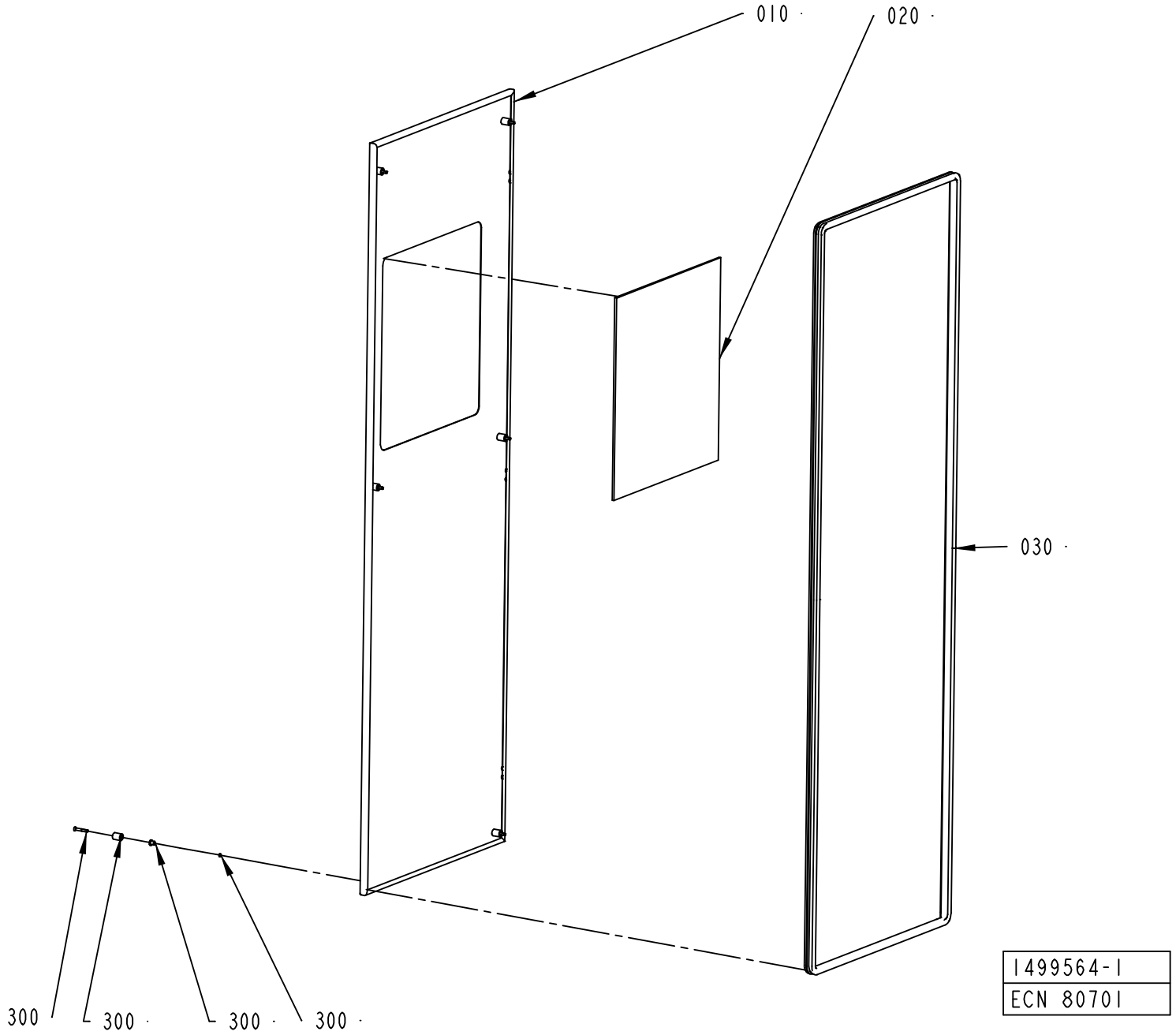
010
020
030
300
300
300
300
1499564-1
ECN 80701

ECM: 249408 - 20060303
Group number: 1499564-0100
Assembly Drawing: 1499564-1_1_AB

This list covers pages from 7-254 to 7-257

Pos	Part No	UN	Qty	Description	Page No
A3/FLEX WITH ARL (See drawing on page: 7-256)					
010	2632542-0000		1	HATCH	
020	1498459-0003		1	GLASS PANE	
040	2632543-0100		1	CONTROL PANEL	**7-259**
A3/FLEX WITHOUT ARL (See drawing on page: 7-254)					
010	1487995-0000		1	HATCH	
020	1498459-0003		1	GLASS PANE	
Common Parts					
030	1498461-0002		1	SEALING STRIP	
300	90226-0458		6	MOUNTING SCREW	

Pos	Part No	UN	Qty	Description	Page No

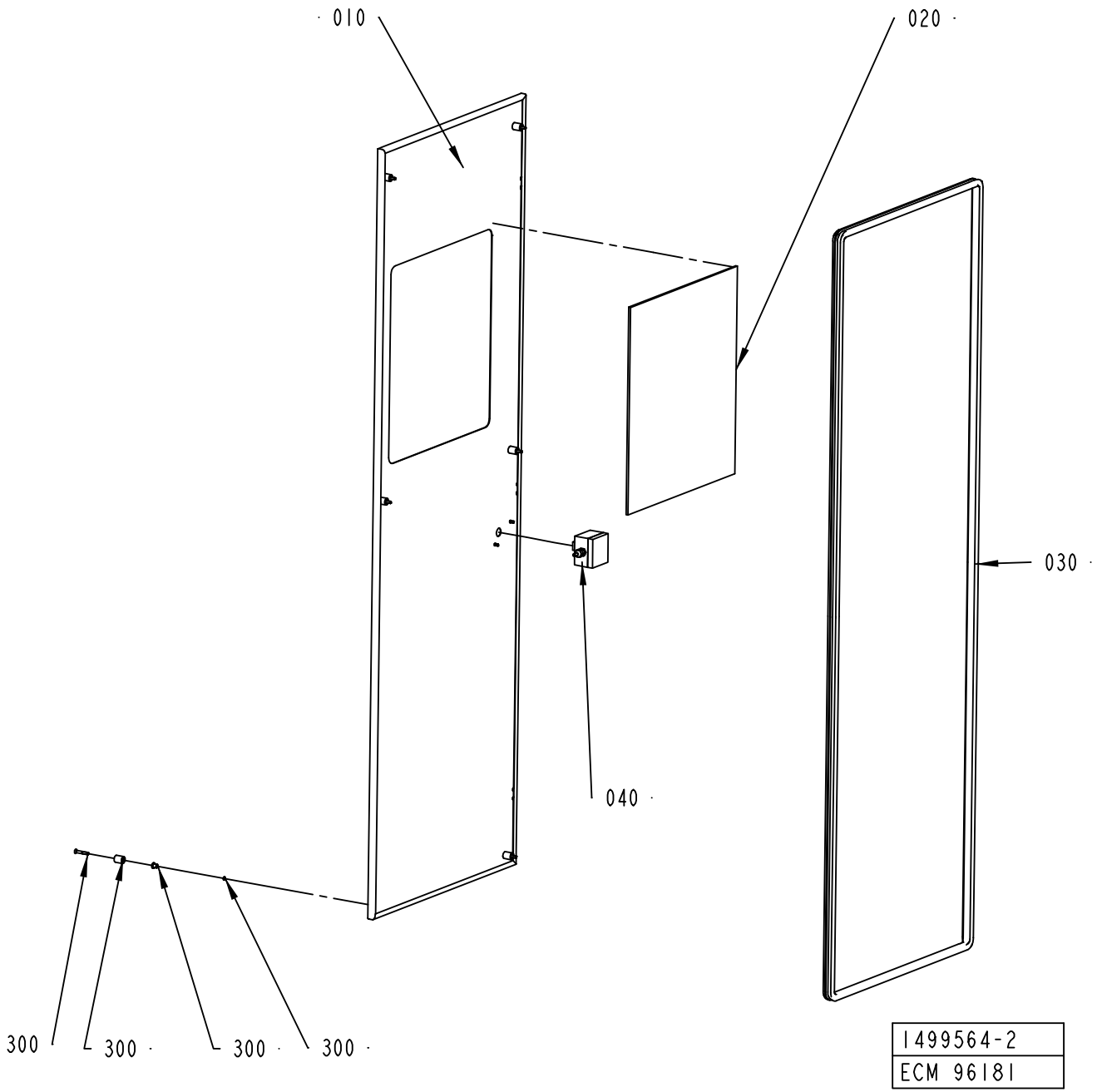
010
020
030
040
300
300
300
300
1499564-2
ECM 96181

ECM: 249408 - 20060303
Group number: 1499564-0100
Assembly Drawing: 1499564-2_1_AA

This list covers pages from 7-254 to 7-257

Pos	Part No	UN	Qty	Description	Page No
A3/FLEX WITH ARL (See drawing on page: 7-256)					
010	2632542-0000		1	HATCH	
020	1498459-0003		1	GLASS PANE	
040	2632543-0100		1	CONTROL PANEL	**7-259**
A3/FLEX WITHOUT ARL (See drawing on page: 7-254)					
010	1487995-0000		1	HATCH	
020	1498459-0003		1	GLASS PANE	
Common Parts					
030	1498461-0002		1	SEALING STRIP	
300	90226-0458		6	MOUNTING SCREW	

Pos	Part No	UN	Qty	Description	Page No

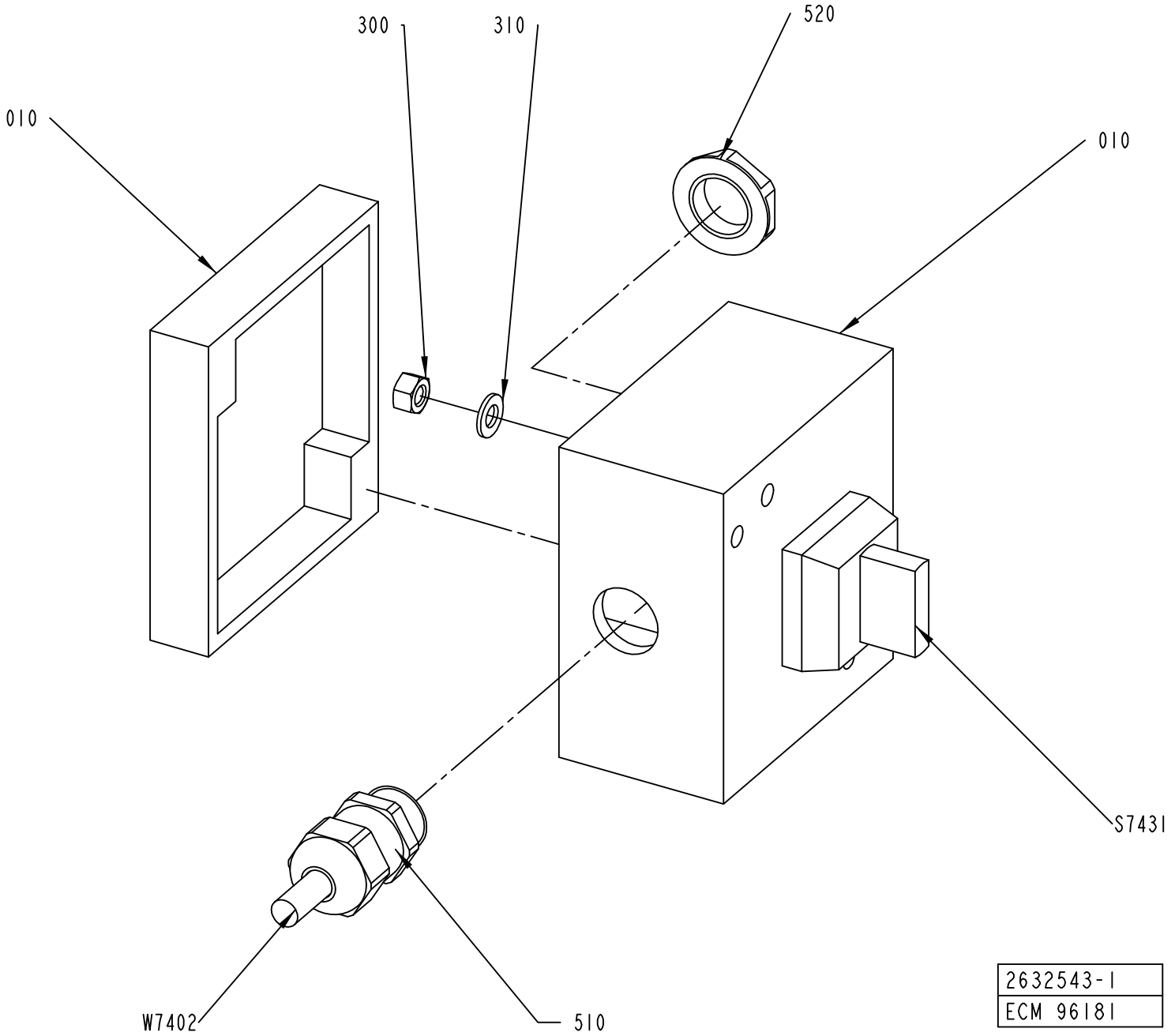
300
310
520
010
010
S7431
W7402
510
2632543-1
ECM 96181

ECM: 181013 - 20041005
Group number: 2632543-0100
Assembly Drawing: 2632543-1_1_AA

Pos	Part No	UN	Qty	Description	Page No
-					
010	2632535-0000		1	CONNECTION BOX	
300	312605-0314		2	HEXAGON NUT, M6M M5 A280	
310	315105-0146		2	WASHER BRB 5,3X10 RFR	
510	90458-0306		1	CABLE GLAND, M16X1,5, NO.5311 1010	
520	90458-0322		1	NUT, M16X1,5	
S7431	90111-0120		1	SWITCH, 2 POS.704.510 .0A+704.901.5/A	
W7402	351150-0403	MM	8000	CABLE OLFLEX 3X0,75 MM2 LIGHT/GREY	

Pos	Part No	UN	Qty	Description	Page No

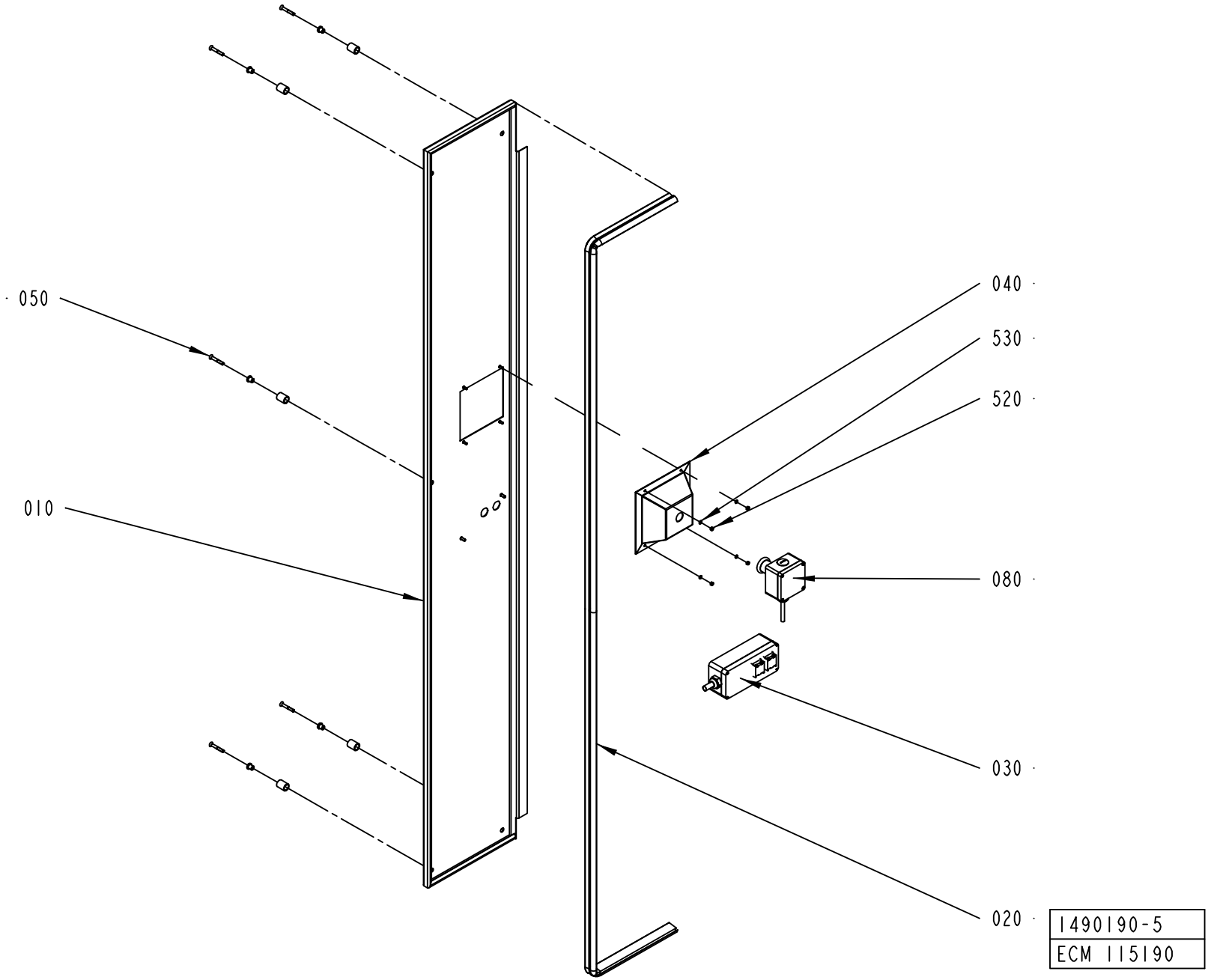
050
010
040
530
520
080
030
020
1490190-5
ECM 115190

ECM: 273532 - 20061102
Group number: 1490190-0200
Assembly Drawing: 1490190-5_1_AB

This list covers pages from 7-260 to 7-263

Pos	Part No	UN	Qty	Description	Page No
A3/FLEX SEPROOM (See drawing on page: 7-262)					
010	2593838-0000		1	HATCH	
060	1490226-0000		1	FILTER	
070	1519947-0100		1	MIMIC PANEL	**7-265**
090	1346423-0000		1	COVER	
500	312605-0314		10	HEXAGON NUT, M6M M5 A280	
510	315105-0146		10	WASHER BRB 5,3X10 RFR	
540	90110-0144		1	COVER	
W79011	90220-0092	M	10	PAIR TWISTED CABLE 3X2X0,25MM2	
X79011	90110-0147		1	CONTACT UNIT	
A3/FLEX ASU (See drawing on page: 7-260)					
010	2532535-0000		1	HATCH	
Common Parts					
020	1512414-0000		1	SEALING STRIP	
030	1512413-0200		1	CONTROL PANEL	**7-267, 7-269**
040	1484363-0000		1	COVER	
050	90226-0458		5	MOUNTING SCREW	
080	2508187-0100		1	EMERGENCY STOP	**7-271**
520	312605-0312		4	HEXAGON NUT, M6M M4 A280	
530	315105-0136		4	WASHER BRB 4,3X9 RFR	

Pos	Part No	UN	Qty	Description	Page No

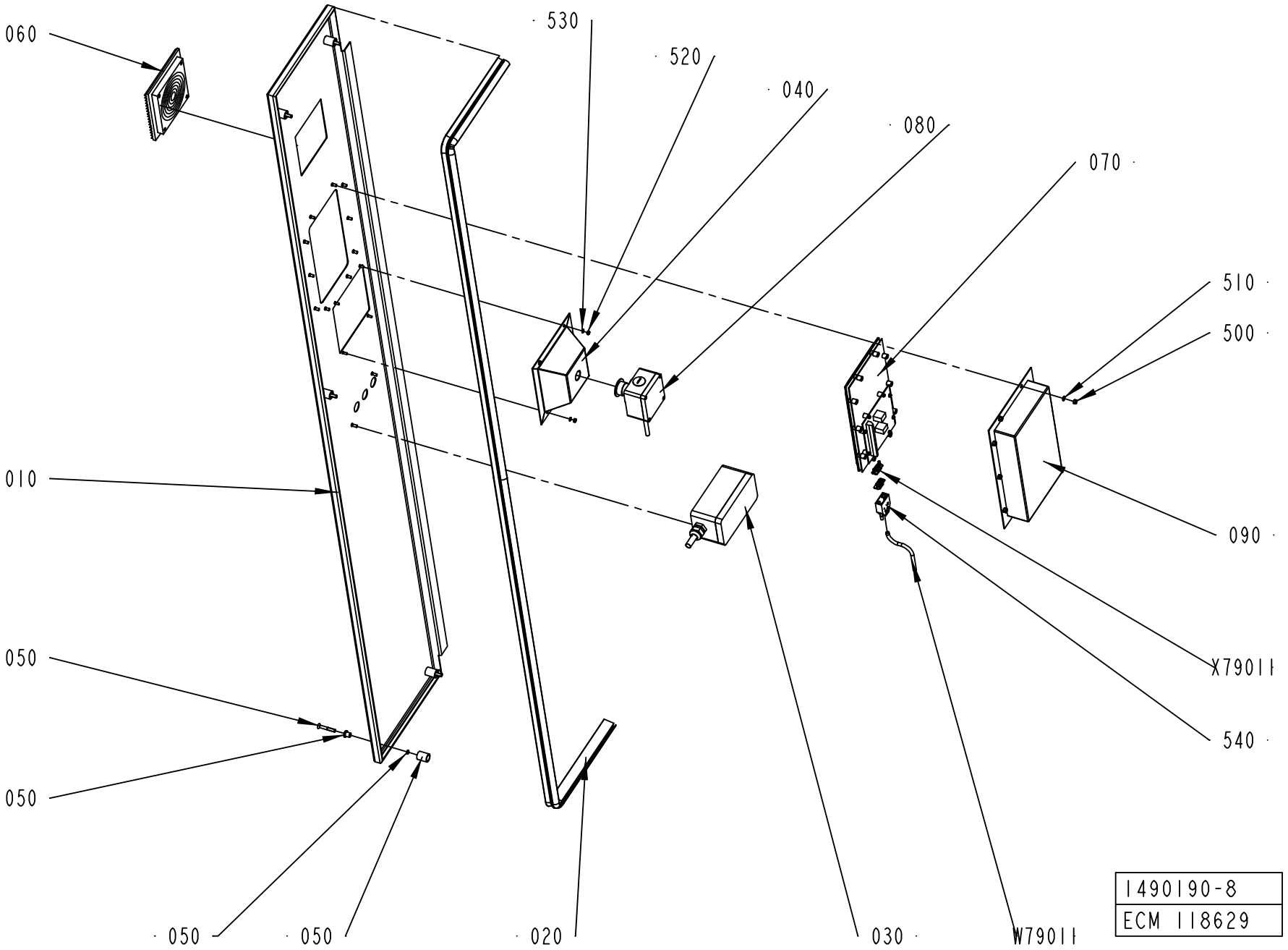
060
530
520
040
080
070
510
500
010
090
050
050
X79011
540
050
050
020
030
W79011
1490190-8
ECM 118629

ECM: 273532 - 20061102
Group number: 1490190-0200
Assembly Drawing: 1490190-8_1_AA

This list covers pages from 7-260 to 7-263

Pos	Part No	UN	Qty	Description	Page No
A3/FLEX SEPROOM (See drawing on page: 7-262)					
010	2593838-0000		1	HATCH	
060	1490226-0000		1	FILTER	
070	1519947-0100		1	MIMIC PANEL	**7-265**
090	1346423-0000		1	COVER	
500	312605-0314		10	HEXAGON NUT, M6M M5 A280	
510	315105-0146		10	WASHER BRB 5,3X10 RFR	
540	90110-0144		1	COVER	
W79011	90220-0092	M	10	PAIR TWISTED CABLE 3X2X0,25MM2	
X79011	90110-0147		1	CONTACT UNIT	
A3/FLEX ASU (See drawing on page: 7-260)					
010	2532535-0000		1	HATCH	
Common Parts					
020	1512414-0000		1	SEALING STRIP	
030	1512413-0200		1	CONTROL PANEL	**7-267, 7-269**
040	1484363-0000		1	COVER	
050	90226-0458		5	MOUNTING SCREW	
080	2508187-0100		1	EMERGENCY STOP	**7-271**
520	312605-0312		4	HEXAGON NUT, M6M M4 A280	
530	315105-0136		4	WASHER BRB 4,3X9 RFR	

Pos	Part No	UN	Qty	Description	Page No

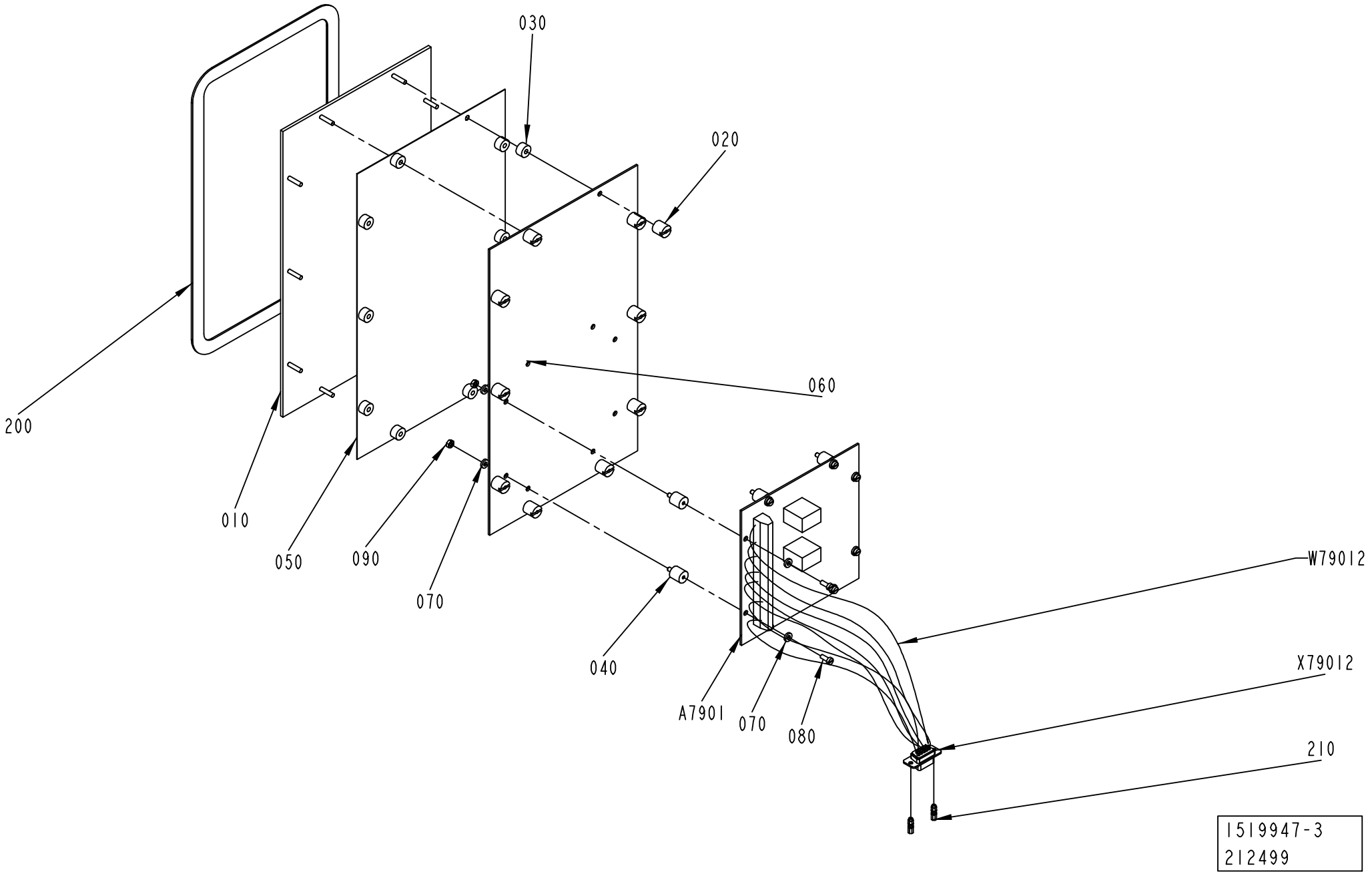
030
020
200
060
010
050
090
070
040
A7901
070
080
W79012
X79012
210
1519947-3
212499

ECM: 237037 - 20061102
Group number: 1519947-0100
Assembly Drawing: 1519947-3_1_AA

Pos	Part No	UN	Qty	Description	Page No
A3/FLEX					
050	2770885-0000		1	CONTROL PANEL DISPLAY	
060	2785993-0000		1	CIRCUIT BOARD	
Common Parts					
010	599556-0000		1	WINDOW	
020	970261-0000		10	SPACER SCREW 10,2X10MM	
030	971286-0000		10	SPACER H=6MM	
040	970262-0000		8	SPACER NUT	
070	1488007-0000		16	WASHER	
080	312125-0222		8	SCREW ISO 1207 M3X8 A4	
090	312605-0310		8	HEXAGON NUT, M6M M3 A280	
200	90144-0044		1	TAPE SCOTCH VHB 4945;12,7MM	
210	90110-0382		2	FASTENING NUT, AMP 215073-1	
A7901	68699-0101		1	MULTIPLEXER CARD 56LED	
010	*578860-0000*		*1*	*CIRCUIT BOARD*	
020	*578861-0001*			*COMPONENTS WITHOUT TP-NO*	
W79012	351179-0102	MM	4000	CABLE AWM 1X075 MM2 BLACK	
X79012	90110-0141		1	CONTACT UNIT, DE09P064TX	

Pos	Part No	UN	Qty	Description	Page No

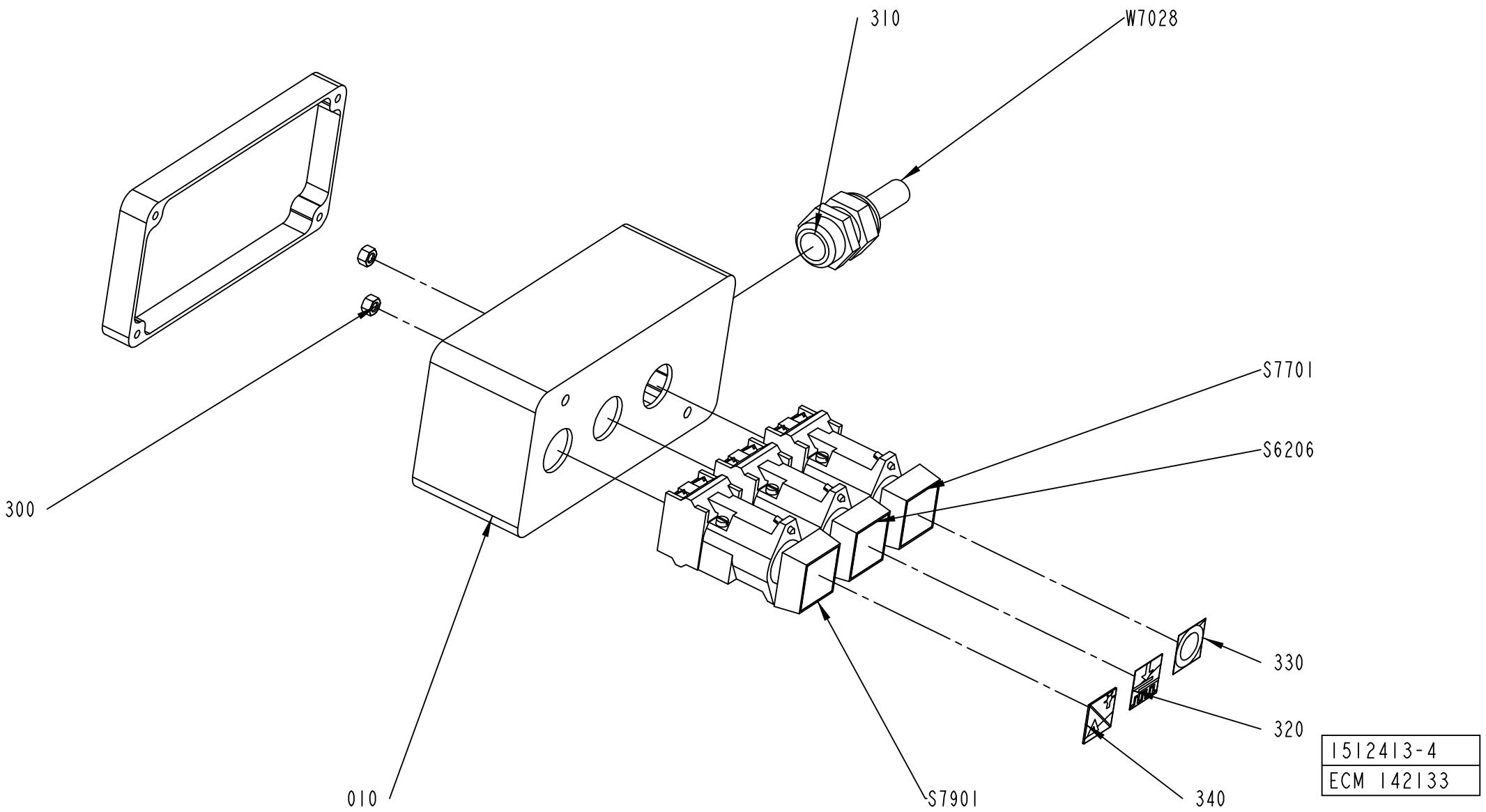
310
W7028
S7701
S6206
300
330
320
010
S7901
340
1512413-4
ECM 142133

ECM: 273551 - 20061102
Group number: 1512413-0200
Assembly Drawing: 1512413-4_1_AB

This list covers pages from 7-266 to 7-269

Pos	Part No	UN	Qty	Description	Page No
A3/FLEX SEPROOM (See drawing on page: 7-266)					
010	2593982-0000		1	PUSH BUTTON BOX	
340	359301-0131		1	BUTTON SIGN, LAMP TEST / RESET	
S7901	90064-0082		1	PUSH BUTTON, WHITE	
	90036-0057		*1*	*LIGHT BULB, BA9S 28V*	
A3/FLEX ASU (See drawing on page: 7-268)					
010	2578785-0000		1	PUSH BUTTON BOX	
Common Parts					
300	312605-0314		2	HEXAGON NUT, M6M M5 A280	
310	352103-0111		1	CABLE GLAND, ST 16, PR22,5/PG16	
320	359301-0101		1	BUTTON SIGN, STRIP SPLICING ON	
330	359301-0110		1	BUTTON SIGN, SHORT STOP	
S6206	90064-0082		1	PUSH BUTTON, WHITE	
	90036-0057		*1*	*LIGHT BULB, BA9S 28V*	
S7701	90064-0084		1	PUSH BUTTON, YELLOW	
W7028	351150-0407	MM	5000	CABLE OLFLEX 12X0,75 MM2 LIGHT/GREY	

Pos	Part No	UN	Qty	Description	Page No

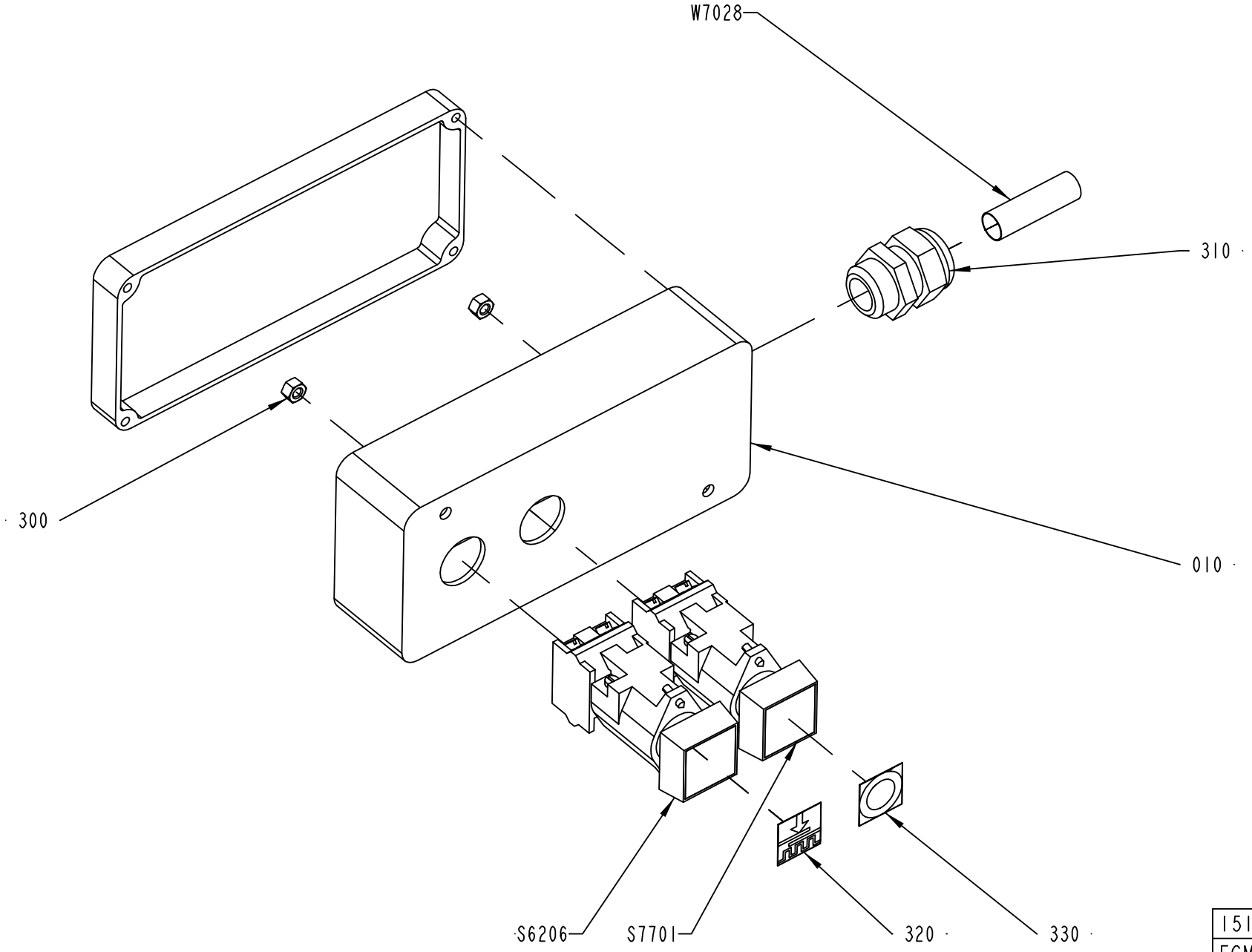

1512413-5
ECM 118629

ECM: 273551 - 20061102
Group number: 1512413-0200
Assembly Drawing: 1512413-5_1_AA

This list covers pages from 7-266 to 7-269

Pos	Part No	UN	Qty	Description	Page No
A3/FLEX SEPROOM (See drawing on page: 7-266)					
010	2593982-0000		1	PUSH BUTTON BOX	
340	359301-0131		1	BUTTON SIGN, LAMP TEST / RESET	
S7901	90064-0082		1	PUSH BUTTON, WHITE	
	90036-0057		*1*	*LIGHT BULB, BA9S 28V*	
A3/FLEX ASU (See drawing on page: 7-268)					
010	2578785-0000		1	PUSH BUTTON BOX	
Common Parts					
300	312605-0314		2	HEXAGON NUT, M6M M5 A280	
310	352103-0111		1	CABLE GLAND, ST 16, PR22,5/PG16	
320	359301-0101		1	BUTTON SIGN, STRIP SPLICING ON	
330	359301-0110		1	BUTTON SIGN, SHORT STOP	
S6206	90064-0082		1	PUSH BUTTON, WHITE	
	90036-0057		*1*	*LIGHT BULB, BA9S 28V*	
S7701	90064-0084		1	PUSH BUTTON, YELLOW	
W7028	351150-0407	MM	5000	CABLE OLFLEX 12X0,75 MM2 LIGHT/GREY	

Pos	Part No	UN	Qty	Description	Page No

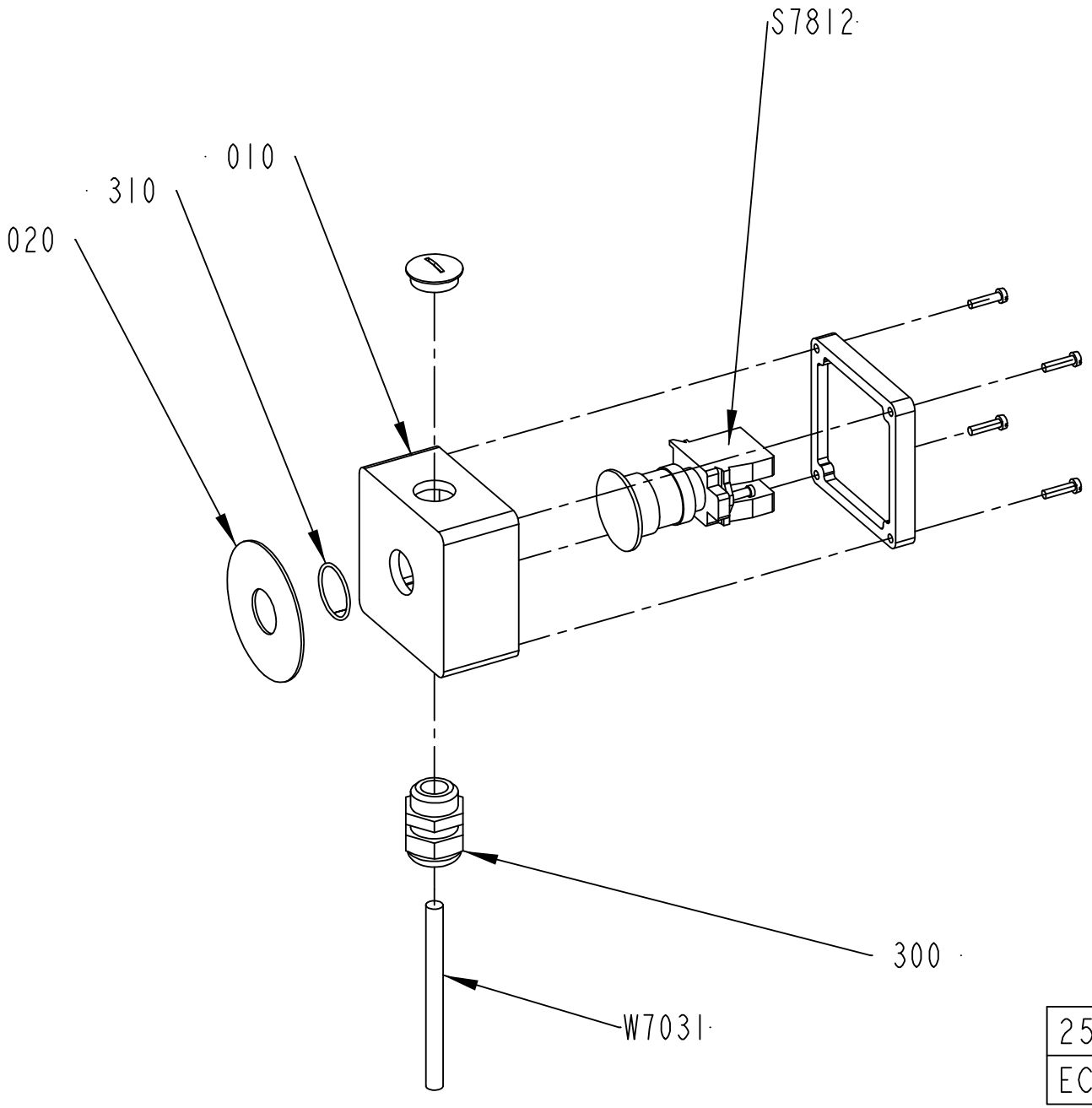

2508187-2
ECM 115190

ECM: 181016 - 20041005
Group number: 2508187-0100
Assembly Drawing: 2508187-2_1_AB

Pos	Part No	UN	Qty	Description	Page No
-					
010	1037130-0000		1	CONNECTION BOX	
020	486826-0001		1	SIGN "EMERGENCY STOP"	
300	352103-0110		1	CABLE GLAND, STR 16, PR22,5/PG16	
310	315202-0119		1	O-RING 25,1X1,6 MM	
S7812	90458-1651		1	EMERGENCY STOP, ZB4-BS-844 ZB4-BZ-104	
W7031	351150-0405	MM	5000	CABLE OLFLEX 5X0,75 MM2 LIGHT/GREY	

Pos	Part No	UN	Qty	Description	Page No

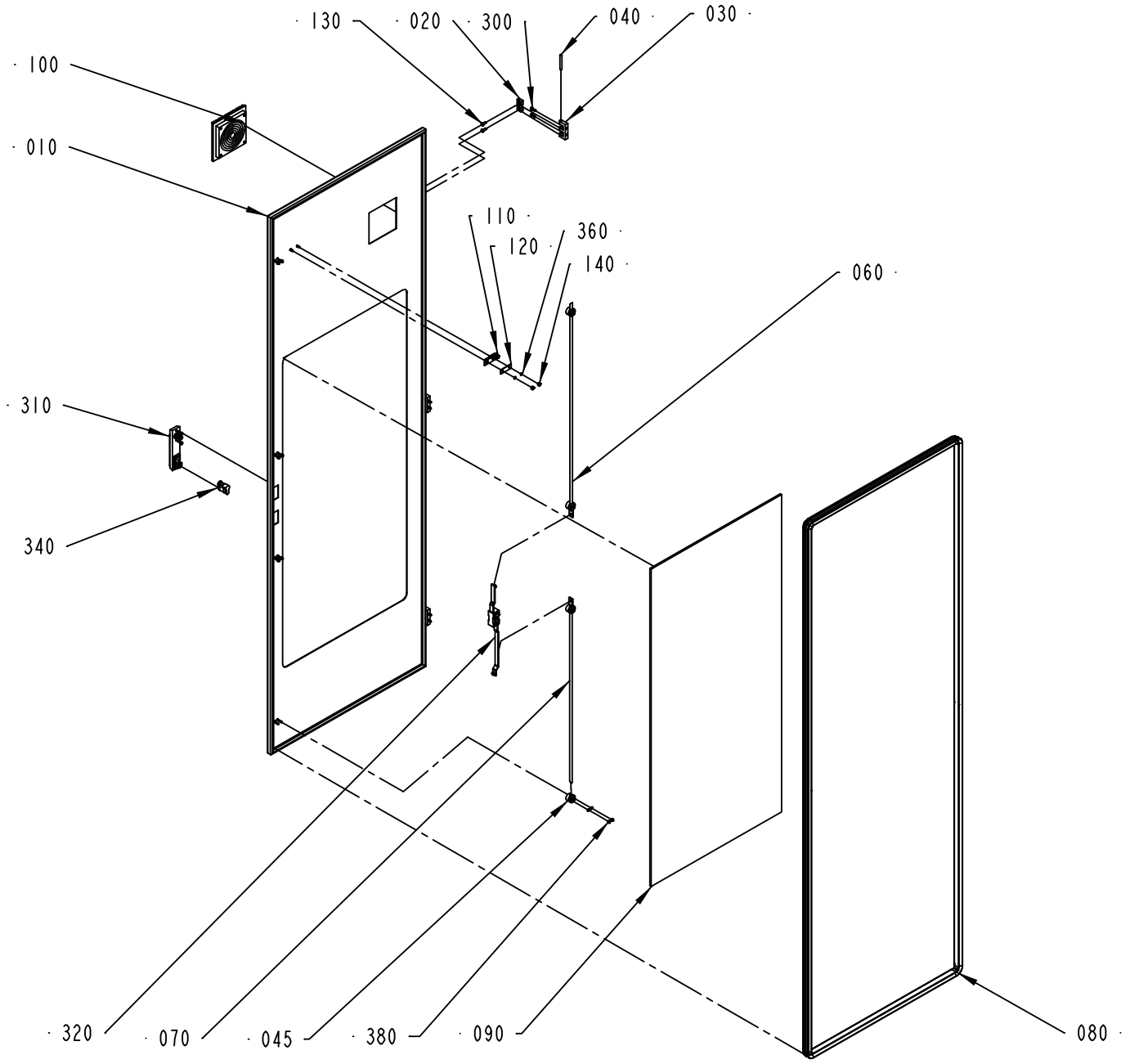

1490191-2
ECM 118629

ECM: 249409 - 20060303
Group number: 1490191-0100
Assembly Drawing: 1490191-2_1_AF

Pos	Part No	UN	Qty	Description	Page No
A3/FLEX					
010	1488000-0000		1	DOOR	
090	1498459-0002		1	GLASS PANE	
Common Parts					
020	1129770-0000		6	BLOCKING PIECE	
030	1035792-0000		3	E-HINGE	
040	988685-0000		3	PIN	
045	2550333-0000		4	GUIDE LUG	
060	1499562-0003		1	LOCKING ARM	
070	1499562-0004		1	LOCKING ARM	
080	1498461-0005		1	SEALING STRIP	
100	1490226-0000		1	FILTER	
110	975917-0000		1	KEY FOR SAFETY SWITCH 90044-103	
120	1036563-0000		1	WASHER	
130	1129767-0000		6	SCREW	
140	1539391-0000		2	ROUND NUT	
300	312115-0327		6	SCREW ISO4762 M5X12 A4 80	
310	90237-0175		1	TURNING HANDLE, 1125-U185-0A	
320	90237-0153		1	LOCK HOUSING, 1121-U26-0B	
340	90237-0128		1	LOCK CYLINDER, 1109-U3	
360	315105-0136		10	WASHER BRB 4,3X9 RFR	
380	312705-0312		8	NUT HEX. DOMED CAP MHM-6 M4 A280	

Pos	Part No	UN	Qty	Description	Page No

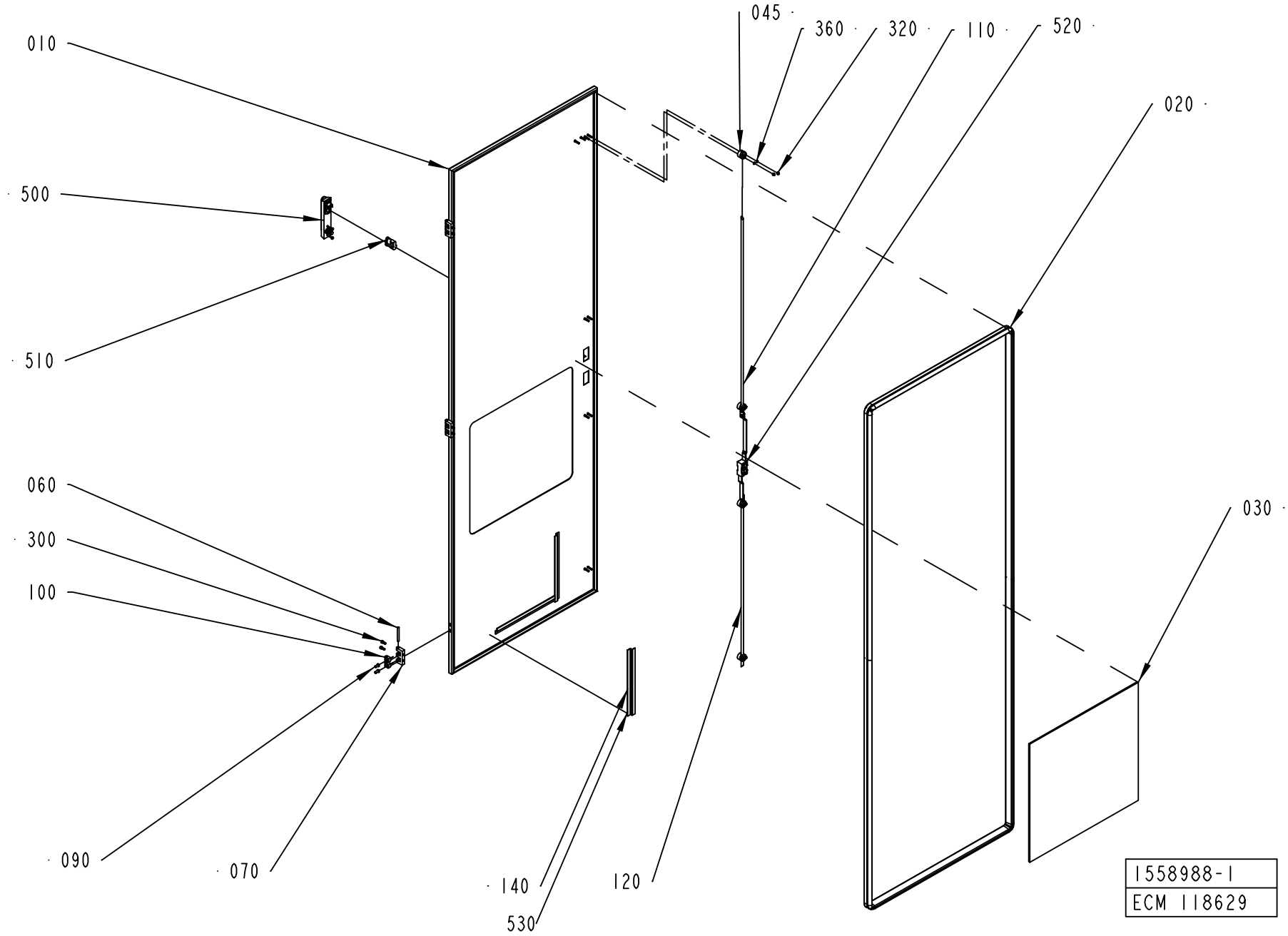
045
360
320
110
520
010
020
500
510
060
300
100
030
090
070
140
120
530
1558988-1
ECM 118629

ECM: 249410 - 20060303
Group number: 1558988-0100
Assembly Drawing: 1558988-1_1_AD

Pos	Part No	UN	Qty	Description	Page No
A3/FLEX					
010	1558983-0000		1	DOOR	
030	1498459-0004		1	GLASS PANE	
Common Parts					
020	1498461-0005		1	SEALING STRIP	
045	2550333-0000		4	GUIDE LUG	
060	988685-0000		3	PIN	
070	1035792-0000		3	E-HINGE	
090	1129767-0000		6	SCREW	
100	1129770-0000		6	BLOCKING PIECE	
110	1499562-0003		1	LOCKING ARM	
120	1499562-0004		1	LOCKING ARM	
140	988690-0000		3	RIM	
300	312115-0327		6	SCREW ISO4762 M5X12 A4 80	
320	312705-0312		8	NUT HEX. DOMED CAP MHM-6 M4 A280	
360	315105-0136		8	WASHER BRB 4,3X9 RFR	
500	90237-0175		1	TURNING HANDLE, 1125-U185-0A	
510	90237-0128		1	LOCK CYLINDER, 1109-U3	
520	90237-0153		1	LOCK HOUSING, 1121-U26-0B	
530	90144-0072	MM	840	TAPE SCOTCH VHBS 4945 W=12,7MM	

Pos	Part No	UN	Qty	Description	Page No

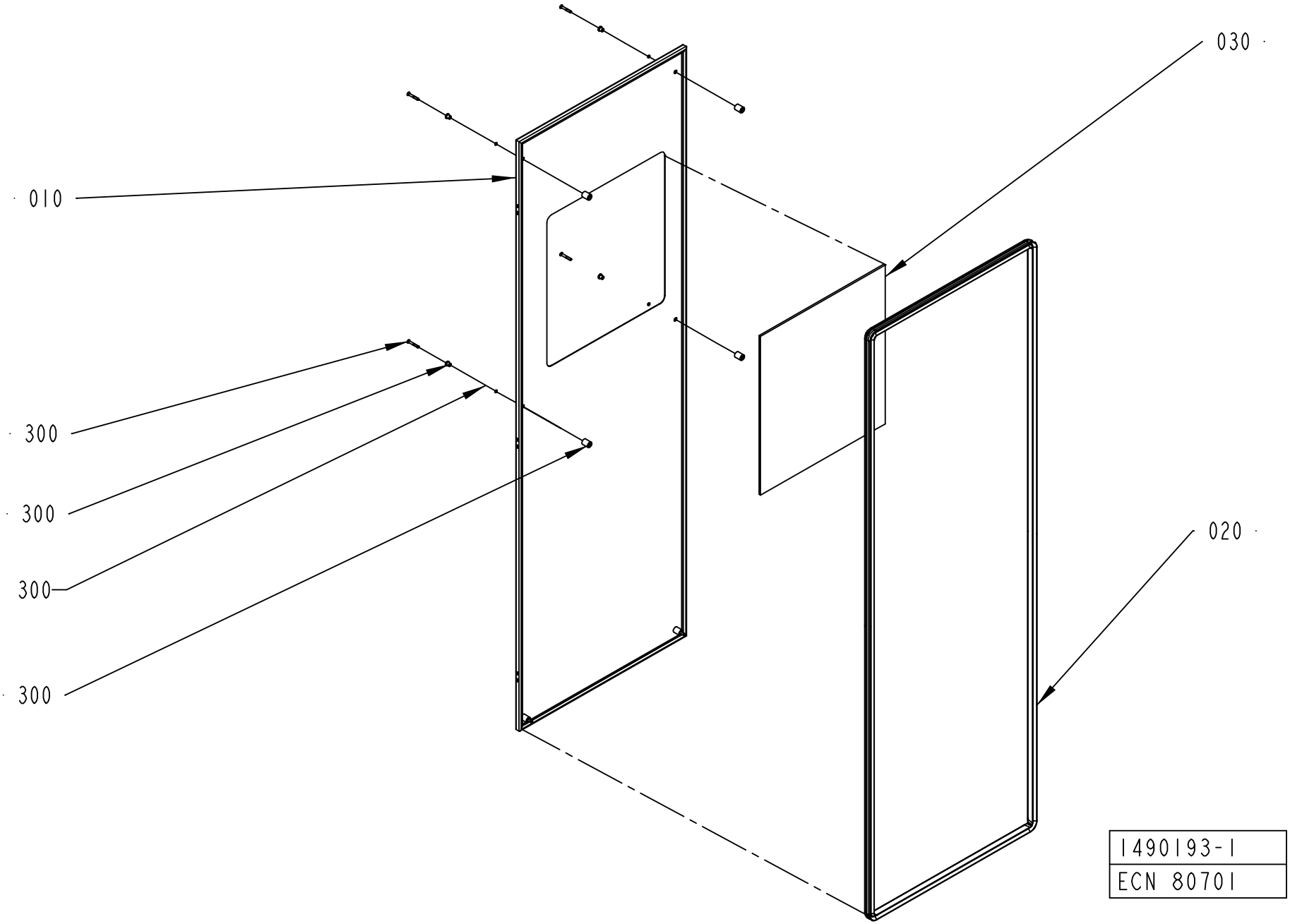
030
010
300
300
300
300
020
1490193-1
ECN 80701

ECM: 249411 - 20060303
Group number: 1490193-0100
Assembly Drawing: 1490193-1_1_AB

This list covers pages from 7-276 to 7-279

Pos	Part No	UN	Qty	Description	Page No
A3/FLEX WITH ARL (See drawing on page: 7-278)					
010	2632534-0000		1	HATCH	
030	1498459-0003		1	GLASS PANE	
040	2632536-0100		1	CONTROL PANEL	**7-281**
A3/FLEX WITHOUT ARL (See drawing on page: 7-276)					
010	1498460-0000		1	HATCH	
030	1498459-0003		1	GLASS PANE	
Common Parts					
020	1498461-0002		1	SEALING STRIP	
300	90226-0458		6	MOUNTING SCREW	

Pos	Part No	UN	Qty	Description	Page No

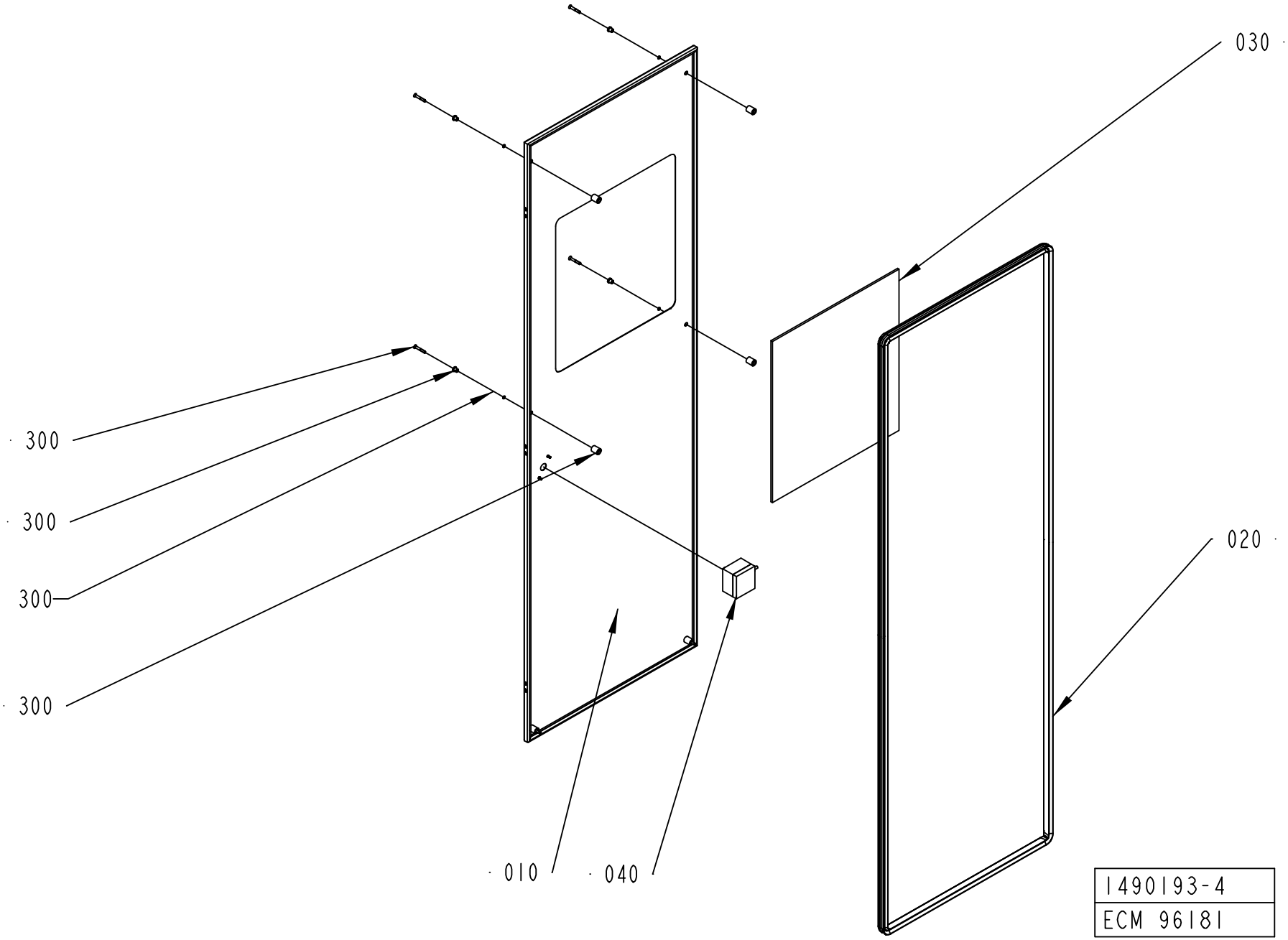
030
300
300
300
300
020
010
040
1490193-4
ECM 96181

ECM: 249411 - 20060303
Group number: 1490193-0100
Assembly Drawing: 1490193-4_1_AA

This list covers pages from 7-276 to 7-279

Pos	Part No	UN	Qty	Description	Page No
A3/FLEX WITH ARL (See drawing on page: 7-278)					
010	2632534-0000		1	HATCH	
030	1498459-0003		1	GLASS PANE	
040	2632536-0100		1	CONTROL PANEL	**7-281**
A3/FLEX WITHOUT ARL (See drawing on page: 7-276)					
010	1498460-0000		1	HATCH	
030	1498459-0003		1	GLASS PANE	
Common Parts					
020	1498461-0002		1	SEALING STRIP	
300	90226-0458		6	MOUNTING SCREW	

Pos	Part No	UN	Qty	Description	Page No

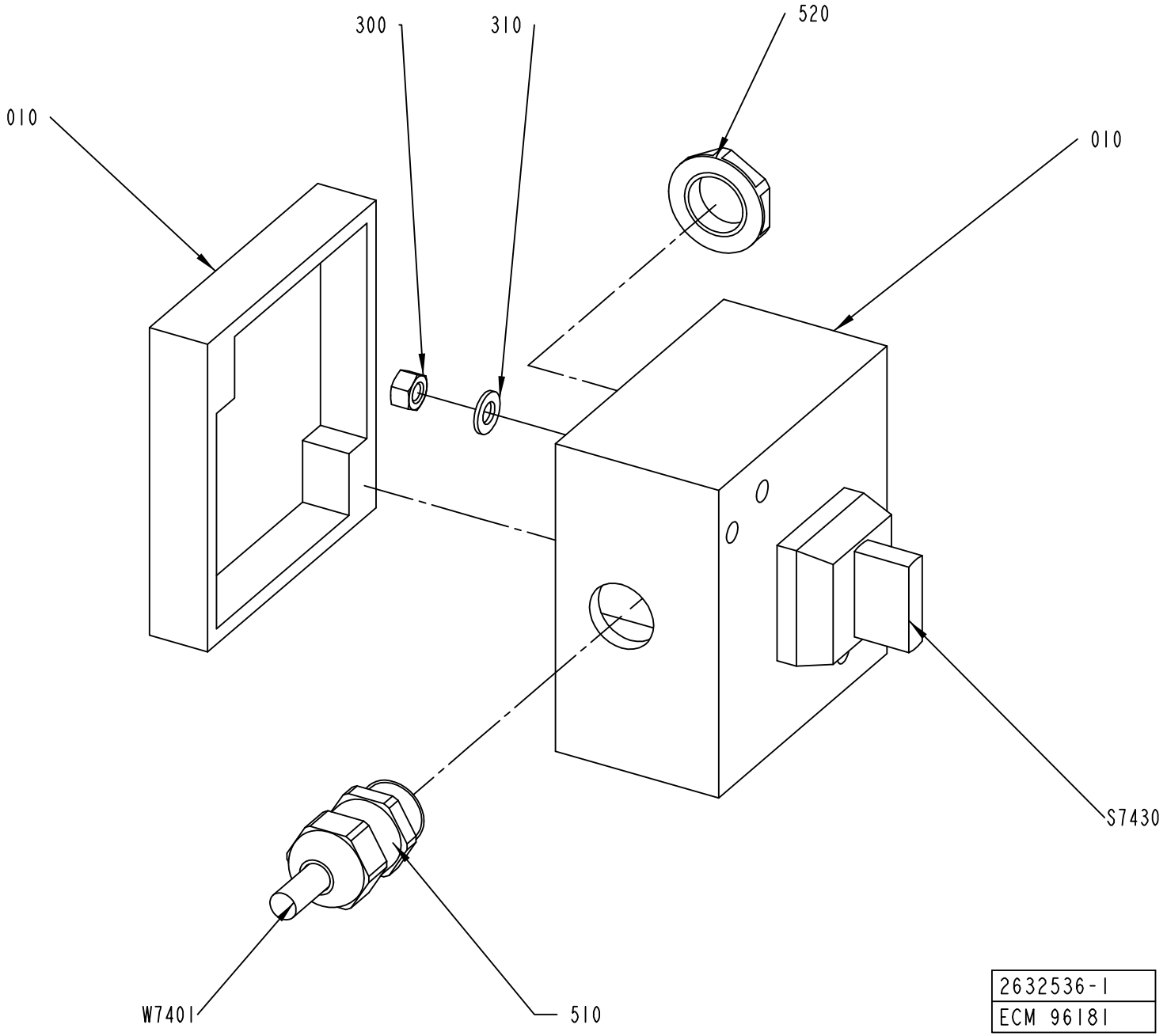
300
310
520
010
010
S7430
W7401
510
2632536-1
ECM 96181

ECM: 181020 - 20041005
Group number: 2632536-0100
Assembly Drawing: 2632536-1_1_AA

Pos	Part No	UN	Qty	Description	Page No
-					
010	2632535-0000		1	CONNECTION BOX	
300	312605-0314		2	HEXAGON NUT, M6M M5 A280	
310	315105-0146		2	WASHER BRB 5,3X10 RFR	
510	90458-0306		1	CABLE GLAND, M16X1,5, NO.5311 1010	
520	90458-0322		1	NUT, M16X1,5	
S7430	90111-0120		1	SWITCH, 2 POS.704.510 .0A+704.901.5/A	
W7401	351150-0403	MM	8000	CABLE OLFLEX 3X0,75 MM2 LIGHT/GREY	

Pos	Part No	UN	Qty	Description	Page No

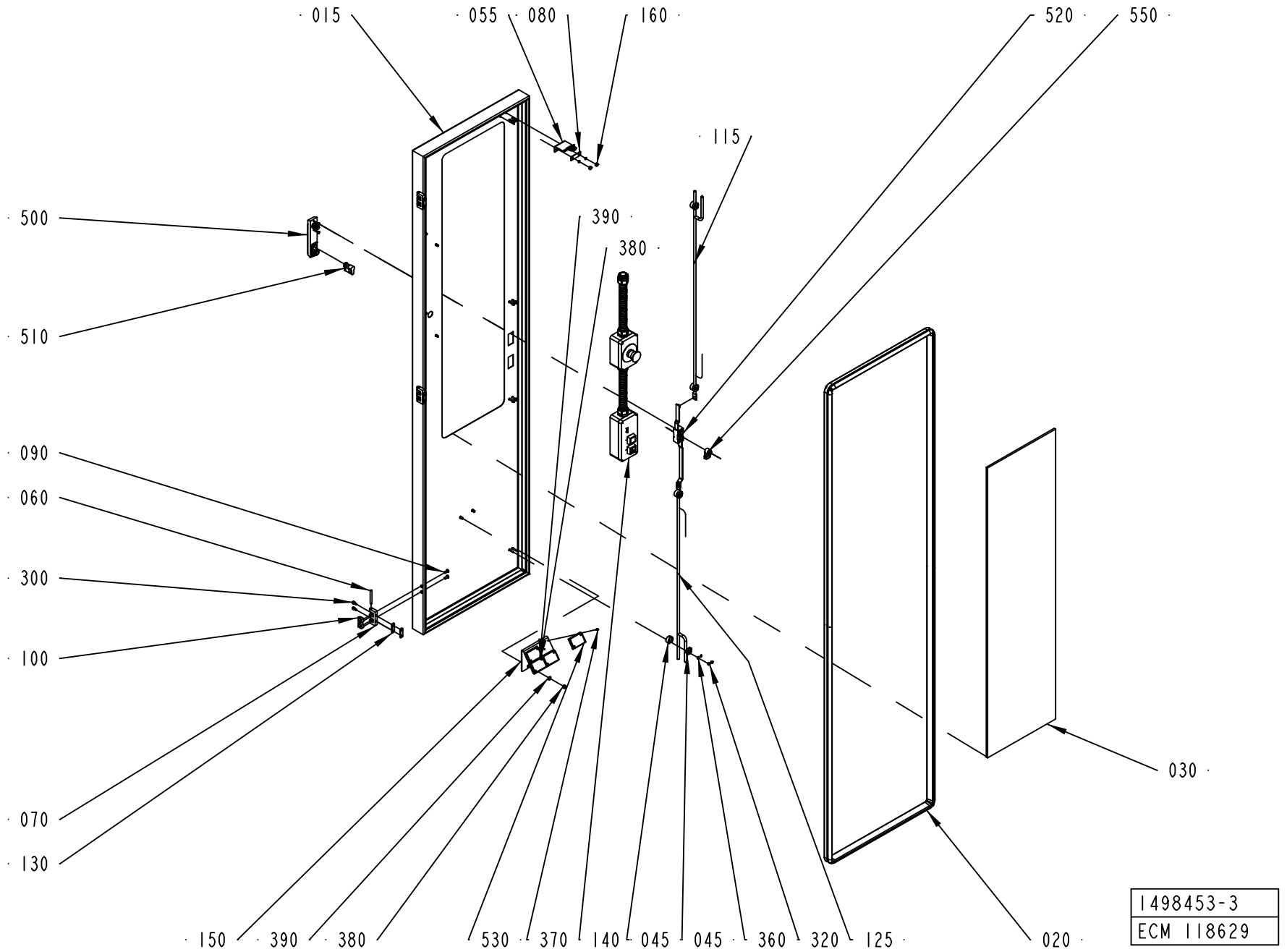
015
055
080
160
520
550
115
500
390
380
510
090
060
300
100
070
130
030
150
390
380
530
370
140
045
045
360
320
125
020
1498453-3
ECM 118629

ECM: 249412 - 20060303
Group number: 1498453-0200
Assembly Drawing: 1498453-3_1_AD

Pos	Part No	UN	Qty	Description	Page No
A3/FLEX					
015	2547666-0000		1	DOOR	
030	1498459-0001		1	GLASS PANE	
Common Parts					
020	1498461-0001		1	SEALING STRIP	
045	2550333-0000		4	GUIDE LUG	
055	2553072-0000		1	KEY FOR SAFETY SWITCH	
060	988685-0000		3	PIN	
070	1035792-0000		3	E-HINGE	
080	1036563-0000		1	WASHER	
090	1129767-0000		6	SCREW	
100	1129770-0000		6	BLOCKING PIECE	
115	2550269-0001		1	LOCKING ARM	
125	2550269-0002		1	LOCKING ARM	
130	1147253-0000		3	NUT	
140	1517088-0200		1	CONTROL PANEL	**7-285**
150	2541943-0000		1	BRACKET	
160	1539391-0000		2	ROUND NUT	
300	312115-0327		6	SCREW ISO4762 M5X12 A4 80	
320	312705-0312		8	NUT HEX. DOMED CAP MHM-6 M4 A280	
360	315105-0136		10	WASHER BRB 4,3X9 RFR	
370	312125-0222		8	SCREW ISO 1207 M3X8 A4	
380	312605-0316		2	HEXAGON NUT, M6M M6 A280	
390	315105-0153		2	WASHER BRB 6,4X12 RFR	
500	90237-0175		1	TURNING HANDLE, 1125-U185-0A	
510	90237-0128		1	LOCK CYLINDER, 1109-U3	
520	90237-0153		1	LOCK HOUSING, 1121-U26-0B	
530	90232-0333		4	REFLECTOR E39-R1	
550	90237-0165		1	LATCH	

Pos	Part No	UN	Qty	Description	Page No

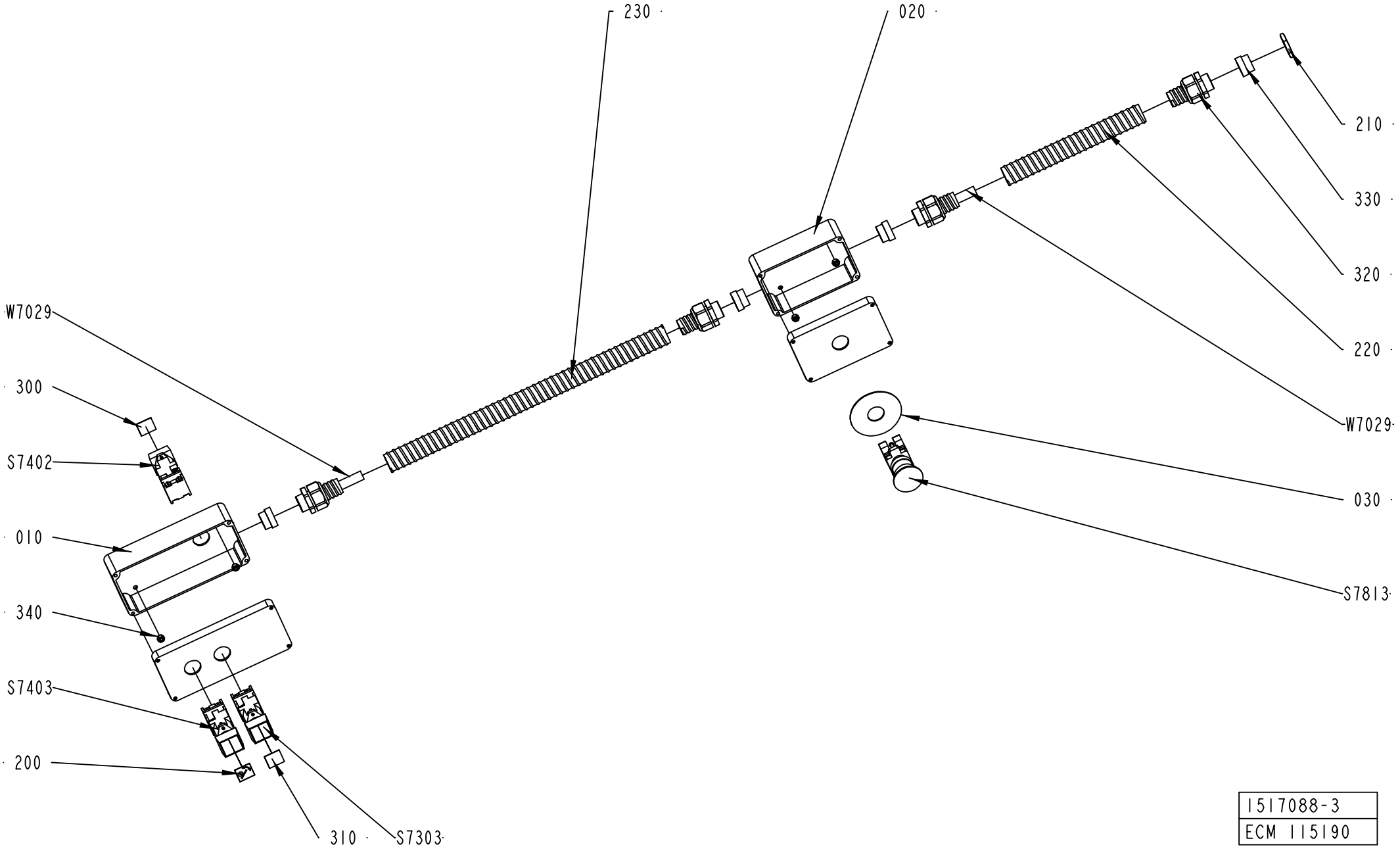

1517088-3
ECM 115190

ECM: 272277 - 20060712
Group number: 1517088-0200
Assembly Drawing: 1517088-3_1_AC

Pos	Part No	UN	Qty	Description	Page No
-					
010	2523482-0000		1	PUSH BUTTON BOX	
020	2523483-0000		1	PUSH BUTTON BOX	
030	486826-0001		1	SIGN "EMERGENCY STOP"	
200	90457-0920		1	BUTTON SIGN, ROTATION OF MATERIAL HOLDER	
210	90099-0110		1	NUT, PR 22,5 (PG16)	
220	90152-0051	MM	500	SPIRAL CONDUIT, 25X18, UL 1816	
230	90152-0051	MM	170	SPIRAL CONDUIT, 25X18, UL 1816	
300	359301-0100		1	BUTTON SIGN, SPLICING	
310	359301-0488		1	BUTTON SIGN, MATERIAL LOCKING	
320	353243-0005		4	HOSE GLAND W/O INSERT PG16 EXTENDED	
330	353249-0014		4	INSERT, SINGEL HOLE, EK 154/16	
340	312605-0314		4	HEXAGON NUT, M6M M5 A280	
S7303	90064-0082		1	PUSH BUTTON, WHITE	
	90036-0057		*1*	*LIGHT BULB, BA9S 28V*	
S7402	90064-0082		1	PUSH BUTTON, WHITE	
	90036-0057		*1*	*LIGHT BULB, BA9S 28V*	
S7403	90064-0082		1	PUSH BUTTON, WHITE	
	90036-0057		*1*	*LIGHT BULB, BA9S 28V*	
S7813	90458-1651		1	EMERGENCY STOP, ZB4-BS-844 ZB4-BZ-104	
W7029	351150-0407	MM	5000	CABLE OLFLEX 12X0,75 MM2 LIGHT/GREY	

Pos	Part No	UN	Qty	Description	Page No

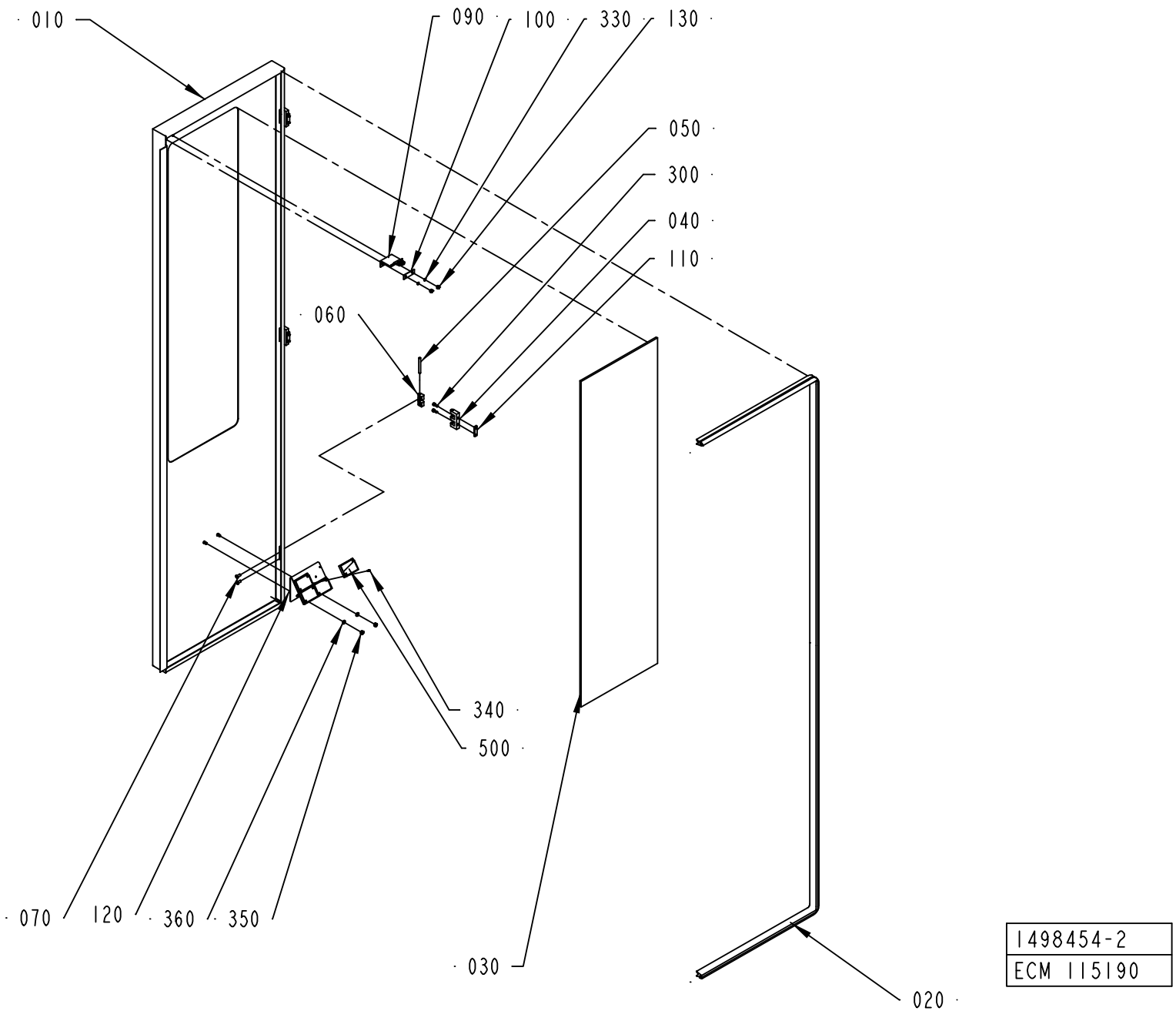

1498454-2
ECM 115190

ECM: 249413 - 20060303
Group number: 1498454-0200
Assembly Drawing: 1498454-2_1_AB

Pos	Part No	UN	Qty	Description	Page No
A3/FLEX					
010	2547667-0000		1	DOOR	
030	1498459-0001		1	GLASS PANE	
Common Parts					
020	1499579-0000		1	SEALING STRIP	
040	1035792-0000		3	E-HINGE	
050	988685-0000		3	PIN	
060	1129770-0000		6	BLOCKING PIECE	
070	1129767-0000		6	SCREW	
090	2553072-0000		1	KEY FOR SAFETY SWITCH	
100	1036563-0000		1	WASHER	
110	1147253-0000		3	NUT	
120	2541943-0000		1	BRACKET	
130	1539391-0000		2	ROUND NUT	
300	312115-0327		6	SCREW ISO4762 M5X12 A4 80	
330	315105-0136		2	WASHER BRB 4,3X9 RFR	
340	312125-0222		8	SCREW ISO 1207 M3X8 A4	
350	312605-0316		2	HEXAGON NUT, M6M M6 A280	
360	315105-0153		2	WASHER BRB 6,4X12 RFR	
500	90232-0333		4	REFLECTOR E39-R1	

Pos	Part No	UN	Qty	Description	Page No

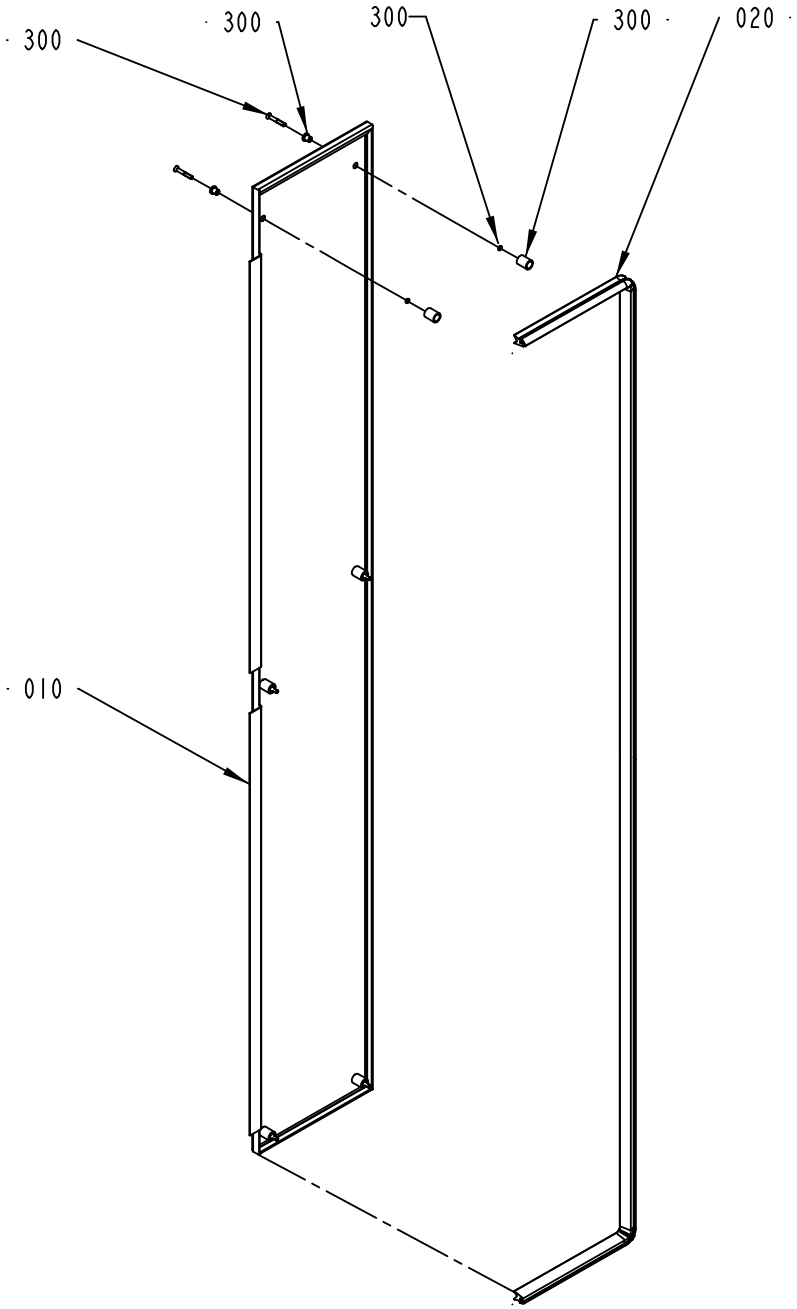

1490188-1
ECN 80701

ECM: 181163 - 20041005
Group number: 1490188-0100
Assembly Drawing: 1490188-1_1_AB

Pos	Part No	UN	Qty	Description	Page No
-					
010	1499568-0000		1	HATCH	
020	1512278-0000		1	SEALING STRIP	
300	90226-0458		6	MOUNTING SCREW	

Pos	Part No	UN	Qty	Description	Page No

Tetra Pak

SPC
Spare Parts Catalogue

Electrical Cabinet

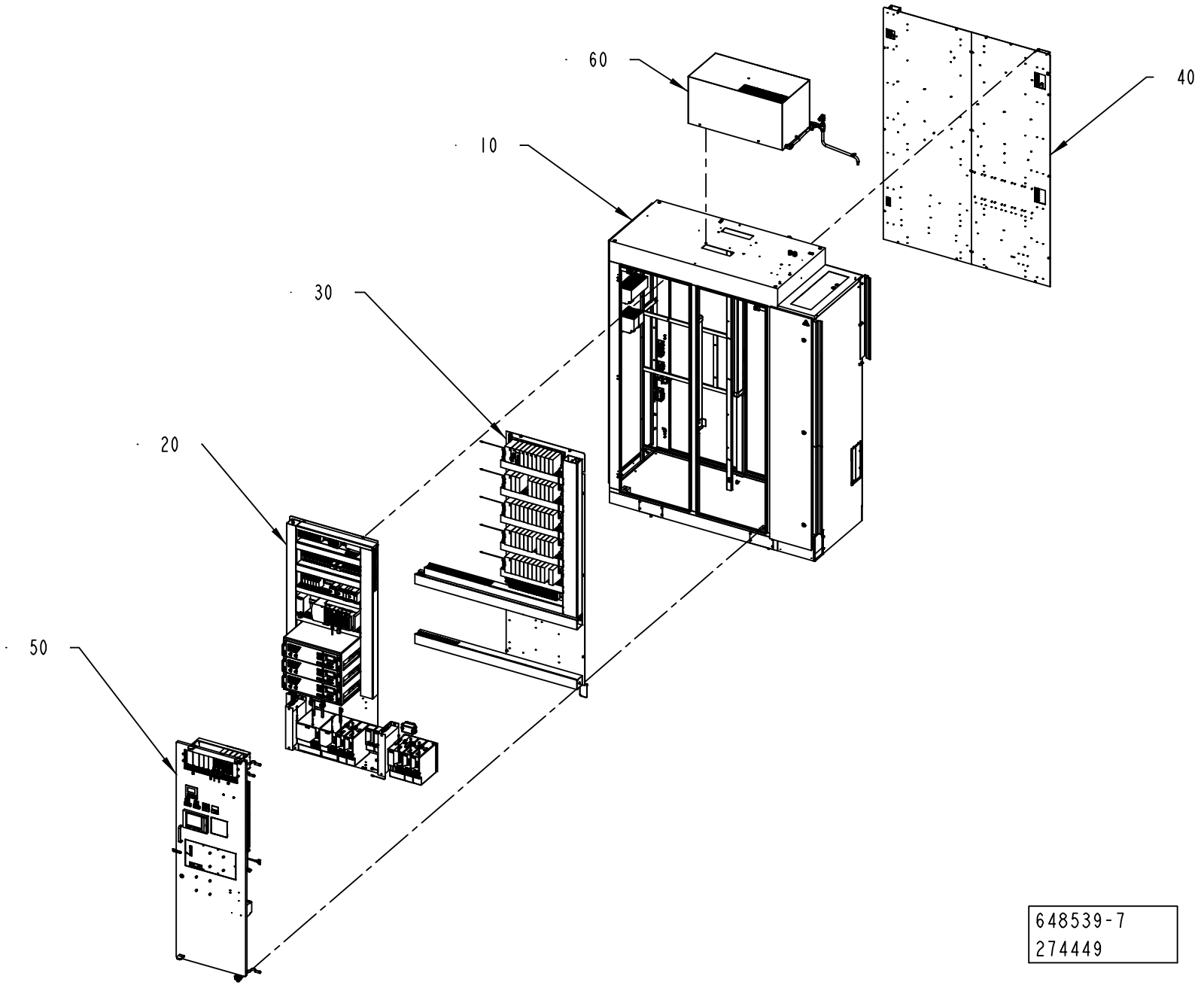

ECM: 998787 - 20061102
Group number: 648539-0250
Assembly Drawing: 648539-7_1_AA

Pos	Part No	UN	Qty	Description	Page No
A3/FLEX					
080	2576335-0100		1	TPOP LINE SUPERVISION	**8-5**
090	2565624-0350		1	SOFTWARE	**8-7**
Common Parts					
	2635131-0150		1	CABLE SET	**8-21**
010	1532902-0250		1	CABINET	**8-23**
020	1532908-0250		1	CONTROL BOARD LEFT	**8-49, 8-51, 8-53**
030	1548123-0150		1	CONTROL BOARD RIGHT	**8-65, 8-67**
040	1548127-0250		1	POWER SUPPLY UNIT	**8-71**
050	1548136-0150		1	DOOR	**8-89, 8-91**
060	2550125-0100		1	COOLING UNIT	**8-103**
070	2576334-0100		1	TPOP DATA COLLECTION	**8-105**

Pos	Part No	UN	Qty	Description	Page No

This page is intentionally left blank.

ECM: 185550 - 20041104
Group number: 2576335-0100
Assembly Drawing:

Pos	Part No	UN	Qty	Description	Page No	Pos	Part No	UN	Qty	Description	Page No
-											
010	90220-0091	M	200	PAIR TWISTED CABLE 2X2X0,25MM2							
020	90110-0518		5	CONNECTOR D-SUB, SUBCON 15/M-SH							
030	90110-0383		5	CONTACT COVER 15 PIN, SUB-D SUBCON							

Machine Type | Group Description | Used-In | Group Number | Page No

This page is intentionally left blank.

ECM: 274757 - 20061101
Group number: 2565624-0350
Assembly Drawing:

Pos	Part No	UN	Qty	Description	Page No
-					
0010	2633186-0200		1	SOFTWARE TPOP	**8-9**
0020	2633187-0200		1	SOFTWARE TMCC	**8-11**
0030	2633188-0200		1	SOFTWARE PLC	**8-13**
0040	2852310-0100		1	SOFTWARE PLC MOTION	**8-15**
0050	2639498-0200		1	SOFTWARE RECORDER	**8-17**
0060	2801571-0100		1	SOFTWARE TPIH	**8-19**

Pos	Part No	UN	Qty	Description	Page No

This page is intentionally left blank.

ECM: 998782 - 20061102
Group number: 2633186-0200
Assembly Drawing:

Pos	Part No	UN	Qty	Description	Page No	Pos	Part No	UN	Qty	Description	Page No
-											
0010	2814681-0003		1	TPOP CD							
0020	2846042-0001		1	TPOP BASIC							
0030	2846043-0001		1	WINDOWS OEM W2000 PROGRAM							

Machine Type | Group Description | Used-In | Group Number | Page No

This page is intentionally left blank.

ECM: 998777 - 20061102
Group number: 2633187-0200
Assembly Drawing:

Pos	Part No	UN	Qty	Description	Page No	Pos	Part No	UN	Qty	Description	Page No
-											
0010	2722583-0003		1	TMCC CD							

Machine Type	Group Description	Used-In	Group Number	Page No

This page is intentionally left blank.

ECM: 998685 - 20061101
Group number: 2633188-0200
Assembly Drawing:

Pos	Part No	UN	Qty	Description	Page No	Pos	Part No	UN	Qty	Description	Page No
-											
0010	1591270-0002		1	PLC CD							

Machine Type	Group Description	Used-In	Group Number	Page No

This page is intentionally left blank.

ECM: 998783 - 20061102
Group number: 2852310-0100
Assembly Drawing:

Pos	Part No	UN	Qty	Description	Page No	Pos	Part No	UN	Qty	Description	Page No
-											
0010	2852314-0002		1	PLC CD MOTION							

Machine Type	Group Description	Used-In	Group Number	Page No

This page is intentionally left blank.

ECM: 252511 - 20060116
Group number: 2639498-0200
Assembly Drawing:

Pos	Part No	UN	Qty	Description	Page No
A3/FLEX USA					
0020	2699092-0001		1	RECORDER	
0030	2699090-0001		1	RECORDER	
0040	2701169-0002		1	RECORDER	
HI					
0010	2811834-0001		1	RECORDER CD	
0010	*2811835-0001*		*1*	*LABEL CD*	
0020	*90458-0118*		*1*	*COMPACT DISC RECORDABLE*	
0030	*2811834-1001*		*1*	*PROGRAM OBJECT CODE*	
0040	*2811834-2001*		*1*	*PROGRAM SOURCE CODE*	
0030	2699090-0001		1	RECORDER	
NOHI					
0010	2811834-0001		1	RECORDER CD	
0010	*2811835-0001*		*1*	*LABEL CD*	
0020	*90458-0118*		*1*	*COMPACT DISC RECORDABLE*	
0030	*2811834-1001*		*1*	*PROGRAM OBJECT CODE*	
0040	*2811834-2001*		*1*	*PROGRAM SOURCE CODE*	
0020	2699092-0001		1	RECORDER	

Pos	Part No	UN	Qty	Description	Page No

This page is intentionally left blank.

ECM: 272726 - 20060712
Group number: 2801571-0100
Assembly Drawing:

Pos	Part No	UN	Qty	Description	Page No	Pos	Part No	UN	Qty	Description	Page No
-											
	2801770-0001		1	TPIH CD							

Machine Type	Group Description	Used-In	Group Number	Page No

This page is intentionally left blank.

ECM: 274609 - 20061101
Group number: 2635131-0150
Assembly Drawing:

Pos	Part No	UN	Qty	Description	Page No
A3/FLEX					
	351164-0107	M	78	CABLE AWM 1X6 MM2 BLACK	
	351160-0104	M	15	CABLE AWM 1X1,5 MM2 DARKBLUE	
	351160-0106	M	15	CABLE AWM 1X4 MM2 DARKBLUE	
	351161-0102	M	35	CABLE (1UNIT = 100M)	
	351160-0105	M	25	CABLE AWM 1X2,5 MM2 DARKBLUE	
	351160-0102	M	2500	CABLE (1UNIT = 100M)	
	351164-0102	M	75	CABLE AWM 1X0,75 MM2 BLACK	
	351162-0109	M	7	CABLE AWM 1X16 MM2 YELLOW-GREEN	
	351164-0104	M	120	CABLE AWM 1X1,5 MM2 BLACK	
	351162-0107	M	34	CABLE AWM 1X6 MM2 YELLOW-GREEN	
	351162-0106	M	5	CABLE AWM 1X4 MM2 YELLOW-GREEN	
	351162-0105	M	54	CABLE AWM 1X2,5 MM2 YELLOW-GREEN	
	351164-0105	M	130	CABLE (1UNIT = 100M)	
	351161-0104	M	75	CABLE AWM LIGHTBLUE 1,5MM2	
	351161-0105	M	6	CABLE AWM 1X2,5 MM2 LIGHTBLUE	
	351164-0106	M	41	CABLE AWM 1X4 MM2 BLACK	
	351162-0104	M	70	CABLE AWM 1X1,5 MM2 YELLOW-GREEN	
	351162-0102	M	120	CABLE AWM 1X0,75 MM2 YELLOW-GREEN	
	351161-0111	M	8	CABLE AWM 1X35 MM2 LIGHTBLUE	
Common Parts					
	351164-0111	M	15	CABLE AWM 1X35 MM2 BLACK	

Pos	Part No	UN	Qty	Description	Page No

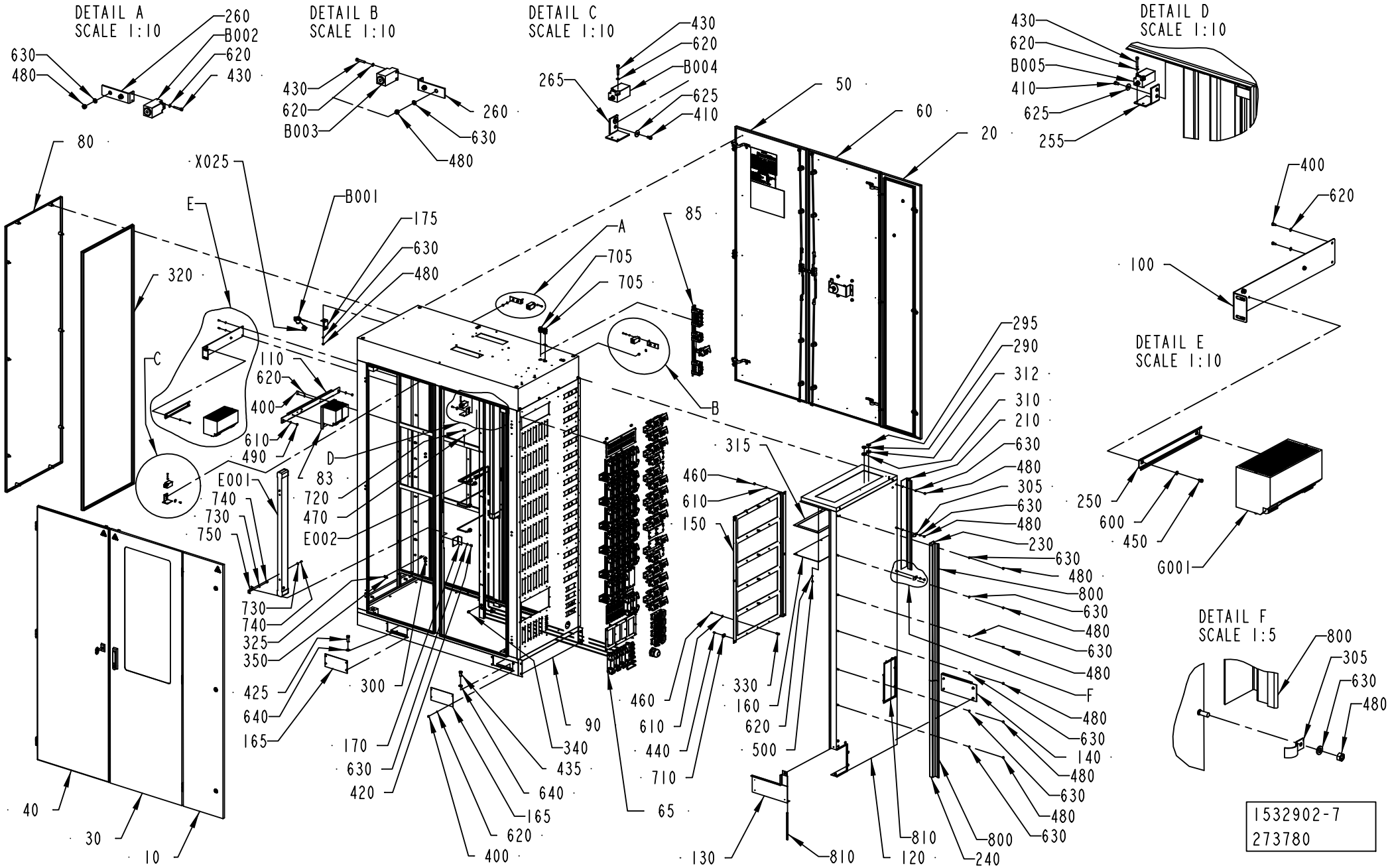
DETAIL A
SCALE 1:10
DETAIL B
SCALE 1:10
DETAIL C
SCALE 1:10
DETAIL D
SCALE 1:10
DETAIL E
SCALE 1:10
DETAIL F
SCALE 1:5
1532902-7
273780

ECM: 273786 - 20061101
Group number: 1532902-0250
Assembly Drawing: 1532902-7_1_AA

Pos	Part No	UN	Qty	Description	Page No
A3/FLEX					
090	2844055-0001		1	WELDED CABINET	
120	2765462-0001		1	COVERING PANEL	
210	2748701-0000		1	BRACKET	
230	2747630-0000		1	BRACKET	
240	2748702-0000		1	BRACKET	
290	90002-0004		1	BLANK-OFF PLUG, PR 22,5 SKINDICHT-BLK16	
295	90002-0016		1	BLANK-OFF PLUG PR 20.4 SKINDICHT-BLK13,5	
705	352103-0108		2	CABLE GLAND, ST 13,5 , PR20,4/PG13,5	
720	352113-0205		6	ANCHOR PLATES FOR STRIPS, TYPE TM2S8-C10	
800	90143-0059	MM	2550	SEAL STRIP 4610069	
Common Parts					
010	2789109-0100		1	DOOR	**8-25**
020	2789107-0100		1	DOOR	**8-27**
030	1532920-0100		1	DOOR	**8-29**
040	1532923-0100		1	DOOR	**8-31**
050	1532932-0250		1	DOOR	**8-33**
060	1532935-0100		1	DOOR	**8-35**
065	2563166-0250		1	CONNECTOR	**8-37, 8-39, 8-41**
080	1532904-0100		1	DOOR	**8-43**
083	2624549-0100		1	POWER SUPPLY UNIT	**8-45**
085	2624551-0200		1	CONNECTION DEVICE	**8-47**
100	1532927-0000		1	FASTENING PLATE	
110	2530287-0000		1	PLATE	
130	1532928-0000		1	COVERING PLATE	
140	1532929-0000		1	COVERING PLATE	
150	1532911-0000		1	FASTENING PLATE	
160	1532909-0000		1	PLATE	
165	1038408-0000		4	COVERING PLATE	
170	1140769-0000		1	DOOR STOPPER	
175	1129318-0000		1	BRACKET	
250	2530286-0000		1	RAIL	
255	2606215-0000		1	BRACKET	
260	2608106-0000		2	BRACKET	
265	2608107-0000		1	BRACKET	
300	90062-0015		11	LOCK WASHER SERRAT.EXT.GEAR,6,4/11 H=0,7	
305	90074-0011		2	CABLE CLIPS, D=14 MM	
310	90099-0110		3	NUT, PR 22,5 (PG16)	
312	90099-0118		1	NUT, PR 20,4 (PG13,5)	
315	1532926-0000		1	GASKET	
320	90143-0057	M	36	STRIP EMKA 1011-05 21X11MM	
325	90194-0152		14	SIGN, EARTH	
330	90287-0137		6	SPACER BOLT DSSM60100	
340	90287-0157		2	SCREW M6SF FLAT HEAD M6X10 88	
350	2608177-0000		11	SIGN	
400	312105-0287		20	SCREW M6S ISO 4017 M4X8 A470	
410	312105-0323		4	SCREW M6S ISO 4017 M5X8 A480	
420	312105-0364		2	SCREW M6S ISO 4017 M6X10 A480	
425	312105-0538		2	SCREW M6S ISO 4017 M12X35 A480	
430	312111-0297		8	SCREW HEX.SOCK.HD.MC6S-TT 4X25 88 FZB	
435	312105-0534		2	SCREW M6S ISO 4017 M12X25 A480	
440	312121-0289		24	SCREW ISO 1207 M4X10 4.8 - 5.8 Z.PL.	
450	312121-0323		2	SCREW ISO 1207 M5X8 4.8 - 5.8 Z.PL.	
460	312601-0316		12	HEXAGON NUT, DIN 934 M6 8 FZB	
470	312605-0312		9	HEXAGON NUT, M6M M4 A280	
480	312605-0316		37	HEXAGON NUT, M6M M6 A280	
490	312810-0316		6	HEXAGON NUT, NY-LOCK M6 FZB	
500	312812-0312		6	HEXAGON NUT, NY-LOCK M4 A480	
600	315101-0146		2	WASHER PLAIN, BRB, 5,3/10 H=1	
610	315101-0153		18	WASHER PLAIN, BRB, 6,4/12 H=1,5	
620	315105-0136		34	WASHER BRB 4,3X9 RFR	
625	90005-0060		4	WASHER PLAIN, RBS 6,4/M6)/18,H=1,5	
630	315105-0153		39	WASHER BRB 6,4X12 RFR	
640	315105-0178		4	WASHER BRB 13X24 RFR	
710	352113-0203		27	ANCHOR PLATES FOR STRIPS, TYPE TM3S8-M0	
730	90005-0082		8	WASHER PLAIN ROUND 4,3(M4)/12,H=1	
740	312125-0289		8	SCREW ISO 1207 M4X10 A4	
750	2675516-0000		4	BRACKET	
810	90143-0060	MM	1550	EDGE STRIP 9,5X6,3MM BLACK PVC	
B001	90326-0053		1	THERMOCOUPLE, 12826-35	
B002	90044-0192		1	LIMIT SW. SZ2586.000	
B003	90044-0192		1	LIMIT SW. SZ2586.000	
B004	90044-0192		1	LIMIT SW. SZ2586.000	
B005	90044-0192		1	LIMIT SW. SZ2586.000	
E001	90459-2560		1	LIGHT FIXTURE, TMS121 1XTL-D30W/830 IP	
E002	90459-2560		1	LIGHT FIXTURE, TMS121 1XTL-D30W/830 IP	
G001	90459-2938		1	POWER SUPPLY, 6EP1437-3BA00	
X025	90326-0020		1	PLUG, FEMALE YELLOW CR-AL	

Machine Type | Group Description | Used-In | Group Number | Page No

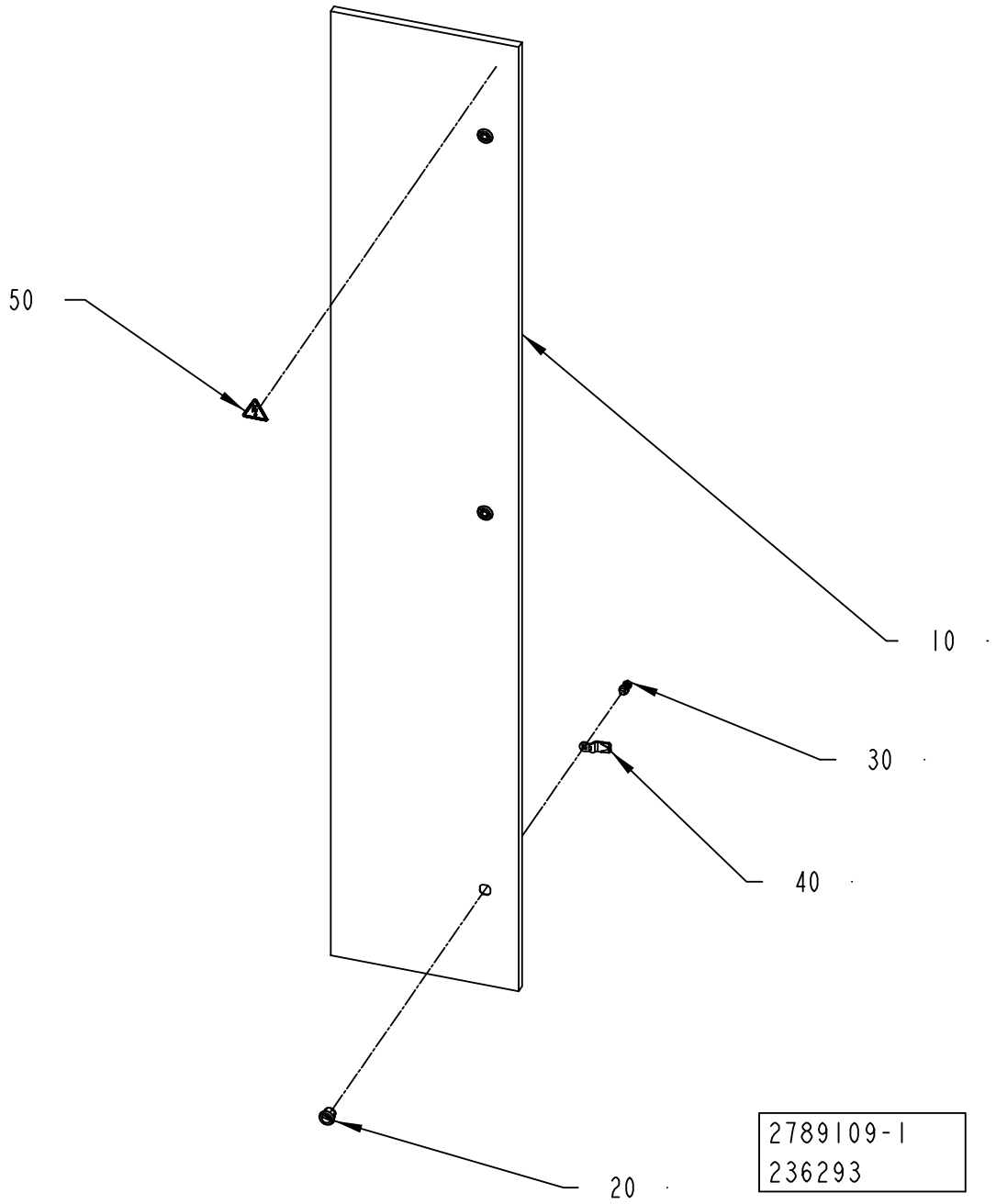
50
10
30
40
20
2789109-1
236293

ECM: 236483 - 20060101
Group number: 2789109-0100
Assembly Drawing: 2789109-1_1_AA

Pos	Part No	UN	Qty	Description	Page No
-					
010	2789110-0000		1	DOOR	
020	90237-0319		3	LOCK HOUSING, 1000-U134	
030	90237-0320		3	LOCK HOUSING, 1000-U136	
040	90237-0157		3	LOCK BOLT, 1000-230	
050	359705-0015		1	WARNING SIGN ISO, RISK OF ELECTRIC SHOCK	

Pos	Part No	UN	Qty	Description	Page No

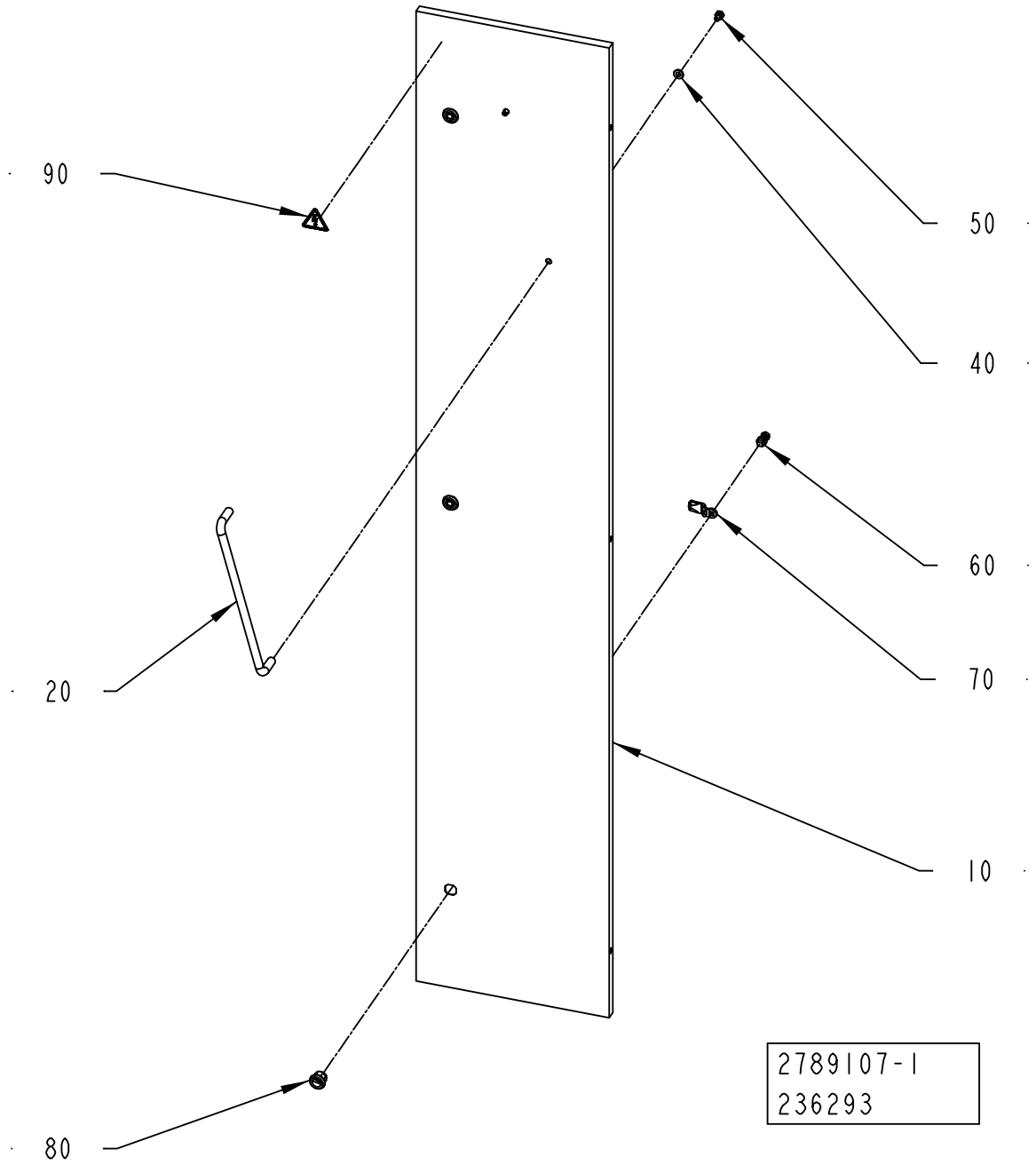
90
50
40
20
60
70
10
80
2789107-1
236293

ECM: 236293 - 20060101
Group number: 2789107-0100
Assembly Drawing: 2789107-1_1_AA

Pos	Part No	UN	Qty	Description	Page No
-					
010	2789108-0000		1	DOOR	
020	90017-0015		1	HANDLE, NO. 14.4012.02.308	
040	90005-0077		2	WASHER PL.RND.NYL.8,4/7, H=2	
050	312105-0447		2	SCREW M6S ISO 4017 M8X12 A480	
060	90237-0320		3	LOCK HOUSING, 1000-U136	
070	90237-0157		3	LOCK BOLT, 1000-230	
080	90237-0319		3	LOCK HOUSING, 1000-U134	
090	359705-0015		1	WARNING SIGN ISO, RISK OF ELECTRIC SHOCK	

Pos	Part No	UN	Qty	Description	Page No

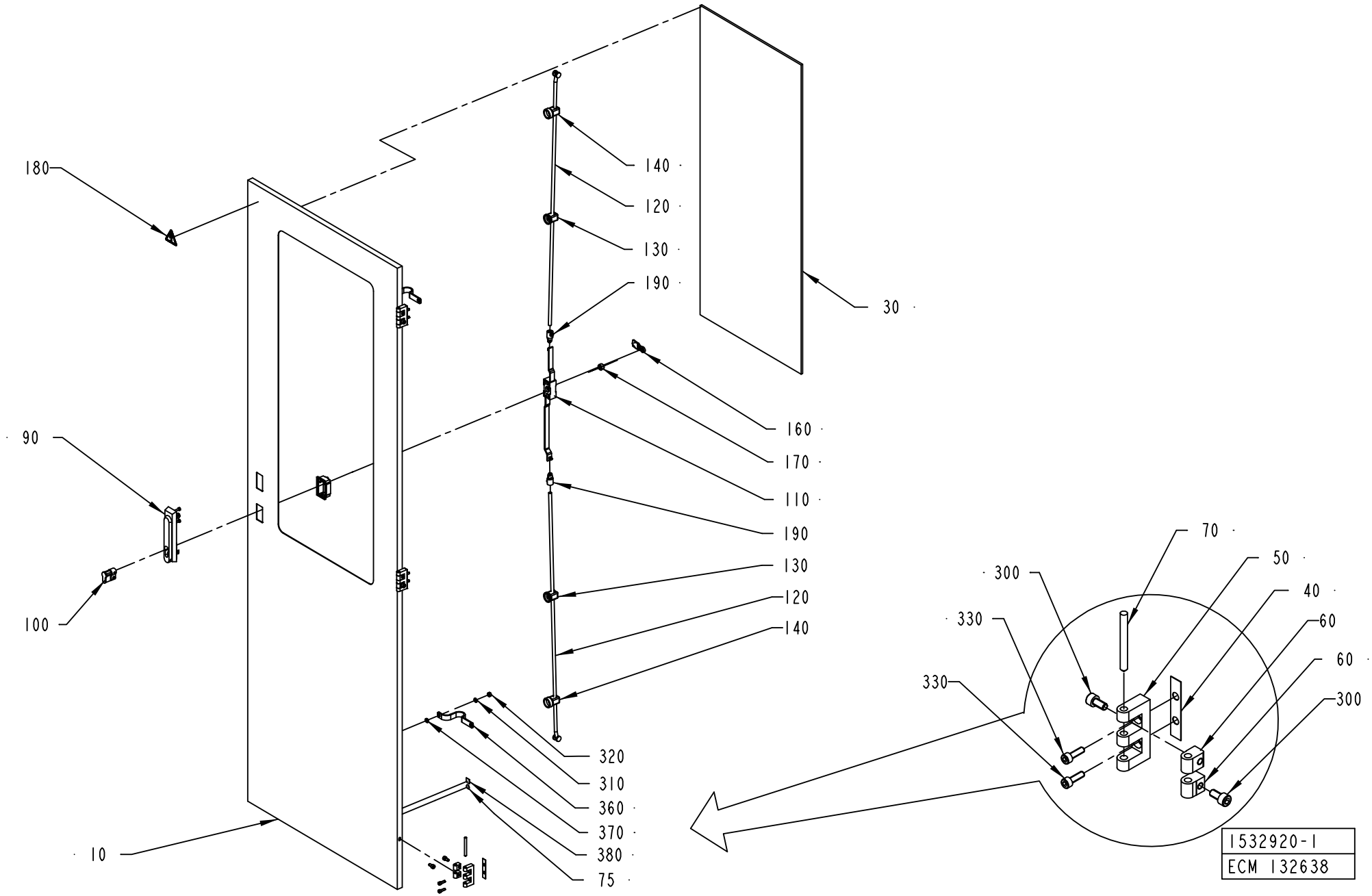
180
140
120
130
190
30
90
160
170
110
190
130
120
140
100
320
310
360
370
380
75
10
70
50
300
40
330
60
330
60
300
1532920-1
ECM 132638

ECM: 184926 - 20040928
Group number: 1532920-0100
Assembly Drawing: 1532920-1_1_AB

Pos	Part No	UN	Qty	Description	Page No
-					
010	1532921-0000		1	DOOR	
030	2530288-0000		1	GLASS PANE	
040	988666-0000		3	GASKET	
050	1035792-0000		3	E-HINGE	
060	1129770-0000		6	BLOCKING PIECE	
070	988685-0000		3	PIN	
075	2608177-0000		2	SIGN	
090	90237-0176		1	TURNING HANDLE, 1125-U190-A	
100	90237-0128		1	LOCK CYLINDER, 1109-U3	
110	90237-0153		1	LOCK HOUSING, 1121-U26-0B	
120	90237-0168		2	ROUND BAR WITH END WHEEL, 1049-U5	
130	90237-0151		2	GUIDE, 1001-U11	
140	90237-0152		2	GUIDE, 1001-U12	
160	90237-0156		1	LOCK BOLT, 1000-16	
170	90237-0155		1	LOCK ADAPTER, 1121-U40	
180	359705-0015		1	WARNING SIGN ISO, RISK OF ELECTRIC SHOCK	
190	90237-0169		2	LOCK ADAPTER, 1000-U49	
300	312115-0366		6	SCREW ISO4762 M6X12 A4 80	
310	315105-0153		2	WASHER BRB 6,4X12 RFR	
320	312605-0316		2	HEXAGON NUT, M6M M6 A280	
330	312115-0329		6	SCREW ISO4762 M5X16 A4 80	
360	90135-0035		2	EARTH WIRE, L=250 MM 16 MM2	
370	90062-0015		2	LOCK WASHER SERRAT.EXT.GEAR,6,4/11 H=0,7	
380	90194-0152		2	SIGN, EARTH	

Pos	Part No	UN	Qty	Description	Page No

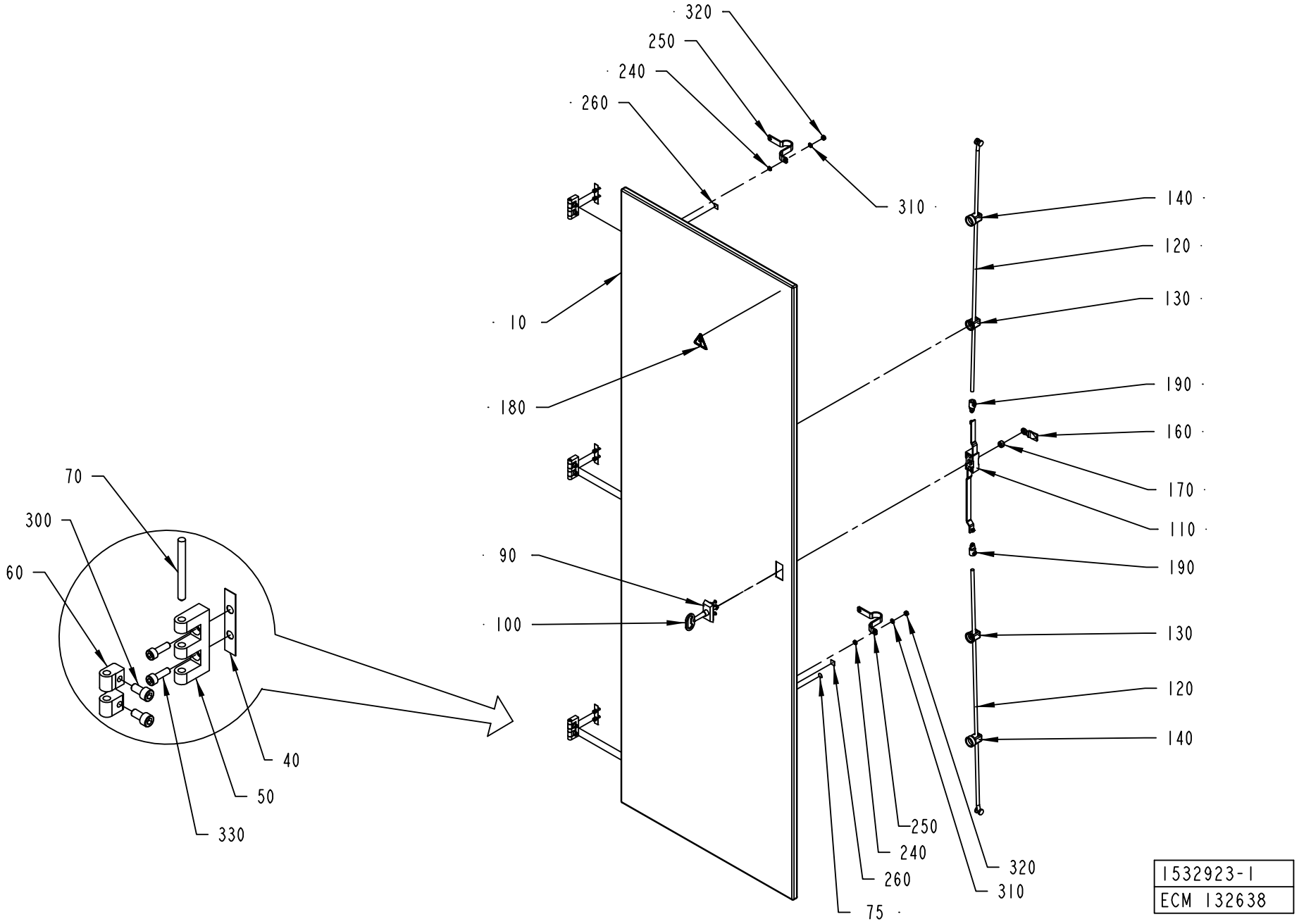
320
250
240
260
310
140
120
130
10
180
190
160
170
110
190
90
100
130
120
140
70
300
60
40
50
330
250
240
260
320
310
75
1532923-1
ECM 132638

ECM: 184927 - 20040928
Group number: 1532923-0100
Assembly Drawing: 1532923-1_1_AB

Pos	Part No	UN	Qty	Description	Page No
-					
010	1532924-0000		1	DOOR	
040	988666-0000		3	GASKET	
050	1035792-0000		3	E-HINGE	
060	1129770-0000		6	BLOCKING PIECE	
070	988685-0000		1	PIN	
075	2608177-0000		2	SIGN	
090	90237-0160		1	ESCUTCHEON WITH SQUARE, 1121-U23/U13	
100	90237-0324		1	KEY, 1104-02 FOR SQUARE 8 MM	
110	90237-0153		1	LOCK HOUSING, 1121-U26-0B	
120	90237-0168		2	ROUND BAR WITH END WHEEL, 1049-U5	
130	90237-0151		2	GUIDE, 1001-U11	
140	90237-0152		2	GUIDE, 1001-U12	
160	90237-0156		1	LOCK BOLT, 1000-16	
170	90237-0155		1	LOCK ADAPTER, 1121-U40	
180	359705-0015		1	WARNING SIGN ISO, RISK OF ELECTRIC SHOCK	
190	90237-0169		2	LOCK ADAPTER, 1000-U49	
240	90062-0015		2	LOCK WASHER SERRAT.EXT.GEAR,6,4/11 H=0,7	
250	90135-0035		2	EARTH WIRE, L=250 MM 16 MM2	
260	90194-0152		2	SIGN, EARTH	
300	312115-0366		6	SCREW ISO4762 M6X12 A4 80	
310	315105-0153		2	WASHER BRB 6,4X12 RFR	
320	312605-0316		2	HEXAGON NUT, M6M M6 A280	
330	312115-0329		6	SCREW ISO4762 M5X16 A4 80	

Pos	Part No	UN	Qty	Description	Page No

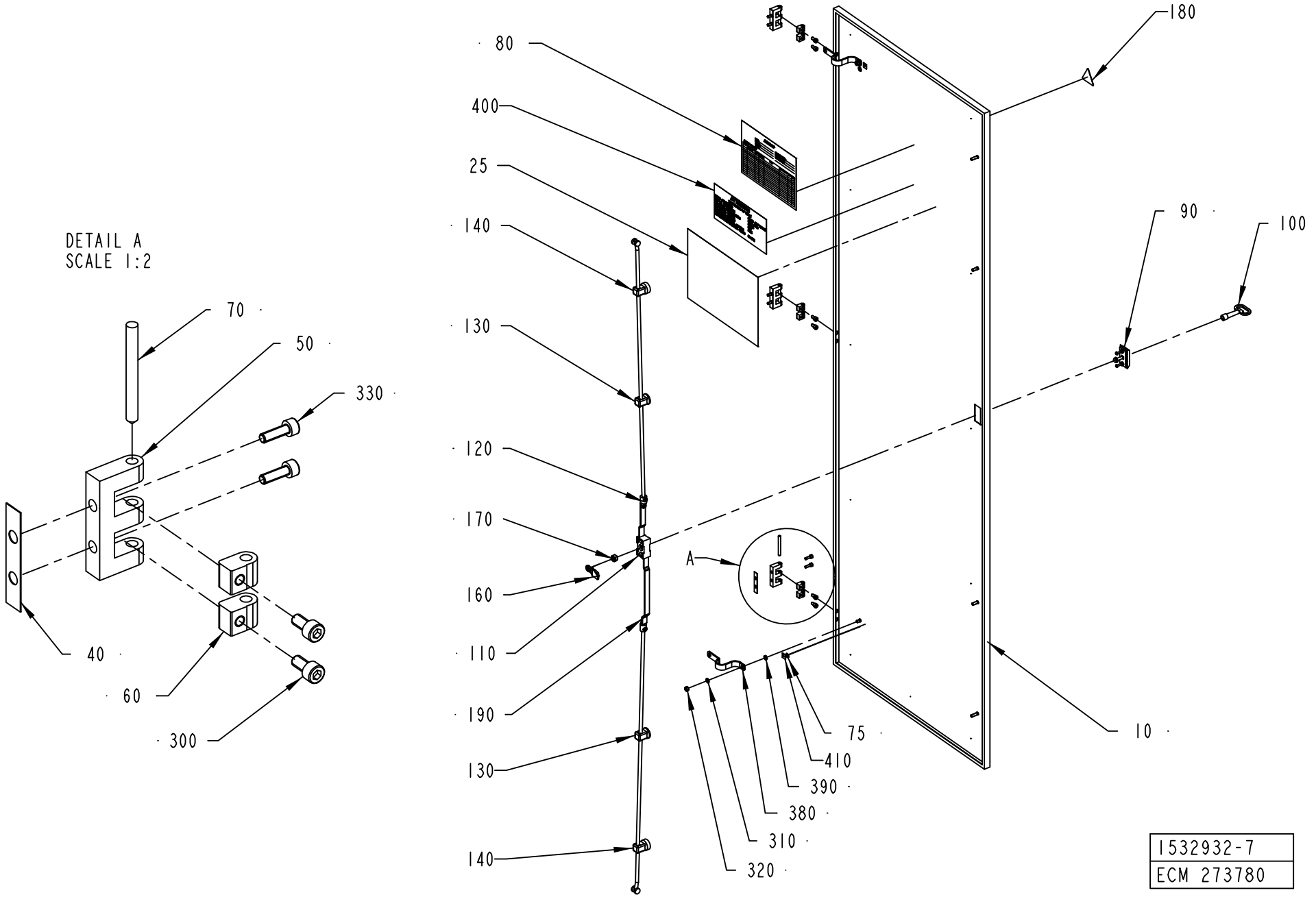
DETAIL A
SCALE 1:2
70
50
330
40
60
300
80
400
25
140
130
120
170
160
110
190
130
140
180
90
100
A
75
410
390
380
310
320
10
1532932-7
ECM 273780

ECM: 273788 - 20061101
Group number: 1532932-0250
Assembly Drawing: 1532932-7_1_AA

Pos	Part No	UN	Qty	Description	Page No
A3/FLEX					
025	2851036-0000		1	FUSE PANEL LABEL	
Common Parts					
010	1532933-0000		1	DOOR	
040	988666-0000		3	GASKET	
050	1035792-0000		3	E-HINGE	
060	1129770-0000		6	BLOCKING PIECE	
070	988685-0000		3	PIN	
075	2608177-0000		2	SIGN	
080	90194-0133		1	SIGN "DELIVERED DESIGN"	
090	90237-0160		1	ESCUTCHEON WITH SQUARE, 1121-U23/U13	
100	90237-0324		1	KEY, 1104-02 FOR SQUARE 8 MM	
110	90237-0153		1	LOCK HOUSING, 1121-U26-0B	
120	90237-0168		2	ROUND BAR WITH END WHEEL, 1049-U5	
130	90237-0151		2	GUIDE, 1001-U11	
140	90237-0152		2	GUIDE, 1001-U12	
160	90237-0156		1	LOCK BOLT, 1000-16	
170	90237-0155		1	LOCK ADAPTER, 1121-U40	
180	359705-0015		1	WARNING SIGN ISO, RISK OF ELECTRIC SHOCK	
190	90237-0169		2	LOCK ADAPTER, 1000-U49	
300	312115-0366		6	SCREW ISO4762 M6X12 A4 80	
310	315105-0153		2	WASHER BRB 6,4X12 RFR	
320	312605-0316		2	HEXAGON NUT, M6M M6 A280	
330	312115-0329		6	SCREW ISO4762 M5X16 A4 80	
380	90135-0035		2	EARTH WIRE, L=250 MM 16 MM2	
390	90062-0015		2	LOCK WASHER SERRAT.EXT.GEAR,6,4/11 H=0,7	
400	90194-0080		1	SIGN, IDENTIFICATION OF WIRING	
410	90194-0152		2	SIGN, EARTH	

Pos	Part No	UN	Qty	Description	Page No

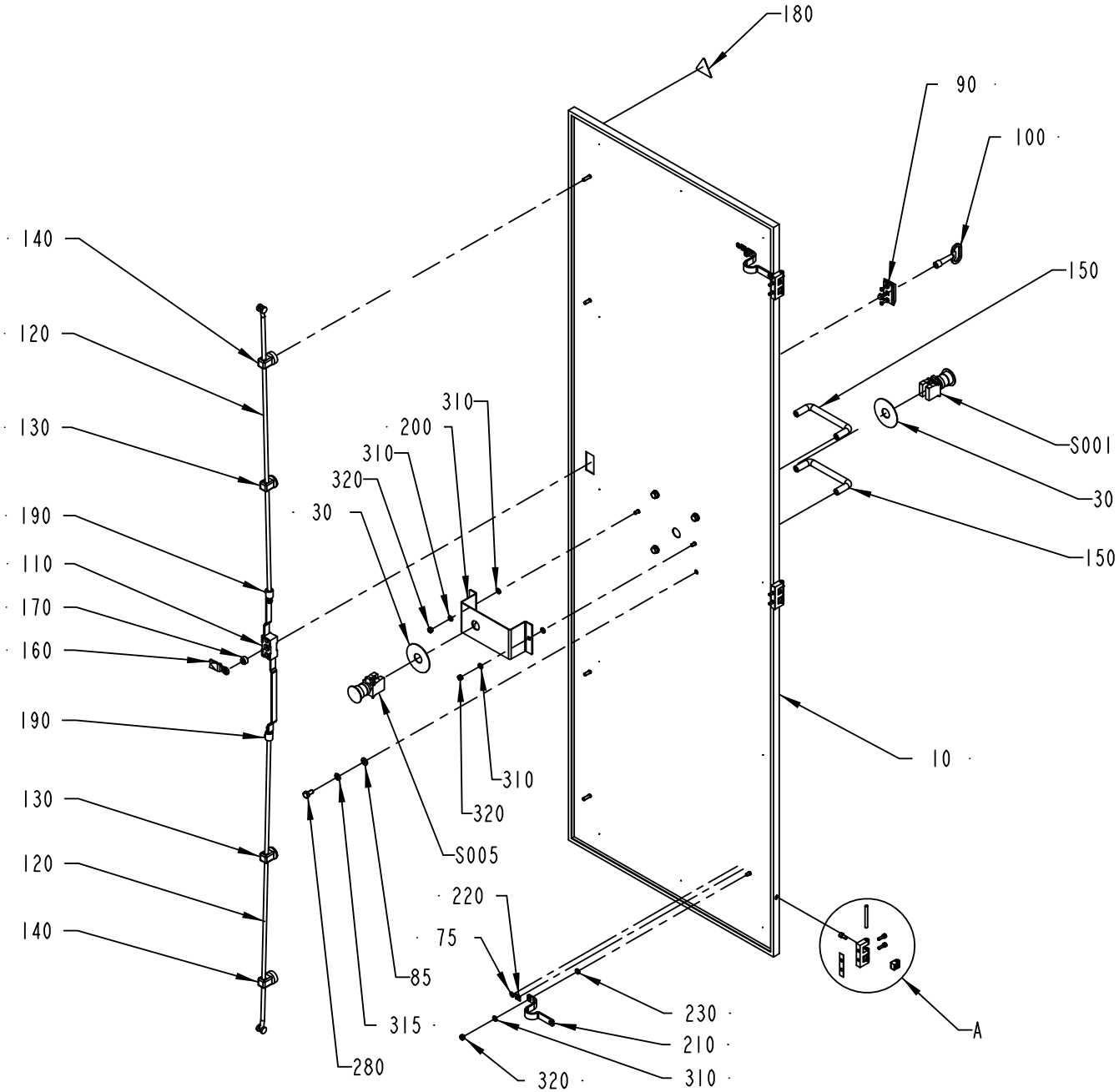

DETAIL A
SCALE 1:2

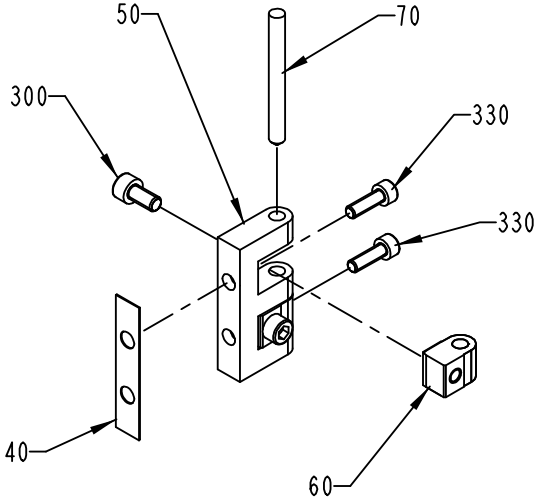

1532935-1
ECM 132638

ECM: 184929 - 20040928
Group number: 1532935-0100
Assembly Drawing: 1532935-1_1_AB

Pos	Part No	UN	Qty	Description	Page No
-					
010	1532936-0000		1	DOOR	
030	486826-0001		2	SIGN "EMERGENCY STOP"	
040	988666-0000		3	GASKET	
050	1035792-0000		3	E-HINGE	
060	1129770-0000		6	BLOCKING PIECE	
070	988685-0000		3	PIN	
075	2608177-0000		2	SIGN	
085	90005-0077		4	WASHER PL.RND.NYL.8,4/7, H=2	
090	90237-0160		1	ESCUTCHEON WITH SQUARE, 1121-U23/U13	
100	90237-0324		1	KEY, 1104-02 FOR SQUARE 8 MM	
110	90237-0153		1	LOCK HOUSING, 1121-U26-0B	
120	90237-0168		2	ROUND BAR WITH END WHEEL, 1049-U5	
130	90237-0151		2	GUIDE, 1001-U11	
140	90237-0152		2	GUIDE, 1001-U12	
150	90017-0016		2	HANDLE, NO. 14.4012.02.120	
160	90237-0156		1	LOCK BOLT, 1000-16	
170	90237-0155		1	LOCK ADAPTER, 1121-U40	
180	359705-0015		1	WARNING SIGN ISO, RISK OF ELECTRIC SHOCK	
190	90237-0169		2	LOCK ADAPTER, 1000-U49	
200	1038699-0000		1	BRACKET	
210	90135-0035		2	EARTH WIRE, L=250 MM 16 MM2	
220	90194-0152		2	SIGN, EARTH	
230	90062-0015		2	LOCK WASHER SERRAT.EXT.GEAR,6,4/11 H=0,7	
280	312105-0449		4	SCREW M6S ISO 4017 M8X16 A480	
300	312115-0366		6	SCREW ISO4762 M6X12 A4 80	
310	315105-0153		6	WASHER BRB 6,4X12 RFR	
315	315105-0165		4	WASHER BRB 8,4X16 RFR	
320	312605-0316		4	HEXAGON NUT, M6M M6 A280	
330	312115-0329		6	SCREW ISO4762 M5X16 A4 80	
S001	90458-1651		1	EMERGENCY STOP, ZB4-BS-844 ZB4-BZ-104	
S005	90458-1651		1	EMERGENCY STOP, ZB4-BS-844 ZB4-BZ-104	

Pos	Part No	UN	Qty	Description	Page No

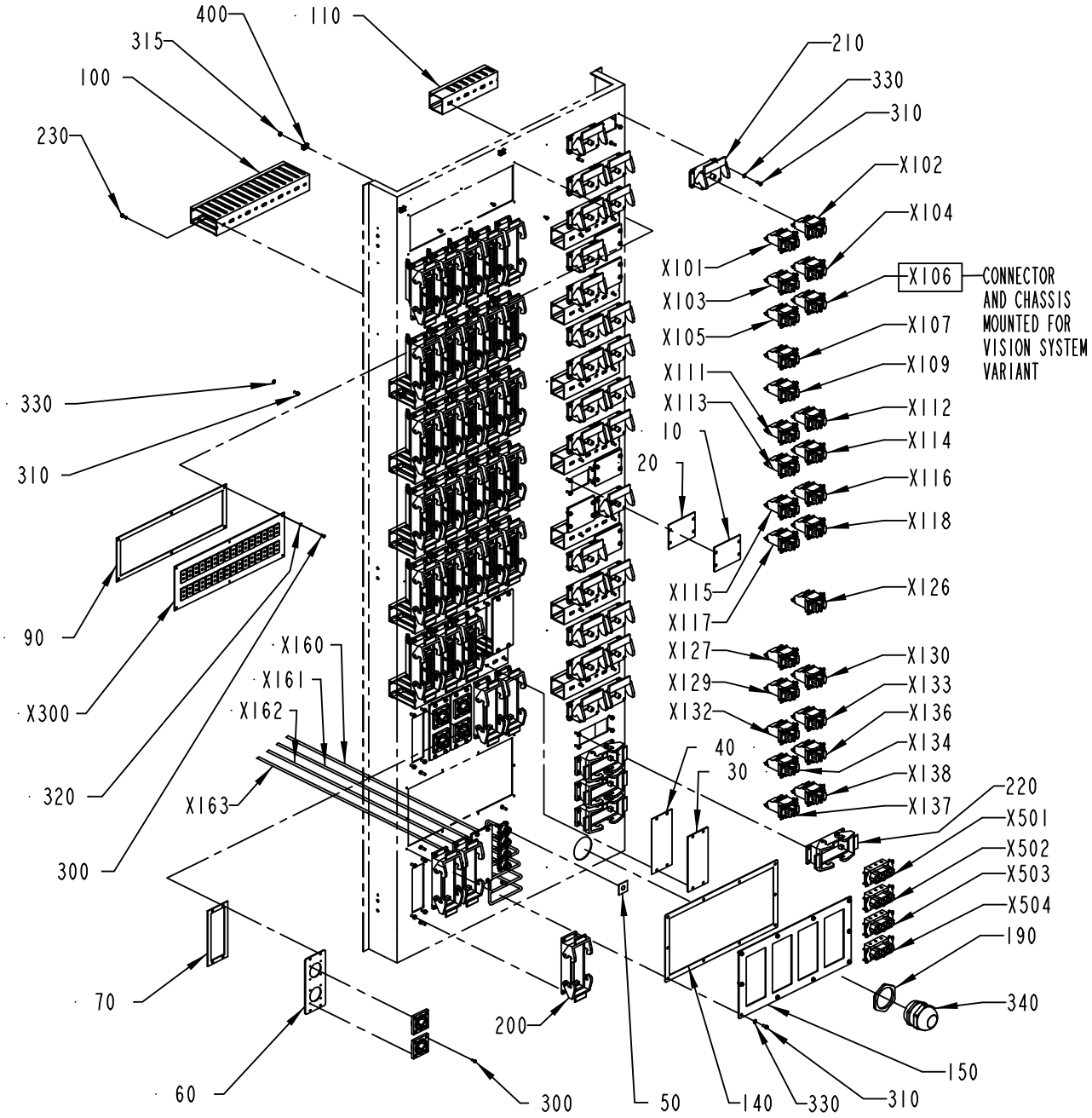
400
110
315
100
230
210
330
310
X102
X104
X101
X103
X105
X106
CONNECTOR AND CHASSIS MOUNTED FOR VISION SYSTEM VARIANT
X107
X109
X111
X113
X112
X114
X116
X118
10
20
X115
X117
X126
330
310
90
X300
320
300
X160
X161
X162
X163
X127
X129
X132
X130
X133
X136
X134
X138
X137
40
30
220
X501
X502
X503
X504
190
340
150
70
60
200
300
50
140
330
310

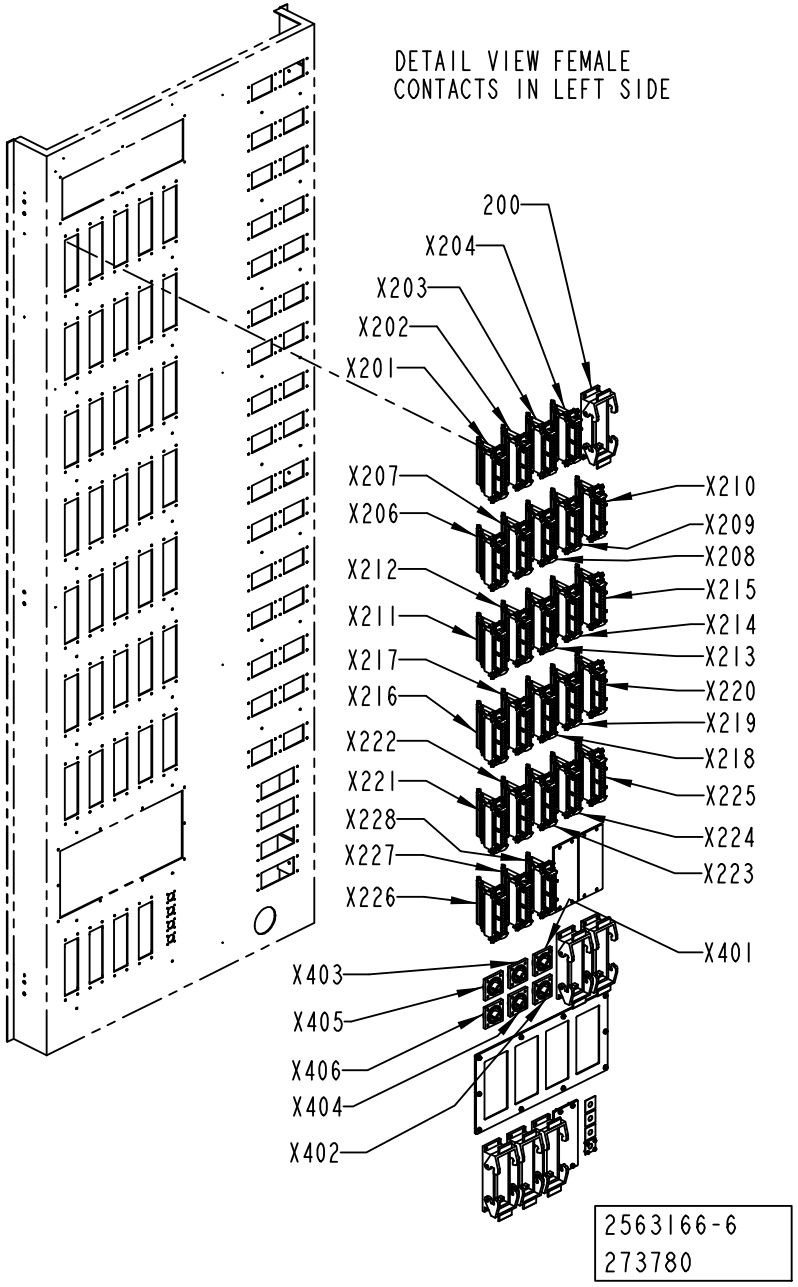
DETAIL VIEW FEMALE CONTACTS IN LEFT SIDE
200
X204
X203
X202
X201
X207
X206
X212
X211
X217
X216
X222
X221
X228
X227
X226
X210
X209
X208
X215
X214
X213
X220
X219
X218
X225
X224
X223
X401
X403
X405
X406
X404
X402
2563166-6
273780

ECM: 273787 - 20061101
Group number: 2563166-0250
Assembly Drawing: 2563166-6_1_AA

This list covers pages from 8-36 to 8-41

Pos	Part No	UN	Qty	Description	Page No
A3/FLEX NOVISION SYS (See drawing on pages: 8-36, 8-38, 8-40)					
010	1037572-0000		7	COVER PLATE	
020	1037573-0000		7	GASKET	
030	1037574-0000		3	COVER PLATE	
040	1037575-0000		3	GASKET	
050	1129276-0000		4	GASKET	
100	2551988-0000		6	CABLE DUCT	
140	2841498-0000		1	GASKET	
150	2841499-0000		1	PLATE	
200	90459-6639		33	HOUSING 24B BULKHEAD, 09 30 024 0301	
210	90110-0123		25	HOUSING, 09 30 006 0301	
220	90459-6638		4	HOUSING 16B BULKHEAD, 09 30 016 0301	
300	312125-0222		46	SCREW ISO 1207 M3X8 A4	
310	312125-0289		312	SCREW ISO 1207 M4X10 A4	
320	315105-0124		22	WASHER BRB 3,2X7 RFR	
330	315105-0136		312	WASHER BRB 4,3X9 RFR	
W106	90220-0183	MM	3200	SCR. CABLE 2X0,34MM2	
W120	90220-0183	MM	3500	SCR. CABLE 2X0,34MM2	
W121	90220-0183	MM	3500	SCR. CABLE 2X0,34MM2	
W122	90220-0183	MM	3600	SCR. CABLE 2X0,34MM2	
W124	90220-0183	MM	2400	SCR. CABLE 2X0,34MM2	
W125	90220-0183	MM	2400	SCR. CABLE 2X0,34MM2	
W126	90220-0183	MM	2200	SCR. CABLE 2X0,34MM2	
W127	90220-0183	MM	2200	SCR. CABLE 2X0,34MM2	
W130	90220-0183	MM	2700	SCR. CABLE 2X0,34MM2	
W133	90220-0183	MM	3500	SCR. CABLE 2X0,34MM2	
W135	90220-0183	MM	2100	SCR. CABLE 2X0,34MM2	
W138	90220-0183	MM	2500	SCR. CABLE 2X0,34MM2	
W139	90220-0183	MM	2400	SCR. CABLE 2X0,34MM2	
W213	90220-0104	MM	1150	SCR. CABLE 4X1,5MM2	
W215	90220-0104	MM	1200	SCR. CABLE 4X1,5MM2	
W300	90220-0034	MM	1200	THERMOCABLE TEX/SITW-20F-KX 2X0,5MM2	
W301	90220-0034	MM	1200	THERMOCABLE TEX/SITW-20F-KX 2X0,5MM2	
W302	90220-0034	MM	1200	THERMOCABLE TEX/SITW-20F-KX 2X0,5MM2	
W303	90220-0034	MM	1200	THERMOCABLE TEX/SITW-20F-KX 2X0,5MM2	
W304	90220-0034	MM	1200	THERMOCABLE TEX/SITW-20F-KX 2X0,5MM2	
W305	90220-0034	MM	1200	THERMOCABLE TEX/SITW-20F-KX 2X0,5MM2	
W313	90220-0034	MM	1200	THERMOCABLE TEX/SITW-20F-KX 2X0,5MM2	
W314	90220-0034	MM	1200	THERMOCABLE TEX/SITW-20F-KX 2X0,5MM2	
W316	90220-0034	MM	1200	THERMOCABLE TEX/SITW-20F-KX 2X0,5MM2	
W317	90220-0034	MM	1200	THERMOCABLE TEX/SITW-20F-KX 2X0,5MM2	
W318	90220-0034	MM	1000	THERMOCABLE TEX/SITW-20F-KX 2X0,5MM2	
W319	90220-0034	MM	1000	THERMOCABLE TEX/SITW-20F-KX 2X0,5MM2	
W320	90220-0034	MM	1000	THERMOCABLE TEX/SITW-20F-KX 2X0,5MM2	
W321	90220-0034	MM	3000	THERMOCABLE TEX/SITW-20F-KX 2X0,5MM2	
W322	90220-0034	MM	3000	THERMOCABLE TEX/SITW-20F-KX 2X0,5MM2	
W323	90220-0034	MM	3000	THERMOCABLE TEX/SITW-20F-KX 2X0,5MM2	
W331	90220-0034	MM	1000	THERMOCABLE TEX/SITW-20F-KX 2X0,5MM2	
W332	90220-0034	MM	1000	THERMOCABLE TEX/SITW-20F-KX 2X0,5MM2	
W333	90220-0034	MM	1000	THERMOCABLE TEX/SITW-20F-KX 2X0,5MM2	
W382	90220-0034	MM	3000	THERMOCABLE TEX/SITW-20F-KX 2X0,5MM2	
W903	90459-2530	MM	1500	DEVICENET CABLE THIN	
W910	90459-2530	MM	950	DEVICENET CABLE THIN	
X105	90459-6624		1	FEMALE INSERT HAN E AV, 09 33 006 4735	
X113	90459-6624		1	FEMALE INSERT HAN E AV, 09 33 006 4735	
X114	90459-6624		1	FEMALE INSERT HAN E AV, 09 33 006 4735	
X118	90459-6624		1	FEMALE INSERT HAN E AV, 09 33 006 4735	
X129	90459-6624		1	FEMALE INSERT HAN E AV, 09 33 006 4735	
X138	90459-6624		1	FEMALE INSERT HAN E AV, 09 33 006 4735	
X160	2540596-0002		1	COAXIAL CABLE	
X161	2540596-0002		1	COAXIAL CABLE	
X162	2540596-0002		1	COAXIAL CABLE	
X163	2540596-0002		1	COAXIAL CABLE	
X501	90110-0055		1	FEMALE INSERT HAN 6 HSB 09 31 006 2701	
X502	90110-0055		1	FEMALE INSERT HAN 6 HSB 09 31 006 2701	
A3/FLEX VISION SYS (See drawing on pages: 8-36, 8-38, 8-40)					
010	1037572-0000		6	COVER PLATE	
020	1037573-0000		6	GASKET	
030	1037574-0000		3	COVER PLATE	
040	1037575-0000		3	GASKET	
050	1129276-0000		4	GASKET	
100	2551988-0000		6	CABLE DUCT	
140	2841498-0000		1	GASKET	
150	2841499-0000		1	PLATE	
200	90459-6639		33	HOUSING 24B BULKHEAD, 09 30 024 0301	
210	90110-0123		26	HOUSING, 09 30 006 0301	
220	90459-6638		4	HOUSING 16B BULKHEAD, 09 30 016 0301	
300	312125-0222		46	SCREW ISO 1207 M3X8 A4	
310	312125-0289		312	SCREW ISO 1207 M4X10 A4	
320	315105-0124		22	WASHER BRB 3,2X7 RFR	
330	315105-0136		312	WASHER BRB 4,3X9 RFR	
W106	90220-0183	MM	3200	SCR. CABLE 2X0,34MM2	
W120	90220-0183	MM	3500	SCR. CABLE 2X0,34MM2	
W121	90220-0183	MM	3500	SCR. CABLE 2X0,34MM2	

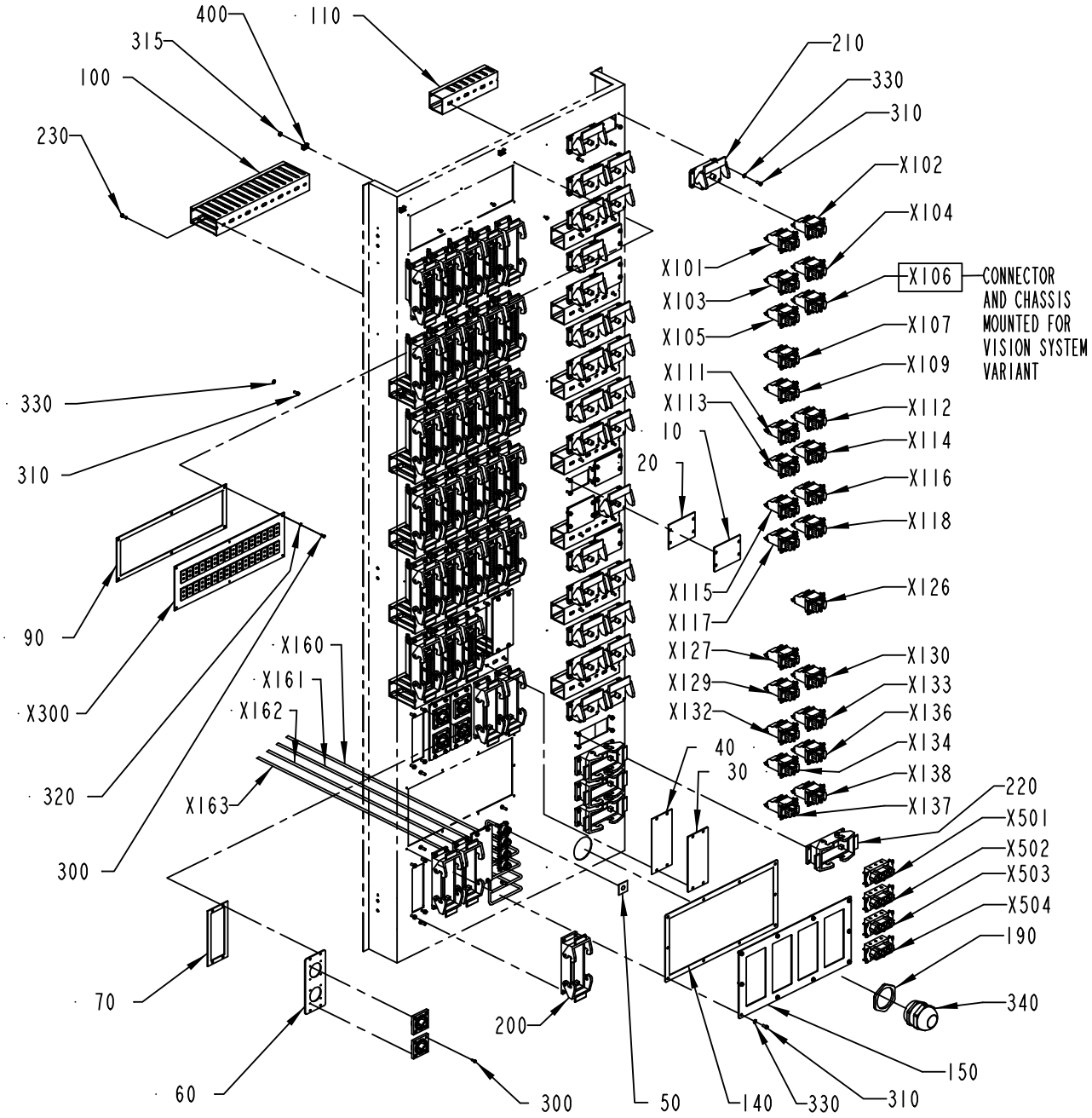
400
110
315
100
230
210
330
310
X102
X104
X101
X103
X105
X106
CONNECTOR AND CHASSIS MOUNTED FOR VISION SYSTEM VARIANT
X107
X109
X111
X113
X112
X114
10
20
X116
X118
X115
X117
X126
330
310
90
X160
X161
X162
X300
320
X163
300
X127
X129
X132
X130
X133
X136
X134
X138
X137
40
30
220
X501
X502
X503
X504
190
340
150
70
60
200
300
50
140
330
310

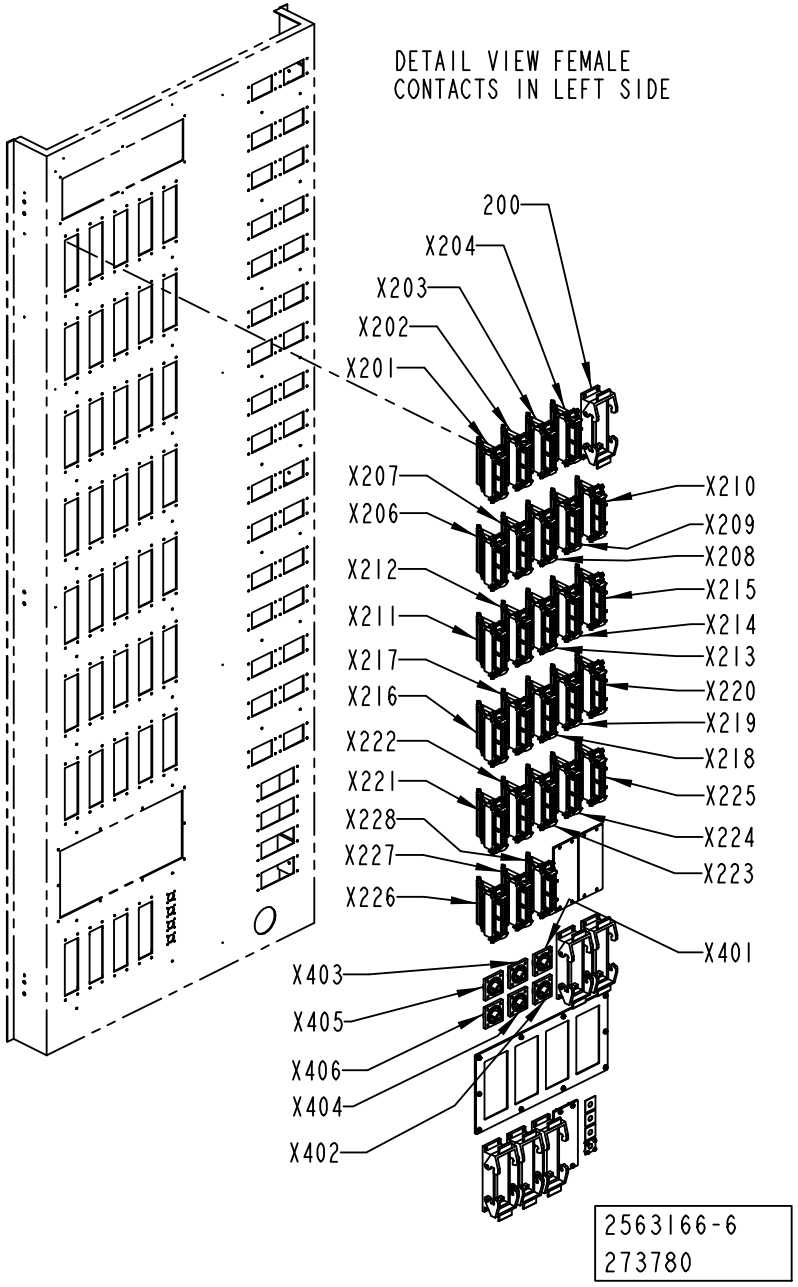
DETAIL VIEW FEMALE CONTACTS IN LEFT SIDE
200
X204
X203
X202
X201
X207
X206
X212
X211
X217
X216
X222
X221
X228
X227
X226
X210
X209
X208
X215
X214
X213
X220
X219
X218
X225
X224
X223
X401
X403
X405
X406
X404
X402
2563166-6
273780

Pos	Part No	UN	Qty	Description	Page No
A3/FLEX VISION SYS (Cont'd) (See drawing on pages: 8-36, 8-38, 8-40)					
W122	90220-0183	MM	3600	SCR. CABLE 2X0,34MM2	
W124	90220-0183	MM	2400	SCR. CABLE 2X0,34MM2	
W125	90220-0183	MM	2400	SCR. CABLE 2X0,34MM2	
W126	90220-0183	MM	2200	SCR. CABLE 2X0,34MM2	
W127	90220-0183	MM	2200	SCR. CABLE 2X0,34MM2	
W130	90220-0183	MM	2700	SCR. CABLE 2X0,34MM2	
W133	90220-0183	MM	3500	SCR. CABLE 2X0,34MM2	
W135	90220-0183	MM	2100	SCR. CABLE 2X0,34MM2	
W138	90220-0183	MM	2500	SCR. CABLE 2X0,34MM2	
W139	90220-0183	MM	2400	SCR. CABLE 2X0,34MM2	
W213	90220-0104	MM	1150	SCR. CABLE 4X1,5MM2	
W215	90220-0104	MM	1200	SCR. CABLE 4X1,5MM2	
W300	90220-0034	MM	1200	THERMOCABLE TEX/SITW-20F-KX 2X0,5MM2	
W301	90220-0034	MM	1200	THERMOCABLE TEX/SITW-20F-KX 2X0,5MM2	
W302	90220-0034	MM	1200	THERMOCABLE TEX/SITW-20F-KX 2X0,5MM2	
W303	90220-0034	MM	1200	THERMOCABLE TEX/SITW-20F-KX 2X0,5MM2	
W304	90220-0034	MM	1200	THERMOCABLE TEX/SITW-20F-KX 2X0,5MM2	
W305	90220-0034	MM	1200	THERMOCABLE TEX/SITW-20F-KX 2X0,5MM2	
W313	90220-0034	MM	1200	THERMOCABLE TEX/SITW-20F-KX 2X0,5MM2	
W314	90220-0034	MM	1200	THERMOCABLE TEX/SITW-20F-KX 2X0,5MM2	
W316	90220-0034	MM	1200	THERMOCABLE TEX/SITW-20F-KX 2X0,5MM2	
W317	90220-0034	MM	1200	THERMOCABLE TEX/SITW-20F-KX 2X0,5MM2	
W318	90220-0034	MM	1000	THERMOCABLE TEX/SITW-20F-KX 2X0,5MM2	
W319	90220-0034	MM	1000	THERMOCABLE TEX/SITW-20F-KX 2X0,5MM2	
W320	90220-0034	MM	1000	THERMOCABLE TEX/SITW-20F-KX 2X0,5MM2	
W321	90220-0034	MM	3000	THERMOCABLE TEX/SITW-20F-KX 2X0,5MM2	
W322	90220-0034	MM	3000	THERMOCABLE TEX/SITW-20F-KX 2X0,5MM2	
W323	90220-0034	MM	3000	THERMOCABLE TEX/SITW-20F-KX 2X0,5MM2	
W331	90220-0034	MM	1000	THERMOCABLE TEX/SITW-20F-KX 2X0,5MM2	
W332	90220-0034	MM	1000	THERMOCABLE TEX/SITW-20F-KX 2X0,5MM2	
W333	90220-0034	MM	1000	THERMOCABLE TEX/SITW-20F-KX 2X0,5MM2	
W382	90220-0034	MM	3000	THERMOCABLE TEX/SITW-20F-KX 2X0,5MM2	
W903	90459-2530	MM	1500	DEVICENET CABLE THIN	
W910	90459-2530	MM	950	DEVICENET CABLE THIN	
X105	90459-6624		1	FEMALE INSERT HAN E AV, 09 33 006 4735	
X106	90459-6624		1	FEMALE INSERT HAN E AV, 09 33 006 4735	
X113	90459-6624		1	FEMALE INSERT HAN E AV, 09 33 006 4735	
X114	90459-6624		1	FEMALE INSERT HAN E AV, 09 33 006 4735	
X118	90459-6624		1	FEMALE INSERT HAN E AV, 09 33 006 4735	
X129	90459-6624		1	FEMALE INSERT HAN E AV, 09 33 006 4735	
X138	90459-6624		1	FEMALE INSERT HAN E AV, 09 33 006 4735	
X160	2540596-0002		1	COAXIAL CABLE	
X161	2540596-0002		1	COAXIAL CABLE	
X162	2540596-0002		1	COAXIAL CABLE	
X163	2540596-0002		1	COAXIAL CABLE	
X501	90110-0055		1	FEMALE INSERT HAN 6 HSB 09 31 006 2701	
X502	90110-0055		1	FEMALE INSERT HAN 6 HSB 09 31 006 2701	
Common Parts					
060	1129549-0000		3	SHEET	
070	1129550-0000		3	GASKET	
090	2539532-0000		1	GASKET	
110	2551989-0000		8	CABLE DUCT	
190	353250-0050		1	GLAND, LOCK NUT M50X1,5	
230	90287-0124		34	SCREW PAN HEAD MSCS M4X12 NYLON	
315	312605-0312		4	HEXAGON NUT, M6M M4 A280	
340	90458-0311		1	CABLE GLAND, M50X1,5, NO.5311 1060	
400	352113-0205		4	ANCHOR PLATES FOR STRIPS, TYPE TM2S8-C10	
W118	90220-0183	MM	3700	SCR. CABLE 2X0,34MM2	
W119	90220-0183	MM	3100	SCR. CABLE 2X0,34MM2	
W123	90220-0183	MM	3500	SCR. CABLE 2X0,34MM2	
W137	90220-0183	MM	3000	SCR. CABLE 2X0,34MM2	
W210	90220-0104	MM	1050	SCR. CABLE 4X1,5MM2	
W211	90220-0104	MM	1000	SCR. CABLE 4X1,5MM2	
W212	90220-0104	MM	1000	SCR. CABLE 4X1,5MM2	
W214	90220-0104	MM	1950	SCR. CABLE 4X1,5MM2	
W306	90220-0034	MM	1200	THERMOCABLE TEX/SITW-20F-KX 2X0,5MM2	
W307	90220-0034	MM	2200	THERMOCABLE TEX/SITW-20F-KX 2X0,5MM2	
W308	90220-0034	MM	1200	THERMOCABLE TEX/SITW-20F-KX 2X0,5MM2	
W309	90220-0034	MM	1200	THERMOCABLE TEX/SITW-20F-KX 2X0,5MM2	
W310	90220-0034	MM	1200	THERMOCABLE TEX/SITW-20F-KX 2X0,5MM2	
W312	90220-0034	MM	1200	THERMOCABLE TEX/SITW-20F-KX 2X0,5MM2	
W315	90220-0034	MM	1200	THERMOCABLE TEX/SITW-20F-KX 2X0,5MM2	
X101	90459-6624		1	FEMALE INSERT HAN E AV, 09 33 006 4735	
X102	90459-6624		1	FEMALE INSERT HAN E AV, 09 33 006 4735	
X103	90459-6624		1	FEMALE INSERT HAN E AV, 09 33 006 4735	
X104	90459-6624		1	FEMALE INSERT HAN E AV, 09 33 006 4735	
X107	90459-6624		1	FEMALE INSERT HAN E AV, 09 33 006 4735	
X109	90459-6624		1	FEMALE INSERT HAN E AV, 09 33 006 4735	
X111	90459-6624		1	FEMALE INSERT HAN E AV, 09 33 006 4735	
X112	90459-6624		1	FEMALE INSERT HAN E AV, 09 33 006 4735	
X115	90459-6624		1	FEMALE INSERT HAN E AV, 09 33 006 4735	
X116	90459-6624		1	FEMALE INSERT HAN E AV, 09 33 006 4735	
X117	90459-6624		1	FEMALE INSERT HAN E AV, 09 33 006 4735	

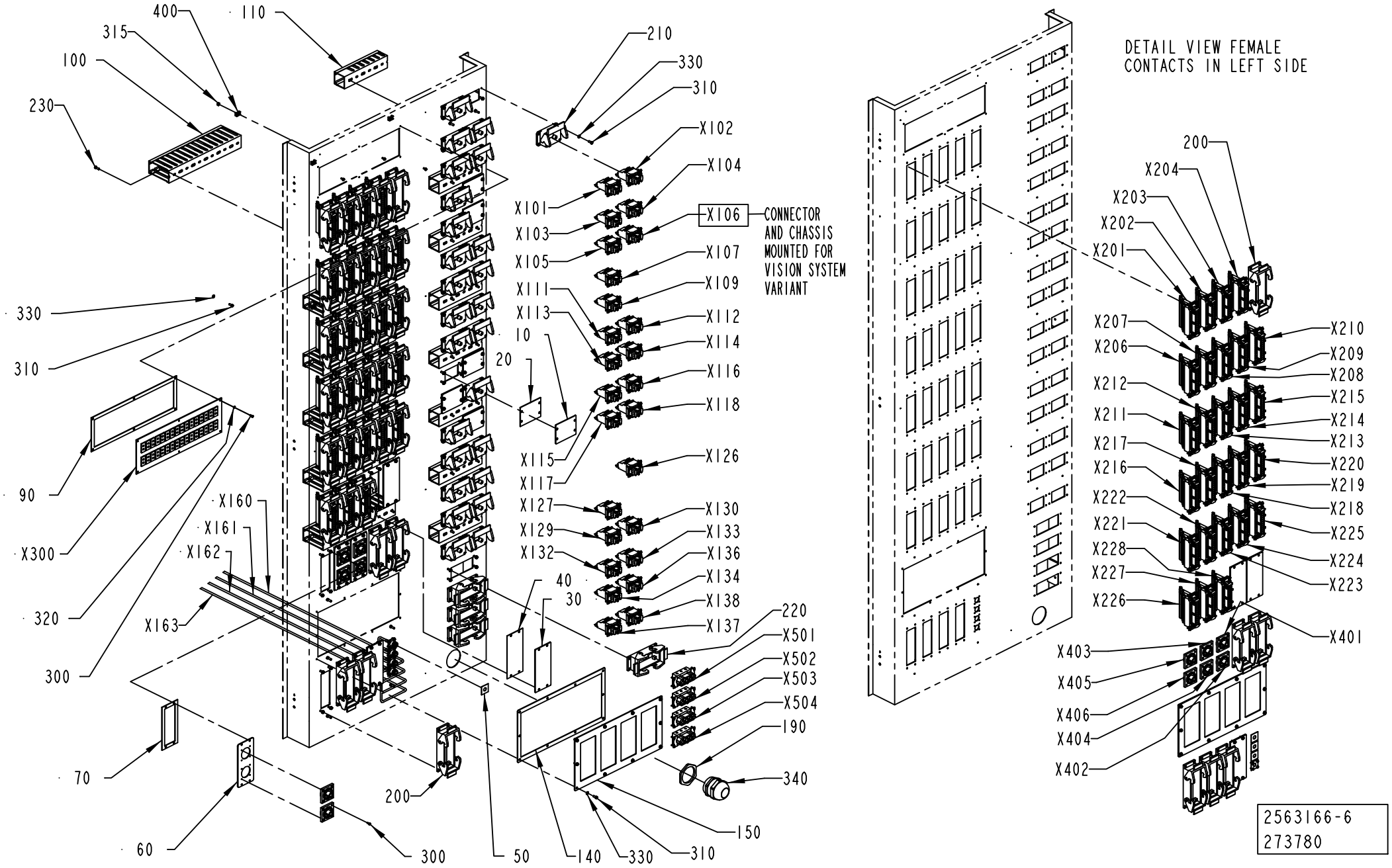
400
110
315
100
230
210
330
310
X102
X104
X101
X103
X105
X106
CONNECTOR AND CHASSIS MOUNTED FOR VISION SYSTEM VARIANT
X107
X109
X111
X113
X112
X114
X116
X118
10
20
X115
X117
X126
330
310
90
X300
320
300
X160
X161
X162
X163
X127
X129
X132
X130
X133
X136
X134
X138
X137
40
30
220
X501
X502
X503
X504
190
340
150
70
60
200
300
50
140
330
310
DETAIL VIEW FEMALE CONTACTS IN LEFT SIDE
200
X204
X203
X202
X201
X207
X206
X212
X211
X217
X216
X222
X221
X228
X227
X226
X210
X209
X208
X215
X214
X213
X220
X219
X218
X225
X224
X223
X401
X403
X405
X406
X404
X402
2563166-6
273780

Pos	Part No	UN	Qty	Description	Page No
Common Parts (Cont'd)					
X126	90459-6624		1	FEMALE INSERT HAN E AV, 09 33 006 4735	
X127	90459-6624		1	FEMALE INSERT HAN E AV, 09 33 006 4735	
X130	90459-6624		1	FEMALE INSERT HAN E AV, 09 33 006 4735	
X132	90459-6624		1	FEMALE INSERT HAN E AV, 09 33 006 4735	
X133	90459-6624		1	FEMALE INSERT HAN E AV, 09 33 006 4735	
X134	90459-6624		1	FEMALE INSERT HAN E AV, 09 33 006 4735	
X136	90459-6624		1	FEMALE INSERT HAN E AV, 09 33 006 4735	
X137	90459-6624		1	FEMALE INSERT HAN E AV, 09 33 006 4735	
X201	90459-6627		1	FEMALE INSERT HAN E AV, 09 33 024 4735	
X202	90459-6627		1	FEMALE INSERT HAN E AV, 09 33 024 4735	
X203	90459-6627		1	FEMALE INSERT HAN E AV, 09 33 024 4735	
X204	90459-6627		1	FEMALE INSERT HAN E AV, 09 33 024 4735	
X206	90459-6627		1	FEMALE INSERT HAN E AV, 09 33 024 4735	
X207	90459-6627		1	FEMALE INSERT HAN E AV, 09 33 024 4735	
X208	90459-6627		1	FEMALE INSERT HAN E AV, 09 33 024 4735	
X209	90459-6627		1	FEMALE INSERT HAN E AV, 09 33 024 4735	
X210	90459-6627		1	FEMALE INSERT HAN E AV, 09 33 024 4735	
X211	90459-6627		1	FEMALE INSERT HAN E AV, 09 33 024 4735	
X212	90459-6627		1	FEMALE INSERT HAN E AV, 09 33 024 4735	
X213	90459-6627		1	FEMALE INSERT HAN E AV, 09 33 024 4735	
X214	90459-6627		1	FEMALE INSERT HAN E AV, 09 33 024 4735	
X215	90459-6627		1	FEMALE INSERT HAN E AV, 09 33 024 4735	
X216	90459-6627		1	FEMALE INSERT HAN E AV, 09 33 024 4735	
X217	90459-6627		1	FEMALE INSERT HAN E AV, 09 33 024 4735	
X218	90459-6627		1	FEMALE INSERT HAN E AV, 09 33 024 4735	
X219	90459-6627		1	FEMALE INSERT HAN E AV, 09 33 024 4735	
X220	90459-6627		1	FEMALE INSERT HAN E AV, 09 33 024 4735	
X221	90459-6627		1	FEMALE INSERT HAN E AV, 09 33 024 4735	
X222	90459-6627		1	FEMALE INSERT HAN E AV, 09 33 024 4735	
X223	90459-6627		1	FEMALE INSERT HAN E AV, 09 33 024 4735	
X224	90459-6627		1	FEMALE INSERT HAN E AV, 09 33 024 4735	
X225	90459-6627		1	FEMALE INSERT HAN E AV, 09 33 024 4735	
X226	90459-6627		1	FEMALE INSERT HAN E AV, 09 33 024 4735	
X227	90459-6627		1	FEMALE INSERT HAN E AV, 09 33 024 4735	
X228	90459-6627		1	FEMALE INSERT HAN E AV, 09 33 024 4735	
X300	90459-0835		1	THERMO CONTACT PANEL, 16 CONTACTS 2 ROWS	
X401	90110-0236		1	CHASSIS CONTACT PX0767/S	
X402	90110-0236		1	CHASSIS CONTACT PX0767/S	
X403	90110-0236		1	CHASSIS CONTACT PX0767/S	
X404	90110-0236		1	CHASSIS CONTACT PX0767/S	
X405	90110-0236		1	CHASSIS CONTACT PX0767/S	
X406	90110-0236		1	CHASSIS CONTACT PX0767/S	
X503	90110-0055		1	FEMALE INSERT HAN 6 HSB 09 31 006 2701	
X504	90110-0055		1	FEMALE INSERT HAN 6 HSB 09 31 006 2701	

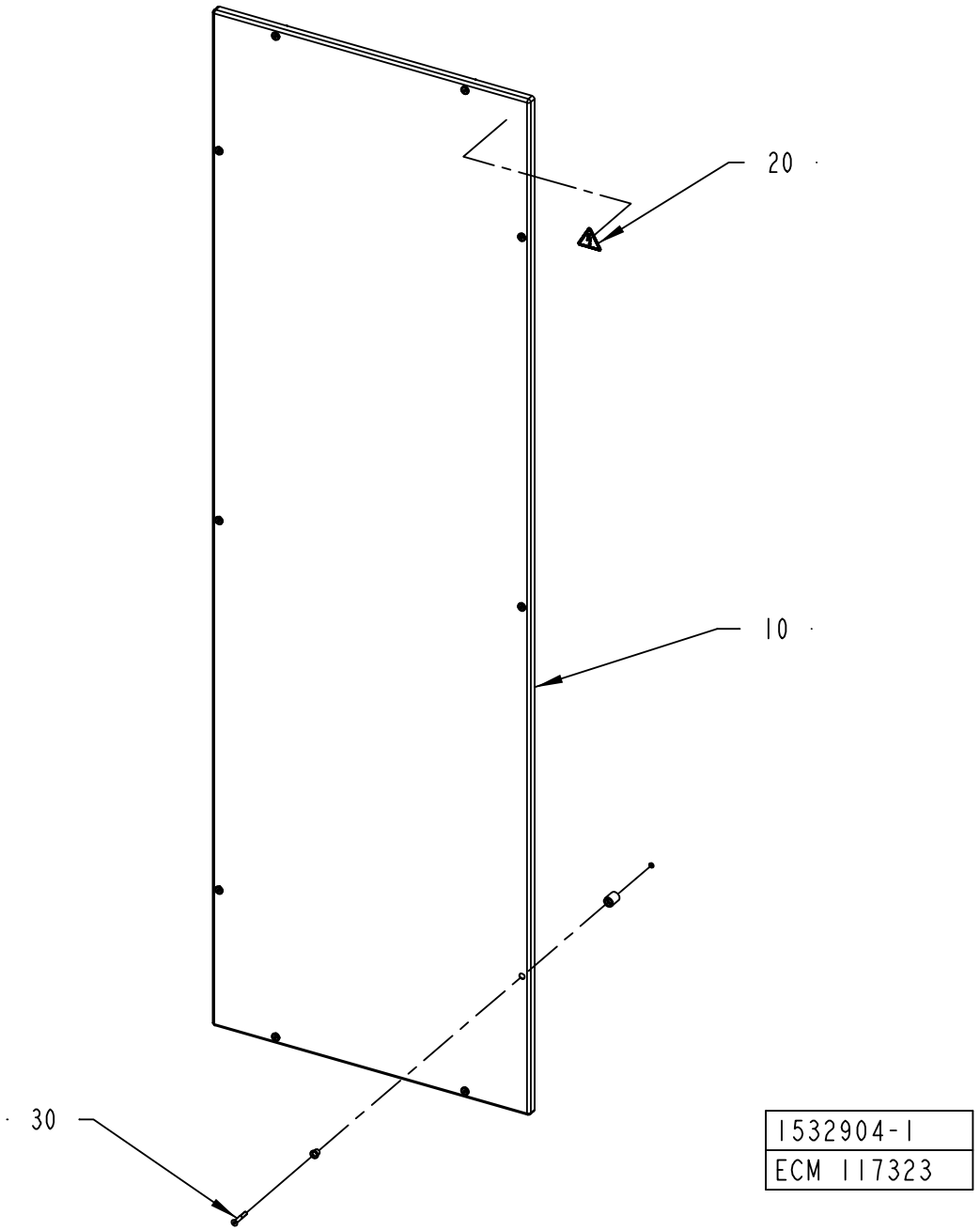
20
10
30
1532904-1
ECM 117323

ECM: 184923 - 20040928
Group number: 1532904-0100
Assembly Drawing: 1532904-1_1_AA

Pos	Part No	UN	Qty	Description	Page No
-					
010	1532905-0000		1	PLATE	
020	359705-0015		1	WARNING SIGN ISO, RISK OF ELECTRIC SHOCK	
030	90226-0458		10	MOUNTING SCREW	

Pos	Part No	UN	Qty	Description	Page No

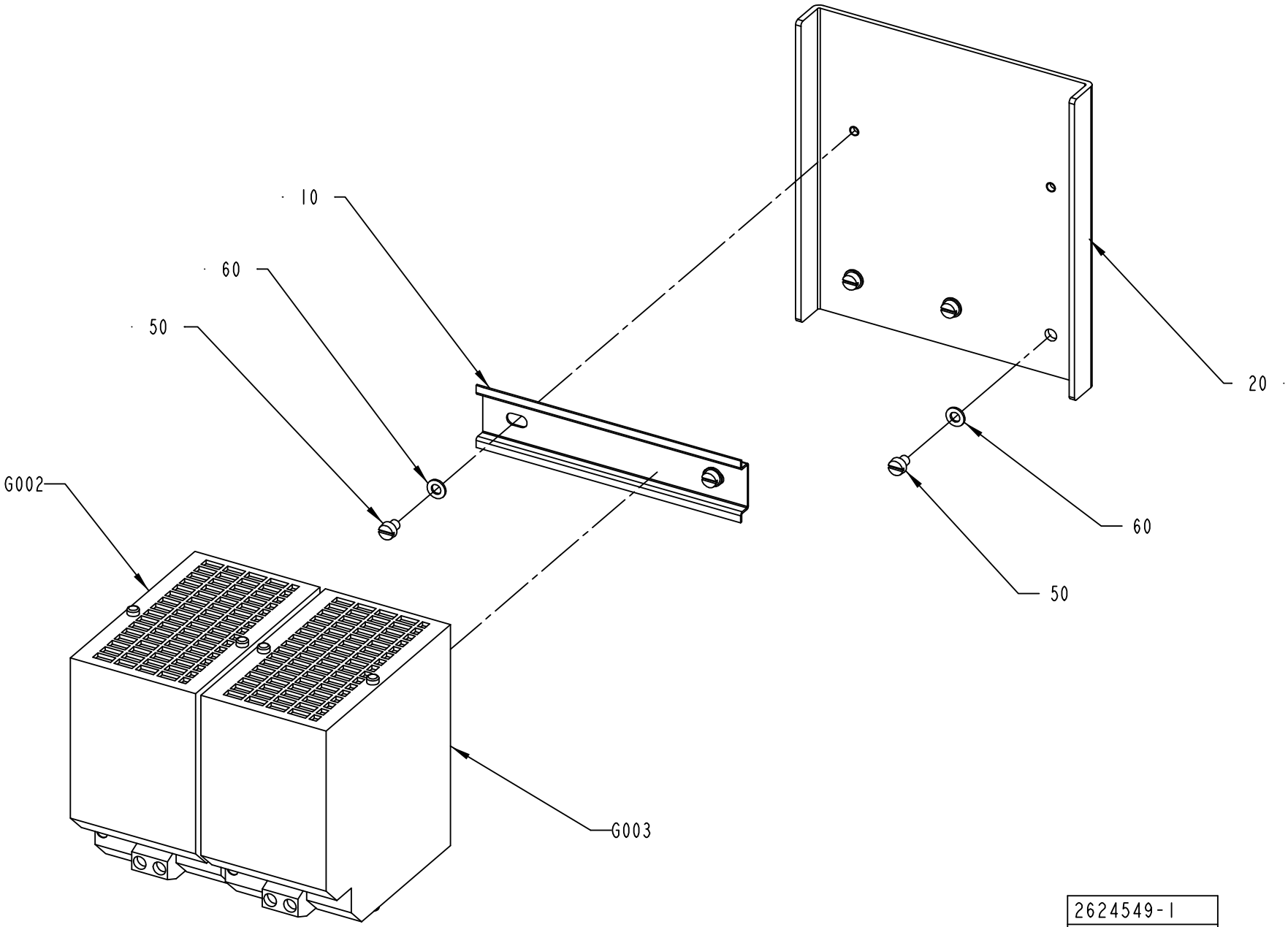

2624549-1
ECM 132638

ECM: 185565 - 20041104
Group number: 2624549-0100
Assembly Drawing: 2624549-1_1_AA

Pos	Part No	UN	Qty	Description	Page No
-					
010	2624550-0000		1	RAIL	
020	2619170-0000		1	PLATE	
050	312121-0321		5	SCREW ISO 1207 M5X6 4.8 - 5.8 Z.PL.	
060	315101-0146		5	WASHER PLAIN, BRB, 5,3/10 H=1	
G002	90459-2939		1	POWER SUPPLY UNIT 6EP1961-3BA00	
G003	90459-2939		1	POWER SUPPLY UNIT 6EP1961-3BA00	

Pos	Part No	UN	Qty	Description	Page No

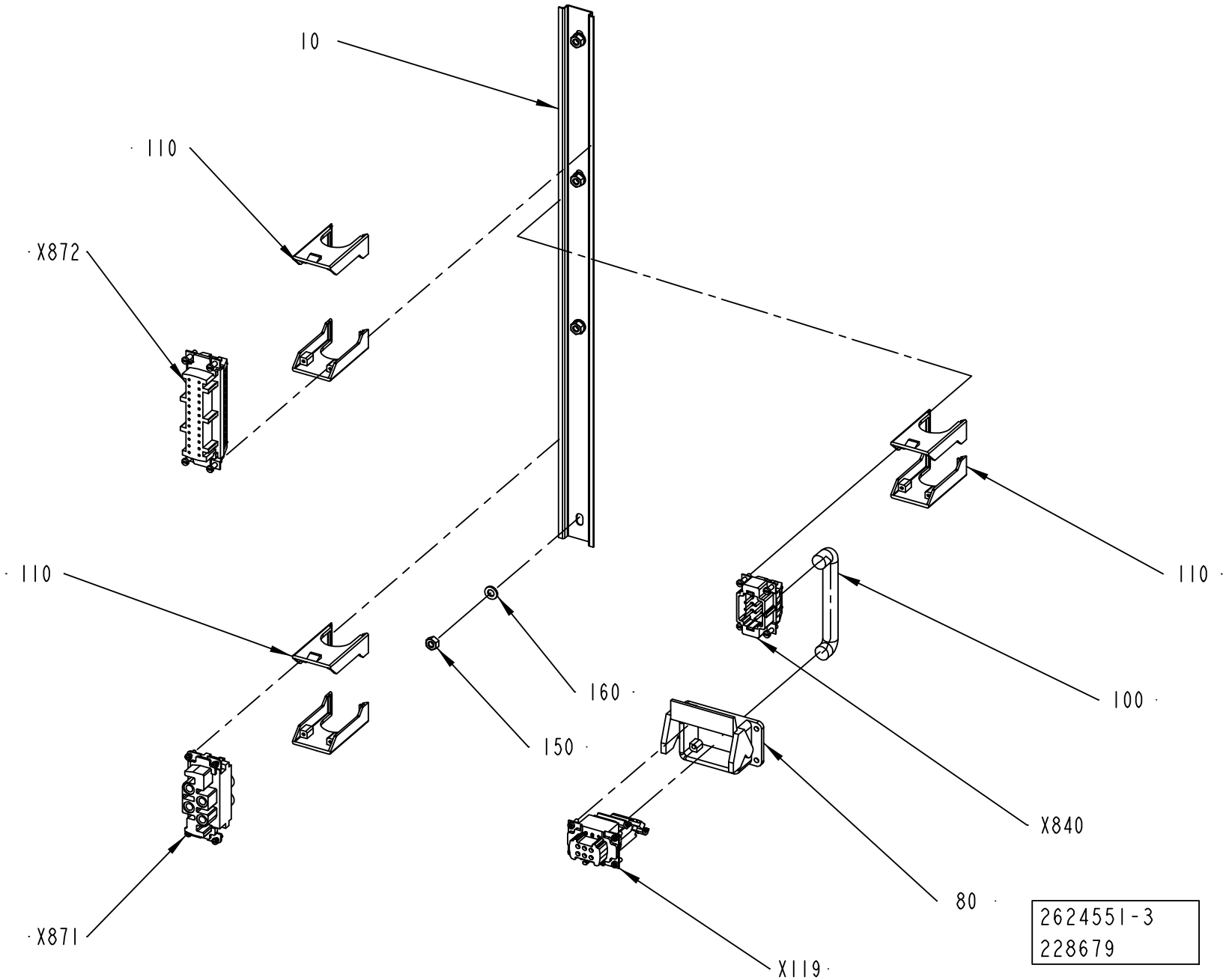
10
110
X872
110
110
160
150
100
X840
80
X871
X119
2624551-3
228679

ECM: 260071 - 20060412
Group number: 2624551-0200
Assembly Drawing: 2624551-3_1_AA

Pos	Part No	UN	Qty	Description	Page No
A3/FLEX DIMC/FLEX (See drawing on page: 8-46)					
080	90110-0123		1	HOUSING, 09 30 006 0301	
100	90220-0105	MM	2250	SCR. CABLE 4X2,5MM2	
110	90459-6859		3	HOUS.SIZE 6-24B HAN-SNAP, 09 33 000 9980	
X119	90459-6624		1	FEMALE INSERT HAN E AV, 09 33 006 4735	
X840	90110-0052		1	MALE INSERT HAN 6E 09 33 006 2601	
A3/FLEX NODIMC (See drawing on page: 8-46)					
110	90459-6859		2	HOUS.SIZE 6-24B HAN-SNAP, 09 33 000 9980	
Common Parts					
010	2789126-0000		1	RAIL	
150	312605-0316		4	HEXAGON NUT, M6M M6 A280	
160	315105-0153		4	WASHER BRB 6,4X12 RFR	
X871	90459-1452		1	FEMALE INSERT HAN K 09 38 006 2711	
X872	90110-0057		1	FEMALE INSERT HAN 24 E 09 33 002 4201	

Pos	Part No	UN	Qty	Description	Page No

CONTROL BOARD LEFT

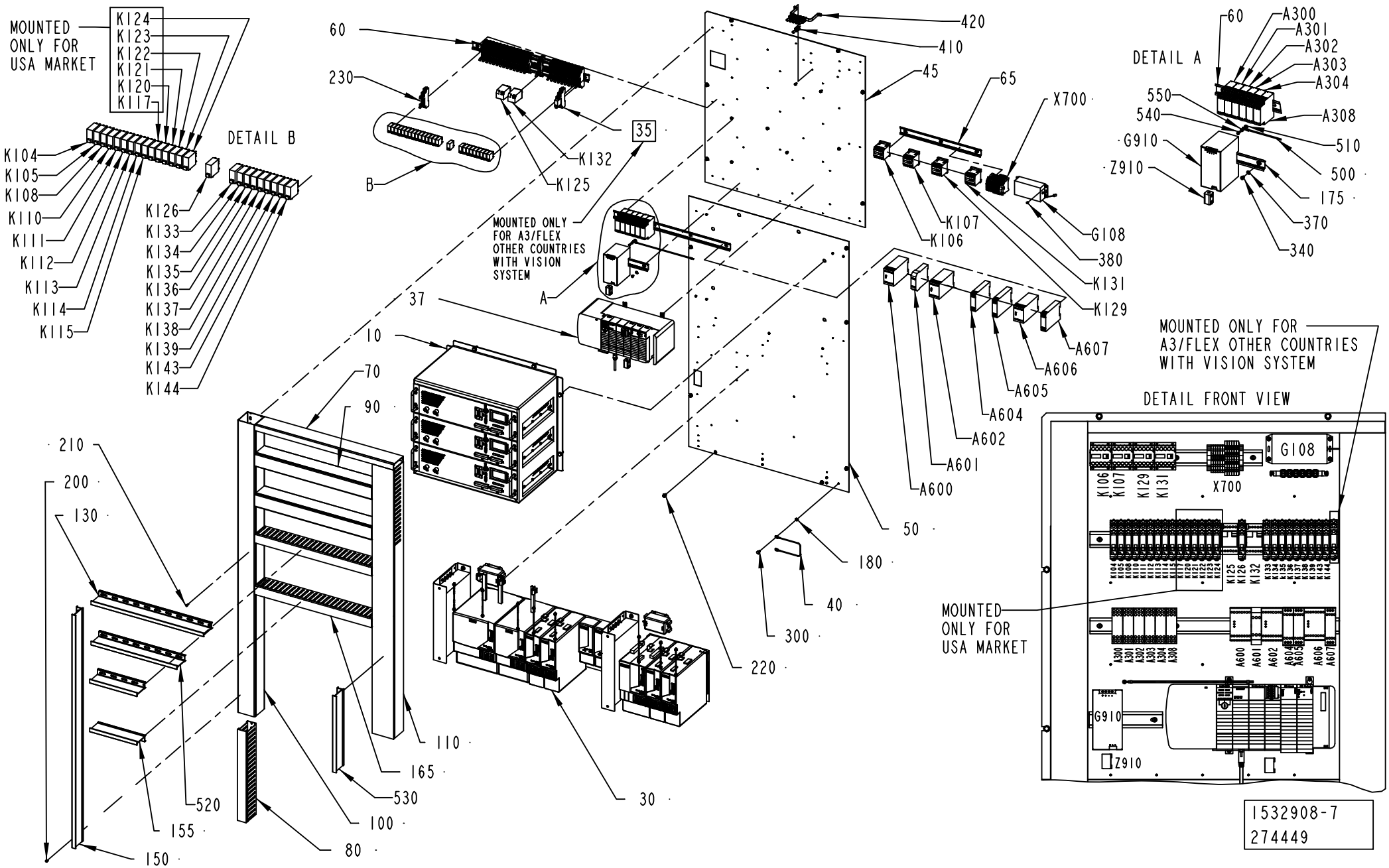

ECM: 274449 - 20061101
Group number: 1532908-0250
Assembly Drawing: 1532908-7_1_AA

This list covers pages from 8-48 to 8-53

Pos	Part No	UN	Qty	Description	Page No
A3/FLEX OTHER COUNTRIES (See drawing on pages: 8-48, 8-50, 8-52)					
010	2533651-0100		1	IH EQUIPMENT	**8-55**
030	2841133-0100		1	MOTOR DRIVE CONTROL	**8-57**
035	2789127-0100		1	RELAY	**8-59**
037	2841132-0100		1	PLC	**8-61**
045	2844056-0000		1	MOUNTING PLATE	
050	2844057-0000		1	MOUNTING PLATE	
060	2550126-0000		2	RAIL	
070	2841125-0000		1	CABLE DUCT	
080	2841126-0000		1	CABLE DUCT	
090	2550129-0000		2	CABLE DUCT	
110	2841130-0000		1	CABLE DUCT	
130	2550133-0000		1	DIVIDER	
155	2557591-0000		2	DIVIDER	
165	2675519-0000		2	CABLE DUCT	
175	2841497-0000		1	RAIL	
190	90129-0006		2	BASE, S3-B	
200	90181-0064		20	LOCK ZP1 FOR CHANNEL T1	
210	90287-0124		50	SCREW PAN HEAD MSCS M4X12 NYLON	
230	90129-0018		19	BASE OMRON P2RF-08-E	
340	312121-0321		13	SCREW ISO 1207 M5X6 4.8 - 5.8 Z.PL.	
370	315101-0146		13	WASHER PLAIN, BRB, 5,3/10 H=1	
410	90600-1200		6	SCREEN CLAMPING SADDLE, 790-108	
420	90600-1201		1	BUSBAR U-SHAPED, 790-191	
500	1512322-0000		1	COPPER BRAID	
510	90062-0059		1	LOCK WASKER SERRAT.EXT.GEAR,4,3/8 H=0,5	
520	2850662-0000		1	DIVIDER	
530	2850663-0000		1	DIVIDER	
540	312121-0289		3	SCREW ISO 1207 M4X10 4.8 - 5.8 Z.PL.	
550	315101-0136		3	WASHER BRB, 4,3/8 H=0,8	
A300	90458-2580		1	LEVEL CONTROL RELAY RM4-LA32M	
A302	90458-2580		1	LEVEL CONTROL RELAY RM4-LA32M	
A600	90119-0072		1	SAFETY RELAY, JSBR4	
A601	90119-0105		1	SAFETY RELAY JOKAB JSR 3T	
A602	90119-0072		1	SAFETY RELAY, JSBR4	
A605	90457-0092		1	SAFETY RELAY RT9-24VDC	
A606	90119-0089		1	SAFETY RELAY, JSBT4 24VDC	
A607	90457-0092		1	SAFETY RELAY RT9-24VDC	
G910	90459-5886		1	POWER SUPPLY UNIT 115-230 VAC/24VDC100W	
K104	90119-0108		1	RELAY OMRON G2R-2-SNI-24DC	
	90129-0018		*1*	*BASE OMRON P2RF-08-E*	
K105	90119-0108		1	RELAY OMRON G2R-2-SNI-24DC	
	90129-0018		*1*	*BASE OMRON P2RF-08-E*	
K106	90075-0141		1	CONTACTOR, 4KW 24VDC	
K107	90075-0141		1	CONTACTOR, 4KW 24VDC	
K110	90119-0108		1	RELAY OMRON G2R-2-SNI-24DC	
	90129-0018		*1*	*BASE OMRON P2RF-08-E*	
K111	90119-0108		1	RELAY OMRON G2R-2-SNI-24DC	
	90129-0018		*1*	*BASE OMRON P2RF-08-E*	
K112	90119-0108		1	RELAY OMRON G2R-2-SNI-24DC	
	90129-0018		*1*	*BASE OMRON P2RF-08-E*	
K113	90119-0108		1	RELAY OMRON G2R-2-SNI-24DC	
	90129-0018		*1*	*BASE OMRON P2RF-08-E*	
K114	90119-0108		1	RELAY OMRON G2R-2-SNI-24DC	
	90129-0018		*1*	*BASE OMRON P2RF-08-E*	
K115	90119-0108		1	RELAY OMRON G2R-2-SNI-24DC	
	90129-0018		*1*	*BASE OMRON P2RF-08-E*	
K129	90075-0141		1	CONTACTOR, 4KW 24VDC	
K131	90075-0141		1	CONTACTOR, 4KW 24VDC	
K134	90119-0108		1	RELAY OMRON G2R-2-SNI-24DC	
	90129-0018		*1*	*BASE OMRON P2RF-08-E*	
K135	90119-0108		1	RELAY OMRON G2R-2-SNI-24DC	
	90129-0018		*1*	*BASE OMRON P2RF-08-E*	
K136	90119-0108		1	RELAY OMRON G2R-2-SNI-24DC	
	90129-0018		*1*	*BASE OMRON P2RF-08-E*	
K137	90119-0108		1	RELAY OMRON G2R-2-SNI-24DC	
	90129-0018		*1*	*BASE OMRON P2RF-08-E*	
K138	90119-0108		1	RELAY OMRON G2R-2-SNI-24DC	
	90129-0018		*1*	*BASE OMRON P2RF-08-E*	
K139	90119-0108		1	RELAY OMRON G2R-2-SNI-24DC	
	90129-0018		*1*	*BASE OMRON P2RF-08-E*	
K144	90119-0108		1	RELAY OMRON G2R-2-SNI-24DC	
	90129-0018		*1*	*BASE OMRON P2RF-08-E*	
X700	2841532-0100		1	PLINTH	**8-63**
Z910	90458-1170		1	FERRITE, SFC-6	
A3/FLEX USA (See drawing on pages: 8-48, 8-50, 8-52)					
010	2533651-0100		1	IH EQUIPMENT	**8-55**
030	2841133-0100		1	MOTOR DRIVE CONTROL	**8-57**
035	2789127-0100		1	RELAY	**8-59**
037	2841132-0100		1	PLC	**8-61**
045	2844056-0000		1	MOUNTING PLATE	
050	2844057-0000		1	MOUNTING PLATE	
060	2550126-0000		2	RAIL	
070	2841125-0000		1	CABLE DUCT	

Machine Type | Group Description | Used-In | Group Number | Page No

CONTROL BOARD LEFT

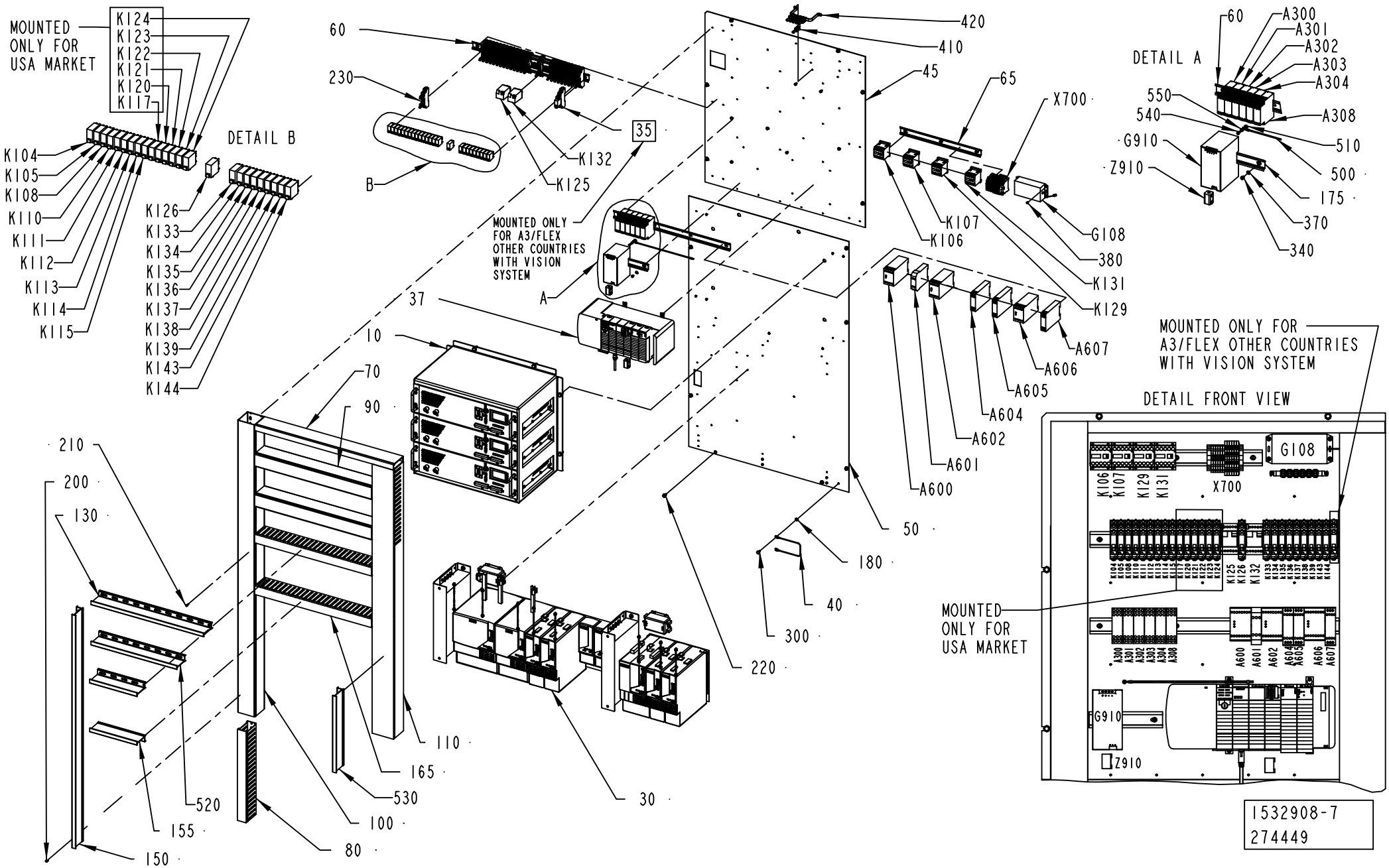

ECM: 274449 - 20061101
Group number: 1532908-0250
Assembly Drawing: 1532908-7_1_AA

This list covers pages from 8-48 to 8-53

Pos	Part No	UN	Qty	Description	Page No
A3/FLEX USA (Cont'd) (See drawing on pages: 8-48, 8-50, 8-52)					
080	2841126-0000		1	CABLE DUCT	
090	2550129-0000		2	CABLE DUCT	
110	2841130-0000		1	CABLE DUCT	
130	2550133-0000		1	DIVIDER	
155	2557591-0000		2	DIVIDER	
165	2675519-0000		2	CABLE DUCT	
175	2841497-0000		1	RAIL	
190	90129-0006		2	BASE, S3-B	
200	90181-0064		20	LOCK ZP1 FOR CHANNEL T1	
210	90287-0124		50	SCREW PAN HEAD MSCS M4X12 NYLON	
230	90129-0018		25	BASE OMRON P2RF-08-E	
340	312121-0321		13	SCREW ISO 1207 M5X6 4.8 - 5.8 Z.PL.	
370	315101-0146		13	WASHER PLAIN, BRB, 5,3/10 H=1	
410	90600-1200		6	SCREEN CLAMPING SADDLE, 790-108	
420	90600-1201		1	BUSBAR U-SHAPED, 790-191	
500	1512322-0000		1	COPPER BRAID	
510	90062-0059		1	LOCK WASKER SERRAT.EXT.GEAR,4,3/8 H=0,5	
520	2850662-0000		1	DIVIDER	
530	2850663-0000		1	DIVIDER	
540	312121-0289		3	SCREW ISO 1207 M4X10 4.8 - 5.8 Z.PL.	
550	315101-0136		3	WASHER BRB, 4,3/8 H=0,8	
A300	90458-2580		1	LEVEL CONTROL RELAY RM4-LA32M	
A302	90458-2580		1	LEVEL CONTROL RELAY RM4-LA32M	
A600	90119-0072		1	SAFETY RELAY, JSBR4	
A601	90119-0105		1	SAFETY RELAY JOKAB JSR 3T	
A602	90119-0072		1	SAFETY RELAY, JSBR4	
A605	90457-0092		1	SAFETY RELAY RT9-24VDC	
A606	90119-0089		1	SAFETY RELAY, JSBT4 24VDC	
A607	90457-0092		1	SAFETY RELAY RT9-24VDC	
G910	90459-5886		1	POWER SUPPLY UNIT 115-230 VAC/24VDC100W	
K104	90119-0108		1	RELAY OMRON G2R-2-SNI-24DC	
	90129-0018		*1*	*BASE OMRON P2RF-08-E*	
K105	90119-0108		1	RELAY OMRON G2R-2-SNI-24DC	
	90129-0018		*1*	*BASE OMRON P2RF-08-E*	
K106	90075-0141		1	CONTACTOR, 4KW 24VDC	
K107	90075-0141		1	CONTACTOR, 4KW 24VDC	
K110	90119-0108		1	RELAY OMRON G2R-2-SNI-24DC	
	90129-0018		*1*	*BASE OMRON P2RF-08-E*	
K111	90119-0108		1	RELAY OMRON G2R-2-SNI-24DC	
	90129-0018		*1*	*BASE OMRON P2RF-08-E*	
K112	90119-0108		1	RELAY OMRON G2R-2-SNI-24DC	
	90129-0018		*1*	*BASE OMRON P2RF-08-E*	
K113	90119-0108		1	RELAY OMRON G2R-2-SNI-24DC	
	90129-0018		*1*	*BASE OMRON P2RF-08-E*	
K114	90119-0108		1	RELAY OMRON G2R-2-SNI-24DC	
	90129-0018		*1*	*BASE OMRON P2RF-08-E*	
K115	90119-0108		1	RELAY OMRON G2R-2-SNI-24DC	
	90129-0018		*1*	*BASE OMRON P2RF-08-E*	
K117	90119-0108		1	RELAY OMRON G2R-2-SNI-24DC	
	90129-0018		*1*	*BASE OMRON P2RF-08-E*	
K120	90119-0108		1	RELAY OMRON G2R-2-SNI-24DC	
	90129-0018		*1*	*BASE OMRON P2RF-08-E*	
K121	90119-0108		1	RELAY OMRON G2R-2-SNI-24DC	
	90129-0018		*1*	*BASE OMRON P2RF-08-E*	
K122	90119-0108		1	RELAY OMRON G2R-2-SNI-24DC	
	90129-0018		*1*	*BASE OMRON P2RF-08-E*	
K123	90119-0108		1	RELAY OMRON G2R-2-SNI-24DC	
	90129-0018		*1*	*BASE OMRON P2RF-08-E*	
K124	90119-0108		1	RELAY OMRON G2R-2-SNI-24DC	
	90129-0018		*1*	*BASE OMRON P2RF-08-E*	
K129	90075-0141		1	CONTACTOR, 4KW 24VDC	
K131	90075-0141		1	CONTACTOR, 4KW 24VDC	
K134	90119-0108		1	RELAY OMRON G2R-2-SNI-24DC	
	90129-0018		*1*	*BASE OMRON P2RF-08-E*	
K135	90119-0108		1	RELAY OMRON G2R-2-SNI-24DC	
	90129-0018		*1*	*BASE OMRON P2RF-08-E*	
K136	90119-0108		1	RELAY OMRON G2R-2-SNI-24DC	
	90129-0018		*1*	*BASE OMRON P2RF-08-E*	
K137	90119-0108		1	RELAY OMRON G2R-2-SNI-24DC	
	90129-0018		*1*	*BASE OMRON P2RF-08-E*	
K138	90119-0108		1	RELAY OMRON G2R-2-SNI-24DC	
	90129-0018		*1*	*BASE OMRON P2RF-08-E*	
K139	90119-0108		1	RELAY OMRON G2R-2-SNI-24DC	
	90129-0018		*1*	*BASE OMRON P2RF-08-E*	
K144	90119-0108		1	RELAY OMRON G2R-2-SNI-24DC	
	90129-0018		*1*	*BASE OMRON P2RF-08-E*	
X700	2841532-0100		1	PLINTH	**8-63**
Z910	90458-1170		1	FERRITE, SFC-6	
Common Parts					
040	1038714-0000		1	CABLE	
065	2829262-0000		1	RAIL	
100	2550130-0000		1	CABLE DUCT	
150	2550135-0000		1	DIVIDER	

CONTROL BOARD LEFT

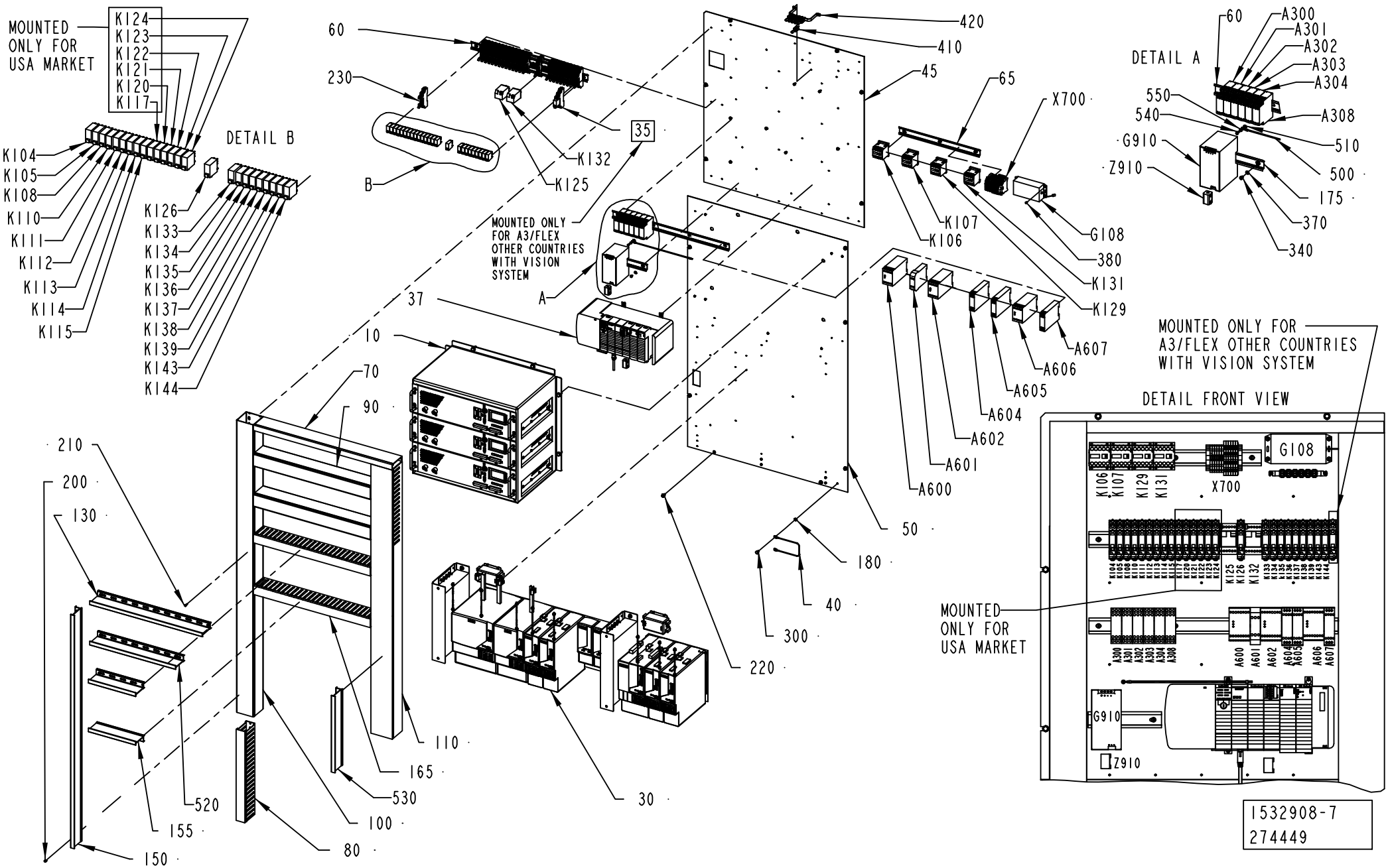

Pos	Part No	UN	Qty	Description	Page No
Common Parts (Cont'd)					
180	90062-0022		1	LOCKING WASHER D=6,4/11	
220	90287-0157		13	SCREW M6SF FLAT HEAD M6X10 88	
300	312101-0364		1	SCREW M6S M6X10 FZB	
380	312145-0285		4	SCREW ISO 2009 MFS M4X6 A4	
A301	90458-2580		1	LEVEL CONTROL RELAY RM4-LA32M	
A303	90458-2580		1	LEVEL CONTROL RELAY RM4-LA32M	
A304	90458-2580		1	LEVEL CONTROL RELAY RM4-LA32M	
A308	90458-2580		1	LEVEL CONTROL RELAY RM4-LA32M	
A604	90457-0092		1	SAFETY RELAY RT9-24VDC	
G108	90459-7198		1	AUXILIARY BATTERY MODULE, IC693ACC302	
K108	90119-0108		1	RELAY OMRON G2R-2-SNI-24DC	
	90129-0018		*1*	*BASE OMRON P2RF-08-E*	
K125	90119-0056		1	RELAY, AUXILIARY MK3P5-S 24VDC	
K126	90119-0108		1	RELAY OMRON G2R-2-SNI-24DC	
	90129-0018		*1*	*BASE OMRON P2RF-08-E*	
K132	90119-0056		1	RELAY, AUXILIARY MK3P5-S 24VDC	
K133	90119-0108		1	RELAY OMRON G2R-2-SNI-24DC	
	90129-0018		*1*	*BASE OMRON P2RF-08-E*	
K143	90119-0108		1	RELAY OMRON G2R-2-SNI-24DC	
	90129-0018		*1*	*BASE OMRON P2RF-08-E*	

Pos	Part No	UN	Qty	Description	Page No

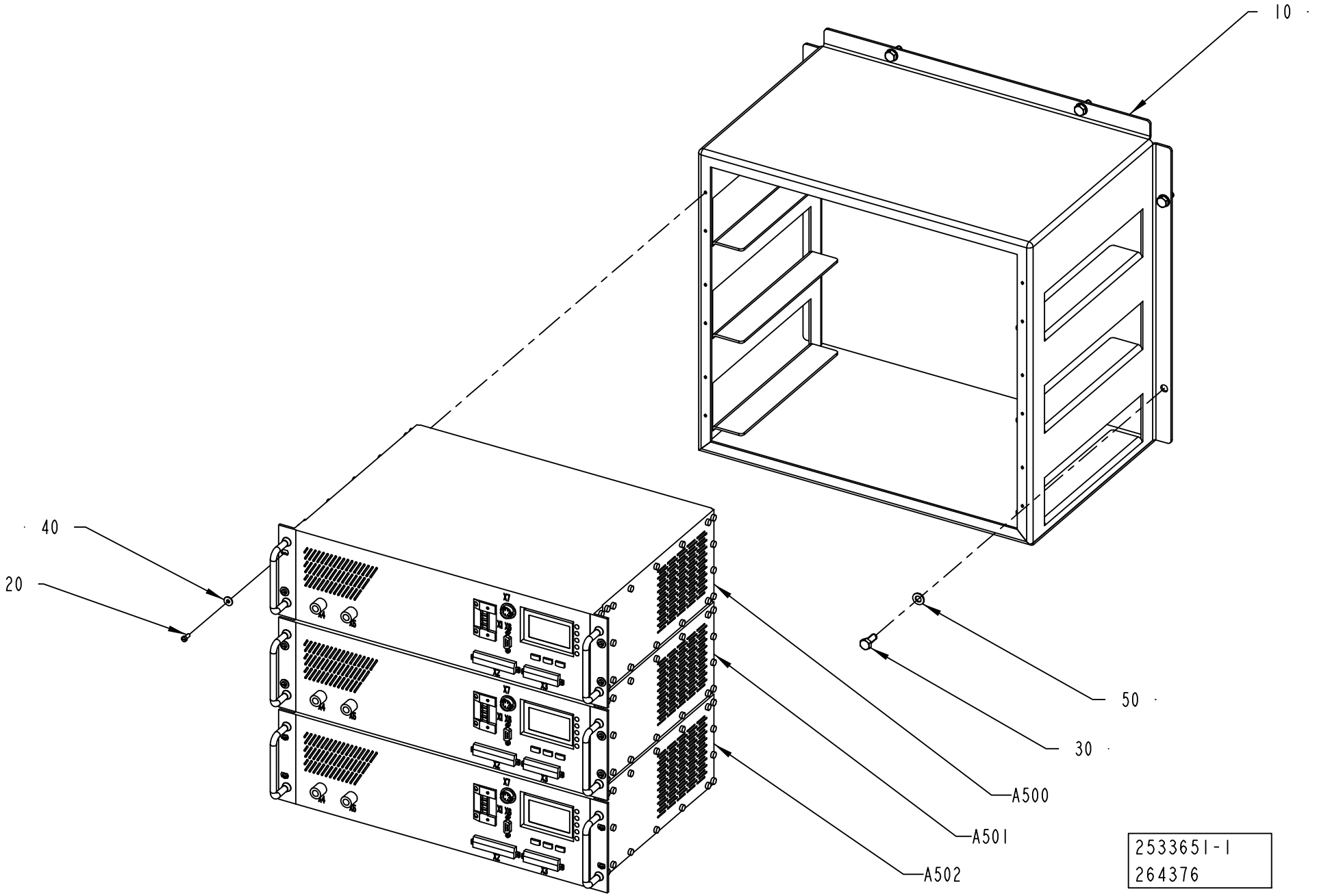
10
40
20
50
30
A500
A501
A502
2533651-1
264376

ECM: 264396 - 20061101
Group number: 2533651-0100
Assembly Drawing: 2533651-1_1_AD

Pos	Part No	UN	Qty	Description	Page No
-					
010	1532912-0000		1	FRAME	
020	312125-0289		12	SCREW ISO 1207 M4X10 A4	
030	312105-0451		6	SCREW M6S ISO 4017 M8X20 A480	
040	90005-0082		12	WASHER PLAIN ROUND 4,3(M4)/12,H=1	
050	315105-0165		6	WASHER BRB 8,4X16 RFR	
A500	1499642-0201		1	TPIH GENERATOR	
A501	1499642-0201		1	TPIH GENERATOR	
A502	1499642-0201		1	TPIH GENERATOR	

Pos	Part No	UN	Qty	Description	Page No

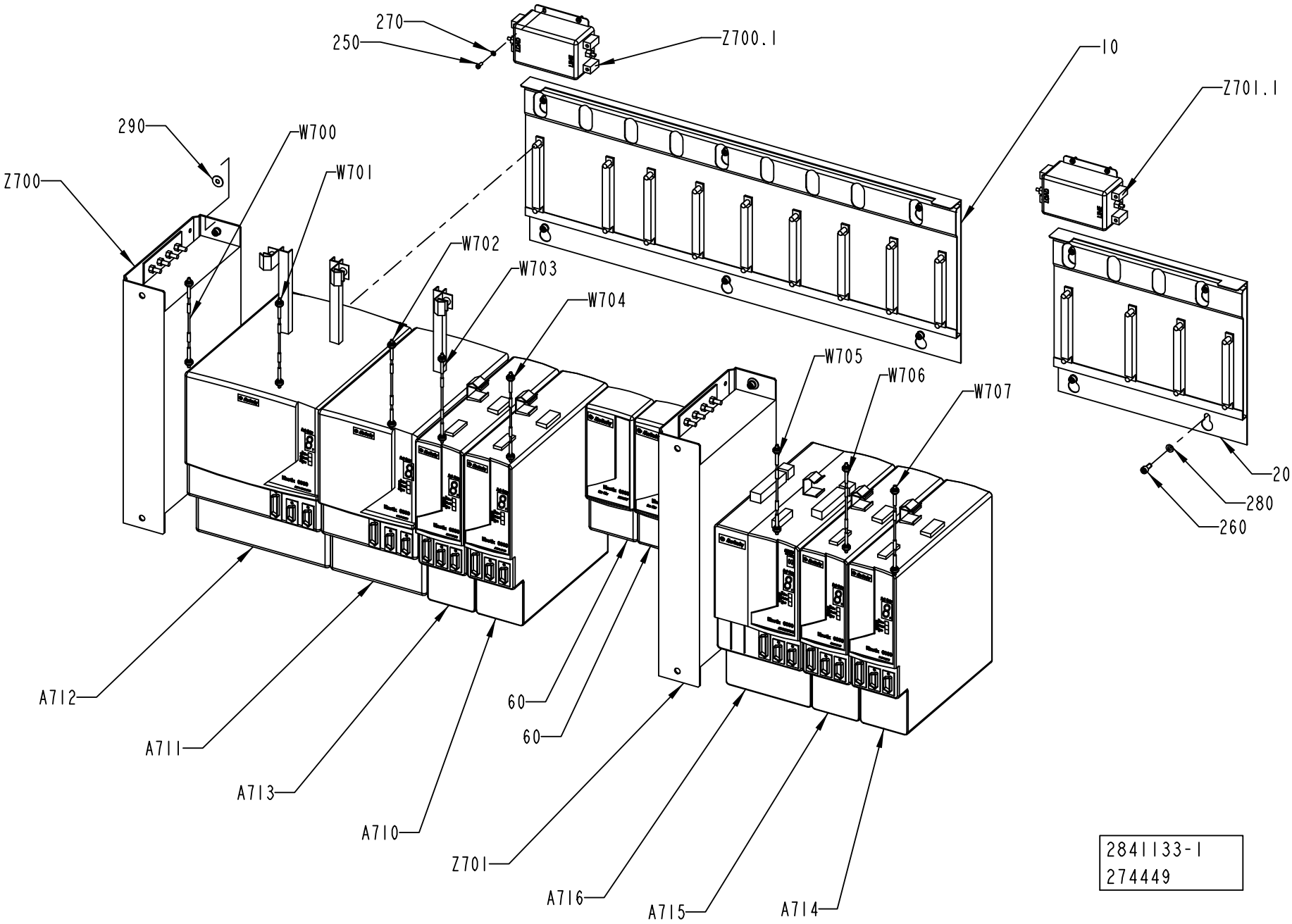
270
250
Z700.1
10
Z701.1
290
W700
W701
Z700
W702
W703
W704
W705
W706
W707
20
280
260
A712
A711
A713
A710
60
60
Z701
A716
A715
A714
2841133-1
274449

ECM: 274449 - 20061101
Group number: 2841133-0100
Assembly Drawing: 2841133-1_1_AA

Pos	Part No	UN	Qty	Description	Page No
-					
010	90459-5195		1	SLIM POWER RAIL,KINETIX,8 AXIS,2094-PRS8	
020	90459-5190		1	SLIM POWER RAIL,KINETIX,3 AXIS,2094-PRS3	
060	90459-2547		2	POWER RAIL SLOT FILLER MODULE, 2094-PRF	
250	312125-0222		8	SCREW ISO 1207 M3X8 A4	
260	312115-0327		14	SCREW ISO4762 M5X12 A4 80	
270	315105-0124		8	WASHER BRB 3,2X7 RFR	
280	315105-0146		14	WASHER BRB 5,3X10 RFR	
290	315125-0146		4	WASHER TBRSB 5.3X15X1 A4	
A710	90459-7215		1	AXIS MODULE 650V, 10,3A, 2094-BM02-S	
A711	90459-7216		1	AXIS MODULE 650V, 21,2A, 2094-BM03-S	
A712	90459-7212		1	AXIS MODULE WITH INT. PS, 2094-BC04-M03-	
A713	90459-7215		1	AXIS MODULE 650V, 10,3A, 2094-BM02-S	
A714	90459-7214		1	AXIS MODULE 650V, 6,1A, 2094-BM01-S	
A715	90459-7214		1	AXIS MODULE 650V, 6,1A, 2094-BM01-S	
A716	90459-7211		1	SERVO AXIS MODULE W/PS 15A 400/460V	
W700	90459-2540		1	SERCOS CABLE 3.0M, 2090-SCEP3-0	
W701	90459-2537		1	SERCOS CABLE 0.3M	
W702	90459-2536		1	SERCOS CABLE 0.1M, 2090-SCEP0-1	
W703	90459-2536		1	SERCOS CABLE 0.1M, 2090-SCEP0-1	
W704	90459-2539		1	SERCOS CABLE 1.0M, 2090-SCEP1-0	
W705	90459-2536		1	SERCOS CABLE 0.1M, 2090-SCEP0-1	
W706	90459-2536		1	SERCOS CABLE 0.1M, 2090-SCEP0-1	
W707	90459-2540		1	SERCOS CABLE 3.0M, 2090-SCEP3-0	
Z700	90459-2549		1	AC LINE FILTER 3-PHASE 30A, 2090-XXLF-X3	
Z700.1	90458-1162		1	FILTER, 6 A, 250 VAC	
Z701	90459-2549		1	AC LINE FILTER 3-PHASE 30A, 2090-XXLF-X3	
Z701.1	90458-1162		1	FILTER, 6 A, 250 VAC	

Pos	Part No	UN	Qty	Description	Page No

Machine Type | Group Description | Used-In | Group Number | Page No

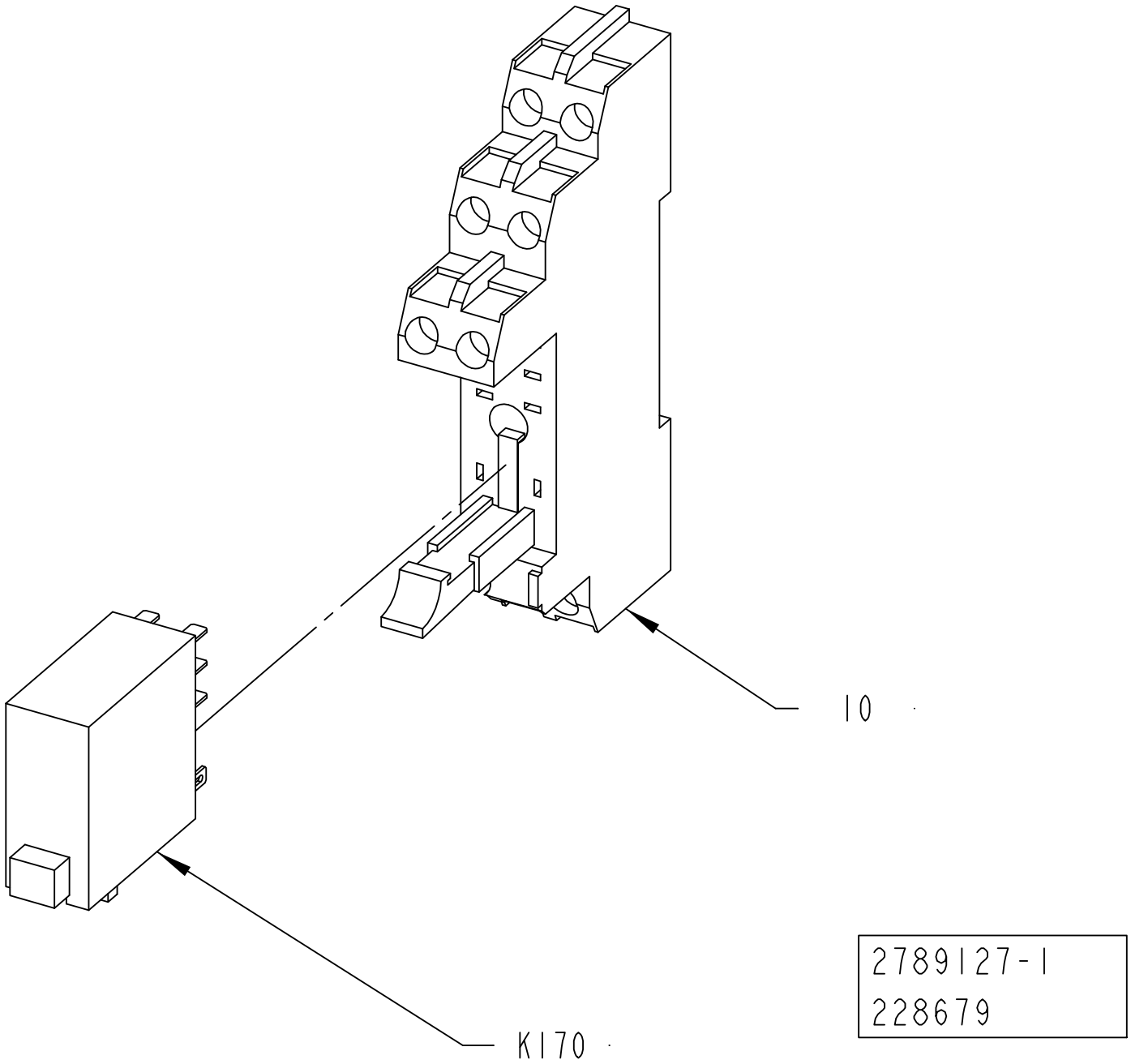
10
K170
2789127-1
228679

ECM: 235074 - 20060101
Group number: 2789127-0100
Assembly Drawing: 2789127-1_1_AA

Pos	Part No	UN	Qty	Description	Page No
VISION SYSTEM					
10	90129-0018		1	BASE OMRON P2RF-08-E	
K170	90119-0108		1	RELAY OMRON G2R-2-SNI-24DC	
	90129-0018		*1*	*BASE OMRON P2RF-08-E*	

Pos	Part No	UN	Qty	Description	Page No

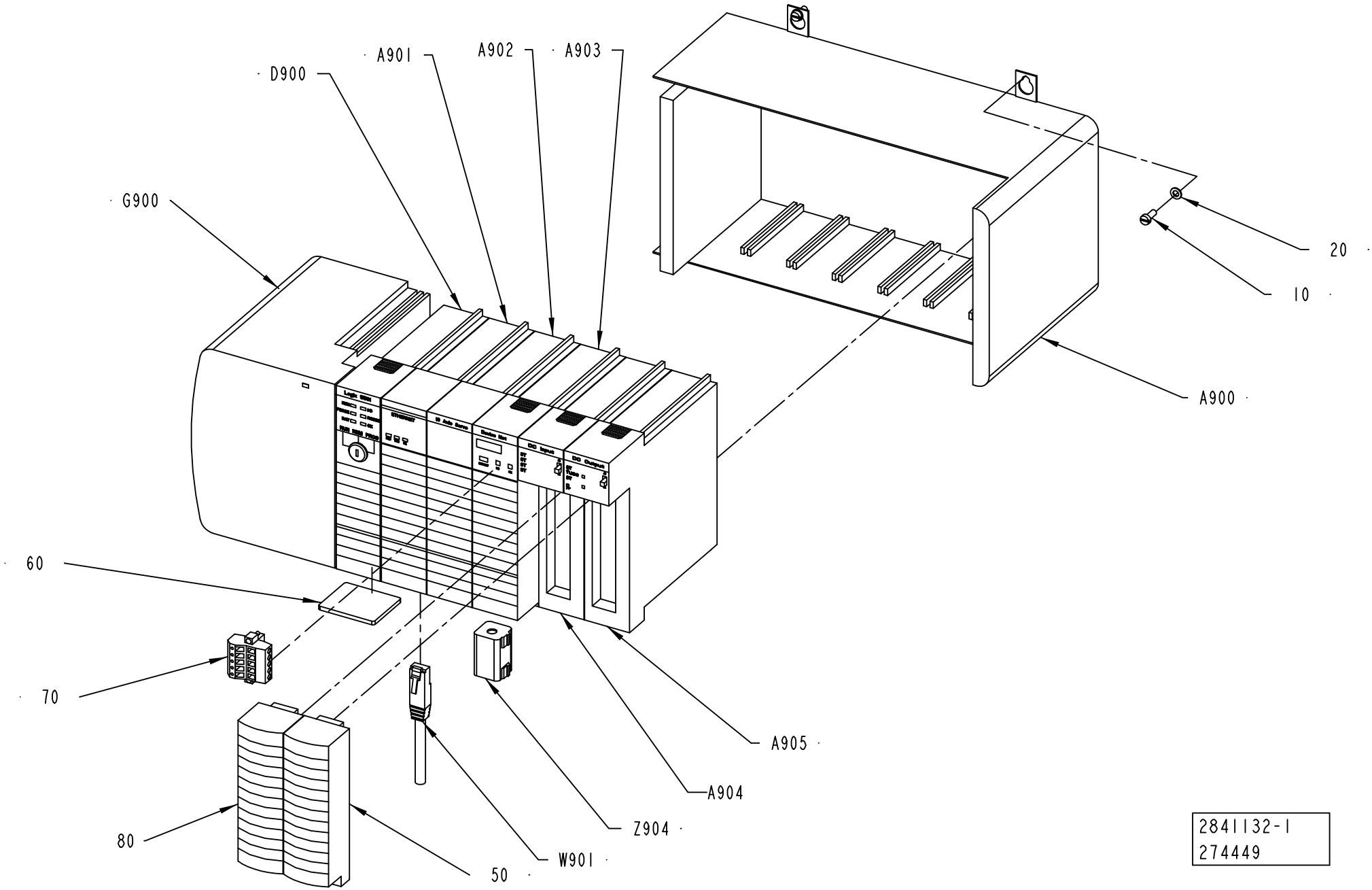
A901
A902
A903
D900
G900
20
10
A900
60
70
A905
A904
Z904
W901
80
50
2841132-1
274449

ECM: 274449 - 20061101
Group number: 2841132-0100
Assembly Drawing: 2841132-1_1_AA

Pos	Part No	UN	Qty	Description	Page No
-					
010	312121-0289		4	SCREW ISO 1207 M4X10 4.8 - 5.8 Z.PL.	
020	315101-0136		4	WASHER BRB, 4,3/8 H=0,8	
050	90459-2487		1	REMOVABLE TERMINAL BLOCK 20 POINTS	
060	90459-3145		1	FLASH MEMORY 64MBYTE, 1784-CF64	
070	90459-5574		1	DEVICENET OPEN STYLE CONN, 1787-PLUG10R	
080	90459-2488		1	REMOVABLE TERMINAL BLOCK 36 POINTS	
A900	90459-2421		1	BASEPLATE, 7 SLOT CONTROLLOGIX CHASSIS	
A901	90459-2477		1	ETHERNET I/P BRIDGE MODULE, 1756-ENBT	
A902	90459-2481		1	PLC 16-AXIS SERCOS MOTION MODULE	
A903	90459-2479		1	PLC DEVICENET BRIDGE/SCANNER MODULE	
A904	90459-6556		1	PLC DIGITAL INPUT 32PTS, 1756-IB32/B	
A905	90459-2474		1	PLC,DIGIT. OUTPUT MODULE 16 PTS 10-31VDC	
D900	90459-6558		1	PROCESSOR L62, SERIES B, 1756-L62	
G900	90459-4607		1	POWER SUPPLY 24VDC, 1756-PB75 SERIES A	
W901	90220-0181		1	CABLE, ETHERNET RJ 45 CONNECT. 5 M	
Z904	90458-1170		1	FERRITE, SFC-6	

Pos	Part No	UN	Qty	Description	Page No

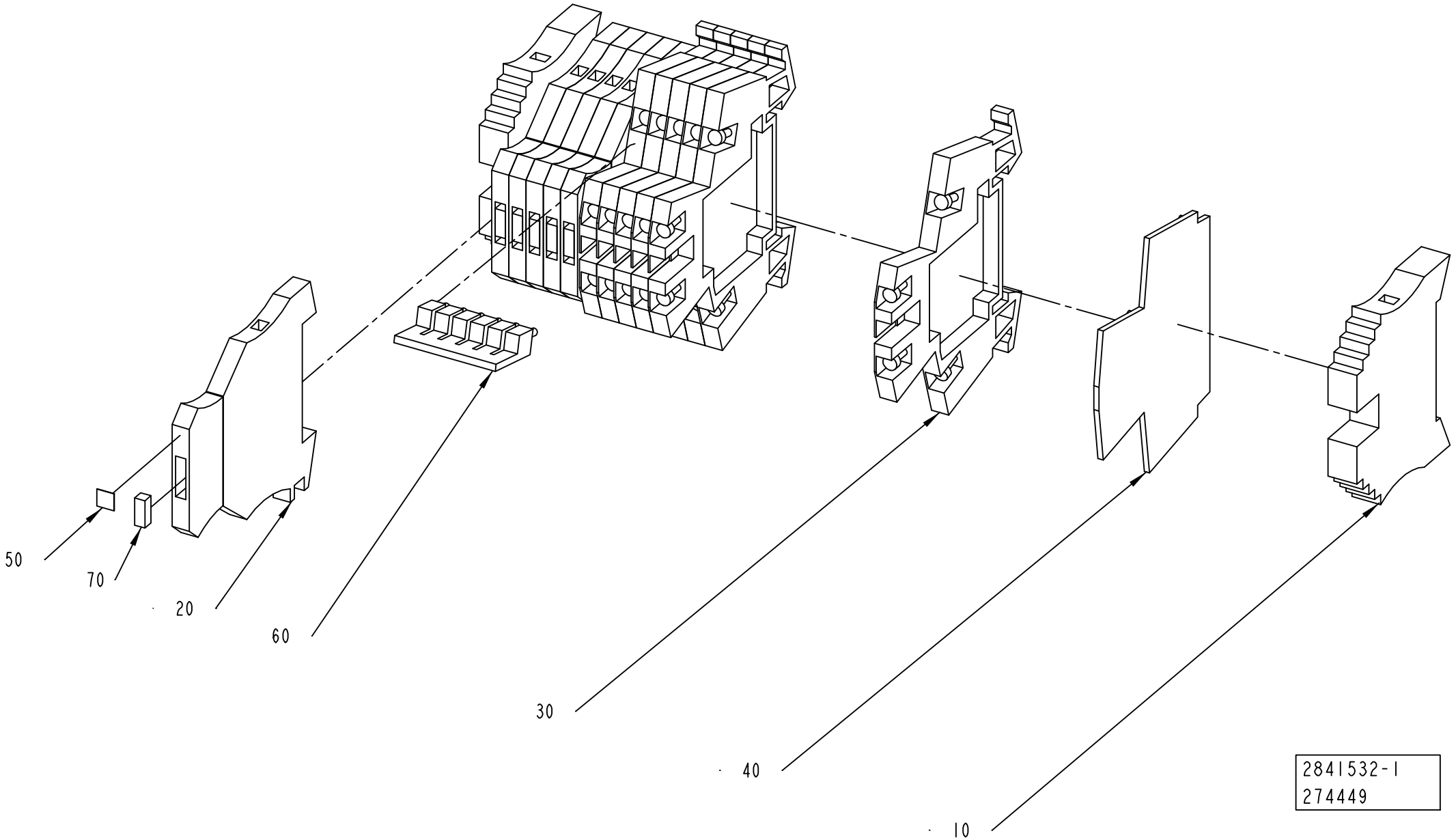
50
70
20
60
30
40
10
2841532-1
274449

ECM: 274489 - 20061101
Group number: 2841532-0100
Assembly Drawing: 2841532-1_1_AA

Pos	Part No	UN	Qty	Description	Page No
-					
010	353031-0203		2	END SUPPORT, WEW 35/2	
020	353021-0127		6	TERMINAL DISCONNECTBLE, WTR 2,5+WSD 2,5	
030	90077-0113		6	FEED THROUGH TERMINAL, 10-00102150-1	
040	353032-0009		1	END PLATE, WAP FOR WDK	
050	359011-0807		1	MARKING PLATES 5-FW 1-50	
060	353034-0030		1	BRIDGE CONNECTOR WQV 2,5/10, 10544.6	
070	90600-1199		6	VARISTOR MOV, 390KD07	

Pos	Part No	UN	Qty	Description	Page No

CONTROL BOARD RIGHT

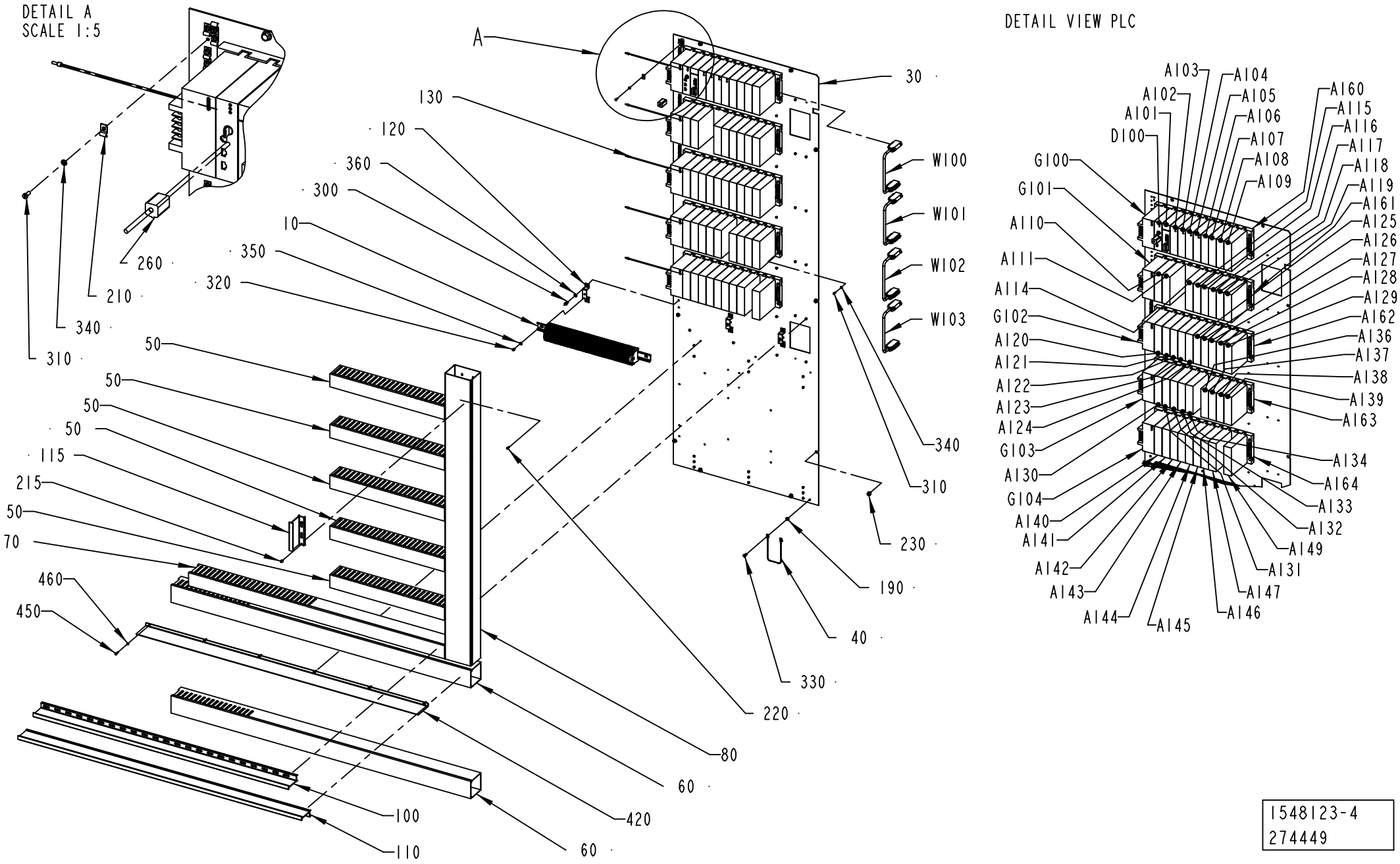

1548123-4
274449

ECM: 274449 - 20061101
Group number: 1548123-0150
Assembly Drawing: 1548123-4_1_AA

This list covers pages from 8-64 to 8-67

Pos	Part No	UN	Qty	Description	Page No
A3/FLEX					
010	2841531-0100		1	PLINTH	**8-69**
030	2841128-0000		1	MOUNTING PLATE	
060	2841129-0000		2	CABLE DUCT	
070	2841131-0000		1	CABLE DUCT	
080	2850659-0000		1	CABLE DUCT	
100	2850660-0000		1	DIVIDER	
110	2850661-0000		1	DIVIDER	
120	90458-1447		3	MOUNTING RAIL SUPPORT TST 128660	
220	90287-0124		45	SCREW PAN HEAD MSCS M4X12 NYLON	
310	312121-0289		63	SCREW ISO 1207 M4X10 4.8 - 5.8 Z.PL.	
340	315101-0136		63	WASHER BRB, 4,3/8 H=0,8	
420	2841134-0000		1	DIVIDER	
450	312115-0293		6	SCREW ISO4762 M4X16 A4 80	
460	315105-0136		6	WASHER BRB 4,3X9 RFR	
A101	90459-4233		1	DEVICENET MASTER MODULE	
Common Parts					
040	1038714-0000		1	CABLE	
050	2557587-0000		5	CABLE DUCT	
115	2675522-0000		1	DIVIDER	
130	1512322-0000		5	COPPER BRAID	
190	90062-0022		1	LOCKING WASHER D=6,4/11	
210	90165-0003		34	PIPE CLIP FOR TUBE D=4 MM	
215	90181-0064		12	LOCK ZP1 FOR CHANNEL T1	
230	90287-0157		11	SCREW M6SF FLAT HEAD M6X10 88	
260	90458-1170		1	FERRITE, SFC-6	
300	312111-0366		6	SCREW HEX.SOCK.HD.MC6S-TT 6X12 88 FZB	
320	312121-0321		3	SCREW ISO 1207 M5X6 4.8 - 5.8 Z.PL.	
330	312121-0366		1	SCREW ISO 1207 M6X12 4.8 - 5.8 Z.PL.	
350	315101-0146		3	WASHER PLAIN, BRB, 5,3/10 H=1	
360	315101-0153		6	WASHER PLAIN, BRB, 6,4/12 H=1,5	
A102	90031-0062		1	PLC, ANALOG OUTPUT MODULE 8PT/CURR/VOLT	
A103	90031-0062		1	PLC, ANALOG OUTPUT MODULE 8PT/CURR/VOLT	
A104	90031-0061		1	PLC,ANALOG INPUT MODULE 16 PT/CURRENT	
A105	90031-0060		1	PLC,ANALOG INPUT MODULE 16 PT/VOLTAGE	
A106	90031-0065		1	PLC,TEMPERATUR CONTROL,INPUT MODULE 8 PT	
A107	90031-0065		1	PLC,TEMPERATUR CONTROL,INPUT MODULE 8 PT	
A108	90031-0065		1	PLC,TEMPERATUR CONTROL,INPUT MODULE 8 PT	
A109	90031-0058		1	PLC, DIGITAL INPUT MODULE	
A110	90031-0057		1	PLC, DIGITAL INPUT MODULE	
A111	90031-0057		1	PLC, DIGITAL INPUT MODULE	
A114	90031-0057		1	PLC, DIGITAL INPUT MODULE	
A115	90031-0057		1	PLC, DIGITAL INPUT MODULE	
A116	90031-0057		1	PLC, DIGITAL INPUT MODULE	
A117	90031-0057		1	PLC, DIGITAL INPUT MODULE	
A118	90031-0057		1	PLC, DIGITAL INPUT MODULE	
A119	90031-0057		1	PLC, DIGITAL INPUT MODULE	
A120	90031-0057		1	PLC, DIGITAL INPUT MODULE	
A121	90031-0057		1	PLC, DIGITAL INPUT MODULE	
A122	90031-0057		1	PLC, DIGITAL INPUT MODULE	
A123	90031-0057		1	PLC, DIGITAL INPUT MODULE	
A124	90031-0057		1	PLC, DIGITAL INPUT MODULE	
A125	90031-0057		1	PLC, DIGITAL INPUT MODULE	
A126	90031-0057		1	PLC, DIGITAL INPUT MODULE	
A127	90031-0057		1	PLC, DIGITAL INPUT MODULE	
A128	90031-0057		1	PLC, DIGITAL INPUT MODULE	
A129	90031-0057		1	PLC, DIGITAL INPUT MODULE	
A130	90031-0059		1	PLC, DIGITAL OUTPUT MODULE	
A131	90031-0059		1	PLC, DIGITAL OUTPUT MODULE	
A132	90031-0059		1	PLC, DIGITAL OUTPUT MODULE	
A133	90031-0059		1	PLC, DIGITAL OUTPUT MODULE	
A134	90031-0059		1	PLC, DIGITAL OUTPUT MODULE	
A136	90031-0059		1	PLC, DIGITAL OUTPUT MODULE	
A137	90031-0059		1	PLC, DIGITAL OUTPUT MODULE	
A138	90031-0059		1	PLC, DIGITAL OUTPUT MODULE	
A139	90031-0059		1	PLC, DIGITAL OUTPUT MODULE	
A140	90031-0059		1	PLC, DIGITAL OUTPUT MODULE	
A141	90031-0059		1	PLC, DIGITAL OUTPUT MODULE	
A142	90031-0059		1	PLC, DIGITAL OUTPUT MODULE	
A143	90031-0059		1	PLC, DIGITAL OUTPUT MODULE	
A144	90031-0059		1	PLC, DIGITAL OUTPUT MODULE	
A145	90031-0059		1	PLC, DIGITAL OUTPUT MODULE	
A146	90031-0059		1	PLC, DIGITAL OUTPUT MODULE	
A147	90031-0059		1	PLC, DIGITAL OUTPUT MODULE	
A149	90031-0059		1	PLC, DIGITAL OUTPUT MODULE	
A160	90031-0051		1	BASEPLATE, 10-SLOT	
A161	90031-0053		1	BASEPLATE,10-SLOT	
	90031-0302		*1*	*I/O BUS TERMINATION PLUG*	
A162	90031-0053		1	BASEPLATE,10-SLOT	
	90031-0302		*1*	*I/O BUS TERMINATION PLUG*	
A163	90031-0053		1	BASEPLATE,10-SLOT	
	90031-0302		*1*	*I/O BUS TERMINATION PLUG*	
A164	90031-0053		1	BASEPLATE,10-SLOT	
	90031-0302		*1*	*I/O BUS TERMINATION PLUG*	

CONTROL BOARD RIGHT

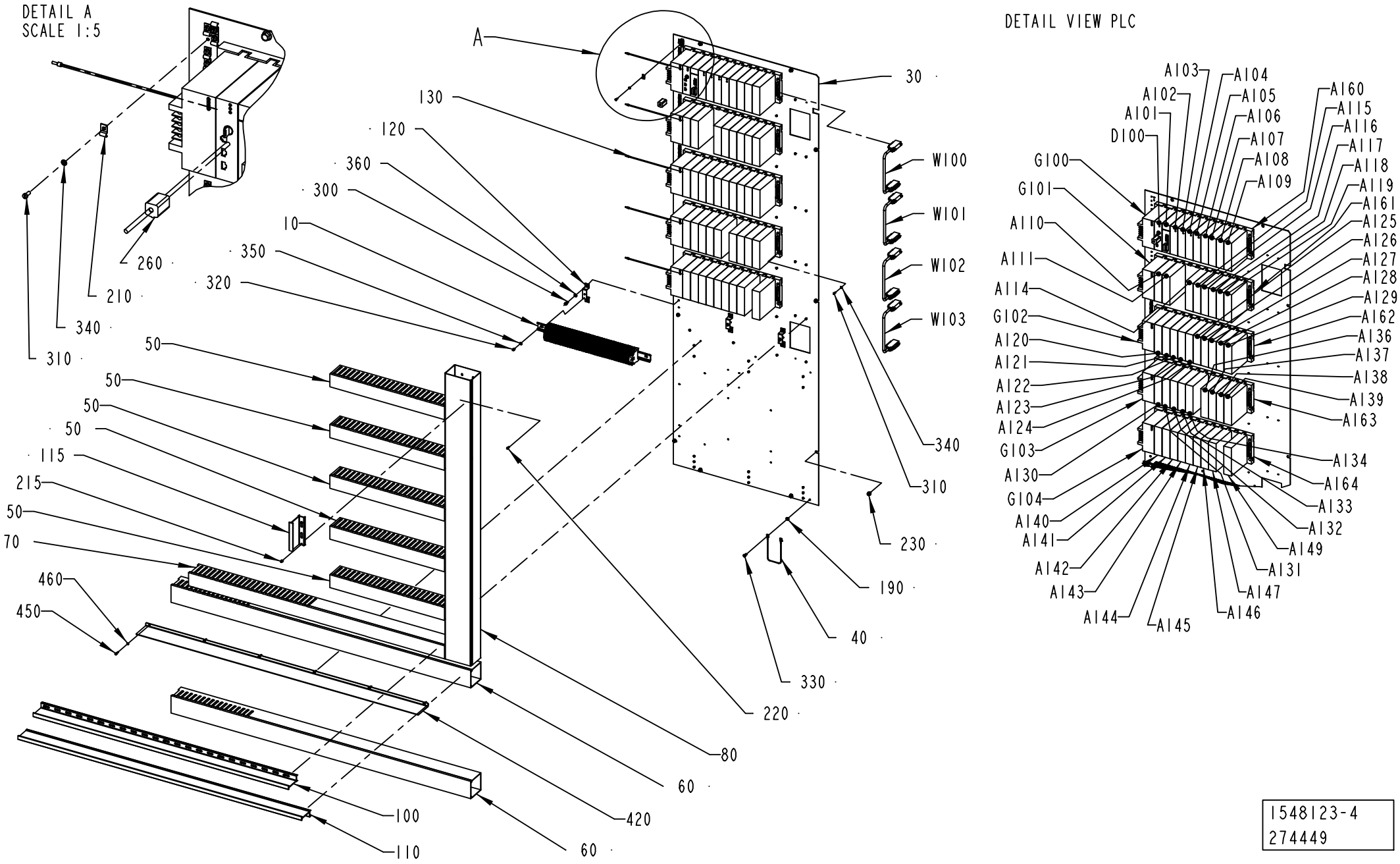

1548123-4
274449

ECM: 274449 - 20061101
Group number: 1548123-0150
Assembly Drawing: 1548123-4_1_AA

This list covers pages from 8-64 to 8-67

Pos	Part No	UN	Qty	Description	Page No
Common Parts (Cont'd)					
D100	90459-2185		1	CPU374, ETHERNET COMMUNICATION	
G100	90031-0068		1	PLC, POWER SUPPLY	
	90031-0301		*1*	*SPARE BATTERY CPU,PCM,2PCS*	
	352551-0134		*1*	*FINE-WIRE FUSE 2 A SLOW,5X20MM*	
G101	90031-0068		1	PLC, POWER SUPPLY	
	90031-0301		*1*	*SPARE BATTERY CPU,PCM,2PCS*	
	352551-0134		*1*	*FINE-WIRE FUSE 2 A SLOW,5X20MM*	
G102	90031-0068		1	PLC, POWER SUPPLY	
	90031-0301		*1*	*SPARE BATTERY CPU,PCM,2PCS*	
	352551-0134		*1*	*FINE-WIRE FUSE 2 A SLOW,5X20MM*	
G103	90031-0068		1	PLC, POWER SUPPLY	
	90031-0301		*1*	*SPARE BATTERY CPU,PCM,2PCS*	
	352551-0134		*1*	*FINE-WIRE FUSE 2 A SLOW,5X20MM*	
G104	90031-0068		1	PLC, POWER SUPPLY	
	90031-0301		*1*	*SPARE BATTERY CPU,PCM,2PCS*	
	352551-0134		*1*	*FINE-WIRE FUSE 2 A SLOW,5X20MM*	
W100	90031-0305		1	I/O EXPANSION CABLE	
W101	90031-0305		1	I/O EXPANSION CABLE	
W102	90031-0305		1	I/O EXPANSION CABLE	
W103	90031-0305		1	I/O EXPANSION CABLE	

Pos	Part No	UN	Qty	Description	Page No

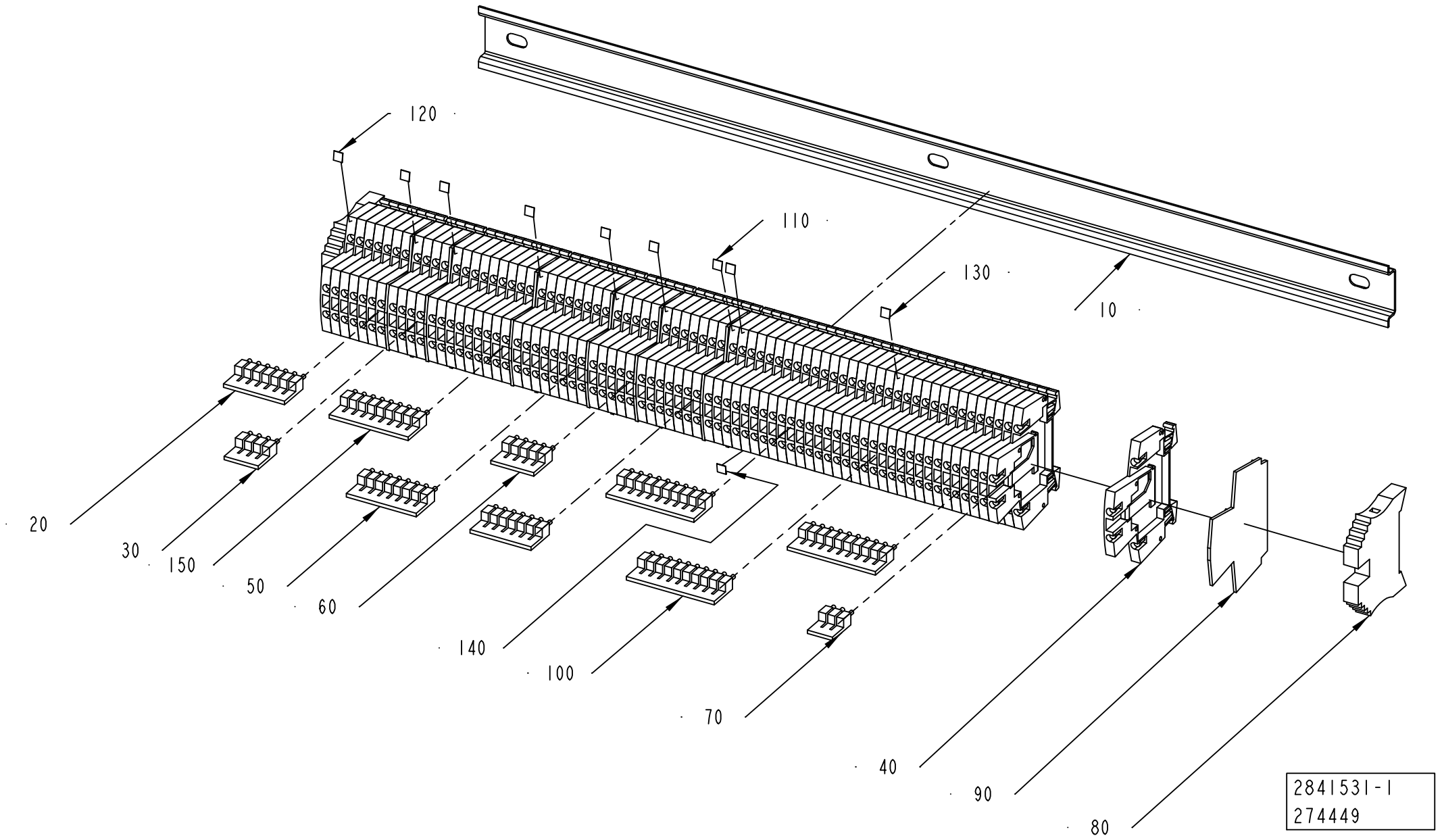
120
110
130
10
20
30
150
50
60
140
100
70
40
90
80
2841531-1
274449

ECM: 274449 - 20061101
Group number: 2841531-0100
Assembly Drawing: 2841531-1_1_AA

Pos	Part No	UN	Qty	Description	Page No
-					
010	2557594-0000		1	RAIL	
020	353034-0030		2	BRIDGE CONNECTOR WQV 2,5/10, 10544.6	
030	353034-0030		1	BRIDGE CONNECTOR WQV 2,5/10, 10544.6	
040	90457-0049		73	TERMINAL BLOCK, 102230	
050	353034-0030		1	BRIDGE CONNECTOR WQV 2,5/10, 10544.6	
060	353034-0030		1	BRIDGE CONNECTOR WQV 2,5/10, 10544.6	
070	353034-0030		1	BRIDGE CONNECTOR WQV 2,5/10, 10544.6	
080	353031-0203		2	END SUPPORT, WEW 35/2	
090	353032-0009		7	END PLATE, WAP FOR WDK	
100	353034-0030		3	BRIDGE CONNECTOR WQV 2,5/10, 10544.6	
110	359011-0808		1	MARKING PLATES 5-FW 51-100	
120	359011-0809		7	MARKING PLATES 5-FW 101-150	
130	359011-0810		1	MARKING PLATES 5-FW 151-200	
140	359011-0811		1	MARKING PLATES 5-FW 201-2	
150	353034-0030		1	BRIDGE CONNECTOR WQV 2,5/10, 10544.6	

Pos	Part No	UN	Qty	Description	Page No

POWER SUPPLY UNIT

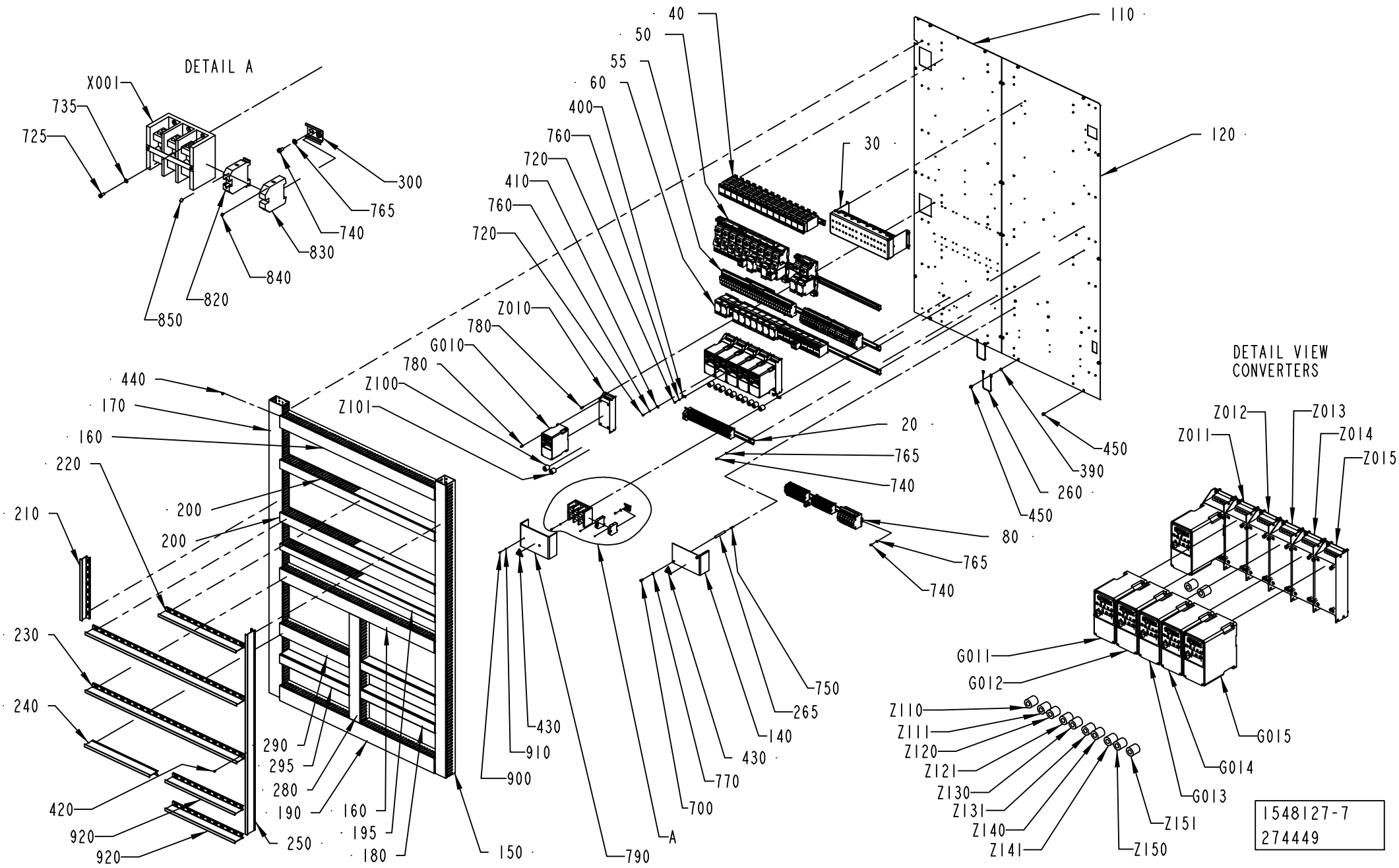

ECM: 274449 - 20061101
Group number: 1548127-0250
Assembly Drawing: 1548127-7_1_AA

Pos	Part No	UN	Qty	Description	Page No
A3/FLEX					
030	1548129-0100		1	RELAY UNIT 2	**8-73**
040	2563170-0100		1	RELAY UNIT 1	**8-75**
080	1548134-0250		1	PLINTH	**8-77**
110	2841529-0000		1	MOUNTING PLATE	
120	2765464-0000		1	MOUNTING PLATE	
140	1532930-0000		1	PROTECTION	
170	2844058-0000		1	CABLE DUCT	
265	1038275-0012		2	SPACER	
400	90165-0007		6	PIPE CLIP FOR TUBE D=8 MM	
410	90165-0022		6	PIPE CLIP, FOR TUBE D=2,5 MM, B-3570	
420	90181-0064		26	LOCK ZP1 FOR CHANNEL T1	
700	312111-0366		2	SCREW HEX.SOCK.HD.MC6S-TT 6X12 88 FZB	
720	312121-0289		12	SCREW ISO 1207 M4X10 4.8 - 5.8 Z.PL.	
725	312125-0289		6	SCREW ISO 1207 M4X10 A4	
735	315105-0136		6	WASHER BRB 4,3X9 RFR	
740	312121-0323		8	SCREW ISO 1207 M5X8 4.8 - 5.8 Z.PL.	
750	312318-0370		2	SCREW ISO4029 M6X20 A4	
760	315101-0136		12	WASHER BRB, 4,3/8 H=0,8	
765	315101-0146		12	WASHER PLAIN, BRB, 5,3/10 H=1	
770	315101-0153		2	WASHER PLAIN, BRB, 6,4/12 H=1,5	
780	312115-0327		48	SCREW ISO4762 M5X12 A4 80	
790	2844054-0000		1	PROTECTION	
900	312503-0229		2	TAPPING SCREW ISO 7049-ST2,9X16-C-Z	
910	315105-0124		2	WASHER BRB 3,2X7 RFR	
920	2851037-0000		2	DIVIDER	
G015	90459-3451		1	VARIABLE FREQUENCY DRIVE 22A-D4P0N104	
Z015	90459-3461		1	FOOTPRINT FILTER 22-RF5P7-AL	
Z150	90458-1140		1	FERRITE, RI-26-28-13	
Z151	90458-1140		1	FERRITE, RI-26-28-13	
Common Parts					
020	1548133-0100		1	PLINTH	**8-79**
050	1548130-0250		1	FUSE BOARD 1	**8-81**
055	1548131-0250		1	FUSE BOARD 2	**8-83, 8-85**
060	1548132-0250		1	FUSE BOARD 3	**8-87**
150	2558761-0000		1	CABLE DUCT	
160	2558762-0000		2	CABLE DUCT	
180	2558764-0000		2	CABLE DUCT	
190	2558766-0000		1	CABLE DUCT	
195	2777369-0000		1	CABLE DUCT	
200	2777368-0000		2	CABLE DUCT	
210	2558769-0000		1	DIVIDER	
220	2558770-0000		1	DIVIDER	
230	2558771-0000		2	DIVIDER	
240	2558772-0000		1	DIVIDER	
250	2558773-0000		1	DIVIDER	
260	1038714-0000		2	CABLE	
280	2558763-0000		1	CABLE DUCT	
290	2558765-0000		1	CABLE DUCT	
295	2558768-0000		1	CABLE DUCT	
300	2789106-0000		1	RAIL	
390	90062-0015		2	LOCK WASHER SERRAT.EXT.GEAR,6,4/11 H=0,7	
430	359705-0015		2	WARNING SIGN ISO, RISK OF ELECTRIC SHOCK	
440	90287-0124		82	SCREW PAN HEAD MSCS M4X12 NYLON	
450	90287-0157		22	SCREW M6SF FLAT HEAD M6X10 88	
820	353021-0226		1	BY-PASS TERMINAL WDU 35	
830	353024-0209		1	EARTH TERMINAL, 1010.5	
840	359011-0819		1	MARKING PLATES 5-GW (EARTH)	
850	359011-0821		1	SET OF SIGNS 6-FW 1-50	
G010	90459-3449		1	VARIABLE FREQUENCY DRIVE 22A-A2P3N104	
G011	90459-3449		1	VARIABLE FREQUENCY DRIVE 22A-A2P3N104	
G012	90459-3449		1	VARIABLE FREQUENCY DRIVE 22A-A2P3N104	
G013	90459-3450		1	VARIABLE FREQUENCY DRIVE 22A-A4P5N104	
G014	90459-3450		1	VARIABLE FREQUENCY DRIVE 22A-A4P5N104	
X001	90459-0959		1	DISTRIBUTOR BLOCK 1492-PD3163	
Z010	90459-3460		1	FOOTPRINT FILTER 22-RF010-AL	
Z011	90459-3460		1	FOOTPRINT FILTER 22-RF010-AL	
Z012	90459-3460		1	FOOTPRINT FILTER 22-RF010-AL	
Z013	90459-3460		1	FOOTPRINT FILTER 22-RF010-AL	
Z014	90459-3460		1	FOOTPRINT FILTER 22-RF010-AL	
Z100	90458-1140		1	FERRITE, RI-26-28-13	
Z101	90458-1140		1	FERRITE, RI-26-28-13	
Z110	90458-1140		1	FERRITE, RI-26-28-13	
Z111	90458-1140		1	FERRITE, RI-26-28-13	
Z120	90458-1140		1	FERRITE, RI-26-28-13	
Z121	90458-1140		1	FERRITE, RI-26-28-13	
Z130	90458-1140		1	FERRITE, RI-26-28-13	
Z131	90458-1140		1	FERRITE, RI-26-28-13	
Z140	90458-1140		1	FERRITE, RI-26-28-13	
Z141	90458-1140		1	FERRITE, RI-26-28-13	

Machine Type | Group Description | Used-In | Group Number | Page No

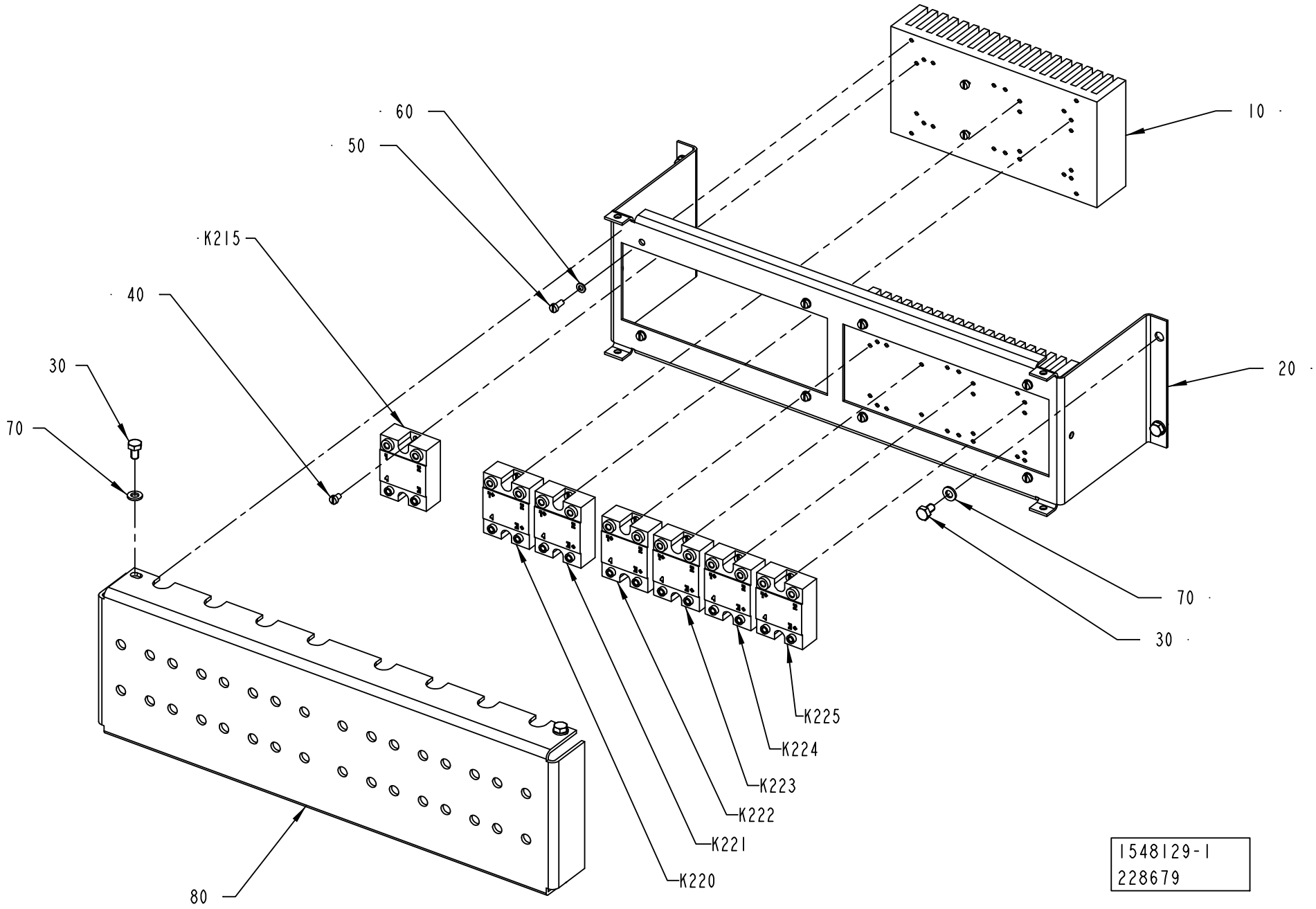
60
50
K215
40
30
70
10
20
70
30
K225
K224
K223
K222
K221
K220
80
1548129-1
228679

ECM: 234967 - 20060101
Group number: 1548129-0100
Assembly Drawing: 1548129-1_1_AC

Pos	Part No	UN	Qty	Description	Page No
A3/FLEX					
K215	90119-0067		1	SOLID-STATE RELAY, H12WD4850	
Common Parts					
010	495495-0000		2	COOLING ELEMENT SSR	
020	1347673-0000		1	BRACKET	
030	312101-0364		8	SCREW M6S M6X10 FZB	
040	312121-0285		16	SCREW ISO 1207 M4X6 4.8 - 5.8 Z.PL.	
050	312121-0289		8	SCREW ISO 1207 M4X10 4.8 - 5.8 Z.PL.	
060	315101-0136		8	WASHER BRB, 4,3/8 H=0,8	
070	315101-0153		8	WASHER PLAIN, BRB, 6,4/12 H=1,5	
080	1129342-0000		1	PROTECTION	
K220	90119-0043		1	OPTO-RELAY, 22DC 60S-3/32VDC	
K221	90119-0043		1	OPTO-RELAY, 22DC 60S-3/32VDC	
K222	90119-0043		1	OPTO-RELAY, 22DC 60S-3/32VDC	
K223	90119-0043		1	OPTO-RELAY, 22DC 60S-3/32VDC	
K224	90119-0043		1	OPTO-RELAY, 22DC 60S-3/32VDC	
K225	90119-0043		1	OPTO-RELAY, 22DC 60S-3/32VDC	

Pos	Part No	UN	Qty	Description	Page No

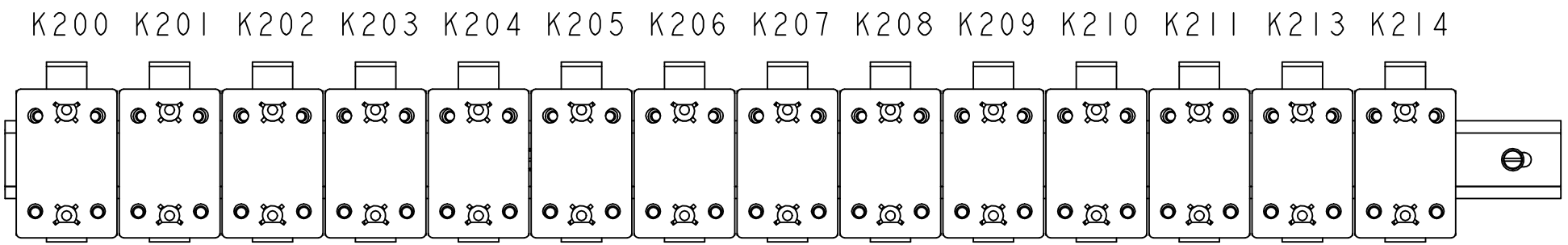

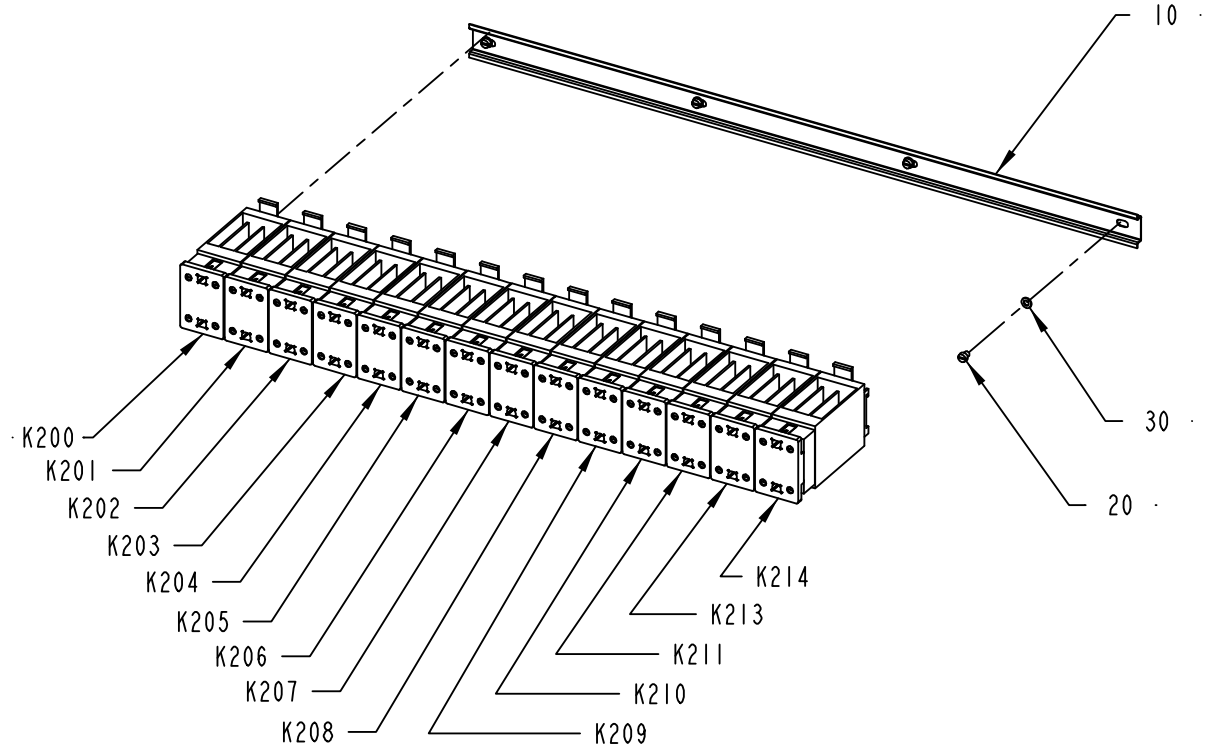

2563170-1
ECM 117324

ECM: 185515 - 20040930
Group number: 2563170-0100
Assembly Drawing: 2563170-1_1_AA

Pos	Part No	UN	Qty	Description	Page No
A3/FLEX					
K200	90119-0082		1	SSR 90119-67 + HEAT SINK	
K201	90119-0082		1	SSR 90119-67 + HEAT SINK	
K202	90119-0082		1	SSR 90119-67 + HEAT SINK	
K203	90119-0082		1	SSR 90119-67 + HEAT SINK	
K204	90119-0082		1	SSR 90119-67 + HEAT SINK	
K205	90119-0082		1	SSR 90119-67 + HEAT SINK	
K206	90119-0082		1	SSR 90119-67 + HEAT SINK	
K207	90119-0082		1	SSR 90119-67 + HEAT SINK	
K213	90119-0082		1	SSR 90119-67 + HEAT SINK	
K214	90119-0082		1	SSR 90119-67 + HEAT SINK	
Common Parts					
010	2558932-0000		1	RAIL	
020	312121-0321		4	SCREW ISO 1207 M5X6 4.8 - 5.8 Z.PL.	
030	315105-0146		4	WASHER BRB 5,3X10 RFR	
K208	90119-0082		1	SSR 90119-67 + HEAT SINK	
K209	90119-0082		1	SSR 90119-67 + HEAT SINK	
K210	90119-0082		1	SSR 90119-67 + HEAT SINK	
K211	90119-0082		1	SSR 90119-67 + HEAT SINK	

Pos	Part No	UN	Qty	Description	Page No

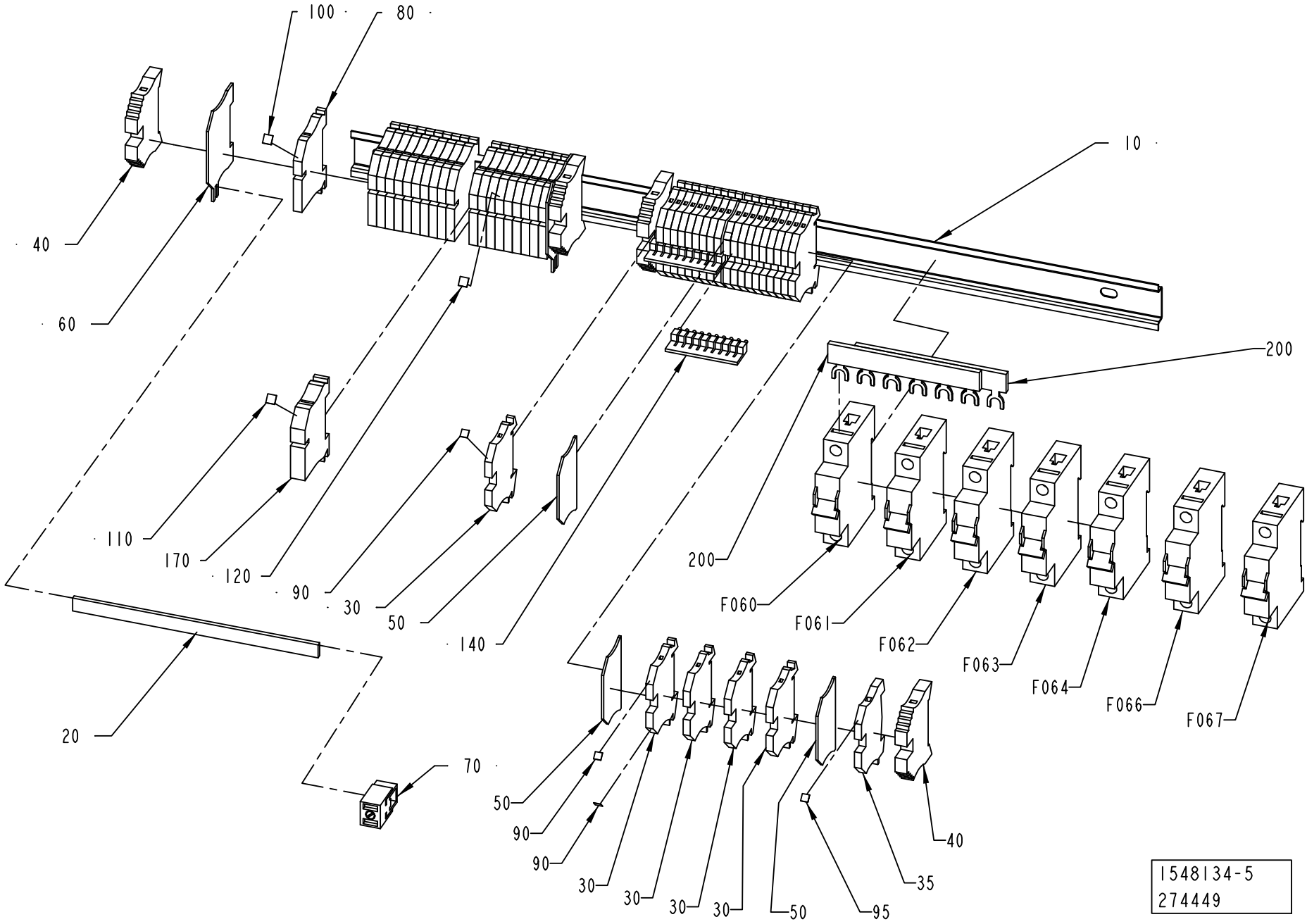
100
80
10
40
60
200
110
170
120
90
30
50
140
200
F060
F061
F062
F063
F064
F066
F067
20
70
50
90
90
30
30
30
30
50
95
35
40
1548134-5
274449

ECM: 274493 - 20061101
Group number: 1548134-0250
Assembly Drawing: 1548134-5_1_AA

Pos	Part No	UN	Qty	Description	Page No
A3/FLEX					
080	353022-0002		20	NEUTRAL TERMINAL, 10107.8	
120	359011-0823		1	SET OF SIGNS 6-FW 101-150	
F063	354000-0100		1	MINIATURE CIRCUIT BREAKER, FAZ-C10/1	
F064	351416-0160		1	MINIATURE CIRC. BREAK., FAZ -D16 1-POLE	
F066	351416-0060		1	MINIATURE CIRC. BREAK., FAZ -D6 1-POLE	
Common Parts					
010	2558933-0000		1	RAIL	
020	353041-0001	MM	170	BUS BAR RAIL 10X3MM SSCH	
030	353021-0212		24	FEED THROUGH TERMINAL, 10200.0	
035	353024-0204		1	EARTH TERMINAL WPE 2,5	
040	353031-0203		4	END SUPPORT, WEW 35/2	
050	353032-0004		3	END PLATE WAP 2,5-10 BEIGE	
060	353033-0104		2	END PLATE, 10502.8	
070	353041-0106		1	HOLDER ZB35 K 5026.8	
090	359011-0807		4	MARKING PLATES 5-FW 1-50	
095	359011-0819		1	MARKING PLATES 5-GW (EARTH)	
100	359011-0821		1	SET OF SIGNS 6-FW 1-50	
110	359011-0822		1	SET OF SIGNS 6-FW 51-100	
140	353034-0030		2	BRIDGE CONNECTOR WQV 2,5/10, 10544.6	
170	353022-0004		1	NEUTRAL TERMINAL, 10109.8	
200	90600-0203		2	COMMONING BUSBAR, 1-PH 85A	
F060	354000-0100		1	MINIATURE CIRCUIT BREAKER, FAZ-C10/1	
F061	354000-0100		1	MINIATURE CIRCUIT BREAKER, FAZ-C10/1	
F062	354000-0100		1	MINIATURE CIRCUIT BREAKER, FAZ-C10/1	
F067	354000-0040		1	MINIATURE CIRCUIT BREAKER, FAZ-C4/1	

Pos	Part No	UN	Qty	Description	Page No

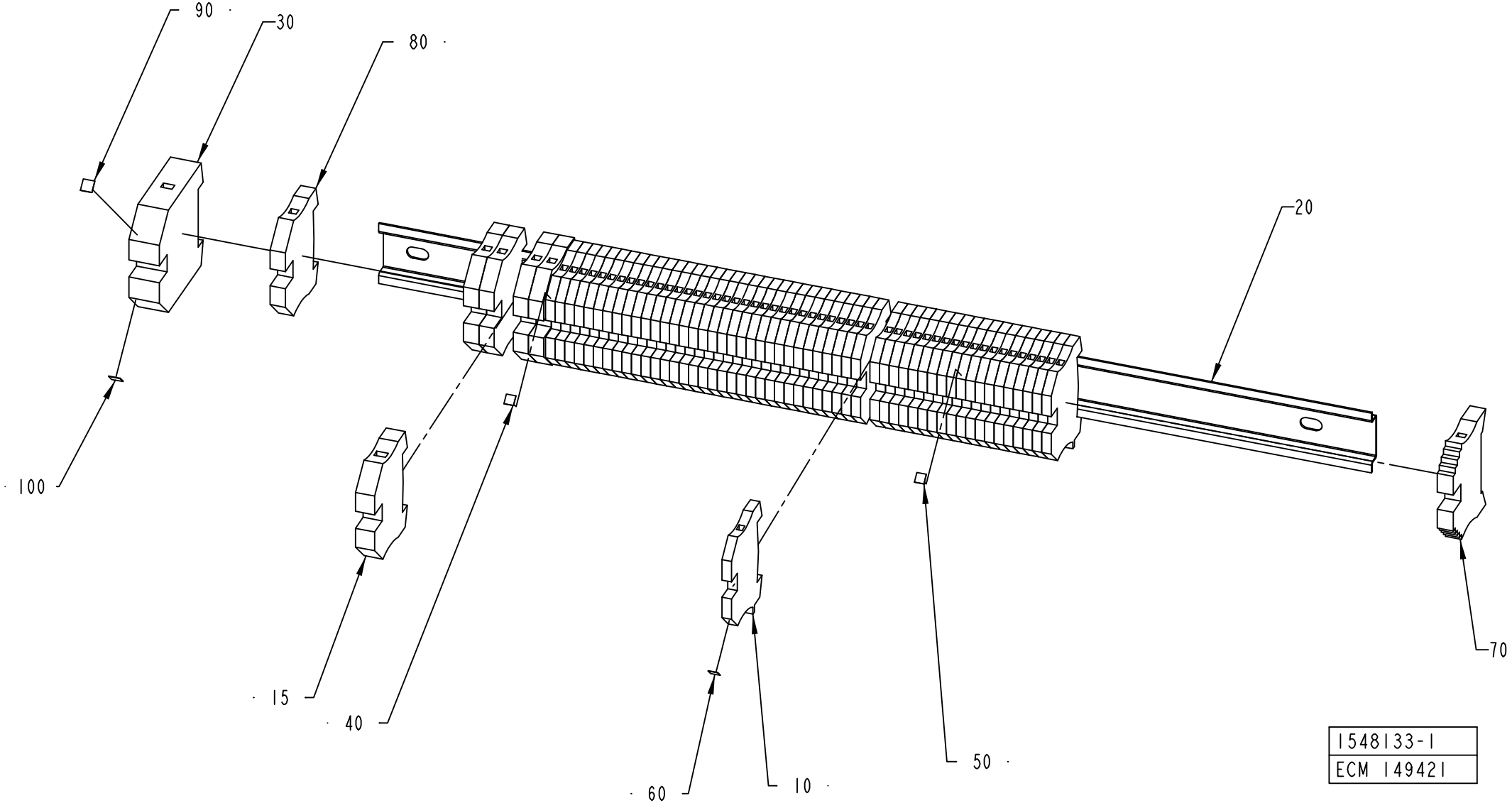
90
30
80
20
100
15
40
60
10
50
70
1548133-1
ECM 149421

ECM: 260068 - 20060412
Group number: 1548133-0100
Assembly Drawing: 1548133-1_1_AB

Pos	Part No	UN	Qty	Description	Page No
A3/FLEX					
040	359011-0807		1	MARKING PLATES 5-FW 1-50	
070	353031-0203		1	END SUPPORT, WEW 35/2	
090	359011-0821		1	SET OF SIGNS 6-FW 1-50	
Common Parts					
010	353024-0204		53	EARTH TERMINAL WPE 2,5	
015	353024-0207		1	EARTH TERMINAL, 1010.3	
020	2558934-0000		1	RAIL	
030	353024-0209		1	EARTH TERMINAL, 1010.5	
050	359011-0808		1	MARKING PLATES 5-FW 51-100	
060	359011-0809		1	MARKING PLATES 5-FW 101-150	
080	353024-0206		5	EARTH TERMINAL, 1010.2	
100	359011-0822		1	SET OF SIGNS 6-FW 51-100	

Pos	Part No	UN	Qty	Description	Page No

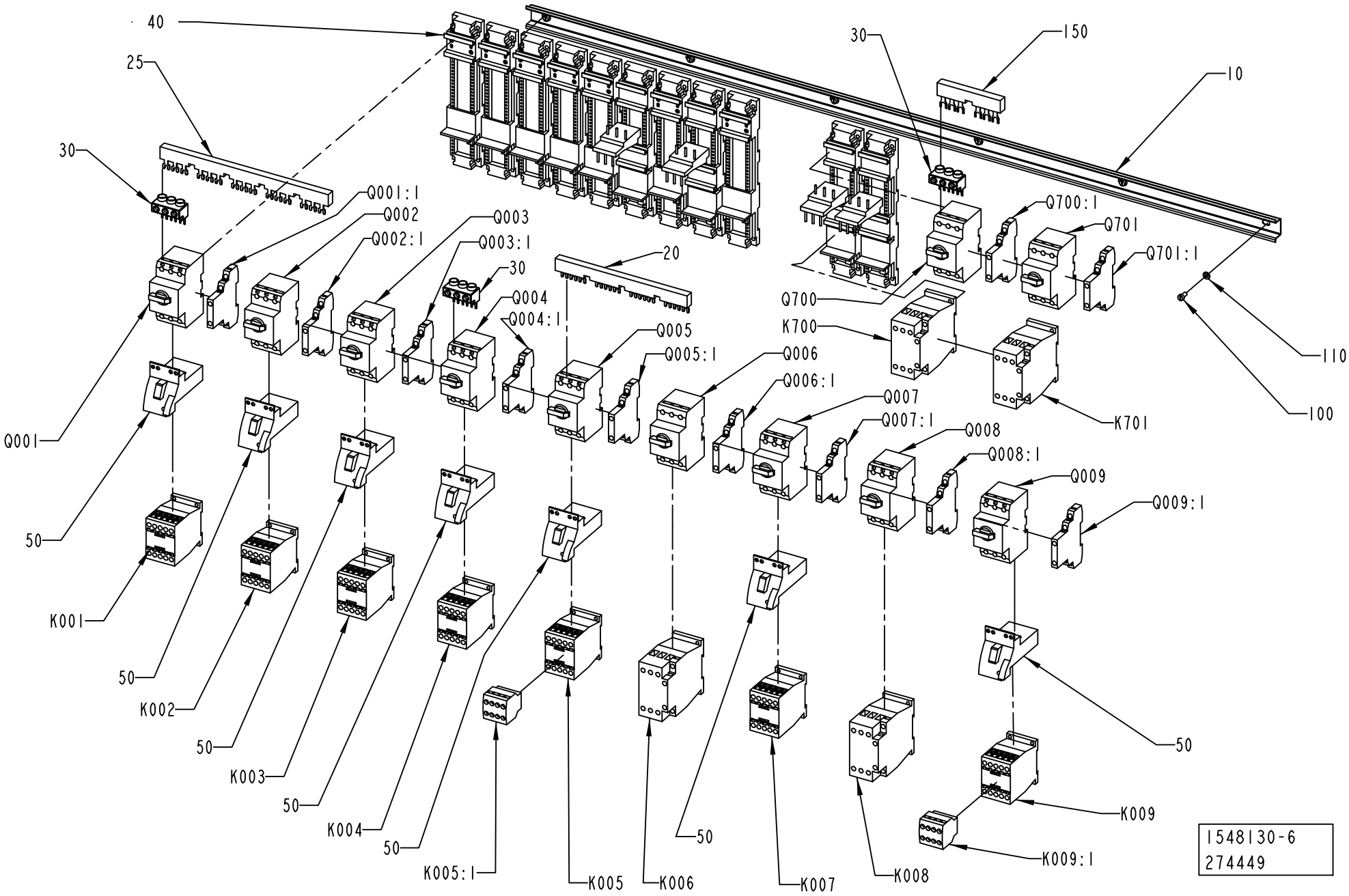
40
25
30
Q001:1
Q002
Q002:1
Q003
Q003:1
30
20
Q004
Q004:1
Q005
Q005:1
Q006
Q006:1
Q007
Q007:1
Q008
Q008:1
Q009
Q009:1
Q001
50
K001
50
K002
50
K003
50
K004
50
K005:1
K005
K006
50
K007
K008
K009
K009:1
50
30
150
10
Q700:1
Q701
Q701:1
Q700
K700
K701
110
100
1548130-6
274449

ECM: 274490 - 20061101
Group number: 1548130-0250
Assembly Drawing: 1548130-6_1_AA

Pos	Part No	UN	Qty	Description	Page No
A3/FLEX					
020	90259-0309		1	3 POLE BUSBAR, K&M B3.1/4	
025	90259-0311		1	3 POLE BUSBAR K&M B3.1/5	
030	90458-0577		3	CONNECTION TERMINAL BK 25/3-PKZ 0	
040	90459-6851		11	BASE UNIT, PKZM0-XDM32	
050	90459-6850		7	CONNECTION, PKZM0-XDM12	
150	90600-1203		1	BUS BAR 3-POLE+AUX. CONT., B3.1/2-PKZ0	
K002	90459-5440		1	CONTACTOR 4KW 24VDC, DILM9-01	
K007	90459-5440		1	CONTACTOR 4KW 24VDC, DILM9-01	
K008	90459-5441		1	CONTACTOR 7,5KW 24VDC, DILM17-01	
K009:1	90459-6852		1	AUXILIARY CONTACT, DILA-XHI22	
K009	90459-5440		1	CONTACTOR 4KW 24VDC, DILM9-01	
K700	90459-5444		1	CONTACTOR 15KW 24VDC, DILM32-01	
K701	90459-5444		1	CONTACTOR 15KW 24VDC, DILM32-01	
Q002:1	90259-0313		1	AUX. CONTACT K&M NHI21-PKZM0	
Q002	90459-5326		1	OVERLOAD PROTECTION, PKZM0-4	
Q004	90459-5325		1	OVERLOAD PROTECTION, PKZM0-2,5	
Q007:1	90259-0313		1	AUX. CONTACT K&M NHI21-PKZM0	
Q007	90459-5324		1	OVERLOAD PROTECTION, PKZM0-1,6	
Q008:1	90259-0313		1	AUX. CONTACT K&M NHI21-PKZM0	
Q008	90459-5328		1	OVERLOAD PROTECTION, PKZM0-10	
Q009:1	90259-0313		1	AUX. CONTACT K&M NHI21-PKZM0	
Q009	90459-5323		1	OVERLOAD PROTECTION, PKZM0-1	
Q700:1	90259-0313		1	AUX. CONTACT K&M NHI21-PKZM0	
Q700	90459-5333		1	OVERLOAD PROTECTION, PKZM0-32	
Q701:1	90259-0313		1	AUX. CONTACT K&M NHI21-PKZM0	
Q701	90459-5333		1	OVERLOAD PROTECTION, PKZM0-32	
Common Parts					
010	2777370-0000		1	RAIL	
100	312125-0325		6	SCREW ISO 1207 M5X10 A4	
110	315105-0146		6	WASHER BRB 5,3X10 RFR	
K001	90459-5440		1	CONTACTOR 4KW 24VDC, DILM9-01	
K003	90459-5440		1	CONTACTOR 4KW 24VDC, DILM9-01	
K004	90459-5440		1	CONTACTOR 4KW 24VDC, DILM9-01	
K005:1	90459-6852		1	AUXILIARY CONTACT, DILA-XHI22	
K005	90459-5440		1	CONTACTOR 4KW 24VDC, DILM9-01	
K006	90459-5441		1	CONTACTOR 7,5KW 24VDC, DILM17-01	
Q001:1	90259-0313		1	AUX. CONTACT K&M NHI21-PKZM0	
Q001	90459-5324		1	OVERLOAD PROTECTION, PKZM0-1,6	
Q003:1	90259-0313		1	AUX. CONTACT K&M NHI21-PKZM0	
Q003	90459-5325		1	OVERLOAD PROTECTION, PKZM0-2,5	
Q004:1	90259-0313		1	AUX. CONTACT K&M NHI21-PKZM0	
Q005:1	90259-0313		1	AUX. CONTACT K&M NHI21-PKZM0	
Q005	90459-5326		1	OVERLOAD PROTECTION, PKZM0-4	
Q006:1	90259-0313		1	AUX. CONTACT K&M NHI21-PKZM0	
Q006	90459-5330		1	OVERLOAD PROTECTION, PKZM0-16	

Machine Type	Group Description	Used-In	Group Number	Page No

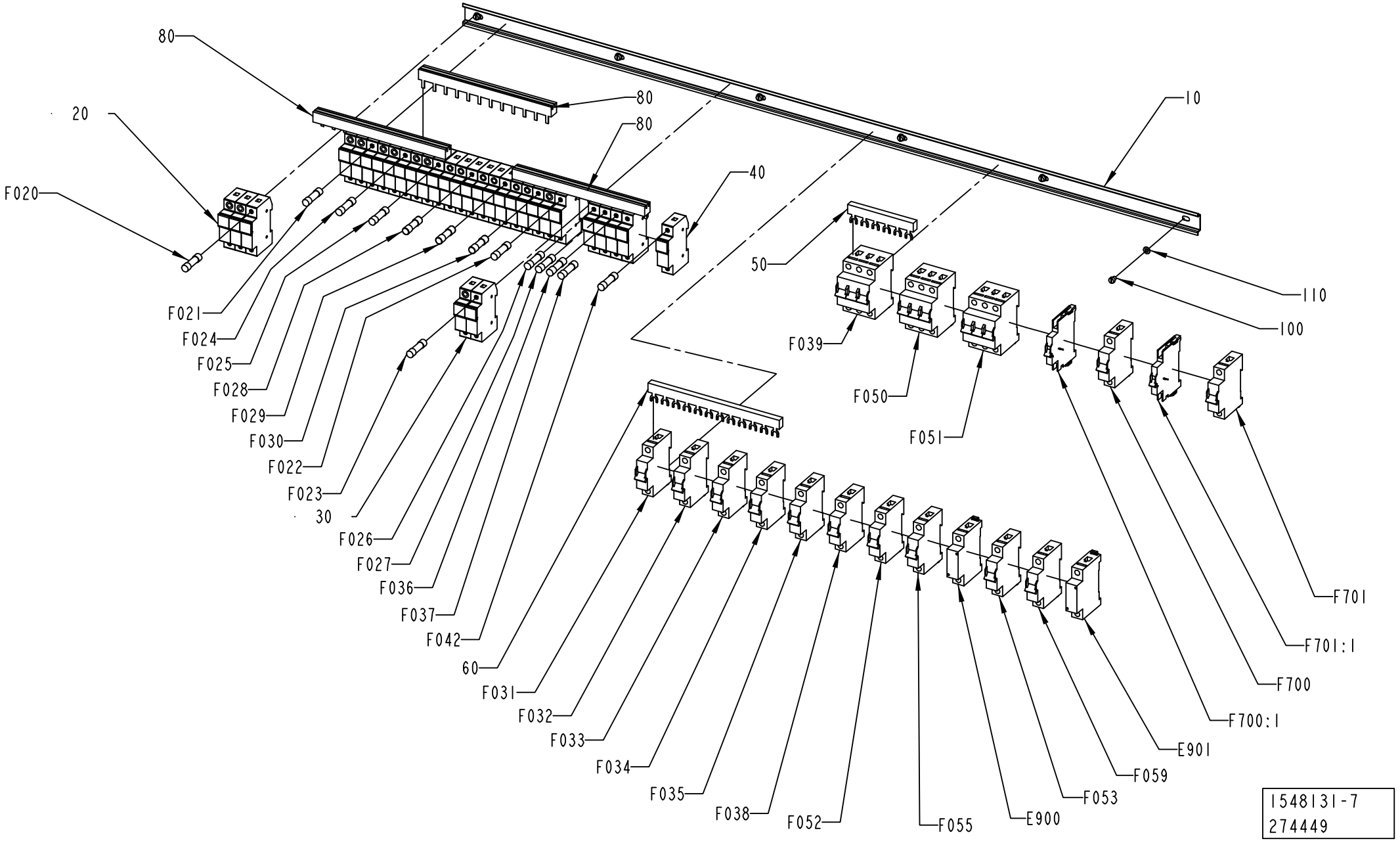
80
20
F020
F021
F024
F025
F028
F029
F030
F022
F023
30
F026
F027
F036
F037
F042
60
F031
F032
F033
F034
F035
F038
F052
F055
E900
F053
F059
E901
F700:1
F700
F701:1
F701
110
100
F039
F050
F051
50
40
80
80
10
1548131-7
274449

ECM: 274491 - 20061101
Group number: 1548131-0250
Assembly Drawing: 1548131-7_1_AA

This list covers pages from 8-82 to 8-85

Pos	Part No	UN	Qty	Description	Page No
A3/FLEX NOVISION SYS (See drawing on page: 8-82)					
020	90459-3800		7	FUSE HOLDER, MSC 10 3-POLE D250151	
030	90459-4553		2	FUSE HOLDER, MSC 10 2-POLE C250150	
040	90459-3799		5	FUSE HOLDER, MSC 10 1-POLE A250148	
050	90459-6854		1	COMMONING BUSBAR, 3-P 3-PH 6 100A	
060	90459-6855		1	COMMONING BUSBAR, 3-P 3-PH 12 100A	
080	90459-6857		3	BUSBAR, 3-P 12 100A	
E900	90459-6856		1	FEEDER BLOCK, FAZ/FIP-XVS-KL	
E901	90459-6856		1	FEEDER BLOCK, FAZ/FIP-XVS-KL	
F020	90233-0028		3	TUBE FUSE, 10A	
F021	90233-0028		3	TUBE FUSE, 10A	
F022	90233-0029		2	TUBE FUSE, 25A	
F023	90233-0029		2	TUBE FUSE, 25A	
F024	90233-0028		3	TUBE FUSE, 10A	
F025	90233-0029		3	TUBE FUSE, 25A	
F027	90233-0027		1	TUBE FUSE, 16A	
	90233-0305		*1*	*INDICATOR*	
F028	90459-1254		3	TUBE FUSE, 4A 500V	
F029	90459-1254		3	TUBE FUSE, 4A 500V	
F030	90459-1254		3	TUBE FUSE, 4A 500V	
F038	351416-0010		1	MINIATURE CIRC. BREAK., FAZ -D1 1-POLE	
F039	351418-0100		1	MINIATURE CIRC. BREAK., FAZ-D10/3 3-POLE	
F042	90233-0027		1	TUBE FUSE, 16A	
	90233-0305		*1*	*INDICATOR*	
F700	351416-0060		1	MINIATURE CIRC. BREAK., FAZ -D6 1-POLE	
F701:1	90459-5813		1	AUXILARY CONTACT, FAZ-XHI11	
F701	351416-0060		1	MINIATURE CIRC. BREAK., FAZ -D6 1-POLE	
A3/FLEX VISION SYS (See drawing on page: 8-84)					
020	90459-3800		7	FUSE HOLDER, MSC 10 3-POLE D250151	
030	90459-4553		2	FUSE HOLDER, MSC 10 2-POLE C250150	
040	90459-3799		5	FUSE HOLDER, MSC 10 1-POLE A250148	
050	90459-6854		1	COMMONING BUSBAR, 3-P 3-PH 6 100A	
060	90459-6855		1	COMMONING BUSBAR, 3-P 3-PH 12 100A	
080	90459-6857		3	BUSBAR, 3-P 12 100A	
E900	90459-6856		1	FEEDER BLOCK, FAZ/FIP-XVS-KL	
F020	90233-0028		3	TUBE FUSE, 10A	
F021	90233-0028		3	TUBE FUSE, 10A	
F022	90233-0029		2	TUBE FUSE, 25A	
F023	90233-0029		2	TUBE FUSE, 25A	
F024	90233-0028		3	TUBE FUSE, 10A	
F025	90233-0029		3	TUBE FUSE, 25A	
F027	90233-0027		1	TUBE FUSE, 16A	
	90233-0305		*1*	*INDICATOR*	
F028	90459-1254		3	TUBE FUSE, 4A 500V	
F029	90459-1254		3	TUBE FUSE, 4A 500V	
F030	90459-1254		3	TUBE FUSE, 4A 500V	
F038	351416-0010		1	MINIATURE CIRC. BREAK., FAZ -D1 1-POLE	
F039	351418-0100		1	MINIATURE CIRC. BREAK., FAZ-D10/3 3-POLE	
F042	90233-0027		1	TUBE FUSE, 16A	
	90233-0305		*1*	*INDICATOR*	
F070	354000-0005		1	MINIATURE CIRCUIT BREAKER, FAZ-C0,5/1	
F700	351416-0060		1	MINIATURE CIRC. BREAK., FAZ -D6 1-POLE	
F701:1	90459-5813		1	AUXILARY CONTACT, FAZ-XHI11	
F701	351416-0060		1	MINIATURE CIRC. BREAK., FAZ -D6 1-POLE	
Common Parts					
010	2777371-0000		1	RAIL	
100	312121-0321		6	SCREW ISO 1207 M5X6 4.8 - 5.8 Z.PL.	
110	315101-0146		6	WASHER PLAIN, BRB, 5,3/10 H=1	
F026	90233-0027		1	TUBE FUSE, 16A	
	90233-0305		*1*	*INDICATOR*	
F031	351416-0100		1	MINIATURE CIRC. BREAK., FAZ -D10 1-POLE	
F032	351416-0100		1	MINIATURE CIRC. BREAK., FAZ -D10 1-POLE	
F033	351416-0100		1	MINIATURE CIRC. BREAK., FAZ -D10 1-POLE	
F034	351416-0160		1	MINIATURE CIRC. BREAK., FAZ -D16 1-POLE	
F035	351416-0160		1	MINIATURE CIRC. BREAK., FAZ -D16 1-POLE	
F036	90459-5687		1	FUSE 1 A 250 VAC	
F037	90233-0062		1	TUBE FUSE, 4A 600V	
F050	351418-0060		1	MINIATURE CIRC. BREAK., FAZ-D6/3 3-POLE	
F051	351418-0400		1	MINIATURE CIRC. BREAK.,FAZ-D40/3 3-POLE	
F052	351416-0060		1	MINIATURE CIRC. BREAK., FAZ -D6 1-POLE	
F053	354000-0100		1	MINIATURE CIRCUIT BREAKER, FAZ-C10/1	
F055	351416-0020		1	MINIATURE CIRC. BREAK., FAZ -D2 1-POLE	
F059	351416-0060		1	MINIATURE CIRC. BREAK., FAZ -D6 1-POLE	
F700:1	90459-5813		1	AUXILARY CONTACT, FAZ-XHI11	

Machine Type | Group Description | Used-In | Group Number | Page No

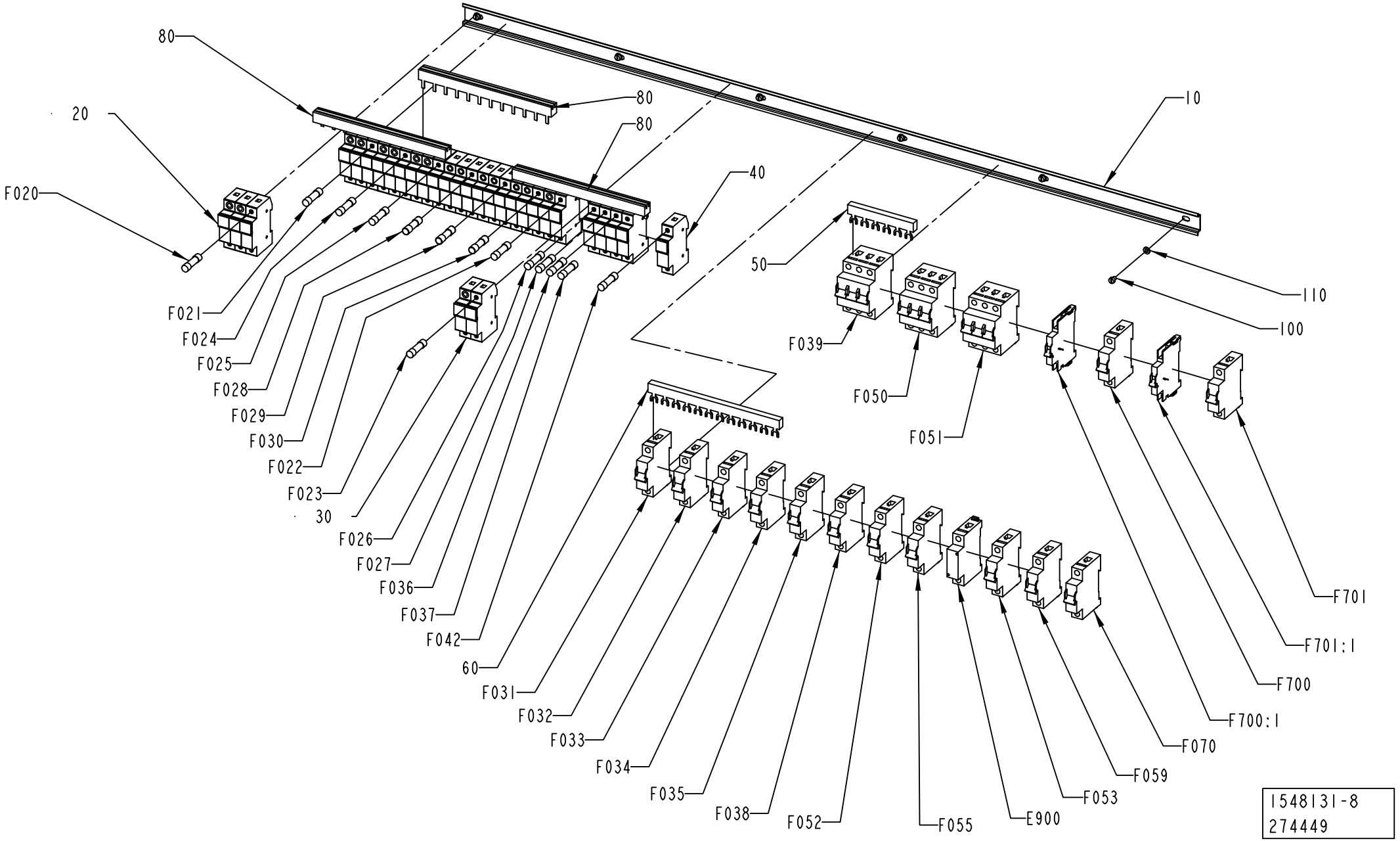
80
20
F020
F021
F024
F025
F028
F029
F030
F022
F023
30
F026
F027
F036
F037
F042
60
F031
F032
F033
F034
F035
F038
F052
F055
E900
F053
F059
F070
F700:1
F700
F701:1
F701
100
110
10
50
F039
F050
F051
40
80
80
80
1548131-8
274449

ECM: 274491 - 20061101
Group number: 1548131-0250
Assembly Drawing: 1548131-8_1_AA

This list covers pages from 8-82 to 8-85

Pos	Part No	UN	Qty	Description	Page No
A3/FLEX NOVISION SYS (See drawing on page: 8-82)					
020	90459-3800		7	FUSE HOLDER, MSC 10 3-POLE D250151	
030	90459-4553		2	FUSE HOLDER, MSC 10 2-POLE C250150	
040	90459-3799		5	FUSE HOLDER, MSC 10 1-POLE A250148	
050	90459-6854		1	COMMONING BUSBAR, 3-P 3-PH 6 100A	
060	90459-6855		1	COMMONING BUSBAR, 3-P 3-PH 12 100A	
080	90459-6857		3	BUSBAR, 3-P 12 100A	
E900	90459-6856		1	FEEDER BLOCK, FAZ/FIP-XVS-KL	
E901	90459-6856		1	FEEDER BLOCK, FAZ/FIP-XVS-KL	
F020	90233-0028		3	TUBE FUSE, 10A	
F021	90233-0028		3	TUBE FUSE, 10A	
F022	90233-0029		2	TUBE FUSE, 25A	
F023	90233-0029		2	TUBE FUSE, 25A	
F024	90233-0028		3	TUBE FUSE, 10A	
F025	90233-0029		3	TUBE FUSE, 25A	
F027	90233-0027		1	TUBE FUSE, 16A	
	90233-0305		*1*	*INDICATOR*	
F028	90459-1254		3	TUBE FUSE, 4A 500V	
F029	90459-1254		3	TUBE FUSE, 4A 500V	
F030	90459-1254		3	TUBE FUSE, 4A 500V	
F038	351416-0010		1	MINIATURE CIRC. BREAK., FAZ -D1 1-POLE	
F039	351418-0100		1	MINIATURE CIRC. BREAK., FAZ-D10/3 3-POLE	
F042	90233-0027		1	TUBE FUSE, 16A	
	90233-0305		*1*	*INDICATOR*	
F700	351416-0060		1	MINIATURE CIRC. BREAK., FAZ -D6 1-POLE	
F701:1	90459-5813		1	AUXILARY CONTACT, FAZ-XHI11	
F701	351416-0060		1	MINIATURE CIRC. BREAK., FAZ -D6 1-POLE	
A3/FLEX VISION SYS (See drawing on page: 8-84)					
020	90459-3800		7	FUSE HOLDER, MSC 10 3-POLE D250151	
030	90459-4553		2	FUSE HOLDER, MSC 10 2-POLE C250150	
040	90459-3799		5	FUSE HOLDER, MSC 10 1-POLE A250148	
050	90459-6854		1	COMMONING BUSBAR, 3-P 3-PH 6 100A	
060	90459-6855		1	COMMONING BUSBAR, 3-P 3-PH 12 100A	
080	90459-6857		3	BUSBAR, 3-P 12 100A	
E900	90459-6856		1	FEEDER BLOCK, FAZ/FIP-XVS-KL	
F020	90233-0028		3	TUBE FUSE, 10A	
F021	90233-0028		3	TUBE FUSE, 10A	
F022	90233-0029		2	TUBE FUSE, 25A	
F023	90233-0029		2	TUBE FUSE, 25A	
F024	90233-0028		3	TUBE FUSE, 10A	
F025	90233-0029		3	TUBE FUSE, 25A	
F027	90233-0027		1	TUBE FUSE, 16A	
	90233-0305		*1*	*INDICATOR*	
F028	90459-1254		3	TUBE FUSE, 4A 500V	
F029	90459-1254		3	TUBE FUSE, 4A 500V	
F030	90459-1254		3	TUBE FUSE, 4A 500V	
F038	351416-0010		1	MINIATURE CIRC. BREAK., FAZ -D1 1-POLE	
F039	351418-0100		1	MINIATURE CIRC. BREAK., FAZ-D10/3 3-POLE	
F042	90233-0027		1	TUBE FUSE, 16A	
	90233-0305		*1*	*INDICATOR*	
F070	354000-0005		1	MINIATURE CIRCUIT BREAKER, FAZ-C0,5/1	
F700	351416-0060		1	MINIATURE CIRC. BREAK., FAZ -D6 1-POLE	
F701:1	90459-5813		1	AUXILARY CONTACT, FAZ-XHI11	
F701	351416-0060		1	MINIATURE CIRC. BREAK., FAZ -D6 1-POLE	
Common Parts					
010	2777371-0000		1	RAIL	
100	312121-0321		6	SCREW ISO 1207 M5X6 4.8 - 5.8 Z.PL.	
110	315101-0146		6	WASHER PLAIN, BRB, 5,3/10 H=1	
F026	90233-0027		1	TUBE FUSE, 16A	
	90233-0305		*1*	*INDICATOR*	
F031	351416-0100		1	MINIATURE CIRC. BREAK., FAZ -D10 1-POLE	
F032	351416-0100		1	MINIATURE CIRC. BREAK., FAZ -D10 1-POLE	
F033	351416-0100		1	MINIATURE CIRC. BREAK., FAZ -D10 1-POLE	
F034	351416-0160		1	MINIATURE CIRC. BREAK., FAZ -D16 1-POLE	
F035	351416-0160		1	MINIATURE CIRC. BREAK., FAZ -D16 1-POLE	
F036	90459-5687		1	FUSE 1 A 250 VAC	
F037	90233-0062		1	TUBE FUSE, 4A 600V	
F050	351418-0060		1	MINIATURE CIRC. BREAK., FAZ-D6/3 3-POLE	
F051	351418-0400		1	MINIATURE CIRC. BREAK.,FAZ-D40/3 3-POLE	
F052	351416-0060		1	MINIATURE CIRC. BREAK., FAZ -D6 1-POLE	
F053	354000-0100		1	MINIATURE CIRCUIT BREAKER, FAZ-C10/1	
F055	351416-0020		1	MINIATURE CIRC. BREAK., FAZ -D2 1-POLE	
F059	351416-0060		1	MINIATURE CIRC. BREAK., FAZ -D6 1-POLE	
F700:1	90459-5813		1	AUXILARY CONTACT, FAZ-XHI11	

Machine Type | Group Description | Used-In | Group Number | Page No

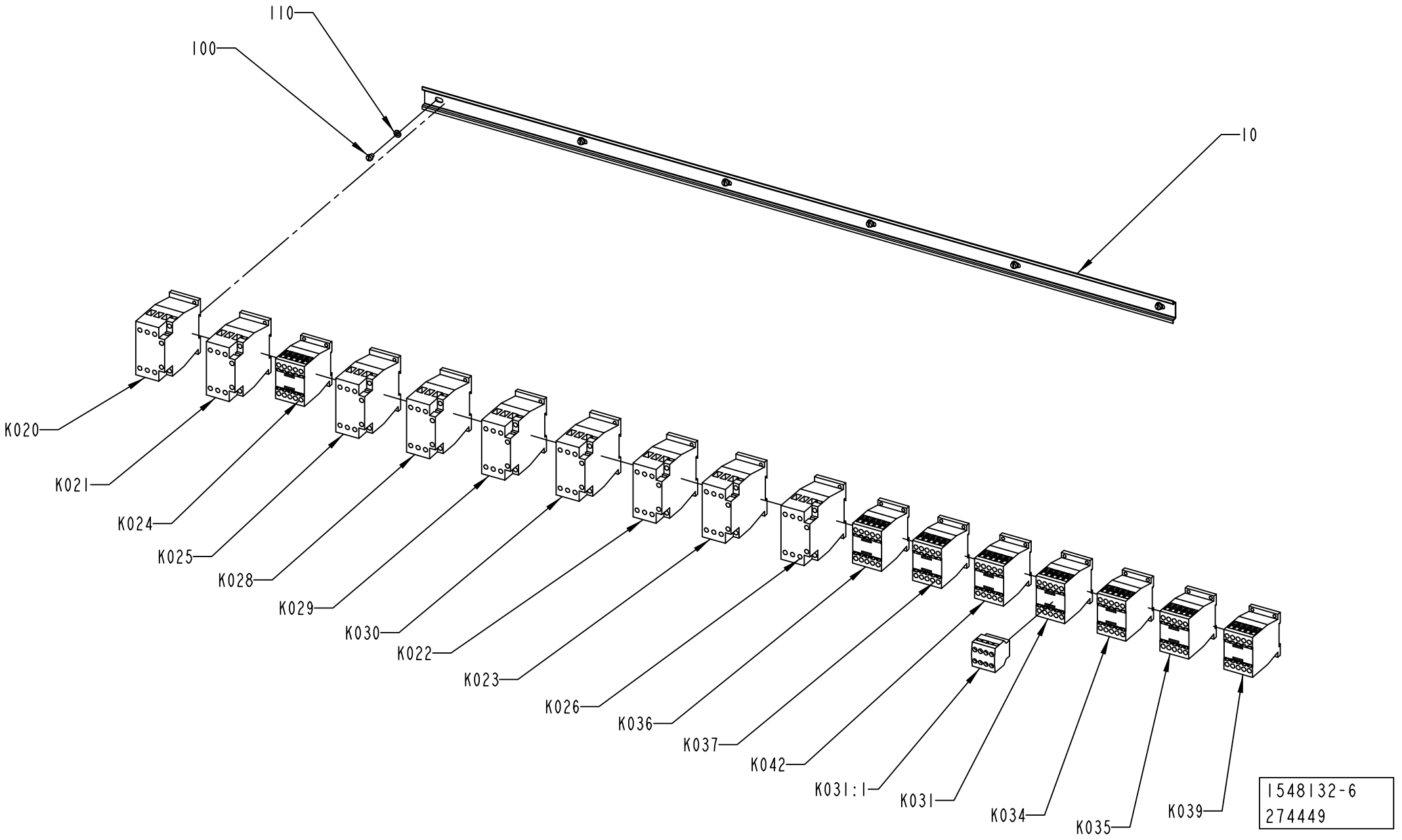
110
100
10
K020
K021
K024
K025
K028
K029
K030
K022
K023
K026
K036
K037
K042
K031:1
K031
K034
K035
K039
1548132-6
274449

ECM: 274492 - 20061101
Group number: 1548132-0250
Assembly Drawing: 1548132-6_1_AA

Pos	Part No	UN	Qty	Description	Page No
A3/FLEX					
K020	90459-5441		1	CONTACTOR 7,5KW 24VDC, DILM17-01	
K021	90459-5441		1	CONTACTOR 7,5KW 24VDC, DILM17-01	
K022	90459-5441		1	CONTACTOR 7,5KW 24VDC, DILM17-01	
K023	90459-5441		1	CONTACTOR 7,5KW 24VDC, DILM17-01	
K024	90459-5440		1	CONTACTOR 4KW 24VDC, DILM9-01	
K025	90459-5441		1	CONTACTOR 7,5KW 24VDC, DILM17-01	
K026	90459-5441		1	CONTACTOR 7,5KW 24VDC, DILM17-01	
K028	90459-5441		1	CONTACTOR 7,5KW 24VDC, DILM17-01	
K029	90459-5441		1	CONTACTOR 7,5KW 24VDC, DILM17-01	
K030	90459-5441		1	CONTACTOR 7,5KW 24VDC, DILM17-01	
K031:1	90459-6852		1	AUXILIARY CONTACT, DILA-XHI22	
K037	90459-5440		1	CONTACTOR 4KW 24VDC, DILM9-01	
K039	90459-5440		1	CONTACTOR 4KW 24VDC, DILM9-01	
K042	90459-5440		1	CONTACTOR 4KW 24VDC, DILM9-01	
Common Parts					
010	2777371-0000		1	RAIL	
100	312121-0321		6	SCREW ISO 1207 M5X6 4.8 - 5.8 Z.PL.	
110	315101-0146		6	WASHER PLAIN, BRB, 5,3/10 H=1	
K031	90459-5440		1	CONTACTOR 4KW 24VDC, DILM9-01	
K034	90459-5440		1	CONTACTOR 4KW 24VDC, DILM9-01	
K035	90459-5440		1	CONTACTOR 4KW 24VDC, DILM9-01	
K036	90459-5440		1	CONTACTOR 4KW 24VDC, DILM9-01	

Pos	Part No	UN	Qty	Description	Page No

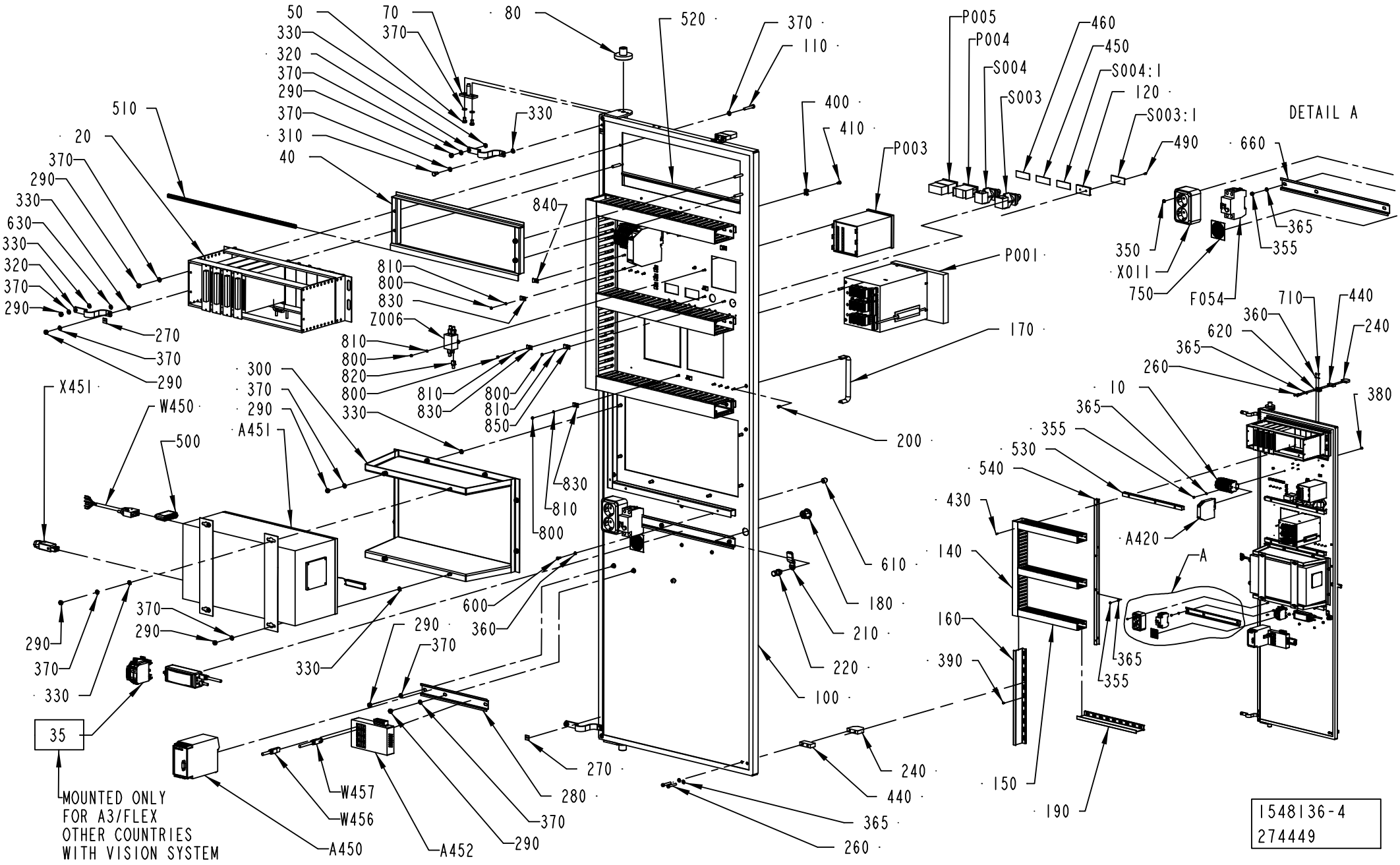
50
70
370
330
320
370
290
370
310
40
80
520
370
110
330
510
20
370
290
330
630
330
320
370
290
270
370
290
840
810
800
830
Z006
810
800
820
800
810
830
800
810
850
330
300
370
290
A451
X451
W450
500
200
400
410
P003
P005
P004
S004
S003
460
450
S004:1
120
S003:1
490
DETAIL A
660
365
355
350
X011
750
F054
P001
170
710
440
360
620
240
365
260
380
10
365
355
530
540
430
A420
A
140
160
390
150
190
610
180
210
220
100
600
360
330
290
370
290
370
330
370
290
35
MOUNTED ONLY
FOR A3/FLEX
OTHER COUNTRIES
WITH VISION SYSTEM
W457
W456
A450
A452
270
280
370
290
240
440
365
260
1548136-4
274449

ECM: 274608 - 20061101
Group number: 1548136-0150
Assembly Drawing: 1548136-4_1_AA

This list covers pages from 8-88 to 8-91

Pos	Part No	UN	Qty	Description	Page No
A3/FLEX OTHER COUNTRIES (See drawing on page: 8-88)					
35	2658743-0100		1	ELECTRICAL CONNECTION	**8-93**
355	312605-0314		21	HEXAGON NUT, M6M M5 A280	
360	315105-0136		10	WASHER BRB 4,3X9 RFR	
365	315105-0146		25	WASHER BRB 5,3X10 RFR	
370	315105-0153		35	WASHER BRB 6,4X12 RFR	
500	90600-1233		1	INTOUCH OEM 3000 V.7.0/9,5 HW KEY	
800	312605-0310		16	HEXAGON NUT, M6M M3 A280	
810	315105-0124		16	WASHER BRB 3,2X7 RFR	
830	90165-0003		11	PIPE CLIP FOR TUBE D=4 MM	
A420	90459-0183		1	TRANSMITTER , TRANS T02 PCP	
P001	90459-6436		1	RECORDER 12-CHANNEL, LOGOSCREEN CF	
P003	90459-5187		1	CONDUCTIVITY TRANSMITTER CLM223-ID7105	
W153	90220-0183	MM	4500	SCR. CABLE 2X0,34MM2	
A3/FLEX USA (See drawing on page: 8-90)					
355	312605-0314		21	HEXAGON NUT, M6M M5 A280	
360	315105-0136		10	WASHER BRB 4,3X9 RFR	
365	315105-0146		25	WASHER BRB 5,3X10 RFR	
370	315105-0153		35	WASHER BRB 6,4X12 RFR	
500	90600-1233		1	INTOUCH OEM 3000 V.7.0/9,5 HW KEY	
800	312605-0310		16	HEXAGON NUT, M6M M3 A280	
810	315105-0124		16	WASHER BRB 3,2X7 RFR	
830	90165-0003		11	PIPE CLIP FOR TUBE D=4 MM	
A420	90459-0183		1	TRANSMITTER , TRANS T02 PCP	
P003	90459-5187		1	CONDUCTIVITY TRANSMITTER CLM223-ID7105	
P900	90332-0020		1	RECORDER, 6 CHANNELS 85-264VAC/DC	
	90332-0324		*1*	*INK WHEEL*	
	90332-0325		*1*	*PAPER FOR RECORDER 90332-20*	
	90332-0326		*1*	*DOWNLOADE INTRFACE FOR RECORDER 90332-20*	
	90332-0328		*1*	*RECORDER CASSETTE PAPER ROLL FOR 90332-2*	
P901	90332-0020		1	RECORDER, 6 CHANNELS 85-264VAC/DC	
	90332-0324		*1*	*INK WHEEL*	
	90332-0325		*1*	*PAPER FOR RECORDER 90332-20*	
	90332-0326		*1*	*DOWNLOADE INTRFACE FOR RECORDER 90332-20*	
	90332-0328		*1*	*RECORDER CASSETTE PAPER ROLL FOR 90332-2*	
W153	90220-0183	MM	4500	SCR. CABLE 2X0,34MM2	
Common Parts					
010	1532901-0100		1	PLINTH	**8-95**
020	1532906-0100		1	RACK	**8-97**
040	1038355-0000		1	FRAME	
050	312105-0364		4	SCREW M6S ISO 4017 M6X10 A480	
070	971346-0000		2	GUIDE PIN	
080	495377-0000		2	BUSH	
100	2765461-0000		1	SWING FRAME	
110	312125-0376		4	SCREW ISO 1207 M6X35 A4	
120	359240-0100		4	SIGN HOLDER FOR 359240-0001	
140	2558939-0000		1	CABLE DUCT	
150	2558938-0000		3	CABLE DUCT	
160	2558941-0000		1	DIVIDER	
170	90017-0017		1	HANDLE, NO. 547-128	
180	90237-0319		1	LOCK HOUSING, 1000-U134	
190	2558940-0000		1	DIVIDER	
210	90237-0157		1	LOCK BOLT, 1000-230	
220	90237-0320		1	LOCK HOUSING, 1000-U136	
240	970215-0000		2	STOP BLOCK	
260	312125-0335		4	SCREW ISO 1207 M5X30 A4	
270	90194-0152		3	SIGN, EARTH	
280	2780072-0000		1	RAIL	
290	312605-0316		22	HEXAGON NUT, M6M M6 A280	
300	2601232-0000		1	FRAME	
310	312105-0366		2	SCREW M6S ISO 4017 M6X12 A480	
320	90135-0035		3	EARTH WIRE, L=250 MM 16 MM2	
330	90062-0022		18	LOCKING WASHER D=6,4/11	
350	312605-0312		2	HEXAGON NUT, M6M M4 A280	
380	312125-0325		2	SCREW ISO 1207 M5X10 A4	
390	90181-0064		6	LOCK ZP1 FOR CHANNEL T1	
400	352113-0205		3	ANCHOR PLATES FOR STRIPS, TYPE TM2S8-C10	
410	312132-0287		3	SCREW SLOT. PAN HEAD MSCS M4X8	
430	90287-0124		12	SCREW PAN HEAD MSCS M4X12 NYLON	
440	1548116-0000		2	SPACER	
450	359241-0201		1	SIGN: " HOUR METER"	
460	359241-0482		1	SIGN "PACKAGE COUNTER"	
490	311520-0320		8	RIVET, BLANK 2,4X6	
510	2530284-0000		1	GASKET	
520	2530285-0000		1	GASKET	
530	2563173-0000		4	PROFILE	
540	2563174-0000		1	PROFILE	
600	312125-0289		4	SCREW ISO 1207 M4X10 A4	
610	2601230-0000		4	BRACKET	
620	2606216-0000		1	BRACKET	
630	2608177-0000		3	SIGN	
660	2675521-0000		1	RAIL	
710	312125-0285		4	SCREW ISO 1207 M4X6 A4	
750	90459-1738		1	MANDATORY ACTION SIGN ISO, READ MAINTENA	

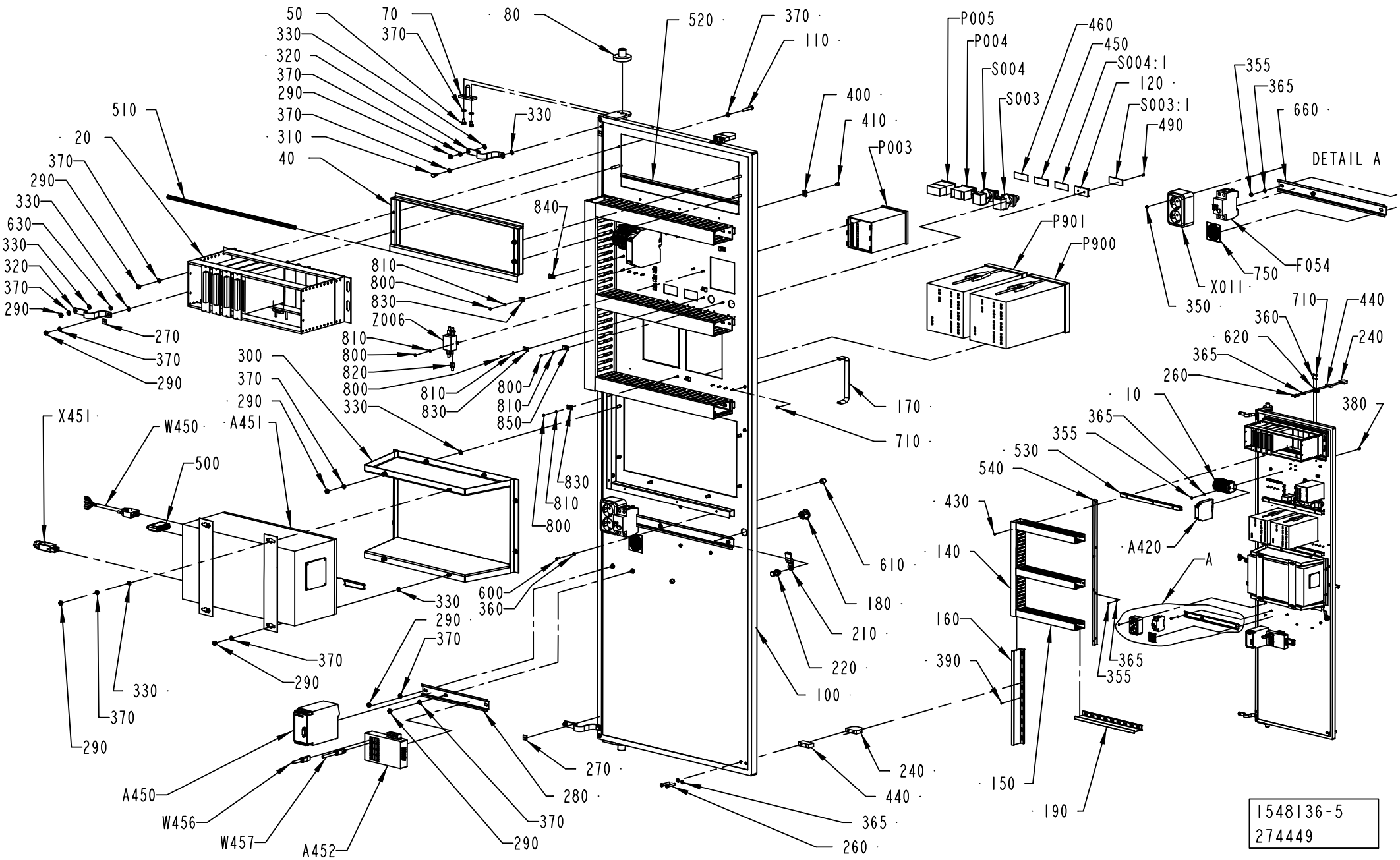
50
330
320
370
290
370
310
40
70
370
80
330
520
370
110
400
410
P003
P005
P004
S004
S003
460
450
S004:1
120
S003:1
490
355
365
660
DETAIL A
P901
P900
F054
750
X011
350
510
20
370
290
330
630
330
320
370
290
270
370
290
840
810
800
830
Z006
810
800
820
800
810
830
800
810
850
300
370
290
A451
330
X451
W450
500
170
710
610
180
210
220
100
600
360
330
290
370
290
330
370
290
370
290
A450
W456
W457
A452
270
280
370
290
240
440
365
260
710
440
360
620
240
365
260
380
10
365
355
530
540
430
140
160
390
A420
A
365
355
150
190
1548136-5
274449

Pos	Part No	UN	Qty	Description	Page No
Common Parts (Cont'd)					
820	90459-3352		5	FLAT PIN SOCKET, 6,3X0,8	
840	90165-0024		1	PIPE CLIP FOR TUBE D=5 MM	
850	90165-0057		2	PIPE CLIP FOR TUBE D=6 MM	
A450	90453-0002		1	MODEM MD-12 DC	
A451	2518145-0101		1	FLEXBOX TETRA BRIK	**8-99**
A452	90459-6858		1	ETHERNET SW, FL SWITCH SF 8TX FROM V 14	
F054	90459-5811		1	RESIDUAL CURRENT DEVICE, FI-25/2/003-A	
P004	90053-0031		1	HOUR COUNTER, B 609.10 10-50VDC	
P005	90053-0029		1	COUNTER, F524.800FA3C 24VDC	
S003	90111-0122		1	KEY SWITCH, 2 NO CONTACTS	
S003:1	359241-0133		1	SIGN: " SERVICE SWITCH"	
S004	90111-0124		1	KEY SWITCH, 1NO,1NC CONTACT	
S004:1	359241-0122		1	SIGN: " CLEANING STEAM BARRIER SPACE"	
W151	90220-0183	MM	4500	SCR. CABLE 2X0,34MM2	
W152	90220-0183	MM	4800	SCR. CABLE 2X0,34MM2	
W450	1254442-0000		1	CABLE SERIAL	
W456	90459-1621		1	CABLE, ETHERNET RJ 45 CONNECT. 1 M	
W457	90220-0180		1	CABLE, ETHERNET RJ 45 CONNECT. 3 M	
X011	90001-0033		1	WALL SOCKET OUTLET	
X451	90110-0028		1	CONTACT UNIT 4-POLEADAPTER	
Z006	90459-1359		1	FILTER, 1 A, 250 VAC	

Pos	Part No	UN	Qty	Description	Page No

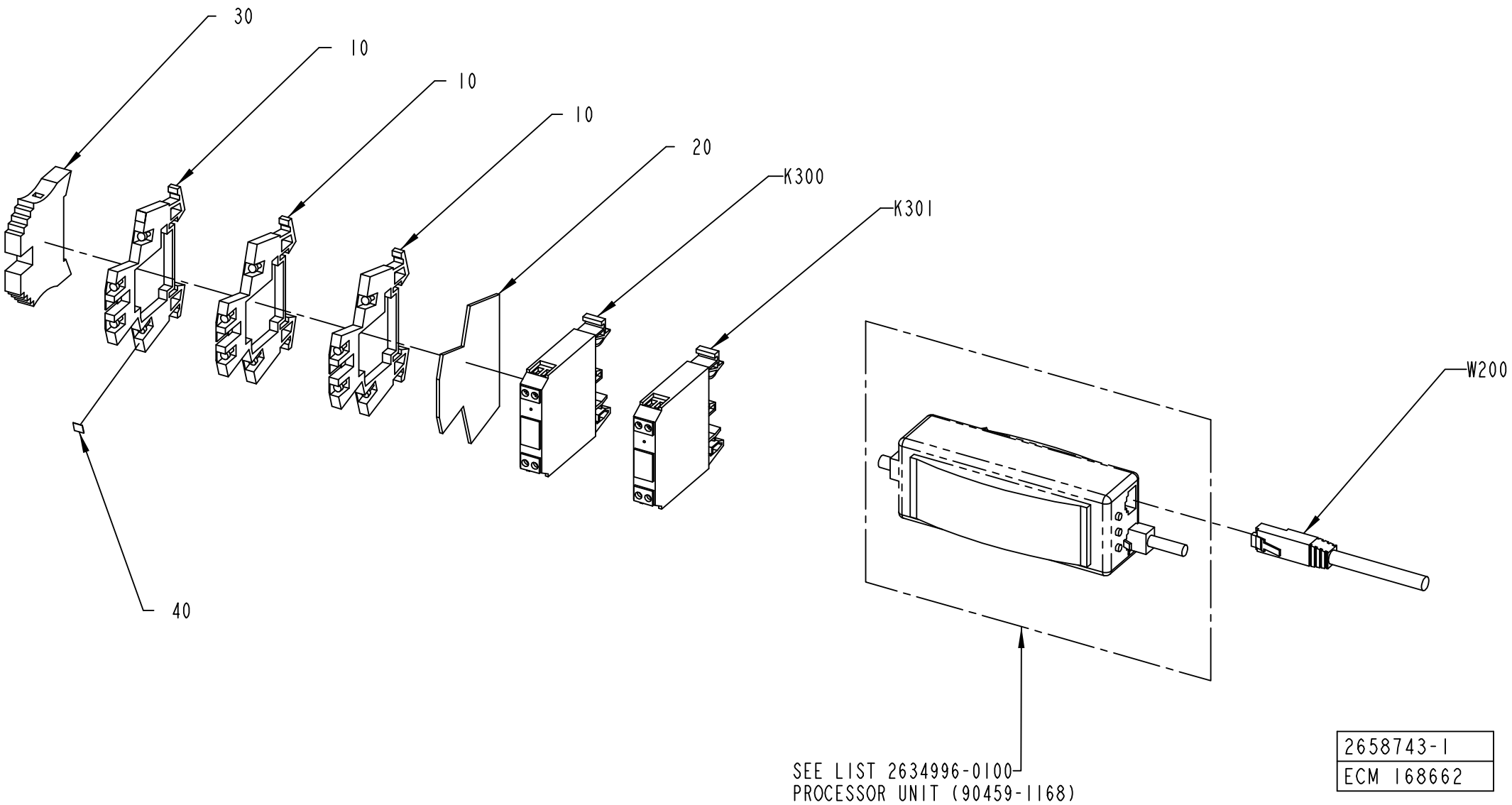
30
10
10
10
20
K300
K301
40
W200
SEE LIST 2634996-0100
PROCESSOR UNIT (90459-1168)
2658743-1
ECM 168662

ECM: 185596 - 20041104
Group number: 2658743-0100
Assembly Drawing: 2658743-1_1_AB

Pos	Part No	UN	Qty	Description	Page No
VISION SYSTEM					
010	90077-0113		3	FEED THROUGH TERMINAL, 10-00102150-1	
020	90077-0114		1	END PLATE, WAP/WDK 2,5	
030	353031-0203		1	END SUPPORT, WEW 35/2	
040	359011-0807		2	MARKING PLATES 5-FW 1-50	
K300	90119-0063		1	OPTO-RELAY, DC/DC AMMS-10-1/30VDC	
K301	90119-0063		1	OPTO-RELAY, DC/DC AMMS-10-1/30VDC	
W200	90459-1621		1	CABLE, ETHERNET RJ 45 CONNECT. 1 M	

Pos	Part No	UN	Qty	Description	Page No

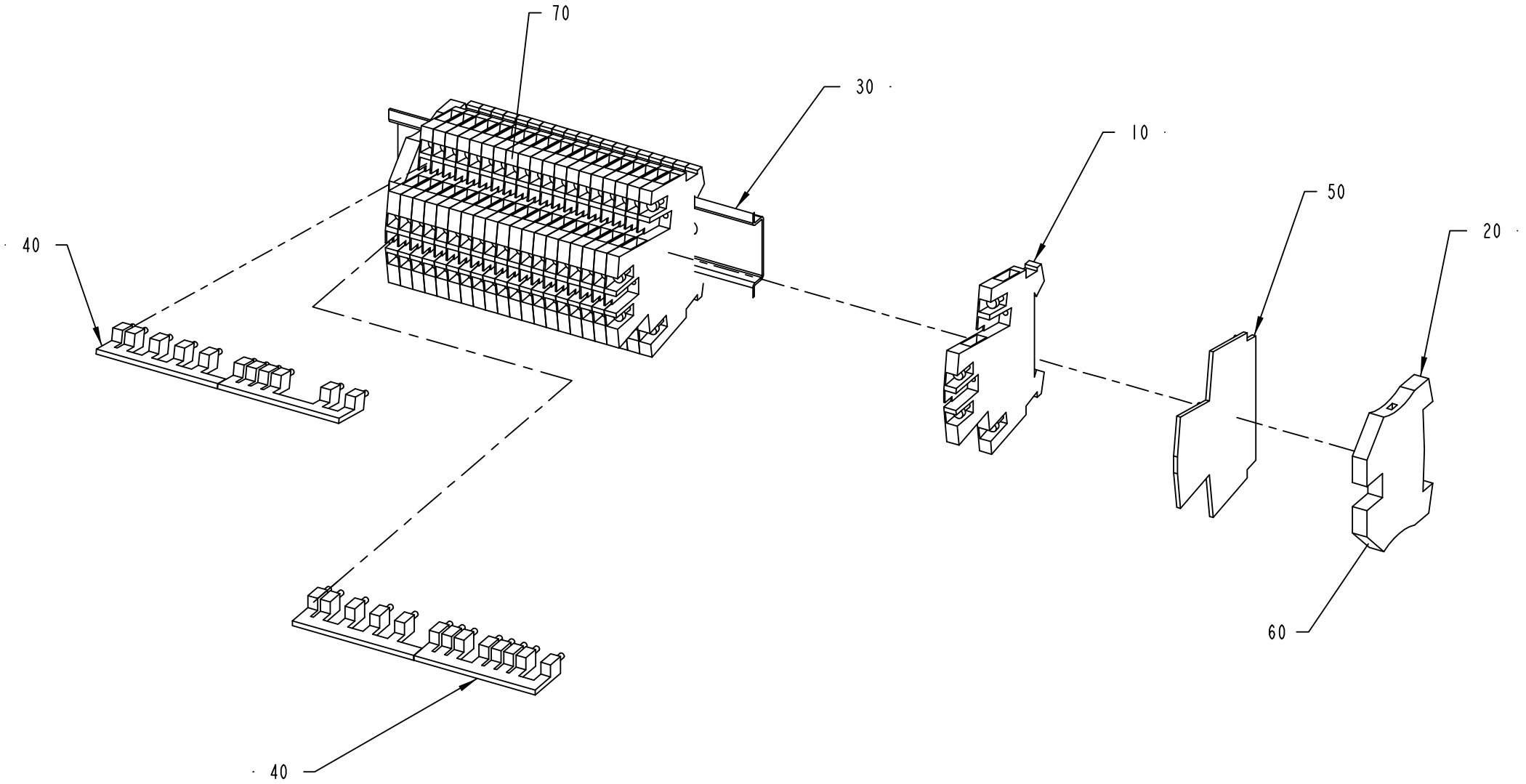

1532901-1
ECM 117324

ECM: 184921 - 20040928
Group number: 1532901-0100
Assembly Drawing: 1532901-1_1_AA

Pos	Part No	UN	Qty	Description	Page No
-					
010	353021-0120		20	FEED THROUGH TERMINAL, 10215.8	
020	353024-0205		2	EARTH TERMINAL, 1010.1	
030	2558937-0000		1	RAIL	
040	353034-0030		4	BRIDGE CONNECTOR WQV 2,5/10, 10544.6	
050	353032-0010		1	END PLATE WAP	
060	359011-0834		1	SET OF SIGNS 6-GW(EARTH)	
070	359011-0807		2	MARKING PLATES 5-FW 1-50	

Pos	Part No	UN	Qty	Description	Page No

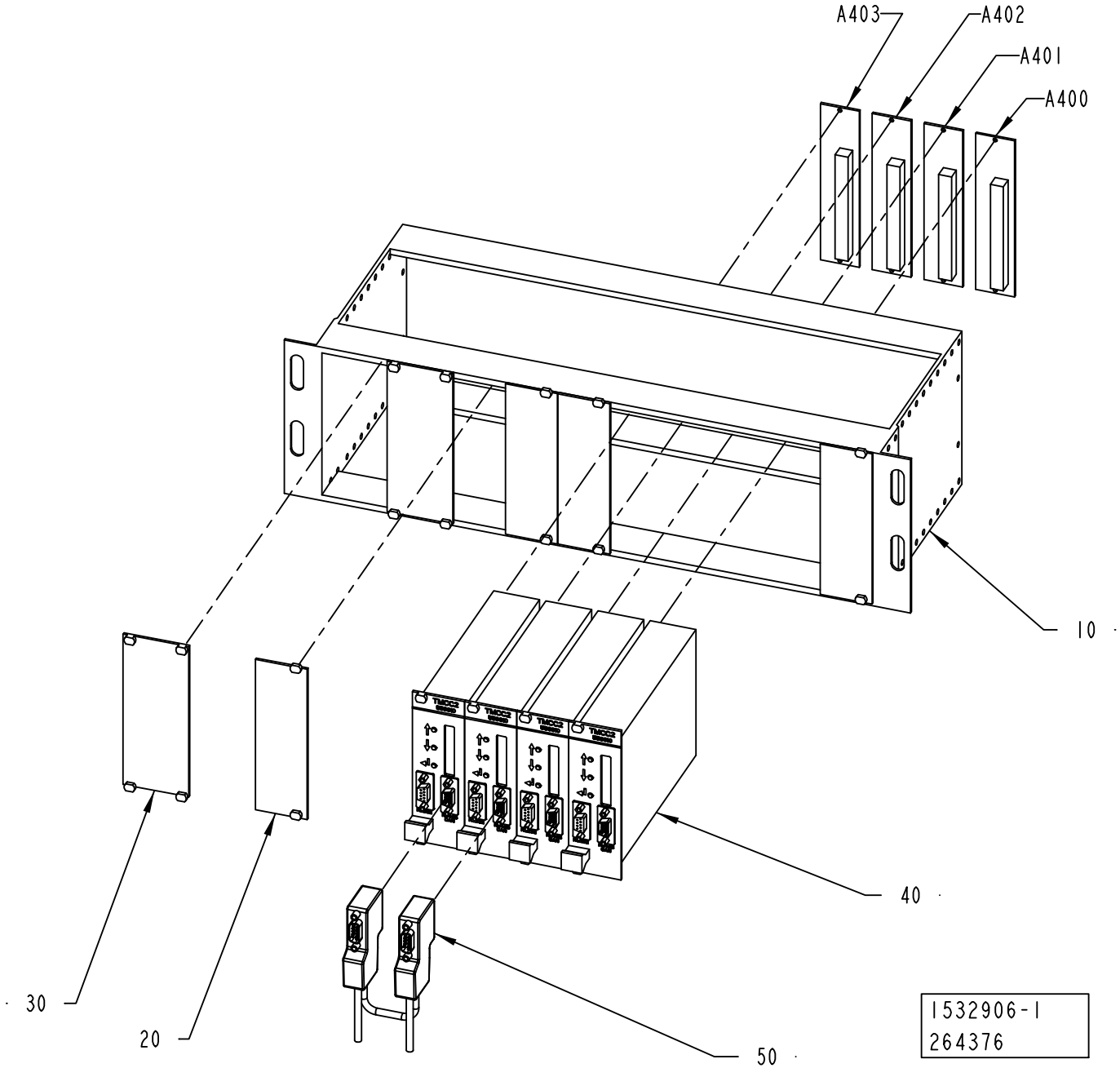
A403
A402
A401
A400
10
40
30
20
50
1532906-1
264376

ECM: 273034 - 20061101
Group number: 1532906-0100
Assembly Drawing: 1532906-1_1_AB

Pos	Part No	UN	Qty	Description	Page No
A3/FLEX					
020	68445-0104		4	FRONT PLATE 8 TE	
010 4	*543921-0004*		*1*	*COMPONENTS WITHOUT TP-NO*	
030	68445-0105		2	FRONT PLATE 10TE	
010 5	*543921-0005*		*1*	*COMPONENTS WITHOUT TP-NO*	
040	559810-0101		4	TMCC2 CONTROLLER	
010	*559809-0101*		*1*	*CIRCUIT BOARD*	
020	*2524654-0000*		*1*	*PLATE*	
030	*2524660-0000*		*1*	*CASING*	
070	*2524662-0000*		*1*	*COOLING BLOCK*	
100	*2524658-0000*		*1*	*COVER*	
170	*2524659-0000*		*1*	*CABLE*	
050	2846698-0000		1	CABLE	
A400	68262-0101		1	BACKPLANE FRONT RACK 8TE	
100	*543371-0000*		*1*	*CIRCUIT BOARD 8TE*	
110	*551927-0001*		*1*	*COMPONENTS WITHOUT TP-NO*	
120	*551928-0000*		*1*	*TERMINAL LABELS 8TE*	
A401	68262-0101		1	BACKPLANE FRONT RACK 8TE	
100	*543371-0000*		*1*	*CIRCUIT BOARD 8TE*	
110	*551927-0001*		*1*	*COMPONENTS WITHOUT TP-NO*	
120	*551928-0000*		*1*	*TERMINAL LABELS 8TE*	
A402	68262-0101		1	BACKPLANE FRONT RACK 8TE	
100	*543371-0000*		*1*	*CIRCUIT BOARD 8TE*	
110	*551927-0001*		*1*	*COMPONENTS WITHOUT TP-NO*	
120	*551928-0000*		*1*	*TERMINAL LABELS 8TE*	
A403	68262-0101		1	BACKPLANE FRONT RACK 8TE	
100	*543371-0000*		*1*	*CIRCUIT BOARD 8TE*	
110	*551927-0001*		*1*	*COMPONENTS WITHOUT TP-NO*	
120	*551928-0000*		*1*	*TERMINAL LABELS 8TE*	
Common Parts					
010	67388-0102		1	RACK FRONTMOUNTED 84TE	
020 2	*542038-0002*		*1*	*COMPONENTS WITHOUT TP-NO*	

Pos	Part No	UN	Qty	Description	Page No

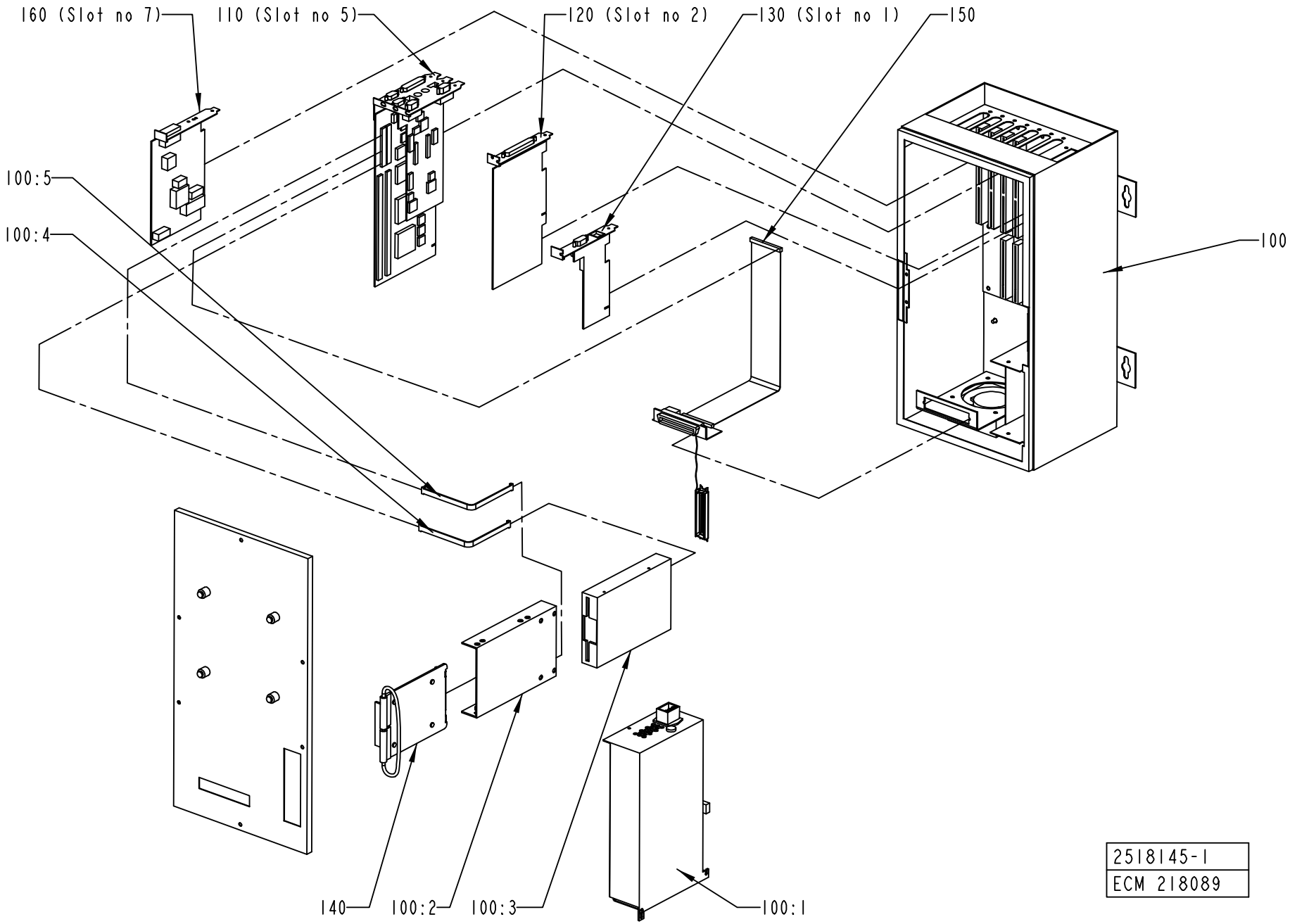
160 (Slot no 7)
110 (Slot no 5)
120 (Slot no 2)
130 (Slot no 1)
150
100:5
100:4
100
140
100:2
100:3
100:1
2518145-1
ECM 218089

ECM: 236016 - 20051006
Group number: 2518145-0101
Assembly Drawing: 2518145-1_1_AC

Pos	Part No	UN	Qty	Description	Page No
-					
100	90459-0275		1	PC ENCLOSURE FLEX BOX ISC E100008A	**8-101**
110	90459-0284		1	PROCESSOR BOARD CLIPS V, UO36418C	
120	90459-1352		1	PCI COMMUNICATION INTERFACE PCI-1612B-A	
130	90459-0261		1	ETHERNET NETWORK INTERFACE CARD 50101034	
140	90459-6472		1	HARD DISC 2,5" , 03589-000	
150	90459-0291		1	CABLE CD UNIT 50400002	

Pos	Part No	UN	Qty	Description	Page No

PC ENCLOSURE FLEX BOX ISC E100008A

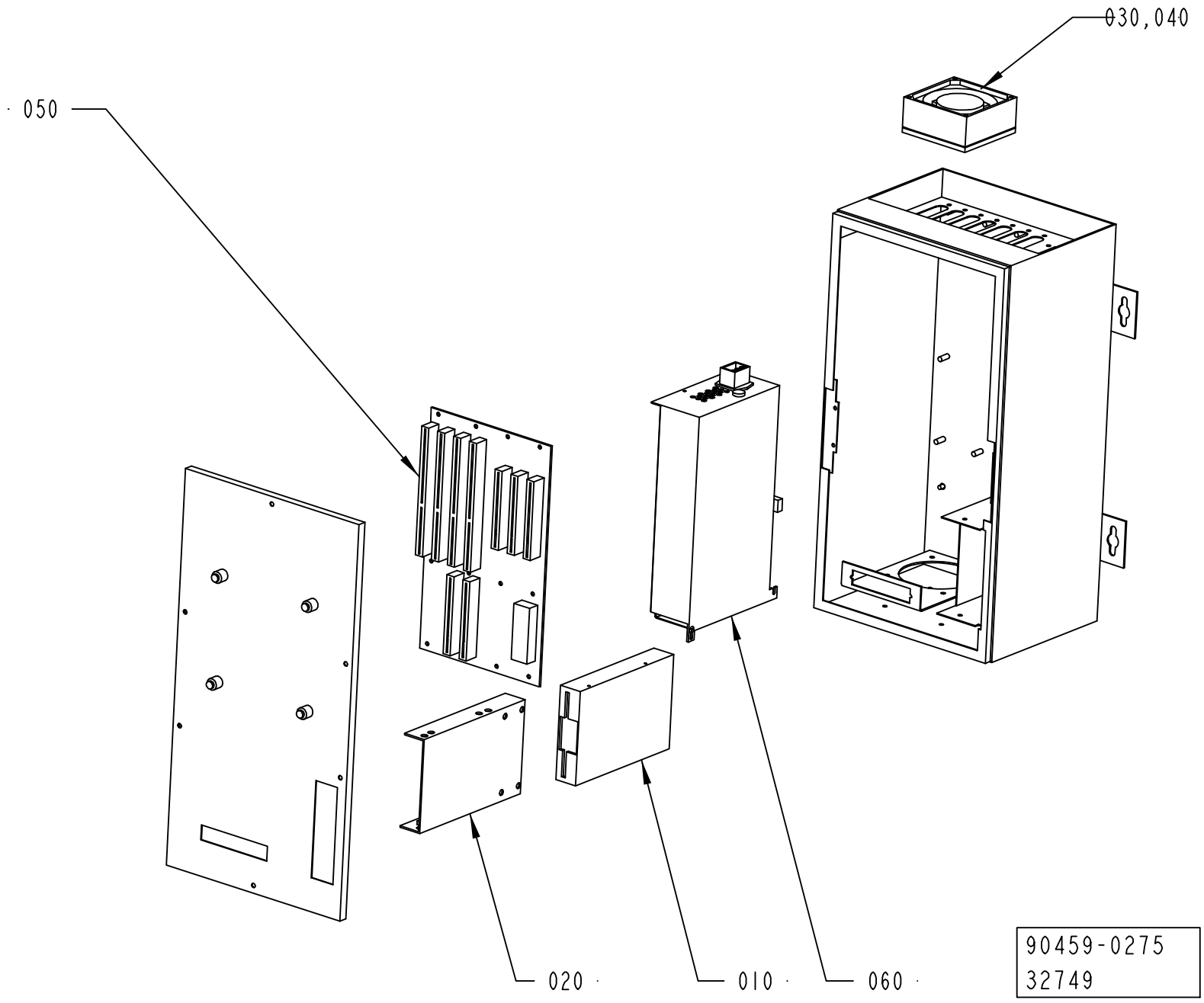

ECM: 190912 - 20041104
Group number: 90459-0275
Assembly Drawing: 90459-275_1_AB

Pos	Part No	UN	Qty	Description	Page No
-					
010	90041-0029		1	FLOPPY DISC UNIT FD-235HF 1,4MB	
020	90041-0091		1	PC 2,5" HD BAY, 3016-0028-013	
030	90264-0064		1	FAN / FL 12G308	
040	90264-0350		1	FILTER / 554141	
050	90459-0262		1	BACKPLANE CARD AR-MB7P	
060	90459-0283		1	POWER SUPPLY UNIT UO36422A	

Pos	Part No	UN	Qty	Description	Page No

Machine Type | Group Description | Used-In | Group Number | Page No

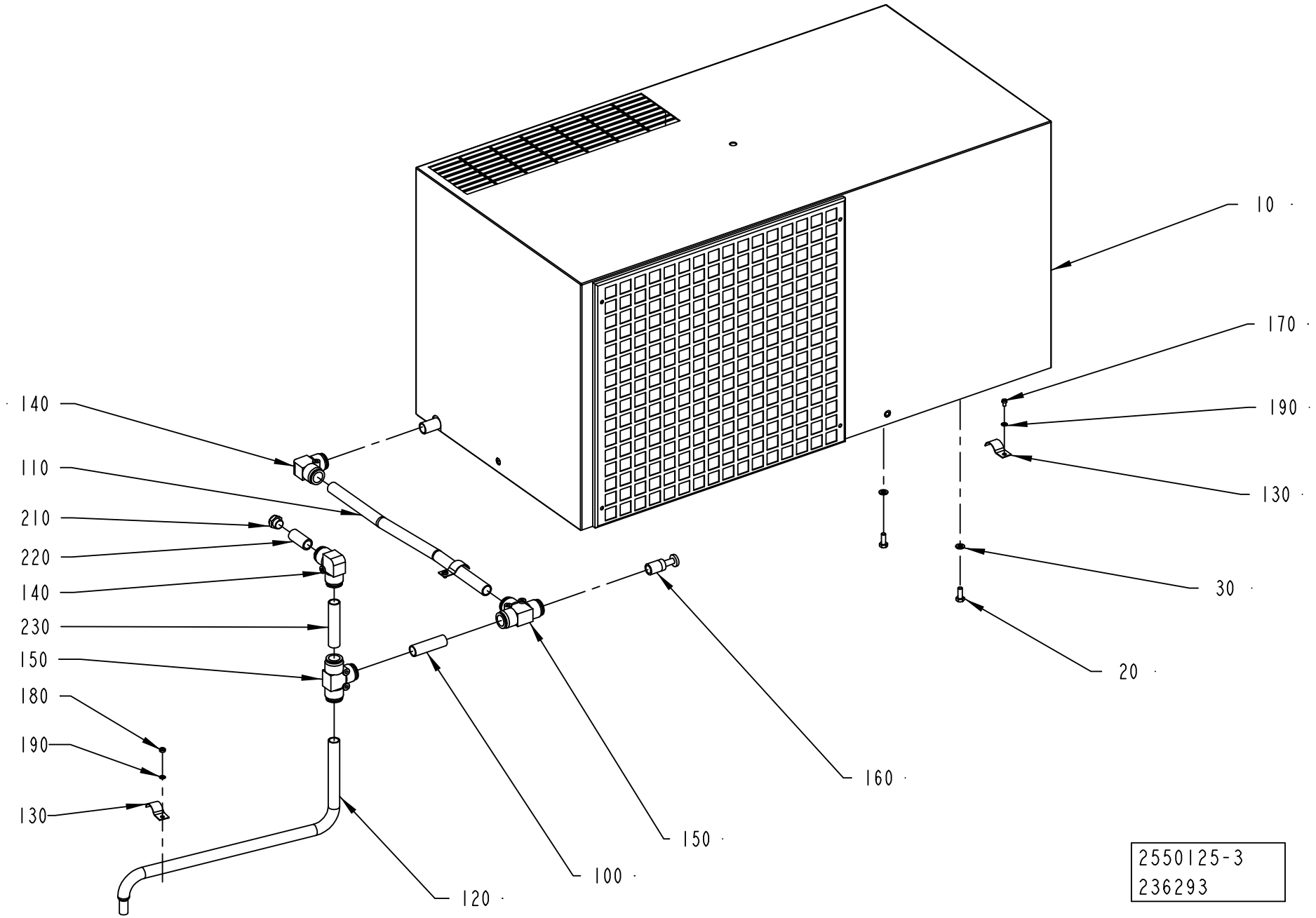
10
170
190
130
30
20
140
110
210
220
140
230
150
180
190
130
160
150
100
120
2550125-3
236293

ECM: 260073 - 20060412
Group number: 2550125-0100
Assembly Drawing: 2550125-3_1_AA

Pos	Part No	UN	Qty	Description	Page No
A3/FLEX					
100	2601580-0000		1	HOSE	
110	2601581-0000		1	HOSE	
120	2601582-0000		1	HOSE	
130	90074-0011		3	CABLE CLIPS, D=14 MM	
140	90459-2553		2	ELBOW PIPE JOINT 16 MM	
180	312605-0312		1	HEXAGON NUT, M6M M4 A280	
190	315105-0136		3	WASHER BRB 4,3X9 RFR	
Common Parts					
010	90459-0363		1	COOLING UNIT, KB40A0721.03	
	90459-0364		*1*	*FILTER KB20/30/40 POLYURETH. FILTER 2001*	
	90600-0670		*1*	*FAN, VBA0001508*	
	90600-0672		*1*	*FAN, VBA0001499*	
	90600-0673		*1*	*THERMOSTAT, KELVIN TMI0000218*	
	90600-0675		*1*	*GASKET, A6411AA*	
	90600-0676		*1*	*GRID, DISA1880AA*	
020	312105-0368		6	SCREW M6S ISO 4017 M6X16 A480	
030	315105-0153		6	WASHER BRB 6,4X12 RFR	
150	90459-2555		2	T-CONNECTION 16MM	
160	90459-2557		1	BLIND PLUG 16 MM	
170	312125-0285		2	SCREW ISO 1207 M4X6 A4	
210	90257-0001		1	FILTER PLUG ART.NO.8145-00-140 TYPE F14	
220	2800104-0000		1	HOSE	
230	2800116-0000		1	HOSE	

Pos	Part No	UN	Qty	Description	Page No

This page is intentionally left blank.

ECM: 205009 - 20050131
Group number: 2576334-0100
Assembly Drawing:

Pos	Part No	UN	Qty	Description	Page No
-					
010	90453-0001		1	MODEM MA-12	
020	90041-0068		1	DATACABLE MODEM PC	
030	90220-0091	M	200	PAIR TWISTED CABLE 2X2X0,25MM2	
040	1190007-0402		1	PLMS RECEIVE	
050	82197-0103		1	UM DOCUMENT SERIAL COMUNICATION ONLY EN	
060	47937-0411		1	PLMS OFF-LINE PROGRAM	
0020	*2710271-0000*		*1*	*DOCUMENTATION DISKETTE*	
0030	*2710272-0000*		*1*	*LABELS, DISKETTE*	
0040	*2710273-0000*		*1*	*LABELS, CD*	
0050	*2710274-0000*		*1*	*SHORT FORM INSTRUCTIONS*	
0060	*47937-1411*		*1*	*SOFTWARE PLMS OFF-LINE*	
0070	*47937-2411*		*1*	*SOFTWARE 47937-1411 (PART 1)*	
0080	*47937-3411*		*1*	*SOFTWARE 47937-1411 (PART 2)*	
070	82351-0106		1	USER MANUAL PLMS OFF-LINE	

Pos	Part No	UN	Qty	Description	Page No

Machine Type | Group Description | Used-In | Group Number | Page No

Tetra Pak

SPC
Spare Parts Catalogue

This page is intentionally left blank.

ECM: 223568 - 20060701
Group number: 648561-0100
Assembly Drawing:

Pos	Part No	UN	Qty	Description	Page No
A3/FLEX DIMC/FLEX					
130	1558933-0000		1	FRAME	
140	90458-2138		2	SCREW M6S M12X120 A280	
150	312605-0322		4	HEXAGON NUT, M6M M12 A280	
160	315105-0178		4	WASHER BRB 13X24 RFR	
A3/FLEX NOPT, A3/FLEX NODIMC					
130	1558933-0000		1	FRAME	
140	90458-2138		2	SCREW M6S M12X120 A280	
150	312605-0322		4	HEXAGON NUT, M6M M12 A280	
160	315105-0178		4	WASHER BRB 13X24 RFR	
A3/FLEX PT/FLEX					
130	1558933-0000		2	FRAME	
140	90458-2138		4	SCREW M6S M12X120 A280	
150	312605-0322		8	HEXAGON NUT, M6M M12 A280	
160	315105-0178		8	WASHER BRB 13X24 RFR	
Common Parts					
010	2555393-0100		1	START-UP KIT	**9-5**
030	531345-0200		1	PERSONAL PROTECT. EQ H2O2	**9-27**
040	2574483-0200		1	TOOLS AND TEMPLATES	**9-29**
050	2544873-0100		1	CONNECTION PIPE	**9-35**
100	598878-0000		1	MACHINE SIGN 2 ADR. EEA	
110	311521-0142		4	BLANK RIVET 3,2X6	
120	2550979-0000		1	TRANSPORT EQUIPMENT	
170	312105-0503		2	SCREW M6S ISO 4014 M10X60 A480	
180	315105-0173		2	WASHER BRB 10,5X20 RFR	
200	90100-0303		1	SAM TO PC TEST MONITORING CABLE	
210	2764527-0100		1	ACCESSORIES	**9-37**

Pos	Part No	UN	Qty	Description	Page No

This page is intentionally left blank.

ECM: 129589 - 20030505
Group number: 2555393-0100
Assembly Drawing:

Pos	Part No	UN	Qty	Description	Page No
A3/FLEX QC					
020	2593831-0100		1	VOLUME KIT	**9-7, 9-9**
Common Parts					
010	2555394-0100		1	START-UP KIT	**9-11, 9-13, 9-15, 9-17, 9-19**
100	90296-0009		1	SILICONE GREASE DOW CORNING 150 GR.	
AS020	2592780-0000		1	DOLLY	
AS010	1484695-0000		1	KNIFE	
DS020	1548454-0000		8	DISC	
DS010	90296-0068		1	SHELL ALVANIA GREASE EP 2	
EC040	90459-1254		10	TUBE FUSE, 4A 500V	
EC030	90233-0027		3	TUBE FUSE, 16A	
	90233-0305		*1*	*INDICATOR*	
EC020	90233-0029		3	TUBE FUSE, 25A	
EC010	90233-0028		10	TUBE FUSE, 10A	
JS090	315202-0101		8	O-RING 3,1X1,6 MM	
JS080	315211-0103		4	BONDED SEAL SS/NBR90 M6	
JS070	312125-0295		2	SCREW ISO 1207 M4X20 A4	
JS060	312115-0297		8	SCREW ISO4762 M4X25 A4 80	
JS050	315211-0104		4	BONDED SEAL SS/NBR90 M8	
JS040	1036584-0000		4	WASHER	
JS030	107426-0000		4	GUIDE SLEEVE	
JS020	32544-0000		2	INSULATION NUT	
JS010	28509-0000		2	WASHER	
MB050	90036-0057		3	LIGHT BULB, BA9S 28V	
MB040	315229-0107		1	GASKETS, 73,9X80,9X3,7 MM 2"1/2 FD	
MB030	315229-0103		2	GASKETS, 23,1X30,1X3,7 MM 1" FDA	
MB020	315229-0104		2	GASKETS, 35,8X42,8X3,7 MM 1"1/2 FD	
MB010	315229-0105		5	GASKETS, 48,5X55,5X3,7 MM 2" FDA	
SU080	342850-0304		4	GASKET 35,4X49,1X5,2 1"1/2 FDA	
SU070	342850-0306		4	GASKET 60,3X76,1X5,2 MM 2"1/2 FDA	
SU060	925998-0000		2	DIAPHRAGM	
SU050	342850-0304		5	GASKET 35,4X49,1X5,2 1"1/2 FDA	
SU040	90217-0348		4	GASKET 35,4X46,8X4 MM	
SA010	1498047-0000		1	SEALING BLOCK	
SU030	1296879-0100		1	SEAL KIT	**9-21**
SU020	1296878-0100		1	SEAL KIT	**9-23**
SU010	1296877-0100		1	SEAL KIT	**9-25**

Pos	Part No	UN	Qty	Description	Page No

Machine Type	Group Description	Used-In	Group Number	Page No

This page is intentionally left blank.

ECM: 223573 - 20050701
Group number: 2593831-0100
Assembly Drawing:

This list covers pages from 9-6 to 9-9

Pos	Part No	UN	Qty	Description	Page No
TBA 0200B					
010	2594512-0103		2	VOLUME FLAP	
010	2594512-0105		2	VOLUME FLAP	
020	1548460-0103		2	VOLUME FLAP	
020	1548460-0105		2	VOLUME FLAP	
030	2527703-0103		1	GUIDE	
030	2527703-0104		1	GUIDE	
040	2527704-0103		1	GUIDE	
040	2527704-0104		1	GUIDE	
TBA 0200M					
010	2594512-0106		2	VOLUME FLAP	
020	1548460-0106		2	VOLUME FLAP	
030	2527703-0110		1	GUIDE	
040	2527704-0110		1	GUIDE	
TBA 0200SQ					
010	2594512-0111		2	VOLUME FLAP	
020	1548460-0111		2	VOLUME FLAP	
030	2527703-0128		1	GUIDE	
040	2527704-0128		1	GUIDE	
TBA 0250B					
010	2594512-0103		2	VOLUME FLAP	
010	2594512-0104		2	VOLUME FLAP	
020	1548460-0103		2	VOLUME FLAP	
020	1548460-0104		2	VOLUME FLAP	
030	2527703-0103		1	GUIDE	
030	2527703-0105		1	GUIDE	
040	2527704-0103		1	GUIDE	
040	2527704-0105		1	GUIDE	
TBA 0250S					
010	2594512-0107		2	VOLUME FLAP	
020	1548460-0107		2	VOLUME FLAP	
030	2527703-0111		1	GUIDE	
040	2527704-0111		1	GUIDE	
TBA 0250SQ					
010	2594512-0110		2	VOLUME FLAP	
020	1548460-0110		2	VOLUME FLAP	
030	2527703-0127		1	GUIDE	
040	2527704-0127		1	GUIDE	
TBA 0330S					
010	2594512-0104		2	VOLUME FLAP	
010	2594512-0105		2	VOLUME FLAP	
020	1548460-0104		2	VOLUME FLAP	
020	1548460-0105		2	VOLUME FLAP	
030	2527703-0104		1	GUIDE	
030	2527703-0105		1	GUIDE	
040	2527704-0104		1	GUIDE	
040	2527704-0105		1	GUIDE	
080	2603489-0000		8	BOTTOM	
TBA 0500B					
010	2594512-0101		2	VOLUME FLAP	
020	1548460-0101		2	VOLUME FLAP	
030	2527703-0101		1	GUIDE	
040	2527704-0101		1	GUIDE	
050	1285023-0000		1	SIDE PLATE	
060	1285022-0000		1	SIDE PLATE	
TBA 1000B					
010	2594512-0102		2	VOLUME FLAP	
020	1548460-0102		2	VOLUME FLAP	
030	2527703-0102		1	GUIDE	
040	2527704-0102		1	GUIDE	
050	2605993-0000		1	SIDE PLATE	
060	2605994-0000		1	SIDE PLATE	
TBA 1890S					
010	2695955-0102		2	VOLUME FLAP	
020	2695955-0102		2	VOLUME FLAP	
030	2527703-0109		1	GUIDE	
040	2527704-0109		1	GUIDE	
080	2616219-0000		8	BOTTOM	
TBA 2000S					
010	2695955-0101		2	VOLUME FLAP	
020	2695955-0101		2	VOLUME FLAP	
030	2527703-0108		1	GUIDE	
040	2527704-0108		1	GUIDE	
080	2616218-0000		8	BOTTOM	
TPA 0200SQ					
010	2594512-0108		2	VOLUME FLAP	
020	1548460-0108		2	VOLUME FLAP	
030	2527703-0120		1	GUIDE	
040	2527704-0120		1	GUIDE	
100	2705814-0102		1	PUSHER	
TPA 0250SQ					
010	2594512-0109		2	VOLUME FLAP	
020	1548460-0109		2	VOLUME FLAP	
030	2527703-0121		1	GUIDE	

Machine Type | Group Description | Used-In | Group Number | Page No

This page is intentionally left blank.

ECM: 223573 - 20050701
Group number: 2593831-0100
Assembly Drawing:

This list covers pages from 9-6 to 9-9

Pos	Part No	UN	Qty	Description	Page No
TPA 0250SQ (Cont'd)					
040	2527704-0121		1	GUIDE	
100	2705814-0101		1	PUSHER	
TPA 0750SQ					
010	2705813-0102		2	VOLUME FLAP	
020	2705812-0102		2	VOLUME FLAP	
030	2527703-0126		1	GUIDE	
040	2527704-0126		1	GUIDE	
080	2658240-0000		8	BOTTOM	
100	2705814-0104		1	PUSHER	
110	2658240-0000		8	BOTTOM	
TPA 1000SQ					
010	2705813-0101		2	VOLUME FLAP	
020	2705812-0101		2	VOLUME FLAP	
030	2527703-0125		1	GUIDE	
040	2527704-0125		1	GUIDE	
080	2663373-0000		8	BOTTOM	
100	2705814-0103		1	PUSHER	
110	2658239-0000		8	BOTTOM	

Pos	Part No	UN	Qty	Description	Page No

This page is intentionally left blank.

ECM: 268277 - 20060702
Group number: 2555394-0100
Assembly Drawing:

This list covers pages from 9-10 to 9-19

Pos	Part No	UN	Qty	Description	Page No
TPA 1000SQ NOQC HI					
JS060	1260659-0000		2	SPRING	
JS040	1348956-0000		2	KNIFE	
JS035	1539843-0000		6	VOLUME SHIM	
JS020	1520052-0000		8	INDUCTOR	
JS010	1520633-0002		12	DOLLY	
SU070	342850-0304		1	GASKET 35,4X49,1X5,2 1"1/2 FDA	
SU060	979813-0000		1	PLUG	
SU050	2529750-0000		1	COVERING PANEL	
SU040	2500081-0000		1	ELBOW PIPE	
SU030	315204-0219		2	O-RING 29,2X3 MM	
SU020	2529420-0000		1	SHAFT	
SU010	257330-0000		2	PRESSURE ROLLER	
TPA 1000SQ QC HI, TPA 0750SQ QC HI					
JS060	1260659-0000		2	SPRING	
JS040	1348956-0000		2	KNIFE	
JS035	2660390-0000		12	VOLUME SHIM	
JS030	2660393-0000		12	VOLUME SHIM	
JS020	2663377-0000		1	INDUCTOR	
JS020	2663378-0000		1	INDUCTOR	
JS010	1520633-0002		12	DOLLY	
SU070	342850-0304		1	GASKET 35,4X49,1X5,2 1"1/2 FDA	
SU060	979813-0000		1	PLUG	
SU050	2529750-0000		1	COVERING PANEL	
SU040	2500081-0000		1	ELBOW PIPE	
SU030	315204-0219		2	O-RING 29,2X3 MM	
SU020	2529420-0000		1	SHAFT	
SU010	257330-0000		2	PRESSURE ROLLER	
TBA 1000S NOMOLDEDCAP HI					
JS060	1260659-0000		2	SPRING	
JS040	1348955-0000		2	KNIFE	
JS030	1040755-0000		8	VOLUME SHIM	
JS020	1110937-0000		2	INDUCTOR	
JS010	1110083-0002		12	DOLLY	
SU070	342850-0304		1	GASKET 35,4X49,1X5,2 1"1/2 FDA	
SU060	979813-0000		1	PLUG	
SU050	2529750-0000		1	COVERING PANEL	
SU040	2500081-0000		1	ELBOW PIPE	
SU030	315204-0219		2	O-RING 29,2X3 MM	
SU020	2529419-0000		1	SHAFT	
SU010	499387-0000		3	PRESSURE ROLLER	
TBA 1000S NOMOLDEDCAP NOHI					
JS060	1260659-0000		2	SPRING	
JS040	1348955-0000		2	KNIFE	
JS030	1040755-0000		8	VOLUME SHIM	
JS020	1110937-0000		2	INDUCTOR	
JS010	1110083-0002		12	DOLLY	
SU030	315204-0219		2	O-RING 29,2X3 MM	
SU020	2529419-0000		1	SHAFT	
SU010	499387-0000		3	PRESSURE ROLLER	
TBA 1000S STDA7 HI					
	90240-0180		12	FLANGE BUSHING 10X14X15MM	
JS100	2767478-0004		2	ROLLER	
JS100	2767478-0001		2	ROLLER	
JS100	2767478-0003		2	ROLLER	
JS060	1260659-0000		2	SPRING	
JS040	1348955-0000		2	KNIFE	
JS030	1040755-0000		8	VOLUME SHIM	
JS020	2546474-0000		2	INDUCTOR	
JS010	1110083-0002		12	DOLLY	
SU070	342850-0304		1	GASKET 35,4X49,1X5,2 1"1/2 FDA	
SU060	979813-0000		1	PLUG	
SU050	2529750-0000		1	COVERING PANEL	
SU040	2500081-0000		1	ELBOW PIPE	
SU030	315204-0219		2	O-RING 29,2X3 MM	
SU020	2529419-0000		1	SHAFT	
SU010	499387-0000		3	PRESSURE ROLLER	
TBA 1000S STDA7 NOHI					
	90240-0180		12	FLANGE BUSHING 10X14X15MM	
JS100	2767478-0004		2	ROLLER	
JS100	2767478-0003		2	ROLLER	
JS100	2767478-0001		2	ROLLER	
JS060	1260659-0000		2	SPRING	
JS040	1348955-0000		2	KNIFE	
JS030	1040755-0000		8	VOLUME SHIM	
JS020	2546474-0000		2	INDUCTOR	
JS010	1110083-0002		12	DOLLY	
SU030	315204-0219		2	O-RING 29,2X3 MM	
SU020	2529419-0000		1	SHAFT	
SU010	499387-0000		3	PRESSURE ROLLER	
TBA 1000SQ HI					
JS060	1260659-0000		2	SPRING	
JS040	1348955-0000		2	KNIFE	
JS030	1487627-0000		8	VOLUME SHIM	

Machine Type | Group Description | Used-In | Group Number | Page No

This page is intentionally left blank.

Pos	Part No	UN	Qty	Description	Page No
TBA 1000SQ HI (Cont'd)					
JS020	1110936-0000		2	INDUCTOR	
JS010	1110083-0002		12	DOLLY	
SU070	342850-0304		1	GASKET 35,4X49,1X5,2 1"1/2 FDA	
SU060	979813-0000		1	PLUG	
SU050	2529750-0000		1	COVERING PANEL	
SU040	2500081-0000		1	ELBOW PIPE	
SU030	315204-0219		2	O-RING 29,2X3 MM	
SU020	2529420-0000		1	SHAFT	
SU010	257330-0000		3	PRESSURE ROLLER	
TBA 1000SQ NOHI					
JS060	1260659-0000		2	SPRING	
JS040	1348955-0000		2	KNIFE	
JS030	1487627-0000		8	VOLUME SHIM	
JS020	1110936-0000		2	INDUCTOR	
JS010	1110083-0002		12	DOLLY	
SU030	315204-0219		2	O-RING 29,2X3 MM	
SU020	2529420-0000		1	SHAFT	
SU010	257330-0000		3	PRESSURE ROLLER	
TBA 1500S HI					
JS060	1260659-0000		2	SPRING	
JS040	1348955-0000		2	KNIFE	
JS030	1349208-0000		8	VOLUME SHIM	
JS020	1110938-0000		2	INDUCTOR	
JS010	1110083-0002		12	DOLLY	
SU070	342850-0304		1	GASKET 35,4X49,1X5,2 1"1/2 FDA	
SU060	979813-0000		1	PLUG	
SU050	2529750-0000		1	COVERING PANEL	
SU040	2500081-0000		1	ELBOW PIPE	
SU030	315204-0219		2	O-RING 29,2X3 MM	
SU020	2523268-0000		1	SHAFT	
SU010	232979-0000		3	PRESSURE ROLLER (PAK OF 10)	
TBA 1500S NOHI					
JS060	1260659-0000		2	SPRING	
JS040	1348955-0000		2	KNIFE	
JS030	1349208-0000		8	VOLUME SHIM	
JS020	1110938-0000		2	INDUCTOR	
JS010	1110083-0002		12	DOLLY	
SU030	315204-0219		2	O-RING 29,2X3 MM	
SU020	2523268-0000		1	SHAFT	
SU010	232979-0000		3	PRESSURE ROLLER (PAK OF 10)	
TBA 1890S HI, TBA 2000S HI					
FF030	2664596-0000		2	CARRIER	
FF020	2650817-0000		4	SPRING	
FF010	2662142-0000		1	SPRING	
JS090	1549378-0000		2	SPRING	
JS080	2662166-0000		2	SPRING	
JS070	2662165-0000		2	SPRING	
JS060	927252-0000		2	COMPRESSION SPRING	
JS040	2664761-0000		2	KNIFE	
JS035	2672745-0000		8	VOLUME SHIM	
JS035	2594890-0000		8	VOLUME SHIM	
JS030	2594891-0000		8	VOLUME SHIM	
JS020	1533046-0000		2	INDUCTOR	
JS010	1520633-0005		12	DOLLY	
SU070	342850-0304		1	GASKET 35,4X49,1X5,2 1"1/2 FDA	
SU060	979813-0000		1	PLUG	
SU050	2529750-0000		1	COVERING PANEL	
SU040	2500081-0000		1	ELBOW PIPE	
SU030	315204-0223		2	O-RING 39,2X3 MM	
SU010	232979-0000		6	PRESSURE ROLLER (PAK OF 10)	
TPA 0200SQ QC HI, TPA 0250SQ QC HI					
JS060	1260659-0000		2	SPRING	
JS040	1348966-0000		2	KNIFE	
JS030	1549594-0000		16	VOLUME SHIM	
JS030	2674328-0000		16	VOLUME SHIM	
JS020	1110930-0000		2	INDUCTOR	
JS010	1110083-0002		12	DOLLY	
SU070	342850-0304		1	GASKET 35,4X49,1X5,2 1"1/2 FDA	
SU060	979813-0000		1	PLUG	
SU050	2529750-0000		1	COVERING PANEL	
SU040	2500081-0000		1	ELBOW PIPE	
SU030	315204-0219		2	O-RING 29,2X3 MM	
SU020	2529416-0000		1	SHAFT	
SU010	272479-0000		3	PRESSURE ROLLER	
TPA 0250SQ HI					
JS010	1110083-0002		12	DOLLY	
TPA 0330SQ HI					
JS060	1260659-0000		2	SPRING	
JS040	1348966-0000		2	KNIFE	
JS030	1539902-0000		8	VOLUME SHIM	
JS020	1520167-0000		2	INDUCTOR	
JS010	1110083-0002		12	DOLLY	
SU070	342850-0304		1	GASKET 35,4X49,1X5,2 1"1/2 FDA	

This page is intentionally left blank.

Pos	Part No	UN	Qty	Description	Page No
TPA 0330SQ HI (Cont'd)					
SU060	979813-0000		1	PLUG	
SU050	2529750-0000		1	COVERING PANEL	
SU040	2500081-0000		1	ELBOW PIPE	
SU030	315204-0215		2	O-RING 19,2X3 MM	
SU020	2529417-0000		1	SHAFT	
SU010	257330-0000		3	PRESSURE ROLLER	
TPA 0500SQ HI					
JS060	1260659-0000		2	SPRING	
JS040	1549828-0000		2	KNIFE	
JS030	1549830-0000		24	VOLUME SHIM	
JS020	2587467-0000		1	INDUCTOR	
JS020	2587466-0000		1	INDUCTOR	
JS010	1110083-0002		12	DOLLY	
SU070	342850-0304		1	GASKET 35,4X49,1X5,2 1"1/2 FDA	
SU060	979813-0000		1	PLUG	
SU050	2529750-0000		1	COVERING PANEL	
SU040	2500081-0000		1	ELBOW PIPE	
SU030	315204-0219		2	O-RING 29,2X3 MM	
SU020	2529420-0000		1	SHAFT	
SU010	257330-0000		3	PRESSURE ROLLER	
TPA 0500SQ NOHI					
JS060	1260659-0000		2	SPRING	
JS040	1549828-0000		2	KNIFE	
JS030	1549830-0000		24	VOLUME SHIM	
JS020	2587467-0000		1	INDUCTOR	
JS020	2587466-0000		1	INDUCTOR	
JS010	1110083-0002		12	DOLLY	
SU030	315204-0219		2	O-RING 29,2X3 MM	
SU020	2529420-0000		1	SHAFT	
SU010	257330-0000		3	PRESSURE ROLLER	
TBA 0200B HI, TBA 0250B HI, TBA 0330S HI					
JS060	1260659-0000		2	SPRING	
JS040	1348966-0000		2	KNIFE	
JS030	1538637-0000		8	VOLUME SHIM	
JS030	1346158-0000		8	VOLUME SHIM	
JS030	2654290-0000		8	VOLUME SHIM	
JS030	2605166-0000		8	VOLUME SHIM	
JS020	1110932-0000		2	INDUCTOR	
JS010	1110083-0002		12	DOLLY	
SU070	342850-0304		1	GASKET 35,4X49,1X5,2 1"1/2 FDA	
SU060	979813-0000		1	PLUG	
SU050	2529750-0000		1	COVERING PANEL	
SU040	2500081-0000		1	ELBOW PIPE	
SU030	315204-0215		2	O-RING 19,2X3 MM	
SU020	2529418-0000		1	SHAFT	
SU010	257330-0000		3	PRESSURE ROLLER	
TBA 0200S HI					
JS060	1260659-0000		2	SPRING	
JS040	1348966-0000		2	KNIFE	
JS030	1037735-0000		8	VOLUME SHIM	
JS020	1110930-0000		2	INDUCTOR	
JS010	1110083-0002		12	DOLLY	
SU070	342850-0304		1	GASKET 35,4X49,1X5,2 1"1/2 FDA	
SU060	979813-0000		1	PLUG	
SU050	2529750-0000		1	COVERING PANEL	
SU040	2500081-0000		1	ELBOW PIPE	
SU030	315204-0215		2	O-RING 19,2X3 MM	
SU020	2529416-0000		1	SHAFT	
SU010	272479-0000		3	PRESSURE ROLLER	
TBA 0200S NOHI					
JS060	1260659-0000		2	SPRING	
JS040	1348966-0000		2	KNIFE	
JS030	1037735-0000		8	VOLUME SHIM	
JS020	1110930-0000		2	INDUCTOR	
JS010	1110083-0002		12	DOLLY	
SU030	315204-0215		2	O-RING 19,2X3 MM	
SU020	2529416-0000		1	SHAFT	
SU010	272479-0000		3	PRESSURE ROLLER	
TBA 0200SQ NOHI, TBA 0250SQ NOHI					
JS060	1260659-0000		2	SPRING	
JS040	1348966-0000		2	KNIFE	
JS030	2678839-0000		16	VOLUME SHIM	
JS030	2678717-0000		16	VOLUME SHIM	
JS020	2767760-0000		2	INDUCTOR	
JS010	1566845-0002		12	DOLLY	
SU030	315204-0215		2	O-RING 19,2X3 MM	
SU020	2529418-0000		1	SHAFT	
SU010	2607089-0000		3	PRESSURE ROLLER	
TBA 0250B NOHI, TBA 0200B NOHI, TBA 0330S NOHI					
JS060	1260659-0000		2	SPRING	
JS040	1348966-0000		2	KNIFE	
JS030	2654290-0000		8	VOLUME SHIM	
JS030	1538637-0000		8	VOLUME SHIM	

Machine Type | Group Description | Used-In | Group Number | Page No

This page is intentionally left blank.

Pos	Part No	UN	Qty	Description	Page No
TBA 0250B NOHI, TBA 0200B NOHI, TBA 0330S NOHI (Cont'd)					
JS030	2605166-0000		8	VOLUME SHIM	
JS030	1346158-0000		8	VOLUME SHIM	
JS020	1110932-0000		2	INDUCTOR	
JS010	1110083-0002		12	DOLLY	
SU030	315204-0215		2	O-RING 19,2X3 MM	
SU020	2529418-0000		1	SHAFT	
SU010	257330-0000		3	PRESSURE ROLLER	
TBA 0250S HI, TBA 0200M HI					
JS040	1348966-0000		2	KNIFE	
JS030	2662169-0000		8	VOLUME SHIM	
JS030	2640139-0000		8	VOLUME SHIM	
JS020	1110931-0000		2	INDUCTOR	
JS010	1110083-0002		12	DOLLY	
SU070	342850-0304		1	GASKET 35,4X49,1X5,2 1"1/2 FDA	
SU060	979813-0000		1	PLUG	
SU050	2529750-0000		1	COVERING PANEL	
SU040	2500081-0000		1	ELBOW PIPE	
SU020	2529416-0000		1	SHAFT	
SU010	272479-0000		3	PRESSURE ROLLER	
TBA 0250S NOHI, TBA 0200M NOHI					
JS040	1348966-0000		2	KNIFE	
JS030	2662169-0000		8	VOLUME SHIM	
JS030	2640139-0000		8	VOLUME SHIM	
JS020	1110931-0000		2	INDUCTOR	
JS010	1110083-0002		12	DOLLY	
SU020	2529416-0000		1	SHAFT	
SU010	272479-0000		3	PRESSURE ROLLER	
TBA 0500B QC HI, TBA 1000B QC HI					
JS060	1260659-0000		2	SPRING	
JS040	1348955-0000		2	KNIFE	
JS030	1511337-0000		8	VOLUME SHIM	
JS030	1511336-0000		8	VOLUME SHIM	
JS020	1110938-0000		2	INDUCTOR	
JS010	1110083-0002		12	DOLLY	
SU070	342850-0304		1	GASKET 35,4X49,1X5,2 1"1/2 FDA	
SU060	979813-0000		1	PLUG	
SU050	2529750-0000		1	COVERING PANEL	
SU040	2500081-0000		1	ELBOW PIPE	
SU030	315204-0219		2	O-RING 29,2X3 MM	
SU020	2523268-0000		1	SHAFT	
SU010	232979-0000		3	PRESSURE ROLLER (PAK OF 10)	
TBA 0500B QC NOHI, TBA 1000B QC NOHI					
JS060	1260659-0000		2	SPRING	
JS040	1348955-0000		2	KNIFE	
JS030	1511337-0000		8	VOLUME SHIM	
JS030	1511336-0000		8	VOLUME SHIM	
JS020	1110938-0000		2	INDUCTOR	
JS010	1110083-0002		12	DOLLY	
SU030	315204-0219		2	O-RING 29,2X3 MM	
SU020	2523268-0000		1	SHAFT	
SU010	232979-0000		3	PRESSURE ROLLER (PAK OF 10)	
TBA 0500S HI					
JS060	1260659-0000		2	SPRING	
JS040	1348956-0000		2	KNIFE	
JS030	1511253-0000		8	VOLUME SHIM	
JS020	1110934-0000		2	INDUCTOR	
JS010	1110083-0002		12	DOLLY	
SU070	342850-0304		1	GASKET 35,4X49,1X5,2 1"1/2 FDA	
SU060	979813-0000		1	PLUG	
SU050	2529750-0000		1	COVERING PANEL	
SU040	2500081-0000		1	ELBOW PIPE	
SU030	315204-0219		2	O-RING 29,2X3 MM	
SU020	2529420-0000		1	SHAFT	
SU010	499387-0000		3	PRESSURE ROLLER	
TBA 0500S NOHI					
JS060	1260659-0000		2	SPRING	
JS040	1348956-0000		2	KNIFE	
JS030	1511253-0000		8	VOLUME SHIM	
JS020	1110934-0000		2	INDUCTOR	
JS010	1110083-0002		12	DOLLY	
SU030	315204-0219		2	O-RING 29,2X3 MM	
SU020	2529420-0000		1	SHAFT	
SU010	499387-0000		3	PRESSURE ROLLER	
TBA 1000B NOQC NOMOLDEDCAP HI					
JS060	1260659-0000		2	SPRING	
JS040	1348955-0000		2	KNIFE	
JS030	1035831-0000		8	VOLUME SHIM	
JS020	1110938-0000		2	INDUCTOR	
JS010	1110083-0002		12	DOLLY	
SU070	342850-0304		1	GASKET 35,4X49,1X5,2 1"1/2 FDA	
SU060	979813-0000		1	PLUG	
SU050	2529750-0000		1	COVERING PANEL	
SU040	2500081-0000		1	ELBOW PIPE	

This page is intentionally left blank.

Pos	Part No	UN	Qty	Description	Page No
TBA 1000B NOQC NOMOLDEDCAP HI (Cont'd)					
SU030	315204-0219		2	O-RING 29,2X3 MM	
SU020	2523268-0000		1	SHAFT	
SU010	232979-0000		3	PRESSURE ROLLER (PAK OF 10)	
TBA 1000B NOQC NOMOLDEDCAP NOHI					
JS060	1260659-0000		2	SPRING	
JS040	1348955-0000		2	KNIFE	
JS030	1035831-0000		8	VOLUME SHIM	
JS020	1110938-0000		2	INDUCTOR	
JS010	1110083-0002		12	DOLLY	
SU030	315204-0219		2	O-RING 29,2X3 MM	
SU020	2523268-0000		1	SHAFT	
SU010	232979-0000		3	PRESSURE ROLLER (PAK OF 10)	
TBA 1000B NOQC STDA7 HI					
	90240-0180		8	FLANGE BUSHING 10X14X15MM	
JS100	2767478-0003		2	ROLLER	
JS100	2767478-0002		2	ROLLER	
JS060	1260659-0000		2	SPRING	
JS040	1348955-0000		2	KNIFE	
JS030	1035831-0000		8	VOLUME SHIM	
JS020	2610956-0000		2	INDUCTOR	
JS010	1110083-0002		12	DOLLY	
SU070	342850-0304		1	GASKET 35,4X49,1X5,2 1"1/2 FDA	
SU060	979813-0000		1	PLUG	
SU050	2529750-0000		1	COVERING PANEL	
SU040	2500081-0000		1	ELBOW PIPE	
SU030	315204-0219		2	O-RING 29,2X3 MM	
SU020	2523268-0000		1	SHAFT	
SU010	232979-0000		3	PRESSURE ROLLER (PAK OF 10)	
TBA 1000B NOQC STDA7 NOHI					
	90240-0180		8	FLANGE BUSHING 10X14X15MM	
JS100	2767478-0002		2	ROLLER	
JS100	2767478-0003		2	ROLLER	
JS060	1260659-0000		2	SPRING	
JS040	1348955-0000		2	KNIFE	
JS030	1035831-0000		8	VOLUME SHIM	
JS020	2610956-0000		2	INDUCTOR	
JS010	1110083-0002		12	DOLLY	
SU030	315204-0219		2	O-RING 29,2X3 MM	
SU020	2523268-0000		1	SHAFT	
SU010	232979-0000		3	PRESSURE ROLLER (PAK OF 10)	
TBA 1000S LIGHTCAP					
	90240-0180		12	FLANGE BUSHING 10X14X15MM	
JS100	2767478-0001		2	ROLLER	
JS100	2767478-0003		2	ROLLER	
JS100	2767478-0004		2	ROLLER	
JS060	1260659-0000		2	SPRING	
JS040	1348955-0000		2	KNIFE	
JS030	1040755-0000		8	VOLUME SHIM	
JS020	2546474-0000		2	INDUCTOR	
JS010	1110083-0002		12	DOLLY	
SU080	2795266-0000		5	SEAL	
SU030	315204-0219		2	O-RING 29,2X3 MM	
SU020	2529419-0000		1	SHAFT	
SU010	499387-0000		3	PRESSURE ROLLER	
Common Parts					
JS050	1037254-0000		12	SHIM	

This page is intentionally left blank.

ECM: 70850 - 19970729
Group number: 1296879-0100
Assembly Drawing:

Pos	Part No	UN	Qty	Description	Page No
-					
090	90091-0237		3	ROD SEAL, GLIDORING 20X27,5X3 MM	
100	315204-0215		1	O-RING 19,2X3 MM	
120	90091-0238		2	WEAR RING 20X22X10 MM	
130	90091-0335		1	PISTON SEAL GLIDE RING 62,5X70X3 MM	
150	90091-0304		1	RADIAL SEAL 45X65X8 MM DUST LIP	

Pos	Part No	UN	Qty	Description	Page No

This page is intentionally left blank.

ECM: 70850 - 19970729
Group number: 1296878-0100
Assembly Drawing:

Pos	Part No	UN	Qty	Description	Page No
-					
080	90030-0336		2	CONN. STRAIGHT, 316L-12M-BVCO-3	
090	90091-0237		5	ROD SEAL, GLIDORING 20X27,5X3 MM	
100	315204-0215		2	O-RING 19,2X3 MM	
120	90091-0238		4	WEAR RING 20X22X10 MM	
140	315204-0308		2	O-RING 84,5X3 MM	

Pos	Part No	UN	Qty	Description	Page No

Machine Type	Group Description	Used-In	Group Number	Page No

This page is intentionally left blank.

ECM: 70850 - 19970729
Group number: 1296877-0100
Assembly Drawing:

Pos	Part No	UN	Qty	Description	Page No
-					
010	530589-0000		4	SEAL RING	
020	530588-0000		1	SEAL RING	
030	533169-0000		1	DIAPHRAGM	
040	539212-0000		1	GASKET	
050	90091-0266		2	SEAL RING 10,4X16,3X2,5 MM	
060	90207-0363		1	GASKET	
070	90207-0365		1	GASKET	
100	315204-0215		1	O-RING 19,2X3 MM	
110	315204-0301		1	O-RING 49,5X3 MM	

Pos	Part No	UN	Qty	Description	Page No

Machine Type	Group Description	Used-In	Group Number	Page No

This page is intentionally left blank.

ECM: 72190 - 19990628
Group number: 531345-0200
Assembly Drawing:

Pos	Part No	UN	Qty	Description	Page No
-					
	90303-0013		1	APRON	
	90303-0012		1	PROTECTIVE GLOVES	
	90303-0011		1	PROTECTIVE GOGGLES	

Pos	Part No	UN	Qty	Description	Page No

Machine Type	Group Description	Used-In	Group Number	Page No

This page is intentionally left blank.

ECM: 223567 - 20060701
Group number: 2574483-0200
Assembly Drawing:

Pos	Part No	UN	Qty	Description	Page No
-					
SU020	2793320-0100		1	TEMPLATE	**9-31**
SU010	1349914-0100		1	TEMPLATE FILLING PIPE	**9-33**

Pos	Part No	UN	Qty	Description	Page No

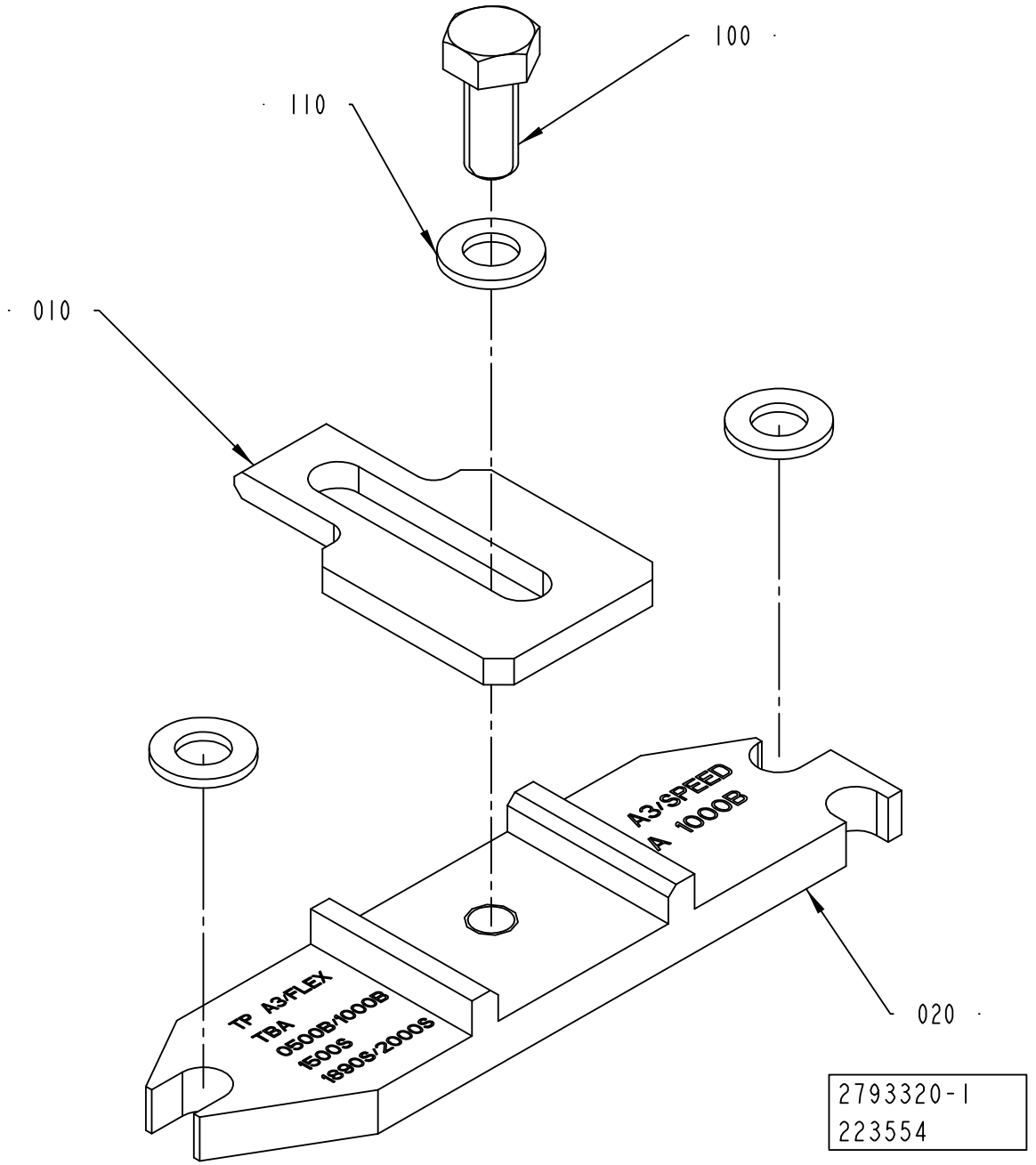
100
110
010
020
A3/SPEED
A 1000B
TP A3/FLEX
TBA
0500B/1000B
1500S
1890S/2000S
2793320-1
223554

ECM: 241083 - 20060701
Group number: 2793320-0100
Assembly Drawing: 2793320-1_1_AA

Pos	Part No	UN	Qty	Description	Page No
TBA 0200SQ, TBA 0250SQ					
020	2793331-0000		1	PLATE	
TBA 0250S, TBA 0200S, TBA 0200M					
020	2793325-0000		1	PLATE	
TBA 0330S, TBA 0200B, TBA 0250B					
020	2793328-0000		1	PLATE	
TBA 0500B, TBA 1000B, TBA 1500S, TBA 1890S, TBA 2000S					
020	2793321-0000		1	PLATE	
TBA 0500S					
020	2793326-0000		1	PLATE	
TBA 1000S					
020	2793322-0000		1	PLATE	
TBA 1000SQ					
020	2793319-0000		1	PLATE	
TPA 0250SQ, TPA 0200SQ					
020	2793327-0000		1	PLATE	
TPA 0330SQ					
020	2793324-0000		1	PLATE	
TPA 0500SQ					
020	2793323-0000		1	PLATE	
TPA 1000SQ, TPA 0750SQ, TPA 1000SQ NOQC					
020	2793329-0000		1	PLATE	
Common Parts					
010	2736719-0000		1	PLATE	
100	312105-0327		1	SCREW M6S ISO 4017 M5X12 A480	
110	315105-0146		3	WASHER BRB 5,3X10 RFR	

Pos	Part No	UN	Qty	Description	Page No

Machine Type	Group Description	Used-In	Group Number	Page No

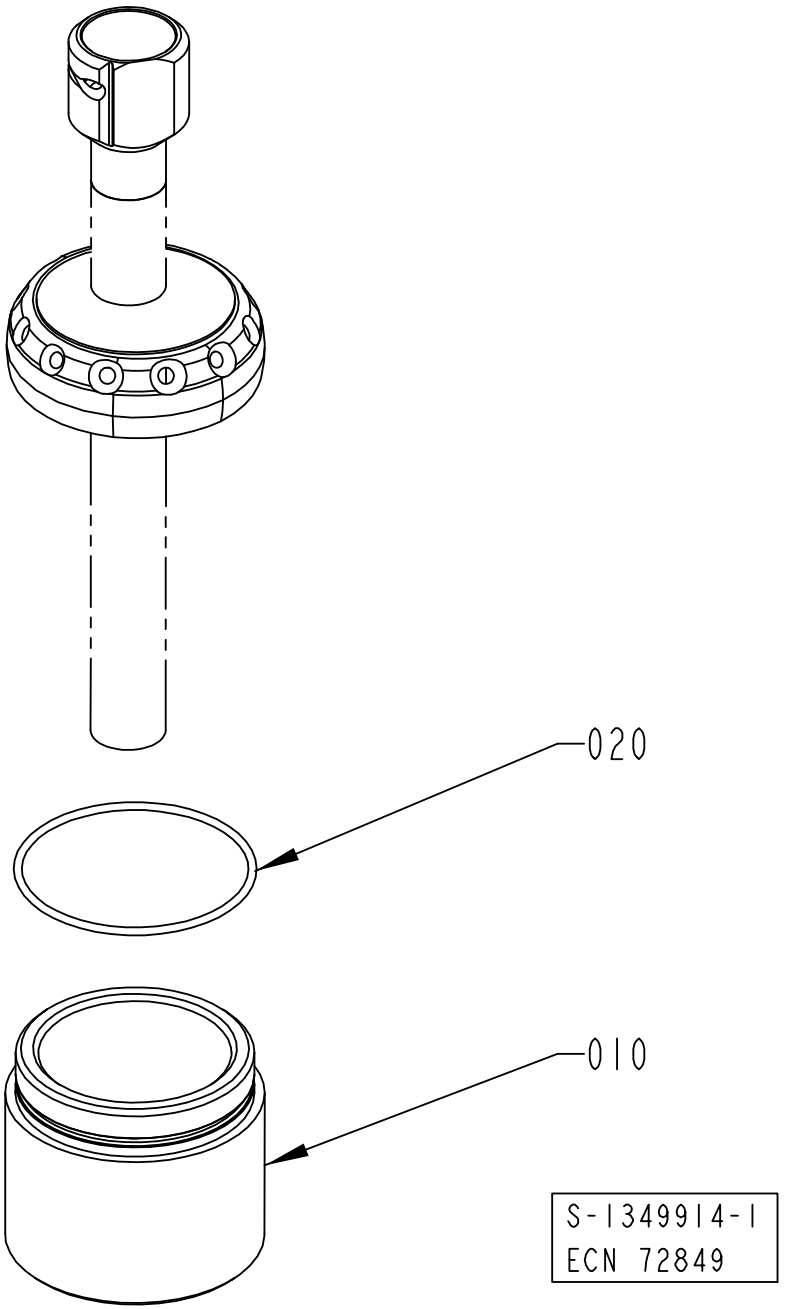
020
010
S-1349914-1
ECN 72849

ECM: 244262 - 20060701
Group number: 1349914-0100
Assembly Drawing: 1349914-1_1_AA

Pos	Part No	UN	Qty	Description	Page No
TBA 0200SQ, TBA 0250SQ					
010	2799729-0000		1	TEMPLATE	
020	315202-0217		1	O-RING 24,2X3 MM	
TBA 0250S, TBA 0200S, TBA 0200M, TPA 0250SQ, TPA 0200SQ					
010	1558304-0000		1	TEMPLATE	
020	315202-0214		1	O-RING 17,3X2,4 MM	
TBA 0330S, TBA 0200B, TBA 0250B					
010	1498149-0000		1	TEMPLATE	
020	315202-0217		1	O-RING 24,2X3 MM	
TBA 0500B QC, TBA 1000B QC					
010	2774372-0000		1	TEMPLATE	
020	315202-0233		1	O-RING 79,2X5,7 MM	
TBA 0500S					
010	1524840-0000		1	TEMPLATE	
020	315202-0303		1	O-RING 59,5X3 MM	
TBA 1000B STDA7					
010	2774374-0000		1	TEMPLATE	
020	315202-0308		1	O-RING 84,5X3 MM	
TBA 1000S NOMOLDEDCAP					
010	1498151-0000		1	TEMPLATE	
020	315202-0307		1	O-RING 79,5X3 MM	
TBA 1000S STDA7					
010	2774373-0000		1	TEMPLATE	
020	315202-0307		1	O-RING 79,5X3 MM	
TBA 1000SQ					
010	1517987-0000		1	TEMPLATE	
020	315202-0305		1	O-RING 69,5X3 MM	
TBA 1500S, TBA 1000B NOQC NOMOLDEDCAP					
010	1498150-0000		1	TEMPLATE	
020	315202-0308		1	O-RING 84,5X3 MM	
TBA 1890S, TBA 2000S					
010	2660843-0000		1	TEMPLATE	
020	315202-0310		1	O-RING 94,5X3 MM	
TPA 0330SQ					
010	1532299-0000		1	TEMPLATE	
020	315202-0217		1	O-RING 24,2X3 MM	
TPA 0500SQ					
010	2545352-0000		1	TEMPLATE	
020	315202-0302		1	O-RING 54,5X3 MM	
TPA 1000SQ, TPA 0750SQ					
010	1524841-0000		1	TEMPLATE	
020	315202-0303		1	O-RING 59,5X3 MM	

Pos	Part No	UN	Qty	Description	Page No

Machine Type | Group Description | Used-In | Group Number | Page No

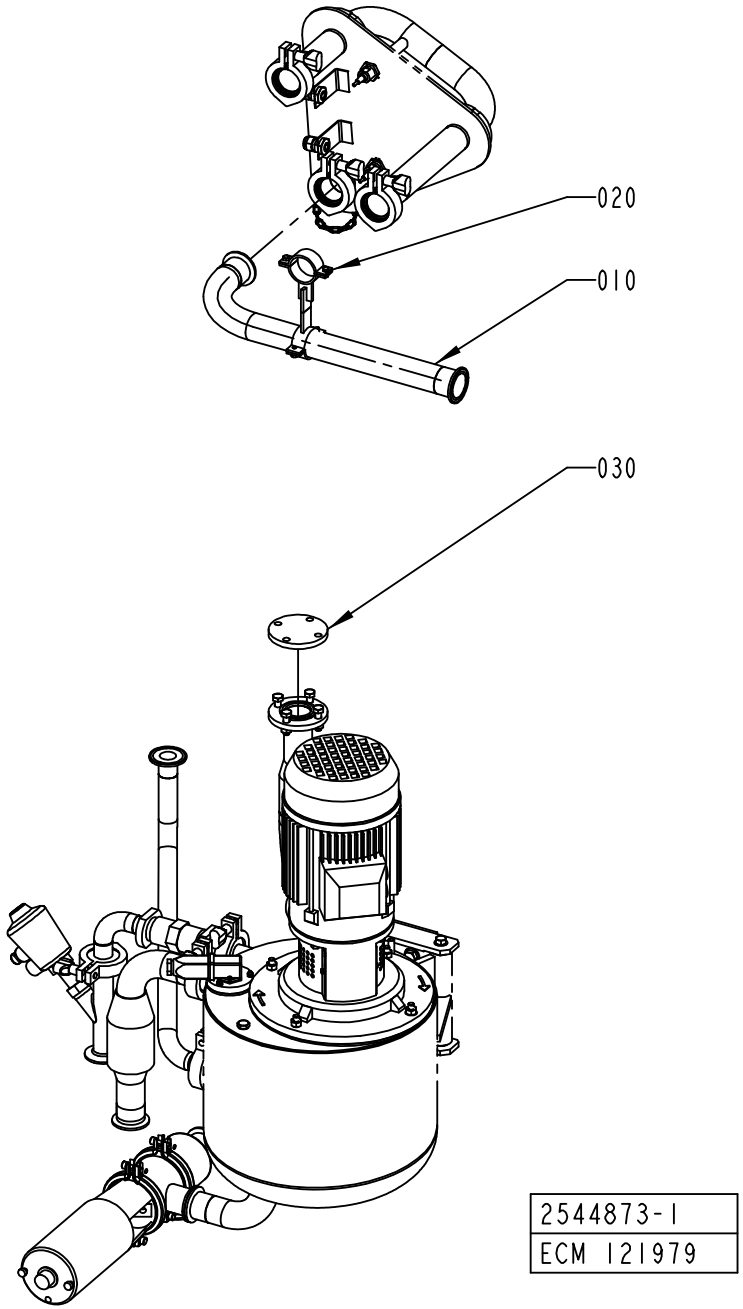
020
010
030
2544873-1
ECM 121979

ECM: 121994 - 20030403
Group number: 2544873-0100
Assembly Drawing: 2544873-1_1_AA

Pos	Part No	UN	Qty	Description	Page No
-					
010	2500089-0000		1	PIPE	
020	2539459-0000		1	HOLDER	
030	2539457-0000		1	LID	

Pos	Part No	UN	Qty	Description	Page No

This page is intentionally left blank.

ECM: 190637 - 20050520
Group number: 2764527-0100
Assembly Drawing:

Pos	Part No	UN	Qty	Description	Page No
A3/FLEX TBA 0250SQ QC, A3/FLEX TBA 0200SQ QC					
080	1512316-0000		1	ARM LEFT	
080	1512315-0000		1	ARM RIGHT	
200	1036617-0000		2	BRACKET	

Pos	Part No	UN	Qty	Description	Page No

Machine Type | Group Description | Used-In | Group Number | Page No

Tetra Pak

SPC
Spare Parts Catalogue

This page is intentionally left blank.

ECM: 252540 - 20060314
Group number: 648564-0100
Assembly Drawing:

Pos	Part No	UN	Qty	Description	Page No
-					
010	2556260-0200		1	TOOLS AND TEMPLATES	**10-5**
020	2556261-0100		1	ACCESSORIES	**10-67**
030	2812327-0100		1	CONTROL PANEL	**10-93**

Pos	Part No	UN	Qty	Description	Page No

Machine Type | Group Description | Used-In | Group Number | Page No

This page is intentionally left blank.

ECM: 254657 - 20060303
Group number: 2556260-0200
Assembly Drawing:

Pos	Part No	UN	Qty	Description	Page No
TBA 0330S, TBA 0200B, TBA 0250S, TBA 0200S, TBA 0200M, TBA 0250B, TPA 0330SQ					
SU070	2552154-0000		1	BRACKET	
TBA 0500B					
SU070	2552151-0000		1	BRACKET	
TBA 1000B					
DC020	2641204-0000		1	TEMPLATE	
SU070	2552151-0000		1	BRACKET	
TBA 1000S					
DC010	2641203-0000		1	TEMPLATE	
SU070	2552152-0000		1	BRACKET	
TBA 1000SQ					
SU070	2552153-0000		1	BRACKET	
TBA 1500S					
SU070	2552152-0000		1	BRACKET	
TBA 1890S, TBA 2000S					
SU090	90459-7315		1	PUSH DYNAMOMETER 20 - 200N, DT120	
TPA 0500SQ					
SU070	2685310-0000		1	BRACKET	
TPA 1000SQ, TPA 0750SQ					
SU090	90459-7315		1	PUSH DYNAMOMETER 20 - 200N, DT120	
SU070	2582613-0000		1	BRACKET	
Common Parts					
	90459-6473		1	HARDDISK COPYING TOOL, 03607-000	
AS010	2564232-0100		1	LEG	**7-43, 7-45, 10-7, 10-9**
DS010	90459-2181		1	BELT TENSION METER, TSM 4	
DC030	2642146-0000		1	TEMPLATE	
DC040	2503720-0100		1	OPENING FORCE TESTER	**10-11**
DS020	2646428-0100		1	LIFTING UNIT	**10-19, 10-21**
EC010	90243-0203		1	MEASURING INSTRUMENT	
EC020	2559112-0100		1	CALIBRATION EQUIPMENT	**10-23**
FF030	1350498-0000		1	ASSEMBLY TOOL	
FF020	1350497-0000		1	ASSEMBLY TOOL	
FF010	1478583-0100		1	PRESSURE GAUGE	**10-25**
JS050	90206-0330		1	SOCKET WRENCH 2"9	
JS040	90243-0146		1	TOOL	
JS010	2725981-0100		1	SETTING TOOL	**10-27**
JS080	2637602-0100		1	DRILLING JIG	**10-35**
JS070	2637599-0100		1	ALIGNMENT TOOL	**10-37**
JS060	1095884-0100		1	ASSEMBLY TOOL	**10-39**
JS030	72846-0101		1	COMPRESSION SPRING	**10-41**
JS020	1035362-0100		1	MEASURING DEVICE	**10-43**
MB030	90459-1037		1	CRIMP TOOL FOR COAX. CONN. HTG 58-901200	
MB040	2588426-0100		1	ALIGNMENT TEMPLATE	**10-45**
PT030	2764526-0000		1	TOOL	
	312105-0291		*2*	*SCREW M6S ISO 4017 M4X12 A470*	
PT020	90459-5181		1	GREASE LUBRICATION KIT , 400999139	
PT010	2564074-0100		1	TOOLS AND TEMPLATES	**10-47**
SU150	90243-0330		1	CABLE	
SU140	90243-0329		1	CABLE	
SU130	90243-0328		1	PAPER ROLL	
SU080	2532974-0000		1	SETTING TOOL	
SU060	90459-1467		1	FORCE GAUGE 0-250N, AFG 250N	
SU030	777200-0101		1	PIPE WRENCH	
SU010	90243-0447		1	LASER EQUIPMENT	
	90243-0328		*1*	*PAPER ROLL*	
	90243-0329		*1*	*CABLE*	
	90243-0330		*1*	*CABLE*	
	90243-0448		*1*	*ANGLE PLATE*	
	90243-0449		*1*	*ANGLE PLATE*	
	90243-0450		*1*	*RIDGE BED*	
SU160	2579687-0100		1	SETTING TOOL	**10-51**
SU120	2569982-0100		1	SETTING TOOL	**10-53**
SU050	533014-0100		1	LEAK FINDING EQUIPMENT (SUPERSTRUCTURE)	**10-55**
					10-57
SU040	449969-0100		1	TOOL DISMOUNTING	**10-61**
SU020	74305-0100		1	PULLER	**10-63**
SU010	1349738-0100		1	PRESSURE TEST EQUIPMENT	**10-65**

Machine Type | Group Description | Used-In | Group Number | Page No

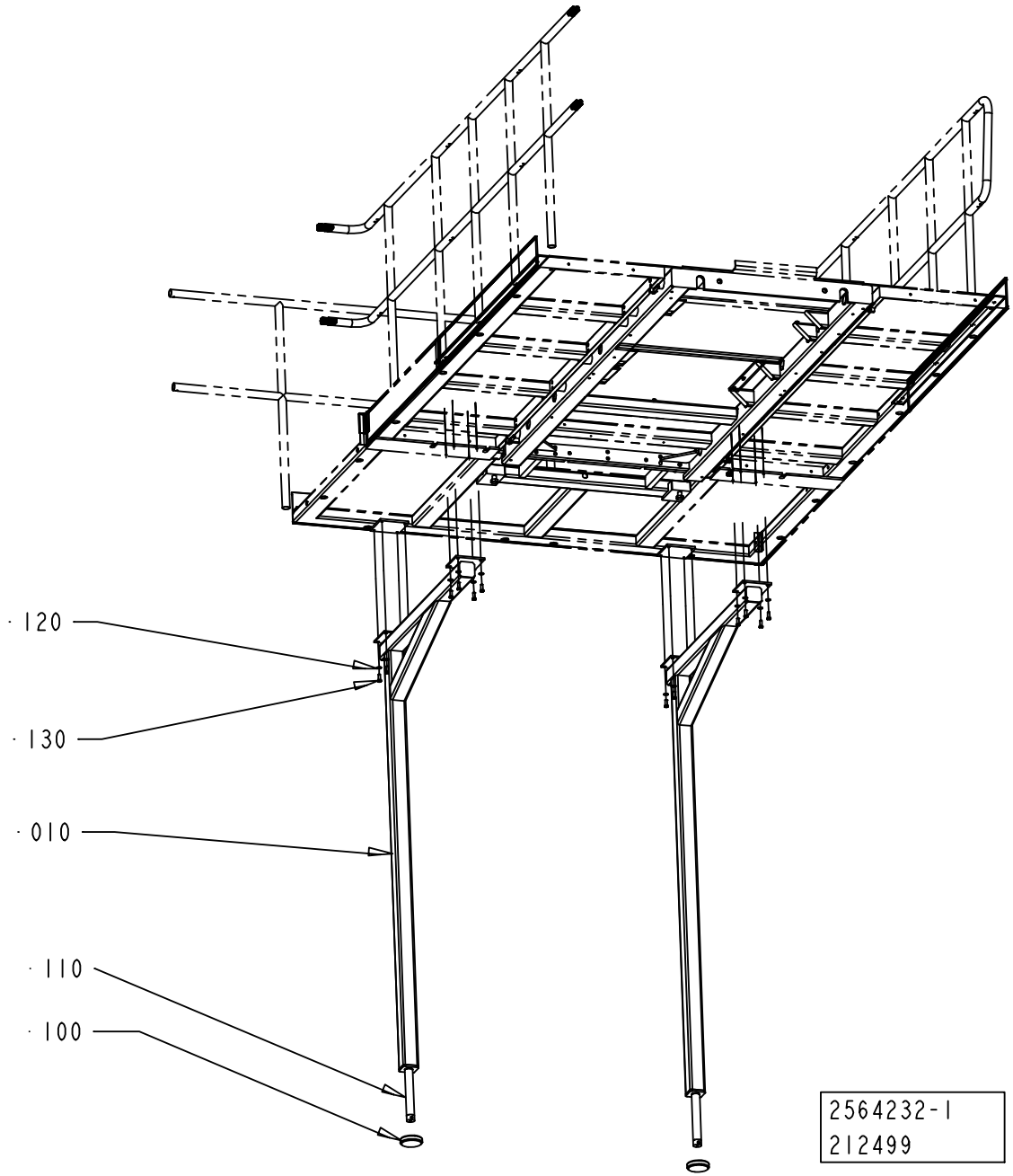
120
130
010
110
100
2564232-1
212499

ECM: 274029 - 20061102
Group number: 2564232-0100
Assembly Drawing: 2564232-1_1_AB

This list covers pages from 10-6 to 10-9

Pos	Part No	UN	Qty	Description	Page No
-					
010	2837177-0000		2	LEG	
10	2553117-0000		2	LEG	
100	90347-0080		2	DAMPER TFE 1201	
110	905373-0000		2	SCREW - LEG	
120	315105-0173		16	WASHER BRB 10,5X20 RFR	
130	312105-0495		16	SCREW M6S ISO 4017 M10X30 A480	

Pos	Part No	UN	Qty	Description	Page No

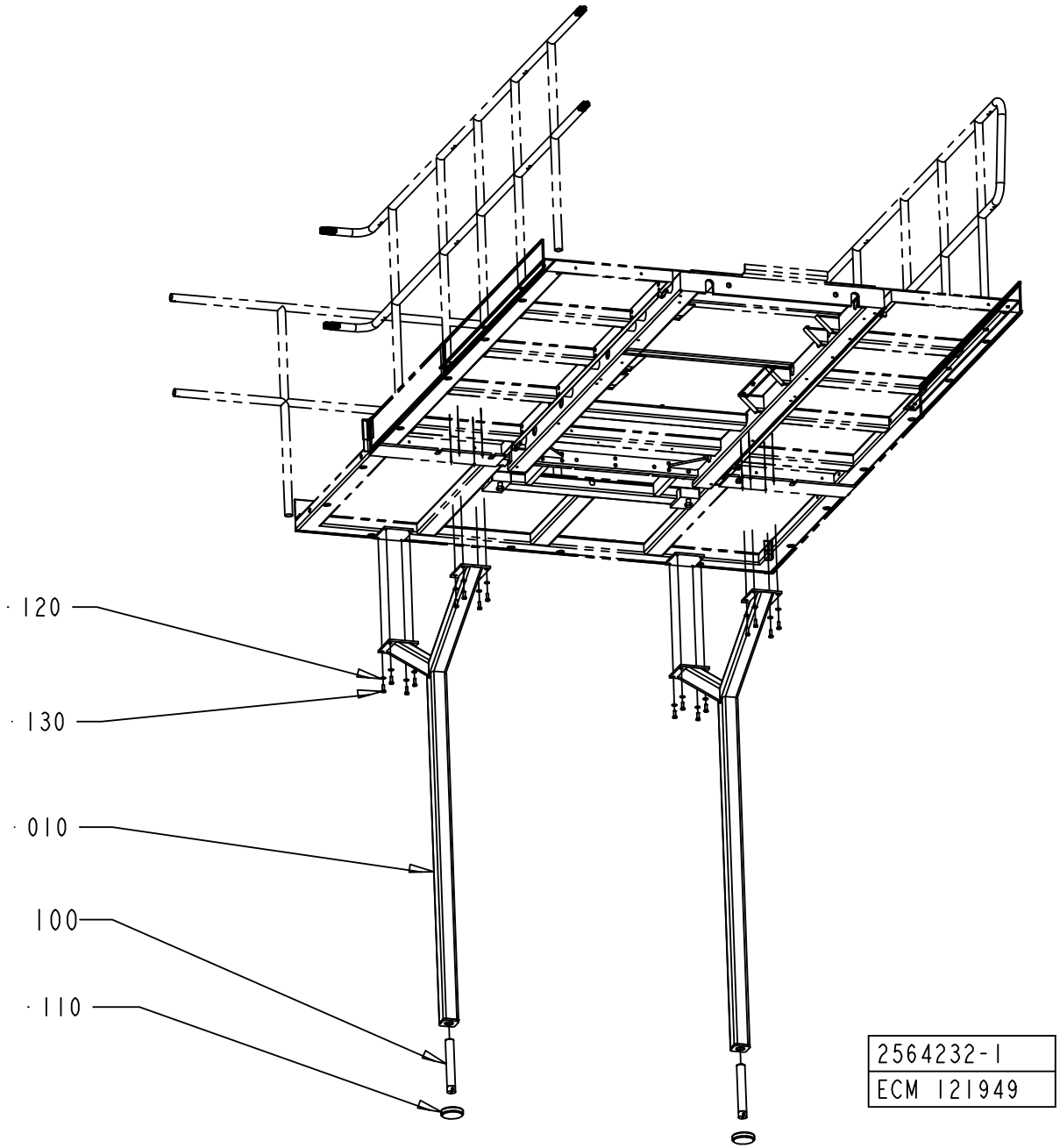
120
130
010
100
110
2564232-1
ECM 121949

ECM: 274029 - 20061102
Group number: 2564232-0100
Assembly Drawing: 2564232-1_1_AA

This list covers pages from 10-6 to 10-9

Pos	Part No	UN	Qty	Description	Page No
-					
010	2837177-0000		2	LEG	
10	2553117-0000		2	LEG	
100	90347-0080		2	DAMPER TFE 1201	
110	905373-0000		2	SCREW - LEG	
120	315105-0173		16	WASHER BRB 10,5X20 RFR	
130	312105-0495		16	SCREW M6S ISO 4017 M10X30 A480	

Pos	Part No	UN	Qty	Description	Page No

OPENING FORCE TESTER

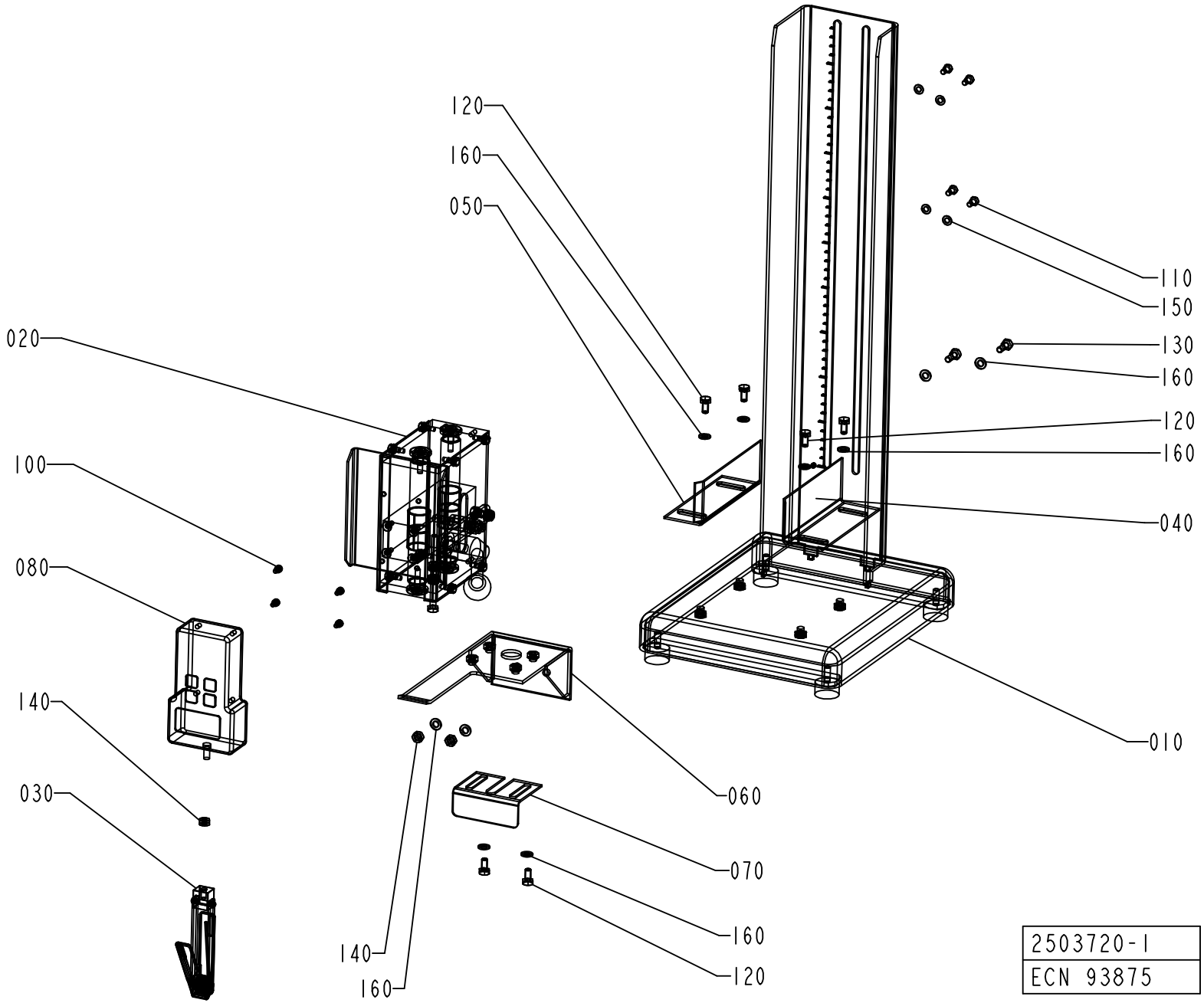

ECM: 94503 - 20010621
Group number: 2503720-0100
Assembly Drawing: 2503720-1_1_AA

Pos	Part No	UN	Qty	Description	Page No
-					
010	2503735-0100		1	FRAME	**10-13**
020	2503722-0100		1	HOLDER	**10-15**
030	2503721-0100		1	GRIPPING DEVICE	**10-17**
040	1338402-0000		1	GUIDE	
050	1338403-0000		1	GUIDE	
060	1338404-0000		1	BRACKET	
070	1338405-0000		1	BRACKET	
080	90243-0456		1	FORCE GAUGE +-50N, FMI-200B5	
100	312155-0285		4	SCREW DIN 7991 MF6S M4X6 A4 70	
110	312105-0325		4	SCREW M6S ISO 4017 M5X10 A480	
120	312105-0366		6	SCREW M6S ISO 4017 M6X12 A480	
130	312105-0368		2	SCREW M6S ISO 4017 M6X16 A480	
140	312605-0316		3	HEXAGON NUT, M6M M6 A280	
150	315105-0146		4	WASHER BRB 5,3X10 RFR	
160	315105-0153		10	WASHER BRB 6,4X12 RFR	

Pos	Part No	UN	Qty	Description	Page No

Machine Type	Group Description	Used-In	Group Number	Page No

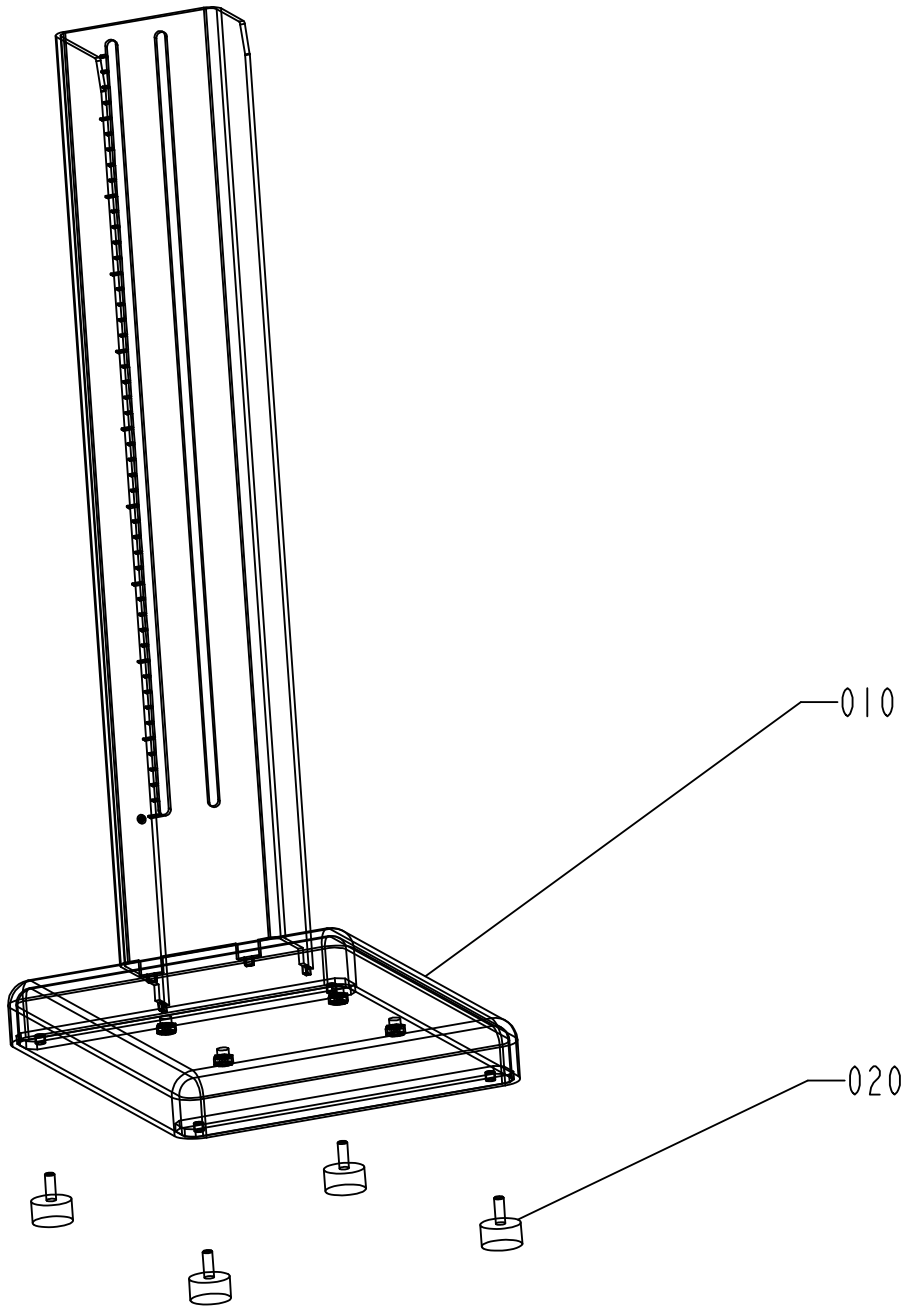

2503735-1
ECN 93875

ECM: 94506 - 20010621
Group number: 2503735-0100
Assembly Drawing: 2503735-1_1_AA

Pos	Part No	UN	Qty	Description	Page No
-					
010	2503719-0000		1	FRAME	
020	90347-0034		4	VIBRATION DAMPER	

Pos	Part No	UN	Qty	Description	Page No

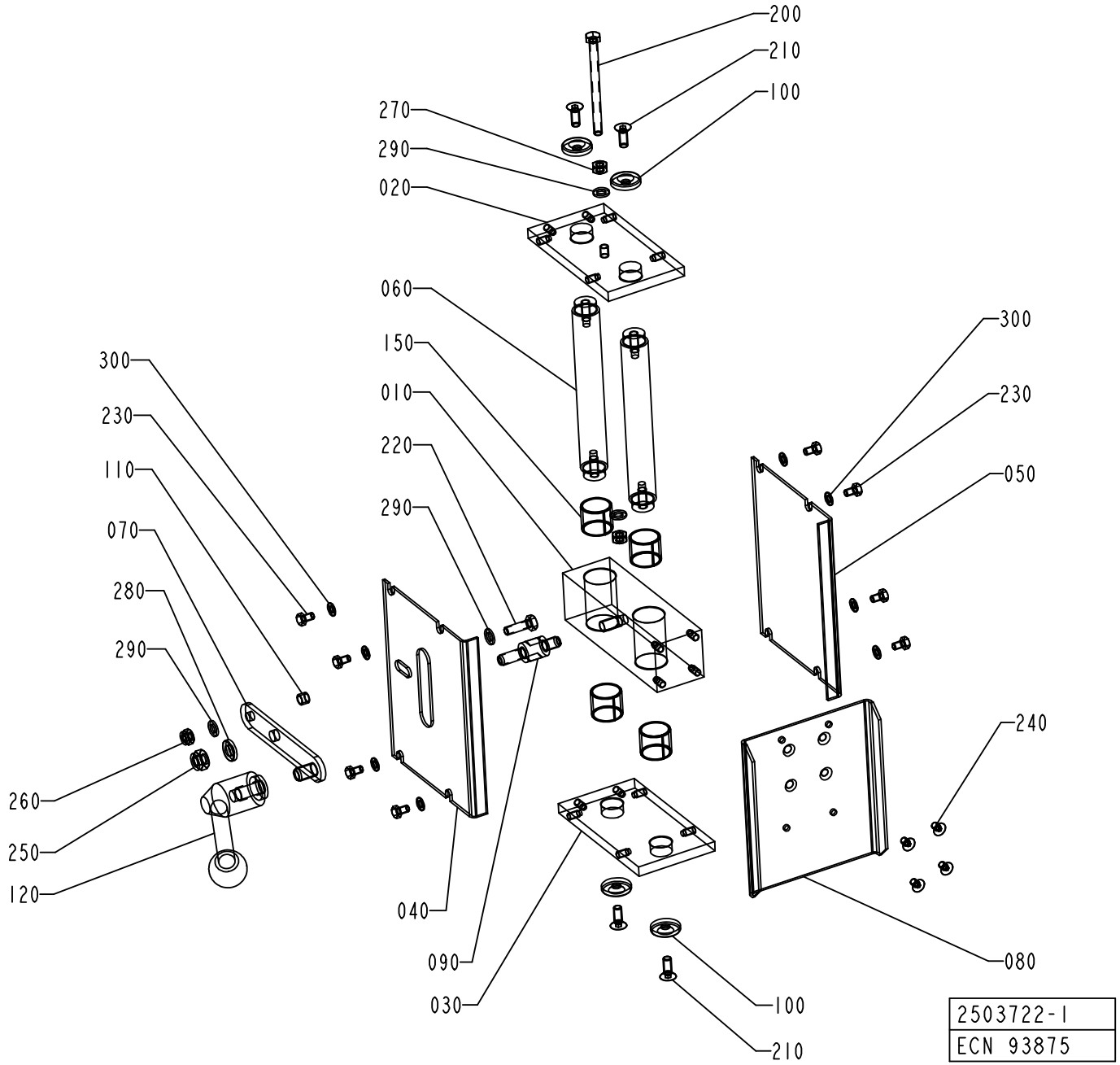
200
210
100
270
290
020
060
150
010
220
290
300
230
110
070
280
290
260
250
120
040
090
030
300
230
050
240
080
100
210
2503722-1
ECN 93875

ECM: 94505 - 20010621
Group number: 2503722-0100
Assembly Drawing: 2503722-1_1_AA

Pos	Part No	UN	Qty	Description	Page No
-					
010	2503723-0000		1	BLOCK	
020	2503725-0000		1	END PLATE	
030	2503724-0000		1	END PLATE	
040	2503727-0000		1	PLATE	
050	2503726-0000		1	PLATE	
060	2503732-0000		2	SHAFT	
070	2503728-0000		1	ARM	
080	2503729-0000		1	MOUNTING PLATE	
090	2503730-0000		1	SPACER	
100	2503734-0000		4	WASHER	
110	2503731-0000		1	SLEEVE	
120	2503733-0000		1	HANDLE	
150	321141-0260		4	BEARING BUSH W/O FLANGE, 20X23X20 MM	
200	312109-0386		1	SCREW M6S ISO 4017 M6X80 A480	
210	312155-0368		4	SCREW DIN 7991 MF6S M6X16 A4 70	
220	312105-0370		1	SCREW M6S ISO 4017 M6X20 A480	
230	312105-0323		8	SCREW M6S ISO 4017 M5X8 A480	
240	312155-0323		4	SCREW DIN 7991 MF6S M5X8 A4 70	
250	312812-0318		1	HEXAGON NUT, NY-LOCK M8 A480	
260	312812-0316		1	HEXAGON NUT, NY-LOCK M6 A480	
270	312605-0316		2	HEXAGON NUT, M6M M6 A280	
280	315115-0165		1	WASHER PLAIN, TBRB 8,4/16 H=3	
290	315105-0153		4	WASHER BRB 6,4X12 RFR	
300	315105-0146		8	WASHER BRB 5,3X10 RFR	

Pos	Part No	UN	Qty	Description	Page No

GRIPPING DEVICE

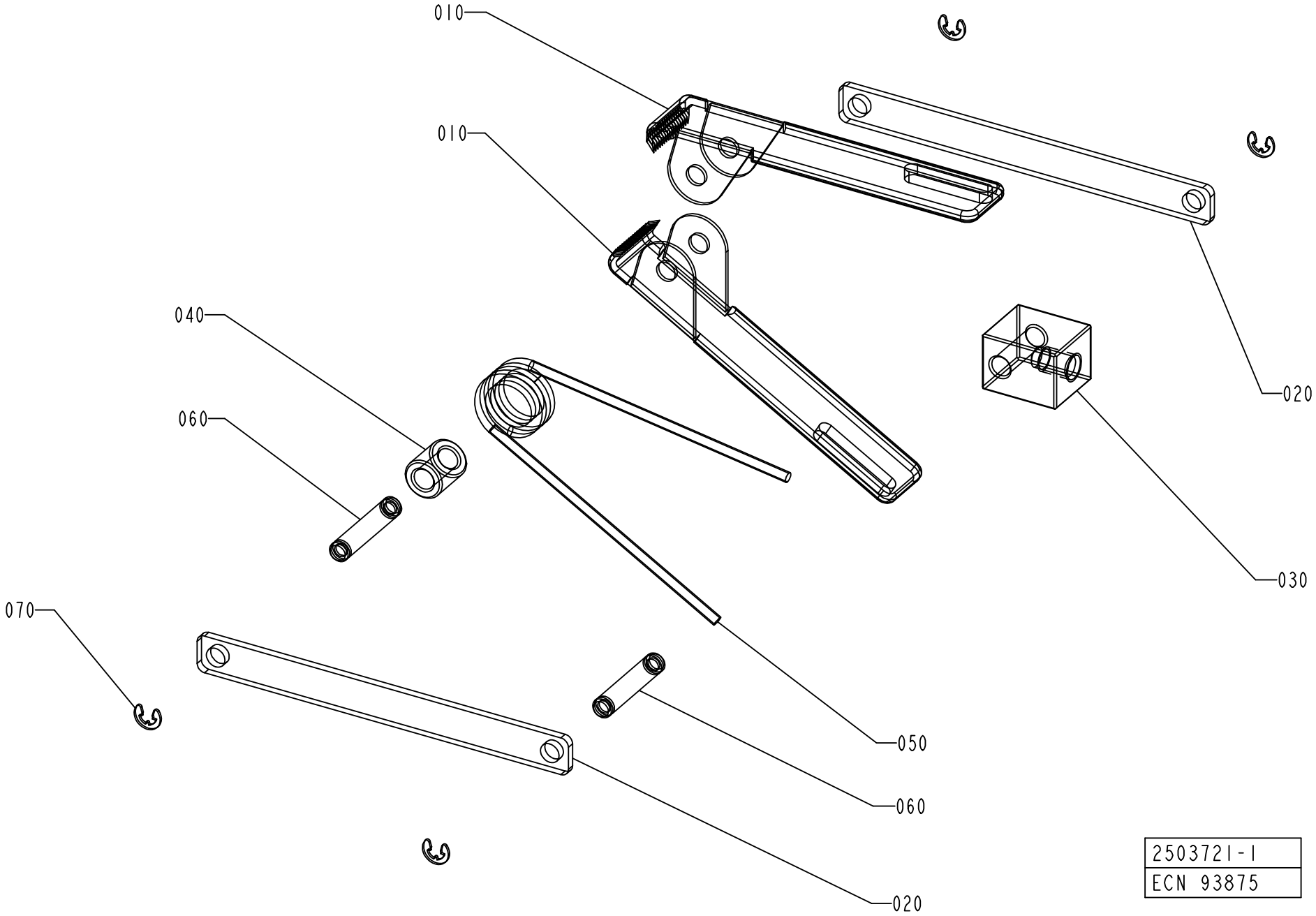

ECM: 94504 - 20010621
Group number: 2503721-0100
Assembly Drawing: 2503721-1_1_AA

Pos	Part No	UN	Qty	Description	Page No
-					
010	1528838-0000		2	CLAMP	
020	1528840-0000		2	LEVER	
030	1528841-0000		1	HOLDER	
040	1528839-0000		1	SLEEVE	
050	1528887-0000		1	TORSION SPRING	
060	1528842-0000		2	PIN	
070	315755-0105		4	RETAINING RING SHAFT DIN 6799 3,2 A2	

Pos	Part No	UN	Qty	Description	Page No

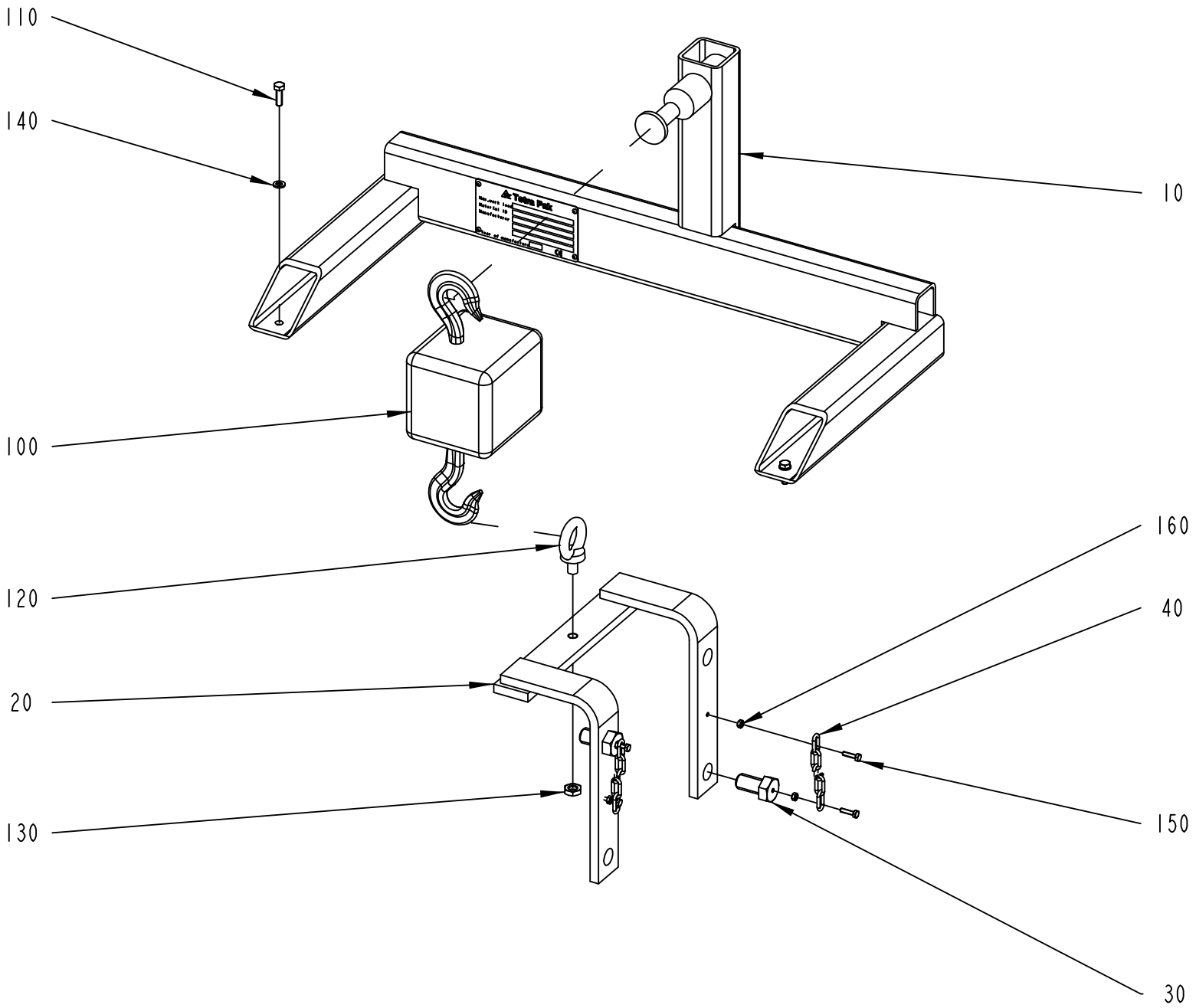
110
140
10
100
160
120
40
20
150
130
30
2646428-1
ECM 152887

ECM: 153155 - 20040511
Group number: 2646428-0100
Assembly Drawing: 2646428-1_1_AA

This list covers pages from 10-18 to 10-21

Pos	Part No	UN	Qty	Description	Page No
-					
010	2587286-0000		1	HOLDER	
020	2630482-0000		1	BRACKET	
030	2661094-0000		2	SCREW	
040	2662211-0000		2	CHAIN	
050	2675434-0000		1	SUPPORT	
100	90459-3618		1	HAND OPERATED CHAIN-HOIST, P.H.D. 250KG	
110	312105-0370		2	SCREW M6S ISO 4017 M6X20 A480	
120	318301-0120		1	LIFTING EYE BOLT, TYPE, LT, M10	
130	312625-0320		1	HEXAGON THIN NUT, EN 24035 ML6M M10 A4	
140	315105-0153		2	WASHER BRB 6,4X12 RFR	
150	312101-0293		4	SCREW M6S M4X16 FZB	
160	312607-0312		4	HEXAGON NUT, EN 24032 M6M M4 A480	
170	312105-0455		2	SCREW M6S ISO 4017 M8X30 A480	
200	2690557-0101		1	DOCUMENT FOLDER	

Pos	Part No	UN	Qty	Description	Page No

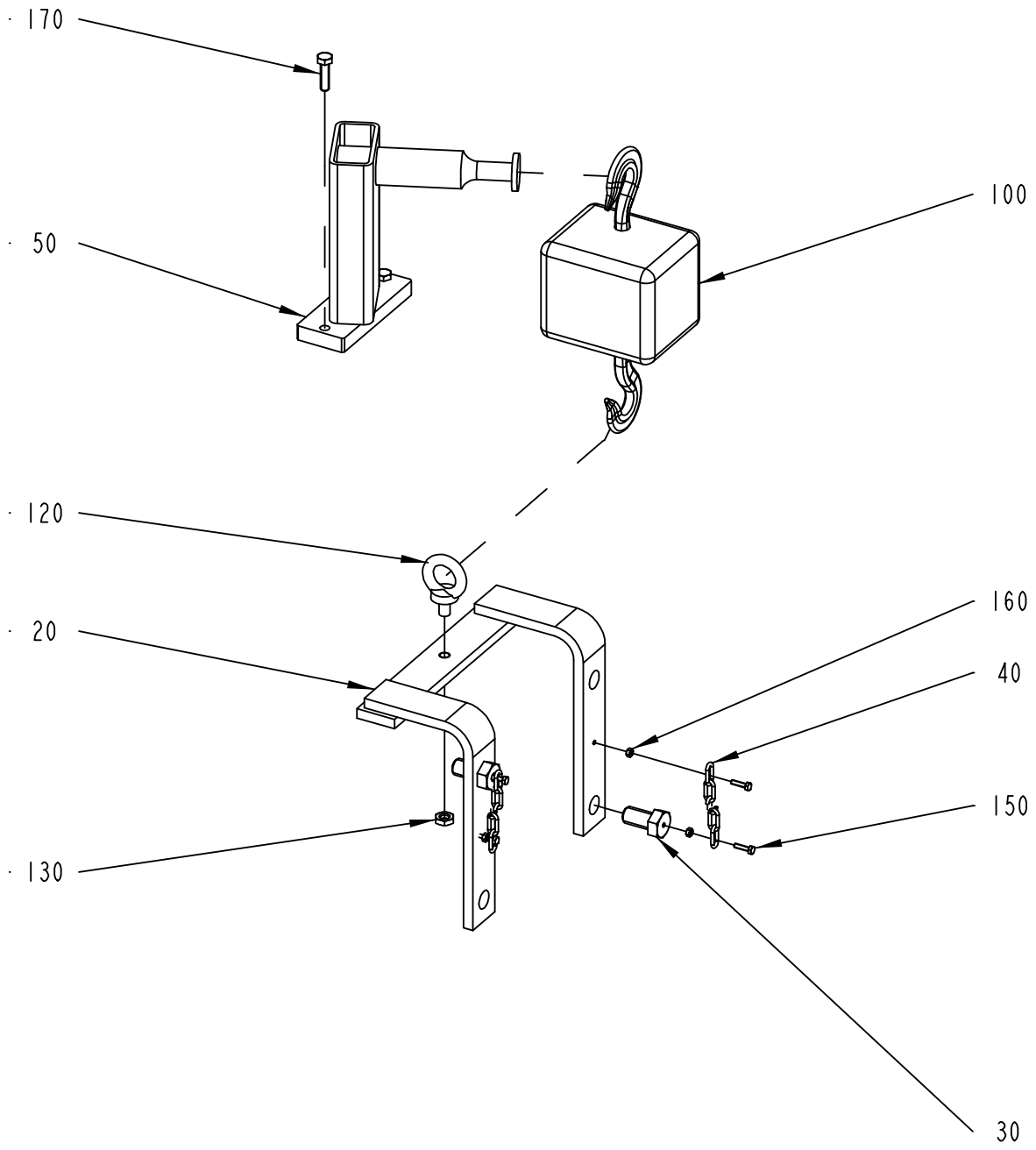

2646428-2
ECM 152887

ECM: 153155 - 20040511
Group number: 2646428-0100
Assembly Drawing: 2646428-2_1_AA

This list covers pages from 10-18 to 10-21

Pos	Part No	UN	Qty	Description	Page No
-					
010	2587286-0000		1	HOLDER	
020	2630482-0000		1	BRACKET	
030	2661094-0000		2	SCREW	
040	2662211-0000		2	CHAIN	
050	2675434-0000		1	SUPPORT	
100	90459-3618		1	HAND OPERATED CHAIN-HOIST, P.H.D. 250KG	
110	312105-0370		2	SCREW M6S ISO 4017 M6X20 A480	
120	318301-0120		1	LIFTING EYE BOLT, TYPE, LT, M10	
130	312625-0320		1	HEXAGON THIN NUT, EN 24035 ML6M M10 A4	
140	315105-0153		2	WASHER BRB 6,4X12 RFR	
150	312101-0293		4	SCREW M6S M4X16 FZB	
160	312607-0312		4	HEXAGON NUT, EN 24032 M6M M4 A480	
170	312105-0455		2	SCREW M6S ISO 4017 M8X30 A480	
200	2690557-0101		1	DOCUMENT FOLDER	

Pos	Part No	UN	Qty	Description	Page No

This page is intentionally left blank.

ECM: 121958 - 20030403
Group number: 2559112-0100
Assembly Drawing:

Pos	Part No	UN	Qty	Description	Page No
-					
10	90410-0338		1	CALIBRATION INSTRUMENT 5100071-001	
20	90326-0308		1	THERMOCOUPLE CABLE FOR CE-557793/MALE 5M	
30	90326-0309		1	THERMOCOUPLE CABLE FOR CE-557793/FEMALE	
40	90194-0113		1	ADHESIVE LABEL, CALIBRATED & DATE	
50	90410-0337		1	CALIBRATION INSTRUMENT 5100071-001	
60	90326-0310		1	THERMOCOUPLE, 5130020-000	

Pos	Part No	UN	Qty	Description	Page No

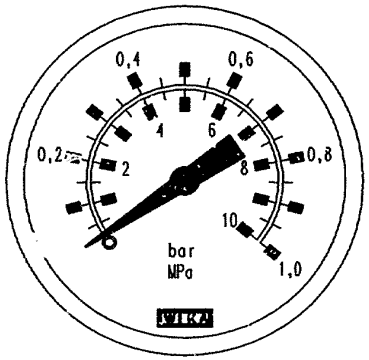
0,4
0,6
0,2
0,8
1
2
4
6
8
10
bar
MPa
1,0
WIKA

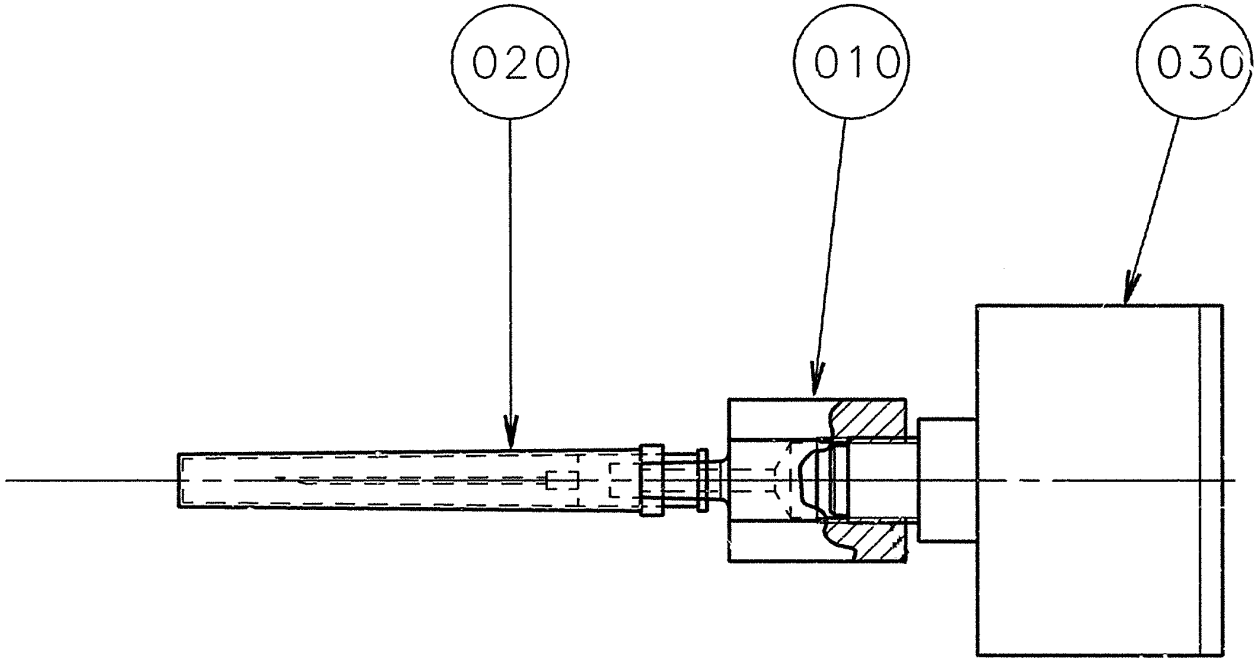
020
010
030

ECM: 110000 - 20030514
Group number: 1478583-0100
Assembly Drawing: 1478583-1_1_AA

Pos	Part No	UN	Qty	Description	Page No
-					
010	1478584-0000		1	NIPPLE	
020	1478585-0000		1	NEEDLE	
030	90043-0043		1	PRESSURE GAUGE 0-10 BAR 1/8"	

Pos	Part No	UN	Qty	Description	Page No

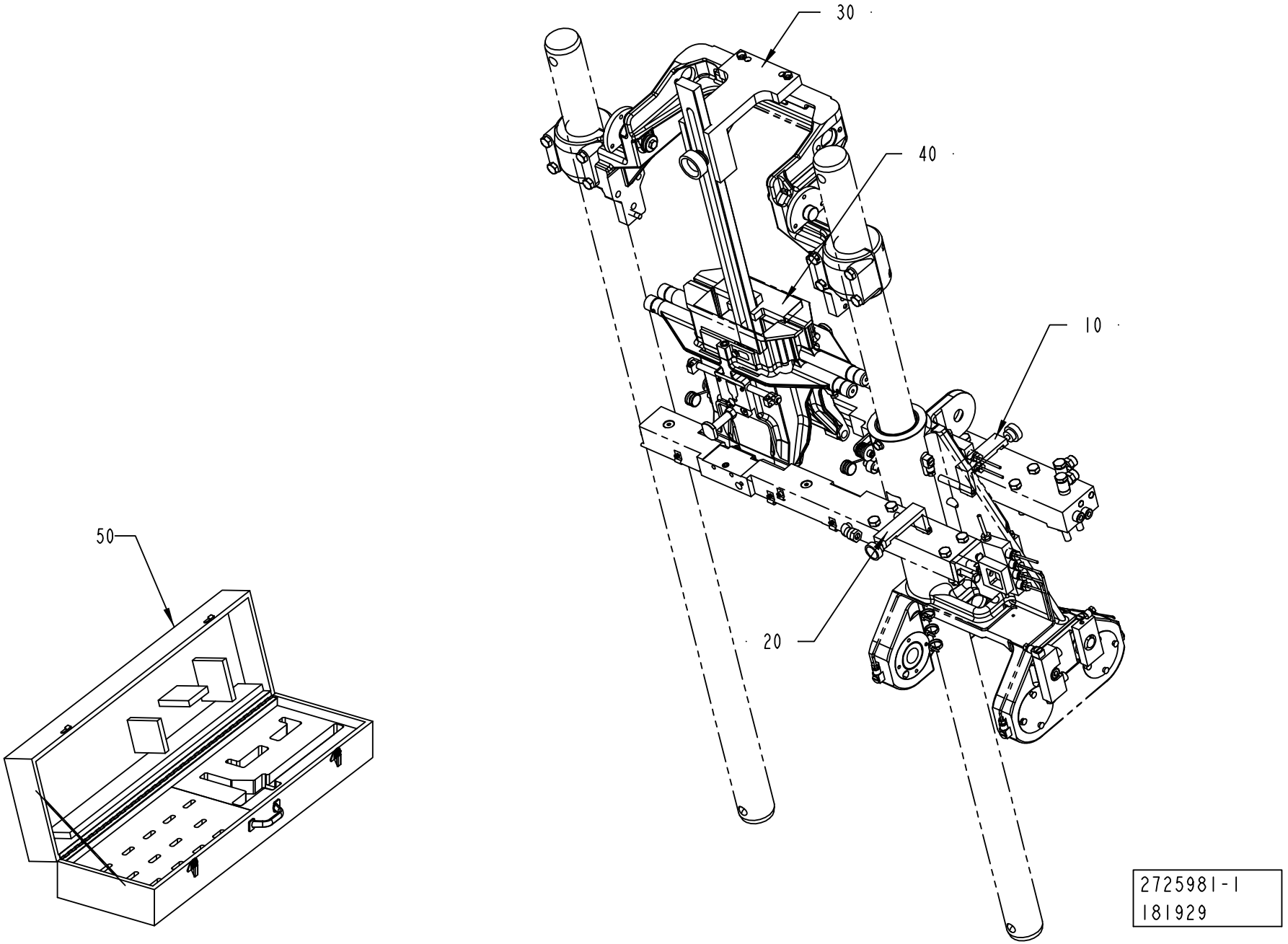
30
40
10
20
50
2725981-1
181929

ECM: 218478 - 20050527
Group number: 2725981-0100
Assembly Drawing: 2725981-1_1_AA

Pos	Part No	UN	Qty	Description	Page No
TBA 0200S					
040	1140283-0000		1	TEMPLATE	
TBA 0200SQ, TBA 0250SQ					
040	2751518-0000		1	TEMPLATE	
TBA 0250S, TBA 0200M					
040	574455-0000		1	TEMPLATE	
TBA 0330S, TBA 0200B, TBA 0250B					
040	1523091-0000		1	TEMPLATE	
TBA 0500B, TBA 1000B					
040	1140268-0000		1	TEMPLATE	
TBA 0500S					
040	1532998-0000		1	TEMPLATE	
TBA 1000S					
040	1140320-0000		1	TEMPLATE	
TBA 1000SQ					
040	1498117-0000		1	TEMPLATE	
TBA 1500S					
040	1478190-0000		1	TEMPLATE	
TBA 1890S, TBA 2000S					
040	2649440-0000		1	TEMPLATE	
TPA 0250SQ, TPA 0200SQ					
040	1539893-0000		1	TEMPLATE	
TPA 0330SQ					
040	1539892-0000		1	TEMPLATE	
TPA 0500SQ					
040	2503692-0000		1	TEMPLATE	
TPA 1000SQ, TPA 0750SQ					
040	2503694-0000		1	TEMPLATE	
Common Parts					
010	2644317-0100		1	TEMPLATE	**10-29**
020	2644318-0100		1	TEMPLATE	**10-31**
030	2725982-0100		1	TEMPLATE	**10-33**
050	2710508-0000		1	TOOL BOX	

Pos	Part No	UN	Qty	Description	Page No

Machine Type | Group Description | Used-In | Group Number | Page No

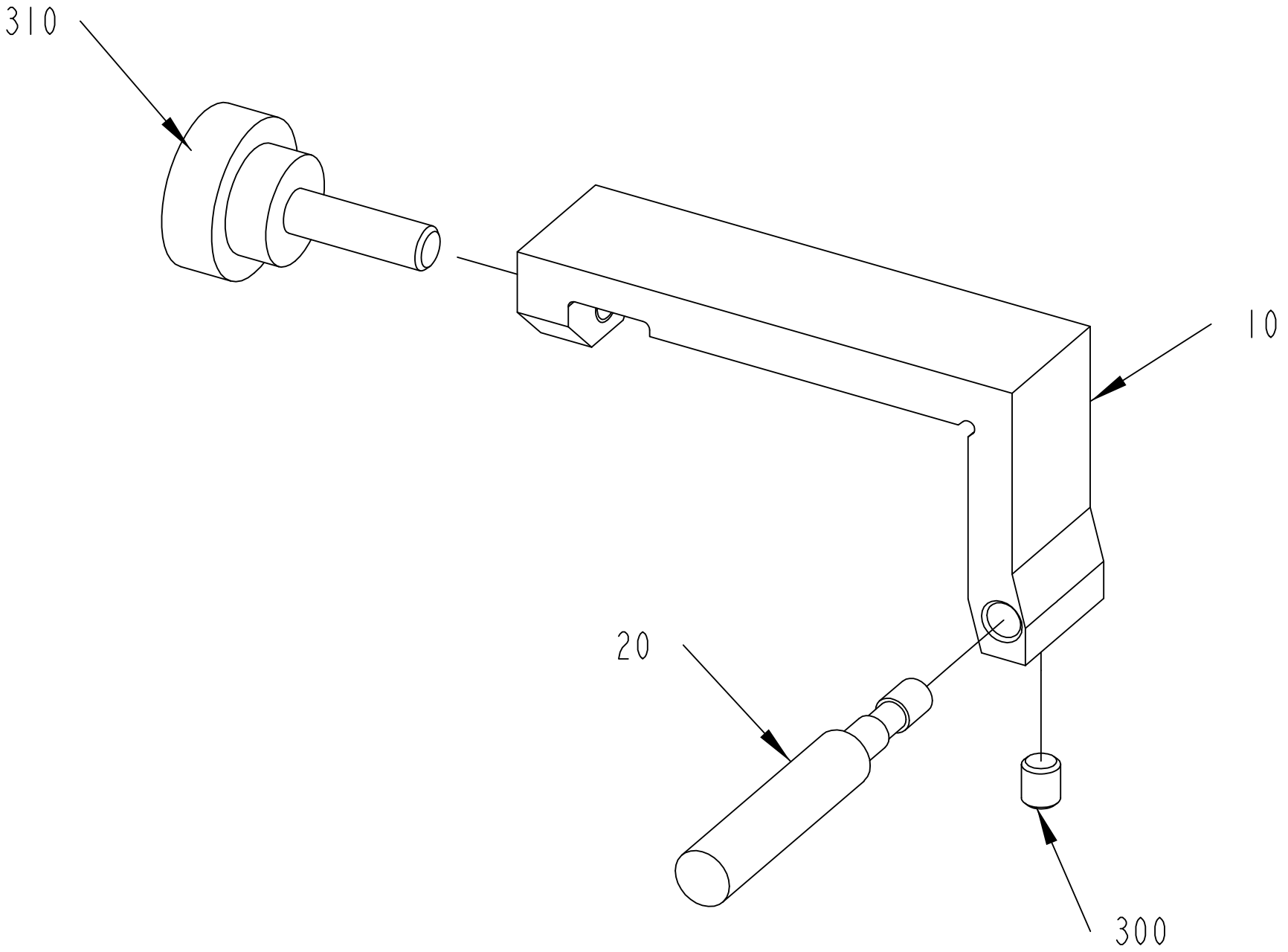

2644317-1
181929

ECM: 195311 - 20041203
Group number: 2644317-0100
Assembly Drawing: 2644317-1_1_AA

Pos	Part No	UN	Qty	Description	Page No
-					
010	2640116-0000		1	TOOL	
020	2640186-0000		1	TOOL	
300	312318-0321		1	SCREW ISO4029 M5X6 A4	
310	90051-0035		1	KNOB, EXTERNAL THREAD. NO. 8308-1135	

Pos	Part No	UN	Qty	Description	Page No

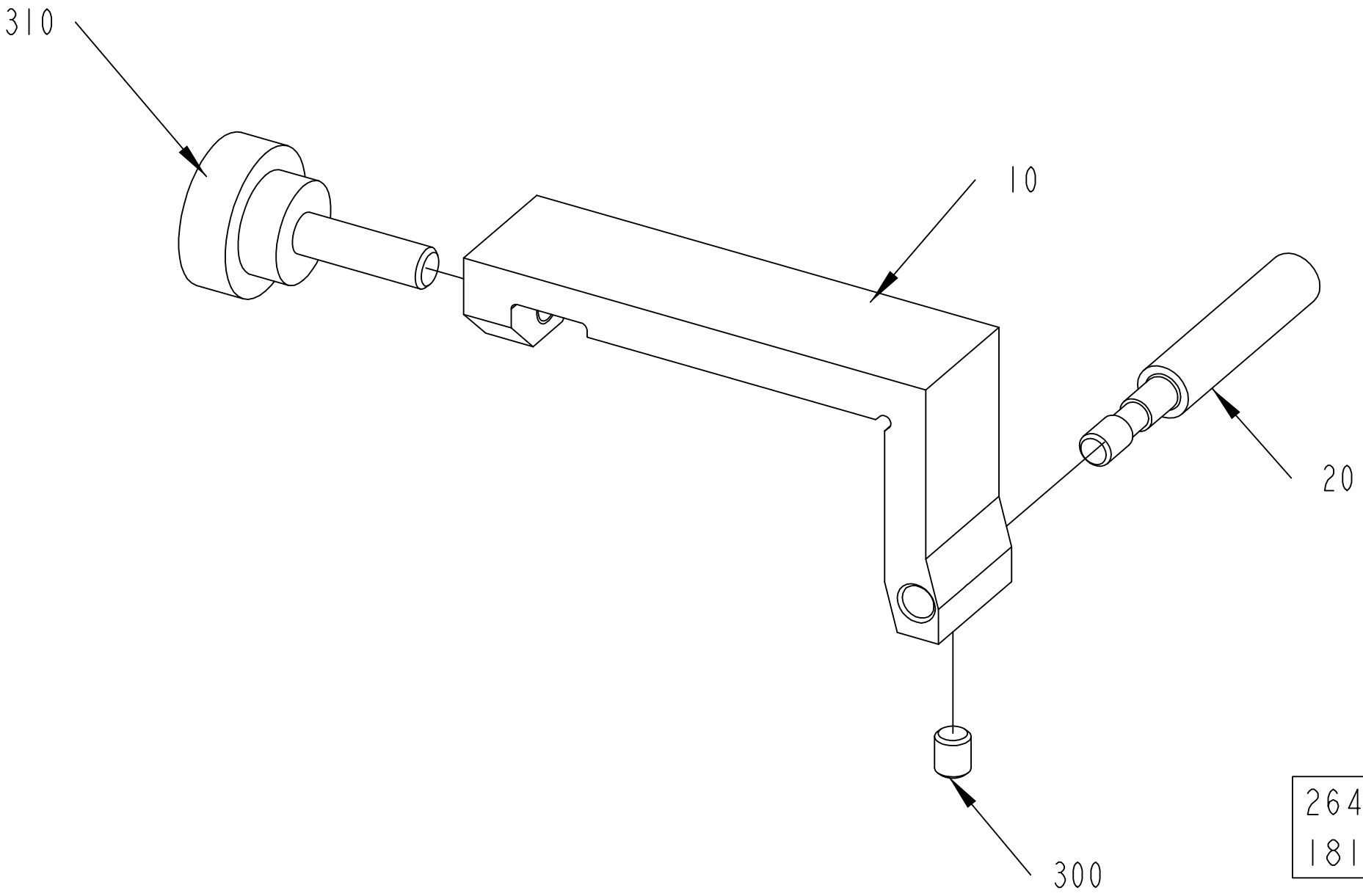
310
10
20
300
2644318-1
181929

ECM: 195312 - 20041203
Group number: 2644318-0100
Assembly Drawing: 2644318-1_1_AA

Pos	Part No	UN	Qty	Description	Page No
-					
010	2640116-0000		1	TOOL	
020	2640186-0000		1	TOOL	
300	312318-0321		1	SCREW ISO4029 M5X6 A4	
310	90051-0035		1	KNOB, EXTERNAL THREAD. NO. 8308-1135	

Pos	Part No	UN	Qty	Description	Page No

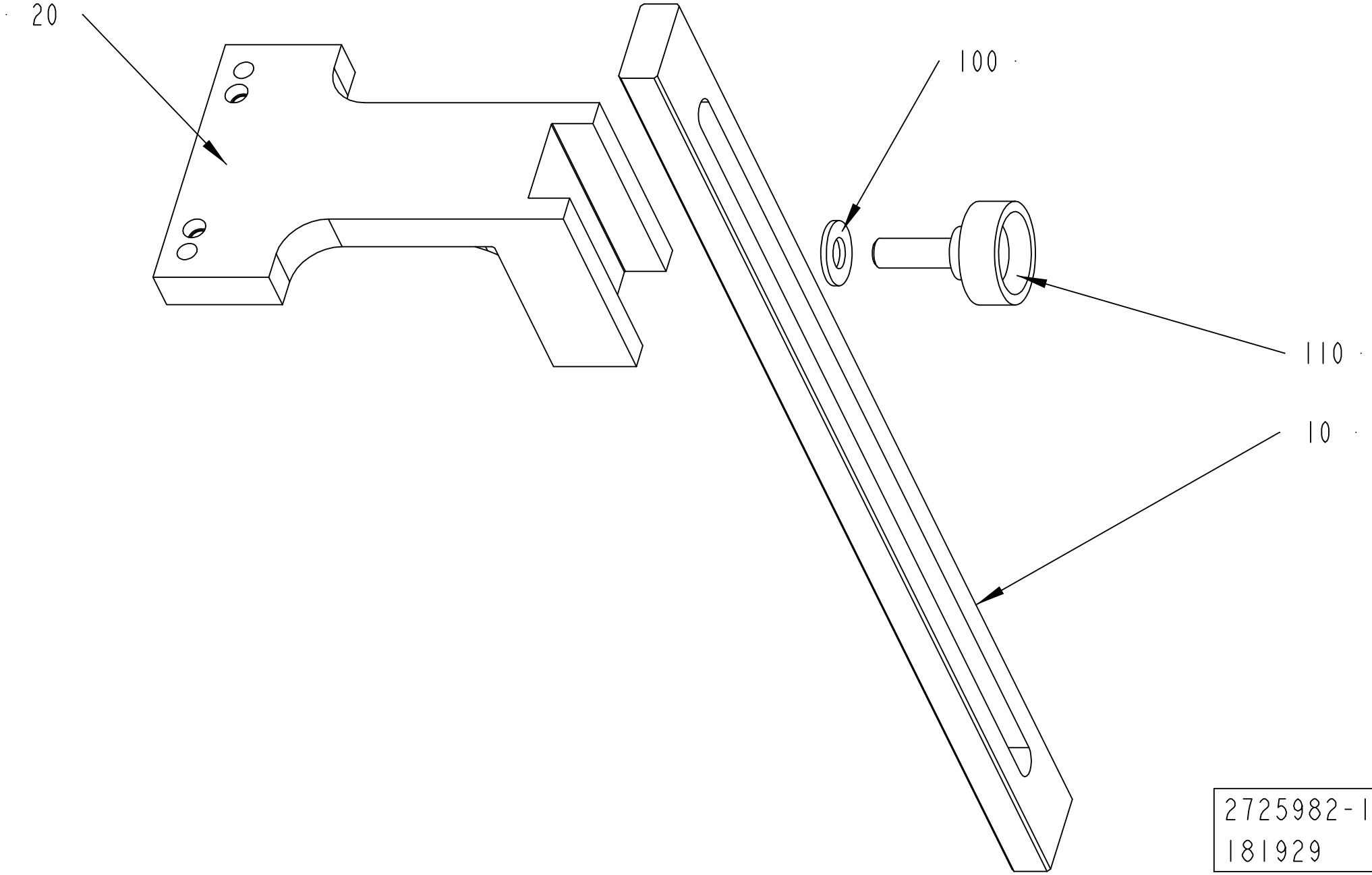
20
100
110
10
2725982-1
181929

ECM: 195314 - 20041203
Group number: 2725982-0100
Assembly Drawing: 2725982-1_1_AA

Pos	Part No	UN	Qty	Description	Page No
-					
010	2640814-0000		1	RULER	
020	2640292-0000		1	TOOL	
100	315105-0173		1	WASHER BRB 10,5X20 RFR	
110	318856-0109		1	KNOB, EXTERNAL THREAD. NO. 8308-1658	

Pos	Part No	UN	Qty	Description	Page No

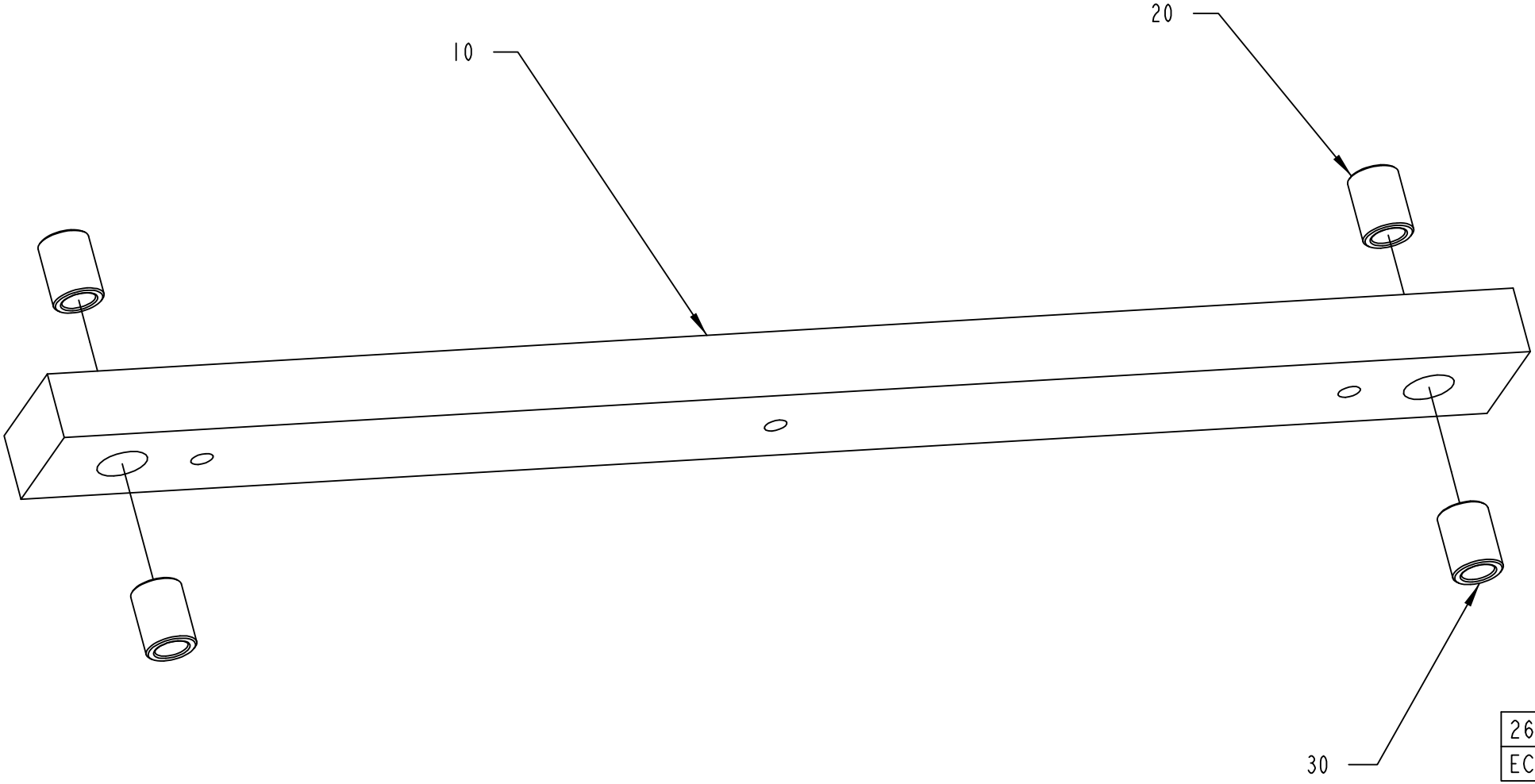

2637602-1
ECM 139936

ECM: 139936 - 20031001
Group number: 2637602-0100
Assembly Drawing: 2637602-1_1_AA

Pos	Part No	UN	Qty	Description	Page No
-					
010	2637603-0000		1	TOOL	
020	2637604-0000		2	BUSHING	
030	2637605-0000		2	BUSHING	

Pos	Part No	UN	Qty	Description	Page No

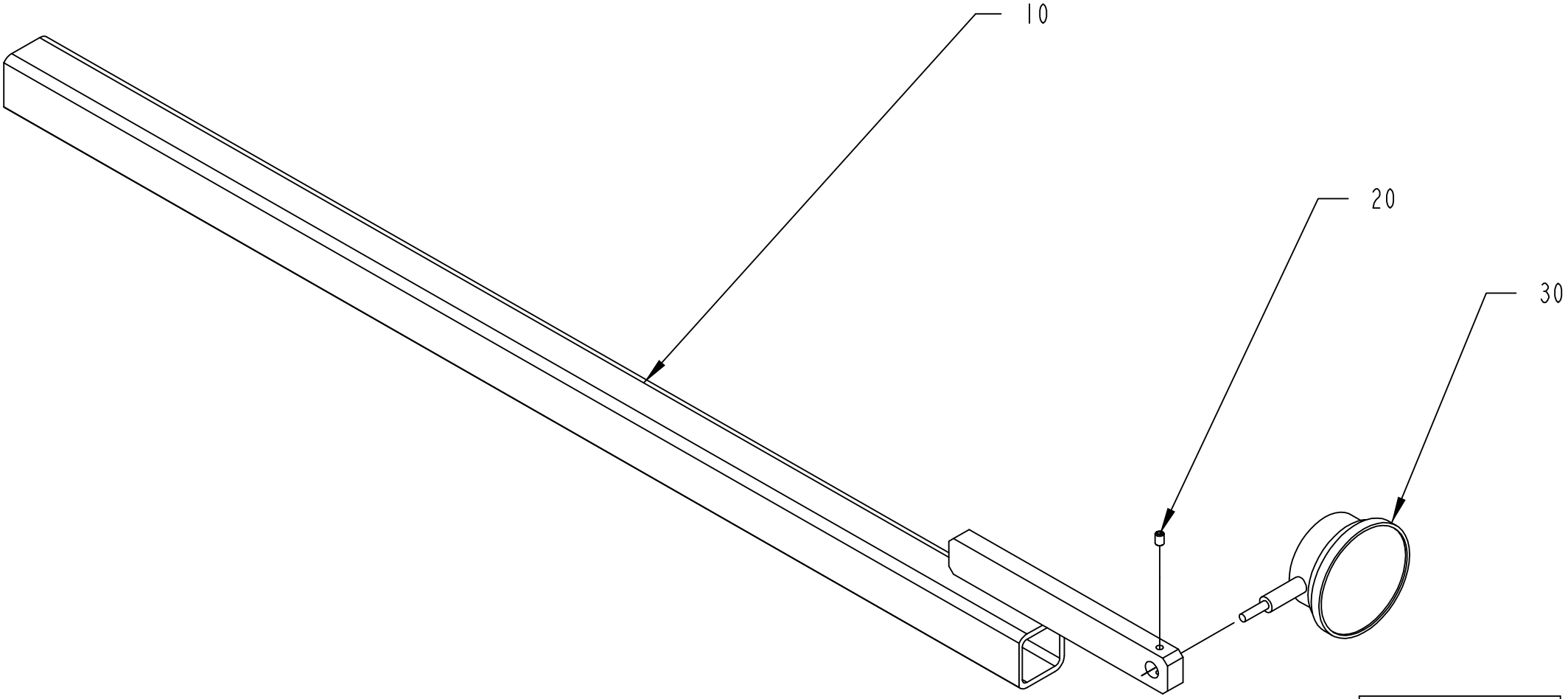

2637599-1
ECM 139936

ECM: 139936 - 20031001
Group number: 2637599-0100
Assembly Drawing: 2637599-1_1_AA

Pos	Part No	UN	Qty	Description	Page No
-					
010	2637600-0000		1	TOOL	
020	312318-0285		1	SCREW ISO4029 M4X6 A4	
030	90243-0461		1	MEASURE GAUGE,6916-0109	

Pos	Part No	UN	Qty	Description	Page No

This page is intentionally left blank.

ECM: 226370 - 20050805
Group number: 1095884-0100
Assembly Drawing:

Pos	Part No	UN	Qty	Description	Page No
TBA 0330S, TBA 0200B, TBA 0250S, TBA 0200S, TBA 0200M, TBA 0250B, TBA 0200SQ, TPA 0250SQ, TPA 0330SQ, TPA 0200SQ, TBA 0250SQ					
010	76131-0000		1	ASSEMBLY CONE	
011	76132-0000		1	ASSEMBLY TOOL	
012	78801-0000		1	CALIBRATION TOOL	
030	90091-0387		1	ASSEMBLY TOOL	
TBA 0500S, TBA 0500B, TBA 1000S, TBA 1000SQ, TBA 1000B, TBA 1500S, TPA 1000SQ, TPA 0500SQ, TPA 0750SQ					
020	90091-0377		1	ASSEMBLY TOOL SLEEVE GLYD RING	
040	90091-0378		1	ASSEMBLY TOOL SLEEVE AQ-SEAL	
TBA 1890S, TBA 2000S					
020	2764475-0000		1	ASSEMBLY TOOL	
040	90091-0378		1	ASSEMBLY TOOL SLEEVE AQ-SEAL	
040	2778300-0000		1	ASSEMBLY TOOL	

Pos	Part No	UN	Qty	Description	Page No

Machine Type | Group Description | Used-In | Group Number | Page No

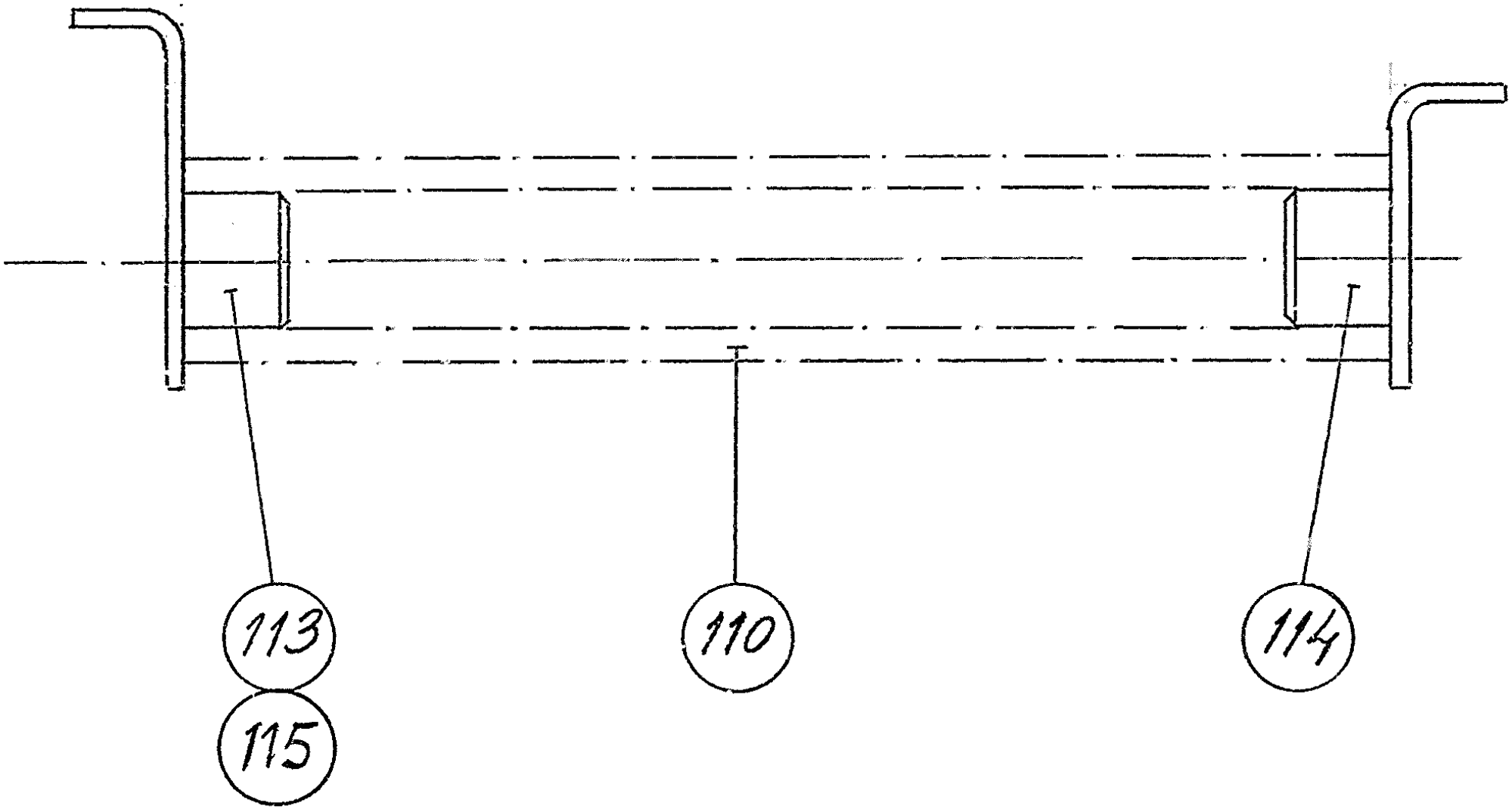
113
115
110
114

ECM: 71001 - 19970802
Group number: 72846-0101
Assembly Drawing: 72846-1_1_AA

Pos	Part No	UN	Qty	Description	Page No
-					
110	72887-0000		1	COMPRESSION SPRING	
113	72888-0001		1	SPRING BRACKET	
114	72888-0002		1	SPRING BRACKET	

Pos	Part No	UN	Qty	Description	Page No

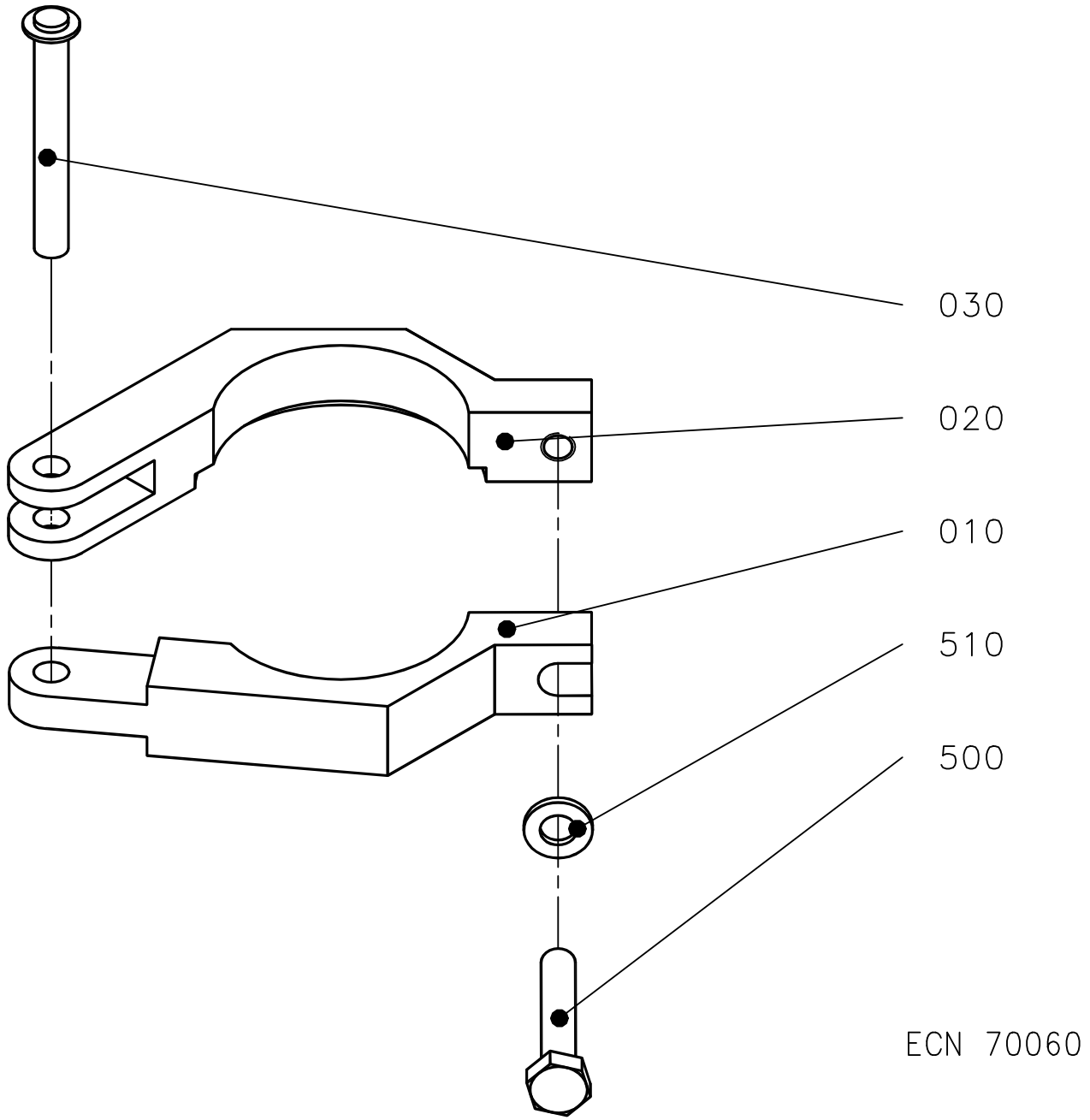
030
020
010
510
500
ECN 70060

ECM: 70060 - 19960315
Group number: 1035362-0100
Assembly Drawing: 1035362-1_1_AA

Pos	Part No	UN	Qty	Description	Page No
-					
010	1037696-0000		1	CLAMPING PIECE	
020	1037697-0000		1	CLAMPING PIECE	
030	74655-0000		1	SHAFT	
500	312105-0374		1	SCREW M6S ISO 4014 M6X30 A480	
510	315105-0153		1	WASHER BRB 6,4X12 RFR	

Pos	Part No	UN	Qty	Description	Page No

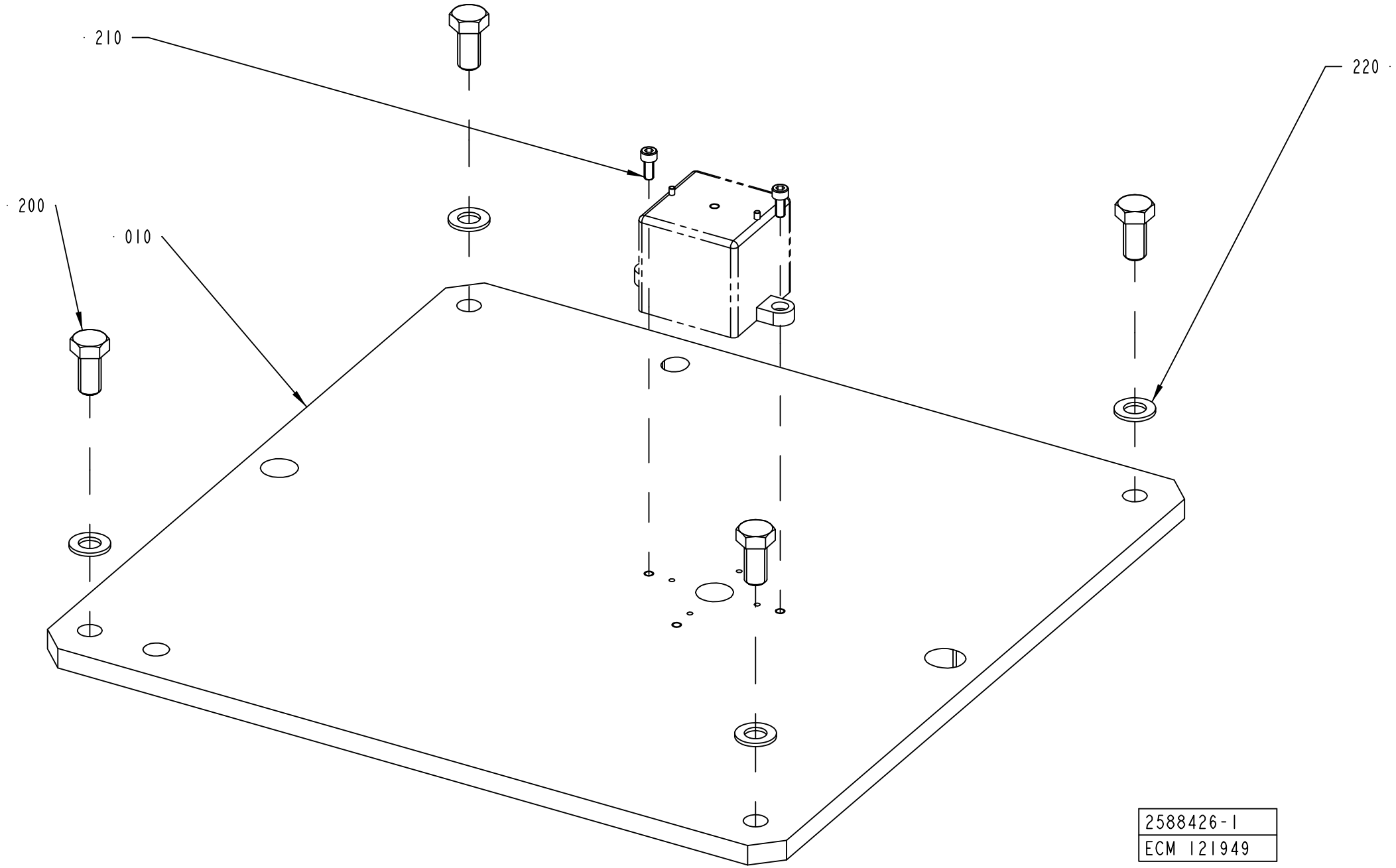
210
220
200
010
2588426-1
ECM 121949

ECM: 121961 - 20030403
Group number: 2588426-0100
Assembly Drawing: 2588426-1_1_AA

Pos	Part No	UN	Qty	Description	Page No
-					
010	2588425-0000		1	PLATE	
200	312105-0534		4	SCREW M6S ISO 4017 M12X25 A480	
210	312115-0327		2	SCREW ISO4762 M5X12 A4 80	
220	315101-0176		4	WASHER PLAIN, BRB, 12/22 H=2	

Pos	Part No	UN	Qty	Description	Page No

This page is intentionally left blank.

ECM: 243451 - 20061101
Group number: 2564074-0100
Assembly Drawing:

Pos	Part No	UN	Qty	Description	Page No
-					
010	1532459-0100		1	SETTING TOOL	**10-49**
100	777170-0107		1	HOOK SPANNER	

Pos	Part No	UN	Qty	Description	Page No

Machine Type	Group Description	Used-In	Group Number	Page No

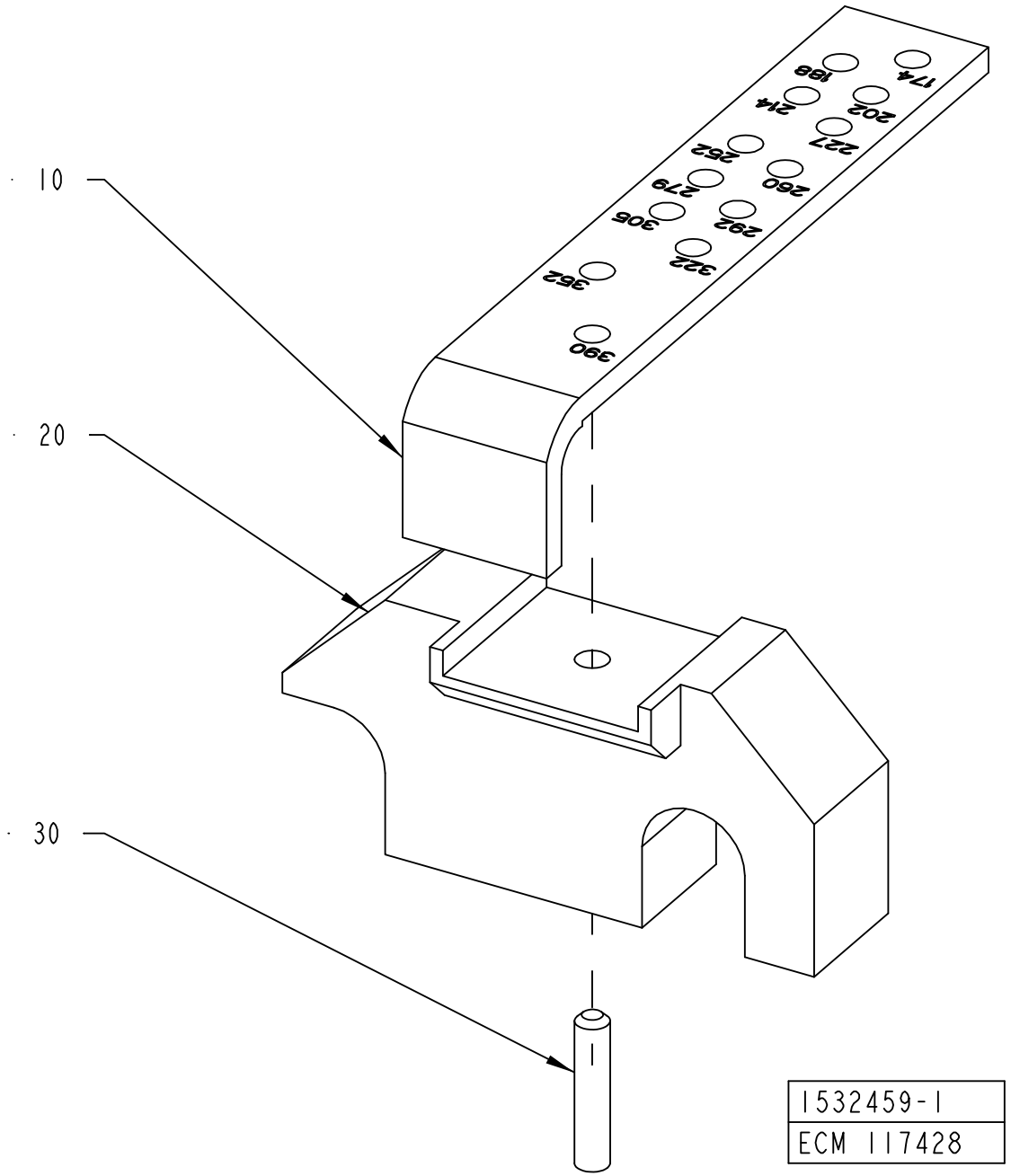
10
20
30
174
198
214
202
227
262
260
279
306
292
322
362
390
1532459-1
ECM 117428

ECM: 185718 - 20041005
Group number: 1532459-0100
Assembly Drawing: 1532459-1_1_AB

Pos	Part No	UN	Qty	Description	Page No
-					
010	1538234-0000		1	SPACER	
020	1532466-0000		1	BRACKET	
030	311103-0351		1	PARALLEL PIN ISO 2338 6M6X16 A1	

Pos	Part No	UN	Qty	Description	Page No

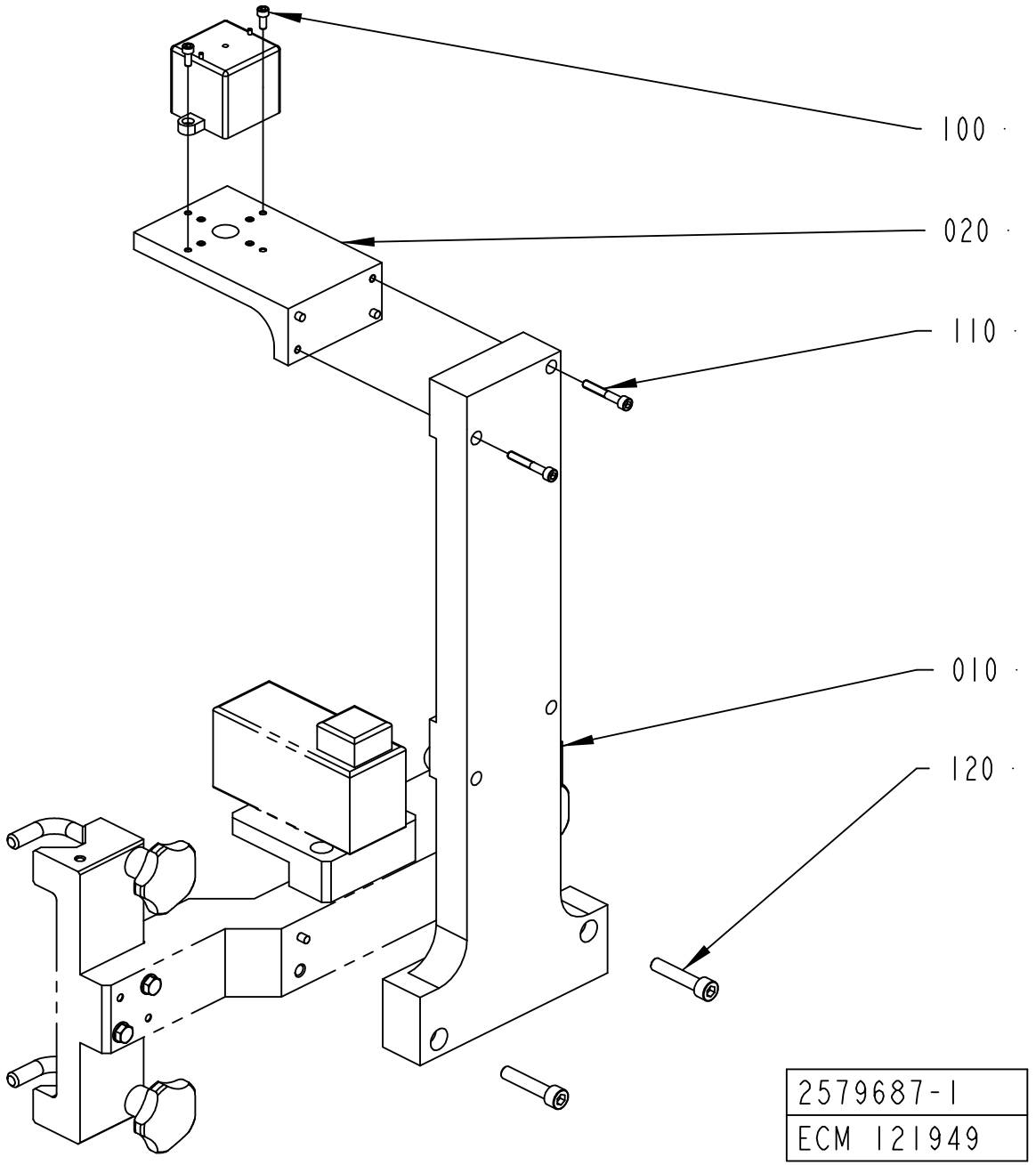
100
020
110
010
120
2579687-1
ECM 121949

ECM: 124333 - 20030403
Group number: 2579687-0100
Assembly Drawing: 2579687-1_1_AA

Pos	Part No	UN	Qty	Description	Page No
-					
010	2570744-0000		1	HOLDER	
020	2579688-0000		1	HOLDER	
100	312111-0327		2	SCREW HEX.SOCK.HD.MC6S-TT 5X12 88 FZB	
110	312115-0378		2	SCREW ISO4762 M6X40 A4 80	
120	312111-0501		2	SCREW HEX.SOCK.HD.MC6S-TT 10X50 88 FZ	

Pos	Part No	UN	Qty	Description	Page No

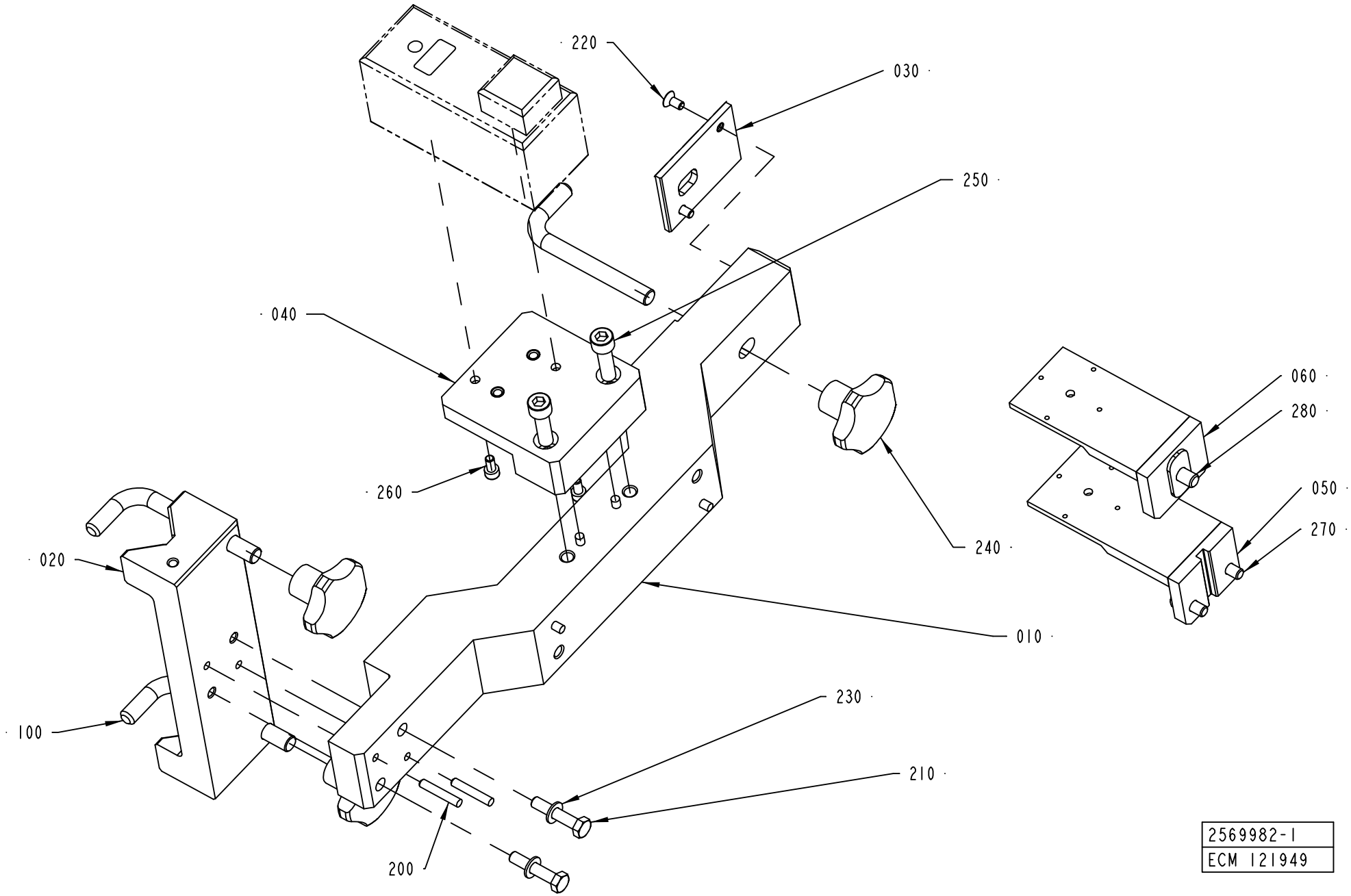
220
030
250
040
060
280
260
050
270
240
020
010
100
230
210
200
2569982-1
ECM 121949

ECM: 121962 - 20030403
Group number: 2569982-0100
Assembly Drawing: 2569982-1_1_AA

Pos	Part No	UN	Qty	Description	Page No
-					
010	2570741-0000		1	HOLDER	
020	2570746-0000		1	BRACKET	
030	2570747-0000		1	PLATE	
040	2570743-0000		1	BRACKET	
050	2515291-0000		1	BRACKET	
060	2515292-0000		1	BRACKET	
100	2523265-0000		3	HOOK	
200	311103-0359		2	PARALLEL PIN ISO 2338 6M6X35 A1	
210	312109-0459		2	SCREW M6S ISO 4017 M8X40 A480	
220	312155-0366		2	SCREW DIN 7991 MF6S M6X12 A4 70	
230	315105-0165		2	WASHER BRB 8,4X16 RFR	
240	318850-0113		3	STELLAR KNOB, INT. THREAD, NO. 8306-0367	
250	312111-0497		2	SCREW HEX.SOCK.HD.MC6S-TT 10X35 88 FZ	
260	312111-0366		2	SCREW HEX.SOCK.HD.MC6S-TT 6X12 88 FZB	
270	312105-0451		2	SCREW M6S ISO 4017 M8X20 A480	
280	312105-0493		1	SCREW M6S ISO 4017 M10X25 A480	

Pos	Part No	UN	Qty	Description	Page No

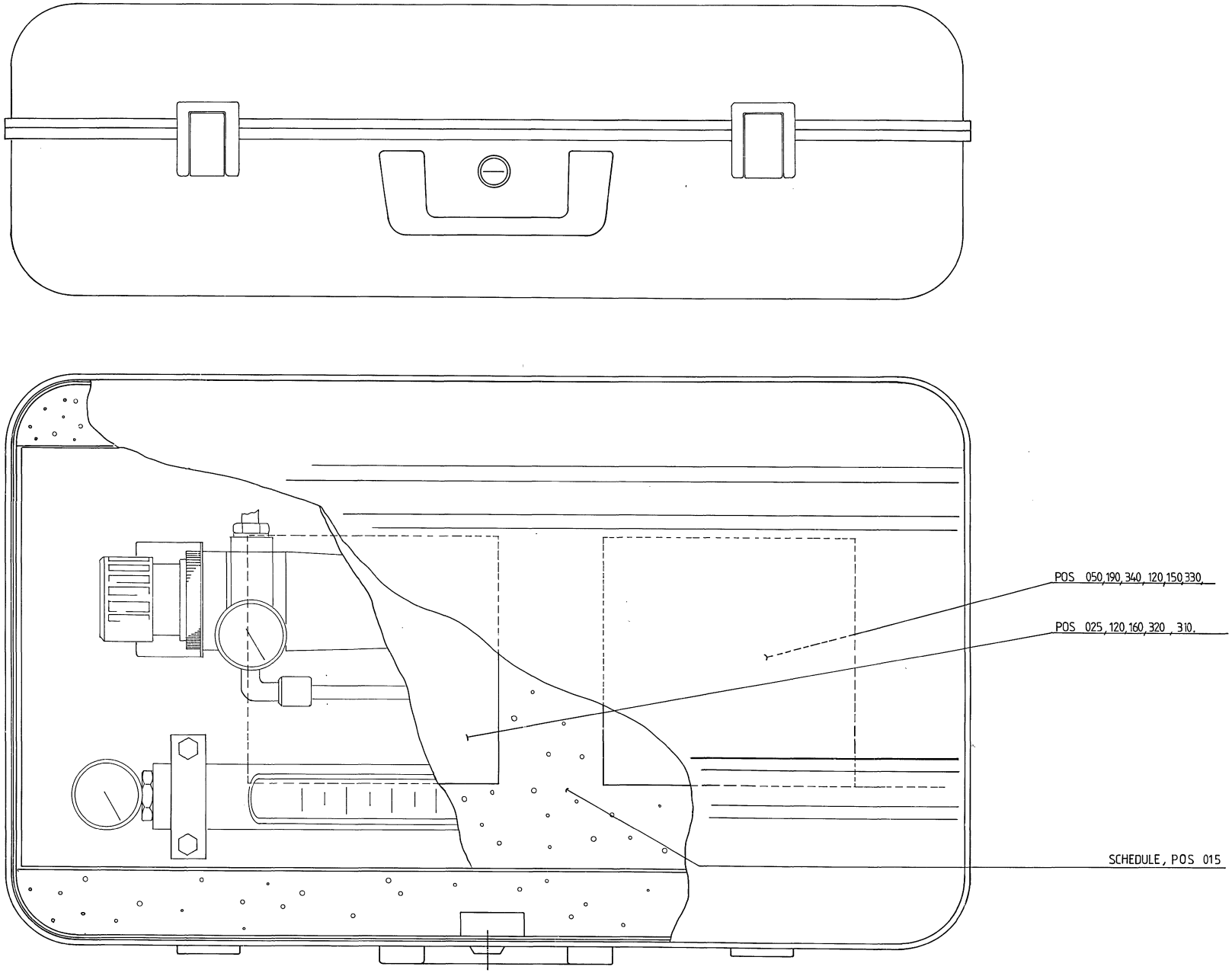
POS 050, 190, 340, 120, 150, 330,
POS 025, 120, 160, 320, 310,
SCHEDULE, POS 015

ECM: 71889 - 19980924
Group number: 533014-0100
Assembly Drawing: 533014-1_1_AA

This list covers pages from 10-54 to 10-57

Pos	Part No	UN	Qty	Description	Page No
-					
010	532676-0000		1	SHEET	
010	533905-0100		1	PONCH	**10-59**
015	533015-0000		1	WIRING DIAGRAM	
020	1360399-0000		4	PIPE HOLDER	
025	493735-0000		1	NIPPLE	
030	532677-0000		1	PIPE	
040	532678-0000		1	DOWEL	
050	532679-0000		1	PLATE	
060	90030-0223		1	BUSHING, INT/EXT. G-THREAD NO. 2531	
070	90030-0224		1	NIPPLES, EXT. THREAD, HEXAGON, NO. 2511	
075	90030-0225		2	BUSHING, INT/EXT. R-THREAD 1/4X3/8	
080	90043-0021		1	PRESSURE GAUGE 0-1 BAR 1/8" D=40	
090	90043-0043		1	PRESSURE GAUGE 0-10 BAR 1/8"	
100	90113-0059		1	FILTER REGULATOR 50UM, B08-396-A3MG	
110	90140-0015		1	T-PIPE, INT. THREAD, 2003-1/8	
120	90163-0056		2	QUICK COUPLING, (F) 5054-6/4	
130	90163-0057		1	QUICK COUPLING, (M) 5150-1/8	
140	90163-0087		1	QUICK COUPLING, (M) 5150-1/4	
150	90166-0124	MM	1250	TUBE 6 MM PA,TRANSP.	
160	90166-0124	MM	1250	TUBE 6 MM PA,TRANSP.	
170	90224-0303		2	CONN. ELBOW 1020-8-1/4	
172	90113-0384		1	BRACKET FOR R11, 5203-06	
175	90243-0137		1	PRESSURE GAUGE KIT 0-50 MM WC, 229900	
180	90243-0147		1	FLOW METER	
190	90330-0029		1	PLUG, EXT. G-THREAD, R-236R3/8	
200	312105-0325		2	SCREW M6S ISO 4017 M5X10 A480	
210	312105-0383		4	SCREW M6S ISO 4014 M6X65 A480	
220	312602-0312		1	HEXAGON NUT, EN 24032 M6M M4 NIPLBR	
230	312605-0314		2	HEXAGON NUT, M6M M5 A280	
240	312605-0316		4	HEXAGON NUT, M6M M6 A280	
250	315103-0136		1	WASHER PLAIN, BRB, 4,3/8,H=0,8 NI PL BR	
260	315105-0146		4	WASHER BRB 5,3X10 RFR	
270	315105-0153		8	WASHER BRB 6,4X12 RFR	
280	315233-0109		2	WASHER CAPTIVE SEALING G1/8	
290	315233-0110		1	WASHER CAPTIVE SEALING G1/4	
295	315233-0111		2	WASHER CAPTIVE SEALING G3/8	
300	315233-0113		2	WASHER CAPTIVE SEALING G1/2	
310	342921-0113		1	STRAIGHT COUPLING,EXT.THREADED 6/4-G1/8"	
320	342921-0114		1	STRAIGHT COUPLING,EXT.THREADED 6/4-G1/4"	
330	342980-0114		1	BANJO-CONNECTION,RING 6/4-G1/4"	
340	342980-0314		1	BANJO-HOLLOW BOLT COUPL,EXT.THR.02-G1/4	
350	342701-0201		1	BUSHING,INT./EXT.G-THREAD G1/4"-G1/8"	

Machine Type	Group Description	Used-In	Group Number	Page No

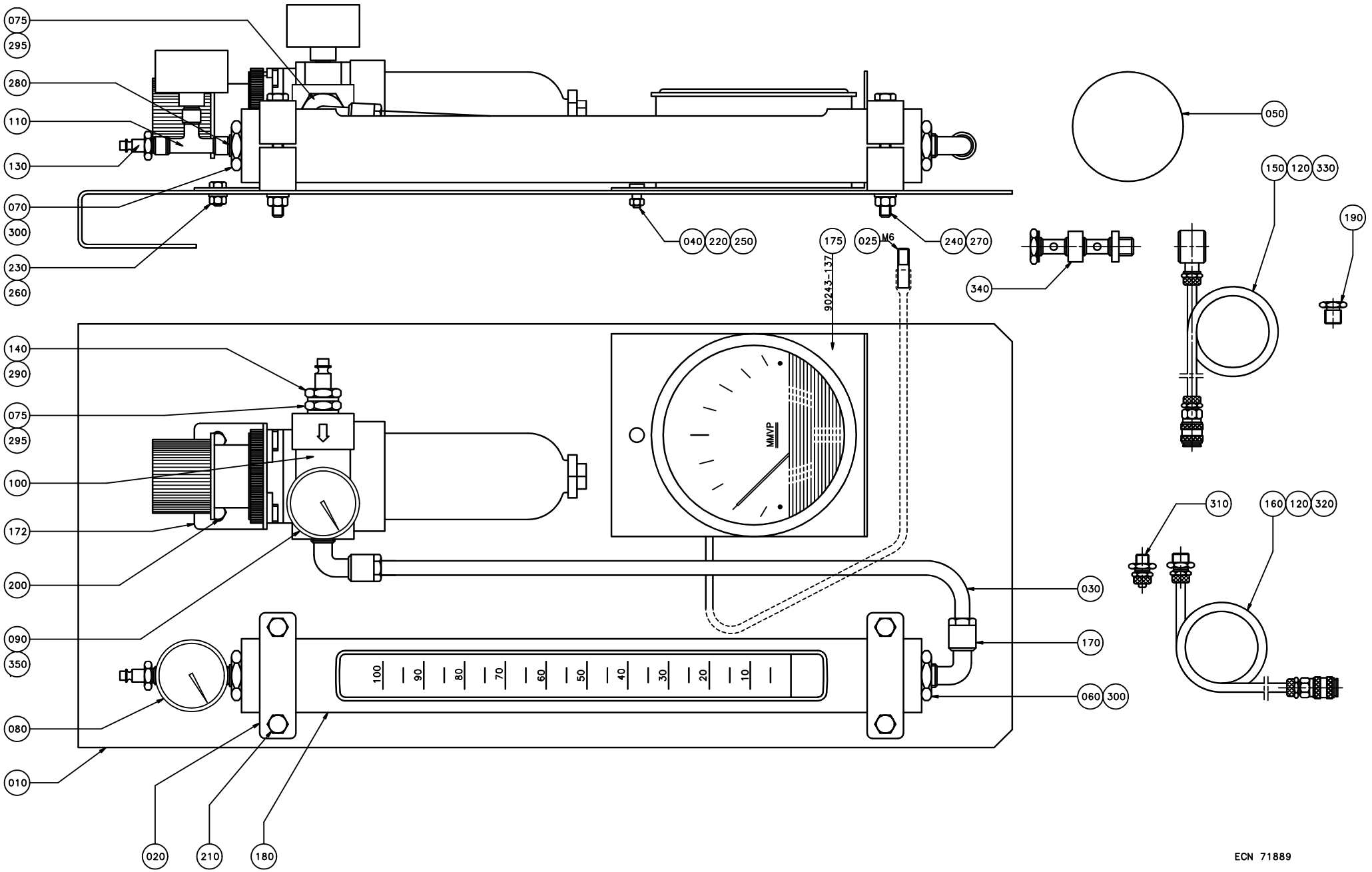
075
295
280
110
130
070
300
230
260
040
220
250
175
025
M6
240
270
90243-137
050
150
120
330
190
340
140
290
075
295
100
172
200
090
350
080
010
020
210
180
MMVP
030
170
060
300
310
160
120
320
100
90
80
70
60
50
40
30
20
10
ECN 71889

ECM: 71889 - 19980924
Group number: 533014-0100
Assembly Drawing: 533014-2_1_AB

This list covers pages from 10-54 to 10-57

Pos	Part No	UN	Qty	Description	Page No
-					
010	532676-0000		1	SHEET	
010	533905-0100		1	PONCH	**10-59**
015	533015-0000		1	WIRING DIAGRAM	
020	1360399-0000		4	PIPE HOLDER	
025	493735-0000		1	NIPPLE	
030	532677-0000		1	PIPE	
040	532678-0000		1	DOWEL	
050	532679-0000		1	PLATE	
060	90030-0223		1	BUSHING, INT/EXT. G-THREAD NO. 2531	
070	90030-0224		1	NIPPLES, EXT. THREAD, HEXAGON, NO. 2511	
075	90030-0225		2	BUSHING, INT/EXT. R-THREAD 1/4X3/8	
080	90043-0021		1	PRESSURE GAUGE 0-1 BAR 1/8" D=40	
090	90043-0043		1	PRESSURE GAUGE 0-10 BAR 1/8"	
100	90113-0059		1	FILTER REGULATOR 50UM, B08-396-A3MG	
110	90140-0015		1	T-PIPE, INT. THREAD, 2003-1/8	
120	90163-0056		2	QUICK COUPLING, (F) 5054-6/4	
130	90163-0057		1	QUICK COUPLING, (M) 5150-1/8	
140	90163-0087		1	QUICK COUPLING, (M) 5150-1/4	
150	90166-0124	MM	1250	TUBE 6 MM PA,TRANSP.	
160	90166-0124	MM	1250	TUBE 6 MM PA,TRANSP.	
170	90224-0303		2	CONN. ELBOW 1020-8-1/4	
172	90113-0384		1	BRACKET FOR R11, 5203-06	
175	90243-0137		1	PRESSURE GAUGE KIT 0-50 MM WC, 229900	
180	90243-0147		1	FLOW METER	
190	90330-0029		1	PLUG, EXT. G-THREAD, R-236R3/8	
200	312105-0325		2	SCREW M6S ISO 4017 M5X10 A480	
210	312105-0383		4	SCREW M6S ISO 4014 M6X65 A480	
220	312602-0312		1	HEXAGON NUT, EN 24032 M6M M4 NIPLBR	
230	312605-0314		2	HEXAGON NUT, M6M M5 A280	
240	312605-0316		4	HEXAGON NUT, M6M M6 A280	
250	315103-0136		1	WASHER PLAIN, BRB, 4,3/8,H=0,8 NI PL BR	
260	315105-0146		4	WASHER BRB 5,3X10 RFR	
270	315105-0153		8	WASHER BRB 6,4X12 RFR	
280	315233-0109		2	WASHER CAPTIVE SEALING G1/8	
290	315233-0110		1	WASHER CAPTIVE SEALING G1/4	
295	315233-0111		2	WASHER CAPTIVE SEALING G3/8	
300	315233-0113		2	WASHER CAPTIVE SEALING G1/2	
310	342921-0113		1	STRAIGHT COUPLING,EXT.THREADED 6/4-G1/8"	
320	342921-0114		1	STRAIGHT COUPLING,EXT.THREADED 6/4-G1/4"	
330	342980-0114		1	BANJO-CONNECTION,RING 6/4-G1/4"	
340	342980-0314		1	BANJO-HOLLOW BOLT COUPL,EXT.THR.02-G1/4	
350	342701-0201		1	BUSHING,INT./EXT.G-THREAD G1/4"-G1/8"	

Machine Type	Group Description	Used-In	Group Number	Page No

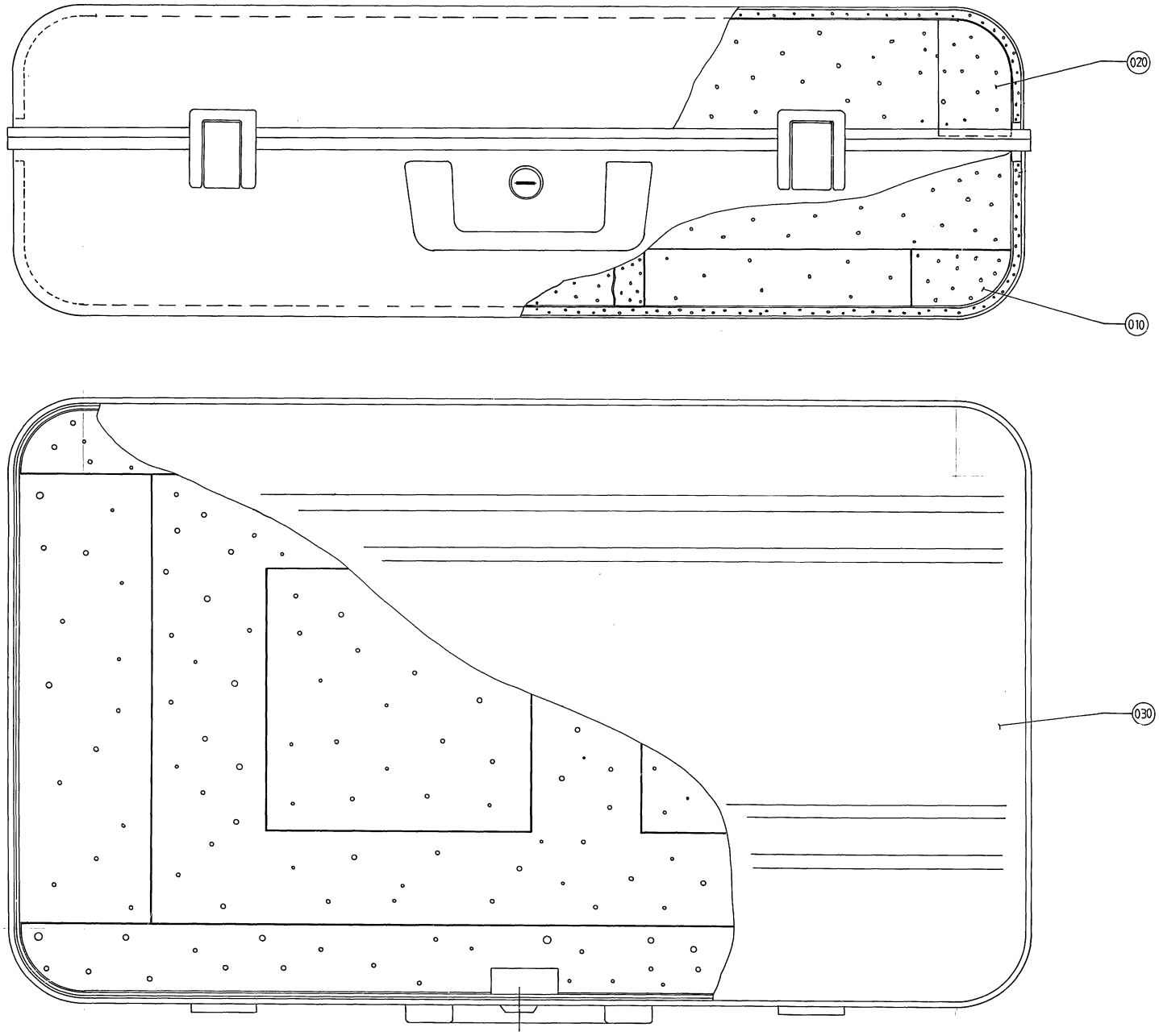
020
010
030

ECM: - -
Group number: 533905-0100
Assembly Drawing: 533905-1_1_AA

Pos	Part No	UN	Qty	Description	Page No
-					
010	533374-0000		1	FITMENT BOTTOM	
020	533906-0000		1	FITMENT COVER	
030	90243-0118		1	TOOL BOX, NO. ZERO 105X-SI	

Pos	Part No	UN	Qty	Description	Page No

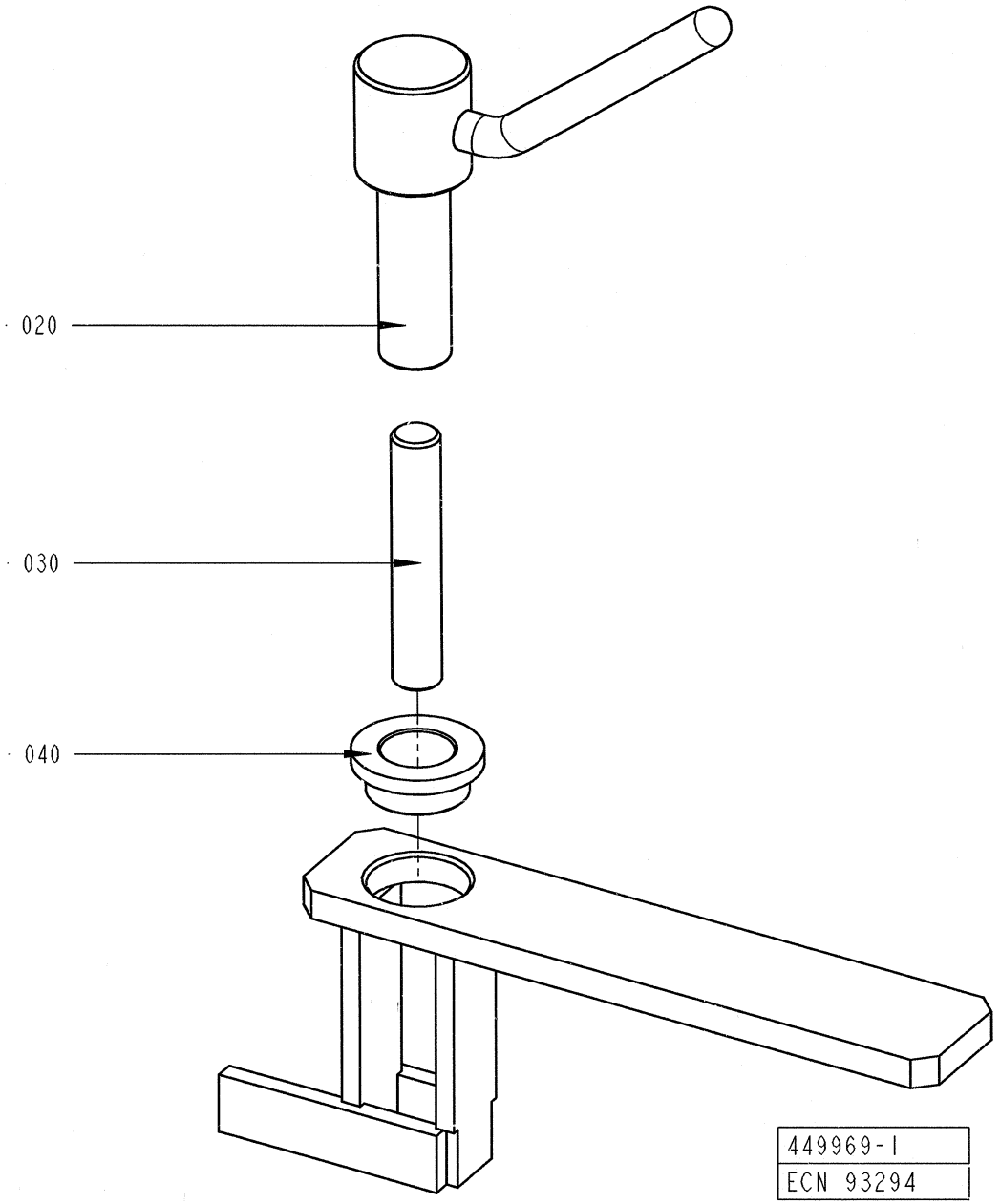
020
030
040
449969-1
ECN 93294

ECM: 6514 -
Group number: 449969-0100
Assembly Drawing: 449969-1_1_AA

Pos	Part No	UN	Qty	Description	Page No
-					
010	449970-0000		1	HOLDER	
020	449971-0000		1	SPINDLE	
030	312306-0546		1	SCREW ISO4026 M12X70 FZB	
040	321101-0222		1	FLANGE BUSHING, 18X25X12	

Pos	Part No	UN	Qty	Description	Page No

Machine Type | Group Description | Used-In | Group Number | Page No

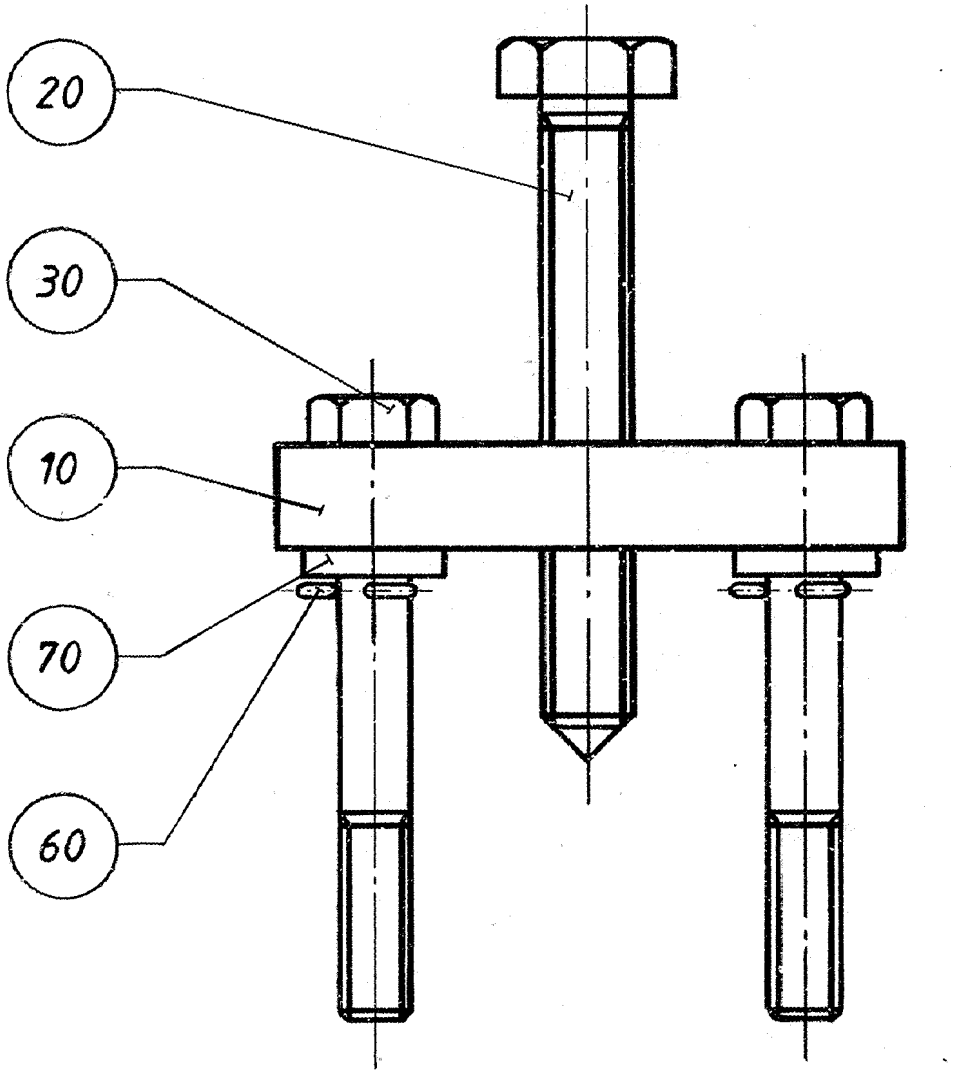
20
30
10
70
60

ECM: - -
Group number: 74305-0100
Assembly Drawing: 74305-1_1_AA

Pos	Part No	UN	Qty	Description	Page No
-					
010	74363-0000		1	FASTENING PLATE	
020	74364-0000		1	EXTRACTOR BOLT	
030	74365-0000		2	SCREW	
060	311411-0152		2	SPLIT PIN SP2X16RFR	
070	315115-0165		2	WASHER PLAIN, TBRB 8,4/16 H=3	

Pos	Part No	UN	Qty	Description	Page No

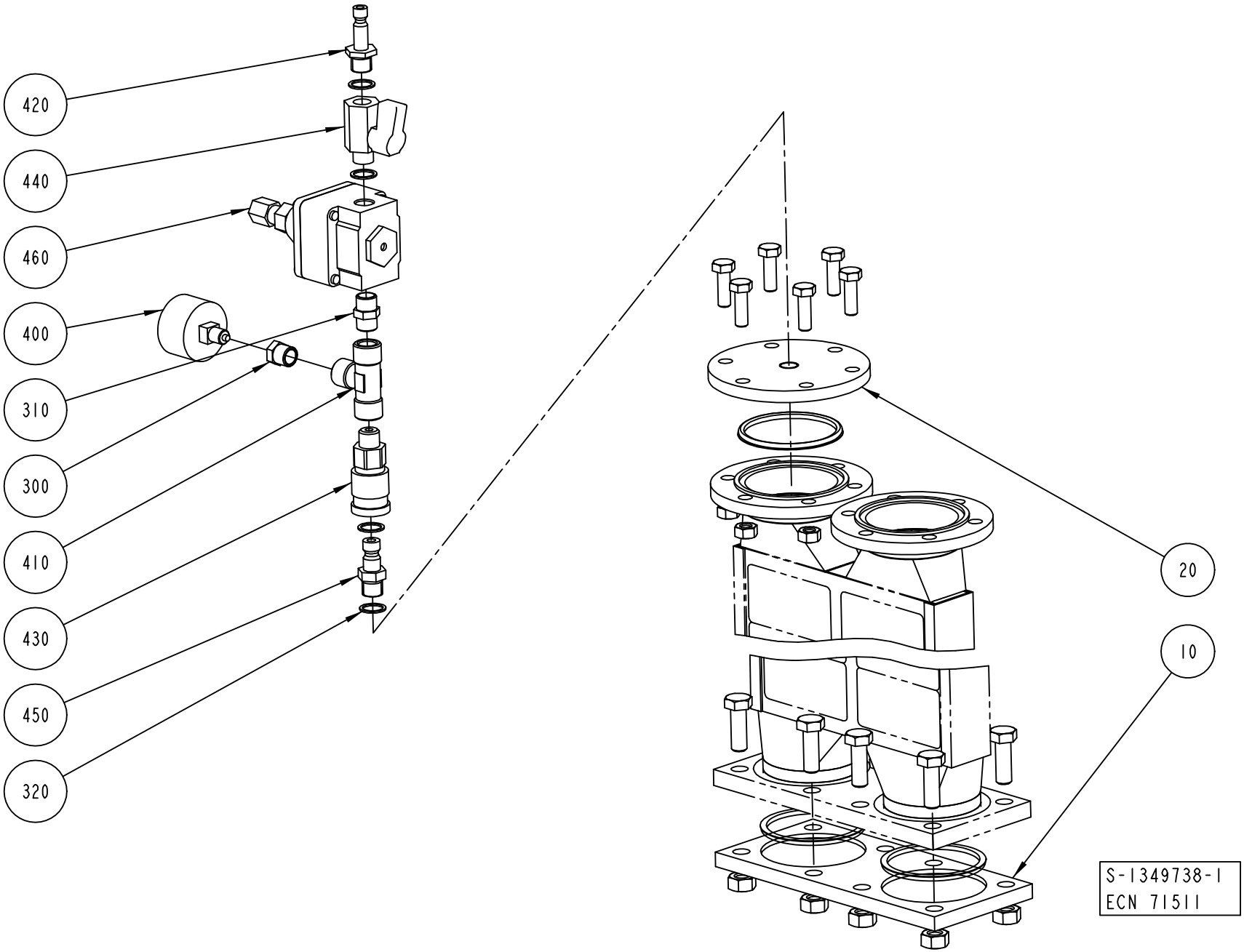
420
440
460
400
310
300
410
430
450
320
20
10
S-1349738-1
ECN 71511

ECM: 71511 - 19981102
Group number: 1349738-0100
Assembly Drawing: 1349738-1_1_AA

Pos	Part No	UN	Qty	Description	Page No
-					
010	1348263-0000		1	FLANGE	
020	979951-0000		1	FLANGE	
300	342701-0201		1	BUSHING,INT./EXT.G-THREAD G1/4"-G1/8"	
310	342700-0110		1	NIPPLES,HEXAGON,EXT.G-THREAD G1/4"-G1/4"	
320	315233-0110		4	WASHER CAPTIVE SEALING G1/4	
400	90043-0021		1	PRESSURE GAUGE 0-1 BAR 1/8" D=40	
410	90140-0018		1	T-PIPE, INT. THREAD, 2003-1/4	
420	90163-0007		1	CONNECTION	
430	90163-0016		1	QUICK COUPLING, (F) LP 006-0-WR013	
440	90187-0045		1	BALL VALVE G1/4 CR PL	
450	90163-0113		1	QUICK COUPLING, (M) LP-006-1-WR013-22	
460	90113-0056		1	REGULATOR, 11-818-998	
500	567372-0000		1	INSTRUCTION FOR USE	

Pos	Part No	UN	Qty	Description	Page No

This page is intentionally left blank.

ECM: 211826 - 20051216
Group number: 2556261-0100
Assembly Drawing:

Pos	Part No	UN	Qty	Description	Page No
-					
010	527898-0100		1	MKS CONTAINER H2O2	**2-35, 10-69**
020	529345-0100		1	FILLING STATION H2O2	**10-71**
030	532210-0100		1	PEROXIDE CONTAINER TROLLEY	**10-73**
040	1035201-0100		1	PAPER REEL HOLDER	**10-75**
050	1538186-0100		1	PAPER TROLLEY	**10-77**
070	2720716-0000		1	LIFTING DEVICE	
080	2514392-0100		1	MACHINE CARRIAGE	**10-89**
090	90031-0300		1	PLC,COMM.CABLE AND ADAPTER	
100	90427-0014		1	INK JET PRINTER A300 STD 3M CONDUIT	
110	90459-0285		1	CD UNIT E100009A	
120	1369439-0102		1	PLMS ON-LINE	
0010	*48633-0102*		*1*	*PLMS ON-LINE CLIENT PROGRAM*	
0020	*58789-0000*		*1*	*DOCUMENTATION DISKETT*	
0030	*1369432-0000*		*1*	*LABELS, DISKETT*	
0040	*58787-0000*		*1*	*SHORT FORM INSTRUCTIONS*	
0050	*58788-0000*		*1*	*MASTER DISKETT*	
0020	*48635-0102*		*1*	*PLMS ON-LINE SERVER PROGRAM*	
0020	*58801-0000*		*1*	*DOCUMENTATION DISKETT*	
0030	*1369437-0000*		*1*	*LABELS, DISKETT*	
0040	*58799-0000*		*1*	*SHORT FORM INSTRUCTIONS*	
0050	*58800-0000*		*1*	*MASTER DISKETT*	
0030	*81595-0101*		*1*	*USER MANUAL PLMS ON-LINE*	
0040	*81596-0101*		*1*	*INSTALLATION MANUAL PLMS ON-LINE*	
130	1520633-0002		12	DOLLY	
140	2587326-0000		2	BRACKET	
150	312105-0489		8	SCREW M6S ISO 4017 M10X16 A480	
160	90459-1898		4	LIFTING EYE BOLT, VLBG(1)1.0T M12 TURN.	
170	2756247-0000		8	WASHER	
180	318302-0120		4	EYE BOLT NUT, TYPE, LH, M10	
190	312105-0507		4	SCREW M6S ISO 4014 M10X80 A480	

Pos	Part No	UN	Qty	Description	Page No

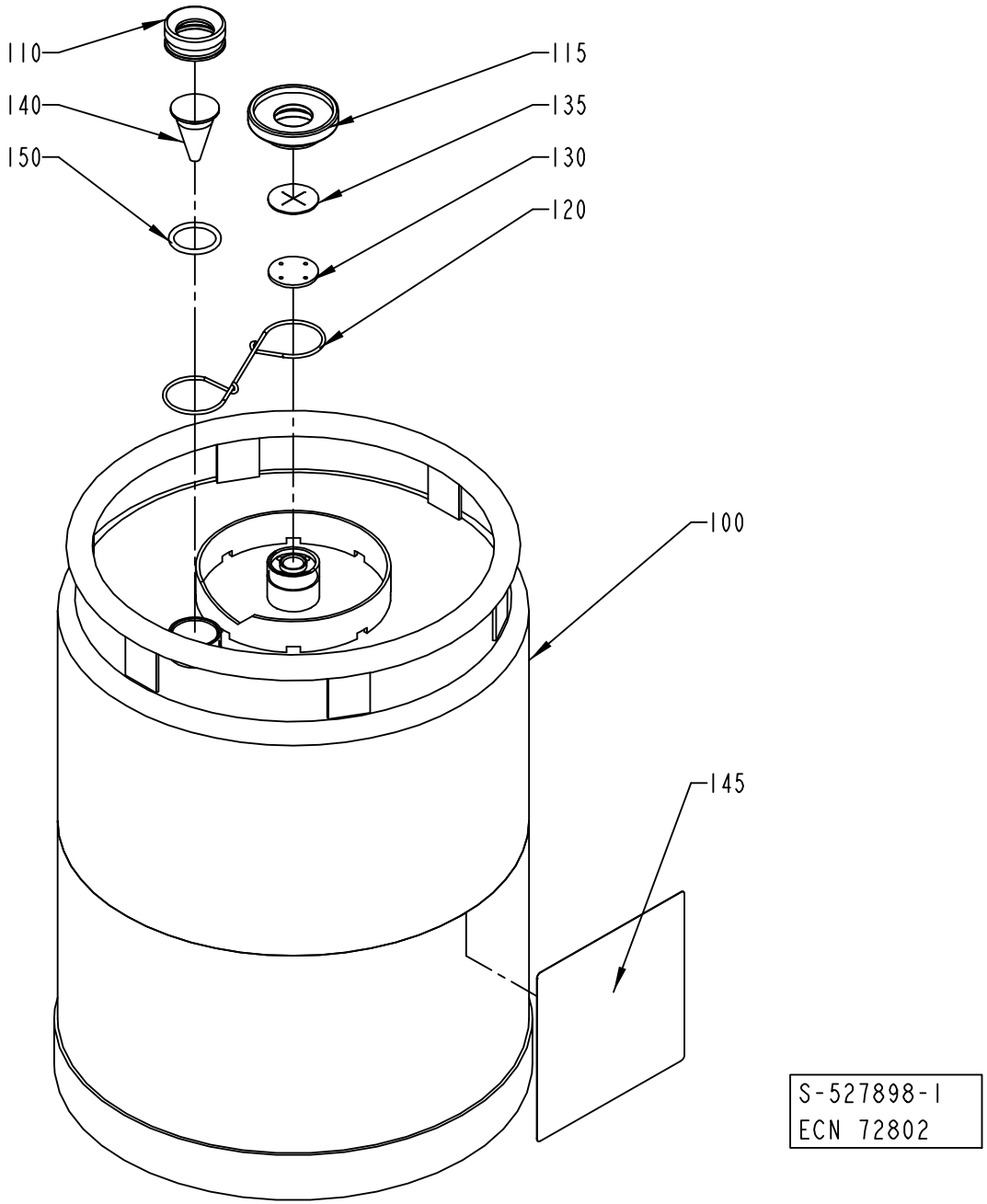
110
140
150
115
135
130
120
100
145
S-527898-1
ECN 72802

ECM: 224840 - 20050831
Group number: 527898-0100
Assembly Drawing: 527898-1_1_AB

Pos	Part No	UN	Qty	Description	Page No	Pos	Part No	UN	Qty	Description	Page No
-											
100	561427-0000		1	CONTAINER							
110	273977-0000		1	NUT							
115	273996-0000		1	NUT							
120	273980-0000		1	SPRING							
130	565250-0000		1	WASHER							
135	565251-0000		1	VALVE							
140	273978-0000		1	LEVEL GLAS							
145	532655-0000		1	CAUTION SIGN							
150	927422-0003		1	O.RING 24.2X3 SILICONE							

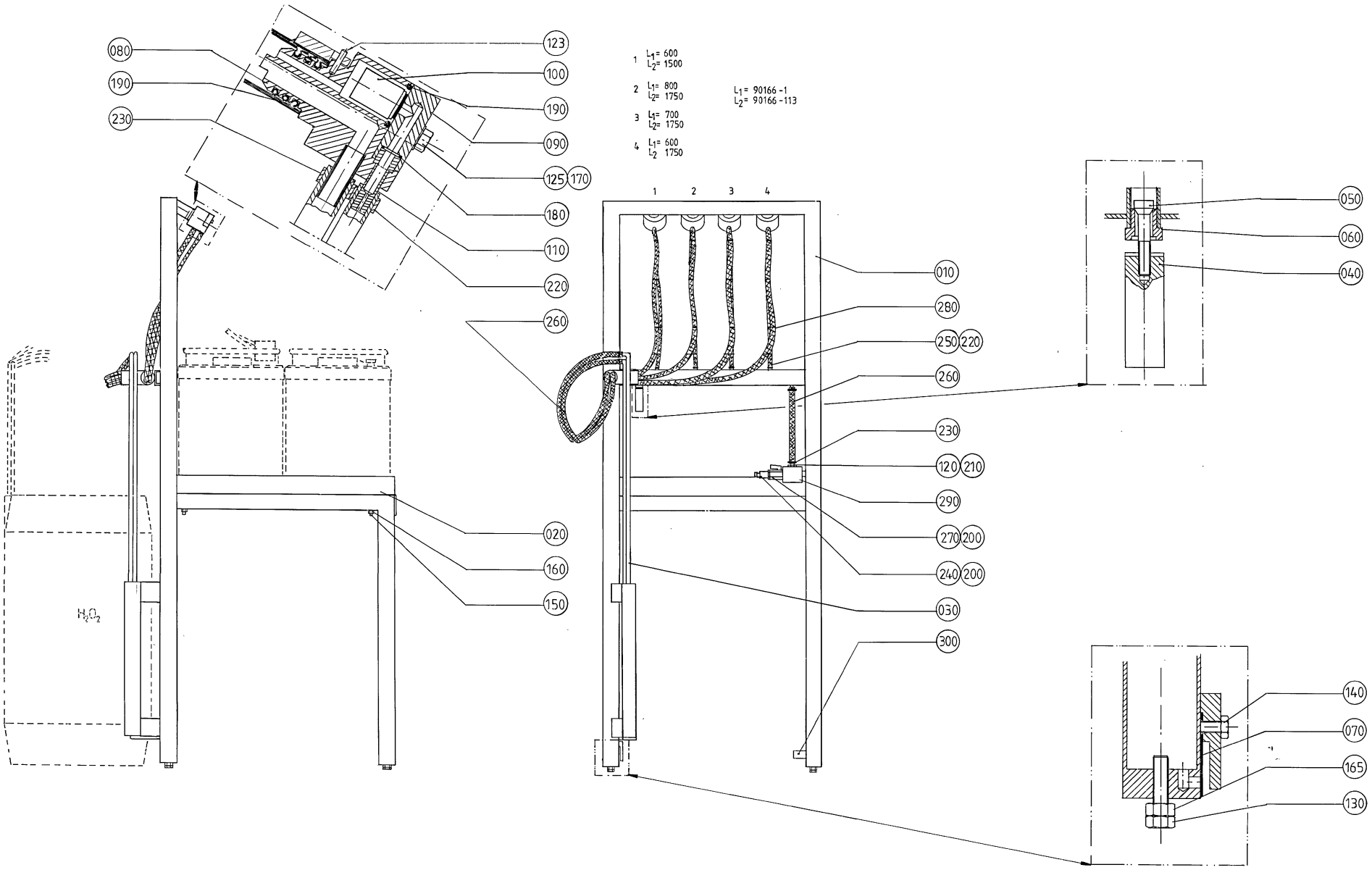
080
190
230
123
100
190
090
125
170
180
110
220
260
020
160
150
1 L1= 600 L2= 1500
2 L1= 800 L2= 1750
3 L1= 700 L2= 1750
4 L1= 600 L2 1750
L1= 90166 -1
L2= 90166 -113
1 2 3 4
010
280
250
220
260
230
120
210
290
270
200
240
200
030
300
050
060
040
140
070
165
130
H2O2

ECM: - -
Group number: 529345-0100
Assembly Drawing: 529345-1_1_AA

Pos	Part No	UN	Qty	Description	Page No
-					
010	534692-0000		1	FRAME SECTION	
020	534693-0000		1	PLATE	
030	534694-0000		1	SUCTIONPIPE	
040	534695-0000		1	WEIGHT	
050	534696-0000		1	VALVE	
060	534697-0000		1	VALVE HOUSING	
070	534691-0000		1	DIAPHRAGM	
080	534637-0000		4	ATTACHMENT	
090	534636-0000		4	LEVEL GLAS	
100	534635-0000		4	VALVE	
110	534634-0000		4	PIPE	
120	534698-0000		1	NIPPLE	
123	311103-0235		1	PARALLEL PIN ISO 2338 3M6X14 A1	
125	312105-0374		8	SCREW M6S ISO 4014 M6X30 A480	
130	312105-0455		4	SCREW M6S ISO 4017 M8X30 A480	
140	312125-0327		1	SCREW ISO 1207 M5X12 A4	
150	312145-0380		4	SCREW ISO 2009 MFS M6X50 A4	
160	312812-0316		4	HEXAGON NUT, NY-LOCK M6 A480	
165	312605-0318		4	HEXAGON NUT, M6M M8 A280	
170	315105-0153		8	WASHER BRB 6,4X12 RFR	
180	927421-0005		4	O-RING 7.3X2.4 SILICONE	
190	927422-0001		16	O-RING 19.2X3 SILICONE	
200	315233-0110		2	WASHER CAPTIVE SEALING G1/4	
210	315233-0113		2	WASHER CAPTIVE SEALING G1/2	
220	342991-0100		8	HOSE CLIP,WORM DRIVE TYPE 10-13	
230	342991-0101		10	HOSE CLIP,WORM DRIVE TYPE (13)-16	
240	90163-0007		1	CONNECTION	
250	90166-0045	MM	3500	HOSE PVC TRANSP. 6/12	
260	90166-0113	MM	7500	HOSE	
270	90187-0045		1	BALL VALVE G1/4 CR PL	
280	352113-0102		30	CLIP-STRIP, BLACK 188X4,8 MM	
290	90425-0016		1	MECMAN TYPE E120 735-120-000	
300	90328-0025		1	SILENCER G1/2"	

Pos	Part No	UN	Qty	Description	Page No

Machine Type | Group Description | Used-In | Group Number | Page No

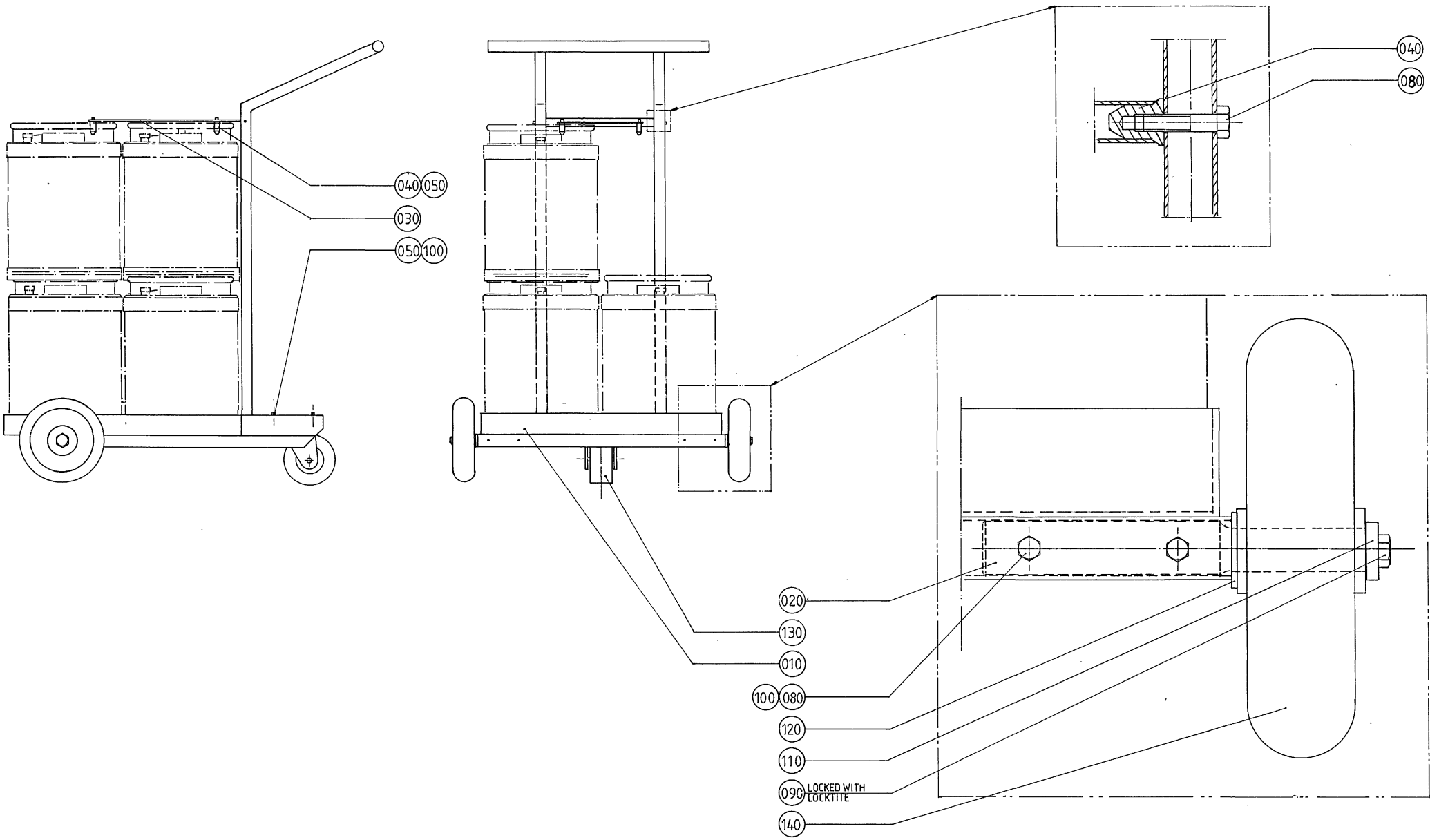
040
050
030
050
100
040
080
020
130
010
100
080
120
110
090
LOCKED WITH LOCKTITE
140

ECM: - -
Group number: 532210-0100
Assembly Drawing: 532210-1_1_AA

Pos	Part No	UN	Qty	Description	Page No
-					
010	273985-0000		1	CARRIAGE	
020	532208-0000		2	SHAFT	
030	532209-0000		1	SHEET	
040	532211-0000		6	DOWEL	
050	312105-0449		8	SCREW M6S ISO 4017 M8X16 A480	
080	312105-0459		6	SCREW M6S ISO 4014 M8X40 A480	
090	312105-0491		2	SCREW M6S ISO 4017 M10X20 A480	
100	312605-0318		4	HEXAGON NUT, M6M M8 A280	
110	315115-0173		2	WASHER PLAIN, TBRB 10,5/22 H=4	
120	315105-0192		2	WASHER BRB 21X37 RFR	
130	90191-0060		1	CASTOR WHEEL, NO. 1599PRT	
140	90191-0047		2	WHEEL, NO.798 821	

Pos	Part No	UN	Qty	Description	Page No

PAPER REEL HOLDER

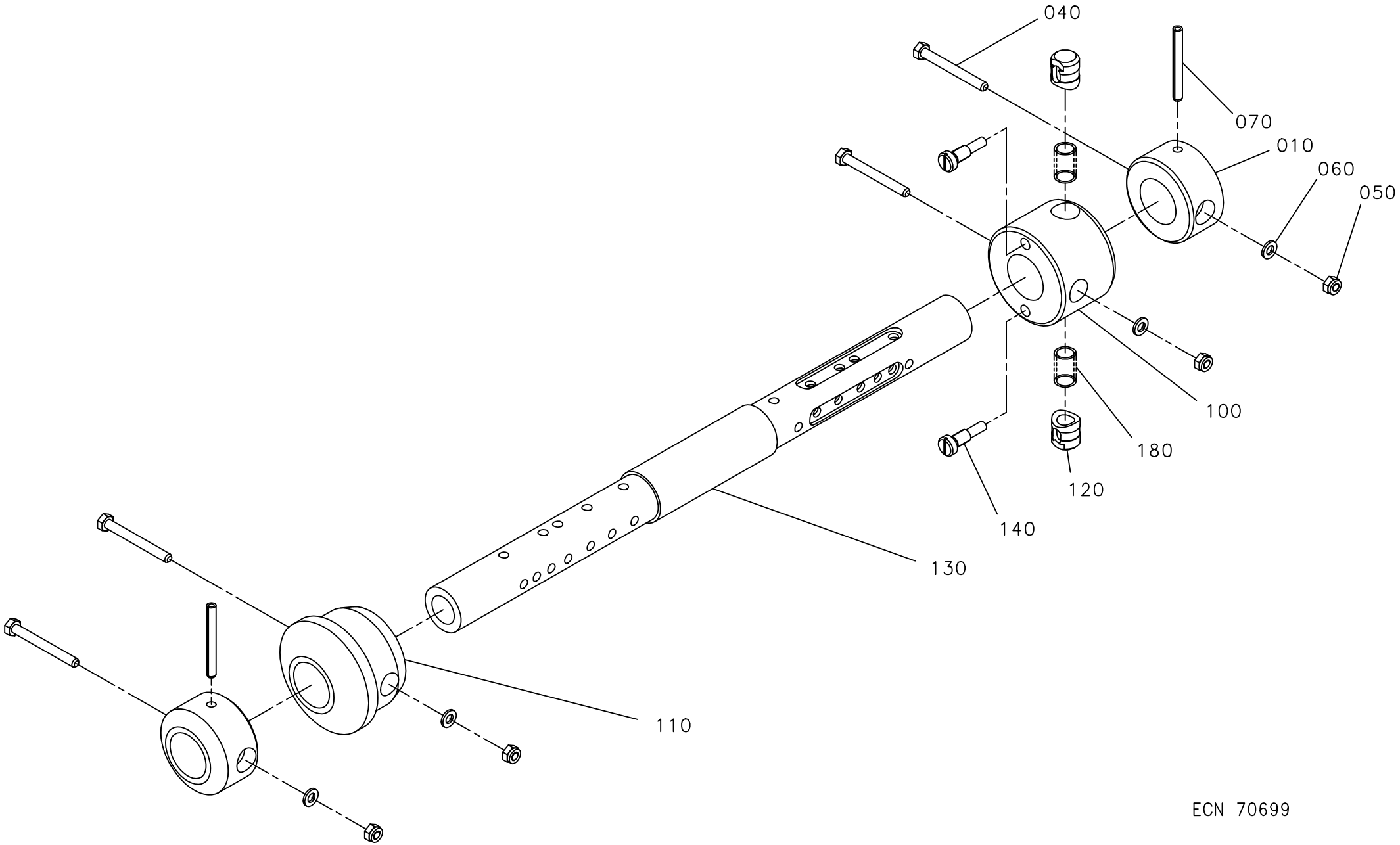

ECN 70699

ECM: 202694 - 20050224
Group number: 1035201-0100
Assembly Drawing: 1035201-1_1_AA

Pos	Part No	UN	Qty	Description	Page No
0200S, 0200B, 0500S, 0250S, 0250B, 0200SQ, 0250SQ, 0330SQ					
010	440259-0000		2	RETAINING RING	
040	312101-0381		4	SCREW M6S M6X55 FZB	
050	312812-0316		4	HEXAGON NUT, NY-LOCK M6 A480	
060	315101-0153		4	WASHER PLAIN, BRB, 6,4/12 H=1,5	
100	271239-0000		1	SLEEVE	
110	272810-0001		1	SLEEVE	
0500B, 1000B					
040	312101-0381		2	SCREW M6S M6X55 FZB	
050	312812-0316		2	HEXAGON NUT, NY-LOCK M6 A480	
060	315101-0153		2	WASHER PLAIN, BRB, 6,4/12 H=1,5	
100	271239-0000		1	SLEEVE	
110	272810-0001		1	SLEEVE	
1000S					
040	312101-0381		2	SCREW M6S M6X55 FZB	
050	312812-0316		2	HEXAGON NUT, NY-LOCK M6 A480	
060	315101-0153		2	WASHER PLAIN, BRB, 6,4/12 H=1,5	
100	569942-0000		1	SLEEVE	
110	569943-0000		1	SLEEVE	
1000SQ, 0750SQ					
010	574051-0000		2	RETAINING RING	
040	312101-0381		2	SCREW M6S M6X55 FZB	
050	312812-0316		2	HEXAGON NUT, NY-LOCK M6 A480	
060	315101-0153		2	WASHER PLAIN, BRB, 6,4/12 H=1,5	
070	311112-0350		2	SPRING PIN, ISO 8752 6X55-C	
100	271239-0000		1	SLEEVE	
110	272810-0001		1	SLEEVE	
Common Parts					
120	272813-0000		2	PLUNGER	
130	1538597-0000		1	SHAFT	
140	271241-0000		2	SCREW	
180	90335-0025		2	COMP. SPRING 22010, 1X11X26	

Pos	Part No	UN	Qty	Description	Page No

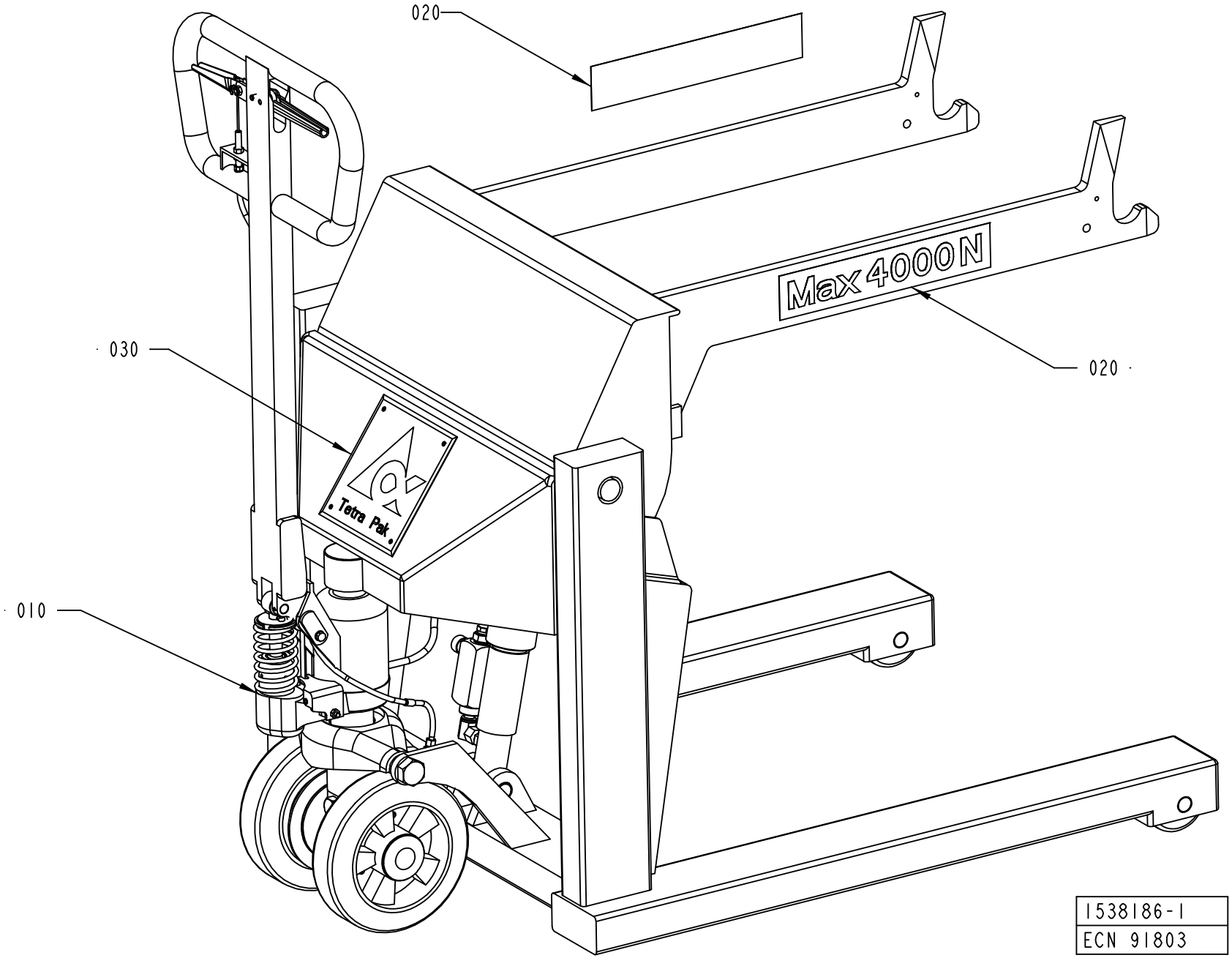
020
Max 4000N
020
030
Tetra Pak
010
1538186-1
ECN 91803

ECM: 211196 - 20050520
Group number: 1538186-0100
Assembly Drawing: 1538186-1_1_AA

Pos	Part No	UN	Qty	Description	Page No
A3/FLEX TBA 1890S, A3/FLEX TBA 2000S					
010	797090-0401		1	JUMBO REEL TRUCK	
A3/FLEX TBA 0500B, A3/FLEX TBA 1000B, A3/FLEX TBA 1000S, A3/FLEX TBA 1000SQ, A3/FLEX TPA 1000SQ, A3/FLEX TBA 0200S, A3/FLEX TBA 1500S, A3/FLEX TBA 0200B, A3/FLEX TBA 0250B, A3/FLEX TBA 0330S, A3/FLEX TPA 0330SQ, A3/FLEX TPA 0500SQ, A3/FLEX TBA 0200M, A3/FLEX TBA 0250S, A3/FLEX TBA 0500S, A3/FLEX TPA 0250SQ, A3/FLEX TPA 0200SQ, A3/FLEX TPA 0750SQ, A3/FLEX TBA 0200SQ, A3/FLEX TBA 0250SQ					
010	90458-1474		1	PAPER TROLLEY, 32 04 192 3	**10-79**
Common Parts					
020	522308-0000		2	SIGN	
030	574658-0000		1	LOGOTYPE TP	

Pos	Part No	UN	Qty	Description	Page No

PAPER TROLLEY, 32 04 192 3

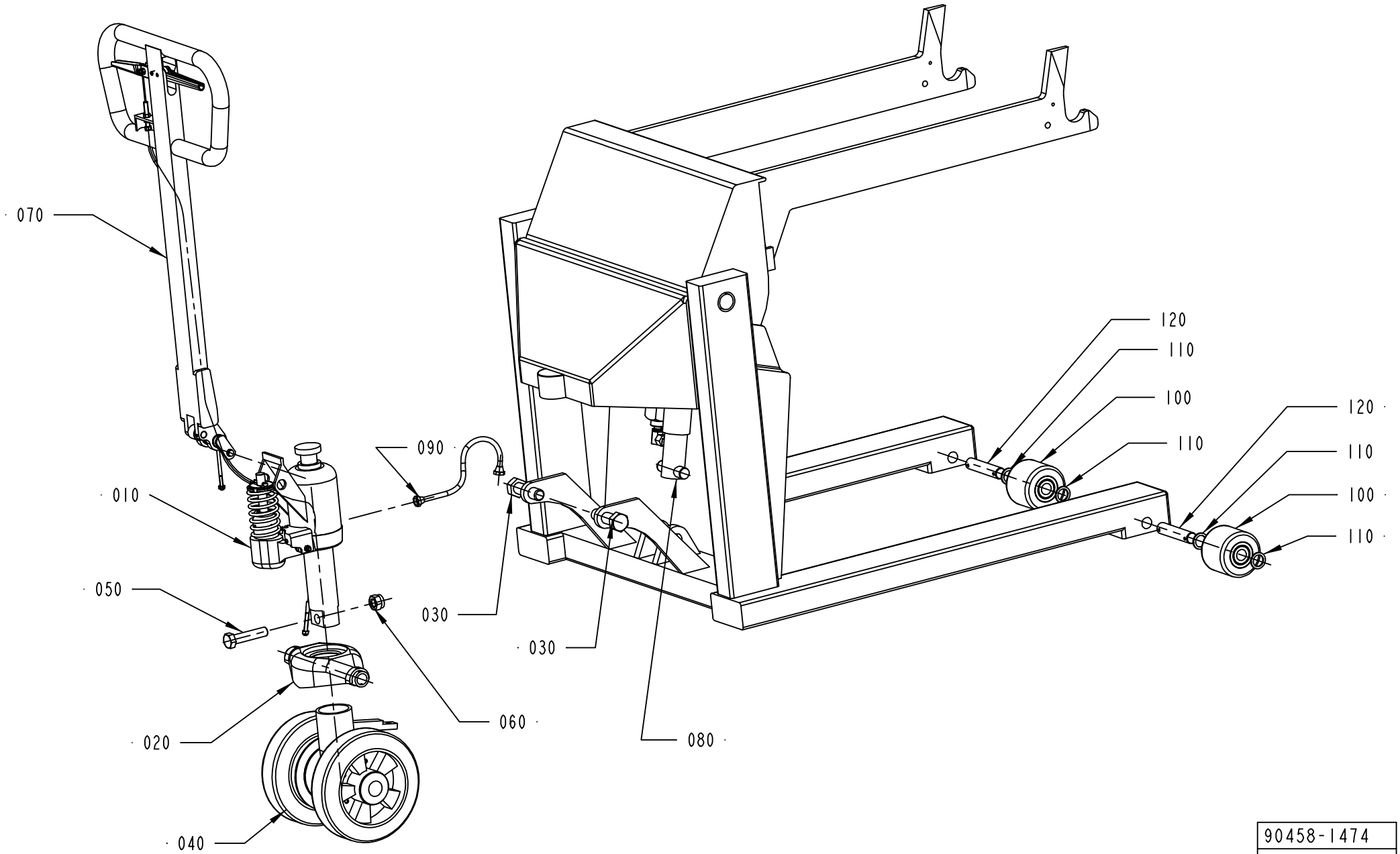

90458-1474
ECM 133556

ECM: 133556 - 20030513
Group number: 90458-1474
Assembly Drawing: 90458-1474_1_AB

Pos	Part No	UN	Qty	Description	Page No
-					
010	90458-1473		1	PUMP, 34 73 521 7	**10-81**
020	90067-0368		1	YOKE	
030	312101-0678		2	SCREW M6S M20X70 FZB	
040	1558477-0100		1	WHEEL	**10-83**
050	312105-0634		1	SCREW M6S ISO 4014 M16X70 A480	
060	312812-0324		1	HEXAGON NUT, NY-LOCK M16 A480	
070	1558479-0100		1	HANDLE	**10-85**
080	1558480-0100		1	LIFTING CYLINDER	**10-87**
090	90067-0365		1	HYDRAULIC HOSE, 32 04 169 1	
100	90067-0370		2	WHEEL, 32 04 176 6	
110	90067-0371		4	SLEEVE, 32 04 175 8	
120	90067-0372		2	SHAFT, 32 04 174 1	

Pos	Part No	UN	Qty	Description	Page No

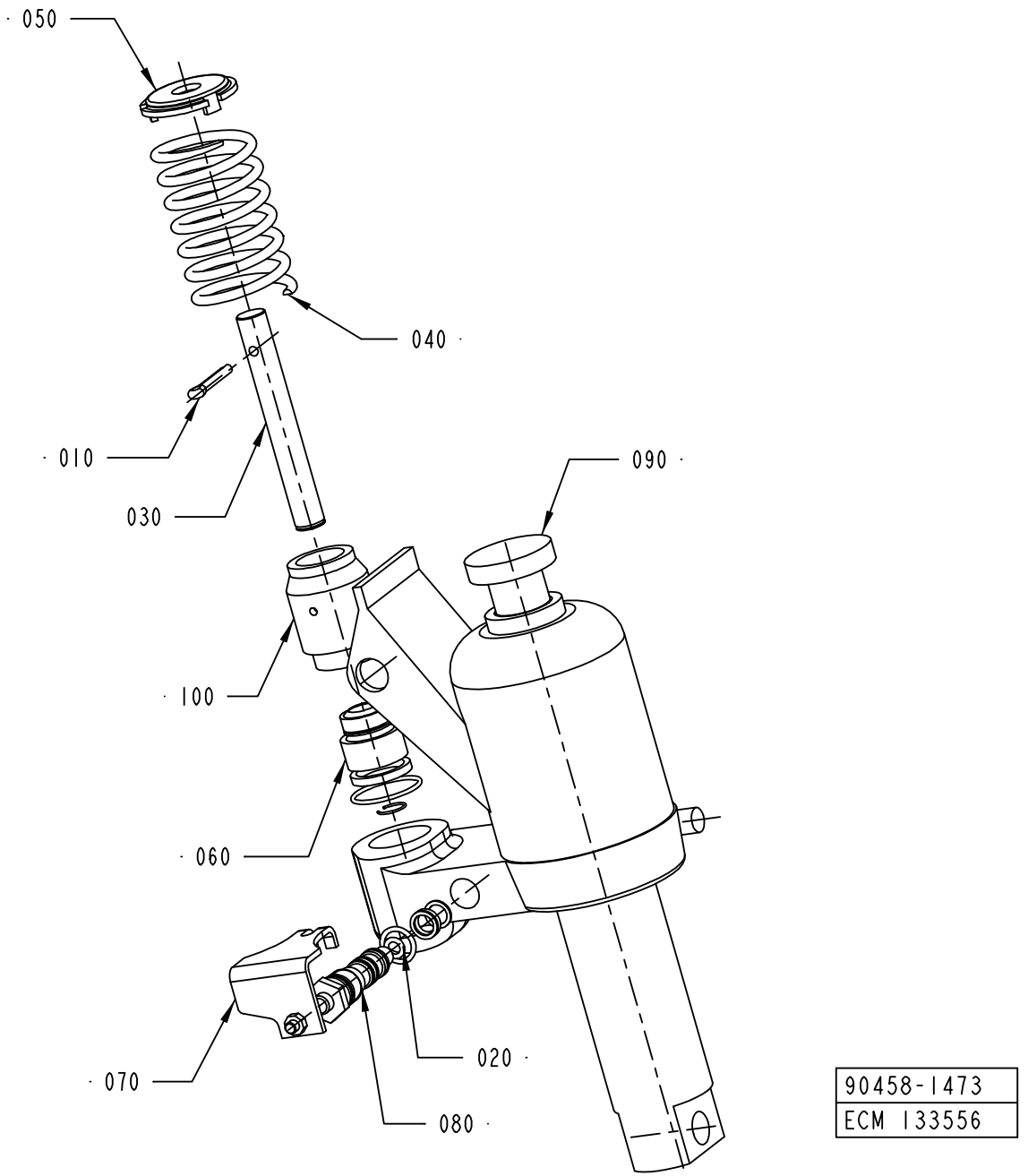
· 050
040 ·
· 010
030
090 ·
· 100
· 060
· 070
020 ·
080 ·
90458-1473
ECM 133556

ECM: 133556 - 20030513
Group number: 90458-1473
Assembly Drawing: 90458-1473_1_AB

Pos	Part No	UN	Qty	Description	Page No
-					
010	90458-1468		1	SPLIT PIN, 43 71 234 8	
020	90067-0351		1	SEAL KIT	
030	90067-0354		1	PUMP PISTON	
040	90067-0355		1	COMPRESSION SPRING	
050	90067-0356		1	TOP WASHER	
060	90067-0357		1	REPAIR KIT	
070	90067-0369		1	VALVE ARM	
080	90458-1470		1	SINK VALVE COMPL, 34 73 094 5	
090	90458-1469		1	PUMP HOUSING, 34 73 517 5	
100	90458-1393		1	PUMP CYLINDER, 34 73 522 5	

Pos	Part No	UN	Qty	Description	Page No

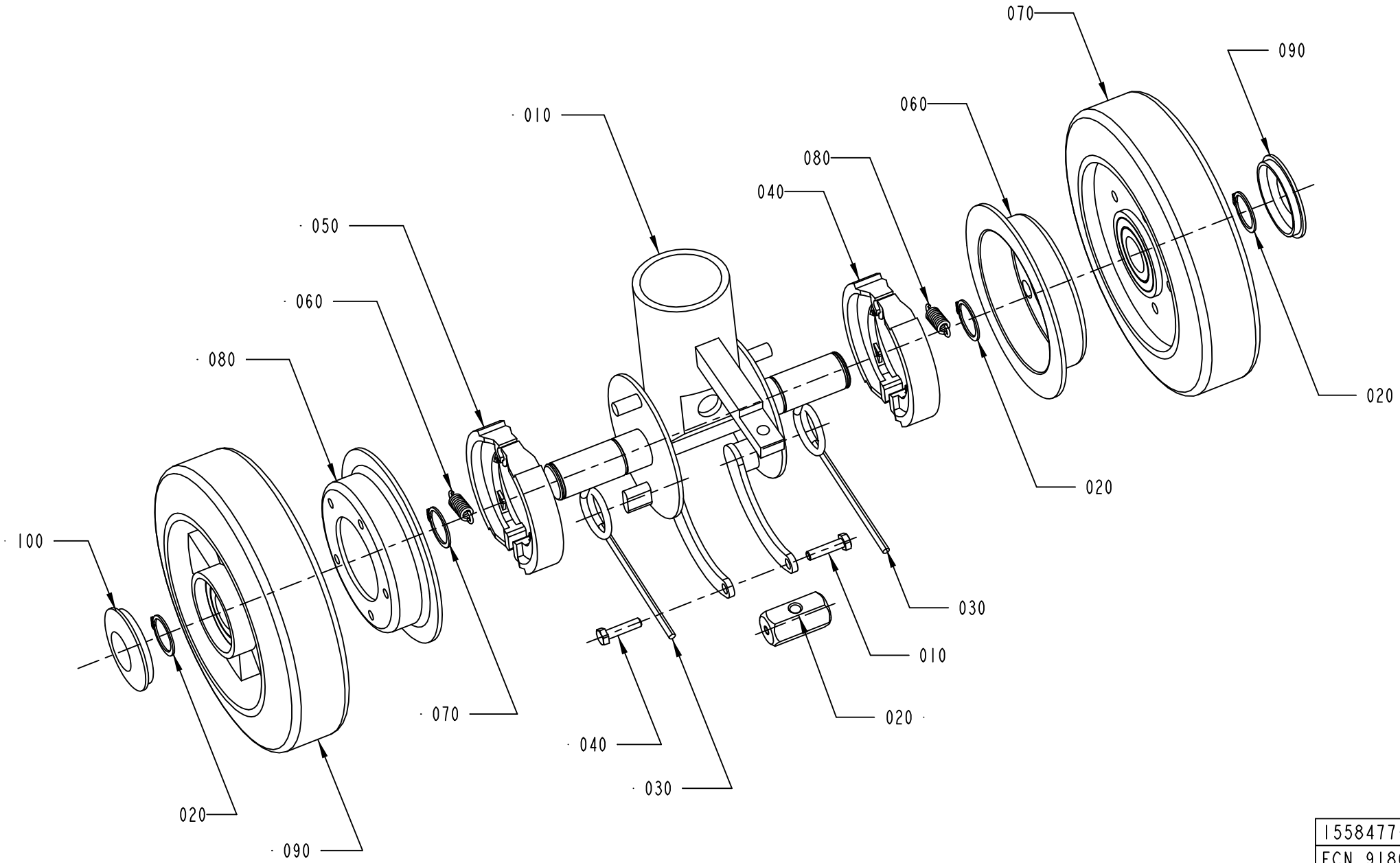

1558477-1
ECN 91803

ECM: 91832 - 20010504
Group number: 1558477-0100
Assembly Drawing: 1558477-1_1_AA

Pos	Part No	UN	Qty	Description	Page No
-					
010	90067-0336		1	GUIDE SHAFT UNIT, 32 82 123 3	
030	90067-0302		2	TORSION SPRING	
040	312105-0372		2	SCREW M6S ISO 4017 M6X25 A480	
050	90067-0317		2	BRAKE LINING	
060	90067-0342		2	TENSION SPRING	
070	315750-0119		4	RETAINING RING SHAFT DIN 471 ST 25	
080	90067-0337		2	BRAKE DRUM	
090	90067-0338		2	GUIDE ROLLER 32 44 117 2	
100	90458-1467		2	CAP, 32 44 129 7	

Pos	Part No	UN	Qty	Description	Page No

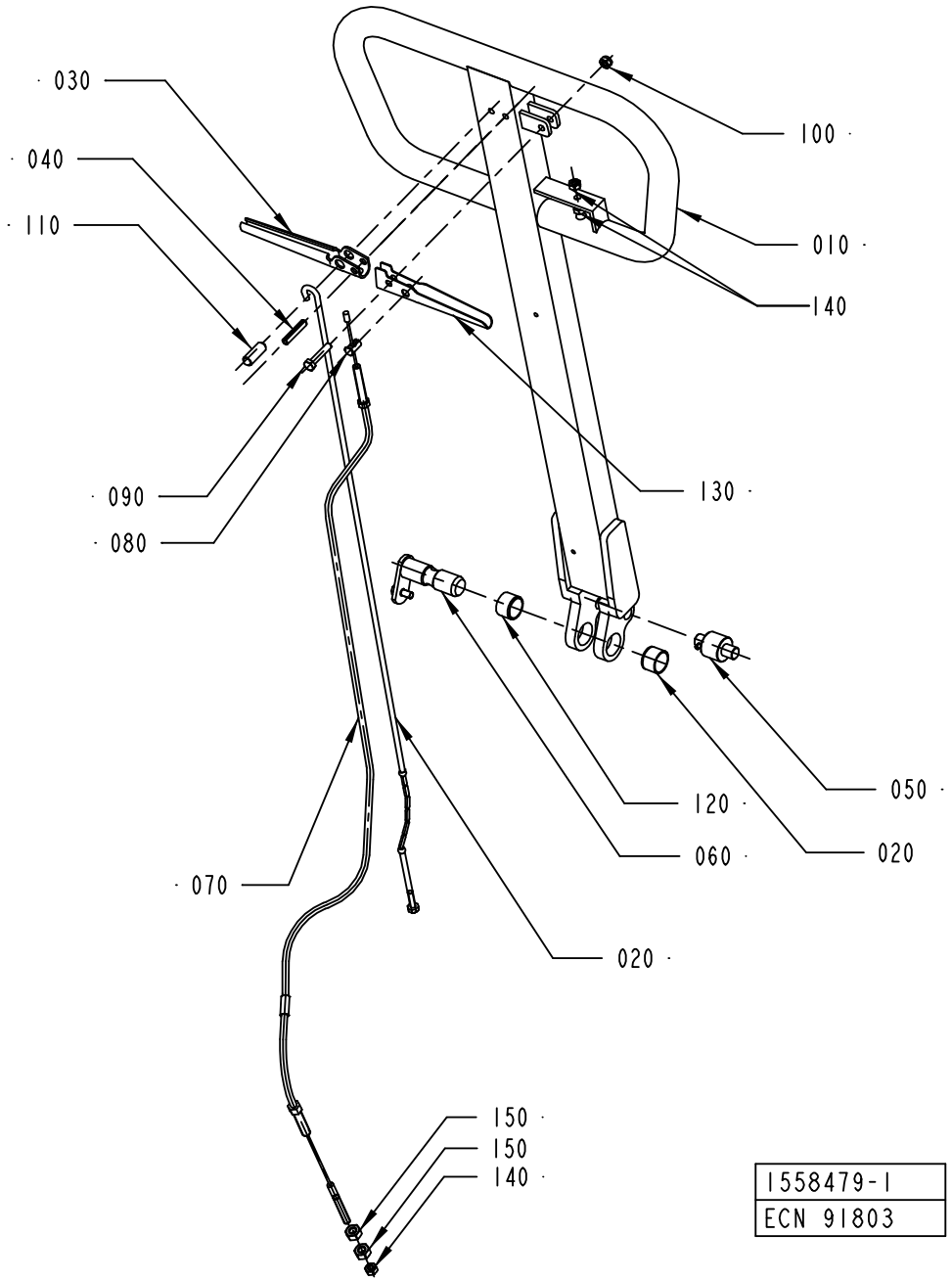
· 030
· 040
· 110
· 090
· 080
· 070
100 ·
010 ·
140
130 ·
120 ·
060 ·
050 ·
020
020 ·
150 ·
150
140 ·
1558479-1
ECN 91803

ECM: 91830 - 20010504
Group number: 1558479-0100
Assembly Drawing: 1558479-1_1_AA

Pos	Part No	UN	Qty	Description	Page No
-					
010	90067-0361		1	TIE ROD	
020	90067-0359		1	SINK ROD, 34 74 021 7	
030	90067-0358		1	SINK HANDLE	
040	311111-0345		1	SPRING PIN ISO 8752 6X32-ST	
050	90067-0349		1	ROLLER KIT, 34 73 050 7	
060	90067-0350		1	AXLE PIN	
070	90067-0301		1	BRAKE WIRE, 32 82 138 1	
080	90067-0320		1	COTTER FOR 90067-301	
090	312109-0374		1	SCREW M6S ISO 4017 M6X30 A480	
100	312812-0316		1	HEXAGON NUT, NY-LOCK M6 A480	
110	90067-0360		1	MOUNTING KIT, 34 74 022 5	
120	321120-0137		2	BEARING BUSH W/O FLANGE, 20X23X15 MM	
130	90067-0364		1	BRAKE HANDLE	
140	312602-0316		3	NUT, EN 24032 M6M M6 NIPLBR	
150	312602-0318		2	HEXAGON NUT, EN 24032 M6M M8 NIPLBR	

Pos	Part No	UN	Qty	Description	Page No

LIFTING CYLINDER

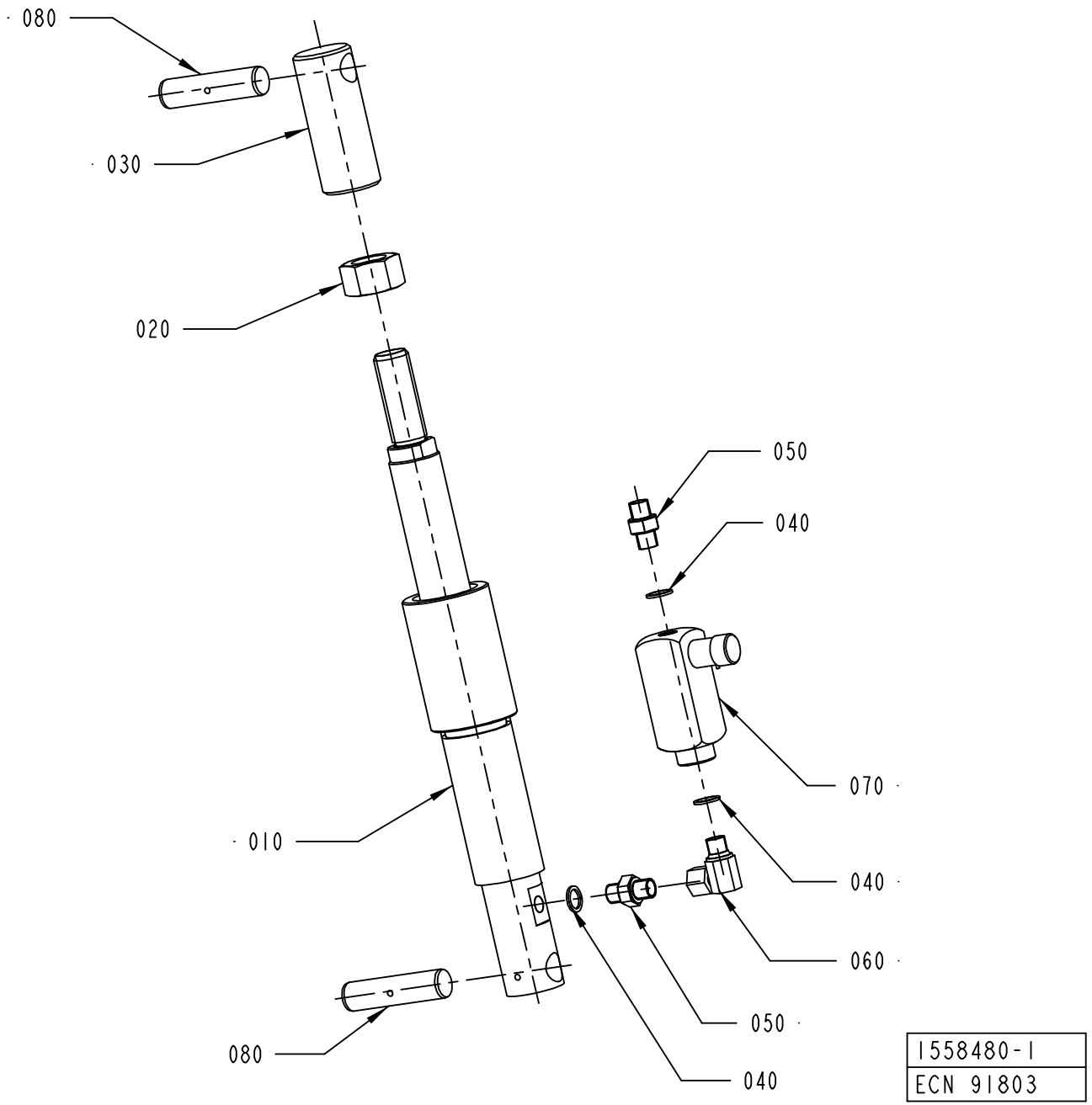

ECM: 91831 - 20010504
Group number: 1558480-0100
Assembly Drawing: 1558480-1_1_AA

Pos	Part No	UN	Qty	Description	Page No
-					
020	312605-0328		1	HEXAGON NUT, M6M M24 A280	
040	315234-0110		3	WASHER,PL.RND.CU.13,5/18 H=1,5	
050	90055-0042		2	NIPPLES, EXT. THREAD, HEXAGON, NO. 6835-	
060	90055-0145		1	ELBOW ADAPTOR-R1/4	
070	90201-0098		1	ADJ. FLOW CON. VALVE, NO. 9 PCCM 400SF	

Pos	Part No	UN	Qty	Description	Page No

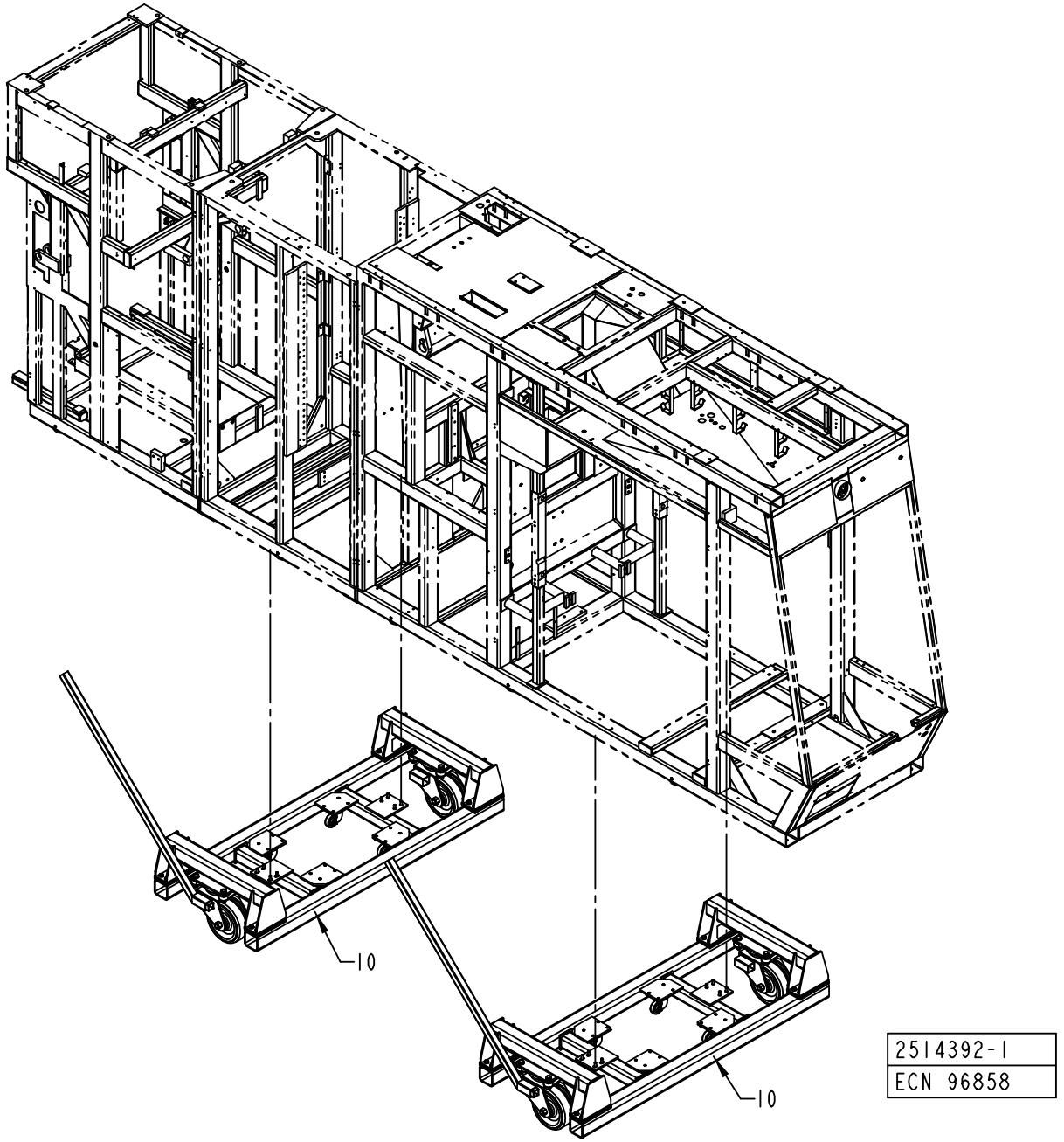
10
10
2514392-1
ECN 96858

ECM: 96863 - 20010830
Group number: 2514392-0100
Assembly Drawing: 2514392-1_1_AA

Pos	Part No	UN	Qty	Description	Page No
-					
0010	582526-0100		2	CARRIAGE	**10-91**

Pos	Part No	UN	Qty	Description	Page No

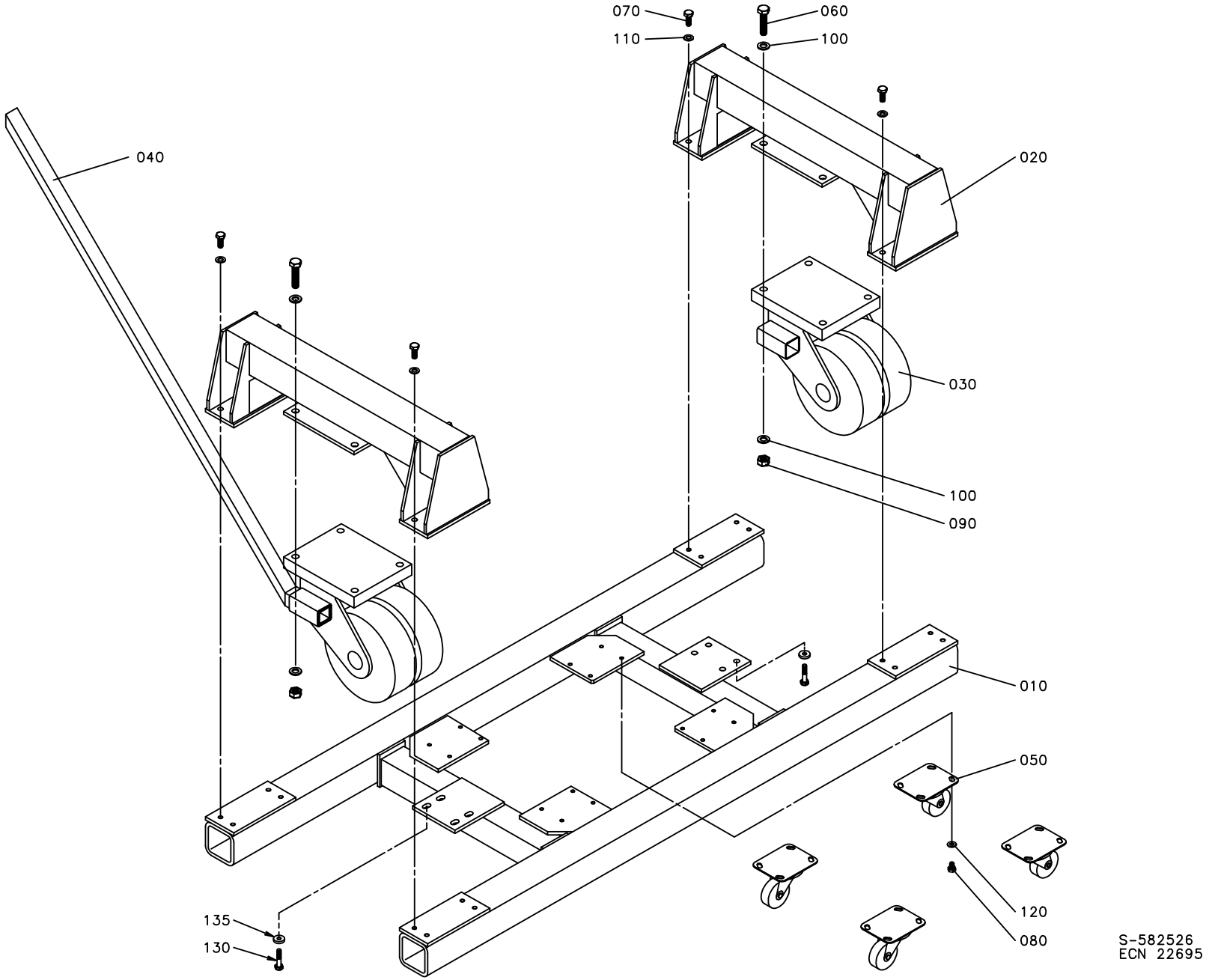
070
110
060
100
040
020
030
100
090
010
050
120
080
135
130
S-582526
ECN 22695

ECM: 96864 - 20010830
Group number: 582526-0100
Assembly Drawing: 582526-1_1_AA

Pos	Part No	UN	Qty	Description	Page No
-					
0010	1140039-0000		1	CONVEYOR FRAME	
0020	1140040-0000		2	BRACKET	
0030	1140840-0000		2	WHEEL	
0040	582527-0000		1	ROD	
0050	90191-0077		4	WHEEL	
0060	312105-0634		8	SCREW M6S ISO 4014 M16X70 A480	
0070	312105-0538		16	SCREW M6S ISO 4017 M12X35 A480	
0080	312105-0489		16	SCREW M6S ISO 4017 M10X16 A480	
0090	312605-0324		8	HEXAGON NUT, M6M M16 A280	
0100	315105-0186		16	WASHER BRB 17X30 RFR	
0110	315105-0178		16	WASHER BRB 13X24 RFR	
0120	315105-0173		16	WASHER BRB 10,5X20 RFR	
0130	312109-0499		8	SCREW M6S ISO 4017 M10X40 A480	
0135	315125-0173		8	WASHER TBRSB 10,5X28X6 A4	

Pos	Part No	UN	Qty	Description	Page No

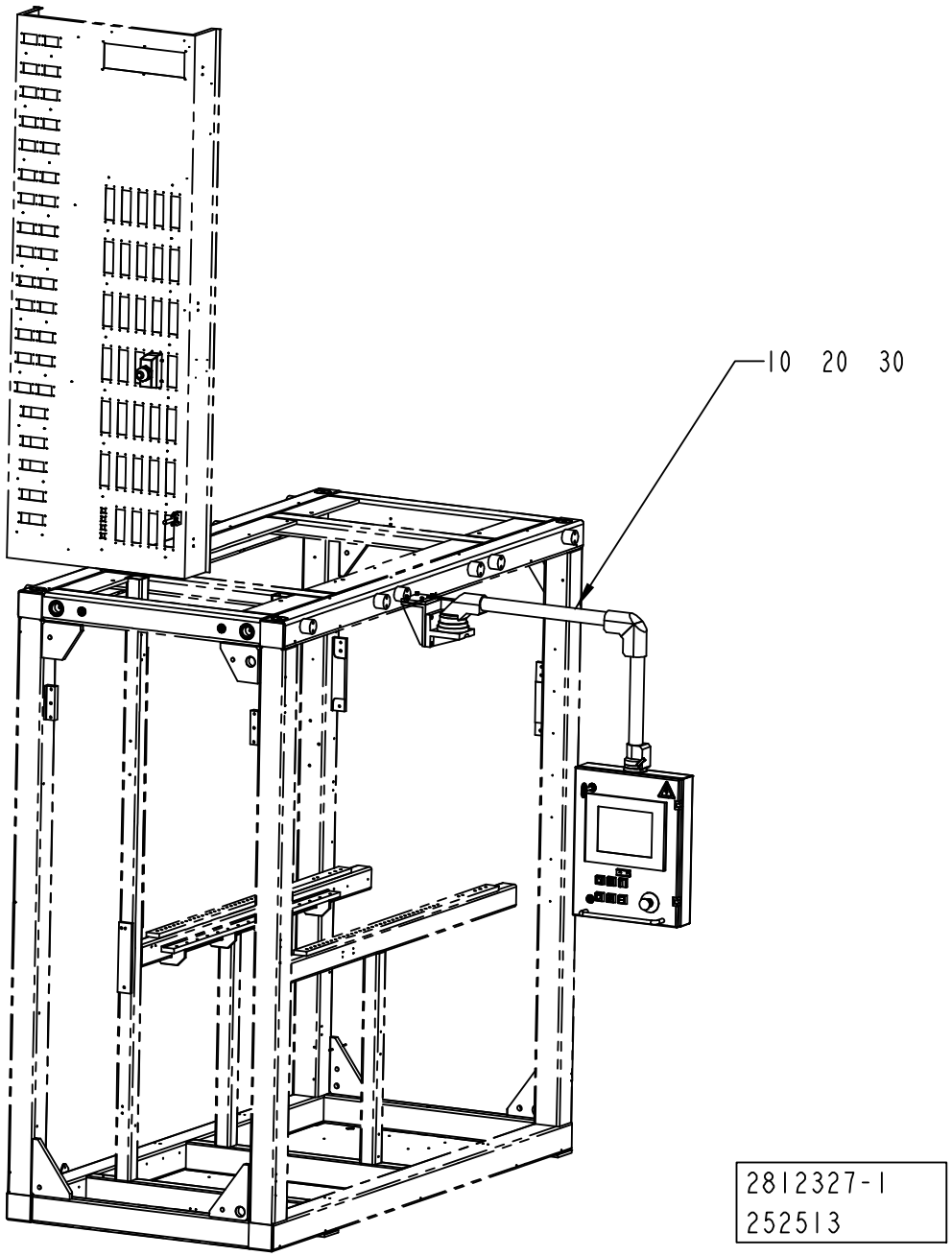
10 20 30
2812327-1
252513

ECM: 252539 - 20060314
Group number: 2812327-0100
Assembly Drawing: 2812327-1_1_AA

Pos	Part No	UN	Qty	Description	Page No
-					
10	2646014-0100		1	CONTROL PANEL	**10-95**
20	2812328-0100		1	CABLE HARNESS	**10-101**
30	2826618-0100		1	SOFTWARE TPOP	**10-103**

Pos	Part No	UN	Qty	Description	Page No

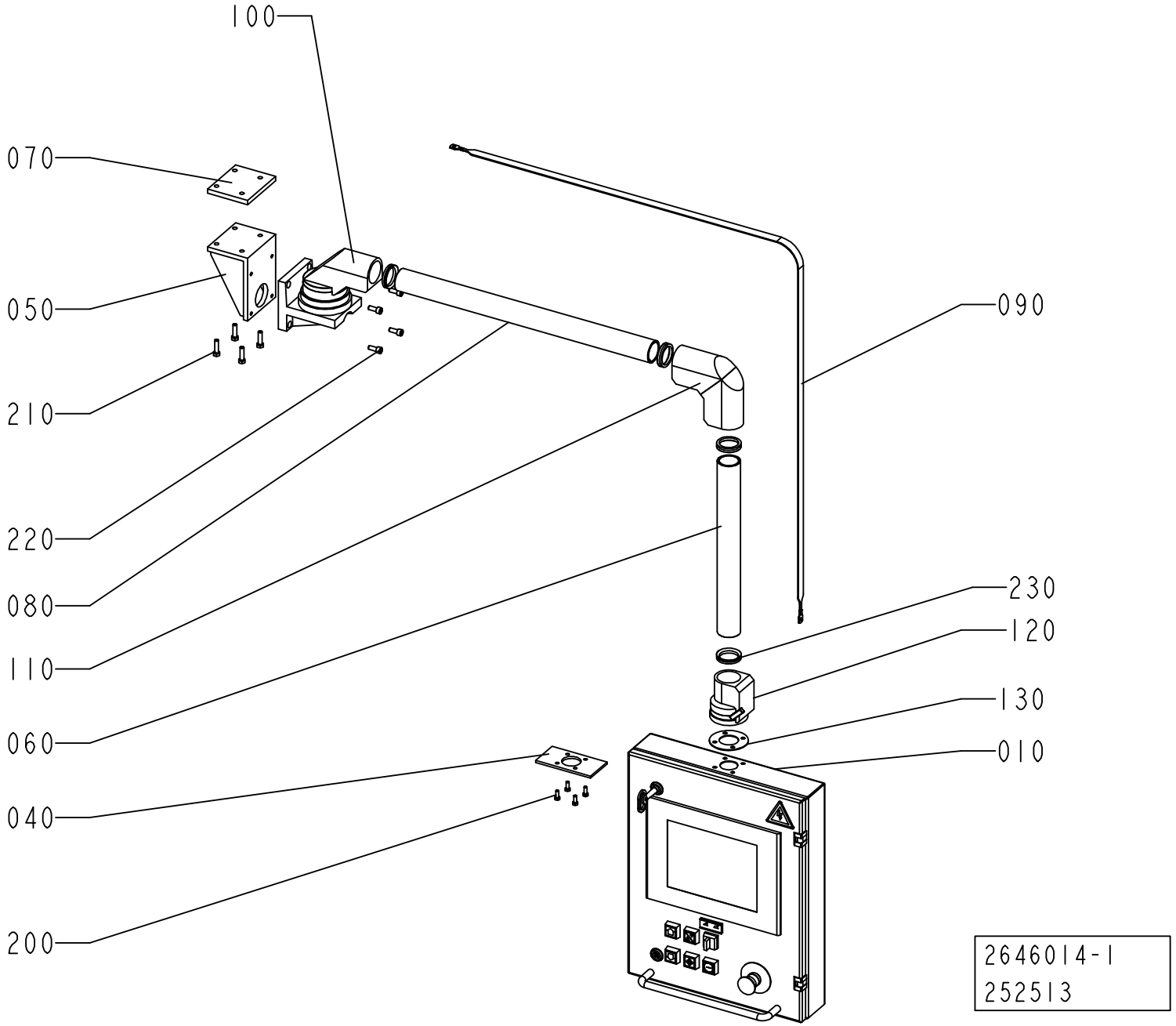
100
070
050
210
220
080
110
060
040
200
090
230
120
130
010
2646014-1
252513

ECM: 252515 - 20060314
Group number: 2646014-0100
Assembly Drawing: 2646014-1_1_AB

Pos	Part No	UN	Qty	Description	Page No
-					
010	2642530-0100		1	CONTROL PANEL	**10-97**
040	1338143-0000		1	DIMCAP, CONTROL PANEL SUPPORT, SHIMS	
050	1528715-0000		1	BRACKET	
060	2523721-0000		1	PIPE	
070	1528747-0000		1	PLATE	
080	1528549-0000		1	PIPE	
090	1367098-0000		1	BRAID	
100	90041-0320		1	WALL BRACKET, 49.49 70 00	
110	90458-0162		1	ELBOW GT48/2, NO.49.49 71 00	
120	90458-0163		1	FLANGE COUPLING, GT48/2, NO.49.49 77 00	
130	2815745-0000		1	GASKET	
200	312105-0368		4	SCREW M6S ISO 4017 M6X16 A480	
210	312105-0455		4	SCREW M6S ISO 4017 M8X30 A480	
220	312115-0451		4	SCREW ISO4762 M8X20 A4 80	
230	90091-0138		4	V-RINGS 40X50X9 MM V-45A	

Pos	Part No	UN	Qty	Description	Page No

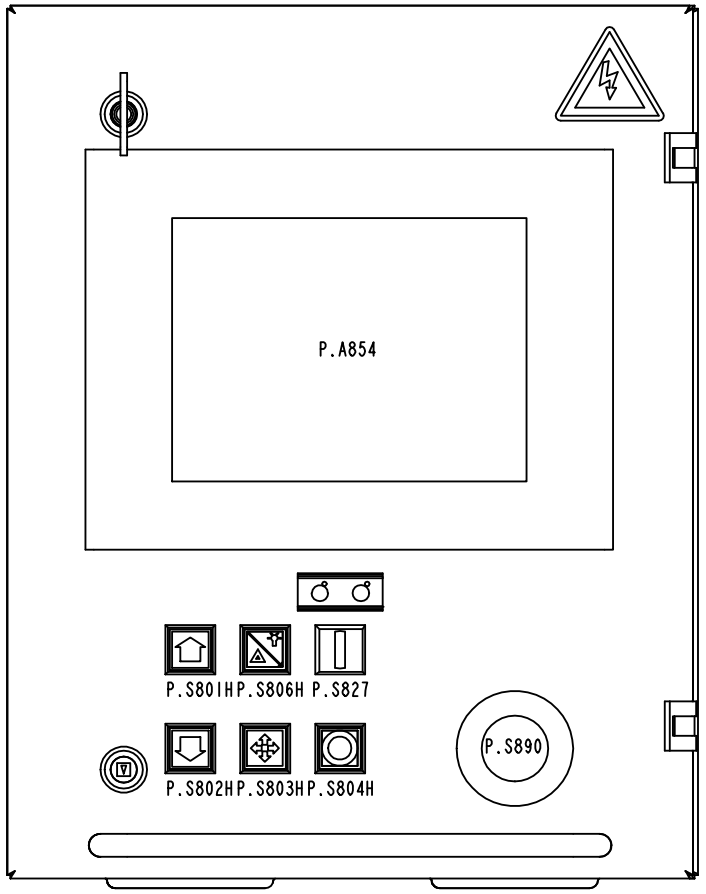
P.A854
P.S801H
P.S806H
P.S827
P.S802H
P.S803H
P.S804H
P.S890

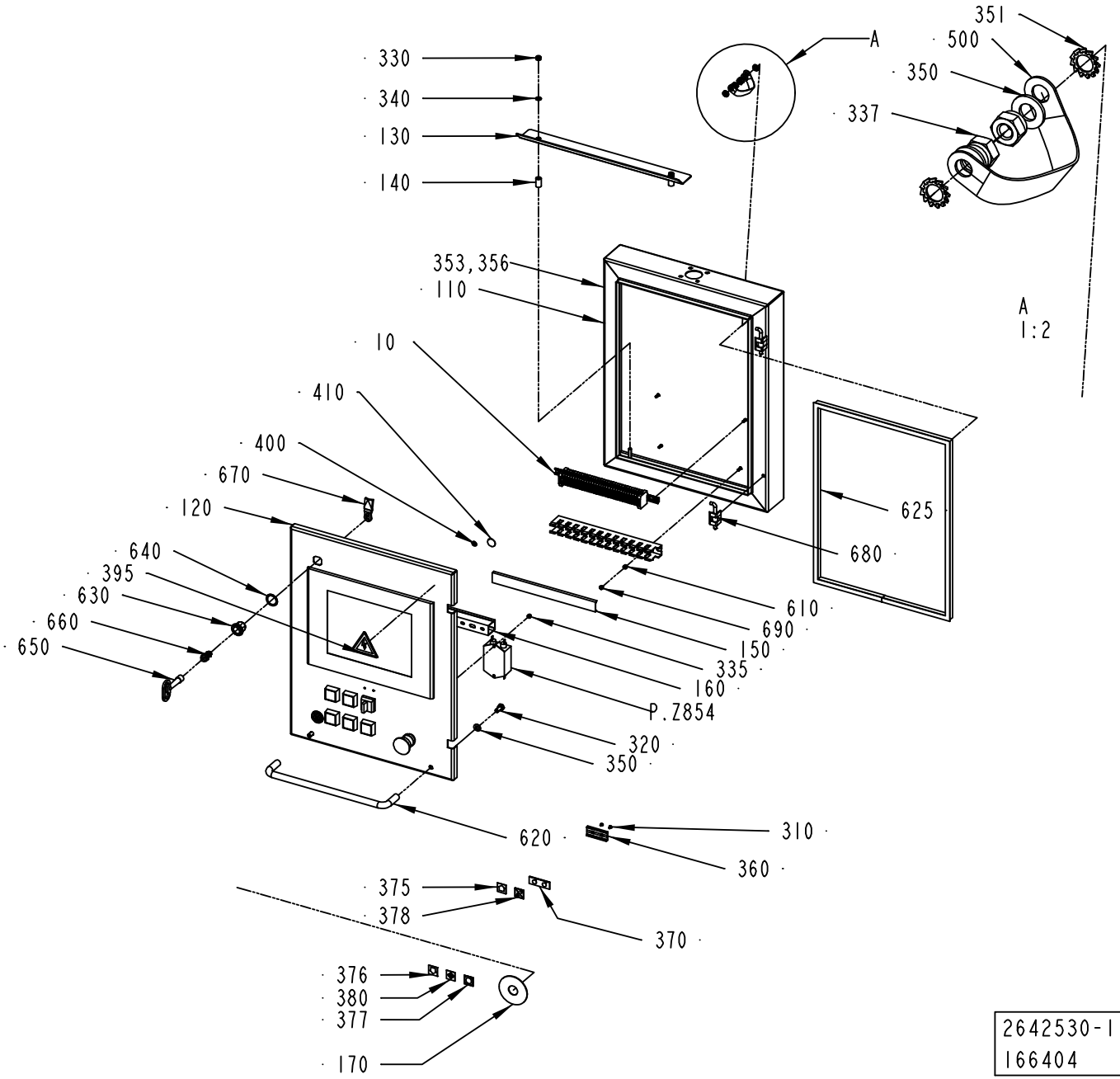
330
340
130
140
353,356
110
10
410
400
670
120
640
395
630
660
650
A
351
500
350
337
A
1:2
625
680
610
690
150
335
160
P.Z854
320
350
620
310
360
375
378
370
376
380
377
170
2642530-1
166404

ECM: 192092 - 20041118
Group number: 2642530-0100
Assembly Drawing: 2642530-1_1_AC

Pos	Part No	UN	Qty	Description	Page No
-					
010	1369599-0100		1	TERMINAL	**10-99**
110	2642531-0000		1	WELDED CABINET	
120	2642532-0000		1	DOOR	
130	1369672-0000		1	BRACKET	
140	1369673-0000		2	TUBE	
150	1369716-0000		1	CABLE DUCT	
160	1369717-0000		1	CABLE DUCT	
170	486826-0001		1	SIGN "EMERGENCY STOP"	
310	311520-0329		2	RIVET, BLANK 2,4X8	
320	312105-0449		2	SCREW M6S ISO 4017 M8X16 A480	
330	312812-0316		2	HEXAGON NUT, NY-LOCK M6 A480	
335	312812-0312		2	HEXAGON NUT, NY-LOCK M4 A480	
337	312812-0318		2	HEXAGON NUT, NY-LOCK M8 A480	
340	315105-0153		2	WASHER BRB 6,4X12 RFR	
350	315105-0165		4	WASHER BRB 8,4X16 RFR	
351	90062-0016		2	LOCK WASHER SERRAT.EXT.GEAR,8,4/15 H=0,8	
353	351160-0102	M	18	CABLE (1UNIT = 100M)	
356	351160-0102	M	1	CABLE (1UNIT = 100M)	
360	359240-0100		1	SIGN HOLDER FOR 359240-0001	
370	907587-0000		1	LABEL	
371	359241-0484		1	SIGN "FILLER/FILLER + PULLTAB"	
375	359301-0001		1	BUTTON SIGN, UP	
376	359301-0005		1	BUTTON SIGN, DOWN	
377	359301-0110		1	BUTTON SIGN, SHORT STOP	
378	359301-0131		1	BUTTON SIGN, LAMP TEST / RESET	
379	359301-0175		1	BUTTON SIGN, PRODUCTION ON	
380	359301-0536		1	SIGN "MANUAL COMMANDS"	
395	90194-0016		1	WARNING SIGN, RISK OF ELECTRIC SHOCK	
400	90194-0163		2	SIGN, EARTH WITHIN CIRCLE	
410	90194-0164		2	SIGN, FRAME/CHASSIS WITHIN CIRCLE	
500	90458-1870		1	EMC EARTH BRAID, 16MM2 L=300MM	
610	90005-0158		4	SPACER 4,3/8, H=5	
620	90017-0015		1	HANDLE, NO. 14.4012.02.308	
625	90143-0057	MM	1562	STRIP EMKA 1011-05 21X11MM	
630	90237-0142		2	LOCK HOUSING, 1000-U45	
640	90237-0322		2	LOCK GASKET, 1000-U137	
650	90237-0324		1	KEY, 1104-02 FOR SQUARE 8 MM	
660	90237-0328		2	LOCK BOLT, 1000-229	
670	90237-0368		2	LOCK CAM, 1000-15	
680	90248-0032		2	HINGE, 1110-U2	
690	90261-0079		4	PLUG, BLIND, PLASTIC, NO. 1955	
P.Z854	90458-2381		1	POWER LINE FILTER 5A	
P.S890	90458-1651		1	EMERGENCY STOP, ZB4-BS-844 ZB4-BZ-104	
P.S834	90458-1651		1	EMERGENCY STOP, ZB4-BS-844 ZB4-BZ-104	
P.S827	90111-0120		1	SWITCH, 2 POS.704.510 .0A+704.901.5/A	
P.S806H	90064-0082		1	PUSH BUTTON, WHITE	
	90036-0057		*1*	*LIGHT BULB, BA9S 28V*	
P.S804H	90064-0085		1	PUSH BUTTON, RED	
P.S803H	90064-0084		1	PUSH BUTTON, YELLOW	
P.S802H	90064-0082		1	PUSH BUTTON, WHITE	
	90036-0057		*1*	*LIGHT BULB, BA9S 28V*	
P.S801H	90064-0083		1	PUSH BUTTON, GREEN	
P.A854	90459-3957		1	TPOP QPICBDEOOOO	

Machine Type | Group Description | Used-In | Group Number | Page No

P.X854

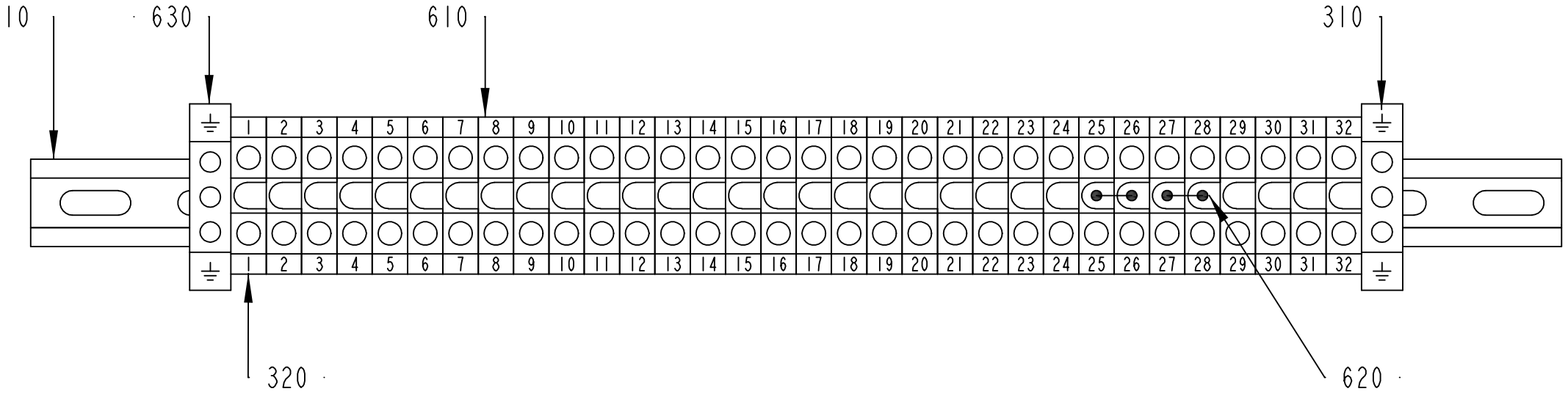

1369599-1
ECN 86049

ECM: 189804 - 20041105
Group number: 1369599-0100
Assembly Drawing: 1369599-1_1_AA

Pos	Part No	UN	Qty	Description	Page No
-					
010	1369706-0000		1	RAIL	
310	359011-0819		1	MARKING PLATES 5-GW (EARTH)	
320	359011-0821		2	SET OF SIGNS 6-FW 1-50	
610	90077-0079		32	FEED THROUGH TERMINAL, 02943.6	
620	353034-0026		2	BRIDGE CONNECTOR, WQV 35/2, 10530.6	
630	90135-0026		2	EARTH TERMINAL, 3802.6	

Pos	Part No	UN	Qty	Description	Page No

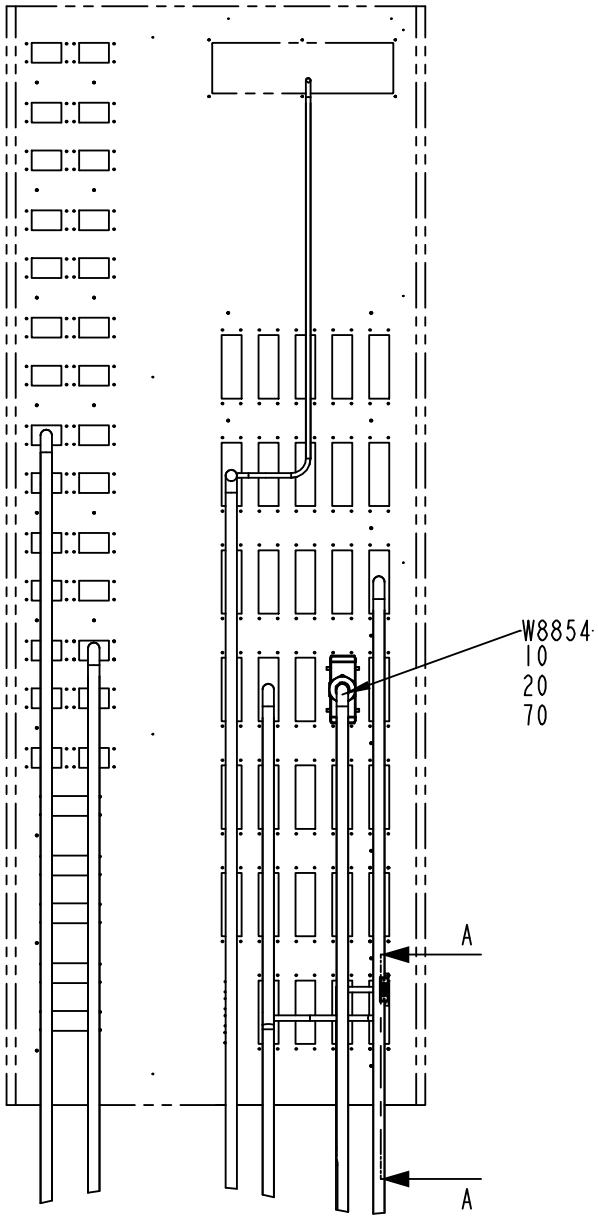

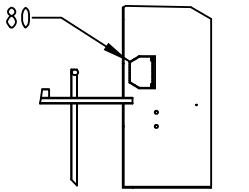

SECTION A-A

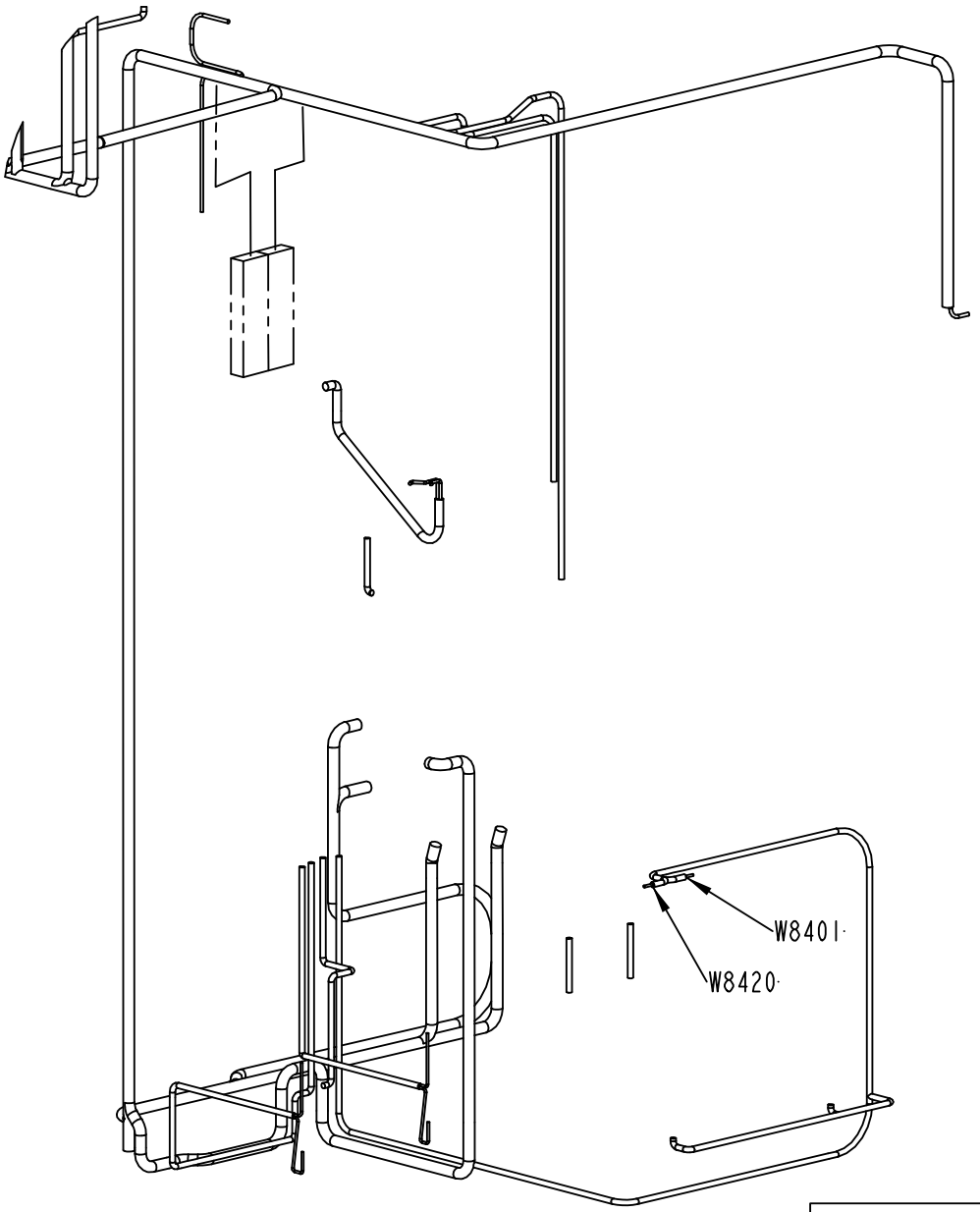

2812328-1
268823

ECM: 268831 - 20061101
Group number: 2812328-0100
Assembly Drawing: 2812328-1_1_AB

Pos	Part No	UN	Qty	Description	Page No
-					
010	90459-7276		1	HOOD 24 B TOP ENTRY, 19 30 024 0428	
020	90458-0310		1	CABLE GLAND, M40X1,5, NO.5311 1050	
070	90110-0150		1	MALE INSERT 121110 0000	
080	2600978-0000		1	CABLE	
	90459-6139		*1*	*HOOD, SUB D TYPE MHDM 15*	
	90220-0092	*M*	*9*	*PAIR TWISTED CABLE 3X2X0,25MM2*	
	90110-0146		*1*	*COVER*	
	90110-0143		*1*	*CONTACT UNIT, DB25P064TX*	
	90110-0142		*1*	*PLUG DA15P064TX*	
W8401	351150-0403	M	5	CABLE OLFLEX 3X0,75 MM2 LIGHT/GREY	
W8420	351150-0403	M	5	CABLE OLFLEX 3X0,75 MM2 LIGHT/GREY	
W8828	351150-0405	M	7	CABLE OLFLEX 5X0,75 MM2 LIGHT/GREY	
W8854	351150-0425	M	6	CABLE OLFLEX 25X0,75 MM2 LIGHT/GREY	
W8870	90220-0107	M	9	SCR. CABLE 5X0,75MM2	

Pos	Part No	UN	Qty	Description	Page No

This page is intentionally left blank.

ECM: 273159 - 20061101
Group number: 2826618-0100
Assembly Drawing:

Pos	Part No	UN	Qty	Description	Page No
-					
	2825345-0002		1	TPOP CD	

Pos	Part No	UN	Qty	Description	Page No

Tetra Pak

SPC
Spare Parts Catalogue

Part No	Description	Page No
2033-0011	WASHER	1-29, 1-31, 1-33, 1-35, 1-37, 1-39, 1-53, 1-55, 1-59, 1-61, 1-63, 1-75, 1-77, 1-79, 1-81, 1-83, 1-91, 1-93, 1-95, 1-97, 1-99
6278-0000	WASHER	7-81, 7-83
7309-0000	HANDLE	1-393, 1-395
12242-0003	GASKET 48X38X5,5	1-167, 1-169
14600-0000	HOOD	1-211, 1-213, 1-215
14729-0000	NUT	4-209, 4-211, 4-219, 4-221
19972-0000	WASHER	4-7, 4-9, 4-11, 4-17, 4-19, 4-21, 4-51, 4-53, 4-55, 4-57, 4-63, 4-65, 4-67, 4-69, 4-77, 4-83
20494-0000	COMPRESSION SPRING	4-203, 4-213
22462-0000	SHAFT	4-127, 4-129, 4-163, 4-165
22463-0000	ROLL	4-127, 4-129, 4-163, 4-165
23765-0001	INSULATING PIPE	5-209, 5-211, 5-213, 5-215, 5-217, 5-219
23765-0002	INSULATING PIPE	5-209, 5-211, 5-213, 5-215, 5-217, 5-219
23765-0003	INSULATING PIPE	5-209, 5-211, 5-213, 5-215, 5-217, 5-219
23765-0004	INSULATING PIPE	5-209, 5-211, 5-213, 5-215, 5-217, 5-219
23765-0005	INSULATING PIPE	5-209, 5-211, 5-213, 5-215, 5-217, 5-219
24928-0000	LOCKING RUBBER	1-211, 1-213, 1-215
26075-0000	VOLUME BULGE	4-51, 4-53, 4-55, 4-57, 4-63, 4-65, 4-67, 4-69
28509-0000	WASHER	4-97, 4-99, 4-101, 4-107, 4-143, 4-145, 4-147, 9-5
29876-0000	COVER	1-199
29886-0000	LACE	4-203, 4-213
30298-0000	INSULATION	1-199
31838-0000	PLUNGER	4-203, 4-213
32079-0000	WASHER	4-107
32544-0000	INSULATION NUT	4-97, 4-99, 4-101, 4-107, 4-143, 4-145, 4-147, 9-5
32957-0000	SCREW	4-209, 4-211, 4-219, 4-221
36753-0000	RING	4-203, 4-213
47937-0411	PLMS OFF-LINE PROGRAM	8-105
67379-0101	TRANSFORMER	4-107
67379-0105	TRANSFORMER	4-107
67379-0114	TRANSFORMER	4-107
67379-0206	TRANSFORMER	4-107
67379-0249	TRANSFORMER	4-107
67379-0258	TRANSFORMER	4-107
67379-0269	TRANSFORMER	4-107
67379-0404	TRANSFORMER	1-13
67379-0405	TRANSFORMER	1-13
67379-0412	TRANSFORMER	1-13
67379-0414	TRANSFORMER	1-13
67379-0417	TRANSFORMER	1-13
67380-0207	TRANSFORMER	7-17
67380-0214	TRANSFORMER	7-17
67388-0102	RACK FRONTMOUNTED 84TE	8-97
68262-0101	BACKPLANE FRONT RACK 8TE	8-97
68445-0104	FRONT PLATE 8 TE	8-97
68445-0105	FRONT PLATE 10TE	8-97
68699-0101	MULTIPLEXER CARD 56LED	7-265
72846-0101	COMPRESSION SPRING	10-5
72887-0000	COMPRESSION SPRING	10-41
72888-0001	SPRING BRACKET	10-41
72888-0002	SPRING BRACKET	10-41
74305-0100	PULLER	10-5
74363-0000	FASTENING PLATE	10-63
74364-0000	EXTRACTOR BOLT	10-63
74365-0000	SCREW	10-63
74655-0000	SHAFT	10-43
76131-0000	ASSEMBLY CONE	10-39
76132-0000	ASSEMBLY TOOL	10-39
78801-0000	CALIBRATION TOOL	10-39
82197-0103	UM DOCUMENT SERIAL COMUNICATION ONLY EN	8-105
82351-0106	USER MANUAL PLMS OFF-LINE	8-105
90001-0033	WALL SOCKET OUTLET	8-89, 8-91
90002-0004	BLANK-OFF PLUG, PR 22,5 SKINDICHT-BLK16	1-291, 1-349, 1-353, 1-355, 1-365, 1-367, 1-381, 1-383, 1-385, 2-97, 6-67, 7-181, 7-183, 8-23
90002-0009	BLANK-OFF PLUG, PR 18.6 SKINDICHT-BLK11	1-349, 1-353, 1-355, 1-365, 1-367, 2-97, 2-155, 2-157, 5-287, 7-181, 7-183
90002-0010	BLANK-OFF PLUG, PR 37 SKINDICHT-BLK29	2-97, 7-93, 7-95, 7-209, 7-211, 7-213
90002-0012	BLANK-OFF PLUG, PR 28,3 SKINDICHT-BLK21	1-365, 1-367, 1-381, 1-383, 1-385, 2-97, 2-149, 2-151, 7-181, 7-183
90002-0013	BLANK-OFF PLUG, PR 15,2 SKINDICHT-BLK9	1-223, 1-349, 1-353, 1-355, 1-365, 1-367, 1-381, 1-383, 1-385, 2-55, 2-157, 6-31, 6-67, 7-181, 7-183
90002-0016	BLANK-OFF PLUG PR 20.4 SKINDICHT-BLK13,5	1-353, 1-355, 1-365, 1-367, 1-381, 1-383, 1-385, 8-23
90005-0002	WASHER 16/6,7X1,5	4-27, 4-29, 4-39, 4-41
90005-0060	WASHER PLAIN, RBS 6,4/M6)/18,H=1,5	1-91, 1-93, 1-173, 1-193, 8-23
90005-0077	WASHER PL.RND.NYL.8,4/7, H=2	2-265, 8-27, 8-35
90005-0082	WASHER PLAIN ROUND 4,3(M4)/12,H=1	4-51, 4-53, 4-55, 4-57, 4-63, 4-65, 4-67, 4-69, 4-77, 4-83, 7-17, 7-23, 7-123, 7-127, 7-131, 8-23, 8-55
90005-0094	GASKET C 19438-EPR	2-245
90005-0095	WASHER PLAIN BLACK PVC, (M)6X14 H=3	5-83, 5-85, 5-87, 5-89, 5-91
90005-0116	WASHER PLAIN ROUND 8,4(M8)/24, H=2	7-49, 7-61, 7-65, 7-67
90005-0125	WASHER PLAIN ROUND 5,5/22, H=1,5 FZB	4-229, 4-231, 5-15
90005-0158	SPACER 4,3/8, H=5	10-97
90012-0049	CABLE GLAND, STR13,5, PR20,4/PG13,5	1-365, 1-367

Part No	Description	Page No
90012-0063	CABLE GLAND PR 15,2	2-41
90012-0125	GLAND FITTING	2-55, 2-97, 2-155, 7-181, 7-183
90012-0126	HOSE GLAND W/O INSERT PG29 NORMAL	1-199
90012-0131	HOSE GLAND W/O INSERT PG21 NORMAL	1-279
90012-0137	GLAND, EXTENDED WITH INSERT, PG11	1-153, 1-155
90015-0020	LEAD-IN, TET5-7, E-1458016	2-9, 2-45, 2-47, 2-125, 2-127, 2-129, 2-149, 2-151
90015-0021	LEAD-IN, TET10-14, E-1458023	2-57, 2-59, 2-211, 2-213, 7-123
90015-0022	LEAD-IN, TET14-20, E-1458029	2-9
90015-0023	LEAD-IN, TET7-10, E-1458019	2-9, 2-49, 2-131, 2-133, 2-149, 2-151
90015-0024	LEAD-IN, TET20-26, E-1458035	7-123
90015-0025	LEAD-IN, TET26-35, E-1458041	6-11
90015-0037	RUBBER BUSHING	6-27
90017-0015	HANDLE, NO. 14.4012.02.308	8-27, 10-97
90017-0016	HANDLE, NO. 14.4012.02.120	2-225, 2-265, 8-35
90017-0017	HANDLE, NO. 547-128	8-89, 8-91
90024-0036	FILTERED TERMINAL BLOCK	6-11
90024-0060	POWER LINE FILTER, 80 A 250/440 VAC	6-11
90028-0020	CONE TUBE 2,5MM	4-7, 4-9, 4-11, 4-17, 4-19, 4-21, 4-51, 4-53, 4-55, 4-57, 4-63, 4-65, 4-67 4-69, 4-77, 4-83, 4-171, 4-173, 4-175, 4-177, 4-203, 4-205, 4-207, 4-209, 4-211, 4-213, 4-215 4-217, 4-219, 4-221, 5-185
90028-0021	CONE TUBE 4 MM	2-89, 4-203, 4-205, 4-207, 4-209, 4-211, 4-213, 4-215, 4-217, 4-219, 4-221
90028-0022	CONE TUBE 6 MM	2-87, 2-89, 4-189
90028-0024	CONE TUBE 4 MM	4-171, 4-173, 4-205, 4-207, 4-215, 4-217
90028-0025	CONE TUBE 6 MM	4-171, 4-173, 4-205, 4-207, 4-215, 4-217, 5-185
90030-0030	CONN. BULKHEAD SV 12-L/SY	1-253
90030-0058	CONN. T-PIPE T-12	1-255
90030-0065	PIPE CONNECTION	4-85, 4-87, 4-89, 4-133, 4-135, 4-137
90030-0067	CONN. BULKHEAD SV 8-L/SY	2-83
90030-0071	CONN. ELBOW WA 8-R1/4	2-37
90030-0088	CONN. STR., 12-R1/4, EXT. THREAD	1-253
90030-0098	ACCESSORIES, FERRULE 8	2-83, 4-237
90030-0106	CONN. PIPE G-12	1-281
90030-0121	CONN. ELBOW ADJ.,INT 10	2-79
90030-0157	CONN. STR. 10-R3/8, EXT. THREAD	2-79
90030-0166	NIPPLE,REDUCING G1/4"-G1/4"	2-197, 2-199
90030-0171	ADJUSTABLE ELBOW CONNECTION,EXT 6-G1/8	2-33
90030-0178	CONN. STR., 10-R1/4, EXT. THREAD	2-81
90030-0180	CONN. STR. GE 12-1/2-14 NPTF	1-253, 1-281
90030-0181	CONN. STR. GE 12-3/8-18 NPTF	1-205
90030-0184	CONN. STR. GA-6-G1/8	1-317, 1-353, 1-355, 2-29, 2-65
90030-0185	CONN. STR. GA-8-G1/4	6-41, 6-43
90030-0187	CONN. STR. GA-12-G3/8	1-255, 1-281, 1-317
90030-0188	CONN. STR. GA-15-G1/2	1-205, 1-253, 1-281, 1-283
90030-0193	CONN. STR. GA-28-G1	1-253
90030-0202	CONN. STR., 6-G1/4, EXT. THREAD	1-289, 1-317
90030-0203	ADJUSTABLE ELBOW CONNECTION,EXT 6-G1/4	1-317
90030-0219	CONN. ELBOW BULKHEAD WSV 6	2-89
90030-0223	BUSHING, INT/EXT. G-THREAD NO. 2531	10-55, 10-57
90030-0224	NIPPLES, EXT. THREAD, HEXAGON, NO. 2511	10-55, 10-57
90030-0225	BUSHING, INT/EXT. R-THREAD 1/4X3/8	10-55, 10-57
90030-0257	CONN. ELBOW, 8-R1/8, EXT.THREAD	4-109, 4-111, 4-113, 4-115, 4-153, 4-155, 4-157, 4-159
90030-0336	CONN. STRAIGHT, 316L-12M-BVCO-3	1-231, 9-23
90030-0338	NUT, PIPE & CONNECTORS, SS-8-BVCO-4	1-231
90030-0340	NIPPLES, EXT. THREAD, HEXAGON, RA-G1/2A3	2-81
90030-0344	CONN. STR., 8-G1/4	2-23
90030-0465	STRAIGHT CONNECTION, MAD DN 15	6-37
90030-0481	REDUCER M12TURM6-316	1-253
90030-0485	CONN. BULKHEAD SV 8-	1-267, 2-39
90030-0567	CONN. STR., 15-R1/2, EXT. THREAD	2-77
90030-0571	CONN. T-PIPE 6	1-247
90031-0051	BASEPLATE, 10-SLOT	8-65, 8-67
90031-0053	BASEPLATE,10-SLOT	8-65, 8-67
90031-0057	PLC, DIGITAL INPUT MODULE	8-65, 8-67
90031-0058	PLC, DIGITAL INPUT MODULE	8-65, 8-67
90031-0059	PLC, DIGITAL OUTPUT MODULE	8-65, 8-67
90031-0060	PLC,ANALOG INPUT MODULE 16 PT/VOLTAGE	8-65, 8-67
90031-0061	PLC,ANALOG INPUT MODULE 16 PT/CURRENT	8-65, 8-67
90031-0062	PLC, ANALOG OUTPUT MODULE 8PT/CURR/VOLT	8-65, 8-67
90031-0065	PLC,TEMPERATUR CONTROL,INPUT MODULE 8 PT	8-65, 8-67
90031-0068	PLC, POWER SUPPLY	8-65, 8-67
90031-0300	PLC,COMM.CABLE AND ADAPTER	10-67
90031-0305	I/O EXPANSION CABLE	8-65, 8-67
90032-0038	BLOCK 2 WAYS	2-89, 4-203, 4-213
90032-0039	BLOCK 4 WAYS	4-171, 4-173, 4-203, 4-205, 4-207, 4-209, 4-211, 4-213, 4-215, 4-217, 4-219, 4-221
90032-0040	BLOCK 6 WAYS	4-209, 4-211, 4-219, 4-221, 5-185
90032-0043	DISTRIBUTION BLOCK 3 WAYS	2-89, 4-205, 4-207, 4-215, 4-217
90032-0046	DISTRIBUTION BLOCK 6 WAYS	2-89
90036-0057	LIGHT BULB, BA9S 28V	9-5
90036-0068	BULB 6.5W 24V	2-177, 7-251
90038-0049	DIODE	1-363
90041-0029	FLOPPY DISC UNIT FD-235HF 1,4MB	8-101
90041-0068	DATACABLE MODEM PC	8-105
90041-0091	PC 2,5" HD BAY, 3016-0028-013	8-101
90041-0320	WALL BRACKET, 49.49 70 00	10-95

Part No	Description	Page No
90042-0170	SOLENOID VALVE BüRKERT	6-9
90042-0171	SOLENOID VALVE BURKERT	1-221
90042-0172	SOLENOID VALVE 4023/1005/1032 24VDC	1-205, 1-283
90042-0203	SOLENOID VALVE BüRKERT	1-227, 1-317
90042-0206	SOLENOID VALVE G1/8, 444-111-000-1	2-27
90042-0215	VALVE BODY 5/2 UNISTABLE	1-335, 1-337, 1-339, 1-343, 1-345, 2-51, 2-135, 2-137, 2-139, 6-75, 7-209, 7-211, 7-213
90042-0221	VALVE BODY 5/2 BISTABLE	7-209, 7-211, 7-213
90042-0230	VALVE BODY 5/3 OPEN CENTRE	2-51, 7-207
90042-0248	SOLENOID VALVE OFFICIENE DI ENSINO	2-201, 2-203, 2-207
90042-0249	SOLENOID VALVE OFFICINE DI ENSINO	6-69, 6-71
90042-0254	SOLENOID VALVE, R1 1/2	6-35
90042-0265	HIGH SPEED VENTING VALVE 583-590-000-1	7-207, 7-209, 7-211, 7-213
90042-0271	VALVE BODY 2X3/2	1-337, 1-339, 1-343, 1-345, 2-51
90042-0392	CONTACT 2 POLE + EARTH	7-109
90042-0487	COIL 24 VDC/15W, 04983 197 18	2-27
90042-0519	BLANK PLATE ISO SIZE 1	1-335, 1-337, 1-339, 1-343, 1-345, 2-51, 2-135, 2-137, 2-139, 6-75, 7-209, 7-211, 7-213
90042-0520	BASE PLATE ISO SIZE 1	1-335, 1-337, 1-339, 1-343, 1-345, 2-51, 2-135, 2-137, 2-139, 7-209, 7-211, 7-213
90042-0522	PORTED END PIECE ISO SIZE 1	1-335, 1-337, 1-339, 1-343, 1-345, 2-51, 2-135, 2-137, 2-139, 6-75, 7-207, 7-209, 7-211, 7-213
90042-0526	PROTECTIVE SLEEVE MECMAN, 04938 294 08	6-75
90042-0528	BLANKING KIT SEALS ISO SIZE 1	1-335, 1-337, 1-339, 1-343, 1-345, 2-51, 2-135, 2-137, 2-139, 6-75, 7-209, 7-211, 7-213
90042-0532	BASE PLATE ISO SIZE 1	1-335, 1-337, 1-339, 1-343, 1-345, 2-51, 2-135, 2-137, 2-139, 6-75, 7-207, 7-209, 7-211, 7-213
90042-0535	TERMINAL BOARD 19 CORDS	1-335, 1-337, 1-339, 1-343, 1-345, 2-51, 2-135, 2-137, 2-139, 6-75, 7-207, 7-209, 7-211, 7-213
90042-0538	PILOT VALVE L=500MM	1-335, 1-337, 1-339, 1-343, 1-345, 2-51, 2-135, 2-137, 2-139, 6-75, 7-209, 7-211, 7-213
90042-0539	PILOT VALVE L=350MM	2-51, 7-207, 7-209, 7-211, 7-213
90042-0545	SUB-BASE SOFT START ISO 1 AND VDMA 01	7-207, 7-209, 7-211, 7-213
90042-0582	COIL NORGREN QM/48/127/21	7-109
90042-0583	CABLE MECMAN 440-827 000-1	6-77
90042-0585	PILOT VALVE L=5M	6-77, 7-209, 7-211, 7-213
90042-0591	PILOT VALVE, 04938-333-08	7-209, 7-211, 7-213
90043-0002	PRESSURE GAUGE, 2040 D=63 MM	1-281
90043-0006	PRESSURE GAUGE, 2041 D=63 MM	6-69, 6-71
90043-0021	PRESSURE GAUGE 0-1 BAR 1/8" D=40	2-49, 10-55, 10-57, 10-65
90043-0043	PRESSURE GAUGE 0-10 BAR 1/8"	6-37, 10-25, 10-55, 10-57
90043-0064	PRESSURE GAUGE, 2048 D=40 MM	2-131, 2-133, 7-209, 7-211, 7-213
90043-0065	MKC NEW FILL PUMP VACUUM PRESSURE GAUGE	1-333, 1-341, 6-75, 7-209, 7-211, 7-213
90043-0082	PRESSURE GAUGE, 2740, D=63 MM	1-253
90043-0090	PRESSURE GAUGE, 2048 D=40 MM	2-49, 2-131, 2-133
90043-0095	PRESSURE GAUGE, 2740, D=63 MM, GLYC.	1-195
90043-0100	PRESSURE GAUGE, 2948 D=63 MM	6-19
90043-0107	PRESSURE GAUGE	6-77
90044-0084	LIMIT SW. 14 CE1-4	1-285, 1-287
90044-0117	PROX.SW. IX 0208	5-69
90044-0165	PROXIMITY SENSOR, SME-8-K5-LED-24	7-79, 7-113
90044-0192	LIMIT SW. SZ2586.000	8-23
90044-0194	PROX.SW. IN5329/IN3002-BPKG(EX90044-104)	1-147, 1-149, 1-151, 1-167, 1-169, 1-229, 1-271, 1-311, 1-313, 5-221, 5-241, 5-243, 5-245, 5-247, 5-249, 5-251, 5-263, 5-267, 5-269, 7-31, 7-123
90044-0204	KEY SAF.SW. NZIVZ-538-E	2-99
90044-0310	KEY FOR SAFETY SWITCH AZ 15/16 B1	1-7, 1-9, 1-109, 1-119, 1-121, 1-175, 1-395, 7-123
90045-0162	MOTOR M42X30/I	2-41
90048-0037	OIL PUMP INCL. CONTAINER 1,5 L	2-87
90051-0035	KNOB, EXTERNAL THREAD. NO. 8308-1135	1-297, 1-299, 1-333, 7-133, 10-29, 10-31
90051-0045	STELLAR KNOB, NO. 8323-257	1-129
90051-0049	KNOB, ADJUST.HI.EXT.THREAD, NO 8324-3755	1-305, 1-307
90051-0082	KNOB, CIRCUL, THREADED BUSH, M6 25X21 MM	7-167, 7-175, 7-223
90051-0083	KNOB, EXTERNAL THREAD. NO. 8308-1321	7-155
90051-0087	LOCK KNOB, NO. GN 617 A5	7-149, 7-151, 7-167, 7-175
90051-0088	ADJUSTMENT SCREW	7-123
90051-0112	LOCK KNOB, NO. GN 617 NIK5	2-49, 2-131, 2-133, 3-19, 3-33
90052-0011	HORN HOOTERT 24:48VDC.PT NO.1YA030221	7-41, 7-93, 7-95
90053-0029	COUNTER, F524.800FA3C 24VDC	8-89, 8-91
90053-0031	HOUR COUNTER, B 609.10 10-50VDC	8-89, 8-91
90055-0033	HOSE NIPPLE, EXT.THR. R1/2-13 MM	2-271
90055-0042	NIPPLES, EXT. THREAD, HEXAGON, NO. 6835-	6-19, 10-87
90055-0051	HOSE NIPPLE, EXT.THR. R3/8X13 MM	2-19, 2-21, 2-23, 2-39
90055-0053	HOSE NIPPLE, EXT.THR. R1-25 MM	6-49
90055-0097	STRAIGHT COUPLING	6-79
90055-0100	Y-CONNECTION, 6-6	2-125, 2-127, 2-129, 2-131, 2-133
90055-0101	Y-CONNECTION, 8-8	2-49
90055-0118	ELBOW WITH TAILPIECE 8/8 MM	2-131, 2-133
90055-0132	HOSE NIPPLE, EXT.THR. R1/4X7,8 MM	2-37
90055-0143	HOSE,ELBOW 90 COUPLING,FPT,6X8MM	1-335, 1-337, 1-339, 1-343, 1-345
90055-0145	ELBOW ADAPTOR-R1/4	10-87
90055-0166	HOSE NIPPLE, EXT.THR. R11/2X38 MM	6-35
90055-0172	ELBOW WITH TAILPIECE 8/8 MM	2-49, 2-51, 2-125, 2-127, 2-129, 2-131, 2-133, 2-135, 2-137, 2-139, 7-209, 7-211, 7-213

Part No	Description	Page No
90055-0173	ELBOW WITH TAILPIECE 8/6 MM	2-51, 7-207, 7-209, 7-211, 7-213
90055-0204	ELBOW WITH TAILPIECE 8/8 MM LONG	5-187, 5-189, 5-191
90055-0217	ELBOW PIPE JOINT	2-51, 7-153, 7-169, 7-179
90055-0227	Y-CONNECTION, 6-8	2-49
90055-0248	ELBOW WITH TAILPIECE 10/10 MM	2-125, 2-127, 2-129
90055-0249	REDUCER 8-10	6-7
90055-0250	ELBOW WITH TAILPIECE 8/8 MM	6-9
90055-0260	NIPPLE-8 MM G1/4"	6-29
90055-0266	STRAIGHT CONNECTION	2-197, 2-199, 6-9
90055-0267	ELBOW PIPE JOINT,EXT.THREAD,D=8 MM G1/4	2-197, 2-199, 6-9, 6-19
90055-0268	ELBOW WITH TAILPIECE 6/6 MM	2-207
90055-0269	ELBOW PIPE JOINT 8X8 MM	2-197, 2-199
90055-0274	STRAIGHT COUPLING, D=8 MM - G1/4"	2-9, 2-197, 2-199, 6-19, 6-27
90055-0276	T-CONNECTION 8 MM	6-7, 6-19, 6-29, 7-153
90055-0277	ELBOW WITH TAILPIECE 12/12 MM	2-211, 2-213
90055-0278	T-COUPLING, ADJ.12-G1/4"	2-49
90062-0015	LOCK WASHER SERRAT.EXT.GEAR,6,4/11 H=0,7	5-187, 5-189, 5-191, 6-11, 7-181, 7-183, 8-23, 8-29, 8-31, 8-33, 8-35, 8-71
90062-0016	LOCK WASHER SERRAT.EXT.GEAR,8,4/15 H=0,8	7-93, 7-95, 7-181, 7-183, 10-97
90062-0022	LOCKING WASHER D=6,4/11	7-77, 8-49, 8-51, 8-53, 8-65, 8-67, 8-89, 8-91
90062-0029	LOCK WASHER 5,1X 8,6, T= 1,5 DIN 7980	1-115, 2-79, 6-17
90062-0030	LOCK WASHER 6,1X9,7; T=1,5 DIN 7980	1-115
90062-0031	"LOCK WASHER 8,2X12,8; T=2 DIN 7980"	1-115
90062-0059	LOCK WASKER SERRAT.EXT.GEAR,4,3/8 H=0,5	7-181, 7-183, 8-49, 8-51, 8-53
90062-0061	LOCK WASHER NORD-LOCK,6,5/10,8, T=2,2	4-27, 4-29, 4-39, 4-41, 5-165, 5-167, 5-265, 5-271
90064-0082	PUSH BUTTON, WHITE	2-265, 7-267, 7-269, 7-285, 10-97
90064-0083	PUSH BUTTON, GREEN	10-97
90064-0084	PUSH BUTTON, YELLOW	1-353, 1-355, 2-265, 7-267, 7-269, 10-97
90064-0085	PUSH BUTTON, RED	10-97
90064-0086	PUSH BUTTON, WHITE	2-265
90064-0093	PUSH BUTTON, GREEN	2-265
90064-0098	PUSH BUTTON, CLEAR	2-265
90067-0301	BRAKE WIRE, 32 82 138 1	10-85
90067-0302	TORSION SPRING	10-83
90067-0317	BRAKE LINING	10-83
90067-0320	COTTER FOR 90067-301	10-85
90067-0336	GUIDE SHAFT UNIT, 32 82 123 3	10-83
90067-0337	BRAKE DRUM	10-83
90067-0338	GUIDE ROLLER 32 44 117 2	10-83
90067-0342	TENSION SPRING	10-83
90067-0349	ROLLER KIT, 34 73 050 7	10-85
90067-0350	AXLE PIN	10-85
90067-0351	SEAL KIT	10-81
90067-0354	PUMP PISTON	10-81
90067-0355	COMPRESSION SPRING	10-81
90067-0356	TOP WASHER	10-81
90067-0357	REPAIR KIT	10-81
90067-0358	SINK HANDLE	10-85
90067-0359	SINK ROD, 34 74 021 7	10-85
90067-0360	MOUNTING KIT, 34 74 022 5	10-85
90067-0361	TIE ROD	10-85
90067-0364	BRAKE HANDLE	10-85
90067-0365	HYDRAULIC HOSE, 32 04 169 1	10-79
90067-0368	YOKE	10-79
90067-0369	VALVE ARM	10-81
90067-0370	WHEEL, 32 04 176 6	10-79
90067-0371	SLEEVE, 32 04 175 8	10-79
90067-0372	SHAFT, 32 04 174 1	10-79
90069-0614	GEARS, WORM MOTOR MC320P2T	7-121
90074-0011	CABLE CLIPS, D=14 MM	8-23, 8-103
90074-0025	CLIPS, CABLE CLIPS DI=8 MM	6-77
90075-0141	CONTACTOR, 4KW 24VDC	8-49, 8-51, 8-53
90077-0079	FEED THROUGH TERMINAL, 02943.6	2-267, 5-287, 10-99
90077-0113	FEED THROUGH TERMINAL, 10-00102150-1	2-97, 2-155, 2-157, 8-63, 8-93
90077-0114	END PLATE, WAP/WDK 2,5	8-93
90077-0328	RAIL TS15/5	2-267, 5-287
90082-0013	OVER VOLT. PROTECT. PU 4C-R 230 VAC	6-11
90083-0052	NEEDLE ROLLER THRUST BEARING, 30X47X2 MM	5-69
90083-0053	SHAFT LOCATING WASHER, 30X47X1MM	5-69
90087-0019	PLUG M10X1 STAINLESS	2-89, 3-17, 4-171, 4-173, 4-203, 4-205, 4-207, 4-213, 4-215, 4-217, 5-185
90087-0036	PLUG, KR 1/4	6-75
90089-0003	REDUCING SLEEVE, PR22,5/PR18,6	1-153, 1-155
90089-0015	REDUCING SLEEVE, PR37M/PR28,3F	1-365, 1-367
90089-0029	ENLARGING SLEEVE	1-365, 1-367
90090-0016	BALL, D=15 MM	5-281
90091-0074	6EAR RING 35X40X5,3 MM	4-95
90091-0138	V-RINGS 40X50X9 MM V-45A	4-229, 4-231, 10-95
90091-0148	RADIAL SEAL 25X47X7 MM DUST LIP	5-73, 5-223, 5-225, 5-227, 5-229, 5-231, 5-233
90091-0237	ROD SEAL, GLIDORING 20X27,5X3 MM	1-233, 1-235, 1-237, 9-21, 9-23
90091-0238	WEAR RING 20X22X10 MM	1-233, 1-235, 1-237, 9-21, 9-23
90091-0266	SEAL RING 10,4X16,3X2,5 MM	1-231, 9-25
90091-0297	RADIAL SEAL 35X47X7 MM DUST LIP	5-5, 5-7, 5-185, 5-241, 5-243, 5-245, 5-247, 5-249, 5-251, 5-263, 5-267, 5-269
90091-0298	RADIAL SEAL 45X65X8 MM DUST LIP	5-241, 5-243, 5-245, 5-247, 5-249, 5-251

Part No	Description	Page No
90091-0299	RADIAL SEAL 30X52X7 MM DUST LIP	5-5, 5-7, 5-73, 5-235, 5-237, 5-239
90091-0304	RADIAL SEAL 45X65X8 MM DUST LIP	9-21
90091-0306	RADIAL SEAL 30X47X7 MM DUST LIP	5-223, 5-225, 5-227, 5-229, 5-231, 5-233
90091-0335	PISTON SEAL GLIDE RING 62,5X70X3 MM	1-235, 9-21
90091-0336	PISTON SEAL GLIDE RING 79X90X4 MM	1-233, 1-237
90091-0358	SCRAPER, ASOB 45X53X7 MM	4-203, 4-213
90091-0359	X-SEAL 36,17X2,62 MM	4-95
90091-0360	BACK-UP RING 37,5X1,4 MM	4-95
90091-0361	SCRAPER, EXCLUDER2 30X34,8X3,7 MM	4-119, 4-121, 4-123, 4-125
90091-0362	SCRAPER, EXCLUDER2 18X22,8X3,7 MM	4-95
90091-0364	ROD SEAL, STEPSEAL 18X25,3X3,2 MM	4-95
90091-0366	WEAR RING 18X23X3,9 MM	4-95
90091-0368	WEAR RING 30X45X5,3 MM	4-95
90091-0377	ASSEMBLY TOOL SLEEVE GLYD RING	10-39
90091-0378	ASSEMBLY TOOL SLEEVE AQ-SEAL	10-39
90091-0380	SCRAPER, EXCLUDER 20X24,8X3,7 MM	5-241, 5-243, 5-245, 5-247, 5-249, 5-251
90091-0387	ASSEMBLY TOOL	10-39
90091-0391	SEAL SLYDRING	4-95
90091-0398	1PISTON SEAL GLIDE RING T 20,5X28X3,2 MM	4-95
90091-0404	RADIAL SEAL 22X40X7 MM DUST LIP	5-73
90091-0408	BEARING SEAL 70X78X5 MM	5-241, 5-243, 5-245, 5-247, 5-249, 5-251
90091-0412	SEAL RING	2-33
90091-0416	RADIAL SEAL 70X90X10 MM DUST LIP	5-69
90091-0428	PISTON SEAL GLIDE RING T 27,5X34,5X3,2 M	4-95
90091-0429	VARILIP 15X26X7 MM	1-173
90091-0436	RADIAL SEAL 20X40X7 MM DUST LIP	4-229, 4-231
90091-0440	RADIAL SEAL 22X40X7 MM DUST LIP	5-263, 5-267, 5-269
90092-0052	METERING VALVE 10 MM3	4-171, 4-173, 4-203, 4-205, 4-207, 4-209, 4-211, 4-213, 4-215, 4-217, 4-219, 4-221, 5-185
90092-0053	METERING VALVE 30 MM3	2-89, 3-17
90092-0054	METERING VALVE 50 MM3	4-203, 4-209, 4-211, 4-213, 4-219, 4-221, 5-185
90099-0007	HEXAGON NUT, M10X1, E 63 137 10	7-149, 7-151
90099-0027	HEXAGON NUT, M14, DIN936	1-147, 1-149, 1-151
90099-0051	NUT HEX. M10X1,25, FE FZB	1-197
90099-0053	HEXAGON NUT, M14X1,5, SMS2176	1-185
90099-0085	NUT	6-11
90099-0095	NUT HEX. M18X1,5	1-123, 1-125
90099-0096	NUT	6-11
90099-0104	NUT, PR 15,2 (PG9)	1-15, 1-17, 1-191, 1-193, 1-195, 1-199, 1-201, 1-219, 1-229, 1-247, 1-259, 1-279, 1-285, 1-287, 1-311, 1-313, 1-317, 1-365, 1-367, 1-381, 1-383, 1-385, 1-387, 2-39, 2-89, 6-19, 7-57, 7-59, 7-181, 7-183
90099-0110	NUT, PR 22,5 (PG16)	1-15, 1-17, 1-179, 1-247, 1-365, 1-367, 1-381, 1-383, 1-385, 1-387, 2-149, 2-151, 7-181, 7-183, 7-285, 8-23
90099-0117	NUT, PR 18,6 (PG11)	1-275, 1-279, 1-333, 1-341, 1-365, 1-367, 1-387, 6-11, 7-181, 7-183
90099-0118	NUT, PR 20,4 (PG13,5)	1-365, 1-367, 1-381, 1-383, 1-385, 1-387, 5-283, 7-41, 7-181, 7-183, 8-23
90099-0119	NUT, PR 28,3 (PG21)	1-365, 1-367, 1-381, 1-383, 1-385, 1-387, 7-163, 7-181, 7-183
90099-0120	NUT, PR 37 (PG29)	1-297, 1-299, 2-149, 2-151, 7-163, 7-181, 7-183
90099-0131	NUT HEX. M16X2 SS	2-89, 7-123
90100-0052	CONNECTOR KIT, FEEDBACK CABLE DRIVE END	2-149, 2-151
90100-0303	SAM TO PC TEST MONITORING CABLE	9-3
90110-0028	CONTACT UNIT 4-POLEADAPTER	8-89, 8-91
90110-0052	MALE INSERT HAN 6E 09 33 006 2601	8-47
90110-0055	FEMALE INSERT HAN 6 HSB 09 31 006 2701	8-37, 8-39, 8-41
90110-0057	FEMALE INSERT HAN 24 E 09 33 002 4201	8-47
90110-0095	CONNECTOR 3 POLE + EARTH	1-221, 2-27, 2-81, 6-69, 6-71
90110-0123	HOUSING, 09 30 006 0301	8-37, 8-39, 8-41, 8-47
90110-0141	CONTACT UNIT, DE09P064TX	7-265
90110-0144	COVER	1-365, 1-367, 7-261, 7-263
90110-0147	CONTACT UNIT	1-365, 1-367, 7-261, 7-263
90110-0150	MALE INSERT 121110 0000	1-223, 1-365, 1-367, 2-57, 2-59, 2-107, 2-109, 2-149, 2-151, 6-67, 7-181, 7-183, 10-101
90110-0151	FEMALE INSERT 24-POL 121130 0000	2-95, 2-149, 2-151
90110-0152	CABLE HOOD 24-POL 70.352.2428.1	1-223, 1-365, 1-367, 2-57, 2-59, 2-107, 2-109, 2-149, 2-151, 7-181, 7-183
90110-0156	MALE INSERT 70.210.0653.0	1-365, 1-367, 2-107, 2-109, 6-41, 6-43, 7-181, 7-183
90110-0157	CABLE HOOD 6-POL 70.352.0628.1	1-223, 1-365, 1-367, 2-57, 2-59, 2-107, 2-109, 2-149, 2-151, 7-163, 7-181, 7-183, 7-227
90110-0159	MALE INSERT 70.310.0640.0	1-223, 1-365, 1-367, 2-57, 2-59, 2-107, 2-109, 2-149, 2-151, 6-17, 6-27, 6-31, 7-163, 7-181, 7-183, 7-227
90110-0160	CABLE HOOD 6-16-POL 70.352.1628.1	1-365, 1-367, 7-181, 7-183
90110-0163	FEMALE INSERT 70 300 0640 0	2-95
90110-0221	CHASSIS HOUSING 310162-33	2-95
90110-0224	CHASSIS HOUSING 310166-33	2-95
90110-0225	CHASSIS HOUSING 310168-33	2-95
90110-0226	CABLE HOOD 6-POL 70.350.0628.0	6-17, 6-27, 6-31
90110-0227	CABLE HOOD 6-16-POL 71.350.1628.0	6-41, 6-43
90110-0228	CABLE HOOD 24-POL 71.350.2428.0	2-149, 2-151, 6-67
90110-0235	CABLE CONTACT, PX0739/P	1-365, 1-367, 2-107, 2-109, 4-191, 4-193, 7-163
90110-0236	CHASSIS CONTACT PX0767/S	2-107, 2-109, 8-37, 8-39, 8-41
90110-0244	CABLE HOOD 6-POL 70.350.1628.0	2-107, 2-109
90110-0247	FEMALE INSERT 70.200.0653.0	2-95
90110-0296	FEMALE INSERT HDC-HA-4BS 149840-B/2	2-107, 2-109
90110-0349	JD TAMPA DE PLASTICO	2-107, 2-109
90110-0370	BASE HOUSING	2-107, 2-109

Part No	Description	Page No
90110-0381	COVER, 310601-33 CYR24.4	1-365, 1-367, 2-107, 2-109, 2-149, 2-151
90110-0382	FASTENING NUT, AMP 215073-1	7-265
90110-0383	CONTACT COVER 15 PIN, SUB-D SUBCON	8-5
90110-0385	MARKING HOLDER, 4.242.385310	1-365, 1-367, 2-57, 2-59, 2-107, 2-109, 2-149, 2-151, 7-181, 7-183
90110-0513	CHASSIS HOUSING, CHP 24L S2	2-149, 2-151
90110-0518	CONNECTOR D-SUB, SUBCON 15/M-SH	8-5
90111-0120	SWITCH, 2 POS.704.510 .0A+704.901.5/A	2-265, 7-259, 7-281, 10-97
90111-0122	KEY SWITCH, 2 NO CONTACTS	8-89, 8-91
90111-0124	KEY SWITCH, 1NO,1NC CONTACT	8-89, 8-91
90113-0056	REGULATOR, 11-818-998	2-49, 10-65
90113-0059	FILTER REGULATOR 50UM, B08-396-A3MG	10-55, 10-57
90113-0064	PRESSURE REGULATOR	1-253
90113-0072	FILTER REGULATOR 40µ, 915-331242	6-77
90113-0098	PRESSURE REGULATOR	6-37
90113-0113	FILTER REGULATOR, B64G-NNK-AD3-RMN	7-109
90113-0140	QUICK CLAMP	1-333, 1-341, 2-131, 2-133
90113-0155	SOFT START VALVE	7-109
90113-0374	SLOW STARTING VALVE	6-77
90113-0375	PRESSURE DISTRIBUTION	6-77
90113-0377	SHUT OFF VALVE G1/2, 915-331053	6-77
90113-0384	BRACKET FOR R11, 5203-06	10-55, 10-57
90113-0407	YOKE SINGLE, Y64A-4GA-N1N	7-109
90113-0413	END CONNECTOR G3/4, 18-026-981	7-109
90113-0423	HIGH SPEED VENTING VALVE G1/2, R40403053	6-77
90113-0427	SHUT OFF VALVE G1/8, T64T-NNS-001	7-109
90113-0469	MANIFOLD REGULATOR 4 BAR	1-333, 1-341, 2-131, 2-133
90113-0470	MANIFOLD REGULATOR 10 BAR	1-333, 6-75, 7-209, 7-211, 7-213
90113-0472	FILTER 0,01 MICRON, F72C-2GD-AEO	1-341
90115-0021	ROD END, ID=8 MM, M8X1,25 LH	5-17
90115-0134	ROD END, ID=10 MM, M10X1,25	2-249, 5-145, 5-147
90115-0137	ROD END, ID=6 MM, M6X1	5-29, 5-31, 5-33, 5-129, 5-131
90115-0139	ROD END, ID=8 MM, M8X1,25	5-11, 5-13
90115-0180	ROD END, ID=8 MM, M8X1,25 LH	5-11, 5-13
90115-0181	ROD END, ID=10 MM M10X1,5	5-5, 5-7
90115-0182	ROD END, ID=10 MM M10X1,5LH	5-5, 5-7
90117-0030	LOCKING HANDLE, M8/F	5-275
90119-0043	OPTO-RELAY, 22DC 60S-3/32VDC	8-73
90119-0056	RELAY, AUXILIARY MK3P5-S 24VDC	8-49, 8-51, 8-53
90119-0063	OPTO-RELAY, DC/DC AMMS-10-1/30VDC	2-157, 8-93
90119-0067	SOLID-STATE RELAY, H12WD4850	8-73
90119-0072	SAFETY RELAY, JSBR4	8-49, 8-51, 8-53
90119-0082	SSR 90119-67 + HEAT SINK	8-75
90119-0089	SAFETY RELAY, JSBT4 24VDC	8-49, 8-51, 8-53
90119-0105	SAFETY RELAY JOKAB JSR 3T	8-49, 8-51, 8-53
90119-0108	RELAY OMRON G2R-2-SNI-24DC	8-49, 8-51, 8-53, 8-59
90121-0127	RESISTANCE FIXED, 1,5 KOHM, 0,25 W	1-363
90121-0132	RESISTANCE FIXED, 0,51 KOHM, 0,25 W	1-365, 1-367
90129-0006	BASE, S3-B	8-49, 8-51, 8-53
90129-0018	BASE OMRON P2RF-08-E	8-49, 8-51, 8-53, 8-59
90132-0021	HOSE CLIP 6-10MM	2-27
90132-0030	SUPORTE MV 87177 KS 580T	1-195, 1-205
90134-0030	SLEEVE FOR PLASTIC TUBE	2-87, 2-89, 4-237, 5-185
90134-0031	SLEEVE FOR PLASTIC TUBE	3-11, 4-203, 4-209, 4-211, 4-213, 4-219, 4-221
90134-0038	BUSHING/NUT INLET/OUTLET 4 MM	4-171, 4-173, 4-203, 4-205, 4-207, 4-209, 4-211, 4-213, 4-215, 4-217, 4-219, 4-221
90134-0039	BUSHING VALVE CONNECTION 2,5 MM	4-171, 4-173, 4-203, 4-205, 4-207, 4-209, 4-211, 4-213, 4-215, 4-217, 4-219, 4-221, 5-185
90134-0040	BUSHING VALVE CONNECTION 4 MM	2-89, 4-203, 4-205, 4-207, 4-209, 4-211, 4-213, 4-215, 4-217, 4-219, 4-221
90134-0051	SPACING COLLAR DOSING BLOCK	4-203, 4-205, 4-207, 4-209, 4-211, 4-213, 4-215, 4-217, 4-219, 4-221
90134-0052	PLUG DOSING BLOCK	4-205, 4-207, 4-209, 4-211, 4-215, 4-217, 4-219, 4-221, 5-185
90134-0054	BLOCK CONNECTION M10X1	2-89
90134-0055	BUSHING/NUT INLET/OUTLET 6 MM	2-89, 4-171, 4-173, 4-189, 4-205, 4-207, 4-215, 4-217, 5-185
90134-0058	CONNECTION	4-109, 4-111, 4-113, 4-115, 4-153, 4-155, 4-157, 4-159, 4-203, 4-205, 4-207 4-209, 4-211, 4-213, 4-215, 4-217, 4-219, 4-221, 4-225, 5-11, 5-13, 5-221, 5-241, 5-243, 5-245 5-247, 5-249, 5-251
90134-0063	BUSHING/NUT M8X1, D=2,5 MM	4-7, 4-9, 4-11, 4-17, 4-19, 4-21, 4-51, 4-53, 4-55, 4-57, 4-63, 4-65, 4-67, 4-69, 4-77, 4-83, 4-175, 4-177
90134-0065	CONNECTION M6 TUBE 2,5 MM	4-171, 4-173, 5-19, 5-21
90134-0068	CONNECTION	3-11, 4-109, 4-111, 4-113, 4-115, 4-153, 4-155, 4-157, 4-159, 4-233, 4-235
90135-0026	EARTH TERMINAL, 3802.6	2-267, 5-287, 10-99
90135-0035	EARTH WIRE, L=250 MM 16 MM2	8-29, 8-31, 8-33, 8-35, 8-89, 8-91
90135-0040	EARTH WIRE, L=150 MM 16 MM2	7-181, 7-183
90140-0011	T-PIPE, INT. THREAD, NO. 2070-1/2-1/2	2-205
90140-0012	ELBOW, 90 INT/EXT, 2020-1/2-1/2	1-281
90140-0013	ELBOW, 90 INT/EXT, 2020-1/4-1/4	2-197, 2-199, 2-207
90140-0015	T-PIPE, INT. THREAD, 2003-1/8	10-55, 10-57
90140-0018	T-PIPE, INT. THREAD, 2003-1/4	2-207, 10-65
90140-0019	ELBOW, 90, INT. THREAD, NO. 2013-1/4	2-207
90140-0020	ELBOW, 90, INT/EXT. THREAD, NO. 2020-3/8	6-69, 6-71, 7-207, 7-209, 7-211, 7-213
90140-0021	ELBOW, 90 INT/EXT, 20201/8-1/8	7-109
90140-0023	T-PIPE, INT. THREAD, NO. 2070-3/8-3/8	6-17, 6-69, 6-71
90140-0079	SLEEVE, INT. THREAD, NO. 501-08	6-79

Part No	Description	Page No
90141-0015	RETAINING RING FOR SHAFT DIN 471 8 A2	4-95, 7-15, 7-125
90141-0016	RETAINING RING FOR SHAFT DIN 471 10 A2	1-147, 1-149, 1-151, 1-167, 1-169, 1-305, 1-307, 3-19, 3-33, 4-185, 4-187, 7-15, 7-81, 7-83, 7-127, 7-133, 7-149, 7-151
90141-0017	RETAINING RING FOR SHAFT DIN 471 17 A2	7-145
90141-0019	RETAINING RING FOR BORE DIN 472 50 A2	5-71, 5-185, 5-263, 5-267, 5-269
90141-0020	RETAINING RING FOR BORE DIN 472 42 A2	2-41
90141-0022	SNAP RING B 16	1-197, 1-201
90141-0029	CIRCLIP	4-127, 4-129, 4-163, 4-165
90143-0020	STRIP	2-31
90143-0054	STRIP	2-225
90143-0057	STRIP EMKA 1011-05 21X11MM	2-265, 6-11, 8-23, 10-97
90143-0059	SEAL STRIP 4610069	1-255, 1-333, 1-341, 1-347, 1-365, 1-367, 2-9, 2-39, 2-245, 2-269, 8-23
90143-0060	EDGE STRIP 9,5X6,3MM BLACK PVC	6-11, 6-55, 6-59, 7-47, 7-119, 7-253, 8-23
90144-0007	TAPE	1-289, 6-35, 6-37, 6-39, 6-45, 6-79
90144-0044	TAPE SCOTCH VHB 4945;12,7MM	7-265
90144-0072	TAPE SCOTCH VHBS 4945 W=12,7MM	7-275
90144-0073	TREBOFLON-TAPE W=13MM	1-195, 1-205, 1-249, 1-279, 1-281, 1-285, 1-287, 2-39
90148-0101	MEASURING HOSE,MINIMESS S110-AC-FA-0063	2-77
90152-0016	HOSE (SPIRAL)	2-141
90152-0017	HOSE (SPIRAL)	2-209
90152-0050	SPIRAL CONDUIT, 20X13, UL 1313	1-119, 1-219, 1-223, 1-279, 1-349, 1-353, 1-355, 1-365, 1-367
90152-0051	SPIRAL CONDUIT, 25X18, UL 1816	1-223, 1-247, 1-279, 7-285
90152-0058	SPIRAL CONDUIT, 15X9, UL 0909	1-353, 1-355, 1-365, 1-367, 6-19
90152-0059	SPIRAL CONDUIT, 18X12, UL 1211	1-247
90152-0060	SPIRAL CONDUIT, 42X35, UL3529	7-163
90152-0070	METAL HOSE, 32,5X26, UL 2621	1-223, 1-365, 1-367, 2-149, 2-151, 7-163
90153-0015	ADHESIVE,LOCTITE IS 496/CYANOLOT 303	4-119, 4-121, 4-123, 4-125
90153-0020	ADHESIVE, BOSTIK 1782 125ML	1-199
90153-0023	ADHESIVE, SILICON 251470 TUB 90CC	1-15, 1-17, 1-117, 2-31
90153-0049	ADHESIVE, LOCTITE 409 20G	2-217, 2-219, 2-225, 2-233, 2-235, 2-239, 2-245, 2-251, 2-259
90153-0060	ADHESIVE, 3M DP-190 B/A	2-265
90155-0008	HANGER CHAIN, 18	1-259
90157-0016	LOCKING FLUID LOCTITE 242 50 ML	2-65, 5-275, 6-69, 6-71, 7-153, 7-167, 7-169, 7-175, 7-179
90157-0021	LOCKING FLUID LOCTITE 270	2-143, 2-145, 4-179, 4-181, 4-183, 4-203, 4-213, 5-119, 5-121
90157-0034	THREAD SEALANT LOCTITE 572 50 ML	2-211, 2-213
90157-0037	THREAD SEALANT LOCTITE 542	1-13, 1-195, 1-205, 1-279, 1-281
90157-0041	SEALING COMPOUND, RHODORSEAL 5651	2-217, 2-219, 2-225, 2-233, 2-235, 2-239, 2-245, 2-247, 2-251, 2-259
90161-0001	O-RING MATERIAL 3 MM	2-119
90163-0007	CONNECTION	10-65, 10-71
90163-0014	QUICK COUPLING, (M) LP-006-1-WR013	2-87
90163-0016	QUICK COUPLING, (F) LP 006-0-WR013	10-65
90163-0041	HOSE NIPPLE, EXT.THR. 3/8-12 MM	2-87, 6-69, 6-71
90163-0052	HOSE NIPPLE, EXT.THR. 1/4-12 MM	2-77
90163-0056	QUICK COUPLING, (F) 5054-6/4	10-55, 10-57
90163-0057	QUICK COUPLING, (M) 5150-1/8	1-321, 1-323, 10-55, 10-57
90163-0062	QUICK COUPLING, (F) 5053-1/8	1-321, 1-323
90163-0063	QUICK COUPLING, (M) 5450-6/4	4-189
90163-0064	QUICK COUPLING, (M) LP-006-2-WR517	2-77, 2-87
90163-0076	QUICK COUPLING, (F) LP-006-0-WR021	2-77
90163-0087	QUICK COUPLING, (M) 5150-1/4	10-55, 10-57
90163-0113	QUICK COUPLING, (M) LP-006-1-WR013-22	10-65
90163-0141	QUICK-RELEASE COUPLING SS-QTM2A-B-8M0-K2	2-39
90163-0172	QUICK-RELEASE COUPLING SS-QTM2A-B-8M0-K4	2-39
90163-0304	QUICK COUPLING, LP-006-5-74-KU (DUST CAP	2-77, 2-87
90164-0015	LIGHT FIXTURE, RL70CV-111 / 230V 50HZ	7-93, 7-95
90164-0303	BRACKET SK2202 WALDMANN	7-93, 7-95
90165-0003	PIPE CLIP FOR TUBE D=4 MM	8-65, 8-67, 8-89, 8-91
90165-0007	PIPE CLIP FOR TUBE D=8 MM	8-71
90165-0009	PIPE CLIP FOR TUBE D=12 MM	7-93, 7-95
90165-0019	TOOL CLIP, 81/3, OPEN, 20 - 30 MM	2-49, 2-131, 2-133
90165-0022	PIPE CLIP, FOR TUBE D=2,5 MM, B-3570	8-71
90165-0024	PIPE CLIP FOR TUBE D=5 MM	8-89, 8-91
90165-0039	PIPE CLAMP D=15 MM, GSK15/12	1-205
90165-0056	PIPE CLIP FOR TUBE D=4 MM	4-85, 4-87, 4-89, 4-109, 4-111, 4-113, 4-115, 4-133, 4-135, 4-137, 4-153, 4-155, 4-157, 4-159, 5-59, 5-61, 5-241, 5-243, 5-245, 5-247, 5-249, 5-251
90165-0057	PIPE CLIP FOR TUBE D=6 MM	2-245, 5-29, 5-31, 5-33, 5-129, 5-131, 5-263, 5-267, 5-269, 8-89, 8-91
90165-0058	PIPE CLIP FOR TUBE D=2,5 MM	4-85, 4-87, 4-89, 4-109, 4-111, 4-113, 4-115, 4-133, 4-135, 4-137, 4-153, 4-155, 4-157, 4-159, 4-171, 4-173
90165-0087	T-CLIP T6 FOR TUBE D=6 - 7 MM	7-153, 7-169, 7-179
90166-0008	HOSE 7/10 PVC TRANSP.	2-37
90166-0013	TUBE 8 MM PA BLUE	1-221, 1-321, 1-323, 1-333, 2-49, 2-125, 2-127, 2-129, 2-131, 2-133, 2-141, 2-205, 2-211, 2-213, 5-103, 5-105, 5-107, 5-109, 5-111, 5-195, 5-197, 5-199, 5-201, 5-203, 5-205, 5-207, 6-79
90166-0045	HOSE PVC TRANSP. 6/12	6-17, 10-71
90166-0049	HOSE PVC 25/33-34	2-205
90166-0060	HOSE 19/26-27 REINF.PVC	2-15
90166-0068	TUBE 12 MM PA BLUE	1-321, 1-323, 1-333, 1-341, 2-49, 6-75, 7-35, 7-37, 7-111, 7-207, 7-209, 7-211, 7-213
90166-0081	TUBE 6 MM PA BLUE	1-333, 1-341, 2-9, 2-33, 2-39, 2-45, 2-47, 2-49, 2-125, 2-127, 2-129, 2-131, 2-133, 2-211, 2-213, 4-191, 4-193
90166-0087	HOSE 15/23 REINF.PVC TRANSP.	1-281, 1-283, 2-29
90166-0095	TUBE 4 MM PA BLUE (50M)	1-333, 1-341, 2-49, 2-131, 2-133, 6-75, 7-127

Part No	Description	Page No
90166-0101	HOSE, SILICONE, 60 SHORE, 6/10 MM	2-27
90166-0108	TUBE 6 MM PA,TRANSP.	2-89, 4-171, 4-173, 4-237, 5-185
90166-0109	TUBE 4 MM PA,TRANSP.	4-203, 4-209, 4-211, 4-213, 4-219, 4-221
90166-0110	TUBE 15 MM PA,TRANSP.	2-205
90166-0113	HOSE	2-87, 10-71
90166-0117	HOSE 4/6 PVC BLUE	7-209, 7-211, 7-213
90166-0118	TUBE 8 MM PA BLACK	1-13, 2-37, 2-197, 2-199, 5-35, 5-37, 5-137, 5-139, 6-9, 6-17, 6-19, 6-21, 6-29, 6-69, 6-71
90166-0121	HOSE	1-205, 2-9, 2-77, 2-121, 2-205, 6-13, 6-15, 6-17, 6-19, 6-23, 6-37
90166-0123	HOSE	4-237
90166-0124	TUBE 6 MM PA,TRANSP.	10-55, 10-57
90166-0132	TUBE 6 MM PA,TRANSP.	2-207, 4-189, 5-65, 5-67
90166-0138	HOSE	2-19, 2-21
90166-0141	TUBE 10 MM PA,TRANSP.	2-209
90166-0143	TUBE 2,5 MM PA,TRANSP.	4-171, 4-173, 4-203, 4-205, 4-207, 4-209, 4-211, 4-213, 4-215, 4-217, 4-219, 4-221, 5-185
90166-0151	HOSE	2-19, 2-21, 2-65, 2-119
90166-0158	HOSE	2-29, 2-65
90166-0161	HOSE	2-27
90166-0176	RUBBER HOSE	1-353, 1-355
90166-0188	PLASTIC HOSE	6-7
90166-0193	TUBE 6 MM PUR BLUE	1-253, 1-255, 1-321, 1-323, 7-17, 7-79, 7-101, 7-127, 7-153, 7-155, 7-169, 7-171, 7-177, 7-179
90166-0194	TUBE 8 MM PUR BLUE	6-75, 7-89, 7-91, 7-93, 7-95, 7-101, 7-153, 7-207, 7-209, 7-211, 7-213
90166-0195	TUBE 12 MM PA BLUE	1-253, 1-321, 1-323, 2-211, 2-213
90166-0196	TUBE 14MM PA BLUE	2-211, 2-213, 6-77, 6-79
90166-0198	RUBBER HOSE	2-39
90166-0199	RUBBER HOSE	1-179
90166-0216	TUBE 10 MM PUR BLUE	2-125, 2-127, 2-129
90166-0225	HOSE	2-39
90166-0232	SHRINKABLE HOSE	6-11
90166-0233	HOSE	2-69, 6-47
90166-0236	HOSE, 38/51 REINFORCED RUBBER	2-113, 2-271, 6-35
90166-0260	HOSE	2-205
90166-0266	TUBE, 6 MM PA BLACK	2-201, 2-203
90181-0064	LOCK ZP1 FOR CHANNEL T1	8-49, 8-51, 8-53, 8-65, 8-67, 8-71, 8-89, 8-91
90181-0199	FLEXIBLE CHAIN, LINK 15	7-85
90181-0202	FLEXIBLE CHAIN, BRACKET 1015. 1PZ	7-85
90181-0203	FLEXIBLE CHAIN, BRACKET 1015. 2PZ	7-85
90181-0313	RIVET DUCTAFIX R4	7-181, 7-183
90187-0029	BALL VALVE G1/2, NPBR	6-25, 6-69, 6-71
90187-0045	BALL VALVE G1/4 CR PL	6-7, 6-19, 6-27, 10-65, 10-71
90187-0059	BALL VALVE FOR HYDR.PER. G1/2 3MM HOLE	2-19, 2-21, 2-29
90187-0062	BALL VALVE G1/2, NPBR	1-205, 1-281
90187-0088	BALL VALVE G1/4, NPBR	7-111
90187-0089	BALL VALVE G3/8, NPBR	6-69, 6-71
90187-0096	BALL VALVE G1	1-253
90187-0105	PURGING VALVE, G3/8 FOR WATER	1-279
90187-0110	DIAPHRAGM VALVE DN15, NC WELD CONN.	1-255
90187-0130	TEMP. CONTR. VALVE, R3/4 0-30øC	6-23
90187-0133	SAFETY VALVE, 10 BARS, R1/2, R1/2	6-37
90187-0147	BALL VALVE G11/2	6-35
90187-0148	BALL VALVE G1	6-47
90187-0149	THROTTLE VALVE, G1/4, G1/4, MALE	2-201, 2-203
90187-0158	THROTTLE BALL VALVE G1/4, R1/4	1-279, 2-9, 2-77, 2-197, 2-199
90187-0312	DIAPHRAGM #328 FOR SIZE 15 VALVE	1-255
90189-0005	BALL BUSHING, 30X47X68 MM	7-143
90189-0011	BALL BUSHING, 16X26X36 MM	2-249, 7-131
90189-0025	BALL BUSHING, 25X37X37 MM	7-231, 7-233
90191-0047	WHEEL, NO.798 821	10-73
90191-0060	CASTOR WHEEL, NO. 1599PRT	10-73
90191-0077	WHEEL	10-91
90194-0016	WARNING SIGN, RISK OF ELECTRIC SHOCK	6-31, 6-65, 6-67, 10-97
90194-0080	SIGN, IDENTIFICATION OF WIRING	8-33
90194-0113	ADHESIVE LABEL, CALIBRATED & DATE	10-23
90194-0133	SIGN "DELIVERED DESIGN"	2-265, 8-33
90194-0143	WARNING SIGN ISO, HOT SURFACE	7-147
90194-0152	SIGN, EARTH	8-23, 8-29, 8-31, 8-33, 8-35, 8-89, 8-91
90194-0163	SIGN, EARTH WITHIN CIRCLE	10-97
90194-0164	SIGN, FRAME/CHASSIS WITHIN CIRCLE	10-97
90195-0020	TERMINAL BLOCK, 1977.2	2-41, 5-187, 5-189, 5-191
90195-0028	TERM.BLOCK 6-POLE STEATIT	1-199
90195-0029	CONN. LINK NO324 FOR -28	1-199
90201-0098	ADJ. FLOW CON. VALVE, NO. 9 PCCM 400SF	10-87
90201-0131	VALVE	2-81
90201-0132	VALVE	2-81
90201-0133	VALVE	2-81
90201-0135	PRESSURE REDUCING VALVE	2-81
90201-0136	DIRECT CHECK VALVE, NO. DGMDC-3-Y-PK-41	2-81
90201-0448	PLUG	2-81
90201-0449	PLUG	2-81
90201-0450	PLUG	2-81
90201-0456	BOLT KIT, NO. BK 464125M	2-81
90206-0030	HEATING ELEMENT 3000W, 220V	5-187, 5-189, 5-191

Machine Type Group Description Page No

Part No	Description	Page No
90206-0070	HEATING ELEMENT 6000W 380/220V	1-279
90206-0326	JUNCTION BOX FOR 90206-56	1-279
90206-0330	SOCKET WRENCH 2"9	10-5
90207-0363	GASKET	1-231, 9-25
90207-0365	GASKET	1-231, 9-25
90208-0087	CLAMPING ELEMENT WITH SLEEVE, 45X59 MM	5-23, 5-25, 5-113, 5-115
90211-0002	WIRE LOCK, 5 MM	7-231, 7-233
90214-0036	BALL BEARING, 10X22X6 MM	3-19, 3-33
90214-0037	BALL BEARING, 5X16X5 MM	1-309
90214-0105	SPHERICAL BALL BEARING, 15X35X14 MM	1-105, 1-107
90214-0112	2BALL BEARING, 12X24X6 MM	1-173
90214-0138	BALL BEARING, 5X19X6 MM	1-311, 1-313, 7-13, 7-31
90214-0165	BALL BEARING, 25X47X12 MM	1-153, 1-155
90214-0194	SPHERICAL BALL BEARING, 15X35X1 MM	4-229, 4-231
90214-0219	CYL.ROLLER BEARING, 17X40X12 MM	5-263, 5-267, 5-269
90214-0229	BALL BEARING, 65X85X10 MM	5-241, 5-243, 5-245, 5-247, 5-249, 5-251
90217-0206	UNION NUT, 1 1/2 APV, 07-01-376/17	1-259
90217-0306	GASKET 22,8X50,5X5,5 MM	1-271
90217-0348	GASKET 35,4X46,8X4 MM	1-243, 1-245, 1-259, 9-5
90220-0034	THERMOCABLE TEX/SITW-20F-KX 2X0,5MM2	1-191, 1-223, 1-247, 1-279, 1-365, 1-367, 2-57, 2-59, 2-107, 2-109, 2-149, 2-151, 6-19, 7-147, 8-37, 8-39, 8-41
90220-0072	SCR. CABLE 4X0,34MM2	1-365, 1-367
90220-0091	PAIR TWISTED CABLE 2X2X0,25MM2	1-365, 1-367, 2-81, 2-107, 2-109, 8-5, 8-105
90220-0092	PAIR TWISTED CABLE 3X2X0,25MM2	7-131, 7-261, 7-263
90220-0095	SCR. CABLE 3X0,75MM2	6-11
90220-0104	SCR. CABLE 4X1,5MM2	1-365, 1-367, 2-149, 2-151, 7-121, 7-163, 7-181, 7-183, 7-227, 8-37, 8-39, 8-41
90220-0105	SCR. CABLE 4X2,5MM2	1-365, 1-367, 8-47
90220-0107	SCR. CABLE 5X0,75MM2	10-101
90220-0165	SCR. CABLE 5X0,34MM2	1-223, 1-353, 1-355, 1-365, 1-367, 2-107, 2-109
90220-0180	CABLE, ETHERNET RJ 45 CONNECT. 3 M	8-89, 8-91
90220-0181	CABLE, ETHERNET RJ 45 CONNECT. 5 M	8-61
90220-0183	SCR. CABLE 2X0,34MM2	8-37, 8-39, 8-41, 8-89, 8-91
90220-0201	CABLE OLFLEX 18X0,75 MM2	1-223
90220-0303	CLAMP FOR SCR.CABLE, 10MM, 55-016-22	6-11
90220-0305	CLAMP FOR SCR.CABLE, 16MM,	6-11
90224-0229	REDUCER, ART.NO RMM 1238	7-111
90224-0303	CONN. ELBOW 1020-8-1/4	10-55, 10-57
90224-0308	CONN. BANJO, ART. NO. 2023-1/8-1/8	1-321, 1-323
90224-0329	ELBOW 90 COUPL.,EXT.THREAD 6/4-G1/4"	2-201, 2-203, 2-207
90224-0349	CONN. BULKHEAD. 1250-6	1-253, 1-321, 1-323
90226-0458	MOUNTING SCREW	1-389, 1-393, 1-395, 2-227, 2-229, 2-231, 2-233, 2-235, 2-245, 2-249, 2-261, 6-53, 6-59, 6-63, 7-47, 7-247, 7-255, 7-257, 7-261, 7-263, 7-277, 7-279, 7-289, 8-43
90230-0017	NON-RETURN VALVE RHD 10-L	2-79
90230-0023	NON-RETURN VALVE	2-77
90230-0027	NON-RETURN VALVE QJ 8355-1/4"	2-245, 5-83, 5-85, 5-87, 5-89, 5-91
90230-0028	NON-RETURN VALVE H 151 R 3/8"	2-207, 6-19
90230-0032	NON-RETURN VALVE, 8MM, L=63,25	2-23, 6-7
90230-0040	NON-RETURN VALVE, R3/8, L=55	6-7
90230-0041	OVERPRESSURE VALVE SS-4 CPA2-RTDG-3	6-27
90230-0042	NON-RETURN VALVE 1/2"	2-121, 6-37, 6-45
90230-0044	NON-RETURN VALVE 1"	2-121, 6-39
90230-0045	NON-RETURN VALVE 1 1/2"	1-273
90230-0064	CHECK VALVE, 6 MM HIGH TEMP.	1-219, 2-33
90232-0103	PH.CELL E3S-CT61-L-5M	5-97, 5-99, 5-285
90232-0104	PH.CELL E3S-CT61-D-5M	5-97, 5-99, 5-285
90232-0106	PH.CELL E3S-CR11-5M	7-225
90232-0129	PH.CELL E3S-CR61-5M	7-115, 7-225
90232-0333	REFLECTOR E39-R1	7-93, 7-95, 7-225, 7-283, 7-287
90233-0027	TUBE FUSE, 16A	8-83, 8-85, 9-5
90233-0028	TUBE FUSE, 10A	8-83, 8-85, 9-5
90233-0029	TUBE FUSE, 25A	8-83, 8-85, 9-5
90233-0062	TUBE FUSE, 4A 600V	8-83, 8-85
90235-0151	NON-RETURN VALVE, 534 098 110 0	6-45
90235-0206	QUICK EXHAUST VALVE, SEU-1/8	7-153
90235-0250	THROTTLE CHECK VALVE, GR-1/8-B FESTO	7-87
90235-0274	THROTTLE CHECK VALVE, G1/8", SCU-604-1/8	1-321, 1-323
90235-0731	THROTTLE CHECK VALVE, G1/4", SCO-606-1/4	5-29, 5-31, 5-33, 5-129, 5-131
90235-0844	THROTTLE CHECK VALVE, M5, MANUAL, 6MM	1-193
90235-0846	THROTTLE CHECK VALVE G1/8", MANUAL, 6	1-167, 1-169, 5-195, 5-197, 5-199, 5-201, 5-203, 5-205, 5-207, 7-79, 7-81, 7-83, 7-171, 7-177
90235-0847	THROTTLE CHECK VALVE, G1/4", MANUAL,6	1-11
90235-0848	THROTTLE CHECK VALVE, G1/8", MANUAL,8	7-89, 7-91
90236-0041	BRACKET	1-221
90237-0070	SNAP-IN BALL LOCK, 69X19 MM	2-225
90237-0079	FAST LOCKING BOLT, FSQ -M8	2-237
90237-0126	TURNING HANDLE "REPBY 90237-175"	6-57, 6-61
90237-0128	LOCK CYLINDER, 1109-U3	2-219, 2-221, 2-239, 2-251, 2-255, 2-257, 2-259, 6-57, 6-61, 7-273, 7-275, 7-283, 8-29
90237-0142	LOCK HOUSING, 1000-U45	10-97
90237-0151	GUIDE, 1001-U11	8-29, 8-31, 8-33, 8-35
90237-0152	GUIDE, 1001-U12	8-29, 8-31, 8-33, 8-35
90237-0153	LOCK HOUSING, 1121-U26-0B	2-219, 2-221, 2-239, 2-251, 2-255, 2-257, 2-259, 6-57, 6-61, 7-273, 7-275, 7-283, 8-29, 8-31, 8-33, 8-35

Part No	Description	Page No
90237-0155	LOCK ADAPTER, 1121-U40	8-29, 8-31, 8-33, 8-35
90237-0156	LOCK BOLT, 1000-16	8-29, 8-31, 8-33, 8-35
90237-0157	LOCK BOLT, 1000-230	2-265, 6-65, 8-25, 8-27, 8-89, 8-91
90237-0160	ESCUTCHEON WITH SQUARE, 1121-U23/U13	8-31, 8-33, 8-35
90237-0165	LATCH	2-219, 2-239, 2-259, 7-283
90237-0168	ROUND BAR WITH END WHEEL, 1049-U5	8-29, 8-31, 8-33, 8-35
90237-0169	LOCK ADAPTER, 1000-U49	8-29, 8-31, 8-33, 8-35
90237-0175	TURNING HANDLE, 1125-U185-0A	7-273, 7-275, 7-283
90237-0176	TURNING HANDLE, 1125-U190-A	2-219, 2-221, 2-239, 2-251, 2-255, 2-257, 2-259, 8-29
90237-0178	FAST LOCKING SOCKET,4-28599, M8	2-237
90237-0319	LOCK HOUSING, 1000-U134	1-251, 1-393, 1-395, 2-265, 6-65, 8-25, 8-27, 8-89, 8-91
90237-0320	LOCK HOUSING, 1000-U136	2-265, 6-65, 8-25, 8-27, 8-89, 8-91
90237-0322	LOCK GASKET, 1000-U137	6-65, 10-97
90237-0323	LOCK O-RING, 1000-24	1-251, 1-393, 1-395, 6-65
90237-0324	KEY, 1104-02 FOR SQUARE 8 MM	8-31, 8-33, 8-35, 10-97
90237-0328	LOCK BOLT, 1000-229	10-97
90237-0335	LOCKING CATCH	1-251, 1-393, 1-395
90237-0337	LOCK HANDLE FOR 90237-319	1-251, 1-393, 1-395
90237-0368	LOCK CAM, 1000-15	10-97
90239-0405	ROD END,BALL JOINT EYE M10X1,25	7-81, 7-83, 7-171, 7-177
90239-0487	REAR,CLEVIS,MINI-ISO 20-25	7-171, 7-177
90239-0489	ROD END, CLEVIS WITH AXLE M6X1,25	1-147, 1-149, 1-151, 1-165, 1-167, 1-169
90239-0491	ROD END,BALL JOINT EYE,MINI-ISO M6	7-127
90239-0832	DOUBLE ACTING, MINI-ISO, CYL. 25-125	7-171, 7-177
90239-0841	DOUBLE ACTING, MINI-ISO, CYL. 16-25	1-165
90239-0861	DOUBLE ACTING, MINI-ISO, CYL. 32-125	7-81, 7-83
90240-0119	BEAR. BUSHING WITHOUT FL	3-19, 3-33
90240-0146	FLANGE BUSHING, 15X21X20 MM	1-285, 1-287
90240-0165	FLANGE BUSHING, 12X16X10 MM	4-243, 4-245
90240-0172	FLANGE BUSHING, 8X12X10 MM	1-29, 1-31, 1-33, 1-35, 1-37, 1-39, 1-53, 1-55, 1-59, 1-61, 1-63, 1-75, 1-77, 1-79, 1-81, 1-83, 1-91, 1-93, 1-95, 1-97, 1-99
90240-0180	FLANGE BUSHING 10X14X15MM	4-185, 4-187, 9-11, 9-13, 9-15, 9-17, 9-19
90240-0258	BUSHING, 15X17X15 MM	5-75, 5-77, 5-79
90240-0261	FLANGE BUSHING, 12X14X9 MM	4-243, 4-245, 4-247
90240-0263	FLANGE BUSHING, 15X17X12 MM	5-75, 5-77, 5-79
90240-0289	FLANGE BUSHING, 10X12X6 MM	4-61, 4-73, 4-243, 4-245
90240-0293	FLANGE BUSHING, 25X28X21 MM	1-15, 1-17
90240-0302	BUSHING, 10X12X10 MM	1-271
90240-0315	SPHER. BEARING, 30X47X22 PLASTIC MM	2-273, 2-275
90240-0317	BUSHING, 35X39X30 MM	5-241, 5-243, 5-245, 5-247, 5-249, 5-251
90242-0093	O-RING MATERIAL 1,5 MM	4-119, 4-121, 4-123, 4-125
90242-0222	O-RING 45,36X3,53 MM	2-41
90242-0223	O-RING 47,35X1,78 MM	2-41
90242-0224	O-RING 44,17X1,78 MM	2-41
90242-0270	O-RING 82,27X1,78 MM	1-137, 1-139, 1-141, 1-143, 1-145, 5-241, 5-243, 5-245, 5-247, 5-249, 5-251
90242-0271	O-RING 63,22X1,78 MM	5-241, 5-243, 5-245, 5-247, 5-249, 5-251
90242-0281	O-RING 58X3 MM	5-235, 5-237, 5-239
90243-0061	AIR GUN, CEJN SERIE 204 ED: 90459-0173	2-141
90243-0118	TOOL BOX, NO. ZERO 105X-SI	10-59
90243-0137	PRESSURE GAUGE KIT 0-50 MM WC, 229900	10-55, 10-57
90243-0146	TOOL	10-5
90243-0147	FLOW METER	10-55, 10-57
90243-0203	MEASURING INSTRUMENT	10-5
90243-0245	MEASURING INSTRUMENT	6-37
90243-0328	PAPER ROLL	10-5
90243-0329	CABLE	10-5
90243-0330	CABLE	10-5
90243-0447	LASER EQUIPMENT	10-5
90243-0456	FORCE GAUGE +-50N, FMI-200B5	10-11
90243-0461	MEASURE GAUGE,6916-0109	10-37
90248-0032	HINGE, 1110-U2	10-97
90248-0047	HINGE, 1150-U50	2-265
90257-0001	FILTER PLUG ART.NO.8145-00-140 TYPE F14	8-103
90258-0031	PIN, STRAIGHT SLOTTED SPRING FRP 3X20	1-129, 7-165, 7-173
90259-0309	3 POLE BUSBAR, K&M B3.1/4	8-81
90259-0311	3 POLE BUSBAR K&M B3.1/5	8-81
90259-0313	AUX. CONTACT K&M NHI21-PKZM0	8-81
90261-0016	PLUG, BLIND, PLASTIC GPN300V2	4-7, 4-9, 4-11, 4-17, 4-19, 4-21, 7-93, 7-95
90261-0033	PLUG, BLIND, PLASTIC GPN300F182	2-173, 2-175, 2-179, 2-181, 2-189, 2-191
90261-0049	PLUG, BLIND, PLASTIC, NO. SR1750	7-129
90261-0057	PLUG, BLIND, PLASTIC	2-65
90261-0069	PLUG, BLIND, PLASTIC, NO. 055-0615	6-49
90261-0070	PLASTIC PLUG SS 0082.31	2-9
90261-0079	PLUG, BLIND, PLASTIC, NO. 1955	10-97
90264-0064	FAN / FL 12G308	8-101
90264-0350	FILTER / 554141	8-101
90266-0019	PIPE	4-171, 4-173, 4-203, 4-205, 4-207, 4-209, 4-211, 4-213, 4-215, 4-217, 4-219, 4-221
90266-0165	BRASS PIPE	4-109, 4-111, 4-113, 4-115, 4-153, 4-155, 4-157, 4-159, 4-203, 4-205, 4-207, 4-209, 4-211, 4-213, 4-215, 4-217, 4-219, 4-221, 4-233, 4-235
90266-0166	PIPE	5-221
90270-0017	COMPRESSOR NASH/ELMO 112 MB/4-2083	1-179
90270-0349	CONSTANT FLOW VALVE, 1/2"X1/2" 2GPM	1-205
90274-0042	PRESSURE GUARD, 200 KPA	6-69, 6-71
90274-0056	PRESSURE SWITCH, 100 - 1200 KPA	6-27

Part No	Description	Page No
90274-0074	PRESSURE GUARD, 530 KPA	6-77
90274-0082	FLOW SWITCH, 2 - 3 L/MIN	6-35
90274-0084	PRESSURE GUARD, 1800 KPA	2-87
90274-0103	PRESSURE GUARD PEV-1/4-B (10773	2-49
90274-0108	DUAL PRESSURE GUARD, -20 - 2800 KPA	6-17
90274-0124	PRESSURE SWITCH	2-81
90277-0039	FILTER HOUSING LF -1/4-S-5M-B	2-49
90277-0045	FILTER / 9900-05-BK	2-49, 2-131, 2-133
90277-0046	FILTER / 9933-05-101	2-49, 2-131, 2-133
90277-0086	AIR FILTER / ART.NO. BK 464125 (70)	2-77
90277-0104	FILTER F64B-2GN-ARO	1-221
90277-0116	FILTER HOUSING / ART.NO FILTER 58P-S5430	7-101
90277-0323	FILTER HOUSING / ART.NO 95S6-1/4 S 5430	1-221
90277-0324	FILTER CARTRIDGE 050-11-A	1-221
90277-0355	FILTER INSERT / MBS 100 IPH	1-253
90286-0013	GREASE NIPPLE STRAIGHT, H1 M6X1 2346	5-195, 5-197, 5-199, 5-201, 5-203, 5-205, 5-207
90287-0073	SCREW MC6S M5X70 129	6-77
90287-0075	SCREW SLOT. PAN HEAD LKCS M6X12	2-119
90287-0106	SCREW SPRINGLOAD. SLOTTED HEAD M10X21	7-129
90287-0112	SCREW SPRINGLOAD. SLOTTED HEAD M8X16	1-15, 1-17, 4-201, 4-209, 4-211, 4-219, 4-221, 4-243, 4-245, 7-133
90287-0124	SCREW PAN HEAD MSCS M4X12 NYLON	8-37, 8-39, 8-41, 8-49, 8-51, 8-53, 8-65, 8-67, 8-71, 8-89, 8-91
90287-0137	SPACER BOLT DSSM60100	8-23
90287-0148	SCREW SPRINGLOAD. SLOTTED HEAD M5X12	4-191, 4-193
90287-0154	SCREW, SOCK.SET DOGPOINT M6X10	7-221, 7-231, 7-233
90287-0157	SCREW M6SF FLAT HEAD M6X10 88	8-23, 8-49, 8-51, 8-53, 8-65, 8-67, 8-71
90287-0159	SCREW, SOCK.SET DOGPOINT M6X16	2-33
90287-0199	SCREW M6S ISO 4017 M5X6 A480	5-221
90287-0261	SCREW MC6S M5X55 A270	7-231, 7-233
90287-0264	SCREW	2-73
90287-0295	SCREW HEX.SOCK.COUNT.MF6S M3X8 A280	4-119, 4-121, 4-123, 4-125
90287-0334	SCREW SPRINGLOAD. SLOTTED HEAD M8X16	7-15
90296-0009	SILICONE GREASE DOW CORNING 150 GR.	9-5
90296-0051	PASTE	7-147
90296-0068	SHELL ALVANIA GREASE EP 2	3-17, 9-5
90303-0011	PROTECTIVE GOGGLES	9-27
90303-0012	PROTECTIVE GLOVES	9-27
90303-0013	APRON	9-27
90304-0020	LIQUID CONTAINER	6-29
90304-0307	ATTACHMENT PIPE	1-281
90319-0013	ROPE 4MM BLUE 3700N	7-231, 7-233
90321-0102	PUMP, MG209XTS37	2-41
90321-0116	PUMP GRUNDFOS CHI 2-60	6-27
90321-0117	PUMP LOWARA SV8-14 F75T	6-41, 6-43
90321-0120	PUMP SV8-09 F756T, 380V60HZ	6-41, 6-43
90321-0128	CHEM. PUMP 081778	2-37
90321-0134	CIRC. PUMP TMB 40/2 230V50HZ	1-279
90321-0135	CIRC. PUMP TMB 40/2 230V60HZ	1-279
90321-0574	PUMP BRACKET LSE-201	2-79
90321-0575	SHAFT COUPLING, 24 MM	2-79
90326-0012	PROTECTIVE COVER, T31A4618	1-15, 1-17, 1-191, 1-219, 1-279, 1-285, 1-287, 6-19, 7-147
90326-0020	PLUG, FEMALE YELLOW CR-AL	1-15, 1-17, 1-191, 1-199, 1-219, 1-247, 1-255, 1-279, 1-285, 1-287, 2-57, 2-59, 2-95, 2-107, 2-109, 2-149, 2-151, 6-19, 7-147, 8-23
90326-0022	PLUG, MALE YELLOW CR-AL	1-219, 1-223, 1-247, 1-365, 1-367, 2-57, 2-59, 2-107, 2-109, 2-149, 2-151, 6-19, 7-147
90326-0051	THERMOCOUPLE, 12826-33	1-199
90326-0053	THERMOCOUPLE, 12826-35	1-219, 1-285, 1-287, 8-23
90326-0054	THERMOCOUPLE, CR-AL STD.GR, 12826-36	7-147
90326-0057	THERMOCOUPLE, CR-AL	1-191, 1-279, 6-19
90326-0060	THERMOCOUPLE, CR-AL	1-247
90326-0081	THERMOCOUPLE, ISA TYPE K.	5-187, 5-189, 5-191
90326-0089	THERMOCOUPLE, 5110-089-000	1-255
90326-0308	THERMOCOUPLE CABLE FOR CE-557793/MALE 5M	10-23
90326-0309	THERMOCOUPLE CABLE FOR CE-557793/FEMALE	10-23
90326-0310	THERMOCOUPLE, 5130020-000	10-23
90328-0001	SILENCER, 338/130 B140-00-120	7-109
90328-0007	SILENCER, 338/125 B140-00-380	6-77
90328-0017	SILENCER, D=6 MM	2-51, 2-135, 2-137, 2-139, 6-75, 7-207, 7-209, 7-211, 7-213
90328-0024	SILENCER G3/8"	1-335, 1-337, 1-339, 1-343, 1-345, 2-51, 2-135, 2-137, 2-139, 6-75, 7-207, 7-209, 7-211, 7-213
90328-0025	SILENCER G1/2"	10-71
90328-0026	SILENCER G1/4"	1-249, 1-253, 1-271
90328-0038	SILENCER, D=8 MM	7-209, 7-211, 7-213
90328-0047	SILENCER G1/8"	1-255
90330-0004	NIPPLES,HEXAGON,EXT.R-THREAD R3/4"-R3/4"	6-19, 6-23
90330-0011	SLEEVE, REDUCTION, INT, R-2023/8X1/4	1-253
90330-0014	ELBOW, 90 INT. THREAD, R-222R1	6-39, 6-49
90330-0020	ELBOW, 90 INT. THREAD, R-2221/2	6-79
90330-0021	NIPPLES, EXT. THREAD. R-207R1/2	2-23, 2-29, 6-7, 6-37
90330-0026	PLUG, EXT. G-THREAD, G1/4	2-9, 6-27
90330-0028	NIPPLES, EXT. THREAD. R-207R3/8	2-23
90330-0029	PLUG, EXT. G-THREAD, R-236R3/8	10-55, 10-57
90330-0036	BUSHING, INT/EXT. THR. RP1/8-RP1/2	6-37

Part No	Description	Page No
90330-0042	BUSHING, INT/EXT. THR. R3/8-RP1/4	6-7, 6-17, 6-19
90330-0043	NIPPLES, EXT. THREAD. R-207R1/4	1-279, 6-27, 6-45
90330-0045	NIPPLES, EXT. THREAD. R-209 KR11/2- KR1	6-39
90330-0047	SLEEVE, REDUCTION, INT, R-2021/2X3/8	2-23
90330-0048	BUSHING, INT/EXT. THR. R1/2-RP3/8	1-281, 2-23
90330-0049	T-PIPE, INT. THREAD, R-221R1/2	1-205, 1-283, 2-23, 6-37, 6-77, 6-79
90330-0054	SLEEVE, INT. THREAD, NO. R-201R1/2	2-29
90330-0056	NIPPLES, EXT. THREAD. R-207 KR11/2	6-35
90330-0057	ELBOW, 90 INT. THREAD, R-222R11/2	6-35
90330-0066	PLUG, EXT. G-THREAD, G1/8	1-15, 1-17, 1-255, 1-267
90330-0078	BUSHING, INT/EXT. THR. R3/4-RP3/8	1-205
90330-0080	NIPPLES, EXT. THREAD. R3/4-R1/2	6-27, 6-37
90330-0085	BUSHING, INT/EXT. THR. R1/2-RP1/4	2-23, 6-69, 6-71
90330-0093	NUT, HEXAGON, G1/2	2-83, 2-197, 2-199
90330-0102	SLEEVE, INT, THREAD, NO., R-201R1/4	6-19
90330-0172	ELBOW, 90 INT/EXT, SS-6-SE	1-253
90330-0185	NIPPLES,REDUCING,INT THR, RC1/8 - R 1/8	7-109
90332-0020	RECORDER, 6 CHANNELS 85-264VAC/DC	8-89, 8-91
90335-0024	COMP. SPRING 22250, 1,25X13,75X27	4-191, 4-193
90335-0025	COMP. SPRING 22010, 1X11X26	7-117, 7-135, 10-75
90335-0036	COMP. SPRING 22450, 1,6X14,1X24	5-29, 5-31, 5-33, 5-129, 5-131
90335-0089	TENSION SPRING 41490, 0,9X10X23	1-311, 1-313, 7-31
90335-0091	TENSION SPRING 41890, 1,2X13X48,2	7-149, 7-151, 7-223
90342-0022	BELLOWS	1-197
90342-0024	RUBBER BELLOWS, 100X100 MM	2-143
90344-0073	TOOTHED WHEEL	2-273, 2-275
90344-0078	PULLEY	7-145
90347-0004	VIBRATION DAMPER D=30 TH=M8 H=17 H2=21MM	1-303
90347-0007	VIBRATION DAMPER	2-13
90347-0009	FLOOR PLATE, NO 1256730	2-189, 2-191, 2-193
90347-0034	VIBRATION DAMPER	1-393, 2-65, 10-13
90347-0039	DAMPER	1-109, 1-119, 1-121, 1-175
90347-0054	DAMPER	1-305, 1-307, 7-81, 7-83, 7-89, 7-91
90347-0080	DAMPER TFE 1201	7-41, 7-43, 7-45, 10-7, 10-9
90347-0144	VIBRATION DAMPER, NO. RA 40EM-A	1-179
90347-0175	MACHINE SHOE BRIK T 125	2-11, 7-105
90347-0182	SHOCK ABSORBER, YSR-16-20-C	7-79, 7-157, 7-159
90358-0091	REDUCING NIPPLE	6-19
90360-0020	STEAM TRAP / MK36/51 3/8 INCH	1-255
90360-0305	FLOAT, ART NO 10739920	1-195
90410-0337	CALIBRATION INSTRUMENT 5100071-001	10-23
90410-0338	CALIBRATION INSTRUMENT 5100071-001	10-23
90411-0001	INSULATING MAT	1-219
90411-0005	INSULATOR	1-199
90411-0020	INSULATING TUBE	2-205
90415-0032	FILTER / 3-02-00-1 1/2"	6-35
90415-0033	OIL FILTER REFILLING UC-HP-1229-25	2-87
90415-0052	FILTER ART NO 12565 C-340-6E FOTVENTI EP	2-37, 2-39
90415-0065	FILTER	6-7, 6-19
90418-0045	ADAPTER, INT. CONN. NO. 7272CU/22-G3/4	6-23
90418-0057	ADAPTER, EXT. CONN. NO. 7276CU / 15-G1/2	6-23
90418-0062	T-PIPE, REDUCTION, INT, NO. 7130-22X15X2	6-23
90419-0012	LIGHT ELEMENT, RED	7-251
90419-0013	LIGHT ELEMENT, BLUE	7-251
90419-0014	LIGHT ELEMENT, YELLOW	7-251
90419-0017	BASE	7-251
90419-0307	GASKET	7-251
90419-0310	GASKET	7-251
90422-0008	COOLER	2-79
90422-0037	HEAT EXCHANGER	6-23
90424-0054	SPRAY NOZZLE 120 DEG	1-205
90424-0066	ROT.SPRAY NOZZLE, D26984-B3/8"-PVDF/4.5	2-69, 2-121
90424-0068	AIR NOZZLE, G1/4, MOD. 216 BSP	5-29, 5-31, 5-33, 5-103, 5-105, 5-107, 5-109, 5-111, 5-129, 5-131, 5-165, 5-167
90424-0071	ROT.SPRAY NOZZLE, D40140-R3/8-PVDF 4.5	2-69
90425-0016	MECMAN TYPE E120 735-120-000	10-71
90426-0003	HAND SHOWER	2-209
90427-0014	INK JET PRINTER A300 STD 3M CONDUIT	10-67
90450-0003	SINGLE ACTING, MINI-ISO, CYL 20-25	7-149, 7-151
90450-0281	DOUBLE ACTING,PROF.CYL 32-80	1-201
90450-0306	DOUBLE ACTING, MINI-ISO, CYL. 12-25	7-127
90450-0504	DOUBLE ACTING, PROFILE, CYL 50-25	5-257, 5-259
90450-0654	BRACKET,REAR,EYE WITH AXLE 32	7-89, 7-91
90450-0655	BRACKET,REAR,CLEVIS FLANGE WITH FOOT 32	7-89, 7-91
90450-0669	SENSOR, BRACKET SERIES 168	1-201
90450-0723	ROD END,BALL JOINT EYE M10X1,25	7-89, 7-91
90450-0725	ROD END, CLEVIS WITH AXLE M6	1-193
90450-0756	BRACKET, REAR EYE 32	1-147, 1-149, 1-151, 1-167, 1-169
90453-0001	MODEM MA-12	8-105
90453-0002	MODEM MD-12 DC	8-89, 8-91
90457-0019	LEVEL PROBE, HMFB-S=45-0=80-0=90-T70	2-77
90457-0035	REDUCING UNIUN	2-77, 2-79
90457-0036	3-PHASE MOTOR,FOOT MOUNT.1,1KW,1410 RPM	2-79
90457-0037	HYDR. PUMP TFP100 3/8-S-C001	2-79

Part No	Description	Page No
90457-0039	PUMP CONN. ELBOW FLANGE T-26/12-3/8	2-79
90457-0043	BUSHING, INT/EXT. G-THREAD NO. 1/2-1/4	2-79
90457-0046	WASHER PLAIN ROUND 25,4/67,5, H=2	2-79
90457-0047	SENSOR 2750-1-5111-1 W.ADAPTER PNP	1-201
90457-0049	TERMINAL BLOCK, 102230	8-69
90457-0078	PANEL NUT	1-333, 1-341, 2-49, 2-131, 2-133, 6-75, 7-209, 7-211, 7-213
90457-0092	SAFETY RELAY RT9-24VDC	8-49, 8-51, 8-53
90457-0100	RESERVOIR, CRVZS-2	7-111
90457-0134	O-RING	2-81
90457-0144	REGULATOR 0,3-2 BAR	1-341, 2-49, 2-131, 2-133, 7-209, 7-211, 7-213
90457-0177	FLOW-RESTRICTOR, 2,0 MM, M6	2-81
90457-0194	KEY FOR SAF.SW.048850-C2052	2-99, 2-149, 2-151
90457-0195	KEY FOR SAF.SW.TZRE024PG RC1635-057950	2-149, 2-151
90457-0196	KEY SAF.SW. TZ2RE024PG RC1635	2-99, 2-149, 2-151
90457-0920	BUTTON SIGN, ROTATION OF MATERIAL HOLDER	7-285
90457-0921	WORM GEAR MOTOR MC320P2TB5/D	7-121
90458-0058	SCREW M5X60 A280	4-107
90458-0072	SCREW ISO 7380 S M6X12 A2	2-171, 2-173, 2-175, 2-179, 2-181, 2-187, 2-189, 2-191
90458-0073	WASHER 6,4/30, H=1,5	2-171, 2-173, 2-175, 2-179, 2-181, 2-187, 2-189, 2-191
90458-0138	PROX. SWITCH, E2EG-X1R5B1-5M	1-249, 2-39, 2-115, 4-229, 4-231, 7-25, 7-123
90458-0162	ELBOW GT48/2, NO.49.49 71 00	10-95
90458-0163	FLANGE COUPLING, GT48/2, NO.49.49 77 00	10-95
90458-0200	PEROX. SAFETY VALVE, NO. 527-430 1/2X3/4	1-281
90458-0201	FLUID AUT. FEEDER, ALINOX 1/2 46.04.00	1-281, 6-7
90458-0256	PROXIMITY SWITCH IIA 3010-BPKG/6M	2-65
90458-0258	TRANSFORMER, 220VAC/6-9-12VAC	7-181, 7-183
90458-0273	COVER STRIP	7-79, 7-113
90458-0274	DISC FOR COUPLING, HUCO 236.50T	2-33
90458-0292	BASE, KT70-1001	2-177
90458-0293	LIGHT ELEMENT, RED, KL70-401R	2-177
90458-0294	LIGHT ELEMENT, YELLOW, KL70-401Y	2-177
90458-0295	LIGHT ELEMENT, BLUE, KL70-401L	2-177
90458-0306	CABLE GLAND, M16X1,5, NO.5311 1010	7-207, 7-209, 7-211, 7-213, 7-259, 7-281
90458-0307	CABLE GLAND, M20X1,5, NO.5311 1020	7-121
90458-0310	CABLE GLAND, M40X1,5, NO.5311 1050	10-101
90458-0311	CABLE GLAND, M50X1,5, NO.5311 1060	8-37, 8-39, 8-41
90458-0315	CABLE GLAND, M20X1,5, NO.5311 1120	2-149, 2-151, 7-93, 7-95
90458-0322	NUT, M16X1,5	7-207, 7-209, 7-211, 7-213, 7-259, 7-281
90458-0323	NUT, M20X1,5	7-93, 7-95
90458-0341	THERMOCOUPLE, 5130050-001	1-15, 1-17
90458-0429	HOSE GLAND W/O INSERT M20 EXTENDED	1-7, 1-9, 1-109, 1-119, 1-121, 1-175, 1-191, 1-395
90458-0438	GLAND, EXTENDED WITH INSERT, M20X1,5	7-145, 7-227
90458-0441	GLAND, EXTENDED WITH INSERT, M25X1,5	1-115
90458-0506	RETAINING RING FOR BORE DIN 472 26 A2	2-249
90458-0528	DOUBLE ACTING, COMPACT, CYL 32-25	1-147, 1-149, 1-151, 1-167, 1-169
90458-0577	CONNECTION TERMINAL BK 25/3-PKZ 0	8-81
90458-0601	CONTRAST SCANNER, KT15W-P2110S01	4-191, 4-193
90458-0602	CONTRAST SCANNER, KT15W-P2110S01	7-155
90458-0603	CONNECTOR FEMALE 5 PINS	7-155
90458-0638	DISTRIBUTION FRAME, ASB 4/LED 5-4-12/5M	1-15, 1-17
90458-0639	VARILIP 20X30X7 MM	1-105, 1-107, 1-129, 1-147, 1-149, 1-151
90458-0640	O-RING 88,62X1,78 MM	1-105, 1-107, 1-123, 1-125
90458-0672	PROXIMITY SENSOR E2E2-X5MB1-5M	1-247, 1-305, 1-307
90458-0676	PROXIMITY SWITCH,E2EG-X5B1-6M	1-259
90458-0677	PROXIMITY SWITCH, E2EG-X5MB1-M1	7-93, 7-95, 7-221, 7-231, 7-233
90458-0751	BUSHING,INT./EXT.G-THREAD G3/4"-G1/2"	1-281
90458-0806	FLOW METER, NO. XF DF23-DN32	1-243, 1-245
90458-0921	FILTER SP 122-200	6-69, 6-71
90458-1076	L-SHAPED CONNECTOR CABLE 933 235-042	7-93, 7-95, 7-221, 7-231, 7-233
90458-1092	PROPORTIONAL VALVE 0 - 10V/0-6 BAR	1-333, 1-341
90458-1136	TERMINAL BLOCK, 103630	2-97, 7-191, 7-193, 7-195, 7-197
90458-1140	FERRITE, RI-26-28-13	8-71
90458-1155	ENLARGING SLEEVE, 7216220	7-121
90458-1162	FILTER, 6 A, 250 VAC	8-57
90458-1170	FERRITE, SFC-6	8-49, 8-51, 8-53, 8-61, 8-65, 8-67
90458-1173	MULTI DIAMETER MODULE, CM 30W40	2-107, 2-109
90458-1174	MULTI DIAMETER MODULE, CM 20W40	2-107, 2-109
90458-1175	MULTI DIAMETER MODULE, CM 15W40	2-107, 2-109
90458-1178	FRAME CF 8	2-107, 2-109
90458-1307	BLIND PLUG CIRCULAR, M16X1,5 514GFK/216	7-209, 7-211, 7-213
90458-1393	PUMP CYLINDER, 34 73 522 5	10-81
90458-1404	FLANGE BUSHING, 12X16X16 MM	4-241
90458-1447	MOUNTING RAIL SUPPORT TST 128660	8-65, 8-67
90458-1467	CAP, 32 44 129 7	10-83
90458-1468	SPLIT PIN, 43 71 234 8	10-81
90458-1469	PUMP HOUSING, 34 73 517 5	10-81
90458-1470	SINK VALVE COMPL, 34 73 094 5	10-81
90458-1473	PUMP, 34 73 521 7	10-79
90458-1474	PAPER TROLLEY, 32 04 192 3	10-77
90458-1477	CONNECTOR 6-1/8 NPT, EXT. TAPERED	2-61
90458-1478	BALL VALVE SS-43T6MM-SH-10147	2-61
90458-1531	ACTUATOR, N.O., PA 38/100	2-115
90458-1535	TRANSDUCER, BTL5-A11-M0850-P-S32	7-131
90458-1537	HOLDER, FOR INDUCTIVE SENSORS	2-115

Part No	Description	Page No
90458-1541	DIAPHRAGM, NA 38/25 PFTE	2-115
90458-1592	FLOATING MAGNET, BTL5-P-3800-2	7-131
90458-1595	CONNECTION, BKS-S 33M-00	2-19, 2-21, 7-131
90458-1607	PUMP, SVI 8 03/03 N15T 1.5KW	1-267
90458-1614	SCREW M6S ISO 4014 M5X80 A480	6-9
90458-1624	PROXIMITY SENSOR, E2E2-X2B1-5M	5-195, 5-197, 5-199, 5-201, 5-203, 5-205, 5-207
90458-1651	EMERGENCY STOP, ZB4-BS-844 ZB4-BZ-104	1-353, 1-355, 2-223, 2-265, 7-271, 7-285, 8-35, 10-97
90458-1704	BALL BEARING, 15X35X11 MM	1-129, 1-137, 1-139, 1-141, 1-143, 1-145, 1-147, 1-149, 1-151, 1-153, 1-155, 1-157, 1-159, 1-161, 1-163
90458-1849	CONN. STR., 6-R1/8, EXT. THREAD	1-321, 1-323
90458-1870	EMC EARTH BRAID, 16MM2 L=300MM	10-97
90458-1963	STRAIGHT COUPLING D=8-G3/8"	6-7, 6-9, 6-19
90458-1977	REFRACTOMETER SET DA15FC15A DFTP A	2-61
90458-2003	ADAPTER 1" MALE NPT X 1" DAIRY CLAMP	1-271
90458-2071	RETAINING RING FOR BORE DIN 472 24 A2	1-173
90458-2138	SCREW M6S M12X120 A280	9-3
90458-2173	PIPE CONNECTION, 552608M	6-9
90458-2174	CONDUCTIVITY TRANSMITTER, 418962Z	6-9
90458-2241	PRESSURE SWITCH 0,5-10 BAR ADJUSTABLE	1-221, 7-109
90458-2264	PRESSURE REGULATOR ARC-30-1/2"	1-253
90458-2300	V-RING 16X22X3 MM	3-23
90458-2301	SPRING, YELLOW SPRING G40X115	3-23
90458-2302	FREE-WHEEL COUPLING, 16X16 MM	3-23
90458-2303	CLAMPING ELEMENT WITH SLEEVE, 38X50 MM	3-7, 3-9
90458-2305	COMP. SPRING D22280	3-19, 3-33
90458-2306	TIMING BELT ATL10 2020X50 MM	3-17
90458-2307	LINEAR UNIT HSR25	3-15, 3-31
90458-2333	VALVE, M8A-V4LQ-KZ-11AO-SS PNEUM. OPER.	2-39
90458-2358	FLOAT, BTL2-S-4414-4Z	2-19, 2-21
90458-2381	POWER LINE FILTER 5A	10-97
90458-2448	ELBOW PIPE JOINT,EXT.THREAD,D=8 MM G1/4	7-153
90458-2466	MOTOR 3GVA071002-CSB	2-33
90458-2490	CONSTANT FLOW VALVE, GX 1"FX1"F 10GPM	1-271
90458-2554	STERILE GRADE MEMBRANE FILTER 0,2µM	1-253
90458-2557	CABLE OLFLEX 25X1 MM2	2-149, 2-151
90458-2580	LEVEL CONTROL RELAY RM4-LA32M	8-49, 8-51, 8-53
90458-2602	BULKHEAD CONNECTOR, 12 MM	2-211, 2-213
90458-2619	FLOW METER, D-6230-HGB-BB-AV-99-0-N2	1-221
90458-2633	HANDLE, 1045-05	2-187
90458-2638	FILTER ELEMENT SINTERED, C3SF	1-269
90458-2664	CONNECTOR 4 POLE COD.600.00.750-1	1-267
90458-2737	SPHERICAL BALL BEARING, 15X35X14 MM	7-27, 7-29
90458-2775	PROXIMITY SENSOR, SMT-8-PS-K5-LED-24-B	1-11
90458-2845	SCREW,HEXAGON HEAD M6S ISO 4017 M10X45	2-171, 2-179, 2-181, 2-187
90458-2850	HOSE CLIP , 51 MM	6-35
90458-2890	CONNECTOR, 21N-50N12N133NE	1-365, 1-367
90458-2892	CONNECTOR, 11 N-50-3-31/133 NE	1-365, 1-367
90458-2893	SLEEVE, 78 Z-0-3-4	1-365, 1-367
90458-2895	COAXIAL CABLE RG 400/U BROWN	1-365, 1-367
90458-2950	BALL BEARING, 5X16X5 MM	7-161
90458-2954	ELBOW PIPE JOINT, EXT.THREAD, D=4MM M5	7-127
90458-2955	ELBOW PIPE JOINT, EXT.THREAD,	1-333, 1-341, 2-49, 2-131, 2-133
90458-2956	ELBOW PIPE JOINT, EXT.THREAD, D=6MM-G1/8	1-11, 1-247, 1-249, 1-255, 1-271, 1-317, 2-27, 2-37, 2-39, 2-125, 2-127, 2-129, 2-249, 5-195, 5-197, 5-199, 5-201, 5-203, 5-205, 5-207, 5-221, 7-209, 7-211, 7-213
90458-2957	ELBOW PIPE JOINT, EXT.THREAD, D=6MM-G1/4	1-271, 1-333, 1-341, 2-49, 2-131, 2-133, 5-257, 5-259, 7-101
90458-2958	ELBOW PIPE JOINT, EXT.THREAD, D=8MM-G1/4	1-333, 1-341, 2-49, 2-131, 2-133, 5-129, 5-131, 5-165, 5-167, 7-101, 7-113
90458-2959	ELBOW PIPE JOINT, EXT.THREAD,D=12MM-G1/4	1-333, 1-341, 7-209, 7-211, 7-213
90458-2960	ELBOW PIPE JOINT, EXT.THREAD,D=12MM-G3/8	1-335, 1-337, 1-339, 1-343, 1-345, 2-51, 2-135, 2-137, 2-139, 6-79, 7-107, 7-209, 7-211, 7-213
90458-2963	ELBOW PIPE JOINT, EXT.THREAD,D=14MM-G3/8	6-79
90458-2964	ELBOW PIPE JOINT, EXT.THREAD, D=8MM-G1/8	6-47, 7-153
90459-0094	O-RING 133,07X1,78 MM	1-105, 1-107, 1-123, 1-125
90459-0098	THRUST BALL BEARING, 15X28X9 MM	1-105, 1-107
90459-0180	FLOW SWITCH, 0,1 - 2,5 L/MIN	6-19
90459-0181	PIPE SURFACE THERM., PT-100 -50° -+120°C	1-243, 1-245
90459-0183	TRANSMITTER , TRANS T02 PCP	8-89, 8-91
90459-0241	VALVE, SEAT, N.C. SRC-38-NC-21	1-271
90459-0261	ETHERNET NETWORK INTERFACE CARD 50101034	8-99
90459-0262	BACKPLANE CARD AR-MB7P	8-101
90459-0275	PC ENCLOSURE FLEX BOX ISC E100008A	8-99
90459-0283	POWER SUPPLY UNIT UO36422A	8-101
90459-0284	PROCESSOR BOARD CLIPS V, UO36418C	8-99
90459-0285	CD UNIT E100009A	10-67
90459-0287	DISPLAY UNIT 15", UO36419A	2-263
90459-0288	SLIM LINE TOUCH BEZEL 15", 1511	2-265
90459-0291	CABLE CD UNIT 50400002	8-99
90459-0363	COOLING UNIT, KB40A0721.03	8-103
90459-0401	DOUBLE ACTING, MINI-ISO, CYL. 25-320	2-249
90459-0462	CANISTER LY 500-10	2-39
90459-0472	KEY SAF.SW. AZ 16 02ZVRK-M20-2152-2254	1-7, 1-9, 1-109, 1-119, 1-121, 1-175, 1-395, 7-93

Part No	Description	Page No
		7-95
90459-0503	CYLINDER, ADVC-16-10-I-P	7-169, 7-179
90459-0586	SWIVEL FLANGE 50	1-11
90459-0587	DOUBLE ACTING, PROFILE, CYL 50-50	1-11
90459-0643	DIFF. PRESS. TRANSDUCER 2671-10CLD2EG2HD	1-353, 1-355
90459-0689	PRESSURE TRANSMITTER 0 - 0,6 BAR	1-113
90459-0711	FLOW SENSOR FS-400 SERIES / 26440	1-205
90459-0713	DOUBLE ACTING, MINI-ISO, CYL 12-80	1-193
90459-0729	HEXAGONAL PROTECTIVE CAP GPN 1000	1-211, 1-213, 1-215
90459-0799	SENSOR BRACKET SMBR-12 FOR CYL 12	1-193
90459-0802	RADIAL SEAL 55X75X10 MM	1-115
90459-0803	O-RING 355,19X3,53 MM	1-115
90459-0804	MOTOR B3/B5 CE CODE: 159353	1-115
90459-0805	BUSHING, 10X14X8 MM	1-173
90459-0829	PROXIMITY SENSOR, SMTO-4U-PS-K-LED-24	1-193
90459-0835	THERMO CONTACT PANEL, 16 CONTACTS 2 ROWS	8-37, 8-39, 8-41
90459-0871	SEALING RING 18X30X7 MM	1-15, 1-17
90459-0941	QUICK COUPLING, PLCD 130-M8	2-197, 2-199
90459-0951	TRANSDUCER, BTL5-A11-M0400-B-S32	2-19, 2-21
90459-0959	DISTRIBUTOR BLOCK 1492-PD3163	8-71
90459-0960	QUICK COUPLING, PLCD 200-M8	2-197, 2-199
90459-0969	COMP. SPRING A D22430, 1,6X11,6X58,5	5-119, 5-121, 5-125
90459-0997	STRAIGHT COUPLING D=8-R1/4"	6-7, 6-9
90459-1000	LIGHT FIXTURE, RL 70CV-136	2-93
90459-1009	RUBBER STRIP, 1025088988	2-9, 2-119
90459-1018	ROD END,BALL JOINT EYE M10X1,25	1-173
90459-1037	CRIMP TOOL FOR COAX. CONN. HTG 58-901200	10-5
90459-1038	PRESSURE TRANSMITTER, 250BAR	2-81
90459-1126	PLASTIC HOSE PVC TRANSPARENT, 8X11MM	7-25
90459-1130	EM. STOP XAL-K178F	1-19
90459-1147	GEARS, WORM MOTOR VF30 F1-10 P63 B14 V6	2-273, 2-275
90459-1148	VARILIP 14X24X7 MM	1-131, 1-133, 1-135
90459-1174	O-RING 75,87X2,62 MM	1-15, 1-17
90459-1175	O-RING 418X3,0 MM	1-15, 1-17
90459-1189	O-RING 56,87X1,78 MM	1-193
90459-1194	KEY SAF.SW. AZ16-03 ZVRK-M16	1-395
90459-1223	PRESSURE GAUGE HYDRAULIC, 1184954.03-11	2-77
90459-1224	FILTER UNIT, MDF-BNHC-30-LB10-C1.0/B6	2-79
90459-1226	GEARS, WORM MOTOR VF 44P-10+BN71B 0.37KW	1-153, 1-155
90459-1227	MANIFOLD BLOCK, A1-17351	2-81
90459-1235	ANGLE SEAT VALVE, N.C. DN13 TYPE 2002	1-253
90459-1241	ANGLE SEAT VALVE, TRI-CLAMP, N.C. DN20	1-271
90459-1254	TUBE FUSE, 4A 500V	8-83, 8-85, 9-5
90459-1297	RESISTANCE FIXED, 120 OHM, 0,25 W	1-365, 1-367
90459-1314	O-RING 491X3 MM	1-117
90459-1352	PCI COMMUNICATION INTERFACE PCI-1612B-A	8-99
90459-1359	FILTER, 1 A, 250 VAC	8-89, 8-91
90459-1395	SCREW HEX.SOCK.SET CONEPT.MS6SS M4X4 A2	1-11
90459-1411	O-RING 7,8X1,9 MM	3-15, 3-31
90459-1420	PROPORTIONAL VALVE 0 - 10V/0-6 BAR	1-221
90459-1424	CONN. STR., 6-G1/8, EXT. THREAD	1-227, 1-247, 2-39
90459-1425	CONN. T-PIPE 8	2-39
90459-1427	QUICK-RELEASE COUPLING, SS-QTM2-D-8M0-K2	2-39
90459-1430	QUICK-RELEASE COUPLING, SS-QTM2-D-8M0-K4	2-39
90459-1452	FEMALE INSERT HAN K 09 38 006 2711	8-47
90459-1467	FORCE GAUGE 0-250N, AFG 250N	10-5
90459-1472	FILTER, KW0604NP3	6-9
90459-1501	CABLE SEALING, 12023/I, ELFA. 44-625-78	2-107, 2-109, 4-191, 4-193, 7-131
90459-1506	ELBOW WITH TAILPIECE 10/10 MM	5-187, 5-189, 5-191
90459-1509	CYLINDER, ADVC-20-20-I-P	7-153
90459-1535	FLEXIBLE COUPLING DISC, 16 MM	2-33
90459-1536	FLEXIBLE COUPLING DISC, 14 MM	2-33
90459-1544	HANDLE, GR/10	7-79
90459-1545	CARRIAGE, 1653-314-20	7-79
90459-1617	TERMINAL BOX FL CAT5	2-157
90459-1621	CABLE, ETHERNET RJ 45 CONNECT. 1 M	8-89, 8-91, 8-93
90459-1623	O-RING 66,40X1,78 MM	1-153, 1-155
90459-1627	O-RING 114,02X1,78 MM	1-129, 1-137, 1-139, 1-141, 1-143, 1-145, 1-153, 1-155
90459-1650	VARILIP 30X40X7 MM	1-153, 1-155
90459-1686	O-RING 126,72X1,78 MM	1-129
90459-1690	DIRECTIONAL VALVE, DG4V-3-6C-MUH-7-60-EN	2-81
90459-1728	SCREW ISO4029 M6X45 A4	1-147, 1-149, 1-151
90459-1733	BELLOW COUPLING, 15X15 MM	4-233, 4-235
90459-1736	PURGE VALVE, 2RM-PG4L-SS	6-27
90459-1738	MANDATORY ACTION SIGN ISO, READ MAINTENA	8-89, 8-91
90459-1742	FEED THROUGH TERMINAL, 1024100	1-225, 1-293
90459-1812	CABLE, ETHERNET RJ 45 CONNECT. 8 M	2-149, 2-151
90459-1825	ELBOW WITH TAILPIECE 12/12 MM	1-341
90459-1848	TAPE, SAFETY WALK R25MM X 18,3M	7-93, 7-95
90459-1849	DOUBLE ACTING SHUTTLE CYL. 40-550 MM	7-113
90459-1898	LIFTING EYE BOLT, VLBG(1)1.0T M12 TURN.	10-67
90459-1953	DOUBLE ACTING, MINI-ISO, CYL. 25-10	5-145, 5-147
90459-1996	FILTER CULLIGAN REFILL LINE 10 760665	6-9
90459-2004	FILTER CARTRIDGE ION-EXCHANGE, 759807	6-9

Part No	Description	Page No
90459-2096	GEARS, WORM MOTOR F2 15 P63 B14 B8 PV 75	7-227
90459-2101	CYLINDER, ADVC-80-25-I-P	7-153
90459-2102	CYLINDER, AEVC 100-25-I-P	7-153
90459-2106	CABLE CONNECTOR, C091 31D004 100 2	1-365, 1-367
90459-2122	THERMOCOUPLE, EN-5130060-0001	1-219
90459-2145	BACK-UP RING 43,5X1,4 MM	4-95
90459-2146	X-SEAL 42,52X2,62 MM	4-95
90459-2173	SEAL GLYDRING 32,5X40X3,2 MM	4-95
90459-2181	BELT TENSION METER, TSM 4	10-5
90459-2185	CPU374, ETHERNET COMMUNICATION	8-65, 8-67
90459-2198	TIMING BELT T10X480X16 POLYURETHANE	7-145
90459-2258	SEAL GLYDRING 25,1X30X2,2 MM	4-127, 4-129, 4-163, 4-165
90459-2363	O-RING MATERIAL 1,78 MM	4-119, 4-121, 4-123, 4-125
90459-2366	HOSE CLIP, (32)-35	2-69, 2-205, 6-47
90459-2421	BASEPLATE, 7 SLOT CONTROLLOGIX CHASSIS	8-61
90459-2474	PLC,DIGIT. OUTPUT MODULE 16 PTS 10-31VDC	8-61
90459-2477	ETHERNET I/P BRIDGE MODULE, 1756-ENBT	8-61
90459-2479	PLC DEVICENET BRIDGE/SCANNER MODULE	8-61
90459-2481	PLC 16-AXIS SERCOS MOTION MODULE	8-61
90459-2487	REMOVABLE TERMINAL BLOCK 20 POINTS	8-61
90459-2488	REMOVABLE TERMINAL BLOCK 36 POINTS	8-61
90459-2530	DEVICENET CABLE THIN	8-37, 8-39, 8-41
90459-2536	SERCOS CABLE 0.1M, 2090-SCEP0-1	8-57
90459-2537	SERCOS CABLE 0.3M	8-57
90459-2539	SERCOS CABLE 1.0M, 2090-SCEP1-0	8-57
90459-2540	SERCOS CABLE 3.0M, 2090-SCEP3-0	8-57
90459-2547	POWER RAIL SLOT FILLER MODULE, 2094-PRF	8-57
90459-2549	AC LINE FILTER 3-PHASE 30A, 2090-XXLF-X3	8-57
90459-2551	CONNECTOR, MOTOR FEEDBACK 15 PIN MALE	2-107, 2-109, 2-149, 2-151
90459-2553	ELBOW PIPE JOINT 16 MM	8-103
90459-2555	T-CONNECTION 16MM	8-103
90459-2557	BLIND PLUG 16 MM	8-103
90459-2560	LIGHT FIXTURE, TMS121 1XTL-D30W/830 IP	8-23
90459-2566	MOTOR CABLE 16 AWG 2090-XXNPMP-16S15	2-107, 2-109
90459-2577	MOTOR BRAKE CABLE 2090-UXNBMP-18S15	2-107, 2-109
90459-2590	ROD END, CLEVIS WITH AXLE M8	7-149, 7-151
90459-2594	SERVO MOTOR MPL-B680B-MX141	3-7, 3-9
90459-2609	BALL VALVE 3/8", SS-1GS6-S1-SPR	1-267, 2-39
90459-2615	HOSE NIPPLE SS-6-HC-A-601	1-267, 2-39
90459-2635	NUT, HEX.LOCK "CONELOCK" M6 DIN 980V	7-147
90459-2647	DOUBLE ACTING, SHUTTLE, CYL. 25-780	7-79
90459-2704	SNAP HOOK STAINLESS 50X5MM	7-231, 7-233
90459-2705	LIFTING EYE BOLT, M6X40MM	7-231, 7-233
90459-2769	ELBOW PIPE JOINT, EXT.THREAD,D=10MM-G1/2	6-7
90459-2826	GEARS, HELICAL MOTOR ME0102210012	7-145
90459-2843	HEATING CARTRIDGE, 800W 240V	7-147
90459-2920	BACK-UP RING 110X? MM	5-195, 5-197, 5-199, 5-201, 5-203, 5-205, 5-207
90459-2938	POWER SUPPLY, 6EP1437-3BA00	8-23
90459-2939	POWER SUPPLY UNIT 6EP1961-3BA00	8-45
90459-3080	HOOD HAN-BRID 3A 19 20 003 1443	2-149, 2-151
90459-3081	HOUSING HAN A 19 20 003 1250	2-149, 2-151
90459-3082	MALE INSERT HAN-BRID RJ45 09 12 003 3001	2-149, 2-151
90459-3083	FEMALE INSERT HAN-BRID RJ45 09 120032790	2-149, 2-151
90459-3145	FLASH MEMORY 64MBYTE, 1784-CF64	8-61
90459-3154	CABLE OLFLONPTFE 1X4,72 MM² YELLOW-GREEN	1-219
90459-3164	TUBE 14MM PA BLACK	2-205
90459-3165	CABLE OLFLON PTFE 1X4,72 MM² BLACK	1-219
90459-3179	GAS SPRING BRACKET, BES/AUG/06/001	7-245
90459-3181	GAS SPRING, G15-150-50N STAINLESS STEEL	7-245
90459-3182	GAS SPRING FITTNG, AU16 STAINLESS STEEL	5-195, 5-197, 5-199, 5-201, 5-203, 5-205, 5-207, 7-245
90459-3339	GASKET NBR/PTFE 17X24X2 MM 3/4"	6-17, 6-23
90459-3352	FLAT PIN SOCKET, 6,3X0,8	8-89, 8-91
90459-3370	DOUBLE ACTING, PROFILE,CYL 32-140	7-89, 7-91
90459-3449	VARIABLE FREQUENCY DRIVE 22A-A2P3N104	8-71
90459-3450	VARIABLE FREQUENCY DRIVE 22A-A4P5N104	8-71
90459-3451	VARIABLE FREQUENCY DRIVE 22A-D4P0N104	8-71
90459-3460	FOOTPRINT FILTER 22-RF010-AL	8-71
90459-3461	FOOTPRINT FILTER 22-RF5P7-AL	8-71
90459-3618	HAND OPERATED CHAIN-HOIST, P.H.D. 250KG	10-19, 10-21
90459-3650	DOUBLE ACTING, MINI-ISO, CYL 25-40	1-173
90459-3682	ROTARY POSITION SENSOR RPN1A111	1-173
90459-3709	CONNECTOR 3-POLE AMP 282087-1	1-173
90459-3759	TIMING BELT 5MR-550-25	4-229, 4-231
90459-3799	FUSE HOLDER, MSC 10 1-POLE A250148	8-83, 8-85
90459-3800	FUSE HOLDER, MSC 10 3-POLE D250151	8-83, 8-85
90459-3832	VENTING BOX, P9852	7-93, 7-95
90459-3940	LEVER, GN 612-6-M16X1.5-A-NI	5-241, 5-243, 5-245, 5-247, 5-249, 5-251
90459-3957	TPOP QPICBDEOOOO	10-97
90459-4032	HYDR.ACC., SBO-210-1.4E1/112U-210AK	2-81
90459-4077	WIRE SEAL , AMP 281934	1-173
90459-4079	MINI MIC SRS, AMP 183035-1	1-173
90459-4145	ROTARY ACTUATOR DRD-4-F05	1-271
90459-4148	CONN. STR., 1/2"-1/4 ISO 7/1, EXT. THREA	1-227

Part No	Description	Page No
90459-4151	HOSE ASSEMBLY 12,7 X 304,8 MM	1-227
90459-4169	HOSE ASSEMBLY 919-1D-1D-8-8-5C-3800	1-267
90459-4179	GASKET 30,5X42X4 MM FDA	1-243, 1-245
90459-4233	DEVICENET MASTER MODULE	8-65, 8-67
90459-4504	ROD END, ID=6MM, M6X1	4-243, 4-245
90459-4505	ROD END, ID=6MM, M6X1 LH	4-243, 4-245
90459-4511	CONN. ELBOW, 6	1-219
90459-4538	GAS SPRING G15-150-150N STAINLESS STEEL	5-195, 5-197, 5-199, 5-201, 5-203, 5-205, 5-207
90459-4553	FUSE HOLDER, MSC 10 2-POLE C250150	8-83, 8-85
90459-4576	O-RING 55X3 MM	5-235, 5-237, 5-239
90459-4577	O-RING 64X3 MM	5-223, 5-225, 5-227, 5-229, 5-231, 5-233
90459-4578	O-RING 78X3 MM	5-223, 5-225, 5-227, 5-229, 5-231, 5-233
90459-4579	O-RING 94X3 MM	5-223, 5-225, 5-227, 5-229, 5-231, 5-233
90459-4580	O-RING 165X4 MM	5-223, 5-225, 5-227, 5-229, 5-231, 5-233
90459-4585	RADIAL SEAL 25X52X7 MM DUST LIP	5-223, 5-225, 5-227, 5-229, 5-231, 5-233
90459-4586	RADIAL SEAL 30X55X7 MM DUST LIP	5-235, 5-237, 5-239
90459-4587	RADIAL SEAL 35X52X7 MM DUST LIP	5-223, 5-225, 5-227, 5-229, 5-231, 5-233
90459-4588	RADIAL SEAL 60X85X8 MM DUST LIP	5-223, 5-225, 5-227, 5-229, 5-231, 5-233
90459-4607	POWER SUPPLY 24VDC, 1756-PB75 SERIES A	8-61
90459-4686	NON-RETURN VALVE, M12A-C6L-1-EPR-SS	1-253
90459-4705	LOCKING PLUG, S 103 A 053-130+ AND 90220	2-101
90459-4932	REAR CLEVIS FOOT MOUNTING , CRLBN-20/25	5-145, 5-147
90459-4991	PRESSURE GAUGE, 9063064 D=40 MM	1-341
90459-5015	CONDUCTIVITY SENSOR CLS 52-A1CS1A2	1-275
90459-5076	SET SCREW ISO4026 M4X5 HRC 45	2-207
90459-5177	ANGLE SEAT VALVE W. FLANGES, N.O.8498668	2-25
90459-5178	ANGLE SEAT VALVE W. FLANGES, N.O.8498669	2-25
90459-5181	GREASE LUBRICATION KIT , 400999139	10-5
90459-5187	CONDUCTIVITY TRANSMITTER CLM223-ID7105	8-89, 8-91
90459-5190	SLIM POWER RAIL,KINETIX,3 AXIS,2094-PRS3	8-57
90459-5195	SLIM POWER RAIL,KINETIX,8 AXIS,2094-PRS8	8-57
90459-5268	DOUBLE ACTING, MINI-ISO, CYL. 25-130	5-195, 5-197, 5-199, 5-201, 5-203, 5-205, 5-207
90459-5278	BELLOW COUPLING, 24X28 MM	5-273
90459-5323	OVERLOAD PROTECTION, PKZM0-1	8-81
90459-5324	OVERLOAD PROTECTION, PKZM0-1,6	8-81
90459-5325	OVERLOAD PROTECTION, PKZM0-2,5	8-81
90459-5326	OVERLOAD PROTECTION, PKZM0-4	8-81
90459-5328	OVERLOAD PROTECTION, PKZM0-10	8-81
90459-5330	OVERLOAD PROTECTION, PKZM0-16	8-81
90459-5333	OVERLOAD PROTECTION, PKZM0-32	8-81
90459-5337	LEVEL SENSOR, COD. 90459	1-267
90459-5440	CONTACTOR 4KW 24VDC, DILM9-01	7-199, 7-201, 8-81, 8-87
90459-5441	CONTACTOR 7,5KW 24VDC, DILM17-01	8-81, 8-87
90459-5444	CONTACTOR 15KW 24VDC, DILM32-01	8-81
90459-5471	STRAIGHT COUPLING INT, D=6 MM - G1/4	2-207
90459-5472	FLOW CONTROL VALVE, CFM360612E	2-207
90459-5503	FILTER HOUSING / IDL 11 GB 16 C2H	1-253
90459-5574	DEVICENET OPEN STYLE CONN, 1787-PLUG10R	8-61
90459-5581	TENSION SPRING 1,2X23X8,5	1-311, 1-313
90459-5633	GUIDE CONSOLE, 30X13X750	2-73
90459-5635	HYDRAULIC TANK, 12 L, A1-19101+A3-16783	2-77
90459-5687	FUSE 1 A 250 VAC	8-83, 8-85
90459-5720	MPF-AIR-PURGE CONNECTOR	5-273
90459-5811	RESIDUAL CURRENT DEVICE, FI-25/2/003-A	8-89, 8-91
90459-5813	AUXILARY CONTACT, FAZ-XHI11	8-83, 8-85
90459-5886	POWER SUPPLY UNIT 115-230 VAC/24VDC100W	8-49, 8-51, 8-53
90459-5968	WEAR RING 19X22X3,2 MM	4-131
90459-6019	PISTON SEAL STEPSEAL 11,5X19X3,2 MM	4-131
90459-6021	PISTON SEAL STEPSEAL 7,2X12X2,2 MM	4-131
90459-6022	PISTON SEAL STEPSEAL 14,5X22X3,2 MM	4-131
90459-6023	PISTON SEAL 13X19X3,2 MM	4-131
90459-6024	PISTON SEAL 16X22X3,2 MM	4-131
90459-6025	PISTON SEAL 6,2X12X3,2 MM	4-131
90459-6026	WEAR RING 16X19X3,2 MM	4-131
90459-6027	WEAR RING 9X12X3,2 MM	4-131
90459-6215	FLOW SWITCH BFS-10-N-G1/4	1-221
90459-6436	RECORDER 12-CHANNEL, LOGOSCREEN CF	8-89, 8-91
90459-6472	HARD DISC 2,5" , 03589-000	8-99
90459-6473	HARDDISK COPYING TOOL, 03607-000	10-5
90459-6556	PLC DIGITAL INPUT 32PTS, 1756-IB32/B	8-61
90459-6558	PROCESSOR L62, SERIES B, 1756-L62	8-61
90459-6624	FEMALE INSERT HAN E AV, 09 33 006 4735	8-37, 8-39, 8-41, 8-47
90459-6627	FEMALE INSERT HAN E AV, 09 33 024 4735	8-37, 8-39, 8-41
90459-6638	HOUSING 16B BULKHEAD, 09 30 016 0301	8-37, 8-39, 8-41
90459-6639	HOUSING 24B BULKHEAD, 09 30 024 0301	8-37, 8-39, 8-41
90459-6850	CONNECTION, PKZM0-XDM12	8-81
90459-6851	BASE UNIT, PKZM0-XDM32	8-81
90459-6852	AUXILIARY CONTACT, DILA-XHI22	8-81, 8-87
90459-6854	COMMONING BUSBAR, 3-P 3-PH 6 100A	8-83, 8-85
90459-6855	COMMONING BUSBAR, 3-P 3-PH 12 100A	8-83, 8-85
90459-6856	FEEDER BLOCK, FAZ/FIP-XVS-KL	8-83, 8-85
90459-6857	BUSBAR, 3-P 12 100A	8-83, 8-85
90459-6858	ETHERNET SW, FL SWITCH SF 8TX FROM V 14	8-89, 8-91
90459-6859	HOUS.SIZE 6-24B HAN-SNAP, 09 33 000 9980	8-47

Part No	Description	Page No
90459-6975	SOLENOID VALVE G1/4, 2401186082702400	1-317
90459-6977	SOLENOID VALVE G1/4, V04B286N-B423A	1-317
90459-7084	FILTER, CPDI000M1	6-21
90459-7110	BRACKET, 4224-50	1-341
90459-7172	SERVO MOTOR MPF-B540K-MJ22AA	5-273
90459-7174	CABLE	2-107, 2-109
90459-7175	CABLE	2-149, 2-151
90459-7176	CABLE	2-149, 2-151
90459-7178	SERVO MOTOR	4-229, 4-231
90459-7198	AUXILIARY BATTERY MODULE, IC693ACC302	8-49, 8-51, 8-53
90459-7208	CABLE	2-107, 2-109
90459-7211	SERVO AXIS MODULE W/PS 15A 400/460V	8-57
90459-7212	AXIS MODULE WITH INT. PS, 2094-BC04-M03-	8-57
90459-7214	AXIS MODULE 650V, 6,1A, 2094-BM01-S	8-57
90459-7215	AXIS MODULE 650V, 10,3A, 2094-BM02-S	8-57
90459-7216	AXIS MODULE 650V, 21,2A, 2094-BM03-S	8-57
90459-7276	HOOD 24 B TOP ENTRY, 19 30 024 0428	10-101
90459-7280	AIR NOZZLE, 011	2-201, 2-203
90459-7315	PUSH DYNAMOMETER 20 - 200N, DT120	10-5
90600-0203	COMMONING BUSBAR, 1-PH 85A	8-77
90600-0495	O-RING	1-243, 1-245, 1-247
90600-0614	BLANK PLUG, 16AMP-316-1/2"-3/4"-AR	1-247
90600-0657	SCREW UNC 1/4-20 X10	1-191
90600-0731	ADJUSTABLE ELBOW CONNECTION,EXT 6-G1/4	1-221
90600-0975	HOSE GLAND W/O INSERT PG13,5 EXTENDED	1-219, 1-223
90600-0976	INSERT, SINGEL HOLE, HI.TEMP, EK153I9	1-219, 1-223
90600-1199	VARISTOR MOV, 390KD07	8-63
90600-1200	SCREEN CLAMPING SADDLE, 790-108	8-49, 8-51, 8-53
90600-1201	BUSBAR U-SHAPED, 790-191	8-49, 8-51, 8-53
90600-1203	BUS BAR 3-POLE+AUX. CONT., B3.1/2-PKZ0	8-81
90600-1233	INTOUCH OEM 3000 V.7.0/9,5 HW KEY	8-89, 8-91
107426-0000	GUIDE SLEEVE	4-95, 9-5
209183-0000	RING	1-259
229207-0000	BEARING SLEEVE	5-59, 5-61
230551-0000	GASKET	1-179
232979-0000	PRESSURE ROLLER (PAK OF 10)	1-211, 1-213, 1-215, 9-11, 9-13, 9-15, 9-17, 9-19
236631-0000	HANDLE	7-73
236634-0000	SHAFT	7-73
239874-0000	WASHER	4-203, 4-213
245039-0000	GUIDE WHEEL	5-59, 5-61
246513-0000	BEARING	4-203, 4-213
247358-0000	SHIFTER HANDLE	1-131, 1-133, 1-135
252766-0001	INSULATING PIPE	5-209, 5-211, 5-213, 5-215, 5-217, 5-219
252766-0002	INSULATING PIPE	5-209, 5-211, 5-213, 5-215, 5-217, 5-219
252766-0004	INSULATING PIPE	5-209, 5-211, 5-213, 5-215, 5-217, 5-219
255978-0000	FORK	1-211, 1-213, 1-215
256628-0000	PIECE	4-209, 4-211, 4-219, 4-221
256629-0001	AXLE PIN	4-209, 4-211, 4-219, 4-221
257330-0000	PRESSURE ROLLER	1-211, 1-213, 1-215, 9-11, 9-13, 9-15, 9-17, 9-19
263311-0000	WASHER	1-13
263655-0006	SHAFT	1-85, 1-87
263655-0007	SHAFT	1-85, 1-87
263655-0009	SHAFT	1-47, 1-49, 1-51, 1-85, 1-87
263655-0015	SHAFT	1-85, 1-87
263655-0018	SHAFT	1-85, 1-87
263673-0000	GASKET	5-209, 5-211, 5-213, 5-215, 5-217, 5-219
266737-0000	WASHER	1-311, 1-313
266739-0000	CABLE GLAND	5-187, 5-189, 5-191
269151-0000	SHAFT	1-41, 1-43
269859-0000	BRACKET	1-179
270927-0000	SCREW	5-187, 5-189, 5-191
271239-0000	SLEEVE	10-75
271241-0000	SCREW	10-75
271860-0000	CLAMP BLOCK	1-7, 1-9, 1-109, 1-119, 1-121, 1-175
272479-0000	PRESSURE ROLLER	1-211, 1-213, 1-215, 9-11, 9-13, 9-15, 9-17, 9-19
272728-0000	BARRIER	7-117
272810-0001	SLEEVE	10-75
272813-0000	PLUNGER	10-75
273429-0000	WASHER	1-199
273450-0000	SIGN, AIR SPRAY	1-333
273452-0000	SIGN, ROLLING MACHINE FOR FABRICS	1-333
273455-0000	SIGN, COLD WATER	6-69, 6-71
273458-0000	SIGN, AIR	6-77, 7-209, 7-211, 7-213
273953-0000	SEAL	1-85, 1-87
273977-0000	NUT	2-35, 10-69
273978-0000	LEVEL GLAS	2-35, 10-69
273980-0000	SPRING	2-35, 10-69
273981-0000	GASKET	2-27
273985-0000	CARRIAGE	10-73
273996-0000	NUT	2-35, 10-69
276398-0000	HEXAGON NIPPLE	2-197, 2-199
279008-0000	BUSHING	1-131, 1-133, 1-135
282635-0000	GUIDE WHEEL	7-15
294464-0000	BASE PLATE	5-187, 5-189, 5-191

Part No	Description	Page No
295377-0001 ..	HOOD	1-211, 1-213, 1-215
295377-0003 ..	HOOD	1-211, 1-213, 1-215
311102-0238 ..	PARALLEL PIN ISO 2338 3M6X20 ST	5-195, 5-197, 5-199, 5-201, 5-203, 5-205, 5-207
311103-0232 ..	PARALLEL PIN ISO 2338 3M6X8 A1	4-63, 4-65, 4-67, 4-69
311103-0234 ..	PARALLEL PIN ISO 2338 3M6X12 A1	4-97, 4-99, 4-101, 4-143, 4-145, 4-147
311103-0235 ..	PARALLEL PIN ISO 2338 3M6X14 A1	1-173, 4-51, 4-53, 4-55, 4-57, 10-71
311103-0236 ..	PARALLEL PIN ISO 2338 3M6X16 A1	1-29, 1-31, 1-33, 1-35, 1-37, 1-53, 1-55, 1-59, 1-61, 1-63
311103-0238 ..	PARALLEL PIN ISO 2338 3M6X20 A1	1-41, 1-43
311103-0267 ..	PARALLEL PIN ISO 2338 4M6X10 A1	4-91, 4-93, 4-139, 4-141
311103-0268 ..	PARALLEL PIN ISO 2338 4M6X12 A1	5-123
311103-0270 ..	PARALLEL PIN ISO 2338 4M6X16 A1	1-285, 1-287, 2-33, 7-157, 7-159
311103-0272 ..	PARALLEL PIN ISO 2338 4M6X20 A1	1-271
311103-0274 ..	PARALLEL PIN ISO 2338 4M6X25 A1	7-115, 7-117
311103-0276 ..	PARALLEL PIN ISO 2338 4M6X30 A1	1-41, 1-43
311103-0306 ..	PARALLEL PIN ISO 2338 5M6X12 A1	1-41, 1-43, 4-175, 4-177
311103-0308 ..	PARALLEL PIN ISO 2338 5M6X16 A1	1-11
311103-0310 ..	PARALLEL PIN ISO 2338 5M6X20 A1	4-179, 4-181, 4-183
311103-0351 ..	PARALLEL PIN ISO 2338 6M6X16 A1	1-11, 4-233, 4-235, 10-49
311103-0353 ..	PARALLEL PIN ISO 2338 6M6X20 A1	1-91, 1-93, 3-13, 3-29
311103-0354 ..	PARALLEL PIN ISO 2338 6M6X22 A1	4-229, 4-231
311103-0355 ..	PARALLEL PIN ISO 2338 6M6X25 A1	7-53, 7-221
311103-0359 ..	PARALLEL PIN ISO 2338 6M6X35 A1	10-53
311103-0361 ..	PARALLEL PIN ISO 2338 6M6X40 A1	7-155
311103-0399 ..	PARALLEL PIN ISO 2338 8M6X16 A1	4-179, 4-181, 4-183
311103-0400 ..	PARALLEL PIN ISO 2338 8M6X18 A	4-171, 4-173
311103-0401 ..	PARALLEL PIN ISO 2338 8M6X20 A1	1-117
311103-0402 ..	PARALLEL PIN ISO 2338 8M6X22 A1	4-179, 4-181, 4-183
311103-0403 ..	PARALLEL PIN ISO 2338 8M6X25 A1	1-297, 1-299
311103-0407 ..	PARALLEL PIN ISO 2338 8M6X35 A1	5-221, 5-267, 5-269
311103-0409 ..	PARALLEL PIN ISO 2338 8M6X40 A1	3-23
311103-0413 ..	PARALLEL PIN ISO 2338 8M6X50 A1	1-7, 1-9, 1-109, 1-119, 1-121, 1-175
311103-0454 ..	PARALLEL PIN ISO 2338 10M6X20 A1	5-69, 7-75
311103-1274 ..	PARALLEL PIN ISO 2338 4M6X24 A1	1-47, 1-49, 1-51, 1-85, 1-87, 7-81, 7-83, 7-89, 7-91
311103-1355 ..	PARALLEL PIN ISO 2338 6M6X24 A1	7-165, 7-173
311103-1403 ..	PARALLEL PIN ISO 2338 8M6X24 A1	1-285, 1-287
311103-1456 ..	PARALLEL PIN ISO 2338 10M6X24 A1	2-65, 3-15, 3-31
311111-0345 ..	SPRING PIN ISO 8752 6X32-ST	10-85
311112-0251 ..	SPRING PIN, ISO 8752 4X10-C	5-221
311112-0255 ..	SPRING PIN, ISO 8752 4X18-C	4-243, 4-245
311112-0256 ..	SPRING PIN, ISO 8752 4X20-C	1-105, 1-107, 4-243, 4-245, 4-247
311112-0258 ..	SPRING PIN, ISO 8752 4X24-C	4-243, 4-245, 7-149, 7-151, 7-223
311112-0262 ..	SPRING PIN, ISO 8752 4X32-C	1-131, 1-133, 1-135
311112-0263 ..	SPRING PIN, ISO 8752 4X35-C	4-243, 4-245
311112-0350 ..	SPRING PIN, ISO 8752 6X55-C	10-75
311411-0152 ..	SPLIT PIN SP2X16RFR	10-63
311411-0169 ..	SPLIT PIN SP2,5X25RFR	2-33
311520-0320 ..	RIVET, BLANK 2,4X6	8-89, 8-91
311520-0329 ..	RIVET, BLANK 2,4X8	6-65, 10-97
311521-0142 ..	BLANK RIVET 3,2X6	9-3
312101-0293 ..	SCREW M6S M4X16 FZB	10-19, 10-21
312101-0325 ..	SCREW M6S M5X10 FZB	2-249
312101-0364 ..	SCREW M6S M6X10 FZB	8-49, 8-51, 8-53, 8-73
312101-0381 ..	SCREW M6S M6X55 FZB	10-75
312101-0632 ..	SCREW M6S M16X60 FZB	7-39
312101-0678 ..	SCREW M6S M20X70 FZB	10-79
312104-0461 ..	SCREW M6S M8X50H FZB	1-303, 2-193
312105-0285 ..	SCREW M6S ISO 4017 M4X6 A470	1-267, 5-195, 5-197, 5-199, 5-201, 5-203, 5-205, 5-207
312105-0287 ..	SCREW M6S ISO 4017 M4X8 A470	1-41, 1-43, 1-115, 1-199, 1-229, 1-249, 1-251, 1-393, 2-201 2-203, 4-27, 4-29, 4-39, 4-41, 4-51, 4-53, 4-55, 4-57, 4-63, 4-65, 4-67, 4-69, 4-77, 4-83, 5-29, 5-31 5-33, 5-97, 5-99, 5-129, 5-131, 5-185, 5-241, 5-243, 5-245, 5-247, 5-249, 5-251, 7-155, 7-157 7-159, 7-165, 7-173, 7-225, 8-23
312105-0289 ..	SCREW M6S ISO 4017 M4X10 A470	1-29, 1-31, 1-33, 1-35, 1-37, 1-53, 1-55, 1-59, 1-61, 1-63 1-113, 1-129, 1-167, 1-169, 1-221, 1-229, 1-267, 2-187, 2-201, 2-203, 2-207, 2-249, 5-23, 5-25 6-9, 7-245
312105-0291 ..	SCREW M6S ISO 4017 M4X12 A470	1-167, 1-169, 1-173, 1-221, 1-333, 2-245, 4-85, 4-87, 4-89 4-109, 4-111, 4-113, 4-115, 4-133, 4-135, 4-137, 4-153, 4-155, 4-157, 4-159, 5-185, 5-277, 5-279 5-281, 7-145, 7-157, 7-159, 7-165, 7-173, 7-225
312105-0292 ..	SCREW M6S ISO 4017 M4X14 A470	1-395
312105-0293 ..	SCREW M6S ISO 4017 M4X16 A470	1-221, 1-317, 2-273, 2-275, 5-195, 5-197, 5-199, 5-201 5-203, 5-205, 5-207, 5-241, 5-243, 5-245, 5-247, 5-249, 5-251, 7-57, 7-59, 7-131, 7-165, 7-173
312105-0295 ..	SCREW M6S ISO 4017 M4X20 A470	1-311, 1-313, 2-89, 4-107, 4-203, 4-205, 4-207, 4-209 4-211, 4-213, 4-215, 4-217, 4-219, 4-221, 5-253, 5-255, 7-31, 7-115
312105-0297 ..	SCREW M6S ISO 4017 M4X25 A470	1-113, 4-243, 4-245, 4-247, 7-25
312105-0299 ..	SCREW M6S ISO 4017 M4X30 A470	7-123, 7-131, 7-225
312105-0301 ..	SCREW M6S ISO 4017 M4X35 A470	1-13, 1-221, 7-169, 7-179
312105-0303 ..	SCREW M6S ISO 4017 M4X40 A470	1-243, 1-245, 1-251, 7-87
312105-0323 ..	SCREW M6S ISO 4017 M5X8 A480	1-95, 1-129, 1-187, 1-189, 1-271, 3-23, 4-243, 4-245, 5-59 5-61, 5-97, 5-99, 5-285, 7-25, 7-75, 7-93, 7-95, 7-115, 7-131, 7-249, 8-23, 10-15
312105-0325 ..	SCREW M6S ISO 4017 M5X10 A480	1-15, 1-17, 1-41, 1-43, 1-105, 1-107, 1-173, 1-267, 2-65 4-27, 4-29, 4-39, 4-41, 4-61, 4-73, 4-191, 4-193, 5-15, 5-157, 5-159, 7-55, 10-11, 10-55, 10-57
312105-0327 ..	SCREW M6S ISO 4017 M5X12 A480	1-11, 1-15, 1-17, 1-29, 1-31, 1-33, 1-35, 1-37, 1-39, 1-41 1-43, 1-53, 1-55, 1-59, 1-61, 1-63, 1-75, 1-77, 1-79, 1-105, 1-107, 1-147, 1-149, 1-151, 1-165 1-193, 1-251, 1-255, 1-283, 1-353, 1-355, 1-393, 2-249, 4-7, 4-9, 4-11, 4-17, 4-19, 4-21, 4-27 4-29, 4-39, 4-41, 4-79, 4-205, 4-207, 4-215, 4-217, 5-69, 5-97, 5-99, 5-263, 5-267, 5-269, 5-277

Part No	Description	Page No
		5-279, 6-19, 6-23, 7-31, 7-53, 7-93, 7-95, 9-31
312105-0328 ..	SCREW M6S ISO 4017 M5X14 A480	1-393, 1-395, 4-7, 4-9, 4-11, 4-17, 4-19, 4-21, 4-27, 4-29, 4-39, 4-41, 4-51, 4-53, 4-55, 4-57, 4-63, 4-65, 4-67, 4-69, 7-221
312105-0329 ..	SCREW M6S ISO 4017 M5X16 A480	1-15, 1-17, 1-29, 1-31, 1-33, 1-35, 1-37, 1-53, 1-55, 1-59, 1-61, 1-63, 1-75, 1-77, 1-79, 1-91, 1-93, 1-123, 1-125, 1-137, 1-139, 1-141, 1-143, 1-145, 1-165, 1-297, 1-299, 1-311, 1-313, 1-393, 2-39, 2-119, 4-179, 4-181, 4-183, 4-205, 4-207, 4-215, 4-217, 5-263, 5-267, 5-269, 5-285, 6-23, 7-79, 7-93, 7-95, 7-121
312105-0331 ..	SCREW M6S ISO 4017 M5X20 A480	1-7, 1-9, 1-39, 1-75, 1-77, 1-79, 1-81, 1-83, 1-91, 1-93, 1-105, 1-107, 1-109, 1-119, 1-121, 1-175, 1-311, 1-313, 1-393, 4-27, 4-29, 4-39, 4-41, 4-51, 4-53, 4-55, 4-57, 4-63, 4-65, 4-67, 4-69, 4-179, 4-181, 4-183, 4-229, 4-231, 7-165, 7-173
312105-0333 ..	SCREW M6S ISO 4017 M5X25 A480	1-227, 1-247, 2-143, 2-217, 2-219, 2-239, 2-259, 4-243, 4-245
312105-0335 ..	SCREW M6S ISO 4014 M5X30 A480	4-203, 4-213
312105-0337 ..	SCREW M6S ISO 4014 M5X35 A480	7-13
312105-0339 ..	SCREW M6S ISO 4014 M5X40 A480	6-9
312105-0340 ..	SCREW M6S ISO 4014 M5X45 A480	1-317
312105-0341 ..	SCREW M6S ISO 4014 M5X50 A480	4-27, 4-29, 4-39, 4-41, 6-7, 7-153
312105-0362 ..	SCREW M6S ISO 4017 M6X8 A480	1-13, 1-41, 1-43, 1-129, 1-179, 1-243, 1-245, 1-247, 1-271, 1-281, 2-265, 2-269, 4-109, 4-111, 4-113, 4-115, 4-153, 4-155, 4-157, 4-159, 4-203, 4-209, 4-211, 4-213, 4-219, 4-221, 5-103, 5-105, 5-107, 5-109, 5-111, 5-171, 5-173, 5-177, 5-179, 5-221, 7-121, 7-123
312105-0364 ..	SCREW M6S ISO 4017 M6X10 A480	1-41, 1-43, 1-173, 1-297, 1-299, 1-365, 1-367, 1-393, 2-243, 4-27, 4-29, 4-39, 4-41, 5-45, 5-47, 5-49, 5-103, 5-105, 5-107, 5-109, 5-111, 5-157, 5-159, 5-171, 5-173, 5-177, 5-179, 7-55, 7-61, 7-75, 7-119, 7-171, 7-177, 7-231, 7-233, 8-23, 8-89, 8-91
312105-0366 ..	SCREW M6S ISO 4017 M6X12 A480	1-11, 1-97, 1-99, 1-123, 1-125, 1-129, 1-137, 1-139, 1-141, 1-143, 1-145, 1-153, 1-155, 1-157, 1-159, 1-161, 1-163, 1-167, 1-169, 1-173, 1-179, 1-187, 1-189, 1-193, 1-199, 1-221, 1-227, 1-249, 1-259, 1-279, 1-283, 1-291, 1-317, 1-321, 1-323, 1-353, 1-355, 1-393, 1-397, 2-49, 2-61, 2-65, 2-69, 2-83, 2-93, 2-95, 2-119, 2-131, 2-133, 2-173, 2-175, 2-201, 2-203, 2-207, 2-219, 2-221, 2-239, 2-251, 2-255, 2-257, 2-259, 2-271, 2-273, 2-275, 4-7, 4-9, 4-11, 4-17, 4-19, 4-21, 4-27, 4-29, 4-119, 4-121, 4-123, 4-125, 4-171, 4-173, 4-175, 4-177, 4-179, 4-181, 4-183, 4-203, 4-213, 4-241, 5-15, 5-29, 5-31, 5-33, 5-35, 5-37, 5-59, 5-61, 5-63, 5-93, 5-95, 5-101, 5-103, 5-105, 5-107, 5-109, 5-111, 5-129, 5-131, 5-137, 5-139, 5-145, 5-147, 5-171, 5-173, 5-177, 5-179, 5-241, 5-243, 5-245, 5-247, 5-249, 5-251, 5-263, 5-267, 5-269, 6-7, 6-9, 6-19, 6-29, 7-11, 7-25, 7-33, 7-51, 7-57, 7-59, 7-73, 7-81, 7-83, 7-85, 7-93, 7-95, 7-107, 7-121, 7-123, 7-145, 7-157, 7-159, 7-165, 7-173, 7-181, 7-183, 7-203, 7-205, 7-207, 7-227, 7-231, 7-233, 7-249, 8-89, 8-91, 10-11
312105-0367 ..	SCREW M6S ISO 4017 M6X14 A480	1-7, 1-9, 1-109, 1-119, 1-121, 1-175, 1-365, 1-367, 2-39, 2-113, 2-121, 4-27, 4-29, 4-39, 4-41, 4-51, 4-53, 4-55, 4-57, 4-63, 4-65, 4-67, 4-69, 4-247, 5-19, 5-21, 5-63, 5-165, 5-167, 5-265, 5-271, 7-25, 7-31, 7-145, 7-149, 7-151, 7-225
312105-0368 ..	SCREW M6S ISO 4017 M6X16 A480	1-11, 1-15, 1-17, 1-41, 1-43, 1-91, 1-93, 1-105, 1-107, 1-113, 1-117, 1-123, 1-125, 1-129, 1-153, 1-155, 1-165, 1-167, 1-169, 1-179, 1-221, 1-267, 1-271, 1-281, 1-283, 1-305, 1-307, 1-315, 1-317, 1-333, 1-341, 1-347, 1-393, 1-395, 2-9, 2-27, 2-37, 2-39, 2-49, 2-65, 2-87, 2-103, 2-105, 2-113, 2-119, 2-131, 2-133, 2-245, 2-269, 4-7, 4-9, 4-11, 4-17, 4-19, 4-21, 4-27, 4-29, 4-39, 4-41, 4-109, 4-111, 4-113, 4-115, 4-153, 4-155, 4-157, 4-159, 4-179, 4-181, 4-183, 4-191, 4-193, 5-5, 5-7, 5-23, 5-25, 5-29, 5-31, 5-33, 5-35, 5-37, 5-65, 5-67, 5-75, 5-77, 5-79, 5-83, 5-85, 5-87, 5-89, 5-91, 5-93, 5-95, 5-103, 5-105, 5-107, 5-109, 5-111, 5-129, 5-131, 5-137, 5-139, 5-145, 5-147, 5-165, 5-167, 5-171, 5-173, 5-177, 5-179, 5-195, 5-197, 5-199, 5-201, 5-203, 5-205, 5-207, 5-241, 5-243, 5-245, 5-247, 5-249, 5-251, 5-265, 5-267, 5-269, 5-271, 5-277, 5-279, 6-7, 6-11, 6-23, 6-49, 6-51, 6-55, 6-67, 6-75, 6-77, 7-79, 7-81, 7-83, 7-93, 7-95, 7-101, 7-111, 7-131, 7-135, 7-157, 7-159, 7-165, 7-173, 7-223, 7-231, 7-233, 7-249, 8-103, 10-11, 10-95
312105-0370 ..	SCREW M6S ISO 4017 M6X20 A480	1-7, 1-15, 1-17, 1-41, 1-43, 1-91, 1-93, 1-97, 1-99, 1-129, 1-131, 1-133, 1-135, 1-137, 1-139, 1-141, 1-143, 1-145, 1-147, 1-149, 1-151, 1-153, 1-155, 1-157, 1-159, 1-161, 1-163, 1-167, 1-169, 1-193, 1-201, 1-203, 1-249, 1-273, 1-285, 1-287, 1-297, 1-299, 1-305, 1-307, 1-333, 1-353, 1-355, 1-365, 1-367, 1-393, 2-33, 2-65, 2-93, 2-179, 2-181, 2-189, 2-191, 2-273, 2-275, 4-77, 4-83, 4-171, 4-173, 4-179, 4-181, 4-183, 4-201, 4-243, 4-245, 4-247, 5-23, 5-25, 5-65, 5-67, 5-83, 5-85, 5-87, 5-89, 5-91, 5-101, 5-103, 5-105, 5-107, 5-109, 5-111, 5-113, 5-115, 5-145, 5-147, 5-165, 5-167, 5-171, 5-173, 5-177, 5-179, 5-185, 5-187, 5-189, 5-191, 5-221, 5-241, 5-243, 5-245, 5-247, 5-249, 5-251, 6-69, 6-71, 7-15, 7-17, 7-27, 7-29, 7-31, 7-61, 7-79, 7-89, 7-91, 7-101, 7-127, 7-133, 7-147, 7-149, 7-151, 7-155, 7-157, 7-159, 7-161, 7-223, 7-227, 10-15, 10-19, 10-21
312105-0371 ..	SCREW M6S ISO 4017 M6X22 A480	1-123, 1-125, 1-173, 1-305, 1-307, 7-19, 7-21
312105-0372 ..	SCREW M6S ISO 4017 M6X25 A480	1-41, 1-43, 1-85, 1-87, 1-105, 1-107, 1-123, 1-125, 1-137, 1-139, 1-141, 1-143, 1-145, 1-165, 1-173, 1-283, 2-33, 2-103, 2-105, 4-85, 4-87, 4-89, 4-133, 4-135, 4-137, 4-243, 4-245, 4-247, 5-17, 5-59, 5-61, 5-63, 5-83, 5-85, 5-87, 5-89, 5-91, 5-103, 5-105, 5-107, 5-109, 5-111, 5-165, 5-167, 5-187, 5-189, 5-191, 5-241, 5-243, 5-245, 5-247, 5-249, 5-251, 5-257, 5-259, 5-265, 5-267, 5-269, 5-271, 7-17, 7-115, 7-155, 7-221, 7-223, 10-83
312105-0374 ..	SCREW M6S ISO 4014 M6X30 A480	1-41, 1-43, 2-273, 2-275, 5-83, 5-85, 5-87, 5-89, 5-91, 5-101, 5-185, 5-195, 5-197, 5-199, 5-201, 5-203, 5-205, 5-207, 7-73, 7-245, 10-43, 10-71
312105-0376 ..	SCREW M6S ISO 4014 M6X35 A480	5-23, 5-25, 5-103, 5-105, 5-107, 5-109, 5-111, 5-113, 5-115, 5-157, 5-159, 5-267, 5-269, 6-75, 7-221, 7-231, 7-233
312105-0378 ..	SCREW M6S ISO 4014 M6X40 A480	4-233, 4-235, 4-237, 5-15, 5-23, 5-25, 5-113, 5-115, 5-265, 5-271
312105-0379 ..	SCREW M6S ISO 4014 M6X45 A480	2-27, 5-101
312105-0380 ..	SCREW M6S ISO 4014 M6X50 A480	7-221, 7-235
312105-0381 ..	SCREW M6S ISO 4014 M6X55 A480	1-113, 1-195, 1-205, 1-285, 1-287, 2-69, 4-189, 5-267, 5-269, 7-231, 7-233
312105-0382 ..	SCREW M6S ISO 4014 M6X60 A480	5-101, 5-281, 7-117
312105-0383 ..	SCREW M6S ISO 4014 M6X65 A480	2-273, 2-275, 7-145, 10-55, 10-57
312105-0384 ..	SCREW M6S ISO 4014 M6X70 A480	1-269, 7-221
312105-0388 ..	SCREW M6S ISO 4014 M6X90 A480	1-349
312105-0447 ..	SCREW M6S ISO 4017 M8X12 A480	1-15, 1-17, 1-123, 1-125, 1-129, 1-221, 1-279, 2-29, 2-119, 2-189, 2-191, 2-265, 2-269, 2-273, 2-275, 3-5, 3-27, 4-117, 4-161, 5-11, 5-13, 5-19, 5-21, 5-263, 5-267, 8-27
312105-0449 ..	SCREW M6S ISO 4017 M8X16 A480	1-15, 1-17, 1-81, 1-83, 1-109, 1-113, 1-119, 1-121, 1-175, 1-179, 1-193, 1-197, 1-279, 1-285, 1-287, 2-19, 2-21, 2-25, 2-61, 2-81, 2-193, 2-225, 2-273, 2-275, 4-191, 4-193, 4-229, 4-231, 5-19, 5-21, 5-29, 5-31, 5-33, 5-63, 5-65, 5-67, 5-69, 5-83, 5-85, 5-87, 5-89, 5-91, 5-129, 5-131, 5-137, 5-139, 5-277, 5-279, 5-281, 6-49, 7-31, 7-33, 7-55, 7-73, 7-93, 7-95, 7-143, 7-181, 7-183, 8-35, 10-73, 10-97

Part No	Description	Page No
312105-0451 ..	SCREW M6S ISO 4017 M8X20 A480	1-7, 1-9, 1-39, 1-41, 1-43, 1-47, 1-49, 1-51, 1-59, 1-61 1-63, 1-75, 1-77, 1-79, 1-81, 1-83, 1-85, 1-87, 1-109, 1-113, 1-119, 1-121, 1-147, 1-149, 1-151 1-175, 1-179, 1-191, 1-199, 1-283, 1-285, 1-287, 1-303, 1-349, 2-25, 2-27, 2-29, 2-39, 2-121, 2-193 5-11, 5-13, 5-19, 5-21, 5-29, 5-31, 5-33, 5-45, 5-47, 5-49, 5-65, 5-67, 5-83, 5-85, 5-87, 5-89, 5-91 5-93, 5-129, 5-131, 5-137, 5-139, 5-221, 5-241, 5-243, 5-245, 5-247, 5-249, 5-251, 5-263, 5-267 5-269, 6-29, 6-49, 7-13, 7-55, 7-61, 7-65, 7-67, 7-79, 7-93, 7-95, 7-107, 7-143, 7-145, 7-147, 7-153 ..... 7-157, 7-159, 8-55, 10-53
312105-0452 ..	SCREW M6S ISO 4017 M8X22 A4 80	1-75, 1-77, 1-79, 1-97, 1-99, 1-123, 1-125, 1-173, 2-103 ..... 2-105, 4-185, 4-187, 5-137, 5-139, 7-25, 7-93, 7-95
312105-0453 ..	SCREW M6S ISO 4017 M8X25 A480	1-75, 1-77, 1-79, 1-129, 1-181, 1-183, 1-185, 1-191, 1-195 1-197, 1-199, 1-201, 1-205, 1-247, 1-283, 1-297, 1-299, 2-11, 2-19, 2-21, 2-25, 2-69, 2-73, 4-201 4-209, 4-211, 4-219, 4-221, 4-229, 4-231, 5-5, 5-7, 5-23, 5-25, 5-29, 5-31, 5-33, 5-45, 5-47, 5-49 5-65, 5-67, 5-69, 5-113, 5-115, 5-129, 5-131, 5-193, 5-221, 5-263, 5-267, 5-269, 6-9, 6-27, 6-41 ..... 6-43, 7-53, 7-61, 7-93, 7-95, 7-105, 7-165, 7-173
312105-0455 ..	SCREW M6S ISO 4017 M8X30 A480	1-15, 1-17, 1-129, 1-191, 1-211, 1-213, 1-215, 1-279 1-283, 1-305, 1-307, 2-69, 2-73, 4-171, 4-173, 4-179, 4-181, 4-183, 4-205, 4-207, 4-209, 4-211 4-215, 4-217, 4-219, 4-221, 5-15, 5-45, 5-47, 5-49, 5-137, 5-139, 5-145, 5-147, 5-185, 5-195, 5-197 5-199, 5-201, 5-203, 5-205, 5-207, 5-209, 5-211, 5-213, 5-215, 5-217, 5-219, 5-241, 5-243, 5-245 ..... 5-247, 5-249, 5-251, 5-257, 5-259, 7-25, 7-49, 7-65, 7-67, 7-103, 10-19, 10-21, 10-71, 10-95
312105-0457 ..	SCREW M6S ISO 4014 M8X35 A480	2-13, 4-171, 4-173, 4-179, 4-181, 4-183, 5-29, 5-31, 5-33 5-129, 5-131, 5-145, 5-147, 5-209, 5-211, 5-213, 5-215, 5-217, 5-219, 5-241, 5-243, 5-245, 5-247 ..... 5-249, 5-251, 5-257, 5-259
312105-0459 ..	SCREW M6S ISO 4014 M8X40 A480	..... 5-209, 5-211, 5-213, 5-215, 5-217, 5-219, 10-73
312105-0460 ..	SCREW M6S ISO 4014 M8X45 A480	4-85, 4-87, 4-89, 4-109, 4-111, 4-113, 4-115, 4-133, 4-135 ..... 4-137, 4-153, 4-155, 4-157, 4-159
312105-0461 ..	SCREW M6S ISO 4014 M8X50 A480	..... 5-45, 5-47, 5-49
312105-0462 ..	SCREW M6S ISO 4014 M8X55 A480	1-47, 1-49, 1-51, 1-85, 1-87, 1-279, 4-241, 5-45, 5-47, 5-49 ..... 5-145, 5-147
312105-0463 ..	SCREW M6S ISO 4014 M8X60 A480	..... 4-201, 5-45, 5-47, 5-49, 5-137, 5-139
312105-0464 ..	SCREW M6S ISO 4014 M8X65 A480	2-87, 4-179, 4-181, 4-183, 5-15, 5-45, 5-47, 5-49, 5-137 ..... 5-139, 5-209, 5-211, 5-213, 5-215, 5-217, 5-219
312105-0465 ..	SCREW M6S ISO 4014 M8X70 A480	5-35, 5-37, 5-45, 5-47, 5-49, 5-145, 5-147, 5-209, 5-211 ..... 5-213, 5-215, 5-217, 5-219
312105-0466 ..	SCREW M6S ISO 4014 M8X75 A480	2-31, 5-35, 5-37, 5-45, 5-47, 5-49, 5-145, 5-147, 5-209 ..... 5-211, 5-213, 5-215, 5-217, 5-219
312105-0467 ..	SCREW M6S ISO 4014 M8X80 A480	2-73, 5-35, 5-37, 5-45, 5-47, 5-49, 5-137, 5-139, 5-145 ..... 5-147, 5-209, 5-211, 5-213, 5-215, 5-217, 5-219
312105-0469 ..	SCREW M6S ISO 4014 M8X90 A480	4-117, 4-161, 5-35, 5-37, 5-45, 5-47, 5-49, 5-75, 5-77, 5-79 ..... 5-137, 5-139, 5-145, 5-147
312105-0471 ..	SCREW M6S ISO 4014 M8X100 A480	..... 5-63, 5-209, 5-211, 5-213, 5-215, 5-217, 5-219
312105-0475 ..	SCREW M6S ISO 4014 M8X120 A480	..... 5-59, 5-61, 5-63, 5-69
312105-0489 ..	SCREW M6S ISO 4017 M10X16 A480	..... 1-15, 1-17, 5-5, 5-7, 10-67, 10-91
312105-0491 ..	SCREW M6S ISO 4017 M10X20 A480	1-179, 1-265, 1-297, 1-299, 2-179, 2-181, 7-41, 7-89 ..... 7-91, 10-73
312105-0493 ..	SCREW M6S ISO 4017 M10X25 A480	1-29, 1-31, 1-53, 1-55, 1-179, 1-297, 1-299, 5-185, 10-53
312105-0495 ..	SCREW M6S ISO 4017 M10X30 A480	1-47, 1-49, 1-51, 1-85, 1-87, 1-179, 1-199, 1-211, 1-213 1-215, 2-171, 2-179, 2-181, 2-189, 2-191, 2-193, 5-5, 5-7, 5-15, 5-69, 5-71, 5-75, 5-77, 5-79 ..... 5-145, 5-147, 5-263, 5-267, 5-269, 6-49, 7-43, 7-45, 7-79, 10-7, 10-9
312105-0497 ..	SCREW M6S ISO 4017 M10X35 A480	..... 3-13, 3-29, 7-81, 7-83, 7-171, 7-177
312105-0499 ..	SCREW M6S ISO 4014 M10X40 A480	..... 5-221, 6-41, 6-43, 7-89, 7-91
312105-0503 ..	SCREW M6S ISO 4014 M10X60 A480	 9-3
312105-0505 ..	SCREW M6S ISO 4014 M10X70 A480	..... 1-297, 1-299
312105-0506 ..	SCREW M6S ISO 4014 M10X75 A480	..... 2-173, 2-175, 2-179, 2-181
312105-0507 ..	SCREW M6S ISO 4014 M10X80 A480	..... 5-69, 10-67
312105-0511 ..	SCREW M6S ISO 4014 M10X100 A480	 5-63
312105-0513 ..	SCREW M6S ISO 4014 M10X110 A480	..... 5-59, 5-61
312105-0517 ..	SCREW M6S ISO 4014 M10X130 A480	..... 1-295, 5-59, 5-61
312105-0534 ..	SCREW M6S ISO 4017 M12X25 A480	..... 7-61, 8-23, 10-45
312105-0536 ..	SCREW M6S ISO 4017 M12X30 A480	..... 1-15, 1-17, 2-189, 2-191
312105-0538 ..	SCREW M6S ISO 4017 M12X35 A480	..... 1-15, 1-17, 8-23, 10-91
312105-0542 ..	SCREW M6S ISO 4014 M12X50 A480	..... 3-7, 3-9, 6-41, 6-43
312105-0546 ..	SCREW M6S ISO 4014 M12X70 A480	..... 3-7, 3-9
312105-0548 ..	SCREW M6S ISO 4014 M12X80 A480	..... 7-39, 7-41, 7-93, 7-95
312105-0550 ..	SCREW M6S ISO 4014 M12X90 A480	 4-201
312105-0552 ..	SCREW M6S ISO 4014 M12X100 A480	 2-65
312105-0622 ..	SCREW M6S ISO 4017 M16X25 A480	..... 2-189, 2-191
312105-0629 ..	SCREW M6S ISO 4017 M16X45 A480	..... 2-179, 2-181
312105-0630 ..	SCREW M6S ISO 4017 M16X50 A480	 7-53
312105-0631 ..	SCREW M6S ISO 4014 M16X55 A480	..... 2-65, 5-221
312105-0633 ..	SCREW M6S ISO 4014 M16X65 A480	..... 2-179, 2-181
312105-0634 ..	SCREW M6S ISO 4014 M16X70 A480	..... 10-79, 10-91
312105-0635 ..	SCREW M6S ISO 4014 M16X75 A480	 7-53
312105-0638 ..	SCREW M6S ISO 4014 M16X90 A480	..... 2-9, 2-119
312105-0640 ..	SCREW M6S ISO 4014 M16X100 A480	..... 7-39, 7-93, 7-95
312105-0674 ..	SCREW M6S ISO 4017 M20X50 A480	..... 2-179, 2-181
312109-0335 ..	SCREW M6S ISO 4017 M5X30 A480	 4-237
312109-0374 ..	SCREW M6S ISO 4017 M6X30 A480	1-165, 2-19, 2-21, 2-67, 2-273, 2-275, 3-15, 3-31, 5-103 5-105, 5-107, 5-109, 5-111, 5-165, 5-167, 5-171, 5-173, 5-177, 5-179, 5-267, 5-269, 7-15, 7-135 ..... 7-157, 7-159, 7-169, 7-179, 10-85
312109-0376 ..	SCREW M6S ISO 4017 M6X35 A480	1-243, 1-245, 1-247, 1-317, 1-333, 1-341, 2-49, 2-131 ..... 2-133, 5-103, 5-105, 5-107, 5-109, 5-111, 5-165, 5-167, 5-185, 7-157, 7-159
312109-0378 ..	SCREW M6S ISO 4017 M6X40 A480	2-171, 2-179, 2-181, 2-273, 2-275, 4-229, 4-231, 5-69, 7-221
312109-0380 ..	SCREW M6S ISO 4017 M6X50 A480	..... 2-33, 6-29
312109-0386 ..	SCREW M6S ISO 4017 M6X80 A480	..... 7-165, 7-173, 10-15

Part No	Description	Page No
312109-0457 ..	SCREW M6S ISO 4017 M8X35 A480	1-191, 1-219, 5-45, 5-47, 5-49, 5-145, 5-147, 5-209, 5-211, 5-213, 5-215, 5-217, 5-219, 6-49
312109-0459 ..	SCREW M6S ISO 4017 M8X40 A480	1-33, 1-35, 1-37, 1-59, 1-61, 1-63, 1-85, 1-87, 1-129, 4-209, 4-211, 4-219, 4-221, 5-209, 5-211, 5-213, 5-215, 5-217, 5-219, 7-13, 10-53
312109-0460 ..	SCREW M6S ISO 4017 M8X45 A480	1-33, 1-35, 1-37, 1-59, 1-61, 1-63, 4-203, 4-213, 5-5, 5-7, 5-145, 5-147, 5-209, 5-211, 5-213, 5-215, 5-217, 5-219, 5-241, 5-243, 5-245, 5-247, 5-249, 5-251
312109-0461 ..	SCREW M6S ISO 4017 M8X50 A480	1-47, 1-49, 1-51, 1-85, 1-87, 5-45, 5-47, 5-49, 5-209, 5-211, 5-213, 5-215, 5-217, 5-219
312109-0463 ..	SCREW M6S ISO 4017 M8X60 A480	5-185, 5-209, 5-211, 5-213, 5-215, 5-217, 5-219, 5-263, 5-267, 5-269
312109-0499 ..	SCREW M6S ISO 4017 M10X40 A480	2-79, 3-15, 3-31, 5-263, 5-267, 5-269, 5-273, 10-91
312109-0500 ..	SCREW M6S ISO 4017 M10X45 A480	5-263
312109-0501 ..	SCREW M6S ISO 4017 M10X50 A480	5-273, 7-157, 7-159
312109-0544 ..	SCREW M6S ISO 4017 M12X60 A480	2-19, 2-21
312111-0297 ..	SCREW HEX.SOCK.HD.MC6S-TT 4X25 88 FZB	8-23
312111-0327 ..	SCREW HEX.SOCK.HD.MC6S-TT 5X12 88 FZB	10-51
312111-0366 ..	SCREW HEX.SOCK.HD.MC6S-TT 6X12 88 FZB	8-65, 8-67, 8-71, 10-53
312111-0497 ..	SCREW HEX.SOCK.HD.MC6S-TT 10X35 88 FZ	10-53
312111-0501 ..	SCREW HEX.SOCK.HD.MC6S-TT 10X50 88 FZ	10-51
312111-0630 ..	SCREW HEX.SOCK.HD.MC6S-TT 16X50 88 FZ	2-171, 2-173, 2-175, 2-179, 2-181, 2-187, 2-189, 2-191
312115-0222 ..	SCREW ISO4762 M3X8 A4 80	2-107, 2-109, 4-243, 4-245, 4-247
312115-0226 ..	SCREW ISO4762 M3X12 A4 80	5-187, 5-189, 5-191
312115-0228 ..	SCREW ISO4762 M3X16 A4 80	1-311, 1-313, 5-263, 5-267, 5-269, 7-31
312115-0230 ..	SCREW ISO4762 M3X20 A4 80	3-23, 5-187, 5-189, 5-191, 5-241, 5-243, 5-245, 5-247, 5-249, 5-251
312115-0285 ..	SCREW ISO4762 M4X6 A4 80	1-341, 4-85, 4-87, 4-89, 4-109, 4-111, 4-113, 4-115, 4-133, 4-135, 4-137, 4-153, 4-155, 4-157, 4-159
312115-0287 ..	SCREW ISO4762 M4X8 A4 80	1-219, 1-247, 1-249, 4-51, 4-53, 4-55, 4-57, 4-63, 4-65, 4-67, 4-69, 7-133
312115-0289 ..	SCREW ISO4762 M4X10 A4 80	4-51, 4-53, 4-55, 4-57, 4-63, 4-65, 4-67, 4-69
312115-0291 ..	SCREW ISO4762 M4X12 A4 80	1-205, 1-237, 2-33, 3-19, 3-33, 4-51, 4-53, 4-55, 4-57, 4-63, 4-65, 4-67, 4-69, 4-171, 4-173, 5-119, 5-121, 5-125, 7-103, 7-149, 7-151, 7-155, 7-181, 7-183, 7-229
312115-0293 ..	SCREW ISO4762 M4X16 A4 80	1-15, 1-17, 4-51, 4-53, 4-55, 4-57, 4-63, 4-65, 4-67, 4-69, 4-171, 4-173, 5-287, 8-65, 8-67
312115-0295 ..	SCREW ISO4762 M4X20 A4 80	7-147
312115-0297 ..	SCREW ISO4762 M4X25 A4 80	1-19, 4-97, 4-99, 4-101, 4-143, 4-145, 4-147, 5-253, 5-255, 9-5
312115-0305 ..	SCREW ISO4762 M4X50 A4 80	1-221, 1-333, 1-341, 4-97, 4-99, 4-101, 4-143, 4-145, 4-147
312115-0323 ..	SCREW ISO4762 M5X8 A4 80	1-393, 7-127, 7-133
312115-0325 ..	SCREW ISO4762 M5X10 A4 80	1-167, 1-169, 4-119, 4-121, 4-123, 4-125
312115-0327 ..	SCREW ISO4762 M5X12 A4 80	1-167, 1-169, 1-333, 1-341, 1-393, 1-395, 2-49, 2-131, 2-133, 2-187, 2-193, 2-219, 2-221, 2-225, 2-237, 2-239, 2-255, 2-257, 4-85, 4-87, 4-89, 4-97, 4-99, 4-101, 4-119, 4-121, 4-123, 4-125, 4-133, 4-135, 4-137, 4-143, 4-145, 4-147, 5-157, 5-159, 6-49, 6-57, 6-61, 6-65, 7-25, 7-165, 7-169, 7-173, 7-179, 7-273, 7-275, 7-283, 7-287, 8-57, 8-71, 10-45
312115-0328 ..	SCREW ISO4762 M5X14 A4	7-153
312115-0329 ..	SCREW ISO4762 M5X16 A4 80	1-285, 1-287, 4-27, 4-29, 4-39, 4-41, 4-97, 4-99, 4-101, 4-119, 4-121, 4-123, 4-125, 4-143, 4-145, 4-147, 4-203, 4-213, 7-93, 7-95, 7-165, 7-173, 8-29, 8-31, 8-33, 8-35
312115-0331 ..	SCREW ISO4762 M5X20 A4 80	1-7, 1-9, 1-109, 1-115, 1-119, 1-121, 1-167, 1-169, 1-175, 2-33, 2-79, 4-51, 4-53, 4-55, 4-57, 4-63, 4-65, 4-67, 4-69, 4-119, 4-121, 4-123, 4-125, 7-155, 7-191, 7-193, 7-195, 7-197, 7-199, 7-201
312115-0333 ..	SCREW ISO4762 M5X25 A4 80	5-157, 5-159, 6-23, 7-153
312115-0335 ..	SCREW ISO4762 M5X30 A4 80	7-133
312115-0337 ..	SCREW ISO4762 M5X35 A4 80	2-173, 2-175, 2-179, 2-181
312115-0339 ..	SCREW ISO4762 M5X40 A4 80	2-99
312115-0340 ..	SCREW ISO4762 M5X45 A4 80	2-99, 2-149, 2-151
312115-0362 ..	SCREW ISO4762 M6X8 A4 80	2-255, 2-257
312115-0364 ..	SCREW ISO4762 M6X10 A4 80	2-33, 6-31, 6-67, 7-119
312115-0366 ..	SCREW ISO4762 M6X12 A4 80	1-111, 1-393, 1-395, 4-27, 4-29, 4-39, 4-41, 4-51, 4-53, 4-55, 4-57, 4-63, 4-65, 4-67, 4-69, 4-229, 4-231, 5-11, 5-13, 5-195, 5-197, 5-199, 5-201, 5-203, 5-205, 5-207, 7-53, 7-89, 7-91, 7-131, 7-143, 7-145, 7-157, 7-159, 8-29, 8-31, 8-33, 8-35
312115-0367 ..	SCREW ISO4762 M6X14 A4 80	4-7, 4-9, 4-11, 4-17, 4-19, 4-21, 4-27, 4-29, 4-39, 4-41, 7-209, 7-211, 7-213
312115-0368 ..	SCREW ISO4762 M6X16 A4 80	1-105, 1-107, 2-65, 3-7, 3-9, 3-13, 3-29, 4-27, 4-29, 4-39, 4-41, 4-51, 4-53, 4-55, 4-57, 4-63, 4-65, 4-67, 4-69, 4-229, 4-231, 4-243, 4-245, 5-145, 5-147, 6-13, 6-15, 6-17, 7-41, 7-81, 7-83, 7-123, 7-145, 7-153, 7-163, 7-227
312115-0370 ..	SCREW ISO4762 M6X20 A4 80	1-115, 1-253, 1-285, 1-287, 4-229, 4-231, 5-113, 5-115, 5-241, 5-243, 5-245, 5-247, 5-249, 5-251, 6-67, 7-25, 7-143, 7-147, 7-149, 7-151, 7-155, 7-169, 7-179, 7-221, 7-223
312115-0372 ..	SCREW ISO4762 M6X25 A4 80	1-291, 1-349, 2-55, 2-79, 2-97, 2-155, 2-157, 4-27, 4-29, 4-39, 4-41, 4-95, 4-225, 5-157, 5-159, 5-253, 5-255, 7-153, 7-231, 7-233
312115-0374 ..	SCREW ISO4762 M6X30 A4 80	1-11, 1-305, 1-307, 1-353, 1-355, 5-145, 5-147, 6-31, 7-89, 7-91, 7-149, 7-151, 7-221
312115-0376 ..	SCREW ISO4762 M6X35 A4 80	3-15, 3-31, 7-81, 7-83, 7-155, 7-207, 7-209, 7-211, 7-213
312115-0378 ..	SCREW ISO4762 M6X40 A4 80	4-27, 4-29, 4-39, 4-41, 7-85, 7-203, 7-205, 10-51
312115-0379 ..	SCREW ISO4762 M6X45 A4 80	4-119, 4-121, 4-123, 4-125
312115-0380 ..	SCREW ISO4762 M6X50 A4 80	4-95, 7-79
312115-0447 ..	SCREW ISO4762 M8X12 A4 80	2-187, 4-85, 4-87, 4-89, 4-133, 4-135, 4-137
312115-0449 ..	SCREW ISO4762 M8X16 A4 80	5-29, 5-31, 5-33, 5-129, 5-131, 5-145, 5-147, 7-125, 7-145, 7-165, 7-173, 7-181, 7-183
312115-0451 ..	SCREW ISO4762 M8X20 A4 80	3-19, 3-33, 4-203, 4-213, 5-63, 7-181, 7-183, 10-95
312115-0453 ..	SCREW ISO4762 M8X25 A4 80	1-115, 1-285, 1-287, 6-45, 7-125
312115-0455 ..	SCREW ISO4762 M8X30 A4 80	5-221
312115-0457 ..	SCREW ISO4762 M8X35 A4 80	4-95, 7-13, 7-79
312115-0459 ..	SCREW ISO4762 M8X40 A4 80	4-95
312115-0460 ..	SCREW ISO4762 M8X45 A4 80	7-79
312115-0461 ..	SCREW ISO4762 M8X50 A4 80	4-95

Part No	Description	Page No
312115-0463 ..	SCREW ISO4762 M8X60 A4 80	7-93, 7-95
312115-0465 ..	SCREW ISO4762 M8X70 A4 80	4-209, 4-211, 4-219, 4-221, 7-153
312115-0467 ..	SCREW ISO4762 M8X80 A4 80	7-153
312115-0489 ..	SCREW ISO4762 M10X16 A4 80	7-231, 7-233
312115-0491 ..	SCREW ISO4762 M10X20 A4 80	2-145
312115-0497 ..	SCREW ISO4762 M10X35 A4 80	1-301, 5-65, 5-67, 5-69
312115-0499 ..	SCREW ISO4762 M10X40 A4 80	2-143
312115-0500 ..	SCREW ISO4762 M10X45 A4 80	5-69
312115-0501 ..	SCREW ISO4762 M10X50 A4 80	2-9, 7-145
312115-0541 ..	SCREW ISO4762 M12X45 A4 80	1-59, 1-61, 1-63
312115-0546 ..	SCREW ISO4762 M12X70 A4 80	2-171, 2-179, 2-181, 2-187
312115-0630 ..	SCREW ISO4762 M16X50 A4 80	1-295
312115-0634 ..	SCREW ISO4762 M16X70 A4 80	2-179, 2-181
312121-0285 ..	SCREW ISO 1207 M4X6 4.8 - 5.8 Z.PL.	7-31, 8-73
312121-0289 ..	SCREW ISO 1207 M4X10 4.8 - 5.8 Z.PL.	8-23, 8-49, 8-51, 8-53, 8-61, 8-65, 8-67, 8-71, 8-73
312121-0321 ..	SCREW ISO 1207 M5X6 4.8 - 5.8 Z.PL.	8-45, 8-49, 8-51, 8-53, 8-65, 8-67, 8-75, 8-83, 8-85, 8-87
312121-0323 ..	SCREW ISO 1207 M5X8 4.8 - 5.8 Z.PL.	8-23, 8-71
312121-0364 ..	SCREW ISO 1207 M6X10 4.8 - 5.8 Z.PL.	2-55, 2-97, 2-155, 2-157
312121-0366 ..	SCREW ISO 1207 M6X12 4.8 - 5.8 Z.PL.	8-65, 8-67
312125-0220 ..	SCREW ISO 1207 M3X6 A4	2-41, 2-49, 2-131, 2-133, 6-19, 7-93, 7-95
312125-0222 ..	SCREW ISO 1207 M3X8 A4	1-305, 1-307, 2-77, 2-149, 2-151, 7-123, 7-225, 7-265, 7-283, 7-287 8-37, 8-39, 8-41, 8-57
312125-0226 ..	SCREW ISO 1207 M3X12 A4	2-107, 2-109
312125-0228 ..	SCREW ISO 1207 M3X16 A4	1-147, 1-149, 1-151, 1-167, 1-169, 1-271, 2-149, 2-151, 5-221
312125-0230 ..	SCREW ISO 1207 M3X20 A4	1-229, 2-95, 5-5, 5-7, 7-123
312125-0232 ..	SCREW ISO 1207 M3X25 A4	2-41
312125-0234 ..	SCREW ISO 1207 M3X30 A4	5-5, 5-7
312125-0285 ..	SCREW ISO 1207 M4X6 A4	1-191, 1-195, 1-317, 2-19, 2-21, 2-87, 7-25, 7-93, 7-95, 7-119 7-121, 7-123, 7-157, 7-159, 7-225, 8-89, 8-91, 8-103
312125-0287 ..	SCREW ISO 1207 M4X8 A4	1-221, 1-297, 1-299, 1-305, 1-307, 2-95, 2-149, 2-151, 5-241, 5-243 5-245, 5-247, 5-249, 5-251, 5-263, 5-267, 5-269, 5-287, 6-49, 6-77, 7-17, 7-31, 7-79, 7-107, 7-123 7-127, 7-131, 7-143, 7-207, 7-221
312125-0289 ..	SCREW ISO 1207 M4X10 A4	6-13, 6-15, 8-23, 8-37, 8-39, 8-41, 8-55, 8-71, 8-89, 8-91
312125-0291 ..	SCREW ISO 1207 M4X12 A4	7-127, 7-133
312125-0293 ..	SCREW ISO 1207 M4X16 A4	7-251
312125-0295 ..	SCREW ISO 1207 M4X20 A4	4-97, 4-99, 4-101, 4-143, 4-145, 4-147, 9-5
312125-0297 ..	SCREW ISO 1207 M4X25 A4	5-285, 7-225
312125-0299 ..	SCREW ISO 1207 M4X30 A4	2-87, 5-281
312125-0303 ..	SCREW ISO 1207 M4X40 A4	1-353, 1-355
312125-0323 ..	SCREW ISO 1207 M5X8 A4	1-199, 1-205, 1-233, 1-235, 1-237
312125-0325 ..	SCREW ISO 1207 M5X10 A4	1-353, 1-355, 8-81, 8-89, 8-91
312125-0327 ..	SCREW ISO 1207 M5X12 A4	2-79, 5-263, 5-267, 5-269, 10-71
312125-0331 ..	SCREW ISO 1207 M5X20 A4	1-199
312125-0335 ..	SCREW ISO 1207 M5X30 A4	8-89, 8-91
312125-0339 ..	SCREW ISO 1207 M5X40 A4	2-49
312125-0341 ..	SCREW ISO 1207 M5X50 A4	2-49
312125-0364 ..	SCREW ISO 1207 M6X10 A4	1-129, 1-279, 1-353, 1-355, 2-57, 2-59, 2-107, 2-109, 2-197 2-199, 3-13, 3-29
312125-0366 ..	SCREW ISO 1207 M6X12 A4	1-15, 1-17, 1-223, 1-291, 1-297, 1-299, 1-349, 2-179, 2-181, 7-77
312125-0370 ..	SCREW ISO 1207 M6X20 A4	2-27
312125-0374 ..	SCREW ISO 1207 M6X30 A4	1-223
312125-0376 ..	SCREW ISO 1207 M6X35 A4	7-123, 8-89, 8-91
312132-0284 ..	SCREW SLOT. PAN HEAD MSCS M4X5	5-187, 5-189, 5-191
312132-0287 ..	SCREW SLOT. PAN HEAD MSCS M4X8	8-89, 8-91
312132-0289 ..	SCREW SLOT. PAN HEAD MSCS M4X10	2-77, 6-17
312141-0222 ..	SCREW ISO 2009 MFS M3X8 4.8 EL.PL	4-51, 4-53, 4-55, 4-57, 4-63, 4-65, 4-67, 4-69
312145-0222 ..	SCREW ISO 2009 MFS M3X8 A4	1-167, 1-169
312145-0224 ..	SCREW ISO 2009 MFS M3X10 A4	1-167, 1-169
312145-0226 ..	SCREW ISO 2009 MFS M3X12 A4	7-153
312145-0228 ..	SCREW ISO 2009 MFS M3X16 A4	1-247
312145-0234 ..	SCREW ISO 2009 MFS M3X30 A4	4-119, 4-121, 4-123, 4-125
312145-0238 ..	SCREW ISO 2009 MFS M3X40 A4	4-119, 4-121, 4-123, 4-125
312145-0285 ..	SCREW ISO 2009 MFS M4X6 A4	8-49, 8-51, 8-53
312145-0287 ..	SCREW ISO 2009 MFS M4X8 A4	4-7, 4-9, 4-11, 4-17, 4-19, 4-21, 4-79, 4-205, 4-207, 4-209 4-211, 4-215, 4-217, 4-219, 4-221, 7-165, 7-173
312145-0289 ..	SCREW ISO 2009 MFS M4X10 A4	4-7, 4-9, 4-11, 4-17, 4-19, 4-21, 4-51, 4-53, 4-55, 4-57, 4-63 4-65, 4-67, 4-69, 4-77, 4-79, 4-83, 5-241, 5-243, 5-245, 5-247, 5-249, 5-251
312145-0291 ..	SCREW ISO 2009 MFS M4X12 A4	4-7, 4-9, 4-11, 4-17, 4-19, 4-21
312145-0323 ..	SCREW ISO 2009 MFS M5X8 A4	4-85, 4-87, 4-89, 4-109, 4-111, 4-113, 4-115, 4-133, 4-135 4-137, 4-153, 4-155, 4-157, 4-159
312145-0327 ..	SCREW ISO 2009 MFS M5X12 A4	7-93, 7-95
312145-0329 ..	SCREW ISO 2009 MFS M5X16 A4	4-51, 4-53, 4-55, 4-57, 4-63, 4-65, 4-67, 4-69
312145-0380 ..	SCREW ISO 2009 MFS M6X50 A4	10-71
312151-0368 ..	SCREW EN 10642 MF6S M6X16 10.9 EL.PL	5-263, 5-267, 5-269
312151-0451 ..	SCREW EN 10642 MF6S M8X20 10.9 EL.PL	5-19
312155-0220 ..	SCREW DIN 7991 MF6S M3X6 A4 70	7-133
312155-0226 ..	SCREW DIN 7991 MF6S M3X12 A4 70	7-133, 7-169, 7-179
312155-0285 ..	SCREW DIN 7991 MF6S M4X6 A4 70	4-119, 4-121, 4-123, 4-125, 10-11
312155-0287 ..	SCREW DIN 7991 MF6S M4X8 A4 70	4-51, 4-53, 4-55, 4-57, 4-63, 4-65, 4-67, 4-69, 4-97, 4-99 4-101, 4-109, 4-111, 4-113, 4-115, 4-119, 4-121, 4-123, 4-125, 4-143, 4-145, 4-147, 4-153, 4-155 4-157, 4-159, 5-23, 5-25, 5-113, 5-115, 5-125, 5-253, 5-255, 7-153, 7-165, 7-173
312155-0289 ..	SCREW DIN 7991 MF6S M4X10 A4 70	2-225, 4-7, 4-9, 4-11, 4-17, 4-19, 4-21, 5-23, 5-25, 5-75 5-77, 5-79, 5-241, 5-243, 5-245, 5-247, 5-249, 5-251, 5-253, 5-255, 7-25, 7-131, 7-153
312155-0291 ..	SCREW DIN 7991 MF6S M4X12 A4 70	2-225, 7-155

Part No	Description	Page No
312155-0293 ..	SCREW DIN 7991 MF6S M4X16 A4 70	5-253, 5-255
312155-0295 ..	SCREW DIN 7991 MF6S M4X20 A4 70	4-171, 4-173, 7-23
312155-0297 ..	SCREW DIN 7991 MF6S M4X25 A4 70	5-185, 7-23
312155-0299 ..	SCREW DIN 7991 MF6S M4X30 A4 70	7-23
312155-0323 ..	SCREW DIN 7991 MF6S M5X8 A4 70	2-73, 4-51, 4-53, 4-55, 4-57, 4-63, 4-65, 4-67, 4-69, 4-85 4-87, 4-89, 4-109, 4-111, 4-113, 4-115, 4-133, 4-135, 4-137, 4-153, 4-155, 4-157, 4-159, 5-165 5-167, 5-265, 5-271, 7-135, 7-155, 10-15
312155-0325 ..	SCREW DIN 7991 MF6S M5X10 A4 70	1-105, 1-107, 1-173, 1-395, 4-51, 4-53, 4-55, 4-57, 4-63 4-65, 4-67, 4-69, 4-97, 4-99, 4-101, 4-143, 4-145, 4-147
312155-0327 ..	SCREW DIN 7991 MF6S M5X12 A4 70	4-51, 4-53, 4-55, 4-57, 4-63, 4-65, 4-67, 4-69, 4-77, 4-83 4-205, 4-207, 4-215, 4-217, 5-119, 5-121, 5-125, 5-241, 5-243, 5-245, 5-247, 5-249, 5-251, 7-147
312155-0329 ..	SCREW DIN 7991 MF6S M5X16 A4 70	1-7, 1-9, 1-109, 1-119, 1-121, 1-175, 2-65, 5-83, 5-85 5-87, 5-89, 5-91
312155-0331 ..	SCREW DIN 7991 MF6S M5X20 A4 70	7-113
312155-0339 ..	SCREW DIN 7991 MF6S M5X40 A4 70	4-27, 4-29, 4-39, 4-41
312155-0364 ..	SCREW DIN 7991 MF6S M6X10 A4 70	1-111, 7-167, 7-175
312155-0366 ..	SCREW DIN 7991 MF6S M6X12 A4 70	5-71, 5-145, 5-147, 7-93, 7-95, 7-129, 7-155, 10-53
312155-0368 ..	SCREW DIN 7991 MF6S M6X16 A4 70	1-247, 2-273, 2-275, 5-59, 5-61, 7-15, 7-235, 10-15
312155-0370 ..	SCREW DIN 7991 MF6S M6X20 A4 70	5-23, 5-25, 5-113, 5-115, 7-25, 7-113
312155-0376 ..	SCREW DIN 7991 MF6S M6X35 A4 70	5-23, 5-25
312155-0378 ..	SCREW DIN 7991 MF6S M6X40 A4 70	2-225, 5-23, 5-25, 5-75, 5-77, 5-79
312155-0379 ..	SCREW DIN 7991 MF6S M6X45 A4 70	5-113, 5-115
312155-0380 ..	SCREW DIN 7991 MF6S M6X50 A4 70	5-23, 5-25
312155-0449 ..	SCREW DIN 7991 MF6S M8X16 A4 70	1-41, 1-43, 5-83, 5-85, 5-87, 5-89, 5-91, 5-137, 5-139 5-269, 7-15, 7-125
312155-0451 ..	SCREW DIN 7991 MF6S M8X20 A4 70	7-15
312155-0453 ..	SCREW DIN 7991 MF6S M8X25 A4 70	2-73, 5-71, 5-241, 5-243, 5-245, 5-247, 5-249, 5-251
312155-0455 ..	SCREW DIN 7991 MF6S M8X30 A4 70	5-145, 5-147
312155-0459 ..	SCREW DIN 7991 MF6S M8X40 A4 70	5-45, 5-47, 5-49, 5-145, 5-147
312155-0461 ..	SCREW DIN 7991 MF6S M8X50A4 70	5-145, 5-147
312155-0491 ..	SCREW DIN 7991 MF6S M10X20 A4 70	7-79
312155-0493 ..	SCREW DIN 7991 MF6S M10X25 A4 70	7-93, 7-95
312155-0495 ..	SCREW DIN 7991 MF6S M10X30 A4 70	5-185, 5-263, 5-267, 5-269
312155-0499 ..	SCREW DIN 7991 MF6S M10X40 A4 70	5-23, 5-25, 5-113, 5-115
312155-0540 ..	SCREW DIN 7991 MF6S M12X40 A4 70	5-185
312156-0370 ..	SCREW EN 10642 MF6S M6X20 A470	1-295
312180-0364 ..	SCREW ISO7379 H6X10	3-15, 3-31
312180-0366 ..	SCREW ISO7379 H6X12	7-19, 7-21, 7-61, 7-235
312180-0489 ..	SCREW ISO7379 H10X16	7-73
312180-0491 ..	SCREW ISO7379 H10X20	7-149, 7-151
312180-0534 ..	SCREW ISO7379 H12X25	1-295
312230-0150 ..	SCREW HEX.HEAD WOOD T6S 10X160 SS	1-397
312306-0546 ..	SCREW ISO4026 M12X70 FZB	10-61
312311-0327 ..	SCREW ISO4028 M5X12 FZB	2-143
312311-0329 ..	SCREW ISO4028 M5X16 FZB	1-297, 1-299
312311-0370 ..	SCREW ISO4028 M6X20 FZB	5-241, 5-243, 5-245, 5-247, 5-249, 5-251
312311-0372 ..	SCREW ISO4028 M6X25 FZB	7-221
312311-0491 ..	SCREW ISO4028 M10X20 FZB	7-39
312318-0220 ..	SCREW ISO4029 M3X6 A4	5-275, 7-227
312318-0283 ..	SCREW ISO4029 M4X4 A4	7-155, 7-221
312318-0284 ..	SCREW ISO4029 M4X5 A4	7-157, 7-159
312318-0285 ..	SCREW ISO4029 M4X6 A4	2-41, 4-7, 4-9, 4-11, 4-17, 4-19, 4-21, 4-51, 4-53, 4-55, 4-57, 4-61 4-63, 4-65, 4-67, 4-69, 4-73, 4-77, 4-83, 10-37
312318-0287 ..	SCREW ISO4029 M4X8 A4	1-309, 4-175, 4-177, 7-15, 7-63, 7-141
312318-0289 ..	SCREW ISO4029 M4X10 A4	1-305, 1-307, 4-209, 4-211, 4-219, 4-221, 7-61
312318-0320 ..	SCREW ISO4029 M5X5 A4	4-51, 4-53, 4-55, 4-57, 4-63, 4-65, 4-67, 4-69
312318-0321 ..	SCREW ISO4029 M5X6 A4	10-29, 10-31
312318-0323 ..	SCREW ISO4029 M5X8 A4	1-95, 3-19, 3-33, 4-51, 4-53, 4-55, 4-57, 4-63, 4-65, 4-67, 4-69 4-191, 4-193, 5-15, 5-125
312318-0325 ..	SCREW ISO4029 M5X10 A4	2-249, 4-51, 4-53, 4-55, 4-57, 4-63, 4-65, 4-67, 4-69, 5-119, 5-121
312318-0327 ..	SCREW ISO4029 M5X12 A4	5-119, 5-121
312318-0329 ..	SCREW ISO4029 M5X16 A4	4-77, 4-83, 4-97, 4-99, 4-101, 4-143, 4-145, 4-147, 7-147
312318-0362 ..	SCREW ISO4029 M6X8 A4	1-131, 1-133, 1-135, 4-233, 4-235, 5-5, 5-7, 5-15, 7-25, 7-89, 7-91 7-103, 7-165, 7-173
312318-0364 ..	SCREW ISO4029 M6X10 A4	2-13
312318-0366 ..	SCREW ISO4029 M6X12 A4	1-305, 1-307, 3-21, 7-27, 7-29, 7-63, 7-141
312318-0368 ..	SCREW ISO4029 M6X16 A4	5-241, 5-243, 5-245, 5-247, 5-249, 5-251, 7-49, 7-143, 7-221
312318-0370 ..	SCREW ISO4029 M6X20 A4	7-115, 8-71
312318-0372 ..	SCREW ISO4029 M6X25 A4	2-145
312318-0376 ..	SCREW ISO4029 M6X35 A4	1-167, 1-169
312318-0443 ..	SCREW ISO4029 M8X8 A4	1-117, 2-273, 2-275, 7-73
312318-0445 ..	SCREW ISO4029 M8X10 A4	7-117
312318-0449 ..	SCREW ISO4029 M8X16 A4	4-205, 4-207, 4-209, 4-211, 4-215, 4-217, 4-219, 4-221
312318-0453 ..	SCREW ISO4029 M8X25 A4	1-301, 2-171, 2-173, 2-175, 2-179, 2-181, 2-189, 2-191
312318-0455 ..	SCREW ISO4029 M8X30 A4	7-93, 7-95
312502-0120 ..	DRIVE SCREW ROUND HEAD KDS 0X5	1-333, 1-341, 2-49, 2-131, 2-133, 6-69, 6-71, 6-75, 6-77
312503-0225 ..	TAPPING SCREW ISO 7049-ST2,9X9,5-C-Z	2-41
312503-0229 ..	TAPPING SCREW ISO 7049-ST2,9X16-C-Z	8-71
312503-0275 ..	TAPPING SCREW ISO 7049-ST3,5X6,5-C-Z	7-119
312601-0316 ..	HEXAGON NUT, DIN 934 M6 8 FZB	8-23
312601-0322 ..	HEXAGON NUT, DIN 934 M12 8 FZB	3-7, 3-9
312601-0324 ..	HEXAGON NUT, DIN 934 M16 8 FZB	7-39
312602-0312 ..	HEXAGON NUT, EN 24032 M6M M4 NIPLBR	1-267, 10-55, 10-57
312602-0316 ..	NUT, EN 24032 M6M M6 NIPLBR	10-85

Part No	Description	Page No
312602-0318 ..	HEXAGON NUT, EN 24032 M6M M8 NIPLBR	10-85
312605-0310 ..	HEXAGON NUT, M6M M3 A280	1-229, 6-11, 7-123, 7-265, 8-89, 8-91
312605-0312 ..	HEXAGON NUT, M6M M4 A280	1-13, 1-41, 1-43, 1-167, 1-169, 1-195, 1-219, 1-227, 1-285 1-287, 1-311, 1-313, 1-317, 1-353, 1-355, 2-87, 2-225, 2-231, 2-273, 2-275, 4-107, 4-179, 4-181 4-183, 4-209, 4-211, 4-219, 4-221, 5-277, 5-279, 5-285, 7-23, 7-31, 7-57, 7-59, 7-123, 7-157, 7-159 7-225, 7-261, 7-263, 8-23, 8-37, 8-39, 8-41, 8-89, 8-91, 8-103
312605-0314 ..	HEXAGON NUT, M6M M5 A280	1-13, 1-41, 1-43, 1-115, 1-123, 1-125, 1-129, 1-197, 1-205 1-297, 1-299, 1-311, 1-313, 1-317, 1-365, 1-367, 1-393, 2-225, 5-59, 5-61, 5-83, 5-85, 5-87, 5-89 5-91, 5-97, 5-99, 5-285, 6-23, 6-75, 7-13, 7-17, 7-19, 7-21, 7-133, 7-165, 7-173, 7-259, 7-261 7-263, 7-267, 7-269, 7-281, 7-285, 8-89, 8-91, 10-55, 10-57
312605-0316 ..	HEXAGON NUT, M6M M6 A280	1-13, 1-15, 1-17, 1-41, 1-43, 1-105, 1-107, 1-123, 1-125, 1-129 1-131, 1-133, 1-135, 1-137, 1-139, 1-141, 1-143, 1-145, 1-147, 1-149, 1-151, 1-153, 1-155, 1-157 1-159, 1-161, 1-163, 1-165, 1-167, 1-169, 1-173, 1-179, 1-193, 1-203, 1-219, 1-251, 1-283, 1-285 1-287, 1-333, 1-341, 1-349, 1-353, 1-355, 1-393, 1-397, 2-13, 2-27, 2-29, 2-33, 2-39, 2-49, 2-121 2-131, 2-133, 2-145, 2-171, 2-187, 2-245, 2-265, 2-271, 2-273, 2-275, 4-109, 4-111, 4-113, 4-115 4-153, 4-155, 4-157, 4-159, 4-171, 4-173, 4-179, 4-181, 4-183, 4-229, 4-231, 4-243, 4-245, 5-17 5-29, 5-31, 5-33, 5-83, 5-85, 5-87, 5-89, 5-91, 5-103, 5-105, 5-107, 5-109, 5-111, 5-129, 5-131 5-165, 5-167, 5-171, 5-173, 5-177, 5-179, 5-241, 5-243, 5-245, 5-247, 5-249, 5-251, 5-277, 5-279 5-281, 6-11, 6-29, 6-75, 7-17, 7-25, 7-31, 7-73, 7-101, 7-111, 7-123, 7-127, 7-133, 7-153, 7-155 7-157, 7-159, 7-165, 7-169, 7-173, 7-179, 7-181, 7-183, 7-207, 7-209, 7-211, 7-213, 7-221, 7-223 7-231, 7-233, 7-235, 7-245, 7-283, 7-287, 8-23, 8-29, 8-31, 8-33, 8-35, 8-47, 8-89, 8-91, 10-11 10-15, 10-55, 10-57
312605-0318 ..	HEXAGON NUT, M6M M8 A280	1-41, 1-43, 1-113, 1-123, 1-125, 1-181, 1-183, 1-185, 1-191 1-195, 1-197, 1-199, 1-201, 1-205, 1-211, 1-213, 1-215, 1-219, 1-247, 1-267, 1-279, 1-283, 1-303 1-305, 1-307, 2-25, 2-31, 2-39, 2-69, 2-87, 2-121, 2-193, 2-273, 2-275, 4-27, 4-29, 4-39, 4-41 4-117, 4-161, 4-185, 4-187, 4-205, 4-207, 4-209, 4-211, 4-215, 4-217, 4-219, 4-221, 4-229, 4-231 5-11, 5-13, 5-15, 5-17, 5-35, 5-37, 5-45, 5-47, 5-49, 5-65, 5-67, 5-69, 5-71, 5-137, 5-139, 5-145 5-147, 5-241, 5-243, 5-245, 5-247, 5-249, 5-251, 5-263, 5-267, 5-269, 5-275, 6-41, 6-43, 6-45, 6-49 7-93, 7-95, 7-107, 7-123, 7-165, 7-167, 7-173, 7-175, 7-181, 7-183, 10-71, 10-73
312605-0320 ..	HEXAGON NUT, M6M M10 A280	1-199, 1-211, 1-213, 1-215, 1-311, 1-313, 2-33, 2-79, 5-5, 5-7 5-63, 5-185, 5-273, 7-157, 7-159
312605-0322 ..	HEXAGON NUT, M6M M12 A280	1-147, 1-149, 1-151, 1-167, 1-169, 2-19, 2-21, 5-185, 7-53 7-71, 9-3
312605-0324 ..	HEXAGON NUT, M6M M16 A280	2-189, 2-191, 2-193, 7-53, 10-91
312605-0328 ..	HEXAGON NUT, M6M M24 A280	10-87
312607-0312 ..	HEXAGON NUT, EN 24032 M6M M4 A480	7-87, 10-19, 10-21
312607-0314 ..	HEXAGON NUT, EN 24032 M6M M5 A480	2-49, 7-87
312607-0316 ..	HEXAGON NUT, EN 24032 M6M M6 A480	7-221
312607-0318 ..	HEXAGON NUT, EN 24032 M6M M8 A480	4-77, 4-83
312625-0316 ..	HEXAGON THIN NUT, EN 24035 ML6M M6 A4	1-147, 1-149, 1-151, 1-167, 1-169, 1-173, 1-309 7-135, 7-149, 7-151
312625-0318 ..	HEXAGON THIN NUT, EN 24035 ML6M M8 A4	1-303, 4-51, 4-53, 4-55, 4-57, 4-63, 4-65, 4-67 4-69, 4-109, 4-111, 4-113, 4-115, 4-153, 4-155, 4-157, 4-159, 4-201, 4-209, 4-211, 4-219, 4-221 4-243, 4-245, 7-15, 7-133
312625-0320 ..	HEXAGON THIN NUT, EN 24035 ML6M M10 A4	10-19, 10-21
312625-0322 ..	HEXAGON THIN NUT, EN 24035 ML6M M12 A4	2-273, 2-275
312625-0326 ..	HEXAGON THIN NUT, EN 24035 ML6M M20 A4	2-179, 2-181
312632-0320 ..	HEX.TH.NUT FINE,EN24035 ML6M M10X1,25 A4	5-195, 5-197, 5-199, 5-201, 5-203, 5-205, 5-207
312635-0320 ..	NUT M6M 10X1 STAINLESS A2 80	4-209, 4-211, 4-219, 4-221
312705-0310 ..	NUT HEX. DOMED CAP MHM-6 M3 A2	1-167, 1-169
312705-0312 ..	NUT HEX. DOMED CAP MHM-6 M4 A280	1-167, 1-169, 2-219, 2-221, 2-225, 2-239, 2-251 2-255, 2-257, 2-259, 6-57, 6-61, 7-273, 7-275, 7-283
312705-0314 ..	NUT HEX. DOMED CAP MHM-6 M5 A280	1-365, 1-367, 4-7, 4-9, 4-11, 4-17, 4-19, 4-21, 4-51 4-53, 4-55, 4-57, 4-63, 4-65, 4-67, 4-69, 5-285
312705-0316 ..	NUT HEX. DOMED CAP MHM-6 M6 A280	1-97, 1-99, 1-105, 1-107, 1-365, 1-367, 2-245, 7-63, 7-141
312705-0318 ..	NUT HEX. DOMED CAP MHM-6 M8 A280	1-97, 1-99, 1-131, 1-133, 1-135
312715-0116 ..	WING NUT DIN 315 A2 MVM-K M6	1-247, 1-285, 1-287
312805-0107 ..	NUT ROUND WITH SLOTS M35X1,5 FE	5-223, 5-225, 5-227, 5-229, 5-231, 5-233
312805-0110 ..	NUT ROUND WITH SLOTS M50X1,5 FE	5-223, 5-225, 5-227, 5-229, 5-231, 5-233
312810-0310 ..	HEXAGON NUT, NY-LOCK M3 FZB	3-23
312810-0312 ..	HEXAGON NUT, NY-LOCK M4 FZB	2-245
312810-0316 ..	HEXAGON NUT, NY-LOCK M6 FZB	8-23
312811-0318 ..	NUT HEX.LOCK HELI COIL M8 SS	4-209, 4-211, 4-219, 4-221
312812-0312 ..	HEXAGON NUT, NY-LOCK M4 A480	2-217, 2-219, 2-233, 2-235, 2-239, 2-259, 4-243, 4-245 4-247, 5-103, 5-105, 5-107, 5-109, 5-111, 5-165, 5-167, 8-23, 10-97
312812-0314 ..	HEXAGON NUT, NY-LOCK M5 A480	1-247, 1-311, 1-313, 2-217, 2-219, 2-239, 2-259
312812-0316 ..	HEXAGON NUT, NY-LOCK M6 A480	1-129, 1-173, 1-281, 1-285, 1-287, 2-93, 2-113, 2-179 2-181, 4-51, 4-53, 4-55, 4-57, 4-63, 4-65, 4-67, 4-69, 5-15, 5-63, 5-265, 5-271, 7-117, 7-123 7-127, 7-157, 7-159, 7-245, 10-15, 10-71, 10-75, 10-85, 10-97
312812-0318 ..	HEXAGON NUT, NY-LOCK M8 A480	2-73, 4-51, 4-53, 4-55, 4-57, 4-63, 4-65, 4-67, 4-69, 4-205 4-207, 4-209, 4-211, 4-215, 4-217, 4-219, 4-221, 4-233, 4-235, 5-11, 5-13, 10-15, 10-97
312812-0320 ..	HEXAGON NUT, NY-LOCK M10 A480	4-229, 4-231, 5-59, 5-61, 7-89, 7-91
312812-0322 ..	HEXAGON NUT, NY-LOCK M12 A480	2-171, 2-179, 2-181, 2-187, 3-25
312812-0324 ..	HEXAGON NUT, NY-LOCK M16 A480	10-79
312902-0316 ..	NUT HEX. LEFT THREAD, M6 A280	4-243, 4-245
312902-0318 ..	NUT HEX. LEFT THREAD, M8 A280	5-11, 5-13, 5-17, 5-241, 5-243, 5-245, 5-247, 5-249, 5-251
312902-0320 ..	NUT HEX. LEFT THREAD, M10 A280	5-5, 5-7
312927-0150 ..	RIVET NUT M8, CLAMP. LENGTH 3,0 - 4,5	7-93, 7-95
315101-0136 ..	WASHER BRB, 4,3/8 H=0,8	5-195, 5-197, 5-199, 5-201, 5-203, 5-205, 5-207, 8-49, 8-51, 8-53 8-61, 8-65, 8-67, 8-71, 8-73
315101-0146 ..	WASHER PLAIN, BRB, 5,3/10 H=1	8-23, 8-45, 8-49, 8-51, 8-53, 8-65, 8-67, 8-71, 8-83, 8-85, 8-87
315101-0153 ..	WASHER PLAIN, BRB, 6,4/12 H=1,5	1-191, 2-37, 2-189, 2-191, 5-19, 5-21, 8-23, 8-65, 8-67 8-71, 8-73, 10-75
315101-0165 ..	WASHER PLAIN, BRB, 8,4/16 H=1,5	1-303, 2-189, 2-191

Part No	Description	Page No
315101-0176 ..	WASHER PLAIN, BRB, 12/22 H=2	10-45
315103-0124 ..	WASHER, BRB, 3,2/6,H=0,5 NI PL BR	7-123
315103-0136 ..	WASHER PLAIN, BRB, 4,3/8,H=0,8 NI PL BR	10-55, 10-57
315103-0153 ..	WASHER, BRB, 6,4/12,H=1,5 NIPL BR	1-137, 1-139, 1-141, 1-143, 1-145, 5-23, 5-25, 5-241 5-243, 5-245, 5-247, 5-249, 5-251, 7-221
315105-0124 ..	WASHER BRB 3,2X7 RFR	1-147, 1-149, 1-151, 1-167, 1-169, 1-229, 1-271, 1-311, 1-313, 2-107 2-109, 5-5, 5-7, 5-241, 5-243, 5-245, 5-247, 5-249, 5-251, 5-263, 5-267, 5-269, 6-11, 7-31, 7-123 8-37, 8-39, 8-41, 8-57, 8-71, 8-89, 8-91
315105-0136 ..	WASHER BRB 4,3X9 RFR	1-113, 1-129, 1-167, 1-169, 1-195, 1-219, 1-221, 1-227, 1-229, 1-243 1-245, 1-249, 1-267, 1-285, 1-287, 1-317, 1-353, 1-355, 1-395, 2-19, 2-21, 2-87, 2-89, 2-187, 2-201 2-203, 2-207, 2-217, 2-219, 2-221, 2-225, 2-231, 2-233, 2-235, 2-239, 2-245, 2-249, 2-251, 2-255 2-257, 2-259, 4-205, 4-207, 4-215, 4-217, 5-23, 5-25, 5-29, 5-31, 5-33, 5-97, 5-99, 5-129, 5-131 5-185, 5-241, 5-243, 5-245, 5-247, 5-249, 5-251, 5-253, 5-255, 5-277, 5-279, 5-285, 6-9, 6-77, 7-25 7-31, 7-57, 7-59, 7-87, 7-123, 7-131, 7-149, 7-151, 7-155, 7-157, 7-159, 7-165, 7-169, 7-173, 7-179 7-181, 7-183, 7-225, 7-245, 7-251, 7-261, 7-263, 7-273, 7-275, 7-283, 7-287, 8-23, 8-37, 8-39, 8-41 8-65, 8-67, 8-71, 8-89, 8-91, 8-103
315105-0146 ..	WASHER BRB 5,3X10 RFR	1-7, 1-9, 1-13, 1-15, 1-17, 1-105, 1-107, 1-109, 1-119, 1-121, 1-123 1-125, 1-129, 1-167, 1-169, 1-175, 1-187, 1-189, 1-199, 1-205, 1-227, 1-247, 1-251, 1-297, 1-299 1-311, 1-313, 1-317, 1-353, 1-355, 1-393, 1-395, 2-39, 2-79, 2-119, 2-193, 2-217, 2-219, 2-225 2-239, 2-249, 2-259, 4-7, 4-9, 4-11, 4-17, 4-19, 4-21, 4-27, 4-29, 4-39, 4-41, 4-51, 4-53, 4-55, 4-57 4-61, 4-63, 4-65, 4-67, 4-69, 4-73, 4-79, 4-97, 4-99, 4-101, 4-119, 4-121, 4-123, 4-125, 4-143 4-145, 4-147, 4-205, 4-207, 4-215, 4-217, 4-237, 4-243, 4-245, 5-59, 5-61, 5-83, 5-85, 5-87, 5-89 5-91, 5-97, 5-99, 5-157, 5-159, 5-221, 5-263, 5-267, 5-269, 5-277, 5-279, 5-285, 6-7, 6-9, 6-49 6-57, 6-61, 6-65, 6-75, 7-13, 7-17, 7-25, 7-31, 7-53, 7-55, 7-75, 7-79, 7-87, 7-93, 7-95, 7-115 7-131, 7-153, 7-165, 7-173, 7-191, 7-193, 7-195, 7-197, 7-199, 7-201, 7-221, 7-249, 7-259, 7-261 7-263, 7-281, 8-57, 8-75, 8-81, 8-89, 8-91, 9-31, 10-11, 10-15, 10-55, 10-57
315105-0153 ..	WASHER BRB 6,4X12 RFR	1-13, 1-15, 1-17, 1-41, 1-43, 1-97, 1-99, 1-111, 1-117, 1-123, 1-125 1-131, 1-133, 1-135, 1-167, 1-169, 1-187, 1-189, 1-219, 1-221, 1-223, 1-249, 1-251, 1-253, 1-259 1-267, 1-273, 1-285, 1-287, 1-291, 1-297, 1-299, 1-305, 1-307, 1-315, 1-317, 1-321, 1-323, 1-333 1-347, 1-349, 1-393, 1-395, 2-9, 2-27, 2-33, 2-39, 2-61, 2-65, 2-67, 2-69, 2-83, 2-87, 2-93, 2-95 2-119, 2-121, 2-179, 2-181, 2-201, 2-203, 2-207, 2-219, 2-221, 2-239, 2-243, 2-245, 2-251, 2-255 2-257, 2-259, 2-269, 2-273, 2-275, 3-15, 3-31, 4-7, 4-9, 4-11, 4-17, 4-19, 4-21, 4-27, 4-29, 4-39 4-41, 4-77, 4-83, 4-85, 4-87, 4-89, 4-133, 4-135, 4-137, 4-171, 4-173, 4-175, 4-177, 4-179, 4-181 4-183, 4-189, 4-203, 4-209, 4-211, 4-213, 4-219, 4-221, 4-233, 4-235, 4-243, 4-245, 4-247, 5-5, 5-7 5-15, 5-23, 5-25, 5-29, 5-31, 5-33, 5-35, 5-37, 5-45, 5-47, 5-49, 5-59, 5-61, 5-63, 5-65, 5-67, 5-83 5-85, 5-87, 5-89, 5-91, 5-95, 5-103, 5-105, 5-107, 5-109, 5-111, 5-113, 5-115, 5-129, 5-131, 5-137 5-139, 5-145, 5-147, 5-157, 5-159, 5-165, 5-167, 5-171, 5-173, 5-177, 5-179, 5-185, 5-195, 5-197 5-199, 5-201, 5-203, 5-205, 5-207, 5-221, 5-241, 5-243, 5-245, 5-247, 5-249, 5-251, 5-257, 5-259 5-265, 5-267, 5-269, 5-271, 5-277, 5-279, 5-281, 6-7, 6-9, 6-11, 6-19, 6-29, 6-49, 6-51, 6-55, 6-67 6-75, 7-11, 7-15, 7-17, 7-19, 7-21, 7-25, 7-27, 7-29, 7-31, 7-33, 7-41, 7-51, 7-53, 7-55, 7-61, 7-75 7-77, 7-79, 7-81, 7-83, 7-85, 7-89, 7-91, 7-93, 7-95, 7-101, 7-107, 7-111, 7-115, 7-117, 7-121 7-123, 7-127, 7-131, 7-133, 7-145, 7-149, 7-151, 7-153, 7-155, 7-157, 7-159, 7-163, 7-165, 7-173 7-181, 7-183, 7-203, 7-205, 7-207, 7-209, 7-211, 7-213, 7-221, 7-223, 7-225, 7-227, 7-231, 7-233 7-235, 7-245, 7-249, 7-283, 7-287, 8-23, 8-29, 8-31, 8-33, 8-35, 8-47, 8-89, 8-91, 8-103, 10-11 10-15, 10-19, 10-21, 10-43, 10-55, 10-57, 10-71, 10-97
315105-0156 ..	WASHER BRB 6,7X14 RFR	1-123, 1-125, 1-309, 2-249, 5-157, 5-159, 7-17, 7-25, 7-63, 7-135 7-141, 7-153, 7-155, 7-157, 7-159
315105-0165 ..	WASHER BRB 8,4X16 RFR	1-41, 1-43, 1-59, 1-61, 1-63, 1-75, 1-77, 1-79, 1-113, 1-123, 1-125 1-131, 1-133, 1-135, 1-219, 1-221, 1-247, 1-267, 1-279, 1-305, 1-307, 1-393, 2-11, 2-13, 2-19 2-21, 2-27, 2-39, 2-61, 2-69, 2-73, 2-81, 2-87, 2-103, 2-105, 2-119, 2-173, 2-175, 2-187, 2-193 2-225, 2-269, 4-85, 4-87, 4-89, 4-109, 4-111, 4-113, 4-115, 4-117, 4-133, 4-135, 4-137, 4-153 4-155, 4-157, 4-159, 4-161, 4-171, 4-173, 4-179, 4-181, 4-183, 4-185, 4-187, 4-191, 4-193, 4-201 4-203, 4-205, 4-207, 4-209, 4-211, 4-213, 4-215, 4-217, 4-219, 4-221, 4-229, 4-231, 4-241, 5-5 5-7, 5-11, 5-13, 5-15, 5-19, 5-21, 5-23, 5-25, 5-29, 5-31, 5-33, 5-35, 5-37, 5-45, 5-47, 5-49, 5-59 5-61, 5-63, 5-65, 5-67, 5-69, 5-75, 5-77, 5-79, 5-83, 5-85, 5-87, 5-89, 5-91, 5-93, 5-113, 5-115 5-119, 5-121, 5-125, 5-129, 5-131, 5-137, 5-139, 5-145, 5-147, 5-185, 5-193, 5-195, 5-197, 5-199 5-201, 5-203, 5-205, 5-207, 5-221, 5-241, 5-243, 5-245, 5-247, 5-249, 5-251, 5-257, 5-259, 5-263 5-267, 5-269, 5-277, 5-279, 6-9, 6-27, 6-49, 7-13, 7-15, 7-25, 7-33, 7-53, 7-79, 7-93, 7-95, 7-103 7-105, 7-107, 7-123, 7-125, 7-143, 7-145, 7-147, 7-149, 7-151, 7-153, 7-167, 7-175, 7-181, 7-183 8-35, 8-55, 10-53, 10-97
315105-0171 ..	WASHER BRB 10X18 RFR	5-5, 5-7, 5-65, 5-67, 5-145, 5-147
315105-0173 ..	WASHER BRB 10,5X20 RFR	1-173, 1-179, 1-211, 1-213, 1-215, 1-265, 1-311, 1-313, 2-33 2-145, 2-171, 2-173, 2-175, 2-179, 2-181, 2-187, 2-189, 2-191, 2-193, 3-13, 3-15, 3-29, 3-31 4-119, 4-121, 4-123, 4-125, 5-5, 5-7, 5-15, 5-29, 5-31, 5-33, 5-59, 5-61, 5-69, 5-129, 5-131, 5-263 5-267, 5-269, 5-273, 6-41, 6-43, 6-49, 7-15, 7-41, 7-43, 7-45, 7-79, 7-81, 7-83, 7-89, 7-91, 7-225 9-3, 10-7, 10-9, 10-33, 10-91
315105-0178 ..	WASHER BRB 13X24 RFR	2-19, 2-21, 2-39, 2-49, 2-65, 2-189, 2-191, 3-7, 3-9, 3-25, 4-201 5-185, 7-39, 7-41, 7-55, 7-71, 7-93, 7-95, 8-23, 9-3, 10-91
315105-0186 ..	WASHER BRB 17X30 RFR	2-9, 2-65, 2-119, 2-171, 2-173, 2-175, 2-179, 2-181, 2-189, 2-191 3-23, 4-205, 4-207, 4-215, 4-217, 5-221, 7-53, 10-91
315105-0192 ..	WASHER BRB 21X37 RFR	5-221, 10-73
315106-0136 ..	WASHER ISO 7089-4-200 HV A4	1-341
315111-0173 ..	WASHER PLAIN, TBRB 10,5/22 H=4	5-63, 7-73
315111-0186 ..	WASHER PLAIN, TBRB 17/30 H=6	2-179, 2-181, 2-187, 2-189, 2-191
315115-0153 ..	WASHER PLAIN, TBRB 6,4/12 H=3	1-85, 1-87, 2-273, 2-275, 5-101, 5-113, 5-115, 6-17, 6-23 7-57, 7-59, 7-93, 7-95, 7-135, 7-165, 7-173, 7-223, 7-245
315115-0165 ..	WASHER PLAIN, TBRB 8,4/16 H=3	1-15, 1-17, 1-33, 1-35, 1-37, 1-41, 1-43, 1-47, 1-49, 1-51 1-59, 1-61, 1-63, 1-85, 1-87, 2-273, 2-275, 4-201, 7-55, 10-15, 10-63
315115-0173 ..	WASHER PLAIN, TBRB 10,5/22 H=4	1-295, 4-229, 4-231, 6-49, 7-231, 7-233, 10-73
315115-0178 ..	WASHER PLAIN, TBRB 13/24 H=4	1-15, 1-17
315121-0178 ..	WASHER PLAIN, TBRSB 13/36 H=6	7-61
315125-0146 ..	WASHER TBRSB 5.3X15X1 A4	8-57
315125-0153 ..	WASHER TBRSB 6,4X22X4 A4	1-11, 1-283, 1-365, 1-367, 2-39, 2-103, 2-105, 2-171, 2-179 2-181, 2-187, 2-189, 2-191, 2-269, 2-271, 4-229, 4-231, 4-241, 5-83, 5-85, 5-87, 5-89, 5-91, 5-263

Part No	Description	Page No
		5-267, 5-269, 6-51, 6-55, 6-69, 6-71, 7-119, 7-121, 7-123, 7-145, 7-165, 7-173, 7-203, 7-205
315125-0165 ..	WASHER TBRSB 8,4X26X5 A4	1-123, 1-125, 1-197, 1-297, 1-299, 2-19, 2-21, 2-73, 3-5, 3-27
		4-191, 4-193, 5-69, 5-187, 5-189, 5-191, 5-263, 5-267, 5-269, 6-29, 7-143, 7-181, 7-183
315125-0173 ..	WASHER TBRSB 10,5X28X6 A4	1-15, 1-17, 1-47, 1-49, 1-51, 1-85, 1-87, 2-171, 2-179, 2-181
		5-263, 5-267, 5-269, 10-91
315202-0101 ..	O-RING 3,1X1,6 MM	4-91, 4-93, 4-139, 4-141, 9-5
315202-0104 ..	O-RING 6,1X1,6 MM	4-119, 4-121, 4-123, 4-125
315202-0105 ..	O-RING 7,1X1,6 MM	4-91, 4-93, 4-95, 4-139, 4-141
315202-0107 ..	O-RING 9,1X1,6 MM	5-11, 5-13, 5-19, 5-21
315202-0110 ..	O-RING 12,1X1,6 MM	4-131
315202-0113 ..	O-RING 15,1X1,6 MM	5-69
315202-0115 ..	O-RING 17,1X1,6 MM	3-17
315202-0116 ..	O-RING 18,1X1,6 MM	4-109, 4-111, 4-113, 4-115, 4-153, 4-155, 4-157, 4-159
315202-0118 ..	O-RING 22,1X1,6 MM	4-131
315202-0119 ..	O-RING 25,1X1,6 MM	1-181, 1-183, 2-223, 4-131, 7-271
315202-0124 ..	O-RING 37,1X1,6 MM	3-7, 3-9
315202-0208 ..	O-RING 9,3X2,4 MM	4-109, 4-111, 4-113, 4-115, 4-153, 4-155, 4-157, 4-159
315202-0211 ..	O-RING 13,3X2,4 MM	2-107, 2-109
315202-0214 ..	O-RING 17,3X2,4 MM	9-33
315202-0217 ..	O-RING 24,2X3 MM	5-5, 5-7, 5-73, 5-241, 5-243, 5-245, 5-247, 5-249, 5-251, 9-33
315202-0221 ..	O-RING 34,2X3 MM	5-263, 5-267, 5-269
315202-0225 ..	O-RING 44,2X3 MM	5-23, 5-25, 5-113, 5-115, 5-223, 5-225, 5-227, 5-229, 5-231, 5-233
315202-0233 ..	O-RING 79,2X5,7 MM	9-33
315202-0267 ..	O-RING 16,3X2,4 MM	5-263, 5-267, 5-269
315202-0302 ..	O-RING 54,5X3 MM	2-113, 5-223, 5-225, 5-227, 5-229, 5-231, 5-233, 9-33
315202-0303 ..	O-RING 59,5X3 MM	5-69, 5-241, 5-243, 5-245, 5-247, 5-249, 5-251, 9-33
315202-0304 ..	O-RING 64,5X3 MM	1-235
315202-0305 ..	O-RING 69,5X3 MM	5-185, 5-241, 5-243, 5-245, 5-247, 5-249, 5-251, 9-33
315202-0307 ..	O-RING 79,5X3 MM	2-145, 9-33
315202-0308 ..	O-RING 84,5X3 MM	1-233, 1-237, 9-33
315202-0310 ..	O-RING 94,5X3 MM	9-33
315202-0311 ..	O-RING 99,5X3 MM	5-23, 5-25, 5-69, 5-113, 5-115
315202-0505 ..	O-RING 6,07X1,78 MM	3-11
315202-0701 ..	O-RING 10,82X1,78 MM	2-41
315202-0709 ..	O-RING 23,52X1,78 MM	2-65, 2-119
315202-0739 ..	O-RING 55,25X2,62 MM	1-115
315204-0103 ..	O-RING 5,1X1,6 MM	2-27
315204-0105 ..	O-RING 7,1X1,6 MM	4-119, 4-121, 4-123, 4-125
315204-0122 ..	O-RING 32,1X1,6 MM	1-147, 1-149, 1-151
315204-0123 ..	O-RING 35,1X1,6 MM	1-131, 1-133, 1-135
315204-0206 ..	O-RING 7,3X2,4 MM	1-193
315204-0207 ..	O-RING 8,3X2,4 MM	2-37
315204-0208 ..	O-RING 9,3X2,4 MM	1-247
315204-0209 ..	O-RING 10,3X2,4 MM	1-129
315204-0213 ..	O-RING 15,2X2,4 MM	1-195
315204-0214 ..	O-RING 17,3X2,4 MM	1-247
315204-0215 ..	O-RING 19,2X3 MM	1-211, 1-213, 1-215, 1-233, 1-235, 1-237, 5-187, 5-189, 5-191, 9-11, 9-13
		9-15, 9-17, 9-19, 9-21, 9-23, 9-25
315204-0219 ..	O-RING 29,2X3 MM	1-211, 1-213, 1-215, 1-253, 9-11, 9-13, 9-15, 9-17, 9-19
315204-0222 ..	O-RING 36,2X3 MM	2-33
315204-0223 ..	O-RING 39,2X3 MM	1-211, 1-213, 1-215, 9-11, 9-13, 9-15, 9-17, 9-19
315204-0301 ..	O-RING 49,5X3 MM	1-235, 9-25
315204-0303 ..	O-RING 59,5X3 MM	5-187, 5-189, 5-191
315204-0307 ..	O-RING 79,5X3 MM	1-203
315204-0308 ..	O-RING 84,5X3 MM	9-23
315204-0317 ..	O-RING 129,5X3 MM	1-195, 1-205
315204-0324 ..	O-RING 164,3X5,7 MM	1-47, 1-49, 1-51, 1-85, 1-87
315205-0703 ..	O-RING 14,0X1,78 MM	1-11
315205-0704 ..	O-RING 15,6X1,78 MM	1-123, 1-125, 1-185
315205-0705 ..	O-RING 17,17X1,78 MM	1-123, 1-125
315205-0707 ..	O-RING 20,35X1,78 MM	1-15, 1-17
315205-0709 ..	O-RING 23,52X1,78 MM	1-165
315205-0713 ..	O-RING 29,87X1,78 MM	1-137, 1-139, 1-141, 1-143, 1-145
315205-0714 ..	O-RING 31,47X1,78 MM	1-131, 1-133, 1-135
315205-0715 ..	O-RING 33,05X1,78 MM	1-173
315205-0716 ..	O-RING 34,65X1,78 MM	1-105, 1-107, 1-147, 1-149, 1-151
315205-0801 ..	O-RING 37,82X1,78 MM	1-129
315205-0802 ..	O-RING 41,0X1,78 MM	1-123, 1-125, 1-137, 1-139, 1-141, 1-143, 1-145, 1-153, 1-155, 1-157
		1-159, 1-161, 1-163, 1-285, 1-287
315205-0803 ..	O-RING 44,17X1,78 MM	1-105, 1-107
315205-0804 ..	O-RING 47,35X1,78 MM	1-129, 1-157, 1-159, 1-161, 1-163, 1-167, 1-169
315205-0805 ..	O-RING 53,7X1,78 MM	1-105, 1-107
315205-0807 ..	O-RING 94,97X1,78 MM	1-105, 1-107, 1-193
315205-0808 ..	O-RING 7,59X2,62 MM	1-187, 1-189
315206-0506 ..	O-RING 7,65X1,78 MM	2-39
315211-0103 ..	BONDED SEAL SS/NBR90 M6	4-109, 4-111, 4-113, 4-115, 4-119, 4-121, 4-123, 4-125, 4-153
		4-155, 4-157, 4-159, 5-69, 9-5
315211-0104 ..	BONDED SEAL SS/NBR90 M8	4-85, 4-87, 4-89, 4-133, 4-135, 4-137, 9-5
315211-0111 ..	BONDED SEAL SS/NBR90 G1/2	1-205, 2-81
315220-0143 ..	V-RINGS 18X26X10,5 MM V-20S	4-243, 4-245
315220-0183 ..	V-RINGS 36X46X13 MM V-40S	2-113
315220-0198 ..	V-RINGS 45X55X13 MM V-50S	2-39, 2-119
315229-0101 ..	GASKETS, 10,4X17,4X3,7 MM 1/2" FDA	1-283
315229-0102 ..	GASKETS, 16,8X23,8X3,7 MM 3/4" FDA	1-113, 6-19

Part No	Description	Page No
315229-0103 ..	GASKETS, 23,1X30,1X3,7 MM 1" FDA	1-279, 1-283, 2-25, 2-69, 2-121, 6-41, 6-43, 6-47, 9-5
315229-0104 ..	GASKETS, 35,8X42,8X3,7 MM 1"1/2 FD	1-113, 1-123, 1-125, 1-279, 2-25, 9-5
315229-0105 ..	GASKETS, 48,5X55,5X3,7 MM 2" FDA	1-113, 1-283, 2-25, 2-29, 9-5
315229-0106 ..	GASKETS, 61,2X68,2X3,7 MM 2"1/2 FD	1-283
315229-0107 ..	GASKETS, 73,9X80,9X3,7 MM 2"1/2 FD	2-25, 9-5
315229-0203 ..	GASKET 22,1X31,1X3,7 MM 1"	1-181, 1-183, 1-185, 1-191, 1-195
315229-0204 ..	GASKET 34,8X42,8X3,7 MM 1"1/2	1-191, 1-205
315229-0205 ..	GASKET 47,5X55,5X3,7 MM 2 INCH	1-191, 1-197, 1-201, 1-205
315229-0206 ..	GASKET 60,2X68,2X3,7 MM 2"1/2	1-191, 1-197, 1-199, 1-201
315229-0208 ..	GASKET 97,4X105,4X3,7 MM 4"	1-219
315233-0101 ..	WASHER CAPTIVE SEALING M5(NEW315239-101)	1-233, 1-235, 1-237
315233-0109 ..	WASHER CAPTIVE SEALING G1/8	10-55, 10-57
315233-0110 ..	WASHER CAPTIVE SEALING G1/4	2-87, 6-19, 6-77, 10-55, 10-57, 10-65, 10-71
315233-0111 ..	WASHER CAPTIVE SEALING G3/8	2-87, 10-55, 10-57
315233-0113 ..	WASHER CAPTIVE SEALING G1/2	2-121, 2-197, 2-199, 6-25, 6-77, 6-79, 10-55, 10-57, 10-71
315234-0109 ..	WASHER,PL.RND.CU.10,3/13,5 H=1,0	5-187, 5-189, 5-191
315234-0110 ..	WASHER,PL.RND.CU.13,5/18 H=1,5	1-219, 2-77, 10-87
315234-0113 ..	WASHER PL.RND.CU.21,3//26 H=1,5	1-179, 2-77
315237-0109 ..	WASHER,PL.RND.AL.10/14,H=1,5	1-321, 1-323
315237-0110 ..	WASHER,PL.RND.AL.13,5/18,H=1,5	1-15, 1-17, 1-285, 1-287, 2-9, 2-87, 2-197, 2-199
315239-0109 ..	NYLON WASHER G1/8	6-69, 6-71
315239-0111 ..	NYLON WASHER G3/8	6-69, 6-71
315239-0113 ..	NYLON WASHER G1/2	6-69, 6-71
315400-0001 ..	TUBE PUN-H-6X1-BL	5-5, 5-7, 5-165, 5-167
315402-0136 ..	LOCK WASHER FBB 4,1	1-237
315402-0156 ..	LOCK WASHER FBB 6,5	1-153, 1-155, 4-229, 4-231
315402-0173 ..	LOCK WASHER FBB 10,2	2-143
315701-0165 ..	PARALLEL KEY W. ROUND ENDS 4X4X10 MM	4-229, 4-231
315701-0166 ..	PARALLEL KEY W. ROUND ENDS 4X4X12 MM	7-227
315701-0170 ..	PARALLEL KEY W. ROUND ENDS 4X4X20 MM	7-129, 7-145
315701-0203 ..	PARALLEL KEY W. ROUND ENDS 5X5X25 MM	4-231
315701-0205 ..	PARALLEL KEY W. ROUND ENDS 5X5X30 MM	4-229
315701-0239 ..	PARALLEL KEY W. ROUND ENDS 6X6X40 MM	1-153, 1-155
315705-0164 ..	PARALLEL KEY W. ROUND ENDS 4X4X8 MM	1-41, 1-43, 2-273, 2-275
315705-0196 ..	PARALLEL KEY W.ROUND ENDS 5X5X10	2-33
315705-0201 ..	PARALLEL KEY W. ROUND ENDS 5X5X20 MM	2-273, 2-275, 4-119, 4-121, 4-123, 4-125
315705-0202 ..	PARALLEL KEY W ROUND ENDS 5X5X25MM	5-263, 5-267, 5-269, 7-227
315705-0238 ..	PARALLEL KEY W. ROUND ENDS 6X6X36 MM	2-273, 2-275
315705-0239 ..	PARALLEL KEY W. ROUND ENDS 6X6X40 MM	5-69
315705-0263 ..	PARALLEL KEY W. ROUND ENDS 8X7X20 MM	5-69
315705-0265 ..	PARALLEL KEY W. ROUND ENDS 8X7X25 MM	5-69
315705-0267 ..	PARALLEL KEY W. ROUND ENDS 8X7X30 MM	5-5, 5-7, 5-241, 5-243, 5-245, 5-247, 5-249, 5-251
315705-0270 ..	PARALLEL KEY W. ROUND ENDS 8X7X40 MM	5-5, 5-7
315705-0301 ..	PARALLEL KEY W. ROUND ENDS 10X8X40 MM	1-41, 1-43
315705-0305 ..	PARALLEL KEY W. ROUND ENDS 10X8X60 MM	7-103
315705-0334 ..	PARALLEL KEY W. ROUND ENDS 12X8X50 MM	1-115
315741-0102 ..	RETAINING RING DIN 705 A2 6	7-221
315742-0112 ..	RETAINING RING 16 SMS 199 RFR	4-233, 4-235
315742-0116 ..	RETAINING RING 20 SMS 199 RFR	5-15
315742-0122 ..	RETAINING RING 30 SMS 199	2-273, 2-275
315742-0123 ..	RETAINING RING 32 SMS 199 RFR	7-117
315750-0112 ..	RETAINING RING SHAFT DIN 471 ST 15	7-225
315750-0119 ..	RETAINING RING SHAFT DIN 471 ST 25	10-83
315751-0103 ..	RETAINING RING FOR SHAFT DIN 471 6 A2	1-165, 1-193, 7-123, 7-153, 7-155, 7-157, 7-159, 7-221, 7-245
315751-0109 ..	RETAINING RING FOR SHAFT DIN 471 12 A2	1-311, 1-313, 3-23, 4-243, 4-245, 7-31, 7-153, 7-155, 7-167, 7-175
315751-0111 ..	RETAINING RING FOR SHAFT DIN 471 14 A2	7-227
315751-0112 ..	RETAINING RING FOR SHAFT DIN 471 15 A2	1-137, 1-139, 1-141, 1-143, 1-145, 1-153, 1-155, 1-157, 1-159, 1-161, 1-163, 3-21, 4-229, 4-231, 7-27, 7-29, 7-49, 7-149, 7-151, 7-223, 7-231, 7-233
315751-0113 ..	RETAINING RING FOR SHAFT DIN 471 16 A2	1-15, 1-17, 2-33, 2-143
315751-0119 ..	RETAINING RING FOR SHAFT DIN 471 25 A2	5-271, 5-185, 5-263, 5-267, 5-269, 7-149, 7-151, 7-223
315753-0122 ..	RETAINING RING FOR BORE DIN 472 30 A2	1-309, 5-241, 5-243, 5-245, 5-247, 5-249, 5-251, 7-63, 7-141
315753-0123 ..	RETAINING RING FOR BORE DIN 472 32 A2	7-227
315753-0124 ..	RETAINING RING FOR BORE DIN 472 35 A2	1-105, 1-107, 4-229, 4-231, 7-27, 7-29, 7-145
315753-0127 ..	RETAINING RING FOR BORE DIN 472 40 A2	7-145
315753-0130 ..	RETAINING RING FOR BORE DIN 472 47 A2	7-143
315753-0132 ..	RETAINING RING FOR BORE DIN 472 52 A2	5-5, 5-7
315753-0135 ..	RETAINING RING FOR BORE DIN 472 60 A2	4-203, 4-213
315754-0113 ..	LOCKING WAE 15	1-233, 1-235, 1-237
315755-0105 ..	RETAINING RING SHAFT DIN 6799 3,2 A2	1-203, 10-17
315755-0106 ..	RETAINING RING SHAFT DIN 6799 4 A2	5-265, 5-271
315755-0107 ..	RETAINING RING SHAFT DIN 6799 5 A2	1-173, 2-273, 2-275, 5-195, 5-197, 5-199, 5-201, 5-203, 5-205, 5-207
315755-0108 ..	RETAINING RING SHAFT DIN 6799 6 A2	1-305, 1-307, 7-63, 7-141
315755-0109 ..	RETAINING RING SHAFT DIN 6799 7 A2	7-149, 7-151
315755-0110 ..	RETAINING RING SHAFT DIN 6799 9 A2	2-19, 2-21
315755-0112 ..	RETAINING RING SHAFT DIN 6799 12 A2	7-89, 7-91, 7-115
315755-0113 ..	RETAINING RING SHAFT DIN 6799 15 A2	5-145, 5-147
315755-0801 ..	RETAINING RING SHAFT DIN 6799 8 A2	2-13, 7-25
316810-0106 ..	PIPE CLIP FOR TUBE D=8 MM	1-267, 5-129, 5-131, 5-185
318301-0120 ..	LIFTING EYE BOLT, TYPE, LT, M10	10-19, 10-21
318302-0120 ..	EYE BOLT NUT, TYPE, LH, M10	10-67

Part No	Description	Page No
318800-0104 ..	HANDLE,SPHERICAL KNOB,INT.THRE.,D.30-M8	1-15, 1-17, 7-25
318850-0113 ..	STELLAR KNOB, INT. THREAD, NO. 8306-0367	10-53
318856-0101 ..	KNOB, EXTERNAL THREAD. NO. 8308-1011	6-21
318856-0109 ..	KNOB, EXTERNAL THREAD. NO. 8308-1658	10-33
318856-0112 ..	KNOB, EXTERNAL THREAD. NO. 8306-0227	6-9
318856-0115 ..	KNOB, EXTERNAL THREAD. NO. 8306-0278	5-15
318860-0106 ..	KNOB, ADJUST.HI.EXT.THREAD, NO 8324-3674	2-143
319030-0125 ..	DISC SPRING, CONICAL 12,5X6,2X0,5 MM	7-147
321101-0162 ..	FLANGE BUSHING, 10X16X8 MM	4-233, 4-235, 7-81, 7-83
321101-0163 ..	FLANGE BUSHING, 10X16X10 MM	4-209, 4-211, 4-219, 4-221
321101-0173 ..	FLANGE BUSHING, 12X18X12 MM	5-19, 5-21
321101-0202 ..	FLANGE BUSHING, 16X22X12 MM	7-89, 7-91
321101-0203 ..	FLANGE BUSHING, 16X22X16 MM	4-233, 4-235
321101-0222 ..	FLANGE BUSHING, 18X25X12	4-223, 10-61
321101-0223 ..	FLANGE BUSHING, 18X25X16	4-223
321105-0163 ..	BEARING BUSH W/O FLANGE, 10X16X10 MM	7-73
321105-0164 ..	BEARING BUSH W/O FLANGE, 10X16X16 MM	7-25
321105-0173 ..	BEARING BUSH W/O FLANGE, 12X18X12 MM	7-73
321111-0097 ..	FLANGE BUSHING, 8X12X12 MM	7-15
321111-0163 ..	FLANGE BUSHING, 12X18X20 MM	4-243, 4-245
321111-0302 ..	FLANGE BUSHING, 20X26X15 MM	5-15
321116-0234 ..	BEARING BUSH W/O FLANGE, 16X20X12 MM	5-257, 5-259
321120-0108 ..	BEARING BUSH W/O FLANGE, 12X14X8 MM	4-179, 4-181, 4-183
321120-0137 ..	BEARING BUSH W/O FLANGE, 20X23X15 MM	10-85
321130-0200 ..	THRUST WASHER, 14X26X1,5 MM	5-241, 5-243, 5-245, 5-247, 5-249, 5-251
321133-0180 ..	BUSHING, 12X14X12 MM	1-165
321133-0260 ..	BUSHING, 20X23X20 MM	4-247
321136-0140 ..	BUSHING, 10X12X10 MM	4-51, 4-53, 4-55, 4-57, 4-63, 4-65, 4-67, 4-69
321137-0140 ..	BUSHING, 10X14X10 MM	1-41, 1-43
321138-0183 ..	BUSHING, 12X14X15 MM	5-123
321141-0064 ..	BEARING BUSH W/O FLANGE, 6X8X10 MM	7-123
321141-0104 ..	BEARING BUSH W/O FLANGE, 8X10X12 MM	5-17, 7-165, 7-173
321141-0138 ..	BEARING BUSH W/O FLANGE, 10X12X8 MM	1-309, 7-157, 7-159
321141-0178 ..	BEARING BUSH W/O FLANGE, 12X14X10 MM	7-165, 7-173
321141-0183 ..	BEARING BUSH W/O FLANGE, 12X14X15 MM	1-311, 1-313
321141-0216 ..	BEARING BUSH W/O FLANGE, 16X18X12 MM	7-165, 7-173
321141-0260 ..	BEARING BUSH W/O FLANGE, 20X23X20 MM	10-15
321153-0136 ..	FLANGE BUSHING, 10X12X6 MM	5-145, 5-147
321161-0185 ..	FLANGE BUSHING, 12X14X17 MM	7-31
321161-0221 ..	FLANGE BUSHING, 16X18X17 MM	2-143
321308-0202 ..	BALL BEARING, 15X32X9 MM	7-81, 7-83, 7-89, 7-91, 7-227
321308-0205 ..	BALL BEARING, 25X47X12MM	5-5, 5-7, 5-71, 5-185, 5-263, 5-267, 5-269, 7-149, 7-151, 7-223
321313-0100 ..	BALL BEARING, 10X30X9 MM	1-309, 7-63, 7-141
321313-0102 ..	BALL BEARING, 15X35X11 MM	1-305, 1-307, 2-13, 7-27, 7-29, 7-49, 7-53, 7-103, 7-145, 7-165, 7-173, 7-221, 7-225, 7-227, 7-229, 7-231, 7-233
321313-0103 ..	BALL BEARING, 17X40X12MM	2-33, 5-263, 5-267, 5-269, 7-145
321313-0105 ..	BALL BEARING, 25X52X15MM	5-5, 5-7, 5-241, 5-243, 5-245, 5-247, 5-249, 5-251
321313-0107 ..	BALL BEARING, 35X72X17MM	5-241, 5-243, 5-245, 5-247, 5-249, 5-251
321316-0205 ..	BALL BEARING, 25X62X17 MM	3-21
321316-0206 ..	BALL BEARING, 30X72X19 MM	5-185
342203-0107 ..	NIPPLES, EXT. THREAD, HEXAGON,ÿNO. 209	6-7
342203-0120 ..	NIPPLES, EXT. THREAD, HEXAGON,ÿNO. 209	6-39
342206-0109 ..	BUSHING, TAPERED, INT/EXT. THR NO. R211	1-195, 1-205, 1-281
342217-0103 ..	SLEEVE, REDUCTION, INT, R-2021/2X1/4	6-7
342245-0102 ..	T-PIPE, INT. THREAD, R1/4XKR1/4	2-49, 2-207
342700-0110 ..	NIPPLES,HEXAGON,EXT.G-THREAD G1/4"-G1/4"	10-65
342700-0111 ..	NIPPLES,HEXAGON,EXT.G-THREAD G3/8"-G3/8"	6-69, 6-71
342700-0113 ..	NIPPLES,HEXAGON,EXT.G-THREAD G1/2"-G1/2"	1-281, 6-77, 6-79
342700-0116 ..	NIPPLES,HEXAGON,EXT.G-THREAD G1"-G1"	6-49
342700-0201 ..	NIPPLES,HEXAGON,EXT.G-THREAD G1/4"-G1/8"	7-109
342700-0203 ..	NIPPLES,HEXAGON,EXT.G-THREAD G3/8"-G1/4"	2-87, 2-207
342700-0205 ..	NIPPLES,HEXAGON,EXT.G-THREAD G1/2"-G1/4"	6-77, 7-111
342700-0206 ..	NIPPLES,HEXAGON,EXT.G-THREAD G1/2"-G3/8"	6-79
342701-0201 ..	BUSHING,INT./EXT.G-THREAD G1/4"-G1/8"	2-49, 10-55, 10-57, 10-65
342701-0202 ..	BUSHING,INT./EXT.G-THREAD G3/8"-G1/8"	6-17, 6-27, 6-69, 6-71
342701-0203 ..	BUSHING, INT/EXT. G-THREAD NO. 3/8-1/4	1-281
342701-0205 ..	BUSHING,INT./EXT.G-THREAD G1/2"-G1/4"	2-77, 2-209
342701-0206 ..	BUSHING,INT./EXT.G-THREAD G1/2"-G3/8"	6-17
342701-0208 ..	BUSHING, INT/EXT. G-THREAD NO. 3/4-1/4	2-79
342701-0209 ..	BUSHING,INT./EXT.G-THREAD G3/4"-G3/8"	1-281, 7-107
342703-0208 ..	NUT, PIPES & CONNECTORS,NUT M-8 SS	1-187, 1-189, 2-83, 4-237
342706-0130 ..	ACCESSORIES, INSERT SLEEVE 6 MM	1-253, 1-321, 1-323, 2-33, 4-189
342706-0195 ..	ACCESSORIES, INSERT SLEEVE 12 MM	1-253
342708-0109 ..	REINFORCING RING VSH 15X1 MM	6-25, 6-69, 6-71
342713-0209 ..	PLUG (QUANT.MINIMA= 10PC).	2-201, 2-203, 4-109, 4-111, 4-113, 4-115, 4-119, 4-121, 4-123, 4-125, 4-153, 4-155, 4-157, 4-159, 7-109, 7-209, 7-211, 7-213
342713-0210 ..	PLUG,EXT THREAD HEX SOCKET(PAK OF 10 PCS	1-221, 1-333, 2-49, 2-131, 2-133
342713-0211 ..	PLUG, EXT THREAD HEX SOCKET 8638-00-380	1-281, 1-335, 1-337, 1-339, 1-343, 1-345, 2-51, 2-135, 2-137, 2-139, 6-75, 7-207, 7-209, 7-211, 7-213
342713-0213 ..	PLUG, EXT THREAD HEX SOCKET 8638-00-120	1-179, 2-205, 2-271, 6-23, 6-49
342715-0100 ..	BLIND PLUG 4 MM	1-335, 1-337, 1-339, 1-343, 1-345
342715-0102 ..	BLIND PLUG 6 MM	1-335, 1-337, 1-339, 1-343, 1-345, 2-9, 2-51, 2-135, 2-137, 2-139, 6-75, 7-207, 7-209, 7-211, 7-213
342715-0103 ..	BLIND PLUG 8 MM	1-335, 1-337, 1-339, 1-343, 1-345, 2-51, 2-135, 2-137, 2-139, 6-75, 7-209

Part No	Description	Page No
		7-211, 7-213
342715-0105 ..	BLIND PLUG 12 MM	2-211, 2-213
342715-0106 ..	BLIND PLUG 14 MM	2-9, 2-211, 2-213
342716-0200 ..	REDUCER 4-5	5-165, 5-167
342716-0202 ..	REDUCER 4-6	1-341, 7-101
342716-0203 ..	REDUCER 6-8	1-341, 2-135, 2-137, 2-139, 7-209, 7-211, 7-213
342716-0205 ..	REDUCER 4-8	1-333
342716-0206 ..	REDUCER 8-10	2-131, 2-133
342716-0209 ..	REDUCER 8-12	1-333, 2-49, 2-211, 2-213, 7-207, 7-209, 7-211, 7-213
342716-0210 ..	REDUCER 6-12	1-253, 1-321, 1-323, 1-333, 1-341, 2-49
342716-0211 ..	REDUCER 12-14	2-211, 2-213, 6-77
342720-0114 ..	CONN. STR. GA-15-G1/2	6-25, 6-69, 6-71
342720-0119 ..	CONN. STR., GA-22-G3/4	6-23
342722-0197 ..	STRAIGHT COUPLING	1-165, 7-127, 7-153, 7-169, 7-179
342722-0202 ..	PIPE COUPLING 1/8" D=6MM	1-147, 1-149, 1-151, 1-173, 1-197, 1-201, 2-87, 2-115, 5-221
		7-17, 7-79, 7-87, 7-155
342722-0203 ..	STRAIGHT COUPLING	2-25, 2-49, 5-65, 5-67
342722-0204 ..	PIPE COUPLING	5-187, 5-189, 5-191, 7-153
342722-0205 ..	STRAIGHT COUPLING D=8-G1/4"	2-37, 6-45
342722-0206 ..	STRAIGHT COUPLING D=8-G3/8"	6-75, 7-209, 7-211, 7-213
342722-0209 ..	STRAIGHT COUPLING D=12-G1/4"	1-333
342722-0211 ..	STRAIGHT COUPLING D=10-G1/4"	5-187, 5-189, 5-191
342723-0114 ..	CONN. STR. PIPE GI-15-G1/2	2-205
342724-0102 ..	CONN. STR. PIPE GI 6-G1/8	1-321, 1-323
342725-0102 ..	CONN. STR. PIPE GI-6-G1/8	7-17
342727-0214 ..	CONN. PIPE G-15-L/SY	2-65
342728-0102 ..	PIPE COUPLING 6 MM	5-165, 5-167, 7-101
342728-0103 ..	PIPE COUPLING 8 MM	5-103, 5-105, 5-107, 5-109, 5-111
342728-0104 ..	PIPE COUPLING 10 MM	2-131, 2-133
342728-0110 ..	PIPE COUPLING 14 MM	2-211, 2-213
342732-0100 ..	ELBOW PIPE JOINT, EXT.THREAD, D=4MM-G1/8	6-75
342732-0104 ..	ELBOW PIPE JOINT, EXT.THREAD, D=8MM-G1/4	5-29, 5-31, 5-33, 5-103, 5-105, 5-107, 5-109
		5-111, 5-165, 5-167, 6-75, 6-77
342732-0109 ..	ELBOW PIPE JOINT, EXT.THREAD, D=1MM-G1/4	6-75
342732-0110 ..	ELBOW PIPE JOINT, EXT.THREAD,D=12MM-G3/8	6-75
342732-0161 ..	ELBOW PIPE JOINT,EXT.THREAD,D=14 MM-G1/2	6-77
342733-0114 ..	CONN. ELBOW WI-15-G1/2	1-205
342735-0102 ..	ELBOW PIPE JOINT	2-201, 2-203, 7-79
342735-0103 ..	ELBOW PIPE JOINT	2-125, 2-127, 2-129, 2-131, 2-133, 6-21, 7-209, 7-211, 7-213
342735-0104 ..	ELBOW PIPE JOINT	2-125, 2-127, 2-129
342735-0109 ..	ELBOW PIPE JOINT	1-253, 1-333, 1-341, 2-211, 2-213, 7-111, 7-209, 7-211, 7-213
342735-0110 ..	ELBOW PIPE	2-211, 2-213
342738-0208 ..	ADJUSTABLE ELBOW CONNECTION,EXT 8-G1/4	2-81, 2-83
342738-0221 ..	ADJUSTABLE ELBOW CONNECTION,EXT 15-G1/2	1-195, 1-281
342741-0209 ..	CONN. T-PIPE TE-12-R3/8	1-281
342742-0103 ..	T-COUPLING,ADJUST,F.PLASTIC TUBE 6-G1/4"	7-101
342742-0110 ..	T-COUPLING,ADJUST,F.PLAST.TUBE 12-G3/8"	7-111
342744-0114 ..	CONN. ELBOW ADJ.,INT 15	2-77
342747-0102 ..	CONN. T-PIPE T-6	1-321, 1-323
342748-0102 ..	T-CONNECTION 6MM	1-341, 2-125, 2-127, 2-129, 5-5, 5-7, 7-153, 7-169, 7-179
342748-0103 ..	T-CONNECTION 8MM	1-221, 1-333, 2-49
342748-0109 ..	T-CONNECTION 12MM	1-321, 1-323, 1-333, 1-341, 2-49, 6-75, 7-209, 7-211, 7-213
342748-0110 ..	T-CONNECTION 14MM	2-211, 2-213, 6-77
342751-0215 ..	CONN. L-PIPE, EXT. LE-12-R3/8	1-253
342751-0221 ..	CONN. L-PIPE, EXT. LE-15-R1/2	1-253
342752-0104 ..	CONN. STR. GA-10-G1/4	2-79
342752-0114 ..	CONN. STR. GA-15-G1/2	2-81
342767-0100 ..	CONN. BULKHEAD G1/8	1-353, 1-355
342767-0104 ..	CONN. BULKHEAD G1/4	2-9, 2-141, 2-209
342768-0102 ..	BULKHEAD CONNECTOR, 6 MM	1-247, 2-9, 2-39
342768-0103 ..	BULKHEAD CONNECTOR, 8 MM	2-49, 2-125, 2-127, 2-129, 2-131, 2-133
342768-0104 ..	BULKHEAD CONNECTOR, 10 MM	2-125, 2-127, 2-129
342768-0110 ..	BULKHEAD CONNECTOR, 14 MM	2-9, 2-211, 2-213
342770-0101 ..	STRAIGHT COUPLING INT, D=4 MM - G1/8	1-333, 1-341, 2-49, 2-131, 2-133, 6-75
342770-0105 ..	STRAIGHT COUPLING INT, D=6 MM - G1/8	7-79, 7-209, 7-211, 7-213
342770-0107 ..	STRAIGHT COUPLING INT, D=8 MM - G1/8	7-153
342772-0122 ..	ELBOW FITTING, 8 - G1/4	2-131, 2-133
342796-0108 ..	CONN. BANJO,WH 10-G1/4	2-79
342796-0114 ..	CONN. BANJO,WH 15-G1/2	2-79
342797-0121 ..	CONN. BANJO, RINGPIECE 6-1/8	1-321, 1-323
342797-0122 ..	CONN. BANJO, RINGPIECE 6-1/4	1-253
342840-0101 ..	CLAMP, 12,7 AND 19,1 MM 3-A PCS+PMCS	1-247
342840-0103 ..	CLAMPING PIECE	1-247, 1-253, 1-259, 1-261, 1-263, 1-271, 1-273, 1-275, 2-113
342840-0105 ..	CLAMPING PIECE	1-195, 1-205, 1-229, 1-271, 2-271
342840-0107 ..	CLAMPING PIECE	1-229, 2-271
342840-0108 ..	CLAMP, 101,6 MM 3-A PCS+PMCS	1-195
342850-0105 ..	GASKET, FDA, 3-A, 2	1-275
342850-0107 ..	GASKET, FDA, 3-A, 3	2-271
342850-0204 ..	GASKET 35,4X49,1X5,2 MM 1"1/2 FDA 3-A	1-253
342850-0303 ..	GASKET 22,7X49,1X5,2 MM 1" FDA	1-271, 1-273
342850-0304 ..	GASKET 35,4X49,1X5,2 1"1/2 FDA	1-259, 1-261, 1-263, 1-271, 1-273, 1-275, 2-113, 9-5, 9-11
		9-13, 9-15, 9-17, 9-19
342850-0305 ..	GASKET 47,8X62,6X5,2 MM 2" FDA	1-229, 1-261, 1-263, 1-271, 1-275, 2-271
342850-0306 ..	GASKET 60,3X76,1X5,2 MM 2"1/2 FDA	1-261, 1-263, 9-5

Machine Type Group Description Page No

Part No	Description	Page No
342850-0307 ..	GASKET 72,9X89,6X5,2 MM 3" FDA	1-229
342850-0405 ..	GASKET 47,8X62,6X5,2 MM 2" FDA	1-195, 1-205
342850-0408 ..	GASKET 97X117,7X5,2 MM 4" FDA	1-195
342901-0101 ..	HOSE NIPPLE, EXT.THR. R1/8-7 MM	2-27
342901-0102 ..	HOSE NIPPLE, EXT.THR. R1/4-7 MM	6-17, 6-69, 6-71
342901-0105 ..	HOSE NIPPLE, EXT.THR. R1/2-12 MM	1-205, 2-121, 2-205, 6-25, 6-37, 6-69, 6-71
342920-0116 ..	STRAIGHT COUPLING,EXT.THREADED 6/4-R1/2"	2-205
342920-0122 ..	STRAIGHT COUPLING,EXT.THREADED 8/6-R1/4"	2-141
342920-0124 ..	STRAIGHT COUPLING,EXT.THREADED 8/6-R1/2"	6-69, 6-71
342920-0132 ..	STRAIGHT COUPL.,EXT.THREADED 10/8-R1/4"	2-209
342920-0151 ..	STRAIGHT COUPL.,EXT.THREAD.15/12,5-R1/2"	1-205, 2-205
342921-0113 ..	STRAIGHT COUPLING,EXT.THREADED 6/4-G1/8"	1-353, 1-355, 2-207, 2-245, 10-55, 10-57
342921-0114 ..	STRAIGHT COUPLING,EXT.THREADED 6/4-G1/4"	2-207, 10-55, 10-57
342921-0115 ..	STRAIGHT COUPLING,EXT.THREADED 6/4-G3/8"	2-207, 6-69, 6-71
342921-0121 ..	STRAIGHT CPLNG,EXT.THREADED 8/6-G1/8INCH	5-45, 5-47, 5-49
342921-0122 ..	STRAIGHT COUPLING,EXT.THREADED 8/6-G1/4"	1-221, 2-205
342923-0122 ..	STRAIGHT COUPL.,INT.THREADED 8/6-G1/4"	2-37
342930-0133 ..	ELBOW 90 COUPL.,EXT.THREADED 10/8-R3/8"	6-69, 6-71
342931-0121 ..	ELBOW 90 COUPL.,EXT.THREAD 8/6-G1/8"	1-13, 5-35, 5-37, 5-45, 5-47, 5-49, 5-137, 5-139, 5-157, 5-159, 6-17
342931-0122 ..	ELBOW 90 COUPL.,EXT.THREAD 8/6-G1/4"	1-221
342941-0114 ..	T-COUPLING,EXT.THREAD 6/4-G1/4"	2-201, 2-203
342941-0122 ..	T-COUPLING,EXT.THREAD 8/6-G1/4"	1-221
342980-0114 ..	BANJO-CONNECTION,RING 6/4-G1/4"	10-55, 10-57
342980-0121 ..	BANJO-CONNECTION,RING 8/6-G1/8	4-85, 4-87, 4-89, 4-133, 4-135, 4-137
342980-0122 ..	BANJO-CONNECTION,RING 8/6-G1/4 INCH	2-79
342980-0303 ..	BANJO-HOLLOW BOLT COUPL,EXT.THR.01-G1/8	1-221, 1-323, 4-85, 4-87, 4-89, 4-133, 4-135, 4-137
342980-0304 ..	BANJO-HOLLOW BOLT COUPL,EXT.THR.01-G1/4	1-253, 2-79
342980-0314 ..	BANJO-HOLLOW BOLT COUPL,EXT.THR.02-G1/4	10-55, 10-57
342981-0122 ..	BANJO CONNEC,RING,FOR PLAST.TUBE 8-G1/4"	5-29, 5-31, 5-33, 5-129, 5-131
342991-0100 ..	HOSE CLIP,WORM DRIVE TYPE 10-13	1-253, 2-37, 6-17, 6-37, 10-71
342991-0101 ..	HOSE CLIP,WORM DRIVE TYPE (13)-16	1-205, 2-19, 2-21, 2-27, 2-39, 2-87, 2-205, 2-271, 6-13, 6-15, 6-17, 6-19, 6-23, 10-71
342991-0102 ..	HOSE CLIP,WORM DRIVE TYPE (16)-19	2-9, 2-39, 2-77, 2-121, 6-49
342991-0103 ..	HOSE CLIP,WORM DRIVE TYPE (19)-23	1-281, 1-283, 2-29
342991-0104 ..	HOSE CLIP,WORM DRIVE TYPE (23)-27	2-19, 2-21, 2-205
342991-0105 ..	HOSE CLIP,WORM DRIVE TYPE (27)-30	2-15, 2-65, 2-119
342991-0106 ..	HOSE CLIP,WORM DRIVE TYPE (30)-36	2-29, 2-65
342991-0109 ..	HOSE CLIP,WORM DRIVE TYPE (48)-50	1-197, 2-113, 2-271
342991-0110 ..	HOSE CLIP,WORM DRIVE TYPE (54)-63	2-19, 2-21, 2-29
342991-0111 ..	HOSE CLIP,WORM DRIVE TYPE (63)-73	1-179
342991-0114 ..	HOSE CLIP,WORM DRIVE TYPE (93)-110	2-143
344502-0021 ..	GREASE NIPPLE STRAIGHT M6	5-75, 5-77, 5-79
346800-0109 ..	SILENCER FILTER R1/8"	2-87
346800-0110 ..	SILENCER FILTER R1/4"	1-221, 1-317, 1-333, 1-341
350001-0006 ..	PUSH-IN FITTING QS-F-G1/8-6	2-201, 2-203, 5-195, 5-197, 5-199, 5-201, 5-203, 5-205, 5-207
350002-0006 ..	PUSH-IN L-FITTING QSL-F-G1/8-6	1-227, 5-5, 5-7, 5-145, 5-147, 7-87, 7-149, 7-151
350002-0009 ..	PUSH-IN L-FITTING QSL-F-G1/4-8	2-49, 7-209, 7-211, 7-213
350002-0011 ..	PUSH-IN L-FITTING QSL-F-G1/4-12	1-341
350002-0012 ..	PUSH-IN L-FITTING QSL-F-G3/8-8	2-51, 7-207
350004-0003 ..	PUSH-IN L-FITTING QSL-F-8	7-207
350005-0002 ..	PUSH-IN T-FITTING QST-F-6	7-209, 7-211, 7-213
350006-0003 ..	PUSH-IN FITTING QS-F-8H-6	1-333
350006-0007 ..	PUSH-IN FITTING QS-F-12H-6	7-209, 7-211, 7-213
350007-0006 ..	PUSH-IN T-FITTING QST-F-G1/8-6	2-201, 2-203
350009-0002 ..	PUSH-IN FITTING QS-F-6	2-211, 2-213
350010-0005 ..	PUSH-IN BULKHEAD FITTING QSS-F-12	1-341
350013-0002 ..	PLUG QSC-6H	2-211, 2-213
350013-0005 ..	PLUG QSC-12H	7-209, 7-211, 7-213
350015-0001 ..	Y-FITTING QSY-F-6	5-165, 5-167
351120-0126 ..	CABLE SILFLEX SIHF 2X4 0046025	7-127
351120-0145 ..	CABLE SILFLEX SIHF 3X2,5 0046020	7-133
351120-0164 ..	CABLE SIHF 4X1,5MM2 GREEN/YELLOW	1-191, 1-279
351120-0168 ..	CABLE SIHF 4X10MM2 GREEN/YELLOW	1-365, 1-367
351150-0166 ..	CABLE OLFLEX 4X4 MM2 LIGHT/GREY	2-107, 2-109, 6-41, 6-43
351150-0196 ..	CABLE OLFLEX 7X4 MM2 LIGHT/GREY	1-291
351150-0403 ..	CABLE OLFLEX 3X0,75 MM2 LIGHT/GREY	1-223, 1-353, 1-355, 2-57, 2-59, 2-79, 2-81, 2-107, 2-109, 2-149, 2-151, 6-35, 6-69, 6-71, 7-259, 7-281, 10-101
351150-0404 ..	CABLE OLFLEX 4X0,75 MM2 LIGHT/GREY	1-223, 1-349, 1-353, 1-355, 2-57, 2-59, 2-107, 2-109
351150-0405 ..	CABLE OLFLEX 5X0,75 MM2 LIGHT/GREY	1-119, 1-349, 1-353, 1-355, 2-57, 2-59, 2-107, 2-109, 2-149, 2-151, 5-281, 5-283, 7-93, 7-95, 7-271, 10-101
351150-0406 ..	CABLE OLFLEX 7X0,75 MM2 LIGHT/GREY	2-57, 2-59, 2-77, 2-107, 2-109, 2-149, 2-151, 6-31, 7-93, 7-95
351150-0407 ..	CABLE OLFLEX 12X0,75 MM2 LIGHT/GREY	1-353, 1-355, 7-267, 7-269, 7-285
351150-0412 ..	CABLE OLFLEX 3X1,5 MM2 LIGHT/GREY	1-279, 2-107, 2-109, 2-149, 2-151, 7-93, 7-95, 7-181, 7-183
351150-0413 ..	CABLE OLFLEX 4X1,5 MM2 LIGHT/GREY	2-149, 2-151, 7-181, 7-183
351150-0414 ..	CABLE OLFLEX 5X1,5 MM2 LIGHT/GREY	2-149, 2-151
351150-0415 ..	CABLE OLFLEX 7X1,5 MM2 LIGHT/GREY	7-181, 7-183
351150-0417 ..	CABLE OLFLEX 3X2,5 MM2 LIGHT/GREY	1-223, 2-149, 2-151
351150-0418 ..	CABLE OLFLEX 4X2,5 MM2 LIGHT/GREY	1-365, 1-367, 2-33, 2-57, 2-59, 2-79, 2-107, 2-109, 6-17, 6-27
351150-0425 ..	CABLE OLFLEX 25X0,75 MM2 LIGHT/GREY	1-349, 1-353, 1-355, 2-57, 2-59, 2-107, 2-109, 2-149, 2-151, 6-67, 7-181, 7-183, 10-101

Part No	Description	Page No
351150-0430 ..	CABLE OLFLEX 5X35 MM2 LIGHT/GREY	2-149, 2-151
351150-0431 ..	CABLE OLFLEX 2X0,75 MM2 LIGHT/GREY	6-17, 6-27, 7-41, 7-93, 7-95
351160-0102 ..	CABLE (1UNIT = 100M)	1-353, 1-355, 8-21, 10-97
351160-0104 ..	CABLE AWM 1X1,5 MM2 DARKBLUE	8-21
351160-0105 ..	CABLE AWM 1X2,5 MM2 DARKBLUE	8-21
351160-0106 ..	CABLE AWM 1X4 MM2 DARKBLUE	8-21
351161-0102 ..	CABLE (1UNIT = 100M)	8-21
351161-0104 ..	CABLE AWM LIGHTBLUE 1,5MM2	8-21
351161-0105 ..	CABLE AWM 1X2,5 MM2 LIGHTBLUE	8-21
351161-0110 ..	CABLE AWM 1X25 MM2 LIGHTBLUE	6-11
351161-0111 ..	CABLE AWM 1X35 MM2 LIGHTBLUE	6-11, 8-21
351162-0102 ..	CABLE AWM 1X0,75 MM2 YELLOW-GREEN	8-21
351162-0104 ..	CABLE AWM 1X1,5 MM2 YELLOW-GREEN	8-21
351162-0105 ..	CABLE AWM 1X2,5 MM2 YELLOW-GREEN	8-21
351162-0106 ..	CABLE AWM 1X4 MM2 YELLOW-GREEN	8-21
351162-0107 ..	CABLE AWM 1X6 MM2 YELLOW-GREEN	8-21
351162-0109 ..	CABLE AWM 1X16 MM2 YELLOW-GREEN	6-11, 8-21
351162-0110 ..	CABLE AWM 1X25 MM2 YELLOW-GREEN	7-77
351164-0102 ..	CABLE AWM 1X0,75 MM2 BLACK	8-21
351164-0104 ..	CABLE AWM 1X1,5 MM2 BLACK	8-21
351164-0105 ..	CABLE (1UNIT = 100M)	8-21
351164-0106 ..	CABLE AWM 1X4 MM2 BLACK	8-21
351164-0107 ..	CABLE AWM 1X6 MM2 BLACK	8-21
351164-0111 ..	CABLE AWM 1X35 MM2 BLACK	6-11, 8-21
351172-0102 ..	CABLE AWM 1X 0,75 MM2 DARKBLUE	6-67
351175-0102 ..	CABLE AWM 1X 075 MM2 YELLOW-GREEN	2-41
351179-0102 ..	CABLE AWM 1X075 MM2 BLACK	7-265
351416-0010 ..	MINIATURE CIRC. BREAK., FAZ -D1 1-POLE	8-83, 8-85
351416-0020 ..	MINIATURE CIRC. BREAK., FAZ -D2 1-POLE	8-83, 8-85
351416-0060 ..	MINIATURE CIRC. BREAK., FAZ -D6 1-POLE	8-77, 8-83, 8-85
351416-0100 ..	MINIATURE CIRC. BREAK., FAZ -D10 1-POLE	8-83, 8-85
351416-0160 ..	MINIATURE CIRC. BREAK., FAZ -D16 1-POLE	8-77, 8-83, 8-85
351418-0060 ..	MINIATURE CIRC. BREAK., FAZ-D6/3 3-POLE	8-83, 8-85
351418-0100 ..	MINIATURE CIRC. BREAK., FAZ-D10/3 3-POLE	8-83, 8-85
351418-0400 ..	MINIATURE CIRC. BREAK.,FAZ-D40/3 3-POLE	8-83, 8-85
352103-0100 ..	CABLE GLAND, STR 9, PR15,2/PG9	1-365, 1-367, 2-39, 2-55, 2-155, 2-157, 6-67
352103-0101 ..	CABLE GLAND, ST 9, PR15,2/PG9	1-195, 1-205, 1-221, 1-223, 1-229, 1-259, 1-285, 1-287 1-291, 1-317, 1-349, 1-353, 1-355, 1-365, 1-367, 2-27, 2-39, 2-81, 2-87, 2-89, 2-207, 6-31, 6-35 6-67, 6-69, 6-71, 6-77, 7-57, 7-59, 7-181, 7-183
352103-0106 ..	CABLE GLAND, ST 11, PR18,6/PG11	1-221, 1-253, 1-365, 1-367, 2-55, 2-79, 2-97, 2-107, 2-109 2-155, 2-157, 5-187, 5-189, 5-191, 6-9, 6-11, 7-181, 7-183
352103-0108 ..	CABLE GLAND, ST 13,5 , PR20,4/PG13,5	1-223, 1-365, 1-367, 2-55, 2-57, 2-59, 2-97, 2-99
352103-0110 ..	CABLE GLAND, STR 16, PR22,5/PG16	1-349, 2-33, 2-97, 2-107, 2-109, 2-149, 2-151, 2-155 2-223, 6-27, 6-31, 6-67, 7-41, 7-271
352103-0111 ..	CABLE GLAND, ST 16, PR22,5/PG16	1-179, 1-353, 1-355, 1-365, 1-367, 2-79, 2-95, 6-41, 6-43 7-181, 7-183, 7-267, 7-269
352103-0115 ..	CABLE GLAND, STR 21, PR28,3/PG21	1-291, 2-145, 2-149, 2-151, 6-41, 6-43, 7-181, 7-183
352103-0116 ..	CABLE GLAND, ST 21, PR28,3/PG21	1-349, 1-353, 1-355, 1-365, 1-367, 2-95, 6-67
352103-0120 ..	CABLE GLAND, STR 29, PR37,0/PG29	1-365, 1-367, 2-57, 2-59, 2-107, 2-109, 2-149, 2-151, 6-67
352103-0121 ..	CABLE GLAND, ST 29, PR37,0/PG29	1-365, 1-367, 2-55, 2-57, 2-59, 2-97, 2-107, 2-109, 2-149 2-151, 2-155, 2-157, 7-181, 7-183
352103-0123 ..	CABLE GLAND, ST 42, PR54,0/PG42	6-11
352113-0101 ..	CABLE TIE, BLACK 92X2,5 MM	1-221, 2-87, 4-109, 4-111, 4-113, 4-115, 4-153, 4-155, 4-157 4-159, 4-237, 5-185, 5-241, 5-243, 5-245, 5-247, 5-249, 5-251
352113-0102 ..	CLIP-STRIP, BLACK 188X4,8 MM	5-35, 5-37, 5-137, 5-139, 5-185, 5-241, 5-243, 5-245, 5-247 5-249, 5-251, 7-25, 7-107, 7-119, 10-71
352113-0103 ..	CLIP STRIP, 290X7,6 MM	3-13, 3-29
352113-0104 ..	CABLE TIE, BLACK 300X4,8 MM	2-205
352113-0203 ..	ANCHOR PLATES FOR STRIPS, TYPE TM3S8-M0	1-221, 6-13, 6-15, 7-123, 8-23
352113-0204 ..	ANCHOR PLATES FOR STRIPS, TYPE TM3S25-M	1-15, 1-17, 1-129, 1-279, 1-297, 1-299 2-57, 2-59, 2-107, 2-109, 2-179, 2-181, 2-197, 2-199, 3-13, 3-29
352113-0205 ..	ANCHOR PLATES FOR STRIPS, TYPE TM2S8-C10	1-305, 1-307, 2-87, 6-49, 7-25, 7-31, 7-79 7-93, 7-95, 7-107, 7-119, 7-121, 7-123, 7-127, 7-143, 7-157, 7-159, 7-207, 7-221, 7-225, 8-23 8-37, 8-39, 8-41, 8-89, 8-91
353001-0103 ..	END SLEEVE 0,75 MM2	5-281
353001-0116 ..	END SLEEVE H0.5/14 ORANGE	1-365, 1-367
353021-0120 ..	FEED THROUGH TERMINAL, 10215.8	8-95
353021-0127 ..	TERMINAL DISCONNECTBLE, WTR 2,5+WSD 2,5	1-363, 8-63
353021-0212 ..	FEED THROUGH TERMINAL, 10200.0	2-97, 2-155, 8-77
353021-0213 ..	FEED THROUGH TERMINAL, 10201.0	1-225, 1-293, 7-199, 7-201
353021-0216 ..	FEED THROUGH TERMINAL, 10200.8	6-31, 6-67
353021-0226 ..	BY-PASS TERMINAL WDU 35	8-71
353021-0301 ..	TERMINALS,TRIPLE-LEVEL, DLI 2,5/35 PA	2-55, 2-97, 2-155, 2-157, 7-191, 7-193, 7-195, 7-197
353021-0302 ..	TERMINALS,TRIPLE-LEVEL, DLD 2,5/35 PA	1-225, 1-351, 1-361, 1-363, 7-191, 7-193, 7-195, 7-197
353022-0002 ..	NEUTRAL TERMINAL, 10107.8	8-77
353022-0004 ..	NEUTRAL TERMINAL, 10109.8	8-77
353024-0204 ..	EARTH TERMINAL WPE 2,5	1-293, 2-55, 2-155, 2-157, 6-67, 8-77, 8-79
353024-0205 ..	EARTH TERMINAL, 1010.1	1-225, 1-351, 1-361, 1-363, 6-31, 6-67, 7-195, 7-197, 7-199, 7-201, 8-95
353024-0206 ..	EARTH TERMINAL, 1010.2	8-79
353024-0207 ..	EARTH TERMINAL, 1010.3	8-79
353024-0209 ..	EARTH TERMINAL, 1010.5	6-11, 8-71, 8-79
353031-0201 ..	END BRACKET EW35	6-67

Part No	Description	Page No
353031-0203 ..	END SUPPORT, WEW 35/2	2-55, 2-97, 2-155, 2-157, 6-31, 7-191, 7-193, 7-199, 7-201, 8-63, 8-69, 8-77, 8-79, 8-93
353032-0004 ..	END PLATE WAP 2,5-10 BEIGE	1-293, 1-363, 2-97, 2-155, 8-77
353032-0009 ..	END PLATE, WAP FOR WDK	2-97, 2-155, 2-157, 7-191, 7-193, 7-195, 7-197, 8-63, 8-69
353032-0010 ..	END PLATE WAP	8-95
353032-0013 ..	END PLATE, 13818.6	7-191, 7-193, 7-195, 7-197
353032-0301 ..	END PLATE WAP, 13132.6	2-55, 2-97, 2-155, 2-157, 7-191, 7-193, 7-195, 7-197
353032-0302 ..	END PLATE WAP, 13176.6	1-225, 1-351, 1-361, 1-363, 7-195, 7-197
353033-0104 ..	END PLATE, 10502.8	8-77
353034-0026 ..	BRIDGE CONNECTOR, WQV 35/2, 10530.6	10-99
353034-0030 ..	BRIDGE CONNECTOR WQV 2,5/10, 10544.6	1-293, 2-97, 2-155, 2-157, 6-31, 6-67, 8-63, 8-69, 8-77, 8-95
353034-0031 ..	BRIDGE CONNECTOR, WQV 4/10, 10520.6	7-199, 7-201
353034-0404 ..	BRIDGE CONNECTOR Q10, 13131.0	1-225, 1-351, 1-361, 1-363, 2-55, 2-97, 2-155, 2-157, 7-191, 7-193, 7-195, 7-197
353041-0001 ..	BUS BAR RAIL 10X3MM SSCH	8-77
353041-0106 ..	HOLDER ZB35 K 5026.8	8-77
353042-0005 ..	RAIL TS 35/7.5	6-11
353101-0118 ..	CABLE SHOE 0,5-1,5MM2 M3 RED	2-41
353101-0130 ..	CABLE SHOE 1,5-2,5MM2 M4 BLUE	2-273, 2-275
353101-0132 ..	CABLE SHOE 1,5-2,5MM2 M5 BLUE	7-133
353101-0153 ..	CABLE SHOE 4,0-6,0MM2 M6 YELLOW	2-149, 2-151
353104-0130 ..	CABLE SHOE, RING UNINS., YAV 025 M 4	7-133
353104-0140 ..	CABLE SHOE, RING UNINS., YAV 06 M 4	7-127
353104-0168 ..	CABLE SHOE, RING UNINS., YAV 16 M 6	6-11
353104-0175 ..	CABLE SHOE, RING UNINS., YAV 25 M 6	7-77
353105-0117 ..	PIN CABLE SHOE 0,75-1,5MM2 RED A1519SR	2-41
353105-0200 ..	PIN CABLE SHOE A4630SR	6-11
353240-0002 ..	GLAND W/O INSERT PG11 NORMAL	2-273, 2-275, 5-287
353240-0005 ..	GLAND W/O INSERT PG21 NORMAL	1-365, 1-367, 2-55, 2-97, 2-155, 7-181, 7-183
353240-0006 ..	GLAND W/O INSERT PG29 NORMAL	1-223, 1-297, 1-299, 1-365, 1-367, 2-149, 2-151
353241-0002 ..	GLAND W/O INSERT PG11 EXTENDED	5-287
353241-0003 ..	GLAND W/O INSERT PG21 EXTENDED	2-149, 2-151
353242-0005 ..	HOSE GLAND W/O INSERT PG9 NORMAL	6-19, 6-67
353243-0001 ..	HOSE GLAND W/O INSERT PG9 EXTENDED	1-15, 1-17, 1-113, 1-191, 1-193, 1-199, 1-201 1-205, 1-219, 1-223, 1-247, 1-279, 1-283, 1-311, 1-313, 1-349, 1-353, 1-355, 1-365, 1-367, 1-387
353243-0003 ..	HOSE GLAND W/O INSERT PG11 EXTENDED	1-275, 1-279, 1-333, 1-341, 1-349, 1-353, 1-355, 1-365, 1-367, 1-387
353243-0004 ..	HOSE GLAND W/O INSERT PG13,5 EXTENDED	1-365, 1-367, 1-387
353243-0005 ..	HOSE GLAND W/O INSERT PG16 EXTENDED	1-15, 1-17, 1-223, 1-247, 1-365, 1-367, 1-387, 2-149, 2-151, 7-285
353243-0007 ..	HOSE GLAND W/O INSERT PG21 EXTENDED	1-223, 1-365, 1-367, 1-387, 7-163
353243-0008 ..	HOSE GLAND W/O INSERT PG29 EXTENDED	2-149, 2-151, 7-163
353243-0009 ..	HOSE GLAND W/O INSERT PG13,5 EXTENDED	1-19, 1-119, 1-353, 1-355, 1-365, 1-367
353245-0006 ..	GLAND, EXTENDED WITH INSERT, PG21/PR28,3	2-149, 2-151
353247-0005 ..	HOSE GLAND EMC PG21 EXTENDED	2-149, 2-151, 5-187, 5-189, 5-191
353249-0003 ..	INSERT, SINGEL HOLE, E151/11	5-287
353249-0008 ..	INSERT, SINGEL HOLE, EK 152/7	1-15, 1-17, 1-191, 1-199, 1-201, 1-219, 1-223, 1-279, 1-311 1-313, 1-353, 1-355, 1-365, 1-367, 1-387
353249-0009 ..	INSERT, SINGEL HOLE, EK 152/9	1-113, 1-247, 1-283, 1-349, 1-353, 1-355, 1-365, 1-367
353249-0011 ..	INSERT, SINGEL HOLE, EK 153/11	1-7, 1-9, 1-19, 1-109, 1-119, 1-121, 1-175, 1-191, 1-275 1-279, 1-333, 1-341, 1-349, 1-353, 1-355, 1-365, 1-367, 1-387, 1-395
353249-0013 ..	INSERT, SINGEL HOLE, EK 154/13	1-223, 1-279, 1-387
353249-0014 ..	INSERT, SINGEL HOLE, EK 154/16	1-15, 1-17, 1-365, 1-367, 7-285
353249-0036 ..	INSERT, MULTI HOLE, EK152 M 2X4	1-193, 1-353, 1-355, 1-365, 1-367, 5-287
353249-0049 ..	INSERT, SOLID, EK155G	2-149, 2-151
353249-0051 ..	INSERT, MULTI HOLE, E154M4X6	1-365, 1-367, 7-181, 7-183
353249-0054 ..	INSERT, SINGEL HOLE, EK 156/25	7-231, 7-233
353249-0060 ..	INSERT, MULTI HOLE, E155M2X13	1-365, 1-367
353249-0061 ..	INSERT, SINGEL HOLE, EK 155/20	1-365, 1-367
353249-0067 ..	INSERT, SINGEL HOLE, E150/7	6-19, 6-67
353249-0079 ..	INSERT, MULTI HOLE, E155M8X5,5	1-297, 1-299
353249-0301 ..	SEALING PIN, 4X20	5-287
353249-0303 ..	SEALING PIN, 5,3X25	2-55
353250-0050 ..	GLAND, LOCK NUT M50X1,5	8-37, 8-39, 8-41
353300-0001 ..	SHRINKABLE HOSE	1-365, 1-367
353300-0006 ..	SHRINKABLE HOSE	1-365, 1-367
353300-0008 ..	SHRINKABLE HOSE	1-365, 1-367
353300-0010 ..	SHRINKABLE HOSE	1-365, 1-367
354000-0005 ..	MINIATURE CIRCUIT BREAKER, FAZ-C0,5/1	8-83, 8-85
354000-0040 ..	MINIATURE CIRCUIT BREAKER, FAZ-C4/1	8-77
354000-0100 ..	MINIATURE CIRCUIT BREAKER, FAZ-C10/1	8-77, 8-83, 8-85
359000-0025 ..	WIRE MARKING, YELLOW, PA3/6"-"	2-211, 2-213
359000-0101 ..	WIRE MARKING, YELLOW, PY01/3"1"	2-41
359000-0102 ..	WIRE MARKING, YELLOW, PY01/3"2"	2-41
359000-0400 ..	WIRE MARKING, YELLOW, PA2/4"0"	1-321, 1-323
359000-0401 ..	WIRE MARKING, YELLOW, PA2/4"1"	1-321, 1-323
359000-0402 ..	WIRE MARKING, YELLOW, PA2/4"2"	1-321, 1-323
359000-0403 ..	WIRE MARKING, YELLOW, PA2/4"3"	1-321, 1-323
359000-0404 ..	WIRE MARKING, YELLOW, PA2/4"4"	1-321, 1-323
359000-0405 ..	WIRE MARKING, YELLOW, PA2/4"5"	1-321, 1-323
359000-0406 ..	WIRE MARKING, YELLOW, PA2/4"6"	1-321, 1-323
359000-0407 ..	WIRE MARKING, YELLOW, PA2/4"7"	1-321, 1-323
359000-0408 ..	WIRE MARKING, YELLOW, PA2/4"8"	1-321, 1-323

Part No	Description	Page No
359000-0409 ..	WIRE MARKING, YELLOW, PA2/4"9"	1-321, 1-323
359000-0500 ..	WIRE MARKING, YELLOW, PA3/6"0"	2-211, 2-213
359000-0501 ..	WIRE MARKING, YELLOW, PA3/6"1"	2-211, 2-213
359000-0502 ..	WIRE MARKING, YELLOW, PA3/6"2"	2-211, 2-213
359000-0503 ..	WIRE MARKING, YELLOW, PA3/6"3"	2-211, 2-213
359000-0504 ..	WIRE MARKING, YELLOW, PA3/6"4"	2-211, 2-213
359000-0505 ..	WIRE MARKING, YELLOW, PA3/6"5"	2-211, 2-213
359000-0506 ..	WIRE MARKING, YELLOW, PA3/6"6"	2-211, 2-213
359000-0507 ..	WIRE MARKING, YELLOW, PA3/6"7"	2-211, 2-213
359000-0800 ..	WIRE MARKING, YELLOW, PA3/6"A"	2-211, 2-213
359000-0802 ..	WIRE MARKING, YELLOW, PA3/6"C"	2-211, 2-213
359000-0803 ..	WIRE MARKING, YELLOW, PA3/6"D"	2-211, 2-213
359000-0808 ..	WIRE MARKING, YELLOW, PA3/6"I"	2-211, 2-213
359000-0812 ..	WIRE MARKING, YELLOW, PA3/6"M"	2-211, 2-213
359000-0815 ..	WIRE MARKING, YELLOW, PA3/6"P"	2-211, 2-213
359000-0818 ..	WIRE MARKING, YELLOW, PA3/6"S"	2-211, 2-213
359000-0819 ..	WIRE MARKING, YELLOW, PA3/6"T"	2-211, 2-213
359000-0820 ..	WIRE MARKING, YELLOW, PA3/6"U"	2-211, 2-213
359005-0010 ..	MARKING LABEL KIT 0 - 9, 04.841.2150.0	2-57, 2-59, 2-107, 2-109, 2-149, 2-151, 6-17, 6-27, 6-31, 6-41, 6-43, 6-67, 7-181, 7-183
359005-0050 ..	MARKING LABEL KIT X, 04.841.4550.0	2-57, 2-59, 2-107, 2-109, 2-149, 2-151, 6-17, 6-27, 6-31, 6-41, 6-43, 6-67, 7-181, 7-183
359011-0807 ..	MARKING PLATES 5-FW 1-50	2-97, 8-63, 8-77, 8-79, 8-93, 8-95
359011-0808 ..	MARKING PLATES 5-FW 51-100	8-69, 8-79
359011-0809 ..	MARKING PLATES 5-FW 101-150	6-31, 6-67, 8-69, 8-79
359011-0810 ..	MARKING PLATES 5-FW 151-200	8-69
359011-0811 ..	MARKING PLATES 5-FW 201-2	2-97, 8-69
359011-0817 ..	SYMBOL 5-GW (+) 50PC	2-55, 2-97, 2-155
359011-0818 ..	SYMBOL 5-GW (-) 50PC	2-55, 2-97, 2-155
359011-0819 ..	MARKING PLATES 5-GW (EARTH)	2-267, 5-287, 8-71, 8-77, 10-99
359011-0821 ..	SET OF SIGNS 6-FW 1-50	1-293, 2-155, 2-267, 5-287, 7-199, 7-201, 8-71, 8-77, 8-79, 10-99
359011-0822 ..	SET OF SIGNS 6-FW 51-100	8-77, 8-79
359011-0823 ..	SET OF SIGNS 6-FW 101-150	1-225, 1-293, 1-351, 1-361, 1-363, 7-195, 7-197, 8-77
359011-0824 ..	SET OF SIGNS 6-FW 151-200	1-351, 1-361, 2-97, 2-155, 7-191, 7-193, 7-195, 7-197
359011-0825 ..	SET OF SIGNS 6-FW 201-250	1-361, 7-191, 7-193
359011-0832 ..	SET OF SIGNS 6-GW (+)	1-225, 1-293, 1-351, 1-361, 1-363, 7-191, 7-193, 7-195, 7-197
359011-0833 ..	SET OF SIGNS 6-GW (-)	1-225, 1-293, 1-351, 1-361, 1-363, 7-191, 7-193, 7-195, 7-197
359011-0834 ..	SET OF SIGNS 6-GW(EARTH)	1-225, 1-293, 1-351, 1-361, 1-363, 2-55, 2-97, 2-155, 2-157, 7-191, 7-193, 7-195, 7-197, 7-199, 7-201, 8-95
359012-0800 ..	MARKING LABEL, WHITE, BSGW, 800	2-55, 2-97, 2-155, 2-157
359240-0100 ..	SIGN HOLDER FOR 359240-0001	6-65, 8-89, 8-91, 10-97
359241-0122 ..	SIGN: " CLEANING STEAM BARRIER SPACE"	8-89, 8-91
359241-0133 ..	SIGN: " SERVICE SWITCH"	8-89, 8-91
359241-0201 ..	SIGN: " HOUR METER"	8-89, 8-91
359241-0431 ..	SIGN: " MAIN SWITCH"	6-65
359241-0482 ..	SIGN "PACKAGE COUNTER"	8-89, 8-91
359241-0484 ..	SIGN "FILLER/FILLER + PULLTAB"	10-97
359243-0917 ..	SIGN"400V, 50HZ, 100A"	6-65
359243-0918 ..	SIGN"400V, 60HZ, 100A"	6-65
359301-0001 ..	BUTTON SIGN, UP	2-265, 10-97
359301-0005 ..	BUTTON SIGN, DOWN	2-265, 10-97
359301-0050 ..	BUTTON SIGN, DROP CHUTE BRIK	2-265
359301-0090 ..	BUTTON SIGN, INCHING	2-265
359301-0091 ..	BUTTON SIGN, INCHING FINAL FOLDER	2-265
359301-0100 ..	BUTTON SIGN, SPLICING	7-285
359301-0101 ..	BUTTON SIGN, STRIP SPLICING ON	7-267, 7-269
359301-0110 ..	BUTTON SIGN, SHORT STOP	1-353, 1-355, 2-265, 7-267, 7-269, 10-97
359301-0130 ..	BUTTON SIGN, LAMP TEST	2-265
359301-0131 ..	BUTTON SIGN, LAMP TEST / RESET	7-267, 7-269, 10-97
359301-0160 ..	BUTTON SIGN, DRAINAGE OF PRODUCT TUBE	2-265
359301-0170 ..	BUTTON SIGN, SPOOLING OF FINAL FOLDER	2-265
359301-0175 ..	BUTTON SIGN, PRODUCTION ON	10-97
359301-0488 ..	BUTTON SIGN, MATERIAL LOCKING	7-285
359301-0519 ..	SIGN "TPOP RESET"	2-265
359301-0536 ..	SIGN "MANUAL COMMANDS"	10-97
359605-0002 ..	MANDATORY SIGN ISO, EYE PROTECTION	2-39
359705-0003 ..	WARNING SIGN ISO, DANGEROUS CHEMICALS	2-39
359705-0004 ..	WARNING SIGN ISO, DANGEROUS CHEMICALS	1-285, 1-287, 2-19, 2-21, 2-39
359705-0005 ..	WARNING SIGN ISO, MOVING PART	7-93, 7-95, 7-115
359705-0007 ..	WARNING SIGN ISO, HOT SURFACE	1-7, 1-9, 1-109, 1-119, 1-121, 1-175, 1-191, 1-219, 1-279, 1-283, 7-121
359705-0015 ..	WARNING SIGN ISO, RISK OF ELECTRIC SHOCK	1-199, 1-223, 1-279, 1-291, 1-349, 1-353, 1-355, 2-55, 2-97, 2-155, 2-157, 2-265, 5-187, 5-189, 5-191, 5-287, 8-25, 8-27, 8-29, 8-31, 8-33, 8-35, 8-43, 8-71
359710-0001 ..	WARNING SIGN ISO, HOT SURFACE	5-209, 5-211, 5-213, 5-215, 5-217, 5-219
400828-0000 ..	SPRING	7-127
400833-0000 ..	PLUNGER	7-127
434320-0000 ..	AXLE PIN	4-7, 4-9, 4-11, 4-17, 4-19, 4-21, 4-77, 4-83
434321-0000 ..	CURVE ROLLER	4-7, 4-9, 4-11, 4-17, 4-19, 4-21, 4-51, 4-53, 4-55, 4-57, 4-63, 4-65, 4-67, 4-69, 4-77, 4-83
434665-0000 ..	HOOD	1-211, 1-213, 1-215
436556-0000 ..	CURVE ROLLER	4-7, 4-9, 4-11, 4-17, 4-19, 4-21
436781-0000 ..	GASKET	1-283
440259-0000 ..	RETAINING RING	10-75

Part No	Description	Page No
440650-0000 ..	WASHER	1-237
440655-0000 ..	RING	1-233
440659-0000 ..	CYLINDRICAL PIN	1-237
440660-0000 ..	COMPRESSION SPRING	1-237
440661-0000 ..	COMPRESSION SPRING	1-237
440662-0000 ..	COMPRESSION SPRING	1-235
440663-0000 ..	COMPRESSION SPRING	1-233, 1-237
441706-0000 ..	WASHER	4-209, 4-211, 4-219, 4-221
441737-0000 ..	WASHER	1-7, 1-9, 1-109, 1-119, 1-121, 1-123, 1-125, 1-175
441739-0000 ..	WASHER	1-7, 1-9, 1-109, 1-119, 1-121, 1-175
441871-0000 ..	PENDULUM SUSPENSION	1-197, 1-201
442237-0000 ..	NUT	1-181, 1-183
445848-0000 ..	ELASTIC COUPLING	2-273, 2-275
449190-0000 ..	SHAFT	5-257, 5-259
449939-0001 ..	HEATING ELEMENT 15KW	1-199
449969-0100 ..	TOOL DISMOUNTING	10-5
449970-0000 ..	HOLDER	10-61
449971-0000 ..	SPINDLE	10-61
450457-0000 ..	FLANGE	2-65
450833-0000 ..	FILTER	1-227, 1-317
451430-0000 ..	CONNECTION HOUS.(MINOR)	1-199
456123-0000 ..	SUPPORT	1-199
456796-0000 ..	ROLLER	1-85, 1-87
457696-0001 ..	JOINT PIECE	5-59, 5-61
464368-0000 ..	CRAMP	4-237
466042-0000 ..	SEAL	1-47, 1-49, 1-51, 1-85, 1-87
466046-0000 ..	ROLLER	1-47, 1-49, 1-51, 1-85, 1-87
466074-0002 ..	SLIDER	5-59, 5-61
466089-0000 ..	SEAL	1-85, 1-87
466092-0000 ..	ROLL	1-85, 1-87
476185-0000 ..	VALVE CONE	1-235
476201-0000 ..	SLEEVE	7-55
476202-0000 ..	SCREW	7-55
476220-0000 ..	SPACER	5-59, 5-61
476975-0000 ..	WHEEL	5-59, 5-61
479261-0000 ..	NIPPLE	1-205, 6-69, 6-71
479964-0000 ..	SIGN	2-131, 2-133
484701-0000 ..	SHUTTER	5-83, 5-85, 5-87, 5-89, 5-91
486826-0001 ..	SIGN "EMERGENCY STOP"	1-19, 1-353, 1-355, 2-223, 7-271, 7-285, 8-35, 10-97
490901-0000 ..	SEAL	1-85, 1-87
490998-0000 ..	THROTTLE SCREW	1-181, 1-183
491305-0000 ..	CONN.DIAGRAM AIR SUPERH.	1-199
491929-0000 ..	IMPELLER WHEEL	2-33
493735-0000 ..	NIPPLE	10-55, 10-57
495118-0014 ..	DISTANCE PIPE L=14 MM	7-191, 7-193, 7-195, 7-197, 7-199, 7-201
495377-0000 ..	BUSH	8-89, 8-91
495495-0000 ..	COOLING ELEMENT SSR	8-73
497748-0000 ..	PIN	1-239, 1-241
499011-0000 ..	SHAFT	1-211, 1-213, 1-215
499387-0000 ..	PRESSURE ROLLER	1-211, 1-213, 1-215, 9-11, 9-13, 9-15, 9-17, 9-19
522308-0000 ..	SIGN	10-77
527898-0100 ..	MKS CONTAINER H2O2	2-17, 10-67
527912-0000 ..	NON-RETURN VALVE	2-27
529345-0100 ..	FILLING STATION H2O2	10-67
530551-0000 ..	WASHER	2-27
530587-0000 ..	WASHER	1-235
530588-0000 ..	SEAL RING	1-235, 9-25
530589-0000 ..	SEAL RING	1-197, 1-201, 1-233, 1-237, 9-25
530590-0000 ..	VALVE CONE	1-197, 1-201, 1-233, 1-237
530591-0000 ..	HOLDER	1-237
530592-0000 ..	SEAL RING HOLDER	1-233
530595-0000 ..	SEAL RING HOLDER	1-233
530597-0000 ..	WASHER	1-237
530598-0000 ..	WASHER	1-237
530599-0000 ..	RING	1-197, 1-201, 1-237
530775-0000 ..	END PIECE	7-73
531345-0200 ..	PERSONAL PROTECT. EQ H2O2	9-3
531616-0000 ..	HOLDER	2-245
531731-0000 ..	GASKET	1-199
532117-0000 ..	CLAMP RING	1-239
532118-0000 ..	CLAMP RING	1-241
532208-0000 ..	SHAFT	10-73
532209-0000 ..	SHEET	10-73
532210-0100 ..	PEROXIDE CONTAINER TROLLEY	10-67
532211-0000 ..	DOWEL	10-73
532349-0000 ..	PLAIN BEARING	1-197, 1-201
532413-0000 ..	REDUCING NIPPLE	2-207, 2-245
532655-0000 ..	CAUTION SIGN	2-35, 10-69
532676-0000 ..	SHEET	10-55, 10-57
532677-0000 ..	PIPE	10-55, 10-57
532678-0000 ..	DOWEL	10-55, 10-57
532679-0000 ..	PLATE	10-55, 10-57
533014-0100 ..	LEAK FINDING EQUIPMENT (SUPERSTRUCTURE)	10-5
533015-0000 ..	WIRING DIAGRAM	10-55, 10-57

Part No	Description	Page No
533169-0000 ..	DIAPHRAGM	1-233, 9-25
533374-0000 ..	FITMENT BOTTOM	10-59
533905-0100 ..	PONCH	10-55, 10-57
533906-0000 ..	FITMENT COVER	10-59
534310-0001 ..	NOZZLE	2-245, 5-83, 5-85, 5-87, 5-89, 5-91
534634-0000 ..	PIPE	10-71
534635-0000 ..	VALVE	10-71
534636-0000 ..	LEVEL GLAS	10-71
534637-0000 ..	ATTACHMENT	10-71
534691-0000 ..	DIAPHRAGM	10-71
534692-0000 ..	FRAME SECTION	10-71
534693-0000 ..	PLATE	10-71
534694-0000 ..	SUCTIONPIPE	10-71
534695-0000 ..	WEIGHT	10-71
534696-0000 ..	VALVE	10-71
534697-0000 ..	VALVE HOUSING	10-71
534698-0000 ..	NIPPLE	10-71
536704-0000 ..	WASHER	4-205, 4-207, 4-209, 4-211, 4-215, 4-217, 4-219, 4-221
536916-0000 ..	AXLE PIN	7-123
539212-0000 ..	GASKET	1-231, 9-25
540718-0000 ..	ELBOW PIPE JOINT	2-83
541163-0200 ..	CLAMP RING	1-231
541164-0200 ..	CLAMP RING	1-231
541165-0000 ..	WASHER	1-239, 1-241
541166-0000 ..	WASHER	1-233
544725-0000 ..	AXLE PIN	7-123
544894-0000 ..	SPRING	1-211, 1-213, 1-215
546929-0000 ..	FILTER	1-195, 1-205
549267-0000 ..	LID	1-317
553607-0000 ..	SLEEVE	1-233, 1-235, 1-237
554141-0000 ..	FILTER	1-227, 1-317
554142-0000 ..	FILTER HOUSING	1-227, 1-317
554162-0000 ..	SCREW	1-239, 1-241
554585-0000 ..	STUD SCREW	1-317
555458-0000 ..	SEALING WASHER	1-237
556133-0000 ..	SEALING WASHER	1-235
559810-0101 ..	TMCC2 CONTROLLER	8-97
560122-0000 ..	SUPPORT ROLLER	4-185, 4-187
560931-0000 ..	BRACKET	1-195
561427-0000 ..	CONTAINER	2-35, 10-69
563285-0000 ..	BLIND PLUG	2-27
565250-0000 ..	WASHER	2-35, 10-69
565251-0000 ..	VALVE	2-35, 10-69
566171-0000 ..	CUP SPRING	2-31
566194-0000 ..	WEIGHT	2-31
566195-0000 ..	LID	2-31
566196-0100 ..	LID WITH WEIGHT	2-29
567018-0000 ..	STEAM HOUSE	1-231
567070-0012 ..	ELECTRODE	1-285, 1-287
567372-0000 ..	INSTRUCTION FOR USE	10-65
567743-0000 ..	SEAL	1-47, 1-49, 1-51, 1-85, 1-87
567746-0001 ..	ROLLER (STANDARD SIZE)	1-29, 1-31, 1-53, 1-55
569058-0000 ..	SUPPORT ROLLER	4-185, 4-187
569942-0000 ..	SLEEVE	10-75
569943-0000 ..	SLEEVE	10-75
573504-0000 ..	ROLLER	1-47, 1-49, 1-51, 1-85, 1-87
574051-0000 ..	RETAINING RING	10-75
574336-0000 ..	SEAL	1-85, 1-87
574455-0000 ..	TEMPLATE	10-27
574658-0000 ..	LOGOTYPE TP	10-77
575002-0000 ..	PLUNGER	7-117
575034-0000 ..	ROUND NUT	1-7, 1-9, 1-109, 1-119, 1-121, 1-175
576436-0100 ..	A-CYLINDER	1-231
576437-0100 ..	C-CYLINDER	1-231
576438-0100 ..	B-CYLINDER	1-231
576439-0000 ..	CYLINDER HOUSING	1-233, 1-237
576440-0000 ..	END SECTION	1-233, 1-237
576441-0000 ..	PISTON	1-233, 1-237
576442-0000 ..	PISTON ROD	1-237
576443-0000 ..	CYLINDER HOUSING	1-235
576444-0000 ..	END SECTION	1-235
576445-0000 ..	PISTON	1-235
576446-0000 ..	PISTON ROD	1-233
576447-0000 ..	PISTON ROD	1-235
576448-0000 ..	SPACER	1-233
576449-0000 ..	SPACER	1-233
576450-0000 ..	SPACER	1-237
576451-0000 ..	SPACER	1-235
578640-0000 ..	CLAMPING RING	1-301
578684-0000 ..	SPRING BRACKET	7-149, 7-151, 7-223
579318-0000 ..	SEAL	1-85, 1-87
582526-0100 ..	CARRIAGE	10-89
582527-0000 ..	ROD	10-91
583727-0000 ..	SHAFT	7-63, 7-141

Part No	Description	Page No
583986-0000 ..	ROLL	7-123
591341-0000 ..	PIN	2-9
596678-0000 ..	KNIFE	7-165, 7-173
598101-0000 ..	BEARING HOUSING	5-185
598549-0000 ..	SCREW	5-221
598713-0000 ..	PLATFORM	2-173, 2-175
598878-0000 ..	MACHINE SIGN 2 ADR. EEA	9-3
599556-0000 ..	WINDOW	7-265
735041-0000 ..	CONNECTION CLAMP	1-349
751009-0000 ..	INSULATION	1-199
751395-0000 ..	FLANGE	2-33
751485-0000 ..	SCREW	1-301
751491-0000 ..	ROLL	1-75, 1-77, 1-79
751492-0000 ..	ROLL	1-75, 1-77, 1-79
751502-0000 ..	ROLLER	1-53, 1-55
751604-0000 ..	SPRING	1-211, 1-213, 1-215
752126-0000 ..	FORMING ROLLER	1-75, 1-77, 1-79
752127-0000 ..	FORMING ROLLER	1-75, 1-77, 1-79
752128-0000 ..	FORMING ROLLER	1-75, 1-77, 1-79
752156-0000 ..	FLANGE BUSHING	1-59, 1-61, 1-63, 1-75, 1-77, 1-79
752186-0002 ..	SHAFT	1-75, 1-77, 1-79
752186-0004 ..	SHAFT	1-53, 1-55
752186-0005 ..	SHAFT	1-39, 1-53, 1-55, 1-75, 1-77, 1-79
752186-0006 ..	SHAFT	1-59, 1-61, 1-63, 1-75, 1-77, 1-79
752186-0007 ..	SHAFT	1-33, 1-35, 1-37, 1-59, 1-61, 1-63
752186-0008 ..	SHAFT	1-75, 1-77, 1-79
752186-0009 ..	SHAFT	1-75, 1-77, 1-79
752186-0012 ..	SHAFT	1-75, 1-77, 1-79
752186-0013 ..	SHAFT	1-75, 1-77, 1-79
752186-0014 ..	SHAFT	1-29, 1-31, 1-53, 1-55
752186-0015 ..	SHAFT	1-33, 1-35, 1-37, 1-53, 1-55, 1-59, 1-61, 1-63
752186-0016 ..	SHAFT	1-29, 1-31, 1-53, 1-55, 1-91, 1-93
752186-0019 ..	SHAFT	1-39, 1-75, 1-77, 1-79
752288-0000 ..	SLEEVE	4-131
777170-0107 ..	HOOK SPANNER	10-47
777200-0101 ..	PIPE WRENCH	10-5
797090-0401 ..	JUMBO REEL TRUCK	10-77
905373-0000 ..	SCREW - LEG	7-41, 7-43, 7-45, 10-7, 10-9
906254-0000 ..	ROLLER	7-149, 7-151, 7-223
907587-0000 ..	LABEL	10-97
925998-0000 ..	DIAPHRAGM	1-249, 9-5
926907-0000 ..	SCREW	1-249
926934-0000 ..	SUPPORT	1-249
927044-0000 ..	SPACER	1-249
927203-0000 ..	COVER	1-249
927244-0100 ..	PUMP	2-39
927252-0000 ..	COMPRESSION SPRING	9-11, 9-13, 9-15, 9-17, 9-19
927262-0000 ..	PIPE	2-39
927339-0000 ..	ADAPTER	2-41
927340-0000 ..	DISC	2-41
927341-0000 ..	HOLDER	2-41
927342-0000 ..	CYLINDER	2-41
927354-0000 ..	SCREW	1-251, 1-393
927362-0000 ..	MAGNET	2-41
927363-0000 ..	PLUG	2-41
927420-0001 ..	O-RING 5.1X1.6 SILICONE	1-227, 1-317
927421-0002 ..	O-RING 12.3X2.4 SILICONE	1-317
927421-0003 ..	O-RING 13.3X2.4 SILICONE	1-227, 1-283
927421-0004 ..	O-RING 15.3X2.4 SILICONE	1-227, 1-285, 1-287, 1-317
927421-0005 ..	O-RING 7.3X2.4 SILICONE	10-71
927422-0001 ..	O-RING 19.2X3 SILICONE	1-227, 1-317, 10-71
927422-0003 ..	O.RING 24.2X3 SILICONE	2-35, 10-69
927422-0005 ..	O-RING 36.2X3 SILICONE	2-33
927422-0006 ..	O-RING 42.2X3 SILICONE	1-227, 2-33
927422-0007 ..	O-RING 44.2X3 SILICONE	1-227, 1-317
927422-0009 ..	O-RING 54.5X3 SILICONE	1-317
927422-0016 ..	O-RING 79.5X3 SILICONE	2-19, 2-21
927454-0000 ..	GASKET	1-199
927859-0000 ..	TOOTHED PULLY	5-267, 5-269
928025-0000 ..	PLUG	2-39
929284-0000 ..	ROLLER	1-85, 1-87
929286-0000 ..	SEAL	1-85, 1-87
929355-0000 ..	ROLLER TPA 330	4-185, 4-187
929372-0000 ..	PISTON	4-95
950351-0000 ..	SHAFT	4-95
970215-0000 ..	STOP BLOCK	8-89, 8-91
970261-0000 ..	SPACER SCREW 10,2X10MM	7-265
970262-0000 ..	SPACER NUT	7-265
971286-0000 ..	SPACER H=6MM	7-265
971346-0000 ..	GUIDE PIN	8-89, 8-91
975917-0000 ..	KEY FOR SAFETY SWITCH 90044-103	7-273
977527-0000 ..	BRACKET	6-19
978440-0000 ..	CRAMP	1-247
978603-0000 ..	SIGN	2-49

Part No	Description	Page No
978757-0000 ..	ROLLER 180-284ML	4-185, 4-187
978760-0000 ..	ROLLER TBA200SL	4-185, 4-187
979434-0000 ..	FERRULE	1-249
979500-0003 ..	ELECTRODE	1-195
979548-0000 ..	MACHINE PLATE	1-305, 1-307
979813-0000 ..	PLUG	9-11, 9-13, 9-15, 9-17, 9-19
979847-0000 ..	SHAFT COUPLING	7-227
979931-0000 ..	VOLUME BULGE	4-51, 4-53, 4-55, 4-57, 4-63, 4-65, 4-67, 4-69
979951-0000 ..	FLANGE	10-65
985328-0000 ..	CONNECTION	2-171, 2-173, 2-175, 2-179, 2-181, 2-189, 2-191
985756-0000 ..	KEY	7-93, 7-95
988666-0000 ..	GASKET	8-29, 8-31, 8-33, 8-35
988685-0000 ..	PIN	1-333, 1-341, 1-393, 1-395, 2-49, 2-131, 2-133, 2-219, 2-221, 2-225, 2-237, 2-239, 2-255, 2-257, 6-57, 6-61, 6-65, 7-273, 7-275, 7-283, 7-287, 8-29, 8-31, 8-33, 8-35
988690-0000 ..	RIM	7-275
996388-0500 ..	PEROXIDE PUMP	2-17
1010822-0000 .	RAILING	2-173, 2-175, 2-179, 2-181, 2-189, 2-191
1020142-0002 .	RAIL HOLDER, B55 WIDTH 30 MM	5-83, 5-85, 5-87, 5-89, 5-91
1020146-0000 .	LOCKING BLOCK REPL BY 1020290-101	5-83, 5-85, 5-87, 5-89, 5-91
1020637-0000 .	HOLDER	5-97, 5-99, 5-285
1020638-0000 .	HOLDER	5-285
1035201-0100 .	PAPER REEL HOLDER	10-67
1035362-0100 .	MEASURING DEVICE	10-5
1035654-0000 .	CONNECTION	1-301
1035788-0000 .	SHAFT	4-205, 4-207, 4-209, 4-211, 4-215, 4-217, 4-219, 4-221
1035792-0000 .	E-HINGE	1-333, 1-341, 1-393, 1-395, 2-49, 2-131, 2-133, 2-219, 2-221, 2-225, 2-237, 2-239, 2-255, 2-257, 6-57, 6-61, 6-65, 7-273, 7-275, 7-283, 7-287, 8-29, 8-31, 8-33, 8-35
1035794-0000 .	BLOCKING PIECE	6-57, 6-61, 6-65
1035828-0000 .	VOLUME BULGE	4-7, 4-9, 4-11, 4-17, 4-19, 4-21
1035831-0000 .	VOLUME SHIM	4-7, 4-9, 4-11, 4-17, 4-19, 4-21, 9-11, 9-13, 9-15, 9-17, 9-19
1035871-0000 .	SCREW	4-119, 4-121, 4-123, 4-125
1035877-0000 .	ARM LEFT	4-205, 4-207
1035878-0000 .	ARM RIGHT	4-215, 4-217
1035882-0000 .	BENDING ROLLER	7-53
1035895-0000 .	SHAFT	7-25
1035954-0000 .	BUSHING	4-203, 4-213
1036155-0000 .	TOOTH PART	4-209, 4-211, 4-219, 4-221
1036156-0000 .	TOOTH PART	4-205, 4-207, 4-215, 4-217
1036187-0000 .	T-PIPE	1-197, 1-201
1036188-0000 .	SHAFT	1-197, 1-201
1036189-0000 .	SPINDEL GUIDE	1-197, 1-201
1036191-0000 .	SEAL HOLDER	1-197, 1-201
1036192-0000 .	SPACER ROD	1-197, 1-201
1036193-0000 .	CYLINDER BRACKET	1-201
1036241-0000 .	WASHER	2-187
1036278-0000 .	SLEEVE	4-131
1036293-0000 .	HOLDER	1-15, 1-17, 1-191, 1-201
1036294-0000 .	GASKET	1-191
1036304-0001 .	LOCKING ARM	6-61
1036304-0014 .	LOCKING ARM	6-61
1036314-0000 .	BOTTOM PANEL	1-179
1036318-0000 .	PIPE	1-179
1036319-0000 .	BRACKET	1-179
1036343-0000 .	SCREW	4-85, 4-87, 4-89, 4-133, 4-135, 4-137
1036372-0000 .	PIPE	1-199
1036373-0000 .	HOLDER	1-199
1036389-0000 .	LID	4-153, 4-155, 4-157, 4-159
1036475-0000 .	PIN	1-129
1036483-0000 .	SEAL	4-205, 4-207, 4-215, 4-217
1036484-0000 .	GASKET	4-205, 4-207, 4-215, 4-217
1036485-0000 .	COVERING PLATE	4-205, 4-207, 4-215, 4-217
1036494-0000 .	GUIDE BUSHING	4-119, 4-121, 4-123, 4-125
1036495-0000 .	BUSHING	4-109, 4-111, 4-113, 4-115, 4-153, 4-155, 4-157, 4-159
1036501-0000 .	SPACER	4-205, 4-207, 4-215, 4-217
1036563-0000 .	WASHER	7-273, 7-283, 7-287
1036584-0000 .	WASHER	4-97, 4-99, 4-101, 4-143, 4-145, 4-147, 9-5
1036585-0000 .	EAR	4-109, 4-111, 4-113, 4-115, 4-153, 4-155, 4-157, 4-159
1036610-0000 .	BRACKET	1-193, 1-221, 1-311, 1-313
1036615-0000 .	SHAFT	4-209, 4-211, 4-219, 4-221
1036616-0000 .	WASHER	4-209, 4-211, 4-219, 4-221
1036617-0000 .	BRACKET	4-209, 4-211, 4-219, 4-221, 9-37
1036618-0000 .	ROLL	4-209, 4-211, 4-219, 4-221
1036620-0000 .	SHAFT	4-209, 4-211, 4-219, 4-221
1036622-0000 .	GUIDE ROLLER	7-63, 7-141
1036623-0000 .	GUIDE ROLLER	1-309, 7-63, 7-141
1036664-0000 .	LID	4-109, 4-111, 4-113, 4-115
1036673-0000 .	WASHER	2-103, 2-105, 4-191, 4-193
1036674-0000 .	FASTENING PLATE	4-191, 4-193
1036794-0000 .	PIPE	6-39
1036811-0000 .	CLAMP	1-195, 1-205
1036826-0000 .	PIPE	6-37
1036827-0000 .	PIPE	6-37, 6-45
1036828-0000 .	TANK	6-41, 6-43
1036911-0000 .	CONTAINER	1-205

Part No	Description	Page No
1036939-0000	.SIDE PIECE	1-303
1036940-0000	.SIDE PIECE	1-303
1036954-0000	.AXLE SUPPORT	1-47, 1-49, 1-51, 1-85, 1-87
1036955-0000	.AXLE SUPPORT	1-47, 1-49, 1-51, 1-85, 1-87
1036963-0000	.HOOK HOLDER	1-303
1036965-0000	.HOOK HOLDER	1-303
1037012-0000	.AXLE PIN	2-13
1037041-0000	.HOLDER	1-205
1037044-0000	.RAILING	1-301
1037069-0000	.SCREW	4-205, 4-207, 4-215, 4-217
1037089-0000	.SPACER	1-175
1037093-0000	.SENSOR BRACKET	1-229
1037102-0000	.SPACER PIPE	2-19, 2-21
1037104-0000	.LOCATING PIECE	4-203, 4-213
1037106-0000	.SLEEVE	4-203, 4-213
1037120-0000	.SHAFT	7-127
1037121-0000	.SHAFT	7-127
1037124-0000	.HOLDER	7-127
1037129-0000	.LID	1-181, 1-183, 6-47
1037130-0000	.CONNECTION BOX	2-223, 7-271
1037184-0000	.SPACER SCREW	6-11
1037254-0000	.SHIM	4-209, 4-211, 4-219, 4-221, 9-11, 9-13, 9-15, 9-17, 9-19
1037267-0000	.PIPE	1-181, 1-183
1037268-0000	.LID	1-181, 1-183
1037391-0000	.CANTILEVER	2-193
1037443-0000	.GASKET	2-69, 2-121
1037539-0000	.BRACKET	2-27
1037562-0000	.SHAFT	2-273, 2-275
1037571-0000	.GUIDE BUSHING	2-171, 2-179, 2-181
1037572-0000	.COVER PLATE	8-37, 8-39, 8-41
1037573-0000	.GASKET	8-37, 8-39, 8-41
1037574-0000	.COVER PLATE	8-37, 8-39, 8-41
1037575-0000	.GASKET	8-37, 8-39, 8-41
1037583-0000	.HOLDER	6-69, 6-71
1037673-0000	.SLEEVE	2-107, 2-109
1037696-0000	.CLAMPING PIECE	10-43
1037697-0000	.CLAMPING PIECE	10-43
1037733-0000	.VOLUME BULGE	4-7, 4-9, 4-11, 4-17, 4-19, 4-21
1037734-0000	.WEDGE	4-7, 4-9, 4-11, 4-17, 4-19, 4-21, 4-51, 4-53, 4-55, 4-57, 4-63, 4-65, 4-67, 4-69, 4-79
1037735-0000	.VOLUME SHIM	4-7, 4-9, 4-11, 4-17, 4-19, 4-21, 9-11, 9-13, 9-15, 9-17, 9-19
1037849-0000	.SLEEVE	4-223
1037851-0000	.LINK	4-223
1037852-0000	.SHAFT	4-225
1037853-0000	.SHAFT	4-205, 4-207, 4-209, 4-211, 4-215, 4-217, 4-219, 4-221
1037885-0000	.REAMED BOLT	1-47, 1-49, 1-51, 1-85, 1-87
1038021-0000	.WASHER	4-223
1038240-0000	.SPACER	4-95
1038275-0012	.SPACER	8-71
1038355-0000	.FRAME	8-89, 8-91
1038408-0000	.COVERING PLATE	8-23
1038464-0000	.SPROCKET	1-131, 1-133, 1-135
1038509-0000	.WASHER	4-203, 4-213
1038576-0000	.AXLE SUPPORT	1-85, 1-87
1038634-0000	.DRAINING	1-195
1038637-0000	.WEDGE	4-7, 4-9, 4-11, 4-17, 4-19, 4-21
1038638-0000	.VOLUME BULGE	4-7, 4-9, 4-11, 4-17, 4-19, 4-21
1038639-0000	.VOLUME SHIM	4-7, 4-9, 4-11, 4-17, 4-19, 4-21
1038688-0000	.HOLDER	1-283
1038699-0000	.BRACKET	8-35
1038714-0000	.CABLE	8-49, 8-51, 8-53, 8-65, 8-67, 8-71
1038828-0000	.PIPE	4-237
1038829-0000	.PIPE	4-237
1038865-0000	.SPACER DISC	7-93, 7-95
1038866-0000	.INTERMEDIARY SECTION	1-195
1038867-0000	.BOW CLAMP	4-209, 4-211, 4-219, 4-221
1040753-0000	.VOLUME FLAP	4-7, 4-9, 4-11, 4-17, 4-19, 4-21
1040754-0000	.VOLUME BULGE	4-7, 4-9, 4-11, 4-17, 4-19, 4-21
1040755-0000	.VOLUME SHIM	4-7, 4-9, 4-11, 4-17, 4-19, 4-21, 9-11, 9-13, 9-15, 9-17, 9-19
1040756-0000	.WEDGE	4-7, 4-9, 4-11, 4-17, 4-19, 4-21
1040796-0000	.PIPE	2-33
1040807-0000	.LID	2-29
1040808-0000	.GASKET	2-29
1040840-0000	.FLANGE	2-19, 2-21
1040841-0000	.FLANGE	2-19, 2-21
1040852-0000	.SEALING RING	2-19, 2-21
1040853-0000	.SEALING RING	2-19, 2-21
1040876-0000	.COVER	1-179
1040877-0000	.PLATE	1-179
1040878-0000	.PLATE	1-179
1040970-0000	.BRACKET	1-279, 1-317
1041046-0000	.FLOW METER	6-19
1041603-0000	.BRACKET	2-13
1041609-0000	.NUT	2-265
1041921-0000	.HOLDER	6-77

Part No	Description	Page No
1041925-0000	.PIPE	6-35
1041926-0000	.PIPE	6-35
1041930-0000	.PIPE	6-25
1041931-0000	.PIPE	6-25
1041932-0000	.PIPE	6-69, 6-71
1041933-0000	.PIPE	6-69, 6-71
1041934-0000	.PIPE	6-45
1041937-0000	.SIGN	1-333
1041938-0000	.SIGN	6-75
1041943-0000	.CONNECTION BOX	6-31
1041946-0000	.PIPE	6-41, 6-43
1041963-0000	.WASTE BOX	6-49
1041967-0000	.COVERING PANEL	6-55
1041970-0000	.DOOR	6-61
1041978-0000	.HINGE FLANGE	1-7, 1-9, 1-109, 1-175
1041979-0000	.HINGE FLANGE	1-7, 1-9, 1-109, 1-175
1041984-0000	.ATTACHMENT PIPE	6-19
1041988-0000	.CLAMP	1-243, 1-245, 1-247
1086888-0000	.COVER	5-285
1086889-0000	.COVER	5-97, 5-99, 5-285
1095597-0100	.TERMINAL	2-265
1095607-0200	.COVERING PANEL	6-3, 6-5
1095608-0100	.WATER PANEL	6-3, 6-5
1095609-0200	.PNEUMATIC UNIT	6-73
1095610-0300	.MAIN SWITCH	6-3, 6-5
1095611-0300	.VALVE PANEL	6-73
1095612-0300	.COOLING WATER SYSTEM	6-3, 6-5
1095627-0300	.FOAM CLEANING UNIT	6-3, 6-5
1095630-0200	.CONNECTION BOX	6-3, 6-5
1095672-0100	.PIPE	6-33
1095673-0100	.SIDE	6-33
1095675-0100	.PIPE	6-33
1095676-0100	.PUMP	6-33
1095677-0100	.BRANCHING PIPE	6-33
1095678-0300	.BALL VALVE	6-33
1095681-0100	.SPRAY GUN	2-195
1095682-0100	.AIR JET GUN	2-123
1095706-0300	.COOLING WATER PUMP	6-13, 6-15
1095709-0200	.CONNECTION BOX	6-13, 6-15
1095710-0300	.COMPRESSOR UNIT	6-13, 6-15
1095714-0300	.SUPPLY SYSTEM	6-3, 6-5
1095715-0100	.ICE WATER	6-23
1095716-0100	.PIPE WORK-AIR	6-73
1095738-0300	.PROTECTIVE COVER	2-241
1095862-0100	.LADDER	1-295
1095863-0200	.PIVOT ARM	2-117
1095883-0200	.GABLE PLATE	6-51
1095884-0100	.ASSEMBLY TOOL	10-5
1095886-0200	.COVERING PANEL	6-51
1095888-0200	.HATCH	6-51
1095889-0100	.DOOR	6-51
1095890-0200	.HATCH	6-51
1095891-0200	.DOOR	6-51
1103298-0000	.NON-SKID	2-65
1103300-0000	.NON-SKID	2-65, 2-119
1110083-0002	.DOLLY	4-119, 4-121, 4-123, 4-125, 9-11, 9-13, 9-15, 9-17, 9-19
1110930-0000	.INDUCTOR	4-97, 4-99, 4-101, 4-143, 4-145, 4-147, 9-11, 9-13, 9-15, 9-17, 9-19
1110931-0000	.INDUCTOR	4-97, 4-99, 4-101, 4-143, 4-145, 4-147, 9-11, 9-13, 9-15, 9-17, 9-19
1110932-0000	.INDUCTOR	4-97, 4-99, 4-101, 4-143, 4-145, 4-147, 9-11, 9-13, 9-15, 9-17, 9-19
1110934-0000	.INDUCTOR	4-97, 4-99, 4-101, 4-143, 4-145, 4-147, 9-11, 9-13, 9-15, 9-17, 9-19
1110936-0000	.INDUCTOR	4-97, 4-99, 4-101, 4-143, 4-145, 4-147, 9-11, 9-13, 9-15, 9-17, 9-19
1110937-0000	.INDUCTOR	4-97, 4-99, 4-101, 4-143, 4-145, 4-147, 9-11, 9-13, 9-15, 9-17, 9-19
1110938-0000	.INDUCTOR	4-97, 4-99, 4-101, 4-143, 4-145, 4-147, 9-11, 9-13, 9-15, 9-17, 9-19
1129066-0000	.RETURN PIPE	6-27
1129079-0000	.FLOW METER	6-19
1129086-0000	.BRACKET	1-15, 1-17
1129141-0000	.MACHINE BODY	6-13, 6-15
1129182-0000	.BRACKET	6-67
1129202-0000	.CONNECTION BOX	6-67
1129209-0000	.MOUNTING RAIL	6-67
1129210-0000	.MOUNTING RAIL	6-31
1129253-0000	.FASTENING PLATE	2-273, 2-275
1129274-0000	.GUIDE LUG	2-219, 2-221, 2-239, 2-251, 2-255, 2-257, 2-259, 6-57, 6-61
1129275-0000	.BOX FOR DIAGRAM	2-251
1129276-0000	.GASKET	8-37, 8-39, 8-41
1129318-0000	.BRACKET	8-23
1129324-0000	.WASHER	2-217, 2-233, 2-235
1129325-0000	.SEALING FLANGE	2-217, 2-233, 2-235
1129328-0000	.ATTACHMENT	2-27
1129342-0000	.PROTECTION	8-73
1129370-0000	.SIGN	2-131, 2-133
1129372-0000	.LID	1-365, 1-367
1129387-0000	.CONNECTION TABLE	6-49
1129402-0000	.SPACER SCREW	6-11

Part No	Description	Page No
1129431-0000	.WASHER	1-47, 1-49, 1-51, 1-85, 1-87
1129432-0000	.LID	2-37
1129480-0000	.CABLE DUCT	1-353, 1-355
1129504-0000	.MOUNTING RAIL	2-155
1129549-0000	.SHEET	8-37, 8-39, 8-41
1129550-0000	.GASKET	8-37, 8-39, 8-41
1129599-0000	.CRAMP	4-237
1129600-0000	.BRAID	2-149, 2-151
1129643-0000	.STAIR	1-303
1129644-0000	.BRACKET	1-303
1129741-0000	.RAILING	1-301
1129767-0000	.SCREW	2-217, 2-219, 2-221, 2-225, 2-237, 2-239, 2-251, 2-255, 2-257, 2-259, 7-273, 7-275, 7-283, 7-287
1129770-0000	.BLOCKING PIECE	1-333, 1-341, 1-393, 1-395, 2-49, 2-131, 2-133, 2-217, 2-219, 2-221, 2-225, 2-237, 2-239, 2-251, 2-255, 2-257, 2-259, 7-273, 7-275, 7-283, 7-287, 8-29, 8-31, 8-33, 8-35
1129801-0000	.PIPE	1-229
1129802-0000	.PIPE	1-229
1129839-0000	.COOLING PLATE	7-17
1129869-0000	.COOLING PLATE	7-17
1140039-0000	.CONVEYOR FRAME	10-91
1140040-0000	.BRACKET	10-91
1140077-0000	.RING	1-13
1140082-0000	.LOCK SHAFT	5-275
1140129-0000	.HOLDER	2-93
1140268-0000	.TEMPLATE	10-27
1140283-0000	.TEMPLATE	10-27
1140320-0000	.TEMPLATE	10-27
1140480-0000	.CLAMP	1-243, 1-245, 1-247
1140603-0000	.COMPRESSOR UNIT	6-17
1140642-0000	.PIPE	6-41, 6-43
1140670-0000	.BRACKET	6-41, 6-43
1140685-0000	.BEAM	1-397
1140769-0000	.DOOR STOPPER	8-23
1140840-0000	.WHEEL	10-91
1143215-0000	.SPRING	4-27, 4-29, 4-39, 4-41
1143216-0000	.SPRING	4-27, 4-29, 4-39, 4-41
1143530-0000	.SPRING	5-241, 5-243, 5-245, 5-247, 5-249, 5-251
1144264-0000	.HUB	5-23, 5-25, 5-113, 5-115
1144312-0000	.AXLE PIN	5-23, 5-25, 5-113, 5-115
1144324-0300	.FRAMEWORK	5-3
1144329-0300	.PULL-DOWN DEVICE	5-3
1144331-0300	.PRESSURE DEVICE	5-3
1144335-0000	.ROLLER	5-23, 5-25, 5-113, 5-115
1144354-0000	.WASHER	5-23, 5-25, 5-113, 5-115
1144356-0000	.COVER	5-23, 5-25, 5-113, 5-115
1144417-0000	.BUSHING	5-23, 5-25, 5-113, 5-115
1144468-0000	.BEARING HOUSING	5-267, 5-269
1144470-0000	.SHAFT	5-263, 5-267, 5-269
1144472-0000	.LEVER	5-5, 5-7
1144473-0000	.LEVER	5-5, 5-7
1144475-0000	.BRACKET	5-5, 5-7
1144476-0000	.BRACKET	5-5, 5-7
1144482-0000	.SUPPORT	5-241, 5-243, 5-245, 5-247, 5-249, 5-251
1144483-0000	.PLATE	5-241, 5-243, 5-245, 5-247, 5-249, 5-251
1144485-0000	.SUPPORT	5-241, 5-243, 5-245, 5-247, 5-249, 5-251
1144486-0000	.CAM	5-241, 5-243, 5-245, 5-247, 5-249, 5-251
1144488-0000	.COLUMN	5-241, 5-243, 5-245, 5-247, 5-249, 5-251
1144489-0000	.FLANGE	5-241, 5-243, 5-245, 5-247, 5-249, 5-251
1144492-0000	.SPRING	5-241, 5-243, 5-245, 5-247, 5-249, 5-251
1144493-0000	.WASHER	5-241, 5-243, 5-245, 5-247, 5-249, 5-251
1144494-0000	.AXLE PIN	5-241, 5-243, 5-245, 5-247, 5-249, 5-251
1144495-0000	.ECCENTRIC	5-241, 5-243, 5-245, 5-247, 5-249, 5-251
1144496-0000	.ECCENTRIC	5-241, 5-243, 5-245, 5-247, 5-249, 5-251
1144498-0000	.FLANGE	5-241, 5-243, 5-245, 5-247, 5-249, 5-251
1144500-0000	.SUPPORT	5-241, 5-243, 5-245, 5-247, 5-249, 5-251
1144501-0000	.SPACER	5-241, 5-243, 5-245, 5-247, 5-249, 5-251
1144502-0000	.WASHER	5-241, 5-243, 5-245, 5-247, 5-249, 5-251
1144503-0000	.FLANGE	5-241, 5-243, 5-245, 5-247, 5-249, 5-251
1144505-0000	.COLUMN	5-241, 5-243, 5-245, 5-247, 5-249, 5-251
1144506-0000	.LEVER	5-241, 5-243, 5-245, 5-247, 5-249, 5-251
1144507-0000	.BUSHING	5-241, 5-243, 5-245, 5-247, 5-249, 5-251
1144508-0000	.AXLE PIN	5-241, 5-243, 5-245, 5-247, 5-249, 5-251
1144511-0000	.SHIM	5-241, 5-243, 5-245, 5-247, 5-249, 5-251
1144514-0000	.BUSHING	5-241, 5-243, 5-245, 5-247, 5-249, 5-251
1144515-0000	.INSERT	5-241, 5-243, 5-245, 5-247, 5-249, 5-251
1144517-0000	.BUSHING	5-241, 5-243, 5-245, 5-247, 5-249, 5-251
1144520-0000	.ROLLER	5-241, 5-243, 5-245, 5-247, 5-249, 5-251
1144521-0000	.CLAMP	5-241, 5-243, 5-245, 5-247, 5-249, 5-251
1144552-0000	.PLATE	5-65, 5-67
1144555-0000	.STUD SCREW	5-35, 5-37, 5-45, 5-47, 5-49, 5-137, 5-139
1144566-0000	.FLANGE	5-5, 5-7
1144577-0000	.BLOCK	5-257, 5-259
1144579-0000	.AXLE	5-257, 5-259
1144581-0000	.ROLLER	5-71, 5-263, 5-267, 5-269

Part No	Description	Page No
1144593-0000	.PLATE	5-263, 5-267, 5-269
1144596-0000	.PLUG	5-263, 5-267, 5-269
1144597-0000	.SPACER	5-263, 5-267, 5-269
1144598-0000	.SHAFT	5-267, 5-269
1144601-0000	.GUIDE STUD	4-27, 4-29, 4-39, 4-41, 4-51, 4-53, 4-55, 4-57, 4-63, 4-65, 4-67, 4-69
1144606-0000	.SIGN	2-131, 2-133
1144607-0000	.SIGN	2-131, 2-133
1144618-0000	.FLANGE	5-185
1144619-0000	.SHAFT	5-263, 5-267, 5-269
1144620-0000	.WASHER	5-185
1144621-0000	.PLATE	5-103, 5-105, 5-107, 5-109, 5-111, 5-171, 5-173, 5-177, 5-179
1144625-0000	.SPACER	5-263, 5-267, 5-269
1144645-0200	.PROTECTIVE COVER	5-263, 5-267
1144653-0000	.SWITCH	5-281
1144662-0000	.BUSHING	5-75, 5-77, 5-79
1144665-0000	.SEAL RING	5-185
1144667-0000	.HINGE	5-265, 5-271
1144668-0000	.HINGE	5-265, 5-271
1144669-0000	.PIN	5-265, 5-271
1144678-0000	.SHAFT	5-5, 5-7
1144681-0000	.WASHER	5-5, 5-7, 5-69, 5-221
1144683-0000	.AXLE PIN	5-5, 5-7
1144684-0000	.SPACER	5-5, 5-7
1144685-0000	.SCREW	5-5, 5-7
1144686-0000	.TIE ROD	5-5, 5-7
1144687-0000	.TIE ROD	5-5, 5-7
1144688-0000	.SCREW	5-5, 5-7
1144719-0000	.RAIL	5-45, 5-47, 5-49
1144760-0000	.PLATE	5-263, 5-267
1144783-0000	.TIMING BELT	5-103, 5-105, 5-107, 5-109, 5-111, 5-165, 5-167
1144784-0000	.TOOTHED PULLEY	5-263
1144788-0000	.TOOTHED PULLEY	5-263
1144794-0000	.SUPPORT	5-263, 5-267, 5-269
1144797-0000	.SUPPORT	5-185
1144802-0000	.PULLEY	5-69
1144839-0000	.BLOCK	5-185
1144841-0000	.TIMING BELT	5-263, 5-267, 5-269
1144849-0000	.SWITCH	5-221
1144892-0000	.GUIDE RIGHT	5-35, 5-37, 5-137, 5-139
1144893-0000	.GUIDE LEFT	5-35, 5-37, 5-137, 5-139
1144897-0000	.FOLDING BAR	5-45, 5-47, 5-49
1144898-0000	.FOLDING BAR	5-45, 5-47, 5-49
1144899-0000	.SUPPORT	5-65, 5-67
1144900-0000	.SUPPORT	5-185
1144901-0000	.GUIDE	5-29, 5-31, 5-33
1144902-0000	.SUPPORT	5-29, 5-31, 5-33, 5-129, 5-131
1144905-0000	.SUPPORT	5-35, 5-37
1144914-0000	.LEVER	5-241, 5-243, 5-245, 5-247, 5-249, 5-251
1144915-0000	.LEVER	5-241, 5-243, 5-245, 5-247, 5-249, 5-251
1144916-0000	.ADJUSTING SCREW	5-241, 5-243, 5-245, 5-247, 5-249, 5-251
1144918-0000	.PLATE	5-103, 5-105, 5-107, 5-109, 5-111, 5-165, 5-167
1144919-0000	.CARRIER	5-103, 5-105, 5-107, 5-109, 5-111, 5-165, 5-167
1144924-0000	.BOTTOM	5-23, 5-25
1144926-0000	.FLAP	5-23, 5-25
1144927-0000	.FLAP	5-23, 5-25
1144928-0000	.PUSHER	5-241, 5-243, 5-245, 5-247, 5-249, 5-251
1144932-0000	.PLATE	5-241, 5-243, 5-245, 5-247, 5-249, 5-251
1144933-0000	.BLOCK	5-5, 5-7
1144941-0000	.COVERING PLATE	5-29, 5-31, 5-33, 5-129, 5-131
1144943-0000	.SPACER	5-59, 5-61
1144974-0000	.ADJUSTING PLATE	5-29, 5-31, 5-33, 5-129, 5-131
1144975-0000	.ATTACHMENT PLATE	5-29, 5-31, 5-33, 5-129, 5-131
1144976-0000	.STOP SCREW	5-29, 5-31, 5-33, 5-129, 5-131
1144978-0000	.CAM	5-241, 5-243, 5-245, 5-247, 5-249, 5-251
1144979-0000	.WASHER	5-29, 5-31, 5-33, 5-129, 5-131
1144990-0000	.FOLDING BAR	5-45, 5-47, 5-49
1145391-0000	.ROLLER	7-221
1147253-0000	.NUT	7-283, 7-287
1190007-0402	.PLMS RECEIVE	8-105
1195360-0000	.YOKE LEFT	4-203
1195361-0000	.YOKE RIGHT	4-213
1195397-0000	.COMPRESSION SPRING	1-249
1195466-0000	.PIPE	6-47
1254025-0000	.STRIP	2-171, 2-187
1254027-0000	.CORNER STRIP	2-187
1254028-0000	.FASTENING PLATE	2-171, 2-187
1254030-0000	.CHECKER PLATE	2-187
1254109-0000	.BRACKET	4-191, 4-193
1254110-0000	.BRACKET	4-191, 4-193
1254111-0000	.BRACKET	4-191, 4-193
1254410-0000	.WASHER	1-301
1254442-0000	.CABLE SERIAL	8-89, 8-91
1254494-0000	.SPACER	2-143
1255117-0000	.PLAIN BEARING	4-233, 4-235

Part No	Description	Page No
1255222-0000	.FRAME	3-13, 3-29
1255223-0000	.HOLDER	3-15, 3-31
1255228-0000	.WHEEL	3-21
1255233-0000	.BUSHING	3-7, 3-9
1255261-0000	.FLANGE	3-7
1255293-0000	.CROSS BAR	6-49
1255365-0000	.MOUNTING PLATE	6-23
1255389-0000	.BUSHING	4-119, 4-121, 4-123, 4-125
1255390-0000	.BUSHING	4-119, 4-121, 4-123, 4-125
1255457-0000	.CARRIER RULER	4-127, 4-129
1255458-0000	.CARRIER RULER	4-127, 4-129
1255459-0000	.CARRIER RULER	4-127, 4-129
1255460-0000	.CARRIER RULER	4-127, 4-129
1255461-0000	.CARRIER RULER	4-163, 4-165
1255462-0000	.CARRIER RULER	4-163, 4-165
1255463-0000	.CARRIER RULER	4-163, 4-165
1255464-0000	.CARRIER RULER	4-163, 4-165
1255541-0000	.BUSHING	4-7, 4-9, 4-11, 4-17, 4-19, 4-21
1255551-0000	.SEAL CLOTH	1-283
1255557-0000	.GASKET	2-33
1255559-0000	.PEROXIDE TANK	2-19, 2-21
1255633-0000	.HATCH	6-59
1255635-0000	.HATCH	6-63
1255636-0000	.COVERING PANEL	6-51
1255637-0000	.COVER	6-51
1255638-0000	.COVERING PANEL	6-51
1255671-0000	.GABLE PLATE	6-53
1255916-0000	.BUSHING	4-77, 4-83
1260247-0000	.CLIP	6-23
1260327-0000	.TUBE	6-23
1260328-0000	.SPRING	4-95
1260547-0100	.ICE WATER UNIT	6-13, 6-15
1260659-0000	.SPRING	9-11, 9-13, 9-15, 9-17, 9-19
1260700-0000	.BLOCK	5-5, 5-7
1260701-0000	.PUSHER	5-241, 5-243, 5-245, 5-247, 5-249, 5-251
1260702-0000	.PLATE	5-241, 5-243, 5-245, 5-247, 5-249, 5-251
1260703-0000	.BOTTOM	5-23, 5-25
1260704-0000	.FLAP	5-23, 5-25, 5-113, 5-115
1260705-0000	.FLAP	5-23, 5-25
1260709-0000	.GUIDE UPPER R	5-35, 5-37
1260710-0000	.GUIDE UPPER L	5-35, 5-37
1260712-0000	.CRANK	5-275
1260714-0000	.SPACER	5-101
1260824-0000	.SPACER RING	5-5, 5-7
1260832-0000	.WASHER	5-69
1260851-0000	.AXLE PIN	5-75, 5-77, 5-79
1260852-0000	.WASHER	5-75, 5-77, 5-79
1260853-0000	.RING	5-75, 5-77, 5-79
1260883-0200	.CRANK	5-3
1260885-0000	.FLAP	5-23, 5-25
1260886-0000	.FLAP	5-23, 5-25
1260887-0000	.BLOCK	5-5, 5-7
1260888-0000	.BLOCK	5-241, 5-243, 5-245, 5-247, 5-249, 5-251
1260889-0000	.PUSHER	5-241, 5-243, 5-245, 5-247, 5-249, 5-251
1260894-0000	.PROTECTION	5-265
1260895-0000	.SPRING	5-241, 5-243, 5-245, 5-247, 5-249, 5-251
1260931-0000	.SCREW	5-185
1260941-0000	.SLIDE	5-263
1260944-0000	.BUSHING	5-5, 5-7
1279409-0000	.PLATE	5-103, 5-105, 5-107, 5-109, 5-111, 5-171, 5-173, 5-177, 5-179
1279559-0000	.ARM	5-23, 5-25, 5-113, 5-115
1279573-0000	.SLIDE RAIL UPPER	5-59, 5-61
1279582-0000	.RAIL	5-83, 5-85, 5-87, 5-89, 5-91
1279585-0000	.SUPPORT	5-59, 5-61
1279586-0000	.SUPPORT	5-59, 5-61
1279587-0000	.SLIDE RAIL UPPER	5-59, 5-61
1279670-0000	.SPACER	5-101
1279677-0100	.CRANK GUARD	5-3
1279680-0000	.PIPE	5-277, 5-279
1279688-0000	.SUPPORT	5-263, 5-267, 5-269
1279689-0000	.ACTIVATOR	5-267, 5-269
1282287-0000	.CARRIER	5-103, 5-105, 5-107, 5-109, 5-111, 5-165, 5-167
1282290-0000	.GUIDE	5-103, 5-105, 5-107, 5-109, 5-111, 5-165, 5-167
1282291-0000	.GUIDE	5-103, 5-105, 5-107, 5-109, 5-111, 5-165, 5-167
1282294-0000	.FOLDING BAR	5-45, 5-47, 5-49
1282295-0000	.FOLDING BAR	5-45, 5-47, 5-49
1282335-0000	.FLANGE	5-69
1282343-0000	.BLOCK	5-69
1282345-0000	.SPRING	5-69
1282681-0000	.TOOTHED PULLEY	5-267, 5-269
1282705-0000	.SUPPORT	5-35, 5-37, 5-137, 5-139
1282708-0000	.BUSHING	5-11, 5-13, 5-19, 5-21, 5-23, 5-25, 5-113, 5-115
1282844-0000	.SUPPORT	5-185
1282848-0000	.CARRIER	5-103, 5-105, 5-107, 5-109, 5-111, 5-165, 5-167

Part No	Description	Page No
1282864-0000	.SPRING	5-75, 5-77, 5-79
1282876-0000	.PIPE	2-25
1282879-0000	.CONNECTING PIPE	2-25
1282891-0000	.PIPE	2-19, 2-21
1282892-0000	.TANK	2-29
1282893-0000	.PIPE	2-29
1282894-0100	.PEROXIDE TANK	2-17
1282895-0200	.PEROXIDE PIPE	2-17
1282896-0100	.TANK	2-17
1282898-0000	.HOSE	2-29
1282899-0000	.HOSE	2-19, 2-21
1282901-0000	.PIPE	2-25
1282906-0000	.NIPPLE	2-19, 2-21
1285003-0000	.LINK	4-167
1285005-0000	.NUT	4-167
1285006-0000	.SPACER	4-167
1285009-0000	.HOLDER	5-83, 5-85, 5-87, 5-89, 5-91
1285010-0000	.HOLDER	5-97, 5-99
1285012-0300	.FOLDING PART	5-3
1285014-0000	.DISTRIBUTOR	5-29, 5-31, 5-33, 5-129, 5-131
1285022-0000	.SIDE PLATE	5-257, 5-259, 9-7, 9-9
1285023-0000	.SIDE PLATE	5-257, 5-259, 9-7, 9-9
1285253-0000	.SPACER	5-83, 5-85, 5-87, 5-89, 5-91
1285254-0000	.WASHER	5-75, 5-77, 5-79
1285260-0400	.OUT FEED	5-3
1285265-0000	.PLATE	5-59, 5-61
1285266-0000	.SPACER	5-59, 5-61
1285267-0000	.SUPPORT	5-35, 5-37, 5-137, 5-139
1285291-0000	.PLATE	5-193
1285293-0000	.HEATING PIPE	5-187, 5-189, 5-191
1285299-0000	.BRACKET	5-29, 5-31, 5-33, 5-129, 5-131
1285306-0000	.SPACER	5-59, 5-61
1285307-0000	.SPACER	5-187, 5-189, 5-191
1285308-0000	.GASKET	5-187, 5-189, 5-191
1285310-0000	.EXTENSION	5-209, 5-211, 5-213, 5-215, 5-217, 5-219
1285311-0000	.PLATE	5-187, 5-189, 5-191
1285312-0000	.GASKET	5-187, 5-189, 5-191
1285363-0000	.TUBE	6-23
1285870-0000	.EXTENSION	5-209, 5-211, 5-213, 5-215, 5-217, 5-219
1285874-0000	.SPACER	5-209, 5-211, 5-213, 5-215, 5-217, 5-219
1285875-0200	.BELT TENSIONER	5-69
1285955-0000	.PLATE	5-267, 5-269
1285956-0000	.BLOCK	5-267, 5-269
1296066-0000	.NOZZLE	5-209, 5-211, 5-213, 5-215, 5-217, 5-219
1296067-0000	.NOZZLE	5-209, 5-211, 5-213, 5-215, 5-217, 5-219
1296068-0000	.NOZZLE	5-209, 5-211, 5-213, 5-215, 5-217, 5-219
1296070-0000	.HEATING PIPE	5-187, 5-189, 5-191
1296072-0000	.EXTENSION	5-209, 5-211, 5-213, 5-215, 5-217, 5-219
1296079-0000	.RAIL	5-83, 5-85, 5-87, 5-89, 5-91
1296081-0000	.PLATE	5-59, 5-61
1296153-0000	.GUIDE	5-209, 5-211, 5-213, 5-215, 5-217, 5-219
1296176-0000	.SPRING	5-75, 5-77, 5-79
1296180-0000	.FOLDING DEVICE	5-11, 5-13
1296181-0000	.FOLDING DEVICE	5-11, 5-13
1296218-0200	.LID	2-245
1296289-0000	.TUNNEL	2-243
1296290-0000	.GASKET	2-243
1296387-0000	.NOZZLE	5-209, 5-211, 5-213, 5-215, 5-217, 5-219
1296845-0000	.BRACKET	2-273, 2-275
1296877-0100	.SEAL KIT	9-5
1296878-0100	.SEAL KIT	9-5
1296879-0100	.SEAL KIT	9-5
1296969-0000	.SCREW HOLDER	5-23, 5-25, 5-113, 5-115
1296970-0000	.SCREW BUSHING	5-23, 5-25, 5-113, 5-115
1317042-0000	.RAIL	5-45, 5-47, 5-49
1317043-0000	.SUPPORT	5-45, 5-47, 5-49, 5-145, 5-147
1317047-0000	.RAIL	5-45, 5-47, 5-49
1317085-0000	.NUT	5-209, 5-211, 5-213, 5-215, 5-217, 5-219
1317088-0000	.SPACER	5-35, 5-37, 5-45, 5-47, 5-49
1317211-0000	.COVERING PLATE	5-29, 5-31, 5-33, 5-129, 5-131
1317213-0000	.ADJUSTING PLATE	5-29, 5-31, 5-33, 5-129, 5-131
1317216-0000	.FOLDING BAR	5-45, 5-47, 5-49
1317217-0000	.FOLDING BAR	5-45, 5-47, 5-49
1317218-0000	.SPACER	5-83, 5-85, 5-87, 5-89, 5-91, 5-101, 5-161, 5-163
1317226-0000	.WEIGHT	2-27
1317228-0000	.WASHER	2-225
1317362-0000	.SHAFT	5-241, 5-243, 5-245, 5-247, 5-249, 5-251
1317363-0000	.SHAFT	5-241, 5-243, 5-245, 5-247, 5-249, 5-251
1317438-0000	.FORK	1-211, 1-213, 1-215
1317439-0000	.CATCH	4-39, 4-41
1317440-0000	.STOP PIN	4-27, 4-29, 4-39, 4-41
1317475-0000	.BRACKET	2-103, 2-105
1317554-0000	.FLAP	5-23, 5-25
1317555-0000	.FLAP	5-23, 5-25

Part No	Description	Page No
1317556-0000	.BOTTOM	5-23, 5-25
1317633-0000	.SPRING	5-29, 5-31, 5-33
1317650-0000	.GUIDE	5-103, 5-105, 5-107, 5-109, 5-111, 5-165, 5-167
1317651-0000	.GUIDE	5-103, 5-105, 5-107, 5-109, 5-111, 5-165, 5-167
1317652-0000	.FOLDING BAR	5-45, 5-47, 5-49
1317653-0000	.FOLDING BAR	5-45, 5-47, 5-49
1317654-0000	.PUSHER	5-241, 5-243, 5-245, 5-247, 5-249, 5-251
1317655-0000	.PLATE	5-241, 5-243, 5-245, 5-247, 5-249, 5-251
1317656-0000	.INSERT	5-23, 5-25
1317711-0000	.SHAFT	7-63, 7-141
1317712-0000	.SHAFT	7-63, 7-141
1317713-0000	.SHAFT	1-305, 1-307
1317740-0000	.RUBBER SLEEVE	4-27, 4-29, 4-39, 4-41
1317741-0000	.CATCH	4-27, 4-29
1317742-0000	.CANTILEVER	4-27, 4-29, 4-39, 4-41
1317784-0000	.BRACKET	2-27
1317787-0000	.CATCH	5-241, 5-243, 5-245, 5-247, 5-249, 5-251
1317789-0000	.BLOCK	5-5, 5-7
1317793-0000	.BASE	7-251
1317794-0000	.BASE	7-251
1317801-0000	.NOZZLE	5-209, 5-211, 5-213, 5-215, 5-217, 5-219
1317802-0000	.NOZZLE	5-209, 5-211, 5-213, 5-215, 5-217, 5-219
1317803-0000	.NOZZLE	5-209, 5-211, 5-213, 5-215, 5-217, 5-219
1317804-0000	.SPACER	5-209, 5-211, 5-213, 5-215, 5-217, 5-219
1317805-0000	.BAR	5-103, 5-105, 5-107, 5-109, 5-111, 5-171, 5-173
1317823-0000	.CANTILEVER	4-27, 4-29, 4-39, 4-41
1317824-0000	.CATCH	4-27, 4-29, 4-39, 4-41
1317983-0100	.ALARM BEACON	7-249
1334012-0000	.GUIDE UPPER L	5-35, 5-37
1334013-0000	.GUIDE UPPER R	5-35, 5-37
1334018-0000	.SHIM	5-5, 5-7
1334081-0000	.CURVE	4-179, 4-181, 4-183
1334113-0000	.HOLDER	5-83, 5-85, 5-87, 5-89, 5-91
1334187-0000	.PLATE	7-125
1334188-0000	.AXLE PIN	7-125
1334189-0000	.BLOCK	7-125
1334190-0000	.BLOCK	7-125
1334271-0000	.BAR	5-103, 5-105, 5-107, 5-109, 5-111, 5-177, 5-179
1334328-0000	.SPACER	5-5, 5-7
1334447-0000	.SPACER	5-35, 5-37, 5-137, 5-139
1334480-0000	.SUPPORT	5-29, 5-31, 5-33, 5-129, 5-131
1334507-0000	.TUBE	1-279
1334523-0000	.SUPPORT	5-35, 5-37, 5-137, 5-139
1334559-0000	.GUIDE UPPER R	5-35, 5-37, 5-137, 5-139
1334560-0000	.GUIDE UPPER L	5-35, 5-37, 5-137, 5-139
1334561-0000	.SLIDE	5-103, 5-105, 5-107, 5-109, 5-111
1334562-0000	.SLIDE	5-103, 5-105, 5-107, 5-109, 5-111
1334632-0000	.SPACER	5-209, 5-211, 5-213, 5-215, 5-217, 5-219
1334633-0200	.VOLUME FLAP CUTTING	4-5
1334634-0200	.VOLUME FLAP PRESSURE	4-5
1334635-0200	.SHOCK ABSORBER	4-5
1334636-0200	.SHOCK ABSORBER	4-5
1334651-0100	.LINK	4-199
1334652-0000	.LINK	4-225
1334653-0000	.LINK	3-11
1334654-0000	.CONNECTION CLAMP	3-25, 4-225
1334655-0000	.LINK ROD	3-25
1334659-0000	.SCREW	3-11
1334718-0000	.SPACER	5-45, 5-47, 5-49
1334856-0000	.COUNTER ROLLER	1-29, 1-31, 1-53, 1-55
1334928-0000	.3AM	3-23
1334929-0000	.SHAFT	3-23
1334932-0000	.DISC	3-23
1334939-0000	.PLUG	3-17
1334941-0000	.TORSION SPRING	3-23
1334942-0000	.WEDGE	3-23
1334943-0000	.STOP LUG	3-23
1334999-0000	.PUSHER	5-241, 5-243, 5-245, 5-247, 5-249, 5-251
1338143-0000	.DIMCAP, CONTROL PANEL SUPPORT, SHIMS	10-95
1338402-0000	.GUIDE	10-11
1338403-0000	.GUIDE	10-11
1338404-0000	.BRACKET	10-11
1338405-0000	.BRACKET	10-11
1338793-0000	.BRACKET	4-209, 4-211, 4-219, 4-221
1346149-0000	.FOLDING BAR	5-45, 5-47, 5-49
1346150-0000	.FOLDING BAR	5-45, 5-47, 5-49
1346153-0000	.STOP PIN	4-27, 4-29, 4-39, 4-41
1346157-0000	.VOLUME BULGE	4-7, 4-9, 4-11, 4-17, 4-19, 4-21
1346158-0000	.VOLUME SHIM	4-7, 4-9, 4-11, 4-17, 4-19, 4-21, 9-11, 9-13, 9-15, 9-17, 9-19
1346307-0000	.HOLDER	5-281
1346312-0000	.SCREW	2-273, 2-275
1346313-0000	.PLATE	2-273, 2-275
1346340-0000	.BRACKET	5-35, 5-37, 5-137, 5-139
1346343-0000	.RAIL	5-45, 5-47, 5-49, 5-145, 5-147

Part No	Description	Page No
1346344-0000	.RAIL	5-45, 5-47, 5-49, 5-145, 5-147
1346395-0000	.LOCKING ARM	7-73
1346399-0000	.DISTANCE	7-53
1346400-0000	.CABLE DUCT	7-57
1346401-0000	.HOLDER	7-53
1346402-0000	.PLATE	7-55
1346403-0000	.BRACKET	7-73
1346404-0000	.BRACKET	7-73
1346405-0000	.WASHER	7-55
1346406-0000	.COVER PLATE	7-55
1346407-0000	.COVER	7-55
1346408-0000	.SUPPORT	7-73
1346409-0000	.SHAFT	7-73
1346410-0000	.BRACKET	7-55
1346411-0000	.BRACKET	7-55
1346417-0000	.FRAME	7-55
1346418-0000	.FRAME	7-53
1346421-0000	.FRAME	7-53
1346423-0000	.COVER	7-261, 7-263
1346427-0000	.DISTANCE	7-249
1346429-0300	.BRACKET	7-35, 7-37
1346430-0100	.SUPPORT	7-35, 7-37
1346431-0100	.HOLDER	7-35, 7-37
1346471-0000	.WEDGE	5-103, 5-105, 5-107, 5-109, 5-111, 5-165, 5-167
1346539-0000	.CONNECTING ROD	5-241, 5-243, 5-245, 5-247, 5-249, 5-251
1346568-0000	.HEAT EXCHANGER	1-279
1346580-0000	.NOZZLE	5-209, 5-211, 5-213, 5-215, 5-217, 5-219
1346581-0000	.NOZZLE	5-209, 5-211, 5-213, 5-215, 5-217, 5-219
1346588-0000	.DRIP PLATE	5-65, 5-67
1346641-0000	.SPACER	5-209, 5-211, 5-213, 5-215, 5-217, 5-219
1346642-0000	.SPACER	5-209, 5-211, 5-213, 5-215, 5-217, 5-219
1346643-0000	.NOZZLE	5-209, 5-211, 5-213, 5-215, 5-217, 5-219
1346644-0000	.NOZZLE	5-209, 5-211, 5-213, 5-215, 5-217, 5-219
1346646-0000	.EXTENSION	5-209, 5-211, 5-213, 5-215, 5-217, 5-219
1346656-0000	.ROD	1-197
1346657-0000	.CYLINDER BRACKET	1-197
1346658-0000	.BRACKET	1-197
1346659-0000	.SCREW	1-197
1346677-0000	.CYLINDER	1-197
1346678-0000	.NOZZLE	5-209, 5-211, 5-213, 5-215, 5-217, 5-219
1346679-0000	.NOZZLE	5-209, 5-211, 5-213, 5-215, 5-217, 5-219
1346736-0000	.WEDGE	5-103, 5-105, 5-107, 5-109, 5-111, 5-165, 5-167
1346845-0000	.PLATE	3-17
1346846-0000	.BELT HOLDER	3-17
1346885-0000	.SUPPORT	2-217, 2-219, 2-239, 2-259
1346890-0000	.SPACER	3-21
1346988-0000	.ROLL	7-25
1347017-0000	.PULLEY	5-221
1347018-0000	.PLUG	5-241, 5-243, 5-245, 5-247, 5-249, 5-251
1347057-0000	.GUIDE	5-29, 5-31, 5-33, 5-129, 5-131
1347108-0000	.PLATE	5-185
1347109-0000	.PLATE	5-185
1347245-0000	.HEAT EXCHANGER	1-199
1347410-0000	.ACTIVATOR	5-263
1347495-0000	.AXLE PIN	5-11, 5-13
1347496-0000	.SCREW	5-11, 5-13, 5-19, 5-21
1347526-0000	.BRACKET	4-27, 4-29, 4-39, 4-41
1347600-0000	.SUPPORT	5-11, 5-13
1347673-0000	.BRACKET	8-73
1347699-0000	.PLATE	5-263
1347704-0000	.THERMOCOUPLE	2-19, 2-21
1347839-0000	.PULLEY	3-7, 3-9
1347878-0000	.RAIL	2-97
1347880-0000	.INSERT	1-223
1348041-0000	.SPACER	5-35, 5-37
1348042-0000	.SPACER	5-45, 5-47, 5-49
1348043-0000	.SPACER	5-209, 5-211, 5-213, 5-215, 5-217, 5-219
1348047-0000	.FORK	1-211, 1-213, 1-215
1348048-0000	.FORK	1-211, 1-213, 1-215
1348049-0000	.FORK	1-211, 1-213, 1-215
1348056-0300	.FOLDING PART	5-5, 5-7
1348072-0000	.DRIP PLATE	5-221
1348132-0000	.SLIDE	5-103, 5-105, 5-107, 5-109, 5-111
1348133-0000	.SLIDE	5-103, 5-105, 5-107, 5-109, 5-111, 5-171, 5-173
1348134-0000	.SLIDE	5-103, 5-105, 5-107, 5-109, 5-111
1348135-0000	.SLIDE	5-103, 5-105, 5-107, 5-109, 5-111, 5-171, 5-173
1348136-0000	.SLIDE	5-103, 5-105, 5-107, 5-109, 5-111, 5-171, 5-173
1348138-0000	.SLIDE	5-103, 5-105, 5-107, 5-109, 5-111
1348139-0000	.SLIDE	5-103, 5-105, 5-107, 5-109, 5-111, 5-177, 5-179
1348140-0000	.SLIDE	5-103, 5-105, 5-107, 5-109, 5-111
1348141-0000	.SLIDE	5-103, 5-105, 5-107, 5-109, 5-111, 5-177, 5-179
1348142-0000	.SLIDE	5-103, 5-105, 5-107, 5-109, 5-111, 5-177, 5-179
1348144-0000	.BAR	5-103, 5-105, 5-107, 5-109, 5-111, 5-171, 5-173
1348145-0000	.BAR	5-103, 5-105, 5-107, 5-109, 5-111

Part No	Description	Page No
1348146-0000	.BAR	5-103, 5-105, 5-107, 5-109, 5-111
1348147-0000	.BAR	5-103, 5-105, 5-107, 5-109, 5-111, 5-171, 5-173
1348148-0000	.BAR	5-103, 5-105, 5-107, 5-109, 5-111, 5-171, 5-173
1348150-0000	.BAR	5-103, 5-105, 5-107, 5-109, 5-111, 5-177, 5-179
1348151-0000	.BAR	5-103, 5-105, 5-107, 5-109, 5-111
1348152-0000	.BAR	5-103, 5-105, 5-107, 5-109, 5-111
1348153-0000	.BAR	5-103, 5-105, 5-107, 5-109, 5-111, 5-177, 5-179
1348154-0000	.BAR	5-103, 5-105, 5-107, 5-109, 5-111, 5-177, 5-179
1348169-0000	.PLATE	5-103, 5-105, 5-107, 5-109, 5-111, 5-171, 5-173, 5-177, 5-179
1348196-0000	.FASTENING PLATE	4-215, 4-217
1348197-0000	.HOLDER	2-131, 2-133
1348263-0000	.FLANGE	10-65
1348303-0000	.STUD SCREW	5-221
1348359-0000	.BRACKET	2-103, 2-105
1348386-0000	.BEARING HOUSING	2-273, 2-275
1348455-0200	.YOKE LEFT	4-199
1348456-0200	.PRESSURE ARM LEFT	4-199
1348457-0200	.CUTTING ARM LEFT	4-199
1348460-0200	.YOKE RIGHT	4-199
1348461-0200	.PRESSURE ARM RIGHT	4-199
1348462-0200	.CUTTING ARM RIGHT	4-199
1348466-0100	.SCISSOR ARM LINK	4-199
1348483-0000	.SPRING RIGHT	4-27, 4-29, 4-39, 4-41, 4-51, 4-53, 4-55, 4-57, 4-63, 4-65, 4-67, 4-69
1348484-0000	.SPRING LEFT	4-27, 4-29, 4-39, 4-41, 4-51, 4-53, 4-55, 4-57, 4-63, 4-65, 4-67, 4-69
1348504-0000	.SLEEVE	4-95
1348529-0000	.STRAINER	2-25
1348530-0000	.LID	2-25
1348537-0000	.TIMING BELT	5-241, 5-243, 5-245, 5-247, 5-249, 5-251
1348538-0000	.LEVER	5-75, 5-77, 5-79
1348540-0000	.PIVOT AXLE	5-75, 5-77, 5-79
1348545-0000	.RAIL	4-97, 4-99, 4-101
1348546-0000	.RAIL	4-143, 4-145, 4-147
1348631-0000	.PLATE	5-75, 5-77, 5-79
1348635-0000	.RUBBER SEAL	5-281
1348663-0000	.PLATE	5-281
1348669-0000	.SCREW	4-209, 4-211, 4-219, 4-221
1348671-0000	.JOINT LEFT	4-209, 4-211
1348672-0000	.JOINT RIGHT	4-219, 4-221
1348808-0000	.CURVE	4-179, 4-181, 4-183
1348809-0000	.CURVE	4-179, 4-181, 4-183
1348854-0000	.PLATE	5-257, 5-259
1348918-0000	.DISTANCE	7-249
1348920-0000	.CRADLE	5-257, 5-259
1348921-0000	.TOOTHED PULLEY	5-263
1348922-0000	.TOOTHED PULLEY	5-263
1348955-0000	.KNIFE	4-167, 9-11, 9-13, 9-15, 9-17, 9-19
1348956-0000	.KNIFE	4-167, 9-11, 9-13, 9-15, 9-17, 9-19
1348957-0000	.BRACKET	5-267
1348963-0000	.SLIDE	5-267
1348966-0000	.KNIFE	4-167, 9-11, 9-13, 9-15, 9-17, 9-19
1348990-0000	.SUPPORT	5-281
1349014-0000	.PAD	7-133
1349017-0000	.PLATE	5-257, 5-259
1349020-0000	.GLAND FITTING	5-281
1349087-0000	.DISTRIBUTOR	5-29, 5-31, 5-33, 5-129, 5-131
1349152-0000	.TIMING BELT	5-103, 5-105, 5-107, 5-109, 5-111, 5-165, 5-167
1349160-0000	.SPACER	5-69
1349181-0000	.TOUCH GUARD	7-127
1349187-0000	.SPRING	2-273, 2-275
1349208-0000	.VOLUME SHIM	4-7, 4-9, 4-11, 4-17, 4-19, 4-21, 9-11, 9-13, 9-15, 9-17, 9-19
1349266-0000	.PLATE	3-19, 3-33
1349319-0000	.CANTILEVER	4-27, 4-29, 4-39, 4-41
1349320-0000	.CATCH	4-27, 4-29, 4-39, 4-41
1349398-0000	.NUT	1-197
1349432-0000	.CATCH	7-25
1349516-0000	.SHAFT	5-241, 5-243, 5-245, 5-247, 5-249, 5-251
1349517-0000	.TOOTHED PULLEY	5-241, 5-243, 5-245, 5-247, 5-249, 5-251
1349518-0000	.SUPPORT	5-241, 5-243, 5-245, 5-247, 5-249, 5-251
1349519-0000	.ACTIVATOR	5-241, 5-243, 5-245, 5-247, 5-249, 5-251
1349566-0000	.COVER	5-285
1349568-0000	.CONNECTION BOX	5-287
1349581-0000	.FLAG	7-123
1349584-0000	.BUSHING	4-97, 4-99, 4-101, 4-143, 4-145, 4-147
1349595-0000	.SLEEVE	4-95
1349599-0000	.HOLDER	4-97, 4-99, 4-101, 4-143, 4-145, 4-147
1349608-0000	.HOLDER	1-279
1349612-0000	.PISTON	4-95
1349672-0000	.GUIDE	7-25
1349738-0100	.PRESSURE TEST EQUIPMENT	10-5
1349741-0000	.CURVE	4-179, 4-181, 4-183
1349744-0000	.VOLUME CAM	4-179, 4-181, 4-183
1349780-0000	.LID	4-203, 4-213
1349806-0000	.GUIDE	5-83, 5-85, 5-87, 5-89, 5-91
1349851-0000	.ROLL	1-29, 1-31, 1-53, 1-55

Part No	Description	Page No
1349867-0000	.FASTENING PLATE	4-205, 4-207
1349868-0000	.FASTENING PLATE	4-205, 4-207, 4-215, 4-217
1349914-0100	.TEMPLATE FILLING PIPE	9-29
1349925-0000	.PLATE	4-119, 4-121, 4-123, 4-125
1349972-0000	.SPRING HOUSING	4-203, 4-213
1349980-0000	.SHAFT	4-97, 4-99, 4-101, 4-143, 4-145, 4-147
1349985-0000	.SPRING	5-75, 5-77, 5-79
1349986-0000	.ROLLER	7-123
1349994-0000	.NUT	7-25
1350042-0000	.GASKET	5-235, 5-237, 5-239
1350210-0100	.RUNNER	3-15, 3-31
1350217-0150	.GUIDE	3-13
1350218-0150	.GUIDE	3-29
1350263-0000	.SPRING RIGHT	4-27, 4-29, 4-39, 4-41, 4-51, 4-53, 4-55, 4-57, 4-63, 4-65, 4-67, 4-69
1350264-0000	.SPRING LEFT	4-27, 4-29, 4-39, 4-41, 4-51, 4-53, 4-55, 4-57, 4-63, 4-65, 4-67, 4-69
1350305-0000	.SEALING RING	5-71
1350421-0000	.NOZZLE	5-209, 5-211, 5-213, 5-215, 5-217, 5-219
1350422-0000	.NOZZLE	5-209, 5-211, 5-213, 5-215, 5-217, 5-219
1350423-0000	.FOLDING BAR	5-35, 5-37, 5-137, 5-139
1350424-0000	.GUIDE RIGHT	5-35, 5-37, 5-137, 5-139
1350425-0000	.GUIDE LEFT	5-35, 5-37, 5-137, 5-139
1350440-0000	.LEVER	5-11, 5-13, 5-19, 5-21
1350441-0000	.SUPPORT	5-11, 5-13
1350497-0000	.ASSEMBLY TOOL	10-5
1350498-0000	.ASSEMBLY TOOL	10-5
1350543-0000	.AXLE PIN	5-75, 5-77, 5-79
1350564-0000	.CLAMP HUB	5-69
1350721-0000	.STUD SCREW	5-35, 5-37, 5-45, 5-47, 5-49
1350808-0000	.BLOCK	5-5, 5-7
1350809-0000	.BLOCK	5-241, 5-243, 5-245, 5-247, 5-249, 5-251
1350810-0000	.PUSHER	5-241, 5-243, 5-245, 5-247, 5-249, 5-251
1350824-0000	.AXLE PIN	3-25
1350825-0000	.LOCK	3-15, 3-31
1350826-0000	.LOCK	3-15, 3-31
1359085-0000	.T-HOLDER	5-95
1359565-0000	.NUT	5-93, 5-95
1360149-0000	.SPACER	5-265, 5-271
1360318-0000	.CARRIER RULER	4-127, 4-129
1360319-0000	.CARRIER RULER	4-163, 4-165
1360399-0000	.PIPE HOLDER	10-55, 10-57
1361560-0000	.PLATE	6-17
1361918-0300	.WHEEL	5-3
1361922-0200	.DROP CHUTE VARIANT	5-3
1361923-0200	.INFEED CONVEYOR VARIANT	5-3
1363297-0000	.CABLE LVDS 10M	2-149, 2-151
1366726-0000	.HOLDER	5-95
1366727-0000	.CLAMP	5-93, 5-95
1366777-0101	.ANGLED RAIL HOLDER TPC21	5-83, 5-85, 5-87, 5-89, 5-91
1367098-0000	.BRAID	10-95
1369439-0102	.PLMS ON-LINE	10-67
1369599-0100	.TERMINAL	10-97
1369672-0000	.BRACKET	10-97
1369673-0000	.TUBE	10-97
1369706-0000	.RAIL	10-99
1369716-0000	.CABLE DUCT	10-97
1369717-0000	.CABLE DUCT	10-97
1478000-0000	.HOSE	4-205, 4-207, 4-215, 4-217
1478001-0000	.HOSE	4-205, 4-207, 4-215, 4-217
1478127-0000	.DRIP PLATE	5-65, 5-67
1478170-0000	.CONTAINER	1-317
1478189-0000	.SUPPORT	5-241, 5-243, 5-245, 5-247, 5-249, 5-251
1478190-0000	.TEMPLATE	10-27
1478214-0000	.SLIDE	5-103, 5-105, 5-107, 5-109, 5-111
1478215-0000	.SLIDE	5-103, 5-105, 5-107, 5-109, 5-111
1478227-0000	.CARRIER	5-75, 5-77, 5-79
1478228-0000	.CAM	5-75, 5-77, 5-79
1478235-0000	.PLATE	5-83, 5-85, 5-87, 5-89, 5-91
1478302-0000	.AXLE BOLT	5-71
1478303-0000	.TENSION SPRING	7-25
1478358-0000	.VOLUME FLAP	4-7, 4-9, 4-11, 4-17, 4-19, 4-21
1478359-0000	.ROLLER	1-97, 1-99
1478389-0000	.COVERING PLATE	2-247
1478391-0000	.GASKET	2-247
1478393-0000	.CATCH	4-27, 4-29, 4-39, 4-41
1478395-0000	.CATCH	4-27, 4-29, 4-39, 4-41
1478396-0000	.STOP	4-27, 4-29, 4-39, 4-41
1478417-0000	.ROLLER	5-185
1478418-0000	.AXLE BOLT	5-185
1478497-0000	.VOLUME CAM	4-179, 4-181, 4-183
1478558-0000	.WASHER	5-75, 5-77, 5-79
1478583-0100	.PRESSURE GAUGE	10-5
1478584-0000	.NIPPLE	10-25
1478585-0000	.NEEDLE	10-25
1478659-0000	.BRACKET	5-285

Part No	Description	Page No
1478753-0000	.SHAFT	5-69
1478768-0200	.KNIFE	4-5
1478813-0000	.SPACER	1-249
1478814-0000	.SENSOR	1-249
1478905-0000	.FLANGE	5-69
1478908-0000	.SUPPORT	5-69
1478925-0000	.HATCH	5-75, 5-77, 5-79
1478926-0000	.GUIDE RIGHT	5-35, 5-37, 5-137, 5-139
1478927-0000	.GUIDE LEFT	5-35, 5-37, 5-137, 5-139
1478928-0000	.BUSHING	5-257, 5-259
1484002-0000	.PLATE	4-119, 4-121, 4-123, 4-125
1484003-0000	.PLATE	4-119, 4-121, 4-123, 4-125
1484067-0000	.BRACKET	1-297, 1-299
1484080-0000	.SUPPORT	1-199
1484081-0000	.BRACKET	1-281, 6-29
1484093-0000	.INSERT	2-149, 2-151
1484096-0000	.COVER	5-187, 5-189, 5-191
1484196-0100	.PACK COUNTER	5-283
1484197-0100	.CONNECTION BOX	5-283
1484210-0200	.OUT FEED DRIVING SYSTEM	5-57
1484250-0000	.VOLUME CAM	4-179, 4-181, 4-183
1484251-0000	.VOLUME CAM	4-179, 4-181, 4-183
1484289-0000	.HATCH	5-75, 5-77, 5-79
1484320-0000	.ROD	4-209, 4-211, 4-219, 4-221
1484363-0000	.COVER	7-261, 7-263
1484379-0000	.INSERT	2-149, 2-151
1484405-0000	.PIPE	1-321, 1-323
1484428-0000	.PLASTIC PLUG	1-285, 1-287
1484447-0000	.BALL BEARING	5-69
1484448-0000	.ROLLER BEARING	5-69
1484620-0000	.SHAFT	5-263
1484693-0000	.KNIFE HOLDER	7-153
1484695-0000	.KNIFE	7-153, 9-5
1484697-0000	.RAIL	7-157, 7-159
1484703-0000	.TIE ROD	7-153
1484704-0000	.SHAFT	7-143, 7-221
1484705-0000	.SLIDER	7-155
1484706-0000	.GEAR WHEEL	7-155
1484707-0200	.STRIP MAGAZINE	7-3, 7-5, 7-7, 7-9
1484708-0000	.MOUNTING PLATE	7-123
1484711-0000	.BRACKET	7-131
1484718-0000	.AXLE PIN	7-123
1484719-0000	.AXLE PIN	7-131
1484720-0100	.HINGE	7-121
1484724-0000	.HUB	7-129
1484725-0100	.HUB	7-121
1484726-0000	.SHAFT	7-129
1484728-0000	.BRACKET	7-221
1484738-0000	.BRACKET	7-221
1484740-0000	.BRACKET	7-123
1484745-0100	.WEB GUIDE	7-137, 7-139, 7-221
1484750-0000	.BRACKET	7-141
1484752-0000	.SLIDER	7-231, 7-233
1484760-0000	.SLIDER	7-231, 7-233
1484761-0000	.ANGLE BRACKET	7-231, 7-233
1484766-0000	.DANCE ROLLER	7-221, 7-231, 7-233
1484776-0000	.RAIL	7-155
1484777-0000	.SLIDER	7-155
1484778-0000	.PLATE	7-231, 7-233
1484779-0000	.ROD	7-155
1484781-0000	.PIN	7-153
1484782-0000	.CLAMP BLOCK	7-155
1484783-0000	.CLAMPING ELEMENT	7-155
1484784-0000	.LOCATING PIECE	7-155
1484785-0000	.LOCATING PIECE	7-155
1484865-0000	.VOLUME FLAP	4-17, 4-19, 4-21
1484866-0000	.VOLUME FLAP	4-7, 4-9, 4-11
1484867-0000	.VOLUME FLAP	4-7, 4-9, 4-11
1484868-0000	.VOLUME FLAP	4-17, 4-19, 4-21
1484889-0100	.DOOR	6-55
1484890-0000	.DOOR	6-57
1484969-0000	.SLEEVE	1-113
1487023-0000	.PIPE	6-47
1487038-0200	.OUTFEED WHEEL	5-57
1487158-0300	.FLAP HEATER VARIANT	5-3
1487159-0000	.CARRIER	5-75, 5-77, 5-79
1487177-0000	.GUIDE	5-83, 5-85, 5-87, 5-89, 5-91
1487338-0200	.SUPPORT LEVEL DETECTOR	2-101
1487504-0000	.WASHER	4-179, 4-181, 4-183
1487505-0001	.WASHER	4-179, 4-181, 4-183
1487505-0002	.WASHER	4-179, 4-181, 4-183
1487510-0000	.RACK GEAR	7-155
1487511-0000	.BRACKET	7-155
1487517-0000	.CATCH	7-153

Part No	Description	Page No
1487518-0000	.RULER	7-165, 7-173
1487519-0000	.SHAFT	7-231, 7-233
1487521-0000	.SHAFT	7-223
1487528-0100	.CYLINDER	7-173
1487530-0001	.GUIDE ROD	7-231, 7-233
1487536-0000	.GUIDE BRACKET	7-231, 7-233
1487537-0000	.BRACKET	7-231, 7-233
1487538-0000	.BRACKET	7-231, 7-233
1487544-0200	.SIDE FEEDER	7-93, 7-95
1487550-0000	.ANGLE BRACKET	7-231, 7-233
1487551-0000	.PLATE	7-231, 7-233
1487554-0000	.BRACKET	7-155
1487555-0000	.BUSHING	7-155
1487556-0000	.BAR	7-155
1487557-0000	.BAR	7-155
1487558-0000	.FASTENING PLATE	7-155
1487559-0000	.SLIDER	7-155
1487560-0200	.MACHINE BODY	7-3, 7-5, 7-7, 7-9
1487618-0000	.CUTTING JAW	4-119, 4-121, 4-123, 4-125
1487619-0000	.PLATE	4-119, 4-121, 4-123, 4-125
1487626-0000	.VOLUME BULGE	4-7, 4-9, 4-11, 4-17, 4-19, 4-21
1487627-0000	.VOLUME SHIM	4-7, 4-9, 4-11, 4-17, 4-19, 4-21, 9-11, 9-13, 9-15, 9-17, 9-19
1487628-0000	.WEDGE	4-7, 4-9, 4-11, 4-17, 4-19, 4-21
1487629-0100	.DAMPER	3-13
1487630-0100	.DAMPER	3-29
1487631-0000	.BRACKET	3-19, 3-33
1487632-0000	.FORK	3-19, 3-33
1487633-0000	.AXLE PIN	3-19, 3-33
1487634-0000	.AXLE PIN	3-19, 3-33
1487635-0000	.WHEEL	3-19, 3-33
1487636-0000	.STOPPER	3-19, 3-33
1487684-0000	.RAIL	5-83, 5-85, 5-87, 5-89, 5-91
1487738-0000	.FLAP	5-23, 5-25
1487739-0000	.FLAP	5-23, 5-25
1487763-0000	.SHAFT	7-149, 7-151
1487765-0000	.SPACER	7-231, 7-233
1487769-0000	.SPACER	7-231, 7-233
1487770-0000	.BRACKET	7-165, 7-173
1487779-0000	.SHAFT	7-165, 7-173
1487781-0000	.BRACKET	7-165, 7-173
1487782-0000	.SHAFT	7-165, 7-173
1487784-0000	.BRACKET	7-225
1487788-0000	.SPACER	7-227
1487795-0000	.PLATE	7-221
1487796-0000	.PLATE	7-221
1487800-0000	.PLATE	7-221
1487802-0000	.SPACER	7-221
1487808-0200	.BRACKET	7-3, 7-5, 7-7, 7-9
1487821-0000	.SPACER	5-185
1487922-0000	.FOLDING DEVICE	5-11, 5-13
1487923-0000	.FOLDING DEVICE	5-11, 5-13
1487929-0000	.SPACER	5-101
1487946-0000	.SHAFT	4-51, 4-53, 4-55, 4-57, 4-63, 4-65, 4-67, 4-69
1487948-0000	.BUSHING	4-51, 4-53, 4-55, 4-57, 4-63, 4-65, 4-67, 4-69
1487954-0000	.CUTTING JAW	4-119, 4-121, 4-123, 4-125
1487955-0000	.HOLDER	4-97, 4-99, 4-101, 4-143, 4-145, 4-147
1487995-0000	.HATCH	7-255, 7-257
1488000-0000	.DOOR	7-273
1488005-0000	.BEARING BLOCK	7-93, 7-95
1488007-0000	.WASHER	7-265
1490031-0000	.PLATE	5-241, 5-243, 5-245, 5-247, 5-249, 5-251
1490032-0000	.PUSHER	5-241, 5-243, 5-245, 5-247, 5-249, 5-251
1490033-0000	.SLIDE	5-103, 5-105, 5-107, 5-109, 5-111
1490034-0000	.SLIDE	5-103, 5-105, 5-107, 5-109, 5-111
1490035-0000	.BAR	5-103, 5-105, 5-107, 5-109, 5-111
1490036-0000	.BAR	5-103, 5-105, 5-107, 5-109, 5-111
1490039-0000	.NOZZLE	5-209, 5-211, 5-213, 5-215, 5-217, 5-219
1490046-0000	.PIN	1-297, 1-299, 2-65
1490057-0000	.BENDING ROLLER	1-285, 1-287
1490085-0000	.GEAR BOX	5-69
1490112-0100	.OUTFEED CONVEYOR	5-57
1490183-0000	.BRACKET	7-231, 7-233
1490187-0000	.ROCKER ARM	7-123
1490188-0100	.COVER	7-237, 7-239, 7-241, 7-243
1490190-0200	.HATCH	7-237, 7-239, 7-241, 7-243
1490191-0100	.DOOR	7-237, 7-239, 7-241, 7-243
1490193-0100	.COVER	7-237, 7-239, 7-241, 7-243
1490210-0000	.PLATE	7-115
1490215-0200	.COVERING PANEL	7-3, 7-5, 7-7, 7-9
1490219-0000	.BRACKET	7-115
1490220-0000	.ANGLE BRACKET	7-157, 7-159
1490226-0000	.FILTER	7-261, 7-263, 7-273
1490442-0000	.STUD SCREW 8X20	5-69
1490713-0000	.SPRING HOLDER	1-111

Part No	Description	Page No
1490714-0000	.GUIDE	1-111
1490715-0000	.DOLLY	1-111
1490762-0000	.ROLLER	1-85, 1-87
1490765-0000	.ROLLER	1-53, 1-55
1490804-0000	.HOLDER	7-127
1490806-0200	.HEATING DEVICE	7-121
1490809-0000	.ARM	7-167, 7-175
1490810-0000	.ARM	7-167, 7-175
1490812-0000	.AXLE	7-167, 7-175
1490813-0000	.SCREW	7-167, 7-175
1490814-0000	.PLATE	7-221
1490815-0000	.PLATE	7-221
1490818-0000	.ARM	7-123
1490820-0000	.SHAFT	7-143
1490821-0000	.ANGLE PIECE	7-165, 7-173
1490831-0200	.MAGAZINE	7-3, 7-5, 7-7, 7-9
1490950-0000	.SPLASH PLATE	2-27
1490962-0000	.LID	1-199
1490963-0000	.PIPE	1-195
1490994-0100	.LINK	3-5, 3-27
1494664-0000	.AXLE LINK	7-157, 7-159
1498029-0000	.PIN	5-241, 5-243, 5-245, 5-247, 5-249, 5-251
1498047-0000	.SEALING BLOCK	7-127, 9-5
1498064-0000	.BLOCK	5-71
1498066-0000	.SCREW	5-71
1498067-0000	.PLATE	5-71
1498068-0000	.SEAL RING	5-263, 5-267, 5-269
1498117-0000	.TEMPLATE	10-27
1498121-0000	.BASE PLATE	1-297, 1-299
1498122-0000	.BRACKET	1-297, 1-299
1498130-0000	.PLATE	1-147, 1-149, 1-151
1498131-0000	.BRACKET	1-147, 1-149, 1-151
1498132-0000	.SHAFT	1-147, 1-149, 1-151, 1-167, 1-169
1498133-0000	.ARM	1-147, 1-149, 1-151
1498134-0000	.PLATE	1-147, 1-149, 1-151
1498135-0000	.ARM	1-147, 1-149, 1-151
1498143-0000	.LOCK RING	1-211, 1-213, 1-215
1498146-0000	.NOZZLE	5-209, 5-211, 5-213, 5-215, 5-217, 5-219
1498147-0000	.NOZZLE	5-209, 5-211, 5-213, 5-215, 5-217, 5-219
1498149-0000	.TEMPLATE	9-33
1498150-0000	.TEMPLATE	9-33
1498151-0000	.TEMPLATE	9-33
1498161-0000	.SUPPORT	5-35, 5-37
1498163-0000	.SPACER	5-209, 5-211, 5-213, 5-215, 5-217, 5-219
1498430-0000	.ROD	7-17
1498445-0000	.COVER	7-121
1498450-0001	.PLATE	7-131
1498451-0001	.SHAFT	7-131
1498453-0200	.DOOR	7-237, 7-239, 7-241, 7-243
1498454-0200	.DOOR	7-237, 7-239, 7-241, 7-243
1498457-0000	.BRACKET	7-113
1498459-0001	.GLASS PANE	7-283, 7-287
1498459-0002	.GLASS PANE	7-273
1498459-0003	.GLASS PANE	7-255, 7-257, 7-277, 7-279
1498459-0004	.GLASS PANE	7-275
1498460-0000	.HATCH	7-277, 7-279
1498461-0001	.SEALING STRIP	7-283
1498461-0002	.SEALING STRIP	7-255, 7-257, 7-277, 7-279
1498461-0005	.SEALING STRIP	7-273, 7-275
1498526-0000	.REGULATOR BODY	1-249
1498528-0000	.TIMING BELT	5-69
1498529-0000	.TIMING BELT	5-69
1498620-0000	.PULLEY	5-69
1498621-0000	.SPRING	1-211, 1-213, 1-215
1498782-0000	.TANK BRACKET	1-297, 1-299
1498783-0000	.WHEEL	1-129
1498784-0000	.BENDING ROLLER	1-123, 1-125
1498787-0000	.BRACKET	1-297, 1-299
1498790-0000	.SHAFT	1-147, 1-149, 1-151
1498791-0000	.FLANGE	1-147, 1-149, 1-151
1498827-0000	.FOLDING BAR	5-45, 5-47, 5-49
1498828-0000	.FOLDING BAR	5-45, 5-47, 5-49
1498849-0000	.BUSBAR	4-97, 4-99, 4-101
1498850-0000	.BUSBAR	4-143, 4-145, 4-147
1498855-0000	.GASKET	2-113
1498856-0000	.FLANGE	2-113
1498857-0000	.CONNECTION	2-113
1498858-0000	.FLANGE	2-113
1498929-0000	.SPRING	5-223, 5-225, 5-227, 5-229, 5-231, 5-233
1499043-0000	.BRACKET	5-69
1499059-0000	.TIMING BELT	5-69
1499064-0000	.PULLEY	5-69
1499071-0000	.SPACER	5-35, 5-37, 5-45, 5-47, 5-49
1499072-0000	.SPACER	5-45, 5-47, 5-49

Part No	Description	Page No
1499094-0000	.SPACER SCREW	5-45, 5-47, 5-49
1499103-0000	.TIE ROD	5-11, 5-13
1499114-0000	.LOCK RING	1-211, 1-213, 1-215
1499135-0000	.GUIDE	5-103, 5-105, 5-107, 5-109, 5-111
1499136-0000	.GUIDE	5-103, 5-105, 5-107, 5-109, 5-111
1499139-0000	.BLOCK	5-5, 5-7
1499140-0000	.SPACER	5-101
1499141-0000	.FLAP	5-23, 5-25
1499142-0000	.FLAP	5-23, 5-25
1499143-0000	.PLATE	5-241, 5-243, 5-245, 5-247, 5-249, 5-251
1499144-0000	.PUSHER	5-241, 5-243, 5-245, 5-247, 5-249, 5-251
1499150-0000	.RAIL	5-45, 5-47, 5-49, 5-145, 5-147
1499151-0000	.RAIL	5-45, 5-47, 5-49, 5-145, 5-147
1499156-0000	.PIPE	1-283
1499157-0000	.HEATING PIPE	1-199
1499158-0100	.AIR SUPER-HEATER	1-177
1499160-0200	.SCRUBBER	1-177
1499162-0000	.TUBE	1-205
1499166-0000	.PIPE	1-281
1499168-0000	.LID	1-129
1499169-0000	.GASKET	1-129
1499170-0000	.GASKET	1-129
1499171-0000	.LID	1-129
1499172-0000	.UPPER SECTION	1-205
1499320-0000	.TIE ROD	4-109, 4-111, 4-113, 4-115, 4-153, 4-155, 4-157, 4-159
1499327-0000	.SHAFT	4-51, 4-53, 4-55, 4-57, 4-63, 4-65, 4-67, 4-69
1499328-0000	.STOPPER	4-51, 4-53, 4-55, 4-57, 4-63, 4-65, 4-67, 4-69
1499345-0000	.FLAP HOLDER	4-51, 4-53, 4-55, 4-57
1499350-0000	.CAM	4-51, 4-53, 4-55, 4-57, 4-63, 4-65, 4-67, 4-69
1499351-0200	.ROLLER UNIT	4-171, 4-173
1499355-0000	.ROLLER	4-51, 4-53, 4-55, 4-57, 4-63, 4-65, 4-67, 4-69
1499356-0000	.CAM	4-51, 4-53, 4-55, 4-57, 4-63, 4-65, 4-67, 4-69
1499358-0000	.VOLUME FLAP	4-51, 4-53, 4-55, 4-57, 4-63, 4-65, 4-67, 4-69
1499400-0000	.GUIDE	5-103, 5-105, 5-107, 5-109, 5-111
1499401-0000	.GUIDE	5-103, 5-105, 5-107, 5-109, 5-111
1499402-0000	.SPACER	5-45, 5-47, 5-49
1499411-0000	.COUNTER ROLLER	1-53, 1-55
1499413-0000	.HOLDER	5-83, 5-85, 5-87, 5-89, 5-91
1499417-0000	.BAR	5-103, 5-105, 5-107, 5-109, 5-111
1499418-0000	.SLIDE	5-103, 5-105, 5-107, 5-109, 5-111
1499422-0000	.SLIDE	5-103, 5-105, 5-107, 5-109, 5-111
1499423-0000	.BAR	5-103, 5-105, 5-107, 5-109, 5-111
1499426-0000	.GUIDE	5-103, 5-105, 5-107, 5-109, 5-111
1499427-0000	.GUIDE	5-103, 5-105, 5-107, 5-109, 5-111
1499444-0000	.NOZZLE	5-209, 5-211, 5-213, 5-215, 5-217, 5-219
1499445-0000	.NOZZLE	5-209, 5-211, 5-213, 5-215, 5-217, 5-219
1499446-0000	.NOZZLE	5-209, 5-211, 5-213, 5-215, 5-217, 5-219
1499475-0000	.HOLDER	5-103, 5-105, 5-107, 5-109, 5-111, 5-165, 5-167
1499476-0000	.HOLDER	5-103, 5-105, 5-107, 5-109, 5-111, 5-165, 5-167, 5-265, 5-271
1499562-0003	.LOCKING ARM	7-273, 7-275
1499562-0004	.LOCKING ARM	7-273, 7-275
1499564-0100	.COVER	7-237, 7-239, 7-241, 7-243
1499566-0000	.WASHER	7-157, 7-159
1499568-0000	.HATCH	7-289
1499569-0000	.BRACKET	7-123
1499570-0000	.HOLDER	7-93, 7-95
1499571-0100	.PAPER REEL HOLDER	7-93, 7-95
1499573-0000	.PIN	7-115
1499577-0000	.ARM	7-173
1499578-0300	.CABLE CONDUIT	7-137, 7-139
1499579-0000	.SEALING STRIP	7-287
1499582-0000	.AXLE PIN	7-165, 7-173
1499584-0000	.AXLE PIN	7-103, 7-221, 7-229
1499588-0000	.BENDING ROLLER	7-165, 7-173
1499594-0000	.VOLUME CAM	4-179, 4-181, 4-183
1499635-0000	.LEVER	5-5, 5-7
1499636-0000	.ROLLER	1-53, 1-55
1499642-0201	.TPIH GENERATOR	8-55
1499675-0000	.VOLUME BULGE	4-7, 4-9, 4-11, 4-17, 4-19, 4-21
1499678-0000	.ROLLER	4-185, 4-187
1499726-0000	.PLASTIC HOSE	1-283
1499735-0000	.RAILING	1-301
1499765-0000	.AXLE LINK	5-11, 5-13
1499786-0000	.BRACKET	6-41, 6-43
1499901-0000	.VOLUME FLAP	4-7, 4-9, 4-11
1499902-0000	.VOLUME FLAP	4-17, 4-19, 4-21
1511067-0000	.CARRIER RULER	4-127, 4-129
1511188-0000	.CARRIER RULER	4-163, 4-165
1511192-0000	.ROCKER	3-23
1511193-0000	.SUPPORT PULLEY	3-21
1511194-0000	.AXLE PIN	3-21
1511195-0000	.SHAFT	3-21
1511196-0000	.SHAFT	3-23
1511197-0100	.PULLEY	3-13, 3-29

Part No	Description	Page No
1511198-0100	.BELT TENSIONER	3-13, 3-29
1511203-0000	.PIPE	2-69
1511209-0000	.BUSHING	3-23
1511225-0000	.CARRIER	5-75, 5-77, 5-79
1511250-0000	.VOLUME FLAP	4-7, 4-9, 4-11
1511251-0000	.VOLUME FLAP	4-17, 4-19, 4-21
1511253-0000	.VOLUME SHIM	4-7, 4-9, 4-11, 4-17, 4-19, 4-21, 9-11, 9-13, 9-15, 9-17, 9-19
1511254-0000	.BUSHING	4-7, 4-9, 4-11, 4-17, 4-19, 4-21
1511336-0000	.VOLUME SHIM	9-11, 9-13, 9-15, 9-17, 9-19
1511337-0000	.VOLUME SHIM	4-51, 4-53, 4-55, 4-57, 4-63, 4-65, 4-67, 4-69, 9-11, 9-13, 9-15, 9-17, 9-19
1511339-0000	.STOP	4-51, 4-53, 4-55, 4-57, 4-63, 4-65, 4-67, 4-69
1511351-0000	.FOLDING FLAP	4-127, 4-129, 4-163, 4-165
1511352-0000	.FOLDING FLAP	4-127, 4-129, 4-163, 4-165
1511492-0000	.SHAFT	1-97, 1-99
1511497-0000	.CONTAINER	1-281
1511503-0000	.PIPE	1-191
1511504-0000	.SPACER	1-295
1511512-0000	.BEARING BUSHING	1-173
1511556-0000	.SET SCREW	4-27, 4-29, 4-39, 4-41
1511558-0000	.BOTTOM	5-23, 5-25, 5-113, 5-115, 5-119, 5-121
1511564-0000	.BRACKET	7-231, 7-233
1511568-0000	.PIN	7-165, 7-173
1511569-0000	.SPACER	7-171, 7-177
1511575-0000	.ARM	7-165
1511579-0000	.BRACKET	7-231, 7-233
1511585-0200	.STRIP GUIDE	7-121
1511586-0001	.BAR	7-131
1511587-0000	.BUSHING BLOCK	7-131
1511600-0000	.SPACER	1-249
1511615-0000	.BRACKET	6-23
1511616-0000	.BRACKET	6-23
1511680-0000	.TUBE	6-23
1511692-0000	.SPACER	5-209, 5-211, 5-213, 5-215, 5-217, 5-219
1511697-0000	..FOLDING FLAP	4-127, 4-129, 4-163, 4-165
1511698-0000	.FOLDING FLAP	4-127, 4-129, 4-163, 4-165
1511699-0000	.FOLDING FLAP	4-127, 4-129, 4-163, 4-165
1511700-0000	.FOLDING FLAP	4-127, 4-129, 4-163, 4-165
1511740-0000	.CARRIER	1-131, 1-133, 1-135
1511755-0000	.NET	1-191
1511759-0000	.SPRING	1-285, 1-287
1511769-0000	.ROLLER	1-137, 1-139, 1-141, 1-143, 1-145, 1-147, 1-149, 1-151
1512145-0000	.LID	2-269
1512146-0000	.AXLE PIN	4-51, 4-53, 4-55, 4-57, 4-63, 4-65, 4-67, 4-69
1512147-0000	.WASHER	4-51, 4-53, 4-55, 4-57, 4-63, 4-65, 4-67, 4-69
1512265-0000	.SLEEVE	7-117
1512266-0000	.SLEEVE	7-117
1512267-0000	.ECCENTRIC BUSHING	7-149, 7-151, 7-223
1512275-0000	.PROTECTION PLATE	7-115
1512276-0000	.PROTECTION PLATE	7-165, 7-173
1512278-0000	.SEALING STRIP	7-289
1512279-0200	.MACHINE BODY	7-93, 7-95
1512307-0000	.GUIDE	5-103, 5-105, 5-107, 5-109, 5-111
1512308-0000	.GUIDE	5-103, 5-105, 5-107, 5-109, 5-111
1512315-0000	.ARM RIGHT	4-219, 4-221, 9-37
1512316-0000	.ARM LEFT	4-209, 4-211, 9-37
1512322-0000	.COPPER BRAID	8-49, 8-51, 8-53, 8-65, 8-67
1512324-0000	.CURVE	4-179, 4-181, 4-183
1512325-0000	.VOLUME CAM	4-179, 4-181, 4-183
1512339-0100	.PHOTOCELL OUTFEED	5-57
1512363-0000	.BEARING HOUSING	7-81, 7-83
1512405-0000	.NUT	1-289
1512413-0200	.CONTROL PANEL	7-261, 7-263
1512414-0000	.SEALING STRIP	7-261, 7-263
1512420-0000	.PLATE	7-93, 7-95
1512421-0000	.CABLE DUCT	7-119
1512423-0000	.CABLE DUCT	7-119
1512425-0000	.CABLE DUCT	7-119
1512426-0000	.CABLE DUCT	7-119
1512428-0200	.MOUNTING SHEET	7-121
1512429-0100	.PRESSURE ROLLER	7-221
1512430-0000	.VOLUME SHIM	7-157, 7-159
1512484-0000	.ROLLER	4-185, 4-187
1512526-0000	.STEERING	7-63, 7-141
1512563-0200	.PRESSURE JAW LEFT	4-5
1512564-0200	.CARRIER CUTTING LEFT	4-5
1512565-0300	.CUTTING JAW LEFT	4-5
1512568-0200	.PRESSURE JAW RIGHT	4-5
1512569-0200	.CARRIER CUTTING RIGHT	4-5
1512570-0300	.CUTTING JAW RIGHT	4-5
1512579-0000	.BRACKET	4-27, 4-29, 4-39, 4-41
1512998-0000	.FOLDING FLAP CAM	4-233, 4-235
1517053-0000	.SPRING	1-211, 1-213, 1-215
1517087-0000	.HINGE	7-123
1517088-0200	.CONTROL PANEL	7-283

Part No	Description	Page No
1517101-0000	.PIPE	7-93, 7-95
1517105-0000	.PLATE	7-225
1517107-0000	.PROTECTION	7-121
1517113-0000	.RAIL	7-157, 7-159
1517134-0100	.COMPRESSOR UNIT	1-177
1517135-0000	.FRONT PLATE	1-179
1517136-0000	.COVER	1-179
1517137-0000	.COVER	1-179
1517138-0000	.COVER	1-179
1517242-0000	.GUIDE	5-103, 5-105, 5-107, 5-109, 5-111
1517243-0000	.GUIDE	5-103, 5-105, 5-107, 5-109, 5-111
1517295-0000	.SHEET	6-75
1517298-0250	.INFEED CONVEYOR	5-3
1517299-0250	.INFEED CONVEYOR LONG	5-261
1517300-0350	.INFEED CONVEYOR SHORT	5-261
1517302-0000	.SUPPORT PLATE	5-65, 5-67
1517348-0000	.HOSE	4-237
1517350-0000	.BULB	3-23
1517472-0000	.SIDE PLATE	5-257, 5-259
1517473-0000	.SIDE PLATE	5-257, 5-259
1517474-0000	.GUIDE	5-103, 5-105, 5-107, 5-109, 5-111
1517475-0000	.GUIDE	5-103, 5-105, 5-107, 5-109, 5-111
1517476-0000	.WEDGE	5-103, 5-105, 5-107, 5-109, 5-111, 5-165, 5-167
1517477-0000	.PLATE	5-103, 5-105, 5-107, 5-109, 5-111, 5-165, 5-167
1517478-0000	.BAR	5-103, 5-105, 5-107, 5-109, 5-111
1517479-0000	.BAR	5-103, 5-105, 5-107, 5-109, 5-111
1517480-0000	.SLIDE	5-103, 5-105, 5-107, 5-109, 5-111
1517481-0000	.SLIDE	5-103, 5-105, 5-107, 5-109, 5-111
1517482-0000	.TUBE	1-191
1517524-0000	.GUIDE	5-103, 5-105, 5-107, 5-109, 5-111
1517525-0000	.GUIDE	5-103, 5-105, 5-107, 5-109, 5-111
1517526-0000	.GUIDE	5-103, 5-105, 5-107, 5-109, 5-111, 5-171, 5-173
1517527-0000	.GUIDE	5-103, 5-105, 5-107, 5-109, 5-111, 5-177, 5-179
1517563-0000	.BRACKET	5-65, 5-67
1517567-0000	.PLATE	5-65, 5-67
1517707-0000	.BRACKET	1-279
1517751-0000	.SHAFT	7-133
1517987-0000	.TEMPLATE	9-33
1519089-0000	.GUIDE	5-103, 5-105, 5-107, 5-109, 5-111
1519090-0000	.GUIDE	5-103, 5-105, 5-107, 5-109, 5-111
1519093-0000	.GUIDE	5-103, 5-105, 5-107, 5-109, 5-111
1519094-0000	.GUIDE	5-103, 5-105, 5-107, 5-109, 5-111
1519150-0000	.PIN	1-15, 1-17
1519156-0000	.AIR DISTRIBUTOR	1-167, 1-169
1519158-0000	.LID	1-167, 1-169
1519159-0000	.BUSHING	1-167, 1-169
1519160-0000	.SHAFT	1-167, 1-169
1519163-0000	.ARM	1-167, 1-169
1519166-0000	.BUSHING	1-167, 1-169
1519336-0000	.NOZZLE	5-209, 5-211, 5-213, 5-215, 5-217, 5-219
1519338-0000	.TIMING BELT	5-103, 5-105, 5-107, 5-109, 5-111, 5-165, 5-167
1519339-0000	.SPACER	5-209, 5-211, 5-213, 5-215, 5-217, 5-219
1519340-0000	.TIE ROD	5-11, 5-13
1519341-0000	.BLOCK	5-5, 5-7
1519344-0000	.CARRIER	5-103, 5-105, 5-107, 5-109, 5-111, 5-165, 5-167
1519345-0000	.GUIDE	5-103, 5-105, 5-107, 5-109, 5-111, 5-165, 5-167
1519346-0000	.GUIDE	5-103, 5-105, 5-107, 5-109, 5-111, 5-165, 5-167
1519355-0000	.SPACER	5-45, 5-47, 5-49, 5-145, 5-147
1519358-0000	.GUIDE	5-35, 5-37
1519359-0000	.GUIDE	5-35, 5-37
1519486-0000	.FILTER HOUSING	1-227, 1-317
1519578-0000	.MOUNTING BLOCK	7-157, 7-159
1519580-0000	.GUIDE FINGER	7-155
1519581-0000	.ROLLER BAR	7-221, 7-235
1519583-0000	.BRACKET	7-149, 7-151
1519586-0000	.BRACKET	7-221
1519588-0000	.PROTECTION PLATE	7-93, 7-95
1519589-0100	.HANDLE	7-173
1519591-0000	.RAIL PIN	7-157, 7-159
1519592-0000	.BOW	7-221, 7-235
1519599-0100	.ROOF	7-237, 7-239, 7-241, 7-243
1519600-0000	.COVER PLATE	7-249
1519769-0000	.FOLDING BAR	5-45, 5-47, 5-49
1519770-0000	.FOLDING BAR	5-45, 5-47, 5-49
1519789-0000	.BRACKET	1-353, 1-355
1519790-0000	.PLATE	1-353, 1-355
1519799-0000	.ANGLE BRACKET	1-111
1519942-0000	.PLATE	7-231, 7-233
1519944-0000	.BRACKET	7-157, 7-159
1519947-0100	.MIMIC PANEL	7-261, 7-263
1519950-0000	.HOLDER	7-249
1519955-0000	.WASHER	7-153
1519960-0000	.SPACER	7-221
1519967-0000	.CLAMP	7-153

Part No	Description	Page No
1520052-0000	.INDUCTOR	4-97, 4-99, 4-101, 4-143, 4-145, 4-147, 9-11, 9-13, 9-15, 9-17, 9-19
1520167-0000	.INDUCTOR	4-97, 4-99, 4-101, 4-143, 4-145, 4-147, 9-11, 9-13, 9-15, 9-17, 9-19
1520455-0000	.CUTTING RAIL	4-119, 4-121, 4-123, 4-125
1520493-0000	.CUTTING RAIL	4-119, 4-121, 4-123, 4-125
1520494-0000	.CUTTING RAIL	4-119, 4-121, 4-123, 4-125
1520633-0002	.DOLLY	4-119, 4-121, 4-123, 4-125, 9-11, 9-13, 9-15, 9-17, 9-19, 10-67
1520633-0005	.DOLLY	4-119, 4-121, 4-123, 4-125, 9-11, 9-13, 9-15, 9-17, 9-19
1523091-0000	.TEMPLATE	10-27
1523146-0000	.FOLDING FLAP	4-127, 4-129, 4-163, 4-165
1523147-0000	.FOLDING FLAP	4-127, 4-129, 4-163, 4-165
1523148-0000	.CARRIER RULER	4-163, 4-165
1523154-0003	.SPRAY NOZZLE	1-247
1523154-0004	.SPRAY NOZZLE	1-247
1523154-0005	.SPRAY NOZZLE	1-247
1523154-0006	.SPRAY NOZZLE	1-247
1523162-0000	.SCREW	4-109, 4-111, 4-113, 4-115, 4-153, 4-155, 4-157, 4-159
1523177-0000	.CARRIER RULER	4-127, 4-129
1523179-0000	.FLANGE	1-165
1523185-0000	.AXLE PIN	1-165
1523190-0000	.SHAFT	1-131, 1-133, 1-135
1523191-0000	.SHAFT	1-131, 1-133, 1-135
1523216-0200	.LEVEL CONTROL DEVICE	2-91
1523467-0000	.VOLUME BULGE	5-23, 5-25, 5-241, 5-243, 5-245, 5-247, 5-249, 5-251, 5-253, 5-255
1523475-0000	.CANTILEVER	4-27, 4-29, 4-39, 4-41
1523483-0000	.ROLLER	7-81, 7-83, 7-89, 7-91
1523486-0000	.SPACER	7-89, 7-91
1523487-0000	.ROLL	7-123, 7-131
1523490-0000	.VOLUME BULGE	4-179, 4-181, 4-183
1523497-0000	.SPACER	5-209, 5-211, 5-213, 5-215, 5-217, 5-219
1523498-0000	.SPACER	5-35, 5-37
1523641-0000	.SPACER	2-201, 2-203
1523645-0000	.AIR NOZZLE	2-201, 2-203
1523664-0001	.ROLLER (STANDARD SIZE)	1-29, 1-31
1523665-0001	.ROLLER (STANDARD SIZE)	1-29, 1-31
1523680-0000	.PIPE	1-113
1523685-0000	.IMPELLER	1-115
1523686-0000	.LID	1-115
1523687-0000	.PUMP BODY	1-115
1523691-0100	.BLOWING DEVICE	1-113
1523696-0000	.GUIDE	1-47, 1-49, 1-51
1523777-0100	.STAIR CASE	2-159, 2-161, 2-163, 2-165, 2-167, 2-169
1523784-0000	.TOE PLATE	2-187
1523793-0000	.TOE PLATE	2-179, 2-181
1523805-0000	.PIN	1-285, 1-287
1523808-0000	.GASKET	1-283
1523818-0000	.BRACKET	1-321, 1-323
1523819-0000	.BRACKET	1-321, 1-323
1523820-0000	.BRACKET	1-321, 1-323
1523826-0000	.PUSHER	5-241, 5-243, 5-245, 5-247, 5-249, 5-251
1523827-0000	.SCREW	4-119, 4-121, 4-123, 4-125
1523884-0000	.FLAP	5-241, 5-243, 5-245, 5-247, 5-249, 5-251
1523885-0000	.PUSHER	5-241, 5-243, 5-245, 5-247, 5-249, 5-251
1523926-0000	.SPACER	5-35, 5-37, 5-45, 5-47, 5-49
1523927-0000	.SPACER SCREW	5-45, 5-47, 5-49
1524035-0000	.VOLUME BULGE	4-7, 4-9, 4-11, 4-17, 4-19, 4-21, 5-23, 5-25
1524147-0000	.ROLLER	1-75, 1-77, 1-79
1524148-0000	.ROLLER	1-75, 1-77, 1-79
1524149-0000	.ROLLER	1-75, 1-77, 1-79
1524150-0000	.ROLLER	1-75, 1-77, 1-79
1524151-0000	.ROLLER	1-59, 1-61, 1-63
1524152-0000	.ROLLER	1-59, 1-61, 1-63
1524156-0000	.ROLLER	1-53, 1-55
1524167-0000	.CORNER STRIP	2-173, 2-175, 2-179, 2-181, 2-189, 2-191
1524168-0000	.CORNER STRIP	2-173, 2-175, 2-179, 2-181
1524171-0000	.FRAME	2-189, 2-191
1524172-0000	.CHECKER PLATE	2-189, 2-191
1524173-0000	.CHECKER PLATE	2-189, 2-191
1524174-0000	.HOOK	2-189, 2-191
1524175-0000	.LEG	2-189, 2-191
1524176-0000	.CLAMP	2-189, 2-191
1524177-0000	.TOE PLATE	2-189, 2-191
1524179-0000	.TOE PLATE	2-189, 2-191
1524180-0000	.TOE PLATE	2-189, 2-191
1524181-0000	.PIN	2-189, 2-191
1524182-0000	.RAILING	2-189, 2-191
1524185-0000	.EXTENSION PIECE	2-189, 2-191, 2-193
1524186-0000	.PROFILE	2-193
1524187-0000	.PROFILE	2-193
1524188-0000	.STAIR	2-193
1524190-0000	.BRACKET	2-193
1524191-0000	.RIM	2-193
1524192-0000	.RAILING	2-193
1524193-0000	.RAILING	2-193
1524233-0000	.PIPE	1-321, 1-323

Part No	Description	Page No
1524234-0000	.PIPE	1-321, 1-323
1524236-0000	.VALVE HOUSING	1-193
1524237-0000	.PIPE	1-321, 1-323
1524239-0000	.PIPE	1-321, 1-323
1524242-0000	.PIPE	1-321, 1-323
1524243-0000	.PIPE	1-321, 1-323
1524310-0000	.VOLUME BULGE	4-51, 4-53, 4-55, 4-57, 4-63, 4-65, 4-67, 4-69
1524375-0000	.BRACKET	7-63
1524394-0100	.CYLINDER	7-165
1524398-0100	.HANDLE	7-165
1524404-0100	.COVER	7-237, 7-239, 7-241, 7-243
1524405-0000	.COVER PLATE	7-247
1524406-0000	.SEALING STRIP	7-247
1524414-0000	.SEAL	1-85, 1-87
1524416-0000	.ROLLER	1-85, 1-87
1524421-0000	.ROLLER	4-185, 4-187
1524477-0200	.CUTTING TABLE	7-121
1524481-0000	.SEALING BLOCK	7-133
1524484-0000	.FLAP	5-23, 5-25
1524731-0300	.BRACKET	7-221
1524732-0200	.DRIVE UNIT	7-221
1524840-0000	.TEMPLATE	9-33
1524841-0000	.TEMPLATE	9-33
1524854-0000	.BEAM	2-179, 2-181
1524864-0000	.RAILING	2-189, 2-191
1524870-0000	.RAILING	2-187
1528549-0000	.PIPE	10-95
1528552-0000	.PLATFORM	2-171
1528553-0000	.PLATFORM	2-171
1528639-0000	.GASKET	1-285, 1-287
1528715-0000	.BRACKET	10-95
1528727-0000	.PIPE	1-321, 1-323
1528728-0000	.PIPE	1-321, 1-323
1528746-0100	.GUIDE	1-101, 1-103
1528747-0000	.PLATE	10-95
1528838-0000	.CLAMP	10-17
1528839-0000	.SLEEVE	10-17
1528840-0000	.LEVER	10-17
1528841-0000	.HOLDER	10-17
1528842-0000	.PIN	10-17
1528847-0100	.PLATFORM	2-159, 2-161, 2-163, 2-165, 2-167, 2-169
1528848-0100	.PLATFORM	2-159, 2-161, 2-163, 2-165, 2-167, 2-169
1528849-0000	.RAILING	2-173, 2-175
1528850-0000	.CHECKER PLATE	2-171
1528855-0000	.CHECKER PLATE	2-171
1528856-0000	.TOE PLATE	2-171
1528857-0000	.TOE PLATE	2-173, 2-175
1528858-0000	.RAILING	2-171
1528859-0000	.RAILING	2-173, 2-175
1528866-0000	.CHECKER PLATE	2-171
1528867-0000	.TOE PLATE	2-171
1528868-0000	.CHECKER PLATE	2-173, 2-175
1528870-0000	.CHECKER PLATE	2-173, 2-175
1528871-0000	.TOE PLATE	2-173, 2-175
1528872-0000	.TOE PLATE	2-173, 2-175
1528873-0000	.RAILING	2-173, 2-175
1528874-0000	.RAILING	2-171
1528887-0000	.TORSION SPRING	10-17
1532223-0000	.BLOCK	1-317
1532231-0000	.CONNECTION	1-167, 1-169
1532236-0000	.CONNECTION BOX	1-291
1532237-0000	.RAIL	1-225, 1-293
1532238-0100	.TERMINAL BLOCK	1-291
1532239-0100	.CONNECTION BOX	1-277
1532240-0000	.BRACKET	1-291
1532249-0000	.WHEEL	1-131, 1-133, 1-135
1532250-0100	.HEAT EXCHANGER VALVE	1-177
1532254-0000	.SPACER	5-101
1532256-0000	.CARRIER	5-103, 5-105, 5-107, 5-109, 5-111
1532257-0000	.SLIDE	5-103, 5-105, 5-107, 5-109, 5-111
1532258-0000	.SLIDE	5-103, 5-105, 5-107, 5-109, 5-111
1532261-0000	.GUIDE	5-103, 5-105, 5-107, 5-109, 5-111
1532262-0000	.GUIDE	5-103, 5-105, 5-107, 5-109, 5-111
1532263-0000	.GUIDE	5-103, 5-105, 5-107, 5-109, 5-111
1532264-0000	.GUIDE	5-103, 5-105, 5-107, 5-109, 5-111
1532266-0000	.BLOCK	5-5, 5-7
1532267-0000	.SUPPORT	5-11, 5-13
1532268-0000	.AXLE LINK	5-11, 5-13
1532269-0000	.TIE ROD	5-11, 5-13
1532270-0000	.SUPPORT	5-11, 5-13
1532275-0000	.FOLDING BAR	5-45, 5-47, 5-49
1532276-0000	.FOLDING BAR	5-45, 5-47, 5-49
1532280-0000	.RAIL	5-45, 5-47, 5-49
1532281-0000	.RAIL	5-45, 5-47, 5-49

Part No	Description	Page No
1532284-0000	.NOZZLE	5-209, 5-211, 5-213, 5-215, 5-217, 5-219
1532285-0000	.NOZZLE	5-209, 5-211, 5-213, 5-215, 5-217, 5-219
1532286-0000	.NOZZLE	5-209, 5-211, 5-213, 5-215, 5-217, 5-219
1532287-0000	.VOLUME FLAP	4-7, 4-9, 4-11, 4-17, 4-19, 4-21
1532289-0000	.PUSHER	5-241, 5-243, 5-245, 5-247, 5-249, 5-251
1532290-0000	.PUSHER	5-241, 5-243, 5-245, 5-247, 5-249, 5-251
1532291-0000	.PLATE	5-241, 5-243, 5-245, 5-247, 5-249, 5-251
1532293-0000	.VOLUME SHIM	4-7, 4-9, 4-11, 4-17, 4-19, 4-21
1532297-0000	.FLAP	5-23, 5-25
1532298-0000	.FLAP	5-23, 5-25
1532299-0000	.TEMPLATE	9-33
1532459-0100	.SETTING TOOL	10-47
1532466-0000	.BRACKET	10-49
1532516-0000	.CARRIER	5-75, 5-77, 5-79
1532901-0100	.PLINTH	8-89, 8-91
1532902-0250	.CABINET	8-3
1532904-0100	.DOOR	8-23
1532905-0000	.PLATE	8-43
1532906-0100	.RACK	8-89, 8-91
1532908-0250	.CONTROL BOARD LEFT	8-3
1532909-0000	.PLATE	8-23
1532911-0000	.FASTENING PLATE	8-23
1532912-0000	.FRAME	8-55
1532920-0100	.DOOR	8-23
1532921-0000	.DOOR	8-29
1532923-0100	.DOOR	8-23
1532924-0000	.DOOR	8-31
1532926-0000	.GASKET	8-23
1532927-0000	.FASTENING PLATE	8-23
1532928-0000	.COVERING PLATE	8-23
1532929-0000	.COVERING PLATE	8-23
1532930-0000	.PROTECTION	8-71
1532932-0250	.DOOR	8-23
1532933-0000	.DOOR	8-33
1532935-0100	.DOOR	8-23
1532936-0000	.DOOR	8-35
1532998-0000	.TEMPLATE	10-27
1533046-0000	.INDUCTOR	4-97, 4-99, 4-101, 4-143, 4-145, 4-147, 9-11, 9-13, 9-15, 9-17, 9-19
1533051-0000	.CUTTING RAIL	4-119, 4-121, 4-123, 4-125
1535036-0000	.PLATE	2-179, 2-181
1538049-0000	.PIPE	1-279
1538109-0000	.COMPRESSION SPRING	4-167
1538154-0000	.DRAIN PIPE	1-191
1538157-0000	.PIPE	1-197
1538158-0000	.PIPE	1-197
1538163-0000	.LEVER	1-165
1538166-0100	.AIR VALVE	1-177
1538169-0000	.HOLDER	1-195
1538181-0000	.PIPE	1-191
1538183-0000	.PIPE	1-191
1538186-0000	.BRACKET	5-45, 5-47, 5-49
1538186-0100	.PAPER TROLLEY	10-67
1538192-0000	.BRACKET	7-221
1538194-0000	.FINGER	7-133
1538202-0000	.AXLE PIN	7-123
1538234-0000	.SPACER	10-49
1538256-0000	.CARRIER RULER	4-127, 4-129
1538264-0000	.CURVE	4-179, 4-181, 4-183
1538265-0000	.VOLUME CAM	4-179, 4-181, 4-183
1538348-0000	.CATCH	4-119, 4-121, 4-123, 4-125
1538349-0000	.CATCH	4-95
1538474-0000	.PIPE	1-191
1538487-0000	.PIPE	1-191
1538494-0000	.LID	1-203
1538496-0000	.ROLLER	1-147, 1-149, 1-151
1538502-0000	.PIPE	1-281
1538503-0000	.PIPE	1-279
1538521-0000	.BUSHING	4-27, 4-29, 4-39, 4-41
1538597-0000	.SHAFT	10-75
1538637-0000	.VOLUME SHIM	4-51, 4-53, 4-55, 4-57, 4-63, 4-65, 4-67, 4-69, 9-11, 9-13, 9-15, 9-17, 9-19
1538723-0000	.PIPE	1-279
1538724-0000	.BRACKET	1-279
1538725-0000	.WASHER	1-129
1538726-0000	.BUSHING	1-129
1538735-0000	.GASKET	1-285, 1-287
1538742-0000	.LID	1-285, 1-287
1538769-0000	.CARRIER RULER	4-163, 4-165
1538770-0000	.BOTTOM	5-23, 5-25
1538868-0000	.BRACKET	2-219, 2-221, 2-239, 2-251, 2-255, 2-257, 2-259, 6-49, 6-75, 7-93, 7-95
1538890-0000	.RAIL	5-45, 5-47, 5-49
1538891-0000	.RAIL	5-45, 5-47, 5-49
1538952-0000	.FORK	1-211, 1-213, 1-215
1538953-0000	.SHAFT	1-211, 1-213, 1-215
1538963-0000	.RAIL	5-65, 5-67

Part No	Description	Page No
1538970-0000	.SLIDE	5-83, 5-85, 5-87, 5-89, 5-91
1539172-0000	.CANTILEVER	4-27, 4-29, 4-39, 4-41
1539174-0000	.BUSHING	1-13
1539175-0000	.PLATE	1-13
1539348-0000	.HOLDER	4-27, 4-29, 4-39, 4-41
1539387-0000	.SCREW	7-123
1539391-0000	.ROUND NUT	7-273, 7-283, 7-287
1539396-0000	.BOW CLAMP	7-221
1539397-0000	.ROLLER	7-235
1539726-0000	.SHAFT	1-285, 1-287
1539727-0000	.WHEEL	1-285, 1-287
1539729-0000	.BRACKET	1-285, 1-287
1539740-0000	.BUSHING	1-193
1539741-0000	.COVER	1-193
1539742-0000	.SHUTTER	1-193
1539743-0000	.SHUTTER	1-193
1539744-0000	.BRACKET	1-193
1539745-0000	.LEVER	1-193
1539746-0200	.DOOR	1-101, 1-103
1539750-0000	.SHAFT	1-193
1539751-0000	.COVER	1-193
1539752-0000	.BRACKET	1-193
1539840-0000	.VOLUME BULGE	4-7, 4-9, 4-11, 4-17, 4-19, 4-21
1539841-0000	.VOLUME BULGE	4-7, 4-9, 4-11, 4-17, 4-19, 4-21
1539842-0000	.VOLUME SHIM	4-7, 4-9, 4-11, 4-17, 4-19, 4-21
1539843-0000	.VOLUME SHIM	4-7, 4-9, 4-11, 4-17, 4-19, 4-21, 9-11, 9-13, 9-15, 9-17, 9-19
1539871-0000	.SPACER	5-35, 5-37, 5-45, 5-47, 5-49, 5-145, 5-147
1539872-0000	.PUSHER	5-241, 5-243, 5-245, 5-247, 5-249, 5-251
1539873-0000	.SPACER	5-45, 5-47, 5-49
1539874-0000	.SLIDE	5-103, 5-105, 5-107, 5-109, 5-111, 5-171, 5-173
1539875-0000	.SLIDE	5-103, 5-105, 5-107, 5-109, 5-111, 5-177, 5-179
1539876-0000	.PLATE	5-103, 5-105, 5-107, 5-109, 5-111, 5-171, 5-173, 5-177, 5-179
1539877-0000	.BAR	5-103, 5-105, 5-107, 5-109, 5-111, 5-171, 5-173
1539878-0000	.BAR	5-103, 5-105, 5-107, 5-109, 5-111, 5-177, 5-179
1539879-0000	.GUIDE	5-103, 5-105, 5-107, 5-109, 5-111
1539880-0000	.GUIDE	5-103, 5-105, 5-107, 5-109, 5-111
1539881-0000	.FOLDING BAR	5-45, 5-47, 5-49
1539882-0000	.FOLDING BAR	5-45, 5-47, 5-49
1539886-0000	.CANTILEVER	4-27, 4-29, 4-39, 4-41
1539887-0000	.CATCH	4-27, 4-29, 4-39, 4-41
1539892-0000	.TEMPLATE	10-27
1539893-0000	.TEMPLATE	10-27
1539894-0000	.GUIDE	5-103, 5-105, 5-107, 5-109, 5-111, 5-171, 5-173
1539895-0000	.GUIDE	5-103, 5-105, 5-107, 5-109, 5-111, 5-177, 5-179
1539898-0000	.SPACER	5-35, 5-37, 5-45, 5-47, 5-49, 5-137, 5-139
1539900-0000	.RIGHT UPPER GUIDE	5-35, 5-37, 5-137, 5-139
1539902-0000	.VOLUME SHIM	4-7, 4-9, 4-11, 4-17, 4-19, 4-21, 9-11, 9-13, 9-15, 9-17, 9-19
1539903-0000	.VOLUME BULGE	4-7, 4-9, 4-11, 4-17, 4-19, 4-21
1539904-0000	.VOLUME FLAP	4-7, 4-9, 4-11
1539983-0000	.GUIDE	5-103, 5-105, 5-107, 5-109, 5-111
1539984-0000	.GUIDE	5-103, 5-105, 5-107, 5-109, 5-111
1548001-0000	.SIGN	1-341
1548002-0000	.CAM	5-221
1548116-0000	.SPACER	8-89, 8-91
1548123-0150	.CONTROL BOARD RIGHT	8-3
1548127-0250	.POWER SUPPLY UNIT	8-3
1548129-0100	.RELAY UNIT 2	8-71
1548130-0250	.FUSE BOARD 1	8-71
1548131-0250	.FUSE BOARD 2	8-71
1548132-0250	.FUSE BOARD 3	8-71
1548133-0100	.PLINTH	8-71
1548134-0250	.PLINTH	8-71
1548136-0150	.DOOR	8-3
1548195-0000	.ROLL	7-123
1548197-0000	.ROLL	7-123
1548199-0000	.WASHER	7-53
1548200-0000	.BRACKET	7-93, 7-95
1548210-0100	.LOCKING DEVICE	7-231, 7-233
1548211-0000	.RAILING	2-179, 2-181
1548230-0000	.BODY	1-249
1548348-0000	.GUIDE	5-83, 5-85, 5-87, 5-89, 5-91
1548353-0000	.SLIDE RAIL	5-59, 5-61
1548354-0000	.COVER	5-59, 5-61
1548454-0000	.DISC	3-23, 9-5
1548460-0101	.VOLUME FLAP	9-7, 9-9
1548460-0102	.VOLUME FLAP	9-7, 9-9
1548460-0103	.VOLUME FLAP	9-7, 9-9
1548460-0104	.VOLUME FLAP	9-7, 9-9
1548460-0105	.VOLUME FLAP	9-7, 9-9
1548460-0106	.VOLUME FLAP	9-7, 9-9
1548460-0107	.VOLUME FLAP	9-7, 9-9
1548460-0108	.VOLUME FLAP	9-7, 9-9
1548460-0109	.VOLUME FLAP	9-7, 9-9
1548460-0110	.VOLUME FLAP	9-7, 9-9

Part No	Description	Page No
1548460-0111	.VOLUME FLAP	9-7, 9-9
1548460-0200	.VOLUME FLAP	4-5
1548491-0200	.ELECTRICAL CABINET	7-3, 7-5, 7-7, 7-9
1548492-0000	.ELECTRICAL CABINET	7-181, 7-183
1548496-0100	.TERMINAL	7-181, 7-183
1548531-0000	.ROLLER	1-59, 1-61, 1-63
1548540-0000	.ROLLER	1-59, 1-61, 1-63
1548541-0000	.ROLLER	1-59, 1-61, 1-63
1548550-0000	.RAIL	5-83, 5-85, 5-87, 5-89, 5-91
1548551-0000	.SPACER	5-83, 5-85, 5-87, 5-89, 5-91
1548612-0000	.COVERING PLATE	5-29, 5-31, 5-33, 5-129, 5-131
1548726-0000	.CONNECTION BOX	1-353, 1-355
1548727-0000	.MOUNTING PLATE	1-353, 1-355
1548728-0100	.TERMINAL BLOCK	1-353, 1-355
1548729-0000	.RAIL	1-361, 1-363
1548730-0000	.SPACER	1-353, 1-355
1548732-0000	.LID	1-123, 1-125
1548733-0100	.CONNECTION BOX	1-3
1548734-0000	.FLANGE	1-129
1548735-0000	.LID	1-129
1548736-0100	.BENDING ROLLER	1-101, 1-103
1548739-0000	.FLANGE	1-129
1548742-0000	.SPACER	1-193
1548743-0000	.WASHER	1-193
1548749-0000	.PIPE	1-353, 1-355
1548751-0000	.BUSHING	1-153, 1-155
1548753-0100	.DRIVE ROLLER	1-101, 1-103
1548869-0000	.SPACER	1-353, 1-355
1548870-0000	.SPACER	1-353, 1-355
1548872-0100	.PILLAR	1-5
1548876-0100	.IH EQUIPMENT	1-5
1548877-0000	.SPACER	1-109
1548882-0000	.FLANGE	1-153, 1-155
1548892-0100	.CALENDER ROLLER	1-101, 1-103
1548940-0000	.SPRING	4-109, 4-111, 4-113, 4-115, 4-153, 4-155, 4-157, 4-159
1549126-0000	.NOZZLE	5-209, 5-211, 5-213, 5-215, 5-217, 5-219
1549127-0000	.NOZZLE	5-209, 5-211, 5-213, 5-215, 5-217, 5-219
1549312-0000	.INSERT	4-85, 4-87, 4-89, 4-109, 4-111, 4-113, 4-115, 4-133, 4-135, 4-137, 4-153, 4-155, 4-157, 4-159
1549324-0000	.BRACKET	7-93, 7-95
1549332-0000	.ROLLER	7-235
1549344-0000	.HOLDER	6-9
1549378-0000	.SPRING	9-11, 9-13, 9-15, 9-17, 9-19
1549388-0000	.SPACER	5-209, 5-211, 5-213, 5-215, 5-217, 5-219
1549389-0000	.SPACER	5-209, 5-211, 5-213, 5-215, 5-217, 5-219
1549390-0000	.NUT	5-209, 5-211, 5-213, 5-215, 5-217, 5-219
1549406-0000	.PACKAGE GUIDE	5-35, 5-37
1549411-0000	.PACKAGE GUIDE	5-35, 5-37
1549508-0000	.SPACER SCREW	5-45, 5-47, 5-49
1549512-0000	.SPACER	5-101
1549513-0000	.SLIDE	5-103, 5-105, 5-107, 5-109, 5-111
1549514-0000	.SLIDE	5-103, 5-105, 5-107, 5-109, 5-111
1549515-0000	.BAR	5-103, 5-105, 5-107, 5-109, 5-111
1549516-0000	.BAR	5-103, 5-105, 5-107, 5-109, 5-111
1549517-0000	.GUIDE	5-103, 5-105, 5-107, 5-109, 5-111
1549518-0000	.GUIDE	5-103, 5-105, 5-107, 5-109, 5-111
1549522-0000	.GUIDE	5-103, 5-105, 5-107, 5-109, 5-111
1549523-0000	.GUIDE	5-103, 5-105, 5-107, 5-109, 5-111
1549526-0000	.CONTAINER	1-191
1549542-0100	.TERMINAL BLOCK	1-353, 1-355
1549545-0000	.FLANGE	1-173
1549548-0000	.FLANGE	1-173
1549568-0000	.CHAIN	1-131, 1-133, 1-135
1549573-0100	.CRANK	1-101, 1-103
1549594-0000	.VOLUME SHIM	4-7, 4-9, 4-11, 4-17, 4-19, 4-21, 4-51, 4-53, 4-55, 4-57, 4-63, 4-65, 4-67, 4-69, 9-11, 9-13, 9-15, 9-17, 9-19
1549614-0000	.LEFT UPPER GUIDE	5-35, 5-37, 5-137, 5-139
1549615-0000	.SPRING	5-75, 5-77, 5-79
1549822-0000	.FOLDING FLAP	4-127, 4-129, 4-163, 4-165
1549823-0000	.FOLDING FLAP	4-127, 4-129, 4-163, 4-165
1549824-0000	.CARRIER RULER	4-127, 4-129
1549825-0000	.CARRIER RULER	4-163, 4-165
1549828-0000	.KNIFE	4-167, 9-11, 9-13, 9-15, 9-17, 9-19
1549829-0000	.VOLUME BULGE	4-7, 4-9, 4-11, 4-17, 4-19, 4-21, 5-125
1549830-0000	.VOLUME SHIM	4-7, 4-9, 4-11, 4-17, 4-19, 4-21, 5-125, 9-11, 9-13, 9-15, 9-17, 9-19
1549831-0000	.WEDGE	4-7, 4-9, 4-11, 4-17, 4-19, 4-21
1549832-0000	.PLUG	4-7, 4-9, 4-11
1549834-0000	.VOLUME BULGE	4-97, 4-99, 4-101, 4-143, 4-145, 4-147
1549836-0000	.VOLUME FLAP	4-7, 4-9, 4-11
1549837-0000	.VOLUME FLAP	4-17, 4-19, 4-21
1549843-0000	.VOLUME CAM	4-179, 4-181, 4-183
1549844-0000	.FLAP	5-23, 5-25
1549846-0000	.BLOCK	5-5, 5-7
1549847-0000	.PUSHER	5-241, 5-243, 5-245, 5-247, 5-249, 5-251

Part No	Description	Page No
1549848-0000	.PUSHER	5-241, 5-243, 5-245, 5-247, 5-249, 5-251
1549849-0000	.PLATE	5-241, 5-243, 5-245, 5-247, 5-249, 5-251
1549852-0000	.SLIDE	5-103, 5-105, 5-107, 5-109, 5-111, 5-171, 5-173
1549853-0000	.SLIDE	5-103, 5-105, 5-107, 5-109, 5-111, 5-177, 5-179
1549854-0000	.BAR	5-103, 5-105, 5-107, 5-109, 5-111, 5-171, 5-173
1549855-0000	.BAR	5-103, 5-105, 5-107, 5-109, 5-111, 5-177, 5-179
1549856-0000	.GUIDE	5-103, 5-105, 5-107, 5-109, 5-111
1549857-0000	.GUIDE	5-103, 5-105, 5-107, 5-109, 5-111
1549940-0000	.PUSHER	5-241, 5-243, 5-245, 5-247, 5-249, 5-251
1549980-0200	.FRAME	1-295
1549981-0000	.FLANGE	1-131, 1-133, 1-135
1549982-0000	.FLANGE	1-131, 1-133, 1-135
1549992-0000	.HINGE FLANGE	1-119, 1-121
1549993-0000	.HINGE FLANGE	1-119, 1-121
1549994-0000	.SPACER	1-119, 1-121
1550348-0002	.BEARING	5-63
1550595-6600	.SLIDING STRIP	5-63
1550595-6700	.SLIDING STRIP	5-63
1550595-7000	.SLIDING STRIP	5-63
1550595-7110	.SLIDING STRIP	5-63
1550743-0100	.RAIL HOLDER	5-83, 5-85, 5-87, 5-89, 5-91
1550772-0000	.HOLDER	5-93
1550773-0000	.RAIL HOLDER	5-93
1558008-0000	.BLOCK	5-5, 5-7
1558020-0000	.ROD	5-5, 5-7
1558047-0000	.PUSHER	5-241, 5-243, 5-245, 5-247, 5-249, 5-251
1558123-0000	.VOLUME FLAP	4-17, 4-19, 4-21
1558178-0000	.PUSHER	5-241, 5-243, 5-245, 5-247, 5-249, 5-251
1558184-0000	.PLATE	5-241, 5-243, 5-245, 5-247, 5-249, 5-251
1558221-0000	.BRACKET	7-107
1558251-0000	.SHAFT	7-161
1558252-0000	.SCREW	7-161
1558253-0000	.ROLLER	7-161
1558254-0000	.SHAFT	1-309
1558304-0000	.TEMPLATE	9-33
1558327-0000	.LID	2-19, 2-21
1558328-0000	.NOZZLE	5-209, 5-211, 5-213, 5-215, 5-217, 5-219
1558329-0000	.NOZZLE	5-209, 5-211, 5-213, 5-215, 5-217, 5-219
1558352-0000	.FLANGE	1-305, 1-307
1558356-0100	.SPLICE DETECTOR	1-305, 1-307
1558357-0000	.SHAFT	1-173
1558358-0000	.WHEEL	1-173
1558417-0000	.FLANGE	1-203
1558418-0000	.SHAFT	1-203
1558427-0000	.LID	1-283
1558437-0000	.FRAME	1-297, 1-299
1558438-0000	.CHECKER PLATE	1-295
1558439-0000	.CHECKER PLATE	1-295
1558440-0000	.BRACKET	1-297, 1-299
1558441-0000	.BRACKET	1-13
1558447-0000	.SPACER	4-229, 4-231, 5-209, 5-211, 5-213, 5-215, 5-217, 5-219
1558477-0100	.WHEEL	10-79
1558479-0100	.HANDLE	10-79
1558480-0100	.LIFTING CYLINDER	10-79
1558484-0000	.PROTECTION PLATE	7-93, 7-95
1558487-0000	.SUPPORT	7-93, 7-95
1558494-0200	.PRODUCT VALVE	1-207, 1-209
1558495-0100	.HEATING UNIT	1-277
1558496-0000	.FRAME	1-279
1558497-0200	.FRAME SECTION,UPPER	1-3
1558510-0000	.PIPE	1-191
1558511-0200	.PIPE WORK-AIR	1-177
1558513-0000	.PILLAR	1-15, 1-17
1558519-0100	.TERMINAL BLOCK	1-349
1558522-0100	.ADJUSTING ROLLER	1-101, 1-103
1558526-0000	.SPACER	5-35, 5-37, 5-137, 5-139
1558527-0000	.SPACER	5-45, 5-47, 5-49
1558700-0000	.CARRIER	5-103, 5-105, 5-107, 5-109, 5-111
1558701-0000	.BUSHING	4-7, 4-9, 4-11, 4-17, 4-19, 4-21
1558713-0000	.SPACER SCREW	5-45, 5-47, 5-49
1558733-0000	.VOLUME BULGE	4-119, 4-121, 4-123, 4-125
1558734-0000	.VOLUME BULGE	4-97, 4-99, 4-101, 4-143, 4-145, 4-147
1558735-0000	.SPACER	5-35, 5-37, 5-45, 5-47, 5-49
1558736-0000	.SPACER	5-35, 5-37
1558737-0000	.HUB	5-113, 5-115
1558748-0000	.FLANGE	1-105, 1-107
1558749-0000	.FLANGE	1-105, 1-107
1558750-0000	.FLANGE	1-105, 1-107
1558751-0000	.FLANGE	1-105, 1-107
1558752-0000	.FLANGE	1-105, 1-107
1558754-0000	.LID	1-105, 1-107
1558755-0000	.FLANGE	1-105, 1-107
1558756-0000	.HOUSING	1-105, 1-107
1558757-0000	.NUT	1-105, 1-107

Part No	Description	Page No
1558758-0000	.SHAFT	1-105, 1-107
1558760-0000	.KNOB	1-105, 1-107
1558761-0000	.SHAFT	1-105, 1-107
1558762-0000	.LID	1-105, 1-107
1558763-0000	.SLIDER	1-105, 1-107
1558764-0000	.FLANGE	1-105, 1-107
1558765-0000	.FLANGE	1-105, 1-107
1558766-0000	.BUSHING	1-105, 1-107
1558768-0000	.WASHER	1-105, 1-107
1558769-0200	.SEPARATOR	1-177
1558795-0000	.RAILING	2-179, 2-181
1558798-0000	.BRACKET	7-93, 7-95
1558801-0000	.SHOULDER SCREW	7-153
1558817-0000	.VOLUME BULGE	4-7, 4-9, 4-11, 4-17, 4-19, 4-21
1558819-0000	.RAIL	4-97, 4-99, 4-101
1558820-0000	.RAIL	4-143, 4-145, 4-147
1558821-0000	.VOLUME BULGE	5-241, 5-243, 5-245, 5-247, 5-249, 5-251
1558830-0000	.COOLING PLATE	1-13
1558831-0000	.COOLING PLATE	1-13
1558832-0000	.RAIL	1-351
1558833-0000	.CONNECTION BOX	1-349
1558834-0200	.CONNECTION BOX	1-3
1558840-0000	.PIPE	1-283
1558841-0000	.PIPE	1-283
1558842-0000	.PIPE	1-283
1558845-0000	.BRACKET	1-397
1558864-0000	.CARRIER	5-103, 5-105, 5-107, 5-109, 5-111
1558889-0000	.SPACER SCREW	5-45, 5-47, 5-49
1558910-0000	.SPACER	5-35, 5-37, 5-137, 5-139
1558911-0000	.PRESSURE ROLLER	7-19, 7-21, 7-61, 7-221
1558914-0000	.ROLLER BRACKET	7-19, 7-21
1558917-0000	.SPACER DISC	7-23
1558918-0000	.TIGHTENING NUT	7-23
1558932-0100	.TOP SECTION	5-27
1558933-0000	.FRAME	9-3
1558934-0000	.GUIDE	5-29, 5-31, 5-33
1558935-0100	.TOP RAIL	5-27
1558940-0200	.FLAP GUIDE	5-27
1558941-0000	.RAIL	5-65, 5-67
1558945-0000	.PIVOT PIN	2-143
1558946-0000	.PLUG	2-193
1558947-0000	.STRIP	2-173, 2-175, 2-179, 2-181
1558948-0000	.PLATE	2-145
1558949-0000	.PLATE	2-143
1558974-0000	.PIPE BRACKET	2-143
1558975-0000	.BLOCKING PIECE	2-143
1558983-0000	.DOOR	7-275
1558988-0100	.DOOR	7-237, 7-239, 7-241, 7-243
1566845-0002	.DOLLY	4-119, 4-121, 4-123, 4-125, 9-11, 9-13, 9-15, 9-17, 9-19
1591270-0002	.PLC CD	8-13
2500071-0000	.O-RING	1-211, 1-213, 1-215
2500078-0000	.BODY	1-249
2500081-0000	.ELBOW PIPE	1-243, 1-245, 9-11, 9-13, 9-15, 9-17, 9-19
2500082-0000	.MOUNTING PLATE	1-211, 1-213, 1-215
2500088-0100	.3-WAY VALVE	2-113
2500089-0000	.PIPE	9-35
2500591-0000	.VOLUME BULGE	4-97, 4-99, 4-101, 4-143, 4-145, 4-147
2501219-0000	.BRACKET	7-131
2501220-0000	.BRACKET	7-131
2501221-0000	.BRACKET	7-131
2501278-0000	.ECCENTRIC	1-243, 1-245
2501290-0200	.FILLING SYSTEM	1-3
2501292-0000	.VALVE HOUSING	2-115
2501310-0100	.FILLING PIPE	1-207, 1-209
2501311-0000	.FILLING PIPE	1-211, 1-213, 1-215
2501312-0000	.CLEANING CUP	1-261, 1-263
2501378-0000	.PIPE	2-61
2501612-0000	.NOZZLE	5-209, 5-211, 5-213, 5-215, 5-217, 5-219
2501851-0000	.CURVE	4-179, 4-181, 4-183
2503436-0000	.SHAFT	1-309
2503438-0000	.LEVER	1-309
2503634-0000	.BEARING FLANGE	1-115
2503635-0000	.SHIELD	1-115
2503636-0000	.STOP SCREW	1-115
2503637-0000	.FAN	1-115
2503638-0000	.FAN HOUSING	1-115
2503654-0000	.RAIL	7-195, 7-197
2503661-0100	.CABLE CONNECTION	4-199
2503665-0100	.DESIGN CORRECTION DEVICE LEFT	4-227
2503666-0100	.DESIGN CORRECTION DEVICE RIGHT	4-227
2503669-0000	.ECCENTRIC SHAFT	4-233, 4-235
2503688-0000	.VOLUME BULGE	4-97, 4-99, 4-101, 4-143, 4-145, 4-147
2503689-0000	.VOLUME BULGE	4-119, 4-121, 4-123, 4-125
2503692-0000	.TEMPLATE	10-27

Part No	Description	Page No
2503694-0000	.TEMPLATE	10-27
2503699-0000	.VOLUME BULGE	4-119, 4-121, 4-123, 4-125
2503700-0000	.VOLUME BULGE	4-97, 4-99, 4-101, 4-143, 4-145, 4-147
2503719-0000	.FRAME	10-13
2503720-0100	.OPENING FORCE TESTER	10-5
2503721-0100	.GRIPPING DEVICE	10-11
2503722-0100	.HOLDER	10-11
2503723-0000	.BLOCK	10-15
2503724-0000	.END PLATE	10-15
2503725-0000	.END PLATE	10-15
2503726-0000	.PLATE	10-15
2503727-0000	.PLATE	10-15
2503728-0000	.ARM	10-15
2503729-0000	.MOUNTING PLATE	10-15
2503730-0000	.SPACER	10-15
2503731-0000	.SLEEVE	10-15
2503732-0000	.SHAFT	10-15
2503733-0000	.HANDLE	10-15
2503734-0000	.WASHER	10-15
2503735-0100	.FRAME	10-11
2504435-0000	.MACHINE BODY	2-9
2504437-0000	.FRAME	2-119
2504496-0100	.TRANSPORT EQUIPMENT	1-3
2504497-0000	.CABLE DUCT	1-365, 1-367
2504498-0000	.CABLE DUCT	1-365, 1-367
2504499-0000	.LID	1-365, 1-367
2504502-0100	.CABLE TRENCH	1-3
2504503-0000	.COVER	1-365, 1-367
2504521-0000	.BAR	1-11
2504523-0000	.CENTERING	1-11
2504547-0000	.GASKET	1-267
2504567-0000	.LINING	1-267
2504569-0000	.WASHER	1-269
2504779-0100	.REAR MODULE	2-3
2504780-0100	.MACHINE BODY	2-5, 2-7
2504781-0100	.HYDROGEN PEROXIDE	2-5, 2-7
2504782-0100	.CHEMICALS	2-5, 2-7
2504784-0200	.BENDING ROLLER	2-9
2504785-0250	.CENTRAL MODULE	2-3
2504786-0200	.MACHINE BODY	2-63
2504787-0100	.CLEANING SYSTEM	2-63
2504789-0100	.LUBRICATION UNIT	2-85
2504790-0100	.LIGHT FIXTURE	2-91, 2-147
2504791-0100	.CABLE DUCT	2-3
2504792-0100	.DRAINING	2-63
2504793-0150	.FRONT MODULE	2-3
2504794-0100	.MACHINE BODY	2-117
2504795-0100	.CLEANING SYSTEM	2-117
2504801-0000	.BRACKET	7-15
2504807-0000	.AXLE PIN	7-15
2504808-0000	.BRACKET	7-15
2504812-0000	.BLOCK	7-31
2504917-0100	.PIPE WORK-WATER	2-3
2504918-0100	.PNEUMATIC SYSTEM	2-3
2504920-0100	.DOORS AND COVERS	2-3
2506269-0000	.BUSHING	1-11
2506273-0000	.LEVER	1-11
2506281-0000	.PLUG	1-15, 1-17
2506283-0000	.PIN	1-15, 1-17
2506291-0000	.BUSHING	1-11
2506328-0000	.BRACKET	7-103
2506334-0000	.SUPPORT	4-229, 4-231
2506336-0000	.PROTECTIVE COVER	4-229, 4-231
2506337-0000	.ANGLE BRACKET	4-229, 4-231
2506338-0000	.SHAFT	4-229, 4-231
2506340-0000	.ECCENTRIC SHAFT	4-233, 4-235
2506359-0100	.VALVE PANEL	2-43
2506360-0100	.VALVE RAMP	2-49
2506361-0000	.PANEL	2-49
2506362-0100	.VALVE PANEL	2-123
2506363-0100	.VALVE RAMP	2-131, 2-133
2506364-0000	.PLATE	2-131, 2-133
2506392-0000	.SPACER	4-229, 4-231
2506496-0100	.PRESSURE ROLLER	7-17
2506497-0100	.PRESSURE ROLLER	7-17
2506498-0000	.SEALING PLATE	7-23
2506499-0000	.SEALING PLATE	7-23
2506500-0000	.PLATE	7-23
2506501-0000	.PLATE	7-23
2506502-0000	.PLATE	7-23
2506503-0000	.PLATE	7-23
2506504-0000	.PLATE	7-23
2506505-0000	.PLATE	7-23
2506578-0100	.TANK	7-107

Part No	Description	Page No
2506614-0100	.BOBBIN BRAKE	7-3, 7-5, 7-7, 7-9
2506615-0100	.BOBBIN BRAKE	7-3, 7-5, 7-7, 7-9
2506636-0000	.PIN	2-9, 2-119
2506637-0100	.AIR PIPE-LINE	2-17
2506647-0000	.LEVER	7-89
2506648-0000	.LEVER	7-91
2506649-0000	.BEARING FLANGE	7-89
2506650-0000	.FRAME	7-89, 7-91
2506651-0000	.BEARING FLANGE	7-91
2506652-0000	.AXLE PIN	7-89, 7-91
2506653-0000	.PIPE	2-69
2506654-0000	.BLOCK	7-25
2506656-0000	.PLATE	7-25
2506657-0000	.SPACER	7-25
2506659-0000	.ROLLER	7-29
2506660-0000	.SPACER	7-13
2506661-0000	.ROLLER	7-27, 7-29, 7-49
2506663-0000	.SUPPORT	7-27
2506664-0000	.STEERING	7-13
2506666-0000	.AXEL	7-27, 7-29, 7-49
2506668-0200	.STRIP APPLICATOR	7-3, 7-5, 7-7, 7-9
2506776-0200	.CENTRAL LUBRICATION	2-85
2506796-0100	.CABLE CONNECTION	2-91
2506920-0000	.CANTILEVER	2-95
2506921-0000	.SUPPORT	2-119
2506922-0000	.PIPE	2-121
2506923-0000	.PIPE	2-121
2506924-0000	.PIPE	2-121
2506925-0000	.PIPE	2-121
2506933-0000	.PIPE	2-69
2506934-0000	.PIPE	2-69
2507019-0100	.ROLLER	7-13
2507020-0100	.ROLLER	7-13
2507022-0200	.SPLICE DETECTOR	7-13
2507048-0000	.GASKET	1-211, 1-213, 1-215
2507059-0300	.REGULATING VALVE	1-243, 1-245
2507060-0200	.PRODUCT LINES	1-207, 1-209
2507076-0000	.FOLDING FLAP	4-127, 4-129, 4-163, 4-165
2507077-0000	.FOLDING FLAP	4-127, 4-129, 4-163, 4-165
2507085-0000	.FOLDING FLAP	4-127, 4-129, 4-163, 4-165
2507086-0000	.FOLDING FLAP	4-127, 4-129, 4-163, 4-165
2507092-0000	.FOLDING FLAP	4-127, 4-129, 4-163, 4-165
2507093-0000	.FOLDING FLAP	4-127, 4-129, 4-163, 4-165
2507096-0000	.FOLDING FLAP	4-127, 4-129, 4-163, 4-165
2507097-0000	.FOLDING FLAP	4-127, 4-129, 4-163, 4-165
2507103-0000	.BEARING FLANGE	7-89, 7-91
2508129-0100	.DOOR	2-215
2508130-0000	.DOOR	2-217
2508131-0000	.GLASS PANE	2-217, 2-219
2508132-0000	.RUBBER SEAL	2-217
2508133-0000	.LOCKING ARM	2-219, 2-221, 2-239, 2-251, 2-257, 2-259
2508134-0000	.LOCKING ARM	2-219, 2-239, 2-259
2508135-0100	.DOOR	2-215
2508136-0000	.DOOR	2-219
2508137-0000	.RUBBER SEAL	2-219
2508138-0100	.DOOR	2-215
2508139-0000	.DOOR	2-251
2508140-0000	.LOCKING ARM	2-221, 2-251, 2-257
2508141-0100	.DOOR	2-215
2508142-0000	.DOOR	2-221
2508147-0000	.LOCKING ARM	2-255
2508149-0200	.DOOR	2-215
2508150-0000	.DOOR	2-255
2508151-0000	.RUBBER SEAL	2-255
2508152-0000	.LOCKING ARM	2-255
2508159-0100	.COVER	2-215
2508160-0000	.COVER	2-227
2508161-0000	.RUBBER SEAL	2-227, 2-261
2508165-0100	.COVER	2-215
2508166-0000	.COVER	2-229
2508167-0000	.RUBBER SEAL	2-229
2508168-0100	.COVER	2-215
2508169-0000	.COVER	2-231
2508171-0000	.RUBBER SEAL	2-231
2508173-0100	.DIAGRAM	2-251
2508175-0100	.DOOR	2-215
2508176-0000	.DOOR	2-259
2508177-0100	.DOOR	2-215
2508178-0000	.DOOR	2-233
2508179-0000	.RUBBER SEAL	2-233
2508180-0001	.GLASS PANE	2-233
2508180-0002	.GLASS PANE	2-235
2508181-0100	.DOOR	2-215
2508182-0000	.DOOR	2-235

Part No	Description	Page No
2508183-0000	.RUBBER SEAL	2-235
2508186-0000	.RUBBER SEAL	2-221, 2-251
2508187-0100	.EMERGENCY STOP	7-261, 7-263
2508192-0000	.GUARD PLATE	2-273, 2-275
2508196-0000	.DRIVE SHAFT	2-273, 2-275
2508200-0000	.SHAFT	2-273, 2-275
2508201-0000	.CONVEYOR CHAIN	2-273, 2-275
2508203-0000	.HOLDER	2-273, 2-275
2508205-0001	.BRACKET	7-229
2508205-0002	.BRACKET	7-229
2508205-0003	.BRACKET	7-229
2508205-0005	.BRACKET	7-229
2508205-0006	.BRACKET	7-229
2508205-0007	.BRACKET	7-229
2508205-0008	.BRACKET	7-229
2508205-0009	.BRACKET	7-229
2508205-0010	.BRACKET	7-229
2508205-0012	.BRACKET	7-229
2508206-0000	.BENDING ROLLER	7-229
2508279-0100	.DOOR	1-5
2508280-0000	.FRAME	1-9
2508281-0000	.GASKET	1-9
2508282-0000	.GLASS PANE	1-9
2508283-0200	.DOOR	1-5
2508285-0000	.GASKET	1-7
2508292-0000	.BUSHING	1-41, 1-43
2508297-0000	.WASHER	1-41, 1-43
2508309-0000	.PLATE	1-41, 1-43
2508311-0000	.PLATE	1-41, 1-43
2508315-0000	.SCREW	1-285, 1-287
2508369-0200	.PLATFORM	2-159, 2-161, 2-163, 2-165, 2-167, 2-169
2508370-0000	.PLATFORM	2-187
2508371-0000	.PLATFORM	2-187
2508374-0000	.CHECKER PLATE	2-187
2508375-0000	.CHECKER PLATE	2-187
2508379-0000	.CHECKER PLATE	2-187
2508380-0000	.CHECKER PLATE	2-187
2508381-0000	.CHECKER PLATE	2-187
2508384-0000	.CHECKER PLATE	2-187
2508385-0000	.CHECKER PLATE	2-187
2508390-0000	.FASTENING PLATE	2-273, 2-275
2508406-0000	.STRUT	4-233, 4-235
2508424-0000	.PIPE	2-69
2508425-0000	.PIPE	2-121
2508426-0000	.BRACKET	2-121
2508427-0000	.BRACKET	2-69
2508428-0000	.PIPE	2-69
2509544-0000	.PIPE	2-113
2509545-0000	.PIPE	2-113
2509546-0000	.CONNECTION	2-113
2509547-0000	.PIPE	2-113
2509552-0000	.DRAINING	2-65, 2-119
2509613-0000	.BUSHING	7-23
2509614-0000	.BUSHING	7-23
2509617-0100	.INDUCTOR	7-17
2509646-0000	.CABLE DUCT	1-365, 1-367
2509647-0000	.CABLE DUCT	1-365, 1-367
2509648-0000	.CABLE DUCT	1-365, 1-367
2509649-0000	.COVER	1-365, 1-367
2509650-0000	.COVER	1-365, 1-367
2509651-0000	.COVER	1-365, 1-367
2509652-0000	.COVER	1-365, 1-367
2509654-0000	.PIPE	1-283
2509655-0000	.PIPE	1-283
2509656-0000	.PIPE	1-283
2509658-0000	.BRACKET	1-393
2509659-0000	.PLATE	1-393
2509674-0000	.BRACKET	1-167, 1-169
2509681-0000	.RAIL	1-167, 1-169
2509935-0000	.SPACER	5-45, 5-47, 5-49
2509936-0000	.SPACER SCREW	5-45, 5-47, 5-49
2509937-0000	.SPACER	5-45, 5-47, 5-49
2509938-0000	.BOTTOM	5-23, 5-25
2509941-0000	.SUPPORT	2-119
2510347-0100	.FRONT GUARD	2-215
2510348-0000	.COVER	2-249
2510349-0000	.SEALING STRIP	2-249
2510350-0000	.SUPPORT	2-249
2510351-0000	.SHAFT	2-249
2510352-0000	.DOOR	2-249
2510353-0000	.GUIDE	2-249
2510354-0000	.PIN	2-249
2510355-0000	.SHAFT	2-249
2510359-0000	.FASTENING BRACKET	7-25

Part No	Description	Page No
2510360-0000	.SHAFT	7-25
2510361-0000	.CONNECTING ROD	7-25
2510362-0000	.SHAFT	7-25
2510363-0000	.SHAFT	7-25
2510364-0000	.SHAFT	7-25
2510365-0000	.ROLLER	7-17
2510366-0000	.SHAFT	7-17
2510372-0000	.BUSHING	2-33
2510399-0000	.BRACKET	7-135
2510400-0000	.HOLDER	7-135
2510401-0100	.HOLDER	7-121
2510404-0000	.SUPPORT	7-27, 7-29
2510405-0000	.SUPPORT	7-27, 7-29
2510755-0000	.BRACKET	6-9
2510785-0000	.COVER PLATE	2-119
2510787-0000	.HOSE	4-237
2510833-0000	.PIPE	2-69
2510901-0000	.BRACKET	2-65
2510904-0000	.HOLDER	2-65
2511330-0000	.SPACER	1-221, 1-333
2512737-0000	.ROLLER	1-33, 1-35, 1-37, 1-59, 1-61, 1-63
2512738-0000	.ROLLER	1-33, 1-35, 1-37, 1-59, 1-61, 1-63
2512740-0000	.ROLLER	1-59, 1-61, 1-63
2512741-0000	.ROLLER	1-33, 1-35, 1-37, 1-59, 1-61, 1-63
2512742-0000	.ROLLER	1-33, 1-35, 1-37, 1-59, 1-61, 1-63
2512746-0000	.ROLLER	1-39, 1-75, 1-77, 1-79
2512748-0000	.ROLLER	1-39, 1-75, 1-77, 1-79
2512749-0000	.ROLLER	1-39, 1-75, 1-77, 1-79
2512768-0000	.SHAFT	1-15, 1-17
2512769-0000	.SHAFT	1-15, 1-17
2512774-0000	.SHIM	1-15, 1-17
2512779-0000	.RING	1-85, 1-87
2512780-0100	.SEAL	1-21, 1-23, 1-25, 1-27
2512821-0000	.EXTERNAL CLEANING DIAGRAM	2-253, 6-33
2512825-0000	.DIAGRAM	2-253
2512826-0000	.DIAGRAM	2-253
2512829-0000	.PNEUMATIC DIAGRAM	2-131, 2-133, 2-253
2512830-0100	.FRONT COVER	2-215
2512910-0200	.CLEANING SYSTEM	1-3
2512930-0200	.SUPPORT RAIL	1-5
2512936-0100	.CLEANING CUP	1-257
2512939-0000	.DISTRIBUTOR BLOCK	1-227
2513013-0000	.SHAFT	4-97, 4-99, 4-101, 4-119, 4-121, 4-123, 4-125, 4-143, 4-145, 4-147
2513014-0000	.CUTTING JAW	4-119, 4-121, 4-123, 4-125
2513015-0000	.HOLDER	4-97, 4-99, 4-101, 4-143, 4-145, 4-147
2514045-0000	.CARRIER	4-85, 4-87, 4-89
2514047-0000	.CARRIER	4-133, 4-135, 4-137
2514048-0200	.CARRIER PRESSURE LEFT	4-5
2514049-0000	.CARRIER	4-85, 4-87, 4-89
2514050-0200	.CARRIER PRESSURE RIGHT	4-5
2514051-0000	.CARRIER	4-133, 4-135, 4-137
2514077-0100	.EXPANSION VESSEL	6-13, 6-15
2514083-0000	.REDUCTION NIPPLE	6-29
2514087-0000	.PLATE	6-29
2514149-0000	.HEATING ELEMENT	5-187, 5-189, 5-191
2514204-0100	.DRAINING	2-9
2514205-0100	.PIPE WORK-WATER	2-195
2514254-0100	.TUBE FLUSHING	2-195
2514255-0100	.PIPE WORK-WATER	2-195
2514392-0100	.MACHINE CARRIAGE	10-67
2514514-0000	.INDUCTOR	1-41, 1-43
2514521-0000	.ROLLER	1-75, 1-77, 1-79
2514522-0000	.INDUCTOR	1-41, 1-43
2514804-0000	.PIN	2-65
2514830-0000	.FRONT COVER	2-245
2514831-0000	.SEALING STRIP	2-245
2514832-0000	.GLASS PANE	2-245
2515289-0000	.BRACKET	7-123
2515291-0000	.BRACKET	10-53
2515292-0000	.BRACKET	10-53
2515323-0100	.VALVE RAMP	1-341
2515324-0100	.VALVE RAMP	1-333
2515325-0100	.VALVE RAMP	1-333
2517062-0100	.FRONT COVER	2-241
2518035-0000	.FLAP	5-113, 5-115
2518098-0000	.COUNTER ROLLER	1-29, 1-31, 1-53, 1-55
2518119-0000	.PLATE	7-101
2518129-0000	.GUIDE	5-171, 5-173
2518130-0000	.GUIDE	5-177, 5-179
2518145-0101	.FLEXBOX TETRA BRIK	8-89, 8-91
2518146-0100	.TPOP PANEL 15"	2-3
2518147-0101	.PANEL UNIT 15"	2-263
2518148-0000	.PANEL	2-265
2518149-0000	.FOIL	2-265

Part No	Description	Page No
2518157-0000	.DOOR	2-265
2519430-0000	.BRACKET	2-121
2519437-0000	.TUBE	1-205
2519439-0000	.TUBE	1-205
2519440-0000	.TUBE	1-205
2519441-0000	.TUBE	1-283
2519442-0000	.TUBE	1-283
2519443-0000	.TUBE	1-283
2519444-0000	.TUBE	1-283
2519554-0000	.PIPE	2-25
2519555-0000	.PIPE	2-25
2519556-0000	.BRACKET	2-61
2519570-0100	.DRAINING	2-3
2519571-0000	.PIPE	2-271
2519572-0000	.PIPE	2-271
2519574-0100	.HYDROGEN PEROXIDE CONCENTRATION METER	2-53
2520160-0000	.CLAMP	5-165, 5-167
2520168-0000	.SLIDE	5-119, 5-121
2520170-0000	.FLAP	5-119, 5-121
2520172-0000	.FOLDING PART	5-145, 5-147
2520175-0000	.FOLDING PART	5-145, 5-147
2520178-0000	.GUIDE	5-137, 5-139
2520179-0000	.GUIDE	5-137, 5-139
2520180-0000	.CABLE DUCT	2-269
2520181-0000	.LID	2-269
2520430-0000	.HOLDER	2-119
2520431-0000	.SUPPORT	2-119
2520470-0000	.CARRIER RULER	4-127, 4-129
2520471-0000	.CARRIER RULER	4-163, 4-165
2520472-0000	.VOLUME FLAP	4-17, 4-19, 4-21
2520473-0000	.VOLUME BULGE	4-7, 4-9, 4-11, 4-17, 4-19, 4-21
2520474-0000	.VOLUME SHIM	4-7, 4-9, 4-11, 4-17, 4-19, 4-21
2520484-0100	.PIPE WORK-HYDRAULIC	2-71
2522128-0150	.MOTOR UNIT	5-3
2522129-0100	.INFEED CONVEYOR VARIANT	5-3
2522148-0000	.PIPE	6-47
2522166-0000	.GUIDE	5-171, 5-173
2522167-0000	.GUIDE	5-177, 5-179
2522184-0000	.PIPE	6-47
2522195-0000	.CONNECTION	1-253
2522196-0000	.SPACER	5-209, 5-211, 5-213, 5-215, 5-217, 5-219
2522197-0000	.PLATE	5-241, 5-243, 5-245, 5-247, 5-249, 5-251
2522199-0000	.BLOCK	5-5, 5-7
2522201-0000	.FLAP	5-113, 5-115
2522202-0000	.SPACER	5-101, 5-161, 5-163
2522213-0004	.SHAFT	1-39, 1-59, 1-61, 1-63, 1-75, 1-77, 1-79
2522213-0005	.SHAFT	1-39, 1-75, 1-77, 1-79
2522213-0006	.SHAFT	1-53, 1-55, 1-75, 1-77, 1-79, 1-81, 1-83
2522213-0007	.SHAFT	1-59, 1-61, 1-63, 1-81, 1-83
2522213-0008	.SHAFT	1-75, 1-77, 1-79
2522213-0009	.SHAFT	1-75, 1-77, 1-79
2522213-0010	.SHAFT	1-75, 1-77, 1-79
2522213-0015	.SHAFT	1-59, 1-61, 1-63, 1-91, 1-93, 1-95
2522213-0016	.SHAFT	1-91, 1-93
2522213-0017	.SHAFT	1-91, 1-93
2522213-0019	.SHAFT	1-75, 1-77, 1-79
2522213-0020	.SHAFT	1-75, 1-77, 1-79
2522233-0000	.BUSHING	1-11
2522235-0000	.COMPRESSION SPRING	1-11
2522258-0000	.FLANGE	1-165
2523265-0000	.HOOK	10-53
2523266-0000	.PUMP SHAFT	2-33
2523268-0000	.SHAFT	1-211, 1-213, 1-215, 9-11, 9-13, 9-15, 9-17, 9-19
2523480-0000	.SLIDE	5-83, 5-85, 5-87, 5-89, 5-91
2523482-0000	.PUSH BUTTON BOX	7-285
2523483-0000	.PUSH BUTTON BOX	7-285
2523497-0000	.BENDING ROLLER	7-227
2523499-0000	.SHAFT	7-227
2523500-0000	.AXLE PIN	7-227
2523597-0000	.SLIDER	7-133
2523598-0000	.84LICING TABLE	7-133
2523600-0000	.PIN	7-133
2523601-0000	.PAD	7-133
2523721-0000	.PIPE	10-95
2523765-0000	.BENDING ROLLER	7-103
2523766-0001	.BRACKET	7-103
2523766-0002	.BRACKET	7-103
2523766-0003	.BRACKET	7-103
2523766-0005	.BRACKET	7-103
2523766-0006	.BRACKET	7-103
2523766-0007	.BRACKET	7-103
2523766-0008	.BRACKET	7-103
2523766-0009	.BRACKET	7-103
2523766-0010	.BRACKET	7-103

Part No	Description	Page No
2523766-0012	.BRACKET	7-103
2523811-0100	.WHEEL	5-3
2523812-0100	.FLAP	5-113, 5-115
2524339-0000	.NOZZLE	5-209, 5-211, 5-213, 5-215, 5-217, 5-219
2524363-0000	.HANGER	6-49
2524388-0000	.VOLUME FLAP	4-7, 4-9, 4-11
2524504-0000	.BRACKET	2-65
2524509-0100	.FLAP HEATER BODY	5-3
2524512-0000	.PUSHER	5-241, 5-243, 5-245, 5-247, 5-249, 5-251
2524600-0100	.PRESSURE ROLLER	7-137, 7-139
2524601-0000	.AXLE PIN	7-149, 7-151
2524602-0000	.HANDLE	7-149, 7-151
2524603-0000	.HOLDER	7-149, 7-151
2524604-0000	.ROCKER ARM	7-149, 7-151
2524606-0000	.CABLE DUCT	7-119
2524607-0000	.CABLE DUCT	7-119
2525338-0000	.PLUG	1-259
2525339-0000	.BRACKET	7-123
2525570-0000	.COVER	3-23
2526563-0000	.HANDLE	5-119, 5-121, 5-125
2526567-0000	.CYLINDER	5-119, 5-121, 5-125
2526575-0000	.FOLDING BAR	5-137, 5-139
2526578-0000	.GUIDE	5-171, 5-173
2526579-0000	.GUIDE	5-177, 5-179
2526810-0000	.HOLDER	4-119, 4-121, 4-123, 4-125
2526811-0000	.310.54HOLDER	4-97, 4-99, 4-101, 4-143, 4-145, 4-147
2526812-0000	.SHAFT	4-97, 4-99, 4-101, 4-119, 4-121, 4-123, 4-125, 4-143, 4-145, 4-147
2526820-0000	.LINK	1-165
2526825-0000	.WASHER	1-29, 1-31, 1-33, 1-35, 1-37, 1-53, 1-55, 1-59, 1-61, 1-63
2526826-0000	.BUSHING	1-29, 1-31, 1-33, 1-35, 1-37, 1-53, 1-55, 1-59, 1-61, 1-63
2526827-0000	.SHAFT	1-29, 1-31, 1-33, 1-35, 1-37, 1-53, 1-55, 1-59, 1-61, 1-63
2526841-0000	.SHAFT	1-11
2526842-0000	.LINK	1-165
2526849-0000	.PLATE	1-165
2526850-0000	.SHAFT	1-165
2526851-0000	.SHUTTER	1-165
2526853-0400	.VALVE PANEL	1-319
2526854-0200	.VALVE PANEL	1-319
2526858-0000	.DOWEL	1-15, 1-17, 1-45
2526859-0000	.CAM	1-15, 1-17
2527252-0100	.CONNECTION BOX	2-91
2527253-0100	.CONNECTION BOX	2-53
2527295-0150	.CABLE HARNESS	2-147
2527297-0100	.CONNECTION BOX	2-147
2527299-0100	.CONNECTION BOX	2-147
2527300-0150	.ELECTRIC EQUIPMENT	2-117
2527368-0000	.PNEUMATIC DIAGRAM	2-49, 2-131, 2-133, 2-253, 6-77
2527371-0000	.INSERT	2-149, 2-151
2527509-0000	.PNEUMATIC DIAGRAM	2-49, 2-253
2527525-0000	.BRACKET	2-83
2527529-0000	.GUIDE UPPER L	5-35, 5-37
2527530-0000	.GUIDE UPPER R	5-35, 5-37
2527531-0000	.TIE ROD	5-11, 5-13
2527639-0000	.RUBBER SEAL	2-239, 2-259
2527640-0000	.GLASS PANE	2-239, 2-259
2527703-0100	.GUIDE	5-165, 5-167
2527703-0101	.GUIDE	9-7, 9-9
2527703-0102	.GUIDE	9-7, 9-9
2527703-0103	.GUIDE	9-7, 9-9
2527703-0104	.GUIDE	9-7, 9-9
2527703-0105	.GUIDE	9-7, 9-9
2527703-0108	.GUIDE	9-7, 9-9
2527703-0109	.GUIDE	9-7, 9-9
2527703-0110	.GUIDE	9-7, 9-9
2527703-0111	.GUIDE	9-7, 9-9
2527703-0120	.GUIDE	9-7, 9-9
2527703-0121	.GUIDE	9-7, 9-9
2527703-0125	.GUIDE	9-7, 9-9
2527703-0126	.GUIDE	9-7, 9-9
2527703-0127	.GUIDE	9-7, 9-9
2527703-0128	.GUIDE	9-7, 9-9
2527704-0100	.GUIDE	5-165, 5-167
2527704-0101	.GUIDE	9-7, 9-9
2527704-0102	.GUIDE	9-7, 9-9
2527704-0103	.GUIDE	9-7, 9-9
2527704-0104	.GUIDE	9-7, 9-9
2527704-0105	.GUIDE	9-7, 9-9
2527704-0108	.GUIDE	9-7, 9-9
2527704-0109	.GUIDE	9-7, 9-9
2527704-0110	.GUIDE	9-7, 9-9
2527704-0111	.GUIDE	9-7, 9-9
2527704-0120	.GUIDE	9-7, 9-9
2527704-0121	.GUIDE	9-7, 9-9
2527704-0125	.GUIDE	9-7, 9-9

Part No	Description	Page No
2527704-0126	.GUIDE	9-7, 9-9
2527704-0127	.GUIDE	9-7, 9-9
2527704-0128	.GUIDE	9-7, 9-9
2527725-0000	.CATCH	4-27, 4-29, 4-39, 4-41
2527792-0000	.SUPPORT	5-165, 5-167, 5-265, 5-271
2527793-0000	.SHAFT	5-165, 5-167, 5-265, 5-271
2528044-0100	.PNEUMATIC SYSTEM	2-117
2528046-0100	.HOSE INSTALLATION	2-123
2528056-0000	.RESISTANCE	1-285, 1-287
2528057-0000	.RESISTANCE	1-285, 1-287
2528058-0000	.COVER	1-285, 1-287
2528059-0000	.BRACKET	1-285, 1-287
2528061-0000	.SCREW	1-193
2528062-0000	.SCREW	1-193
2528068-0000	.CAM	1-15, 1-17
2528070-0000	.LOCKING LEVER	1-15, 1-17
2528073-0000	.LID	1-105, 1-107
2528076-0100	.STERILE AIR SYSTEM	1-3
2528079-0200	.PNEUMATIC SYSTEM	1-3
2528080-0200	.HOSE INSTALLATION	1-319
2528081-0200	.HOSE HOLDER	1-319
2528082-0000	.PIPE	1-347
2528083-0000	.TUBE	1-347
2528087-0100	.EMERGENCY STOP	1-5
2528088-0000	.HOLDER	1-15, 1-17
2528096-0000	.RING	1-85, 1-87
2528097-0000	.PLATE	1-85, 1-87
2528101-0100	.BLOWING SYSTEM	1-101, 1-103
2528102-0000	.LOCKING LEVER	1-15, 1-17
2528104-0000	.PIPE	1-211, 1-213, 1-215
2528105-0000	.PLATE	1-311, 1-313
2528106-0000	.FLANGE	1-15, 1-17
2528107-0000	.SHIM	1-15, 1-17
2528110-0000	.HOUSING	1-305, 1-307
2528111-0000	.PLATE	1-15, 1-17
2528112-0000	.BRACKET	1-97, 1-99
2528113-0000	.BRACKET	1-97, 1-99
2528114-0000	.COVER PLATE	1-97, 1-99
2528118-0001	.LOCK PLATE	1-33, 1-35, 1-37, 1-59, 1-61, 1-63
2528118-0002	.LOCK PLATE	1-59, 1-61, 1-63
2528118-0003	.LOCK PLATE	1-53, 1-55, 1-59, 1-61, 1-63
2528118-0004	.LOCK PLATE	1-29, 1-31, 1-53, 1-55, 1-59, 1-61, 1-63
2528118-0005	.LOCK PLATE	1-33, 1-35, 1-37, 1-53, 1-55, 1-59, 1-61, 1-63
2528119-0001	.LOCK PLATE	1-33, 1-35, 1-37, 1-59, 1-61, 1-63
2528119-0002	.LOCK PLATE	1-59, 1-61, 1-63
2528119-0003	.LOCK PLATE	1-53, 1-55, 1-59, 1-61, 1-63
2528119-0004	.LOCK PLATE	1-29, 1-31, 1-53, 1-55, 1-59, 1-61, 1-63
2528119-0005	.LOCK PLATE	1-29, 1-31, 1-33, 1-35, 1-37, 1-53, 1-55, 1-59, 1-61, 1-63
2528123-0001	.LOCK PLATE	1-33, 1-35, 1-37, 1-39, 1-59, 1-61, 1-63, 1-75, 1-77, 1-79
2528123-0002	.LOCK PLATE	1-39, 1-53, 1-55, 1-59, 1-61, 1-63, 1-75, 1-77, 1-79
2528123-0003	.LOCK PLATE	1-53, 1-55, 1-59, 1-61, 1-63
2528123-0004	.LOCK PLATE	1-29, 1-31, 1-33, 1-35, 1-37, 1-53, 1-55, 1-59, 1-61, 1-63
2528123-0005	.LOCK PLATE	1-59, 1-61, 1-63
2528123-0006	.LOCK PLATE	1-91, 1-93
2528123-0007	.LOCK PLATE	1-39, 1-75, 1-77, 1-79
2528123-0008	.LOCK PLATE	1-33, 1-35, 1-37, 1-39, 1-59, 1-61, 1-63, 1-75, 1-77, 1-79
2528123-0009	.LOCK PLATE	1-91, 1-93
2528127-0000	.BRACKET	1-311, 1-313
2528128-0000	.SHAFT	1-311, 1-313
2528129-0200	.FRAME HOUSING	1-123, 1-125
2528133-0000	.WASHER	1-129
2528134-0000	.GASKET	1-129
2528135-0000	.SHAFT	1-311, 1-313
2528136-0000	.SQUEE-GEE ROLLER	1-137, 1-139, 1-141, 1-143, 1-145, 1-147, 1-149, 1-151
2528144-0000	.FRAME	1-121
2528145-0100	.DOOR	1-101, 1-103
2528146-0100	.DOOR	1-101, 1-103
2528455-0100	.ELECTRIC EQUIPMENT	2-5, 2-7
2528457-0100	.PNEUMATIC SYSTEM	2-5, 2-7
2529069-0000	.PIPE	2-69
2529072-0000	.PIPE	1-283
2529073-0000	.PIPE	1-283
2529110-0000	.BRACKET	2-69
2529111-0000	.BRACKET	2-69
2529115-0000	.RAIL	5-83, 5-85, 5-87, 5-89, 5-91
2529116-0150	.ELECTRIC EQUIPMENT	2-63
2529117-0100	.DOOR SAFETY SWITCH	2-91
2529167-0200	.LUBRICATING SYSTEM	2-63
2529169-0000	.HOLDER	2-119
2529178-0000	.HYDRAULIC PIPE	2-83
2529179-0000	.HYDRAULIC PIPE	2-83
2529182-0000	.HYDRAULIC PIPE	2-83
2529183-0000	.HYDRAULIC PIPE	2-83
2529187-0000	.SPACER	3-11

Part No	Description	Page No
2529341-0000	.GASKET	2-65
2529342-0000	.GASKET	2-65
2529410-0150	.CABLE HARNESS	2-91
2529412-0000	.PUMP HOUSING	2-33
2529413-0000	.EXTENSION PIPE	2-33
2529416-0000	.SHAFT	1-211, 1-213, 1-215, 9-11, 9-13, 9-15, 9-17, 9-19
2529417-0000	.SHAFT	1-211, 1-213, 1-215, 9-11, 9-13, 9-15, 9-17, 9-19
2529418-0000	.SHAFT	1-211, 1-213, 1-215, 9-11, 9-13, 9-15, 9-17, 9-19
2529419-0000	.SHAFT	1-211, 1-213, 1-215, 9-11, 9-13, 9-15, 9-17, 9-19
2529420-0000	.SHAFT	1-211, 1-213, 1-215, 9-11, 9-13, 9-15, 9-17, 9-19
2529484-0100	.PEROXIDE PIPE	1-277
2529485-0200	.SPRAY SYSTEM	1-295
2529498-0000	.GASKET	2-107, 2-109
2529499-0100	.CABLE HARNESS	2-53
2529544-0000	.CABLE DUCT	7-119
2529546-0000	.SUPPORT	7-161
2529547-0100	.PAPER GUIDE	7-137, 7-139, 7-221
2529549-0000	.PLATE	7-149, 7-151, 7-223
2529550-0000	.SUPPORT	7-25
2529551-0000	.PROTECTION PLATE	7-93, 7-95
2529569-0100	.INDUCTOR	7-13
2529571-0100	.PRESSURE ROLLER	7-13
2529572-0000	.BRACKET	7-21
2529573-0000	.BRACKET	7-19
2529578-0000	.BUSHING	7-23
2529579-0000	.COVER	2-273, 2-275
2529597-0200	.DOOR	2-215
2529598-0000	.DOOR	2-257
2529599-0000	.RUBBER SEAL	2-257
2529603-0000	.GUIDE	5-103, 5-105, 5-107, 5-109, 5-111
2529604-0000	.GUIDE	5-103, 5-105, 5-107, 5-109, 5-111
2529605-0000	.SLIDE	5-103, 5-105, 5-107, 5-109, 5-111, 5-171, 5-173
2529606-0000	.SLIDE	5-103, 5-105, 5-107, 5-109, 5-111, 5-177, 5-179
2529607-0000	.BAR	5-103, 5-105, 5-107, 5-109, 5-111, 5-177, 5-179
2529608-0000	.BAR	5-103, 5-105, 5-107, 5-109, 5-111, 5-171, 5-173
2529609-0000	.GUIDE	5-103, 5-105, 5-107, 5-109, 5-111
2529610-0000	.GUIDE	5-103, 5-105, 5-107, 5-109, 5-111
2529664-0000	.CARRIER	5-75, 5-77, 5-79
2529670-0000	.WASHER	2-273, 2-275
2529671-0000	.FOLDING DEVICE	5-11, 5-13, 5-19
2529672-0000	.FOLDING DEVICE	5-11, 5-13, 5-21
2529673-0000	.SUPPORT	5-11, 5-13
2529674-0000	.SUPPORT	5-11, 5-13
2529675-0000	.LEVER	5-11, 5-13
2529676-0000	.LEVER	5-11, 5-13
2529742-0000	.CLAMP	1-349
2529750-0000	.COVERING PANEL	1-243, 1-245, 9-11, 9-13, 9-15, 9-17, 9-19
2529760-0200	.COVERING PANEL	1-391
2529785-0000	.KNOB	5-165, 5-167
2529786-0000	.KNOB	5-165, 5-167
2529909-0000	.FOLDING BAR	5-45, 5-47, 5-49
2529910-0000	.FOLDING BAR	5-45, 5-47, 5-49
2529925-0000	.STEP	1-315
2529926-0000	.RAILING	1-301
2529930-0000	.AIR NOZZLE	7-17
2529990-0000	.FRAME	7-119
2529991-0100	.RAILING	1-295
2530080-0100	.DOOR	2-215
2530082-0000	.GLASS PANE	2-237
2530087-0000	.DOOR	2-239
2530096-0000	.RAILING	1-301
2530124-0000	.ROLLER	4-185, 4-187
2530188-0100	.STEP	1-295
2530201-0000	.SPACER SCREW	5-45, 5-47, 5-49
2530256-0000	.VOLUME FLAP	4-7, 4-9, 4-11
2530257-0000	.VOLUME FLAP	4-17, 4-19, 4-21
2530284-0000	.GASKET	8-89, 8-91
2530285-0000	.GASKET	8-89, 8-91
2530286-0000	.RAIL	8-23
2530287-0000	.PLATE	8-23
2530288-0000	.GLASS PANE	8-29
2530292-0000	.BRACKET	4-85, 4-87, 4-89, 4-133, 4-135, 4-137
2530293-0000	.BRACKET	4-85, 4-87, 4-89, 4-133, 4-135, 4-137
2530296-0000	.ROLLER	4-85, 4-87, 4-89, 4-133, 4-135, 4-137
2530300-0000	.PIPE	2-119
2530301-0000	.PIPE	2-119
2530302-0000	.PIPE	2-119
2530303-0000	.PIPE	2-119
2530313-0000	.BUSHING	4-7, 4-9, 4-11, 4-17, 4-19, 4-21, 4-51, 4-53, 4-55, 4-57, 4-63, 4-65, 4-67, 4-69
2530399-0000	.HANGER	7-15
2530405-0000	.BRACKET	7-15
2530408-0000	.LEVER	7-15
2530410-0200	.STRIP GUIDE	7-13
2530418-0000	.SPRING	5-165, 5-167, 5-265, 5-271

Part No	Description	Page No
2530508-0000	.TIE ROD	4-109, 4-111, 4-113, 4-115, 4-153, 4-155, 4-157, 4-159
2530875-0000	.BRACKET	1-267
2531037-0000	.FRAME	1-109
2531038-0000	.FRAME	1-119
2531039-0100	.DOOR	1-101, 1-103
2531040-0000	.GASKET	1-119, 1-121
2531041-0000	.GLASS PANE	1-119, 1-121
2531043-0100	.HOUSING	1-101, 1-103
2531044-0000	.BOX FRAME	1-117
2531045-0000	.GASKET	1-109
2531046-0000	.GLASS PANE	1-109
2531047-0200	.HOUSING	1-101, 1-103
2531048-0000	.BENDING ROLLER	1-123, 1-125
2531052-0100	.PRESSURE UNIT	1-277
2531053-0000	.PLUG	1-123, 1-125
2531054-0000	.PLUG	1-123, 1-125
2531055-0000	.PLUG	1-123, 1-125
2531060-0000	.BRACKET	1-41, 1-43
2531076-0200	.INTEGRATED CLEANING UNIT	1-257
2531077-0200	.CLEANING TANK	1-265
2531078-0200	.VALVE PIPE	1-265
2531079-0000	.PIPE	1-271
2531082-0000	.CLAMP	1-273
2531083-0000	.SLEEVE	1-273
2531114-0000	.CARRIER	4-109, 4-111, 4-113, 4-115
2531233-0000	.HYDRAULIC PIPE	2-83
2531234-0000	.HYDRAULIC PIPE	2-83
2531235-0000	.HYDRAULIC PIPE	2-83
2531236-0000	.HYDRAULIC PIPE	2-83
2531237-0000	.HYDRAULIC PIPE	2-83
2531238-0000	.HYDRAULIC PIPE	2-83
2531245-0000	.HOSE NIPPLE	6-17, 6-19, 6-23
2531274-0100	.ELECTRICAL CONNECTION	5-3
2531276-0000	.BRACKET	5-277, 5-279
2531423-0000	.NUT	6-17, 6-19, 6-23
2531435-0000	.PLUG	1-271
2531493-0000	.BRACKET	7-133
2531500-0000	.PIPE	2-61
2531501-0000	.PIPE	2-61
2531703-0000	.BUSHING	4-97, 4-99, 4-101, 4-119, 4-121, 4-123, 4-125, 4-143, 4-145, 4-147
2532531-0000	.ROLLER	4-85, 4-87, 4-89, 4-133, 4-135, 4-137
2532535-0000	.HATCH	7-261, 7-263
2532561-0000	.SPACER	7-227
2532574-0000	.COVER	6-17, 6-23
2532580-0000	.HATCH	5-75, 5-77, 5-79
2532619-0000	.COVER	2-221, 2-251
2532620-0000	.GLASS PANE	2-251
2532806-0000	.ATTACHMENT PIPE	6-27
2532837-0000	.TUBE FLUSHING DEVICE	4-189
2532838-0000	.TUBE FLUSHING DEVICE	4-189
2532864-0000	.BRACKET	5-83, 5-85, 5-87, 5-89, 5-91
2532895-0001	.LOCK PLATE	1-75, 1-77, 1-79
2532895-0002	.LOCK PLATE	1-75, 1-77, 1-79
2532895-0003	.LOCK PLATE	1-39, 1-75, 1-77, 1-79, 1-81, 1-83
2532895-0004	.LOCK PLATE	1-39, 1-75, 1-77, 1-79, 1-91, 1-93
2532895-0005	.LOCK PLATE	1-81, 1-83
2532895-0006	.LOCK PLATE	1-75, 1-77, 1-79
2532895-0008	.LOCK PLATE	1-75, 1-77, 1-79, 1-91, 1-93
2532895-0009	.LOCK PLATE	1-81, 1-83
2532896-0000	.COVER	1-123, 1-125
2532897-0000	.GASKET	1-123, 1-125
2532898-0000	.BRACKET	1-41, 1-43
2532899-0000	.BRACKET	1-41, 1-43
2532908-0000	.ROLLER	1-305, 1-307
2532909-0200	.COVERING PANEL	1-3
2532911-0000	.ROLLER	1-305, 1-307
2532912-0001	.LOCK PLATE	1-75, 1-77, 1-79
2532912-0002	.LOCK PLATE	1-75, 1-77, 1-79
2532914-0000	.SPACER	1-33, 1-35, 1-37, 1-59, 1-61, 1-63
2532915-0000	.WASHER	1-167, 1-169
2532916-0000	.AIR GUIDE	1-167, 1-169
2532918-0000	.HOLDER	1-167, 1-169
2532919-0000	.PLATE	1-167, 1-169
2532922-0000	.PLATE	1-167, 1-169
2532925-0000	.INDUCTOR	1-41, 1-43
2532931-0000	.FLANGE	1-153, 1-155
2532934-0100	.AIR KNIFE	1-101, 1-103
2532938-0000	.INDUCTOR	1-41, 1-43
2532956-0000	.BENDING ROLLER	1-157, 1-159, 1-161, 1-163
2532963-0000	.DEFLECTOR	1-117
2532964-0000	.DEFLECTOR	1-117
2532965-0000	.ROLLER	1-59, 1-61, 1-63
2532968-0000	.BUSHING	1-197
2532969-0000	.SHAFT	1-147, 1-149, 1-151

Part No	Description	Page No
2532974-0000	.SETTING TOOL	10-5
2532977-0000	.BRACKET	1-15, 1-17
2532978-0000	.PLATE	1-15, 1-17
2532979-0000	.SPACER	1-13
2532983-0000	.FLANGE	1-137, 1-139, 1-141, 1-143, 1-145
2532984-0000	.FLANGE	1-137, 1-139, 1-141, 1-143, 1-145
2533627-0000	.SUPPORT BLOCK	1-15, 1-17
2533628-0000	.SUPPORT BLOCK	1-15, 1-17
2533638-0000	.AXLE PIN	3-5, 3-27
2533651-0100	.IH EQUIPMENT	8-49, 8-51, 8-53
2533670-0000	.SUPPORT	1-309
2533671-0000	.SCREW	1-309
2533672-0000	.SHAFT	1-309
2533673-0000	.ROLLER	1-309
2533736-0000	.SLEEVE	4-179, 4-181, 4-183
2533737-0000	.RAIL BRACKET	4-179, 4-181, 4-183
2533740-0000	.RAIL BRACKET	4-179, 4-181, 4-183
2533741-0000	.RAIL BRACKET	4-179, 4-181, 4-183
2533742-0000	.RAIL BRACKET	4-179, 4-181, 4-183
2533744-0000	.RAIL BRACKET	4-179, 4-181, 4-183
2533745-0000	.RAIL BRACKET	4-179, 4-181, 4-183
2533747-0000	.RAIL BRACKET	4-179, 4-181, 4-183
2533763-0000	.COVERING PANEL	1-389
2533766-0100	.COVERING PANEL	1-3
2533768-0000	.COVERING PLATE	1-389
2534851-0000	.BAR	4-233, 4-235
2535441-0000	.LEVER	4-243, 4-245
2535442-0000	.PIVOT PIN	4-243, 4-245
2535443-0000	.PIVOT PIN	4-179, 4-181, 4-183
2535455-0000	.LINK	4-243, 4-245, 4-247
2535457-0000	.WOODRUFF KEY	4-243, 4-245, 4-247
2535458-0000	.SHAFT	4-243, 4-245, 4-247
2535461-0000	.CONNECTING ROD	4-243, 4-245
2535538-0200	.FRAME	5-187, 5-189, 5-191
2535932-0000	.CAM	7-25
2536026-0000	.CARRIER	4-153, 4-155, 4-157, 4-159
2536047-0000	.ARM	4-219, 4-221
2536048-0000	.ARM	4-209, 4-211
2537111-0000	.CONNECTION BOX	2-97
2537112-0000	.BOX	2-55
2537113-0000	.CONNECTION BOX	2-155
2537114-0000	.CONNECTION BOX	2-157
2537120-0000	.BRACKET	2-65
2537128-0100	.DROP CHUTE VARIANT	5-3
2537129-0000	.SPACER	5-161, 5-163
2537848-0000	.HOUSE	1-269
2537849-0100	.DIFFUSOR	1-267
2538064-0000	.REFLECTOR	7-173
2538065-0000	.REFLECTOR	7-165
2538072-0100	.AUTOMATIC REEL LOADING	7-3, 7-5, 7-7, 7-9
2538073-0001	.SHIMS	7-93, 7-95
2538073-0002	.SHIMS	7-93, 7-95
2538075-0000	.BRACKET	7-93, 7-95
2538076-0000	.BRACKET	7-93, 7-95
2538110-0000	.RAIL	5-83, 5-85, 5-87, 5-89, 5-91
2539277-0000	.SHIM	5-113, 5-115
2539440-0100	.ASEPTIC CHAMBER	1-3
2539442-0200	.CLEANING PIPE	1-257
2539445-0200	.PENDULUM ROLLER	1-101, 1-103
2539448-0200	.CLEANING PIPE	1-257
2539450-0200	.DRYING CHAMBER	1-3
2539452-0200	.FLOW SWITCH	1-257
2539453-0000	.SPRING	1-211, 1-213, 1-215
2539455-0100	.VALVE	1-101, 1-103
2539457-0000	.LID	9-35
2539458-0100	.SPRAY TANK	1-217
2539459-0000	.HOLDER	9-35
2539471-0000	.COVERING PLATE	1-389
2539532-0000	.GASKET	8-37, 8-39, 8-41
2540593-0000	.CAM	5-75, 5-77, 5-79
2540594-0000	.CAM	5-75, 5-77, 5-79
2540595-0007	.COAXIAL CABLE	7-17
2540596-0002	.COAXIAL CABLE	8-37, 8-39, 8-41
2540596-0003	.COAXIAL CABLE	2-107, 2-109
2540609-0000	.KNOB	5-161, 5-163
2540612-0000	.PLATE	5-165, 5-167, 5-265, 5-271
2540615-0000	.CLEANING CUP	1-261, 1-263
2540716-0100	.SIGNAL LAMP	2-173, 2-175, 2-179, 2-181, 2-187
2540767-0000	.PIPE	2-177
2540813-0000	.CHUTE	2-273, 2-275
2540814-0000	.SPLASH PLATE	2-273, 2-275
2540816-0000	.BRACKET	2-273, 2-275
2540817-0000	.CHUTE	2-273, 2-275
2540818-0000	.BRACKET	2-273, 2-275

Part No	Description	Page No
2540823-0000	.BRACKET	5-257, 5-259
2541083-0100	.BENDING ROLLER	7-93, 7-95
2541125-0000	.SCREW	5-35, 5-37, 5-137, 5-139
2541633-0000	.FLANGE	1-137, 1-139, 1-141, 1-143, 1-145
2541634-0100	.EDGE ROLLER	1-21, 1-23, 1-25, 1-27
2541635-0100	.SQUEE-GEE ROLLER	1-101, 1-103
2541637-0000	.SHAFT	1-137, 1-139, 1-141, 1-143, 1-145
2541639-0000	.LID	1-137, 1-139, 1-141, 1-143, 1-145, 1-153, 1-155, 1-157, 1-159, 1-161, 1-163
2541640-0000	.FLANGE	1-137, 1-139, 1-141, 1-143, 1-145
2541641-0000	.FLANGE	1-137, 1-139, 1-141, 1-143, 1-145
2541643-0000	.FLANGE	1-147, 1-149, 1-151
2541645-0000	.SHIM	1-15, 1-17
2541646-0000	.SHIM	1-15, 1-17
2541647-0000	.LID	1-137, 1-139, 1-141, 1-143, 1-145
2541648-0000	.LID	1-137, 1-139, 1-141, 1-143, 1-145
2541650-0000	.LID	1-147, 1-149, 1-151
2541651-0000	.PLATE	1-7, 1-9, 1-109, 1-119, 1-121, 1-175
2541656-0000	.BEAM	1-397
2541657-0000	.BEAM	1-397
2541658-0000	.SCREW	1-11
2541661-0000	.LID	1-165
2541664-0000	.COVER	1-13
2541673-0000	.WASHER	1-295
2541680-0100	.HYDROGEN PEROXIDE	1-3
2541681-0000	.WASHER	1-147, 1-149, 1-151
2541682-0000	.BUSHING	1-147, 1-149, 1-151
2541714-0100	.DROP CHUTE CRADLE	5-3
2541877-0000	.NAIL	5-241, 5-243, 5-245, 5-247, 5-249, 5-251
2541878-0000	.WASHER	5-241, 5-243, 5-245, 5-247, 5-249, 5-251
2541890-0100	.BRACKET	7-93, 7-95
2541891-0100	.FILTER	7-93, 7-95
2541942-0000	.BRACKET	7-225
2541943-0000	.BRACKET	7-283, 7-287
2542325-0100	.WASTE CONVEYOR	2-3
2542340-0000	.COLUMN	2-65
2542341-0000	.DRAINING	2-65
2542488-0000	.NUT	4-201
2542489-0200	.GUIDE	4-199
2542490-0000	.LID	2-67
2542491-0100	.HOLDER	2-65
2542492-0000	.LID	2-67
2542493-0000	.BLOCK	2-65
2542494-0000	.BLOCK	2-65
2542496-0000	.BRACKET	7-225
2543231-0000	.CARRIER	5-75, 5-77, 5-79
2543234-0000	.BRACKET	5-83, 5-85, 5-87, 5-89, 5-91
2543240-0000	.SPACER	5-209, 5-211, 5-213, 5-215, 5-217, 5-219
2543242-0000	.ANGLE BLOCK	5-103, 5-105, 5-107, 5-109, 5-111, 5-171, 5-173, 5-177, 5-179
2543349-0000	.DRAINING	2-65
2543480-0100	.FOLDING PART	5-3
2543481-0100	.TOP SECTION	5-127
2543482-0100	.TOP RAIL	5-127
2544199-0200	.STEAM PIPE	1-251
2544213-0000	.BRACKET	2-69
2544214-0000	.PIPE	2-69
2544303-0000	.GASKET	2-67
2544305-0000	.PROTECTION	2-225
2544306-0000	.DOOR	2-225
2544307-0000	.RUBBER SEAL	2-225
2544308-0000	.GLASS PANE	2-225
2544310-0100	.PROTECTIVE COVER	2-215
2544311-0000	.BOX	2-39
2544312-0000	.FLOAT	2-39
2544313-0000	.PIPE	2-39
2544314-0000	.PIPE	2-39
2544316-0000	.PIPE	2-39
2544318-0000	.PIPE	2-39
2544319-0000	.COVER	2-39
2544321-0000	.COVER	2-39
2544324-0000	.PIPE	2-39
2544325-0000	.GASKET	2-39
2544326-0100	.INTEGRATED CLEANING UNIT	2-5, 2-7
2544330-0000	.PLUG	2-39
2544331-0000	.COVER	2-261
2544332-0000	.PROTECTION	2-261
2544333-0100	.DOOR	2-215
2544339-0100	.FRAME	5-187, 5-189, 5-191
2544342-0000	.BRACKET	5-145, 5-147
2544850-0100	.FORMING SECTION	1-3
2544865-0000	.BUSHING	1-15, 1-17
2544866-0000	.WASHER	1-15, 1-17
2544873-0100	.CONNECTION PIPE	9-3
2544880-0000	.PROTECTION	1-279
2544881-0000	.ROLLER	1-75, 1-77, 1-79

Part No	Description	Page No
2544882-0000	.COUNTER ROLLER	1-53, 1-55
2544883-0000	.PLATE	1-147, 1-149, 1-151
2544884-0000	.PLATE	1-147, 1-149, 1-151
2544885-0000	.ARM	1-147, 1-149, 1-151
2544886-0000	.ARM	1-147, 1-149, 1-151
2544891-0000	.INSULATING PLATE	1-41, 1-43
2544892-0000	.INSULATING PLATE	1-41, 1-43
2544893-0000	.INSULATING PLATE	1-41, 1-43
2544894-0000	.INSULATING PLATE	1-41, 1-43
2544897-0000	.BRACKET	1-41, 1-43
2544898-0000	.SHAFT	1-41, 1-43
2544902-0000	.BRACKET	5-221
2544990-0000	.VOLUME FLAP	4-7, 4-9, 4-11
2544991-0000	.VOLUME FLAP	4-17, 4-19, 4-21
2544992-0000	.VOLUME BULGE	4-7, 4-9, 4-11, 4-17, 4-19, 4-21
2544993-0000	.VOLUME SHIM	4-7, 4-9, 4-11, 4-17, 4-19, 4-21
2544995-0000	.GUIDE	5-103, 5-105, 5-107, 5-109, 5-111
2544996-0000	.GUIDE	5-103, 5-105, 5-107, 5-109, 5-111
2544997-0000	.SLIDE	5-103, 5-105, 5-107, 5-109, 5-111, 5-171, 5-173
2544998-0000	.SLIDE	5-103, 5-105, 5-107, 5-109, 5-111, 5-177, 5-179
2544999-0000	.BAR	5-103, 5-105, 5-107, 5-109, 5-111, 5-177, 5-179
2545000-0000	.BAR	5-103, 5-105, 5-107, 5-109, 5-111, 5-171, 5-173
2545006-0000	.SPACER	5-209, 5-211, 5-213, 5-215, 5-217, 5-219
2545017-0000	.PARALLEL KEYS WITH ROUND ENDS	3-7, 3-9
2545135-0000	.SPACER	5-209, 5-211, 5-213, 5-215, 5-217, 5-219
2545236-0000	.NOZZLE	5-209, 5-211, 5-213, 5-215, 5-217, 5-219
2545245-0000	.BUSHING	5-75, 5-77, 5-79
2545352-0000	.TEMPLATE	9-33
2545382-0000	.CARRIER	5-75, 5-77, 5-79
2545433-0000	.SPACER	5-209, 5-211, 5-213, 5-215, 5-217, 5-219
2545537-0000	.SPACER	5-209, 5-211, 5-213, 5-215, 5-217, 5-219
2545545-0000	.INSERT	5-103, 5-105, 5-107, 5-109, 5-111
2545639-0200	.COVERING PANEL	1-391
2545651-0200	.STEAM SYSTEM	1-207, 1-209
2545658-0000	.PLATE	1-297, 1-299
2546229-0100	.ADAPTION TRANSFORMER	4-91, 4-93, 4-139, 4-141
2546319-0000	.HOLDER	2-49
2546463-0000	.PRESSURE RAIL	7-153
2546474-0000	.INDUCTOR	4-97, 4-99, 4-101, 4-143, 4-145, 4-147, 9-11, 9-13, 9-15, 9-17, 9-19
2546475-0000	.RAIL	4-97, 4-99, 4-101
2546476-0000	.RAIL	4-143, 4-145, 4-147
2546496-0000	.RAIL	2-55, 2-157
2546499-0200	.GUIDE	2-71
2546500-0100	.HYDRAULIC SYSTEM	2-63
2546501-0000	.FOLDING FLAP	4-127, 4-129, 4-163, 4-165
2547010-0000	.BRACKET	4-7, 4-9, 4-11, 4-17, 4-19, 4-21
2547011-0000	.VOLUME FLAP	4-7, 4-9, 4-11
2547012-0000	.VOLUME FLAP	4-17, 4-19, 4-21
2547015-0000	.TOOTHED PULLEY	5-267, 5-269
2547017-0000	.TOOTHED PULLEY	5-267, 5-269
2547061-0000	.HOLDER	6-69, 6-71
2547187-0000	.PLATE	5-267
2547205-0200	.PRESSURE REGULATOR	1-177
2547211-0000	.FLANGE	1-205
2547213-0000	.FLOW SENSOR	1-205
2547376-0100	.KNOB	1-41, 1-43
2547377-0000	.WASHER	1-41, 1-43
2547386-0000	.SHAFT	1-15, 1-17
2547387-0000	.ROD END	1-11
2547388-0000	.AXLE PIN	1-41, 1-43
2547391-0100	.NOZZLE	1-277
2547398-0000	.LID	1-123, 1-125
2547399-0000	.LID	1-123, 1-125
2547401-0000	.SUPPORT PLATE	1-11
2547402-0000	.BRACKET	1-11
2547403-0000	.WHEEL	1-11
2547404-0000	.BRACKET	1-41, 1-43
2547405-0000	.BRACKET	1-41, 1-43
2547406-0000	.ROLLER	1-137, 1-139, 1-141, 1-143, 1-145, 1-147, 1-149, 1-151
2547407-0000	.PIPE	1-191
2547408-0000	.BODY	1-231
2547410-0100	.PRODUCT VALVE	1-229
2547419-0000	.SHIM	1-11
2547420-0100	.EDGE ROLLER	1-21, 1-23, 1-25, 1-27
2547421-0100	.FORMING RING	1-21, 1-23, 1-25, 1-27
2547422-0200	.UPPER FORMING RING	1-21, 1-23, 1-25, 1-27
2547425-0000	.BRACKET	1-305, 1-307
2547474-0000	.SIGN LANGUAGE INDEPENDENT	6-19
2547565-0000	.HOLDER	1-305, 1-307
2547566-0000	.ROD	1-305, 1-307
2547568-0000	.PLATE	1-305, 1-307
2547588-0000	.SPRING	4-85, 4-87, 4-89, 4-133, 4-135, 4-137
2547589-0000	.SPRING	4-85, 4-87, 4-89, 4-133, 4-135, 4-137
2547666-0000	.DOOR	7-283

Part No	Description	Page No
2547667-0000	.DOOR	7-287
2549829-0000	.SPACER	7-153
2550125-0100	.COOLING UNIT	8-3
2550126-0000	.RAIL	8-49, 8-51, 8-53
2550129-0000	.CABLE DUCT	8-49, 8-51, 8-53
2550130-0000	.CABLE DUCT	8-49, 8-51, 8-53
2550133-0000	.DIVIDER	8-49, 8-51, 8-53
2550135-0000	.DIVIDER	8-49, 8-51, 8-53
2550138-0100	.PLATFORM	2-159, 2-161, 2-163, 2-165, 2-167, 2-169
2550139-0100	.PLATFORM	2-3
2550140-0000	.CHECKER PLATE	2-179, 2-181
2550141-0000	.CHECKER PLATE	2-179, 2-181
2550142-0000	.PLATFORM	2-179, 2-181
2550143-0000	.PLATFORM	2-179, 2-181
2550144-0000	.PLATFORM	2-179, 2-181
2550145-0000	.RAILING	2-179, 2-181
2550146-0000	.RAILING	2-179, 2-181
2550147-0000	.RAILING	2-179, 2-181
2550189-0000	.RAILING	2-179, 2-181
2550191-0000	.TOE PLATE	2-179, 2-181
2550192-0000	.TOE PLATE	2-179, 2-181
2550193-0000	.TOE PLATE	2-179, 2-181
2550211-0000	.VOLUME BULGE	5-23, 5-25
2550269-0001	.LOCKING ARM	7-283
2550269-0002	.LOCKING ARM	7-283
2550333-0000	.GUIDE LUG	7-273, 7-275, 7-283
2550890-0100	.VALVE	1-177
2550891-0000	.BENDING ROLLER	1-105, 1-107
2550893-0000	.BENDING ROLLER	1-105, 1-107
2550895-0100	.CHANGE OVER VALVE	1-191
2550896-0000	.RAIL	7-221
2550944-0000	.WATER DIAGRAM	2-253, 6-69, 6-71
2550945-0000	.WATER DIAGRAM	2-253, 6-69, 6-71
2550979-0000	.TRANSPORT EQUIPMENT	9-3
2551075-0000	.ROLLER	1-305, 1-307
2551119-0000	.PNEUMATIC DIAGRAM	2-253, 6-75
2551120-0000	.CARRIER	5-103, 5-105, 5-107, 5-109, 5-111
2551951-0000	.RAILING	2-173, 2-175, 2-179, 2-181
2551988-0000	.CABLE DUCT	8-37, 8-39, 8-41
2551989-0000	.CABLE DUCT	8-37, 8-39, 8-41
2552001-0000	.HYDRAULIC DIAGRAM	2-71, 2-253
2552002-0250	.BASE UNIT	4-3
2552003-0100	.FORMING UNIT	4-3
2552005-0100	.PRESSURE JAW	4-91, 4-93, 4-139, 4-141
2552006-0100	.INDUCTOR LEFT	4-91, 4-93
2552007-0100	.INDUCTOR RIGHT	4-139, 4-141
2552008-0200	.CUTTING JAW	4-117, 4-161
2552009-0100	.FOLDING FLAP LEFT	4-117
2552010-0200	.PISTON	4-117, 4-161
2552011-0100	.FOLDING FLAP RIGHT	4-161
2552018-0000	.CARRIER	5-75, 5-77, 5-79
2552022-0000	.GUIDE	5-29, 5-31, 5-33, 5-129, 5-131
2552077-0250	.DRIVE UNIT	3-3
2552078-0250	.DRIVE UNIT	3-3
2552080-0100	.LINK	3-5, 3-27
2552110-0150	.SUPPORT	3-5
2552111-0150	.SUPPORT	3-27
2552113-0100	.FLOW METER	6-13, 6-15
2552121-0000	.BRACKET	1-11
2552124-0000	.BRACKET	1-305, 1-307
2552125-0100	.BENDING ROLLER	1-295
2552127-0000	.FLANGE	1-157, 1-159, 1-161, 1-163
2552133-0000	.BENDING ROLLER	1-157, 1-159, 1-161, 1-163
2552135-0000	.BENDING ROLLER	1-153, 1-155
2552136-0000	.FLANGE	1-153, 1-155
2552138-0000	.LID	1-15, 1-17
2552139-0000	.BENDING ROLLER	1-153, 1-155
2552140-0000	.BRACKET	1-91, 1-93
2552141-0000	.BRACKET	1-91, 1-93
2552142-0000	.BRACKET	1-91, 1-93
2552143-0000	.BRACKET	1-91, 1-93
2552144-0000	.ROLL	1-91, 1-93
2552151-0000	.BRACKET	10-5
2552152-0000	.BRACKET	10-5
2552153-0000	.BRACKET	10-5
2552154-0000	.BRACKET	10-5
2552155-0000	.ROLL	1-91, 1-93
2552158-0000	.SCREW	1-91, 1-93
2552160-0000	.SUPPORT RING	1-39, 1-75, 1-77, 1-79
2552161-0000	.SUPPORT RING	1-39, 1-75, 1-77, 1-79
2552176-0001	.LOCK PLATE	1-39, 1-75, 1-77, 1-79
2552176-0003	.LOCK PLATE	1-39, 1-75, 1-77, 1-79
2552177-0001	.LOCK PLATE	1-39, 1-75, 1-77, 1-79
2552177-0003	.LOCK PLATE	1-39, 1-75, 1-77, 1-79

Part No	Description	Page No
2552187-0000	.ROLLER	1-75, 1-77, 1-79
2552188-0000	.ROLLER	1-39, 1-75, 1-77, 1-79
2552201-0000	.LOCKING DEVICE	1-243, 1-245
2552205-0000	.ROLLER	1-39, 1-75, 1-77, 1-79
2552206-0000	.ROLLER	1-39, 1-75, 1-77, 1-79
2552215-0200	.STEAM TRAP	1-251
2552445-0000	.SUPPORT	5-263
2552655-0000	.ROLLER	1-85, 1-87
2552656-0000	.ROLLER	1-85, 1-87
2552776-0000	.ADAPTER	1-253
2552777-0000	.ADAPTER	1-253
2552794-0000	.PULLEY	5-221
2552798-0000	.COMPRESSION ROD	7-153
2552802-0000	.SLIDE PLATE	7-153
2552821-0000	.BRACKET	7-93, 7-95
2552931-0100	.HOSE INSTALLATION	2-43
2553072-0000	.KEY FOR SAFETY SWITCH	7-283, 7-287
2553092-0000	.PLATE	1-113
2553093-0000	.PLATE	1-113
2553094-0000	.PIPE	1-113
2553095-0000	.PIPE	1-113
2553107-0000	.HOLDER	7-93, 7-95
2553108-0000	.HOLDER	7-93, 7-95
2553109-0000	.HOLDER	7-93, 7-95
2553115-0000	.PLATFORM	2-179, 2-181
2553116-0000	.CHECKER PLATE	2-179, 2-181
2553117-0000	.LEG	7-43, 7-45, 10-7, 10-9
2553118-0000	.TOE PLATE	2-179, 2-181
2553119-0000	.RAILING	2-179, 2-181
2553120-0000	.RAILING	2-179, 2-181
2553122-0000	.PLATE	2-173, 2-175, 2-179, 2-181
2553124-0000	.PIN	2-179, 2-181
2553125-0000	.CHECKER PLATE	2-179, 2-181
2553167-0000	.LID	1-227
2553272-0000	.SUPPORT BLOCK	7-169, 7-179
2553273-0000	.AXLE PIN	7-169, 7-179
2553275-0000	.SLIDE PLATE	7-165, 7-173
2553284-0000	.BLOCK	5-29, 5-31, 5-33, 5-129, 5-131
2553343-0000	.SUPPORT	5-11, 5-13
2553344-0000	.SUPPORT	5-11, 5-13
2553345-0000	.TIE ROD	5-11, 5-13
2553346-0000	.AXLE LINK	5-11, 5-13
2553347-0000	.FOLDING BAR	5-45, 5-47, 5-49
2553348-0000	.FOLDING BAR	5-45, 5-47, 5-49
2553615-0000	.FLAP	5-119, 5-121
2553617-0000	.SLIDE	5-119, 5-121
2553799-0000	.WASHER	7-169, 7-179
2554263-0000	.BRACKET	5-83, 5-85, 5-87, 5-89, 5-91
2555082-0000	.SPACER SCREW	5-137, 5-139, 5-145, 5-147
2555393-0100	.START-UP KIT	9-3
2555394-0100	.START-UP KIT	9-5
2555404-0000	.FLAP	5-23, 5-25
2555613-0000	.BUSHING	1-105, 1-107
2555614-0000	.BRACKET	1-41, 1-43
2555615-0000	.BRACKET	1-41, 1-43
2555616-0000	.ROLLER	1-41, 1-43
2555617-0000	.PIN	1-41, 1-43
2555618-0000	.SHAFT	1-41, 1-43
2555619-0000	.BRACKET	1-41, 1-43
2555620-0000	.COVER	1-41, 1-43
2555621-0000	.ROLLER	1-33, 1-35, 1-37
2555622-0000	.ROLLER	1-33, 1-35, 1-37
2555623-0000	.COVER	1-41, 1-43
2555625-0000	.ROLL	1-41, 1-43
2555627-0100	.PRESSURE ROLLER	1-21, 1-23, 1-25, 1-27
2555637-0000	.GUIDE	5-29, 5-31, 5-33, 5-129, 5-131
2556260-0200	.TOOLS AND TEMPLATES	10-3
2556261-0100	.ACCESSORIES	10-3
2556496-0000	.CARRIAGE	7-79
2556497-0000	.CARRIAGE	7-79
2556499-0000	.BRACKET	7-79
2556503-0100	.PAPER BRAKE	7-79
2556504-0000	.BRACKET	7-81, 7-83
2556505-0002	.PIN	7-81, 7-83
2556505-0003	.PIN	7-81, 7-83
2556506-0000	.LINK	7-81, 7-83
2556507-0000	.LEVER	7-81, 7-83
2556508-0000	.BRACKET	7-81, 7-83
2556509-0000	.SHAFT	7-81, 7-83
2556510-0000	.BRACKET	7-81, 7-83
2556512-0000	.BRACKET	7-79
2556525-0000	.LEVER	5-75, 5-77, 5-79
2556526-0000	.LEVER	5-75, 5-77, 5-79
2556615-0000	.PIPE CONNECTION	4-189

Part No	Description	Page No
2556893-0100	.TUBE FLUSHING	4-169
2556894-0000	.TUBE FLUSHING DEVICE	4-189
2556895-0000	.TUBE FLUSHING DEVICE	4-189
2557587-0000	.CABLE DUCT	8-65, 8-67
2557591-0000	.DIVIDER	8-49, 8-51, 8-53
2557594-0000	.RAIL	8-69
2557612-0000	.SPRING	4-27, 4-29, 4-39, 4-41
2557613-0000	.SPRING	4-27, 4-29, 4-39, 4-41
2558127-0000	.SPACER	5-145, 5-147
2558145-0000	.FLAP	5-23, 5-25
2558146-0000	.CRADLE	5-257, 5-259
2558148-0000	.SLIDING STRIP	7-153
2558703-0000	.GUIDE UPPER L	5-137, 5-139
2558704-0000	.GUIDE UPPER R	5-137, 5-139
2558754-0000	.RAIL	5-83, 5-85, 5-87, 5-89, 5-91
2558761-0000	.CABLE DUCT	8-71
2558762-0000	.CABLE DUCT	8-71
2558763-0000	.CABLE DUCT	8-71
2558764-0000	.CABLE DUCT	8-71
2558765-0000	.CABLE DUCT	8-71
2558766-0000	.CABLE DUCT	8-71
2558768-0000	.CABLE DUCT	8-71
2558769-0000	.DIVIDER	8-71
2558770-0000	.DIVIDER	8-71
2558771-0000	.DIVIDER	8-71
2558772-0000	.DIVIDER	8-71
2558773-0000	.DIVIDER	8-71
2558826-0000	.PIPE	2-39
2558845-0200	.TANK	2-75
2558878-0000	.SIGN	7-121
2558879-0000	.SIGN	7-121
2558920-0000	.STOP	4-39, 4-41
2558921-0000	.STOP	4-27, 4-29
2558922-0000	.STOP	4-39, 4-41
2558923-0000	.STOP	4-27, 4-29
2558929-0000	.BAR	4-27, 4-29, 4-39, 4-41
2558930-0100	.PUMP	2-75
2558932-0000	.RAIL	8-75
2558933-0000	.RAIL	8-77
2558934-0000	.RAIL	8-79
2558937-0000	.RAIL	8-95
2558938-0000	.CABLE DUCT	8-89, 8-91
2558939-0000	.CABLE DUCT	8-89, 8-91
2558940-0000	.DIVIDER	8-89, 8-91
2558941-0000	.DIVIDER	8-89, 8-91
2558947-0200	.HYDRAULIC UNIT	2-71
2559008-0000	.VOLUME BULGE	5-241, 5-243, 5-245, 5-247, 5-249, 5-251
2559045-0003	.ELECTRODE	1-317
2559045-0004	.ELECTRODE	1-317
2559051-0000	.INSERT	1-247
2559061-0200	.UPPER FORMING RING	1-21, 1-23, 1-25, 1-27
2559062-0200	.LOWER FORMING RING	1-21, 1-23, 1-25, 1-27
2559063-0200	.LOWER FORMING RING	1-21, 1-23, 1-25, 1-27
2559064-0100	.SEAL	1-21, 1-23, 1-25, 1-27
2559066-0000	.STUD SCREW	1-13
2559095-0000	.BRACKET	1-229
2559102-0000	.RING	1-85, 1-87
2559103-0000	.PLATE	1-85, 1-87
2559104-0000	.PLATE	1-85, 1-87
2559105-0000	.SUPPORT RING	1-75, 1-77, 1-79
2559111-0200	.HYDRAULIC VALVE	2-75
2559112-0100	.CALIBRATION EQUIPMENT	10-5
2559310-0000	.HYDRAULIC PIPE	2-83
2559311-0000	.HYDRAULIC PIPE	2-83
2559424-0000	.CUTTING JAW	4-119, 4-121, 4-123, 4-125
2559425-0000	.CLAMP HOLDER	4-97, 4-99, 4-101, 4-143, 4-145, 4-147
2559439-0000	.COUPLING BOLT	7-153
2559461-0000	.SPACER	2-39
2559976-0000	.BRACKET	2-39
2559977-0000	.HOSE	2-39
2559978-0000	.PIPE	2-39
2559986-0000	.SEALING PLATE	7-147
2559987-0000	.SEALING PLATE	7-147
2562307-0000	.PIPE	1-219
2562315-0000	.PLUG	1-219
2562551-0000	.SLIDE PLANE	7-143
2562552-0000	.SLIDE PLANE	7-143
2562664-0000	.ROLL	1-91, 1-93
2562667-0002	.LOCK PLATE	1-91, 1-93
2562667-0008	.LOCK PLATE	1-75, 1-77, 1-79
2562667-0009	.LOCK PLATE	1-75, 1-77, 1-79
2562677-0000	.WASHER	1-15, 1-17
2562684-0000	.ROLL	1-91, 1-93
2562685-0000	.ROLLER	1-59, 1-61, 1-63

Part No	Description	Page No
2562686-0000	.ROLLER	1-59, 1-61, 1-63
2562687-0000	.PLATE	1-47, 1-49, 1-51
2562688-0000	.RING	1-47, 1-49, 1-51
2562692-0000	.BRACKET	1-91, 1-93
2562693-0000	.BRACKET	1-91, 1-93
2562694-0000	.ROLLER	1-91, 1-93
2562695-0000	.ROLLER	1-91, 1-93
2562696-0000	.BRACKET	1-91, 1-93
2562697-0000	.BRACKET	1-91, 1-93
2562704-0000	.BODY	1-249
2562709-0000	.ROLLER	1-85, 1-87
2562710-0000	.RING	1-85, 1-87
2562711-0000	.PLATE	1-85, 1-87
2562736-0001	.COAXIAL CABLE	4-237
2563166-0250	.CONNECTOR	8-23
2563170-0100	.RELAY UNIT 1	8-71
2563173-0000	.PROFILE	8-89, 8-91
2563174-0000	.PROFILE	8-89, 8-91
2563183-0000	.GUIDE RAIL	7-157, 7-159
2563274-0000	.CARRIER	5-75, 5-77, 5-79
2563276-0000	.PNEUMATIC DIAGRAM	1-319, 2-253
2563279-0000	.PIPE	1-283
2563281-0000	.PIPE	1-283
2563289-0000	.LOWER FILLING PIPE	1-211, 1-213, 1-215
2563290-0000	.PRESSURE FLANGE	1-211, 1-213, 1-215
2563292-0000	.STOP PIN	1-211, 1-213, 1-215
2563293-0000	.LOWER FILLING PIPE	1-211, 1-213, 1-215
2563294-0000	.PRESSURE FLANGE	1-211, 1-213, 1-215
2563295-0000	.STOP PIN	1-211, 1-213, 1-215
2563296-0000	.LOWER FILLING PIPE	1-211, 1-213, 1-215
2563666-0000	.CANTILEVER	4-27, 4-29, 4-39, 4-41
2563667-0000	.SHAFT	4-27, 4-29, 4-39, 4-41
2563671-0000	.SHAFT	4-27, 4-29, 4-39, 4-41
2563759-0000	.SPRAY SYSTEM	1-289
2563760-0000	.EXTENSION	1-289
2563761-0000	.NUT	1-289
2563762-0000	.SPACER	1-289
2564054-0100	.AIR INLET	7-107
2564074-0100	.TOOLS AND TEMPLATES	10-5
2564105-0000	.CONNECTION BOX	1-223
2564106-0100	.CONNECTION BOX	1-217
2564107-0000	.LID	1-283
2564225-0000	.BUSHING	2-33
2564232-0100	.LEG	7-35, 7-37, 10-5
2564342-0000	.SPACER	2-33
2564347-0000	.FLAP	5-23, 5-25
2564504-0000	.SUPPORT	7-25
2564545-0000	.PLATE	2-189, 2-191
2564546-0100	.PLATFORM	2-159, 2-161, 2-163, 2-165, 2-167, 2-169
2564561-0000	.PIPE	2-33
2564562-0000	.ROLLER	7-153, 7-155, 7-157, 7-159
2564565-0000	.TOE PLATE	2-187
2564566-0000	.TOE PLATE	2-187
2564596-0000	.FLOAT	1-211, 1-213, 1-215
2564597-0000	.FLOAT	1-211, 1-213, 1-215
2564598-0000	.FLOAT	1-211, 1-213, 1-215
2564599-0000	.FLOAT	1-211, 1-213, 1-215
2564600-0000	.FLOAT	1-211, 1-213, 1-215
2564601-0000	.FLOAT	1-211, 1-213, 1-215
2564602-0000	.FLOAT	1-211, 1-213, 1-215
2564606-0000	.SUPPORT PLATE	1-221
2564623-0000	.HANDLE	7-79
2564630-0100	.CABLE DRAG CHAIN	7-79
2564632-0100	.VALVE PANEL	7-203, 7-205
2564633-0100	.VALVE PANEL	7-3, 7-5, 7-7, 7-9
2564634-0000	.BEARING BLOCK	7-203, 7-205
2564683-0000	.CURVE	4-179, 4-181, 4-183
2564978-0000	.PIPE	2-33
2565424-0000	.ROLLER	1-53, 1-55
2565425-0000	.COUNTER ROLLER	1-53, 1-55
2565430-0000	.SUPPORT RING	1-75, 1-77, 1-79
2565431-0000	.SUPPORT RING	1-75, 1-77, 1-79
2565432-0100	.TERMINAL BLOCK	1-223
2565436-0000	.FILLING PIPE	1-211, 1-213, 1-215
2565437-0000	.CLEANING CUP	1-261, 1-263
2565440-0000	.INDUCTOR	1-41, 1-43
2565441-0000	.INSULATING PLATE	1-41, 1-43
2565467-0000	.FLANGE	1-191
2565482-0000	.BOX	1-113
2565483-0000	.NOZZLE	1-113
2565492-0000	.PNEUMATIC DIAGRAM	1-319
2565493-0000	.PNEUMATIC DIAGRAM	1-319, 2-253
2565494-0000	.PNEUMATIC DIAGRAM	1-319
2565513-0000	.ROLLER	1-53, 1-55

Part No	Description	Page No
2565526-0000	.PIPE	2-65
2565624-0350	.SOFTWARE	8-3
2566117-0000	.CUTTING TABLE	7-165, 7-173
2566118-0000	.BRACKET	7-165, 7-173
2566123-0000	.SLIDE PLANE	7-153
2566124-0000	.SLIDE PLANE	7-153
2566125-0000	.SLIDE PLATE	7-153
2566127-0000	.SPACER	7-147
2566128-0000	.HOUSING	7-147
2566129-0000	.ADJUSTMENT ANGLE	7-147
2566130-0000	.PLATE	7-147
2566209-0000	.PLATE	2-39
2566210-0000	.PLATE	2-39
2566211-0000	.LABEL	2-39
2566212-0000	.LABEL	2-39
2566258-0000	.TOE PLATE	2-179, 2-181
2566317-0000	.CARRIER RULER	4-163, 4-165
2566318-0000	.CARRIER RULER	4-127, 4-129
2566319-0000	.FOLDING FLAP	4-127, 4-129, 4-163, 4-165
2566320-0000	.FOLDING FLAP	4-127, 4-129, 4-163, 4-165
2566321-0000	.FLAP	5-113, 5-115
2566323-0000	.FLAP	5-113, 5-115
2566327-0000	.CARRIER	4-153, 4-155, 4-157, 4-159
2566328-0000	.PLATE	4-109, 4-111, 4-113, 4-115, 4-153, 4-155, 4-157, 4-159
2566329-0000	.CARRIER	4-109, 4-111, 4-113, 4-115
2566330-0000	.SLEEVE	4-131
2566332-0000	.SHAFT	4-51, 4-53, 4-55, 4-57, 4-63, 4-65, 4-67, 4-69, 4-77, 4-83
2566333-0000	.HOLDER (STAFFA)	4-51, 4-53, 4-55, 4-57, 4-63, 4-65, 4-67, 4-69, 4-77, 4-83
2566336-0000	.BEARING HOUSING	4-95
2566338-0000	.CATCH	4-95
2566339-0000	.CATCH	4-119, 4-121, 4-123, 4-125
2566340-0000	.CARRIER	4-85, 4-87, 4-89
2566341-0000	.CARRIER	4-133, 4-135, 4-137
2569034-0000	.PIPE	2-81
2569035-0000	.PIPE	2-79
2569036-0000	.PIPE	2-77
2569037-0000	.PIPE	2-77
2569038-0000	.PIPE	2-79
2569039-0000	.PIPE	2-79
2569908-0000	.HOUSING	4-95
2569982-0100	.SETTING TOOL	10-5
2570004-0001	.CABLE	2-149, 2-151
2570015-0000	.PRESSURE FLANGE	1-211, 1-213, 1-215
2570017-0000	.PRESSURE FLANGE	1-211, 1-213, 1-215
2570301-0000	.CUTTING JAW	4-119, 4-121, 4-123, 4-125
2570302-0000	.CLAMP HOLDER	4-97, 4-99, 4-101, 4-143, 4-145, 4-147
2570616-0100	.FASTENING PLATE	2-143
2570678-0000	.HANDLE	1-353, 1-355
2570741-0000	.HOLDER	10-53
2570743-0000	.BRACKET	10-53
2570744-0000	.HOLDER	10-51
2570746-0000	.BRACKET	10-53
2570747-0000	.PLATE	10-53
2570821-0000	.SHEET	7-209, 7-211, 7-213
2570836-0000	.PROTECTION PLATE	7-203, 7-205
2570848-0000	.HOLDER	4-97, 4-99, 4-101, 4-143, 4-145, 4-147
2570849-0000	.BUSHING	4-97, 4-99, 4-101, 4-119, 4-121, 4-123, 4-125, 4-143, 4-145, 4-147
2570850-0000	.CUTTING JAW	4-119, 4-121, 4-123, 4-125
2571843-0000	.CARRIER	4-109, 4-111, 4-113, 4-115
2572071-0000	.HOOD	1-211, 1-213, 1-215
2572248-0000	.CARRIER	4-153, 4-155, 4-157, 4-159
2572563-0000	.SUPPORT	5-267
2574401-0000	.FRAME	7-143
2574402-0000	.PRESSURE JAW	7-153
2574421-0000	.PIPE	2-29
2574483-0200	.TOOLS AND TEMPLATES	9-3
2575631-0000	.RAIL BRACKET	4-179, 4-181, 4-183
2576244-0000	.BRACKET	7-235
2576245-0000	.ARM	7-235
2576334-0100	.TPOP DATA COLLECTION	8-3
2576335-0100	.TPOP LINE SUPERVISION	8-3
2576379-0000	.ROCKER ARM	7-223
2576396-0000	.PLATE	7-147
2578455-0000	.LIFTING HANDLE	7-223
2578486-0000	.BRACKET	1-317
2578785-0000	.PUSH BUTTON BOX	7-267, 7-269
2579687-0100	.SETTING TOOL	10-5
2579688-0000	.HOLDER	10-51
2579838-0000	.TOUCH GUARD	7-133
2579861-0003	.PIVOT BRACKET	6-19
2579988-0000	.CUTTING JAW	4-119, 4-121, 4-123, 4-125
2579989-0000	.HOLDER	4-97, 4-99, 4-101, 4-143, 4-145, 4-147
2579990-0000	.SHAFT	4-97, 4-99, 4-101, 4-119, 4-121, 4-123, 4-125, 4-143, 4-145, 4-147
2579991-0000	.HOLDER	4-97, 4-99, 4-101, 4-143, 4-145, 4-147

Part No	Description	Page No
2579995-0100	.LAST POINT DE	5-3
2579996-0000	.PLATE	7-33
2581994-0000	.VOLUME BULGE	4-7, 4-9, 4-11, 4-17, 4-19, 4-21, 4-51, 4-53, 4-55, 4-57, 4-63, 4-65, 4-67, 4-69
2582002-0000	.VOLUME FLAP	4-17, 4-19, 4-21
2582003-0100	.GUIDE RAIL	7-137, 7-139
2582020-0000	.RAIL BRACKET	4-179, 4-181, 4-183
2582558-0000	.BASE PLATE	7-169, 7-179
2582559-0000	.RAIL	7-169, 7-179
2582574-0000	.BODY	1-45
2582575-0000	.KNOB	1-45
2582576-0000	.STOP SCREW	1-193
2582590-0000	.PIPE	1-253
2582613-0000	.BRACKET	10-5
2582616-0000	.PLATE	1-85, 1-87
2582623-0000	.SEAL	1-85, 1-87
2582629-0000	.RING	1-85, 1-87
2582630-0000	.ROLLER	1-85, 1-87
2582651-0000	.AIR GUIDE	1-167, 1-169
2582652-0000	.AIR GUIDE	1-167, 1-169
2582654-0000	.PLATE	1-167, 1-169
2582655-0000	.HOLDER	1-167, 1-169
2582668-0000	.PLATE	7-157, 7-159
2587235-0000	.VOLUME FLAP	4-17, 4-19, 4-21
2587236-0000	.VOLUME FLAP	4-7, 4-9, 4-11
2587250-0000	.ARM	7-165, 7-173
2587251-0000	.ANGLE PIECE	7-165, 7-173
2587286-0000	.HOLDER	10-19, 10-21
2587289-0000	.CHECKER PLATE	2-187
2587290-0000	.CHECKER PLATE	2-187
2587291-0000	.CHECKER PLATE	2-187
2587292-0000	.CHECKER PLATE	2-187
2587326-0000	.BRACKET	10-67
2587464-0000	.CANTILEVER	4-241
2587466-0000	.INDUCTOR	4-97, 4-99, 4-101, 9-11, 9-13, 9-15, 9-17, 9-19
2587467-0000	.INDUCTOR	4-143, 4-145, 4-147, 9-11, 9-13, 9-15, 9-17, 9-19
2588044-0000	.BRACKET	7-155
2588045-0000	.BRACKET	7-155
2588046-0000	.SHAFT	7-153, 7-155
2588067-0000	.SHAFT	7-227
2588127-0000	.AXLE PIN	5-15
2588130-0100	.FOLDING FIN DEVICE	5-5, 5-7
2588134-0000	.YOKE	5-15
2588290-0000	.BRACKET	7-153
2588291-0000	.TIE ROD	4-109, 4-111, 4-113, 4-115, 4-153, 4-155, 4-157, 4-159
2588292-0000	.PLATE	4-119, 4-121, 4-123, 4-125
2588293-0000	.HOLDER	4-97, 4-99, 4-101, 4-143, 4-145, 4-147
2588294-0000	.LID	4-95
2588295-0000	.SLEEVE	4-95
2588296-0000	.PISTON	4-95
2588297-0000	.SHAFT	4-95
2588299-0000	.BUSHING	4-119, 4-121, 4-123, 4-125
2588300-0000	.RAIL BRACKET	4-179, 4-181, 4-183
2588301-0000	.CURVE	4-179, 4-181, 4-183
2588302-0000	.VOLUME CAM	4-179, 4-181, 4-183
2588303-0000	.SCREW	4-119, 4-121, 4-123, 4-125
2588304-0000	.VOLUME FLAP	4-77
2588305-0000	.VOLUME FLAP	4-83
2588306-0000	.VOLUME FLAP	4-79
2588307-0000	.VOLUME FLAP	4-79
2588327-0000	.INSERT	5-113, 5-115
2588328-0000	.PULLEY	5-69
2588329-0000	.PULLEY	5-69
2588379-0100	.MATERIAL HOLDER	7-173
2588383-0100	.MATERIAL HOLDER	7-165
2588422-0100	.MATERIAL HOLDER L1	7-3, 7-5, 7-7, 7-9
2588423-0100	.MATERIAL HOLDER L2	7-3, 7-5, 7-7, 7-9
2588425-0000	.PLATE	10-45
2588426-0100	.ALIGNMENT TEMPLATE	10-5
2588946-0100	.SPLICING DEVICE	7-3, 7-5, 7-7, 7-9
2588947-0000	.SHIMS	7-147
2588948-0000	.SHIMS	7-147
2589104-0100	.FRAME	7-137, 7-139
2589105-0100	.DRIVE UNIT	7-137, 7-139
2589106-0100	.HEATING UNIT	7-137, 7-139
2589108-0000	.BENDING ROLLER	7-145
2589109-0000	.TOOTHED PULLEY	7-145
2589110-0000	.SHAFT	7-145
2589111-0000	.FLANGE	7-145
2589112-0000	.FLANGE	7-145
2589113-0000	.SHAFT	7-145
2589114-0000	.SHAFT	7-145
2589115-0000	.COVER	7-145
2589119-0000	.NUT	7-143
2589786-0000	.BRACKET	7-245

Part No	Description	Page No
2589787-0000	.FITTING	7-245
2589791-0000	.KNIFE HOLDER	7-165, 7-173
2591680-0100	.HOLDER	7-237, 7-239, 7-241, 7-243
2591782-0000	.SPRING	1-309
2591790-0000	.BLOCK	5-5, 5-7
2592525-0000	.FILLING PIPE	1-211, 1-213, 1-215
2592530-0000	.PLATE	1-129
2592539-0000	.ROLLER	1-29, 1-31
2592540-0000	.ROLLER	1-29, 1-31
2592544-0000	.FILLING PIPE	1-211, 1-213, 1-215
2592545-0000	.ROLLER	1-39
2592546-0000	.ROLLER	1-47, 1-49, 1-51
2592547-0000	.ROLLER	1-47, 1-49, 1-51
2592548-0000	.ROLLER	1-47, 1-49, 1-51
2592549-0000	.ROLLER	1-47, 1-49, 1-51
2592550-0100	.FORMING RING	1-21, 1-23, 1-25, 1-27
2592567-0100	.PRESSURE JAW	7-137, 7-139
2592568-0100	.BAR CODE READER	7-137, 7-139
2592780-0000	.DOLLY	7-153, 9-5
2593831-0100	.VOLUME KIT	9-5
2593838-0000	.HATCH	7-261, 7-263
2593851-0100	.EMERGENCY STOP	2-221, 2-251
2593982-0000	.PUSH BUTTON BOX	7-267, 7-269
2594043-0000	.SHOCK ABSORBER	1-249
2594054-0100	.INDEXING UNIT	5-3
2594058-0000	.GUIDE	5-157, 5-159
2594125-0000	.SLEEVE	1-309
2594126-0000	.GUIDE ROLLER	1-309
2594393-0000	.PNEUMATIC DIAGRAM	2-253, 7-209, 7-211, 7-213
2594512-0101	.VOLUME FLAP	9-7, 9-9
2594512-0102	.VOLUME FLAP	9-7, 9-9
2594512-0103	.VOLUME FLAP	9-7, 9-9
2594512-0104	.VOLUME FLAP	9-7, 9-9
2594512-0105	.VOLUME FLAP	9-7, 9-9
2594512-0106	.VOLUME FLAP	9-7, 9-9
2594512-0107	.VOLUME FLAP	9-7, 9-9
2594512-0108	.VOLUME FLAP	9-7, 9-9
2594512-0109	.VOLUME FLAP	9-7, 9-9
2594512-0110	.VOLUME FLAP	9-7, 9-9
2594512-0111	.VOLUME FLAP	9-7, 9-9
2594512-0200	.VOLUME FLAP	4-5
2594567-0000	.PIPE	2-271
2594589-0000	.BRACKET	2-271
2594596-0000	.BRACKET	1-95
2594601-0000	.RAIL	1-167, 1-169
2594606-0100	.STERILE AIR PIPE	1-177
2594621-0000	.WASHER	1-173
2594624-0000	.PLUG	1-123, 1-125
2594629-0000	.FILLING PIPE	1-211, 1-213, 1-215
2594636-0000	.BRACKET	1-41, 1-43
2594644-0000	.ROLLER	1-53, 1-55
2594646-0000	.PIPE	2-113
2594647-0000	.PIPE	2-113
2594709-0000	.AXLE PIN	4-61, 4-73
2594886-0000	.PLATE	5-257, 5-259
2594887-0000	.SPACER	4-179, 4-181, 4-183
2594888-0000	.VOLUME BULGE	4-77, 4-83
2594889-0000	.VOLUME BULGE	4-79
2594890-0000	.VOLUME SHIM	4-77, 4-83, 9-11, 9-13, 9-15, 9-17, 9-19
2594891-0000	.VOLUME SHIM	4-79, 9-11, 9-13, 9-15, 9-17, 9-19
2594892-0000	.SPRING	4-95
2594893-0000	.WEDGE	4-77, 4-83
2594896-0000	.SCREW	4-79
2594902-0000	.CATCH	5-241, 5-243, 5-245, 5-247, 5-249, 5-251
2594905-0000	.SLIDE	5-171, 5-173
2594906-0000	.SLIDE	5-177, 5-179
2594910-0000	.LEVER	5-75, 5-77, 5-79
2594911-0000	.HATCH	5-75, 5-77, 5-79
2595704-0000	.FOLDING PART	5-145, 5-147
2595705-0000	.FOLDING PART	5-145, 5-147
2595706-0000	.BRACKET	5-145, 5-147
2595707-0000	.FOLDING PART	5-145, 5-147
2595708-0000	.FOLDING PART	5-145, 5-147
2595709-0000	.FOLDING PART	5-145, 5-147
2597324-0100	.VOLUME FLAP	4-5
2597325-0100	.VOLUME FLAP	4-5
2597329-0100	.CURVE UNIT	4-169
2597330-0100	.CONTROL UNIT	4-239
2597331-0100	.CENTERING UNIT	4-239
2597600-0000	.BUSHING	7-23
2597768-0000	.BRACKET	5-157, 5-159
2597769-0000	.GUIDE	5-157, 5-159
2598008-0000	.STOP PIN	1-211, 1-213, 1-215
2598010-0000	.STOP PIN	1-211, 1-213, 1-215

Part No	Description	Page No
2598015-0000	.LOWER FILLING PIPE	1-211, 1-213, 1-215
2598017-0000	.PRESSURE FLANGE	1-211, 1-213, 1-215
2598018-0000	.LOWER FILLING PIPE	1-211, 1-213, 1-215
2598025-0000	.SIGN	2-131, 2-133
2598065-0000	.SUPPORT	4-241
2598067-0000	.SHAFT	4-247
2598084-0000	.PLATE	1-219
2598085-0000	.SPACER	1-219
2598485-0000	.CLAMP	5-157, 5-159
2598486-0000	.CLAMP	5-157, 5-159
2598487-0000	.SLIDE	5-171, 5-173
2598488-0000	.SLIDE	5-177, 5-179
2598491-0000	.FOLDING PART	5-145, 5-147
2598492-0000	.FOLDING PART	5-145, 5-147
2598493-0000	.BRACKET	5-145, 5-147
2598494-0000	.FOLDING PART	5-145, 5-147
2598495-0000	.FOLDING PART	5-145, 5-147
2598496-0000	.FOLDING PART	5-145, 5-147
2598497-0000	.FOLDING PART	5-145, 5-147
2598498-0000	.NOZZLE	5-209, 5-211, 5-213, 5-215, 5-217, 5-219
2598499-0000	.NOZZLE	5-209, 5-211, 5-213, 5-215, 5-217, 5-219
2598500-0000	.NOZZLE	5-209, 5-211, 5-213, 5-215, 5-217, 5-219
2598502-0000	.SUPPORT	4-243, 4-245
2598503-0000	.EXTENSION	5-209, 5-211, 5-213, 5-215, 5-217, 5-219
2598508-0100	.INFEED/OUTFEED CONVEYOR	5-57
2598513-0000	.SPACER	5-63
2598514-0000	.COVER	5-63
2598689-0000	.HOSE	2-25
2598706-0000	.BAR	5-5, 5-7
2598805-0000	.FLAP	5-119, 5-121
2598807-0000	.SLIDE	5-119, 5-121
2598819-0000	.SPACER	5-161, 5-163
2598820-0000	.SPACER	5-161, 5-163
2598844-0000	.COVER	2-65
2598880-0000	.SETTING SCREW	5-17
2599044-0000	.BRACKET	5-157, 5-159
2599738-0000	.ECCENTRIC	4-179, 4-181, 4-183
2599739-0000	.ECCENTRIC	4-179, 4-181, 4-183
2599741-0000	.SUPPORT	4-247
2599742-0000	.SHAFT	4-243, 4-245, 4-247
2599743-0000	.SHAFT	4-247
2599847-0000	.SPACER	5-145, 5-147
2599941-0000	.SPACER	2-173, 2-175, 2-179, 2-181, 7-39, 7-41, 7-93, 7-95
2600978-0000	.CABLE	10-101
2601230-0000	.BRACKET	8-89, 8-91
2601232-0000	.FRAME	8-89, 8-91
2601237-0000	.BENDING ROLLER	1-105, 1-107
2601239-0000	.SPRING	1-211, 1-213, 1-215
2601240-0000	.ROLLER	1-39
2601247-0000	.INDUCTOR	1-41, 1-43
2601248-0000	.INSULATING PLATE	1-41, 1-43
2601249-0000	.BRACKET	1-41, 1-43
2601259-0000	.COUNTER ROLLER	1-53, 1-55
2601269-0000	.ROLLER	1-91, 1-93
2601271-0000	.ROLLER	1-91, 1-93
2601272-0000	.ROLLER	1-91, 1-93
2601273-0000	.ROLLER	1-91, 1-93
2601278-0000	.ROLLER	1-75, 1-77, 1-79
2601279-0000	.ROLLER	1-75, 1-77, 1-79
2601284-0000	.LEVER	1-173
2601285-0000	.ROLLER	1-75, 1-77, 1-79
2601286-0000	.ROLLER	1-75, 1-77, 1-79, 1-97, 1-99
2601289-0000	.INDUCTOR	1-41, 1-43
2601307-0000	.INSULATING PLATE	1-41, 1-43
2601308-0000	.ROLLER	1-53, 1-55
2601309-0000	.ROLLER	1-53, 1-55
2601321-0000	.FILLING PIPE	1-211, 1-213, 1-215
2601327-0000	.ROLLER	1-53, 1-55
2601328-0000	.ROLLER	1-53, 1-55
2601333-0000	.ROLLER	1-59, 1-61, 1-63
2601334-0000	.ROLLER	1-59, 1-61, 1-63
2601445-0000	.FOLDING PART	5-145, 5-147
2601455-0000	.FOLDING PART	5-145, 5-147
2601464-0000	.FOLDING PART	5-145, 5-147
2601465-0000	.FOLDING PART	5-145, 5-147
2601468-0000	.PRESSURE FLANGE	1-211, 1-213, 1-215
2601469-0000	.PRESSURE FLANGE	1-211, 1-213, 1-215
2601470-0000	.PRESSURE FLANGE	1-211, 1-213, 1-215
2601472-0000	.PRESSURE FLANGE	1-211, 1-213, 1-215
2601473-0000	.PRESSURE FLANGE	1-211, 1-213, 1-215
2601474-0000	.PRESSURE FLANGE	1-211, 1-213, 1-215
2601483-0100	.PAPER GUIDE	1-305, 1-307
2601580-0000	.HOSE	8-103
2601581-0000	.HOSE	8-103

Part No	Description	Page No
2601582-0000	.HOSE	8-103
2602592-0000	.FOLDING PART	5-145, 5-147
2602613-0000	.VOLUME BULGE	5-241, 5-243, 5-245, 5-247, 5-249, 5-251
2602614-0000	.BOTTOM	5-23, 5-25
2602652-0000	.SHAFT	4-243, 4-245, 4-247
2602655-0000	.ROLLER	4-185, 4-187
2602657-0000	.LOCK PLATE	4-243, 4-245
2602658-0000	.SHAFT	4-243, 4-245
2602990-0000	.SHEET	7-13
2602991-0000	.ROD	7-15
2602992-0000	.ROD	7-15
2602993-0000	.LEVER	7-31
2602994-0000	.BRACKET	7-31
2602995-0000	.AXLE	7-31
2603138-0000	.BRACKET	5-157, 5-159
2603140-0000	.GUIDE	5-157, 5-159
2603147-0000	.PLATE	5-145, 5-147
2603148-0000	.CLAMP	5-157, 5-159
2603151-0000	.SHIM	4-109, 4-111, 4-113, 4-115, 4-153, 4-155, 4-157, 4-159
2603374-0000	.ECCENTRIC	4-175, 4-177
2603376-0000	.AXLE PIN	4-175, 4-177
2603378-0000	.ROLLER	4-175, 4-177
2603387-0000	.SPACER	2-39
2603488-0000	.FLAP	5-119, 5-121
2603489-0000	.BOTTOM	5-119, 5-121, 9-7, 9-9
2603490-0000	.SLIDE	5-119, 5-121
2603546-0000	.SLIDE PLATE	1-167, 1-169
2603547-0000	.FOLDING PART	5-145, 5-147
2603548-0000	.FOLDING PART	5-145, 5-147
2603630-0000	.SLIDE PLATE	1-167, 1-169
2603659-0000	.FOLDING PART	5-145, 5-147
2603660-0000	.FOLDING PART	5-145, 5-147
2603661-0000	.BRACKET	5-145, 5-147
2603662-0000	.BRACKET	5-145, 5-147
2603663-0000	.SPACER	5-35, 5-37, 5-45, 5-47, 5-49, 5-137, 5-139
2603664-0000	.RAIL	5-145, 5-147
2603823-0000	.BOTTOM PLATE	1-167, 1-169
2603824-0000	.COUNTER PLATE	1-167, 1-169
2603826-0100	.FOLDING PART	5-127
2603827-0100	.FLAP GUIDE	5-127
2604069-0000	.BRACKET	6-7
2604493-0000	.VOLUME FLAP	4-51, 4-53, 4-55, 4-57
2604494-0000	.VOLUME FLAP	4-63, 4-65, 4-67, 4-69
2604495-0000	.VOLUME FLAP	4-51, 4-53, 4-55, 4-57
2604496-0000	.VOLUME FLAP	4-63, 4-65, 4-67, 4-69
2604539-0000	.PROTRACTOR	5-221
2604564-0000	.CUTTING JAW	4-119, 4-121, 4-123, 4-125
2604565-0000	.HOLDER	4-97, 4-99, 4-101, 4-143, 4-145, 4-147
2605066-0000	.CURVE	4-171, 4-173
2605125-0000	.PUSHER	5-241, 5-243, 5-245, 5-247, 5-249, 5-251
2605148-0000	.STOP PIN	1-211, 1-213, 1-215
2605166-0000	.VOLUME SHIM	4-51, 4-53, 4-55, 4-57, 4-63, 4-65, 4-67, 4-69, 9-11, 9-13, 9-15, 9-17, 9-19
2605191-0000	.VOLUME FLAP	4-51, 4-53, 4-55, 4-57
2605192-0000	.VOLUME FLAP	4-63, 4-65, 4-67, 4-69
2605213-0000	.RAIL	5-145, 5-147
2605226-0200	.ROLLER UNIT	4-171, 4-173
2605228-0100	.BENDING ROLLER	7-221
2605869-0000	.FLAP HOLDER	4-51, 4-53, 4-55, 4-57, 4-63, 4-65, 4-67, 4-69
2605875-0000	.FOLDING FLAP	4-127, 4-129, 4-163, 4-165
2605876-0000	.FOLDING FLAP	4-127, 4-129, 4-163, 4-165
2605877-0000	.BENDING ROLLER	2-13, 7-49
2605879-0000	.CANTILEVER	2-13
2605880-0000	.SHAFT	2-13
2605993-0000	.SIDE PLATE	5-257, 5-259, 9-7, 9-9
2605994-0000	.SIDE PLATE	5-257, 5-259, 9-7, 9-9
2606215-0000	.BRACKET	8-23
2606216-0000	.BRACKET	8-89, 8-91
2606218-0000	.CAM	4-51, 4-53, 4-55, 4-57, 4-63, 4-65, 4-67, 4-69
2606277-0000	.FOLDING DEVICE	5-11, 5-13
2606278-0000	.FOLDING DEVICE	5-11, 5-13
2606289-0000	.BOTTOM	5-23, 5-25
2606305-0000	.VOLUME FLAP	4-7, 4-9, 4-11
2606306-0000	.VOLUME FLAP	4-17, 4-19, 4-21
2606891-0000	.ECCENTRIC	4-179, 4-181, 4-183
2606892-0000	.ECCENTRIC	4-179, 4-181, 4-183
2607087-0000	.BOTTOM PLATE	1-167, 1-169
2607089-0000	.PRESSURE ROLLER	1-211, 1-213, 1-215, 9-11, 9-13, 9-15, 9-17, 9-19
2607440-0000	.SLIDE PLATE	1-167, 1-169
2608103-0000	.BRACKET	2-39
2608104-0000	.BRACKET	2-39
2608106-0000	.BRACKET	8-23
2608107-0000	.BRACKET	8-23
2608177-0000	.SIGN	7-77, 8-23, 8-29, 8-31, 8-33, 8-35, 8-89, 8-91
2608273-0000	.HOLDER	2-201, 2-203

Part No	Description	Page No
2608274-0000	.PIPE	2-201, 2-203
2609303-0000	.WEIGHT	7-231, 7-233
2609365-0000	.HOLDER	2-201, 2-203
2609368-0000	.TIE ROD	5-11, 5-13
2609369-0000	.FOLDING BAR	5-45, 5-47, 5-49
2609370-0000	.FOLDING BAR	5-45, 5-47, 5-49
2609371-0000	.SPACER	5-45, 5-47, 5-49
2609372-0000	.GUIDE	5-129, 5-131
2609923-0000	.WASHER	4-175, 4-177
2609925-0000	.VOLUME BULGE	4-51, 4-53, 4-55, 4-57, 4-63, 4-65, 4-67, 4-69
2610764-0000	.PLATE	5-269
2610779-0000	.BLOCK	5-5, 5-7
2610793-0000	.BLOCK	4-171, 4-173
2610954-0000	.RAIL	4-97, 4-99, 4-101
2610955-0000	.RAIL	4-143, 4-145, 4-147
2610956-0000	.INDUCTOR	4-97, 4-99, 4-101, 4-143, 4-145, 4-147, 9-11, 9-13, 9-15, 9-17, 9-19
2611000-0000	.CUTTING JAW	4-119, 4-121, 4-123, 4-125
2611001-0000	.CLAMP HOLDER	4-97, 4-99, 4-101, 4-143, 4-145, 4-147
2611009-0000	.SHAFT	1-173
2611012-0000	.ROLLER	1-59, 1-61, 1-63
2611016-0000	.ROLLER	1-59, 1-61, 1-63
2611017-0000	.ROLLER	1-59, 1-61, 1-63
2611020-0000	.ROLLER	1-59, 1-61, 1-63
2611024-0000	.SPACER	1-59, 1-61, 1-63
2611025-0000	.ROLLER	1-75, 1-77, 1-79
2611026-0000	.ROLLER	1-75, 1-77, 1-79
2611027-0000	.ROLLER	1-75, 1-77, 1-79
2611028-0000	.SUPPORT ROLLER	1-75, 1-77, 1-79
2611034-0000	.BRACKET	1-271
2611038-0000	.SUPPORT RING	1-75, 1-77, 1-79
2611039-0000	.ROLLER	1-81, 1-83
2611040-0000	.ROLLER	1-81, 1-83
2611041-0000	.SUPPORT ROLLER	1-81, 1-83
2611044-0000	.PLATE	1-85, 1-87
2611045-0000	.RING	1-85, 1-87
2611046-0000	.PLATE	1-85, 1-87
2611047-0000	.RING	1-85, 1-87
2611051-0000	.PIPE	1-281
2611053-0000	.INDUCTOR	1-41, 1-43
2611054-0000	.INSULATING PLATE	1-41, 1-43
2611056-0000	.INSULATING PLATE	1-41, 1-43
2611077-0000	.PIPE	1-253
2611104-0000	.HOLDER	1-113
2611457-0000	.CABLE DUCT	7-181, 7-183
2611458-0000	.CABLE DUCT	7-181, 7-183
2611459-0000	.CABLE DUCT	7-181, 7-183
2611460-0000	.CABLE DUCT	7-181, 7-183
2611461-0000	.CABLE DUCT	7-181, 7-183
2611462-0100	.TERMINAL BLOCK	7-181, 7-183
2611463-0100	.TERMINAL BLOCK	7-181, 7-183
2611464-0000	.RAIL	7-191, 7-193
2611465-0000	.RAIL	7-199, 7-201
2611655-0000	.CLAMP HOLDER	4-97, 4-99, 4-101, 4-143, 4-145, 4-147
2611710-0000	.CUTTING JAW	4-119, 4-121, 4-123, 4-125
2611875-0000	.SHIM	5-241, 5-243, 5-245, 5-247, 5-249, 5-251
2613033-0000	.MACHINE BODY	6-49
2613034-0100	.MACHINE BODY	6-3, 6-5
2613644-0100	.CANTILEVER	4-239
2613645-0100	.CURVE UNIT	4-169
2613646-0100	.VOLUME ADJUSTER	4-199
2613647-0100	.VOLUME CURVE PIECE	4-5
2613648-0100	.SUPPORT ROLLER	4-169
2613749-0100	.COVER	7-3, 7-5, 7-7, 7-9
2613763-0000	.SLEEVE	4-171, 4-173
2613764-0000	.SLEEVE	4-171, 4-173, 4-179, 4-181, 4-183
2613809-0000	.SPACER	4-171, 4-173
2614038-0000	.SPACER	4-247
2614039-0000	.CLAMP	4-241
2614371-0000	.ROLLER BRACKET	4-171, 4-173
2614372-0000	.SLEEVE	4-171, 4-173, 4-179, 4-181, 4-183
2614373-0000	.ROLLER BRACKET	4-171, 4-173
2614376-0001	.WASHER	4-171, 4-173, 4-179, 4-181, 4-183
2614376-0002	.WASHER	4-171, 4-173, 4-179, 4-181, 4-183
2615463-0100	.FLUSHING DEVICE	2-195
2616034-0000	.COVER PLATE	7-209, 7-211, 7-213
2616217-0000	.BOTTOM	5-123
2616218-0000	.BOTTOM	5-123, 9-7, 9-9
2616219-0000	.BOTTOM	5-123, 9-7, 9-9
2616221-0000	.BRACKET	4-201
2616224-0200	.PHOTOCELL UNIT	4-5
2616225-0000	.CLAMP	4-201
2616227-0000	.TIMING BELT	5-69
2616229-0000	.BLOCK	5-5, 5-7
2616231-0000	.ROLLER	1-85, 1-87

Part No	Description	Page No
2616236-0000	.WASHER	1-113
2616237-0000	.CONNECTION	1-113
2616238-0000	.HOLDER	1-113
2616239-0000	.HOLDER	1-113
2616240-0000	.PIPE	1-113
2616298-0000	.BRACKET	1-253
2618259-0000	.SPACER	4-171, 4-173, 4-179, 4-181, 4-183
2618302-0000	.PIVOT PIN	4-171, 4-173, 4-179, 4-181, 4-183
2618329-0000	.PLATE	4-243, 4-245
2618330-0000	.HANDLE	4-243, 4-245
2618332-0000	.SHAFT	4-243, 4-245
2618333-0000	.PLATE	4-243, 4-245
2618377-0000	.ECCENTRIC	4-171, 4-173, 4-179, 4-181, 4-183
2618378-0000	.ECCENTRIC	4-171, 4-173, 4-179, 4-181, 4-183
2618424-0000	.SUPPORT	5-29, 5-31, 5-33
2618425-0000	.GUIDE	5-29, 5-31, 5-33
2618683-0000	.SPACER	5-209, 5-211, 5-213, 5-215, 5-217, 5-219
2619170-0000	.PLATE	8-45
2619171-0000	.PLATE	1-129
2619198-0000	.SHAFT	4-185, 4-187
2619199-0000	.ROLLER	4-185, 4-187
2619200-0000	.PLATE	4-185, 4-187
2619210-0000	.SPACER	5-63
2619211-0000	.SPACER	5-63
2619212-0000	.SPACER	5-63
2619213-0000	.SPACER	5-63
2619319-0000	.SHAFT	4-185, 4-187
2619528-0000	.LOCKING CIRCLIP	5-17
2619529-0000	.SLEEVE	5-17
2619530-0000	.SLEEVE	5-17
2619574-0000	.SPACER	5-161, 5-163
2619584-0100	.STRUT	5-15
2619588-0000	.PIPE	5-15
2619589-0000	.HANDLE	5-15
2619596-0000	.HANDLE	5-17
2619597-0100	.FLAP GUIDE	5-15
2619598-0100	.FLAP GUIDE	5-15
2619607-0000	.COVER	1-393
2619737-0000	.KNOB	5-165, 5-167
2623513-0000	.BUSHING	4-247
2623712-0000	.HANGER	6-9
2623713-0000	.HOLDER	6-9
2623714-0100	.PEROXIDE REDUCER	6-3, 6-5
2623715-0000	.HOLDER	6-7
2623717-0000	.HOLDER	6-7
2623718-0100	.PEROXIDE REDUCER	6-3, 6-5
2623719-0000	.HOLDER	6-9
2623720-0000	.HOLDER	6-9
2623721-0100	.PEROXIDE REDUCER	2-19, 2-21
2623783-0000	.PLATE	4-185, 4-187
2623883-0000	.BRACKET	7-79
2623884-0000	.PLATE	7-79
2624539-0000	.PIPE	2-23
2624543-0000	.SPACER	4-179, 4-181, 4-183
2624544-0000	.PIVOT PIN	4-179, 4-181, 4-183
2624549-0100	.POWER SUPPLY UNIT	8-23
2624550-0000	.RAIL	8-45
2624551-0200	.CONNECTION DEVICE	8-23
2624554-0000	.FOLDING FLAP	4-127, 4-129, 4-163, 4-165
2624555-0000	.FOLDING FLAP	4-127, 4-129, 4-163, 4-165
2628598-0000	.SPACER	4-179, 4-181, 4-183
2628989-0000	.BRACKET	7-163
2628990-0000	.BRACKET	7-163
2629156-0000	.BODY	1-231
2629236-0000	.CAM	4-51, 4-53, 4-55, 4-57, 4-63, 4-65, 4-67, 4-69
2629237-0000	.CAM	4-51, 4-53, 4-55, 4-57, 4-63, 4-65, 4-67, 4-69
2629239-0000	.TUBE FLUSHING DEVICE	4-189
2629240-0000	.TUBE FLUSHING DEVICE	4-189
2629303-0000	.COVERING PLATE	5-129, 5-131
2629315-0100	.PAPER BRAKE	7-79
2629336-0000	.BOTTOM	5-119, 5-121
2629338-0000	.GUIDE RAIL	7-79
2629344-0000	.SPACER	5-145, 5-147
2630482-0000	.BRACKET	10-19, 10-21
2632534-0000	.HATCH	7-277, 7-279
2632535-0000	.CONNECTION BOX	7-259, 7-281
2632536-0100	.CONTROL PANEL	7-277, 7-279
2632542-0000	.HATCH	7-255, 7-257
2632543-0100	.CONTROL PANEL	7-255, 7-257
2632578-0000	.PLATE	2-171
2632642-0200	.NOZZLE UNIT	1-243, 1-245
2632817-0000	.PLATE	4-185, 4-187
2632818-0000	.SHAFT	4-185, 4-187
2633186-0200	.SOFTWARE TPOP	8-7

Part No	Description	Page No
2633187-0200	.SOFTWARE TMCC	8-7
2633188-0200	.SOFTWARE PLC	8-7
2633328-0000	.PNEUMATIC DIAGRAM	7-209, 7-211, 7-213
2633438-0000	.SPACER	4-179, 4-181, 4-183
2633439-0000	.PIPE	5-277, 5-279
2633440-0000	.PIPE	5-277, 5-279
2633441-0000	.BRACKET	5-277, 5-279
2634515-0000	.CANTILEVER	4-27, 4-29, 4-39, 4-41
2634523-0000	.LOWER FILLING PIPE	1-211, 1-213, 1-215
2634524-0000	.PRESSURE FLANGE	1-211, 1-213, 1-215
2634536-0000	.SUPPORT	2-245
2634894-0000	.FLANGE	5-221
2634917-0000	.SIGN	1-341
2634926-0000	.SUPPORT ROLLER	1-75, 1-77, 1-79
2634930-0000	.SUPPORT ROLLER	1-91, 1-93
2634931-0000	.BRACKET	1-91, 1-93
2634932-0000	.BRACKET	1-97, 1-99
2634933-0000	.BRACKET	1-97, 1-99
2634934-0000	.SHAFT	1-97, 1-99
2634943-0000	.ROLLER	1-81, 1-83
2634947-0000	.ROLLER	1-59, 1-61, 1-63
2634948-0000	.ROLLER	1-59, 1-61, 1-63
2634949-0000	.ROLLER	1-59, 1-61, 1-63
2634953-0000	.ROLLER	1-59, 1-61, 1-63
2634954-0000	.ROLLER	1-59, 1-61, 1-63
2634955-0000	.ROLLER	1-59, 1-61, 1-63
2634956-0000	.ROLLER	1-59, 1-61, 1-63
2634957-0000	.ROLLER	1-59, 1-61, 1-63
2634958-0000	.ROLLER	1-59, 1-61, 1-63
2634961-0000	.SHIM	1-59, 1-61, 1-63
2634967-0000	.SUPPORT RING	1-75, 1-77, 1-79
2634968-0000	.ROLLER	1-75, 1-77, 1-79
2634969-0000	.ROLLER	1-75, 1-77, 1-79
2634970-0000	.ROLLER	1-75, 1-77, 1-79
2634971-0000	.ROLLER	1-75, 1-77, 1-79
2634972-0000	.SHAFT	1-211, 1-213, 1-215
2634983-0000	.ROLLER	1-59, 1-61, 1-63
2634984-0000	.ROLLER	1-59, 1-61, 1-63
2634985-0000	.ROLLER	1-59, 1-61, 1-63
2634987-0000	.SPACER	1-59, 1-61, 1-63
2634988-0000	.ROLLER	1-59, 1-61, 1-63
2634989-0000	.ROLLER	1-59, 1-61, 1-63
2634990-0000	.ROLLER	1-59, 1-61, 1-63
2634995-0000	.FLOAT	1-211, 1-213, 1-215
2634997-0000	.GASKET	1-15, 1-17
2635131-0150	.CABLE SET	8-3
2635167-0000	.VOLUME BULGE	5-241, 5-243, 5-245, 5-247, 5-249, 5-251
2636399-0000	.FLAP	5-119, 5-121
2636400-0000	.BOTTOM	5-119, 5-121
2636401-0000	.SLIDE	5-119, 5-121
2637599-0100	.ALIGNMENT TOOL	10-5
2637600-0000	.TOOL	10-37
2637602-0100	.DRILLING JIG	10-5
2637603-0000	.TOOL	10-35
2637604-0000	.BUSHING	10-35
2637605-0000	.BUSHING	10-35
2637665-0000	.GUIDE	5-103, 5-105, 5-107, 5-109, 5-111, 5-171, 5-173
2637666-0000	.GUIDE	5-103, 5-105, 5-107, 5-109, 5-111, 5-177, 5-179
2638077-0000	.SHAFT	1-211, 1-213, 1-215
2638180-0000	.INSERT	5-113, 5-115
2639127-0000	.FOLDING BAR	5-45, 5-47, 5-49
2639128-0000	.FOLDING BAR	5-45, 5-47, 5-49
2639393-0000	.SPACER	5-45, 5-47, 5-49
2639498-0200	.SOFTWARE RECORDER	8-7
2639832-0000	.RAIL	5-83, 5-85, 5-87, 5-89, 5-91
2639866-0000	.VOLUME FLAP	4-51, 4-53, 4-55, 4-57
2639867-0000	.VOLUME FLAP	4-63, 4-65, 4-67, 4-69
2640075-0000	.VOLUME BULGE	5-241, 5-243, 5-245, 5-247, 5-249, 5-251
2640076-0000	.RAIL	5-83, 5-85, 5-87, 5-89, 5-91
2640116-0000	.TOOL	10-29, 10-31
2640138-0000	.VOLUME BULGE	4-51, 4-53, 4-55, 4-57, 4-63, 4-65, 4-67, 4-69
2640139-0000	.VOLUME SHIM	4-51, 4-53, 4-55, 4-57, 4-63, 4-65, 4-67, 4-69, 9-11, 9-13, 9-15, 9-17, 9-19
2640186-0000	.TOOL	10-29, 10-31
2640292-0000	.TOOL	10-33
2640353-0000	.BRACKET	1-81, 1-83
2640354-0000	.ROLLER	1-81, 1-83
2640814-0000	.RULER	10-33
2640819-0000	.SCREW	3-17
2640822-0000	.SIGN	1-333
2640826-0000	.NUT	3-23
2640831-0000	.GUIDE	4-201
2640991-0000	.SLIDE	1-41, 1-43
2640992-0000	.SLIDE	1-41, 1-43
2640993-0000	.PLATE	1-41, 1-43

Part No	Description	Page No
2641000-0000	.SHAFT	1-41, 1-43
2641203-0000	.TEMPLATE	10-5
2641204-0000	.TEMPLATE	10-5
2641225-0000	.INSERT	4-85, 4-87, 4-89, 4-109, 4-111, 4-113, 4-115, 4-133, 4-135, 4-137, 4-153, 4-155, 4-157, 4-159
2641261-0000	.SPRING	1-211, 1-213, 1-215
2641282-0000	.COUNTER ROLLER	1-53, 1-55
2641285-0000	.ROLLER	1-59, 1-61, 1-63
2641286-0000	.ROLLER	1-59, 1-61, 1-63
2641287-0000	.ROLLER	1-59, 1-61, 1-63
2641288-0000	.ROLLER	1-59, 1-61, 1-63
2641289-0000	.ROLLER	1-59, 1-61, 1-63
2641290-0000	.ROLLER	1-59, 1-61, 1-63
2641294-0000	.STOP PIN	1-211, 1-213, 1-215
2641296-0000	.PIPE	1-191
2641297-0000	.PRESSURE FLANGE	1-211, 1-213, 1-215
2641298-0000	.PIPE	1-185
2641299-0000	.PIPE	1-191
2641317-0000	.PIPE	1-187, 1-189
2641318-0000	.NOZZLE	1-187, 1-189
2641319-0000	.BRACKET	1-187, 1-189
2641322-0000	.PIPE	1-185
2642097-0000	.PLATE	4-185, 4-187
2642146-0000	.TEMPLATE	10-5
2642177-0000	.GUIDE UPPER	5-137, 5-139
2642178-0000	.GUIDE UPPER	5-137, 5-139
2642530-0100	.CONTROL PANEL	10-95
2642531-0000	.WELDED CABINET	10-97
2642532-0000	.DOOR	10-97
2644177-0000	.CLAMP HUB	5-69
2644178-0000	.BLOCK	5-69
2644317-0100	.TEMPLATE	10-27
2644318-0100	.TEMPLATE	10-27
2644368-0000	.BRACKET	5-145, 5-147
2644397-0000	.HOLDER	4-97, 4-99, 4-101, 4-143, 4-145, 4-147
2645568-0000	.CUTTING JAW	4-119, 4-121, 4-123, 4-125
2646014-0100	.CONTROL PANEL	10-93
2646344-0000	.PLATE	4-185, 4-187
2646345-0000	.SHAFT	4-185, 4-187
2646428-0100	.LIFTING UNIT	10-5
2647082-0000	.GUIDE	5-177, 5-179
2647083-0000	.GUIDE	5-171, 5-173
2647084-0000	.BAR	5-171, 5-173
2647085-0000	.BAR	5-177, 5-179
2647086-0000	.GUIDE	5-177, 5-179
2647087-0000	.GUIDE	5-171, 5-173
2647088-0000	.BAR	5-171, 5-173
2647089-0000	.BAR	5-177, 5-179
2647090-0000	.SLIDE	5-171, 5-173
2647091-0000	.SLIDE	5-177, 5-179
2647092-0000	.ANGLE BLOCK	5-171, 5-173, 5-177, 5-179
2647093-0000	.PUSHER	5-253, 5-255
2647094-0000	.PUSHER	5-253, 5-255
2647095-0000	.PUSHER	5-253, 5-255
2647096-0000	.PUSHER	5-253, 5-255
2647097-0000	.NAIL	5-253, 5-255
2647098-0000	.BLOCK	5-253, 5-255
2647099-0000	.GUIDE	5-241, 5-243, 5-245, 5-247, 5-249, 5-251
2647100-0000	.VOLUME BULGE	5-253, 5-255
2647101-0000	.SUPPORT	5-241, 5-243, 5-245, 5-247, 5-249, 5-251
2647102-0000	.PIPE	5-15
2647103-0000	.SHAFT	5-15
2647104-0000	.LEVER	5-19, 5-21
2647105-0000	.AXLE PIN	5-19, 5-21
2647106-0000	.SLIDER	5-21
2647107-0000	.SLIDER	5-19
2647108-0000	.STRUT	5-17
2647109-0000	.SHAFT	5-17
2647110-0000	.BLOCK	5-5, 5-7
2647111-0000	.SUPPORT	5-129, 5-131
2647112-0000	.GUIDE	5-129, 5-131
2647113-0000	.BUSHING	5-253, 5-255
2647114-0000	.INSERT	4-85, 4-87, 4-89, 4-109, 4-111, 4-113, 4-115, 4-133, 4-135, 4-137, 4-153, 4-155, 4-157, 4-159
2647115-0000	.CARRIER	4-85, 4-87, 4-89
2647116-0000	.CARRIER	4-109, 4-111, 4-113, 4-115
2647117-0000	.CARRIER	4-133, 4-135, 4-137
2647118-0000	.CARRIER	4-153, 4-155, 4-157, 4-159
2647119-0000	.GUIDE	5-137, 5-139
2647120-0000	.GUIDE	5-137, 5-139
2647121-0000	.FOLDING PART	5-145, 5-147
2647122-0000	.FOLDING PART	5-145, 5-147
2647126-0000	.BRACKET	5-145, 5-147
2647127-0000	.FOLDING PART	5-145, 5-147
2647128-0000	.FOLDING PART	5-145, 5-147
2647129-0000	.FOLDING PART	5-145, 5-147

Part No	Description	Page No
2647130-0000	.FOLDING PART	5-145, 5-147
2647131-0000	.GUIDE	5-157, 5-159
2648780-0000	.LEVER	1-173
2648846-0000	.SHAFT	4-185, 4-187
2648847-0000	.PLATE	4-185, 4-187
2649130-0000	.GUIDE RAIL	5-145, 5-147
2649131-0000	.GUIDE RAIL	5-145, 5-147
2649132-0000	.GUIDE RAIL	5-145, 5-147
2649133-0000	.GUIDE RAIL	5-145, 5-147
2649134-0000	.BRACKET	5-145, 5-147
2649139-0000	.SPACER	5-145, 5-147
2649165-0100	.CABLE DUCT	1-381, 1-383, 1-385
2649167-0000	.INSERT	1-223, 1-387
2649440-0000	.TEMPLATE	10-27
2649441-0000	.SHAFT	4-185, 4-187
2649442-0000	.PLATE	4-185, 4-187
2649443-0000	.CAM	4-51, 4-53, 4-55, 4-57, 4-63, 4-65, 4-67, 4-69
2650713-0000	.PLATE	4-229, 4-231
2650717-0000	.SCREW	4-229, 4-231
2650807-0000	.SIDE PLATE	5-257, 5-259
2650808-0000	.SIDE PLATE	5-257, 5-259
2650812-0000	.SHAFT	4-185, 4-187
2650817-0000	.SPRING	5-123, 9-11, 9-13, 9-15, 9-17, 9-19
2651145-0000	.BLOCK	5-241, 5-243, 5-245, 5-247, 5-249, 5-251
2651146-0000	.FLAP	5-113, 5-115
2651695-0000	.COVER PLATE	1-97, 1-99
2651789-0000	.ROLLER	1-91, 1-93
2651790-0000	.ROLLER	1-91, 1-93
2651925-0000	.PLATE	7-225
2652191-0000	.KNOB	5-161, 5-163, 5-165, 5-167
2652206-0000	.GUIDE	5-83, 5-85, 5-87, 5-89, 5-91
2652311-0000	.PLATE	5-63
2652888-0000	.SHAFT	5-123
2652889-0000	.SCREW	5-123
2652891-0000	.TOOTHED PULLEY	4-229, 4-231
2652892-0000	.PLATE	4-185, 4-187
2652893-0000	.RAIL	5-83, 5-85, 5-87, 5-89, 5-91
2652896-0000	.SHAFT	4-27, 4-29, 4-39, 4-41, 4-51, 4-53, 4-55, 4-57, 4-63, 4-65, 4-67, 4-69
2653607-0000	.SCREW	1-173
2654290-0000	.VOLUME SHIM	4-51, 4-53, 4-55, 4-57, 4-63, 4-65, 4-67, 4-69, 9-11, 9-13, 9-15, 9-17, 9-19
2655095-0000	.BRACKET	4-191, 4-193
2655096-0000	.SLIDE	4-191, 4-193
2655097-0000	.KNOB	4-191, 4-193
2655098-0000	.SHAFT	4-191, 4-193
2655500-0000	.WASHER	5-83, 5-85, 5-87, 5-89, 5-91
2656299-0000	.SHAFT	7-117
2656672-0000	.SPROCKET	5-63
2656899-0000	.BRACKET	2-103, 2-105
2656905-0100	.OPTIONAL PARTS	1-365, 1-367
2656910-0200	.HEAD SPACE BY INJECTION	1-207, 1-209
2657860-0000	.BRACKET	1-81, 1-83
2657863-0000	.PIPE CONNECTION	1-227
2657864-0000	.PIPE CONNECTION	1-227
2657865-0000	.PIPE CONNECTION	1-227
2657873-0100	.LONGITUDINAL SEALING	1-21, 1-23, 1-25, 1-27
2657886-0000	.COUNTER PLATE	1-167, 1-169
2657887-0000	.HORN	1-191
2657888-0000	.HORN	1-191
2657902-0000	.PRESSURE FLANGE	1-211, 1-213, 1-215
2657903-0000	.FILLING PIPE	1-211, 1-213, 1-215
2657923-0000	.COUNTER ROLLER	1-53, 1-55
2657925-0000	.ROLLER	1-95
2657932-0000	.BAR	5-171, 5-173
2657933-0000	.BAR	5-177, 5-179
2657934-0000	.SLIDE	5-177, 5-179
2657935-0000	.SLIDE	5-171, 5-173
2657936-0000	.GUIDE	5-177, 5-179
2657937-0000	.GUIDE	5-171, 5-173
2658058-0000	.RAIL	7-153
2658077-0000	.SHAFT	1-173
2658237-0100	.FLAP	5-113, 5-115
2658238-0000	.FLAP	5-125
2658239-0000	.BOTTOM	5-125, 9-7, 9-9
2658240-0000	.BOTTOM	5-119, 5-121, 5-125, 9-7, 9-9
2658241-0000	.SLIDE	5-119, 5-121, 5-125
2658242-0000	.FLAP	5-119, 5-121
2658247-0000	.WASHER	5-253, 5-255
2658249-0000	.SHIM	5-241, 5-243, 5-245, 5-247, 5-249, 5-251
2658251-0000	.SPACER	4-179, 4-181, 4-183
2658252-0000	.RAIL BRACKET	4-179, 4-181, 4-183
2658253-0000	.CURVE	4-179, 4-181, 4-183
2658256-0000	.FLAP HOLDER	4-63, 4-65, 4-67, 4-69
2658257-0000	.FLAP HOLDER	4-51, 4-53, 4-55, 4-57
2658258-0000	.SHAFT	4-51, 4-53, 4-55, 4-57, 4-63, 4-65, 4-67, 4-69

Part No	Description	Page No
2658263-0000	.VOLUME BULGE	5-253, 5-255
2658264-0000	.VOLUME BULGE	5-253, 5-255
2658265-0000	.CUTTING JAW	4-119, 4-121, 4-123, 4-125
2658298-0000	.TUBE FLUSHING DEVICE	4-189
2658299-0000	.TUBE FLUSHING DEVICE	4-189
2658390-0100	.BOTTOM	5-113, 5-115
2658743-0100	.ELECTRICAL CONNECTION	8-89, 8-91
2660379-0000	.VOLUME FLAP	4-51, 4-53, 4-55, 4-57
2660380-0000	.VOLUME FLAP	4-63, 4-65, 4-67, 4-69
2660381-0000	.VOLUME FLAP	4-73
2660382-0000	.VOLUME FLAP	4-73
2660383-0000	.VOLUME FLAP	4-61
2660384-0000	.VOLUME FLAP	4-61
2660390-0000	.VOLUME SHIM	4-61, 4-73, 9-11, 9-13, 9-15, 9-17, 9-19
2660391-0000	.SCREW	4-51, 4-53, 4-55, 4-57, 4-63, 4-65, 4-67, 4-69
2660392-0000	.VOLUME BULGE	4-51, 4-53, 4-55, 4-57, 4-63, 4-65, 4-67, 4-69
2660393-0000	.VOLUME SHIM	4-51, 4-53, 4-55, 4-57, 4-63, 4-65, 4-67, 4-69, 9-11, 9-13, 9-15, 9-17, 9-19
2660395-0000	.VOLUME BULGE	4-61, 4-73
2660397-0000	.WEDGE	4-51, 4-53, 4-55, 4-57, 4-63, 4-65, 4-67, 4-69
2660398-0000	.WEDGE	4-61, 4-73
2660399-0000	.ROLLER	4-61, 4-73
2660400-0000	.STOP	4-51, 4-53, 4-55, 4-57, 4-63, 4-65, 4-67, 4-69, 4-77, 4-83
2660401-0000	.CATCH	4-51, 4-53, 4-55, 4-57, 4-63, 4-65, 4-67, 4-69, 4-77, 4-83
2660404-0000	.HOLDER	4-97, 4-99, 4-101, 4-143, 4-145, 4-147
2660776-0000	.BEARING BLOCK	7-79
2660841-0000	.PUSHER	5-241, 5-243, 5-245, 5-247, 5-249, 5-251
2660843-0000	.TEMPLATE	9-33
2661082-0000	.PLATE	2-119
2661094-0000	.SCREW	10-19, 10-21
2661153-0000	.SPACER	5-161, 5-163
2661429-0000	.PUSHER	5-241, 5-243, 5-245, 5-247, 5-249, 5-251
2661450-0000	.VOLUME FLAP	4-63, 4-65, 4-67, 4-69
2661451-0000	.VOLUME FLAP	4-51, 4-53, 4-55, 4-57
2662012-0000	.NIPPLE	2-89
2662142-0000	.SPRING	5-241, 5-243, 5-245, 5-247, 5-249, 5-251, 9-11, 9-13, 9-15, 9-17, 9-19
2662165-0000	.SPRING	4-27, 4-29, 4-39, 4-41, 9-11, 9-13, 9-15, 9-17, 9-19
2662166-0000	.SPRING	4-27, 4-29, 4-39, 4-41, 9-11, 9-13, 9-15, 9-17, 9-19
2662167-0000	.BUSHING	4-27, 4-29, 4-39, 4-41, 4-51, 4-53, 4-55, 4-57, 4-63, 4-65, 4-67, 4-69
2662168-0000	.VOLUME BULGE	4-51, 4-53, 4-55, 4-57, 4-63, 4-65, 4-67, 4-69
2662169-0000	.VOLUME SHIM	4-51, 4-53, 4-55, 4-57, 4-63, 4-65, 4-67, 4-69, 9-11, 9-13, 9-15, 9-17, 9-19
2662211-0000	.CHAIN	10-19, 10-21
2662431-0000	.CAM	4-51, 4-53, 4-55, 4-57, 4-63, 4-65, 4-67, 4-69
2662432-0000	.COUPLING	1-271
2662433-0000	.BRACKET	1-271
2662434-0000	.BRACKET	1-271
2662639-0000	.ROLLER	1-305, 1-307
2662640-0000	.VOLUME CAM	4-179, 4-181, 4-183
2662641-0000	.VOLUME CAM	4-179, 4-181, 4-183
2663360-0000	.SPRING	4-51, 4-53, 4-55, 4-57, 4-63, 4-65, 4-67, 4-69
2663361-0000	.SPRING	4-51, 4-53, 4-55, 4-57, 4-63, 4-65, 4-67, 4-69
2663367-0000	.NUT	5-15
2663369-0000	.BLOCK	5-15
2663370-0000	.SUPPORT	5-15
2663371-0000	.SCREW	5-15
2663372-0000	.SCREW	4-51, 4-53, 4-55, 4-57, 4-63, 4-65, 4-67, 4-69
2663373-0000	.BOTTOM	5-119, 5-121, 9-7, 9-9
2663375-0000	.WASHER	4-27, 4-29, 4-39, 4-41, 4-51, 4-53, 4-55, 4-57, 4-63, 4-65, 4-67, 4-69
2663376-0000	.WASHER	4-27, 4-29, 4-39, 4-41, 4-51, 4-53, 4-55, 4-57, 4-63, 4-65, 4-67, 4-69
2663377-0000	.INDUCTOR	4-143, 4-145, 4-147, 9-11, 9-13, 9-15, 9-17, 9-19
2663378-0000	.INDUCTOR	4-97, 4-99, 4-101, 9-11, 9-13, 9-15, 9-17, 9-19
2664035-0000	.SPACER SCREW	5-145, 5-147
2664098-0000	.FILLING PIPE	1-211, 1-213, 1-215
2664200-0000	.GUIDE	5-171, 5-173
2664201-0000	.GUIDE	5-177, 5-179
2664280-0000	.HOLDER	4-97, 4-99, 4-101, 4-143, 4-145, 4-147
2664596-0000	.CARRIER	5-75, 5-77, 5-79, 9-11, 9-13, 9-15, 9-17, 9-19
2664761-0000	.KNIFE	4-167, 9-11, 9-13, 9-15, 9-17, 9-19
2664762-0000	.CUTTING JAW	4-119, 4-121, 4-123, 4-125
2664779-0000	.PLATE	4-185, 4-187
2664780-0000	.PLATE	4-185, 4-187
2665129-0000	.GABLE PLATE	6-55
2665131-0000	.LOCKING ARM	6-57
2665132-0000	.LOCKING ARM	6-57
2665188-0000	.CUTTING JAW	4-119, 4-121, 4-123, 4-125
2665197-0000	.BRACKET	5-269
2665198-0000	.PROTECTION	5-271
2665199-0000	.SLIDE	5-269
2665200-0000	.GUIDE	5-165, 5-167
2665201-0000	.GUIDE	5-165, 5-167
2665202-0000	.GUIDE	5-171, 5-173
2665203-0000	.GUIDE	5-177, 5-179
2665204-0000	.CRADLE	5-257, 5-259
2665205-0000	.PLATE	5-257, 5-259
2665206-0000	.PLATE	5-257, 5-259

Part No	Description	Page No
2665624-0000	.BENDING ROLLER	7-145
2665720-0000	.SUPPORT	4-243, 4-245
2665721-0000	.SHAFT	4-243, 4-245
2665722-0000	.SUPPORT	4-243, 4-245
2668220-0000	.BOTTOM	5-119, 5-121
2668221-0000	.FLAP	5-119, 5-121
2668222-0000	.SLIDE	5-119, 5-121
2668223-0000	.FLAP	5-113, 5-115
2668224-0000	.GUIDE	5-171, 5-173
2668225-0000	.GUIDE	5-171, 5-173
2668226-0000	.BAR	5-171, 5-173
2668227-0000	.SLIDE	5-171, 5-173
2668228-0000	.GUIDE	5-177, 5-179
2668229-0000	.GUIDE	5-177, 5-179
2668230-0000	.BAR	5-177, 5-179
2668231-0000	.SLIDE	5-177, 5-179
2668232-0000	.BAR	5-171, 5-173
2668233-0000	.SLIDE	5-171, 5-173
2668234-0000	.BAR	5-177, 5-179
2668235-0000	.SLIDE	5-177, 5-179
2668236-0000	.LEVER	5-17
2668237-0000	.SHAFT	5-17
2668238-0000	.PIPE	5-15
2668239-0000	.BLOCK	5-5, 5-7
2668240-0000	.BLOCK	5-241, 5-243, 5-245, 5-247, 5-249, 5-251
2668242-0000	.BLOCK	5-129, 5-131
2668243-0000	.GUIDE	5-129, 5-131
2668244-0000	.HOLDER	5-165, 5-167
2668245-0000	.SLIDER	5-19
2668246-0000	.SLIDER	5-21
2668247-0000	.GUIDE	5-157, 5-159
2668248-0000	.FOLDING PART	5-145, 5-147
2668249-0000	.GUIDE RAIL	5-145, 5-147
2668250-0000	.GUIDE RAIL	5-145, 5-147
2668251-0000	.FOLDING PART	5-145, 5-147
2668252-0000	.GUIDE RAIL	5-145, 5-147
2668253-0000	.GUIDE RAIL	5-145, 5-147
2668254-0000	.BRACKET	5-145, 5-147
2668312-0000	.FLAP HOLDER	4-51, 4-53, 4-55, 4-57, 4-63, 4-65, 4-67, 4-69
2668313-0000	.FOLDING FLAP	4-127, 4-129, 4-163, 4-165
2668314-0000	.FOLDING FLAP	4-127, 4-129, 4-163, 4-165
2668315-0000	.SHAFT	4-51, 4-53, 4-55, 4-57, 4-63, 4-65, 4-67, 4-69
2668318-0000	.HOLDER	4-97, 4-99, 4-101, 4-143, 4-145, 4-147
2668319-0000	.CUTTING JAW	4-119, 4-121, 4-123, 4-125
2668565-0000	.NOZZLE	1-187, 1-189
2668569-0000	.PLUG	1-187, 1-189
2671730-0100	.AIR NOZZLE	1-185
2672745-0000	.VOLUME SHIM	4-79, 9-11, 9-13, 9-15, 9-17, 9-19
2672746-0000	.VOLUME BULGE	4-79
2672847-0000	.ARM	1-267
2672942-0000	.SYMBOLSIGN	1-341
2672949-0000	.FILLING PIPE	1-211, 1-213, 1-215
2672950-0000	.ROLLER	1-59, 1-61, 1-63
2672951-0000	.ROLLER	1-59, 1-61, 1-63
2672952-0000	.ROLLER	1-59, 1-61, 1-63
2672953-0000	.ROLLER	1-59, 1-61, 1-63
2672954-0000	.ROLLER	1-59, 1-61, 1-63
2672955-0000	.ROLLER	1-59, 1-61, 1-63
2672962-0000	.CONNECTING PIPE	1-243, 1-245
2672963-0000	.CONNECTING PIPE	1-243, 1-245
2672968-0000	.INSULATING PLATE	1-41, 1-43
2672970-0000	.ROLLER	1-75, 1-77, 1-79
2672972-0000	.ELECTRODE	1-227
2672973-0000	.ELECTRODE	1-227
2672974-0000	.BUSHING	1-227
2672975-0000	.SPACER	1-219
2672978-0000	.ROLLER	1-59, 1-61, 1-63
2672979-0000	.ROLLER	1-59, 1-61, 1-63
2672980-0000	.ROLLER	1-59, 1-61, 1-63
2672981-0000	.ROLLER	1-59, 1-61, 1-63
2672984-0000	.INDUCTOR	1-41, 1-43
2672985-0000	.ROLLER	1-75, 1-77, 1-79
2672986-0000	.ROLLER	1-75, 1-77, 1-79
2672994-0000	.HOOD	1-211, 1-213, 1-215
2673005-0000	.FILLING PIPE	1-211, 1-213, 1-215
2673015-0000	.FORK	1-211, 1-213, 1-215
2673016-0000	.FORK	1-211, 1-213, 1-215
2673021-0000	.SHAFT	1-211, 1-213, 1-215
2673022-0000	.SHAFT	1-211, 1-213, 1-215
2673023-0000	.LOWER FORMING RING	1-53, 1-55
2674188-0100	.EDGE ROLLER	1-21, 1-23, 1-25, 1-27
2674237-0000	.FLAP	5-125
2674238-0000	.BOTTOM	5-125
2674239-0000	.SLIDE	5-119, 5-121, 5-125

Part No	Description	Page No
2674240-0000	.FLAP	5-119, 5-121
2674241-0000	.BOTTOM	5-119, 5-121
2674242-0000	.SPACER	5-209, 5-211, 5-213, 5-215, 5-217, 5-219
2674244-0000	.GUIDE	5-177, 5-179
2674245-0000	.GUIDE	5-177, 5-179
2674246-0000	.BAR	5-177, 5-179
2674247-0000	.SLIDE	5-177, 5-179
2674248-0000	.PLATE	5-171, 5-173, 5-177, 5-179
2674249-0000	.GUIDE	5-171, 5-173
2674250-0000	.GUIDE	5-171, 5-173
2674251-0000	.BAR	5-171, 5-173
2674252-0000	.SLIDE	5-171, 5-173
2674253-0000	.BLOCK	5-5, 5-7
2674254-0000	.SLIDER	5-21
2674255-0000	.STRUT	5-17
2674256-0000	.SHAFT	5-17
2674257-0000	.PIPE	5-15
2674258-0000	.SLIDER	5-19
2674259-0000	.GUIDE	5-157, 5-159
2674260-0000	.FOLDING PART	5-145, 5-147
2674261-0000	.FOLDING PART	5-145, 5-147
2674262-0000	.FOLDING PART	5-145, 5-147
2674263-0000	.FOLDING PART	5-145, 5-147
2674264-0000	.FOLDING PART	5-145, 5-147
2674265-0000	.FOLDING PART	5-145, 5-147
2674266-0000	.SPACER	5-145, 5-147
2674267-0000	.SPACER	5-145, 5-147
2674268-0000	.SPACER	5-145, 5-147
2674269-0000	.NAIL	5-253, 5-255
2674270-0000	.PUSHER	5-253, 5-255
2674271-0000	.PUSHER	5-253, 5-255
2674272-0000	.PUSHER	5-253, 5-255
2674273-0000	.PUSHER	5-253, 5-255
2674323-0000	.PLATE	4-185, 4-187
2674325-0000	.CAM	4-51, 4-53, 4-55, 4-57, 4-63, 4-65, 4-67, 4-69
2674326-0000	.CAM	4-51, 4-53, 4-55, 4-57, 4-63, 4-65, 4-67, 4-69
2674327-0000	.SHAFT	4-51, 4-53, 4-55, 4-57, 4-63, 4-65, 4-67, 4-69
2674328-0000	.VOLUME SHIM	4-51, 4-53, 4-55, 4-57, 4-63, 4-65, 4-67, 4-69, 9-11, 9-13, 9-15, 9-17, 9-19
2674329-0000	.VOLUME BULGE	4-51, 4-53, 4-55, 4-57, 4-63, 4-65, 4-67, 4-69
2674331-0000	.VOLUME FLAP	4-63, 4-65, 4-67, 4-69
2674332-0000	.VOLUME FLAP	4-51, 4-53, 4-55, 4-57
2674333-0000	.VOLUME FLAP	4-63, 4-65, 4-67, 4-69
2674334-0000	.VOLUME FLAP	4-51, 4-53, 4-55, 4-57
2674335-0000	.HOLDER	4-97, 4-99, 4-101, 4-143, 4-145, 4-147
2674336-0000	.CUTTING JAW	4-119, 4-121, 4-123, 4-125
2675238-0000	.ROLLER	7-123
2675322-0000	.SLIDE	5-177, 5-179
2675323-0000	.SLIDE	5-171, 5-173
2675434-0000	.SUPPORT	10-19, 10-21
2675516-0000	.BRACKET	8-23
2675519-0000	.CABLE DUCT	8-49, 8-51, 8-53
2675521-0000	.RAIL	8-89, 8-91
2675522-0000	.DIVIDER	8-65, 8-67
2676615-0000	.NOZZLE	5-209, 5-211, 5-213, 5-215, 5-217, 5-219
2676616-0000	.NOZZLE	5-209, 5-211, 5-213, 5-215, 5-217, 5-219
2676617-0000	.NOZZLE	5-209, 5-211, 5-213, 5-215, 5-217, 5-219
2676815-0000	.FOLDING BAR	5-137, 5-139
2676816-0000	.FOLDING BAR	5-137, 5-139
2676933-0000	.BUSHING	4-51, 4-53, 4-55, 4-57, 4-63, 4-65, 4-67, 4-69
2676934-0000	.STOP	4-51, 4-53, 4-55, 4-57, 4-63, 4-65, 4-67, 4-69
2677899-0000	.WASHER	4-191, 4-193
2678414-0000	.RAIL	5-83, 5-85, 5-87, 5-89, 5-91
2678417-0000	.WHEEL	5-59, 5-61
2678621-0000	.GUIDE	5-177, 5-179
2678622-0000	.GUIDE	5-171, 5-173
2678708-0000	.SUPPORT	5-269
2678709-0100	.PROTECTIVE COVER	5-269
2678710-0150	.INFEED CONVEYOR SHORT	5-261
2678713-0000	.CAM	4-51, 4-53, 4-55, 4-57, 4-63, 4-65, 4-67, 4-69
2678714-0000	.CAM	4-51, 4-53, 4-55, 4-57, 4-63, 4-65, 4-67, 4-69
2678717-0000	.VOLUME SHIM	4-51, 4-53, 4-55, 4-57, 4-63, 4-65, 4-67, 4-69, 9-11, 9-13, 9-15, 9-17, 9-19
2678753-0000	.PLATE	5-269
2678838-0000	.VOLUME BULGE	4-51, 4-53, 4-55, 4-57, 4-63, 4-65, 4-67, 4-69
2678839-0000	.VOLUME SHIM	4-51, 4-53, 4-55, 4-57, 4-63, 4-65, 4-67, 4-69, 9-11, 9-13, 9-15, 9-17, 9-19
2678840-0000	.VOLUME BULGE	4-51, 4-53, 4-55, 4-57, 4-63, 4-65, 4-67, 4-69
2679598-0000	.SPLASH PLATE	2-273, 2-275
2679599-0000	.CHUTE	2-273, 2-275
2679735-0000	.SPRING	4-27, 4-29, 4-39, 4-41
2679736-0000	.SPRING	4-27, 4-29, 4-39, 4-41
2679884-0000	.BRACKET	4-191, 4-193
2679885-0000	.SLIDE	4-191, 4-193
2679886-0000	.KNOB	4-191, 4-193
2679889-0000	.SPRING	1-211, 1-213, 1-215
2679952-0000	.VOLUME BULGE	4-119, 4-121, 4-123, 4-125

Part No	Description	Page No
2679953-0000	.VOLUME BULGE	4-97, 4-99, 4-101, 4-143, 4-145, 4-147
2680193-0000	.ROLLER	1-75, 1-77, 1-79
2680195-0000	.ROLLER	1-59, 1-61, 1-63
2680196-0000	.ROLLER	1-59, 1-61, 1-63
2680197-0000	.ROLLER	1-59, 1-61, 1-63
2680198-0000	.ROLLER	1-59, 1-61, 1-63
2680201-0000	.ROLLER	1-59, 1-61, 1-63
2680390-0000	.INDEXING DEVICE	5-221
2680391-0000	.HEAD	5-223, 5-225, 5-227, 5-229, 5-231, 5-233
2680392-0000	.FILTER	5-235, 5-237, 5-239
2680393-0000	.LEVER	5-235, 5-237, 5-239
2680394-0000	.GASKET	5-235, 5-237, 5-239
2680401-0000	.SPRING	5-223, 5-225, 5-227, 5-229, 5-231, 5-233
2681244-0000	.PLATE	4-185, 4-187
2681259-0000	.RAIL	7-157, 7-159
2681260-0000	.RAIL	7-157, 7-159
2681261-0000	.SHAFT	7-149, 7-151
2681262-0000	.BRACKET	7-149, 7-151
2681263-0000	.BUSHING	7-149, 7-151
2681266-0000	.WASHER	7-149, 7-151
2681267-0000	.PLATE	7-157, 7-159
2681535-0000	.SHAFT	7-157, 7-159
2681617-0000	.GEAR WHEEL	4-243, 4-245, 4-247
2681618-0000	.WORM WHEEL	4-243, 4-245
2681619-0000	.WORM GEAR	4-243, 4-245
2682167-0000	.ROLLER	1-75, 1-77, 1-79
2682168-0000	.ROLLER	1-75, 1-77, 1-79
2682169-0000	.ROLLER	1-75, 1-77, 1-79
2682170-0000	.ROLLER	1-75, 1-77, 1-79
2682198-0000	.ARM	4-219, 4-221
2682199-0000	.ARM	4-209, 4-211
2682222-0000	.CARRIER	5-75, 5-77, 5-79
2683974-0000	.HOLDER	2-9
2683975-0000	.HOLDER	2-9
2683976-0000	.SUPPORT	4-229, 4-231
2685238-0000	.PIPE	1-181, 1-183
2685246-0000	.PIPE	1-195
2685247-0000	.UPPER SECTION	1-195
2685271-0000	.PIPE	1-205
2685277-0000	.FILLING PIPE	1-211, 1-213, 1-215
2685285-0000	.BRACKET	1-211, 1-213, 1-215
2685306-0000	.PRESSURE FLANGE	1-211, 1-213, 1-215
2685310-0000	.BRACKET	10-5
2685311-0000	.CONNECTING PIPE	1-243, 1-245
2685314-0000	.COIL	1-219
2685339-0000	.GASKET	1-219
2685340-0000	.COVER	1-219
2685341-0000	.COVER	1-219
2685342-0000	.HEATING ELEMENT	1-219
2685346-0000	.PIPE	1-219
2685375-0000	.RETAINING RING	1-195
2685380-0000	.SPACER	1-285, 1-287
2685631-0000	.ROLLER	1-75, 1-77, 1-79
2685632-0000	.ROLLER	1-75, 1-77, 1-79
2685633-0000	.ROLLER	1-75, 1-77, 1-79
2686144-0000	.SHAFT	4-97, 4-99, 4-101, 4-119, 4-121, 4-123, 4-125, 4-143, 4-145, 4-147
2686316-0000	.FLANGE	3-9
2686317-0000	.SUPPORT	2-73
2686318-0000	.HOLDER	2-73
2686319-0000	.BRACKET	2-73
2686861-0000	.ROLLER	1-53, 1-55
2686876-0000	.PUSHER	5-241, 5-243, 5-245, 5-247, 5-249, 5-251
2687109-0000	.COUPLING	5-235, 5-237, 5-239
2687110-0000	.LOCK WASHER	5-223, 5-225, 5-227, 5-229, 5-231, 5-233
2687111-0000	.LOCK WASHER	5-223, 5-225, 5-227, 5-229, 5-231, 5-233
2687787-0000	.RAIL	5-83, 5-85, 5-87, 5-89, 5-91
2687960-0000	.FRAME	7-143
2688066-0000	.MOUNTING SHEET	2-87
2688917-0000	.ROLLER	4-185, 4-187
2689138-0000	.MOUNTING BLOCK	7-157, 7-159
2689172-0000	.SPACER	1-59, 1-61, 1-63
2689173-0000	.MOUNTING BLOCK	7-157, 7-159
2690377-0000	.BRACKET	1-311, 1-313
2690494-0100	.PNEUMATIC SYSTEM	7-93, 7-95
2690557-0101	.DOCUMENT FOLDER	10-19, 10-21
2691105-0000	.PNEUMATIC DIAGRAM	7-209, 7-211, 7-213
2691183-0000	.FLANGED SHAFT	1-173
2691184-0000	.SHAFT	1-173
2691185-0000	.SUPPORT	1-173
2691359-0000	.INDUCTOR	1-41, 1-43
2691421-0000	.SHIM	4-243, 4-245
2693153-0100	.FOOT	7-93, 7-95
2693155-0000	.LEG	7-105
2693162-0000	.ROLLER	1-59, 1-61, 1-63

Part No	Description	Page No
2693197-0000	.INSERT	5-113, 5-115
2693199-0000	.PLATE	7-157, 7-159
2693200-0000	.SCREW	5-113, 5-115
2693322-0000	.PIPE	5-277, 5-279
2693457-0000	.RAIL	5-83, 5-85, 5-87, 5-89, 5-91
2693459-0000	.BRACKET	5-83, 5-85, 5-87, 5-89, 5-91
2693460-0000	.BRACKET	5-83, 5-85, 5-87, 5-89, 5-91
2693461-0000	.RAIL	5-83, 5-85, 5-87, 5-89, 5-91
2693462-0000	.RAIL	5-83, 5-85, 5-87, 5-89, 5-91
2693463-0000	.RAIL	5-83, 5-85, 5-87, 5-89, 5-91
2693464-0000	.RAIL	5-83, 5-85, 5-87, 5-89, 5-91
2693622-0000	.SPACER	1-249
2694095-0000	.BRACKET	4-191, 4-193
2694714-0000	.GUIDE	1-41, 1-43
2694715-0000	.SUPPORT	1-41, 1-43
2694716-0000	.PLATE	1-41, 1-43
2695408-0000	.HOLDER	4-177
2695409-0000	.HOLDER	4-175
2695800-0000	.INDUCTOR	1-41, 1-43
2695955-0100	.VOLUME FLAP	4-75, 4-81
2695955-0101	.VOLUME FLAP	9-7, 9-9
2695955-0102	.VOLUME FLAP	9-7, 9-9
2695982-0000	.HOUSING	1-129
2695983-0000	.GLASS PANE	1-7
2695984-0000	.FRAME	1-7
2695987-0000	.PIPE	1-253
2695988-0000	.PIPE	1-253
2695989-0000	.PIPE	1-253
2695990-0000	.PIPE	1-253
2695991-0000	.PIPE	1-253
2695992-0000	.PIPE	1-253
2695993-0000	.PIPE	1-253
2695994-0000	.ATTACHMENT PIPE	1-255
2695995-0000	.PIPE	1-255
2695996-0000	.PIPE	1-255
2695997-0000	.PIPE	1-191
2695998-0000	.PIPE	1-191
2695999-0000	.PIPE	1-321, 1-323
2696000-0000	.PIPE	1-321, 1-323
2696001-0000	.PIPE	1-321, 1-323
2696002-0000	.TANK	1-267
2696003-0000	.GASKET	1-267
2696005-0000	.PIPE	1-271
2696006-0000	.PIPE	1-271
2696007-0000	.PIPE	1-271
2696008-0000	.PIPE	1-271
2696010-0000	.PIPE	1-275
2696012-0000	.PIPE	1-273
2696013-0000	.PIPE	1-273
2696025-0000	.PIPE	1-255
2696026-0000	.PIPE	1-273
2696027-0000	.PIPE	1-273
2696028-0000	.PIPE SUPPORT	1-259
2696029-0000	.CONNECTING PIPE	1-259
2696031-0000	.FRAME UPPER	1-297, 1-299
2696032-0000	.FRAME	1-297, 1-299
2696034-0000	.HOLDER	1-297, 1-299
2696035-0000	.COVER	1-297, 1-299
2696036-0000	.HOLDER	1-297, 1-299
2696037-0000	.PIPE	1-255
2696038-0000	.BRACKET	1-349
2696039-0000	.BRACKET	1-349
2696094-0000	.CHAMBER	1-285, 1-287
2696095-0000	.PEROXIDE CHAMBER	1-285, 1-287
2696097-0000	.PLATE	1-285, 1-287
2696104-0000	.BRACKET	1-297, 1-299
2696106-0000	.BRACKET	1-247
2696108-0000	.PIPE	1-247
2696109-0000	.PLUG	1-247
2696111-0000	.VALVE BODY	1-247
2696112-0000	.VALVE BODY	1-247
2696118-0100	.HEATER	1-217
2696119-0000	.PIPE	1-219
2696120-0100	.PNEUMATIC PANEL	1-217
2696156-0100	.VOLUME FLAP	4-81
2696182-0100	.VOLUME FLAP	4-75
2696411-0000	.SPACER	1-59, 1-61, 1-63
2696412-0000	.SPACER	1-59, 1-61, 1-63
2696806-0000	.ROLLER	4-185, 4-187
2697307-0000	.CURVE	4-179, 4-181, 4-183
2697704-0000	.LEVEL PROBE	2-101
2698011-0000	.BUSBAR	4-97, 4-99, 4-101
2698012-0000	.BUSBAR	4-143, 4-145, 4-147
2698178-0000	.BUSBAR	1-15, 1-17

Part No	Description	Page No
2698260-0000	.VOLUME SHIM	5-241, 5-243, 5-245, 5-247, 5-249, 5-251
2698261-0000	.VOLUME BULGE	5-241, 5-243, 5-245, 5-247, 5-249, 5-251
2698262-0000	.VOLUME BULGE	5-241, 5-243, 5-245, 5-247, 5-249, 5-251
2698263-0000	.VOLUME BULGE	5-241, 5-243, 5-245, 5-247, 5-249, 5-251
2698264-0000	.FLAP	5-241, 5-243, 5-245, 5-247, 5-249, 5-251
2698293-0000	.FOLDING DEVICE	5-19
2698294-0000	.FOLDING DEVICE	5-21
2698299-0000	.BRACKET	5-137, 5-139
2698300-0000	.PLATE	5-241, 5-243, 5-245, 5-247, 5-249, 5-251
2698319-0000	.BLOCK	5-253, 5-255
2698383-0000	.SLEEVE	7-105
2698628-0000	.RULER	4-201
2699090-0001	.RECORDER	8-17
2699092-0001	.RECORDER	8-17
2699106-0000	.SIDE PLATE	5-63
2699107-0000	.SIDE PLATE	5-63
2699108-0000	.SHAFT	5-63
2699109-0000	.SPACER	5-63
2699996-0000	.BLOCK	7-165, 7-173
2700019-0000	.ROCKER ARM	7-165
2700030-0000	.ROCKER ARM	7-165
2700034-0000	.ROCKER ARM	7-173
2700035-0000	.ROCKER ARM	7-173
2700151-0000	.LID	4-95
2700546-0000	.FRONT RING	1-29, 1-31, 1-53, 1-55
2701169-0002	.RECORDER	8-17
2701319-0000	.GUIDE PIN	7-221
2701846-0000	.FLANGE	7-229
2701847-0000	.BRACKET	7-229
2701880-0000	.FLANGE	7-103
2701881-0000	.BRACKET	7-103
2703095-0000	.ROCKER ARM	7-149, 7-151
2703096-0000	.SUPPORT	7-149, 7-151
2705812-0100	.VOLUME FLAP	4-63, 4-65, 4-67, 4-69
2705812-0101	.VOLUME FLAP	9-7, 9-9
2705812-0102	.VOLUME FLAP	9-7, 9-9
2705813-0100	.VOLUME FLAP	4-51, 4-53, 4-55, 4-57
2705813-0101	.VOLUME FLAP	9-7, 9-9
2705813-0102	.VOLUME FLAP	9-7, 9-9
2705814-0100	.PUSHER	5-241, 5-243, 5-245, 5-247, 5-249, 5-251
2705814-0101	.PUSHER	9-7, 9-9
2705814-0102	.PUSHER	9-7, 9-9
2705814-0103	.PUSHER	9-7, 9-9
2705814-0104	.PUSHER	9-7, 9-9
2705896-0000	.FLANGE	5-273
2707506-0000	.SHAFT	1-311, 1-313
2708322-0000	.RAIL	5-145, 5-147
2708323-0000	.RAIL	5-145, 5-147
2708584-0000	.'CONNECTION PIPE	1-283
2709210-0000	.FLANGE	1-157, 1-159, 1-161, 1-163
2709212-0000	.LID	1-157, 1-159, 1-161, 1-163
2709213-0000	.FLANGE	1-137, 1-139, 1-141, 1-143, 1-145
2709214-0000	.FLANGE	1-137, 1-139, 1-141, 1-143, 1-145
2709216-0000	.FRAME	1-175
2709217-0000	.GASKET	1-175
2709218-0000	.GLASS PANE	1-175
2709219-0000	.COVER	1-219
2709220-0000	.SPACER	1-219
2709223-0000	.BENDING ROLLER	1-285, 1-287
2709224-0000	.WHEEL	1-285, 1-287
2709225-0000	.SHAFT	1-131, 1-133, 1-135
2709262-0000	.SHAFT	1-11
2709302-0000	.ROLLER	1-75, 1-77, 1-79
2709785-0000	.ROLLER	1-53, 1-55
2710507-0000	.KNOB	2-207
2710508-0000	.TOOL BOX	10-27
2710558-0000	.COVERING PANEL	1-395
2710559-0000	.GLASS PANE	1-395
2710560-0000	.COVER	1-395
2710561-0000	.COVERING PANEL	1-393
2710562-0000	.GLASS PANE	1-393
2710563-0000	.BRACKET	1-395
2710564-0000	.DOOR	1-393
2711240-0000	.BRACKET	1-395
2711242-0000	.BRACKET	1-395
2711243-0000	.COVERING PANEL	1-393
2711244-0000	.GLASS PANE	1-393
2711245-0000	.COVER	1-251
2711246-0000	.COVERING PANEL	1-393
2711247-0000	.COVER	1-251
2711248-0000	.DOOR	1-393
2711249-0000	.PANEL	1-393
2711250-0000	.FRAME	1-393
2711251-0000	.HINGE	1-251

Part No	Description	Page No
2711254-0000	.COVER	1-251
2711255-0000	.COVERING PANEL	1-393
2711256-0000	.BRACKET	1-395
2711257-0000	.BRACKET	1-395
2711258-0000	.FRAME	1-395
2711259-0000	.FRAME	1-395
2711260-0000	.BRACKET	1-395
2711261-0000	.BRACKET	1-393
2711262-0000	.BRACKET	1-393
2711263-0000	.BRACKET	1-393
2711266-0000	.BRACKET	1-393
2711267-0000	.BRACKET	1-393
2711269-0000	.DOOR	1-395
2711289-0000	.SUPPORT	4-247
2711991-0000	.SUPPORT	7-87
2711992-0000	.COVER	7-87
2711993-0100	.AIR SUPPLY	7-79
2712433-0000	.COVERING PANEL	1-393
2712434-0000	.FRAME	1-395
2712435-0000	.BRACKET	1-395
2713376-0000	.BRACKET	7-141
2713377-0000	.SUPPORT	7-161
2715295-0000	.BRACKET	4-191, 4-193
2715296-0000	.BRACKET	4-191, 4-193
2715297-0000	.BOW CLAMP	4-191, 4-193
2715298-0000	.BRACKET	2-103, 2-105
2715299-0000	.BRACKET	2-103, 2-105
2715300-0000	.BRACKET	4-201
2715301-0000	.SUPPORT	4-201
2715302-0000	.BRACKET	4-191, 4-193
2715497-0000	.RAIL	5-83, 5-85, 5-87, 5-89, 5-91
2715498-0000	.RAIL	5-83, 5-85, 5-87, 5-89, 5-91
2715499-0000	.SUPPORTING ARM	5-65, 5-67
2715500-0000	.RAIL	5-83, 5-85, 5-87, 5-89, 5-91
2715502-0000	.SUPPORTING ARM	5-65, 5-67
2715503-0000	.RAIL	5-83, 5-85, 5-87, 5-89, 5-91
2715504-0000	.RAIL	5-83, 5-85, 5-87, 5-89, 5-91
2715553-0000	.BENDING ROLLER	1-123, 1-125
2715556-0100	.BATH	1-277
2715567-0000	.BRACKET	1-95
2715569-0000	.BRACKET	1-211, 1-213, 1-215
2715570-0000	.ROLLER	1-95
2715581-0000	.PLATE	1-333
2715601-0000	.SHAFT	1-11
2715602-0000	.PIPE	1-247
2715618-0000	.LEVER	1-11
2715649-0004	.SPACER	1-95
2715649-0005	.SPACER	1-95
2715650-0002	.SCREW	1-95
2715650-0006	.SCREW	1-95
2715652-0000	.FORK	1-211, 1-213, 1-215
2716441-0000	.BOTTOM PLATE	1-167, 1-169
2716442-0000	.PLATE	1-167, 1-169
2716443-0000	.ROLLER	1-39
2716444-0000	.SLIDE	1-129
2716445-0000	.PLATE	1-129
2716539-0000	.ROLLER	1-33, 1-35, 1-37
2716540-0000	.ROLLER	1-33, 1-35, 1-37
2716541-0000	.ROLLER	1-29, 1-31
2716544-0000	.ROLLER	1-29, 1-31
2716547-0000	.ROLLER	1-47, 1-49, 1-51
2716548-0000	.ROLLER	1-47, 1-49, 1-51
2718901-0000	.SEAL	1-85, 1-87
2719081-0000	.BRACKET	4-191, 4-193
2719686-0000	.SPRING	1-211, 1-213, 1-215
2719737-0000	.PNEUMATIC DIAGRAM	2-131, 2-133, 2-253
2719738-0000	.PNEUMATIC DIAGRAM	2-49, 2-253
2720716-0000	.LIFTING DEVICE	10-67
2720717-0000	.ROLLER	1-59, 1-61, 1-63
2720846-0000	.COUNTER ROLLER	1-53, 1-55
2721151-0000	.CANTILEVER	2-207
2721423-0000	.FORMING RING	1-29, 1-31, 1-53, 1-55
2721434-0000	.SHAFT	1-311, 1-313
2722583-0003	.TMCC CD	8-11
2723460-0000	.FRAME	2-65
2724927-0000	.BRACKET	4-191, 4-193
2724928-0000	.SLIDE	4-191, 4-193
2724929-0000	.KNOB	4-191, 4-193
2724930-0000	.SCREW	4-191, 4-193
2724932-0000	.NUT	4-191, 4-193
2724933-0000	.RAIL	5-83, 5-85, 5-87, 5-89, 5-91
2724934-0000	.BRACKET	5-83, 5-85, 5-87, 5-89, 5-91
2724936-0000	.BRACKET	5-83, 5-85, 5-87, 5-89, 5-91
2724937-0000	.SUPPORTING ARM	5-65, 5-67

Part No	Description	Page No
2724940-0000	.RAIL	5-83, 5-85, 5-87, 5-89, 5-91
2724941-0000	.RAIL	5-83, 5-85, 5-87, 5-89, 5-91
2724942-0000	.RAIL	5-83, 5-85, 5-87, 5-89, 5-91
2724943-0000	.RAIL	5-83, 5-85, 5-87, 5-89, 5-91
2724944-0000	.RAIL	5-83, 5-85, 5-87, 5-89, 5-91
2724947-0000	.RAIL	5-83, 5-85, 5-87, 5-89, 5-91
2724948-0000	.RAIL	5-83, 5-85, 5-87, 5-89, 5-91
2724949-0000	.RAIL	5-83, 5-85, 5-87, 5-89, 5-91
2724950-0000	.RAIL	5-83, 5-85, 5-87, 5-89, 5-91
2724951-0000	.RAIL	5-83, 5-85, 5-87, 5-89, 5-91
2724952-0000	.SUPPORTING ARM	5-65, 5-67
2725392-0000	.STOP	4-51, 4-53, 4-55, 4-57, 4-63, 4-65, 4-67, 4-69
2725393-0000	.STOPPER	4-51, 4-53, 4-55, 4-57, 4-63, 4-65, 4-67, 4-69
2725394-0000	.FLAP HOLDER	4-51, 4-53, 4-55, 4-57, 4-63, 4-65, 4-67, 4-69
2725526-0000	.SCREW	1-41, 1-43
2725559-0000	.PLATE	1-255
2725564-0000	.WHEEL	1-129
2725826-0000	.CLAMP	5-165, 5-167
2725827-0000	.SPACER	5-165, 5-167
2725981-0100	.SETTING TOOL	10-5
2725982-0100	.TEMPLATE	10-27
2726295-0000	.COVER STRIP	2-257
2726296-0000	.COVER STRIP	2-255
2727659-0000	.PROTECTION PLATE	5-185
2727874-0000	.BOTTOM	5-23, 5-25
2728139-0000	.COVER STRIP	2-257
2728140-0000	.COVER STRIP	2-255
2728241-0000	.BRACKET	5-277, 5-279
2728883-0000	.FOLDING FLAP	4-127, 4-129, 4-163, 4-165
2728884-0000	.FOLDING FLAP	4-127, 4-129, 4-163, 4-165
2730770-0000	.SPACER	3-7, 3-9
2731428-0000	.NUT	1-29, 1-31, 1-33, 1-35, 1-37, 1-53, 1-55, 1-59, 1-61, 1-63
2731434-0000	.LEVER	1-11
2731438-0000	.FILLING PIPE	1-211, 1-213, 1-215
2731503-0000	.LOWER FORMING RING	1-53, 1-55
2731506-0000	.LOWER FORMING RING	1-53, 1-55
2731880-0001	.SHIM	7-79
2731880-0002	.SHIM	7-79
2732810-0000	.BRACKET	5-83, 5-85, 5-87, 5-89, 5-91
2732811-0000	.RAIL	5-83, 5-85, 5-87, 5-89, 5-91
2732812-0000	.RAIL	5-83, 5-85, 5-87, 5-89, 5-91
2732814-0000	.BRACKET	5-83, 5-85, 5-87, 5-89, 5-91
2732815-0000	.BRACKET	5-83, 5-85, 5-87, 5-89, 5-91
2732819-0000	.RAIL	5-83, 5-85, 5-87, 5-89, 5-91
2732820-0100	.RAIL OUT FEED	5-57
2732821-0000	.RAIL	5-83, 5-85, 5-87, 5-89, 5-91
2732822-0000	.BRACKET	5-83, 5-85, 5-87, 5-89, 5-91
2732824-0000	.RAIL	5-83, 5-85, 5-87, 5-89, 5-91
2732825-0100	.RAIL	5-57
2732826-0000	.RAIL	5-83, 5-85, 5-87, 5-89, 5-91
2732827-0000	.BRACKET	5-83, 5-85, 5-87, 5-89, 5-91
2732828-0000	.RAIL	5-83, 5-85, 5-87, 5-89, 5-91
2734982-0100	.BRACKET	7-35, 7-37
2734983-0000	.BRACKET	7-39
2734984-0000	.SPACER DISC	7-39
2734985-0100	.LEG	7-35, 7-37
2734986-0000	.LEG	7-41
2735125-0000	.GUIDE UPPER	5-137, 5-139
2735126-0000	.GUIDE UPPER	5-137, 5-139
2735127-0000	.RAIL	5-145, 5-147
2735128-0000	.RAIL	5-145, 5-147
2735473-0000	.BRACKET	4-191, 4-193
2735474-0000	.SLIDE	4-191, 4-193
2736138-0000	.CARRIER RULER	4-127, 4-129
2736139-0000	.CARRIER RULER	4-163, 4-165
2736628-0000	.LOWER FORMING RING	1-53, 1-55
2736629-0000	.LOWER FORMING RING	1-53, 1-55
2736630-0000	.LOWER FORMING RING	1-53, 1-55
2736631-0000	.UPPER FORMING RING	1-59, 1-61, 1-63
2736632-0000	.UPPER FORMING RING	1-59, 1-61, 1-63
2736633-0000	.UPPER FORMING RING	1-59, 1-61, 1-63
2736634-0000	.UPPER FORMING RING	1-59, 1-61, 1-63
2736635-0000	.UPPER FORMING RING	1-59, 1-61, 1-63
2736636-0000	.UPPER FORMING RING	1-59, 1-61, 1-63
2736676-0000	.UPPER FORMING RING	1-33, 1-35, 1-37, 1-59, 1-61, 1-63
2736677-0000	.UPPER FORMING RING	1-33, 1-35, 1-37, 1-59, 1-61, 1-63
2736697-0000	.UPPER FORMING RING	1-59, 1-61, 1-63
2736702-0000	.BRACKET	1-333
2736705-0000	.LOWER FORMING RING	1-53, 1-55
2736707-0000	.PIPE	1-219
2736719-0000	.PLATE	9-31
2737034-0000	.TIE ROD	4-109, 4-111, 4-113, 4-115, 4-153, 4-155, 4-157, 4-159
2737771-0000	.PLUNGER	4-131
2737772-0000	.PLUNGER	4-131

Part No	Description	Page No
2737773-0000	.PLUNGER	4-131
2737841-0000	.BRACKET	7-225
2737842-0000	.BRACKET	7-225
2739682-0000	.SPACER SCREW	5-15
2740795-0000	.FLANGE BUSHING	1-33, 1-35, 1-37
2742199-0000	.BRACKET	7-207
2742200-0100	.VALVE PANEL	7-203, 7-205
2743319-0000	.SUPPORT	1-393
2743320-0000	.SUPPORT	1-393
2745172-0000	.BRACKET	7-61
2745173-0000	.BAR	7-61
2745174-0000	.BRACKET	7-65, 7-67
2745231-0000	.GUIDE	7-61, 7-65, 7-67
2746136-0000	.SPRING	4-51, 4-53, 4-55, 4-57, 4-63, 4-65, 4-67, 4-69
2746137-0000	.SPRING	4-51, 4-53, 4-55, 4-57, 4-63, 4-65, 4-67, 4-69
2746721-0000	.COVER	2-231
2746790-0000	.FOLDING DEVICE	5-19
2746791-0000	.FOLDING DEVICE	5-21
2747138-0000	.VOLUME FLAP	4-51, 4-53, 4-55, 4-57, 4-63, 4-65, 4-67, 4-69
2747139-0000	.CAM	4-171, 4-173
2747142-0000	.VOLUME FLAP	4-51, 4-53, 4-55, 4-57, 4-63, 4-65, 4-67, 4-69
2747630-0000	.BRACKET	8-23
2748115-0000	.CRADLE	5-257, 5-259
2748216-0000	.CLAMP	1-251
2748217-0000	.CLAMP	1-251
2748218-0000	.TOUCH GUARD	1-251
2748219-0000	.TOUCH GUARD	1-251
2748220-0000	.HANGER	1-251
2748618-0000	.REEL HOLDER	7-53
2748619-0000	.SHAFT	7-61
2748621-0000	.BRACKET	7-53
2748622-0000	.COVER PLATE	7-253
2748623-0000	.COVER	7-69
2748624-0000	.COVER	7-69
2748625-0100	.COVER	7-35, 7-37
2748626-0000	.COVER	7-57
2748627-0000	.CABLE DUCT	7-57
2748697-0000	.BRACKET	7-15
2748698-0000	.ADJUSTING SCREW	7-15
2748699-0000	.KNOB	7-15
2748701-0000	.BRACKET	8-23
2748702-0000	.BRACKET	8-23
2750544-0000	.SPACER	5-137, 5-139
2750805-0100	.COVER	7-35, 7-37
2750806-0000	.COVER	7-59
2750807-0000	.CABLE DUCT	7-59
2750808-0000	.TEMPLATE	7-75
2751466-0000	.SHAFT	1-11
2751478-0000	.ROLLER	1-33, 1-35, 1-37, 1-59, 1-61, 1-63
2751479-0000	.ROLLER	1-33, 1-35, 1-37, 1-59, 1-61, 1-63
2751480-0000	.ROLLER	1-59, 1-61, 1-63
2751481-0000	.ROLLER	1-33, 1-35, 1-37, 1-59, 1-61, 1-63
2751482-0000	.ROLLER	1-33, 1-35, 1-37, 1-59, 1-61, 1-63
2751483-0000	.ROLLER	1-33, 1-35, 1-37, 1-59, 1-61, 1-63
2751518-0000	.TEMPLATE	10-27
2751788-0000	.CRADLE	5-257, 5-259
2752533-0000	.SPACER	5-137, 5-139
2752534-0000	.SPACER	5-145, 5-147
2752647-0000	.GUIDE	5-171, 5-173
2752648-0000	.GUIDE	5-177, 5-179
2752754-0000	.RAIL	5-83, 5-85, 5-87, 5-89, 5-91
2752756-0000	.RAIL	5-83, 5-85, 5-87, 5-89, 5-91
2752757-0000	.RAIL	5-83, 5-85, 5-87, 5-89, 5-91
2752758-0000	.RAIL	5-83, 5-85, 5-87, 5-89, 5-91
2752759-0000	.BRACKET	5-83, 5-85, 5-87, 5-89, 5-91
2752760-0000	.RAIL	5-83, 5-85, 5-87, 5-89, 5-91
2755890-0100	.SUPPORT	7-35, 7-37
2755891-0100	.COVER	7-237, 7-239, 7-241, 7-243
2755892-0100	.SUPPORT	7-35, 7-37
2755893-0100	.COVER	7-35, 7-37
2756247-0000	.WASHER	10-67
2756349-0000	.SPACER	5-195, 5-197, 5-199, 5-201, 5-203, 5-205, 5-207
2757847-0000	.PUSHER	5-241, 5-243, 5-245, 5-247, 5-249, 5-251
2758084-0000	.ROLLER	1-33, 1-35, 1-37
2758085-0000	.ROLLER	1-33, 1-35, 1-37
2759322-0000	.ROLLER	1-59, 1-61, 1-63
2759323-0000	.ROLLER	1-59, 1-61, 1-63
2759331-0000	.SHAFT	4-51, 4-53, 4-55, 4-57, 4-63, 4-65, 4-67, 4-69
2760089-0000	.STOP	5-195, 5-197, 5-199, 5-201, 5-203, 5-205, 5-207
2760120-0000	.PLATE	5-195, 5-197, 5-199, 5-201, 5-203, 5-205, 5-207
2760121-0000	.BAR	5-195, 5-197, 5-199, 5-201, 5-203, 5-205, 5-207
2760125-0100	.SEPARATE ROOM	7-3, 7-5, 7-7, 7-9
2760126-0000	.SPACER	5-195, 5-197, 5-199, 5-201, 5-203, 5-205, 5-207
2760313-0000	.PLATE	5-195, 5-197, 5-199, 5-201, 5-203, 5-205, 5-207

Part No	Description	Page No
2760963-0000	.COVER	2-237
2760964-0000	.RUBBER SEAL	2-237
2761004-0000	.SCREW	5-195, 5-197, 5-199, 5-201, 5-203, 5-205, 5-207
2761017-0000	.SUPPORT RING	1-75, 1-77, 1-79
2761018-0000	.ROLLER	1-75, 1-77, 1-79
2761019-0000	.ROLLER	1-75, 1-77, 1-79
2761020-0000	.ROLLER	1-75, 1-77, 1-79
2761021-0000	.ROLLER	1-75, 1-77, 1-79
2761022-0000	.LOCK PLATE	1-75, 1-77, 1-79
2761763-0000	.LEG	2-11
2761764-0000	.SLEEVE	2-11
2761765-0000	.SLEEVE	2-11
2761766-0100	.FOOT	2-9, 2-65, 2-119
2763948-0000	.BRACKET	1-221
2763949-0000	.ELBOW PIPE	1-247
2763962-0000	.BRACKET	1-317
2763966-0000	.PIPE	1-317
2763967-0000	.PIPE	1-317
2763968-0000	.SPACER	1-317
2763969-0000	.REDUCER	1-317
2763994-0000	.COVER	1-247
2763995-0000	.TOUCH GUARD	1-247
2764013-0000	.UPPER FORMING RING	1-59, 1-61, 1-63
2764014-0000	.UPPER FORMING RING	1-33, 1-35, 1-37, 1-59, 1-61, 1-63
2764015-0000	.UPPER FORMING RING	1-59, 1-61, 1-63
2764016-0000	.UPPER FORMING RING	1-59, 1-61, 1-63
2764017-0000	.UPPER FORMING RING	1-59, 1-61, 1-63
2764018-0000	.UPPER FORMING RING	1-59, 1-61, 1-63
2764019-0000	.UPPER FORMING RING	1-59, 1-61, 1-63
2764020-0000	.UPPER FORMING RING	1-59, 1-61, 1-63
2764021-0000	.UPPER FORMING RING	1-59, 1-61, 1-63
2764022-0000	.UPPER FORMING RING	1-33, 1-35, 1-37, 1-59, 1-61, 1-63
2764023-0000	.LOWER FORMING RING	1-53, 1-55
2764024-0000	.LOWER FORMING RING	1-53, 1-55
2764025-0000	.LOWER FORMING RING	1-53, 1-55
2764026-0000	.LOWER FORMING RING	1-29, 1-31, 1-53, 1-55
2764027-0000	.LOWER FORMING RING	1-29, 1-31, 1-53, 1-55
2764028-0000	.LOWER FORMING RING	1-53, 1-55
2764029-0000	.LOWER FORMING RING	1-53, 1-55
2764030-0000	.LOWER FORMING RING	1-53, 1-55
2764031-0000	.LOWER FORMING RING	1-53, 1-55
2764032-0000	.SHAFT	1-29, 1-31, 1-53, 1-55
2764033-0000	.SHAFT	1-29, 1-31, 1-53, 1-55
2764034-0000	.SHAFT	1-33, 1-35, 1-37, 1-59, 1-61, 1-63
2764035-0000	.SHAFT	1-33, 1-35, 1-37, 1-59, 1-61, 1-63
2764036-0000	.KNOB	1-29, 1-31, 1-33, 1-35, 1-37, 1-53, 1-55, 1-59, 1-61, 1-63
2764286-0000	.CABLE DUCT	7-51
2764290-0100	.WEB GUIDE	7-61
2764291-0000	.BRACKET	7-61
2764292-0000	.CABLE DUCT	7-61
2764293-0000	.TEMPLATE	7-75
2764294-0000	.TEMPLATE	7-75
2764295-0100	.TOOLS AND TEMPLATES	7-35, 7-37
2764297-0100	.CABLE DUCT	7-35, 7-37
2764474-0000	.PLATE	5-195, 5-197, 5-199, 5-201, 5-203, 5-205, 5-207
2764475-0000	.ASSEMBLY TOOL	10-39
2764526-0000	.TOOL	10-5
2764527-0100	.ACCESSORIES	9-3
2764809-0000	.CANTILEVER	2-65
2765461-0000	.SWING FRAME	8-89, 8-91
2765462-0001	.COVERING PANEL	8-23
2765464-0000	.MOUNTING PLATE	8-71
2766751-0000	.RAIL	4-97, 4-99, 4-101
2766752-0000	.RAIL	4-143, 4-145, 4-147
2767105-0000	.PROTECTION PLATE	5-185
2767478-0001	.ROLLER	4-185, 4-187, 9-11, 9-13, 9-15, 9-17, 9-19
2767478-0002	.ROLLER	4-185, 4-187, 9-11, 9-13, 9-15, 9-17, 9-19
2767478-0003	.ROLLER	9-11, 9-13, 9-15, 9-17, 9-19
2767478-0004	.ROLLER	9-11, 9-13, 9-15, 9-17, 9-19
2767760-0000	.INDUCTOR	4-97, 4-99, 4-101, 4-143, 4-145, 4-147, 9-11, 9-13, 9-15, 9-17, 9-19
2768908-0000	.STOPPER	4-51, 4-53, 4-55, 4-57, 4-63, 4-65, 4-67, 4-69
2768909-0000	.STOP	4-51, 4-53, 4-55, 4-57, 4-63, 4-65, 4-67, 4-69
2768910-0000	.FLAP HOLDER	4-51, 4-53, 4-55, 4-57, 4-63, 4-65, 4-67, 4-69
2769340-0000	.CAM	4-171, 4-173
2769546-0000	.SPACER	4-171, 4-173
2770115-0000	.SUPPORT	2-73
2770494-0000	.FILLING PIPE	1-211, 1-213, 1-215
2770885-0000	.CONTROL PANEL DISPLAY	7-265
2771122-0000	.SPRING	4-51, 4-53, 4-55, 4-57, 4-63, 4-65, 4-67, 4-69
2771123-0000	.SPRING	4-51, 4-53, 4-55, 4-57, 4-63, 4-65, 4-67, 4-69
2771550-0000	.CAM	4-171, 4-173
2771551-0000	.CAM	4-171, 4-173
2772921-0000	.PLATE	5-195, 5-197, 5-199, 5-201, 5-203, 5-205, 5-207
2773080-0000	.PLATE	5-195, 5-197, 5-199, 5-201, 5-203, 5-205, 5-207

Part No	Description	Page No
2773929-0000	.STOPPER	4-51, 4-53, 4-55, 4-57, 4-63, 4-65, 4-67, 4-69
2774348-0000	.EXTENSION SHAFT	6-65
2774372-0000	.TEMPLATE	9-33
2774373-0000	.TEMPLATE	9-33
2774374-0000	.TEMPLATE	9-33
2774454-0100	.COVER	2-215
2774493-0000	.COMPRESSION SPRING	4-167
2774547-0000	.BEARING HOUSING	4-119, 4-121, 4-123, 4-125
2774548-0000	.BEARING HOUSING	4-119, 4-121, 4-123, 4-125
2774708-0000	.ROLLER	7-15
2775283-0000	.BEARING HOUSING	4-119, 4-121, 4-123, 4-125
2775284-0000	.BEARING HOUSING	4-119, 4-121, 4-123, 4-125
2775285-0000	.BEARING HOUSING	4-119, 4-121, 4-123, 4-125
2775286-0000	.BEARING HOUSING	4-119, 4-121, 4-123, 4-125
2775287-0000	.BEARING HOUSING	4-119, 4-121, 4-123, 4-125
2775288-0000	.BEARING HOUSING	4-119, 4-121, 4-123, 4-125
2775290-0000	.BEARING HOUSING	4-119, 4-121, 4-123, 4-125
2775292-0000	.BEARING HOUSING	4-119, 4-121, 4-123, 4-125
2775293-0000	.BEARING HOUSING	4-119, 4-121, 4-123, 4-125
2777368-0000	.CABLE DUCT	8-71
2777369-0000	.CABLE DUCT	8-71
2777370-0000	.RAIL	8-81
2777371-0000	.RAIL	8-83, 8-85, 8-87
2777382-0000	.STOP PIN	1-211, 1-213, 1-215
2777968-0000	.SPACER	1-221
2778300-0000	.ASSEMBLY TOOL	10-39
2778547-0000	.BRACKET	5-195, 5-197, 5-199, 5-201, 5-203, 5-205, 5-207
2778562-0000	.BOTTOM SECTION	1-285, 1-287
2779660-0000	.BRACKET	2-201, 2-203
2779661-0000	.ANGLE	2-201, 2-203
2779662-0000	.SUPPORT	2-201, 2-203
2779663-0000	.BRACKET	2-201, 2-203
2779664-0000	.SUPPORT	2-201, 2-203
2779738-0000	.GUIDE	5-165, 5-167
2779739-0000	.GUIDE	5-165, 5-167
2780072-0000	.RAIL	8-89, 8-91
2785993-0000	.CIRCUIT BOARD	7-265
2788635-0000	.TOUCH GUARD	1-393
2788636-0000	.TOUCH GUARD	1-393
2788637-0000	.COVERING PANEL	1-393
2788638-0000	.BRACKET	1-393
2789083-0100	.GUIDE ROLLER	7-35, 7-37
2789084-0000	.ROLLER BRACKET	7-49
2789106-0000	.RAIL	8-71
2789107-0100	.DOOR	8-23
2789108-0000	.DOOR	8-27
2789109-0100	.DOOR	8-23
2789110-0000	.DOOR	8-25
2789112-0000	.BRACKET	7-65, 7-67
2789126-0000	.RAIL	8-47
2789127-0100	.RELAY	8-49, 8-51, 8-53
2790429-0000	.SHUTTER	1-249
2790430-0000	.SHUTTER	1-249
2790431-0000	.SHUTTER	1-249
2790432-0000	.SHUTTER	1-249
2790433-0000	.BODY	1-249
2790434-0000	.PLATE	1-341
2791090-0000	.COVER	7-47
2791162-0000	.SPACER SCREW	7-47
2791432-0100	.COVER	7-35, 7-37
2792118-0000	.SUPPORT	6-21
2792119-0100	.FILTER	6-19
2792120-0000	.SUPPORT	6-21
2792300-0100	.DESIGN CORRECTION	4-199
2792301-0100	.DRIVE UNIT	4-227
2792302-0100	.DRIVE UNIT	4-227
2792304-0000	.PLATE	4-229
2792305-0000	.PLATE	4-231
2792306-0000	.TOOTHED PULLEY	4-229, 4-231
2792661-0100	.MOTOR UNIT	3-5, 3-27
2792662-0100	.MOTOR UNIT	3-5, 3-27
2793319-0000	.PLATE	9-31
2793320-0100	.TEMPLATE	9-29
2793321-0000	.PLATE	9-31
2793322-0000	.PLATE	9-31
2793323-0000	.PLATE	9-31
2793324-0000	.PLATE	9-31
2793325-0000	.PLATE	9-31
2793326-0000	.PLATE	9-31
2793327-0000	.PLATE	9-31
2793328-0000	.PLATE	9-31
2793329-0000	.PLATE	9-31
2793331-0000	.PLATE	9-31
2793360-0000	.HEATER	1-191

Part No	Description	Page No
2793907-0000	.FASTENING PLATE	6-21
2793908-0000	.CONNECTOR	6-21
2794725-0000	.PLATE	1-47, 1-49, 1-51
2794726-0000	.RING	1-47, 1-49, 1-51
2795266-0000	.SEAL	1-47, 1-49, 1-51, 9-11, 9-13, 9-15, 9-17, 9-19
2796652-0000	.BOTTOM	5-119, 5-121
2799729-0000	.TEMPLATE	9-33
2800104-0000	.HOSE	8-103
2800116-0000	.HOSE	8-103
2801571-0100	.SOFTWARE TPIH	8-7
2801770-0001	.TPIH CD	8-19
2802438-0000	.PEROXIDE CHAMBER	1-285, 1-287
2802612-0000	.BOTTOM	5-23, 5-25, 5-113, 5-115
2804288-0000	.BRACKET	5-83, 5-85, 5-87, 5-89, 5-91
2804289-0000	.BRACKET	5-83, 5-85, 5-87, 5-89, 5-91
2804290-0000	.BRACKET	5-83, 5-85, 5-87, 5-89, 5-91
2804291-0000	.BRACKET	5-83, 5-85, 5-87, 5-89, 5-91
2804292-0000	.BRACKET	5-83, 5-85, 5-87, 5-89, 5-91
2804293-0000	.BRACKET	5-83, 5-85, 5-87, 5-89, 5-91
2804294-0000	.BRACKET	5-83, 5-85, 5-87, 5-89, 5-91
2804295-0000	.BRACKET	5-83, 5-85, 5-87, 5-89, 5-91
2804298-0000	.BRACKET	5-83, 5-85, 5-87, 5-89, 5-91
2804299-0000	.BRACKET	5-83, 5-85, 5-87, 5-89, 5-91
2804300-0000	.BRACKET	5-83, 5-85, 5-87, 5-89, 5-91
2804301-0000	.BRACKET	5-83, 5-85, 5-87, 5-89, 5-91
2804302-0000	.BRACKET	5-83, 5-85, 5-87, 5-89, 5-91
2804303-0000	.BRACKET	5-83, 5-85, 5-87, 5-89, 5-91
2804304-0000	.BRACKET	5-83, 5-85, 5-87, 5-89, 5-91
2804305-0000	.BRACKET	5-83, 5-85, 5-87, 5-89, 5-91
2804306-0000	.BRACKET	5-83, 5-85, 5-87, 5-89, 5-91
2804307-0000	.BRACKET	5-83, 5-85, 5-87, 5-89, 5-91
2804308-0000	.BRACKET	5-83, 5-85, 5-87, 5-89, 5-91
2804309-0000	.BRACKET	5-83, 5-85, 5-87, 5-89, 5-91
2804310-0000	.BRACKET	5-83, 5-85, 5-87, 5-89, 5-91
2804311-0000	.BRACKET	5-83, 5-85, 5-87, 5-89, 5-91
2804312-0000	.BRACKET	5-83, 5-85, 5-87, 5-89, 5-91
2804313-0000	.BRACKET	5-83, 5-85, 5-87, 5-89, 5-91
2804314-0000	.BRACKET	5-83, 5-85, 5-87, 5-89, 5-91
2804857-0000	.SPACER SCREW	5-145, 5-147
2811776-0000	.NOZZLE	1-113
2811834-0001	.RECORDER CD	8-17
2812327-0100	.CONTROL PANEL	10-3
2812328-0100	.CABLE HARNESS	10-93
2812397-0100	.FIXING UNIT	7-35, 7-37
2812398-0000	.PLATE	7-71
2812399-0000	.MOUNTING BAR	7-71
2812400-0000	.PLATE	7-71
2812556-0000	.HEAT GUARD	1-317
2814681-0003	.TPOP CD	8-9
2815309-0000	.PLATE	5-195, 5-197, 5-199, 5-201, 5-203, 5-205, 5-207
2815745-0000	.GASKET	10-95
2819098-0000	.PIPE	1-243, 1-245
2825345-0002	.TPOP CD	10-103
2826618-0100	.SOFTWARE TPOP	10-93
2829262-0000	.RAIL	8-49, 8-51, 8-53
2829288-0000	.COVERING PLATE	1-191
2829385-0000	.PLATE	5-195, 5-197, 5-199, 5-201, 5-203, 5-205, 5-207
2829630-0000	.STOP	5-195, 5-197, 5-199, 5-201, 5-203, 5-205, 5-207
2829663-0000	.STOP	5-195, 5-197, 5-199, 5-201, 5-203, 5-205, 5-207
2832865-0100	.COVER	7-3, 7-5, 7-7, 7-9
2832866-0000	.COVER	7-11
2833334-0000	.BRACKET	7-11
2834329-0000	.PIPE	1-243, 1-245
2837177-0000	.LEG	7-43, 7-45, 10-7, 10-9
2838351-0000	.STOPPER	4-51, 4-53, 4-55, 4-57, 4-63, 4-65, 4-67, 4-69
2838479-0000	.FLAP HOLDER	4-51, 4-53, 4-55, 4-57, 4-63, 4-65, 4-67, 4-69
2838629-0000	.STOPPER	4-51, 4-53, 4-55, 4-57, 4-63, 4-65, 4-67, 4-69
2839175-0000	.VOLUME FLAP	4-51, 4-53, 4-55, 4-57, 4-63, 4-65, 4-67, 4-69
2839410-0000	.STOPPER	4-51, 4-53, 4-55, 4-57, 4-63, 4-65, 4-67, 4-69
2839411-0000	.FLAP HOLDER	4-51, 4-53, 4-55, 4-57, 4-63, 4-65, 4-67, 4-69
2839678-0000	.FLAP HOLDER	4-51, 4-53, 4-55, 4-57, 4-63, 4-65, 4-67, 4-69
2839679-0000	.STOPPER	4-51, 4-53, 4-55, 4-57, 4-63, 4-65, 4-67, 4-69
2839822-0000	.STOP	4-51, 4-53, 4-55, 4-57, 4-63, 4-65, 4-67, 4-69
2841125-0000	.CABLE DUCT	8-49, 8-51, 8-53
2841126-0000	.CABLE DUCT	8-49, 8-51, 8-53
2841128-0000	.MOUNTING PLATE	8-65, 8-67
2841129-0000	.CABLE DUCT	8-65, 8-67
2841130-0000	.CABLE DUCT	8-49, 8-51, 8-53
2841131-0000	.CABLE DUCT	8-65, 8-67
2841132-0100	.PLC	8-49, 8-51, 8-53
2841133-0100	.MOTOR DRIVE CONTROL	8-49, 8-51, 8-53
2841134-0000	.DIVIDER	8-65, 8-67
2841497-0000	.RAIL	8-49, 8-51, 8-53
2841498-0000	.GASKET	8-37, 8-39, 8-41

Tetra Pak

SPC
Spare Parts Catalogue

Pos	Part No	Description	Page No
A			
AS010	1484695-0000 ..	KNIFE	9-5
AS010	2564232-0100 ..	LEG	10-5
AS020	2592780-0000 ..	DOLLY	9-5
A101	90459-4233	DEVICENET MASTER MODULE	8-65, 8-67
A102	90031-0062	PLC, ANALOG OUTPUT MODULE 8PT/CURR/VOLT	8-65, 8-67
A103	90031-0062	PLC, ANALOG OUTPUT MODULE 8PT/CURR/VOLT	8-65, 8-67
A104	90031-0061	PLC,ANALOG INPUT MODULE 16 PT/CURRENT	8-65, 8-67
A105	90031-0060	PLC,ANALOG INPUT MODULE 16 PT/VOLTAGE	8-65, 8-67
A106	90031-0065	PLC,TEMPERATUR CONTROL,INPUT MODULE 8 PT	8-65, 8-67
A107	90031-0065	PLC,TEMPERATUR CONTROL,INPUT MODULE 8 PT	8-65, 8-67
A108	90031-0065	PLC,TEMPERATUR CONTROL,INPUT MODULE 8 PT	8-65, 8-67
A109	90031-0058	PLC, DIGITAL INPUT MODULE	8-65, 8-67
A110	90031-0057	PLC, DIGITAL INPUT MODULE	8-65, 8-67
A111	90031-0057	PLC, DIGITAL INPUT MODULE	8-65, 8-67
A114	90031-0057	PLC, DIGITAL INPUT MODULE	8-65, 8-67
A115	90031-0057	PLC, DIGITAL INPUT MODULE	8-65, 8-67
A116	90031-0057	PLC, DIGITAL INPUT MODULE	8-65, 8-67
A117	90031-0057	PLC, DIGITAL INPUT MODULE	8-65, 8-67
A118	90031-0057	PLC, DIGITAL INPUT MODULE	8-65, 8-67
A119	90031-0057	PLC, DIGITAL INPUT MODULE	8-65, 8-67
A120	90031-0057	PLC, DIGITAL INPUT MODULE	8-65, 8-67
A121	90031-0057	PLC, DIGITAL INPUT MODULE	8-65, 8-67
A122	90031-0057	PLC, DIGITAL INPUT MODULE	8-65, 8-67
A123	90031-0057	PLC, DIGITAL INPUT MODULE	8-65, 8-67
A124	90031-0057	PLC, DIGITAL INPUT MODULE	8-65, 8-67
A125	90031-0057	PLC, DIGITAL INPUT MODULE	8-65, 8-67
A126	90031-0057	PLC, DIGITAL INPUT MODULE	8-65, 8-67
A127	90031-0057	PLC, DIGITAL INPUT MODULE	8-65, 8-67
A128	90031-0057	PLC, DIGITAL INPUT MODULE	8-65, 8-67
A129	90031-0057	PLC, DIGITAL INPUT MODULE	8-65, 8-67
A130	90031-0059	PLC, DIGITAL OUTPUT MODULE	8-65, 8-67
A131	90031-0059	PLC, DIGITAL OUTPUT MODULE	8-65, 8-67
A132	90031-0059	PLC, DIGITAL OUTPUT MODULE	8-65, 8-67
A133	90031-0059	PLC, DIGITAL OUTPUT MODULE	8-65, 8-67
A134	90031-0059	PLC, DIGITAL OUTPUT MODULE	8-65, 8-67
A136	90031-0059	PLC, DIGITAL OUTPUT MODULE	8-65, 8-67
A137	90031-0059	PLC, DIGITAL OUTPUT MODULE	8-65, 8-67
A138	90031-0059	PLC, DIGITAL OUTPUT MODULE	8-65, 8-67
A139	90031-0059	PLC, DIGITAL OUTPUT MODULE	8-65, 8-67
A140	90031-0059	PLC, DIGITAL OUTPUT MODULE	8-65, 8-67
A141	90031-0059	PLC, DIGITAL OUTPUT MODULE	8-65, 8-67
A142	90031-0059	PLC, DIGITAL OUTPUT MODULE	8-65, 8-67
A143	90031-0059	PLC, DIGITAL OUTPUT MODULE	8-65, 8-67
A144	90031-0059	PLC, DIGITAL OUTPUT MODULE	8-65, 8-67
A145	90031-0059	PLC, DIGITAL OUTPUT MODULE	8-65, 8-67
A146	90031-0059	PLC, DIGITAL OUTPUT MODULE	8-65, 8-67
A147	90031-0059	PLC, DIGITAL OUTPUT MODULE	8-65, 8-67
A149	90031-0059	PLC, DIGITAL OUTPUT MODULE	8-65, 8-67
A160	90031-0051	BASEPLATE, 10-SLOT	8-65, 8-67
A161	90031-0053	BASEPLATE,10-SLOT	8-65, 8-67
A162	90031-0053	BASEPLATE,10-SLOT	8-65, 8-67
A163	90031-0053	BASEPLATE,10-SLOT	8-65, 8-67
A164	90031-0053	BASEPLATE,10-SLOT	8-65, 8-67
A300	90458-2580	LEVEL CONTROL RELAY RM4-LA32M	8-49, 8-51, 8-53
A301	90458-2580	LEVEL CONTROL RELAY RM4-LA32M	8-49, 8-51, 8-53
A302	90458-2580	LEVEL CONTROL RELAY RM4-LA32M	8-49, 8-51, 8-53
A303	90458-2580	LEVEL CONTROL RELAY RM4-LA32M	8-49, 8-51, 8-53
A304	90458-2580	LEVEL CONTROL RELAY RM4-LA32M	8-49, 8-51, 8-53
A308	90458-2580	LEVEL CONTROL RELAY RM4-LA32M	8-49, 8-51, 8-53
A400	68262-0101	BACKPLANE FRONT RACK 8TE	8-97
A401	68262-0101	BACKPLANE FRONT RACK 8TE	8-97
A402	68262-0101	BACKPLANE FRONT RACK 8TE	8-97
A403	68262-0101	BACKPLANE FRONT RACK 8TE	8-97
A420	90459-0183	TRANSMITTER , TRANS T02 PCP	8-89, 8-91
A450	90453-0002	MODEM MD-12 DC	8-89, 8-91
A451	2518145-0101 ..	FLEXBOX TETRA BRIK	8-89, 8-91
A452	90459-6858	ETHERNET SW, FL SWITCH SF 8TX FROM V 14	8-89, 8-91
A500	1499642-0201 ..	TPIH GENERATOR	8-55
A501	1499642-0201 ..	TPIH GENERATOR	8-55
A502	1499642-0201 ..	TPIH GENERATOR	8-55
A600	90119-0072	SAFETY RELAY, JSBR4	8-49, 8-51, 8-53
A601	90119-0105	SAFETY RELAY JOKAB JSR 3T	8-49, 8-51, 8-53
A602	90119-0072	SAFETY RELAY, JSBR4	8-49, 8-51, 8-53
A604	90457-0092	SAFETY RELAY RT9-24VDC	8-49, 8-51, 8-53
A605	90457-0092	SAFETY RELAY RT9-24VDC	8-49, 8-51, 8-53
A606	90119-0089	SAFETY RELAY, JSBT4 24VDC	8-49, 8-51, 8-53
A607	90457-0092	SAFETY RELAY RT9-24VDC	8-49, 8-51, 8-53
A710	90459-7215	AXIS MODULE 650V, 10,3A, 2094-BM02-S	8-57
A711	90459-7216	AXIS MODULE 650V, 21,2A, 2094-BM03-S	8-57
A712	90459-7212	AXIS MODULE WITH INT. PS, 2094-BC04-M03-	8-57
A713	90459-7215	AXIS MODULE 650V, 10,3A, 2094-BM02-S	8-57
A714	90459-7214	AXIS MODULE 650V, 6,1A, 2094-BM01-S	8-57

Pos	Part No	Description	Page No
A			
A715	90459-7214	AXIS MODULE 650V, 6,1A, 2094-BM01-S	8-57
A716	90459-7211	SERVO AXIS MODULE W/PS 15A 400/460V	8-57
A900	90459-2421	BASEPLATE, 7 SLOT CONTROLLOGIX CHASSIS	8-61
A901	90459-2477	ETHERNET I/P BRIDGE MODULE, 1756-ENBT	8-61
A902	90459-2481	PLC 16-AXIS SERCOS MOTION MODULE	8-61
A903	90459-2479	PLC DEVICENET BRIDGE/SCANNER MODULE	8-61
A904	90459-6556	PLC DIGITAL INPUT 32PTS, 1756-IB32/B	8-61
A905	90459-2474	PLC,DIGIT. OUTPUT MODULE 16 PTS 10-31VDC	8-61
A7901	68699-0101	MULTIPLEXER CARD 56LED	7-265
B			
B001	90326-0053	THERMOCOUPLE, 12826-35	8-23
B002	90044-0192	LIMIT SW. SZ2586.000	8-23
B003	90044-0192	LIMIT SW. SZ2586.000	8-23
B004	90044-0192	LIMIT SW. SZ2586.000	8-23
B005	90044-0192	LIMIT SW. SZ2586.000	8-23
B1040	90458-0672	PROXIMITY SENSOR E2E2-X5MB1-5M	1-305, 1-307
B1101	90459-0711	FLOW SENSOR FS-400 SERIES / 26440	1-205
B1102	2547213-0000	FLOW SENSOR	1-205
B1104	979500-0003	ELECTRODE	1-195
B1106	90326-0057	THERMOCOUPLE, CR-AL	1-191
B1109	90458-0341	THERMOCOUPLE, 5130050-001	1-15, 1-17
B1111	90457-0047	SENSOR 2750-1-5111-1 W.ADAPTER PNP	1-201
B1163	90459-0643	DIFF. PRESS. TRANSDUCER 2671-10CLD2EG2HD	1-353, 1-355
B1209	90326-0057	THERMOCOUPLE, CR-AL	1-279
B1210	90459-0951	TRANSDUCER, BTL5-A11-M0400-B-S32	2-19, 2-21
B1240	90458-2775	PROXIMITY SENSOR, SMT-8-PS-K5-LED-24-B	1-11
B1241	90459-0829	PROXIMITY SENSOR, SMTO-4U-PS-K-LED-24	1-193
B1242	90459-0829	PROXIMITY SENSOR, SMTO-4U-PS-K-LED-24	1-193
B1243	90459-0829	PROXIMITY SENSOR, SMTO-4U-PS-K-LED-24	1-193
B1244	90459-0829	PROXIMITY SENSOR, SMTO-4U-PS-K-LED-24	1-193
B1301	90044-0194	PROX.SW. IN5329/IN3002-BPKG(EX90044-104)	1-229
B1302	90044-0194	PROX.SW. IN5329/IN3002-BPKG(EX90044-104)	1-229
B1303	90044-0194	PROX.SW. IN5329/IN3002-BPKG(EX90044-104)	1-229
B1305	90458-0256	PROXIMITY SWITCH IIA 3010-BPKG/6M	2-65
B1306	90458-0676	PROXIMITY SWITCH,E2EG-X5B1-6M	1-259
B1307	90458-0676	PROXIMITY SWITCH,E2EG-X5B1-6M	1-259
B1315	90459-5015	CONDUCTIVITY SENSOR CLS 52-A1CS1A2	1-275
B1316	90458-0806	FLOW METER, NO. XF DF23-DN32	1-243, 1-245
B1321	90458-0138	PROX. SWITCH, E2EG-X1R5B1-5M	1-249
B1322	1478814-0000	SENSOR	1-249
B1403	90044-0194	PROX.SW. IN5329/IN3002-BPKG(EX90044-104)	1-311, 1-313
B1405	90044-0194	PROX.SW. IN5329/IN3002-BPKG(EX90044-104)	1-167, 1-169
B1420	90459-0181	PIPE SURFACE THERM., PT-100 -50° -+120°C	1-243, 1-245
B1502	90044-0194	PROX.SW. IN5329/IN3002-BPKG(EX90044-104)	1-147, 1-149, 1-151
B1503	90326-0057	THERMOCOUPLE, CR-AL	1-191
B1504	90459-0472	KEY SAF.SW. AZ 16 02ZVRK-M20-2152-2254	1-109, 1-121
B1505	90459-0472	KEY SAF.SW. AZ 16 02ZVRK-M20-2152-2254	1-9
B1506	90459-0472	KEY SAF.SW. AZ 16 02ZVRK-M20-2152-2254	1-7
B1508	90459-0472	KEY SAF.SW. AZ 16 02ZVRK-M20-2152-2254	1-175
B1509	90459-0472	KEY SAF.SW. AZ 16 02ZVRK-M20-2152-2254	1-119
B1511	90459-3682	ROTARY POSITION SENSOR RPN1A111	1-173
B1803	90458-0138	PROX. SWITCH, E2EG-X1R5B1-5M	2-39
B1807	90458-0138	PROX. SWITCH, E2EG-X1R5B1-5M	2-39
B1810	90459-5337	LEVEL SENSOR, COD. 90459	1-267
B1812	90044-0194	PROX.SW. IN5329/IN3002-BPKG(EX90044-104)	1-271
B1816	90458-0138	PROX. SWITCH, E2EG-X1R5B1-5M	2-115
B1823	90459-0472	KEY SAF.SW. AZ 16 02ZVRK-M20-2152-2254	1-395
B 2102	90274-0042	PRESSURE GUARD, 200 KPA	6-69, 6-71
B2110	90459-0180	FLOW SWITCH, 0,1 - 2,5 L/MIN	6-19
B2111	90459-0180	FLOW SWITCH, 0,1 - 2,5 L/MIN	6-19
B2201	90274-0074	PRESSURE GUARD, 530 KPA	6-77
B2310	90459-1224	FILTER UNIT, MDF-BNHC-30-LB10-C1.0/B6	2-79
B2320	90457-0019	LEVEL PROBE, HMFB-S=45-0=80-0=90-T70	2-77
B2401	90274-0084	PRESSURE GUARD, 1800 KPA	2-87
B2403	90459-1038	PRESSURE TRANSMITTER, 250BAR	2-81
B2404	90459-1038	PRESSURE TRANSMITTER, 250BAR	2-81
B 2501	90274-0056	PRESSURE SWITCH, 100 - 1200 KPA	6-27
B2510	90326-0057	THERMOCOUPLE, CR-AL	6-19
B2540	90274-0108	DUAL PRESSURE GUARD, -20 - 2800 KPA	6-17
B2810	90457-0196	KEY SAF.SW. TZ2RE024PG RC1635	2-149, 2-151
B2811	90044-0204	KEY SAF.SW. NZIVZ-538-E	2-99
B2812	90457-0196	KEY SAF.SW. TZ2RE024PG RC1635	2-99
B2830	90457-0196	KEY SAF.SW. TZ2RE024PG RC1635	2-149, 2-151
B2831	90457-0196	KEY SAF.SW. TZ2RE024PG RC1635	2-99
B2832	90044-0204	KEY SAF.SW. NZIVZ-538-E	2-99
B3102	90274-0082	FLOW SWITCH, 2 - 3 L/MIN	6-35
B3105	90243-0245	MEASURING INSTRUMENT	6-37
B4315	90458-0138	PROX. SWITCH, E2EG-X1R5B1-5M	4-229, 4-231
B 5104	1144653-0000	SWITCH	5-281
B5203	90044-0194	PROX.SW. IN5329/IN3002-BPKG(EX90044-104)	5-263, 5-267, 5-269
B5302	90044-0194	PROX.SW. IN5329/IN3002-BPKG(EX90044-104)	5-241, 5-243, 5-245, 5-247
			5-249, 5-251

Pos	Part No	Description	Page No
B			
B5307	90326-0081	THERMOCOUPLE, ISA TYPE K.	5-187, 5-189, 5-191
B5308	90326-0081	THERMOCOUPLE, ISA TYPE K.	5-187, 5-189, 5-191
B5309	90326-0081	THERMOCOUPLE, ISA TYPE K.	5-187, 5-189, 5-191
B5310	90326-0089	THERMOCOUPLE, 5110-089-000	1-255
B5314	90044-0194	PROX.SW. IN5329/IN3002-BPKG(EX90044-104)	5-221
B5402	90232-0104	PH.CELL E3S-CT61-D-5M	5-97, 5-99
B5403	90232-0103	PH.CELL E3S-CT61-L-5M	5-97, 5-99
B5501	90232-0104	PH.CELL E3S-CT61-D-5M	5-97, 5-99
B5502	90232-0103	PH.CELL E3S-CT61-L-5M	5-97, 5-99
B5601	90232-0103	PH.CELL E3S-CT61-L-5M	5-285
B5602	90232-0104	PH.CELL E3S-CT61-D-5M	5-285
B6105	90044-0194	PROX.SW. IN5329/IN3002-BPKG(EX90044-104)	7-31
B6107	90458-0677	PROXIMITY SWITCH, E2EG-X5MB1-M1	7-221
B6201	90044-0194	PROX.SW. IN5329/IN3002-BPKG(EX90044-104)	7-123
B6202	90044-0194	PROX.SW. IN5329/IN3002-BPKG(EX90044-104)	7-123
B6203	90458-0138	PROX. SWITCH, E2EG-X1R5B1-5M	7-25
B6204	90044-0194	PROX.SW. IN5329/IN3002-BPKG(EX90044-104)	7-123
B6205	90458-1535	TRANSDUCER, BTL5-A11-M0850-P-S32	7-131
B6208	90458-0138	PROX. SWITCH, E2EG-X1R5B1-5M	7-123
B6209	90459-0472	KEY SAF.SW. AZ 16 02ZVRK-M20-2152-2254	7-93, 7-95
B7210	90232-0129	PH.CELL E3S-CR61-5M	7-225
B7211	90232-0129	PH.CELL E3S-CR61-5M	7-115
B7304	90326-0054	THERMOCOUPLE, CR-AL STD.GR, 12826-36	7-147
B7401	90232-0106	PH.CELL E3S-CR11-5M	7-225
B7411	90458-0677	PROXIMITY SWITCH, E2EG-X5MB1-M1	7-93, 7-95
B7412	90044-0165	PROXIMITY SENSOR, SME-8-K5-LED-24	7-113
B7414	90458-0677	PROXIMITY SWITCH, E2EG-X5MB1-M1	7-93, 7-95
B7430	90044-0165	PROXIMITY SENSOR, SME-8-K5-LED-24	7-79
B7431	90044-0165	PROXIMITY SENSOR, SME-8-K5-LED-24	7-79
B7432	90044-0165	PROXIMITY SENSOR, SME-8-K5-LED-24	7-79
B7433	90044-0165	PROXIMITY SENSOR, SME-8-K5-LED-24	7-79
B7501	90232-0106	PH.CELL E3S-CR11-5M	7-225
B7512	90044-0165	PROXIMITY SENSOR, SME-8-K5-LED-24	7-113
B7801	90459-0472	KEY SAF.SW. AZ 16 02ZVRK-M20-2152-2254	7-93, 7-95
B7806	90459-0472	KEY SAF.SW. AZ 16 02ZVRK-M20-2152-2254	7-93, 7-95
B7807	90459-0472	KEY SAF.SW. AZ 16 02ZVRK-M20-2152-2254	7-93, 7-95
B8420	90458-2241	PRESSURE SWITCH 0,5-10 BAR ADJUSTABLE	7-109
B9104	90458-2241	PRESSURE SWITCH 0,5-10 BAR ADJUSTABLE	1-221
B9106	90326-0060	THERMOCOUPLE, CR-AL	1-247
B9107	90458-0672	PROXIMITY SENSOR E2E2-X5MB1-5M	1-247
B9108	90458-0672	PROXIMITY SENSOR E2E2-X5MB1-5M	1-247
B9109	90458-0672	PROXIMITY SENSOR E2E2-X5MB1-5M	1-247
B9110	90458-0672	PROXIMITY SENSOR E2E2-X5MB1-5M	1-247
B9111	90458-0672	PROXIMITY SENSOR E2E2-X5MB1-5M	1-247
B9113	2672972-0000	ELECTRODE	1-227
B9116	2672973-0000	ELECTRODE	1-227
B9117	90458-2619	FLOW METER, D-6230-HGB-BB-AV-99-0-N2	1-221
B9118	90459-6215	FLOW SWITCH BFS-10-N-G1/4	1-221
B9121	90459-2122	THERMOCOUPLE, EN-5130060-0001	1-219
B9122	90326-0053	THERMOCOUPLE, 12826-35	1-219
B43011	90458-0601	CONTRAST SCANNER, KT15W-P2110S01	4-191, 4-193
B43012	90458-0601	CONTRAST SCANNER, KT15W-P2110S01	4-191, 4-193
B72232	90458-0677	PROXIMITY SWITCH, E2EG-X5MB1-M1	7-231, 7-233
B72234	90458-0677	PROXIMITY SWITCH, E2EG-X5MB1-M1	7-231, 7-233
B74031	90458-0602	CONTRAST SCANNER, KT15W-P2110S01	7-155
B74032	90458-0602	CONTRAST SCANNER, KT15W-P2110S01	7-155
C			
C1314	90458-1092	PROPORTIONAL VALVE 0 - 10V/0-6 BAR	1-341
C1315	90458-1092	PROPORTIONAL VALVE 0 - 10V/0-6 BAR	1-333
C1501	90459-3650	DOUBLE ACTING, MINI-ISO, CYL 25-40	1-173
C7410	90459-2101	CYLINDER, ADVC-80-25-I-P	7-153
C7412	90239-0861	DOUBLE ACTING, MINI-ISO, CYL. 32-125	7-81
C7412	90459-1849	DOUBLE ACTING SHUTTLE CYL. 40-550 MM	7-113
C7414	90239-0832	DOUBLE ACTING, MINI-ISO, CYL. 25-125	7-171
C7415	90239-0832	DOUBLE ACTING, MINI-ISO, CYL. 25-125	7-177
C7420	90239-0861	DOUBLE ACTING, MINI-ISO, CYL. 32-125	7-83
C7420	90459-3370	DOUBLE ACTING, PROFILE,CYL 32-140	7-89
C7421	90459-3370	DOUBLE ACTING, PROFILE,CYL 32-140	7-91
C7430	90459-2647	DOUBLE ACTING, SHUTTLE, CYL. 25-780	7-79
C7432	90459-2647	DOUBLE ACTING, SHUTTLE, CYL. 25-780	7-79
C9115	90459-1420	PROPORTIONAL VALVE 0 - 10V/0-6 BAR	1-221
C73031	90459-0503	CYLINDER, ADVC-16-10-I-P	7-169
C73032	90459-0503	CYLINDER, ADVC-16-10-I-P	7-169
C73151	90459-0503	CYLINDER, ADVC-16-10-I-P	7-179
C73152	90459-0503	CYLINDER, ADVC-16-10-I-P	7-179
C74071	90459-1509	CYLINDER, ADVC-20-20-I-P	7-153
C74072	90459-1509	CYLINDER, ADVC-20-20-I-P	7-153
C74081	90459-2102	CYLINDER, AEVC 100-25-I-P	7-153
C74082	90459-2102	CYLINDER, AEVC 100-25-I-P	7-153
D			
DC010	2641203-0000	TEMPLATE	10-5
DC020	2641204-0000	TEMPLATE	10-5

Pos	Part No	Description	Page No
D			
DC030	2642146-0000	TEMPLATE	10-5
DC040	2503720-0100	OPENING FORCE TESTER	10-5
DS010	90296-0068	SHELL ALVANIA GREASE EP 2	9-5
DS010	90459-2181	BELT TENSION METER, TSM 4	10-5
DS020	1548454-0000	DISC	9-5
DS020	2646428-0100	LIFTING UNIT	10-5
D100	90459-2185	CPU374, ETHERNET COMMUNICATION	8-65, 8-67
D900	90459-6558	PROCESSOR L62, SERIES B, 1756-L62	8-61
E			
E001	90459-2560	LIGHT FIXTURE, TMS121 1XTL-D30W/830 IP	8-23
E002	90459-2560	LIGHT FIXTURE, TMS121 1XTL-D30W/830 IP	8-23
EC010	90233-0028	TUBE FUSE, 10A	9-5
EC010	90243-0203	MEASURING INSTRUMENT	10-5
EC020	90233-0029	TUBE FUSE, 25A	9-5
EC020	2559112-0100	CALIBRATION EQUIPMENT	10-5
EC030	90233-0027	TUBE FUSE, 16A	9-5
EC040	90459-1254	TUBE FUSE, 4A 500V	9-5
E900	90459-6856	FEEDER BLOCK, FAZ/FIP-XVS-KL	8-83, 8-85
E901	90459-6856	FEEDER BLOCK, FAZ/FIP-XVS-KL	8-83, 8-85
E7702	90164-0015	LIGHT FIXTURE, RL70CV-111 / 230V 50HZ	7-93, 7-95
E7705	90164-0015	LIGHT FIXTURE, RL70CV-111 / 230V 50HZ	7-93, 7-95
F			
F020	90233-0028	TUBE FUSE, 10A	8-83, 8-85
F021	90233-0028	TUBE FUSE, 10A	8-83, 8-85
F022	90233-0029	TUBE FUSE, 25A	8-83, 8-85
F023	90233-0029	TUBE FUSE, 25A	8-83, 8-85
F024	90233-0028	TUBE FUSE, 10A	8-83, 8-85
F025	90233-0029	TUBE FUSE, 25A	8-83, 8-85
F026	90233-0027	TUBE FUSE, 16A	8-83, 8-85
F027	90233-0027	TUBE FUSE, 16A	8-83, 8-85
F028	90459-1254	TUBE FUSE, 4A 500V	8-83, 8-85
F029	90459-1254	TUBE FUSE, 4A 500V	8-83, 8-85
F030	90459-1254	TUBE FUSE, 4A 500V	8-83, 8-85
F031	351416-0100	MINIATURE CIRC. BREAK., FAZ -D10 1-POLE	8-83, 8-85
F032	351416-0100	MINIATURE CIRC. BREAK., FAZ -D10 1-POLE	8-83, 8-85
F033	351416-0100	MINIATURE CIRC. BREAK., FAZ -D10 1-POLE	8-83, 8-85
F034	351416-0160	MINIATURE CIRC. BREAK., FAZ -D16 1-POLE	8-83, 8-85
F035	351416-0160	MINIATURE CIRC. BREAK., FAZ -D16 1-POLE	8-83, 8-85
F036	90459-5687	FUSE 1 A 250 VAC	8-83, 8-85
F037	90233-0062	TUBE FUSE, 4A 600V	8-83, 8-85
F038	351416-0010	MINIATURE CIRC. BREAK., FAZ -D1 1-POLE	8-83, 8-85
F039	351418-0100	MINIATURE CIRC. BREAK., FAZ-D10/3 3-POLE	8-83, 8-85
F042	90233-0027	TUBE FUSE, 16A	8-83, 8-85
F050	351418-0060	MINIATURE CIRC. BREAK., FAZ-D6/3 3-POLE	8-83, 8-85
F051	351418-0400	MINIATURE CIRC. BREAK.,FAZ-D40/3 3-POLE	8-83, 8-85
F052	351416-0060	MINIATURE CIRC. BREAK., FAZ -D6 1-POLE	8-83, 8-85
F053	354000-0100	MINIATURE CIRCUIT BREAKER, FAZ-C10/1	8-83, 8-85
F054	90459-5811	RESIDUAL CURRENT DEVICE, FI-25/2/003-A	8-89, 8-91
F055	351416-0020	MINIATURE CIRC. BREAK., FAZ -D2 1-POLE	8-83, 8-85
F059	351416-0060	MINIATURE CIRC. BREAK., FAZ -D6 1-POLE	8-83, 8-85
F060	354000-0100	MINIATURE CIRCUIT BREAKER, FAZ-C10/1	8-77
F061	354000-0100	MINIATURE CIRCUIT BREAKER, FAZ-C10/1	8-77
F062	354000-0100	MINIATURE CIRCUIT BREAKER, FAZ-C10/1	8-77
F063	354000-0100	MINIATURE CIRCUIT BREAKER, FAZ-C10/1	8-77
F064	351416-0160	MINIATURE CIRC. BREAK., FAZ -D16 1-POLE	8-77
F066	351416-0060	MINIATURE CIRC. BREAK., FAZ -D6 1-POLE	8-77
F067	354000-0040	MINIATURE CIRCUIT BREAKER, FAZ-C4/1	8-77
F070	354000-0005	MINIATURE CIRCUIT BREAKER, FAZ-C0,5/1	8-83, 8-85
FF010	1478583-0100	PRESSURE GAUGE	10-5
FF010	2662142-0000	SPRING	9-11, 9-13, 9-15, 9-17, 9-19
FF020	1350497-0000	ASSEMBLY TOOL	10-5
FF020	2650817-0000	SPRING	9-11, 9-13, 9-15, 9-17, 9-19
FF030	1350498-0000	ASSEMBLY TOOL	10-5
FF030	2664596-0000	CARRIER	9-11, 9-13, 9-15, 9-17, 9-19
F150	1523691-0100	BLOWING DEVICE	1-113
F700	351416-0060	MINIATURE CIRC. BREAK., FAZ -D6 1-POLE	8-83, 8-85
F700:1	90459-5813	AUXILARY CONTACT, FAZ-XHI11	8-83, 8-85
F701	351416-0060	MINIATURE CIRC. BREAK., FAZ -D6 1-POLE	8-83, 8-85
F701:1	90459-5813	AUXILARY CONTACT, FAZ-XHI11	8-83, 8-85
G			
G001	90459-2938	POWER SUPPLY, 6EP1437-3BA00	8-23
G002	90459-2939	POWER SUPPLY UNIT 6EP1961-3BA00	8-45
G003	90459-2939	POWER SUPPLY UNIT 6EP1961-3BA00	8-45
G010	90459-3449	VARIABLE FREQUENCY DRIVE 22A-A2P3N104	8-71
G011	90459-3449	VARIABLE FREQUENCY DRIVE 22A-A2P3N104	8-71
G012	90459-3449	VARIABLE FREQUENCY DRIVE 22A-A2P3N104	8-71
G013	90459-3450	VARIABLE FREQUENCY DRIVE 22A-A4P5N104	8-71
G014	90459-3450	VARIABLE FREQUENCY DRIVE 22A-A4P5N104	8-71
G015	90459-3451	VARIABLE FREQUENCY DRIVE 22A-D4P0N104	8-71
G100	90031-0068	PLC, POWER SUPPLY	8-65, 8-67
G101	90031-0068	PLC, POWER SUPPLY	8-65, 8-67
G102	90031-0068	PLC, POWER SUPPLY	8-65, 8-67

Pos	Part No	Description	Page No
G			
G103	90031-0068	PLC, POWER SUPPLY	8-65, 8-67
G104	90031-0068	PLC, POWER SUPPLY	8-65, 8-67
G108	90459-7198	AUXILIARY BATTERY MODULE, IC693ACC302	8-49, 8-51, 8-53
G900	90459-4607	POWER SUPPLY 24VDC, 1756-PB75 SERIES A	8-61
G910	90459-5886	POWER SUPPLY UNIT 115-230 VAC/24VDC100W	8-49, 8-51, 8-53
H			
H2801	2540716-0100	SIGNAL LAMP	2-187
H7703	90052-0011	HORN HOOTERT 24:48VDC.PT NO.1YA030221	7-93, 7-95
H7703	2540716-0100	SIGNAL LAMP	2-179, 2-181
J			
JS010	28509-0000	WASHER	9-5
JS010	1110083-0002	DOLLY	9-11, 9-13, 9-15, 9-17, 9-19
JS010	1520633-0002	DOLLY	9-11, 9-13, 9-15, 9-17, 9-19
JS010	1520633-0005	DOLLY	9-11, 9-13, 9-15, 9-17, 9-19
JS010	1566845-0002	DOLLY	9-11, 9-13, 9-15, 9-17, 9-19
JS010	2725981-0100	SETTING TOOL	10-5
JS020	32544-0000	INSULATION NUT	9-5
JS020	1035362-0100	MEASURING DEVICE	10-5
JS020	1110930-0000	INDUCTOR	9-11, 9-13, 9-15, 9-17, 9-19
JS020	1110931-0000	INDUCTOR	9-11, 9-13, 9-15, 9-17, 9-19
JS020	1110932-0000	INDUCTOR	9-11, 9-13, 9-15, 9-17, 9-19
JS020	1110934-0000	INDUCTOR	9-11, 9-13, 9-15, 9-17, 9-19
JS020	1110936-0000	INDUCTOR	9-11, 9-13, 9-15, 9-17, 9-19
JS020	1110937-0000	INDUCTOR	9-11, 9-13, 9-15, 9-17, 9-19
JS020	1110938-0000	INDUCTOR	9-11, 9-13, 9-15, 9-17, 9-19
JS020	1520052-0000	INDUCTOR	9-11, 9-13, 9-15, 9-17, 9-19
JS020	1520167-0000	INDUCTOR	9-11, 9-13, 9-15, 9-17, 9-19
JS020	1533046-0000	INDUCTOR	9-11, 9-13, 9-15, 9-17, 9-19
JS020	2546474-0000	INDUCTOR	9-11, 9-13, 9-15, 9-17, 9-19
JS020	2587466-0000	INDUCTOR	9-11, 9-13, 9-15, 9-17, 9-19
JS020	2587467-0000	INDUCTOR	9-11, 9-13, 9-15, 9-17, 9-19
JS020	2610956-0000	INDUCTOR	9-11, 9-13, 9-15, 9-17, 9-19
JS020	2663377-0000	INDUCTOR	9-11, 9-13, 9-15, 9-17, 9-19
JS020	2663378-0000	INDUCTOR	9-11, 9-13, 9-15, 9-17, 9-19
JS020	2767760-0000	INDUCTOR	9-11, 9-13, 9-15, 9-17, 9-19
JS030	72846-0101	COMPRESSION SPRING	10-5
JS030	107426-0000	GUIDE SLEEVE	9-5
JS030	1035831-0000	VOLUME SHIM	9-11, 9-13, 9-15, 9-17, 9-19
JS030	1037735-0000	VOLUME SHIM	9-11, 9-13, 9-15, 9-17, 9-19
JS030	1040755-0000	VOLUME SHIM	9-11, 9-13, 9-15, 9-17, 9-19
JS030	1346158-0000	VOLUME SHIM	9-11, 9-13, 9-15, 9-17, 9-19
JS030	1349208-0000	VOLUME SHIM	9-11, 9-13, 9-15, 9-17, 9-19
JS030	1487627-0000	VOLUME SHIM	9-11, 9-13, 9-15, 9-17, 9-19
JS030	1511253-0000	VOLUME SHIM	9-11, 9-13, 9-15, 9-17, 9-19
JS030	1511336-0000	VOLUME SHIM	9-11, 9-13, 9-15, 9-17, 9-19
JS030	1511337-0000	VOLUME SHIM	9-11, 9-13, 9-15, 9-17, 9-19
JS030	1538637-0000	VOLUME SHIM	9-11, 9-13, 9-15, 9-17, 9-19
JS030	1539902-0000	VOLUME SHIM	9-11, 9-13, 9-15, 9-17, 9-19
JS030	1549594-0000	VOLUME SHIM	9-11, 9-13, 9-15, 9-17, 9-19
JS030	1549830-0000	VOLUME SHIM	9-11, 9-13, 9-15, 9-17, 9-19
JS030	2594891-0000	VOLUME SHIM	9-11, 9-13, 9-15, 9-17, 9-19
JS030	2605166-0000	VOLUME SHIM	9-11, 9-13, 9-15, 9-17, 9-19
JS030	2640139-0000	VOLUME SHIM	9-11, 9-13, 9-15, 9-17, 9-19
JS030	2654290-0000	VOLUME SHIM	9-11, 9-13, 9-15, 9-17, 9-19
JS030	2660393-0000	VOLUME SHIM	9-11, 9-13, 9-15, 9-17, 9-19
JS030	2662169-0000	VOLUME SHIM	9-11, 9-13, 9-15, 9-17, 9-19
JS030	2674328-0000	VOLUME SHIM	9-11, 9-13, 9-15, 9-17, 9-19
JS030	2678717-0000	VOLUME SHIM	9-11, 9-13, 9-15, 9-17, 9-19
JS030	2678839-0000	VOLUME SHIM	9-11, 9-13, 9-15, 9-17, 9-19
JS035	1539843-0000	VOLUME SHIM	9-11, 9-13, 9-15, 9-17, 9-19
JS035	2594890-0000	VOLUME SHIM	9-11, 9-13, 9-15, 9-17, 9-19
JS035	2660390-0000	VOLUME SHIM	9-11, 9-13, 9-15, 9-17, 9-19
JS035	2672745-0000	VOLUME SHIM	9-11, 9-13, 9-15, 9-17, 9-19
JS040	90243-0146	TOOL	10-5
JS040	1036584-0000	WASHER	9-5
JS040	1348955-0000	KNIFE	9-11, 9-13, 9-15, 9-17, 9-19
JS040	1348956-0000	KNIFE	9-11, 9-13, 9-15, 9-17, 9-19
JS040	1348966-0000	KNIFE	9-11, 9-13, 9-15, 9-17, 9-19
JS040	1549828-0000	KNIFE	9-11, 9-13, 9-15, 9-17, 9-19
JS040	2664761-0000	KNIFE	9-11, 9-13, 9-15, 9-17, 9-19
JS050	90206-0330	SOCKET WRENCH 2"9	10-5
JS050	315211-0104	BONDED SEAL SS/NBR90 M8	9-5
JS050	1037254-0000	SHIM	9-11, 9-13, 9-15, 9-17, 9-19
JS060	312115-0297	SCREW ISO4762 M4X25 A4 80	9-5
JS060	927252-0000	COMPRESSION SPRING	9-11, 9-13, 9-15, 9-17, 9-19
JS060	1095884-0100	ASSEMBLY TOOL	10-5
JS060	1260659-0000	SPRING	9-11, 9-13, 9-15, 9-17, 9-19
JS070	312125-0295	SCREW ISO 1207 M4X20 A4	9-5
JS070	2637599-0100	ALIGNMENT TOOL	10-5
JS070	2662165-0000	SPRING	9-11, 9-13, 9-15, 9-17, 9-19
JS080	315211-0103	BONDED SEAL SS/NBR90 M6	9-5
JS080	2637602-0100	DRILLING JIG	10-5

Pos	Part No	Description	Page No
J			
JS080	2662166-0000	SPRING	9-11, 9-13, 9-15, 9-17, 9-19
JS090	315202-0101	O-RING 3,1X1,6 MM	9-5
JS090	1549378-0000	SPRING	9-11, 9-13, 9-15, 9-17, 9-19
JS100	2767478-0001	ROLLER	9-11, 9-13, 9-15, 9-17, 9-19
JS100	2767478-0002	ROLLER	9-11, 9-13, 9-15, 9-17, 9-19
JS100	2767478-0003	ROLLER	9-11, 9-13, 9-15, 9-17, 9-19
JS100	2767478-0004	ROLLER	9-11, 9-13, 9-15, 9-17, 9-19
K			
K001	90459-5440	CONTACTOR 4KW 24VDC, DILM9-01	8-81
K002	90459-5440	CONTACTOR 4KW 24VDC, DILM9-01	8-81
K003	90459-5440	CONTACTOR 4KW 24VDC, DILM9-01	8-81
K004	90459-5440	CONTACTOR 4KW 24VDC, DILM9-01	8-81
K005	90459-5440	CONTACTOR 4KW 24VDC, DILM9-01	8-81
K005:1	90459-6852	AUXILIARY CONTACT, DILA-XHI22	8-81
K006	90459-5441	CONTACTOR 7,5KW 24VDC, DILM17-01	8-81
K007	90459-5440	CONTACTOR 4KW 24VDC, DILM9-01	8-81
K008	90459-5441	CONTACTOR 7,5KW 24VDC, DILM17-01	8-81
K009	90459-5440	CONTACTOR 4KW 24VDC, DILM9-01	8-81
K009:1	90459-6852	AUXILIARY CONTACT, DILA-XHI22	8-81
K020	90459-5441	CONTACTOR 7,5KW 24VDC, DILM17-01	8-87
K021	90459-5441	CONTACTOR 7,5KW 24VDC, DILM17-01	8-87
K022	90459-5441	CONTACTOR 7,5KW 24VDC, DILM17-01	8-87
K023	90459-5441	CONTACTOR 7,5KW 24VDC, DILM17-01	8-87
K024	90459-5440	CONTACTOR 4KW 24VDC, DILM9-01	8-87
K025	90459-5441	CONTACTOR 7,5KW 24VDC, DILM17-01	8-87
K026	90459-5441	CONTACTOR 7,5KW 24VDC, DILM17-01	8-87
K028	90459-5441	CONTACTOR 7,5KW 24VDC, DILM17-01	8-87
K029	90459-5441	CONTACTOR 7,5KW 24VDC, DILM17-01	8-87
K030	90459-5441	CONTACTOR 7,5KW 24VDC, DILM17-01	8-87
K031	90459-5440	CONTACTOR 4KW 24VDC, DILM9-01	8-87
K031:1	90459-6852	AUXILIARY CONTACT, DILA-XHI22	8-87
K034	90459-5440	CONTACTOR 4KW 24VDC, DILM9-01	8-87
K035	90459-5440	CONTACTOR 4KW 24VDC, DILM9-01	8-87
K036	90459-5440	CONTACTOR 4KW 24VDC, DILM9-01	8-87
K037	90459-5440	CONTACTOR 4KW 24VDC, DILM9-01	8-87
K039	90459-5440	CONTACTOR 4KW 24VDC, DILM9-01	8-87
K042	90459-5440	CONTACTOR 4KW 24VDC, DILM9-01	8-87
K104	90119-0108	RELAY OMRON G2R-2-SNI-24DC	8-49, 8-51, 8-53
K105	90119-0108	RELAY OMRON G2R-2-SNI-24DC	8-49, 8-51, 8-53
K106	90075-0141	CONTACTOR, 4KW 24VDC	8-49, 8-51, 8-53
K107	90075-0141	CONTACTOR, 4KW 24VDC	8-49, 8-51, 8-53
K108	90119-0108	RELAY OMRON G2R-2-SNI-24DC	8-49, 8-51, 8-53
K110	90119-0108	RELAY OMRON G2R-2-SNI-24DC	8-49, 8-51, 8-53
K111	90119-0108	RELAY OMRON G2R-2-SNI-24DC	8-49, 8-51, 8-53
K112	90119-0108	RELAY OMRON G2R-2-SNI-24DC	8-49, 8-51, 8-53
K113	90119-0108	RELAY OMRON G2R-2-SNI-24DC	8-49, 8-51, 8-53
K114	90119-0108	RELAY OMRON G2R-2-SNI-24DC	8-49, 8-51, 8-53
K115	90119-0108	RELAY OMRON G2R-2-SNI-24DC	8-49, 8-51, 8-53
K117	90119-0108	RELAY OMRON G2R-2-SNI-24DC	8-49, 8-51, 8-53
K120	90119-0108	RELAY OMRON G2R-2-SNI-24DC	8-49, 8-51, 8-53
K121	90119-0108	RELAY OMRON G2R-2-SNI-24DC	8-49, 8-51, 8-53
K122	90119-0108	RELAY OMRON G2R-2-SNI-24DC	8-49, 8-51, 8-53
K123	90119-0108	RELAY OMRON G2R-2-SNI-24DC	8-49, 8-51, 8-53
K124	90119-0108	RELAY OMRON G2R-2-SNI-24DC	8-49, 8-51, 8-53
K125	90119-0056	RELAY, AUXILIARY MK3P5-S 24VDC	8-49, 8-51, 8-53
K126	90119-0108	RELAY OMRON G2R-2-SNI-24DC	8-49, 8-51, 8-53
K129	90075-0141	CONTACTOR, 4KW 24VDC	8-49, 8-51, 8-53
K131	90075-0141	CONTACTOR, 4KW 24VDC	8-49, 8-51, 8-53
K132	90119-0056	RELAY, AUXILIARY MK3P5-S 24VDC	8-49, 8-51, 8-53
K133	90119-0108	RELAY OMRON G2R-2-SNI-24DC	8-49, 8-51, 8-53
K134	90119-0108	RELAY OMRON G2R-2-SNI-24DC	8-49, 8-51, 8-53
K135	90119-0108	RELAY OMRON G2R-2-SNI-24DC	8-49, 8-51, 8-53
K136	90119-0108	RELAY OMRON G2R-2-SNI-24DC	8-49, 8-51, 8-53
K137	90119-0108	RELAY OMRON G2R-2-SNI-24DC	8-49, 8-51, 8-53
K138	90119-0108	RELAY OMRON G2R-2-SNI-24DC	8-49, 8-51, 8-53
K139	90119-0108	RELAY OMRON G2R-2-SNI-24DC	8-49, 8-51, 8-53
K143	90119-0108	RELAY OMRON G2R-2-SNI-24DC	8-49, 8-51, 8-53
K144	90119-0108	RELAY OMRON G2R-2-SNI-24DC	8-49, 8-51, 8-53
K170	90119-0108	RELAY OMRON G2R-2-SNI-24DC	8-59
K200	90119-0082	SSR 90119-67 + HEAT SINK	8-75
K201	90119-0082	SSR 90119-67 + HEAT SINK	8-75
K202	90119-0082	SSR 90119-67 + HEAT SINK	8-75
K203	90119-0082	SSR 90119-67 + HEAT SINK	8-75
K204	90119-0082	SSR 90119-67 + HEAT SINK	8-75
K205	90119-0082	SSR 90119-67 + HEAT SINK	8-75
K206	90119-0082	SSR 90119-67 + HEAT SINK	8-75
K207	90119-0082	SSR 90119-67 + HEAT SINK	8-75
K208	90119-0082	SSR 90119-67 + HEAT SINK	8-75
K209	90119-0082	SSR 90119-67 + HEAT SINK	8-75
K210	90119-0082	SSR 90119-67 + HEAT SINK	8-75
K211	90119-0082	SSR 90119-67 + HEAT SINK	8-75
K213	90119-0082	SSR 90119-67 + HEAT SINK	8-75

Pos	Part No	Description	Page No
K			
K214	90119-0082	SSR 90119-67 + HEAT SINK	8-75
K215	90119-0067	SOLID-STATE RELAY, H12WD4850	8-73
K220	90119-0043	OPTO-RELAY, 22DC 60S-3/32VDC	8-73
K221	90119-0043	OPTO-RELAY, 22DC 60S-3/32VDC	8-73
K222	90119-0043	OPTO-RELAY, 22DC 60S-3/32VDC	8-73
K223	90119-0043	OPTO-RELAY, 22DC 60S-3/32VDC	8-73
K224	90119-0043	OPTO-RELAY, 22DC 60S-3/32VDC	8-73
K225	90119-0043	OPTO-RELAY, 22DC 60S-3/32VDC	8-73
K300	90119-0063	OPTO-RELAY, DC/DC AMMS-10-1/30VDC	8-93
K301	90119-0063	OPTO-RELAY, DC/DC AMMS-10-1/30VDC	8-93
K700	90459-5444	CONTACTOR 15KW 24VDC, DILM32-01	8-81
K701	90459-5444	CONTACTOR 15KW 24VDC, DILM32-01	8-81
K7000	90459-5440	CONTACTOR 4KW 24VDC, DILM9-01	7-199, 7-201
K7001	90459-5440	CONTACTOR 4KW 24VDC, DILM9-01	7-199, 7-201
L			
L4309	1110930-0000	INDUCTOR	4-97, 4-99, 4-101, 4-143, 4-145, 4-147
L4309	1110931-0000	INDUCTOR	4-97, 4-99, 4-101, 4-143, 4-145, 4-147
L4309	1110932-0000	INDUCTOR	4-97, 4-99, 4-101, 4-143, 4-145, 4-147
L4309	1110934-0000	INDUCTOR	4-97, 4-99, 4-101, 4-143, 4-145, 4-147
L4309	1110936-0000	INDUCTOR	4-97, 4-99, 4-101, 4-143, 4-145, 4-147
L4309	1110937-0000	INDUCTOR	4-97, 4-99, 4-101, 4-143, 4-145, 4-147
L4309	1110938-0000	INDUCTOR	4-97, 4-99, 4-101, 4-143, 4-145, 4-147
L4309	1520052-0000	INDUCTOR	4-97, 4-99, 4-101, 4-143, 4-145, 4-147
L4309	1520167-0000	INDUCTOR	4-97, 4-99, 4-101, 4-143, 4-145, 4-147
L4309	1533046-0000	INDUCTOR	4-97, 4-99, 4-101, 4-143, 4-145, 4-147
L4309	2546474-0000	INDUCTOR	4-97, 4-99, 4-101, 4-143, 4-145, 4-147
L4309	2587466-0000	INDUCTOR	4-97, 4-99, 4-101
L4309	2587467-0000	INDUCTOR	4-143, 4-145, 4-147
L4309	2610956-0000	INDUCTOR	4-97, 4-99, 4-101, 4-143, 4-145, 4-147
L4309	2663377-0000	INDUCTOR	4-143, 4-145, 4-147
L4309	2663378-0000	INDUCTOR	4-97, 4-99, 4-101
L4309	2767760-0000	INDUCTOR	4-97, 4-99, 4-101, 4-143, 4-145, 4-147
L6101	2509617-0100	INDUCTOR	7-17
M			
MB010	315229-0105	GASKETS, 48,5X55,5X3,7 MM 2" FDA	9-5
MB020	315229-0104	GASKETS, 35,8X42,8X3,7 MM 1"1/2 FD	9-5
MB030	90459-1037	CRIMP TOOL FOR COAX. CONN. HTG 58-901200	10-5
MB030	315229-0103	GASKETS, 23,1X30,1X3,7 MM 1" FDA	9-5
MB040	315229-0107	GASKETS, 73,9X80,9X3,7 MM 2"1/2 FD	9-5
MB040	2588426-0100	ALIGNMENT TEMPLATE	10-5
MB050	90036-0057	LIGHT BULB, BA9S 28V	9-5
M1101	90270-0017	COMPRESSOR NASH/ELMO 112 MB/4-2083	1-179
M1206	90321-0134	CIRC. PUMP TMB 40/2 230V50HZ	1-279
M1206	90321-0135	CIRC. PUMP TMB 40/2 230V60HZ	1-279
M 1213	90458-2466	MOTOR 3GVA071002-CSB	2-33
M1501	90459-1226	GEARS, WORM MOTOR VF 44P-10+BN71B 0.37KW	1-153, 1-155
M1801	90458-1607	PUMP, SVI 8 03/03 N15T 1.5KW	1-267
M2301	90457-0036	3-PHASE MOTOR,FOOT MOUNT.1,1KW,1410 RPM	2-79
M 2501	90321-0116	PUMP GRUNDFOS CHI 2-60	6-27
M2714	90459-7178	SERVO MOTOR	4-231
M2715	90459-7178	SERVO MOTOR	4-229
M2716	90459-7172	SERVO MOTOR MPF-B540K-MJ22AA	5-273
M3102	90321-0117	PUMP LOWARA SV8-14 F75T	6-41, 6-43
M3102	90321-0120	PUMP SV8-09 F756T, 380V60HZ	6-41, 6-43
M5503	90459-1147	GEARS, WORM MOTOR VF30 F1-10 P63 B14 V6	2-273, 2-275
M6201	90069-0614	GEARS, WORM MOTOR MC320P2T	7-121
M6202	90457-0921	WORM GEAR MOTOR MC320P2TB5/D	7-121
M7208	90459-2826	GEARS, HELICAL MOTOR ME0102210012	7-145
M7217	90459-2096	GEARS, WORM MOTOR F2 15 P63 B14 B8 PV 75	7-227
O			
O2530	90304-0020	LIQUID CONTAINER	6-29
P			
P1	90166-0195	TUBE 12 MM PA BLUE	1-321, 1-323
P001	90459-6436	RECORDER 12-CHANNEL, LOGOSCREEN CF	8-89, 8-91
P1:1	90166-0193	TUBE 6 MM PUR BLUE	1-321, 1-323
P1:3	90166-0195	TUBE 12 MM PA BLUE	1-321, 1-323
P2	90166-0013	TUBE 8 MM PA BLUE	1-321, 1-323
P003	90459-5187	CONDUCTIVITY TRANSMITTER CLM223-ID7105	8-89, 8-91
P004	90053-0031	HOUR COUNTER, B 609.10 10-50VDC	8-89, 8-91
P005	90053-0029	COUNTER, F524.800FA3C 24VDC	8-89, 8-91
P1ASU3	90166-0195	TUBE 12 MM PA BLUE	2-211
P1ASU2	90166-0195	TUBE 12 MM PA BLUE	2-211
P1ASU1	90166-0195	TUBE 12 MM PA BLUE	2-211
P1ASU3	90166-0195	TUBE 12 MM PA BLUE	2-213
P1ASU2	90166-0195	TUBE 12 MM PA BLUE	2-213
P1ASU1	90166-0195	TUBE 12 MM PA BLUE	2-213
P.A854	90459-3957	TPOP QPICBDEOOOO	10-97
P.S827	90111-0120	SWITCH, 2 POS.704.510 .0A+704.901.5/A	10-97
P.S890	90458-1651	EMERGENCY STOP, ZB4-BS-844 ZB4-BZ-104	10-97
P.S834	90458-1651	EMERGENCY STOP, ZB4-BS-844 ZB4-BZ-104	10-97
PT010	2564074-0100	TOOLS AND TEMPLATES	10-5
PT020	90459-5181	GREASE LUBRICATION KIT , 400999139	10-5

Pos	Part No	Description	Page No
P			
PT030	2764526-0000	TOOL	10-5
P.Z854	90458-2381	POWER LINE FILTER 5A	10-97
P101	90166-0196	TUBE 14MM PA BLUE	2-211, 2-213
P102	90166-0195	TUBE 12 MM PA BLUE	2-211, 2-213
P103	90166-0196	TUBE 14MM PA BLUE	2-211, 2-213
P104	90166-0196	TUBE 14MM PA BLUE	2-211, 2-213
P105	90166-0196	TUBE 14MM PA BLUE	2-211, 2-213
P106	90166-0195	TUBE 12 MM PA BLUE	2-211, 2-213
P201	90166-0196	TUBE 14MM PA BLUE	2-211, 2-213
P202	90166-0013	TUBE 8 MM PA BLUE	2-211, 2-213
P203	90166-0196	TUBE 14MM PA BLUE	2-211, 2-213
P204	90166-0195	TUBE 12 MM PA BLUE	2-211, 2-213
P205	90166-0195	TUBE 12 MM PA BLUE	2-211, 2-213
P206	90166-0195	TUBE 12 MM PA BLUE	2-211, 2-213
P207	90166-0195	TUBE 12 MM PA BLUE	2-211, 2-213
P900	90332-0020	RECORDER, 6 CHANNELS 85-264VAC/DC	8-89, 8-91
P901	90332-0020	RECORDER, 6 CHANNELS 85-264VAC/DC	8-89, 8-91
Q			
Q001	90459-5324	OVERLOAD PROTECTION, PKZM0-1,6	8-81
Q001:1	90259-0313	AUX. CONTACT K&M NHI21-PKZM0	8-81
Q002	90459-5326	OVERLOAD PROTECTION, PKZM0-4	8-81
Q002:1	90259-0313	AUX. CONTACT K&M NHI21-PKZM0	8-81
Q003	90459-5325	OVERLOAD PROTECTION, PKZM0-2,5	8-81
Q003:1	90259-0313	AUX. CONTACT K&M NHI21-PKZM0	8-81
Q004	90459-5325	OVERLOAD PROTECTION, PKZM0-2,5	8-81
Q004:1	90259-0313	AUX. CONTACT K&M NHI21-PKZM0	8-81
Q005	90459-5326	OVERLOAD PROTECTION, PKZM0-4	8-81
Q005:1	90259-0313	AUX. CONTACT K&M NHI21-PKZM0	8-81
Q006	90459-5330	OVERLOAD PROTECTION, PKZM0-16	8-81
Q006:1	90259-0313	AUX. CONTACT K&M NHI21-PKZM0	8-81
Q007	90459-5324	OVERLOAD PROTECTION, PKZM0-1,6	8-81
Q007:1	90259-0313	AUX. CONTACT K&M NHI21-PKZM0	8-81
Q008	90459-5328	OVERLOAD PROTECTION, PKZM0-10	8-81
Q008:1	90259-0313	AUX. CONTACT K&M NHI21-PKZM0	8-81
Q009	90459-5323	OVERLOAD PROTECTION, PKZM0-1	8-81
Q009:1	90259-0313	AUX. CONTACT K&M NHI21-PKZM0	8-81
Q700	90459-5333	OVERLOAD PROTECTION, PKZM0-32	8-81
Q700:1	90259-0313	AUX. CONTACT K&M NHI21-PKZM0	8-81
Q701	90459-5333	OVERLOAD PROTECTION, PKZM0-32	8-81
Q701:1	90259-0313	AUX. CONTACT K&M NHI21-PKZM0	8-81
R			
R1105	449939-0001	HEATING ELEMENT 15KW	1-199
R1208	90206-0070	HEATING ELEMENT 6000W 380/220V	1-279
R1209	90206-0070	HEATING ELEMENT 6000W 380/220V	1-279
R1503	2793360-0000	HEATER	1-191
R5307	2514149-0000	HEATING ELEMENT	5-187, 5-189, 5-191
R5308	2514149-0000	HEATING ELEMENT	5-187, 5-189, 5-191
R5309	90206-0030	HEATING ELEMENT 3000W, 220V	5-187, 5-189, 5-191
R6203	1498047-0000	SEALING BLOCK	7-127
R6204	1524481-0000	SEALING BLOCK	7-133
R7304	90459-2843	HEATING CARTRIDGE, 800W 240V	7-147
S			
S001	90458-1651	EMERGENCY STOP, ZB4-BS-844 ZB4-BZ-104	8-35
S003	90111-0122	KEY SWITCH, 2 NO CONTACTS	8-89, 8-91
S003:1	359241-0133	SIGN: " SERVICE SWITCH"	8-89, 8-91
S004	90111-0124	KEY SWITCH, 1NO,1NC CONTACT	8-89, 8-91
S004:1	359241-0122	SIGN: " CLEANING STEAM BARRIER SPACE"	8-89, 8-91
S005	90458-1651	EMERGENCY STOP, ZB4-BS-844 ZB4-BZ-104	8-35
SA010	1498047-0000	SEALING BLOCK	9-5
SU010	90243-0447	LASER EQUIPMENT	10-5
SU010	232979-0000	PRESSURE ROLLER (PAK OF 10)	9-11, 9-13, 9-15, 9-17, 9-19
SU010	257330-0000	PRESSURE ROLLER	9-11, 9-13, 9-15, 9-17, 9-19
SU010	272479-0000	PRESSURE ROLLER	9-11, 9-13, 9-15, 9-17, 9-19
SU010	499387-0000	PRESSURE ROLLER	9-11, 9-13, 9-15, 9-17, 9-19
SU010	1296877-0100	SEAL KIT	9-5
SU010	1349738-0100	PRESSURE TEST EQUIPMENT	10-5
SU010	1349914-0100	TEMPLATE FILLING PIPE	9-29
SU010	2607089-0000	PRESSURE ROLLER	9-11, 9-13, 9-15, 9-17, 9-19
SU020	74305-0100	PULLER	10-5
SU020	1296878-0100	SEAL KIT	9-5
SU020	2523268-0000	SHAFT	9-11, 9-13, 9-15, 9-17, 9-19
SU020	2529416-0000	SHAFT	9-11, 9-13, 9-15, 9-17, 9-19
SU020	2529417-0000	SHAFT	9-11, 9-13, 9-15, 9-17, 9-19
SU020	2529418-0000	SHAFT	9-11, 9-13, 9-15, 9-17, 9-19
SU020	2529419-0000	SHAFT	9-11, 9-13, 9-15, 9-17, 9-19
SU020	2529420-0000	SHAFT	9-11, 9-13, 9-15, 9-17, 9-19
SU020	2793320-0100	TEMPLATE	9-29
SU030	315204-0215	O-RING 19,2X3 MM	9-11, 9-13, 9-15, 9-17, 9-19
SU030	315204-0219	O-RING 29,2X3 MM	9-11, 9-13, 9-15, 9-17, 9-19
SU030	315204-0223	O-RING 39,2X3 MM	9-11, 9-13, 9-15, 9-17, 9-19
SU030	777200-0101	PIPE WRENCH	10-5
SU030	1296879-0100	SEAL KIT	9-5

Pos	Part No	Description	Page No
S			
SU040	90217-0348	GASKET 35,4X46,8X4 MM	9-5
SU040	449969-0100	TOOL DISMOUNTING	10-5
SU040	2500081-0000	ELBOW PIPE	9-11, 9-13, 9-15, 9-17, 9-19
SU050	342850-0304	GASKET 35,4X49,1X5,2 1"1/2 FDA	9-5
SU050	533014-0100	LEAK FINDING EQUIPMENT (SUPERSTRUCTURE)	10-5
SU050	2529750-0000	COVERING PANEL	9-11, 9-13, 9-15, 9-17, 9-19
SU060	90459-1467	FORCE GAUGE 0-250N, AFG 250N	10-5
SU060	925998-0000	DIAPHRAGM	9-5
SU060	979813-0000	PLUG	9-11, 9-13, 9-15, 9-17, 9-19
SU070	342850-0304	GASKET 35,4X49,1X5,2 1"1/2 FDA	9-11, 9-13, 9-15, 9-17, 9-19
SU070	342850-0306	GASKET 60,3X76,1X5,2 MM 2"1/2 FDA	9-5
SU070	2552151-0000	BRACKET	10-5
SU070	2552152-0000	BRACKET	10-5
SU070	2552153-0000	BRACKET	10-5
SU070	2552154-0000	BRACKET	10-5
SU070	2582613-0000	BRACKET	10-5
SU070	2685310-0000	BRACKET	10-5
SU080	342850-0304	GASKET 35,4X49,1X5,2 1"1/2 FDA	9-5
SU080	2532974-0000	SETTING TOOL	10-5
SU080	2795266-0000	SEAL	9-11, 9-13, 9-15, 9-17, 9-19
SU090	90459-7315	PUSH DYNAMOMETER 20 - 200N, DT120	10-5
SU120	2569982-0100	SETTING TOOL	10-5
SU130	90243-0328	PAPER ROLL	10-5
SU140	90243-0329	CABLE	10-5
SU150	90243-0330	CABLE	10-5
SU160	2579687-0100	SETTING TOOL	10-5
S900	90458-1651	EMERGENCY STOP, ZB4-BS-844 ZB4-BZ-104	2-265
S901	90064-0082	PUSH BUTTON, WHITE	2-265
S901:1	359301-0519	SIGN "TPOP RESET"	2-265
S902	90064-0082	PUSH BUTTON, WHITE	2-265
S902:1	359301-0130	BUTTON SIGN, LAMP TEST	2-265
S903	90111-0120	SWITCH, 2 POS.704.510 .0A+704.901.5/A	2-265
S904	90064-0082	PUSH BUTTON, WHITE	2-265
S904:1	359301-0170	BUTTON SIGN, SPOOLING OF FINAL FOLDER	2-265
S905	90064-0098	PUSH BUTTON, CLEAR	2-265
S905:1	359301-0091	BUTTON SIGN, INCHING FINAL FOLDER	2-265
S906	90064-0082	PUSH BUTTON, WHITE	2-265
S906:1	359301-0050	BUTTON SIGN, DROP CHUTE BRIK	2-265
S907	90064-0098	PUSH BUTTON, CLEAR	2-265
S907:1	359301-0090	BUTTON SIGN, INCHING	2-265
S908	90064-0084	PUSH BUTTON, YELLOW	2-265
S908:1	359301-0110	BUTTON SIGN, SHORT STOP	2-265
S909	90064-0086	PUSH BUTTON, WHITE	2-265
S909:1	359301-0160	BUTTON SIGN, DRAINAGE OF PRODUCT TUBE	2-265
S911	90064-0093	PUSH BUTTON, GREEN	2-265
S911:1	359301-0001	BUTTON SIGN, UP	2-265
S912	90064-0082	PUSH BUTTON, WHITE	2-265
S912:1	359301-0005	BUTTON SIGN, DOWN	2-265
S1003	90064-0084	PUSH BUTTON, YELLOW	1-353, 1-355
S1802	90458-1651	EMERGENCY STOP, ZB4-BS-844 ZB4-BZ-104	1-353, 1-355
S2803	90458-1651	EMERGENCY STOP, ZB4-BS-844 ZB4-BZ-104	2-223
S6206	90064-0082	PUSH BUTTON, WHITE	7-267, 7-269
S7303	90064-0082	PUSH BUTTON, WHITE	7-285
S7402	90064-0082	PUSH BUTTON, WHITE	7-285
S7403	90064-0082	PUSH BUTTON, WHITE	7-285
S7408	90235-0206	QUICK EXHAUST VALVE, SEU-1/8	7-153
S7410	90235-0206	QUICK EXHAUST VALVE, SEU-1/8	7-153
S7430	90111-0120	SWITCH, 2 POS.704.510 .0A+704.901.5/A	7-281
S7431	90111-0120	SWITCH, 2 POS.704.510 .0A+704.901.5/A	7-259
S7701	90064-0084	PUSH BUTTON, YELLOW	7-267, 7-269
S7812	90458-1651	EMERGENCY STOP, ZB4-BS-844 ZB4-BZ-104	7-271
S7813	90458-1651	EMERGENCY STOP, ZB4-BS-844 ZB4-BZ-104	7-285
S7901	90064-0082	PUSH BUTTON, WHITE	7-267, 7-269
T			
T1231	90113-0469	MANIFOLD REGULATOR 4 BAR	1-333
T1316	90457-0144	REGULATOR 0,3-2 BAR	1-341
T1332	90113-0469	MANIFOLD REGULATOR 4 BAR	1-341
T1402	67379-0404	TRANSFORMER	1-13
T1402	67379-0405	TRANSFORMER	1-13
T1402	67379-0412	TRANSFORMER	1-13
T1402	67379-0414	TRANSFORMER	1-13
T1402	67379-0417	TRANSFORMER	1-13
T1502	90113-0470	MANIFOLD REGULATOR 10 BAR	1-333
T4200	90113-0469	MANIFOLD REGULATOR 4 BAR	2-131, 2-133
T4301	90457-0144	REGULATOR 0,3-2 BAR	2-49
T5001	90457-0144	REGULATOR 0,3-2 BAR	2-131, 2-133
T5306	90113-0469	MANIFOLD REGULATOR 4 BAR	2-131, 2-133
T5315	90113-0469	MANIFOLD REGULATOR 4 BAR	2-131, 2-133
T5504	90113-0469	MANIFOLD REGULATOR 4 BAR	2-131, 2-133
T6101	67380-0207	TRANSFORMER	7-17
T6101	67380-0214	TRANSFORMER	7-17
T6203	90458-0258	TRANSFORMER, 220VAC/6-9-12VAC	7-181, 7-183

Pos	Part No	Description	Page No
T			
T9114	90113-0469	MANIFOLD REGULATOR 4 BAR	1-333
U			
U1231	90043-0065	MKC NEW FILL PUMP VACUUM PRESSURE GAUGE	1-333
U1314	90043-0065	MKC NEW FILL PUMP VACUUM PRESSURE GAUGE	1-341
U1315	90043-0065	MKC NEW FILL PUMP VACUUM PRESSURE GAUGE	1-333
U1316	90459-4991	PRESSURE GAUGE, 9063064 D=40 MM	1-341
U1332	90043-0065	MKC NEW FILL PUMP VACUUM PRESSURE GAUGE	1-341
U1502	90043-0065	MKC NEW FILL PUMP VACUUM PRESSURE GAUGE	1-333
U4200	90043-0064	PRESSURE GAUGE, 2048 D=40 MM	2-131, 2-133
U4301	90043-0090	PRESSURE GAUGE, 2048 D=40 MM	2-49
U5001	90043-0090	PRESSURE GAUGE, 2048 D=40 MM	2-131, 2-133
U5215	90043-0064	PRESSURE GAUGE, 2048 D=40 MM	2-131, 2-133
U5306	90043-0064	PRESSURE GAUGE, 2048 D=40 MM	2-131, 2-133
U5315	90043-0064	PRESSURE GAUGE, 2048 D=40 MM	2-131, 2-133
U5504	90043-0064	PRESSURE GAUGE, 2048 D=40 MM	2-131, 2-133
U9114	90043-0065	MKC NEW FILL PUMP VACUUM PRESSURE GAUGE	1-333
W			
W0001	351150-0430	CABLE OLFLEX 5X35 MM2 LIGHT/GREY	2-149, 2-151
W100	90031-0305	I/O EXPANSION CABLE	8-65, 8-67
W101	90031-0305	I/O EXPANSION CABLE	8-65, 8-67
W102	90031-0305	I/O EXPANSION CABLE	8-65, 8-67
W103	90031-0305	I/O EXPANSION CABLE	8-65, 8-67
W106	90220-0183	SCR. CABLE 2X0,34MM2	8-37, 8-39, 8-41
W118	90220-0183	SCR. CABLE 2X0,34MM2	8-37, 8-39, 8-41
W119	90220-0183	SCR. CABLE 2X0,34MM2	8-37, 8-39, 8-41
W120	90220-0183	SCR. CABLE 2X0,34MM2	8-37, 8-39, 8-41
W121	90220-0183	SCR. CABLE 2X0,34MM2	8-37, 8-39, 8-41
W122	90220-0183	SCR. CABLE 2X0,34MM2	8-37, 8-39, 8-41
W123	90220-0183	SCR. CABLE 2X0,34MM2	8-37, 8-39, 8-41
W124	90220-0183	SCR. CABLE 2X0,34MM2	8-37, 8-39, 8-41
W125	90220-0183	SCR. CABLE 2X0,34MM2	8-37, 8-39, 8-41
W126	90220-0183	SCR. CABLE 2X0,34MM2	8-37, 8-39, 8-41
W127	90220-0183	SCR. CABLE 2X0,34MM2	8-37, 8-39, 8-41
W130	90220-0183	SCR. CABLE 2X0,34MM2	8-37, 8-39, 8-41
W133	90220-0183	SCR. CABLE 2X0,34MM2	8-37, 8-39, 8-41
W135	90220-0183	SCR. CABLE 2X0,34MM2	8-37, 8-39, 8-41
W137	90220-0183	SCR. CABLE 2X0,34MM2	8-37, 8-39, 8-41
W138	90220-0183	SCR. CABLE 2X0,34MM2	8-37, 8-39, 8-41
W139	90220-0183	SCR. CABLE 2X0,34MM2	8-37, 8-39, 8-41
W151	90220-0183	SCR. CABLE 2X0,34MM2	8-89, 8-91
W152	90220-0183	SCR. CABLE 2X0,34MM2	8-89, 8-91
W153	90220-0183	SCR. CABLE 2X0,34MM2	8-89, 8-91
W200	90459-1621	CABLE, ETHERNET RJ 45 CONNECT. 1 M	8-93
W210	90220-0104	SCR. CABLE 4X1,5MM2	8-37, 8-39, 8-41
W211	90220-0104	SCR. CABLE 4X1,5MM2	8-37, 8-39, 8-41
W212	90220-0104	SCR. CABLE 4X1,5MM2	8-37, 8-39, 8-41
W213	90220-0104	SCR. CABLE 4X1,5MM2	8-37, 8-39, 8-41
W214	90220-0104	SCR. CABLE 4X1,5MM2	8-37, 8-39, 8-41
W215	90220-0104	SCR. CABLE 4X1,5MM2	8-37, 8-39, 8-41
W300	90220-0034	THERMOCABLE TEX/SITW-20F-KX 2X0,5MM2	8-37, 8-39, 8-41
W301	90220-0034	THERMOCABLE TEX/SITW-20F-KX 2X0,5MM2	8-37, 8-39, 8-41
W302	90220-0034	THERMOCABLE TEX/SITW-20F-KX 2X0,5MM2	8-37, 8-39, 8-41
W303	90220-0034	THERMOCABLE TEX/SITW-20F-KX 2X0,5MM2	8-37, 8-39, 8-41
W304	90220-0034	THERMOCABLE TEX/SITW-20F-KX 2X0,5MM2	8-37, 8-39, 8-41
W305	90220-0034	THERMOCABLE TEX/SITW-20F-KX 2X0,5MM2	8-37, 8-39, 8-41
W306	90220-0034	THERMOCABLE TEX/SITW-20F-KX 2X0,5MM2	8-37, 8-39, 8-41
W307	90220-0034	THERMOCABLE TEX/SITW-20F-KX 2X0,5MM2	8-37, 8-39, 8-41
W308	90220-0034	THERMOCABLE TEX/SITW-20F-KX 2X0,5MM2	8-37, 8-39, 8-41
W309	90220-0034	THERMOCABLE TEX/SITW-20F-KX 2X0,5MM2	8-37, 8-39, 8-41
W310	90220-0034	THERMOCABLE TEX/SITW-20F-KX 2X0,5MM2	8-37, 8-39, 8-41
W312	90220-0034	THERMOCABLE TEX/SITW-20F-KX 2X0,5MM2	8-37, 8-39, 8-41
W313	90220-0034	THERMOCABLE TEX/SITW-20F-KX 2X0,5MM2	8-37, 8-39, 8-41
W314	90220-0034	THERMOCABLE TEX/SITW-20F-KX 2X0,5MM2	8-37, 8-39, 8-41
W315	90220-0034	THERMOCABLE TEX/SITW-20F-KX 2X0,5MM2	8-37, 8-39, 8-41
W316	90220-0034	THERMOCABLE TEX/SITW-20F-KX 2X0,5MM2	8-37, 8-39, 8-41
W317	90220-0034	THERMOCABLE TEX/SITW-20F-KX 2X0,5MM2	8-37, 8-39, 8-41
W318	90220-0034	THERMOCABLE TEX/SITW-20F-KX 2X0,5MM2	8-37, 8-39, 8-41
W319	90220-0034	THERMOCABLE TEX/SITW-20F-KX 2X0,5MM2	8-37, 8-39, 8-41
W320	90220-0034	THERMOCABLE TEX/SITW-20F-KX 2X0,5MM2	8-37, 8-39, 8-41
W321	90220-0034	THERMOCABLE TEX/SITW-20F-KX 2X0,5MM2	8-37, 8-39, 8-41
W322	90220-0034	THERMOCABLE TEX/SITW-20F-KX 2X0,5MM2	8-37, 8-39, 8-41
W323	90220-0034	THERMOCABLE TEX/SITW-20F-KX 2X0,5MM2	8-37, 8-39, 8-41
W331	90220-0034	THERMOCABLE TEX/SITW-20F-KX 2X0,5MM2	8-37, 8-39, 8-41
W332	90220-0034	THERMOCABLE TEX/SITW-20F-KX 2X0,5MM2	8-37, 8-39, 8-41
W333	90220-0034	THERMOCABLE TEX/SITW-20F-KX 2X0,5MM2	8-37, 8-39, 8-41
W382	90220-0034	THERMOCABLE TEX/SITW-20F-KX 2X0,5MM2	8-37, 8-39, 8-41
W450	1254442-0000	CABLE SERIAL	8-89, 8-91
W456	90459-1621	CABLE, ETHERNET RJ 45 CONNECT. 1 M	8-89, 8-91
W457	90220-0180	CABLE, ETHERNET RJ 45 CONNECT. 3 M	8-89, 8-91
W700	90459-2540	SERCOS CABLE 3.0M, 2090-SCEP3-0	8-57
W701	90459-2537	SERCOS CABLE 0.3M	8-57
W702	90459-2536	SERCOS CABLE 0.1M, 2090-SCEP0-1	8-57

W

Pos	Part No	Description	Page No
W703	90459-2536	SERCOS CABLE 0.1M, 2090-SCEP0-1	8-57
W704	90459-2539	SERCOS CABLE 1.0M, 2090-SCEP1-0	8-57
W705	90459-2536	SERCOS CABLE 0.1M, 2090-SCEP0-1	8-57
W706	90459-2536	SERCOS CABLE 0.1M, 2090-SCEP0-1	8-57
W707	90459-2540	SERCOS CABLE 3.0M, 2090-SCEP3-0	8-57
W901	90220-0181	CABLE, ETHERNET RJ 45 CONNECT. 5 M	8-61
W903	90459-2530	DEVICENET CABLE THIN	8-37, 8-39, 8-41
W910	90459-2530	DEVICENET CABLE THIN	8-37, 8-39, 8-41
W1001	351150-0425	CABLE OLFLEX 25X0,75 MM2 LIGHT/GREY	1-349
W1002	351150-0425	CABLE OLFLEX 25X0,75 MM2 LIGHT/GREY	1-349
W1003	351150-0425	CABLE OLFLEX 25X0,75 MM2 LIGHT/GREY	1-353, 1-355
W1004	351150-0425	CABLE OLFLEX 25X0,75 MM2 LIGHT/GREY	1-353, 1-355
W1005	351150-0418	CABLE OLFLEX 4X2,5 MM2 LIGHT/GREY	2-57, 2-59
W1005	351150-0425	CABLE OLFLEX 25X0,75 MM2 LIGHT/GREY	1-353, 1-355
W1006	351150-0407	CABLE OLFLEX 12X0,75 MM2 LIGHT/GREY	1-353, 1-355
W1011	351150-0405	CABLE OLFLEX 5X0,75 MM2 LIGHT/GREY	1-353, 1-355
W1012	351150-0403	CABLE OLFLEX 3X0,75 MM2 LIGHT/GREY	1-353, 1-355
W1013	351150-0403	CABLE OLFLEX 3X0,75 MM2 LIGHT/GREY	1-353, 1-355
W1015	351150-0403	CABLE OLFLEX 3X0,75 MM2 LIGHT/GREY	1-353, 1-355
W1018	351150-0403	CABLE OLFLEX 3X0,75 MM2 LIGHT/GREY	1-353, 1-355
W1029	351150-0404	CABLE OLFLEX 4X0,75 MM2 LIGHT/GREY	1-353, 1-355
W1030	351150-0403	CABLE OLFLEX 3X0,75 MM2 LIGHT/GREY	1-353, 1-355
W1031	351150-0403	CABLE OLFLEX 3X0,75 MM2 LIGHT/GREY	1-353, 1-355
W1041	351150-0405	CABLE OLFLEX 5X0,75 MM2 LIGHT/GREY	1-353, 1-355
W1044	351150-0405	CABLE OLFLEX 5X0,75 MM2 LIGHT/GREY	1-353, 1-355
W1045	351150-0405	CABLE OLFLEX 5X0,75 MM2 LIGHT/GREY	1-349
W1046	351150-0405	CABLE OLFLEX 5X0,75 MM2 LIGHT/GREY	1-349
W1048	351150-0405	CABLE OLFLEX 5X0,75 MM2 LIGHT/GREY	1-353, 1-355
W1052	90220-0165	SCR. CABLE 5X0,34MM2	1-365, 1-367
W1053	90220-0091	PAIR TWISTED CABLE 2X2X0,25MM2	1-365, 1-367
W1054	90458-2895	COAXIAL CABLE RG 400/U BROWN	1-365, 1-367
W1058	351150-0403	CABLE OLFLEX 3X0,75 MM2 LIGHT/GREY	1-353, 1-355
W1065	351150-0403	CABLE OLFLEX 3X0,75 MM2 LIGHT/GREY	1-353, 1-355
W1066	351150-0403	CABLE OLFLEX 3X0,75 MM2 LIGHT/GREY	1-353, 1-355
W1067	351150-0405	CABLE OLFLEX 5X0,75 MM2 LIGHT/GREY	1-119
W1107	90220-0034	THERMOCABLE TEX/SITW-20F-KX 2X0,5MM2	1-365, 1-367
W1232	351150-0403	CABLE OLFLEX 3X0,75 MM2 LIGHT/GREY	1-353, 1-355
W1233	351150-0403	CABLE OLFLEX 3X0,75 MM2 LIGHT/GREY	1-353, 1-355
W1235	351150-0403	CABLE OLFLEX 3X0,75 MM2 LIGHT/GREY	1-353, 1-355
W1240	90220-0105	SCR. CABLE 4X2,5MM2	1-365, 1-367
W1300	90220-0034	THERMOCABLE TEX/SITW-20F-KX 2X0,5MM2	1-365, 1-367
W1301	90220-0034	THERMOCABLE TEX/SITW-20F-KX 2X0,5MM2	1-191
W1302	90220-0034	THERMOCABLE TEX/SITW-20F-KX 2X0,5MM2	1-365, 1-367
W1303	90220-0034	THERMOCABLE TEX/SITW-20F-KX 2X0,5MM2	1-279
W1304	90220-0034	THERMOCABLE TEX/SITW-20F-KX 2X0,5MM2	2-57, 2-59
W1305	90220-0034	THERMOCABLE TEX/SITW-20F-KX 2X0,5MM2	1-365, 1-367
W1307	90220-0034	THERMOCABLE TEX/SITW-20F-KX 2X0,5MM2	1-365, 1-367
W1315	90220-0165	SCR. CABLE 5X0,34MM2	1-365, 1-367
W1320	90220-0034	THERMOCABLE TEX/SITW-20F-KX 2X0,5MM2	1-365, 1-367
W1321	90220-0034	THERMOCABLE TEX/SITW-20F-KX 2X0,5MM2	1-191
W1322	90220-0034	THERMOCABLE TEX/SITW-20F-KX 2X0,5MM2	1-365, 1-367
W1323	90220-0034	THERMOCABLE TEX/SITW-20F-KX 2X0,5MM2	1-365, 1-367
W1420	90220-0072	SCR. CABLE 4X0,34MM2	1-365, 1-367
W1500	351150-0418	CABLE OLFLEX 4X2,5 MM2 LIGHT/GREY	1-365, 1-367
W1501	351120-0168	CABLE SIHF 4X10MM2 GREEN/YELLOW	1-365, 1-367
W1502	351150-0196	CABLE OLFLEX 7X4 MM2 LIGHT/GREY	1-291
W1503	351120-0164	CABLE SIHF 4X1,5MM2 GREEN/YELLOW	1-191
W1511	90220-0165	SCR. CABLE 5X0,34MM2	1-353, 1-355
W1801	351150-0404	CABLE OLFLEX 4X0,75 MM2 LIGHT/GREY	1-349
W1802	351150-0404	CABLE OLFLEX 4X0,75 MM2 LIGHT/GREY	2-57, 2-59
W1804	351150-0403	CABLE OLFLEX 3X0,75 MM2 LIGHT/GREY	2-57, 2-59
W1805	351150-0403	CABLE OLFLEX 3X0,75 MM2 LIGHT/GREY	2-57, 2-59
W1806	351150-0404	CABLE OLFLEX 4X0,75 MM2 LIGHT/GREY	2-57, 2-59
W1810	351150-0404	CABLE OLFLEX 4X0,75 MM2 LIGHT/GREY	1-349
W1820	90220-0034	THERMOCABLE TEX/SITW-20F-KX 2X0,5MM2	1-365, 1-367
W1830	90220-0104	SCR. CABLE 4X1,5MM2	1-365, 1-367
W2001	351150-0425	CABLE OLFLEX 25X0,75 MM2 LIGHT/GREY	2-107, 2-109
W 2002	351150-0418	CABLE OLFLEX 4X2,5 MM2 LIGHT/GREY	2-33
W2002	351150-0425	CABLE OLFLEX 25X0,75 MM2 LIGHT/GREY	2-107, 2-109
W2003	351150-0166	CABLE OLFLEX 4X4 MM2 LIGHT/GREY	2-107, 2-109
W2005	351150-0412	CABLE OLFLEX 3X1,5 MM2 LIGHT/GREY	2-107, 2-109
W2007	351150-0418	CABLE OLFLEX 4X2,5 MM2 LIGHT/GREY	2-107, 2-109
W2008	351150-0418	CABLE OLFLEX 4X2,5 MM2 LIGHT/GREY	2-107, 2-109
W2009	351150-0418	CABLE OLFLEX 4X2,5 MM2 LIGHT/GREY	2-107, 2-109
W2010	351150-0425	CABLE OLFLEX 25X0,75 MM2 LIGHT/GREY	2-149, 2-151
W2011	351150-0425	CABLE OLFLEX 25X0,75 MM2 LIGHT/GREY	2-149, 2-151
W2014	351150-0413	CABLE OLFLEX 4X1,5 MM2 LIGHT/GREY	2-149, 2-151
W2015	90220-0104	SCR. CABLE 4X1,5MM2	2-149, 2-151
W2016	351150-0412	CABLE OLFLEX 3X1,5 MM2 LIGHT/GREY	2-149, 2-151
W2017	351150-0412	CABLE OLFLEX 3X1,5 MM2 LIGHT/GREY	2-149, 2-151
W2018	351150-0412	CABLE OLFLEX 3X1,5 MM2 LIGHT/GREY	2-149, 2-151
W2019	351150-0412	CABLE OLFLEX 3X1,5 MM2 LIGHT/GREY	2-149, 2-151

Pos	Part No	Description	Page No
W			
W2021	90220-0034	THERMOCABLE TEX/SITW-20F-KX 2X0,5MM2	2-149, 2-151
W2022	90220-0034	THERMOCABLE TEX/SITW-20F-KX 2X0,5MM2	2-149, 2-151
W2023	90220-0034	THERMOCABLE TEX/SITW-20F-KX 2X0,5MM2	2-149, 2-151
W2027	90220-0095	SCR. CABLE 3X0,75MM2	6-11
W2029	90220-0104	SCR. CABLE 4X1,5MM2	1-365, 1-367
W2030	351150-0425	CABLE OLFLEX 25X0,75 MM2 LIGHT/GREY	2-149, 2-151
W2040	351150-0412	CABLE OLFLEX 3X1,5 MM2 LIGHT/GREY	1-279
W2041	351120-0164	CABLE SIHF 4X1,5MM2 GREEN/YELLOW	1-279
W2042	351120-0164	CABLE SIHF 4X1,5MM2 GREEN/YELLOW	1-279
W2050	351150-0425	CABLE OLFLEX 25X0,75 MM2 LIGHT/GREY	2-107, 2-109
W2055	90220-0034	THERMOCABLE TEX/SITW-20F-KX 2X0,5MM2	2-107, 2-109
W2060	90220-0201	CABLE OLFLEX 18X0,75 MM2	1-223
W2061	351150-0417	CABLE OLFLEX 3X2,5 MM2 LIGHT/GREY	1-223
W2062	90220-0165	SCR. CABLE 5X0,34MM2	1-223
W2063	90220-0034	THERMOCABLE TEX/SITW-20F-KX 2X0,5MM2	1-247
W2064	90220-0034	THERMOCABLE TEX/SITW-20F-KX 2X0,5MM2	1-223
W2066	90458-2557	CABLE OLFLEX 25X1 MM2	2-149, 2-151
W2067	90458-2557	CABLE OLFLEX 25X1 MM2	2-149, 2-151
W2068	1363297-0000	CABLE LVDS 10M	2-149, 2-151
W2071	351150-0412	CABLE OLFLEX 3X1,5 MM2 LIGHT/GREY	2-107, 2-109
W2072	351150-0412	CABLE OLFLEX 3X1,5 MM2 LIGHT/GREY	2-107, 2-109
W2090	2540596-0003	COAXIAL CABLE	2-107, 2-109
W2091	2540596-0003	COAXIAL CABLE	2-107, 2-109
W2201	90042-0583	CABLE MECMAN 440-827 000-1	6-77
W2208	351150-0403	CABLE OLFLEX 3X0,75 MM2 LIGHT/GREY	2-81
W2209	351150-0403	CABLE OLFLEX 3X0,75 MM2 LIGHT/GREY	2-81
W2209	351150-0418	CABLE OLFLEX 4X2,5 MM2 LIGHT/GREY	2-79
W2211	351150-0412	CABLE OLFLEX 3X1,5 MM2 LIGHT/GREY	2-107, 2-109
W2212	351150-0405	CABLE OLFLEX 5X0,75 MM2 LIGHT/GREY	2-149, 2-151
W 2213	351150-0418	CABLE OLFLEX 4X2,5 MM2 LIGHT/GREY	6-27
W 2214	351150-0418	CABLE OLFLEX 4X2,5 MM2 LIGHT/GREY	6-17
W 2220	351150-0403	CABLE OLFLEX 3X0,75 MM2 LIGHT/GREY	6-69, 6-71
W2222	351150-0403	CABLE OLFLEX 3X0,75 MM2 LIGHT/GREY	6-35
W2224	351150-0406	CABLE OLFLEX 7X0,75 MM2 LIGHT/GREY	2-149, 2-151
W2225	351150-0405	CABLE OLFLEX 5X0,75 MM2 LIGHT/GREY	2-107, 2-109
W2226	351150-0406	CABLE OLFLEX 7X0,75 MM2 LIGHT/GREY	2-107, 2-109
W2228	351150-0406	CABLE OLFLEX 7X0,75 MM2 LIGHT/GREY	2-149, 2-151
W2230	351150-0405	CABLE OLFLEX 5X0,75 MM2 LIGHT/GREY	2-107, 2-109
W2231	351150-0406	CABLE OLFLEX 7X0,75 MM2 LIGHT/GREY	2-107, 2-109
W2232	351150-0406	CABLE OLFLEX 7X0,75 MM2 LIGHT/GREY	2-107, 2-109
W2233	351150-0403	CABLE OLFLEX 3X0,75 MM2 LIGHT/GREY	2-79
W2234	351150-0406	CABLE OLFLEX 7X0,75 MM2 LIGHT/GREY	2-77
W2235	351150-0403	CABLE OLFLEX 3X0,75 MM2 LIGHT/GREY	2-107, 2-109
W2236	351150-0403	CABLE OLFLEX 3X0,75 MM2 LIGHT/GREY	2-81
W2237	351150-0403	CABLE OLFLEX 3X0,75 MM2 LIGHT/GREY	2-81
W2238	351150-0403	CABLE OLFLEX 3X0,75 MM2 LIGHT/GREY	2-81
W2242	90220-0034	THERMOCABLE TEX/SITW-20F-KX 2X0,5MM2	6-19
W 2243	351150-0403	CABLE OLFLEX 3X0,75 MM2 LIGHT/GREY	6-69, 6-71
W2244	351150-0412	CABLE OLFLEX 3X1,5 MM2 LIGHT/GREY	2-107, 2-109
W2248	351150-0403	CABLE OLFLEX 3X0,75 MM2 LIGHT/GREY	2-81
W2249	351150-0403	CABLE OLFLEX 3X0,75 MM2 LIGHT/GREY	2-81
W2250	351150-0406	CABLE OLFLEX 7X0,75 MM2 LIGHT/GREY	6-31
W 2251	351150-0431	CABLE OLFLEX 2X0,75 MM2 LIGHT/GREY	6-27
W2252	351150-0431	CABLE OLFLEX 2X0,75 MM2 LIGHT/GREY	6-17
W2254	351150-0405	CABLE OLFLEX 5X0,75 MM2 LIGHT/GREY	2-57, 2-59
W2255	351150-0405	CABLE OLFLEX 5X0,75 MM2 LIGHT/GREY	2-57, 2-59
W2256	351150-0166	CABLE OLFLEX 4X4 MM2 LIGHT/GREY	6-41, 6-43
W2258	351150-0425	CABLE OLFLEX 25X0,75 MM2 LIGHT/GREY	6-67
W2270	90220-0091	PAIR TWISTED CABLE 2X2X0,25MM2	2-81, 2-107, 2-109
W2271	90220-0091	PAIR TWISTED CABLE 2X2X0,25MM2	2-81, 2-107, 2-109
W2710	90459-7174	CABLE	2-107, 2-109
W2711	90459-7174	CABLE	2-107, 2-109
W2712	90459-7174	CABLE	2-107, 2-109
W2713	90459-7174	CABLE	2-107, 2-109
W2714	90459-2566	MOTOR CABLE 16 AWG 2090-XXNPMP-16S15	2-107, 2-109
W2715	90459-2566	MOTOR CABLE 16 AWG 2090-XXNPMP-16S15	2-107, 2-109
W2716	90459-7175	CABLE	2-149, 2-151
W2720	90459-7208	CABLE	2-107, 2-109
W2721	90459-7208	CABLE	2-107, 2-109
W2722	90459-7208	CABLE	2-107, 2-109
W2723	90459-7208	CABLE	2-107, 2-109
W2724	90459-7208	CABLE	2-107, 2-109
W2725	90459-7208	CABLE	2-107, 2-109
W2726	90459-7176	CABLE	2-149, 2-151
W2730	90459-2577	MOTOR BRAKE CABLE 2090-UXNBMP-18S15	2-107, 2-109
W2731	90459-2577	MOTOR BRAKE CABLE 2090-UXNBMP-18S15	2-107, 2-109
W2732	90459-2577	MOTOR BRAKE CABLE 2090-UXNBMP-18S15	2-107, 2-109
W2733	90459-2577	MOTOR BRAKE CABLE 2090-UXNBMP-18S15	2-107, 2-109
W2734	90459-2577	MOTOR BRAKE CABLE 2090-UXNBMP-18S15	2-107, 2-109
W2735	90459-2577	MOTOR BRAKE CABLE 2090-UXNBMP-18S15	2-107, 2-109
W4001	351150-0425	CABLE OLFLEX 25X0,75 MM2 LIGHT/GREY	2-57, 2-59
W4002	351150-0425	CABLE OLFLEX 25X0,75 MM2 LIGHT/GREY	2-57, 2-59

Pos	Part No	Description	Page No
W			
W4005	351150-0414	CABLE OLFLEX 5X1,5 MM2 LIGHT/GREY	2-149, 2-151
W4006	351150-0417	CABLE OLFLEX 3X2,5 MM2 LIGHT/GREY	2-149, 2-151
W4008	2562736-0001	COAXIAL CABLE	4-237
W4009	2562736-0001	COAXIAL CABLE	4-237
W4016	90220-0165	SCR. CABLE 5X0,34MM2	2-107, 2-109
W4017	90220-0165	SCR. CABLE 5X0,34MM2	2-107, 2-109
W4022	351150-0403	CABLE OLFLEX 3X0,75 MM2 LIGHT/GREY	2-57, 2-59
W4052	351150-0403	CABLE OLFLEX 3X0,75 MM2 LIGHT/GREY	2-107, 2-109
W4053	351150-0404	CABLE OLFLEX 4X0,75 MM2 LIGHT/GREY	2-107, 2-109
W4054	351150-0406	CABLE OLFLEX 7X0,75 MM2 LIGHT/GREY	2-57, 2-59
W4502	2570004-0001	CABLE	2-149, 2-151
W4503	2570004-0001	CABLE	2-149, 2-151
W4505	90459-1812	CABLE, ETHERNET RJ 45 CONNECT. 8 M	2-149, 2-151
W4506	351150-0425	CABLE OLFLEX 25X0,75 MM2 LIGHT/GREY	2-149, 2-151
W4507	90459-1812	CABLE, ETHERNET RJ 45 CONNECT. 8 M	2-149, 2-151
W5002	351150-0413	CABLE OLFLEX 4X1,5 MM2 LIGHT/GREY	2-149, 2-151
W5003	90220-0104	SCR. CABLE 4X1,5MM2	2-149, 2-151
W5004	351150-0412	CABLE OLFLEX 3X1,5 MM2 LIGHT/GREY	2-149, 2-151
W 5006	351150-0405	CABLE OLFLEX 5X0,75 MM2 LIGHT/GREY	5-281
W5021	90220-0034	THERMOCABLE TEX/SITW-20F-KX 2X0,5MM2	2-149, 2-151
W5022	90220-0034	THERMOCABLE TEX/SITW-20F-KX 2X0,5MM2	2-149, 2-151
W5023	90220-0034	THERMOCABLE TEX/SITW-20F-KX 2X0,5MM2	2-149, 2-151
W5503	351150-0403	CABLE OLFLEX 3X0,75 MM2 LIGHT/GREY	2-57, 2-59
W5510	351150-0405	CABLE OLFLEX 5X0,75 MM2 LIGHT/GREY	5-283
W5603	351150-0405	CABLE OLFLEX 5X0,75 MM2 LIGHT/GREY	5-283
W5700	351150-0403	CABLE OLFLEX 3X0,75 MM2 LIGHT/GREY	2-149, 2-151
W7004	351150-0413	CABLE OLFLEX 4X1,5 MM2 LIGHT/GREY	7-181, 7-183
W7005	351150-0412	CABLE OLFLEX 3X1,5 MM2 LIGHT/GREY	7-181, 7-183
W7006	351150-0425	CABLE OLFLEX 25X0,75 MM2 LIGHT/GREY	7-181, 7-183
W7007	351150-0425	CABLE OLFLEX 25X0,75 MM2 LIGHT/GREY	7-181, 7-183
W7008	351150-0425	CABLE OLFLEX 25X0,75 MM2 LIGHT/GREY	7-181, 7-183
W7009	351150-0425	CABLE OLFLEX 25X0,75 MM2 LIGHT/GREY	7-181, 7-183
W7010	90220-0104	SCR. CABLE 4X1,5MM2	7-163
W7011	90220-0104	SCR. CABLE 4X1,5MM2	7-227
W7014	351150-0412	CABLE OLFLEX 3X1,5 MM2 LIGHT/GREY	7-93, 7-95
W7015	90458-1076	L-SHAPED CONNECTOR CABLE 933 235-042	7-231, 7-233
W7020	90458-1076	L-SHAPED CONNECTOR CABLE 933 235-042	7-221
W7023	90458-1076	L-SHAPED CONNECTOR CABLE 933 235-042	7-231, 7-233
W7024	90458-1076	L-SHAPED CONNECTOR CABLE 933 235-042	7-93, 7-95
W7025	90458-1076	L-SHAPED CONNECTOR CABLE 933 235-042	7-93, 7-95
W7028	351150-0407	CABLE OLFLEX 12X0,75 MM2 LIGHT/GREY	7-267, 7-269
W7029	351150-0407	CABLE OLFLEX 12X0,75 MM2 LIGHT/GREY	7-285
W7031	351150-0405	CABLE OLFLEX 5X0,75 MM2 LIGHT/GREY	7-271
W7037	351150-0415	CABLE OLFLEX 7X1,5 MM2 LIGHT/GREY	7-181, 7-183
W7042	351150-0405	CABLE OLFLEX 5X0,75 MM2 LIGHT/GREY	7-93, 7-95
W7043	351150-0405	CABLE OLFLEX 5X0,75 MM2 LIGHT/GREY	7-93, 7-95
W7044	351150-0405	CABLE OLFLEX 5X0,75 MM2 LIGHT/GREY	7-93, 7-95
W7045	351150-0431	CABLE OLFLEX 2X0,75 MM2 LIGHT/GREY	7-93, 7-95
W7046	351120-0126	CABLE SILFLEX SIHF 2X4 0046025	7-127
W7047	2540595-0007	COAXIAL CABLE	7-17
W7049	351120-0145	CABLE SILFLEX SIHF 3X2,5 0046020	7-133
W7050	90220-0092	PAIR TWISTED CABLE 3X2X0,25MM2	7-131
W7054	351150-0406	CABLE OLFLEX 7X0,75 MM2 LIGHT/GREY	7-93, 7-95
W7055	351150-0412	CABLE OLFLEX 3X1,5 MM2 LIGHT/GREY	7-93, 7-95
W7072	90220-0104	SCR. CABLE 4X1,5MM2	7-121
W7073	90220-0104	SCR. CABLE 4X1,5MM2	7-121
W7076	90220-0104	SCR. CABLE 4X1,5MM2	7-181, 7-183
W7077	351150-0405	CABLE OLFLEX 5X0,75 MM2 LIGHT/GREY	7-93, 7-95
W7304	90220-0034	THERMOCABLE TEX/SITW-20F-KX 2X0,5MM2	7-147
W7401	351150-0403	CABLE OLFLEX 3X0,75 MM2 LIGHT/GREY	7-281
W7402	351150-0403	CABLE OLFLEX 3X0,75 MM2 LIGHT/GREY	7-259
W8401	351150-0403	CABLE OLFLEX 3X0,75 MM2 LIGHT/GREY	10-101
W8420	351150-0403	CABLE OLFLEX 3X0,75 MM2 LIGHT/GREY	10-101
W8828	351150-0405	CABLE OLFLEX 5X0,75 MM2 LIGHT/GREY	10-101
W8854	351150-0425	CABLE OLFLEX 25X0,75 MM2 LIGHT/GREY	10-101
W8870	90220-0107	SCR. CABLE 5X0,75MM2	10-101
W9101	351150-0403	CABLE OLFLEX 3X0,75 MM2 LIGHT/GREY	1-223
W9103	351150-0403	CABLE OLFLEX 3X0,75 MM2 LIGHT/GREY	1-223
W9104	351150-0403	CABLE OLFLEX 3X0,75 MM2 LIGHT/GREY	1-223
W9112	351150-0403	CABLE OLFLEX 3X0,75 MM2 LIGHT/GREY	1-223
W9113	351150-0404	CABLE OLFLEX 4X0,75 MM2 LIGHT/GREY	1-223
W9114	351150-0403	CABLE OLFLEX 3X0,75 MM2 LIGHT/GREY	1-223
W9115	90220-0165	SCR. CABLE 5X0,34MM2	1-223
W9117	90220-0165	SCR. CABLE 5X0,34MM2	1-223
W9118	351150-0403	CABLE OLFLEX 3X0,75 MM2 LIGHT/GREY	1-223
W9120:1	90459-3165	CABLE OLFLON PTFE 1X4,72 MM² BLACK	1-219
W9120:2	90459-3165	CABLE OLFLON PTFE 1X4,72 MM² BLACK	1-219
W9120:3	90459-3154	CABLE OLFLONPTFE 1X4,72 MM² YELLOW-GREEN	1-219
W79011	90220-0092	PAIR TWISTED CABLE 3X2X0,25MM2	7-261, 7-263
W79012	351179-0102	CABLE AWM 1X075 MM2 BLACK	7-265
X			
X001	90459-0959	DISTRIBUTOR BLOCK 1492-PD3163	8-71

Pos	Part No	Description	Page No
X			
X011	90001-0033	WALL SOCKET OUTLET	8-89, 8-91
X025	90326-0020	PLUG, FEMALE YELLOW CR-AL	8-23
X101	90459-6624	FEMALE INSERT HAN E AV, 09 33 006 4735	8-37, 8-39, 8-41
X102	90459-6624	FEMALE INSERT HAN E AV, 09 33 006 4735	8-37, 8-39, 8-41
X103	90459-6624	FEMALE INSERT HAN E AV, 09 33 006 4735	8-37, 8-39, 8-41
X104	90459-6624	FEMALE INSERT HAN E AV, 09 33 006 4735	8-37, 8-39, 8-41
X105	90459-6624	FEMALE INSERT HAN E AV, 09 33 006 4735	8-37, 8-39, 8-41
X106	90459-6624	FEMALE INSERT HAN E AV, 09 33 006 4735	8-37, 8-39, 8-41
X107	90459-6624	FEMALE INSERT HAN E AV, 09 33 006 4735	8-37, 8-39, 8-41
X109	90459-6624	FEMALE INSERT HAN E AV, 09 33 006 4735	8-37, 8-39, 8-41
X111	90459-6624	FEMALE INSERT HAN E AV, 09 33 006 4735	8-37, 8-39, 8-41
X112	90459-6624	FEMALE INSERT HAN E AV, 09 33 006 4735	8-37, 8-39, 8-41
X113	90459-6624	FEMALE INSERT HAN E AV, 09 33 006 4735	8-37, 8-39, 8-41
X114	90459-6624	FEMALE INSERT HAN E AV, 09 33 006 4735	8-37, 8-39, 8-41
X115	90459-6624	FEMALE INSERT HAN E AV, 09 33 006 4735	8-37, 8-39, 8-41
X116	90459-6624	FEMALE INSERT HAN E AV, 09 33 006 4735	8-37, 8-39, 8-41
X117	90459-6624	FEMALE INSERT HAN E AV, 09 33 006 4735	8-37, 8-39, 8-41
X118	90459-6624	FEMALE INSERT HAN E AV, 09 33 006 4735	8-37, 8-39, 8-41
X119	90459-6624	FEMALE INSERT HAN E AV, 09 33 006 4735	8-47
X126	90110-0159	MALE INSERT 70.310.0640.0	7-163
X126	90459-6624	FEMALE INSERT HAN E AV, 09 33 006 4735	8-37, 8-39, 8-41
X127	90459-6624	FEMALE INSERT HAN E AV, 09 33 006 4735	8-37, 8-39, 8-41
X129	90459-6624	FEMALE INSERT HAN E AV, 09 33 006 4735	8-37, 8-39, 8-41
X130	90459-6624	FEMALE INSERT HAN E AV, 09 33 006 4735	8-37, 8-39, 8-41
X132	90110-0159	MALE INSERT 70.310.0640.0	7-181, 7-183
X132	90459-6624	FEMALE INSERT HAN E AV, 09 33 006 4735	8-37, 8-39, 8-41
X133	90110-0159	MALE INSERT 70.310.0640.0	7-181, 7-183
X133	90459-6624	FEMALE INSERT HAN E AV, 09 33 006 4735	8-37, 8-39, 8-41
X134	90110-0159	MALE INSERT 70.310.0640.0	7-181, 7-183
X134	90459-6624	FEMALE INSERT HAN E AV, 09 33 006 4735	8-37, 8-39, 8-41
X136	90459-6624	FEMALE INSERT HAN E AV, 09 33 006 4735	8-37, 8-39, 8-41
X137	90459-6624	FEMALE INSERT HAN E AV, 09 33 006 4735	8-37, 8-39, 8-41
X138	90459-6624	FEMALE INSERT HAN E AV, 09 33 006 4735	8-37, 8-39, 8-41
X160	2540596-0002	COAXIAL CABLE	8-37, 8-39, 8-41
X161	2540596-0002	COAXIAL CABLE	8-37, 8-39, 8-41
X162	2540596-0002	COAXIAL CABLE	8-37, 8-39, 8-41
X163	2540596-0002	COAXIAL CABLE	8-37, 8-39, 8-41
X201	90459-6627	FEMALE INSERT HAN E AV, 09 33 024 4735	8-37, 8-39, 8-41
X202	90459-6627	FEMALE INSERT HAN E AV, 09 33 024 4735	8-37, 8-39, 8-41
X203	90459-6627	FEMALE INSERT HAN E AV, 09 33 024 4735	8-37, 8-39, 8-41
X204	90459-6627	FEMALE INSERT HAN E AV, 09 33 024 4735	8-37, 8-39, 8-41
X206	90459-6627	FEMALE INSERT HAN E AV, 09 33 024 4735	8-37, 8-39, 8-41
X207	90459-6627	FEMALE INSERT HAN E AV, 09 33 024 4735	8-37, 8-39, 8-41
X208	90459-6627	FEMALE INSERT HAN E AV, 09 33 024 4735	8-37, 8-39, 8-41
X209	90459-6627	FEMALE INSERT HAN E AV, 09 33 024 4735	8-37, 8-39, 8-41
X210	90459-6627	FEMALE INSERT HAN E AV, 09 33 024 4735	8-37, 8-39, 8-41
X211	90459-6627	FEMALE INSERT HAN E AV, 09 33 024 4735	8-37, 8-39, 8-41
X212	90459-6627	FEMALE INSERT HAN E AV, 09 33 024 4735	8-37, 8-39, 8-41
X213	90110-0150	MALE INSERT 121110 0000	7-181, 7-183
X213	90459-6627	FEMALE INSERT HAN E AV, 09 33 024 4735	8-37, 8-39, 8-41
X214	90110-0150	MALE INSERT 121110 0000	7-181, 7-183
X214	90459-6627	FEMALE INSERT HAN E AV, 09 33 024 4735	8-37, 8-39, 8-41
X215	90459-6627	FEMALE INSERT HAN E AV, 09 33 024 4735	8-37, 8-39, 8-41
X216	90459-6627	FEMALE INSERT HAN E AV, 09 33 024 4735	8-37, 8-39, 8-41
X217	90459-6627	FEMALE INSERT HAN E AV, 09 33 024 4735	8-37, 8-39, 8-41
X218	90459-6627	FEMALE INSERT HAN E AV, 09 33 024 4735	8-37, 8-39, 8-41
X219	90110-0150	MALE INSERT 121110 0000	7-181, 7-183
X219	90459-6627	FEMALE INSERT HAN E AV, 09 33 024 4735	8-37, 8-39, 8-41
X220	90110-0150	MALE INSERT 121110 0000	7-181, 7-183
X220	90459-6627	FEMALE INSERT HAN E AV, 09 33 024 4735	8-37, 8-39, 8-41
X221	90459-6627	FEMALE INSERT HAN E AV, 09 33 024 4735	8-37, 8-39, 8-41
X222	90459-6627	FEMALE INSERT HAN E AV, 09 33 024 4735	8-37, 8-39, 8-41
X223	90459-6627	FEMALE INSERT HAN E AV, 09 33 024 4735	8-37, 8-39, 8-41
X224	90459-6627	FEMALE INSERT HAN E AV, 09 33 024 4735	8-37, 8-39, 8-41
X225	90459-6627	FEMALE INSERT HAN E AV, 09 33 024 4735	8-37, 8-39, 8-41
X226	90459-6627	FEMALE INSERT HAN E AV, 09 33 024 4735	8-37, 8-39, 8-41
X227	90459-6627	FEMALE INSERT HAN E AV, 09 33 024 4735	8-37, 8-39, 8-41
X228	90459-6627	FEMALE INSERT HAN E AV, 09 33 024 4735	8-37, 8-39, 8-41
X300	90459-0835	THERMO CONTACT PANEL, 16 CONTACTS 2 ROWS	8-37, 8-39, 8-41
X308	90326-0022	PLUG, MALE YELLOW CR-AL	1-365, 1-367
X312	90326-0022	PLUG, MALE YELLOW CR-AL	1-365, 1-367
X317	90326-0022	PLUG, MALE YELLOW CR-AL	1-365, 1-367
X318	90326-0022	PLUG, MALE YELLOW CR-AL	1-365, 1-367
X320	90326-0022	PLUG, MALE YELLOW CR-AL	7-147
X401	90110-0235	CABLE CONTACT, PX0739/P	7-163
X401	90110-0236	CHASSIS CONTACT PX0767/S	8-37, 8-39, 8-41
X402	90110-0235	CABLE CONTACT, PX0739/P	7-163
X402	90110-0236	CHASSIS CONTACT PX0767/S	8-37, 8-39, 8-41
X403	90110-0236	CHASSIS CONTACT PX0767/S	8-37, 8-39, 8-41
X404	90110-0236	CHASSIS CONTACT PX0767/S	8-37, 8-39, 8-41
X405	90110-0236	CHASSIS CONTACT PX0767/S	8-37, 8-39, 8-41
X406	90110-0236	CHASSIS CONTACT PX0767/S	8-37, 8-39, 8-41

Pos	Part No	Description	Page No
X			
X451	90110-0028	CONTACT UNIT 4-POLEADAPTER	8-89, 8-91
X501	90110-0055	FEMALE INSERT HAN 6 HSB 09 31 006 2701	8-37, 8-39, 8-41
X502	90110-0055	FEMALE INSERT HAN 6 HSB 09 31 006 2701	8-37, 8-39, 8-41
X503	90110-0055	FEMALE INSERT HAN 6 HSB 09 31 006 2701	8-37, 8-39, 8-41
X504	90110-0055	FEMALE INSERT HAN 6 HSB 09 31 006 2701	8-37, 8-39, 8-41
X504	90110-0156	MALE INSERT 70.210.0653.0	7-181, 7-183
X600	90110-0381	COVER, 310601-33 CYR24.4	1-365, 1-367
X610	90458-1178	FRAME CF 8	2-107, 2-109
X611	90458-1178	FRAME CF 8	2-107, 2-109
X612	90458-1178	FRAME CF 8	2-107, 2-109
X613	90458-1178	FRAME CF 8	2-107, 2-109
X700	2841532-0100	PLINTH	8-49, 8-51, 8-53
X710.3	90459-2551	CONNECTOR, MOTOR FEEDBACK 15 PIN MALE	2-107, 2-109
X711.3	90459-2551	CONNECTOR, MOTOR FEEDBACK 15 PIN MALE	2-107, 2-109
X712.3	90459-2551	CONNECTOR, MOTOR FEEDBACK 15 PIN MALE	2-107, 2-109
X713.3	90459-2551	CONNECTOR, MOTOR FEEDBACK 15 PIN MALE	2-107, 2-109
X714.3	90459-2551	CONNECTOR, MOTOR FEEDBACK 15 PIN MALE	2-107, 2-109
X715.3	90459-2551	CONNECTOR, MOTOR FEEDBACK 15 PIN MALE	2-107, 2-109
X716.3	90459-2551	CONNECTOR, MOTOR FEEDBACK 15 PIN MALE	2-107, 2-109
X840	90110-0052	MALE INSERT HAN 6E 09 33 006 2601	8-47
X871	90459-1452	FEMALE INSERT HAN K 09 38 006 2711	8-47
X872	90110-0057	FEMALE INSERT HAN 24 E 09 33 002 4201	8-47
X901	1095597-0100	TERMINAL	2-265
X1250	90042-0535	TERMINAL BOARD 19 CORDS	1-335
X1251	90042-0535	TERMINAL BOARD 19 CORDS	1-337, 1-339
X1252	90042-0535	TERMINAL BOARD 19 CORDS	1-337, 1-339
X1253	90042-0535	TERMINAL BOARD 19 CORDS	1-343, 1-345
X1307	90326-0020	PLUG, FEMALE YELLOW CR-AL	1-255
X1511	90459-3709	CONNECTOR 3-POLE AMP 282087-1	1-173
X1512	90459-4077	WIRE SEAL , AMP 281934	1-173
X1513	90459-4079	MINI MIC SRS, AMP 183035-1	1-173
X2038	90326-0022	PLUG, MALE YELLOW CR-AL	6-19
X2051	90042-0535	TERMINAL BOARD 19 CORDS	6-75
X7022	90458-1595	CONNECTION, BKS-S 33M-00	7-131
X7049	90042-0535	TERMINAL BOARD 19 CORDS	7-209, 7-211, 7-213
X7050	90042-0535	TERMINAL BOARD 19 CORDS	7-209, 7-211, 7-213
X7051	90042-0535	TERMINAL BOARD 19 CORDS	7-207
X7304	90326-0020	PLUG, FEMALE YELLOW CR-AL	7-147
X9121	90326-0020	PLUG, FEMALE YELLOW CR-AL	1-219
X9122	90326-0020	PLUG, FEMALE YELLOW CR-AL	1-219
X74031	90458-0603	CONNECTOR FEMALE 5 PINS	7-155
X74032	90458-0603	CONNECTOR FEMALE 5 PINS	7-155
X79011	90110-0147	CONTACT UNIT	7-261, 7-263
X79012	90110-0141	CONTACT UNIT, DE09P064TX	7-265
Y			
Y1104	90042-0172	SOLENOID VALVE 4023/1005/1032 24VDC	1-205
Y1107	90042-0538	PILOT VALVE L=500MM	1-337, 1-339
Y1108	90042-0538	PILOT VALVE L=500MM	1-337, 1-339
Y1111	90042-0538	PILOT VALVE L=500MM	1-337, 1-339
Y1112	90042-0538	PILOT VALVE L=500MM	1-337, 1-339
Y1210	90042-0206	SOLENOID VALVE G1/8, 444-111-000-1	2-27
Y1220	90042-0538	PILOT VALVE L=500MM	2-51
Y1221	90042-0538	PILOT VALVE L=500MM	2-51
Y1222	90042-0172	SOLENOID VALVE 4023/1005/1032 24VDC	1-283
Y1223	90042-0172	SOLENOID VALVE 4023/1005/1032 24VDC	1-283
Y1230	90042-0203	SOLENOID VALVE BüRKERT	1-317
Y1231	90042-0203	SOLENOID VALVE BüRKERT	1-317
Y1232	90459-6975	SOLENOID VALVE G1/4, 2401186082702400	1-317
Y1233	90459-6977	SOLENOID VALVE G1/4, V04B286N-B423A	1-317
Y1241	90042-0538	PILOT VALVE L=500MM	1-337, 1-339
Y1242	90042-0538	PILOT VALVE L=500MM	1-337, 1-339
Y1303	90042-0538	PILOT VALVE L=500MM	1-335
Y1311	90042-0538	PILOT VALVE L=500MM	1-343, 1-345
Y1312	90042-0538	PILOT VALVE L=500MM	1-335
Y1318	90042-0538	PILOT VALVE L=500MM	1-335
Y1320	90042-0538	PILOT VALVE L=500MM	1-343, 1-345
Y1323	90042-0538	PILOT VALVE L=500MM	1-335
Y1324	90042-0538	PILOT VALVE L=500MM	1-343, 1-345
Y1325	90042-0538	PILOT VALVE L=500MM	1-343, 1-345
Y1326	90042-0538	PILOT VALVE L=500MM	1-343, 1-345
Y1332	90042-0538	PILOT VALVE L=500MM	1-343, 1-345
Y1333	90042-0538	PILOT VALVE L=500MM	1-343, 1-345
Y1333	90187-0110	DIAPHRAGM VALVE DN15, NC WELD CONN.	1-255
Y1401	90042-0538	PILOT VALVE L=500MM	1-337, 1-339
Y1501	90042-0538	PILOT VALVE L=500MM	1-337, 1-339
Y1502	90042-0538	PILOT VALVE L=500MM	1-335
Y1503	90042-0538	PILOT VALVE L=500MM	1-335
Y1801	90042-0538	PILOT VALVE L=500MM	1-343, 1-345
Y1802	90042-0538	PILOT VALVE L=500MM	1-343, 1-345
Y1803	90042-0538	PILOT VALVE L=500MM	1-343, 1-345
Y1804	90042-0538	PILOT VALVE L=500MM	2-51
Y1805	90042-0538	PILOT VALVE L=500MM	2-51

Pos	Part No	Description	Page No
Y			
Y1808	90042-0538	PILOT VALVE L=500MM	2-51
Y1809	90042-0538	PILOT VALVE L=500MM	2-51
Y1810	90042-0538	PILOT VALVE L=500MM	1-335
Y2104	90042-0538	PILOT VALVE L=500MM	2-51
Y2106	90042-0248	SOLENOID VALVE OFFICIENE DI ENSINO	2-207
Y 2108	90042-0249	SOLENOID VALVE OFFICINE DI ENSINO	6-69, 6-71
Y2201	90042-0585	PILOT VALVE L=5M	6-77
Y2401	90042-0538	PILOT VALVE L=500MM	2-51
Y3101	90042-0254	SOLENOID VALVE, R1 1/2	6-35
Y3103	90042-0538	PILOT VALVE L=500MM	6-75
Y3105	90042-0538	PILOT VALVE L=500MM	2-51
Y3109	90042-0538	PILOT VALVE L=500MM	6-75
Y3110	90042-0538	PILOT VALVE L=500MM	6-75
Y3111	90042-0538	PILOT VALVE L=500MM	6-75
Y3112	90042-0538	PILOT VALVE L=500MM	6-75
Y5200	90042-0538	PILOT VALVE L=500MM	2-135, 2-137, 2-139
Y5210	90042-0538	PILOT VALVE L=500MM	2-135, 2-137, 2-139
Y5315	90042-0538	PILOT VALVE L=500MM	2-135, 2-137, 2-139
Y5501	90042-0538	PILOT VALVE L=500MM	2-51
Y5502	90042-0538	PILOT VALVE L=500MM	2-51
Y5503	90042-0539	PILOT VALVE L=350MM	2-51
Y5504	90042-0538	PILOT VALVE L=500MM	2-135, 2-137, 2-139
Y5505	90042-0538	PILOT VALVE L=500MM	2-135, 2-137, 2-139
Y5506	90042-0538	PILOT VALVE L=500MM	2-135, 2-137, 2-139
Y6201	90042-0591	PILOT VALVE, 04938-333-08	7-209, 7-211, 7-213
Y6203	90042-0539	PILOT VALVE L=350MM	7-209, 7-211, 7-213
Y6205	90042-0591	PILOT VALVE, 04938-333-08	7-209, 7-211, 7-213
Y7303	90042-0539	PILOT VALVE L=350MM	7-209, 7-211, 7-213
Y7315	90042-0591	PILOT VALVE, 04938-333-08	7-209, 7-211, 7-213
Y7402	90042-0591	PILOT VALVE, 04938-333-08	7-209, 7-211, 7-213
Y7407	90042-0591	PILOT VALVE, 04938-333-08	7-209, 7-211, 7-213
Y7408	90042-0538	PILOT VALVE L=500MM	7-209, 7-211, 7-213
Y7410	90042-0539	PILOT VALVE L=350MM	7-209, 7-211, 7-213
Y7412	90042-0538	PILOT VALVE L=500MM	7-209, 7-211, 7-213
Y7413	90042-0538	PILOT VALVE L=500MM	7-209, 7-211, 7-213
Y7414	90042-0538	PILOT VALVE L=500MM	7-209, 7-211, 7-213
Y7415	90042-0538	PILOT VALVE L=500MM	7-209, 7-211, 7-213
Y7420	90042-0591	PILOT VALVE, 04938-333-08	7-209, 7-211, 7-213
Y7421	90042-0591	PILOT VALVE, 04938-333-08	7-209, 7-211, 7-213
Y7425	90042-0585	PILOT VALVE L=5M	7-209, 7-211, 7-213
Y7430	90042-0539	PILOT VALVE L=350MM	7-207
Y7431	90042-0539	PILOT VALVE L=350MM	7-207
Y7432	90042-0539	PILOT VALVE L=350MM	7-207
Y7433	90042-0539	PILOT VALVE L=350MM	7-207
Y7435	90042-0539	PILOT VALVE L=350MM	7-207
Y8401	90042-0582	COIL NORGREN QM/48/127/21	7-109
Y9101	90042-0171	SOLENOID VALVE BURKERT	1-221
Y9105	90042-0538	PILOT VALVE L=500MM	1-337, 1-339
Y9106	90042-0538	PILOT VALVE L=500MM	1-337, 1-339
Y9112	90042-0203	SOLENOID VALVE BüRKERT	1-227
Y9114	90042-0203	SOLENOID VALVE BüRKERT	1-227
Z			
Z001	90024-0060	POWER LINE FILTER, 80 A 250/440 VAC	6-11
Z002	90082-0013	OVER VOLT. PROTECT. PU 4C-R 230 VAC	6-11
Z004	90024-0036	FILTERED TERMINAL BLOCK	6-11
Z006	90459-1359	FILTER, 1 A, 250 VAC	8-89, 8-91
Z010	90459-3460	FOOTPRINT FILTER 22-RF010-AL	8-71
Z011	90459-3460	FOOTPRINT FILTER 22-RF010-AL	8-71
Z012	90459-3460	FOOTPRINT FILTER 22-RF010-AL	8-71
Z013	90459-3460	FOOTPRINT FILTER 22-RF010-AL	8-71
Z014	90459-3460	FOOTPRINT FILTER 22-RF010-AL	8-71
Z015	90459-3461	FOOTPRINT FILTER 22-RF5P7-AL	8-71
Z100	90458-1140	FERRITE, RI-26-28-13	8-71
Z101	90458-1140	FERRITE, RI-26-28-13	8-71
Z110	90458-1140	FERRITE, RI-26-28-13	8-71
Z111	90458-1140	FERRITE, RI-26-28-13	8-71
Z120	90458-1140	FERRITE, RI-26-28-13	8-71
Z121	90458-1140	FERRITE, RI-26-28-13	8-71
Z130	90458-1140	FERRITE, RI-26-28-13	8-71
Z131	90458-1140	FERRITE, RI-26-28-13	8-71
Z140	90458-1140	FERRITE, RI-26-28-13	8-71
Z141	90458-1140	FERRITE, RI-26-28-13	8-71
Z150	90458-1140	FERRITE, RI-26-28-13	8-71
Z151	90458-1140	FERRITE, RI-26-28-13	8-71
Z700.1	90458-1162	FILTER, 6 A, 250 VAC	8-57
Z700	90459-2549	AC LINE FILTER 3-PHASE 30A, 2090-XXLF-X3	8-57
Z701.1	90458-1162	FILTER, 6 A, 250 VAC	8-57
Z701	90459-2549	AC LINE FILTER 3-PHASE 30A, 2090-XXLF-X3	8-57
Z904	90458-1170	FERRITE, SFC-6	8-61
Z910	90458-1170	FERRITE, SFC-6	8-49, 8-51, 8-53
Z91031	90277-0104	FILTER F64B-2GN-ARO	1-221
Z91032	90277-0323	FILTER HOUSING / ART.NO 95S6-1/4 S 5430	1-221

Tetra Pak

SPC binder labels. 40 mm Full width *Note! This page is generated* **automatically.**
using the **variable definitions** *made in the* **front page** *file!!*

Tetra Pak A3/Flex 1(2)
648575-0150
Issue: 2006-10 Doc No: SPC-2851301-0101

Tetra Pak A3/Flex 1(2)
648575-0150
Issue: 2006-10 Doc No: SPC-2851301-0101

Tetra Pak A3/Flex 2(2)
648575-0150
Issue: 2006-10 Doc No: SPC-2851301-0101

Tetra Pak A3/Flex 2(2)
648575-0150
Issue: 2006-10 Doc No: SPC-2851301-0101

Tetra Pak A3/Flex 1(2)
648575-0150
Issue: 2006-10 Doc No: SPC-2851301-0101

Tetra Pak A3/Flex 1(2)
648575-0150
Issue: 2006-10 Doc No: SPC-2851301-0101

Tetra Pak A3/Flex 2(2)
648575-0150
Issue: 2006-10 Doc No: SPC-2851301-0101

Tetra Pak A3/Flex 2(2)
648575-0150
Issue: 2006-10 Doc No: SPC-2851301-0101

Tetra Pak A3/Flex 1(2)
648575-0150
Issue: 2006-10 Doc No: SPC-2851301-0101

Tetra Pak A3/Flex 1(2)
648575-0150
Issue: 2006-10 Doc No: SPC-2851301-0101

Tetra Pak A3/Flex 2(2)
648575-0150
Issue: 2006-10 Doc No: SPC-2851301-0101

Tetra Pak A3/Flex 2(2)
648575-0150
Issue: 2006-10 Doc No: SPC-2851301-0101