SPC

Spare Parts Catalogue

Tetra Pak A3/Flex

648575-0100

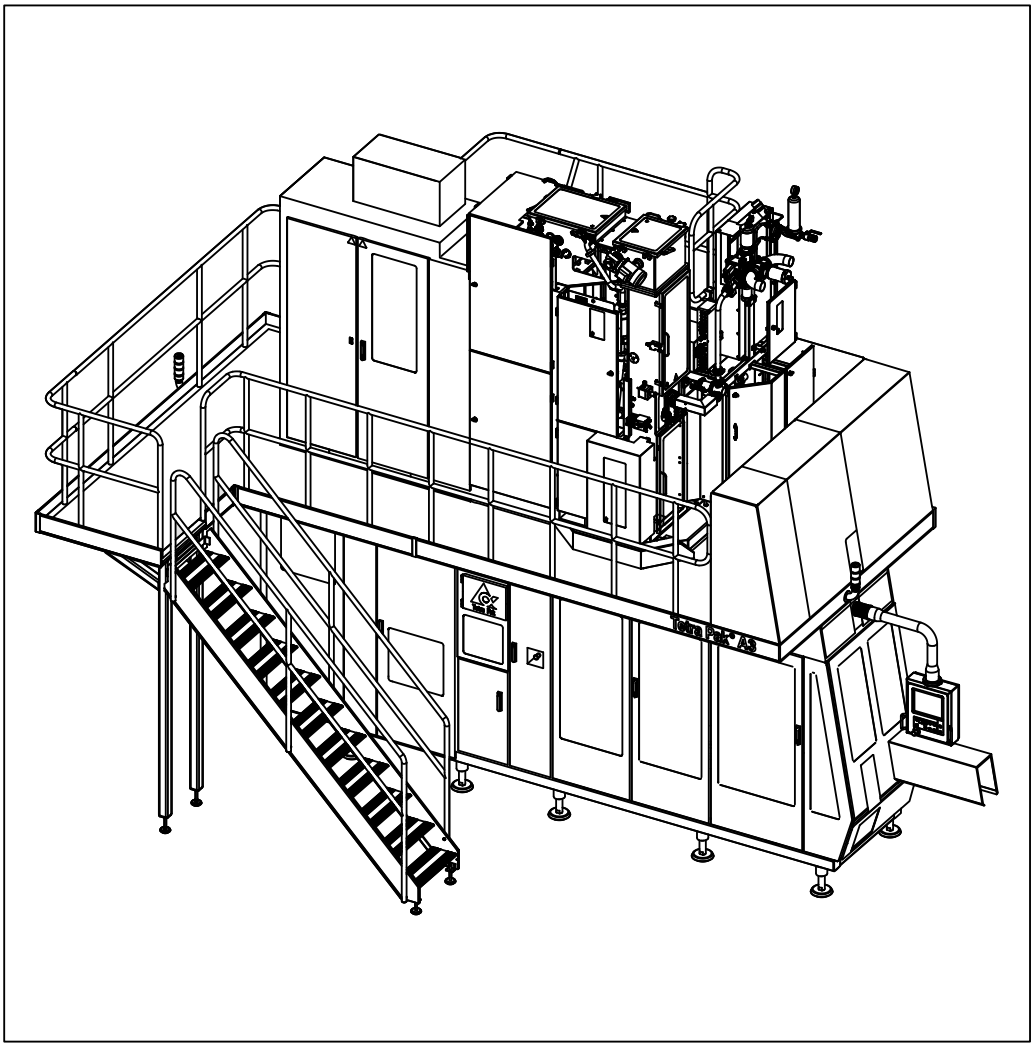

Tetra Pak

Doc. No: SPC-81806-0146

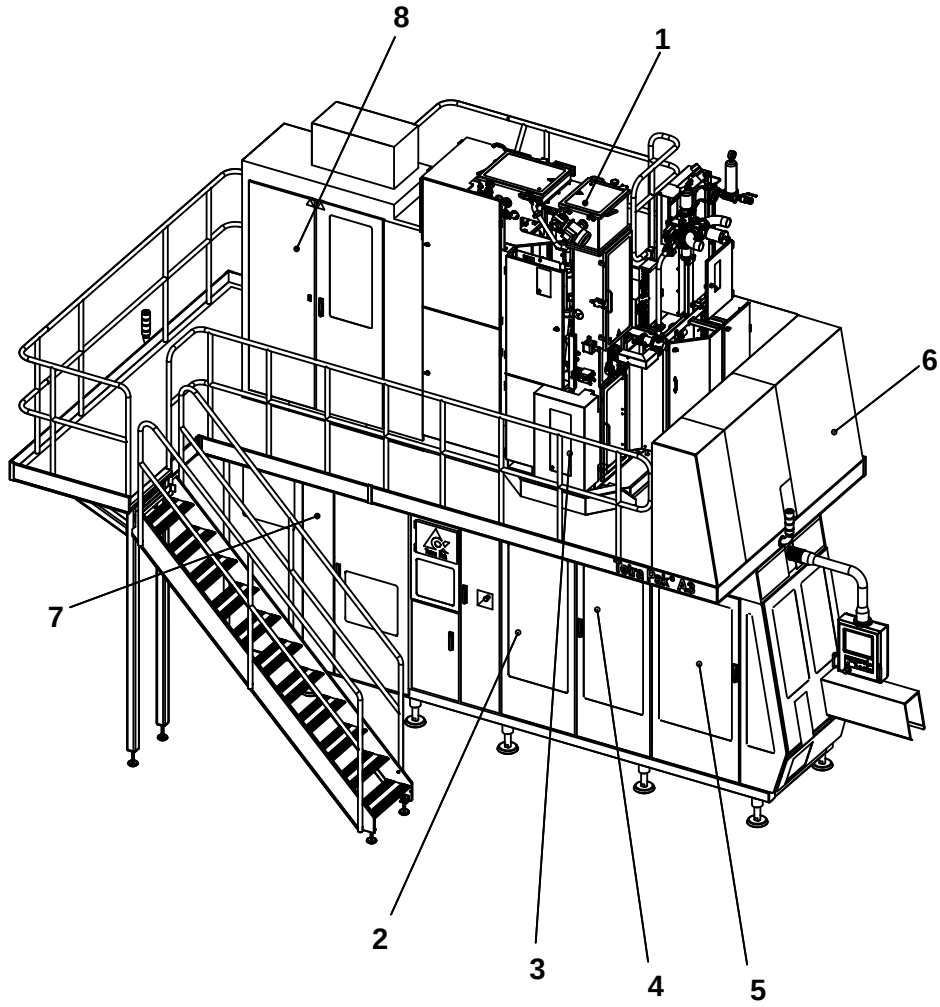

The position numbers in the illustration correspond with the chapter numbers listed on the next page.

Copyright © 2007 Tetra Pak Group

All rights reserved. No part of this document may be reproduced or copied in any form or by any means without written permission from Tetra Pak Packaging Solutions.

Tetra Pak and all Tetra Pak products are trademarks belonging to the Tetra Pak Group.

The content of this manual is in accordance with the design and construction of the machine or equipment at the time of publishing. Tetra Pak reserves the right to introduce design modifications without prior notice.

This document was produced by:

Tetra Pak Packaging Solutions
Technical Publications
Via Delfini 1
41100 Modena /Italy

Additional copies can be ordered from Tetra Pak. When ordering additional copies, always provide the document number.

Doc. No. SPC-81806-0146

Issue 2007-03

This document is valid from:

21207/00422

Series No/Machine No Sign.

SPC

Spare Parts Catalogue

BINDER 1

i Introduction

1 Superstructure

2 Machine Body

3 Drive Unit

4 Jaw System

BINDER 2

5 Final Folder

6 Service Unit

7 Automatic Splicing Unit

8 Electrical Cabinet

9 Regular Accessories

10 Optional Accessories

ii Part Number Index

iii Ref. Des. Parts Index

Machine or equipment configurations that this catalogue is valid for are described on the next page.

Doc. No: SPC-81806-0146

Issue 2007-03

Tetra Pak

Tetra Pak Packaging Solutions

Valid for:

Name	Drawing Specification and Development Step	Additional Information
Tetra Pak A3/Flex 010V	648575-0100	-

Update Log for Doc. No. SPC-81806-0146

This table shows all changes made to this catalogue, including installed rebuilding kits, added or removed pages.

Date	Installed Kit	Added Pages (Doc. No.)	Removed Pages	Signature

Date	Installed Kit	Added Pages (Doc. No.)	Removed Pages	Signature

i Introduction

en About the Introduction Chapter
This chapter contains basic information about this catalogue and related Tetra Pak equipment.

bg За уводната глава
Тази глава съдържа основна информация за този каталог и приложимото Tetra Pak оборудване.

cs O kapitole Úvod
Tato kapitola obsahuje základní informace o této příručce a souvisejícím zařízení Tetra Pak.

da Om indledningen
Kapitlet indeholder grundlæggende oplysninger om dette katalog og tilhørende Tetra Pak-udstyr.

de Über das Einleitungskapitel
Diese Kapitel enthält grundlegende Informationen über diesen Katalog und die zugehörige Tetra Pak-Ausrüstung

el Σχετικά με το Κεφάλαιο 'Εισαγωγή'
Αυτό το κεφάλαιο περιέχει βασικές πληροφορίες για τον παρόντα κατάλογο και τον σχετικό εξοπλισμό της Tetra Pak.

es Acerca del capítulo Introducción
Este capítulo contiene información básica sobre este catálogo y el equipo Tetra Pak relacionado.

et Sissejuhatava peatüki kohta
See peatükk sisaldab teavet käesoleva kataloogi ja sellega seonduva Tetra Paki seadme kohta.

fi Tietoja Johdanto-luvusta
Tässä luvussa on perustietoja tästä luettelosta ja Tetra Pak -laitteesta.

fr À propos du chapitre Introduction
Ce chapitre contient les informations de base à propos de ce catalogue et de l'équipement Tetra Pak concerné.

hu A Bevezetés fejezetről
Ez a fejezet alapvető információkat tartalmaz a katalógusról és a hozzá tartozó Tetra Pak berendezésről.

is Um inngangskaflann
Þessi kafli inniheldur grundvallarupplýsingar um þennan vörulista og tengdan Tetra Pak búnað.

it Informazioni sul capitolo Introduzione
Questo capitolo contiene informazioni generali sul presente catalogo e sulla relativa macchina Tetra Pak.

lt Apie įvadinį skyrių
Šiame skyriuje pateikta pagrindinė informacija apie šį katalogą ir su juo susijusią "Tetra Pak" įrangą.

lv Par Ievada nodaļu
Šī nodaļa ietver galveno informāciju par šo katalogu un saistītajām Tetra Pak iekārtām.

nl Over de inleiding
Dit hoofdstuk bevat basisinformatie omtrent deze catalogus en aanverwante Tetra Pak-installatie.

no Om kapitlet Introduksjon
Dette kapitlet inneholder grunnleggende informasjon om denne katalogen og relatert Tetra Pak-utstyr.

pl Informacje na temat rozdziału wprowadzającego
Rozdział wprowadzający zawiera podstawowe informacje dotyczące niniejszego katalogu i związanej z nim maszyny Tetra Pak.

pt Acerca do Capítulo de Introdução
Este capítulo contém informações básicas sobre este catálogo e os equipamentos relacionados da Tetra Pak.

ro Despre capitolul introductiv
Acest capitol conține informații de bază despre acest catalog și despre echipamentul Tetra Pak corelat.

sk O kapitole Úvod
Táto kapitola obsahuje základné informácie o tomto návode a informácie súvisiace so zariadením Tetra Pak.

sl O uvodnem poglavju
To poglavje vsebuje osnovne informacije o tem katalogu in opremi Tetra Pak.

sv Om inledningskapitlet
Det här kapitlet innehåller grundläggande information om katalogen och Tetra Pak-utrustningen.

Introduction

Illustrations . . . . . i - 5
English Text . . . . . i - 7

Увод

Илюстрации . . . . . i - 5
Текст на български език . . . . . i -11

Úvod

Obrázky . . . . . i -5
Český text . . . . . i - 15

Indledning

Illustrationer . . . . . i - 5
Dansk tekst . . . . . i - 19

Einleitung

Abbildungen . . . . . i - 5
Deutscher Text . . . . . i - 23

Εισαγωγή

Εικόνες . . . . . i - 5
Ελληνικό Κείμενο . . . . . i - 27

Introducción

Ilustraciones . . . . . i - 5
Texto en español . . . . . i - 31

Sissejuhatus

Joonised . . . . . i - 5
Eestikeelne tekst . . . . . i - 35

Johdanto

Kuvat . . . . . i - 5
Suomenkielinen teksti . . . . . i - 39

Introduction

Illustrations . . . . . i - 5
Texte français . . . . . i - 43

Bevezetés

Ábrák . . . . . i - 5
Magyar szöveg . . . . . i - 47

Inngangur

Skýringarmyndir . . . . . i - 5
Íslenskur texti . . . . . i - 51

Introduzione

Figure . . . . . i - 5
Testo in italiano . . . . . i - 55

Įvadas

Paveikslėliai . . . . . i - 5
Lietuviškas tekstas . . . . . i - 59

Ievads

Ilustrācijas . . . . . i - 5
Teksts latviešu valodā . . . . . i - 63

Inleiding

Afbeeldingen . . . . . i - 5
Nederlands tekst . . . . . i - 67

Introduksjon

Illustrasjoner . . . . . i - 5
Norsk tekst . . . . . i - 71

Wprowadzenie

Rysunki . . . . . i - 5
Tekst polski . . . . . i - 75

Introdução

Ilustrações . . . . . i - 5
Texto em português . . . . . i - 79

Introducere

Ilustrații . . . . . i - 5
Text în limba română . . . . . i - 83

Úvod

Ilustrácie . . . . . i – 5
Slovenský text . . . . . i - 87

Uvod

Slike . . . . . i - 5
Slovensko besedilo . . . . . i - 91

Inledning

Bilder . . . . . i - 5
Svensk text . . . . . i - 95

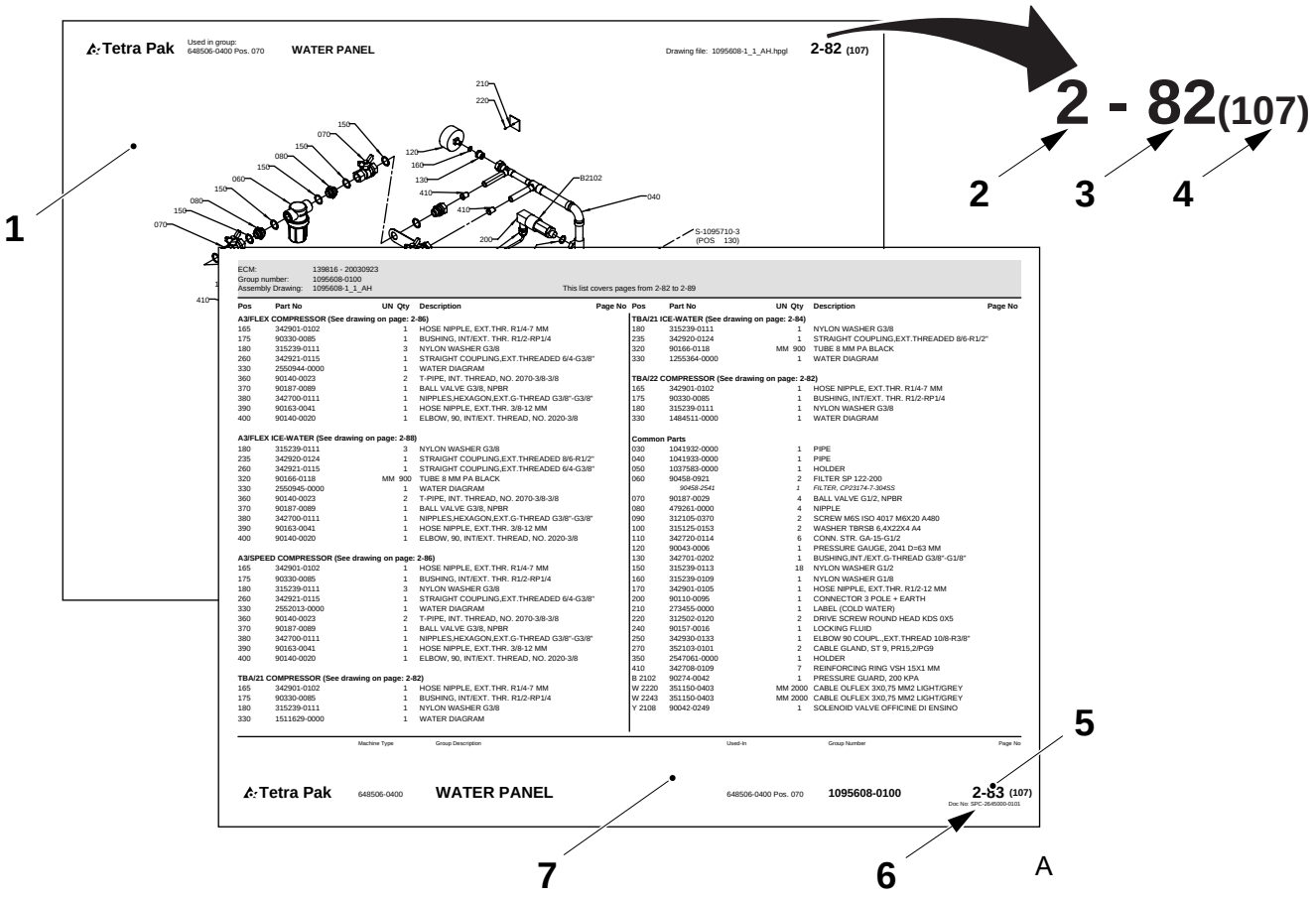
Tetra Pak
Used in group: 648506-0400 Pos. 070
WATER PANEL
Drawing file: 1095608-1_1_AH.hpgl
2-82 (107)
2 - 82(107)
1
2
3
4
5
6
7
A
ECM: 139816 - 20030923
Group number: 1095608-0100
Assembly Drawing: 1095608-1_1_AH
This list covers pages from 2-82 to 2-89
Tetra Pak
648506-0400
WATER PANEL
648506-0400 Pos. 070
1095608-0100
2-83 (107)

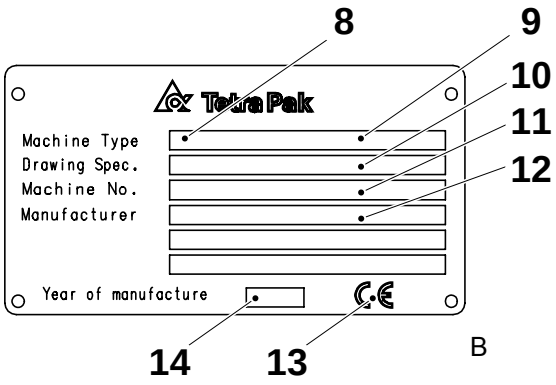
8
9
10
11
12
Tetra Pak
Machine Type
Drawing Spec.
Machine No.
Manufacturer
Year of manufacture
14
13
B

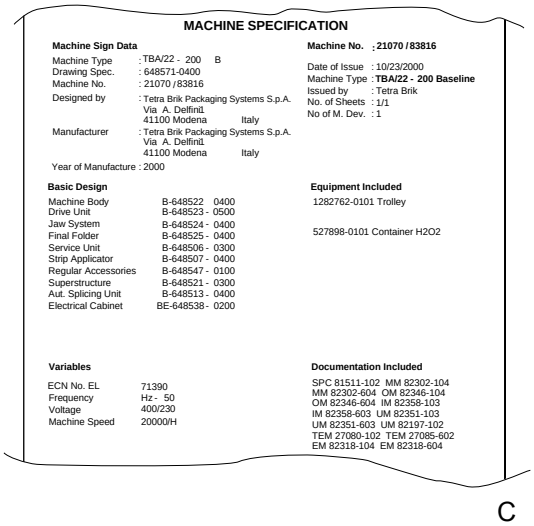
MACHINE SPECIFICATION
Machine Sign Data
Machine Type : TBA/22 - 200 B
Drawing Spec. : 648571-0400
Machine No. : 21070 / 83816
Designed by : Tetra Brik Packaging Systems S.p.A. Via A. Delfini1 41100 Modena Italy
Manufacturer : Tetra Brik Packaging Systems S.p.A. Via A. Delfini1 41100 Modena Italy
Year of Manufacture : 2000
Machine No. ; 21070 / 83816
Date of Issue : 10/23/2000
Machine Type : TBA/22 - 200 Baseline
Issued by : Tetra Brik
No. of Sheets : 1/1
No of M. Dev. : 1
Basic Design
Machine Body B-648522 0400
Drive Unit B-648523 - 0500
Jaw System B-648524 - 0400
Final Folder B-648525 - 0400
Service Unit B-648506 - 0300
Strip Applicator B-648507 - 0400
Regular Accessories B-648547 - 0100
Superstructure B-648521 - 0300
Aut. Splicing Unit B-648513 - 0400
Electrical Cabinet BE-648538 - 0200
Equipment Included
1282762-0101 Trolley
527898-0101 Container H2O2
Variables
ECN No. EL 71390
Frequency Hz - 50
Voltage 400/230
Machine Speed 20000/H
Documentation Included
SPC 81511-102 MM 82302-104
MM 82302-604 OM 82346-104
OM 82346-604 IM 82358-103
IM 82358-603 UM 82351-103
UM 82351-603 UM 82197-102
TEM 27080-102 TEM 27085-602
EM 82318-104 EM 82318-604
C

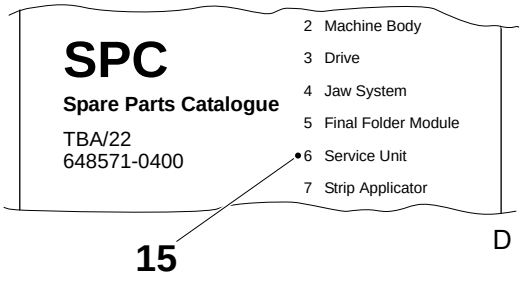
SPC
Spare Parts Catalogue
TBA/22
648571-0400
2 Machine Body
3 Drive
4 Jaw System
5 Final Folder Module
6 Service Unit
7 Strip Applicator
15
D

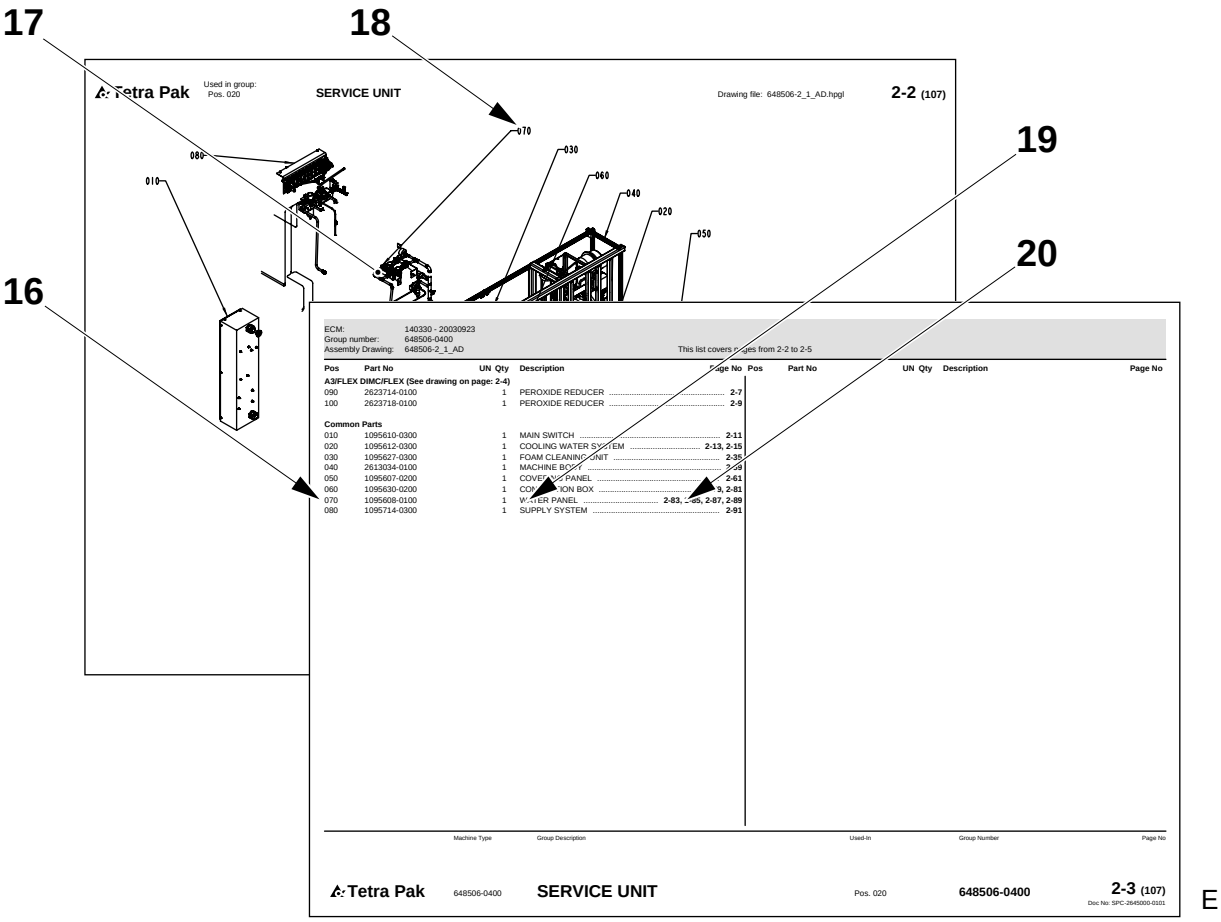
17
18
19
20
16
Tetra Pak
Used in group:
Pos. 020
SERVICE UNIT
Drawing file: 648506-2_1_AD.hpgl
2-2 (107)
070
030
080
060
010
040
020
050
ECM: 140330 - 20030923
Group number: 648506-0400
Assembly Drawing: 648506-2_1_AD
This list covers pages from 2-2 to 2-5
Pos Part No UN Qty Description Page No
A3/FLEX DIMC/FLEX (See drawing on page: 2-4)
090 2623714-0100 1 PEROXIDE REDUCER 2-7
100 2623718-0100 1 PEROXIDE REDUCER 2-9
Common Parts
010 1095610-0300 1 MAIN SWITCH 2-11
020 1095612-0300 1 COOLING WATER SYSTEM 2-13, 2-15
030 1095627-0300 1 FOAM CLEANING UNIT 2-35
040 2613034-0100 1 MACHINE BODY 2-39
050 1095607-0200 1 COVERING PANEL 2-61
060 1095630-0200 1 CONNECTION BOX 2-79, 2-81
070 1095608-0100 1 WATER PANEL 2-83, 2-85, 2-87, 2-89
080 1095714-0300 1 SUPPLY SYSTEM 2-91
Pos Part No UN Qty Description Page No
Machine Type Group Description Used-In Group Number Page No
Tetra Pak 648506-0400 SERVICE UNIT Pos. 020 648506-0400 2-3 (107)
Doc No: SPC-2645000-0101
E

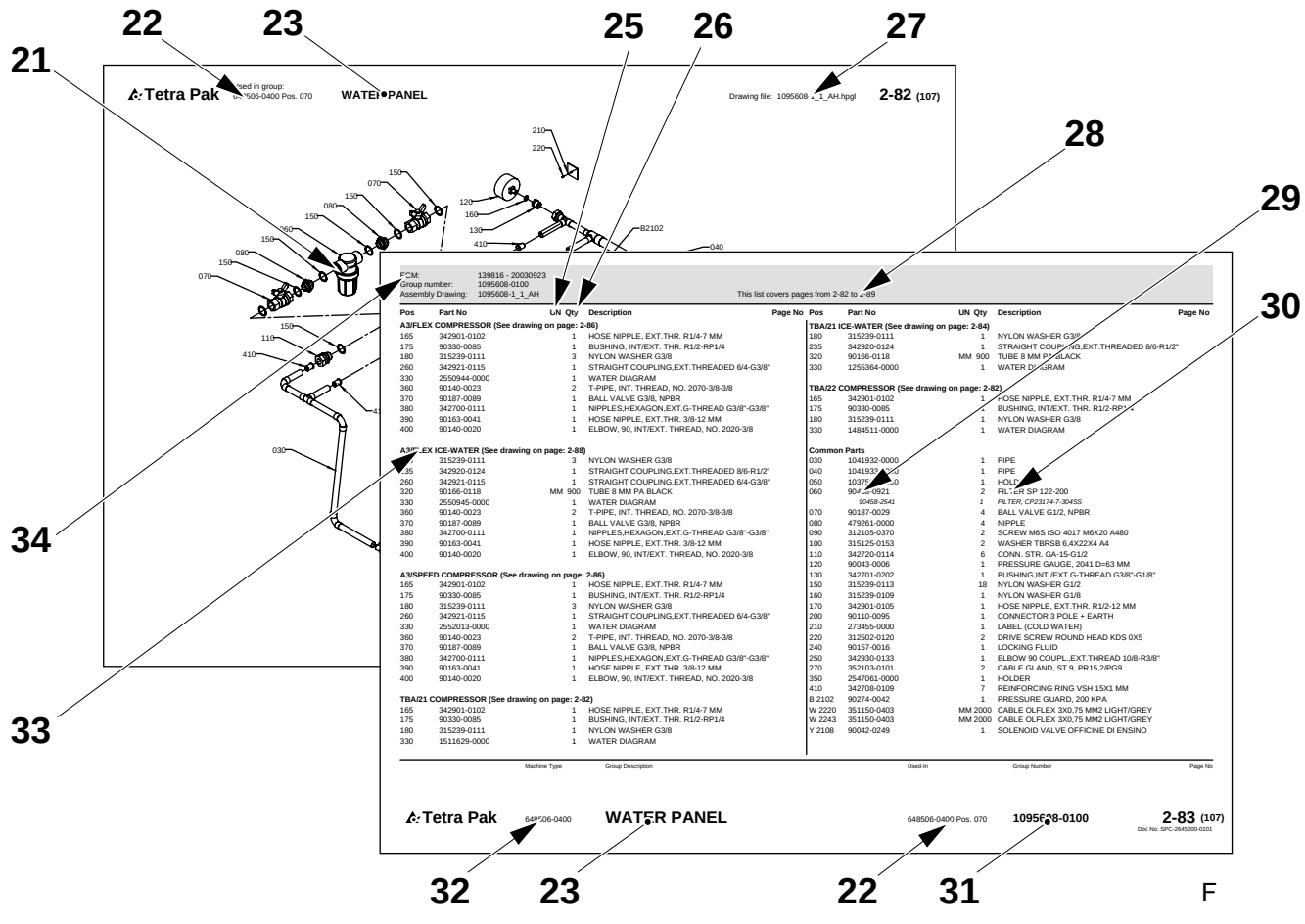
22
23
25
26
27
21
28
29
30
34
33
Tetra Pak
Used in group:
Pos. 070
WATER PANEL
Drawing file: 1095608-1_1_AH.hpgl
2-82 (107)
210
220
150
070
080
150
150
080
150
070
120
160
130
410
B2102
040
030
110
410
ECM: 139816 - 20030923
Group number: 1095608-0100
Assembly Drawing: 1095608-1_1_AH
This list covers pages from 2-82 to 2-89
Pos Part No UN Qty Description Page No
A3/FLEX COMPRESSOR (See drawing on page: 2-86)
165 342901-0102 1 HOSE NIPPLE, EXT.THR. R1/4-7 MM
175 90330-0085 1 BUSHING, INT/EXT. THR. R1/2-RP1/4
180 315239-0111 3 NYLON WASHER G3/8
260 342921-0115 1 STRAIGHT COUPLING,EXT.THREADED 6/4-G3/8"
330 2550944-0000 1 WATER DIAGRAM
360 90140-0023 2 T-PIPE, INT. THREAD, NO. 2070-3/8-3/8
370 90187-0089 1 BALL VALVE G3/8, NPBR
380 342700-0111 1 NIPPLES,HEXAGON,EXT.G-THREAD G3/8"-G3/8"
390 90163-0041 1 HOSE NIPPLE, EXT.THR. 3/8-12 MM
400 90140-0020 1 ELBOW, 90, INT/EXT. THREAD, NO. 2020-3/8
A3/FLEX ICE-WATER (See drawing on page: 2-88)
235 315239-0111 3 NYLON WASHER G3/8
235 342920-0124 1 STRAIGHT COUPLING,EXT.THREADED 8/6-R1/2"
260 342921-0115 1 STRAIGHT COUPLING,EXT.THREADED 6/4-G3/8"
320 90166-0118 MM 900 TUBE 8 MM PA BLACK
330 2550945-0000 1 WATER DIAGRAM
360 90140-0023 2 T-PIPE, INT. THREAD, NO. 2070-3/8-3/8
370 90187-0089 1 BALL VALVE G3/8, NPBR
380 342700-0111 1 NIPPLES,HEXAGON,EXT.G-THREAD G3/8"-G3/8"
390 90163-0041 1 HOSE NIPPLE, EXT.THR. 3/8-12 MM
400 90140-0020 1 ELBOW, 90, INT/EXT. THREAD, NO. 2020-3/8
A3/SPEED COMPRESSOR (See drawing on page: 2-86)
165 342901-0102 1 HOSE NIPPLE, EXT.THR. R1/4-7 MM
175 90330-0085 1 BUSHING, INT/EXT. THR. R1/2-RP1/4
180 315239-0111 3 NYLON WASHER G3/8
260 342921-0115 1 STRAIGHT COUPLING,EXT.THREADED 6/4-G3/8"
330 2552013-0000 1 WATER DIAGRAM
360 90140-0023 2 T-PIPE, INT. THREAD, NO. 2070-3/8-3/8
370 90187-0089 1 BALL VALVE G3/8, NPBR
380 342700-0111 1 NIPPLES,HEXAGON,EXT.G-THREAD G3/8"-G3/8"
390 90163-0041 1 HOSE NIPPLE, EXT.THR. 3/8-12 MM
400 90140-0020 1 ELBOW, 90, INT/EXT. THREAD, NO. 2020-3/8
TBA/21 COMPRESSOR (See drawing on page: 2-82)
165 342901-0102 1 HOSE NIPPLE, EXT.THR. R1/4-7 MM
175 90330-0085 1 BUSHING, INT/EXT. THR. R1/2-RP1/4
180 315239-0111 1 NYLON WASHER G3/8
330 1511629-0000 1 WATER DIAGRAM
TBA/21 ICE-WATER (See drawing on page: 2-84)
180 315239-0111 1 NYLON WASHER G3/8
235 342920-0124 1 STRAIGHT COUPLING,EXT.THREADED 8/6-R1/2"
320 90166-0118 MM 900 TUBE 8 MM PA BLACK
330 1255364-0000 1 WATER DIAGRAM
TBA/22 COMPRESSOR (See drawing on page: 2-82)
165 342901-0102 1 HOSE NIPPLE, EXT.THR. R1/4-7 MM
175 90330-0085 1 BUSHING, INT/EXT. THR. R1/2-RP1/4
180 315239-0111 1 NYLON WASHER G3/8
330 1484511-0000 1 WATER DIAGRAM
Common Parts
030 1041932-0000 1 PIPE
040 1041933-0000 1 PIPE
050 1037[illegible]-0000 1 HOLDER
060 90458-0921 2 FILTER SP 122-200
90458-2541 FILTER, CP23174-7-304SS
070 90187-0029 4 BALL VALVE G1/2, NPBR
080 479261-0000 4 NIPPLE
090 312105-0370 2 SCREW M6S ISO 4017 M6X20 A480
100 315125-0153 2 WASHER TBRSB 6,4X22X4 A4
110 342720-0114 6 CONN. STR. GA-15-G1/2
120 90043-0006 1 PRESSURE GAUGE, 2041 D=63 MM
130 342701-0202 1 BUSHING,INT./EXT.G-THREAD G3/8"-G1/8"
150 315239-0113 18 NYLON WASHER G1/2
160 315239-0109 1 NYLON WASHER G1/8
170 342901-0105 1 HOSE NIPPLE, EXT.THR. R1/2-12 MM
200 90110-0095 1 CONNECTOR 3 POLE + EARTH
210 273455-0000 1 LABEL (COLD WATER)
220 312502-0120 2 DRIVE SCREW ROUND HEAD KDS 0X5
240 90157-0016 1 LOCKING FLUID
250 342930-0133 1 ELBOW 90 COUPL.,EXT.THREAD 10/8-R3/8"
270 352103-0101 2 CABLE GLAND, ST 9, PR15,2/PG9
350 2547061-0000 1 HOLDER
410 342708-0109 7 REINFORCING RING VSH 15X1 MM
B 2102 90274-0042 1 PRESSURE GUARD, 200 KPA
W 2220 351150-0403 MM 2000 CABLE OLFLEX 3X0,75 MM2 LIGHT/GREY
W 2243 351150-0403 MM 2000 CABLE OLFLEX 3X0,75 MM2 LIGHT/GREY
Y 2108 90042-0249 1 SOLENOID VALVE OFFICINE DI ENSINO
Pos Part No UN Qty Description Page No
Machine Type Group Description Used-In Group Number Page No
Tetra Pak 648506-0400 WATER PANEL 648506-0400 Pos. 070 1095608-0100 2-83 (107)
Doc No: SPC-2645000-0101
32 23 22 31
F

Introduction

Manual Information

Tetra Pak recommends reading all delivered manuals carefully. Make sure that the delivered manuals are available to personnel who operate or maintain the equipment.

It is important to keep this catalogue for the lifetime of the equipment and to pass the catalogue on to any subsequent holder or user.

Tetra Pak will not be held responsible for any damage to the equipment caused by not following the instructions given in the manuals that accompany this equipment.

Delivered Manuals

Manuals delivered with this equipment may include

- CM
  The Conversion Manual provides technicians with information on converting the equipment between different production modes.
- EM
  The Electrical Manual provides technicians with information about the equipment's electrical system.
- IM
  The Installation Manual provides technicians with information required to safely install the equipment.
- MM
  The Maintenance Manual provides technicians with information on maintaining the equipment.
- OM
  The Operation Manual manual provides the operator with information on handling and operating the equipment before, during, and after production.
- SPC
  The Spare Parts Catalogue provides the information necessary to order spare parts from Tetra Pak
- TeM
  The Technical Manual
  - provides technicians with information required to safely install the equipment
  - provides technicians with information on maintaining the equipment
  - provides technicians with information about the machine's/ equipment's electrical system
  - provides the information necessary to order spare parts from Tetra Pak.

Page Layout

Refer to the illustration (A) on page i-5: The main pages in a Spare Parts Catalogue consist of an illustration page (1) and a corresponding list page (7). The page number (5) is shown in the header of an illustration page and in the footer of a list page. The document number (6) is shown in the footer of a list page.

Page Numbering

Refer to the illustration (A) on page i-5: A page number (5) has three parts:

- chapter number (2)
- consecutive page number within the chapter (3)
- total number of pages in the chapter (4)

Machine Introduction

Manufacturer

For the manufacturer's name and address, see the second page of this catalogue.

Service

To order spare parts for this machine, or to report problems associated with operating this machine, contact the nearest Tetra Pak office.

Contact the Liaison with other inquiries, comments, or suggestions for improvement regarding the equipment and its documentation.

Identification

CE Classification

This equipment complies with the basic health and safety regulations of the European Economic Area (EEA).

Machine Plate

The illustration (B) on page i-5 shows an example of a machine plate. An illustration of the valid machine plate and its location on the equipment is shown in the Introduction chapter of the manuals delivered with this equipment. The machine plate contains the data listed below, needed when contacting Tetra Pak concerning this specific equipment.

- Machine type (8)
- Volume (9)
- Drawing specifications (10)
- Machine serial number (11)
- Manufacturer (12)
- CE mark (13)
- Year of manufacture (14)

The illustration (C) on page i-5 shows an example of a machine specification. Make sure that the equipment data listed in the front pages of this manual corresponds to the machine plate data and the machine specification.

How to Use This Spare Parts Catalogue

Locate a Spare Part Number

a) Refer to the illustration (D) on page i-5: Go to the chapter number (15) indicated beside the main group that contains the part you want to locate.

Items b) and c) refer to the illustration (E) on page i-6.

b) On the main group illustration, look for the machine subgroup (17) that contains the part or subgroup you are looking for. Note the position number (18) and go to the list page that follows the illustration.

c) Look for the position number/reference designation (16) or the subgroup name (19). Go to the corresponding page number (20) listed in the right-hand column. Tetra Pak has chosen to always use the function oriented structure for reference designation. The prefix indicating function oriented structure (=) is not shown in the reference designation.

Items d) and e) refer to the illustration (F) on page i-6.

d) Locate the part (21) that you are looking for on the subgroup illustration and note the part's position number.

e) The part number (29) and part description (30) are listed beside the position number on the list page.

Information Listed in a Spare Parts Catalogue

The list below refers to the illustration (F) on page i-6. A Spare Parts Catalogue contains the following information about groups, subgroups, and spare parts for the equipment:

- Group structure reference (22). Indicates the next higher group in the equipment list structure.
- Group name (23)
- Unit of measure (25)
- Quantity (26)
- Assembly drawing number (27)
- List page range (28). Included if there are multiple pages in the group illustration or list.
- Part or subgroup number (29)
- Subgroup name or part description (30)
- Group number (31)
- Equipment number (32)
- Group information heading (33). Indicates if the section below the heading is for a specific machine variant or if it is a list of common parts. If a list has more than one variant and each variant has its own assembly drawing, a page reference to the variant's assembly drawing is shown.
- Internal information (34)

Увод

Информация за ръководството

Tetra Pak Ви препоръчва да прочетете внимателно всички доставени ръководства. Проверете дали доставените ръководства са достъпни за служителите, които поддържат или работят с оборудването.

Важно е да запазите този каталог през целия живот на оборудването и да го предадете на трети лица, които ще използват или съхраняват оборудването.

Tetra Pak не може да бъде държана под отговорност за щети върху оборудването, причинени от неспазване на даденте инструкции в ръководствата, които съпровождат оборудването.

Доставени ръководства

Ръководствата, доставени с това оборудване, могат да включват

- CM
  Ръководството за приспособяване осигурява на техническите лица информация за приспособяването на оборудване към различни производствени режими.
- EM
  Електрическото ръководство осигурява на техническите лица информация за електрическата система на оборудването.
- IM
  Ръководството за инсталиране предоставя на техническите лица информацията, която е необходима за безопасно инсталиране на оборудването.
- MM
  Ръководството за поддръжка предоставя на техническите лица информация относно поддържането на оборудването.
- OM
  Ръководството за операции предоставя на операторите информация за това, как да боравят и функционират с оборудването преди, по време на и след производство.
- SPC
  Каталогът с резервни части предоставя необходимата информация за поръчка на резервни части от Tetra Pak
- TeM
  Техническото ръководство
  - предоставя на техническите лица необходимата информация за безопасно инсталиране на оборудването
  - предоставя на техническите лица информация за поддръжка на оборудването
  - предоставя на техническите лица информация за електрическата система на машината/оборудването
  - предоставя необходимата информация за поръчка на резервни части от Tetra Pak.

Формат на страниците

Разгледайте илюстрация (A) на страница i-5: Главните страници в Каталога с резервни части се състоят от страница с илюстрация (1) и прилежаща страница със списък (7). Номерът на страницата (5) е посочен в горната част на страницата с илюстрация и в долната част на страницата със списъка. Номерът на документа (6) е показан в долната част на страницата със списъка.

Номериране на страници

Разгледайте илюстрация (A) на страница i-5: Един номер на страница (5) има три части:

- номер на глава (2)
- последователен номер на страница в една глава (3)
- общ брой страници в главата (4)

Машини Увод

Производител

Вижте втората страница на този каталог, за да проверите името и адреса на производителя.

Обслужване

За да поръчате резервни части за тази машина или да докладвате за проблеми, свързани с работата с тази машина, се свържете с най-близкия офис на Tetra Pak.

Свържете се с отдела за контакти с клиенти за други запитвания, коментари и предложения за подобрение по отношение на оборудването и прилежащата му документация.

Идентификация

Класификация на ЦЕ

Това оборудване отговаря на основните наредби, свързани с опазване на здравето и безопасността на Европейската Икономическа Общност (ЕИО).

Табелка на машина

Илюстрация (B) на страница i-5 показва пример с табелка на машина. В уводната глава на ръководствата, доставени с това оборудване, е показана илюстрация с валидната табелка на машината и нейното положение върху оборудването. Табелката на машината съдържа посочените по-долу данни, които Ви трябват, когато се свързвате с Tetra Pak относно това специфично оборудване.

- Тип машина (8)
- Обем (9)
- Спесификации за чертане (10)
- Сериен номер на машината (11)
- Производител (12)
- CE печат (13)
- Година на производство (14)

Илюстрация (C) на страница i-5 показва пример със спесификация за машина. Проверете дали данните за оборудването, изброени на предните страници в това ръководство отговарят на данните от табелката на машината и на спесификацията на машината.

Как да използвате този Каталог за резервни части

Намерете Номер на резервна част

a) Разгледайте илюстрация (D) на страница i-5: Отидете в глава номер (15) посочена до главната група, която съдържа частта, която искате да намерите.

Артикули b) и c) се отнасят до илюстрация (E) на страница i-6.

b) На главната обща илюстрация вижте подгрупата на машината (17), която съдържа частта или подгрупата, която търсите. Намерете номера на позицията (18) и отворете на страницата със списъка, която е след илюстрацията.

c) Намерете номера на позицията/референцията (16) или името на подгрупата (19). Отворете съответстващия номер на страница (20) в дясната колона. Tetra Pak е избрала да използва винаги функционално-ориентирана структура при обозначаване на референциите. Префиксът, който показва функционално-ориентирана структура (=) не е посочен в обозначаването на референциите.

Артикули d) и e) се отнасят до илюстрация (F) на страница i-6.

d) Намерете частта (21), която търсите в илюстрацията на подгрупата и запомнете номера на частта.

e) Номерът на частта (29) и описанието на частта (30) са изброени до номера на позицията на страницата със списъка.

Изброена информация в Каталога с резервни части

По-долу посоченият списък се отнася до илюстрация (F) на страница i-6. Каталогът с резервни части съдържа следната информация за групи, подгрупи и резервни части за оборудването:

- Референция за структурата (22). Показва следващата по-голяма група в структурата със списъка на оборудването.
- Име на група (23)
- Единица мярка (25)
- Количество (26)
- Номер за монтажен чертеж (27)
- Обхват на страницата със списък (28). Включен, ако има няколко страници в илюстрацията на групата или списъка.
- Номер на част или подгрупа (29)
- Име на подгрупа или описание на част (30)
- Номер на група (31)
- Номер на оборудване (32)
- Референция за информацията за групата (33). Показва дали частта под заглавието е за специфична версия на машината или е списък с общи части. Ако един списък има повече от един вариант и всеки вариант има собствен монтажен чертеж, се показва референцията на страницата към монтажния чертеж на варианта.
- Вътрешна информация (34)

Úvod

Informace o manuálu

Tetra Pak doporučuje, abyste si pozorně přečetli všechny dodané příručky. Přesvědčte se, že dodané manuály jsou k dispozici personálu, který obsluhuje nebo provádí údržbu zařízení.

Je důležité ponechat si tuto příručku po celou dobu životnosti zařízení a předat ho jakémukoliv následujícímu vlastníkovi nebo uživateli.

Tetra Pak nebude odpovídat za žádné škody zařízení, způsobené nedodržováním pokynů uvedených v této příručce.

Dodané příručky

Příručky dodané s tímto zařízením mohou obsahovat

- CM
  Konverzní manuál (CM) poskytuje technikům informace o konverzi zařízení mezi různými výrobními režimy.
- EM
  Elektrický manuál (EM) poskytuje technikům informace o elektrickém systému tohoto zařízení.
- IM
  Instalační manuál (IM) poskytuje technikům informace potřebné k bezpečné instalaci zařízení.
- MM
  Údržbový manuál (MM) poskytuje technikům informace o údržbě tohoto zařízení.
- OM
  Provozní manuál (OM) poskytuje operátorovi informace o manipulaci s tímto zařízením a provozu před, během a po výrobě.
- SPC
  Katalog náhradních dílů (SPC) poskytuje informace potřebné pro objednávání náhradních dílů od společnosti Tetra Pak
- TeM
  Technický manuál
  - poskytuje technikům informace potřebné k bezpečné instalaci tohoto zařízení
  - poskytuje technikům informace o údržbě tohoto zařízení
  - poskytuje technikům informace o elektrickém systému tohoto zařízení
  - poskytuje informace potřebné pro objednávání náhradních dílů od společnosti Tetra Pak

Rozvržení stránky

Viz obrázek (A) na straně i-5: Hlavní strany Katalogu náhradních dílů obsahují stranu s obrázky (1) a odpovídající stranu seznamu (7). Číslo strany (5) je uvedeno v záhlaví strany s obrázky a v zápatí strany seznamu. Číslo dokumentu (6) je uvedeno v zápatí strany seznamu.

Číslování stran

Viz obrázek (A) na straně i-5: Číslo strany (5) sestává ze tří částí:

- číslo kapitoly (2)
- pořadové číslo strany (3) v kapitole
- celkový počet stránek (4) v kapitole

Úvod ke stroji

Výrobce

Název a adresa výrobce je uvedena na druhé straně tohoto katalogu.

Servis

Chcete-li objednat náhradní díly nebo ohlásit problémy související s provozem tohoto stroje, kontaktujte nejbližší kancelář Tetra Pak.

S dalšími dotazy, připomínkami nebo náměty na vylepšení ohledně zařízení a této dokumentace se obracejte na kontaktní osobu.

Identifikace

Klasifikace CE

Toto zařízení splňuje základní zdravotní a bezpečnostní předpisy Evropského hospodářského prostoru (EEA).

Štítek na stroji

Obrázek (B) na straně i-5 znázorňuje příklad štítku na stroji. Obrázek platného štítku na stroji a jeho umístění na zařízení je uveden v příručkách dodaných s tímto strojem v kapitole Úvod. Na štítku jsou uvedeny údaje potřebné při kontaktování společnosti Tetra Pak, týkající se tohoto specifického zařízení.

- Typ stroje (8)
- Objem (9)
- Výkresové specifikace (10)
- Výrobní číslo stroje (11)
- Výrobce (12)
- Označení CE (13)
- Rok výroby (14)

Obrázek (C) na straně i-5 zobrazuje příklad specifikace stroje. Přesvědčte se, že údaje o zařízení uvedená v seznamu na předních stranách tohoto manuálu odpovídají údajům štítku na stroji a specifikaci stroje.

Jak používat tento Katalog náhradních dílů

Vyhledejte číslo náhradního dílu

a) Viz obrázek (D) na straně i-5: Přejděte na číslo kapitoly (15) uvedené vedle hlavní skupiny, která obsahuje hledaný díl.

Položky b) a c) odkazují na obrázek (E) na straně i-6.

b) Na vyobrazení hlavní skupiny vyhledejte strojní podskupinu (17), která obsahuje hledaný díl nebo podskupinu. Poznamenejte si číslo pozice (18) a přejděte na stranu seznamu vyplývající z obrázku.

c) Vyhledejte číslo pozice/označení odkazu (16) nebo název podskupiny (19). Přejděte na odpovídající číslo strany (20) v seznamu v pravém sloupci. Tetra Pak zvolil pro označování odkazu používat vždy uspořádání orientované na funkci. Prefix indikující uspořádání orientované na funkci (=) není uveden v označení odkazu.

Položky d) a e) odkazují na obrázek (F) na straně i-6.

d) Vyhledejte díl (21), který hledáte na vyobrazení podskupiny a poznamenejte si číslo pozice dílu.

e) Číslo dílu (29) a popis dílu (30) jsou uvedeny v seznamu vedle čísla pozice na straně seznamu.

Informace uvedené v seznamu v Katalogu náhradních dílů

Níže uvedený seznam odkazuje na obrázek (F) na straně i-6. Katalog náhradních dílů obsahuje následující informace o skupinách, podskupinách a náhradních dílech pro toto zařízení:

- Odkaz na uspořádání skupiny (22). Indikuje další vyšší skupinu v uspořádání seznamu zařízení.
- Název skupiny (23)
- Měrná jednotka (25)
- Množství (26)
- Číslo montážního výkresu (27)
- Rozsah stran seznamu (28). Včetně toho, zda existuje více stran v obrázku skupiny nebo seznamu.
- Díl nebo číslo podskupiny (29)
- Název podskupiny nebo popis dílu (30)
- Číslo skupiny (31)
- Číslo zařízení (32)
- Záhlaví informace o skupině (33). Indikuje, že oddíl pod záhlavím je pro specifickou variantu stroje nebo jde-li o seznam běžných dílů. Jestliže seznam obsahuje více než jednu variantu a každá varianta má svůj vlastní montážní výkres, pak je uveden odkaz na stranu montážního výkresu této varianty.
- Interní informace (34)

Indledning

Oplysninger om manualen

Tetra Pak anbefaler, at alle leverede manualer læses omhyggeligt. Sørg for, at de udleverede manualer er til rådighed for personale, som arbejder med eller vedligeholder udstyret.

Det er vigtigt at opbevare dette katalog hele udstyrets levetid og give kataloget videre til eventuelt kommende ejere eller brugere.

Tetra Pak kan ikke holdes ansvarlig for eventuel beskadigelse af udstyr, der opstår, fordi instruktionerne i manualerne til dette udstyr ikke følges.

Udleverede manualer

De manualer, der leveres sammen med dette udstyr, kan omfatte

- CM
  Denne konverteringsmanual forsyner teknikere med oplysninger om konvertering af udstyret mellem forskellige produktionstilstande.
- EM
  Denne elektriske manual forsyner teknikere med informationer om udstyrets elektriske system.
- IM
  Denne installationsmanual forsyner teknikere med nødvendig information i forbindelse med sikker installation af udstyret.
- MM
  Denne vedligeholdelsesmanual forsyner teknikere med information om vedligeholdelse af udstyret.
- OM
  Denne betjeningsmanual giver operatøren oplysninger om betjening af udstyret før, under og efter produktion.
- SPC
  Denne reservedelskatalog indeholder oplysninger, der er nødvendig for at bestille reservedele fra Tetra Pak
- TeM
  Den tekniske manual
  – forsyner teknikere med information, der er nødvendig for en sikker installation af udstyret.
  – forsyner teknikere med information om vedligeholdelse af udstyret.
  – forsyner teknikere med information om maskinens/udstyrets elektriske system.
  – indeholder de informationer, der er nødvendige for at kunne bestille reservedele fra Tetra Pak.

Sidelayout

Se illustration (A) på side i-5: Hovedsiderne i et reservedelskatalog består af en illustrationsside (1) og en tilsvarende listeside (7). Sidenummeret (5) vises i sidehovedet på en illlustrationsside og i sidefoden på en listeside. Dokumentnummeret (6) vises i sidefoden på en listeside.

Sidenummerering

Se illustrationen (A) på side i-5: Et sidenummer (5) har tre dele:

- kapitelnummer (2)
- fortløbende sidenummer i kapitlet (3)
- samlet sideantal i kapitlet (4)

Præsentation af maskinen

Producent

Producentens navn og adresse findes på side to i dette katalog.

Service

Kontakt nærmeste Tetra Pak-kontor for at bestille reservedele eller rapportere problemer i forbindelse med betjening af denne maskine.

Henvendelse til vores kontaktperson med andre forespørgsler, kommentarer eller forslag til forbedring angående udstyr og dokumentation.

Identificering

CE-klassificering

Dette udstyr lever op til de grundlæggende regulativer for sundhed og sikkerhed indenfor den Europæiske Økonomiske Samarbejdsområde (EØS).

Maskinskilt

Illustrationen (B) på side i-5 viser et eksempel på et maskinskilt.
En illustration af et gyldigt maskinskilt og dets placering på udstyret er vist i indledningskapitlet i de manualer, der leveres med dette udstyr. Maskinskiltet indeholder nedennævnte data. Disse er nødvendige ved kontakt med Tetra Pak vedrørende dette specifikke udstyr.

- Maskintype (8)
- Volumen (9)
- Tegningsspecifikationer (10)
- Maskinens serienummer (11)
- Producent (12)
- CE-mærke (13)
- Produktionsår (14)

Illustrationen (C) på side i-5 viser et eksempel på en maskinspecifikation. Kontroller, at de udstyrsdata, der er anført på de første sider i denne manual, svarer til maskinskiltsdataene og maskinspecifikationen.

Sådan bruges dette reservedelskatalog.

Find et reservedelsnummer

a) Se illustrationen (D) på side i-5: Gå til kapitelnummeret (15), der er angivet ved siden af hovedgruppen, der indeholder den del, der ønskes fundet.

Punkterne b) og c) refererer til illustrationen (E) på side i-6.

b) I hovedgruppeillustrationen skal man se efter maskinundergruppen (17), som indeholder den del eller undergruppe, der søges. Bemærk placeringsnummeret (18), og gå til listesiden, som følger illustrationen.

c) Se efter placeringsnummeret/henvisningsbetegnelse (16) eller undergruppens navn (19). Gå til det tilsvarende sidenummer (20) angivet i den højre kolonne. Tetra Pak har valgt altid at anvende den funktionsorienterede struktur til henvisningsbetegnelse. Præfikset angiver funktionsorienteret struktur (=) ikke vist i henvisningsbetegnelsen.

Punkterne d) og e) refererer til illustrationen (F) på side i-6.

d) Find den del (21), du søger i undergruppeillustrationen, og notér delens placeringsnummer.

e) Reservedelsnummeret (29) og -beskrivelsen (30) er angivet ved siden af placeringsnummeret på listesiden.

Informationer der er angivet i et reservedelskatalog

Listen nedenfor refererer til illustrationen (F) på side i-6. Et reservedelskatalog indeholder følgende informationer om grupper, undergrupper og reservedele til udstyret:

- Gruppestrukturreference (22). Angiver næste overordnede gruppe i udstyrslistestrukturen.
- Gruppenavn (23)
- Måleenhed (25)
- Antal (26)
- Samletegningsnummer (27)
- Listens sideområde (28). Er angivet, hvis gruppeillustrationen eller -listen inkluderer mange sider.
- Del- eller undergruppenummer (29)
- Undergruppens navn eller delsbeskrivelse (30)
- Gruppenummer (31)
- Udstyrsnummer (32)
- Overskrift for gruppeinformation (33). Angiver, om afsnittet under overskriften er for en specifik maskinvariant, eller om det er en liste over fælles dele. Hvis en liste har mere end én variant, og hver variant har sin egen samletegning, vises en sidereference til variantens samletegning.
- Intern information (34)

Einleitung

Informationen über das Handbuch

Tetra Pak empfiehlt, alle mitgelieferten Handbücher sorgfältig durchzulesen. Stellen Sie sicher, dass die Handbücher dem Personal, das die Ausrüstung betreibt oder wartet, zur Verfügung steht.

Es ist wichtig, dass Sie diesen Katalog für die gesamte Lebensdauer der Ausrüstung vorliegen haben und einem etwaigen Nachbesitzer oder -betreiber übergeben.

Tetra Pak haftet nicht für Schäden an der Ausrüstung, die aufgrund von Nichtbeachtung der Anweisungen aus den Handbüchern, die mit diesem Gerät geliefert werden, entstehen.

Gelieferte Handbücher

Die Handbücher, die mit dieser Ausrüstung geliefert wird, können Folgendes beinhalten

- CM
  Das Umbauhandbuch gibt den Technikern Informationen über den Umbau der Ausrüstung zwischen verschiedenen Produktionsweisen.
- EM
  Das Elektrohandbuch gibt den Technikern Informationen zum Elektrosystem der Ausrüstung.
- IM
  Das Installationshandbuch gibt den Technikern Informationen für die sichere Installation der Ausrüstung.
- MM
  Das Wartungshandbuch gibt den Technikern Informationen für die Wartung der Ausrüstung.
- OM
  Das Betriebshandbuch gibt dem Bediener Informationen über die Bedienung und den Betrieb der Ausrüstung vor, während und nach der Produktion.
- SPC
  Der Ersatzteilkatalog liefert die Informationen, die für die Bestellung von Ersatzteilen bei Tetra Pak erforderlich sind.
- TeM
  Das technische Handbuch
  - gibt den Technikern Informationen für die sichere Installation der Ausrüstung
  - gibt den Technikern Informationen für die Wartung der Ausrüstung
  - gibt den Techniker Informationen zum Elektrosystem der Ausrüstung/der Maschine
  - liefert die Informationen, die für die Bestellung von Ersatzteilen bei Tetra Pak erforderlich sind.

Seitenlayout

Bezugnahme auf Abbildung (A) auf Seite i-5: Die Hauptseiten in einem Ersatzteilkatalog bestehen aus einer Abbildungsseite (1) und einer entsprechenden Listenseite (7). Die Seitennummer (5) wird in der Kopfzeile einer Abbildungsseite und in der Fußzeile einer Listenseite aufgeführt. Die Dokumentennummer (6) wird in der Fußzeile einer Listenseite aufgeführt.

Seitennummerierung

Bezugnahme auf Abbildung (A) auf Seite i-5: Eine Seitennummer (5) besteht aus drei Teilen:

- Kapitelnummer (2)
- Fortlaufende Seitennummer innerhalb des Kapitels (3)
- Gesamtzahl der Seiten im Kapitel (4)

Einführung zur Maschine

Hersteller

Bitte entnehmen Sie den Namen und die Adresse des Herstellers der zweiten Seite dieses Katalogs.

Service

Zur Bestellung von Ersatzteilen für diese Maschine oder um Probleme im Zusammenhang mit dem Betrieb dieser Maschine zu melden, wenden Sie sich bitte an das nächstgelegene Büro von Tetra Pak.

Wenden Sie sich bei anderen Anfragen, Kommentaren oder Verbesserungsvorschlägen mit Bezug auf die Ausrüstung und seine Dokumentation an die Verbindungsstelle.

Identifizierung

CE-Klassifizierung

Diese Ausrüstung erfüllt die wesentlichen Anforderungen des Europäischen Wirtschaftsraum (EWR) für Gesundheitsschutz und die Sicherheit.

Maschinenschild

Die Abbildung (B) auf Seite i-5 zeigt ein Beispiel eines Maschinenschilds. Die Abbildung eines gültigen Maschinenschildes und seine Position auf der Ausrüstung wird im Einleitungskapitel der mit dieser Ausrüstung gelieferten Handbücher gezeigt. Das Maschinenschild enthält die Daten, die erforderlich sind, wenn Sie sich bezüglich dieser speziallen Ausrüstung an Tetra Pak wenden.

- Maschinentyp (8)
- Volumen (9)
- Zeichnungsspezifikationen (10)
- Seriennummer der Maschine (11)
- Hersteller (12)
- CE-Zeichen (13)
- Baujahr (14)

Die Abbildung (C) auf Seite i-5 zeigt ein Beispiel einer Maschinenspezifikation. Stellen Sie sicher, dass die Ausrüstungsdaten, die in den vorderen Seiten dieses Handbuchs aufgelistet sind, mit den Maschinenschilddaten und der Maschinenspezifikation übereinstimmen.

Benutzung dieses Ersatzteilkatalogs

Finden einer Ersatzteilnummer

a) Bezugnahme auf Abbildung (D) auf Seite i-5: Weiter zur Kapitel nummer (15), die neben der Hauptgruppe angegeben ist, die das entsprechende Teil enthält.

Die Positionen b) und c) beziehen sich auf die Abbildung (E) auf Seite i-6.

b) Suchen Sie auf der Hauptgruppenillustration nach der Maschinen-Untergruppe (17), die das gesuchte Teil oder die Untergruppe enthält. Notieren Sie die Positionsnummer (18) und gehen Sie dann zur Listenseite, die der Abbildung folgt.

c) Suchen Sie nach der Positionsnummer/Referenzbezeichnung (16) oder dem Namen der Untergruppe (19). Gehen Sie zur entsprechenden Seitennummer (20), die in der rechten Spalte aufgelistet ist. Tetra Pak hat sich dazu entschieden, stets eine funktionsorientierte Struktur für die Referenzbezeichnung zu verwenden. Die vorangestellte Kennzeichnung, welche die funktionsorientierte Struktur angibt (=), wird in der Referenzbezeichnung nicht angezeigt.

Die Positionen d) und e) beziehen sich auf die Abbildung (F) auf Seite i-6.

d) Finden Sie das gesuchte Teil (21) auf der Abbildung der Untergruppe und notieren Sie die Positionsnummer des Teils.

e) Die Teilenummer (29) und die Teilebeschreibung (30) werden neben der Positionsnummer auf der Listenseite aufgelistet.

In einem Ersatzteilkatalog aufgelistete Informationen

Die folgende Liste bezieht sich auf die Abbildung (F) auf Seite i-6. Ein Ersatzteilkatalog enthält folgende Informationen über Gruppen, Untergruppen und Ersatzteile für die Ausrüstung:

- Gruppenstrukturreferenz (22). Sie gibt die nächst höhere Gruppe in der Ausrüstungslistenstruktur an.
- Gruppenname (23)
- Maßeinheit (25)
- Menge (26)
- Nummer der Zusammenbauzeichnung (27)
- Listenseitenbereich (28). Enthalten, wenn es mehrere Seiten in der Gruppenabbildung oder Liste gibt.
- Teile- oder Untergruppennummer (29)
- Untergruppenname oder Teilebeschreibung (30)
- Gruppennummer (31)
- Ausrüstungsnummer (32)
- Gruppeninformationsüberschrift (33). Gibt an, ob sich der Abschnitt unter der Überschrift auf eine spezifische Maschinenvariante bezieht oder ob es sich um eine Liste der allgemeinen Teile handelt. Wenn eine Liste mehr als eine Variante hat und jede Variante über eine eigene Zusammenbauzeichnung verfügt, wird eine Seitenreferenz zur Zusammenbauzeichnung angezeigt.
- Interne Informationen (34)

Εισαγωγή

Πληροφορίες για το Εγχειρίδιο

Η Tetra Pak σάς συνιστά να διαβάζετε προσεκτικά όλα τα παρεχόμενα εγχειρίδια. Εξασφαλίζετε ότι όλα τα παρεχόμενα εγχειρίδια διατίθενται στο προσωπικό που χειρίζεται ή συντηρεί τον εξοπλισμό.

Είναι σημαντικό να διατηρείτε αυτό τον κατάλογο καθ' όλη τη διάρκεια ζωής του εξοπλισμού καθώς και να παραδίδετε τον κατάλογο στον τυχόν επόμενο ιδιοκτήτη ή χρήστη του εξοπλισμού.

Η Tetra Pak δεν πρόκειται να αναλάβει καμία ευθύνη για οποιαδήποτε ζημιά που μπορεί να προκληθεί στον εξοπλισμό εξαιτίας της μη τήρησης των οδηγιών οι οποίες παρέχονται στα εγχειρίδια που συνοδεύουν αυτό τον εξοπλισμό.

Παρεχόμενα Εγχειρίδια

Στα εγχειρίδια που παρέχονται μαζί μ' αυτό τον εξοπλισμό, μπορεί να περιλαμβάνονται τα εξής:

- CM
  Αυτό το Εγχειρίδιο Μετατροπής παρέχει στους τεχνικούς πληροφορίες για τη μετατροπή του εξοπλισμού μεταξύ των διάφορων λειτουργιών παραγωγής.
- EM
  Αυτό το Ηλεκτρικό Εγχειρίδιο παρέχει στους τεχνικούς πληροφορίες για το ηλεκτρικό σύστημα του εξοπλισμού.
- IM
  Αυτό το Εγχειρίδιο Εγκατάστασης παρέχει στους τεχνικούς τις απαιτούμενες πληροφορίες για την ασφαλή εγκατάσταση του εξοπλισμού.
- MM
  Αυτό το Εγχειρίδιο Συντήρησης παρέχει στους τεχνικούς πληροφορίες για τη συντήρηση του εξοπλισμού.
- OM
  Αυτό το Εγχειρίδιο Χειρισμού παρέχει στο χειριστή πληροφορίες για το χειρισμό και τη λειτουργία του εξοπλισμού πριν, κατά τη διάρκεια και μετά την παραγωγή.
- SPC
  Αυτός ο Κατάλογος Ανταλλακτικών παρέχει τις απαραίτητες πληροφορίες για την παραγγελία ανταλλακτικών από την Tetra Pak.
- TeM
  Το Τεχνικό Εγχειρίδιο
  - παρέχει στους τεχνικούς τις απαιτούμενες πληροφορίες για την ασφαλή εγκατάσταση του εξοπλισμού
  - παρέχει στους τεχνικούς πληροφορίες για τη συντήρηση του εξοπλισμού
  - παρέχει στους τεχνικούς πληροφορίες για το ηλεκτρικό σύστημα του εξοπλισμού/μηχανής
  - παρέχει τις απαραίτητες πληροφορίες για την παραγγελία ανταλλακτικών από την Tetra Pak.

Διάταξη Σελίδων

Ανατρέξτε στην εικόν (A) της σελίδας i-5: Οι κύριες σελίδες ενός Καταλόγου Ανταλλακτικών αποτελούνται από μία εικονογραφημένη σελίδα (1) και από μία αντίστοιχη σελίδα λίστας (7). Ο αριθμός σελίδας (5) εμφανίζεται στην κεφαλίδα μιας εικονογραφημένης σελίδας και στο υποσέλιδο μιας σελίδας λίστας. Ο αριθμός εγγράφου (6) εμφανίζεται στο υποσέλιδο μιας σελίδας λίστας.

Αρίθμηση Σελίδων

Ανατρέξτε στην εικόνα (A) της σελίδας i-5: Ένας αριθμός σελίδας (5) αποτελείται από τα εξής τρία μέρη:

- αριθμός κεφαλαίου (2)
- αύξων αριθμός σελίδας του κεφαλαίου (3)
- συνολικός αριθμός σελίδων του κεφαλαίου (4)

Παρουσίαση Μηχανής

Κατασκευαστής

Για το όνομα και τη διεύθυνση του κατασκευαστή, ανατρέξτε στη δεύτερη σελίδα αυτού του καταλόγου.

Τεχνική Εξυπηρέτηση

Για να παραγγείλετε ανταλλακτικά για τη συγκεκριμένη μηχανή ή για να αναφέρετε προβλήματα που σχετίζονται με τη λειτουργία αυτής της μηχανής, επικοινωνήστε με το πλησιέστερο γραφείο της Tetra Pak.

Εάν έχετε άλλου είδους ερωτήσεις, σχόλια ή προτάσεις βελτίωσης σχετικά με τον εξοπλισμό και την έγγραφη τεκμηρίωσή του, επικοινωνήστε με το Τμήμα Σχέσεων.

Στοιχεία Ταυτότητας

Σήμανση CE

Αυτός ο εξοπλισμός συμμορφώνεται με τους βασικούς κανονισμούς υγείας και ασφάλειας του Ευρωπαϊκού Οικονομικού Χώρου (ΕΟΧ).

Πινακίδα Αναγνώρισης Μηχανής

Η εικόνα (B) της σελίδας i-5 δείχνει ένα παράδειγμα μιας πινακίδας αναγνώρισης μηχανής.
Μια εικόνα που δείχνει την ενδεδειγμένη μορφή και θέση της πινακίδας αναγνώρισης μηχανής στον εξοπλισμό, παρουσιάζεται στο κεφάλαιο 'Εισαγωγή' των εγχειριδίων που παρέχονται μ' αυτόν τον εξοπλισμό.
Η πινακίδα αναγνώρισης μηχανής αναγράφει τα δεδομένα που παρατίθενται στη συνέχεια, τα οποία είναι απαραίτητα όταν επικοινωνείτε με την Tetra Pak για θέματα που αφορούν αυτό το συγκεκριμένο εξοπλισμό.

- Τύπος μηχανής (8)
- Χωρητικότητα (9)
- Στοιχεία σχεδίου (10)
- Αριθμός σειράς μηχανής (11)
- Κατασκευαστής (12)
- Σήμανση CE (13)
- Έτος κατασκευής (14)

Η εικόνα (Γ) της σελίδας i-5 δείχνει ένα παράδειγμα τεχνικών χαρακτηριστικών μηχανής. Βεβαιωθείτε ότι τα δεδομένα εξοπλισμού που παρατίθενται στις πρώτες σελίδες αυτού του εγχειριδίου συμφωνούν με τα δεδομένα της πινακίδας αναγνώρισης μηχανής και των τεχνικών χαρακτηριστικών μηχανής.

Πώς Χρησιμοποιείται Αυτός ο Κατάλογος Ανταλλακτικών

Εύρεση ενός Αριθμού Ανταλλακτικού

a) Ανατρέξτε στην εικόνα (Δ) της σελίδας i-5: Πηγαίνετε στον αριθμό κεφαλαίου (15) που υποδεικνύεται δίπλα από την κύρια ομάδα της μηχανής η οποία περιλαμβάνει το εξάρτημα που θέλετε να βρείτε.

Τα βήματα b) και c) αναφέρονται στην εικόνα (Ε) της σελίδας i-6.

b) Στην εικόνα της κύριας ομάδας μηχανής, αναζητήστε την υποομάδα μηχανής (17) η οποία περιλαμβάνει το εξάρτημα ή την υποομάδα που αναζητάτε. Σημειώστε τον αριθμό θέσης (18) και πηγαίνετε στη σελίδα λίστας που ακολουθεί την εικόνα.

c) Αναζητήστε τον αριθμό θέσης/ονομασία αναφοράς (16) ή το όνομα υποομάδας (19). Πηγαίνετε στον αντίστοιχο αριθμό σελίδας (20) που αναγράφεται στη δεξιά στήλη. Η Tetra Pak έχει επιλέξει να χρησιμοποιεί πάντα δομή ονομασίας αναφοράς με βάση τη λειτουργία. Το πρόθεμα που υποδεικνύει τη δομή με βάση τη λειτουργία (=) δε φαίνεται στο διάγραμμα αναφοράς.

Τα βήματα d) και e) αναφέρονται στην εικόνα (ΣΤ) της σελίδας i-6.

d) Βρείτε το εξάρτημα (21) που αναζητάτε στην εικόνα υποομάδας μηχανής και σημειώστε τον αριθμό θέσης του εξαρτήματος.

e) Ο αριθμός του εξαρτήματος (29) και η περιγραφή του εξαρτήματος (30) παρατίθενται δίπλα στον αριθμό θέσης στη σελίδα λίστας.

Πληροφορίες που Περιέχονται σε έναν Κατάλογο Ανταλλακτικών

Η λίστα που ακολουθεί αναφέρεται στην εικόνα (F) της σελίδας i-6. Ένας Κατάλογος Ανταλλακτικών περιέχει τις παρακάτω πληροφορίες σχετικά με τις ομάδες, τις υποομάδες και τα ανταλλακτικά του εξοπλισμού:

- Αναφορά δομής ομάδας (22). Υποδηλώνει την επόμενη μεγαλύτερη ομάδα στη δομή λίστας του εξοπλισμού.
- Όνομα ομάδας (23)
- Μονάδα μέτρησης (25)
- Ποσότητα (26)
- Αριθμός σχεδίου συγκροτήματος (27)
- Περιοχή σελίδων λίστας (28). Περιλαμβάνεται εφόσον η εικόνα ή η λίστα μιας ομάδας εκτίθεται σε περισσότερες από μία σελίδες.
- Αριθμός εξαρτήματος ή υποομάδας (29)
- Αριθμός υποομάδας ή περιγραφή εξαρτήματος (30)
- Αριθμός ομάδας (31)
- Αριθμός εξοπλισμού (32)
- Επικεφαλίδα πληροφοριών ομάδας (33). Υποδεικνύει εάν η ενότητα κάτω από την επικεφαλίδα αφορά μια συγκεκριμένη παραλλαγή μηχανής ή αποτελεί μια λίστα κοινών εξαρτημάτων. Σε περίπτωση που μια λίστα περιέχει περισσότερες από μία παραλλαγές και κάθε παραλλαγή έχει ξεχωριστό σχέδιο συγκροτήματος, εμφανίζεται μια παραπομπή προς τη σελίδα όπου βρίσκεται το σχέδιο συγκροτήματος της παραλλαγής.
- Εσωτερικές πληροφορίες (34)

Introducción

Información sobre el manual

Tetra Pak recomienda leer atentamente todos los manuales suministrados. Asegúrese de que los manuales están disponibles para el personal que opera o mantiene el equipo.

Es importante conservar este catálogo durante la vida útil del equipo, así como facilitárselo a cualquier propietario o usuario posterior.

Tetra Pak no se responsabilizará de daños en el equipo por no seguir las instrucciones proporcionadas en los manuales que acompañan este equipo.

Manuales entregados

Los manuales entregados con este equipo pueden incluir:

- CM
  El Manual de conversión proporciona a los técnicos información sobre cómo convertir el equipo a diferentes modos de producción.
- EM
  El Manual eléctrico proporciona a los técnicos información sobre el sistema eléctrico del equipo.
- IM
  El Manual de instalación proporciona a los técnicos la información necesaria para instalar el equipo de manera segura.
- MM
  El Manual de mantenimiento proporciona a los técnicos información sobre el mantenimiento del equipo.
- OM
  El Manual de funcionamiento proporciona al operador información sobre el manejo y el funcionamiento del equipo antes, durante y después de la producción.
- SPC
  El Catálogo de recambios proporciona la información necesaria para pedir las piezas de recambio a Tetra Pak.
- TeM
  El Manual técnico
  - proporciona a los técnicos la información necesaria para instalar de manera segura el equipo
  - proporciona a los técnicos información sobre el mantenimiento del equipo
  - proporciona a los técnicos información sobre el sistema eléctrico de la máquina/equipo
  - proporciona la información necesaria para pedir las piezas de recambio a Tetra Pak.

Organización de las páginas

Consultar la ilustración (A) en la página i-5: Las páginas principales en un Catálogo de recambios se componen de una página de ilustración (1) y una página de lista correspondiente (7). El número de la página (5) se muestra en el encabezado de una página de ilustración y en el pie de página de una página de lista. El número del documento (6) se muestra en el pie de página de una página de lista.

Numeración de las páginas

Consulte la ilustración (A) en la página i-5: Un número de página (5) consta de tres partes:

- número de capítulo (2)
- número de página consecutivo dentro del capítulo (3)
- número total de páginas del capítulo (4)

Introducción a la máquina

Fabricante

Para obtener el nombre y la dirección del fabricante, véase la segunda página de este catálogo.

Servicio

Para pedir recambios para esta máquina o informar de problemas asociados con el funcionamiento de la misma, póngase en contacto con la oficina de Tetra Pak más cercana.

Póngase en contacto con el representante para otras consultas, comentarios o consejos sobre mejoras referidos al equipo y su documentación.

Identificación

Clasificación de la CE

Este equipo cumple con la normativa básica sobre salud y seguridad del Espacio Económico Europeo (EEE).

Placa de máquina

La ilustración (B) en la página i-5 muestra un ejemplo de una placa de máquina.
En el capítulo Introducción de los manuales entregados con este equipo, se muestra una ilustración de la placa de máquina válida y su ubicación en el equipo. La placa de máquina contiene los datos que se enumeran a continuación, requeridos al ponerse en contacto con Tetra Pak en relación con este equipo específico.

- Tipo de máquina (8)
- Volumen (9)
- Especificaciones de plano (10)
- Número de serie de la máquina (11)
- Fabricante (12)
- Marca de la CE (13)
- Año de fabricación (14)

La ilustración (C) en la página i-5 muestra un ejemplo de especificación de la máquina. Asegúrese de que los datos de equipo que se enumeran en las páginas de la cubierta de este manual corresponden a los datos de la placa y las especificaciones de la máquina.

Cómo utilizar este Catálogo de recambios

Localizar un número de recambio

a) Consulte la ilustración (D) en la página i-5: Vaya al número de capítulo (15) indicado junto al grupo principal que contiene la pieza que desea localizar.

Los puntos b) y c) hacen referencia a la ilustración (E) en la página i-6.

b) En la ilustración del grupo principal, busque el subgrupo de la máquina (17) que contiene la pieza o el subgrupo que busca. Anote el número de posición (18) y vaya a la página de lista que sigue a la ilustración.

c) Busque el número de posición/denominación de referencia (16) o el nombre del subgrupo (19). Vaya al número de página correspondiente (20) que aparece en la columna de la derecha. Tetra Pak ha elegido utilizar siempre la estructura orientada a la función para la denominación de referencia. El prefijo que indica la estructura orientada a la función (=) no aparece en la denominación de referencia.

Los puntos d) y e) hacen referencia a la ilustración (F) en la página i-6.

d) Localice la pieza (21) que busca en la ilustración del subgrupo y anote el número de posición de la pieza.

e) El número de pieza (29) y la descripción de la misma (30) aparecen junto al número de posición en la página de lista.

Información que contiene un Catálogo de recambios

La lista que aparece a continuación hace referencia a la ilustración (F) en la página i-6. Un Catálogo de recambios contiene la siguiente información sobre grupos, subgrupos y recambios para el equipo:

- Referencia de estructura de grupo (22). Indica el siguiente grupo más alto en la estructura de lista del equipo.
- Nombre del grupo (23)
- Unidad de medida (25)
- Cantidad (26)
- Número de dibujo del conjunto (27)
- Intervalo de página de lista (28). Incluido si hay varias páginas en la ilustración o lista de grupo.
- Número de pieza o subgrupo (29)
- Nombre de subgrupo o descripción de pieza (30)
- Número de grupo (31)
- Número de equipo (32)
- Encabezado de información de grupo (33). Indica si la sección que aparece debajo del encabezado corresponde a una variante específica de la máquina o si es una lista de piezas comunes. Si la lista tiene más de una variante y cada variante tiene su propio dibujo de conjunto, se muestra una referencia de página al dibujo de conjunto de la variante.
- Información interna (34)

Sissejuhatus

Juhendi teave

Tetra Pak soovitab kõik juhendid hoolikalt läbi lugeda. Kontrollige, et juhendid oleksid seadmetega töötavatele ja neid hooldavatele isikutele kättesaadavad.

Kataloog tuleb seadme kasutusaja vältel alles hoida ning järgmisele omanikule või kasutajale edasi anda.

Tetra Pak ei vastuta seadme vigastuste eest, mis on tekkinud seadmega kaasnevate juhendite mittejärgimise tõttu.

Kaasaolevad juhendid

Seadmega kaasasolevad juhendid võivad sisaldada järgmist:

- CM
  Ümberseadistusjuhend annab tehnikutele teavet seadme ümber seadistamise kohta eri tootmisrežiimide korral.
- EM
  Elektrijuhend annab tehnikutele informatsiooni seadme elektrisüsteemi kohta.
- IM
  Paigaldusjuhend annab tehnikutele vajalikku teavet seadme ohutu paigaldamise kohta.
- MM
  Hooldusjuhend annab tehnikutele teavet seadme hoolduse kohta.
- OM
  Kasutusjuhend annab operaatorile teavet seadme käsitsemise ja kasutamise kohta enne tootmist, selle ajal ja pärast seda.
- SPC
  Varuosade kataloog annab vajalikku teavet Tetra Pakilt varuosade tellimiseks
- TeM
  Tehniline juhend
  - annab tehnikutele vajalikku teavet seadme ohutuks paigaldamiseks
  - annab tehnikutele teavet seadme hooldamise kohta
  - annab tehnikutele teavet masina/seadme elektrisüsteemi kohta
  - annab vajalikku teavet Tetra Pakilt varuosade tellimiseks.

Lehekülje kujundus

Vt joonist (A) lk i-5: Varuosade kataloogi põhilehtedeks on jooniste lehekülg (1) ja vastav loeteluleht (7). Lehekülje number (5) on toodud joonistelehe päises ja loetelulehe jaluses. Dokumendi number (6) on toodud loetelulehe jaluses.

Lehekülje nummerdus

Vt joonist (A) lk i-5: Lehekülje number (5) koosneb kolmest osast:

- peatüki number (2)
- järgneva lehekülje number (3) peatükis
- lehekülgede koguarv peatükis (4)

Sissejuhatus masina kohta

Tootja

Tootja nimi ja aadress on toodud kataloogi teisel lehel.

Teenindus

Masina varuosade tellimiseks või masina kasutamisega seonduvate probleemide teatamiseks võtke ühendust lähima Tetra Pak kontoriga.

Seadme ja dokumendiga seonduvate küsimuste, kommentaaride ja parandusettepanekute puhul võtke ühendust ettevõtte esindajaga.

Identifikatsioon

CE klassifikatsioon

Seade on kooskõlas Euroopa Majanduspiirkonna (EEA) tervishoiu- ja ohutusnõuetega.

Masina andmeplaat

Joonisel (B) leheküljel i-5 on kujutatud masina andmeplaati. Masina andmeplaadi joonis ja selle asukoht seadmel on toodud seadmega kaasasoleva juhendi sissejuhatavas peatükis. Masina andmeplaadil on toodud allpool loetletud andmed, mida vajate antud konkreetse seadmega seoses Tetra Paki poole pöördudes.

- Masina tüüp (8)
- Maht (9)
- Joonisspetsifikatsioonid (10)
- Masina seerianumber (11)
- Tootja (12)
- CE tähis (13)
- Tootmisaasta (14)

Joonisel (C) leheküljel i-5 on kujutatud näide masina spetsifikatsioonist. Veenduge, et juhendi esimestel lehekülgedel toodud andmed seadme kohta vastavad masina andmesildil olevatele andmetele ja masina spetsifikatsioonile.

Kuidas varuosade kataloogi kasutada

Leidke varuosa number

a) Vt joonist (D) lk i-5: Leidke peatükk, mille number (15) on toodud selle põhirühma juures, mis sisaldab otsitavat varuosa.

Punktid b) ja c) viitavad joonisele (E) lk i-6.

b) Põhirühma joonisel leidke masina alamrühm (17), mis sisaldab otsitavat osa või alamrühma. Leidke positsiooninumber (18) ja avage joonisele järgnev loeteluleht.

c) Leidke positsiooninumber/viite tähis (16) või alamgrupi nimetus (19). Avage parempoolses veerus loetletud vastav lehekülje number (20). Tetra Pak on valinud viite tähise puhul alatiseks kasutamiseks funktsioonile suunatud struktuuri. Funktsioonile suunatud struktuuri prefiks (=) pole viite tähises näidatud.

Punktid d) ja e) viitavad jooniselerefer (F) lk i-6.

d) Leidke otsitav osa (21) alamrühma joonisel ja seejärel osa positsioonnumber.

e) Osa number (29) ja osa kirjeldus (30) on toodud loetelulehel positsioonnumbri kõrval.

Varuosade kataloogis toodud teave

Allpool toodud loetelui viitab joonisele (F) lk i-6. Varuosade kataloog sisaldab järgmist teavet seadme rühmade, alamrühmade ja varuosade kohta:

- Rühmastruktuuri viide (22). Märgib seadme loetelu struktuuris järgmist kõrgemat rühma.
- Rühma nimetus (23)
- Mõõtühik (25)
- Kogus (26)
- Koostejoonise number (27)
- Loetelu lehekülgede vahemik (28). Kaasatud kui rühma joonised või loetelu on toodud mitmel lehel.
- Osa või alamrühma number (29)
- Alamrühma nimetus või osa kirjeldus (30)
- Rühma number (31)
- Seadme number (32)
- Rühma teabe pealkiri (33). Näitab, kas pealkirja all toodud jaotis on konkreetse masinavariandi kohta või on tegemist tavaliste varuosade loeteluga. Kui loetelus on toodud rohkem kui üks variant ja iga variandi jaoks on oma koostejoonis, esitatakse viide selle variandi koostejoonise leheküljele.
- Siseteave (34)

Johdanto

Tietoja käsikirjasta

Tetra Pak suosittelee kaikkien toimitettavien oppaiden lukemista huolellisesti. Varmista, että toimitetut oppaat ovat laitetta käyttävän tai huoltavan henkilökunnan saatavilla.

Tämä luettelo on säilytettävä laitteen käyttöiän ajan ja toimitettava edelleen mahdolliselle seuraavalle omistajalle tai käyttäjälle.

Tetra Pak ei vastaa laitevaurioista, jotka aiheutuvat laitteen mukana tulevissa oppaissa annettujen ohjeiden noudattamatta jättämisestä.

Toimitettavat ohjeet

Tämän laitteen mukana toimitettaviin ohjeisiin kuuluvat:

- CM
  Muunnoskirjassa on teknikoille tarkoitettuja ohjeita laitteiston muuttamisesta eri tuotantotiloihin.
- EM
  Sähkökirjassa on teknikoille tarkoitettuja tietoja laitteen sähköjärjestelmästä.
- IM
  Asennuskäsikirjassa on teknikoille tarkoitettuja tietoja, jotka tarvitaan laitteen turvallista asentamista varten.
- MM
  Huoltokäsikirjassa on teknikoille tarkoitettuja tietoja tämän laitteen huoltamisesta.
- OM
  Käyttäjän käsikirjassa on käyttäjälle tarkoitettuja tietoja laitteen käsittelystä ja käyttämisestä ennen tuotantoa, tuotannon aikana ja sen jälkeen.
- SPC
  Varaosaluettelossa on tietoja, joita tarvitaan varaosien tilaamiseen Tetra Pakilta.
- TeM
  Tekninen käsikirja
  - sisältää teknikoille tarkoitettuja tietoja, joita tarvitaan laitteen turvallista asentamista varten
  - sisältää teknikoille tarkoitettuja tietoja laitteen huoltamisesta
  - sisältää teknikoille tarkoitettuja tietoja koneen/laitteen sähköjärjestelmästä
  - sisältää tietoja, joita tarvitaan varaosien tilaamiseen Tetra Pakilta.

Sivujen asettelu

Katso kuva (A) sivulla i-5: Varaosaluettelon pääsivut koostuvat kuvasivusta (1) ja sitä vastaavasta luettelosivusta (7). Sivunumero (5) näytetään kuvasivun ylätunnisteessa ja luettelosivun alatunnisteessa. Asiakirjan numero (6) näytetään luettelosivun alatunnisteessa.

Sivunumerointi

Katso kuva (A) sivulla i-5: Sivunumerossa (5) on kolme osaa:

- luvun numero (2)
- perättäinen sivunumero (3) luvun sisällä
- luvun kokonaissivumäärä (4).

Koneen esittely

Valmistaja

Valmistajan nimi ja osoite on ilmoitettu tämän luettelon toisella sivulla.

Huolto

Jos haluat tilata tähän koneeseen varaosia tai jos tämän koneen käytössä ilmenee ongelmia, jotka haluat raportoida, ota yhteyttä lähimpään Tetra Pakin toimistoon.

Jos sinulla on muuta kysyttävää, huomautettavaa tai ehdotuksia ja sen asiakirjoja koskevista parannuksista, ota yhteys yhteyshenkilöön.

Tunnistetiedot

CE-luokitus

Tämä laite vastaa Euroopan talousalueen (ETA) terveyttä ja turvallisuutta koskevia perusvaatimuksia.

Koneen tyyppikilpi

Kuvassa (B) sivulla i-5 on esimerkki koneen tyyppikilvestä. Voimassa olevan tyyppikilven kuva ja sen sijainti koneessa käy ilmi laitteiston mukana tulleiden ohjeiden Johdanto-luvusta. Tyyppikilvessä on tarvitsemasi Tetra Pakin voimassa olevat yhteystiedot, kun on kyseessä tämä nimenomainen laite.

- Konetyyppi (8)
- Tilavuus (9)
- Piirustuserittely (10)
- Koneen sarjanumero (11)
- Valmistaja (12)
- CE-merkki (13)
- Valmistusvuosi (14)

Kuvassa (C) sivulla i-5 on esimerkki koneen erittelystä. Varmista, että tämän ohjeen etusivuilla ilmoitetut laitetiedot vastaavat tyyppikilven ja kone-erittelyn tietoja.

Tämän varaosaluettelon käyttäminen

Etsi varaosan numero

a) Katso kuva (D) sivulla i-5: Siirry lukuun (15), joka on ilmoitettu etsittävän osan pääryhmän vieressä.

Kohdat b) ja c) viittaavat kuvaan (E) sivulla i-6.

b) Etsi pääryhmän kuvasta koneen alaryhmä (17), joka sisältää etsimäsi osan tai alaryhmän. Merkitse muistiin paikkanumero (18) ja siirry luettelosivulle, joka seuraa kuvaa.

c) Etsi paikkanumero (16) tai alaryhmän nimi (19). Siirry vastaavalle sivunumerolle (20), joka on ilmoitettu oikeassa sarakkeessa. Tetra Pak on päättänyt aina noudattaa toimintoperusteista rakennetta viitemerkinnöissä. Viitemerkinnässä ei esitetä toimintoperusteisen rakenteen osoittavaa etuliitettä (=).

Kohdat d) ja e) viittaavat kuvaan (F) sivulla i-6.

d) Hae etsittävä osa (21) alaryhmän kuvasta ja merkitse osan paikkanumero muistiin.

e) Osanumero (29) ja osan kuvaus (30) on annettu paikkanumeron vieressä luettelosivulla.

Varaosaluettelossa olevat tiedot

Alla oleva luettelo viittaa kuvaan (F) sivulla i-6. Varaosaluettelo sisältää seuraavat tiedot ryhmistä, alaryhmistä ja laitteen varaosista:

- Ryhmärakenneviite (22). Osoittaa seuraavaksi ylemmän ryhmän laiteluettelorakenteessa.
- Ryhmän nimi (23)
- Mittayksikkö (25)
- Määrä (26)
- Kokoonpanopiirustuksen numero (27)
- Luettelon sivualue (28). Tämä on mukana, jos ryhmäkuvassa tai luettelossa on useita sivuja.
- Osan tai alaryhmän numero (29)
- Alaryhmän nimi tai osan kuvaus (30)
- Ryhmän numero (31)
- Laitteen numero (32)
- Ryhmätietojen otsikko (33). Osoittaa, koskeeko alla oleva osio tiettyä koneversiota vai onko kyseessä yhteisten osien luettelo. Jos luettelolla on useampi kuin yksi versio ja kullakin versiolla on oma kokoonpanopiirustuksensa, näytetään version kokoonpanopiirustuksen sivuviittaus.
- Sisäiset tiedot (34)

Introduction

Informations sur ce manuel

Tetra Pak recommande de lire attentivement tous les manuels remis. S'assurer que ceux-ci sont accessibles au personnel d'exploitation et de maintenance de l'équipement.

Il est important de conserver ce catalogue pendant la durée de vie de l'équipement et de le transmettre à tout détenteur ou à tout utilisateur ultérieur de l'équipement.

Tetra Pak ne pourra être tenu responsable d'aucun dommage causé à l'équipement suite au non respect des instructions fournies dans les manuels remis avec cet équipement.

Manuels remis

Les manuels remis avec cet équipement peuvent comprendre

- CM
  Le Manuel de Conversion contient les informations destinées aux techniciens pour la conversion de l'équipement en vue des différents modes de production.
- EM
  Le Manuel Electrique fournit aux techniciens des informations sur le système électrique de l'équipement.
- IM
  Le Manuel d'Installation fournit les informations nécessaires aux techniciens pour installer l'équipement en toute sécurité.
- MM
  Le Manuel d'Entretien contient les informations nécessaires aux techniciens pour la maintenance de l'équipement.
- OM
  Le Manuel d'Utilisation fournit à l'opérateur les informations nécessaires à la manutention et à l'exploitation de l'équipement, avant, pendant et après la production.
- SPC
  Le Catalogue des Pièces de Rechange contient les informations permettant de commander des pièces de rechange auprès de Tetra Pak
- TeM
  Le Manuel Technique
  - contient les informations nécessaires aux techniciens pour installer l'équipement en toute sécurité.
  - contient les informations nécessaires aux techniciens pour la maintenance de l'équipement.
  - fournit aux techniciens des informations sur le système électrique de la machine/de l'équipement.
  - fournit les informations permettant de commander des pièces de rechange auprès de Tetra Pak.

Mise en page

Reportez-vous au schéma (A) page i-5 : Dans un catalogue de Pièces de Rechange, les pages principales sont les pages de schémas (1) et les pages de listes correspondantes (7). Le numéro de page (5) est indiqué en en-tête sur une page de schéma et en bas de page sur une page de liste. Le numéro de document (6) est indiqué au bas d'une page de liste.

Numérotation des pages

Reportez-vous au schéma (A) page i-5 : Un numéro de page (5) se compose de trois éléments :

- numéro du chapitre (2)
- numéro de page séquentiel à l'intérieur du chapitre (3)
- nombre total de pages du chapitre (4)

Présentation de la machine

Fabricant

Les nom et adresse du fabricant sont donnés en deuxième page de ce catalogue.

Assistance technique

Pour commander des pièces de rechange pour cette machine ou signaler un problème lié à son fonctionnement, contactez l'agence Tetra Pak la plus proche.

Contactez le responsable de liaison pour tout autre renseignement, commentaire ou suggestion d'amélioration relatifs à l'équipement et à sa documentation.

Identification

Certification CE

Cet équipement est conforme aux réglementations essentielles en matière d'hygiène et de sécurité de l'Espace économique européen (EEE).

Plaque signalétique de la machine

Le schéma (B) de la page i-5 reproduit un exemple de plaque signalétique de la machine.
Le chapitre Introduction des manuels remis avec cet équipement comprend une reproduction de la plaque signalétique valide de la machine et indique son emplacement sur l'équipement. La plaque comporte les caractéristiques indiquées ci-dessous, nécessaires pour prendre contact avec Tetra Pak à propos de cet équipement spécifique.

- Type de la machine (8)
- Volume (9)
- Caractéristiques schéma (10)
- Numéro de série de la machine (11)
- Fabricant (12)
- Marquage CE (13)
- Année de fabrication (14)

Le schéma (C) de la page i-5 reproduit un exemple de plaque signalétique de la machine. Assurez-vous que les données relatives à l'équipement qui se trouvent au début de ce manuel correspondent bien aux données figurant sur la plaque signalétique de la machine et à ses spécifications.

Comment utiliser ce Catalogue des Pièces de Rechange

Trouver un numéro de pièce de rechange

a) Reportez-vous au schéma (D) page i-5 : Allez au numéro de chapitre (15) indiqué à côté du groupe principal contenant la pièce que vous recherchez.

Les éléments b) et c) se rapportent au schéma (E) de la page i-6.

b) Sur le schéma du groupe principal, recherchez le sous-groupe de la machine (17) contenant la pièce ou le sous-groupe que vous recherchez. Notez le numéro de position (18) et reportez-vous à la page de liste suivant le schéma.

c) Recherchez le numéro de position/la désignation de référence (16) ou le nom du sous-groupe (19). Allez au numéro de page correspondant (20) figurant dans la liste de la colonne de droite. Tetra Pak a pris le parti de toujours utiliser la structure de la fonction pour la désignation de la référence. Le préfixe indiquant la structure de la fonction (=) ne figure pas dans la désignation de la référence.

Les éléments d) et e) se rapportent au schéma (F) de la page i-6.

d) Repérez la pièce (21) que vous recherchez dans le schéma du sous-groupe et notez le numéro de position de la pièce.

e) Le numéro de la pièce (29) et sa description (30) figurent à côté du numéro de position sur la page de liste.

Informations données dans un Catalogue de Pièces de Rechange

La liste ci-dessous se rapporte au schéma (F) de la page i-6. Un Catalogue de Pièces de Rechange contient les informations suivantes concernant les groupes, sous-groupes et pièces de rechange de l'équipement :

- Référence de structure de groupe (22). Indique le groupe immédiatement supérieur dans la structure de liste de l'équipement.
- Nom du groupe (23)
- Unité de mesure (25)
- Quantité (26)
- Numéro de plan de montage (27)
- Groupe de pages de liste (28). Indiqué si la liste ou l'illustration du groupe comporte plusieurs pages.
- Numéro de pièce ou de sous-groupe (29)
- Nom du sous-groupe ou description de la pièce (30)
- Numéro de groupe (31)
- Numéro de l'équipement (32)
- Titre information du groupe (33) Indique si la section en-dessous du titre est destinée à une variante spécifique de la machine ou s'il s'agit d'une liste de pièces communes. Si une liste comprend plus d'une variante et que chaque variante a son propre plan de montage, une référence de page est donnée pour le plan de montage de la variante.
- Information interne (34)

Bevezetés

Kézikönyvre vonatkozó információk

A Tetra Pak javasolja, hogy az összes kapott kézikönyvet gondosan olvassa el. Gondoskodjon róla, hogy a kézikönyvek a berendezést üzemeltető és karbantartó személyzet számára elérhetők legyenek.

Fontos, hogy megőrizzék ezt a katalógust a berendezés élettartama alatt, és átadják a következő tulajdonosoknak és felhasználóknak.

A Tetra Pak nem vállal felelősséget a berendezés semmilyen megrongálódása esetén, ha nem követték a berendezéshez tartozó kézikönyvekben leírt utasításokat.

Szállított kézikönyvek

A berendezéssel szállított kézikönyvek az alábbiak lehetnek

- CM
  Az Átállási kézikönyv a műszaki szakemberek számára a berendezés különböző gyártási módjai közötti átállásra vonatkozó információkat tartalmaz.
- EM
  A Villamossági kézikönyv a berendezés elektronikai rendszerére vonatkozó információkat szolgáltat a műszaki szakemberek részére.
- IM
  Az Üzembe helyezési kézikönyv a berendezés biztonságos üzembe helyezésére vonatkozó információkat biztosít a technikai szakemberek részére.
- MM
  A Karbantartási kézikönyv a berendezés karbantartására vonatkozó információkat biztosít a technikai szakemberek részére.
- OM
  Az Üzemeltetési kézikönyv az üzemeltető személyzetnek szolgáltat a berendezés kezelésére és üzemeltetésére, a feldolgozás előtti, közbeni és utáni teendőkre vonatkozó információkat.
- SPC
  A Tartalékalkatrész-katalógus információt biztosít a pótalkatrészek Tetra Pak-tól történő megrendeléséhez.
- TeM
  A Technikai kézikönyv
  – a berendezés biztonságos üzembe helyezésére vonatkozó információkat biztosít a technikai szakemberek részére.
  – a berendezés karbantartására vonatkozó információkat biztosít a technikai szakemberek részére.
  – a gép/berendezés elektromos rendszerére vonatkotó információkat szolgáltat a technikai szakemberek számára.
  – információkat biztosít a pótalkatrészek Tetra Pak-tól történő megrendeléséhez.

Oldalelrendezés

Tekintse meg az i-5 oldalon lévő (A) ábrát: A Tartalékalkatrész-katalógus főoldalai egy rajzoldalból (1) és egy hozzá tartozó listaoldalból (7) állnak. Az oldalszám (5) a rajzoldal fejlécében és a listaoldal láblécében látható. A dokumentum száma (6) a listaoldal láblécében jelenik meg.

Oldalszámozás

Tekintse meg az i-5 oldalon lévő (A) ábrát: Az oldalszám (5) három részből áll:

- fejezetszám (2)
- folyamatos oldalszám (3) a fejezeten belül
- összes oldalszám (4) a fejezeten belül.

Bevezetés

Gyártó

A gyártó neve és címe a katalógus második oldalán található.

Szerviz

A gép valamely pótalkatrészének megrendelése vagy a berendezés működésével kapcsolatos zavarok bejelentése végett forduljon a legközelebbi Tetra Pak képviselethez.

Bármilyen más, a berendezésre illetve a dokumentációra vonatkozó kérdéseivel, megjegyzéseivel vagy javaslataival forduljon területi képviselőjéhez.

Azonosítás

CE besorolás

Ez a berendezés megfelel az Európai Gazdasági Régió (EEA) alapvető egészségügyi és biztonsági előírásainak.

Gépcímke

A(z) i-5 oldalon található (B) ábra a gépcímke egy példáját mutatja be. Egy érvényes gépcímkét és megfelelő elhelyezését ábrázoló rajz látható a berendezéssel szállított kézikönyv Bevezetés fejezetében. A gépcímke azokat az alább felsorolt adatokat tartalmazza, amelyek a Tetra Pak-kal történő, a berendezésre vonatkozó kommunikációhoz szükségesek.

- Géptípus (8)
- Térfogat (9)
- Tervrajzok (10)
- A gép sorozatszáma (11)
- Gyártó (12)
- CE jelzés (13)
- Gyártási év (14)

A(z) i-5 oldalon található (C) ábra a gép műszaki specifikációjának egy példáját mutatja be. Győződjön meg róla, hogy a kézikönyv első lapjain közölt berendezésadatok megegyeznek a gép adattábláján és a gép műszaki leírásában megjelenő információkkal.

A Tartalékalkatrész-katalógus használata

A tartalékalkatrész számának kikeresése

a) Tekintse meg a(z) i-5 oldalon lévő (D) ábrát: Lapozzon a keresett alkatrészt tartalmazó főcsoport mellett feltüntetett (15) számú fejezetre.

A b) és c) elemek az i-6 oldalon található ábrára vonatkoznak.

b) A főcsoport-ábrán keresse meg azt az alcsoportot (17), amelyik a keresett alkatrészt vagy alcsoportot tartalmazza. Jegyezze meg a pozíciószámot (18), majd lapozzon az ábrát követő listaoldalra.

c) Keresse meg a lejegyzett pozíciószámot/hivatkozási megjelölést (16) vagy a keresett alcsoport nevét (19). Lapozzon a jobb oldali oszlopban feltüntetett számú (20) oldalra. A Tetra Pak a hivatkozási jelöléseket mindig funkció-orientált struktúra alapján végzi el. Az előtaggal jelölt funkció-orientált struktúra (=) nem jelenik meg a hivatkozási jelölésben.

A d) és e) elemek az i-6 oldalon található (F) ábrára vonatkoznak.

d) Az alcsoport ábrán keresse meg a kívánt alkatrészt (21), és jegyezze meg az alkatrész pozíciószámát.

e) Az alkatrész száma (29) és leírása (30) a listaoldalon, a pozíciószám mellett látható.

A Tartalékalkatrész-katalógusban megtalálható információk

Az alábbi lista az i-6 oldalon található (F) ábrára vonatkozik.
A Tartalékalkatrész-katalógus a következő, csoportokra, alcsoportokra és pótalkatrészekre vonatkozó adatokat tartalmazza:

- Csoportstruktúra-hivatkozás (22). A berendezés listás struktúrájában közvetlenül az aktuális csoport fölött álló csoportot jelöli.
- Csoportnév (23)
- Mértékegység (25)
- Mennyiség (26)
- Összeszerelési rajzszám (27)
- Lista oldaltartománya (28). Abban az esetben jelenik meg, ha a csoport ábrája vagy listája többoldalas.
- Alkatrész vagy alcsoport száma (29)
- Alcsoport neve vagy alkatrész leírása (30)
- Csoportszám (31)
- Berendezésszám (32)
- Csoportinformáció fejléce (33). Azt mutatja, hogy a fejléc után következő rész egy speciális gépváltozatra vonatkozik vagy az általános pótalkatrészek listája. Ha a listának több változata van, és mindegyikhez saját összeszerelési rajz tartozik, az illető összeszerelési rajz oldalhivatkozása is megjelenik.
- Belső információ (34)

Inngangur

Upplýsingar um handbók

Tetra Pak mælir með því að allar handbækur sem afhentar eru séu lesnar vandlega. Gætið þess að afhentar handbækur séu tiltækar fyrir starfsfólk sem vinnur við eða viðheldur tækjabúnaðinum.

Það er mikilvægt að halda upp á þennan vörulista allan líftíma tækjabúnaðarins og að láta síðari eiganda eða notanda hafa vörulistann.

Ekki er hægt að gera Tetra Pak ábyrgt fyrir neinum skemmdum sem verða á tækjabúnaðinum vegna þess að ekki er farið eftir leiðbeiningunum í þeim handbókum sem fylgja tækjabúnaðinum.

Afhentar handbækur

Handbækur sem afhentar eru með þessum tækjabúnaði geta verið

- CM
  Breytingahandbók, sem veitir tæknimönnum upplýsingar um breytingar á tækjabúnaðinum milli mismunandi framleiðsluhama.
- EM
  Rafmagnshandbók, sem veitir tæknimönnum upplýsingar um rafkerfi tækjabúnaðarins.
- IM
  Uppsetningarhandbók, sem veitir tæknimönnum nauðsynlegar upplýsingar til að setja tækjabúnaðinn upp á öruggan hátt.
- MM
  Viðhaldshandbók, sem eitir tæknimönnum upplýsingar um viðhald tækjabúnaðarins.
- OM
  Notkunarhandbók, sem veitir stjórnandanum upplýsingar um meðhöndlun og notkun tækjabúnaðarins, fyrir, eftir og meðan á framleiðslu stendur.
- SPC
  Varahlutavörulisti, sem veitir nauðsynlegar upplýsingar til pöntunar varahluta frá Tetra Pak.
- TeM
  Tæknihandbók
  - sem veitir tæknimönnum nauðsynlegar upplýsingar til að setja tækjabúnaðinn upp á öruggan hátt
  - sem veitir tæknimönnum upplýsingar um viðhald tækjabúnaðarins
  - sem veitir tæknimönnum upplýsingar um rafkerfi vélarinnar/ tækjabúnaðarins
  - sem veitir nauðsynlegar upplýsingar til pöntunar varahluta frá Tetra Pak.

Umbrot

Sjá skýringarmynd (A) á síðu i-5: Aðalsíðurnar í Varahlutavörulistanum samanstanda af skýringarsíðu (1) og samsvarandi listasíðu (7). Síðunúmerið (5) er sýnt í haus síðunnar með skýringarmyndinni og í fæti listasíðunnar. Skjalnúmerið (6) er sýnt í fæti listasíðunnar.

Númerun síðu

Sjá skýringarmynd (A) á síðu i-5: Síðunúmer (5) er í þremur hlutum:

- kaflanúmer (2)
- samfellt síðunúmer innan kaflans (3)
- heildarfjölda blaðsíðna í kaflanum (4)

Kynning á vél

Framleiðandi

Fyrir nafn og heimilisfang framleiðanda, sjá síðu tvö í þessum vörulista.

Þjónusta

Til að panta varahluti fyrir þessa vél, eða til að tilkynna vandamál sem tengjast notkun þessarar vélar, skal hafa samband við næstu Tetra Pak skrifstofu.

Hafðu samband við Samskiptatengsl með aðrar fyrirspurnir, athugasemdir eða uppástungur varðandi tækjabúnaðinn og fylgiskjöl hans.

Kennsl

CE flokkun

Þessi tækjabúnaður er í samræmi við grundvallar heilbrigðis- og öryggisreglugerðir á Evrópska efnahags svæðinu (EES).

Nafnplata

Skýringarmynd (B) á síðu i-5 sýnir dæmi um nafnplötu.
Skýringarmynd af gildri nafnplötu og staðsetningu hennar á tækjabúnaðinum er sýnd í Inngangskafla handbókanna sem afhentar eru með þessum tækjabúnaði. Á nafnplötunni eru upplýsingarnar sem taldar eru upp hér að neðan, sem þörf er á þegar haft er samband við Tetra Pak varðandi þennan tiltekna tækjabúnað.

- Vélartegund (8)
- Fjöldi (9)
- Teikniupplýsingar (10)
- Raðnúmer vélar (11)
- Framleiðandi (12)
- CE merki (13)
- Framleiðsluár (14)

Skýringarmynd (C) á síðu i-5 sýnir dæmi um tæknilýsingu vélar. Gættu þess að upplýsingar um tækjabúnað sem talinn er upp á fremstu síðum þessarar handbóka samsvari upplýsingum á nafnplötu og tæknilýsingu vélar.

Hvernig nota á þennan Varahlutavörulista

Finndu varahlutarnúmer

a) Sjá skýringarmynd (D) á síðu i-5: Farðu í kaflanúmerið (15) sem gefið er til kynna við hlið aðalflokksins sem inniheldur hlutinn sem þú vilt finna.

Atriði b) og c) vísa til skýringarmyndar (E) á síðu i-6:

b) Á skýringarmynd aðalflokksins skaltu leita að undirflokki (17) vélarinnar, sem inniheldur hlutinn eða undirflokkinn sem þú ert að leita að. Taktu eftir stöðunúmerinu (18) og farðu á listasíðuna sem fylgir skýringarmyndinni.

c) Leitaðu að stöðunúmeri/tilvísunartitli (16) eða heiti undirflokksins (19). Farðu á samsvarandi síðunúmer (20) sem sýnt er í hægri dálkinum. Tetra Pak hefur kosið að nota alltaf sérhæfða skipan fyrir tilvísunartitla. Forskeytið sem gefur til kynna sérhæfða skipan (=) er ekki sýnt í tilvísunartitlinum.

Atriði d) og e) vísa til skýringarmyndar (F) á síðu i-6:

d) Finndu hlutinn (21) sem þú ert að leita að á undirflokksskýringarmyndinni og taktu eftir stöðunúmeri hlutarins.

e) Hlutarnúmerið (29) og lýsing hlutar (30) eru skráð hjá stöðunúmerinu á listasíðunni.

Upplýsingar skráðar í Varahlutavörulista

Listinn að neðan vísar til skýringarmyndar (F) á síðu i-6: Varahlutavörulisti inniheldur eftirfarandi upplýsingar um flokka, undirflokka og varahluti fyrir tækjabúnaðinn:

- Tilvísun flokkaskipunar (22). Gefur til kynna næsta flokk fyrir ofan í listaskipan tækjabúnaðarins.
- Heiti flokks (23)
- Mælieining (25)
- Magn (26)
- Númer samsetningarteikningar (27)
- Röð listasíðu (28). Fylgir með ef það eru margar blaðsíður í skýringarmynd eða lista flokksins.
- Númer hlutar eða undirflokks (29)
- Heiti undirflokks eða lýsing hlutar (30)
- Númer flokks (31)
- Númer tækjabúnaðar (32)
- Fyrirsögn flokkaskipunar (33). Gefur til kynna ef kaflinn fyrir neðan fyrirsögnina er fyrir sérstakt afbrigði vélar eða ef hann er listi yfir algenga hluti. Ef listi er með meira en eitt afbrigði og hvert afbrigði á sína eigin samsetningarteikningu, er sýnd blaðsíðutilvísun til samsetningarteikningar afbrigðisins.
- Innri upplýsingar (34)

Introduzione

Informazioni sul manuale

Tetra Pak consiglia di leggere con attenzione tutti i manuali forniti in dotazione. Assicurarsi che tutti i manuali in dotazione siano disponibili per il personale addetto al funzionamento o alla manutenzione della macchina.

È importante conservare il presente catalogo per tutta la durata della macchina e consegnarlo al successivo proprietario o utilizzatore.

Tetra Pak non sarà da ritenersi responsabile per eventuali danni alla macchina causati dal mancato rispetto delle istruzioni fornite nei manuali che accompagnano questa macchina.

Manuali in dotazione

I manuali consegnati con la presente macchina possono comprendere:

- CM (Manuale di conversione)
  Questo manuale fornisce ai tecnici le informazioni necessarie per la conversione della macchina da una modalità di produzione a un'altra.
- EM (Manuale elettrico)
  Questo manuale fornisce ai tecnici informazioni sull'impianto elettrico della macchina.
- IM (Manuale d'installazione)
  Questo manuale fornisce ai tecnici le informazioni necessarie per installare in sicurezza la macchina.
- MM (Manuale di manutenzione)
  Questo manuale fornisce ai tecnici le informazioni sulla manutenzione della macchina.
- OM (Manuale operativo)
  Questo manuale fornisce all'operatore le informazioni sull'utilizzo e il funzionamento della macchina prima, durante e dopo la produzione.
- SPC (Catalogo dei pezzi di ricambio)
  Questo catalogo fornisce le informazioni necessarie per ordinare i pezzi di ricambio a Tetra Pak.
- TeM (Manuale tecnico)
  Questo manuale:
  - fornisce ai tecnici le informazioni necessarie per installare in sicurezza la macchina
  - fornisce ai tecnici le informazioni sulla manutenzione della macchina
  - fornisce ai tecnici informazioni sull'impianto elettrico della macchina
  - fornisce le informazioni necessarie per ordinare i pezzi di ricambio a Tetra Pak.

Schema delle pagine

Consultare la figura (A) a pagina i-5: Le pagine principali di un Catalogo dei pezzi di ricambio sono costituite da una pagina con la figura (1) e una pagina elenco corrispondente (7). Il numero di pagina (5) è indicato nell'intestazione delle pagine con le figure e nel piè di pagina delle pagine elenco. Il codice del documento (6) è indicato nel piè di pagina delle pagine elenco.

Numerazione delle pagine

Consultare la figura (A) a pagina i-5: Il numero di pagina (5) è suddiviso in tre parti:

- numero del capitolo (2)
- numero progressivo di pagina all'interno del capitolo (3)
- numero totale di pagine nel capitolo (4)

Introduzione alla macchina

Fabbricante

Il nome e l'indirizzo del fabbricante sono riportati sulla seconda pagina del presente catalogo.

Assistenza

Per ordinare i pezzi di ricambio per questa macchina oppure per riferire problemi associati al funzionamento della macchina, contattare l'ufficio Tetra Pak più vicino.

Per tutte le altre richieste, commenti o suggerimenti per eventuali miglioramenti da apportare alla macchina e alla relativa documentazione, contattare il responsabile di collegamento.

Identificazione

Classificazione CE

Questa macchina è conforme alle principali norme sanitarie e di sicurezza dell'Area Economica Europea (EEA).

Targhetta della macchina

La figura (B) a pagina i-5 mostra un esempio di targhetta della macchina. Il capitolo Introduzione di tutti i manuali consegnati con la presente macchina contiene invece la figura della targhetta della macchina valida e la sua posizione sulla macchina. La targhetta riporta i dati elencati qui sotto, che sono necessari per contattare Tetra Pak in relazione a questa macchina specifica.

- Tipo di macchina (8)
- Volume (9)
- Specifiche disegno (10)
- Numero di matricola della macchina (11)
- Fabbricante (12)
- Marchio CE (13)
- Anno di fabbricazione (14)

La figura (C) a pagina i-5 mostra un esempio delle specifiche di una macchina. Verificare che i dati relativi alla macchina elencati nelle pagine iniziali del presente manuale corrispondano ai dati riportati sulla targhetta della macchina e nelle specifiche della macchina.

Come usare questo Catalogo dei pezzi di ricambio

Individuare il numero del pezzo di ricambio

a) Consultare la figura (D) a pagina i-5: andare al numero del capitolo (15) indicato accanto al gruppo principale che contiene il pezzo che si desidera individuare.

I punti b) e c) fanno riferimento alla figura (E) a pagina i-6.

b) Nella figura del gruppo principale, identificare il sottogruppo della macchina (17) che contiene il pezzo o il sottogruppo cercato. Annotare il numero di posizione (18) e andare alla pagina elenco che segue la figura.

c) Identificare il numero di posizione/l'indicazione di riferimento (16) o il nome del sottogruppo (19). Andare al numero di pagina corrispondente (20) indicato nella colonna di destra. Per le indicazioni di riferimento, Tetra Pak ha scelto di usare sempre la struttura "function-oriented". Il prefisso che indica la struttura "function-oriented" (=) non è mostrato nell'indicazione di riferimento.

I punti d) e e) fanno riferimento alla figura (F) a pagina i-6.

d) Individuare il pezzo (21) cercato sulla figura del sottogruppo e annotare il numero di posizione del pezzo.

e) Il numero del pezzo (29) e la descrizione del pezzo (30) sono indicati accanto al numero di posizione sulla pagina elenco.

Informazioni contenute nel Catalogo dei pezzi di ricambio

L'elenco seguente fa riferimento alla figura (F) a pagina i-6. Il Catalogo dei pezzi di ricambio contiene le seguenti informazioni sui gruppi, i sottogruppi e i pezzi di ricambio della macchina:

- Riferimento struttura gruppo (22). Indica il gruppo superiore successivo nella struttura elenco della macchina.
- Nome gruppo (23)
- Unità di misura (25)
- Quantità (26)
- Numero disegno di assemblaggio (27)
- Intervallo delle pagine elenco (28). Questa informazione è presente se la figura o l'elenco relativi al gruppo occupano più di una pagina del manuale.
- Numero pezzo o sottogruppo (29)
- Nome sottogruppo o descrizione pezzo (30)
- Numero gruppo (31)
- Numero macchina (32)
- Intestazione informazioni gruppo (33). Indica se la sezione che segue l'intestazione si riferisce a una variante di macchina specifica oppure se si tratta di un elenco di parti comuni. Se un elenco contiene più di una variante ed esiste un disegno di assemblaggio specifico per ogni variante, viene fornito il riferimento alla pagina in cui è mostrato il disegno di assemblaggio relativo alla variante.
- Informazioni interne (34)

Įvadas

Informacija apie instrukciją

"Tetra Pak" rekomenduoja atidžiai perskaityti visas pateiktas instrukcijas. Pasirūpinkite, kad instrukcijos būtų prieinamos darbuotojams, kurie eksploatuoja arba prižiūri įrangą.

Svarbu šį katalogą išsaugoti visą įrangos tarnavimo laiką ir perduoti jį kitam įrangos savininkui arba naudotojui.

"Tetra Pak" neprisiima atsakomybės už įrangos sugadinimą, jei nesilaikoma nurodymų, pateiktų prie šios įrangos pridedamuose kataloguose.

Pateikiamos instrukcijos

Su šia įranga pateikiamose instrukcijose gali būti

- CM
  Transformacijos instrukcija, suteikianti technikams informaciją apie įrangos transformavimą skirtingiems gamybos režimams.
- EM
  Elektrinės dalies instrukcija, suteikianti technikams informaciją apie įrangos elektros sistemą.
- IM
  Įrengimo instrukcija, suteikianti technikams informaciją, reikalingą norint saugiai sumontuoti įrangą.
- MM
  Techninės priežiūros instrukcija, suteikianti technikams informaciją apie įrangos priežiūrą.
- OM
  Eksploatavimo instrukcijos paskirtis yra suteikti informaciją operatoriui, kaip naudoti ir valdyti įrangą prieš gamybos procesą, jo metu ir po jo.
- SPC
  Atsarginių dalių katalogas, kuriame yra informacija, reikalinga atsarginėms dalims iš "Tetra Pak" užsakyti
- TeM
  Techninė instrukcija
  – suteikia technikams informaciją, reikalingą saugiai sumontuoti įrangą
  – suteikia technikams informaciją apie įrangos priežiūrą
  – suteikia technikams informaciją apie įrangos elektros sistemą
  – suteikia informaciją, reikalingą užsakyti iš "Tetra Pak" atsargines dalis

Puslapių išdėstymas

Žr. paveikslėlį (A) puslapyje i-5. Pagrindiniai atsarginių dalių katalogo puslapiai sudaryti iš paveikslėlio puslapio (1) ir atitinkamo sąrašo puslapio (7). Puslapio numeris (5) nurodomas paveikslėlio puslapio viršuje ir sąrašo puslapio apačioje. Dokumento numeris (6) nurodomas sąrašo puslapio apačioje.

Puslapių numeravimas

Žr. iliustraciją (A) puslapyje i-5. Puslapio numerį (5) sudaro trys dalys:

- skyriaus numeris (2)
- puslapio eilės numeris (3) skyriuje
- bendras puslapių skaičius (4) skyriuje

Įrenginio pristatymas

Gamintojas

Gamintojo pavadinimas ir adresas pateikti antrajame šio katalogo puslapyje.

Aptarnavimas

Jei reikia šiai įrangai užsakyti atsarginių dalių arba pranešti apie jos eksploatavimo nesklandumus, kreipkitės į artimiausią "Tetra Pak" biurą.

Su kitais klausimais, pastabomis ar įrangos ir jos dokumentacijos tobulinimo pasiūlymais kreipkitės į savo kontaktinį asmenį.

Identifikavimas

CE klasifikacija

Šis įrenginys atitinka esminius Europos ekonominės erdvės (EEE) sveikatos ir saugumo reikalavimus.

Vardinė plokštelė

Puslapyje i-5 pateiktame paveikslėlyje (B) parodytas įrangos vardinės plokštelės pavyzdys.
Atitinkamos įrangos vardinė plokštelė ir jos vieta ant įrangos parodoma su šia įranga pateikiamų instrukcijų įvade. Įrangos vardinėje plokštelėje pateikiami žemiau nurodyti duomenys, kurie reikalingi kreipiantis į "Tetra Pak" dėl konkretaus įrenginio.

- Mašinos tipas (8)
- Tomas (9)
- Brėžinių specifikacijos (10)
- Įrangos serijos numeris (11)
- Gamintojas (12)
- CE ženklas (13)
- Pagaminimo metai (14)

Paveikslėlyje (C) puslapyje i-5 parodytas įrangos specifikacijos pavyzdys. Patikrinkite, ar šios instrukcijos pirmuosiuose puslapiuose nurodyti duomenys atitinka duomenis vardinėje plokštelėje ir įrangos specifikaciją.

Kaip naudotis atsarginių dalių katalogu

Atsarginės dalies numerio suradimas

a) Žr. iliustraciją (D) puslapyje i-5. Atsiverskite skyrių (15), nurodytą šalia pagrindinio mazgo, kuriame yra jūsų ieškoma dalis.

Punktai b) ir c) atitinka paveikslėlį (E) puslapyje i-6.

b) Pagrindinio mazgo paveikslėlyje suraskite smulkesnį įrangos mazgą (17), kuriame yra jūsų ieškoma dalis arba mazgas. Pasižiūrėkite pozicijos numerį (18) ir suraskite jį toliau pateiktame sąraše.

c) Suraskite pozicijos numerį/pavadinimą (16) arba smulkesnio mazgo pavadinimą (19). Atsiverskite dešiniajame stulpelyje nurodytą puslapį (20). "Tetra Pak" nusprendė pavadinimuose visada naudoti paskirtį atitinkančią struktūrą. Pavadinimuose nepateikiamas paskirtį atitinkančios struktūros prefiksas (=).

Punktai d) ir e) atitinka paveikslėlį (F) puslapyje i-6.

d) Suraskite ieškomą dalį (21) smulkesnio mazgo paveikslėlyje ir pasižiūrėkite dalies pozicijos numerį.

e) Dalies numeris (29) ir dalies aprašymas (30) sąrašo puslapyje nurodyti šalia pozicijos numerio.

Atsarginių dalių kataloge pateikiama informacija

Žemiau pateiktas sąrašas atitinka paveikslėlį (F) puslapyje i-6. Atsarginių dalių kataloge apie įrangos mazgus, smulkesnius mazgus ir atsargines dalis pateikiama tokia informacija:

- Struktūrinė mazgo nuoroda (22). Nurodo stambesnį mazgą įrangos sąrašo struktūroje.
- Mazgo pavadinimas (23)
- Matavimo vienetai (25)
- Kiekis (26)
- Surinkimo brėžinio numeris (27)
- Sąrašo puslapių intervalas (28) Pateikiamas, jei mazgo paveikslėlis arba sąrašas užima kelis puslapius.
- Dalies arba smulkesnio mazgo numeris (29)
- Smulkesnio mazgo arba dalies aprašymas (30)
- Mazgo numeris (31)
- Įrangos numeris (32)
- Informacijos apie mazgą puslapio antraštė (33). Nurodo, ar po antrašte pateikta informacija yra specifinio įrangos varianto, ar tai paprastų dalių sąrašas. Jei yra daugiau kaip vienas sąrašo variantas ir kiekvienam variantui yra atskiras surinkimo brėžinys, nurodomas puslapis, kuriame pateiktas konkretaus varianto surinkimo brėžinys.
- Vidinė informacija (34)

Ievads

Informācija par rokasgrāmatu

Tetra Pak iesaka rūpīgi izlasīt visas piegādātās rokasgrāmatas. Jānodrošina, lai piegādātas rokasgrāmatas būtu pieejamas personālam, kas apkalpo iekārtas vai veic to apkopi.

Šo katalogu ir nepieciešams saglabāt visu laiku, kamēr iekārtas tiek izmantotas, un nodot katalogu nākamajam īpašniekam vai lietotājam.

Tetra Pak neatbild par jebkuriem iekārtas bojājumiem, kuri rodas līdz ar iekārtu piegādāto instrukciju neievērošanas rezultātā.

Piegādātas rokasgrāmatas

Līdz ar iekārtu var tikt piegādātas šādas rokasgrāmatas

- CM
  Pārslēgšanas rokasgrāmata sniedz tehniķiem informāciju par iekārtas pārslēgšanu dažādos atšķirīgos ražošanas režīmos.
- EM
  Elektriskās instalācijas rokasgrāmata sniedz tehniķiem informāciju par iekārtas elektriskās instalācijas sistēmu.
- IM
  Uzstādīšanas rokasgrāmata sniedz tehniķiem informāciju, kas nepieciešama drošai iekārtas uzstādīšanai.
- MM
  Apkopes rokasgrāmata sniedz tehniķiem informāciju par iekārtas apkopi.
- OM
  Ekspluatācijas rokasgrāmata sniedz apkalpojošajam personālam informāciju par iekārtas apkalpošanu un ekspluatēšanu pirms darba sākuma, darba laikā un pēc darba beigām.
- SPC
  Rezerves daļu katalogs sniedz informāciju, kas nepieciešama, lai pasūtītu rezerves daļas no Tetra Pak
- TeM
  Tehniskā rokasgrāmata
  - sniedz tehniķiem informāciju, kas nepieciešama drošai iekārtas uzstādīšanai
  - sniedz tehniķiem informāciju par iekārtas apkopi
  - sniedz tehniķiem informāciju par mašīnas/iekārtas elektrisko instalāciju
  - sniedz informāciju, kas nepieciešama, lai pasūtītu rezerves daļas no Tetra Pak.

Lappuses izkārtojums

Skatīt ilustrāciju (A) i-5 lappusē: Galvenās lappuses Rezerves daļu katalogā sastāv no ilustrāciju lapas (1) un atbilstīgās saraksta lapas (7). Lappuses numurs (5) ir norādīts ilustrāciju lapas galvenē un saraksta lapas kājenē. Dokumenta numurs (6) ir norādīts saraksta lapas kājenē.

Lappušu numerācija

Skatīt ilustrāciju (A) lappusē i-5: Lappuses numurs (5) sastāv no trim daļām:

- nodaļas numura (2)
- secīga lappuses numura nodaļas ietvaros (3)
- kopējā lappušu skaita nodaļā (3)

Iepazīstināšana ar iekārtu

Ražotājs

Ražotāja nosaukumu un adresi skatīt šī kataloga otrajā lappusē.

Serviss

Lai pasūtītu rezerves daļas šai mašīnai vai lai ziņotu par problēmām saistībā ar šīs mašīnas ekspluatāciju, sazinieties ar tuvāko Tetra Pak pārstāvniecību.

Ja Jums ir citi jautājumi, piezīmes vai ieteikumi par iekārtas un tās dokumentācijas uzlabošanu, tad lūdzam sazināties ar Sakaru biroju.

Identifikācija

EK klasifikācija

Šī iekārta atbilst galvenajām Eiropas Ekonomiskās Zonas (EEA) regulām, kuras attiecas uz veselību un drošību.

Mašīnas tipa plāksnīte

Ilustrācijā (B) i-5 lappusē ir redzams mašīnas tipa plāksnītes paraugs. Aktuālās mašīnas tipa plāksnīte un tās atrašanās vieta uz iekārtas ir parādīta līdz ar šo iekārtu piegādāto rokasgrāmatu Ievada nodaļā. Mašīnas tipa plāksnīte ietver turpmāk uzskaitīto informāciju, kura ir nepieciešama, sazinoties ar Tetra Pak par šo konkrēto iekārtu.

- Mašīnas tips (8)
- Daudzums (9)
- Rasējuma specifikācijas (10)
- Mašīnas sērijas numurs (11)
- Ražotājs (12)
- CE apzīmējums (13)
- Izgatavošanas gads (14)

Ilustrācijā (C) lappusē i-5 ir parādīts mašīnas specifikācijas paraugs. Pārliecinieties, ka šīs rokasgrāmatas titullapās minētā informācija par iekārtu atbilst tai, kas norādīta uz mašīnas tipa plāksnītes un mašīnas specifikācijā.

Rezerves daļu kataloga lietošana

Vajadzīgās rezerves daļas numura atrašana

a) Skatiet ilustrāciju (D) lappusē i-5: Atrodiet nodaļas numuru (15), kas norādīts līdzās galvenajai grupai, kurā ietilpst Jūsu meklētā rezerves daļa.

Pozīcijas b) un c) skatiet ilustrāciju (E) lappusē i-6.

b) Galvenās grupas ilustrācijā atrodiet mašīnas apakšgrupu (17), kurā ietilpst Jūsu meklētā detaļa vai apakšgrupa. Atzīmējiet pozīcijas numuru (18) un pievērsieties saraksta lappusei, kura seko šai ilustrācijai.

c) Sameklējiet atbilstīgo pozīcijas numuru (16) vai apakšgrupas nosaukumu (19). Pievērsieties atbilstīgajam lappuses numuram (20), kas norādīts ailē pa labi. Tetra Pak norādes apzīmēšanai ir izvēlējies vienmēr izmantot uz funkciju orientētu struktūru. Priedēklis, kas norāda uz funkciju orientētu struktūru (=), norādes apzīmējumā nav parādīts.

Pozīcijas d) un e) skatiet ilustrāciju (F) lappusē i-6.

d) Atrodiet vajadzīgo rezerves daļu (21) apakšgrupas ilustrācijā un atzīmējiet šīs detaļas pozīcijas numuru.

e) Šīs detaļas numurs (29) un apraksts (30) atrodas saraksta lapā līdzās pozīcijas numuram.

Rezerves daļu katalogā sniegtā informācija

Šis saraksts attiecas uz ilustrāciju (F) lappusē i-6. Rezerves daļu katalogs satur šādu informāciju par grupām, apakšgrupām un iekārtas rezerves daļām:

- Grupas struktūras norāde (22). Norāda nākamo augstāko grupu iekārtas saraksta struktūrā.
- Grupas nosaukums (23)
- Mērvienība (25)
- Skaits (26)
- Montāžas rasējuma numurs (27)
- Saraksta lappuses zona (28). Tiek izmantota tad, ja grupas ilustrācija vai saraksts ir uz vairākām lappusēm.
- Daļas vai apakšgrupas numurs (29)
- Apakšgrupas nosaukums vai daļas apraksts (30)
- Grupas numurs (31)
- Iekārtas numurs (32)
- Grupas informācijas iedaļas apzīmējums (33). Norāda, vai iedaļa zem šī apzīmējuma attiecas uz noteiktu mašīnas variantu, vai arī tas ir kopējo rezerves daļu saraksts. Ja sarakstam ir vairāk nekā viens variants un katram variantam ir savs montāžas rasējums, tad tiek dota atsauce uz lappusi, kur atrodams katra varianta montāžas rasējums.
- Iekšējā informācija (34)

Inleiding

Informatiehandboek

Tetra Pak adviseert alle meegeleverde handboeken zorgvuldig te lezen. Controleer of het bedienende of onderhoudspersoneel van de machine de beschikking heeft over de meegeleverde handboeken

Het is belangrijk deze catalogus tijdens de levensduur van de machine te bewaren en de catalogus door te geven aan iedere volgende eigenaar of gebruiker.

Tetra Pak stelt zich niet aansprakelijk voor eventuele schade aan de installatie als gevolg van het niet naleven van de instructies die in de meegeleverde handboeken worden gegeven.

Meegeleverde handboeken

De bij deze installatie meegeleverde handboeken omvatten

- CM
  Het conversiehandboek geeft technici informatie met betrekking tot de ombouw van de installatie tussen verschillende productiemodi.
- EM
  Het elektriciteitshandboek informeerttechnici omtrent het elektrischesysteem van de installatie.
- IM
  Het installatiehandboek informeert technici hoe men de installatie op veilige wijze installeert.
- MM
  Het onderhoudshandboek geeft technici informatie over het onderhoud van de installatie.
- OM
  Het bedieningshandboek informeert de operator betreffende het omgaan met en het bedienen van de installatie voor, tijdens en na de productie.
- SPC
  De reserveonderdelencatalogus geeft de nodige informatie omtrent het bestellen van reserveonderdelen bij Tetra Pak
- TeM
  Het technische handboek
  - informeert technici hoe men de installatie op veilige wijze installeert
  - informeert technici omtrent het onderhoud van de installatie
  - informeert technici omtrent het elektrische systeem van de machine/ installatie
  - informeert over welke informatie men nodig heeft om reserveonderdelen bij Tetra Pak te bestellen.

Pagina layout

Zie afbeelding (A) op pagina i-5: De belangrijkste bladzijden van een reserveonderdelencatalogus bestaan uit een bladzijde met afbeeldingen (1) en een bladzijde met een corresponderende lijst (7). Het bladzijde-nummer (5) is te vinden in de kop van een bladzijde met een afbeelding en in de voetnoot van een lijstbladzijde. Het documentennummer (6) is te vinden in de voetnoot van een lijstbladzijde.

Bladzijdenummering

Zie afbeelding (A) op pagina: i-5: Een bladzijdenummer (5) bestaat uit drie delen:

- hoofdstuknummer (2)
- opeenvolgend bladzijdenummer in het hoofdstuk (3)
- totaal aantal bladzijden in het hoofdstuk (4)

Introductie van de machine

Fabrikant

Zie de tweede bladzijde van deze catalogus voor naam en adres van de fabrikant.

Service

Neem voor het bestellen van reserveonderdelen voor deze machine, of om bedieningsproblemen met betrekking tot deze machine te melden, contact op met de dichtstbijzijnde Tetra Pak vestiging.

Neem contact op met de contactpersoon voor verdere informatie, opmerkingen of suggesties ter verbetering van de installatie en de bijbehorende documentatie.

Identificatie

CE-classificatie

Deze installatie voldoet aan de basisvoorschriften voor gezondheid en veiligheid voor het Europese Economische Gebied (EEG).

Machineplaatje

Afbeelding (B) op bladzijde i-5 toont een voorbeeld van een machineplaatje. Een afbeelding van het geldige machineplaatje en de plaatsing ervan worden getoond in de Inleiding van de handboeken, die bij deze installatie worden meegeleverd. Het machineplaatje bevat onderstaande gegevens, die men nodig heeft wanneer men omtrent de desbetreffende installatie contact opneemt met Tetra Pak.

- Machinetype (8)
- Volume (9)
- Specificatietekeningen (10)
- Serienummer van de machine (11)
- Fabrikant (12)
- CE-markering (13)
- Jaar van fabrikage (14)

Afbeelding (C) op pagina i-5 toont een voorbeeld van een machinespecificatie. Controleer of de gegevens betreffende de installatie op de eerste bladzijden van dit handboek overeenkomen met de gegevens op het machineplaatje en de machinespecificatie.

Gebruik van de reserveonderdelencatalogus

Vinden van het bestelnummer van een reserveonderdeel

a) Zie afbeelding (D) op pagina i-5: Ga naar het hoofdstuknummer (15) dat wordt aangeven naast de hoofdgroep waarin zich het door u gezochte onderdeel bevindt.

Items b) en c) verwijzen naar afbeelding (E) op pagina i-6.

b) Op de afbeelding van de hoofdgroep zoekt u de machinesubgroep (17), die het gezochte onderdeel of de gezochte subgroep bevat. Noteer het positienummer (18) en ga naar de lijstbladzijde die op de afbeelding volgt.

c) Zoek naar het positienummer/de referentie (16) of de subgroep-naam (19). Ga naar de corresponderende bladzijde (20) die in de rechterkolom staat vermeld. Tetra Pak heeft voor de benoeming van de referenties gekozen voor de functiegeoriënteerde structuur. De prefixaanduidende functiegeoriënteerde structuur (=) wordt niet in de referentie getoond.

Items d) en e) verwijzen naar afbeelding (F) op pagina i-6.

d) Zoek het gewenste deel (21) op de subgroepafbeelding en noteer het positienummer van het onderdeel.

e) Het bestelnummer (29) en de omschrijving (30) van het onderdeel staan naast het positienummer op de lijstbladzijde.

Informatie die in een reserveonderdelencatalogus wordt gegeven

De onderstaande lijst verwijst naar afbeelding (F) op bladzijde i-6. Een reserveonderdelencatalogus bevat de volgende informatie over groepen, subgroepen en reserveronderdelen voor de installatie:

- Referentie groepstructuur (22). Geeft de volgende hogere groep in de lijststructuur van de installatie aan.
- Groepsnaam (23)
- Meeteenheid (25)
- Hoeveelheid (26)
- Nummer montagetekening (27)
- Lijst bladzijdenreeks (28). Wordt vermeld wanneer er meerdere bladzijden in de groepsafbeelding of -lijst voorkomen.
- Deel- of subgroepnummer (29)
- Subgroepnaam of onderdeelbeschrijving (30)
- Groepsnummer (31)
- Machinenummer (32)
- Titel groepsinformatie (33). Geeft aan of het gedeelte onder de titel voor een specifieke machinesoort is of dat het een lijst met gebruikelijke onderdelen is. Indien een lijst meer dan één type bevat en ieder type zijn eigen montagetekening heeft, wordt een bladzijdereferentie getoond voor de montagetekening van het type.
- Interne informatie (34)

Introduksjon

Informasjon om manualen

Tetra Pak anbefaler at du leser nøye gjennom alle leverte manualer. Sørg for at manualene er tilgjengelige for alle som betjener eller vedlikeholder utstyret.

Det er viktig at du tar vare på denne katalogen under hele levetiden til utstyret og at du gir den videre til eventuelle nye eiere eller brukere.

Tetra Pak vil ikke være ansvarlig for skader på utstyret som oppstår fordi brukeren ikke følger instruksjonene i manualene som følger med utstyret.

Leverte manualer

Manualene som leveres med dette utstyret, kan inkludere

- CM
  Konverteringsmanualen gir teknikere informasjon om hvordan de konverterer utstyret mellom ulike produksjonsmodi.
- EM
  Den elektriske manualen gir teknikere informasjon om utstyrets elektriske system.
- IM
  Installasjonsmanualen gir teknikere informasjon som kreves for å kunne installere utstyret på en sikker måte.
- MM
  Vedlikeholdsmanualen gir teknikere informasjon om vedlikehold av utstyret.
- OM
  Driftsmanualen gir operatøren informasjon om hvordan han håndterer og bruker utstyret før, under og etter produksjon.
- SPC
  Reservedelskatalogen inneholder informasjon som du trenger for å bestille reservedeler fra Tetra Pak
- TeM
  Den tekniske manualen
  – gir teknikere informasjon om sikker installasjon av utstyret
  – gir teknikere informasjon om vedlikehold av utstyret
  – gir teknikere informasjon om maskinens/utstyrets elektriske system
  – inneholder informasjon som du trenger for å bestille reservedeler fra Tetra Pak.

Sideoppsett

Se illustrasjonen (A) på side i-5: Hovedsidene i reservedelskatalogen består av en illustrasjonsside (1) og en korresponderende listeside (7). Sidenummeret (5) vises i topteksten på illustrasjonssiden og i bunnteksten på listesiden. Dokumentnummeret (6) vises i bunnteksten på listesiden.

Sidenummerering

Se illustrasjonen (A) på side i-5: Et sidenummer (5) består av tre deler:

- kapittelnummer (2)
- etterfølgende sidenummer i kapitlet (3)
- det totale antall sider i kapitlet (4)

Introduksjon av maskinen

Produsent

Hvis du ønsker produsentens navn og adresse, kan du se side to i denne katalogen.

Service

Når du skal bestille reservedeler til denne maskinen eller rapportere problemer forbundet med driften av denne maskinen, må du kontakte ditt nærmeste Tetra Pak-kontor.

Når det gjelder andre forespørsler, kommentarer eller forslag til forbedringer av utstyret og dets dokumentasjon, kan du ta kontakt med din kontaktperson.

Identifisering

CE-klassifisering

Dette utstyret er i overensstemmelse med de grunnleggende helse- og sikkerhetsforskriftene i Det europeiske økonomiske samarbeidsområdet (EØS).

Maskinplate

Illustrasjonen (B) på side i-5 viser et eksempel på en maskinplate.
En illustrasjon av en gyldig maskinplate og hvor denne er plassert på utstyret, er vist i introduksjonskapitlet i manualene som følger med dette utstyret. Maskinplaten inneholder nedenstående data, som du trenger når du skal kontakte Tetra Pak angående dette bestemte utstyret.

- Maskintype (8)
- Volum (9)
- Tegningsspesifikasjoner (10)
- Maskin-serienummer (11)
- Produsent (12)
- CE-merke (13)
- Produksjonsår (14)

Illustrasjonen (C) på side i-5 viser et eksempel på en maskinspesifikasjon. Sørg for at utstyrsdataene som står oppført foran i denne manualen, samsvarer med dataene på maskinplaten og maskinspesifikasjonen.

Hvordan bruke denne reservedelskatalogen

Finn et reservedelsnummer

a) Se illustrasjonen (D) på side i-5: Gå til kapittelnummeret (15) som er angitt ved siden av hovedgruppen som inneholder delen du vil finne.

Punkt b) og c) viser til illustrasjonen (E) på side i-6.

b) På hovedgruppeillustrasjonen ser du etter maskinundergruppen (17) som inneholder delen eller undergruppen du ser etter. Merk deg posisjonsnummeret (18), og gå til listesiden som kommer etter illustrasjonen.

c) Se etter posisjonsnummeret/referansebetegnelsen (16) eller undergruppenavnet (19). Gå til det korresponderende sidenummeret (20) som står oppført i høyre kolonne. Tetra Pak har valgt å alltid bruke den funksjonsorienterte inndelingen for referansebetegnelse. Prefiksen som angir funksjonsorientert inndeling (=), er ikke vist i referansebetegnelsen.

Punkt d) og e) viser til illustrasjonen (F) på side i-6.

d) Finn delen (21) du ser etter på undergruppeillustrasjonen, og merk deg delens posisjonsnummer.

e) Delenummeret (29) og delebeskrivelsen (30) finner du ved siden av posisjonsnummeret på listesiden.

Informasjon i en reservedelskatalog

Listen nedenfor viser til illustrasjonen (F) på side i-6. En reservedelskatalog inneholder følgende informasjon om grupper, undergrupper og reservedeler for utstyret:

- Gruppeinndelingsreferanse (22). Angir den neste gruppen opp i inndelingen av utstyrslisten.
- Gruppenavn (23)
- Målenhet (25)
- Antall (26)
- Tegningsnummer (27)
- Listesideområde (28). Inkludert hvis det er flere sider i gruppe-illustrasjonen eller listen.
- Dele- eller undergruppenummer (29)
- Undergruppenavn eller delebeskrivelse (30)
- Gruppenummer (31)
- Utstyrsnummer (32)
- Gruppeinformasjonsoverskrift (33). Angir om avsnittet under overskriften er for en bestemt maskinvariant eller om det er en liste over vanlige deler. Hvis en liste har flere varianter og hver variant har sin egen sammenstillingstegning, vises det en sidereferanse til variantens sammenstillingstegning.
- Intern informasjon (34)

Wprowadzenie

Informacje na temat instrukcji

Firma Tetra Pak zaleca dokładne przeczytanie wszystkich dostarczonych instrukcji. Należy upewnić się, że dostarczone instrukcje są dostępne dla personelu, który obsługuje lub konserwuje maszynę.

Należy przechowywać ten katalog przez cały okres użytkowania maszyny i przekazać go kolejnemu właścicielowi lub użytkownikowi.

Firma Tetra Pak nie będzie ponosić odpowiedzialności za jakiekolwiek uszkodzenia maszyny spowodowane niestosowaniem się do zaleceń zawartych w instrukcjach dostarczonych z maszyną.

Dostarczone instrukcje

W skład dokumentacji dostarczonej z maszyną wchodzą:

- Instrukcja konwersji (CM)
  W tej instrukcji zawarte są informacje dotyczące dostosowania maszyny do różnych trybów produkcji.
- Instrukcja dotycząca wyposażenia elektrycznego (EM)
  W tej instrukcji zawarte są informacje dotyczące układu elektrycznego maszyny.
- Instrukcja instalacji (IM)
  W tej instrukcji zawarte są informacje niezbędne do bezpiecznego zainstalowania maszyny.
- Instrukcja konserwacji (MM)
  W tej instrukcji zawarte są informacje dotyczące konserwacji maszyny.
- Instrukcja obsługi (OM)
  W tej instrukcji zawarte są informacje dotyczące obsługi maszyny przed rozpoczęciem produkcji, w jej trakcie oraz po jej zakończeniu.
- Katalog części zamiennych (SPC)
  W katalogu zawarte są informacje dotyczące zamawiania części zamiennych w firmie Tetra Pak.
- Instrukcja techniczna (TeM)
  Instrukcja techniczna zawiera informacje:
  - dotyczące bezpiecznego instalowania maszyny,
  - dotyczące konserwacji maszyny,
  - dotyczące układu elektrycznego maszyny,
  - dotyczące zamawiania części zamiennych w firmie Tetra Pak.

Układ strony

Patrz rysunek (A) na stronie i-5: Główne strony w Katalogu części zamiennych składają się ze strony zawierającej rysunek (1) i odpowiadającej jej strony zawierającej listę (7). Numer strony (5) znajduje się w nagłówku strony zawierającej rysunek i w stopce strony zawierającej listę. Numer dokumentu (6) znajduje się w stopce strony zawierającej listę.

Numeracja stron

Patrz rysunek (A) na stronie i-5: Numer strony (5) składa się z trzech części:

- numeru rozdziału (2),
- kolejnego numeru strony w rozdziale (3),
- całkowitej liczby stron w rozdziale (4).

Ogólne informacje o maszynie

Producent

Nazwę i adres producenta można znaleźć na drugiej stronie niniejszego katalogu.

Serwis

Aby zamówić części zapasowe do tej maszyny lub zgłosić problemy związane z jej pracą, należy skontaktować się z najbliższym biurem Tetra Pak.

Można kontaktować się także w przypadku innych zapytań, uwag lub sugestii dotyczących udoskonalenia urządzenia i dokumentacji.

Identyfikacja

Klasyfikacja CE

Maszyna spełnia podstawowe wymogi z zakresu bezpieczeństwa i ochrony zdrowia obowiązujące w Europejskiej Strefie Ekonomicznej (EEA).

Tabliczka znamionowa

Na rysunku (B), znajdującym się na stronie i-5, pokazano przykładową tabliczkę znamionową.
Rysunek prawidłowej tabliczki znamionowej oraz jej umiejscowienie na maszynie pokazano w rozdziale Wprowadzenie zawartym w instrukcjach dostarczonych z maszyną. Tabliczka znamionowa zawiera następujące dane potrzebne w przypadku kontaktowania się z firmą Tetra Pak w sprawie dotyczącej danej maszyny:

- typ maszyny (8),
- objętość (9),
- specyfikacje rysunkowe (10),
- numer seryjny maszyny (11),
- nazwę producenta (12),
- oznaczenie CE (13),
- rok produkcji (14).

Na rysunku (C) zamieszczonym na stronie i-5 pokazano przykład specyfikacji maszyny. Należy sprawdzić, czy dane dotyczące maszyny przedstawione na pierwszej stronie tej instrukcji odpowiadają danym zawartym na tabliczce znamionowej maszyny oraz specyfikacji maszyny.

Jak korzystać z niniejszego Katalogu części zamiennych

Należy odnaleźć numer części zamiennej

a) Zapoznaj się z rysunkiem (D) na stronie i-5: przejdź do numeru rozdziału (15) pokazanego obok głównej grupy zawierającej część, którą chcesz odszukać.

Punkty b) i c) odnoszą się do rysunku (E) na stronie i-6.

b) Na rysunku grupy głównej odszukaj podgrupę maszyny (17), która zawiera odpowiednią część lub podgrupę, której szukasz. Zanotuj numer pozycji (18) i przejdź do strony z listą odpowiadającą rysunkowi.

c) Odszukaj numer pozycji/oznaczenie odnośnika (16) lub nazwę podgrupy (19). Przejdź do odpowiedniego numeru strony (20) podanego w kolumnie umieszczonej po prawej stronie. Firma Tetra Pak w przypadku oznaczenia odnośnika korzysta ze struktury ukierunkowanej na funkcję. Przedrostek wskazujący strukturę ukierunkowaną na funkcję (=) nie jest pokazany w oznaczeniu odnośnika.

Punkty d) i e) odnoszą się do rysunku (F) na stronie i-6.

d) Na rysunku podgrupyodszukaj odpowiednią część (21) i zanotuj numer pozycji części.

e) Numer części (29) oraz jej opis (30) podano na stronie zawierającej listę obok numeru pozycji.

Informacje zawarte w Katalogu części zamiennych

Poniższa lista odnosi się do rysunku (F), znajdującego się na stronie i-6. Katalog części zamiennych zawiera następujące informacje o grupach, podgrupach oraz częściach zamiennych maszyny:

- Odnośnik struktury grup (22). Wskazuje następną wyższą grupę zawartą w strukturze listy maszyny.
- Nazwa grupy (23).
- Jednostka miary (25).
- Liczba (26).
- Numer rysunku złożeniowego (27).
- Zakres stron zawierających listę (28). Podany w przypadku występowania wielu stron zawierających rysunek grupy lub listę.
- Numer części lub podgrupy (29).
- Nazwa podgrupy lub opis części (30).
- Numer grupy (31).
- Numer maszyny (32).
- Nagłówek informacyjny grupy (33). Wskazuje, czy sekcja umieszczona pod nagłówkiem dotyczy określonego wariantu maszyny, czy też jest to lista wspólna dla wszystkich wariantów. Jeśli lista występuje w wielu wariantach i dla każdego z nich dostępny jest osobny rysunek złożeniowy, podany jest odnośnik strony do rysunku złożeniowego dla danego wariantu.
- Informacje wewnętrzne (34).

Introdução

Informações sobre o Manual

A Tetra Pak recomenda que leia atentamente todos os manuais incluídos. Certifique-se de que os manuais incluídos estão disponíveis para o pessoal que utiliza ou faz a manutenção do equipamento.

É importante que mantenha este catálogo durante toda a vida útil do equipamento, devendo ainda ser fornecido a quaisquer proprietários e operadores subsequentes do mesmo.

A Tetra Pak não será responsável por quaisquer danos no equipamento provocados pelo não seguimento das instruções fornecidas nos manuais que acompanham este equipamento.

Manuais Fornecidos

Os manuais fornecidos com este equipamento podem incluir

- CM
  O Manual de Conversão (Conversion Manual) fornece aos técnicos informações sobre a conversão do equipamento entre modos de produção diferentes.
- EM
  O Manual Eléctrico (Electrical Manual) fornece aos técnicos informações sobre o sistema eléctrico do equipamento.
- IM
  O Manual de Instalação (Installation Manual) fornece aos técnicos as informações necessárias à instalação do equipamento em segurança.
- MM
  O Manual de Manutenção (Maintenance Manual) fornece aos técnicos informações sobre como realizar a manutenção do equipamento.
- OM
  O Manual de Funcionamento (Operation Manual) fornece ao operador informações sobre o manuseamento e funcionamento do equipamento antes, durante e após a produção.
- SPC
  O Spare Parts Catalogue (Catálogo das Peças Sobressalentes) fornece as informações necessárias para encomendar peças sobressalentes à Tetra Pak
- TeM
  O Manual Técnico (Technical Manual)
  - fornece aos técnicos as informações necessárias à instalação do equipamento em segurança
  - fornece aos técnicos informações sobre a manutenção do equipamento
  - fornece aos técnicos informações sobre o sistema eléctrico da máquina/equipamento
  - fornece as informações necessárias para encomendar peças sobressalentes à Tetra Pak.

Desenho da Página

Consulte a ilustração (A) na página i-5: As páginas principais num Catálogo de Peças Sobressalentes são constituídas por uma página de ilustração (1) e uma página de lista correspondente (7). O número de página (5) é apresentado no cabeçalho de uma página de ilustração e no rodapé de uma página de lista. O número do documento (6) é apresentado no rodapé de uma página de lista.

Numeração das Páginas

Consulte a ilustração (A) na página i-5: Um número de página (5) tem três partes:

- número do capítulo (2)
- número das páginas consecutivas dentro do capítulo (3)
- número de páginas total no capítulo (4)

Introdução da Máquina

Fabricante

Quanto ao nome e endereço do fabricante, consulte a segunda página deste catálogo.

Manutenção

Para encomendar peças sobressalentes para esta máquina ou para apresentar relatórios de problemas associados com o funcionamento desta máquina, contacte os escritórios mais próximos da Tetra Pak.

Contacte a Ligação com outras questões, comentários ou sugestões para melhoria referentes ao equipamento e à sua documentação.

Identificação

Classificação da CE

Este equipamento está em conformidade com as regulamentações básicas da saúde e segurança da Área Económica Europeia (AEE).

Chapa de Identificação da Máquina

A ilustração (B) na página i-5 mostra um exemplo de uma chapa de identificação da máquina.
No capítulo Introdução dos manuais entregues com este equipamento é apresentada uma ilustração da chapa de identificação válida da máquina e a sua localização no equipamento. A chapa de identificação da máquina contém os dados listados em baixo, necessários quando contactar a Tetra Pak em relação a este equipamento específico.

- Tipo de máquina (8)
- Volume (9)
- Especificações do desenho (10)
- Número de série da máquina (11)
- Fabricante (12)
- Marca da CE (13)
- Ano de fabricação (14)

A ilustração (C) na página i-5 mostra um exemplo de uma especificação da máquina. Certifique-se de que os dados do equipamento listados nas primeiras páginas deste manual correspondem aos dados indicados na chapa de identificação da máquina e às especificações da máquina.

Como utilizar este Catálogo de Peças Sobressalentes

Localize o Número da Peça Sobressalente

a) Consulte a ilustração (D) na página i-5: Vá para o número do capítulo (15) indicado no grupo principal que contém a peça que pretende localizar.

Os itens b) e c) referem-se à ilustração (E) na página i-6:

b) Na ilustração do grupo principal, procure o subgrupo da máquina (17) que contém a peça ou o subgrupo que procura. Tome nota do número de posição (18) e vá para a página de lista a seguir à ilustração.

c) Procure o número de posição/designação de referência (16) ou o nome do subgrupo (19). Vá para o número de página correspondente (20) indicado na coluna do lado direito. A Tetra Pak preferiu utilizar sempre a estrutura orientada para a função como designação de referência. O prefixo que inicia a estrutura orientada para a função (=) não está indicada na designação de referência.

Os itens d) e e) referem-se à ilustração (F) na página i-6:

d) Localize a peça (21) que procura na ilustração do subgrupo e tome nota do número de posição da peça.

e) O número de peça (29) e a descrição da peça (30) são apresentados ao lado do número da posição na página de lista.

Informações listadas num Catálogo de Peças Sobressalentes

A lista em baixo refere-se à ilustração (F) na página i-6: Um Catálogo de Peças Sobressalentes contém as seguintes informações sobre grupos, subgrupos e peças sobressalentes para o equipamento:

- Referência da estrutura do grupo (22). Indica o grupo mais elevado seguinte na estrutura da lista do equipamento.
- Nome do grupo (23)
- Unidade de medida (25)
- Quantidade (26)
- Número de série do conjunto (27)
- Intervalo de páginas da lista (28). Incluído se existirem várias páginas na ilustração ou na lista do grupo.
- Número de peça ou subgrupo (29)
- Nome do subgrupo ou descrição da peça (30)
- Número do grupo (31)
- Número do equipamento (32)
- Cabeçalho das informações do grupo (33). Indica se a secção em baixo do cabeçalho é de uma variante específica da máquina ou se é uma lista de peças comuns. Se uma lista tiver mais de uma variante e cada variante tiver o seu próprio desenho de conjunto, é apresentada uma referência de página ao desenho do conjunto da variante.
- Informações internas (34)

Introducere

Informații despre manual

Tetra Pak recomandă citirea cu atenție a tuturor manualelor livrate. Asigurați-vă că manualele livrate sunt puse la îndemâna personalului care exploatează sau întreține echipamentul.

Este important să păstrați acest catalog pe întreaga durată de viață a echipamentului și să transmiteți catalogul deținătorilor sau utilizatorilor ulteriori.

Tetra Pak nu va fi răspunzător pentru niciun defect al echipamentului cauzat prin nerespectarea instrucțiunilor date în manualele care însoțesc acest echipament.

Manuale livrate

Manualele livrate cu acest echipament pot include

- CM
  Manualul de conversie furnizează tehnicienilor informații despre conversia echipamentului între diferite moduri de producție.
- EM
  Manualul electric furnizează tehnicienilor informații despre sistemul electric al echipamentului.
- IM
  Manualul de instalare furnizează tehnicienilor informații necesare pentru instalarea în siguranță a echipamentului.
- MM
  Manualul de întreținere furnizează tehnicienilor informații cu privire la întreținerea echipamentului.
- OM
  Manualul de exploatare pune la dispoziție operatorilor informații despre manevrarea și exploatarea echipamentului înainte, în timpul și după producție.
- SPC
  Catalogul pieselor de schimb furnizează informații necesare pentru comandarea pieselor de schimb de la Tetra Pak.
- TeM
  Manualul tehnic
  – furnizează tehnicienilor informații necesare pentru instalarea în siguranță a echipamentului
  – furnizează tehnicienilor informații necesare cu privire la întreținerea echipamentului
  – furnizează tehnicienilor informații despre sistemul electric al mașinii/echipamentului
  – furnizează informații necesare pentru comandarea pieselor de schimb de la Tetra Pak.

Configurația paginilor

Examinați ilustrația (A) de pe pagina i-5: Paginile principale dintr-un catalog de piese de schimb constau dintr-o pagină de ilustrare (1) și o pagină de liste corespunzătoare (7). Numărul paginii (5) apare în antetul unei pagini de ilustrare și în subsolul unei pagini de liste. Numărul documentului (6) apare în subsolul unei pagini de liste.

Numerotarea paginilor

Examinați ilustrația (A) de la pagina i-5: Un număr de pagină (5) are trei părți:

- numărul capitolului (2)
- numărul paginii consecutive din cadrul capitolului (3)
- număr total de pagini din capitol (4)

Prezentare introductivă a mașinii

Producător

Pentru numele și adresa producătorului, consultați pagina a doua a acestui catalog.

Service

Pentru comandarea pieselor de schimb pentru această mașină sau pentru a raporta problemele asociate cu exploatarea acestei mașini, contactați cel mai apropiat birou Tetra Pak.

Contactați Liaison cu privire la alte întrebări, comentarii sau sugestii legate de îmbunătățirea echipamentului și a documentației acestuia.

Identificare

Clasificare CE

Acest echipament este fabricat în conformitate cu reglementările de bază cu privire la sănătate și siguranță din Zona economică europeană (EEA).

Plăcuța mașinii

Ilustrația (B) de la pagina i-5 arată un exemplu al unei plăcuțe de mașină. O ilustrație a plăcuței valide a mașinii și a poziției acesteia pe echipament este arătată în capitolul introductiv al manualelor livrate împreună cu acest echipament. Plăcuța mașinii conține datele listate mai jos, necesare în cazul în care contactați Tetra Pak în legătură cu acest echipament specific.

- Tip mașină (8)
- Volum (9)
- Specificații de desen (10)
- Număr de serie al mașinii (11)
- Producător (12)
- Marcaj CE (13)
- Anul fabricației (14)

Ilustrația (C) de la pagina i-5 arată un exemplu al unei specificații de mașină. Asigurați-vă că datele specifice echipamentului, listate în paginile din față ale acestui manual, corespund cu datele de pe plăcuța mașinii și cu specificațiile mașinii.

Cum se utilizează acest catalog de piese de schimb

Localizarea unui număr de piesă de schimb

a) Examinați ilustrația (D) de la pagina i-5: Treceți la numărul de capitol (15) indicat lângă grupa principală care conține piesa pe care doriți să o localizați.

Articolele b) și c) se referă la ilustrația (E) de la pagina i-6.

b) Pe ilustrația grupei principale, căutați subgrupa aferentă mașinii (17) care conține piesa sau subgrupa pe care o căutați. Notați numărul poziției (18) și treceți la pagina de liste care urmează după ilustrație.

c) Căutați numărul poziției/marcarea de referință (16) sau numele subgrupei (19). Treceți la numărul de pagină corespunzător (20) listat în coloana din partea dreaptă. Tetra Pak a optat ca întotdeauna să utilizeze structura orientată pe funcție pentru marcarea de referință. Prefixul care indică structura orientată pe funcție (=) nu este arătat în marcarea de referință.

Articolele d) și e) se referă la ilustrația (F) de la pagina i-6.

d) Localizați piesa (21) pe care o căutați pe ilustrația subgrupei și notați numărul de poziție al piesei.

e) Numărul piesei (29) și descrierea piesei (30) sunt listate lângă numărul de poziție de pe pagina de liste.

Informațiile listate într-un catalog de piese de schimb

Lista de mai jos se referă la ilustrația (F) de la pagina i-6. Un catalog de piese de schimb conține următoarele informații despre grupe, subgrupe și piese de schimb pentru echipament:

- Referința despre structura grupelor (22). Indică următoarea grupă superioară din structura de liste a echipamentului.
- Numele grupei (23)
- Unitatea de măsură (25)
- Cantitatea (26)
- Numărul de desen de ansamblu (27)
- Intervalul de pagini de liste (28). Inclus dacă există mai multe pagini în ilustrația sau lista grupei.
- Numărul piesei sau al subgrupei (29)
- Numele subgrupei sau descrierea piesei (30)
- Numărul grupei (31)
- Numărul echipamentului (32)
- Antet cu informații despre grupă (33). Indică dacă secțiunea de sub antet se referă la o anumită variantă de mașină sau este o listă de piese comune. Dacă o listă are mai multe variante și fiecare variantă are propriul său desen de ansamblu, este arătată o referință de pagină pentru desenul de ansamblu al variantei.
- Informații interne (34)

Úvod

Informácie o návode

Spoločnosť Tetra Pak odporúča, starostlivo si prečítať všetky dodané návody. Dbajte, aby pracovníci, obsluhujúci zariadenie alebo zabezpečujúci jeho údržbu, mali vždy dodané návody k dispozícii.

Je dôležité, aby bol tento katalóg k dispozícii počas celého času životnosti zariadenia, a aby sa katalóg dostal aj k jeho prípadnému ďalšiemu držiteľovi alebo používateľovi.

Spoločnosť Tetra Pak nepreberá zodpovednosť za akékoľvek poškodenie zariadenia spôsobené nedodržaním pokynov uvedených v návodoch dodávaných s týmto zariadením.

Dodané návody

S týmto zariadením vám mohli byť dodané nasledujúce návody:

- CM
  Návod na prestavovanie poskytuje technikom informácie o prestavovaní zariadenia do rôznych výrobných režimov.
- EM
  Elektrotechnický návod poskytujetechnikom informácie o elektrickom systéme zariadenia.
- IM
  Návod na inštaláciu poskytuje technikom informácie potrebné na bezpečnú inštaláciu zariadenia.
- MM
  Návod na údržbu poskytujetechnikom informácie o údržbe zariadenia.
- OM
  Návod na obsluhu poskytuje obsluhe informácie o zaobchádzaní a obsluhe zariadenia pred, počas a po prevádzke.
- SPC
  Katalóg náhradných dielcov poskytuje informácie potrebné na objednávanie náhradných dielcov od spoločnosti Tetra Pak
- TeM
  Technický návod
  - poskytuje technikom informácie potrebné na bezpečnú inštaláciu zariadenia
  - poskytuje technikom informácie o údržbe zariadenia
  - poskytuje technikom informácie o elektrickom systéme stroja/ zariadenia
  - poskytuje informácie potrebné na objednávanie náhradných dielcov od spoločnosti Tetra Pak.

Rozloženie strany

Pozri ilustráciu (A) na strane i-5: Hlavné strany Katalógu náhradných dielcov obsahujú stránku s ilustráciami (1) a príslušnú stranu so zoznamom (7). Číslo strany (5) sa uvádza v záhlaví na strane s ilustráciami a v päte strany so zoznamom. Číslo dokumentu (6) sa uvádza v päte strany so zoznamom.

Číslovanie strán

Pozri ilustráciu (A) na strane i-5: Číslo strany (5) má tri časti:

- číslo kapitoly (2)
- poradové číslo strany v rámci kapitoly (3)
- celkový počet strán v kapitole (4)

Základné informácie o stroji

Výrobca

Meno a adresa výrobcu sa uvádza na druhej strane tohto katalógu.

Servis

Pri objednávaní náhradných dielcov pre tento stroj alebo na nahlasovanie problémov súvisiacich s prevádzkou tohto stroja sa obráťte na najbližšie zastúpenie spoločnosti Tetra Pak.

S ostatnými otázkami, pripomienkami a podnetmi na vylepšenie stroja alebo zariadenia a jeho dokumentácie sa obracajte na kontaktnú osobu.

Identifikácia

Klasifikácia CE

Toto zariadenie spĺňa základné predpisy o ochrane zdravia a bezpečnosti Európskeho hospodárskeho priestoru (EEA).

Typový štítok stroja

Na ilustrácii (B) na strane i-5 uvádzame príklad typového štítku. Ilustrácia platného typového štítku stroja a jeho umiestnenia na zariadení sa uvádza v kapitole Úvod v návodoch, dodaných s týmto zariadením. Typový štítok obsahuje dolu údaje uvedené, potrebné pri kontaktoch so spoločnosťou Tetra Pak ohľadom tohto špecifického zariadenia.

- Typ stroja (8)
- Objem (9)
- Údaje o výkrese (10)
- Výrobné číslo stroja (11)
- Výrobca (12)
- Značka CE (13)
- Rok výroby (14)

Ilustrácia (C) na strane i-5 zobrazuje príklad špecifikácie stroja. Presvedčite sa, že údaje zariadenia uvedené na predných stranách tohto návodu zodpovedajú údajom na typovom štítku a v špecifikácii stroja.

Ako sa tento Katalóg náhradných dielcov používa

Vyhľadanie čísla náhradného dielca

a) Pozri ilustráciu (D) na strane i-5: Prejdite na číslo kapitoly (15) uvedené vedľa hlavnej skupiny obsahujúcej dielec, ktorý chcete vyhľadať.

Položky b) a c) odkazujú na ilustráciu (E) na strane i-6.

b) Na ilustrácii hlavnej skupiny hľadajte podskupinu stroja (17), ktorý obsahuje dielec alebo podskupinu, ktorú hľadáte. Poznamenajte si číslo položky (18) a prejdite stranu so zoznamom nasledujúcu po ilustrácii.

c) Vyhľadajte číslo položky/referenčné označenie (16) alebo názov podskupiny (19). Prejdite na príslušné číslo strany (20) uvedené v zozname v pravom stĺpci. Spoločnosť Tetra Pak sa rozhodla vždy používať funkčne zameranú štruktúru na referenčné označovanie. Predčíslie udávajúce funkčne orientovanú štruktúra (=) sa v referenčnom označení nezobrazuje.

Položky d) a e) odkazujú na ilustráciu (F) na strane i-6.

d) Nájdite dielec (21), ktorý hľadáte, na ilustrácii podskupiny a poznamenajte si číslo položky daného dielca.

e) Číslo dielca (29) a popis dielca (30) sa uvádza vedľa čísla položky na stránke so zoznamom.

Informácie uvádzané v Katalógu náhradných dielcov

Dolu uvedený zoznam odkazuje na ilustráciu (F) na strane i-6. Katalóg náhradných dielcov obsahuje nasledujúce informácia o skupinách, podskupinách a náhradných dielcov zariadenia:

- Referenčná štruktúrna skupina (22). Označuje najbližšiu vyššiu skupinu v štruktúre zoznamu zariadenia.
- Názobv skupiny (23)
- Jednotka merania (25)
- Množstvo (26)
- Číslo výkresu celkovej zostavy (27)
- Rozsah strán zoznamu (28). Uvádza sa, ak má ilustrácia alebo zoznam skupiny viac strán.
- Číslo dielca alebo podskupiny (29)
- Názov podskupiny alebo popis dielca (30)
- Číslo skupiny (31)
- Číslo zariadenia (32)
- Záhlavie informácií o skupine (33). Uvádza, či je časť nasledujúca pod záhlavím určená pre špecifický variant stroja, alebo či ide o zoznam spoločných dielcov. Ak má zoznam viac ako jeden variant a každý z variantov má vlastný výkres celkovej zostavy, uvádza sa odkaz na stranu s výkresom zostavy daného variantu.
- Interné informácie (34)

Uvod

Informacije o priročnikih

Tetra Pak priporoča, da natančno preberete vse priložene priročnike. Osebje, ki upravlja in vzdržuje opremo mora imeti dostop do priloženih priročnikov.

Katalog hranite v celotnem času uporabe opreme. V primeru, ko opremo pridobi drug imetnik ali uporabnik, mu obenem izročite tudi katalog.

Podjetje Tetra Pak ne prevzema odgovornosti za poškodbe na opremi, ki nastanejo zaradi neupoštevanja navodil iz priročnikov, ki so priloženi opremi.

Priloženi priročniki

Priročniki, ki so priloženi tej opremi, lahko vključujejo

- Priročnik za zamenjavo (CM)
  V tem priročniku so podatki, ki tehnikom omogočajo izvesti zamenjavo opreme med različnimi načini proizvodnje.
- Elektrotehnični priročnik (EM)
  Priročnik vsebuje podatke za tehnike o električnem sistemu opreme.
- Priročnik za montažo (IM)
  Priročnik vsebuje podatke, ki jih tehniki potrebujejo za varno montažo opreme.
- Priročnik za vzdrževanje (MM)
  Priročnik vsebuje podatke za tehnike o vzdrževanju opreme.
- Priročnik za obratovanje (OM)
  Priročnik je namenjen informiranju za pravilno rokovanje in upravljanje s strojem pred, med in po proizvodnem postopku.
- Katalog nadomestnih delov (SPC)
  Katalog vsebuje potrebne podatke za naročilo nadomestnih delov pri podjetju Tetra Pak.
- Tehnični priročnik (TeM)
  Priročnik
  - vsebuje podatke, ki jih tehniki potrebujejo za varno montažo opreme;
  - vsebuje podatke za tehnike o vzdrževanju opreme;
  - vsebuje podatke za tehnike o električnem sistemu stroja/opreme;
  - vsebuje potrebne podatke za naročilo nadomestnih delov pri podjetju Tetra Pak.

Postavitev strani

Poglejte sliko (A) na strani i-5: Glavne strani v Katalogu nadomestnih delov sestavljata stran s sliko (1) in ustrezna stran s seznamom (7). Številka strani (5) je prikazana na vrhu strani s sliko in na dnu strani s seznamom. Številka dokumenta (6) je prikazana na dnu strani s seznamom.

Številčenje strani

Oglejte si sliko (A) na strani i-5: Številka strani (5) ima tri dele:

- številko poglavja (2);
- zaporedno številko strani v poglavju (3);
- število vseh strani v poglavju (4).

Predstavitev stroja

Proizvajalec

Ime in naslov proizvajalca najdete na drugi strani kataloga.

Servisiranje

Za naročanje nadomestnih delov za stroj ter za sporočanje motenj pri delovanju stroja se obrnite na najbližjo servisno službo podjetja Tetra Pak.

V primeru drugih zahtev, komentarjev, predlogov za izboljšavo opreme ali dokumentacije se obrnite na odgovorno osebo.

Identifikacijska oznaka

CE-klasifikacija

Oprema je izdelana v skladu z osnovnimi zdravstvenimi in varnostnimi predpisi Evropskega gospodarskega prostora (EGS).

Napisna ploščica

Slika (B) na strani i-5 prikazuje primer napisne ploščice.
Sliko veljavne napisne ploščice in njeno mesto na opremi najdete v uvodnem poglavju priloženih priročnikov. Ploščica vsebuje spodaj navedene podatke, ki jih potrebujete, ko se v zvezi z določeno opremo obrnete na podjetje Tetra Pak:

- tip stroja (8);
- prostornino (9);
- specifikacije risbe (10);
- serijsko številko stroja (11);
- proizvajalca (12);
- oznako CE (13);
- leto izdelave (14).

Slika (C) na strani i-5 prikazuje primer specifikacije stroja. Podatki o opremi, navedeni na prvih straneh tega priročnika, se morajo ujemati s podatki o stroju, navedenimi na napisni ploščici in v specifikacijah.

Uporaba Kataloga nadomestnih delov

Iskanje številke nadomestnega dela

a) Oglejte si sliko (D) na strani i-5: Poiščite številko poglavja (15), navedeno poleg glavne skupine, ki vsebuje iskani del.

Točki b) in c) se nanašata na sliko (E) na strani i-6.

b) Na sliki glavne skupine poiščite podskupino stroja (17), ki vsebuje iskani del ali podskupino. Zapomnite si pozicijsko številko (18) in poiščite stran s seznamom, ki pripada sliki.

c) Poiščite pozicijsko številko/referenčno oznako (16) ali ime podskupine (19). Pojdite na stran (20), navedeno v desnem stolpcu. Tetra Pak za referenčno označevanje vedno uporablja funkcijsko strukturo. Predpona, ki označuje funkcijsko strukturo (=), ni prikazana v referenčni oznaki.

Točki d) in e) se nanašata na sliko (F) na strani i-6.

d) Na sliki podskupine poiščite del (21), ki ga iščete, in si zapomnite njegovo pozicijsko številko.

e) Številka (29) in opis dela (30) sta navedena poleg pozicijske številke na strani s seznamom.

Informacije v Katalogu nadomestnih delov

Spodnji seznam se nanaša na sliko (F) na strani i-6. Katalog nadomestnih delov vsebuje naslednje informacije o skupinah, podskupinah in nadomestnih delih za opremo:

- referenco strukture skupine (22); Označuje naslednjo višjo skupino v strukturi seznamov opreme.
- ime skupine (23);
- mersko enoto (25);
- količino (26);
- številko sestavne risbe (27);
- število strani seznama (28); Če je slika ali seznam skupine sestavljen iz več strani.
- številko dela ali podskupine (29);
- ime podskupine ali opis dela (30);
- številko skupine (31);
- številko opreme (32);
- naslov z informacijami o skupini (33). Označuje, ali je razdelek pod naslovom namenjen specifični izvedbi stroja ali gre za seznam skupnih delov. Če ima seznam več izvedb in če ima vsaka od njih svojo sestavno risbo, je ob vsaki izvedbi navedena referenčna stran s sestavno risbo.
- interne informacije (34).

Inledning

Information om manualen

Tetra Pak rekommenderar att alla manualer läses noggrant. Se till att manualerna är tillgängliga för personalen som använder eller underhåller utrustningen.

Det är viktigt att denna katalog behålls under utrustningens livslängd, och att den överlämnas till varje efterföljande innehavare eller användare av utrustningen.

Tetra Pak tar inte ansvar för någon skada på utrustningen som orsakats av att instruktionerna i medföljande manualer inte har följts.

Medföljande manualer

Följande manualer kan levereras tillsammans med utrustningen:

- CM
  Konverteringsmanualen (CM) innehåller information för tekniker om hur man konverterar utrustningen mellan olika produktionslägen.
- EM
  Den elektriska manualen (EM) innehåller information för tekniker om utrustningens elektriska system.
- IM
  Installationsmanualen (IM) innehåller information för tekniker om hur utrustningen installeras på ett säkert sätt.
- MM
  Underhållsmanualen (MM) innehåller information för tekniker om hur utrustningen underhålls.
- OM
  Driftsmanualen (OM) innehåller information för operatören om hur utrustningen ska hanteras före, under och efter produktion.
- SPC
  Reservdelskatalogen (SPC) innehåller den information som behövs för att beställa reservdelar från Tetra Pak.
- TeM
  Den tekniska manualen (TeM)
  - innehåller information för tekniker om hur utrustningen installeras på ett säkert sätt.
  - innehåller information för tekniker om hur utrustningen underhålls.
  - innehåller information för tekniker om maskinens/utrustningens elektriska system.
  - innehåller den information som behövs för att beställa reservdelar från Tetra Pak.

Sidlayout

Se bild (A) på sidan i-5: Huvudsidorna i reservdelskatalogen består av en bildsida (1) och en motsvarande listsida (7). Sidnumret (5) visas i sidhuvudet på bildsidan och i sidfoten på listsidan. Dokumentnumret (6) visas i sidfoten på listsidan.

Sidnumrering

Se bild (A) på sidan i-5: Ett sidnummer (5) består av tre delar:

- kapitlets nummer (2)
- löpande sidnummer inom kapitlet (3)
- totalt sidantal i kapitlet (4)

Introduktion till maskinen

Tillverkare

Tillverkarens namn och adress finns på sidan 2 i katalogen.

Service

För att beställa reservdelar till denna maskin eller för att rapportera problem som uppstått i samband med driften kontaktar du närmaste Tetra Pak-kontor.

Om du har andra frågor, kommentarer eller förslag till förbättringar av utrustningen och dokumentationen vänder du dig till din kontaktperson på Tetra Pak.

Identifiering

CE-märkning

Denna utrustning överensstämmer med den grundläggande hälso- och säkerhetslagstiftningen inom Europeiska ekonomiska samarbetsområdet (EES).

Maskinskylt

Bild (B) på sidan i-5 visar ett exempel på en maskinskylt.
En bild på giltig maskinskylt och dess placering på utrustningen visas i inledningskapitlet som medföljer utrustningen. Skylten innehåller de uppgifter som listas nedan och som behövs vid kontakt med Tetra Pak angående utrustningen.

- Maskintyp (8)
- Volym (9)
- Ritningsspecifikationer (10)
- Maskinnummer (11)
- Tillverkare (12)
- CE-märkning (13)
- Tillverkningsår (14)

Bild (C) på sidan i-5 visar ett exempel på en maskinspecifikation. Kontrollera att informationen om utrustningen som listas på de första sidorna i manualen motsvarar informationen på maskinskylten och i maskinspecifikationen.

Använda reservdelskatalogen

Hitta ett reservdelsnummer

a) Se bild (D) på sidan i-5: Gå till kapitelnumret (15) som står vid sidan om huvudgruppen som innehåller den del du vill hitta.

Punkt b) och c) hänvisar till bild (E) på sidan i-6.

b) På huvudgruppsbilden letar du efter den maskinundergrupp (17) som innehåller delen eller undergruppen du letar efter. Notera positionsnumret (18) och gå till listsidan som anges efter bilden.

c) Leta efter positionsnumret/referensbeteckningen (16) eller undergruppsnamnet (19). Gå till motsvarande sidnummer (20) som listas i den högra kolumnen. Tetra Pak har valt allt alltid använda en funktionsorienterad struktur för referensbeteckningarna. Prefixet för funktionsorienterad struktur (=) visas inte i referensbeteckningen.

Punkt d) och e) hänvisar till bild (F) på sidan i-6.

d) Leta reda på delen (21) i undergruppsbilden och notera delens positionsnummer.

e) Reservdelsnumret (29) och reservdelsbeskrivningen (30) står bredvid positionsnumret på listsidan.

Information i reservdelskatalogen

Listan nedan hänvisar till bild (F) på sidan i-6. Reservdelskatalogen innehåller följande information om grupper, undergrupper och reservdelar för utrustningen:

- Gruppstrukturreferens (22). Anger nästa högre grupp i utrustningslistans struktur.
- Gruppnamn (23)
- Måttenhet (25)
- Kvantitet (26)
- Monteringsritningsnummer (27)
- Listsideintervall (28). Anges om det finns flera sidor i gruppbilden eller grupplistan.
- Reservdels- eller undergruppsnummer (29)
- Undergruppsnamn eller reservdelsbeskrivning (30)
- Gruppnummer (31)
- Utrustningsnummer (32)
- Gruppinformationsrubrik (33). Anger om avsnittet under rubriken gäller en viss maskinvariant eller om det är en lista över allmänna delar. Om en lista har fler än en variant och varje variant har sin egen monteringsritning visas en sidhänvisning till variantens monteringsritning.
- Intern information (34)

SPC
Spare Parts Catalogue

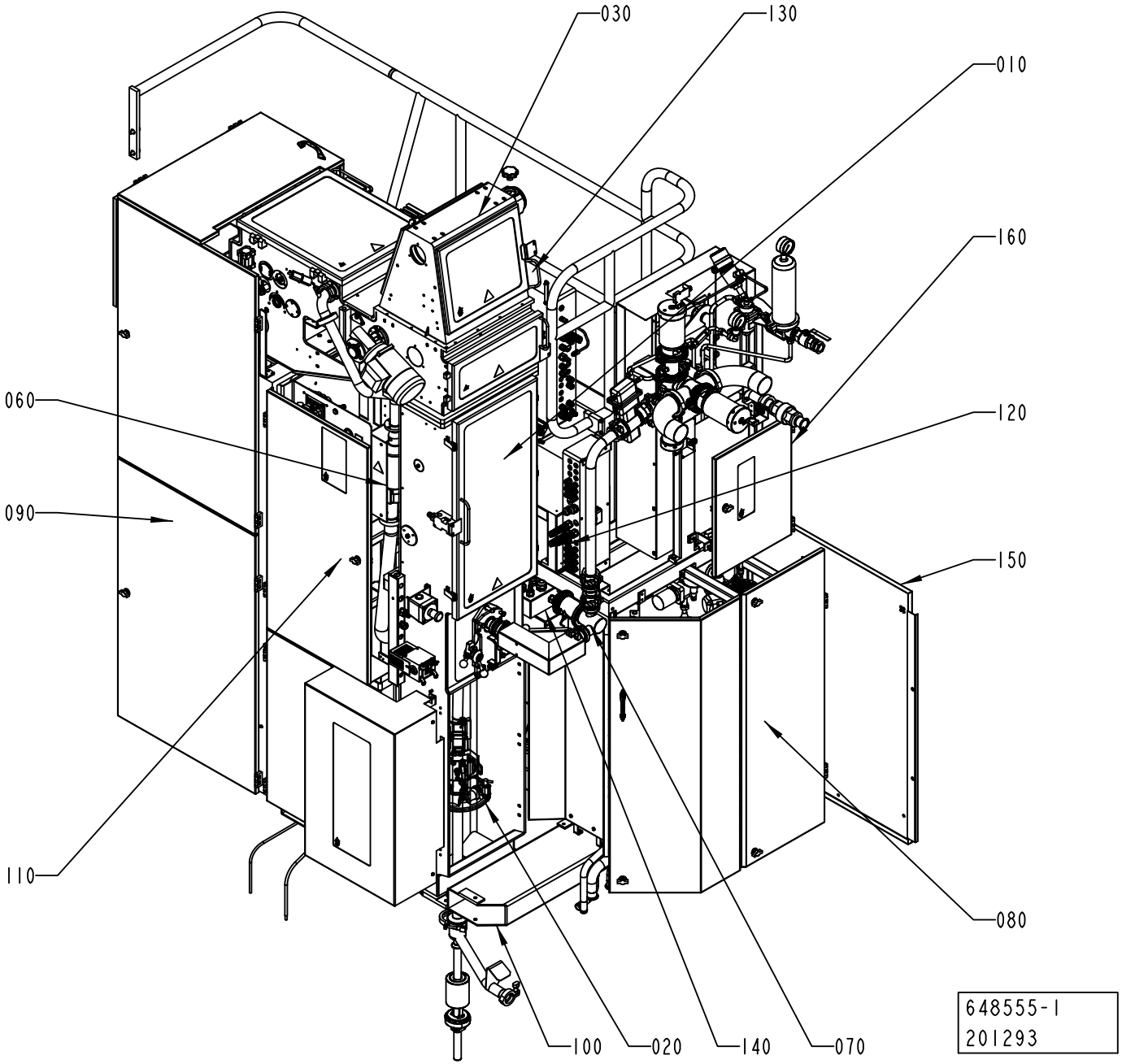
030
130
010
160
060
120
090
150
110
080
100
020
140
070
648555-1
201293

ECM: 201294 - 20050224
Group number: 648555-0100
Assembly Drawing: 648555-1_1_AC

Pos	Part No	UN	Qty	Description	Page No
-					
010	2539440-0100		1	ASEPTIC CHAMBER	**1-5**
020	2544850-0100		1	FORMING SECTION	**1-21, 1-23, 1-25, 1-27**
030	2539450-0200		1	DRYING CHAMBER	**1-101, 1-103**
060	2528076-0100		1	STERILE AIR SYSTEM	**1-179**
070	2501290-0200		1	FILLING SYSTEM	**1-209, 1-211**
080	2512910-0200		1	CLEANING SYSTEM	**1-259**
090	2541680-0100		1	HYDROGEN PEROXIDE	**1-279**
100	1558497-0200		1	FRAME SECTION,UPPER	**1-297**
110	2528079-0200		1	PNEUMATIC SYSTEM	**1-321**
120	1558834-0200		1	CONNECTION BOX	**1-351**
130	1548733-0100		1	CONNECTION BOX	**1-355, 1-357, 1-359, 1-361**
140	2504502-0100		1	CABLE TRENCH	**1-367, 1-369, 1-371, 1-373, 1-375, 1-377, 1-379, 1-381**
150	2533766-0100		1	COVERING PANEL	**1-391**
160	2532909-0200		1	COVERING PANEL	**1-393**
170	2504496-0100		1	TRANSPORT EQUIPMENT	**1-399**

Pos	Part No	UN	Qty	Description	Page No

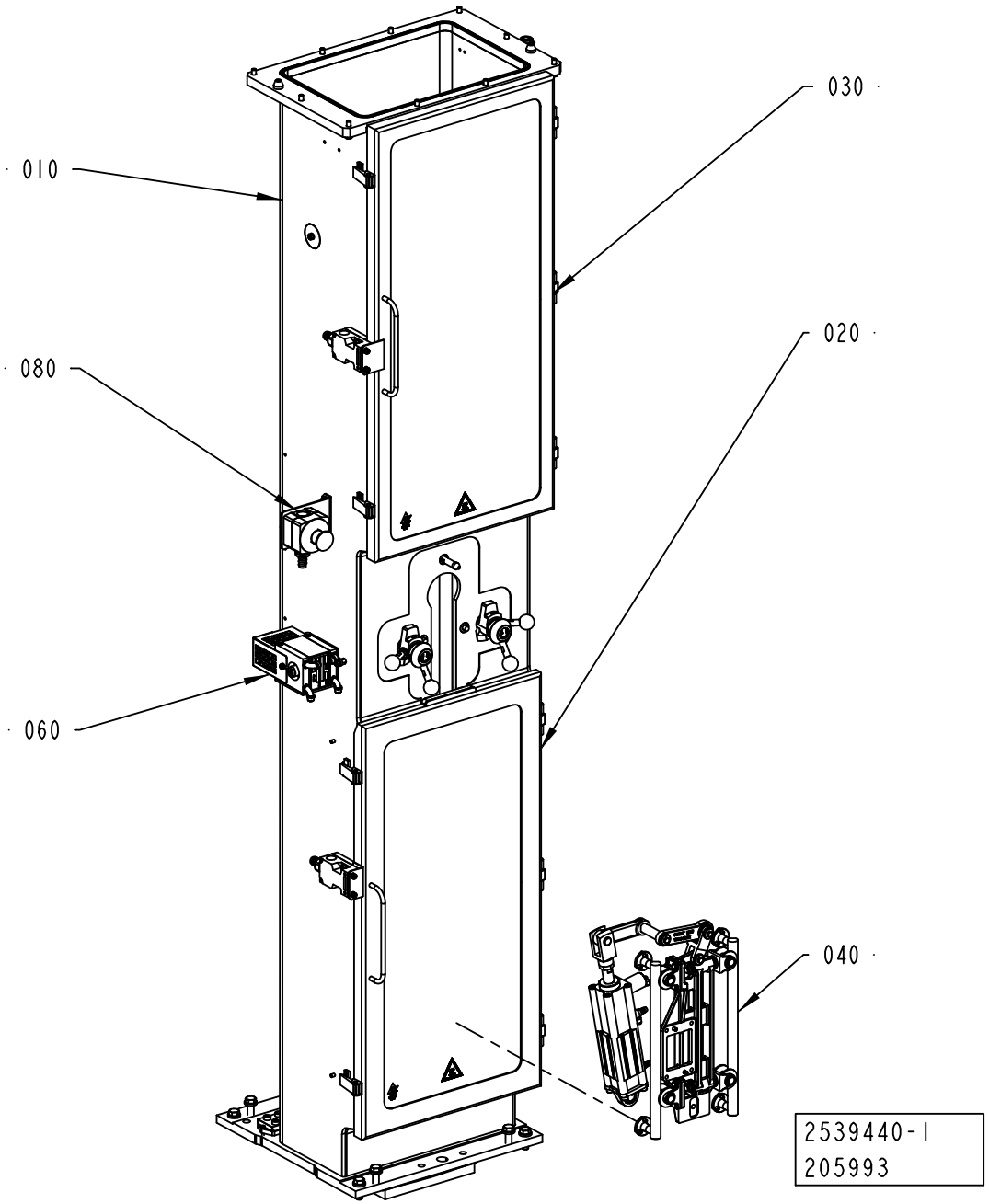
010
030
080
020
060
040
2539440-1
205993

ECM: 206202 - 20050627
Group number: 2539440-0100
Assembly Drawing: 2539440-1_1_AC

Pos	Part No	UN	Qty	Description	Page No
A3/FLEX					
020	2508283-0200		1	DOOR	**1-7**
030	2508279-0100		1	DOOR	**1-9**
040	2512930-0200		1	SUPPORT RAIL	**1-11**
060	1548876-0100		1	IH EQUIPMENT	**1-13**
Common Parts					
010	1548872-0100		1	PILLAR	**1-15, 1-17**
080	2528087-0100		1	EMERGENCY STOP	**1-19**

Pos	Part No	UN	Qty	Description	Page No

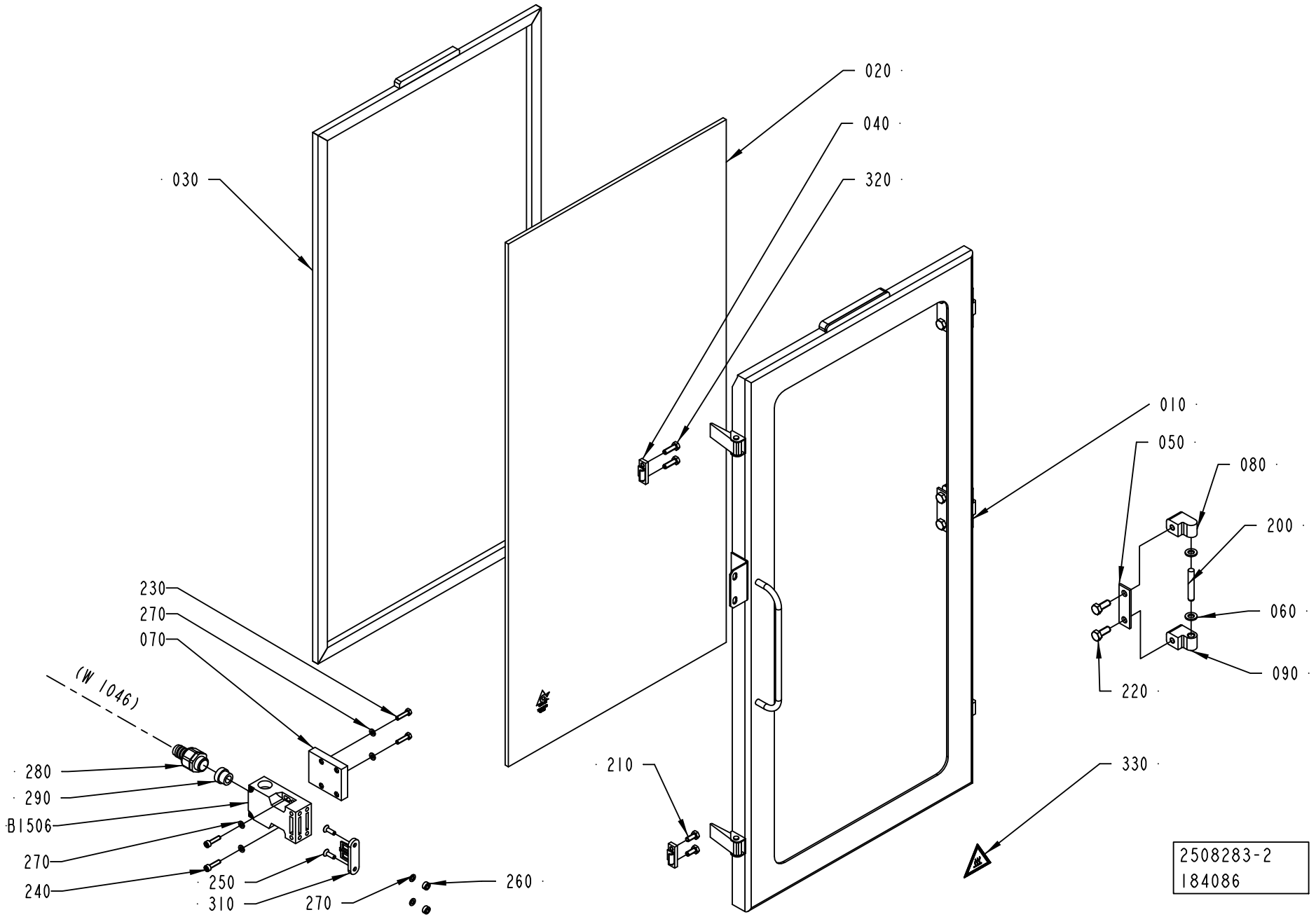
020
040
320
030
010
050
080
200
060
090
220
230
270
070
(W 1046)
280
290
B1506
270
240
250
310
270
260
210
330
2508283-2
184086

ECM: 220648 - 20050615
Group number: 2508283-0200
Assembly Drawing: 2508283-2_1_AA

Pos	Part No	UN	Qty	Description	Page No
-					
010	2695984-0000		1	FRAME	
020	2695983-0000		1	GLASS PANE	
030	2508285-0000		1	GASKET	
040	271860-0000		2	CLAMP BLOCK	
050	441737-0000		3	WASHER	
060	441739-0000		6	WASHER	
070	2541651-0000		1	PLATE	
080	1041978-0000		3	HINGE FLANGE	
090	1041979-0000		3	HINGE FLANGE	
200	311103-0413		3	PARALLEL PIN ISO 2338 8M6X50 A1	
210	312105-0367		2	SCREW M6S ISO 4017 M6X14 A480	
220	312105-0451		6	SCREW M6S ISO 4017 M8X20 A480	
230	312105-0331		2	SCREW M6S ISO 4017 M5X20 A480	
240	312115-0331		2	SCREW ISO4762 M5X20 A4 80	
250	312155-0329		2	SCREW DIN 7991 MF6S M5X16 A4 70	
260	575034-0000		2	ROUND NUT	
270	315105-0146		6	WASHER BRB 5,3X10 RFR	
280	90458-0429		1	HOSE GLAND W/O INSERT M20 EXTENDED	
290	353249-0011		1	INSERT, SINGEL HOLE, EK 153/11	
310	90044-0310		1	KEY FOR SAFETY SWITCH AZ 15/16 B1	
320	312105-0370		2	SCREW M6S ISO 4017 M6X20 A480	
330	359705-0007		1	WARNING SIGN ISO, HOT SURFACE	
B1506	90459-0472		1	KEY SAF.SW. AZ 16 02ZVRK-M20-2152-2254	

Pos	Part No	UN	Qty	Description	Page No

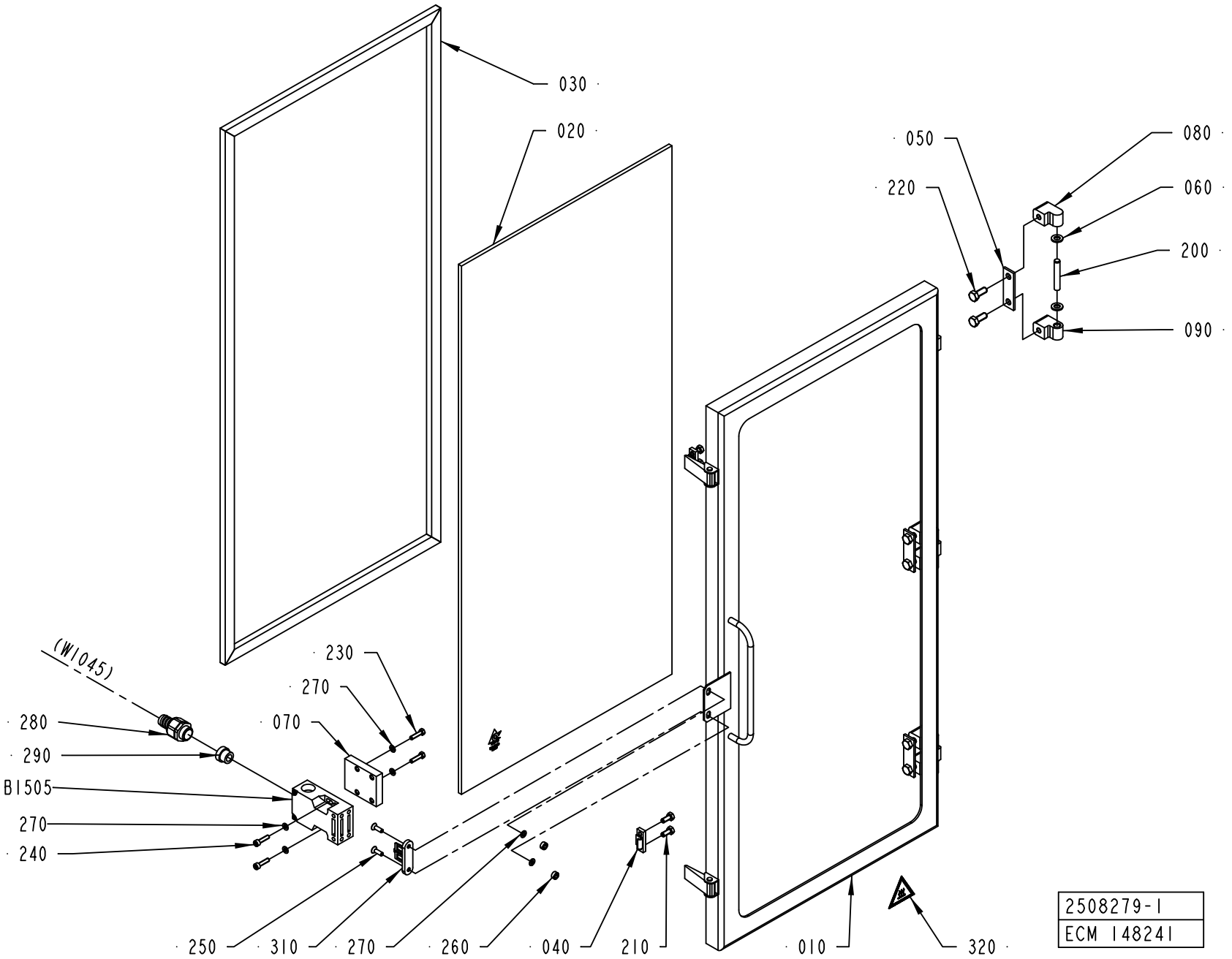
030
020
050
220
080
060
200
090
(W1045)
230
270
070
280
290
B1505
270
240
250
310
270
260
040
210
010
320
2508279-1
ECM 148241

ECM: 188344 - 20041117
Group number: 2508279-0100
Assembly Drawing: 2508279-1_1_AB

Pos	Part No	UN	Qty	Description	Page No
-					
010	2508280-0000		1	FRAME	
020	2508282-0000		1	GLASS PANE	
030	2508281-0000		1	GASKET	
040	271860-0000		2	CLAMP BLOCK	
050	441737-0000		3	WASHER	
060	441739-0000		6	WASHER	
070	2541651-0000		1	PLATE	
080	1041978-0000		3	HINGE FLANGE	
090	1041979-0000		3	HINGE FLANGE	
200	311103-0413		3	PARALLEL PIN ISO 2338 8M6X50 A1	
210	312105-0367		4	SCREW M6S ISO 4017 M6X14 A480	
220	312105-0451		6	SCREW M6S ISO 4017 M8X20 A480	
230	312105-0331		2	SCREW M6S ISO 4017 M5X20 A480	
240	312115-0331		2	SCREW ISO4762 M5X20 A4 80	
250	312155-0329		2	SCREW DIN 7991 MF6S M5X16 A4 70	
260	575034-0000		2	ROUND NUT	
270	315105-0146		6	WASHER BRB 5,3X10 RFR	
280	90458-0429		1	HOSE GLAND W/O INSERT M20 EXTENDED	
290	353249-0011		1	INSERT, SINGEL HOLE, EK 153/11	
310	90044-0310		1	KEY FOR SAFETY SWITCH AZ 15/16 B1	
320	359705-0007		1	WARNING SIGN ISO, HOT SURFACE	
B1505	90459-0472		1	KEY SAF.SW. AZ 16 02ZVRK-M20-2152-2254	

Pos	Part No	UN	Qty	Description	Page No

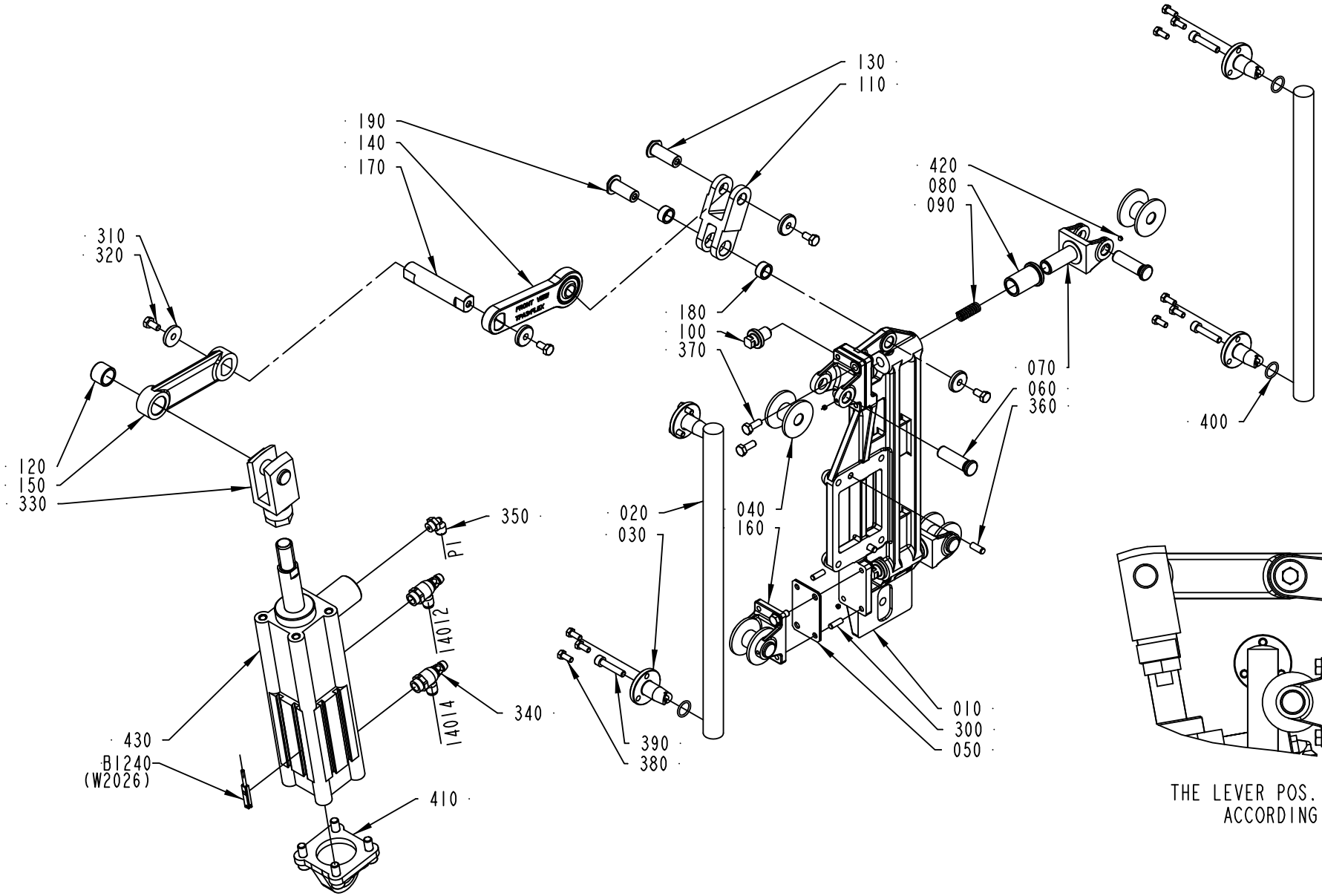

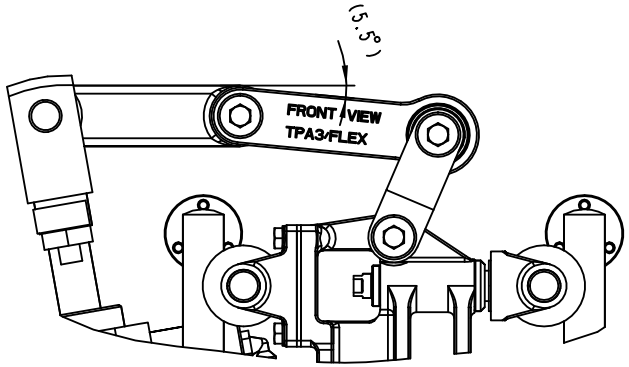

THE LEVER POS. 140 MUST BE MOUNTED ACCORDING TO THE PICTURE

2512930-4
205993

ECM: 205995 - 20050627
Group number: 2512930-0200
Assembly Drawing: 2512930-4_1_AA

Pos	Part No	UN	Qty	Description	Page No
A3/FLEX					
110	2731434-0000		1	LEVER	
Common Parts					
010	2547401-0000		1	SUPPORT PLATE	
020	2504521-0000		2	BAR	
030	2504523-0000		4	CENTERING	
040	2547403-0000		4	WHEEL	
050	2547419-0000		2	SHIM	
060	2526841-0000		4	SHAFT	
070	2552121-0000		2	BRACKET	
080	2522233-0000		2	BUSHING	
090	2522235-0000		2	COMPRESSION SPRING	
100	2541658-0000		2	SCREW	
120	2506269-0000		1	BUSHING	
130	2709262-0000		1	SHAFT	
140	2715618-0000		1	LEVER	
150	2506273-0000		1	LEVER	
160	2547402-0000		2	BRACKET	
170	2715601-0000		1	SHAFT	
180	2506291-0000		2	BUSHING	
190	2751466-0000		1	SHAFT	
300	311103-0308		4	PARALLEL PIN ISO 2338 5M6X16 A1	
310	315125-0153		4	WASHER TBRSB 6,4X22X4 A4	
320	312105-0366		4	SCREW M6S ISO 4017 M6X12 A480	
330	2547387-0000		1	ROD END	
340	90235-0847		2	THROTTLE CHECK VALVE, G1/4", MANUAL,6	
350	90458-2956		1	ELBOW PIPE JOINT, EXT.THREAD, D=6MM-G1/8	
360	311103-0351		2	PARALLEL PIN ISO 2338 6M6X16 A1	
370	312105-0368		4	SCREW M6S ISO 4017 M6X16 A480	
380	312105-0327		12	SCREW M6S ISO 4017 M5X12 A480	
390	312115-0374		4	SCREW ISO4762 M6X30 A4 80	
400	315205-0703		4	O-RING 14,0X1,78 MM	
410	90459-0586		1	SWIVEL FLANGE 50	
420	90459-1395		4	SCREW HEX.SOCK.SET CONEPT.MS6SS M4X4 A2	
430	90459-0587		1	DOUBLE ACTING, PROFILE, CYL 50-50	
B1240	90458-2775		1	PROXIMITY SENSOR, SMT-8-PS-K5-LED-24-B	

Pos	Part No	UN	Qty	Description	Page No

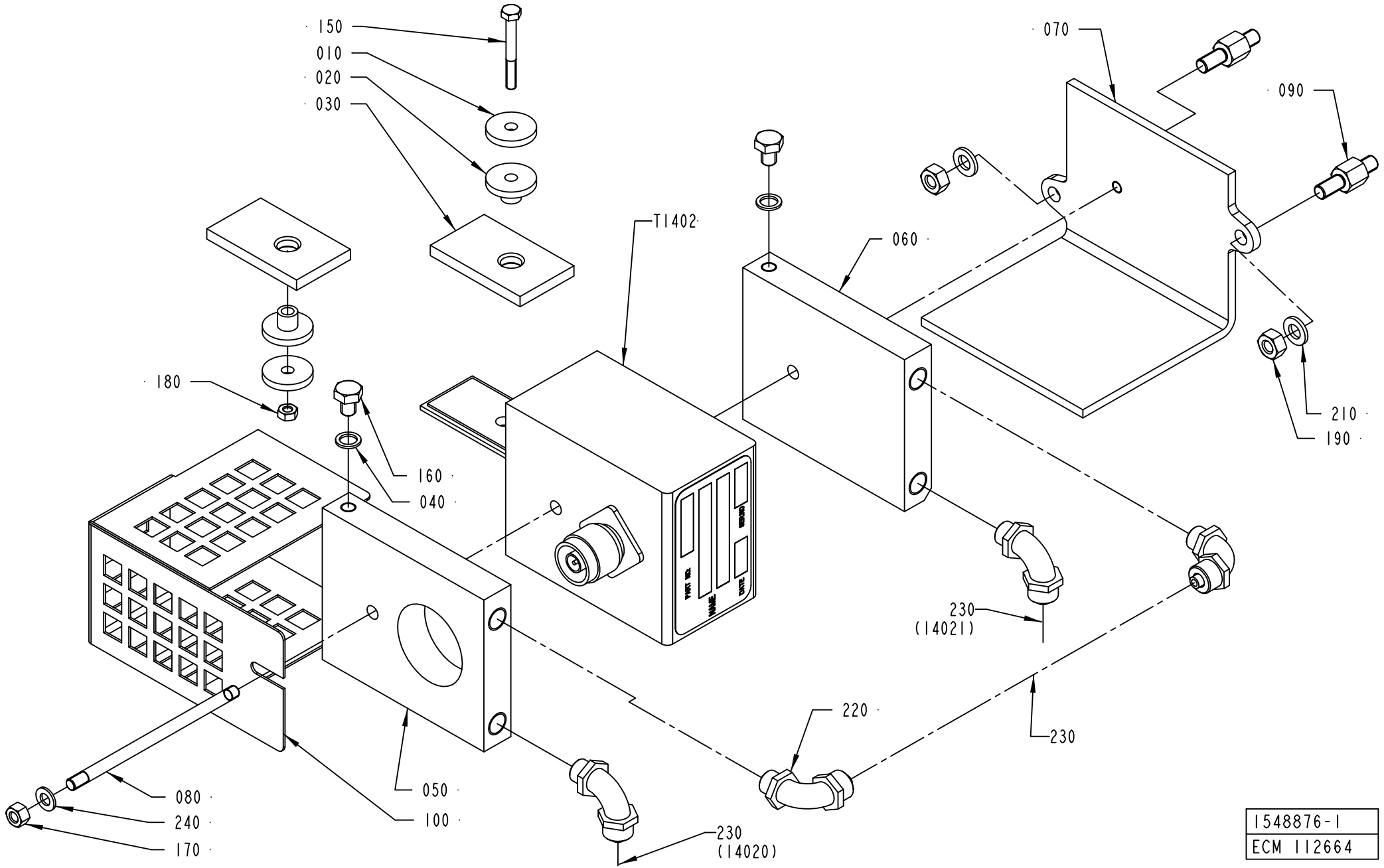
150
010
020
030
070
090
T1402
060
180
210
190
160
040
230
(14021)
220
230
080
240
170
050
100
230
(14020)
1548876-1
ECM 112664

ECM: 267092 - 20060703
Group number: 1548876-0100
Assembly Drawing: 1548876-1_1_AA

Pos	Part No	UN	Qty	Description	Page No
A3/FLEX TBA 0200B, A3/FLEX TBA 0250B, A3/FLEX TBA 0330S, A3/FLEX TPA 0330SQ, A3/FLEX TPA 0500SQ, A3/FLEX TBA 0500S					
230	90166-0118	MM	6000	TUBE 8 MM PA BLACK	
T1402	67379-0412		1	TRANSFORMER	
A3/FLEX TBA 0200S, A3/FLEX TBA 1890S, A3/FLEX TBA 2000S, A3/FLEX TBA 0200M, A3/FLEX TBA 0250S, A3/FLEX TPA 0200SQ QC, A3/FLEX TPA 0250SQ QC, A3/FLEX TBA 0200SQ, A3/FLEX TBA 0250SQ					
230	90166-0118	MM	6000	TUBE 8 MM PA BLACK	
T1402	67379-0414		1	TRANSFORMER	
A3/FLEX TBA 0500B, A3/FLEX TBA 1000B, A3/FLEX TPA 1000SQ, A3/FLEX TBA 1500S, A3/FLEX TPA 0750SQ					
230	90166-0118	MM	6000	TUBE 8 MM PA BLACK	
T1402	67379-0417		1	TRANSFORMER	
A3/FLEX TBA 1000S NODIMC					
230	90166-0118	MM	6000	TUBE 8 MM PA BLACK	
T1402	67379-0404		1	TRANSFORMER	
A3/FLEX TBA 1000SQ, A3/FLEX TBA 1000S DIMC/FLEX					
230	90166-0118	MM	6000	TUBE 8 MM PA BLACK	
T1402	67379-0405		1	TRANSFORMER	
Common Parts					
010	263311-0000		2	WASHER	
020	1539174-0000		2	BUSHING	
030	1539175-0000		2	PLATE	
040	1140077-0000		2	RING	
050	1558830-0000		1	COOLING PLATE	
060	1558831-0000		1	COOLING PLATE	
070	1558441-0000		1	BRACKET	
080	2559066-0000		1	STUD SCREW	
090	2532979-0000		2	SPACER	
100	2541664-0000		1	COVER	
150	312105-0301		1	SCREW M6S ISO 4017 M4X35 A470	
160	312105-0362		2	SCREW M6S ISO 4017 M6X8 A480	
170	312605-0314		1	HEXAGON NUT, M6M M5 A280	
180	312605-0312		1	HEXAGON NUT, M6M M4 A280	
190	312605-0316		2	HEXAGON NUT, M6M M6 A280	
210	315105-0153		2	WASHER BRB 6,4X12 RFR	
220	342931-0121		4	ELBOW 90 COUPL.,EXT.THREAD 8/6-G1/8"	
240	315105-0146		1	WASHER BRB 5,3X10 RFR	
250	90157-0037		1	THREAD SEALANT LOCTITE 542	

Pos	Part No	UN	Qty	Description	Page No

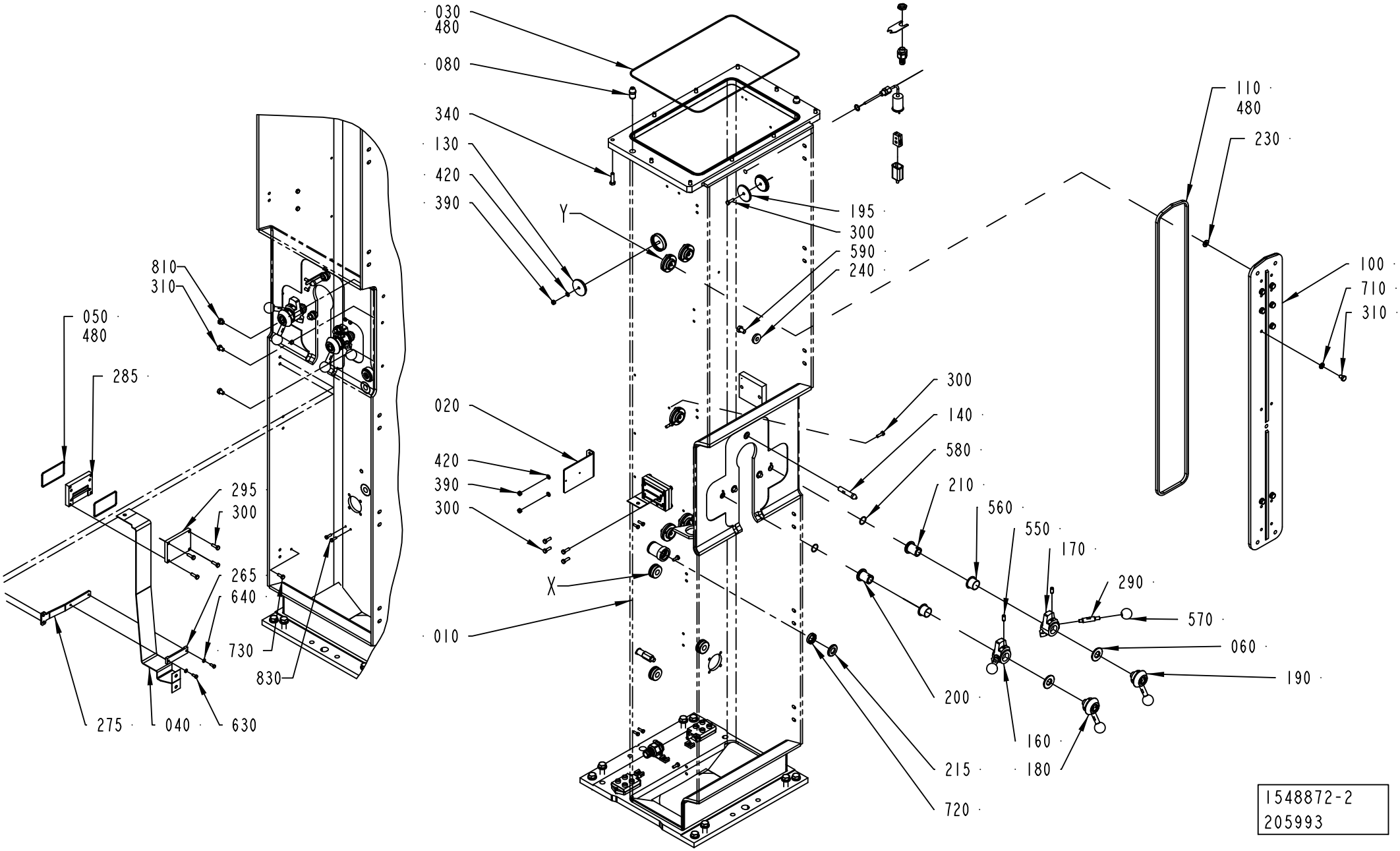
030
480
080
340
130
420
390
Y
195
300
590
240
110
480
230
100
710
310
810
310
050
480
285
295
300
265
640
730
830
275
040
630
020
420
390
300
X
010
300
140
580
210
560
550
170
290
570
060
190
200
160
180
215
720
1548872-2
205993

ECM: 274256 - 20060728
Group number: 1548872-0100
Assembly Drawing: 1548872-2_1_AE

This list covers pages from 1-14 to 1-17

Pos	Part No	UN	Qty	Description	Page No
A3/FLEX (See drawing on pages: 1-14, 1-16)					
010	1558513-0000		1	PILLAR	
040	2698178-0000		1	BUSBAR	
050	90459-1174		2	O-RING 75,87X2,62 MM	
150	1036293-0000		1	HOLDER	
265	2532978-0000		1	PLATE	
275	2532977-0000		1	BRACKET	
285	2533628-0000		1	SUPPORT BLOCK	
295	2533627-0000		1	SUPPORT BLOCK	
296	1129086-0000		1	BRACKET	
300	312105-0370		12	SCREW M6S ISO 4017 M6X20 A480	
310	312105-0447		16	SCREW M6S ISO 4017 M8X12 A480	
390	312605-0316		4	HEXAGON NUT, M6M M6 A280	
490	90099-0104		1	NUT, PR 15,2 (PG9)	
500	353243-0001		1	HOSE GLAND W/O INSERT PG9 EXTENDED	
510	353249-0008		1	INSERT, SINGEL HOLE, EK 152/7	
520	90326-0020		1	PLUG, FEMALE YELLOW CR-AL	
530	90326-0012		1	PROTECTIVE COVER, T31A4618	
540	315237-0110		1	WASHER,PL.RND.AL.13,5/18,H=1,5	
630	312105-0327		2	SCREW M6S ISO 4017 M5X12 A480	
640	315105-0146		2	WASHER BRB 5,3X10 RFR	
680	90458-0638		2	DISTRIBUTION FRAME, ASB 4/LED 5-4-12/5M	
690	312115-0293		6	SCREW ISO4762 M4X16 A4 80	
730	312105-0368		2	SCREW M6S ISO 4017 M6X16 A480	
780	353243-0005		1	HOSE GLAND W/O INSERT PG16 EXTENDED	
790	353249-0014		1	INSERT, SINGEL HOLE, EK 154/16	
800	90099-0110		1	NUT, PR 22,5 (PG16)	
810	90330-0066		1	PLUG, EXT. G-THREAD, G1/8	
830	312105-0329		4	SCREW M6S ISO 4017 M5X16 A480	
B1109	90458-0341		1	THERMOCOUPLE, 5130050-001	
Common Parts					
020	2528088-0000		1	HOLDER	
030	90459-1175		1	O-RING 418X3,0 MM	
060	2562677-0000		2	WASHER	
080	1519150-0000		2	PIN	
100	2528111-0000		1	PLATE	
110	2634997-0000		1	GASKET	
120	2544865-0000		1	BUSHING	
130	2506281-0000		2	PLUG	
140	2506283-0000		1	PIN	
160	2526859-0000		1	CAM	
170	2528068-0000		1	CAM	
180	2528070-0000		1	LOCKING LEVER	
190	2528102-0000		1	LOCKING LEVER	
195	2552138-0000		2	LID	
200	2512769-0000		1	SHAFT	
210	2512768-0000		1	SHAFT	
215	2544866-0000		1	WASHER	
220	2512774-0000		4	SHIM	
230	2528107-0000		5	SHIM	
235	2541645-0000		4	SHIM	
240	315125-0173		2	WASHER TBRSB 10,5X28X6 A4	
245	2541646-0000		5	SHIM	
255	2547386-0000		1	SHAFT	
280	2528106-0000		5	FLANGE	
290	2526858-0000		2	DOWEL	
320	312105-0449		5	SCREW M6S ISO 4017 M8X16 A480	
340	312105-0455		10	SCREW M6S ISO 4017 M8X30 A480	
360	312105-0536		4	SCREW M6S ISO 4017 M12X30 A480	
370	312105-0538		4	SCREW M6S ISO 4017 M12X35 A480	
380	312125-0366		3	SCREW ISO 1207 M6X12 A4	
420	315105-0153		4	WASHER BRB 6,4X12 RFR	
450	315115-0178		8	WASHER PLAIN, TBRB 13/24 H=4	
460	352113-0204		3	ANCHOR PLATES FOR STRIPS, TYPE TM3S25-M	
480	90153-0023		1	ADHESIVE, SILICON 251470 TUB 90CC	
550	90287-0112		2	SCREW SPRINGLOAD. SLOTTED HEAD M8X16	
560	90240-0293		2	FLANGE BUSHING, 25X28X21 MM	
570	318800-0104		2	HANDLE,SPHERICAL KNOB,INT.THRE.,D.30-M8	
580	315205-0707		2	O-RING 20,35X1,78 MM	
590	312105-0489		2	SCREW M6S ISO 4017 M10X16 A480	
600	312105-0325		15	SCREW M6S ISO 4017 M5X10 A480	
670	315751-0113		1	RETAINING RING FOR SHAFT DIN 471 16 A2	
710	315115-0165		16	WASHER PLAIN, TBRB 8,4/16 H=3	
720	90459-0871		1	SEALING RING 18X30X7 MM	

Machine Type | Group Description | Used-In | Group Number | Page No

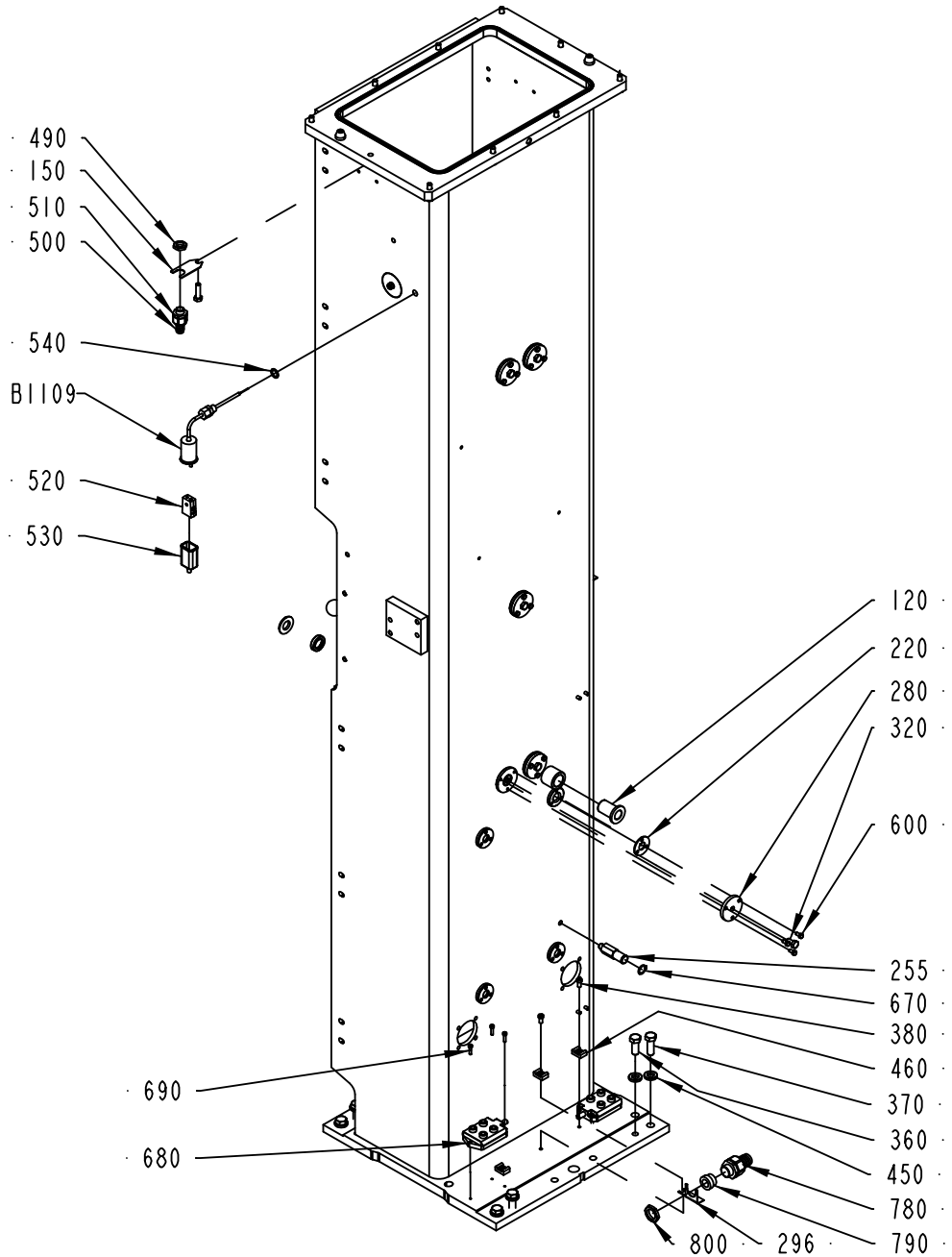

1548872-2
205993

ECM: 274256 - 20060728
Group number: 1548872-0100
Assembly Drawing: 1548872-2_2_AE

This list covers pages from 1-14 to 1-17

Pos	Part No	UN	Qty	Description	Page No
A3/FLEX (See drawing on pages: 1-14, 1-16)					
010	1558513-0000		1	PILLAR	
040	2698178-0000		1	BUSBAR	
050	90459-1174		2	O-RING 75,87X2,62 MM	
150	1036293-0000		1	HOLDER	
265	2532978-0000		1	PLATE	
275	2532977-0000		1	BRACKET	
285	2533628-0000		1	SUPPORT BLOCK	
295	2533627-0000		1	SUPPORT BLOCK	
296	1129086-0000		1	BRACKET	
300	312105-0370		12	SCREW M6S ISO 4017 M6X20 A480	
310	312105-0447		16	SCREW M6S ISO 4017 M8X12 A480	
390	312605-0316		4	HEXAGON NUT, M6M M6 A280	
490	90099-0104		1	NUT, PR 15,2 (PG9)	
500	353243-0001		1	HOSE GLAND W/O INSERT PG9 EXTENDED	
510	353249-0008		1	INSERT, SINGEL HOLE, EK 152/7	
520	90326-0020		1	PLUG, FEMALE YELLOW CR-AL	
530	90326-0012		1	PROTECTIVE COVER, T31A4618	
540	315237-0110		1	WASHER,PL.RND.AL.13,5/18,H=1,5	
630	312105-0327		2	SCREW M6S ISO 4017 M5X12 A480	
640	315105-0146		2	WASHER BRB 5,3X10 RFR	
680	90458-0638		2	DISTRIBUTION FRAME, ASB 4/LED 5-4-12/5M	
690	312115-0293		6	SCREW ISO4762 M4X16 A4 80	
730	312105-0368		2	SCREW M6S ISO 4017 M6X16 A480	
780	353243-0005		1	HOSE GLAND W/O INSERT PG16 EXTENDED	
790	353249-0014		1	INSERT, SINGEL HOLE, EK 154/16	
800	90099-0110		1	NUT, PR 22,5 (PG16)	
810	90330-0066		1	PLUG, EXT. G-THREAD, G1/8	
830	312105-0329		4	SCREW M6S ISO 4017 M5X16 A480	
B1109	90458-0341		1	THERMOCOUPLE, 5130050-001	
Common Parts					
020	2528088-0000		1	HOLDER	
030	90459-1175		1	O-RING 418X3,0 MM	
060	2562677-0000		2	WASHER	
080	1519150-0000		2	PIN	
100	2528111-0000		1	PLATE	
110	2634997-0000		1	GASKET	
120	2544865-0000		1	BUSHING	
130	2506281-0000		2	PLUG	
140	2506283-0000		1	PIN	
160	2526859-0000		1	CAM	
170	2528068-0000		1	CAM	
180	2528070-0000		1	LOCKING LEVER	
190	2528102-0000		1	LOCKING LEVER	
195	2552138-0000		2	LID	
200	2512769-0000		1	SHAFT	
210	2512768-0000		1	SHAFT	
215	2544866-0000		1	WASHER	
220	2512774-0000		4	SHIM	
230	2528107-0000		5	SHIM	
235	2541645-0000		4	SHIM	
240	315125-0173		2	WASHER TBRSB 10,5X28X6 A4	
245	2541646-0000		5	SHIM	
255	2547386-0000		1	SHAFT	
280	2528106-0000		5	FLANGE	
290	2526858-0000		2	DOWEL	
320	312105-0449		5	SCREW M6S ISO 4017 M8X16 A480	
340	312105-0455		10	SCREW M6S ISO 4017 M8X30 A480	
360	312105-0536		4	SCREW M6S ISO 4017 M12X30 A480	
370	312105-0538		4	SCREW M6S ISO 4017 M12X35 A480	
380	312125-0366		3	SCREW ISO 1207 M6X12 A4	
420	315105-0153		4	WASHER BRB 6,4X12 RFR	
450	315115-0178		8	WASHER PLAIN, TBRB 13/24 H=4	
460	352113-0204		3	ANCHOR PLATES FOR STRIPS, TYPE TM3S25-M	
480	90153-0023		1	ADHESIVE, SILICON 251470 TUB 90CC	
550	90287-0112		2	SCREW SPRINGLOAD. SLOTTED HEAD M8X16	
560	90240-0293		2	FLANGE BUSHING, 25X28X21 MM	
570	318800-0104		2	HANDLE,SPHERICAL KNOB,INT.THRE.,D.30-M8	
580	315205-0707		2	O-RING 20,35X1,78 MM	
590	312105-0489		2	SCREW M6S ISO 4017 M10X16 A480	
600	312105-0325		15	SCREW M6S ISO 4017 M5X10 A480	
670	315751-0113		1	RETAINING RING FOR SHAFT DIN 471 16 A2	
710	315115-0165		16	WASHER PLAIN, TBRB 8,4/16 H=3	
720	90459-0871		1	SEALING RING 18X30X7 MM	

Machine Type | Group Description | Used-In | Group Number | Page No

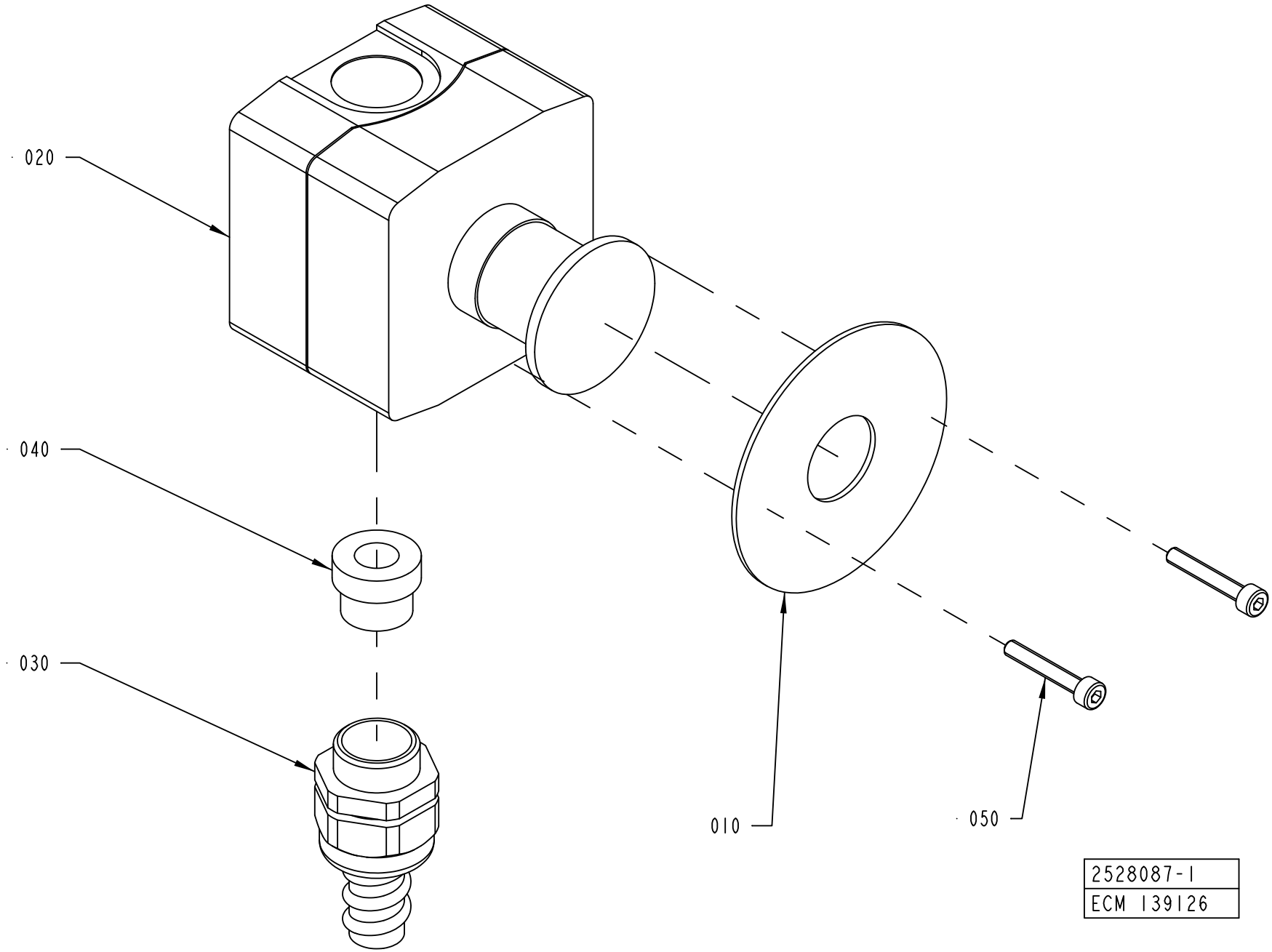
020
040
030
010
050
2528087-1
ECM 139126

ECM: 188383 - 20041117
Group number: 2528087-0100
Assembly Drawing: 2528087-1_1_AA

Pos	Part No	UN	Qty	Description	Page No
-					
010	486826-0001		1	SIGN "EMERGENCY STOP"	
020	90459-1130		1	EM. STOP XAL-K178F	
030	353243-0009		1	HOSE GLAND W/O INSERT PG13,5 EXTENDED	
040	353249-0011		1	INSERT, SINGEL HOLE, EK 153/11	
050	312115-0297		2	SCREW ISO4762 M4X25 A4 80	

Pos	Part No	UN	Qty	Description	Page No

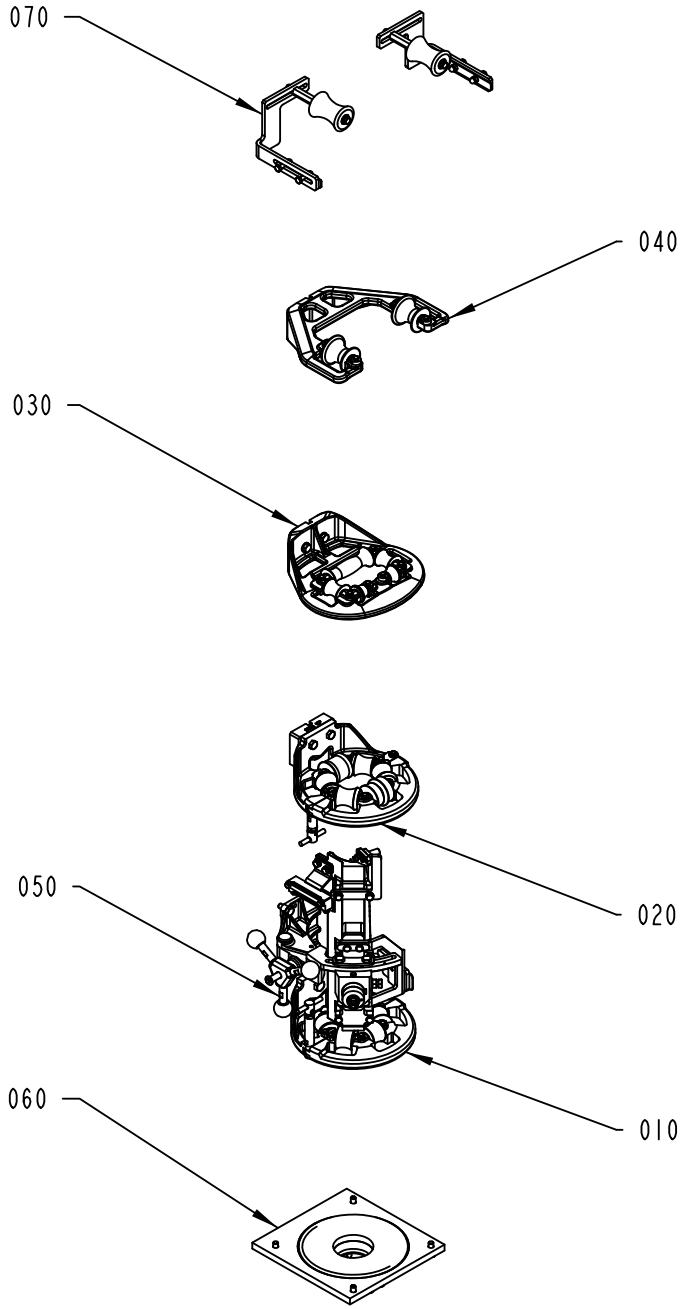

2544850-1
201309

ECM: 271584 - 20060706
Group number: 2544850-0100
Assembly Drawing: 2544850-1_1_AE

This list covers pages from 1-20 to 1-27

Pos	Part No	UN	Qty	Description	Page No
A3/FLEX DIMC/FLEX (See drawing on page: 1-22)					**1-71, 1-73**
010	2559063-0200		1	LOWER FORMING RING	**1-29, 1-31**
020	2559061-0200		1	UPPER FORMING RING	**1-33, 1-35, 1-37**
030	2592550-0100		1	FORMING RING	**1-39**
050	2657873-0100		1	LONGITUDINAL SEALING	**1-41, 1-43**
060	2559064-0100		1	SEAL	**1-47, 1-49, 1-51**
A3/FLEX TBA 0200S NODIMC, A3/FLEX TBA 0200B NODIMC, A3/FLEX TBA 0250B NODIMC, A3/FLEX TBA 0330S NODIMC, A3/FLEX TPA 0200SQ NODIMC, A3/FLEX TPA 0250SQ NODIMC (See drawing on page: 1-20)					
010	2559062-0200		1	LOWER FORMING RING	**1-53, 1-55, 1-57**
020	2547422-0200		1	UPPER FORMING RING	**1-59, 1-61, 1-63, 1-65, 1-67, 1-69, 1-71, 1-73**
030	2547421-0100		1	FORMING RING	**1-75, 1-77, 1-79**
040	2674188-0100		1	EDGE ROLLER	**1-81, 1-83**
050	2657873-0100		1	LONGITUDINAL SEALING	**1-41, 1-43**
060	2512780-0100		1	SEAL	**1-85, 1-87, 1-89**
A3/FLEX TBA 0200SQ NODIMC, A3/FLEX TBA 0250SQ NODIMC (See drawing on page: 1-22)					
010	2559062-0200		1	LOWER FORMING RING	**1-53, 1-55, 1-57**
020	2547422-0200		1	UPPER FORMING RING	**1-59, 1-61, 1-63, 1-65, 1-67, 1-69, 1-71, 1-73**
030	2547421-0100		1	FORMING RING	**1-75, 1-77, 1-79**
050	2657873-0100		1	LONGITUDINAL SEALING	**1-41, 1-43**
060	2512780-0100		1	SEAL	**1-85, 1-87, 1-89**
A3/FLEX TBA 0250S NODIMC, A3/FLEX TBA 0200M NODIMC (See drawing on page: 1-20)					
010	2559062-0200		1	LOWER FORMING RING	**1-53, 1-55, 1-57**
020	2547422-0200		1	UPPER FORMING RING	**1-59, 1-61, 1-63, 1-65, 1-67, 1-69, 1-71, 1-73**
030	2547421-0100		1	FORMING RING	**1-75, 1-77, 1-79**
040	2674188-0100		1	EDGE ROLLER	**1-81, 1-83**
050	2657873-0100		1	LONGITUDINAL SEALING	**1-41, 1-43**
060	2512780-0100		1	SEAL	**1-85, 1-87, 1-89**
A3/FLEX TBA 0500S NODIMC (See drawing on page: 1-22)					
010	2559062-0200		1	LOWER FORMING RING	**1-53, 1-55, 1-57**
020	2547422-0200		1	UPPER FORMING RING	**1-59, 1-61, 1-63, 1-65, 1-67, 1-69, 1-71, 1-73**
030	2547421-0100		1	FORMING RING	**1-75, 1-77, 1-79**
050	2657873-0100		1	LONGITUDINAL SEALING	**1-41, 1-43**
060	2512780-0100		1	SEAL	**1-85, 1-87, 1-89**
A3/FLEX TBA 1000SQ NODIMC, A3/FLEX TBA 1000S NODIMC, A3/FLEX TBA 1000B NODIMC, A3/FLEX TBA 0500B NODIMC, A3/FLEX TBA 1500S NODIMC (See drawing on page: 1-22)					
010	2559062-0200		1	LOWER FORMING RING	**1-53, 1-55, 1-57**
020	2547422-0200		1	UPPER FORMING RING	**1-59, 1-61, 1-63, 1-65, 1-67, 1-69, 1-71, 1-73**
030	2547421-0100		1	FORMING RING	**1-75, 1-77, 1-79**
050	2657873-0100		1	LONGITUDINAL SEALING	**1-41, 1-43**
060	2512780-0100		1	SEAL	**1-85, 1-87, 1-89**
A3/FLEX TBA 2000S NODIMC, A3/FLEX TBA 1890S NODIMC (See drawing on page: 1-24)					
010	2559062-0200		1	LOWER FORMING RING	**1-53, 1-55, 1-57**
020	2547422-0200		1	UPPER FORMING RING	**1-59, 1-61, 1-63, 1-65, 1-67, 1-69, 1-71, 1-73**
030	2547421-0100		1	FORMING RING	**1-75, 1-77, 1-79**
040	2547420-0100		1	EDGE ROLLER	**1-91, 1-93**
050	2657873-0100		1	LONGITUDINAL SEALING	**1-41, 1-43**
060	2512780-0100		1	SEAL	**1-85, 1-87, 1-89**
090	2555627-0100		1	PRESSURE ROLLER	**1-95**
A3/FLEX TPA 0330SQ NODIMC (See drawing on page: 1-22)					
010	2559062-0200		1	LOWER FORMING RING	**1-53, 1-55, 1-57**
020	2547422-0200		1	UPPER FORMING RING	**1-59, 1-61, 1-63, 1-65, 1-67, 1-69, 1-71, 1-73**
030	2547421-0100		1	FORMING RING	**1-75, 1-77, 1-79**
050	2657873-0100		1	LONGITUDINAL SEALING	**1-41, 1-43**
060	2512780-0100		1	SEAL	**1-85, 1-87, 1-89**
A3/FLEX TPA 0500SQ NODIMC (See drawing on page: 1-22)					
010	2559062-0200		1	LOWER FORMING RING	**1-53, 1-55, 1-57**
020	2547422-0200		1	UPPER FORMING RING	**1-59, 1-61, 1-63, 1-65, 1-67, 1-69, 1-71, 1-73**
030	2547421-0100		1	FORMING RING	**1-75, 1-77, 1-79**
050	2657873-0100		1	LONGITUDINAL SEALING	**1-41, 1-43**
060	2512780-0100		1	SEAL	**1-85, 1-87, 1-89**
A3/FLEX TPA 1000SQ NODIMC QC, A3/FLEX TPA 0750SQ NODIMC QC (See drawing on page: 1-26)					
010	2559062-0200		1	LOWER FORMING RING	**1-53, 1-55, 1-57**
020	2547422-0200		1	UPPER FORMING RING	**1-59, 1-61, 1-63, 1-65, 1-67, 1-69, 1-71, 1-73**
030	2547421-0100		1	FORMING RING	**1-75, 1-77, 1-79**
050	2657873-0100		1	LONGITUDINAL SEALING	**1-41, 1-43**
060	2512780-0100		1	SEAL	**1-85, 1-87, 1-89**
090	2555627-0100		1	PRESSURE ROLLER	**1-95**
A3/FLEX TPA 1000SQ NODIMC NOQC (See drawing on page: 1-26)					
010	2559062-0200		1	LOWER FORMING RING	**1-53, 1-55, 1-57**
020	2547422-0200		1	UPPER FORMING RING	**1-59, 1-61, 1-63, 1-65, 1-67, 1-69, 1-71, 1-73**
030	2547421-0100		1	FORMING RING	**1-75, 1-77, 1-79**
050	2657873-0100		1	LONGITUDINAL SEALING	**1-41, 1-43**
060	2512780-0100		1	SEAL	**1-85, 1-87, 1-89**

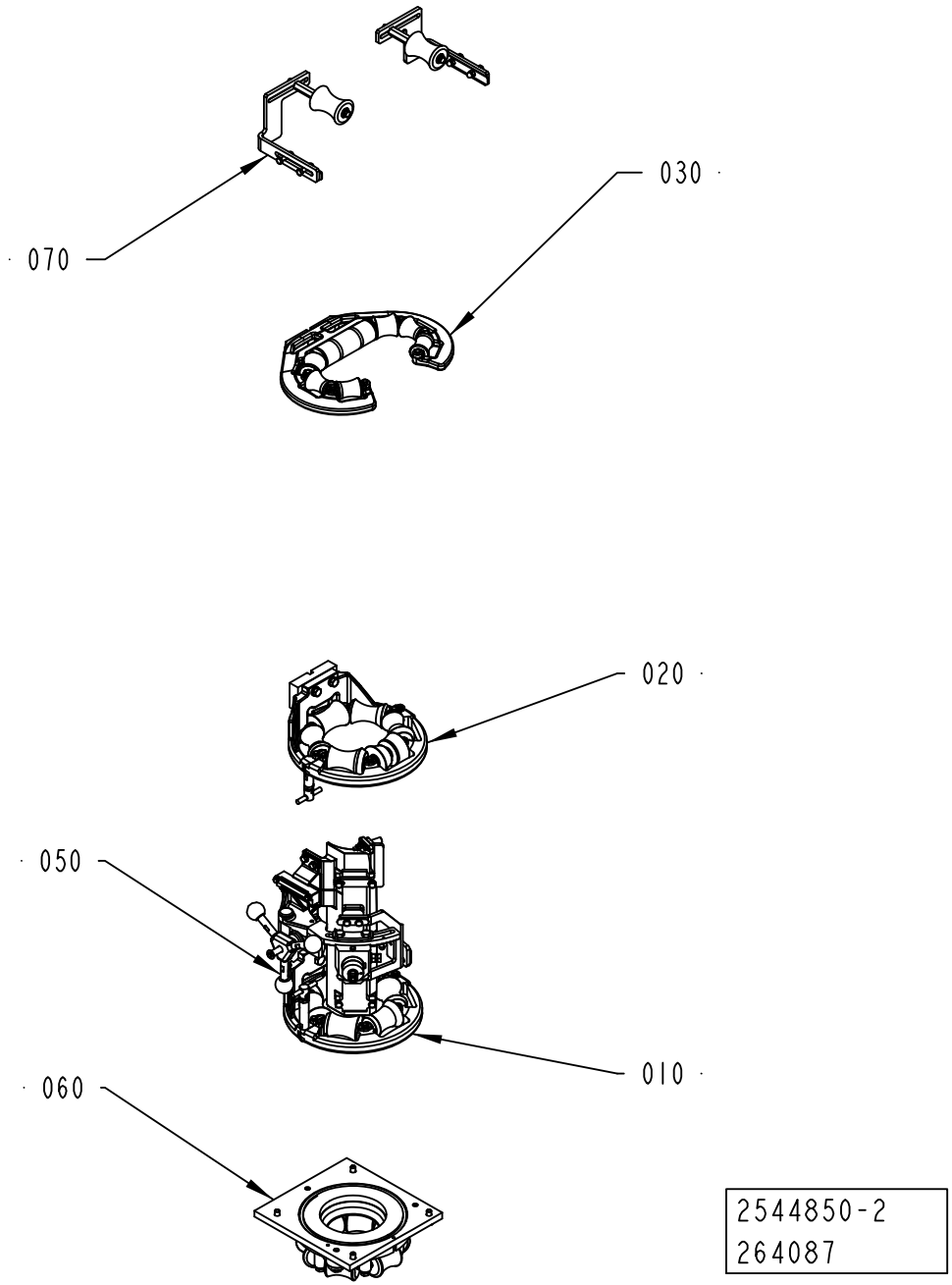
070
030
020
050
010
060
2544850-2
264087

ECM: 271584 - 20060706
Group number: 2544850-0100
Assembly Drawing: 2544850-2_1_AJ

This list covers pages from 1-20 to 1-27

Pos	Part No	UN	Qty	Description	Page No
A3/FLEX DIMC/FLEX (See drawing on page: 1-22)					**1-71, 1-73**
010	2559063-0200		1	LOWER FORMING RING	**1-29, 1-31**
020	2559061-0200		1	UPPER FORMING RING	**1-33, 1-35, 1-37**
030	2592550-0100		1	FORMING RING	**1-39**
050	2657873-0100		1	LONGITUDINAL SEALING	**1-41, 1-43**
060	2559064-0100		1	SEAL	**1-47, 1-49, 1-51**
A3/FLEX TBA 0200S NODIMC, A3/FLEX TBA 0200B NODIMC, A3/FLEX TBA 0250B NODIMC, A3/FLEX TBA 0330S NODIMC, A3/FLEX TPA 0200SQ NODIMC, A3/FLEX TPA 0250SQ NODIMC (See drawing on page: 1-20)					
010	2559062-0200		1	LOWER FORMING RING	**1-53, 1-55, 1-57**
020	2547422-0200		1	UPPER FORMING RING	**1-59, 1-61, 1-63, 1-65, 1-67, 1-69**
					1-71, 1-73
030	2547421-0100		1	FORMING RING	**1-75, 1-77, 1-79**
040	2674188-0100		1	EDGE ROLLER	**1-81, 1-83**
050	2657873-0100		1	LONGITUDINAL SEALING	**1-41, 1-43**
060	2512780-0100		1	SEAL	**1-85, 1-87, 1-89**
A3/FLEX TBA 0200SQ NODIMC, A3/FLEX TBA 0250SQ NODIMC (See drawing on page: 1-22)					
010	2559062-0200		1	LOWER FORMING RING	**1-53, 1-55, 1-57**
020	2547422-0200		1	UPPER FORMING RING	**1-59, 1-61, 1-63, 1-65, 1-67, 1-69**
					1-71, 1-73
030	2547421-0100		1	FORMING RING	**1-75, 1-77, 1-79**
050	2657873-0100		1	LONGITUDINAL SEALING	**1-41, 1-43**
060	2512780-0100		1	SEAL	**1-85, 1-87, 1-89**
A3/FLEX TBA 0250S NODIMC, A3/FLEX TBA 0200M NODIMC (See drawing on page: 1-20)					
010	2559062-0200		1	LOWER FORMING RING	**1-53, 1-55, 1-57**
020	2547422-0200		1	UPPER FORMING RING	**1-59, 1-61, 1-63, 1-65, 1-67, 1-69**
					1-71, 1-73
030	2547421-0100		1	FORMING RING	**1-75, 1-77, 1-79**
040	2674188-0100		1	EDGE ROLLER	**1-81, 1-83**
050	2657873-0100		1	LONGITUDINAL SEALING	**1-41, 1-43**
060	2512780-0100		1	SEAL	**1-85, 1-87, 1-89**
A3/FLEX TBA 0500S NODIMC (See drawing on page: 1-22)					
010	2559062-0200		1	LOWER FORMING RING	**1-53, 1-55, 1-57**
020	2547422-0200		1	UPPER FORMING RING	**1-59, 1-61, 1-63, 1-65, 1-67, 1-69**
					1-71, 1-73
030	2547421-0100		1	FORMING RING	**1-75, 1-77, 1-79**
050	2657873-0100		1	LONGITUDINAL SEALING	**1-41, 1-43**
060	2512780-0100		1	SEAL	**1-85, 1-87, 1-89**
A3/FLEX TBA 1000SQ NODIMC, A3/FLEX TBA 1000S NODIMC, A3/FLEX TBA 1000B NODIMC, A3/FLEX TBA 0500B NODIMC, A3/FLEX TBA 1500S NODIMC (See drawing on page: 1-22)					
010	2559062-0200		1	LOWER FORMING RING	**1-53, 1-55, 1-57**
020	2547422-0200		1	UPPER FORMING RING	**1-59, 1-61, 1-63, 1-65, 1-67, 1-69**
030	2547421-0100		1	FORMING RING	**1-75, 1-77, 1-79**
050	2657873-0100		1	LONGITUDINAL SEALING	**1-41, 1-43**
060	2512780-0100		1	SEAL	**1-85, 1-87, 1-89**
A3/FLEX TBA 2000S NODIMC, A3/FLEX TBA 1890S NODIMC (See drawing on page: 1-24)					
010	2559062-0200		1	LOWER FORMING RING	**1-53, 1-55, 1-57**
020	2547422-0200		1	UPPER FORMING RING	**1-59, 1-61, 1-63, 1-65, 1-67, 1-69**
					1-71, 1-73
030	2547421-0100		1	FORMING RING	**1-75, 1-77, 1-79**
040	2547420-0100		1	EDGE ROLLER	**1-91, 1-93**
050	2657873-0100		1	LONGITUDINAL SEALING	**1-41, 1-43**
060	2512780-0100		1	SEAL	**1-85, 1-87, 1-89**
090	2555627-0100		1	PRESSURE ROLLER	**1-95**
A3/FLEX TPA 0330SQ NODIMC (See drawing on page: 1-22)					
010	2559062-0200		1	LOWER FORMING RING	**1-53, 1-55, 1-57**
020	2547422-0200		1	UPPER FORMING RING	**1-59, 1-61, 1-63, 1-65, 1-67, 1-69**
					1-71, 1-73
030	2547421-0100		1	FORMING RING	**1-75, 1-77, 1-79**
050	2657873-0100		1	LONGITUDINAL SEALING	**1-41, 1-43**
060	2512780-0100		1	SEAL	**1-85, 1-87, 1-89**
A3/FLEX TPA 0500SQ NODIMC (See drawing on page: 1-22)					
010	2559062-0200		1	LOWER FORMING RING	**1-53, 1-55, 1-57**
020	2547422-0200		1	UPPER FORMING RING	**1-59, 1-61, 1-63, 1-65, 1-67, 1-69**
					1-71, 1-73
030	2547421-0100		1	FORMING RING	**1-75, 1-77, 1-79**
050	2657873-0100		1	LONGITUDINAL SEALING	**1-41, 1-43**
060	2512780-0100		1	SEAL	**1-85, 1-87, 1-89**
A3/FLEX TPA 1000SQ NODIMC QC, A3/FLEX TPA 0750SQ NODIMC QC (See drawing on page: 1-26)					
010	2559062-0200		1	LOWER FORMING RING	**1-53, 1-55, 1-57**
020	2547422-0200		1	UPPER FORMING RING	**1-59, 1-61, 1-63, 1-65, 1-67, 1-69**
					1-71, 1-73
030	2547421-0100		1	FORMING RING	**1-75, 1-77, 1-79**
050	2657873-0100		1	LONGITUDINAL SEALING	**1-41, 1-43**
060	2512780-0100		1	SEAL	**1-85, 1-87, 1-89**
090	2555627-0100		1	PRESSURE ROLLER	**1-95**
A3/FLEX TPA 1000SQ NODIMC NOQC (See drawing on page: 1-26)					
010	2559062-0200		1	LOWER FORMING RING	**1-53, 1-55, 1-57**
020	2547422-0200		1	UPPER FORMING RING	**1-59, 1-61, 1-63, 1-65, 1-67, 1-69**
					1-71, 1-73
030	2547421-0100		1	FORMING RING	**1-75, 1-77, 1-79**
050	2657873-0100		1	LONGITUDINAL SEALING	**1-41, 1-43**
060	2512780-0100		1	SEAL	**1-85, 1-87, 1-89**

Machine Type | Group Description | Used-In | Group Number | Page No

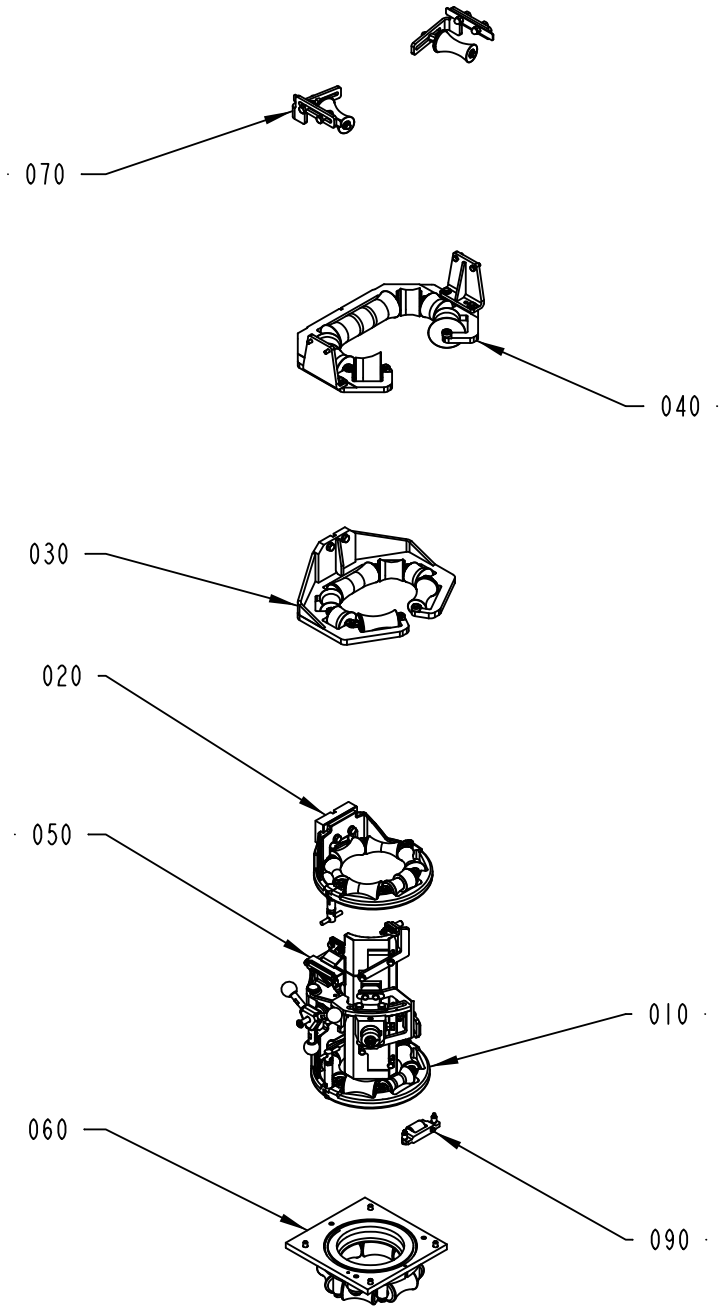

2544850-5
201309

ECM: 271584 - 20060706
Group number: 2544850-0100
Assembly Drawing: 2544850-5_1_AB

This list covers pages from 1-20 to 1-27

Pos	Part No	UN	Qty	Description	Page No
A3/FLEX DIMC/FLEX (See drawing on page: 1-22)					**1-71, 1-73**
010	2559063-0200		1	LOWER FORMING RING	**1-29, 1-31**
020	2559061-0200		1	UPPER FORMING RING	**1-33, 1-35, 1-37**
030	2592550-0100		1	FORMING RING	**1-39**
050	2657873-0100		1	LONGITUDINAL SEALING	**1-41, 1-43**
060	2559064-0100		1	SEAL	**1-47, 1-49, 1-51**
A3/FLEX TBA 0200S NODIMC, A3/FLEX TBA 0200B NODIMC, A3/FLEX TBA 0250B NODIMC, A3/FLEX TBA 0330S NODIMC, A3/FLEX TPA 0200SQ NODIMC, A3/FLEX TPA 0250SQ NODIMC (See drawing on page: 1-20)					
010	2559062-0200		1	LOWER FORMING RING	**1-53, 1-55, 1-57**
020	2547422-0200		1	UPPER FORMING RING	**1-59, 1-61, 1-63, 1-65, 1-67, 1-69, 1-71, 1-73**
030	2547421-0100		1	FORMING RING	**1-75, 1-77, 1-79**
040	2674188-0100		1	EDGE ROLLER	**1-81, 1-83**
050	2657873-0100		1	LONGITUDINAL SEALING	**1-41, 1-43**
060	2512780-0100		1	SEAL	**1-85, 1-87, 1-89**
A3/FLEX TBA 0200SQ NODIMC, A3/FLEX TBA 0250SQ NODIMC (See drawing on page: 1-22)					
010	2559062-0200		1	LOWER FORMING RING	**1-53, 1-55, 1-57**
020	2547422-0200		1	UPPER FORMING RING	**1-59, 1-61, 1-63, 1-65, 1-67, 1-69, 1-71, 1-73**
030	2547421-0100		1	FORMING RING	**1-75, 1-77, 1-79**
050	2657873-0100		1	LONGITUDINAL SEALING	**1-41, 1-43**
060	2512780-0100		1	SEAL	**1-85, 1-87, 1-89**
A3/FLEX TBA 0250S NODIMC, A3/FLEX TBA 0200M NODIMC (See drawing on page: 1-20)					
010	2559062-0200		1	LOWER FORMING RING	**1-53, 1-55, 1-57**
020	2547422-0200		1	UPPER FORMING RING	**1-59, 1-61, 1-63, 1-65, 1-67, 1-69, 1-71, 1-73**
030	2547421-0100		1	FORMING RING	**1-75, 1-77, 1-79**
040	2674188-0100		1	EDGE ROLLER	**1-81, 1-83**
050	2657873-0100		1	LONGITUDINAL SEALING	**1-41, 1-43**
060	2512780-0100		1	SEAL	**1-85, 1-87, 1-89**
A3/FLEX TBA 0500S NODIMC (See drawing on page: 1-22)					
010	2559062-0200		1	LOWER FORMING RING	**1-53, 1-55, 1-57**
020	2547422-0200		1	UPPER FORMING RING	**1-59, 1-61, 1-63, 1-65, 1-67, 1-69, 1-71, 1-73**
030	2547421-0100		1	FORMING RING	**1-75, 1-77, 1-79**
050	2657873-0100		1	LONGITUDINAL SEALING	**1-41, 1-43**
060	2512780-0100		1	SEAL	**1-85, 1-87, 1-89**
A3/FLEX TBA 1000SQ NODIMC, A3/FLEX TBA 1000S NODIMC, A3/FLEX TBA 1000B NODIMC, A3/FLEX TBA 0500B NODIMC, A3/FLEX TBA 1500S NODIMC (See drawing on page: 1-22)					
010	2559062-0200		1	LOWER FORMING RING	**1-53, 1-55, 1-57**
020	2547422-0200		1	UPPER FORMING RING	**1-59, 1-61, 1-63, 1-65, 1-67, 1-69, 1-71, 1-73**
030	2547421-0100		1	FORMING RING	**1-75, 1-77, 1-79**
050	2657873-0100		1	LONGITUDINAL SEALING	**1-41, 1-43**
060	2512780-0100		1	SEAL	**1-85, 1-87, 1-89**
A3/FLEX TBA 2000S NODIMC, A3/FLEX TBA 1890S NODIMC (See drawing on page: 1-24)					
010	2559062-0200		1	LOWER FORMING RING	**1-53, 1-55, 1-57**
020	2547422-0200		1	UPPER FORMING RING	**1-59, 1-61, 1-63, 1-65, 1-67, 1-69, 1-71, 1-73**
030	2547421-0100		1	FORMING RING	**1-75, 1-77, 1-79**
040	2547420-0100		1	EDGE ROLLER	**1-91, 1-93**
050	2657873-0100		1	LONGITUDINAL SEALING	**1-41, 1-43**
060	2512780-0100		1	SEAL	**1-85, 1-87, 1-89**
090	2555627-0100		1	PRESSURE ROLLER	**1-95**
A3/FLEX TPA 0330SQ NODIMC (See drawing on page: 1-22)					
010	2559062-0200		1	LOWER FORMING RING	**1-53, 1-55, 1-57**
020	2547422-0200		1	UPPER FORMING RING	**1-59, 1-61, 1-63, 1-65, 1-67, 1-69, 1-71, 1-73**
030	2547421-0100		1	FORMING RING	**1-75, 1-77, 1-79**
050	2657873-0100		1	LONGITUDINAL SEALING	**1-41, 1-43**
060	2512780-0100		1	SEAL	**1-85, 1-87, 1-89**
A3/FLEX TPA 0500SQ NODIMC (See drawing on page: 1-22)					
010	2559062-0200		1	LOWER FORMING RING	**1-53, 1-55, 1-57**
020	2547422-0200		1	UPPER FORMING RING	**1-59, 1-61, 1-63, 1-65, 1-67, 1-69, 1-71, 1-73**
030	2547421-0100		1	FORMING RING	**1-75, 1-77, 1-79**
050	2657873-0100		1	LONGITUDINAL SEALING	**1-41, 1-43**
060	2512780-0100		1	SEAL	**1-85, 1-87, 1-89**
A3/FLEX TPA 1000SQ NODIMC QC, A3/FLEX TPA 0750SQ NODIMC QC (See drawing on page: 1-26)					
010	2559062-0200		1	LOWER FORMING RING	**1-53, 1-55, 1-57**
020	2547422-0200		1	UPPER FORMING RING	**1-59, 1-61, 1-63, 1-65, 1-67, 1-69, 1-71, 1-73**
030	2547421-0100		1	FORMING RING	**1-75, 1-77, 1-79**
050	2657873-0100		1	LONGITUDINAL SEALING	**1-41, 1-43**
060	2512780-0100		1	SEAL	**1-85, 1-87, 1-89**
090	2555627-0100		1	PRESSURE ROLLER	**1-95**
A3/FLEX TPA 1000SQ NODIMC NOQC (See drawing on page: 1-26)					
010	2559062-0200		1	LOWER FORMING RING	**1-53, 1-55, 1-57**
020	2547422-0200		1	UPPER FORMING RING	**1-59, 1-61, 1-63, 1-65, 1-67, 1-69, 1-71, 1-73**
030	2547421-0100		1	FORMING RING	**1-75, 1-77, 1-79**
050	2657873-0100		1	LONGITUDINAL SEALING	**1-41, 1-43**
060	2512780-0100		1	SEAL	**1-85, 1-87, 1-89**

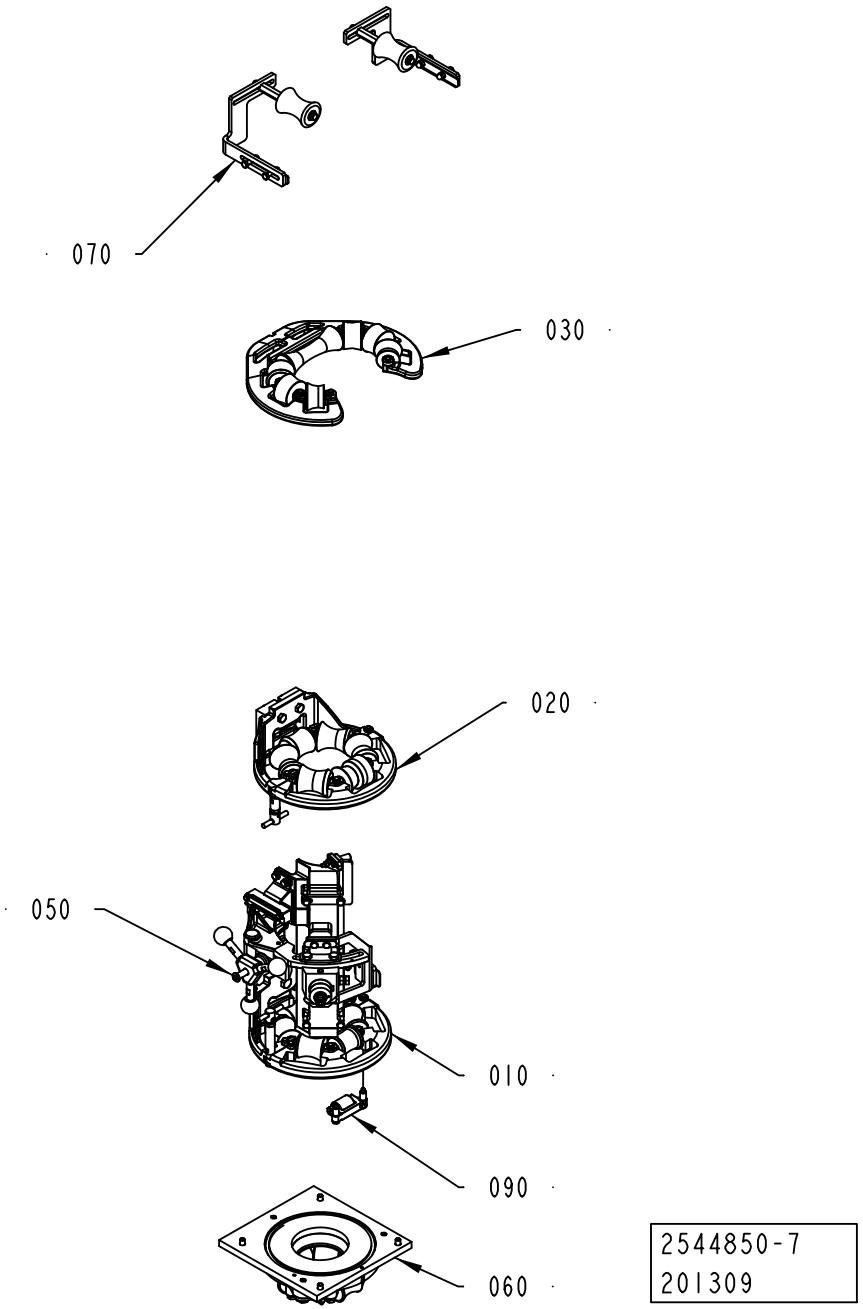
070
030
020
050
010
090
060
2544850-7
201309

ECM: 271584 - 20060706
Group number: 2544850-0100
Assembly Drawing: 2544850-7_1_AA

This list covers pages from 1-20 to 1-27

Pos	Part No	UN	Qty	Description	Page No
A3/FLEX DIMC/FLEX (See drawing on page: 1-22)					**1-71, 1-73**
010	2559063-0200		1	LOWER FORMING RING	**1-29, 1-31**
020	2559061-0200		1	UPPER FORMING RING	**1-33, 1-35, 1-37**
030	2592550-0100		1	FORMING RING	**1-39**
050	2657873-0100		1	LONGITUDINAL SEALING	**1-41, 1-43**
060	2559064-0100		1	SEAL	**1-47, 1-49, 1-51**
A3/FLEX TBA 0200S NODIMC, A3/FLEX TBA 0200B NODIMC, A3/FLEX TBA 0250B NODIMC, A3/FLEX TBA 0330S NODIMC, A3/FLEX TPA 0200SQ NODIMC, A3/FLEX TPA 0250SQ NODIMC (See drawing on page: 1-20)					
010	2559062-0200		1	LOWER FORMING RING	**1-53, 1-55, 1-57**
020	2547422-0200		1	UPPER FORMING RING	**1-59, 1-61, 1-63, 1-65, 1-67, 1-69, 1-71, 1-73**
030	2547421-0100		1	FORMING RING	**1-75, 1-77, 1-79**
040	2674188-0100		1	EDGE ROLLER	**1-81, 1-83**
050	2657873-0100		1	LONGITUDINAL SEALING	**1-41, 1-43**
060	2512780-0100		1	SEAL	**1-85, 1-87, 1-89**
A3/FLEX TBA 0200SQ NODIMC, A3/FLEX TBA 0250SQ NODIMC (See drawing on page: 1-22)					
010	2559062-0200		1	LOWER FORMING RING	**1-53, 1-55, 1-57**
020	2547422-0200		1	UPPER FORMING RING	**1-59, 1-61, 1-63, 1-65, 1-67, 1-69, 1-71, 1-73**
030	2547421-0100		1	FORMING RING	**1-75, 1-77, 1-79**
050	2657873-0100		1	LONGITUDINAL SEALING	**1-41, 1-43**
060	2512780-0100		1	SEAL	**1-85, 1-87, 1-89**
A3/FLEX TBA 0250S NODIMC, A3/FLEX TBA 0200M NODIMC (See drawing on page: 1-20)					
010	2559062-0200		1	LOWER FORMING RING	**1-53, 1-55, 1-57**
020	2547422-0200		1	UPPER FORMING RING	**1-59, 1-61, 1-63, 1-65, 1-67, 1-69, 1-71, 1-73**
030	2547421-0100		1	FORMING RING	**1-75, 1-77, 1-79**
040	2674188-0100		1	EDGE ROLLER	**1-81, 1-83**
050	2657873-0100		1	LONGITUDINAL SEALING	**1-41, 1-43**
060	2512780-0100		1	SEAL	**1-85, 1-87, 1-89**
A3/FLEX TBA 0500S NODIMC (See drawing on page: 1-22)					
010	2559062-0200		1	LOWER FORMING RING	**1-53, 1-55, 1-57**
020	2547422-0200		1	UPPER FORMING RING	**1-59, 1-61, 1-63, 1-65, 1-67, 1-69, 1-71, 1-73**
030	2547421-0100		1	FORMING RING	**1-75, 1-77, 1-79**
050	2657873-0100		1	LONGITUDINAL SEALING	**1-41, 1-43**
060	2512780-0100		1	SEAL	**1-85, 1-87, 1-89**
A3/FLEX TBA 1000SQ NODIMC, A3/FLEX TBA 1000S NODIMC, A3/FLEX TBA 1000B NODIMC, A3/FLEX TBA 0500B NODIMC, A3/FLEX TBA 1500S NODIMC (See drawing on page: 1-22)					
010	2559062-0200		1	LOWER FORMING RING	**1-53, 1-55, 1-57**
020	2547422-0200		1	UPPER FORMING RING	**1-59, 1-61, 1-63, 1-65, 1-67, 1-69, 1-71, 1-73**
030	2547421-0100		1	FORMING RING	**1-75, 1-77, 1-79**
050	2657873-0100		1	LONGITUDINAL SEALING	**1-41, 1-43**
060	2512780-0100		1	SEAL	**1-85, 1-87, 1-89**
A3/FLEX TBA 2000S NODIMC, A3/FLEX TBA 1890S NODIMC (See drawing on page: 1-24)					
010	2559062-0200		1	LOWER FORMING RING	**1-53, 1-55, 1-57**
020	2547422-0200		1	UPPER FORMING RING	**1-59, 1-61, 1-63, 1-65, 1-67, 1-69, 1-71, 1-73**
030	2547421-0100		1	FORMING RING	**1-75, 1-77, 1-79**
040	2547420-0100		1	EDGE ROLLER	**1-91, 1-93**
050	2657873-0100		1	LONGITUDINAL SEALING	**1-41, 1-43**
060	2512780-0100		1	SEAL	**1-85, 1-87, 1-89**
090	2555627-0100		1	PRESSURE ROLLER	**1-95**
A3/FLEX TPA 0330SQ NODIMC (See drawing on page: 1-22)					
010	2559062-0200		1	LOWER FORMING RING	**1-53, 1-55, 1-57**
020	2547422-0200		1	UPPER FORMING RING	**1-59, 1-61, 1-63, 1-65, 1-67, 1-69, 1-71, 1-73**
030	2547421-0100		1	FORMING RING	**1-75, 1-77, 1-79**
050	2657873-0100		1	LONGITUDINAL SEALING	**1-41, 1-43**
060	2512780-0100		1	SEAL	**1-85, 1-87, 1-89**
A3/FLEX TPA 0500SQ NODIMC (See drawing on page: 1-22)					
010	2559062-0200		1	LOWER FORMING RING	**1-53, 1-55, 1-57**
020	2547422-0200		1	UPPER FORMING RING	**1-59, 1-61, 1-63, 1-65, 1-67, 1-69, 1-71, 1-73**
030	2547421-0100		1	FORMING RING	**1-75, 1-77, 1-79**
050	2657873-0100		1	LONGITUDINAL SEALING	**1-41, 1-43**
060	2512780-0100		1	SEAL	**1-85, 1-87, 1-89**
A3/FLEX TPA 1000SQ NODIMC QC, A3/FLEX TPA 0750SQ NODIMC QC (See drawing on page: 1-26)					
010	2559062-0200		1	LOWER FORMING RING	**1-53, 1-55, 1-57**
020	2547422-0200		1	UPPER FORMING RING	**1-59, 1-61, 1-63, 1-65, 1-67, 1-69, 1-71, 1-73**
030	2547421-0100		1	FORMING RING	**1-75, 1-77, 1-79**
050	2657873-0100		1	LONGITUDINAL SEALING	**1-41, 1-43**
060	2512780-0100		1	SEAL	**1-85, 1-87, 1-89**
090	2555627-0100		1	PRESSURE ROLLER	**1-95**
A3/FLEX TPA 1000SQ NODIMC NOQC (See drawing on page: 1-26)					
010	2559062-0200		1	LOWER FORMING RING	**1-53, 1-55, 1-57**
020	2547422-0200		1	UPPER FORMING RING	**1-59, 1-61, 1-63, 1-65, 1-67, 1-69, 1-71, 1-73**
030	2547421-0100		1	FORMING RING	**1-75, 1-77, 1-79**
050	2657873-0100		1	LONGITUDINAL SEALING	**1-41, 1-43**
060	2512780-0100		1	SEAL	**1-85, 1-87, 1-89**

LOWER FORMING RING

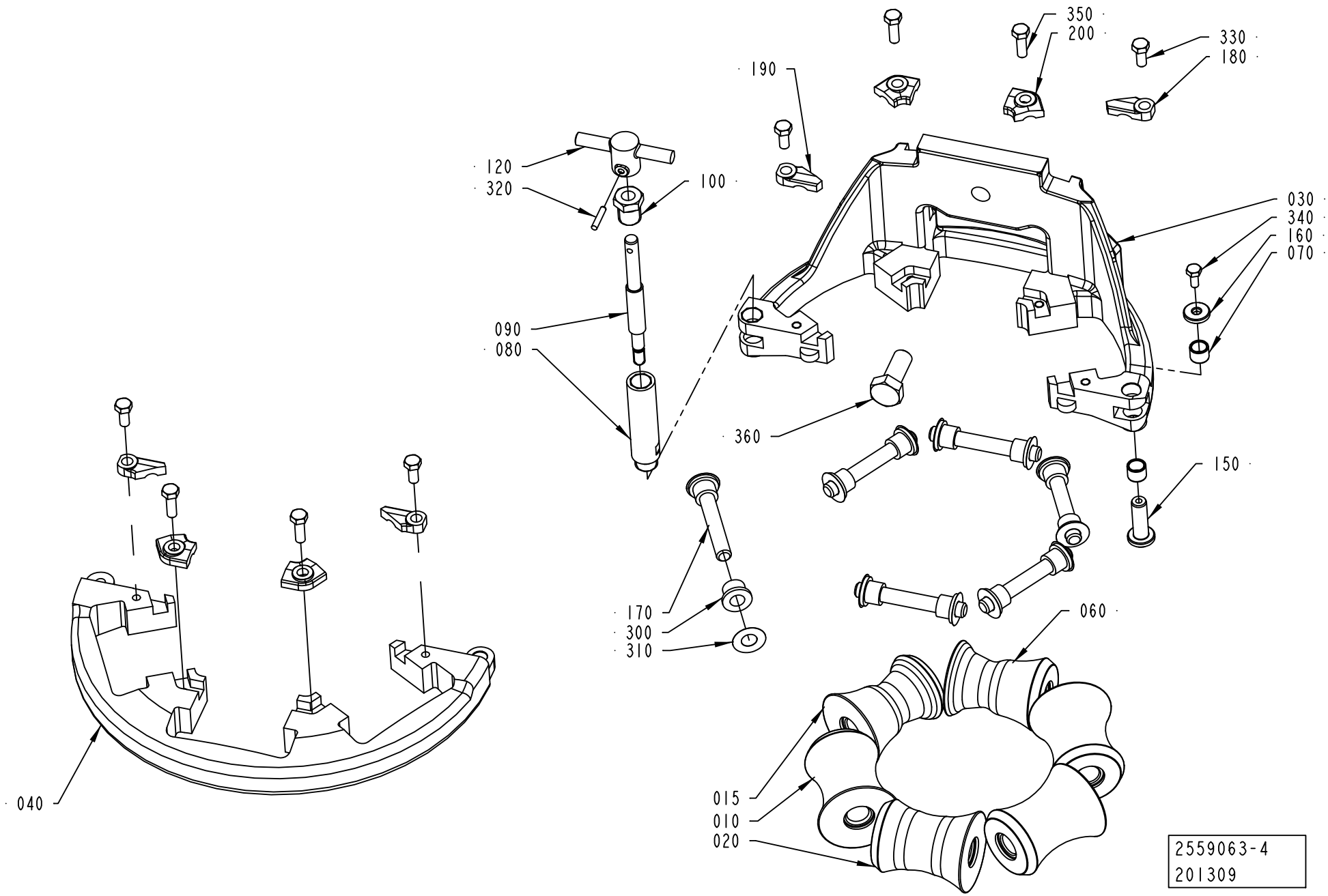

ECM: 264017 - 20060702
Group number: 2559063-0200
Assembly Drawing: 2559063-4_1_AA

This list covers pages from 1-28 to 1-31

Pos	Part No	UN	Qty	Description	Page No
TBA 1000B (See drawing on page: 1-28)					
010	1349851-0000		3	ROLL	
	Remark : PLUS ROLLER 1349853-0000				
	MINUS ROLLER 1349852-0000				
015	2592540-0000		1	ROLLER	
020	2518098-0000		1	COUNTER ROLLER	
030	2764026-0000		1	LOWER FORMING RING	
040	2700546-0000		1	FRONT RING	
060	2592539-0000		1	ROLLER	
170	752186-0014		6	SHAFT	
180	2528119-0004		2	LOCK PLATE	
190	2528118-0004		2	LOCK PLATE	
TBA 1000S LIGHTCAP (See drawing on page: 1-30)					
010	567746-0001		3	ROLLER (STANDARD SIZE)	
	Remark : PLUS ROLLER 3-567746-2				
	MINUS ROLLER 3-567746-3				
015	2716541-0000		1	ROLLER	
020	1334856-0000		1	COUNTER ROLLER	
030	2764027-0000		1	LOWER FORMING RING	
040	2721423-0000		1	FORMING RING	
060	2716544-0000		1	ROLLER	
170	752186-0016		6	SHAFT	
180	2528119-0005		2	LOCK PLATE	
190	2528119-0005		2	LOCK PLATE	
TBA 1000S NOMOLDEDCAP, TBA 1000S STDA7 (See drawing on page: 1-28)					
010	567746-0001		3	ROLLER (STANDARD SIZE)	
	Remark : PLUS ROLLER 3-567746-2				
	MINUS ROLLER 3-567746-3				
015	1523664-0001		1	ROLLER (STANDARD SIZE)	
020	1334856-0000		1	COUNTER ROLLER	
030	2764027-0000		1	LOWER FORMING RING	
040	2721423-0000		1	FORMING RING	
060	1523665-0001		1	ROLLER (STANDARD SIZE)	
170	752186-0016		6	SHAFT	
180	2528119-0005		2	LOCK PLATE	
190	2528119-0005		2	LOCK PLATE	
Common Parts					
070	2526826-0000		2	BUSHING	
080	2764032-0000		1	SHAFT	
090	2764033-0000		1	SHAFT	
100	2731428-0000		1	NUT	
120	2764036-0000		1	KNOB	
150	2526827-0000		1	SHAFT	
160	2526825-0000		1	WASHER	
200	2528123-0004		4	LOCK PLATE	
300	90240-0172		12	FLANGE BUSHING, 8X12X10 MM	
310	2033-0011		12	WASHER	
320	311103-0236		1	PARALLEL PIN ISO 2338 3M6X16 A1	
330	312105-0327		4	SCREW M6S ISO 4017 M5X12 A480	
340	312105-0289		1	SCREW M6S ISO 4017 M4X10 A470	
350	312105-0329		4	SCREW M6S ISO 4017 M5X16 A480	
360	312105-0493		1	SCREW M6S ISO 4017 M10X25 A480	

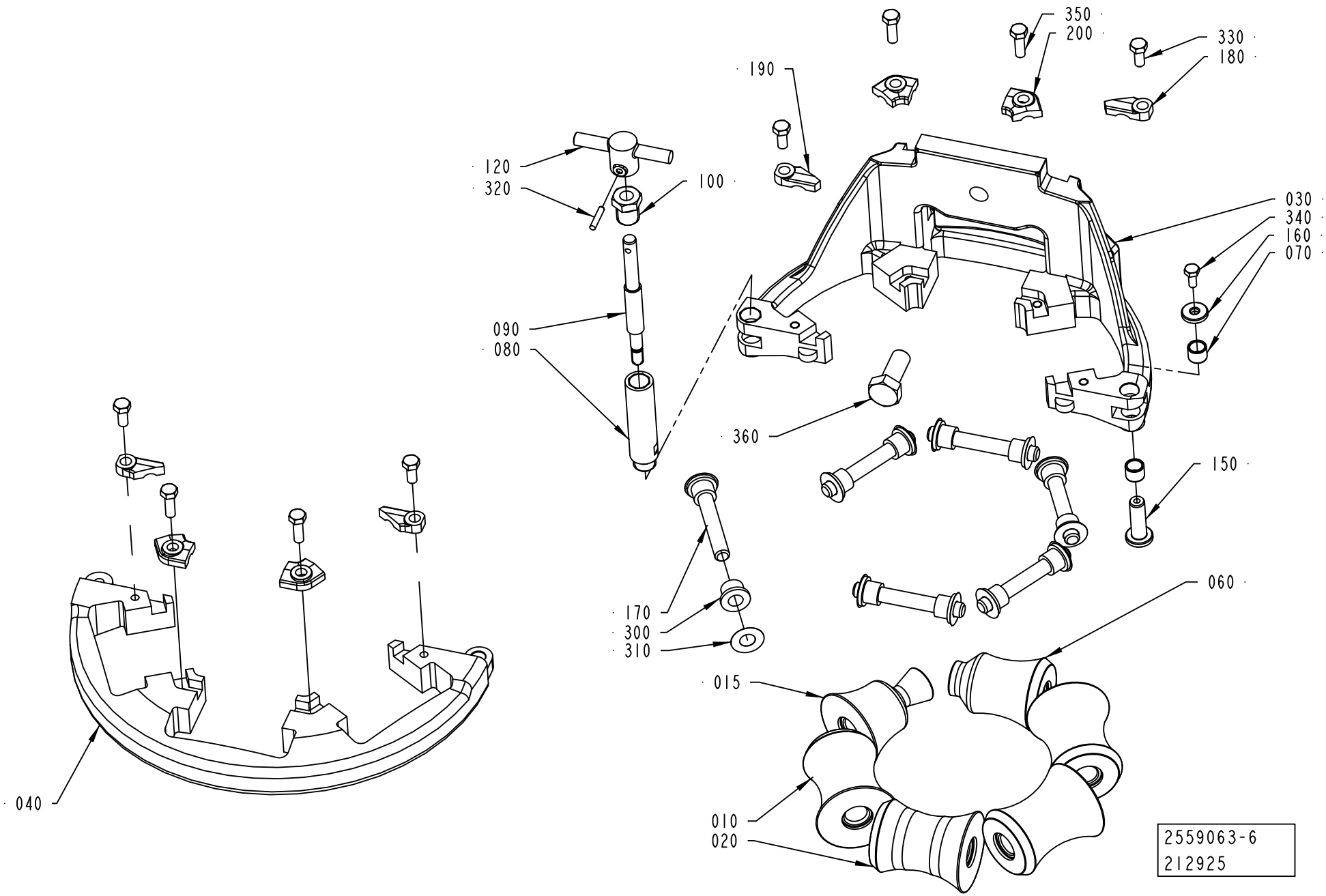
350
200
330
180
190
120
320
100
030
340
160
070
090
080
360
150
170
300
310
060
015
010
020
040
2559063-6
212925

ECM: 264017 - 20060702
Group number: 2559063-0200
Assembly Drawing: 2559063-6_1_AA

This list covers pages from 1-28 to 1-31

Pos	Part No	UN	Qty	Description	Page No
TBA 1000B (See drawing on page: 1-28)					
010	1349851-0000		3	ROLL	
	Remark : PLUS ROLLER 1349853-0000				
	MINUS ROLLER 1349852-0000				
015	2592540-0000		1	ROLLER	
020	2518098-0000		1	COUNTER ROLLER	
030	2764026-0000		1	LOWER FORMING RING	
040	2700546-0000		1	FRONT RING	
060	2592539-0000		1	ROLLER	
170	752186-0014		6	SHAFT	
180	2528119-0004		2	LOCK PLATE	
190	2528118-0004		2	LOCK PLATE	
TBA 1000S LIGHTCAP (See drawing on page: 1-30)					
010	567746-0001		3	ROLLER (STANDARD SIZE)	
	Remark : PLUS ROLLER 3-567746-2				
	MINUS ROLLER 3-567746-3				
015	2716541-0000		1	ROLLER	
020	1334856-0000		1	COUNTER ROLLER	
030	2764027-0000		1	LOWER FORMING RING	
040	2721423-0000		1	FORMING RING	
060	2716544-0000		1	ROLLER	
170	752186-0016		6	SHAFT	
180	2528119-0005		2	LOCK PLATE	
190	2528119-0005		2	LOCK PLATE	
TBA 1000S NOMOLDEDCAP, TBA 1000S STDA7 (See drawing on page: 1-28)					
010	567746-0001		3	ROLLER (STANDARD SIZE)	
	Remark : PLUS ROLLER 3-567746-2				
	MINUS ROLLER 3-567746-3				
015	1523664-0001		1	ROLLER (STANDARD SIZE)	
020	1334856-0000		1	COUNTER ROLLER	
030	2764027-0000		1	LOWER FORMING RING	
040	2721423-0000		1	FORMING RING	
060	1523665-0001		1	ROLLER (STANDARD SIZE)	
170	752186-0016		6	SHAFT	
180	2528119-0005		2	LOCK PLATE	
190	2528119-0005		2	LOCK PLATE	
Common Parts					
070	2526826-0000		2	BUSHING	
080	2764032-0000		1	SHAFT	
090	2764033-0000		1	SHAFT	
100	2731428-0000		1	NUT	
120	2764036-0000		1	KNOB	
150	2526827-0000		1	SHAFT	
160	2526825-0000		1	WASHER	
200	2528123-0004		4	LOCK PLATE	
300	90240-0172		12	FLANGE BUSHING, 8X12X10 MM	
310	2033-0011		12	WASHER	
320	311103-0236		1	PARALLEL PIN ISO 2338 3M6X16 A1	
330	312105-0327		4	SCREW M6S ISO 4017 M5X12 A480	
340	312105-0289		1	SCREW M6S ISO 4017 M4X10 A470	
350	312105-0329		4	SCREW M6S ISO 4017 M5X16 A480	
360	312105-0493		1	SCREW M6S ISO 4017 M10X25 A480	

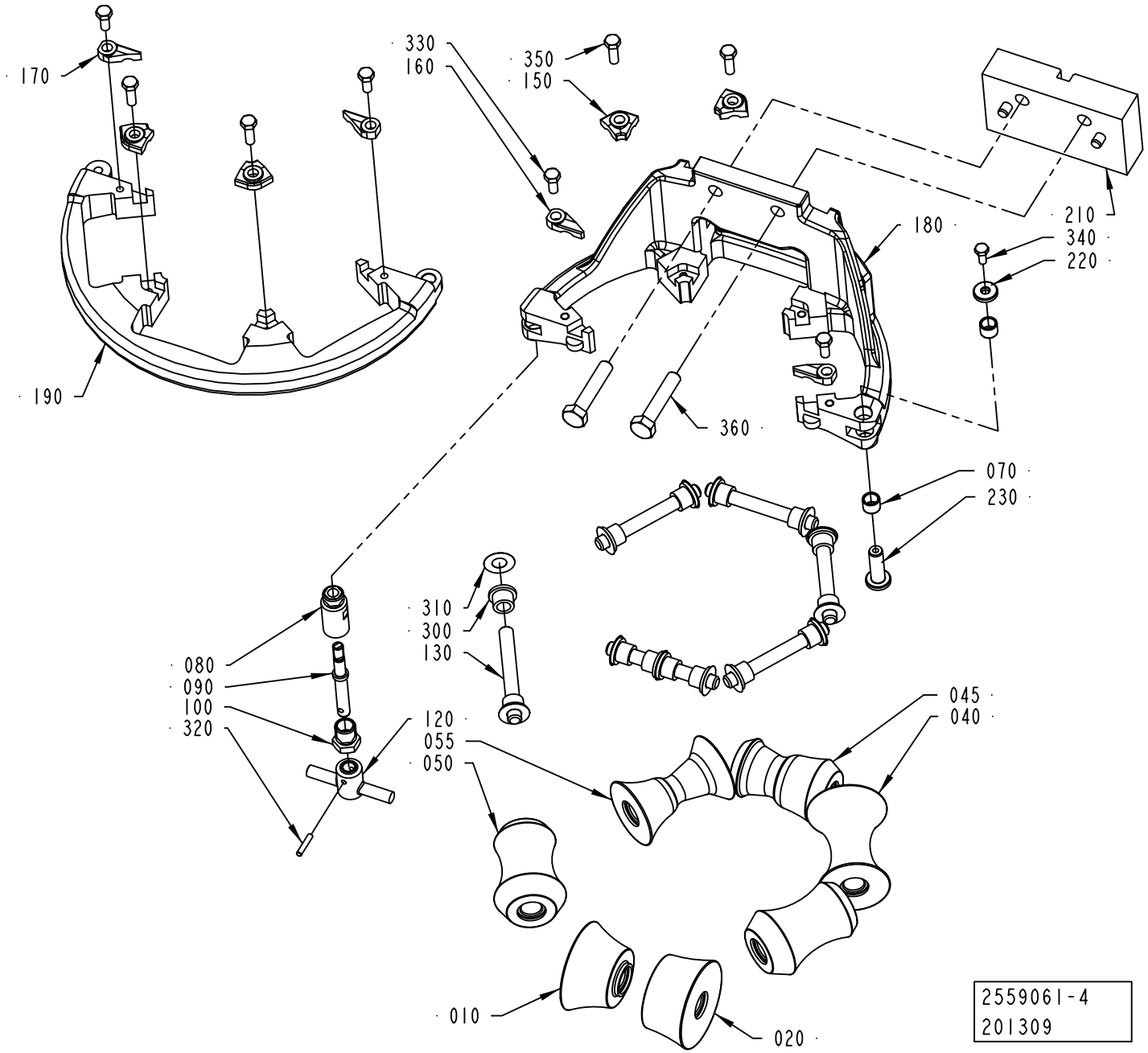
170
330
160
350
150
210
340
220
180
190
360
070
230
310
300
130
080
090
100
320
120
055
050
045
040
010
020
2559061-4
201309

ECM: 264016 - 20060702
Group number: 2559061-0200
Assembly Drawing: 2559061-4_1_AA

This list covers pages from 1-32 to 1-37

Pos	Part No	UN	Qty	Description	Page No
TBA 1000B (See drawing on page: 1-34)					
010	2751479-0000		1	ROLLER	
020	2751478-0000		1	ROLLER	
030	2751483-0000		1	ROLLER	
040	2751481-0000		1	ROLLER	
045	2758084-0000		1	ROLLER	
055	2758085-0000		1	ROLLER	
060	2751482-0000		1	ROLLER	
130	752186-0015		3	SHAFT	
135	752186-0007		3	SHAFT	
150	2528123-0004		2	LOCK PLATE	
155	2528123-0008		2	LOCK PLATE	
160	2528118-0005		1	LOCK PLATE	
165	2528118-0001		1	LOCK PLATE	
170	2528119-0005		1	LOCK PLATE	
175	2528119-0001		1	LOCK PLATE	
180	2764022-0000		1	UPPER FORMING RING	
190	2736677-0000		1	UPPER FORMING RING	
300	90240-0172		14	FLANGE BUSHING, 8X12X10 MM	
360	312109-0460		2	SCREW M6S ISO 4017 M8X45 A480	
380	315115-0165		2	WASHER PLAIN, TBRB 8,4/16 H=3	
TBA 1000S LIGHTCAP (See drawing on page: 1-36)					
010	2512737-0000		1	ROLLER	
020	2512738-0000		1	ROLLER	
040	2512741-0000		1	ROLLER	
045	2716540-0000		1	ROLLER	
050	2512742-0000		2	ROLLER	
055	2716539-0000		1	ROLLER	
130	752186-0007		6	SHAFT	
150	2528123-0001		4	LOCK PLATE	
160	2528118-0001		2	LOCK PLATE	
170	2528119-0001		2	LOCK PLATE	
180	2764014-0000		1	UPPER FORMING RING	
190	2736676-0000		1	UPPER FORMING RING	
300	90240-0172		10	FLANGE BUSHING, 8X12X10 MM	
305	2740795-0000		4	FLANGE BUSHING	
360	312109-0459		2	SCREW M6S ISO 4017 M8X40 A480	
TBA 1000S NOMOLDEDCAP, TBA 1000S STDA7 (See drawing on page: 1-32)					
010	2512737-0000		1	ROLLER	
020	2512738-0000		1	ROLLER	
040	2512741-0000		1	ROLLER	
045	2555622-0000		1	ROLLER	
050	2512742-0000		2	ROLLER	
055	2555621-0000		1	ROLLER	
130	752186-0007		6	SHAFT	
150	2528123-0001		4	LOCK PLATE	
160	2528118-0001		2	LOCK PLATE	
170	2528119-0001		2	LOCK PLATE	
180	2764014-0000		1	UPPER FORMING RING	
190	2736676-0000		1	UPPER FORMING RING	
300	90240-0172		14	FLANGE BUSHING, 8X12X10 MM	
360	312109-0459		2	SCREW M6S ISO 4017 M8X40 A480	
Common Parts					
070	2526826-0000		2	BUSHING	
080	2764034-0000		1	SHAFT	
090	2764035-0000		1	SHAFT	
100	2731428-0000		1	NUT	
120	2764036-0000		1	KNOB	
210	2532914-0000		1	SPACER	
220	2526825-0000		1	WASHER	
230	2526827-0000		1	SHAFT	
310	2033-0011		14	WASHER	
320	311103-0236		1	PARALLEL PIN ISO 2338 3M6X16 A1	
330	312105-0327		4	SCREW M6S ISO 4017 M5X12 A480	
340	312105-0289		1	SCREW M6S ISO 4017 M4X10 A470	
350	312105-0329		4	SCREW M6S ISO 4017 M5X16 A480	

UPPER FORMING RING

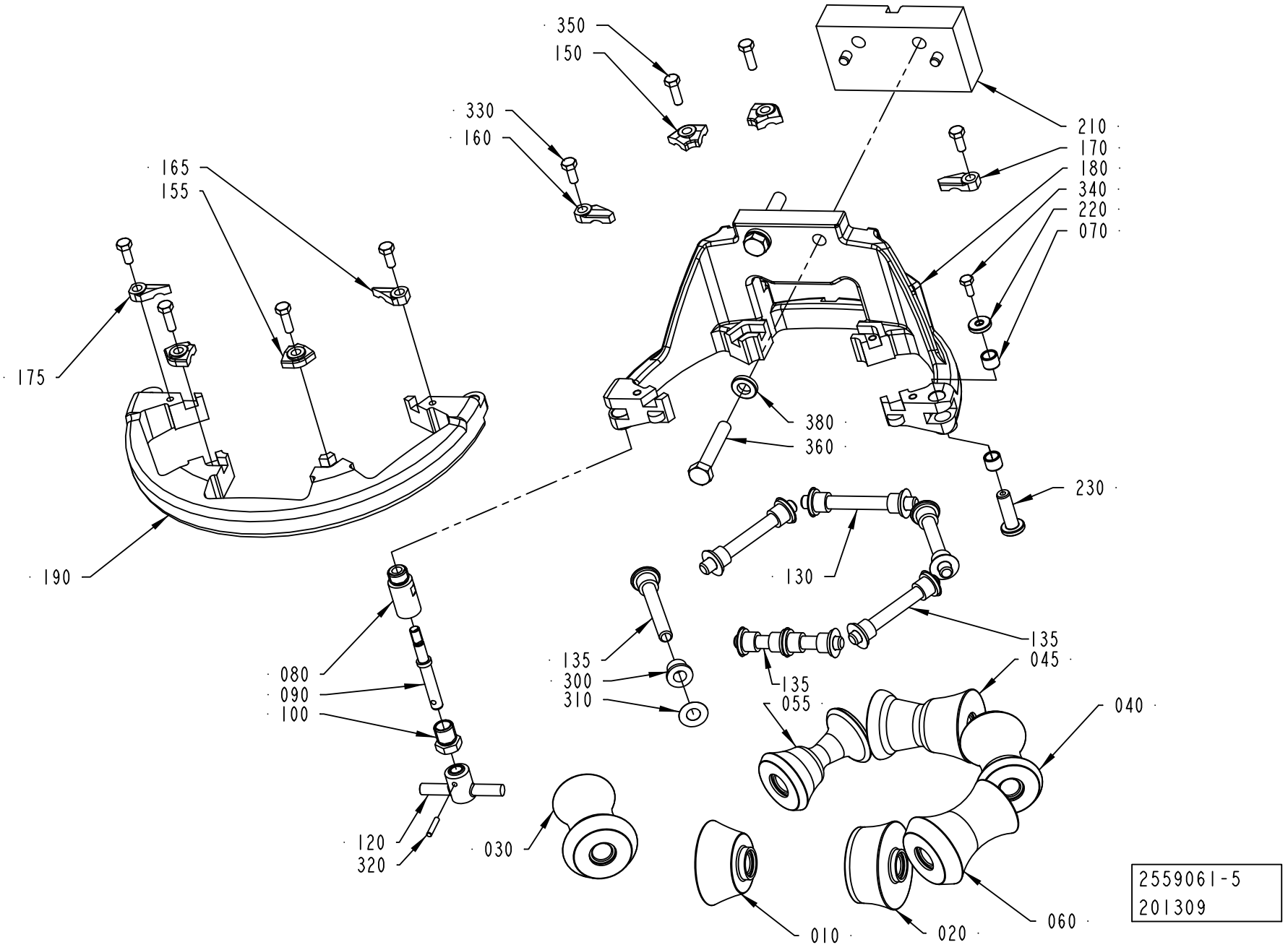

ECM: 264016 - 20060702
Group number: 2559061-0200
Assembly Drawing: 2559061-5_1_AA

This list covers pages from 1-32 to 1-37

Pos	Part No	UN	Qty	Description	Page No
TBA 1000B (See drawing on page: 1-34)					
010	2751479-0000		1	ROLLER	
020	2751478-0000		1	ROLLER	
030	2751483-0000		1	ROLLER	
040	2751481-0000		1	ROLLER	
045	2758084-0000		1	ROLLER	
055	2758085-0000		1	ROLLER	
060	2751482-0000		1	ROLLER	
130	752186-0015		3	SHAFT	
135	752186-0007		3	SHAFT	
150	2528123-0004		2	LOCK PLATE	
155	2528123-0008		2	LOCK PLATE	
160	2528118-0005		1	LOCK PLATE	
165	2528118-0001		1	LOCK PLATE	
170	2528119-0005		1	LOCK PLATE	
175	2528119-0001		1	LOCK PLATE	
180	2764022-0000		1	UPPER FORMING RING	
190	2736677-0000		1	UPPER FORMING RING	
300	90240-0172		14	FLANGE BUSHING, 8X12X10 MM	
360	312109-0460		2	SCREW M6S ISO 4017 M8X45 A480	
380	315115-0165		2	WASHER PLAIN, TBRB 8,4/16 H=3	
TBA 1000S LIGHTCAP (See drawing on page: 1-36)					
010	2512737-0000		1	ROLLER	
020	2512738-0000		1	ROLLER	
040	2512741-0000		1	ROLLER	
045	2716540-0000		1	ROLLER	
050	2512742-0000		2	ROLLER	
055	2716539-0000		1	ROLLER	
130	752186-0007		6	SHAFT	
150	2528123-0001		4	LOCK PLATE	
160	2528118-0001		2	LOCK PLATE	
170	2528119-0001		2	LOCK PLATE	
180	2764014-0000		1	UPPER FORMING RING	
190	2736676-0000		1	UPPER FORMING RING	
300	90240-0172		10	FLANGE BUSHING, 8X12X10 MM	
305	2740795-0000		4	FLANGE BUSHING	
360	312109-0459		2	SCREW M6S ISO 4017 M8X40 A480	
TBA 1000S NOMOLDEDCAP, TBA 1000S STDA7 (See drawing on page: 1-32)					
010	2512737-0000		1	ROLLER	
020	2512738-0000		1	ROLLER	
040	2512741-0000		1	ROLLER	
045	2555622-0000		1	ROLLER	
050	2512742-0000		2	ROLLER	
055	2555621-0000		1	ROLLER	
130	752186-0007		6	SHAFT	
150	2528123-0001		4	LOCK PLATE	
160	2528118-0001		2	LOCK PLATE	
170	2528119-0001		2	LOCK PLATE	
180	2764014-0000		1	UPPER FORMING RING	
190	2736676-0000		1	UPPER FORMING RING	
300	90240-0172		14	FLANGE BUSHING, 8X12X10 MM	
360	312109-0459		2	SCREW M6S ISO 4017 M8X40 A480	
Common Parts					
070	2526826-0000		2	BUSHING	
080	2764034-0000		1	SHAFT	
090	2764035-0000		1	SHAFT	
100	2731428-0000		1	NUT	
120	2764036-0000		1	KNOB	
210	2532914-0000		1	SPACER	
220	2526825-0000		1	WASHER	
230	2526827-0000		1	SHAFT	
310	2033-0011		14	WASHER	
320	311103-0236		1	PARALLEL PIN ISO 2338 3M6X16 A1	
330	312105-0327		4	SCREW M6S ISO 4017 M5X12 A480	
340	312105-0289		1	SCREW M6S ISO 4017 M4X10 A470	
350	312105-0329		4	SCREW M6S ISO 4017 M5X16 A480	

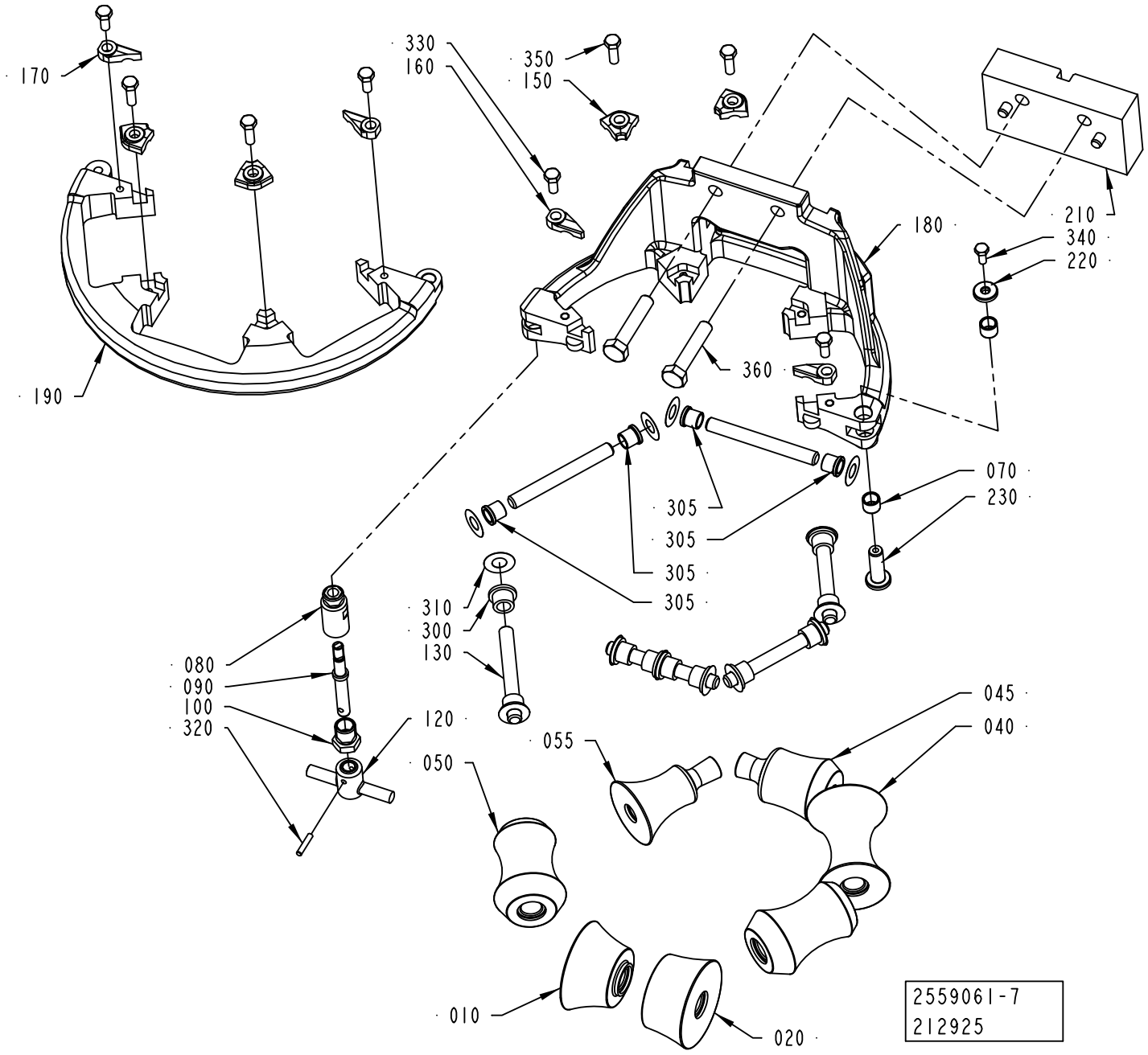
170
330
160
350
150
210
340
220
180
360
190
070
230
305
305
305
305
310
300
130
080
090
100
320
120
050
055
045
040
010
020
2559061-7
212925

ECM: 264016 - 20060702
Group number: 2559061-0200
Assembly Drawing: 2559061-7_1_AA

This list covers pages from 1-32 to 1-37

Pos	Part No	UN	Qty	Description	Page No
TBA 1000B (See drawing on page: 1-34)					
010	2751479-0000		1	ROLLER	
020	2751478-0000		1	ROLLER	
030	2751483-0000		1	ROLLER	
040	2751481-0000		1	ROLLER	
045	2758084-0000		1	ROLLER	
055	2758085-0000		1	ROLLER	
060	2751482-0000		1	ROLLER	
130	752186-0015		3	SHAFT	
135	752186-0007		3	SHAFT	
150	2528123-0004		2	LOCK PLATE	
155	2528123-0008		2	LOCK PLATE	
160	2528118-0005		1	LOCK PLATE	
165	2528118-0001		1	LOCK PLATE	
170	2528119-0005		1	LOCK PLATE	
175	2528119-0001		1	LOCK PLATE	
180	2764022-0000		1	UPPER FORMING RING	
190	2736677-0000		1	UPPER FORMING RING	
300	90240-0172		14	FLANGE BUSHING, 8X12X10 MM	
360	312109-0460		2	SCREW M6S ISO 4017 M8X45 A480	
380	315115-0165		2	WASHER PLAIN, TBRB 8,4/16 H=3	
TBA 1000S LIGHTCAP (See drawing on page: 1-36)					
010	2512737-0000		1	ROLLER	
020	2512738-0000		1	ROLLER	
040	2512741-0000		1	ROLLER	
045	2716540-0000		1	ROLLER	
050	2512742-0000		2	ROLLER	
055	2716539-0000		1	ROLLER	
130	752186-0007		6	SHAFT	
150	2528123-0001		4	LOCK PLATE	
160	2528118-0001		2	LOCK PLATE	
170	2528119-0001		2	LOCK PLATE	
180	2764014-0000		1	UPPER FORMING RING	
190	2736676-0000		1	UPPER FORMING RING	
300	90240-0172		10	FLANGE BUSHING, 8X12X10 MM	
305	2740795-0000		4	FLANGE BUSHING	
360	312109-0459		2	SCREW M6S ISO 4017 M8X40 A480	
TBA 1000S NOMOLDEDCAP, TBA 1000S STDA7 (See drawing on page: 1-32)					
010	2512737-0000		1	ROLLER	
020	2512738-0000		1	ROLLER	
040	2512741-0000		1	ROLLER	
045	2555622-0000		1	ROLLER	
050	2512742-0000		2	ROLLER	
055	2555621-0000		1	ROLLER	
130	752186-0007		6	SHAFT	
150	2528123-0001		4	LOCK PLATE	
160	2528118-0001		2	LOCK PLATE	
170	2528119-0001		2	LOCK PLATE	
180	2764014-0000		1	UPPER FORMING RING	
190	2736676-0000		1	UPPER FORMING RING	
300	90240-0172		14	FLANGE BUSHING, 8X12X10 MM	
360	312109-0459		2	SCREW M6S ISO 4017 M8X40 A480	
Common Parts					
070	2526826-0000		2	BUSHING	
080	2764034-0000		1	SHAFT	
090	2764035-0000		1	SHAFT	
100	2731428-0000		1	NUT	
120	2764036-0000		1	KNOB	
210	2532914-0000		1	SPACER	
220	2526825-0000		1	WASHER	
230	2526827-0000		1	SHAFT	
310	2033-0011		14	WASHER	
320	311103-0236		1	PARALLEL PIN ISO 2338 3M6X16 A1	
330	312105-0327		4	SCREW M6S ISO 4017 M5X12 A480	
340	312105-0289		1	SCREW M6S ISO 4017 M4X10 A470	
350	312105-0329		4	SCREW M6S ISO 4017 M5X16 A480	

Machine Type | Group Description | Used-In | Group Number | Page No

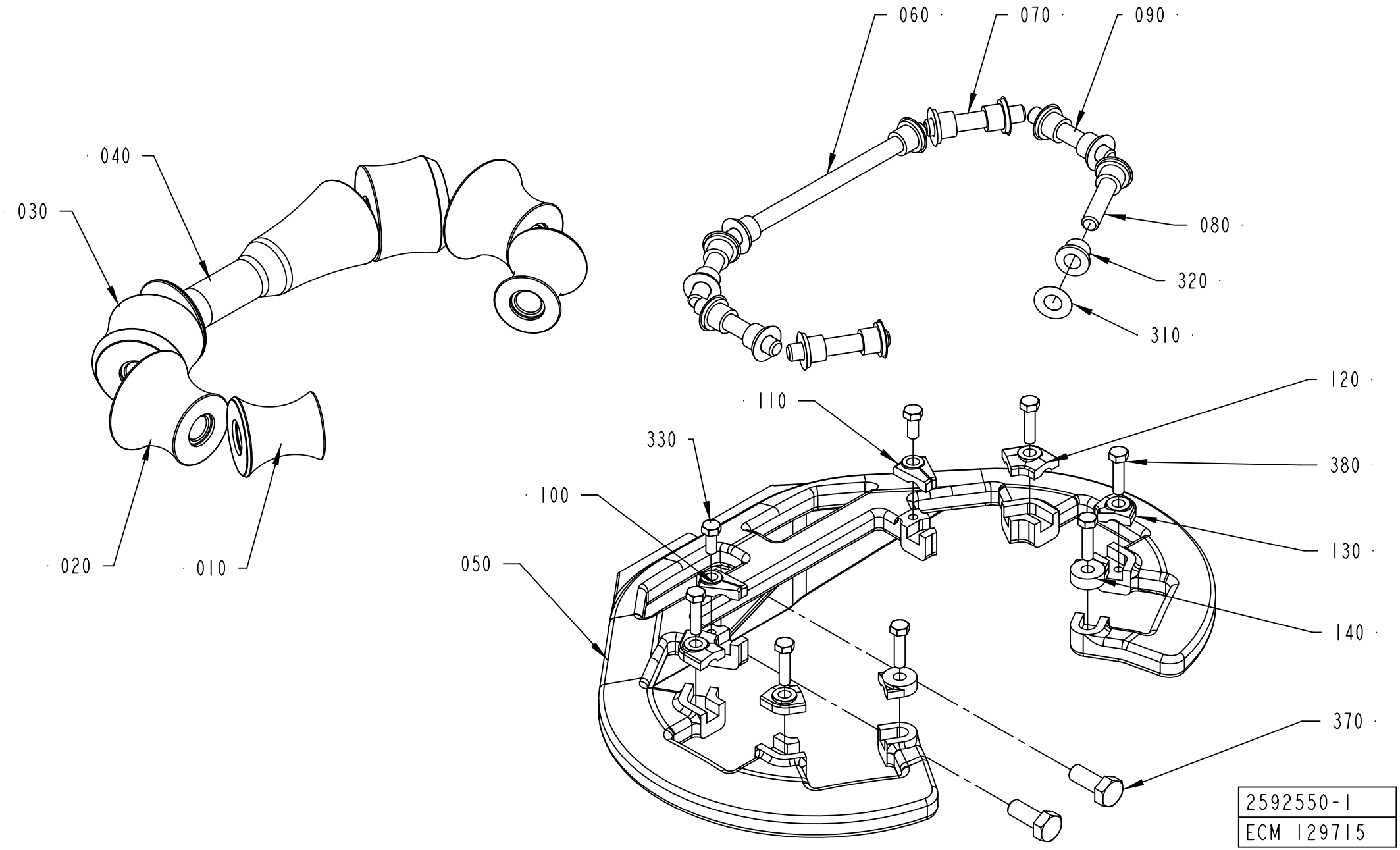
060
070
090
080
320
310
040
030
020
010
120
110
330
380
100
130
050
140
370
2592550-1
ECM 129715

ECM: 258304 - 20060702
Group number: 2592550-0100
Assembly Drawing: 2592550-1_1_AA

Pos	Part No	UN	Qty	Description	Page No
TBA 1000B					
010	2552206-0000		2	ROLLER	
020	2552205-0000		2	ROLLER	
030	2552188-0000		2	ROLLER	
040	2601240-0000		1	ROLLER	
050	2552160-0000		1	SUPPORT RING	
100	2552176-0001		1	LOCK PLATE	
110	2552177-0001		1	LOCK PLATE	
120	2528123-0002		2	LOCK PLATE	
130	2528123-0008		2	LOCK PLATE	
140	2532895-0004		2	LOCK PLATE	
TBA 1000S LIGHTCAP					
010	2512748-0000		2	ROLLER	
020	2512749-0000		2	ROLLER	
030	2512746-0000		2	ROLLER	
040	2716443-0000		1	ROLLER	
050	2552161-0000		1	SUPPORT RING	
100	2552176-0003		1	LOCK PLATE	
110	2552177-0003		1	LOCK PLATE	
120	2528123-0007		2	LOCK PLATE	
130	2528123-0001		2	LOCK PLATE	
140	2532895-0003		2	LOCK PLATE	
TBA 1000S NOMOLDEDCAP, TBA 1000S STDA7					
010	2512748-0000		2	ROLLER	
020	2512749-0000		2	ROLLER	
030	2512746-0000		2	ROLLER	
040	2592545-0000		1	ROLLER	
050	2552161-0000		1	SUPPORT RING	
100	2552176-0003		1	LOCK PLATE	
110	2552177-0003		1	LOCK PLATE	
120	2528123-0007		2	LOCK PLATE	
130	2528123-0001		2	LOCK PLATE	
140	2532895-0003		2	LOCK PLATE	
Common Parts					
060	2522213-0005		1	SHAFT	
070	752186-0005		2	SHAFT	
080	2522213-0004		2	SHAFT	
090	752186-0019		2	SHAFT	
310	2033-0011		14	WASHER	
320	90240-0172		14	FLANGE BUSHING, 8X12X10 MM	
330	312105-0327		2	SCREW M6S ISO 4017 M5X12 A480	
370	312105-0451		2	SCREW M6S ISO 4017 M8X20 A480	
380	312105-0331		6	SCREW M6S ISO 4017 M5X20 A480	

Machine Type | Group Description | Used-In | Group Number | Page No

LONGITUDINAL SEALING

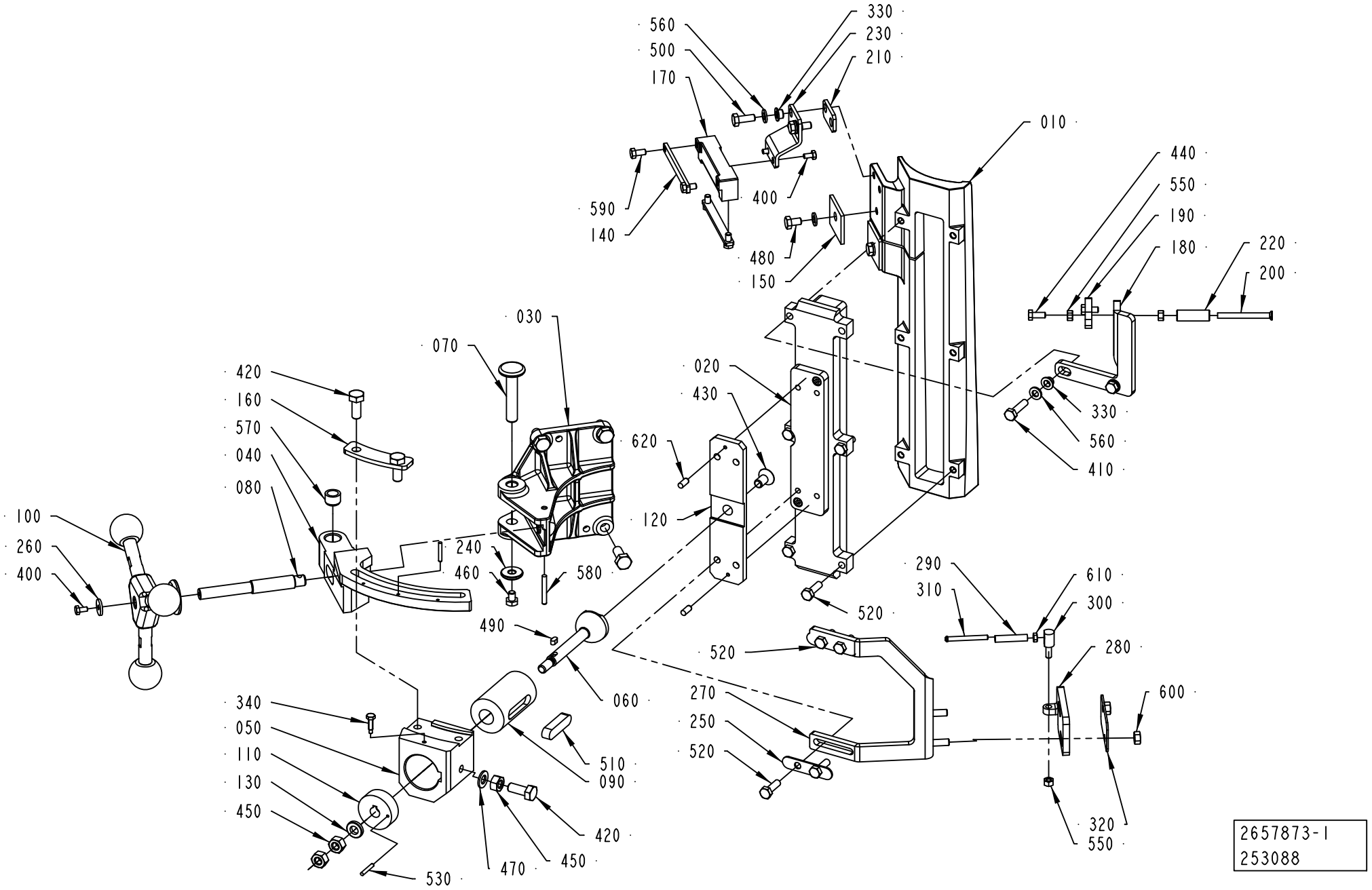

2657873-1
253088

ECM: 253090 - 20060701
Group number: 2657873-0100
Assembly Drawing: 2657873-1_1_AD

This list covers pages from 1-40 to 1-43

Pos	Part No	UN	Qty	Description	Page No
TBA 0200B, TBA 0200SQ, TBA 0250B, TBA 0330S, TBA 0250SQ					
010	2532938-0000		1	INDUCTOR	
020	2544894-0000		1	INSULATING PLATE	
180	2547404-0000		1	BRACKET	
270	2555614-0000		1	BRACKET	
280	2555619-0000		1	BRACKET	
410	312105-0372		2	SCREW M6S ISO 4017 M6X25 A480	
520	312105-0370		8	SCREW M6S ISO 4017 M6X20 A480	
TBA 0200M, TBA 0250S					
010	2611053-0000		1	INDUCTOR	
020	2611054-0000		1	INSULATING PLATE	
180	2547404-0000		1	BRACKET	
270	2555614-0000		1	BRACKET	
280	2555619-0000		1	BRACKET	
410	312105-0372		2	SCREW M6S ISO 4017 M6X25 A480	
520	312105-0370		8	SCREW M6S ISO 4017 M6X20 A480	
TBA 0200S, TPA 0250SQ, TPA 0200SQ					
010	2565440-0000		1	INDUCTOR	
020	2565441-0000		1	INSULATING PLATE	
180	2547404-0000		1	BRACKET	
270	2555614-0000		1	BRACKET	
280	2555619-0000		1	BRACKET	
410	312105-0372		2	SCREW M6S ISO 4017 M6X25 A480	
520	312105-0370		8	SCREW M6S ISO 4017 M6X20 A480	
TBA 0500B, TBA 1000B, TBA 1500S					
010	2514514-0000		1	INDUCTOR	
020	2544891-0000		1	INSULATING PLATE	
180	2547404-0000		1	BRACKET	
270	2555614-0000		1	BRACKET	
280	2555615-0000		1	BRACKET	
410	312105-0372		2	SCREW M6S ISO 4017 M6X25 A480	
520	312105-0370		8	SCREW M6S ISO 4017 M6X20 A480	
TBA 0500S					
010	2672984-0000		1	INDUCTOR	
020	2672968-0000		1	INSULATING PLATE	
180	2547404-0000		1	BRACKET	
270	2555614-0000		1	BRACKET	
280	2555615-0000		1	BRACKET	
410	312105-0372		2	SCREW M6S ISO 4017 M6X25 A480	
520	312105-0370		8	SCREW M6S ISO 4017 M6X20 A480	
TBA 1000SQ					
010	2532925-0000		1	INDUCTOR	
020	2544893-0000		1	INSULATING PLATE	
180	2547404-0000		1	BRACKET	
270	2555614-0000		1	BRACKET	
280	2555615-0000		1	BRACKET	
410	312105-0372		2	SCREW M6S ISO 4017 M6X25 A480	
520	312105-0370		8	SCREW M6S ISO 4017 M6X20 A480	
TBA 1000S					
010	2514522-0000		1	INDUCTOR	
020	2544892-0000		1	INSULATING PLATE	
180	2547404-0000		1	BRACKET	
270	2555614-0000		1	BRACKET	
280	2555615-0000		1	BRACKET	
410	312105-0374		2	SCREW M6S ISO 4014 M6X30 A480	
520	312105-0370		8	SCREW M6S ISO 4017 M6X20 A480	
TBA 1890S, TBA 2000S					
010	2601247-0000		1	INDUCTOR	
020	2601248-0000		1	INSULATING PLATE	
180	2601249-0000		1	BRACKET	
270	2594636-0000		1	BRACKET	
280	2555615-0000		1	BRACKET	
410	312105-0372		2	SCREW M6S ISO 4017 M6X25 A480	
520	312105-0370		7	SCREW M6S ISO 4017 M6X20 A480	
TPA 0330SQ					
010	2695800-0000		1	INDUCTOR	
020	2544894-0000		1	INSULATING PLATE	
180	2547404-0000		1	BRACKET	
270	2555614-0000		1	BRACKET	
280	2555619-0000		1	BRACKET	
410	312105-0372		2	SCREW M6S ISO 4017 M6X25 A480	
520	312105-0370		8	SCREW M6S ISO 4017 M6X20 A480	
TPA 0500SQ					
010	2691359-0000		1	INDUCTOR	
020	2611056-0000		1	INSULATING PLATE	
180	2547404-0000		1	BRACKET	
270	2555614-0000		1	BRACKET	
280	2555619-0000		1	BRACKET	
410	312105-0372		2	SCREW M6S ISO 4017 M6X25 A480	
520	312105-0370		8	SCREW M6S ISO 4017 M6X20 A480	
TPA 1000SQ, TPA 0750SQ					
010	2601289-0000		1	INDUCTOR	
020	2601307-0000		1	INSULATING PLATE	
180	2547404-0000		1	BRACKET	

Machine Type | Group Description | Used-In | Group Number | Page No

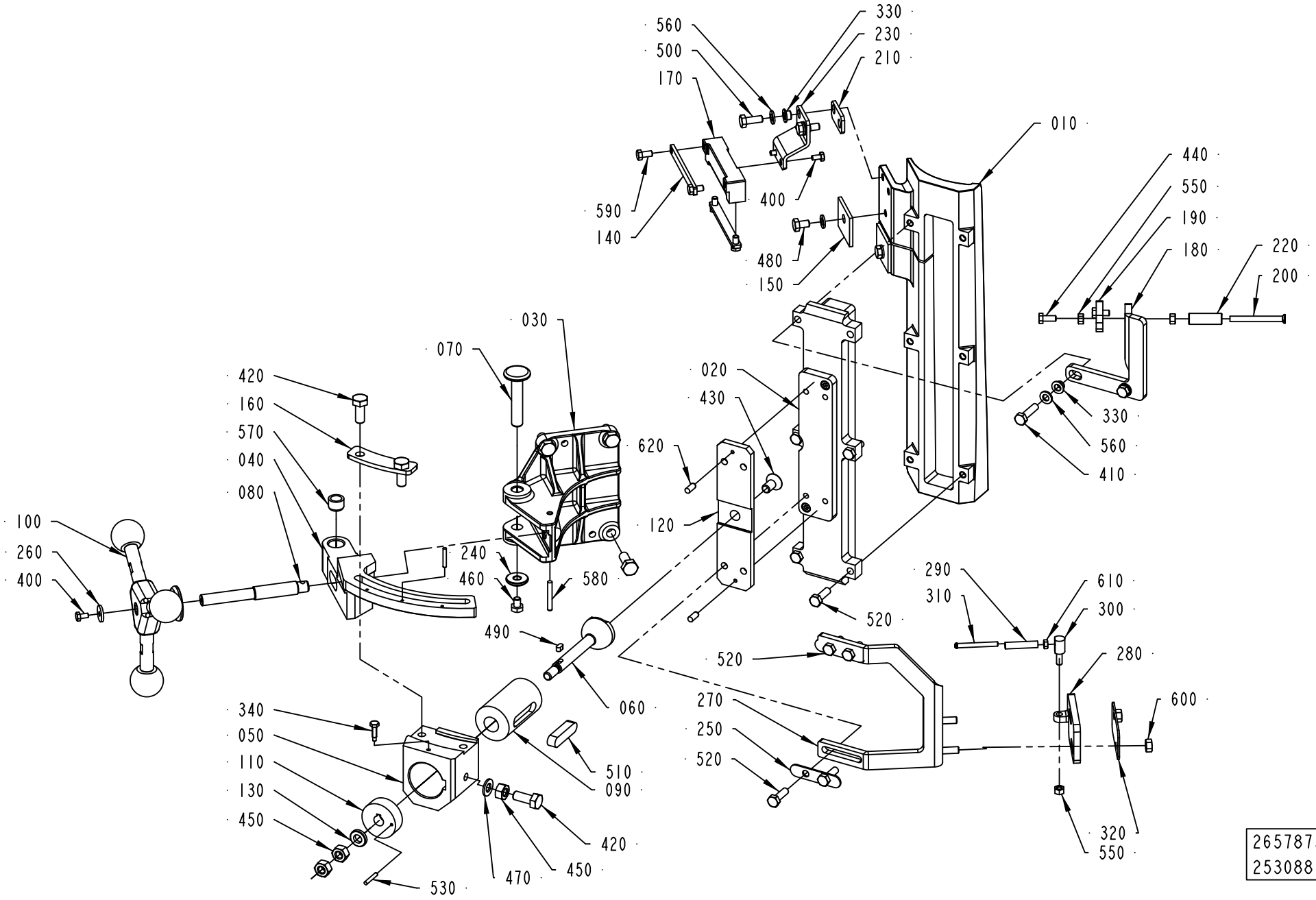
560
500
170
330
230
210
010
590
140
400
480
150
440
550
190
180
220
200
030
070
420
160
570
040
080
020
430
620
120
330
560
410
100
260
400
240
460
580
490
060
290
310
610
300
280
520
520
270
250
520
600
340
050
110
130
450
510
090
420
530
470
450
320
550
2657873-1
253088

ECM: 253090 - 20060701
Group number: 2657873-0100
Assembly Drawing: 2657873-1_1_AD

This list covers pages from 1-40 to 1-43

Pos	Part No	UN	Qty	Description	Page No
TPA 1000SQ, TPA 0750SQ (Cont'd)					
270	2555614-0000		1	BRACKET	
280	2555615-0000		1	BRACKET	
410	312105-0372		2	SCREW M6S ISO 4017 M6X25 A480	
520	312105-0370		8	SCREW M6S ISO 4017 M6X20 A480	
Common Parts					
030	2544897-0000		1	BRACKET	
040	2694714-0000		1	GUIDE	
050	2694715-0000		1	SUPPORT	
060	2641000-0000		1	SHAFT	
070	2547388-0000		1	AXLE PIN	
080	2544898-0000		1	SHAFT	
090	2640991-0000		1	SLIDE	
100	2547376-0100		1	KNOB	**1-45**
110	2640992-0000		1	SLIDE	
120	2640993-0000		1	PLATE	
130	315115-0165		1	WASHER PLAIN, TBRB 8,4/16 H=3	
140	2508309-0000		2	PLATE	
150	2508311-0000		2	PLATE	
160	2694716-0000		1	PLATE	
170	2531060-0000		1	BRACKET	
190	2547405-0000		1	BRACKET	
200	269151-0000		1	SHAFT	
210	2532898-0000		1	BRACKET	
220	2555625-0000		1	ROLL	
230	2532899-0000		1	BRACKET	
240	2508297-0000		1	WASHER	
250	2555623-0000		2	COVER	
260	2547377-0000		1	WASHER	
290	2555616-0000		1	ROLLER	
300	2555617-0000		1	PIN	
310	2555618-0000		1	SHAFT	
320	2555620-0000		1	COVER	
330	2508292-0000		4	BUSHING	
340	2725526-0000		1	SCREW	
400	312105-0287		3	SCREW M6S ISO 4017 M4X8 A470	
420	312105-0451		7	SCREW M6S ISO 4017 M8X20 A480	
430	312155-0449		1	SCREW DIN 7991 MF6S M8X16 A4 70	
440	312105-0327		2	SCREW M6S ISO 4017 M5X12 A480	
450	312605-0318		3	HEXAGON NUT, M6M M8 A280	
460	312105-0362		1	SCREW M6S ISO 4017 M6X8 A480	
470	315105-0165		1	WASHER BRB 8,4X16 RFR	
480	312105-0364		2	SCREW M6S ISO 4017 M6X10 A480	
490	315705-0164		1	PARALLEL KEY W. ROUND ENDS 4X4X8 MM	
500	312105-0368		2	SCREW M6S ISO 4017 M6X16 A480	
510	315705-0301		1	PARALLEL KEY W. ROUND ENDS 10X8X40 MM	
530	311103-0238		2	PARALLEL PIN ISO 2338 3M6X20 A1	
550	312605-0314		3	HEXAGON NUT, M6M M5 A280	
560	315105-0153		6	WASHER BRB 6,4X12 RFR	
570	321137-0140		2	BUSHING, 10X14X10 MM	
580	311103-0276		1	PARALLEL PIN ISO 2338 4M6X30 A1	
590	312105-0325		4	SCREW M6S ISO 4017 M5X10 A480	
600	312605-0316		2	HEXAGON NUT, M6M M6 A280	
610	312605-0312		1	HEXAGON NUT, M6M M4 A280	
620	311103-0306		2	PARALLEL PIN ISO 2338 5M6X12 A1	

Machine Type	Group Description	Used-In	Group Number	Page No

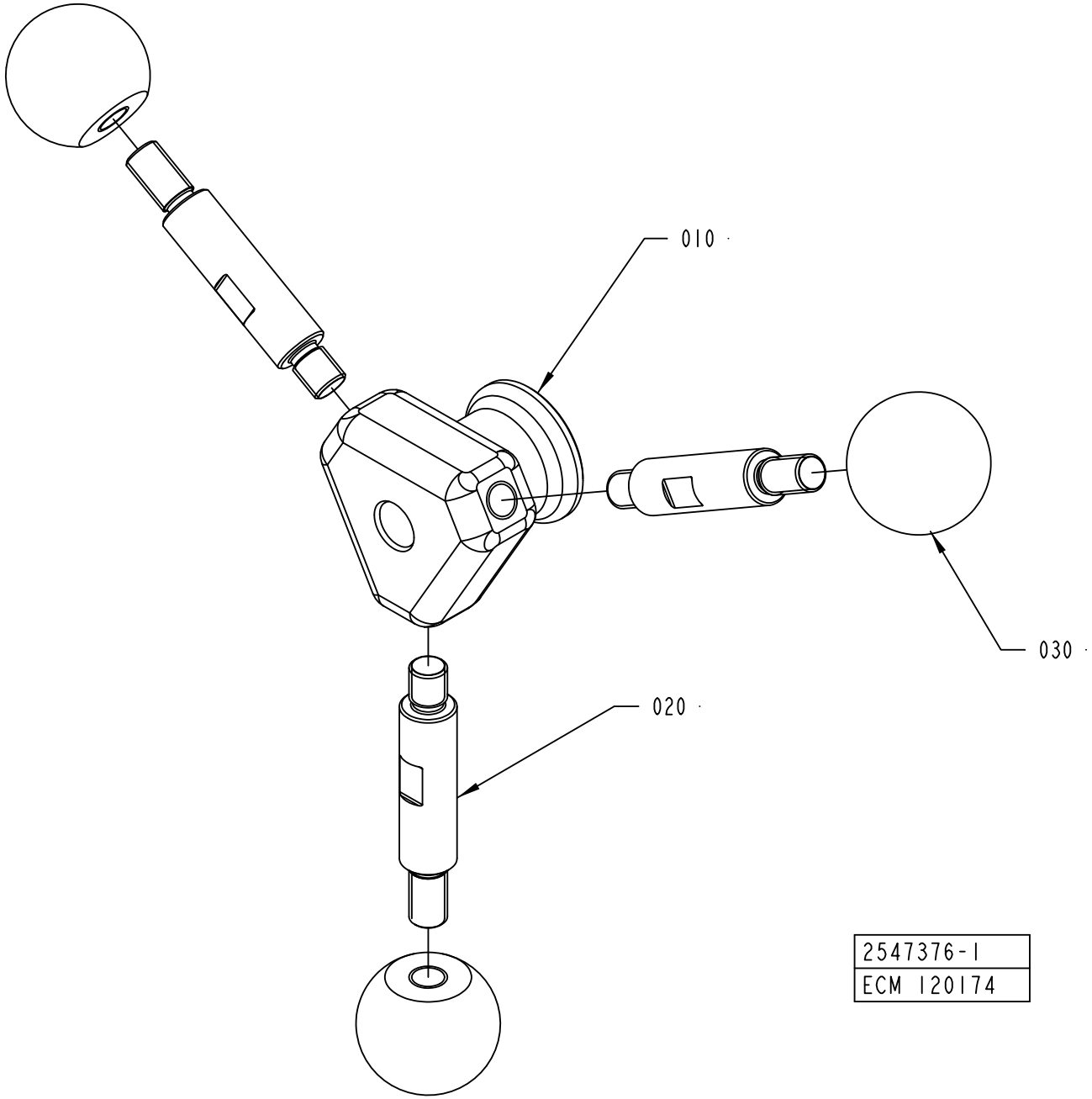
010
020
030
2547376-1
ECM 120174

ECM: 121123 - 20030123
Group number: 2547376-0100
Assembly Drawing: 2547376-1_1_AA

Pos	Part No	UN	Qty	Description	Page No
-					
010	2582574-0000		1	BODY	
020	2526858-0000		3	DOWEL	
030	2582575-0000		3	KNOB	

Pos	Part No	UN	Qty	Description	Page No

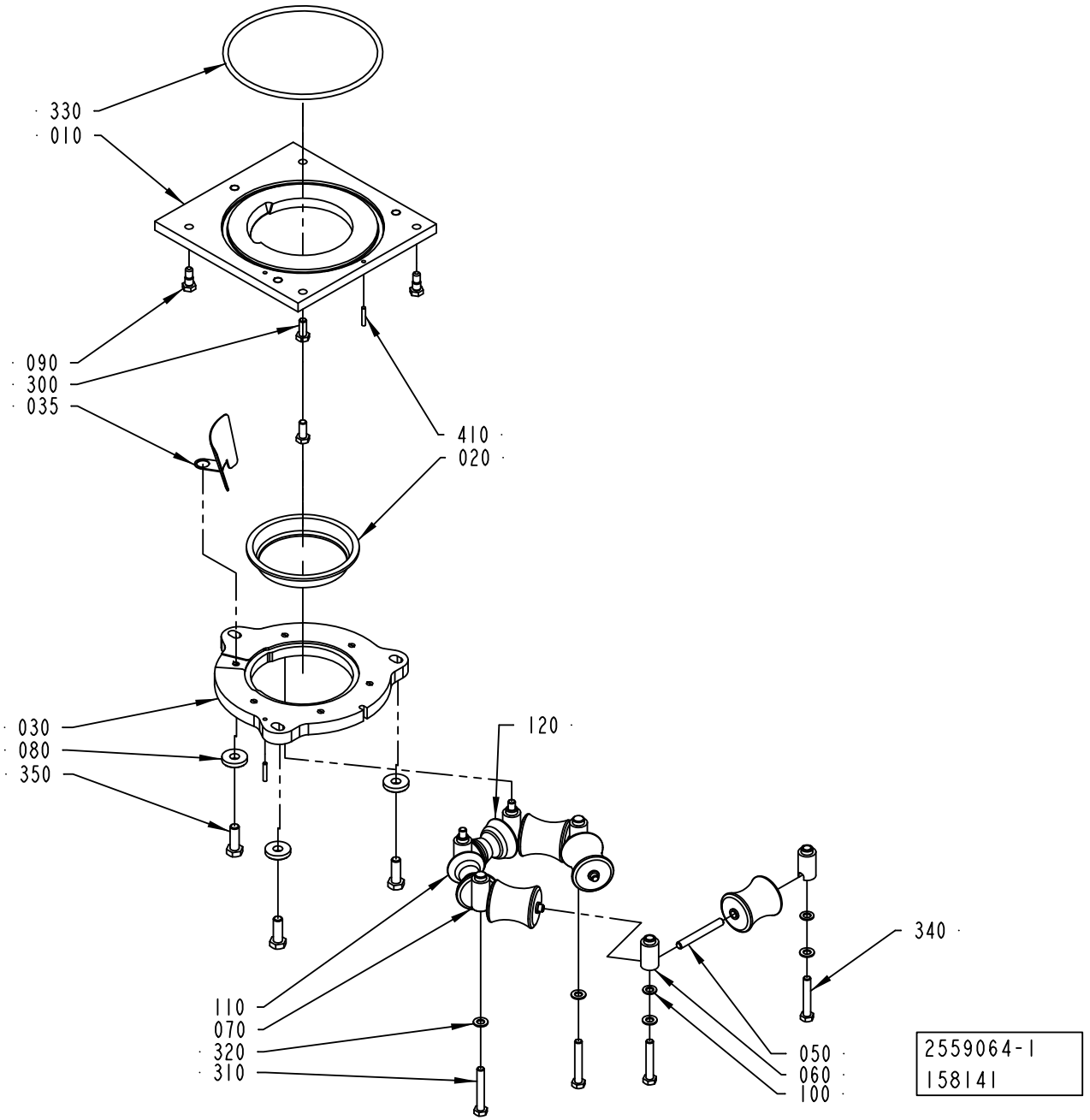
330
010
090
300
035
410
020
030
080
350
120
110
070
320
310
340
050
060
100
2559064-1
158141

ECM: 223716 - 20060701
Group number: 2559064-0100
Assembly Drawing: 2559064-1_1_AB

This list covers pages from 1-46 to 1-51

Pos	Part No	UN	Qty	Description	Page No
TBA 1000B (See drawing on page: 1-48)					
010	2562687-0000		1	PLATE	
020	466042-0000		1	SEAL	
030	2562688-0000		1	RING	
040	466046-0000		4	ROLLER	
110	2592548-0000		1	ROLLER	
120	2592549-0000		1	ROLLER	
TBA 1000S LIGHTCAP (See drawing on page: 1-50)					
010	2794725-0000		1	PLATE	
020	2795266-0000		1	SEAL	
030	2794726-0000		1	RING	
110	2716548-0000		1	ROLLER	
120	2716547-0000		1	ROLLER	
TBA 1000S NOMOLDEDCAP, TBA 1000S STDA7 (See drawing on page: 1-46)					
010	2562687-0000		1	PLATE	
020	567743-0000		1	SEAL	
030	2562688-0000		1	RING	
035	1523696-0000		1	GUIDE	
040	573504-0000		4	ROLLER	
110	2592546-0000		1	ROLLER	
120	2592547-0000		1	ROLLER	
Common Parts					
050	263655-0009		6	SHAFT	
060	1036954-0000		4	AXLE SUPPORT	
070	1036955-0000		2	AXLE SUPPORT	
080	315125-0173		3	WASHER TBRSB 10,5X28X6 A4	
090	1037885-0000		2	REAMED BOLT	
100	1129431-0000		4	WASHER	
300	312105-0451		2	SCREW M6S ISO 4017 M8X20 A480	
310	312105-0462		2	SCREW M6S ISO 4014 M8X55 A480	
320	315115-0165		6	WASHER PLAIN, TBRB 8,4/16 H=3	
330	315204-0324		1	O-RING 164,3X5,7 MM	
340	312109-0461		4	SCREW M6S ISO 4017 M8X50 A480	
350	312105-0495		3	SCREW M6S ISO 4017 M10X30 A480	
370	311103-1274		2	PARALLEL PIN ISO 2338 4M6X24 A1	

Pos	Part No	UN	Qty	Description	Page No

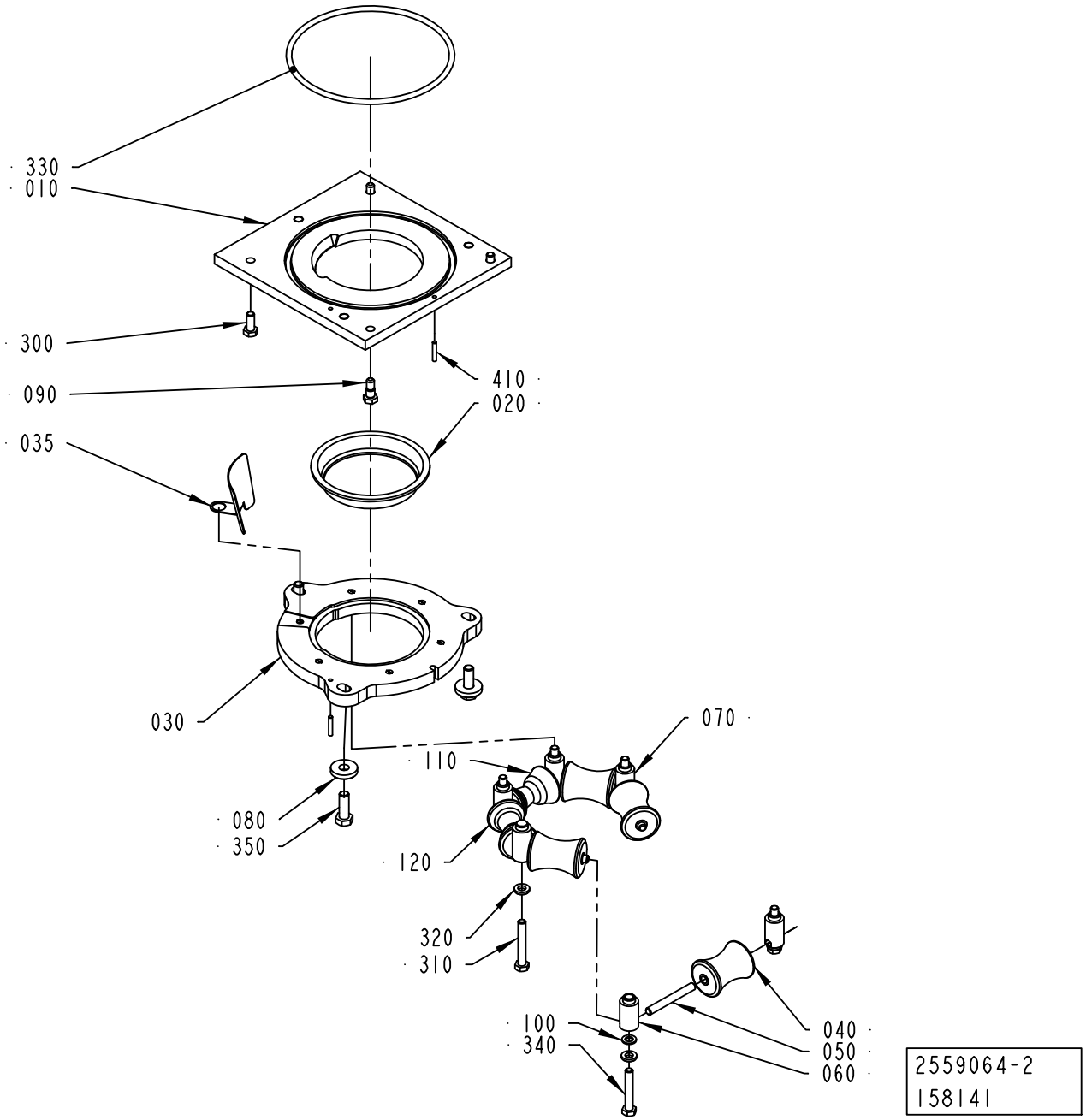
330
010
300
090
035
410
020
030
070
110
080
350
120
320
310
100
340
040
050
060
2559064-2
158141

ECM: 223716 - 20060701
Group number: 2559064-0100
Assembly Drawing: 2559064-2_1_AB

This list covers pages from 1-46 to 1-51

Pos	Part No	UN	Qty	Description	Page No
TBA 1000B (See drawing on page: 1-48)					
010	2562687-0000		1	PLATE	
020	466042-0000		1	SEAL	
030	2562688-0000		1	RING	
040	466046-0000		4	ROLLER	
110	2592548-0000		1	ROLLER	
120	2592549-0000		1	ROLLER	
TBA 1000S LIGHTCAP (See drawing on page: 1-50)					
010	2794725-0000		1	PLATE	
020	2795266-0000		1	SEAL	
030	2794726-0000		1	RING	
110	2716548-0000		1	ROLLER	
120	2716547-0000		1	ROLLER	
TBA 1000S NOMOLDEDCAP, TBA 1000S STDA7 (See drawing on page: 1-46)					
010	2562687-0000		1	PLATE	
020	567743-0000		1	SEAL	
030	2562688-0000		1	RING	
035	1523696-0000		1	GUIDE	
040	573504-0000		4	ROLLER	
110	2592546-0000		1	ROLLER	
120	2592547-0000		1	ROLLER	
Common Parts					
050	263655-0009		6	SHAFT	
060	1036954-0000		4	AXLE SUPPORT	
070	1036955-0000		2	AXLE SUPPORT	
080	315125-0173		3	WASHER TBRSB 10,5X28X6 A4	
090	1037885-0000		2	REAMED BOLT	
100	1129431-0000		4	WASHER	
300	312105-0451		2	SCREW M6S ISO 4017 M8X20 A480	
310	312105-0462		2	SCREW M6S ISO 4014 M8X55 A480	
320	315115-0165		6	WASHER PLAIN, TBRB 8,4/16 H=3	
330	315204-0324		1	O-RING 164,3X5,7 MM	
340	312109-0461		4	SCREW M6S ISO 4017 M8X50 A480	
350	312105-0495		3	SCREW M6S ISO 4017 M10X30 A480	
370	311103-1274		2	PARALLEL PIN ISO 2338 4M6X24 A1	

Pos	Part No	UN	Qty	Description	Page No

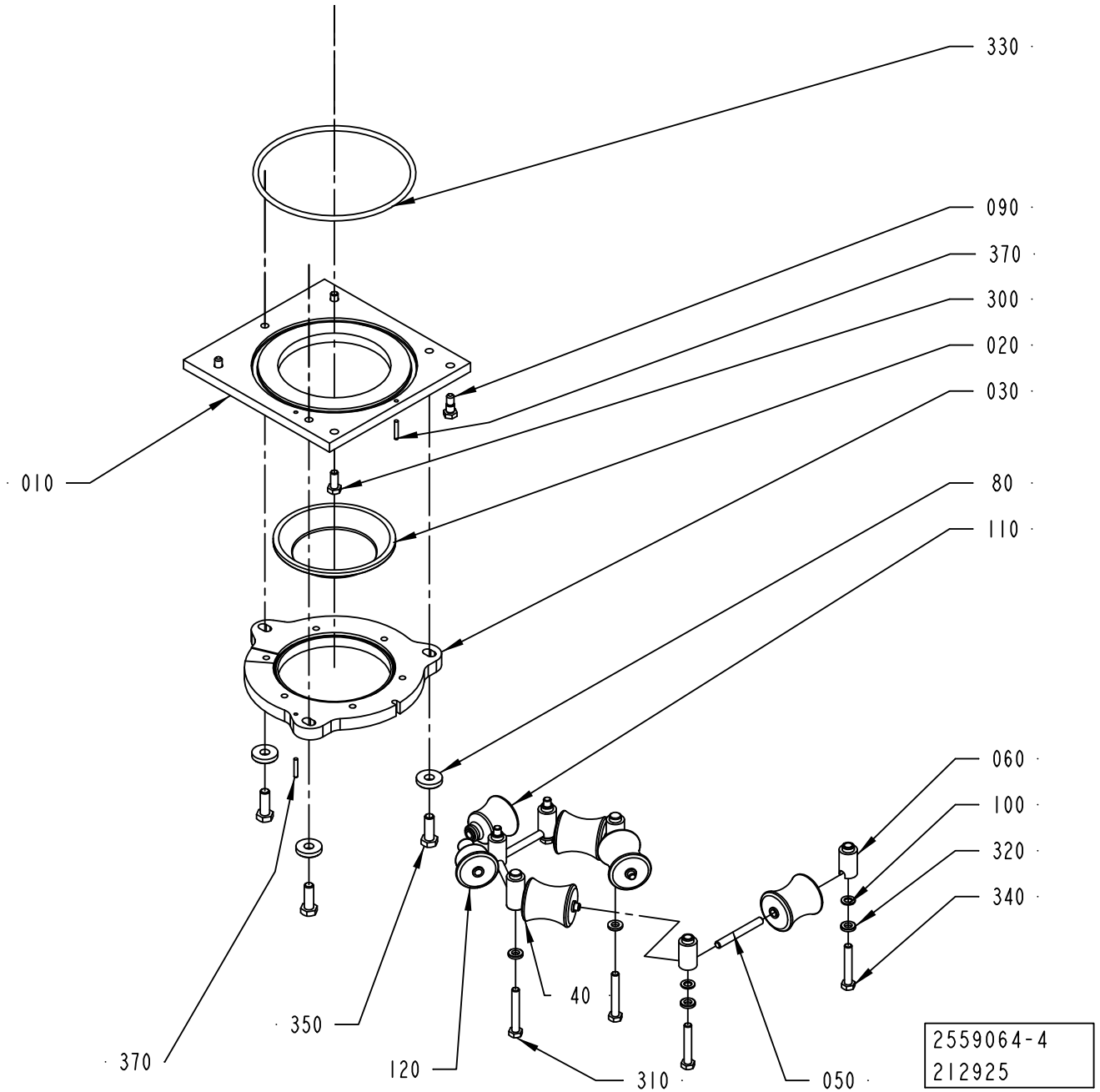
330
090
370
300
020
030
010
80
110
060
100
320
340
40
350
370
120
310
050
2559064-4
212925

ECM: 223716 - 20060701
Group number: 2559064-0100
Assembly Drawing: 2559064-4_1_AA

This list covers pages from 1-46 to 1-51

Pos	Part No	UN	Qty	Description	Page No
TBA 1000B (See drawing on page: 1-48)					
010	2562687-0000		1	PLATE	
020	466042-0000		1	SEAL	
030	2562688-0000		1	RING	
040	466046-0000		4	ROLLER	
110	2592548-0000		1	ROLLER	
120	2592549-0000		1	ROLLER	
TBA 1000S LIGHTCAP (See drawing on page: 1-50)					
010	2794725-0000		1	PLATE	
020	2795266-0000		1	SEAL	
030	2794726-0000		1	RING	
110	2716548-0000		1	ROLLER	
120	2716547-0000		1	ROLLER	
TBA 1000S NOMOLDEDCAP, TBA 1000S STDA7 (See drawing on page: 1-46)					
010	2562687-0000		1	PLATE	
020	567743-0000		1	SEAL	
030	2562688-0000		1	RING	
035	1523696-0000		1	GUIDE	
040	573504-0000		4	ROLLER	
110	2592546-0000		1	ROLLER	
120	2592547-0000		1	ROLLER	
Common Parts					
050	263655-0009		6	SHAFT	
060	1036954-0000		4	AXLE SUPPORT	
070	1036955-0000		2	AXLE SUPPORT	
080	315125-0173		3	WASHER TBRSB 10,5X28X6 A4	
090	1037885-0000		2	REAMED BOLT	
100	1129431-0000		4	WASHER	
300	312105-0451		2	SCREW M6S ISO 4017 M8X20 A480	
310	312105-0462		2	SCREW M6S ISO 4014 M8X55 A480	
320	315115-0165		6	WASHER PLAIN, TBRB 8,4/16 H=3	
330	315204-0324		1	O-RING 164,3X5,7 MM	
340	312109-0461		4	SCREW M6S ISO 4017 M8X50 A480	
350	312105-0495		3	SCREW M6S ISO 4017 M10X30 A480	
370	311103-1274		2	PARALLEL PIN ISO 2338 4M6X24 A1	

Pos	Part No	UN	Qty	Description	Page No

LOWER FORMING RING

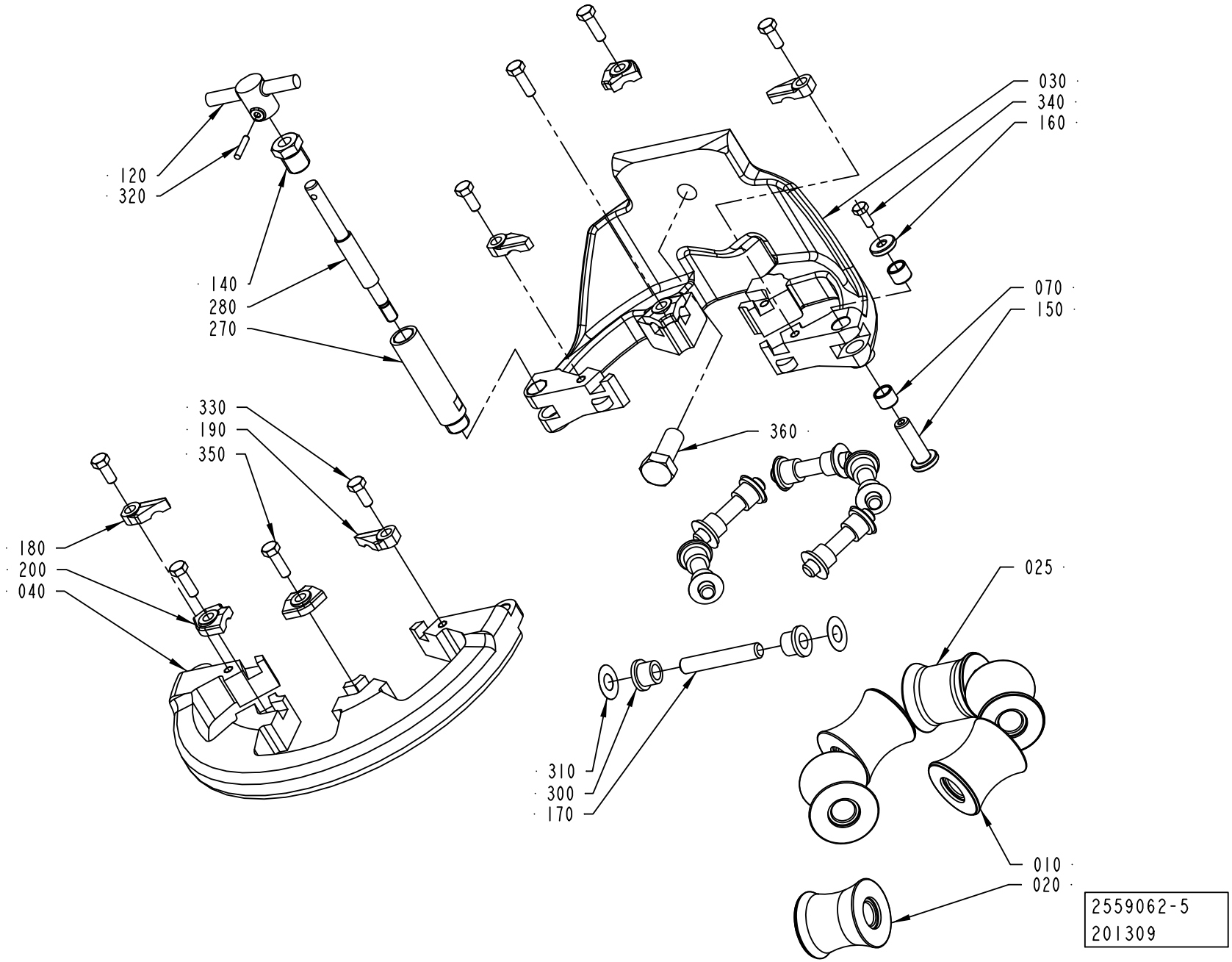

ECM: 264015 - 20060702
Group number: 2559062-0200
Assembly Drawing: 2559062-5_1_AA

This list covers pages from 1-52 to 1-57

Pos	Part No	UN	Qty	Description	Page No
TBA 0200B, TBA 0250B, TBA 0330S (See drawing on page: 1-56)					
010	751502-0000		5	ROLLER	
	Remark : PLUS ROLLER 3-752462				
	MINUS ROLLER 3-752463				
020	2544882-0000		1	COUNTER ROLLER	
030	2764024-0000		1	LOWER FORMING RING	
040	2736630-0000		1	LOWER FORMING RING	
170	752186-0005		6	SHAFT	
180	2528119-0005		2	LOCK PLATE	
190	2528118-0005		2	LOCK PLATE	
200	2528123-0004		4	LOCK PLATE	
TBA 0200M, TBA 0250S (See drawing on page: 1-56)					
010	2601308-0000		5	ROLLER	
	Remark : PLUS ROLLER 2641280-0002				
	MINUS ROLLER 2641280-0001				
020	2601309-0000		1	ROLLER	
030	2764030-0000		1	LOWER FORMING RING	
040	2736629-0000		1	LOWER FORMING RING	
170	752186-0004		6	SHAFT	
180	2528119-0003		2	LOCK PLATE	
190	2528118-0003		2	LOCK PLATE	
200	2528123-0002		4	LOCK PLATE	
TBA 0200S, TPA 0250SQ, TPA 0200SQ (See drawing on page: 1-56)					
010	2565424-0000		5	ROLLER	
	Remark : PLUS ROLLER 2641278-0002				
	MINUS ROLLER 2641278-0001				
020	2565425-0000		1	COUNTER ROLLER	
030	2764028-0000		1	LOWER FORMING RING	
040	2736628-0000		1	LOWER FORMING RING	
170	752186-0004		6	SHAFT	
180	2528119-0005		2	LOCK PLATE	
190	2528118-0005		2	LOCK PLATE	
200	2528123-0004		4	LOCK PLATE	
TBA 0200SQ, TBA 0250SQ (See drawing on page: 1-56)					
010	751502-0000		5	ROLLER	
	Remark : PLUS ROLLER 3-752462				
	MINUS ROLLER 3-752463				
020	2720846-0000		1	COUNTER ROLLER	
030	2764024-0000		1	LOWER FORMING RING	
040	2736630-0000		1	LOWER FORMING RING	
170	752186-0005		6	SHAFT	
180	2528119-0005		2	LOCK PLATE	
190	2528118-0005		2	LOCK PLATE	
200	2528123-0004		4	LOCK PLATE	
TBA 0500B, TBA 1000B, TBA 1500S (See drawing on page: 1-56)					
010	1349851-0000		5	ROLL	
	Remark : PLUS ROLLER 1349853-0000				
	MINUS ROLLER 1349852-0000				
020	2518098-0000		1	COUNTER ROLLER	
030	2764026-0000		1	LOWER FORMING RING	
040	2700546-0000		1	FRONT RING	
170	752186-0014		6	SHAFT	
180	2528119-0004		2	LOCK PLATE	
190	2528118-0004		2	LOCK PLATE	
200	2528123-0004		4	LOCK PLATE	
TBA 0500S (See drawing on page: 1-56)					
010	1499636-0000		5	ROLLER	
	Remark : PLUS ROLLER 1538616-0000				
	MINUS ROLLER 1538617-0000				
020	2709785-0000		1	ROLLER	
030	2764025-0000		1	LOWER FORMING RING	
040	2731503-0000		1	LOWER FORMING RING	
170	2522213-0006		6	SHAFT	
180	2528119-0005		2	LOCK PLATE	
190	2528118-0005		2	LOCK PLATE	
200	2528123-0004		4	LOCK PLATE	
TBA 1000SQ (See drawing on page: 1-56)					
010	1490765-0000		5	ROLLER	
	Remark : PLUS ROLLER 1490767-0000				
	MINUS ROLLER 1490763				
020	1499411-0000		1	COUNTER ROLLER	
030	2764023-0000		1	LOWER FORMING RING	
040	2736705-0000		1	LOWER FORMING RING	
170	752186-0016		6	SHAFT	
180	2528119-0004		2	LOCK PLATE	
190	2528118-0004		2	LOCK PLATE	
200	2528123-0004		4	LOCK PLATE	
TBA 1000S (See drawing on page: 1-56)					
010	567746-0001		5	ROLLER (STANDARD SIZE)	
	Remark : PLUS ROLLER 3-567746-2				
	MINUS ROLLER 3-567746-3				
020	1334856-0000		1	COUNTER ROLLER	
030	2764027-0000		1	LOWER FORMING RING	
040	2721423-0000		1	FORMING RING	

LOWER FORMING RING

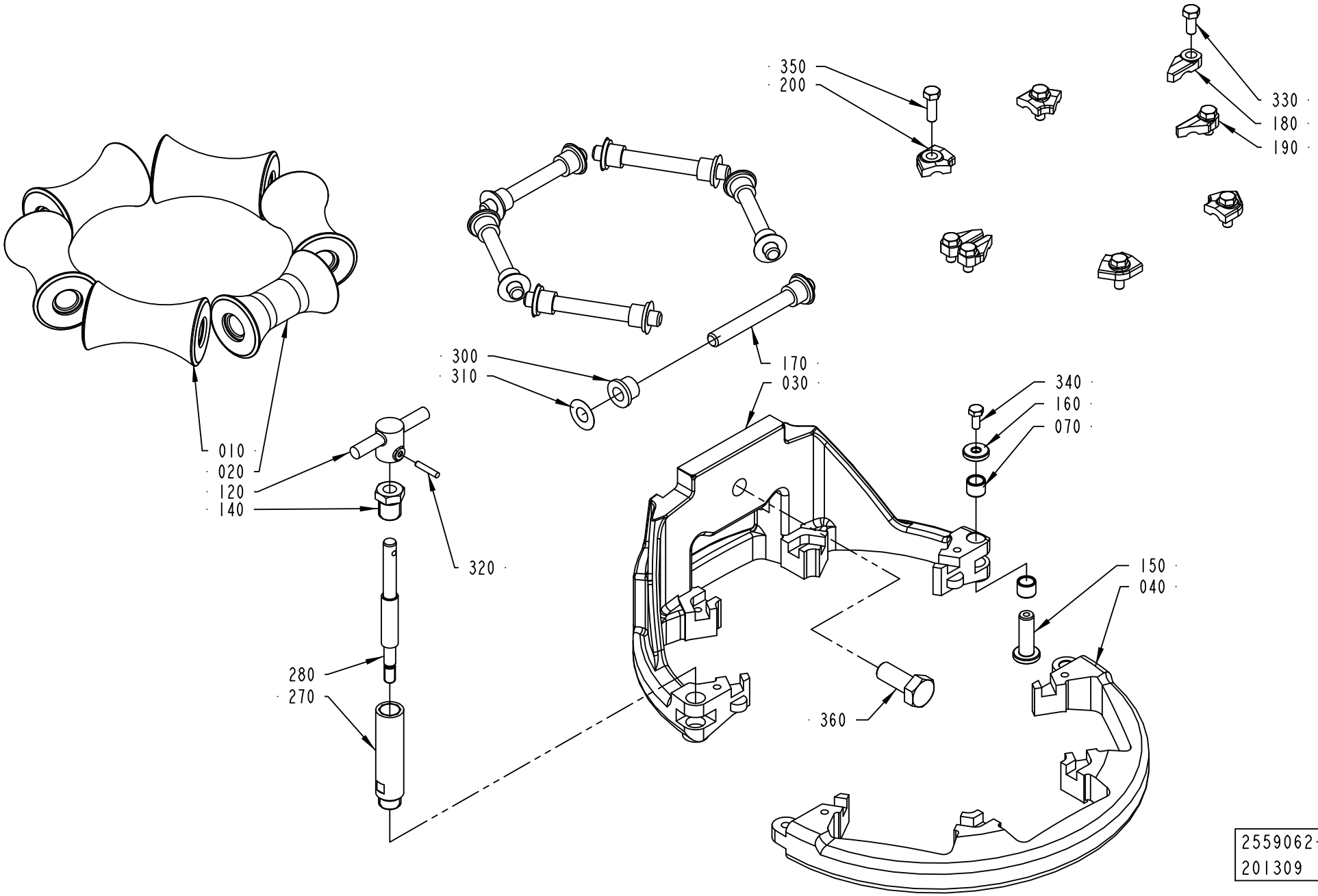

ECM: 264015 - 20060702
Group number: 2559062-0200
Assembly Drawing: 2559062-6_1_AA

This list covers pages from 1-52 to 1-57

Pos	Part No	UN	Qty	Description	Page No
TBA 1000S (Cont'd) (See drawing on page: 1-56)					
170	752186-0016		6	SHAFT	
180	2528119-0005		2	LOCK PLATE	
190	2528118-0005		2	LOCK PLATE	
200	2528123-0004		4	LOCK PLATE	
TBA 1890S, TBA 2000S (See drawing on page: 1-54)					
010	2565513-0000		5	ROLLER	
	Remark : PLUS ROLLER 2601311-0000				
	MINUS ROLLER 2601310-0000				
020	2657923-0000		1	COUNTER ROLLER	
030	2764029-0000		1	LOWER FORMING RING	
040	2673023-0000		1	LOWER FORMING RING	
170	752186-0015		6	SHAFT	
180	2528119-0004		2	LOCK PLATE	
190	2528118-0004		2	LOCK PLATE	
200	2528123-0004		4	LOCK PLATE	
TPA 0330SQ (See drawing on page: 1-56)					
010	2594644-0000		5	ROLLER	
	Remark : PLUS ROLLER 2611279-0001				
	MINUS ROLLER 2611279-0002				
020	2641282-0000		1	COUNTER ROLLER	
030	2764024-0000		1	LOWER FORMING RING	
040	2736630-0000		1	LOWER FORMING RING	
170	752186-0005		6	SHAFT	
180	2528119-0005		2	LOCK PLATE	
190	2528118-0005		2	LOCK PLATE	
200	2528123-0004		4	LOCK PLATE	
TPA 0500SQ (See drawing on page: 1-52)					
010	2601328-0000		4	ROLLER	
	Remark : PLUS ROLLER 2641281-0002				
	MINUS ROLLER 2641281-0001				
020	2686861-0000		1	ROLLER	
025	2601327-0000		1	ROLLER	
030	2764031-0000		1	LOWER FORMING RING	
040	2731506-0000		1	LOWER FORMING RING	
170	752186-0005		6	SHAFT	
180	2528119-0004		2	LOCK PLATE	
190	2528118-0004		2	LOCK PLATE	
200	2528123-0003		4	LOCK PLATE	
TPA 1000SQ, TPA 0750SQ (See drawing on page: 1-56)					
010	1524156-0000		5	ROLLER	
020	2601259-0000		1	COUNTER ROLLER	
030	2764025-0000		1	LOWER FORMING RING	
040	2731503-0000		1	LOWER FORMING RING	
170	2522213-0006		6	SHAFT	
180	2528119-0005		2	LOCK PLATE	
190	2528118-0005		2	LOCK PLATE	
200	2528123-0004		4	LOCK PLATE	
Common Parts					
070	2526826-0000		2	BUSHING	
120	2764036-0000		1	KNOB	
140	2731428-0000		1	NUT	
150	2526827-0000		1	SHAFT	
160	2526825-0000		1	WASHER	
270	2764032-0000		1	SHAFT	
280	2764033-0000		1	SHAFT	
300	90240-0172		12	FLANGE BUSHING, 8X12X10 MM	
310	2033-0011		12	WASHER	
320	311103-0236		1	PARALLEL PIN ISO 2338 3M6X16 A1	
330	312105-0327		4	SCREW M6S ISO 4017 M5X12 A480	
340	312105-0289		1	SCREW M6S ISO 4017 M4X10 A470	
350	312105-0329		4	SCREW M6S ISO 4017 M5X16 A480	
360	312105-0493		1	SCREW M6S ISO 4017 M10X25 A480	

LOWER FORMING RING

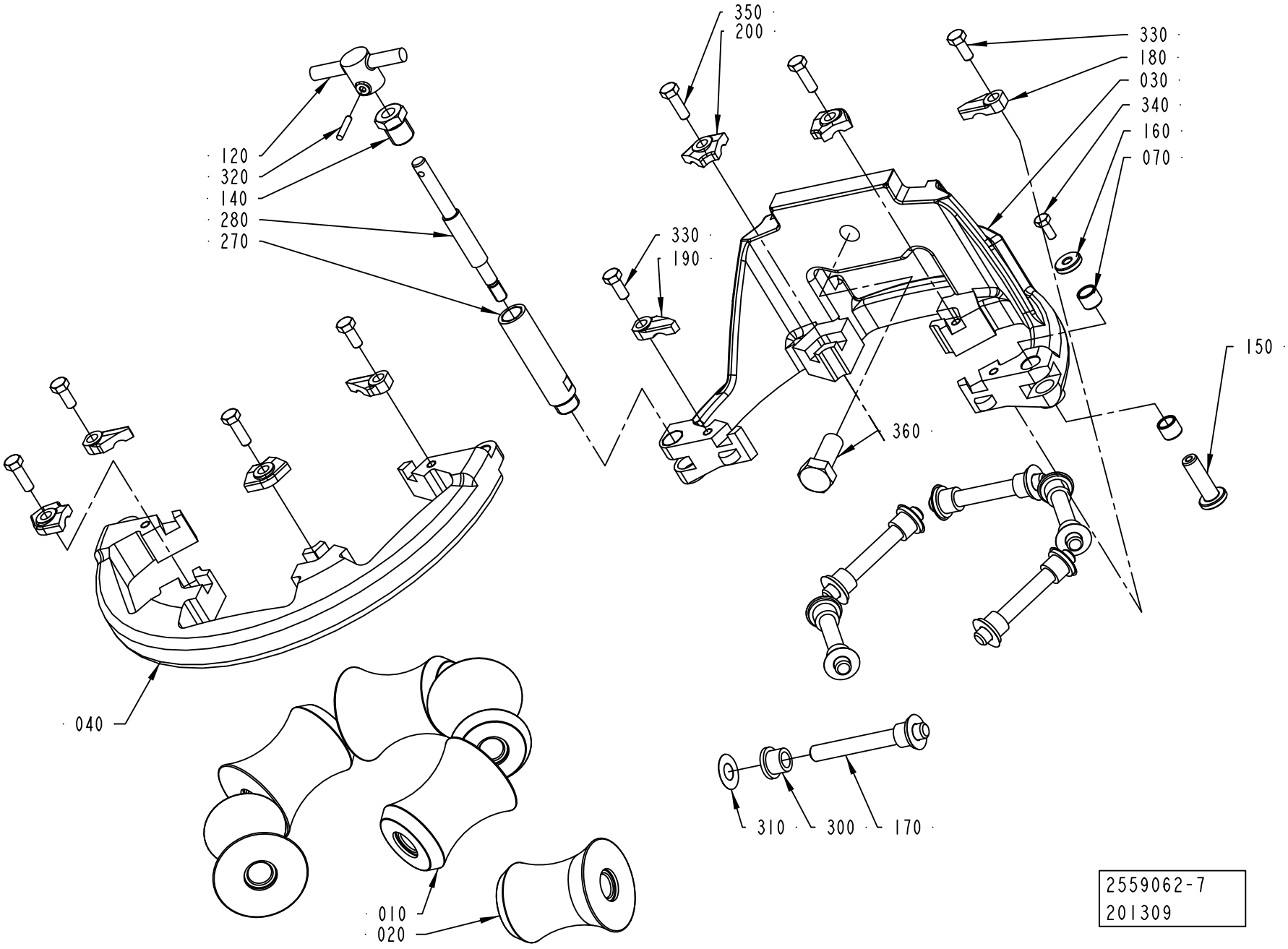

ECM: 264015 - 20060702
Group number: 2559062-0200
Assembly Drawing: 2559062-7_1_AA

This list covers pages from 1-52 to 1-57

Pos	Part No	UN	Qty	Description	Page No
SEE PREVIOUS LISTS PAGES: 1-53, 1-55.					

Pos	Part No	UN	Qty	Description	Page No

UPPER FORMING RING

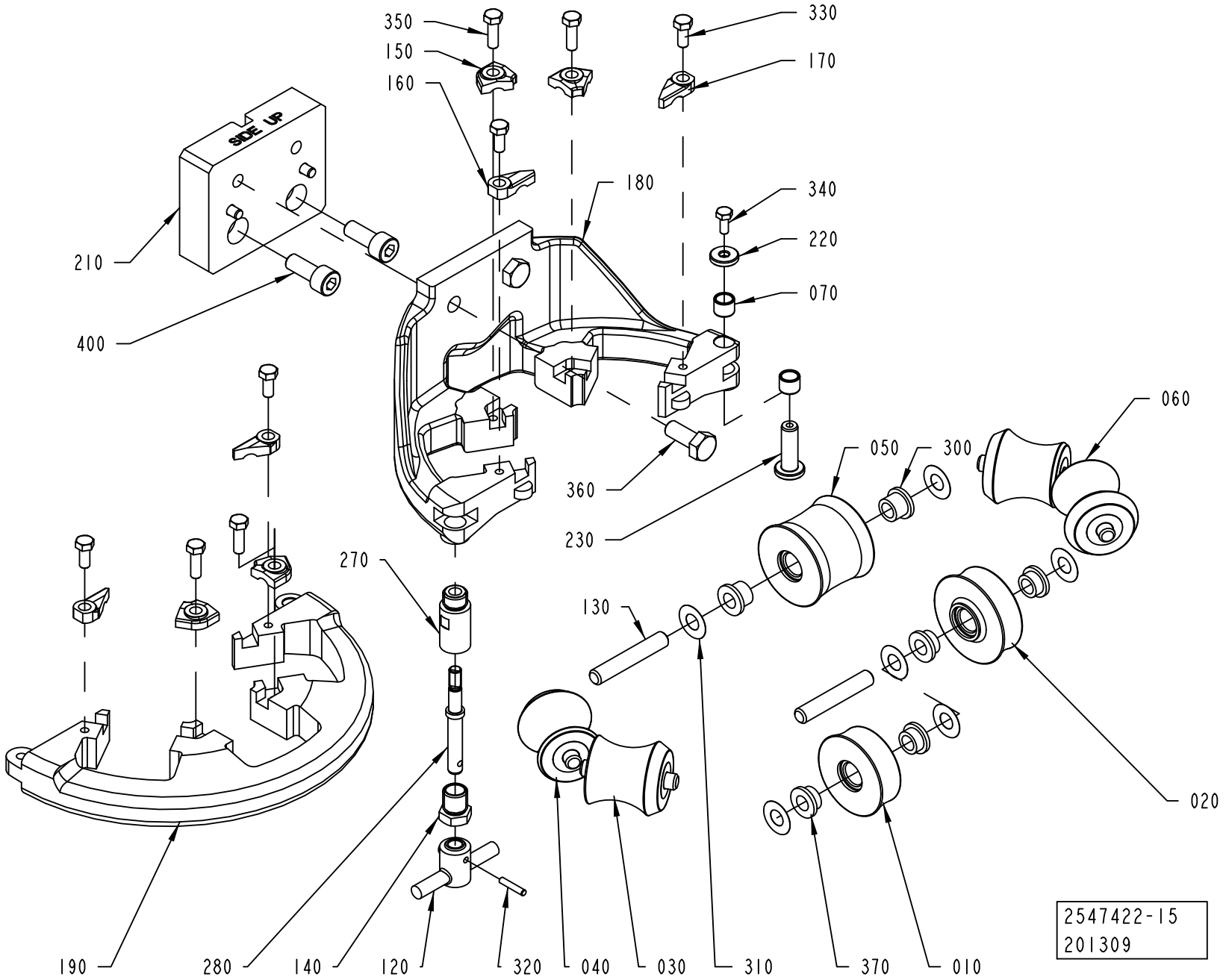

ECM: 264087 - 20060702
Group number: 2547422-0200
Assembly Drawing: 2547422-15_1_AA

This list covers pages from 1-58 to 1-73

Pos	Part No	UN	Qty	Description	Page No
TBA 0200B, TBA 0250B, TBA 0330S (See drawing on page: 1-58)					
010	2641285-0000		1	ROLLER	
020	2641286-0000		1	ROLLER	
030	2641287-0000		1	ROLLER	
040	2641288-0000		2	ROLLER	
050	2641289-0000		1	ROLLER	
060	2641290-0000		1	ROLLER	
130	2522213-0015		6	SHAFT	
150	2528123-0003		4	LOCK PLATE	
160	2528118-0003		2	LOCK PLATE	
170	2528119-0003		2	LOCK PLATE	
180	2764020-0000		1	UPPER FORMING RING	
190	2736636-0000		1	UPPER FORMING RING	
210	2634987-0000		1	SPACER	
300	90240-0172		10	FLANGE BUSHING, 8X12X10 MM	
360	312105-0451		2	SCREW M6S ISO 4017 M8X20 A480	
370	752156-0000		4	FLANGE BUSHING	
400	312115-0541		2	SCREW ISO4762 M12X45 A4 80	
TBA 0200M, TBA 0250S (See drawing on page: 1-58)					
010	2634988-0000		1	ROLLER	
020	2634989-0000		1	ROLLER	
030	2611012-0000		1	ROLLER	
040	2601334-0000		2	ROLLER	
050	2601333-0000		1	ROLLER	
060	2634990-0000		1	ROLLER	
130	2522213-0004		6	SHAFT	
150	2528123-0001		4	LOCK PLATE	
160	2528118-0002		2	LOCK PLATE	
170	2528119-0002		2	LOCK PLATE	
180	2764016-0000		1	UPPER FORMING RING	
190	2736635-0000		1	UPPER FORMING RING	
210	2634987-0000		1	SPACER	
300	90240-0172		10	FLANGE BUSHING, 8X12X10 MM	
360	312105-0451		2	SCREW M6S ISO 4017 M8X20 A480	
370	752156-0000		4	FLANGE BUSHING	
400	312115-0541		2	SCREW ISO4762 M12X45 A4 80	
TBA 0200S, TPA 0250SQ, TPA 0200SQ (See drawing on page: 1-58)					
010	2634984-0000		1	ROLLER	
020	2634985-0000		1	ROLLER	
030	2634949-0000		1	ROLLER	
040	2634948-0000		2	ROLLER	
050	2634947-0000		1	ROLLER	
060	2634983-0000		1	ROLLER	
130	2522213-0004		6	SHAFT	
150	2528123-0001		4	LOCK PLATE	
160	2528118-0002		2	LOCK PLATE	
170	2528119-0002		2	LOCK PLATE	
180	2764018-0000		1	UPPER FORMING RING	
190	2736634-0000		1	UPPER FORMING RING	
210	2634987-0000		1	SPACER	
300	90240-0172		10	FLANGE BUSHING, 8X12X10 MM	
360	312105-0451		2	SCREW M6S ISO 4017 M8X20 A480	
370	752156-0000		4	FLANGE BUSHING	
400	312115-0541		2	SCREW ISO4762 M12X45 A4 80	
TBA 0200SQ, TBA 0250SQ (See drawing on page: 1-58)					
010	2759322-0000		1	ROLLER	
020	2759323-0000		1	ROLLER	
030	2641287-0000		1	ROLLER	
040	2641288-0000		2	ROLLER	
050	2641289-0000		1	ROLLER	
060	2641290-0000		1	ROLLER	
130	2522213-0015		6	SHAFT	
150	2528123-0003		4	LOCK PLATE	
160	2528118-0003		2	LOCK PLATE	
170	2528119-0003		2	LOCK PLATE	
180	2764020-0000		1	UPPER FORMING RING	
190	2736636-0000		1	UPPER FORMING RING	
210	2634987-0000		1	SPACER	
300	90240-0172		10	FLANGE BUSHING, 8X12X10 MM	
360	312105-0451		2	SCREW M6S ISO 4017 M8X20 A480	
370	752156-0000		4	FLANGE BUSHING	
400	312115-0541		2	SCREW ISO4762 M12X45 A4 80	
TBA 0500B, TBA 1000B, TBA 1500S (See drawing on page: 1-72)					
010	2751479-0000		1	ROLLER	
020	2751478-0000		1	ROLLER	
030	2751483-0000		1	ROLLER	
040	2751481-0000		2	ROLLER	
050	2751480-0000		1	ROLLER	
060	2751482-0000		1	ROLLER	
130	752186-0015		3	SHAFT	
135	752186-0007		3	SHAFT	
150	2528123-0004		2	LOCK PLATE	
155	2528123-0008		2	LOCK PLATE	
160	2528118-0005		1	LOCK PLATE	

UPPER FORMING RING

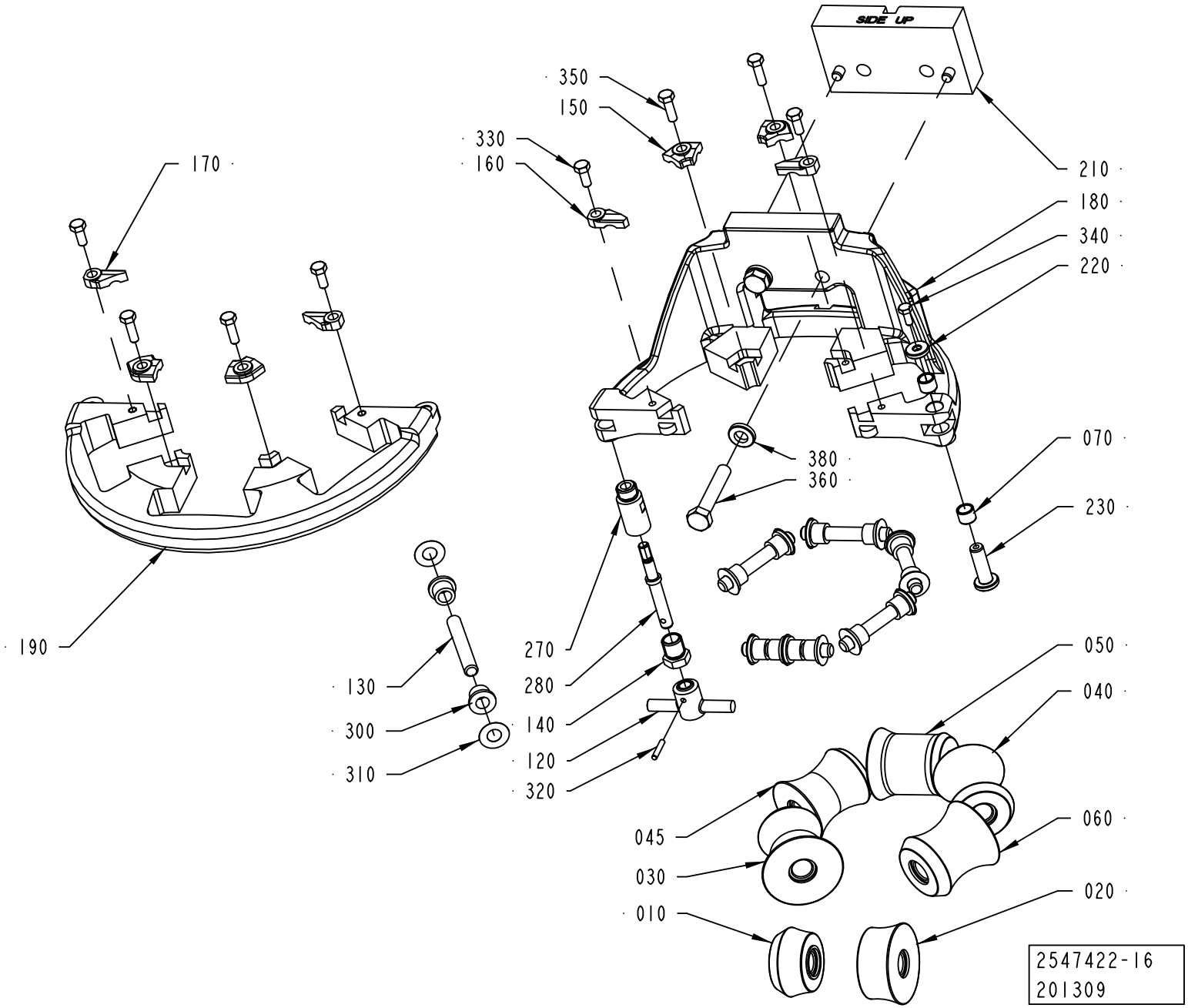

ECM: 264087 - 20060702
Group number: 2547422-0200
Assembly Drawing: 2547422-16_1_AA

This list covers pages from 1-58 to 1-73

Pos	Part No	UN	Qty	Description	Page No
TBA 0500B, TBA 1000B, TBA 1500S (Cont'd) (See drawing on page: 1-72)					
165	2528118-0001		1	LOCK PLATE	
170	2528119-0005		1	LOCK PLATE	
175	2528119-0001		1	LOCK PLATE	
180	2764022-0000		1	UPPER FORMING RING	
190	2736677-0000		1	UPPER FORMING RING	
210	2696412-0000		1	SPACER	
300	90240-0172		14	FLANGE BUSHING, 8X12X10 MM	
360	312109-0460		2	SCREW M6S ISO 4017 M8X45 A480	
380	315115-0165		2	WASHER PLAIN, TBRB 8,4/16 H=3	
TBA 0500S (See drawing on page: 1-70)					
010	2611020-0000		1	ROLLER	
020	2720717-0000		1	ROLLER	
030	2672980-0000		1	ROLLER	
040	2672979-0000		2	ROLLER	
050	2672978-0000		1	ROLLER	
060	2672981-0000		1	ROLLER	
130	2522213-0007		6	SHAFT	
150	2528123-0005		4	LOCK PLATE	
160	2528118-0005		2	LOCK PLATE	
170	2528119-0005		2	LOCK PLATE	
180	2764021-0000		1	UPPER FORMING RING	
190	2736631-0000		1	UPPER FORMING RING	
210	2532914-0000		1	SPACER	
300	90240-0172		14	FLANGE BUSHING, 8X12X10 MM	
360	312109-0459		2	SCREW M6S ISO 4017 M8X40 A480	
TBA 1000SQ (See drawing on page: 1-66)					
010	2532965-0000		1	ROLLER	
020	1548541-0000		1	ROLLER	
030	1548531-0000		4	ROLLER	
060	1548540-0000		1	ROLLER	
130	752186-0007		6	SHAFT	
150	2528123-0004		4	LOCK PLATE	
160	2528118-0004		2	LOCK PLATE	
170	2528119-0004		2	LOCK PLATE	
180	2764013-0000		1	UPPER FORMING RING	
190	2736697-0000		1	UPPER FORMING RING	
210	2532914-0000		1	SPACER	
300	90240-0172		14	FLANGE BUSHING, 8X12X10 MM	
360	312109-0459		2	SCREW M6S ISO 4017 M8X40 A480	
TBA 1000S (See drawing on page: 1-68)					
010	2512737-0000		1	ROLLER	
020	2512738-0000		1	ROLLER	
030	2512740-0000		1	ROLLER	
040	2512741-0000		2	ROLLER	
050	2512742-0000		2	ROLLER	
130	752186-0007		6	SHAFT	
150	2528123-0001		4	LOCK PLATE	
160	2528118-0001		2	LOCK PLATE	
170	2528119-0001		2	LOCK PLATE	
180	2764014-0000		1	UPPER FORMING RING	
190	2736676-0000		1	UPPER FORMING RING	
210	2532914-0000		1	SPACER	
300	90240-0172		14	FLANGE BUSHING, 8X12X10 MM	
360	312109-0459		2	SCREW M6S ISO 4017 M8X40 A480	
TBA 1890S, TBA 2000S (See drawing on page: 1-64)					
010	2634958-0000		1	ROLLER	
020	2634957-0000		1	ROLLER	
030	2634956-0000		1	ROLLER	
040	2634954-0000		2	ROLLER	
050	2634953-0000		1	ROLLER	
060	2634955-0000		1	ROLLER	
130	752186-0015		6	SHAFT	
150	2528123-0002		4	LOCK PLATE	
160	2528118-0003		2	LOCK PLATE	
170	2528119-0003		2	LOCK PLATE	
180	2764019-0000		1	UPPER FORMING RING	
190	2736633-0000		1	UPPER FORMING RING	
210	2532914-0000		1	SPACER	
215	2634961-0000		1	SHIM	
300	90240-0172		14	FLANGE BUSHING, 8X12X10 MM	
360	312109-0459		2	SCREW M6S ISO 4017 M8X40 A480	
380	315105-0165		2	WASHER BRB 8,4X16 RFR	
TPA 0330SQ (See drawing on page: 1-58)					
010	2672950-0000		1	ROLLER	
020	2672951-0000		1	ROLLER	
030	2672955-0000		1	ROLLER	
040	2672953-0000		2	ROLLER	
050	2672954-0000		1	ROLLER	
060	2672952-0000		1	ROLLER	
130	2522213-0015		6	SHAFT	
150	2528123-0003		4	LOCK PLATE	
160	2528118-0003		2	LOCK PLATE	
170	2528119-0003		2	LOCK PLATE	

Machine Type | Group Description | Used-In | Group Number | Page No

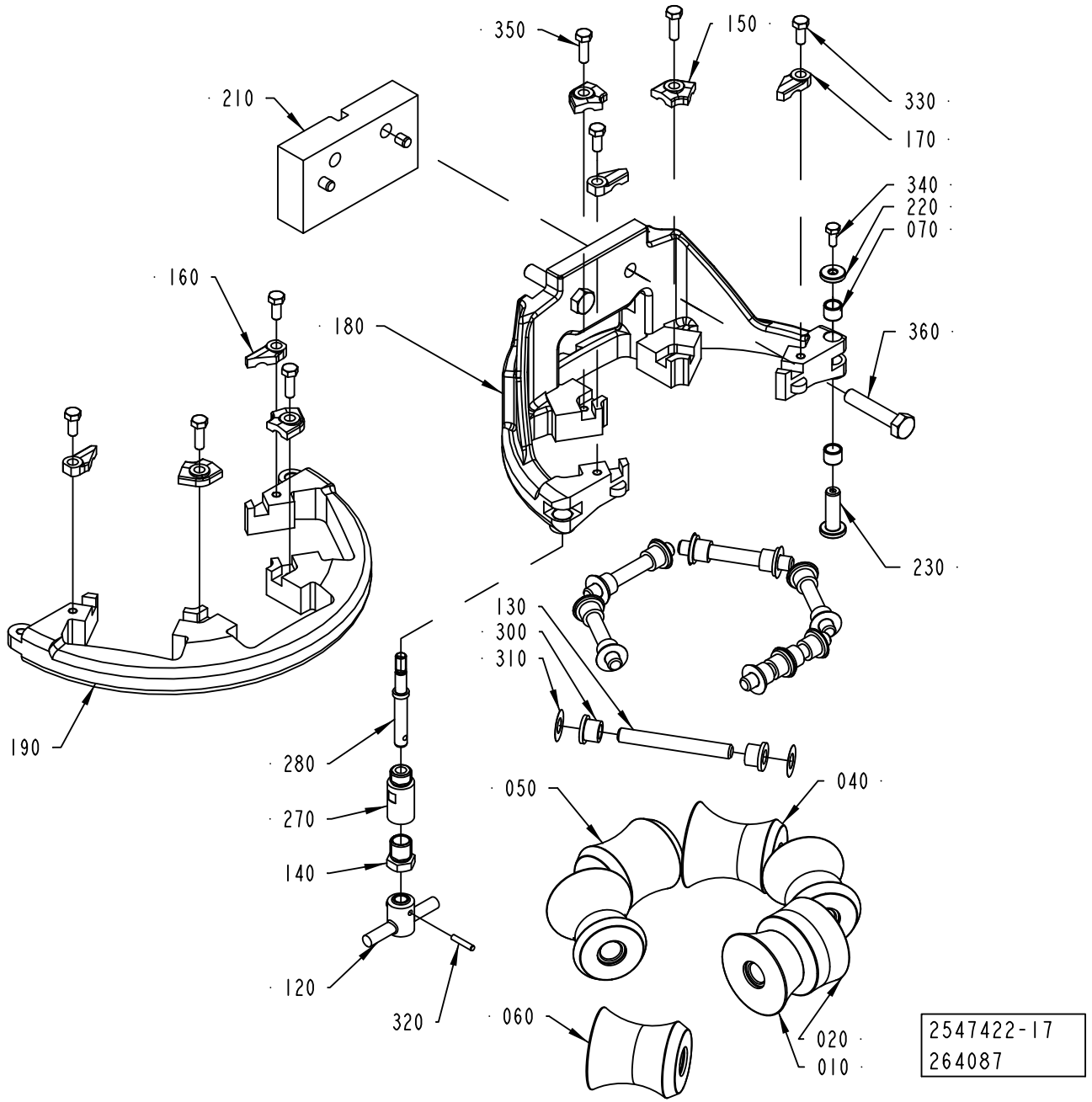
350
150
210
330
170
340
220
070
160
180
360
230
130
300
310
190
280
270
140
120
320
050
040
060
020
010
2547422-17
264087

Pos	Part No	UN	Qty	Description	Page No
TPA 0330SQ (Cont'd) (See drawing on page: 1-58)					
180	2764020-0000		1	UPPER FORMING RING	
190	2736636-0000		1	UPPER FORMING RING	
210	2689172-0000		1	SPACER	
300	90240-0172		10	FLANGE BUSHING, 8X12X10 MM	
360	312105-0451		2	SCREW M6S ISO 4017 M8X20 A480	
370	752156-0000		4	FLANGE BUSHING	
400	312115-0541		2	SCREW ISO4762 M12X45 A4 80	
TPA 0500SQ (See drawing on page: 1-60)					
010	2680198-0000		1	ROLLER	
020	2680201-0000		1	ROLLER	
030	2680197-0000		1	ROLLER	
040	2611016-0000		1	ROLLER	
045	2680196-0000		1	ROLLER	
050	2680195-0000		1	ROLLER	
060	2611017-0000		1	ROLLER	
130	752186-0006		6	SHAFT	
150	2528123-0003		4	LOCK PLATE	
160	2528118-0004		2	LOCK PLATE	
170	2528119-0004		2	LOCK PLATE	
180	2764017-0000		1	UPPER FORMING RING	
190	2736632-0000		1	UPPER FORMING RING	
210	2611024-0000		1	SPACER	
300	90240-0172		14	FLANGE BUSHING, 8X12X10 MM	
360	312109-0460		2	SCREW M6S ISO 4017 M8X45 A480	
380	315115-0165		2	WASHER PLAIN, TBRB 8,4/16 H=3	
TPA 1000SQ, TPA 0750SQ (See drawing on page: 1-62)					
010	2562685-0000		1	ROLLER	
020	2693162-0000		1	ROLLER	
030	1524151-0000		2	ROLLER	
040	1524152-0000		2	ROLLER	
050	2562686-0000		1	ROLLER	
130	2522213-0007		6	SHAFT	
150	2528123-0005		4	LOCK PLATE	
160	2528118-0005		2	LOCK PLATE	
170	2528119-0005		2	LOCK PLATE	
180	2764015-0000		1	UPPER FORMING RING	
190	2736631-0000		1	UPPER FORMING RING	
210	2696411-0000		1	SPACER	
300	90240-0172		14	FLANGE BUSHING, 8X12X10 MM	
360	312109-0459		2	SCREW M6S ISO 4017 M8X40 A480	
Common Parts					
070	2526826-0000		2	BUSHING	
120	2764036-0000		1	KNOB	
140	2731428-0000		1	NUT	
220	2526825-0000		1	WASHER	
230	2526827-0000		1	SHAFT	
270	2764034-0000		1	SHAFT	
280	2764035-0000		1	SHAFT	
310	2033-0011		14	WASHER	
320	311103-0236		1	PARALLEL PIN ISO 2338 3M6X16 A1	
330	312105-0327		4	SCREW M6S ISO 4017 M5X12 A480	
340	312105-0289		1	SCREW M6S ISO 4017 M4X10 A470	
350	312105-0329		4	SCREW M6S ISO 4017 M5X16 A480	

UPPER FORMING RING

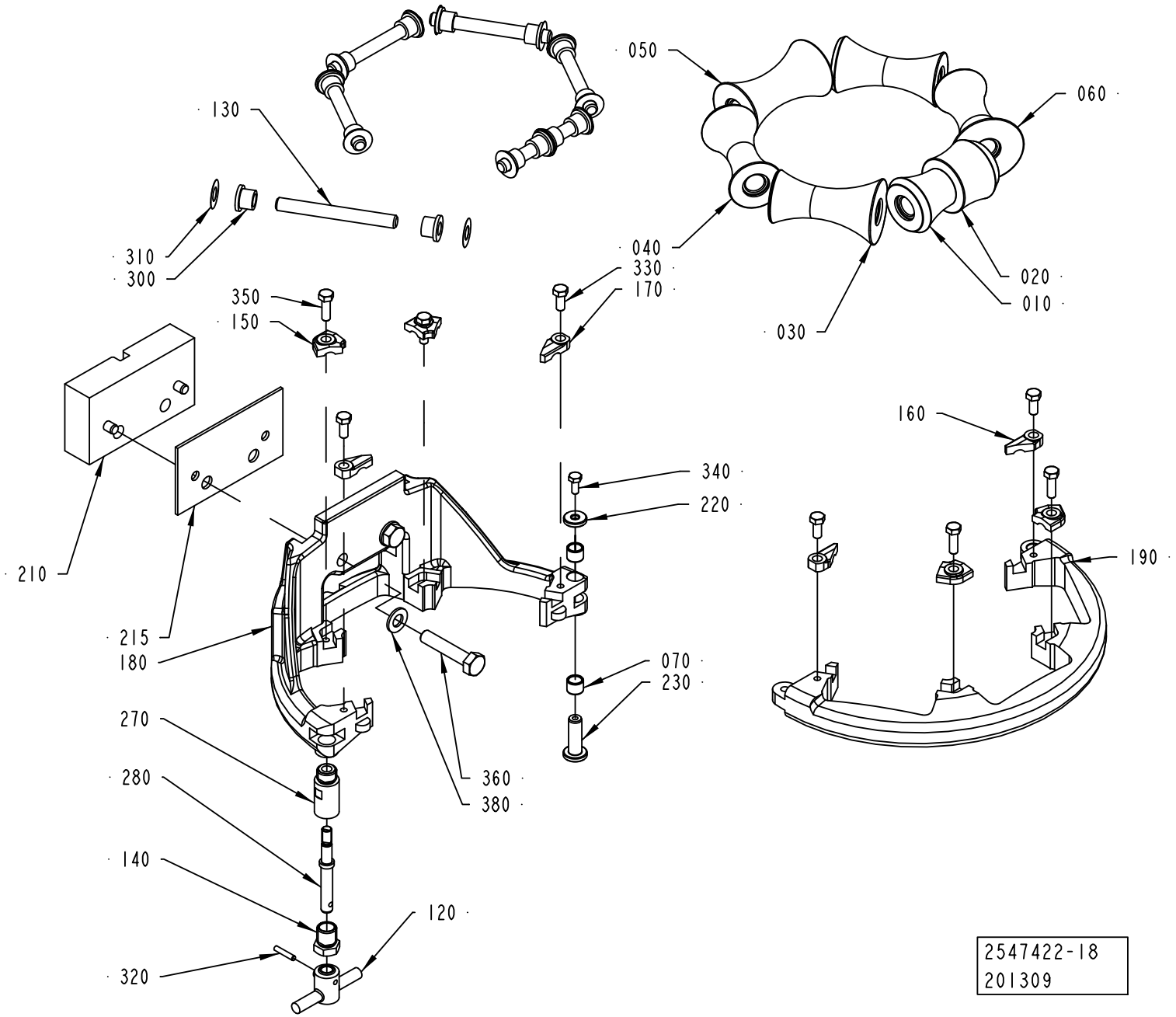

ECM: 264087 - 20060702
Group number: 2547422-0200
Assembly Drawing: 2547422-18_1_AA

This list covers pages from 1-58 to 1-73

Pos	Part No	UN	Qty	Description	Page No
SEE PREVIOUS LISTS PAGES: 1-59, 1-61, 1-63.					

Pos	Part No	UN	Qty	Description	Page No

UPPER FORMING RING

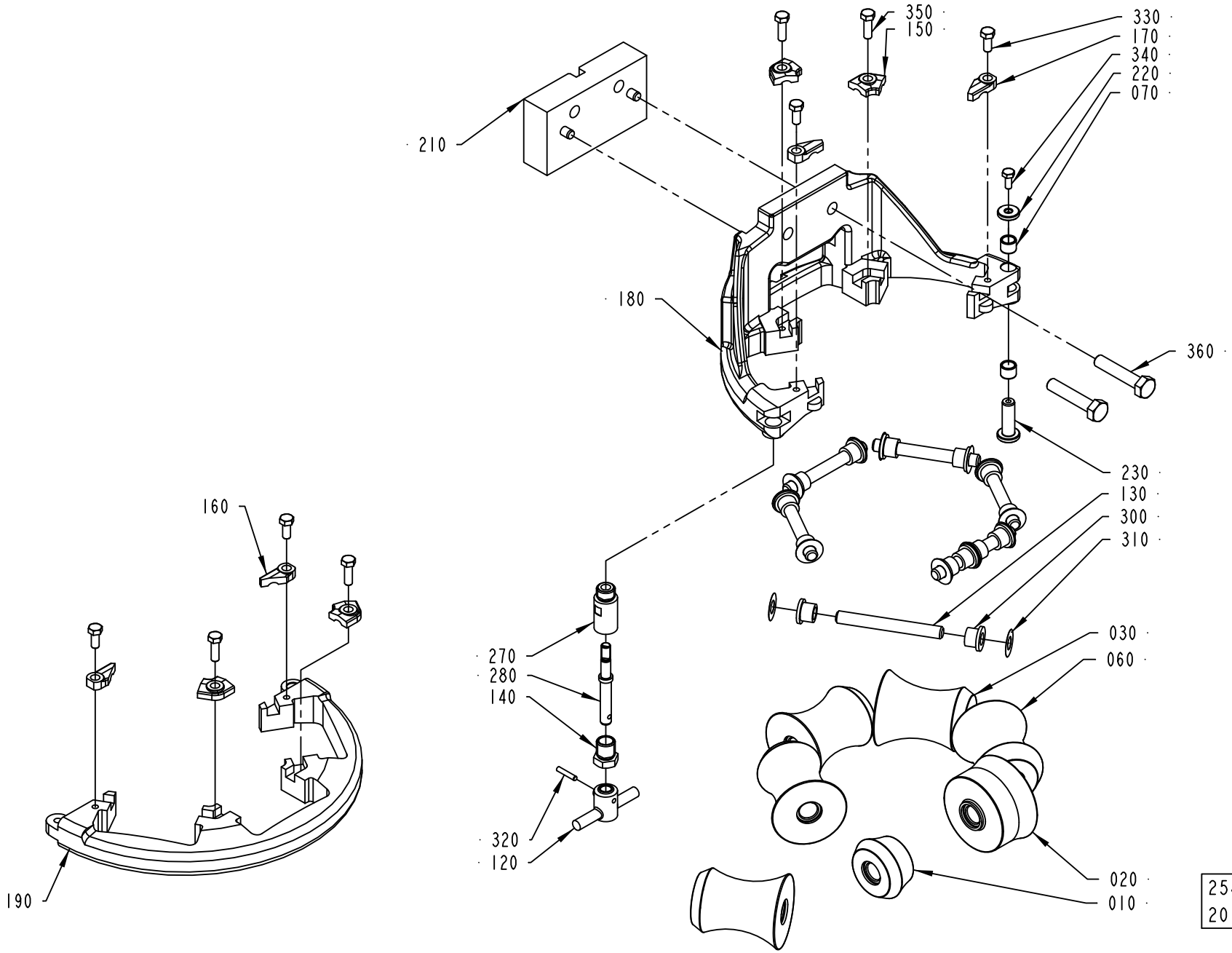

ECM: 264087 - 20060702
Group number: 2547422-0200
Assembly Drawing: 2547422-19_1_AA

This list covers pages from 1-58 to 1-73

Pos	Part No	UN	Qty	Description	Page No
SEE PREVIOUS LISTS PAGES: 1-59, 1-61, 1-63.					

Pos	Part No	UN	Qty	Description	Page No

UPPER FORMING RING

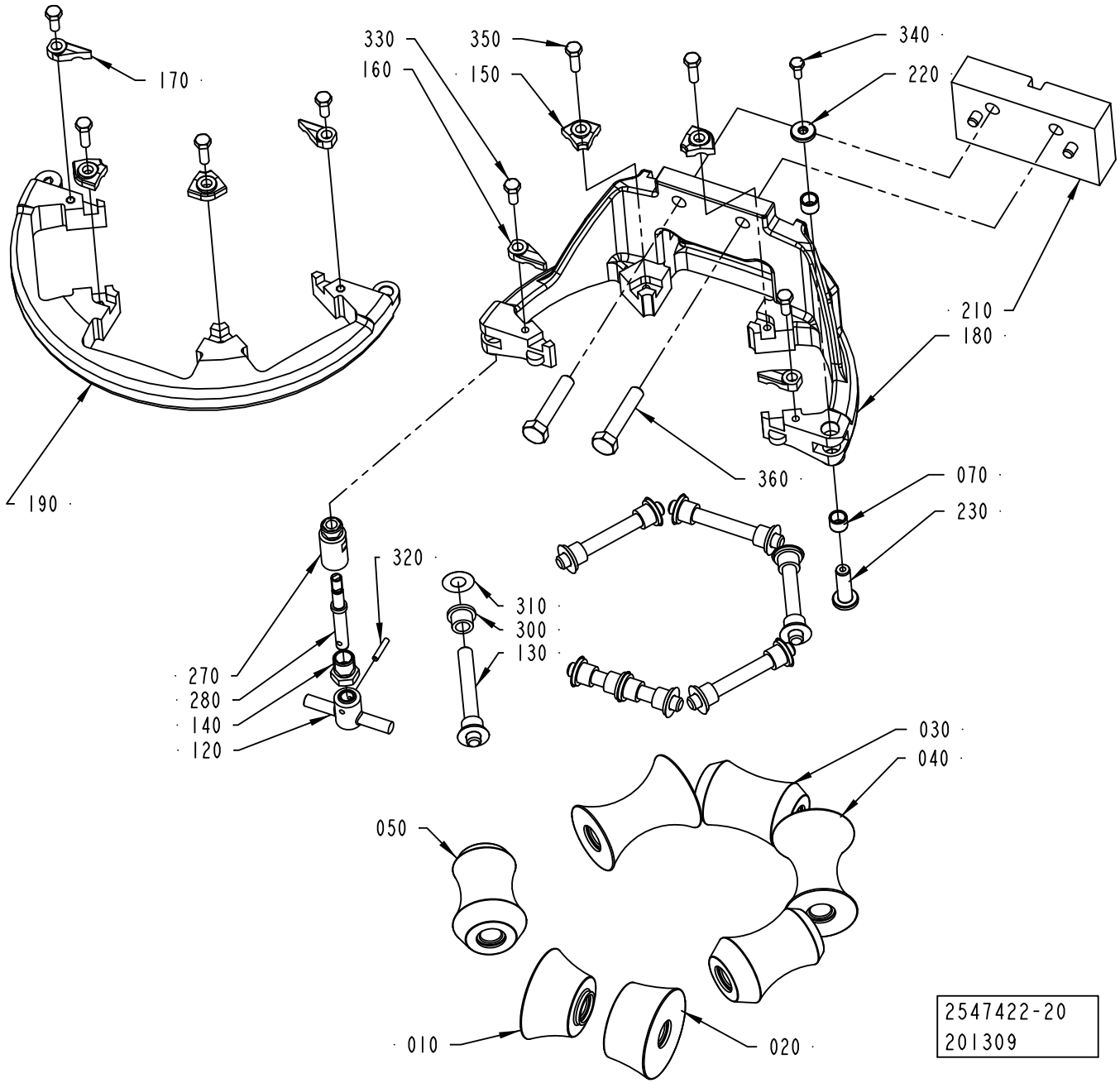

ECM: 264087 - 20060702
Group number: 2547422-0200
Assembly Drawing: 2547422-20_1_AA

This list covers pages from 1-58 to 1-73

Pos	Part No	UN	Qty	Description	Page No
SEE PREVIOUS LISTS PAGES: 1-59, 1-61, 1-63.					

Pos	Part No	UN	Qty	Description	Page No

UPPER FORMING RING

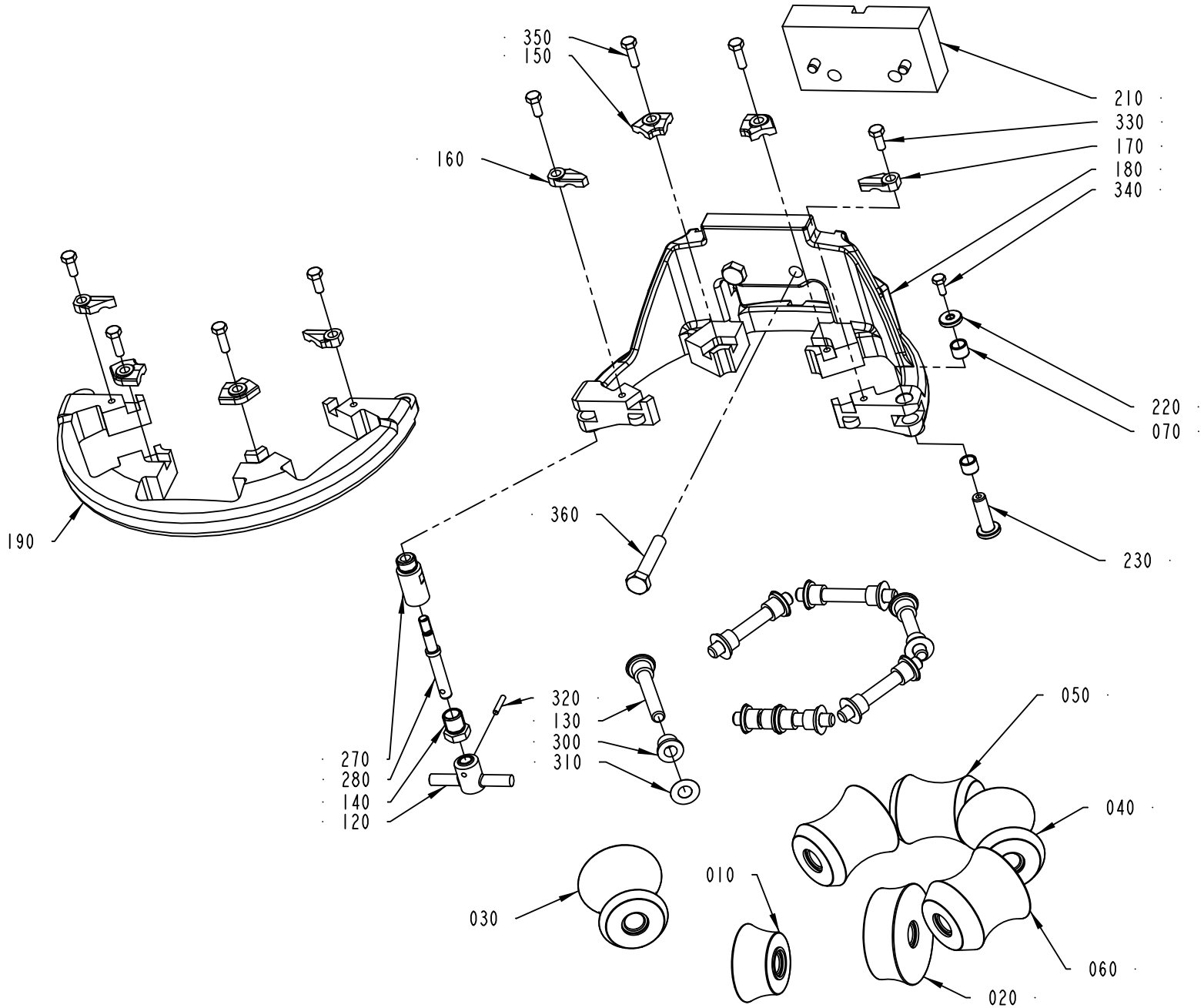

ECM: 264087 - 20060702
Group number: 2547422-0200
Assembly Drawing: 2547422-21_1_AA

This list covers pages from 1-58 to 1-73

Pos	Part No	UN	Qty	Description	Page No
SEE PREVIOUS LISTS PAGES: 1-59, 1-61, 1-63.					

Pos	Part No	UN	Qty	Description	Page No

UPPER FORMING RING

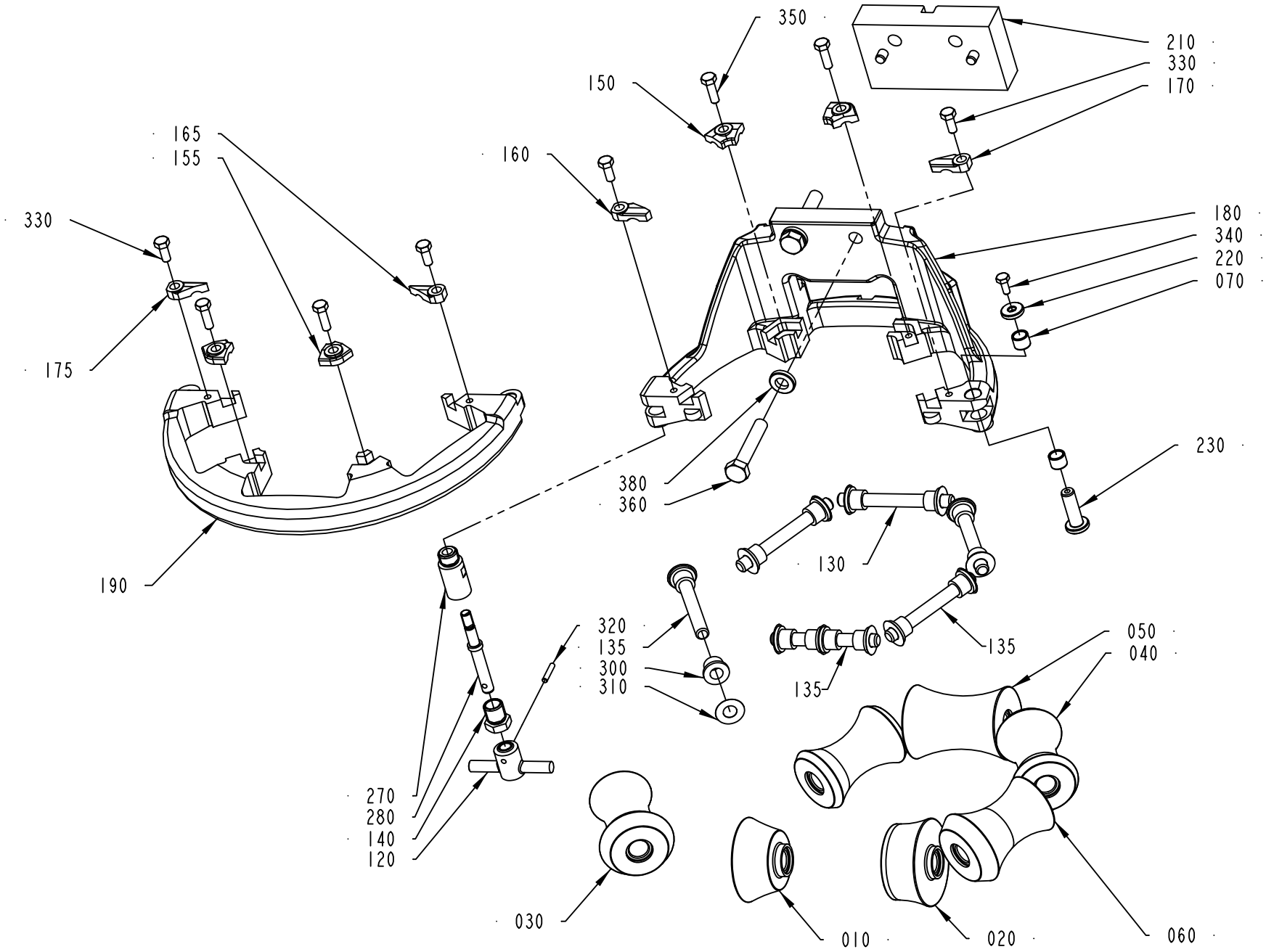

2547422-22
201309

ECM: 264087 - 20060702
Group number: 2547422-0200
Assembly Drawing: 2547422-22_1_AA

This list covers pages from 1-58 to 1-73

Pos	Part No	UN	Qty	Description	Page No	Pos	Part No	UN	Qty	Description	Page No
SEE PREVIOUS LISTS PAGES: 1-59, 1-61, 1-63.											

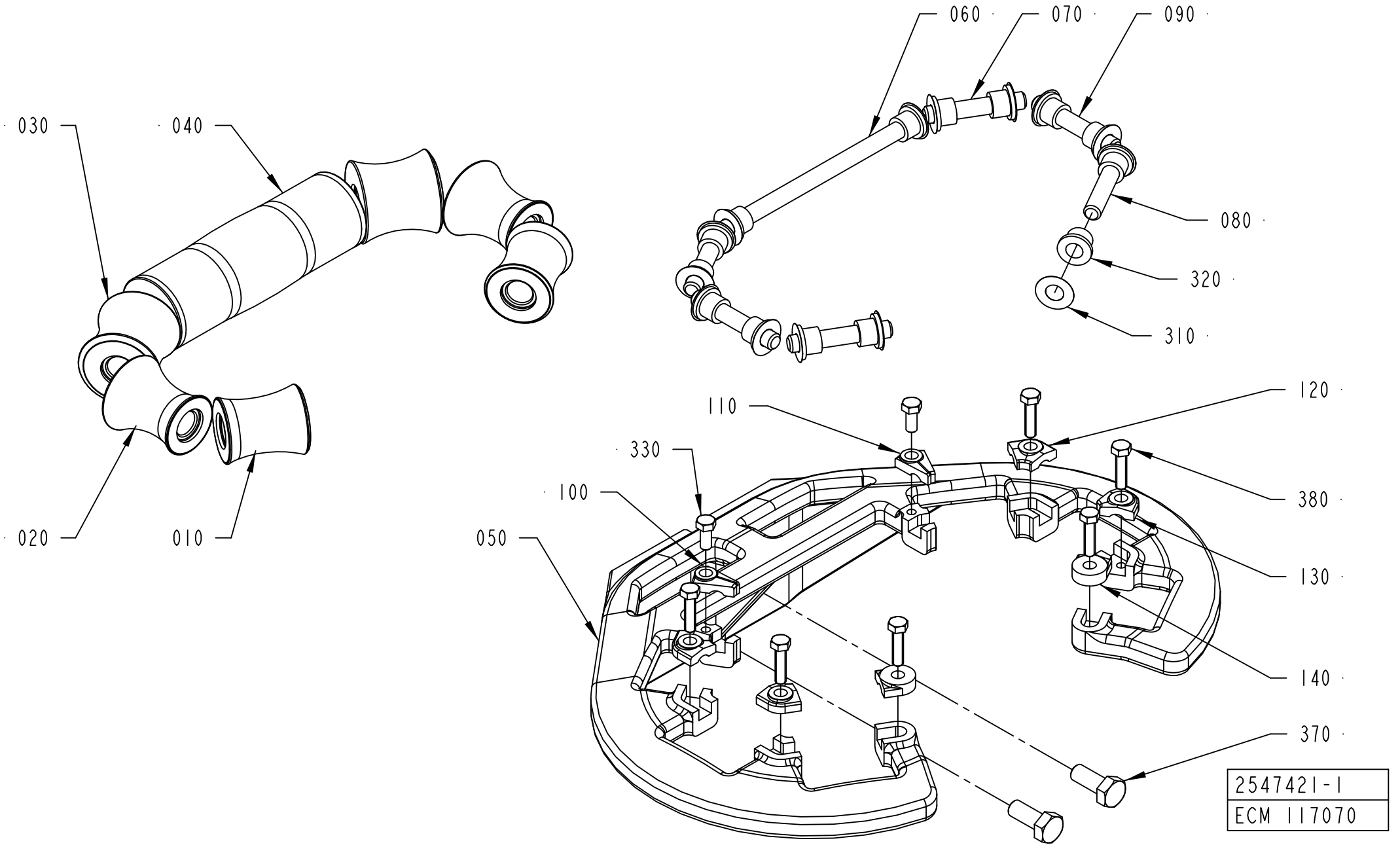
060
070
090
080
320
310
030
040
020
010
120
110
330
380
100
130
050
140
370
2547421-1
ECM 117070

ECM: 274258 - 20060728
Group number: 2547421-0100
Assembly Drawing: 2547421-1_1_AA

This list covers pages from 1-74 to 1-79

Pos	Part No	UN	Qty	Description	Page No
TPA 0330SQ (See drawing on page: 1-74)					
010	2682169-0000		2	ROLLER	
020	2682168-0000		2	ROLLER	
030	2682167-0000		2	ROLLER	
040	2682170-0000		1	ROLLER	
050	2611038-0000		1	SUPPORT RING	
060	752186-0009		1	SHAFT	
070	752186-0012		2	SHAFT	
080	752186-0012		2	SHAFT	
090	752186-0002		2	SHAFT	
120	2562667-0008		6	LOCK PLATE	
140	2532895-0001		2	LOCK PLATE	
310	2033-0011		14	WASHER	
320	90240-0172		14	FLANGE BUSHING, 8X12X10 MM	
370	312105-0453		2	SCREW M6S ISO 4017 M8X25 A480	
380	312105-0331		8	SCREW M6S ISO 4017 M5X20 A480	
TPA 0500SQ (See drawing on page: 1-74)					
010	2680193-0000		2	ROLLER	
020	2685633-0000		2	ROLLER	
030	2685632-0000		2	ROLLER	
040	2685631-0000		1	ROLLER	
050	2611038-0000		1	SUPPORT RING	
060	752186-0009		1	SHAFT	
070	752186-0012		2	SHAFT	
080	752186-0012		2	SHAFT	
090	752186-0002		2	SHAFT	
120	2562667-0008		6	LOCK PLATE	
140	2532895-0001		2	LOCK PLATE	
310	2033-0011		14	WASHER	
320	90240-0172		14	FLANGE BUSHING, 8X12X10 MM	
370	312105-0453		2	SCREW M6S ISO 4017 M8X25 A480	
380	312105-0331		8	SCREW M6S ISO 4017 M5X20 A480	
TPA 1000SQ, TPA 0750SQ (See drawing on page: 1-74)					
010	1524150-0000		2	ROLLER	
020	1524149-0000		2	ROLLER	
030	1524148-0000		2	ROLLER	
040	1524147-0000		1	ROLLER	
050	2559105-0000		1	SUPPORT RING	
060	2522213-0008		1	SHAFT	
070	752186-0012		2	SHAFT	
080	2522213-0009		4	SHAFT	
120	2562667-0008		6	LOCK PLATE	
140	2532895-0008		2	LOCK PLATE	
310	2033-0011		14	WASHER	
320	90240-0172		14	FLANGE BUSHING, 8X12X10 MM	
370	312105-0451		2	SCREW M6S ISO 4017 M8X20 A480	
380	312105-0331		8	SCREW M6S ISO 4017 M5X20 A480	
A3/FLEX TBA 1000S (See drawing on page: 1-74)					
010	2512748-0000		2	ROLLER	
020	2512749-0000		2	ROLLER	
030	2512746-0000		2	ROLLER	
040	2514521-0000		2	ROLLER	
050	2552161-0000		1	SUPPORT RING	
060	2522213-0005		1	SHAFT	
070	752186-0005		2	SHAFT	
080	2522213-0004		2	SHAFT	
090	752186-0019		2	SHAFT	
100	2552176-0003		1	LOCK PLATE	
110	2552177-0003		1	LOCK PLATE	
120	2528123-0007		2	LOCK PLATE	
130	2528123-0001		2	LOCK PLATE	
140	2532895-0003		2	LOCK PLATE	
310	2033-0011		16	WASHER	
320	90240-0172		16	FLANGE BUSHING, 8X12X10 MM	
330	312105-0327		2	SCREW M6S ISO 4017 M5X12 A480	
370	312105-0451		2	SCREW M6S ISO 4017 M8X20 A480	
380	312105-0331		6	SCREW M6S ISO 4017 M5X20 A480	
A3/FLEX TBA 1000SQ (See drawing on page: 1-74)					
010	2634971-0000		2	ROLLER	
020	2634970-0000		2	ROLLER	
030	2634969-0000		2	ROLLER	
040	2634968-0000		1	ROLLER	
050	2634967-0000		1	SUPPORT RING	
060	2522213-0008		1	SHAFT	
070	752186-0012		2	SHAFT	
080	2522213-0009		4	SHAFT	
120	2562667-0009		6	LOCK PLATE	
140	2532895-0003		2	LOCK PLATE	
310	2033-0011		14	WASHER	
320	90240-0172		14	FLANGE BUSHING, 8X12X10 MM	
370	312105-0451		2	SCREW M6S ISO 4017 M8X20 A480	
380	312105-0331		8	SCREW M6S ISO 4017 M5X20 A480	
TBA 0200B, TBA 0250B, TBA 0330S (See drawing on page: 1-76)					
010	2544881-0000		2	ROLLER	

Machine Type | Group Description | Used-In | Group Number | Page No

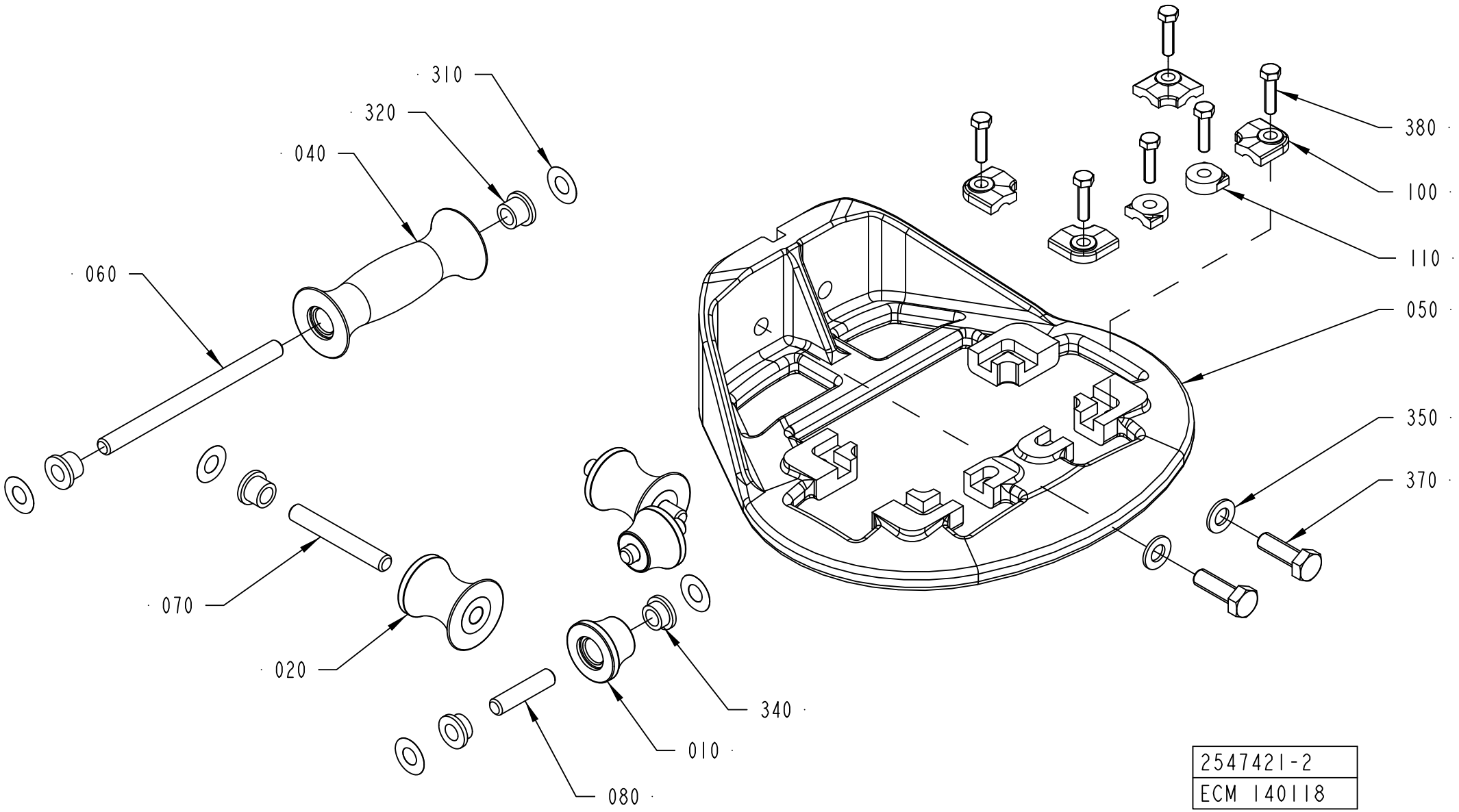
310
320
040
060
070
020
080
010
340
380
100
110
050
350
370
2547421-2
ECM 140118

ECM: 274258 - 20060728
Group number: 2547421-0100
Assembly Drawing: 2547421-2_1_AA

This list covers pages from 1-74 to 1-79

Pos	Part No	UN	Qty	Description	Page No
TBA 0200B, TBA 0250B, TBA 0330S (Cont'd) (See drawing on page: 1-76)					
020	751492-0000		2	ROLL	
040	751491-0000		1	ROLL	
050	2565431-0000		1	SUPPORT RING	
060	2522213-0005		1	SHAFT	
070	2522213-0006		2	SHAFT	
080	2522213-0004		2	SHAFT	
100	2532912-0002		4	LOCK PLATE	
110	2532895-0003		2	LOCK PLATE	
310	2033-0011		10	WASHER	
320	90240-0172		10	FLANGE BUSHING, 8X12X10 MM	
350	315105-0165		2	WASHER BRB 8,4X16 RFR	
370	312105-0453		2	SCREW M6S ISO 4017 M8X25 A480	
380	312105-0331		6	SCREW M6S ISO 4017 M5X20 A480	
TBA 0200M, TBA 0250S (See drawing on page: 1-76)					
010	2611027-0000		2	ROLLER	
020	2611026-0000		2	ROLLER	
040	2611025-0000		1	ROLLER	
050	2611028-0000		1	SUPPORT ROLLER	
060	752186-0008		1	SHAFT	
070	2522213-0006		2	SHAFT	
080	752186-0013		2	SHAFT	
100	2532912-0002		4	LOCK PLATE	
110	2532895-0006		2	LOCK PLATE	
310	2033-0011		10	WASHER	
320	90240-0172		6	FLANGE BUSHING, 8X12X10 MM	
340	752156-0000		4	FLANGE BUSHING	
350	315105-0165		2	WASHER BRB 8,4X16 RFR	
370	312105-0453		2	SCREW M6S ISO 4017 M8X25 A480	
380	312105-0331		6	SCREW M6S ISO 4017 M5X20 A480	
TBA 0200S, TPA 0250SQ, TPA 0200SQ (See drawing on page: 1-76)					
010	752128-0000		2	FORMING ROLLER	
020	752127-0000		2	FORMING ROLLER	
040	752126-0000		1	FORMING ROLLER	
050	2565430-0000		1	SUPPORT RING	
060	752186-0008		1	SHAFT	
070	2522213-0006		2	SHAFT	
080	2522213-0010		2	SHAFT	
100	2532912-0001		4	LOCK PLATE	
110	2532895-0002		2	LOCK PLATE	
310	2033-0011		10	WASHER	
320	90240-0172		6	FLANGE BUSHING, 8X12X10 MM	
340	752156-0000		4	FLANGE BUSHING	
350	315105-0165		2	WASHER BRB 8,4X16 RFR	
370	312105-0453		2	SCREW M6S ISO 4017 M8X25 A480	
380	312105-0331		6	SCREW M6S ISO 4017 M5X20 A480	
TBA 0200SQ, TBA 0250SQ (See drawing on page: 1-78)					
010	2761021-0000		2	ROLLER	
020	2761020-0000		2	ROLLER	
030	2761019-0000		2	ROLLER	
040	2761018-0000		1	ROLLER	
050	2761017-0000		1	SUPPORT RING	
060	2522213-0004		1	SHAFT	
070	752186-0006		2	SHAFT	
080	752186-0006		2	SHAFT	
090	2522213-0006		2	SHAFT	
120	2761022-0000		2	LOCK PLATE	
130	2528123-0007		4	LOCK PLATE	
140	2532895-0002		2	LOCK PLATE	
310	2033-0011		14	WASHER	
320	90240-0172		14	FLANGE BUSHING, 8X12X10 MM	
370	312105-0453		2	SCREW M6S ISO 4017 M8X25 A480	
380	312105-0331		8	SCREW M6S ISO 4017 M5X20 A480	
TBA 0500B, TBA 1000B, TBA 1500S (See drawing on page: 1-74)					
010	2552206-0000		2	ROLLER	
020	2552205-0000		2	ROLLER	
030	2552188-0000		2	ROLLER	
040	2552187-0000		1	ROLLER	
050	2552160-0000		1	SUPPORT RING	
060	2522213-0005		1	SHAFT	
070	752186-0005		2	SHAFT	
080	2522213-0004		2	SHAFT	
090	752186-0019		2	SHAFT	
100	2552176-0001		1	LOCK PLATE	
110	2552177-0001		1	LOCK PLATE	
120	2528123-0002		2	LOCK PLATE	
130	2528123-0008		2	LOCK PLATE	
140	2532895-0004		2	LOCK PLATE	
310	2033-0011		14	WASHER	
320	90240-0172		14	FLANGE BUSHING, 8X12X10 MM	
330	312105-0327		2	SCREW M6S ISO 4017 M5X12 A480	
370	312105-0451		2	SCREW M6S ISO 4017 M8X20 A480	
380	312105-0331		6	SCREW M6S ISO 4017 M5X20 A480	
TBA 0500S (See drawing on page: 1-74)					

Machine Type | Group Description | Used-In | Group Number | Page No

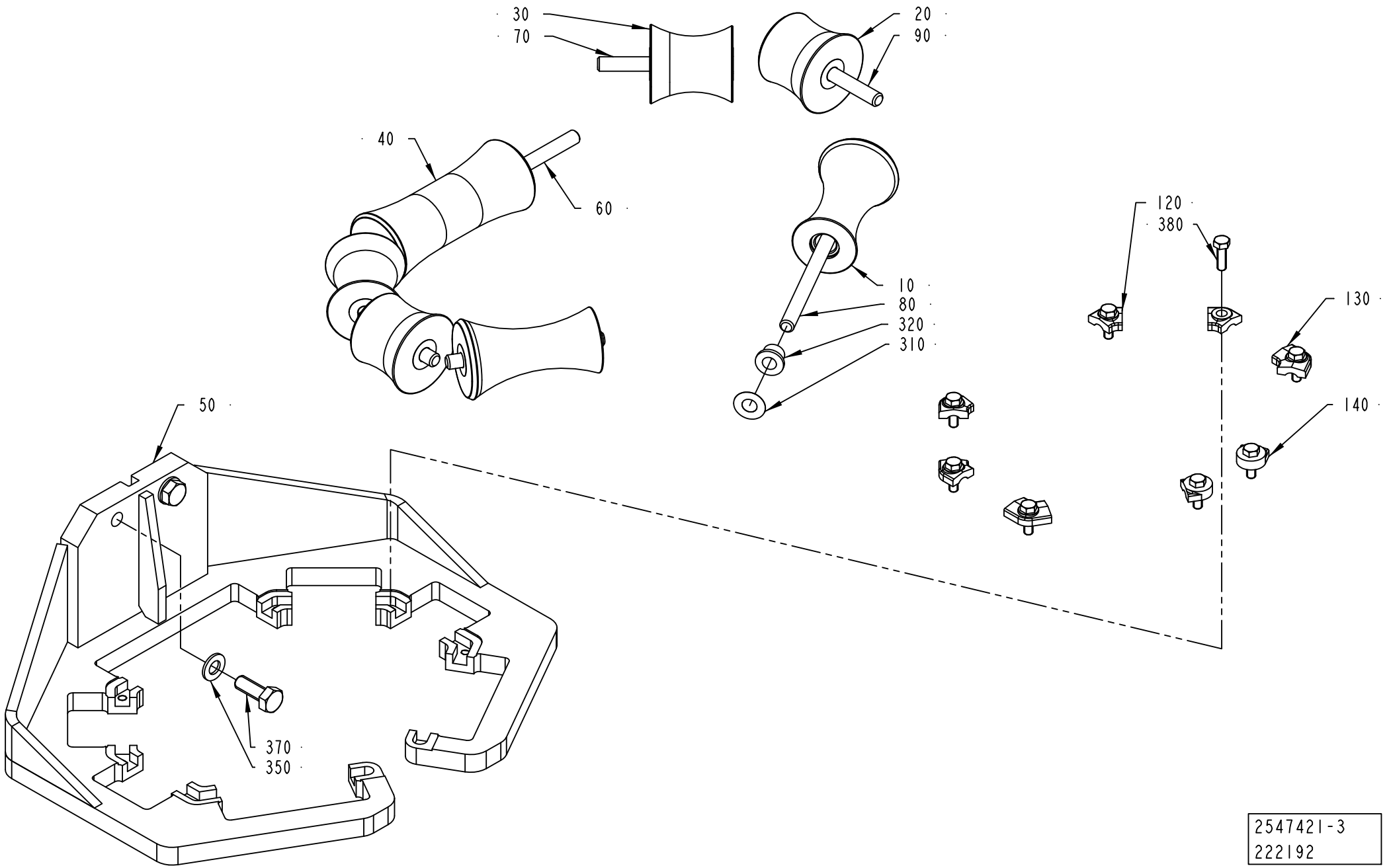

2547421-3
222192

Pos	Part No	UN	Qty	Description	Page No
TBA 0500S (Cont'd) (See drawing on page: 1-74)					
010	2672986-0000		2	ROLLER	
020	2672985-0000		2	ROLLER	
030	2672970-0000		2	ROLLER	
040	2709302-0000		1	ROLLER	
050	2611038-0000		1	SUPPORT RING	
060	752186-0009		1	SHAFT	
070	752186-0012		2	SHAFT	
080	752186-0012		2	SHAFT	
090	752186-0002		2	SHAFT	
120	2562667-0008		6	LOCK PLATE	
140	2532895-0001		2	LOCK PLATE	
310	2033-0011		14	WASHER	
320	90240-0172		14	FLANGE BUSHING, 8X12X10 MM	
370	312105-0451		2	SCREW M6S ISO 4017 M8X20 A480	
380	312105-0331		8	SCREW M6S ISO 4017 M5X20 A480	
TBA 1890S, TBA 2000S (See drawing on page: 1-78)					
010	2601286-0000		2	ROLLER	
020	2601285-0000		2	ROLLER	
030	2601279-0000		2	ROLLER	
040	2601278-0000		1	ROLLER	
050	2634926-0000		1	SUPPORT ROLLER	
060	2522213-0019		1	SHAFT	
070	752186-0006		2	SHAFT	
080	2522213-0020		2	SHAFT	
090	752186-0019		2	SHAFT	
120	2562667-0008		4	LOCK PLATE	
130	2528123-0007		2	LOCK PLATE	
140	2532895-0002		2	LOCK PLATE	
310	2033-0011		14	WASHER	
320	90240-0172		14	FLANGE BUSHING, 8X12X10 MM	
350	315105-0165		2	WASHER BRB 8,4X16 RFR	
370	312105-0452		2	SCREW M6S ISO 4017 M8X22 A4 80	
380	312105-0329		8	SCREW M6S ISO 4017 M5X16 A480	

Pos	Part No	UN	Qty	Description	Page No

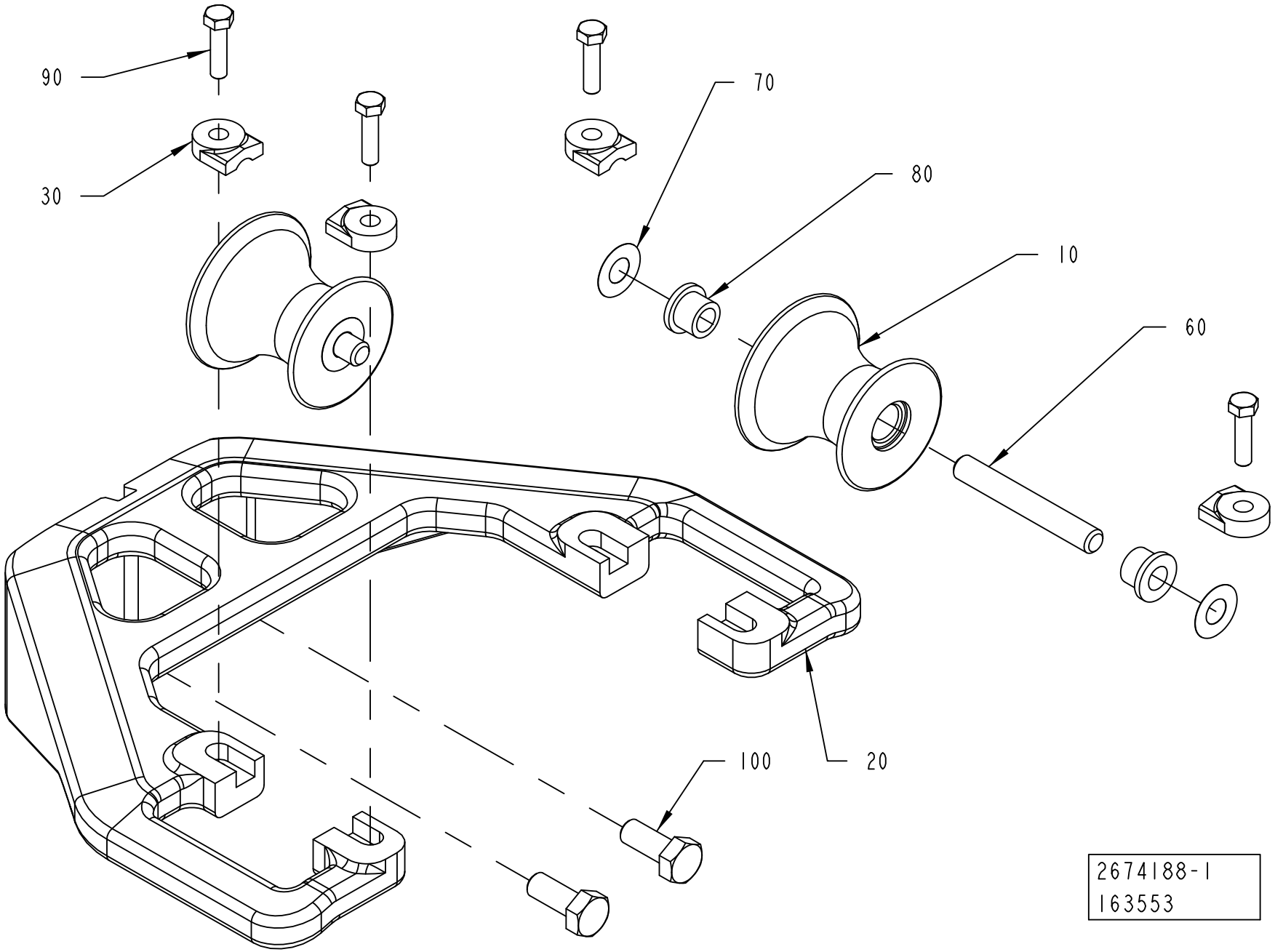
90
30
70
80
10
60
100
20
2674188-1
163553

ECM: 223505 - 20050713
Group number: 2674188-0100
Assembly Drawing: 2674188-1_1_AA

This list covers pages from 1-80 to 1-83

Pos	Part No	UN	Qty	Description	Page No
TBA 0200B, TBA 0250B, TBA 0330S (See drawing on page: 1-80)					
010	2634943-0000		2	ROLLER	
020	2657860-0000		1	BRACKET	
030	2532895-0005		4	LOCK PLATE	
060	2522213-0007		2	SHAFT	
070	2033-0011		4	WASHER	
080	90240-0172		4	FLANGE BUSHING, 8X12X10 MM	
090	312105-0331		4	SCREW M6S ISO 4017 M5X20 A480	
100	312105-0449		2	SCREW M6S ISO 4017 M8X16 A480	
TBA 0200M, TBA 0250S (See drawing on page: 1-82)					
005	2611039-0000		1	ROLLER	
010	2611040-0000		2	ROLLER	
020	2611041-0000		1	SUPPORT ROLLER	
030	2532895-0009		4	LOCK PLATE	
040	2532895-0003		2	LOCK PLATE	
060	2522213-0006		3	SHAFT	
070	2033-0011		6	WASHER	
080	90240-0172		6	FLANGE BUSHING, 8X12X10 MM	
090	312105-0331		6	SCREW M6S ISO 4017 M5X20 A480	
100	312105-0451		2	SCREW M6S ISO 4017 M8X20 A480	
TBA 0200S, TPA 0250SQ, TPA 0200SQ (See drawing on page: 1-80)					
010	2640354-0000		2	ROLLER	
020	2640353-0000		1	BRACKET	
030	2532895-0009		4	LOCK PLATE	
060	2522213-0006		2	SHAFT	
070	2033-0011		4	WASHER	
080	90240-0172		4	FLANGE BUSHING, 8X12X10 MM	
090	312105-0331		4	SCREW M6S ISO 4017 M5X20 A480	
100	312105-0451		2	SCREW M6S ISO 4017 M8X20 A480	

Pos	Part No	UN	Qty	Description	Page No

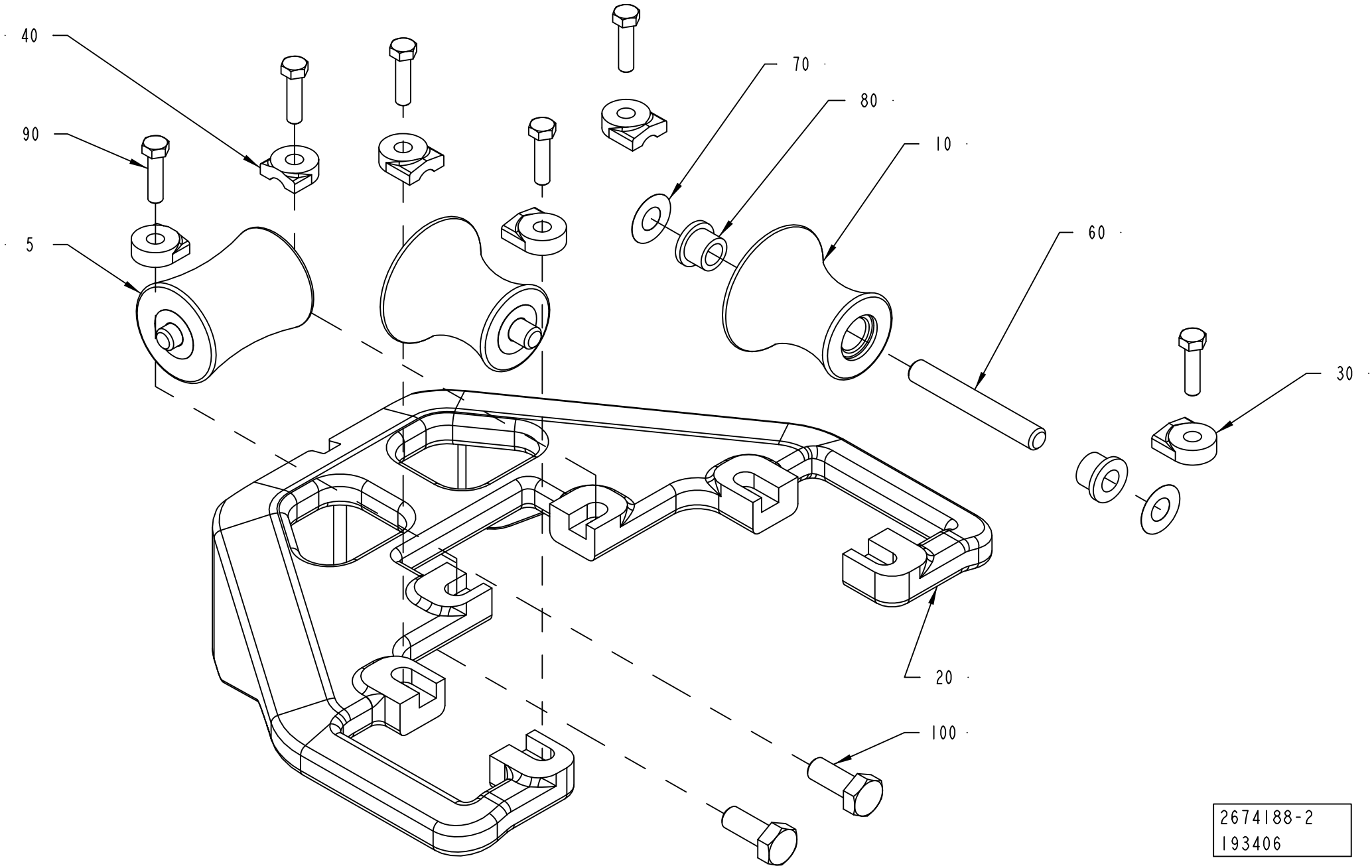
40
90
5
70
80
10
60
30
20
100
2674188-2
193406

ECM: 223505 - 20050713
Group number: 2674188-0100
Assembly Drawing: 2674188-2_1_AA

This list covers pages from 1-80 to 1-83

Pos	Part No	UN	Qty	Description	Page No
TBA 0200B, TBA 0250B, TBA 0330S (See drawing on page: 1-80)					
010	2634943-0000		2	ROLLER	
020	2657860-0000		1	BRACKET	
030	2532895-0005		4	LOCK PLATE	
060	2522213-0007		2	SHAFT	
070	2033-0011		4	WASHER	
080	90240-0172		4	FLANGE BUSHING, 8X12X10 MM	
090	312105-0331		4	SCREW M6S ISO 4017 M5X20 A480	
100	312105-0449		2	SCREW M6S ISO 4017 M8X16 A480	
TBA 0200M, TBA 0250S (See drawing on page: 1-82)					
005	2611039-0000		1	ROLLER	
010	2611040-0000		2	ROLLER	
020	2611041-0000		1	SUPPORT ROLLER	
030	2532895-0009		4	LOCK PLATE	
040	2532895-0003		2	LOCK PLATE	
060	2522213-0006		3	SHAFT	
070	2033-0011		6	WASHER	
080	90240-0172		6	FLANGE BUSHING, 8X12X10 MM	
090	312105-0331		6	SCREW M6S ISO 4017 M5X20 A480	
100	312105-0451		2	SCREW M6S ISO 4017 M8X20 A480	
TBA 0200S, TPA 0250SQ, TPA 0200SQ (See drawing on page: 1-80)					
010	2640354-0000		2	ROLLER	
020	2640353-0000		1	BRACKET	
030	2532895-0009		4	LOCK PLATE	
060	2522213-0006		2	SHAFT	
070	2033-0011		4	WASHER	
080	90240-0172		4	FLANGE BUSHING, 8X12X10 MM	
090	312105-0331		4	SCREW M6S ISO 4017 M5X20 A480	
100	312105-0451		2	SCREW M6S ISO 4017 M8X20 A480	

Pos	Part No	UN	Qty	Description	Page No

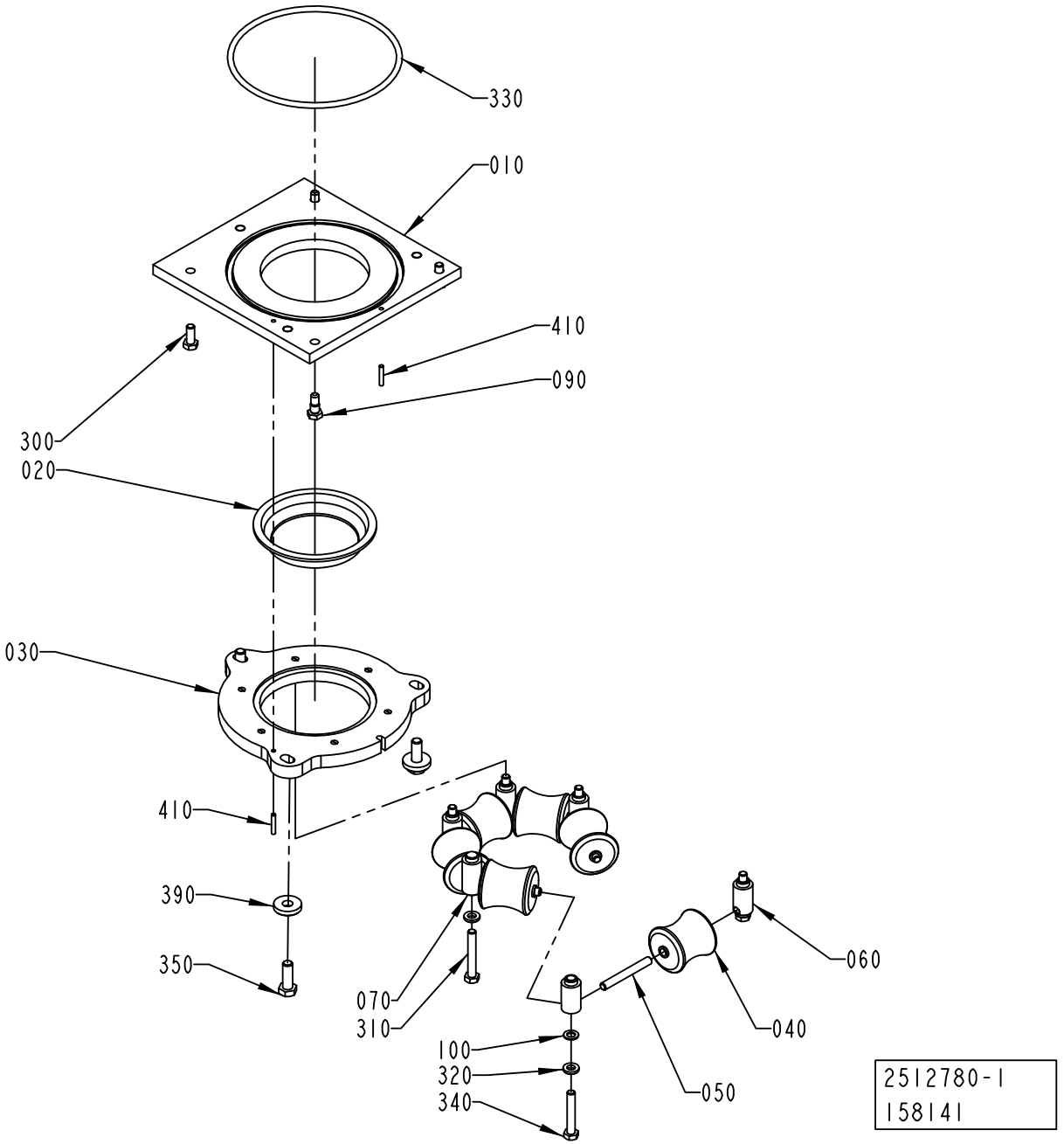
330
010
410
090
300
020
030
410
390
350
070
310
100
320
340
060
040
050
2512780-1
158141

ECM: 271560 - 20060706
Group number: 2512780-0100
Assembly Drawing: 2512780-1_1_AB

This list covers pages from 1-84 to 1-89

Pos	Part No	UN	Qty	Description	Page No
TBA 0200B, TBA 0200SQ, TBA 0250B, TBA 0330S, TBA 0250SQ (See drawing on page: 1-86)					
010	2528097-0000		1	PLATE	
020	273953-0000		1	SEAL	
030	2528096-0000		1	RING	
040	456796-0000		2	ROLLER	
050	263655-0006		2	SHAFT	
060	1038576-0000		4	AXLE SUPPORT	
340	312109-0459		4	SCREW M6S ISO 4017 M8X40 A480	
350	312105-0372		3	SCREW M6S ISO 4017 M6X25 A480	
390	315115-0153		3	WASHER PLAIN, TBRB 6,4/12 H=3	
410	311103-1274		1	PARALLEL PIN ISO 2338 4M6X24 A1	
TBA 0200M, TBA 0250S (See drawing on page: 1-86)					
010	2611044-0000		1	PLATE	
020	574336-0000		1	SEAL	
030	2611045-0000		1	RING	
040	2616231-0000		2	ROLLER	
050	263655-0018		2	SHAFT	
060	1038576-0000		4	AXLE SUPPORT	
340	312109-0459		4	SCREW M6S ISO 4017 M8X40 A480	
350	312105-0372		3	SCREW M6S ISO 4017 M6X25 A480	
390	315115-0153		3	WASHER PLAIN, TBRB 6,4/12 H=3	
410	311103-1274		1	PARALLEL PIN ISO 2338 4M6X24 A1	
TBA 0200S, TPA 0250SQ, TPA 0200SQ (See drawing on page: 1-86)					
010	2562711-0000		1	PLATE	
020	490901-0000		1	SEAL	
030	2562710-0000		1	RING	
040	2562709-0000		2	ROLLER	
050	263655-0018		2	SHAFT	
060	1038576-0000		4	AXLE SUPPORT	
340	312109-0459		4	SCREW M6S ISO 4017 M8X40 A480	
350	312105-0372		3	SCREW M6S ISO 4017 M6X25 A480	
390	315115-0153		3	WASHER PLAIN, TBRB 6,4/12 H=3	
410	311103-1274		1	PARALLEL PIN ISO 2338 4M6X24 A1	
TBA 0500B, TBA 1000B, TBA 1500S (See drawing on page: 1-84)					
010	2559104-0000		1	PLATE	
020	466042-0000		1	SEAL	
030	2512779-0000		1	RING	
040	466046-0000		6	ROLLER	
050	263655-0009		6	SHAFT	
060	1036954-0000		4	AXLE SUPPORT	
070	1036955-0000		2	AXLE SUPPORT	
100	1129431-0000		4	WASHER	
310	312105-0462		2	SCREW M6S ISO 4014 M8X55 A480	
320	315115-0165		6	WASHER PLAIN, TBRB 8,4/16 H=3	
340	312109-0461		4	SCREW M6S ISO 4017 M8X50 A480	
350	312105-0495		3	SCREW M6S ISO 4017 M10X30 A480	
390	315125-0173		3	WASHER TBRSB 10,5X28X6 A4	
410	311103-1274		2	PARALLEL PIN ISO 2338 4M6X24 A1	
TBA 0500S (See drawing on page: 1-84)					
010	2559103-0000		1	PLATE	
020	466089-0000		1	SEAL	
030	2559102-0000		1	RING	
040	466092-0000		6	ROLL	
050	263655-0007		6	SHAFT	
060	1036954-0000		4	AXLE SUPPORT	
070	1036955-0000		2	AXLE SUPPORT	
100	1129431-0000		4	WASHER	
310	312105-0462		2	SCREW M6S ISO 4014 M8X55 A480	
320	315115-0165		6	WASHER PLAIN, TBRB 8,4/16 H=3	
340	312109-0461		4	SCREW M6S ISO 4017 M8X50 A480	
350	312105-0495		3	SCREW M6S ISO 4017 M10X30 A480	
390	315125-0173		3	WASHER TBRSB 10,5X28X6 A4	
410	311103-1274		2	PARALLEL PIN ISO 2338 4M6X24 A1	
TBA 1000SQ (See drawing on page: 1-84)					
010	2559104-0000		1	PLATE	
020	579318-0000		1	SEAL	
030	2512779-0000		1	RING	
040	1490762-0000		6	ROLLER	
050	263655-0009		6	SHAFT	
060	1036954-0000		4	AXLE SUPPORT	
070	1036955-0000		2	AXLE SUPPORT	
100	1129431-0000		4	WASHER	
310	312105-0462		2	SCREW M6S ISO 4014 M8X55 A480	
320	315115-0165		6	WASHER PLAIN, TBRB 8,4/16 H=3	
340	312109-0461		4	SCREW M6S ISO 4017 M8X50 A480	
350	312105-0495		3	SCREW M6S ISO 4017 M10X30 A480	
390	315125-0173		3	WASHER TBRSB 10,5X28X6 A4	
410	311103-1274		2	PARALLEL PIN ISO 2338 4M6X24 A1	
TBA 1000S (See drawing on page: 1-84)					
010	2559104-0000		1	PLATE	
020	567743-0000		1	SEAL	
030	2512779-0000		1	RING	
040	573504-0000		6	ROLLER	
050	263655-0009		6	SHAFT	

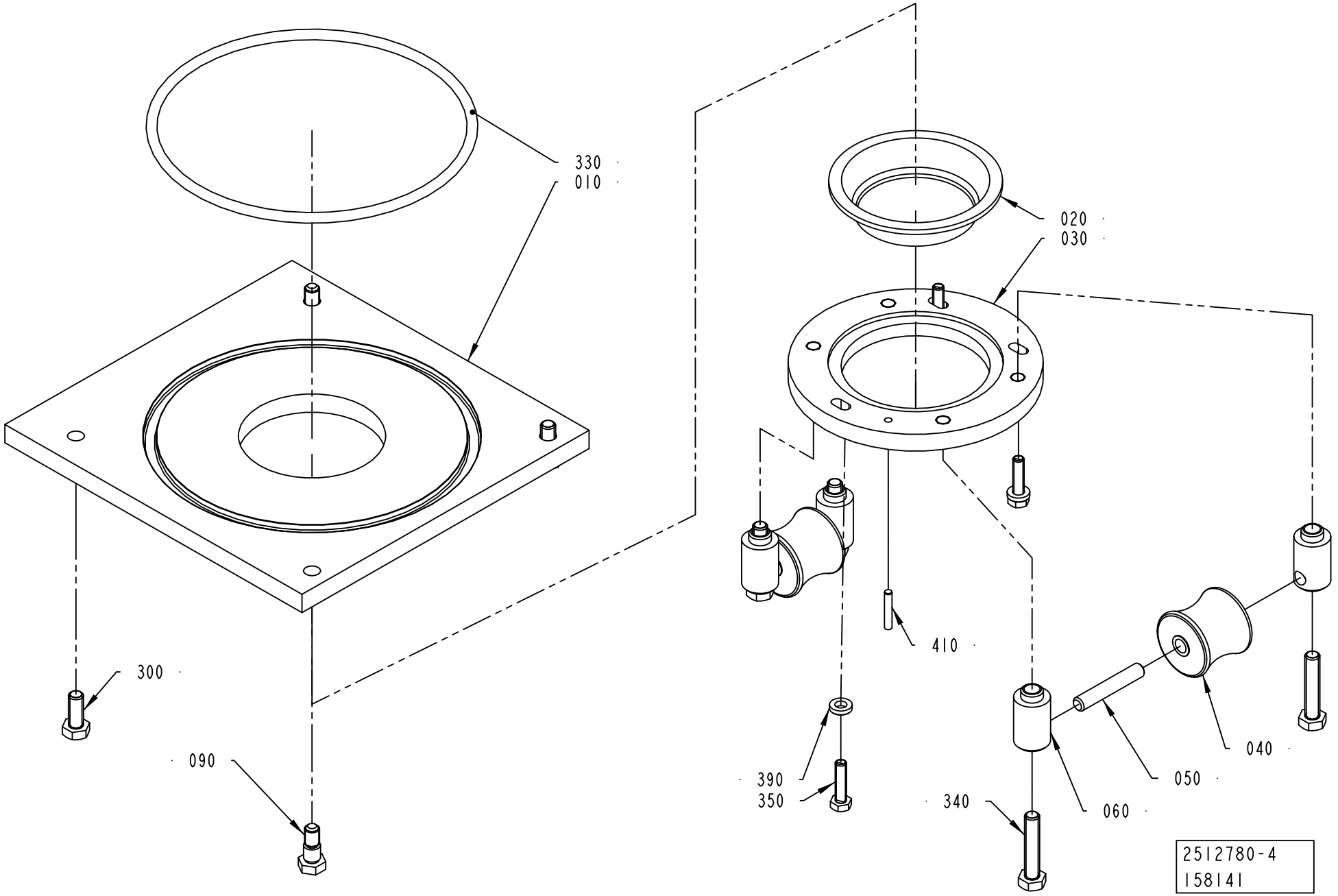
330
010
020
030
300
090
410
390
350
340
060
050
040
2512780-4
158141

ECM: 271560 - 20060706
Group number: 2512780-0100
Assembly Drawing: 2512780-4_1_AB

This list covers pages from 1-84 to 1-89

Pos	Part No	UN	Qty	Description	Page No
TBA 1000S (Cont'd) (See drawing on page: 1-84)					
050	263655-0009		6	SHAFT	
060	1036954-0000		4	AXLE SUPPORT	
070	1036955-0000		2	AXLE SUPPORT	
100	1129431-0000		4	WASHER	
310	312105-0462		2	SCREW M6S ISO 4014 M8X55 A480	
320	315115-0165		6	WASHER PLAIN, TBRB 8,4/16 H=3	
340	312109-0461		4	SCREW M6S ISO 4017 M8X50 A480	
350	312105-0495		3	SCREW M6S ISO 4017 M10X30 A480	
390	315125-0173		3	WASHER TBRSB 10,5X28X6 A4	
410	311103-1274		2	PARALLEL PIN ISO 2338 4M6X24 A1	
TBA 1890S, TBA 2000S (See drawing on page: 1-84)					
010	2582616-0000		1	PLATE	
020	2582623-0000		1	SEAL	
030	2582629-0000		1	RING	
040	2582630-0000		6	ROLLER	
050	263655-0015		6	SHAFT	
060	1036954-0000		4	AXLE SUPPORT	
070	1036955-0000		2	AXLE SUPPORT	
100	1129431-0000		4	WASHER	
310	312105-0462		2	SCREW M6S ISO 4014 M8X55 A480	
320	315115-0165		6	WASHER PLAIN, TBRB 8,4/16 H=3	
340	312109-0461		4	SCREW M6S ISO 4017 M8X50 A480	
350	312105-0495		3	SCREW M6S ISO 4017 M10X30 A480	
390	315125-0173		3	WASHER TBRSB 10,5X28X6 A4	
410	311103-1274		2	PARALLEL PIN ISO 2338 4M6X24 A1	
TPA 0330SQ (See drawing on page: 1-86)					
010	2528097-0000		1	PLATE	
020	929286-0000		1	SEAL	
030	2528096-0000		1	RING	
040	929284-0000		2	ROLLER	
050	263655-0006		2	SHAFT	
060	1038576-0000		4	AXLE SUPPORT	
340	312109-0459		4	SCREW M6S ISO 4017 M8X40 A480	
350	312105-0372		3	SCREW M6S ISO 4017 M6X25 A480	
390	315115-0153		3	WASHER PLAIN, TBRB 6,4/12 H=3	
410	311103-1274		1	PARALLEL PIN ISO 2338 4M6X24 A1	
TPA 0500SQ (See drawing on page: 1-88)					
010	2611046-0000		1	PLATE	
020	2718901-0000		1	SEAL	
030	2611047-0000		1	RING	
040	2552655-0000		5	ROLLER	
045	2552656-0000		1	ROLLER	
050	263655-0007		6	SHAFT	
060	1036954-0000		4	AXLE SUPPORT	
070	1036955-0000		2	AXLE SUPPORT	
100	1129431-0000		4	WASHER	
310	312105-0462		2	SCREW M6S ISO 4014 M8X55 A480	
320	315115-0165		6	WASHER PLAIN, TBRB 8,4/16 H=3	
340	312109-0461		4	SCREW M6S ISO 4017 M8X50 A480	
350	312105-0495		3	SCREW M6S ISO 4017 M10X30 A480	
390	315125-0173		3	WASHER TBRSB 10,5X28X6 A4	
410	311103-1274		2	PARALLEL PIN ISO 2338 4M6X24 A1	
TPA 1000SQ, TPA 0750SQ (See drawing on page: 1-84)					
010	2559103-0000		1	PLATE	
020	1524414-0000		1	SEAL	
030	2559102-0000		1	RING	
040	1524416-0000		6	ROLLER	
050	263655-0007		6	SHAFT	
060	1036954-0000		4	AXLE SUPPORT	
070	1036955-0000		2	AXLE SUPPORT	
100	1129431-0000		4	WASHER	
310	312105-0462		2	SCREW M6S ISO 4014 M8X55 A480	
320	315115-0165		6	WASHER PLAIN, TBRB 8,4/16 H=3	
340	312109-0461		4	SCREW M6S ISO 4017 M8X50 A480	
350	312105-0495		3	SCREW M6S ISO 4017 M10X30 A480	
390	315125-0173		3	WASHER TBRSB 10,5X28X6 A4	
410	311103-1274		2	PARALLEL PIN ISO 2338 4M6X24 A1	
Common Parts					
090	1037885-0000		2	REAMED BOLT	
300	312105-0451		2	SCREW M6S ISO 4017 M8X20 A480	
330	315204-0324		1	O-RING 164,3X5,7 MM	

Machine Type | Group Description | Used-In | Group Number | Page No

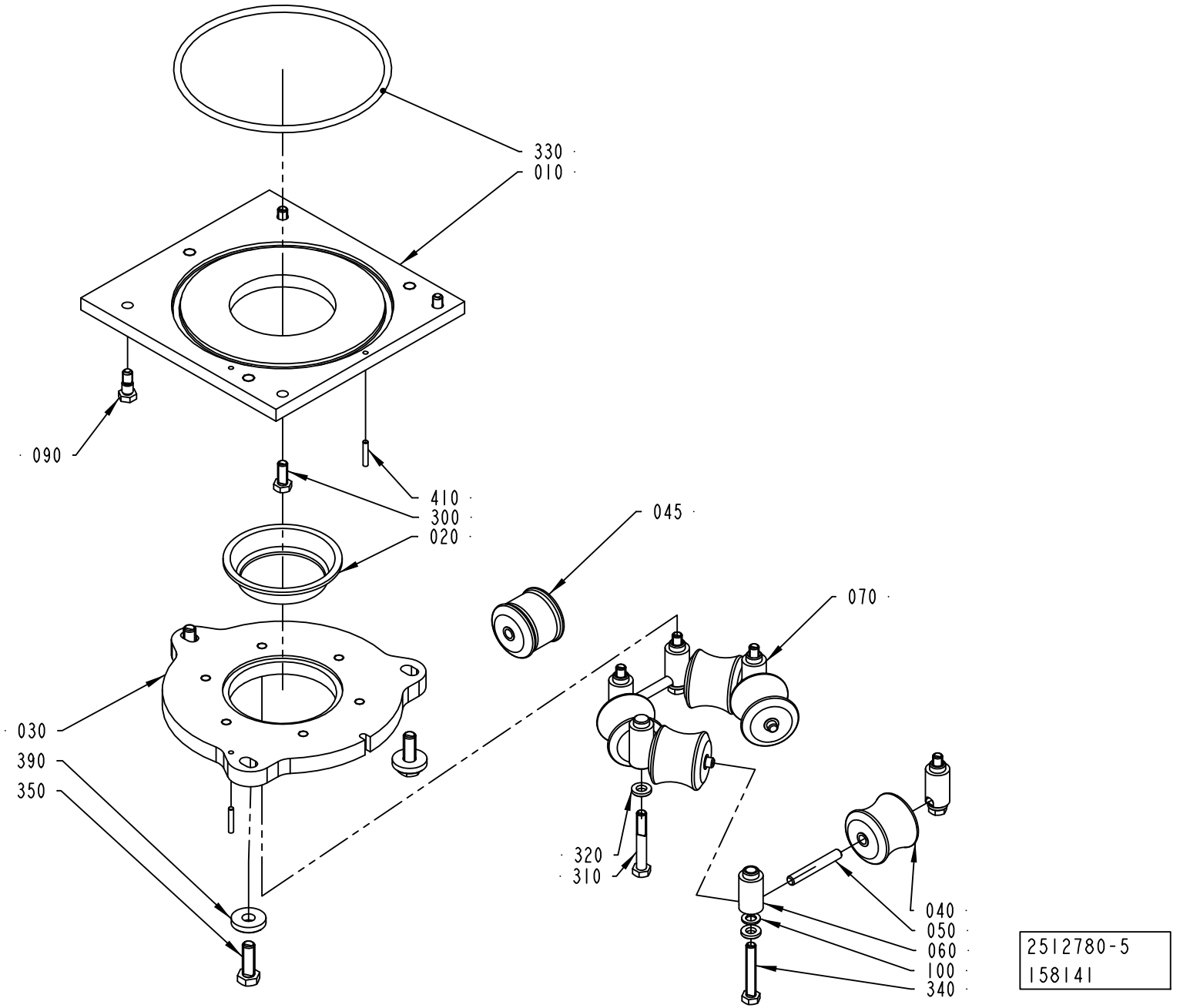
330
010
090
410
300
020
045
070
030
390
350
320
310
040
050
060
100
340
2512780-5
158141

ECM: 271560 - 20060706
Group number: 2512780-0100
Assembly Drawing: 2512780-5_1_AB

This list covers pages from 1-84 to 1-89

Pos	Part No	UN	Qty	Description	Page No
SEE PREVIOUS LISTS PAGES: 1-85, 1-87.					

Pos	Part No	UN	Qty	Description	Page No

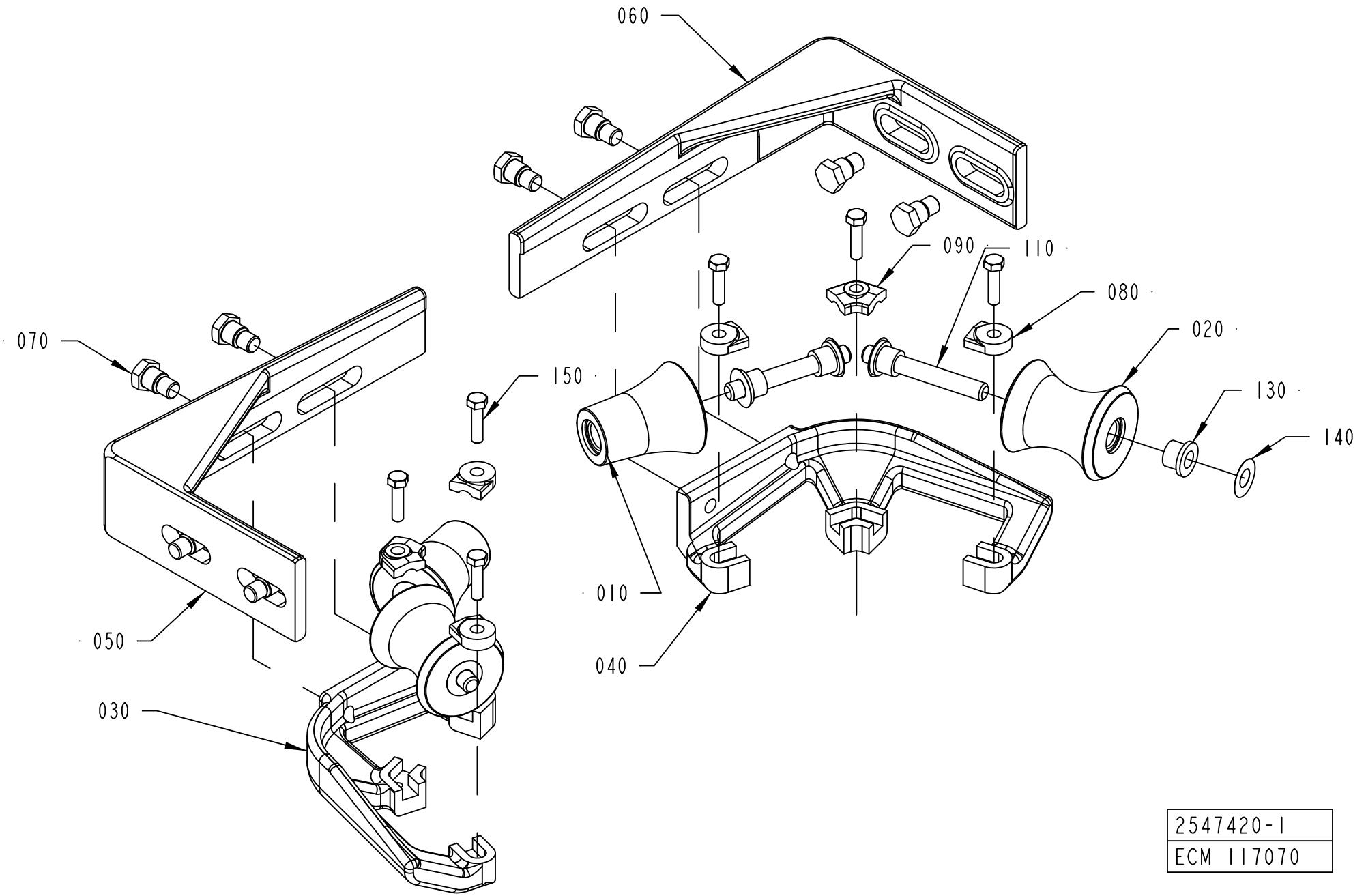

2547420-1
ECM 117070

ECM: 271579 - 20060706
Group number: 2547420-0100
Assembly Drawing: 2547420-1_1_AA

This list covers pages from 1-90 to 1-93

Pos	Part No	UN	Qty	Description	Page No
TBA 0500B, TBA 1000B (See drawing on page: 1-90)					
010	2651790-0000		2	ROLLER	
020	2651789-0000		2	ROLLER	
030	2552140-0000		1	BRACKET	
040	2552141-0000		1	BRACKET	
050	2552142-0000		1	BRACKET	
060	2552143-0000		1	BRACKET	
070	2552158-0000		8	SCREW	
080	2532895-0008		4	LOCK PLATE	
090	2528123-0006		2	LOCK PLATE	
110	752186-0016		4	SHAFT	
130	90240-0172		8	FLANGE BUSHING, 8X12X10 MM	
140	2033-0011		8	WASHER	
150	312105-0331		6	SCREW M6S ISO 4017 M5X20 A480	
TBA 1000S, TBA 1500S (See drawing on page: 1-90)					
010	2552144-0000		2	ROLL	
020	2562664-0000		2	ROLL	
030	2552140-0000		1	BRACKET	
040	2552141-0000		1	BRACKET	
050	2552142-0000		1	BRACKET	
060	2552143-0000		1	BRACKET	
070	2552158-0000		8	SCREW	
080	2532895-0008		4	LOCK PLATE	
090	2528123-0006		2	LOCK PLATE	
110	752186-0016		4	SHAFT	
130	90240-0172		8	FLANGE BUSHING, 8X12X10 MM	
140	2033-0011		8	WASHER	
150	312105-0331		6	SCREW M6S ISO 4017 M5X20 A480	
TBA 1000SQ (See drawing on page: 1-90)					
010	2552155-0000		2	ROLL	
020	2562684-0000		2	ROLL	
030	2552140-0000		1	BRACKET	
040	2552141-0000		1	BRACKET	
050	2552142-0000		1	BRACKET	
060	2552143-0000		1	BRACKET	
070	2552158-0000		8	SCREW	
080	2532895-0008		4	LOCK PLATE	
090	2528123-0006		2	LOCK PLATE	
110	752186-0016		4	SHAFT	
130	90240-0172		8	FLANGE BUSHING, 8X12X10 MM	
140	2033-0011		8	WASHER	
150	312105-0331		6	SCREW M6S ISO 4017 M5X20 A480	
TBA 1890S, TBA 2000S (See drawing on page: 1-92)					
010	2601269-0000		1	ROLLER	
015	2601272-0000		2	ROLLER	
020	2601271-0000		2	ROLLER	
025	2601273-0000		2	ROLLER	
050	2634930-0000		1	SUPPORT ROLLER	
060	2634931-0000		2	BRACKET	
080	2532895-0004		2	LOCK PLATE	
090	2562667-0002		6	LOCK PLATE	
100	2522213-0016		1	SHAFT	
110	2522213-0015		4	SHAFT	
120	2522213-0017		2	SHAFT	
130	90240-0172		14	FLANGE BUSHING, 8X12X10 MM	
140	2033-0011		14	WASHER	
150	312105-0329		8	SCREW M6S ISO 4017 M5X16 A480	
160	312105-0368		4	SCREW M6S ISO 4017 M6X16 A480	
170	312105-0370		4	SCREW M6S ISO 4017 M6X20 A480	
180	90005-0060		4	WASHER PLAIN, RBS 6,4/M6)/18,H=1,5	
190	311103-0353		2	PARALLEL PIN ISO 2338 6M6X20 A1	
TPA 1000SQ, TPA 0750SQ (See drawing on page: 1-90)					
010	2562694-0000		2	ROLLER	
020	2562695-0000		2	ROLLER	
030	2562696-0000		1	BRACKET	
040	2562697-0000		1	BRACKET	
050	2562692-0000		1	BRACKET	
060	2562693-0000		1	BRACKET	
070	2552158-0000		8	SCREW	
080	2532895-0008		4	LOCK PLATE	
090	2528123-0009		2	LOCK PLATE	
110	752186-0016		4	SHAFT	
130	90240-0172		8	FLANGE BUSHING, 8X12X10 MM	
140	2033-0011		8	WASHER	
150	312105-0331		6	SCREW M6S ISO 4017 M5X20 A480	

Machine Type | Group Description | Used-In | Group Number | Page No

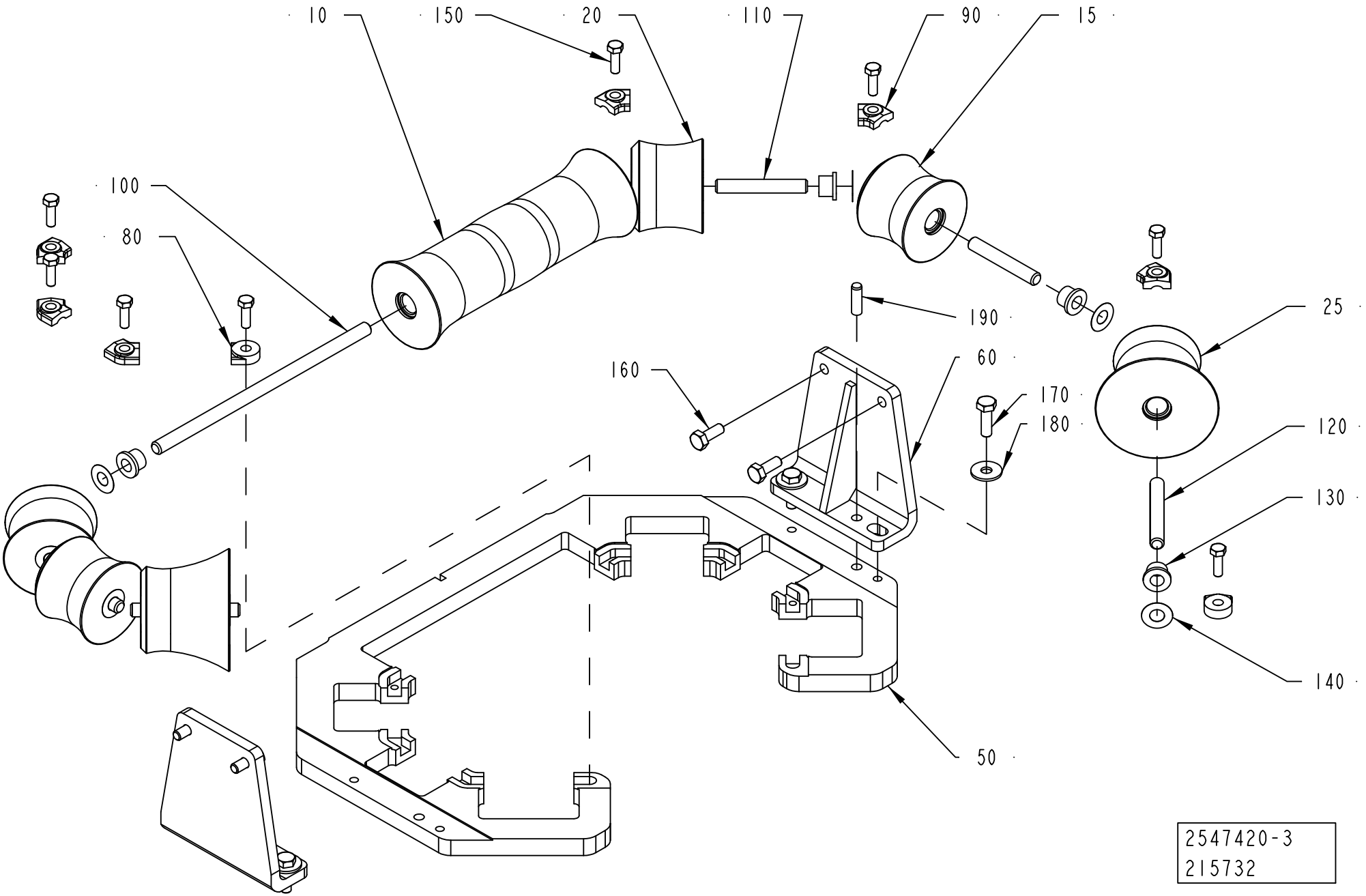
10
150
20
110
90
15
100
80
190
25
60
160
170
180
120
130
140
50
2547420-3
215732

ECM: 271579 - 20060706
Group number: 2547420-0100
Assembly Drawing: 2547420-3_1_AB

This list covers pages from 1-90 to 1-93

Pos	Part No	UN	Qty	Description	Page No
TBA 0500B, TBA 1000B (See drawing on page: 1-90)					
010	2651790-0000		2	ROLLER	
020	2651789-0000		2	ROLLER	
030	2552140-0000		1	BRACKET	
040	2552141-0000		1	BRACKET	
050	2552142-0000		1	BRACKET	
060	2552143-0000		1	BRACKET	
070	2552158-0000		8	SCREW	
080	2532895-0008		4	LOCK PLATE	
090	2528123-0006		2	LOCK PLATE	
110	752186-0016		4	SHAFT	
130	90240-0172		8	FLANGE BUSHING, 8X12X10 MM	
140	2033-0011		8	WASHER	
150	312105-0331		6	SCREW M6S ISO 4017 M5X20 A480	
TBA 1000S, TBA 1500S (See drawing on page: 1-90)					
010	2552144-0000		2	ROLL	
020	2562664-0000		2	ROLL	
030	2552140-0000		1	BRACKET	
040	2552141-0000		1	BRACKET	
050	2552142-0000		1	BRACKET	
060	2552143-0000		1	BRACKET	
070	2552158-0000		8	SCREW	
080	2532895-0008		4	LOCK PLATE	
090	2528123-0006		2	LOCK PLATE	
110	752186-0016		4	SHAFT	
130	90240-0172		8	FLANGE BUSHING, 8X12X10 MM	
140	2033-0011		8	WASHER	
150	312105-0331		6	SCREW M6S ISO 4017 M5X20 A480	
TBA 1000SQ (See drawing on page: 1-90)					
010	2552155-0000		2	ROLL	
020	2562684-0000		2	ROLL	
030	2552140-0000		1	BRACKET	
040	2552141-0000		1	BRACKET	
050	2552142-0000		1	BRACKET	
060	2552143-0000		1	BRACKET	
070	2552158-0000		8	SCREW	
080	2532895-0008		4	LOCK PLATE	
090	2528123-0006		2	LOCK PLATE	
110	752186-0016		4	SHAFT	
130	90240-0172		8	FLANGE BUSHING, 8X12X10 MM	
140	2033-0011		8	WASHER	
150	312105-0331		6	SCREW M6S ISO 4017 M5X20 A480	
TBA 1890S, TBA 2000S (See drawing on page: 1-92)					
010	2601269-0000		1	ROLLER	
015	2601272-0000		2	ROLLER	
020	2601271-0000		2	ROLLER	
025	2601273-0000		2	ROLLER	
050	2634930-0000		1	SUPPORT ROLLER	
060	2634931-0000		2	BRACKET	
080	2532895-0004		2	LOCK PLATE	
090	2562667-0002		6	LOCK PLATE	
100	2522213-0016		1	SHAFT	
110	2522213-0015		4	SHAFT	
120	2522213-0017		2	SHAFT	
130	90240-0172		14	FLANGE BUSHING, 8X12X10 MM	
140	2033-0011		14	WASHER	
150	312105-0329		8	SCREW M6S ISO 4017 M5X16 A480	
160	312105-0368		4	SCREW M6S ISO 4017 M6X16 A480	
170	312105-0370		4	SCREW M6S ISO 4017 M6X20 A480	
180	90005-0060		4	WASHER PLAIN, RBS 6,4/M6)/18,H=1,5	
190	311103-0353		2	PARALLEL PIN ISO 2338 6M6X20 A1	
TPA 1000SQ, TPA 0750SQ (See drawing on page: 1-90)					
010	2562694-0000		2	ROLLER	
020	2562695-0000		2	ROLLER	
030	2562696-0000		1	BRACKET	
040	2562697-0000		1	BRACKET	
050	2562692-0000		1	BRACKET	
060	2562693-0000		1	BRACKET	
070	2552158-0000		8	SCREW	
080	2532895-0008		4	LOCK PLATE	
090	2528123-0009		2	LOCK PLATE	
110	752186-0016		4	SHAFT	
130	90240-0172		8	FLANGE BUSHING, 8X12X10 MM	
140	2033-0011		8	WASHER	
150	312105-0331		6	SCREW M6S ISO 4017 M5X20 A480	

Machine Type | Group Description | Used-In | Group Number | Page No

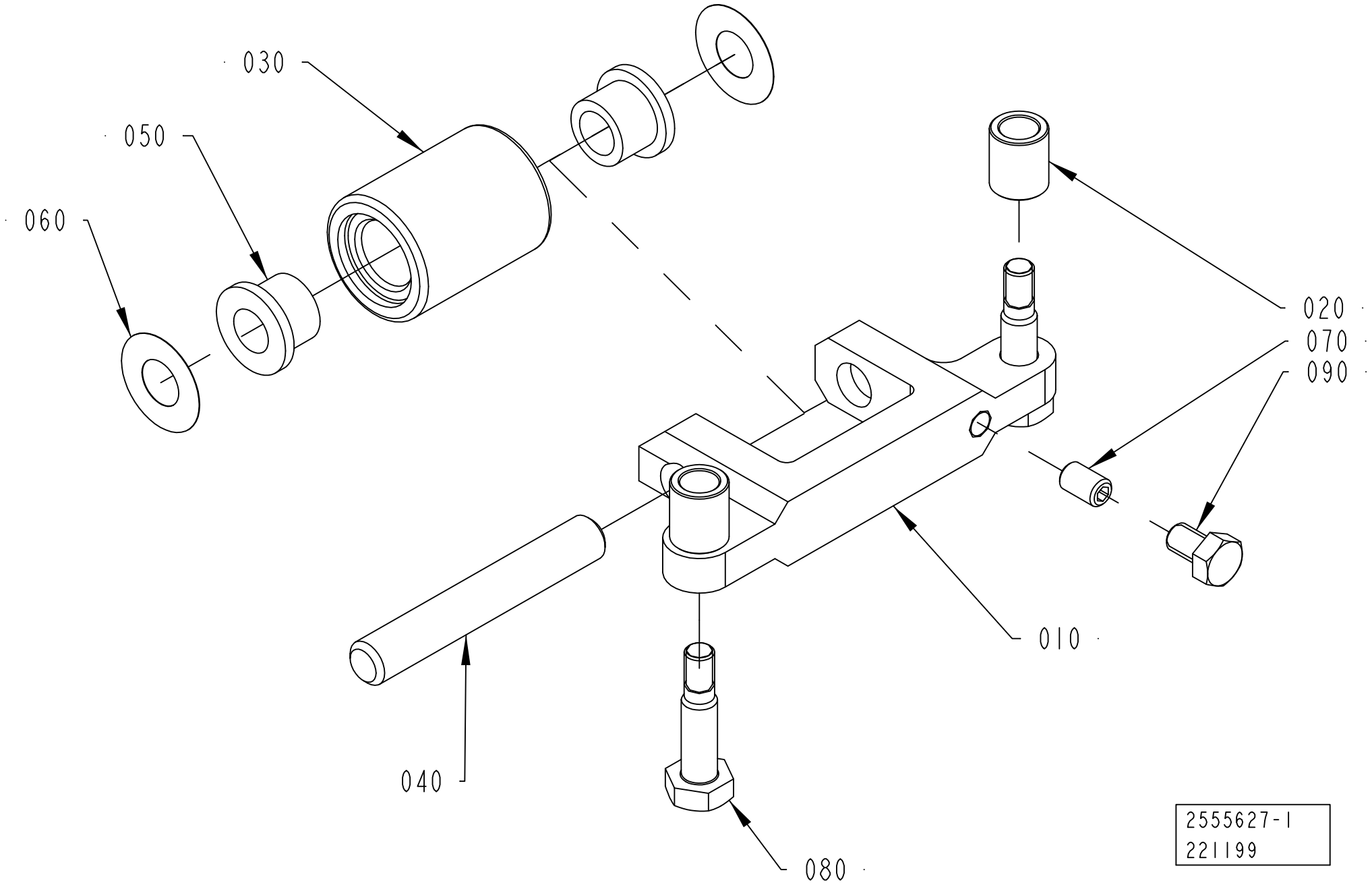
030
050
060
020
070
090
010
040
080
2555627-1
221199

ECM: 267089 - 20060703
Group number: 2555627-0100
Assembly Drawing: 2555627-1_1_AB

Pos	Part No	UN	Qty	Description	Page No
A3/FLEX TBA 1890S, A3/FLEX TBA 2000S					
010	2594596-0000		1	BRACKET	
020	2715649-0004		2	SPACER	
030	2657925-0000		1	ROLLER	
080	2715650-0002		2	SCREW	
A3/FLEX TPA 1000SQ, A3/FLEX TPA 0750SQ					
010	2715567-0000		1	BRACKET	
020	2715649-0005		2	SPACER	
030	2715570-0000		1	ROLLER	
080	2715650-0006		2	SCREW	
Common Parts					
040	2522213-0015		1	SHAFT	
050	90240-0172		2	FLANGE BUSHING, 8X12X10 MM	
060	2033-0011		2	WASHER	
070	312318-0323		1	SCREW ISO4029 M5X8 A4	
090	312105-0323		1	SCREW M6S ISO 4017 M5X8 A480	

Pos	Part No	UN	Qty	Description	Page No

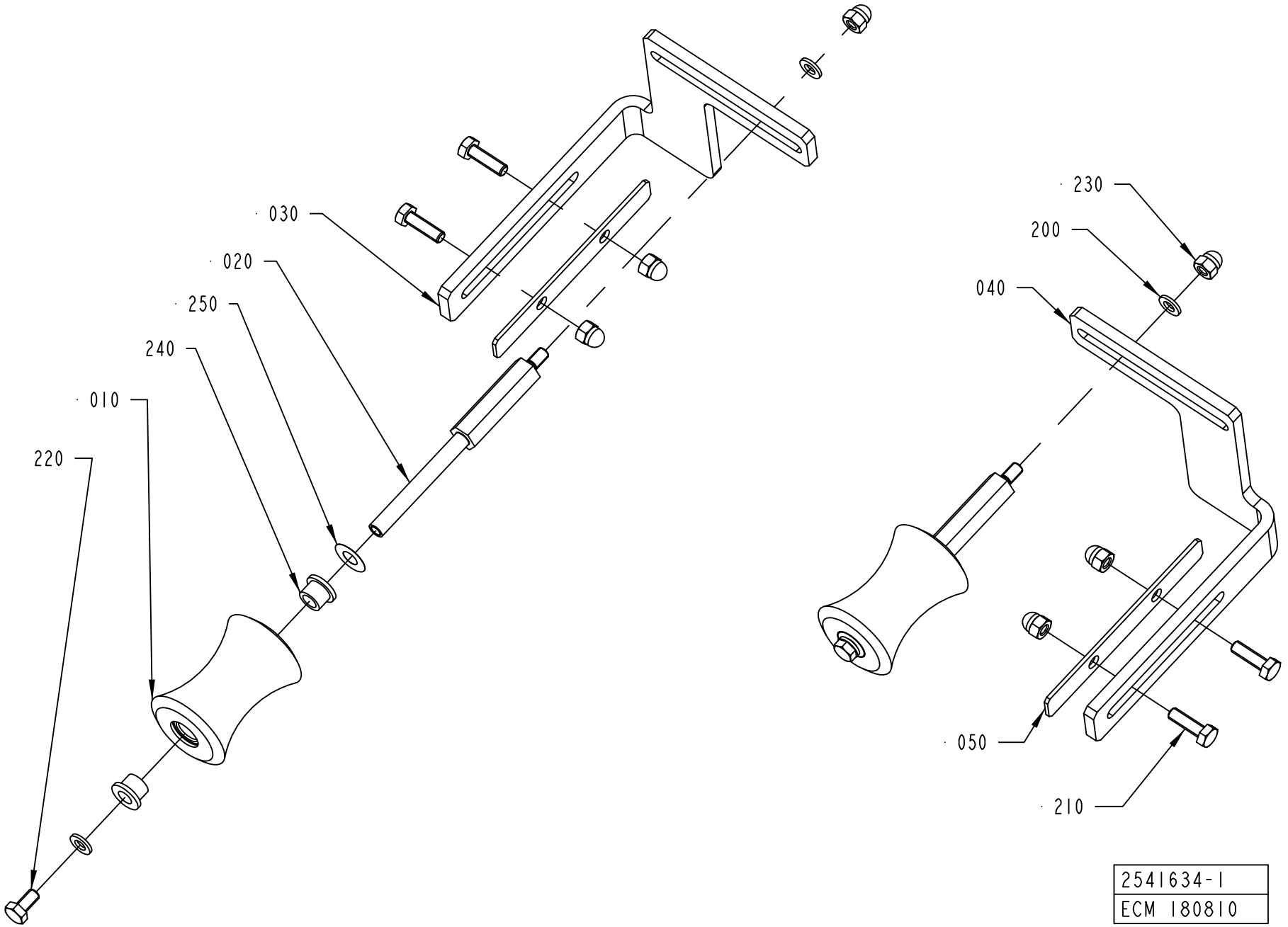
030
020
250
240
010
220
230
200
040
050
210
2541634-1
ECM 180810

Pos	Part No	UN	Qty	Description	Page No
A3/FLEX TBA 0500B, A3/FLEX TBA 1000B, A3/FLEX TBA 1000S, A3/FLEX TBA 1000SQ, A3/FLEX TPA 1000SQ, A3/FLEX TBA 0200S, A3/FLEX TBA 1500S, A3/FLEX TBA 0200B, A3/FLEX TBA 0250B, A3/FLEX TBA 0330S, A3/FLEX TPA 0330SQ, A3/FLEX TPA 0500SQ, A3/FLEX TBA 0200M, A3/FLEX TBA 0250S, A3/FLEX TBA 0500S, A3/FLEX TPA 0250SQ, A3/FLEX TPA 0200SQ, A3/FLEX TPA 0750SQ, A3/FLEX TBA 0200SQ, A3/FLEX TBA 0250SQ (See drawing on page: 1-96)					
010	1478359-0000		2	ROLLER	
020	1511492-0000		2	SHAFT	
030	2528112-0000		1	BRACKET	
040	2528113-0000		1	BRACKET	
050	2528114-0000		2	COVER PLATE	
200	315105-0153		4	WASHER BRB 6,4X12 RFR	
210	312105-0370		4	SCREW M6S ISO 4017 M6X20 A480	
220	312105-0366		2	SCREW M6S ISO 4017 M6X12 A480	
230	312705-0316		6	NUT HEX. DOMED CAP MHM-6 M6 A280	
240	90240-0172		4	FLANGE BUSHING, 8X12X10 MM	
A3/FLEX TBA 1890S, A3/FLEX TBA 2000S (See drawing on page: 1-98)					
010	2601286-0000		2	ROLLER	
020	2634934-0000		2	SHAFT	
030	2634932-0000		1	BRACKET	
040	2634933-0000		1	BRACKET	
050	2651695-0000		2	COVER PLATE	
200	315105-0153		4	WASHER BRB 6,4X12 RFR	
210	312105-0452		4	SCREW M6S ISO 4017 M8X22 A4 80	
220	312105-0366		2	SCREW M6S ISO 4017 M6X12 A480	
230	312705-0316		2	NUT HEX. DOMED CAP MHM-6 M6 A280	
240	90240-0172		4	FLANGE BUSHING, 8X12X10 MM	
260	312705-0318		4	NUT HEX. DOMED CAP MHM-6 M8 A280	
Common Parts					
250	2033-0011		2	WASHER	

Pos	Part No	UN	Qty	Description	Page No

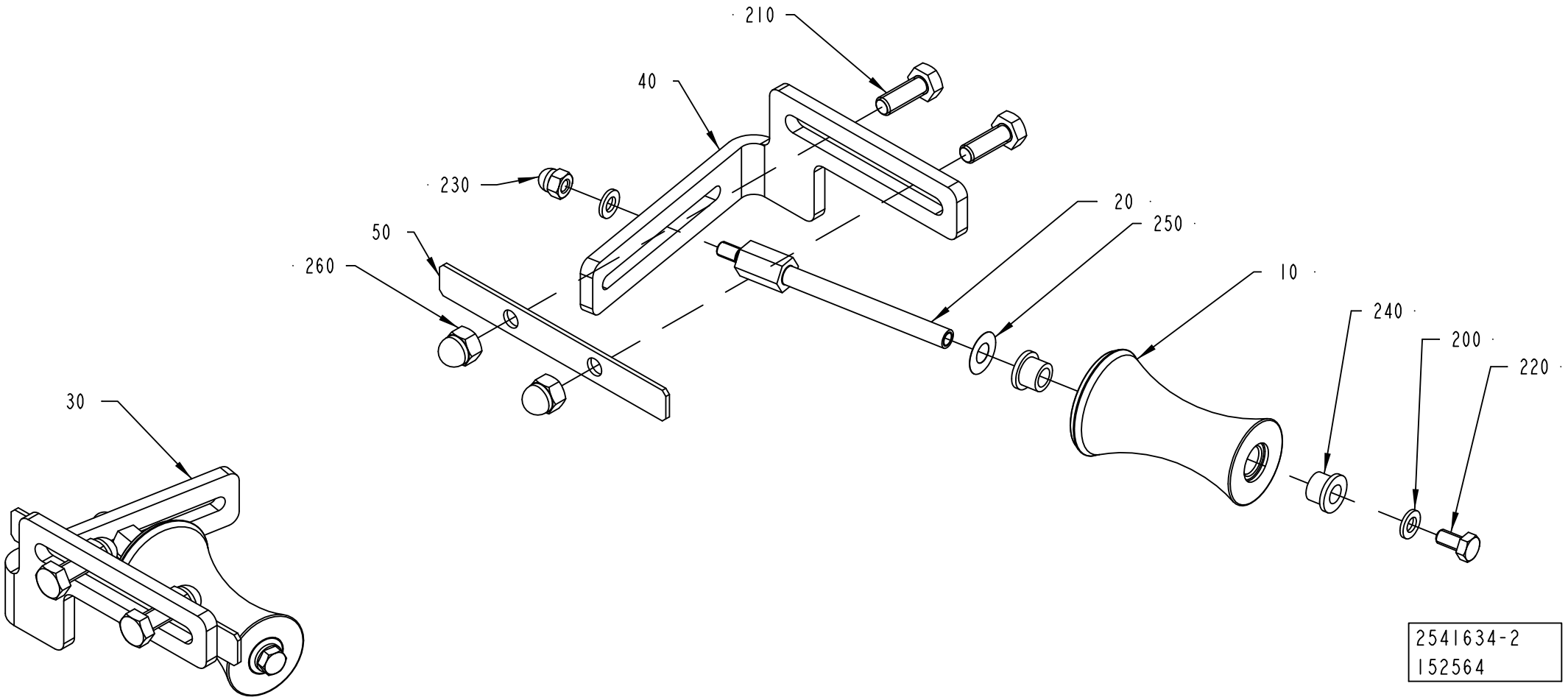
210
40
230
50
260
20
250
10
240
200
220
30
2541634-2
152564

ECM: 998082 - 20060927
Group number: 2541634-0100
Assembly Drawing: 2541634-2_1_AA

This list covers pages from 1-96 to 1-99

Pos	Part No	UN	Qty	Description	Page No
A3/FLEX TBA 0500B, A3/FLEX TBA 1000B, A3/FLEX TBA 1000S, A3/FLEX TBA 1000SQ, A3/FLEX TPA 1000SQ, A3/FLEX TBA 0200S, A3/FLEX TBA 1500S, A3/FLEX TBA 0200B, A3/FLEX TBA 0250B, A3/FLEX TBA 0330S, A3/FLEX TPA 0330SQ, A3/FLEX TPA 0500SQ, A3/FLEX TBA 0200M, A3/FLEX TBA 0250S, A3/FLEX TBA 0500S, A3/FLEX TPA 0250SQ, A3/FLEX TPA 0200SQ, A3/FLEX TPA 0750SQ, A3/FLEX TBA 0200SQ, A3/FLEX TBA 0250SQ (See drawing on page: 1-96)					
010	1478359-0000		2	ROLLER	
020	1511492-0000		2	SHAFT	
030	2528112-0000		1	BRACKET	
040	2528113-0000		1	BRACKET	
050	2528114-0000		2	COVER PLATE	
200	315105-0153		4	WASHER BRB 6,4X12 RFR	
210	312105-0370		4	SCREW M6S ISO 4017 M6X20 A480	
220	312105-0366		2	SCREW M6S ISO 4017 M6X12 A480	
230	312705-0316		6	NUT HEX. DOMED CAP MHM-6 M6 A280	
240	90240-0172		4	FLANGE BUSHING, 8X12X10 MM	
A3/FLEX TBA 1890S, A3/FLEX TBA 2000S (See drawing on page: 1-98)					
010	2601286-0000		2	ROLLER	
020	2634934-0000		2	SHAFT	
030	2634932-0000		1	BRACKET	
040	2634933-0000		1	BRACKET	
050	2651695-0000		2	COVER PLATE	
200	315105-0153		4	WASHER BRB 6,4X12 RFR	
210	312105-0452		4	SCREW M6S ISO 4017 M8X22 A4 80	
220	312105-0366		2	SCREW M6S ISO 4017 M6X12 A480	
230	312705-0316		2	NUT HEX. DOMED CAP MHM-6 M6 A280	
240	90240-0172		4	FLANGE BUSHING, 8X12X10 MM	
260	312705-0318		4	NUT HEX. DOMED CAP MHM-6 M8 A280	
Common Parts					
250	2033-0011		2	WASHER	

Pos	Part No	UN	Qty	Description	Page No

DRYING CHAMBER

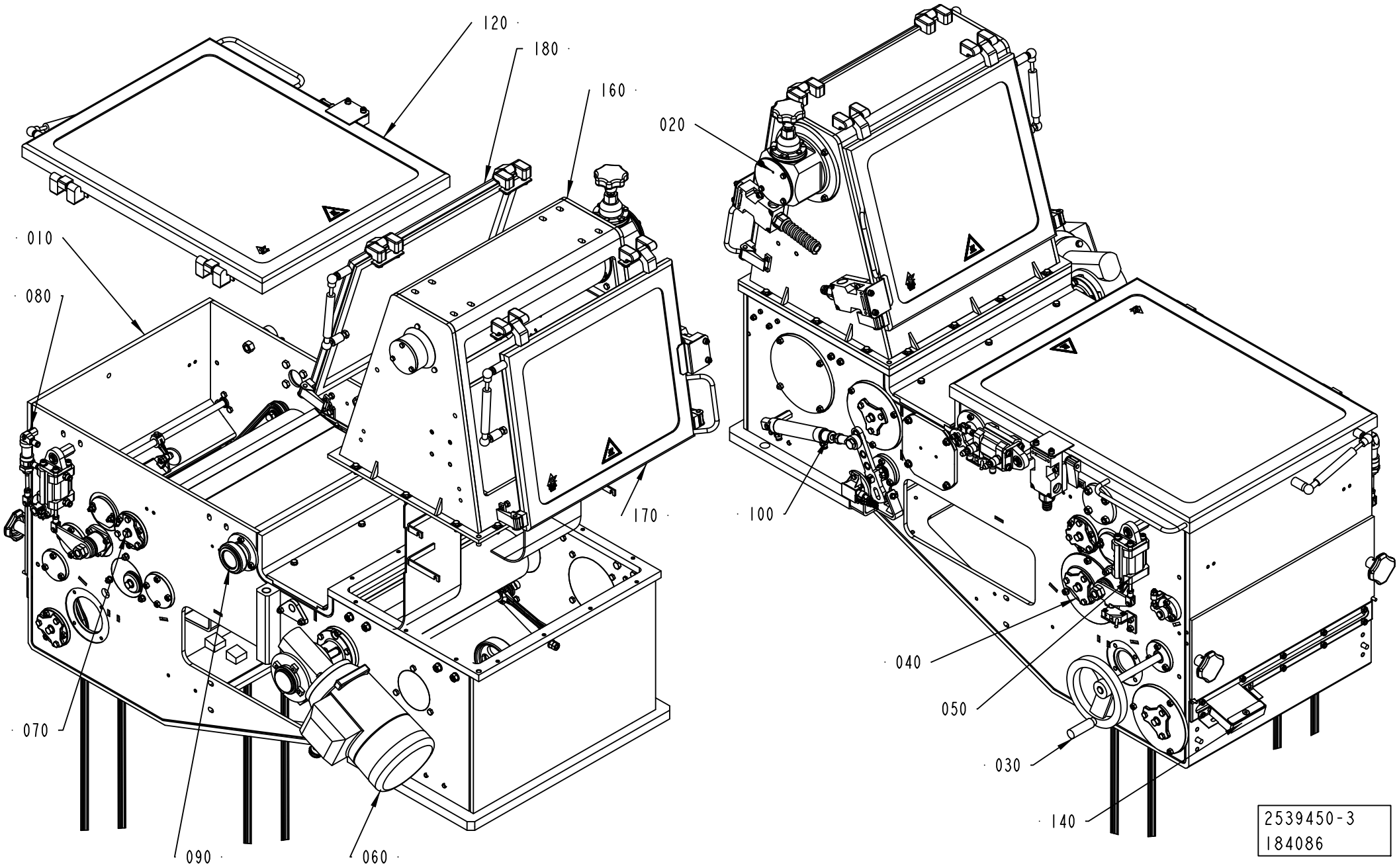

ECM: 267088 - 20060703
Group number: 2539450-0200
Assembly Drawing: 2539450-3_1_AB

This list covers pages from 1-100 to 1-103

Pos	Part No	UN	Qty	Description	Page No
A3/FLEX DIMC/FLEX (See drawing on page: 1-102)					
020	1558522-0100		1	ADJUSTING ROLLER	**1-105, 1-107**
110	2528146-0100		1	DOOR	**1-109**
140	1528746-0100		1	GUIDE	**1-111**
150	2528101-0100		1	BLOWING SYSTEM	**1-113**
A3/FLEX NODIMC NOPT (See drawing on page: 1-102)					
020	1558522-0100		1	ADJUSTING ROLLER	**1-105, 1-107**
110	2528146-0100		1	DOOR	**1-109**
A3/FLEX TBA 0200S NODIMC PT/FLEX, A3/FLEX TBA 0330S NODIMC PT/FLEX, A3/FLEX TBA 0500S NODIMC PT/FLEX, A3/FLEX TBA 0200B NODIMC PT/FLEX, A3/FLEX TBA 0500B NODIMC PT/FLEX, A3/FLEX TBA 0250B NODIMC PT/FLEX, A3/FLEX TBA 1000B NODIMC PT/FLEX, A3/FLEX TBA 1000SQ NODIMC PT/FLEX, A3/FLEX TPA 1000SQ NODIMC PT/FLEX, A3/FLEX TBA 1500S NODIMC PT/FLEX, A3/FLEX TBA 1000S NODIMC PT/FLEX, A3/FLEX TPA 0500SQ NODIMC PT/FLEX, A3/FLEX TPA 0330SQ NODIMC PT/FLEX, A3/FLEX TBA 0250S NODIMC PT/FLEX, A3/FLEX TBA 0200M NODIMC PT/FLEX, A3/FLEX TBA 0200SQ NODIMC PT/FLEX, A3/FLEX TBA 0250SQ NODIMC PT/FLEX, A3/FLEX TPA 0200SQ NODIMC PT/FLEX, A3/FLEX TPA 0250SQ NODIMC PT/FLEX (See drawing on page: 1-102)					
020	1558522-0100		1	ADJUSTING ROLLER	**1-105, 1-107**
110	2528146-0100		1	DOOR	**1-109**
140	1528746-0100		1	GUIDE	**1-111**
A3/FLEX TBA 2000S NODIMC PT/FLEX, A3/FLEX TBA 1890S NODIMC PT/FLEX (See drawing on page: 1-100)					
020	1558522-0100		1	ADJUSTING ROLLER	**1-105, 1-107**
140	1528746-0100		1	GUIDE	**1-111**
160	2531043-0100		1	HOUSING	**1-117**
170	2531039-0100		1	DOOR	**1-119**
180	2528145-0100		1	DOOR	**1-121**
Common Parts					
010	2531047-0200		1	HOUSING	**1-123, 1-125, 1-127**
030	1549573-0100		1	CRANK	**1-133, 1-135, 1-137**
040	2541635-0100		1	SQUEE-GEE ROLLER	**1-139, 1-141, 1-143, 1-145, 1-147**
050	1548892-0100		1	CALENDER ROLLER	**1-149, 1-151, 1-153**
060	1548753-0100		1	DRIVE ROLLER	**1-155, 1-157**
070	1548736-0100		1	BENDING ROLLER	**1-159, 1-161, 1-163, 1-165**
080	2539455-0100		1	VALVE	**1-167**
090	2532934-0100		1	AIR KNIFE	**1-169, 1-171, 1-173**
100	2539445-0200		1	PENDULUM ROLLER	**1-175**
120	1539746-0200		1	DOOR	**1-177**

Pos	Part No	UN	Qty	Description	Page No

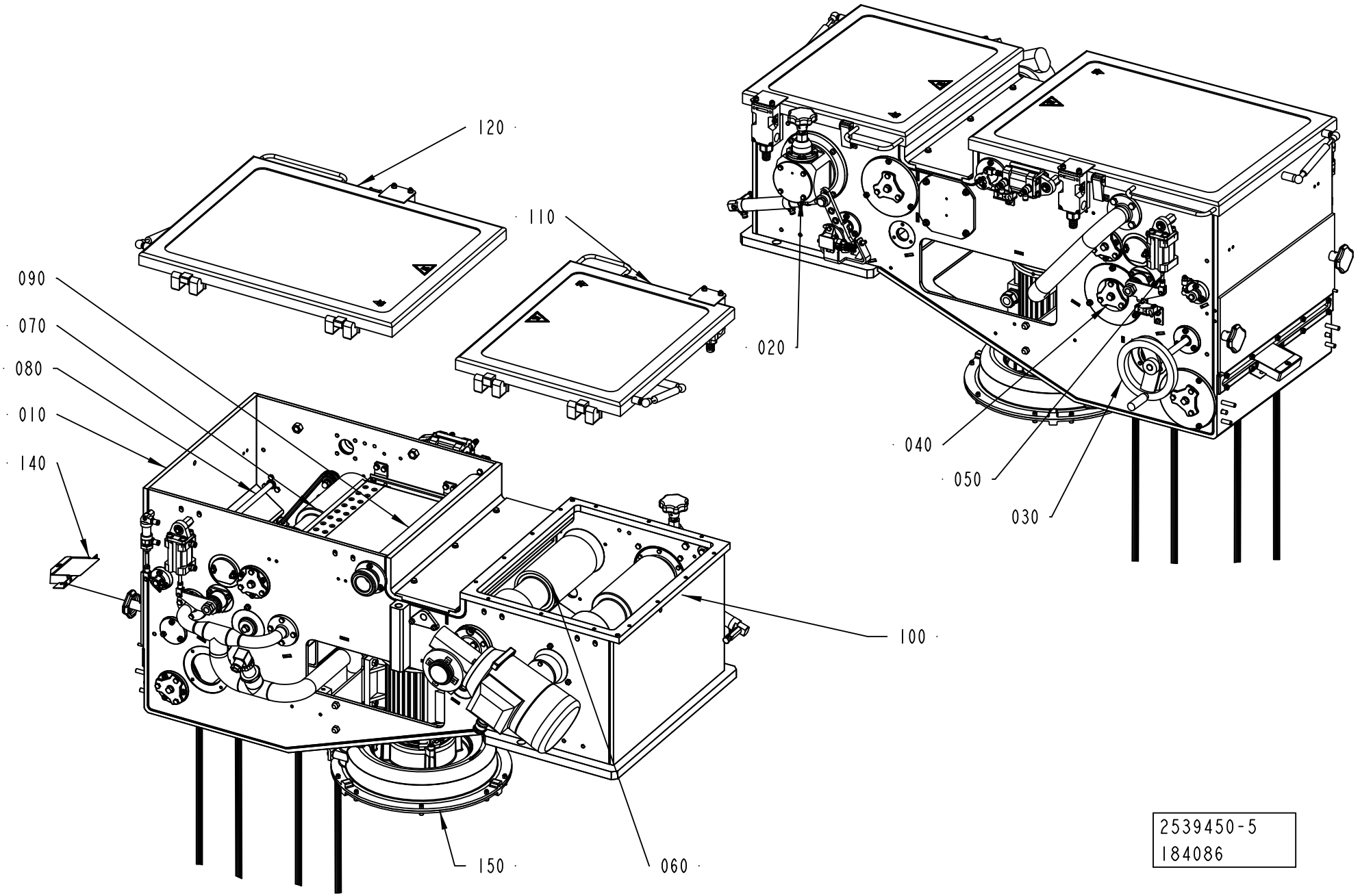
120
110
090
070
080
010
140
020
040
050
030
100
150
060
2539450-5
184086

ECM: 267088 - 20060703
Group number: 2539450-0200
Assembly Drawing: 2539450-5_1_AB

This list covers pages from 1-100 to 1-103

Pos	Part No	UN	Qty	Description	Page No
A3/FLEX DIMC/FLEX (See drawing on page: 1-102)					
020	1558522-0100		1	ADJUSTING ROLLER	**1-105, 1-107**
110	2528146-0100		1	DOOR	**1-109**
140	1528746-0100		1	GUIDE	**1-111**
150	2528101-0100		1	BLOWING SYSTEM	**1-113**
A3/FLEX NODIMC NOPT (See drawing on page: 1-102)					
020	1558522-0100		1	ADJUSTING ROLLER	**1-105, 1-107**
110	2528146-0100		1	DOOR	**1-109**
A3/FLEX TBA 0200S NODIMC PT/FLEX, A3/FLEX TBA 0330S NODIMC PT/FLEX, A3/FLEX TBA 0500S NODIMC PT/FLEX, A3/FLEX TBA 0200B NODIMC PT/FLEX, A3/FLEX TBA 0500B NODIMC PT/FLEX, A3/FLEX TBA 0250B NODIMC PT/FLEX, A3/FLEX TBA 1000B NODIMC PT/FLEX, A3/FLEX TBA 1000SQ NODIMC PT/FLEX, A3/FLEX TPA 1000SQ NODIMC PT/FLEX, A3/FLEX TBA 1500S NODIMC PT/FLEX, A3/FLEX TBA 1000S NODIMC PT/FLEX, A3/FLEX TPA 0500SQ NODIMC PT/FLEX, A3/FLEX TPA 0330SQ NODIMC PT/FLEX, A3/FLEX TBA 0250S NODIMC PT/FLEX, A3/FLEX TBA 0200M NODIMC PT/FLEX, A3/FLEX TBA 0200SQ NODIMC PT/FLEX, A3/FLEX TBA 0250SQ NODIMC PT/FLEX, A3/FLEX TPA 0200SQ NODIMC PT/FLEX, A3/FLEX TPA 0250SQ NODIMC PT/FLEX (See drawing on page: 1-102)					
020	1558522-0100		1	ADJUSTING ROLLER	**1-105, 1-107**
110	2528146-0100		1	DOOR	**1-109**
140	1528746-0100		1	GUIDE	**1-111**
A3/FLEX TBA 2000S NODIMC PT/FLEX, A3/FLEX TBA 1890S NODIMC PT/FLEX (See drawing on page: 1-100)					
020	1558522-0100		1	ADJUSTING ROLLER	**1-105, 1-107**
140	1528746-0100		1	GUIDE	**1-111**
160	2531043-0100		1	HOUSING	**1-117**
170	2531039-0100		1	DOOR	**1-119**
180	2528145-0100		1	DOOR	**1-121**
Common Parts					
010	2531047-0200		1	HOUSING	**1-123, 1-125, 1-127**
030	1549573-0100		1	CRANK	**1-133, 1-135, 1-137**
040	2541635-0100		1	SQUEE-GEE ROLLER	**1-139, 1-141, 1-143, 1-145, 1-147**
050	1548892-0100		1	CALENDER ROLLER	**1-149, 1-151, 1-153**
060	1548753-0100		1	DRIVE ROLLER	**1-155, 1-157**
070	1548736-0100		1	BENDING ROLLER	**1-159, 1-161, 1-163, 1-165**
080	2539455-0100		1	VALVE	**1-167**
090	2532934-0100		1	AIR KNIFE	**1-169, 1-171, 1-173**
100	2539445-0200		1	PENDULUM ROLLER	**1-175**
120	1539746-0200		1	DOOR	**1-177**

Pos	Part No	UN	Qty	Description	Page No

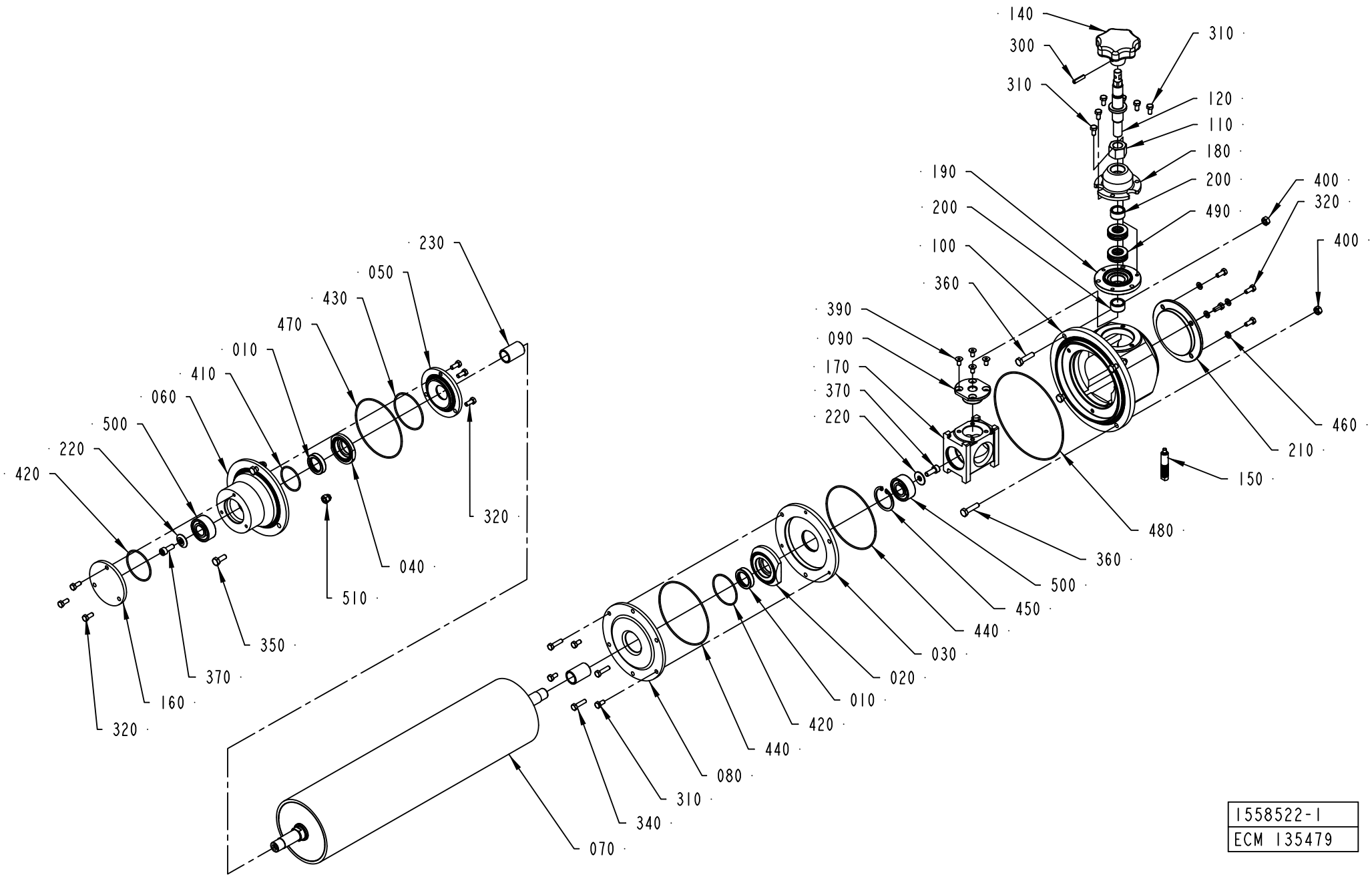

1558522-1
ECM 135479

ECM: 266129 - 20060702
Group number: 1558522-0100
Assembly Drawing: 1558522-1_1_AB

This list covers pages from 1-104 to 1-107

Pos	Part No	UN	Qty	Description	Page No
A3/FLEX DIMC/FLEX (See drawing on page: 1-106)					
070	2550893-0000		1	BENDING ROLLER	
A3/FLEX TBA 2000S NODIMC, A3/FLEX TBA 1890S NODIMC (See drawing on page: 1-104)					
070	2601237-0000		1	BENDING ROLLER	
A3/FLEX TBA 0200S NODIMC, A3/FLEX TBA 1000SQ NODIMC, A3/FLEX TBA 1000S NODIMC, A3/FLEX TBA 1000B NODIMC, A3/FLEX TBA 0500B NODIMC, A3/FLEX TPA 1000SQ NODIMC, A3/FLEX TBA 1500S NODIMC, A3/FLEX TBA 0200B NODIMC, A3/FLEX TBA 0250B NODIMC, A3/FLEX TBA 0330S NODIMC, A3/FLEX TPA 0330SQ NODIMC, A3/FLEX TPA 0500SQ NODIMC, A3/FLEX TBA 0250S NODIMC, A3/FLEX TBA 0200M NODIMC, A3/FLEX TBA 0500S NODIMC, A3/FLEX TPA 0200SQ NODIMC, A3/FLEX TPA 0250SQ NODIMC, A3/FLEX TPA 0750SQ NODIMC, A3/FLEX TBA 0200SQ NODIMC, A3/FLEX TBA 0250SQ NODIMC (See drawing on page: 1-104)					
070	2550891-0000		1	BENDING ROLLER	
Common Parts					
010	90458-0639		2	VARILIP 20X30X7 MM	
020	1558748-0000		1	FLANGE	
030	1558749-0000		1	FLANGE	
040	1558750-0000		1	FLANGE	
050	1558751-0000		1	FLANGE	
060	1558752-0000		1	FLANGE	
080	1558754-0000		1	LID	
090	1558755-0000		1	FLANGE	
100	1558756-0000		1	HOUSING	
110	1558757-0000		1	NUT	
120	1558758-0000		1	SHAFT	
140	1558760-0000		1	KNOB	
150	1558761-0000		1	SHAFT	
160	1558762-0000		1	LID	
170	1558763-0000		1	SLIDER	
180	1558764-0000		1	FLANGE	
190	1558765-0000		1	FLANGE	
200	1558766-0000		2	BUSHING	
210	2528073-0000		1	LID	
220	1558768-0000		2	WASHER	
230	2555613-0000		2	BUSHING	
300	311112-0256		1	SPRING PIN, ISO 8752 4X20-C	
310	312105-0325		9	SCREW M6S ISO 4017 M5X10 A480	
320	312105-0327		10	SCREW M6S ISO 4017 M5X12 A480	
340	312105-0331		3	SCREW M6S ISO 4017 M5X20 A480	
350	312105-0368		3	SCREW M6S ISO 4017 M6X16 A480	
360	312105-0372		4	SCREW M6S ISO 4017 M6X25 A480	
370	312115-0368		2	SCREW ISO4762 M6X16 A4 80	
390	312155-0325		4	SCREW DIN 7991 MF6S M5X10 A4 70	
400	312605-0316		4	HEXAGON NUT, M6M M6 A280	
410	315205-0716		1	O-RING 34,65X1,78 MM	
420	315205-0803		2	O-RING 44,17X1,78 MM	
430	315205-0805		1	O-RING 53,7X1,78 MM	
440	315205-0807		2	O-RING 94,97X1,78 MM	
450	315753-0124		1	RETAINING RING FOR BORE DIN 472 35 A2	
460	315105-0146		4	WASHER BRB 5,3X10 RFR	
470	90458-0640		1	O-RING 88,62X1,78 MM	
480	90459-0094		1	O-RING 133,07X1,78 MM	
490	90459-0098		2	THRUST BALL BEARING, 15X28X9 MM	
500	90214-0105		2	SPHERICAL BALL BEARING, 15X35X14 MM	
510	312705-0316		3	NUT HEX. DOMED CAP MHM-6 M6 A280	

Machine Type	Group Description	Used-In	Group Number	Page No

ADJUSTING ROLLER

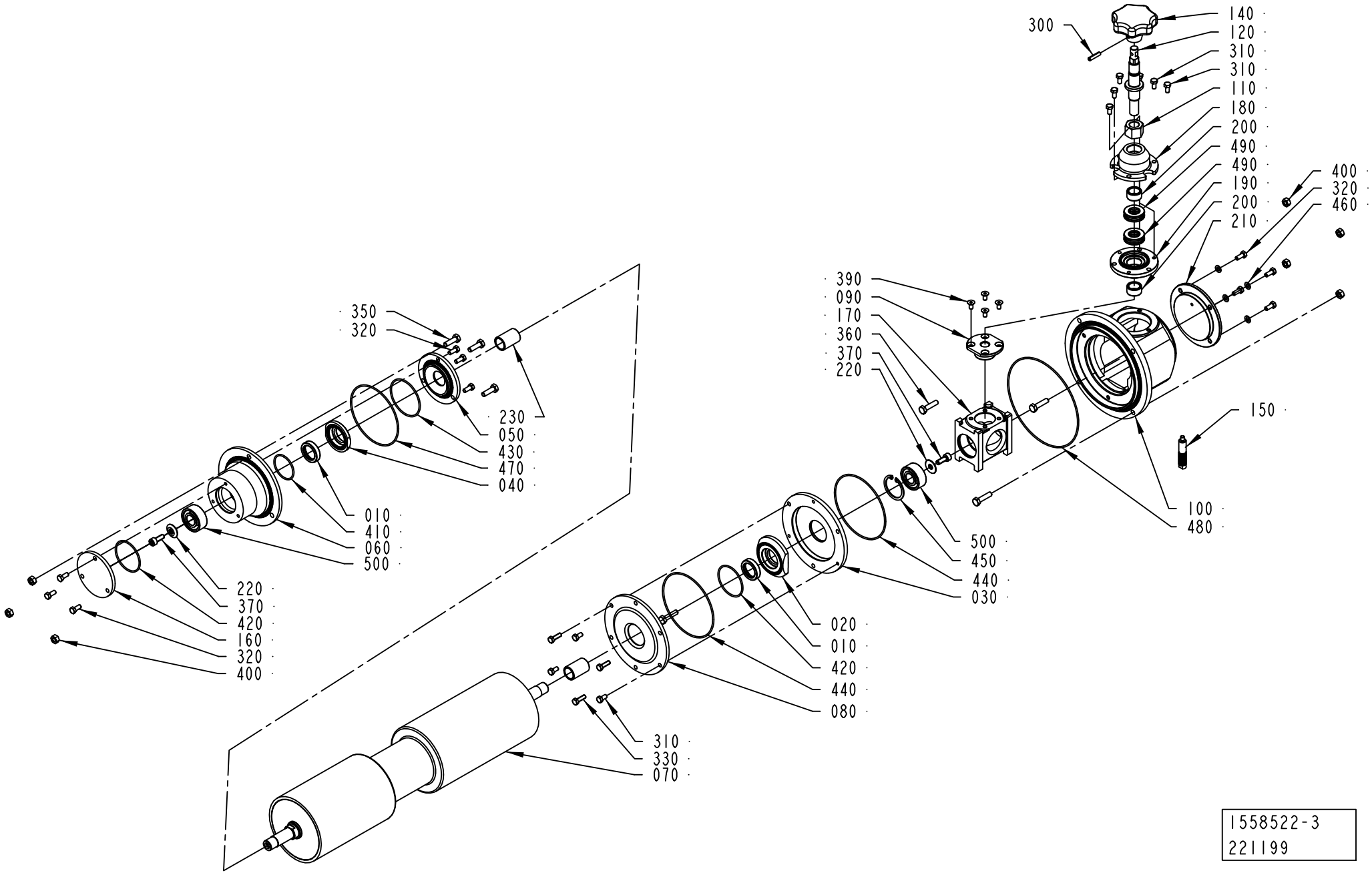

ECM: 266129 - 20060702
Group number: 1558522-0100
Assembly Drawing: 1558522-3_1_AA

This list covers pages from 1-104 to 1-107

Pos	Part No	UN	Qty	Description	Page No
A3/FLEX DIMC/FLEX (See drawing on page: 1-106)					
070	2550893-0000		1	BENDING ROLLER	
A3/FLEX TBA 2000S NODIMC, A3/FLEX TBA 1890S NODIMC (See drawing on page: 1-104)					
070	2601237-0000		1	BENDING ROLLER	
A3/FLEX TBA 0200S NODIMC, A3/FLEX TBA 1000SQ NODIMC, A3/FLEX TBA 1000S NODIMC, A3/FLEX TBA 1000B NODIMC, A3/FLEX TBA 0500B NODIMC, A3/FLEX TPA 1000SQ NODIMC, A3/FLEX TBA 1500S NODIMC, A3/FLEX TBA 0200B NODIMC, A3/FLEX TBA 0250B NODIMC, A3/FLEX TBA 0330S NODIMC, A3/FLEX TPA 0330SQ NODIMC, A3/FLEX TPA 0500SQ NODIMC, A3/FLEX TBA 0250S NODIMC, A3/FLEX TBA 0200M NODIMC, A3/FLEX TBA 0500S NODIMC, A3/FLEX TPA 0200SQ NODIMC, A3/FLEX TPA 0250SQ NODIMC, A3/FLEX TPA 0750SQ NODIMC, A3/FLEX TBA 0200SQ NODIMC, A3/FLEX TBA 0250SQ NODIMC (See drawing on page: 1-104)					
070	2550891-0000		1	BENDING ROLLER	
Common Parts					
010	90458-0639		2	VARILIP 20X30X7 MM	
020	1558748-0000		1	FLANGE	
030	1558749-0000		1	FLANGE	
040	1558750-0000		1	FLANGE	
050	1558751-0000		1	FLANGE	
060	1558752-0000		1	FLANGE	
080	1558754-0000		1	LID	
090	1558755-0000		1	FLANGE	
100	1558756-0000		1	HOUSING	
110	1558757-0000		1	NUT	
120	1558758-0000		1	SHAFT	
140	1558760-0000		1	KNOB	
150	1558761-0000		1	SHAFT	
160	1558762-0000		1	LID	
170	1558763-0000		1	SLIDER	
180	1558764-0000		1	FLANGE	
190	1558765-0000		1	FLANGE	
200	1558766-0000		2	BUSHING	
210	2528073-0000		1	LID	
220	1558768-0000		2	WASHER	
230	2555613-0000		2	BUSHING	
300	311112-0256		1	SPRING PIN, ISO 8752 4X20-C	
310	312105-0325		9	SCREW M6S ISO 4017 M5X10 A480	
320	312105-0327		10	SCREW M6S ISO 4017 M5X12 A480	
340	312105-0331		3	SCREW M6S ISO 4017 M5X20 A480	
350	312105-0368		3	SCREW M6S ISO 4017 M6X16 A480	
360	312105-0372		4	SCREW M6S ISO 4017 M6X25 A480	
370	312115-0368		2	SCREW ISO4762 M6X16 A4 80	
390	312155-0325		4	SCREW DIN 7991 MF6S M5X10 A4 70	
400	312605-0316		4	HEXAGON NUT, M6M M6 A280	
410	315205-0716		1	O-RING 34,65X1,78 MM	
420	315205-0803		2	O-RING 44,17X1,78 MM	
430	315205-0805		1	O-RING 53,7X1,78 MM	
440	315205-0807		2	O-RING 94,97X1,78 MM	
450	315753-0124		1	RETAINING RING FOR BORE DIN 472 35 A2	
460	315105-0146		4	WASHER BRB 5,3X10 RFR	
470	90458-0640		1	O-RING 88,62X1,78 MM	
480	90459-0094		1	O-RING 133,07X1,78 MM	
490	90459-0098		2	THRUST BALL BEARING, 15X28X9 MM	
500	90214-0105		2	SPHERICAL BALL BEARING, 15X35X14 MM	
510	312705-0316		3	NUT HEX. DOMED CAP MHM-6 M6 A280	

Machine Type | Group Description | Used-In | Group Number | Page No

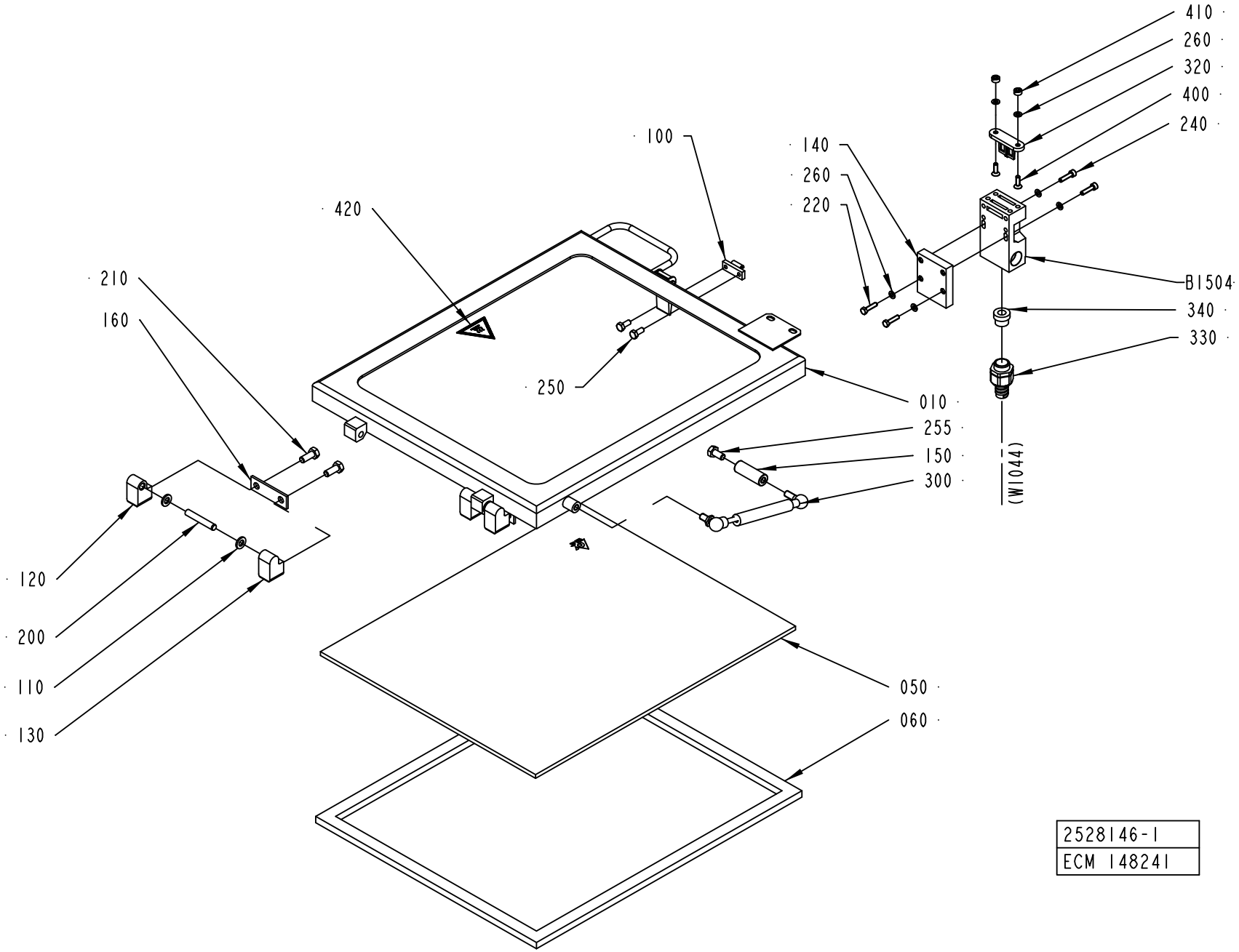
410
260
320
400
240
100
140
260
220
420
B1504
340
330
210
160
250
010
255
150
300
(W1044)
120
200
110
130
050
060
2528146-1
ECM 148241

ECM: 189725 - 20041104
Group number: 2528146-0100
Assembly Drawing: 2528146-1_1_AB

Pos	Part No	UN	Qty	Description	Page No
-					
010	2531037-0000		1	FRAME	
050	2531046-0000		1	GLASS PANE	
060	2531045-0000		1	GASKET	
100	271860-0000		1	CLAMP BLOCK	
110	441739-0000		4	WASHER	
120	1041979-0000		2	HINGE FLANGE	
130	1041978-0000		2	HINGE FLANGE	
140	2541651-0000		1	PLATE	
150	1548877-0000		1	SPACER	
160	441737-0000		2	WASHER	
200	311103-0413		2	PARALLEL PIN ISO 2338 8M6X50 A1	
210	312105-0451		4	SCREW M6S ISO 4017 M8X20 A480	
220	312105-0331		2	SCREW M6S ISO 4017 M5X20 A480	
240	312115-0331		2	SCREW ISO4762 M5X20 A4 80	
250	312105-0367		2	SCREW M6S ISO 4017 M6X14 A480	
255	312105-0449		1	SCREW M6S ISO 4017 M8X16 A480	
260	315105-0146		6	WASHER BRB 5,3X10 RFR	
300	90347-0039		1	DAMPER	
320	90044-0310		1	KEY FOR SAFETY SWITCH AZ 15/16 B1	
330	90458-0429		1	HOSE GLAND W/O INSERT M20 EXTENDED	
340	353249-0011		1	INSERT, SINGEL HOLE, EK 153/11	
400	312155-0329		2	SCREW DIN 7991 MF6S M5X16 A4 70	
410	575034-0000		2	ROUND NUT	
420	359705-0007		1	WARNING SIGN ISO, HOT SURFACE	
B1504	90459-0472		1	KEY SAF.SW. AZ 16 02ZVRK-M20-2152-2254	

Pos	Part No	UN	Qty	Description	Page No

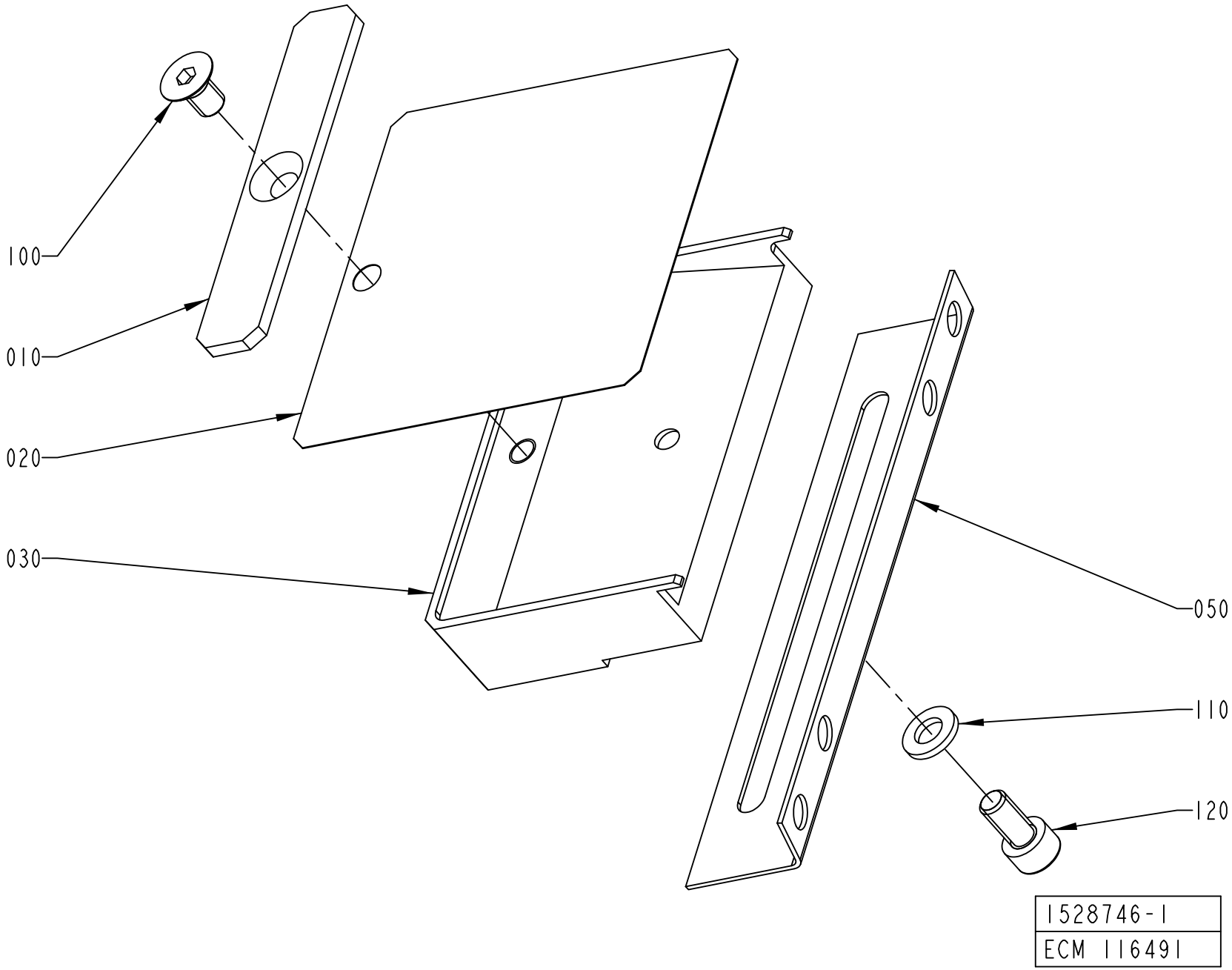
100
010
020
030
050
110
120
1528746-1
ECM 116491

ECM: 200391 - 20050121
Group number: 1528746-0100
Assembly Drawing: 1528746-1_1_AA

Pos	Part No	UN	Qty	Description	Page No
-					
010	1490715-0000		1	DOLLY	
020	1490714-0000		1	GUIDE	
030	1490713-0000		1	SPRING HOLDER	
040	1519799-0000		1	ANGLE BRACKET	
100	312155-0364		1	SCREW DIN 7991 MF6S M6X10 A4 70	
110	315105-0153		1	WASHER BRB 6,4X12 RFR	
120	312115-0366		1	SCREW ISO4762 M6X12 A4 80	

Pos	Part No	UN	Qty	Description	Page No

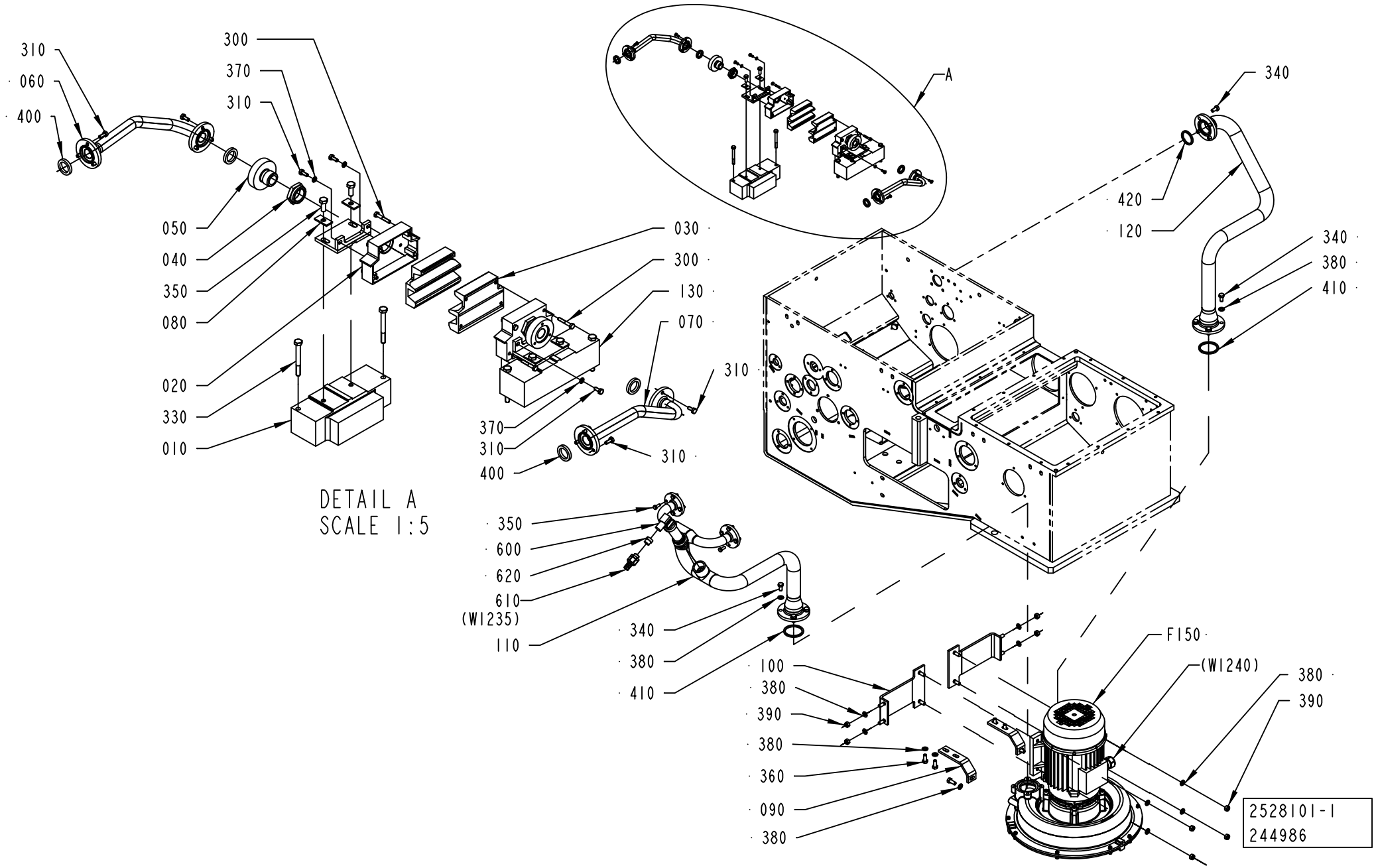
310
060
400
300
370
310
050
040
350
080
020
330
010
030
300
130
070
310
370
310
400
310
A
340
420
120
340
380
410
DETAIL A
SCALE 1:5
350
600
620
610
(W1235)
110
340
380
410
100
380
390
380
360
090
380
F150
(W1240)
380
390
2528101-1
244986

ECM: 274497 - 20060728
Group number: 2528101-0100
Assembly Drawing: 2528101-1_1_AC

Pos	Part No	UN	Qty	Description	Page No
LIGHTCAP					
030	2811776-0000		2	NOZZLE	
STDA7 CAP, NOMOLDEDCAP					
030	2565483-0000		2	NOZZLE	
Common Parts					
010	2553093-0000		1	PLATE	
015	2611104-0000		2	HOLDER	
020	2565482-0000		2	BOX	
040	1484969-0000		2	SLEEVE	
050	2616237-0000		2	CONNECTION	
060	2553095-0000		1	PIPE	
070	2553094-0000		1	PIPE	
080	2616236-0000		4	WASHER	
090	2616238-0000		2	HOLDER	
100	2616239-0000		2	HOLDER	
110	1523680-0000		1	PIPE	
120	2616240-0000		1	PIPE	
130	2553092-0000		1	PLATE	
300	312105-0297		8	SCREW M6S ISO 4017 M4X25 A470	
310	312105-0289		16	SCREW M6S ISO 4017 M4X10 A470	
330	312105-0381		4	SCREW M6S ISO 4014 M6X55 A480	
340	312105-0449		12	SCREW M6S ISO 4017 M8X16 A480	
350	312105-0368		12	SCREW M6S ISO 4017 M6X16 A480	
360	312105-0451		6	SCREW M6S ISO 4017 M8X20 A480	
370	315105-0136		4	WASHER BRB 4,3X8 RFR	
380	315105-0165		22	WASHER BRB 8,4X16 RFR	
390	312605-0318		8	HEXAGON NUT, M6M M8 A280	
400	315229-0102		4	GASKETS, 16,8X23,8X3,7 MM 3/4" FDA	
410	315229-0105		2	GASKETS, 48,5X55,5X3,7 MM 2" FDA	
420	315229-0104		1	GASKETS, 35,8X42,8X3,7 MM 1"1/2 FD	
600	90459-0689		1	PRESSURE TRANSMITTER 0 - 0,6 BAR	
610	353243-0001		1	HOSE GLAND W/O INSERT PG9 EXTENDED	
620	353249-0009		1	INSERT, SINGEL HOLE, EK 152/9	
F150	1523691-0100		1	BLOWING DEVICE	**1-115**

Pos	Part No	UN	Qty	Description	Page No

Machine Type | Group Description | Used-In | Group Number | Page No

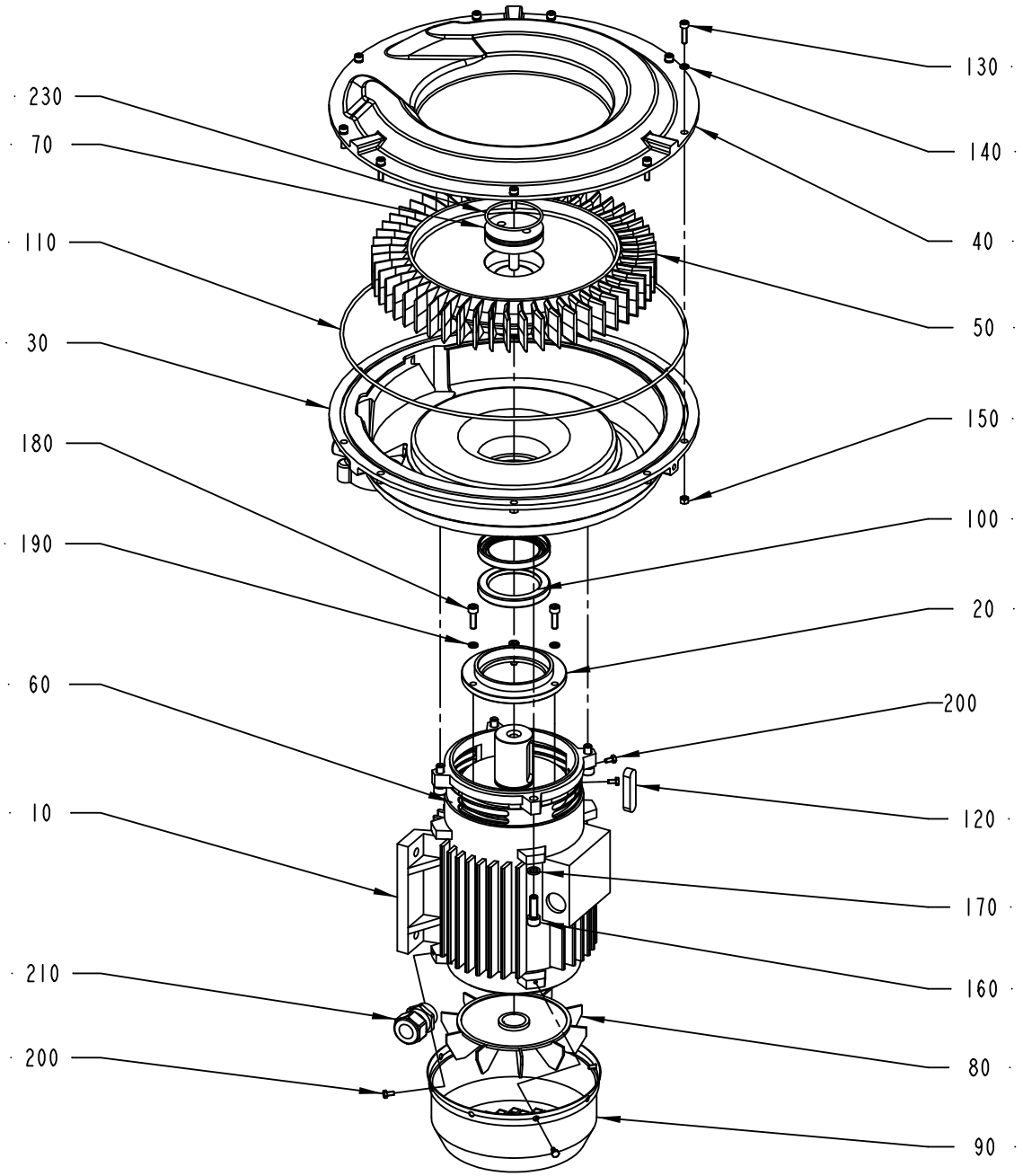
230
70
110
30
180
190
60
10
210
200
130
140
40
50
150
100
20
200
120
170
160
80
90
1523691-1
ECM 218328

ECM: 218328 - 20050603
Group number: 1523691-0100
Assembly Drawing: 1523691-1_1_AD

Pos	Part No	UN	Qty	Description	Page No
-					
010	90459-0804		1	MOTOR B3/B5 CE CODE: 159353	
	90459-3854		*1*	*ANG. BALL BEAR, 45X85X30,2 MM*	
020	2503634-0000		1	BEARING FLANGE	
030	1523687-0000		1	PUMP BODY	
040	1523686-0000		1	LID	
050	1523685-0000		1	IMPELLER	
060	2503635-0000		1	SHIELD	
070	2503636-0000		1	1STOP SCREW	
080	2503637-0000		1	FAN	
090	2503638-0000		1	FAN HOUSING	
100	90459-0802		2	RADIAL SEAL 55X75X10 MM	
110	90459-0803		1	O-RING 355,19X3,53 MM	
120	315705-0334		1	PARALLEL KEY W. ROUND ENDS 12X8X50 MM	
130	312115-0331		9	SCREW ISO4762 M5X20 A4 80	
140	90062-0029		9	LOCK WASHER 5,1X 8,6, T= 1,5 DIN 7980	
150	312605-0314		9	HEXAGON NUT, M6M M5 A280	
160	312115-0453		4	SCREW ISO4762 M8X25 A4 80	
170	90062-0031		4	"LOCK WASHER 8,2X12,8; T=2 DIN 7980"	
180	312115-0370		3	SCREW ISO4762 M6X20 A4 80	
190	90062-0030		3	LOCK WASHER 6,1X9,7; T=1,5 DIN 7980	
200	312105-0287		6	SCREW M6S ISO 4017 M4X8 A470	
210	90458-0441		1	GLAND, EXTENDED WITH INSERT, M25X1,5	
230	315202-0739		1	O-RING 55,25X2,62 MM	

Pos	Part No	UN	Qty	Description	Page No

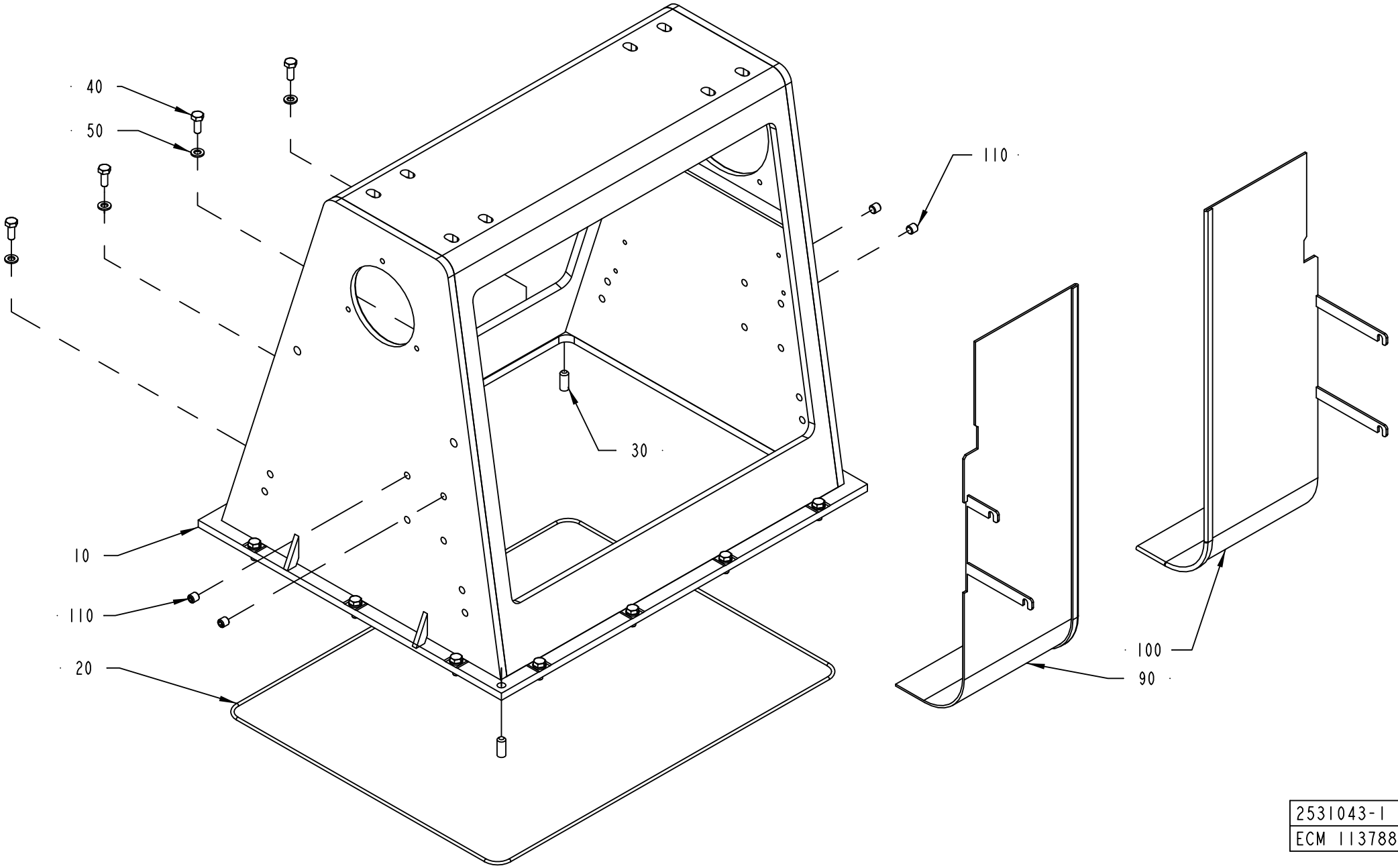

2531043-1
ECM 113788

ECM: 267087 - 20060703
Group number: 2531043-0100
Assembly Drawing: 2531043-1_1_AA

Pos	Part No	UN	Qty	Description	Page No
A3/FLEX TBA 1890S, A3/FLEX TBA 2000S					
090	2532963-0000		1	DEFLECTOR	
100	2532964-0000		1	DEFLECTOR	
Common Parts					
010	2531044-0000		1	BOX FRAME	
020	90459-1314		1	O-RING 491X3 MM	
030	311103-0401		2	PARALLEL PIN ISO 2338 8M6X20 A1	
040	312105-0368		14	SCREW M6S ISO 4017 M6X16 A480	
050	315105-0153		14	WASHER BRB 6,4X12 RFR	
060	90153-0023		1	ADHESIVE, SILICON 251470 TUB 90CC	
110	312318-0443		4	SCREW ISO4029 M8X8 A4	

Pos	Part No	UN	Qty	Description	Page No

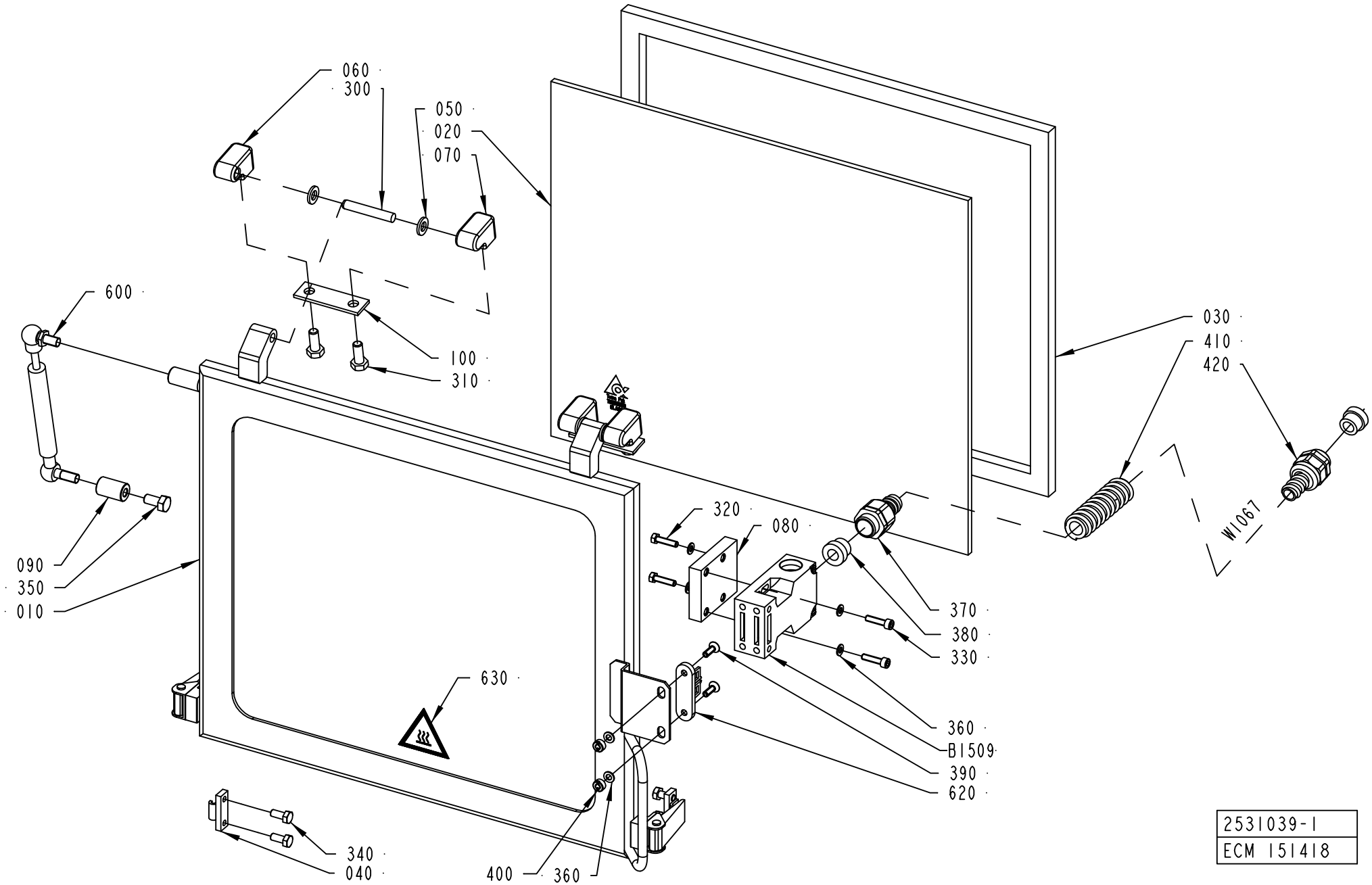
060
300
050
020
070
600
100
310
030
410
420
W1067
320
080
090
350
010
370
380
330
630
360
B1509
390
620
340
040
400
360
2531039-1
ECM 151418

ECM: 190567 - 20041104
Group number: 2531039-0100
Assembly Drawing: 2531039-1_1_AC

Pos	Part No	UN	Qty	Description	Page No
-					
010	2531038-0000		1	FRAME	
020	2531041-0000		1	GLASS PANE	
030	2531040-0000		1	GASKET	
040	271860-0000		2	CLAMP BLOCK	
050	441739-0000		4	WASHER	
060	1549992-0000		2	HINGE FLANGE	
070	1549993-0000		2	HINGE FLANGE	
080	2541651-0000		1	PLATE	
090	1549994-0000		1	SPACER	
100	441737-0000		2	WASHER	
300	311103-0413		2	PARALLEL PIN ISO 2338 8M6X50 A1	
310	312105-0451		4	SCREW M6S ISO 4017 M8X20 A480	
320	312105-0331		2	SCREW M6S ISO 4017 M5X20 A480	
330	312115-0331		2	SCREW ISO4762 M5X20 A4 80	
340	312105-0367		4	SCREW M6S ISO 4017 M6X14 A480	
350	312105-0449		1	SCREW M6S ISO 4017 M8X16 A480	
360	315105-0146		6	WASHER BRB 5,3X10 RFR	
370	90458-0429		1	HOSE GLAND W/O INSERT M20 EXTENDED	
380	353249-0011		2	INSERT, SINGEL HOLE, EK 153/11	
390	312155-0329		2	SCREW DIN 7991 MF6S M5X16 A4 70	
400	575034-0000		2	ROUND NUT	
410	90152-0050	M	1	SPIRAL CONDUIT, 20X13, UL 1313	
420	353243-0009		1	HOSE GLAND W/O INSERT PG13,5 EXTENDED	
600	90347-0039		1	DAMPER	
620	90044-0310		1	KEY FOR SAFETY SWITCH AZ 15/16 B1	
630	359705-0007		1	WARNING SIGN ISO, HOT SURFACE	
B1509	90459-0472		1	KEY SAF.SW. AZ 16 02ZVRK-M20-2152-2254	
W1067	351150-0405	M	1.7	CABLE OLFLEX 5X0,75 MM2 LIGHT/GREY	

Pos	Part No	UN	Qty	Description	Page No

Machine Type | Group Description | Used-In | Group Number | Page No

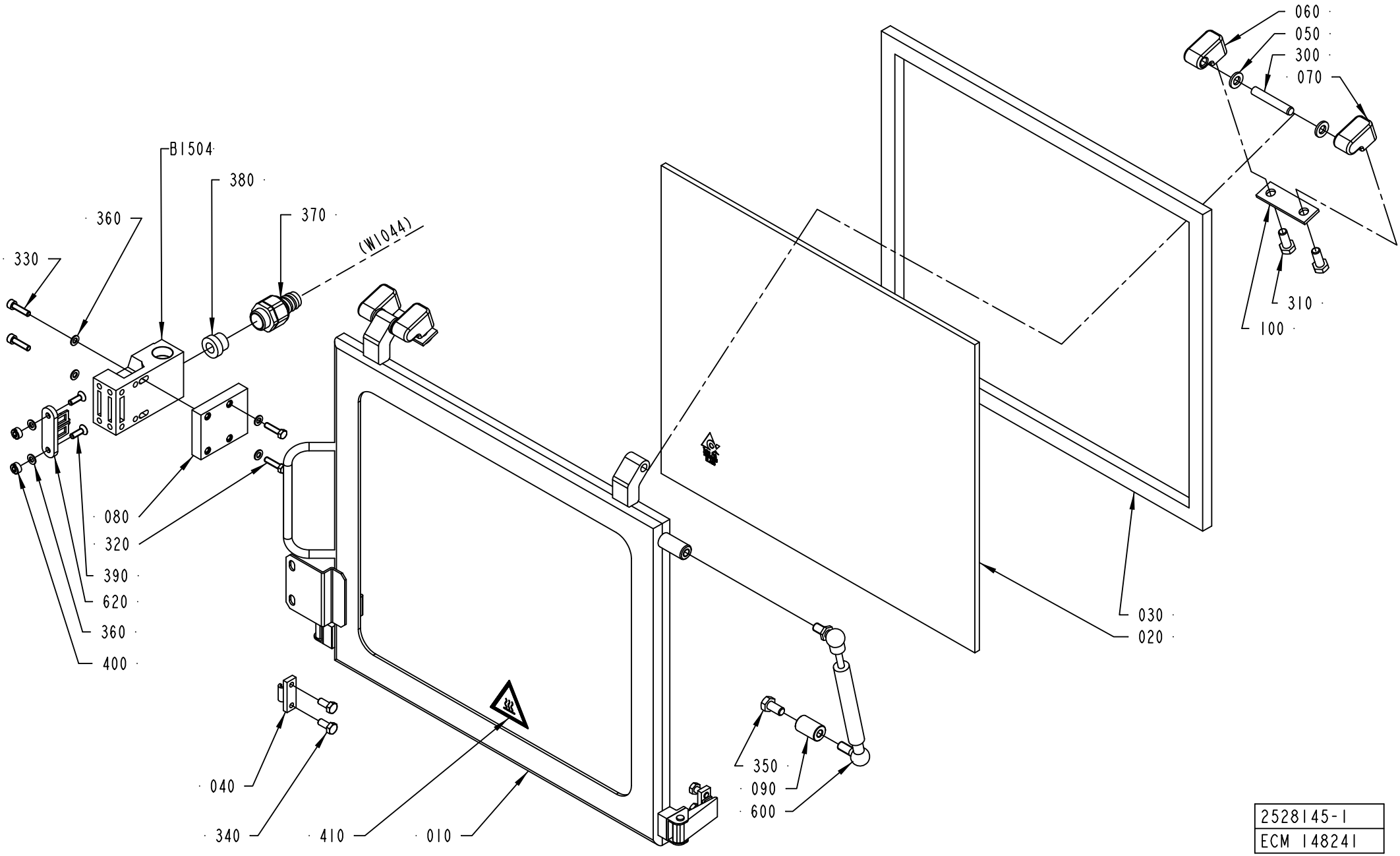

2528145-1
ECM 148241

ECM: 189731 - 20041104
Group number: 2528145-0100
Assembly Drawing: 2528145-1_1_AB

Pos	Part No	UN	Qty	Description	Page No
-					
010	2528144-0000		1	FRAME	
020	2531041-0000		1	GLASS PANE	
030	2531040-0000		1	GASKET	
040	271860-0000		2	CLAMP BLOCK	
050	441739-0000		4	WASHER	
060	1549992-0000		2	HINGE FLANGE	
070	1549993-0000		2	HINGE FLANGE	
080	2541651-0000		1	PLATE	
090	1549994-0000		1	SPACER	
100	441737-0000		2	WASHER	
300	311103-0413		2	PARALLEL PIN ISO 2338 8M6X50 A1	
310	312105-0451		4	SCREW M6S ISO 4017 M8X20 A480	
320	312105-0331		2	SCREW M6S ISO 4017 M5X20 A480	
330	312115-0331		2	SCREW ISO4762 M5X20 A4 80	
340	312105-0367		4	SCREW M6S ISO 4017 M6X14 A480	
350	312105-0449		1	SCREW M6S ISO 4017 M8X16 A480	
360	315105-0146		6	WASHER BRB 5,3X10 RFR	
370	90458-0429		1	HOSE GLAND W/O INSERT M20 EXTENDED	
380	353249-0011		1	INSERT, SINGEL HOLE, EK 153/11	
390	312155-0329		2	SCREW DIN 7991 MF6S M5X16 A4 70	
400	575034-0000		2	ROUND NUT	
410	359705-0007		1	WARNING SIGN ISO, HOT SURFACE	
600	90347-0039		1	DAMPER	
620	90044-0310		1	KEY FOR SAFETY SWITCH AZ 15/16 B1	
B1504	90459-0472		1	KEY SAF.SW. AZ 16 02ZVRK-M20-2152-2254	

Pos	Part No	UN	Qty	Description	Page No

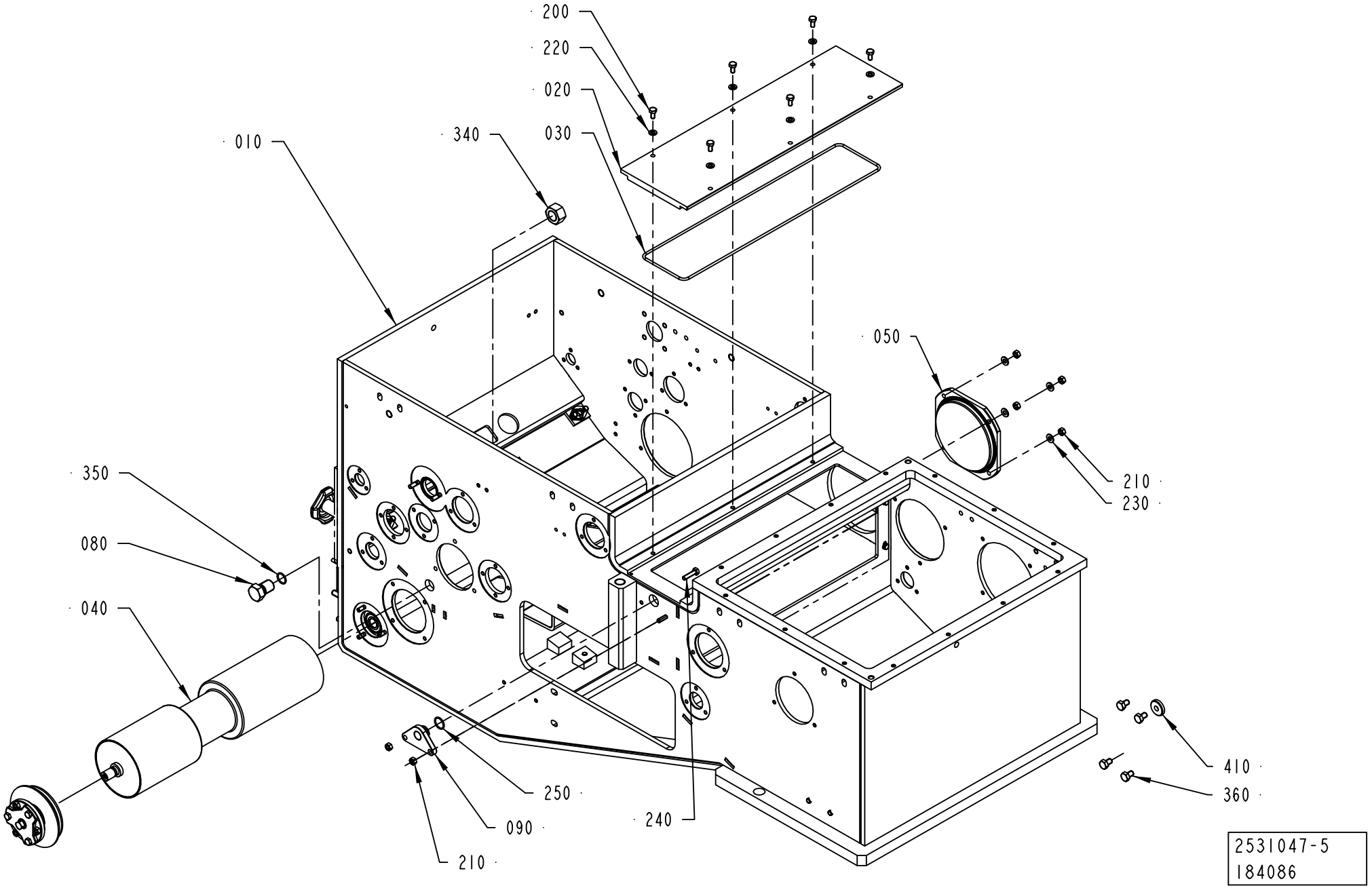
200
220
020
030
340
010
050
210
230
350
080
040
410
360
250
090
240
210
2531047-5
184086

Pos	Part No	UN	Qty	Description	Page No
A3/FLEX TBA 0200S NODIMC, A3/FLEX TBA 1000SQ NODIMC, A3/FLEX TBA 1000S NODIMC, A3/FLEX TBA 1000B NODIMC, A3/FLEX TBA 0500B NODIMC, A3/FLEX TPA 1000SQ NODIMC, A3/FLEX TBA 1500S NODIMC, A3/FLEX TBA 0200B NODIMC, A3/FLEX TBA 0250B NODIMC, A3/FLEX TBA 0330S NODIMC, A3/FLEX TPA 0330SQ NODIMC, A3/FLEX TPA 0500SQ NODIMC, A3/FLEX TBA 0250S NODIMC, A3/FLEX TBA 0200M NODIMC, A3/FLEX TBA 0500S NODIMC, A3/FLEX TPA 0200SQ NODIMC, A3/FLEX TPA 0250SQ NODIMC, A3/FLEX TBA 0200SQ NODIMC, A3/FLEX TBA 0250SQ NODIMC (See drawing on page: 1-124)					
020	2532896-0000		1	COVER	
030	2532897-0000		1	GASKET	
040	1498784-0000		1	BENDING ROLLER	
050	1548732-0000		1	LID	
090	2531053-0000		1	PLUG	
100	2531054-0000		2	PLUG	
110	2531055-0000		1	PLUG	
200	312105-0366		6	SCREW M6S ISO 4017 M6X12 A480	
210	312605-0316		14	HEXAGON NUT, M6M M6 A280	
220	315105-0153		6	WASHER BRB 6,4X12 RFR	
230	315105-0156		4	WASHER BRB 6,7X14 RFR	
240	312105-0372		2	SCREW M6S ISO 4017 M6X25 A480	
250	315205-0705		1	O-RING 17,17X1,78 MM	
260	315205-0802		2	O-RING 41,0X1,78 MM	
270	315229-0104		1	GASKETS, 35,8X42,8X3,7 MM 1"1/2 FD	
280	312105-0371		8	SCREW M6S ISO 4017 M6X22 A480	
290	312105-0452		4	SCREW M6S ISO 4017 M8X22 A4 80	
300	312605-0318		4	HEXAGON NUT, M6M M8 A280	
360	312105-0447		6	SCREW M6S ISO 4017 M8X12 A480	
410	315125-0165		1	WASHER TBRSB 8,4X26X5 A4	
A3/FLEX TBA 1000S LIGHTCAP (See drawing on page: 1-122)					
020	2532896-0000		1	COVER	
030	2532897-0000		1	GASKET	
040	2715553-0000		1	BENDING ROLLER	
050	1548732-0000		1	LID	
080	2594624-0000		1	PLUG	
090	2531053-0000		1	PLUG	
200	312105-0366		6	SCREW M6S ISO 4017 M6X12 A480	
210	312605-0316		6	HEXAGON NUT, M6M M6 A280	
220	315105-0153		6	WASHER BRB 6,4X12 RFR	
230	315105-0156		4	WASHER BRB 6,7X14 RFR	
240	312105-0372		2	SCREW M6S ISO 4017 M6X25 A480	
250	315205-0705		1	O-RING 17,17X1,78 MM	
340	90099-0095		1	NUT HEX. M18X1,5	
350	315205-0704		1	O-RING 15,6X1,78 MM	
360	312105-0447		6	SCREW M6S ISO 4017 M8X12 A480	
410	315125-0165		1	WASHER TBRSB 8,4X26X5 A4	
A3/FLEX TBA 1000S STDA7, A3/FLEX TBA 1000B STDA7, A3/FLEX TBA 1000S NOMOLDEDCAP (See drawing on page: 1-122)					
020	2532896-0000		1	COVER	
030	2532897-0000		1	GASKET	
040	2531048-0000		1	BENDING ROLLER	
050	1548732-0000		1	LID	
080	2594624-0000		1	PLUG	
090	2531053-0000		1	PLUG	
200	312105-0366		6	SCREW M6S ISO 4017 M6X12 A480	
210	312605-0316		6	HEXAGON NUT, M6M M6 A280	
220	315105-0153		6	WASHER BRB 6,4X12 RFR	
230	315105-0156		4	WASHER BRB 6,7X14 RFR	
240	312105-0372		2	SCREW M6S ISO 4017 M6X25 A480	
250	315205-0705		1	O-RING 17,17X1,78 MM	
340	90099-0095		1	NUT HEX. M18X1,5	
350	315205-0704		1	O-RING 15,6X1,78 MM	
360	312105-0447		6	SCREW M6S ISO 4017 M8X12 A480	
410	315125-0165		1	WASHER TBRSB 8,4X26X5 A4	
A3/FLEX TBA 2000S NODIMC, A3/FLEX TBA 1890S NODIMC (See drawing on page: 1-126)					
020	2532896-0000		1	COVER	
030	2532897-0000		1	GASKET	
040	1498784-0000		1	BENDING ROLLER	
050	1548732-0000		1	LID	
090	2531053-0000		1	PLUG	
100	2531054-0000		2	PLUG	
110	2531055-0000		1	PLUG	
120	2547398-0000		1	LID	
130	2547399-0000		1	LID	
140	441737-0000		2	WASHER	
200	312105-0366		6	SCREW M6S ISO 4017 M6X12 A480	
210	312605-0316		17	HEXAGON NUT, M6M M6 A280	
220	315105-0153		8	WASHER BRB 6,4X12 RFR	
230	315105-0156		4	WASHER BRB 6,7X14 RFR	
240	312105-0372		2	SCREW M6S ISO 4017 M6X25 A480	
250	315205-0705		1	O-RING 17,17X1,78 MM	
260	315205-0802		2	O-RING 41,0X1,78 MM	
270	315229-0104		1	GASKETS, 35,8X42,8X3,7 MM 1"1/2 FD	
280	312105-0371		15	SCREW M6S ISO 4017 M6X22 A480	
290	312105-0452		9	SCREW M6S ISO 4017 M8X22 A4 80	
300	312605-0318		10	HEXAGON NUT, M6M M8 A280	
310	90458-0640		1	O-RING 88,62X1,78 MM	

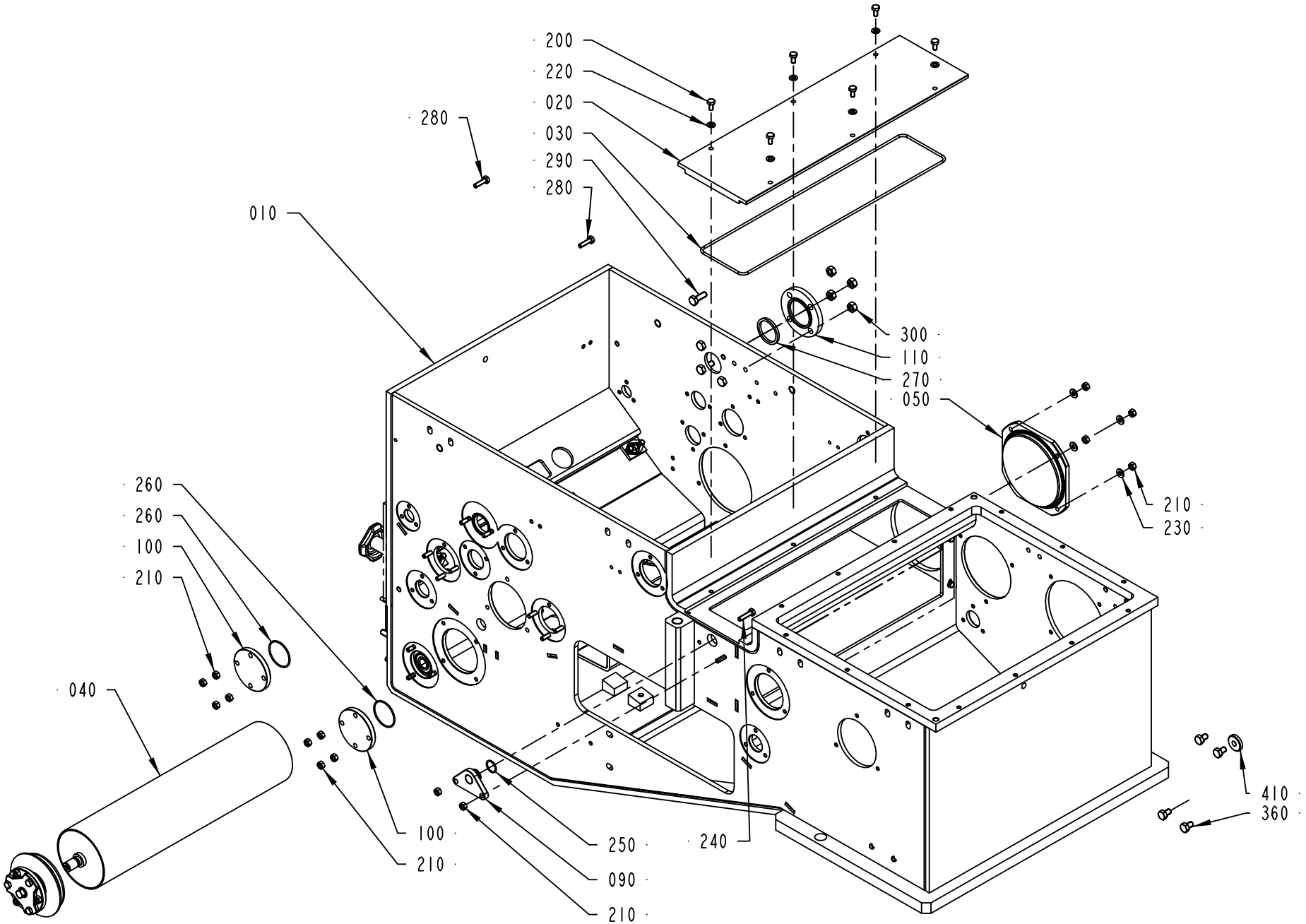

2531047-6
184086

ECM: 258300 - 20060702
Group number: 2531047-0200
Assembly Drawing: 2531047-6_1_AA

This list covers pages from 1-122 to 1-127

Pos	Part No	UN	Qty	Description	Page No
A3/FLEX TBA 2000S NODIMC, A3/FLEX TBA 1890S NODIMC (Cont'd) (See drawing on page: 1-126)					
290	312105-0452		9	SCREW M6S ISO 4017 M8X22 A4 80	
300	312605-0318		10	HEXAGON NUT, M6M M8 A280	
310	90458-0640		1	O-RING 88,62X1,78 MM	
320	90459-0094		1	O-RING 133,07X1,78 MM	
330	315105-0165		5	WASHER BRB 8,4X16 RFR	
360	312105-0447		6	SCREW M6S ISO 4017 M8X12 A480	
370	312105-0329		2	SCREW M6S ISO 4017 M5X16 A480	
380	315105-0146		2	WASHER BRB 5,3X10 RFR	
390	312605-0314		2	HEXAGON NUT, M6M M5 A280	
400	312105-0368		2	SCREW M6S ISO 4017 M6X16 A480	
Common Parts					
010	2528129-0200		1	FRAME HOUSING	**1-129, 1-131**

Pos	Part No	UN	Qty	Description	Page No

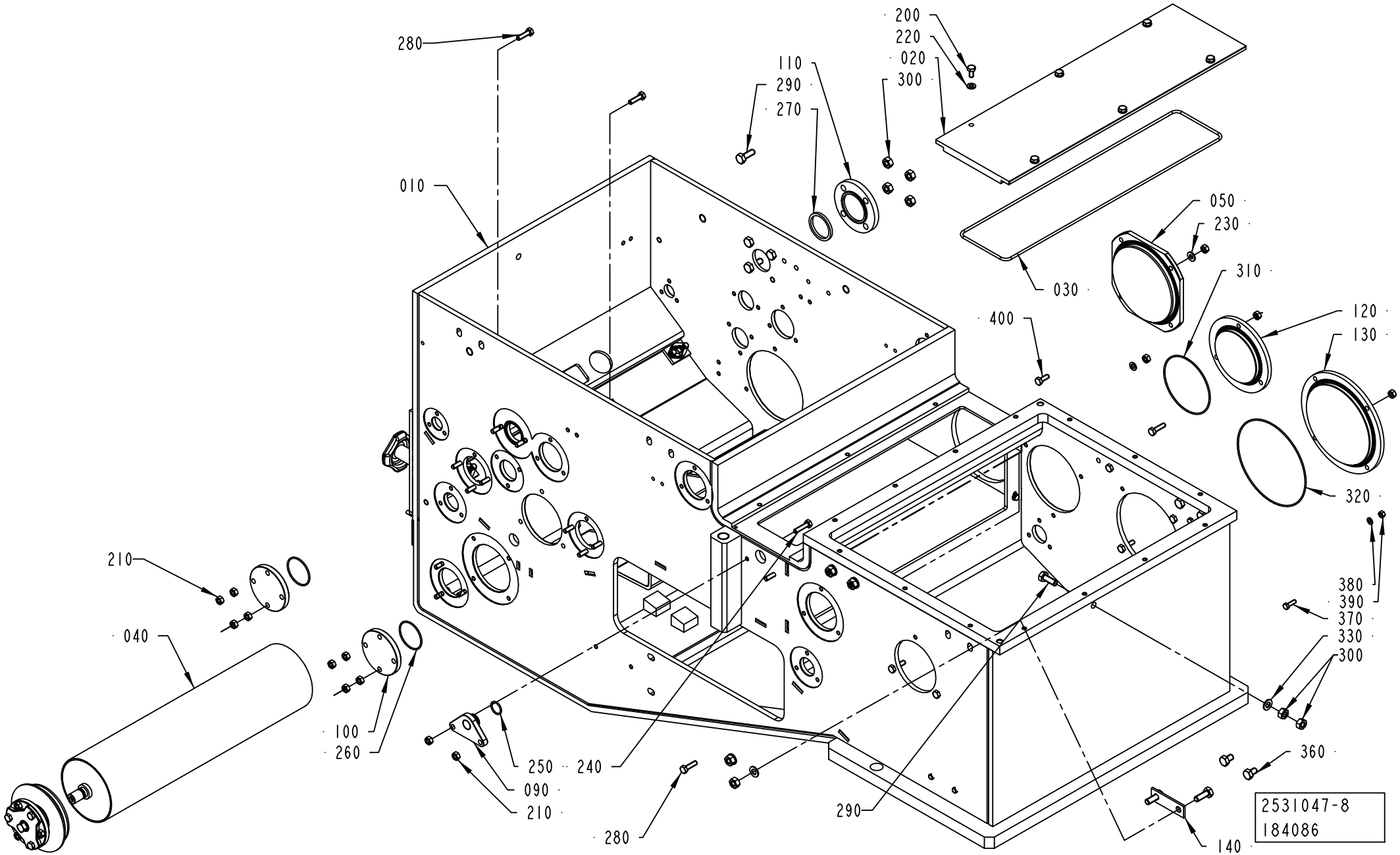
280
010
110
290
270
200
220
020
300
030
050
230
310
400
120
130
320
380
390
370
330
300
360
140
290
280
250
240
090
210
100
260
040
210
2531047-8
184086

Pos	Part No	UN	Qty	Description	Page No	Pos	Part No	UN	Qty	Description	Page No

SEE PREVIOUS LISTS PAGES: 1-123, 1-125.

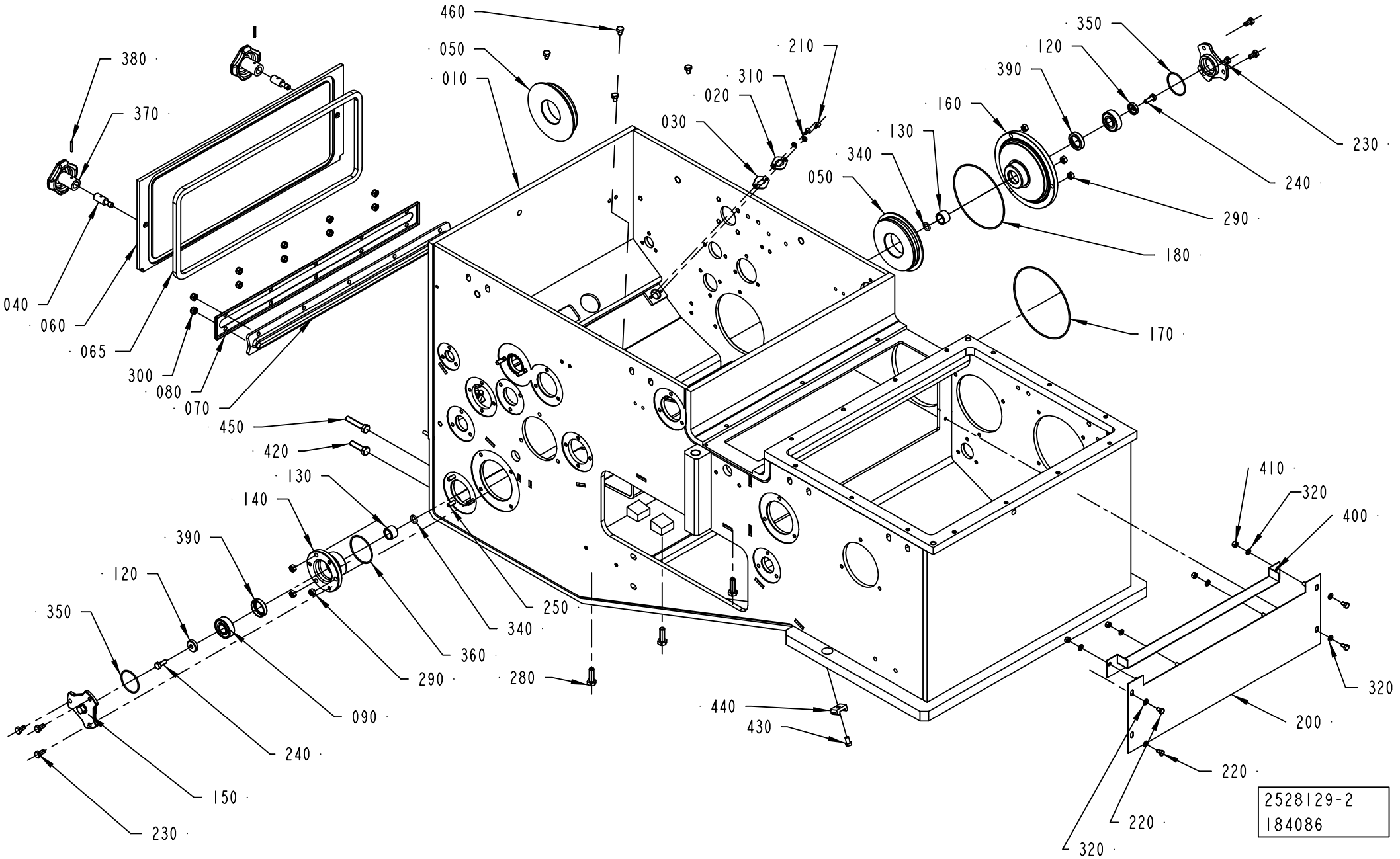
460
050
010
210
310
020
030
350
120
390
160
130
340
050
230
240
290
180
380
370
040
060
065
300
080
070
450
420
130
140
390
120
350
250
340
360
290
280
090
240
150
230
440
430
170
410
320
400
320
200
220
220
320
2528129-2
184086

ECM: 258299 - 20060702
Group number: 2528129-0200
Assembly Drawing: 2528129-2_1_AA

This list covers pages from 1-128 to 1-131

Pos	Part No	UN	Qty	Description	Page No
TBA 0200M, TBA 0200B, TBA 0200SQ, TBA 0200S, TBA 0250S, TBA 0250B, TBA 0330S, TPA 0330SQ, TPA 0250SQ, TPA 0200SQ, TBA 0250SQ					
200	2619171-0000		1	PLATE	
320	315105-0146		8	WASHER BRB 5,3X10 RFR	
400	2619759-0000		1	SLIDE	
410	312605-0314		4	HEXAGON NUT, M6M M5 A280	
420	312105-0455		2	SCREW M6S ISO 4017 M8X30 A480	
430	312125-0364		6	SCREW ISO 1207 M6X10 A4	
440	352113-0204		6	ANCHOR PLATES FOR STRIPS, TYPE TM3S25-M	
450	312109-0459		2	SCREW M6S ISO 4017 M8X40 A480	
460	312105-0362		4	SCREW M6S ISO 4017 M6X8 A480	
TBA 0500S, TPA 0500SQ					
200	2619171-0000		1	PLATE	
320	315105-0146		8	WASHER BRB 5,3X10 RFR	
400	2720207-0000		1	SLIDE	
410	312605-0314		4	HEXAGON NUT, M6M M5 A280	
420	312105-0455		2	SCREW M6S ISO 4017 M8X30 A480	
430	312125-0364		6	SCREW ISO 1207 M6X10 A4	
440	352113-0204		6	ANCHOR PLATES FOR STRIPS, TYPE TM3S25-M	
450	312109-0459		2	SCREW M6S ISO 4017 M8X40 A480	
460	312105-0362		4	SCREW M6S ISO 4017 M6X8 A480	
TBA 0500B, TBA 1000B, TBA 1000SQ, TBA 1500S, TBA 1000S NOMOLDEDCAP, TBA 1000S STDA7					
200	2619171-0000		1	PLATE	
320	315105-0146		8	WASHER BRB 5,3X10 RFR	
400	2619069-0000		1	SLIDE	
410	312605-0314		4	HEXAGON NUT, M6M M5 A280	
420	312105-0455		2	SCREW M6S ISO 4017 M8X30 A480	
430	312125-0364		6	SCREW ISO 1207 M6X10 A4	
440	352113-0204		6	ANCHOR PLATES FOR STRIPS, TYPE TM3S25-M	
450	312109-0459		2	SCREW M6S ISO 4017 M8X40 A480	
460	312105-0362		4	SCREW M6S ISO 4017 M6X8 A480	
TBA 1000S LIGHTCAP					
050	2725564-0000		2	WHEEL	
200	2716445-0000		1	PLATE	
320	315105-0146		8	WASHER BRB 5,3X10 RFR	
400	2716444-0000		1	SLIDE	
410	312605-0314		4	HEXAGON NUT, M6M M5 A280	
420	312105-0455		2	SCREW M6S ISO 4017 M8X30 A480	
430	312125-0364		6	SCREW ISO 1207 M6X10 A4	
440	352113-0204		6	ANCHOR PLATES FOR STRIPS, TYPE TM3S25-M	
450	312109-0459		2	SCREW M6S ISO 4017 M8X40 A480	
460	312105-0362		4	SCREW M6S ISO 4017 M6X8 A480	
TBA 1890S, TBA 2000S					
200	2592530-0000		1	PLATE	
320	315105-0146		4	WASHER BRB 5,3X10 RFR	
TPA 1000SQ, TPA 0750SQ					
200	2763953-0000		1	PLATE	
320	315105-0146		4	WASHER BRB 5,3X10 RFR	
420	312105-0455		2	SCREW M6S ISO 4017 M8X30 A480	
430	312125-0364		6	SCREW ISO 1207 M6X10 A4	
440	352113-0204		6	ANCHOR PLATES FOR STRIPS, TYPE TM3S25-M	
450	312109-0459		2	SCREW M6S ISO 4017 M8X40 A480	
460	312105-0362		4	SCREW M6S ISO 4017 M6X8 A480	
Common Parts					
010	2695982-0000		1	HOUSING	
020	2528133-0000		2	WASHER	
030	2528134-0000		2	GASKET	
040	1036475-0000		2	PIN	
050	1498783-0000		2	WHEEL	
060	1499168-0000		1	LID	
065	1499169-0000		1	GASKET	
070	1499170-0000		1	GASKET	
080	1499171-0000		1	LID	
090	90458-1704		2	BALL BEARING, 15X35X11 MM	
120	1538725-0000		2	WASHER	
130	1538726-0000		2	BUSHING	
140	1548734-0000		1	FLANGE	
150	1548735-0000		2	LID	
160	1548739-0000		1	FLANGE	
170	90459-1686		1	O-RING 126,72X1,78 MM	
180	90459-1627		1	O-RING 114,02X1,78 MM	
210	312105-0289		4	SCREW M6S ISO 4017 M4X10 A470	
220	312105-0323		4	SCREW M6S ISO 4017 M5X8 A480	
230	312105-0366		6	SCREW M6S ISO 4017 M6X12 A480	
240	312105-0368		2	SCREW M6S ISO 4017 M6X16 A480	
250	312105-0370		16	SCREW M6S ISO 4017 M6X20 A480	
280	312105-0453		3	SCREW M6S ISO 4017 M8X25 A480	
290	312605-0316		6	HEXAGON NUT, M6M M6 A280	
300	312812-0316		10	HEXAGON NUT, NY-LOCK M6 A480	
310	315105-0136		4	WASHER BRB 4,3X8 RFR	
340	315204-0209		2	O-RING 10,3X2,4 MM	
350	315205-0801		2	O-RING 37,82X1,78 MM	
360	315205-0804		1	O-RING 47,35X1,78 MM	
370	90051-0045		2	STELLAR KNOB, NO. 8323-257	

Machine Type | Group Description | Used-In | Group Number | Page No

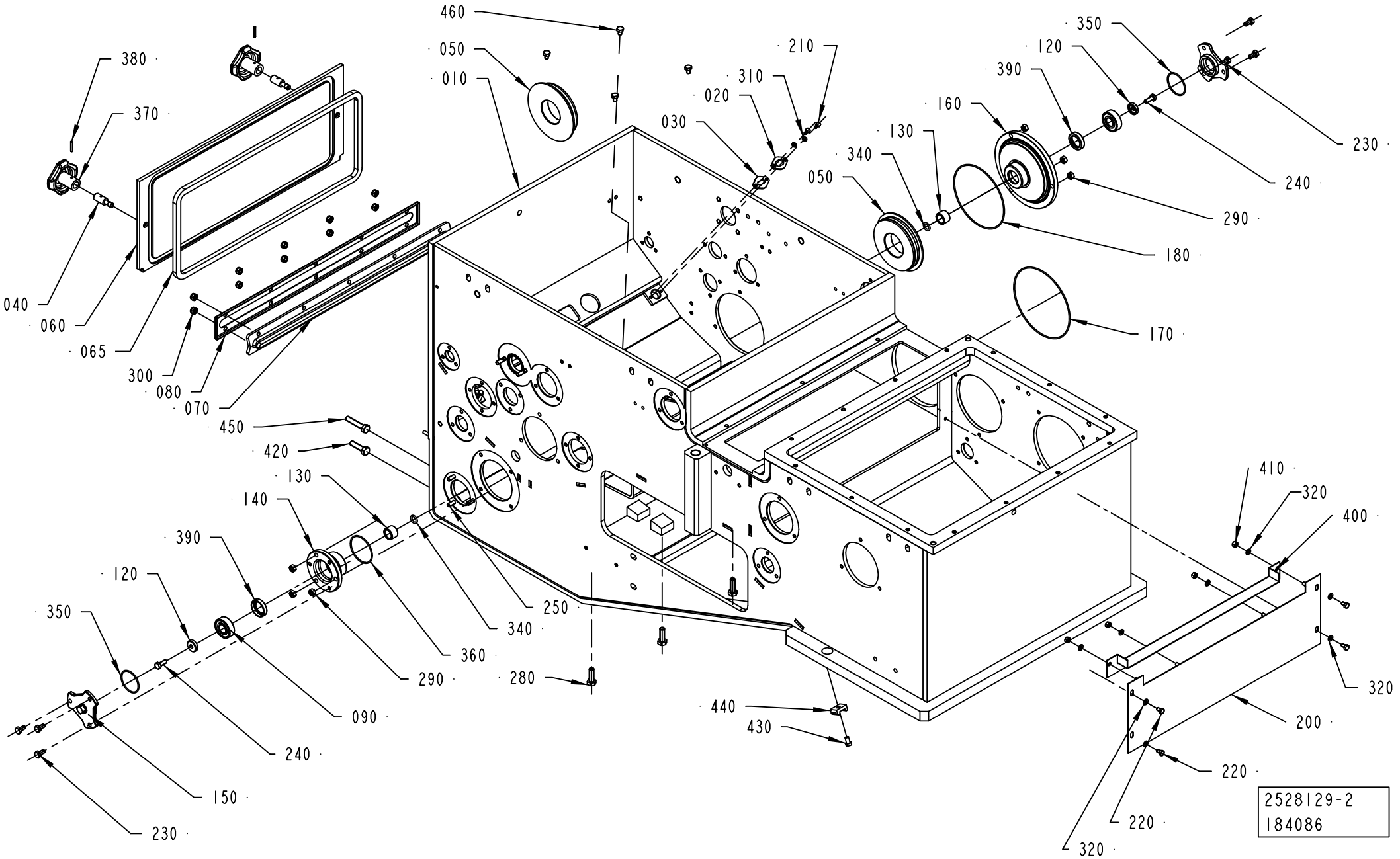
460
050
010
210
310
020
030
350
120
390
160
130
340
050
230
240
290
180
380
370
040
060
065
300
080
070
450
420
130
140
390
120
350
250
340
360
290
280
090
240
150
230
440
430
170
410
320
400
320
200
220
220
320
2528129-2
184086

Pos	Part No	UN	Qty	Description	Page No
Common Parts (Cont'd)					
370	90051-0045		2	STELLAR KNOB, NO. 8323-257	
380	90258-0031		2	PIN, STRAIGHT SLOTTED SPRING FRP 3X20	
390	90458-0639		2	VARILIP 20X30X7 MM	

Pos	Part No	UN	Qty	Description	Page No

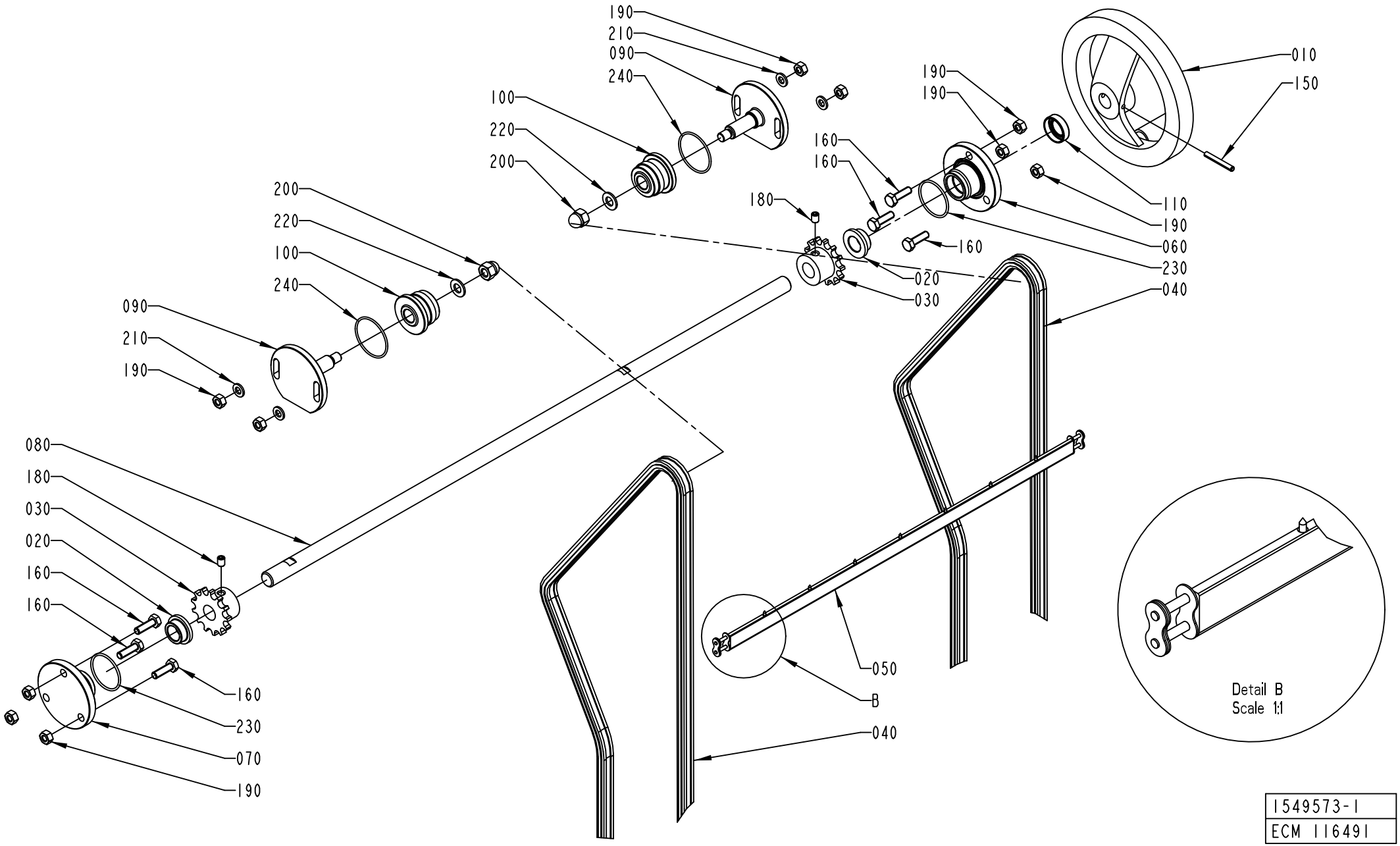

1549573-1
ECM 116491

ECM: 258295 - 20060702
Group number: 1549573-0100
Assembly Drawing: 1549573-1_1_AA

This list covers pages from 1-132 to 1-137

Pos	Part No	UN	Qty	Description	Page No
LIGHTCAP (See drawing on pages: 1-134, 1-136)					
090	2709225-0000		2	SHAFT	
STDA7 CAP, NOMOLDEDCAP (See drawing on page: 1-132)					
090	1523191-0000		2	SHAFT	
Common Parts					
010	247358-0000		1	SHIFTER HANDLE	
020	279008-0000		2	BUSHING	
030	1038464-0000		2	SPROCKET	
040	1549568-0000		2	CHAIN	
050	1511740-0000		1	CARRIER	
060	1549982-0000		1	FLANGE	
070	1549981-0000		1	FLANGE	
080	1523190-0000		1	SHAFT	
100	1532249-0000		2	WHEEL	
110	90459-1148		1	VARILIP 14X24X7 MM	
150	311112-0262		1	SPRING PIN, ISO 8752 4X32-C	
160	312105-0370		6	SCREW M6S ISO 4017 M6X20 A480	
180	312318-0362		2	SCREW ISO4029 M6X8 A4	
190	312605-0316		10	HEXAGON NUT, M6M M6 A280	
200	312705-0318		2	NUT HEX. DOMED CAP MHM-6 M8 A280	
210	315105-0153		4	WASHER BRB 6,4X12 RFR	
220	315105-0165		2	WASHER BRB 8,4X16 RFR	
230	315205-0714		2	O-RING 31,47X1,78 MM	
240	315204-0123		2	O-RING 35,1X1,6 MM	

Pos	Part No	UN	Qty	Description	Page No

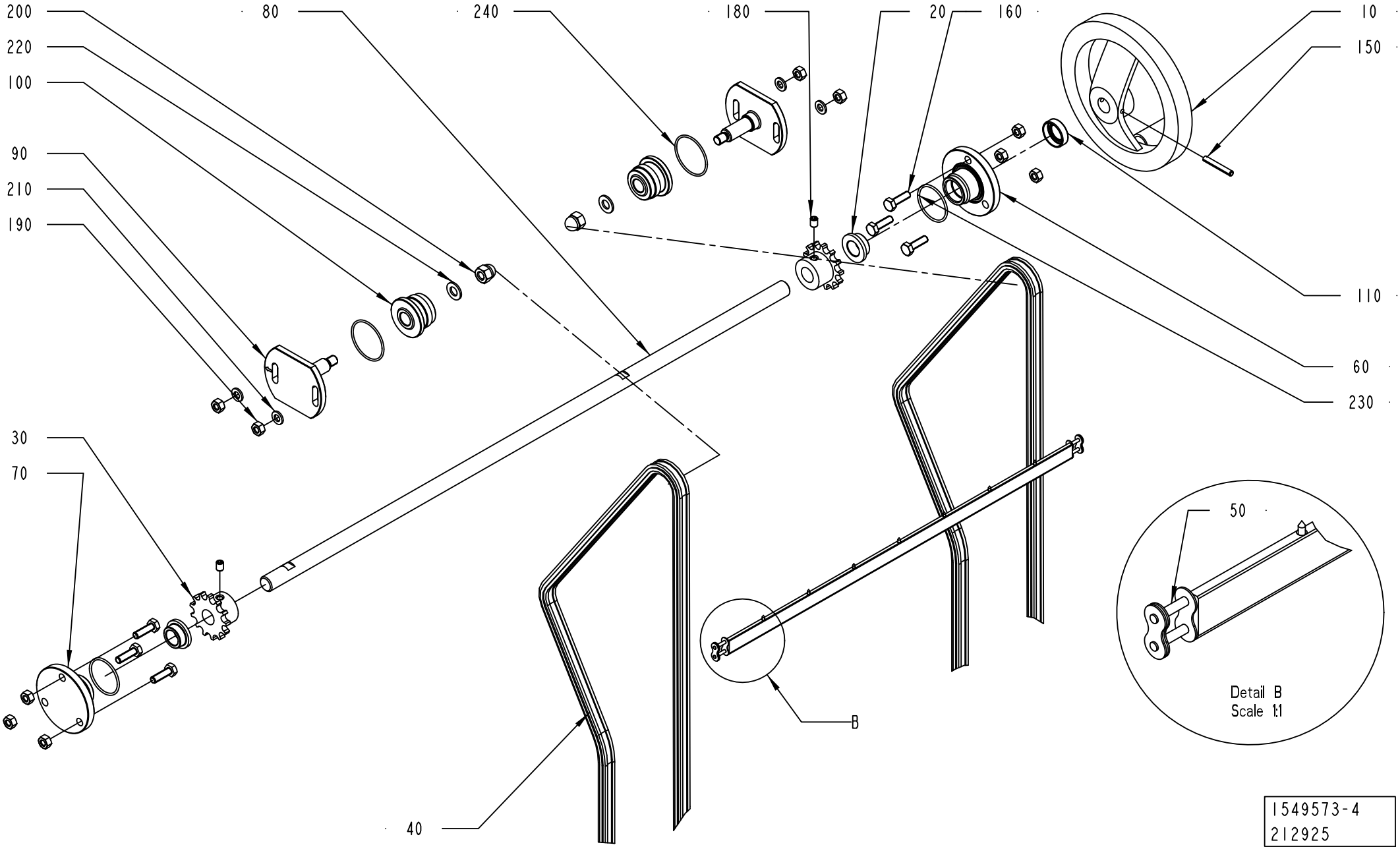
200
220
100
90
210
190
80
240
180
20
160
10
150
110
60
230
30
70
40
50
B
Detail B
Scale 1:1
1549573-4
212925

Pos	Part No	UN	Qty	Description	Page No
LIGHTCAP (See drawing on pages: 1-134, 1-136)					
090	2709225-0000		2	SHAFT	
STDA7 CAP, NOMOLDEDCAP (See drawing on page: 1-132)					
090	1523191-0000		2	SHAFT	
Common Parts					
010	247358-0000		1	SHIFTER HANDLE	
020	279008-0000		2	BUSHING	
030	1038464-0000		2	SPROCKET	
040	1549568-0000		2	CHAIN	
050	1511740-0000		1	CARRIER	
060	1549982-0000		1	FLANGE	
070	1549981-0000		1	FLANGE	
080	1523190-0000		1	SHAFT	
100	1532249-0000		2	WHEEL	
110	90459-1148		1	VARILIP 14X24X7 MM	
150	311112-0262		1	SPRING PIN, ISO 8752 4X32-C	
160	312105-0370		6	SCREW M6S ISO 4017 M6X20 A480	
180	312318-0362		2	SCREW ISO4029 M6X8 A4	
190	312605-0316		10	HEXAGON NUT, M6M M6 A280	
200	312705-0318		2	NUT HEX. DOMED CAP MHM-6 M8 A280	
210	315105-0153		4	WASHER BRB 6,4X12 RFR	
220	315105-0165		2	WASHER BRB 8,4X16 RFR	
230	315205-0714		2	O-RING 31,47X1,78 MM	
240	315204-0123		2	O-RING 35,1X1,6 MM	

Pos	Part No	UN	Qty	Description	Page No

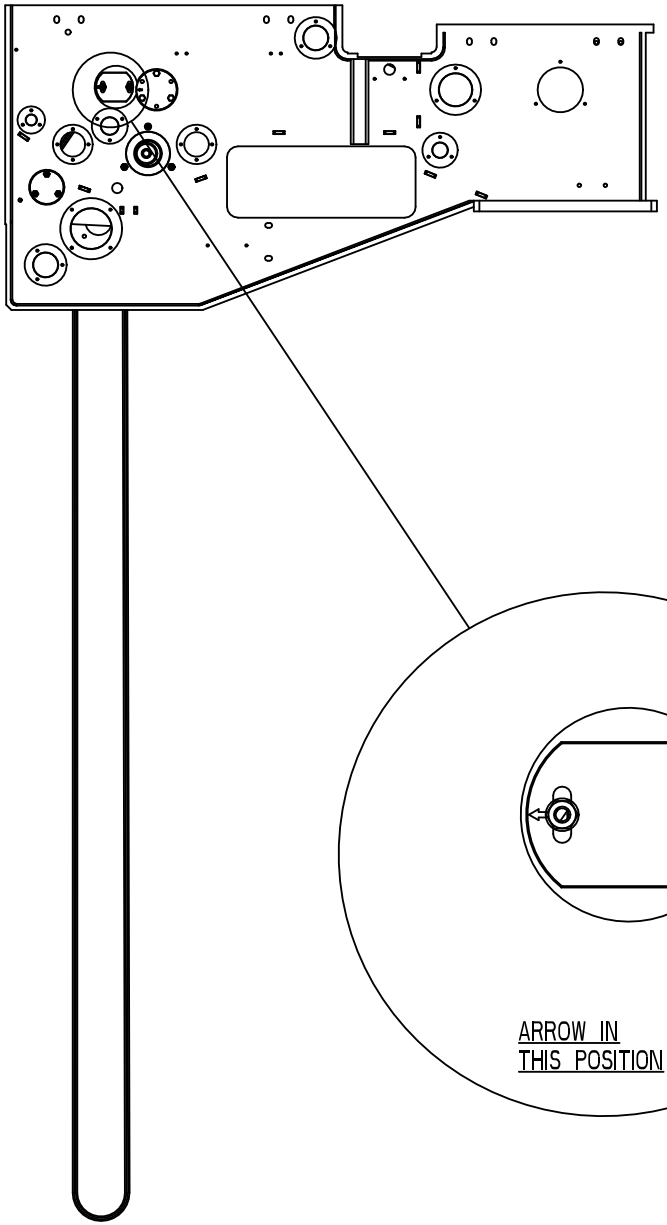

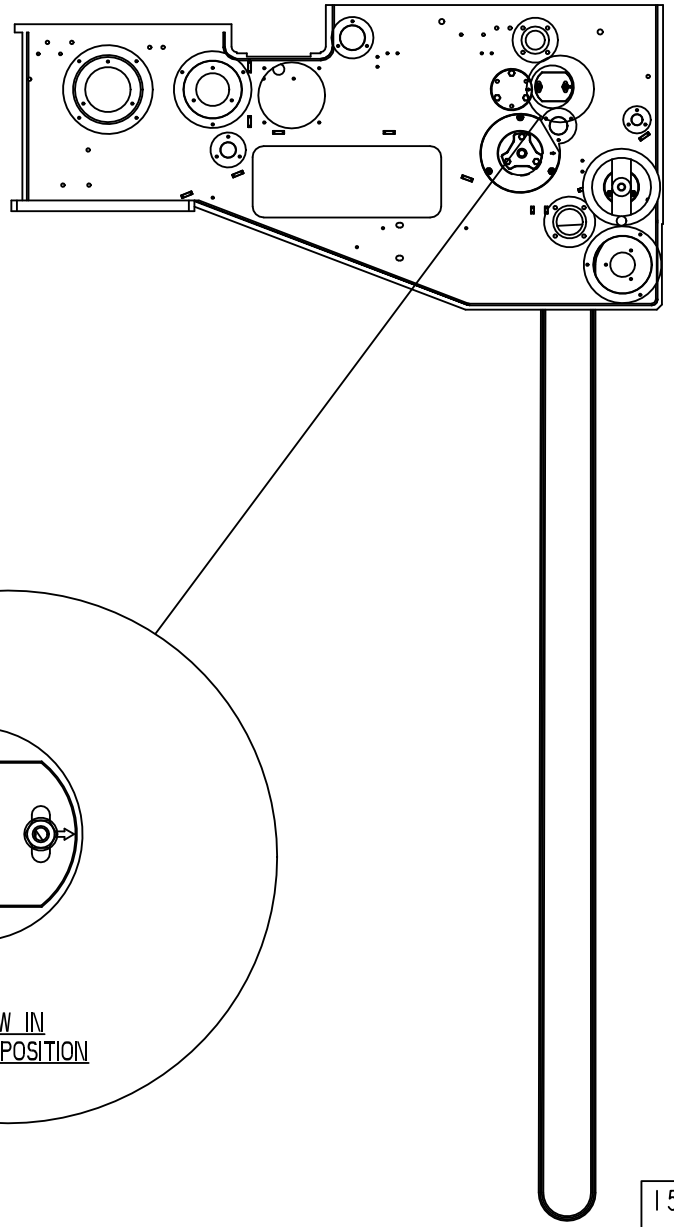

1549573-4
212925

ECM: 258295 - 20060702
Group number: 1549573-0100
Assembly Drawing: 1549573-4_2_AA

This list covers pages from 1-132 to 1-137

Pos	Part No	UN	Qty	Description	Page No
LIGHTCAP (See drawing on pages: 1-134, 1-136)					
090	2709225-0000		2	SHAFT	
STDA7 CAP, NOMOLDEDCAP (See drawing on page: 1-132)					
090	1523191-0000		2	SHAFT	
Common Parts					
010	247358-0000		1	SHIFTER HANDLE	
020	279008-0000		2	BUSHING	
030	1038464-0000		2	SPROCKET	
040	1549568-0000		2	CHAIN	
050	1511740-0000		1	CARRIER	
060	1549982-0000		1	FLANGE	
070	1549981-0000		1	FLANGE	
080	1523190-0000		1	SHAFT	
100	1532249-0000		2	WHEEL	
110	90459-1148		1	VARILIP 14X24X7 MM	
150	311112-0262		1	SPRING PIN, ISO 8752 4X32-C	
160	312105-0370		6	SCREW M6S ISO 4017 M6X20 A480	
180	312318-0362		2	SCREW ISO4029 M6X8 A4	
190	312605-0316		10	HEXAGON NUT, M6M M6 A280	
200	312705-0318		2	NUT HEX. DOMED CAP MHM-6 M8 A280	
210	315105-0153		4	WASHER BRB 6,4X12 RFR	
220	315105-0165		2	WASHER BRB 8,4X16 RFR	
230	315205-0714		2	O-RING 31,47X1,78 MM	
240	315204-0123		2	O-RING 35,1X1,6 MM	

Pos	Part No	UN	Qty	Description	Page No

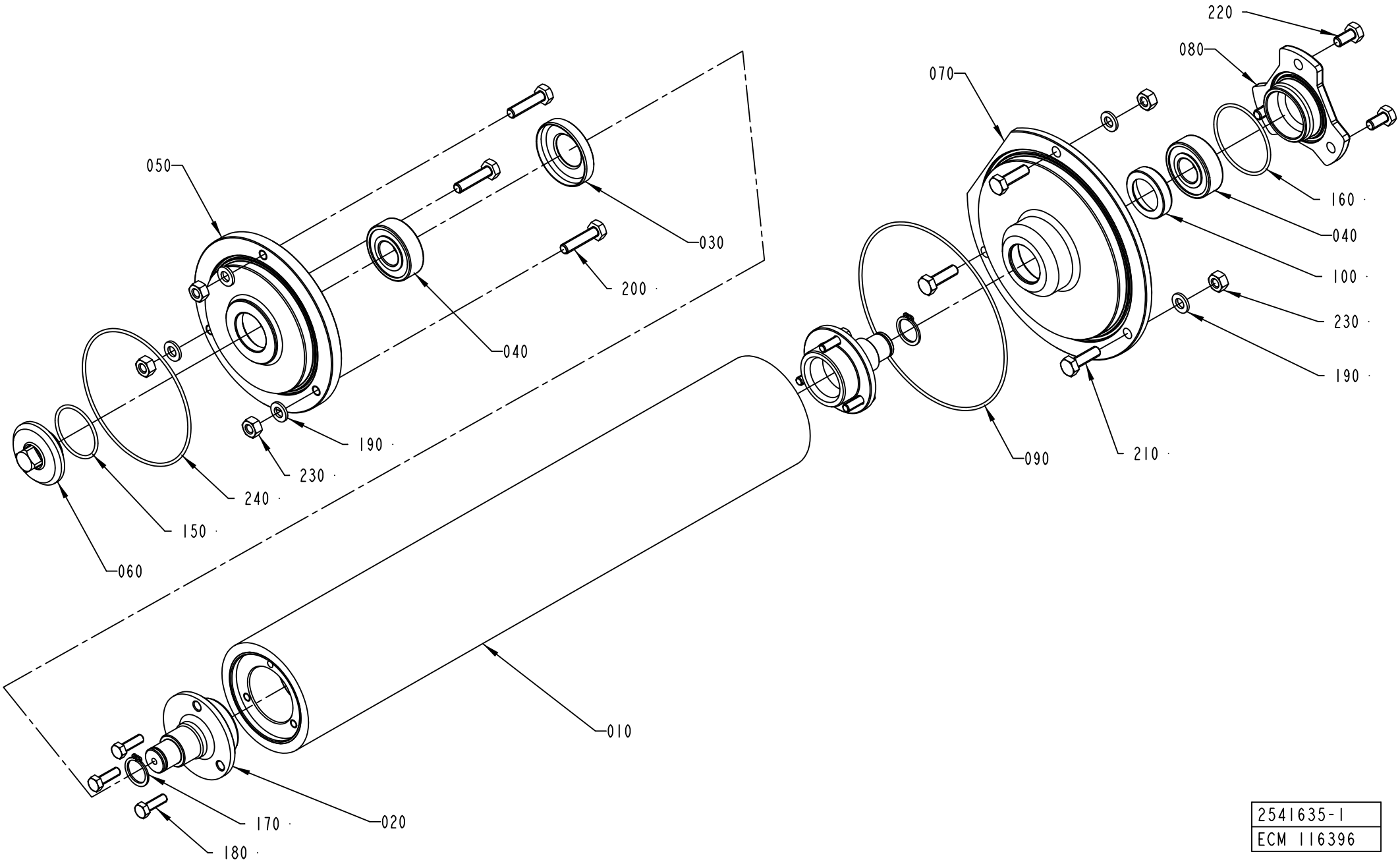

2541635-1
ECM 116396

Pos	Part No	UN	Qty	Description	Page No
A3/FLEX TBA 0200S NODIMC, A3/FLEX TBA 1000SQ NODIMC, A3/FLEX TBA 1000S NODIMC, A3/FLEX TBA 1000B NODIMC, A3/FLEX TBA 0500B NODIMC, A3/FLEX TPA 1000SQ NODIMC, A3/FLEX TBA 1500S NODIMC, A3/FLEX TBA 0200B NODIMC, A3/FLEX TBA 0250B NODIMC, A3/FLEX TBA 0330S NODIMC, A3/FLEX TPA 0330SQ NODIMC, A3/FLEX TPA 0500SQ NODIMC, A3/FLEX TBA 0250S NODIMC, A3/FLEX TBA 0200M NODIMC, A3/FLEX TBA 0500S NODIMC, A3/FLEX TPA 0200SQ NODIMC, A3/FLEX TPA 0250SQ NODIMC, A3/FLEX TPA 0750SQ NODIMC, A3/FLEX TBA 0200SQ NODIMC, A3/FLEX TBA 0250SQ NODIMC (See drawing on page: 1-138)					
010	1511769-0000		1	ROLLER	
050	2541633-0000		1	FLANGE	
070	2532984-0000		1	FLANGE	
A3/FLEX TBA 1000S LIGHTCAP (See drawing on pages: 1-144, 1-146)					
010	2528136-0000		1	SQUEE-GEE ROLLER	
050	2709213-0000		1	FLANGE	
070	2709214-0000		1	FLANGE	
A3/FLEX TBA 1000S STDA7, A3/FLEX TBA 1000B STDA7, A3/FLEX TBA 1000S NOMOLDEDCAP (See drawing on page: 1-140)					
010	2528136-0000		1	SQUEE-GEE ROLLER	
050	2541633-0000		1	FLANGE	
070	2532984-0000		1	FLANGE	
A3/FLEX TBA 2000S NODIMC, A3/FLEX TBA 1890S NODIMC (See drawing on page: 1-142)					
010	2547406-0000		1	ROLLER	
050	2541641-0000		1	FLANGE	
070	2541640-0000		1	FLANGE	
Common Parts					
020	2541637-0000		2	SHAFT	
030	2541647-0000		1	LID	
040	90458-1704		2	BALL BEARING, 15X35X11 MM	
060	2532983-0000		1	FLANGE	
080	2541639-0000		1	LID	
090	90459-1627		1	O-RING 114,02X1,78 MM	
100	2541648-0000		1	LID	
150	315205-0713		1	O-RING 29,87X1,78 MM	
160	315205-0802		1	O-RING 41,0X1,78 MM	
170	315751-0112		2	RETAINING RING FOR SHAFT DIN 471 15 A2	
180	312105-0329		6	SCREW M6S ISO 4017 M5X16 A480	
190	315103-0153		6	WASHER, BRB, 6,4/12,H=1,5 NIPL BR	
200	312105-0372		3	SCREW M6S ISO 4017 M6X25 A480	
210	312105-0370		3	SCREW M6S ISO 4017 M6X20 A480	
220	312105-0366		3	SCREW M6S ISO 4017 M6X12 A480	
230	312605-0316		6	HEXAGON NUT, M6M M6 A280	
240	90242-0270		1	O-RING 82,27X1,78 MM	

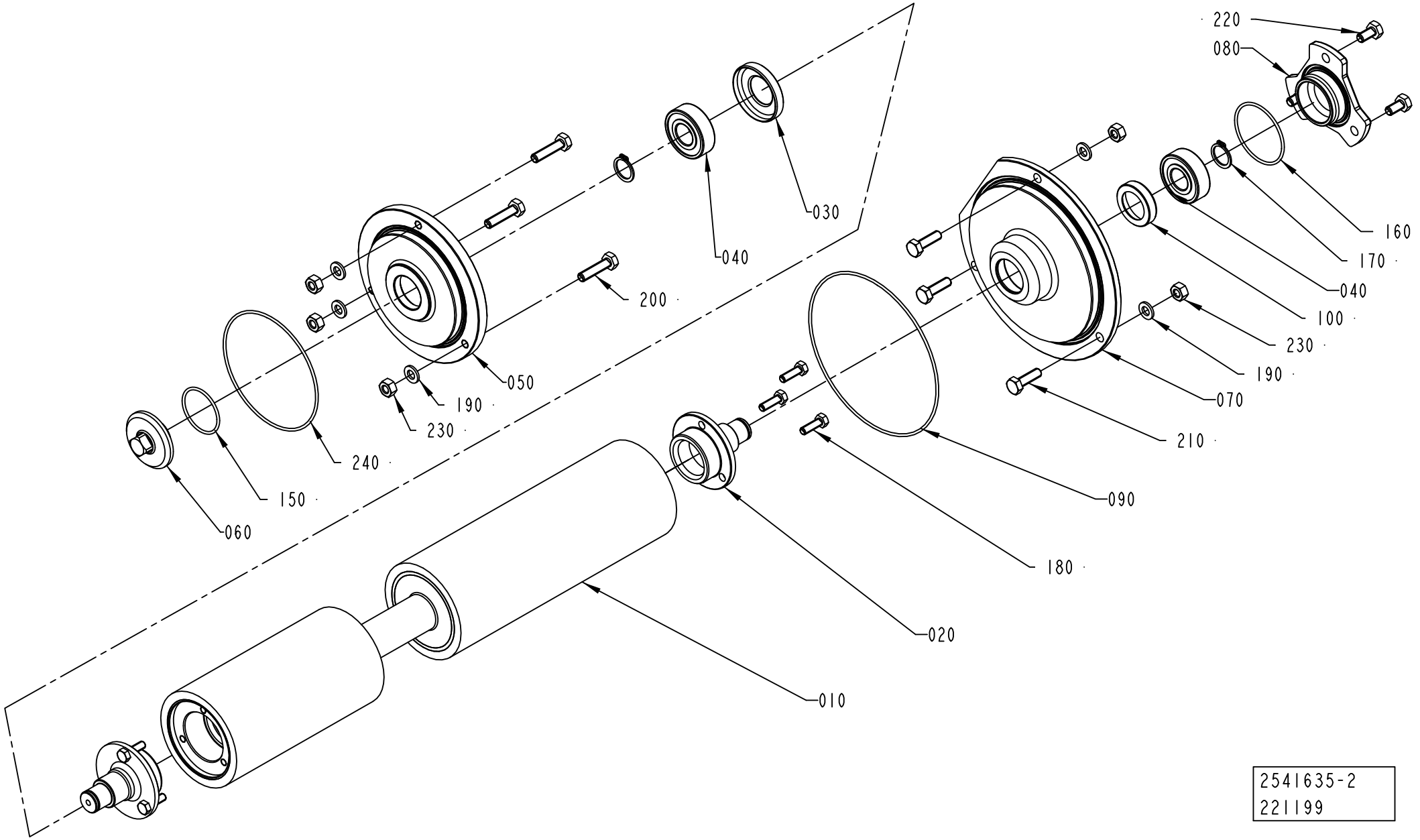
220
080
160
170
040
100
230
190
070
210
090
180
020
010
030
040
200
050
190
230
240
150
060
2541635-2
221199

Pos	Part No	UN	Qty	Description	Page No
A3/FLEX TBA 0200S NODIMC, A3/FLEX TBA 1000SQ NODIMC, A3/FLEX TBA 1000S NODIMC, A3/FLEX TBA 1000B NODIMC, A3/FLEX TBA 0500B NODIMC, A3/FLEX TPA 1000SQ NODIMC, A3/FLEX TBA 1500S NODIMC, A3/FLEX TBA 0200B NODIMC, A3/FLEX TBA 0250B NODIMC, A3/FLEX TBA 0330S NODIMC, A3/FLEX TPA 0330SQ NODIMC, A3/FLEX TPA 0500SQ NODIMC, A3/FLEX TBA 0250S NODIMC, A3/FLEX TBA 0200M NODIMC, A3/FLEX TBA 0500S NODIMC, A3/FLEX TPA 0200SQ NODIMC, A3/FLEX TPA 0250SQ NODIMC, A3/FLEX TPA 0750SQ NODIMC, A3/FLEX TBA 0200SQ NODIMC, A3/FLEX TBA 0250SQ NODIMC (See drawing on page: 1-138)					
010	1511769-0000		1	ROLLER	
050	2541633-0000		1	FLANGE	
070	2532984-0000		1	FLANGE	
A3/FLEX TBA 1000S LIGHTCAP (See drawing on pages: 1-144, 1-146)					
010	2528136-0000		1	SQUEE-GEE ROLLER	
050	2709213-0000		1	FLANGE	
070	2709214-0000		1	FLANGE	
A3/FLEX TBA 1000S STDA7, A3/FLEX TBA 1000B STDA7, A3/FLEX TBA 1000S NOMOLDEDCAP (See drawing on page: 1-140)					
010	2528136-0000		1	SQUEE-GEE ROLLER	
050	2541633-0000		1	FLANGE	
070	2532984-0000		1	FLANGE	
A3/FLEX TBA 2000S NODIMC, A3/FLEX TBA 1890S NODIMC (See drawing on page: 1-142)					
010	2547406-0000		1	ROLLER	
050	2541641-0000		1	FLANGE	
070	2541640-0000		1	FLANGE	
Common Parts					
020	2541637-0000		2	SHAFT	
030	2541647-0000		1	LID	
040	90458-1704		2	BALL BEARING, 15X35X11 MM	
060	2532983-0000		1	FLANGE	
080	2541639-0000		1	LID	
090	90459-1627		1	O-RING 114,02X1,78 MM	
100	2541648-0000		1	LID	
150	315205-0713		1	O-RING 29,87X1,78 MM	
160	315205-0802		1	O-RING 41,0X1,78 MM	
170	315751-0112		2	RETAINING RING FOR SHAFT DIN 471 15 A2	
180	312105-0329		6	SCREW M6S ISO 4017 M5X16 A480	
190	315103-0153		6	WASHER, BRB, 6,4/12,H=1,5 NIPL BR	
200	312105-0372		3	SCREW M6S ISO 4017 M6X25 A480	
210	312105-0370		3	SCREW M6S ISO 4017 M6X20 A480	
220	312105-0366		3	SCREW M6S ISO 4017 M6X12 A480	
230	312605-0316		6	HEXAGON NUT, M6M M6 A280	
240	90242-0270		1	O-RING 82,27X1,78 MM	

SQUEE-GEE ROLLER

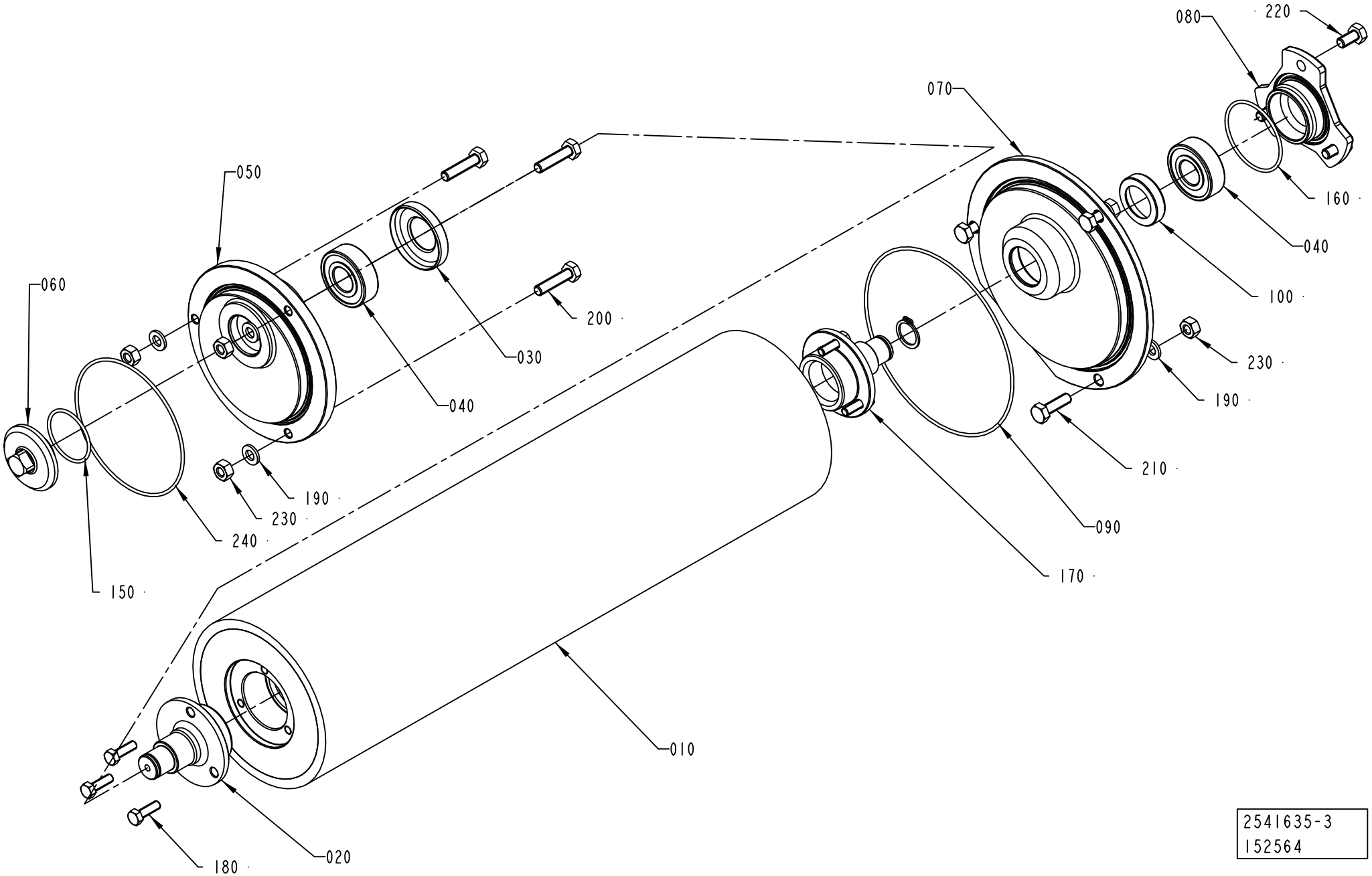

Pos	Part No	UN	Qty	Description	Page No
A3/FLEX TBA 0200S NODIMC, A3/FLEX TBA 1000SQ NODIMC, A3/FLEX TBA 1000S NODIMC, A3/FLEX TBA 1000B NODIMC, A3/FLEX TBA 0500B NODIMC, A3/FLEX TPA 1000SQ NODIMC, A3/FLEX TBA 1500S NODIMC, A3/FLEX TBA 0200B NODIMC, A3/FLEX TBA 0250B NODIMC, A3/FLEX TBA 0330S NODIMC, A3/FLEX TPA 0330SQ NODIMC, A3/FLEX TPA 0500SQ NODIMC, A3/FLEX TBA 0250S NODIMC, A3/FLEX TBA 0200M NODIMC, A3/FLEX TBA 0500S NODIMC, A3/FLEX TPA 0200SQ NODIMC, A3/FLEX TPA 0250SQ NODIMC, A3/FLEX TPA 0750SQ NODIMC, A3/FLEX TBA 0200SQ NODIMC, A3/FLEX TBA 0250SQ NODIMC (See drawing on page: 1-138)					
010	1511769-0000		1	ROLLER	
050	2541633-0000		1	FLANGE	
070	2532984-0000		1	FLANGE	
A3/FLEX TBA 1000S LIGHTCAP (See drawing on pages: 1-144, 1-146)					
010	2528136-0000		1	SQUEE-GEE ROLLER	
050	2709213-0000		1	FLANGE	
070	2709214-0000		1	FLANGE	
A3/FLEX TBA 1000S STDA7, A3/FLEX TBA 1000B STDA7, A3/FLEX TBA 1000S NOMOLDEDCAP (See drawing on page: 1-140)					
010	2528136-0000		1	SQUEE-GEE ROLLER	
050	2541633-0000		1	FLANGE	
070	2532984-0000		1	FLANGE	
A3/FLEX TBA 2000S NODIMC, A3/FLEX TBA 1890S NODIMC (See drawing on page: 1-142)					
010	2547406-0000		1	ROLLER	
050	2541641-0000		1	FLANGE	
070	2541640-0000		1	FLANGE	
Common Parts					
020	2541637-0000		2	SHAFT	
030	2541647-0000		1	LID	
040	90458-1704		2	BALL BEARING, 15X35X11 MM	
060	2532983-0000		1	FLANGE	
080	2541639-0000		1	LID	
090	90459-1627		1	O-RING 114,02X1,78 MM	
100	2541648-0000		1	LID	
150	315205-0713		1	O-RING 29,87X1,78 MM	
160	315205-0802		1	O-RING 41,0X1,78 MM	
170	315751-0112		2	RETAINING RING FOR SHAFT DIN 471 15 A2	
180	312105-0329		6	SCREW M6S ISO 4017 M5X16 A480	
190	315103-0153		6	WASHER, BRB, 6,4/12,H=1,5 NIPL BR	
200	312105-0372		3	SCREW M6S ISO 4017 M6X25 A480	
210	312105-0370		3	SCREW M6S ISO 4017 M6X20 A480	
220	312105-0366		3	SCREW M6S ISO 4017 M6X12 A480	
230	312605-0316		6	HEXAGON NUT, M6M M6 A280	
240	90242-0270		1	O-RING 82,27X1,78 MM	

SQUEE-GEE ROLLER

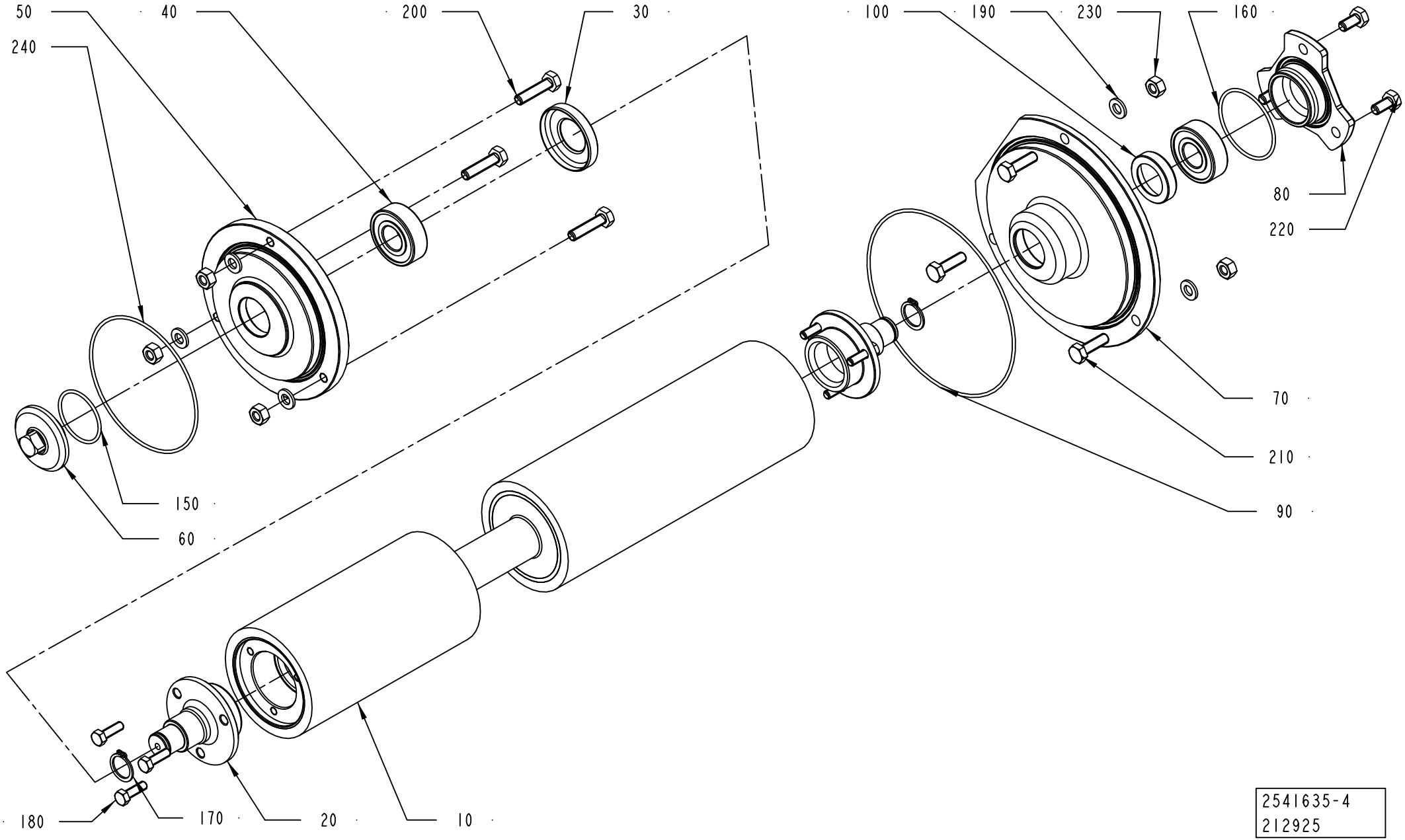

2541635-4
212925

Pos	Part No	UN	Qty	Description	Page No
A3/FLEX TBA 0200S NODIMC, A3/FLEX TBA 1000SQ NODIMC, A3/FLEX TBA 1000S NODIMC, A3/FLEX TBA 1000B NODIMC, A3/FLEX TBA 0500B NODIMC, A3/FLEX TPA 1000SQ NODIMC, A3/FLEX TBA 1500S NODIMC, A3/FLEX TBA 0200B NODIMC, A3/FLEX TBA 0250B NODIMC, A3/FLEX TBA 0330S NODIMC, A3/FLEX TPA 0330SQ NODIMC, A3/FLEX TPA 0500SQ NODIMC, A3/FLEX TBA 0250S NODIMC, A3/FLEX TBA 0200M NODIMC, A3/FLEX TBA 0500S NODIMC, A3/FLEX TPA 0200SQ NODIMC, A3/FLEX TPA 0250SQ NODIMC, A3/FLEX TPA 0750SQ NODIMC, A3/FLEX TBA 0200SQ NODIMC, A3/FLEX TBA 0250SQ NODIMC (See drawing on page: 1-138)					
010	1511769-0000		1	ROLLER	
050	2541633-0000		1	FLANGE	
070	2532984-0000		1	FLANGE	
A3/FLEX TBA 1000S LIGHTCAP (See drawing on pages: 1-144, 1-146)					
010	2528136-0000		1	SQUEE-GEE ROLLER	
050	2709213-0000		1	FLANGE	
070	2709214-0000		1	FLANGE	
A3/FLEX TBA 1000S STDA7, A3/FLEX TBA 1000B STDA7, A3/FLEX TBA 1000S NOMOLDEDCAP (See drawing on page: 1-140)					
010	2528136-0000		1	SQUEE-GEE ROLLER	
050	2541633-0000		1	FLANGE	
070	2532984-0000		1	FLANGE	
A3/FLEX TBA 2000S NODIMC, A3/FLEX TBA 1890S NODIMC (See drawing on page: 1-142)					
010	2547406-0000		1	ROLLER	
050	2541641-0000		1	FLANGE	
070	2541640-0000		1	FLANGE	
Common Parts					
020	2541637-0000		2	SHAFT	
030	2541647-0000		1	LID	
040	90458-1704		2	BALL BEARING, 15X35X11 MM	
060	2532983-0000		1	FLANGE	
080	2541639-0000		1	LID	
090	90459-1627		1	O-RING 114,02X1,78 MM	
100	2541648-0000		1	LID	
150	315205-0713		1	O-RING 29,87X1,78 MM	
160	315205-0802		1	O-RING 41,0X1,78 MM	
170	315751-0112		2	RETAINING RING FOR SHAFT DIN 471 15 A2	
180	312105-0329		6	SCREW M6S ISO 4017 M5X16 A480	
190	315103-0153		6	WASHER, BRB, 6,4/12,H=1,5 NIPL BR	
200	312105-0372		3	SCREW M6S ISO 4017 M6X25 A480	
210	312105-0370		3	SCREW M6S ISO 4017 M6X20 A480	
220	312105-0366		3	SCREW M6S ISO 4017 M6X12 A480	
230	312605-0316		6	HEXAGON NUT, M6M M6 A280	
240	90242-0270		1	O-RING 82,27X1,78 MM	

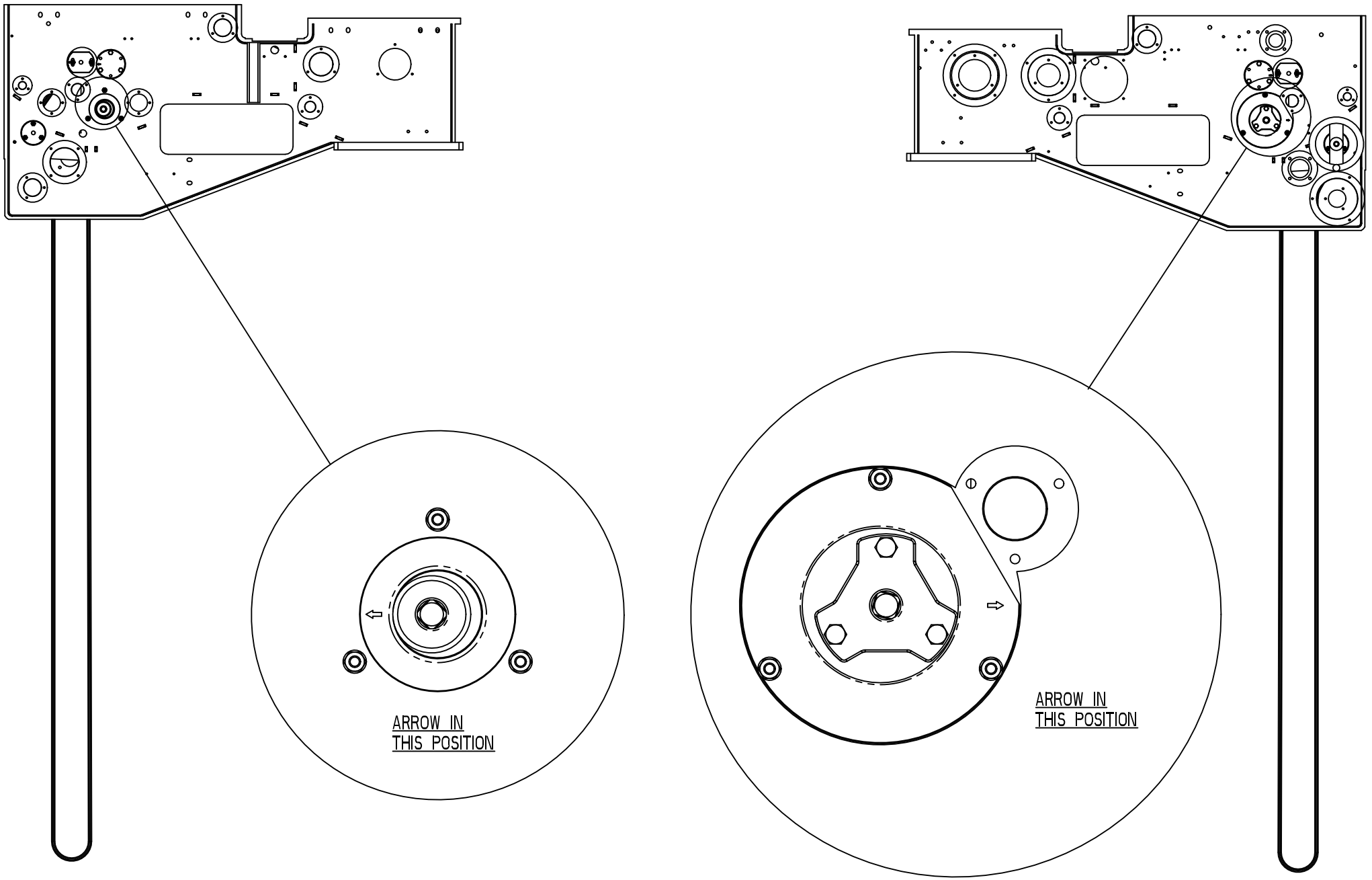
ARROW IN
THIS POSITION
ARROW IN
THIS POSITION

Pos	Part No	UN	Qty	Description	Page No
A3/FLEX TBA 0200S NODIMC, A3/FLEX TBA 1000SQ NODIMC, A3/FLEX TBA 1000S NODIMC, A3/FLEX TBA 1000B NODIMC, A3/FLEX TBA 0500B NODIMC, A3/FLEX TPA 1000SQ NODIMC, A3/FLEX TBA 1500S NODIMC, A3/FLEX TBA 0200B NODIMC, A3/FLEX TBA 0250B NODIMC, A3/FLEX TBA 0330S NODIMC, A3/FLEX TPA 0330SQ NODIMC, A3/FLEX TPA 0500SQ NODIMC, A3/FLEX TBA 0250S NODIMC, A3/FLEX TBA 0200M NODIMC, A3/FLEX TBA 0500S NODIMC, A3/FLEX TPA 0200SQ NODIMC, A3/FLEX TPA 0250SQ NODIMC, A3/FLEX TPA 0750SQ NODIMC, A3/FLEX TBA 0200SQ NODIMC, A3/FLEX TBA 0250SQ NODIMC (See drawing on page: 1-138)					
010	1511769-0000		1	ROLLER	
050	2541633-0000		1	FLANGE	
070	2532984-0000		1	FLANGE	
A3/FLEX TBA 1000S LIGHTCAP (See drawing on pages: 1-144, 1-146)					
010	2528136-0000		1	SQUEE-GEE ROLLER	
050	2709213-0000		1	FLANGE	
070	2709214-0000		1	FLANGE	
A3/FLEX TBA 1000S STDA7, A3/FLEX TBA 1000B STDA7, A3/FLEX TBA 1000S NOMOLDEDCAP (See drawing on page: 1-140)					
010	2528136-0000		1	SQUEE-GEE ROLLER	
050	2541633-0000		1	FLANGE	
070	2532984-0000		1	FLANGE	
A3/FLEX TBA 2000S NODIMC, A3/FLEX TBA 1890S NODIMC (See drawing on page: 1-142)					
010	2547406-0000		1	ROLLER	
050	2541641-0000		1	FLANGE	
070	2541640-0000		1	FLANGE	
Common Parts					
020	2541637-0000		2	SHAFT	
030	2541647-0000		1	LID	
040	90458-1704		2	BALL BEARING, 15X35X11 MM	
060	2532983-0000		1	FLANGE	
080	2541639-0000		1	LID	
090	90459-1627		1	O-RING 114,02X1,78 MM	
100	2541648-0000		1	LID	
150	315205-0713		1	O-RING 29,87X1,78 MM	
160	315205-0802		1	O-RING 41,0X1,78 MM	
170	315751-0112		2	RETAINING RING FOR SHAFT DIN 471 15 A2	
180	312105-0329		6	SCREW M6S ISO 4017 M5X16 A480	
190	315103-0153		6	WASHER, BRB, 6,4/12,H=1,5 NIPL BR	
200	312105-0372		3	SCREW M6S ISO 4017 M6X25 A480	
210	312105-0370		3	SCREW M6S ISO 4017 M6X20 A480	
220	312105-0366		3	SCREW M6S ISO 4017 M6X12 A480	
230	312605-0316		6	HEXAGON NUT, M6M M6 A280	
240	90242-0270		1	O-RING 82,27X1,78 MM	

CALENDER ROLLER

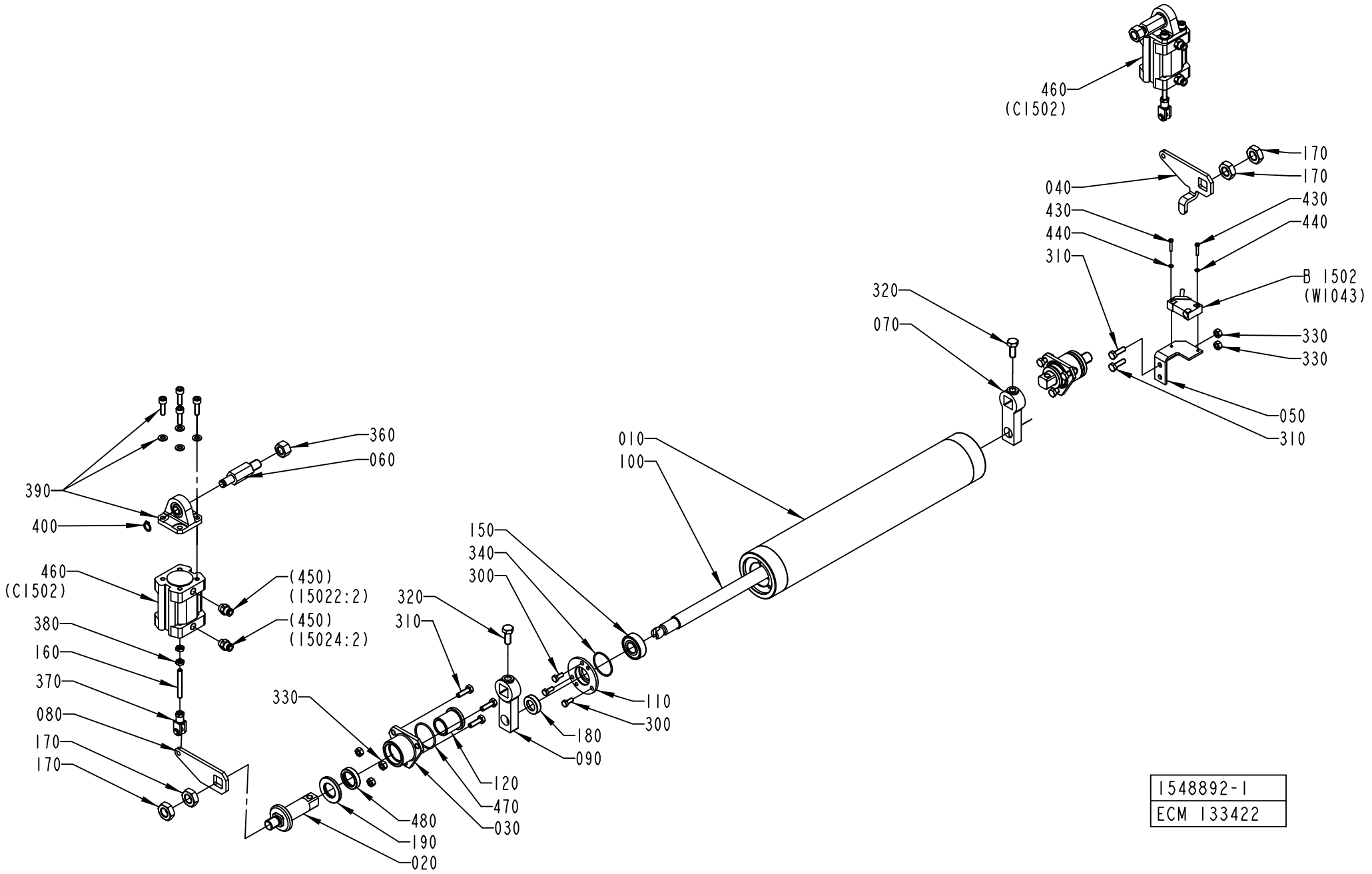

ECM: 271749 - 20060728
Group number: 1548892-0100
Assembly Drawing: 1548892-1_1_AB

This list covers pages from 1-148 to 1-153

Pos	Part No	UN	Qty	Description	Page No
A3/FLEX DIMC/FLEX (See drawing on page: 1-152)					
010	2528136-0000		1	SQUEE-GEE ROLLER	
040	1498130-0000		1	PLATE	
060	1498132-0000		2	SHAFT	
070	1498133-0000		1	ARM	
080	1498134-0000		1	PLATE	
090	1498135-0000		1	ARM	
390	90450-0756		2	BRACKET, REAR EYE 32	
400	90141-0016		2	RETAINING RING FOR SHAFT DIN 471 10 A2	
A3/FLEX TBA 0200S NODIMC, A3/FLEX TBA 1000SQ NODIMC, A3/FLEX TBA 1000S NODIMC, A3/FLEX TBA 1000B NODIMC, A3/FLEX TBA 0500B NODIMC, A3/FLEX TBA 0250S NODIMC, A3/FLEX TBA 0200M NODIMC (See drawing on page: 1-148)					
010	1538496-0000		1	ROLLER	
040	1498130-0000		1	PLATE	
060	1498132-0000		2	SHAFT	
070	1498133-0000		1	ARM	
080	1498134-0000		1	PLATE	
090	1498135-0000		1	ARM	
390	90450-0756		2	BRACKET, REAR EYE 32	
400	90141-0016		2	RETAINING RING FOR SHAFT DIN 471 10 A2	
460	90458-0528		2	DOUBLE ACTING, COMPACT, CYL 32-25	
A3/FLEX TBA 2000S NODIMC, A3/FLEX TBA 1890S NODIMC (See drawing on page: 1-150)					
010	2547406-0000		1	ROLLER	
040	2544883-0000		1	PLATE	
060	1498132-0000		2	SHAFT	
070	2544885-0000		1	ARM	
080	2544884-0000		1	PLATE	
090	2544886-0000		1	ARM	
390	90450-0756		2	BRACKET, REAR EYE 32	
400	90141-0016		2	RETAINING RING FOR SHAFT DIN 471 10 A2	
460	90458-0528		2	DOUBLE ACTING, COMPACT, CYL 32-25	
A3/FLEX TPA 1000SQ NODIMC, A3/FLEX TBA 1500S NODIMC, A3/FLEX TBA 0200B NODIMC, A3/FLEX TBA 0250B NODIMC, A3/FLEX TBA 0330S NODIMC, A3/FLEX TPA 0330SQ NODIMC, A3/FLEX TPA 0500SQ NODIMC, A3/FLEX TBA 0500S NODIMC, A3/FLEX TPA 0200SQ NODIMC, A3/FLEX TPA 0250SQ NODIMC, A3/FLEX TPA 0750SQ NODIMC, A3/FLEX TBA 0200SQ NODIMC, A3/FLEX TBA 0250SQ NODIMC (See drawing on page: 1-148)					
010	1511769-0000		1	ROLLER	
040	1498130-0000		1	PLATE	
060	1498132-0000		2	SHAFT	
070	1498133-0000		1	ARM	
080	1498134-0000		1	PLATE	
090	1498135-0000		1	ARM	
390	90450-0756		2	BRACKET, REAR EYE 32	
400	90141-0016		2	RETAINING RING FOR SHAFT DIN 471 10 A2	
460	90458-0528		2	DOUBLE ACTING, COMPACT, CYL 32-25	
Common Parts					
020	2532969-0000		2	SHAFT	
030	2541643-0000		2	FLANGE	
050	1498131-0000		1	BRACKET	
100	1498790-0000		1	SHAFT	
110	1498791-0000		2	FLANGE	
120	2541682-0000		2	BUSHING	
150	90458-1704		2	BALL BEARING, 15X35X11 MM	
160	90459-1728		2	SCREW ISO4029 M6X45 A4	
170	90099-0027		4	HEXAGON NUT, M14, DIN936	
180	2541650-0000		2	LID	
190	2541681-0000		2	WASHER	
300	312105-0327		6	SCREW M6S ISO 4017 M5X12 A480	
310	312105-0370		8	SCREW M6S ISO 4017 M6X20 A480	
320	312105-0451		2	SCREW M6S ISO 4017 M8X20 A480	
330	312605-0316		8	HEXAGON NUT, M6M M6 A280	
340	315204-0122		2	O-RING 32,1X1,6 MM	
360	312605-0322		2	HEXAGON NUT, M6M M12 A280	
370	90239-0489		2	ROD END, CLEVIS WITH AXLE M6X1,25	
380	312625-0316		4	HEXAGON THIN NUT, EN 24035 ML6M M6 A4	
430	312125-0228		2	SCREW ISO 1207 M3X16 A4	
440	315105-0124		2	WASHER BRB 3,2X6 RFR	
450	342722-0202		4	PIPE COUPLING 1/8" D=6MM	
470	315205-0716		2	O-RING 34,65X1,78 MM	
480	90458-0639		2	VARILIP 20X30X7 MM	
B1502	90044-0194		1	PROX.SW. IN5329/IN3002-BPKG(EX90044-104)	

Machine Type | Group Description | Used-In | Group Number | Page No

CALENDER ROLLER

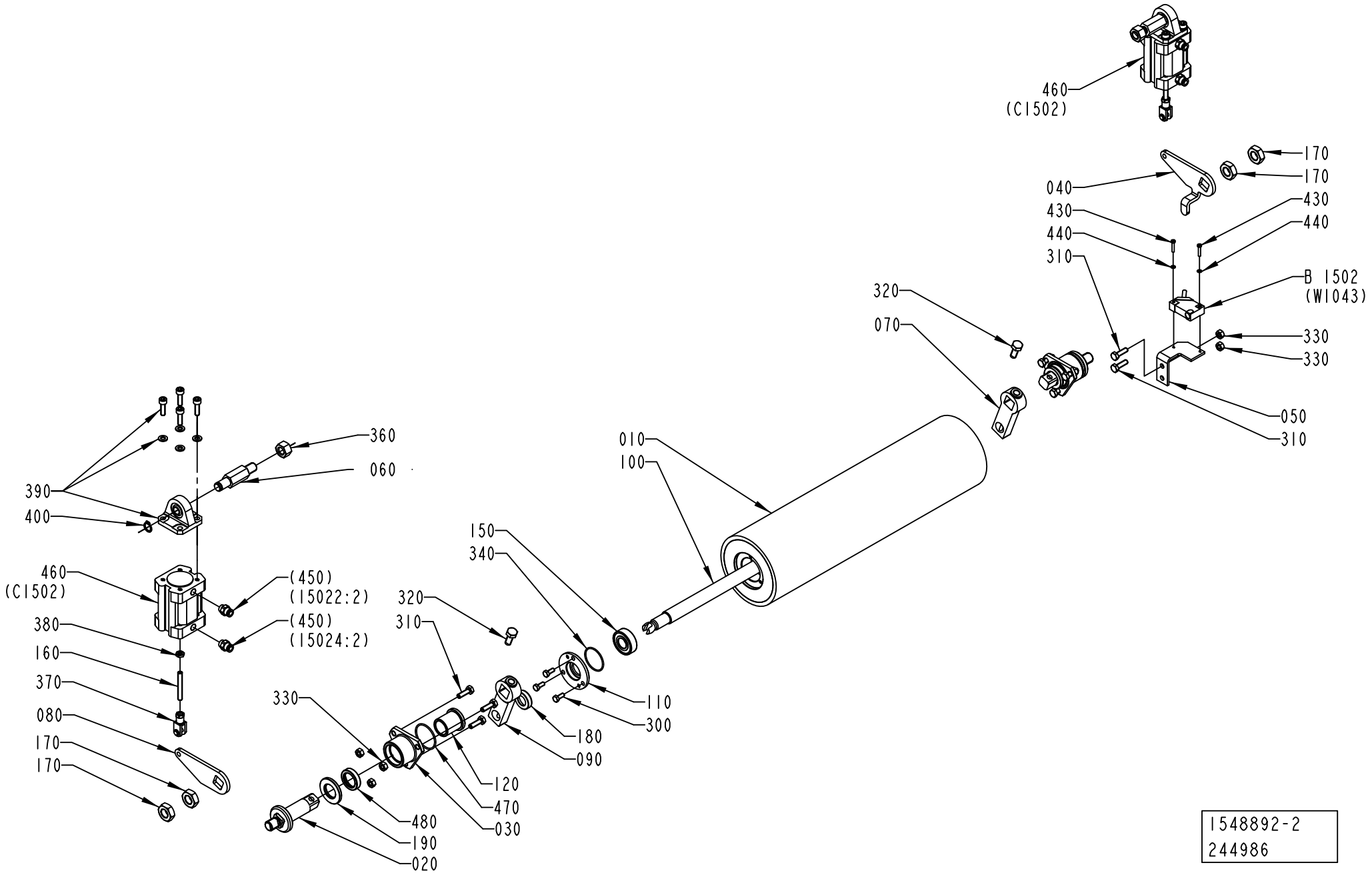

1548892-2
244986

ECM: 271749 - 20060728
Group number: 1548892-0100
Assembly Drawing: 1548892-2_1_AB

This list covers pages from 1-148 to 1-153

Pos	Part No	UN	Qty	Description	Page No
A3/FLEX DIMC/FLEX (See drawing on page: 1-152)					
010	2528136-0000		1	SQUEE-GEE ROLLER	
040	1498130-0000		1	PLATE	
060	1498132-0000		2	SHAFT	
070	1498133-0000		1	ARM	
080	1498134-0000		1	PLATE	
090	1498135-0000		1	ARM	
390	90450-0756		2	BRACKET, REAR EYE 32	
400	90141-0016		2	RETAINING RING FOR SHAFT DIN 471 10 A2	
A3/FLEX TBA 0200S NODIMC, A3/FLEX TBA 1000SQ NODIMC, A3/FLEX TBA 1000S NODIMC, A3/FLEX TBA 1000B NODIMC, A3/FLEX TBA 0500B NODIMC, A3/FLEX TBA 0250S NODIMC, A3/FLEX TBA 0200M NODIMC (See drawing on page: 1-148)					
010	1538496-0000		1	ROLLER	
040	1498130-0000		1	PLATE	
060	1498132-0000		2	SHAFT	
070	1498133-0000		1	ARM	
080	1498134-0000		1	PLATE	
090	1498135-0000		1	ARM	
390	90450-0756		2	BRACKET, REAR EYE 32	
400	90141-0016		2	RETAINING RING FOR SHAFT DIN 471 10 A2	
460	90458-0528		2	DOUBLE ACTING, COMPACT, CYL 32-25	
A3/FLEX TBA 2000S NODIMC, A3/FLEX TBA 1890S NODIMC (See drawing on page: 1-150)					
010	2547406-0000		1	ROLLER	
040	2544883-0000		1	PLATE	
060	1498132-0000		2	SHAFT	
070	2544885-0000		1	ARM	
080	2544884-0000		1	PLATE	
090	2544886-0000		1	ARM	
390	90450-0756		2	BRACKET, REAR EYE 32	
400	90141-0016		2	RETAINING RING FOR SHAFT DIN 471 10 A2	
460	90458-0528		2	DOUBLE ACTING, COMPACT, CYL 32-25	
A3/FLEX TPA 1000SQ NODIMC, A3/FLEX TBA 1500S NODIMC, A3/FLEX TBA 0200B NODIMC, A3/FLEX TBA 0250B NODIMC, A3/FLEX TBA 0330S NODIMC, A3/FLEX TPA 0330SQ NODIMC, A3/FLEX TPA 0500SQ NODIMC, A3/FLEX TBA 0500S NODIMC, A3/FLEX TPA 0200SQ NODIMC, A3/FLEX TPA 0250SQ NODIMC, A3/FLEX TPA 0750SQ NODIMC, A3/FLEX TBA 0200SQ NODIMC, A3/FLEX TBA 0250SQ NODIMC (See drawing on page: 1-148)					
010	1511769-0000		1	ROLLER	
040	1498130-0000		1	PLATE	
060	1498132-0000		2	SHAFT	
070	1498133-0000		1	ARM	
080	1498134-0000		1	PLATE	
090	1498135-0000		1	ARM	
390	90450-0756		2	BRACKET, REAR EYE 32	
400	90141-0016		2	RETAINING RING FOR SHAFT DIN 471 10 A2	
460	90458-0528		2	DOUBLE ACTING, COMPACT, CYL 32-25	
Common Parts					
020	2532969-0000		2	SHAFT	
030	2541643-0000		2	FLANGE	
050	1498131-0000		1	BRACKET	
100	1498790-0000		1	SHAFT	
110	1498791-0000		2	FLANGE	
120	2541682-0000		2	BUSHING	
150	90458-1704		2	BALL BEARING, 15X35X11 MM	
160	90459-1728		2	SCREW ISO4029 M6X45 A4	
170	90099-0027		4	HEXAGON NUT, M14, DIN936	
180	2541650-0000		2	LID	
190	2541681-0000		2	WASHER	
300	312105-0327		6	SCREW M6S ISO 4017 M5X12 A480	
310	312105-0370		8	SCREW M6S ISO 4017 M6X20 A480	
320	312105-0451		2	SCREW M6S ISO 4017 M8X20 A480	
330	312605-0316		8	HEXAGON NUT, M6M M6 A280	
340	315204-0122		2	O-RING 32,1X1,6 MM	
360	312605-0322		2	HEXAGON NUT, M6M M12 A280	
370	90239-0489		2	ROD END, CLEVIS WITH AXLE M6X1,25	
380	312625-0316		4	HEXAGON THIN NUT, EN 24035 ML6M M6 A4	
430	312125-0228		2	SCREW ISO 1207 M3X16 A4	
440	315105-0124		2	WASHER BRB 3,2X6 RFR	
450	342722-0202		4	PIPE COUPLING 1/8" D=6MM	
470	315205-0716		2	O-RING 34,65X1,78 MM	
480	90458-0639		2	VARILIP 20X30X7 MM	
B1502	90044-0194		1	PROX.SW. IN5329/IN3002-BPKG(EX90044-104)	

Machine Type	Group Description	Used-In	Group Number	Page No

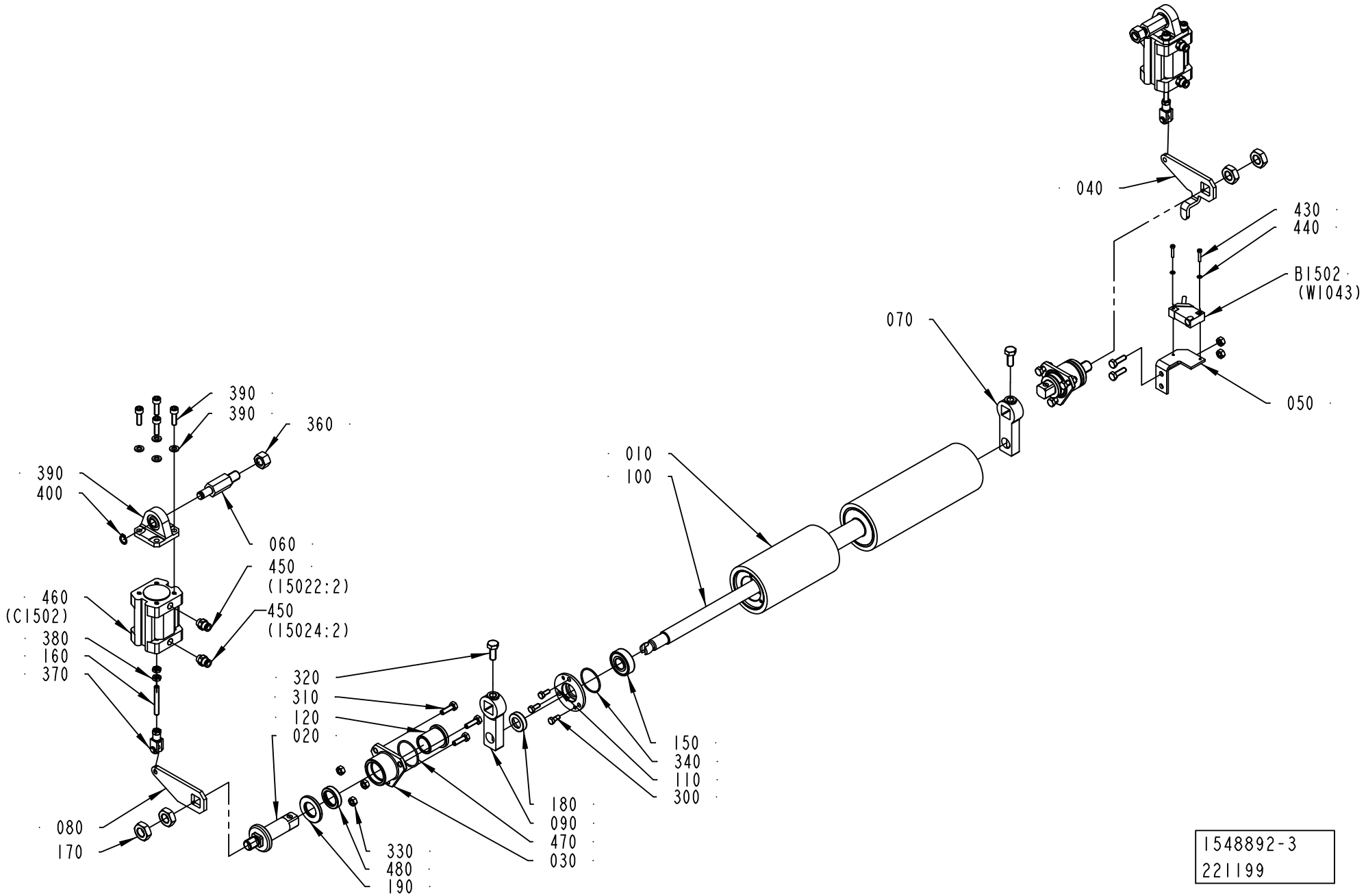
040
430
440
B1502
(W1043)
070
050
010
100
390
390
360
390
400
060
450
(15022:2)
460
(C1502)
450
(15024:2)
380
160
370
320
310
120
020
150
340
110
300
180
090
470
030
080
170
330
480
190
1548892-3
221199

ECM: 271749 - 20060728
Group number: 1548892-0100
Assembly Drawing: 1548892-3_1_AA

This list covers pages from 1-148 to 1-153

Pos	Part No	UN	Qty	Description	Page No
A3/FLEX DIMC/FLEX (See drawing on page: 1-152)					
010	2528136-0000		1	SQUEE-GEE ROLLER	
040	1498130-0000		1	PLATE	
060	1498132-0000		2	SHAFT	
070	1498133-0000		1	ARM	
080	1498134-0000		1	PLATE	
090	1498135-0000		1	ARM	
390	90450-0756		2	BRACKET, REAR EYE 32	
400	90141-0016		2	RETAINING RING FOR SHAFT DIN 471 10 A2	
A3/FLEX TBA 0200S NODIMC, A3/FLEX TBA 1000SQ NODIMC, A3/FLEX TBA 1000S NODIMC, A3/FLEX TBA 1000B NODIMC, A3/FLEX TBA 0500B NODIMC, A3/FLEX TBA 0250S NODIMC, A3/FLEX TBA 0200M NODIMC (See drawing on page: 1-148)					
010	1538496-0000		1	ROLLER	
040	1498130-0000		1	PLATE	
060	1498132-0000		2	SHAFT	
070	1498133-0000		1	ARM	
080	1498134-0000		1	PLATE	
090	1498135-0000		1	ARM	
390	90450-0756		2	BRACKET, REAR EYE 32	
400	90141-0016		2	RETAINING RING FOR SHAFT DIN 471 10 A2	
460	90458-0528		2	DOUBLE ACTING, COMPACT, CYL 32-25	
A3/FLEX TBA 2000S NODIMC, A3/FLEX TBA 1890S NODIMC (See drawing on page: 1-150)					
010	2547406-0000		1	ROLLER	
040	2544883-0000		1	PLATE	
060	1498132-0000		2	SHAFT	
070	2544885-0000		1	ARM	
080	2544884-0000		1	PLATE	
090	2544886-0000		1	ARM	
390	90450-0756		2	BRACKET, REAR EYE 32	
400	90141-0016		2	RETAINING RING FOR SHAFT DIN 471 10 A2	
460	90458-0528		2	DOUBLE ACTING, COMPACT, CYL 32-25	
A3/FLEX TPA 1000SQ NODIMC, A3/FLEX TBA 1500S NODIMC, A3/FLEX TBA 0200B NODIMC, A3/FLEX TBA 0250B NODIMC, A3/FLEX TBA 0330S NODIMC, A3/FLEX TPA 0330SQ NODIMC, A3/FLEX TPA 0500SQ NODIMC, A3/FLEX TBA 0500S NODIMC, A3/FLEX TPA 0200SQ NODIMC, A3/FLEX TPA 0250SQ NODIMC, A3/FLEX TPA 0750SQ NODIMC, A3/FLEX TBA 0200SQ NODIMC, A3/FLEX TBA 0250SQ NODIMC (See drawing on page: 1-148)					
010	1511769-0000		1	ROLLER	
040	1498130-0000		1	PLATE	
060	1498132-0000		2	SHAFT	
070	1498133-0000		1	ARM	
080	1498134-0000		1	PLATE	
090	1498135-0000		1	ARM	
390	90450-0756		2	BRACKET, REAR EYE 32	
400	90141-0016		2	RETAINING RING FOR SHAFT DIN 471 10 A2	
460	90458-0528		2	DOUBLE ACTING, COMPACT, CYL 32-25	
Common Parts					
020	2532969-0000		2	SHAFT	
030	2541643-0000		2	FLANGE	
050	1498131-0000		1	BRACKET	
100	1498790-0000		1	SHAFT	
110	1498791-0000		2	FLANGE	
120	2541682-0000		2	BUSHING	
150	90458-1704		2	BALL BEARING, 15X35X11 MM	
160	90459-1728		2	SCREW ISO4029 M6X45 A4	
170	90099-0027		4	HEXAGON NUT, M14, DIN936	
180	2541650-0000		2	LID	
190	2541681-0000		2	WASHER	
300	312105-0327		6	SCREW M6S ISO 4017 M5X12 A480	
310	312105-0370		8	SCREW M6S ISO 4017 M6X20 A480	
320	312105-0451		2	SCREW M6S ISO 4017 M8X20 A480	
330	312605-0316		8	HEXAGON NUT, M6M M6 A280	
340	315204-0122		2	O-RING 32,1X1,6 MM	
360	312605-0322		2	HEXAGON NUT, M6M M12 A280	
370	90239-0489		2	ROD END, CLEVIS WITH AXLE M6X1,25	
380	312625-0316		4	HEXAGON THIN NUT, EN 24035 ML6M M6 A4	
430	312125-0228		2	SCREW ISO 1207 M3X16 A4	
440	315105-0124		2	WASHER BRB 3,2X6 RFR	
450	342722-0202		4	PIPE COUPLING 1/8" D=6MM	
470	315205-0716		2	O-RING 34,65X1,78 MM	
480	90458-0639		2	VARILIP 20X30X7 MM	
B1502	90044-0194		1	PROX.SW. IN5329/IN3002-BPKG(EX90044-104)	

Machine Type | Group Description | Used-In | Group Number | Page No

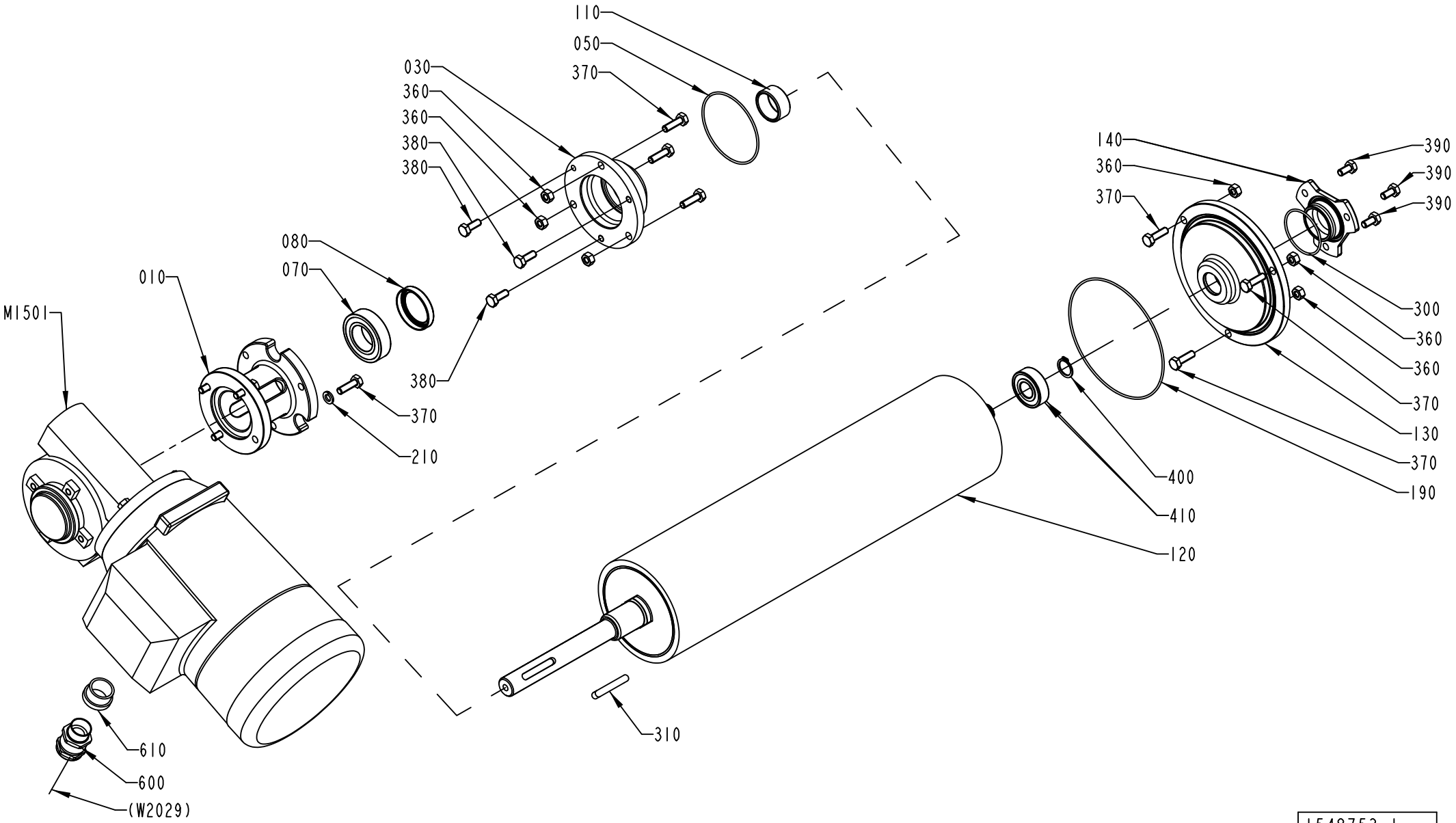

1548753-1
ECM 116071

ECM: 233031 - 20051102
Group number: 1548753-0100
Assembly Drawing: 1548753-1_1_AA

This list covers pages from 1-154 to 1-157

Pos	Part No	UN	Qty	Description	Page No
A3/FLEX DIMC/FLEX (See drawing on page: 1-156)					
120	2552139-0000		1	BENDING ROLLER	
M1501	90459-1226		1	GEARS, WORM MOTOR VF 44P-10+BN71B 0.37KW	
A3/FLEX NODIMC (See drawing on page: 1-154)					
120	2552135-0000		1	BENDING ROLLER	
M1501	90459-1226		1	GEARS, WORM MOTOR VF 44P-10+BN71B 0.37KW	
Common Parts					
010	2532931-0000		1	FLANGE	
030	1548882-0000		1	FLANGE	
050	90459-1623		1	O-RING 66,40X1,78 MM	
070	90214-0165		1	BALL BEARING, 25X47X12 MM	
080	90459-1650		1	VARILIP 30X40X7 MM	
110	1548751-0000		1	BUSHING	
130	2552136-0000		1	FLANGE	
140	2541639-0000		1	LID	
190	90459-1627		1	O-RING 114,02X1,78 MM	
210	315402-0156		4	LOCK WASHER FBB 6,5	
300	315205-0802		1	O-RING 41,0X1,78 MM	
310	315701-0239		1	PARALLEL KEY W. ROUND ENDS 6X6X40 MM	
360	312605-0316		6	HEXAGON NUT, M6M M6 A280	
370	312105-0370		10	SCREW M6S ISO 4017 M6X20 A480	
380	312105-0368		3	SCREW M6S ISO 4017 M6X16 A480	
390	312105-0366		3	SCREW M6S ISO 4017 M6X12 A480	
400	315751-0112		1	RETAINING RING FOR SHAFT DIN 471 15 A2	
410	90458-1704		1	BALL BEARING, 15X35X11 MM	
600	90012-0137		1	GLAND, EXTENDED WITH INSERT, PG11	
610	90089-0003		1	REDUCING SLEEVE, PR22,5/PR18,6	

Pos	Part No	UN	Qty	Description	Page No

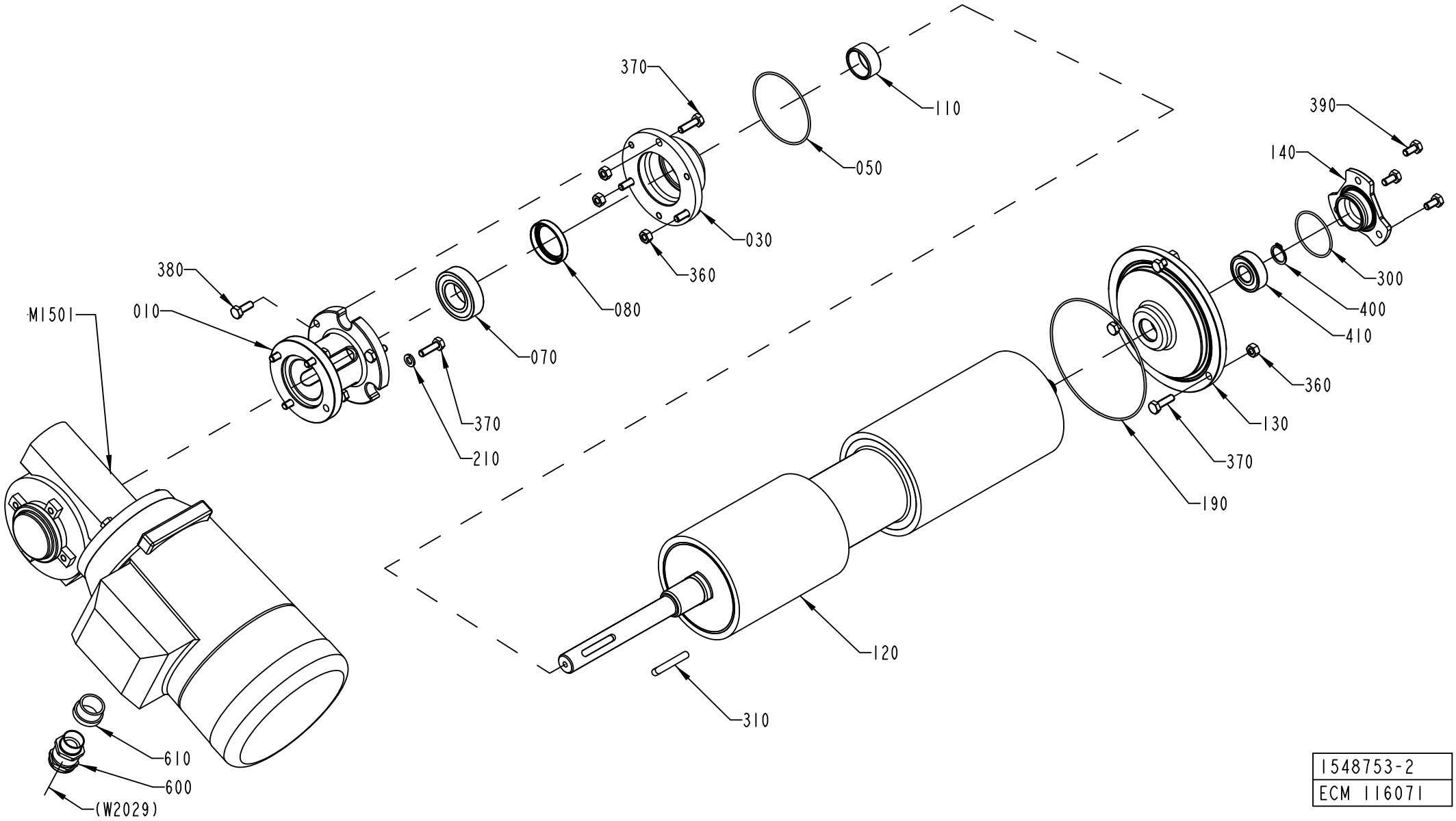

1548753-2
ECM 116071

ECM: 233031 - 20051102
Group number: 1548753-0100
Assembly Drawing: 1548753-2_1_AA

This list covers pages from 1-154 to 1-157

Pos	Part No	UN	Qty	Description	Page No
A3/FLEX DIMC/FLEX (See drawing on page: 1-156)					
120	2552139-0000		1	BENDING ROLLER	
M1501	90459-1226		1	GEARS, WORM MOTOR VF 44P-10+BN71B 0.37KW	
A3/FLEX NODIMC (See drawing on page: 1-154)					
120	2552135-0000		1	BENDING ROLLER	
M1501	90459-1226		1	GEARS, WORM MOTOR VF 44P-10+BN71B 0.37KW	
Common Parts					
010	2532931-0000		1	FLANGE	
030	1548882-0000		1	FLANGE	
050	90459-1623		1	O-RING 66,40X1,78 MM	
070	90214-0165		1	BALL BEARING, 25X47X12 MM	
080	90459-1650		1	VARILIP 30X40X7 MM	
110	1548751-0000		1	BUSHING	
130	2552136-0000		1	FLANGE	
140	2541639-0000		1	LID	
190	90459-1627		1	O-RING 114,02X1,78 MM	
210	315402-0156		4	LOCK WASHER FBB 6,5	
300	315205-0802		1	O-RING 41,0X1,78 MM	
310	315701-0239		1	PARALLEL KEY W. ROUND ENDS 6X6X40 MM	
360	312605-0316		6	HEXAGON NUT, M6M M6 A280	
370	312105-0370		10	SCREW M6S ISO 4017 M6X20 A480	
380	312105-0368		3	SCREW M6S ISO 4017 M6X16 A480	
390	312105-0366		3	SCREW M6S ISO 4017 M6X12 A480	
400	315751-0112		1	RETAINING RING FOR SHAFT DIN 471 15 A2	
410	90458-1704		1	BALL BEARING, 15X35X11 MM	
600	90012-0137		1	GLAND, EXTENDED WITH INSERT, PG11	
610	90089-0003		1	REDUCING SLEEVE, PR22,5/PR18,6	

Pos	Part No	UN	Qty	Description	Page No

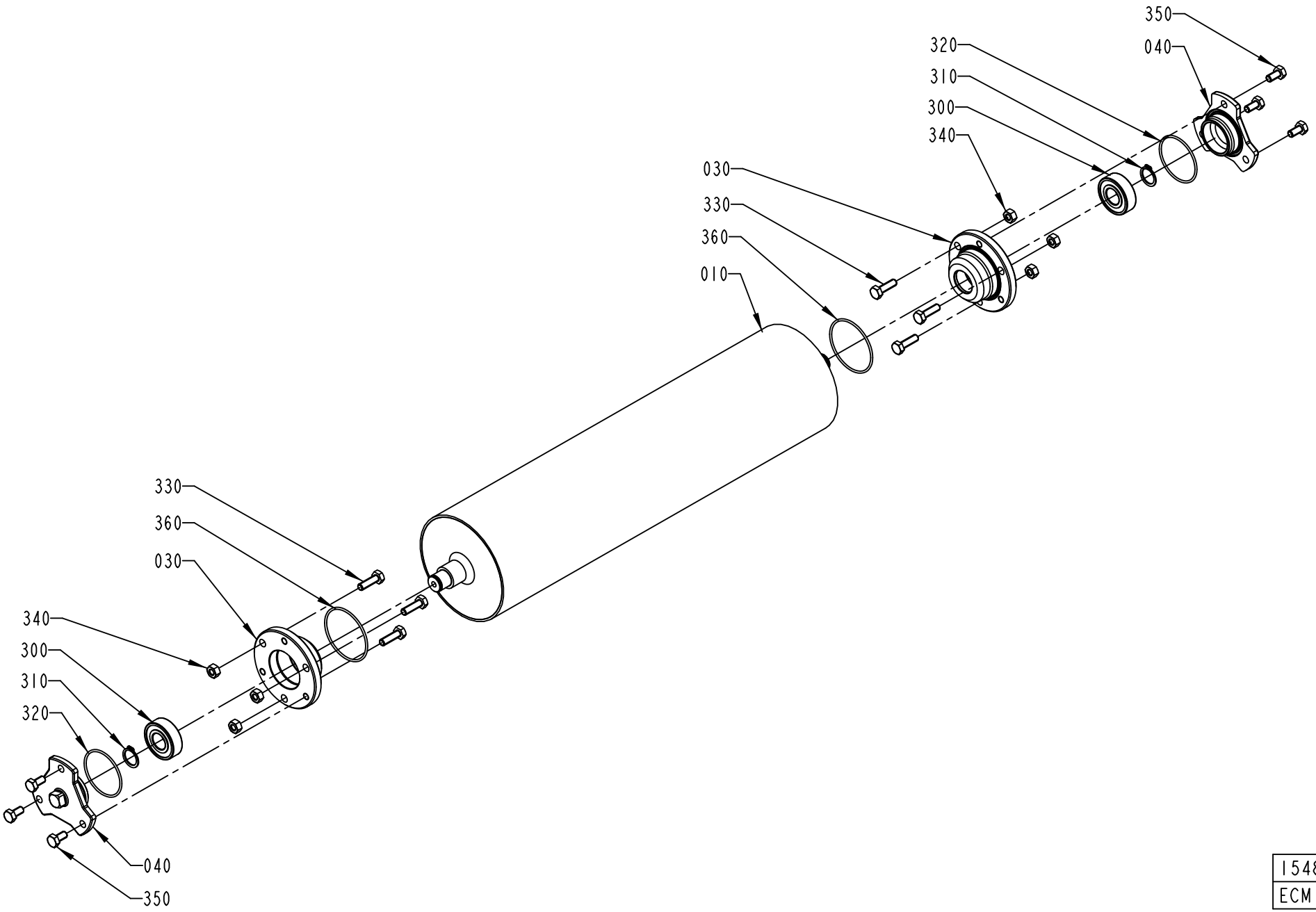

1548736-1
ECM 116071

ECM: 258302 - 20060702
Group number: 1548736-0100
Assembly Drawing: 1548736-1_1_AA

This list covers pages from 1-158 to 1-165

Pos	Part No	UN	Qty	Description	Page No
LIGHTCAP (See drawing on pages: 1-162, 1-164)					
010	2552133-0000		1	BENDING ROLLER	
030	2709210-0000		2	FLANGE	
040	2709212-0000		2	LID	
NOMOLDEDCAP (See drawing on page: 1-158)					
010	2532956-0000		1	BENDING ROLLER	
340	312605-0316		6	HEXAGON NUT, M6M M6 A280	
350	312105-0366		6	SCREW M6S ISO 4017 M6X12 A480	
STDA7 CAP (See drawing on page: 1-160)					
010	2552133-0000		1	BENDING ROLLER	
030	2552127-0000		2	FLANGE	
040	2541639-0000		2	LID	
340	312605-0316		6	HEXAGON NUT, M6M M6 A280	
350	312105-0366		6	SCREW M6S ISO 4017 M6X12 A480	
Common Parts					
300	90458-1704		2	BALL BEARING, 15X35X11 MM	
310	315751-0112		2	RETAINING RING FOR SHAFT DIN 471 15 A2	
320	315205-0802		2	O-RING 41,0X1,78 MM	
330	312105-0370		6	SCREW M6S ISO 4017 M6X20 A480	
360	315205-0804		2	O-RING 47,35X1,78 MM	

Pos	Part No	UN	Qty	Description	Page No

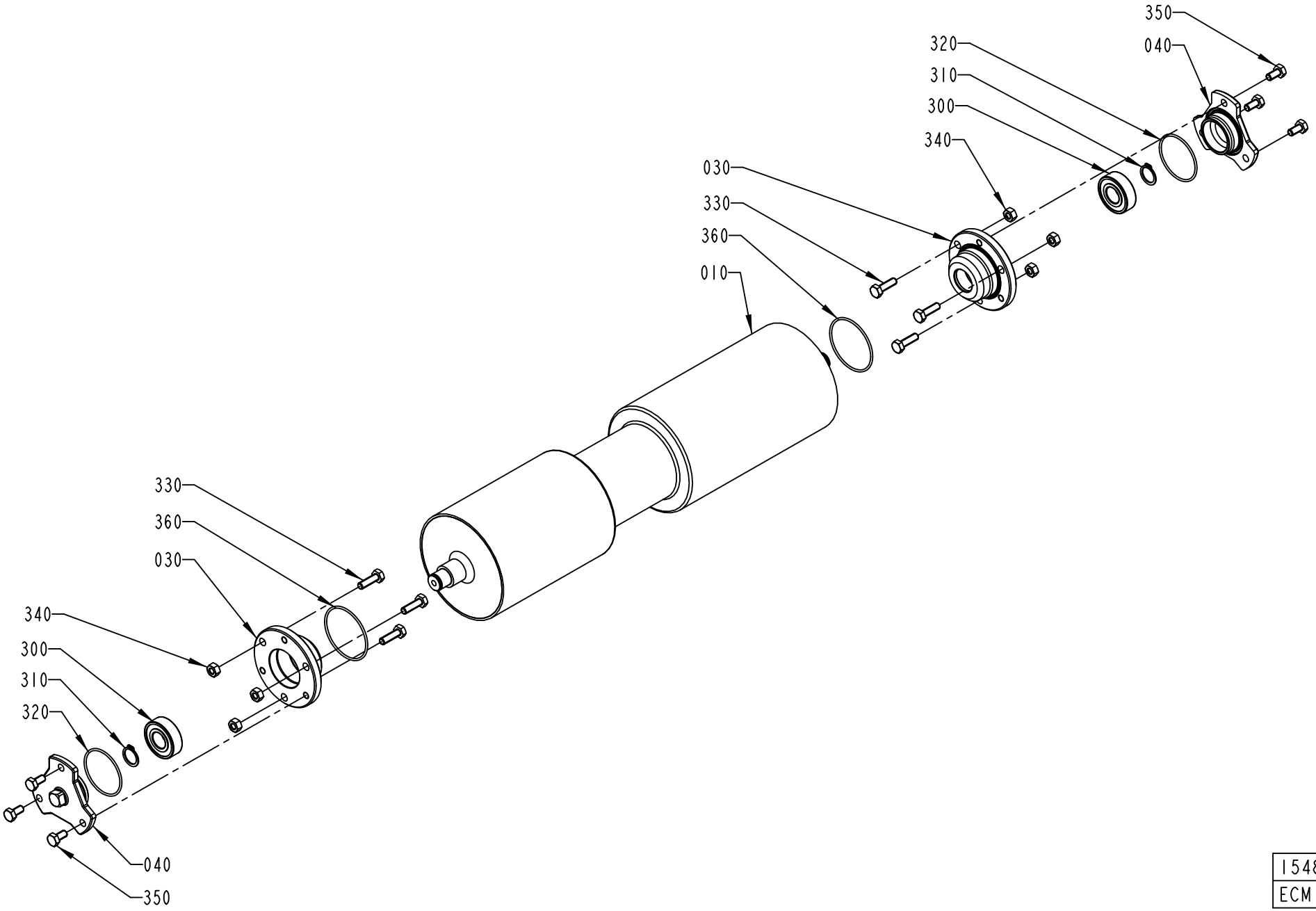

1548736-2
ECM 116071

ECM: 258302 - 20060702
Group number: 1548736-0100
Assembly Drawing: 1548736-2_1_AA

This list covers pages from 1-158 to 1-165

Pos	Part No	UN	Qty	Description	Page No
LIGHTCAP (See drawing on pages: 1-162, 1-164)					
010	2552133-0000		1	BENDING ROLLER	
030	2709210-0000		2	FLANGE	
040	2709212-0000		2	LID	
NOMOLDEDCAP (See drawing on page: 1-158)					
010	2532956-0000		1	BENDING ROLLER	
340	312605-0316		6	HEXAGON NUT, M6M M6 A280	
350	312105-0366		6	SCREW M6S ISO 4017 M6X12 A480	
STDA7 CAP (See drawing on page: 1-160)					
010	2552133-0000		1	BENDING ROLLER	
030	2552127-0000		2	FLANGE	
040	2541639-0000		2	LID	
340	312605-0316		6	HEXAGON NUT, M6M M6 A280	
350	312105-0366		6	SCREW M6S ISO 4017 M6X12 A480	
Common Parts					
300	90458-1704		2	BALL BEARING, 15X35X11 MM	
310	315751-0112		2	RETAINING RING FOR SHAFT DIN 471 15 A2	
320	315205-0802		2	O-RING 41,0X1,78 MM	
330	312105-0370		6	SCREW M6S ISO 4017 M6X20 A480	
360	315205-0804		2	O-RING 47,35X1,78 MM	

Pos	Part No	UN	Qty	Description	Page No

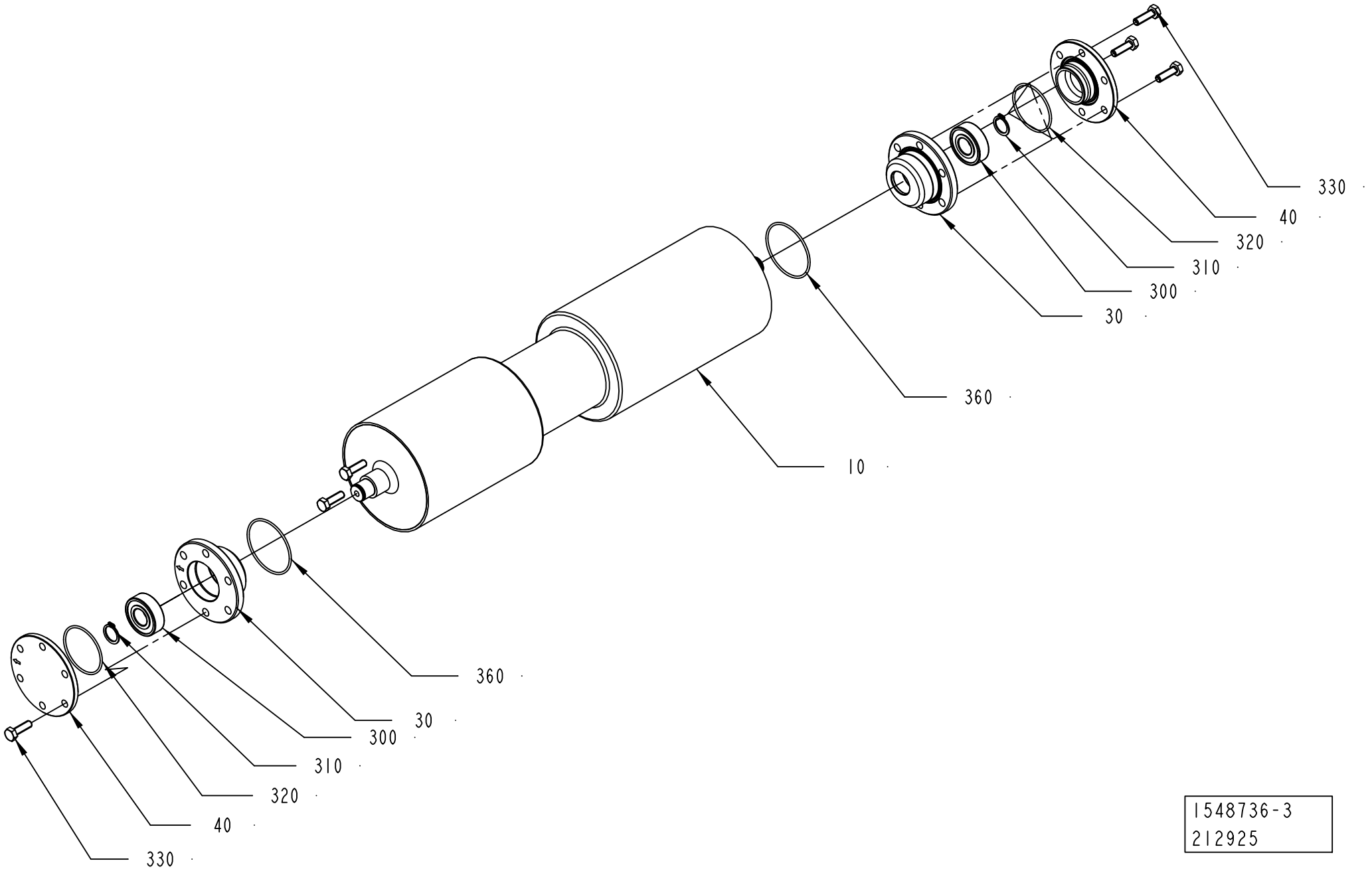
330
40
320
310
300
30
360
10
360
30
300
310
320
40
330
1548736-3
212925

ECM: 258302 - 20060702
Group number: 1548736-0100
Assembly Drawing: 1548736-3_1_AA

This list covers pages from 1-158 to 1-165

Pos	Part No	UN	Qty	Description	Page No
LIGHTCAP (See drawing on pages: 1-162, 1-164)					
010	2552133-0000		1	BENDING ROLLER	
030	2709210-0000		2	FLANGE	
040	2709212-0000		2	LID	
NOMOLDEDCAP (See drawing on page: 1-158)					
010	2532956-0000		1	BENDING ROLLER	
340	312605-0316		6	HEXAGON NUT, M6M M6 A280	
350	312105-0366		6	SCREW M6S ISO 4017 M6X12 A480	
STDA7 CAP (See drawing on page: 1-160)					
010	2552133-0000		1	BENDING ROLLER	
030	2552127-0000		2	FLANGE	
040	2541639-0000		2	LID	
340	312605-0316		6	HEXAGON NUT, M6M M6 A280	
350	312105-0366		6	SCREW M6S ISO 4017 M6X12 A480	
Common Parts					
300	90458-1704		2	BALL BEARING, 15X35X11 MM	
310	315751-0112		2	RETAINING RING FOR SHAFT DIN 471 15 A2	
320	315205-0802		2	O-RING 41,0X1,78 MM	
330	312105-0370		6	SCREW M6S ISO 4017 M6X20 A480	
360	315205-0804		2	O-RING 47,35X1,78 MM	

Pos	Part No	UN	Qty	Description	Page No

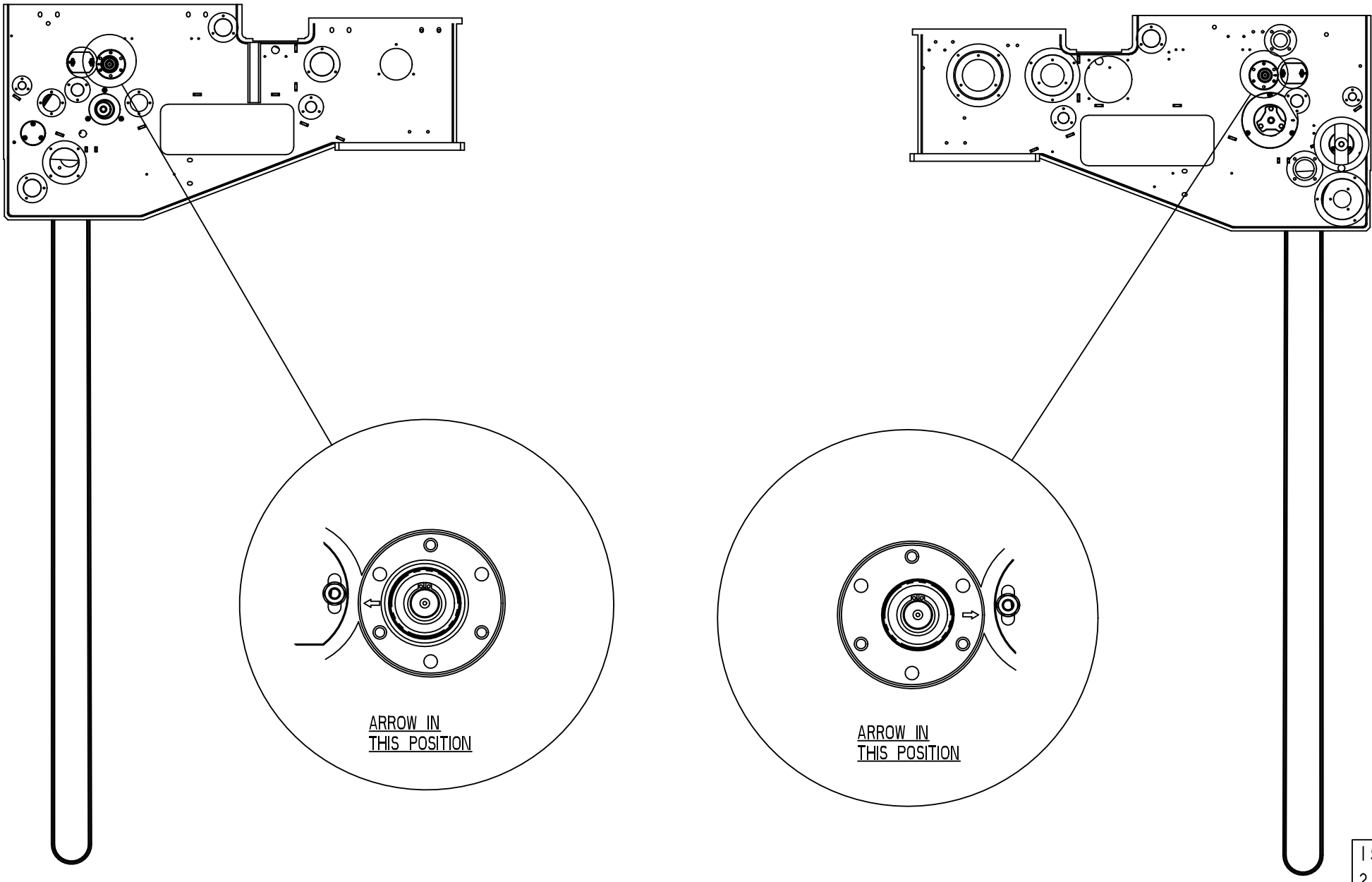
ARROW IN
THIS POSITION
ARROW IN
THIS POSITION
1548736-3
212925

ECM: 258302 - 20060702
Group number: 1548736-0100
Assembly Drawing: 1548736-3_2_AA

This list covers pages from 1-158 to 1-165

Pos	Part No	UN	Qty	Description	Page No
LIGHTCAP (See drawing on pages: 1-162, 1-164)					
010	2552133-0000		1	BENDING ROLLER	
030	2709210-0000		2	FLANGE	
040	2709212-0000		2	LID	
NOMOLDEDCAP (See drawing on page: 1-158)					
010	2532956-0000		1	BENDING ROLLER	
340	312605-0316		6	HEXAGON NUT, M6M M6 A280	
350	312105-0366		6	SCREW M6S ISO 4017 M6X12 A480	
STDA7 CAP (See drawing on page: 1-160)					
010	2552133-0000		1	BENDING ROLLER	
030	2552127-0000		2	FLANGE	
040	2541639-0000		2	LID	
340	312605-0316		6	HEXAGON NUT, M6M M6 A280	
350	312105-0366		6	SCREW M6S ISO 4017 M6X12 A480	
Common Parts					
300	90458-1704		2	BALL BEARING, 15X35X11 MM	
310	315751-0112		2	RETAINING RING FOR SHAFT DIN 471 15 A2	
320	315205-0802		2	O-RING 41,0X1,78 MM	
330	312105-0370		6	SCREW M6S ISO 4017 M6X20 A480	
360	315205-0804		2	O-RING 47,35X1,78 MM	

Pos	Part No	UN	Qty	Description	Page No

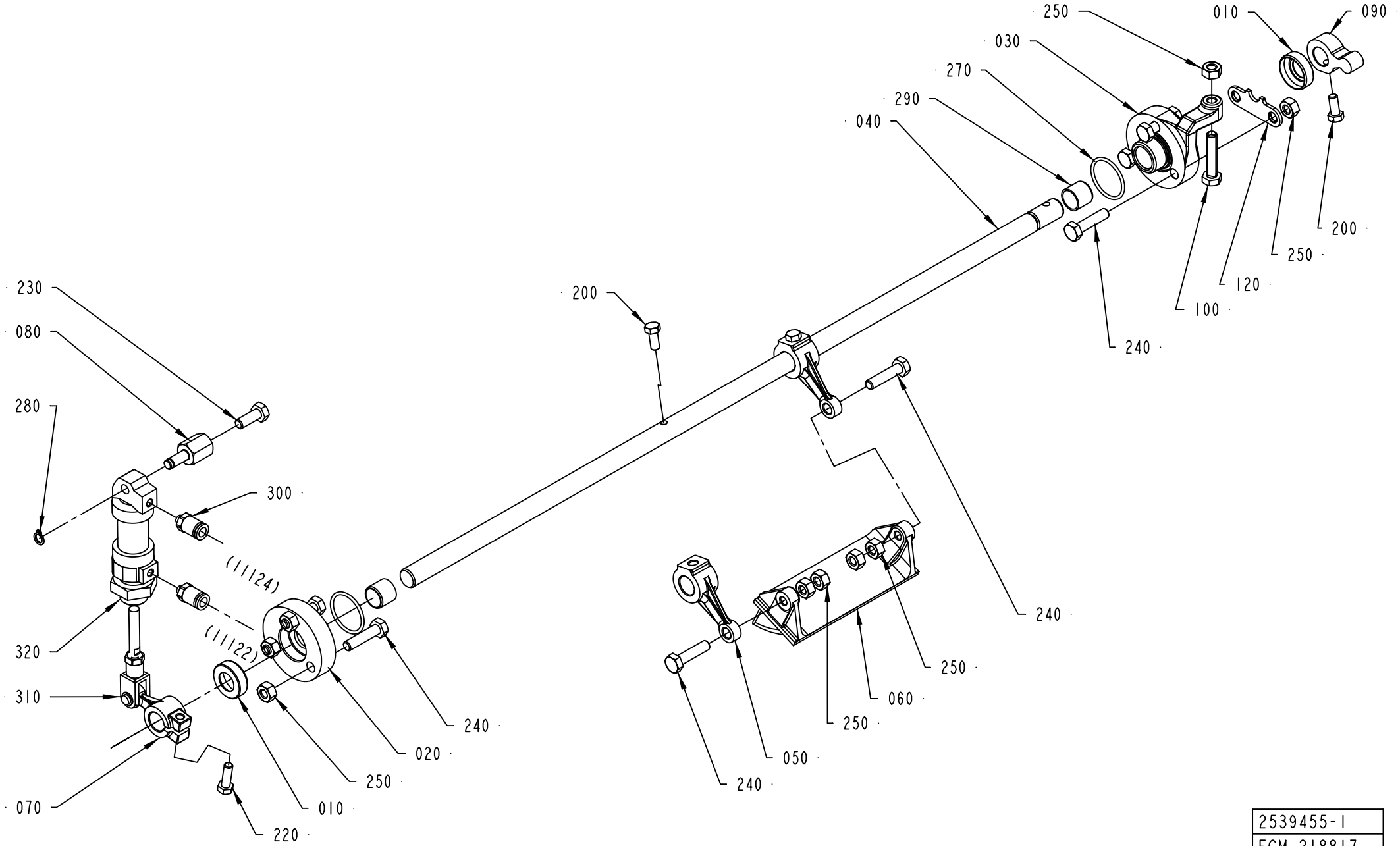

2539455-1
ECM 218817

ECM: 222708 - 20050701
Group number: 2539455-0100
Assembly Drawing: 2539455-1_1_AD

Pos	Part No	UN	Qty	Description	Page No
A3/FLEX					
060	2526851-0000		1	SHUTTER	
Common Parts					
010	2541661-0000		2	LID	
020	1523179-0000		1	FLANGE	
030	2522258-0000		1	FLANGE	
040	2526850-0000		1	SHAFT	
050	2526842-0000		2	LINK	
070	2526820-0000		1	LINK	
080	1523185-0000		1	AXLE PIN	
090	1538163-0000		1	LEVER	
100	312109-0374		1	SCREW M6S ISO 4017 M6X30 A480	
120	2526849-0000		1	PLATE	
200	312105-0327		3	SCREW M6S ISO 4017 M5X12 A480	
220	312105-0329		1	SCREW M6S ISO 4017 M5X16 A480	
230	312105-0368		1	SCREW M6S ISO 4017 M6X16 A480	
240	312105-0372		8	SCREW M6S ISO 4017 M6X25 A480	
250	312605-0316		11	HEXAGON NUT, M6M M6 A280	
270	315205-0709		2	O-RING 23,52X1,78 MM	
280	315751-0103		1	RETAINING RING FOR SHAFT DIN 471 6 A2	
290	321133-0180		2	BUSHING, 12X14X12 MM	
300	342722-0197		2	STRAIGHT COUPLING	
310	90239-0489		1	ROD END, CLEVIS WITH AXLE M6X1,25	
320	90239-0841		1	DOUBLE ACTING, MINI-ISO, CYL. 16-25	

Pos	Part No	UN	Qty	Description	Page No

AIR KNIFE

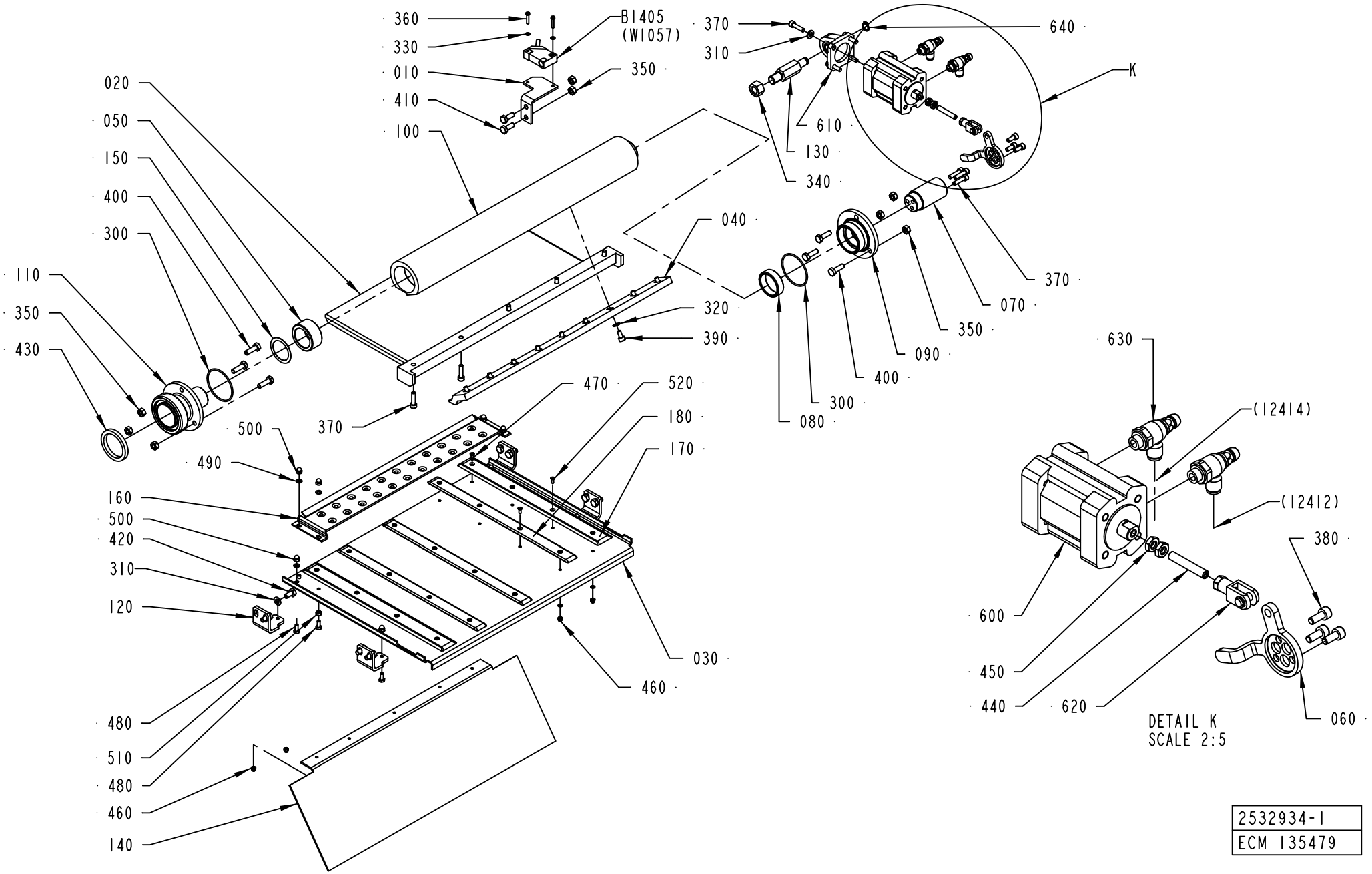

2532934-1
ECM 135479

ECM: 258297 - 20060702
Group number: 2532934-0100
Assembly Drawing: 2532934-1_1_AC

This list covers pages from 1-168 to 1-173

Pos	Part No	UN	Qty	Description	Page No
A3/FLEX TBA 0200S NODIMC, A3/FLEX TBA 1000SQ NODIMC, A3/FLEX TBA 1000S NODIMC, A3/FLEX TBA 1000B NODIMC, A3/FLEX TBA 0500B NODIMC, A3/FLEX TPA 1000SQ NODIMC, A3/FLEX TBA 1500S NODIMC, A3/FLEX TBA 0200B NODIMC, A3/FLEX TBA 0250B NODIMC, A3/FLEX TBA 0330S NODIMC, A3/FLEX TPA 0330SQ NODIMC, A3/FLEX TPA 0500SQ NODIMC, A3/FLEX TBA 0250S NODIMC, A3/FLEX TBA 0200M NODIMC, A3/FLEX TBA 0500S NODIMC, A3/FLEX TPA 0200SQ NODIMC, A3/FLEX TPA 0250SQ NODIMC, A3/FLEX TPA 0750SQ NODIMC, A3/FLEX TBA 0200SQ NODIMC, A3/FLEX TBA 0250SQ NODIMC (See drawing on page: 1-168)					
030	2603823-0000		1	BOTTOM PLATE	
140	2532919-0000		1	PLATE	
160	2603824-0000		1	COUNTER PLATE	
170	2603546-0000		2	SLIDE PLATE	
180	2603630-0000		3	SLIDE PLATE	
330	315105-0124		22	WASHER BRB 3,2X6 RFR	
460	312705-0310		20	NUT HEX. DOMED CAP MHM-6 M3 A2	
470	312145-0224		5	SCREW ISO 2009 MFS M3X10 A4	
520	312145-0222		15	SCREW ISO 2009 MFS M3X8 A4	
A3/FLEX TBA 1000S LIGHTCAP (See drawing on page: 1-170)					
030	2716441-0000		1	BOTTOM PLATE	
140	2716442-0000		1	PLATE	
160	2603824-0000		1	COUNTER PLATE	
180	2603630-0000		2	SLIDE PLATE	
190	2607440-0000		1	SLIDE PLATE	
330	315105-0124		14	WASHER BRB 3,2X6 RFR	
460	312705-0310		12	NUT HEX. DOMED CAP MHM-6 M3 A2	
470	312145-0224		2	SCREW ISO 2009 MFS M3X10 A4	
520	312145-0222		10	SCREW ISO 2009 MFS M3X8 A4	
A3/FLEX TBA 1000S STDA7, A3/FLEX TBA 1000B STDA7, A3/FLEX TBA 1000S NOMOLDEDCAP (See drawing on page: 1-170)					
030	2607087-0000		1	BOTTOM PLATE	
140	2532922-0000		1	PLATE	
160	2603824-0000		1	COUNTER PLATE	
180	2603630-0000		2	SLIDE PLATE	
190	2607440-0000		1	SLIDE PLATE	
330	315105-0124		14	WASHER BRB 3,2X6 RFR	
460	312705-0310		12	NUT HEX. DOMED CAP MHM-6 M3 A2	
470	312145-0224		2	SCREW ISO 2009 MFS M3X10 A4	
520	312145-0222		10	SCREW ISO 2009 MFS M3X8 A4	
A3/FLEX TBA 2000S NODIMC, A3/FLEX TBA 1890S NODIMC (See drawing on page: 1-172)					
010	2582651-0000		1	AIR GUIDE	
030	2582652-0000		1	AIR GUIDE	
040	2594601-0000		1	RAIL	
120	2582655-0000		4	HOLDER	
140	2582654-0000		1	PLATE	
160	2657886-0000		1	COUNTER PLATE	
170	2603546-0000		2	SLIDE PLATE	
180	2603630-0000		3	SLIDE PLATE	
330	315105-0124		22	WASHER BRB 3,2X6 RFR	
460	312705-0310		20	NUT HEX. DOMED CAP MHM-6 M3 A2	
470	312145-0224		5	SCREW ISO 2009 MFS M3X10 A4	
520	312145-0222		15	SCREW ISO 2009 MFS M3X8 A4	
650	312105-0291		2	SCREW M6S ISO 4017 M4X12 A470	
Common Parts					
010	2509674-0000		1	BRACKET	
020	2532916-0000		1	AIR GUIDE	
040	2509681-0000		1	RAIL	
050	1519166-0000		1	BUSHING	
060	1519163-0000		1	ARM	
070	1519160-0000		1	SHAFT	
080	1519159-0000		1	BUSHING	
090	1519158-0000		1	LID	
100	1519156-0000		1	AIR DISTRIBUTOR	
110	1532231-0000		1	CONNECTION	
120	2532918-0000		4	HOLDER	
130	1498132-0000		1	SHAFT	
150	2532915-0000		1	WASHER	
300	315205-0804		2	O-RING 47,35X1,78 MM	
310	315105-0153		12	WASHER BRB 6,4X12 RFR	
320	315105-0146		9	WASHER BRB 5,3X10 RFR	
340	312605-0322		1	HEXAGON NUT, M6M M12 A280	
350	312605-0316		8	HEXAGON NUT, M6M M6 A280	
360	312125-0228		2	SCREW ISO 1207 M3X16 A4	
370	312115-0331		12	SCREW ISO4762 M5X20 A4 80	
380	312115-0327		3	SCREW ISO4762 M5X12 A4 80	
390	312115-0325		9	SCREW ISO4762 M5X10 A4 80	
400	312105-0370		6	SCREW M6S ISO 4017 M6X20 A480	
410	312105-0368		2	SCREW M6S ISO 4017 M6X16 A480	
420	312105-0366		8	SCREW M6S ISO 4017 M6X12 A480	
430	12242-0003		1	GASKET 48X38X5,5	
440	312318-0376		1	SCREW ISO4029 M6X35 A4	
450	312625-0316		2	HEXAGON THIN NUT, EN 24035 ML6M M6 A4	
480	312105-0289		8	SCREW M6S ISO 4017 M4X10 A470	
490	315105-0136		8	WASHER BRB 4,3X8 RFR	
500	312705-0312		8	NUT HEX. DOMED CAP MHM-6 M4 A280	
510	312605-0312		4	HEXAGON NUT, M6M M4 A280	

Machine Type | Group Description | Used-In | Group Number | Page No

AIR KNIFE

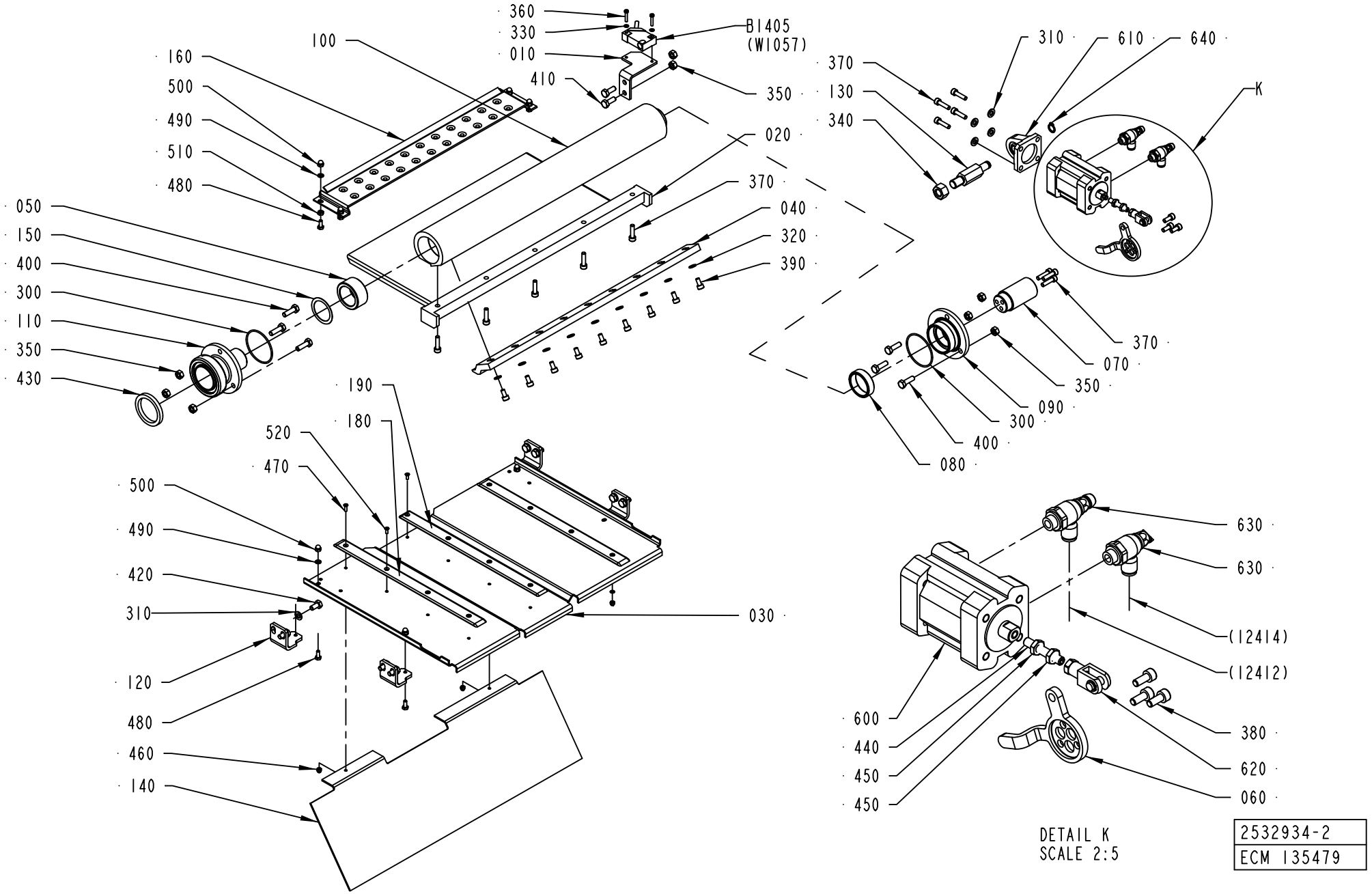
360
330
010
410
B1405
(W1057)
350
100
160
500
490
510
480
050
150
400
300
110
350
430
020
370
040
320
390
310
610
640
370
130
340
K
370
070
350
090
300
400
080
190
180
520
470
500
490
420
310
120
480
460
140
030
630
630
(12414)
(12412)
380
620
060
600
440
450
450
DETAIL K
SCALE 2:5
2532934-2
ECM 135479

Pos	Part No	UN	Qty	Description	Page No
Common Parts (Cont'd)					
490	315105-0136		8	WASHER BRB 4,3X8 RFR	
500	312705-0312		8	NUT HEX. DOMED CAP MHM-6 M4 A280	
510	312605-0312		4	HEXAGON NUT, M6M M4 A280	
600	90458-0528		1	DOUBLE ACTING, COMPACT, CYL 32-25	
610	90450-0756		1	BRACKET, REAR EYE 32	
620	90239-0489		1	ROD END, CLEVIS WITH AXLE M6X1,25	
630	90235-0846		2	THROTTLE CHECK VALVE G1/8", MANUAL, 6	
640	90141-0016		1	RETAINING RING FOR SHAFT DIN 471 10 A2	
B1405	90044-0194		1	PROX.SW. IN5329/IN3002-BPKG(EX90044-104)	

Pos	Part No	UN	Qty	Description	Page No

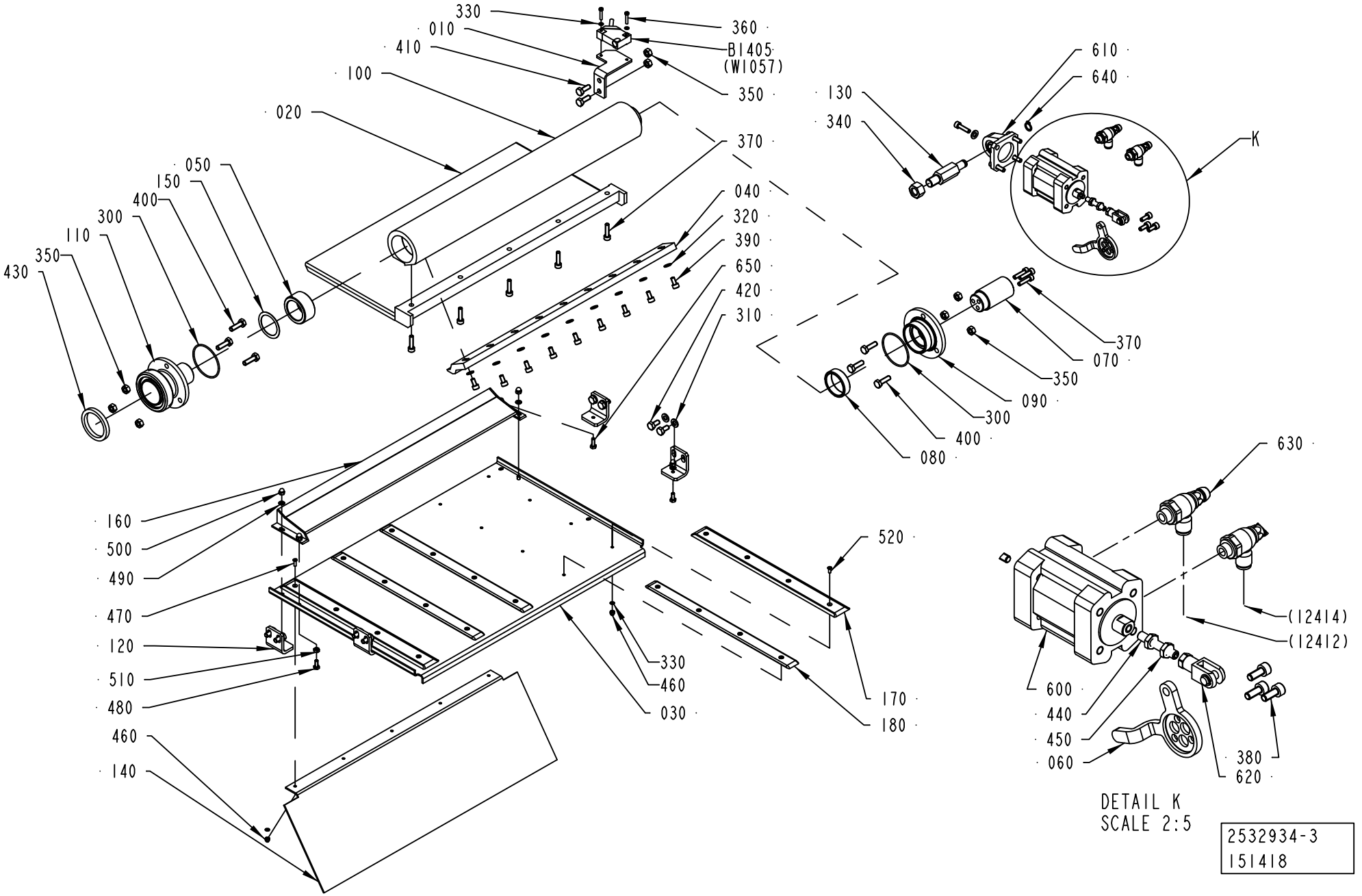
330
010
410
100
020
050
150
400
300
110
350
430
360
B1405
(W1057)
350
370
040
320
390
650
420
310
610
640
130
340
K
370
070
350
090
300
400
080
160
500
490
470
120
510
480
460
140
520
330
460
030
170
180
630
(12414)
(12412)
600
440
450
060
380
620
DETAIL K
SCALE 2:5
2532934-3
151418

ECM: 258297 - 20060702
Group number: 2532934-0100
Assembly Drawing: 2532934-3_1_AA

This list covers pages from 1-168 to 1-173

Pos	Part No	UN	Qty	Description	Page No	Pos	Part No	UN	Qty	Description	Page No

SEE PREVIOUS LISTS PAGES: 1-169, 1-171.

PENDULUM ROLLER

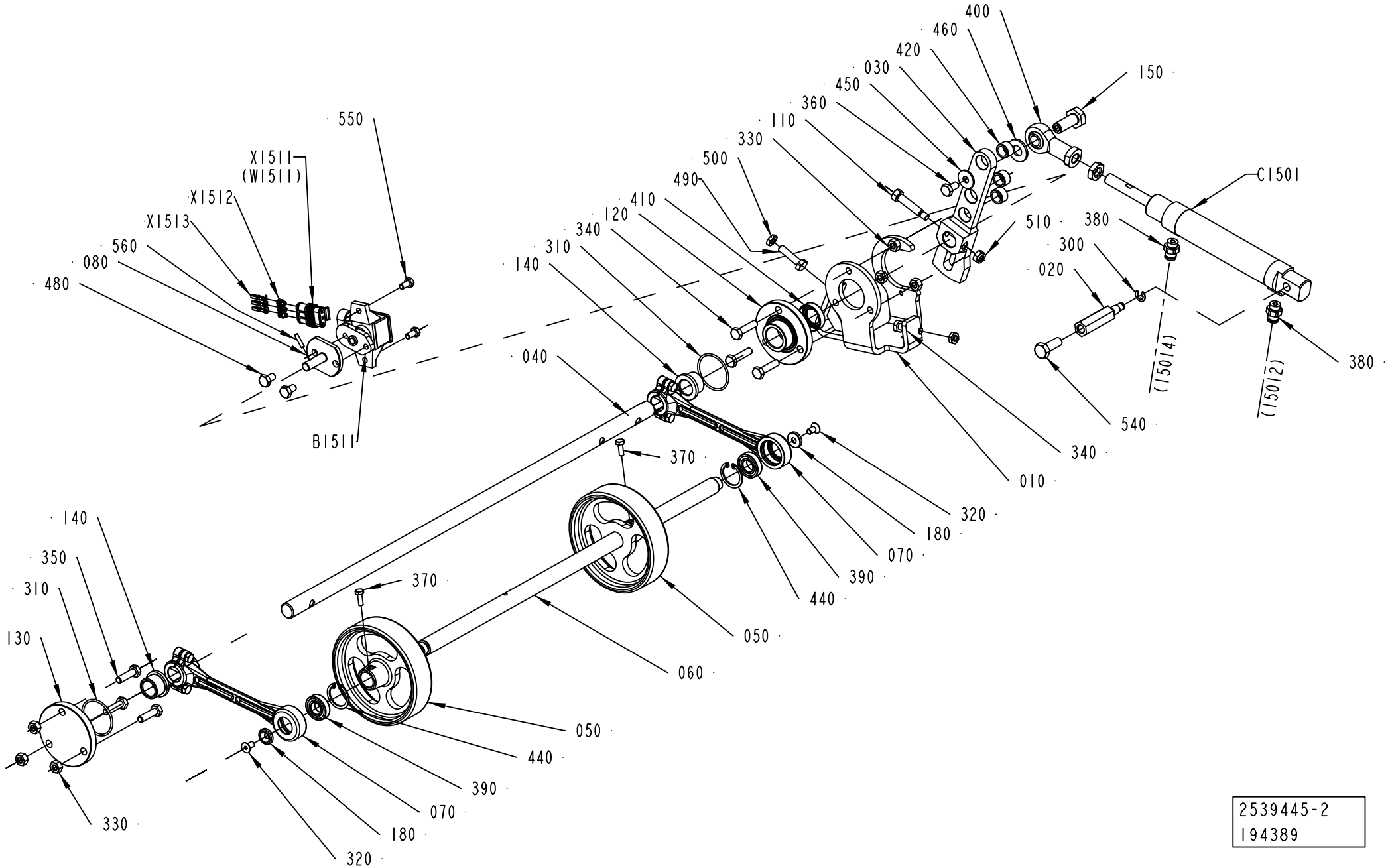

2539445-2
194389

ECM: 195302 - 20041203
Group number: 2539445-0200
Assembly Drawing: 2539445-2_1_AB

Pos	Part No	UN	Qty	Description	Page No
-					
010	2691185-0000		1	SUPPORT	
020	2658077-0000		1	SHAFT	
030	2648780-0000		1	LEVER	
040	2691184-0000		1	SHAFT	
050	1558358-0000		2	WHEEL	
060	1558357-0000		1	SHAFT	
070	2601284-0000		2	438,66LEVER	
080	2691183-0000		1	FLANGED SHAFT	
110	2653607-0000		1	SCREW	
120	1549548-0000		1	FLANGE	
130	1549545-0000		1	FLANGE	
140	1511512-0000		2	BEARING BUSHING	
150	2611009-0000		1	SHAFT	
180	2594621-0000		2	WASHER	
300	315755-0107		1	RETAINING RING SHAFT DIN 6799 5 A2	
310	315205-0715		2	O-RING 33,05X1,78 MM	
320	312155-0325		2	SCREW DIN 7991 MF6S M5X10 A4 70	
330	312605-0316		6	HEXAGON NUT, M6M M6 A280	
340	312105-0372		4	SCREW M6S ISO 4017 M6X25 A480	
350	312105-0371		3	SCREW M6S ISO 4017 M6X22 A480	
360	312105-0366		1	SCREW M6S ISO 4017 M6X12 A480	
370	312105-0291		2	SCREW M6S ISO 4017 M4X12 A470	
380	342722-0202		2	PIPE COUPLING 1/8" D=6MM	
390	90214-0112		2	BALL BEARING, 12X24X6 MM	
400	90459-1018		1	ROD END,BALL JOINT EYE M10X1,25	
410	90091-0429		1	VARILIP 15X26X7 MM	
420	90459-0805		3	BUSHING, 10X14X8 MM	
440	90458-2071		2	RETAINING RING FOR BORE DIN 472 24 A2	
450	90005-0060		1	WASHER PLAIN, RBS 6,4/M6)/18,H=1,5	
460	315105-0173		1	WASHER BRB 10,5X22 RFR	
480	312105-0364		2	SCREW M6S ISO 4017 M6X10 A480	
490	312105-0372		1	SCREW M6S ISO 4017 M6X25 A480	
500	312625-0316		2	HEXAGON THIN NUT, EN 24035 ML6M M6 A4	
510	312812-0316		1	HEXAGON NUT, NY-LOCK M6 A480	
540	312105-0452		1	SCREW M6S ISO 4017 M8X22 A4 80	
550	312105-0325		2	SCREW M6S ISO 4017 M5X10 A480	
560	311103-0235		1	PARALLEL PIN ISO 2338 3M6X14 A1	
B1511	90459-3682		1	ROTARY POSITION SENSOR RPN1A111	
C1501	90459-3650		1	DOUBLE ACTING, MINI-ISO, CYL 25-40	
X1511	90459-3709		1	CONNECTOR 3-POLE AMP 282087-1	
X1512	90459-4077		3	WIRE SEAL , AMP 281934	
X1513	90459-4079		3	MINI MIC SRS, AMP 183035-1	

Machine Type | Group Description | Used-In | Group Number | Page No

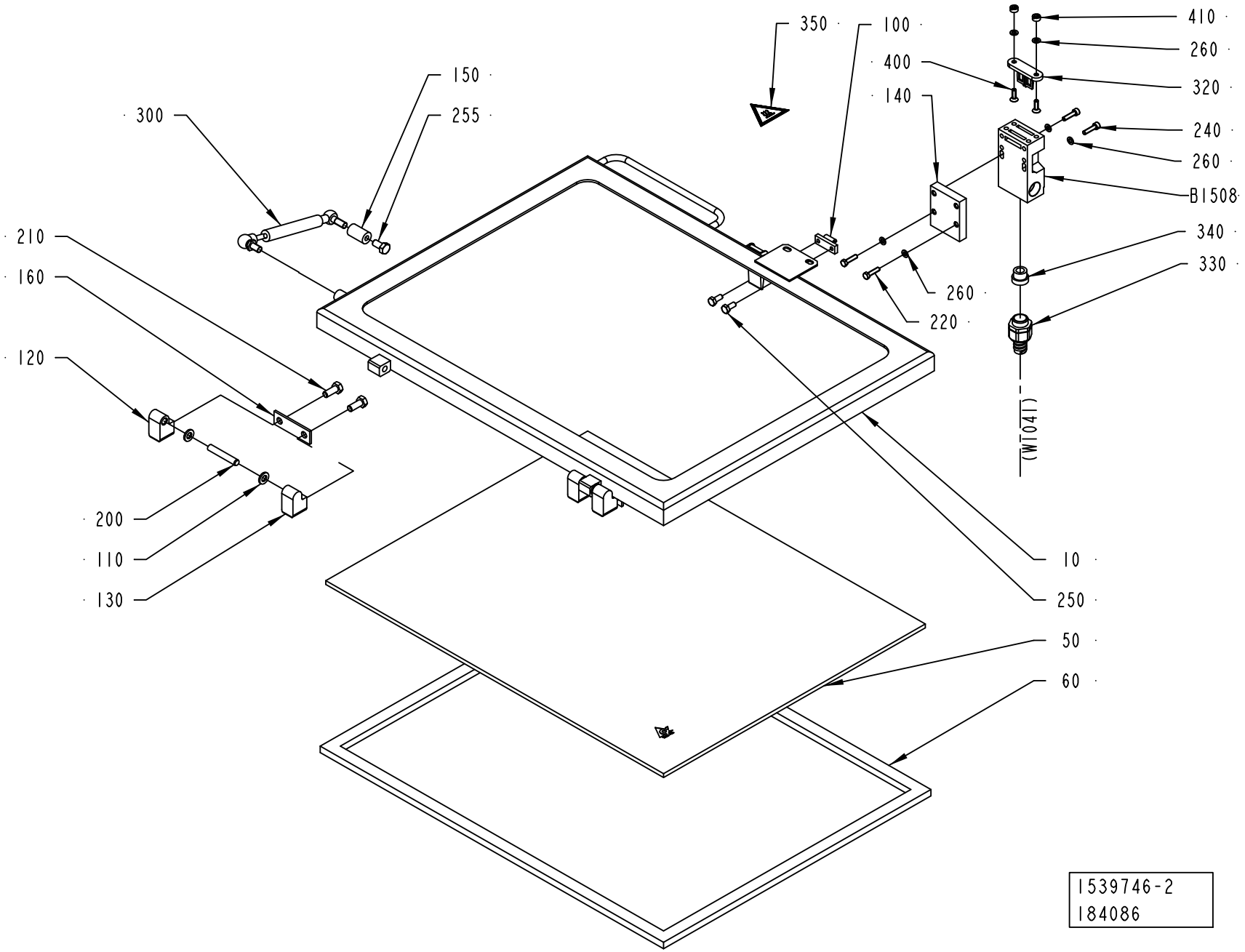
350
100
410
260
320
400
140
150
255
300
240
260
B1508
340
330
210
160
120
260
220
(WT041)
200
110
130
10
250
50
60
1539746-2
184086

ECM: 194061 - 20050224
Group number: 1539746-0200
Assembly Drawing: 1539746-2_1_AA

Pos	Part No	UN	Qty	Description	Page No
-					
010	2709216-0000		1	FRAME	
050	2709218-0000		1	GLASS PANE	
060	2709217-0000		1	GASKET	
100	271860-0000		1	CLAMP BLOCK	
110	441739-0000		4	WASHER	
120	1041979-0000		2	HINGE FLANGE	
130	1041978-0000		2	HINGE FLANGE	
140	2541651-0000		1	PLATE	
150	1037089-0000		1	SPACER	
160	441737-0000		2	WASHER	
200	311103-0413		2	PARALLEL PIN ISO 2338 8M6X50 A1	
210	312105-0451		4	SCREW M6S ISO 4017 M8X20 A480	
220	312105-0331		2	SCREW M6S ISO 4017 M5X20 A480	
240	312115-0331		2	SCREW ISO4762 M5X20 A4 80	
250	312105-0367		2	SCREW M6S ISO 4017 M6X14 A480	
255	312105-0449		1	SCREW M6S ISO 4017 M8X16 A480	
260	315105-0146		6	WASHER BRB 5,3X10 RFR	
300	90347-0039		1	DAMPER	
320	90044-0310		1	KEY FOR SAFETY SWITCH AZ 15/16 B1	
330	90458-0429		1	HOSE GLAND W/O INSERT M20 EXTENDED	
340	353249-0011		1	INSERT, SINGEL HOLE, EK 153/11	
350	359705-0007		1	WARNING SIGN ISO, HOT SURFACE	
400	312155-0329		2	SCREW DIN 7991 MF6S M5X16 A4 70	
410	575034-0000		2	ROUND NUT	
B1508	90459-0472		1	KEY SAF.SW. AZ 16 02ZVRK-M20-2152-2254	

Pos	Part No	UN	Qty	Description	Page No

STERILE AIR SYSTEM

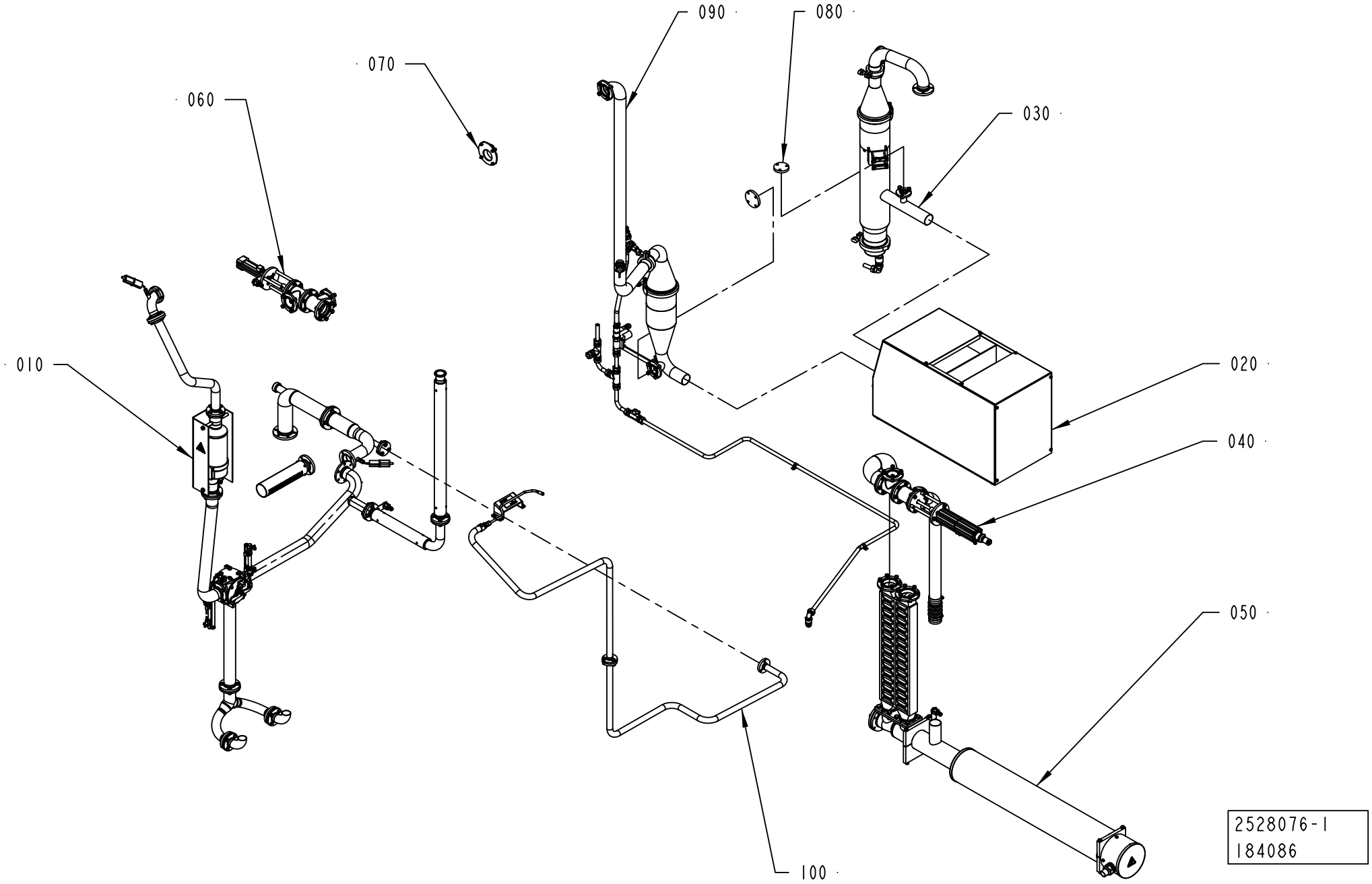

ECM: 221356 - 20050701
Group number: 2528076-0100
Assembly Drawing: 2528076-1_1_AE

Pos	Part No	UN	Qty	Description	Page No
A3/FLEX DIMC/FLEX (See drawing on page: 1-178)					
020	1517134-0100		1	COMPRESSOR UNIT	**1-181**
080	2547205-0200		1	PRESSURE REGULATOR	**1-183, 1-185**
A3/FLEX NODIMC (See drawing on page: 1-178)					
020	1517134-0100		1	COMPRESSOR UNIT	**1-181**
080	2547205-0200		1	PRESSURE REGULATOR	**1-183, 1-185**
100	2594606-0100		1	STERILE AIR PIPE	**1-187**
Common Parts					
010	1558511-0200		1	PIPE WORK-AIR	**1-193**
030	1558769-0200		1	SEPARATOR	**1-197**
040	1532250-0100		1	HEAT EXCHANGER VALVE	**1-199**
050	1499158-0100		1	AIR SUPER-HEATER	**1-201**
060	1538166-0100		1	AIR VALVE	**1-203**
070	2550890-0100		1	VALVE	**1-205**
090	1499160-0200		1	SCRUBBER	**1-207**

Pos	Part No	UN	Qty	Description	Page No

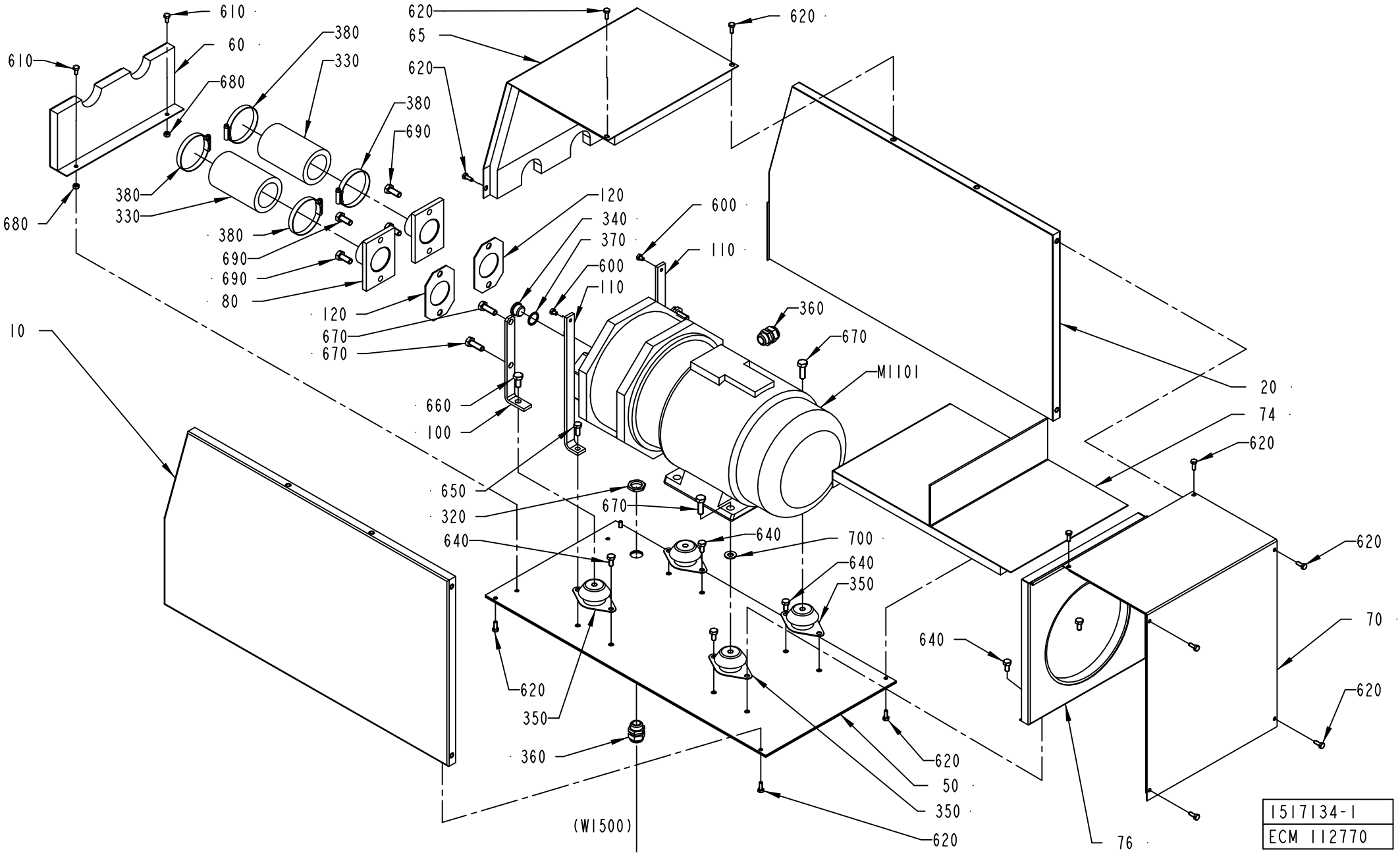
610
60
610
380
330
680
620
65
620
620
380
690
680
380
330
380
690
690
80
120
670
670
120
340
370
600
110
600
110
360
670
MI101
660
100
10
650
320
640
670
640
700
640
350
620
350
360
(WI500)
620
50
350
620
20
74
620
620
70
620
640
76
1517134-1
ECM 112770

ECM: 188391 - 20041117
Group number: 1517134-0100
Assembly Drawing: 1517134-1_1_AA

Pos	Part No	UN	Qty	Description	Page No
-					
010	1517137-0000		1	COVER	
020	1517138-0000		1	COVER	
050	1036314-0000		1	BOTTOM PANEL	
060	1517135-0000		1	FRONT PLATE	
065	1517136-0000		1	COVER	
070	1040876-0000		1	COVER	
074	1040877-0000		1	PLATE	
076	1040878-0000		1	PLATE	
080	1036318-0000		2	PIPE	
100	269859-0000		2	BRACKET	
110	1036319-0000		2	BRACKET	
120	230551-0000		2	GASKET	
320	90099-0110		1	NUT, PR 22,5 (PG16)	
330	90166-0199	MM	240	RUBBER HOSE	
340	342713-0213		1	PLUG, EXT THREAD HEX SOCKET 8638-00-120	
350	90347-0144		4	VIBRATION DAMPER, NO. RA 40EM-A	
360	352103-0111		2	CABLE GLAND, ST 16, PR22,5/PG16	
370	315234-0113		1	WASHER PL.RND.CU.21,3//26 H=1,5	
380	342991-0111		4	HOSE CLIP,WORM DRIVE TYPE (63)-73	
600	312105-0362		2	SCREW M6S ISO 4017 M6X8 A480	
610	312105-0366		2	SCREW M6S ISO 4017 M6X12 A480	
620	312105-0368		14	SCREW M6S ISO 4017 M6X16 A480	
640	312105-0449		6	SCREW M6S ISO 4017 M8X16 A480	
650	312105-0451		2	SCREW M6S ISO 4017 M8X20 A480	
660	312105-0491		2	SCREW M6S ISO 4017 M10X20 A480	
670	312105-0495		6	SCREW M6S ISO 4017 M10X30 A480	
680	312605-0316		2	HEXAGON NUT, M6M M6 A280	
690	312105-0493		4	SCREW M6S ISO 4017 M10X25 A480	
700	315105-0173		2	WASHER BRB 10,5X22 RFR	
M1101	90270-0017		1	COMPRESSOR NASH/ELMO 112 MB/4-2083	

Pos	Part No	UN	Qty	Description	Page No

PRESSURE REGULATOR

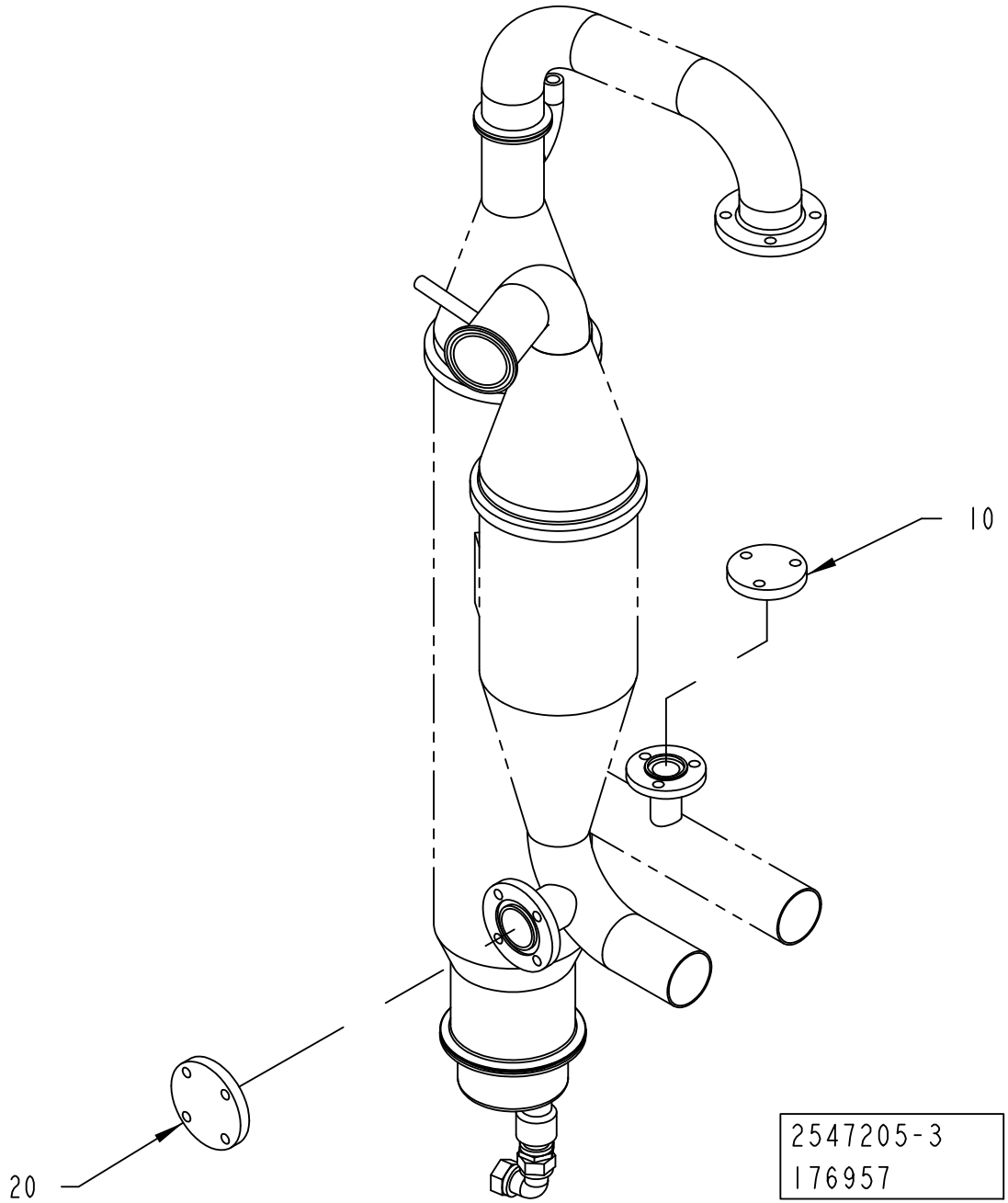

ECM: 190574 - 20041104
Group number: 2547205-0200
Assembly Drawing: 2547205-3_1_AA

This list covers pages from 1-182 to 1-185

Pos	Part No	UN	Qty	Description	Page No
50HZ (See drawing on page: 1-182)					
010	1037129-0000		1	LID	
020	1037268-0000		1	LID	
60HZ (See drawing on page: 1-184)					
010	1037267-0000		1	PIPE	
020	2685238-0000		1	PIPE	
030	490998-0000		1	THROTTLE SCREW	
040	442237-0000		1	PORCA	
100	315202-0119		1	O-RING 25,1X1,6 MM	
110	315229-0203		1	GASKET 22,1X31,1X3,7 MM 1"	
120	312105-0453		3	SCREW M6S ISO 4017 M8X25 A480	
130	312605-0318		3	HEXAGON NUT, M6M M8 A280	

Pos	Part No	UN	Qty	Description	Page No

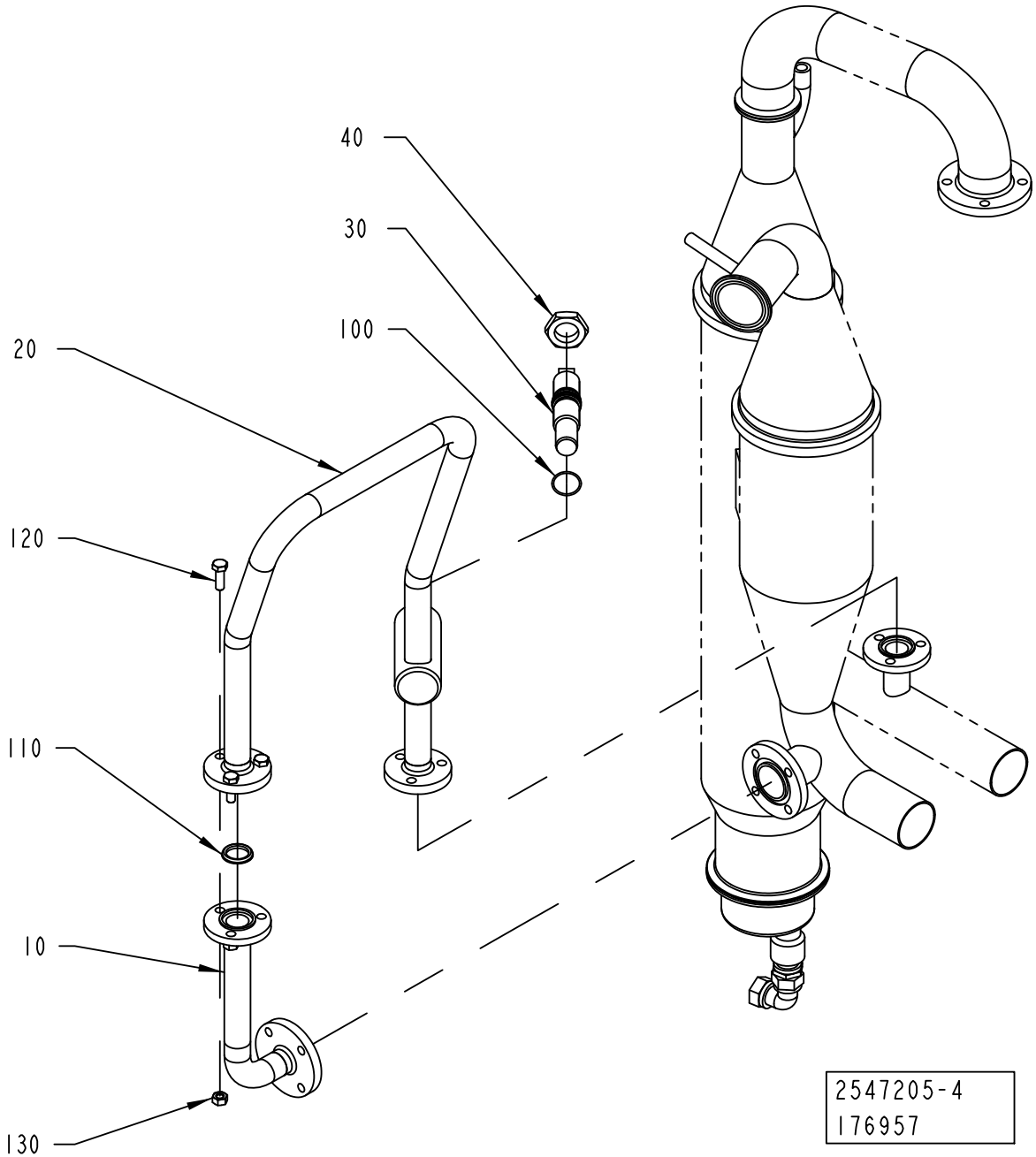
40
30
100
20
120
110
10
130
2547205-4
176957

ECM: 190574 - 20041104
Group number: 2547205-0200
Assembly Drawing: 2547205-4_1_AA

This list covers pages from 1-182 to 1-185

Pos	Part No	UN	Qty	Description	Page No
50HZ (See drawing on page: 1-182)					
010	1037129-0000		1	LID	
020	1037268-0000		1	LID	
60HZ (See drawing on page: 1-184)					
010	1037267-0000		1	PIPE	
020	2685238-0000		1	PIPE	
030	490998-0000		1	THROTTLE SCREW	
040	442237-0000		1	PORCA	
100	315202-0119		1	O-RING 25,1X1,6 MM	
110	315229-0203		1	GASKET 22,1X31,1X3,7 MM 1"	
120	312105-0453		3	SCREW M6S ISO 4017 M8X25 A480	
130	312605-0318		3	HEXAGON NUT, M6M M8 A280	

Pos	Part No	UN	Qty	Description	Page No

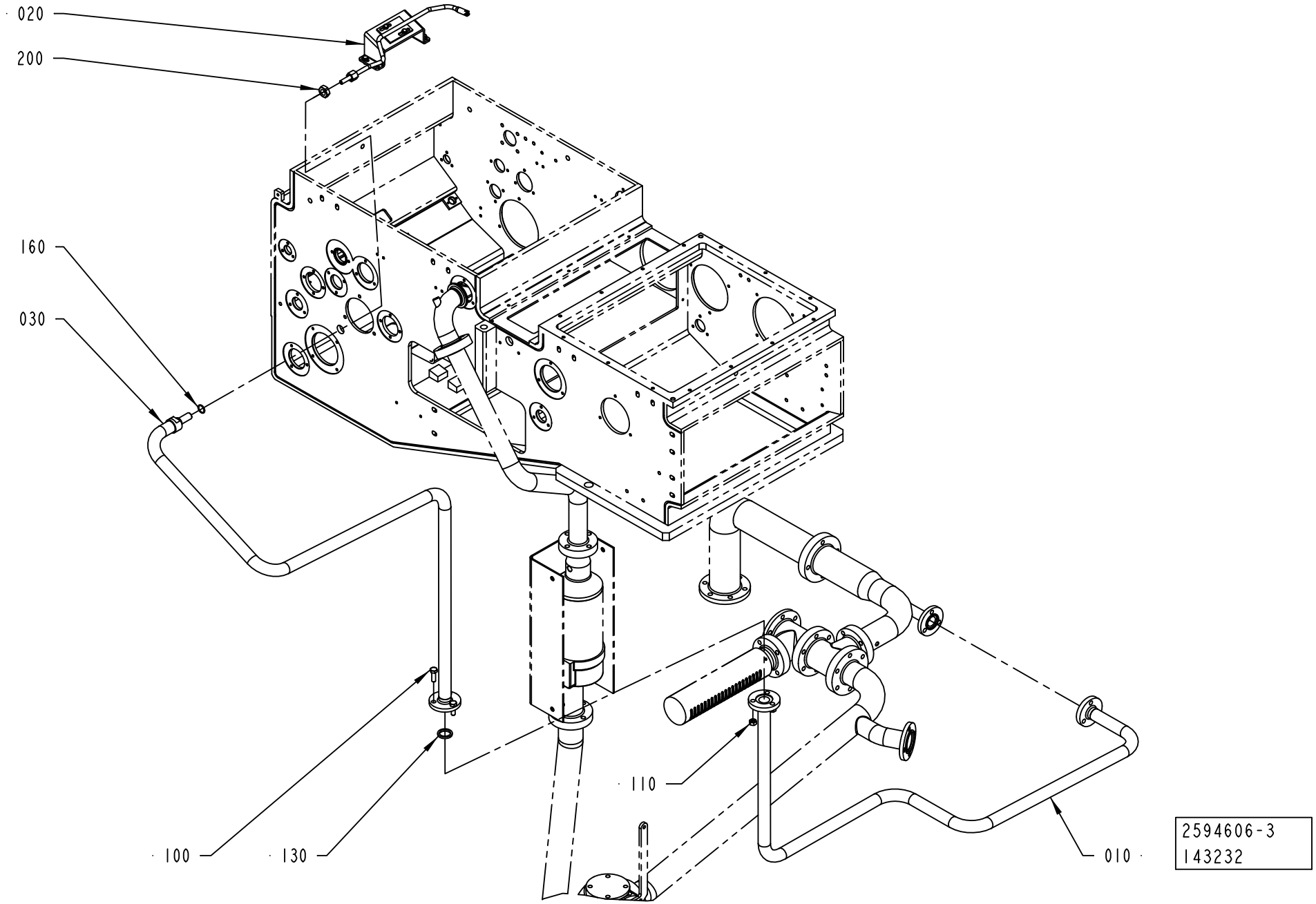
020
200
160
030
110
100
130
010
2594606-3
143232

ECM: 226035 - 20050712
Group number: 2594606-0100
Assembly Drawing: 2594606-3_1_AA

Pos	Part No	UN	Qty	Description	Page No
A3/FLEX					
030	2641322-0000		1	PIPE	
160	315205-0704		1	O-RING 15,6X1,78 MM	
200	90099-0053		1	HEXAGON NUT, M14X1,5, SMS2176	
Common Parts					
010	2641298-0000		1	PIPE	
020	2671730-0100		1	AIR NOZZLE	**1-189, 1-191**
100	312105-0453		3	SCREW M6S ISO 4017 M8X25 A480	
110	312605-0318		3	HEXAGON NUT, M6M M8 A280	
130	315229-0203		1	GASKET 22,1X31,1X3,7 MM 1"	

Pos	Part No	UN	Qty	Description	Page No

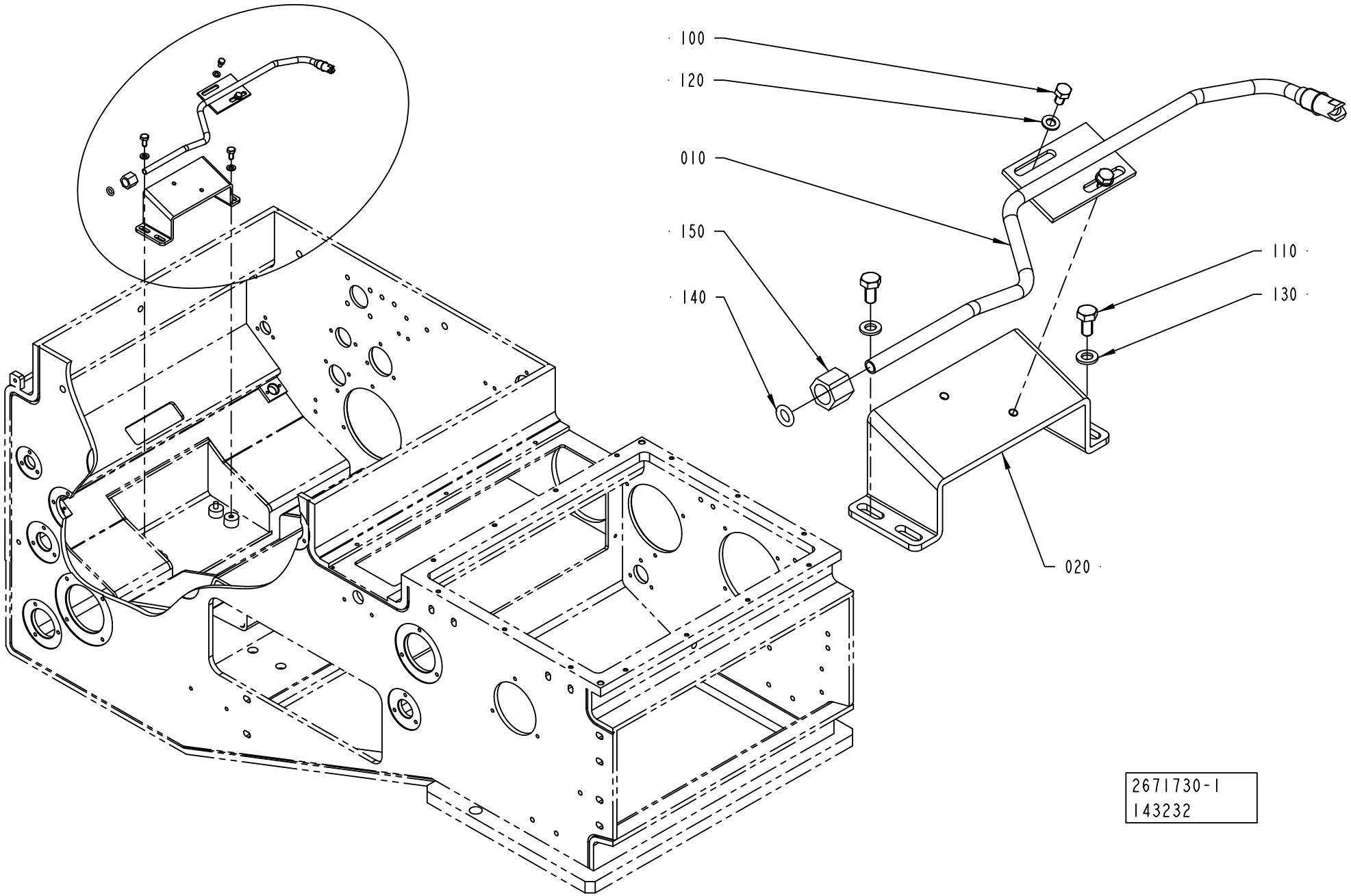
100
120
010
150
140
110
130
020
2671730-1
143232

Pos	Part No	UN	Qty	Description	Page No
A3/FLEX TBA 0500B, A3/FLEX TBA 1000B, A3/FLEX TBA 1000S, A3/FLEX TBA 1000SQ, A3/FLEX TBA 0200S, A3/FLEX TBA 0200B, A3/FLEX TBA 0250B, A3/FLEX TBA 0200M, A3/FLEX TBA 0250S, A3/FLEX TBA 0500S, A3/FLEX TPA 1000S (See drawing on page: 1-190)					
010	2668569-0000		1	PLUG	
140	315205-0808		1	O-RING 7,59X2,62 MM	
A3/FLEX TBA 1500S (See drawing on page: 1-188)					
010	2641318-0000		1	NOZZLE	
140	315205-0808		1	O-RING 7,59X2,62 MM	
150	342703-0208		1	NUT, PIPES & CONNECTORS,NUT M-8 SS	
A3/FLEX TBA 1890S, A3/FLEX TBA 2000S (See drawing on page: 1-188)					
010	2641317-0000		1	PIPE	
140	315205-0808		1	O-RING 7,59X2,62 MM	
150	342703-0208		1	NUT, PIPES & CONNECTORS,NUT M-8 SS	
A3/FLEX TPA 1000SQ, A3/FLEX TPA 0330SQ, A3/FLEX TPA 0500SQ, A3/FLEX TPA 0250SQ, A3/FLEX TPA 0200SQ, A3/FLEX TPA 0750SQ, A3/FLEX TBA 0200SQ, A3/FLEX TBA 0250SQ (See drawing on page: 1-188)					
010	2668565-0000		1	NOZZLE	
140	315205-0808		1	O-RING 7,59X2,62 MM	
150	342703-0208		1	NUT, PIPES & CONNECTORS,NUT M-8 SS	
Common Parts					
020	2641319-0000		1	BRACKET	
100	312105-0323		2	SCREW M6S ISO 4017 M5X8 A480	
110	312105-0366		2	SCREW M6S ISO 4017 M6X12 A480	
120	315105-0146		2	WASHER BRB 5,3X10 RFR	
130	315105-0153		2	WASHER BRB 6,4X12 RFR	

Pos	Part No	UN	Qty	Description	Page No

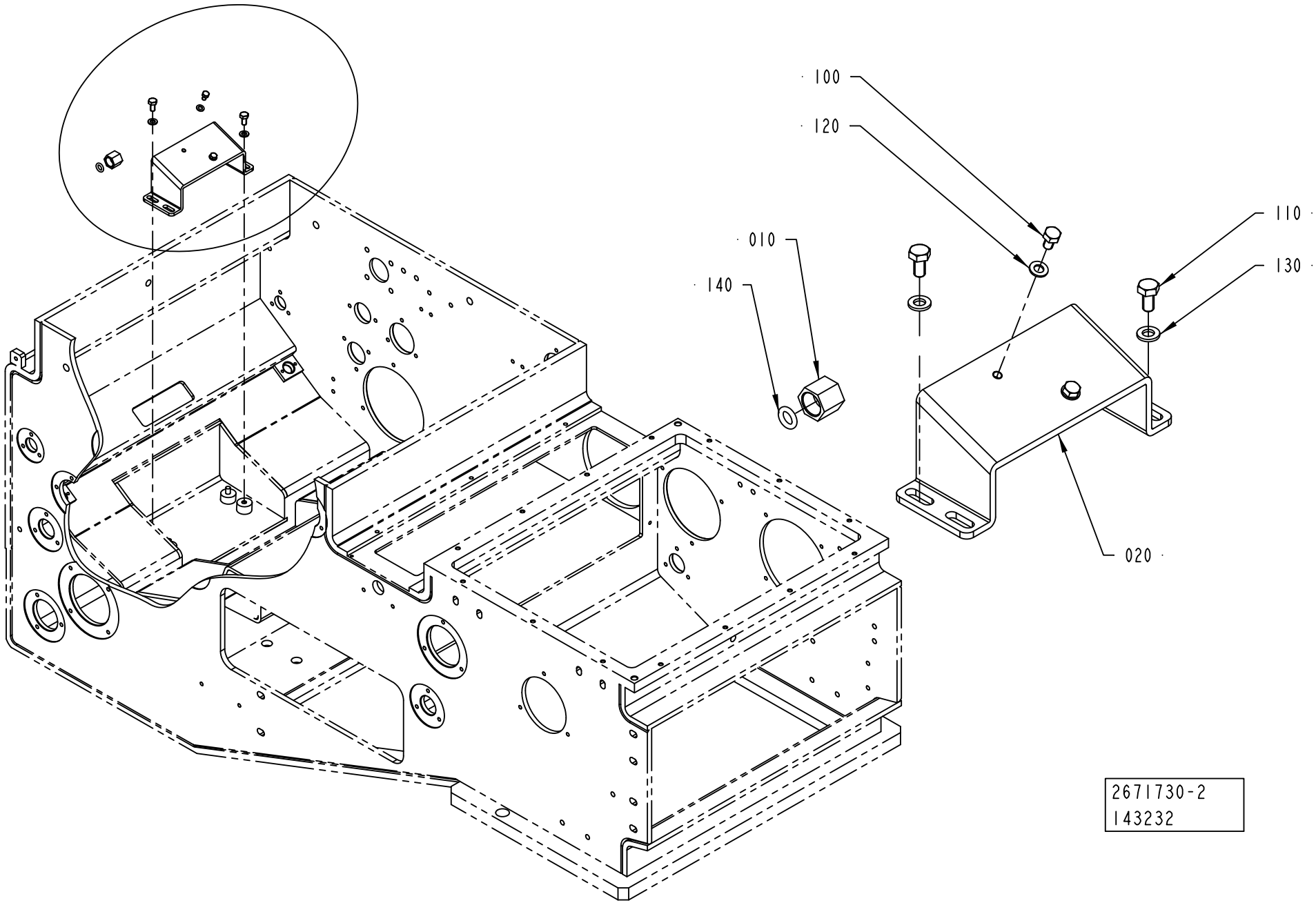
100
120
110
130
010
140
020
2671730-2
143232

Pos	Part No	UN	Qty	Description	Page No
A3/FLEX TBA 0500B, A3/FLEX TBA 1000B, A3/FLEX TBA 1000S, A3/FLEX TBA 1000SQ, A3/FLEX TBA 0200S, A3/FLEX TBA 0200B, A3/FLEX TBA 0250B, A3/FLEX TBA 0200M, A3/FLEX TBA 0250S, A3/FLEX TBA 0500S, A3/FLEX TPA 1000S (See drawing on page: 1-190)					
010	2668569-0000		1	PLUG	
140	315205-0808		1	O-RING 7,59X2,62 MM	
A3/FLEX TBA 1500S (See drawing on page: 1-188)					
010	2641318-0000		1	NOZZLE	
140	315205-0808		1	O-RING 7,59X2,62 MM	
150	342703-0208		1	NUT, PIPES & CONNECTORS,NUT M-8 SS	
A3/FLEX TBA 1890S, A3/FLEX TBA 2000S (See drawing on page: 1-188)					
010	2641317-0000		1	PIPE	
140	315205-0808		1	O-RING 7,59X2,62 MM	
150	342703-0208		1	NUT, PIPES & CONNECTORS,NUT M-8 SS	
A3/FLEX TPA 1000SQ, A3/FLEX TPA 0330SQ, A3/FLEX TPA 0500SQ, A3/FLEX TPA 0250SQ, A3/FLEX TPA 0200SQ, A3/FLEX TPA 0750SQ, A3/FLEX TBA 0200SQ, A3/FLEX TBA 0250SQ (See drawing on page: 1-188)					
010	2668565-0000		1	NOZZLE	
140	315205-0808		1	O-RING 7,59X2,62 MM	
150	342703-0208		1	NUT, PIPES & CONNECTORS,NUT M-8 SS	
Common Parts					
020	2641319-0000		1	BRACKET	
100	312105-0323		2	SCREW M6S ISO 4017 M5X8 A480	
110	312105-0366		2	SCREW M6S ISO 4017 M6X12 A480	
120	315105-0146		2	WASHER BRB 5,3X10 RFR	
130	315105-0153		2	WASHER BRB 6,4X12 RFR	

Pos	Part No	UN	Qty	Description	Page No

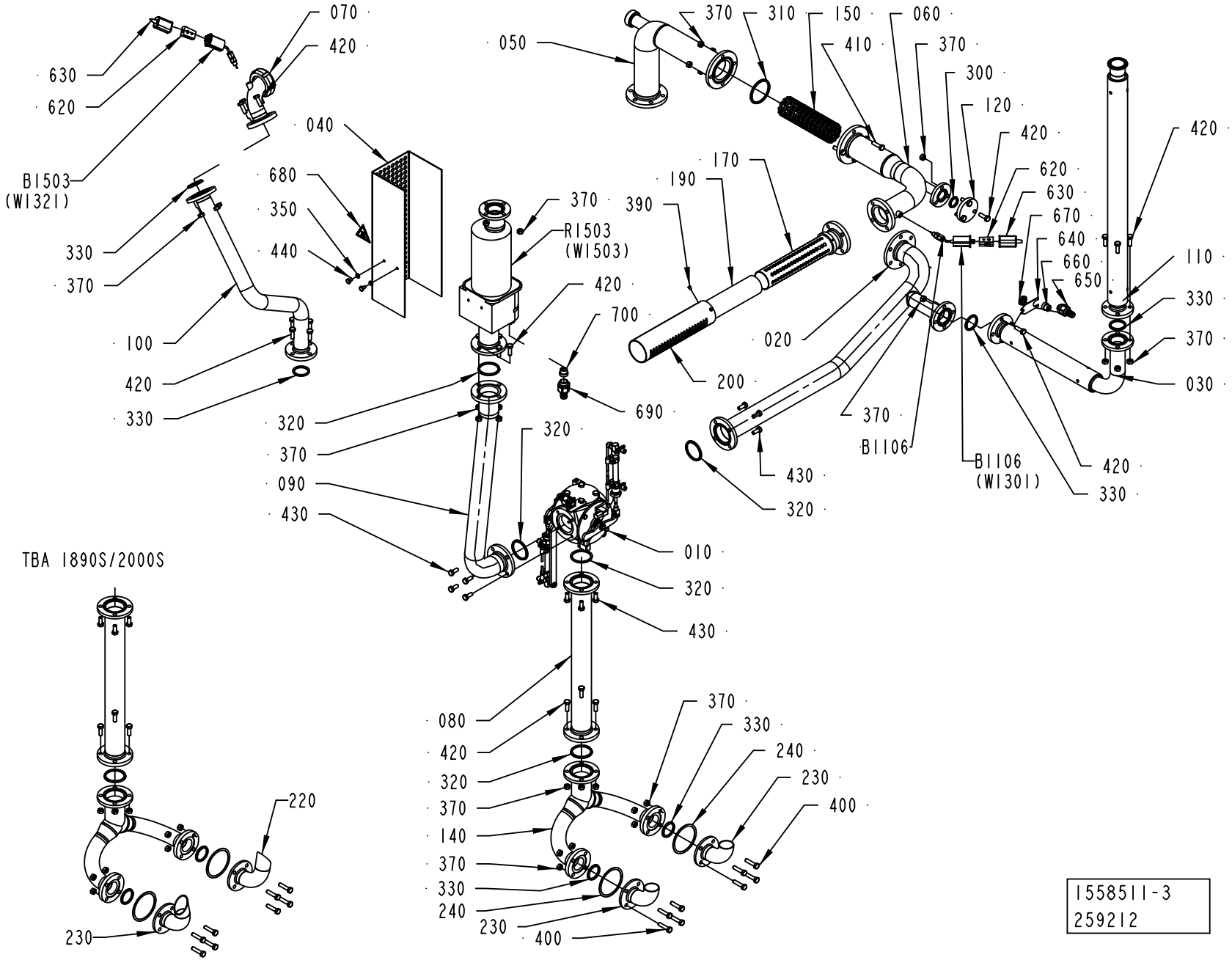

1558511-3
259212

ECM: 269551 - 20060703
Group number: 1558511-0200
Assembly Drawing: 1558511-3_1_AB

Pos	Part No	UN	Qty	Description	Page No
A3/FLEX DIMC/FLEX					
080	1538183-0000		1	PIPE	
120	2565467-0000		1	FLANGE	
230	2547407-0000		2	PIPE	
320	315229-0205		5	GASKET 47,5X55,5X3,7 MM 2 INCH	
370	312605-0318		39	HEXAGON NUT, M6M M8 A280	
420	312105-0453		27	SCREW M6S ISO 4017 M8X25 A480	
A3/FLEX TBA 0200S NODIMC, A3/FLEX TBA 1000SQ NODIMC, A3/FLEX TBA 1000S NODIMC, A3/FLEX TBA 1000B NODIMC, A3/FLEX TBA 0500B NODIMC, A3/FLEX TPA 1000SQ NODIMC, A3/FLEX TBA 1500S NODIMC, A3/FLEX TBA 0200B NODIMC, A3/FLEX TBA 0250B NODIMC, A3/FLEX TBA 0330S NODIMC, A3/FLEX TPA 0330SQ NODIMC, A3/FLEX TPA 0500SQ NODIMC, A3/FLEX TBA 0250S NODIMC, A3/FLEX TBA 0200M NODIMC, A3/FLEX TBA 0500S NODIMC, A3/FLEX TPA 0200SQ NODIMC, A3/FLEX TPA 0250SQ NODIMC, A3/FLEX TPA 0750SQ NODIMC, A3/FLEX TBA 0200SQ NODIMC, A3/FLEX TBA 0250SQ NODIMC					
080	1538183-0000		1	PIPE	
230	2547407-0000		2	PIPE	
320	315229-0205		5	GASKET 47,5X55,5X3,7 MM 2 INCH	
370	312605-0318		39	HEXAGON NUT, M6M M8 A280	
420	312105-0453		27	SCREW M6S ISO 4017 M8X25 A480	
A3/FLEX TBA 2000S NODIMC, A3/FLEX TBA 1890S NODIMC					
080	1538183-0000		1	PIPE	
220	2657887-0000		1	HORN	
230	2657888-0000		1	HORN	
320	315229-0205		5	GASKET 47,5X55,5X3,7 MM 2 INCH	
370	312605-0318		39	HEXAGON NUT, M6M M8 A280	
420	312105-0453		27	SCREW M6S ISO 4017 M8X25 A480	
Common Parts					
010	2550895-0100		1	CHANGE OVER VALVE	**1-195**
020	2695997-0000		1	PIPE	
030	1558510-0000		1	PIPE	
040	2829288-0000		1	COVERING PLATE	
050	1538487-0000		1	PIPE	
060	2641296-0000		1	PIPE	
070	1538474-0000		1	PIPE	
090	2641299-0000		1	PIPE	
100	1538181-0000		1	PIPE	
110	2695998-0000		1	PIPE	
140	1538154-0000		1	DRAIN PIPE	
150	1549526-0000		1	CONTAINER	
170	1517482-0000		1	TUBE	
190	1511755-0000		1	NET	
200	1511503-0000		1	PIPE	
240	1036294-0000		2	GASKET	
300	315229-0203		1	GASKET 22,1X31,1X3,7 MM 1"	
310	315229-0206		1	GASKET 60,2X68,2X3,7 MM 2"1/2	
330	315229-0204		6	GASKET 34,8X42,8X3,7 MM 1"1/2	
350	315101-0153		2	WASHER PLAIN, BRB, 6,4/12 H=1,5	
390	312125-0285		4	SCREW ISO 1207 M4X6 A4	
400	312109-0457		8	SCREW M6S ISO 4017 M8X35 A480	
410	312105-0455		4	SCREW M6S ISO 4017 M8X30 A480	
430	312105-0451		12	SCREW M6S ISO 4017 M8X20 A480	
440	90600-0657		2	SCREW UNC 1/4-20 X10	
620	90326-0020		2	PLUG, FEMALE YELLOW CR-AL	
630	90326-0012		2	PROTECTIVE COVER, T31A4618	
640	1036293-0000		1	HOLDER	
650	353243-0001		1	HOSE GLAND W/O INSERT PG9 EXTENDED	
660	353249-0008		1	INSERT, SINGEL HOLE, EK 152/7	
670	90099-0104		1	NUT, PR 15,2 (PG9)	
680	359705-0007		1	WARNING SIGN ISO, HOT SURFACE	
690	90458-0429		1	HOSE GLAND W/O INSERT M20 EXTENDED	
700	353249-0011		1	INSERT, SINGEL HOLE, EK 153/11	
B1106	90326-0057		1	THERMOCOUPLE, CR-AL	
B1503	90326-0057		1	THERMOCOUPLE, CR-AL	
R1503	2793360-0000		1	HEATER	
W1301	90220-0034	MM	8000	THERMOCABLE TEX/SITW-20F-KX 2X0,5MM2	
W1321	90220-0034	MM	8000	THERMOCABLE TEX/SITW-20F-KX 2X0,5MM2	
W1503	351120-0164	MM	9000	CABLE SIHF 4X1,5MM2 GREEN/YELLOW	

Machine Type | Group Description | Used-In | Group Number | Page No

CHANGE OVER VALVE

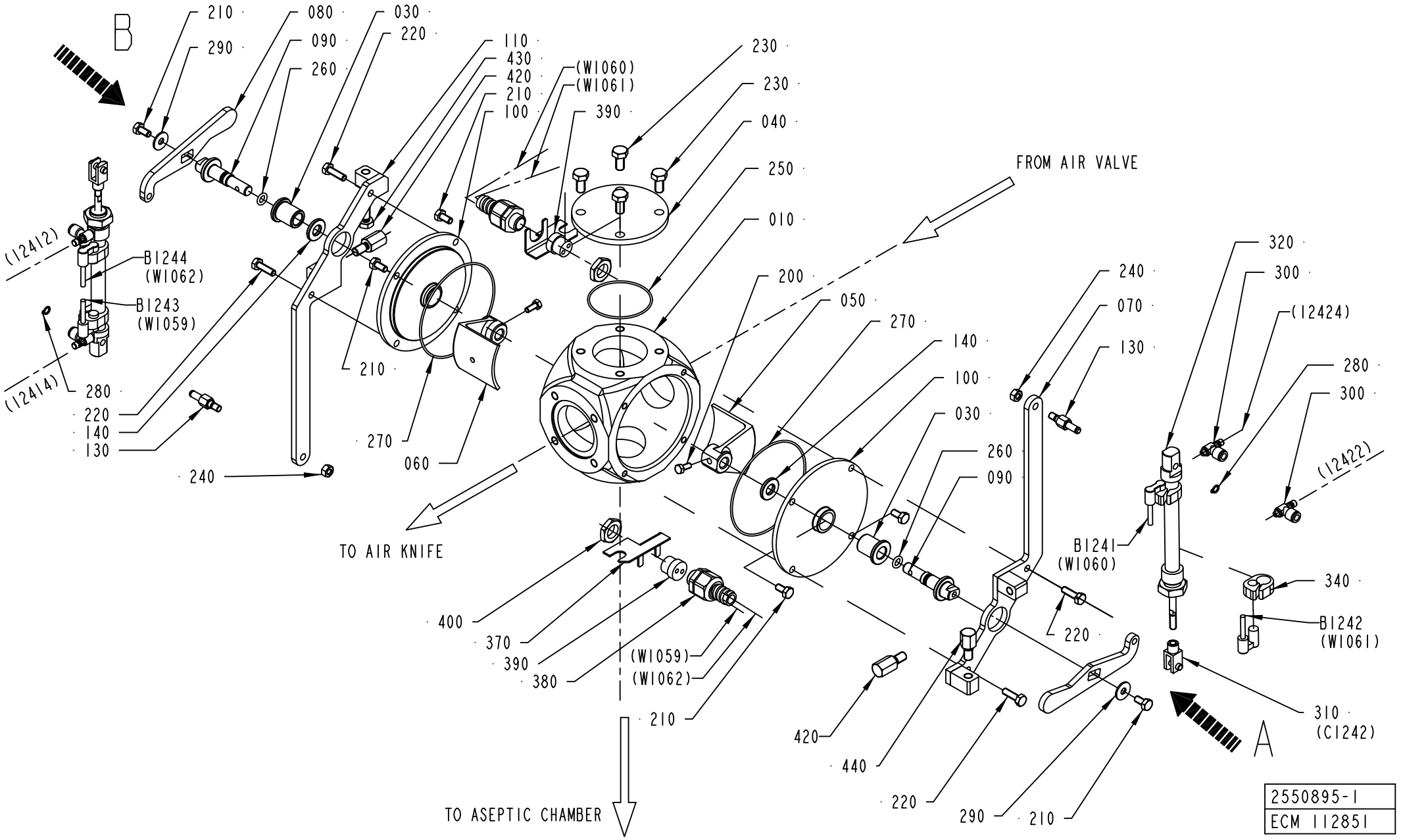

2550895-1
ECM 112851

ECM: 188390 - 20041117
Group number: 2550895-0100
Assembly Drawing: 2550895-1_1_AA

Pos	Part No	UN	Qty	Description	Page No
A3/FLEX					
440	2582576-0000		1	STOP SCREW	
Common Parts					
010	1524236-0000		1	VALVE HOUSING	
030	1539740-0000		2	BUSHING	
040	1539741-0000		1	COVER	
050	1539742-0000		1	SHUTTER	
060	1539743-0000		1	SHUTTER	
070	1539744-0000		1	BRACKET	
080	1539745-0000		2	LEVER	
090	1539750-0000		2	SHAFT	
100	1539751-0000		2	COVER	
110	1539752-0000		1	BRACKET	
130	1548742-0000		2	SPACER	
140	1548743-0000		2	WASHER	
200	312105-0327		2	SCREW M6S ISO 4017 M5X12 A480	
210	312105-0366		6	SCREW M6S ISO 4017 M6X12 A480	
220	312105-0370		4	SCREW M6S ISO 4017 M6X20 A480	
230	312105-0449		4	SCREW M6S ISO 4017 M8X16 A480	
240	312605-0316		4	HEXAGON NUT, M6M M6 A280	
250	90459-1189		1	O-RING 56,87X1,78 MM	
260	315204-0206		2	O-RING 7,3X2,4 MM	
270	315205-0807		2	O-RING 94,97X1,78 MM	
280	315751-0103		2	RETAINING RING FOR SHAFT DIN 471 6 A2	
290	90005-0060		2	WASHER PLAIN, RBS 6,4/M6)/18,H=1,5	
300	90235-0844		4	THROTTLE CHECK VALVE, M5, MANUAL, 6MM	
310	90450-0725		2	ROD END, CLEVIS WITH AXLE M6	
320	90459-0713		2	DOUBLE ACTING, MINI-ISO, CYL 12-80	
340	90459-0799		4	SENSOR BRACKET SMBR-12 FOR CYL 12	
370	1036610-0000		2	BRACKET	
380	353243-0001		2	HOSE GLAND W/O INSERT PG9 EXTENDED	
390	353249-0036		2	INSERT, MULTI HOLE, EK152 M 2X4	
400	90099-0104		2	NUT, PR 15,2 (PG9)	
420	2528061-0000		2	SCREW	
430	2528062-0000		1	SCREW	
B1241	90459-0829		1	PROXIMITY SENSOR, SMTO-4U-PS-K-LED-24	
B1242	90459-0829		1	PROXIMITY SENSOR, SMTO-4U-PS-K-LED-24	
B1243	90459-0829		1	PROXIMITY SENSOR, SMTO-4U-PS-K-LED-24	
B1244	90459-0829		1	PROXIMITY SENSOR, SMTO-4U-PS-K-LED-24	

Pos	Part No	UN	Qty	Description	Page No

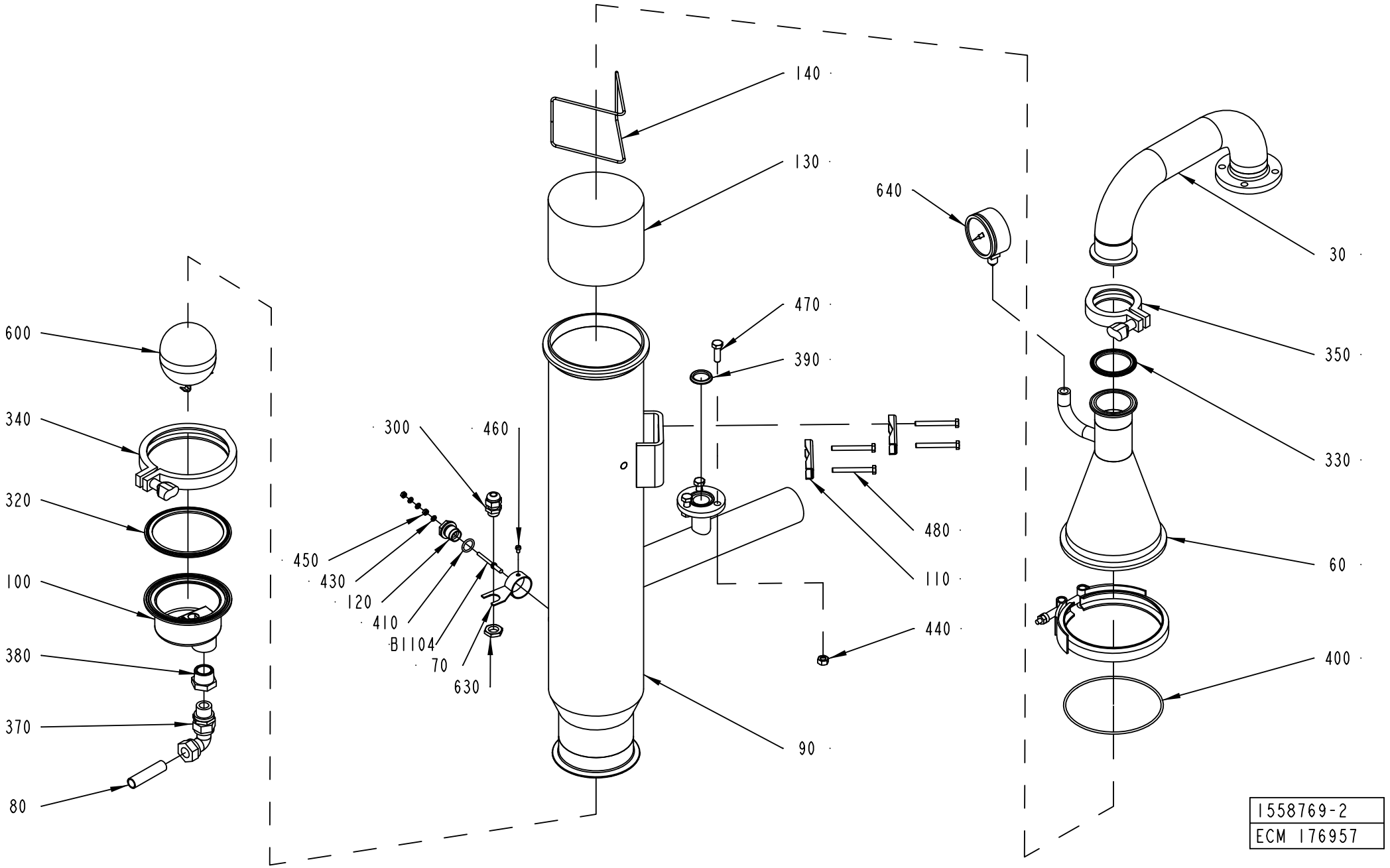
140
130
640
30
470
350
390
600
340
300
460
330
320
450
480
430
120
110
100
410
440
B1104
70
60
380
630
400
370
90
80
1558769-2
ECM 176957

ECM: 272120 - 20060728
Group number: 1558769-0200
Assembly Drawing: 1558769-2_1_AA

Pos	Part No	UN	Qty	Description	Page No
A3/FLEX					
090	1038866-0000		1	INTERMEDIARY SECTION	
390	315229-0203		1	GASKET 22,1X31,1X3,7 MM 1"	
440	312605-0318		3	HEXAGON NUT, M6M M8 A280	
470	312105-0453		3	SCREW M6S ISO 4017 M8X25 A480	
Common Parts					
030	2685246-0000		1	PIPE	
060	2685247-0000		1	UPPER SECTION	
070	1538169-0000		1	HOLDER	
080	1490963-0000		1	PIPE	
100	1038634-0000		1	DRAINING	
110	1036811-0000		2	CLAMP	
120	560931-0000		1	BRACKET	
130	546929-0000		1	FILTER	
140	2685375-0000		1	RETAINING RING	
300	352103-0101		1	CABLE GLAND, ST 9, PR15,2/PG9	
320	342850-0408		1	GASKET 97X117,7X5,2 MM 4" FDA	
330	342850-0405		1	GASKET 47,8X62,6X5,2 MM 2" FDA	
340	342840-0108		1	CLAMP, 101,6 MM 3-A PCS+PMCS	
350	342840-0105		1	CLAMPING PIECE	
370	342738-0221		1	ADJUSTABLE ELBOW CONNECTION,EXT 15-G1/2	
380	342206-0109		1	BUSHING, TAPERED, INT/EXT. THR NO. R211	
400	315204-0317		1	O-RING 129,5X3 MM	
410	315204-0213		1	O-RING 15,2X2,4 MM	
430	315105-0136		3	WASHER BRB 4,3X8 RFR	
450	312605-0312		2	HEXAGON NUT, M6M M4 A280	
460	312125-0285		1	SCREW ISO 1207 M4X6 A4	
480	312105-0381		4	SCREW M6S ISO 4014 M6X55 A480	
600	90360-0305		1	FLOAT, ART NO 10739920	
610	90157-0037		1	THREAD SEALANT LOCTITE 542	
620	90132-0030		1	SUPORTE MV 87177 KS 580T	
630	90099-0104		1	NUT, PR 15,2 (PG9)	
640	90043-0095		1	PRESSURE GAUGE, 2740, D=63 MM, GLYC.	
700	90144-0073		1	TREBOFLON-TAPE W=13MM	
B1104	979500-0003		1	ELECTRODE	

Pos	Part No	UN	Qty	Description	Page No

HEAT EXCHANGER VALVE

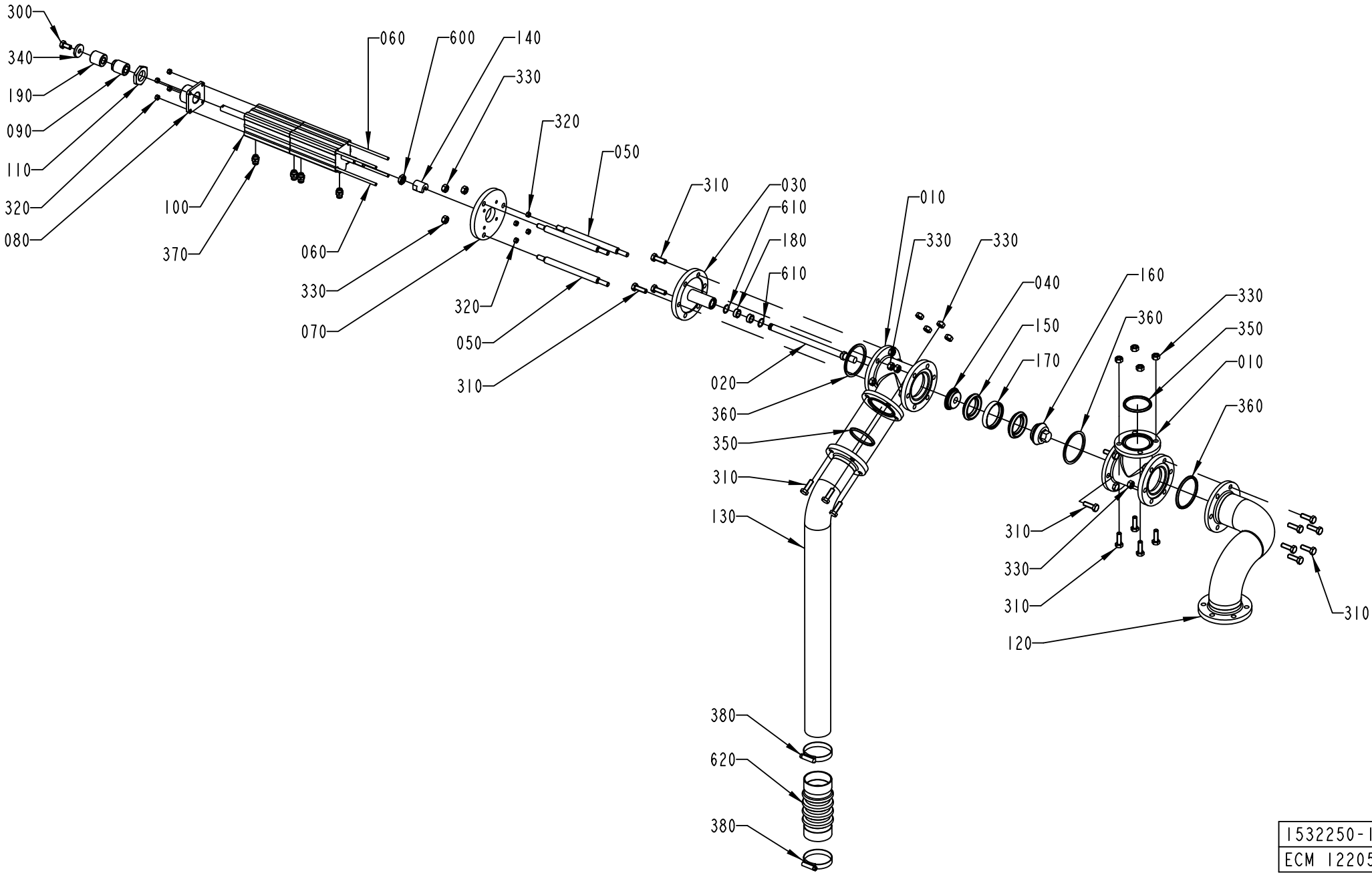

1532250-1
ECM 122050

ECM: 188392 - 20041117
Group number: 1532250-0100
Assembly Drawing: 1532250-1_1_AB

Pos	Part No	UN	Qty	Description	Page No
-					
010	1036187-0000		2	T-PIPE	
020	1036188-0000		1	SHAFT	
030	1036189-0000		1	SPINDEL GUIDE	
040	1036191-0000		1	SEAL HOLDER	
050	1036192-0000		3	SPACER ROD	
060	1346656-0000		4	ROD	
070	1346657-0000		1	CYLINDER BRACKET	
080	1346658-0000		1	BRACKET	
090	1346659-0000		1	SCREW	
100	1346677-0000		1	CYLINDER	
110	1349398-0000		1	NUT	
120	1538157-0000		1	PIPE	
130	1538158-0000		1	PIPE	
140	441871-0000		1	PENDULUM SUSPENSION	
150	530589-0000		2	SEAL RING	
160	530590-0000		1	VALVE CONE	
170	530599-0000		1	RING	
180	532349-0000		2	PLAIN BEARING	
190	2532968-0000		1	BUSHING	
300	312105-0449		1	SCREW M6S ISO 4017 M8X16 A480	
310	312105-0453		23	SCREW M6S ISO 4017 M8X25 A480	
320	312605-0314		8	HEXAGON NUT, M6M M5 A280	
330	312605-0318		29	HEXAGON NUT, M6M M8 A280	
340	315125-0165		1	WASHER TBRSB 8,4X26X5 A4	
350	315229-0205		2	GASKET 47,5X55,5X3,7 MM 2 INCH	
360	315229-0206		3	GASKET 60,2X68,2X3,7 MM 2"1/2	
370	342722-0202		4	PIPE COUPLING 1/8" D=6MM	
380	342991-0109		2	HOSE CLIP,WORM DRIVE TYPE (48)-50	
600	90099-0051		1	NUT HEX. M10X1,25, FE FZB	
610	90141-0022		2	SNAP RING B 16	
620	90342-0022		1	BELLOWS	

Pos	Part No	UN	Qty	Description	Page No

Machine Type | Group Description | Used-In | Group Number | Page No

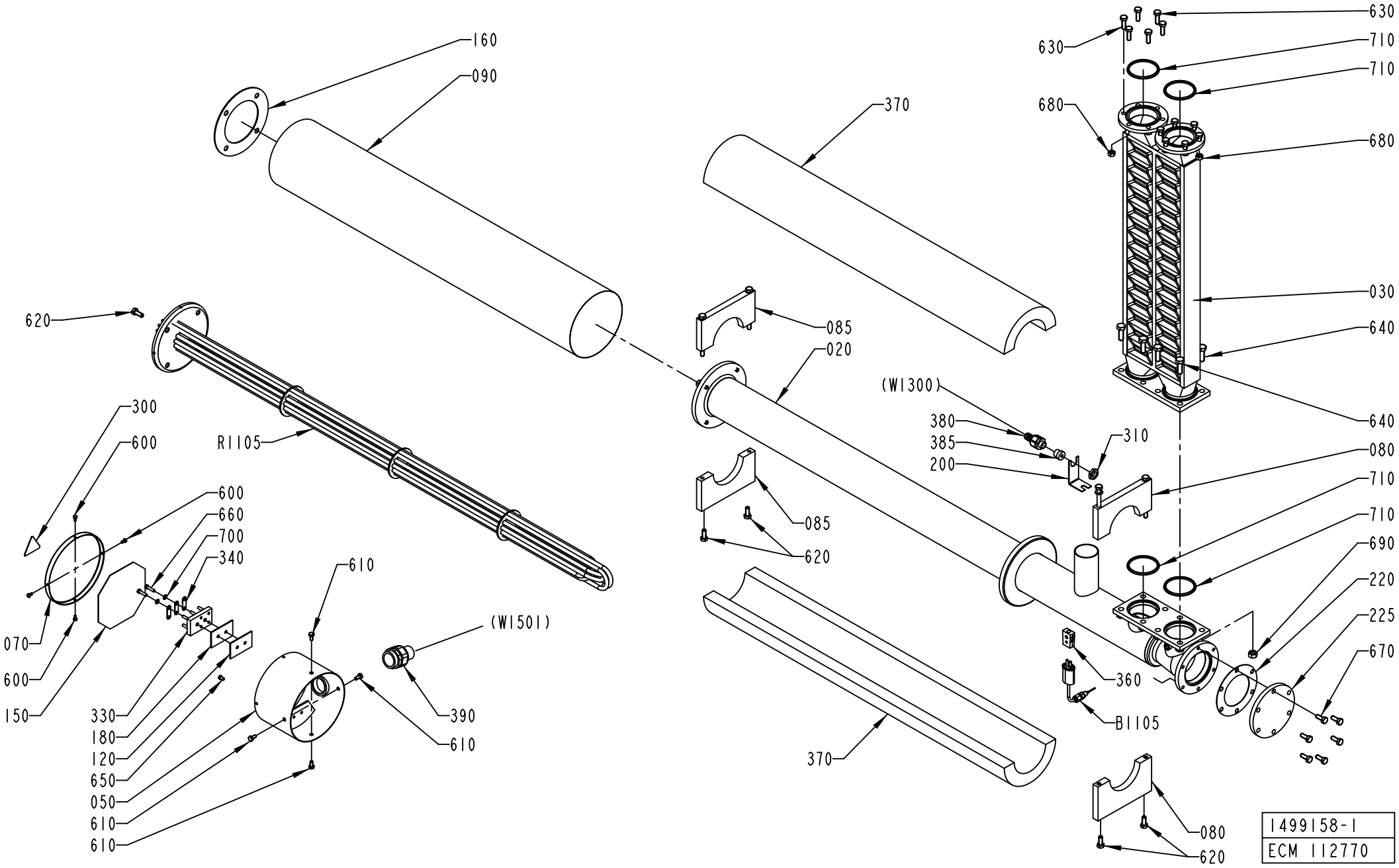
160
090
620
300
600
R1105
600
660
700
340
610
(W1501)
070
600
150
330
180
120
650
050
610
610
390
610
370
085
020
085
620
370
630
630
710
710
680
680
030
640
640
(W1300)
380
385
200
310
080
710
710
690
220
225
670
360
B1105
080
620
1499158-1
ECM 112770

ECM: 222758 - 20050701
Group number: 1499158-0100
Assembly Drawing: 1499158-1_1_AA

Pos	Part No	UN	Qty	Description	Page No
A3/FLEX					
030	1347245-0000		1	HEAT EXCHANGER	
Common Parts					
020	1499157-0000		1	HEATING PIPE	
050	451430-0000		1	CONNECTION HOUS.(MINOR)	
070	29876-0000		1	COVER	
080	456123-0000		1	SUPPORT	
	312105-0471		*2*	*SCREW M6S ISO 4014 M8X100 A480*	
	315105-0165		*2*	*WASHER BRB 8,4X16 RFR*	
085	1484080-0000		1	SUPPORT	
090	1036372-0000		1	PIPE	
120	30298-0000		1	INSULATION	
150	491305-0000		1	CONN.DIAGRAM AIR SUPERH.	
160	531731-0000		1	GASKET	
180	751009-0000		1	INSULATION	
190	90326-0051		1	THERMOCOUPLE, 12826-33	
195	273429-0000		1	WASHER	
200	1036373-0000		1	HOLDER	
220	927454-0000		1	GASKET	
225	1490962-0000		1	LID	
300	359705-0015		1	WARNING SIGN ISO, RISK OF ELECTRIC SHOCK	
310	90099-0104		1	NUT, PR 15,2 (PG9)	
320	90153-0020		1	ADHESIVE, BOSTIK 1782 125ML	
330	90195-0028		1	TERM.BLOCK 6-POLE STEATIT	
340	90195-0029		3	CONN. LINK NO324 FOR -28	
360	90326-0020		1	PLUG, FEMALE YELLOW CR-AL	
370	90411-0005	MM	900	INSULATOR	
380	353243-0001		1	HOSE GLAND W/O INSERT PG9 EXTENDED	
385	353249-0008		1	INSERT, SINGEL HOLE, EK 152/7	
390	90012-0126		1	HOSE GLAND W/O INSERT PG29 NORMAL	
600	312105-0287		4	SCREW M6S ISO 4017 M4X8 A470	
610	312105-0366		4	SCREW M6S ISO 4017 M6X12 A480	
620	312105-0451		8	SCREW M6S ISO 4017 M8X20 A480	
630	312105-0453		12	SCREW M6S ISO 4017 M8X25 A480	
640	312105-0495		8	SCREW M6S ISO 4017 M10X30 A480	
650	312125-0323		1	SCREW ISO 1207 M5X8 A4	
660	312125-0331		2	SCREW ISO 1207 M5X20 A4	
670	312105-0451		6	SCREW M6S ISO 4017 M8X20 A480	
680	312605-0318		12	HEXAGON NUT, M6M M8 A280	
690	312605-0320		8	HEXAGON NUT, M6M M10 A280	
700	315105-0146		2	WASHER BRB 5,3X10 RFR	
710	315229-0206		4	GASKET 60,2X68,2X3,7 MM 2"1/2	

Pos	Part No	UN	Qty	Description	Page No
R1105	449939-0001		1	HEATING ELEMENT 15KW	
	449938-0001		*2*	*HEATING PIPE*	
	449938-0002		*2*	*HEATING PIPE*	
	449938-0003		*2*	*HEATING PIPE*	

Machine Type	Group Description	Used-In	Group Number	Page No

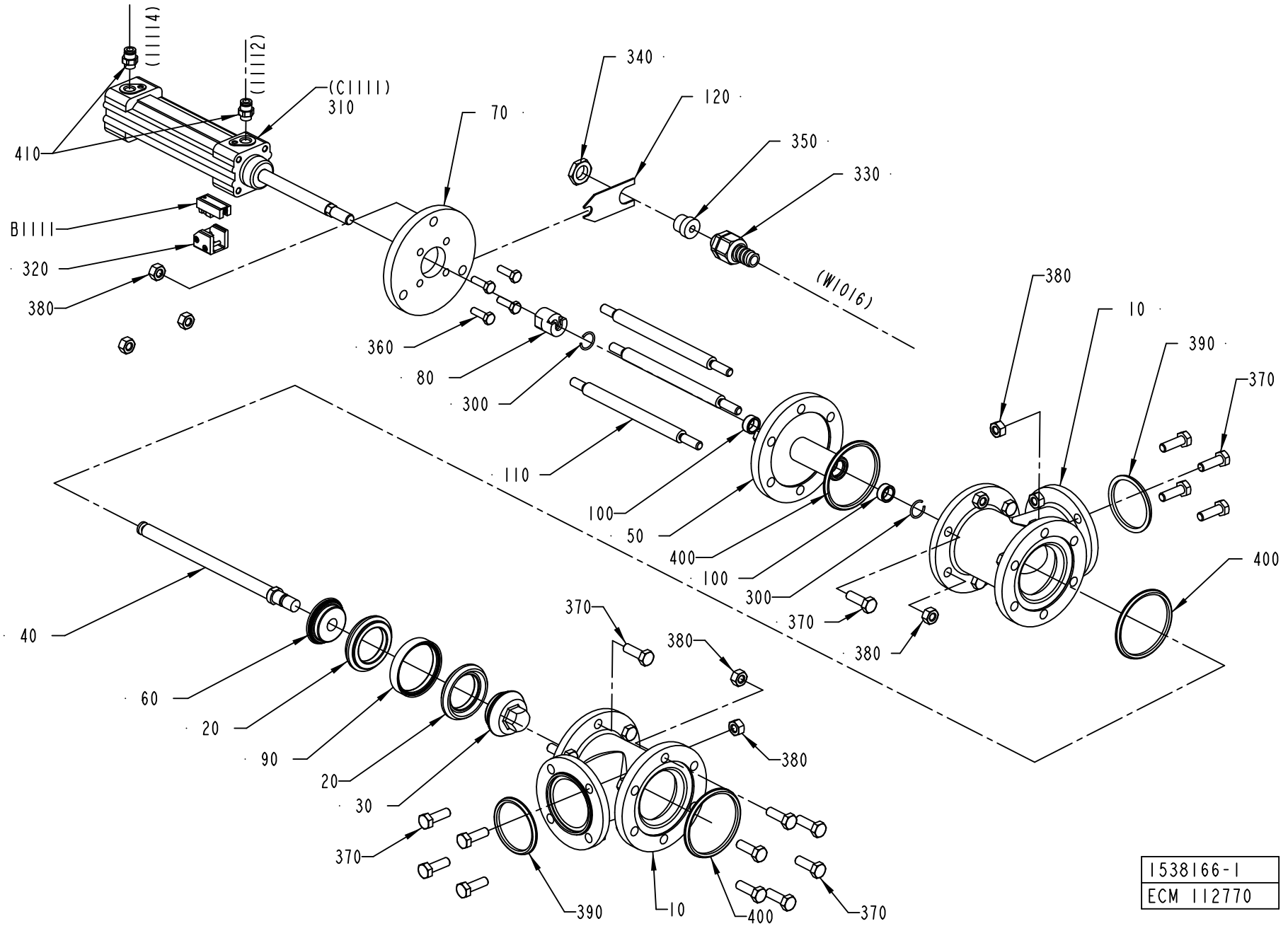
(11114)
(11112)
(C1111)
310
410
B1111
320
380
340
120
350
330
70
(W1016)
360
80
300
110
100
50
400
100
300
370
380
380
10
390
370
400
40
60
20
90
20
30
370
370
380
380
390
10
400
370
1538166-1
ECM 112770

ECM: 188394 - 20041117
Group number: 1538166-0100
Assembly Drawing: 1538166-1_1_AA

Pos	Part No	UN	Qty	Description	Page No
-					
010	1036187-0000		2	T-PIPE	
020	530589-0000		2	SEAL RING	
030	530590-0000		1	VALVE CONE	
040	1036188-0000		1	SHAFT	
050	1036189-0000		1	SPINDEL GUIDE	
060	1036191-0000		1	SEAL HOLDER	
070	1036193-0000		1	CYLINDER BRACKET	
080	441871-0000		1	PENDULUM SUSPENSION	
090	530599-0000		1	RING	
100	532349-0000		2	PLAIN BEARING	
110	1036192-0000		3	SPACER ROD	
120	1036293-0000		1	HOLDER	
300	90141-0022		2	SNAP RING B 16	
310	90450-0281		1	DOUBLE ACTING,PROF.CYL 32-80	
320	90450-0669		1	SENSOR, BRACKET SERIES 168	
330	353243-0001		1	HOSE GLAND W/O INSERT PG9 EXTENDED	
340	90099-0104		1	NUT, PR 15,2 (PG9)	
350	353249-0008		1	INSERT, SINGEL HOLE, EK 152/7	
360	312105-0370		4	SCREW M6S ISO 4017 M6X20 A480	
370	312105-0453		23	SCREW M6S ISO 4017 M8X25 A480	
380	312605-0318		31	HEXAGON NUT, M6M M8 A280	
390	315229-0205		2	GASKET 47,5X55,5X3,7 MM 2 INCH	
400	315229-0206		3	GASKET 60,2X68,2X3,7 MM 2"1/2	
410	342722-0202		2	PIPE COUPLING 1/8" D=6MM	
B1111	90457-0047		1	SENSOR 2750-1-5111-1 W.ADAPTER PNP	

Pos	Part No	UN	Qty	Description	Page No

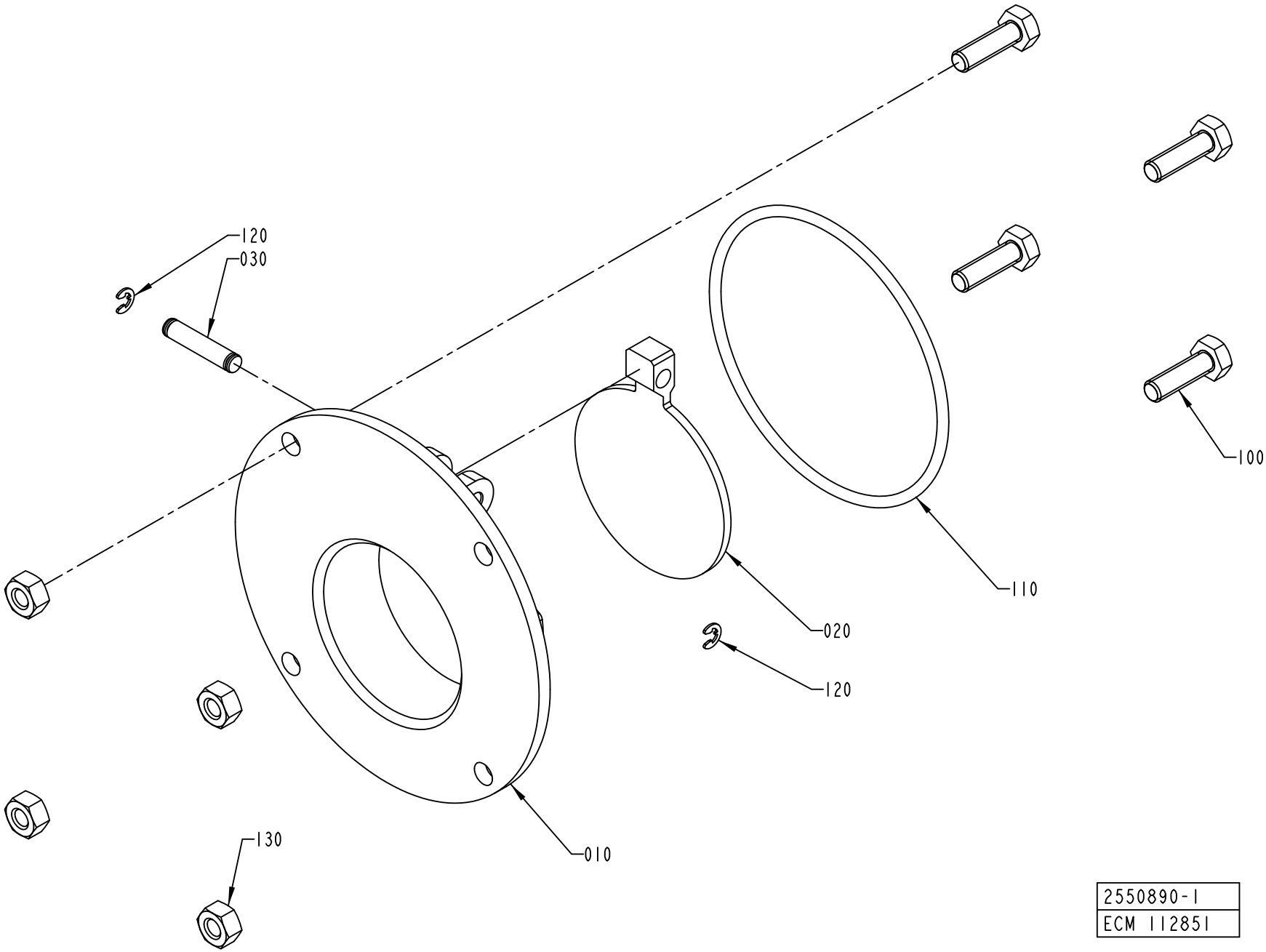

2550890-1
ECM 112851

ECM: 188395 - 20041117
Group number: 2550890-0100
Assembly Drawing: 2550890-1_1_AA

Pos	Part No	UN	Qty	Description	Page No
-					
010	1558417-0000		1	FLANGE	
020	1538494-0000		1	LID	
030	1558418-0000		1	SHAFT	
100	312105-0370		4	SCREW M6S ISO 4017 M6X20 A480	
110	315204-0307		1	O-RING 79,5X3 MM	
120	315755-0105		2	RETAINING RING SHAFT DIN 6799 3,2 A2	
130	312605-0316		4	HEXAGON NUT, M6M M6 A280	

Pos	Part No	UN	Qty	Description	Page No

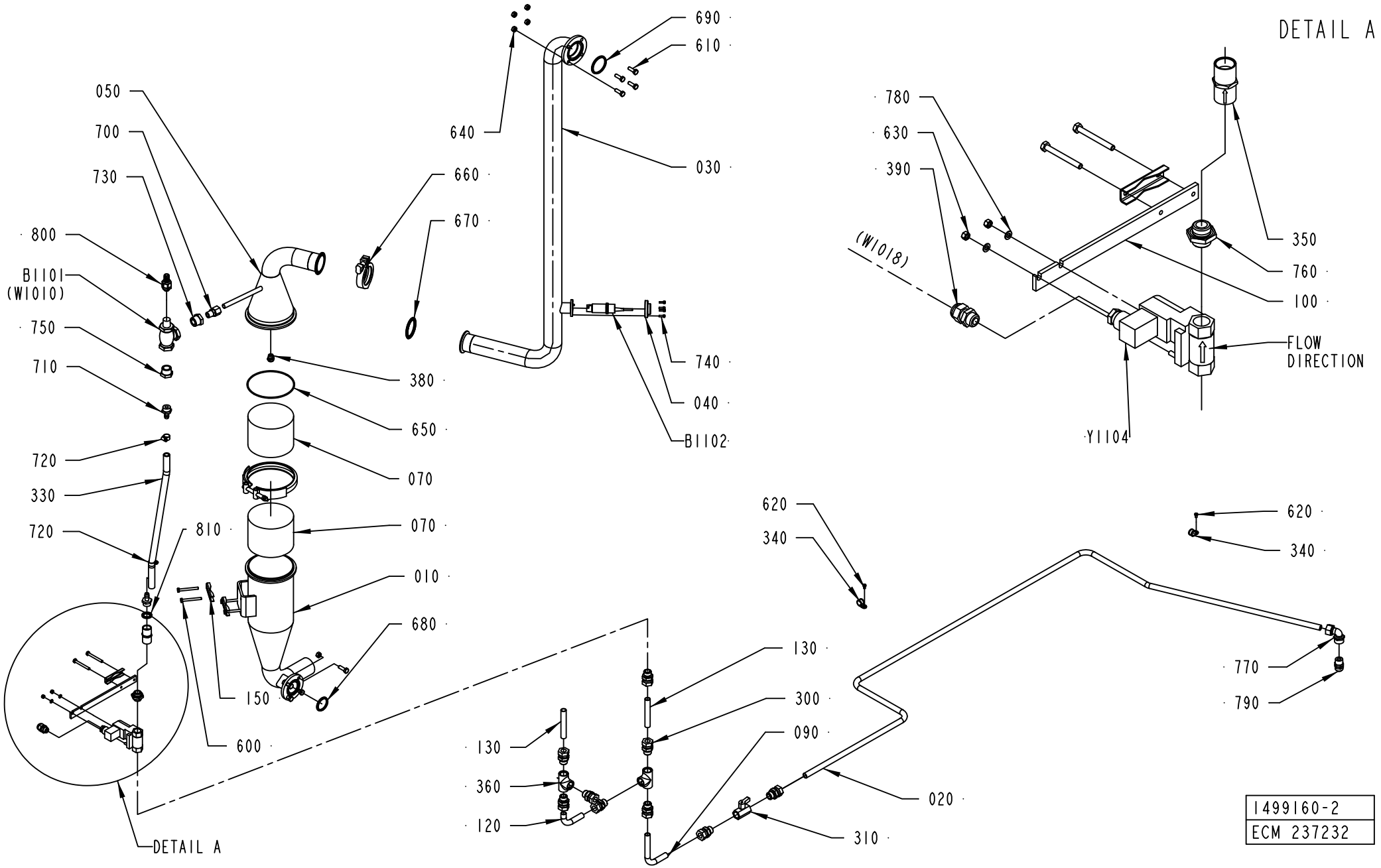
690
610
640
030
660
670
740
040
B1102
050
700
730
800
B1101
(W1010)
750
710
380
650
070
720
330
720
810
070
010
680
150
600
DETAIL A
DETAIL A
780
630
390
(W1018)
350
760
100
FLOW
DIRECTION
Y1104
620
340
620
340
130
300
090
020
310
130
360
120
770
790
1499160-2
ECM 237232

ECM: 271743 - 20060728
Group number: 1499160-0200
Assembly Drawing: 1499160-2_1_AB

Pos	Part No	UN	Qty	Description	Page No
A3/FLEX					
010	1036911-0000		1	CONTAINER	
030	2685271-0000		1	PIPE	
040	2547211-0000		1	FLANGE	
050	1499172-0000		1	UPPER SECTION	
350	90270-0349		1	CONSTANT FLOW VALVE, 1/2"X1/2" 2GPM	
380	90424-0054		1	SPRAY NOZZLE 120 DEG	
610	312105-0453		8	SCREW M6S ISO 4017 M8X25 A480	
640	312605-0318		8	HEXAGON NUT, M6M M8 A280	
680	315229-0204		1	GASKET 34,8X42,8X3,7 MM 1"1/2	
740	312115-0291		4	SCREW ISO4762 M4X12 A4 80	
B1101	90459-0711		1	FLOW SENSOR FS-400 SERIES / 26440	
B1102	2547213-0000		1	FLOW SENSOR	
Common Parts					
020	1499162-0000		1	TUBE	
070	546929-0000		2	FILTER	
090	2519437-0000		1	TUBE	
100	1037041-0000		1	HOLDER	
120	2519439-0000		1	TUBE	
130	2519440-0000		2	TUBE	
150	1036811-0000		3	CLAMP	
300	90030-0188		9	CONN. STR. GA-15-G1/2	
310	90187-0062		1	BALL VALVE G1/2, NPBR	
330	90166-0121	MM	450	HOSE	
340	90165-0039		2	PIPE CLAMP D=15 MM, GSK15/12	
360	90330-0049		2	T-PIPE, INT. THREAD, R-221R1/2	
390	352103-0101		1	CABLE GLAND, ST 9, PR15,2/PG9	
400	90132-0030		1	SUPORTE MV 87177 KS 580T	
410	90144-0073		1	TREBOFLON-TAPE W=13MM	
420	90157-0037		1	THREAD SEALANT LOCTITE 542	
600	312105-0381		6	SCREW M6S ISO 4014 M6X55 A480	
620	312125-0323		2	SCREW ISO 1207 M5X8 A4	
630	312605-0314		2	HEXAGON NUT, M6M M5 A280	
650	315204-0317		1	O-RING 129,5X3 MM	
660	342840-0105		1	CLAMPING PIECE	
670	342850-0405		1	GASKET 47,8X62,6X5,2 MM 2" FDA	
690	315229-0205		1	GASKET 47,5X55,5X3,7 MM 2 INCH	
700	90030-0181		1	CONN. STR. GE 12-3/8-18 NPTF	
710	342901-0105		2	HOSE NIPPLE, EXT.THR. R1/2-12 MM	
720	342991-0101		2	HOSE CLIP,WORM DRIVE TYPE (13)-16	
730	90330-0078		1	BUSHING, INT/EXT. THR. R3/4-RP3/8	
750	342206-0109		1	BUSHING, TAPERED, INT/EXT. THR NO. R211	
760	479261-0000		1	NIPPLE	
770	342733-0114		1	CONN. ELBOW WI-15-G1/2	
780	315105-0146		2	WASHER BRB 5,3X10 RFR	
790	342920-0151		1	STRAIGHT COUPL.,EXT.THREAD.15/12,5-R1/2"	
800	353243-0001		1	HOSE GLAND W/O INSERT PG9 EXTENDED	
810	315211-0111		1	BONDED SEAL SS/NBR90 G1/2	
Y1104	90042-0172		1	SOLENOID VALVE 4023/1005/1032 24VDC	
	90042-0467		*1*	*COIL 24VDC GSR*	

Machine Type	Group Description	Used-In	Group Number	Page No

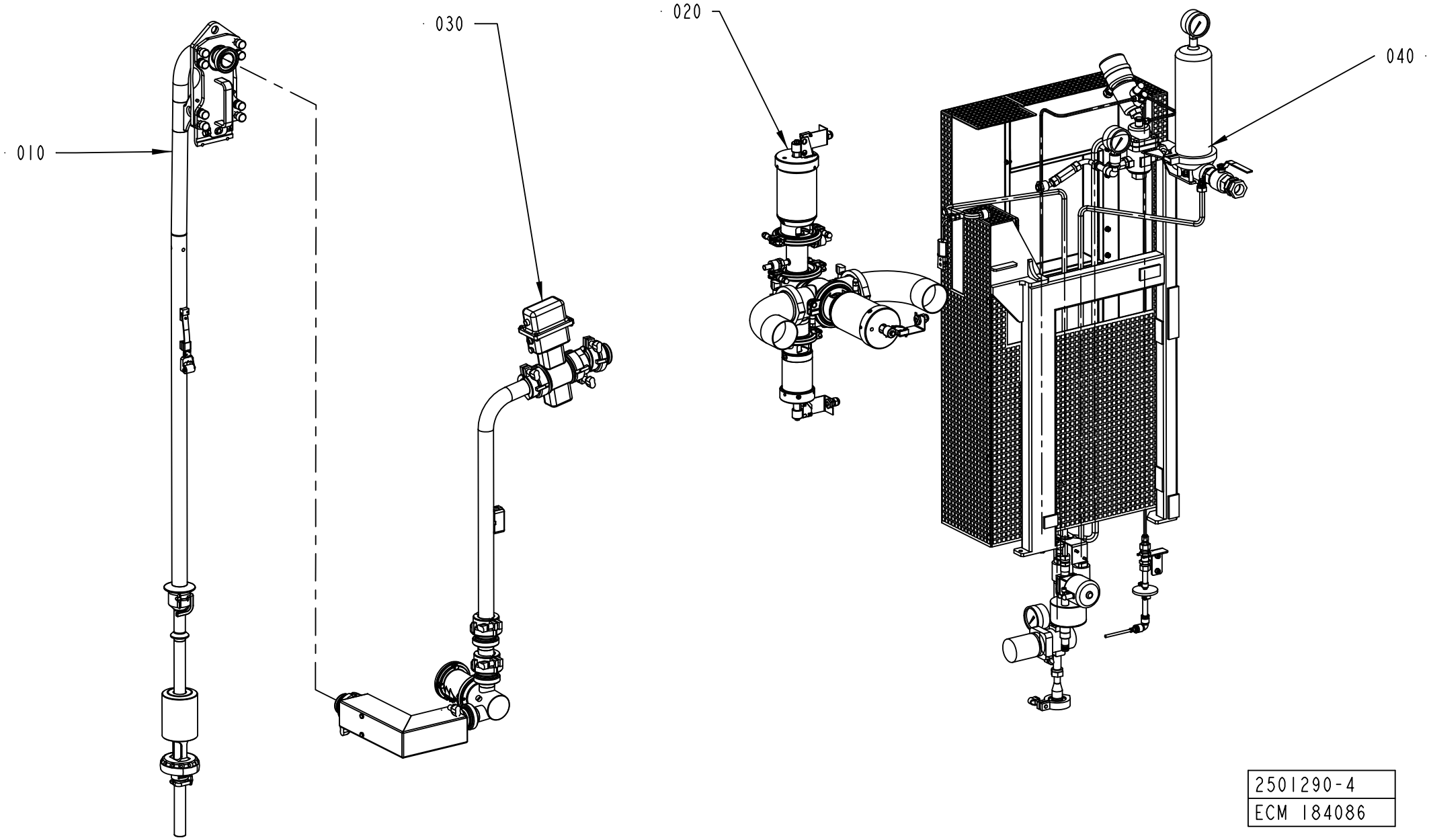

2501290-4
ECM 184086

ECM: 194060 - 20050224
Group number: 2501290-0200
Assembly Drawing: 2501290-4_1_AA

This list covers pages from 1-208 to 1-211

Pos	Part No	UN	Qty	Description	Page No
A3/FLEX HI (See drawing on page: 1-210)					
010	2501310-0100		1	FILLING PIPE	**1-213, 1-215, 1-217**
060	2656910-0100		1	HEAD SPACE BY INJECTION	**1-219**
A3/FLEX NOHI (See drawing on page: 1-208)					
010	2501310-0100		1	FILLING PIPE	**1-213, 1-215, 1-217**
Common Parts					
020	1558494-0200		1	PRODUCT VALVE	**1-231**
030	2507060-0200		1	PRODUCT LINES	**1-245, 1-247**
040	2545651-0200		1	STEAM SYSTEM	**1-253**

Pos	Part No	UN	Qty	Description	Page No

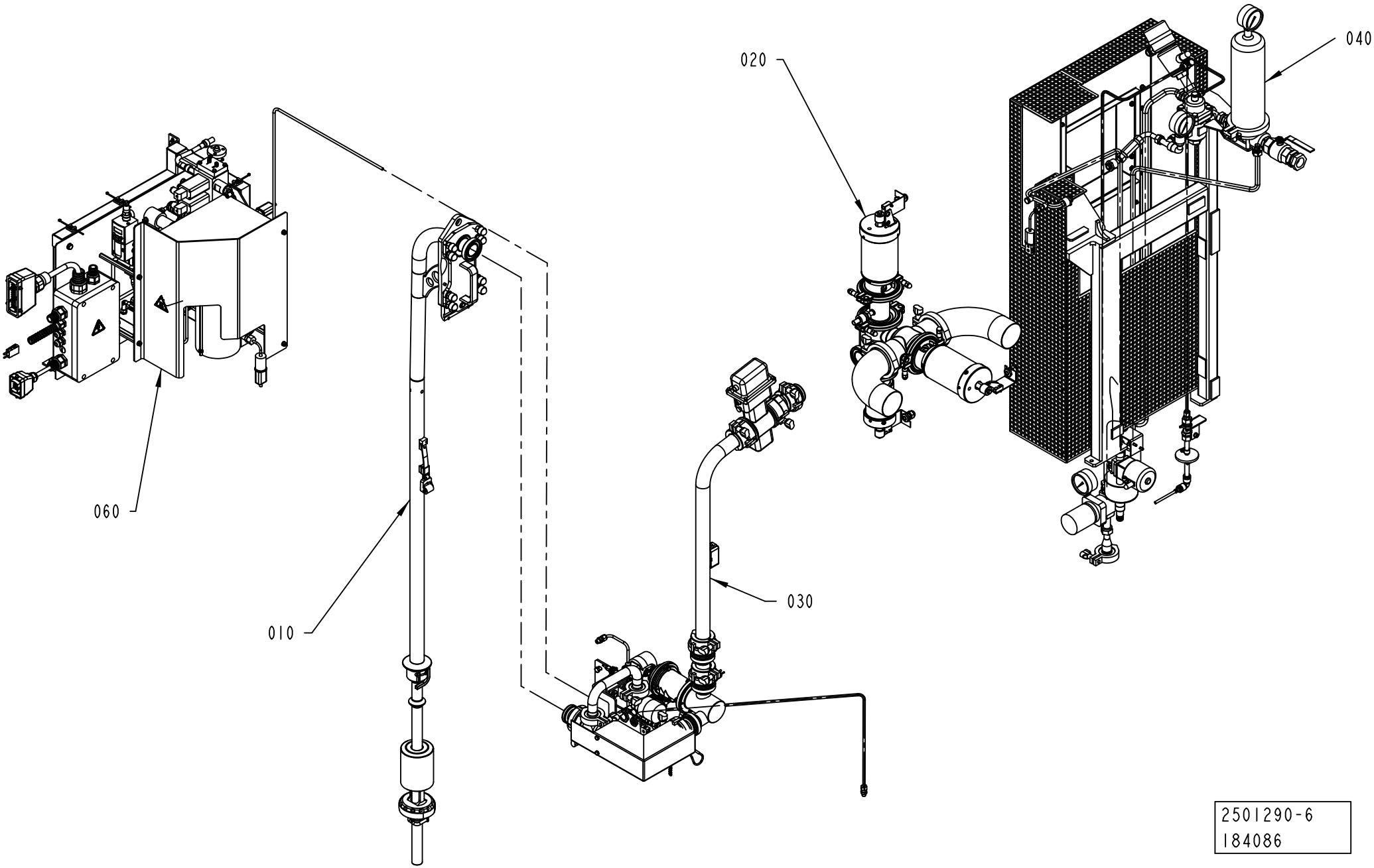
020
040
060
010
030
2501290-6
184086

ECM: 194060 - 20050224
Group number: 2501290-0200
Assembly Drawing: 2501290-6_1_AA

This list covers pages from 1-208 to 1-211

Pos	Part No	UN	Qty	Description	Page No
A3/FLEX HI (See drawing on page: 1-210)					
010	2501310-0100		1	FILLING PIPE	**1-213, 1-215, 1-217**
060	2656910-0100		1	HEAD SPACE BY INJECTION	**1-219**
A3/FLEX NOHI (See drawing on page: 1-208)					
010	2501310-0100		1	FILLING PIPE	**1-213, 1-215, 1-217**
Common Parts					
020	1558494-0200		1	PRODUCT VALVE	**1-231**
030	2507060-0200		1	PRODUCT LINES	**1-245, 1-247**
040	2545651-0200		1	STEAM SYSTEM	**1-253**

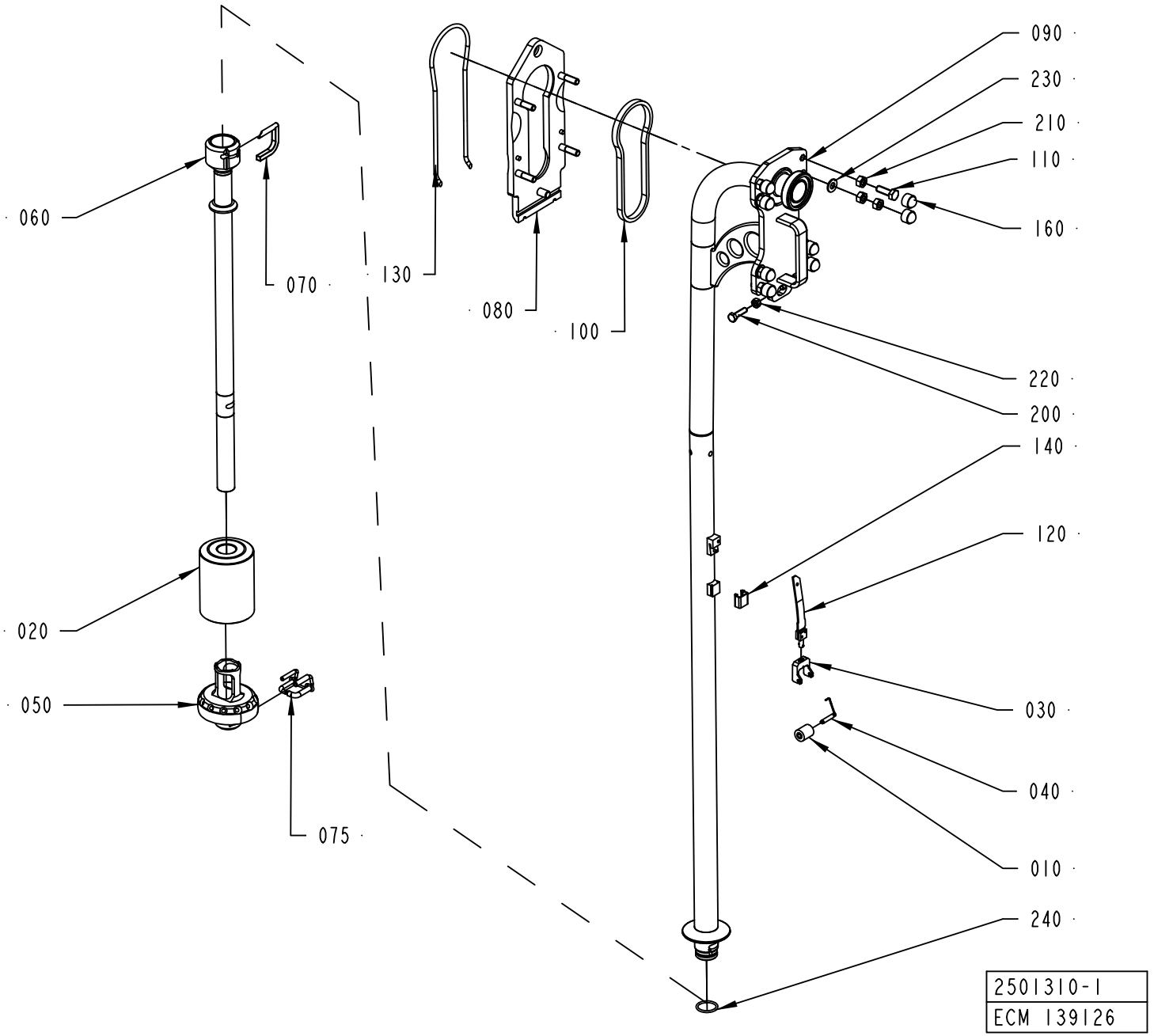
090
230
210
110
160
060
070
130
080
100
220
200
140
120
020
050
030
040
075
010
240
2501310-1
ECM 139126

ECM: 270355 - 20060704
Group number: 2501310-0100
Assembly Drawing: 2501310-1_1_AC

This list covers pages from 1-212 to 1-217

Pos	Part No	UN	Qty	Description	Page No
TPA 0250SQ, TPA 0200SQ (See drawing on page: 1-214)					
010	272479-0000		1	PRESSURE ROLLER (10PCS)	
020	2564601-0000		1	FLOAT	
030	255978-0000		1	FORK	
040	2529416-0000		1	SHAFT	
050	2601473-0000		1	PRESSURE FLANGE	
060	2731438-0000		1	FILLING PIPE	
070	2605148-0000		2	STOP PIN	
075	2563292-0000		1	STOP PIN	
090	2528104-0000		1	PIPE	
120	2719686-0000		1	SPRING	
140	295377-0001		1	HOOD	
150	1499114-0000		1	LOCK RING	
240	315204-0215		1	O-RING 19,2X3 MM	
TPA 0330SQ (See drawing on page: 1-214)					
010	257330-0000		1	PRESSURE ROLLER	
020	2564599-0000		1	FLOAT	
030	1348047-0000		1	FORK	
040	2529417-0000		1	SHAFT	
050	2601470-0000		1	PRESSURE FLANGE	
060	2598018-0000		1	LOWER FILLING PIPE	
070	2605148-0000		2	STOP PIN	
075	2563292-0000		1	STOP PIN	
090	2528104-0000		1	PIPE	
120	544894-0000		1	SPRING	
140	295377-0003		1	HOOD	
150	1498143-0000		1	LOCK RING	
240	315204-0215		1	O-RING 19,2X3 MM	
TPA 0500SQ (See drawing on page: 1-212)					
010	257330-0000		1	PRESSURE ROLLER	
020	2564600-0000		1	FLOAT	
030	2673015-0000		1	FORK	
040	2673021-0000		1	SHAFT	
050	2601474-0000		1	PRESSURE FLANGE	
060	2672949-0000		1	FILLING PIPE	
070	2598010-0000		1	STOP PIN	
075	2563295-0000		1	STOP PIN	
090	2673005-0000		1	FILLING PIPE	
120	2679889-0000		1	SPRING	
140	14600-0000		1	HOOD	
240	315204-0219		1	O-RING 29,2X3 MM	
TPA 1000SQ NOQC, TPA 1000SQ QC, TPA 0750SQ QC (See drawing on page: 1-216)					
010	257330-0000		2	PRESSURE ROLLER	
020	2564602-0000		1	FLOAT	
030	2715652-0000		1	FORK	
040	2634972-0000		1	SHAFT	
050	2570017-0000		1	PRESSURE FLANGE	
060	2770494-0000		1	FILLING PIPE	
070	2598008-0000		1	STOP PIN	
075	2563295-0000		1	STOP PIN	
090	2565436-0000		1	FILLING PIPE	
120	2641261-0000		1	SPRING	
140	2572071-0000		1	HOOD	
170	24928-0000		3	LOCKING RUBBER	
185	499011-0000		2	SHAFT	
190	2715569-0000		1	BRACKET	
240	315204-0219		1	O-RING 29,2X3 MM	
TBA 0200B NOQC, TBA 0250B NOQC (See drawing on page: 1-214)					
010	257330-0000		1	PRESSURE ROLLER	
020	2564600-0000		1	FLOAT	
030	1317438-0000		1	FORK	
040	2529418-0000		1	SHAFT	
050	2601472-0000		1	PRESSURE FLANGE	
060	2598015-0000		1	LOWER FILLING PIPE	
070	2605148-0000		2	STOP PIN	
075	2563292-0000		1	STOP PIN	
090	2528104-0000		1	PIPE	
120	1498621-0000		1	SPRING	
140	295377-0003		1	HOOD	
150	1498143-0000		1	LOCK RING	
240	315204-0215		1	O-RING 19,2X3 MM	
TBA 0500B NOQC, TBA 1000B NOQC (See drawing on page: 1-212)					
010	232979-0000		1	PRESSURE ROLLER (PAK OF 10)	
020	2564596-0000		1	FLOAT	
030	1348048-0000		1	FORK	
040	2523268-0000		1	SHAFT	
050	2563294-0000		1	PRESSURE FLANGE	
060	2563293-0000		1	LOWER FILLING PIPE	
070	2598008-0000		1	STOP PIN	
075	2563295-0000		1	STOP PIN	
090	2501311-0000		1	FILLING PIPE	
120	1517053-0000		1	SPRING	
140	14600-0000		1	HOOD	
240	315204-0219		1	O-RING 29,2X3 MM	

Machine Type | Group Description | Used-In | Group Number | Page No

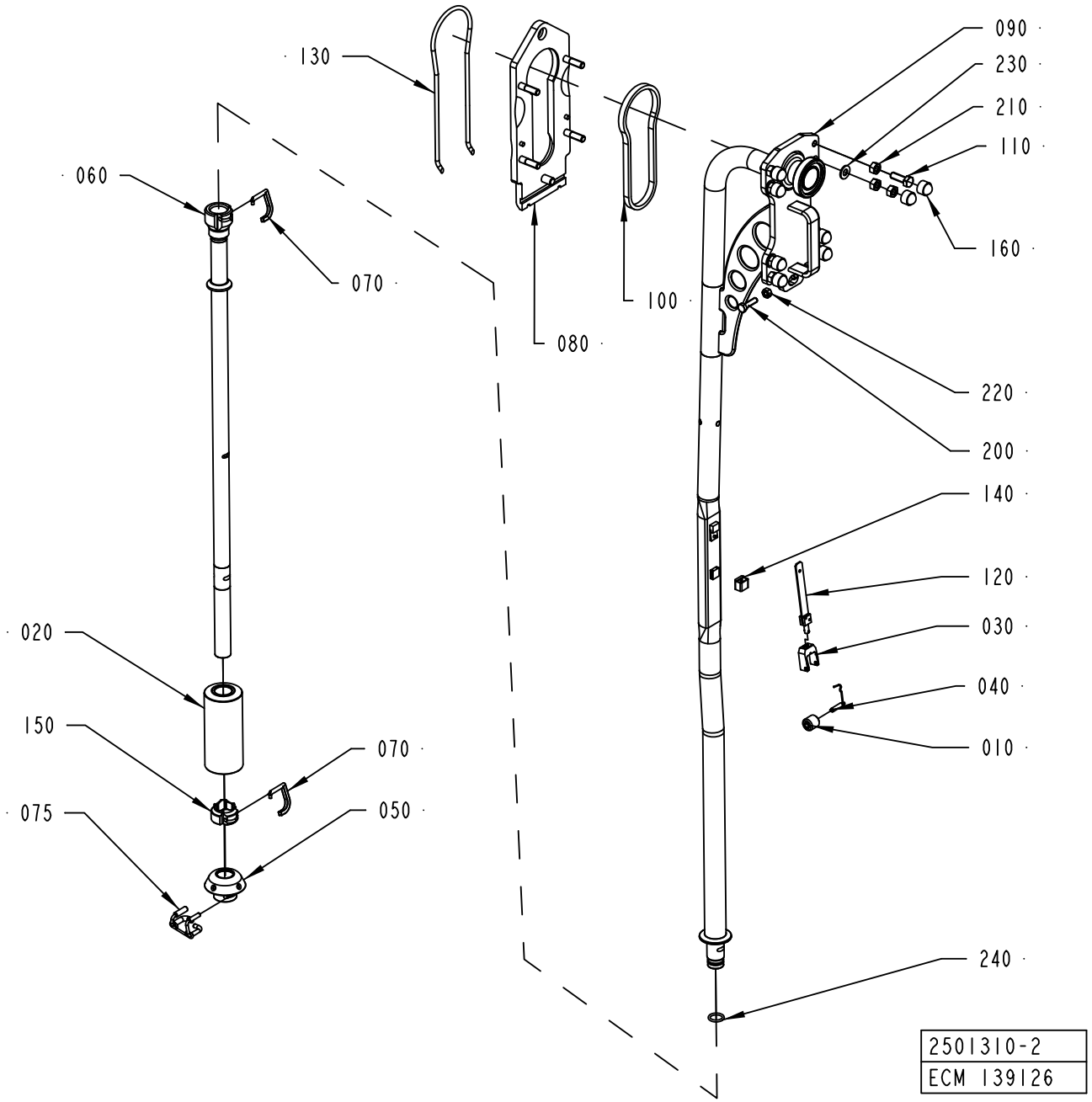
130
060
070
080
100
090
230
210
110
160
220
200
140
120
030
040
010
020
150
070
075
050
240
2501310-2
ECM 139126

ECM: 270355 - 20060704
Group number: 2501310-0100
Assembly Drawing: 2501310-2_1_AC

This list covers pages from 1-212 to 1-217

Pos	Part No	UN	Qty	Description	Page No
TBA 0200B QC, TBA 0330S QC, TBA 0250B QC (Cont'd) (See drawing on page: 1-212)					
010	257330-0000		1	PRESSURE ROLLER	
020	2564600-0000		1	FLOAT	
030	1317438-0000		1	FORK	
040	2529418-0000		1	SHAFT	
050	2601472-0000		1	PRESSURE FLANGE	
060	2664098-0000		1	FILLING PIPE	
070	2605148-0000		2	STOP PIN	
075	2563292-0000		1	STOP PIN	
090	2528104-0000		1	PIPE	
120	1498621-0000		1	SPRING	
140	295377-0003		1	HOOD	
150	1498143-0000		1	LOCK RING	
240	315204-0215		1	O-RING 19,2X3 MM	
TBA 0200M, TBA 0250S (See drawing on page: 1-214)					
010	272479-0000		1	PRESSURE ROLLER (10PCS)	
020	2564601-0000		1	FLOAT	
030	255978-0000		1	FORK	
040	2529416-0000		1	SHAFT	
050	2685306-0000		1	PRESSURE FLANGE	
060	2601321-0000		1	FILLING PIPE	
070	2605148-0000		2	STOP PIN	
075	2563292-0000		1	STOP PIN	
090	2528104-0000		1	PIPE	
120	751604-0000		1	SPRING	
140	295377-0001		1	HOOD	
150	1499114-0000		1	LOCK RING	
240	315204-0215		1	O-RING 19,2X3 MM	
TBA 0200S (See drawing on page: 1-214)					
010	272479-0000		1	PRESSURE ROLLER (10PCS)	
020	2564601-0000		1	FLOAT	
030	255978-0000		1	FORK	
040	2529416-0000		1	SHAFT	
050	2570015-0000		1	PRESSURE FLANGE	
060	2563296-0000		1	LOWER FILLING PIPE	
070	2605148-0000		2	STOP PIN	
075	2563292-0000		1	STOP PIN	
090	2528104-0000		1	PIPE	
120	751604-0000		1	SPRING	
140	295377-0001		1	HOOD	
150	1499114-0000		1	LOCK RING	
240	315204-0215		1	O-RING 19,2X3 MM	
TBA 0200SQ, TBA 0250SQ (See drawing on page: 1-214)					
010	2607089-0000		1	PRESSURE ROLLER	
020	2564600-0000		1	FLOAT	
030	1317438-0000		1	FORK	
040	2529418-0000		1	SHAFT	
050	2657902-0000		1	PRESSURE FLANGE	
060	2657903-0000		1	FILLING PIPE	
070	2605148-0000		2	STOP PIN	
075	2563292-0000		1	STOP PIN	
090	2528104-0000		1	PIPE	
120	1498621-0000		1	SPRING	
140	295377-0003		1	HOOD	
150	1498143-0000		1	LOCK RING	
240	315204-0215		1	O-RING 19,2X3 MM	
TBA 0500B QC, TBA 1000B QC (See drawing on page: 1-212)					
010	232979-0000		1	PRESSURE ROLLER (PAK OF 10)	
020	2564596-0000		1	FLOAT	
030	1348048-0000		1	FORK	
040	2523268-0000		1	SHAFT	
050	2634524-0000		1	PRESSURE FLANGE	
060	2634523-0000		1	LOWER FILLING PIPE	
070	2598008-0000		1	STOP PIN	
075	2563295-0000		1	STOP PIN	
090	2501311-0000		1	FILLING PIPE	
120	1517053-0000		1	SPRING	
140	14600-0000		1	HOOD	
240	315204-0219		1	O-RING 29,2X3 MM	
TBA 0500S (See drawing on page: 1-212)					
010	257330-0000		1	PRESSURE ROLLER	
020	2564598-0000		1	FLOAT	
030	2673016-0000		1	FORK	
040	2673022-0000		1	SHAFT	
050	2601468-0000		1	PRESSURE FLANGE	
060	2685277-0000		1	FILLING PIPE	
070	2598008-0000		1	STOP PIN	
075	2563295-0000		1	STOP PIN	
090	2673005-0000		1	FILLING PIPE	
120	1517053-0000		1	SPRING	
140	14600-0000		1	HOOD	
240	315204-0219		1	O-RING 29,2X3 MM	
TBA 1000S (See drawing on page: 1-212)					
010	499387-0000		1	PRESSURE ROLLER	

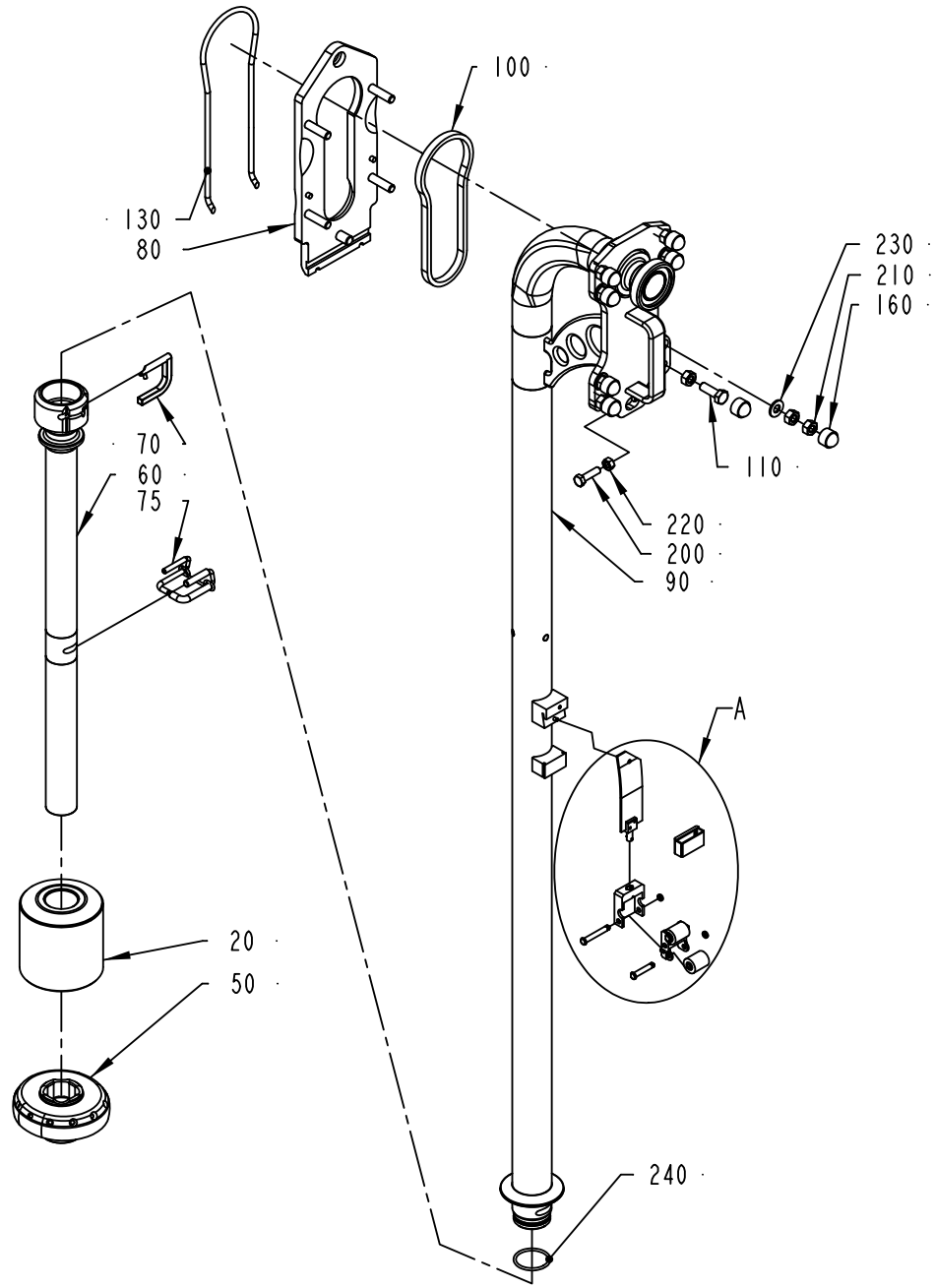

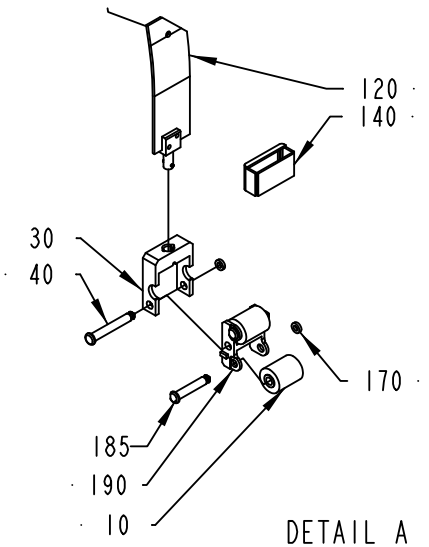

DETAIL A
SCALE 1:4

2501310-3
248571

ECM: 270355 - 20060704
Group number: 2501310-0100
Assembly Drawing: 2501310-3_1_AC

This list covers pages from 1-212 to 1-217

Pos	Part No	UN	Qty	Description	Page No
TBA 1000S (Cont'd) (See drawing on page: 1-212)					
020	2564596-0000		1	FLOAT	
030	1348047-0000		1	FORK	
040	2529419-0000		1	SHAFT	
050	2563290-0000		1	PRESSURE FLANGE	
060	2563289-0000		1	LOWER FILLING PIPE	
070	2598008-0000		1	STOP PIN	
075	2563295-0000		1	STOP PIN	
090	2501311-0000		1	FILLING PIPE	
120	2539453-0000		1	SPRING	
140	434665-0000		1	HOOD	
240	315204-0219		1	O-RING 29,2X3 MM	
TBA 1000SQ (See drawing on page: 1-212)					
010	257330-0000		1	PRESSURE ROLLER	
020	2564597-0000		1	FLOAT	
030	1348049-0000		1	FORK	
040	2529420-0000		1	SHAFT	
050	2601469-0000		1	PRESSURE FLANGE	
060	2563289-0000		1	LOWER FILLING PIPE	
070	2598008-0000		1	STOP PIN	
075	2563295-0000		1	STOP PIN	
090	2501311-0000		1	FILLING PIPE	
120	2539453-0000		1	SPRING	
140	434665-0000		1	HOOD	
240	315204-0219		1	O-RING 29,2X3 MM	
TBA 1500S (See drawing on page: 1-212)					
010	232979-0000		1	PRESSURE ROLLER (PAK OF 10)	
020	2564596-0000		1	FLOAT	
030	1348048-0000		1	FORK	
040	2523268-0000		1	SHAFT	
050	2598017-0000		1	PRESSURE FLANGE	
060	2592525-0000		1	FILLING PIPE	
070	2598008-0000		1	STOP PIN	
075	2563295-0000		1	STOP PIN	
090	2501311-0000		1	FILLING PIPE	
120	1517053-0000		1	SPRING	
140	14600-0000		1	HOOD	
240	315204-0219		1	O-RING 29,2X3 MM	
TBA 1890S QC, TBA 2000S QC (See drawing on page: 1-216)					
010	232979-0000		2	PRESSURE ROLLER (PAK OF 10)	
020	2634995-0000		1	FLOAT	
030	1538952-0000		1	FORK	
040	1538953-0000		1	SHAFT	
050	2641297-0000		1	PRESSURE FLANGE	
060	2594629-0000		1	FILLING PIPE	
070	2777382-0000		1	STOP PIN	
075	2641294-0000		1	STOP PIN	
090	2592544-0000		1	FILLING PIPE	
120	2601239-0000		1	SPRING	
140	2672994-0000		1	HOOD	
170	24928-0000		3	LOCKING RUBBER	
185	2638077-0000		2	SHAFT	
190	2685285-0000		1	BRACKET	
240	315204-0223		1	O-RING 39,2X3 MM	
Common Parts					
080	2500082-0000		1	MOUNTING PLATE	
100	2507048-0000		1	GASKET	
110	312105-0495		4	SCREW M6S ISO 4017 M10X30 A480	
130	2500071-0000		1	O-RING	
160	90459-0729		8	HEXAGONAL PROTECTIVE CAP GPN 1000	
200	312105-0455		2	SCREW M6S ISO 4017 M8X30 A480	
210	312605-0320		12	HEXAGON NUT, M6M M10 A280	
220	312605-0318		2	HEXAGON NUT, M6M M8 A280	
230	315105-0173		4	WASHER BRB 10,5X22 RFR	

Machine Type | Group Description | Used-In | Group Number | Page No

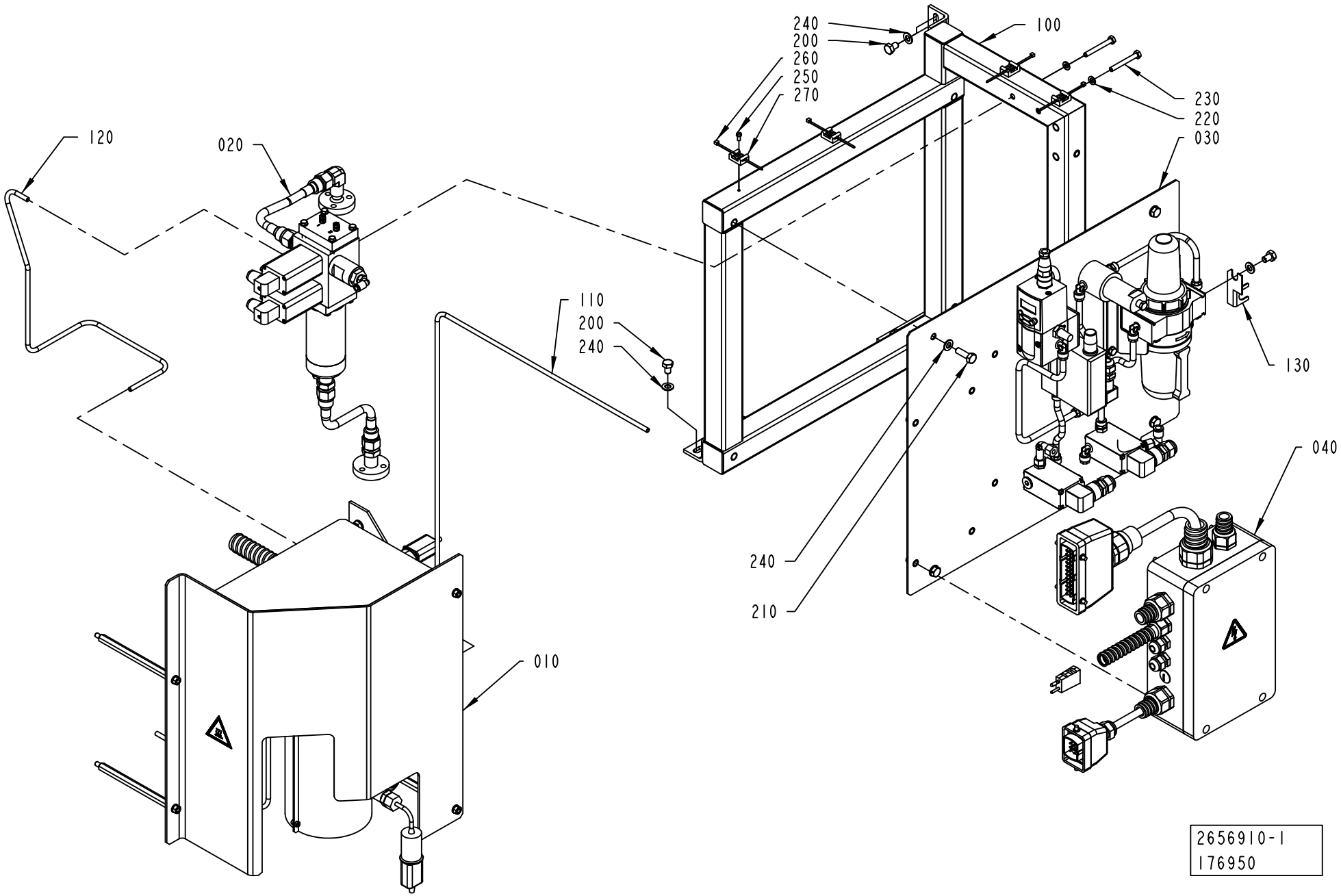
240
200
260
250
270
100
230
220
030
120
020
110
200
240
130
040
240
210
010
2656910-1
176950

ECM: 188745 - 20041117
Group number: 2656910-0100
Assembly Drawing: 2656910-1_1_AB

Pos	Part No	UN	Qty	Description	Page No
-					
005	2649169-0000		1	FUNCTION DIAGRAM	
010	2607082-0100		1	HEATER	**1-221**
020	2539458-0100		1	SPRAY TANK	**1-223**
030	2562893-0100		1	PNEUMATIC PANEL	**1-225**
040	2564106-0100		1	CONNECTION BOX	**1-227**
100	2629327-0000		1	FRAME	
110	2629325-0000		1	PIPE	
120	2629326-0000		1	PIPE	
130	1036610-0000		1	BRACKET	
200	312105-0447		7	SCREW M6S ISO 4017 M8X12 A480	
210	312105-0453		4	SCREW M6S ISO 4017 M8X25 A480	
220	315105-0153		2	WASHER BRB 6,4X12 RFR	
230	312105-0380		2	SCREW M6S ISO 4014 M6X50 A480	
240	315105-0165		11	WASHER BRB 8,4X16 RFR	
250	312125-0287		4	SCREW ISO 1207 M4X8 A4	
260	352113-0101		4	CABLE TIE, BLACK 92X2,5 MM	
270	352113-0203		4	ANCHOR PLATES FOR STRIPS, TYPE TM3S8-M0	

Pos	Part No	UN	Qty	Description	Page No

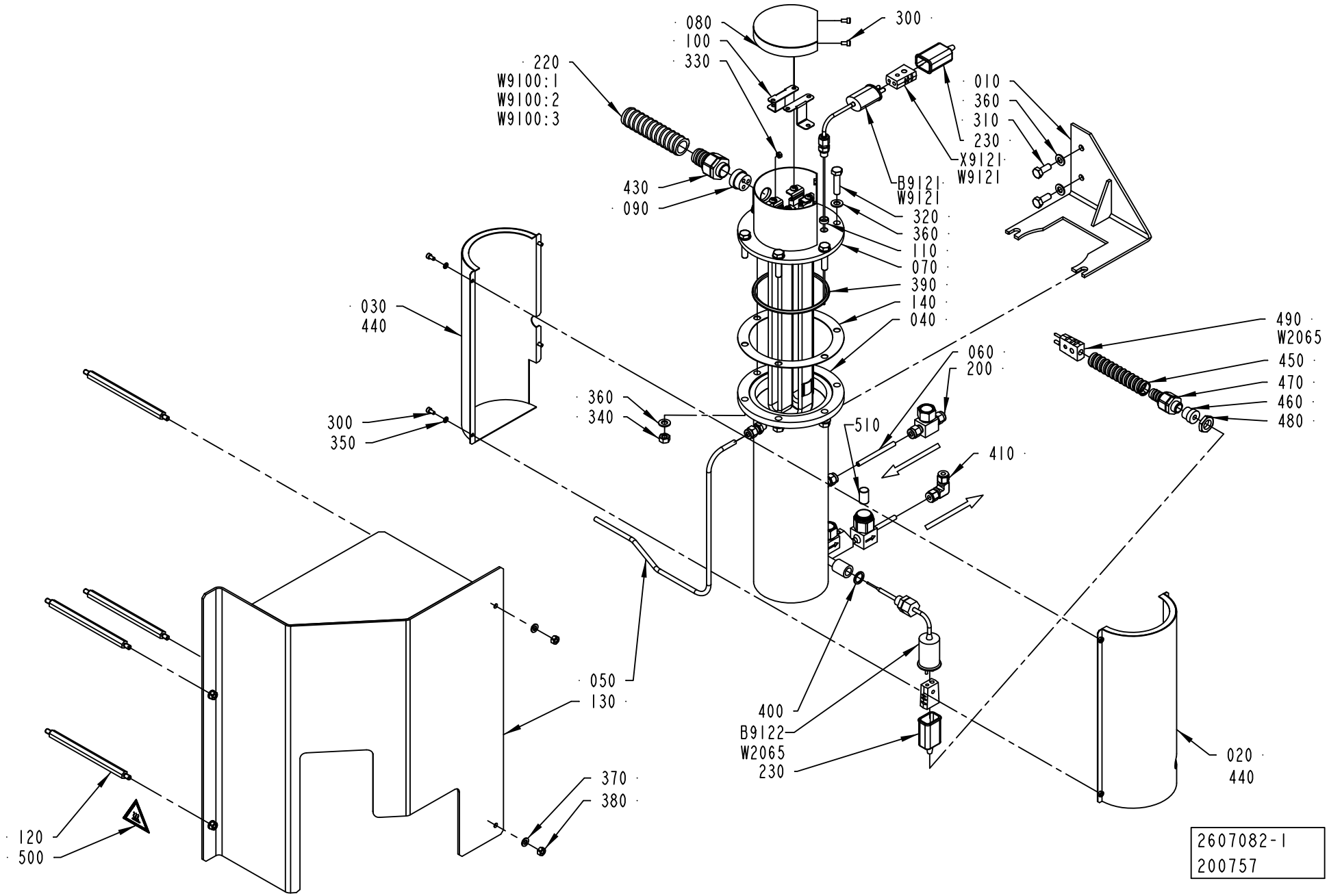
080
100
330
300
220
W9100:1
W9100:2
W9100:3
010
360
310
230
X9121
W9121
B9121
W9121
430
090
320
360
110
070
390
140
040
030
440
490
W2065
450
470
460
480
060
200
360
340
300
350
510
410
050
130
400
B9122
W2065
230
020
440
370
380
120
500
2607082-1
200757

ECM: 204468 - 20050418
Group number: 2607082-0100
Assembly Drawing: 2607082-1_1_AC

Pos	Part No	UN	Qty	Description	Page No
-					
010	2629324-0000		1	BRACKET	
020	2629322-0000		1	COVER	
030	2629323-0000		1	COVER	
040	2629321-0000		1	COIL	
050	2651329-0000		1	PIPE	
060	2562307-0000		1	PIPE	
070	2685342-0000		1	HEATING ELEMENT	
080	2562315-0000		1	PLUG	
090	2579745-0000		1	INSERT	
100	2598084-0000		2	PLATE	
110	2598085-0000		1	SPACER	
120	2672975-0000		4	SPACER	
130	2696098-0000		1	COVER	
140	2685339-0000		1	GASKET	
200	90230-0064		1	CHECK VALVE, 6 MM HIGH TEMP.	
220	90152-0051	MM	600	SPIRAL CONDUIT, 25X18, UL 1816	
230	90326-0012		2	PROTECTIVE COVER, T31A4618	
300	312115-0287		6	SCREW ISO4762 M4X8 A4 80	
310	312105-0451		2	SCREW M6S ISO 4017 M8X20 A480	
320	312109-0457		6	SCREW M6S ISO 4017 M8X35 A480	
330	312607-0312		1	HEXAGON NUT, EN 24032 M6M M4 A480	
340	312605-0318		6	HEXAGON NUT, M6M M8 A280	
350	315105-0136		4	WASHER BRB 4,3X8 RFR	
360	315105-0165		14	WASHER BRB 8,4X16 RFR	
370	315105-0153		4	WASHER BRB 6,4X12 RFR	
380	312605-0316		4	HEXAGON NUT, M6M M6 A280	
390	315229-0208		1	GASKET 97,4X105,4X3,7 MM 4"	
400	315234-0110		1	WASHER,PL.RND.CU.13,5/18 H=1,5	
410	90459-4511		1	CONN. ELBOW, 6	
430	353244-0003		1	HOSE GLAND W/O INSERT PG13,5 EXTENDED	
440	90411-0001	M	1	INSULATING MAT	
450	90152-0050	MM	1250	SPIRAL CONDUIT, 20X13, UL 1313	
460	353249-0008		1	INSERT, SINGEL HOLE, EK 152/7	
470	353243-0001		1	HOSE GLAND W/O INSERT PG9 EXTENDED	
480	90099-0104		1	NUT, PR 15,2 (PG9)	
490	90326-0022		1	PLUG, MALE YELLOW CR-AL	
500	359705-0007		1	WARNING SIGN ISO, HOT SURFACE	
510	90277-0407		1	FILTER ELEMENT 60µ, SS-4F-K4-60	
B9121	90459-2122		1	THERMOCOUPLE, EN-5130060-0001	
B9122	90326-0053		1	THERMOCOUPLE, 12826-35	
W2065	90220-0034	MM	5600	THERMOCABLE TEX/SITW-20F-KX 2X0,5MM2	
W9100:1	90459-3165	M	12	CABLE OLFLON PTFE 1X4,72 MM² BLACK	
W9100:2	90459-3165	M	12	CABLE OLFLON PTFE 1X4,72 MM² BLACK	
W9100:3	90459-3154	M	12	CABLE OLFLONPTFE 1X4,72 MM² YELLOW-GREEN	
W9121	90220-0034	MM	1600	THERMOCABLE TEX/SITW-20F-KX 2X0,5MM2	
X9121	90326-0020		1	PLUG, FEMALE YELLOW CR-AL	
X9122	90326-0020		1	PLUG, FEMALE YELLOW CR-AL	

Machine Type	Group Description	Used-In	Group Number	Page No

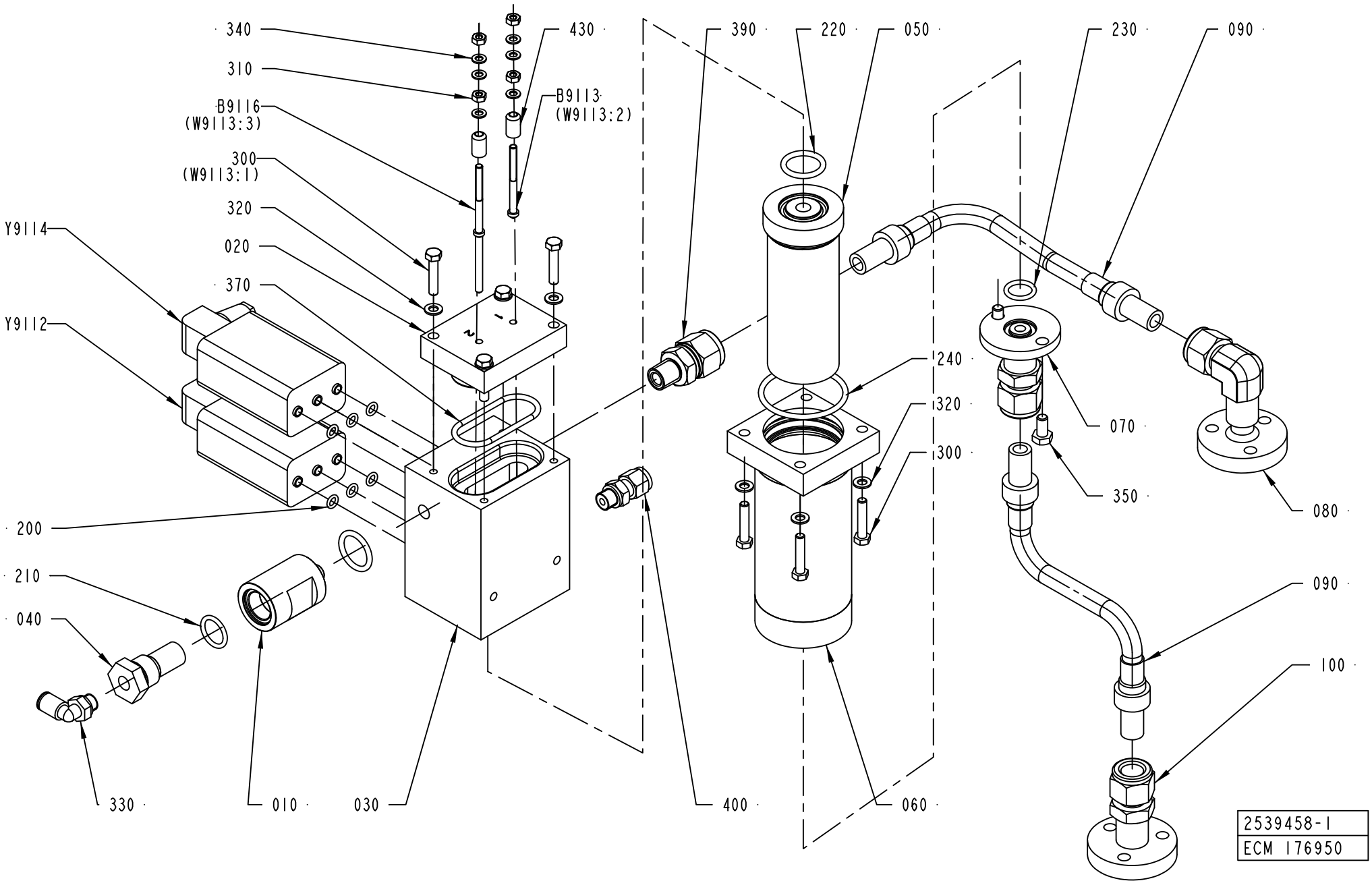
340
310
B9116
(W9113:3)
300
(W9113:1)
320
020
370
Y9114
Y9112
200
210
040
330
010
030
430
B9113
(W9113:2)
390
220
050
230
090
240
320
300
070
350
080
090
100
400
060
2539458-1
ECM 176950

ECM: 190571 - 20041125
Group number: 2539458-0100
Assembly Drawing: 2539458-1_1_AC

Pos	Part No	UN	Qty	Description	Page No
-					
010	1519486-0000		1	FILTER HOUSING	
020	2553167-0000		1	LID	
030	2512939-0000		1	DISTRIBUTOR BLOCK	
040	450833-0000		1	FILTER	
050	554141-0000		1	FILTER	
060	554142-0000		1	FILTER HOUSING	
070	2657865-0000		1	PIPE CONNECTION	
080	2657863-0000		1	PIPE CONNECTION	
090	90459-4151		2	HOSE ASSEMBLY 12,7 X 304,8 MM	
100	2657864-0000		1	PIPE CONNECTION	
200	927420-0001		6	O-RING 5.1X1.6 SILICONE	
210	927421-0004		1	O-RING 15.3X2.4 SILICONE	
220	927422-0001		2	O-RING 19.2X3 SILICONE	
230	927421-0003		1	O-RING 13.3X2.4 SILICONE	
240	927422-0007		1	O-RING 44.2X3 SILICONE	
300	312105-0333		8	SCREW M6S ISO 4017 M5X25 A480	
310	312605-0312		4	HEXAGON NUT, M6M M4 A280	
320	315105-0146		8	WASHER BRB 5,3X10 RFR	
330	350002-0006		1	PUSH-IN L-FITTING QSL-F-G1/8-6	
340	315105-0136		6	WASHER BRB 4,3X8 RFR	
350	312105-0366		2	SCREW M6S ISO 4017 M6X12 A480	
370	927422-0006		1	O-RING 42.2X3 SILICONE	
390	90459-4148		1	CONN. STR., 1/2"-1/4 ISO 7/1, EXT. THREA	
400	90459-1424		1	CONN. STR., 6-G1/8, EXT. THREAD	
430	2672974-0000		2	BUSHING	
B9113	2672972-0000		1	ELECTRODE	
B9116	2672973-0000		1	ELECTRODE	
Y9112	90042-0203		1	SOLENOID VALVE BüRKERT	
Y9114	90042-0203		1	SOLENOID VALVE BüRKERT	

Pos	Part No	UN	Qty	Description	Page No

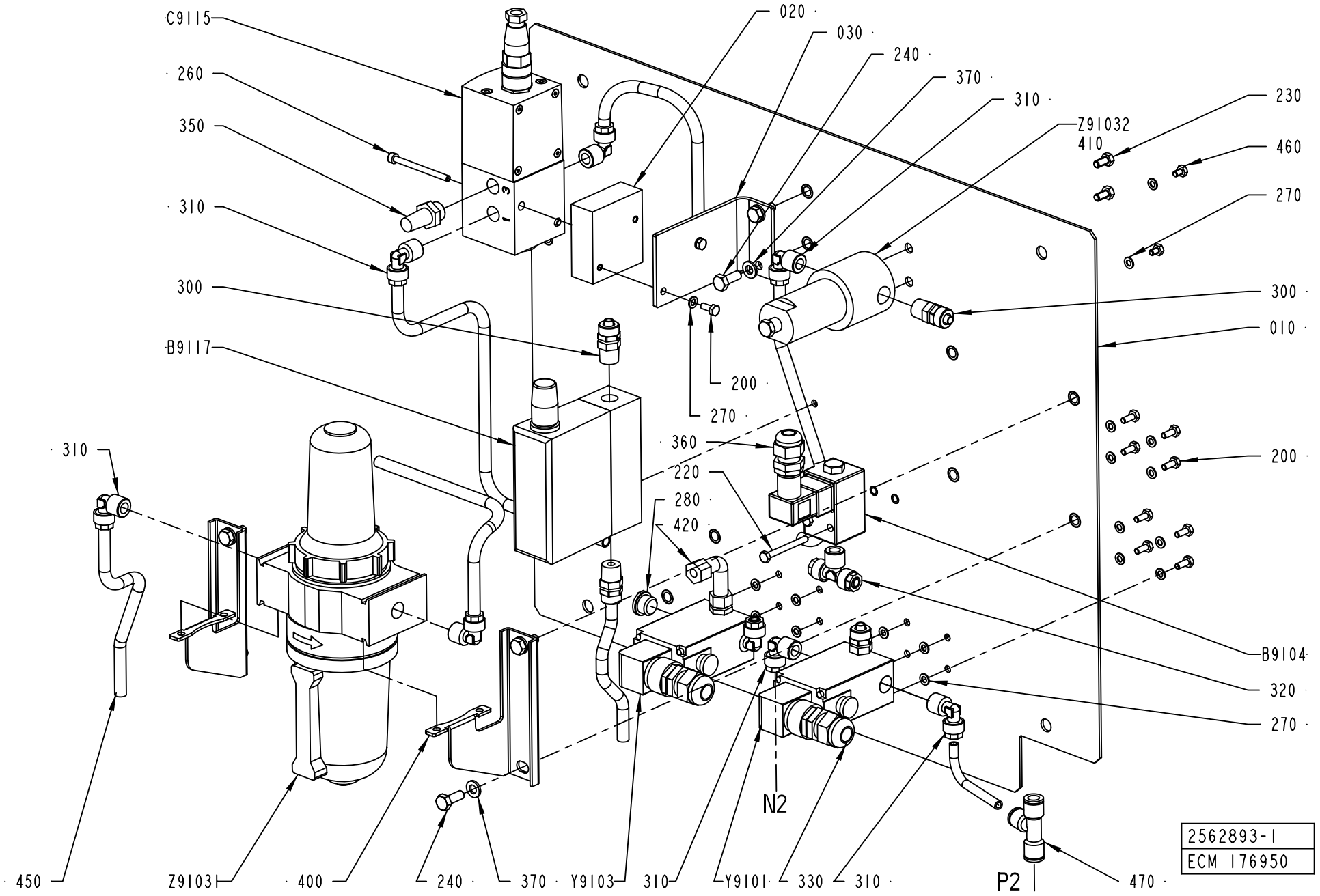
C9115
260
350
310
300
B9117
310
450
Z9103
400
240
370
Y9103
310
020
030
240
370
310
Z91032
410
230
460
270
300
010
200
270
360
220
280
420
200
B9104
320
270
N2
Y9101
330
310
P2
470
2562893-1
ECM 176950

ECM: 176950 - 20041115
Group number: 2562893-0100
Assembly Drawing: 2562893-1_1_AB

Pos	Part No	UN	Qty	Description	Page No
-					
010	2564607-0000		1	PLATE	
020	2511330-0000		1	SPACER	
030	2564606-0000		1	SUPPORT PLATE	
200	312105-0289		10	SCREW M6S ISO 4017 M4X10 A470	
220	312105-0303		2	SCREW M6S ISO 4017 M4X40 A470	
230	312105-0325		2	SCREW M6S ISO 4017 M5X10 A480	
240	312105-0368		6	SCREW M6S ISO 4017 M6X16 A480	
260	312115-0305		2	SCREW ISO4762 M4X50 A4 80	
270	315105-0136		20	WASHER BRB 4,3X8 RFR	
280	342713-0210		1	PLUG,EXT THREAD HEX SOCKET(PAK OF 10 PCS	
300	342920-0122		4	STRAIGHT COUPLING,EXT.THREADED 8/6-R1/4"	
310	342930-0122		8	ELBOW 90 COUPL.,EXT.THREAD 8/6-R1/4"	
320	342940-0122		1	T-COUPLING,EXT.THREAD 8/6-R1/4"	
330	352103-0106		2	CABLE GLAND, ST 11, PR18,6/PG11	
350	346800-0110		1	SILENCER FILTER R1/4"	
360	352103-0101		1	CABLE GLAND, ST 9, PR15,2/PG9	
370	315105-0153		6	WASHER BRB 6,4X12 RFR	
400	90236-0041		1	BRACKET	
410	90277-0324		1	FILTER CARTRIDGE 050-11-A	
420	90030-0203		1	ADJUSTABLE ELBOW CONNECTION,EXT 6-G1/4	
450	90166-0013	MM	2500	TUBE 8 MM PA BLUE	
460	312105-0285		2	SCREW M6S ISO 4017 M4X6 A470	
470	342748-0103		1	T-CONNECTION 8MM	
B9104	90274-0110		1	PRESSURE SWITCH, 50 - 1000 KPA	
B9117	90458-2619		1	FLOW METER, D-6230-HGB-BB-AV-99-0-N2	
C9115	90459-1420		1	PROPORTIONAL VALVE 0 - 10V/0-6 BAR	
	90458-1262		*1*	*CONNECTOR 131028001 FOR PROP. VALVE*	
Y9101	90042-0171		1	SOLENOID VALVE BURKERT	
	90042-0466		*1*	*DIAPHRAGM 330.95.2 VITON*	
Y9103	90042-0171		1	SOLENOID VALVE BURKERT	
	90042-0466		*1*	*DIAPHRAGM 330.95.2 VITON*	
Z91031	90277-0104		1	FILTER F64B-2GN-ARO	
	90113-0457		*1*	*FILTER ELEMENTS*	
	90113-0458		*1*	*FILTER ELEMENTS, 5350-99*	
Z91032	90277-0323		1	FILTER HOUSING / ART.NO 95S6-1/4 S 5430	

Pos	Part No	UN	Qty	Description	Page No

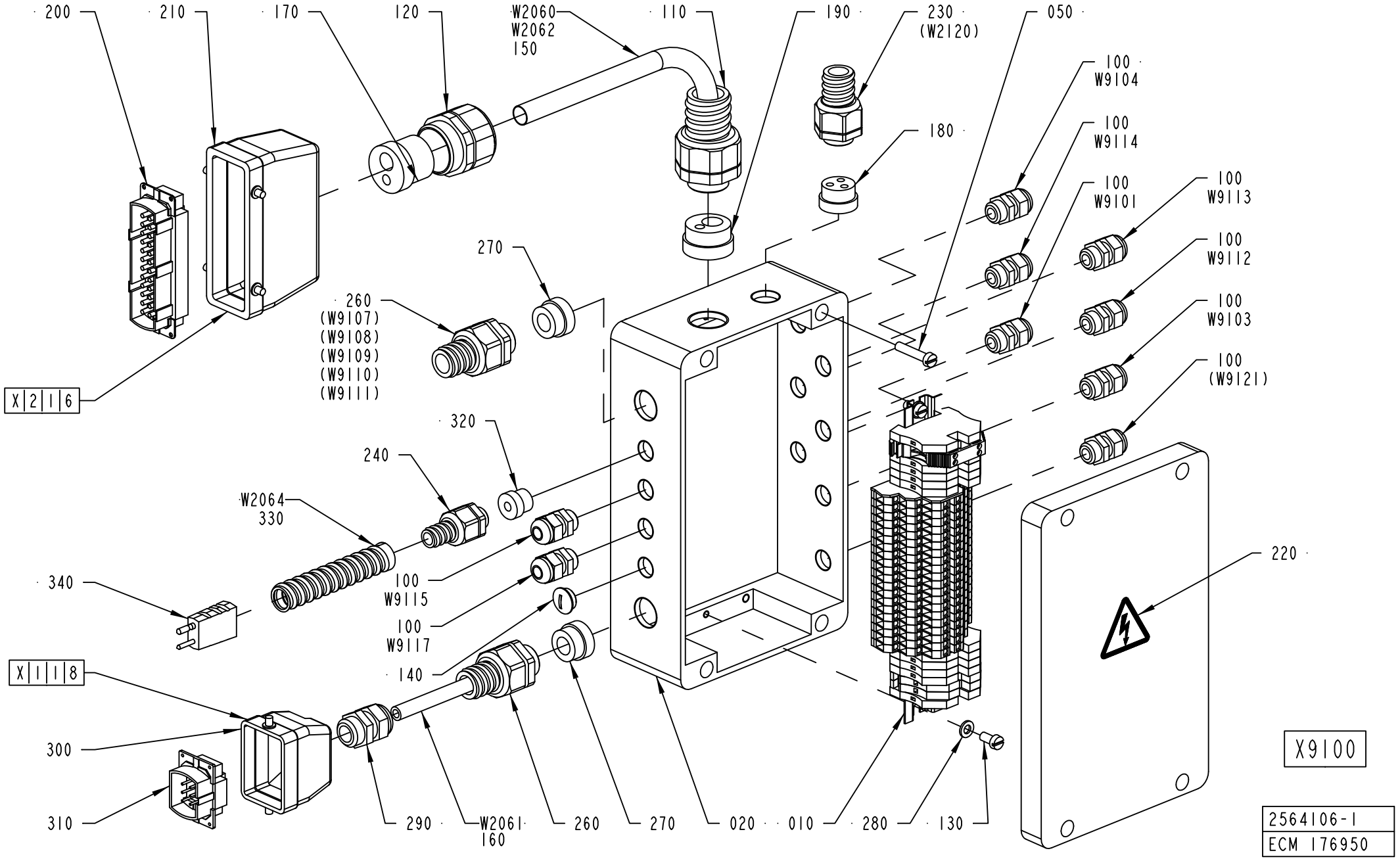
200
210
170
120
W2060
W2062
150
110
190
230
(W2120)
050
100
W9104
100
W9114
100
W9101
100
W9113
100
W9112
100
W9103
100
(W9121)
180
270
260
(W9107)
(W9108)
(W9109)
(W9110)
(W9111)
X216
320
240
W2064
330
340
100
W9115
100
W9117
X118
140
300
310
290
W2061
160
260
270
020
010
280
130
220
X9100
2564106-1
ECM 176950

ECM: 176950 - 20041115
Group number: 2564106-0100
Assembly Drawing: 2564106-1_1_AB

Pos	Part No	UN	Qty	Description	Page No
-					
010	2565432-0100		1	TERMINAL BLOCK	**1-229**
020	2564105-0000		1	CONNECTION BOX	
050	312125-0374		4	SCREW ISO 1207 M6X30 A4	
100	352103-0101		9	CABLE GLAND, ST 9, PR15,2/PG9	
110	353243-0007		1	HOSE GLAND W/O INSERT PG21 EXTENDED	
120	353240-0006		1	GLAND W/O INSERT PG29 NORMAL	
130	312125-0366		2	SCREW ISO 1207 M6X12 A4	
140	90002-0013		1	BLANK-OFF PLUG, PR 15,2 SKINDICHT-BLK9	
150	90152-0070	MM	1500	METAL HOSE, 32,5X26, UL 2621	
160	90152-0051	MM	1850	SPIRAL CONDUIT, 25X18, UL 1816	
170	1347880-0000		1	INSERT	
180	2579745-0000		1	INSERT	
190	2649167-0000		1	INSERT	
200	90110-0150		1	MALE INSERT 121110 0000	
210	90110-0152		1	CABLE HOOD 24-POL 70.352.2428.1	
220	359705-0015		1	WARNING SIGN ISO, RISK OF ELECTRIC SHOCK	
230	353244-0003		1	HOSE GLAND W/O INSERT PG13,5 EXTENDED	
240	353243-0001		1	HOSE GLAND W/O INSERT PG9 EXTENDED	
260	353243-0005		2	HOSE GLAND W/O INSERT PG16 EXTENDED	
270	353249-0013		2	INSERT, SINGEL HOLE, EK 154/13	
280	315105-0153		2	WASHER BRB 6,4X12 RFR	
290	352103-0108		1	CABLE GLAND, ST 13,5 , PR20,4/PG13,5	
300	90110-0157		1	CABLE HOOD 6-POL 70.352.0628.1	
310	90110-0159		1	MALE INSERT 70.310.0640.0	
320	353249-0008		1	INSERT, SINGEL HOLE, EK 152/7	
330	90152-0050	MM	1700	SPIRAL CONDUIT, 20X13, UL 1313	
340	90326-0022		1	PLUG, MALE YELLOW CR-AL	
W2060	90220-0201	MM	1500	CABLE OLFLEX 18X0,75 MM2	
W2061	351150-0417	MM	5600	CABLE OLFLEX 3X2,5 MM2 LIGHT/GREY	
W2062	90220-0165	MM	1500	SCR. CABLE 5X0,34MM2	
W2064	90220-0034	MM	7000	THERMOCABLE TEX/SITW-20F-KX 2X0,5MM2	
W9101	351150-0403	MM	1400	CABLE OLFLEX 3X0,75 MM2 LIGHT/GREY	
W9103	351150-0403	MM	1100	CABLE OLFLEX 3X0,75 MM2 LIGHT/GREY	
W9104	351150-0403	MM	1100	CABLE OLFLEX 3X0,75 MM2 LIGHT/GREY	
W9112	351150-0403	MM	800	CABLE OLFLEX 3X0,75 MM2 LIGHT/GREY	
W9113	351150-0404	MM	1000	CABLE OLFLEX 4X0,75 MM2 LIGHT/GREY	
W9114	351150-0403	MM	900	CABLE OLFLEX 3X0,75 MM2 LIGHT/GREY	
W9115	90220-0165	MM	1300	SCR. CABLE 5X0,34MM2	
W9117	90220-0165	MM	1400	SCR. CABLE 5X0,34MM2	

Pos	Part No	UN	Qty	Description	Page No

TERMINAL BLOCK

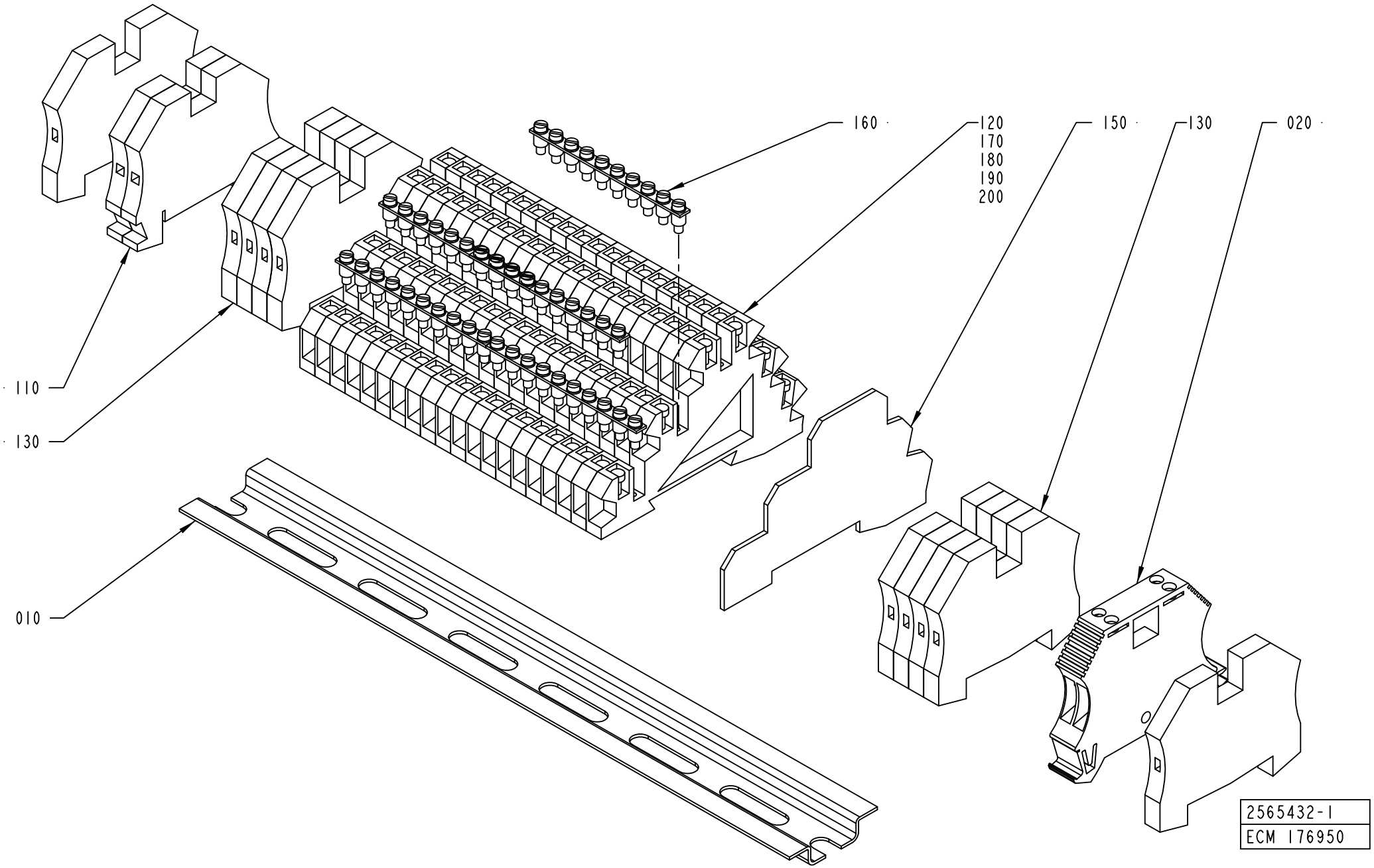

ECM: 176950 - 20041115
Group number: 2565432-0100
Assembly Drawing: 2565432-1_1_AB

Pos	Part No	UN	Qty	Description	Page No
-					
010	1532237-0000		1	RAIL	
020	90459-1742		1	FEED THROUGH TERMINAL, 1024100	
110	353021-0213		2	FEED THROUGH TERMINAL, 10201.0	
120	353021-0302		20	TERMINALS,TRIPLE-LEVEL, DLD 2,5/35 PA	
130	353024-0205		10	EARTH TERMINAL, 1010.1	
150	353032-0302		1	END PLATE WAP, 13176.6	
160	353034-0404		5	BRIDGE CONNECTOR Q10, 13131.0	
170	359011-0823		1	SET OF SIGNS 6-FW 101-150	
180	359011-0834		1	SET OF SIGNS 6-GW(EARTH)	
190	359011-0832		1	SET OF SIGNS 6-GW (+)	
200	359011-0833		1	SET OF SIGNS 6-GW (-)	

Pos	Part No	UN	Qty	Description	Page No

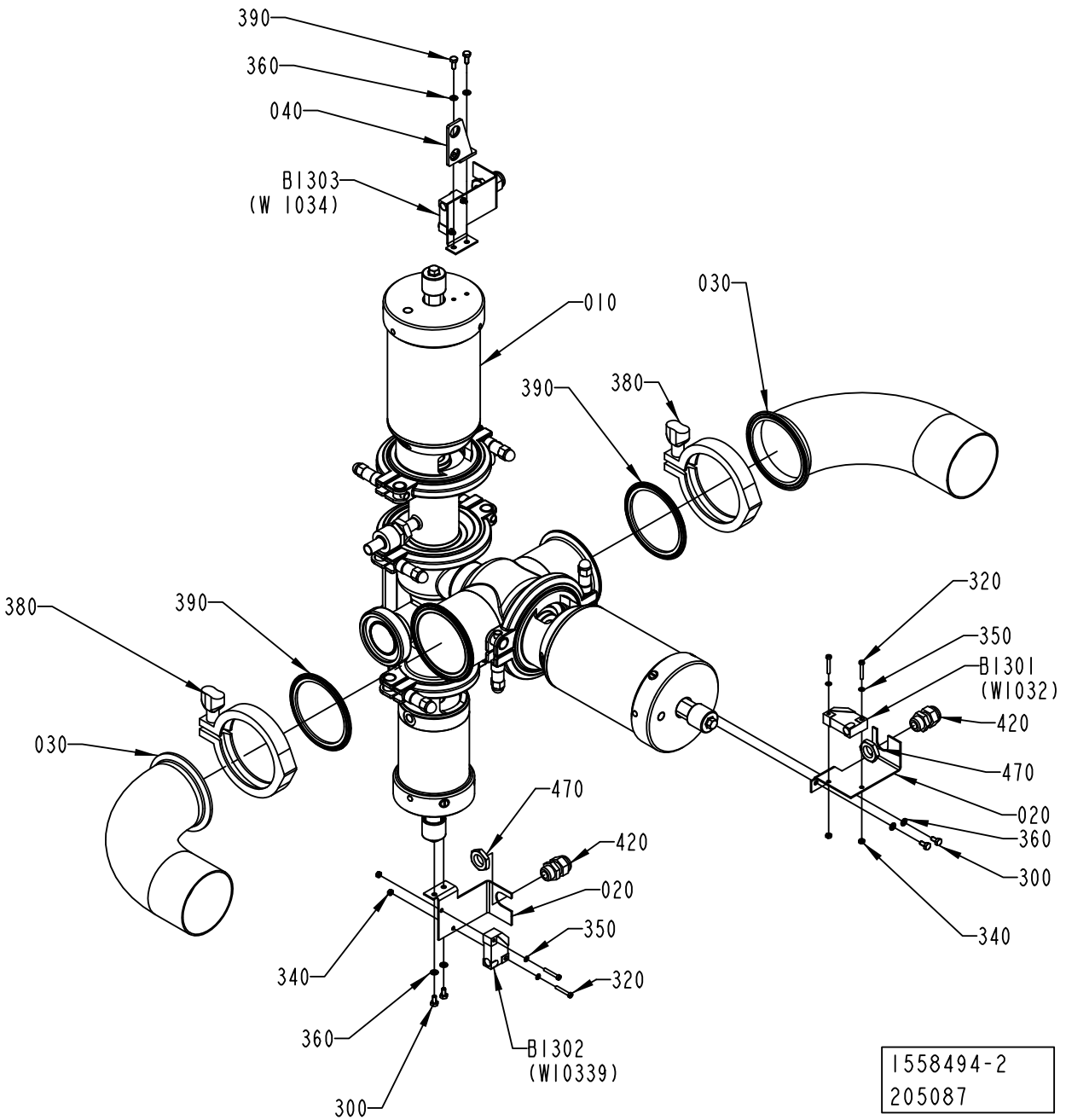
390
360
040
B1303
(W 1034)
010
030
390
380
380
390
030
320
350
B1301
(W1032)
420
470
020
360
300
340
470
420
020
350
320
340
360
300
B1302
(W10339)
1558494-2
205087

ECM: 207187 - 20050615
Group number: 1558494-0200
Assembly Drawing: 1558494-2_1_AB

Pos	Part No	UN	Qty	Description	Page No
2"					
030	1129801-0000		2	PIPE	
380	342840-0105		2	CLAMPING PIECE	
390	342850-0305		2	GASKET 47,8X62,6X5,2 MM 2" FDA	
3"					
030	1129802-0000		2	PIPE	
380	342840-0107		2	CLAMPING PIECE	
390	342850-0307		2	GASKET 72,9X89,6X5,2 MM 3" FDA	
Common Parts					
010	2547410-0100		1	RODUCT VALVE	**1-233**
020	1037093-0000		3	SENSOR BRACKET	
040	2559095-0000		1	BRACKET	
300	312105-0287		4	SCREW M6S ISO 4017 M4X8 A470	
320	312125-0230		6	SCREW ISO 1207 M3X20 A4	
340	312605-0310		6	HEXAGON NUT, M6M M3 A280	
350	315105-0124		6	WASHER BRB 3,2X6 RFR	
360	315105-0136		6	WASHER BRB 4,3X8 RFR	
390	312105-0289		2	SCREW M6S ISO 4017 M4X10 A470	
420	352103-0101		3	CABLE GLAND, ST 9, PR15,2/PG9	
470	90099-0104		3	NUT, PR 15,2 (PG9)	
B1301	90044-0194		1	PROX.SW. IN5329/IN3002-BPKG(EX90044-104)	
B1302	90044-0194		1	PROX.SW. IN5329/IN3002-BPKG(EX90044-104)	
B1303	90044-0194		1	PROX.SW. IN5329/IN3002-BPKG(EX90044-104)	

Pos	Part No	UN	Qty	Description	Page No

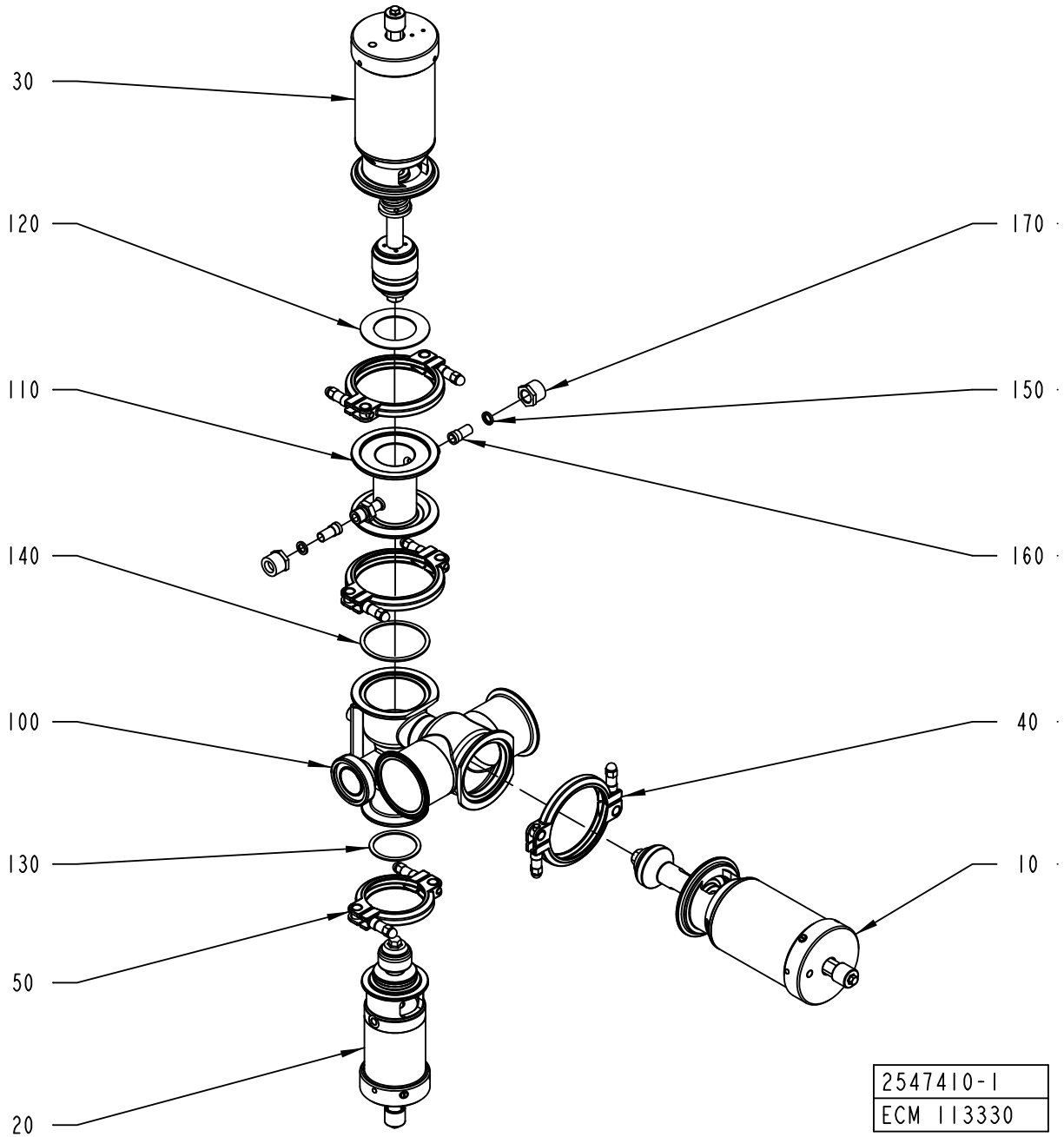
30
120
110
140
100
130
50
20
170
150
160
40
10
2547410-1
ECM 113330

ECM: 188739 - 20041117
Group number: 2547410-0100
Assembly Drawing: 2547410-1_1_AA

Pos	Part No	UN	Qty	Description	Page No
2"					
100	2629156-0000		1	BODY	
3"					
100	2547408-0000		1	BODY	
Common Parts					
010	576436-0100		1	A-CYLINDER	**1-235**
020	576438-0100		1	B-CYLINDER	**1-237**
030	576437-0100		1	C-CYLINDER	**1-239**
040	541163-0200		3	CLAMP RING	**1-241**
050	541164-0200		1	CLAMP RING	**1-243**
110	567018-0000		1	STEAM HOUSE	
120	539212-0000		1	GASKET	
130	90207-0365		1	GASKET	
140	90207-0363		1	GASKET	
150	90091-0266		2	SEAL RING 10,4X16,3X2,5 MM	
160	90030-0336		2	CONN. STRAIGHT, 316L-12M-BVCO-3	
170	90030-0338		2	NUT, PIPE & CONNECTORS, SS-8-BVCO-4	

Pos	Part No	UN	Qty	Description	Page No

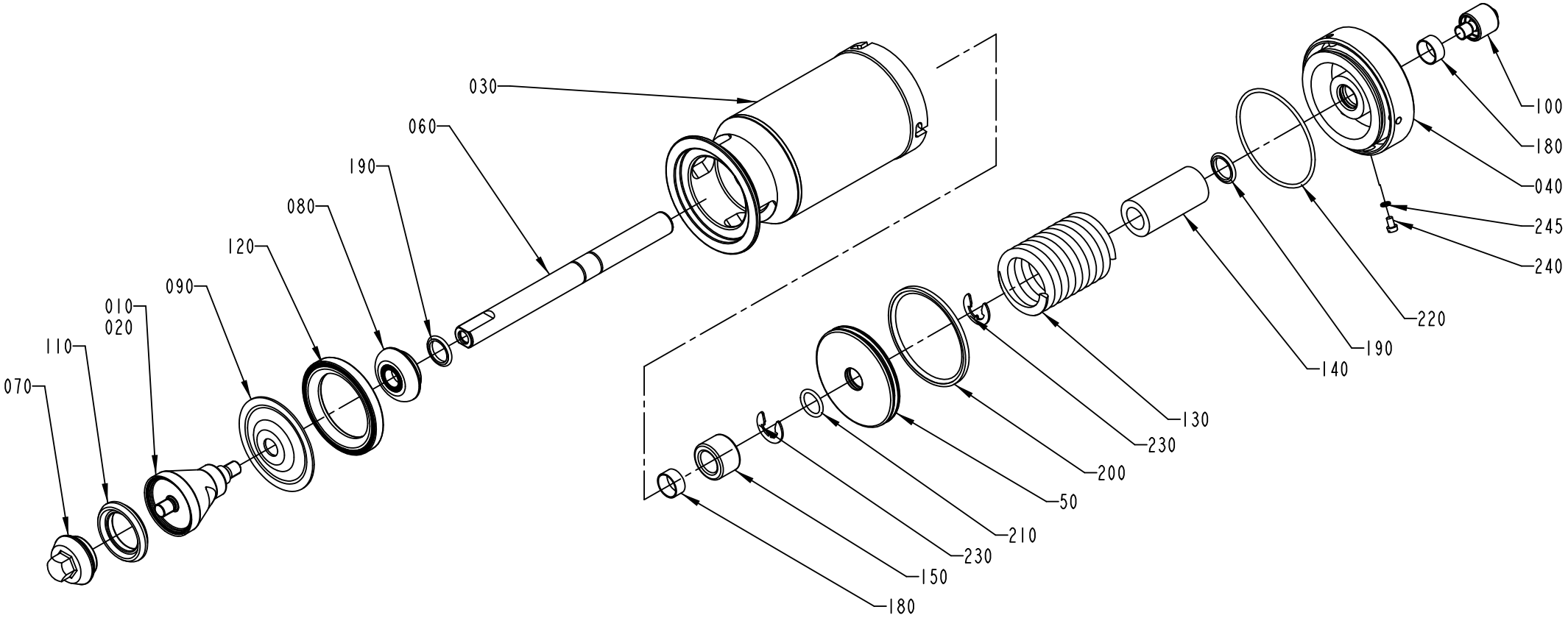

576436-1
ECN 73164

ECM: 259397 - 20060419
Group number: 576436-0100
Assembly Drawing: 576436-1_1_AB

Pos	Part No	UN	Qty	Description	Page No
2"					
010	530592-0000		1	SEAL RING HOLDER	
3"					
010	530595-0000		1	SEAL RING HOLDER	
Common Parts					
030	576439-0000		1	CYLINDER HOUSING	
040	576440-0000		1	END SECTION	
050	576441-0000		1	PISTON	
060	576446-0000		1	PISTON ROD	
070	530590-0000		1	VALVE CONE	
080	541166-0000		1	WASHER	
090	533169-0000		1	DIAPHRAGM	
100	553607-0000		1	SLEEVE	
110	530589-0000		1	SEAL RING	
120	440655-0000		1	RING	
130	440663-0000		1	COMPRESSION SPRING	
140	576448-0000		1	SPACER	
150	576449-0000		1	SPACER	
180	90091-0238		2	WEAR RING 20X22X10 MM	
190	90091-0237		2	ROD SEAL, GLIDORING 20X27,5X3 MM	
200	90091-0336		1	PISTON SEAL GLIDE RING 79X90X4 MM	
210	315204-0215		1	O-RING 19,2X3 MM	
220	315202-0308		1	O-RING 84,5X3 MM	
230	315754-0113		2	LOCKING WAE 15	
240	312125-0323		1	SCREW ISO 1207 M5X8 A4	
245	315233-0101		1	WASHER CAPTIVE SEALING M5(NEW315239-101)	

Pos	Part No	UN	Qty	Description	Page No

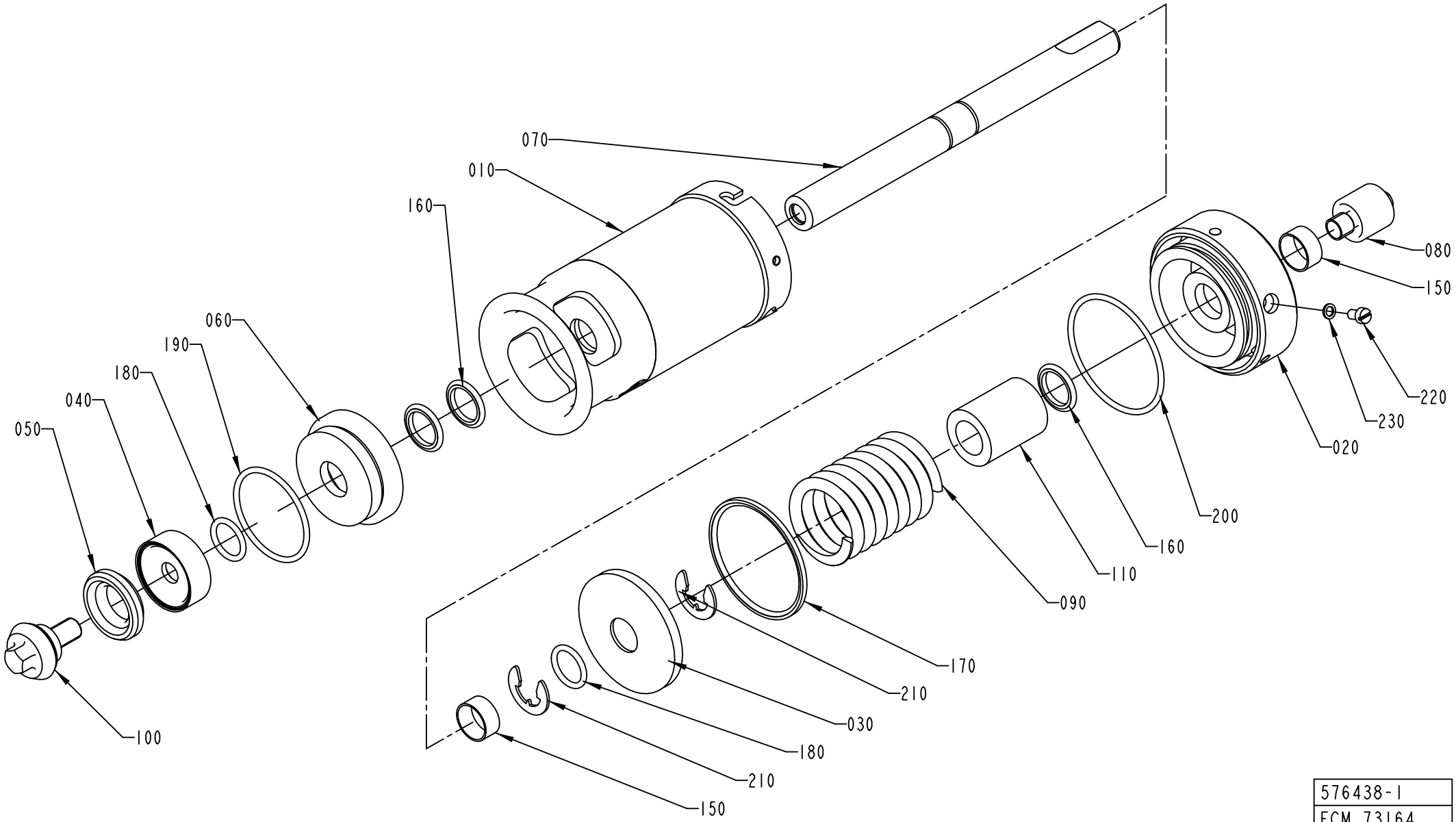

576438-1
ECM 73164

ECM: 259399 - 20060419
Group number: 576438-0100
Assembly Drawing: 576438-1_1_AB

Pos	Part No	UN	Qty	Description	Page No
-					
010	576443-0000		1	CYLINDER HOUSING	
020	576444-0000		1	END SECTION	
030	576445-0000		1	PISTON	
040	530587-0000		1	WASHER	
050	530588-0000		1	SEAL RING	
060	556133-0000		1	SEALING WASHER	
070	576447-0000		1	PISTON ROD	
080	553607-0000		1	SLEEVE	
090	440662-0000		1	COMPRESSION SPRING	
100	476185-0000		1	VALVE CONE	
110	576451-0000		1	SPACER	
150	90091-0238		2	WEAR RING 20X22X10 MM	
160	90091-0237		3	ROD SEAL, GLIDORING 20X27,5X3 MM	
170	90091-0335		1	PISTON SEAL GLIDE RING 62,5X70X3 MM	
180	315204-0215		2	O-RING 19,2X3 MM	
190	315204-0301		1	O-RING 49,5X3 MM	
200	315202-0304		1	O-RING 64,5X3 MM	
210	315754-0113		2	LOCKING WAE 15	
220	312125-0323		1	SCREW ISO 1207 M5X8 A4	
230	315233-0101		1	WASHER CAPTIVE SEALING M5(NEW315239-101)	

Pos	Part No	UN	Qty	Description	Page No

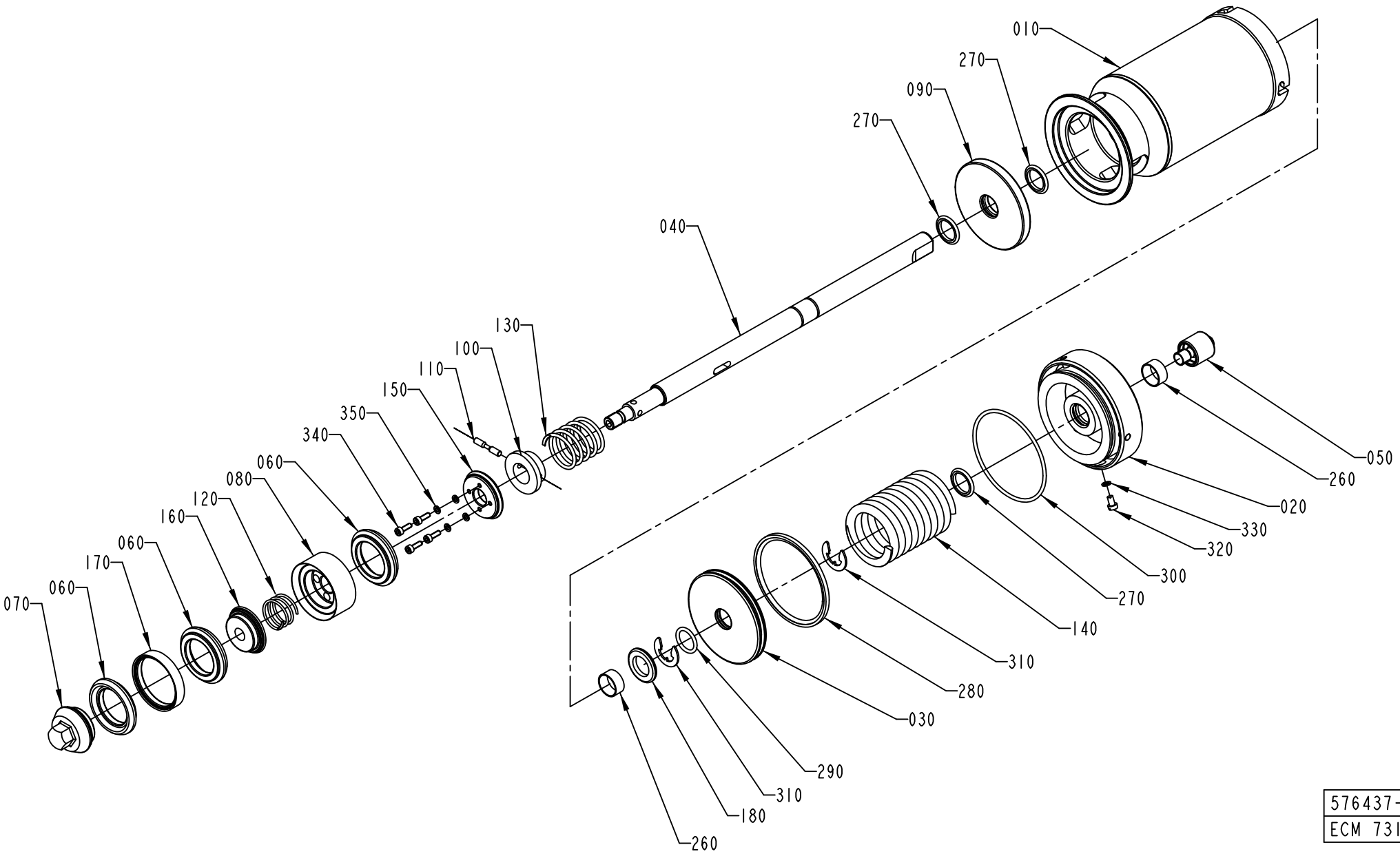

576437-1
ECM 73164

ECM: 259398 - 20060419
Group number: 576437-0100
Assembly Drawing: 576437-1_1_AB

Pos	Part No	UN	Qty	Description	Page No
-					
010	576439-0000		1	CYLINDER HOUSING	
020	576440-0000		1	END SECTION	
030	576441-0000		1	PISTON	
040	576442-0000		1	PISTON ROD	
050	553607-0000		1	SLEEVE	
060	530589-0000		3	SEAL RING	
070	530590-0000		1	VALVE CONE	
080	530591-0000		1	HOLDER	
090	555458-0000		1	SEALING WASHER	
100	440650-0000		1	WASHER	
110	440659-0000		1	CYLINDRICAL PIN	
120	440660-0000		1	COMPRESSION SPRING	
130	440661-0000		1	COMPRESSION SPRING	
140	440663-0000		1	COMPRESSION SPRING	
150	530597-0000		1	WASHER	
160	530598-0000		1	WASHER	
170	530599-0000		2	RING	
180	576450-0000		1	SPACER	
260	90091-0238		2	WEAR RING 20X22X10 MM	
270	90091-0237		3	ROD SEAL, GLIDORING 20X27,5X3 MM	
280	90091-0336		1	PISTON SEAL GLIDE RING 79X90X4 MM	
290	315204-0215		1	O-RING 19,2X3 MM	
300	315202-0308		1	O-RING 84,5X3 MM	
310	315754-0113		2	LOCKING WAE 15	
320	312125-0323		1	SCREW ISO 1207 M5X8 A4	
330	315233-0101		1	WASHER CAPTIVE SEALING M5(NEW315239-101)	
340	312115-0291		4	SCREW ISO4762 M4X12 A4 80	
350	315402-0136		4	LOCK WASHER FBB 4,1	

Pos	Part No	UN	Qty	Description	Page No

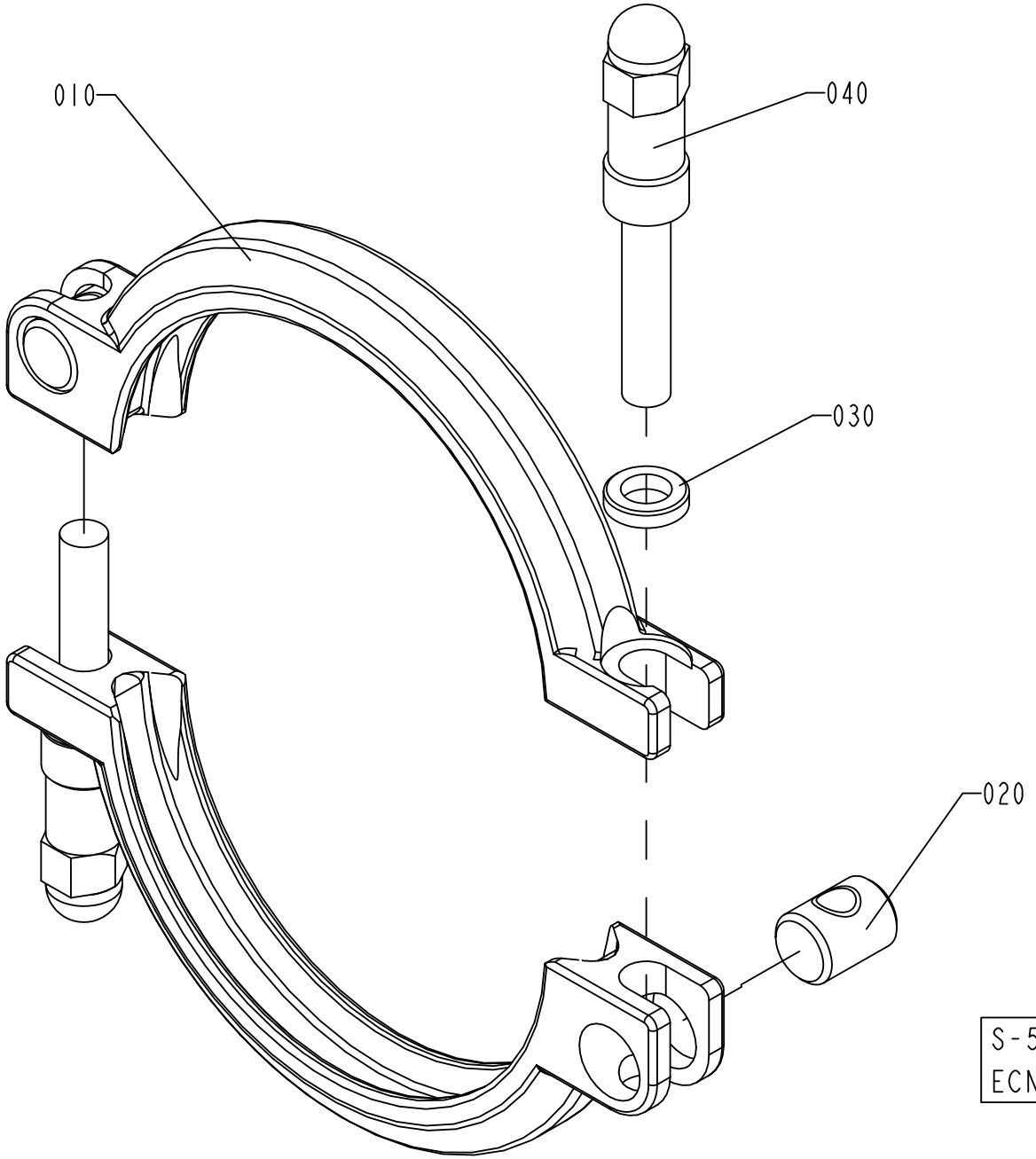
010
040
030
020
S-541163-2
ECN 71956

ECM: 178064 - 20040910
Group number: 541163-0200
Assembly Drawing: 541163-2_1_AB

Pos	Part No	UN	Qty	Description	Page No
-					
010	532117-0000		2	CLAMP RING	
020	497748-0000		2	PIN	
030	541165-0000		2	WASHER	
040	554162-0000		2	SCREW	

Pos	Part No	UN	Qty	Description	Page No

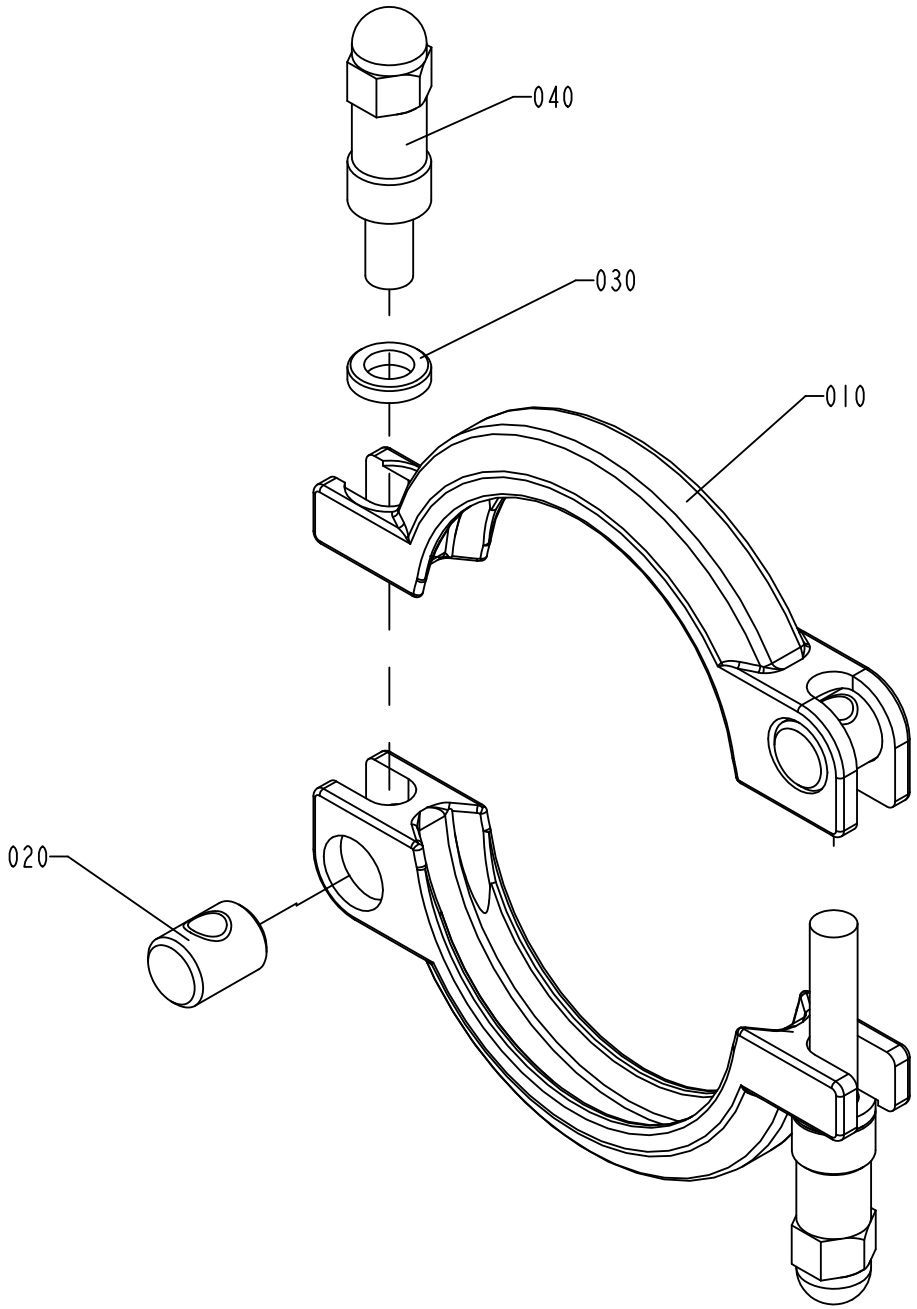

S-541164-2
ECN 71956

ECM: 178065 - 20040910
Group number: 541164-0200
Assembly Drawing: 541164-2_1_AB

Pos	Part No	UN	Qty	Description	Page No
-					
010	532118-0000		2	CLAMP RING	
020	497748-0000		2	PIN	
030	541165-0000		2	WASHER	
040	554162-0000		2	SCREW	

Pos	Part No	UN	Qty	Description	Page No

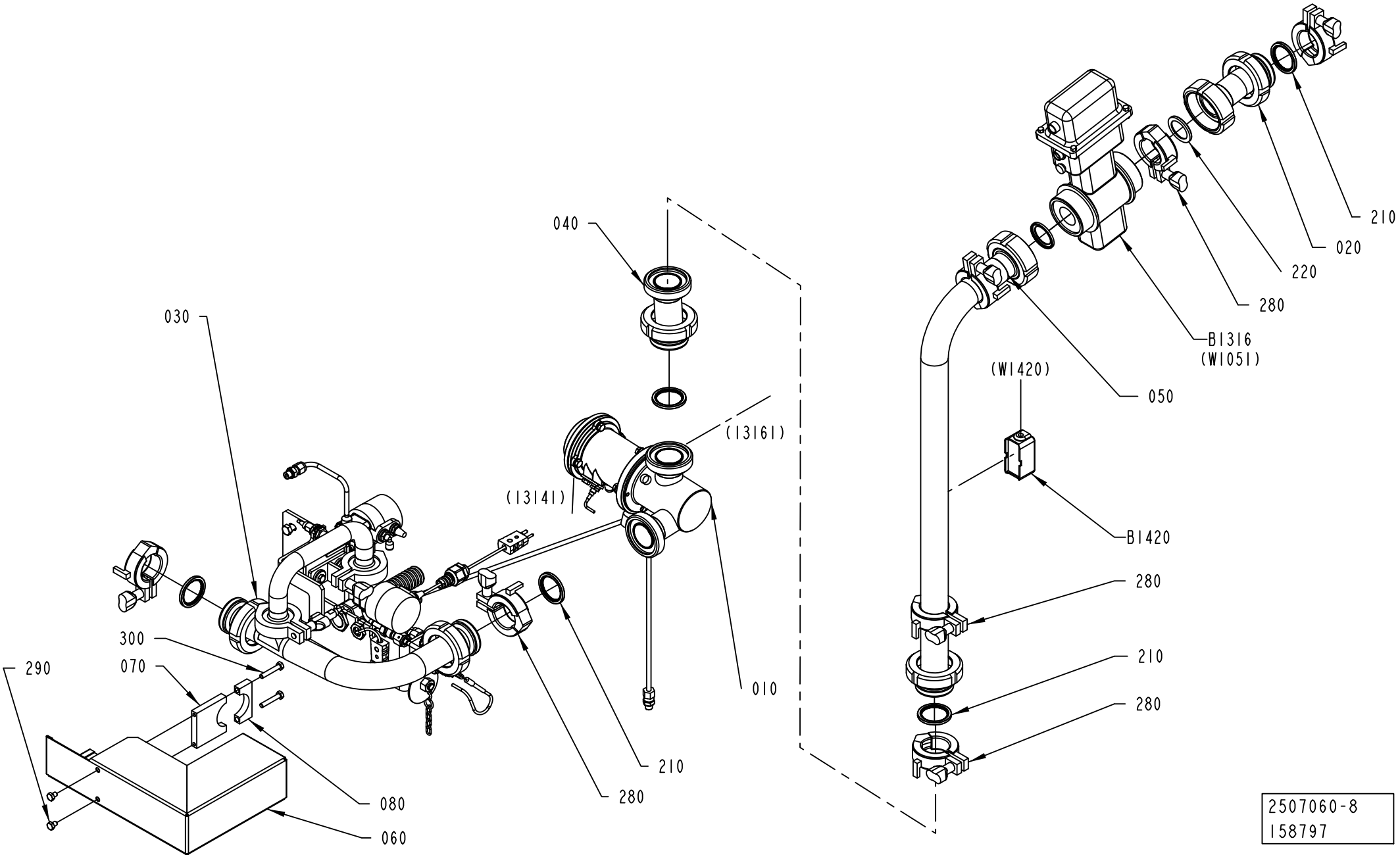
040
030
(13161)
(13141)
300
070
290
080
060
210
280
010
210
020
220
280
B1316
(W1051)
(W1420)
050
B1420
280
210
280
2507060-8
158797

Pos	Part No	UN	Qty	Description	Page No
A3/FLEX NOHI (See drawing on page: 1-246)					
030	2500081-0000		1	ELBOW PIPE	
050	2672962-0000		1	CONNECTING PIPE	
060	2529750-0000		1	COVERING PANEL	
A3/FLEX TBA 0200M HI, A3/FLEX TBA 0250B HI, A3/FLEX TBA 0200B HI, A3/FLEX TBA 0200S HI, A3/FLEX TBA 0330S HI, A3/FLEX TBA 1000B HI, A3/FLEX TBA 1000SQ HI, A3/FLEX TPA 0500SQ HI, A3/FLEX TBA 0250S HI, A3/FLEX TBA 0500B HI, A3/FLEX TBA 1000S HI, A3/FLEX TPA 0330SQ HI, A3/FLEX TPA 1000SQ HI, A3/FLEX TBA 1500S HI, A3/FLEX TBA 0500S HI, A3/FLEX TPA 0750SQ HI, A3/FLEX TBA 0200SQ HI, A3/FLEX TBA 0250SQ HI, A3/FLEX TPA 0250SQ HI, A3/FLEX TPA 0200SQ HI (See drawing on page: 1-244)					
030	2632642-0100		1	NOZZLE UNIT	**1-249**
050	2672962-0000		1	CONNECTING PIPE	
060	2651326-0000		1	TOUCH GUARD	
A3/FLEX TBA 2000S HI, A3/FLEX TBA 1890S HI (See drawing on page: 1-244)					
030	2632642-0100		1	NOZZLE UNIT	**1-249**
050	2685311-0000		1	CONNECTING PIPE	
060	2651326-0000		1	TOUCH GUARD	
Common Parts					
010	2507059-0200		1	REGULATING VALVE	**1-251**
020	2672963-0000		1	CONNECTING PIPE	
040	2501278-0000		1	ECCENTRIC	
070	1140480-0000		1	CLAMP	
080	1041988-0000		1	CLAMP	
210	90217-0348		5	GASKET 35,4X46,8X4 MM	
220	90459-4179		2	GASKET 30,5X42X4 MM FDA	
280	2552201-0000		7	LOCKING DEVICE	
290	312105-0362		2	SCREW M6S ISO 4017 M6X8 A480	
300	312109-0376		2	SCREW M6S ISO 4017 M6X35 A480	
B1316	90458-0806		1	FLOW METER, NO. XF DF23-DN32	
B1420	90459-0181		1	PIPE SURFACE THERM., PT-100 -50° -+120°C	

Pos	Part No	UN	Qty	Description	Page No

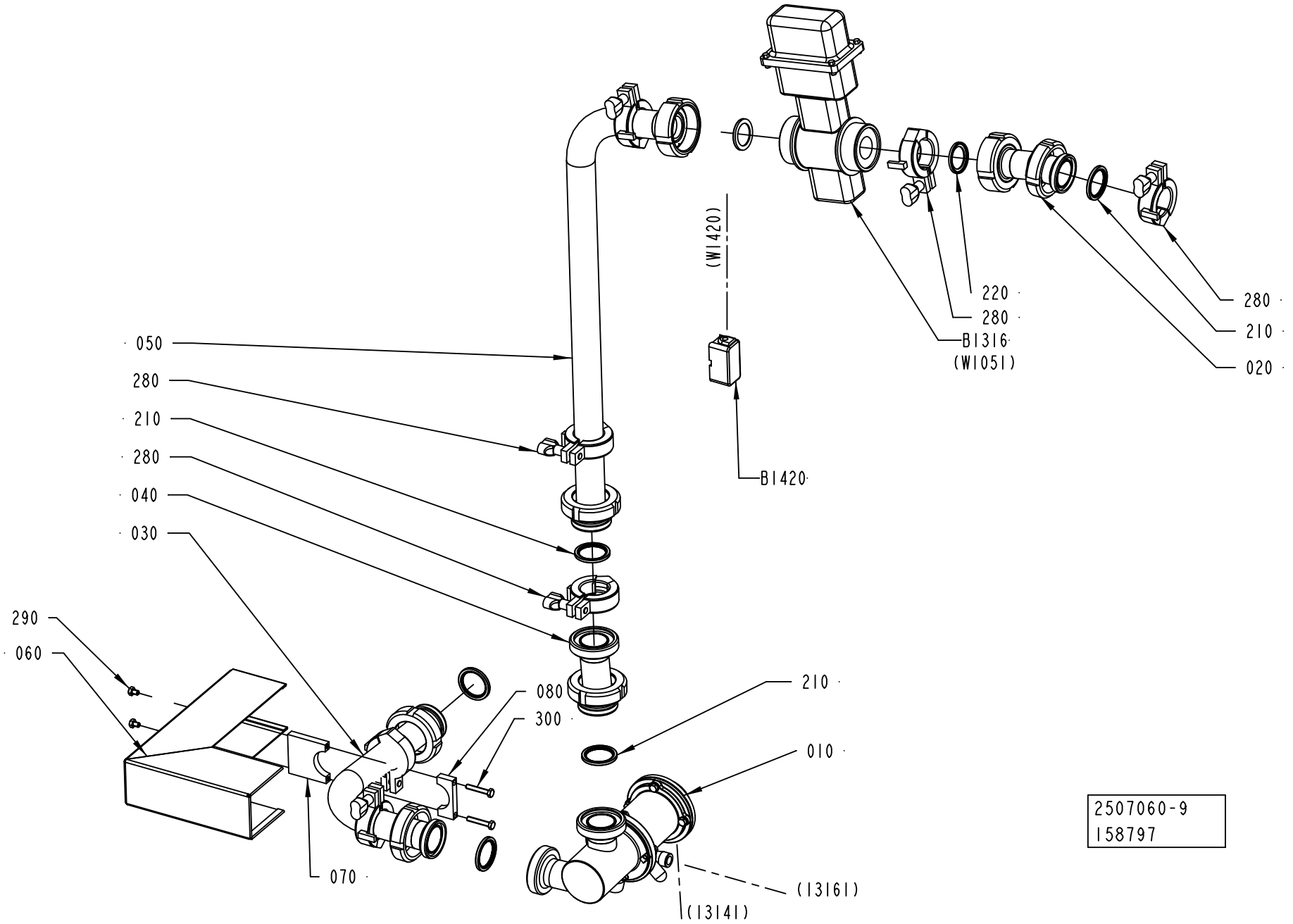
050
280
210
280
040
030
290
060
070
080
300
210
010
(13161)
(13141)
(W1420)
B1420
220
280
B1316
(W1051)
280
210
020
2507060-9
158797

Pos	Part No	UN	Qty	Description	Page No
A3/FLEX NOHI (See drawing on page: 1-246)					
030	2500081-0000		1	ELBOW PIPE	
050	2672962-0000		1	CONNECTING PIPE	
060	2529750-0000		1	COVERING PANEL	
A3/FLEX TBA 0200M HI, A3/FLEX TBA 0250B HI, A3/FLEX TBA 0200B HI, A3/FLEX TBA 0200S HI, A3/FLEX TBA 0330S HI, A3/FLEX TBA 1000B HI, A3/FLEX TBA 1000SQ HI, A3/FLEX TPA 0500SQ HI, A3/FLEX TBA 0250S HI, A3/FLEX TBA 0500B HI, A3/FLEX TBA 1000S HI, A3/FLEX TPA 0330SQ HI, A3/FLEX TPA 1000SQ HI, A3/FLEX TBA 1500S HI, A3/FLEX TBA 0500S HI, A3/FLEX TPA 0750SQ HI, A3/FLEX TBA 0200SQ HI, A3/FLEX TBA 0250SQ HI, A3/FLEX TPA 0250SQ HI, A3/FLEX TPA 0200SQ HI (See drawing on page: 1-244)					
030	2632642-0100		1	NOZZLE UNIT	**1-249**
050	2672962-0000		1	CONNECTING PIPE	
060	2651326-0000		1	TOUCH GUARD	
A3/FLEX TBA 2000S HI, A3/FLEX TBA 1890S HI (See drawing on page: 1-244)					
030	2632642-0100		1	NOZZLE UNIT	**1-249**
050	2685311-0000		1	CONNECTING PIPE	
060	2651326-0000		1	TOUCH GUARD	
Common Parts					
010	2507059-0200		1	REGULATING VALVE	**1-251**
020	2672963-0000		1	CONNECTING PIPE	
040	2501278-0000		1	ECCENTRIC	
070	1140480-0000		1	CLAMP	
080	1041988-0000		1	CLAMP	
210	90217-0348		5	GASKET 35,4X46,8X4 MM	
220	90459-4179		2	GASKET 30,5X42X4 MM FDA	
280	2552201-0000		7	LOCKING DEVICE	
290	312105-0362		2	SCREW M6S ISO 4017 M6X8 A480	
300	312109-0376		2	SCREW M6S ISO 4017 M6X35 A480	
B1316	90458-0806		1	FLOW METER, NO. XF DF23-DN32	
B1420	90459-0181		1	PIPE SURFACE THERM., PT-100 -50° -+120°C	

Pos	Part No	UN	Qty	Description	Page No

NOZZLE UNIT

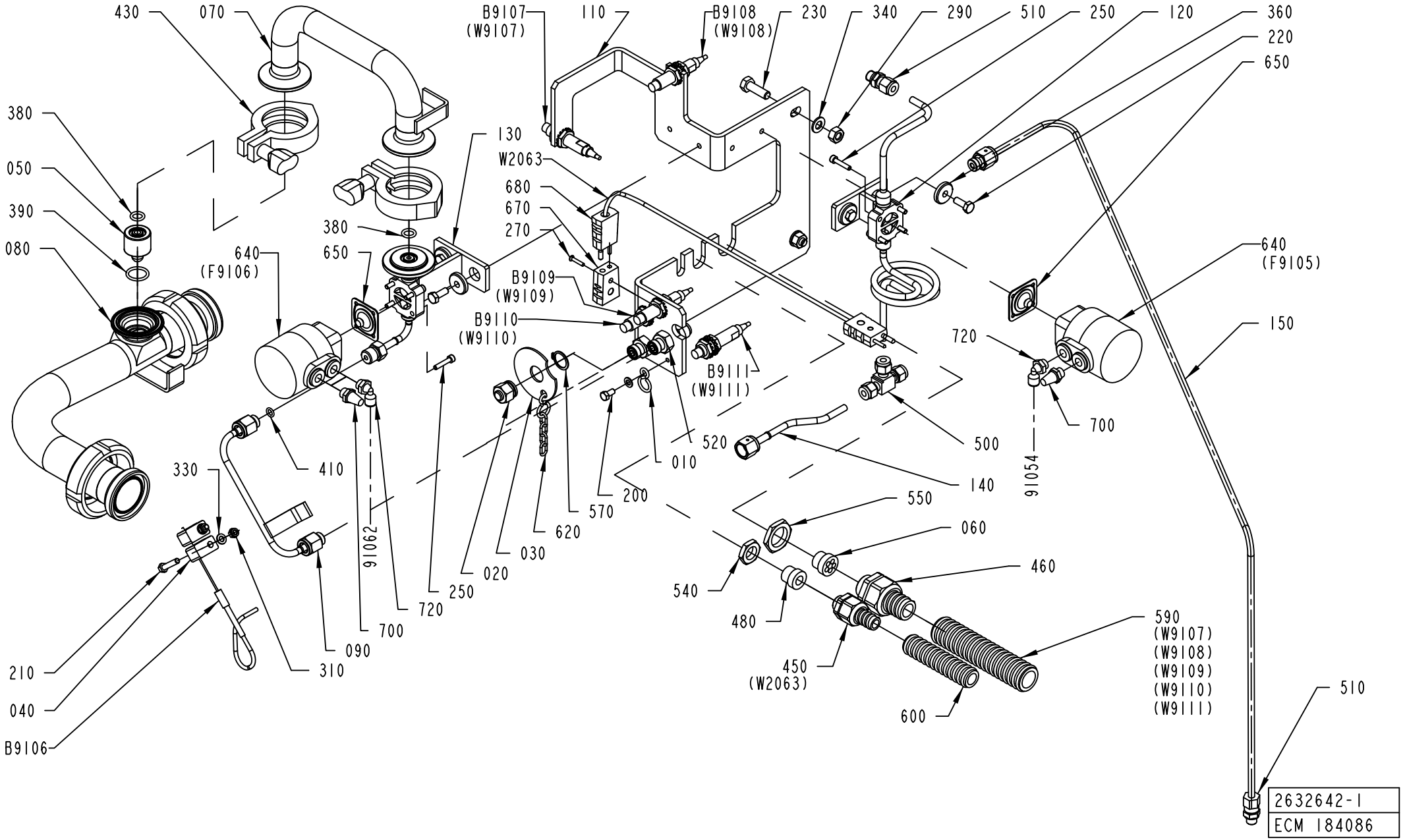
430
070
B9107
(W9107)
110
B9108
(W9108)
230
340
290
510
250
120
360
220
650
380
050
390
080
130
W2063
680
670
270
380
650
640
(F9106)
B9109
(W9109)
B9110
(W9110)
640
(F9105)
150
720
B9111
(W9111)
700
520
500
010
140
91054
330
410
200
550
060
460
570
620
030
020
250
720
700
090
310
91062
540
480
450
(W2063)
600
590
(W9107)
(W9108)
(W9109)
(W9110)
(W9111)
210
040
B9106
510
2632642-1
ECM 184086

ECM: 196317 - 20050224
Group number: 2632642-0100
Assembly Drawing: 2632642-1_1_AC

Pos	Part No	UN	Qty	Description	Page No
-					
010	209183-0000		2	RING	
020	978380-0000		1	BLIND PLUG	
030	978381-0000		1	WASHER 56X2MM	
040	978440-0000		2	CRAMP	
050	1523154-0003		1	SPRAY NOZZLE	
050	1523154-0004		1	SPRAY NOZZLE	
050	1523154-0006		1	SPRAY NOZZLE	
050	1523154-0005		1	SPRAY NOZZLE	
060	2559051-0000		1	INSERT	
070	2562881-0000		1	TRANSITION PIPE	
080	2562882-0000		1	ELBOW PIPE	
090	2562883-0000		1	PIPE	
110	2632638-0000		1	HOLDER	
120	2632639-0000		1	VALVE BODY	
130	2632640-0000		1	VALVE BODY	
140	2632641-0000		1	PIPE	
150	2731448-0000		1	PIPE	
200	312105-0325		3	SCREW M6S ISO 4017 M5X10 A480	
210	312105-0333		2	SCREW M6S ISO 4017 M5X25 A480	
220	312105-0368		4	SCREW M6S ISO 4017 M6X16 A480	
230	312105-0453		2	SCREW M6S ISO 4017 M8X25 A480	
250	312115-0295		8	SCREW ISO4762 M4X20 A4 80	
270	312145-0228		1	SCREW ISO 2009 MFS M3X16 A4	
290	312605-0318		2	HEXAGON NUT, M6M M8 A280	
310	312812-0314		2	HEXAGON NUT, NY-LOCK M5 A480	
330	315105-0146		3	WASHER BRB 5,3X10 RFR	
340	315105-0165		2	WASHER BRB 8,4X16 RFR	
360	315125-0153		4	WASHER TBRSB 6,4X22X4 A4	
380	315204-0208		2	O-RING 9,3X2,4 MM	
390	315204-0214		1	O-RING 17,3X2,4 MM	
410	315205-0505		5	O-RING 6,07X1,78 MM	
430	342840-0103		2	CLAMPING PIECE	
450	353243-0001		1	HOSE GLAND W/O INSERT PG9 EXTENDED	
460	353243-0005		1	HOSE GLAND W/O INSERT PG16 EXTENDED	
480	353249-0009		1	INSERT, SINGEL HOLE, EK 152/9	
500	90030-0571		1	CONN. T-PIPE 6	
510	90459-1424		2	CONN. STR., 6-G1/8, EXT. THREAD	
520	90030-0549		2	CONN. STRAIGHT, BULKHEAD, SS-4-VCO-61	
540	90099-0104		1	NUT, PR 15,2 (PG9)	
550	90099-0110		1	NUT, PR 22,5 (PG16)	
570	90141-0017		1	RETAINING RING FOR SHAFT DIN 471 17 A2	
590	90152-0051	MM	2100	SPIRAL CONDUIT, 25X18, UL 1816	
600	90152-0059	MM	700	SPIRAL CONDUIT, 18X12, UL 1211	
620	90155-0008	MM	300	HANGER CHAIN, 18	
640	90187-0176		2	ACTUATOR ECC 008 FOR DIAPHR. VALVE	
650	90187-0325		2	DIAPHRAGM, 214/300 AO08 4-B -20-150§C	
670	90326-0020		1	PLUG, FEMALE YELLOW CR-AL	
680	90326-0022		2	PLUG, MALE YELLOW CR-AL	
700	90328-0003		2	SILENCER, 338/110	
720	90458-2956		2	ELBOW PIPE JOINT, EXT.THREAD, D=6MM-G1/8	
B9106	90326-0060		1	THERMOCOUPLE, CR-AL	
B9107	90458-0672		1	PROXIMITY SENSOR E2E2-X5MB1-5M	
B9108	90458-0672		1	PROXIMITY SENSOR E2E2-X5MB1-5M	
B9109	90458-0672		1	PROXIMITY SENSOR E2E2-X5MB1-5M	
B9110	90458-0672		1	PROXIMITY SENSOR E2E2-X5MB1-5M	
B9111	90458-0672		1	PROXIMITY SENSOR E2E2-X5MB1-5M	
W2063	90220-0034	MM	7000	THERMOCABLE TEX/SITW-20F-KX 2X0,5MM2	

Machine Type	Group Description	Used-In	Group Number	Page No

REGULATING VALVE

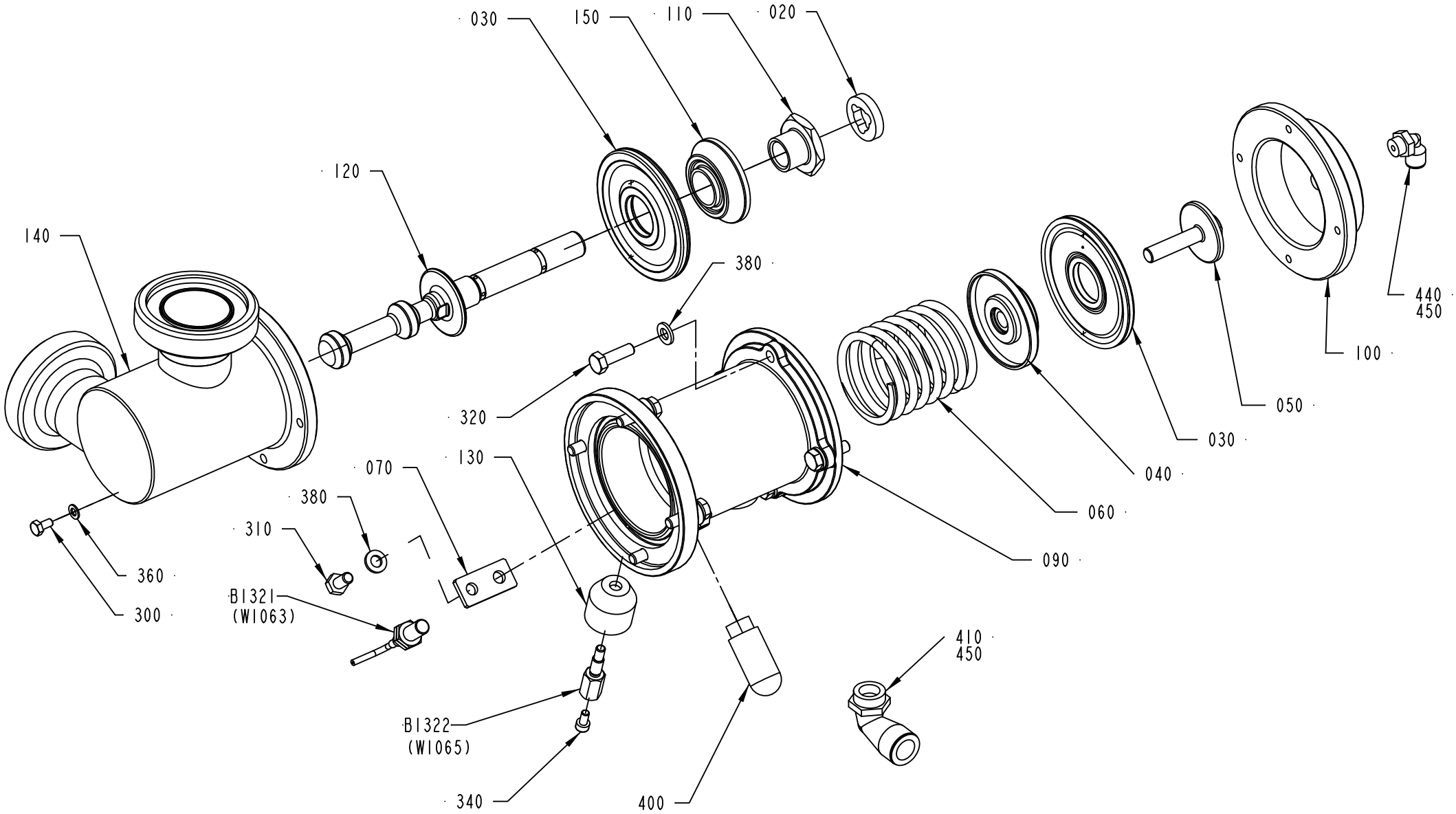

2507059-4
ECM 158797

ECM: 267090 - 20060703
Group number: 2507059-0200
Assembly Drawing: 2507059-4_1_AA

Pos	Part No	UN	Qty	Description	Page No
A3/FLEX TBA 0200S, A3/FLEX TBA 0200B, A3/FLEX TBA 0250B, A3/FLEX TBA 0330S, A3/FLEX TPA 0330SQ, A3/FLEX TBA 0200M, A3/FLEX TBA 0250S, A3/FLEX TPA 0250SQ, A3/FLEX TPA 0200SQ, A3/FLEX TBA 0200SQ, A3/FLEX TBA 0250SQ					
120	2672938-0000		1	SHUTTER	
140	2562704-0000		1	BODY	
A3/FLEX TBA 0500B, A3/FLEX TBA 1000B, A3/FLEX TBA 1000S, A3/FLEX TBA 1000SQ, A3/FLEX TPA 1000SQ, A3/FLEX TPA 0500SQ, A3/FLEX TBA 0500S, A3/FLEX TPA 0750SQ					
120	2672936-0000		1	SHUTTER	
140	1548230-0000		1	BODY	
A3/FLEX TBA 1500S					
120	2672937-0000		1	SHUTTER	
140	1498526-0000		1	REGULATOR BODY	
A3/FLEX TBA 1890S, A3/FLEX TBA 2000S					
120	2657922-0000		1	SHUTTER	
140	2500078-0000		1	BODY	
Common Parts					
020	2594043-0000		1	SHOCK ABSORBER	
030	925998-0000		2	DIAPHRAGM	
040	2693622-0000		1	SPACER	
050	926907-0000		1	SCREW	
060	1195397-0000		1	COMPRESSION SPRING	
070	926934-0000		1	SUPPORT	
090	2563766-0000		1	BODY	
100	927203-0000		1	COVER	
110	979434-0000		1	FERRULE	
130	1478813-0000		1	SPACER	
150	1511600-0000		1	SPACER	
300	312105-0287		1	SCREW M6S ISO 4017 M4X8 A470	
310	312105-0366		1	SCREW M6S ISO 4017 M6X12 A480	
320	312105-0370		8	SCREW M6S ISO 4017 M6X20 A480	
340	312115-0287		1	SCREW ISO4762 M4X8 A4 80	
360	315105-0136		1	WASHER BRB 4,3X8 RFR	
380	315105-0153		9	WASHER BRB 6,4X12 RFR	
400	90328-0026		1	SILENCER G1/4"	
410	90458-2960		1	ELBOW PIPE JOINT, EXT.THREAD,D=12MM-G3/8	
440	90458-2956		2	ELBOW PIPE JOINT, EXT.THREAD, D=6MM-G1/8	
450	90144-0073		1	TREBOFLON-TAPE W=13MM	
B1321	90458-0138		1	PROX. SWITCH, E2EG-X1R5B1-5M	
B1322	1478814-0000		1	SENSOR	

Pos	Part No	UN	Qty	Description	Page No

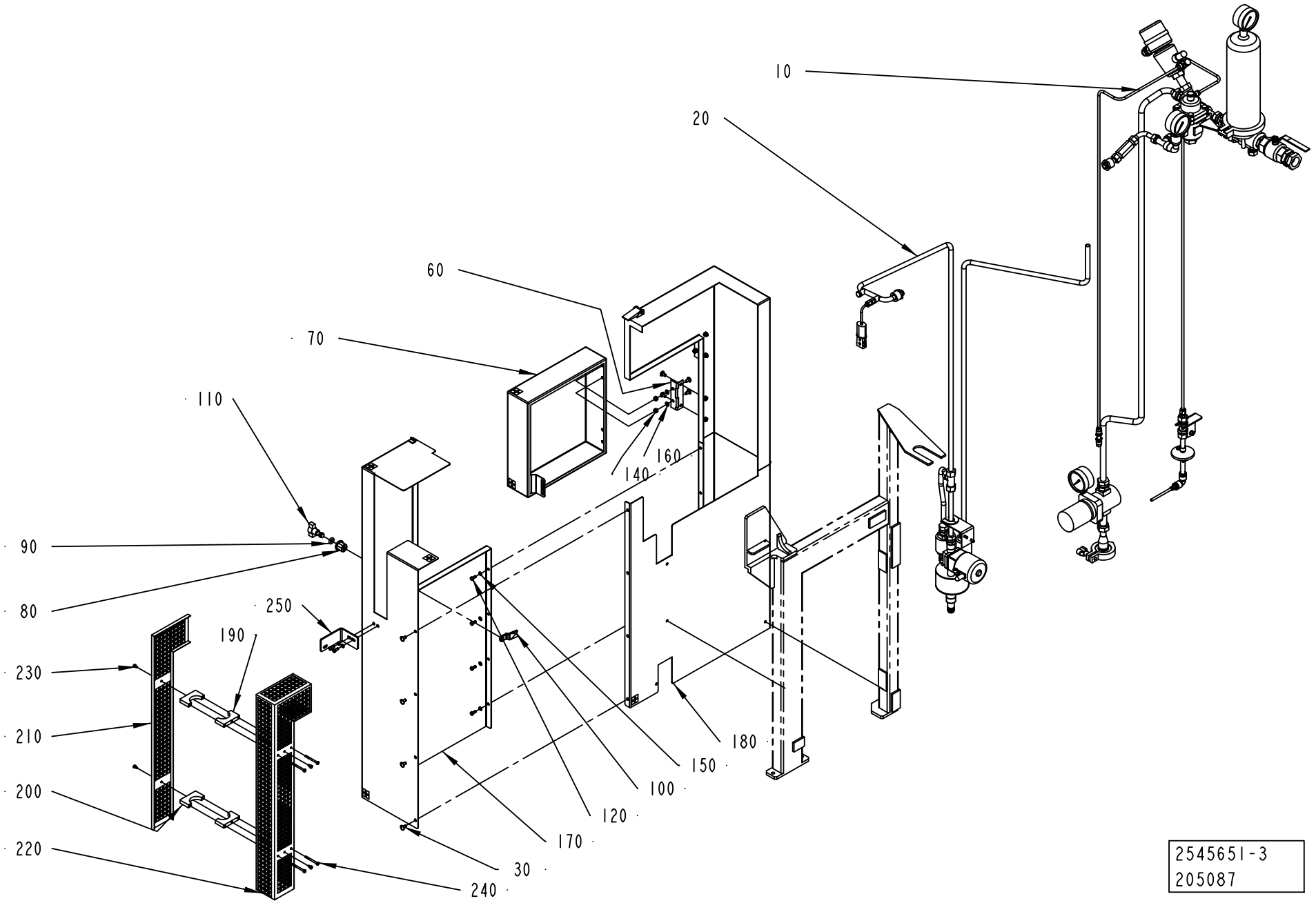
10
20
60
70
110
140
160
90
80
250
190
230
210
200
220
180
150
100
120
170
30
240
2545651-3
205087

ECM: 239320 - 20051011
Group number: 2545651-0200
Assembly Drawing: 2545651-3_1_AB

Pos	Part No	UN	Qty	Description	Page No
A3/FLEX					
190	2748216-0000		2	CLAMP	
200	2748217-0000		2	CLAMP	
210	2748218-0000		1	TOUCH GUARD	
220	2748219-0000		1	TOUCH GUARD	
230	312105-0287		4	SCREW M6S ISO 4017 M4X8 A470	
240	312105-0303		4	SCREW M6S ISO 4017 M4X40 A470	
Common Parts					
010	2544199-0200		1	STEAM PIPE	**1-255**
020	2552215-0200		1	STEAM TRAP	**1-257**
030	927354-0000		12	SCREW	
060	2711251-0000		2	HINGE	
070	2711254-0000		1	COVER	
080	90237-0319		1	LOCK HOUSING, 1000-U134	
090	90237-0323		1	LOCK O-RING, 1000-24	
100	90237-0335		1	LOCKING CATCH	
110	90237-0337		1	LOCK HANDLE FOR 90237-319	
120	312105-0327		6	SCREW M6S ISO 4017 M5X12 A480	
140	312605-0316		4	HEXAGON NUT, M6M M6 A280	
150	315105-0146		6	WASHER BRB 5,3X10 RFR	
160	315105-0153		4	WASHER BRB 6,4X12 RFR	
170	2711247-0000		1	COVER	
180	2711245-0000		1	COVER	
250	2748220-0000		1	HANGER	

Pos	Part No	UN	Qty	Description	Page No

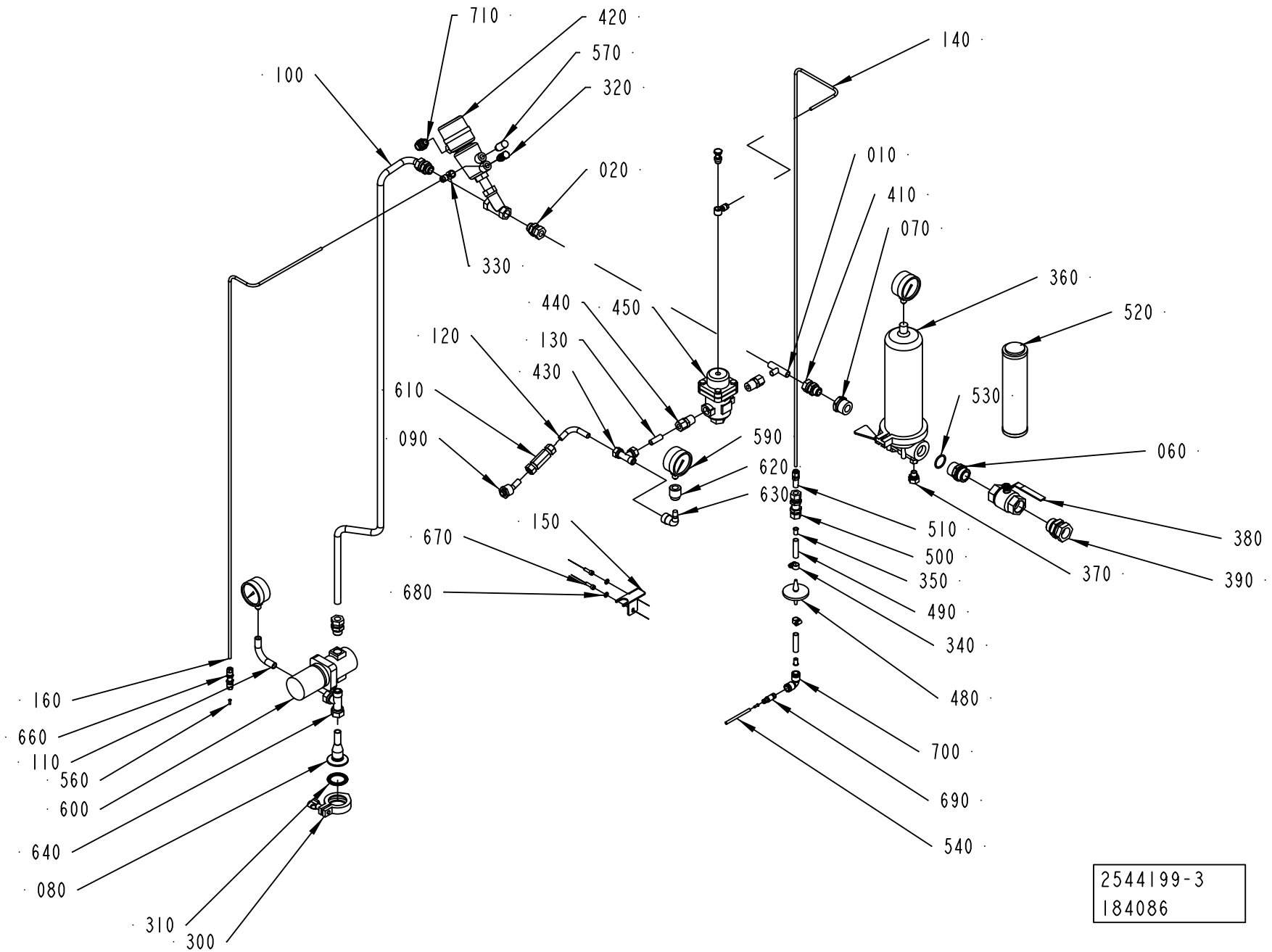
710
420
570
320
100
020
330
140
010
410
070
360
520
530
060
380
390
370
440
450
120
130
430
610
090
590
620
630
150
670
680
510
500
350
490
340
480
700
690
540
160
660
110
560
600
640
080
310
300
2544199-3
184086

ECM: 211119 - 20050615
Group number: 2544199-0200
Assembly Drawing: 2544199-3_1_AA

Pos	Part No	UN	Qty	Description	Page No
-					
010	2695987-0000		1	PIPE	
020	2522195-0000		2	CONNECTION	
060	2552776-0000		1	ADAPTER	
070	2552777-0000		1	ADAPTER	
080	2611077-0000		1	PIPE	
090	2695990-0000		1	PIPE	
100	2695988-0000		1	PIPE	
110	2582590-0000		1	PIPE	
120	2695991-0000		1	PIPE	
130	2695992-0000		1	PIPE	
140	2695993-0000		1	PIPE	
150	2616298-0000		1	BRACKET	
160	2695989-0000		1	PIPE	
300	342840-0103		1	CLAMPING PIECE	
310	342850-0204		1	GASKET 35,4X49,1X5,2 MM 1"1/2 FDA 3-A	
320	342980-0304		2	BANJO-HOLLOW BOLT COUPL,EXT.THR.01-G1/4	
330	342797-0122		2	CONN. BANJO, RINGPIECE 6-1/4	
340	342991-0100		2	HOSE CLIP,WORM DRIVE TYPE 10-13	
350	342706-0195		2	ACCESSORIES, INSERT SLEEVE 12 MM	
360	90459-5503		1	FILTER HOUSING / IDL 11 GB 16 C2H	
370	90030-0088		1	CONN. STR., 12-R1/4, EXT. THREAD	
380	90187-0096		1	BALL VALVE G1	
390	90030-0193		1	CONN. STR. GA-28-G1	
410	90030-0188		2	CONN. STR. GA-15-G1/2	
420	90459-1235		1	ANGLE SEAT VALVE, N.C. DN13 TYPE 2002	
430	342751-0215		1	CONN. L-PIPE, EXT. LE-12-R3/8	
440	90030-0180		2	CONN. STR. GE 12-1/2-14 NPTF	
450	90458-2264		1	PRESSURE REGULATOR ARC-30-1/2"	
	90458-2655		*1*	*STRAINER FOR ARC-30-1/2"*	
	90458-2654		*1*	*GASKET KIT FOR ARC-30-1/2"*	
	90458-2653		*1*	*BELLOWS AISI 316L FOR ARC-30-1/2"*	
480	90458-2554		1	STERILE GRADE MEMBRANE FILTER 0,2µM	
490	90166-0195	MM	50	TUBE 12 MM PA BLUE	
500	90030-0030		1	CONN. BULKHEAD SV 12-L/SY	
510	90030-0481		1	REDUCER M12TURM6-316	
520	90277-0355		1	FILTER INSERT / MBS 100 IPH	
530	315204-0219		1	O-RING 29,2X3 MM	
540	90166-0193	MM	3500	TUBE 6 MM PUR BLUE	
550	90166-0195	MM	50	TUBE 12 MM PA BLUE	
560	342706-0130		2	ACCESSORIES, INSERT SLEEVE 6 MM	
570	90328-0026		1	SILENCER G1/4"	
590	90043-0082		3	PRESSURE GAUGE, 2740, D=63 MM	
600	90113-0064		1	PRESSURE REGULATOR	
610	90459-4686		1	NON-RETURN VALVE, M12A-C6L-1-EPR-SS	
620	90330-0011		1	SLEEVE, REDUCTION, INT, R-2023/8X1/4	
630	90330-0172		1	ELBOW, 90 INT/EXT, SS-6-SE	
640	342751-0221		1	CONN. L-PIPE, EXT. LE-15-R1/2	
660	90224-0349		1	CONN. BULKHEAD. 1250-6	
670	312115-0370		2	SCREW ISO4762 M6X20 A4 80	
680	315105-0153		2	WASHER BRB 6,4X12 RFR	
690	342716-0210		1	REDUCER 6-12	
700	342735-0109		1	ELBOW PIPE JOINT	
710	352103-0106		1	CABLE GLAND, ST 11, PR18,6/PG11	

Machine Type	Group Description	Used-In	Group Number	Page No

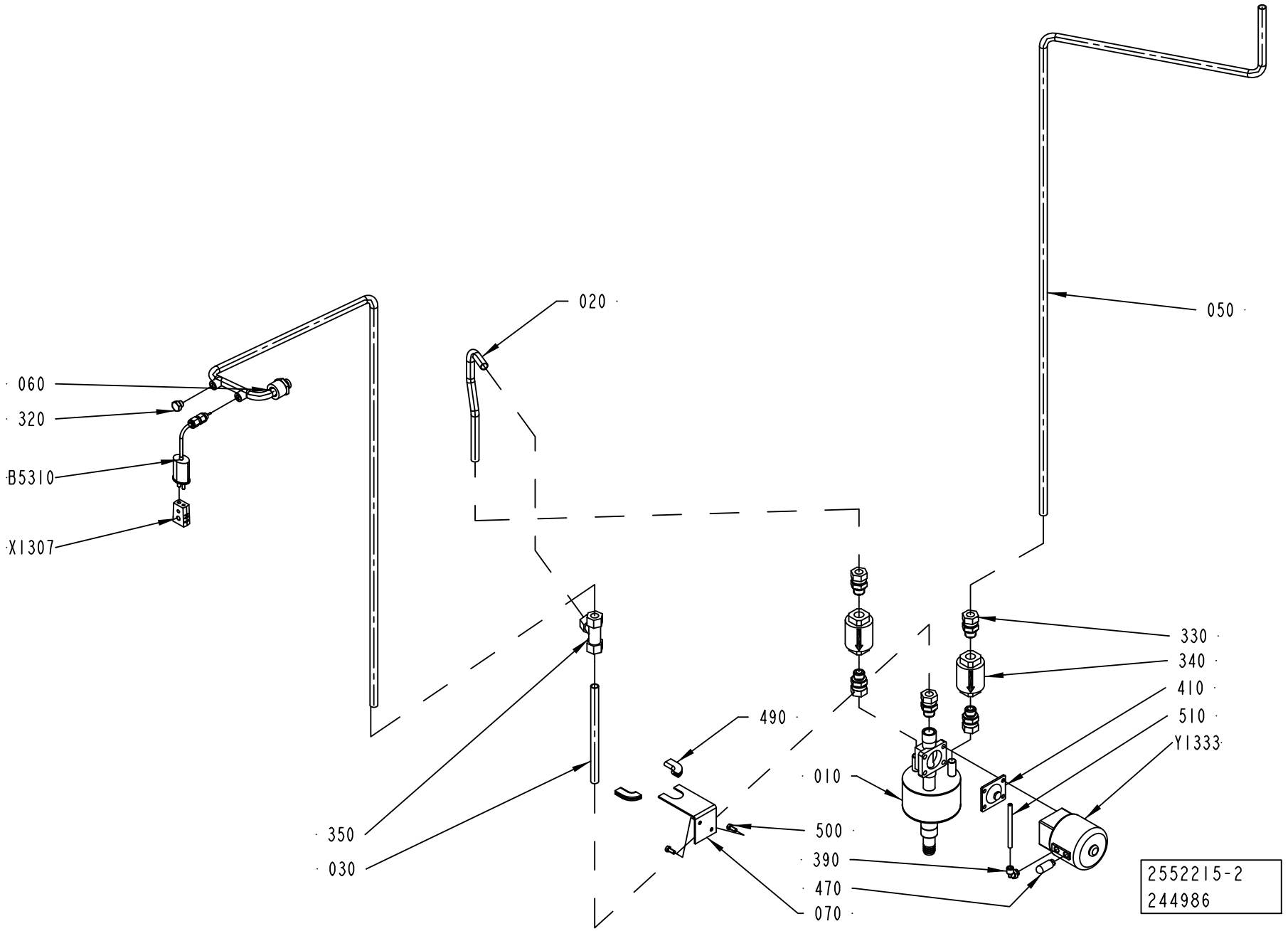
060
320
B5310
X1307
020
050
330
340
410
510
Y1333
490
010
500
390
470
070
350
030
2552215-2
244986

ECM: 244986 - 20060728
Group number: 2552215-0200
Assembly Drawing: 2552215-2_1_AB

Pos	Part No	UN	Qty	Description	Page No
-					
010	2695994-0000		1	ATTACHMENT PIPE	
020	2696037-0000		1	PIPE	
030	2696025-0000		1	PIPE	
050	2695995-0000		1	PIPE	
060	2695996-0000		1	PIPE	
070	2725559-0000		1	PLATE	
320	90330-0066		1	PLUG, EXT. G-THREAD, G1/8	
330	90030-0187		5	CONN. STR. GA-12-G3/8	
340	90360-0020		2	STEAM TRAP / MK36/51 3/8 INCH	
	90360-0309		*1*	*STRAINER, FOR STEAM TRAP 90360-20*	
	90360-0310		*1*	*CAPSULE, FOR STEAM TRAP 90360-20*	
350	90030-0058		1	CONN. T-PIPE T-12	
390	90458-2956		1	ELBOW PIPE JOINT, EXT.THREAD, D=6MM-G1/8	
410	90187-0312		1	DIAPHRAGM #328 FOR SIZE 15 VALVE	
470	90328-0047		1	SILENCER G1/8"	
490	90143-0059	MM	33	SEAL STRIP 4610069	
500	312105-0327		2	SCREW M6S ISO 4017 M5X12 A480	
510	90166-0193	MM	1000	TUBE 6 MM PUR BLUE	
B5310	90326-0089		1	THERMOCOUPLE, 5110-089-000	
X1307	90326-0020		1	PLUG, FEMALE YELLOW CR-AL	
Y1333	90187-0110		1	DIAPHRAGM VALVE DN15, NC WELD CONN.	

Pos	Part No	UN	Qty	Description	Page No

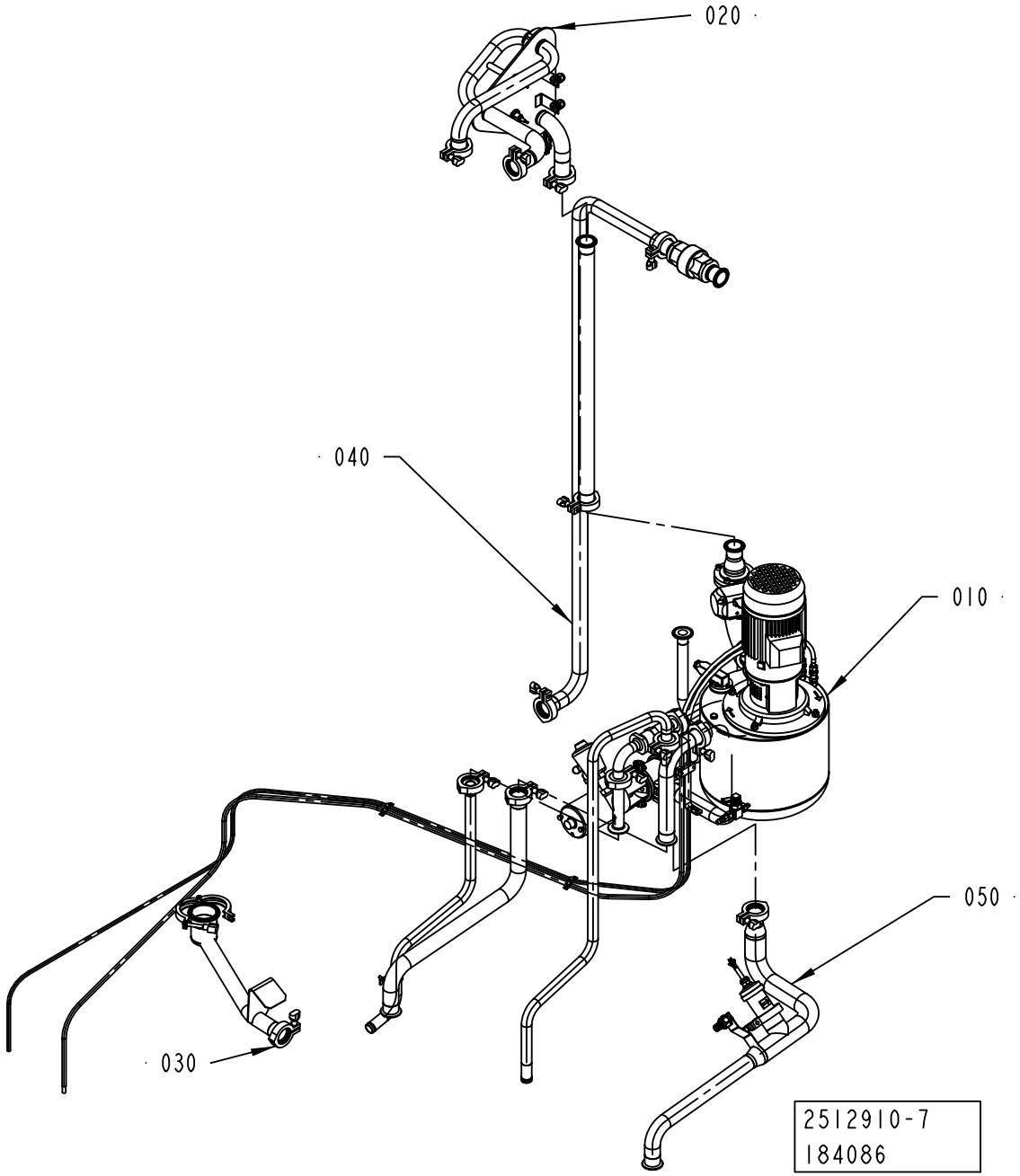
020
040
010
050
030
2512910-7
184086

ECM: 186104 - 20050224
Group number: 2512910-0200
Assembly Drawing: 2512910-7_1_AA

Pos	Part No	UN	Qty	Description	Page No
A3/FLEX MANUALCIP					
020	2539452-0200		1	FLOW SWITCH	**1-261**
030	2512936-0100		1	CLEANING CUP	**1-263, 1-265**
Common Parts					
010	2531076-0200		1	INTEGRATED CLEANING UNIT	**1-267**
040	2539442-0200		1	CLEANING PIPE	**1-275**
050	2539448-0200		1	CLEANING PIPE	**1-277**

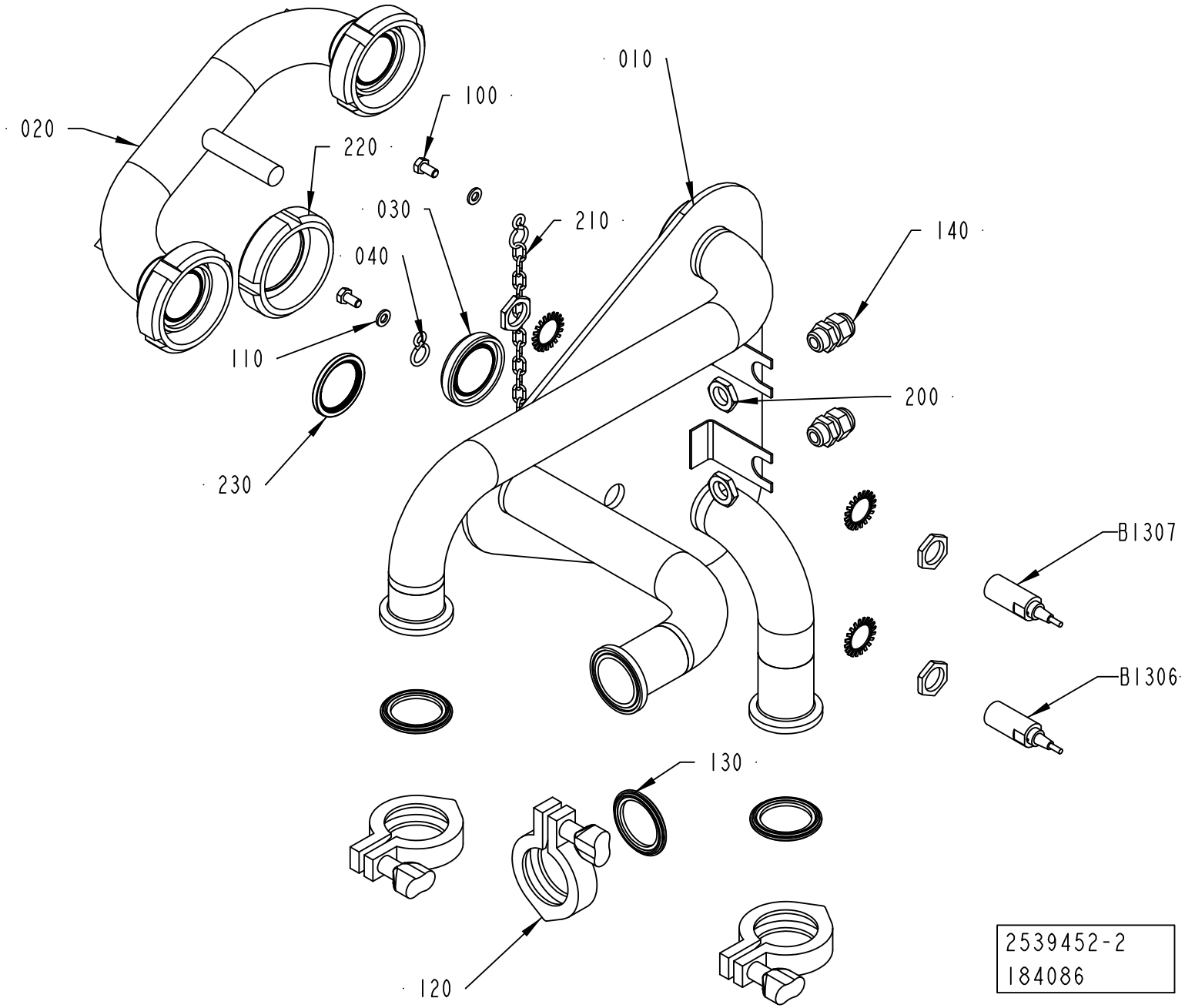
010
020
100
220
030
210
140
040
110
200
230
B1307
B1306
130
120
2539452-2
184086

ECM: 185354 - 20050224
Group number: 2539452-0200
Assembly Drawing: 2539452-2_1_AA

Pos	Part No	UN	Qty	Description	Page No
-					
010	2696028-0000		1	PIPE SUPPORT	
020	2696029-0000		1	CONNECTING PIPE	
030	2525338-0000		1	PLUG	
040	209183-0000		2	RING	
100	312105-0366		2	SCREW M6S ISO 4017 M6X12 A480	
110	315105-0153		2	WASHER BRB 6,4X12 RFR	
120	342840-0103		3	CLAMPING PIECE	
130	342850-0304		3	GASKET 35,4X49,1X5,2 1"1/2 FDA	
140	352103-0101		2	CABLE GLAND, ST 9, PR15,2/PG9	
200	90099-0104		2	NUT, PR 15,2 (PG9)	
210	90155-0008	MM	500	HANGER CHAIN, 18	
220	90217-0206		1	UNION NUT, 1 1/2 APV, 07-01-376/17	
230	90217-0348		3	GASKET 35,4X46,8X4 MM	
B1306	90458-0676		1	PROXIMITY SWITCH,E2EG-X5B1-6M	
B1307	90458-0676		1	PROXIMITY SWITCH,E2EG-X5B1-6M	

Pos	Part No	UN	Qty	Description	Page No

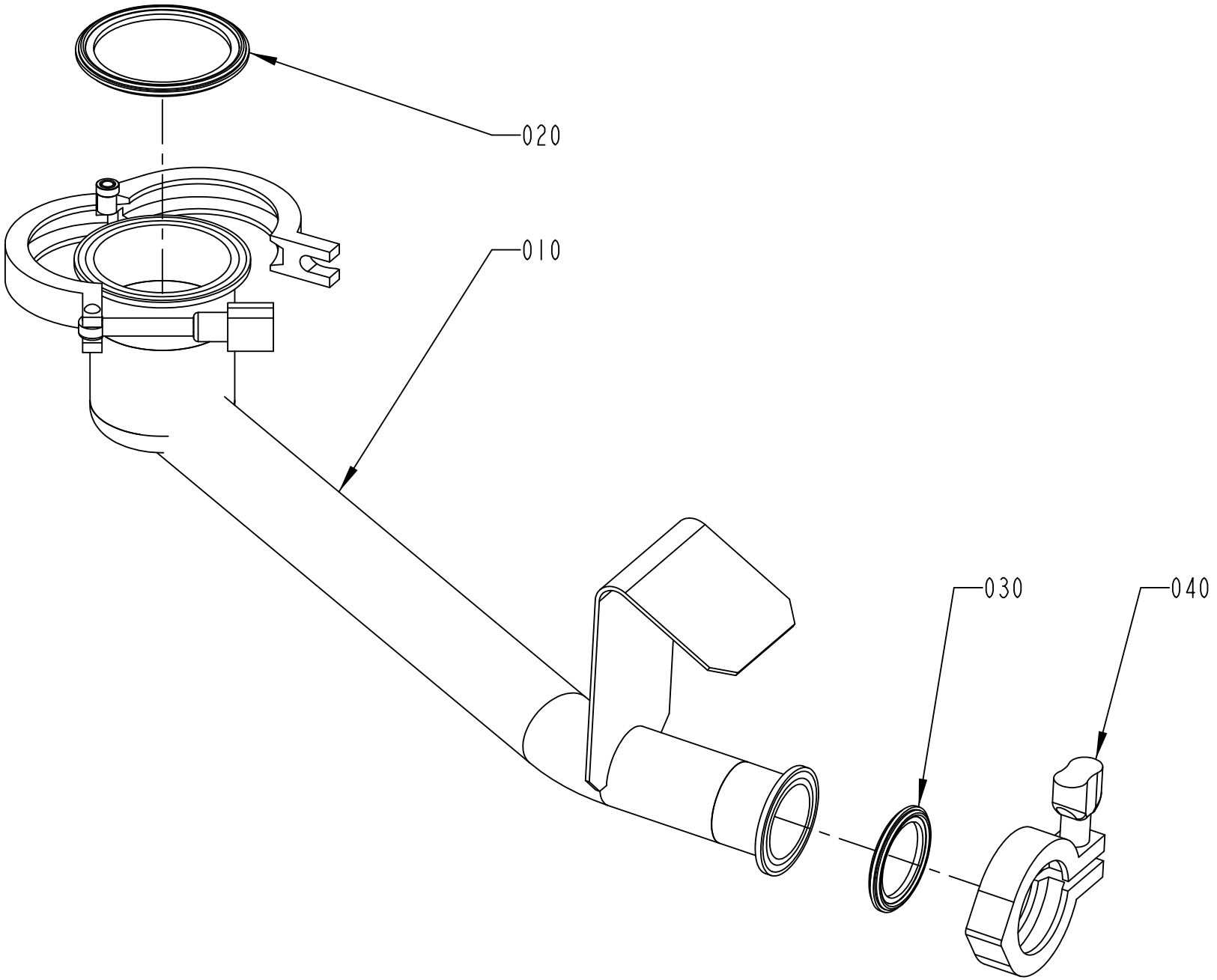
020
010
030
040
2512936-1
ECM 112508

ECM: 272935 - 20060706
Group number: 2512936-0100
Assembly Drawing: 2512936-1_1_AA

This list covers pages from 1-262 to 1-265

Pos	Part No	UN	Qty	Description	Page No
TBA 0200M, TBA 0200B, TBA 0200SQ, TBA 0200S, TBA 0250S, TBA 0250B, TBA 0330S, TPA 0330SQ, TPA 0250SQ, TPA 0200SQ, TBA 0250SQ (See drawing on page: 1-264)					
010	2540615-0000		1	CLEANING CUP	
030	342850-0304		2	GASKET 35,4X49,1X5,2 1"1/2 FDA	
TBA 0500S, TPA 1000SQ, TPA 0500SQ, TPA 0750SQ (See drawing on page: 1-262)					
010	2565437-0000		1	CLEANING CUP	
020	342850-0305		1	GASKET 47,8X62,6X5,2 MM 2" FDA	
030	342850-0304		1	GASKET 35,4X49,1X5,2 1"1/2 FDA	
TBA 1000B, TBA 1000SQ, TBA 1000S, TBA 1500S, TBA 1890S, TBA 2000S (See drawing on page: 1-262)					
010	2501312-0000		1	CLEANING CUP	
020	342850-0306		1	GASKET 60,3X76,1X5,2 MM 2"1/2 FDA	
030	342850-0304		1	GASKET 35,4X49,1X5,2 1"1/2 FDA	
Common Parts					
040	342840-0103		1	CLAMPING PIECE	

Pos	Part No	UN	Qty	Description	Page No

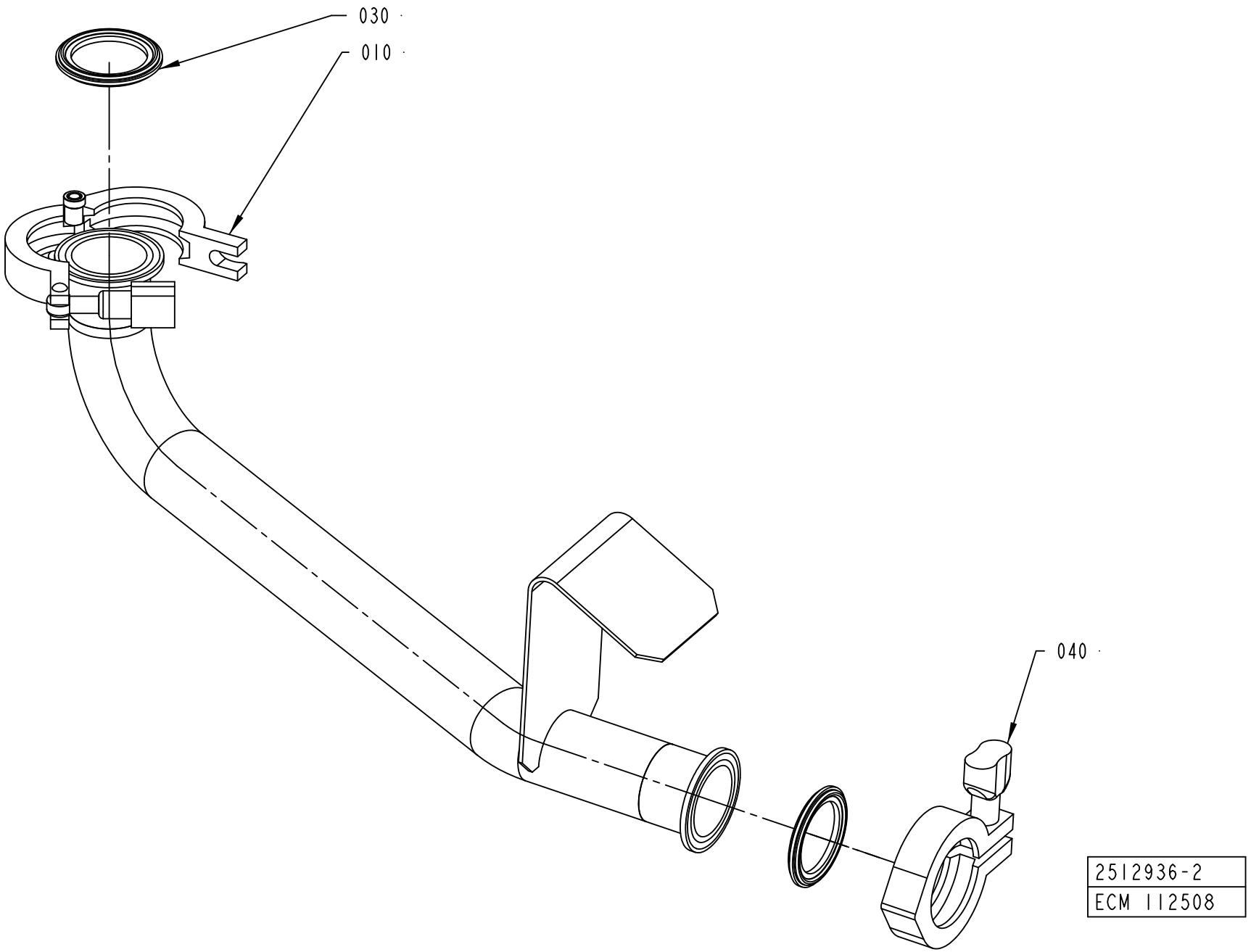
030
010
040
2512936-2
ECM 112508

Pos	Part No	UN	Qty	Description	Page No
TBA 0200M, TBA 0200B, TBA 0200SQ, TBA 0200S, TBA 0250S, TBA 0250B, TBA 0330S, TPA 0330SQ, TPA 0250SQ, TPA 0200SQ, TBA 0250SQ (See drawing on page: 1-264)					
010	2540615-0000		1	CLEANING CUP	
030	342850-0304		2	GASKET 35,4X49,1X5,2 1"1/2 FDA	
TBA 0500S, TPA 1000SQ, TPA 0500SQ, TPA 0750SQ (See drawing on page: 1-262)					
010	2565437-0000		1	CLEANING CUP	
020	342850-0305		1	GASKET 47,8X62,6X5,2 MM 2" FDA	
030	342850-0304		1	GASKET 35,4X49,1X5,2 1"1/2 FDA	
TBA 1000B, TBA 1000SQ, TBA 1000S, TBA 1500S, TBA 1890S, TBA 2000S (See drawing on page: 1-262)					
010	2501312-0000		1	CLEANING CUP	
020	342850-0306		1	GASKET 60,3X76,1X5,2 MM 2"1/2 FDA	
030	342850-0304		1	GASKET 35,4X49,1X5,2 1"1/2 FDA	
Common Parts					
040	342840-0103		1	CLAMPING PIECE	

Pos	Part No	UN	Qty	Description	Page No

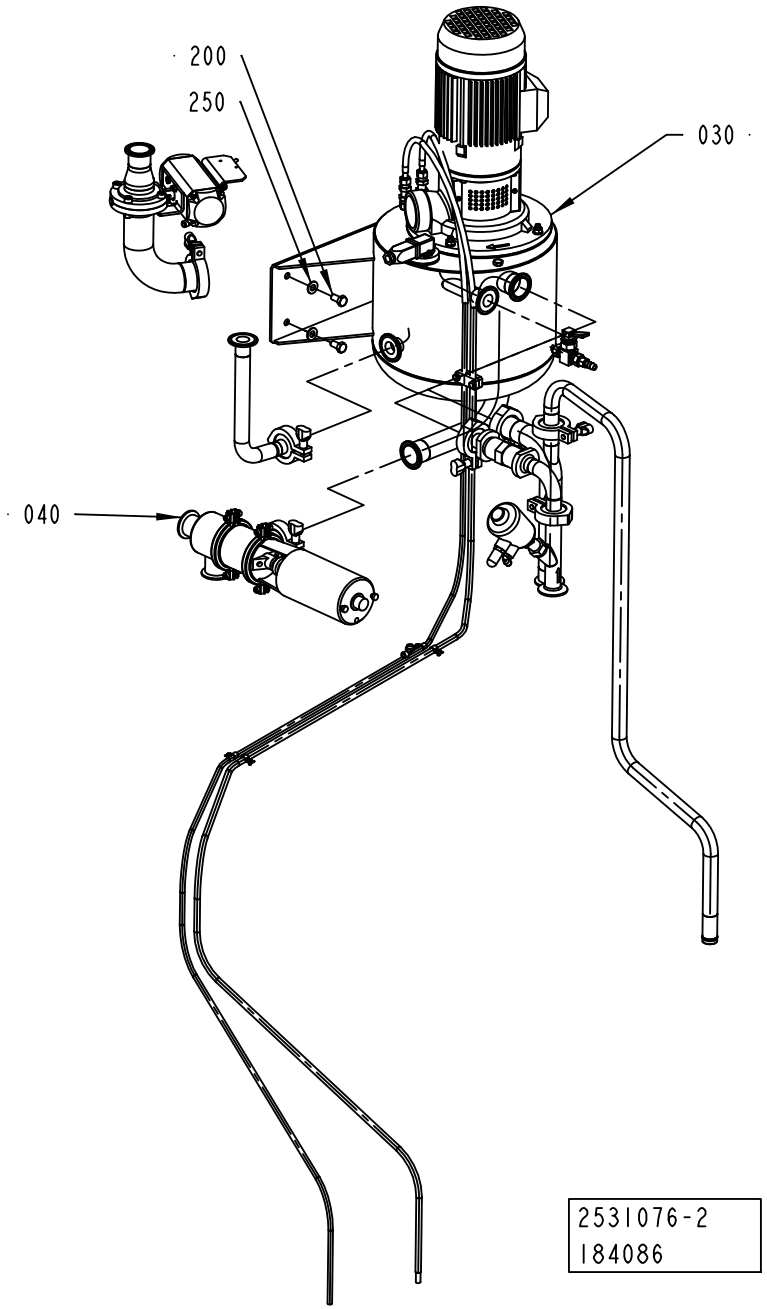
200
250
030
040
2531076-2
184086

ECM: 185350 - 20050224
Group number: 2531076-0200
Assembly Drawing: 2531076-2_1_AA

Pos	Part No	UN	Qty	Description	Page No
-					
030	2531077-0200		1	CLEANING TANK	**1-269**
040	2531078-0200		1	VALVE PIPE	**1-273**
200	312105-0491		2	SCREW M6S ISO 4017 M10X20 A480	
250	315105-0173		2	WASHER BRB 10,5X22 RFR	

Pos	Part No	UN	Qty	Description	Page No

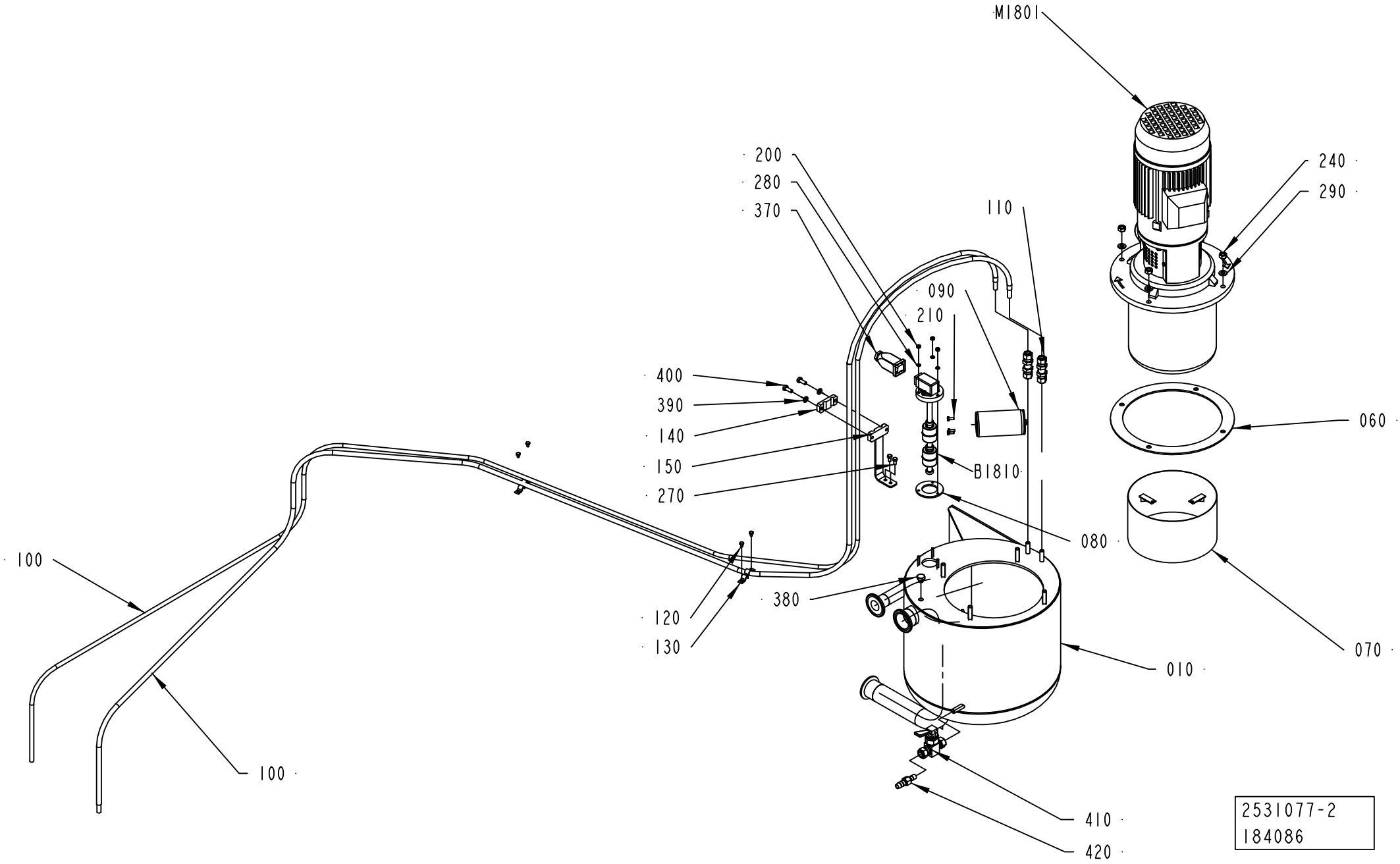
M1801
200
280
370
240
290
110
090
210
400
390
140
150
270
060
B1810
080
100
380
120
130
070
010
100
410
420
2531077-2
184086

ECM: 216483 - 20050615
Group number: 2531077-0200
Assembly Drawing: 2531077-2_1_AA

Pos	Part No	UN	Qty	Description	Page No
-					
010	2696002-0000		1	TANK	
060	2504547-0000		1	GASKET	
070	2504567-0000		1	LINING	
080	2696003-0000		1	GASKET	
090	2537849-0100		1	DIFFUSOR	**1-271**
100	90459-4169		2	HOSE ASSEMBLY 919-1D-1D-8-8-5C-3800	
110	90030-0485		2	CONN. BULKHEAD SV 8-	
120	312105-0285		4	SCREW M6S ISO 4017 M4X6 A470	
130	316810-0106		4	PIPE CLIP FOR TUBE D=8 MM	
140	2530875-0000		1	BRACKET	
150	2672847-0000		1	ARM	
200	312602-0312		3	HEXAGON NUT, EN 24032 M6M M4 NIPLBR	
210	312105-0289		3	SCREW M6S ISO 4017 M4X10 A470	
240	312605-0318		4	HEXAGON NUT, M6M M8 A280	
270	312105-0325		2	SCREW M6S ISO 4017 M5X10 A480	
280	315105-0136		3	WASHER BRB 4,3X8 RFR	
290	315105-0165		4	WASHER BRB 8,4X16 RFR	
370	90458-2664		1	CONNECTOR 4 POLE COD.600.00.750-1	
380	90330-0066		1	PLUG, EXT. G-THREAD, G1/8	
390	315105-0153		2	WASHER BRB 6,4X12 RFR	
400	312105-0368		2	SCREW M6S ISO 4017 M6X16 A480	
410	90459-2609		1	BALL VALVE 3/8", 6A-V6LQ-SI-SSP-ALH	
420	90459-2615		1	HOSE NIPPLE SS-6-HC-A-601	
B1810	90459-5337		1	LEVEL SENSOR, COD. 90459	
M1801	90458-1607		1	PUMP, SVI 8 03/03 N15T 1.5KW	
	90459-5671		*1*	*PIPE, 16408240*	
	315206-0607		*1*	*O-RING 59,92X3,53 MM*	

Pos	Part No	UN	Qty	Description	Page No

Machine Type	Group Description	Used-In	Group Number	Page No

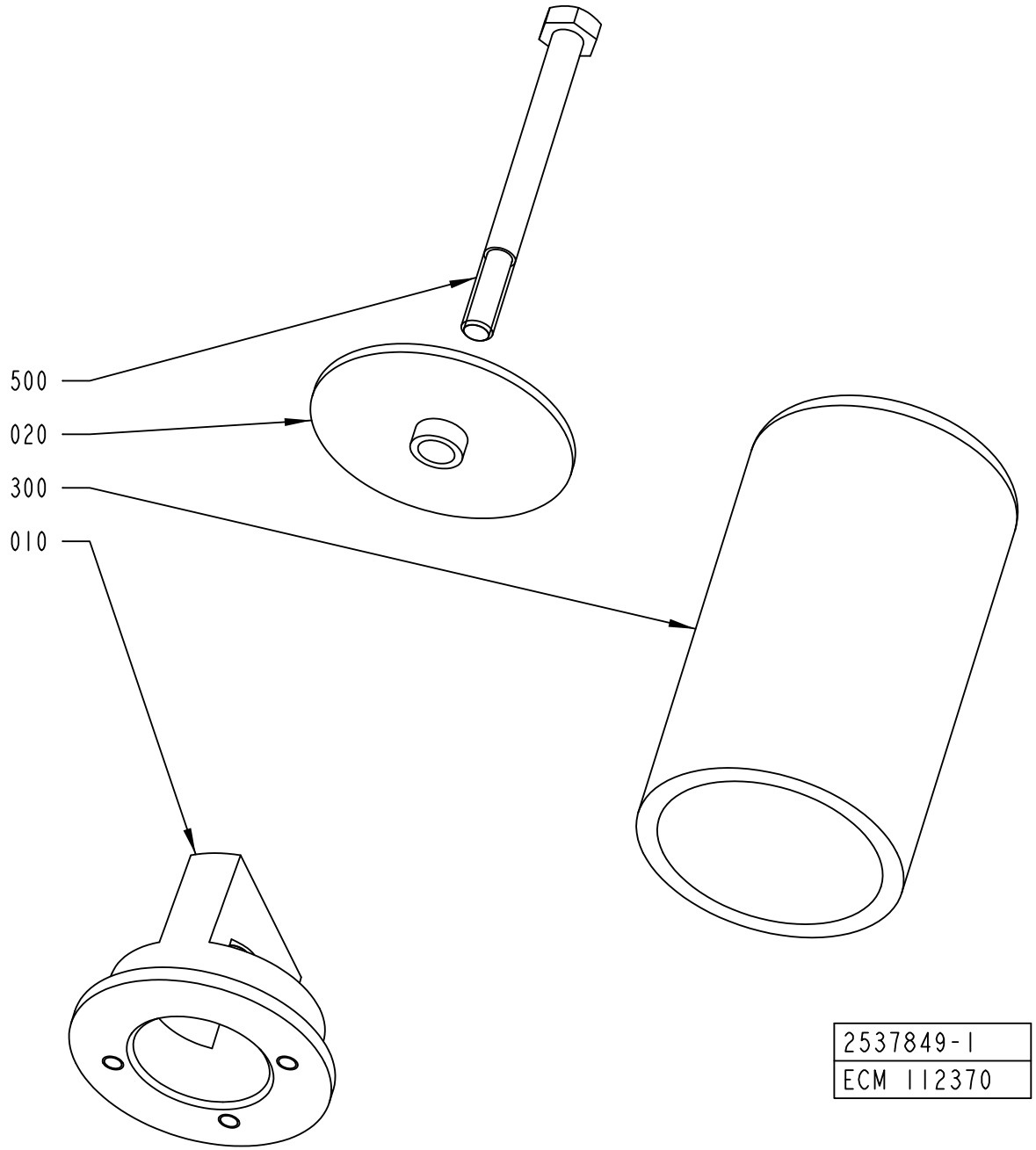
500
020
300
010
2537849-1
ECM 112370

ECM: 188834 - 20041104
Group number: 2537849-0100
Assembly Drawing: 2537849-1_1_AA

Pos	Part No	UN	Qty	Description	Page No
-					
010	2537848-0000		1	HOUSE	
020	2504569-0000		1	WASHER	
300	90458-2638		1	FILTER ELEMENT SINTERED, C3SF	
500	312105-0384		1	SCREW M6S ISO 4014 M6X70 A480	

Pos	Part No	UN	Qty	Description	Page No

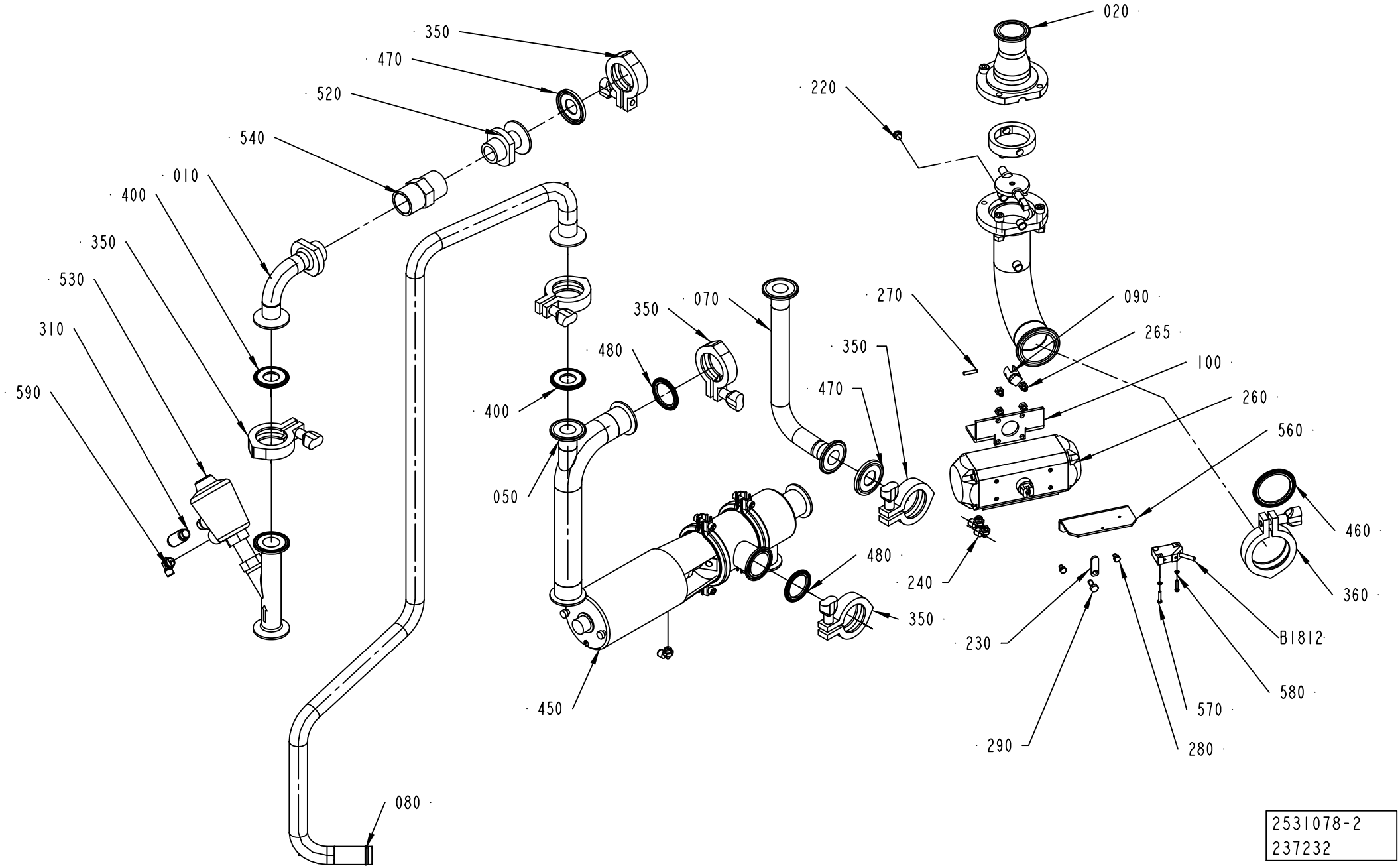

2531078-2
237232

ECM: 239318 - 20051011
Group number: 2531078-0200
Assembly Drawing: 2531078-2_1_AC

Pos	Part No	UN	Qty	Description	Page No
A3/FLEX					
080	2696008-0000		1	PIPE	
Common Parts					
010	2531079-0000		1	PIPE	
020	2696007-0000		1	PIPE	
050	2696005-0000		1	PIPE	
070	2696006-0000		1	PIPE	
090	2662432-0000		1	COUPLING	
100	2662434-0000		1	BRACKET	
210	90240-0302		2	BUSHING, 10X12X10 MM	
220	2531435-0000		1	PLUG	
230	2611034-0000		1	BRACKET	
240	90458-2956		3	ELBOW PIPE JOINT, EXT.THREAD, D=6MM-G1/8	
260	90459-4145		1	ROTARY ACTUATOR DRD-4-F05	
265	312105-0362		4	SCREW M6S ISO 4017 M6X8 A480	
270	311103-0272		1	PARALLEL PIN ISO 2338 4M6X20 A1	
280	312105-0323		2	SCREW M6S ISO 4017 M5X8 A480	
290	312105-0368		1	SCREW M6S ISO 4017 M6X16 A480	
310	90328-0026		1	SILENCER G1/4"	
350	342840-0103		6	CLAMPING PIECE	
360	342840-0105		1	CLAMPING PIECE	
400	342850-0303		1	GASKET 22,7X49,1X5,2 MM 1" FDA	
450	90459-0241		1	VALVE, SEAT, N.C. SRC-38-NC-21	
460	342850-0305		1	GASKET 47,8X62,6X5,2 MM 2" FDA	
470	90217-0306		2	GASKET 22,8X50,5X5,5 MM	
480	342850-0304		2	GASKET 35,4X49,1X5,2 1"1/2 FDA	
520	90458-2003		1	ADAPTER 1" MALE NPT X 1" DAIRY CLAMP	
530	90459-1241		1	ANGLE SEAT VALVE, TRI-CLAMP, N.C. DN20	
540	90458-2490		1	CONSTANT FLOW VALVE, GX 1"FX1"F 10GPM	
560	2662433-0000		1	BRACKET	
570	312125-0228		2	SCREW ISO 1207 M3X16 A4	
580	315105-0124		2	WASHER BRB 3,2X6 RFR	
590	90458-2957		1	ELBOW PIPE JOINT, EXT.THREAD, D=6MM-G1/4	
B1812	90044-0194		1	PROX.SW. IN5329/IN3002-BPKG(EX90044-104)	

Pos	Part No	UN	Qty	Description	Page No

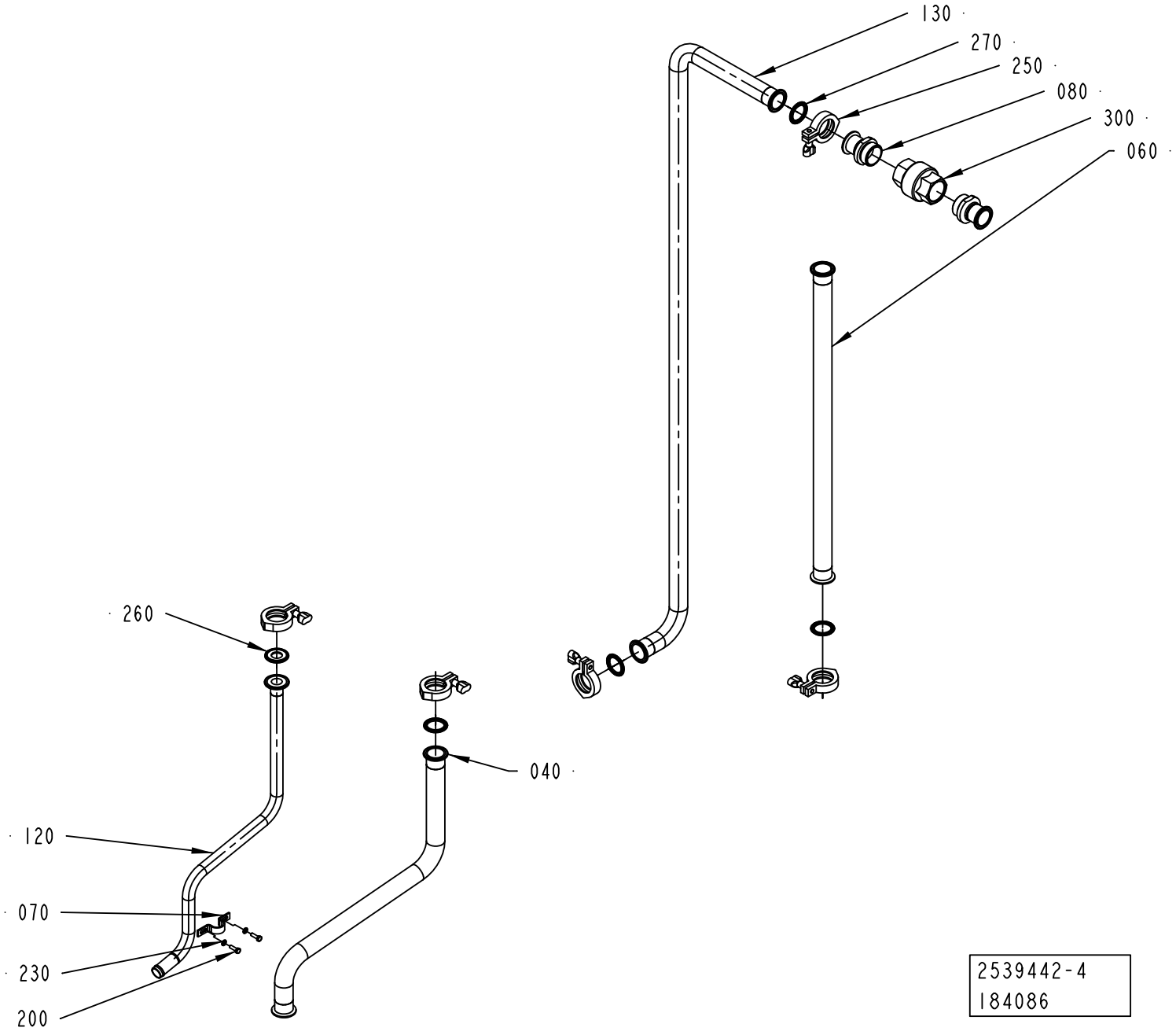
130
270
250
080
300
060
260
040
120
070
230
200
2539442-4
184086

ECM: 185356 - 20050224
Group number: 2539442-0200
Assembly Drawing: 2539442-4_1_AA

Pos	Part No	UN	Qty	Description	Page No
-					
040	2696026-0000		1	PIPE	
060	2696027-0000		1	PIPE	
070	2531082-0000		1	CLAMP	
080	2531083-0000		2	SLEEVE	
120	2696013-0000		1	PIPE	
130	2696012-0000		1	PIPE	
200	312105-0370		2	SCREW M6S ISO 4017 M6X20 A480	
230	315105-0153		2	WASHER BRB 6,4X12 RFR	
250	342840-0103		5	CLAMPING PIECE	
260	342850-0303		1	GASKET 22,7X49,1X5,2 MM 1" FDA	
270	342850-0304		4	GASKET 35,4X49,1X5,2 1"1/2 FDA	
300	90230-0045		1	NON-RETURN VALVE 1 1/2"	
	90230-0309		*1*	*GASKET KIT*	

Pos	Part No	UN	Qty	Description	Page No

Machine Type	Group Description	Used-In	Group Number	Page No

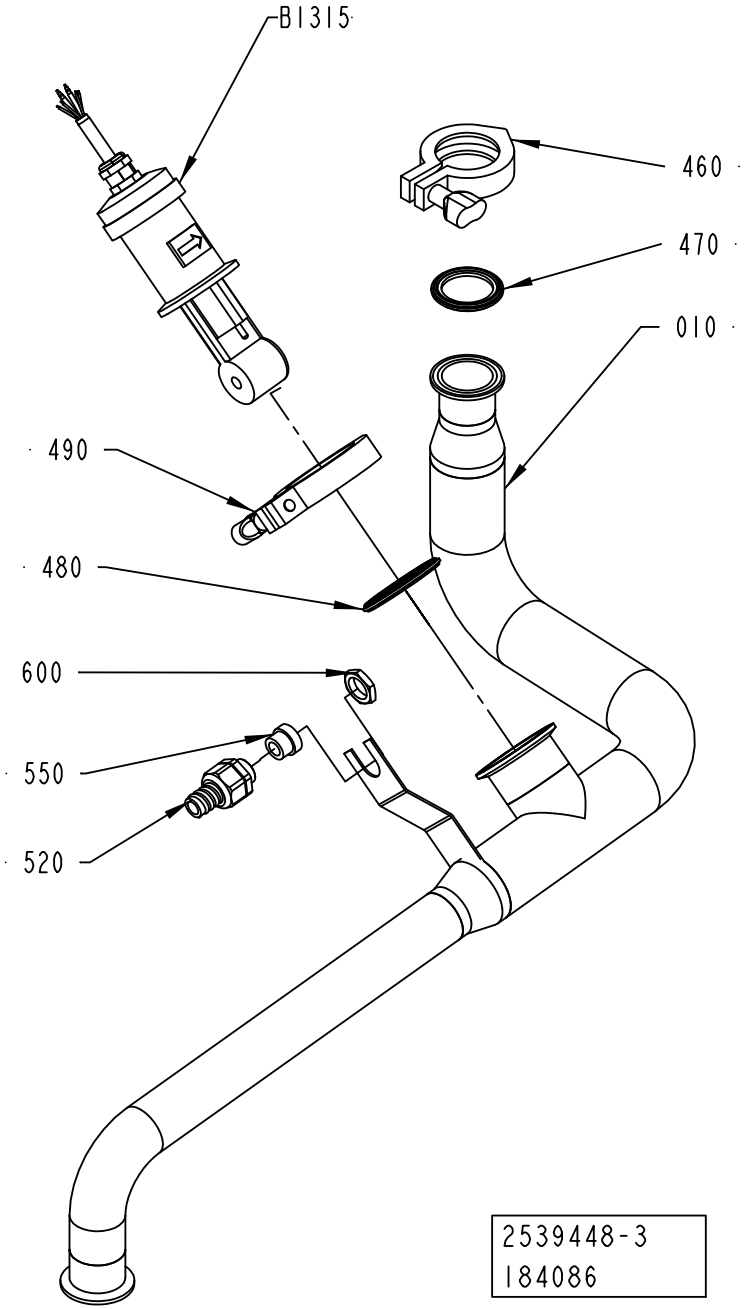
B1315
460
470
010
490
480
600
550
520
2539448-3
184086

ECM: 210314 - 20050615
Group number: 2539448-0200
Assembly Drawing: 2539448-3_1_AA

Pos	Part No	UN	Qty	Description	Page No
A3/FLEX					
010	2696010-0000		1	PIPE	
460	342840-0103		1	CLAMPING PIECE	
470	342850-0304		1	GASKET 35,4X49,1X5,2 1"1/2 FDA	
Common Parts					
480	342850-0305		1	GASKET 47,8X62,6X5,2 MM 2" FDA	
490	342850-0105		1	GASKET, FDA, 3-A, 2	
520	353243-0003		1	HOSE GLAND W/O INSERT PG11 EXTENDED	
550	353249-0011		1	INSERT, SINGEL HOLE, EK 153/11	
600	90099-0117		1	NUT, PR 18,6 (PG11)	
B1315	90459-5015		1	CONDUCTIVITY SENSOR CLS 52-A1CS1A2	

Pos	Part No	UN	Qty	Description	Page No

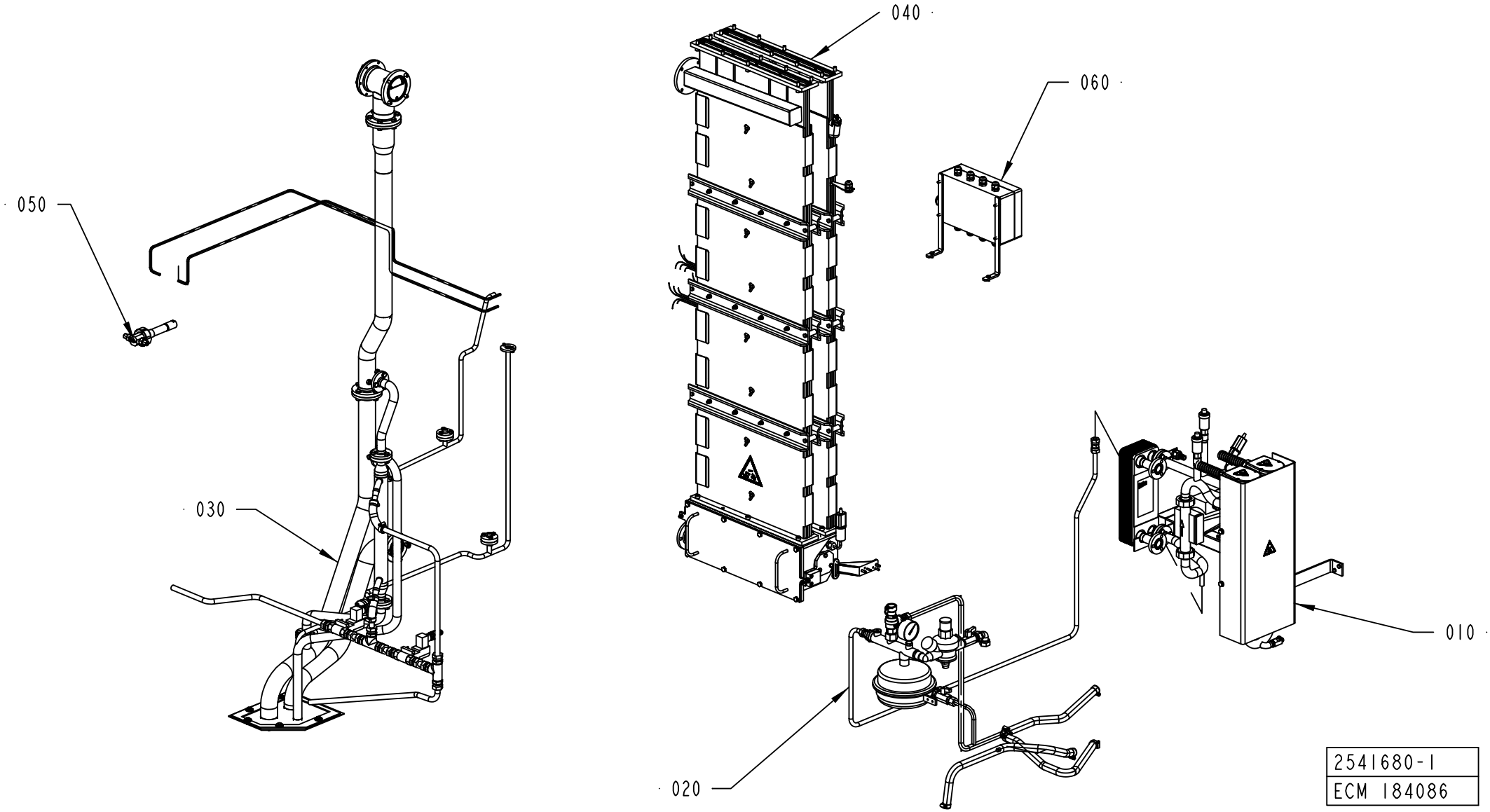
040
060
050
030
010
020
2541680-1
ECM 184086

ECM: 196313 - 20050224
Group number: 2541680-0100
Assembly Drawing: 2541680-1_1_AB

Pos	Part No	UN	Qty	Description	Page No
-					
010	1558495-0100		1	HEATING UNIT	**1-281**
020	2531052-0100		1	PRESSURE UNIT	**1-283**
030	2529484-0100		1	PEROXIDE PIPE	**1-285**
040	2715556-0100		1	BATH	**1-287, 1-289**
050	2547391-0100		1	NOZZLE	**1-291**
060	1532239-0100		1	CONNECTION BOX	**1-293**

Pos	Part No	UN	Qty	Description	Page No

HEATING UNIT

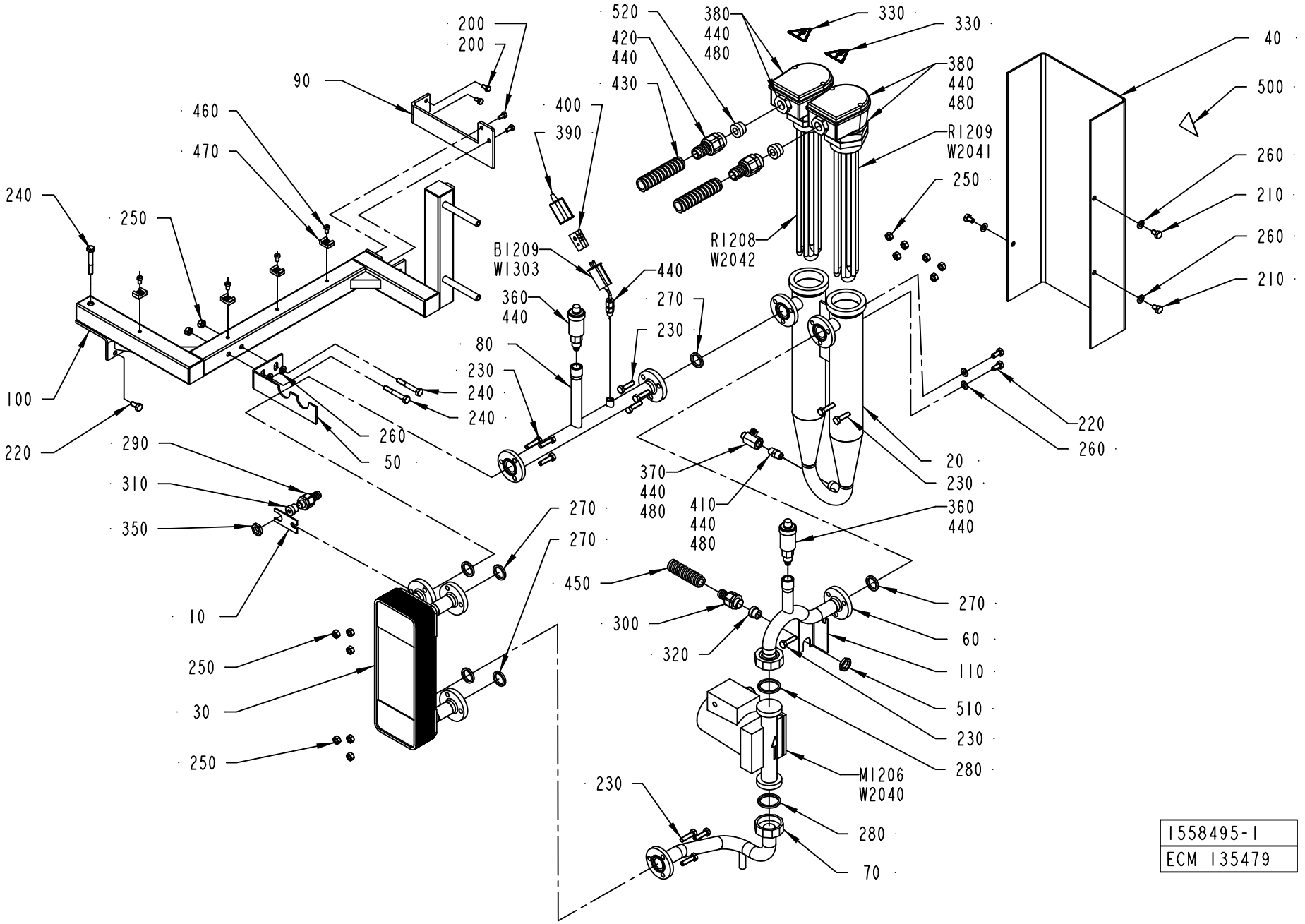

1558495-1
ECM 135479

ECM: 188845 - 20041104
Group number: 1558495-0100
Assembly Drawing: 1558495-1_1_AB

Pos	Part No	UN	Qty	Description	Page No
50HZ					
M1206	90321-0134		1	CIRC. PUMP TMB 40/2 230V50HZ	
60HZ					
M1206	90321-0135		1	CIRC. PUMP TMB 40/2 230V60HZ	
Common Parts					
010	1040970-0000		1	BRACKET	
020	1334507-0000		1	TUBE	
030	1346568-0000		1	HEAT EXCHANGER	
040	2544880-0000		1	PROTECTION	
050	1349608-0000		1	HOLDER	
060	1538049-0000		1	PIPE	
070	1538503-0000		1	PIPE	
080	1538723-0000		1	PIPE	
090	1538724-0000		1	BRACKET	
100	1558496-0000		1	FRAME	
110	1517707-0000		1	BRACKET	
200	312105-0366		4	SCREW M6S ISO 4017 M6X12 A480	
210	312105-0447		3	SCREW M6S ISO 4017 M8X12 A480	
220	312105-0449		3	SCREW M6S ISO 4017 M8X16 A480	
230	312105-0455		12	SCREW M6S ISO 4017 M8X30 A480	
240	312105-0462		3	SCREW M6S ISO 4014 M8X55 A480	
250	312605-0318		14	HEXAGON NUT, M6M M8 A280	
260	315105-0165		7	WASHER BRB 8,4X16 RFR	
270	315229-0103		6	GASKETS, 23,1X30,1X3,7 MM 1" FDA	
280	315229-0104		2	GASKETS, 35,8X42,8X3,7 MM 1"1/2 FD	
290	353243-0001		1	HOSE GLAND W/O INSERT PG9 EXTENDED	
300	353243-0003		1	HOSE GLAND W/O INSERT PG11 EXTENDED	
310	353249-0008		1	INSERT, SINGEL HOLE, EK 152/7	
320	353249-0011		1	INSERT, SINGEL HOLE, EK 153/11	
330	359705-0015		2	WARNING SIGN ISO, RISK OF ELECTRIC SHOCK	
350	90099-0104		1	NUT, PR 15,2 (PG9)	
360	90187-0105		2	PURGING VALVE, G3/8 FOR WATER	
370	90187-0158		1	THROTTLE BALL VALVE G1/4, R1/4	
380	90206-0326		2	JUNCTION BOX FOR 90206-56	
390	90326-0012		1	PROTECTIVE COVER, T31A4618	
400	90326-0020		1	PLUG, FEMALE YELLOW CR-AL	
410	90330-0043		1	NIPPLES, EXT. THREAD. R-207R1/4	
420	90012-0131		2	HOSE GLAND W/O INSERT PG21 NORMAL	
430	90152-0051	M	4	SPIRAL CONDUIT, 25X18, UL 1816	
440	90144-0073		1	TREBOFLON-TAPE W=13MM	
450	90152-0050	M	3.5	SPIRAL CONDUIT, 20X13, UL 1313	
460	312125-0364		4	SCREW ISO 1207 M6X10 A4	
470	352113-0204		4	ANCHOR PLATES FOR STRIPS, TYPE TM3S25-M	
480	90157-0037		1	THREAD SEALANT LOCTITE 542	
500	359705-0007		1	WARNING SIGN ISO, HOT SURFACE	
510	90099-0117		1	NUT, PR 18,6 (PG11)	
520	353249-0013		2	INSERT, SINGEL HOLE, EK 154/13	
B1209	90326-0057		1	THERMOCOUPLE, CR-AL	
R1208	90206-0070		1	HEATING ELEMENT 6000W 380/220V	
	90206-0326		*1*	*JUNCTION BOX FOR 90206-56*	
	90269-0308		*1*	*GASKET 59X68X3 MM*	
R1209	90206-0070		1	HEATING ELEMENT 6000W 380/220V	
	90206-0326		*1*	*JUNCTION BOX FOR 90206-56*	
	90269-0308		*1*	*GASKET 59X68X3 MM*	
W1303	90220-0034	M	5	THERMOCABLE TEX/SITW-20F-KX 2X0,5MM2	
W2040	351150-0412	M	4	CABLE OLFLEX 3X1,5 MM2 LIGHT/GREY	
W2041	351120-0164	M	4	CABLE SIHF 4X1,5MM2 GREEN/YELLOW	
W2042	351120-0164	M	4	CABLE SIHF 4X1,5MM2 GREEN/YELLOW	

Machine Type | Group Description | Used-In | Group Number | Page No

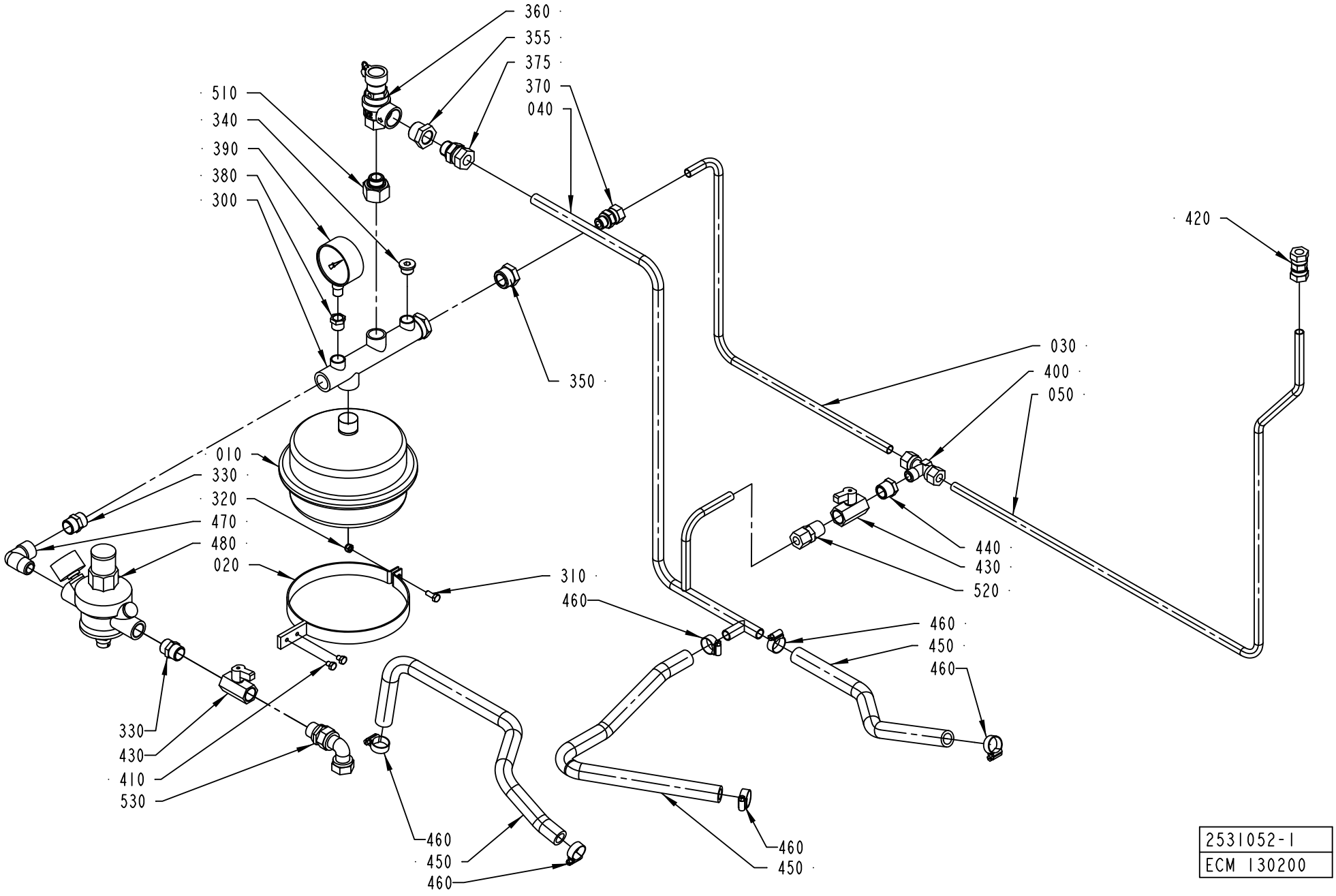
360
355
375
370
040
510
340
390
380
300
420
030
400
050
350
010
330
320
470
480
020
310
460
440
430
520
460
450
460
330
430
410
530
460
450
460
460
450
2531052-1
ECM 130200

ECM: 188846 - 20041104
Group number: 2531052-0100
Assembly Drawing: 2531052-1_1_AB

Pos	Part No	UN	Qty	Description	Page No
-					
010	1511497-0000		1	CONTAINER	
020	1484081-0000		1	BRACKET	
030	1499166-0000		1	PIPE	
040	2611051-0000		1	PIPE	
050	1538502-0000		1	PIPE	
300	90304-0307		1	ATTACHMENT PIPE	
310	312105-0368		1	SCREW M6S ISO 4017 M6X16 A480	
320	312812-0316		1	HEXAGON NUT, NY-LOCK M6 A480	
330	342700-0113		2	NIPPLES,HEXAGON,EXT.G-THREAD G1/2"-G1/2"	
340	342713-0211		1	PLUG, EXT THREAD HEX SOCKET 8638-00-380	
350	342701-0209		1	BUSHING,INT./EXT.G-THREAD G3/4"-G3/8"	
355	342206-0109		1	BUSHING, TAPERED, INT/EXT. THR NO. R211	
360	90458-0200		1	PEROX. SAFETY VALVE, NO. 527-430 1/2X3/4	
370	90030-0187		1	CONN. STR. GA-12-G3/8	
375	90030-0188		1	CONN. STR. GA-15-G1/2	
380	342701-0203		1	BUSHING, INT/EXT. G-THREAD NO. 3/8-1/4	
390	90043-0002		1	PRESSURE GAUGE, 2040 D=63 MM	
400	342741-0209		1	CONN. T-PIPE TE-12-R3/8	
410	312105-0362		2	SCREW M6S ISO 4017 M6X8 A480	
420	90030-0106		1	CONN. PIPE G-12	
430	90187-0062		2	BALL VALVE G1/2, NPBR	
440	90330-0048		1	BUSHING, INT/EXT. THR. R1/2-RP3/8	
450	90166-0087	MM	1500	HOSE 15/23 REINF.PVC TRANSP.	
460	342991-0103		6	HOSE CLIP,WORM DRIVE TYPE (19)-23	
470	90140-0012		1	ELBOW, 90 INT/EXT, 2020-1/2-1/2	
480	90458-0201		1	FLUID AUT. FEEDER, ALINOX 1/2 46.04.00	
490	90144-0073	MM	1	TREBOFLON-TAPE W=13MM	
500	90157-0037	ML	1	THREAD SEALANT LOCTITE 542	
510	90458-0751		1	BUSHING,INT./EXT.G-THREAD G3/4"-G1/2"	
520	90030-0180		1	CONN. STR. GE 12-1/2-14 NPTF	
530	342738-0221		1	ADJUSTABLE ELBOW CONNECTION,EXT 15-G1/2	

Pos	Part No	UN	Qty	Description	Page No

PEROXIDE PIPE

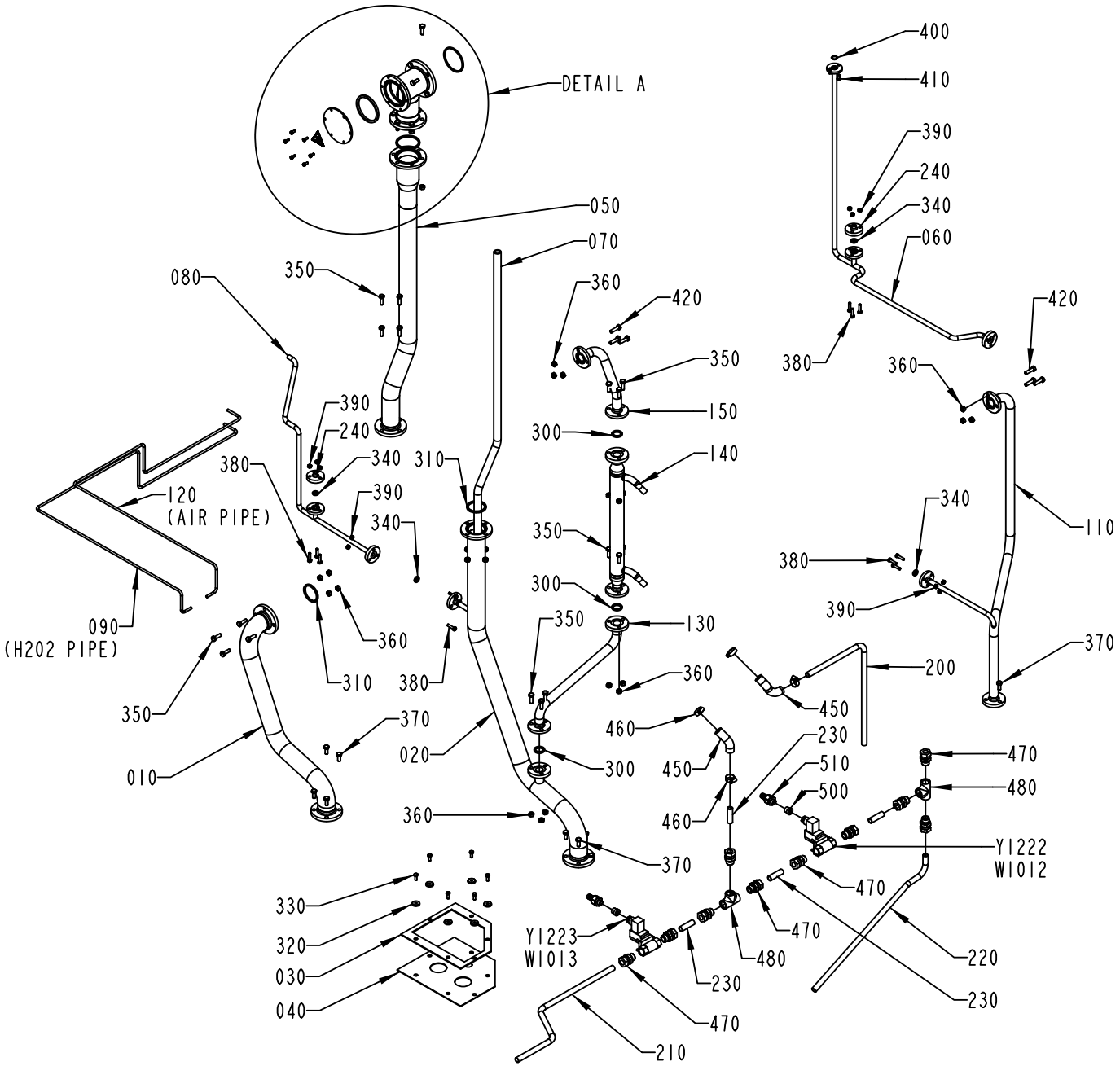

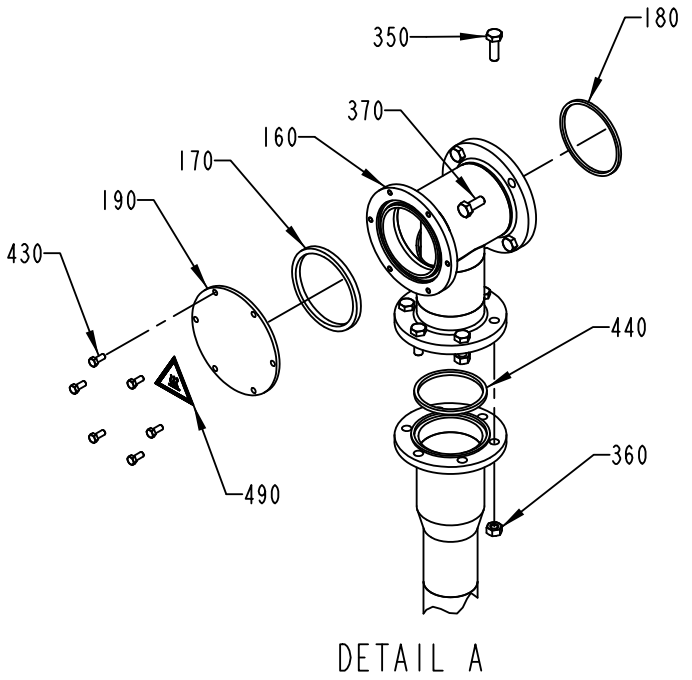

2529484-1
ECM 184086

ECM: 196314 - 20050224
Group number: 2529484-0100
Assembly Drawing: 2529484-1_1_AC

Pos	Part No	UN	Qty	Description	Page No
-					
010	1558842-0000		1	PIPE	
020	1558841-0000		1	PIPE	
030	1038688-0000		1	HOLDER	
040	1255551-0000		1	SEAL CLOTH	
050	1499156-0000		1	PIPE	
060	2529073-0000		1	PIPE	
070	1499726-0000		1	PLASTIC HOSE	
080	2529072-0000		1	PIPE	
090	2563279-0000		1	PIPE	
110	1558840-0000		1	PIPE	
120	2563281-0000		1	PIPE	
130	2509654-0000		1	PIPE	
140	2509656-0000		1	PIPE	
150	2509655-0000		1	PIPE	
160	2708584-0000		1	'CONNECTION PIPE	
170	436781-0000		1	GASKET	
180	1523808-0000		1	GASKET	
190	1558427-0000		1	LID	
200	2519444-0000		1	TUBE	
210	2519441-0000		1	TUBE	
220	2519443-0000		1	TUBE	
230	2519442-0000		4	TUBE	
240	2564107-0000		2	LID	
300	315229-0103		3	GASKETS, 23,1X30,1X3,7 MM 1" FDA	
310	315229-0105		2	GASKETS, 48,5X55,5X3,7 MM 2" FDA	
320	315125-0153		6	WASHER TBRSB 6,4X22X4 A4	
330	312105-0368		6	SCREW M6S ISO 4017 M6X16 A480	
340	315229-0101		4	GASKETS, 10,4X17,4X3,7 MM 1/2" FDA	
350	312105-0453		23	SCREW M6S ISO 4017 M8X25 A480	
360	312605-0318		29	HEXAGON NUT, M6M M8 A280	
370	312105-0451		15	SCREW M6S ISO 4017 M8X20 A480	
380	312105-0372		12	SCREW M6S ISO 4017 M6X25 A480	
390	312605-0316		12	HEXAGON NUT, M6M M6 A280	
400	927421-0003		1	O-RING 13.3X2.4 SILICONE	
410	312105-0366		2	SCREW M6S ISO 4017 M6X12 A480	
420	312105-0455		6	SCREW M6S ISO 4017 M8X30 A480	
430	312105-0327		6	SCREW M6S ISO 4017 M5X12 A480	
440	315229-0106		1	GASKETS, 61,2X68,2X3,7 MM 2"1/2 FD	
450	90166-0087	MM	330	HOSE 15/23 REINF.PVC TRANSP.	
460	342991-0103		4	HOSE CLIP,WORM DRIVE TYPE (19)-23	
470	90030-0188		10	CONN. STR. GA-15-G1/2	
480	90330-0049		2	T-PIPE, INT. THREAD, R-221R1/2	
490	359705-0007		1	WARNING SIGN ISO, HOT SURFACE	
500	353249-0009		2	INSERT, SINGEL HOLE, EK 152/9	
510	353243-0001		2	HOSE GLAND W/O INSERT PG9 EXTENDED	
Y1222	90042-0172		1	SOLENOID VALVE 4023/1005/1032 24VDC	
	90042-0467		*1*	*COIL 24VDC GSR*	
Y1223	90042-0172		1	SOLENOID VALVE 4023/1005/1032 24VDC	
	90042-0467		*1*	*COIL 24VDC GSR*	

Machine Type	Group Description	Used-In	Group Number	Page No

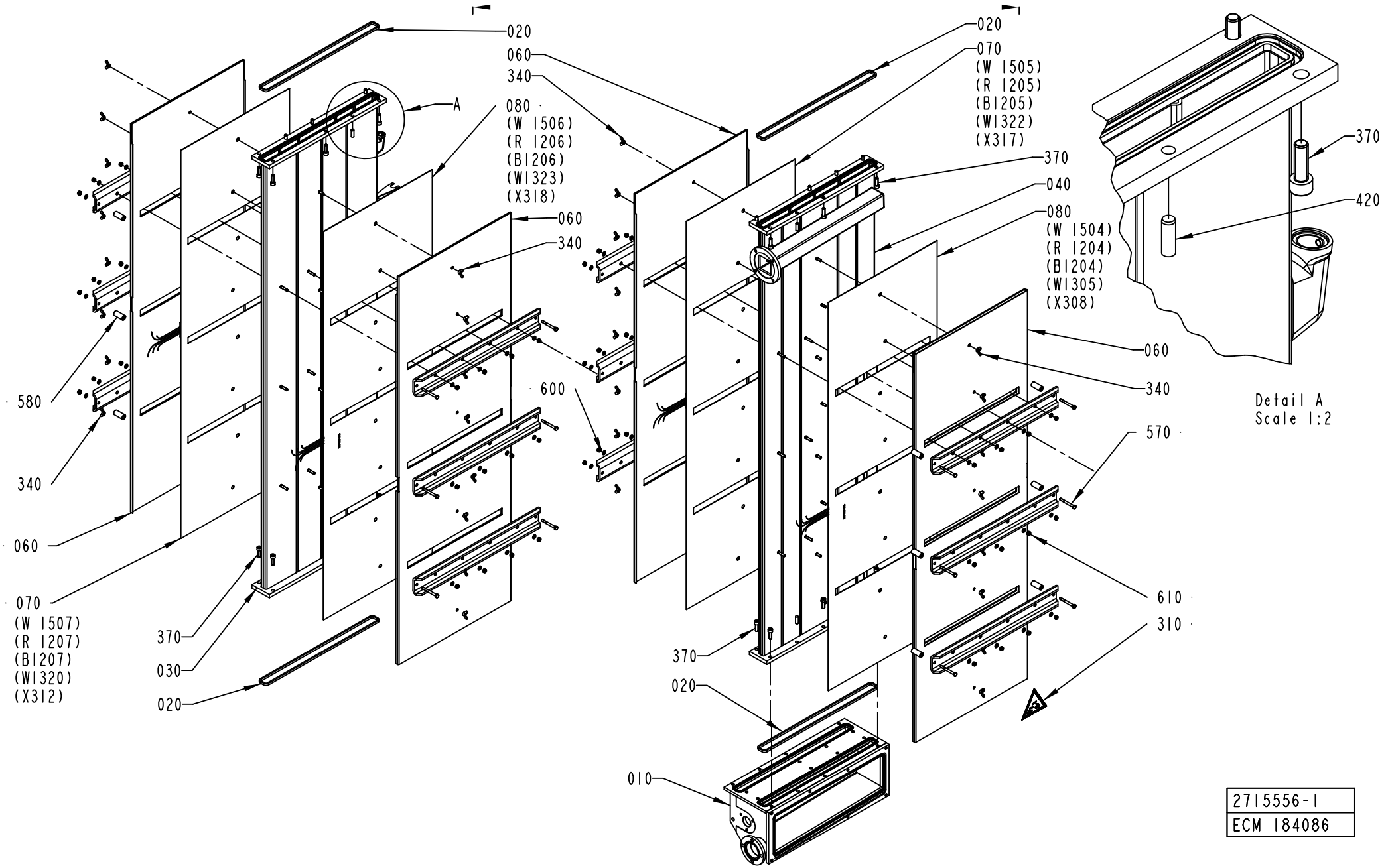

2715556-1
ECM 184086

ECM: 258294 - 20060702
Group number: 2715556-0100
Assembly Drawing: 2715556-1_1_AA

This list covers pages from 1-286 to 1-289

Pos	Part No	UN	Qty	Description	Page No
LIGHTCAP					
040	2802438-0000		1	PEROXIDE CHAMBER	
140	2709224-0000		2	WHEEL	
150	2709223-0000		1	BENDING ROLLER	
STDA7 CAP, NOMOLDEDCAP					
040	2696095-0000		1	PEROXIDE CHAMBER	
140	1539727-0000		2	WHEEL	
150	1490057-0000		1	BENDING ROLLER	
Common Parts					
010	2778562-0000		1	BOTTOM SECTION	
020	1538735-0000		4	GASKET	
030	2696094-0000		1	CHAMBER	
050	1528639-0000		1	GASKET	
060	2528058-0000		4	COVER	
070	2528056-0000		2	RESISTANCE	
080	2528057-0000		2	RESISTANCE	
090	1523805-0000		2	PIN	
100	1511759-0000		32	SPRING	
110	2528059-0000		2	BRACKET	
120	1539729-0000		2	BRACKET	
130	1538742-0000		1	LID	
170	1539726-0000		2	SHAFT	
180	2508315-0000		1	SCREW	
190	1484428-0000		1	PLASTIC PLUG	
300	927421-0004		1	O-RING 15.3X2.4 SILICONE	
310	359705-0004		1	WARNING SIGN ISO, DANGEROUS CHEMICALS	
320	352103-0101		1	CABLE GLAND, ST 9, PR15,2/PG9	
330	315237-0110		1	WASHER,PL.RND.AL.13,5/18,H=1,5	
340	312715-0116		32	WING NUT DIN 315 A2 MVM-K M6	
350	312605-0316		14	HEXAGON NUT, M6M M6 A280	
370	312115-0453		24	SCREW ISO4762 M8X25 A4 80	
380	312105-0370		8	SCREW M6S ISO 4017 M6X20 A480	
390	312115-0329		4	SCREW ISO4762 M5X16 A4 80	
400	312105-0449		4	SCREW M6S ISO 4017 M8X16 A480	
420	311103-1403		8	PARALLEL PIN ISO 2338 8M6X24 A1	
430	311103-0270		4	PARALLEL PIN ISO 2338 4M6X16 A1	
440	312105-0451		4	SCREW M6S ISO 4017 M8X20 A480	
450	90144-0073	MM	1	TREBOFLON-TAPE W=13MM	
460	90326-0053		1	THERMOCOUPLE, 12826-35	
470	90326-0020		1	PLUG, FEMALE YELLOW CR-AL	
480	90326-0012		1	PROTECTIVE COVER, T31A4618	
490	315205-0802		2	O-RING 41,0X1,78 MM	
500	90240-0146		2	FLANGE BUSHING, 15X21X20 MM	
510	90099-0104		1	NUT, PR 15,2 (PG9)	
520	90044-0084		2	LIMIT SW. 14 CE1-4	
530	567070-0012		1	ELECTRODE	
540	312605-0312		2	HEXAGON NUT, M6M M4 A280	
550	315105-0136		3	WASHER BRB 4,3X8 RFR	
560	312115-0370		4	SCREW ISO4762 M6X20 A4 80	
570	312105-0381		12	SCREW M6S ISO 4014 M6X55 A480	
580	2685380-0000		12	SPACER	
590	2696097-0000		12	PLATE	
600	315105-0153		60	WASHER BRB 6,4X12 RFR	
610	312812-0316		48	HEXAGON NUT, NY-LOCK M6 A480	

Machine Type | Group Description | Used-In | Group Number | Page No

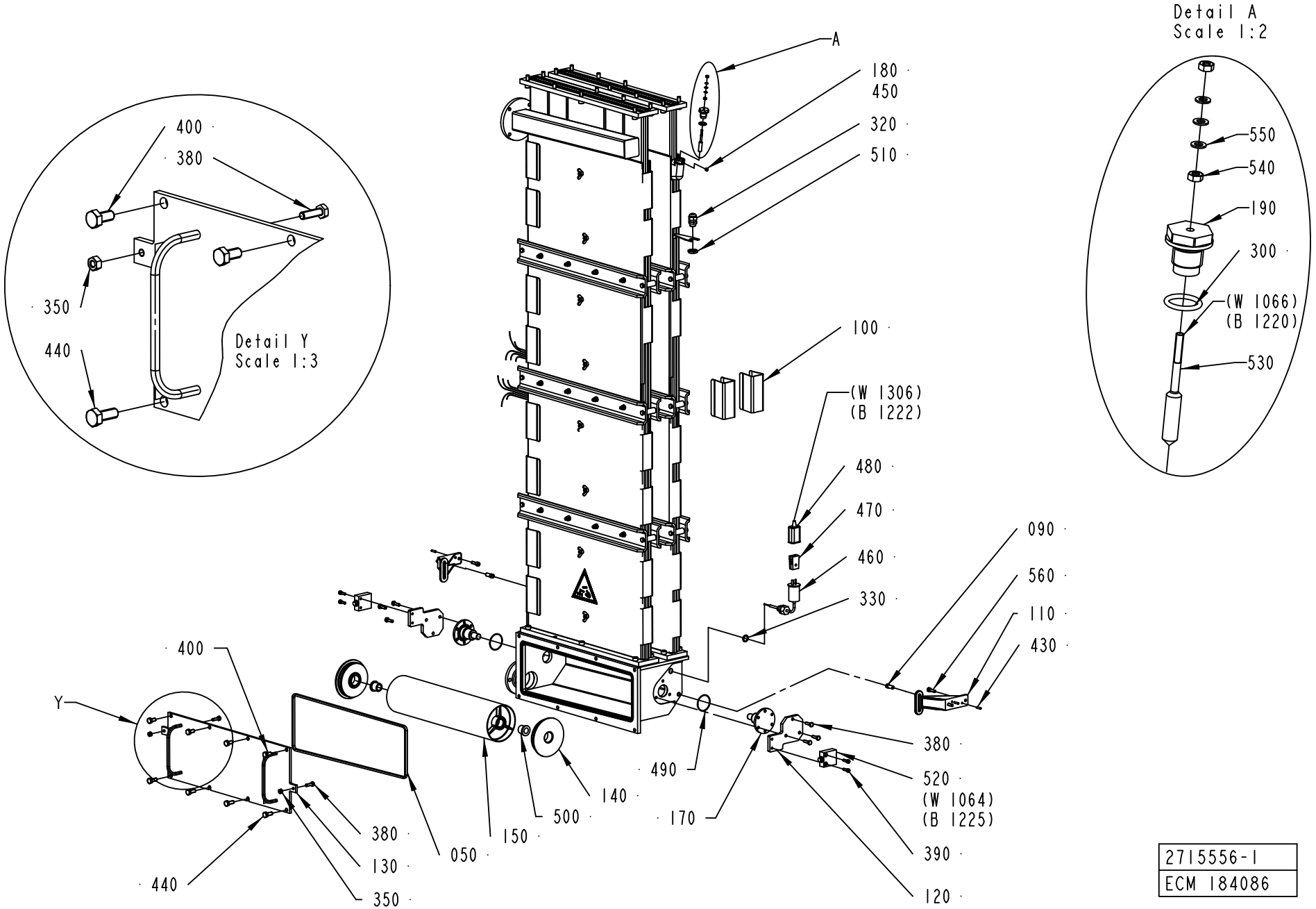

2715556-1
ECM 184086

ECM: 258294 - 20060702
Group number: 2715556-0100
Assembly Drawing: 2715556-1_2_AA

This list covers pages from 1-286 to 1-289

Pos	Part No	UN	Qty	Description	Page No
LIGHTCAP					
040	2802438-0000		1	PEROXIDE CHAMBER	
140	2709224-0000		2	WHEEL	
150	2709223-0000		1	BENDING ROLLER	
STDA7 CAP, NOMOLDEDCAP					
040	2696095-0000		1	PEROXIDE CHAMBER	
140	1539727-0000		2	WHEEL	
150	1490057-0000		1	BENDING ROLLER	
Common Parts					
010	2778562-0000		1	BOTTOM SECTION	
020	1538735-0000		4	GASKET	
030	2696094-0000		1	CHAMBER	
050	1528639-0000		1	GASKET	
060	2528058-0000		4	COVER	
070	2528056-0000		2	RESISTANCE	
080	2528057-0000		2	RESISTANCE	
090	1523805-0000		2	PIN	
100	1511759-0000		32	SPRING	
110	2528059-0000		2	BRACKET	
120	1539729-0000		2	BRACKET	
130	1538742-0000		1	LID	
170	1539726-0000		2	SHAFT	
180	2508315-0000		1	SCREW	
190	1484428-0000		1	PLASTIC PLUG	
300	927421-0004		1	O-RING 15.3X2.4 SILICONE	
310	359705-0004		1	WARNING SIGN ISO, DANGEROUS CHEMICALS	
320	352103-0101		1	CABLE GLAND, ST 9, PR15,2/PG9	
330	315237-0110		1	WASHER,PL.RND.AL.13,5/18,H=1,5	
340	312715-0116		32	WING NUT DIN 315 A2 MVM-K M6	
350	312605-0316		14	HEXAGON NUT, M6M M6 A280	
370	312115-0453		24	SCREW ISO4762 M8X25 A4 80	
380	312105-0370		8	SCREW M6S ISO 4017 M6X20 A480	
390	312115-0329		4	SCREW ISO4762 M5X16 A4 80	
400	312105-0449		4	SCREW M6S ISO 4017 M8X16 A480	
420	311103-1403		8	PARALLEL PIN ISO 2338 8M6X24 A1	
430	311103-0270		4	PARALLEL PIN ISO 2338 4M6X16 A1	
440	312105-0451		4	SCREW M6S ISO 4017 M8X20 A480	
450	90144-0073	MM	1	TREBOFLON-TAPE W=13MM	
460	90326-0053		1	THERMOCOUPLE, 12826-35	
470	90326-0020		1	PLUG, FEMALE YELLOW CR-AL	
480	90326-0012		1	PROTECTIVE COVER, T31A4618	
490	315205-0802		2	O-RING 41,0X1,78 MM	
500	90240-0146		2	FLANGE BUSHING, 15X21X20 MM	
510	90099-0104		1	NUT, PR 15,2 (PG9)	
520	90044-0084		2	LIMIT SW. 14 CE1-4	
530	567070-0012		1	ELECTRODE	
540	312605-0312		2	HEXAGON NUT, M6M M4 A280	
550	315105-0136		3	WASHER BRB 4,3X8 RFR	
560	312115-0370		4	SCREW ISO4762 M6X20 A4 80	
570	312105-0381		12	SCREW M6S ISO 4014 M6X55 A480	
580	2685380-0000		12	SPACER	
590	2696097-0000		12	PLATE	
600	315105-0153		60	WASHER BRB 6,4X12 RFR	
610	312812-0316		48	HEXAGON NUT, NY-LOCK M6 A480	

Machine Type | Group Description | Used-In | Group Number | Page No

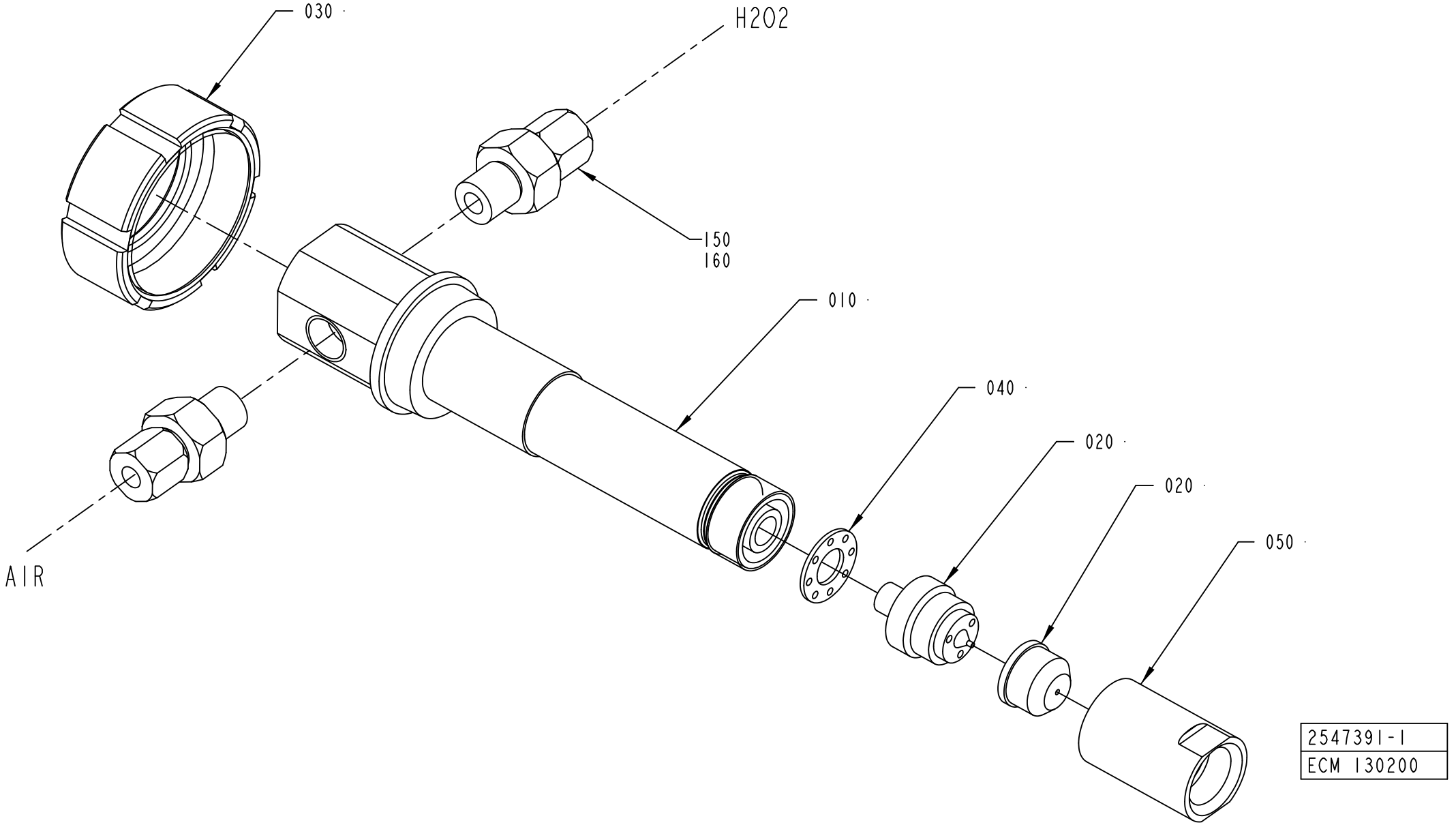
030
H2O2
150
160
010
040
020
020
050
AIR
2547391-1
ECM 130200

ECM: 188838 - 20041104
Group number: 2547391-0100
Assembly Drawing: 2547391-1_1_AB

Pos	Part No	UN	Qty	Description	Page No
-					
010	2563760-0000		1	EXTENSION	
020	2563759-0000		1	SPRAY SYSTEM	
030	1512405-0000		1	NUT	
040	2563762-0000		1	SPACER	
050	2563761-0000		1	NUT	
150	90030-0202		2	CONN. STR., 6-G1/4, EXT. THREAD	
160	90144-0007		1	TAPE	

Pos	Part No	UN	Qty	Description	Page No

CONNECTION BOX

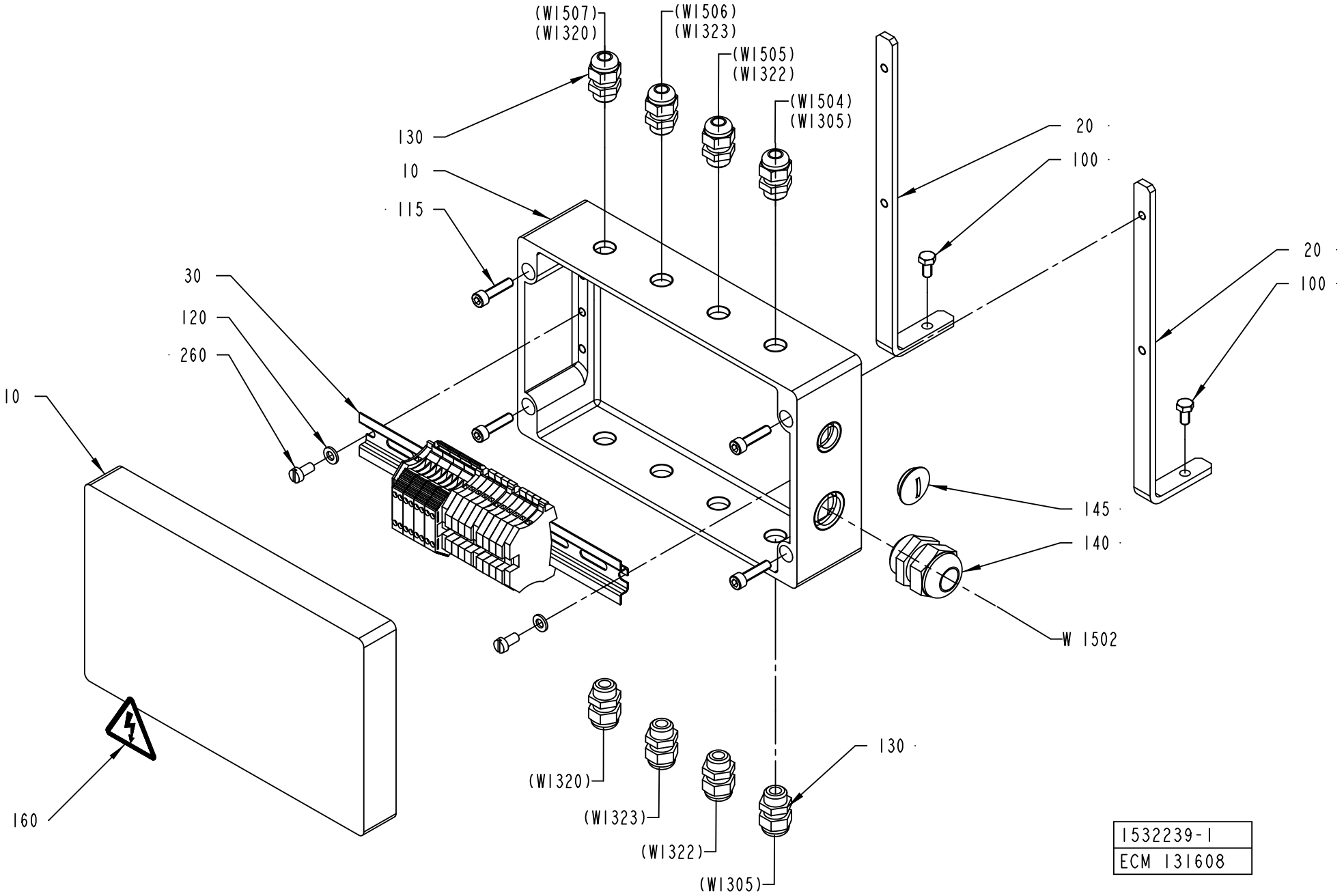

ECM: 189100 - 20041104
Group number: 1532239-0100
Assembly Drawing: 1532239-1_1_AB

Pos	Part No	UN	Qty	Description	Page No
-					
010	1532236-0000		1	CONNECTION BOX	
020	1532240-0000		2	BRACKET	
030	1532238-0100		1	TERMINAL BLOCK	**1-295**
100	312105-0366		2	SCREW M6S ISO 4017 M6X12 A480	
115	312115-0372		4	SCREW ISO4762 M6X25 A4 80	
120	315105-0153		2	WASHER BRB 6,4X12 RFR	
130	352103-0101		8	CABLE GLAND, ST 9, PR15,2/PG9	
140	352103-0115		1	CABLE GLAND, STR 21, PR28,3/PG21	
145	90002-0004		1	BLANK-OFF PLUG, PR 22,5 SKINDICHT-BLK16	
160	359705-0015		1	WARNING SIGN ISO, RISK OF ELECTRIC SHOCK	
260	312125-0366		2	SCREW ISO 1207 M6X12 A4	
W1502	351150-0196	M	7	CABLE OLFLEX 7X4 MM2 LIGHT/GREY	

Pos	Part No	UN	Qty	Description	Page No

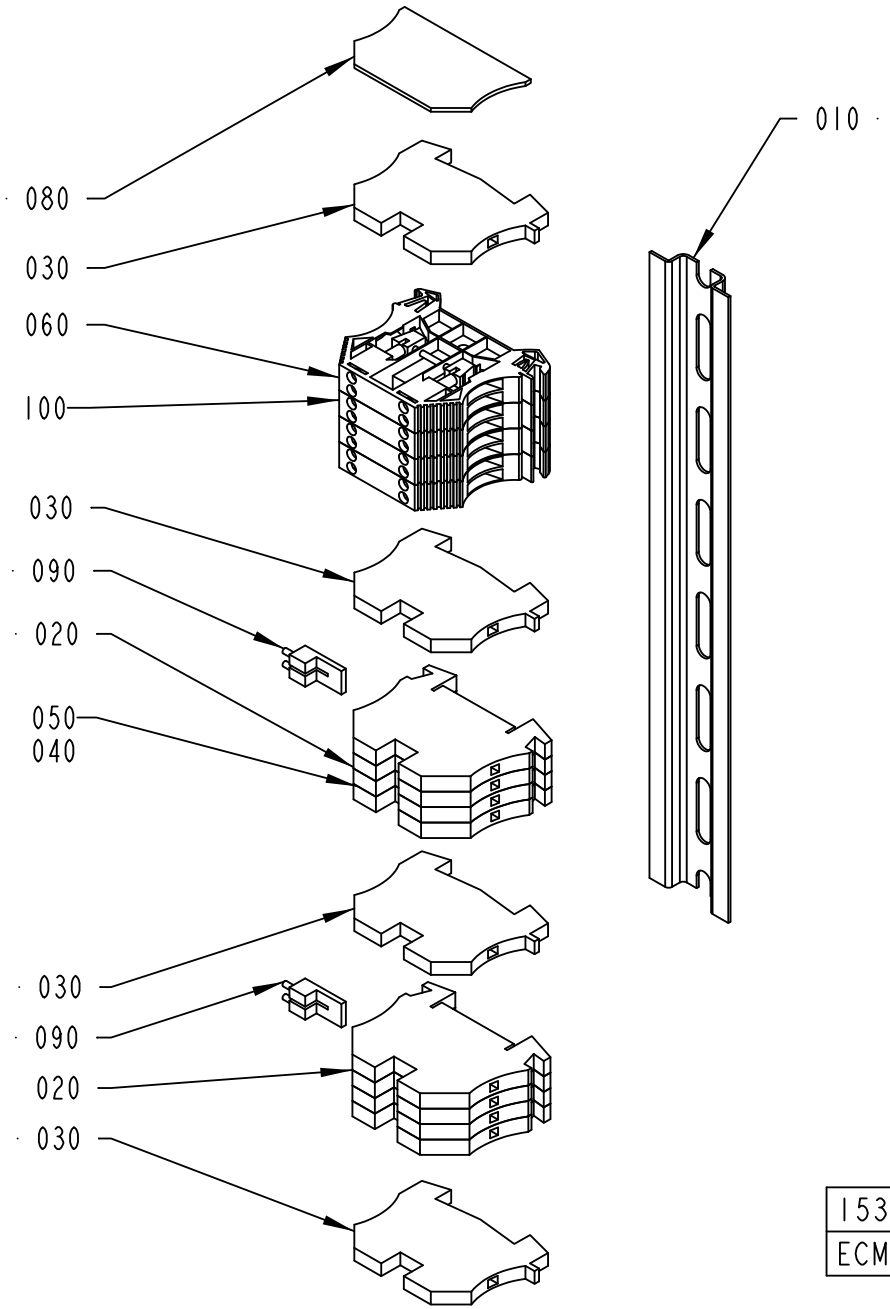

1532238-1
ECM 112985

ECM: 189101 - 20041104
Group number: 1532238-0100
Assembly Drawing: 1532238-1_1_AA

Pos	Part No	UN	Qty	Description	Page No
-					
010	1532237-0000		1	RAIL	
020	353021-0213		8	FEED THROUGH TERMINAL, 10201.0	
030	353024-0204		4	EARTH TERMINAL WPE 2,5	
040	359011-0834		1	SET OF SIGNS 6-GW(EARTH)	
050	359011-0821		1	SET OF SIGNS 6-FW 1-50	
060	90459-1742		4	FEED THROUGH TERMINAL, 1024100	
080	353032-0004		1	END PLATE WAP 2,5-10 BEIGE	
090	353034-0030		1	BRIDGE CONNECTOR WQV 2,5/10, 10544.6	
100	359011-0823		1	SET OF SIGNS 6-FW 101-150	
110	359011-0832		1	SET OF SIGNS 6-GW (+)	
120	359011-0833		1	SET OF SIGNS 6-GW (-)	

Pos	Part No	UN	Qty	Description	Page No

FRAME SECTION,UPPER

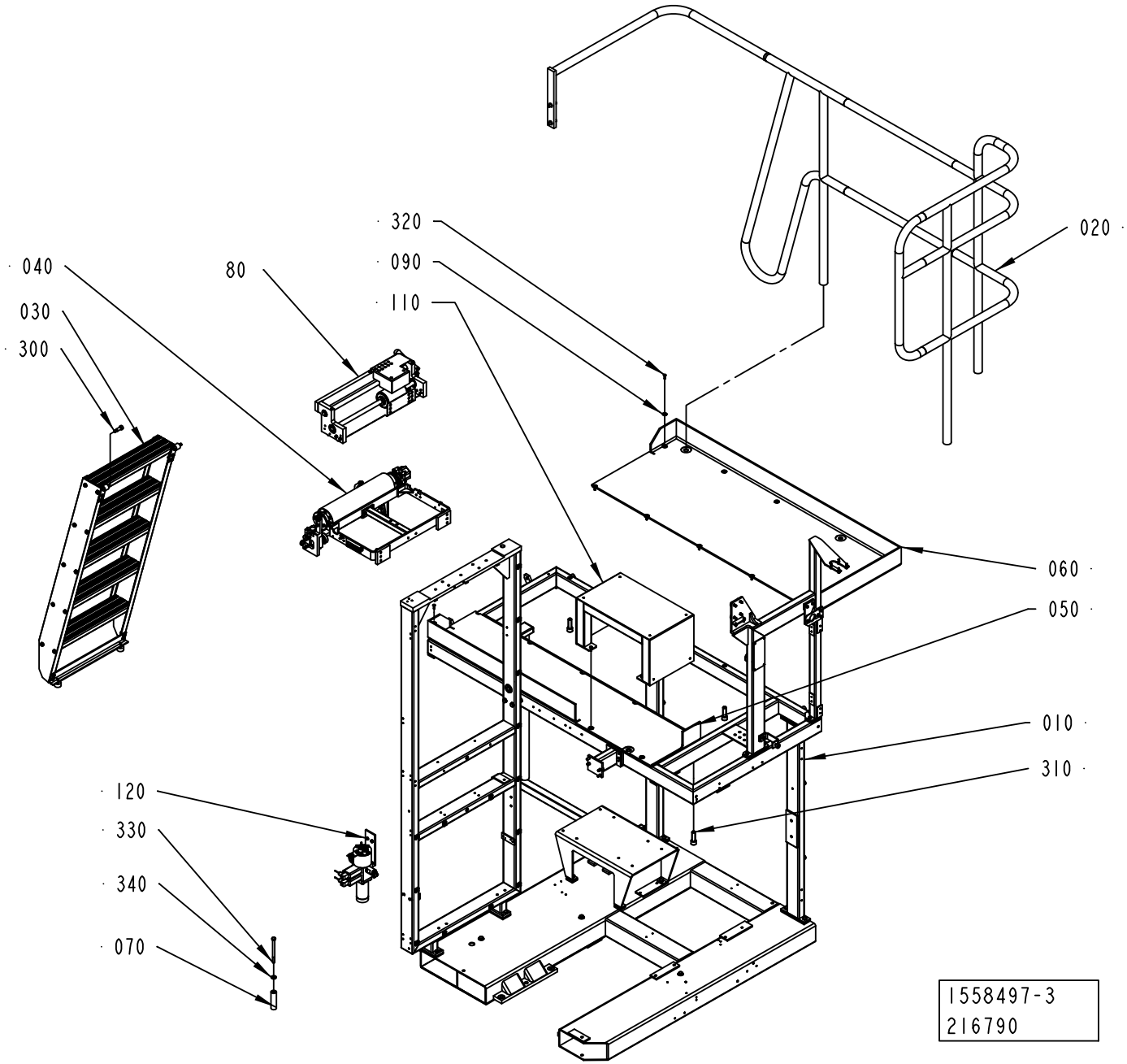

ECM: 236726 - 20060101
Group number: 1558497-0200
Assembly Drawing: 1558497-3_1_AB

Pos	Part No	UN	Qty	Description	Page No
-					
010	1549980-0200		1	FRAME	**1-299, 1-301**
020	2529991-0100		1	RAILING	**1-303**
030	1095862-0100		1	LADDER	**1-305**
040	2552125-0100		1	BENDING ROLLER	**1-307, 1-309**
050	1558438-0000		1	CHECKER PLATE	
060	1558439-0000		1	CHECKER PLATE	
070	1511504-0000		3	SPACER	
090	2541673-0000		13	WASHER	
110	2530188-0100		1	STEP	**1-317**
120	2529485-0200		1	SPRAY SYSTEM	**1-319**
300	312180-0534		2	SCREW ISO7379 H12X25	
310	312115-0630		3	SCREW ISO4762 M16X50 A4 80	
320	312156-0370		13	SCREW EN 10642 MF6S M6X20 A470	
330	312105-0517		4	SCREW M6S ISO 4014 M10X130 A480	
340	315115-0173		4	WASHER PLAIN, TBRB 10,5/22 H=4	

Pos	Part No	UN	Qty	Description	Page No

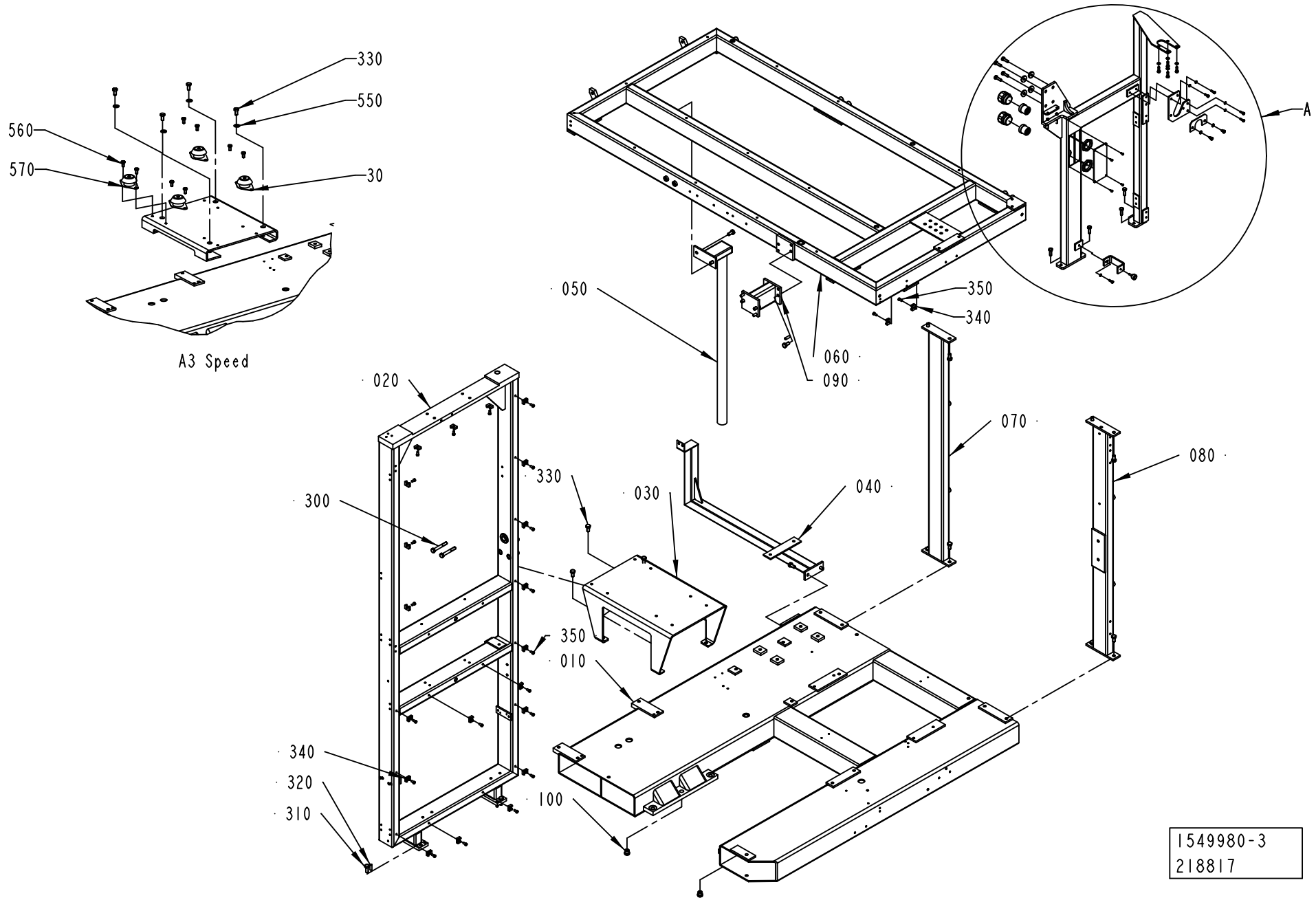
330
550
560
570
30
A3 Speed
A
050
350
340
060
090
070
080
020
330
030
040
300
350
010
340
320
310
100
1549980-3
218817

ECM: 218817 - 20050701
Group number: 1549980-0200
Assembly Drawing: 1549980-3_1_AB

This list covers pages from 1-298 to 1-301

Pos	Part No	UN	Qty	Description	Page No
A3/FLEX					
030	1498122-0000		1	BRACKET	
Common Parts					
010	1498121-0000		1	BASE PLATE	
020	1558437-0000		1	FRAME	
040	1498782-0000		1	TANK BRACKET	
050	1484067-0000		1	BRACKET	
060	2696031-0000		1	FRAME UPPER	
070	1498787-0000		1	BRACKET	
080	2696104-0000		1	BRACKET	
090	1558440-0000		1	BRACKET	
100	1490046-0000		2	PIN	
110	2696035-0000		1	COVER	
120	2696034-0000		1	HOLDER	
130	2696036-0000		1	HOLDER	
140	2696032-0000		1	FRAME	
150	2545658-0000		1	PLATE	
300	312105-0505		2	SCREW M6S ISO 4014 M10X70 A480	
310	312105-0493		4	SCREW M6S ISO 4017 M10X25 A480	
320	311103-0403		6	PARALLEL PIN ISO 2338 8M6X25 A1	
330	312105-0491		20	SCREW M6S ISO 4017 M10X20 A480	
340	352113-0204		22	ANCHOR PLATES FOR STRIPS, TYPE TM3S25-M	
350	312125-0366		22	SCREW ISO 1207 M6X12 A4	
360	90051-0035		1	KNOB, EXTERNAL THREAD. NO. 8308-1135	
370	90099-0120		2	NUT, PR 37 (PG29)	
380	312105-0329		5	SCREW M6S ISO 4017 M5X16 A480	
400	312105-0453		8	SCREW M6S ISO 4017 M8X25 A480	
420	312125-0287		4	SCREW ISO 1207 M4X8 A4	
430	312311-0329		2	SCREW ISO4028 M5X16 FZB	
440	312605-0314		2	HEXAGON NUT, M6M M5 A280	
460	315105-0146		5	WASHER BRB 5,3X10 RFR	
490	315125-0165		4	WASHER TBRSB 8,4X26X5 A4	
500	353240-0006		2	GLAND W/O INSERT PG29 NORMAL	
510	353249-0079		2	INSERT, MULTI HOLE, E155M8X5,5	
520	312105-0370		4	SCREW M6S ISO 4017 M6X20 A480	
530	312105-0364		2	SCREW M6S ISO 4017 M6X10 A480	
540	315105-0153		6	WASHER BRB 6,4X12 RFR	

Pos	Part No	UN	Qty	Description	Page No

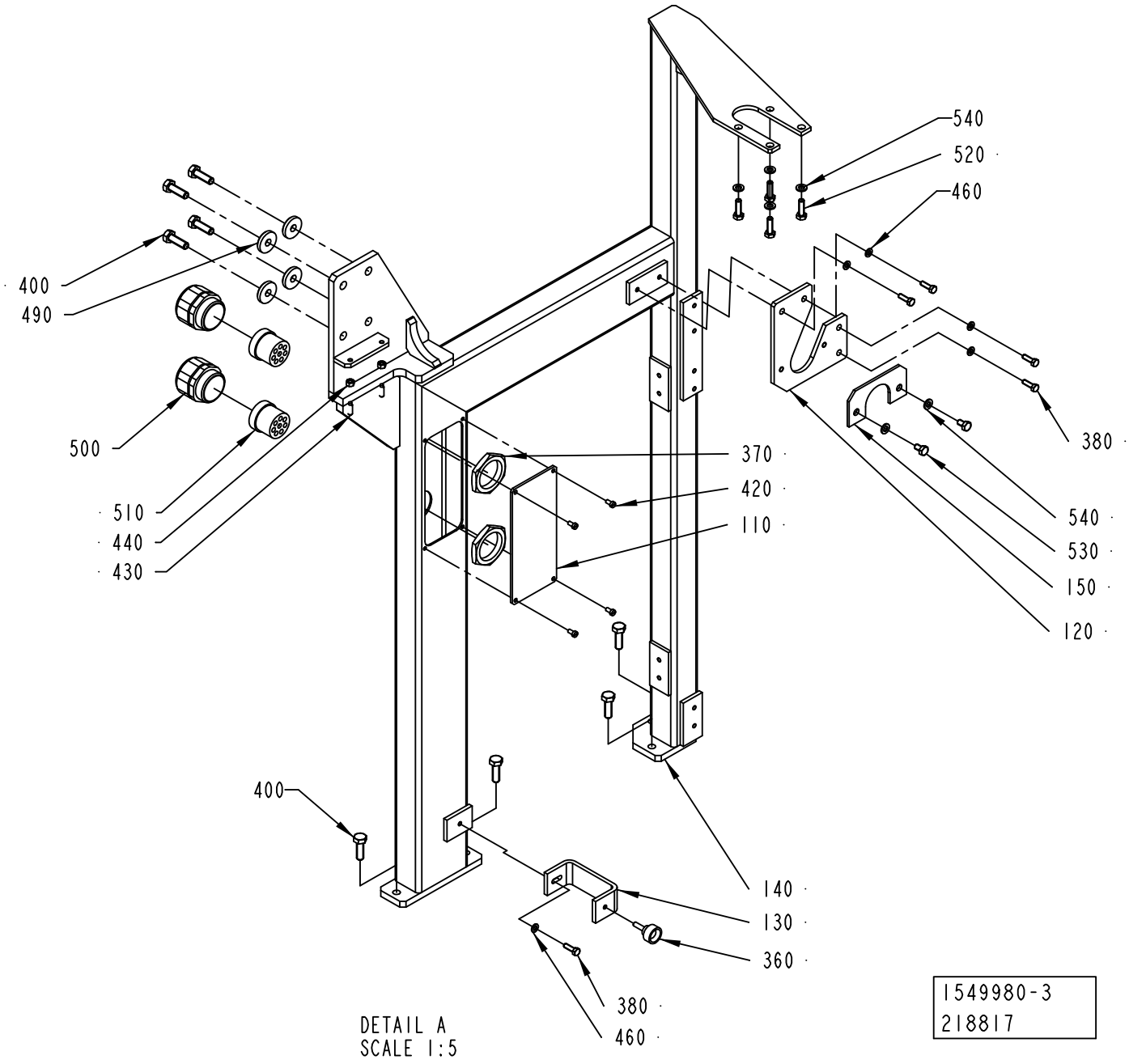
540
520
460
400
490
500
510
440
430
370
420
110
380
540
530
150
120
400
140
130
360
380
460
DETAIL A
SCALE 1:5
1549980-3
218817

ECM: 218817 - 20050701
Group number: 1549980-0200
Assembly Drawing: 1549980-3_2_AB

This list covers pages from 1-298 to 1-301

Pos	Part No	UN	Qty	Description	Page No
A3/FLEX					
030	1498122-0000		1	BRACKET	
Common Parts					
010	1498121-0000		1	BASE PLATE	
020	1558437-0000		1	FRAME	
040	1498782-0000		1	TANK BRACKET	
050	1484067-0000		1	BRACKET	
060	2696031-0000		1	FRAME UPPER	
070	1498787-0000		1	BRACKET	
080	2696104-0000		1	BRACKET	
090	1558440-0000		1	BRACKET	
100	1490046-0000		2	PIN	
110	2696035-0000		1	COVER	
120	2696034-0000		1	HOLDER	
130	2696036-0000		1	HOLDER	
140	2696032-0000		1	FRAME	
150	2545658-0000		1	PLATE	
300	312105-0505		2	SCREW M6S ISO 4014 M10X70 A480	
310	312105-0493		4	SCREW M6S ISO 4017 M10X25 A480	
320	311103-0403		6	PARALLEL PIN ISO 2338 8M6X25 A1	
330	312105-0491		20	SCREW M6S ISO 4017 M10X20 A480	
340	352113-0204		22	ANCHOR PLATES FOR STRIPS, TYPE TM3S25-M	
350	312125-0366		22	SCREW ISO 1207 M6X12 A4	
360	90051-0035		1	KNOB, EXTERNAL THREAD. NO. 8308-1135	
370	90099-0120		2	NUT, PR 37 (PG29)	
380	312105-0329		5	SCREW M6S ISO 4017 M5X16 A480	
400	312105-0453		8	SCREW M6S ISO 4017 M8X25 A480	
420	312125-0287		4	SCREW ISO 1207 M4X8 A4	
430	312311-0329		2	SCREW ISO4028 M5X16 FZB	
440	312605-0314		2	HEXAGON NUT, M6M M5 A280	
460	315105-0146		5	WASHER BRB 5,3X10 RFR	
490	315125-0165		4	WASHER TBRSB 8,4X26X5 A4	
500	353240-0006		2	GLAND W/O INSERT PG29 NORMAL	
510	353249-0079		2	INSERT, MULTI HOLE, E155M8X5,5	
520	312105-0370		4	SCREW M6S ISO 4017 M6X20 A480	
530	312105-0364		2	SCREW M6S ISO 4017 M6X10 A480	
540	315105-0153		6	WASHER BRB 6,4X12 RFR	

Pos	Part No	UN	Qty	Description	Page No

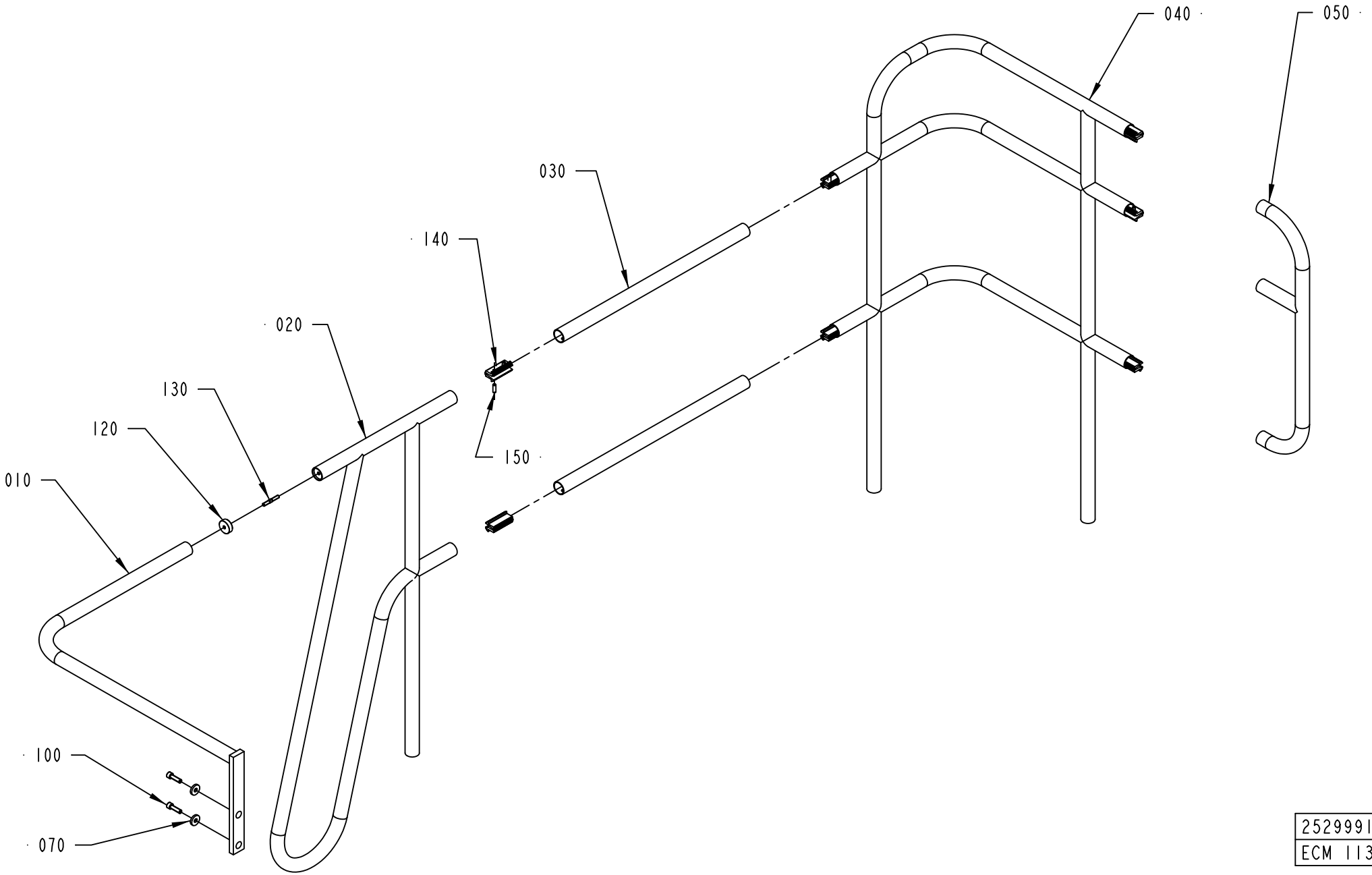

2529991-1
ECM 113014

ECM: 189104 - 20041104
Group number: 2529991-0100
Assembly Drawing: 2529991-1_1_AA

Pos	Part No	UN	Qty	Description	Page No
-					
010	1499735-0000		1	RAILING	
020	1129741-0000		1	RAILING	
030	1037044-0000		2	RAILING	
040	2530096-0000		1	RAILING	
050	2529926-0000		1	RAILING	
100	312115-0497		2	SCREW ISO4762 M10X35 A4 80	
110	1254410-0000		2	WASHER	
120	578640-0000		1	CLAMPING RING	
130	751485-0000		1	SCREW	
140	1035654-0000		7	CONNECTION	
150	312318-0453		14	SCREW ISO4029 M8X25 A4	

Pos	Part No	UN	Qty	Description	Page No

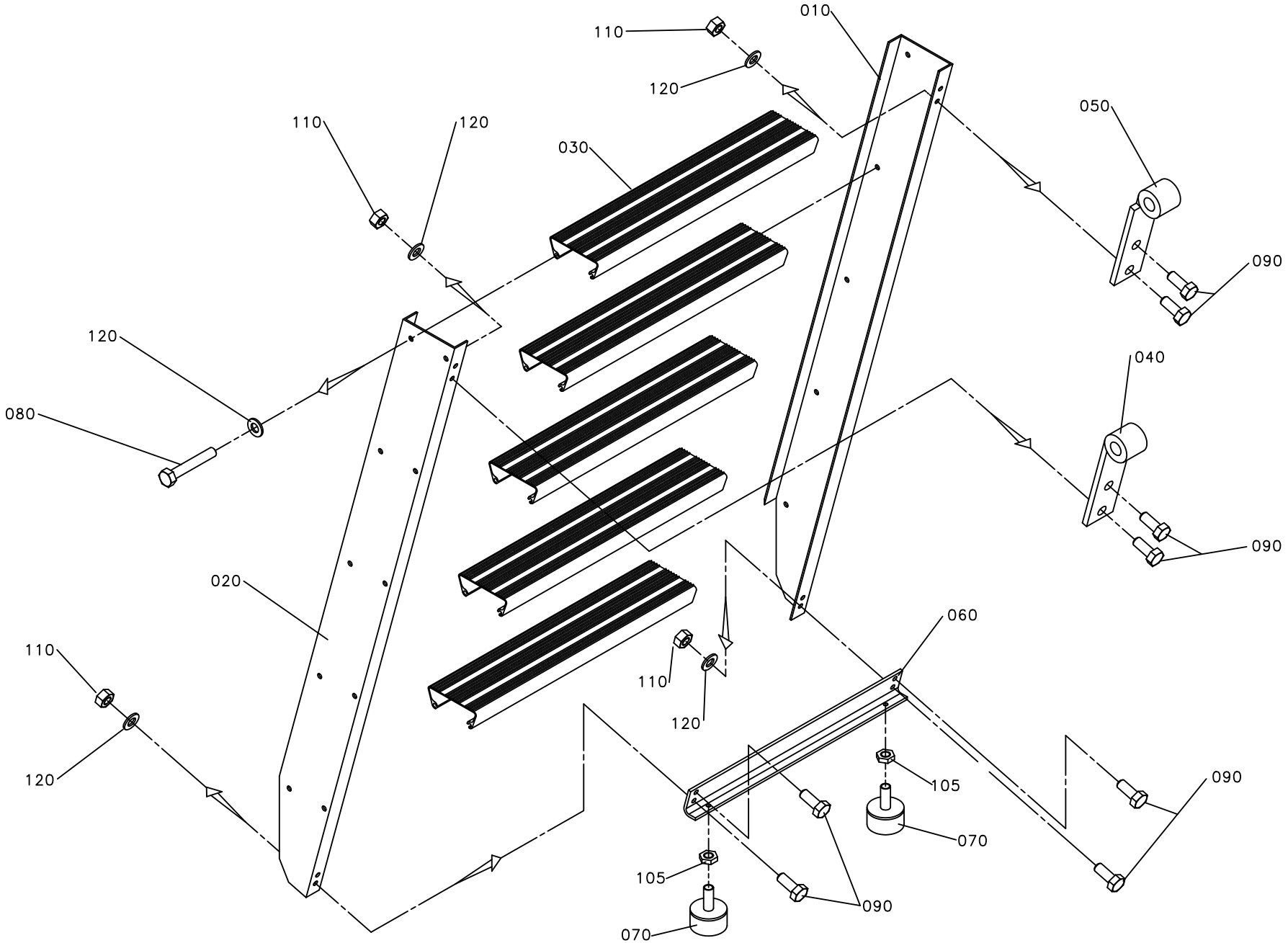
010
110
120
050
110
120
030
090
120
080
040
090
020
060
110
120
110
120
105
090
070
105
090
070

ECM: 189105 - 20041104
Group number: 1095862-0100
Assembly Drawing: 1095862-1_1_AA

Pos	Part No	UN	Qty	Description	Page No
-					
010	1036939-0000		1	SIDE PIECE	
020	1036940-0000		1	SIDE PIECE	
030	1129643-0000		5	STAIR	
040	1036963-0000		1	HOOK HOLDER	
050	1036965-0000		1	HOOK HOLDER	
060	1129644-0000		2	BRACKET	
070	90347-0004		2	VIBRATION DAMPER D=30 TH=M8 H=17 H2=21MM	
080	312104-0461		20	SCREW M6S M8X50H FZB	
090	312105-0451		8	SCREW M6S ISO 4017 M8X20 A480	
105	312625-0318		2	HEXAGON THIN NUT, EN 24035 ML6M M8 A4	
110	312605-0318		8	HEXAGON NUT, M6M M8 A280	
120	315101-0165		28	WASHER PLAIN, BRB, 8,4/16 H=1,5	

Pos	Part No	UN	Qty	Description	Page No

BENDING ROLLER

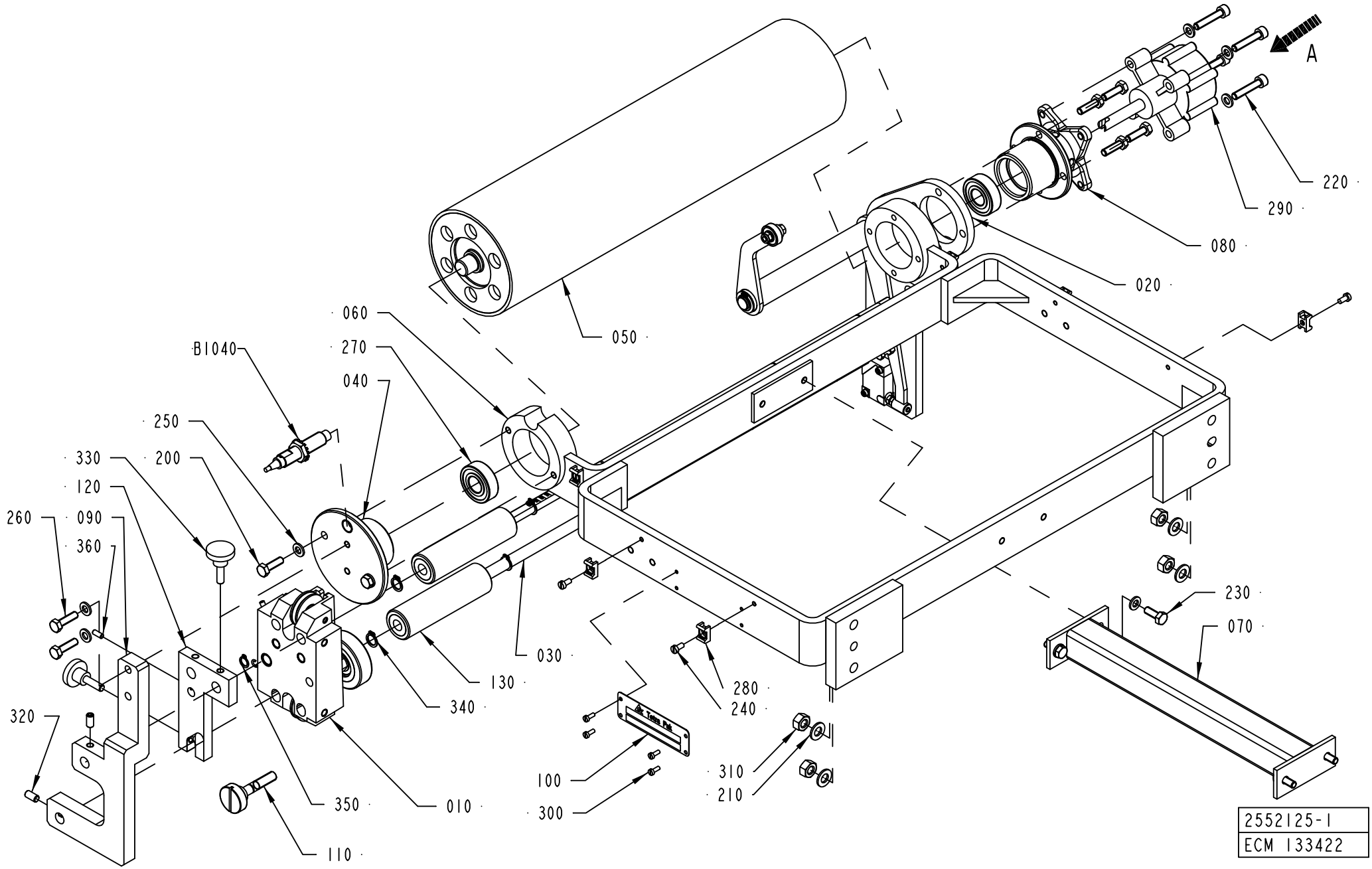

ECM: 276682 - 20060929
Group number: 2552125-0100
Assembly Drawing: 2552125-1_1_AB

This list covers pages from 1-306 to 1-309

Pos	Part No	UN	Qty	Description	Page No
A3/FLEX DIMC/FLEX (See drawing on page: 1-308)					
040	1558352-0000		1	FLANGE	
050	2532908-0000		1	ROLLER	
270	321313-0102		2	BALL BEARING, 15X35X11 MM	
A3/FLEX TBA 2000S NODIMC, A3/FLEX TBA 1890S NODIMC (See drawing on page: 1-306)					
040	1558352-0000		1	FLANGE	
050	2662639-0000		1	ROLLER	
270	321313-0102		2	BALL BEARING, 15X35X11 MM	
A3/FLEX TBA 0200S NODIMC, A3/FLEX TBA 1000SQ NODIMC, A3/FLEX TBA 1000S NODIMC, A3/FLEX TBA 1000B NODIMC, A3/FLEX TBA 0500B NODIMC, A3/FLEX TPA 1000SQ NODIMC, A3/FLEX TBA 1500S NODIMC, A3/FLEX TBA 0200B NODIMC, A3/FLEX TBA 0250B NODIMC, A3/FLEX TBA 0330S NODIMC, A3/FLEX TPA 0330SQ NODIMC, A3/FLEX TPA 0500SQ NODIMC, A3/FLEX TBA 0250S NODIMC, A3/FLEX TBA 0200M NODIMC, A3/FLEX TBA 0500S NODIMC, A3/FLEX TPA 0200SQ NODIMC, A3/FLEX TPA 0250SQ NODIMC, A3/FLEX TPA 0750SQ NODIMC, A3/FLEX TBA 0200SQ NODIMC, A3/FLEX TBA 0250SQ NODIMC (See drawing on page: 1-306)					
040	1558352-0000		1	FLANGE	
050	2532911-0000		1	ROLLER	
270	321313-0102		2	BALL BEARING, 15X35X11 MM	
Common Parts					
010	2601483-0100		1	PAPER GUIDE	**1-311**
020	1558356-0100		1	SPLICE DETECTOR	**1-313, 1-315**
030	2547566-0000		2	ROD	
060	2547425-0000		1	BRACKET	
070	2552124-0000		1	BRACKET	
080	2528110-0000		1	HOUSING	
090	2547568-0000		1	PLATE	
100	979548-0000		1	MACHINE PLATE	
110	1317713-0000		1	SHAFT	
120	2547565-0000		1	HOLDER	
130	2551075-0000		2	ROLLER	
200	312105-0370		6	SCREW M6S ISO 4017 M6X20 A480	
210	315105-0165		4	WASHER BRB 8,4X16 RFR	
220	312115-0374		4	SCREW ISO4762 M6X30 A4 80	
230	312105-0368		4	SCREW M6S ISO 4017 M6X16 A480	
240	312125-0287		6	SCREW ISO 1207 M4X8 A4	
250	315105-0153		12	WASHER BRB 6,4X12 RFR	
260	312105-0371		2	SCREW M6S ISO 4017 M6X22 A480	
280	352113-0205		6	ANCHOR PLATES FOR STRIPS, TYPE TM2S8-C10	
290	90347-0054		1	ROTARY DASHPOT, S-CRD-P277	
300	312125-0222		4	SCREW ISO 1207 M3X8 A4	
310	312605-0318		4	HEXAGON NUT, M6M M8 A280	
320	312318-0366		2	SCREW ISO4029 M6X12 A4	
330	90051-0049		2	KNOB, ADJUST.HI.EXT.THREAD, NO 8324-3755	
340	90141-0016		4	RETAINING RING FOR SHAFT DIN 471 10 A2	
350	315755-0108		1	RETAINING RING SHAFT DIN 6799 6 A2	
360	312318-0289		1	SCREW ISO4029 M4X10 A4	
390	312105-0455		4	SCREW M6S ISO 4017 M8X30 A480	
B1040	90458-0672		1	PROXIMITY SENSOR E2E2-X5MB1-5M	

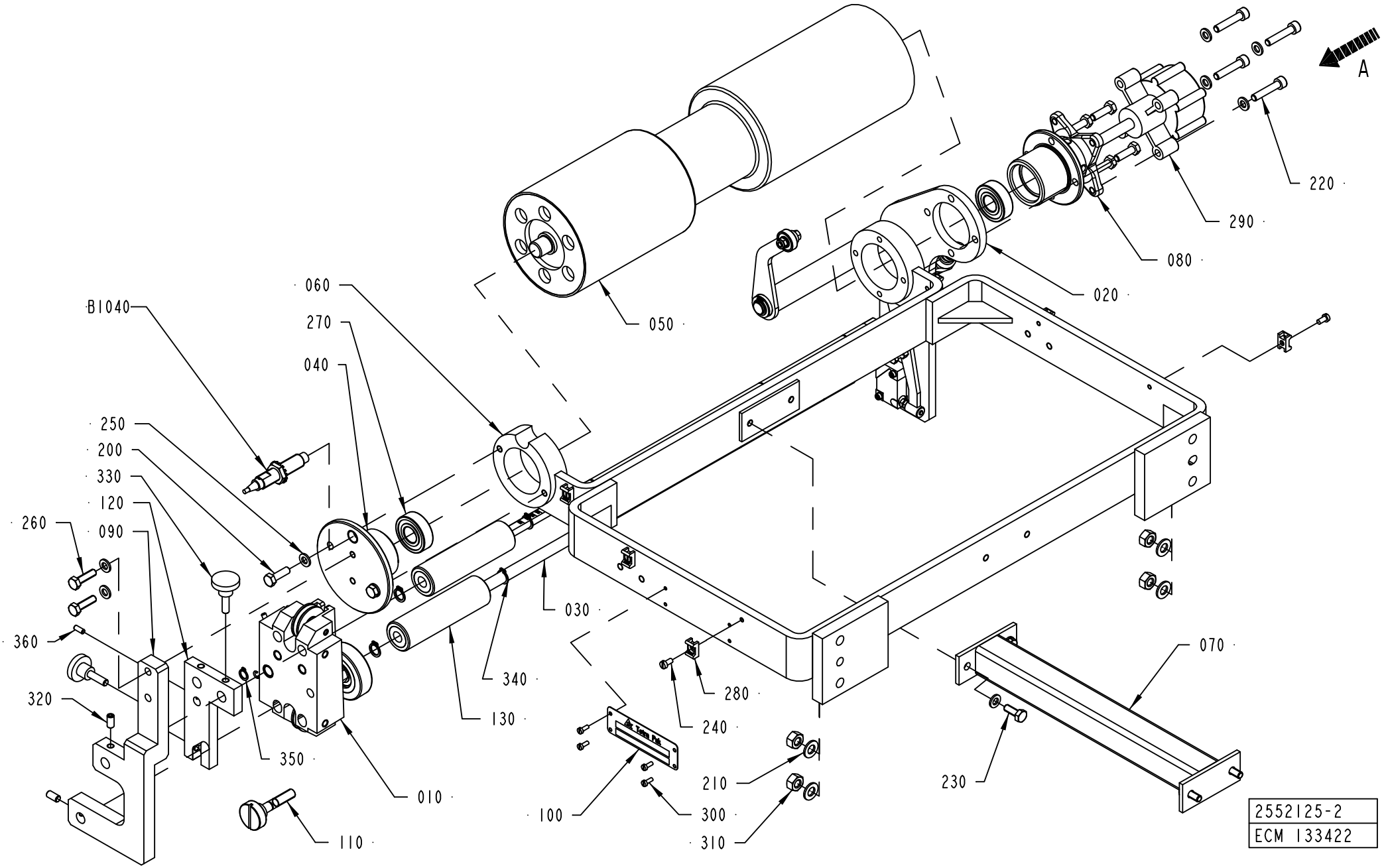
A
B1040
060
270
040
250
200
330
120
090
260
360
320
050
020
080
290
220
070
030
340
130
280
240
350
010
110
100
210
300
310
230
2552125-2
ECM 133422

ECM: 276682 - 20060929
Group number: 2552125-0100
Assembly Drawing: 2552125-2_1_AB

This list covers pages from 1-306 to 1-309

Pos	Part No	UN	Qty	Description	Page No
A3/FLEX DIMC/FLEX (See drawing on page: 1-308)					
040	1558352-0000		1	FLANGE	
050	2532908-0000		1	ROLLER	
270	321313-0102		2	BALL BEARING, 15X35X11 MM	
A3/FLEX TBA 2000S NODIMC, A3/FLEX TBA 1890S NODIMC (See drawing on page: 1-306)					
040	1558352-0000		1	FLANGE	
050	2662639-0000		1	ROLLER	
270	321313-0102		2	BALL BEARING, 15X35X11 MM	
A3/FLEX TBA 0200S NODIMC, A3/FLEX TBA 1000SQ NODIMC, A3/FLEX TBA 1000S NODIMC, A3/FLEX TBA 1000B NODIMC, A3/FLEX TBA 0500B NODIMC, A3/FLEX TPA 1000SQ NODIMC, A3/FLEX TBA 1500S NODIMC, A3/FLEX TBA 0200B NODIMC, A3/FLEX TBA 0250B NODIMC, A3/FLEX TBA 0330S NODIMC, A3/FLEX TPA 0330SQ NODIMC, A3/FLEX TPA 0500SQ NODIMC, A3/FLEX TBA 0250S NODIMC, A3/FLEX TBA 0200M NODIMC, A3/FLEX TBA 0500S NODIMC, A3/FLEX TPA 0200SQ NODIMC, A3/FLEX TPA 0250SQ NODIMC, A3/FLEX TPA 0750SQ NODIMC, A3/FLEX TBA 0200SQ NODIMC, A3/FLEX TBA 0250SQ NODIMC (See drawing on page: 1-306)					
040	1558352-0000		1	FLANGE	
050	2532911-0000		1	ROLLER	
270	321313-0102		2	BALL BEARING, 15X35X11 MM	
Common Parts					
010	2601483-0100		1	PAPER GUIDE	**1-311**
020	1558356-0100		1	SPLICE DETECTOR	**1-313, 1-315**
030	2547566-0000		2	ROD	
060	2547425-0000		1	BRACKET	
070	2552124-0000		1	BRACKET	
080	2528110-0000		1	HOUSING	
090	2547568-0000		1	PLATE	
100	979548-0000		1	MACHINE PLATE	
110	1317713-0000		1	SHAFT	
120	2547565-0000		1	HOLDER	
130	2551075-0000		2	ROLLER	
200	312105-0370		6	SCREW M6S ISO 4017 M6X20 A480	
210	315105-0165		4	WASHER BRB 8,4X16 RFR	
220	312115-0374		4	SCREW ISO4762 M6X30 A4 80	
230	312105-0368		4	SCREW M6S ISO 4017 M6X16 A480	
240	312125-0287		6	SCREW ISO 1207 M4X8 A4	
250	315105-0153		12	WASHER BRB 6,4X12 RFR	
260	312105-0371		2	SCREW M6S ISO 4017 M6X22 A480	
280	352113-0205		6	ANCHOR PLATES FOR STRIPS, TYPE TM2S8-C10	
290	90347-0054		1	ROTARY DASHPOT, S-CRD-P277	
300	312125-0222		4	SCREW ISO 1207 M3X8 A4	
310	312605-0318		4	HEXAGON NUT, M6M M8 A280	
320	312318-0366		2	SCREW ISO4029 M6X12 A4	
330	90051-0049		2	KNOB, ADJUST.HI.EXT.THREAD, NO 8324-3755	
340	90141-0016		4	RETAINING RING FOR SHAFT DIN 471 10 A2	
350	315755-0108		1	RETAINING RING SHAFT DIN 6799 6 A2	
360	312318-0289		1	SCREW ISO4029 M4X10 A4	
390	312105-0455		4	SCREW M6S ISO 4017 M8X30 A480	
B1040	90458-0672		1	PROXIMITY SENSOR E2E2-X5MB1-5M	

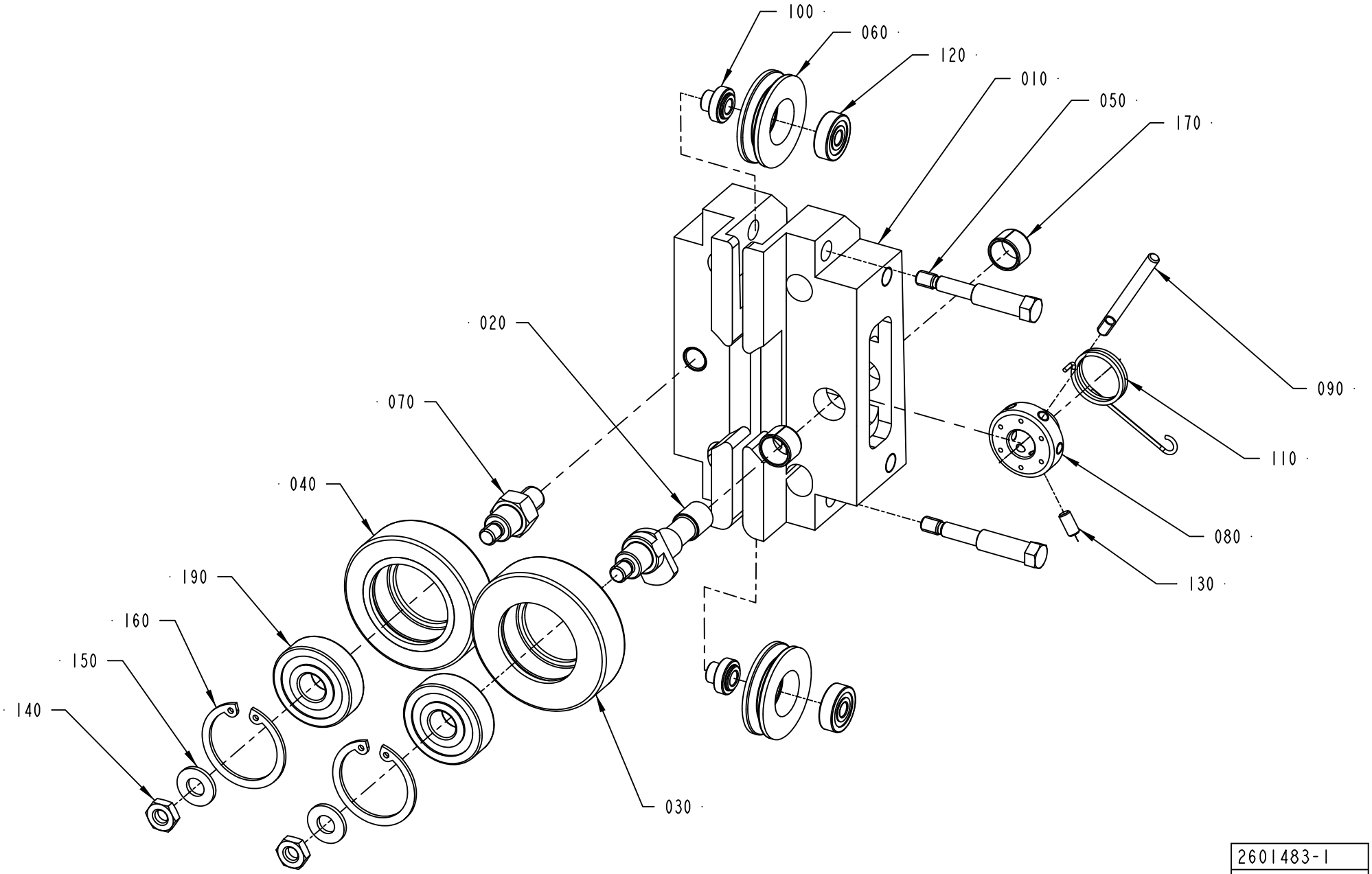

2601483-1
ECM 122050

ECM: 189106 - 20041104
Group number: 2601483-0100
Assembly Drawing: 2601483-1_1_AA

Pos	Part No	UN	Qty	Description	Page No
-					
010	2533670-0000		1	SUPPORT	
020	2503436-0000		1	SHAFT	
030	2594126-0000		1	GUIDE ROLLER	
040	1036623-0000		1	GUIDE ROLLER	
050	2533671-0000		2	SCREW	
060	2533673-0000		2	ROLLER	
070	1558254-0000		1	SHAFT	
080	2594125-0000		1	SLEEVE	
090	2503438-0000		1	LEVER	
100	2533672-0000		2	SHAFT	
110	2591782-0000		1	SPRING	
120	90214-0037		2	BALL BEARING, 5X16X5 MM	
130	312318-0287		1	SCREW ISO4029 M4X8 A4	
140	312625-0316		2	HEXAGON THIN NUT, EN 24035 ML6M M6 A4	
150	315105-0156		2	WASHER BRB 6,7X14 RFR	
160	315753-0122		2	RETAINING RING FOR BORE DIN 472 30 A2	
170	321141-0138		2	BEARING BUSH W/O FLANGE, 10X12X8 MM	
190	321313-0100		2	BALL BEARING, 10X30X9 MM	

Pos	Part No	UN	Qty	Description	Page No

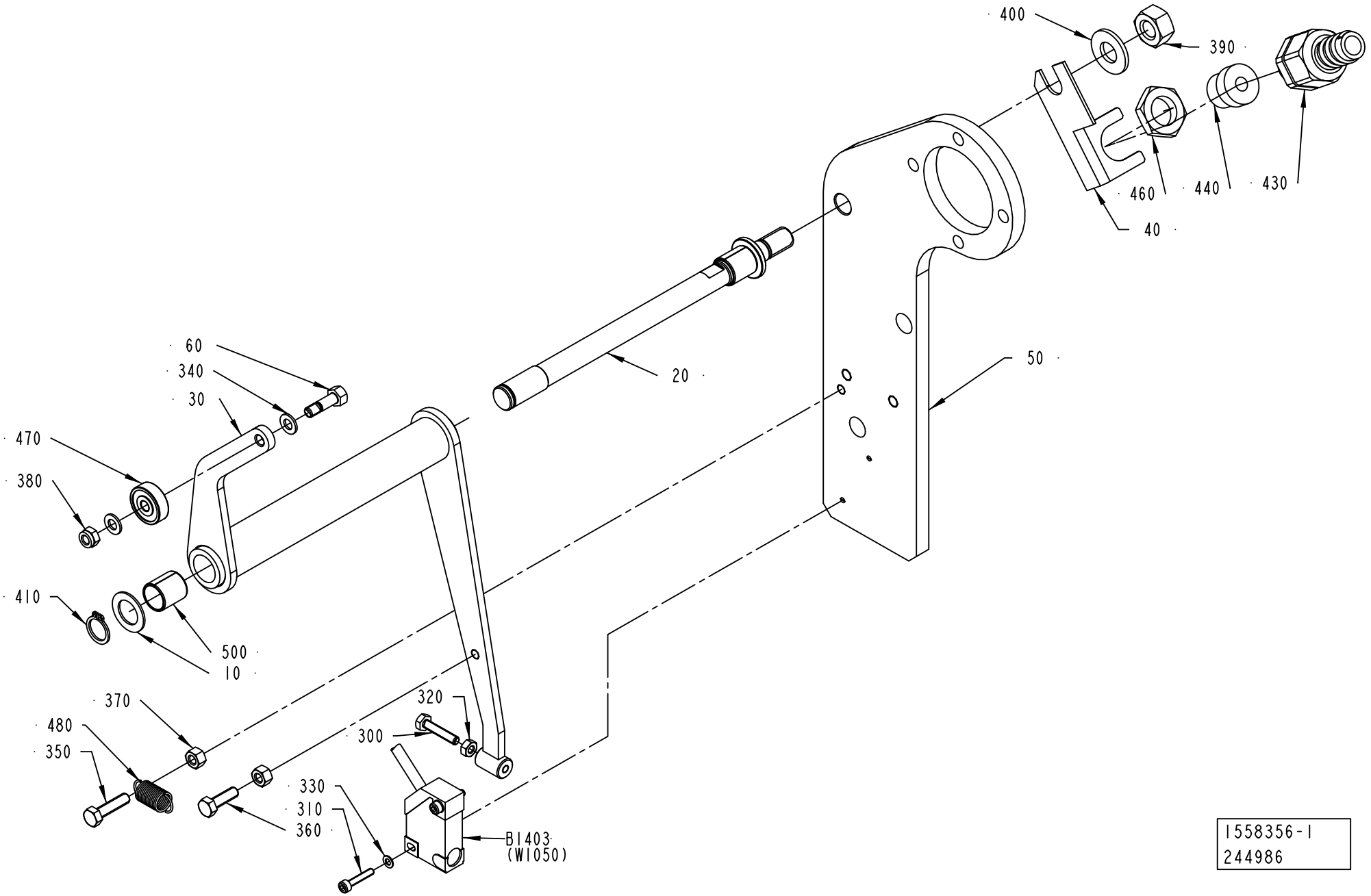
400
390
460
440
430
40
20
50
60
340
30
470
380
410
500
10
370
480
350
320
300
330
310
360
B1403
(W1050)
1558356-1
244986

ECM: 271750 - 20060728
Group number: 1558356-0100
Assembly Drawing: 1558356-1_1_AB

This list covers pages from 1-312 to 1-315

Pos	Part No	UN	Qty	Description	Page No
A3/FLEX TBA 0200B, A3/FLEX TBA 0250B, A3/FLEX TBA 0330S (See drawing on page: 1-312)					
020	2707506-0000		1	SHAFT	
030	2690377-0000		1	BRACKET	
060	2528135-0000		1	SHAFT	
340	315105-0146		2	WASHER BRB 5,3X10 RFR	
470	90214-0138		1	BALL BEARING, 5X19X6 MM	
480	90335-0089		1	TENSION SPRING 41490, 0,9X10X23	
A3/FLEX TBA 0500B, A3/FLEX TBA 1000B, A3/FLEX TBA 1000S, A3/FLEX TBA 1000SQ, A3/FLEX TPA 1000SQ, A3/FLEX TBA 0200S, A3/FLEX TBA 1500S, A3/FLEX TPA 0330SQ, A3/FLEX TPA 0500SQ, A3/FLEX TBA 0200M, A3/FLEX TBA 0250S, A3/FLEX TBA 0500S, A3/FLEX TPA 0200SQ QC, A3/FLEX TPA 0250SQ QC, A3/FLEX TBA 0200SQ, A3/FLEX TBA 0250SQ (See drawing on page: 1-312)					
020	2528128-0000		1	SHAFT	
030	2528127-0000		1	BRACKET	
060	2528135-0000		1	SHAFT	
340	315105-0146		2	WASHER BRB 5,3X10 RFR	
470	90214-0138		1	BALL BEARING, 5X19X6 MM	
480	90335-0089		1	TENSION SPRING 41490, 0,9X10X23	
A3/FLEX TBA 1890S, A3/FLEX TBA 2000S (See drawing on page: 1-314)					
020	2528128-0000		1	SHAFT	
030	2528127-0000		1	BRACKET	
060	2721434-0000		1	SHAFT	
340	315105-0146		4	WASHER BRB 5,3X10 RFR	
470	90214-0138		2	BALL BEARING, 5X19X6 MM	
480	90459-5581		1	TENSION SPRING 1,2X23X8,5	
Common Parts					
010	266737-0000		1	WASHER	
040	1036610-0000		1	BRACKET	
050	2528105-0000		1	PLATE	
300	312105-0295		1	SCREW M6S ISO 4017 M4X20 A470	
310	312115-0228		2	SCREW ISO4762 M3X16 A4 80	
320	312605-0312		1	HEXAGON NUT, M6M M4 A280	
330	315105-0124		2	WASHER BRB 3,2X6 RFR	
350	312105-0331		1	SCREW M6S ISO 4017 M5X20 A480	
360	312105-0329		1	SCREW M6S ISO 4017 M5X16 A480	
370	312605-0314		2	HEXAGON NUT, M6M M5 A280	
380	312812-0314		1	HEXAGON NUT, NY-LOCK M5 A480	
390	312605-0320		1	HEXAGON NUT, M6M M10 A280	
400	315105-0173		1	WASHER BRB 10,5X22 RFR	
410	315751-0109		1	RETAINING RING FOR SHAFT DIN 471 12 A2	
430	353243-0001		1	HOSE GLAND W/O INSERT PG9 EXTENDED	
440	353249-0008		1	INSERT, SINGEL HOLE, EK 152/7	
460	90099-0104		1	NUT, PR 15,2 (PG9)	
500	321141-0183		2	BEARING BUSH W/O FLANGE, 12X14X15 MM	
B1403	90044-0194		1	PROX.SW. IN5329/IN3002-BPKG(EX90044-104)	

Machine Type	Group Description	Used-In	Group Number	Page No

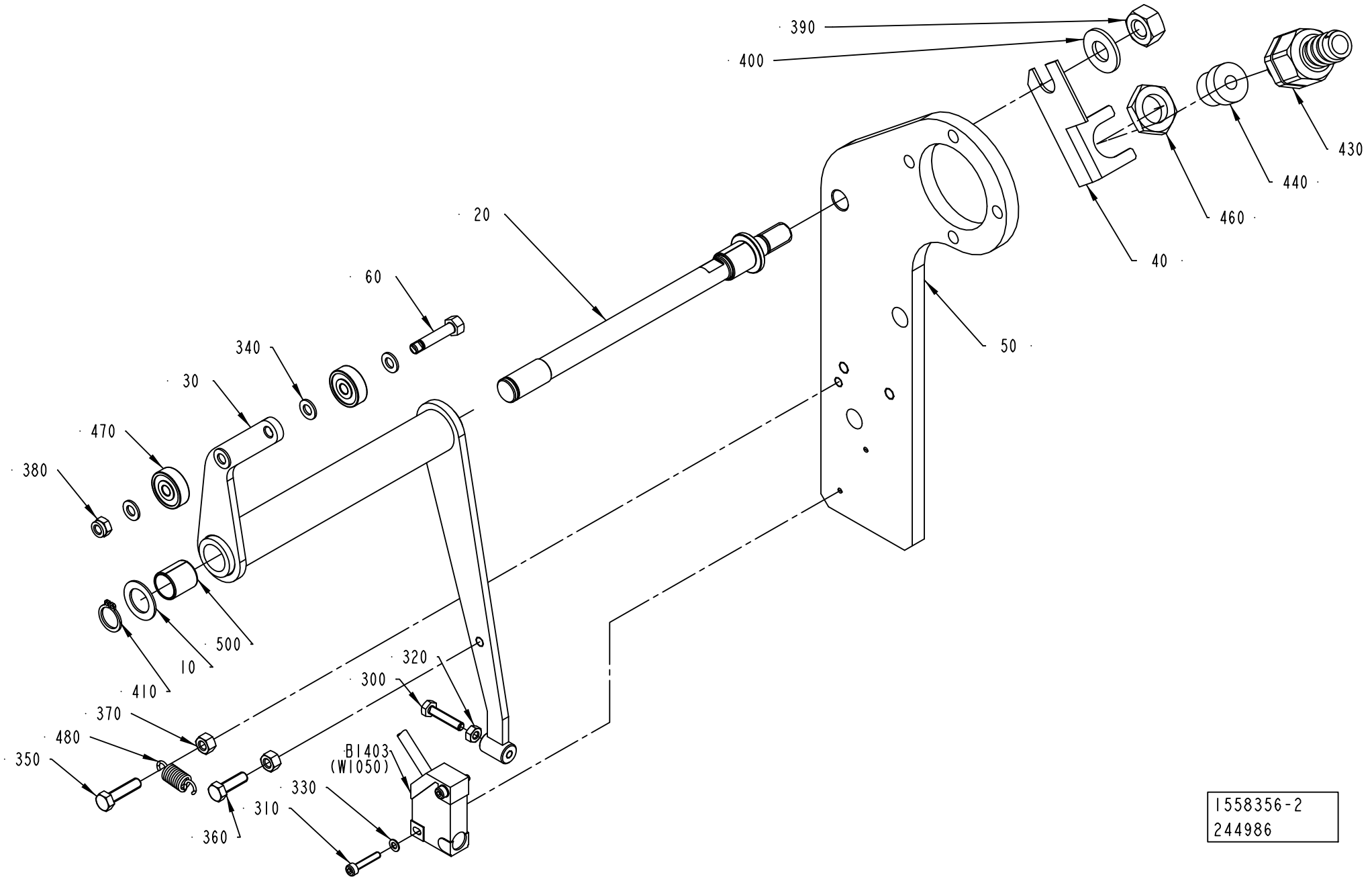
390
400
430
440
460
40
20
50
60
340
30
470
380
500
10
410
320
300
370
480
350
BI403
(WI050)
330
310
360
1558356-2
244986

ECM: 271750 - 20060728
Group number: 1558356-0100
Assembly Drawing: 1558356-2_1_AB

This list covers pages from 1-312 to 1-315

Pos	Part No	UN	Qty	Description	Page No
A3/FLEX TBA 0200B, A3/FLEX TBA 0250B, A3/FLEX TBA 0330S (See drawing on page: 1-312)					
020	2707506-0000		1	SHAFT	
030	2690377-0000		1	BRACKET	
060	2528135-0000		1	SHAFT	
340	315105-0146		2	WASHER BRB 5,3X10 RFR	
470	90214-0138		1	BALL BEARING, 5X19X6 MM	
480	90335-0089		1	TENSION SPRING 41490, 0,9X10X23	
A3/FLEX TBA 0500B, A3/FLEX TBA 1000B, A3/FLEX TBA 1000S, A3/FLEX TBA 1000SQ, A3/FLEX TPA 1000SQ, A3/FLEX TBA 0200S, A3/FLEX TBA 1500S, A3/FLEX TPA 0330SQ, A3/FLEX TPA 0500SQ, A3/FLEX TBA 0200M, A3/FLEX TBA 0250S, A3/FLEX TBA 0500S, A3/FLEX TPA 0200SQ QC, A3/FLEX TPA 0250SQ QC, A3/FLEX TBA 0200SQ, A3/FLEX TBA 0250SQ (See drawing on page: 1-312)					
020	2528128-0000		1	SHAFT	
030	2528127-0000		1	BRACKET	
060	2528135-0000		1	SHAFT	
340	315105-0146		2	WASHER BRB 5,3X10 RFR	
470	90214-0138		1	BALL BEARING, 5X19X6 MM	
480	90335-0089		1	TENSION SPRING 41490, 0,9X10X23	
A3/FLEX TBA 1890S, A3/FLEX TBA 2000S (See drawing on page: 1-314)					
020	2528128-0000		1	SHAFT	
030	2528127-0000		1	BRACKET	
060	2721434-0000		1	SHAFT	
340	315105-0146		4	WASHER BRB 5,3X10 RFR	
470	90214-0138		2	BALL BEARING, 5X19X6 MM	
480	90459-5581		1	TENSION SPRING 1,2X23X8,5	
Common Parts					
010	266737-0000		1	WASHER	
040	1036610-0000		1	BRACKET	
050	2528105-0000		1	PLATE	
300	312105-0295		1	SCREW M6S ISO 4017 M4X20 A470	
310	312115-0228		2	SCREW ISO4762 M3X16 A4 80	
320	312605-0312		1	HEXAGON NUT, M6M M4 A280	
330	315105-0124		2	WASHER BRB 3,2X6 RFR	
350	312105-0331		1	SCREW M6S ISO 4017 M5X20 A480	
360	312105-0329		1	SCREW M6S ISO 4017 M5X16 A480	
370	312605-0314		2	HEXAGON NUT, M6M M5 A280	
380	312812-0314		1	HEXAGON NUT, NY-LOCK M5 A480	
390	312605-0320		1	HEXAGON NUT, M6M M10 A280	
400	315105-0173		1	WASHER BRB 10,5X22 RFR	
410	315751-0109		1	RETAINING RING FOR SHAFT DIN 471 12 A2	
430	353243-0001		1	HOSE GLAND W/O INSERT PG9 EXTENDED	
440	353249-0008		1	INSERT, SINGEL HOLE, EK 152/7	
460	90099-0104		1	NUT, PR 15,2 (PG9)	
500	321141-0183		2	BEARING BUSH W/O FLANGE, 12X14X15 MM	
B1403	90044-0194		1	PROX.SW. IN5329/IN3002-BPKG(EX90044-104)	

Machine Type	Group Description	Used-In	Group Number	Page No

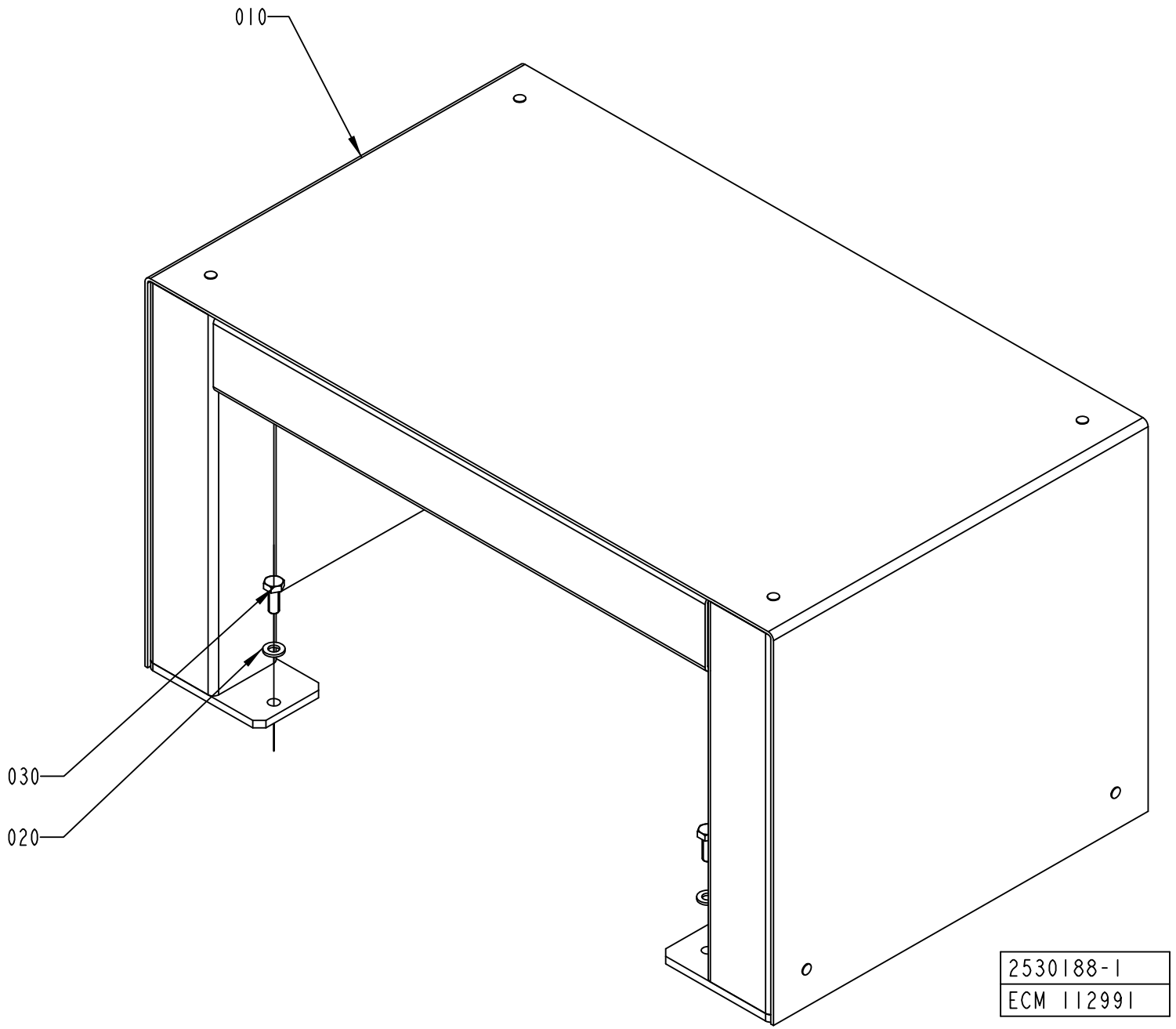
010
030
020
2530188-1
ECM 112991

ECM: 189109 - 20041104
Group number: 2530188-0100
Assembly Drawing: 2530188-1_1_AA

Pos	Part No	UN	Qty	Description	Page No	Pos	Part No	UN	Qty	Description	Page No
-											
010	2529925-0000		1	STEP							
020	315105-0153		2	WASHER BRB 6,4X12 RFR							
030	312105-0368		2	SCREW M6S ISO 4017 M6X16 A480							

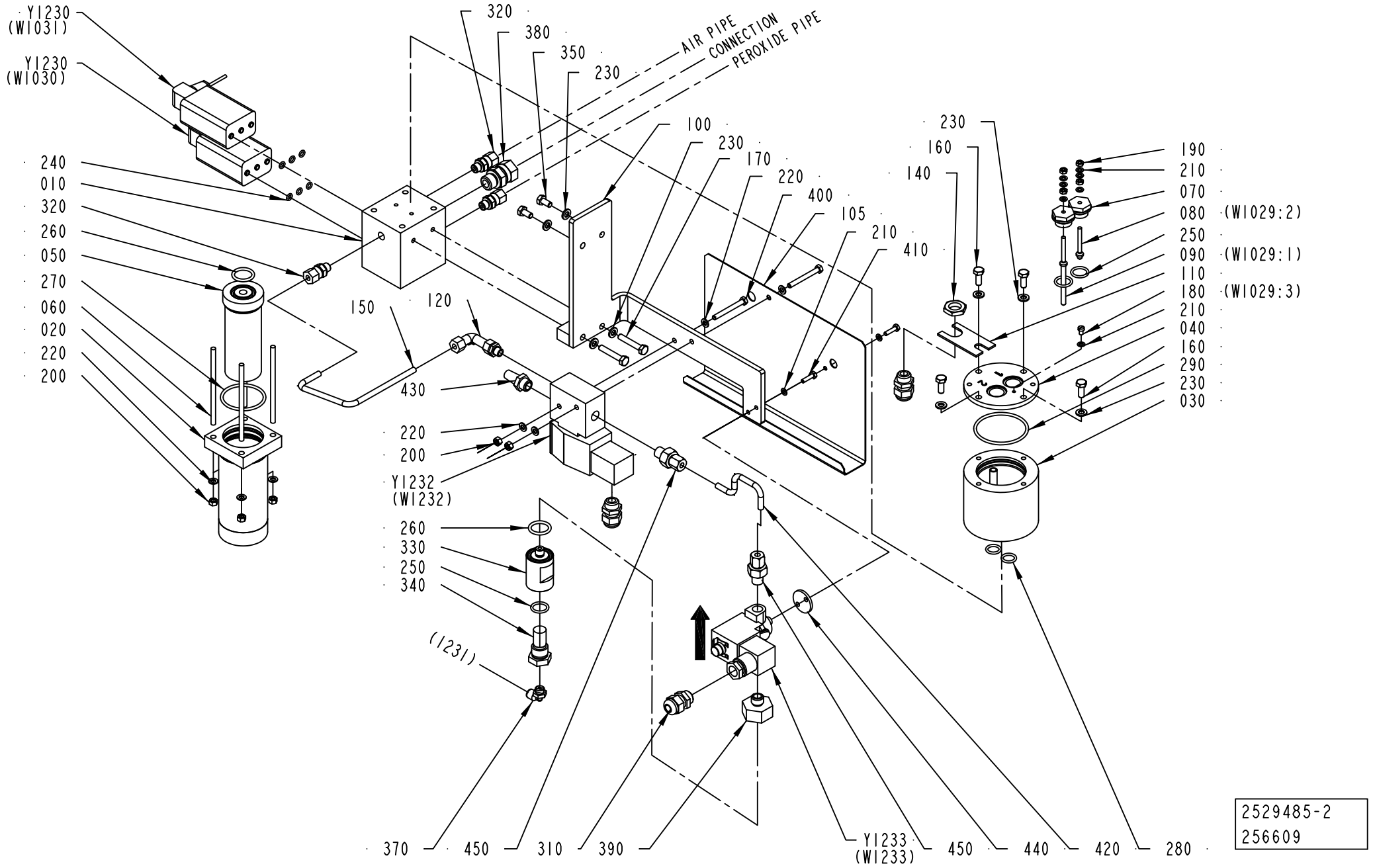
Y1230
(W1031)
Y1230
(W1030)
240
010
320
260
050
270
060
020
220
200
320
380
350
230
AIR PIPE
CONNECTION
PEROXIDE PIPE
100
230
170
220
400
105
210
410
230
160
140
190
210
070
080 (W1029:2)
250
090 (W1029:1)
110
180 (W1029:3)
210
040
160
290
230
030
150
120
430
220
200
Y1232
(W1232)
260
330
250
340
(1231)
370
450
310
390
Y1233
(W1233)
450
440
420
280
2529485-2
256609

ECM: 256611 - 20060701
Group number: 2529485-0200
Assembly Drawing: 2529485-2_1_AB

Pos	Part No	UN	Qty	Description	Page No
-					
010	1532223-0000		1	BLOCK	
020	554142-0000		1	FILTER HOUSING	
030	1478170-0000		1	CONTAINER	
040	549267-0000		1	LID	
050	554141-0000		1	FILTER	
060	554585-0000		4	STUD SCREW	
070	2578486-0000		2	BRACKET	
080	2559045-0004		1	ELECTRODE	
090	2559045-0003		1	ELECTRODE	
100	2763962-0000		1	BRACKET	
105	2812556-0000		1	HEAT GUARD	
110	1040970-0000		1	BRACKET	
120	90030-0203		1	ADJUSTABLE ELBOW CONNECTION,EXT 6-G1/4	
140	90099-0104		1	NUT, PR 15,2 (PG9)	
150	2763966-0000		1	PIPE	
160	312105-0368		4	SCREW M6S ISO 4017 M6X16 A480	
170	312109-0376		2	SCREW M6S ISO 4017 M6X35 A480	
180	312125-0285		1	SCREW ISO 1207 M4X6 A4	
190	312605-0312		4	HEXAGON NUT, M6M M4 A280	
200	312605-0314		6	HEXAGON NUT, M6M M5 A280	
210	315105-0136		9	WASHER BRB 4,3X8 RFR	
220	315105-0146		8	WASHER BRB 5,3X10 RFR	
230	315105-0153		8	WASHER BRB 6,4X12 RFR	
240	927420-0001		6	O-RING 5.1X1.6 SILICONE	
250	927421-0004		3	O-RING 15.3X2.4 SILICONE	
260	927422-0001		2	O-RING 19.2X3 SILICONE	
270	927422-0007		1	O-RING 44.2X3 SILICONE	
280	927421-0002		2	O-RING 12.3X2.4 SILICONE	
290	927422-0009		1	O-RING 54.5X3 SILICONE	
310	352103-0101		3	CABLE GLAND, ST 9, PR15,2/PG9	
320	90030-0184		3	CONN. STR. GA-6-G1/8	
330	1519486-0000		1	FILTER HOUSING	
340	450833-0000		1	FILTER	
350	312105-0366		2	SCREW M6S ISO 4017 M6X12 A480	
370	90458-2956		1	ELBOW PIPE JOINT, EXT.THREAD, D=6MM-G1/8	
380	90030-0187		1	CONN. STR. GA-12-G3/8	
390	2763969-0000		1	REDUCER	
400	312105-0340		2	SCREW M6S ISO 4014 M5X45 A480	
410	312105-0293		2	SCREW M6S ISO 4017 M4X16 A470	
420	2763967-0000		1	PIPE	
430	346800-0110		1	SILENCER FILTER R1/4"	
440	2763968-0000		1	SPACER	
450	90030-0202		2	CONN. STR., 6-G1/4, EXT. THREAD	
Y1230	90042-0203		1	SOLENOID VALVE BüRKERT	
Y1231	90042-0203		1	SOLENOID VALVE BüRKERT	
Y1232	90459-6975		1	SOLENOID VALVE G1/4, 2401186082702400	
Y1233	90459-6977		1	SOLENOID VALVE G1/4, V04B286N-B423A	

Machine Type	Group Description	Used-In	Group Number	Page No

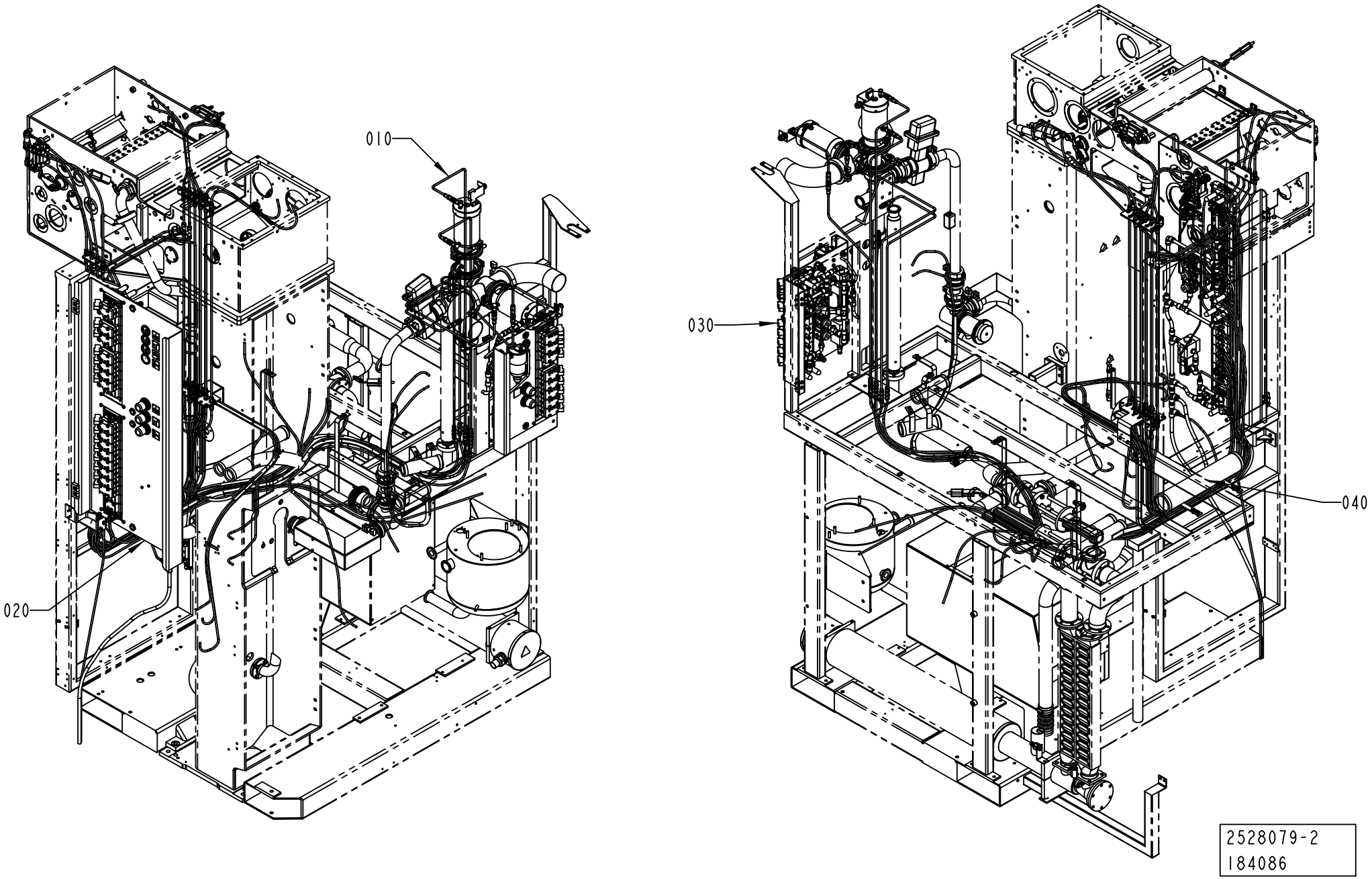
010
020
030
040
2528079-2
184086

ECM: 207188 - 20050615
Group number: 2528079-0200
Assembly Drawing: 2528079-2_1_AA

Pos	Part No	UN	Qty	Description	Page No
-					
005	2565494-0000		1	PNEUMATIC DIAGRAM	
005	2565493-0000		1	PNEUMATIC DIAGRAM	
005	2565492-0000		1	PNEUMATIC DIAGRAM	
005	2563276-0000		1	PNEUMATIC DIAGRAM	
010	2528080-0200		1	HOSE INSTALLATION	**1-323, 1-325, 1-327, 1-329, 1-331, 1-333**
020	2526854-0200		1	VALVE PANEL	**1-335**
030	2526853-0300		1	VALVE PANEL	**1-343**
040	2528081-0200		1	HOSE HOLDER	**1-349**

Pos	Part No	UN	Qty	Description	Page No

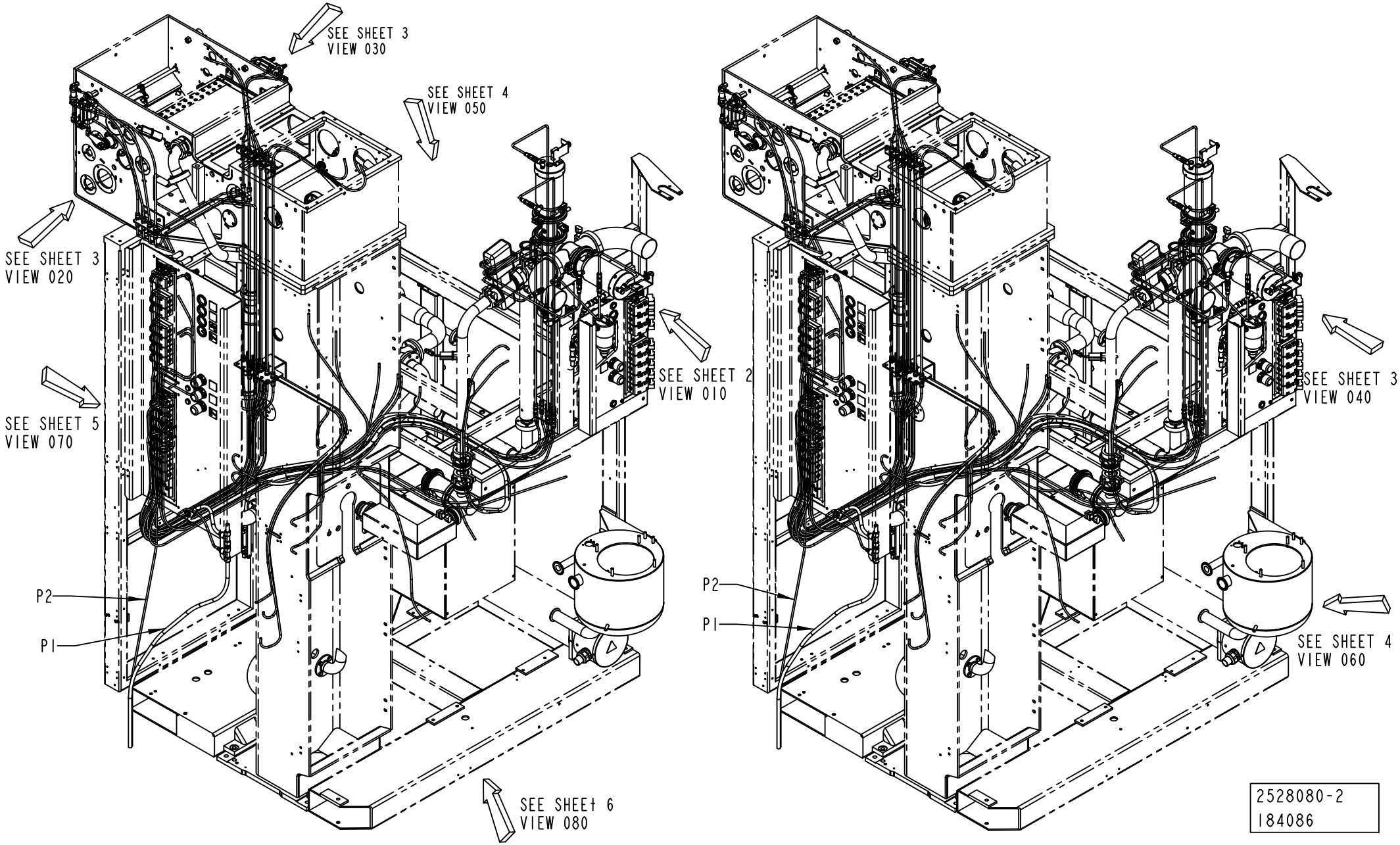
SEE SHEET 3
VIEW 030
SEE SHEET 4
VIEW 050
SEE SHEET 3
VIEW 020
SEE SHEET 2
VIEW 010
SEE SHEET 5
VIEW 070
P2
P1
SEE SHEET 6
VIEW 080
P2
P1
SEE SHEET 3
VIEW 040
SEE SHEET 4
VIEW 060
2528080-2
184086

ECM: 274260 - 20060728
Group number: 2528080-0200
Assembly Drawing: 2528080-2_1_AA

This list covers pages from 1-322 to 1-333

Pos	Part No	UN	Qty	Description	Page No
A3/FLEX HI					
13184	90166-0193	MM	6000	TUBE 6 MM PUR BLUE	
91014	90166-0193	MM	2500	TUBE 6 MM PUR BLUE	
91052	90166-0193	MM	3800	TUBE 6 MM PUR BLUE	
91064	90166-0193	MM	3800	TUBE 6 MM PUR BLUE	
A3/FLEX NOHI					
13184	90166-0193	MM	6000	TUBE 6 MM PUR BLUE	
Common Parts					
010	1484405-0000		1	PIPE	
020	1524237-0000		1	PIPE	
030	2695999-0000		1	PIPE	
040	1524239-0000		1	PIPE	
050	2696000-0000		1	PIPE	
060	2696001-0000		1	PIPE	
070	1524242-0000		1	PIPE	
080	1528727-0000		2	PIPE	
090	1528728-0000		2	PIPE	
100	1524233-0000		2	PIPE	
110	1524234-0000		6	PIPE	
11072	90166-0193	MM	2600	TUBE 6 MM PUR BLUE	
11074	90166-0193	MM	2600	TUBE 6 MM PUR BLUE	
11082	90166-0193	MM	2600	TUBE 6 MM PUR BLUE	
11084	90166-0193	MM	2600	TUBE 6 MM PUR BLUE	
11112	90166-0193	MM	2800	TUBE 6 MM PUR BLUE	
11114	90166-0193	MM	2800	TUBE 6 MM PUR BLUE	
11122	90166-0193	MM	1900	TUBE 6 MM PUR BLUE	
11122:1	90166-0193	MM	700	TUBE 6 MM PUR BLUE	
11124	90166-0193	MM	1900	TUBE 6 MM PUR BLUE	
11124:1	90166-0193	MM	700	TUBE 6 MM PUR BLUE	
120	1524243-0000		2	PIPE	
1231	90166-0193	MM	3000	TUBE 6 MM PUR BLUE	
12412	90166-0193	MM	3300	TUBE 6 MM PUR BLUE	
12414	90166-0193	MM	3300	TUBE 6 MM PUR BLUE	
12422	90166-0193	MM	2800	TUBE 6 MM PUR BLUE	
12424	90166-0193	MM	2800	TUBE 6 MM PUR BLUE	
130	1523818-0000		1	BRACKET	
13032	90166-0193	MM	3700	TUBE 6 MM PUR BLUE	
13034	90166-0193	MM	3700	TUBE 6 MM PUR BLUE	
13122	90166-0193	MM	3700	TUBE 6 MM PUR BLUE	
13124	90166-0193	MM	3700	TUBE 6 MM PUR BLUE	
13141	90166-0193	MM	1200	TUBE 6 MM PUR BLUE	
13232	90166-0193	MM	3700	TUBE 6 MM PUR BLUE	
13234	90166-0193	MM	3500	TUBE 6 MM PUR BLUE	
13261	90166-0068	MM	1250	TUBE 12 MM PA BLUE	
140	1523819-0000		1	BRACKET	
14012	90166-0193	MM	3500	TUBE 6 MM PUR BLUE	
14014	90166-0193	MM	3500	TUBE 6 MM PUR BLUE	
150	1523820-0000		1	BRACKET	
15012	90166-0193	MM	2600	TUBE 6 MM PUR BLUE	
15012:1	90166-0193	MM	650	TUBE 6 MM PUR BLUE	
15014	90166-0193	MM	2000	TUBE 6 MM PUR BLUE	
15014:1	90166-0193	MM	600	TUBE 6 MM PUR BLUE	
15022	90166-0193	MM	2600	TUBE 6 MM PUR BLUE	
15022:1	90166-0193	MM	500	TUBE 6 MM PUR BLUE	
15022:2	90166-0193	MM	550	TUBE 6 MM PUR BLUE	
15024	90166-0193	MM	2600	TUBE 6 MM PUR BLUE	
15024:1	90166-0193	MM	500	TUBE 6 MM PUR BLUE	
15024:2	90166-0193	MM	550	TUBE 6 MM PUR BLUE	
15032	90166-0193	MM	2600	TUBE 6 MM PUR BLUE	
15032:1	90166-0193	MM	450	TUBE 6 MM PUR BLUE	
15034	90166-0193	MM	2600	TUBE 6 MM PUR BLUE	
15034:1	90166-0193	MM	450	TUBE 6 MM PUR BLUE	
18024	90166-0193	MM	2000	TUBE 6 MM PUR BLUE	
18034	90166-0193	MM	2500	TUBE 6 MM PUR BLUE	
18102	90166-0193	MM	3700	TUBE 6 MM PUR BLUE	
18104	90166-0193	MM	3700	TUBE 6 MM PUR BLUE	
300	312105-0366		6	SCREW M6S ISO 4017 M6X12 A480	
310	315237-0109		6	WASHER,PL.RND.AL.10/14,H=1,5	
320	342706-0130		28	ACCESSORIES, INSERT SLEEVE 6 MM	
330	342724-0102		1	CONN. STR. PIPE GI 6-G1/8	
340	342797-0121		1	CONN. BANJO, RINGPIECE 6-1/8	
350	342980-0303		4	BANJO-HOLLOW BOLT COUPL,EXT.THR.01-G1/8	
360	342747-0102		2	CONN. T-PIPE T-6	
370	342748-0109		2	T-CONNECTION 12MM	
380	342716-0210		1	REDUCER 6-12	
400	90163-0057		6	QUICK COUPLING, (M) 5150-1/8	
410	90163-0062		6	QUICK COUPLING, (F) 5053-1/8	
420	90458-1849		6	CONN. STR., 6-R1/8, EXT. THREAD	
430	90224-0308		4	CONN. BANJO, ART. NO. 2023-1/8-1/8	
440	90224-0349		30	CONN. BULKHEAD. 1250-6	
450	90235-0274		1	THROTTLE CHECK VALVE, G1/8", SCU-604-1/8	
460	359000-0400		50	WIRE MARKING, YELLOW, PA2/4"0"	
470	359000-0401		50	WIRE MARKING, YELLOW, PA2/4"1"	
480	359000-0402		50	WIRE MARKING, YELLOW, PA2/4"2"	

Machine Type | Group Description | Used-In | Group Number | Page No

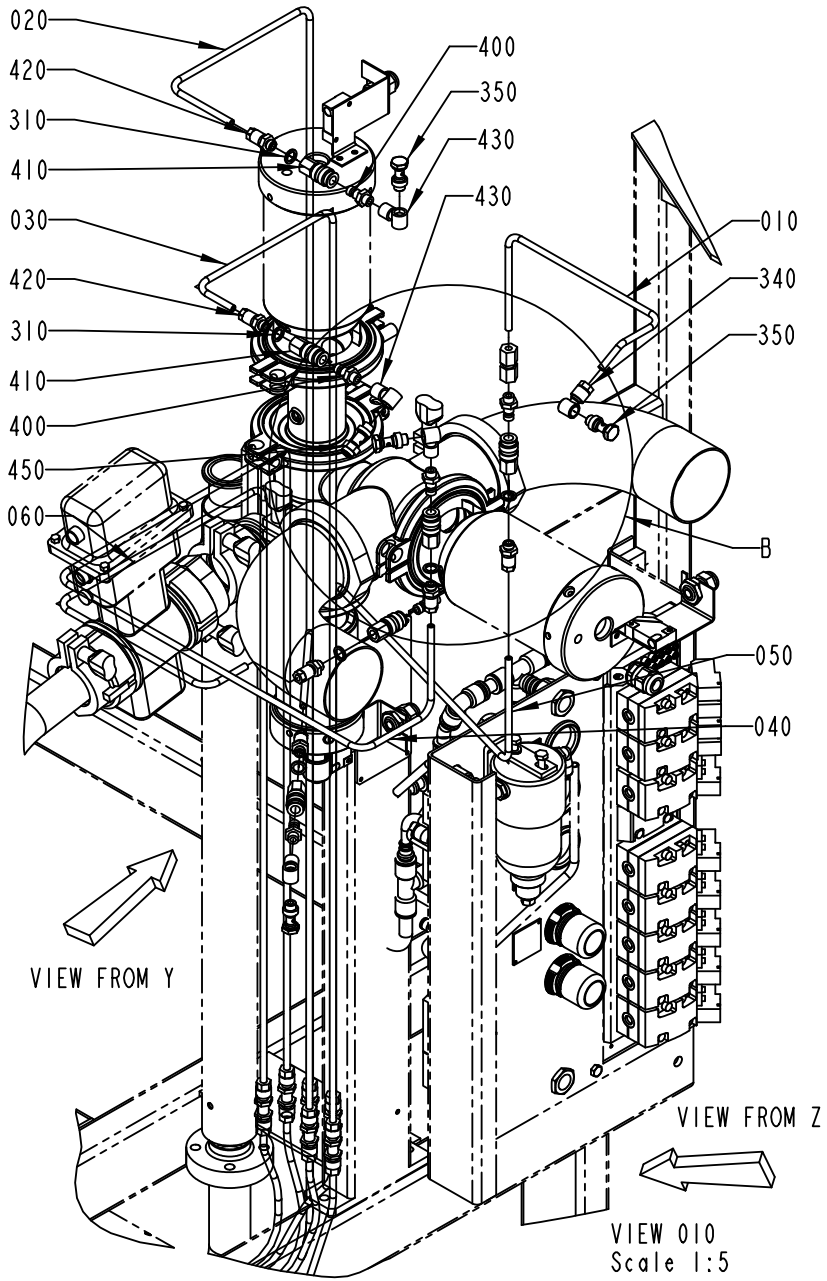

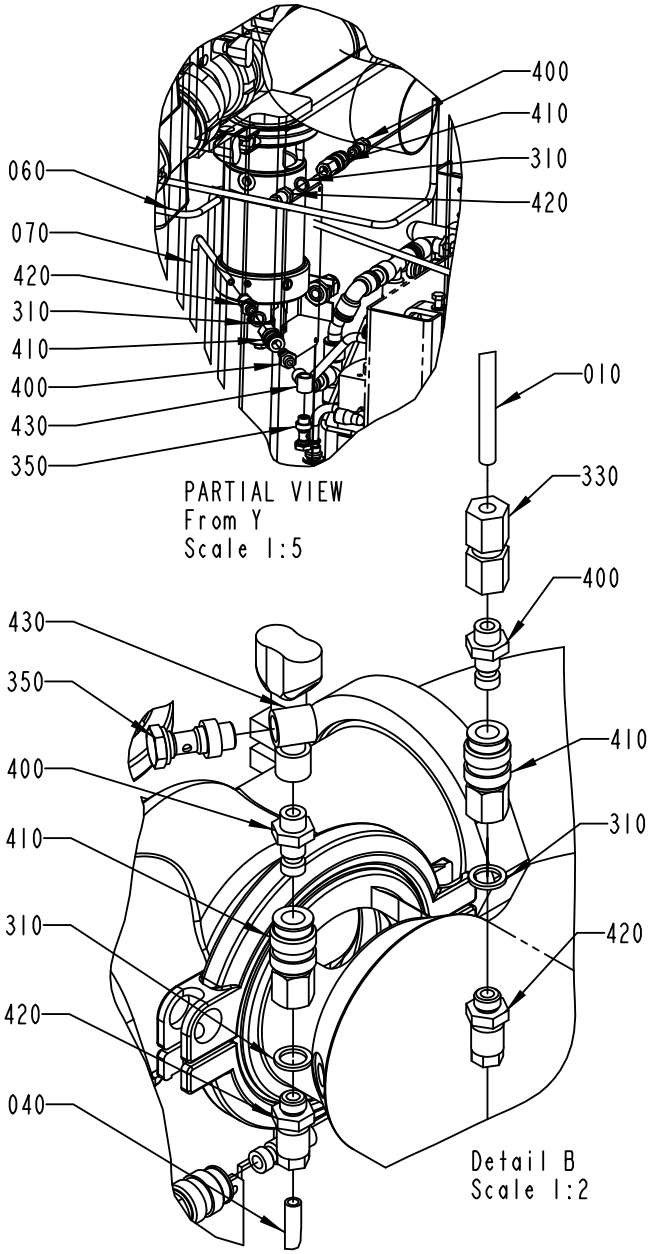

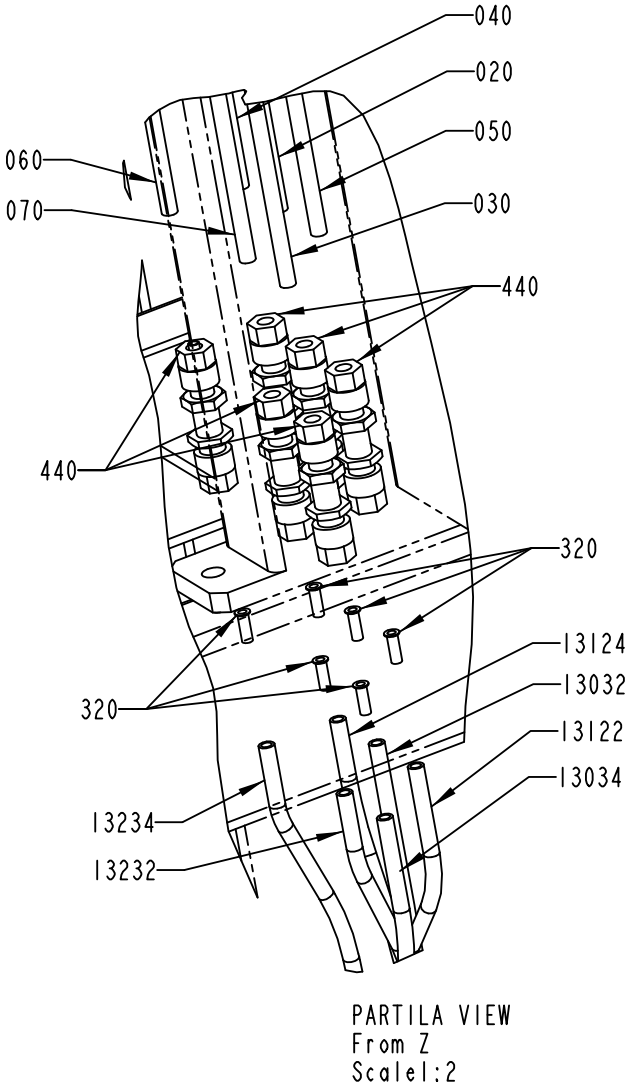

2528080-2
184086

Pos	Part No	UN	Qty	Description	Page No
Common Parts (Cont'd)					
490	359000-0403		50	WIRE MARKING, YELLOW, PA2/4"3"	
500	359000-0404		50	WIRE MARKING, YELLOW, PA2/4"4"	
510	359000-0405		50	WIRE MARKING, YELLOW, PA2/4"5"	
520	359000-0406		50	WIRE MARKING, YELLOW, PA2/4"6"	
530	359000-0407		50	WIRE MARKING, YELLOW, PA2/4"7"	
540	359000-0408		50	WIRE MARKING, YELLOW, PA2/4"8"	
550	359000-0409		50	WIRE MARKING, YELLOW, PA2/4"9"	
560	315105-0153		2	WASHER BRB 6,4X12 RFR	
P1	90166-0195	MM	2000	TUBE 12 MM PA BLUE	
P1:1	90166-0193	MM	3500	TUBE 6 MM PUR BLUE	
P1:3	90166-0195	MM	3800	TUBE 12 MM PA BLUE	
P2	90166-0013	MM	3000	TUBE 8 MM PA BLUE	

Pos	Part No	UN	Qty	Description	Page No

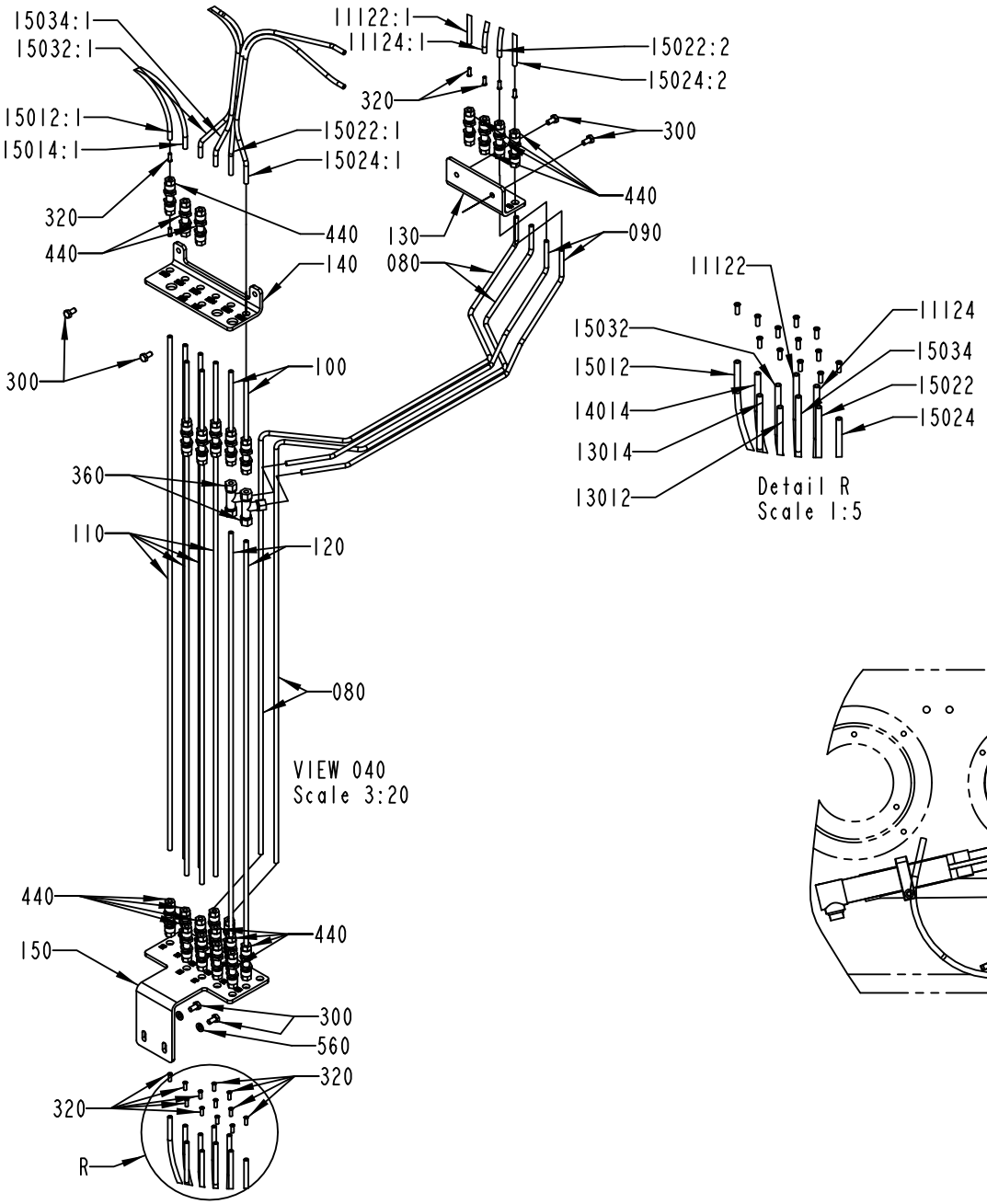

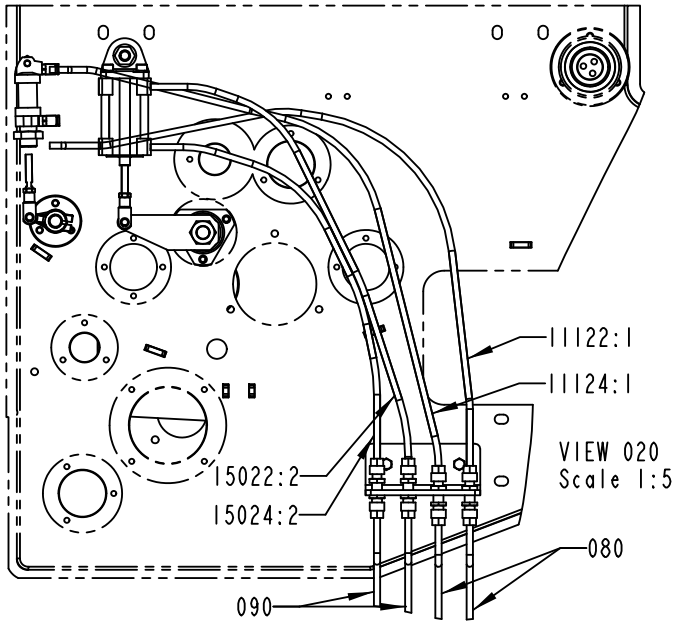

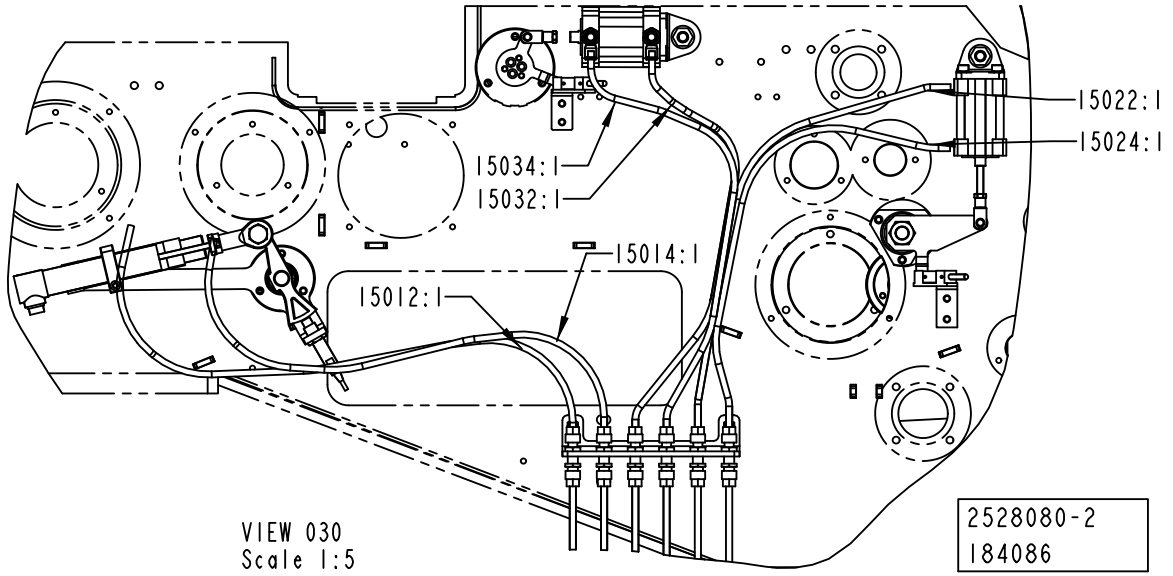

2528080-2
184086

ECM: 274260 - 20060728
Group number: 2528080-0200
Assembly Drawing: 2528080-2_3_AA

This list covers pages from 1-322 to 1-333

Pos	Part No	UN	Qty	Description	Page No	Pos	Part No	UN	Qty	Description	Page No

SEE PREVIOUS LISTS PAGES: 1-323, 1-325.

HOSE INSTALLATION

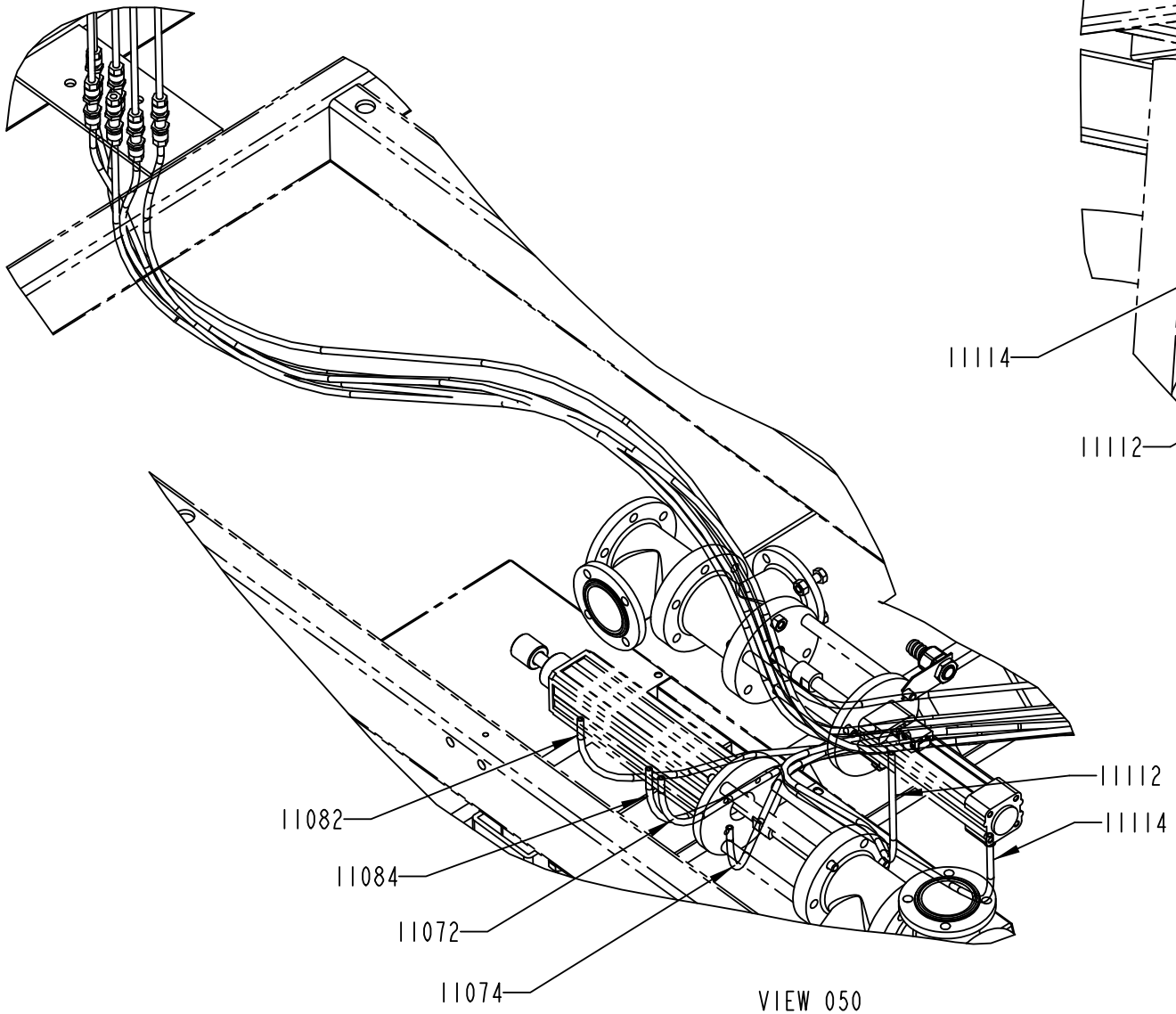

VIEW 050
Scale 1:5

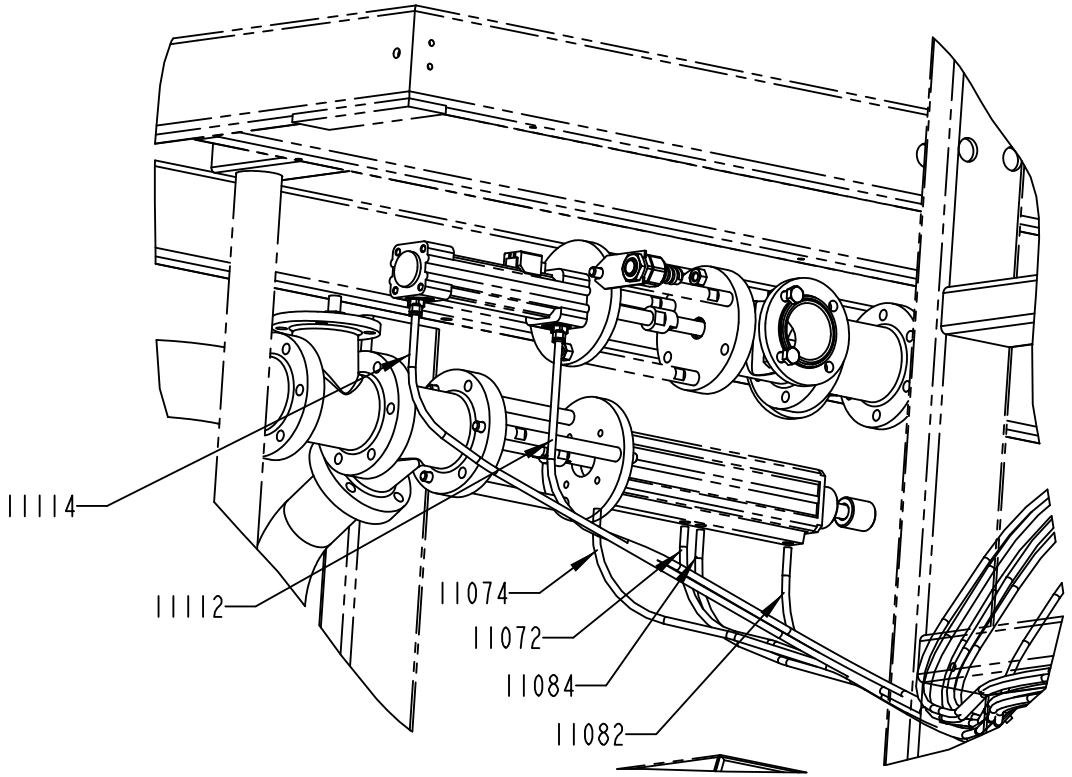

VIEW 060
Scale 1:5

2528080-2
184086

ECM: 274260 - 20060728
Group number: 2528080-0200
Assembly Drawing: 2528080-2_4_AA

This list covers pages from 1-322 to 1-333

Pos	Part No	UN	Qty	Description	Page No	Pos	Part No	UN	Qty	Description	Page No

SEE PREVIOUS LISTS PAGES: 1-323, 1-325.

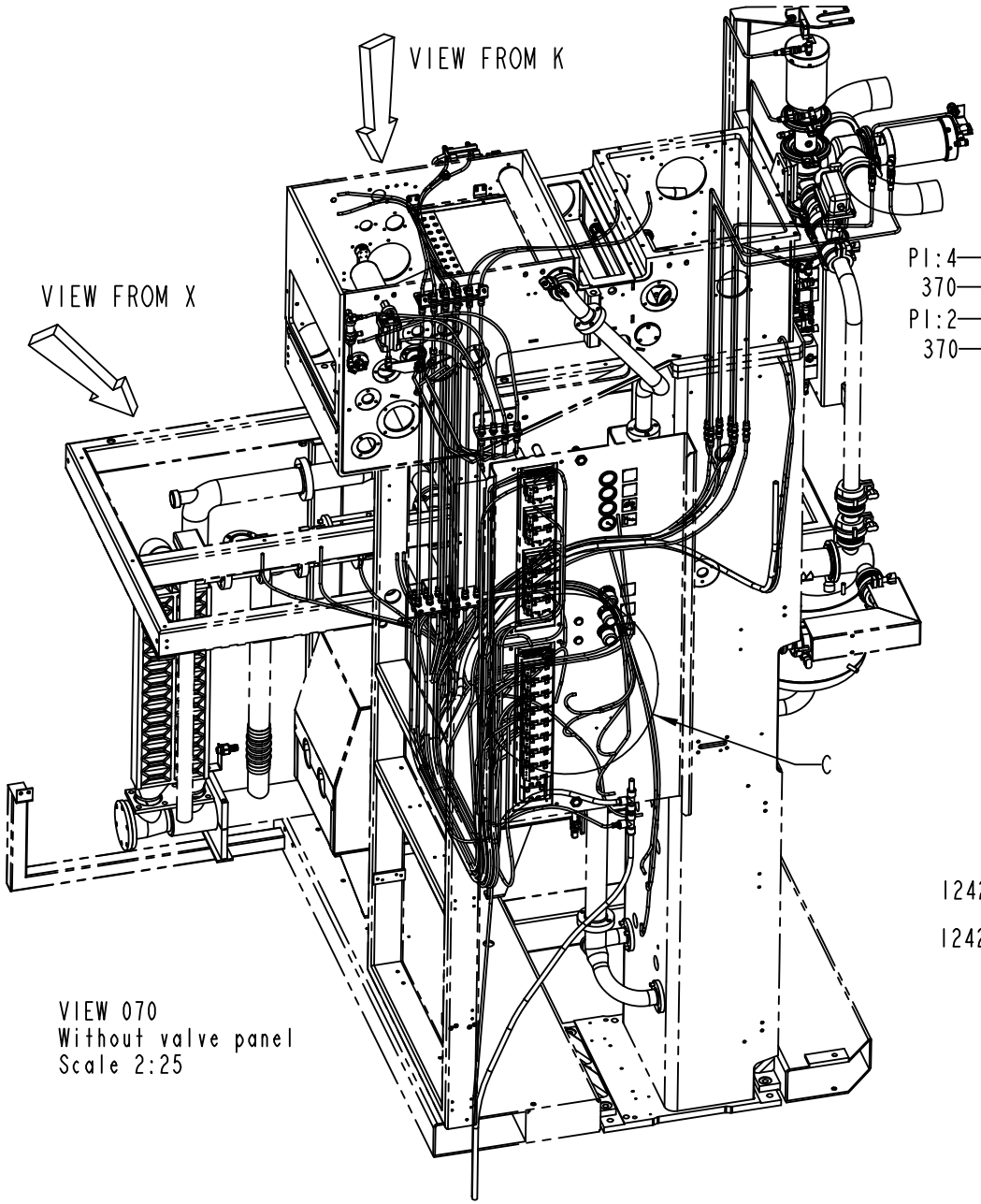

VIEW 070
Without valve panel
Scale 2:25

Valve Panel

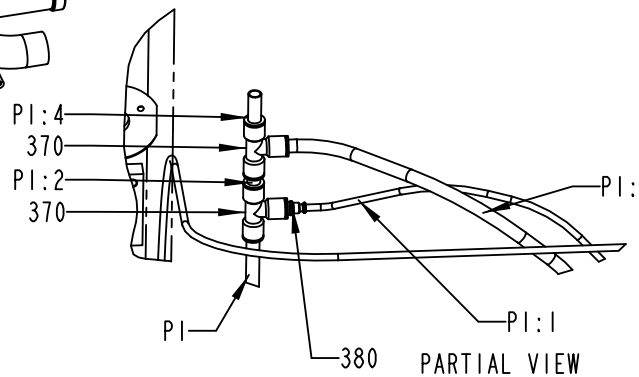

PARTIAL VIEW
From K with valve panel
Sacle 1:5

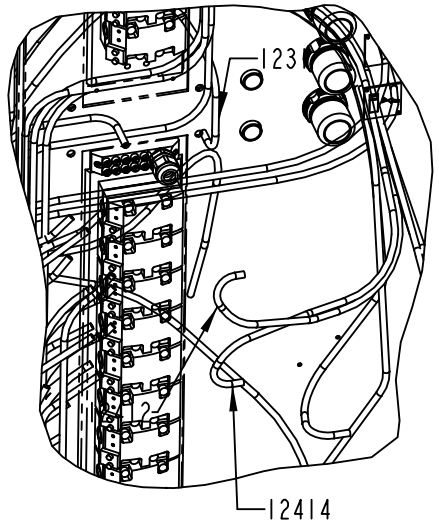

Detail C
Sacle 1:5

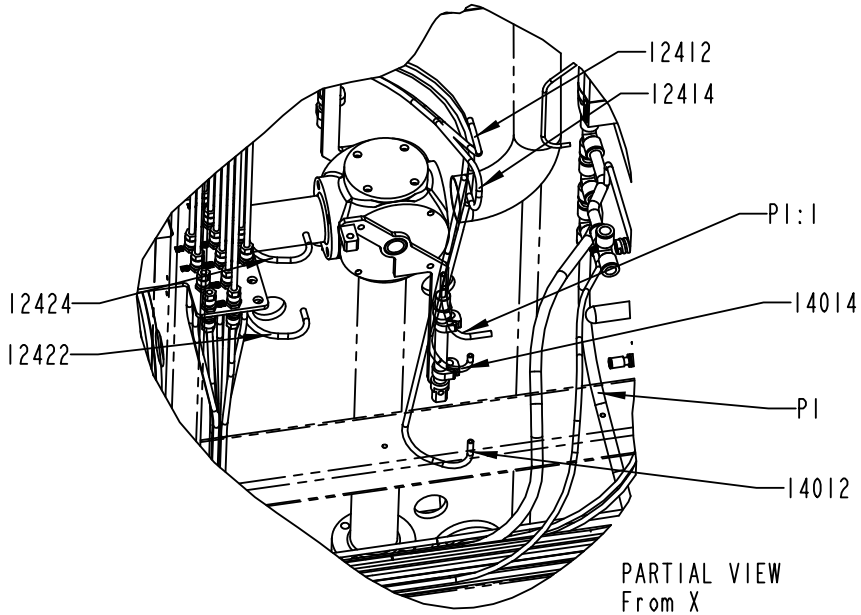

PARTIAL VIEW
From X
Scale 17:100

2528080-2
184086

ECM: 274260 - 20060728
Group number: 2528080-0200
Assembly Drawing: 2528080-2_5_AA

This list covers pages from 1-322 to 1-333

Pos	Part No	UN	Qty	Description	Page No	Pos	Part No	UN	Qty	Description	Page No

SEE PREVIOUS LISTS PAGES: 1-323, 1-325.

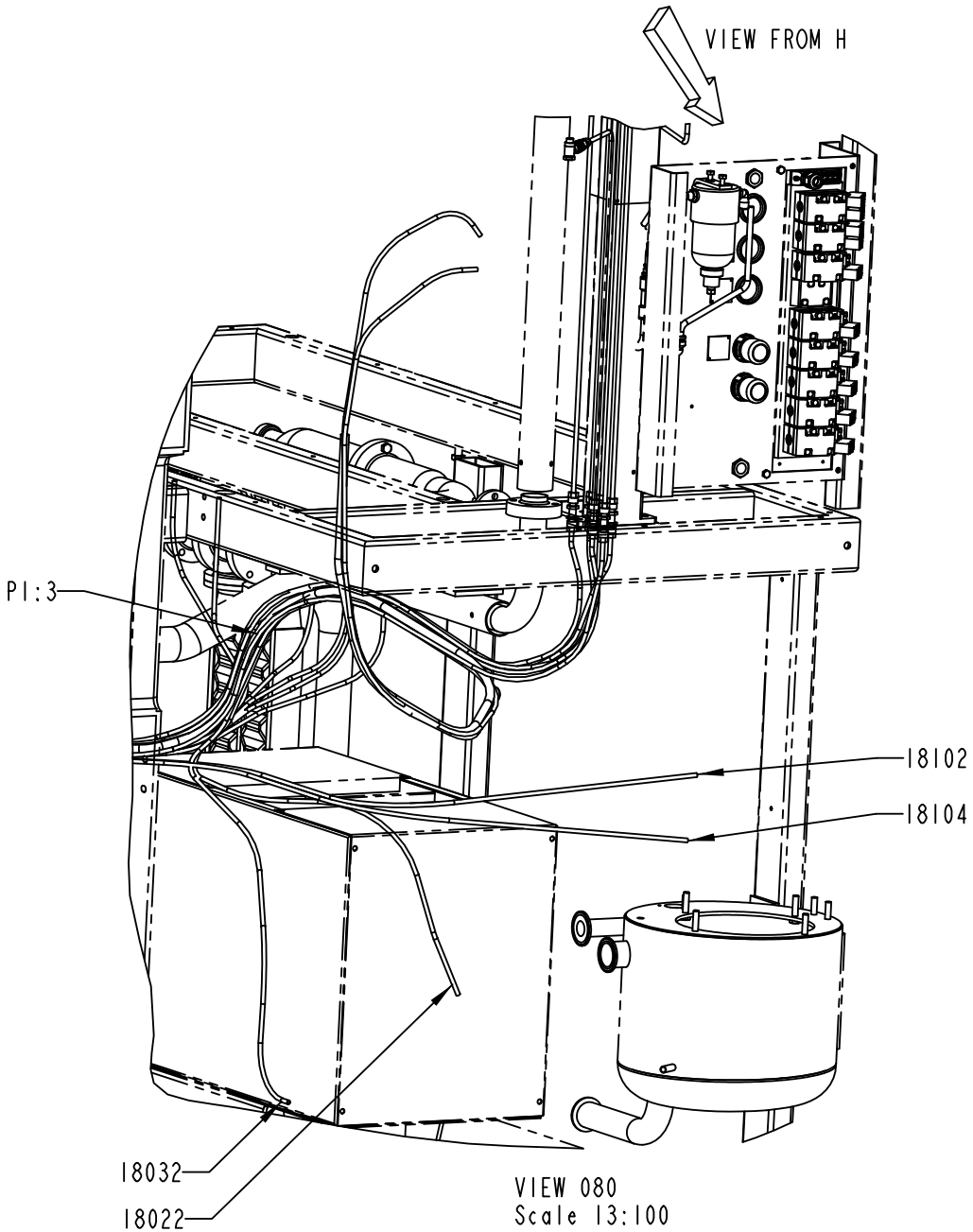

VIEW 080
Scale 13:100

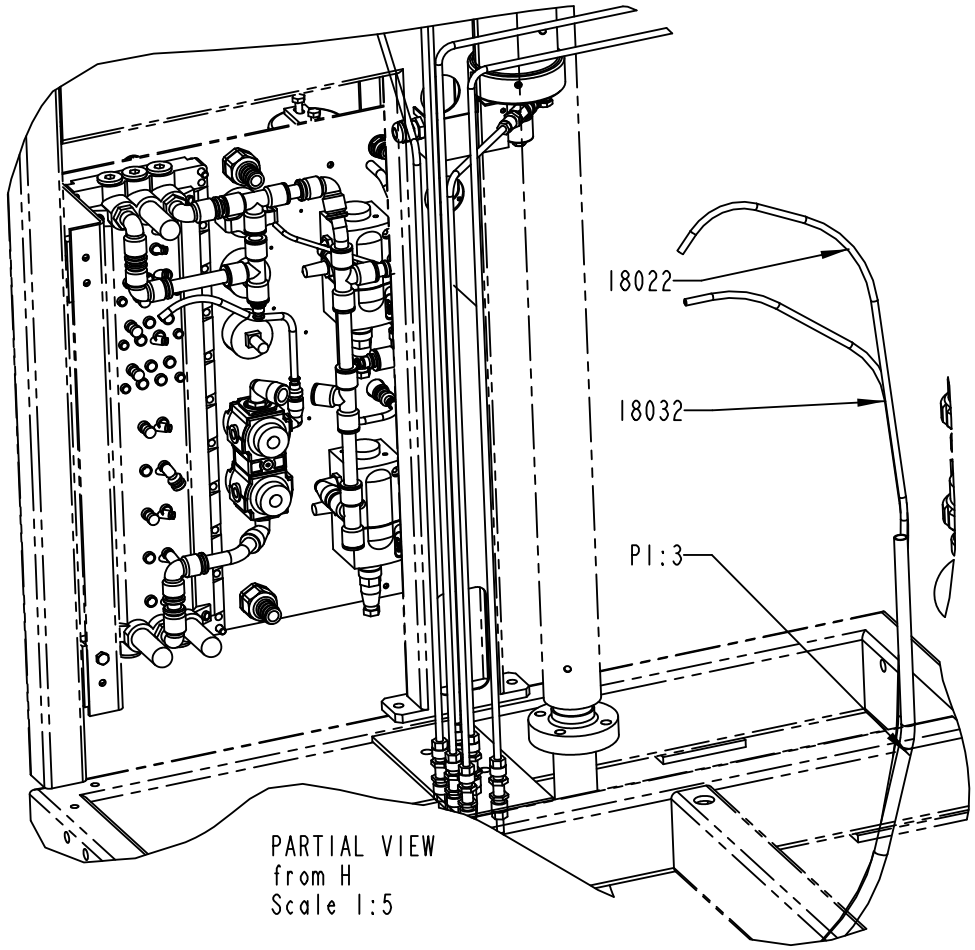

PARTIAL VIEW
from H
Scale 1:5

2528080-2
184086

Pos	Part No	UN	Qty	Description	Page No
SEE PREVIOUS LISTS PAGES: 1-323, 1-325.					

Pos	Part No	UN	Qty	Description	Page No

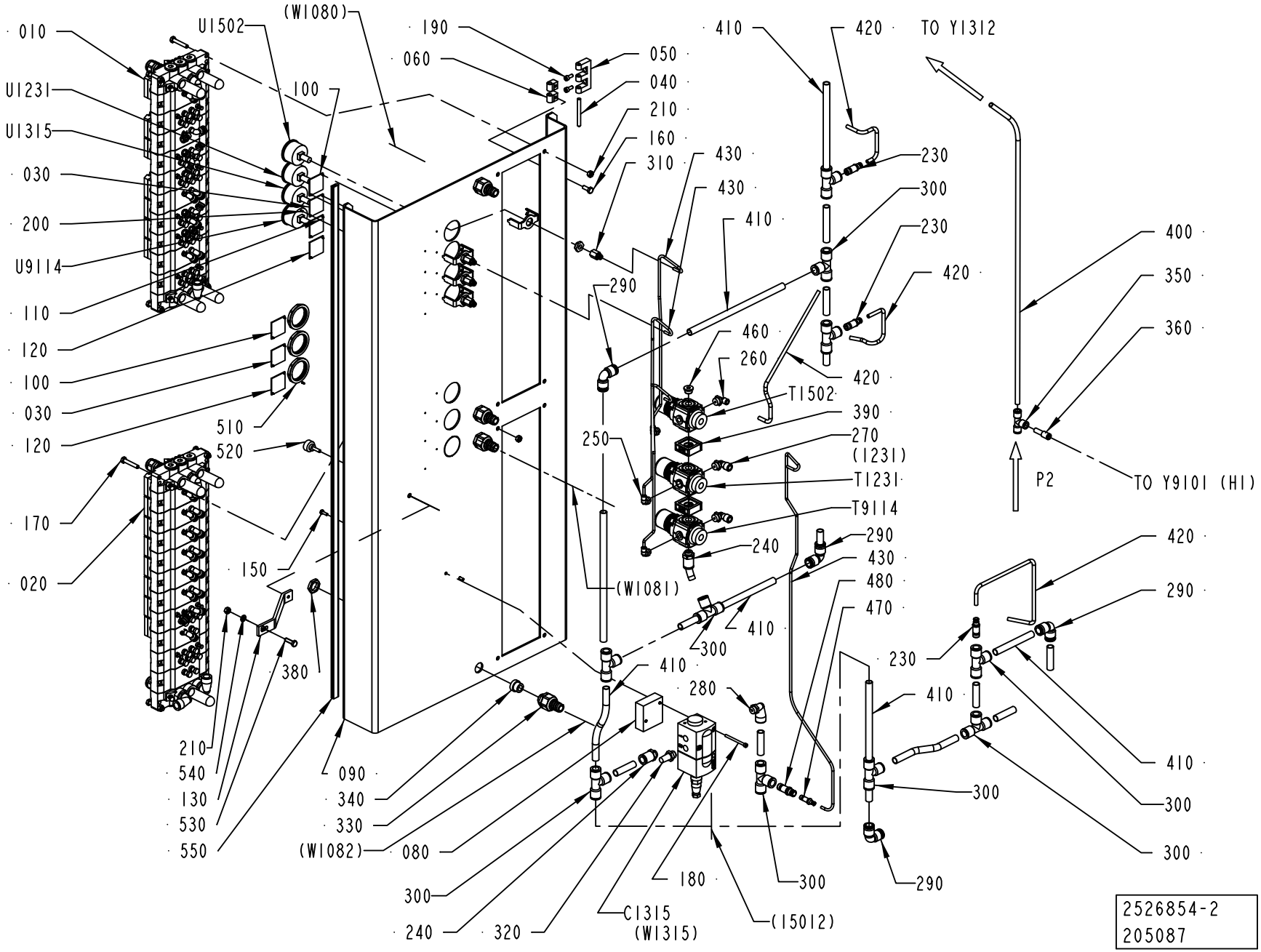
010
U1231
U1315
030
200
U9114
110
120
100
030
120
170
020
U1502
(W1080)
100
190
060
050
040
210
160
310
430
430
410
290
460
260
T1502
250
390
270
(1231)
T1231
T9114
240
(W1081)
510
520
150
380
210
540
130
530
550
090
340
330
(W1082)
080
300
240
320
C1315
(W1315)
180
(15012)
300
280
P2
410
300
290
480
470
410
230
410
300
300
290
410
300
300
230
420
290
420
410
420
TO Y1312
400
350
360
P2
TO Y9101 (HI)
2526854-2
205087

ECM: 207192 - 20050615
Group number: 2526854-0200
Assembly Drawing: 2526854-2_1_AB

Pos	Part No	UN	Qty	Description	Page No
HI					
120	2640822-0000		2	SIGN	
200	312502-0120		14	DRIVE SCREW ROUND HEAD KDS 0X5	
250	90458-2955		3	ELBOW PIPE JOINT, EXT.THREAD,	
270	90458-2958		2	ELBOW PIPE JOINT, EXT.THREAD, D=8MM-G1/4	
310	342770-0101		4	STRAIGHT COUPLING INT, D=4 MM - G1/8	
350	342748-0103		1	T-CONNECTION 8MM	
360	350006-0003		1	PUSH-IN FITTING QS-F-8H-6	
390	90113-0140		2	QUICK CLAMP	
400	90166-0013	MM	1000	TUBE 8 MM PA BLUE	
510	90457-0078		3	PANEL NUT	
T9114	90113-0469		1	MANIFOLD REGULATOR 4 BAR	
U9114	90043-0065		1	MKC NEW FILL PUMP VACUUM PRESSURE GAUGE	
NOHI					
200	312502-0120		10	DRIVE SCREW ROUND HEAD KDS 0X5	
250	90458-2955		2	ELBOW PIPE JOINT, EXT.THREAD,	
270	90458-2958		1	ELBOW PIPE JOINT, EXT.THREAD, D=8MM-G1/4	
310	342770-0101		3	STRAIGHT COUPLING INT, D=4 MM - G1/8	
390	90113-0140		1	QUICK CLAMP	
510	90457-0078		2	PANEL NUT	
Common Parts					
010	2515324-0100		1	VALVE RAMP	**1-337**
020	2515325-0100		1	VALVE RAMP	**1-339, 1-341**
030	273450-0000		2	SIGN, AIR SPRAY	
040	988685-0000		2	PIN	
050	1035792-0000		2	E-HINGE	
060	1129770-0000		2	BLOCKING PIECE	
080	2511330-0000		1	SPACER	
090	2715581-0000		1	PLATE	
100	273452-0000		2	SIGN, ROLLING MACHINE FOR FABRICS	
110	1041937-0000		1	SIGN	
130	2736702-0000		1	BRACKET	
150	312105-0291		2	SCREW M6S ISO 4017 M4X12 A470	
160	312105-0368		4	SCREW M6S ISO 4017 M6X16 A480	
170	312109-0376		8	SCREW M6S ISO 4017 M6X35 A480	
180	312115-0305		2	SCREW ISO4762 M4X50 A4 80	
190	312115-0327		4	SCREW ISO4762 M5X12 A4 80	
210	312605-0316		9	HEXAGON NUT, M6M M6 A280	
230	342716-0210		3	REDUCER 6-12	
240	342722-0209		2	STRAIGHT COUPLING D=12-G1/4"	
260	90458-2957		1	ELBOW PIPE JOINT, EXT.THREAD, D=6MM-G1/4	
280	90458-2959		1	ELBOW PIPE JOINT, EXT.THREAD,D=12MM-G1/4	
290	342735-0109		4	ELBOW PIPE JOINT	
300	342748-0109		10	T-CONNECTION 12MM	
320	346800-0110		1	SILENCER FILTER R1/4"	
330	353243-0003		4	HOSE GLAND W/O INSERT PG11 EXTENDED	
340	353249-0011		4	INSERT, SINGEL HOLE, EK 153/11	
380	90099-0117		4	NUT, PR 18,6 (PG11)	
410	90166-0068	MM	5000	TUBE 12 MM PA BLUE	
420	90166-0081	MM	5000	TUBE 6 MM PA BLUE	
430	90166-0095	MM	4000	TUBE 4 MM PA BLUE (50M)	
460	342713-0210		1	PLUG,EXT THREAD HEX SOCKET(PAK OF 10 PCS	
470	342716-0205		1	REDUCER 4-8	
480	342716-0209		1	REDUCER 8-12	
520	90051-0035		1	KNOB, EXTERNAL THREAD. NO. 8308-1135	
530	312105-0370		1	SCREW M6S ISO 4017 M6X20 A480	
540	315105-0153		1	WASHER BRB 6,4X12 RFR	
550	90143-0059	MM	1100	SEAL STRIP 4610069	
C1315	90458-1092		1	PROPORTIONAL VALVE 0 - 10V/0-6 BAR	
	90458-1262		*1*	*CONNECTOR 131028001 FOR PROP. VALVE*	
T1231	90113-0469		1	MANIFOLD REGULATOR 4 BAR	
T1502	90113-0470		1	MANIFOLD REGULATOR 10 BAR	
U1231	90043-0065		1	MKC NEW FILL PUMP VACUUM PRESSURE GAUGE	
U1315	90043-0065		1	MKC NEW FILL PUMP VACUUM PRESSURE GAUGE	
U1502	90043-0065		1	MKC NEW FILL PUMP VACUUM PRESSURE GAUGE	

Machine Type | Group Description | Used-In | Group Number | Page No

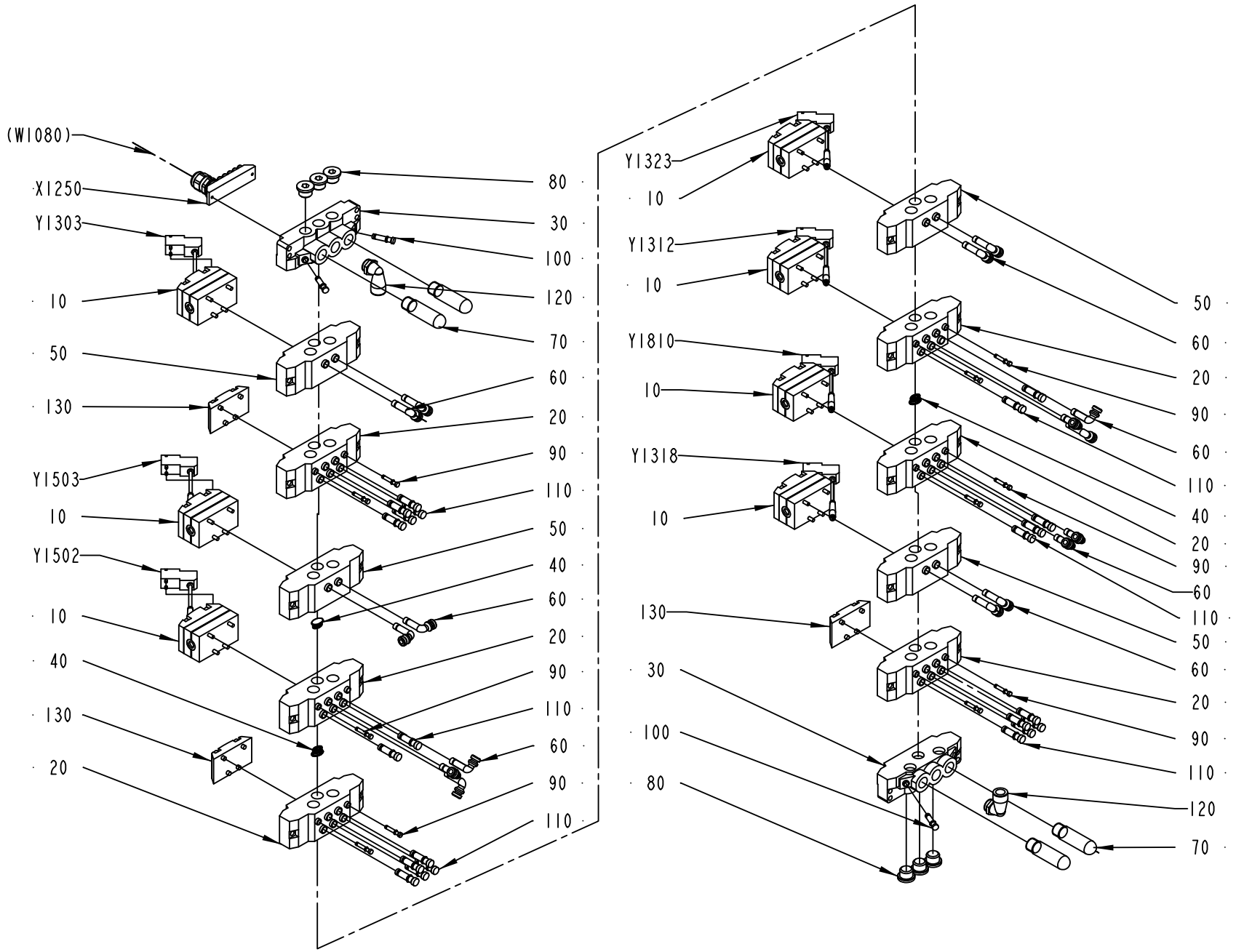

2515324-1
ECM 131608

ECM: 189208 - 20041104
Group number: 2515324-0100
Assembly Drawing: 2515324-1_1_AB

Pos	Part No	UN	Qty	Description	Page No
A3/FLEX					
010	90042-0215		7	VALVE BODY 5/2 UNISTABLE	
130	90042-0519		3	BLANK PLATE ISO SIZE 1	
Common Parts					
020	90042-0520		6	BASE PLATE ISO SIZE 1	
030	90042-0522		2	PORTED END PIECE ISO SIZE 1	
040	90042-0528		3	BLANKING KIT SEALS ISO SIZE 1	
050	90042-0532		4	BASE PLATE ISO SIZE 1	
060	90055-0143		16	HOSE,ELBOW 90 COUPLING,FPT,6X8MM	
070	90328-0024		4	SILENCER G3/8"	
080	342713-0211		6	PLUG, EXT THREAD HEX SOCKET 8638-00-380	
090	342715-0100		11	BLIND PLUG 4 MM	
100	342715-0102		3	BLIND PLUG 6 MM	
110	342715-0103		22	BLIND PLUG 8 MM	
120	90458-2960		2	ELBOW PIPE JOINT, EXT.THREAD,D=12MM-G3/8	
X1250	90042-0535		1	TERMINAL BOARD 19 CORDS	
Y1303	90042-0538		1	PILOT VALVE L=500MM	
Y1312	90042-0538		1	PILOT VALVE L=500MM	
Y1318	90042-0538		1	PILOT VALVE L=500MM	
Y1323	90042-0538		1	PILOT VALVE L=500MM	
Y1502	90042-0538		1	PILOT VALVE L=500MM	
Y1503	90042-0538		1	PILOT VALVE L=500MM	
Y1810	90042-0538		1	PILOT VALVE L=500MM	

Pos	Part No	UN	Qty	Description	Page No

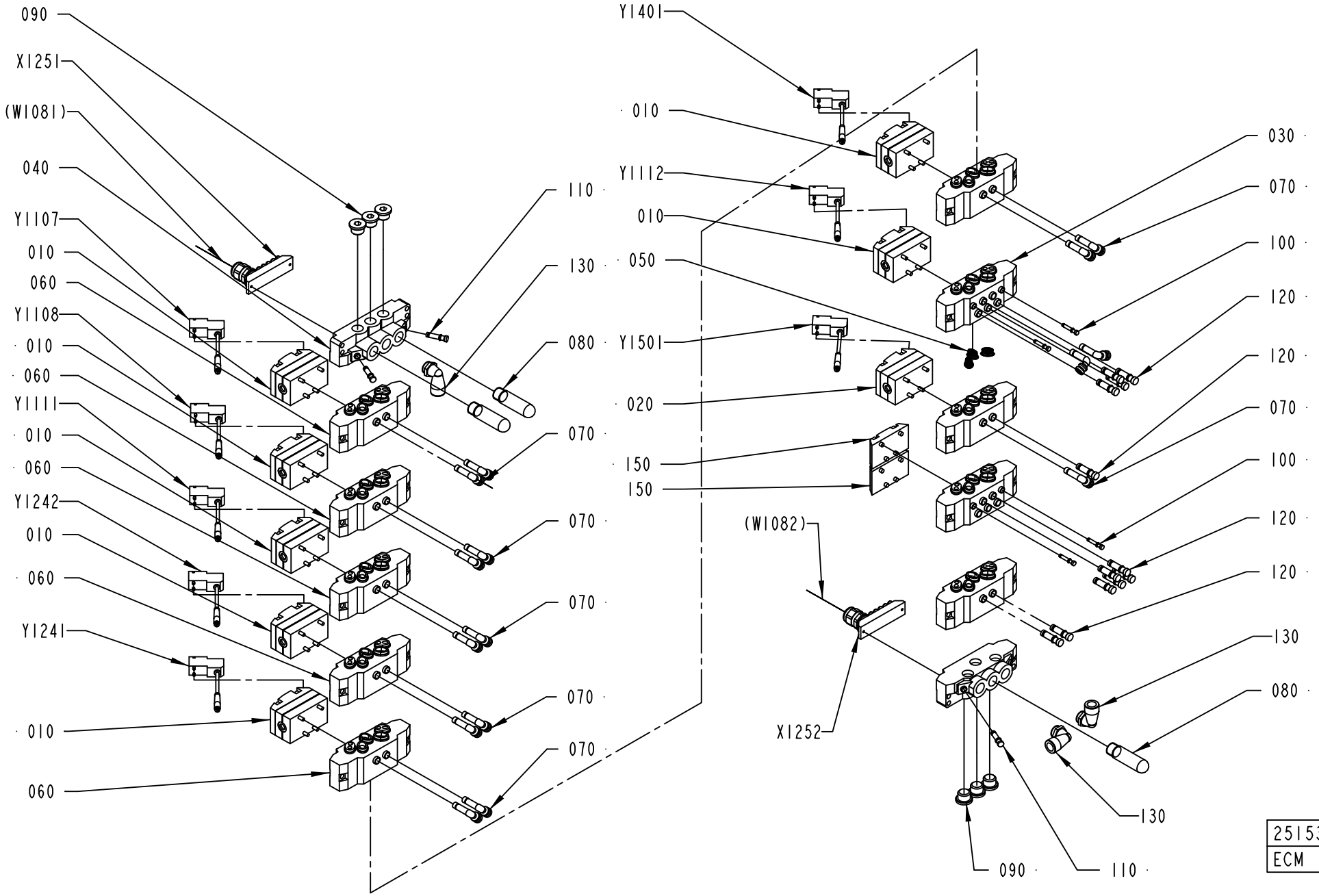
090
X1251
(W1081)
040
Y1107
010
060
Y1108
010
060
Y1111
010
060
Y1242
010
060
Y1241
010
060
110
130
080
070
070
070
070
070
Y1401
010
Y1112
010
050
Y1501
020
150
150
(W1082)
X1252
030
070
100
120
120
070
100
120
120
130
080
130
090
110
2515325-1
ECM 140502

ECM: 176950 - 20041115
Group number: 2515325-0100
Assembly Drawing: 2515325-1_1_AC

This list covers pages from 1-338 to 1-341

Pos	Part No	UN	Qty	Description	Page No
HI (See drawing on page: 1-340)					
020	90042-0271		2	VALVE BODY 2X3/2	
070	90055-0143		16	HOSE,ELBOW 90 COUPLING,FPT,6X8MM	
120	342715-0103		10	BLIND PLUG 8 MM	
150	90042-0519		1	BLANK PLATE ISO SIZE 1	
Y9105	90042-0538		1	PILOT VALVE L=500MM	
Y9106	90042-0538		1	PILOT VALVE L=500MM	
NOHI (See drawing on page: 1-338)					
020	90042-0271		1	VALVE BODY 2X3/2	
070	90055-0143		14	HOSE,ELBOW 90 COUPLING,FPT,6X8MM	
120	342715-0103		12	BLIND PLUG 8 MM	
150	90042-0519		2	BLANK PLATE ISO SIZE 1	
Common Parts					
010	90042-0215		7	VALVE BODY 5/2 UNISTABLE	
030	90042-0520		2	BASE PLATE ISO SIZE 1	
040	90042-0522		2	PORTED END PIECE ISO SIZE 1	
050	90042-0528		3	BLANKING KIT SEALS ISO SIZE 1	
060	90042-0532		8	BASE PLATE ISO SIZE 1	
080	90328-0024		3	SILENCER G3/8"	
090	342713-0211		6	PLUG, EXT THREAD HEX SOCKET 8638-00-380	
100	342715-0100		4	BLIND PLUG 4 MM	
110	342715-0102		3	BLIND PLUG 6 MM	
130	90458-2960		3	ELBOW PIPE JOINT, EXT.THREAD,D=12MM-G3/8	
X1251	90042-0535		1	TERMINAL BOARD 19 CORDS	
X1252	90042-0535		1	TERMINAL BOARD 19 CORDS	
Y1107	90042-0538		1	PILOT VALVE L=500MM	
Y1108	90042-0538		1	PILOT VALVE L=500MM	
Y1111	90042-0538		1	PILOT VALVE L=500MM	
Y1112	90042-0538		1	PILOT VALVE L=500MM	
Y1241	90042-0538		1	PILOT VALVE L=500MM	
Y1242	90042-0538		1	PILOT VALVE L=500MM	
Y1401	90042-0538		1	PILOT VALVE L=500MM	
Y1501	90042-0538		1	PILOT VALVE L=500MM	

Pos	Part No	UN	Qty	Description	Page No

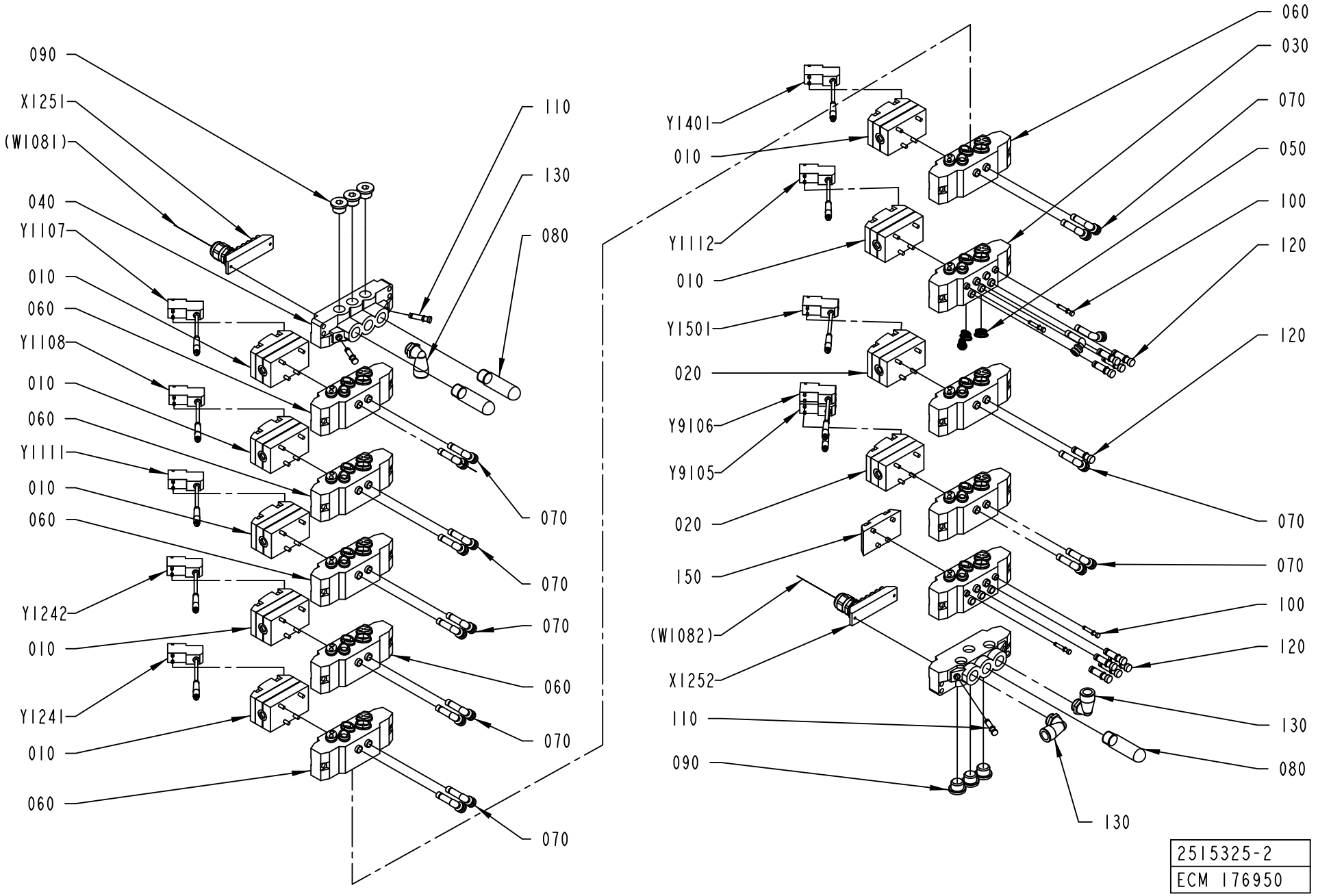
090
X1251
(W1081)
040
Y1107
010
060
Y1108
010
060
Y1111
010
060
Y1242
010
Y1241
010
060
110
130
080
070
070
070
070
060
070
070
Y1401
010
Y1112
010
Y1501
020
Y9106
Y9105
020
150
(W1082)
X1252
110
090
060
030
070
050
100
120
120
070
070
100
120
130
080
130
2515325-2
ECM 176950

ECM: 176950 - 20041115
Group number: 2515325-0100
Assembly Drawing: 2515325-2_1_AB

This list covers pages from 1-338 to 1-341

Pos	Part No	UN	Qty	Description	Page No
HI (See drawing on page: 1-340)					
020	90042-0271		2	VALVE BODY 2X3/2	
070	90055-0143		16	HOSE,ELBOW 90 COUPLING,FPT,6X8MM	
120	342715-0103		10	BLIND PLUG 8 MM	
150	90042-0519		1	BLANK PLATE ISO SIZE 1	
Y9105	90042-0538		1	PILOT VALVE L=500MM	
Y9106	90042-0538		1	PILOT VALVE L=500MM	
NOHI (See drawing on page: 1-338)					
020	90042-0271		1	VALVE BODY 2X3/2	
070	90055-0143		14	HOSE,ELBOW 90 COUPLING,FPT,6X8MM	
120	342715-0103		12	BLIND PLUG 8 MM	
150	90042-0519		2	BLANK PLATE ISO SIZE 1	
Common Parts					
010	90042-0215		7	VALVE BODY 5/2 UNISTABLE	
030	90042-0520		2	BASE PLATE ISO SIZE 1	
040	90042-0522		2	PORTED END PIECE ISO SIZE 1	
050	90042-0528		3	BLANKING KIT SEALS ISO SIZE 1	
060	90042-0532		8	BASE PLATE ISO SIZE 1	
080	90328-0024		3	SILENCER G3/8"	
090	342713-0211		6	PLUG, EXT THREAD HEX SOCKET 8638-00-380	
100	342715-0100		4	BLIND PLUG 4 MM	
110	342715-0102		3	BLIND PLUG 6 MM	
130	90458-2960		3	ELBOW PIPE JOINT, EXT.THREAD,D=12MM-G3/8	
X1251	90042-0535		1	TERMINAL BOARD 19 CORDS	
X1252	90042-0535		1	TERMINAL BOARD 19 CORDS	
Y1107	90042-0538		1	PILOT VALVE L=500MM	
Y1108	90042-0538		1	PILOT VALVE L=500MM	
Y1111	90042-0538		1	PILOT VALVE L=500MM	
Y1112	90042-0538		1	PILOT VALVE L=500MM	
Y1241	90042-0538		1	PILOT VALVE L=500MM	
Y1242	90042-0538		1	PILOT VALVE L=500MM	
Y1401	90042-0538		1	PILOT VALVE L=500MM	
Y1501	90042-0538		1	PILOT VALVE L=500MM	

Pos	Part No	UN	Qty	Description	Page No

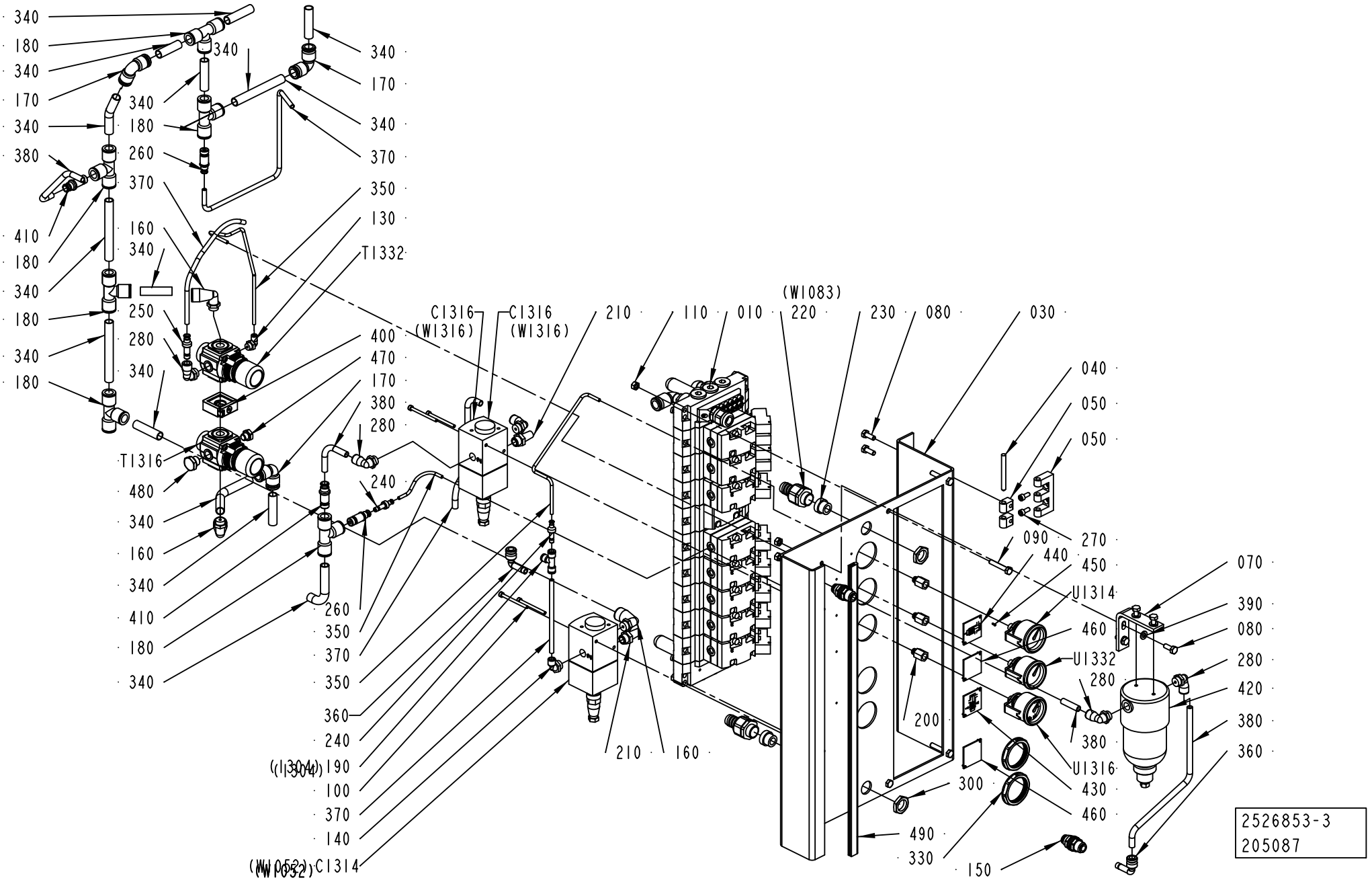
340
180
340
170
340
380
410
180
340
180
340
180
340
180
340
340
340
340
180
260
370
160
340
250
280
340
T1316
480
340
160
340
410
180
340
340
170
340
180
260
370
350
130
T1332
400
470
170
380
280
240
260
350
370
350
360
240
190
100
370
140
C1314
(W1052)
(W1304)
C1316
(W1316)
C1316
(W1316)
210
160
(W1083)
210
110
010
220
230
080
030
040
050
050
090
270
440
450
U1314
460
U1332
280
380
U1316
430
460
300
490
330
150
200
070
390
080
280
420
380
360
2526853-3
205087

ECM: 207191 - 20050615
Group number: 2526853-0300
Assembly Drawing: 2526853-3_1_AB

Pos	Part No	UN	Qty	Description	Page No
-					
010	2515323-0100		1	VALVE RAMP	**1-345, 1-347**
030	2696033-0000		1	PLATE	
040	988685-0000		2	PIN	
050	1035792-0000		2	E-HINGE	
060	1129770-0000		4	BLOCKING PIECE	
070	2696379-0000		1	BRACKET	
080	312105-0368		6	SCREW M6S ISO 4017 M6X16 A480	
090	312109-0376		4	SCREW M6S ISO 4017 M6X35 A480	
100	312115-0305		4	SCREW ISO4762 M4X50 A4 80	
110	312605-0316		6	HEXAGON NUT, M6M M6 A280	
130	90458-2955		1	ELBOW PIPE JOINT, EXT.THREAD,	
140	90458-2957		1	ELBOW PIPE JOINT, EXT.THREAD, D=6MM-G1/4	
150	342768-0103		2	BULKHEAD CONNECTOR, 8 MM	
160	90458-2959		3	ELBOW PIPE JOINT, EXT.THREAD,D=12MM-G1/4	
170	342735-0109		3	ELBOW PIPE JOINT	
180	342748-0109		6	T-CONNECTION 12MM	
190	342748-0102		1	T-CONNECTION 6MM	
200	342770-0101		3	STRAIGHT COUPLING INT, D=4 MM - G1/8	
210	346800-0110		2	SILENCER FILTER R1/4"	
220	353243-0003		2	HOSE GLAND W/O INSERT PG11 EXTENDED	
230	353249-0011		2	INSERT, SINGEL HOLE, EK 153/11	
240	342716-0202		2	REDUCER 4-6	
250	342716-0203		2	REDUCER 6-8	
260	342716-0210		2	REDUCER 6-12	
270	312115-0327		4	SCREW ISO4762 M5X12 A4 80	
280	90458-2958		5	ELBOW PIPE JOINT, EXT.THREAD, D=8MM-G1/4	
300	90099-0117		2	NUT, PR 18,6 (PG11)	
330	90457-0078		2	PANEL NUT	
340	90166-0068	MM	2250	TUBE 12 MM PA BLUE	
350	90166-0095	MM	900	TUBE 4 MM PA BLUE (50M)	
360	90055-0118		2	ELBOW WITH TAILPIECE 8/8 MM	
370	90166-0081	MM	900	TUBE 6 MM PA BLUE	
380	90166-0013	MM	800	TUBE 8 MM PA BLUE	
390	315105-0153		4	WASHER BRB 6,4X12 RFR	
400	90113-0140		1	QUICK CLAMP	
410	342716-0209		2	REDUCER 8-12	
420	90277-0116		1	FILTER HOUSING / ART.NO FILTER 58P-S5430	
	90277-0406		*1*	*CARTRIDGE 100-12-BX*	
430	1548001-0000		1	SIGN	
440	2672942-0000		1	SYMBOLSIGN	
450	312502-0120		8	DRIVE SCREW ROUND HEAD KDS 0X5	
460	2634917-0000		2	SIGN	
470	90330-0066		1	PLUG, EXT. G-THREAD, G1/8	
480	90330-0026		1	PLUG, EXT. G-THREAD, G1/4	
490	90143-0059	MM	480	SEAL STRIP 4610069	
C1314	90458-1092		1	PROPORTIONAL VALVE 0 - 10V/0-6 BAR	
	90458-1262		*1*	*CONNECTOR 131028001 FOR PROP. VALVE*	
C1316	90458-1092		1	PROPORTIONAL VALVE 0 - 10V/0-6 BAR	
	90458-1262		*1*	*CONNECTOR 131028001 FOR PROP. VALVE*	
T1316	90457-0144		1	REGULATOR 0,3-2 BAR	
T1332	90113-0469		1	MANIFOLD REGULATOR 4 BAR	
U1314	90043-0065		1	MKC NEW FILL PUMP VACUUM PRESSURE GAUGE	
U1316	90459-4991		1	PRESSURE GAUGE, 9063064 D=40 MM	
U1332	90043-0065		1	MKC NEW FILL PUMP VACUUM PRESSURE GAUGE	

Machine Type | Group Description | Used-In | Group Number | Page No

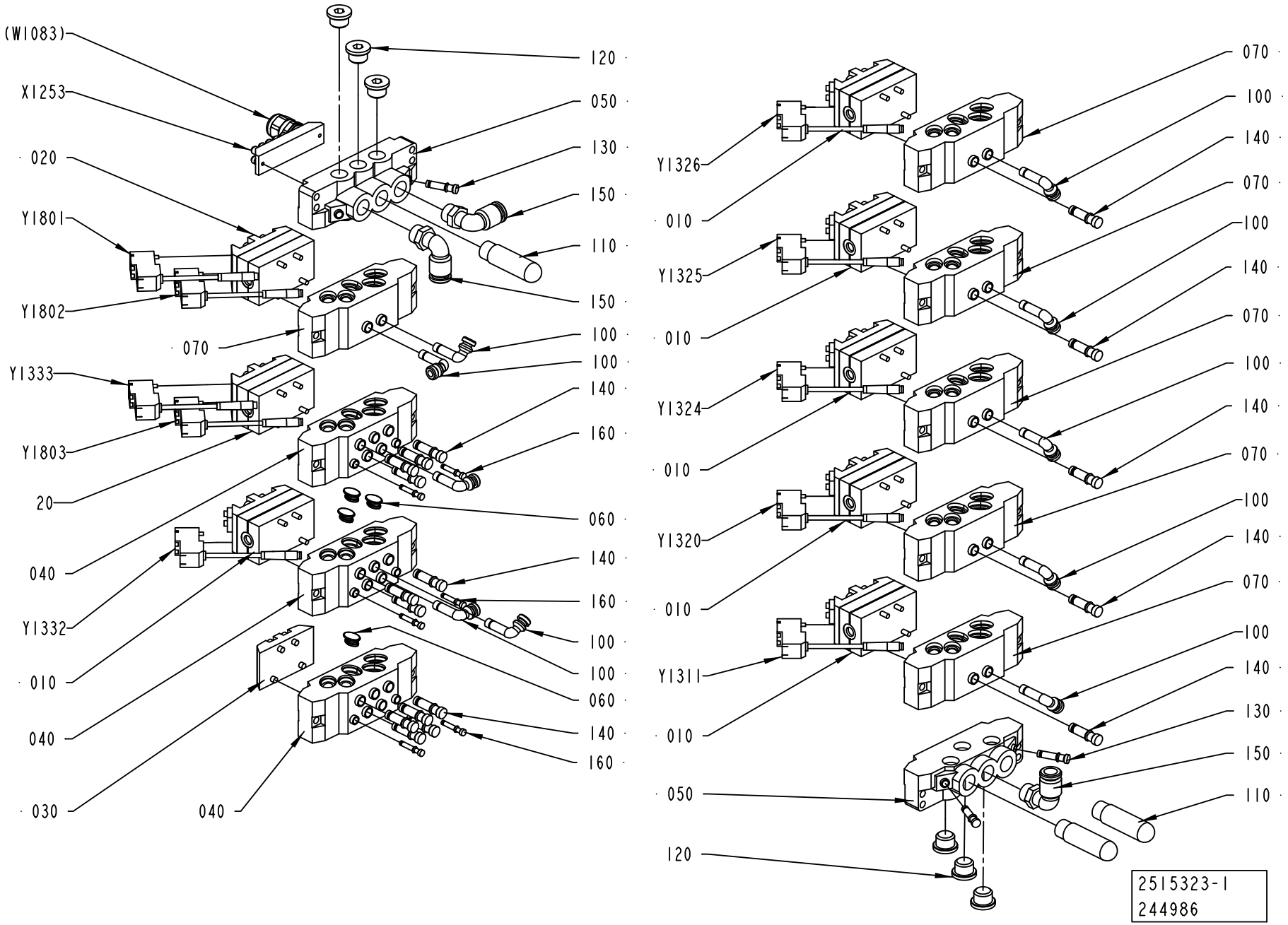
(W1083)
X1253
020
Y1801
Y1802
070
Y1333
Y1803
20
040
Y1332
010
040
030
040
120
050
130
150
110
150
100
100
140
160
060
140
160
100
100
060
140
160
070
100
140
070
Y1326
010
Y1325
010
Y1324
010
Y1320
010
Y1311
010
050
120
070
100
140
070
100
140
070
100
140
070
100
140
130
150
110
2515323-1
244986

ECM: 275953 - 20060928
Group number: 2515323-0100
Assembly Drawing: 2515323-1_1_AC

This list covers pages from 1-344 to 1-347

Pos	Part No	UN	Qty	Description	Page No
A3/FLEX AUTOMCIP (See drawing on page: 1-344)					
010	90042-0215		6	VALVE BODY 5/2 UNISTABLE	
030	90042-0519		1	BLANK PLATE ISO SIZE 1	
100	90055-0143		10	HOSE,ELBOW 90 COUPLING,FPT,6X8MM	
140	342715-0103		17	BLIND PLUG 8 MM	
Y1311	90042-0538		1	PILOT VALVE L=500MM	
Y1320	90042-0538		1	PILOT VALVE L=500MM	
Y1324	90042-0538		1	PILOT VALVE L=500MM	
Y1325	90042-0538		1	PILOT VALVE L=500MM	
Y1326	90042-0538		1	PILOT VALVE L=500MM	
Y1801	90042-0538		1	PILOT VALVE L=500MM	
Y1802	90042-0538		1	PILOT VALVE L=500MM	
Y1803	90042-0538		1	PILOT VALVE L=500MM	
A3/FLEX MANUALCIP (See drawing on page: 1-346)					
010	90042-0215		1	VALVE BODY 5/2 UNISTABLE	
030	90042-0519		6	BLANK PLATE ISO SIZE 1	
100	90055-0143		6	HOSE,ELBOW 90 COUPLING,FPT,6X8MM	
140	342715-0103		21	BLIND PLUG 8 MM	
Y1801	90042-0538		1	PILOT VALVE L=500MM	
Y1802	90042-0538		1	PILOT VALVE L=500MM	
Y1803	90042-0538		1	PILOT VALVE L=500MM	
Common Parts					
020	90042-0271		2	VALVE BODY 2X3/2	
040	90042-0520		3	BASE PLATE ISO SIZE 1	
050	90042-0522		2	PORTED END PIECE ISO SIZE 1	
060	90042-0528		4	BLANKING KIT SEALS ISO SIZE 1	
070	90042-0532		6	BASE PLATE ISO SIZE 1	
110	90328-0024		3	SILENCER G3/8"	
120	342713-0211		6	PLUG, EXT THREAD HEX SOCKET 8638-00-380	
130	342715-0102		3	BLIND PLUG 6 MM	
150	90458-2960		3	ELBOW PIPE JOINT, EXT.THREAD,D=12MM-G3/8	
160	342715-0100		6	BLIND PLUG 4 MM	
X1253	90042-0535		1	TERMINAL BOARD 19 CORDS	
Y1332	90042-0538		1	PILOT VALVE L=500MM	
Y1333	90042-0538		1	PILOT VALVE L=500MM	

Pos	Part No	UN	Qty	Description	Page No

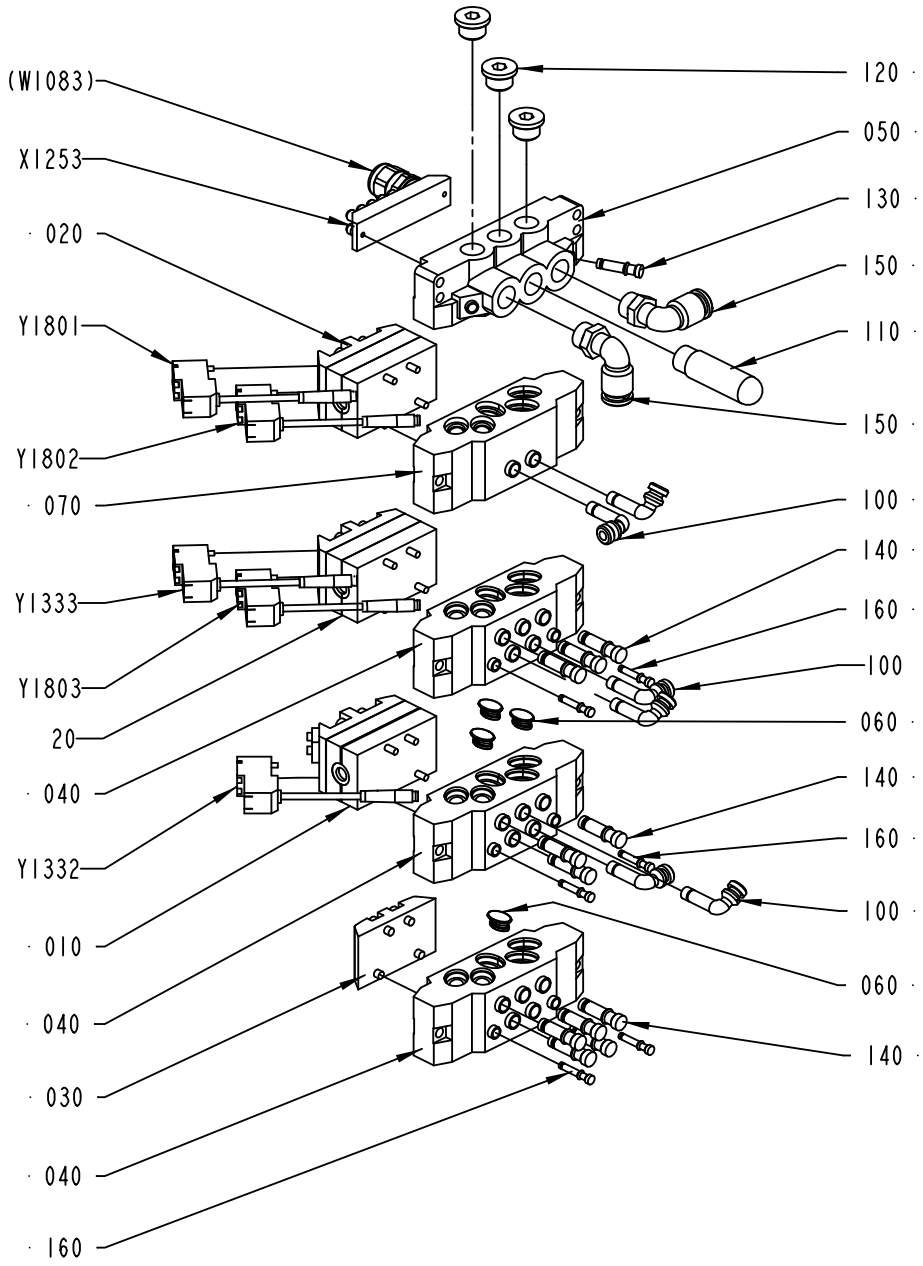

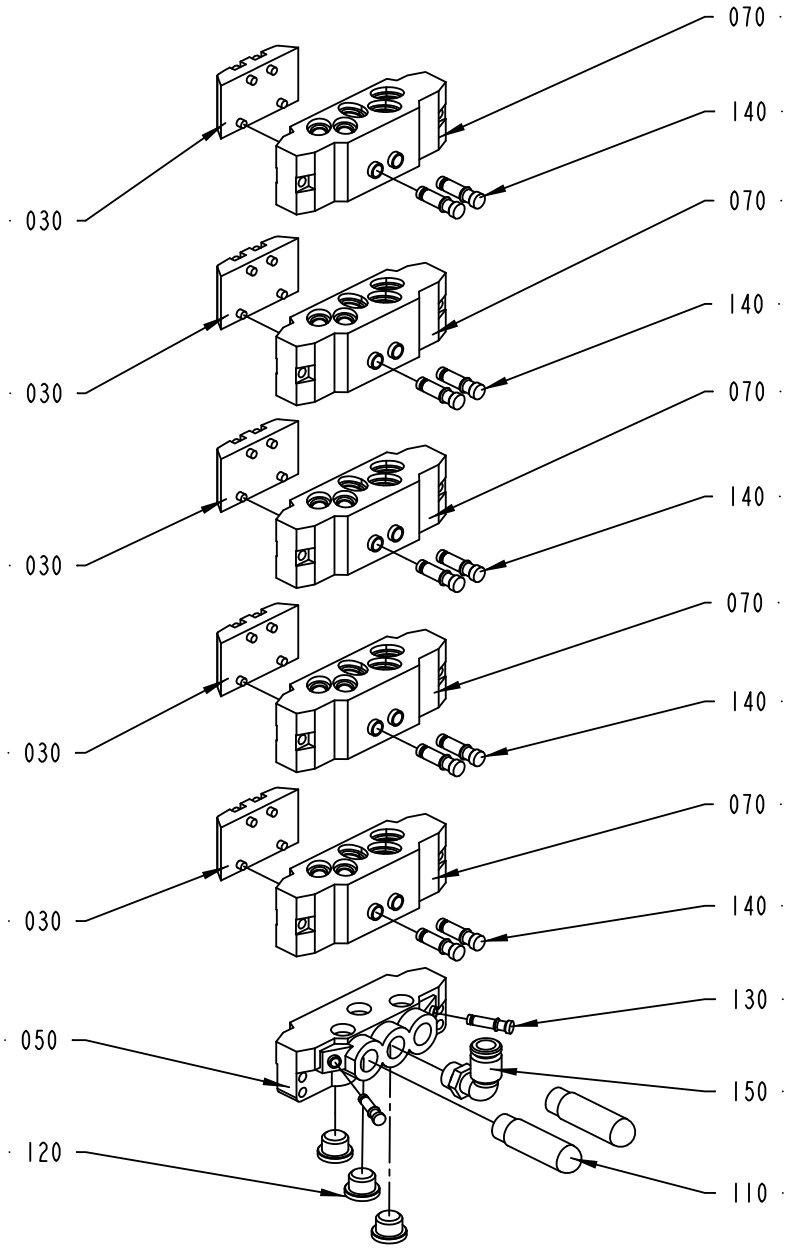

2515323-2
244986

ECM: 275953 - 20060928
Group number: 2515323-0100
Assembly Drawing: 2515323-2_1_AC

This list covers pages from 1-344 to 1-347

Pos	Part No	UN	Qty	Description	Page No
A3/FLEX AUTOMCIP (See drawing on page: 1-344)					
010	90042-0215		6	VALVE BODY 5/2 UNISTABLE	
030	90042-0519		1	BLANK PLATE ISO SIZE 1	
100	90055-0143		10	HOSE,ELBOW 90 COUPLING,FPT,6X8MM	
140	342715-0103		17	BLIND PLUG 8 MM	
Y1311	90042-0538		1	PILOT VALVE L=500MM	
Y1320	90042-0538		1	PILOT VALVE L=500MM	
Y1324	90042-0538		1	PILOT VALVE L=500MM	
Y1325	90042-0538		1	PILOT VALVE L=500MM	
Y1326	90042-0538		1	PILOT VALVE L=500MM	
Y1801	90042-0538		1	PILOT VALVE L=500MM	
Y1802	90042-0538		1	PILOT VALVE L=500MM	
Y1803	90042-0538		1	PILOT VALVE L=500MM	
A3/FLEX MANUALCIP (See drawing on page: 1-346)					
010	90042-0215		1	VALVE BODY 5/2 UNISTABLE	
030	90042-0519		6	BLANK PLATE ISO SIZE 1	
100	90055-0143		6	HOSE,ELBOW 90 COUPLING,FPT,6X8MM	
140	342715-0103		21	BLIND PLUG 8 MM	
Y1801	90042-0538		1	PILOT VALVE L=500MM	
Y1802	90042-0538		1	PILOT VALVE L=500MM	
Y1803	90042-0538		1	PILOT VALVE L=500MM	
Common Parts					
020	90042-0271		2	VALVE BODY 2X3/2	
040	90042-0520		3	BASE PLATE ISO SIZE 1	
050	90042-0522		2	PORTED END PIECE ISO SIZE 1	
060	90042-0528		4	BLANKING KIT SEALS ISO SIZE 1	
070	90042-0532		6	BASE PLATE ISO SIZE 1	
110	90328-0024		3	SILENCER G3/8"	
120	342713-0211		6	PLUG, EXT THREAD HEX SOCKET 8638-00-380	
130	342715-0102		3	BLIND PLUG 6 MM	
150	90458-2960		3	ELBOW PIPE JOINT, EXT.THREAD,D=12MM-G3/8	
160	342715-0100		6	BLIND PLUG 4 MM	
X1253	90042-0535		1	TERMINAL BOARD 19 CORDS	
Y1332	90042-0538		1	PILOT VALVE L=500MM	
Y1333	90042-0538		1	PILOT VALVE L=500MM	

Pos	Part No	UN	Qty	Description	Page No

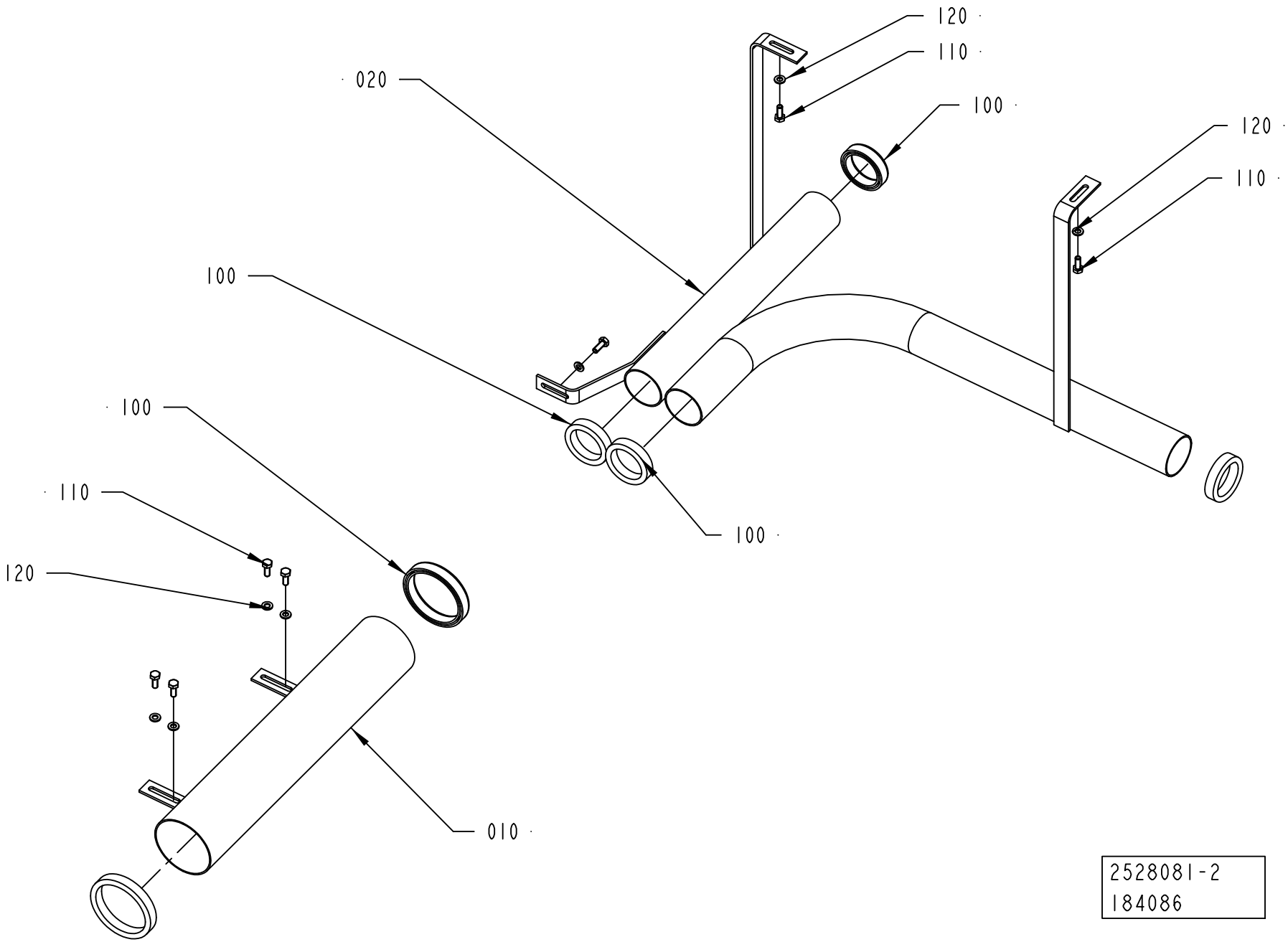
120
110
020
100
120
110
100
100
100
110
120
010
2528081-2
184086

ECM: 202216 - 20050224
Group number: 2528081-0200
Assembly Drawing: 2528081-2_1_AA

Pos	Part No	UN	Qty	Description	Page No
-					
010	2528082-0000		1	PIPE	
020	2528083-0000		1	TUBE	
100	90143-0059	MM	1600	SEAL STRIP 4610069	
110	312105-0368		7	SCREW M6S ISO 4017 M6X16 A480	
120	315105-0153		7	WASHER BRB 6,4X12 RFR	

Pos	Part No	UN	Qty	Description	Page No

CONNECTION BOX

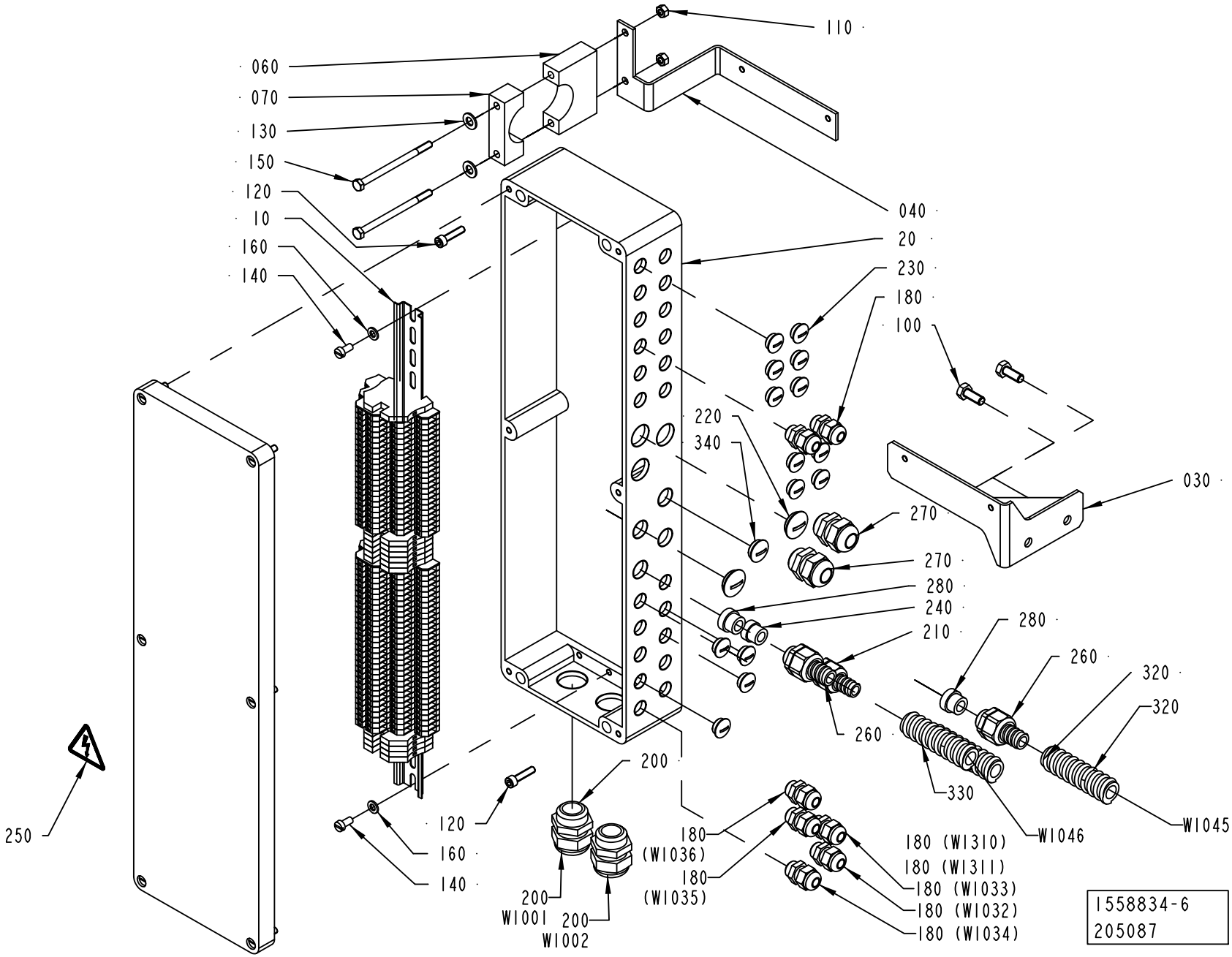

ECM: 207190 - 20050615
Group number: 1558834-0200
Assembly Drawing: 1558834-6_1_AB

Pos	Part No	UN	Qty	Description	Page No
A3/FLEX					
180	352103-0101		15	CABLE GLAND, ST 9, PR15,2/PG9	
220	90002-0004		2	BLANK-OFF PLUG, PR 22,5 SKINDICHT-BLK16	
230	90002-0013		6	BLANK-OFF PLUG, PR 15,2 SKINDICHT-BLK9	
260	353243-0003		2	HOSE GLAND W/O INSERT PG11 EXTENDED	
270	352103-0110		2	CABLE GLAND, STR 16, PR22,5/PG16	
280	353249-0011		2	INSERT, SINGEL HOLE, EK 153/11	
330	90152-0050	MM	900	SPIRAL CONDUIT, 20X13, UL 1313	
340	90002-0009		1	BLANK-OFF PLUG, PR 18.6 SKINDICHT-BLK11	
Common Parts					
010	1558519-0100		1	TERMINAL BLOCK	**1-353**
020	1558833-0000		1	CONNECTION BOX	
030	2696039-0000		1	BRACKET	
040	2696038-0000		1	BRACKET	
060	2529742-0000		1	CLAMP	
070	735041-0000		1	CONNECTION CLAMP	
100	312105-0451		2	SCREW M6S ISO 4017 M8X20 A480	
110	312605-0316		2	HEXAGON NUT, M6M M6 A280	
120	312115-0372		4	SCREW ISO4762 M6X25 A4 80	
130	315105-0165		2	WASHER BRB 8,4X16 RFR	
140	312125-0366		2	SCREW ISO 1207 M6X12 A4	
150	312105-0388		2	SCREW M6S ISO 4014 M6X90 A480	
160	315105-0153		2	WASHER BRB 6,4X12 RFR	
200	352103-0116		2	CABLE GLAND, ST 21, PR28,3/PG21	
210	353243-0001		1	HOSE GLAND W/O INSERT PG9 EXTENDED	
240	353249-0009		1	INSERT, SINGEL HOLE, EK 152/9	
250	359705-0015		1	WARNING SIGN ISO, RISK OF ELECTRIC SHOCK	
320	90152-0050	MM	1200	SPIRAL CONDUIT, 20X13, UL 1313	
380	90152-0050	MM	2200	SPIRAL CONDUIT, 20X13, UL 1313	
W1001	351150-0425	M	6	CABLE OLFLEX 25X0,75 MM2 LIGHT/GREY	
W1002	351150-0425	M	6	CABLE OLFLEX 25X0,75 MM2 LIGHT/GREY	
W1045	351150-0405	M	6	CABLE OLFLEX 5X0,75 MM2 LIGHT/GREY	
W1046	351150-0405	M	6	CABLE OLFLEX 5X0,75 MM2 LIGHT/GREY	
W1316	90220-0165	M	2	SCR. CABLE 5X0,34MM2	
W1801	351150-0404	M	3	CABLE OLFLEX 4X0,75 MM2 LIGHT/GREY	
W1810	351150-0404	M	2.4	CABLE OLFLEX 4X0,75 MM2 LIGHT/GREY	

Pos	Part No	UN	Qty	Description	Page No

TERMINAL BLOCK

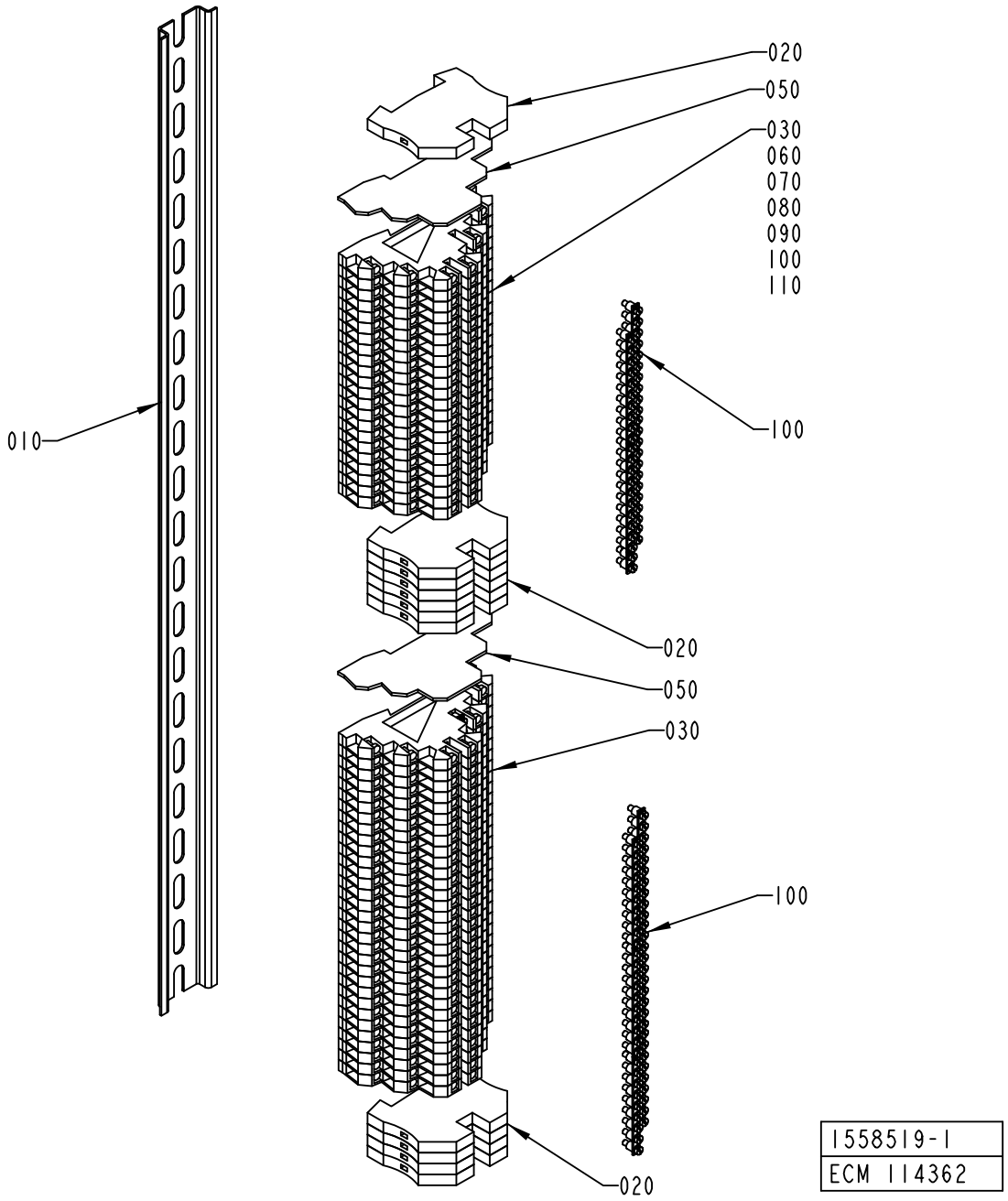

ECM: 189211 - 20041104
Group number: 1558519-0100
Assembly Drawing: 1558519-1_1_AA

Pos	Part No	UN	Qty	Description	Page No
-					
010	1558832-0000		1	RAIL	
020	353024-0205		11	EARTH TERMINAL, 1010.1	
030	353021-0302		53	TERMINALS,TRIPLE-LEVEL, DLD 2,5/35 PA	
050	353032-0302		2	END PLATE WAP, 13176.6	
060	359011-0834		2	SET OF SIGNS 6-GW(EARTH)	
070	359011-0833		5	SET OF SIGNS 6-GW (-)	
080	359011-0832		5	SET OF SIGNS 6-GW (+)	
090	359011-0823		2	SET OF SIGNS 6-FW 101-150	
100	353034-0404		11	BRIDGE CONNECTOR Q10, 13131.0	
110	359011-0824		2	SET OF SIGNS 6-FW 151-200	

Pos	Part No	UN	Qty	Description	Page No

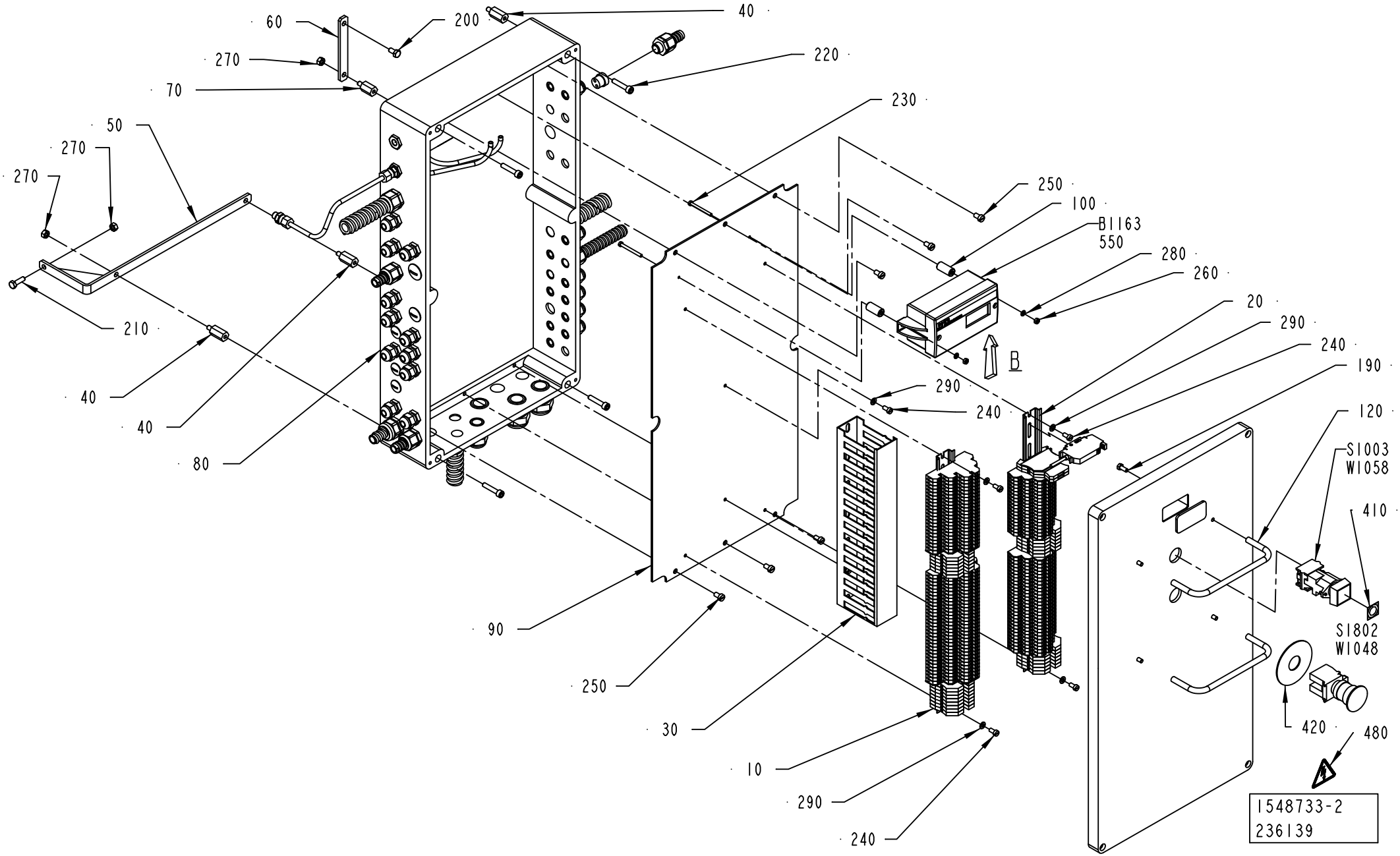
60
200
40
270
220
70
230
50
270
270
250
100
B1163
550
280
260
20
290
240
190
210
B
290
240
120
S1003
W1058
410
40
40
80
90
250
S1802
W1048
30
420
480
10
290
240
1548733-2
236139

ECM: 259567 - 20060411
Group number: 1548733-0100
Assembly Drawing: 1548733-2_1_AD

This list covers pages from 1-354 to 1-361

Pos	Part No	UN	Qty	Description	Page No
A3/FLEX DIMC/FLEX (See drawing on pages: 1-358, 1-360)					
040	1548869-0000		3	SPACER	
060	1519790-0000		1	PLATE	
070	1548870-0000		1	SPACER	
080	1548726-0000		1	CONNECTION BOX	
100	1548730-0000		2	SPACER	
110	1548749-0000		1	PIPE	
200	312105-0366		1	SCREW M6S ISO 4017 M6X12 A480	
210	312105-0370		1	SCREW M6S ISO 4017 M6X20 A480	
230	312125-0303		2	SCREW ISO 1207 M4X40 A4	
260	312605-0312		2	HEXAGON NUT, M6M M4 A280	
270	312605-0316		4	HEXAGON NUT, M6M M6 A280	
280	315105-0136		2	WASHER BRB 4,3X8 RFR	
300	342767-0100		2	CONN. BULKHEAD G1/8	
310	342921-0113		2	STRAIGHT COUPLING,EXT.THREADED 6/4-G1/8"	
320	352103-0101		23	CABLE GLAND, ST 9, PR15,2/PG9	
370	353243-0001		4	HOSE GLAND W/O INSERT PG9 EXTENDED	
380	353243-0003		4	HOSE GLAND W/O INSERT PG11 EXTENDED	
400	353249-0011		6	INSERT, SINGEL HOLE, EK 153/11	
440	90002-0009		2	BLANK-OFF PLUG, PR 18.6 SKINDICHT-BLK11	
450	90002-0013		8	BLANK-OFF PLUG, PR 15,2 SKINDICHT-BLK9	
460	90002-0016		2	BLANK-OFF PLUG PR 20.4 SKINDICHT-BLK13,5	
470	90030-0184		2	CONN. STR. GA-6-G1/8	
490	90166-0176	MM	210	RUBBER HOSE	
500	90166-0176	MM	170	RUBBER HOSE	
510	90152-0050	M	12.2	SPIRAL CONDUIT, 20X13, UL 1313	
520	90152-0058	M	1	SPIRAL CONDUIT, 15X9, UL 0909	
550	351160-0102	M	4.5	CABLE (1UNIT = 100M)	
580	353243-0009		1	HOSE GLAND W/O INSERT PG13,5 EXTENDED	
590	353249-0008		1	INSERT, SINGEL HOLE, EK 152/7	
600	353249-0036		2	INSERT, MULTI HOLE, EK152 M 2X4	
610	351160-0102	M	5	CABLE (1UNIT = 100M)	
B1163	90459-0643		1	DIFF. PRESS. TRANSDUCER 2671-10CLD2EG2HD	
W1012	351150-0403	M	5	CABLE OLFLEX 3X0,75 MM2 LIGHT/GREY	
W1013	351150-0403	M	4.2	CABLE OLFLEX 3X0,75 MM2 LIGHT/GREY	
W1015	351150-0403	M	4.5	CABLE OLFLEX 3X0,75 MM2 LIGHT/GREY	
W1018	351150-0403	M	4.6	CABLE OLFLEX 3X0,75 MM2 LIGHT/GREY	
W1041	351150-0405	M	3	CABLE OLFLEX 5X0,75 MM2 LIGHT/GREY	
W1066	351150-0403	M	2	CABLE OLFLEX 3X0,75 MM2 LIGHT/GREY	
W1232	351150-0403	M	3.5	CABLE OLFLEX 3X0,75 MM2 LIGHT/GREY	
W1233	351150-0403	M	3.5	CABLE OLFLEX 3X0,75 MM2 LIGHT/GREY	
W1235	351150-0403	M	2.5	CABLE OLFLEX 3X0,75 MM2 LIGHT/GREY	

Pos	Part No	UN	Qty	Description	Page No
A3/FLEX NODIMC (See drawing on pages: 1-354, 1-356)					
040	1548869-0000		3	SPACER	
060	1519790-0000		1	PLATE	
070	1548870-0000		1	SPACER	
080	1548726-0000		1	CONNECTION BOX	
100	1548730-0000		2	SPACER	
110	1548749-0000		1	PIPE	
200	312105-0366		1	SCREW M6S ISO 4017 M6X12 A480	
210	312105-0370		1	SCREW M6S ISO 4017 M6X20 A480	
230	312125-0303		2	SCREW ISO 1207 M4X40 A4	
260	312605-0312		2	HEXAGON NUT, M6M M4 A280	
270	312605-0316		4	HEXAGON NUT, M6M M6 A280	
280	315105-0136		2	WASHER BRB 4,3X8 RFR	
300	342767-0100		2	CONN. BULKHEAD G1/8	
310	342921-0113		2	STRAIGHT COUPLING,EXT.THREADED 6/4-G1/8"	
320	352103-0101		22	CABLE GLAND, ST 9, PR15,2/PG9	
370	353243-0001		4	HOSE GLAND W/O INSERT PG9 EXTENDED	
380	353243-0003		3	HOSE GLAND W/O INSERT PG11 EXTENDED	
390	353249-0009		1	INSERT, SINGEL HOLE, EK 152/9	
400	353249-0011		4	INSERT, SINGEL HOLE, EK 153/11	
440	90002-0009		3	BLANK-OFF PLUG, PR 18.6 SKINDICHT-BLK11	
450	90002-0013		8	BLANK-OFF PLUG, PR 15,2 SKINDICHT-BLK9	
460	90002-0016		2	BLANK-OFF PLUG PR 20.4 SKINDICHT-BLK13,5	
470	90030-0184		2	CONN. STR. GA-6-G1/8	
490	90166-0176	MM	210	RUBBER HOSE	
500	90166-0176	MM	170	RUBBER HOSE	
510	90152-0050	M	12	SPIRAL CONDUIT, 20X13, UL 1313	
520	90152-0058	M	1	SPIRAL CONDUIT, 15X9, UL 0909	
550	351160-0102	M	4.5	CABLE (1UNIT = 100M)	
580	353243-0009		1	HOSE GLAND W/O INSERT PG13,5 EXTENDED	
590	353249-0008		1	INSERT, SINGEL HOLE, EK 152/7	
600	353249-0036		2	INSERT, MULTI HOLE, EK152 M 2X4	
610	351160-0102	M	5	CABLE (1UNIT = 100M)	
B1163	90459-0643		1	DIFF. PRESS. TRANSDUCER 2671-10CLD2EG2HD	
W1012	351150-0403	M	5	CABLE OLFLEX 3X0,75 MM2 LIGHT/GREY	
W1013	351150-0403	M	4.2	CABLE OLFLEX 3X0,75 MM2 LIGHT/GREY	
W1015	351150-0403	M	4.5	CABLE OLFLEX 3X0,75 MM2 LIGHT/GREY	
W1018	351150-0403	M	4.6	CABLE OLFLEX 3X0,75 MM2 LIGHT/GREY	
W1041	351150-0405	M	3	CABLE OLFLEX 5X0,75 MM2 LIGHT/GREY	
W1066	351150-0403	M	2	CABLE OLFLEX 3X0,75 MM2 LIGHT/GREY	
W1232	351150-0403	M	3.5	CABLE OLFLEX 3X0,75 MM2 LIGHT/GREY	
W1233	351150-0403	M	3.5	CABLE OLFLEX 3X0,75 MM2 LIGHT/GREY	

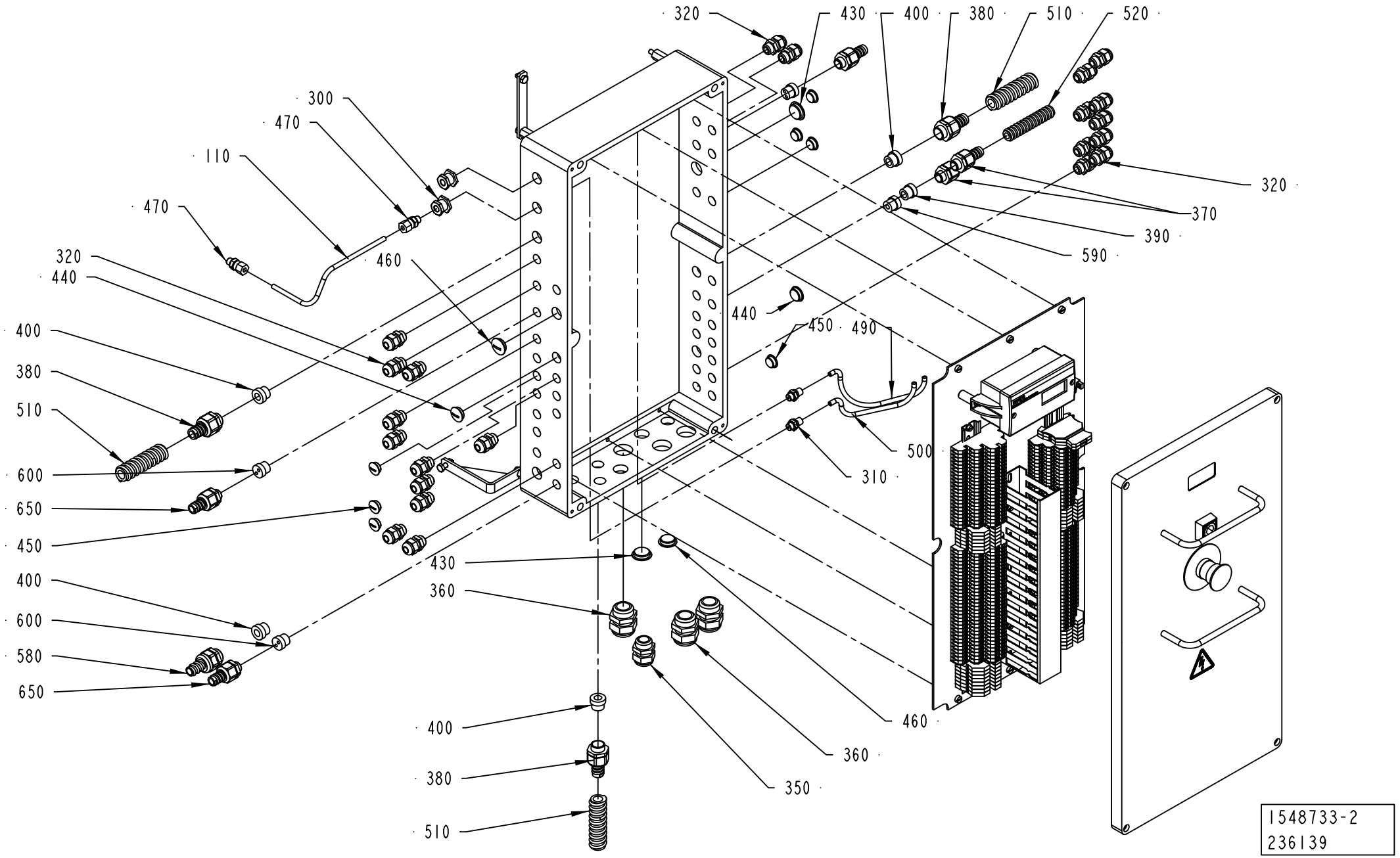
320
430
400
380
510
520
300
470
110
470
460
320
440
400
380
510
600
650
450
400
600
580
650
320
370
390
590
440
450
490
500
310
430
360
460
360
350
400
380
510
1548733-2
236139

Pos	Part No	UN	Qty	Description	Page No
Common Parts (Cont'd)					
010	1549542-0100		1	TERMINAL BLOCK	**1-363**
020	1548728-0100		1	TERMINAL BLOCK	**1-365**
030	1129480-0000		1	CABLE DUCT	
050	1519789-0000		1	BRACKET	
090	1548727-0000		1	MOUNTING PLATE	
120	2570678-0000		2	HANDLE	
190	312105-0327		4	SCREW M6S ISO 4017 M5X12 A480	
220	312115-0374		4	SCREW ISO4762 M6X30 A4 80	
240	312125-0325		6	SCREW ISO 1207 M5X10 A4	
250	312125-0364		6	SCREW ISO 1207 M6X10 A4	
290	315105-0146		6	WASHER BRB 5,3X10 RFR	
350	352103-0111		1	CABLE GLAND, ST 16, PR22,5/PG16	
360	352103-0116		3	CABLE GLAND, ST 21, PR28,3/PG21	
410	359301-0110		1	BUTTON SIGN, SHORT STOP	
420	486826-0001		1	SIGN "EMERGENCY STOP"	
430	90002-0004		3	BLANK-OFF PLUG, PR 22,5 SKINDICHT-BLK16	
480	359705-0015		1	WARNING SIGN ISO, RISK OF ELECTRIC SHOCK	
S1003	90064-0084		1	PUSH BUTTON, YELLOW	
S1802	90458-1651		1	EMERGENCY STOP, ZB4-BS-844 ZB4-BZ-104	
W1003	351150-0425	M	7	CABLE OLFLEX 25X0,75 MM2 LIGHT/GREY	
W1004	351150-0425	M	7	CABLE OLFLEX 25X0,75 MM2 LIGHT/GREY	
W1005	351150-0425	M	7	CABLE OLFLEX 25X0,75 MM2 LIGHT/GREY	
W1006	351150-0407	M	6	CABLE OLFLEX 12X0,75 MM2 LIGHT/GREY	
W1011	351150-0405	M	3	CABLE OLFLEX 5X0,75 MM2 LIGHT/GREY	
W1029	351150-0404	M	2	CABLE OLFLEX 4X0,75 MM2 LIGHT/GREY	
W1030	351150-0403	M	3	CABLE OLFLEX 3X0,75 MM2 LIGHT/GREY	
W1031	351150-0403	M	3	CABLE OLFLEX 3X0,75 MM2 LIGHT/GREY	
W1044	351150-0405	M	3	CABLE OLFLEX 5X0,75 MM2 LIGHT/GREY	
W1048	351150-0405	M	1	CABLE OLFLEX 5X0,75 MM2 LIGHT/GREY	
W1058	351150-0403	M	1.1	CABLE OLFLEX 3X0,75 MM2 LIGHT/GREY	
W1065	351150-0403	M	3	CABLE OLFLEX 3X0,75 MM2 LIGHT/GREY	
W1511	90220-0165	M	1.2	SCR. CABLE 5X0,34MM2	

Pos	Part No	UN	Qty	Description	Page No

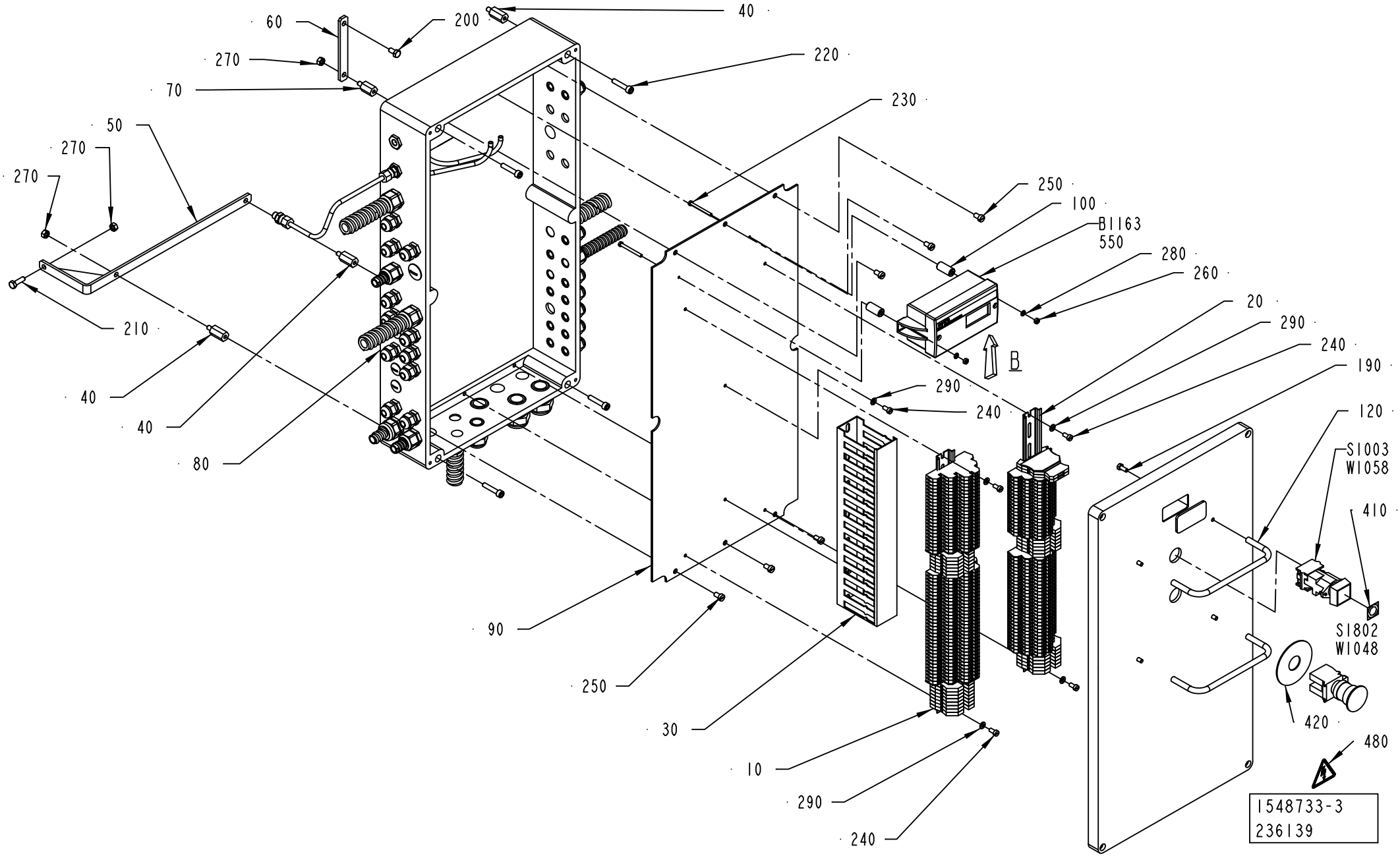
60
200
40
270
220
70
230
50
270
270
250
100
B1163
550
280
260
20
290
240
190
210
290
240
B
40
40
80
120
S1003
W1058
410
90
250
S1802
W1048
30
420
10
480
290
240
1548733-3
236139

Pos	Part No	UN	Qty	Description	Page No	Pos	Part No	UN	Qty	Description	Page No

SEE PREVIOUS LISTS PAGES: 1-355, 1-357.

CONNECTION BOX

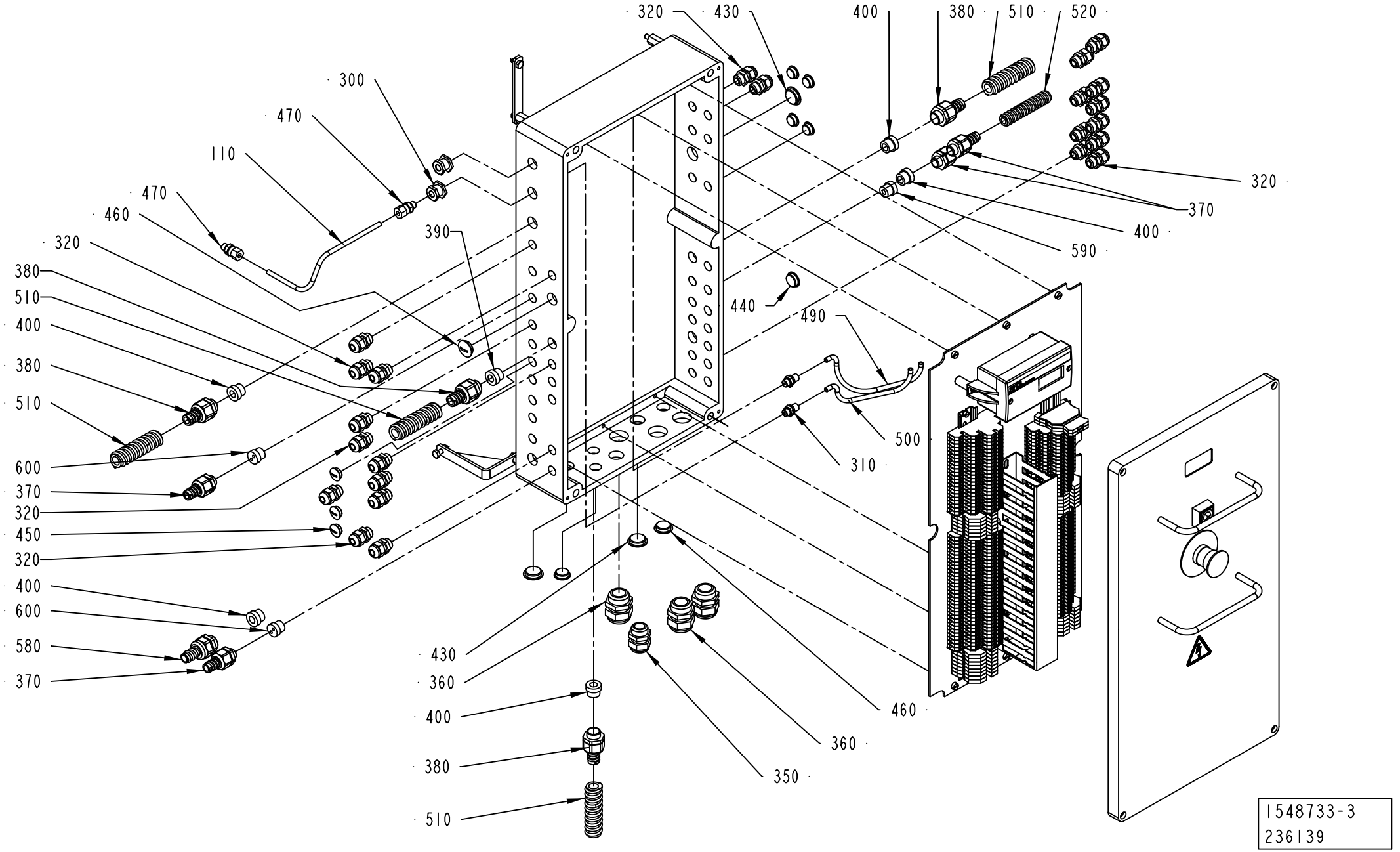

Pos	Part No	UN	Qty	Description	Page No	Pos	Part No	UN	Qty	Description	Page No

SEE PREVIOUS LISTS PAGES: 1-355, 1-357.

TERMINAL BLOCK

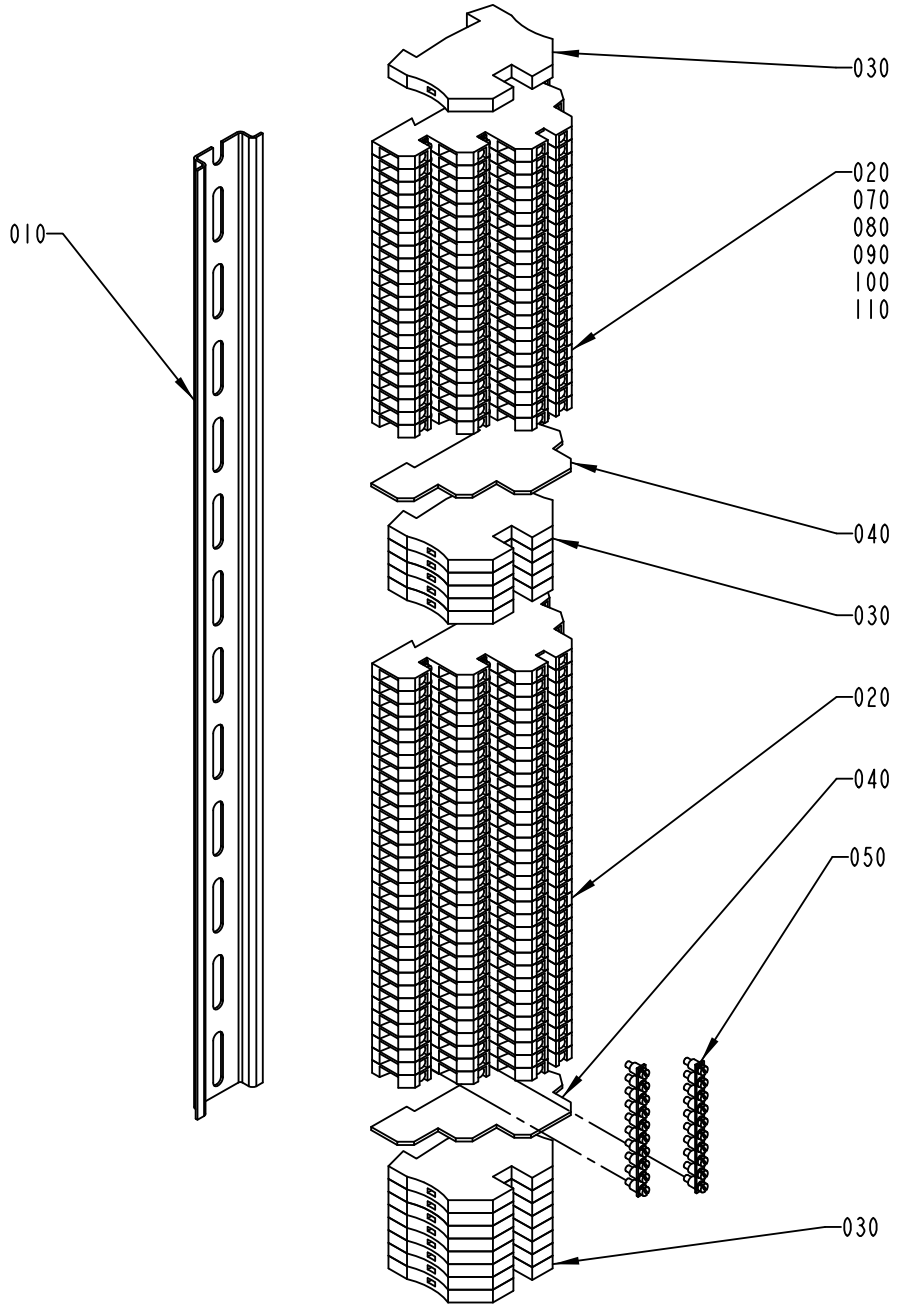

1549542-1
244986

ECM: 274550 - 20060728
Group number: 1549542-0100
Assembly Drawing: 1549542-1_1_AB

Pos	Part No	UN	Qty	Description	Page No
-					
010	1548729-0000		1	RAIL	
020	353021-0302		54	TERMINALS,TRIPLE-LEVEL, DLD 2,5/35 PA	
030	353024-0205		14	EARTH TERMINAL, 1010.1	
040	353032-0302		2	END PLATE WAP, 13176.6	
050	353034-0404		11	BRIDGE CONNECTOR Q10, 13131.0	
060	359011-0823		1	SET OF SIGNS 6-FW 101-150	
070	359011-0832		1	SET OF SIGNS 6-GW (+)	
080	359011-0833		1	SET OF SIGNS 6-GW (-)	
090	359011-0834		1	SET OF SIGNS 6-GW(EARTH)	
100	359011-0824		1	SET OF SIGNS 6-FW 151-200	
110	359011-0825		1	SET OF SIGNS 6-FW 201-250	

Pos	Part No	UN	Qty	Description	Page No

TERMINAL BLOCK

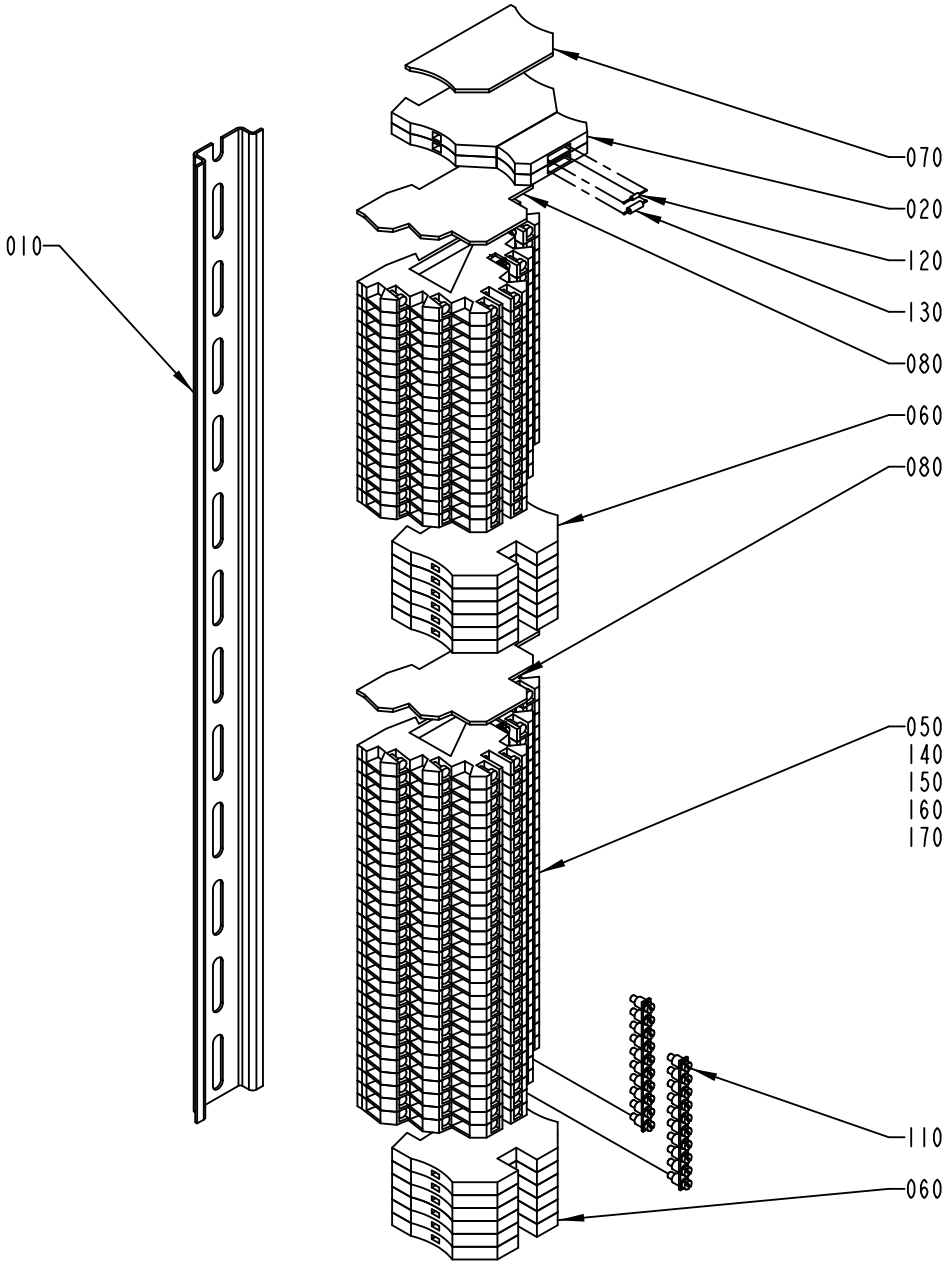

1548728-1
ECN 114362

ECM: 189213 - 20041104
Group number: 1548728-0100
Assembly Drawing: 1548728-1_1_AA

Pos	Part No	UN	Qty	Description	Page No
-					
010	1548729-0000		1	RAIL	
020	353021-0127		2	TERMINAL DISCONNECTABLE, WTR 2,5+WSD 2,5	
050	353021-0302		45	TERMINALS,TRIPLE-LEVEL, DLD 2,5/35 PA	
060	353024-0205		12	EARTH TERMINAL, 1010.1	
070	353032-0004		1	END PLATE WAP 2,5-10 BEIGE	
080	353032-0302		2	END PLATE WAP, 13176.6	
110	353034-0404		10	BRIDGE CONNECTOR Q10, 13131.0	
120	90038-0049		1	DIODE	
130	90121-0127		1	RESISTANCE FIXED, 1,5 KOHM, 0,25 W	
140	359011-0823		1	SET OF SIGNS 6-FW 101-150	
150	359011-0832		1	SET OF SIGNS 6-GW (+)	
160	359011-0833		1	SET OF SIGNS 6-GW (-)	
170	359011-0834		1	SET OF SIGNS 6-GW(EARTH)	

Pos	Part No	UN	Qty	Description	Page No

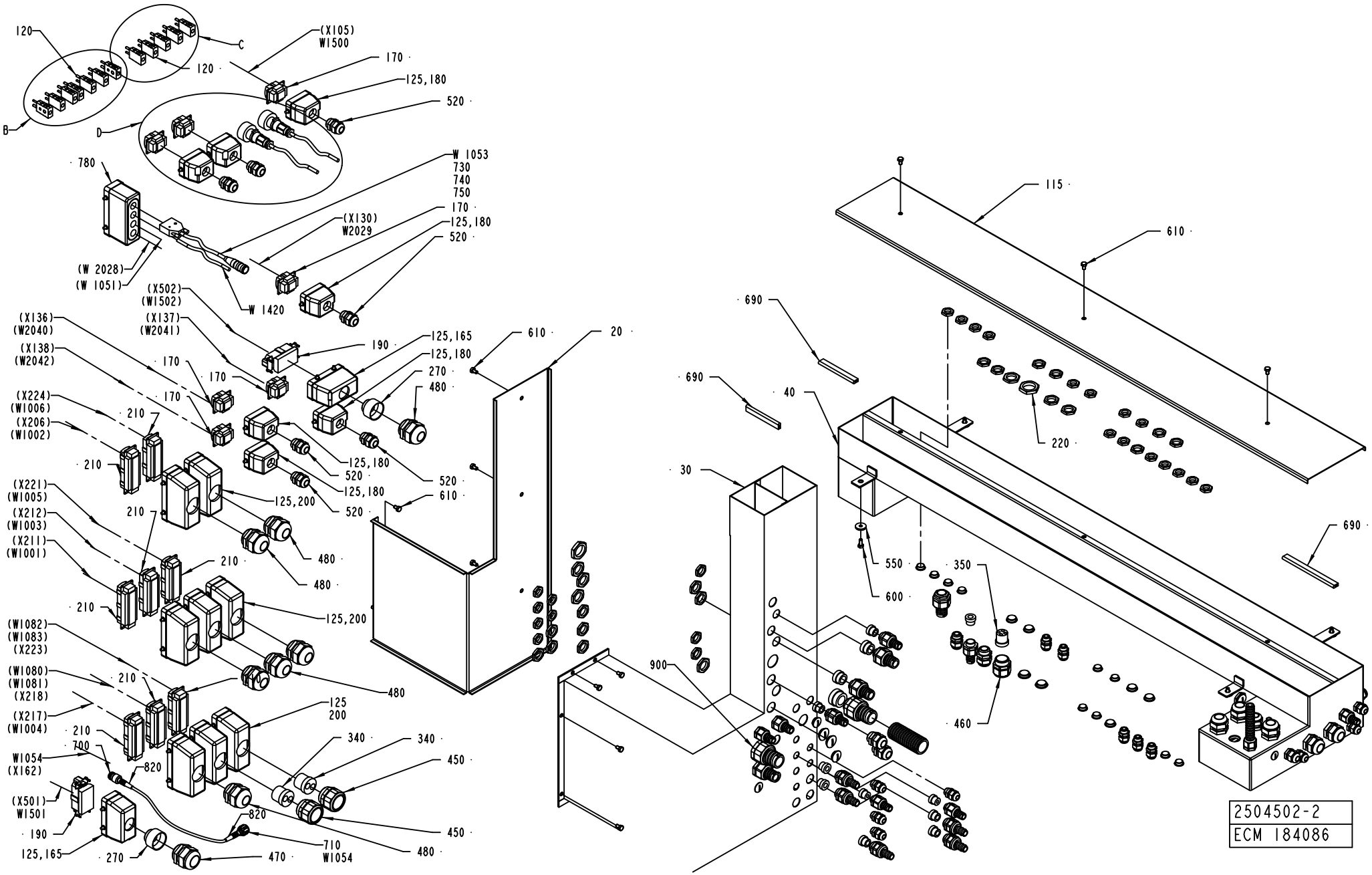
120
C
(X105)
W1500
170
120
125,180
520
B
D
780
W 1053
730
740
750
170
(X130)
W2029
125,180
520
(W 2028)
(W 1051)
W 1420
(X502)
(W1502)
(X136)
(W2040)
(X137)
(W2041)
190
125,165
125,180
610
20
(X138)
(W2042)
170
170
270
480
(X224)
(W1006)
170
210
(X206)
(W1002)
210
125,180
520
520
125,180
610
(X221)
(W1005)
125,200
210
520
(X212)
(W1003)
(X211)
(W1001)
480
210
480
210
125,200
(W1082)
(W1083)
(X223)
480
(W1080)
(W1081)
(X218)
210
125
200
(X217)
(W1004)
210
340
340
700
450
W1054
(X162)
820
(X501)
W1501
820
450
190
710
W1054
125,165
270
470
480
690
115
610
690
40
220
690
30
550
350
600
900
460
690
2504502-2
ECM 184086

ECM: 237232 - 20051011
Group number: 2504502-0100
Assembly Drawing: 2504502-2_1_AD

This list covers pages from 1-366 to 1-381

Pos	Part No	UN	Qty	Description	Page No
A3/FLEX DIMC/FLEX (See drawing on pages: 1-374, 1-376, 1-378, 1-380)					
050	2509652-0000		1	COVER	
060	2509650-0000		1	COVER	
070	2509651-0000		1	COVER	
080	2509649-0000		1	COVER	
090	2509648-0000		1	CABLE DUCT	
100	2509647-0000		1	CABLE DUCT	
110	2509646-0000		1	CABLE DUCT	
125	90110-0385		18	MARKING HOLDER, 4.242.3853.0	
150	90152-0050	M	2	SPIRAL CONDUIT, 20X13, UL 1313	
155	90152-0050	M	8	SPIRAL CONDUIT, 20X13, UL 1313	
170	90110-0159		8	MALE INSERT 70.310.0640.0	
180	90110-0157		8	CABLE HOOD 6-POL 70.352.0628.1	
240	90099-0117		27	NUT, PR 18,6 (PG11)	
260	90099-0104		52	NUT, PR 15,2 (PG9)	
290	90002-0013		25	BLANK-OFF PLUG, PR 15,2 SKINDICHT-BLK9	
310	90002-0009		13	BLANK-OFF PLUG, PR 18.6 SKINDICHT-BLK11	
320	90002-0004		2	BLANK-OFF PLUG, PR 22,5 SKINDICHT-BLK16	
360	353249-0014		3	INSERT, SINGEL HOLE, EK 154/16	
380	353249-0009		1	INSERT, SINGEL HOLE, EK 152/9	
390	353249-0008		4	INSERT, SINGEL HOLE, EK 152/7	
430	353243-0003		11	HOSE GLAND W/O INSERT PG11 EXTENDED	
440	353243-0001		9	HOSE GLAND W/O INSERT PG9 EXTENDED	
500	352103-0111		6	CABLE GLAND, ST 16, PR22,5/PG16	
530	352103-0101		17	CABLE GLAND, ST 9, PR15,2/PG9	
540	352103-0100		2	CABLE GLAND, STR 9, PR15,2/PG9	
640	353249-0036		4	INSERT, MULTI HOLE, EK152 M 2X4	
760	353243-0005		2	HOSE GLAND W/O INSERT PG16 EXTENDED	
870	90089-0029		1	ENLARGING SLEEVE	
W1240	90220-0105	M	6	SCR. CABLE 4X2,5MM2	
A3/FLEX NODIMC (See drawing on pages: 1-366, 1-368, 1-370, 1-372)					
050	2509652-0000		1	COVER	
060	2509650-0000		1	COVER	
070	2509651-0000		1	COVER	
080	2509649-0000		1	COVER	
090	2509648-0000		1	CABLE DUCT	
100	2509647-0000		1	CABLE DUCT	
110	2509646-0000		1	CABLE DUCT	
125	90110-0385		17	MARKING HOLDER, 4.242.3853.0	
150	90152-0050	M	2	SPIRAL CONDUIT, 20X13, UL 1313	
170	90110-0159		7	MALE INSERT 70.310.0640.0	
180	90110-0157		7	CABLE HOOD 6-POL 70.352.0628.1	
240	90099-0117		27	NUT, PR 18,6 (PG11)	
260	90099-0104		54	NUT, PR 15,2 (PG9)	
290	90002-0013		25	BLANK-OFF PLUG, PR 15,2 SKINDICHT-BLK9	
310	90002-0009		13	BLANK-OFF PLUG, PR 18.6 SKINDICHT-BLK11	
320	90002-0004		3	BLANK-OFF PLUG, PR 22,5 SKINDICHT-BLK16	
360	353249-0014		3	INSERT, SINGEL HOLE, EK 154/16	
370	353249-0011		16	INSERT, SINGEL HOLE, EK 153/11	
380	353249-0009		1	INSERT, SINGEL HOLE, EK 152/9	
390	353249-0008		5	INSERT, SINGEL HOLE, EK 152/7	
430	353243-0003		11	HOSE GLAND W/O INSERT PG11 EXTENDED	
440	353243-0001		10	HOSE GLAND W/O INSERT PG9 EXTENDED	
500	352103-0111		4	CABLE GLAND, ST 16, PR22,5/PG16	
530	352103-0101		17	CABLE GLAND, ST 9, PR15,2/PG9	
540	352103-0100		2	CABLE GLAND, STR 9, PR15,2/PG9	
640	353249-0036		4	INSERT, MULTI HOLE, EK152 M 2X4	
760	353243-0005		2	HOSE GLAND W/O INSERT PG16 EXTENDED	
Common Parts					
010	2504503-0000		1	COVER	
020	2504499-0000		1	LID	
030	2504498-0000		1	CABLE DUCT	
040	2504497-0000		1	CABLE DUCT	
115	1129372-0000		1	LID	
120	90326-0022		13	PLUG, MALE YELLOW CR-AL	
130	90152-0050	M	1	SPIRAL CONDUIT, 20X13, UL 1313	
135	90152-0050	M	1	SPIRAL CONDUIT, 20X13, UL 1313	
140	90152-0050	M	1	SPIRAL CONDUIT, 20X13, UL 1313	
160	90152-0058	M	1	SPIRAL CONDUIT, 15X9, UL 0909	
165	90110-0160		2	CABLE HOOD 6-16-POL 70.352.1628.1	
190	90110-0156		2	MALE INSERT 70.210.0653.0	
200	90110-0152		8	CABLE HOOD 24-POL 70.352.2428.1	
210	90110-0150		8	MALE INSERT 121110 0000	
220	90099-0119		9	NUT, PR 28,3 (PG21)	
230	90099-0118		15	NUT, PR 20,4 (PG13,5)	
250	90099-0110		8	NUT, PR 22,5 (PG16)	
270	90089-0015		2	REDUCING SLEEVE, PR37M/PR28,3F	
280	90002-0016		7	BLANK-OFF PLUG PR 20.4 SKINDICHT-BLK13,5	
300	90002-0012		1	BLANK-OFF PLUG, PR 28,3 SKINDICHT-BLK21	
330	353249-0061		1	INSERT, SINGEL HOLE, EK 155/20	
340	353249-0060		2	INSERT, MULTI HOLE, E155M2X13	
350	353249-0051		1	INSERT, MULTI HOLE, E154M4X6	
400	353243-0009		5	HOSE GLAND W/O INSERT PG13,5 EXTENDED	
410	353243-0007		1	HOSE GLAND W/O INSERT PG21 EXTENDED	

CABLE TRENCH

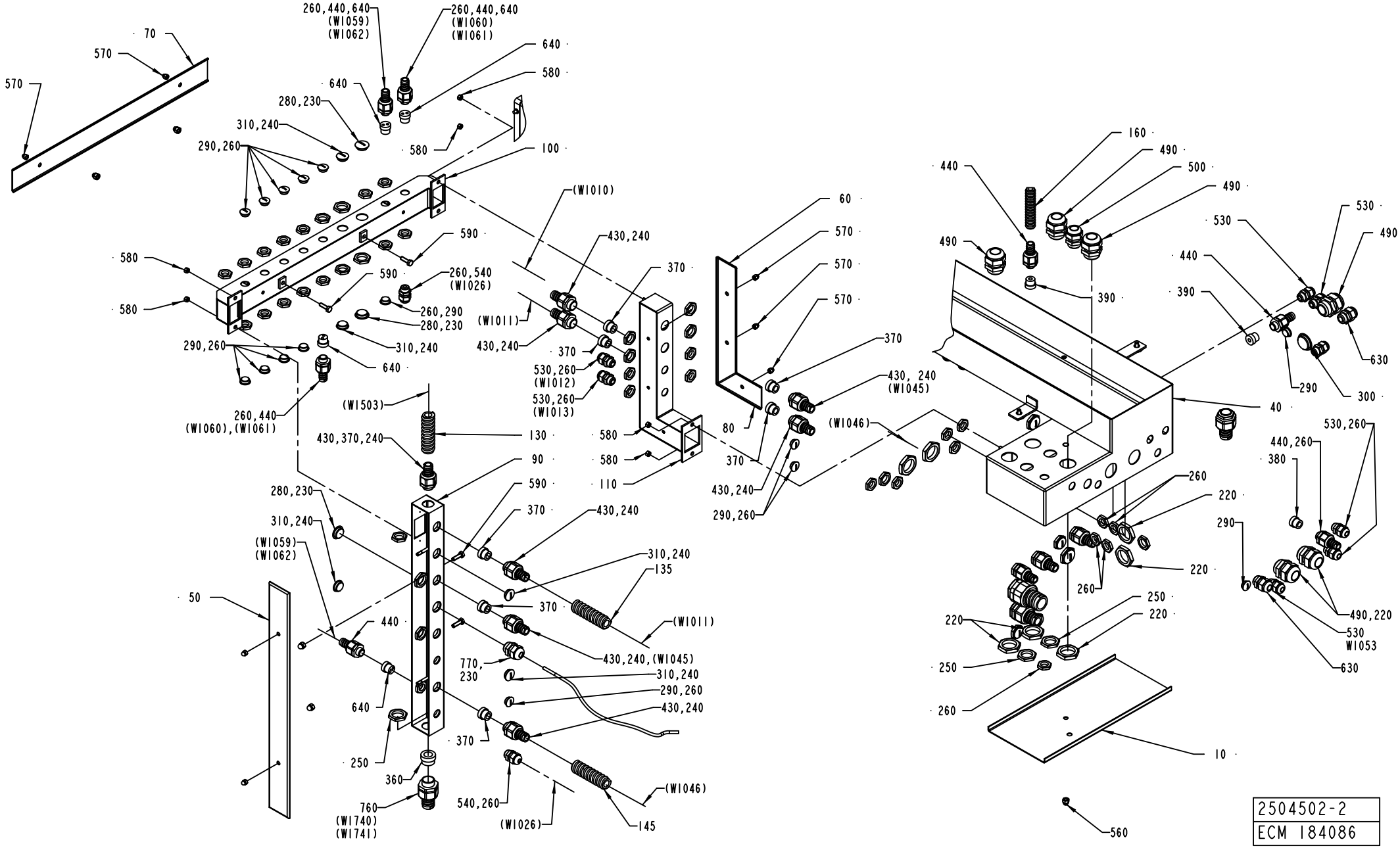

Pos	Part No	UN	Qty	Description	Page No
Common Parts (Cont'd)					
420	353243-0004		2	HOSE GLAND W/O INSERT PG13,5 EXTENDED	
450	353240-0006		2	GLAND W/O INSERT PG29 NORMAL	
460	353240-0005		1	GLAND W/O INSERT PG21 NORMAL	
470	352103-0121		1	CABLE GLAND, ST 29, PR37,0/PG29	
480	352103-0120		7	CABLE GLAND, STR 29, PR37,0/PG29	
490	352103-0116		6	CABLE GLAND, ST 21, PR28,3/PG21	
520	352103-0108		7	CABLE GLAND, ST 13,5 , PR20,4/PG13,5	
550	315125-0153		4	WASHER TBRSB 6,4X22X4 A4	
560	312705-0316		5	NUT HEX. DOMED CAP MHM-6 M6 A280	
570	312705-0314		7	NUT HEX. DOMED CAP MHM-6 M5 A280	
580	312605-0314		6	HEXAGON NUT, M6M M5 A280	
590	312105-0370		4	SCREW M6S ISO 4017 M6X20 A480	
600	312105-0367		4	SCREW M6S ISO 4017 M6X14 A480	
610	312105-0364		12	SCREW M6S ISO 4017 M6X10 A480	
630	352103-0106		4	CABLE GLAND, ST 11, PR18,6/PG11	
690	90143-0059	M	1	SEAL STRIP 4610069	
700	90458-2890		1	CONNECTOR, 21N-50N12N133NE	
710	90458-2892		1	CONNECTOR, 11 N-50-3-31/133 NE	
720	90110-0235		2	CABLE CONTACT, PX0739/P	
730	90459-2106		1	CABLE CONNECTOR, C091 31D004 100 2	
740	90110-0144		1	COVER D-SUB 9, 8655MH0911LF	
750	90110-0147		1	PLUG D-SUB 9 FEMALE, DE09S064TLF	
770	90012-0049		1	CABLE GLAND, STR13,5, PR20,4/PG13,5	
780	90110-0381		1	COVER, 310601-33 CYR24.4	
790	353300-0006	M	0.5	SHRINKABLE HOSE	
800	353300-0008	M	0.2	SHRINKABLE HOSE	
810	353300-0008	M	1.5	SHRINKABLE HOSE	
820	90458-2893		2	SLEEVE, 78 Z-0-3-4	
830	90459-1297		2	RESISTANCE FIXED, 120 OHM, 0,25 W	
840	90121-0132		2	RESISTANCE FIXED, 0,51 KOHM, 0,25 W	
850	353001-0116		12	END SLEEVE H0.5/14 ORANGE	
860	90152-0070	M	2.3	METAL HOSE, 32,5X26, UL 2621	
880	353300-0010		1	SHRINKABLE HOSE	
890	353300-0001	M	0.05	SHRINKABLE HOSE	
900	2656905-0100		1	OPTIONAL PARTS	**1-383, 1-385, 1-387**
W1052	90220-0165	M	7	SCR. CABLE 5X0,34MM2	
W1053	90220-0091	M	10	PAIR TWISTED CABLE 2X2X0,25MM2	
W1054	90458-2895	M	6	COAXIAL CABLE RG 400/U BROWN	
W1107	90220-0034	M	7	THERMOCABLE TEX/SITW-20F-KX 2X0,5MM2	
W1300	90220-0034	M	5.5	THERMOCABLE TEX/SITW-20F-KX 2X0,5MM2	
W1302	90220-0034	M	8	THERMOCABLE TEX/SITW-20F-KX 2X0,5MM2	
W1305	90220-0034	M	8	THERMOCABLE TEX/SITW-20F-KX 2X0,5MM2	
W1307	90220-0034	M	8	THERMOCABLE TEX/SITW-20F-KX 2X0,5MM2	
W1315	90220-0165	M	7	SCR. CABLE 5X0,34MM2	
W1320	90220-0034	M	7	THERMOCABLE TEX/SITW-20F-KX 2X0,5MM2	
W1322	90220-0034	M	7	THERMOCABLE TEX/SITW-20F-KX 2X0,5MM2	
W1323	90220-0034	M	7	THERMOCABLE TEX/SITW-20F-KX 2X0,5MM2	
W1420	90220-0072	M	10	SCR. CABLE 4X0,34MM2	
W1500	351150-0418	M	5	CABLE OLFLEX 4X2,5 MM2 LIGHT/GREY	
W1501	351120-0168	M	5	CABLE SIHF 4X10MM2 GREEN/YELLOW	
W1820	90220-0034	M	8	THERMOCABLE TEX/SITW-20F-KX 2X0,5MM2	
W1830	90220-0104	M	6	SCR. CABLE 4X1,5MM2	
W2029	90220-0104	M	6.7	SCR. CABLE 4X1,5MM2	
X308	90326-0022		1	PLUG, MALE YELLOW CR-AL	
X312	90326-0022		1	PLUG, MALE YELLOW CR-AL	
X317	90326-0022		1	PLUG, MALE YELLOW CR-AL	
X318	90326-0022		1	PLUG, MALE YELLOW CR-AL	
X600	90110-0381		1	COVER, 310601-33 CYR24.4	

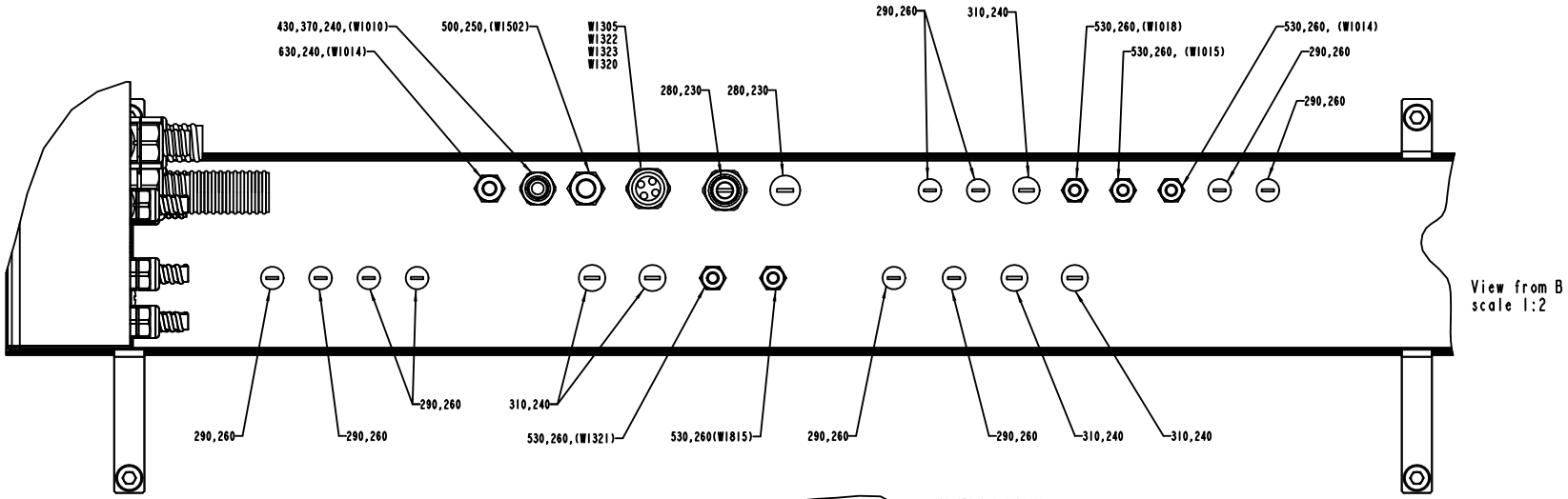
430,370,240,(W1010)
630,240,(W1014)
500,250,(W1502)
W1305
W1322
W1323
W1320
280,230
280,230
290,260
310,240
530,260,(W1018)
530,260, (W1015)
530,260, (W1014)
290,260
290,260
290,260
290,260
290,260
310,240
530,260,(W1321)
530,260(W1815)
290,260
290,260
310,240
310,240
View from B
scale 1:2

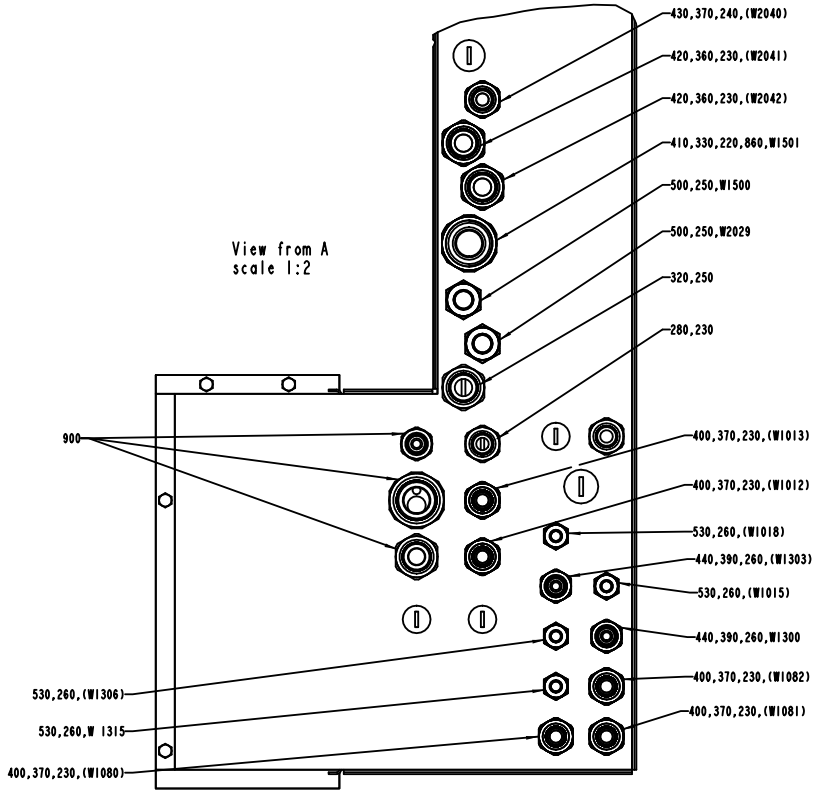
View from A
scale 1:2
430,370,240,(W2040)
420,360,230,(W2041)
420,360,230,(W2042)
410,330,220,860,W1501
500,250,W1500
500,250,W2029
320,250
280,230
900
400,370,230,(W1013)
400,370,230,(W1012)
530,260,(W1018)
440,390,260,(W1303)
530,260,(W1015)
440,390,260,W1300
400,370,230,(W1082)
400,370,230,(W1081)
530,260,(W1306)
530,260,W 1315
400,370,230,(W1080)

Pos	Part No	UN	Qty	Description	Page No	Pos	Part No	UN	Qty	Description	Page No

SEE PREVIOUS LISTS PAGES: 1-367, 1-369.

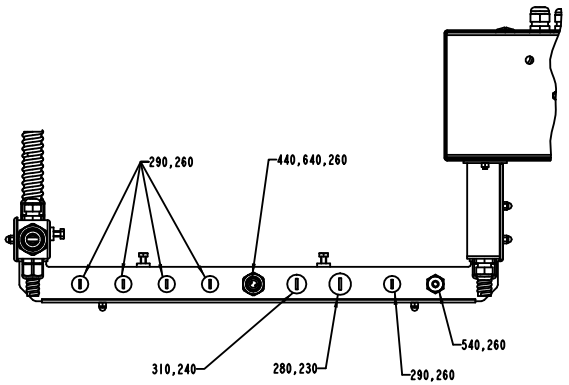

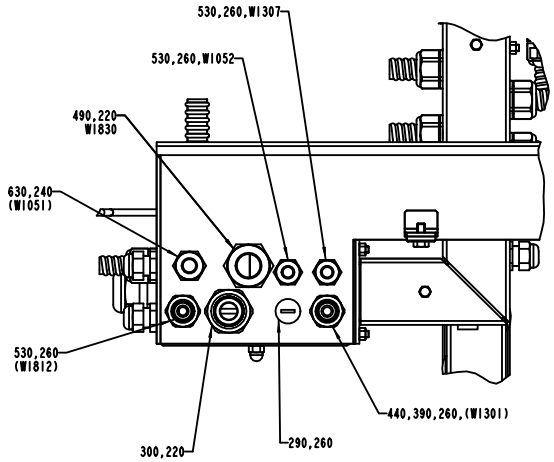

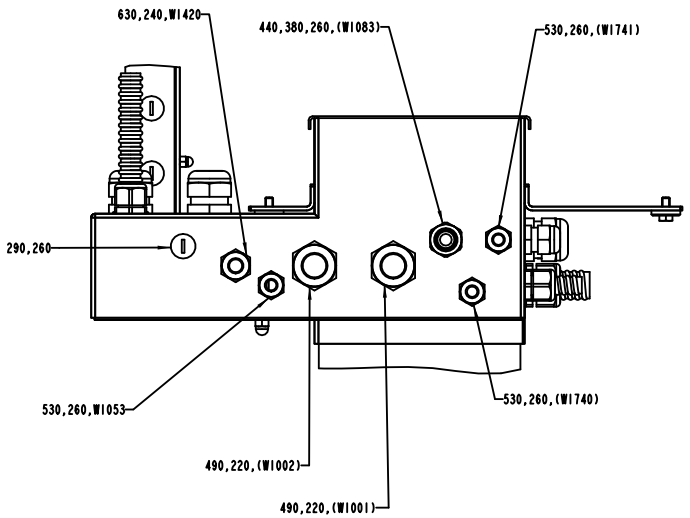

View from D
scale 1:2

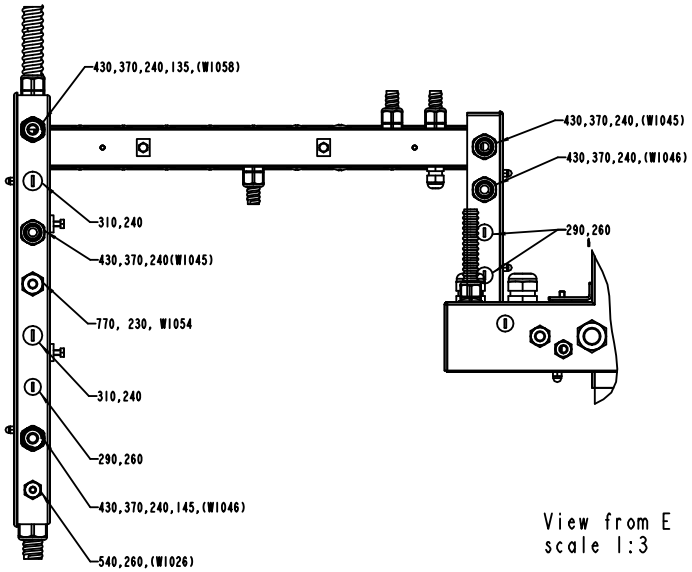

View from E
scale 1:3

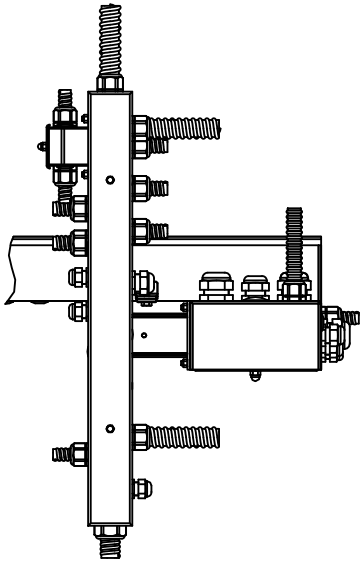

View from C
scale 1:2

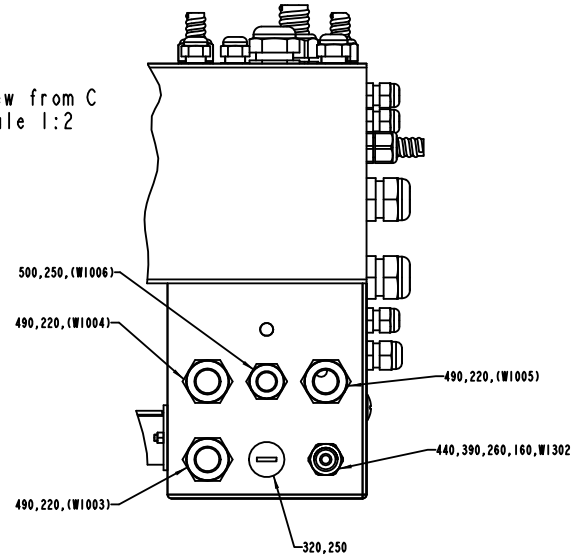

Pos	Part No	UN	Qty	Description	Page No	Pos	Part No	UN	Qty	Description	Page No

SEE PREVIOUS LISTS PAGES: 1-367, 1-369.

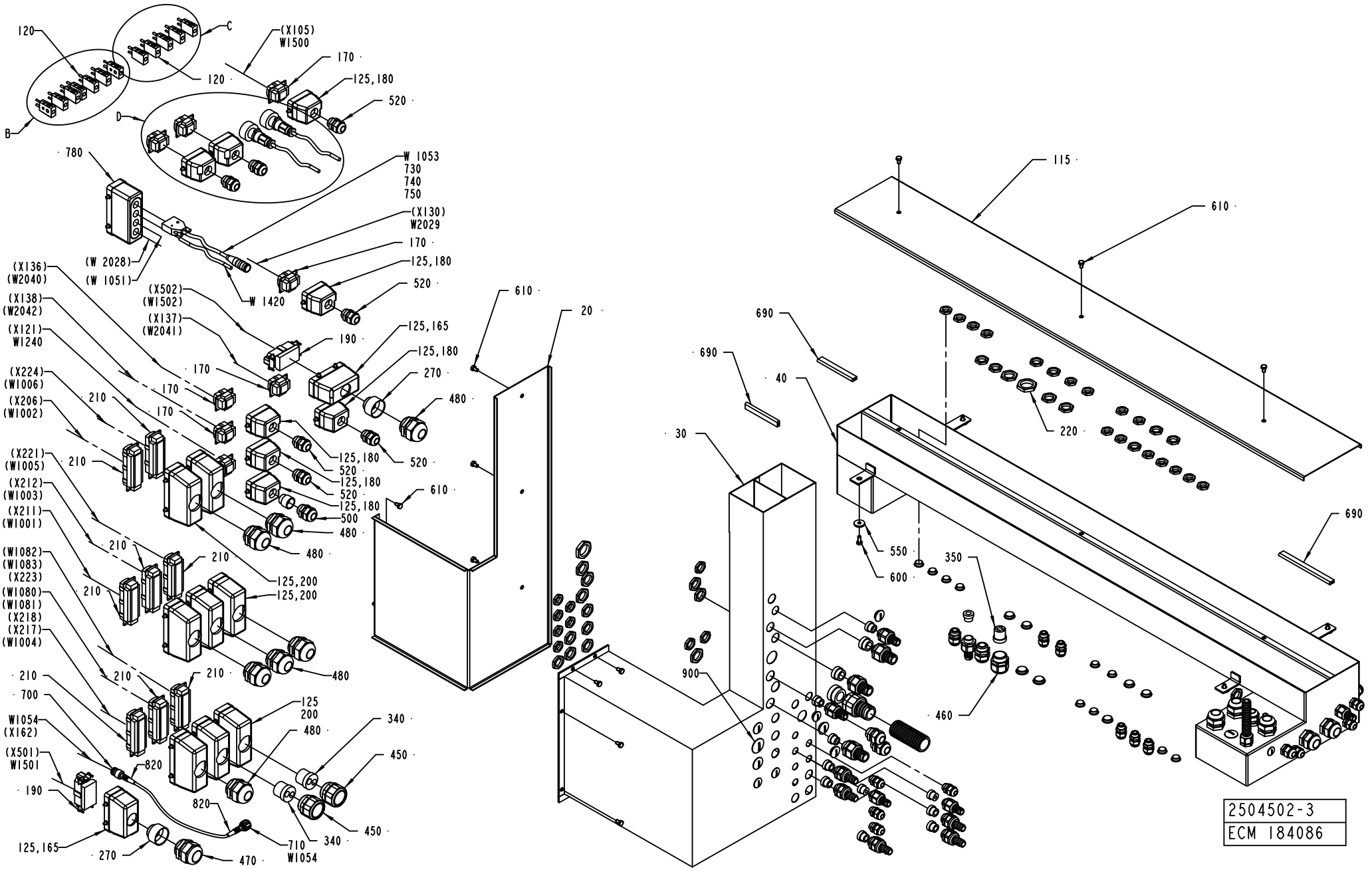
120
C
(X105)
W1500
170
125,180
520
120
D
B
780
W 1053
730
740
750
(X130)
W2029
170
125,180
520
(W 2028)
(W 1051)
W 1420
(X136)
(W2040)
(X138)
(W2042)
(X121)
W1240
(X502)
(W1502)
(X137)
(W2041)
190
125,165
125,180
270
480
520
610
20
690
690
40
30
115
610
220
690
550
600
350
460
900
(X224)
(W1006)
(X206)
(W1002)
170
170
170
210
210
(X221)
(W1005)
(X212)
(W1003)
(X211)
(W1001)
125,180
520
125,180
520
125,180
500
480
480
610
(W1082)
(W1083)
(X223)
(W1080)
(W1081)
(X218)
(X217)
(W1004)
210
210
210
210
210
125,200
125,200
480
700
W1054
(X162)
(X501)
W1501
190
820
820
125
200
480
340
450
340
450
710
W1054
125,165
270
470
2504502-3
ECM 184086

Pos	Part No	UN	Qty	Description	Page No	Pos	Part No	UN	Qty	Description	Page No

SEE PREVIOUS LISTS PAGES: 1-367, 1-369.

CABLE TRENCH

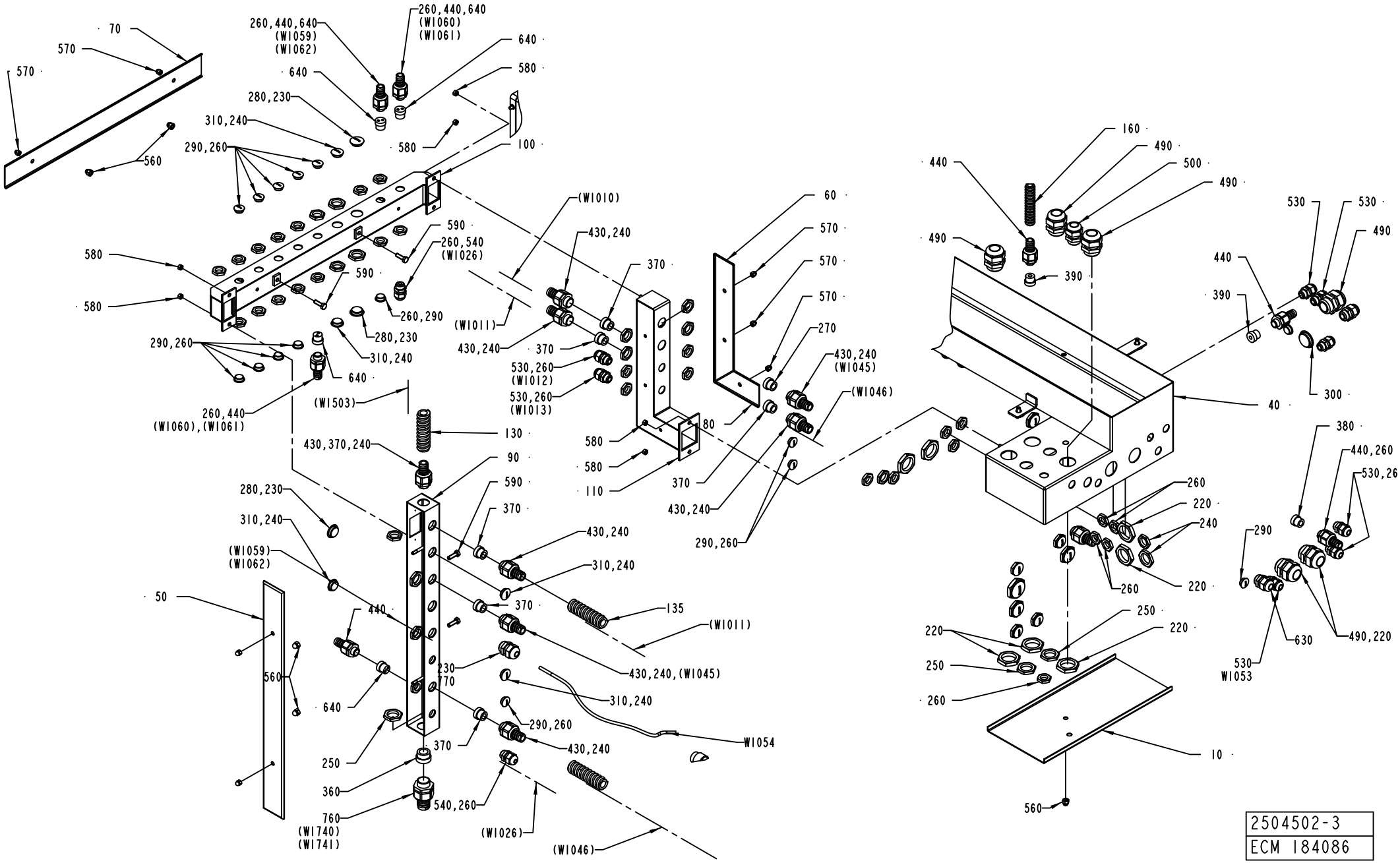

Pos	Part No	UN	Qty	Description	Page No	Pos	Part No	UN	Qty	Description	Page No

SEE PREVIOUS LISTS PAGES: 1-367, 1-369.

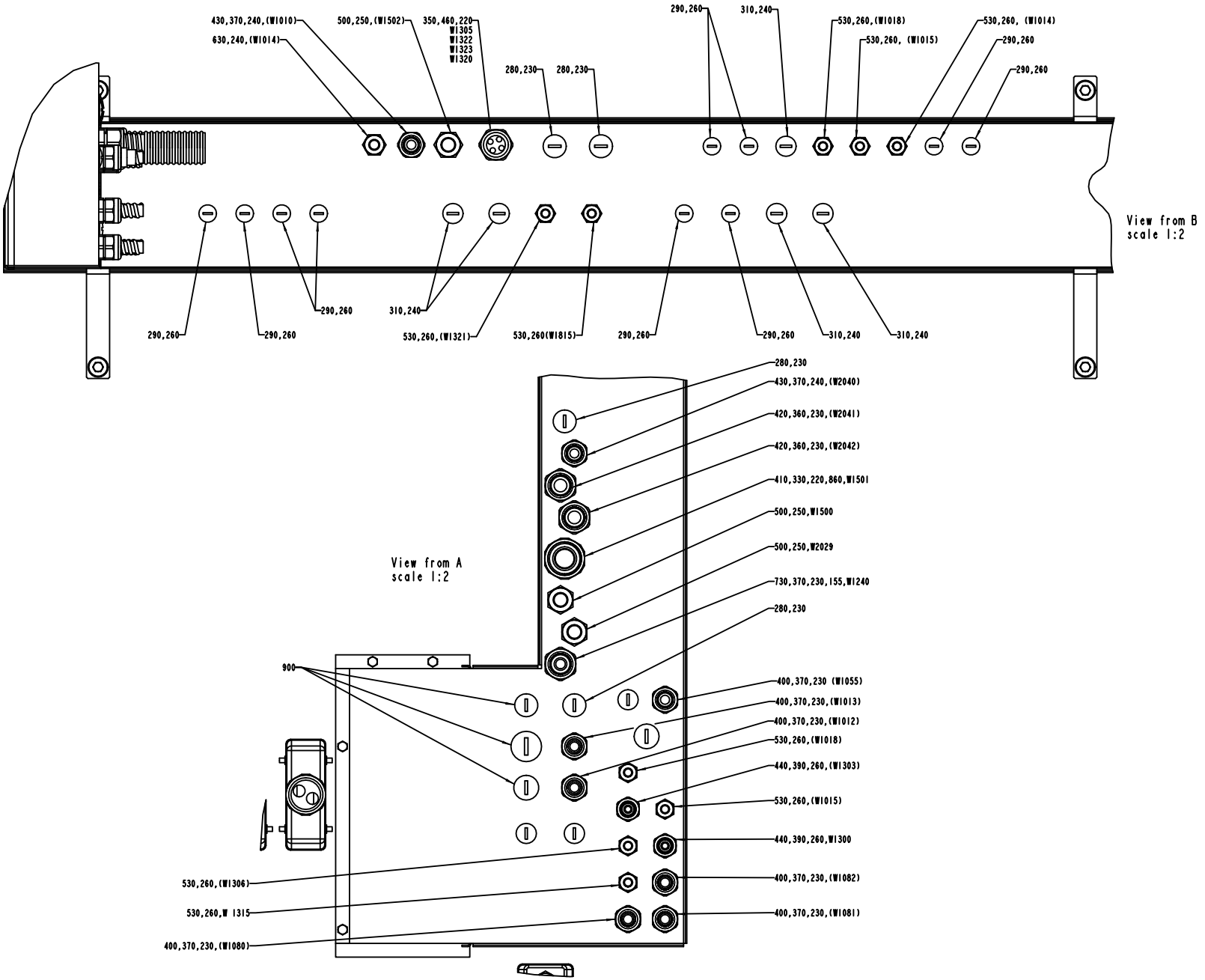
430,370,240,(W1010)
630,240,(W1014)
500,250,(W1502)
350,460,220
W1305
W1322
W1323
W1320
280,230
280,230
290,260
310,240
530,260,(W1018)
530,260, (W1015)
530,260, (W1014)
290,260
290,260
290,260
290,260
290,260
310,240
530,260,(W1321)
530,260(W1815)
290,260
290,260
310,240
310,240
View from B
scale 1:2
280,230
430,370,240,(W2040)
420,360,230,(W2041)
420,360,230,(W2042)
410,330,220,860,W1501
500,250,W1500
500,250,W2029
730,370,230,155,W1240
280,230
View from A
scale 1:2
900
400,370,230 (W1055)
400,370,230,(W1013)
400,370,230,(W1012)
530,260,(W1018)
440,390,260,(W1303)
530,260,(W1015)
440,390,260,W1300
400,370,230,(W1082)
400,370,230,(W1081)
530,260,(W1306)
530,260,W 1315
400,370,230,(W1080)

Pos	Part No	UN	Qty	Description	Page No	Pos	Part No	UN	Qty	Description	Page No

SEE PREVIOUS LISTS PAGES: 1-367, 1-369.

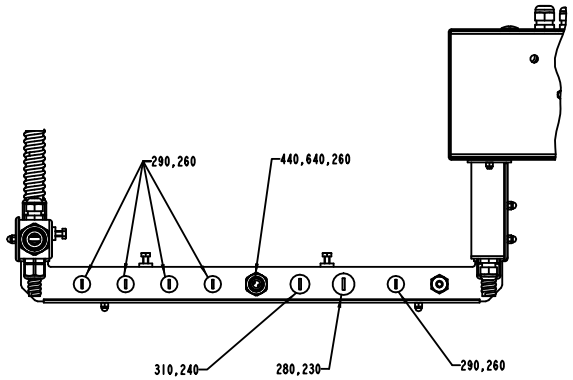
290,260
440,640,260
310,240
280,230
290,260

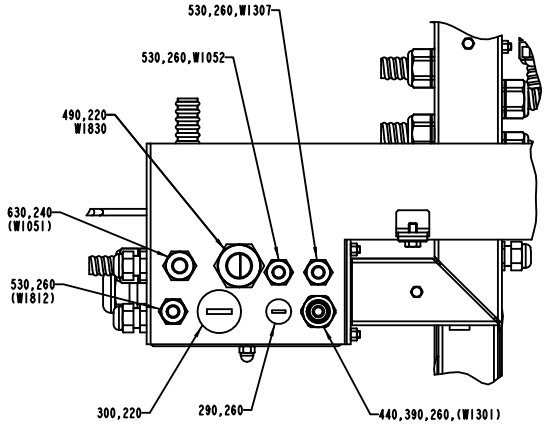
530,260,WI307
530,260,WI052
490,220
WI830
630,240
(WI051)
530,260
(WI812)
300,220
290,260
440,390,260,(WI301)

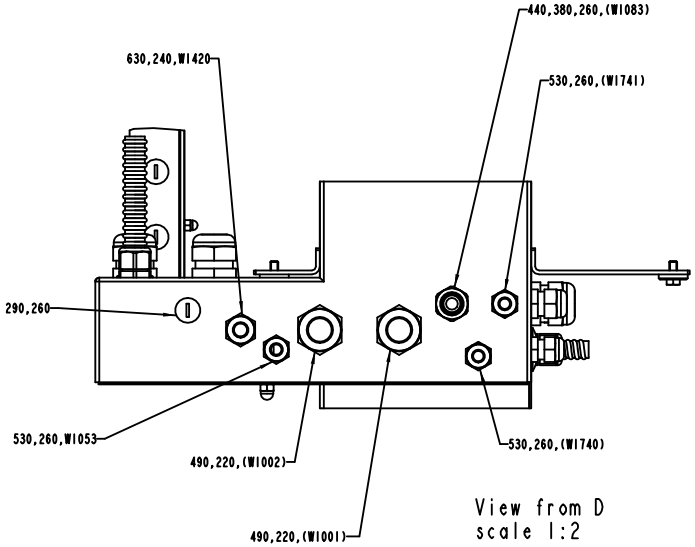
440,380,260,(WI083)
630,240,WI420
530,260,(WI741)
290,260
530,260,WI053
490,220,(WI002)
530,260,(WI740)
490,220,(WI001)
View from D
scale 1:2

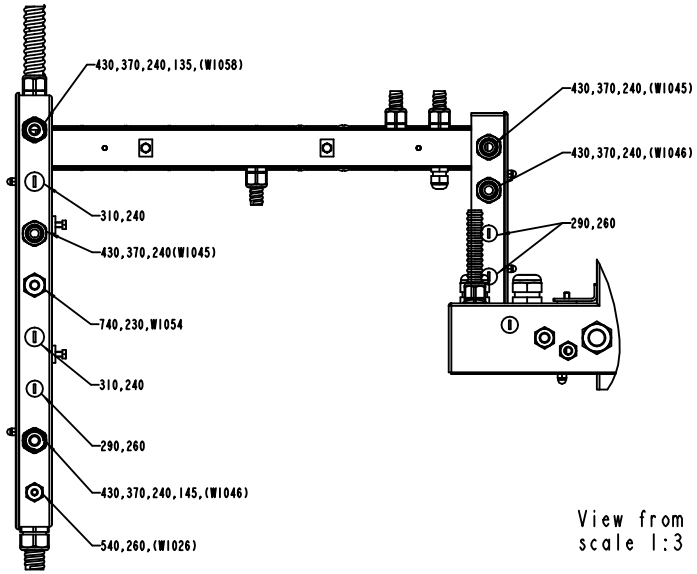
430,370,240,135,(WI058)
430,370,240,(WI045)
430,370,240,(WI046)
310,240
290,260
430,370,240(WI045)
740,230,WI054
310,240
290,260
430,370,240,145,(WI046)
540,260,(WI026)

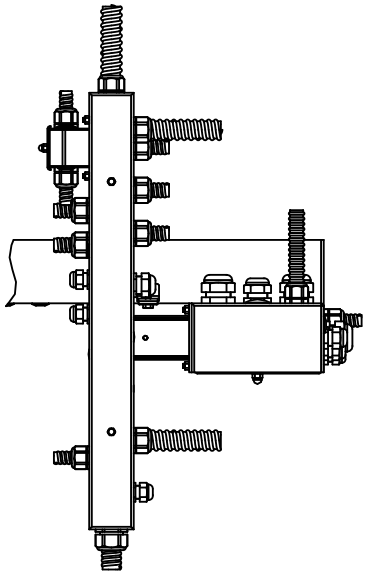
View from E
scale 1:3

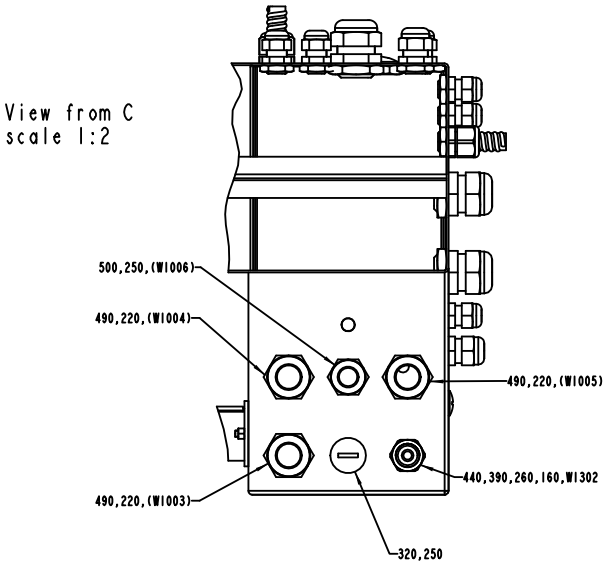
View from C
scale 1:2
500,250,(WI006)
490,220,(WI004)
490,220,(WI005)
440,390,260,160,WI302
490,220,(WI003)
320,250

ECM: 237232 - 20051011
Group number: 2504502-0100
Assembly Drawing: 2504502-3_4_AC

This list covers pages from 1-366 to 1-381

Pos	Part No	UN	Qty	Description	Page No	Pos	Part No	UN	Qty	Description	Page No

SEE PREVIOUS LISTS PAGES: 1-367, 1-369.

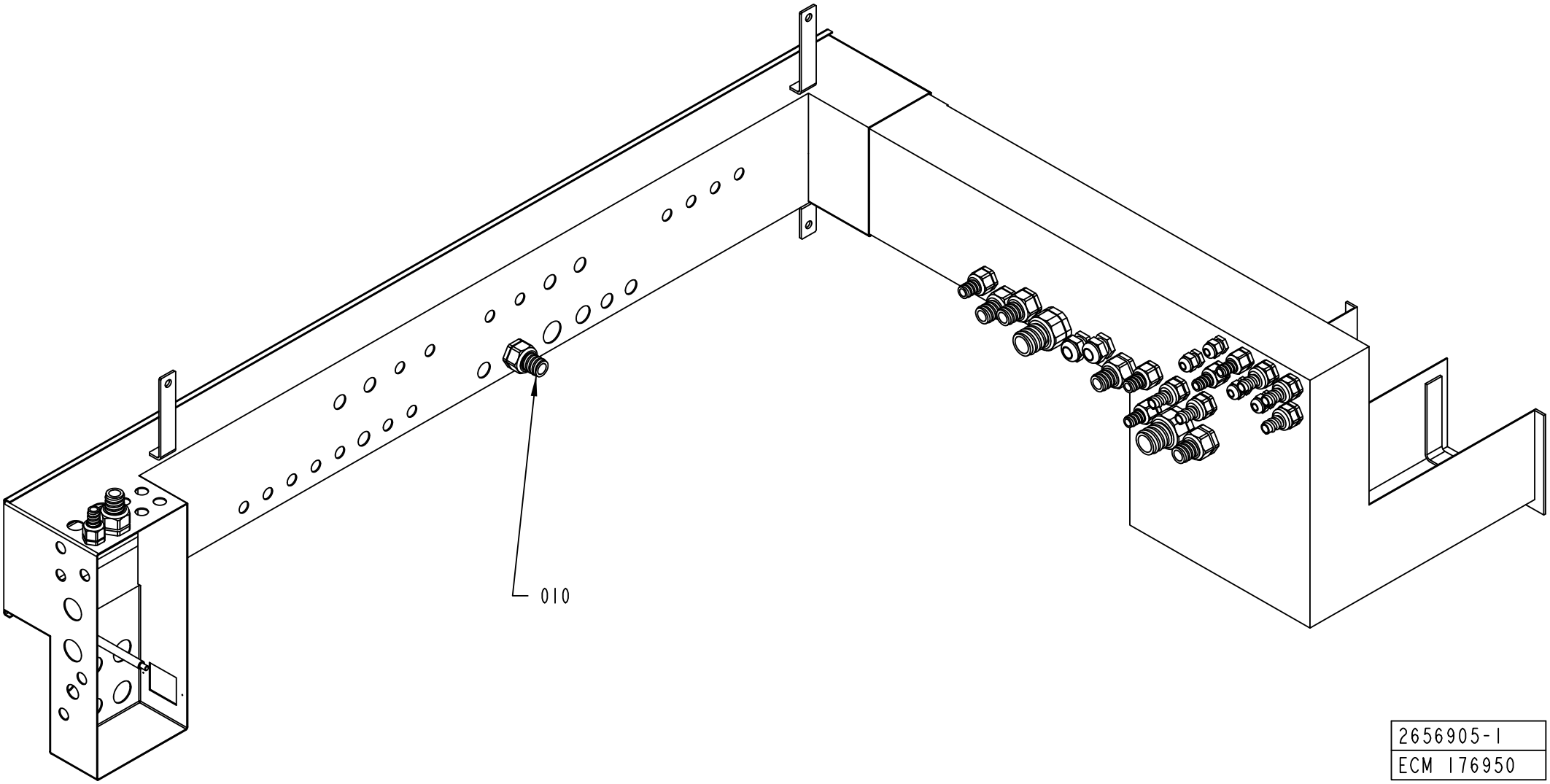

2656905-1
ECM 176950

ECM: 270974 - 20060728
Group number: 2656905-0100
Assembly Drawing: 2656905-1_1_AB

This list covers pages from 1-382 to 1-387

Pos	Part No	UN	Qty	Description	Page No
HI (See drawing on page: 1-382)					
010	2649165-0100		1	CABLE DUCT	**1-389**
NOHI (See drawing on pages: 1-384, 1-386)					
050	90099-0119		2	NUT, PR 28,3 (PG21)	
060	90099-0110		1	NUT, PR 22,5 (PG16)	
090	90099-0118		3	NUT, PR 20,4 (PG13,5)	
100	90002-0004		1	BLANK-OFF PLUG, PR 22,5 SKINDICHT-BLK16	
110	90002-0012		2	BLANK-OFF PLUG, PR 28,3 SKINDICHT-BLK21	
120	90002-0016		3	BLANK-OFF PLUG PR 20.4 SKINDICHT-BLK13,5	
130	90002-0013		1	BLANK-OFF PLUG, PR 15,2 SKINDICHT-BLK9	
140	90099-0104		1	NUT, PR 15,2 (PG9)	

Pos	Part No	UN	Qty	Description	Page No

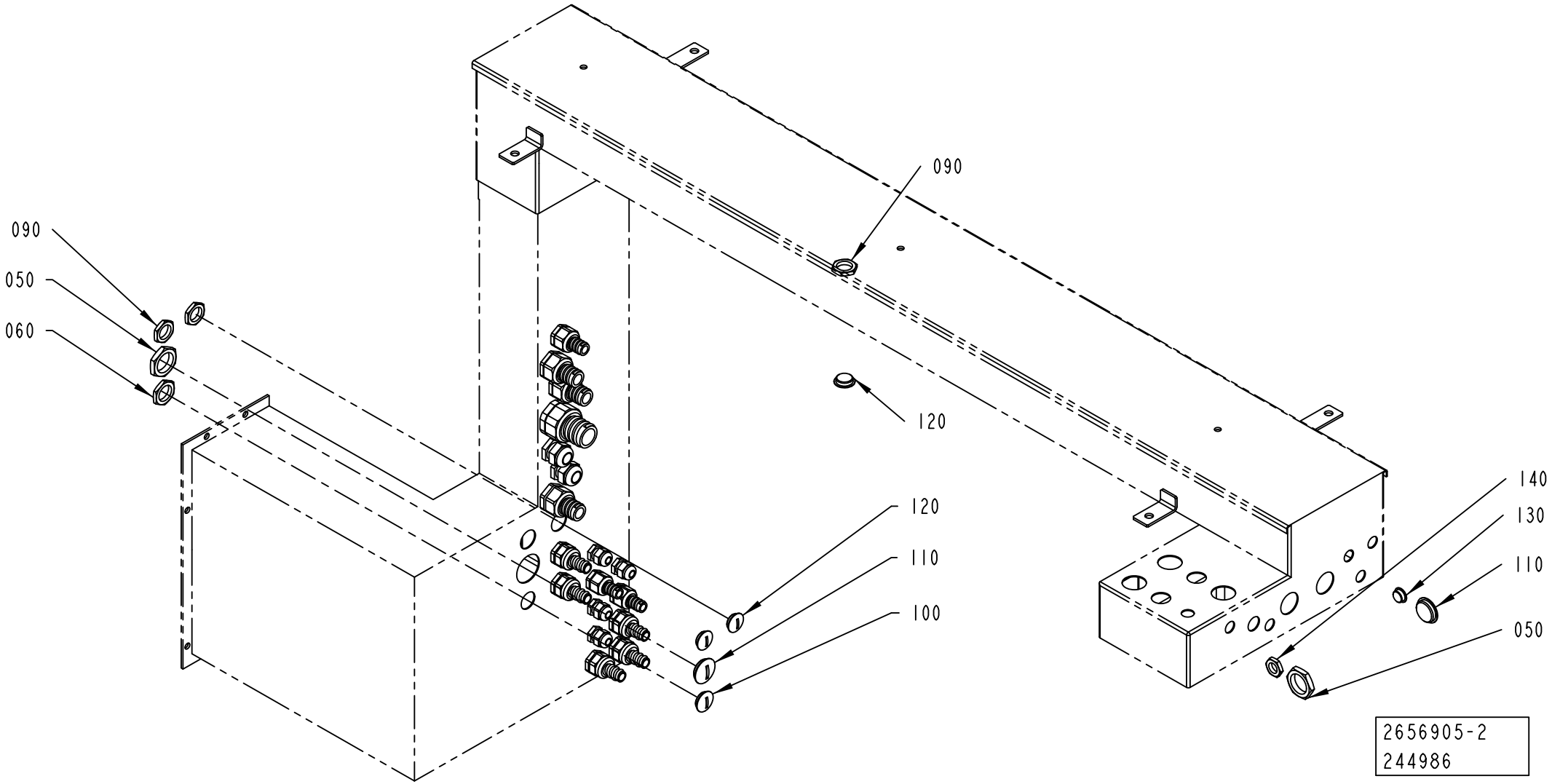
090
090
050
060
120
120
110
100
140
130
110
050
2656905-2
244986

ECM: 270974 - 20060728
Group number: 2656905-0100
Assembly Drawing: 2656905-2_1_AC

This list covers pages from 1-382 to 1-387

Pos	Part No	UN	Qty	Description	Page No
HI (See drawing on page: 1-382)					
010	2649165-0100		1	CABLE DUCT	**1-389**
NOHI (See drawing on pages: 1-384, 1-386)					
050	90099-0119		2	NUT, PR 28,3 (PG21)	
060	90099-0110		1	NUT, PR 22,5 (PG16)	
090	90099-0118		3	NUT, PR 20,4 (PG13,5)	
100	90002-0004		1	BLANK-OFF PLUG, PR 22,5 SKINDICHT-BLK16	
110	90002-0012		2	BLANK-OFF PLUG, PR 28,3 SKINDICHT-BLK21	
120	90002-0016		3	BLANK-OFF PLUG PR 20.4 SKINDICHT-BLK13,5	
130	90002-0013		1	BLANK-OFF PLUG, PR 15,2 SKINDICHT-BLK9	
140	90099-0104		1	NUT, PR 15,2 (PG9)	

Pos	Part No	UN	Qty	Description	Page No

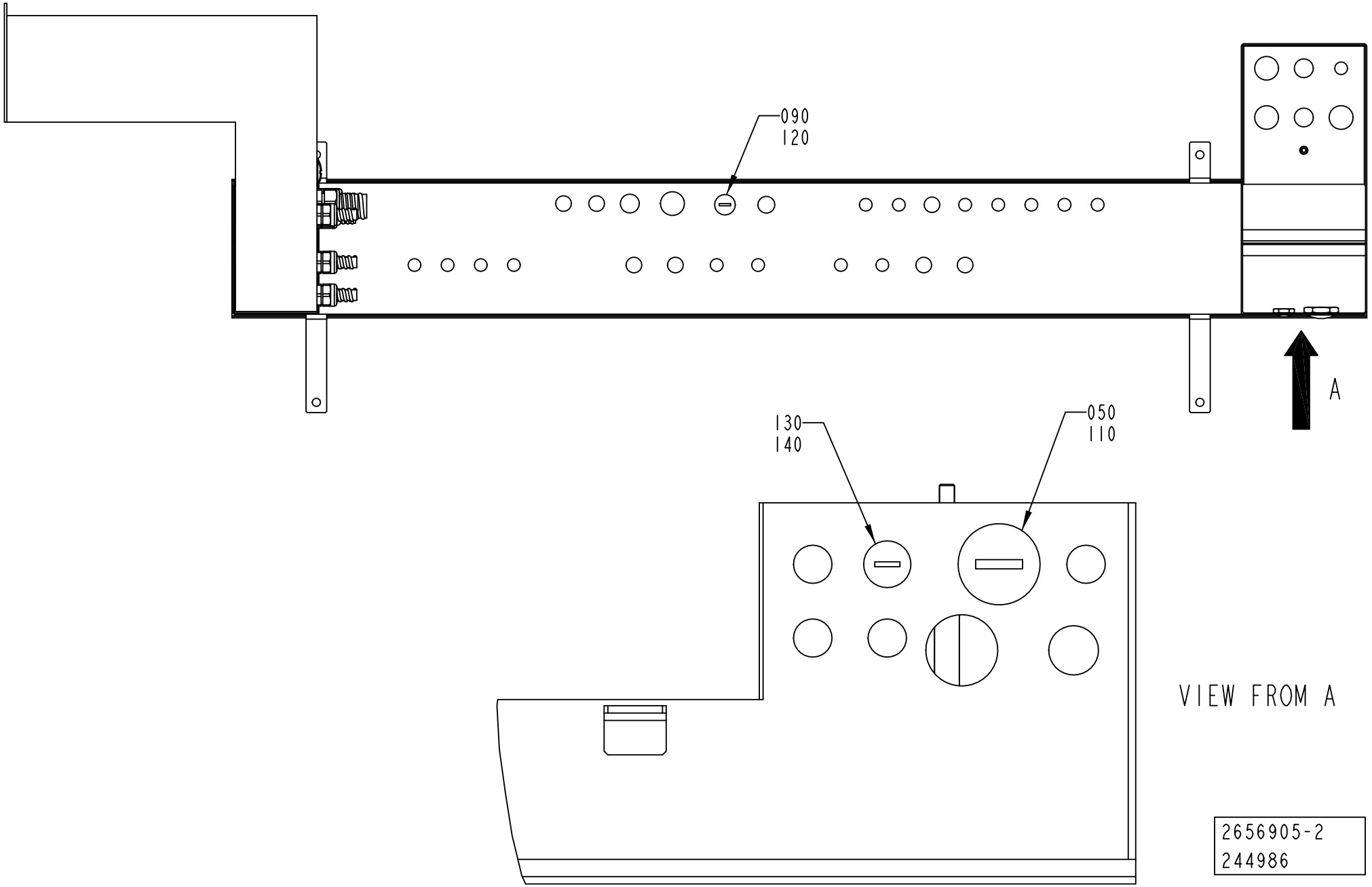
090
120
A
130
140
050
110
VIEW FROM A
2656905-2
244986

ECM: 270974 - 20060728
Group number: 2656905-0100
Assembly Drawing: 2656905-2_2_AC

This list covers pages from 1-382 to 1-387

Pos	Part No	UN	Qty	Description	Page No
HI (See drawing on page: 1-382)					
010	2649165-0100		1	CABLE DUCT	**1-389**
NOHI (See drawing on pages: 1-384, 1-386)					
050	90099-0119		2	NUT, PR 28,3 (PG21)	
060	90099-0110		1	NUT, PR 22,5 (PG16)	
090	90099-0118		3	NUT, PR 20,4 (PG13,5)	
100	90002-0004		1	BLANK-OFF PLUG, PR 22,5 SKINDICHT-BLK16	
110	90002-0012		2	BLANK-OFF PLUG, PR 28,3 SKINDICHT-BLK21	
120	90002-0016		3	BLANK-OFF PLUG PR 20.4 SKINDICHT-BLK13,5	
130	90002-0013		1	BLANK-OFF PLUG, PR 15,2 SKINDICHT-BLK9	
140	90099-0104		1	NUT, PR 15,2 (PG9)	

Pos	Part No	UN	Qty	Description	Page No

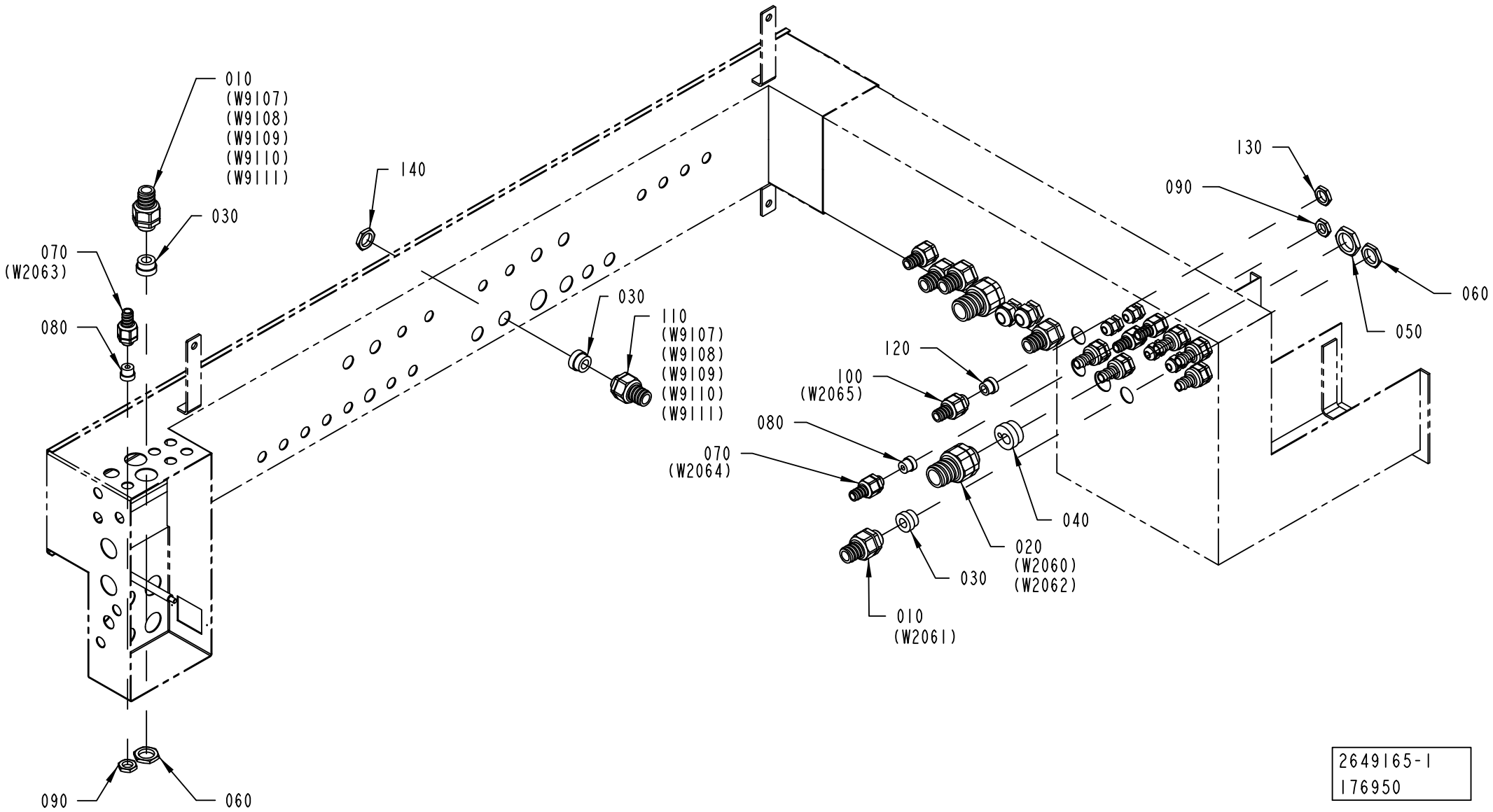

2649165-1
176950

ECM: 176950 - 20041115
Group number: 2649165-0100
Assembly Drawing: 2649165-1_1_AB

Pos	Part No	UN	Qty	Description	Page No
-					
010	353243-0005		2	HOSE GLAND W/O INSERT PG16 EXTENDED	
020	353243-0007		1	HOSE GLAND W/O INSERT PG21 EXTENDED	
030	353249-0013		3	INSERT, SINGEL HOLE, EK 154/13	
040	2649167-0000		1	INSERT	
050	90099-0119		1	NUT, PR 28,3 (PG21)	
060	90099-0110		2	NUT, PR 22,5 (PG16)	
070	353243-0001		2	HOSE GLAND W/O INSERT PG9 EXTENDED	
080	353249-0008		2	INSERT, SINGEL HOLE, EK 152/7	
090	90099-0104		2	NUT, PR 15,2 (PG9)	
100	353243-0003		1	HOSE GLAND W/O INSERT PG11 EXTENDED	
110	353243-0004		1	HOSE GLAND W/O INSERT PG13,5 EXTENDED	
120	353249-0011		1	INSERT, SINGEL HOLE, EK 153/11	
130	90099-0117		1	NUT, PR 18,6 (PG11)	
140	90099-0118		1	NUT, PR 20,4 (PG13,5)	

Pos	Part No	UN	Qty	Description	Page No

COVERING PANEL

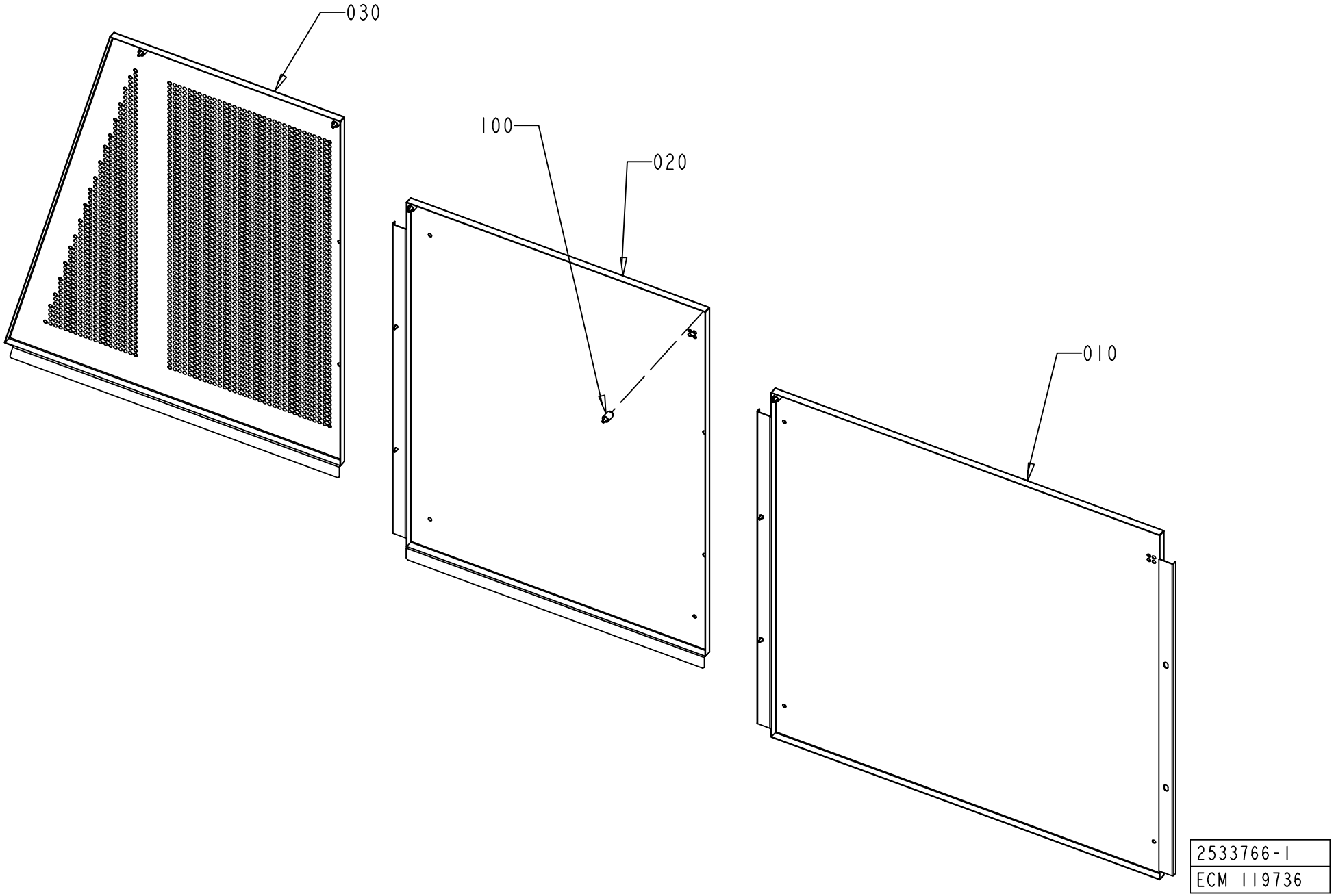

ECM: 264012 - 20060702
Group number: 2533766-0100
Assembly Drawing: 2533766-1_1_AA

Pos	Part No	UN	Qty	Description	Page No
A3/FLEX TBA, A3/FLEX TPA					
010	2533763-0000		1	COVERING PANEL	
Common Parts					
020	2533768-0000		1	COVERING PLATE	
030	2539471-0000		1	COVERING PLATE	
100	90226-0458		9	MOUNTING SCREW	

Pos	Part No	UN	Qty	Description	Page No

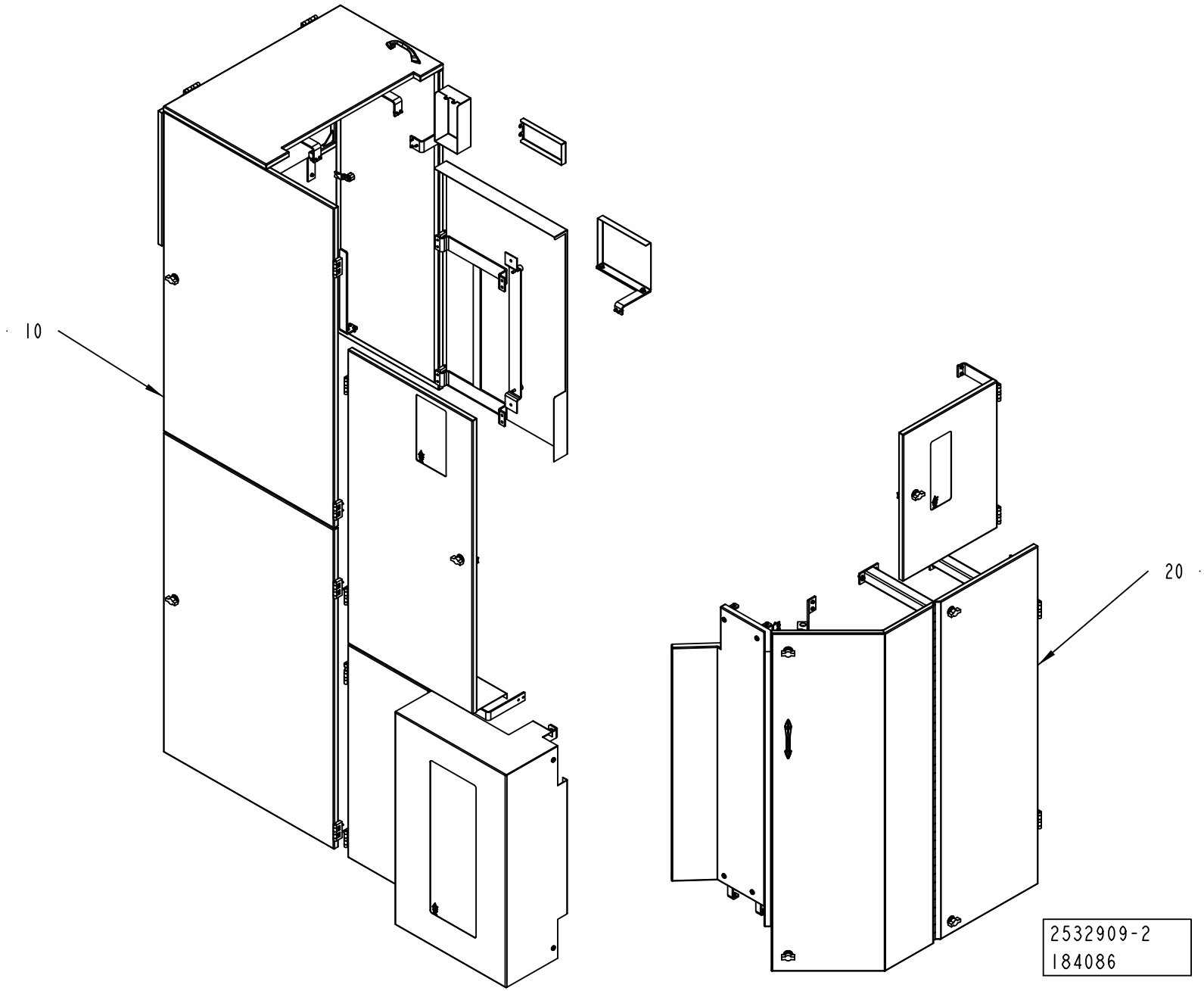
10
20
2532909-2
184086

ECM: 186105 - 20050224
Group number: 2532909-0200
Assembly Drawing: 2532909-2_1_AA

Pos	Part No	UN	Qty	Description	Page No
-					
010	2529760-0200		1	COVERING PANEL	**1-395**
020	2545639-0200		1	COVERING PANEL	**1-397**

Pos	Part No	UN	Qty	Description	Page No

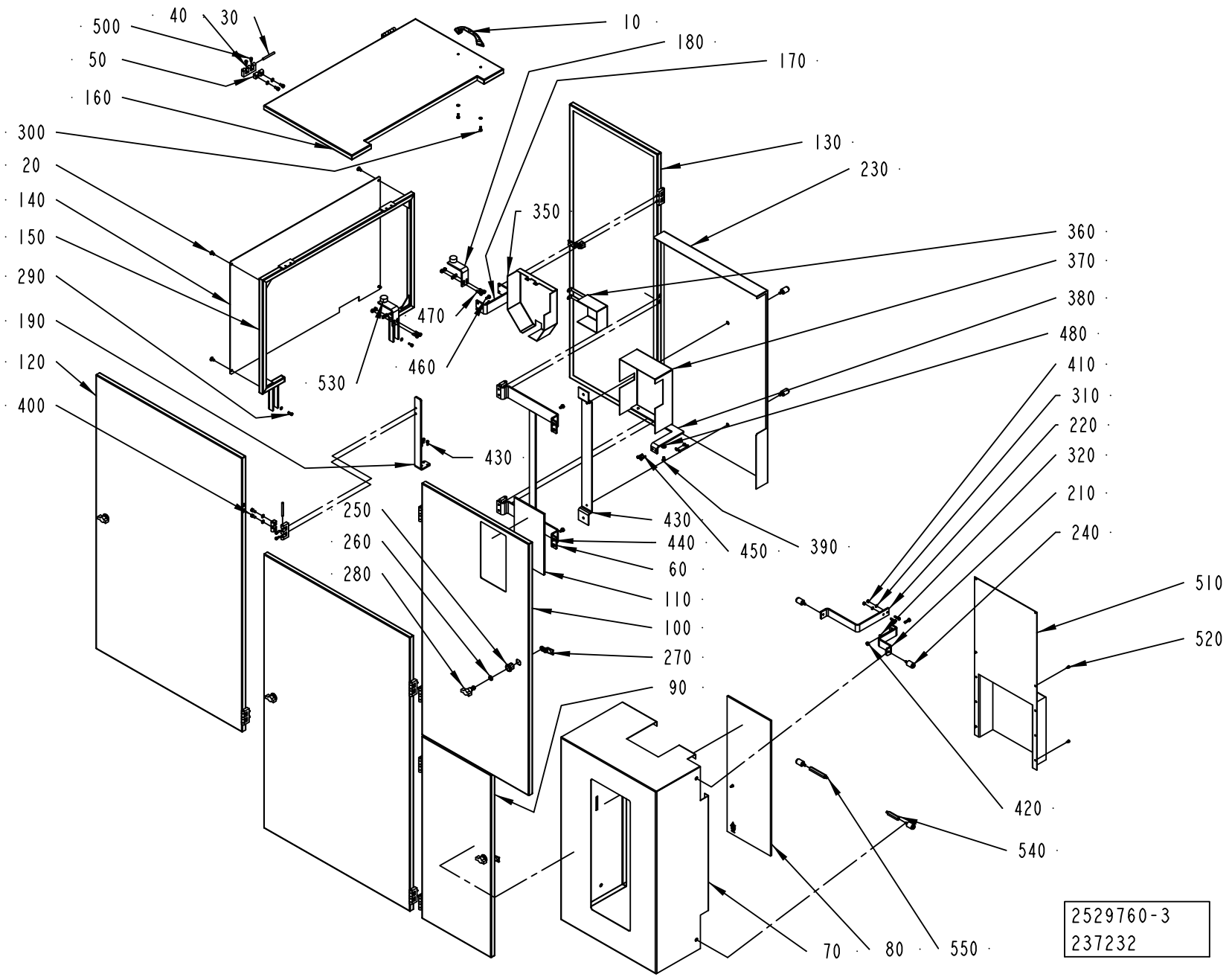
500
40
30
10
50
180
160
170
300
130
20
230
140
350
360
150
370
290
380
470
480
190
460
410
530
120
310
400
220
430
320
250
210
430
260
440
240
450
390
280
60
510
110
100
520
270
90
420
540
70
80
550
2529760-3
237232

ECM: 239321 - 20051011
Group number: 2529760-0200
Assembly Drawing: 2529760-3_1_AC

Pos	Part No	UN	Qty	Description	Page No
A3/FLEX					
020	927354-0000		4	SCREW	
070	2710561-0000		1	COVERING PANEL	
080	2710562-0000		1	GLASS PANE	
090	2710564-0000		1	DOOR	
140	2711249-0000		1	PANEL	
210	2711266-0000		1	BRACKET	
220	2711267-0000		1	BRACKET	
230	2712433-0000		1	COVERING PANEL	
240	90226-0458		6	MOUNTING SCREW	
295	312105-0368		6	SCREW M6S ISO 4017 M6X16 A480	
310	315105-0146		10	WASHER BRB 5,3X10 RFR	
320	315105-0153		27	WASHER BRB 6,4X12 RFR	
410	312605-0314		4	HEXAGON NUT, M6M M5 A280	
420	312605-0316		5	HEXAGON NUT, M6M M6 A280	
510	2619607-0000		1	COVER	
520	312105-0287		4	SCREW M6S ISO 4017 M4X8 A470	
540	2743319-0000		1	SUPPORT	
550	2743320-0000		1	SUPPORT	
Common Parts					
010	7309-0000		1	HANDLE	
030	988685-0000		13	PIN	
040	1035792-0000		13	E-HINGE	
050	1129770-0000		26	BLOCKING PIECE	
060	2509658-0000		1	BRACKET	
100	2711243-0000		1	COVERING PANEL	
110	2711244-0000		1	GLASS PANE	
120	2711246-0000		2	COVERING PANEL	
130	2711248-0000		1	DOOR	
150	2711250-0000		1	FRAME	
160	2711255-0000		1	COVERING PANEL	
170	2711261-0000		1	BRACKET	
180	2711262-0000		2	BRACKET	
190	2711263-0000		1	BRACKET	
250	90237-0319		5	LOCK HOUSING, 1000-U134	
260	90237-0323		5	LOCK O-RING, 1000-24	
270	90237-0335		5	LOCKING CATCH	
280	90237-0337		5	LOCK HANDLE FOR 90237-319	
290	312105-0328		4	SCREW M6S ISO 4017 M5X14 A480	
300	312115-0327		28	SCREW ISO4762 M5X12 A4 80	
350	2788635-0000		1	TOUCH GUARD	
360	2788636-0000		1	TOUCH GUARD	
370	2788637-0000		1	COVERING PANEL	
380	2788638-0000		1	BRACKET	
390	312105-0364		4	SCREW M6S ISO 4017 M6X10 A480	
400	312115-0366		26	SCREW ISO4762 M6X12 A4 80	
430	2509659-0000		1	PLATE	
440	312105-0327		3	SCREW M6S ISO 4017 M5X12 A480	
450	312105-0329		4	SCREW M6S ISO 4017 M5X16 A480	
460	312105-0331		5	SCREW M6S ISO 4017 M5X20 A480	
470	312105-0366		5	SCREW M6S ISO 4017 M6X12 A480	
480	312105-0370		2	SCREW M6S ISO 4017 M6X20 A480	
490	315105-0165		2	WASHER BRB 8,4X16 RFR	
500	312115-0323		4	SCREW ISO4762 M5X8 A4 80	
530	90347-0034		2	VIBRATION DAMPER	

Machine Type | Group Description | Used-In | Group Number | Page No

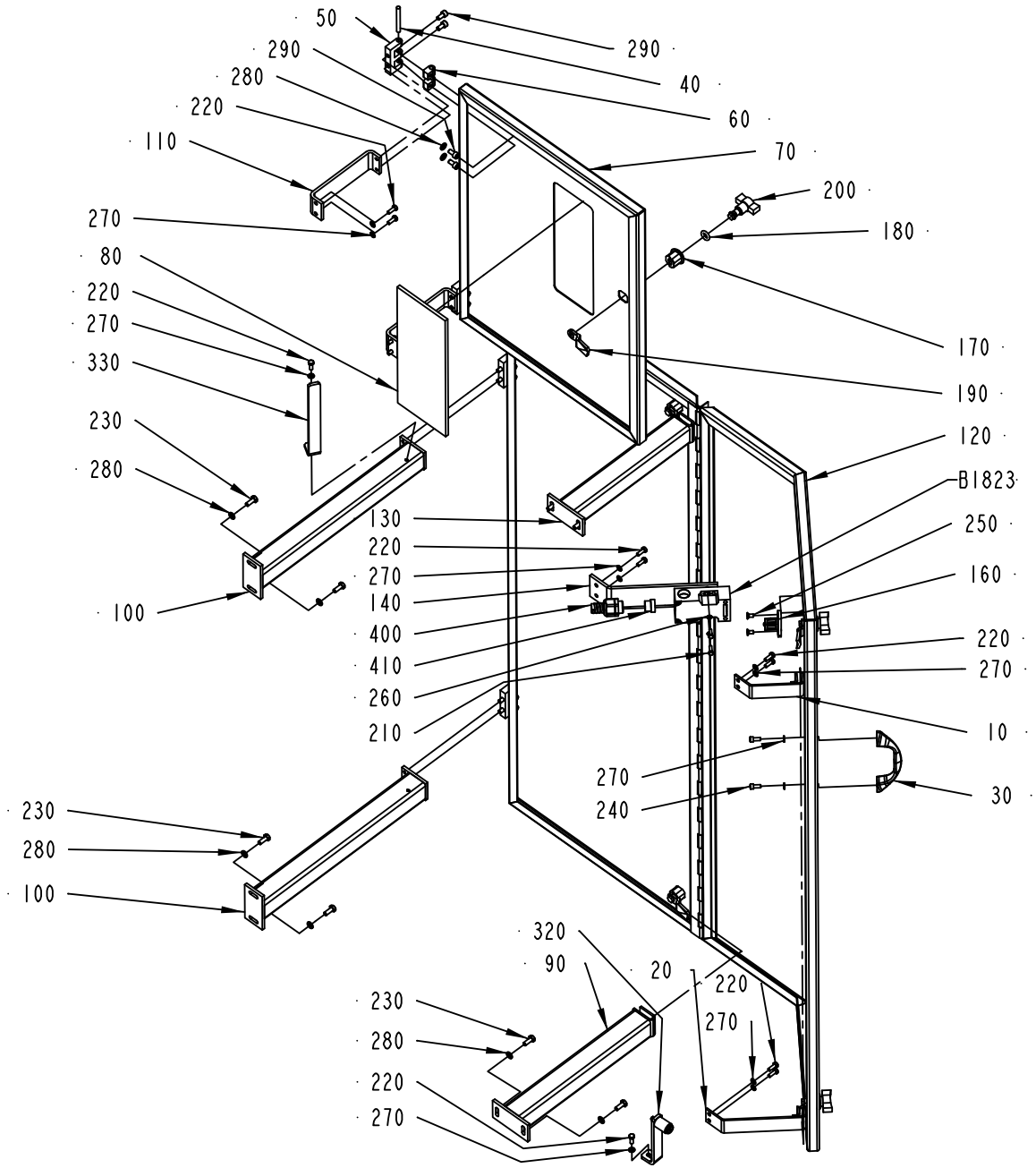
50
290
280
220
110
270
80
220
270
330
230
280
100
290
40
60
70
200
180
170
190
120
B1823
250
160
220
270
10
30
130
220
270
140
400
410
260
210
270
240
230
280
100
320
90
20
220
270
230
280
220
270

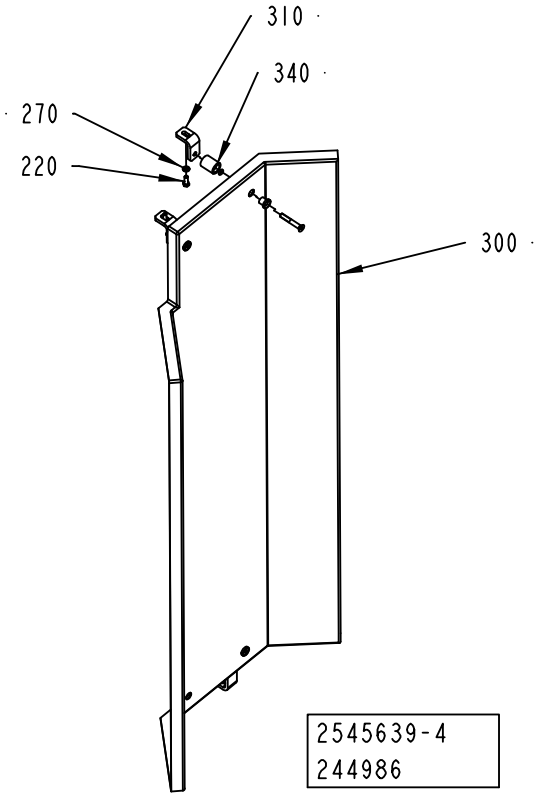
310
340
270
220
300
2545639-4
244986

ECM: 244986 - 20060728
Group number: 2545639-0200
Assembly Drawing: 2545639-4_1_AB

Pos	Part No	UN	Qty	Description	Page No
-					
010	2711256-0000		1	BRACKET	
020	2711257-0000		1	BRACKET	
030	7309-0000		1	HANDLE	
040	988685-0000		4	PIN	
050	1035792-0000		4	E-HINGE	
060	1129770-0000		8	BLOCKING PIECE	
070	2710558-0000		1	COVERING PANEL	
080	2710559-0000		1	GLASS PANE	
090	2711258-0000		1	FRAME	
100	2711259-0000		2	FRAME	
110	2711260-0000		2	BRACKET	
120	2711269-0000		1	DOOR	
130	2712434-0000		1	FRAME	
140	2712435-0000		1	BRACKET	
150	90459-1194		1	KEY SAF.SW. AZ16-03 ZVRK-M16	
160	90044-0310		1	KEY FOR SAFETY SWITCH AZ 15/16 B1	
170	90237-0319		5	LOCK HOUSING, 1000-U134	
180	90237-0323		5	LOCK O-RING, 1000-24	
190	90237-0335		5	LOCKING CATCH	
200	90237-0337		5	LOCK HANDLE FOR 90237-319	
210	312105-0292		2	SCREW M6S ISO 4017 M4X14 A470	
220	312105-0328		15	SCREW M6S ISO 4017 M5X14 A480	
230	312105-0368		8	SCREW M6S ISO 4017 M6X16 A480	
240	312115-0327		2	SCREW ISO4762 M5X12 A4 80	
250	312155-0325		2	SCREW DIN 7991 MF6S M5X10 A4 70	
260	315105-0136		2	WASHER BRB 4,3X8 RFR	
270	315105-0146		17	WASHER BRB 5,3X10 RFR	
280	315105-0153		16	WASHER BRB 6,4X12 RFR	
290	312115-0366		16	SCREW ISO4762 M6X12 A4 80	
300	2710560-0000		1	COVER	
310	2710563-0000		2	BRACKET	
320	2711240-0000		2	BRACKET	
330	2711242-0000		1	BRACKET	
340	90226-0458		4	MOUNTING SCREW	
400	90458-0429		1	HOSE GLAND W/O INSERT M20 EXTENDED	
410	353249-0011		1	INSERT, SINGEL HOLE, EK 153/11	
B1823	90459-0472		1	KEY SAF.SW. AZ 16 02ZVRK-M20-2152-2254	

Pos	Part No	UN	Qty	Description	Page No

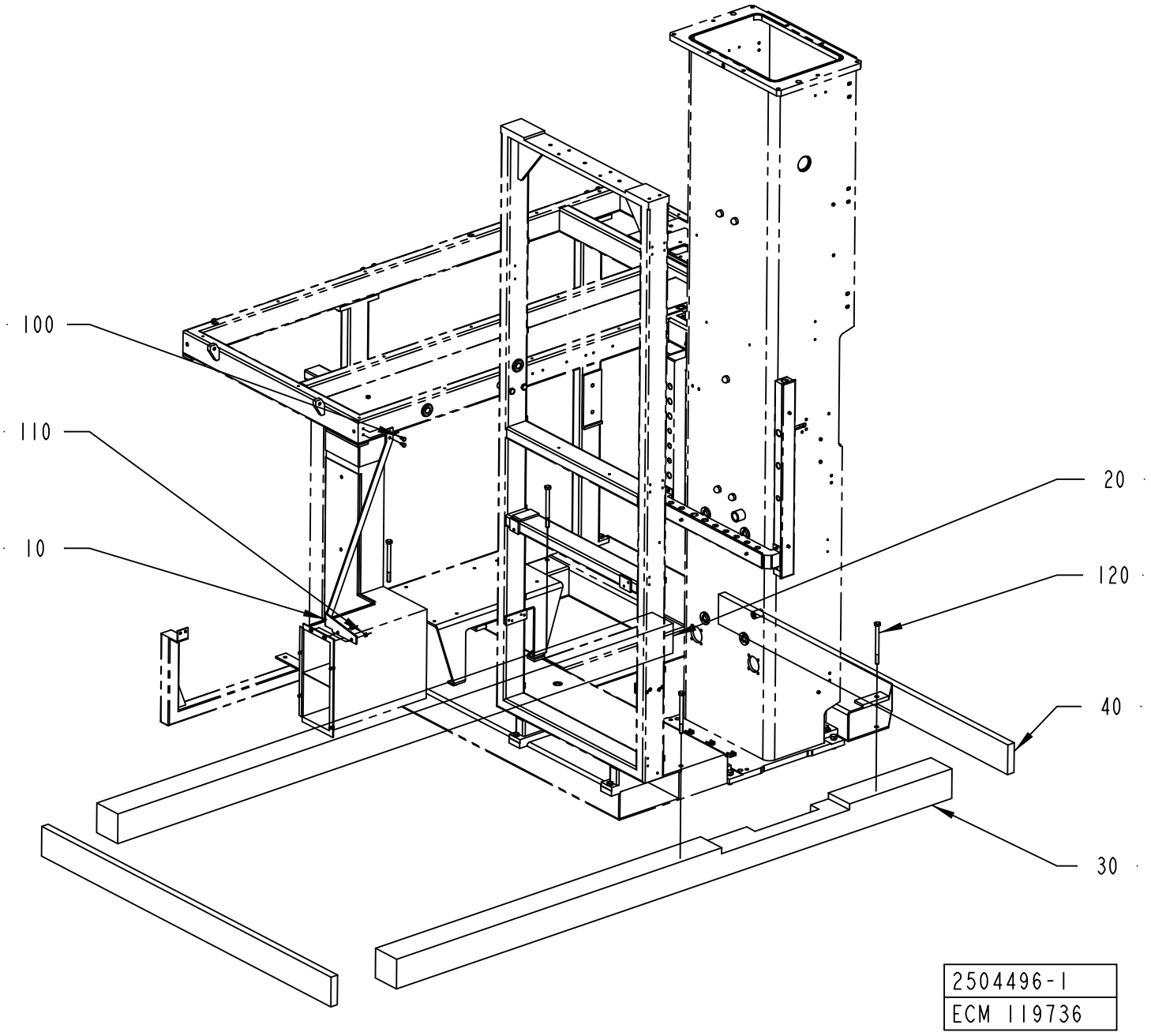
100
110
10
20
120
40
30
2504496-1
ECM 119736

ECM: 189221 - 20041104
Group number: 2504496-0100
Assembly Drawing: 2504496-1_1_AA

Pos	Part No	UN	Qty	Description	Page No
-					
010	1558845-0000		1	BRACKET	
020	1140685-0000		1	BEAM	
030	2541656-0000		1	BEAM	
040	2541657-0000		2	BEAM	
100	312105-0366		2	SCREW M6S ISO 4017 M6X12 A480	
110	312605-0316		2	HEXAGON NUT, M6M M6 A280	
120	312230-0150		4	SCREW HEX.HEAD WOOD T6S 10X160 SS	

Pos	Part No	UN	Qty	Description	Page No

Tetra Pak

SPC
Spare Parts Catalogue

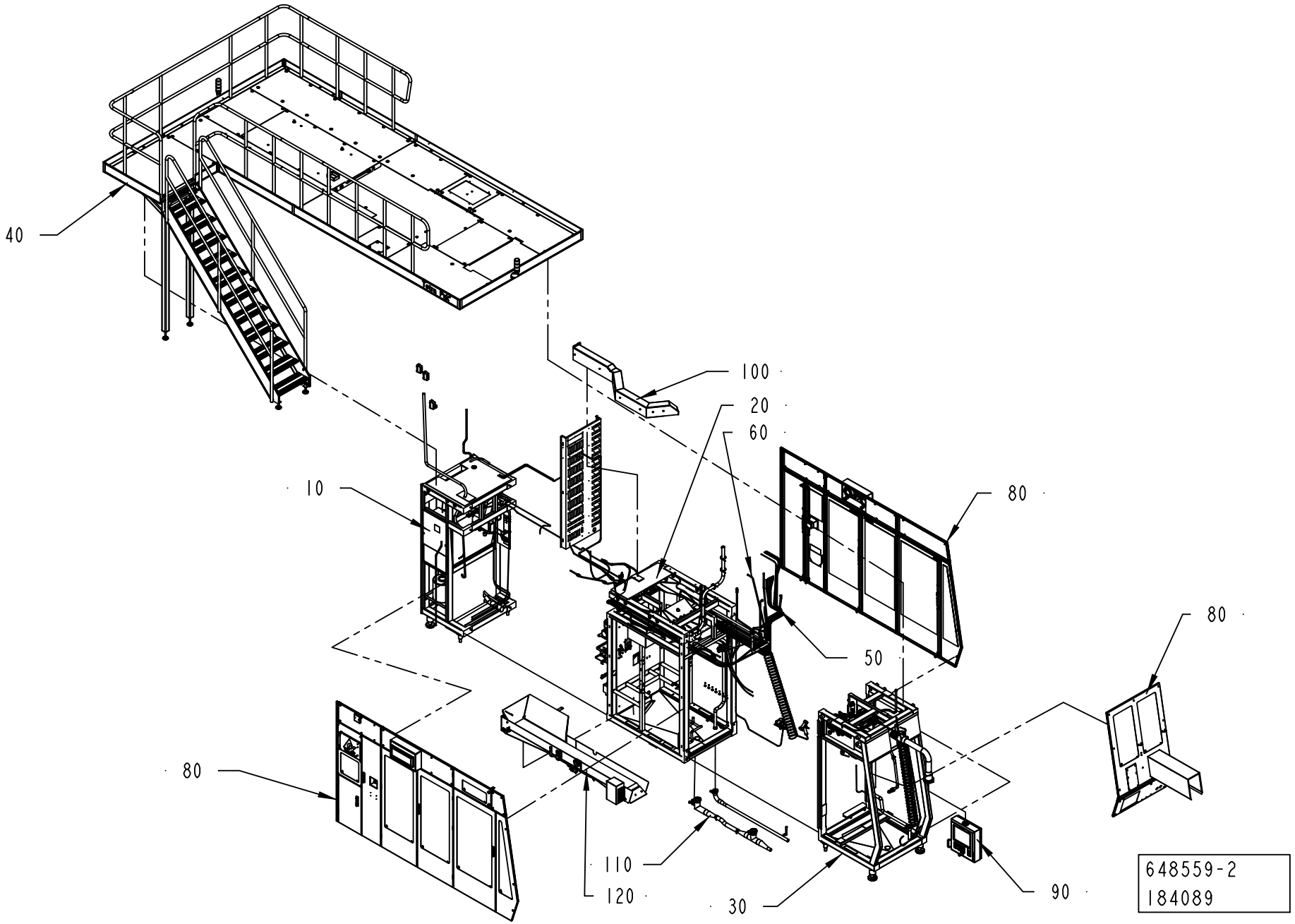
40
100
20
60
10
80
80
50
80
110
120
30
90
648559-2
184089

ECM: 192970 - 20050620
Group number: 648559-0200
Assembly Drawing: 648559-2_1_AA

Pos	Part No	UN	Qty	Description	Page No
A3/FLEX					
010	2504779-0100		1	REAR MODULE	**2-5, 2-7**
Common Parts					
020	2504785-0200		1	CENTRAL MODULE	**2-63**
030	2504793-0100		1	FRONT MODULE	**2-117**
040	2550139-0100		1	PLATFORM	**2-159, 2-161, 2-163, 2-165, 2-167, 2-169**
050	2504917-0100		1	PIPE WORK-WATER	**2-195**
060	2504918-0100		1	PNEUMATIC SYSTEM	**2-211, 2-213**
080	2504920-0100		1	DOORS AND COVERS	**2-215**
090	2518146-0100		1	TPOP PANEL 15"	**2-263**
100	2504791-0100		1	CABLE DUCT	**2-269**
110	2519570-0100		1	DRAINING	**2-271**
120	2542325-0100		1	WASTE CONVEYOR	**2-273, 2-275**

Pos	Part No	UN	Qty	Description	Page No

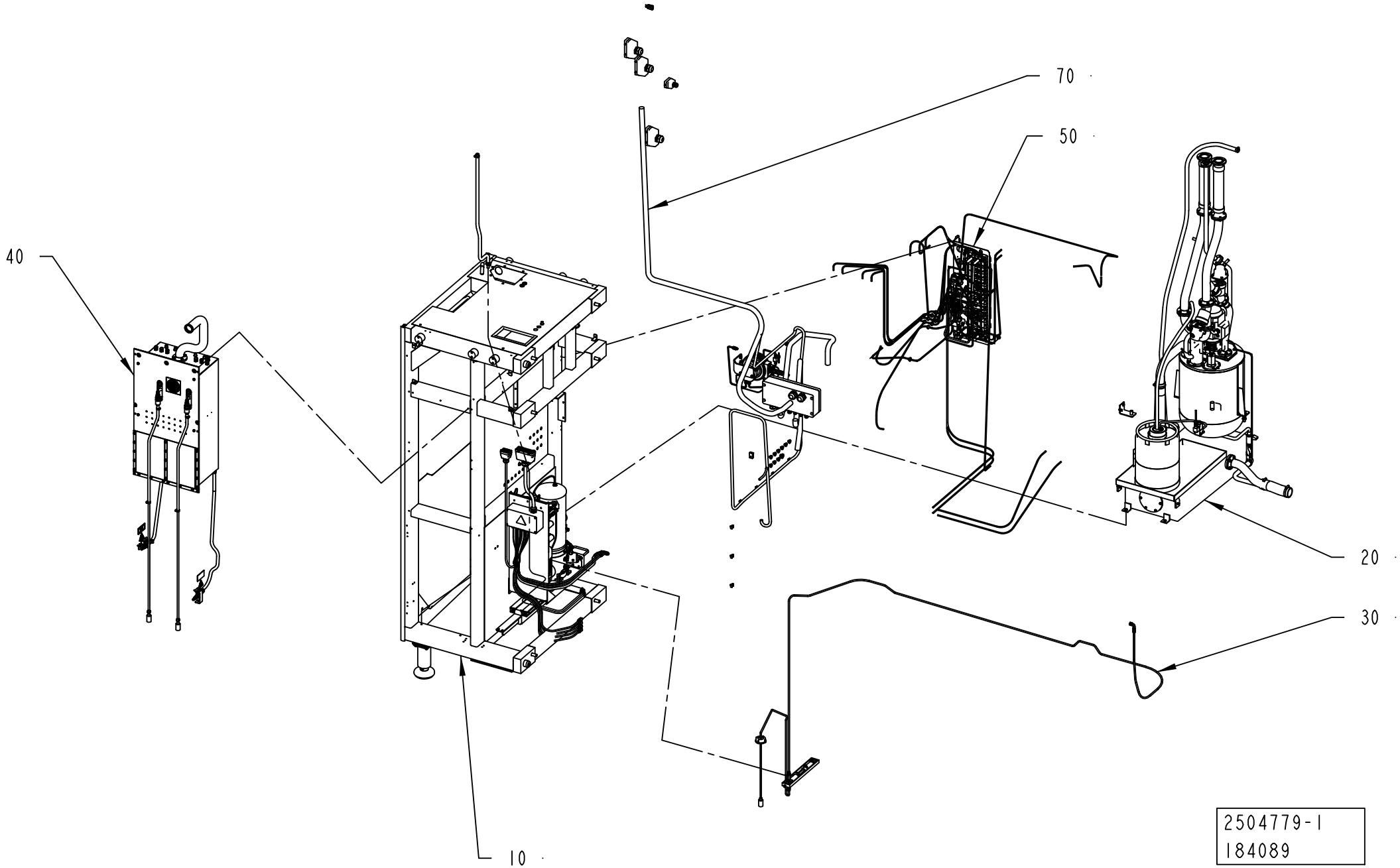
70
50
40
20
30
10
2504779-1
184089

ECM: 192976 - 20050620
Group number: 2504779-0100
Assembly Drawing: 2504779-1_1_AE

This list covers pages from 2-4 to 2-7

Pos	Part No	UN	Qty	Description	Page No
-					
010	2504780-0100		1	MACHINE BODY	**2-9**
020	2504781-0100		1	HYDROGEN PEROXIDE	**2-17**
030	2504782-0100		1	CHEMICALS	**2-37**
040	2544326-0100		1	INTEGRATED CLEANING UNIT	**2-39**
050	2528457-0100		1	PNEUMATIC SYSTEM	**2-43**
070	2528455-0100		1	ELECTRIC EQUIPMENT	**2-53**

Pos	Part No	UN	Qty	Description	Page No

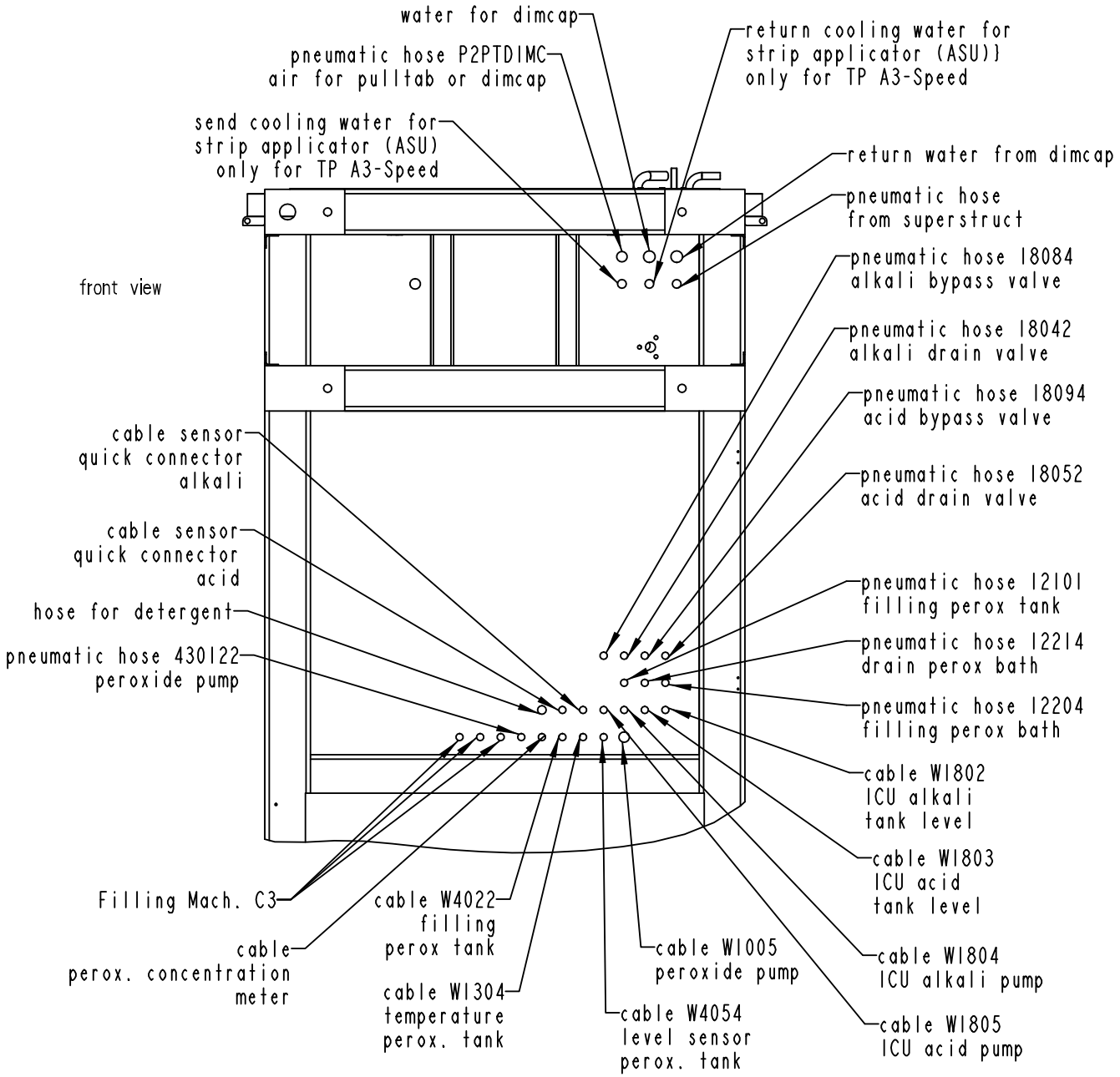

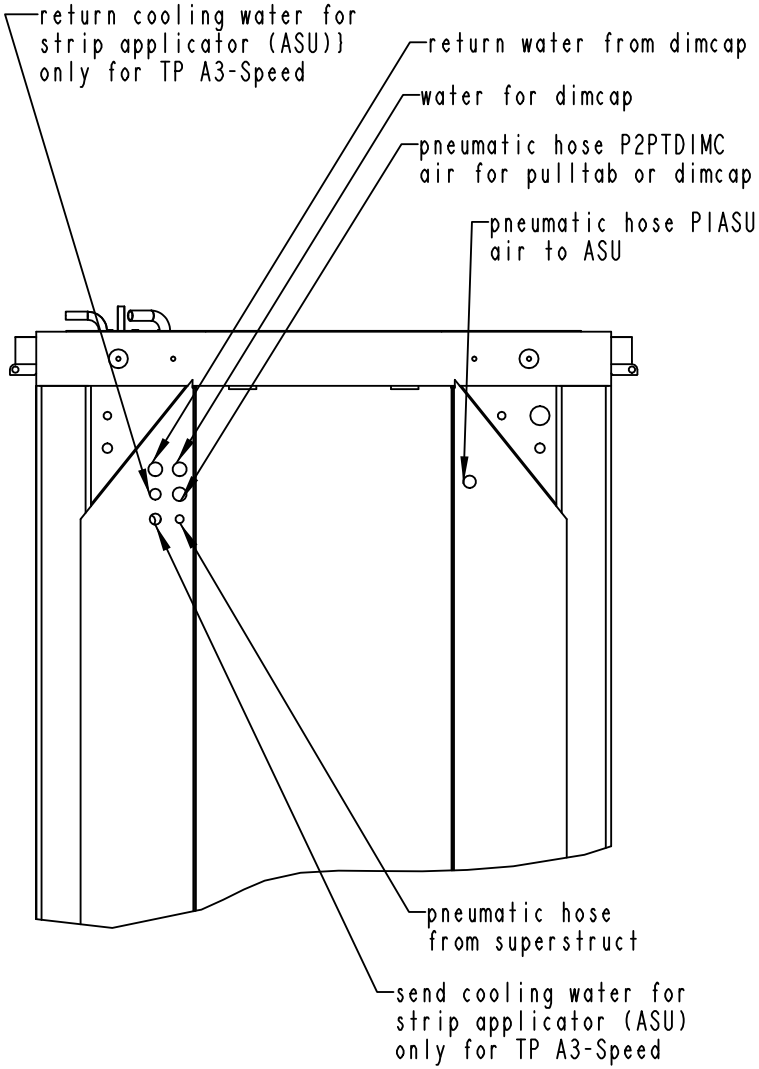

2504779-1
184089

ECM: 192976 - 20050620
Group number: 2504779-0100
Assembly Drawing: 2504779-1_2_AE

This list covers pages from 2-4 to 2-7

Pos	Part No	UN	Qty	Description	Page No
-					
010	2504780-0100		1	MACHINE BODY	**2-9**
020	2504781-0100		1	HYDROGEN PEROXIDE	**2-17**
030	2504782-0100		1	CHEMICALS	**2-37**
040	2544326-0100		1	INTEGRATED CLEANING UNIT	**2-39**
050	2528457-0100		1	PNEUMATIC SYSTEM	**2-43**
070	2528455-0100		1	ELECTRIC EQUIPMENT	**2-53**

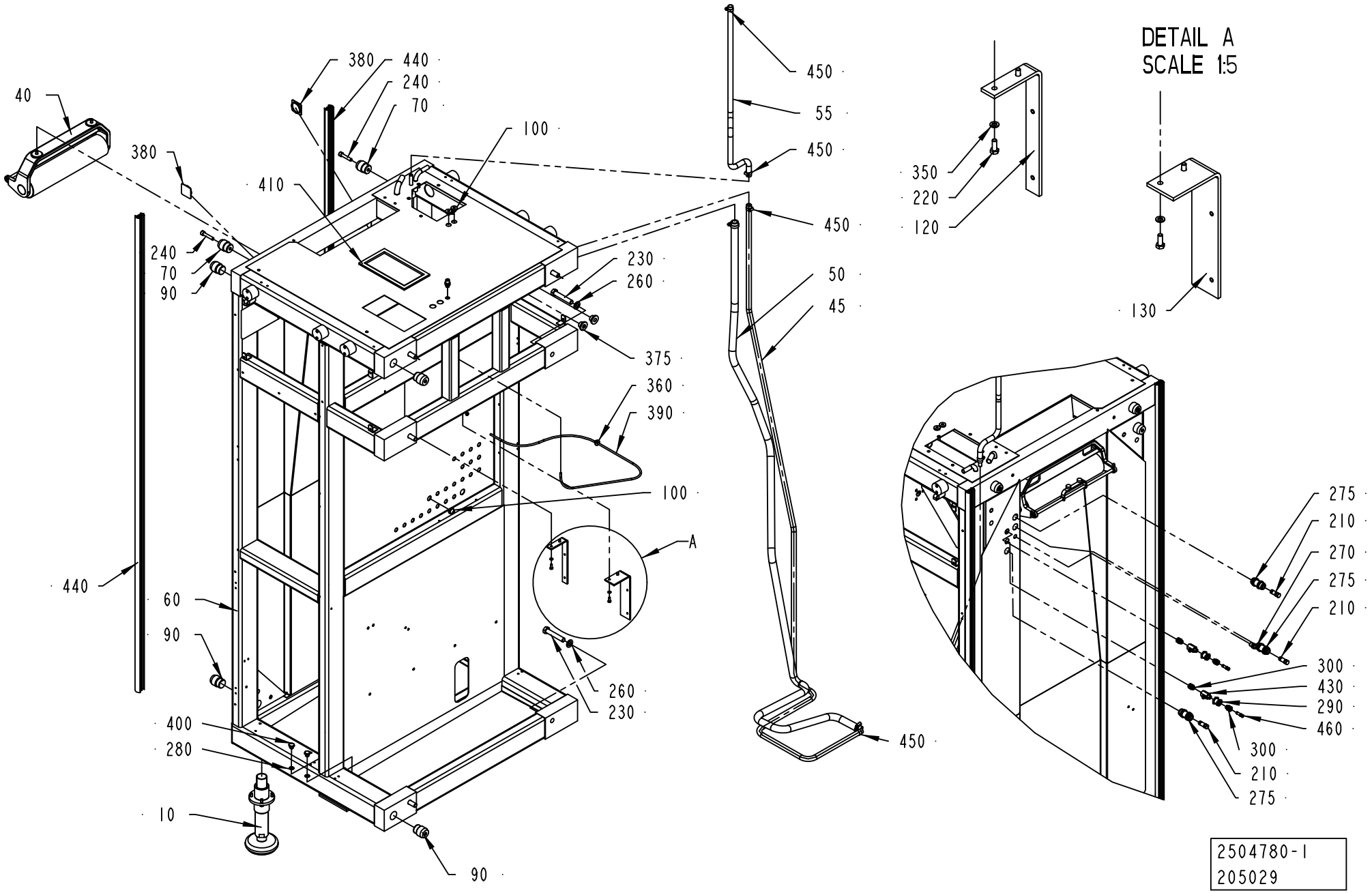
DETAIL A
SCALE 1:5
40
380
440
240
70
100
410
450
55
450
350
220
120
130
240
70
90
230
260
450
50
45
375
360
390
100
A
440
60
90
260
230
400
280
10
90
450
275
210
270
275
210
300
430
290
460
300
210
275
2504780-1
205029

ECM: 224433 - 20060701
Group number: 2504780-0100
Assembly Drawing: 2504780-1_1_AG

Pos	Part No	UN	Qty	Description	Page No
-					
010	2761766-0100		2	FOOT	**2-11**
040	2504784-0200		1	BENDING ROLLER	**2-13**
045	90166-0121	MM	3200	HOSE	
050	2514204-0100		1	DRAINING	**2-15**
055	90166-0121	MM	2100	HOSE	
060	2504435-0000		1	MACHINE BODY	
070	591341-0000		2	PIN	
090	2506636-0000		4	PIN	
100	90015-0023		2	LEAD-IN, TET7-10, E-1458019	
120	2683974-0000		1	HOLDER	
130	2683975-0000		1	HOLDER	
210	342715-0106		3	BLIND PLUG 14 MM	
220	312105-0368		4	SCREW M6S ISO 4017 M6X16 A480	
230	312105-0638		6	SCREW M6S ISO 4014 M16X90 A480	
240	312115-0501		2	SCREW ISO4762 M10X50 A4 80	
260	315105-0186		6	WASHER BRB17X30RFR	
270	342768-0102		2	BULKHEAD CONNECTOR, 6 MM	
275	342768-0110		3	BULKHEAD CONNECTOR, 14 MM	
280	315237-0110		2	WASHER,PL.RND.AL.13,5/18,H=1,5	
290	342767-0104		2	CONN. BULKHEAD G1/4	
300	90055-0274		4	STRAIGHT COUPLING, D=8 MM - G1/4"	
350	315105-0153		4	WASHER BRB6,4X12RFR	
360	90015-0020		1	LEAD-IN, TET5-7, E-1458016	
370	90015-0023		1	LEAD-IN, TET7-10, E-1458019	
375	90015-0022		2	LEAD-IN, TET14-20, E-1458029	
380	90261-0070		2	PLASTIC PLUG SS 0082.31	
390	90166-0081	MM	1320	TUBE 6 MM PA BLUE	
400	90330-0026		2	PLUG, EXT. G-THREAD, G1/4	
410	90143-0059	MM	700	SEAL STRIP 4610069	
430	90187-0158		2	THROTTLE BALL VALVE G1/4, R1/4	
440	90459-1009	MM	4500	RUBBER STRIP, 1025088988	
450	342991-0102		4	HOSE CLIP,WORM DRIVE TYPE (16)-19	
460	342715-0102		1	BLIND PLUG 6 MM	

Pos	Part No	UN	Qty	Description	Page No

Machine Type | Group Description | Used-In | Group Number | Page No

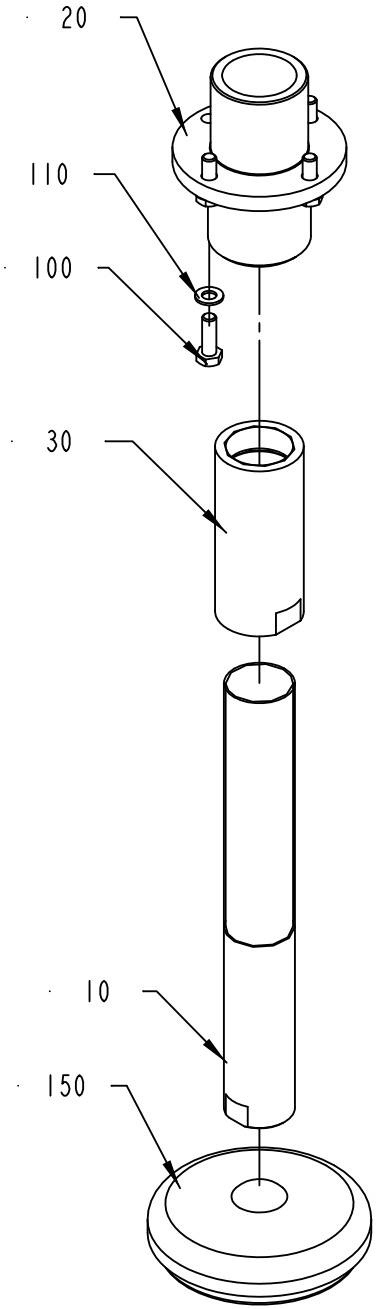

2761766-1
205029

ECM: 253976 - 20060701
Group number: 2761766-0100
Assembly Drawing: 2761766-1_1_AB

Pos	Part No	UN	Qty	Description	Page No
-					
010	2761763-0000		1	LEG	
020	2761764-0000		1	SLEEVE	
030	2761765-0000		1	SLEEVE	
100	312105-0453		4	SCREW M6S ISO 4017 M8X25 A480	
110	315105-0165		4	WASHER BRB8,4X16RFR	
150	90347-0175		1	MACHINE SHOE BRIK T 125	

Pos	Part No	UN	Qty	Description	Page No

BENDING ROLLER

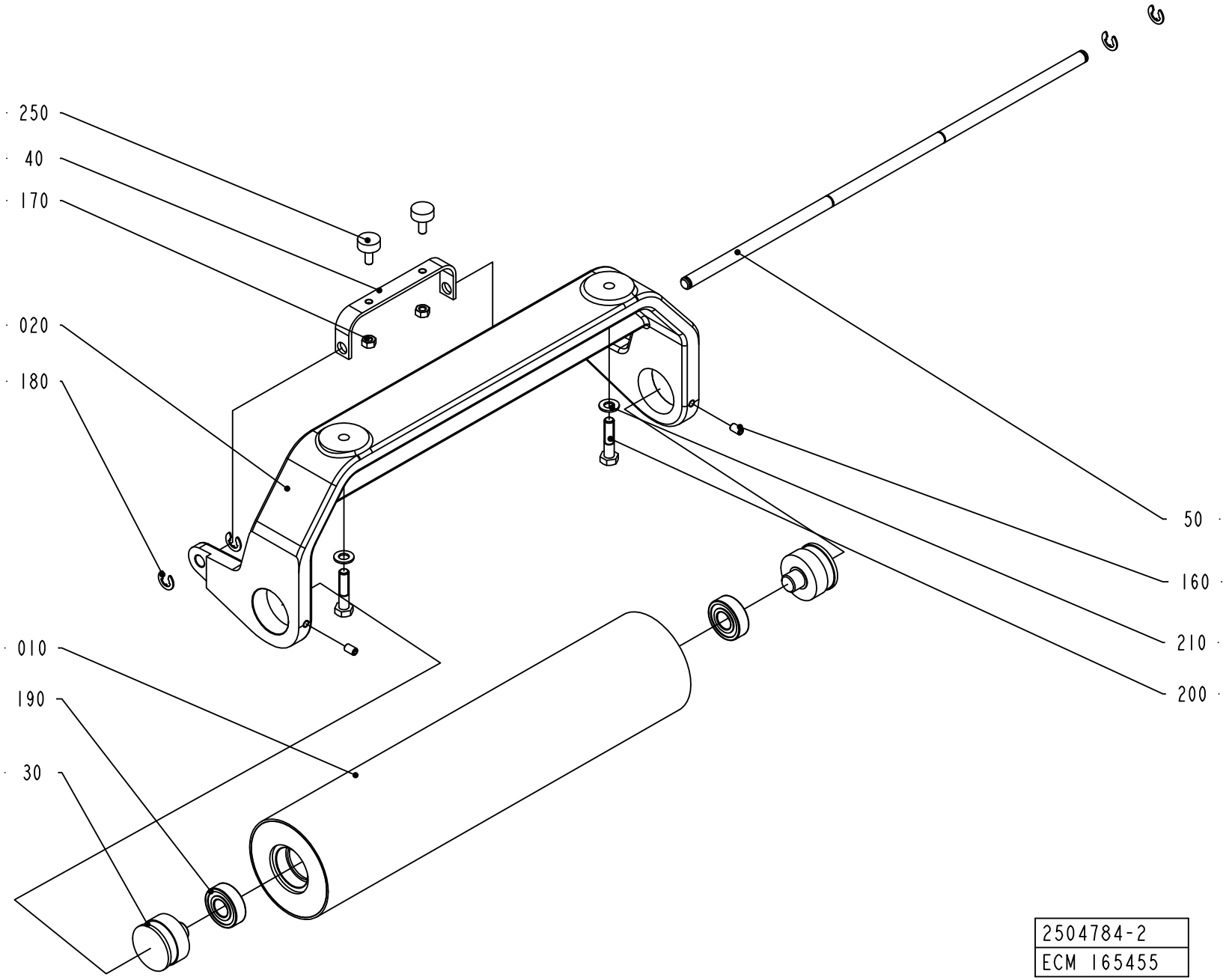

ECM: 165457 - 20040715
Group number: 2504784-0200
Assembly Drawing: 2504784-2_1_AA

Pos	Part No	UN	Qty	Description	Page No
-					
010	2605877-0000		1	BENDING ROLLER	
020	2605879-0000		1	CANTILEVER	
030	1037012-0000		2	AXLE PIN	
040	1041603-0000		1	BRACKET	
050	2605880-0000		1	SHAFT	
160	312318-0364		2	SCREW ISO4029 M6X10 A4	
170	312605-0316		2	HEXAGON NUT, M6M M6 A280	
180	315755-0801		4	RETAINING RING SHAFT DIN 6799 8 A2	
190	321313-0102		2	BALL BEARING, 15X35X11 MM	
200	312105-0457		2	SCREW M6S ISO 4014 M8X35 A480	
210	315105-0165		2	WASHER BRB8,4X16RFR	
250	90347-0007		2	VIBRATION DAMPER	

Pos	Part No	UN	Qty	Description	Page No

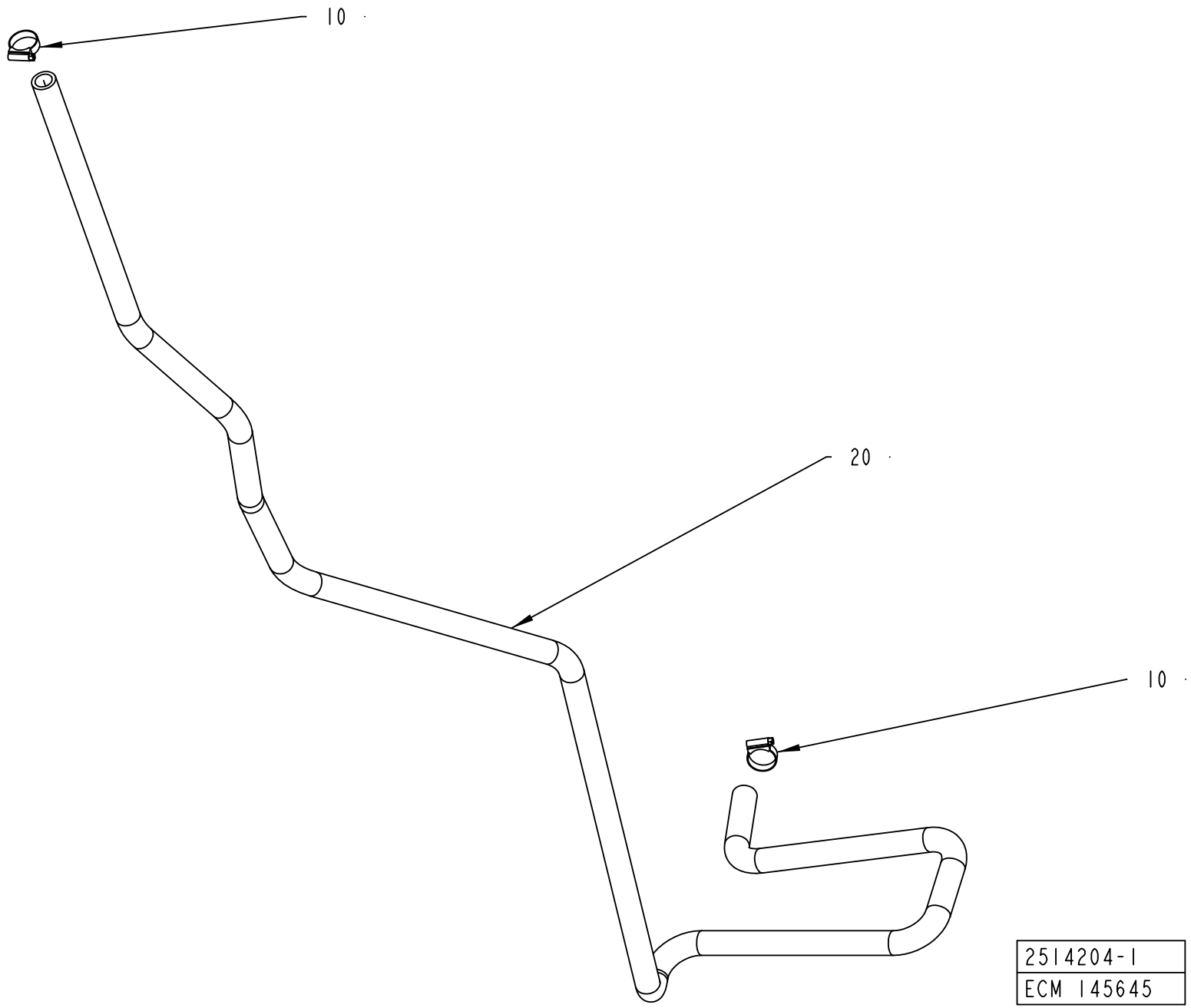
10
20
10
2514204-1
ECM 145645

ECM: 189743 - 20041104
Group number: 2514204-0100
Assembly Drawing: 2514204-1_1_AB

Pos	Part No	UN	Qty	Description	Page No
A3/FLEX					
020	90166-0060	MM	2450	HOSE 19/26-27 REINF.PVC	
Common Parts					
010	342991-0105		2	HOSE CLIP,WORM DRIVE TYPE (27)-30	

Pos	Part No	UN	Qty	Description	Page No

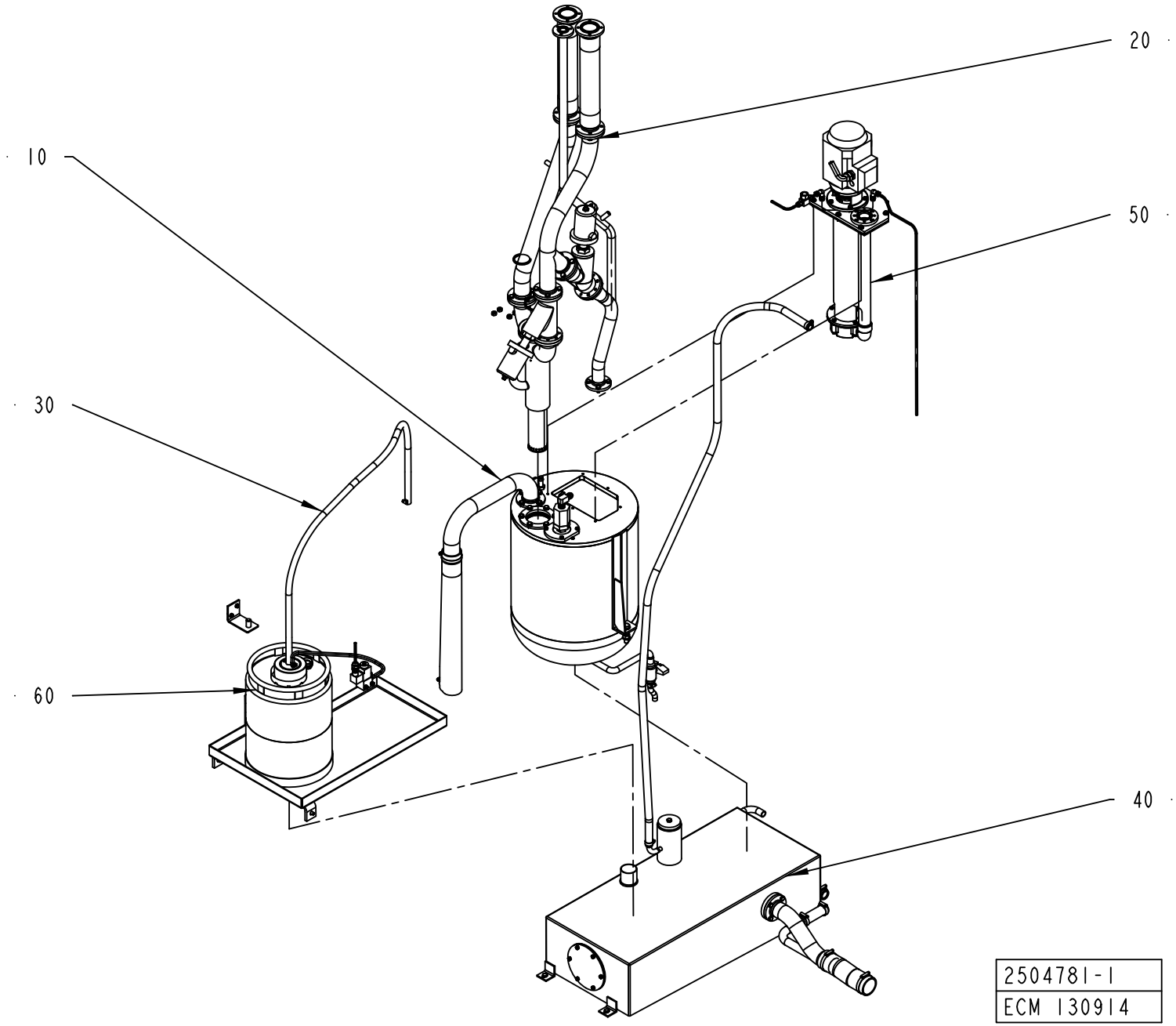
20
10
50
30
60
40
2504781-1
ECM 130914

ECM: 131957 - 20030522
Group number: 2504781-0100
Assembly Drawing: 2504781-1_1_AB

Pos	Part No	UN	Qty	Description	Page No
-					
010	1282894-0100		1	PEROXIDE TANK	**2-19, 2-21**
020	1282895-0200		1	PEROXIDE PIPE	**2-25**
030	2506637-0100		1	AIR PIPE-LINE	**2-27**
040	1282896-0100		1	TANK	**2-29**
050	996388-0500		1	PEROXIDE PUMP	**2-33**
060	527898-0100		1	MKS CONTAINER H2O2	**2-35, 10-69**

Pos	Part No	UN	Qty	Description	Page No

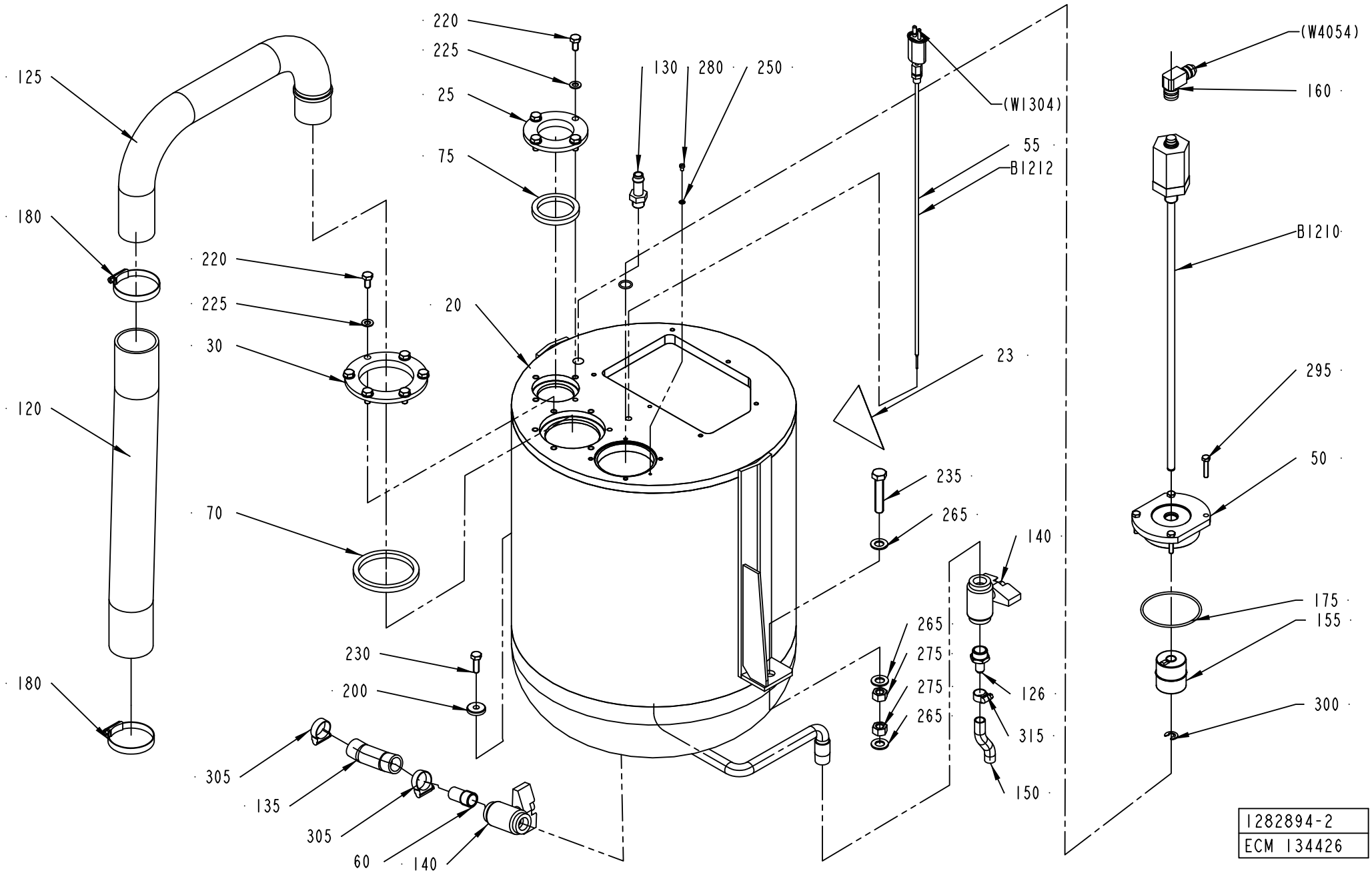
125
180
120
180
220
225
30
70
220
225
25
75
20
130
280
250
(W1304)
55
B1212
23
235
265
140
265
275
275
265
126
315
150
230
200
305
135
305
60
140
(W4054)
160
B1210
295
50
175
155
300
1282894-2
ECM 134426

ECM: 267645 - 20060702
Group number: 1282894-0100
Assembly Drawing: 1282894-2_1_AB

This list covers pages from 2-18 to 2-21

Pos	Part No	UN	Qty	Description	Page No
A3/FLEX DIMC/FLEX, A3/FLEX TBA 2000S NODIMC, A3/FLEX TBA 1890S NODIMC (See drawing on page: 2-20)					
127	2623721-0100		1	PEROXIDE REDUCER	**2-23**
A3/FLEX TBA 1000B NODIMC, A3/FLEX TBA 0500B NODIMC, A3/FLEX TBA 1000S NODIMC, A3/FLEX TBA 1000SQ NODIMC, A3/FLEX TBA 0200S NODIMC, A3/FLEX TPA 1000SQ NODIMC, A3/FLEX TBA 1500S NODIMC, A3/FLEX TBA 0200B NODIMC, A3/FLEX TBA 0250B NODIMC, A3/FLEX TBA 0330S NODIMC, A3/FLEX TPA 0330SQ NODIMC, A3/FLEX TPA 0500SQ NODIMC, A3/FLEX TBA 0200M NODIMC, A3/FLEX TBA 0250S NODIMC, A3/FLEX TBA 0500S NODIMC, A3/FLEX TPA 0200SQ NODIMC, A3/FLEX TPA 0250SQ NODIMC, A3/FLEX TPA 0750SQ NODIMC, A3/FLEX TBA 0200SQ NODIMC, A3/FLEX TBA 0250SQ NODIMC (See drawing on page: 2-18)					
050	1558327-0000		1	LID	
155	90458-2358		1	FLOAT, BTL2-S-4414-4Z	
160	90458-1595		1	CONNECTION, BKS-S 33M-00	
250	315105-0136		1	WASHER BRB4,3XRFR	
300	315755-0110		1	RETAINING RING SHAFT DIN 6799 9 A2	
B1210	90459-0951		1	TRANSDUCER, BTL5-A11-M0400-B-S32	
Common Parts					
020	1255559-0000		1	PEROXIDE TANK	
023	359705-0004		1	WARNING SIGN ISO, DANGEROUS CHEMICALS	
025	1040840-0000		1	FLANGE	
030	1040841-0000		1	FLANGE	
055	1347704-0000		1	THERMOCOUPLE	
	1040890-0000		*1*	*THERMOCOUPLE*	
	90326-0306		*1*	*GLAND FITTING 9041-45-KS-KR.1/8" D=4,5MM*	
060	1037102-0000		1	SPACER PIPE	
070	1040852-0000		1	SEALING RING	
075	1040853-0000		1	SEALING RING	
120	1282899-0000		1	HOSE	
125	1282891-0000		1	PIPE	
126	1282906-0000		1	NIPPLE	
130	90055-0051		1	HOSE NIPPLE, EXT.THR. R3/8X13 MM	
135	90166-0151	MM	140	HOSE	
140	90187-0059		2	BALL VALVE FOR HYDR.PER. G1/2 3MM HOLE	
150	90166-0138	MM	85	HOSE	
175	927422-0016		1	O-RING 79.5X3 SILICONE	
180	342991-0110		2	HOSE CLIP,WORM DRIVE TYPE (54)-63	
200	315125-0165		1	WASHER TBRSB 8,4X26X5 A4	
220	312105-0449		10	SCREW M6S ISO 4017 M8X16 A480	
225	315105-0165		10	WASHER BRB8,4X16RFR	
230	312105-0453		1	SCREW M6S ISO 4017 M8X25 A480	
235	312109-0544		1	SCREW M6S ISO 4017 M12X60 A480	
265	315105-0178		3	WASHER BRB13X24RFR	
275	312605-0322		2	HEXAGON NUT, M6M M12 A280	
280	312125-0285		1	SCREW ISO 1207 M4X6 A4	
295	312109-0374		4	SCREW M6S ISO 4017 M6X30 A480	
305	342991-0104		2	HOSE CLIP,WORM DRIVE TYPE (23)-27	
315	342991-0101		1	HOSE CLIP,WORM DRIVE TYPE (13)-16	

Machine Type | Group Description | Used-In | Group Number | Page No

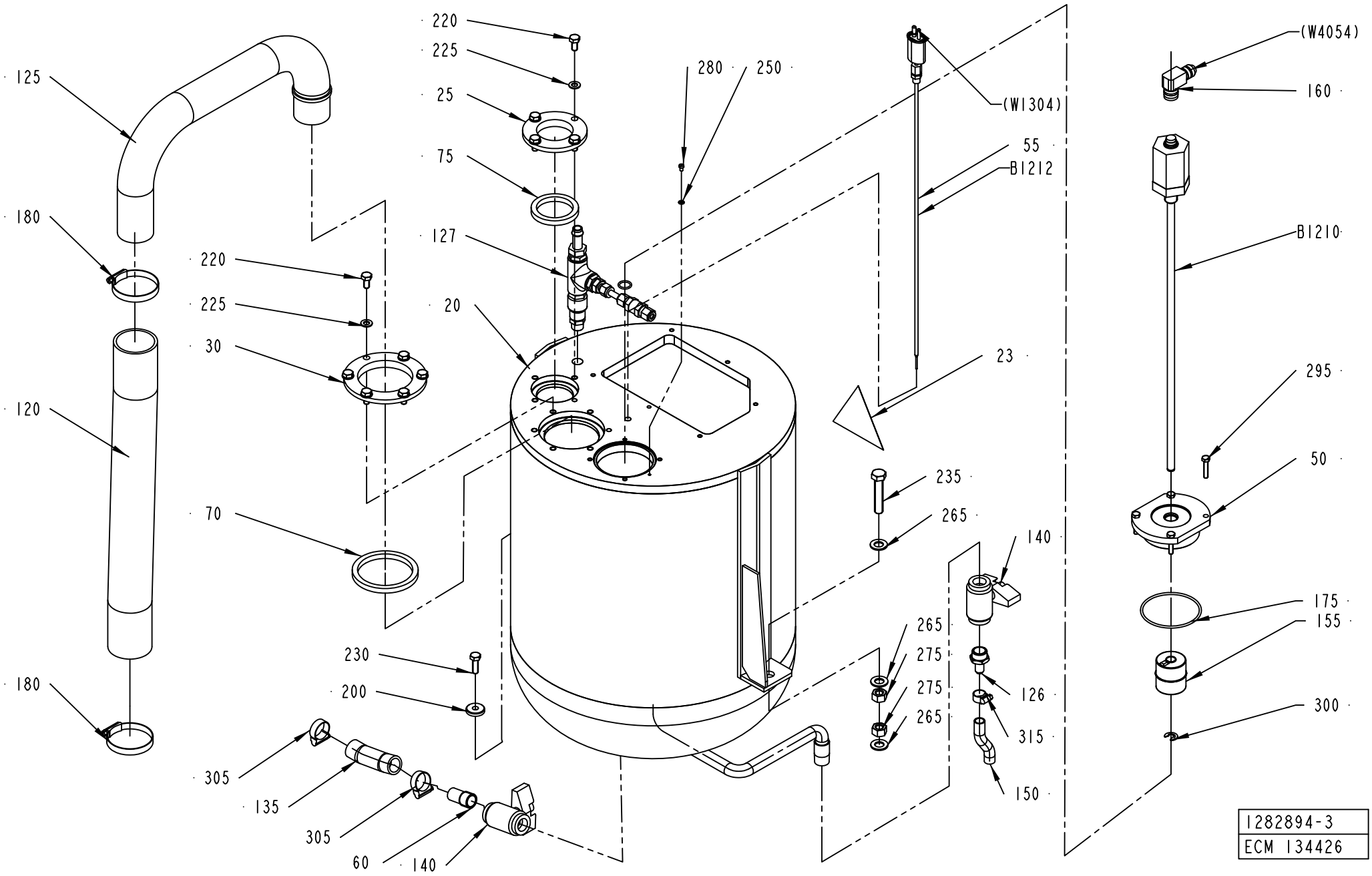
125
180
120
180
220
225
30
70
220
225
25
75
127
20
280
250
(W1304)
55
B1212
23
235
265
140
265
275
275
265
126
315
150
(W4054)
160
B1210
295
50
175
155
300
230
200
305
135
305
60
140
1282894-3
ECM 134426

ECM: 267645 - 20060702
Group number: 1282894-0100
Assembly Drawing: 1282894-3_1_AA

This list covers pages from 2-18 to 2-21

Pos	Part No	UN	Qty	Description	Page No
A3/FLEX DIMC/FLEX, A3/FLEX TBA 2000S NODIMC, A3/FLEX TBA 1890S NODIMC (See drawing on page: 2-20)					
127	2623721-0100		1	PEROXIDE REDUCER	**2-23**
A3/FLEX TBA 1000B NODIMC, A3/FLEX TBA 0500B NODIMC, A3/FLEX TBA 1000S NODIMC, A3/FLEX TBA 1000SQ NODIMC, A3/FLEX TBA 0200S NODIMC, A3/FLEX TPA 1000SQ NODIMC, A3/FLEX TBA 1500S NODIMC, A3/FLEX TBA 0200B NODIMC, A3/FLEX TBA 0250B NODIMC, A3/FLEX TBA 0330S NODIMC, A3/FLEX TPA 0330SQ NODIMC, A3/FLEX TPA 0500SQ NODIMC, A3/FLEX TBA 0200M NODIMC, A3/FLEX TBA 0250S NODIMC, A3/FLEX TBA 0500S NODIMC, A3/FLEX TPA 0200SQ NODIMC, A3/FLEX TPA 0250SQ NODIMC, A3/FLEX TPA 0750SQ NODIMC, A3/FLEX TBA 0200SQ NODIMC, A3/FLEX TBA 0250SQ NODIMC (See drawing on page: 2-18)					
050	1558327-0000		1	LID	
155	90458-2358		1	FLOAT, BTL2-S-4414-4Z	
160	90458-1595		1	CONNECTION, BKS-S 33M-00	
250	315105-0136		1	WASHER BRB4,3XRFR	
300	315755-0110		1	RETAINING RING SHAFT DIN 6799 9 A2	
B1210	90459-0951		1	TRANSDUCER, BTL5-A11-M0400-B-S32	
Common Parts					
020	1255559-0000		1	PEROXIDE TANK	
023	359705-0004		1	WARNING SIGN ISO, DANGEROUS CHEMICALS	
025	1040840-0000		1	FLANGE	
030	1040841-0000		1	FLANGE	
055	1347704-0000		1	THERMOCOUPLE	
	1040890-0000		*1*	*THERMOCOUPLE*	
	90326-0306		*1*	*GLAND FITTING 9041-45-KS-KR.1/8" D=4,5MM*	
060	1037102-0000		1	SPACER PIPE	
070	1040852-0000		1	SEALING RING	
075	1040853-0000		1	SEALING RING	
120	1282899-0000		1	HOSE	
125	1282891-0000		1	PIPE	
126	1282906-0000		1	NIPPLE	
130	90055-0051		1	HOSE NIPPLE, EXT.THR. R3/8X13 MM	
135	90166-0151	MM	140	HOSE	
140	90187-0059		2	BALL VALVE FOR HYDR.PER. G1/2 3MM HOLE	
150	90166-0138	MM	85	HOSE	
175	927422-0016		1	O-RING 79.5X3 SILICONE	
180	342991-0110		2	HOSE CLIP,WORM DRIVE TYPE (54)-63	
200	315125-0165		1	WASHER TBRSB 8,4X26X5 A4	
220	312105-0449		10	SCREW M6S ISO 4017 M8X16 A480	
225	315105-0165		10	WASHER BRB8,4X16RFR	
230	312105-0453		1	SCREW M6S ISO 4017 M8X25 A480	
235	312109-0544		1	SCREW M6S ISO 4017 M12X60 A480	
265	315105-0178		3	WASHER BRB13X24RFR	
275	312605-0322		2	HEXAGON NUT, M6M M12 A280	
280	312125-0285		1	SCREW ISO 1207 M4X6 A4	
295	312109-0374		4	SCREW M6S ISO 4017 M6X30 A480	
305	342991-0104		2	HOSE CLIP,WORM DRIVE TYPE (23)-27	
315	342991-0101		1	HOSE CLIP,WORM DRIVE TYPE (13)-16	

Machine Type | Group Description | Used-In | Group Number | Page No

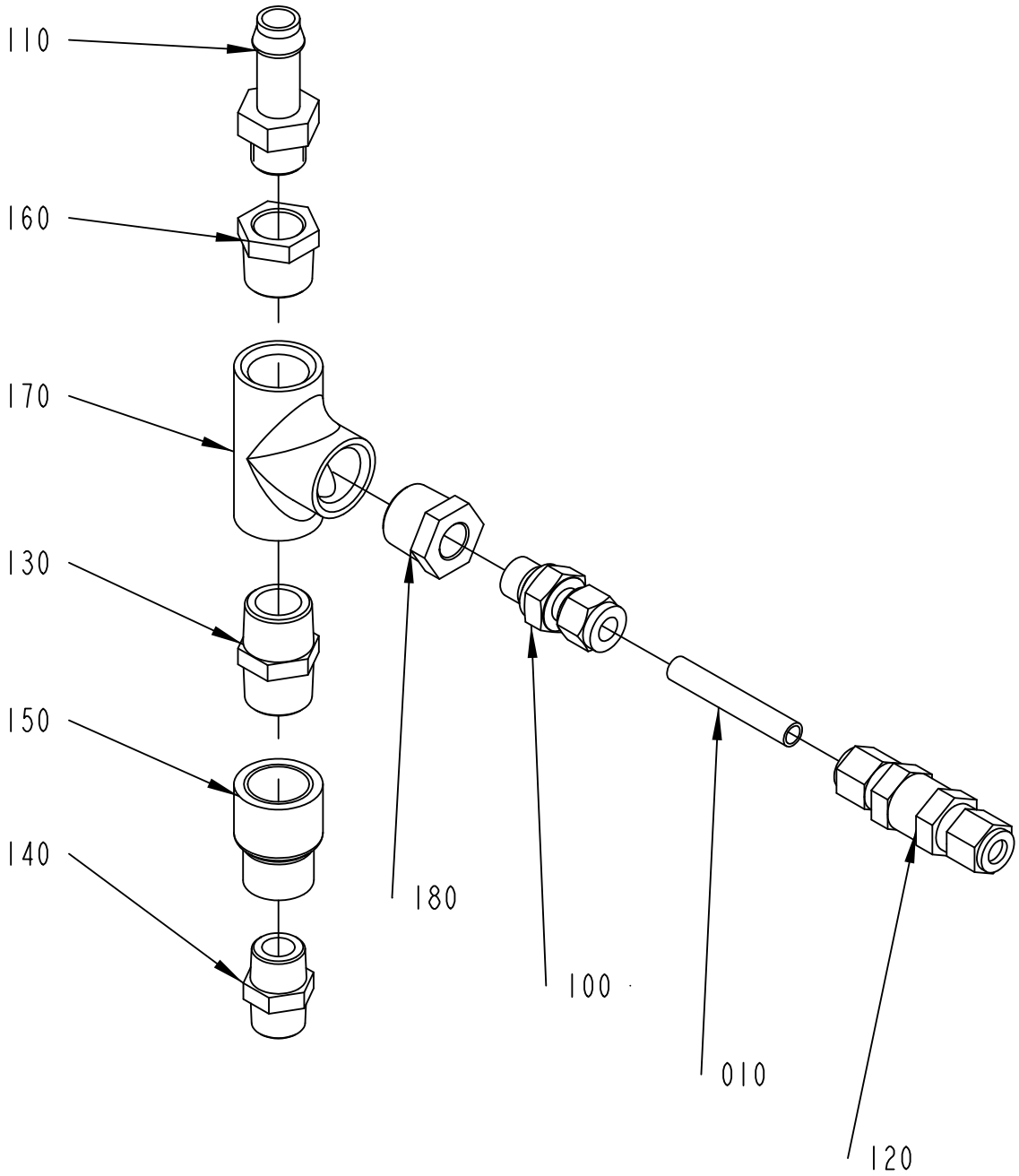

2623721-1
ECM 134426

ECM: 189745 - 20041104
Group number: 2623721-0100
Assembly Drawing: 2623721-1_1_AA

Pos	Part No	UN	Qty	Description	Page No
-					
010	2624539-0000		1	PIPE	
100	90030-0344		1	CONN. STR., 8-G1/4	
110	90055-0051		1	HOSE NIPPLE, EXT.THR. R3/8X13 MM	
120	90230-0032		1	NON-RETURN VALVE, 8MM, L=63,25	
130	90330-0021		1	NIPPLES, EXT. THREAD. R-207R1/2	
140	90330-0028		1	NIPPLES, EXT. THREAD. R-207R3/8	
150	90330-0047		1	SLEEVE, REDUCTION, INT, R-2021/2X3/8	
160	90330-0048		1	BUSHING, INT/EXT. THR. R1/2-RP3/8	
170	90330-0049		1	T-PIPE, INT. THREAD, R-221R1/2	
180	90330-0085		1	BUSHING, INT/EXT. THR. R1/2-RP1/4	

Pos	Part No	UN	Qty	Description	Page No

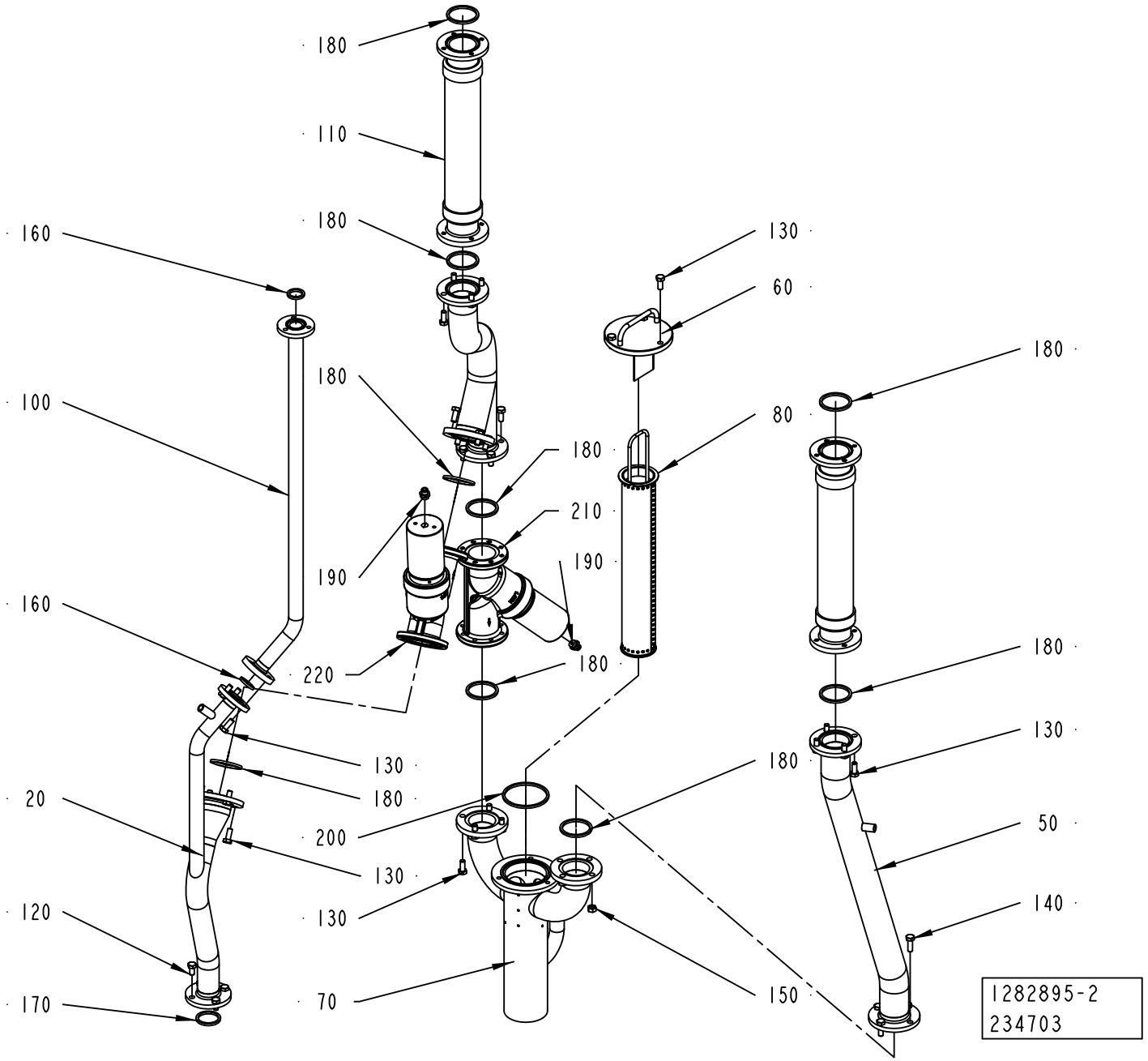
180
110
180
160
130
60
180
100
180
80
180
210
190
190
160
220
180
180
130
180
20
200
130
180
130
50
120
140
70
150
170
1282895-2
234703

ECM: 234703 - 20060313
Group number: 1282895-0200
Assembly Drawing: 1282895-2_1_AD

Pos	Part No	UN	Qty	Description	Page No
-					
020	2519554-0000		1	PIPE	
040	1282876-0000		1	PIPE	
050	2519555-0000		1	PIPE	
060	1348530-0000		1	LID	
070	1282879-0000		1	CONNECTING PIPE	
080	1348529-0000		1	STRAINER	
100	1282901-0000		1	PIPE	
110	2598689-0000		2	HOSE	
120	312105-0449		4	SCREW M6S ISO 4017 M8X16 A480	
130	312105-0451		30	SCREW M6S ISO 4017 M8X20 A480	
140	312105-0453		4	SCREW M6S ISO 4017 M8X25 A480	
150	312605-0318		4	HEXAGON NUT, M6M M8 A280	
160	315229-0103		2	GASKETS, 23,1X30,1X3,7 MM 1" FDA	
170	315229-0104		1	GASKETS, 35,8X42,8X3,7 MM 1"1/2 FD	
180	315229-0105		9	GASKETS, 48,5X55,5X3,7 MM 2" FDA	
190	342722-0203		2	STRAIGHT COUPLING	
200	315229-0107		1	GASKETS, 73,9X80,9X3,7 MM 2"1/2 FD	
210	90459-5177		1	ANGLE SEAT VALVE W. FLANGES, N.O.8498668	
220	90459-5178		1	ANGLE SEAT VALVE W. FLANGES, N.O.8498669	

Pos	Part No	UN	Qty	Description	Page No

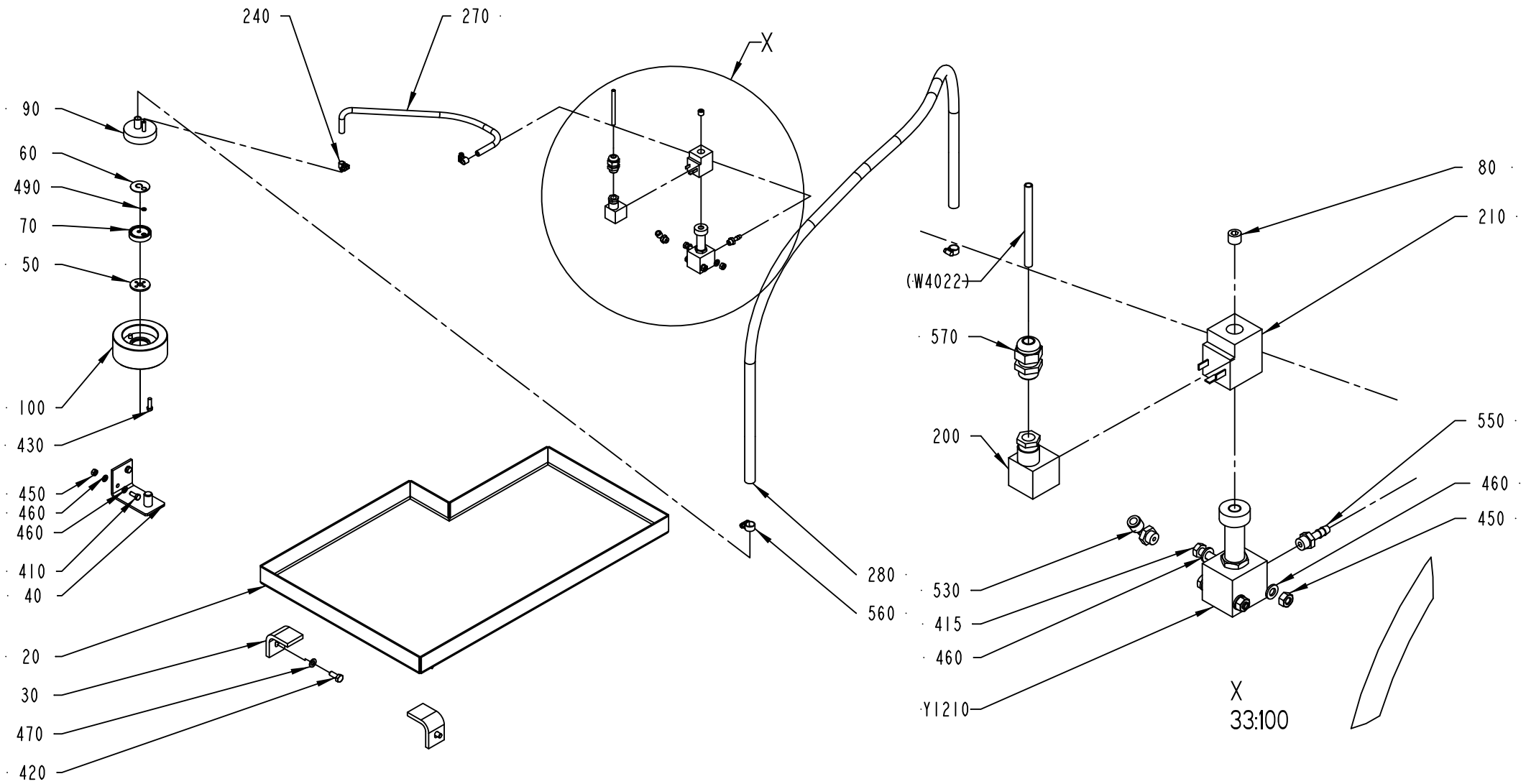

2506637-1
ECM 117202

ECM: 189746 - 20041104
Group number: 2506637-0100
Assembly Drawing: 2506637-1_1_AA

Pos	Part No	UN	Qty	Description	Page No
-					
020	1490950-0000		1	SPLASH PLATE	
030	1037539-0000		2	BRACKET	
040	1317784-0000		1	BRACKET	
050	273981-0000		1	GASKET	
060	527912-0000		1	NON-RETURN VALVE	
070	530551-0000		1	WASHER	
080	563285-0000		1	BLIND PLUG	
090	1129328-0000		1	ATTACHMENT	
100	1317226-0000		1	WEIGHT	
200	90110-0095		1	CONNECTOR 3 POLE + EARTH	
210	90042-0487		1	COIL 24 VDC/15W, 04983 197 18	
240	90132-0021		2	HOSE CLIP 6-10MM	
270	90166-0101	MM	700	HOSE, SILICONE, 60 SHORE, 6/10 MM	
280	90166-0161	MM	1600	HOSE	
410	312105-0368		2	SCREW M6S ISO 4017 M6X16 A480	
415	312105-0379		2	SCREW M6S ISO 4014 M6X45 A480	
420	312105-0451		2	SCREW M6S ISO 4017 M8X20 A480	
430	312125-0370		2	SCREW ISO 1207 M6X20 A4	
450	312605-0316		4	HEXAGON NUT, M6M M6 A280	
460	315105-0153		8	WASHER BRB6,4X12RFR	
470	315105-0165		2	WASHER BRB8,4X16RFR	
490	315204-0103		1	O-RING 5,1X1,6 MM	
530	90458-2956		1	ELBOW PIPE JOINT, EXT.THREAD, D=6MM-G1/8	
550	342901-0101		1	HOSE NIPPLE, EXT.THR. R1/8-7 MM	
560	342991-0101		2	HOSE CLIP,WORM DRIVE TYPE (13)-16	
570	352103-0101		1	CABLE GLAND, ST 9, PR15,2/PG9	
Y1210	90042-0206		1	SOLENOID VALVE G1/8, 444-111-000-1	

Pos	Part No	UN	Qty	Description	Page No

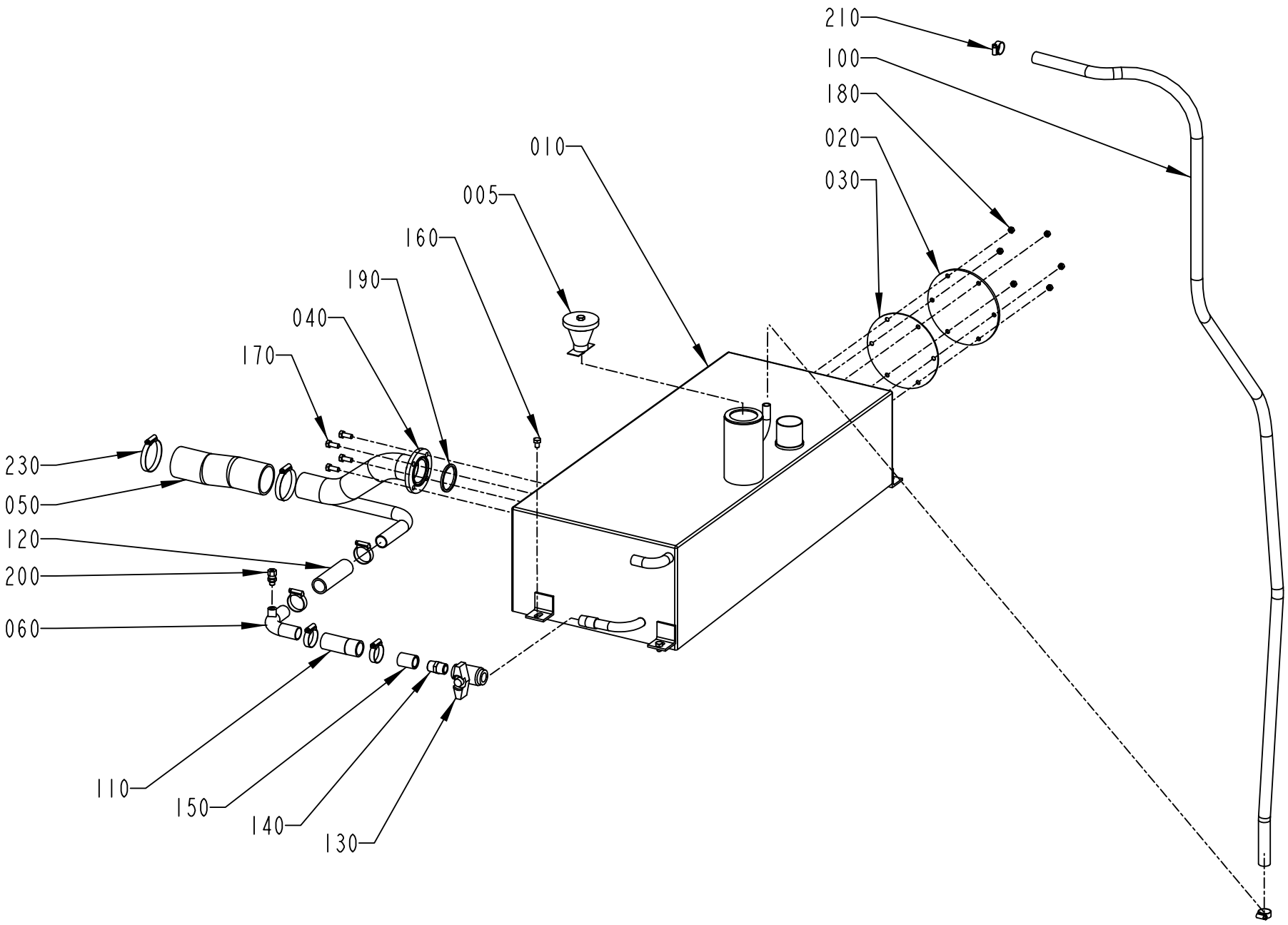

1282896-1
ECM 121676

ECM: 224842 - 20050831
Group number: 1282896-0100
Assembly Drawing: 1282896-1_1_AB

Pos	Part No	UN	Qty	Description	Page No
-					
005	566196-0100		1	LID WITH WEIGHT	**2-31**
010	1282892-0000		1	TANK	
020	1040807-0000		1	LID	
030	1040808-0000		1	GASKET	
040	1282893-0000		1	PIPE	
050	1282898-0000		1	HOSE	
060	2574421-0000		1	PIPE	
100	90166-0087	MM	2500	HOSE 15/23 REINF.PVC TRANSP.	
110	90166-0158	MM	85	HOSE	
120	90166-0158	MM	105	HOSE	
130	90187-0059		1	BALL VALVE FOR HYDR.PER. G1/2 3MM HOLE	
140	90330-0021		1	NIPPLES, EXT. THREAD. R-207R1/2	
150	90330-0054		1	SLEEVE, INT. THREAD, NO. R-201R1/2	
160	312105-0447		4	SCREW M6S ISO 4017 M8X12 A480	
170	312105-0451		4	SCREW M6S ISO 4017 M8X20 A480	
180	312605-0316		6	HEXAGON NUT, M6M M6 A280	
190	315229-0105		1	GASKETS, 48,5X55,5X3,7 MM 2" FDA	
200	90030-0184		1	CONN. STR. GA-6-G1/8	
210	342991-0103		2	HOSE CLIP,WORM DRIVE TYPE (19)-23	
220	342991-0106		4	HOSE CLIP,WORM DRIVE TYPE (30)-36	
230	342991-0110		2	HOSE CLIP,WORM DRIVE TYPE (54)-63	

Pos	Part No	UN	Qty	Description	Page No

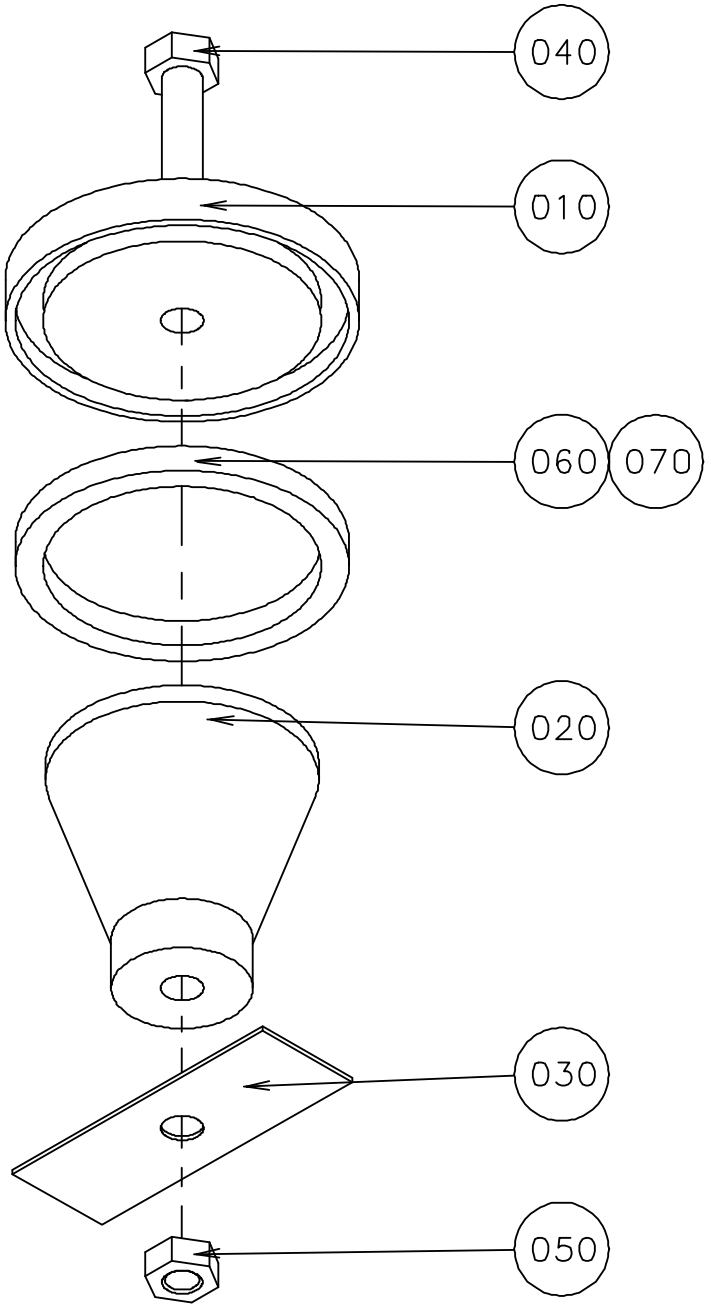

S-566196-1
ECN 70662

ECM: 189748 - 20041104
Group number: 566196-0100
Assembly Drawing: 566196-1_1_AA

Pos	Part No	UN	Qty	Description	Page No
-					
010	566195-0000		1	LID	
020	566194-0000		1	WEIGHT	
030	566171-0000		1	CUP SPRING	
040	312105-0466		1	SCREW M6S ISO 4014 M8X75 A480	
050	312605-0318		1	HEXAGON NUT, M6M M8 A280	
060	90143-0020	MM	190	STRIP	
070	90153-0023		1	ADHESIVE, SILICON 251470 TUB 90CC	

Pos	Part No	UN	Qty	Description	Page No

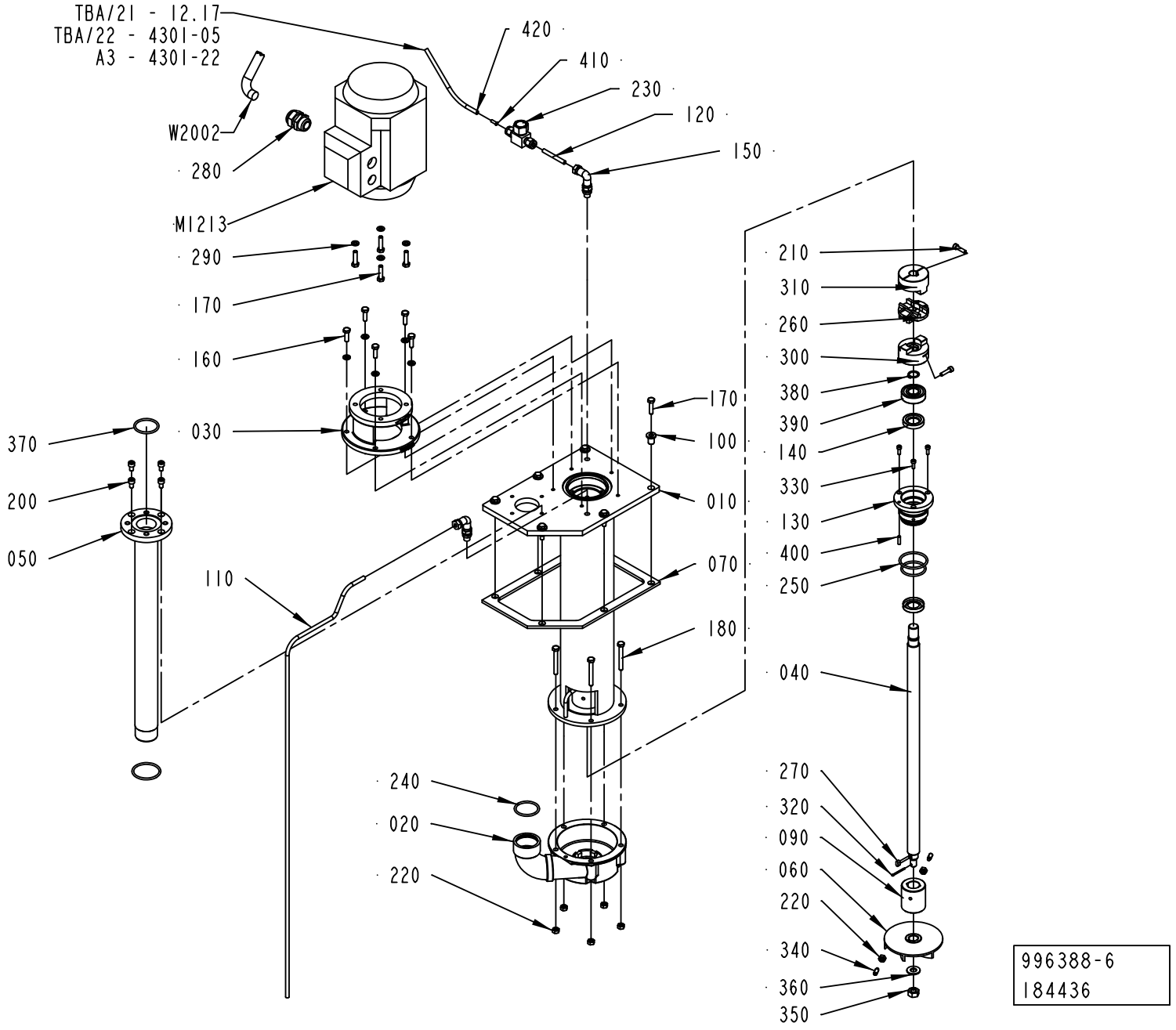
TBA/21 - 12.17
TBA/22 - 4301-05
A3 - 4301-22
W2002
280
M1213
290
170
160
030
370
200
050
110
420
410
230
120
150
210
310
260
300
380
390
140
330
130
400
250
180
040
270
320
090
060
220
340
360
350
170
100
010
070
240
020
220
996388-6
184436

ECM: 222142 - 20060313
Group number: 996388-0500
Assembly Drawing: 996388-6_1_AC

Pos	Part No	UN	Qty	Description	Page No
-					
010	2529413-0000		1	EXTENSION PIPE	
020	2529412-0000		1	PUMP HOUSING	
030	751395-0000		1	FLANGE	
040	2523266-0000		1	PUMP SHAFT	
050	1040796-0000		1	PIPE	
060	491929-0000		1	IMPELLER WHEEL	
070	1255557-0000		1	GASKET	
090	2510372-0000		1	BUSHING	
100	2564342-0000		6	SPACER	
110	2564561-0000		1	PIPE	
120	2564978-0000		1	PIPE	
130	2564225-0000		1	BUSHING	
140	90091-0412		2	SEAL RING	
150	90030-0171		2	ADJUSTABLE ELBOW CONNECTION,EXT 6-G1/8	
160	312105-0370		5	SCREW M6S ISO 4017 M6X20 A480	
170	312105-0372		10	SCREW M6S ISO 4017 M6X25 A480	
180	312109-0380		5	SCREW M6S ISO 4017 M6X50 A480	
200	312115-0364		4	SCREW ISO4762 M6X10 A4 80	
210	312115-0331		2	SCREW ISO4762 M5X20 A4 80	
220	312605-0316		7	HEXAGON NUT, M6M M6 A280	
230	90230-0064		1	CHECK VALVE, 6 MM HIGH TEMP.	
240	927422-0005		2	O-RING 36.2X3 SILICONE	
250	927422-0006		2	O-RING 42.2X3 SILICONE	
260	90458-0274		1	DISC FOR COUPLING, HUCO 236.50T	
270	315705-0196		1	PARALLEL KEY W.ROUND ENDS 5X5X10	
280	352103-0110		1	CABLE GLAND, STR 16, PR22,5/PG16	
290	315105-0153		9	WASHER BRB6,4X12RFR	
300	90459-1535		1	FLEXIBLE COUPLING DISC, 16 MM	
310	90459-1536		1	FLEXIBLE COUPLING DISC, 14 MM	
320	311411-0169		1	SPLIT PIN SP2,5X25RFR	
330	312115-0291		3	SCREW ISO4762 M4X12 A4 80	
340	90287-0159		2	SCREW, SOCK.SET DOGPOINT M6X16	
350	312605-0320		1	HEXAGON NUT, M6M M10 A280	
360	315105-0173		1	WASHER BRB10,5X22RFR	
370	315204-0222		1	O-RING 36,2X3 MM	
380	315751-0113		1	RETAINING RING FOR SHAFT DIN 471 16 A2	
390	321313-0103		1	BALL BEARING, 17X40X12MM	
400	311103-0270		1	PARALLEL PIN ISO 2338 4M6X16 A1	
410	342706-0130		1	ACCESSORIES, INSERT SLEEVE 6 MM	
420	90166-0081	M	1	TUBE 6 MM PA BLUE	
M 1213	90458-2466		1	MOTOR 3GVA071002-CSB	
W 2002	351150-0418	M	4	CABLE OLFLEX 4X2,5 MM2 LIGHT/GREY	

Machine Type | Group Description | Used-In | Group Number | Page No

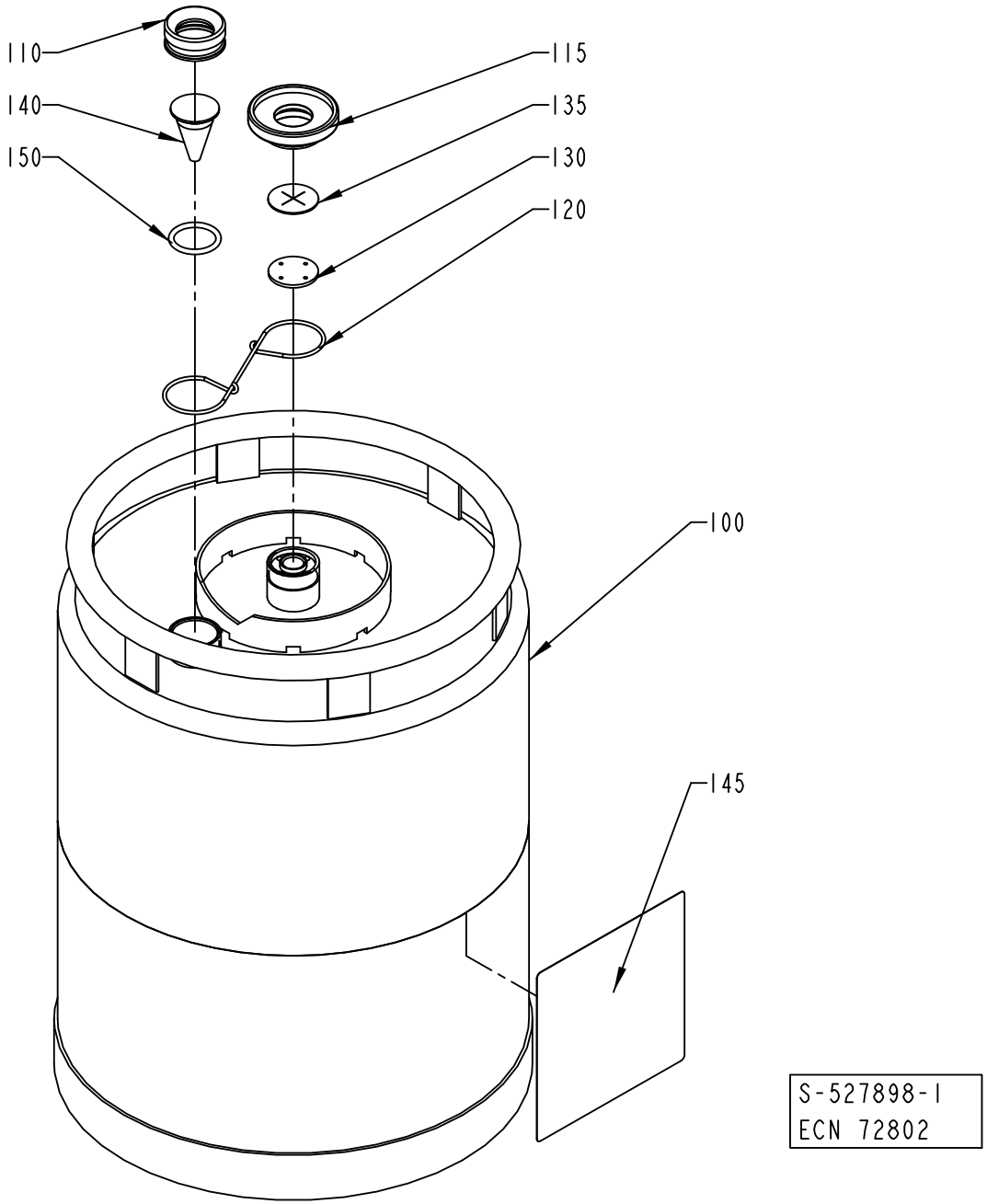
110
140
150
115
135
130
120
100
145
S-527898-1
ECN 72802

ECM: 224840 - 20050831
Group number: 527898-0100
Assembly Drawing: 527898-1_1_AB

Pos	Part No	UN	Qty	Description	Page No
-					
100	561427-0000		1	CONTAINER	
110	273977-0000		1	NUT	
115	273996-0000		1	NUT	
120	273980-0000		1	SPRING	
130	565250-0000		1	WASHER	
135	565251-0000		1	VALVE	
140	273978-0000		1	LEVEL GLAS	
145	532655-0000		1	CAUTION SIGN	
150	927422-0003		1	O.RING 24.2X3 SILICONE	

Pos	Part No	UN	Qty	Description	Page No

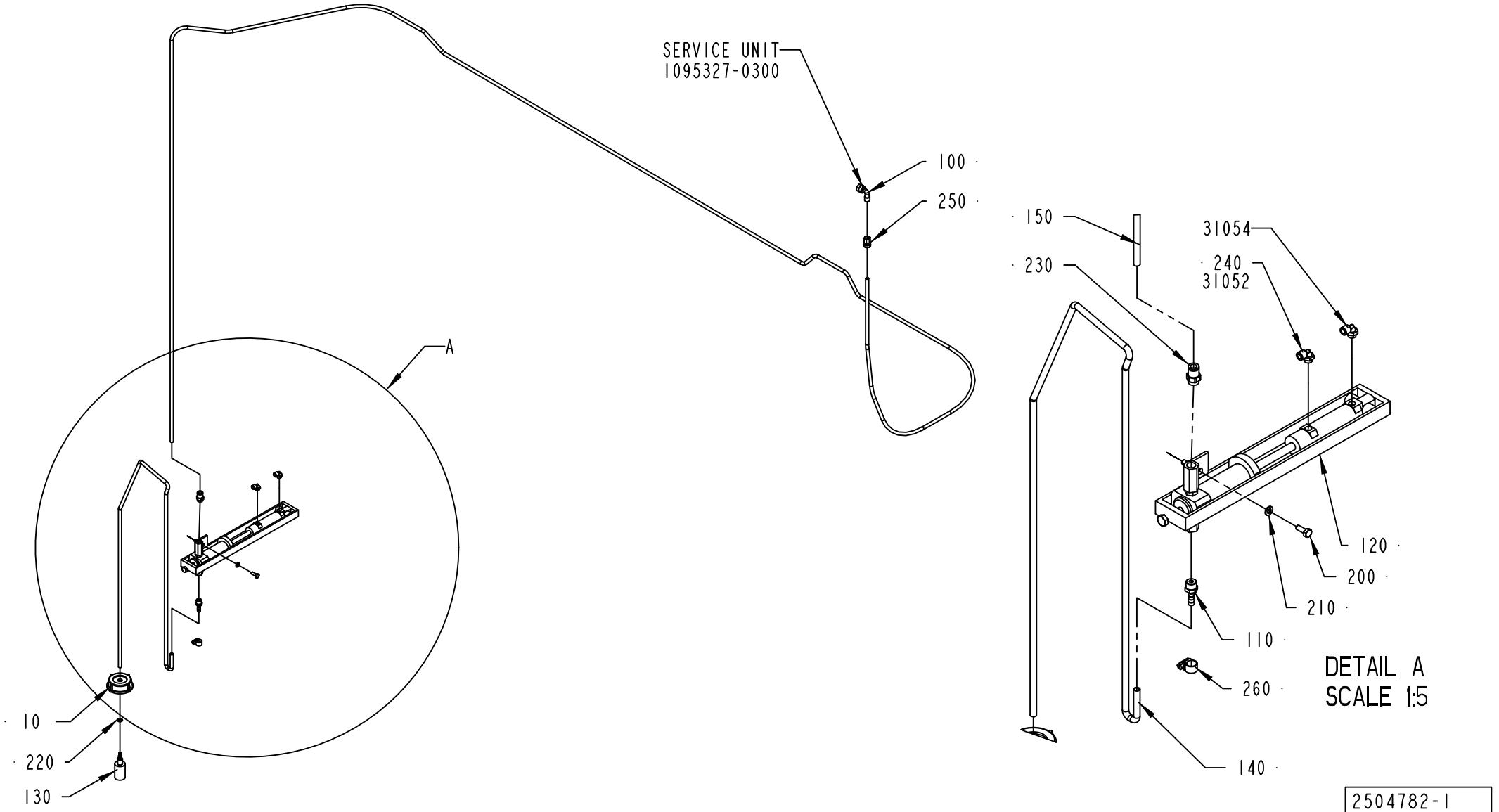
SERVICE UNIT
1095327-0300
100
250
A
10
220
130
150
230
31054
240
31052
120
200
210
110
260
140
DETAIL A
SCALE 1:5
2504782-1
184089

ECM: 192977 - 20050620
Group number: 2504782-0100
Assembly Drawing: 2504782-1_1_AB

Pos	Part No	UN	Qty	Description	Page No
-					
010	1129432-0000		1	LID	
100	90030-0071		1	CONN. ELBOW WA 8-R1/4	
110	90055-0132		1	HOSE NIPPLE, EXT.THR. R1/4X7,8 MM	
120	90321-0128		1	CHEM. PUMP 081778	
130	90415-0052		1	FILTER ART NO 12565 C-340-6E FOTVENTI EP	
140	90166-0008	MM	1500	HOSE 7/10 PVC TRANSP.	
150	90166-0118	MM	5300	TUBE 8 MM PA BLACK	
200	312105-0368		2	SCREW M6S ISO 4017 M6X16 A480	
210	315101-0153		2	WASHER PLAIN, BRB, 6,4/12 H=1,5	
220	315204-0207		1	O-RING 8,3X2,4 MM	
230	342722-0205		1	STRAIGHT COUPLING D=8-G1/4"	
240	90458-2956		2	ELBOW PIPE JOINT, EXT.THREAD, D=6MM-G1/8	
250	342923-0122		1	STRAIGHT COUPL.,INT.THREADED 8/6-G1/4"	
260	342991-0100		1	HOSE CLIP,WORM DRIVE TYPE 10-13	

Pos	Part No	UN	Qty	Description	Page No

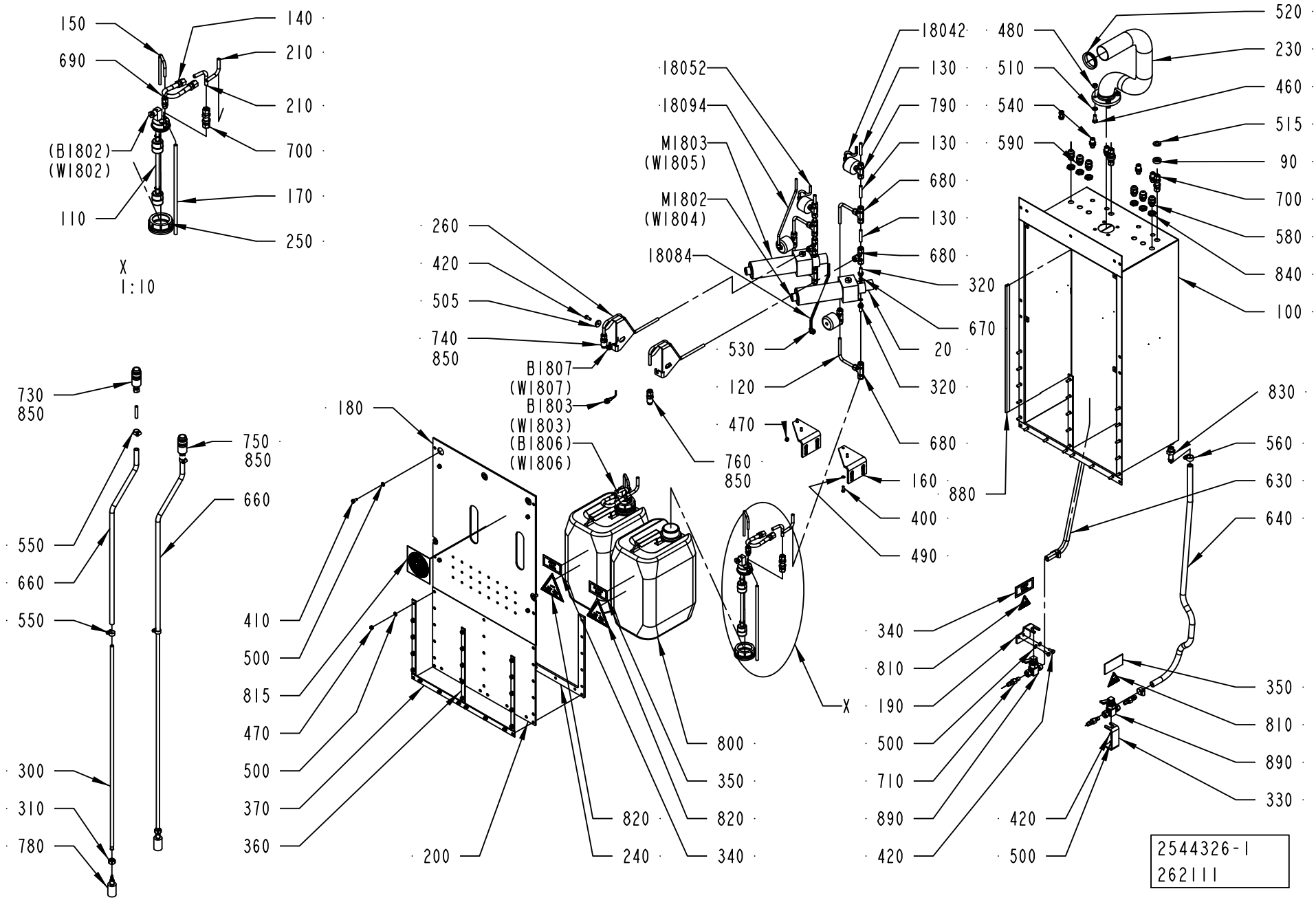
150
140
690
210
210
(B1802)
(W1802)
700
170
110
250
X
1:10
730
850
750
850
660
550
660
550
300
310
780
410
500
815
470
500
370
360
180
200
260
420
505
740
850
B1807
(W1807)
B1803
(W1803)
(B1806)
(W1806)
760
850
820
240
800
350
820
340
18052
18094
M1803
(W1805)
M1802
(W1804)
18084
530
120
470
X
18042
130
790
130
680
130
680
320
670
20
320
680
160
400
490
880
480
510
540
590
520
230
460
515
90
700
580
840
100
830
560
630
640
340
810
190
500
710
890
420
420
500
350
810
890
330
2544326-1
262111

ECM: 262113 - 20060410
Group number: 2544326-0100
Assembly Drawing: 2544326-1_1_AE

Pos	Part No	UN	Qty	Description	Page No
-					
020	927244-0100		2	PUMP	**2-41**
090	2603387-0000		2	SPACER	
100	2544311-0000		1	BOX	
110	2544312-0000		2	FLOAT	
120	2544313-0000		4	PIPE	
130	2544314-0000		8	PIPE	
140	2559977-0000		2	HOSE	
150	2544316-0000		2	PIPE	
160	2559976-0000		2	BRACKET	
170	2544318-0000		2	PIPE	
180	2544319-0000		1	COVER	
18042	90166-0081	MM	150	TUBE 6 MM PA BLUE	
18052	90166-0081	MM	150	TUBE 6 MM PA BLUE	
18084	90166-0081	MM	300	TUBE 6 MM PA BLUE	
18094	90166-0081	MM	300	TUBE 6 MM PA BLUE	
190	2608104-0000		1	BRACKET	
200	2544321-0000		1	COVER	
210	2559978-0000		4	PIPE	
230	2544324-0000		1	PIPE	
240	2544325-0000		1	GASKET	
250	2544330-0000		2	PLUG	
260	2558826-0000		2	PIPE	
300	927262-0000		2	PIPE	
310	928025-0000		2	PLUG	
320	2559461-0000		4	SPACER	
330	2608103-0000		1	BRACKET	
340	2566211-0000		2	LABEL	
350	2566212-0000		2	LABEL	
360	2566209-0000		3	PLATE	
370	2566210-0000		1	PLATE	
400	312105-0329		4	SCREW M6S ISO 4017 M5X16 A480	
410	312105-0367		9	SCREW M6S ISO 4017 M6X14 A480	
420	312105-0368		5	SCREW M6S ISO 4017 M6X16 A480	
460	312105-0451		4	SCREW M6S ISO 4017 M8X20 A480	
470	312605-0316		25	HEXAGON NUT, M6M M6 A280	
480	312605-0318		4	HEXAGON NUT, M6M M8 A280	
490	315105-0146		4	WASHER BRB5,3X10RFR	
500	315105-0153		33	WASHER BRB6,4X12RFR	
505	315125-0153		2	WASHER TBRSB 6,4X22X4 A4	
510	315105-0165		4	WASHER BRB8,4X16RFR	
515	315105-0178		2	WASHER BRB13X24RFR	
520	315220-0198		1	V-RINGS 45X55X13 MM V-50S	
530	90458-2956		4	ELBOW PIPE JOINT, EXT.THREAD, D=6MM-G1/8	
540	342768-0102		4	BULKHEAD CONNECTOR, 6 MM	
550	342991-0101		4	HOSE CLIP,WORM DRIVE TYPE (13)-16	
560	342991-0102		4	HOSE CLIP,WORM DRIVE TYPE (16)-19	
580	352103-0101		4	CABLE GLAND, ST 9, PR15,2/PG9	
590	352103-0100		2	CABLE GLAND, STR 9, PR15,2/PG9	
630	90166-0198	MM	700	RUBBER HOSE	
640	90166-0198	MM	950	RUBBER HOSE	
650	90166-0225	MM	680	HOSE	
660	90166-0225	MM	680	HOSE	
670	315206-0506		4	O-RING 7,65X1,78 MM	
680	90459-1425		6	CONN. T-PIPE 8	
690	90459-1424		2	CONN. STR., 6-G1/8, EXT. THREAD	
700	90030-0485		4	CONN. BULKHEAD SV 8-	
710	90459-2615		4	HOSE NIPPLE SS-6-HC-A-601	
730	90163-0172		1	QUICK-RELEASE COUPLING SS-QTM2A-B-8M0-K4	
740	90459-1430		1	QUICK-RELEASE COUPLING, SS-QTM2-D-8M0-K4	
750	90163-0141		1	QUICK-RELEASE COUPLING SS-QTM2A-B-8M0-K2	
760	90459-1427		1	QUICK-RELEASE COUPLING, SS-QTM2-D-8M0-K2	
780	90415-0052		2	FILTER ART NO 12565 C-340-6E FOTVENTI EP	
790	90458-2333		4	VALVE, M8A-V4LQ-KZ-11AO-SS PNEUM. OPER.	
800	90459-0462		2	CANISTER LY 500-10	
810	359705-0003		2	WARNING SIGN ISO, DANGEROUS CHEMICALS	
815	359605-0002		1	MANDATORY SIGN ISO, EYE PROTECTION	
820	359705-0004		2	WARNING SIGN ISO, DANGEROUS CHEMICALS	
830	90055-0051		2	HOSE NIPPLE, EXT.THR. R3/8X13 MM	
840	90099-0104		6	NUT, PR 15,2 (PG9)	
850	90144-0073		1	TREBOFLON-TAPE W=13MM	
880	90143-0059	MM	495	SEAL STRIP 4610069	
890	90459-2609		2	BALL VALVE 3/8", SS-1GS6-S1-SPR	
B1803	90458-0138		1	PROX. SWITCH, E2EG-X1R5B1-5M	
B1807	90458-0138		1	PROX. SWITCH, E2EG-X1R5B1-5M	

Machine Type | Group Description | Used-In | Group Number | Page No

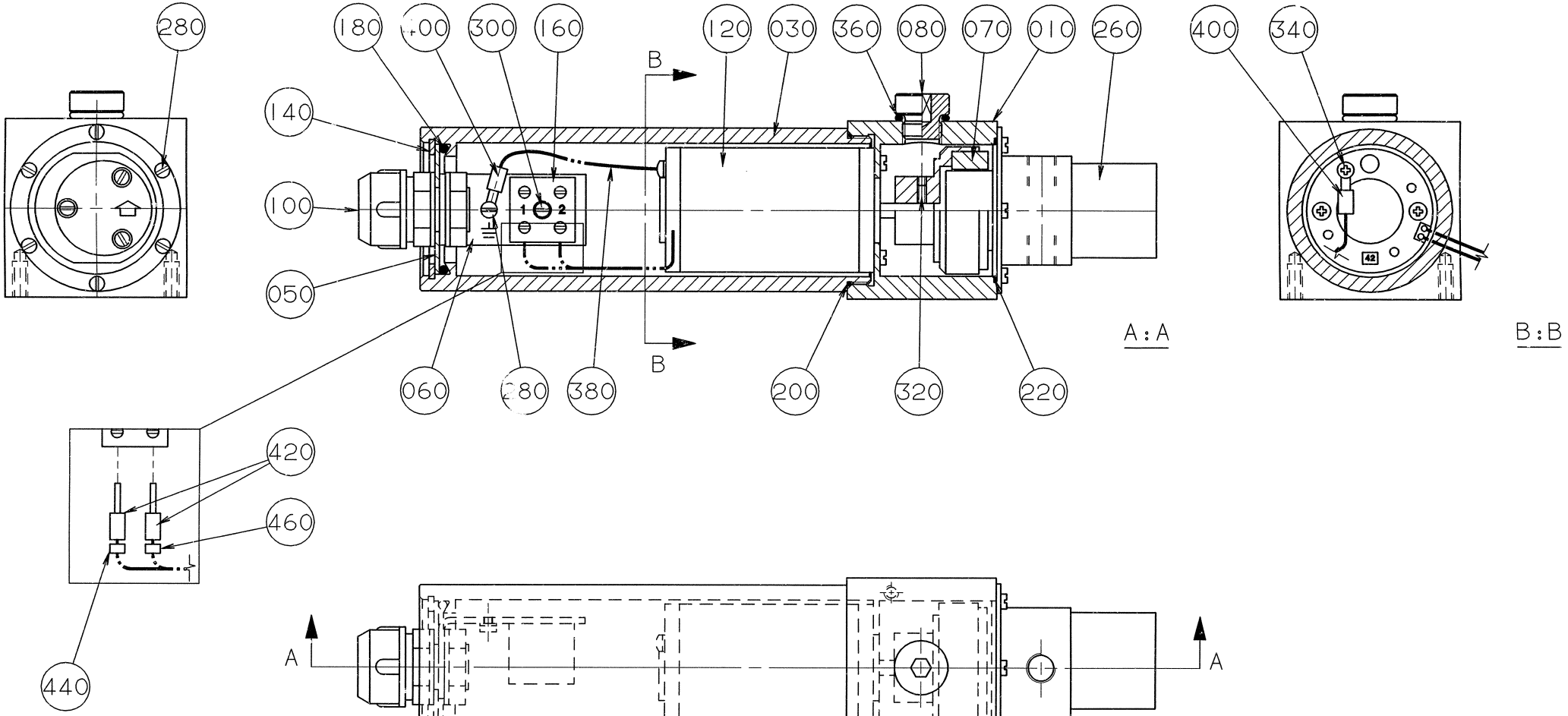
280
180
200
300
160
120
030
360
080
070
010
260
400
340
140
100
050
060
280
380
200
320
220
A : A
B : B
420
460
440
A
A

ECM: 189751 - 20041104
Group number: 927244-0100
Assembly Drawing: 927244-1_1_AA

Pos	Part No	UN	Qty	Description	Page No
-					
010	927339-0000		1	ADAPTER	
030	927342-0000		1	CYLINDER	
050	927340-0000		1	DISC	
060	927341-0000		1	HOLDER	
070	927362-0000		1	MAGNET	
080	927363-0000		1	PLUG	
100	90012-0063		1	CABLE GLAND PR 15,2	
120	90045-0162		1	MOTOR M42X30/I	
140	90141-0020		1	RETAINING RING FOR BORE DIN 472 42 A2	
160	90195-0020		1	TERMINAL BLOCK, 1977.2	
180	90242-0222		1	O-RING 45,36X3,53 MM	
200	90242-0223		1	O-RING 47,35X1,78 MM	
220	90242-0224		1	O-RING 44,17X1,78 MM	
260	90321-0102		1	PUMP, MG209XTS37	
280	312125-0220		11	SCREW ISO 1207 M3X6 A4	
300	312125-0232		1	SCREW ISO 1207 M3X25 A4	
320	312318-0285		1	SCREW ISO4029 M4X6 A4	
340	312503-0225		1	TAPPING SCREW ISO 7049-ST2,9X9,5-C-Z	
360	315202-0701		1	O-RING 10,82X1,78 MM	
380	351175-0102	MM	300	CABLE AWM 1X 075 MM2 YELLOW-GREEN	
400	353101-0118		2	CABLE SHOE 0,5-1,5MM2 M3 RED	
420	353105-0117		2	PIN CABLE SHOE 0,75-1,5MM2 RED A1519SR	
440	359000-0101		1	WIRE MARKING, YELLOW, PY01/3"1"	
460	359000-0102		1	WIRE MARKING, YELLOW, PY01/3"2"	

Pos	Part No	UN	Qty	Description	Page No

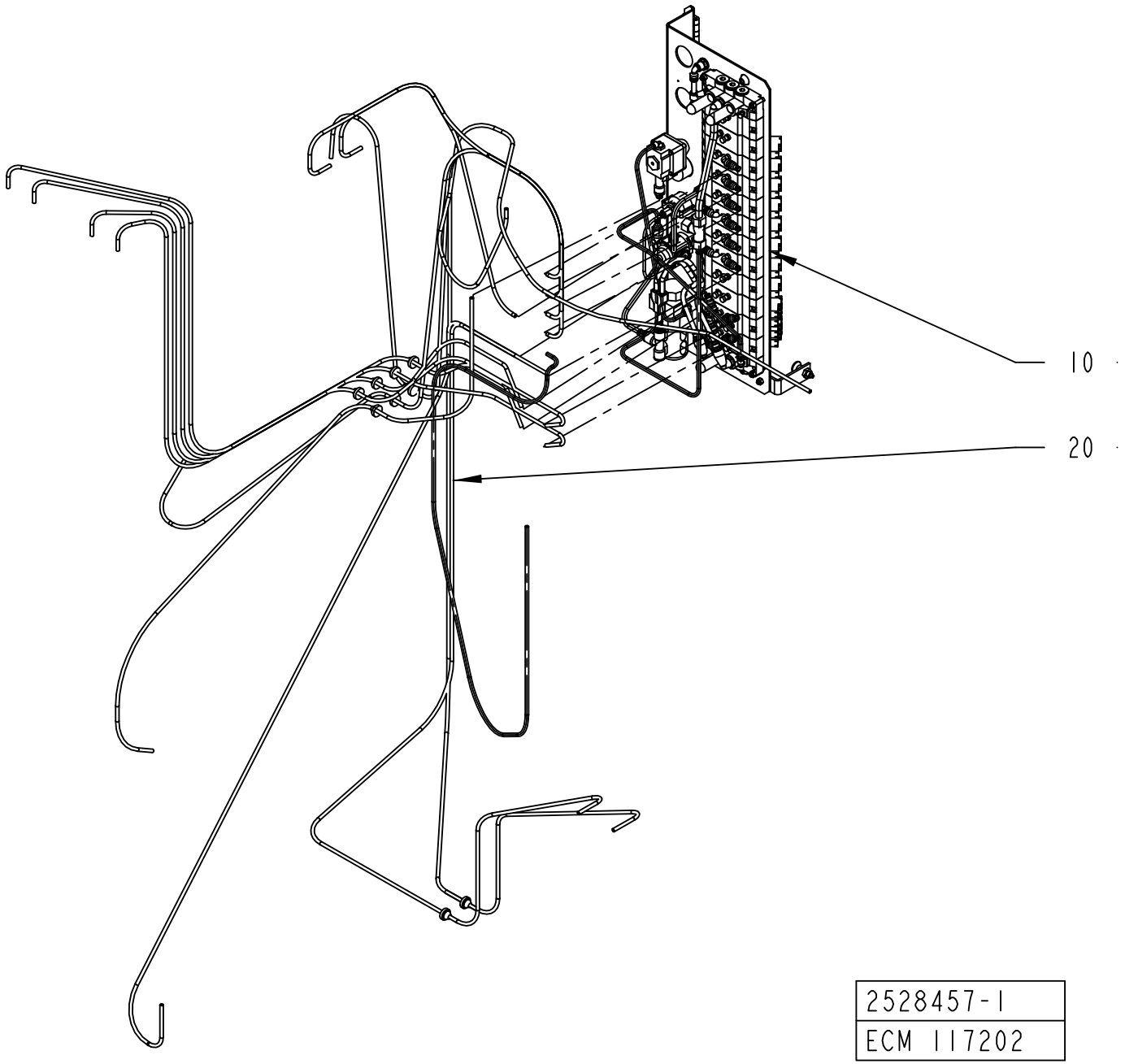
10
20
2528457-1
ECM 117202

ECM: 117202 - 20030403
Group number: 2528457-0100
Assembly Drawing: 2528457-1_1_AA

Pos	Part No	UN	Qty	Description	Page No
A3/FLEX					
020	2552931-0100		1	HOSE INSTALLATION	**2-45, 2-47**
Common Parts					
010	2506359-0100		1	VALVE PANEL	**2-49**

Pos	Part No	UN	Qty	Description	Page No

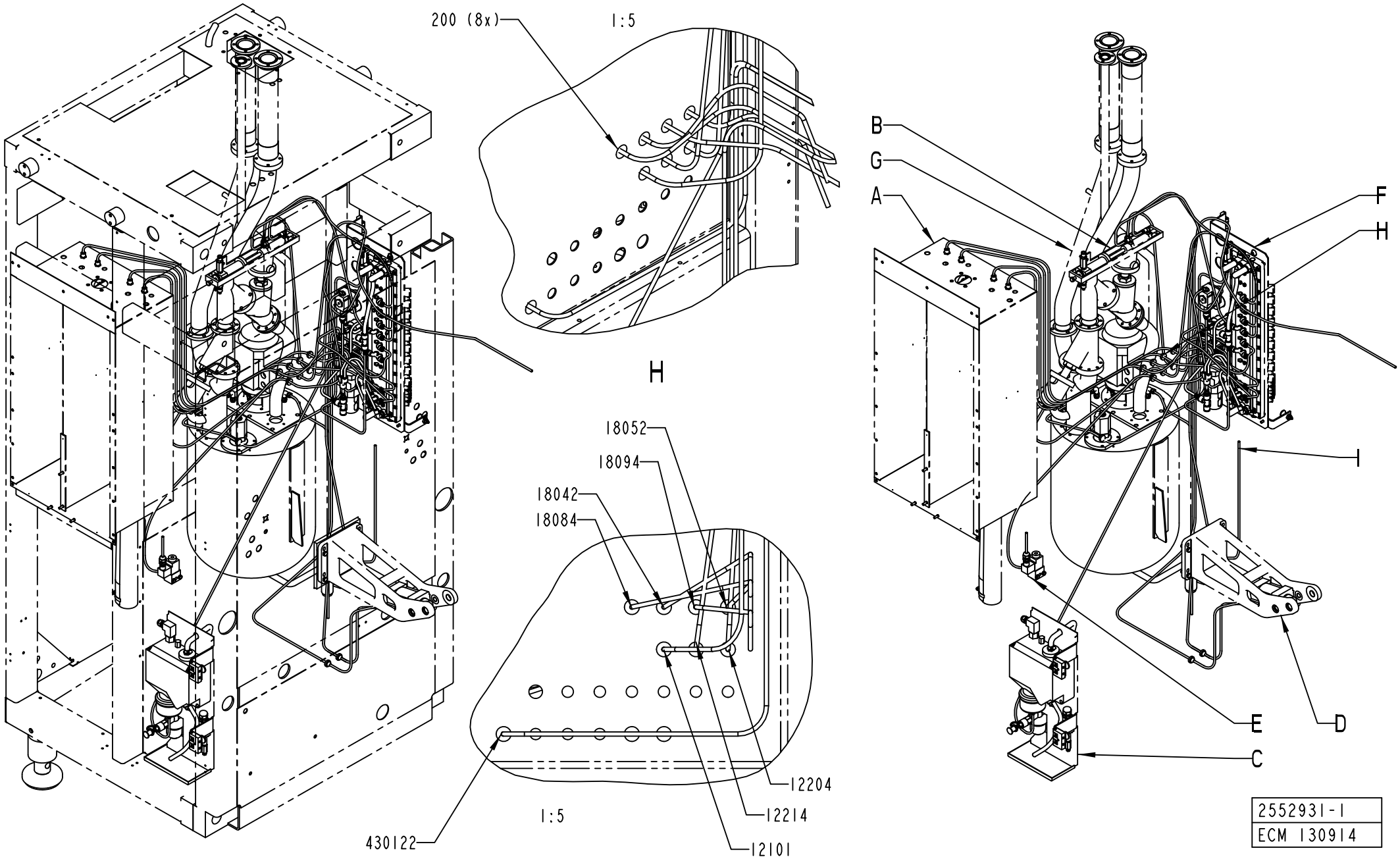
200 (8x)
1:5
H
18052
18094
18042
18084
12204
12214
12101
430122
1:5
B
G
A
F
H
I
E
D
C
2552931-1
ECM 130914

ECM: 189753 - 20041104
Group number: 2552931-0100
Assembly Drawing: 2552931-1_1_AB

This list covers pages from 2-44 to 2-47

Pos	Part No	UN	Qty	Description	Page No
-					
12101	90166-0081	MM	1750	TUBE 6 MM PA BLUE	
12204	90166-0081	MM	2070	TUBE 6 MM PA BLUE	
12214	90166-0081	MM	2010	TUBE 6 MM PA BLUE	
18042	90166-0081	MM	2070	TUBE 6 MM PA BLUE	
18052	90166-0081	MM	2000	TUBE 6 MM PA BLUE	
18084	90166-0081	MM	2210	TUBE 6 MM PA BLUE	
18094	90166-0081	MM	2120	TUBE 6 MM PA BLUE	
200	90015-0020		10	LEAD-IN, TET5-7, E-1458016	
21044	90166-0081	MM	2040	TUBE 6 MM PA BLUE	
24014	90166-0081	MM	2760	TUBE 6 MM PA BLUE	
31052	90166-0081	MM	1230	TUBE 6 MM PA BLUE	
31054	90166-0081	MM	1310	TUBE 6 MM PA BLUE	
43012	90166-0081	MM	1800	TUBE 6 MM PA BLUE	
430122	90166-0081	MM	1800	TUBE 6 MM PA BLUE	
55012	90166-0081	MM	2490	TUBE 6 MM PA BLUE	
55014	90166-0081	MM	2700	TUBE 6 MM PA BLUE	

Pos	Part No	UN	Qty	Description	Page No

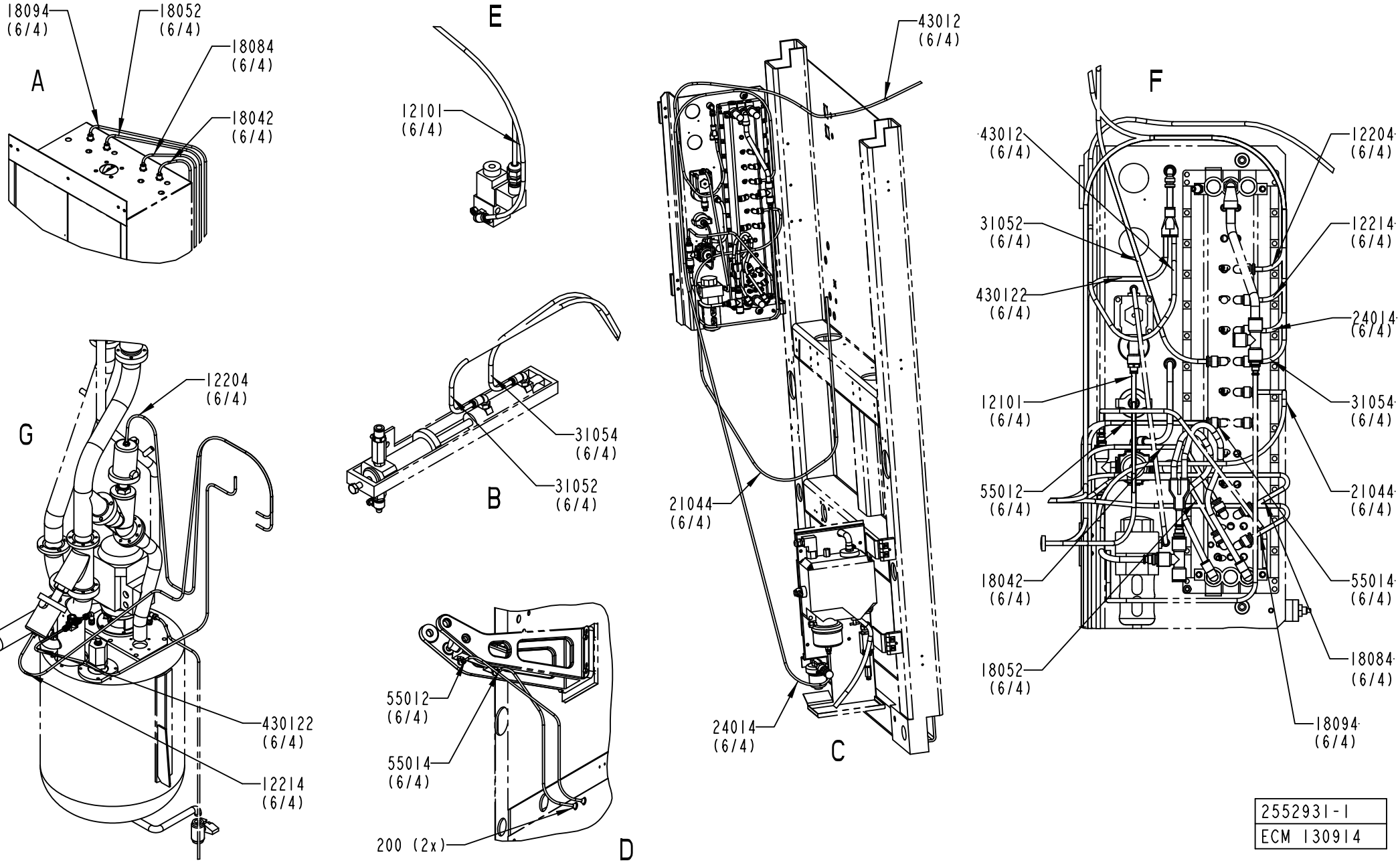
18094
(6/4)
18052
(6/4)
18084
(6/4)
18042
(6/4)
A
E
12101
(6/4)
43012
(6/4)
F
43012
(6/4)
12204
(6/4)
31052
(6/4)
12214
(6/4)
430122
(6/4)
24014
(6/4)
12101
(6/4)
31054
(6/4)
55012
(6/4)
21044
(6/4)
18042
(6/4)
55014
(6/4)
18052
(6/4)
18084
(6/4)
18094
(6/4)
G
12204
(6/4)
430122
(6/4)
12214
(6/4)
31054
(6/4)
31052
(6/4)
B
21044
(6/4)
24014
(6/4)
C
55012
(6/4)
55014
(6/4)
200 (2x)
D
2552931-1
ECM 130914

ECM: 189753 - 20041104
Group number: 2552931-0100
Assembly Drawing: 2552931-1_2_AB

This list covers pages from 2-44 to 2-47

Pos	Part No	UN	Qty	Description	Page No
-					
12101	90166-0081	MM	1750	TUBE 6 MM PA BLUE	
12204	90166-0081	MM	2070	TUBE 6 MM PA BLUE	
12214	90166-0081	MM	2010	TUBE 6 MM PA BLUE	
18042	90166-0081	MM	2070	TUBE 6 MM PA BLUE	
18052	90166-0081	MM	2000	TUBE 6 MM PA BLUE	
18084	90166-0081	MM	2210	TUBE 6 MM PA BLUE	
18094	90166-0081	MM	2120	TUBE 6 MM PA BLUE	
200	90015-0020		10	LEAD-IN, TET5-7, E-1458016	
21044	90166-0081	MM	2040	TUBE 6 MM PA BLUE	
24014	90166-0081	MM	2760	TUBE 6 MM PA BLUE	
31052	90166-0081	MM	1230	TUBE 6 MM PA BLUE	
31054	90166-0081	MM	1310	TUBE 6 MM PA BLUE	
43012	90166-0081	MM	1800	TUBE 6 MM PA BLUE	
430122	90166-0081	MM	1800	TUBE 6 MM PA BLUE	
55012	90166-0081	MM	2490	TUBE 6 MM PA BLUE	
55014	90166-0081	MM	2700	TUBE 6 MM PA BLUE	

Pos	Part No	UN	Qty	Description	Page No

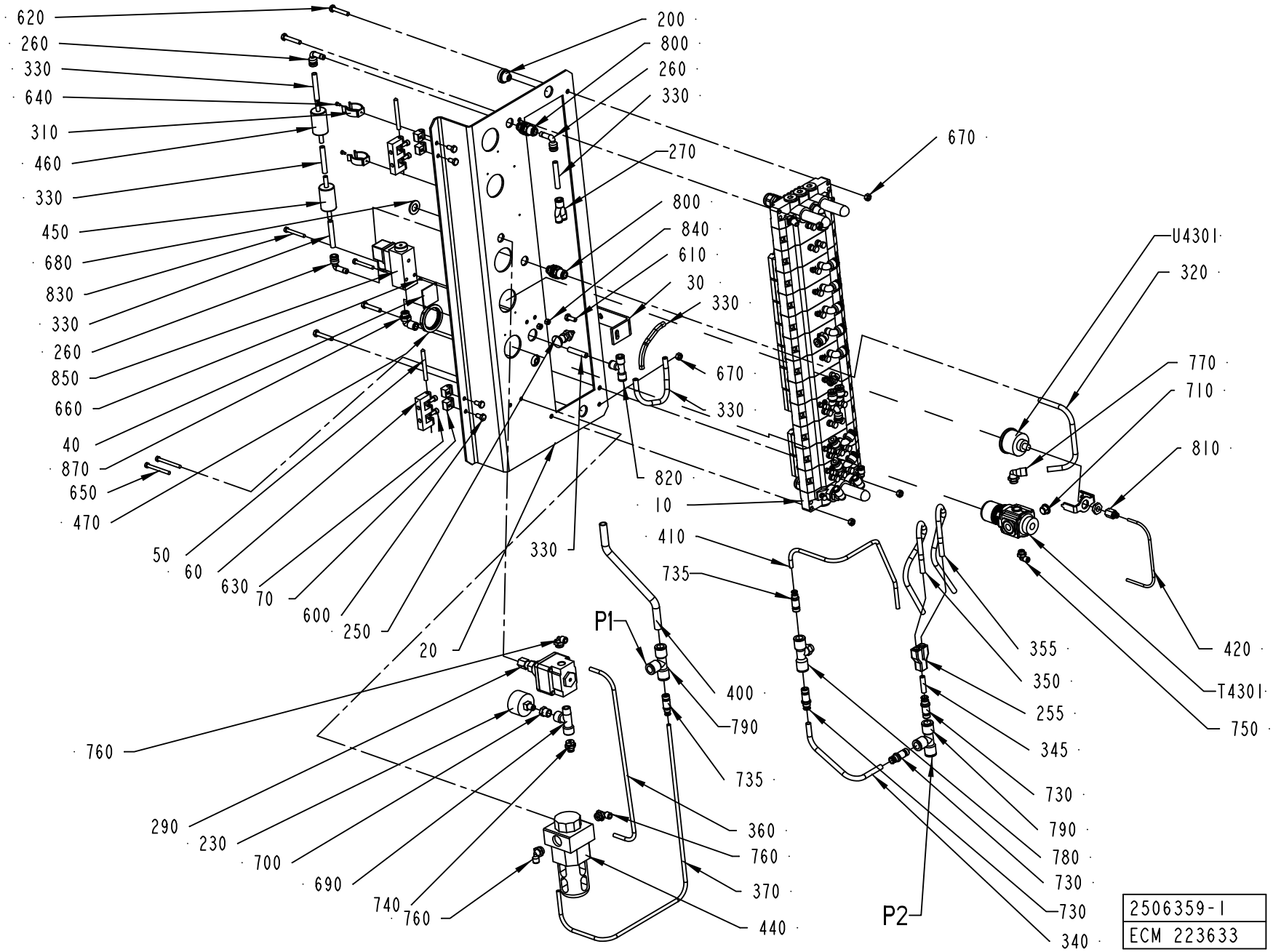
620
260
330
640
310
460
330
450
680
830
330
260
850
660
40
870
650
470
50
60
630
70
600
250
20
330
200
800
260
330
270
800
840
610
30
330
670
330
820
10
670
U4301
320
770
710
810
420
T4301
750
410
735
P1
400
790
735
360
760
370
440
355
350
255
345
730
790
780
730
730
340
P2
760
290
230
700
690
740
760
2506359-1
ECM 223633

ECM: 267647 - 20060702
Group number: 2506359-0100
Assembly Drawing: 2506359-1_1_AE

Pos	Part No	UN	Qty	Description	Page No
A3/FLEX TBA 0500B, A3/FLEX TBA 1000B, A3/FLEX TBA 1000S, A3/FLEX TBA 1000SQ, A3/FLEX TPA 1000SQ, A3/FLEX TBA 0200S, A3/FLEX TBA 1500S, A3/FLEX TBA 0200B, A3/FLEX TBA 0250B, A3/FLEX TBA 0330S, A3/FLEX TPA 0330SQ, A3/FLEX TPA 0500SQ, A3/FLEX TBA 0200M, A3/FLEX TBA 0250S, A3/FLEX TBA 0500S					
	2527509-0000		1	PNEUMATIC DIAGRAM	
A3/FLEX TBA 1890S, A3/FLEX TBA 2000S (See drawing on pages: 2-48)					
	2719738-0000		1	PNEUMATIC DIAGRAM	
Common Parts					
	2527368-0000		1	PNEUMATIC DIAGRAM	
010	2506360-0100		1	VALVE RAMP	**2-51**
020	2506361-0000		1	PANEL	
030	2546319-0000		1	HOLDER	
040	978603-0000		1	SIGN	
050	988685-0000		2	PIN	
060	1035792-0000		2	E-HINGE	
070	1129770-0000		4	BLOCKING PIECE	
200	90015-0023		3	LEAD-IN, TET7-10, E-1458019	
230	90043-0021		1	PRESSURE GAUGE 0-1 BAR 1/8" D=40	
250	90051-0112		1	LOCK KNOB, NO. GN 617 NIK5	
255	90055-0101		1	Y-CONNECTION, 8-8	
260	90055-0172		3	ELBOW WITH TAILPIECE 8/8 MM	
270	90055-0227		1	Y-CONNECTION, 6-8	
290	90113-0056		1	REGULATOR, 11-818-998	
310	90165-0019		2	TOOL CLIP, 81/3, OPEN, 20 - 30 MM	
320	90166-0013	MM	300	TUBE 8 MM PA BLUE	
330	90166-0013	MM	600	TUBE 8 MM PA BLUE	
340	90166-0013	MM	320	TUBE 8 MM PA BLUE	
345	90166-0013	MM	350	TUBE 8 MM PA BLUE	
350	90166-0013	MM	290	TUBE 8 MM PA BLUE	
355	90166-0013	MM	300	TUBE 8 MM PA BLUE	
360	90166-0081	MM	550	TUBE 6 MM PA BLUE	
370	90166-0081	MM	800	TUBE 6 MM PA BLUE	
400	90166-0068	MM	300	TUBE 12 MM PA BLUE	
410	90166-0081	MM	600	TUBE 6 MM PA BLUE	
420	90166-0095	MM	300	TUBE 4 MM PA BLUE (50M)	
440	90277-0039		1	FILTER HOUSING LF -1/4-S-5M-B	
	90234-0328		*1*	*COVER*	
	90277-0346		*1*	*FILTER CARTRIDGE, LFP-1/4-S-5M*	
450	90277-0045		1	FILTER / 9900-05-BK	
460	90277-0046		1	FILTER / 9933-05-101	
470	90457-0078		1	PANEL NUT	
600	312105-0366		4	SCREW M6S ISO 4017 M6X12 A480	
610	312105-0368		1	SCREW M6S ISO 4017 M6X16 A480	
620	312109-0376		4	SCREW M6S ISO 4017 M6X35 A480	
630	312115-0327		4	SCREW ISO4762 M5X12 A4 80	
640	312125-0220		2	SCREW ISO 1207 M3X6 A4	
650	312125-0341		2	SCREW ISO 1207 M5X50 A4	
660	312502-0120		2	DRIVE SCREW ROUND HEAD KDS 0X5	
670	312605-0316		5	HEXAGON NUT, M6M M6 A280	
680	315105-0178		1	WASHER BRB13X24RFR	
690	342245-0102		1	T-PIPE, INT. THREAD, R1/4XKR1/4	
700	342701-0201		1	BUSHING,INT./EXT.G-THREAD G1/4"-G1/8"	
710	342713-0210		1	PLUG,EXT THREAD HEX SOCKET(PAK OF 10 PCS	
730	342716-0209		3	REDUCER 8-12	
735	342716-0210		2	REDUCER 6-12	
740	342722-0203		1	STRAIGHT COUPLING	
750	90458-2955		1	ELBOW PIPE JOINT, EXT.THREAD,	
760	90458-2957		3	ELBOW PIPE JOINT, EXT.THREAD, D=6MM-G1/4	
770	90458-2958		1	ELBOW PIPE JOINT, EXT.THREAD, D=8MM-G1/4	
780	90055-0278		1	T-COUPLING, ADJ.12-G1/4"	
790	342748-0109		2	T-CONNECTION 12MM	
800	342768-0103		2	BULKHEAD CONNECTOR, 8 MM	
810	342770-0101		1	STRAIGHT COUPLING INT, D=4 MM - G1/8	
820	342748-0103		1	T-CONNECTION 8MM	
830	312125-0339		2	SCREW ISO 1207 M5X40 A4	
840	312607-0314		2	HEXAGON NUT, EN 24032 M6M M5 A480	
850	90274-0103		1	PRESSURE GUARD PEV-1/4-B (10773	
870	350002-0009		1	PUSH-IN L-FITTING QSL-F-G1/4-8	
T4301	90457-0144		1	REGULATOR 0,3-2 BAR	
U4301	90043-0090		1	PRESSURE GAUGE, 2048 D=40 MM	

Machine Type	Group Description	Used-In	Group Number	Page No

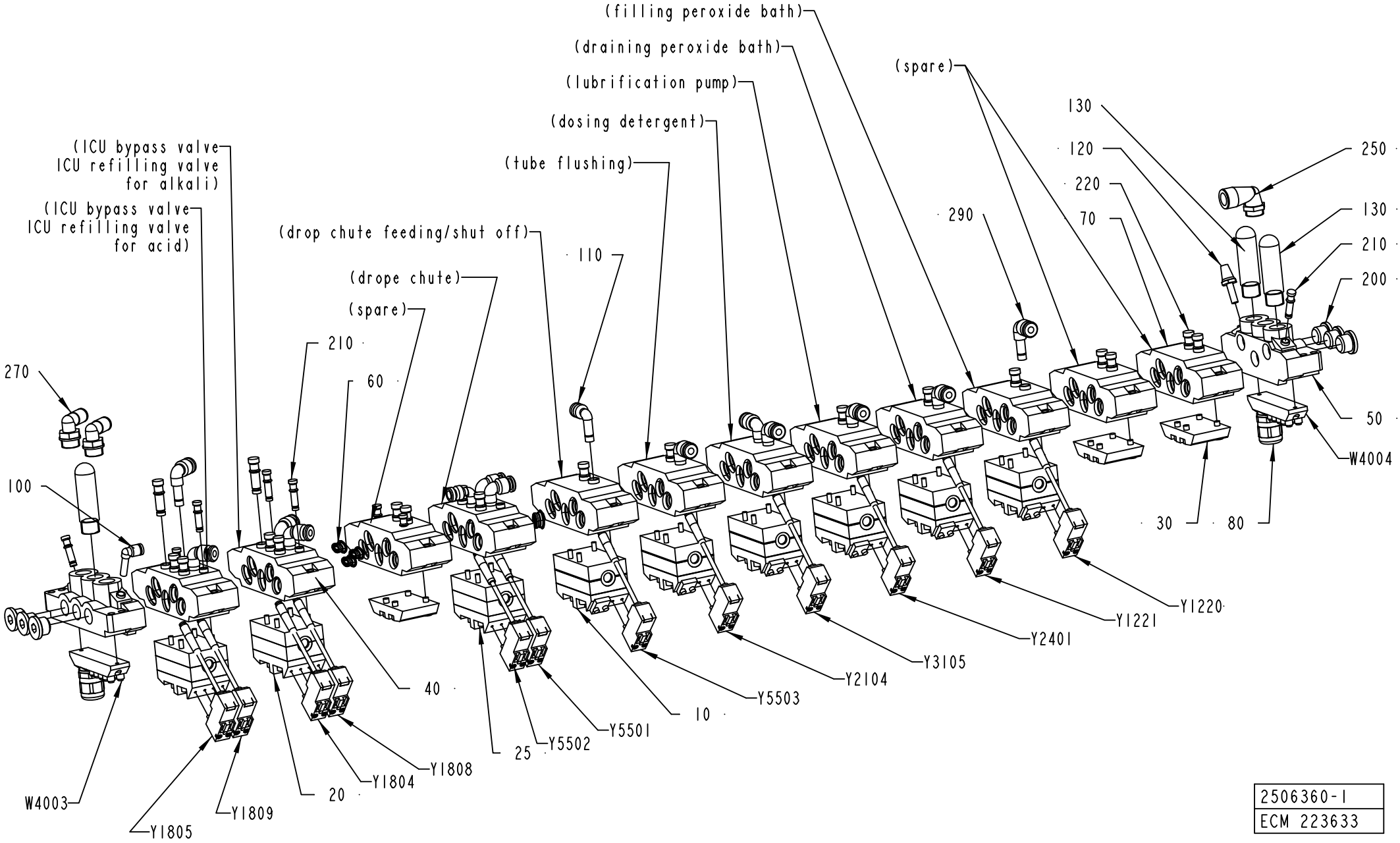

2506360-1
ECM 223633

ECM: 265568 - 20060425
Group number: 2506360-0100
Assembly Drawing: 2506360-1_1_AC

Pos	Part No	UN	Qty	Description	Page No
A3/FLEX					
010	90042-0215		6	VALVE BODY 5/2 UNISTABLE	
020	90042-0271		2	VALVE BODY 2X3/2	
060	90042-0528		4	BLANKING KIT SEALS ISO SIZE 1	
070	90042-0532		10	BASE PLATE ISO SIZE 1	
110	90055-0172		2	ELBOW WITH TAILPIECE 8/8 MM	
130	90328-0024		3	SILENCER G3/8"	
210	342715-0102		8	BLIND PLUG 6 MM	
220	342715-0103		19	BLIND PLUG 8 MM	
270	350002-0012		2	PUSH-IN L-FITTING QSL-F-G3/8-8	
290	90055-0173		12	ELBOW WITH TAILPIECE 8/6 MM	
Y1220	90042-0538		1	PILOT VALVE L=500MM	
Y1221	90042-0538		1	PILOT VALVE L=500MM	
Y1804	90042-0538		1	PILOT VALVE L=500MM	
Y1805	90042-0538		1	PILOT VALVE L=500MM	
Y1808	90042-0538		1	PILOT VALVE L=500MM	
Y1809	90042-0538		1	PILOT VALVE L=500MM	
Y2104	90042-0538		1	PILOT VALVE L=500MM	
Y2401	90042-0538		1	PILOT VALVE L=500MM	
Common Parts					
025	90042-0230		1	VALVE BODY 5/3 OPEN CENTRE	
030	90042-0519		3	BLANK PLATE ISO SIZE 1	
040	90042-0520		3	BASE PLATE ISO SIZE 1	
050	90042-0522		2	PORTED END PIECE ISO SIZE 1	
080	90042-0535		2	TERMINAL BOARD 19 CORDS	
100	90055-0217		1	ELBOW PIPE JOINT	
120	90328-0017		1	SILENCER, D=6 MM	
200	342713-0211		6	PLUG, EXT THREAD HEX SOCKET 8638-00-380	
250	90458-2960		1	ELBOW PIPE JOINT, EXT.THREAD,D=12MM-G3/8	
Y3105	90042-0538		1	PILOT VALVE L=500MM	
Y5501	90042-0538		1	PILOT VALVE L=500MM	
Y5502	90042-0538		1	PILOT VALVE L=500MM	
Y5503	90042-0539		1	PILOT VALVE L=350MM	

Pos	Part No	UN	Qty	Description	Page No

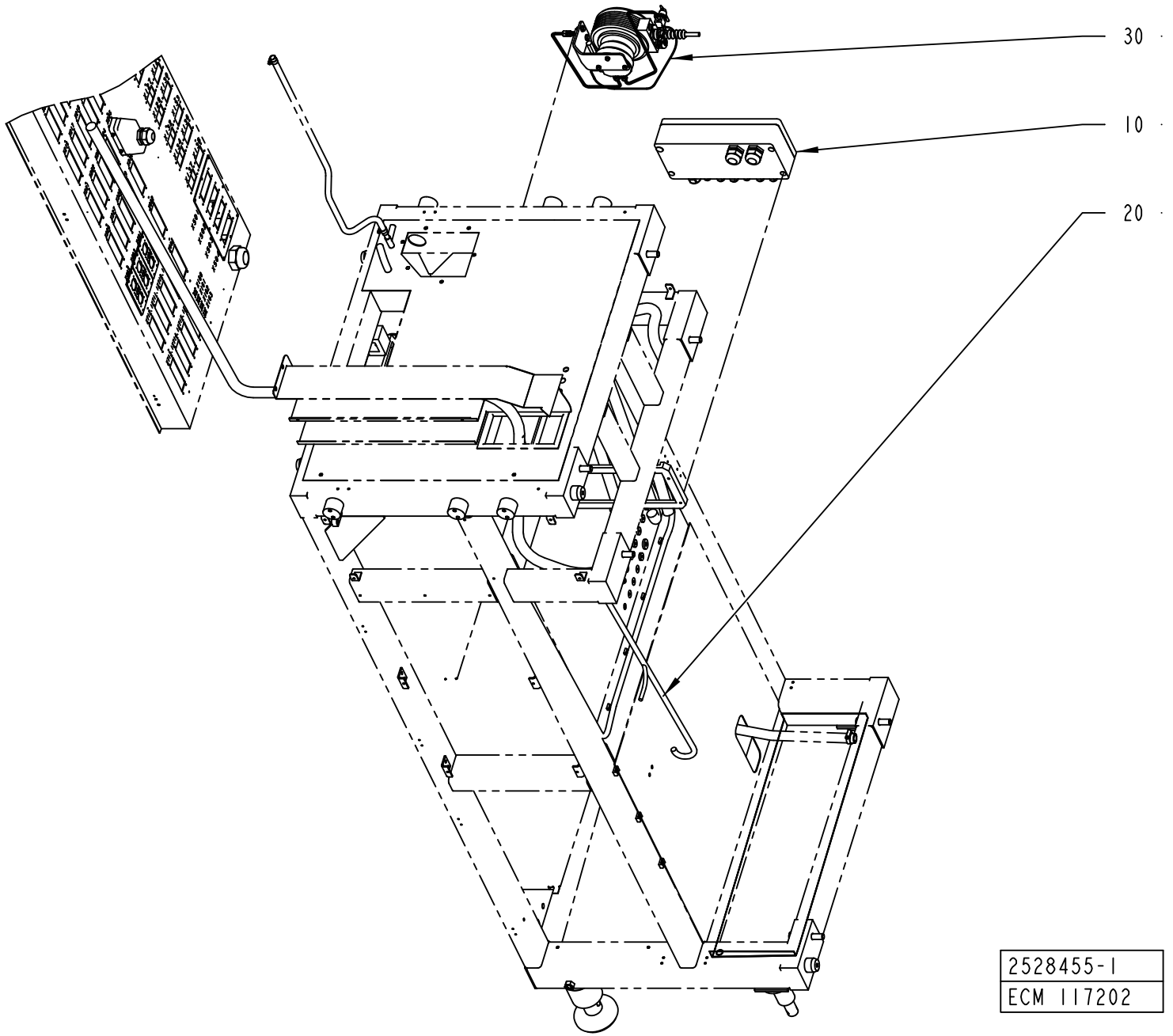
30
10
20
2528455-1
ECM 117202

ECM: 117202 - 20030403
Group number: 2528455-0100
Assembly Drawing: 2528455-1_1_AA

Pos	Part No	UN	Qty	Description	Page No
-					
010	2527253-0100		1	CONNECTION BOX	**2-55**
020	2529499-0100		1	CABLE HARNESS	**2-57, 2-59**
030	2519574-0100		1	HYDROGEN PEROXIDE CONCENTRATION METER	**2-61**

Pos	Part No	UN	Qty	Description	Page No

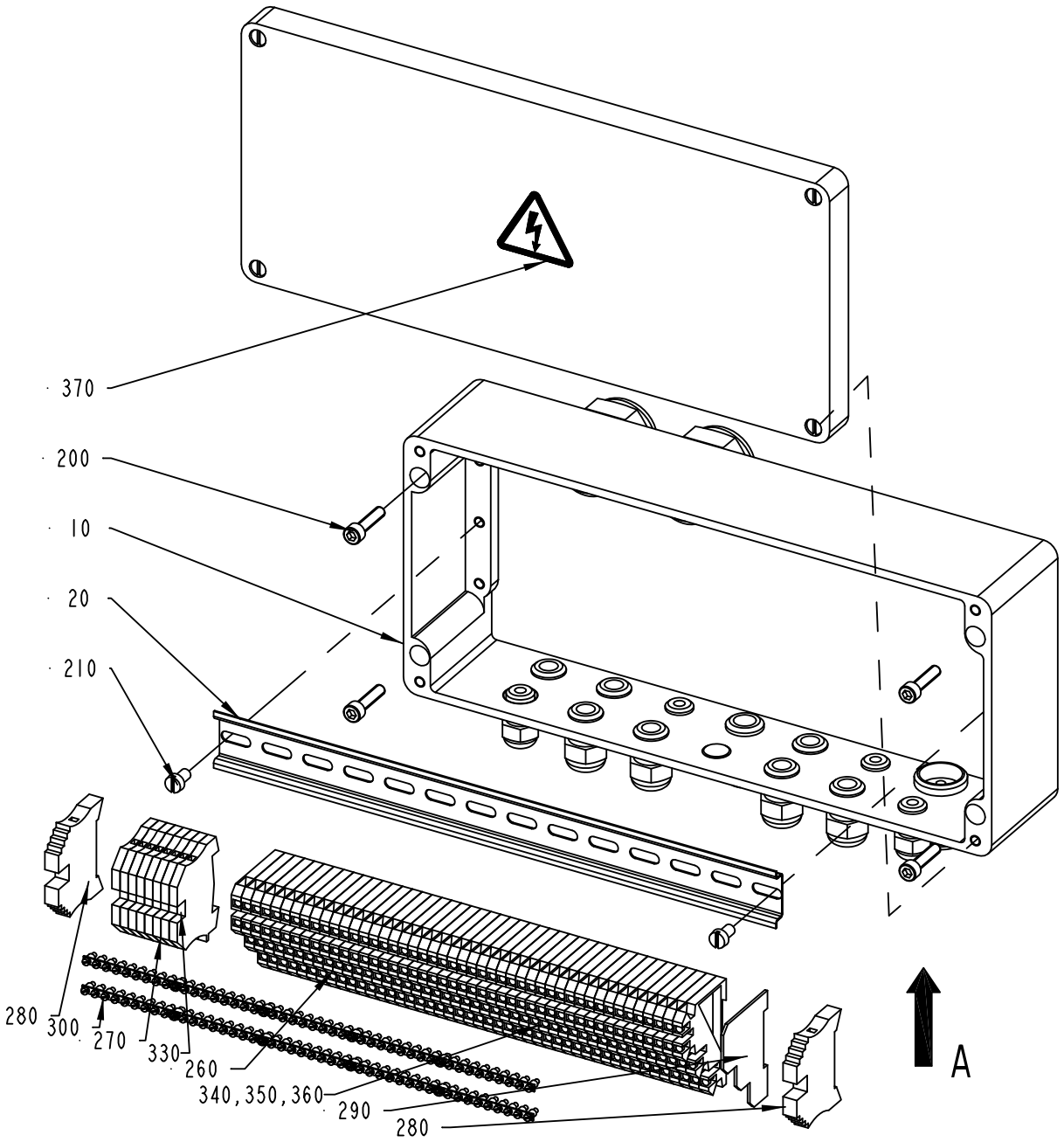

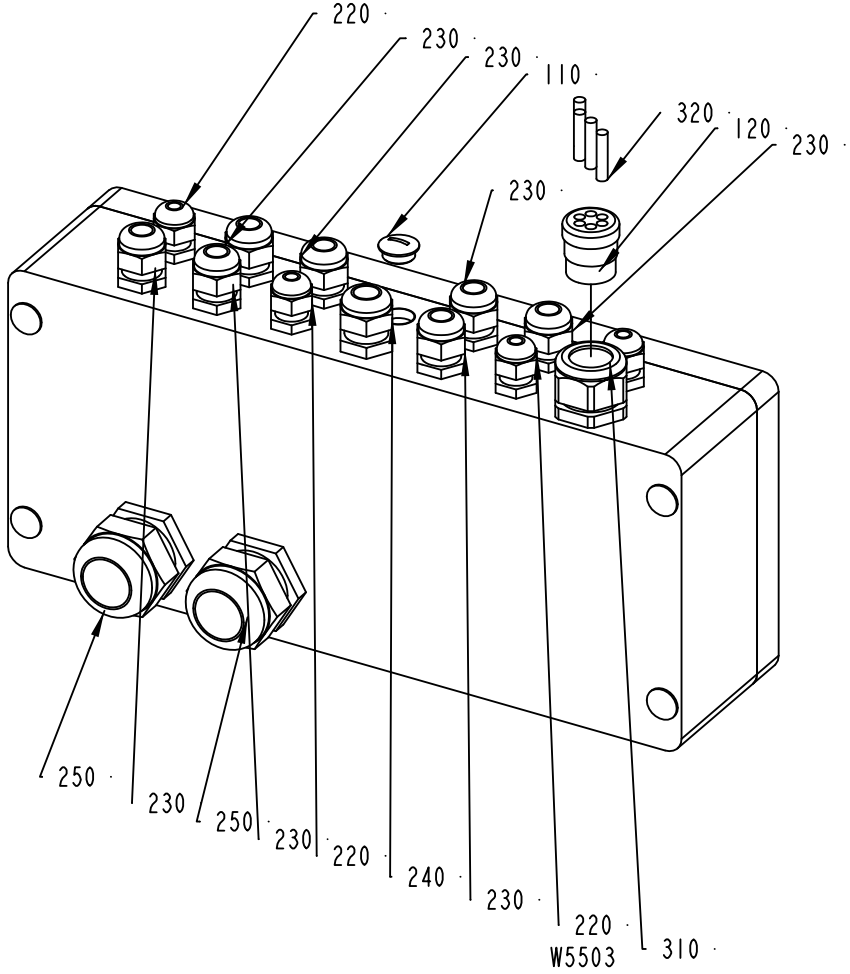

VIEW FROM A

2527253-1
ECM 197448

ECM: 205843 - 20050701
Group number: 2527253-0100
Assembly Drawing: 2527253-1_1_AB

Pos	Part No	UN	Qty	Description	Page No
-					
010	2537112-0000		1	BOX	
020	2546496-0000		1	RAIL	
110	90002-0013		1	BLANK-OFF PLUG, PR 15,2 SKINDICHT-BLK9	
120	90012-0125		1	GLAND FITTING	
200	312115-0372		4	SCREW ISO4762 M6X25 A4 80	
210	312121-0364		2	SCREW ISO 1207 M6X10 4.8 - 5.8 Z.PL.	
220	352103-0100		4	CABLE GLAND, STR 9, PR15,2/PG9	
230	352103-0106		7	CABLE GLAND, ST 11, PR18,6/PG11	
240	352103-0108		1	CABLE GLAND, ST 13,5 , PR20,4/PG13,5	
250	352103-0121		2	CABLE GLAND, ST 29, PR37,0/PG29	
260	353021-0301		46	TERMINALS,TRIPLE-LEVEL, DLI 2,5/35 PA	
270	353024-0204		8	EARTH TERMINAL WPE 2,5	
280	353031-0203		2	END SUPPORT, WEW 35/2	
290	353032-0301		1	END PLATE WAP, 13132.6	
300	353034-0404		10	BRIDGE CONNECTOR Q10, 13131.0	
310	353240-0005		1	GLAND W/O INSERT PG21 NORMAL	
320	353249-0303		4	SEALING PIN, 5,3X25	
330	359011-0834		1	SET OF SIGNS 6-GW(EARTH)	
340	359011-0817		1	SYMBOL 5-GW (+) 50PC	
350	359011-0818		1	SYMBOL 5-GW (-) 50PC	
360	359012-0800		2	TERMINAL MARKING LAB. KIT, BSFW, 101-15	
370	359705-0015		1	WARNING SIGN ISO, RISK OF ELECTRIC SHOCK	

Pos	Part No	UN	Qty	Description	Page No

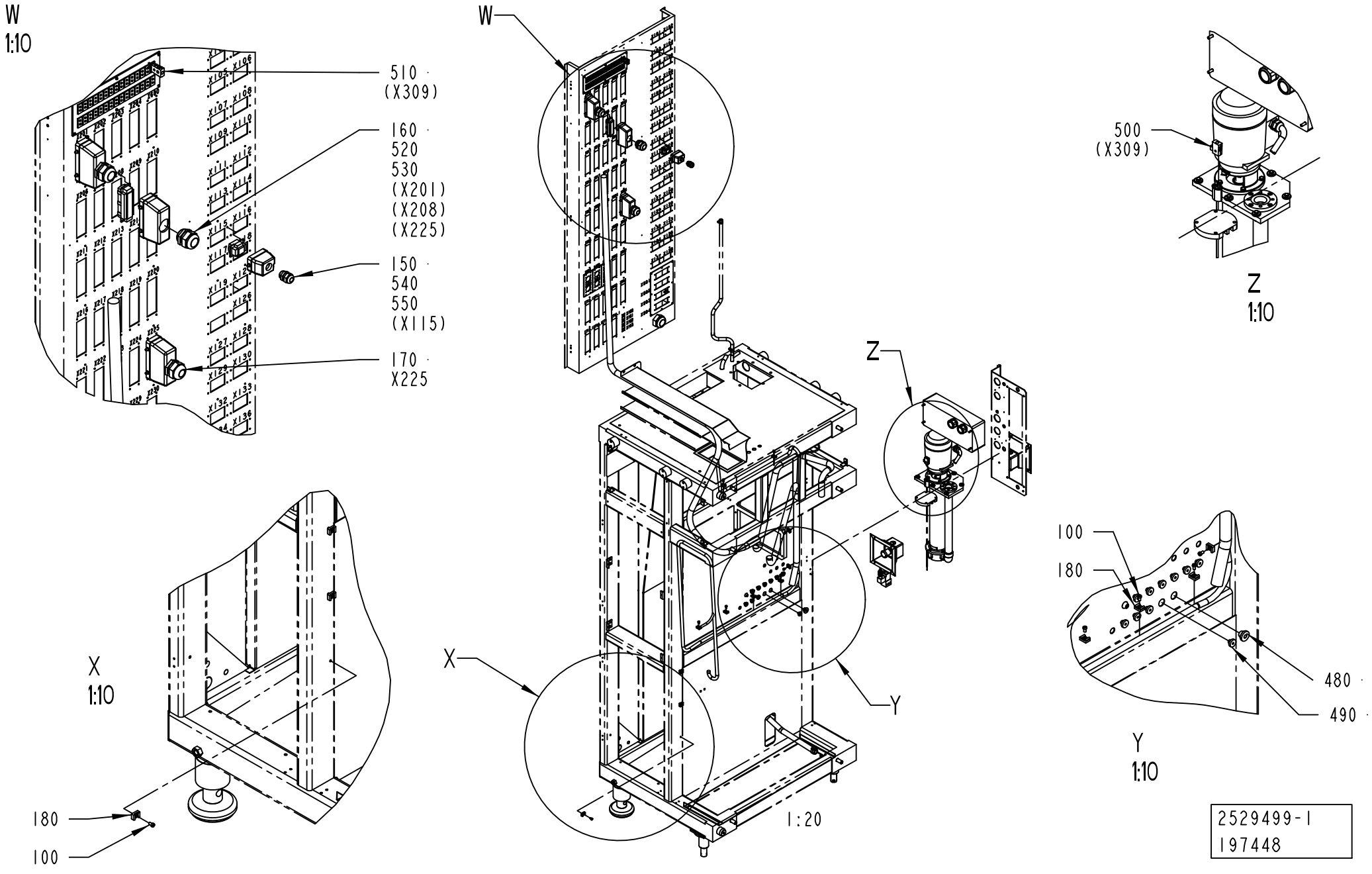
W
1:10
510 · (X309)
160 · 520 530 (X201) (X208) (X225)
150 · 540 550 (X115)
170 · X225
W
500 (X309)
Z
1:10
Z
X
1:10
180
100
X
Y
1:20
100
180
480 ·
490 ·
Y
1:10
2529499-1
197448

ECM: 217855 - 20050701
Group number: 2529499-0100
Assembly Drawing: 2529499-1_1_AB

This list covers pages from 2-56 to 2-59

Pos	Part No	UN	Qty	Description	Page No
-					
100	312125-0364		12	SCREW ISO 1207 M6X10 A4	
150	352103-0108		1	CABLE GLAND, ST 13,5 , PR20,4/PG13,5	
160	352103-0121		3	CABLE GLAND, ST 29, PR37,0/PG29	
170	352103-0120		1	CABLE GLAND, STR 29, PR37,0/PG29	
180	352113-0204		12	ANCHOR PLATES FOR STRIPS, TYPE TM3S25-M	
480	90015-0021		1	LEAD-IN, TET10-14, E-1458023	
490	90015-0021		10	LEAD-IN, TET10-14, E-1458023	
500	90326-0020		1	PLUG, FEMALE YELLOW CR-AL	
510	90326-0022		1	PLUG, MALE YELLOW CR-AL	
520	90110-0150		3	MALE INSERT 121110 0000	
530	90110-0152		3	CABLE HOOD 24-POL 70.352.2428.1	
540	90110-0157		1	CABLE HOOD 6-POL 70.352.0628.1	
550	90110-0159		1	MALE INSERT 70.310.0640.0	
560	359005-0010		1	MARKING LABEL KIT 0 - 9, 04.841.2150.0	
570	359005-0050		3	MARKING LABEL KIT X, 04.841.4550.0	
580	90110-0385		3	MARKING HOLDER, 4.242.3853.0	
W1005	351150-0418	MM	6000	CABLE OLFLEX 4X2,5 MM2 LIGHT/GREY	
W1304	90220-0034	MM	7500	THERMOCABLE TEX/SITW-20F-KX 2X0,5MM2	
W1802	351150-0404	MM	2500	CABLE OLFLEX 4X0,75 MM2 LIGHT/GREY	
W1804	351150-0403	MM	3800	CABLE OLFLEX 3X0,75 MM2 LIGHT/GREY	
W1805	351150-0403	MM	3800	CABLE OLFLEX 3X0,75 MM2 LIGHT/GREY	
W1806	351150-0404	MM	2500	CABLE OLFLEX 4X0,75 MM2 LIGHT/GREY	
W2254	351150-0405	MM	3000	CABLE OLFLEX 5X0,75 MM2 LIGHT/GREY	
W2255	351150-0405	MM	5000	CABLE OLFLEX 5X0,75 MM2 LIGHT/GREY	
W4001	351150-0425	MM	5000	CABLE OLFLEX 25X0,75 MM2 LIGHT/GREY	
W4002	351150-0425	MM	5000	CABLE OLFLEX 25X0,75 MM2 LIGHT/GREY	
W4022	351150-0403	MM	2300	CABLE OLFLEX 3X0,75 MM2 LIGHT/GREY	
W4054	351150-0406	MM	2000	CABLE OLFLEX 7X0,75 MM2 LIGHT/GREY	
W5503	351150-0403	M	3	CABLE OLFLEX 3X0,75 MM2 LIGHT/GREY	

Pos	Part No	UN	Qty	Description	Page No

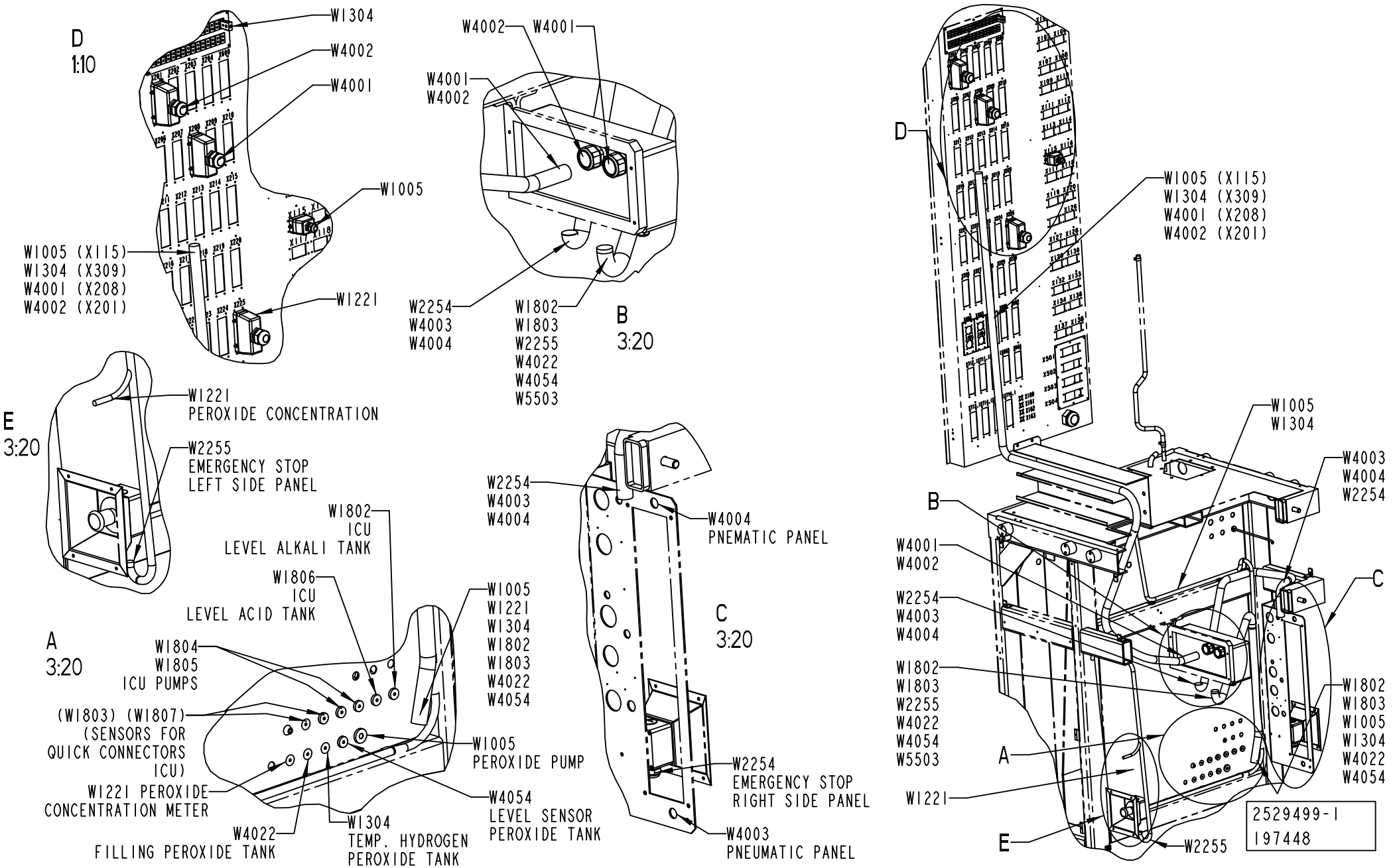
D
1:10
W1304
W4002
W4001
W1005
W1005 (X115)
W1304 (X309)
W4001 (X208)
W4002 (X201)
W1221
W4002
W4001
W4001
W4002
W2254
W4003
W4004
W1802
W1803
W2255
W4022
W4054
W5503
B
3:20
E
3:20
W1221
PEROXIDE CONCENTRATION
W2255
EMERGENCY STOP
LEFT SIDE PANEL
W1802
ICU
LEVEL ALKALI TANK
W1806
ICU
LEVEL ACID TANK
A
3:20
W1804
W1805
ICU PUMPS
(W1803) (W1807)
(SENSORS FOR
QUICK CONNECTORS
ICU)
W1221 PEROXIDE
CONCENTRATION METER
W4022
FILLING PEROXIDE TANK
W1304
TEMP. HYDROGEN
PEROXIDE TANK
W1005
W1221
W1304
W1802
W1803
W4022
W4054
W1005
PEROXIDE PUMP
W4054
LEVEL SENSOR
PEROXIDE TANK
W2254
W4003
W4004
W4004
PNEMATIC PANEL
C
3:20
W2254
EMERGENCY STOP
RIGHT SIDE PANEL
W4003
PNEUMATIC PANEL
D
W1005 (X115)
W1304 (X309)
W4001 (X208)
W4002 (X201)
W1005
W1304
W4003
W4004
W2254
B
W4001
W4002
C
W2254
W4003
W4004
W1802
W1803
W2255
W4022
W4054
W5503
A
W1221
E
W2255
W1802
W1803
W1005
W1304
W4022
W4054
2529499-1
197448

ECM: 217855 - 20050701
Group number: 2529499-0100
Assembly Drawing: 2529499-1_2_AB

This list covers pages from 2-56 to 2-59

Pos	Part No	UN	Qty	Description	Page No
-					
100	312125-0364		12	SCREW ISO 1207 M6X10 A4	
150	352103-0108		1	CABLE GLAND, ST 13,5 , PR20,4/PG13,5	
160	352103-0121		3	CABLE GLAND, ST 29, PR37,0/PG29	
170	352103-0120		1	CABLE GLAND, STR 29, PR37,0/PG29	
180	352113-0204		12	ANCHOR PLATES FOR STRIPS, TYPE TM3S25-M	
480	90015-0021		1	LEAD-IN, TET10-14, E-1458023	
490	90015-0021		10	LEAD-IN, TET10-14, E-1458023	
500	90326-0020		1	PLUG, FEMALE YELLOW CR-AL	
510	90326-0022		1	PLUG, MALE YELLOW CR-AL	
520	90110-0150		3	MALE INSERT 121110 0000	
530	90110-0152		3	CABLE HOOD 24-POL 70.352.2428.1	
540	90110-0157		1	CABLE HOOD 6-POL 70.352.0628.1	
550	90110-0159		1	MALE INSERT 70.310.0640.0	
560	359005-0010		1	MARKING LABEL KIT 0 - 9, 04.841.2150.0	
570	359005-0050		3	MARKING LABEL KIT X, 04.841.4550.0	
580	90110-0385		3	MARKING HOLDER, 4.242.3853.0	
W1005	351150-0418	MM	6000	CABLE OLFLEX 4X2,5 MM2 LIGHT/GREY	
W1304	90220-0034	MM	7500	THERMOCABLE TEX/SITW-20F-KX 2X0,5MM2	
W1802	351150-0404	MM	2500	CABLE OLFLEX 4X0,75 MM2 LIGHT/GREY	
W1804	351150-0403	MM	3800	CABLE OLFLEX 3X0,75 MM2 LIGHT/GREY	
W1805	351150-0403	MM	3800	CABLE OLFLEX 3X0,75 MM2 LIGHT/GREY	
W1806	351150-0404	MM	2500	CABLE OLFLEX 4X0,75 MM2 LIGHT/GREY	
W2254	351150-0405	MM	3000	CABLE OLFLEX 5X0,75 MM2 LIGHT/GREY	
W2255	351150-0405	MM	5000	CABLE OLFLEX 5X0,75 MM2 LIGHT/GREY	
W4001	351150-0425	MM	5000	CABLE OLFLEX 25X0,75 MM2 LIGHT/GREY	
W4002	351150-0425	MM	5000	CABLE OLFLEX 25X0,75 MM2 LIGHT/GREY	
W4022	351150-0403	MM	2300	CABLE OLFLEX 3X0,75 MM2 LIGHT/GREY	
W4054	351150-0406	MM	2000	CABLE OLFLEX 7X0,75 MM2 LIGHT/GREY	
W5503	351150-0403	M	3	CABLE OLFLEX 3X0,75 MM2 LIGHT/GREY	

Pos	Part No	UN	Qty	Description	Page No

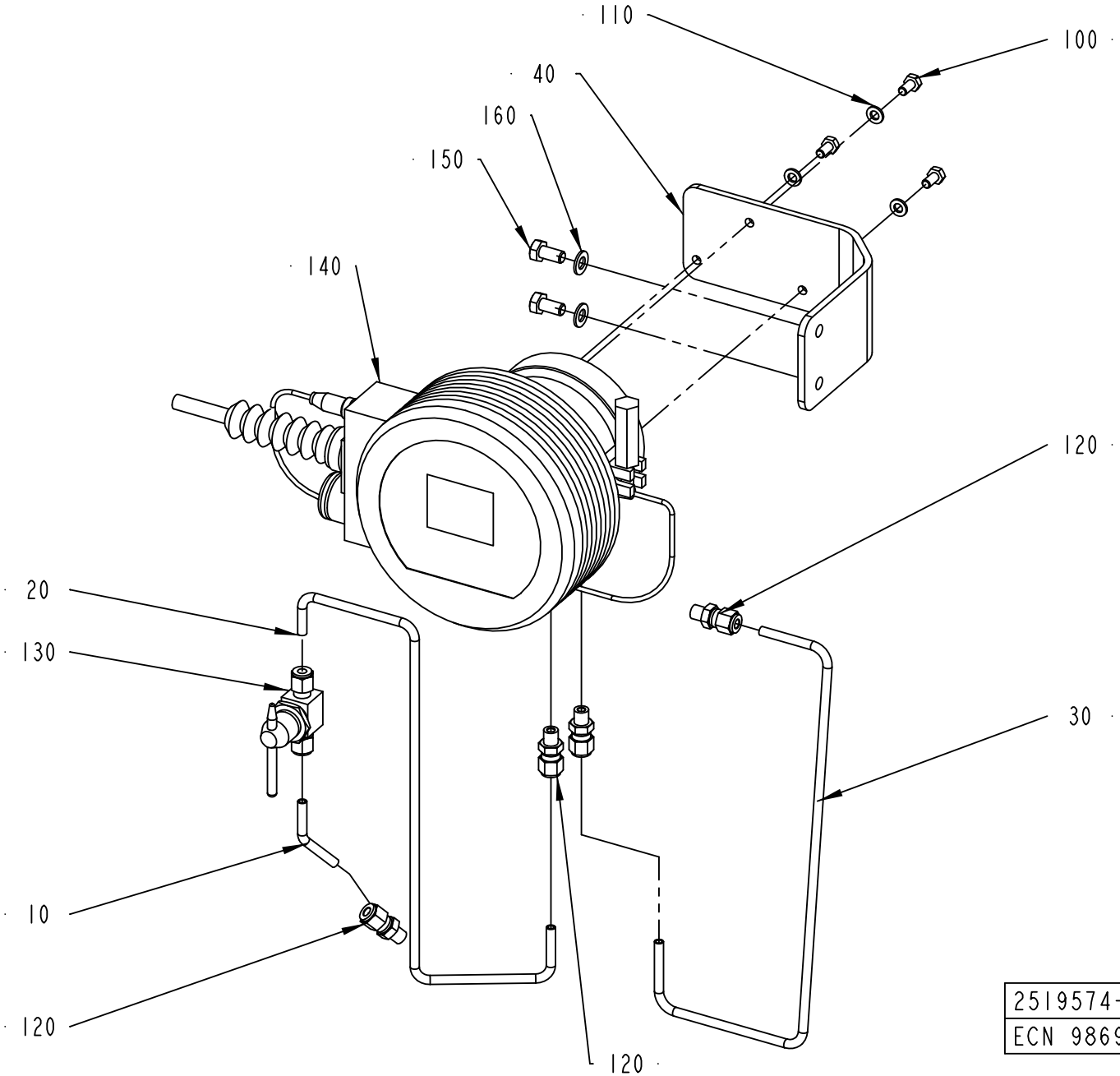

2519574-1
ECN 98690

ECM: 224852 - 20050831
Group number: 2519574-0100
Assembly Drawing: 2519574-1_1_AA

Pos	Part No	UN	Qty	Description	Page No
-					
010	2501378-0000		1	PIPE	
020	2531500-0000		1	PIPE	
030	2531501-0000		1	PIPE	
040	2519556-0000		1	BRACKET	
100	312105-0366		3	SCREW M6S ISO 4017 M6X12 A480	
110	315105-0153		3	WASHER BRB6,4X12RFR	
120	90458-1477		4	CONNECTOR 6-1/8 NPT, EXT. TAPERED	
130	90458-1478		1	BALL VALVE SS-43T6MM-SH-10147	
140	90458-1977		1	REFRACTOMETER SET DA15FC15A DFTP A	
	90458-2269		*1*	*DEFLECTOR A0808137*	
	90458-1980		*1*	*REFRACTOMETER DA16FC16B*	
	90458-1979		*1*	*BELLOWS A0710020*	
	90458-1976		*1*	*CABLE A0804273*	
	90458-1950		*1*	*PROBE A0803021 IPT100 1/8" GAS TRIC-B*	
	90458-1943		*1*	*O-RING A0701145 53,65X2,62 MM*	
	90458-1941		*1*	*O-RING A0701180 10,82X1,78 MM*	
	90458-1940		*1*	*CLAMP A0515170 3" AISI 304*	
	90458-1893		*1*	*FILTER CARTRIDGE A0111004*	
	90458-1892		*1*	*GASKET A0539066 80,5X90,5X2 MM*	
150	312105-0449		2	SCREW M6S ISO 4017 M8X16 A480	
160	315105-0165		2	WASHER BRB8,4X16RFR	

Pos	Part No	UN	Qty	Description	Page No

Machine Type | Group Description | Used-In | Group Number | Page No

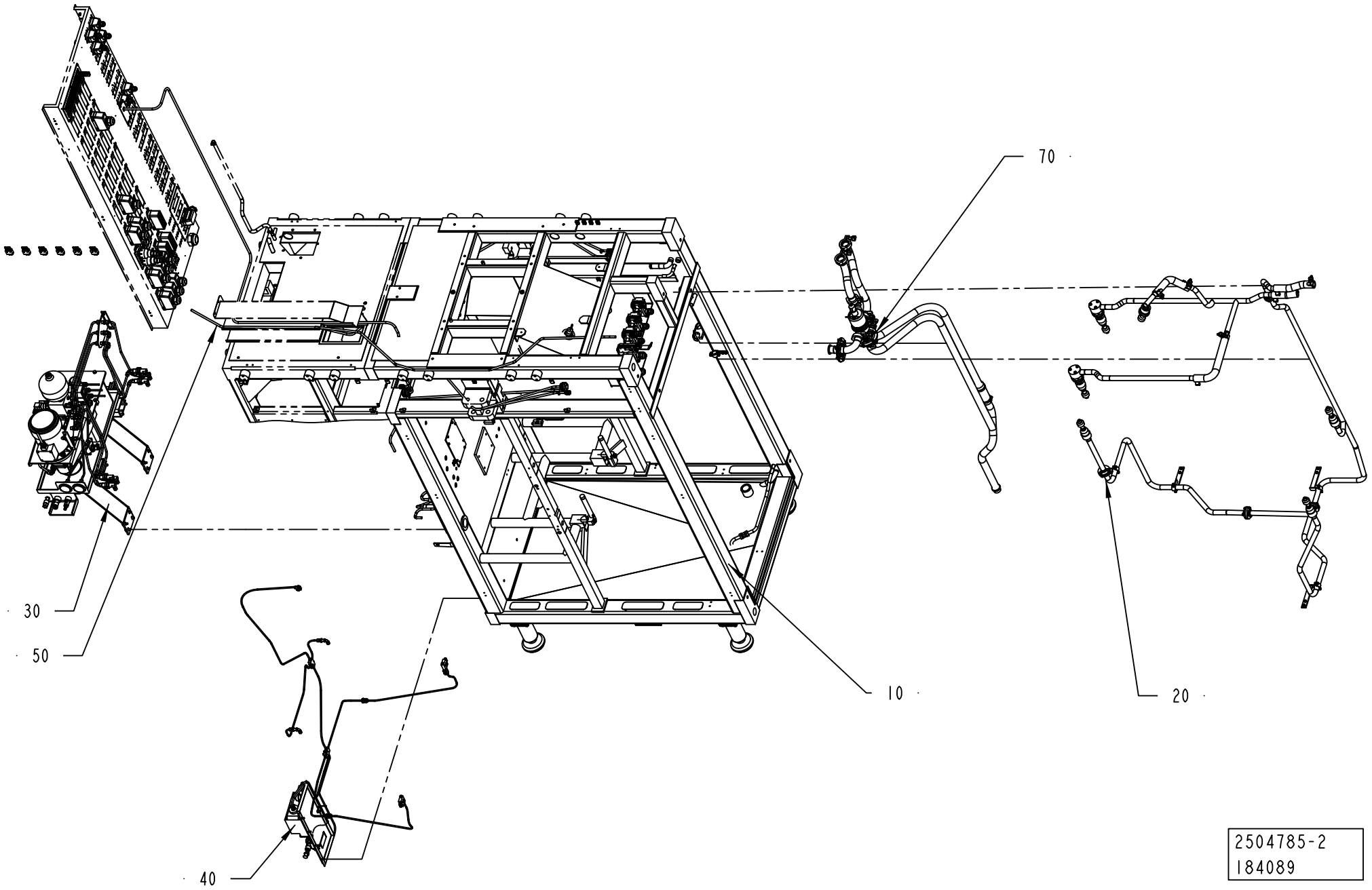
70
30
50
10
20
40
2504785-2
184089

ECM: 192971 - 20050620
Group number: 2504785-0200
Assembly Drawing: 2504785-2_1_AA

Pos	Part No	UN	Qty	Description	Page No
-					
010	2504786-0200		1	MACHINE BODY	**2-65**
020	2504787-0100		1	CLEANING SYSTEM	**2-69**
030	2546500-0100		1	HYDRAULIC SYSTEM	**2-71**
040	2529167-0200		1	LUBRICATING SYSTEM	**2-85**
050	2529116-0100		1	ELECTRIC EQUIPMENT	**2-91**
070	2504792-0100		1	DRAINING	**2-113**

Pos	Part No	UN	Qty	Description	Page No

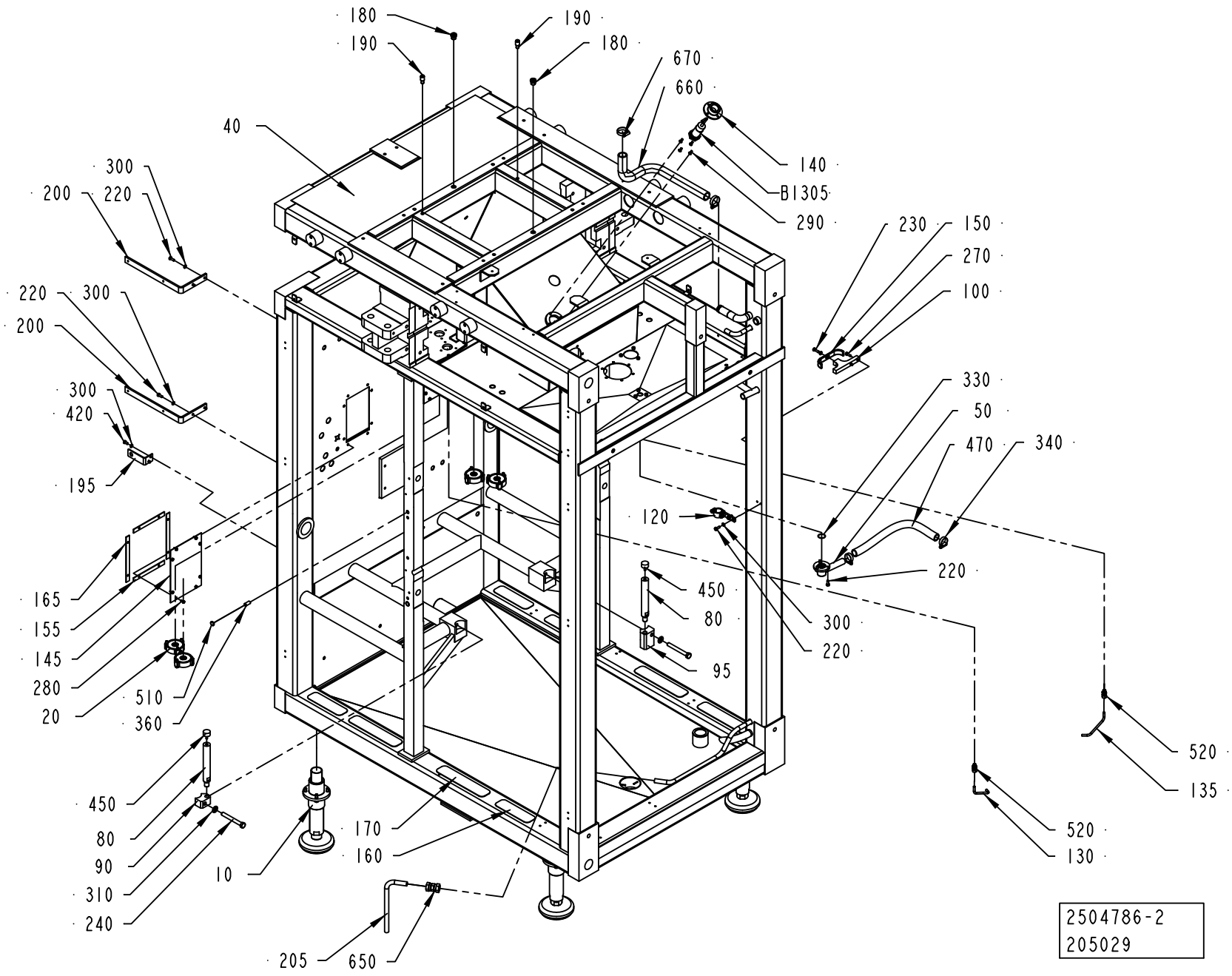
180
190
190
180
670
660
40
140
B1305
290
300
200
220
230
150
270
100
220
300
200
330
50
300
420
470
340
195
120
220
450
80
165
155
145
280
20
510
360
300
220
95
520
135
520
130
450
80
90
310
240
10
170
160
205
650
2504786-2
205029

ECM: 224434 - 20060701
Group number: 2504786-0200
Assembly Drawing: 2504786-2_1_AC

Pos	Part No	UN	Qty	Description	Page No
A3/FLEX					
145	2598844-0000		2	COVER	
Common Parts					
010	2761766-0100		4	FOOT	**2-11**
020	2542491-0100		4	HOLDER	**2-67**
040	2723460-0000		1	FRAME	
050	2509552-0000		1	DRAINING	
080	2542340-0000		2	COLUMN	
090	2542493-0000		1	BLOCK	
095	2542494-0000		1	BLOCK	
100	2510901-0000		1	BRACKET	
120	2510904-0000		1	HOLDER	
130	2542341-0000		1	DRAINING	
135	2543349-0000		1	DRAINING	
140	450457-0000		1	FLANGE	
150	2537120-0000		1	BRACKET	
155	2529341-0000		4	GASKET	
160	1103298-0000		4	NON-SKID	
165	2529342-0000		4	GASKET	
170	1103300-0000		4	NON-SKID	
180	1490046-0000		2	PIN	
190	2514804-0000		2	PIN	
195	2764809-0000		1	CANTILEVER	
200	2524504-0000		2	BRACKET	
205	2565526-0000		1	PIPE	
220	312105-0368		9	SCREW M6S ISO 4017 M6X16 A480	
230	312105-0370		1	SCREW M6S ISO 4017 M6X20 A480	
240	312105-0552		2	SCREW M6S ISO 4014 M12X100 A480	
270	312115-0368		2	SCREW ISO4762 M6X16 A4 80	
280	312105-0325		16	SCREW M6S ISO 4017 M5X10 A480	
290	312155-0329		4	SCREW DIN 7991 MF6S M5X16 A4 70	
300	315105-0153		9	WASHER BRB6,4X12RFR	
310	315105-0178		2	WASHER BRB13X24RFR	
330	315202-0709		1	O-RING 23,52X1,78 MM	
340	342991-0105		2	HOSE CLIP,WORM DRIVE TYPE (27)-30	
360	311103-1456		4	PARALLEL PIN ISO 2338 10M6X24 A1	
420	312105-0366		2	SCREW M6S ISO 4017 M6X12 A480	
450	90347-0034		2	VIBRATION DAMPER	
470	90166-0151	MM	440	HOSE	
510	90261-0057		4	PLUG, BLIND, PLASTIC	
520	90030-0184		2	CONN. STR. GA-6-G1/8	
530	312105-0631		6	SCREW M6S ISO 4014 M16X55 A480	
540	315105-0186		6	WASHER BRB17X30RFR	
600	90157-0016		1	LOCKING FLUID LOCTITE 242 50 ML	
650	342727-0214		1	CONN. PIPE G-15-L/SY	
660	90166-0158	MM	700	HOSE	
670	342991-0106		2	HOSE CLIP,WORM DRIVE TYPE (30)-36	
B1305	90458-0256		1	PROXIMITY SWITCH IIA 3010-BPKG/6M	

Machine Type | Group Description | Used-In | Group Number | Page No

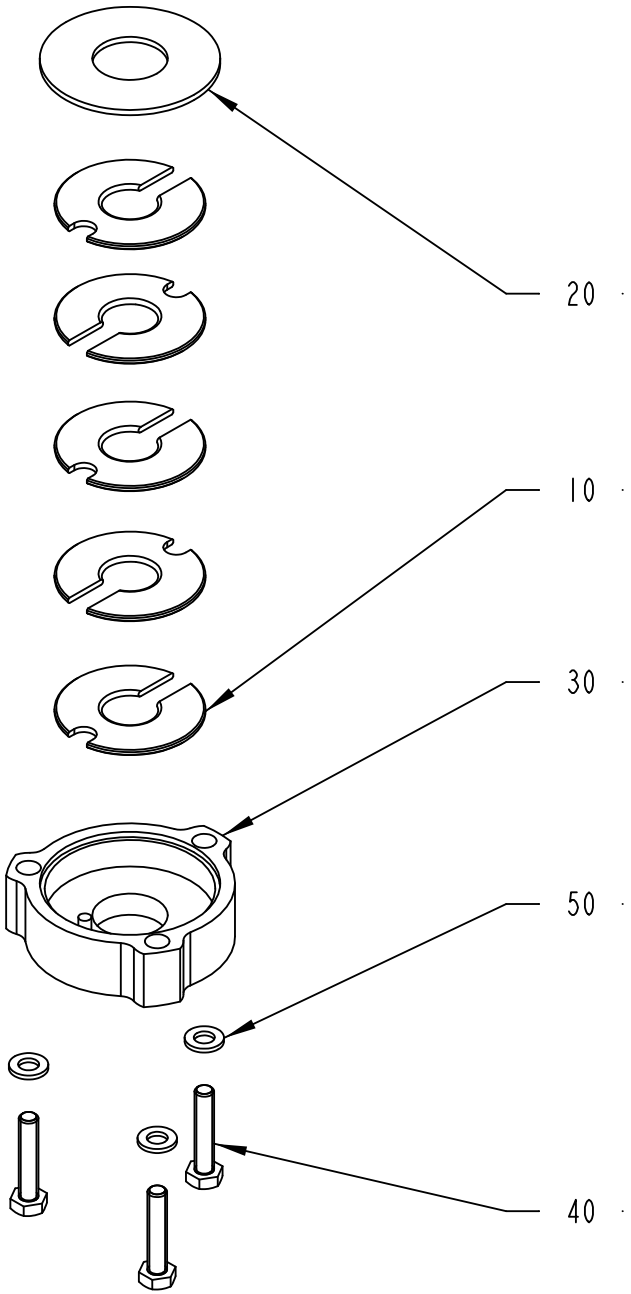

2542491-1
ECM 117204

ECM: 189758 - 20041104
Group number: 2542491-0100
Assembly Drawing: 2542491-1_1_AA

Pos	Part No	UN	Qty	Description	Page No
-					
010	2544303-0000		5	GASKET	
020	2542490-0000		1	LID	
030	2542492-0000		1	LID	
040	312109-0374		3	SCREW M6S ISO 4017 M6X30 A480	
050	315105-0153		3	WASHER BRB6,4X12RFR	

Pos	Part No	UN	Qty	Description	Page No

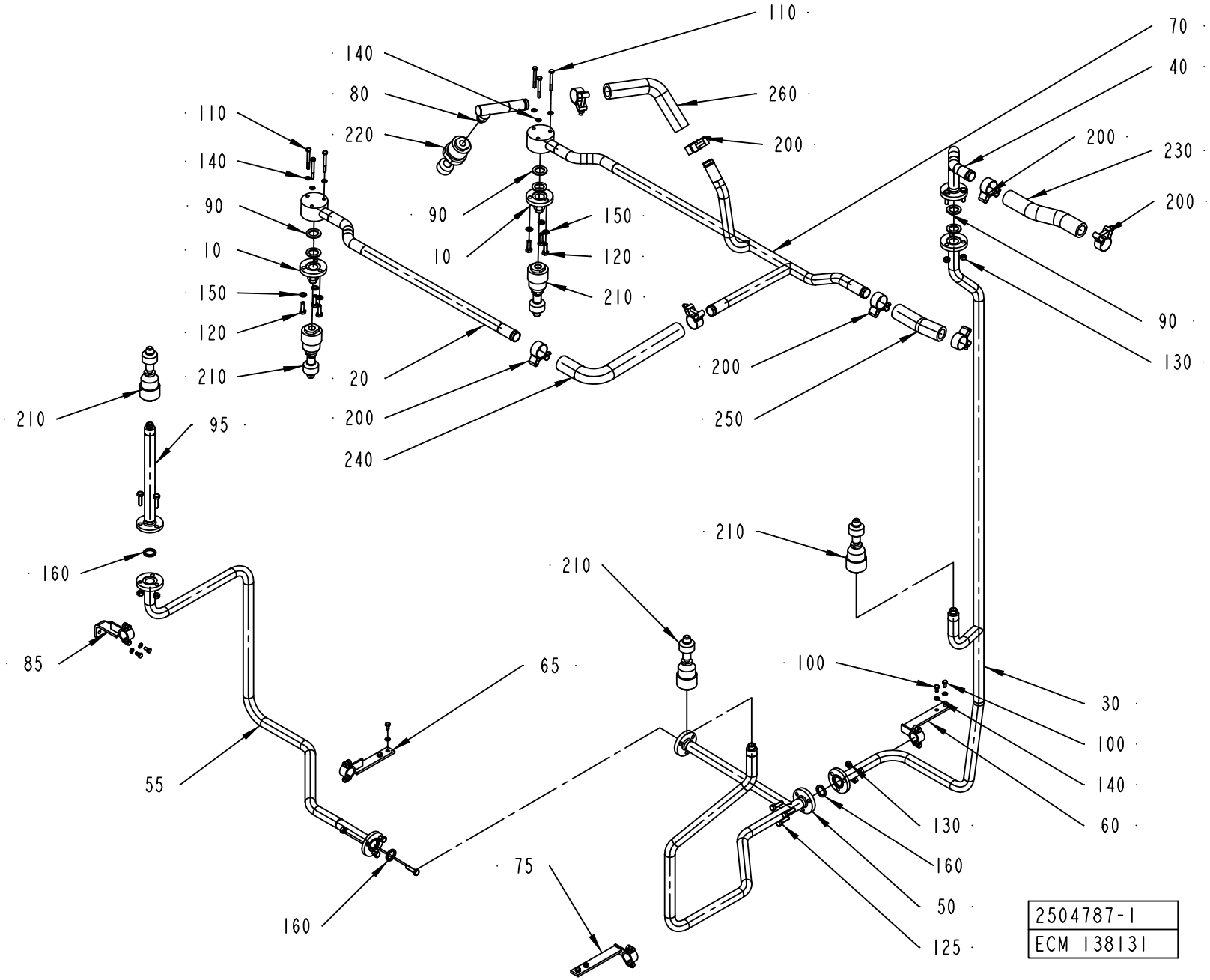
110
140
80
220
260
200
110
140
90
10
150
120
210
90
150
10
120
210
20
200
240
70
40
200
230
200
90
130
200
250
210
95
210
160
85
210
210
100
65
55
30
100
140
60
130
160
50
125
75
160
2504787-1
ECM 138131

ECM: 189759 - 20041104
Group number: 2504787-0100
Assembly Drawing: 2504787-1_1_AB

Pos	Part No	UN	Qty	Description	Page No
-					
010	1511203-0000		2	PIPE	
020	2506653-0000		1	PIPE	
030	2506933-0000		1	PIPE	
040	2506934-0000		1	PIPE	
050	2508424-0000		1	PIPE	
055	2529069-0000		1	PIPE	
060	2508427-0000		1	BRACKET	
065	2529110-0000		1	BRACKET	
070	2508428-0000		1	PIPE	
075	2529111-0000		1	BRACKET	
080	2510833-0000		1	PIPE	
085	2544213-0000		1	BRACKET	
090	1037443-0000		6	GASKET	
095	2544214-0000		1	PIPE	
100	312105-0366		8	SCREW M6S ISO 4017 M6X12 A480	
110	312105-0381		6	SCREW M6S ISO 4014 M6X55 A480	
120	312105-0453		6	SCREW M6S ISO 4017 M8X25 A480	
125	312105-0455		9	SCREW M6S ISO 4017 M8X30 A480	
130	312605-0318		12	HEXAGON NUT, M6M M8 A280	
140	315105-0153		14	WASHER BRB6,4X12RFR	
150	315105-0165		6	WASHER BRB8,4X16RFR	
160	315229-0103		3	GASKETS, 23,1X30,1X3,7 MM 1" FDA	
200	90459-2366		8	HOSE CLIP, (32)-35	
210	90424-0066		5	ROT.SPRAY NOZZLE, D26984-B3/8"-PVDF/4.5	
220	90424-0071		1	ROT.SPRAY NOZZLE, D40140-R3/8-PVDF 4.5	
230	90166-0233	MM	260	HOSE	
240	90166-0233	MM	430	HOSE	
250	90166-0233	MM	175	HOSE	
260	90166-0233	MM	300	HOSE	

Pos	Part No	UN	Qty	Description	Page No

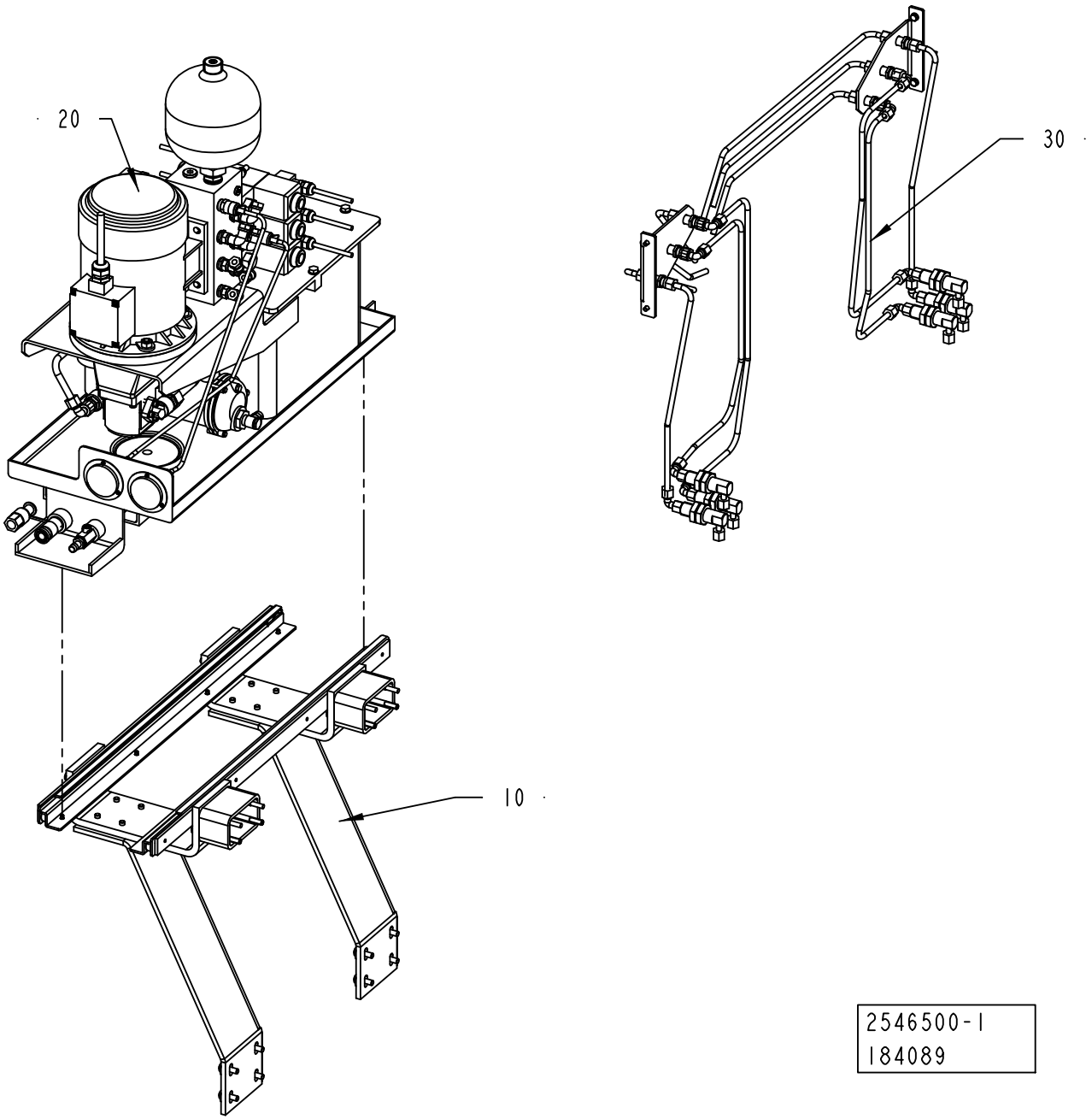
20
30
10
2546500-1
184089

ECM: 195315 - 20050620
Group number: 2546500-0100
Assembly Drawing: 2546500-1_1_AB

Pos	Part No	UN	Qty	Description	Page No
-					
005	2552001-0000		1	HYDRAULIC DIAGRAM	
010	2546499-0200		1	GUIDE	**2-73**
020	2558947-0200		1	HYDRAULIC UNIT	**2-75**
030	2520484-0100		1	PIPE WORK-HYDRAULIC	**2-83**

Pos	Part No	UN	Qty	Description	Page No

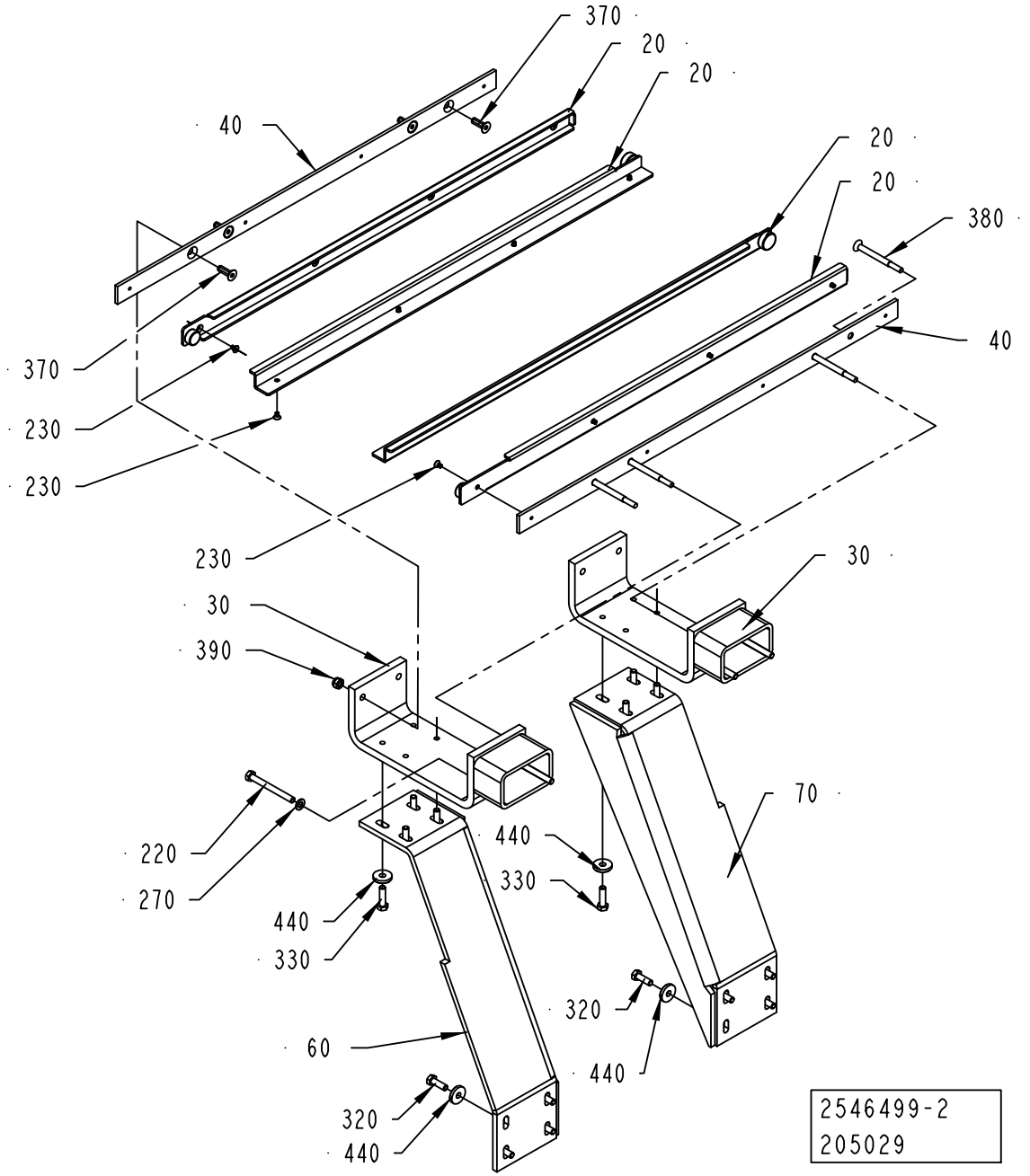
370
20
20
40
20
20
380
40
370
230
230
230
30
30
390
220
270
440
330
440
330
60
320
440
70
440
330
320
440
2546499-2
205029

ECM: 224431 - 20060701
Group number: 2546499-0200
Assembly Drawing: 2546499-2_1_AB

Pos	Part No	UN	Qty	Description	Page No
-					
020	90459-5633		1	GUIDE CONSOLE, 30X13X750	
030	2686319-0000		2	BRACKET	
040	2686318-0000		2	HOLDER	
060	2686317-0000		1	SUPPORT	
070	2770115-0000		1	SUPPORT	
220	312105-0467		4	SCREW M6S ISO 4014 M8X80 A480	
230	312155-0323		16	SCREW DIN 7991 MF6S M5X8 A4 70	
270	315105-0165		4	WASHER BRB8,4X16RFR	
320	312105-0453		8	SCREW M6S ISO 4017 M8X25 A480	
330	312105-0455		8	SCREW M6S ISO 4017 M8X30 A480	
370	312155-0453		4	SCREW DIN 7991 MF6S M8X25 A4 70	
380	90287-0264		4	SCREW	
390	312812-0318		4	HEXAGON NUT, NY-LOCK M8 A480	
440	315125-0165		16	WASHER TBRSB 8,4X26X5 A4	

Pos	Part No	UN	Qty	Description	Page No

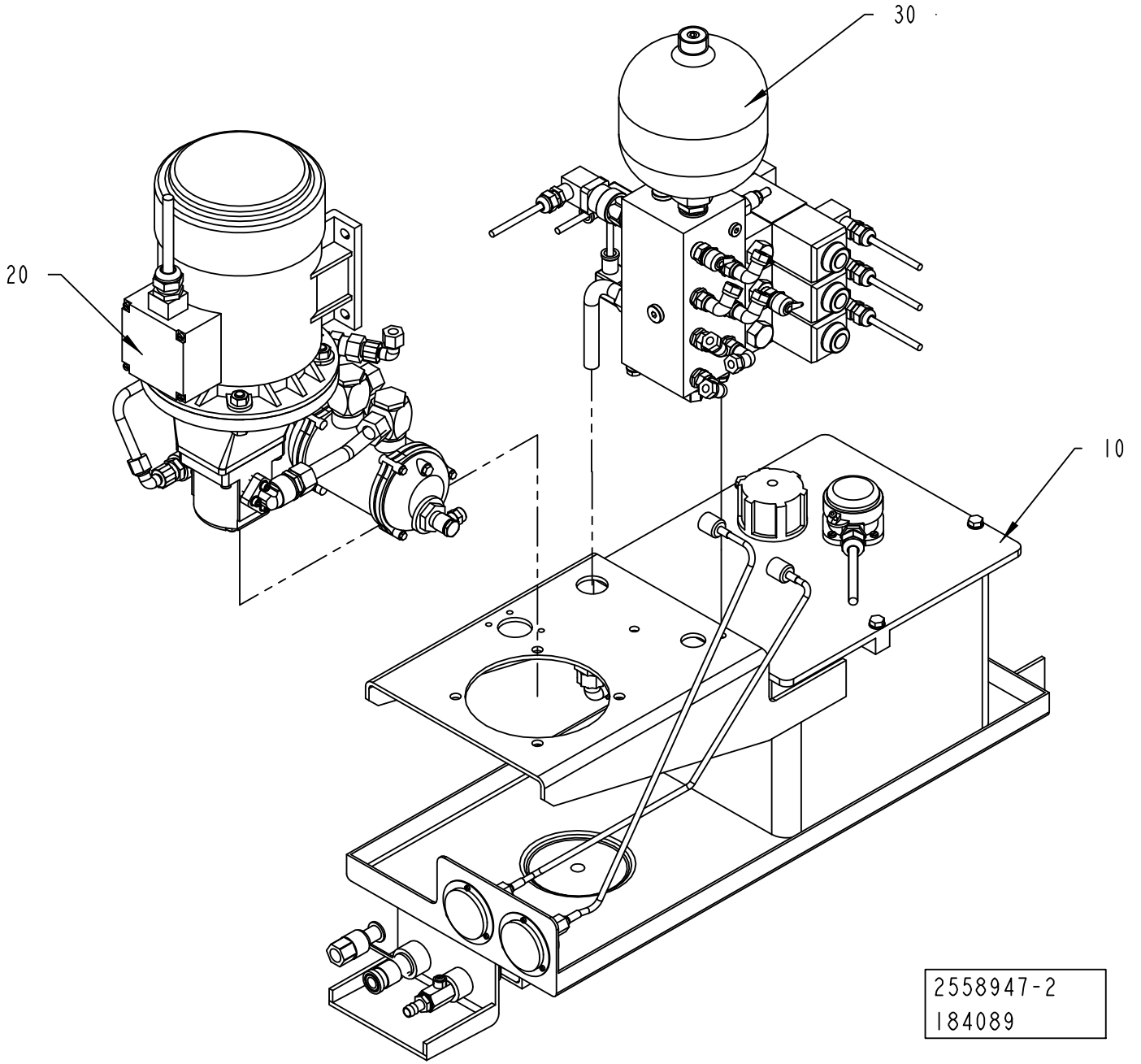
30
20
10
2558947-2
184089

ECM: 192979 - 20050620
Group number: 2558947-0200
Assembly Drawing: 2558947-2_1_AA

Pos	Part No	UN	Qty	Description	Page No
-					
010	2558845-0200		1	TANK	**2-77**
020	2558930-0100		1	PUMP	**2-79**
030	2559111-0200		1	HYDRAULIC VALVE	**2-81**

Pos	Part No	UN	Qty	Description	Page No

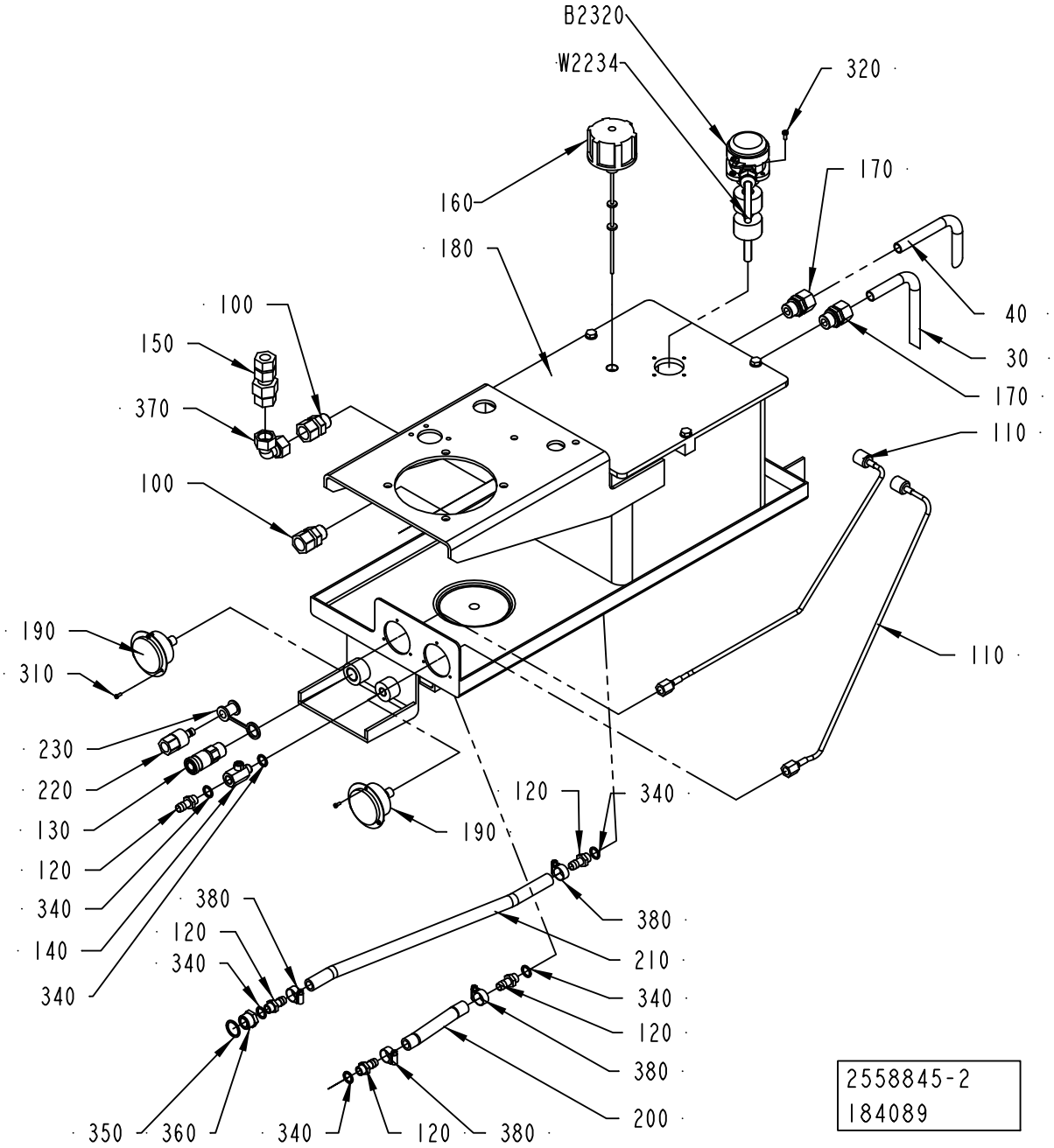
B2320
W2234
320
160
170
180
40
100
150
30
370
170
110
100
190
110
310
230
120
220
340
130
190
120
340
380
140
120
380
340
210
340
340
120
380
350
360
340
120
380
200
2558845-2
184089

ECM: 192978 - 20050620
Group number: 2558845-0200
Assembly Drawing: 2558845-2_1_AA

Pos	Part No	UN	Qty	Description	Page No
-					
030	2569036-0000		1	PIPE	
040	2569037-0000		1	PIPE	
100	90030-0567		2	CONN. STR., 15-R1/2, EXT. THREAD	
110	90148-0101		2	MEASURING HOSE,MINIMESS S110-AC-FA-0063	
120	90163-0052		5	HOSE NIPPLE, EXT.THR. 1/4-12 MM	
130	90163-0076		1	QUICK COUPLING, (F) LP-006-0-WR021	
140	90187-0158		1	THROTTLE BALL VALVE G1/4, R1/4	
150	90230-0023		1	NON-RETURN VALVE	
160	90277-0086		1	AIR FILTER / ART.NO. BK 464125 (70)	
170	90457-0035		2	REDUCING UNIUN	
180	90459-5635		1	HYDRAULIC TANK, 12 L, A1-19101+A3-16783	
190	90459-1223		2	PRESSURE GAUGE HYDRAULIC, 1184954.03-11	
200	90166-0121	MM	130	HOSE	
210	90166-0121	MM	440	HOSE	
220	90163-0064		1	QUICK COUPLING, (M) LP-006-2-WR517	
230	90163-0304		1	QUICK COUPLING, LP-006-5-74-KU (DUST CAP	
310	312125-0222		6	SCREW ISO 1207 M3X8 A4	
320	312132-0289		4	SCREW SLOT. PAN HEAD MSCS M4X10	
340	315234-0110		6	WASHER,PL.RND.CU.13,5/18 H=1,5	
350	315234-0113		1	WASHER PL.RND.CU.21,3//26 H=1,5	
360	342701-0205		1	BUSHING,INT./EXT.G-THREAD G1/2"-G1/4"	
370	342744-0114		1	CONN. ELBOW ADJ.,INT 15	
380	342991-0102		4	HOSE CLIP,WORM DRIVE TYPE (16)-19	
B2320	90457-0019		1	LEVEL PROBE, HMFB-S=45-0=80-0=90-T70	
W2234	351150-0406	M	4	CABLE OLFLEX 7X0,75 MM2 LIGHT/GREY	

Pos	Part No	UN	Qty	Description	Page No

Machine Type | Group Description | Used-In | Group Number | Page No

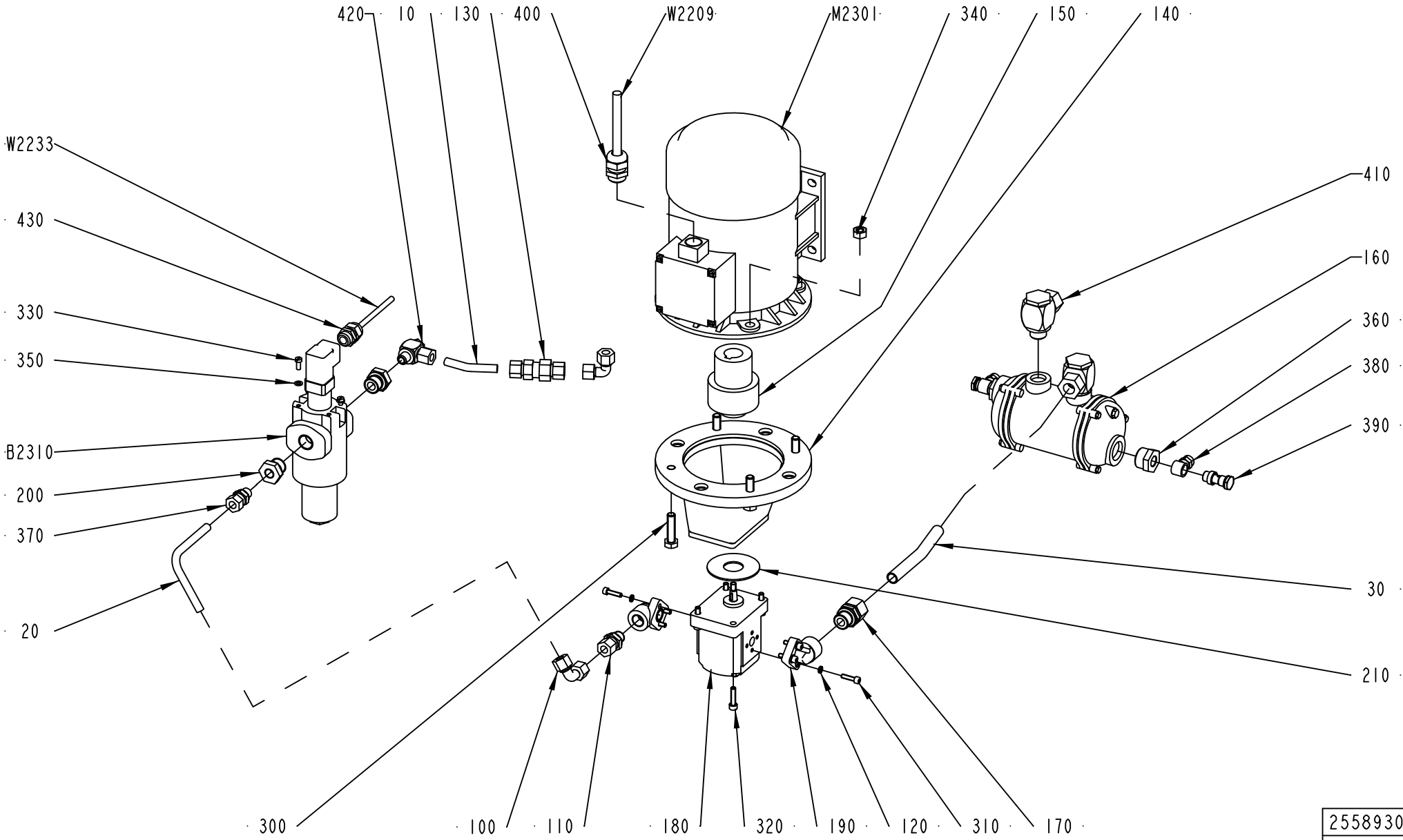

2558930-1
ECM 118242

ECM: 189763 - 20041104
Group number: 2558930-0100
Assembly Drawing: 2558930-1_1_AA

Pos	Part No	UN	Qty	Description	Page No
-					
010	2569035-0000		1	PIPE	
020	2569038-0000		1	PIPE	
030	2569039-0000		1	PIPE	
100	90030-0121		2	CONN. ELBOW ADJ.,INT 10	
110	90030-0157		1	CONN. STR. 10-R3/8, EXT. THREAD	
120	90062-0029		6	LOCK WASHER 5,1X 8,6, T= 1,5 DIN 7980	
130	90230-0017		1	NON-RETURN VALVE RHD 10-L	
140	90321-0574		1	PUMP BRACKET LSE-201	
150	90321-0575		1	SHAFT COUPLING	
160	90422-0008		1	COOLER	
	315202-0612		*1*	*O-RING 75,80X3,53 MM*	
170	90457-0035		1	REDUCING UNIUN	
180	90457-0037		1	HYDR. PUMP TFP100 3/8-S-C001	
190	90457-0039		2	PUMP CONN. ELBOW FLANGE T-26/12-3/8	
200	90457-0043		2	BUSHING, INT/EXT. G-THREAD NO. 1/2-1/4	
210	90457-0046		1	WASHER PLAIN ROUND 25,4/67,5, H=2	
300	312109-0499		4	SCREW M6S ISO 4017 M10X40 A480	
310	312115-0331		6	SCREW ISO4762 M5X20 A4 80	
320	312115-0372		4	SCREW ISO4762 M6X25 A4 80	
330	312125-0327		3	SCREW ISO 1207 M5X12 A4	
340	312605-0320		4	HEXAGON NUT, M6M M10 A280	
350	315105-0146		3	WASHER BRB5,3X10RFR	
360	342701-0208		2	BUSHING, INT/EXT. G-THREAD NO. 3/4-1/4	
370	342752-0104		1	CONN. STR. GA-10-G1/4	
380	342980-0122		2	BANJO-CONNECTION,RING 8/6-G1/4 INCH	
390	342980-0304		2	BANJO-HOLLOW BOLT COUPL,EXT.THR.01-G1/4	
400	352103-0111		1	CABLE GLAND, ST 16, PR22,5/PG16	
410	342796-0114		2	CONN. BANJO,WH 15-G1/2	
420	342796-0108		1	CONN. BANJO,WH 10-G1/4	
430	352103-0106		1	CABLE GLAND, ST 11, PR18,6/PG11	
B2310	90459-1224		1	FILTER UNIT, MDF-BNHC-30-LB10-C1.0/B6	
M2301	90457-0036		1	3-PHASE MOTOR,FOOT MOUNT.1,1KW,1410 RPM	
W2209	351150-0418	M	4	CABLE OLFLEX 4X2,5 MM2 LIGHT/GREY	
W2233	351150-0403	M	4	CABLE OLFLEX 3X0,75 MM2 LIGHT/GREY	

Pos	Part No	UN	Qty	Description	Page No

Machine Type	Group Description	Used-In	Group Number	Page No

HYDRAULIC VALVE

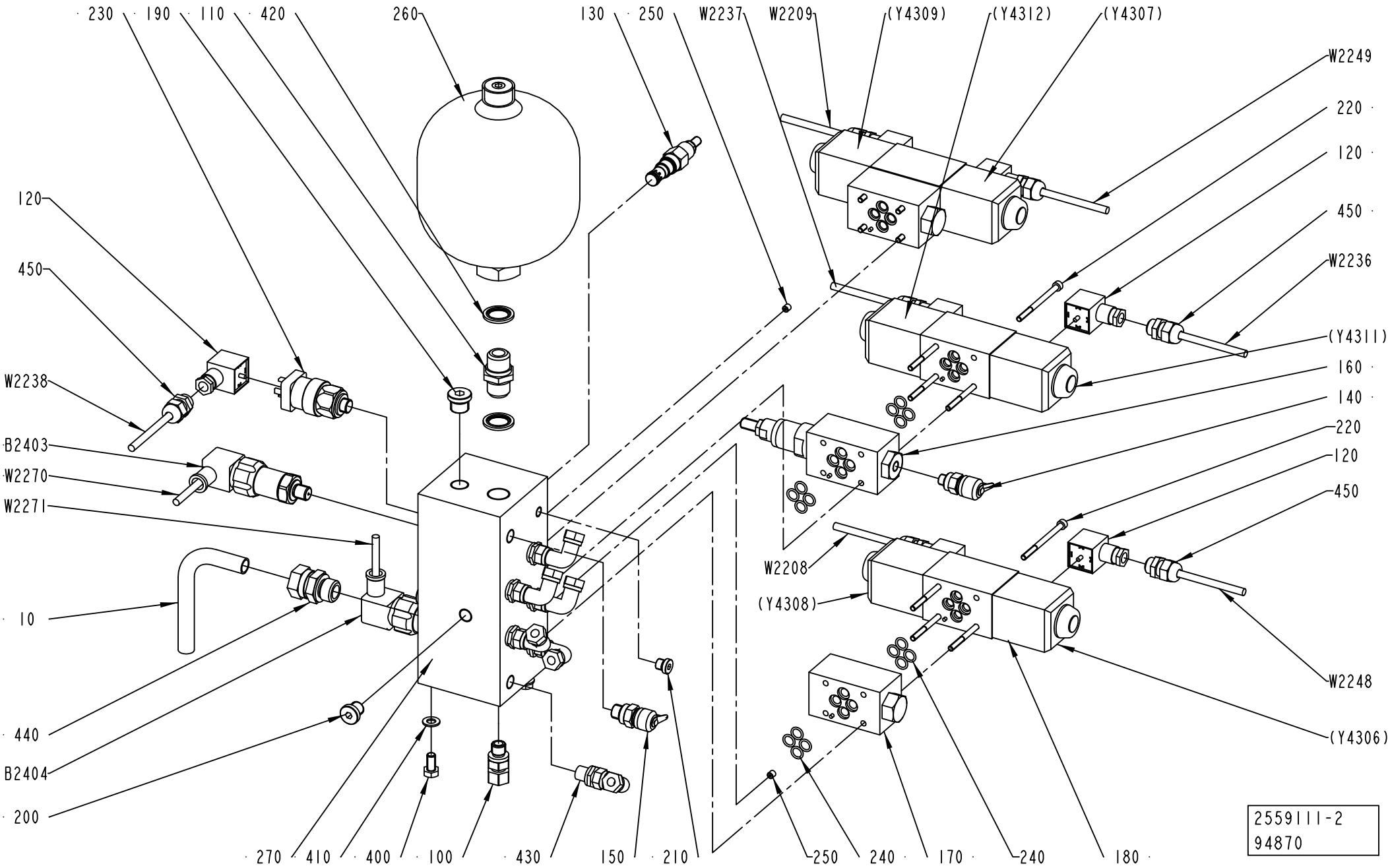

ECM: 191247 - 20050103
Group number: 2559111-0200
Assembly Drawing: 2559111-2_1_AA

Pos	Part No	UN	Qty	Description	Page No
-					
010	2569034-0000		1	PIPE	
100	90030-0178		1	CONN. STR., 10-R1/4, EXT. THREAD	
110	90030-0340		1	NIPPLES, EXT. THREAD, HEXAGON, RA-G1/2A3	
120	90110-0095		7	CONNECTOR 3 POLE + EARTH	
130	90201-0131		1	VALVE	
140	90201-0132		1	VALVE	
150	90201-0133		1	VALVE	
160	90201-0135		1	PRESSURE REDUCING VALVE	
170	90201-0136		2	DIRECT CHECK VALVE, NO. DGMDC-3-Y-PK-41	
180	90459-1690		3	DIRECTIONAL VALVE, DG4V-3-6C-MUH-7-60-EN	
190	90201-0448		1	PLUG	
200	90201-0449		4	PLUG	
210	90201-0450		1	PLUG	
220	90201-0456		12	BOLT KIT, NO. BK 464125M	
230	90274-0124		1	PRESSURE SWITCH	
240	90457-0134		24	O-RING	
250	90457-0177		2	FLOW-RESTRICTOR, 2,0 MM, M6	
260	90459-4032		1	HYDR.ACC., SBO-210-1.4E1/112U-210AK	
270	90459-1227		1	MANIFOLD BLOCK, A1-17351	
400	312105-0449		2	SCREW M6S ISO 4017 M8X16 A480	
410	315105-0165		2	WASHER BRB8,4X16RFR	
420	315211-0111		2	BONDED SEAL SS/NBR90 G1/2	
430	342738-0208		6	ADJUSTABLE ELBOW CONNECTION,EXT 8-G1/4	
440	342752-0114		1	CONN. STR. GA-15-G1/2	
450	352103-0101		7	CABLE GLAND, ST 9, PR15,2/PG9	
B2403	90459-1038		1	PRESSURE TRANSMITTER, 250BAR	
B2404	90459-1038		1	PRESSURE TRANSMITTER, 250BAR	
W2208	351150-0403	M	4	CABLE OLFLEX 3X0,75 MM2 LIGHT/GREY	
W2209	351150-0403	M	4	CABLE OLFLEX 3X0,75 MM2 LIGHT/GREY	
W2236	351150-0403	M	4	CABLE OLFLEX 3X0,75 MM2 LIGHT/GREY	
W2237	351150-0403	M	4	CABLE OLFLEX 3X0,75 MM2 LIGHT/GREY	
W2238	351150-0403	M	4	CABLE OLFLEX 3X0,75 MM2 LIGHT/GREY	
W2248	351150-0403	M	4	CABLE OLFLEX 3X0,75 MM2 LIGHT/GREY	
W2249	351150-0403	M	4	CABLE OLFLEX 3X0,75 MM2 LIGHT/GREY	
W2270	90220-0091	M	4	PAIR TWISTED CABLE 2X2X0,25MM2	
W2271	90220-0091	M	4	PAIR TWISTED CABLE 2X2X0,25MM2	

Pos	Part No	UN	Qty	Description	Page No

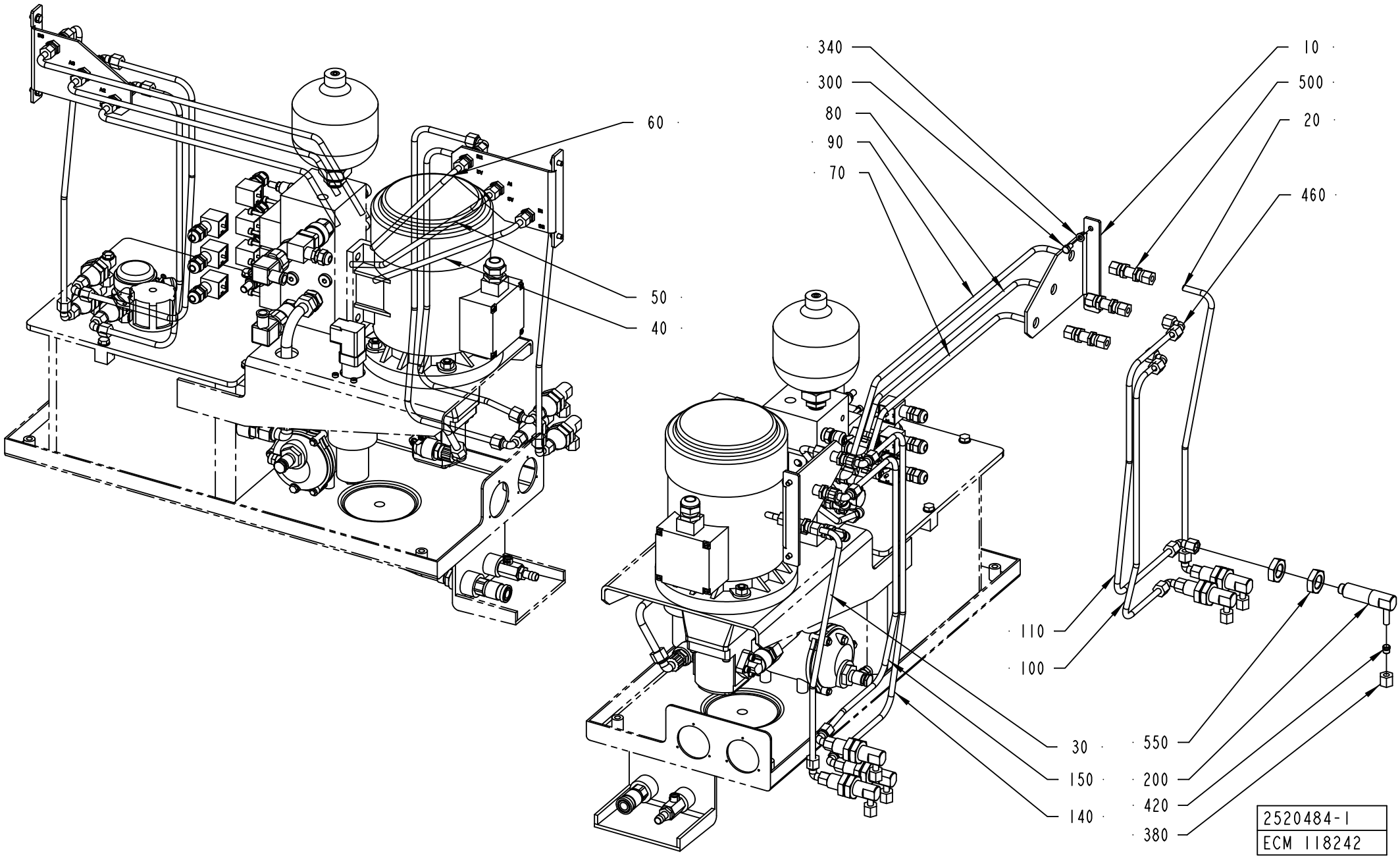
60
50
40
340
300
80
90
70
10
500
20
460
110
100
30
150
140
550
200
420
380
2520484-1
ECM 118242

ECM: 189761 - 20041104
Group number: 2520484-0100
Assembly Drawing: 2520484-1_1_AA

Pos	Part No	UN	Qty	Description	Page No
-					
010	2527525-0000		2	BRACKET	
020	2559310-0000		1	HYDRAULIC PIPE	
030	2559311-0000		1	HYDRAULIC PIPE	
040	2531238-0000		1	HYDRAULIC PIPE	
050	2531237-0000		1	HYDRAULIC PIPE	
060	2531236-0000		1	HYDRAULIC PIPE	
070	2531235-0000		1	HYDRAULIC PIPE	
080	2531234-0000		1	HYDRAULIC PIPE	
090	2531233-0000		1	HYDRAULIC PIPE	
100	2529178-0000		1	HYDRAULIC PIPE	
110	2529179-0000		1	HYDRAULIC PIPE	
140	2529182-0000		1	HYDRAULIC PIPE	
150	2529183-0000		1	HYDRAULIC PIPE	
200	540718-0000		6	ELBOW PIPE JOINT	
300	312105-0366		4	SCREW M6S ISO 4017 M6X12 A480	
340	315105-0153		4	WASHER BRB6,4X12RFR	
380	342703-0208		6	NUT, PIPES & CONNECTORS,NUT M-8 SS	
420	90030-0098		6	ACCESSORIES, FERRULE 8	
460	342738-0208		10	ADJUSTABLE ELBOW CONNECTION,EXT 8-G1/4	
500	90030-0067		6	CONN. BULKHEAD SV 8-L/SY	
550	90330-0093		12	NUT, HEXAGON, G1/2	

Pos	Part No	UN	Qty	Description	Page No

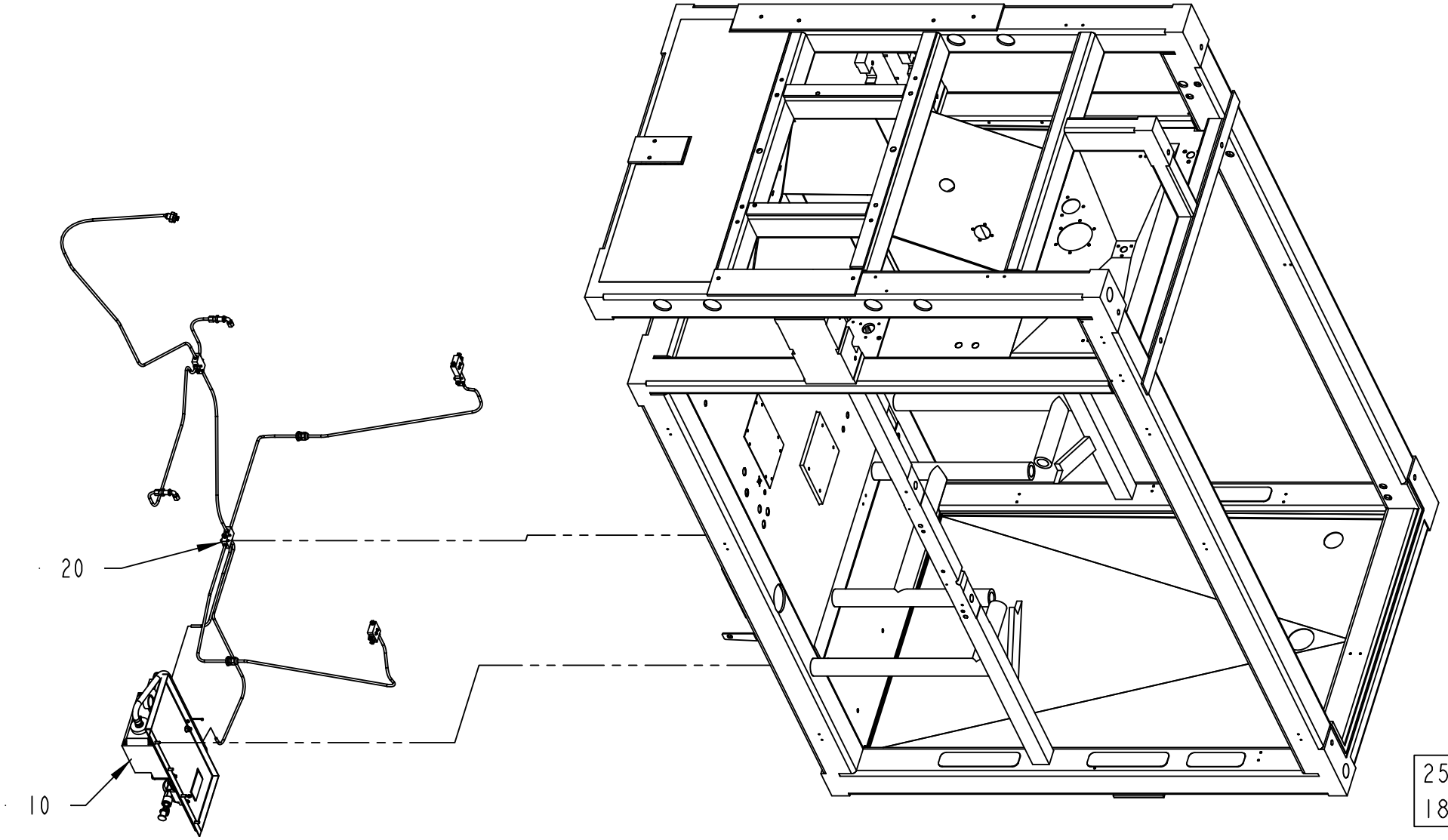
20
10
2529167-2
184089

ECM: 195317 - 20050620
Group number: 2529167-0200
Assembly Drawing: 2529167-2_1_AA

Pos	Part No	UN	Qty	Description	Page No
-					
010	2506776-0200		1	CENTRAL LUBRICATION	**2-87**
020	2504789-0100		1	LUBRICATION UNIT	**2-89**

Pos	Part No	UN	Qty	Description	Page No

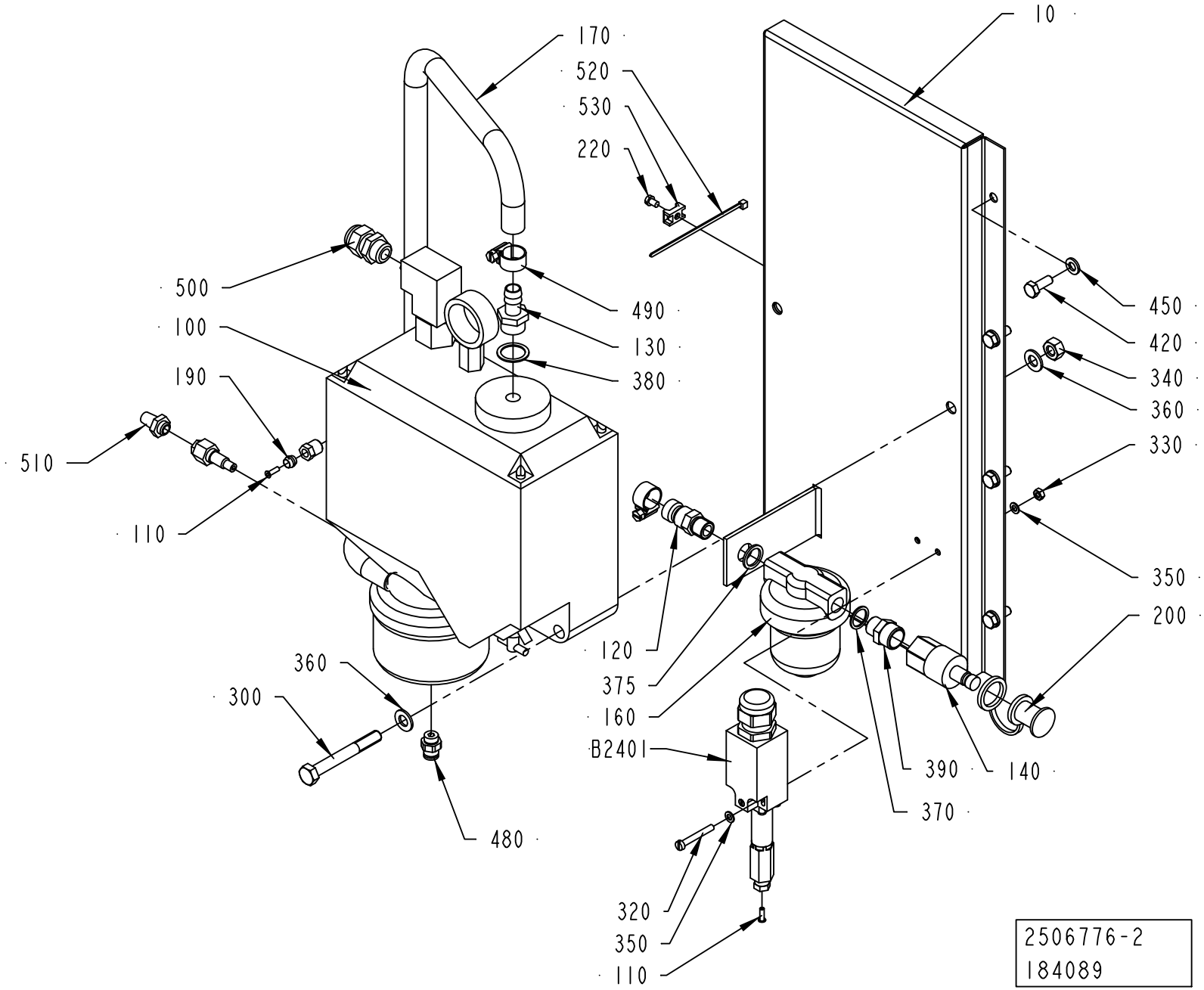
10
170
520
530
220
500
100
190
510
110
490
130
380
450
420
340
360
330
350
200
120
375
160
B2401
360
300
480
390
140
370
320
350
110
2506776-2
184089

ECM: 192974 - 20050620
Group number: 2506776-0200
Assembly Drawing: 2506776-2_1_AA

Pos	Part No	UN	Qty	Description	Page No
-					
010	2688066-0000		1	MOUNTING SHEET	
100	90048-0037		1	OIL PUMP INCL. CONTAINER 1,5 L	
110	90134-0030		2	SLEEVE FOR PLASTIC TUBE	
120	90163-0014		1	QUICK COUPLING, (M) LP-006-1-WR013	
130	90163-0041		1	HOSE NIPPLE, EXT.THR. 3/8-12 MM	
140	90163-0064		1	QUICK COUPLING, (M) LP-006-2-WR517	
160	90415-0033		1	OIL FILTER REFILLING UC-HP-1229-25	
	90415-0330		*1*	*FILTER INSERT ART.NO. HR-1229-25UCC*	
170	90166-0113	MM	850	HOSE	
190	90028-0022		1	CONE TUBE 6 MM	
200	90163-0304		1	QUICK COUPLING, LP-006-5-74-KU (DUST CAP	
220	312125-0285		1	SCREW ISO 1207 M4X6 A4	
300	312105-0464		2	SCREW M6S ISO 4014 M8X65 A480	
320	312125-0299		2	SCREW ISO 1207 M4X30 A4	
330	312605-0312		2	HEXAGON NUT, M6M M4 A280	
340	312605-0318		2	HEXAGON NUT, M6M M8 A280	
350	315105-0136		4	WASHER BRB4,3XRFR	
360	315105-0165		4	WASHER BRB8,4X16RFR	
370	315233-0110		1	WASHER CAPTIVE SEALING G1/4	
375	315237-0110		1	WASHER,PL.RND.AL.13,5/18,H=1,5	
380	315233-0111		1	WASHER CAPTIVE SEALING G3/8	
390	342700-0203		1	NIPPLES,HEXAGON,EXT.G-THREAD G3/8"-G1/4"	
420	312105-0368		4	SCREW M6S ISO 4017 M6X16 A480	
450	315105-0153		4	WASHER BRB6,4X12RFR	
480	342722-0202		1	PIPE COUPLING 1/8" D=6MM	
490	342991-0101		2	HOSE CLIP,WORM DRIVE TYPE (13)-16	
500	352103-0101		1	CABLE GLAND, ST 9, PR15,2/PG9	
510	346800-0109		1	SILENCER FILTER R1/8"	
520	352113-0101		1	CLIP STRIP, 92X2,5 MM	
530	352113-0205		1	ANCHOR PLATES FOR STRIPS, TYPE TM2S8-C10	
B2401	90274-0084		1	PRESSURE GUARD, 1800 KPA	

Pos	Part No	UN	Qty	Description	Page No

Machine Type | Group Description | Used-In | Group Number | Page No

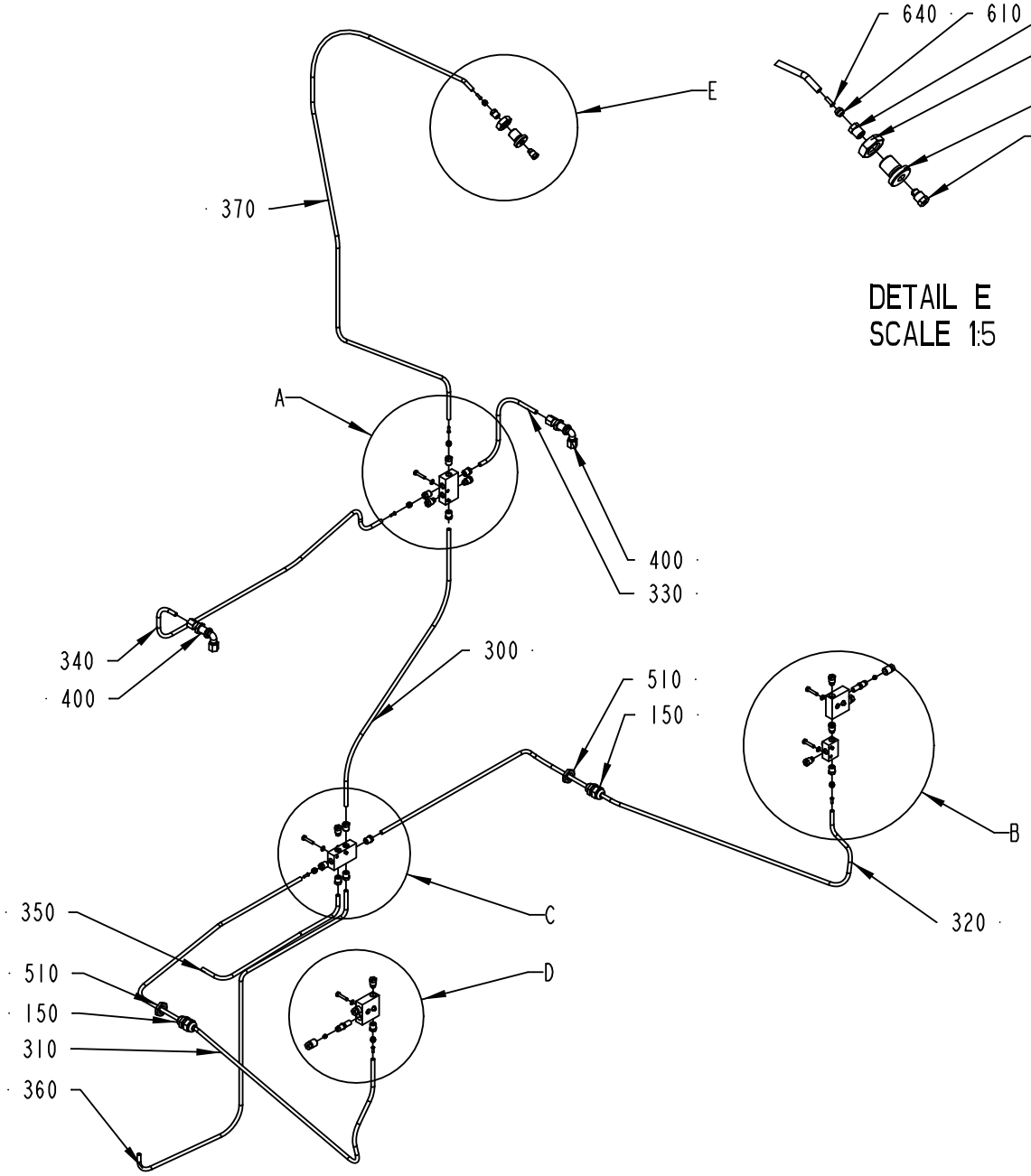

DETAIL E
SCALE 1:5

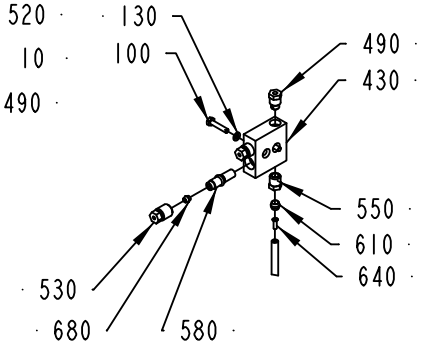

DETAIL D
SCALE 1:5

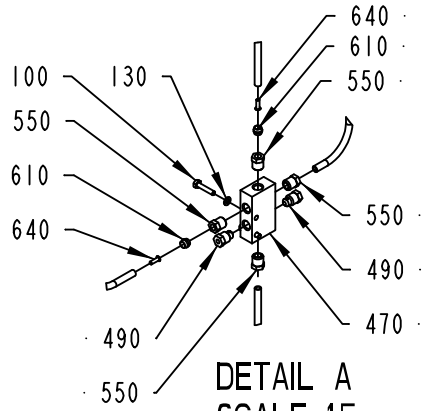

DETAIL A
SCALE 1:5

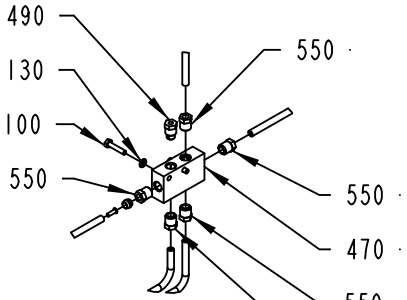

DETAIL C
SCALE 1:5

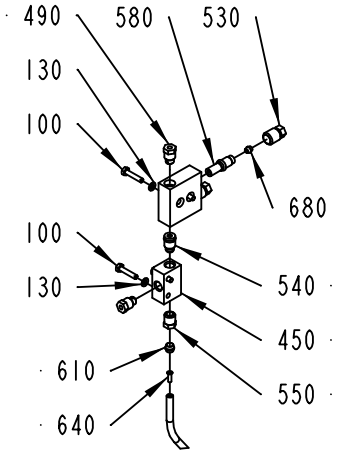

DETAIL B
SCALE 1:5

2504789-1
184089

ECM: 210342 - 20050621
Group number: 2504789-0100
Assembly Drawing: 2504789-1_1_AB

Pos	Part No	UN	Qty	Description	Page No
-					
010	2662012-0000		1	NIPPLE	
100	312105-0295		10	SCREW M6S ISO 4017 M4X20 A470	
130	315105-0136		10	WASHER BRB4,3XRFR	
150	352103-0101		2	CABLE GLAND, ST 9, PR15,2/PG9	
300	90166-0108	MM	550	TUBE 6 MM PA,TRANSP.	
310	90166-0108	MM	1700	TUBE 6 MM PA,TRANSP.	
320	90166-0108	MM	1100	TUBE 6 MM PA,TRANSP.	
330	90166-0108	MM	400	TUBE 6 MM PA,TRANSP.	
340	90166-0108	MM	1000	TUBE 6 MM PA,TRANSP.	
350	90166-0108	MM	500	TUBE 6 MM PA,TRANSP.	
360	90166-0108	MM	1000	TUBE 6 MM PA,TRANSP.	
370	90166-0108	MM	1800	TUBE 6 MM PA,TRANSP.	
400	90030-0219		2	CONN. ELBOW BULKHEAD WSV 6	
430	90032-0038		2	BLOCK 2 WAYS	
450	90032-0043		1	DISTRIBUTION BLOCK 3 WAYS	
470	90032-0046		2	DISTRIBUTION BLOCK 6 WAYS	
490	90087-0019		7	PLUG M10X1 STAINLESS	
510	90099-0104		2	NUT, PR 15,2 (PG9)	
520	90099-0131		1	NUT HEX. M16X2 SS	
530	90134-0040		4	BUSHING VALVE CONNECTION 4 MM	
540	90134-0054		1	BLOCK CONNECTION M10X1	
550	90134-0055		12	BUSHING/NUT INLET/OUTLET 6 MM	
580	90092-0053		4	METERING VALVE 30 MM3	
610	90028-0022		12	CONE TUBE 6 MM	
640	90134-0030		12	SLEEVE FOR PLASTIC TUBE	
680	90028-0021		4	CONE TUBE 4 MM	

Pos	Part No	UN	Qty	Description	Page No

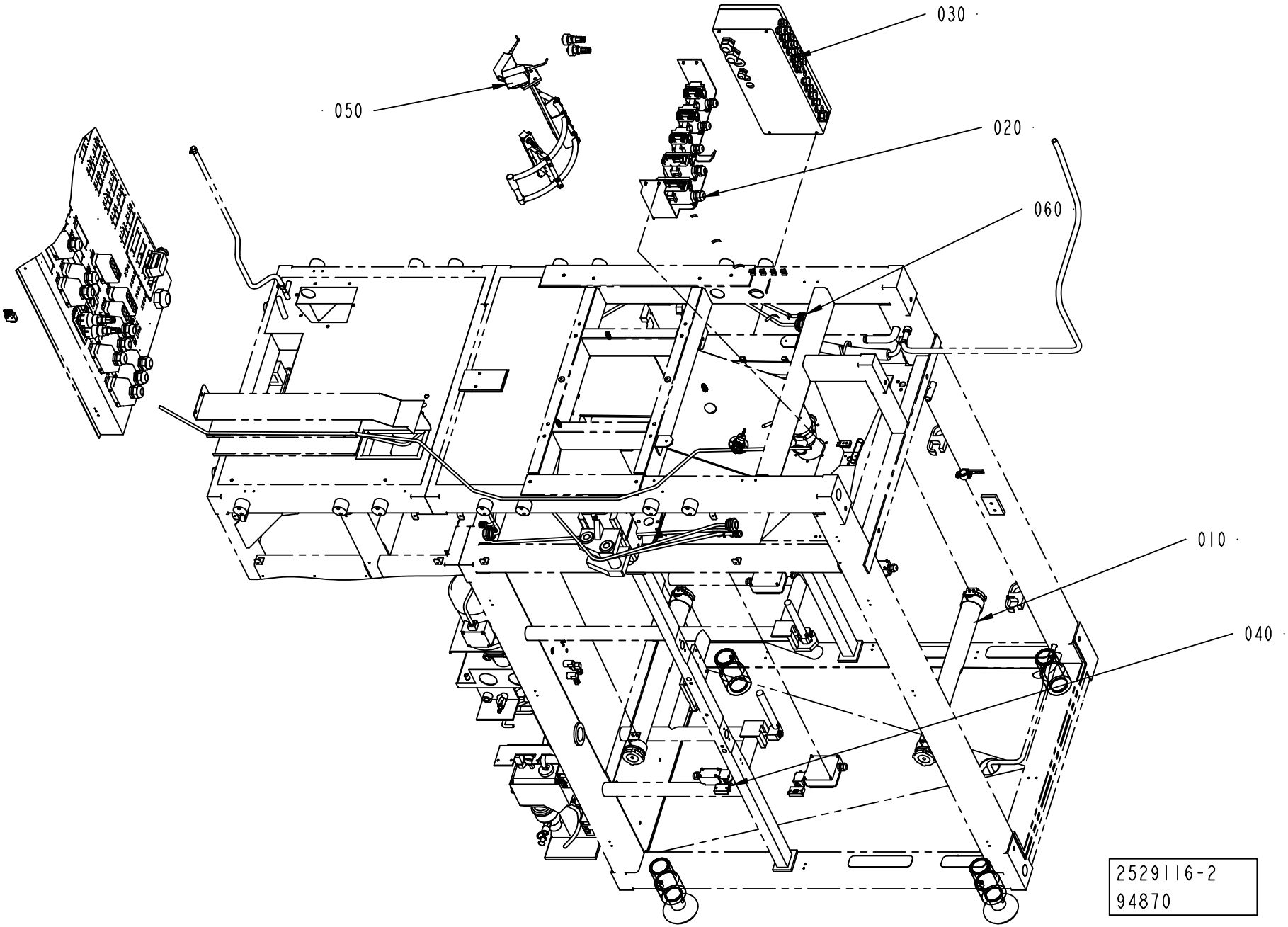
030
050
020
060
010
040
2529116-2
94870

ECM: 265701 - 20060702
Group number: 2529116-0100
Assembly Drawing: 2529116-2_1_AA

Pos	Part No	UN	Qty	Description	Page No
-					
010	2504790-0100		2	LIGHT FIXTURE	**2-93**
020	2506796-0100		1	CABLE CONNECTION	**2-95**
030	2527252-0100		1	CONNECTION BOX	**2-97**
040	2529117-0100		1	DOOR SAFETY SWITCH	**2-99**
050	1523216-0200		1	LEVEL CONTROL DEVICE	**2-101**
060	2529410-0100		1	CABLE HARNESS	**2-107, 2-109, 2-111**

Pos	Part No	UN	Qty	Description	Page No

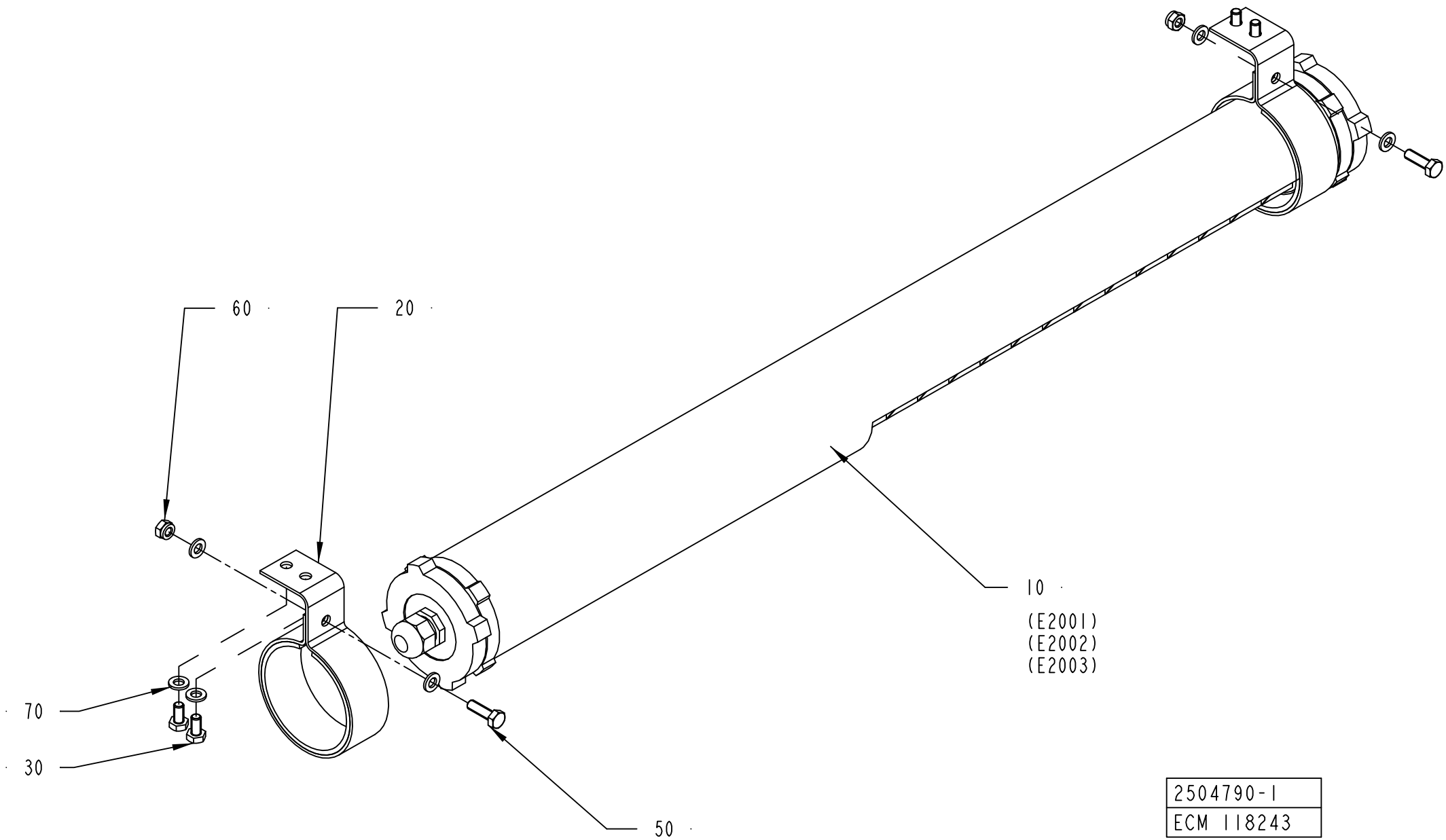

2504790-1
ECM 118243

ECM: 189766 - 20041104
Group number: 2504790-0100
Assembly Drawing: 2504790-1_1_AA

Pos	Part No	UN	Qty	Description	Page No
-					
010	90459-1000		1	LIGHT FIXTURE, RL 70CV-136	
020	1140129-0000		2	HOLDER	
030	312105-0366		4	SCREW M6S ISO 4017 M6X12 A480	
050	312105-0370		2	SCREW M6S ISO 4017 M6X20 A480	
060	312812-0316		2	HEXAGON NUT, NY-LOCK M6 A480	
070	315105-0153		8	WASHER BRB6,4X12RFR	

Pos	Part No	UN	Qty	Description	Page No

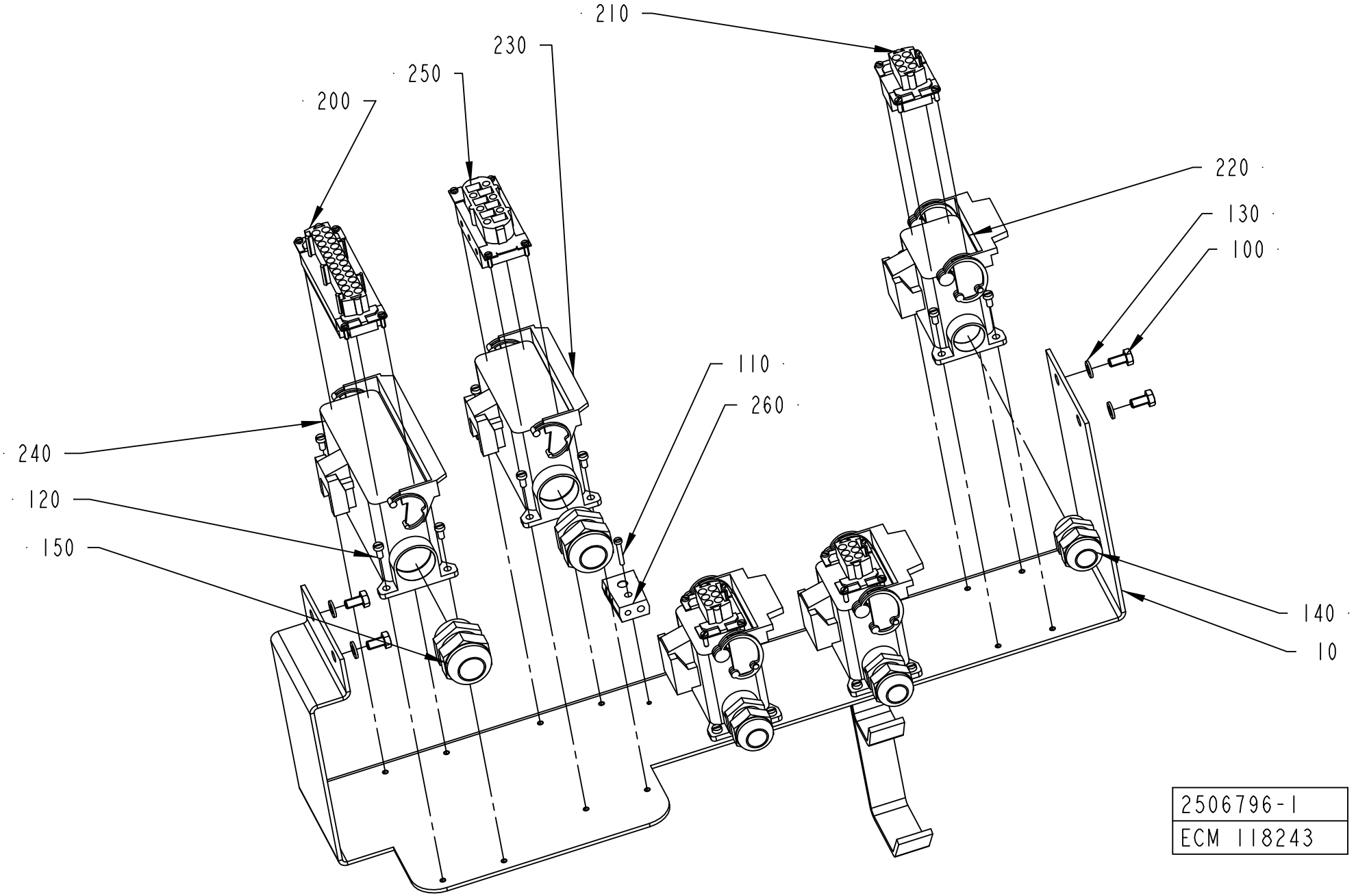
210
230
250
200
220
130
100
110
260
240
120
150
140
10
2506796-1
ECM 118243

ECM: 189767 - 20041104
Group number: 2506796-0100
Assembly Drawing: 2506796-1_1_AA

Pos	Part No	UN	Qty	Description	Page No
-					
010	2506920-0000		1	CANTILEVER	
100	312105-0366		4	SCREW M6S ISO 4017 M6X12 A480	
110	312125-0230		1	SCREW ISO 1207 M3X20 A4	
120	312125-0287		20	SCREW ISO 1207 M4X8 A4	
130	315105-0153		4	WASHER BRB6,4X12RFR	
140	352103-0111		3	CABLE GLAND, ST 16, PR22,5/PG16	
150	352103-0116		2	CABLE GLAND, ST 21, PR28,3/PG21	
200	90110-0151		1	FEMALE INSERT 24-POL 121130 0000	
210	90110-0163		3	FEMALE INSERT 70 300 0640 0	
220	90110-0221		3	CHASSIS HOUSING 310162-33	
230	90110-0224		1	CHASSIS HOUSING 310166-33	
240	90110-0225		1	CHASSIS HOUSING 310168-33	
250	90110-0247		1	FEMALE INSERT 70.200.0653.0	
260	90326-0020		1	PLUG, FEMALE YELLOW CR-AL	

Pos	Part No	UN	Qty	Description	Page No

CONNECTION BOX

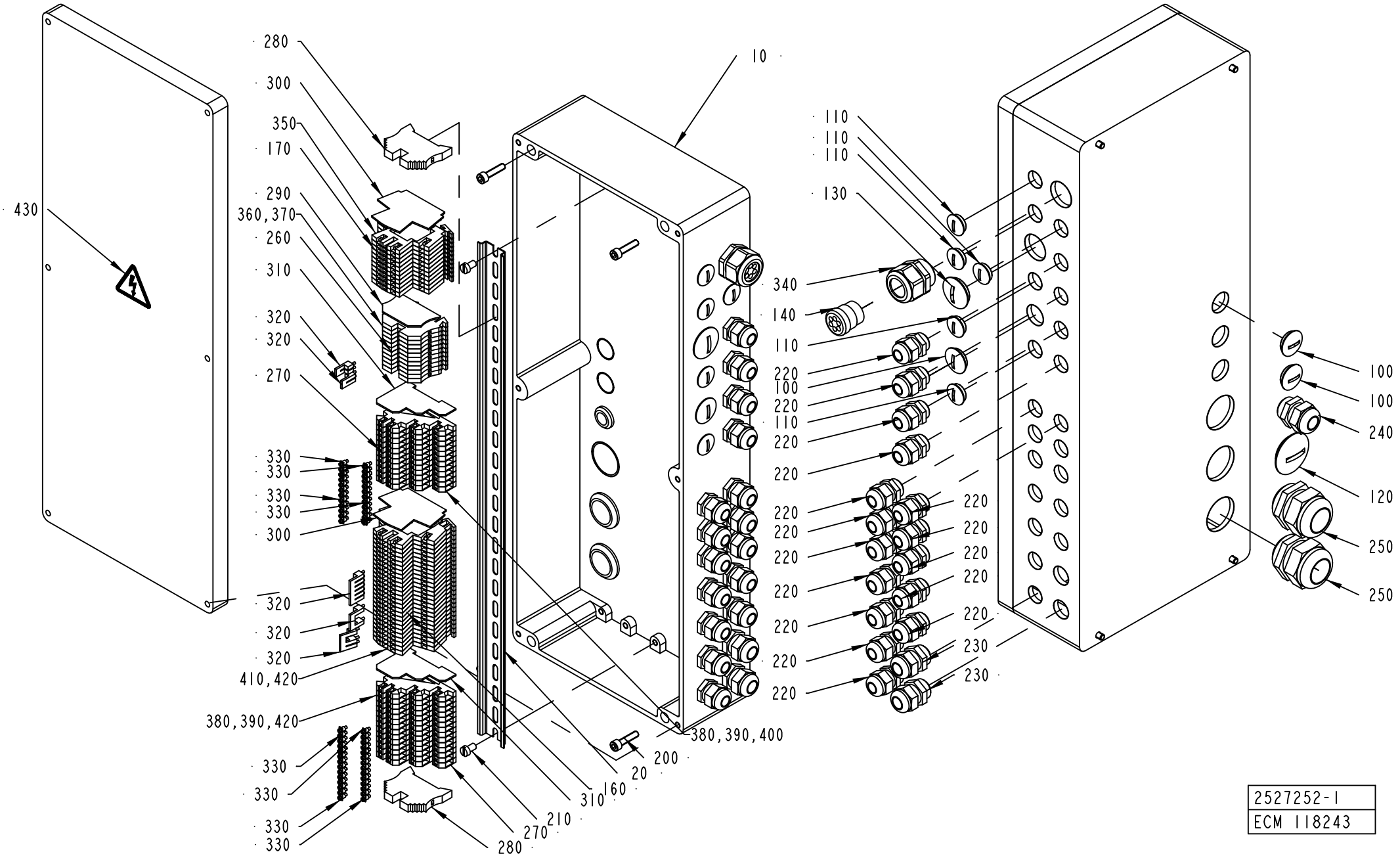

2527252-1
ECM 118243

ECM: 189768 - 20041104
Group number: 2527252-0100
Assembly Drawing: 2527252-1_1_AA

Pos	Part No	UN	Qty	Description	Page No
A3/FLEX					
100	90002-0004		3	BLANK-OFF PLUG, PR 22,5 SKINDICHT-BLK16	
110	90002-0009		5	BLANK-OFF PLUG, PR 18.6 SKINDICHT-BLK11	
200	312115-0372		4	SCREW ISO4762 M6X25 A4 80	
220	352103-0106		16	CABLE GLAND, ST 11, PR18,6/PG11	
240	352103-0110		1	CABLE GLAND, STR 16, PR22,5/PG16	
250	352103-0121		2	CABLE GLAND, ST 29, PR37,0/PG29	
270	353021-0301		26	TERMINALS,TRIPLE-LEVEL, DLI 2,5/35 PA	
400	359011-0811		2	MARKING PLATES 5-FW 201-2	
Common Parts					
010	2537111-0000		1	CONNECTION BOX	
020	1347878-0000		1	RAIL	
120	90002-0010		1	LANK-OFF PLUG, PR 37 SKINDICHT-BLK29	
130	90002-0012		1	BLANK-OFF PLUG, PR 28,3 SKINDICHT-BLK21	
140	90012-0125		1	GLAND FITTING	
160	90077-0113		26	FEED THROUGH TERMINAL, 10-00102150-1	
170	90458-1136		11	TERMINAL BLOCK, 103630	
210	312121-0364		2	SCREW ISO 1207 M6X10 4.8 - 5.8 Z.PL.	
230	352103-0108		2	CABLE GLAND, ST 13,5 , PR20,4/PG13,5	
260	353021-0212		11	FEED THROUGH TERMINAL, 10200.0	
280	353031-0203		2	END SUPPORT, WEW 35/2	
290	353032-0004		1	END PLATE WAP 2,5-10 BEIGE	
300	353032-0009		2	END PLATE, WAP FOR WDK	
310	353032-0301		2	END PLATE WAP, 13132.6	
320	353034-0030		4	BRIDGE CONNECTOR WQV 2,5/10, 10544.6	
330	353034-0404		8	BRIDGE CONNECTOR Q10, 13131.0	
340	353240-0005		1	GLAND W/O INSERT PG21 NORMAL	
350	359011-0834		1	SET OF SIGNS 6-GW(EARTH)	
360	359011-0807		1	MARKING PLATES 5-FW 1-50	
370	359011-0807		1	MARKING PLATES 5-FW 1-50	
380	359011-0817		1	SYMBOL 5-GW (+) 50PC	
390	359011-0818		1	SYMBOL 5-GW (-) 50PC	
410	359011-0824		2	SET OF SIGNS 6-FW 151-200	
420	359012-0800		2	TERMINAL MARKING LAB. KIT, BSFW, 101-15	
430	359705-0015		1	WARNING SIGN ISO, RISK OF ELECTRIC SHOCK	

Pos	Part No	UN	Qty	Description	Page No

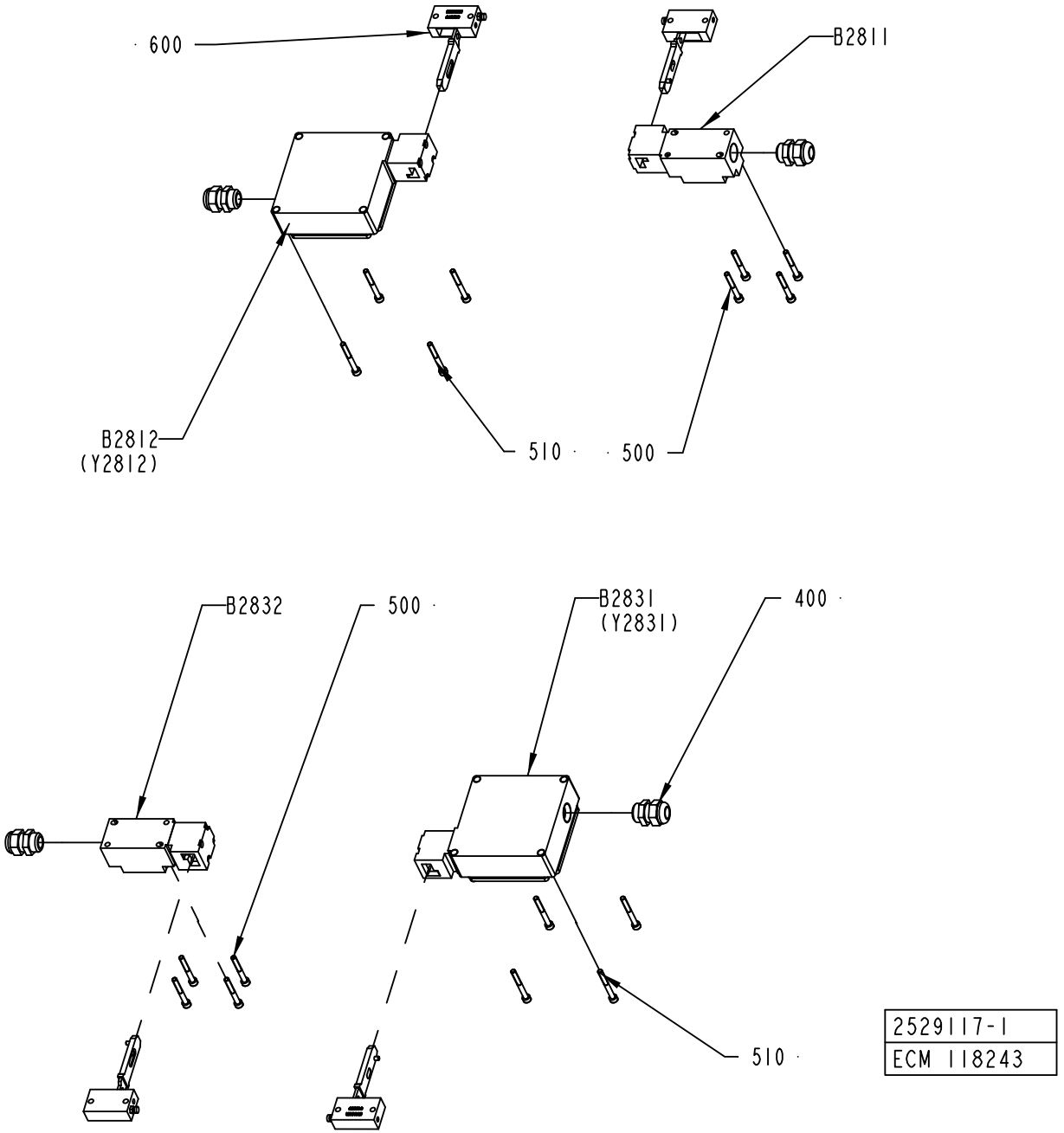
600
B2811
B2812
(Y2812)
510
500
B2832
500
B2831
(Y2831)
400
510
2529117-1
ECM 118243

ECM: 189769 - 20041104
Group number: 2529117-0100
Assembly Drawing: 2529117-1_1_AA

Pos	Part No	UN	Qty	Description	Page No
-					
400	352103-0108		4	CABLE GLAND, ST 13,5 , PR20,4/PG13,5	
500	312115-0339		8	SCREW ISO4762 M5X40 A4 80	
510	312115-0340		8	SCREW ISO4762 M5X45 A4 80	
600	90457-0194		4	KEY FOR SAF.SW.048850-C2052	
B2811	90044-0204		1	KEY SAF.SW. NZIVZ-538-E	
B2812	90457-0196		1	KEY SAF.SW. TZ2RE024PG RC1635	
B2831	90457-0196		1	KEY SAF.SW. TZ2RE024PG RC1635	
B2832	90044-0204		1	KEY SAF.SW. NZIVZ-538-E	

Pos	Part No	UN	Qty	Description	Page No

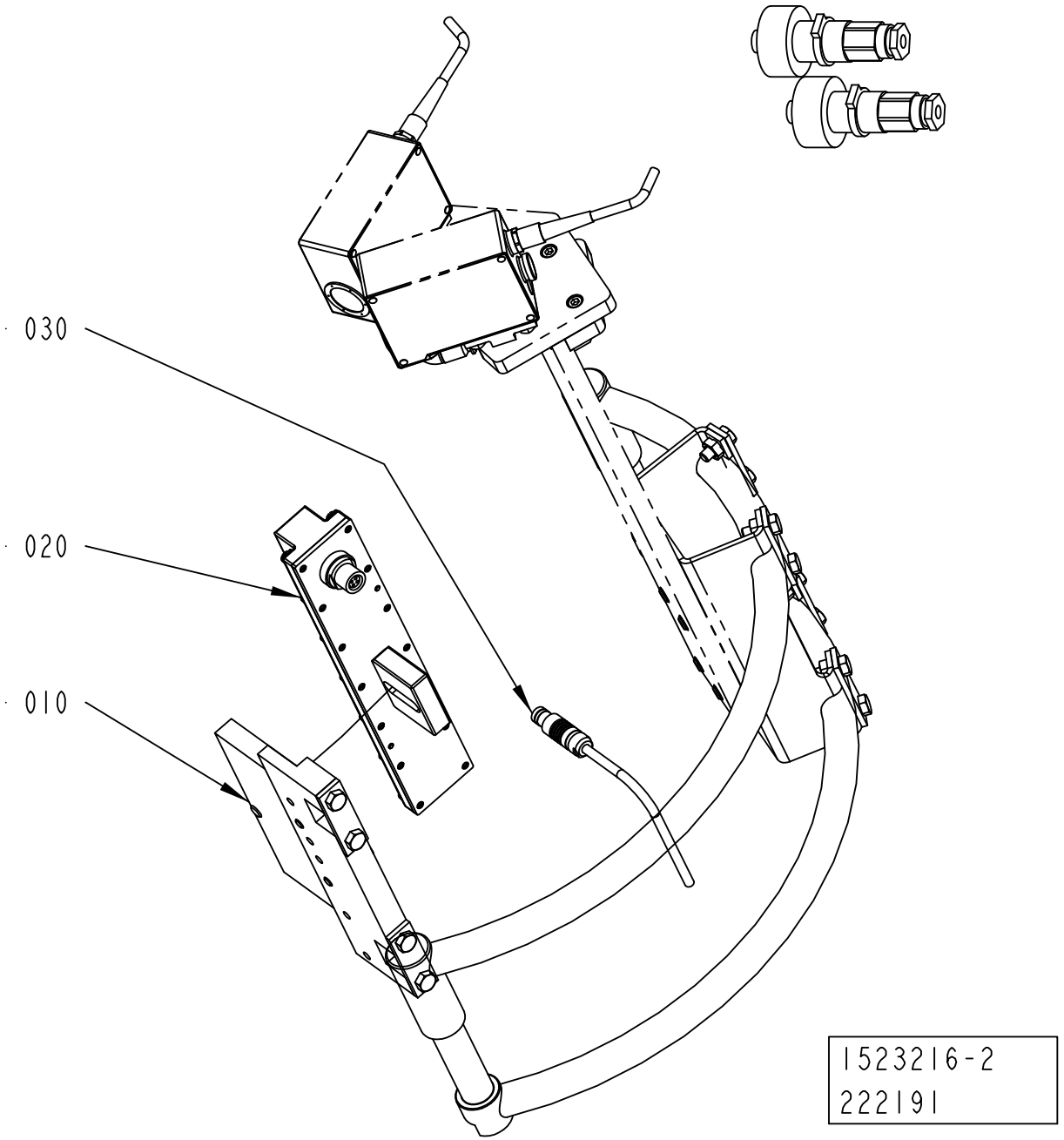
030
020
010
1523216-2
222191

ECM: 244364 - 20060701
Group number: 1523216-0200
Assembly Drawing: 1523216-2_1_AB

Pos	Part No	UN	Qty	Description	Page No
A3/FLEX					
010	1487338-0200		1	SUPPORT LEVEL DETECTOR	**2-103, 2-105**
Common Parts					
020	2697704-0000		1	LEVEL PROBE	
030	90459-4705		1	LOCKING PLUG, S 103 A 053-130+ AND 90220	
	90459-4707		*1*	*RECEPTACLE, MOD.DBEE 103 A 053-130*	

Pos	Part No	UN	Qty	Description	Page No

SUPPORT LEVEL DETECTOR

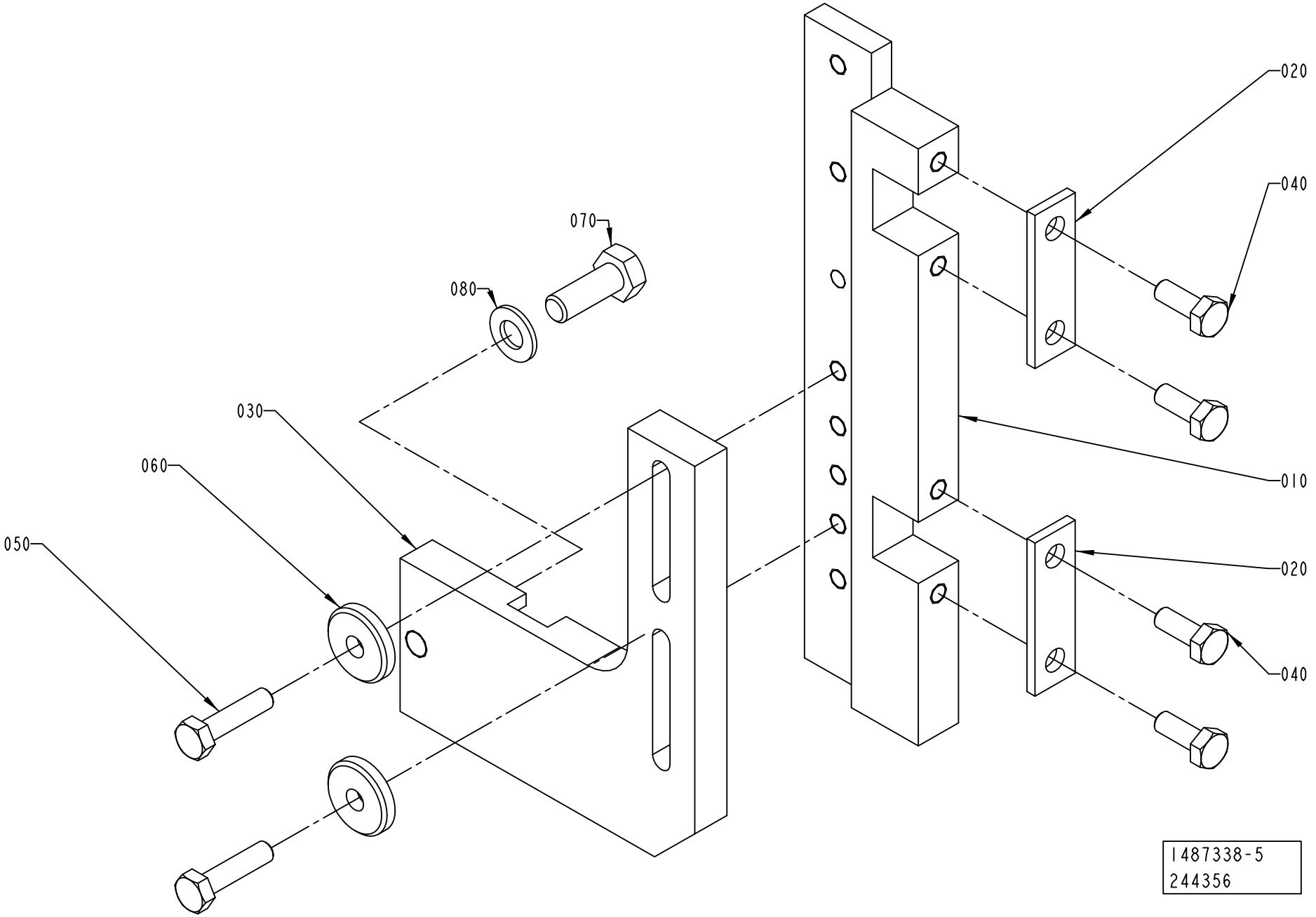

Pos	Part No	UN	Qty	Description	Page No
TBA 0330S, TBA 0200B, TBA 0250S, TBA 0200S, TBA 0200M, TBA 0250B, TBA 0200SQ, TPA 0250SQ, TPA 0330SQ, TPA 0200SQ, TPA 0500SQ, TBA 0250SQ (See drawing on page: 2-102)					
010	2715298-0000		1	BRACKET	
030	1348359-0000		1	BRACKET	
TBA 0500S, TBA 0500B, TBA 1000S, TBA 1000SQ, TBA 1000B, TBA 1500S, TPA 1000SQ NOQC (See drawing on page: 2-104)					
010	2715298-0000		1	BRACKET	
030	1317475-0000		1	BRACKET	
TBA 1890S, TBA 2000S (See drawing on page: 2-104)					
010	2715299-0000		1	BRACKET	
030	2656899-0000		1	BRACKET	
TPA 1000SQ QC, TPA 0750SQ QC (See drawing on page: 2-104)					
010	2715299-0000		1	BRACKET	
030	1317475-0000		1	BRACKET	
Common Parts					
020	1036673-0000		2	WASHER	
040	312105-0368		4	SCREW M6S ISO 4017 M6X16 A480	
050	312105-0372		2	SCREW M6S ISO 4017 M6X25 A480	
060	315125-0153		2	WASHER TBRSB 6,4X22X4 A4	
070	312105-0452		1	SCREW M6S ISO 4017 M8X22 A4 80	
080	315105-0165		1	WASHER BRB8,4X16RFR	

Pos	Part No	UN	Qty	Description	Page No

SUPPORT LEVEL DETECTOR

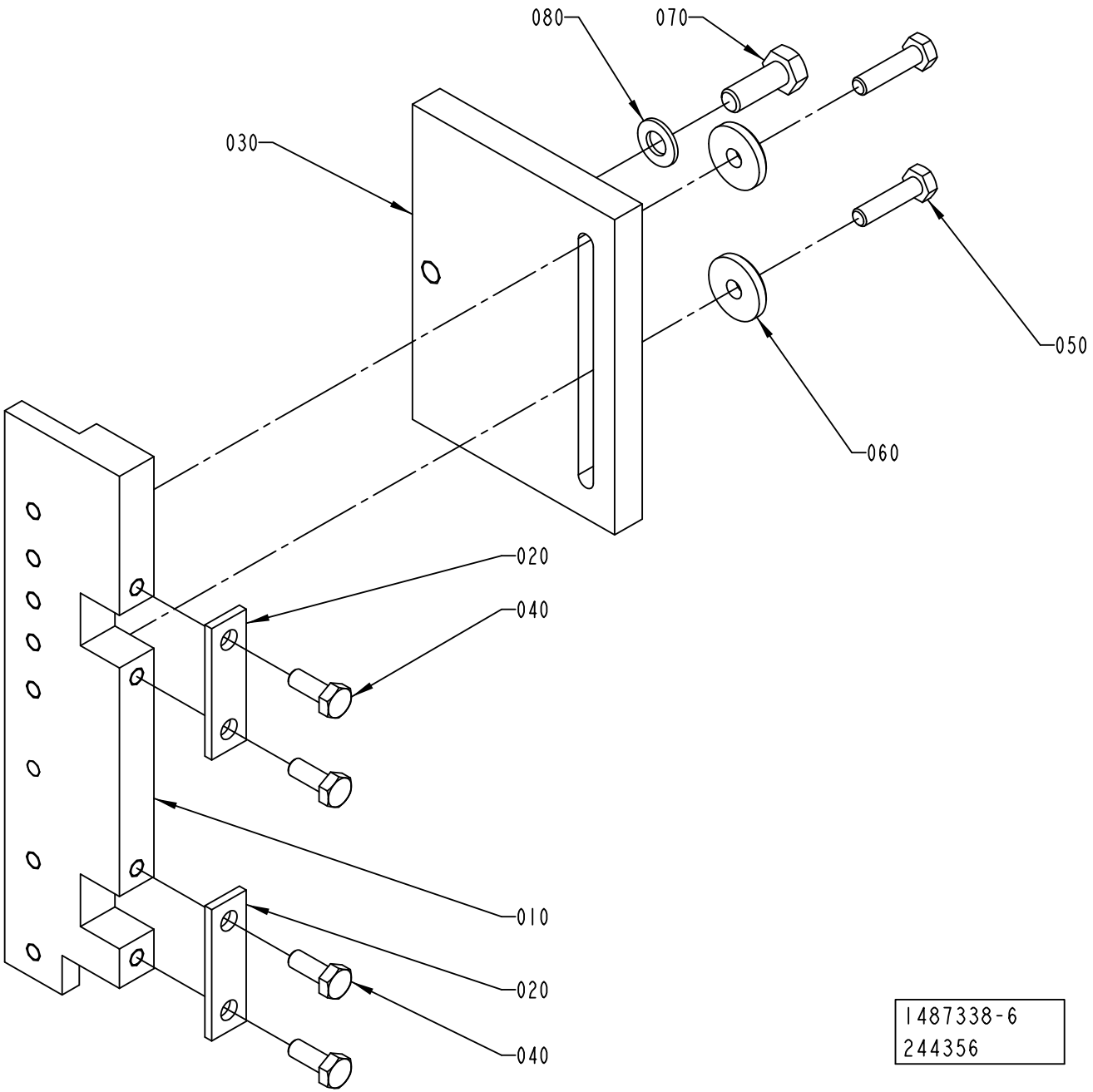

ECM: 267646 - 20060702
Group number: 1487338-0200
Assembly Drawing: 1487338-6_1_AA

This list covers pages from 2-102 to 2-105

Pos	Part No	UN	Qty	Description	Page No
TBA 0330S, TBA 0200B, TBA 0250S, TBA 0200S, TBA 0200M, TBA 0250B, TBA 0200SQ, TPA 0250SQ, TPA 0330SQ, TPA 0200SQ, TPA 0500SQ, TBA 0250SQ (See drawing on page: 2-102)					
010	2715298-0000		1	BRACKET	
030	1348359-0000		1	BRACKET	
TBA 0500S, TBA 0500B, TBA 1000S, TBA 1000SQ, TBA 1000B, TBA 1500S, TPA 1000SQ NOQC (See drawing on page: 2-104)					
010	2715298-0000		1	BRACKET	
030	1317475-0000		1	BRACKET	
TBA 1890S, TBA 2000S (See drawing on page: 2-104)					
010	2715299-0000		1	BRACKET	
030	2656899-0000		1	BRACKET	
TPA 1000SQ QC, TPA 0750SQ QC (See drawing on page: 2-104)					
010	2715299-0000		1	BRACKET	
030	1317475-0000		1	BRACKET	
Common Parts					
020	1036673-0000		2	WASHER	
040	312105-0368		4	SCREW M6S ISO 4017 M6X16 A480	
050	312105-0372		2	SCREW M6S ISO 4017 M6X25 A480	
060	315125-0153		2	WASHER TBRSB 6,4X22X4 A4	
070	312105-0452		1	SCREW M6S ISO 4017 M8X22 A4 80	
080	315105-0165		1	WASHER BRB8,4X16RFR	

Pos	Part No	UN	Qty	Description	Page No

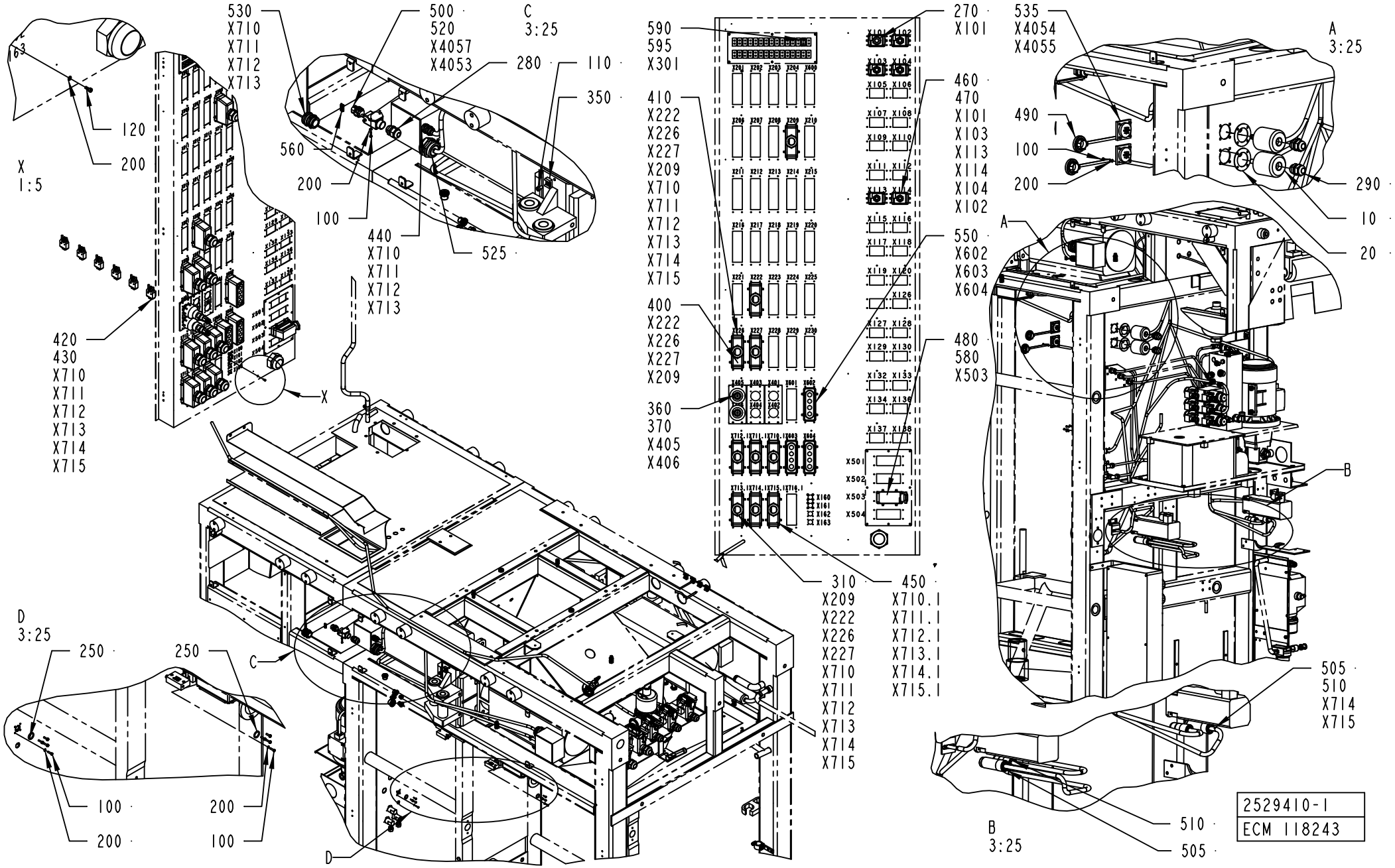
530
X710
X711
X712
X713
500
520
X4057
X4053
C
3:25
280
110
350
560
200
100
440
X710
X711
X712
X713
525
590
595
X301
410
X222
X226
X227
X209
X710
X711
X712
X713
X714
X715
400
X222
X226
X227
X209
360
370
X405
X406
270
X101
460
470
X101
X103
X113
X114
X104
X102
550
X602
X603
X604
480
580
X503
535
X4054
X4055
A
3:25
490
100
200
290
10
20
163
120
200
X
1:5
420
430
X710
X711
X712
X713
X714
X715
X
310
X209
X222
X226
X227
X710
X711
X712
X713
X714
X715
450
X710.1
X711.1
X712.1
X713.1
X714.1
X715.1
D
3:25
250
250
C
100
200
200
100
D
B
3:25
505
510
X714
X715
510
505
2529410-1
ECM 118243

ECM: 235719 - 20051017
Group number: 2529410-0100
Assembly Drawing: 2529410-1_1_AA

This list covers pages from 2-106 to 2-111

Pos	Part No	UN	Qty	Description	Page No
A3/FLEX (See drawing on pages: 2-106, 2-108, 2-110)					
010	1037673-0000		2	SLEEVE	
020	2529498-0000		2	GASKET	
250	315202-0211		2	O-RING 13,3X2,4 MM	
W2090	2540596-0003		1	COAXIAL CABLE	
W2091	2540596-0003		1	COAXIAL CABLE	
Common Parts					
100	312125-0226		20	SCREW ISO 1207 M3X12 A4	
110	312125-0364		17	SCREW ISO 1207 M6X10 A4	
120	312115-0222		8	SCREW ISO4762 M3X8 A4 80	
200	315105-0124		28	WASHER BRB3,2X6RFR	
270	352103-0110		1	CABLE GLAND, STR 16, PR22,5/PG16	
280	352103-0106		2	CABLE GLAND, ST 11, PR18,6/PG11	
290	352103-0108		8	CABLE GLAND, ST 13,5 , PR20,4/PG13,5	
300	352103-0120		6	CABLE GLAND, STR 29, PR37,0/PG29	
310	352103-0121		10	CABLE GLAND, ST 29, PR37,0/PG29	
350	352113-0204		17	ANCHOR PLATES FOR STRIPS, TYPE TM3S25-M	
360	90110-0235		2	CABLE CONTACT, PX0739/P	
370	90110-0348		2	CABLE SEALING, 12033/I, ELFA. 44-625-78	
400	90110-0150		4	MALE INSERT 121110 0000	
410	90110-0152		10	CABLE HOOD 24-POL 70.352.2428.1	
420	90110-0141		6	CONTACT UNIT, DE09P064TX	
430	90110-0144		6	COVER	
440	90100-0052		4	CONNECTOR KIT, FEEDBACK CABLE DRIVE END	
450	90110-0517		6	MALE INSERT 4+8 POLES 313102-33 CXM4/8	
460	90110-0157		6	CABLE HOOD 6-POL 70.352.0628.1	
470	90110-0159		6	MALE INSERT 70.310.0640.0	
480	90110-0156		1	MALE INSERT 70.210.0653.0	
490	90110-0349		2	JD TAMPA DE PLASTICO	
500	90110-0296		2	FEMALE INSERT HDC-HA-4BS 149840-B/2	
505	90458-0758		2	CONN.KIT MOTOR END WINDING C38/39/40	
510	90458-0759		2	CONN.KIT MOTOR END FEEDBACK C38/C39/C40	
520	90110-0370		2	BASE HOUSING	
525	90458-0757		4	MOTOR END STRAIN RELIEF HPG29 13 20MM	
530	90100-0045		8	CABLE GLAND, MOTOR END 9032 010 806	
535	90110-0236		2	CHASSIS CONTACT PX0767/S	
550	90110-0381		3	COVER, 310601-33 CYR24.4	
560	90110-0385		1	MARKING HOLDER, 4.242.3853.0	
580	90110-0244		1	CABLE HOOD 6-POL 70.350.1628.0	
590	90326-0022		2	PLUG, MALE YELLOW CR-AL	
595	90326-0020		2	PLUG, FEMALE YELLOW CR-AL	
650	359005-0010		11	MARKING LABEL KIT 0 - 9, 04.841.2150.0	
660	359005-0050		11	MARKING LABEL KIT X, 04.841.4550.0	
670	90110-0385		12	MARKING HOLDER, 4.242.3853.0	
W2001	351150-0425	MM	5500	CABLE OLFLEX 25X0,75 MM2 LIGHT/GREY	
W2002	351150-0425	MM	5500	CABLE OLFLEX 25X0,75 MM2 LIGHT/GREY	
W2003	351150-0166	MM	4500	CABLE OLFLEX 4X4 MM2 LIGHT/GREY	
W2005	351150-0412	MM	7000	CABLE OLFLEX 3X1,5 MM2 LIGHT/GREY	
W2007	351150-0418	MM	6200	CABLE OLFLEX 4X2,5 MM2 LIGHT/GREY	
W2008	351150-0418	MM	6200	CABLE OLFLEX 4X2,5 MM2 LIGHT/GREY	
W2009	351150-0418	MM	7000	CABLE OLFLEX 4X2,5 MM2 LIGHT/GREY	
W2050	351150-0425	MM	5500	CABLE OLFLEX 25X0,75 MM2 LIGHT/GREY	
W2055	90220-0034	MM	7500	THERMOCABLE TEX/SITW-20F-KX 2X0,5MM2	
W2071	351150-0412	MM	4500	CABLE OLFLEX 3X1,5 MM2 LIGHT/GREY	
W2072	351150-0412	MM	4500	CABLE OLFLEX 3X1,5 MM2 LIGHT/GREY	
W2211	351150-0412	MM	6000	CABLE OLFLEX 3X1,5 MM2 LIGHT/GREY	
W2225	351150-0405	MM	6500	CABLE OLFLEX 5X0,75 MM2 LIGHT/GREY	
W2226	351150-0406	MM	6500	CABLE OLFLEX 7X0,75 MM2 LIGHT/GREY	
W2230	351150-0405	MM	7500	CABLE OLFLEX 5X0,75 MM2 LIGHT/GREY	
W2231	351150-0406	MM	7500	CABLE OLFLEX 7X0,75 MM2 LIGHT/GREY	
W2232	351150-0406	MM	8000	CABLE OLFLEX 7X0,75 MM2 LIGHT/GREY	
W2235	351150-0403	MM	2500	CABLE OLFLEX 3X0,75 MM2 LIGHT/GREY	
W2244	351150-0412	MM	6000	CABLE OLFLEX 3X1,5 MM2 LIGHT/GREY	
W2270	90220-0091	MM	7000	PAIR TWISTED CABLE 2X2X0,25MM2	
W2271	90220-0091	MM	7000	PAIR TWISTED CABLE 2X2X0,25MM2	
W2710	90220-0125	MM	4400	MOTOR CABLE 4X4,0+2X1,0+2X0,75+SHIELD	
W2711	90220-0125	MM	4200	MOTOR CABLE 4X4,0+2X1,0+2X0,75+SHIELD	
W2712	90220-0125	MM	4100	MOTOR CABLE 4X4,0+2X1,0+2X0,75+SHIELD	
W2713	90220-0125	MM	4300	MOTOR CABLE 4X4,0+2X1,0+2X0,75+SHIELD	
W2714	90220-0116	MM	4600	MOTOR CABLE 4X1,0+2(2X0,5)+SHIELD	
W2715	90220-0116	MM	4700	MOTOR CABLE 4X1,0+2(2X0,5)+SHIELD	
W2720	90220-0131	MM	6600	PAIR TWISTED CABLE 3X2X0,25MM2	
W2721	90220-0131	MM	6500	PAIR TWISTED CABLE 3X2X0,25MM2	
W2722	90220-0131	MM	6500	PAIR TWISTED CABLE 3X2X0,25MM2	
W2723	90220-0131	MM	6600	PAIR TWISTED CABLE 3X2X0,25MM2	
W2724	90220-0131	MM	7100	PAIR TWISTED CABLE 3X2X0,25MM2	
W2725	90220-0131	MM	7100	PAIR TWISTED CABLE 3X2X0,25MM2	
W4016	90220-0165	MM	8200	SCR. CABLE 5X0,34MM2	
W4017	90220-0165	MM	8200	SCR. CABLE 5X0,34MM2	
W4052	351150-0403	MM	3200	CABLE OLFLEX 3X0,75 MM2 LIGHT/GREY	
W4053	351150-0404	MM	3200	CABLE OLFLEX 4X0,75 MM2 LIGHT/GREY	

Machine Type	Group Description	Used-In	Group Number	Page No

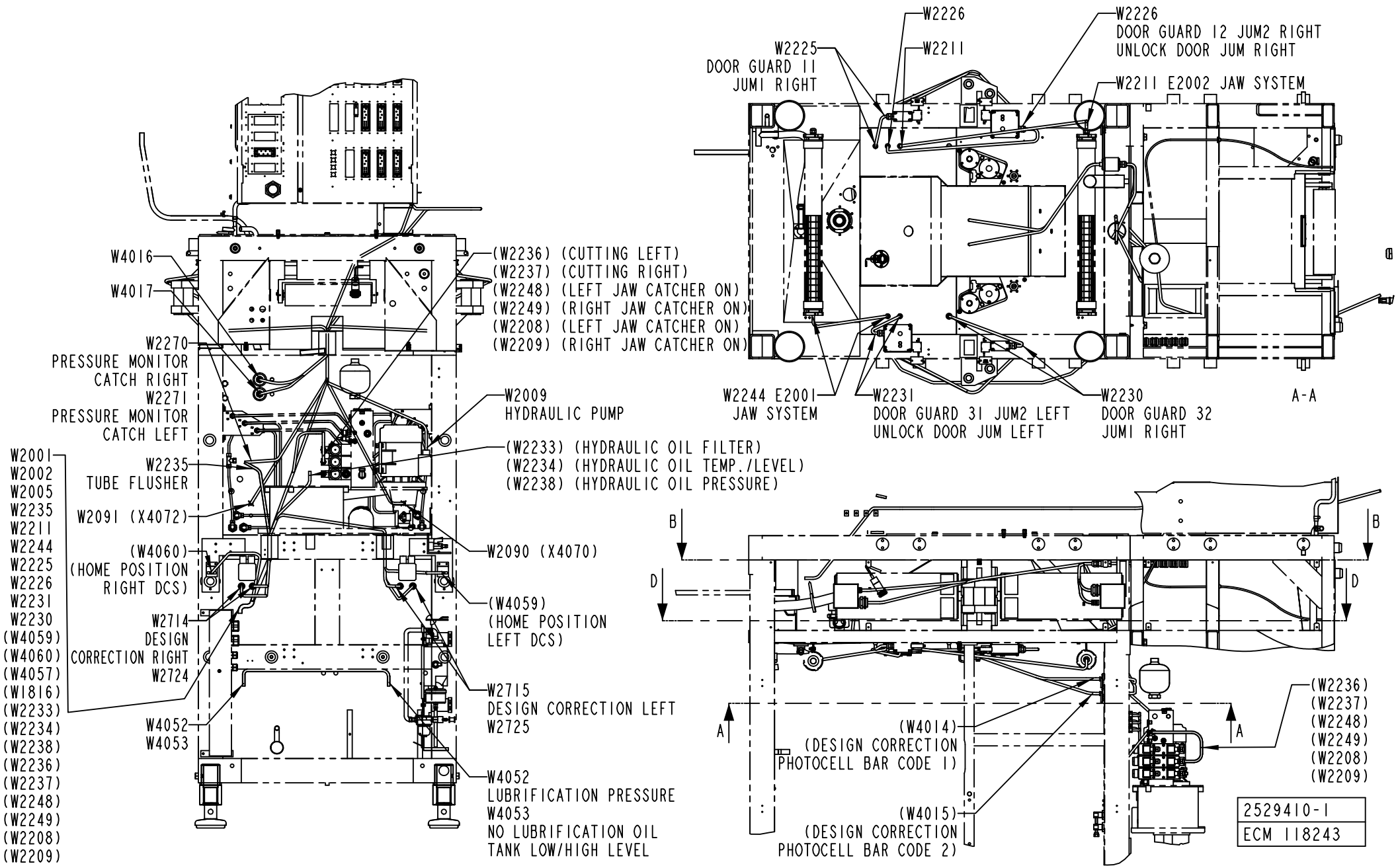
W2226
W2225
DOOR GUARD 11
JUMI RIGHT
W2211
W2226
DOOR GUARD 12 JUM2 RIGHT
UNLOCK DOOR JUM RIGHT
W2211 E2002 JAW SYSTEM
W4016
W4017
(W2236) (CUTTING LEFT)
(W2237) (CUTTING RIGHT)
(W2248) (LEFT JAW CATCHER ON)
(W2249) (RIGHT JAW CATCHER ON)
(W2208) (LEFT JAW CATCHER ON)
(W2209) (RIGHT JAW CATCHER ON)
W2270
PRESSURE MONITOR
CATCH RIGHT
W2271
PRESSURE MONITOR
CATCH LEFT
W2009
HYDRAULIC PUMP
W2244 E2001
JAW SYSTEM
W2231
DOOR GUARD 31 JUM2 LEFT
UNLOCK DOOR JUM LEFT
W2230
DOOR GUARD 32
JUMI RIGHT
A-A
W2001
W2002
W2005
W2235
W2211
W2244
W2225
W2226
W2231
W2230
(W4059)
(W4060)
(W4057)
(W1816)
(W2233)
(W2234)
(W2238)
(W2236)
(W2237)
(W2248)
(W2249)
(W2208)
(W2209)
W2235
TUBE FLUSHER
(W2233) (HYDRAULIC OIL FILTER)
(W2234) (HYDRAULIC OIL TEMP./LEVEL)
(W2238) (HYDRAULIC OIL PRESSURE)
W2091 (X4072)
(W4060)
(HOME POSITION
RIGHT DCS)
W2090 (X4070)
(W4059)
(HOME POSITION
LEFT DCS)
W2714
DESIGN
CORRECTION RIGHT
W2724
W2715
DESIGN CORRECTION LEFT
W2725
W4052
W4053
W4052
LUBRIFICATION PRESSURE
W4053
NO LUBRIFICATION OIL
TANK LOW/HIGH LEVEL
B
D
A
(W4014)
(DESIGN CORRECTION
PHOTOCELL BAR CODE 1)
(W4015)
(DESIGN CORRECTION
PHOTOCELL BAR CODE 2)
(W2236)
(W2237)
(W2248)
(W2249)
(W2208)
(W2209)
2529410-1
ECM 118243

ECM: 235719 - 20051017
Group number: 2529410-0100
Assembly Drawing: 2529410-1_2_AA

This list covers pages from 2-106 to 2-111

Pos	Part No	UN	Qty	Description	Page No
A3/FLEX (See drawing on pages: 2-106, 2-108, 2-110)					
010	1037673-0000		2	SLEEVE	
020	2529498-0000		2	GASKET	
250	315202-0211		2	O-RING 13,3X2,4 MM	
W2090	2540596-0003		1	COAXIAL CABLE	
W2091	2540596-0003		1	COAXIAL CABLE	
Common Parts					
100	312125-0226		20	SCREW ISO 1207 M3X12 A4	
110	312125-0364		17	SCREW ISO 1207 M6X10 A4	
120	312115-0222		8	SCREW ISO4762 M3X8 A4 80	
200	315105-0124		28	WASHER BRB3,2X6RFR	
270	352103-0110		1	CABLE GLAND, STR 16, PR22,5/PG16	
280	352103-0106		2	CABLE GLAND, ST 11, PR18,6/PG11	
290	352103-0108		8	CABLE GLAND, ST 13,5 , PR20,4/PG13,5	
300	352103-0120		6	CABLE GLAND, STR 29, PR37,0/PG29	
310	352103-0121		10	CABLE GLAND, ST 29, PR37,0/PG29	
350	352113-0204		17	ANCHOR PLATES FOR STRIPS, TYPE TM3S25-M	
360	90110-0235		2	CABLE CONTACT, PX0739/P	
370	90110-0348		2	CABLE SEALING, 12033/I, ELFA. 44-625-78	
400	90110-0150		4	MALE INSERT 121110 0000	
410	90110-0152		10	CABLE HOOD 24-POL 70.352.2428.1	
420	90110-0141		6	CONTACT UNIT, DE09P064TX	
430	90110-0144		6	COVER	
440	90100-0052		4	CONNECTOR KIT, FEEDBACK CABLE DRIVE END	
450	90110-0517		6	MALE INSERT 4+8 POLES 313102-33 CXM4/8	
460	90110-0157		6	CABLE HOOD 6-POL 70.352.0628.1	
470	90110-0159		6	MALE INSERT 70.310.0640.0	
480	90110-0156		1	MALE INSERT 70.210.0653.0	
490	90110-0349		2	JD TAMPA DE PLASTICO	
500	90110-0296		2	FEMALE INSERT HDC-HA-4BS 149840-B/2	
505	90458-0758		2	CONN.KIT MOTOR END WINDING C38/39/40	
510	90458-0759		2	CONN.KIT MOTOR END FEEDBACK C38/C39/C40	
520	90110-0370		2	BASE HOUSING	
525	90458-0757		4	MOTOR END STRAIN RELIEF HPG29 13 20MM	
530	90100-0045		8	CABLE GLAND, MOTOR END 9032 010 806	
535	90110-0236		2	CHASSIS CONTACT PX0767/S	
550	90110-0381		3	COVER, 310601-33 CYR24.4	
560	90110-0385		1	MARKING HOLDER, 4.242.3853.0	
580	90110-0244		1	CABLE HOOD 6-POL 70.350.1628.0	
590	90326-0022		2	PLUG, MALE YELLOW CR-AL	
595	90326-0020		2	PLUG, FEMALE YELLOW CR-AL	
650	359005-0010		11	MARKING LABEL KIT 0 - 9, 04.841.2150.0	
660	359005-0050		11	MARKING LABEL KIT X, 04.841.4550.0	
670	90110-0385		12	MARKING HOLDER, 4.242.3853.0	
W2001	351150-0425	MM	5500	CABLE OLFLEX 25X0,75 MM2 LIGHT/GREY	
W2002	351150-0425	MM	5500	CABLE OLFLEX 25X0,75 MM2 LIGHT/GREY	
W2003	351150-0166	MM	4500	CABLE OLFLEX 4X4 MM2 LIGHT/GREY	
W2005	351150-0412	MM	7000	CABLE OLFLEX 3X1,5 MM2 LIGHT/GREY	
W2007	351150-0418	MM	6200	CABLE OLFLEX 4X2,5 MM2 LIGHT/GREY	
W2008	351150-0418	MM	6200	CABLE OLFLEX 4X2,5 MM2 LIGHT/GREY	
W2009	351150-0418	MM	7000	CABLE OLFLEX 4X2,5 MM2 LIGHT/GREY	
W2050	351150-0425	MM	5500	CABLE OLFLEX 25X0,75 MM2 LIGHT/GREY	
W2055	90220-0034	MM	7500	THERMOCABLE TEX/SITW-20F-KX 2X0,5MM2	
W2071	351150-0412	MM	4500	CABLE OLFLEX 3X1,5 MM2 LIGHT/GREY	
W2072	351150-0412	MM	4500	CABLE OLFLEX 3X1,5 MM2 LIGHT/GREY	
W2211	351150-0412	MM	6000	CABLE OLFLEX 3X1,5 MM2 LIGHT/GREY	
W2225	351150-0405	MM	6500	CABLE OLFLEX 5X0,75 MM2 LIGHT/GREY	
W2226	351150-0406	MM	6500	CABLE OLFLEX 7X0,75 MM2 LIGHT/GREY	
W2230	351150-0405	MM	7500	CABLE OLFLEX 5X0,75 MM2 LIGHT/GREY	
W2231	351150-0406	MM	7500	CABLE OLFLEX 7X0,75 MM2 LIGHT/GREY	
W2232	351150-0406	MM	8000	CABLE OLFLEX 7X0,75 MM2 LIGHT/GREY	
W2235	351150-0403	MM	2500	CABLE OLFLEX 3X0,75 MM2 LIGHT/GREY	
W2244	351150-0412	MM	6000	CABLE OLFLEX 3X1,5 MM2 LIGHT/GREY	
W2270	90220-0091	MM	7000	PAIR TWISTED CABLE 2X2X0,25MM2	
W2271	90220-0091	MM	7000	PAIR TWISTED CABLE 2X2X0,25MM2	
W2710	90220-0125	MM	4400	MOTOR CABLE 4X4,0+2X1,0+2X0,75+SHIELD	
W2711	90220-0125	MM	4200	MOTOR CABLE 4X4,0+2X1,0+2X0,75+SHIELD	
W2712	90220-0125	MM	4100	MOTOR CABLE 4X4,0+2X1,0+2X0,75+SHIELD	
W2713	90220-0125	MM	4300	MOTOR CABLE 4X4,0+2X1,0+2X0,75+SHIELD	
W2714	90220-0116	MM	4600	MOTOR CABLE 4X1,0+2(2X0,5)+SHIELD	
W2715	90220-0116	MM	4700	MOTOR CABLE 4X1,0+2(2X0,5)+SHIELD	
W2720	90220-0131	MM	6600	PAIR TWISTED CABLE 3X2X0,25MM2	
W2721	90220-0131	MM	6500	PAIR TWISTED CABLE 3X2X0,25MM2	
W2722	90220-0131	MM	6500	PAIR TWISTED CABLE 3X2X0,25MM2	
W2723	90220-0131	MM	6600	PAIR TWISTED CABLE 3X2X0,25MM2	
W2724	90220-0131	MM	7100	PAIR TWISTED CABLE 3X2X0,25MM2	
W2725	90220-0131	MM	7100	PAIR TWISTED CABLE 3X2X0,25MM2	
W4016	90220-0165	MM	8200	SCR. CABLE 5X0,34MM2	
W4017	90220-0165	MM	8200	SCR. CABLE 5X0,34MM2	
W4052	351150-0403	MM	3200	CABLE OLFLEX 3X0,75 MM2 LIGHT/GREY	
W4053	351150-0404	MM	3200	CABLE OLFLEX 4X0,75 MM2 LIGHT/GREY	

Machine Type | Group Description | Used-In | Group Number | Page No

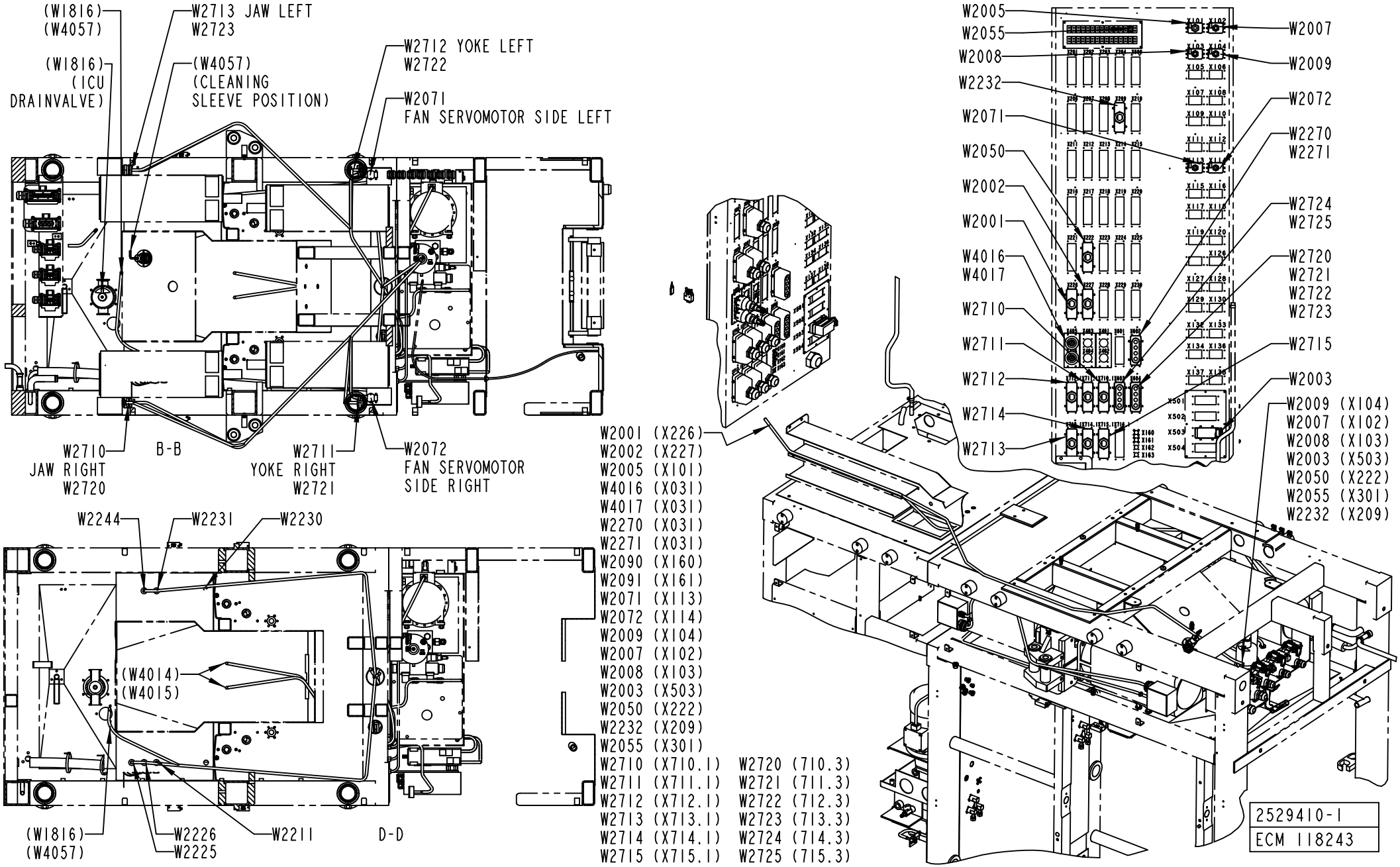
(W1816)
(W4057)
W2713 JAW LEFT
W2723
(W1816)
(ICU
DRAINVALVE)
(W4057)
(CLEANING
SLEEVE POSITION)
W2712 YOKE LEFT
W2722
W2071
FAN SERVOMOTOR SIDE LEFT
W2710
JAW RIGHT
W2720
B-B
W2711
YOKE RIGHT
W2721
W2072
FAN SERVOMOTOR
SIDE RIGHT
W2244
W2231
W2230
(W4014)
(W4015)
(W1816)
(W4057)
W2226
W2225
W2211
D-D
W2001 (X226)
W2002 (X227)
W2005 (X101)
W4016 (X031)
W4017 (X031)
W2270 (X031)
W2271 (X031)
W2090 (X160)
W2091 (X161)
W2071 (X113)
W2072 (X114)
W2009 (X104)
W2007 (X102)
W2008 (X103)
W2003 (X503)
W2050 (X222)
W2232 (X209)
W2055 (X301)
W2710 (X710.1) W2720 (710.3)
W2711 (X711.1) W2721 (711.3)
W2712 (X712.1) W2722 (712.3)
W2713 (X713.1) W2723 (713.3)
W2714 (X714.1) W2724 (714.3)
W2715 (X715.1) W2725 (715.3)
W2005
W2055
W2008
W2232
W2071
W2050
W2002
W2001
W4016
W4017
W2710
W2711
W2712
W2714
W2713
W2007
W2009
W2072
W2270
W2271
W2724
W2725
W2720
W2721
W2722
W2723
W2715
W2003
W2009 (X104)
W2007 (X102)
W2008 (X103)
W2003 (X503)
W2050 (X222)
W2055 (X301)
W2232 (X209)
2529410-1
ECM 118243

ECM: 235719 - 20051017
Group number: 2529410-0100
Assembly Drawing: 2529410-1_3_AA

This list covers pages from 2-106 to 2-111

Pos	Part No	UN	Qty	Description	Page No
A3/FLEX (See drawing on pages: 2-106, 2-108, 2-110)					
010	1037673-0000		2	SLEEVE	
020	2529498-0000		2	GASKET	
250	315202-0211		2	O-RING 13,3X2,4 MM	
W2090	2540596-0003		1	COAXIAL CABLE	
W2091	2540596-0003		1	COAXIAL CABLE	
Common Parts					
100	312125-0226		20	SCREW ISO 1207 M3X12 A4	
110	312125-0364		17	SCREW ISO 1207 M6X10 A4	
120	312115-0222		8	SCREW ISO4762 M3X8 A4 80	
200	315105-0124		28	WASHER BRB3,2X6RFR	
270	352103-0110		1	CABLE GLAND, STR 16, PR22,5/PG16	
280	352103-0106		2	CABLE GLAND, ST 11, PR18,6/PG11	
290	352103-0108		8	CABLE GLAND, ST 13,5 , PR20,4/PG13,5	
300	352103-0120		6	CABLE GLAND, STR 29, PR37,0/PG29	
310	352103-0121		10	CABLE GLAND, ST 29, PR37,0/PG29	
350	352113-0204		17	ANCHOR PLATES FOR STRIPS, TYPE TM3S25-M	
360	90110-0235		2	CABLE CONTACT, PX0739/P	
370	90110-0348		2	CABLE SEALING, 12033/I, ELFA. 44-625-78	
400	90110-0150		4	MALE INSERT 121110 0000	
410	90110-0152		10	CABLE HOOD 24-POL 70.352.2428.1	
420	90110-0141		6	CONTACT UNIT, DE09P064TX	
430	90110-0144		6	COVER	
440	90100-0052		4	CONNECTOR KIT, FEEDBACK CABLE DRIVE END	
450	90110-0517		6	MALE INSERT 4+8 POLES 313102-33 CXM4/8	
460	90110-0157		6	CABLE HOOD 6-POL 70.352.0628.1	
470	90110-0159		6	MALE INSERT 70.310.0640.0	
480	90110-0156		1	MALE INSERT 70.210.0653.0	
490	90110-0349		2	JD TAMPA DE PLASTICO	
500	90110-0296		2	FEMALE INSERT HDC-HA-4BS 149840-B/2	
505	90458-0758		2	CONN.KIT MOTOR END WINDING C38/39/40	
510	90458-0759		2	CONN.KIT MOTOR END FEEDBACK C38/C39/C40	
520	90110-0370		2	BASE HOUSING	
525	90458-0757		4	MOTOR END STRAIN RELIEF HPG29 13 20MM	
530	90100-0045		8	CABLE GLAND, MOTOR END 9032 010 806	
535	90110-0236		2	CHASSIS CONTACT PX0767/S	
550	90110-0381		3	COVER, 310601-33 CYR24.4	
560	90110-0385		1	MARKING HOLDER, 4.242.3853.0	
580	90110-0244		1	CABLE HOOD 6-POL 70.350.1628.0	
590	90326-0022		2	PLUG, MALE YELLOW CR-AL	
595	90326-0020		2	PLUG, FEMALE YELLOW CR-AL	
650	359005-0010		11	MARKING LABEL KIT 0 - 9, 04.841.2150.0	
660	359005-0050		11	MARKING LABEL KIT X, 04.841.4550.0	
670	90110-0385		12	MARKING HOLDER, 4.242.3853.0	
W2001	351150-0425	MM	5500	CABLE OLFLEX 25X0,75 MM2 LIGHT/GREY	
W2002	351150-0425	MM	5500	CABLE OLFLEX 25X0,75 MM2 LIGHT/GREY	
W2003	351150-0166	MM	4500	CABLE OLFLEX 4X4 MM2 LIGHT/GREY	
W2005	351150-0412	MM	7000	CABLE OLFLEX 3X1,5 MM2 LIGHT/GREY	
W2007	351150-0418	MM	6200	CABLE OLFLEX 4X2,5 MM2 LIGHT/GREY	
W2008	351150-0418	MM	6200	CABLE OLFLEX 4X2,5 MM2 LIGHT/GREY	
W2009	351150-0418	MM	7000	CABLE OLFLEX 4X2,5 MM2 LIGHT/GREY	
W2050	351150-0425	MM	5500	CABLE OLFLEX 25X0,75 MM2 LIGHT/GREY	
W2055	90220-0034	MM	7500	THERMOCABLE TEX/SITW-20F-KX 2X0,5MM2	
W2071	351150-0412	MM	4500	CABLE OLFLEX 3X1,5 MM2 LIGHT/GREY	
W2072	351150-0412	MM	4500	CABLE OLFLEX 3X1,5 MM2 LIGHT/GREY	
W2211	351150-0412	MM	6000	CABLE OLFLEX 3X1,5 MM2 LIGHT/GREY	
W2225	351150-0405	MM	6500	CABLE OLFLEX 5X0,75 MM2 LIGHT/GREY	
W2226	351150-0406	MM	6500	CABLE OLFLEX 7X0,75 MM2 LIGHT/GREY	
W2230	351150-0405	MM	7500	CABLE OLFLEX 5X0,75 MM2 LIGHT/GREY	
W2231	351150-0406	MM	7500	CABLE OLFLEX 7X0,75 MM2 LIGHT/GREY	
W2232	351150-0406	MM	8000	CABLE OLFLEX 7X0,75 MM2 LIGHT/GREY	
W2235	351150-0403	MM	2500	CABLE OLFLEX 3X0,75 MM2 LIGHT/GREY	
W2244	351150-0412	MM	6000	CABLE OLFLEX 3X1,5 MM2 LIGHT/GREY	
W2270	90220-0091	MM	7000	PAIR TWISTED CABLE 2X2X0,25MM2	
W2271	90220-0091	MM	7000	PAIR TWISTED CABLE 2X2X0,25MM2	
W2710	90220-0125	MM	4400	MOTOR CABLE 4X4,0+2X1,0+2X0,75+SHIELD	
W2711	90220-0125	MM	4200	MOTOR CABLE 4X4,0+2X1,0+2X0,75+SHIELD	
W2712	90220-0125	MM	4100	MOTOR CABLE 4X4,0+2X1,0+2X0,75+SHIELD	
W2713	90220-0125	MM	4300	MOTOR CABLE 4X4,0+2X1,0+2X0,75+SHIELD	
W2714	90220-0116	MM	4600	MOTOR CABLE 4X1,0+2(2X0,5)+SHIELD	
W2715	90220-0116	MM	4700	MOTOR CABLE 4X1,0+2(2X0,5)+SHIELD	
W2720	90220-0131	MM	6600	PAIR TWISTED CABLE 3X2X0,25MM2	
W2721	90220-0131	MM	6500	PAIR TWISTED CABLE 3X2X0,25MM2	
W2722	90220-0131	MM	6500	PAIR TWISTED CABLE 3X2X0,25MM2	
W2723	90220-0131	MM	6600	PAIR TWISTED CABLE 3X2X0,25MM2	
W2724	90220-0131	MM	7100	PAIR TWISTED CABLE 3X2X0,25MM2	
W2725	90220-0131	MM	7100	PAIR TWISTED CABLE 3X2X0,25MM2	
W4016	90220-0165	MM	8200	SCR. CABLE 5X0,34MM2	
W4017	90220-0165	MM	8200	SCR. CABLE 5X0,34MM2	
W4052	351150-0403	MM	3200	CABLE OLFLEX 3X0,75 MM2 LIGHT/GREY	
W4053	351150-0404	MM	3200	CABLE OLFLEX 4X0,75 MM2 LIGHT/GREY	

Machine Type | Group Description | Used-In | Group Number | Page No

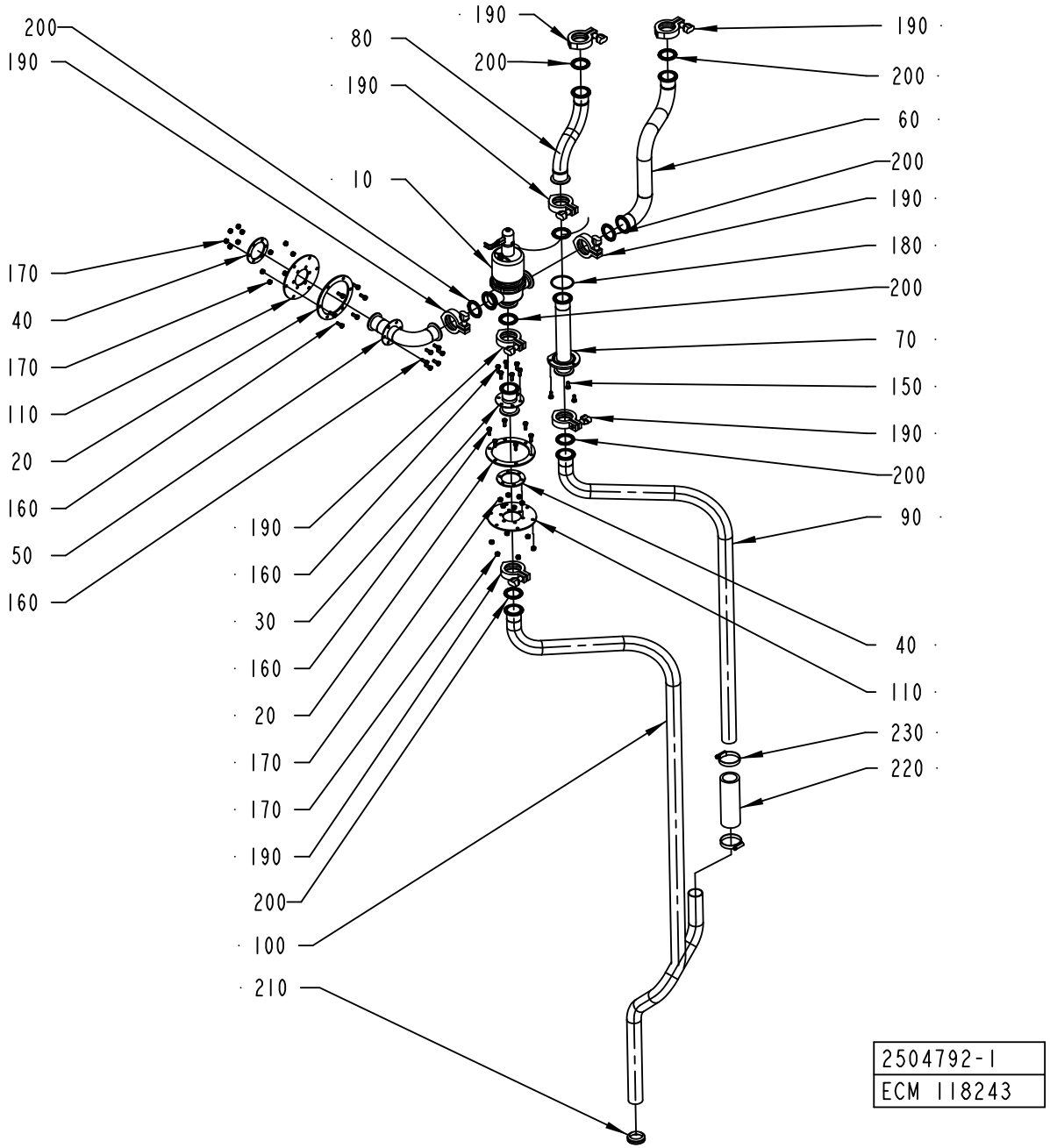
200
190
170
40
170
110
20
160
50
160
80
190
10
190
160
30
160
20
170
170
190
200
100
210
190
200
60
200
190
180
200
70
150
190
200
90
40
110
230
220
2504792-1
ECM 118243

ECM: 189851 - 20041104
Group number: 2504792-0100
Assembly Drawing: 2504792-1_1_AA

Pos	Part No	UN	Qty	Description	Page No
-					
010	2500088-0100		1	3-WAY VALVE	**2-115**
020	1498856-0000		2	FLANGE	
030	1498857-0000		1	CONNECTION	
040	1498858-0000		2	FLANGE	
050	2509544-0000		1	PIPE	
060	2509545-0000		1	PIPE	
070	2509546-0000		1	CONNECTION	
080	2509547-0000		1	PIPE	
090	2594647-0000		1	PIPE	
100	2594646-0000		1	PIPE	
110	1498855-0000		2	GASKET	
150	312105-0367		3	SCREW M6S ISO 4017 M6X14 A480	
160	312105-0368		24	SCREW M6S ISO 4017 M6X16 A480	
170	312812-0316		24	HEXAGON NUT, NY-LOCK M6 A480	
180	315202-0302		1	O-RING 54,5X3 MM	
190	342840-0103		8	CLAMPING PIECE	
200	342850-0304		8	GASKET 35,4X49,1X5,2 1"1/2 FDA	
210	315220-0183		1	V-RINGS 36X46X13 MM V-40S	
220	90166-0236	M		HOSE, 38/51 REINFORCED RUBBER	
230	342991-0109		2	HOSE CLIP,WORM DRIVE TYPE (48)-50	

Pos	Part No	UN	Qty	Description	Page No

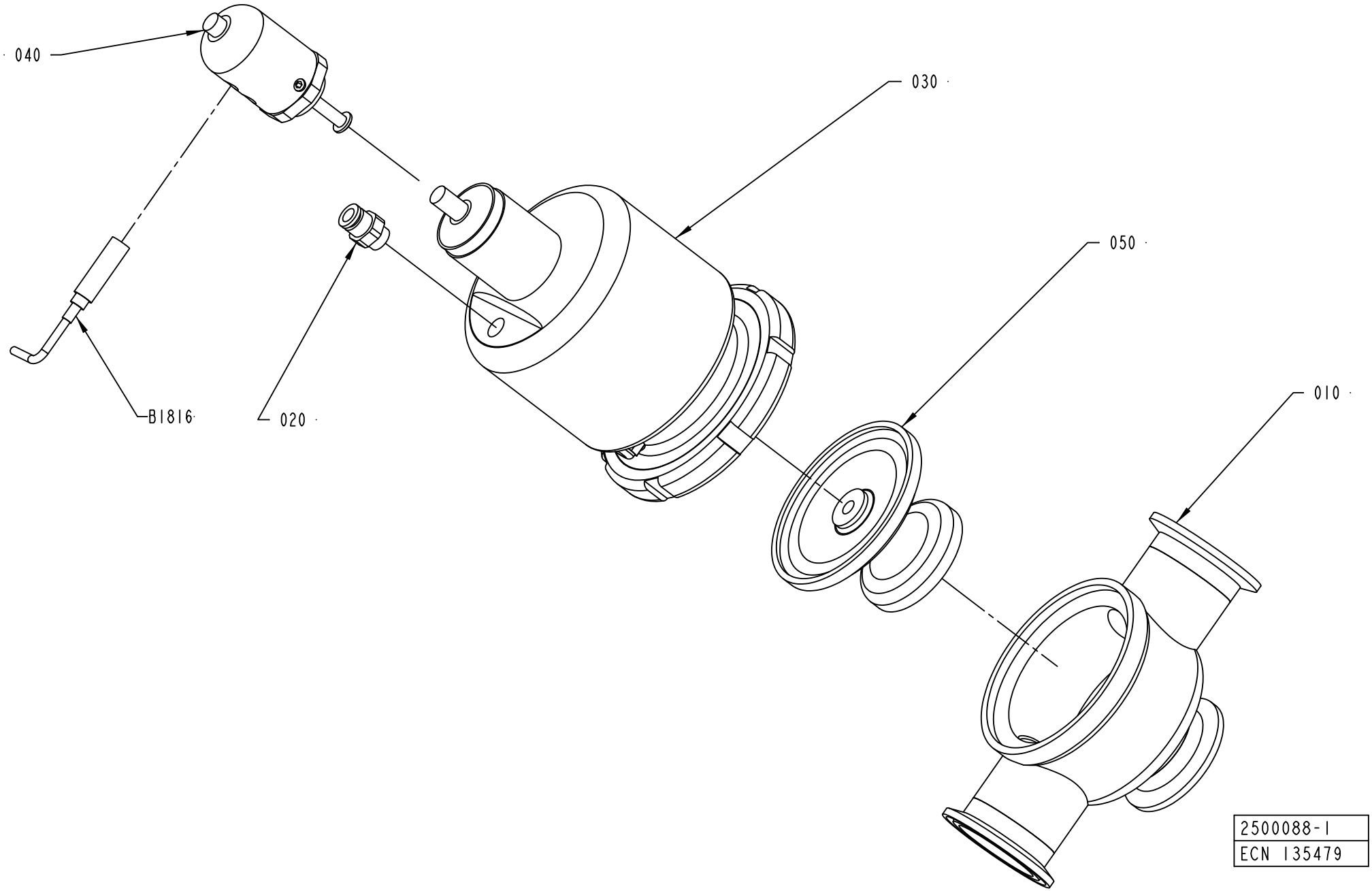
040
030
050
010
B1816
020
2500088-1
ECN 135479

ECM: 188843 - 20041104
Group number: 2500088-0100
Assembly Drawing: 2500088-1_1_AB

Pos	Part No	UN	Qty	Description	Page No
-					
010	2501292-0000		1	VALVE HOUSING	
020	342722-0202		1	PIPE COUPLING 1/8" D=6MM	
030	90458-1531		1	ACTUATOR, N.O., PA 38/100	
040	90458-1537		1	HOLDER, FOR INDUCTIVE SENSORS	
050	90458-1541		1	DIAPHRAGM, NA 38/25 PFTE	
B1816	90458-0138		1	PROX. SWITCH, E2EG-X1R5B1-5M	

Pos	Part No	UN	Qty	Description	Page No

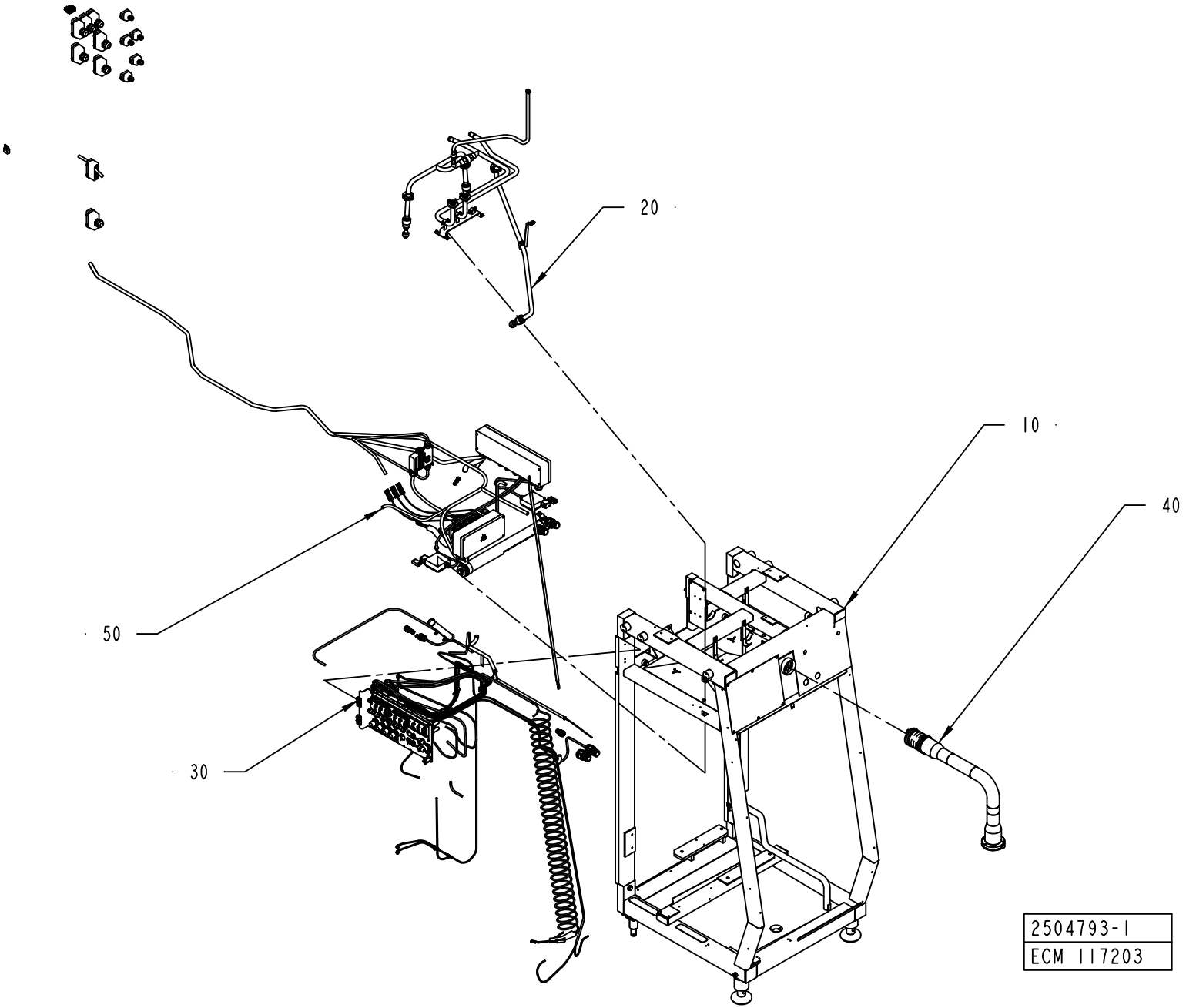
20
10
40
50
30
2504793-1
ECM 117203

ECM: 265244 - 20060702
Group number: 2504793-0100
Assembly Drawing: 2504793-1_1_AA

Pos	Part No	UN	Qty	Description	Page No
-					
010	2504794-0100		1	MACHINE BODY	**2-119**
020	2504795-0100		1	CLEANING SYSTEM	**2-121**
030	2528044-0100		1	PNEUMATIC SYSTEM	**2-123**
040	1095863-0200		1	PIVOT ARM	**2-143**
050	2527300-0100		1	ELECTRIC EQUIPMENT	**2-147**

Pos	Part No	UN	Qty	Description	Page No

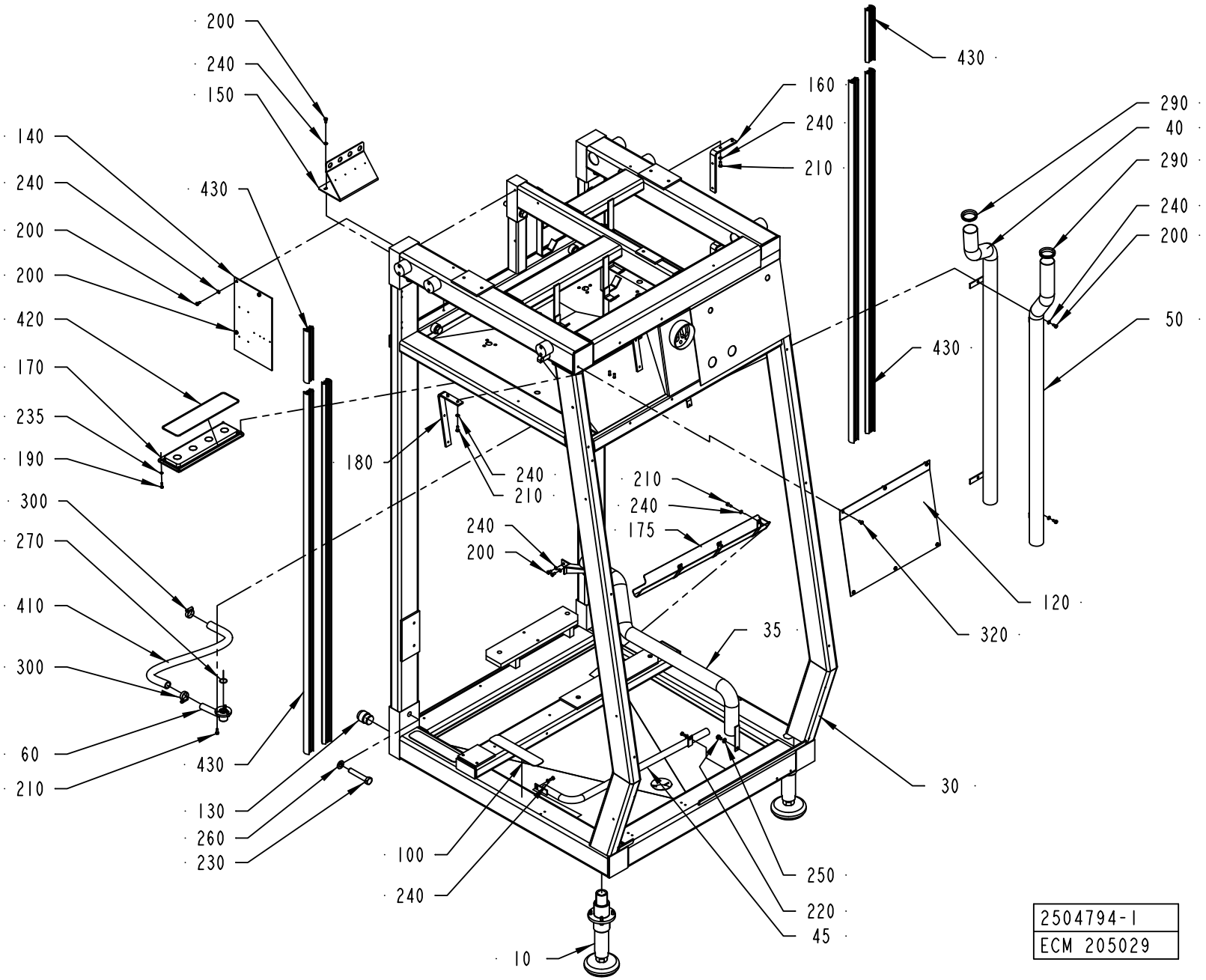
200
240
150
140
240
200
200
420
170
235
190
300
270
410
300
60
210
430
180
430
160
240
210
430
290
40
290
240
200
50
430
240
210
240
200
210
240
175
120
320
35
30
130
260
230
100
240
250
220
45
10
2504794-1
ECM 205029

ECM: 265933 - 20060702
Group number: 2504794-0100
Assembly Drawing: 2504794-1_1_AD

Pos	Part No	UN	Qty	Description	Page No
A3/FLEX TBA, A3/FLEX TPA					
030	2504437-0000		1	FRAME	
035	2530300-0000		1	PIPE	
040	2530301-0000		1	PIPE	
045	2530303-0000		1	PIPE	
050	2530302-0000		1	PIPE	
120	2510785-0000		1	COVER PLATE	
150	2509941-0000		1	SUPPORT	
160	2520431-0000		2	SUPPORT	
175	2529169-0000		1	HOLDER	
180	2520430-0000		2	HOLDER	
200	312105-0366		12	SCREW M6S ISO 4017 M6X12 A480	
210	312105-0368		14	SCREW M6S ISO 4017 M6X16 A480	
220	312105-0447		1	SCREW M6S ISO 4017 M8X12 A480	
240	315105-0153		23	WASHER BRB6,4X12RFR	
250	315105-0165		1	WASHER BRB8,4X16RFR	
290	315220-0198		2	V-RINGS 45X55X13 MM V-50S	
Common Parts					
010	2761766-0100		2	FOOT	**2-11**
060	2509552-0000		1	DRAINING	
100	1103300-0000		3	NON-SKID	
130	2506636-0000		2	PIN	
140	2506921-0000		1	SUPPORT	
170	2661082-0000		1	PLATE	
190	312105-0329		4	SCREW M6S ISO 4017 M5X16 A480	
230	312105-0638		7	SCREW M6S ISO 4014 M16X90 A480	
235	315105-0146		4	WASHER BRB5,3X10RFR	
260	315105-0186		7	WASHER BRB17X30RFR	
270	315202-0709		1	O-RING 23,52X1,78 MM	
300	342991-0105		2	HOSE CLIP,WORM DRIVE TYPE (27)-30	
320	90287-0075		6	SCREW SLOT. PAN HEAD LKCS M6X12	
410	90166-0151	MM	610	HOSE	
420	90161-0001	MM	800	O-RING MATERIAL 3 MM	
430	90459-1009	MM	7000	RUBBER STRIP, 1025088988	

Pos	Part No	UN	Qty	Description	Page No

Machine Type | Group Description | Used-In | Group Number | Page No

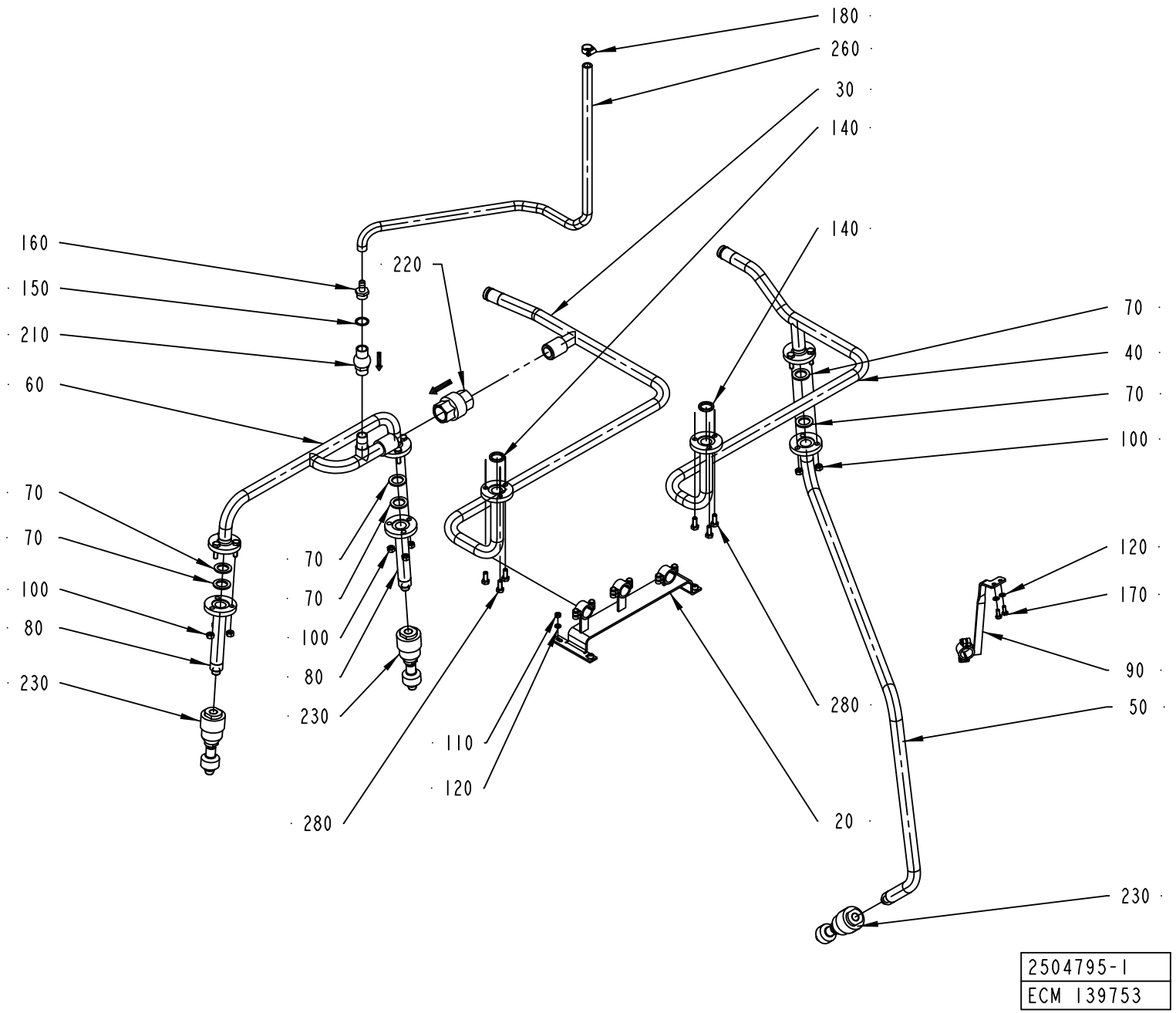
180
260
30
140
140
160
150
210
60
220
70
40
70
100
70
70
100
80
230
70
70
100
80
230
120
170
90
280
50
110
120
280
20
230
2504795-1
ECM 139753

ECM: 265998 - 20060702
Group number: 2504795-0100
Assembly Drawing: 2504795-1_1_AC

Pos	Part No	UN	Qty	Description	Page No
A3/FLEX TBA, A3/FLEX TPA					
030	2506922-0000		1	PIPE	
040	2506923-0000		1	PIPE	
050	2506924-0000		1	PIPE	
060	2506925-0000		1	PIPE	
080	2508425-0000		2	PIPE	
090	2519430-0000		1	BRACKET	
140	315229-0103		2	GASKETS, 23,1X30,1X3,7 MM 1" FDA	
230	90424-0066		3	ROT.SPRAY NOZZLE, D26984-B3/8"-PVDF/4.5	
280	312105-0451		6	SCREW M6S ISO 4017 M8X20 A480	
Common Parts					
020	2508426-0000		1	BRACKET	
070	1037443-0000		6	GASKET	
100	312605-0318		9	HEXAGON NUT, M6M M8 A280	
110	312605-0316		4	HEXAGON NUT, M6M M6 A280	
120	315105-0153		6	WASHER BRB6,4X12RFR	
150	315233-0113		1	WASHER CAPTIVE SEALING G1/2	
160	342901-0105		1	HOSE NIPPLE, EXT.THR. R1/2-12 MM	
170	312105-0367		2	SCREW M6S ISO 4017 M6X14 A480	
180	342991-0102		1	HOSE CLIP,WORM DRIVE TYPE (16)-19	
210	90230-0042		1	NON-RETURN VALVE 1/2"	
220	90230-0044		1	NON-RETURN VALVE 1"	
	90230-0308		*1*	*GASKET KIT*	
260	90166-0121	MM	1000	HOSE	

Pos	Part No	UN	Qty	Description	Page No

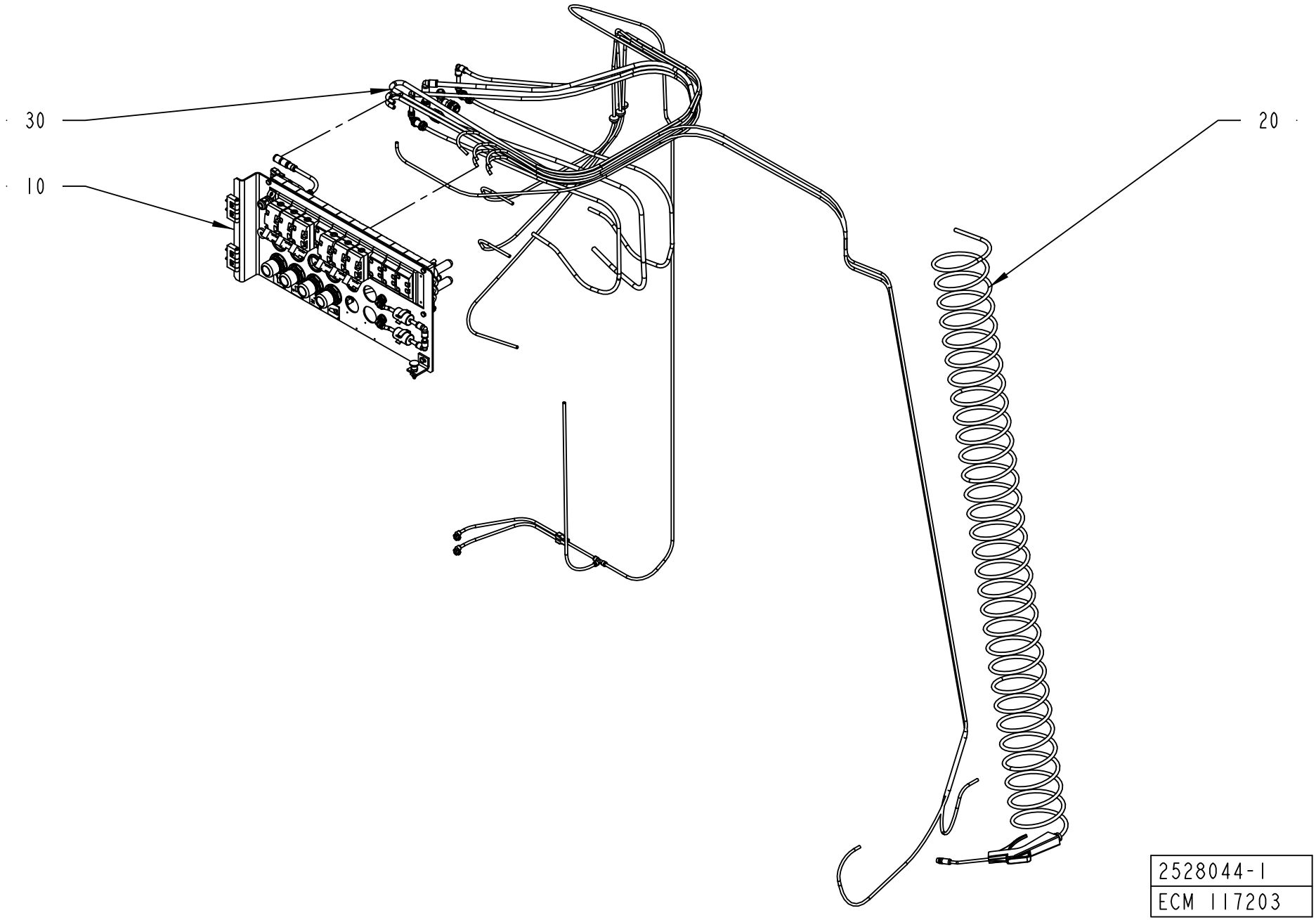
30
10
20
2528044-1
ECM 117203

ECM: 267114 - 20060702
Group number: 2528044-0100
Assembly Drawing: 2528044-1_1_AA

Pos	Part No	UN	Qty	Description	Page No
A3/FLEX TBA, A3/FLEX TPA					
030	2528046-0100		1	HOSE INSTALLATION	**2-125, 2-127, 2-129**
Common Parts					
010	2506362-0100		1	VALVE PANEL	**2-131, 2-133**
020	1095682-0100		1	AIR JET GUN	**2-141**

Pos	Part No	UN	Qty	Description	Page No

HOSE INSTALLATION

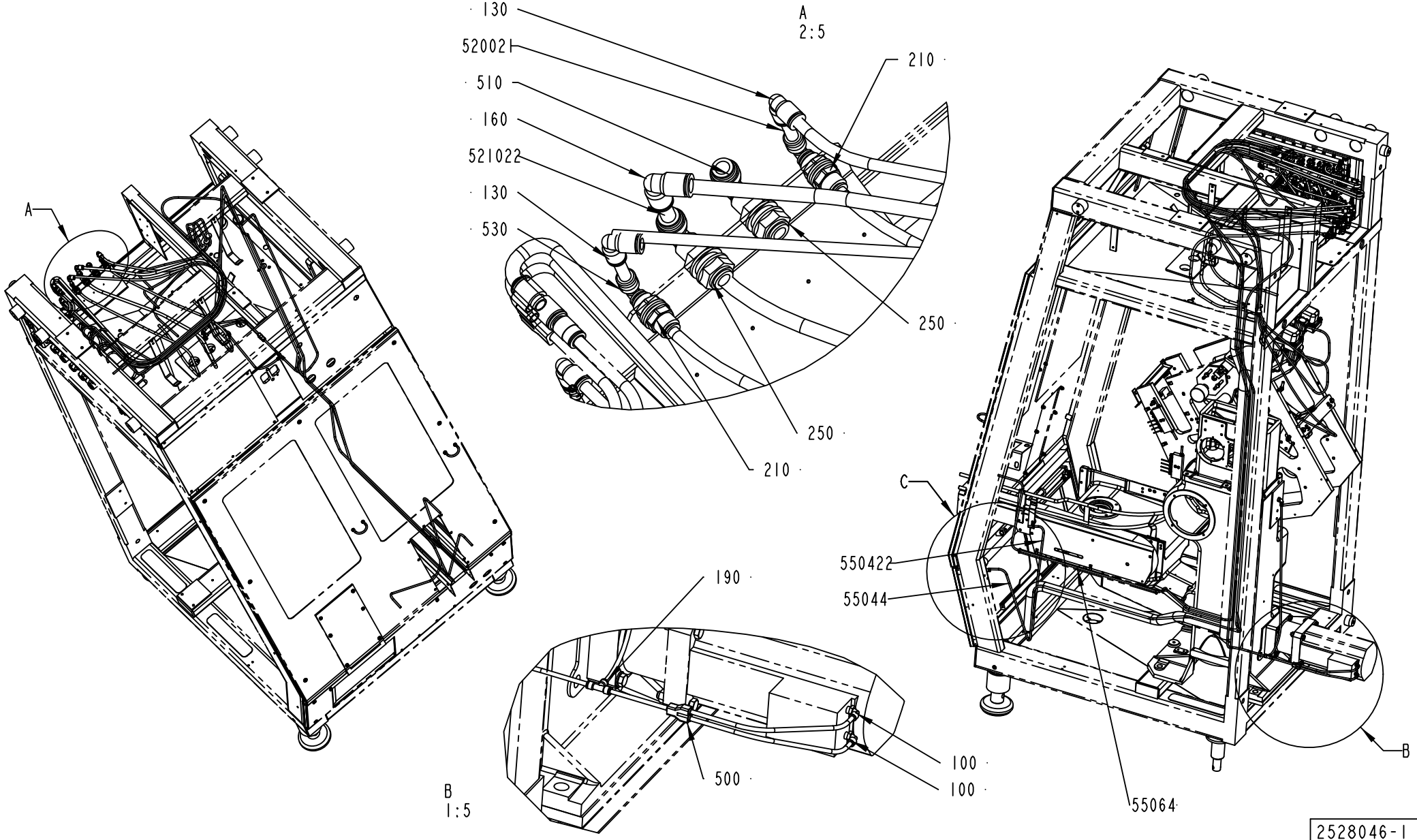

2528046-1
ECM 134706

ECM: 189859 - 20041104
Group number: 2528046-0100
Assembly Drawing: 2528046-1_1_AC

This list covers pages from 2-124 to 2-129

Pos	Part No	UN	Qty	Description	Page No
A3/FLEX DIMC/FLEX (See drawing on pages: 2-124, 2-126, 2-128)					
55064	90166-0081	MM	4300	TUBE 6 MM PA BLUE	
A3/FLEX QC (See drawing on pages: 2-124, 2-126, 2-128)					
55052	90166-0081	MM	2450	TUBE 6 MM PA BLUE	
55054	90166-0081	MM	2300	TUBE 6 MM PA BLUE	
Common Parts					
100	90458-2956		2	ELBOW PIPE JOINT, EXT.THREAD, D=6MM-G1/8	
130	342735-0103		2	ELBOW PIPE JOINT	
160	342735-0104		1	ELBOW PIPE JOINT	
190	342748-0102		1	T-CONNECTION 6MM	
210	342768-0103		2	BULKHEAD CONNECTOR, 8 MM	
250	342768-0104		2	BULKHEAD CONNECTOR, 10 MM	
300	90015-0020		3	LEAD-IN, TET5-7, E-1458016	
500	90055-0100		1	Y-CONNECTION, 6-6	
50011	90166-0081	MM	4200	TUBE 6 MM PA BLUE	
500111	90166-0081	MM	760	TUBE 6 MM PA BLUE	
500112	90166-0081	MM	170	TUBE 6 MM PA BLUE	
500113	90166-0081	MM	310	TUBE 6 MM PA BLUE	
500114	90166-0081	MM	320	TUBE 6 MM PA BLUE	
510	90055-0248		2	ELBOW WITH TAILPIECE 10/10 MM	
520021	90166-0013	MM	140	TUBE 8 MM PA BLUE	
520022	90166-0013	MM	1960	TUBE 8 MM PA BLUE	
5200221	90166-0013	MM	1200	TUBE 8 MM PA BLUE	
520023	90166-0013	MM	2050	TUBE 8 MM PA BLUE	
5200231	90166-0013	MM	1200	TUBE 8 MM PA BLUE	
52102	90166-0216	MM	2600	TUBE 10 MM PUR BLUE	
521021	90166-0216	MM	1150	TUBE 10 MM PUR BLUE	
521022	90166-0216	MM	70	TUBE 10 MM PUR BLUE	
530	90055-0172		2	ELBOW WITH TAILPIECE 8/8 MM	
53154	90166-0081	MM	2800	TUBE 6 MM PA BLUE	
550422	90166-0081	M	4800	TUBE 6 MM PA BLUE	
55044	90166-0081	MM	4800	TUBE 6 MM PA BLUE	

Pos	Part No	UN	Qty	Description	Page No

Machine Type | Group Description | Used-In | Group Number | Page No

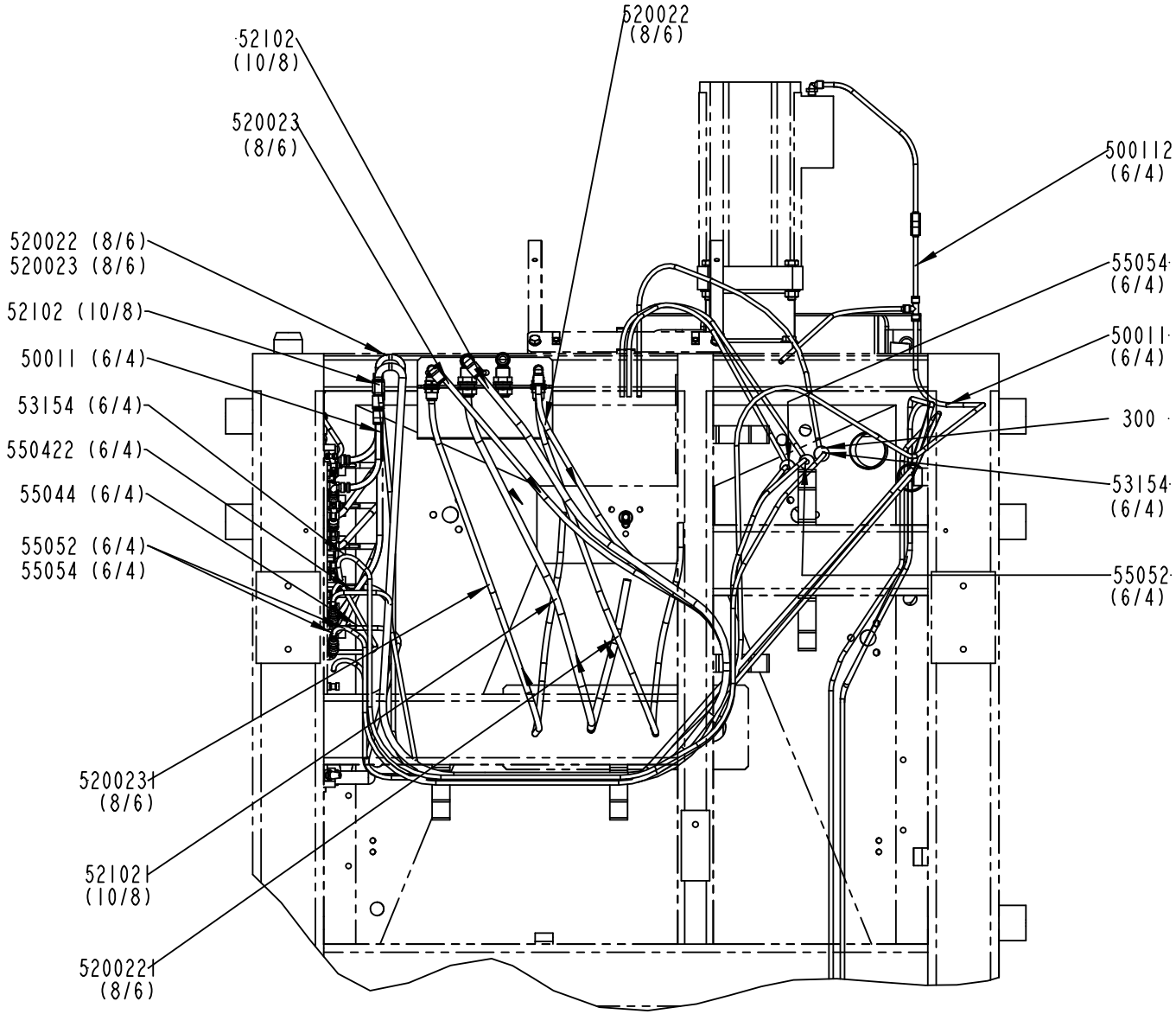

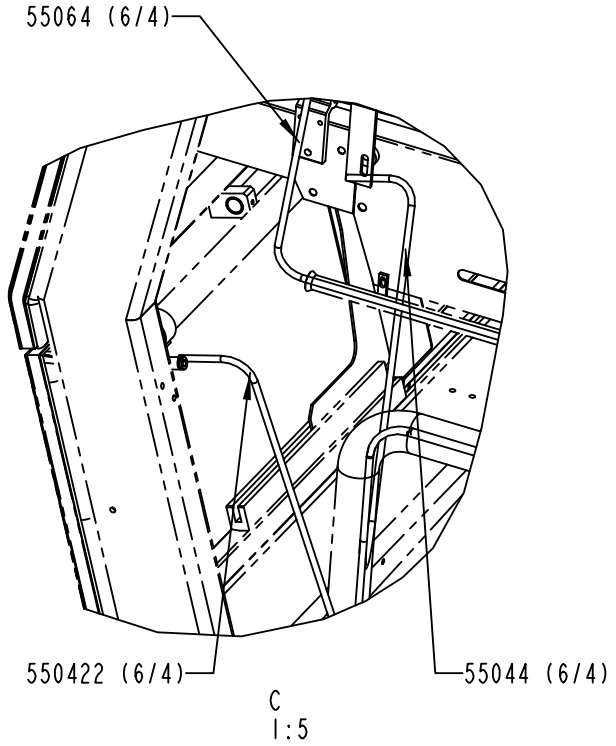

2528046-1
ECM 134706

ECM: 189859 - 20041104
Group number: 2528046-0100
Assembly Drawing: 2528046-1_2_AC

This list covers pages from 2-124 to 2-129

Pos	Part No	UN	Qty	Description	Page No
A3/FLEX DIMC/FLEX (See drawing on pages: 2-124, 2-126, 2-128)					
55064	90166-0081	MM	4300	TUBE 6 MM PA BLUE	
A3/FLEX QC (See drawing on pages: 2-124, 2-126, 2-128)					
55052	90166-0081	MM	2450	TUBE 6 MM PA BLUE	
55054	90166-0081	MM	2300	TUBE 6 MM PA BLUE	
Common Parts					
100	90458-2956		2	ELBOW PIPE JOINT, EXT.THREAD, D=6MM-G1/8	
130	342735-0103		2	ELBOW PIPE JOINT	
160	342735-0104		1	ELBOW PIPE JOINT	
190	342748-0102		1	T-CONNECTION 6MM	
210	342768-0103		2	BULKHEAD CONNECTOR, 8 MM	
250	342768-0104		2	BULKHEAD CONNECTOR, 10 MM	
300	90015-0020		3	LEAD-IN, TET5-7, E-1458016	
500	90055-0100		1	Y-CONNECTION, 6-6	
50011	90166-0081	MM	4200	TUBE 6 MM PA BLUE	
500111	90166-0081	MM	760	TUBE 6 MM PA BLUE	
500112	90166-0081	MM	170	TUBE 6 MM PA BLUE	
500113	90166-0081	MM	310	TUBE 6 MM PA BLUE	
500114	90166-0081	MM	320	TUBE 6 MM PA BLUE	
510	90055-0248		2	ELBOW WITH TAILPIECE 10/10 MM	
520021	90166-0013	MM	140	TUBE 8 MM PA BLUE	
520022	90166-0013	MM	1960	TUBE 8 MM PA BLUE	
5200221	90166-0013	MM	1200	TUBE 8 MM PA BLUE	
520023	90166-0013	MM	2050	TUBE 8 MM PA BLUE	
5200231	90166-0013	MM	1200	TUBE 8 MM PA BLUE	
52102	90166-0216	MM	2600	TUBE 10 MM PUR BLUE	
521021	90166-0216	MM	1150	TUBE 10 MM PUR BLUE	
521022	90166-0216	MM	70	TUBE 10 MM PUR BLUE	
530	90055-0172		2	ELBOW WITH TAILPIECE 8/8 MM	
53154	90166-0081	MM	2800	TUBE 6 MM PA BLUE	
550422	90166-0081	M	4800	TUBE 6 MM PA BLUE	
55044	90166-0081	MM	4800	TUBE 6 MM PA BLUE	

Pos	Part No	UN	Qty	Description	Page No

Machine Type | Group Description | Used-In | Group Number | Page No

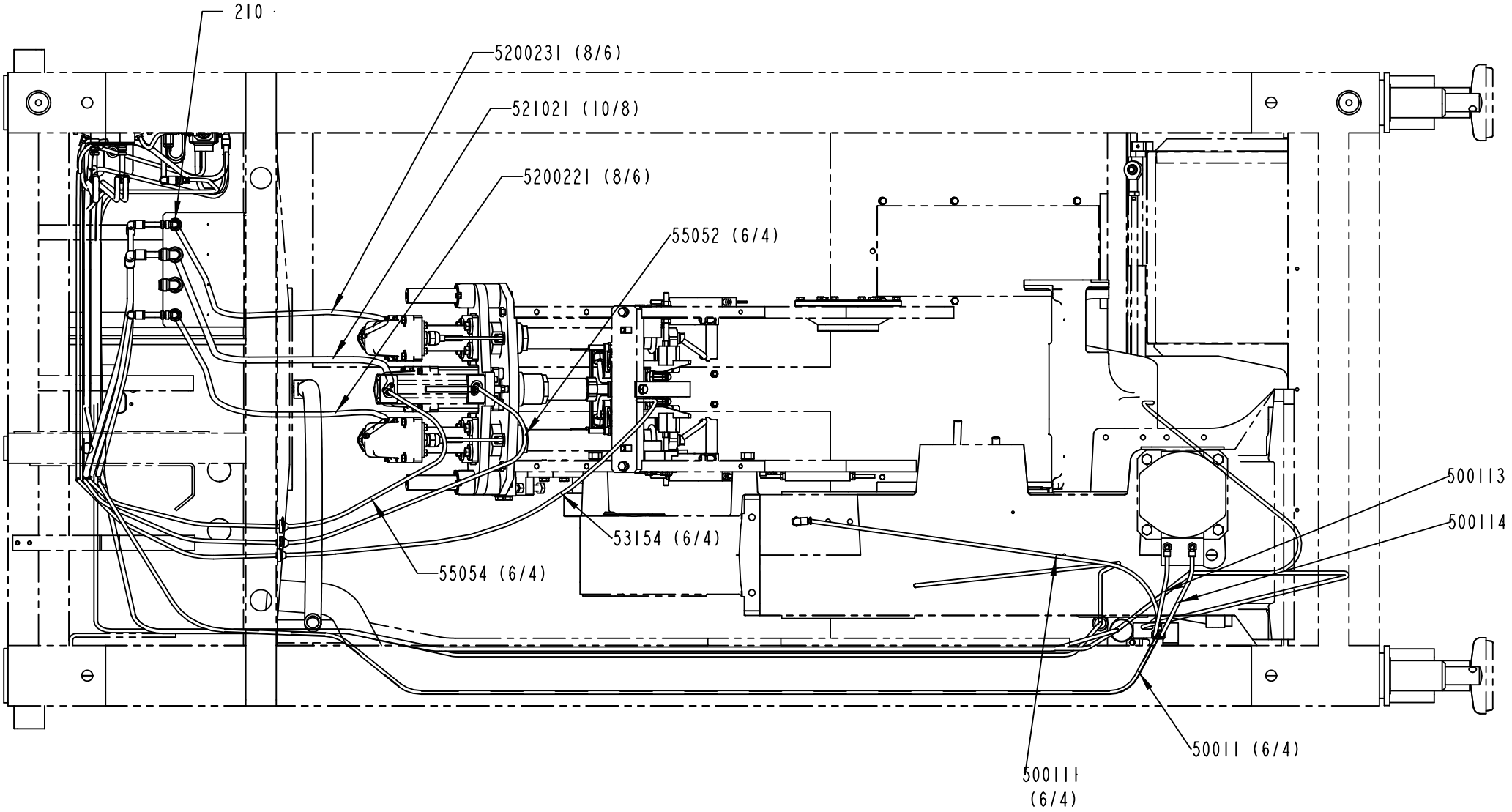

2528046-1
ECM 134706

ECM: 189859 - 20041104
Group number: 2528046-0100
Assembly Drawing: 2528046-1_3_AC

This list covers pages from 2-124 to 2-129

Pos	Part No	UN	Qty	Description	Page No
A3/FLEX DIMC/FLEX (See drawing on pages: 2-124, 2-126, 2-128)					
55064	90166-0081	MM	4300	TUBE 6 MM PA BLUE	
A3/FLEX QC (See drawing on pages: 2-124, 2-126, 2-128)					
55052	90166-0081	MM	2450	TUBE 6 MM PA BLUE	
55054	90166-0081	MM	2300	TUBE 6 MM PA BLUE	
Common Parts					
100	90458-2956		2	ELBOW PIPE JOINT, EXT.THREAD, D=6MM-G1/8	
130	342735-0103		2	ELBOW PIPE JOINT	
160	342735-0104		1	ELBOW PIPE JOINT	
190	342748-0102		1	T-CONNECTION 6MM	
210	342768-0103		2	BULKHEAD CONNECTOR, 8 MM	
250	342768-0104		2	BULKHEAD CONNECTOR, 10 MM	
300	90015-0020		3	LEAD-IN, TET5-7, E-1458016	
500	90055-0100		1	Y-CONNECTION, 6-6	
50011	90166-0081	MM	4200	TUBE 6 MM PA BLUE	
500111	90166-0081	MM	760	TUBE 6 MM PA BLUE	
500112	90166-0081	MM	170	TUBE 6 MM PA BLUE	
500113	90166-0081	MM	310	TUBE 6 MM PA BLUE	
500114	90166-0081	MM	320	TUBE 6 MM PA BLUE	
510	90055-0248		2	ELBOW WITH TAILPIECE 10/10 MM	
520021	90166-0013	MM	140	TUBE 8 MM PA BLUE	
520022	90166-0013	MM	1960	TUBE 8 MM PA BLUE	
5200221	90166-0013	MM	1200	TUBE 8 MM PA BLUE	
520023	90166-0013	MM	2050	TUBE 8 MM PA BLUE	
5200231	90166-0013	MM	1200	TUBE 8 MM PA BLUE	
52102	90166-0216	MM	2600	TUBE 10 MM PUR BLUE	
521021	90166-0216	MM	1150	TUBE 10 MM PUR BLUE	
521022	90166-0216	MM	70	TUBE 10 MM PUR BLUE	
530	90055-0172		2	ELBOW WITH TAILPIECE 8/8 MM	
53154	90166-0081	MM	2800	TUBE 6 MM PA BLUE	
550422	90166-0081	M	4800	TUBE 6 MM PA BLUE	
55044	90166-0081	MM	4800	TUBE 6 MM PA BLUE	

Pos	Part No	UN	Qty	Description	Page No

Machine Type | Group Description | Used-In | Group Number | Page No

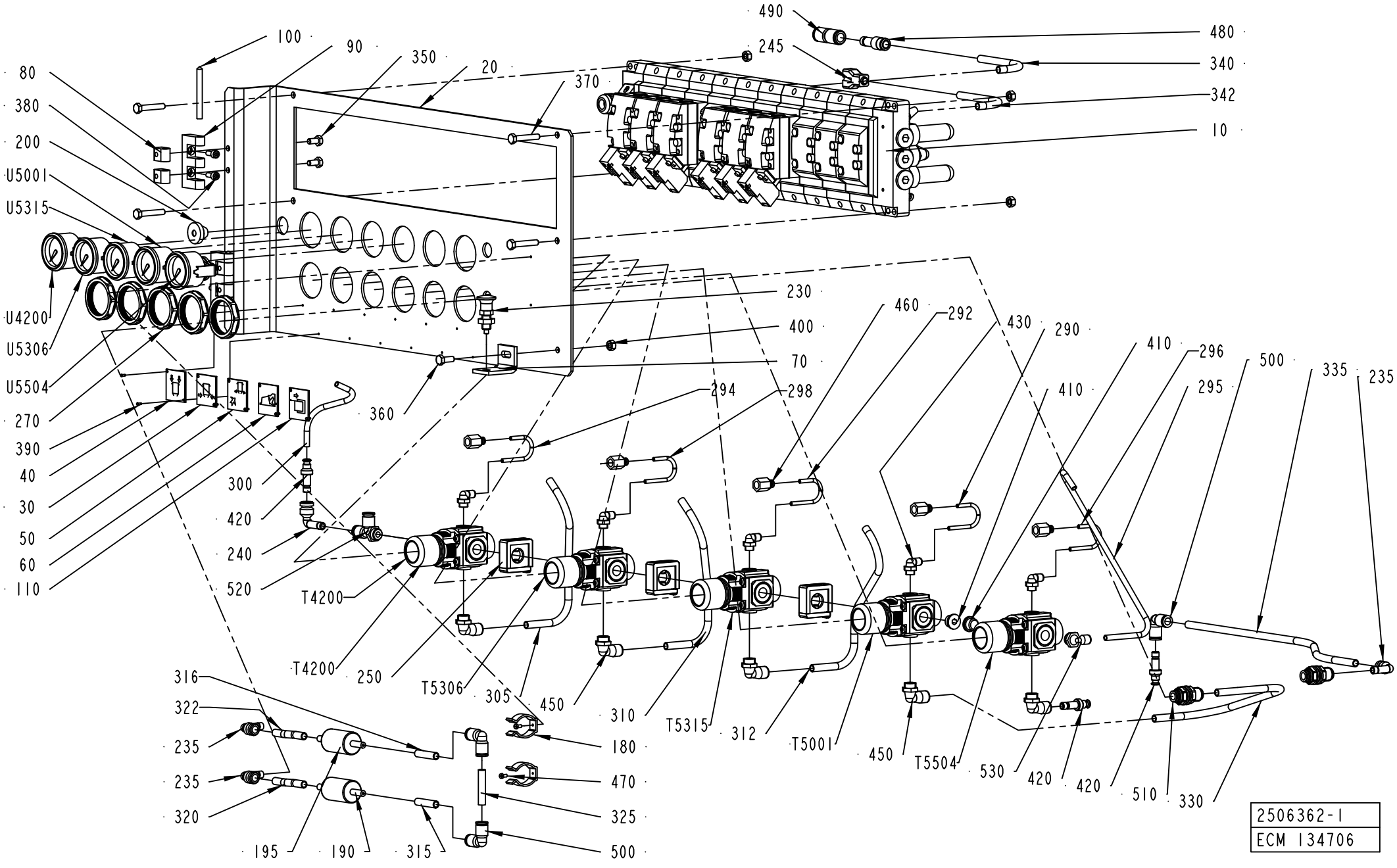
100
90
350
20
370
490
245
480
340
342
10
80
380
200
U5001
U5315
U4200
U5306
U5504
270
390
40
30
50
60
110
230
400
70
360
460
292
430
290
410
296
500
335
235
294
298
410
295
300
420
240
520
T4200
T4200
250
T5306
305
450
310
T5315
312
T5001
450
T5504
530
420
420
510
330
316
322
235
235
320
195
190
315
180
470
325
500
2506362-1
ECM 134706

Pos	Part No	UN	Qty	Description	Page No
A3/FLEX TBA 0500B, A3/FLEX TBA 1000B, A3/FLEX TBA 1000S, A3/FLEX TBA 1000SQ, A3/FLEX TPA 1000SQ, A3/FLEX TBA 0200S, A3/FLEX TBA 1500S, A3/FLEX TBA 0200B, A3/FLEX TBA 0250B, A3/FLEX TBA 0330S, A3/FLEX TPA 0330SQ, A3/FLEX TPA 0500SQ, A3/FLEX TBA 0200M, A3/FLEX TBA 0250S, A3/FLEX TBA 0500S (See drawing on page: 2-130)					
	2512829-0000		1	PNEUMATIC DIAGRAM	
	2527368-0000		1	PNEUMATIC DIAGRAM	
030	1144607-0000		1	SIGN	
040	1144606-0000		1	SIGN	
050	1129370-0000		1	SIGN	
060	479964-0000		1	SIGN	
180	90165-0019		2	TOOL CLIP, 81/3, OPEN, 20 - 30 MM	
190	90277-0045		1	FILTER / 9900-05-BK	
195	90277-0046		1	FILTER / 9933-05-101	
235	90055-0172		3	ELBOW WITH TAILPIECE 8/8 MM	
245	90055-0100		1	Y-CONNECTION, 6-6	
295	90166-0081	MM	350	TUBE 6 MM PA BLUE	
315	90166-0013	MM	40	TUBE 8 MM PA BLUE	
316	90166-0013	MM	40	TUBE 8 MM PA BLUE	
320	90166-0013	MM	60	TUBE 8 MM PA BLUE	
322	90166-0013	MM	60	TUBE 8 MM PA BLUE	
325	90166-0013	MM	40	TUBE 8 MM PA BLUE	
330	90166-0013	MM	325	TUBE 8 MM PA BLUE	
335	90166-0013	MM	450	TUBE 8 MM PA BLUE	
340	90166-0013	MM	350	TUBE 8 MM PA BLUE	
342	90166-0013	MM	80	TUBE 8 MM PA BLUE	
470	312125-0220		2	SCREW ISO 1207 M3X6 A4	
480	342716-0206		1	REDUCER 8-10	
490	342728-0104		1	PIPE COUPLING 10 MM	
500	342735-0103		3	ELBOW PIPE JOINT	
510	342768-0103		2	BULKHEAD CONNECTOR, 8 MM	
T4200	90113-0469		1	MANIFOLD REGULATOR 4 BAR	
T5001	90457-0144		1	REGULATOR 0,3-2 BAR	
T5306	90113-0469		1	MANIFOLD REGULATOR 4 BAR	
T5315	90113-0469		1	MANIFOLD REGULATOR 4 BAR	
U4200	90043-0064		1	PRESSURE GAUGE, 2048 D=40 MM	
U5001	90043-0090		1	PRESSURE GAUGE, 2048 D=40 MM	
U5306	90043-0064		1	PRESSURE GAUGE, 2048 D=40 MM	
U5315	90043-0064		1	PRESSURE GAUGE, 2048 D=40 MM	
A3/FLEX TBA 1890S, A3/FLEX TBA 2000S (See drawing on page: 2-132)					
	2527368-0000		1	PNEUMATIC DIAGRAM	
	2719737-0000		1	PNEUMATIC DIAGRAM	
030	1144607-0000		1	SIGN	
040	1144606-0000		1	SIGN	
050	1129370-0000		1	SIGN	
060	479964-0000		1	SIGN	
180	90165-0019		2	TOOL CLIP, 81/3, OPEN, 20 - 30 MM	
190	90277-0045		1	FILTER / 9900-05-BK	
195	90277-0046		1	FILTER / 9933-05-101	
235	90055-0172		3	ELBOW WITH TAILPIECE 8/8 MM	
245	90055-0100		1	Y-CONNECTION, 6-6	
295	90166-0081	MM	350	TUBE 6 MM PA BLUE	
315	90166-0013	MM	40	TUBE 8 MM PA BLUE	
316	90166-0013	MM	40	TUBE 8 MM PA BLUE	
320	90166-0013	MM	60	TUBE 8 MM PA BLUE	
322	90166-0013	MM	60	TUBE 8 MM PA BLUE	
325	90166-0013	MM	40	TUBE 8 MM PA BLUE	
330	90166-0013	MM	325	TUBE 8 MM PA BLUE	
335	90166-0013	MM	450	TUBE 8 MM PA BLUE	
340	90166-0013	MM	350	TUBE 8 MM PA BLUE	
342	90166-0013	MM	80	TUBE 8 MM PA BLUE	
470	312125-0220		2	SCREW ISO 1207 M3X6 A4	
480	342716-0206		1	REDUCER 8-10	
490	342728-0104		1	PIPE COUPLING 10 MM	
500	342735-0103		3	ELBOW PIPE JOINT	
510	342768-0103		2	BULKHEAD CONNECTOR, 8 MM	
T4200	90113-0469		1	MANIFOLD REGULATOR 4 BAR	
T5001	90457-0144		1	REGULATOR 0,3-2 BAR	
T5306	90113-0469		1	MANIFOLD REGULATOR 4 BAR	
T5315	90113-0469		1	MANIFOLD REGULATOR 4 BAR	
U4200	90043-0064		1	PRESSURE GAUGE, 2048 D=40 MM	
U5001	90043-0090		1	PRESSURE GAUGE, 2048 D=40 MM	
U5306	90043-0064		1	PRESSURE GAUGE, 2048 D=40 MM	
U5315	90043-0064		1	PRESSURE GAUGE, 2048 D=40 MM	
Common Parts					
010	2506363-0100		1	VALVE RAMP	**2-135, 2-137, 2-139**
020	2506364-0000		1	PLATE	
070	1348197-0000		1	HOLDER	
080	1129770-0000		4	BLOCKING PIECE	
090	1035792-0000		2	E-HINGE	
100	988685-0000		2	PIN	
110	2598025-0000		1	SIGN	
200	90015-0023		1	LEAD-IN, TET7-10, E-1458019	
230	90051-0112		1	LOCK KNOB, NO. GN 617 NIK5	
240	90055-0118		1	ELBOW WITH TAILPIECE 8/8 MM	

Machine Type | Group Description | Used-In | Group Number | Page No

VALVE PANEL

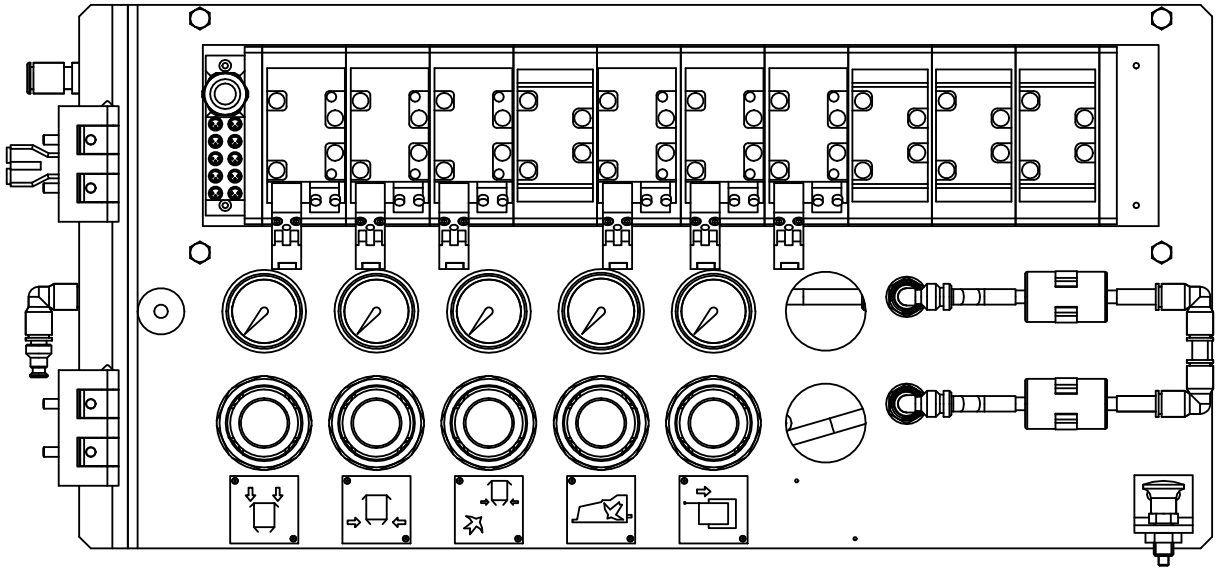

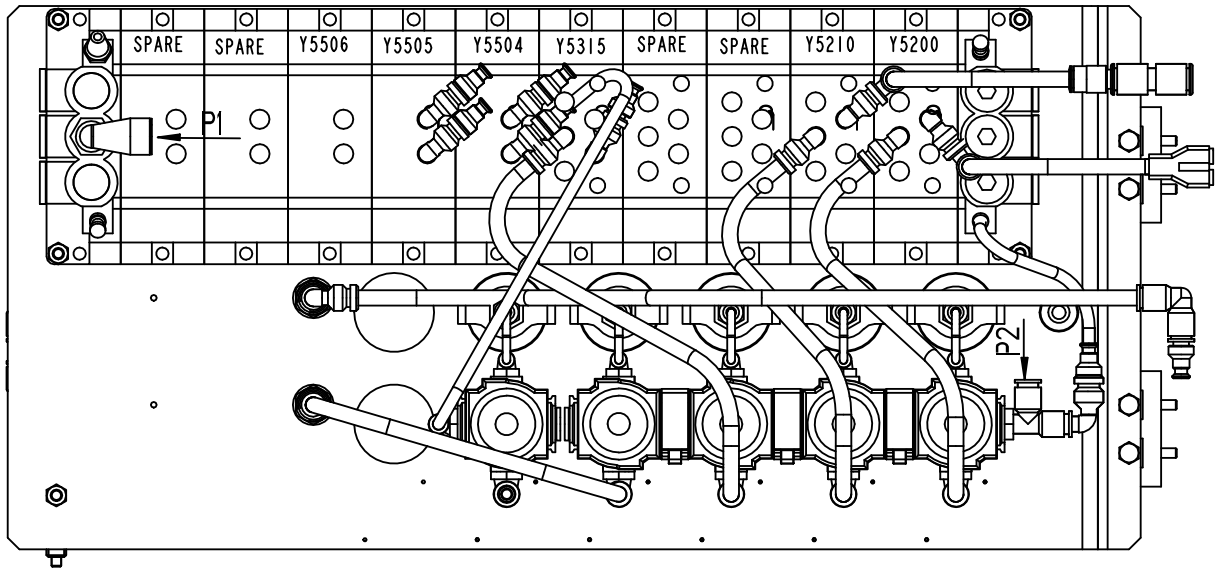

2506362-1
ECM 134706

ECM: 267115 - 20060702
Group number: 2506362-0100
Assembly Drawing: 2506362-1_2_AC

This list covers pages from 2-130 to 2-133

Pos	Part No	UN	Qty	Description	Page No
Common Parts (Cont'd)					
240	90055-0118		1	ELBOW WITH TAILPIECE 8/8 MM	
250	90113-0140		3	QUICK CLAMP	
270	90457-0078		5	PANEL NUT	
290	90166-0095	MM	90	TUBE 4 MM PA BLUE (50M)	
292	90166-0095	MM	90	TUBE 4 MM PA BLUE (50M)	
294	90166-0095	MM	90	TUBE 4 MM PA BLUE (50M)	
296	90166-0095	MM	90	TUBE 4 MM PA BLUE (50M)	
298	90166-0095	MM	90	TUBE 4 MM PA BLUE (50M)	
300	90166-0081	MM	150	TUBE 6 MM PA BLUE	
305	90166-0013	MM	290	TUBE 8 MM PA BLUE	
310	90166-0013	MM	285	TUBE 8 MM PA BLUE	
312	90166-0013	MM	315	TUBE 8 MM PA BLUE	
350	312105-0366		4	SCREW M6S ISO 4017 M6X12 A480	
360	312105-0368		1	SCREW M6S ISO 4017 M6X16 A480	
370	312109-0376		4	SCREW M6S ISO 4017 M6X35 A480	
380	312115-0327		4	SCREW ISO4762 M5X12 A4 80	
390	312502-0120		10	DRIVE SCREW ROUND HEAD KDS 0X5	
400	312605-0316		5	HEXAGON NUT, M6M M6 A280	
410	342713-0210		2	PLUG,EXT THREAD HEX SOCKET(PAK OF 10 PCS	
430	90458-2955		5	ELBOW PIPE JOINT, EXT.THREAD,	
450	90458-2958		5	ELBOW PIPE JOINT, EXT.THREAD, D=8MM-G1/4	
460	342770-0101		5	STRAIGHT COUPLING INT, D=4 MM - G1/8	
520	342772-0122		1	ELBOW FITTING, 8 - G1/4	
530	90458-2957		1	ELBOW PIPE JOINT, EXT.THREAD, D=6MM-G1/4	
T5504	90113-0469		1	MANIFOLD REGULATOR 4 BAR	
U5215	90043-0064		1	PRESSURE GAUGE, 2048 D=40 MM	
U5504	90043-0064		1	PRESSURE GAUGE, 2048 D=40 MM	

Pos	Part No	UN	Qty	Description	Page No

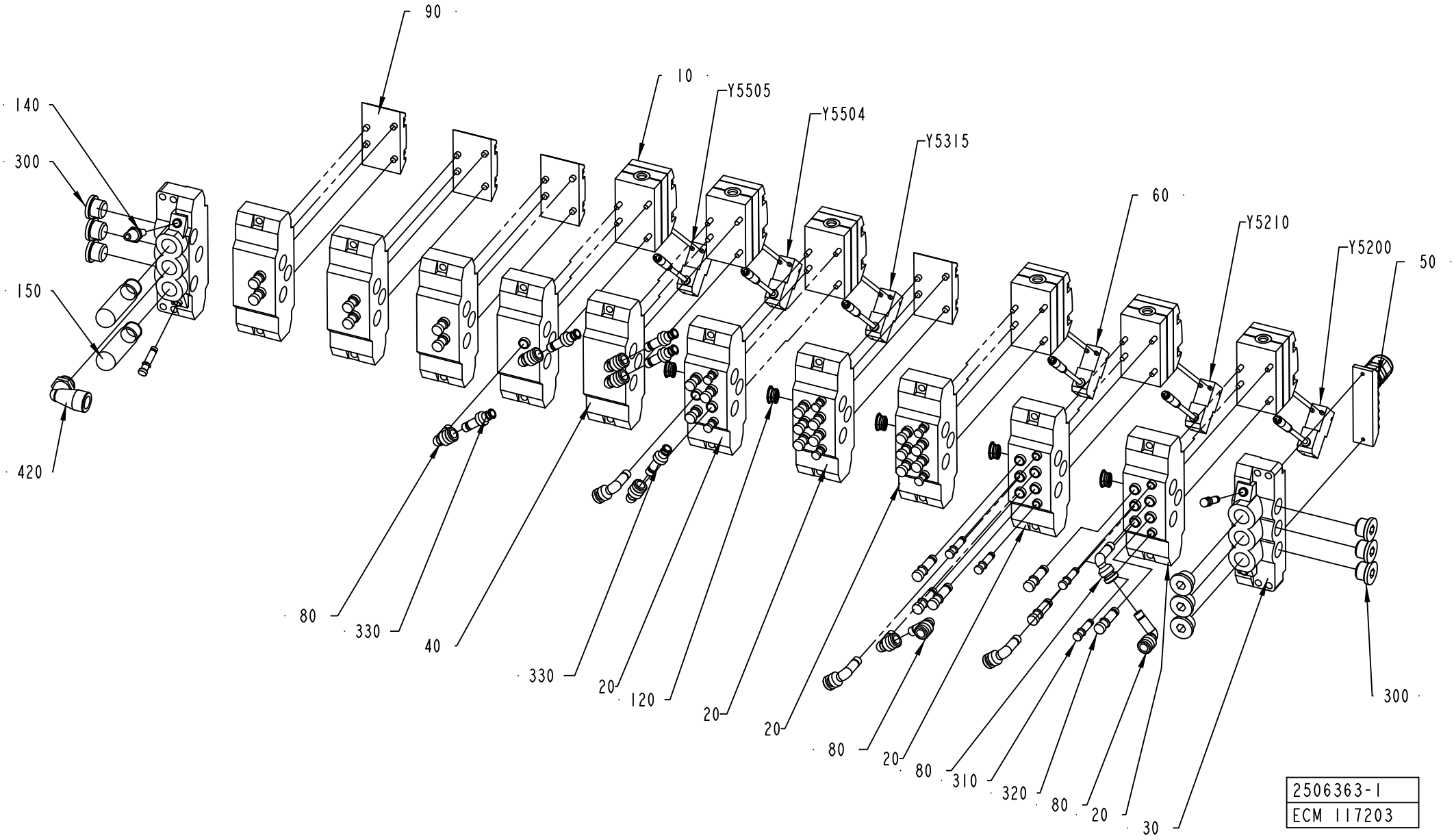
90
10
Y5505
Y5504
Y5315
140
300
150
420
60
Y5210
Y5200
50
80
330
40
330
20
120
20
20
80
20
80
310
320
80
20
30
300
2506363-1
ECM 117203

ECM: 192429 - 20041201
Group number: 2506363-0100
Assembly Drawing: 2506363-1_1_AA

This list covers pages from 2-134 to 2-139

Pos	Part No	UN	Qty	Description	Page No
A3/FLEX NOQC DIMC/FLEX (See drawing on page: 2-138)					
010	90042-0215		6	VALVE BODY 5/2 UNISTABLE	
060	90042-0538		1	PILOT VALVE L=500MM	
080	90055-0172		11	ELBOW WITH TAILPIECE 8/8 MM	
090	90042-0519		4	BLANK PLATE ISO SIZE 1	
320	342715-0103		26	BLIND PLUG 8 MM	
330	342716-0203		4	REDUCER 6-8	
Y5315	90042-0538		1	PILOT VALVE L=500MM	
Y5506	90042-0538		1	PILOT VALVE L=500MM	
A3/FLEX NOQC NODIMC (See drawing on page: 2-136)					
010	90042-0215		5	VALVE BODY 5/2 UNISTABLE	
060	90042-0538		1	PILOT VALVE L=500MM	
080	90055-0172		10	ELBOW WITH TAILPIECE 8/8 MM	
090	90042-0519		5	BLANK PLATE ISO SIZE 1	
320	342715-0103		27	BLIND PLUG 8 MM	
330	342716-0203		3	REDUCER 6-8	
Y5315	90042-0538		1	PILOT VALVE L=500MM	
A3/FLEX QC NODIMC (See drawing on page: 2-134)					
010	90042-0215		6	VALVE BODY 5/2 UNISTABLE	
060	90042-0538		1	PILOT VALVE L=500MM	
080	90055-0172		12	ELBOW WITH TAILPIECE 8/8 MM	
090	90042-0519		4	BLANK PLATE ISO SIZE 1	
320	342715-0103		25	BLIND PLUG 8 MM	
330	342716-0203		5	REDUCER 6-8	
Y5315	90042-0538		1	PILOT VALVE L=500MM	
Y5505	90042-0538		1	PILOT VALVE L=500MM	
Common Parts					
020	90042-0520		5	BASE PLATE ISO SIZE 1	
030	90042-0522		2	PORTED END PIECE ISO SIZE 1	
040	90042-0532		5	BASE PLATE ISO SIZE 1	
050	90042-0535		1	TERMINAL BOARD 19 CORDS	
120	90042-0528		5	BLANKING KIT SEALS ISO SIZE 1	
140	90328-0017		1	SILENCER, D=6 MM	
150	90328-0024		2	SILENCER G3/8"	
300	342713-0211		9	PLUG, EXT THREAD HEX SOCKET 8638-00-380	
310	342715-0102		12	BLIND PLUG 6 MM	
420	90458-2960		1	ELBOW PIPE JOINT, EXT.THREAD,D=12MM-G3/8	
Y5200	90042-0538		1	PILOT VALVE L=500MM	
Y5210	90042-0538		1	PILOT VALVE L=500MM	
Y5504	90042-0538		1	PILOT VALVE L=500MM	

Pos	Part No	UN	Qty	Description	Page No

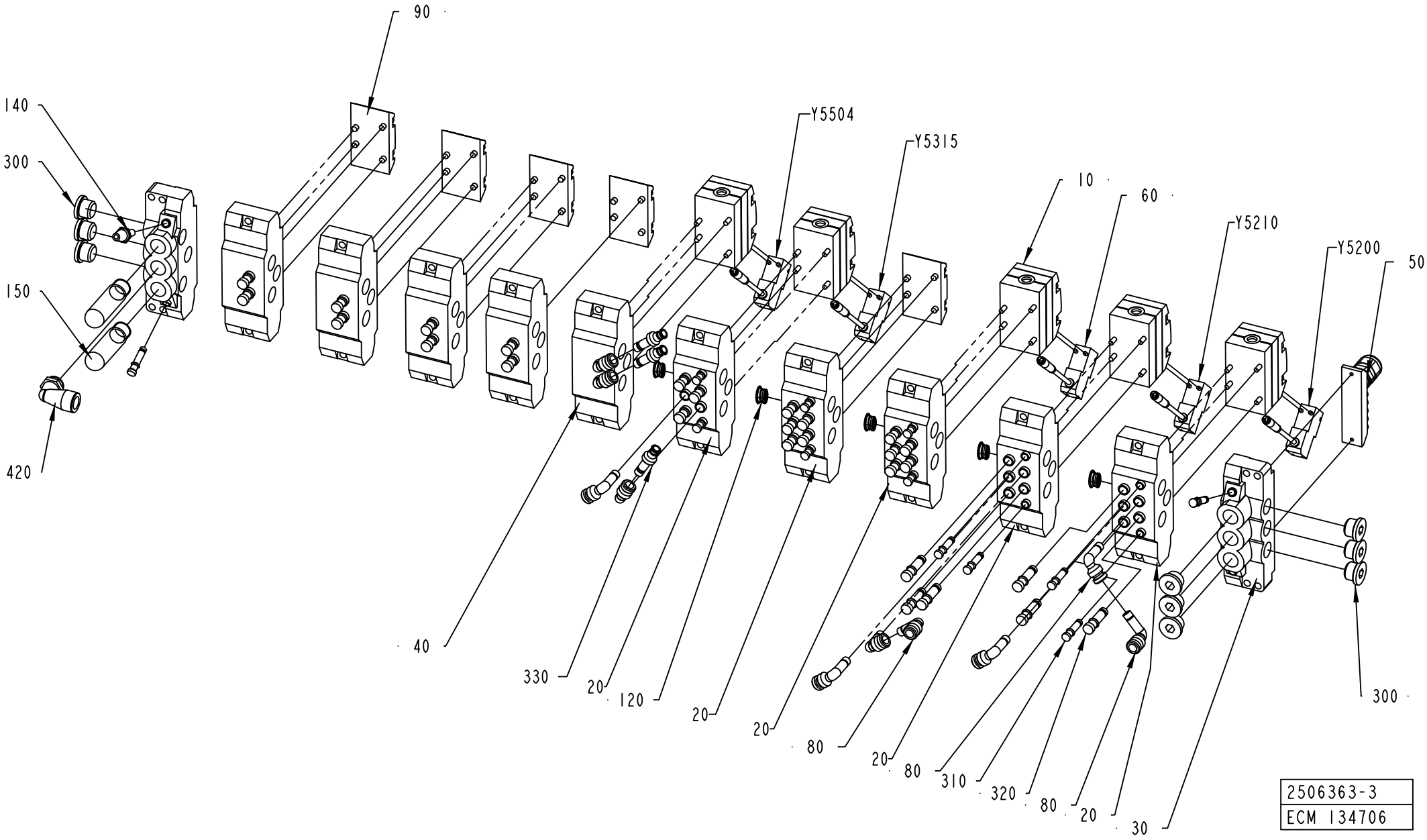
90
140
300
150
420
Y5504
Y5315
10
60
Y5210
Y5200
50
40
330
20
120
20
20
80
20
80
310
320
80
20
30
300
2506363-3
ECM 134706

ECM: 192429 - 20041201
Group number: 2506363-0100
Assembly Drawing: 2506363-3_1_AA

This list covers pages from 2-134 to 2-139

Pos	Part No	UN	Qty	Description	Page No
A3/FLEX NOQC DIMC/FLEX (See drawing on page: 2-138)					
010	90042-0215		6	VALVE BODY 5/2 UNISTABLE	
060	90042-0538		1	PILOT VALVE L=500MM	
080	90055-0172		11	ELBOW WITH TAILPIECE 8/8 MM	
090	90042-0519		4	BLANK PLATE ISO SIZE 1	
320	342715-0103		26	BLIND PLUG 8 MM	
330	342716-0203		4	REDUCER 6-8	
Y5315	90042-0538		1	PILOT VALVE L=500MM	
Y5506	90042-0538		1	PILOT VALVE L=500MM	
A3/FLEX NOQC NODIMC (See drawing on page: 2-136)					
010	90042-0215		5	VALVE BODY 5/2 UNISTABLE	
060	90042-0538		1	PILOT VALVE L=500MM	
080	90055-0172		10	ELBOW WITH TAILPIECE 8/8 MM	
090	90042-0519		5	BLANK PLATE ISO SIZE 1	
320	342715-0103		27	BLIND PLUG 8 MM	
330	342716-0203		3	REDUCER 6-8	
Y5315	90042-0538		1	PILOT VALVE L=500MM	
A3/FLEX QC NODIMC (See drawing on page: 2-134)					
010	90042-0215		6	VALVE BODY 5/2 UNISTABLE	
060	90042-0538		1	PILOT VALVE L=500MM	
080	90055-0172		12	ELBOW WITH TAILPIECE 8/8 MM	
090	90042-0519		4	BLANK PLATE ISO SIZE 1	
320	342715-0103		25	BLIND PLUG 8 MM	
330	342716-0203		5	REDUCER 6-8	
Y5315	90042-0538		1	PILOT VALVE L=500MM	
Y5505	90042-0538		1	PILOT VALVE L=500MM	
Common Parts					
020	90042-0520		5	BASE PLATE ISO SIZE 1	
030	90042-0522		2	PORTED END PIECE ISO SIZE 1	
040	90042-0532		5	BASE PLATE ISO SIZE 1	
050	90042-0535		1	TERMINAL BOARD 19 CORDS	
120	90042-0528		5	BLANKING KIT SEALS ISO SIZE 1	
140	90328-0017		1	SILENCER, D=6 MM	
150	90328-0024		2	SILENCER G3/8"	
300	342713-0211		9	PLUG, EXT THREAD HEX SOCKET 8638-00-380	
310	342715-0102		12	BLIND PLUG 6 MM	
420	90458-2960		1	ELBOW PIPE JOINT, EXT.THREAD,D=12MM-G3/8	
Y5200	90042-0538		1	PILOT VALVE L=500MM	
Y5210	90042-0538		1	PILOT VALVE L=500MM	
Y5504	90042-0538		1	PILOT VALVE L=500MM	

Pos	Part No	UN	Qty	Description	Page No

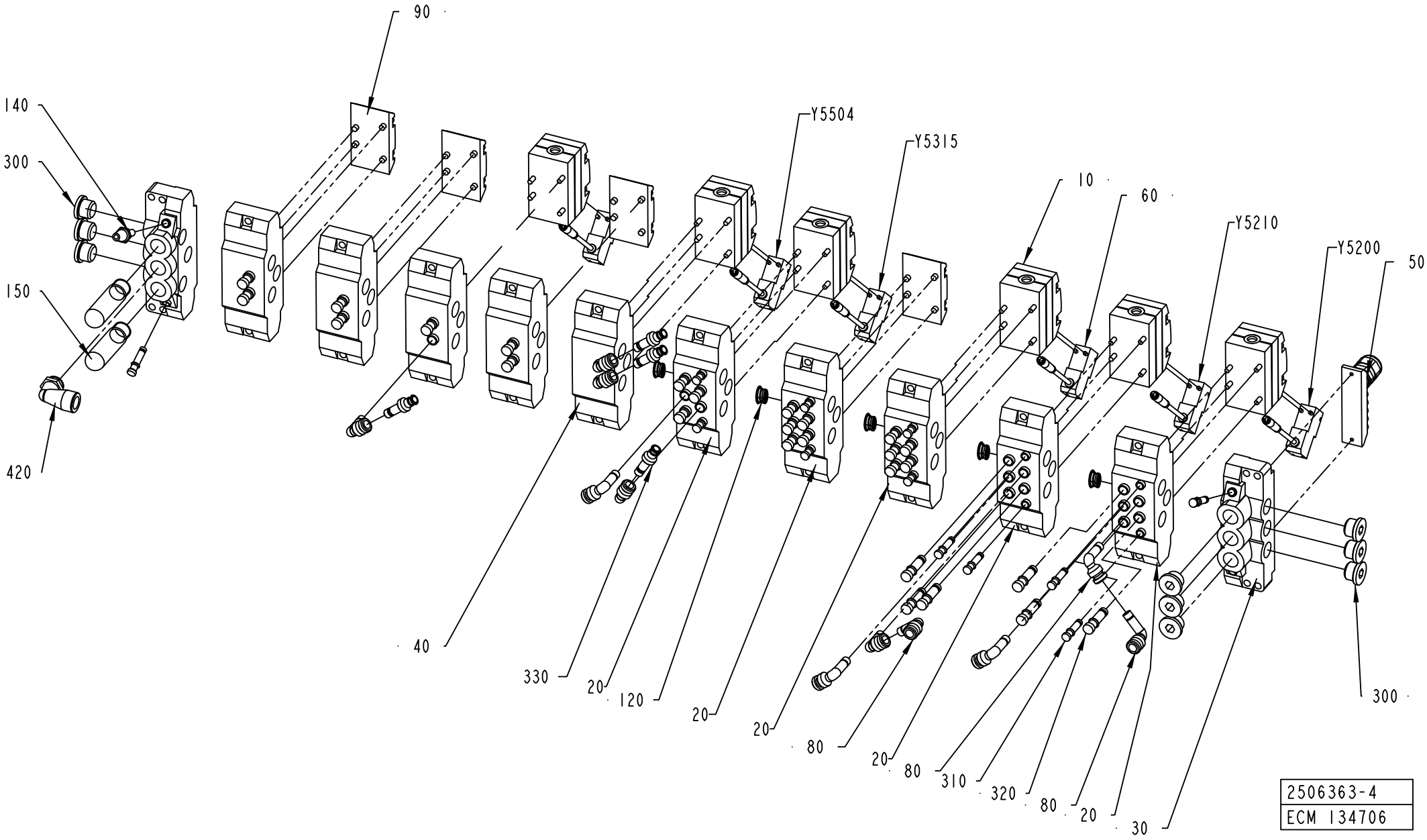
90
140
300
150
420
Y5504
Y5315
10
60
Y5210
Y5200
50
40
330
20
120
20
20
80
20
80
310
320
80
20
30
300
2506363-4
ECM 134706

ECM: 192429 - 20041201
Group number: 2506363-0100
Assembly Drawing: 2506363-4_1_AA

This list covers pages from 2-134 to 2-139

Pos	Part No	UN	Qty	Description	Page No
A3/FLEX NOQC DIMC/FLEX (See drawing on page: 2-138)					
010	90042-0215		6	VALVE BODY 5/2 UNISTABLE	
060	90042-0538		1	PILOT VALVE L=500MM	
080	90055-0172		11	ELBOW WITH TAILPIECE 8/8 MM	
090	90042-0519		4	BLANK PLATE ISO SIZE 1	
320	342715-0103		26	BLIND PLUG 8 MM	
330	342716-0203		4	REDUCER 6-8	
Y5315	90042-0538		1	PILOT VALVE L=500MM	
Y5506	90042-0538		1	PILOT VALVE L=500MM	
A3/FLEX NOQC NODIMC (See drawing on page: 2-136)					
010	90042-0215		5	VALVE BODY 5/2 UNISTABLE	
060	90042-0538		1	PILOT VALVE L=500MM	
080	90055-0172		10	ELBOW WITH TAILPIECE 8/8 MM	
090	90042-0519		5	BLANK PLATE ISO SIZE 1	
320	342715-0103		27	BLIND PLUG 8 MM	
330	342716-0203		3	REDUCER 6-8	
Y5315	90042-0538		1	PILOT VALVE L=500MM	
A3/FLEX QC NODIMC (See drawing on page: 2-134)					
010	90042-0215		6	VALVE BODY 5/2 UNISTABLE	
060	90042-0538		1	PILOT VALVE L=500MM	
080	90055-0172		12	ELBOW WITH TAILPIECE 8/8 MM	
090	90042-0519		4	BLANK PLATE ISO SIZE 1	
320	342715-0103		25	BLIND PLUG 8 MM	
330	342716-0203		5	REDUCER 6-8	
Y5315	90042-0538		1	PILOT VALVE L=500MM	
Y5505	90042-0538		1	PILOT VALVE L=500MM	
Common Parts					
020	90042-0520		5	BASE PLATE ISO SIZE 1	
030	90042-0522		2	PORTED END PIECE ISO SIZE 1	
040	90042-0532		5	BASE PLATE ISO SIZE 1	
050	90042-0535		1	TERMINAL BOARD 19 CORDS	
120	90042-0528		5	BLANKING KIT SEALS ISO SIZE 1	
140	90328-0017		1	SILENCER, D=6 MM	
150	90328-0024		2	SILENCER G3/8"	
300	342713-0211		9	PLUG, EXT THREAD HEX SOCKET 8638-00-380	
310	342715-0102		12	BLIND PLUG 6 MM	
420	90458-2960		1	ELBOW PIPE JOINT, EXT.THREAD,D=12MM-G3/8	
Y5200	90042-0538		1	PILOT VALVE L=500MM	
Y5210	90042-0538		1	PILOT VALVE L=500MM	
Y5504	90042-0538		1	PILOT VALVE L=500MM	

Pos	Part No	UN	Qty	Description	Page No

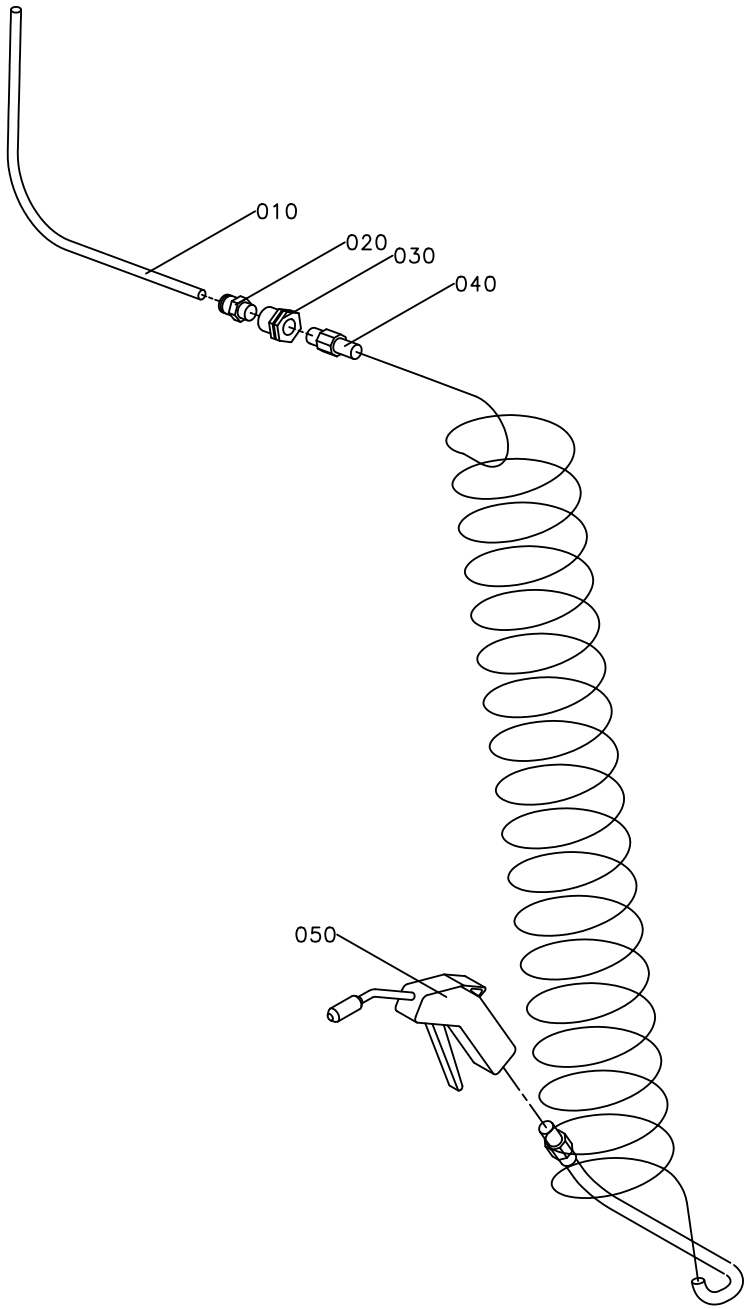
010
020
030
040
050

ECM: 189858 - 20041104
Group number: 1095682-0100
Assembly Drawing: 1095682-1_1_AA

Pos	Part No	UN	Qty	Description	Page No
-					
010	90166-0013	MM	1800	TUBE 8 MM PA BLUE	
020	342920-0122		1	STRAIGHT COUPLING,EXT.THREADED 8/6-R1/4"	
030	342767-0104		1	CONN. BULKHEAD G1/4	
040	90152-0016		1	HOSE (SPIRAL)	
050	90243-0061		1	AIR GUN, CEJN SERIE 204 ED: 90459-0173	

Pos	Part No	UN	Qty	Description	Page No

PIVOT ARM

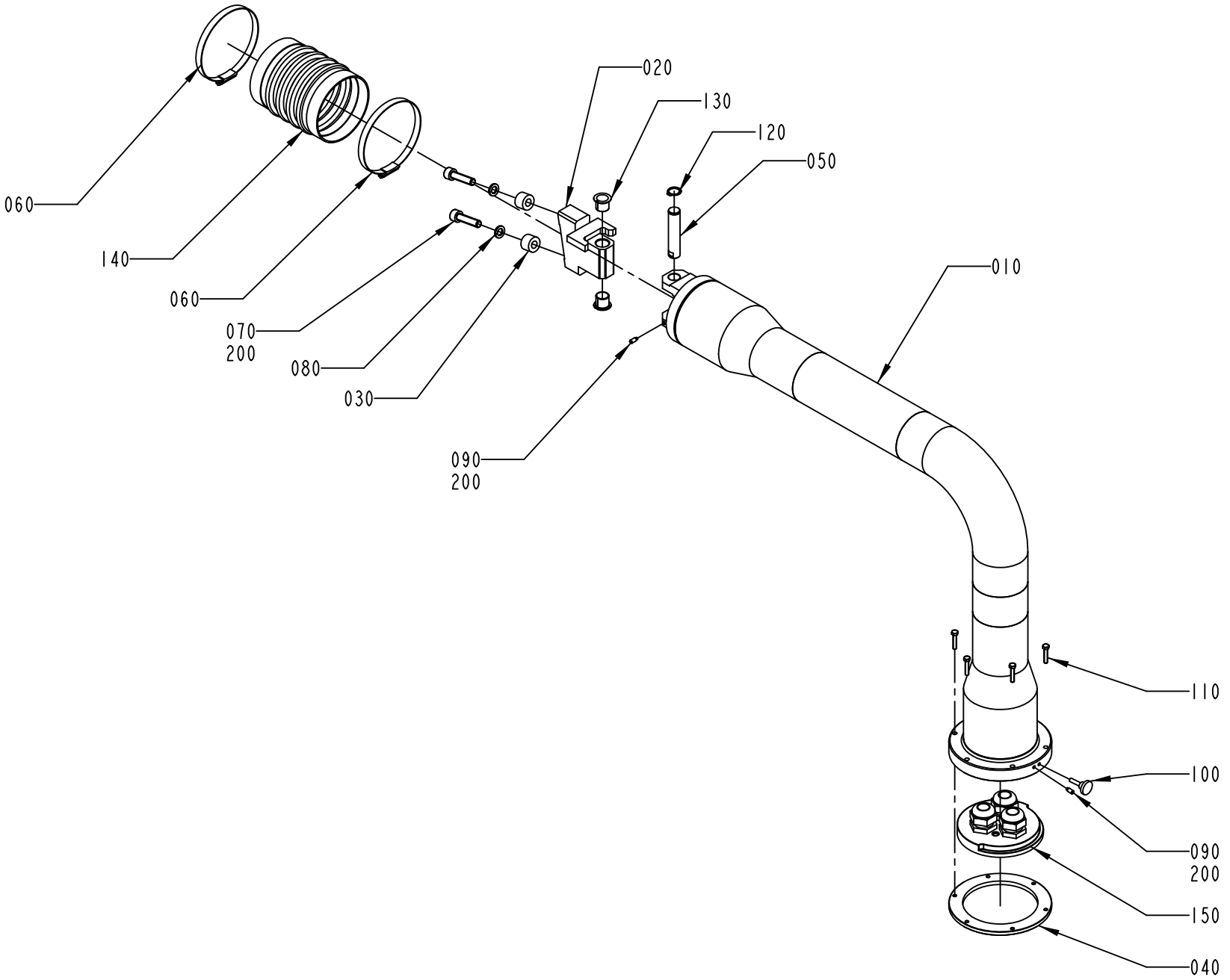

1095863-2
ECM 116300

ECM: 189861 - 20041104
Group number: 1095863-0200
Assembly Drawing: 1095863-2_1_AA

Pos	Part No	UN	Qty	Description	Page No
-					
010	1558974-0000		1	PIPE BRACKET	
020	1558975-0000		1	BLOCKING PIECE	
030	1254494-0000		1	SPACER	
040	1558949-0000		1	PLATE	
050	1558945-0000		1	PIVOT PIN	
060	342991-0114		2	HOSE CLIP,WORM DRIVE TYPE (93)-110	
070	312115-0499		2	SCREW ISO4762 M10X40 A4 80	
080	315402-0173		2	LOCK WASHER FBB 10,2	
090	312311-0327		2	SCREW ISO4028 M5X12 FZB	
100	318860-0106		1	KNOB, ADJUST.HI.EXT.THREAD, NO 8324-3674	
110	312105-0333		6	SCREW M6S ISO 4017 M5X25 A480	
120	315751-0113		1	RETAINING RING FOR SHAFT DIN 471 16 A2	
130	321161-0221		2	FLANGE BUSHING, 16X18X17 MM	
140	90342-0024		1	RUBBER BELLOWS, 100X100 MM	
150	2570616-0100		1	FASTENING PLATE	**2-145**
200	90157-0021	KG	1	LOCKING FLUID LOCTITE 270	

Pos	Part No	UN	Qty	Description	Page No

Machine Type	Group Description	Used-In	Group Number	Page No

FASTENING PLATE

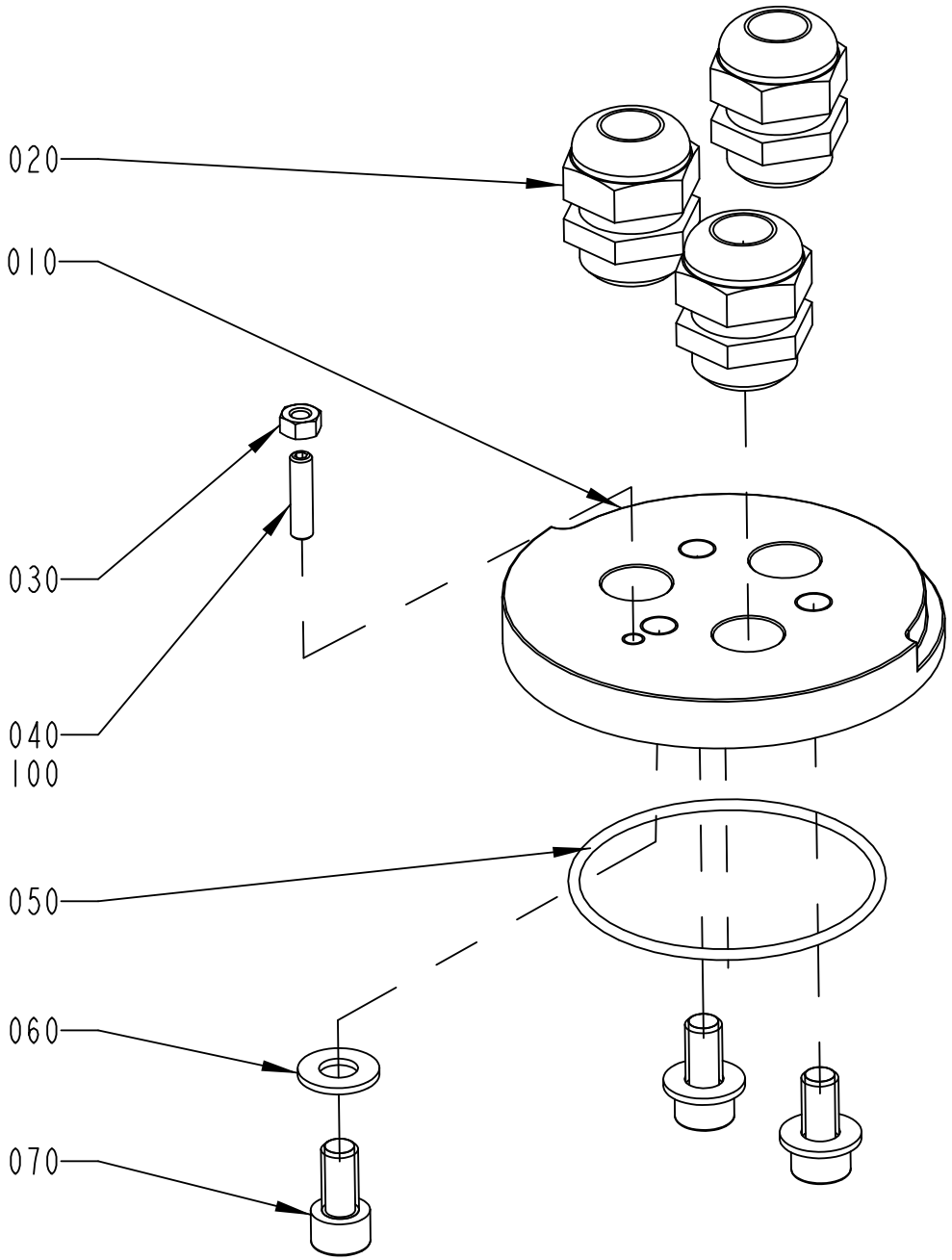

2570616-1
ECM 116300

ECM: 224853 - 20050831
Group number: 2570616-0100
Assembly Drawing: 2570616-1_1_AA

Pos	Part No	UN	Qty	Description	Page No
-					
010	1558948-0000		1	PLATE	
020	352103-0115		3	CABLE GLAND, STR 21, PR28,3/PG21	
030	312605-0316		1	HEXAGON NUT, M6M M6 A280	
040	312318-0372		1	SCREW ISO4029 M6X25 A4	
050	315202-0307		1	O-RING 79,5X3 MM	
060	315105-0173		3	WASHER BRB10,5X22RFR	
070	312115-0491		3	SCREW ISO4762 M10X20 A4 80	
100	90157-0021		1	LOCKING FLUID LOCTITE 270	

Pos	Part No	UN	Qty	Description	Page No

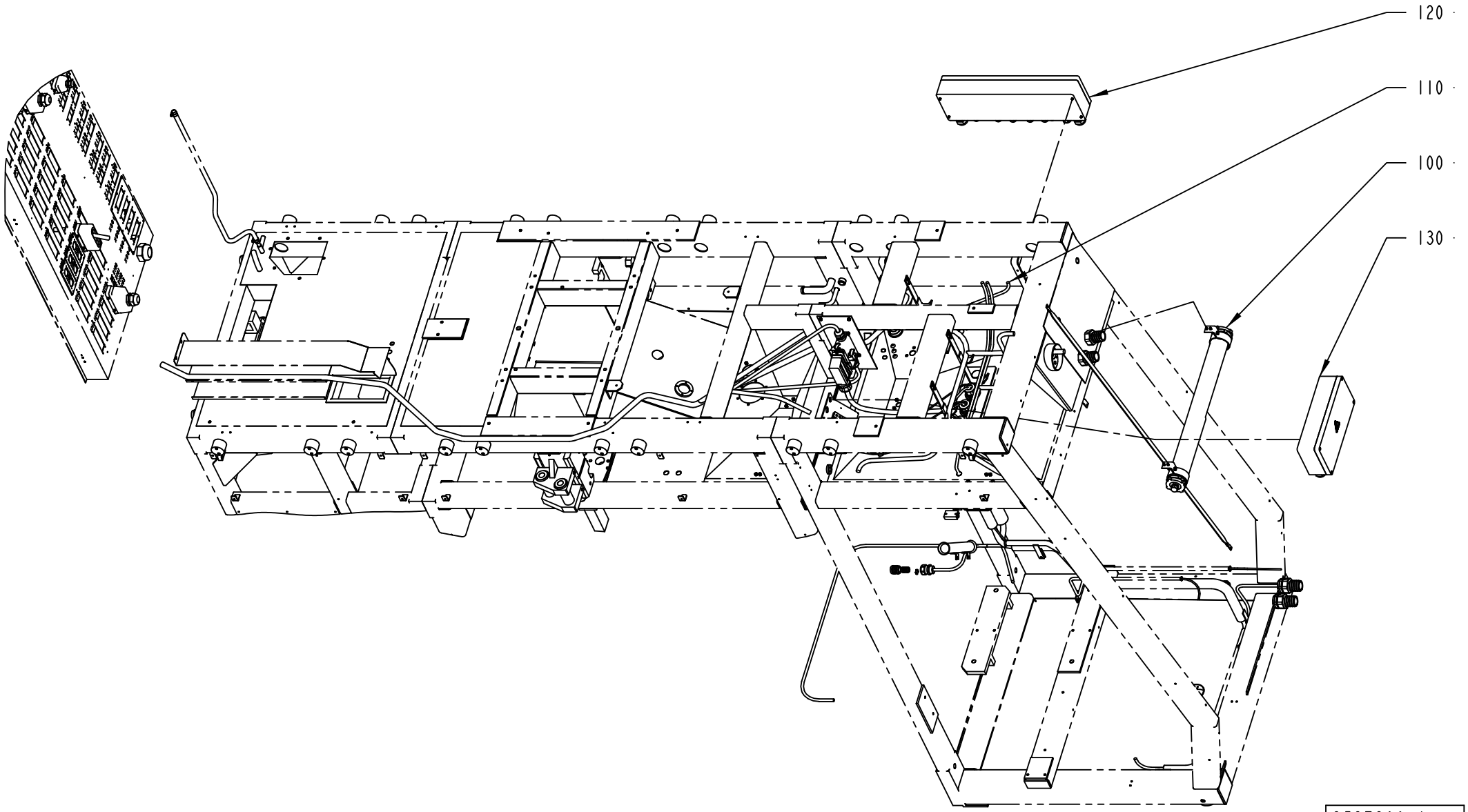
120
110
100
130
2527300-1
ECM 117203

ECM: 267113 - 20060702
Group number: 2527300-0100
Assembly Drawing: 2527300-1_1_AA

Pos	Part No	UN	Qty	Description	Page No
A3/FLEX TBA, A3/FLEX TPA					
110	2527295-0100		1	CABLE HARNESS	**2-149, 2-151, 2-153**
Common Parts					
100	2504790-0100		1	LIGHT FIXTURE	**2-93**
120	2527297-0100		1	CONNECTION BOX	**2-155**
130	2527299-0100		1	CONNECTION BOX	**2-157**

Pos	Part No	UN	Qty	Description	Page No

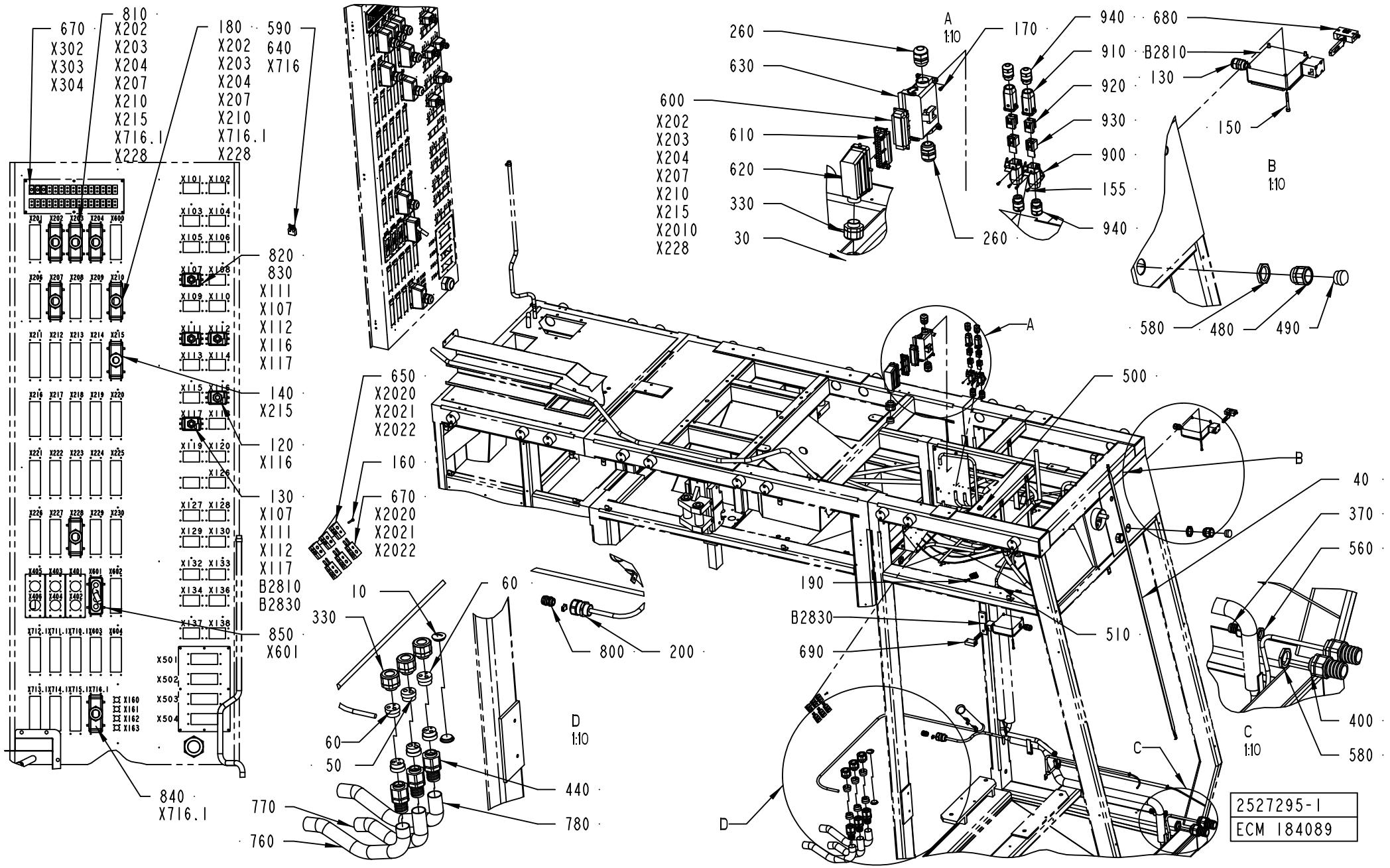
810
670
X302
X303
X304
X202
X203
X204
X207
X210
X215
X716.1
X228
180
X202
X203
X204
X207
X210
X716.1
X228
590
640
X716
820
830
X111
X107
X112
X116
X117
140
X215
120
X116
130
X107
X111
X112
X117
B2810
B2830
850
X601
840
X716.1
650
X2020
X2021
X2022
160
670
X2020
X2021
X2022
10
330
60
50
770
760
440
780
D
1:10
800
200
260
630
600
X202
X203
X204
X207
X210
X215
X2010
X228
610
620
330
30
A
1:10
170
260
940
910
920
930
900
155
940
680
B2810
130
150
B
1:10
580
480
490
A
500
B
190
B2830
690
510
40
370
560
400
580
C
1:10
C
D
2527295-1
ECM 184089

ECM: 217417 - 20051017
Group number: 2527295-0100
Assembly Drawing: 2527295-1_1_AC

This list covers pages from 2-148 to 2-153

Pos	Part No	UN	Qty	Description	Page No
A3/FLEX (See drawing on pages: 2-148, 2-150, 2-152)					
130	352103-0108		6	CABLE GLAND, ST 13,5 , PR20,4/PG13,5	
820	90110-0157		5	CABLE HOOD 6-POL 70.352.0628.1	
830	90110-0159		5	MALE INSERT 70.310.0640.0	
W5700	351150-0403	MM	1500	CABLE OLFLEX 3X0,75 MM2 LIGHT/GREY	
Common Parts					
010	90002-0012		2	BLANK-OFF PLUG, PR 28,3 SKINDICHT-BLK21	
030	2527371-0000		1	INSERT	
040	1129600-0000		1	BRAID	
050	1484093-0000		2	INSERT	
060	1484379-0000		4	INSERT	
120	352103-0110		1	CABLE GLAND, STR 16, PR22,5/PG16	
140	352103-0120		1	CABLE GLAND, STR 29, PR37,0/PG29	
150	312115-0340		8	SCREW ISO4762 M5X45 A4 80	
155	312125-0222		4	SCREW ISO 1207 M3X8 A4	
160	312125-0228		3	SCREW ISO 1207 M3X16 A4	
170	312125-0287		4	SCREW ISO 1207 M4X8 A4	
180	352103-0121		7	CABLE GLAND, ST 29, PR37,0/PG29	
190	353101-0153		1	CABLE SHOE 4,0-6,0MM2 M6 YELLOW	
200	353245-0006		1	GLAND, EXTENDED WITH INSERT, PG21/PR28,3	
260	352103-0115		2	CABLE GLAND, STR 21, PR28,3/PG21	
330	353241-0003		4	GLAND W/O INSERT PG21 EXTENDED	
370	353243-0005		1	HOSE GLAND W/O INSERT PG16 EXTENDED	
400	353243-0008		2	HOSE GLAND W/O INSERT PG29 EXTENDED	
440	353247-0005		3	HOSE GLAND EMC PG21 EXTENDED	
480	353249-0049		2	INSERT, SOLID, EK155G	
490	353240-0006		2	GLAND W/O INSERT PG29 NORMAL	
500	90015-0020		3	LEAD-IN, TET5-7, E-1458016	
510	90015-0023		5	LEAD-IN, TET7-10, E-1458019	
560	90099-0110		1	NUT, PR 22,5 (PG16)	
580	90099-0120		4	NUT PR 37 (PG29)	
590	90110-0144		1	COVER	
600	90110-0150		8	MALE INSERT 121110 0000	
610	90110-0151		1	FEMALE INSERT 24-POL 121130 0000	
620	90110-0228		1	CABLE HOOD 24-POL 71.350.2428.0	
630	90110-0513		1	CHASSIS HOUSING, CHP 24L S2	
640	90110-0141		1	CONTACT UNIT, DE09P064TX	
650	90326-0020		3	PLUG, FEMALE YELLOW CR-AL	
670	90326-0022		6	PLUG, MALE YELLOW CR-AL	
680	90457-0194		1	KEY FOR SAF.SW.048850-C2052	
690	90457-0195		1	KEY FOR SAF.SW.TZRE024PG RC1635-057950	
760	90152-0070	MM	490	METAL HOSE, 32,5X26, UL 2621	
770	90152-0070	MM	360	METAL HOSE, 32,5X26, UL 2621	
780	90152-0070	MM	510	METAL HOSE, 32,5X26, UL 2621	
800	90100-0052		1	CONNECTOR KIT, FEEDBACK CABLE DRIVE END	
810	90110-0152		8	CABLE HOOD 24-POL 70.352.2428.1	
840	90110-0517		1	MALE INSERT 4+8 POLES 313102-33 CXM4/8	
850	90110-0381		1	COVER, 310601-33 CYR24.4	
860	359005-0010		13	MARKING LABEL KIT 0 - 9, 04.841.2150.0	
870	359005-0050		12	MARKING LABEL KIT X, 04.841.4550.0	
890	90110-0385		13	MARKING HOLDER, 4.242.3853.0	
900	90459-3081		2	HOUSING HAN A 19 20 003 1250	
910	90459-3080		2	HOOD HAN-BRID 3A 19 20 003 1443	
920	90459-3082		2	MALE INSERT HAN-BRID RJ45 09 12 003 3001	
930	90459-3083		2	FEMALE INSERT HAN-BRID RJ45 09 120032790	
940	90458-0315		4	CABLE GLAND, M20X1,5, NO.5311 1120	
B2810	90457-0196		1	KEY SAF.SW. TZ2RE024PG RC1635	
B2830	90457-0196		1	KEY SAF.SW. TZ2RE024PG RC1635	
W0001	351150-0430	M	8	CABLE OLFLEX 5X35 MM2 LIGHT/GREY	
W2010	351150-0425	MM	7400	CABLE OLFLEX 25X0,75 MM2 LIGHT/GREY	
W2011	351150-0425	MM	7000	CABLE OLFLEX 25X0,75 MM2 LIGHT/GREY	
W2014	351150-0413	MM	7000	CABLE OLFLEX 4X1,5 MM2 LIGHT/GREY	
W2015	90220-0104	MM	6900	SCR. CABLE 4X1,5MM2	
W2016	351150-0412	MM	8000	CABLE OLFLEX 3X1,5 MM2 LIGHT/GREY	
W2017	351150-0412	MM	2000	CABLE OLFLEX 3X1,5 MM2 LIGHT/GREY	
W2018	351150-0412	MM	2000	CABLE OLFLEX 3X1,5 MM2 LIGHT/GREY	
W2019	351150-0412	MM	2000	CABLE OLFLEX 3X1,5 MM2 LIGHT/GREY	
W2021	90220-0034	MM	7500	THERMOCABLE TEX/SITW-20F-KX 2X0,5MM2	
W2022	90220-0034	MM	7500	THERMOCABLE TEX/SITW-20F-KX 2X0,5MM2	
W2023	90220-0034	MM	7500	THERMOCABLE TEX/SITW-20F-KX 2X0,5MM2	
W2030	351150-0425	MM	7500	CABLE OLFLEX 25X0,75 MM2 LIGHT/GREY	
W2066	90458-2557	MM	9100	CABLE OLFLEX 25X1 MM2	
W2067	90458-2557	MM	9100	CABLE OLFLEX 25X1 MM2	
W2068	1363297-0000		1	CABLE LVDS 10M	
W2212	351150-0405	MM	4000	CABLE OLFLEX 5X0,75 MM2 LIGHT/GREY	
W2224	351150-0406	MM	1500	CABLE OLFLEX 7X0,75 MM2 LIGHT/GREY	
W2228	351150-0406	MM	2500	CABLE OLFLEX 7X0,75 MM2 LIGHT/GREY	
W2716	90220-0084	MM	8400	MOTOR CABLE 4X2,5+2(2X0.75)+SHIELD	
W2726	90220-0131	M	11	PAIR TWISTED CABLE 3X2X0,25MM2	
W4005	351150-0414	MM	6500	CABLE OLFLEX 5X1,5 MM2 LIGHT/GREY	
W4006	351150-0417	MM	6500	CABLE OLFLEX 3X2,5 MM2 LIGHT/GREY	
W4502	2570004-0001		1	CABLE	
W4503	2570004-0001		1	CABLE	
W4505	90459-1812		1	CABLE, ETHERNET RJ 45 CONNECT. 8 M	

Machine Type | Group Description | Used-In | Group Number | Page No

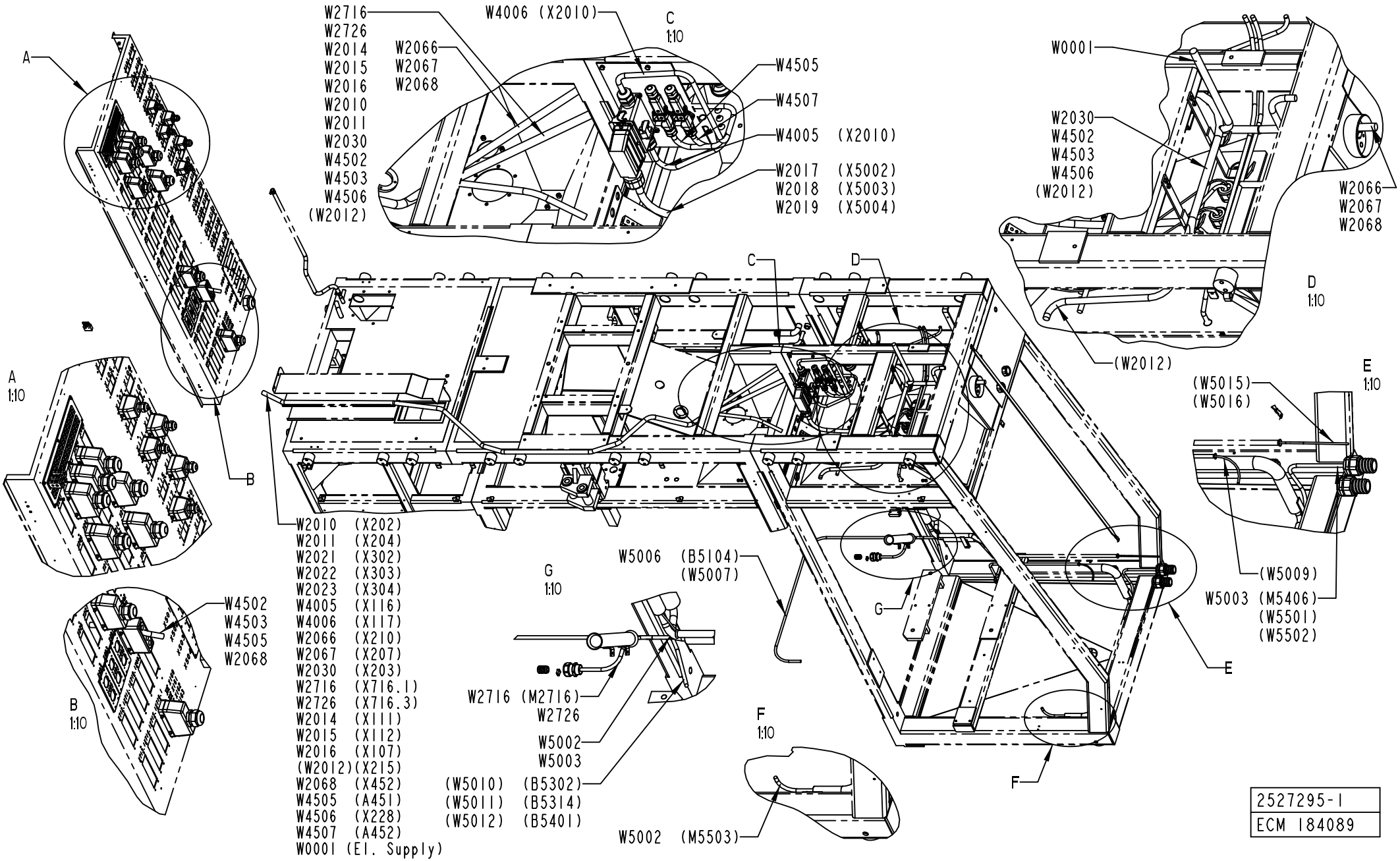
W2716
W2726
W2014
W2015
W2016
W2010
W2011
W2030
W4502
W4503
W4506
(W2012)
W2066
W2067
W2068
W4006 (X2010)
C
1:10
W4505
W4507
W4005 (X2010)
W2017 (X5002)
W2018 (X5003)
W2019 (X5004)
W0001
W2030
W4502
W4503
W4506
(W2012)
W2066
W2067
W2068
D
1:10
(W2012)
A
1:10
B
1:10
W4502
W4503
W4505
W2068
W2010 (X202)
W2011 (X204)
W2021 (X302)
W2022 (X303)
W2023 (X304)
W4005 (X116)
W4006 (X117)
W2066 (X210)
W2067 (X207)
W2030 (X203)
W2716 (X716.1)
W2726 (X716.3)
W2014 (X111)
W2015 (X112)
W2016 (X107)
(W2012)(X215)
W2068 (X452)
W4505 (A451)
W4506 (X228)
W4507 (A452)
W0001 (El. Supply)
G
1:10
W2716 (M2716)
W2726
W5002
W5003
W5006 (B5104)
(W5007)
(W5010) (B5302)
(W5011) (B5314)
(W5012) (B5401)
W5002 (M5503)
F
1:10
E
1:10
(W5015)
(W5016)
(W5009)
W5003 (M5406)
(W5501)
(W5502)
2527295-1
ECM 184089

Pos	Part No	UN	Qty	Description	Page No
Common Parts (Cont'd)					
W4506	351150-0425	MM	7500	CABLE OLFLEX 25X0,75 MM2 LIGHT/GREY	
W4507	90459-1812		1	CABLE, ETHERNET RJ 45 CONNECT. 8 M	
W5002	351150-0413	MM	5000	CABLE OLFLEX 4X1,5 MM2 LIGHT/GREY	
W5003	90220-0104	MM	7500	SCR. CABLE 4X1,5MM2	
W5004	351150-0412	MM	2500	CABLE OLFLEX 3X1,5 MM2 LIGHT/GREY	
W5021	90220-0034	M	2	THERMOCABLE TEX/SITW-20F-KX 2X0,5MM2	
W5022	90220-0034	M	2	THERMOCABLE TEX/SITW-20F-KX 2X0,5MM2	
W5023	90220-0034	M	2	THERMOCABLE TEX/SITW-20F-KX 2X0,5MM2	

Pos	Part No	UN	Qty	Description	Page No

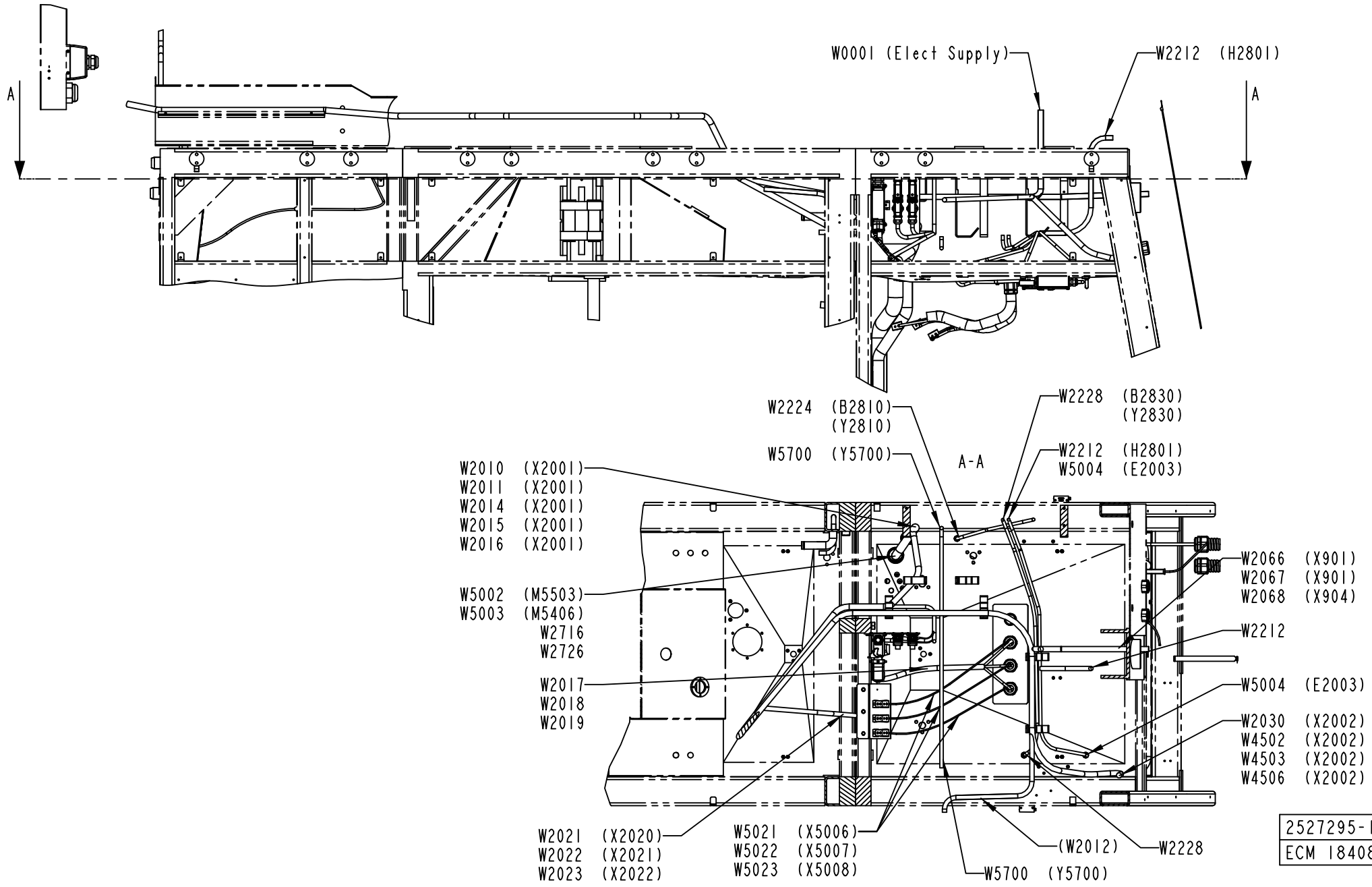
A
A
W0001 (Elect Supply)
W2212 (H2801)
W2224 (B2810)
(Y2810)
W5700 (Y5700)
A-A
W2228 (B2830)
(Y2830)
W2212 (H2801)
W5004 (E2003)
W2010 (X2001)
W2011 (X2001)
W2014 (X2001)
W2015 (X2001)
W2016 (X2001)
W5002 (M5503)
W5003 (M5406)
W2716
W2726
W2017
W2018
W2019
W2066 (X901)
W2067 (X901)
W2068 (X904)
W2212
W5004 (E2003)
W2030 (X2002)
W4502 (X2002)
W4503 (X2002)
W4506 (X2002)
W2021 (X2020)
W2022 (X2021)
W2023 (X2022)
W5021 (X5006)
W5022 (X5007)
W5023 (X5008)
(W2012)
W2228
W5700 (Y5700)
2527295-1
ECM 184089

ECM: 217417 - 20051017
Group number: 2527295-0100
Assembly Drawing: 2527295-1_3_AC

This list covers pages from 2-148 to 2-153

Pos	Part No	UN	Qty	Description	Page No
SEE PREVIOUS LISTS PAGES: 2-149, 2-151.					

Pos	Part No	UN	Qty	Description	Page No

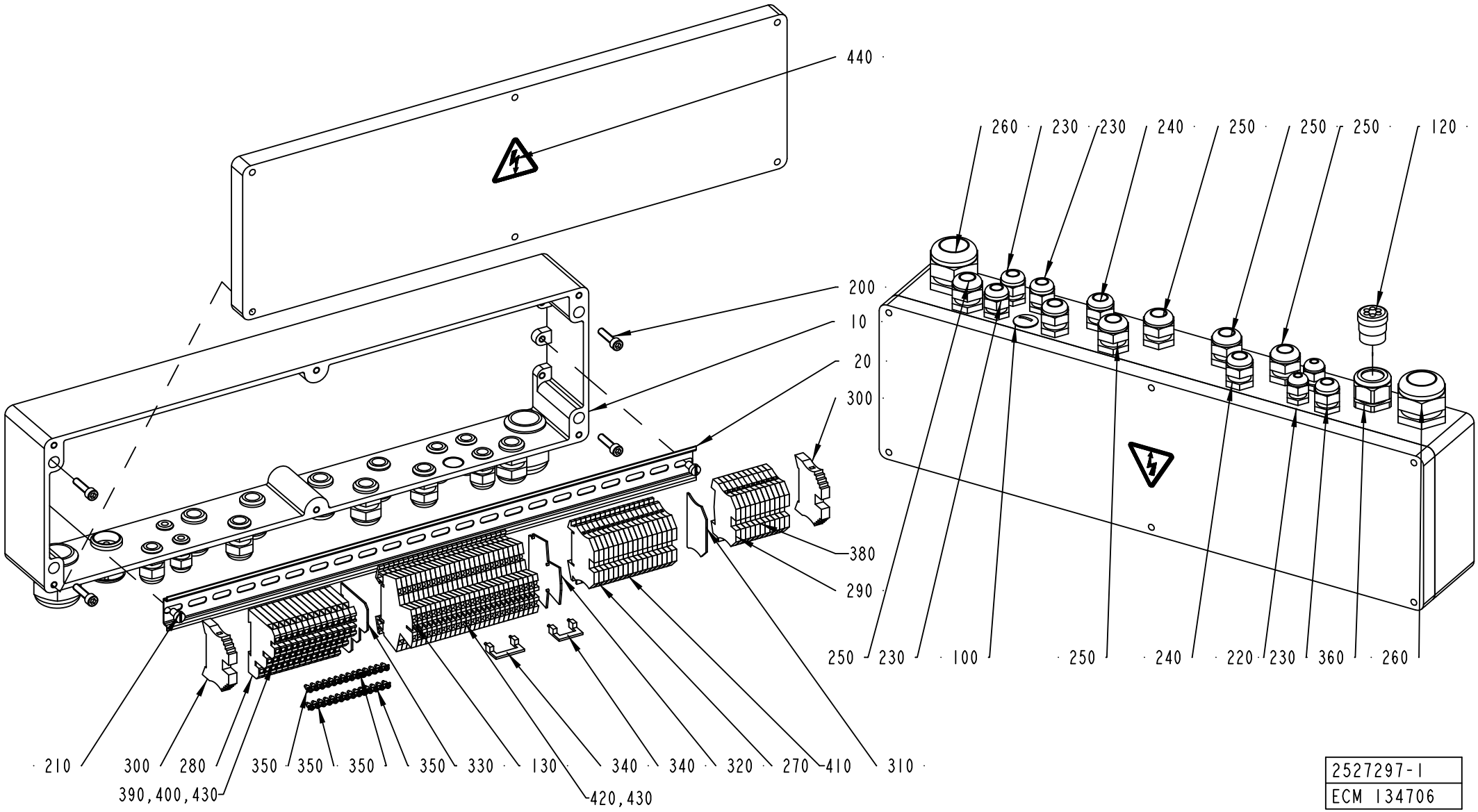

2527297-1
ECM 134706

ECM: 217418 - 20051017
Group number: 2527297-0100
Assembly Drawing: 2527297-1_1_AB

Pos	Part No	UN	Qty	Description	Page No
A3/FLEX					
100	90002-0009		1	BLANK-OFF PLUG, PR 18.6 SKINDICHT-BLK11	
230	352103-0106		4	CABLE GLAND, ST 11, PR18,6/PG11	
Common Parts					
010	2537113-0000		1	CONNECTION BOX	
020	1129504-0000		1	MOUNTING RAIL	
120	90012-0125		1	GLAND FITTING	
130	90077-0113		26	FEED THROUGH TERMINAL, 10-00102150-1	
200	312115-0372		4	SCREW ISO4762 M6X25 A4 80	
210	312121-0364		2	SCREW ISO 1207 M6X10 4.8 - 5.8 Z.PL.	
220	352103-0100		2	CABLE GLAND, STR 9, PR15,2/PG9	
240	352103-0108		3	CABLE GLAND, ST 13,5 , PR20,4/PG13,5	
250	352103-0110		5	CABLE GLAND, STR 16, PR22,5/PG16	
260	352103-0121		2	CABLE GLAND, ST 29, PR37,0/PG29	
270	353021-0212		17	FEED THROUGH TERMINAL, 10200.0	
280	353021-0301		14	TERMINALS,TRIPLE-LEVEL, DLI 2,5/35 PA	
290	353024-0204		11	EARTH TERMINAL WPE 2,5	
300	353031-0203		2	END SUPPORT, WEW 35/2	
310	353032-0004		1	END PLATE WAP 2,5-10 BEIGE	
320	353032-0009		1	END PLATE, WAP FOR WDK	
330	353032-0301		1	END PLATE WAP, 13132.6	
340	353034-0030		2	BRIDGE CONNECTOR WQV 2,5/10, 10544.6	
350	353034-0404		4	BRIDGE CONNECTOR Q10, 13131.0	
360	353240-0005		1	GLAND W/O INSERT PG21 NORMAL	
380	359011-0834		1	SET OF SIGNS 6-GW(EARTH)	
390	359011-0817		1	SYMBOL 5-GW (+) 50PC	
400	359011-0818		1	SYMBOL 5-GW (-) 50PC	
410	359011-0821		2	SET OF SIGNS 6-FW 1-50	
420	359011-0824		2	SET OF SIGNS 6-FW 151-200	
430	359012-0800		2	TERMINAL MARKING LAB. KIT, BSFW, 101-15	
440	359705-0015		1	WARNING SIGN ISO, RISK OF ELECTRIC SHOCK	

Pos	Part No	UN	Qty	Description	Page No

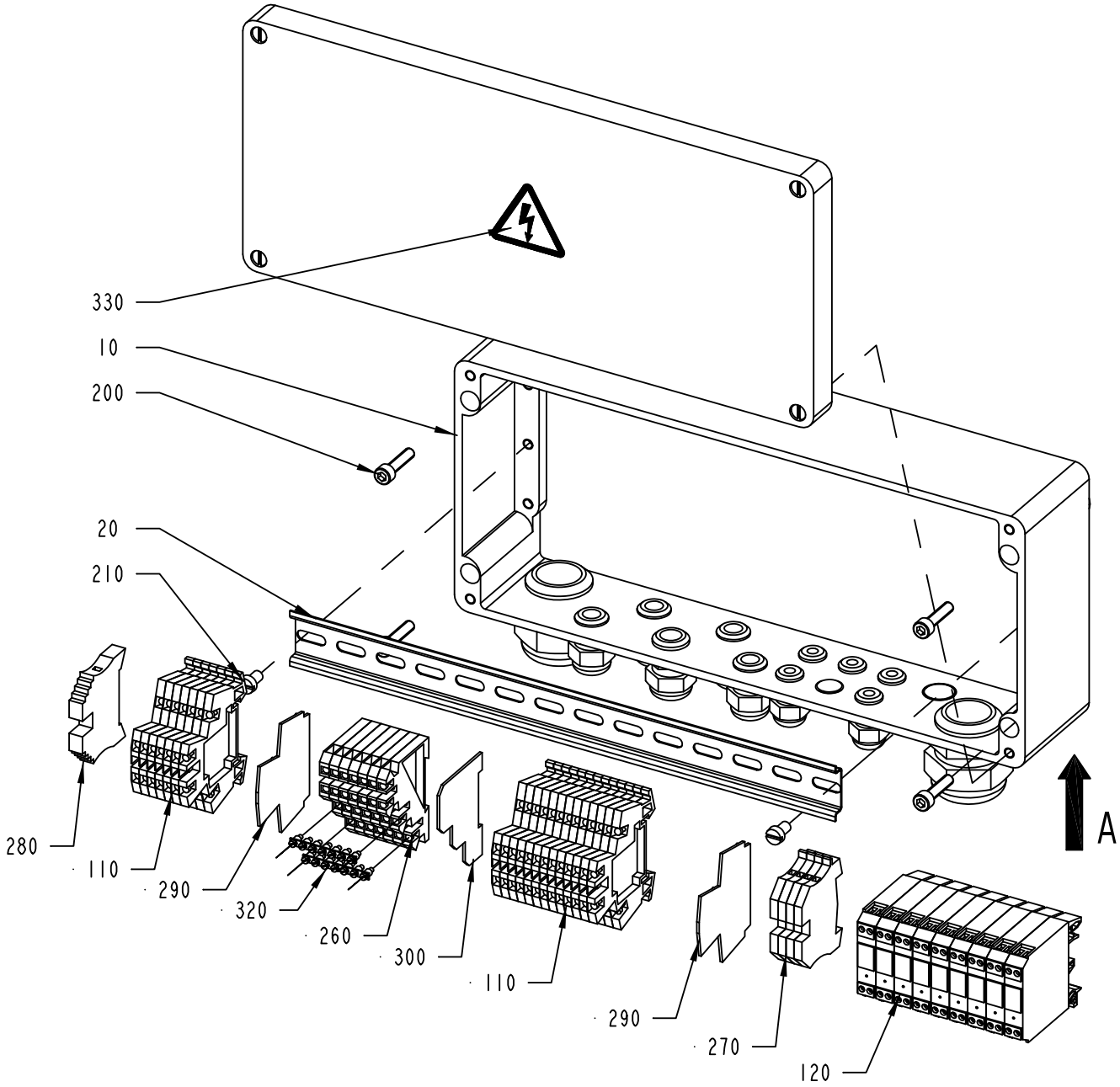

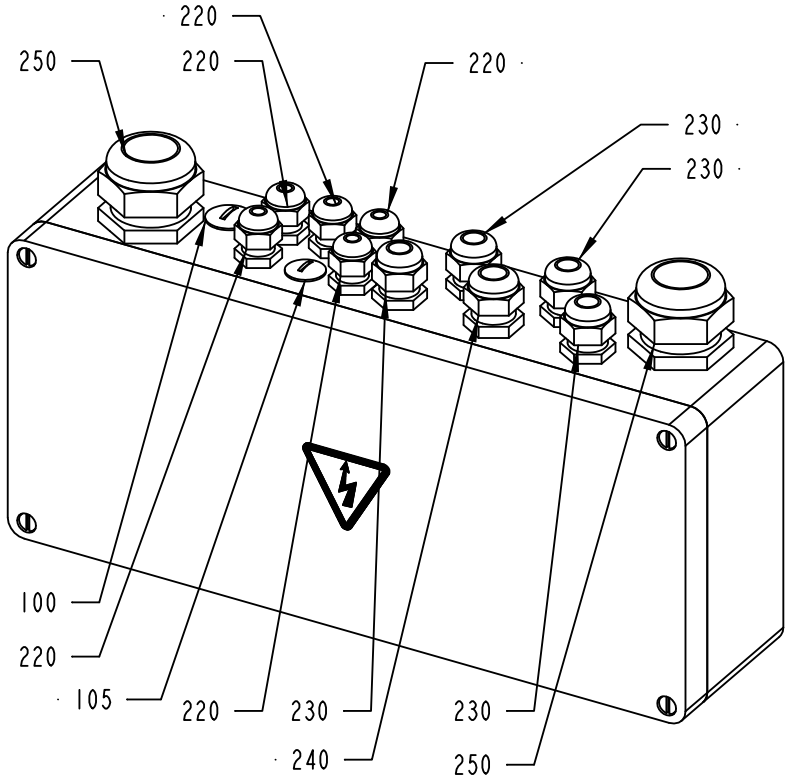

VIEW FROM A

2527299-1
ECM 133290

ECM: 210346 - 20050621
Group number: 2527299-0100
Assembly Drawing: 2527299-1_1_AB

Pos	Part No	UN	Qty	Description	Page No
A3/FLEX					
120	90119-0063		9	OPTO-RELAY, DC/DC AMMS-10-1/30VDC	
Common Parts					
010	2537114-0000		1	CONNECTION BOX	
020	2546496-0000		1	RAIL	
100	90002-0009		1	BLANK-OFF PLUG, PR 18.6 SKINDICHT-BLK11	
105	90002-0013		1	BLANK-OFF PLUG, PR 15,2 SKINDICHT-BLK9	
110	90077-0113		20	FEED THROUGH TERMINAL, 10-00102150-1	
130	90459-1617		1	TERMINAL BOX FL CAT5	
200	312115-0372		4	SCREW ISO4762 M6X25 A4 80	
210	312121-0364		2	SCREW ISO 1207 M6X10 4.8 - 5.8 Z.PL.	
220	352103-0100		5	CABLE GLAND, STR 9, PR15,2/PG9	
230	352103-0106		4	CABLE GLAND, ST 11, PR18,6/PG11	
240	352103-0108		1	CABLE GLAND, ST 13,5 , PR20,4/PG13,5	
250	352103-0121		2	CABLE GLAND, ST 29, PR37,0/PG29	
260	353021-0301		7	TERMINALS,TRIPLE-LEVEL, DLI 2,5/35 PA	
270	353024-0204		4	EARTH TERMINAL WPE 2,5	
280	353031-0203		1	END SUPPORT, WEW 35/2	
290	353032-0009		2	END PLATE, WAP FOR WDK	
300	353032-0301		1	END PLATE WAP, 13132.6	
310	353034-0030		1	BRIDGE CONNECTOR WQV 2,5/10, 10544.6	
320	353034-0404		2	BRIDGE CONNECTOR Q10, 13131.0	
330	359705-0015		1	WARNING SIGN ISO, RISK OF ELECTRIC SHOCK	
340	359011-0834		1	SET OF SIGNS 6-GW(EARTH)	
350	359012-0800		2	TERMINAL MARKING LAB. KIT, BSFW, 101-15	

Pos	Part No	UN	Qty	Description	Page No

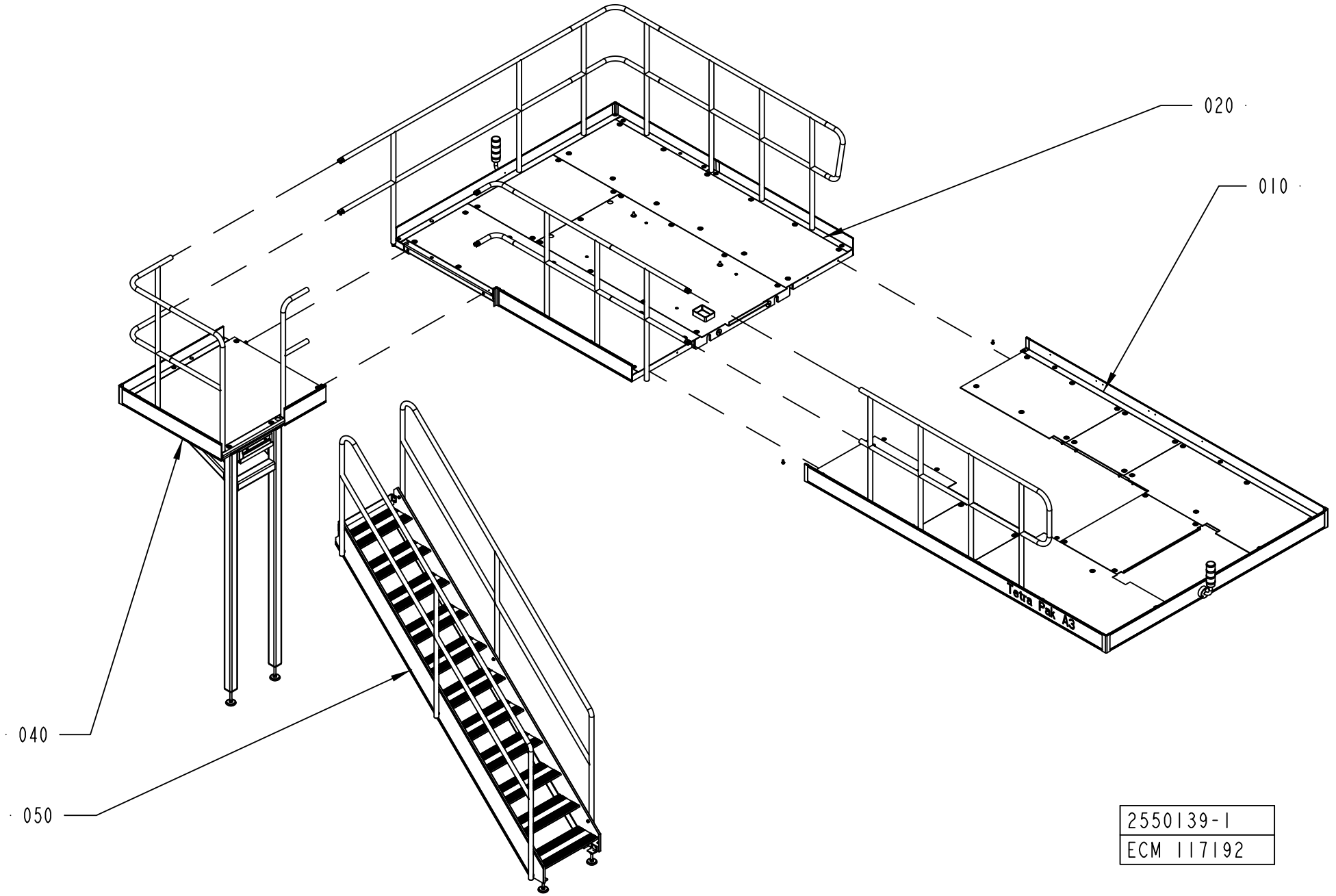
020
010
040
050
Tetra Pak A3
2550139-1
ECM 117192

ECM: 266298 - 20060702
Group number: 2550139-0100
Assembly Drawing: 2550139-1_1_AA

This list covers pages from 2-158 to 2-169

Pos	Part No	UN	Qty	Description	Page No
A3/FLEX DIMC/FLEX LEFTSTAIR (See drawing on page: 2-162)					
020	1528847-0100		1	PLATFORM	**2-171**
030	1528848-0100		1	PLATFORM	**2-173, 2-175**
A3/FLEX DIMC/FLEX RIGHTSTAIR (See drawing on page: 2-168)					
020	1528847-0100		1	PLATFORM	**2-171**
030	1528848-0100		1	PLATFORM	**2-173, 2-175**
A3/FLEX NOPT LEFTSTAIR, A3/FLEX NODIMC LEFTSTAIR (See drawing on page: 2-158)					
020	2550138-0100		1	PLATFORM	**2-179, 2-181, 2-183, 2-185**
A3/FLEX NOPT RIGHTSTAIR, A3/FLEX NODIMC RIGHTSTAIR (See drawing on page: 2-164)					
020	2550138-0100		1	PLATFORM	**2-179, 2-181, 2-183, 2-185**
A3/FLEX PT/FLEX LEFTSTAIR (See drawing on page: 2-160)					
020	2550138-0100		1	PLATFORM	**2-179, 2-181, 2-183, 2-185**
A3/FLEX PT/FLEX RIGHTSTAIR (See drawing on page: 2-166)					
020	2550138-0100		1	PLATFORM	**2-179, 2-181, 2-183, 2-185**
Common Parts					
010	2508369-0200		1	PLATFORM	**2-187**
040	2564546-0100		1	PLATFORM	**2-189, 2-191**
050	1523777-0100		1	STAIR CASE	**2-193**

Pos	Part No	UN	Qty	Description	Page No

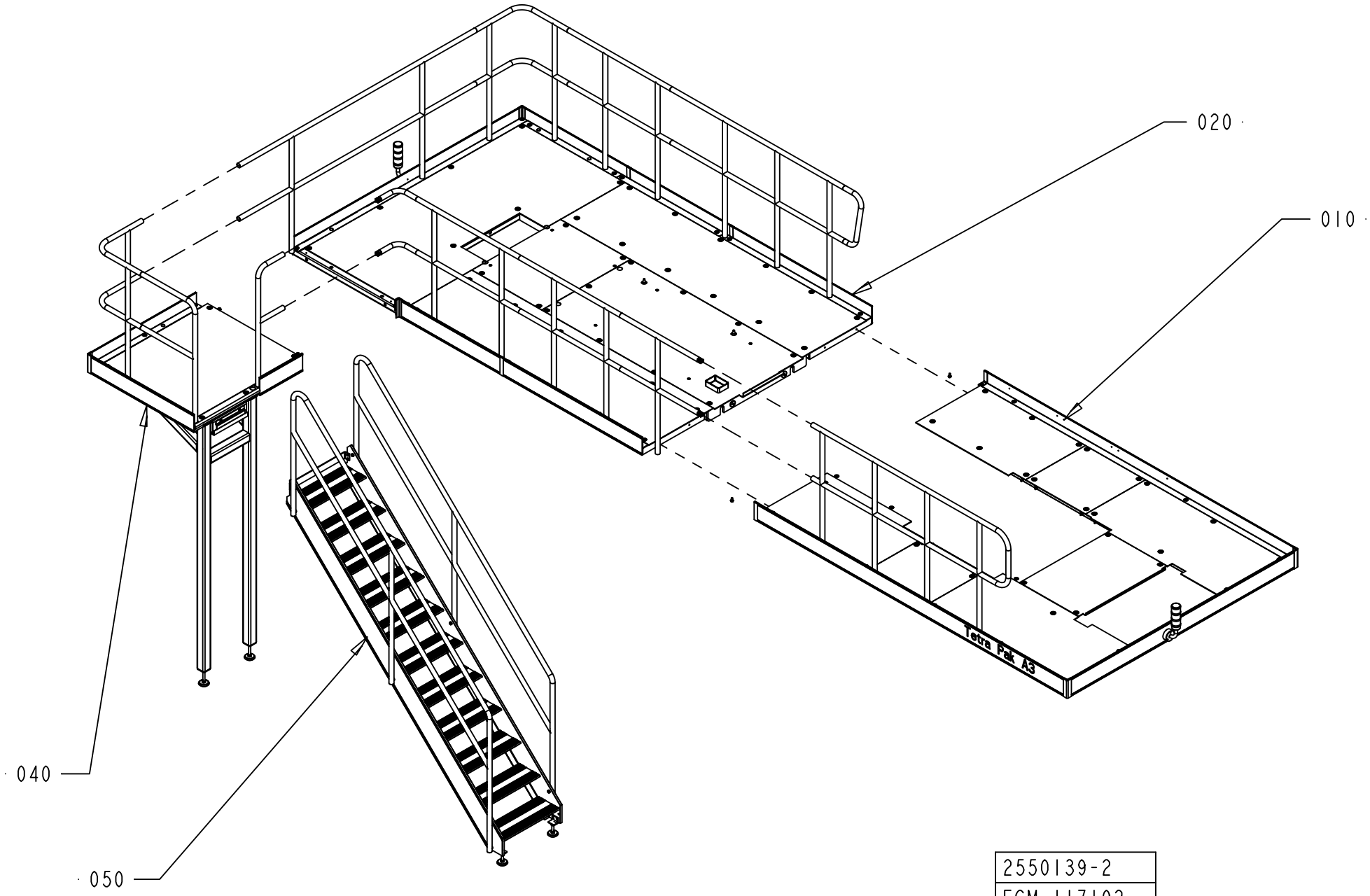

2550139-2
ECM 117192

ECM: 266298 - 20060702
Group number: 2550139-0100
Assembly Drawing: 2550139-2_1_AA

This list covers pages from 2-158 to 2-169

Pos	Part No	UN	Qty	Description	Page No
A3/FLEX DIMC/FLEX LEFTSTAIR (See drawing on page: 2-162)					
020	1528847-0100		1	PLATFORM	**2-171**
030	1528848-0100		1	PLATFORM	**2-173, 2-175**
A3/FLEX DIMC/FLEX RIGHTSTAIR (See drawing on page: 2-168)					
020	1528847-0100		1	PLATFORM	**2-171**
030	1528848-0100		1	PLATFORM	**2-173, 2-175**
A3/FLEX NOPT LEFTSTAIR, A3/FLEX NODIMC LEFTSTAIR (See drawing on page: 2-158)					
020	2550138-0100		1	PLATFORM	**2-179, 2-181, 2-183, 2-185**
A3/FLEX NOPT RIGHTSTAIR, A3/FLEX NODIMC RIGHTSTAIR (See drawing on page: 2-164)					
020	2550138-0100		1	PLATFORM	**2-179, 2-181, 2-183, 2-185**
A3/FLEX PT/FLEX LEFTSTAIR (See drawing on page: 2-160)					
020	2550138-0100		1	PLATFORM	**2-179, 2-181, 2-183, 2-185**
A3/FLEX PT/FLEX RIGHTSTAIR (See drawing on page: 2-166)					
020	2550138-0100		1	PLATFORM	**2-179, 2-181, 2-183, 2-185**
Common Parts					
010	2508369-0200		1	PLATFORM	**2-187**
040	2564546-0100		1	PLATFORM	**2-189, 2-191**
050	1523777-0100		1	STAIR CASE	**2-193**

Pos	Part No	UN	Qty	Description	Page No

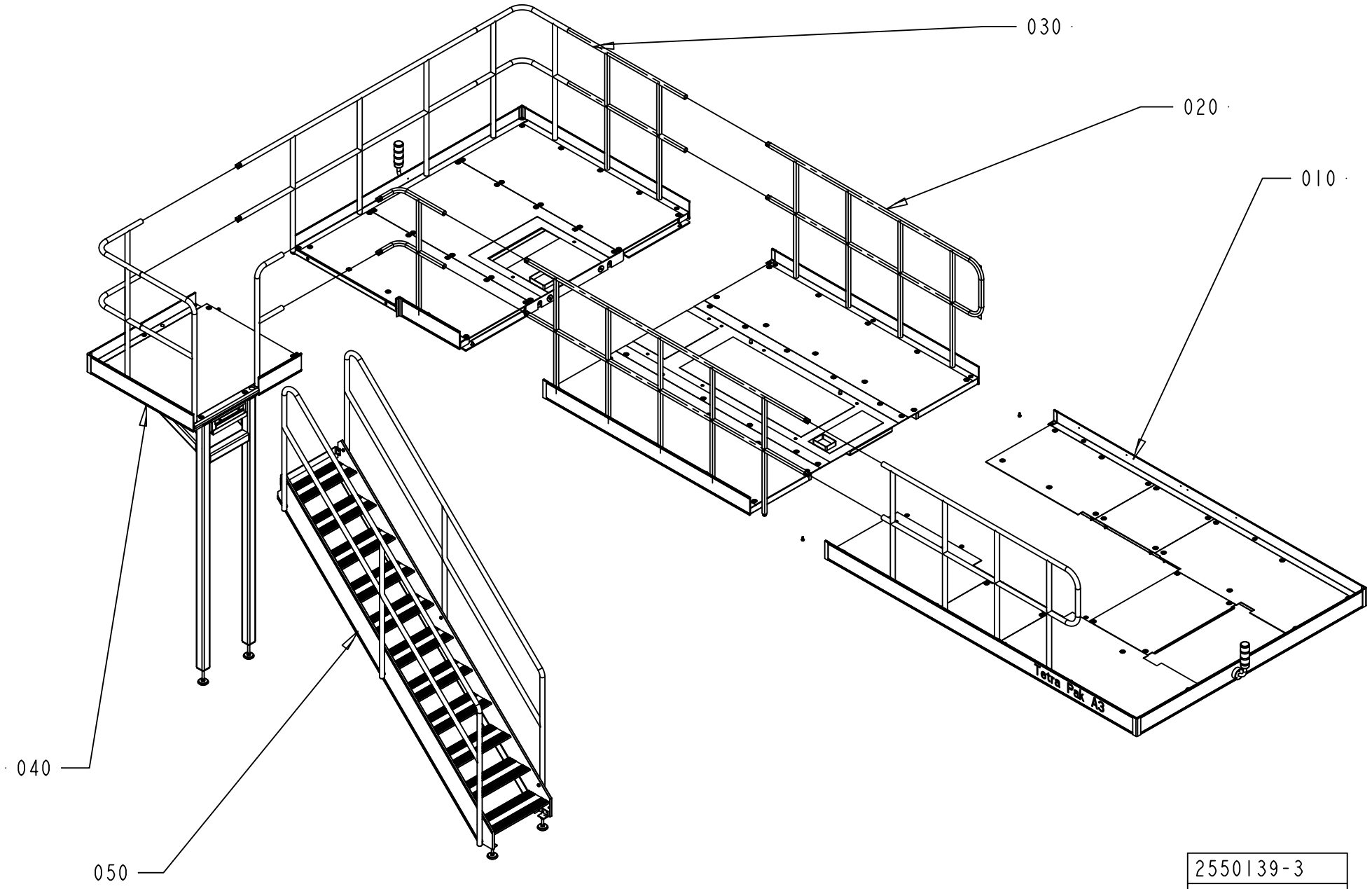

2550139-3
ECM 117192

ECM: 266298 - 20060702
Group number: 2550139-0100
Assembly Drawing: 2550139-3_1_AA

This list covers pages from 2-158 to 2-169

Pos	Part No	UN	Qty	Description	Page No
A3/FLEX DIMC/FLEX LEFTSTAIR (See drawing on page: 2-162)					
020	1528847-0100		1	PLATFORM	**2-171**
030	1528848-0100		1	PLATFORM	**2-173, 2-175**
A3/FLEX DIMC/FLEX RIGHTSTAIR (See drawing on page: 2-168)					
020	1528847-0100		1	PLATFORM	**2-171**
030	1528848-0100		1	PLATFORM	**2-173, 2-175**
A3/FLEX NOPT LEFTSTAIR, A3/FLEX NODIMC LEFTSTAIR (See drawing on page: 2-158)					
020	2550138-0100		1	PLATFORM	**2-179, 2-181, 2-183, 2-185**
A3/FLEX NOPT RIGHTSTAIR, A3/FLEX NODIMC RIGHTSTAIR (See drawing on page: 2-164)					
020	2550138-0100		1	PLATFORM	**2-179, 2-181, 2-183, 2-185**
A3/FLEX PT/FLEX LEFTSTAIR (See drawing on page: 2-160)					
020	2550138-0100		1	PLATFORM	**2-179, 2-181, 2-183, 2-185**
A3/FLEX PT/FLEX RIGHTSTAIR (See drawing on page: 2-166)					
020	2550138-0100		1	PLATFORM	**2-179, 2-181, 2-183, 2-185**
Common Parts					
010	2508369-0200		1	PLATFORM	**2-187**
040	2564546-0100		1	PLATFORM	**2-189, 2-191**
050	1523777-0100		1	STAIR CASE	**2-193**

Pos	Part No	UN	Qty	Description	Page No

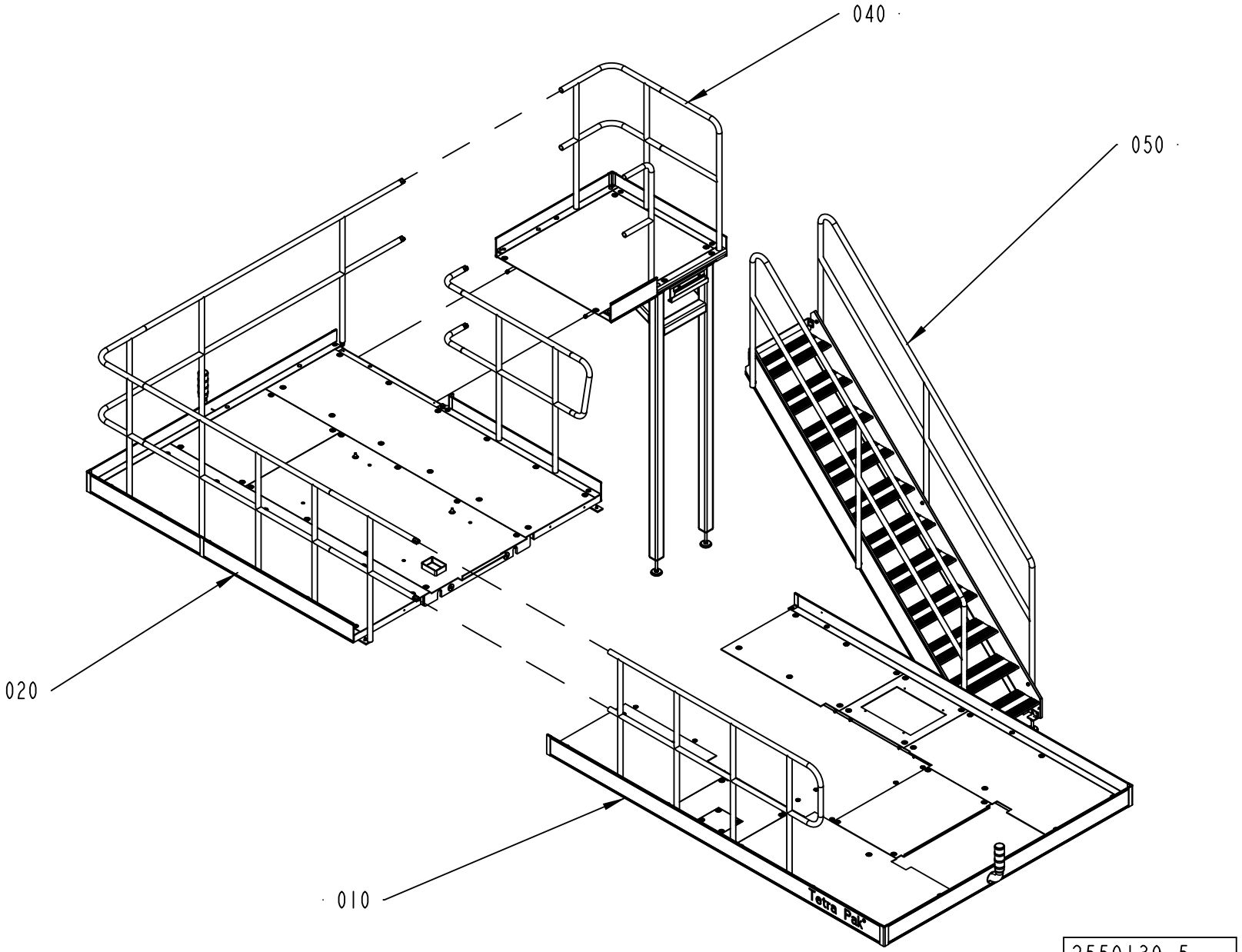

2550139-5
ECM 139753

ECM: 266298 - 20060702
Group number: 2550139-0100
Assembly Drawing: 2550139-5_1_AA

This list covers pages from 2-158 to 2-169

Pos	Part No	UN	Qty	Description	Page No
A3/FLEX DIMC/FLEX LEFTSTAIR (See drawing on page: 2-162)					
020	1528847-0100		1	PLATFORM	**2-171**
030	1528848-0100		1	PLATFORM	**2-173, 2-175**
A3/FLEX DIMC/FLEX RIGHTSTAIR (See drawing on page: 2-168)					
020	1528847-0100		1	PLATFORM	**2-171**
030	1528848-0100		1	PLATFORM	**2-173, 2-175**
A3/FLEX NOPT LEFTSTAIR, A3/FLEX NODIMC LEFTSTAIR (See drawing on page: 2-158)					
020	2550138-0100		1	PLATFORM	**2-179, 2-181, 2-183, 2-185**
A3/FLEX NOPT RIGHTSTAIR, A3/FLEX NODIMC RIGHTSTAIR (See drawing on page: 2-164)					
020	2550138-0100		1	PLATFORM	**2-179, 2-181, 2-183, 2-185**
A3/FLEX PT/FLEX LEFTSTAIR (See drawing on page: 2-160)					
020	2550138-0100		1	PLATFORM	**2-179, 2-181, 2-183, 2-185**
A3/FLEX PT/FLEX RIGHTSTAIR (See drawing on page: 2-166)					
020	2550138-0100		1	PLATFORM	**2-179, 2-181, 2-183, 2-185**
Common Parts					
010	2508369-0200		1	PLATFORM	**2-187**
040	2564546-0100		1	PLATFORM	**2-189, 2-191**
050	1523777-0100		1	STAIR CASE	**2-193**

Pos	Part No	UN	Qty	Description	Page No

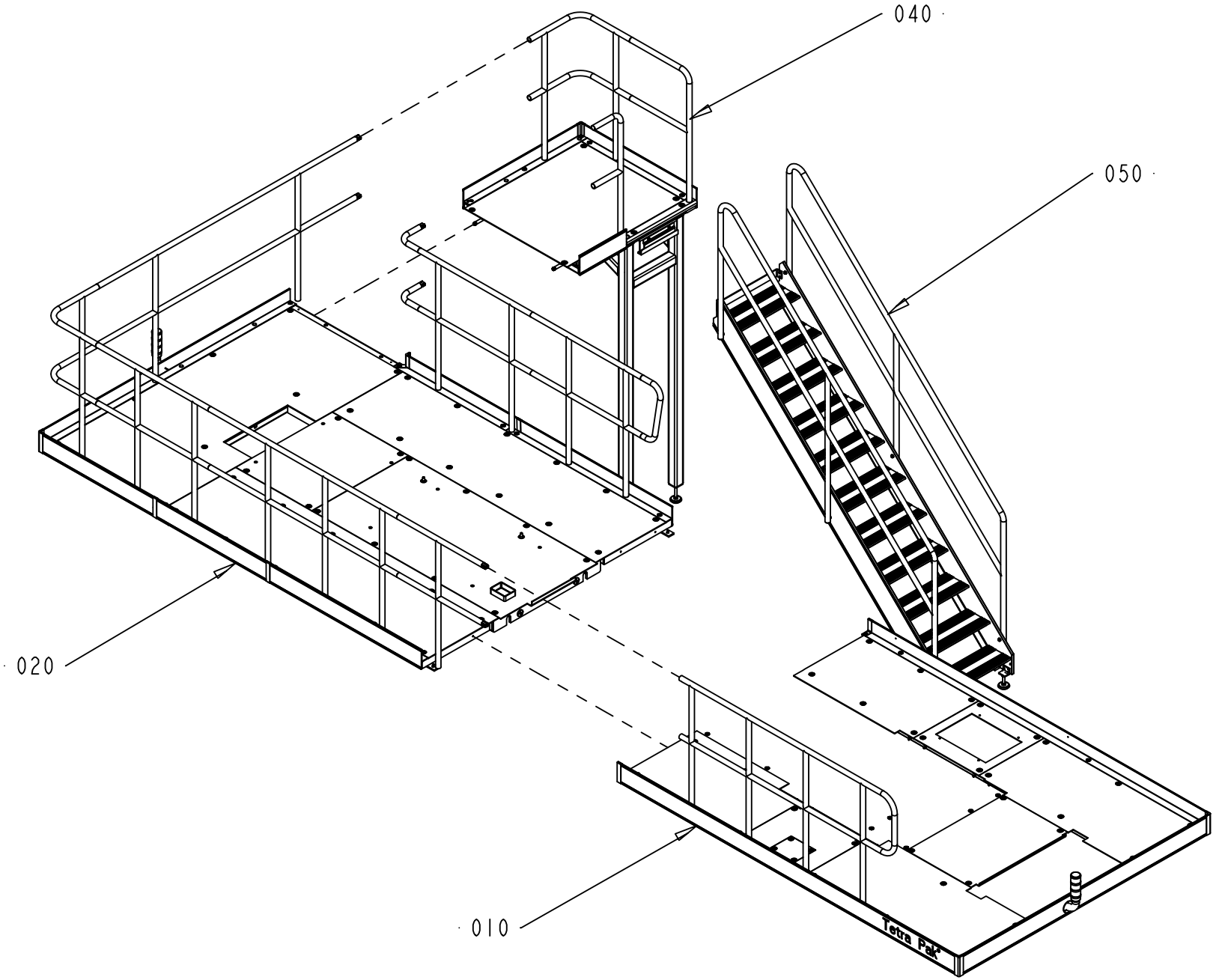

2550139-6
ECM 139753

ECM: 266298 - 20060702
Group number: 2550139-0100
Assembly Drawing: 2550139-6_1_AA

This list covers pages from 2-158 to 2-169

Pos	Part No	UN	Qty	Description	Page No
A3/FLEX DIMC/FLEX LEFTSTAIR (See drawing on page: 2-162)					
020	1528847-0100		1	PLATFORM	**2-171**
030	1528848-0100		1	PLATFORM	**2-173, 2-175**
A3/FLEX DIMC/FLEX RIGHTSTAIR (See drawing on page: 2-168)					
020	1528847-0100		1	PLATFORM	**2-171**
030	1528848-0100		1	PLATFORM	**2-173, 2-175**
A3/FLEX NOPT LEFTSTAIR, A3/FLEX NODIMC LEFTSTAIR (See drawing on page: 2-158)					
020	2550138-0100		1	PLATFORM	**2-179, 2-181, 2-183, 2-185**
A3/FLEX NOPT RIGHTSTAIR, A3/FLEX NODIMC RIGHTSTAIR (See drawing on page: 2-164)					
020	2550138-0100		1	PLATFORM	**2-179, 2-181, 2-183, 2-185**
A3/FLEX PT/FLEX LEFTSTAIR (See drawing on page: 2-160)					
020	2550138-0100		1	PLATFORM	**2-179, 2-181, 2-183, 2-185**
A3/FLEX PT/FLEX RIGHTSTAIR (See drawing on page: 2-166)					
020	2550138-0100		1	PLATFORM	**2-179, 2-181, 2-183, 2-185**
Common Parts					
010	2508369-0200		1	PLATFORM	**2-187**
040	2564546-0100		1	PLATFORM	**2-189, 2-191**
050	1523777-0100		1	STAIR CASE	**2-193**

Pos	Part No	UN	Qty	Description	Page No

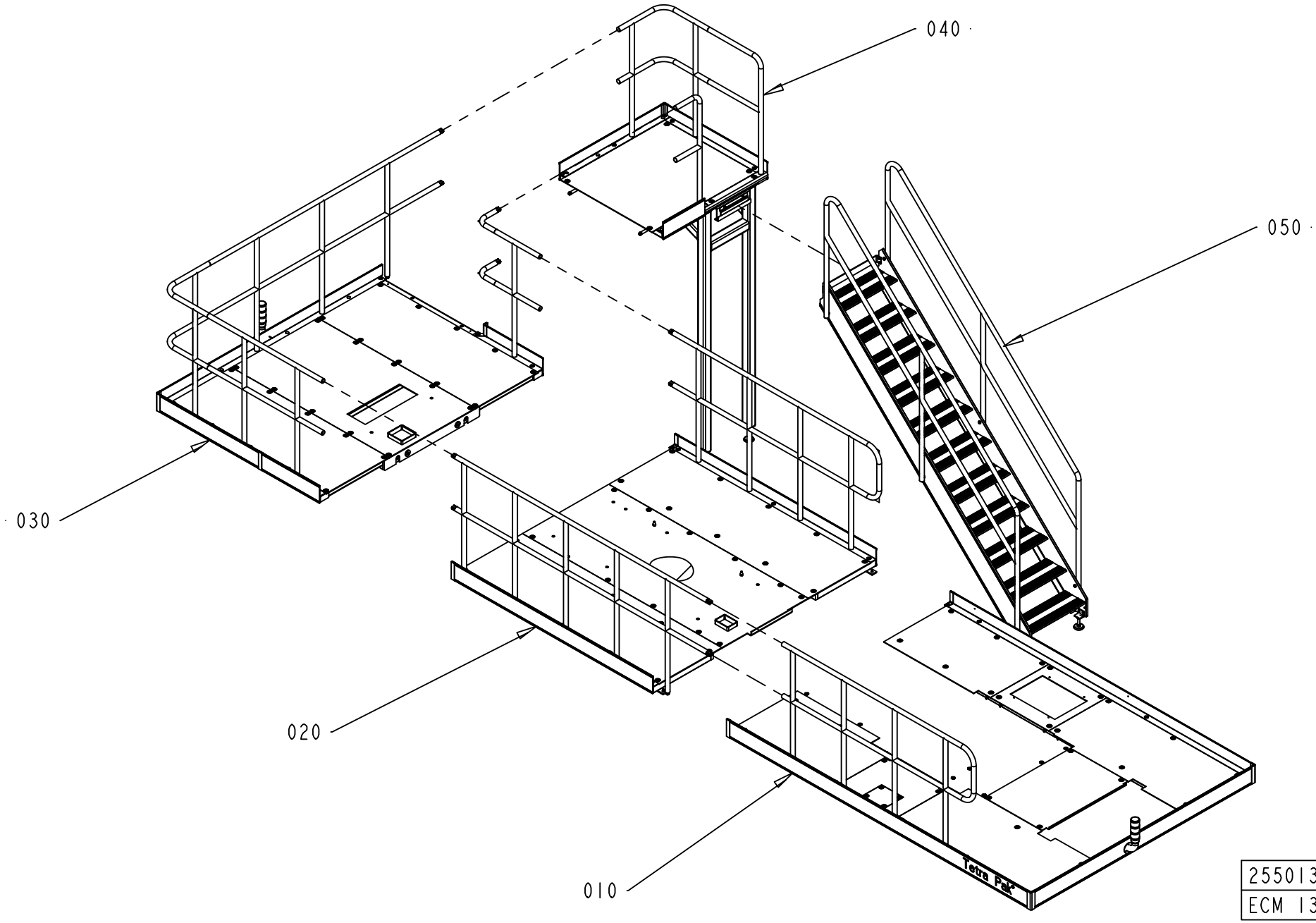

2550139-7
ECM 139753

ECM: 266298 - 20060702
Group number: 2550139-0100
Assembly Drawing: 2550139-7_1_AA

This list covers pages from 2-158 to 2-169

Pos	Part No	UN	Qty	Description	Page No
A3/FLEX DIMC/FLEX LEFTSTAIR (See drawing on page: 2-162)					
020	1528847-0100		1	PLATFORM	**2-171**
030	1528848-0100		1	PLATFORM	**2-173, 2-175**
A3/FLEX DIMC/FLEX RIGHTSTAIR (See drawing on page: 2-168)					
020	1528847-0100		1	PLATFORM	**2-171**
030	1528848-0100		1	PLATFORM	**2-173, 2-175**
A3/FLEX NOPT LEFTSTAIR, A3/FLEX NODIMC LEFTSTAIR (See drawing on page: 2-158)					
020	2550138-0100		1	PLATFORM	**2-179, 2-181, 2-183, 2-185**
A3/FLEX NOPT RIGHTSTAIR, A3/FLEX NODIMC RIGHTSTAIR (See drawing on page: 2-164)					
020	2550138-0100		1	PLATFORM	**2-179, 2-181, 2-183, 2-185**
A3/FLEX PT/FLEX LEFTSTAIR (See drawing on page: 2-160)					
020	2550138-0100		1	PLATFORM	**2-179, 2-181, 2-183, 2-185**
A3/FLEX PT/FLEX RIGHTSTAIR (See drawing on page: 2-166)					
020	2550138-0100		1	PLATFORM	**2-179, 2-181, 2-183, 2-185**
Common Parts					
010	2508369-0200		1	PLATFORM	**2-187**
040	2564546-0100		1	PLATFORM	**2-189, 2-191**
050	1523777-0100		1	STAIR CASE	**2-193**

Pos	Part No	UN	Qty	Description	Page No

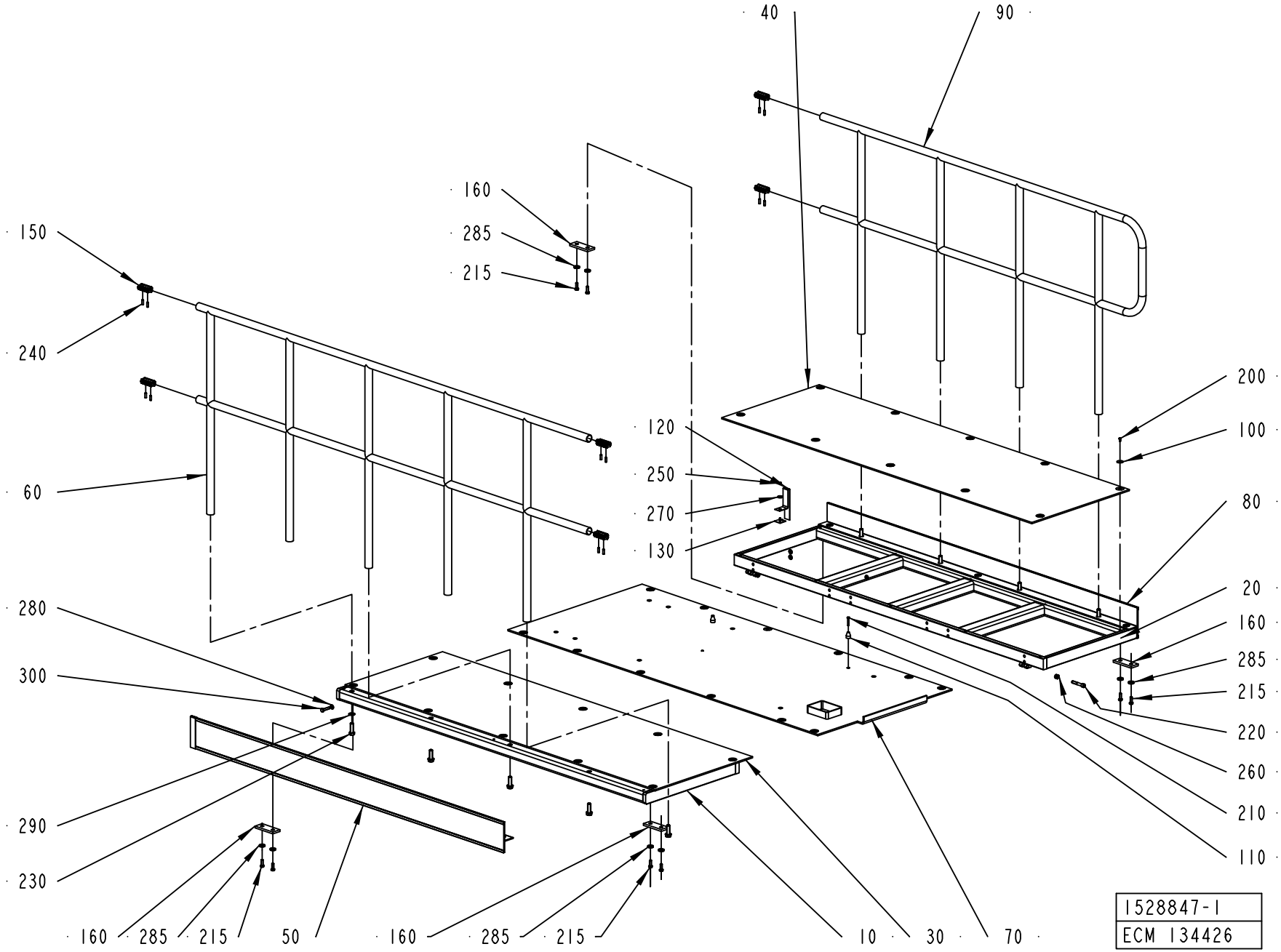
40
90
160
285
215
150
240
60
120
250
270
130
200
100
80
20
160
285
215
220
260
210
110
280
300
290
230
160
285
215
50
160
285
215
10
30
70
1528847-1
ECM 134426

ECM: 189872 - 20041104
Group number: 1528847-0100
Assembly Drawing: 1528847-1_1_AB

Pos	Part No	UN	Qty	Description	Page No
-					
010	1528552-0000		1	PLATFORM	
020	1528553-0000		1	PLATFORM	
030	1528850-0000		1	CHECKER PLATE	
040	1528855-0000		1	CHECKER PLATE	
050	1528856-0000		1	TOE PLATE	
060	1528858-0000		1	RAILING	
070	1528866-0000		1	CHECKER PLATE	
080	1528867-0000		1	TOE PLATE	
090	1528874-0000		1	RAILING	
100	90458-0073		38	WASHER 6,4/30, H=1,5	
110	1037571-0000		2	GUIDE BUSHING	
120	1254025-0000		2	STRIP	
130	1254028-0000		2	FASTENING PLATE	
150	985328-0000		6	CONNECTION	
160	2632578-0000		4	PLATE	
200	90458-0072		38	SCREW ISO 7380 S M6X12 A2	
210	312109-0378		2	SCREW M6S ISO 4017 M6X40 A480	
215	312105-0495		8	SCREW M6S ISO 4017 M10X30 A480	
220	312115-0546		4	SCREW ISO4762 M12X70 A4 80	
230	312111-0630		9	SCREW HEX.SOCK.HD.MC6S-TT 16X50 88 FZ	
240	312318-0453		12	SCREW ISO4029 M8X25 A4	
250	312605-0316		2	HEXAGON NUT, M6M M6 A280	
260	312812-0322		4	HEXAGON NUT, NY-LOCK M12 A480	
270	315125-0153		2	WASHER TBRSB 6,4X22X4 A4	
280	315105-0173		24	WASHER BRB10,5X22RFR	
285	315125-0173		8	WASHER TBRSB 10,5X28X6 A4	
290	315105-0186		9	WASHER BRB17X30RFR	
300	90458-2845		24	SCREW,HEXAGON HEAD M6S ISO 4017 M10X45	

Pos	Part No	UN	Qty	Description	Page No

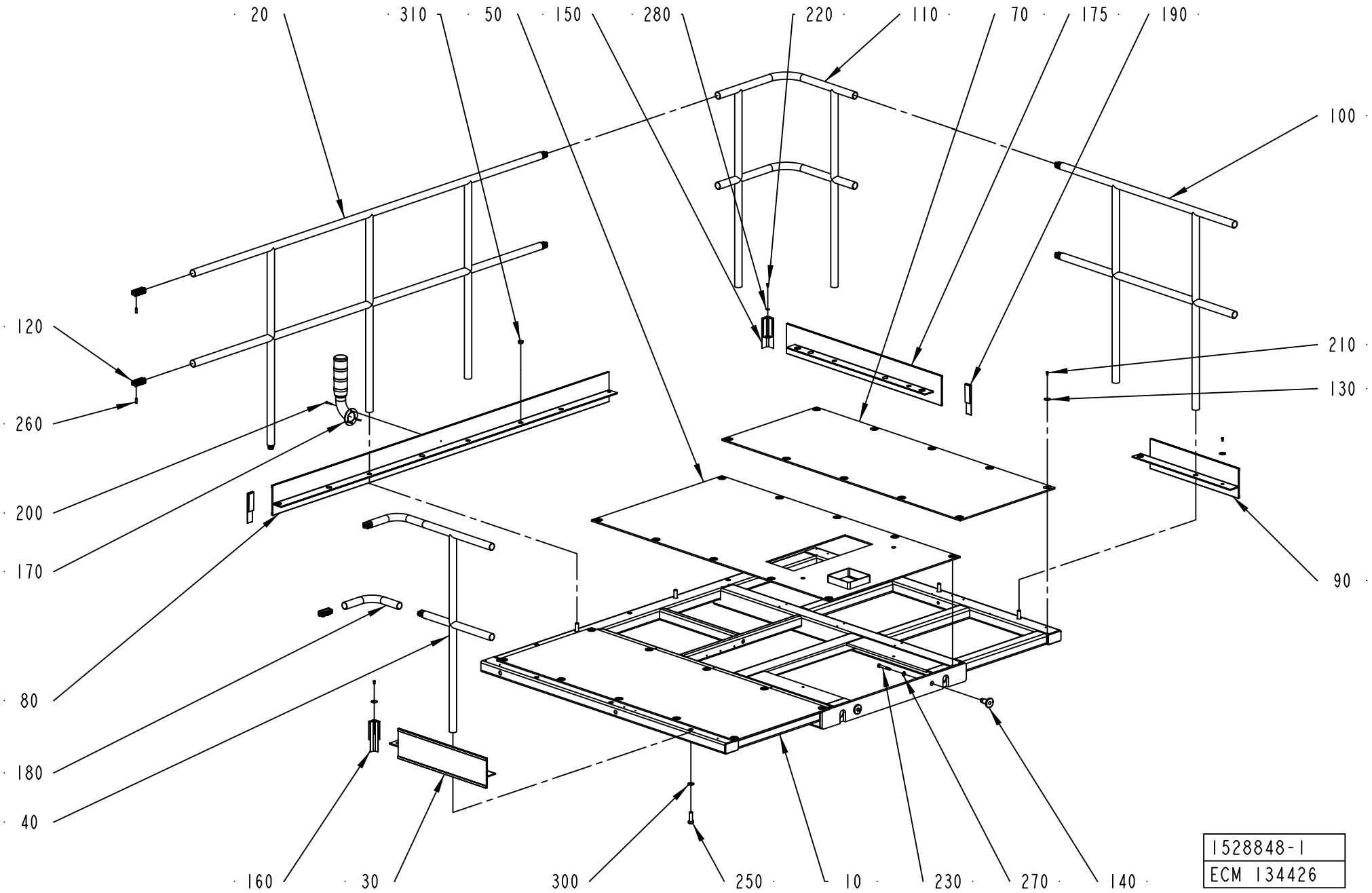
20
310
50
150
280
220
110
70
175
190
100
120
260
200
170
80
180
40
210
130
90
160
30
300
250
10
230
270
140
1528848-1
ECM 134426

ECM: 189873 - 20041104
Group number: 1528848-0100
Assembly Drawing: 1528848-1_1_AC

This list covers pages from 2-172 to 2-175

Pos	Part No	UN	Qty	Description	Page No
-					
010	598713-0000		1	PLATFORM	
020	1528849-0000		1	RAILING	
030	1528857-0000		1	TOE PLATE	
040	1528859-0000		1	RAILING	
050	1528868-0000		1	CHECKER PLATE	
070	1528870-0000		2	CHECKER PLATE	
080	1528871-0000		1	TOE PLATE	
090	1528872-0000		1	TOE PLATE	
100	1528873-0000		1	RAILING	
110	1010822-0000		1	RAILING	
120	985328-0000		10	CONNECTION	
130	90458-0073		37	WASHER 6,4/30, H=1,5	
140	2599941-0000		2	SPACER	
150	1524167-0000		1	CORNER STRIP	
160	1524168-0000		1	CORNER STRIP	
170	2540716-0100		1	SIGNAL LAMP	**2-177**
175	2553122-0000		1	PLATE	
180	2551951-0000		2	RAILING	
190	1558947-0000		2	STRIP	
200	312115-0337		3	SCREW ISO4762 M5X35 A4 80	
210	90458-0072		37	SCREW ISO 7380 S M6X12 A2	
220	312105-0366		1	SCREW M6S ISO 4017 M6X12 A480	
230	312105-0506		2	SCREW M6S ISO 4014 M10X75 A480	
250	312111-0630		8	SCREW HEX.SOCK.HD.MC6S-TT 16X50 88 FZ	
260	312318-0453		20	SCREW ISO4029 M8X25 A4	
270	315105-0173		2	WASHER BRB10,5X22RFR	
280	315105-0165		1	WASHER BRB8,4X16RFR	
300	315105-0186		8	WASHER BRB17X30RFR	
310	90261-0033		5	PLUG, BLIND, PLASTIC GPN300F182	

Pos	Part No	UN	Qty	Description	Page No

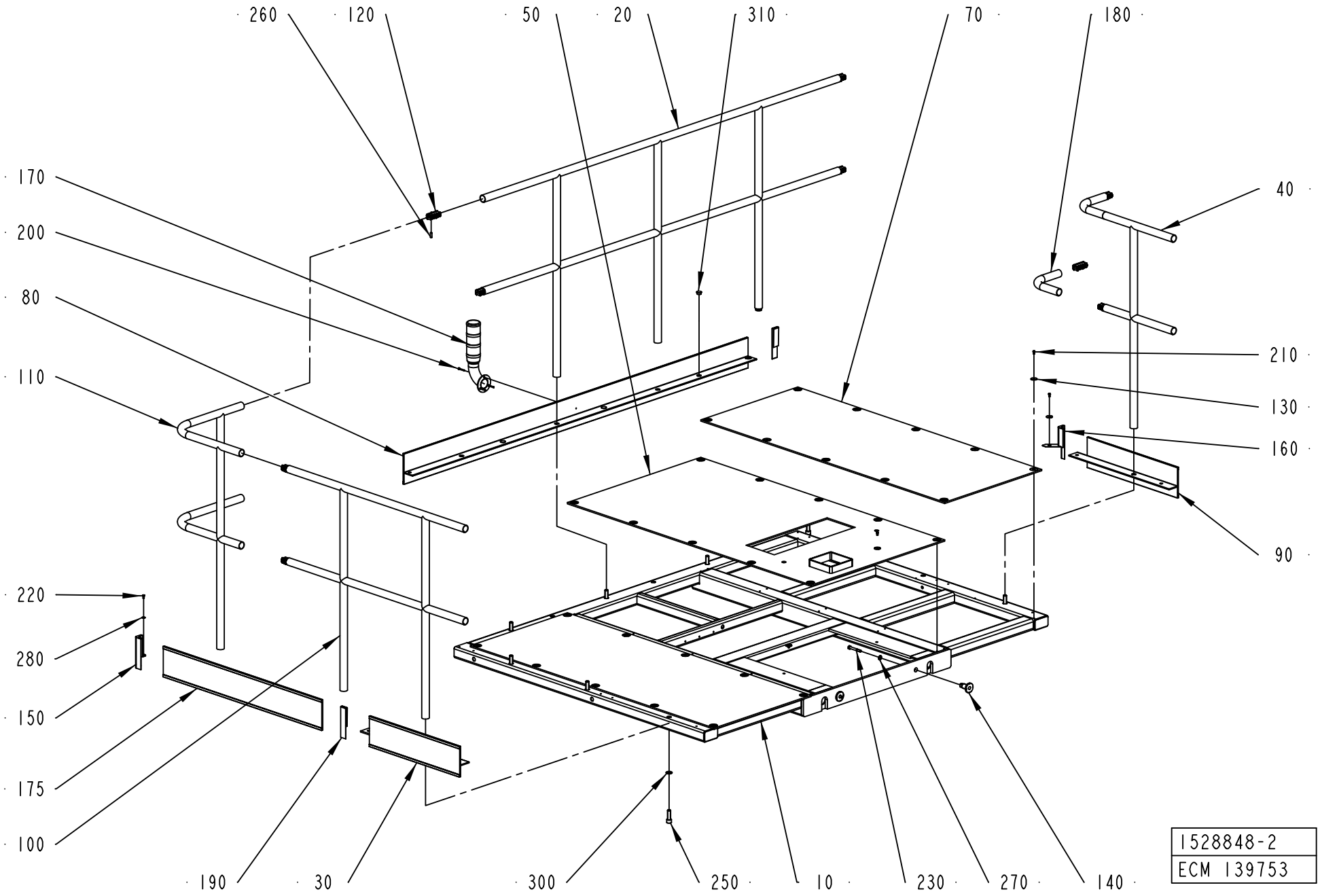
260
120
50
20
310
70
180
170
200
80
110
40
210
130
160
90
220
280
150
175
100
190
30
300
250
10
230
270
140
1528848-2
ECM 139753

ECM: 189873 - 20041104
Group number: 1528848-0100
Assembly Drawing: 1528848-2_1_AA

This list covers pages from 2-172 to 2-175

Pos	Part No	UN	Qty	Description	Page No
-					
010	598713-0000		1	PLATFORM	
020	1528849-0000		1	RAILING	
030	1528857-0000		1	TOE PLATE	
040	1528859-0000		1	RAILING	
050	1528868-0000		1	CHECKER PLATE	
070	1528870-0000		2	CHECKER PLATE	
080	1528871-0000		1	TOE PLATE	
090	1528872-0000		1	TOE PLATE	
100	1528873-0000		1	RAILING	
110	1010822-0000		1	RAILING	
120	985328-0000		10	CONNECTION	
130	90458-0073		37	WASHER 6,4/30, H=1,5	
140	2599941-0000		2	SPACER	
150	1524167-0000		1	CORNER STRIP	
160	1524168-0000		1	CORNER STRIP	
170	2540716-0100		1	SIGNAL LAMP	**2-177**
175	2553122-0000		1	PLATE	
180	2551951-0000		2	RAILING	
190	1558947-0000		2	STRIP	
200	312115-0337		3	SCREW ISO4762 M5X35 A4 80	
210	90458-0072		37	SCREW ISO 7380 S M6X12 A2	
220	312105-0366		1	SCREW M6S ISO 4017 M6X12 A480	
230	312105-0506		2	SCREW M6S ISO 4014 M10X75 A480	
250	312111-0630		8	SCREW HEX.SOCK.HD.MC6S-TT 16X50 88 FZ	
260	312318-0453		20	SCREW ISO4029 M8X25 A4	
270	315105-0173		2	WASHER BRB10,5X22RFR	
280	315105-0165		1	WASHER BRB8,4X16RFR	
300	315105-0186		8	WASHER BRB17X30RFR	
310	90261-0033		5	PLUG, BLIND, PLASTIC GPN300F182	

Pos	Part No	UN	Qty	Description	Page No

SIGNAL LAMP

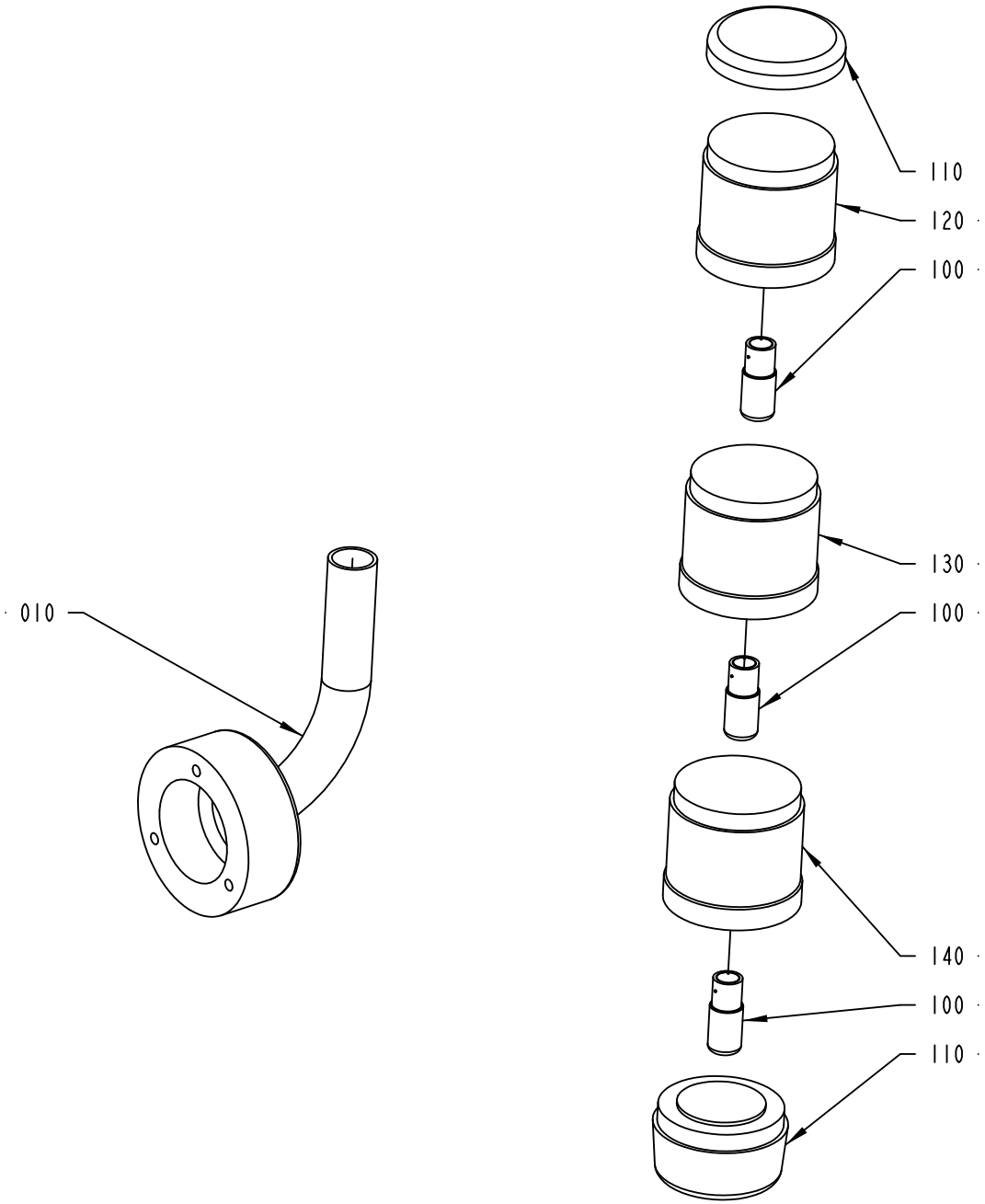

ECM: 189868 - 20041104
Group number: 2540716-0100
Assembly Drawing: 2540716-1_1_AA

Pos	Part No	UN	Qty	Description	Page No
-					
010	2540767-0000		1	PIPE	
100	90036-0068		3	BULB 6.5W 24V	
110	90458-0292		1	BASE, KT70-1001	
120	90458-0293		1	LIGHT ELEMENT, RED, KL70-401R	
130	90458-0294		1	LIGHT ELEMENT, YELLOW, KL70-401Y	
140	90458-0295		1	LIGHT ELEMENT, BLUE, KL70-401L	

Pos	Part No	UN	Qty	Description	Page No

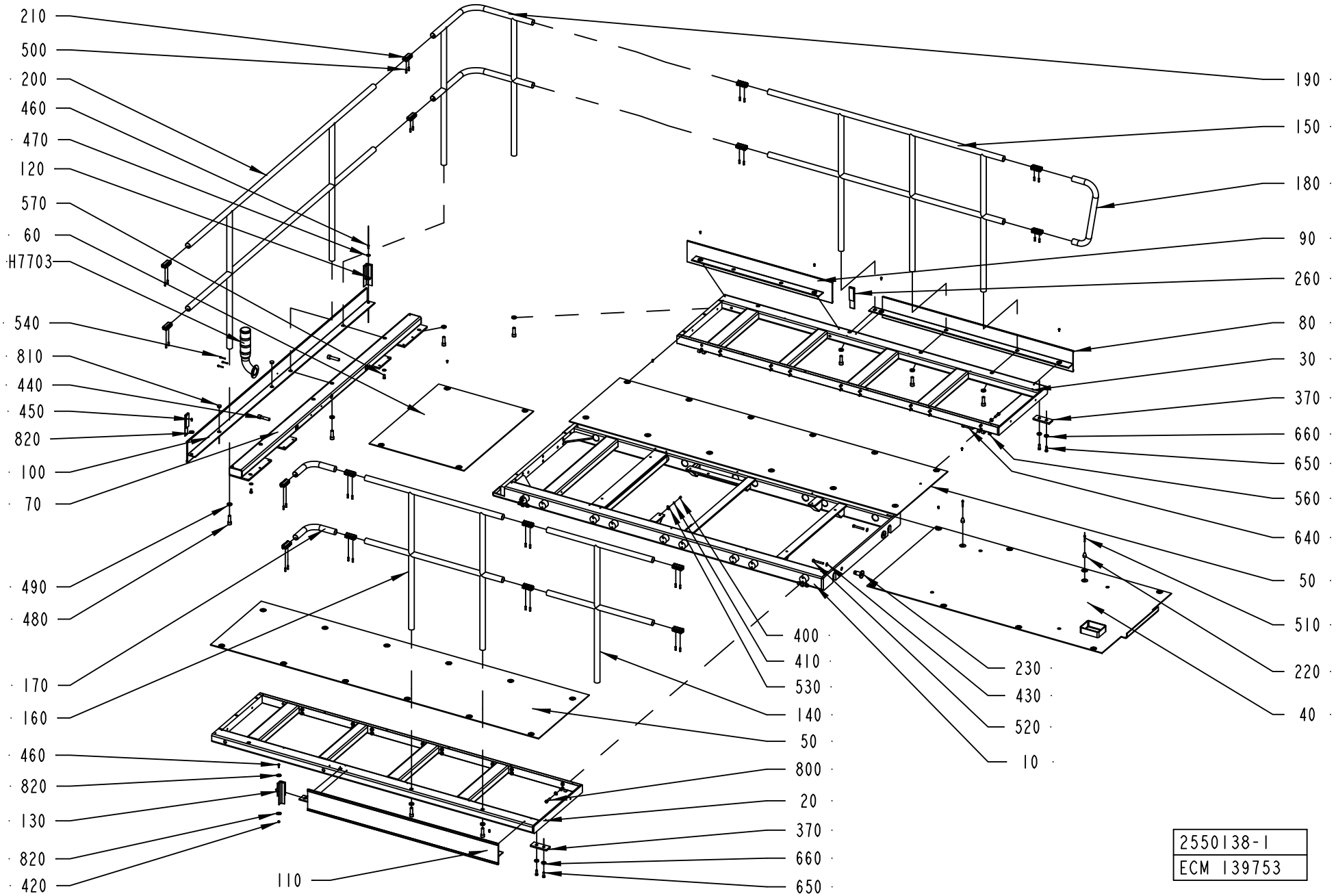
210
500
200
460
470
120
570
60
H7703
540
810
440
450
820
100
70
490
480
170
160
460
820
130
820
420
110
400
410
530
140
50
800
20
370
660
650
190
150
180
90
260
80
30
370
660
650
560
640
50
510
220
40
230
430
520
10
2550138-1
ECM 139753

ECM: 194467 - 20050125
Group number: 2550138-0100
Assembly Drawing: 2550138-1_1_AD

This list covers pages from 2-178 to 2-185

Pos	Part No	UN	Qty	Description	Page No
A3/FLEX NOPT LEFTSTAIR (See drawing on page: 2-178)					
060	2550145-0000		1	RAILING	
070	1524854-0000		1	BEAM	
090	2550193-0000		1	TOE PLATE	
210	985328-0000		16	CONNECTION	
260	1558947-0000		2	STRIP	
400	312125-0366		4	SCREW ISO 1207 M6X12 A4	
410	315105-0153		4	WASHER BRB6,4X12RFR	
420	312812-0316		1	HEXAGON NUT, NY-LOCK M6 A480	
430	315105-0173		40	WASHER BRB10,5X22RFR	
440	312115-0634		2	SCREW ISO4762 M16X70 A4 80	
450	90458-0072		43	SCREW ISO 7380 S M6X12 A2	
460	312105-0370		2	SCREW M6S ISO 4017 M6X20 A480	
470	315125-0153		1	WASHER TBRSB 6,4X22X4 A4	
480	312111-0630		9	SCREW HEX.SOCK.HD.MC6S-TT 16X50 88 FZ	
490	315111-0186		9	WASHER PLAIN, TBRB 17/30 H=6	
500	312318-0453		32	SCREW ISO4029 M8X25 A4	
530	352113-0204		4	ANCHOR PLATES FOR STRIPS, TYPE TM3S25-M	
570	312105-0491		2	SCREW M6S ISO 4017 M10X20 A480	
810	90261-0033		2	PLUG, BLIND, PLASTIC GPN300F182	
820	90458-0073		45	WASHER 6,4/30, H=1,5	
A3/FLEX NOPT RIGHTSTAIR (See drawing on page: 2-182)					
060	2550145-0000		1	RAILING	
070	1524854-0000		1	BEAM	
090	2550193-0000		1	TOE PLATE	
210	985328-0000		16	CONNECTION	
260	1558947-0000		2	STRIP	
400	312125-0366		4	SCREW ISO 1207 M6X12 A4	
410	315105-0153		4	WASHER BRB6,4X12RFR	
420	312812-0316		1	HEXAGON NUT, NY-LOCK M6 A480	
430	315105-0173		40	WASHER BRB10,5X22RFR	
440	312115-0634		2	SCREW ISO4762 M16X70 A4 80	
450	90458-0072		43	SCREW ISO 7380 S M6X12 A2	
460	312105-0370		2	SCREW M6S ISO 4017 M6X20 A480	
470	315125-0153		1	WASHER TBRSB 6,4X22X4 A4	
480	312111-0630		9	SCREW HEX.SOCK.HD.MC6S-TT 16X50 88 FZ	
490	315111-0186		9	WASHER PLAIN, TBRB 17/30 H=6	
500	312318-0453		32	SCREW ISO4029 M8X25 A4	
530	352113-0204		4	ANCHOR PLATES FOR STRIPS, TYPE TM3S25-M	
570	312105-0491		2	SCREW M6S ISO 4017 M10X20 A480	
810	90261-0033		2	PLUG, BLIND, PLASTIC GPN300F182	
820	90458-0073		45	WASHER 6,4/30, H=1,5	

Pos	Part No	UN	Qty	Description	Page No
A3/FLEX PT/FLEX LEFTSTAIR (See drawing on page: 2-180)					
090	2566258-0000		1	TOE PLATE	
210	985328-0000		20	CONNECTION	
260	1558947-0000		3	STRIP	
270	2553115-0000		1	PLATFORM	
280	2553116-0000		1	CHECKER PLATE	
290	2553118-0000		1	TOE PLATE	
300	2553119-0000		1	RAILING	
310	2553120-0000		1	RAILING	
330	2553122-0000		1	PLATE	
350	2553124-0000		2	PIN	
360	2553125-0000		1	CHECKER PLATE	
430	315105-0173		38	WASHER BRB10,5X22RFR	
450	90458-0072		56	SCREW ISO 7380 S M6X12 A2	
480	312111-0630		12	SCREW HEX.SOCK.HD.MC6S-TT 16X50 88 FZ	
490	315111-0186		12	WASHER PLAIN, TBRB 17/30 H=6	
500	312318-0453		40	SCREW ISO4029 M8X25 A4	
590	312105-0629		4	SCREW M6S ISO 4017 M16X45 A480	
600	312105-0633		14	SCREW M6S ISO 4014 M16X65 A480	
610	312105-0674		2	SCREW M6S ISO 4017 M20X50 A480	
620	312625-0326		2	HEXAGON THIN NUT, EN 24035 ML6M M20 A4	
630	315105-0186		18	WASHER BRB17X30RFR	
810	90261-0033		4	PLUG, BLIND, PLASTIC GPN300F182	
820	90458-0073		56	WASHER 6,4/30, H=1,5	
A3/FLEX PT/FLEX RIGHTSTAIR (See drawing on page: 2-184)					
090	2566258-0000		1	TOE PLATE	
210	985328-0000		20	CONNECTION	
260	1558947-0000		3	STRIP	
270	2553115-0000		1	PLATFORM	
280	2553116-0000		1	CHECKER PLATE	
290	2553118-0000		1	TOE PLATE	
300	2553119-0000		1	RAILING	
310	2553120-0000		1	RAILING	
330	2553122-0000		1	PLATE	
350	2553124-0000		2	PIN	
360	2553125-0000		1	CHECKER PLATE	
430	315105-0173		38	WASHER BRB10,5X22RFR	
450	90458-0072		56	SCREW ISO 7380 S M6X12 A2	
480	312111-0630		12	SCREW HEX.SOCK.HD.MC6S-TT 16X50 88 FZ	
490	315111-0186		12	WASHER PLAIN, TBRB 17/30 H=6	
500	312318-0453		40	SCREW ISO4029 M8X25 A4	
590	312105-0629		4	SCREW M6S ISO 4017 M16X45 A480	

Machine Type | Group Description | Used-In | Group Number | Page No

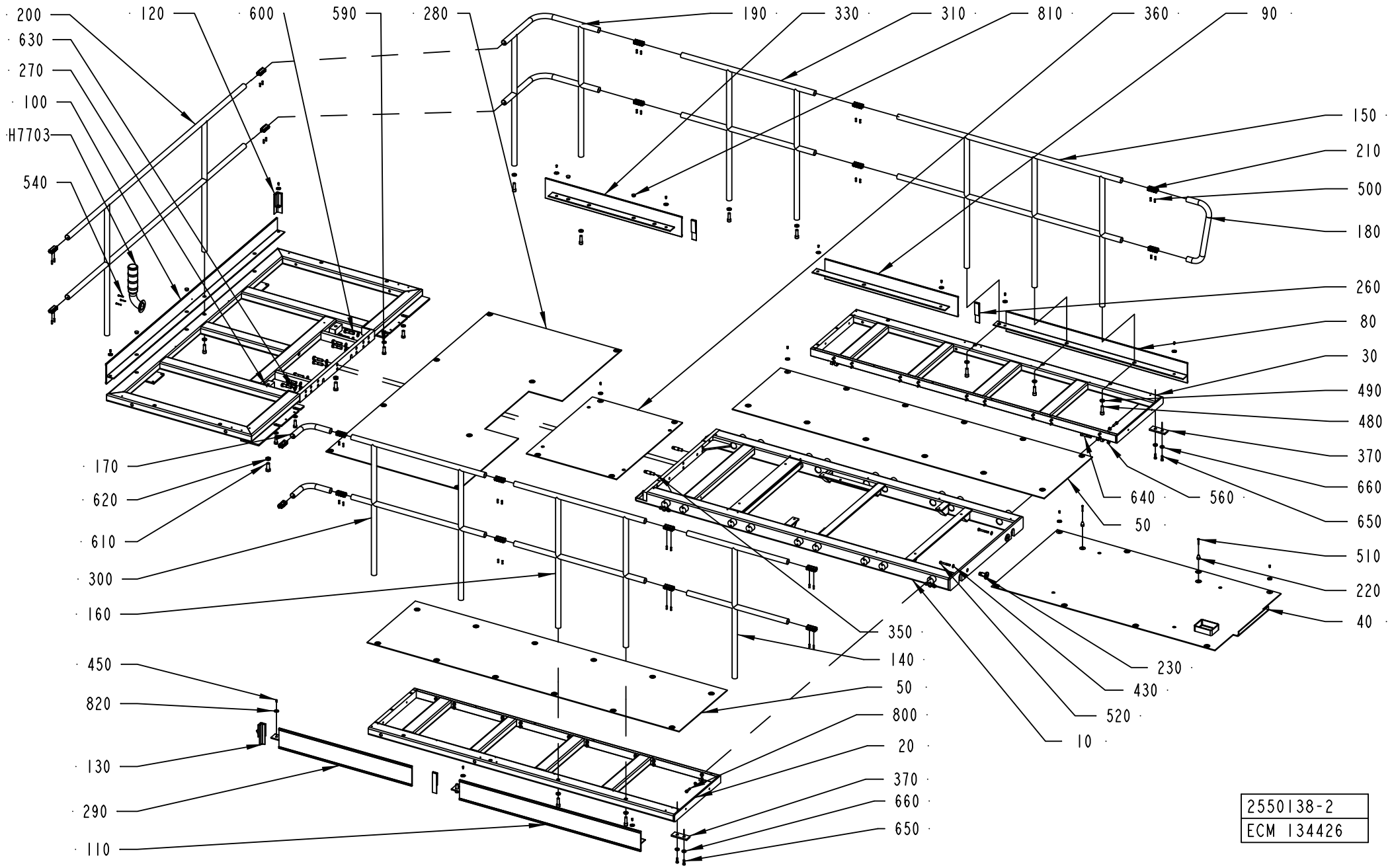
200
120
600
590
280
190
330
310
810
360
90
630
270
100
H7703
540
150
210
500
180
260
80
30
490
480
370
660
650
510
220
40
170
620
610
300
160
450
820
130
290
110
640
560
50
350
140
50
800
20
370
660
650
230
430
520
10
2550138-2
ECM 134426

Pos	Part No	UN	Qty	Description	Page No
A3/FLEX PT/FLEX RIGHTSTAIR (Cont'd) (See drawing on page: 2-184)					
600	312105-0633		14	SCREW M6S ISO 4014 M16X65 A480	
610	312105-0674		2	SCREW M6S ISO 4017 M20X50 A480	
620	312625-0326		2	HEXAGON THIN NUT, EN 24035 ML6M M20 A4	
630	315105-0186		18	WASHER BRB17X30RFR	
810	90261-0033		4	PLUG, BLIND, PLASTIC GPN300F182	
820	90458-0073		56	WASHER 6,4/30, H=1,5	
Common Parts					
010	2550144-0000		1	PLATFORM	
020	2550142-0000		1	PLATFORM	
030	2550143-0000		1	PLATFORM	
040	2550140-0000		1	CHECKER PLATE	
050	2550141-0000		2	CHECKER PLATE	
080	2550192-0000		1	TOE PLATE	
100	1523793-0000		1	TOE PLATE	
110	2550191-0000		1	TOE PLATE	
120	1524167-0000		1	CORNER STRIP	
130	1524168-0000		1	CORNER STRIP	
140	2550146-0000		1	RAILING	
150	2550189-0000		1	RAILING	
160	2550147-0000		1	RAILING	
170	2551951-0000		2	RAILING	
180	1558795-0000		1	RAILING	
190	1010822-0000		1	RAILING	
200	1548211-0000		1	RAILING	
220	1037571-0000		2	GUIDE BUSHING	
230	2599941-0000		2	SPACER	
370	1535036-0000		2	PLATE	
510	312109-0378		2	SCREW M6S ISO 4017 M6X40 A480	
520	312105-0506		2	SCREW M6S ISO 4014 M10X75 A480	
540	312115-0337		3	SCREW ISO4762 M5X35 A4 80	
560	312812-0322		4	HEXAGON NUT, NY-LOCK M12 A480	
640	312115-0546		4	SCREW ISO4762 M12X70 A4 80	
650	312105-0495		4	SCREW M6S ISO 4017 M10X30 A480	
660	315125-0173		4	WASHER TBRSB 10,5X28X6 A4	
800	90458-2845		36	SCREW,HEXAGON HEAD M6S ISO 4017 M10X45	
H7703	2540716-0100		1	SIGNAL LAMP	**2-177**

Pos	Part No	UN	Qty	Description	Page No

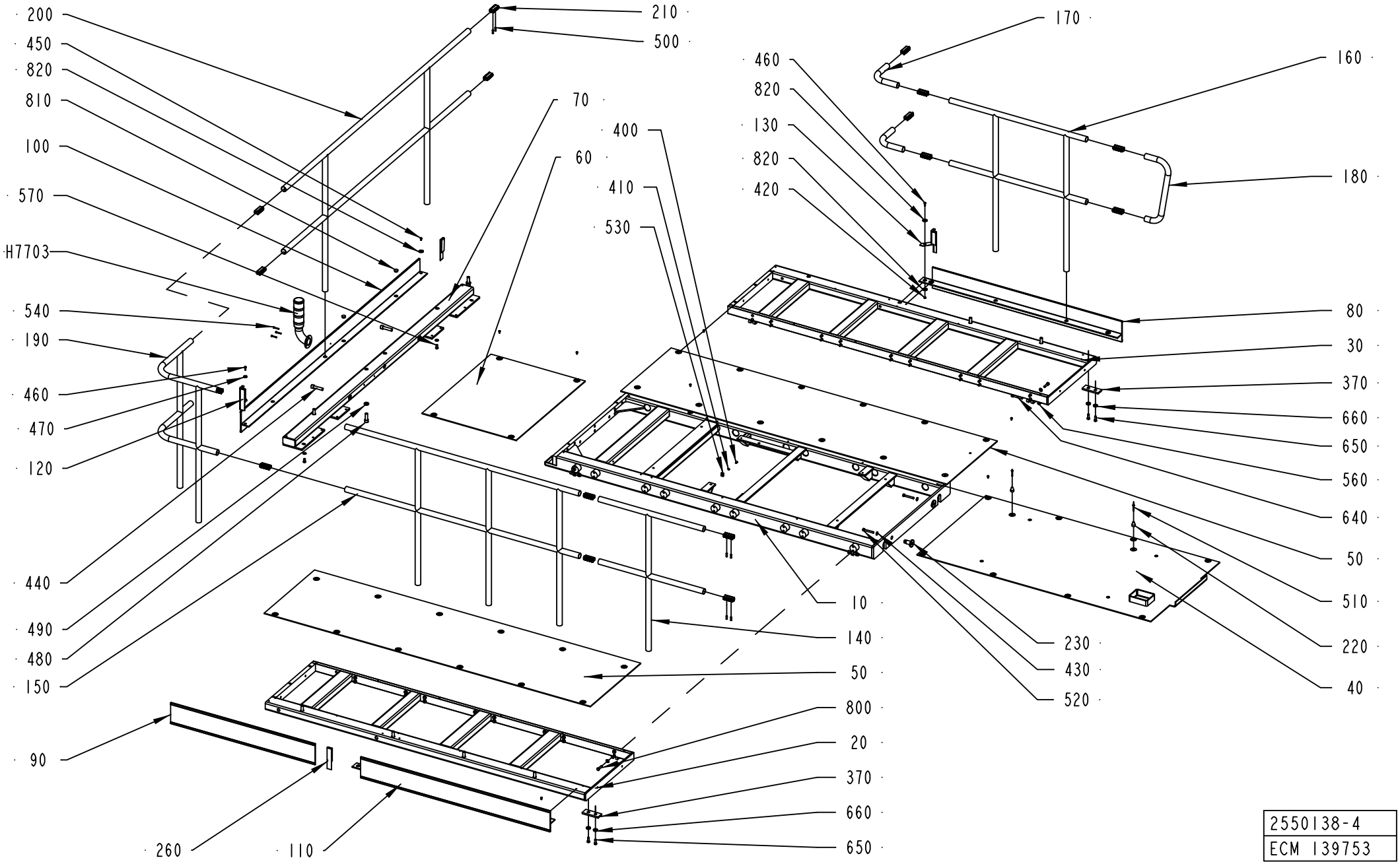
200
450
820
810
100
570
H7703
540
190
460
470
120
440
490
480
150
90
260
110
210
500
70
60
400
410
530
10
140
50
800
20
370
660
650
170
160
460
820
130
820
420
180
80
30
370
660
650
560
640
50
510
220
40
230
430
520
2550138-4
ECM 139753

ECM: 194467 - 20050125
Group number: 2550138-0100
Assembly Drawing: 2550138-4_1_AA

This list covers pages from 2-178 to 2-185

Pos	Part No	UN	Qty	Description	Page No	Pos	Part No	UN	Qty	Description	Page No

SEE PREVIOUS LISTS PAGES: 2-179, 2-181.

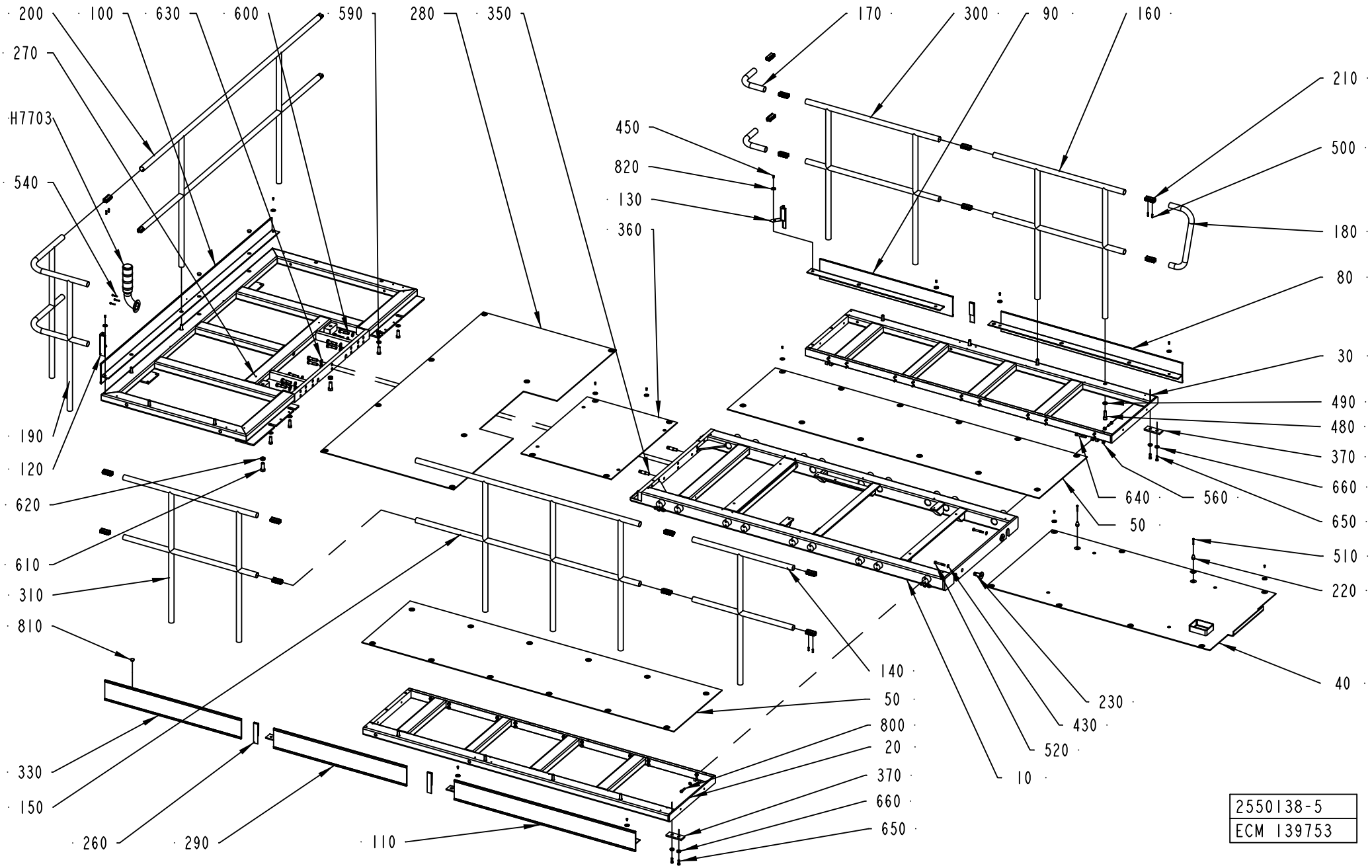
200
100
630
600
590
280
350
170
300
90
160
270
H7703
540
450
820
130
360
210
500
180
80
30
490
480
370
660
650
510
220
40
640
560
50
190
120
620
610
310
810
330
150
260
290
110
140
50
800
20
370
660
650
230
430
520
10
2550138-5
ECM 139753

Pos	Part No	UN	Qty	Description	Page No	Pos	Part No	UN	Qty	Description	Page No

SEE PREVIOUS LISTS PAGES: 2-179, 2-181.

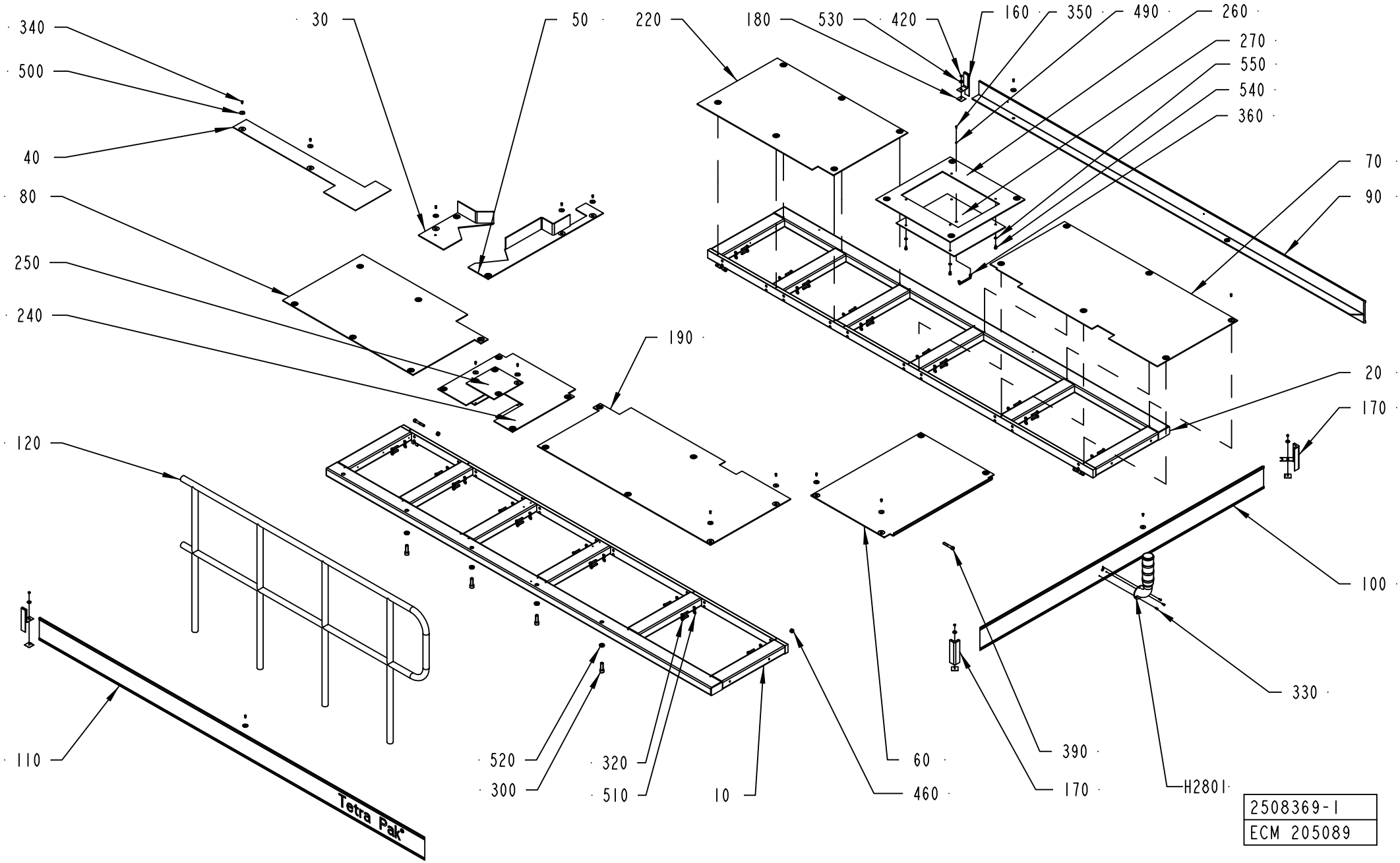
340
500
40
80
250
240
120
110
30
50
220
180
530
420
160
350
490
260
270
550
540
360
70
90
190
20
170
100
330
390
170
H2801
60
460
520
300
320
510
10
Tetra Pak
2508369-1
ECM 205089

ECM: 256212 - 20060702
Group number: 2508369-0200
Assembly Drawing: 2508369-1_1_AE

Pos	Part No	UN	Qty	Description	Page No
A3/FLEX TBA, A3/FLEX TPA					
010	2508370-0000		1	PLATFORM	
020	2508371-0000		1	PLATFORM	
030	2508385-0000		1	CHECKER PLATE	
040	2508380-0000		1	CHECKER PLATE	
050	2508381-0000		1	CHECKER PLATE	
060	1254030-0000		1	CHECKER PLATE	
080	2508379-0000		1	CHECKER PLATE	
090	2564565-0000		1	TOE PLATE	
110	2564566-0000		1	TOE PLATE	
120	1524870-0000		1	RAILING	
220	2508384-0000		1	CHECKER PLATE	
240	2587289-0000		1	CHECKER PLATE	
250	2587290-0000		1	CHECKER PLATE	
260	2587291-0000		1	CHECKER PLATE	
270	2587292-0000		1	CHECKER PLATE	
300	312111-0630		4	SCREW HEX.SOCK.HD.MC6S-TT 16X50 88 FZ	
340	90458-0072		51	SCREW ISO 7380 S M6X12 A2	
350	312105-0289		2	SCREW M6S ISO 4017 M4X10 A470	
360	90458-2633		1	HANDLE, 1045-05	
490	315105-0136		2	WASHER BRB4,3XRFR	
500	90458-0073		51	WASHER 6,4/30, H=1,5	
520	315111-0186		4	WASHER PLAIN, TBRB 17/30 H=6	
540	312115-0447		4	SCREW ISO4762 M8X12 A4 80	
550	315105-0165		4	WASHER BRB8,4X16RFR	
Common Parts					
070	2508374-0000		1	CHECKER PLATE	
100	1523784-0000		1	TOE PLATE	
130	1036241-0000		52	WASHER	
160	1254025-0000		2	STRIP	
170	1254027-0000		2	CORNER STRIP	
180	1254028-0000		4	FASTENING PLATE	
190	2508375-0000		1	CHECKER PLATE	
320	90458-2845		40	SCREW,HEXAGON HEAD M6S ISO 4017 M10X45	
330	312115-0327		3	SCREW ISO4762 M5X12 A4 80	
390	312115-0546		4	SCREW ISO4762 M12X70 A4 80	
420	312605-0316		4	HEXAGON NUT, M6M M6 A280	
460	312812-0322		4	HEXAGON NUT, NY-LOCK M12 A480	
510	315105-0173		40	WASHER BRB10,5X22RFR	
530	315125-0153		4	WASHER TBRSB 6,4X22X4 A4	
H2801	2540716-0100		1	SIGNAL LAMP	**2-177**

Machine Type	Group Description	Used-In	Group Number	Page No

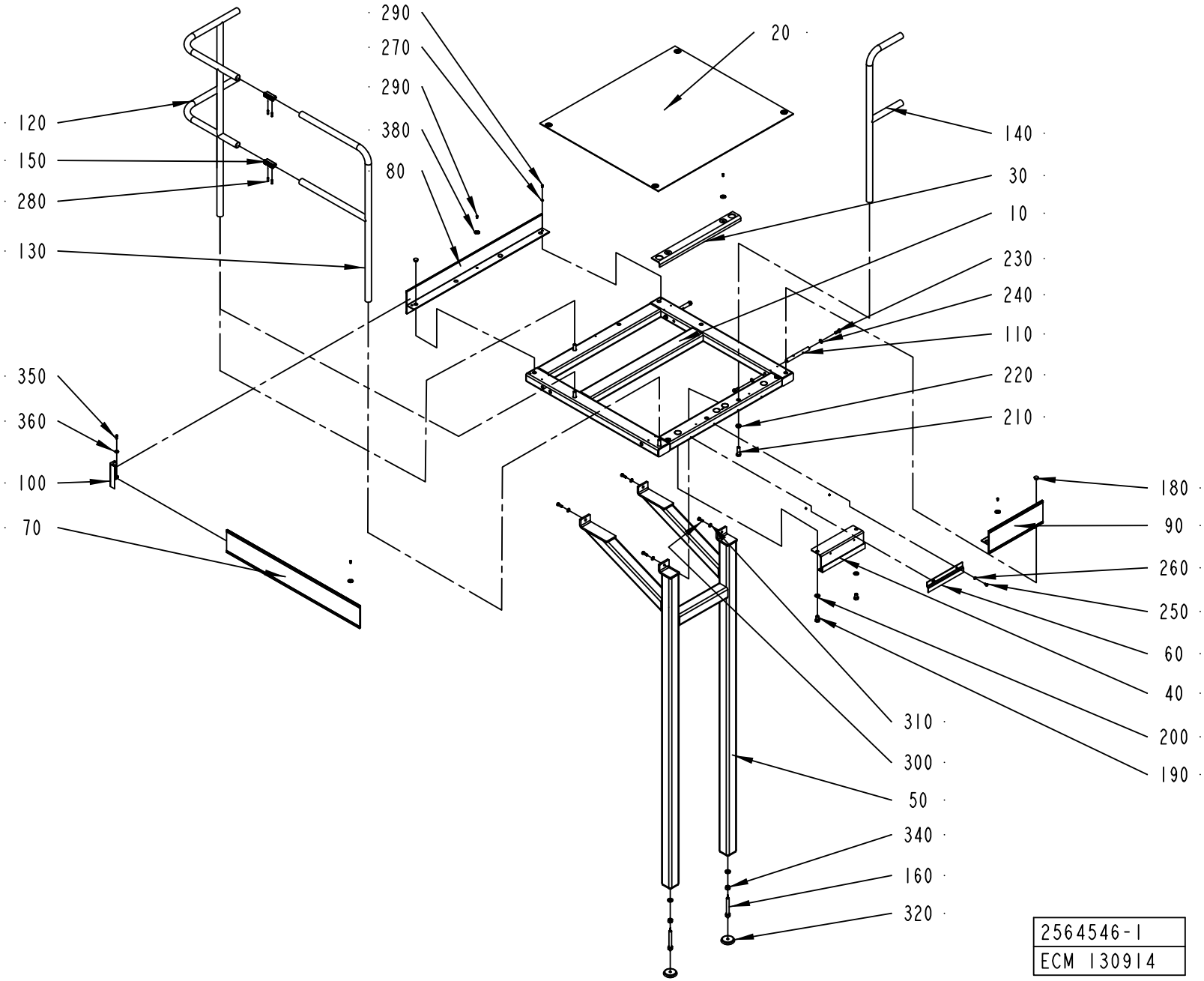
290
270
290
380
80
20
120
150
280
130
140
30
10
230
240
110
220
210
350
360
100
70
180
90
260
250
60
40
200
190
310
300
50
340
160
320
2564546-1
ECM 130914

Pos	Part No	UN	Qty	Description	Page No
LEFTSTAIR (See drawing on page: 2-188)					
070	1524177-0000		1	TOE PLATE	
RIGHTSTAIR (See drawing on page: 2-190)					
070	1524180-0000		1	TOE PLATE	
Common Parts					
010	1524171-0000		1	FRAME	
020	1524172-0000		1	CHECKER PLATE	
030	1524173-0000		1	CHECKER PLATE	
040	1524174-0000		1	HOOK	
050	1524175-0000		1	LEG	
060	1524176-0000		1	CLAMP	
080	2564545-0000		1	PLATE	
090	1524179-0000		1	TOE PLATE	
100	1524167-0000		1	CORNER STRIP	
110	1524181-0000		2	PIN	
120	1010822-0000		1	RAILING	
130	1524182-0000		1	RAILING	
140	1524864-0000		1	RAILING	
150	985328-0000		2	CONNECTION	
160	1524185-0000		2	EXTENSION PIECE	
180	90261-0033		3	PLUG, BLIND, PLASTIC GPN300F182	
190	312105-0622		2	SCREW M6S ISO 4017 M16X25 A480	
200	315105-0186		2	WASHER BRB17X30RFR	
210	312111-0630		4	SCREW HEX.SOCK.HD.MC6S-TT 16X50 88 FZ	
220	315111-0186		6	WASHER PLAIN, TBRB 17/30 H=6	
230	312105-0536		4	SCREW M6S ISO 4017 M12X30 A480	
240	315105-0178		4	WASHER BRB13X24RFR	
250	312105-0447		2	SCREW M6S ISO 4017 M8X12 A480	
260	315101-0165		2	WASHER PLAIN, BRB, 8,4/16 H=1,5	
270	315101-0153		1	WASHER PLAIN, BRB, 6,4/12 H=1,5	
280	312318-0453		4	SCREW ISO4029 M8X25 A4	
290	90458-0072		12	SCREW ISO 7380 S M6X12 A2	
300	312105-0495		4	SCREW M6S ISO 4017 M10X30 A480	
310	315105-0173		4	WASHER BRB10,5X22RFR	
320	90347-0009		2	FLOOR PLATE, NO 1256730	
340	312605-0324		2	HEXAGON NUT, M6M M16 A280	
350	312105-0370		1	SCREW M6S ISO 4017 M6X20 A480	
360	315125-0153		1	WASHER TBRSB 6,4X22X4 A4	
380	90458-0073		11	WASHER 6,4/30, H=1,5	

Pos	Part No	UN	Qty	Description	Page No

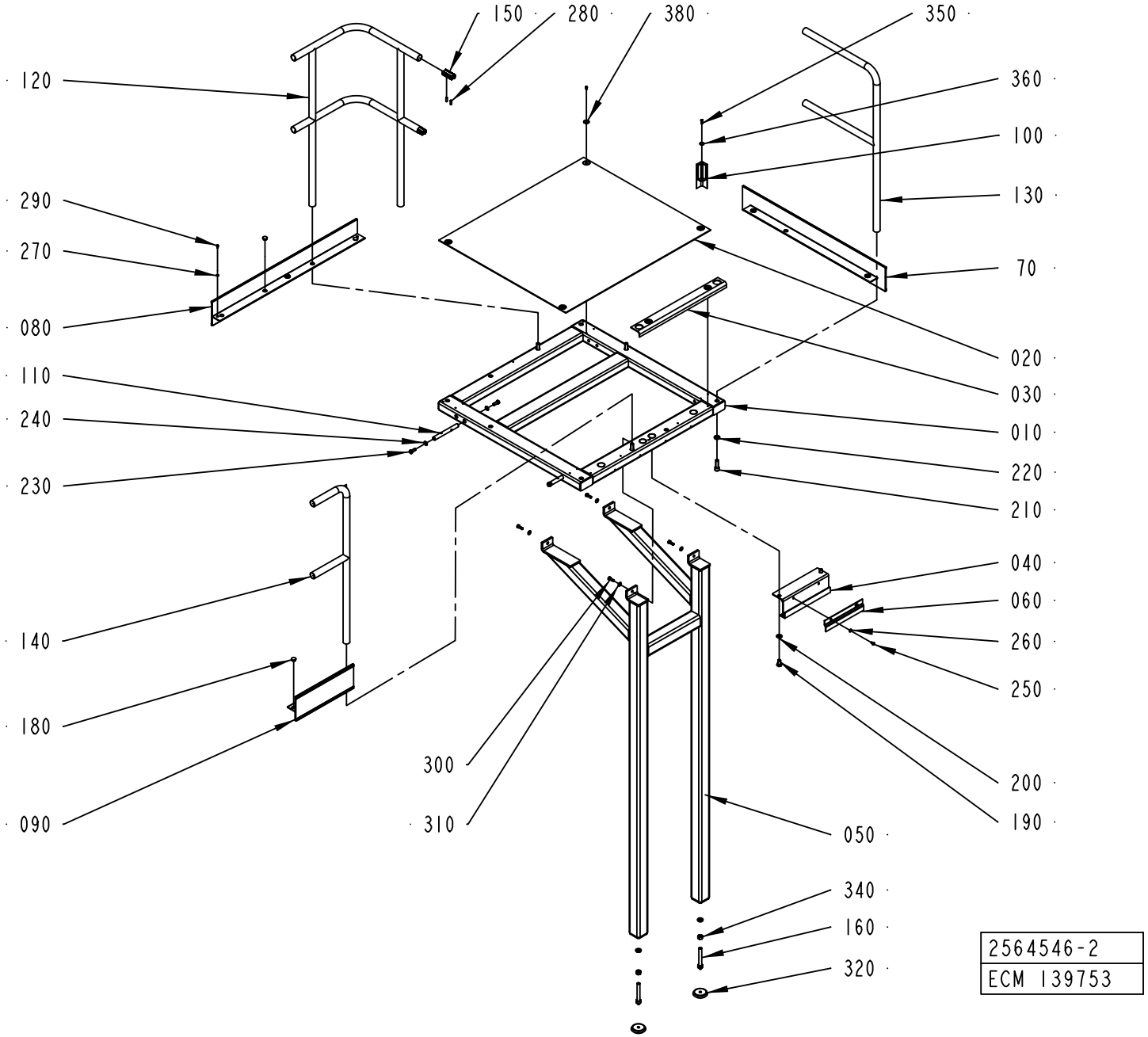
150
280
380
350
120
360
100
290
130
270
70
080
020
110
030
240
010
230
220
210
040
140
060
260
250
180
300
200
310
190
090
050
340
160
320
2564546-2
ECM 139753

ECM: 189874 - 20041104
Group number: 2564546-0100
Assembly Drawing: 2564546-2_1_AA

This list covers pages from 2-188 to 2-191

Pos	Part No	UN	Qty	Description	Page No
LEFTSTAIR (See drawing on page: 2-188)					
070	1524177-0000		1	TOE PLATE	
RIGHTSTAIR (See drawing on page: 2-190)					
070	1524180-0000		1	TOE PLATE	
Common Parts					
010	1524171-0000		1	FRAME	
020	1524172-0000		1	CHECKER PLATE	
030	1524173-0000		1	CHECKER PLATE	
040	1524174-0000		1	HOOK	
050	1524175-0000		1	LEG	
060	1524176-0000		1	CLAMP	
080	2564545-0000		1	PLATE	
090	1524179-0000		1	TOE PLATE	
100	1524167-0000		1	CORNER STRIP	
110	1524181-0000		2	PIN	
120	1010822-0000		1	RAILING	
130	1524182-0000		1	RAILING	
140	1524864-0000		1	RAILING	
150	985328-0000		2	CONNECTION	
160	1524185-0000		2	EXTENSION PIECE	
180	90261-0033		3	PLUG, BLIND, PLASTIC GPN300F182	
190	312105-0622		2	SCREW M6S ISO 4017 M16X25 A480	
200	315105-0186		2	WASHER BRB17X30RFR	
210	312111-0630		4	SCREW HEX.SOCK.HD.MC6S-TT 16X50 88 FZ	
220	315111-0186		6	WASHER PLAIN, TBRB 17/30 H=6	
230	312105-0536		4	SCREW M6S ISO 4017 M12X30 A480	
240	315105-0178		4	WASHER BRB13X24RFR	
250	312105-0447		2	SCREW M6S ISO 4017 M8X12 A480	
260	315101-0165		2	WASHER PLAIN, BRB, 8,4/16 H=1,5	
270	315101-0153		1	WASHER PLAIN, BRB, 6,4/12 H=1,5	
280	312318-0453		4	SCREW ISO4029 M8X25 A4	
290	90458-0072		12	SCREW ISO 7380 S M6X12 A2	
300	312105-0495		4	SCREW M6S ISO 4017 M10X30 A480	
310	315105-0173		4	WASHER BRB10,5X22RFR	
320	90347-0009		2	FLOOR PLATE, NO 1256730	
340	312605-0324		2	HEXAGON NUT, M6M M16 A280	
350	312105-0370		1	SCREW M6S ISO 4017 M6X20 A480	
360	315125-0153		1	WASHER TBRSB 6,4X22X4 A4	
380	90458-0073		11	WASHER 6,4/30, H=1,5	

Pos	Part No	UN	Qty	Description	Page No

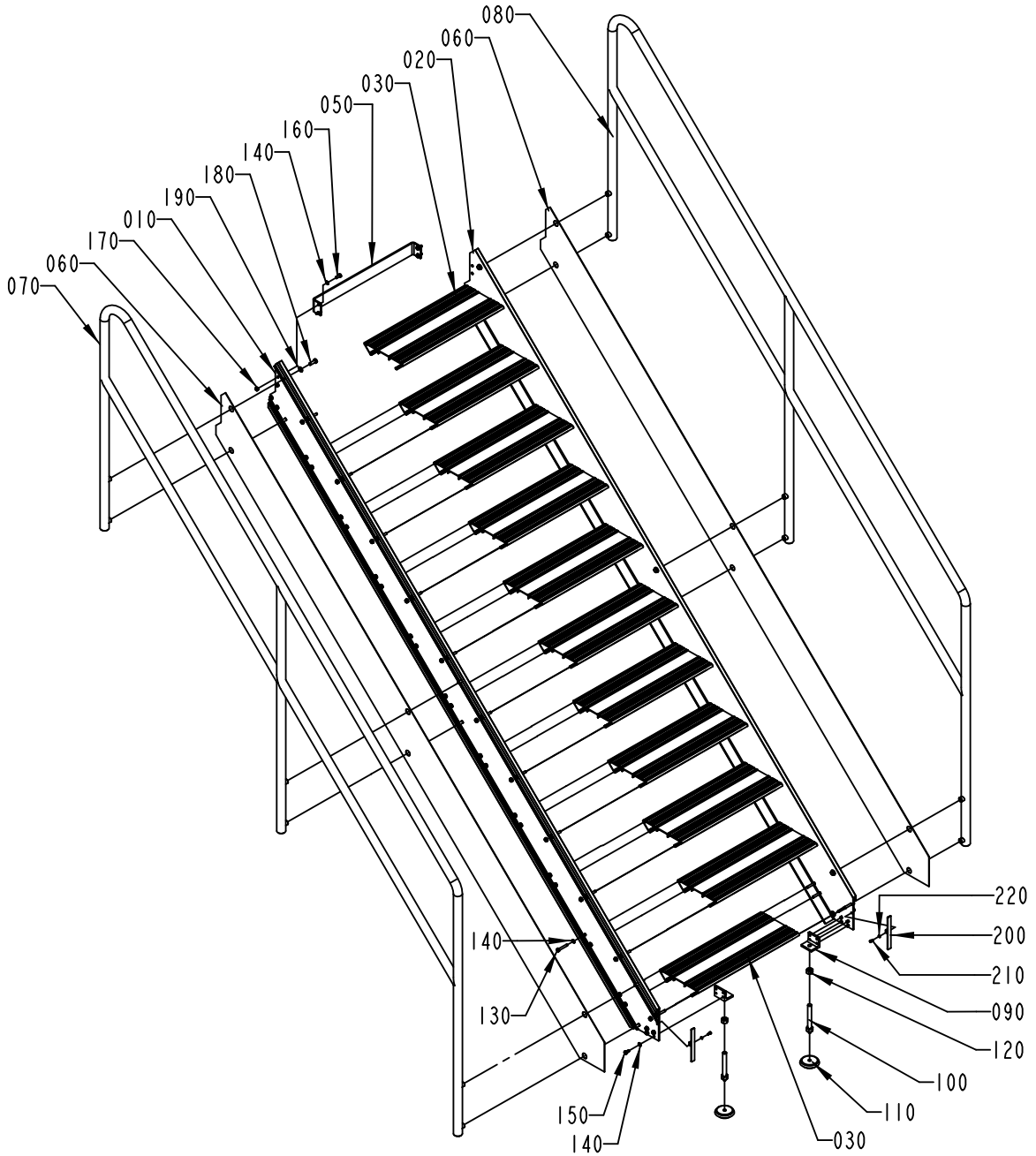

1523777-1
ECN 93149

ECM: 189875 - 20041104
Group number: 1523777-0100
Assembly Drawing: 1523777-1_1_AB

Pos	Part No	UN	Qty	Description	Page No
-					
010	1524186-0000		1	PROFILE	
020	1524187-0000		1	PROFILE	
030	1524188-0000		10	STAIR	
050	1524190-0000		1	BRACKET	
060	1524191-0000		2	RIM	
070	1524192-0000		1	RAILING	
080	1524193-0000		1	RAILING	
090	1037391-0000		2	CANTILEVER	
100	1524185-0000		2	EXTENSION PIECE	
110	90347-0009		2	FLOOR PLATE, NO 1256730	
120	312605-0324		2	HEXAGON NUT, M6M M16 A280	
130	312104-0461		88	SCREW M6S M8X50H FZB	
140	315105-0165		94	WASHER BRB8,4X16RFR	
150	312105-0449		8	SCREW M6S ISO 4017 M8X16 A480	
160	312105-0451		6	SCREW M6S ISO 4017 M8X20 A480	
170	312605-0318		4	HEXAGON NUT, M6M M8 A280	
180	312105-0495		12	SCREW M6S ISO 4017 M10X30 A480	
190	315105-0173		12	WASHER BRB10,5X22RFR	
200	1558946-0000		2	PLUG	
210	312115-0327		2	SCREW ISO4762 M5X12 A4 80	
220	315105-0146		2	WASHER BRB5,3X10RFR	

Pos	Part No	UN	Qty	Description	Page No

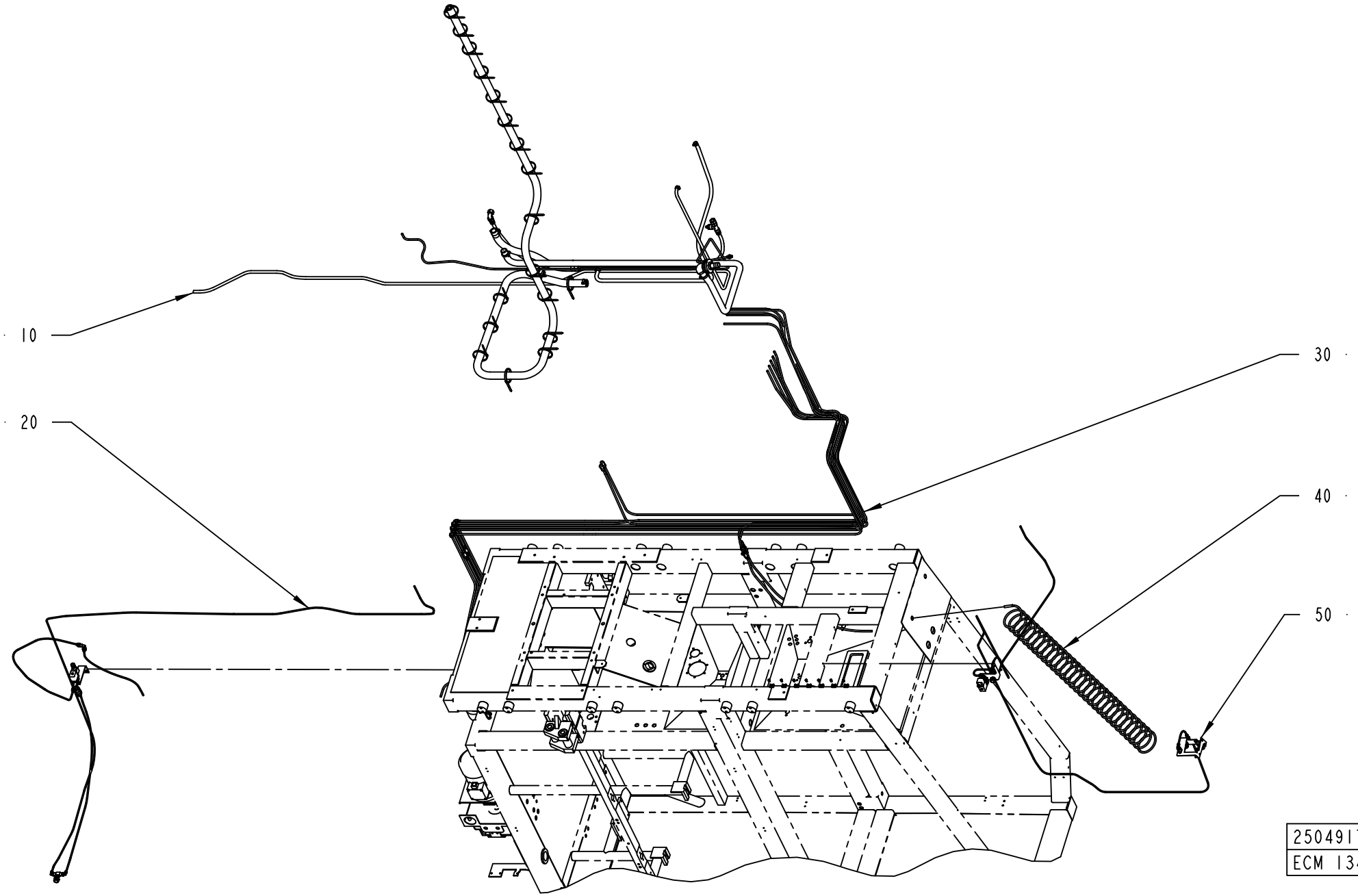
10
20
30
40
50
2504917-1
ECM 134706

ECM: 139369 - 20031007
Group number: 2504917-0100
Assembly Drawing: 2504917-1_1_AB

Pos	Part No	UN	Qty	Description	Page No
A3/FLEX DIMC/FLEX					
030	2514255-0100		1	PIPE WORK-WATER	**2-197, 2-199**
050	2615463-0100		1	FLUSHING DEVICE	**2-201, 2-203**
A3/FLEX NODIMC					
030	2514255-0100		1	PIPE WORK-WATER	**2-197, 2-199**
Common Parts					
010	2514205-0100		1	PIPE WORK-WATER	**2-205**
020	2514254-0100		1	TUBE FLUSHING	**2-207**
040	1095681-0100		1	SPRAY GUN	**2-209**

Pos	Part No	UN	Qty	Description	Page No

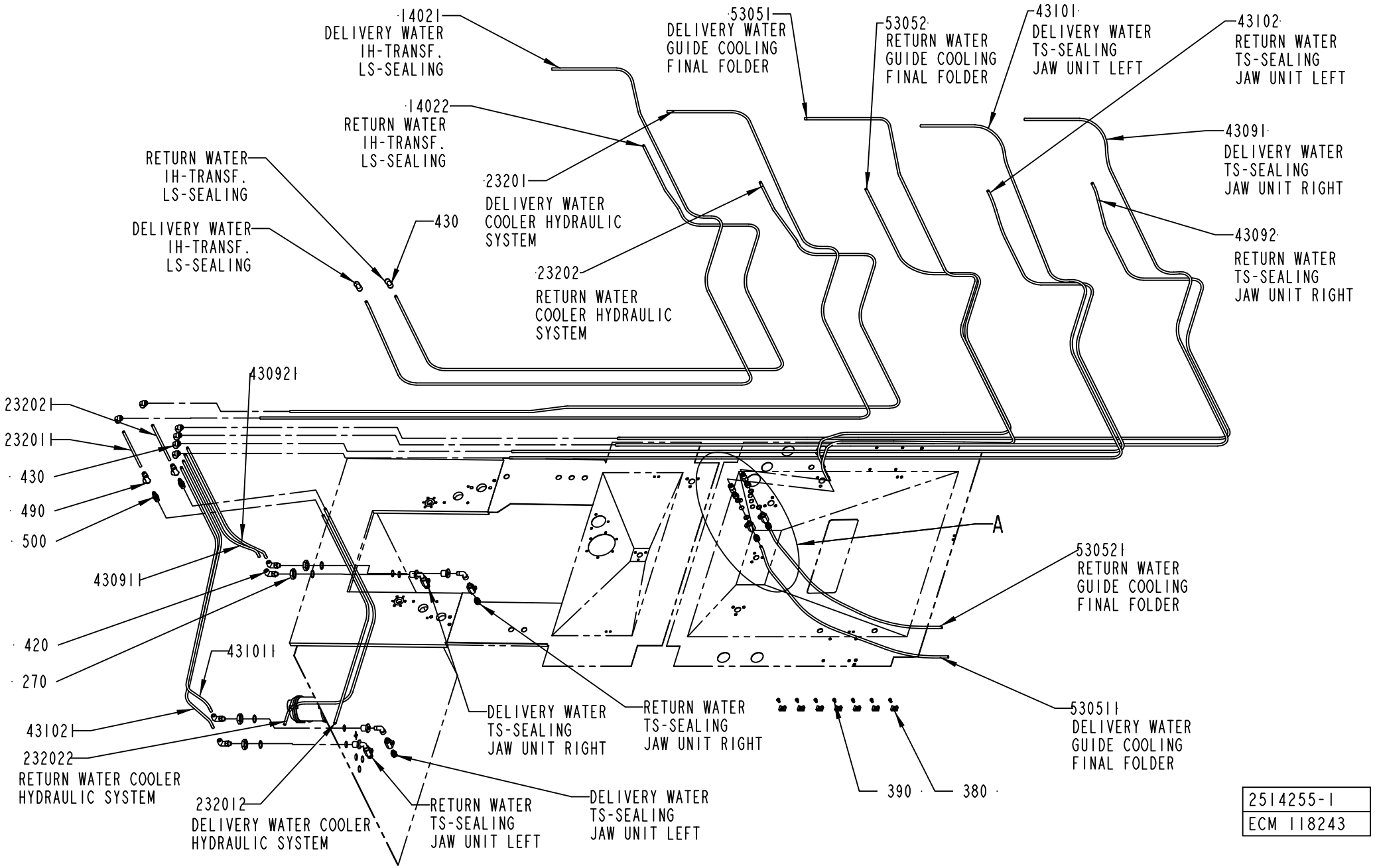

2514255-1
ECM 118243

ECM: 210344 - 20050621
Group number: 2514255-0100
Assembly Drawing: 2514255-1_1_AA

This list covers pages from 2-196 to 2-199

Pos	Part No	UN	Qty	Description	Page No
-					
010	276398-0000		4	HEXAGON NIPPLE	
100	90140-0013		4	ELBOW, 90 INT/EXT, 2020-1/4-1/4	
14021	90166-0118	MM	3300	TUBE 8 MM PA BLACK	
14022	90166-0118	MM	3900	TUBE 8 MM PA BLACK	
23201	90166-0118	MM	4400	TUBE 8 MM PA BLACK	
232011	90166-0118	MM	200	TUBE 8 MM PA BLACK	
232012	90166-0118	MM	1100	TUBE 8 MM PA BLACK	
23202	90166-0118	MM	4000	TUBE 8 MM PA BLACK	
232021	90166-0118	MM	200	TUBE 8 MM PA BLACK	
232022	90166-0118	MM	1300	TUBE 8 MM PA BLACK	
260	90187-0158		6	THROTTLE BALL VALVE G1/4, R1/4	
270	90330-0093		4	NUT, HEXAGON, G1/2	
280	90030-0166		2	NIPPLE,REDUCING G1/4"-G1/4"	
380	352113-0204		7	ANCHOR PLATES FOR STRIPS, TYPE TM3S25-M	
390	312125-0364		7	SCREW ISO 1207 M6X10 A4	
400	315237-0110		4	WASHER,PL.RND.AL.13,5/18,H=1,5	
410	315233-0113		4	WASHER CAPTIVE SEALING G1/2	
420	90055-0267		4	ELBOW PIPE JOINT,EXT.THREAD,D=8 MM G1/4	
430	90055-0269		8	ELBOW PIPE JOINT 8X8 MM	
43091	90166-0118	MM	4630	TUBE 8 MM PA BLACK	
430911	90166-0118	MM	650	TUBE 8 MM PA BLACK	
43092	90166-0118	MM	4000	TUBE 8 MM PA BLACK	
430921	90166-0118	MM	700	TUBE 8 MM PA BLACK	
43101	90166-0118	MM	5350	TUBE 8 MM PA BLACK	
431011	90166-0118	MM	650	TUBE 8 MM PA BLACK	
43102	90166-0118	MM	4800	TUBE 8 MM PA BLACK	
431021	90166-0118	MM	700	TUBE 8 MM PA BLACK	
440	90055-0266		2	STRAIGHT CONNECTION	
450	90055-0274		6	STRAIGHT COUPLING, D=8 MM - G1/4"	
490	90459-0941		2	QUICK COUPLING, PLCD 130-M8	
500	90459-0960		2	QUICK COUPLING, PLCD 200-M8	
53051	90166-0118	MM	3370	TUBE 8 MM PA BLACK	
530511	90166-0118	MM	980	TUBE 8 MM PA BLACK	
53052	90166-0118	MM	2840	TUBE 8 MM PA BLACK	
530521	90166-0118	MM	940	TUBE 8 MM PA BLACK	

Pos	Part No	UN	Qty	Description	Page No

Machine Type | Group Description | Used-In | Group Number | Page No

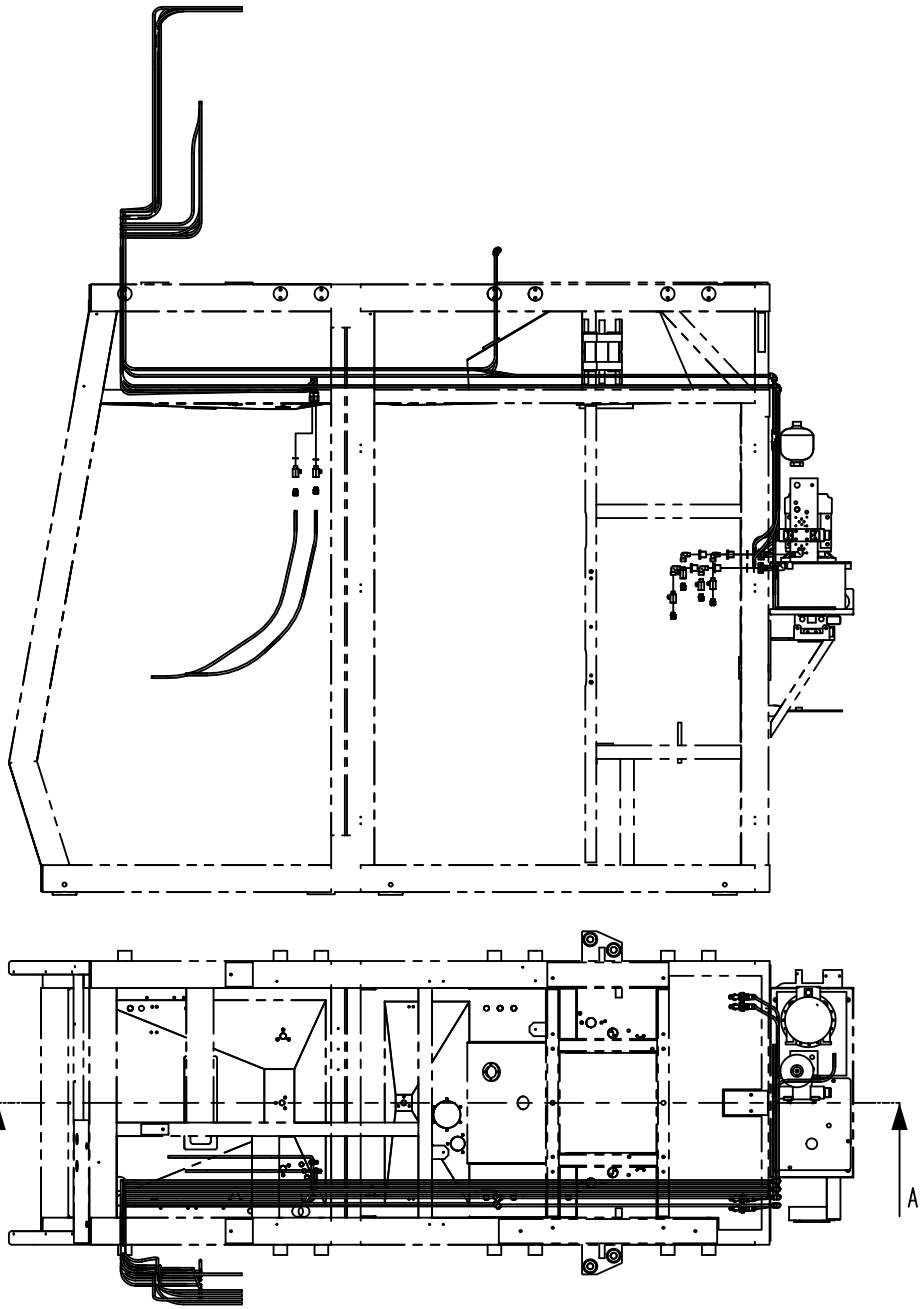

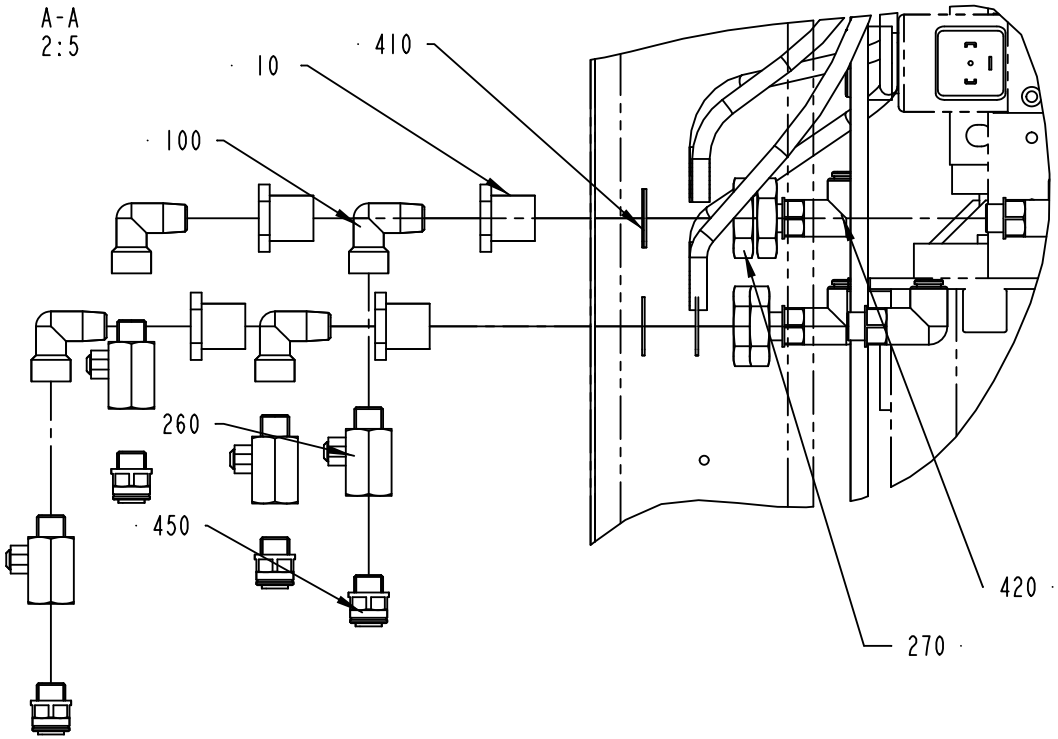

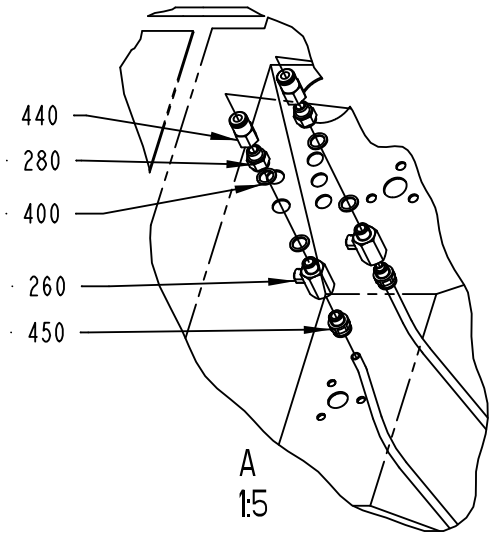

2514255-1
ECM 118243

ECM: 210344 - 20050621
Group number: 2514255-0100
Assembly Drawing: 2514255-1_2_AA

This list covers pages from 2-196 to 2-199

Pos	Part No	UN	Qty	Description	Page No
-					
010	276398-0000		4	HEXAGON NIPPLE	
100	90140-0013		4	ELBOW, 90 INT/EXT, 2020-1/4-1/4	
14021	90166-0118	MM	3300	TUBE 8 MM PA BLACK	
14022	90166-0118	MM	3900	TUBE 8 MM PA BLACK	
23201	90166-0118	MM	4400	TUBE 8 MM PA BLACK	
232011	90166-0118	MM	200	TUBE 8 MM PA BLACK	
232012	90166-0118	MM	1100	TUBE 8 MM PA BLACK	
23202	90166-0118	MM	4000	TUBE 8 MM PA BLACK	
232021	90166-0118	MM	200	TUBE 8 MM PA BLACK	
232022	90166-0118	MM	1300	TUBE 8 MM PA BLACK	
260	90187-0158		6	THROTTLE BALL VALVE G1/4, R1/4	
270	90330-0093		4	NUT, HEXAGON, G1/2	
280	90030-0166		2	NIPPLE,REDUCING G1/4"-G1/4"	
380	352113-0204		7	ANCHOR PLATES FOR STRIPS, TYPE TM3S25-M	
390	312125-0364		7	SCREW ISO 1207 M6X10 A4	
400	315237-0110		4	WASHER,PL.RND.AL.13,5/18,H=1,5	
410	315233-0113		4	WASHER CAPTIVE SEALING G1/2	
420	90055-0267		4	ELBOW PIPE JOINT,EXT.THREAD,D=8 MM G1/4	
430	90055-0269		8	ELBOW PIPE JOINT 8X8 MM	
43091	90166-0118	MM	4630	TUBE 8 MM PA BLACK	
430911	90166-0118	MM	650	TUBE 8 MM PA BLACK	
43092	90166-0118	MM	4000	TUBE 8 MM PA BLACK	
430921	90166-0118	MM	700	TUBE 8 MM PA BLACK	
43101	90166-0118	MM	5350	TUBE 8 MM PA BLACK	
431011	90166-0118	MM	650	TUBE 8 MM PA BLACK	
43102	90166-0118	MM	4800	TUBE 8 MM PA BLACK	
431021	90166-0118	MM	700	TUBE 8 MM PA BLACK	
440	90055-0266		2	STRAIGHT CONNECTION	
450	90055-0274		6	STRAIGHT COUPLING, D=8 MM - G1/4"	
490	90459-0941		2	QUICK COUPLING, PLCD 130-M8	
500	90459-0960		2	QUICK COUPLING, PLCD 200-M8	
53051	90166-0118	MM	3370	TUBE 8 MM PA BLACK	
530511	90166-0118	MM	980	TUBE 8 MM PA BLACK	
53052	90166-0118	MM	2840	TUBE 8 MM PA BLACK	
530521	90166-0118	MM	940	TUBE 8 MM PA BLACK	

Pos	Part No	UN	Qty	Description	Page No

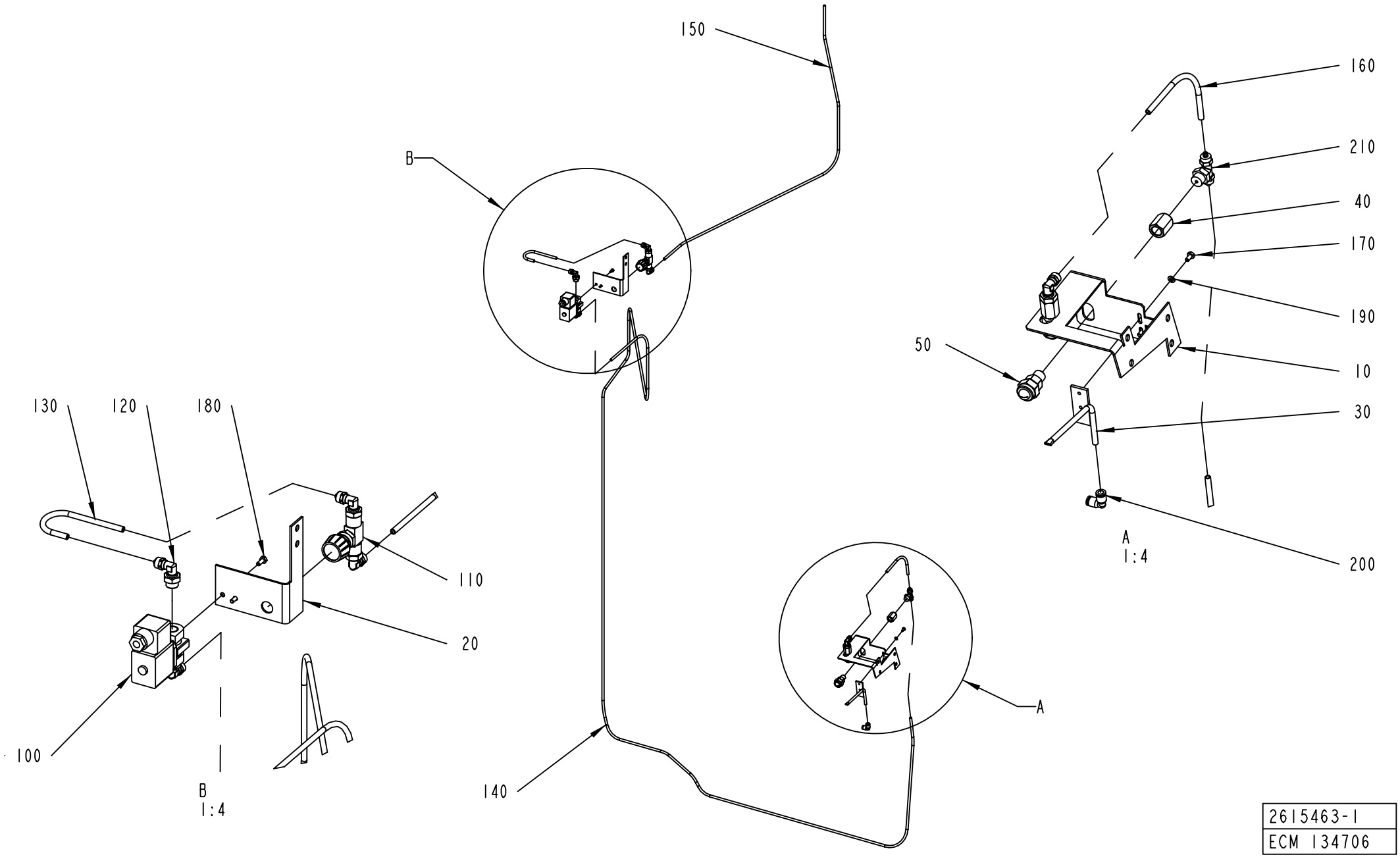

2615463-1
ECM 134706

ECM: 258274 - 20060702
Group number: 2615463-0100
Assembly Drawing: 2615463-1_1_AA

This list covers pages from 2-200 to 2-203

Pos	Part No	UN	Qty	Description	Page No
LIGHTCAP (See drawing on page: 2-202)					
230	2779660-0000		2	BRACKET	
240	2779661-0000		2	ANGLE	
250	2779662-0000		1	SUPPORT	
255	312105-0366		6	SCREW M6S ISO 4017 M6X12 A480	
260	2779663-0000		2	BRACKET	
270	315105-0153		6	WASHER BRB6,4X12RFR	
275	2779664-0000		1	SUPPORT	
290	90459-7280		1	AIR NOZZLE, 011	
350	350001-0006		1	PUSH-IN FITTING QS-F-G1/8-6	
360	350007-0006		1	PUSH-IN T-FITTING QST-F-G1/8-6	
410	342713-0209		1	PLUG (QUANT.MINIMA= 10PC).	
STDA7 CAP (See drawing on page: 2-200)					
010	2608273-0000		1	HOLDER	
030	2608274-0000		1	PIPE	
170	312105-0287		2	SCREW M6S ISO 4017 M4X8 A470	
190	315105-0136		2	WASHER BRB4,3XRFR	
200	342735-0102		1	ELBOW PIPE JOINT	
Common Parts					
020	2609365-0000		1	HOLDER	
040	1523641-0000		2	SPACER	
050	1523645-0000		2	AIR NOZZLE	
100	90042-0248		1	SOLENOID VALVE OFFICIENE DI ENSINO	
110	90187-0149		1	THROTTLE VALVE, G1/4, G1/4, MALE	
120	90224-0329		5	ELBOW 90 COUPL.,EXT.THREAD 6/4-G1/4"	
130	90166-0266	MM	200	TUBE, 6 MM PA BLACK	
140	90166-0266	MM	4000	TUBE, 6 MM PA BLACK	
150	90166-0266	MM	1200	TUBE, 6 MM PA BLACK	
160	90166-0266	MM	200	TUBE, 6 MM PA BLACK	
180	312105-0289		2	SCREW M6S ISO 4017 M4X10 A470	
210	342941-0114		1	T-COUPLING,EXT.THREAD 6/4-G1/4"	

Pos	Part No	UN	Qty	Description	Page No

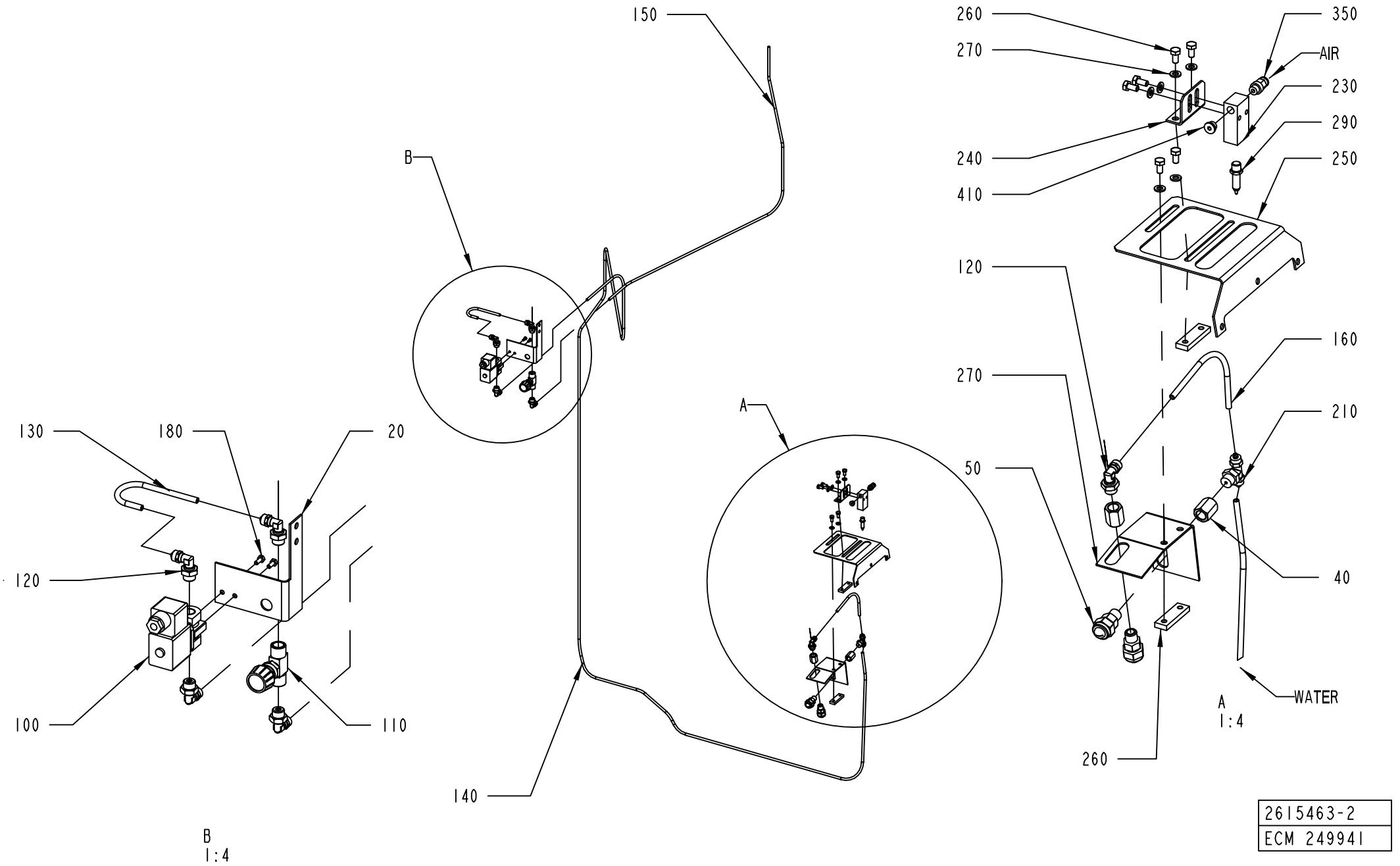

2615463-2
ECM 249941

ECM: 258274 - 20060702
Group number: 2615463-0100
Assembly Drawing: 2615463-2_1_AA

This list covers pages from 2-200 to 2-203

Pos	Part No	UN	Qty	Description	Page No
LIGHTCAP (See drawing on page: 2-202)					
230	2779660-0000		2	BRACKET	
240	2779661-0000		2	ANGLE	
250	2779662-0000		1	SUPPORT	
255	312105-0366		6	SCREW M6S ISO 4017 M6X12 A480	
260	2779663-0000		2	BRACKET	
270	315105-0153		6	WASHER BRB6,4X12RFR	
275	2779664-0000		1	SUPPORT	
290	90459-7280		1	AIR NOZZLE, 011	
350	350001-0006		1	PUSH-IN FITTING QS-F-G1/8-6	
360	350007-0006		1	PUSH-IN T-FITTING QST-F-G1/8-6	
410	342713-0209		1	PLUG (QUANT.MINIMA= 10PC).	
STDA7 CAP (See drawing on page: 2-200)					
010	2608273-0000		1	HOLDER	
030	2608274-0000		1	PIPE	
170	312105-0287		2	SCREW M6S ISO 4017 M4X8 A470	
190	315105-0136		2	WASHER BRB4,3XRFR	
200	342735-0102		1	ELBOW PIPE JOINT	
Common Parts					
020	2609365-0000		1	HOLDER	
040	1523641-0000		2	SPACER	
050	1523645-0000		2	AIR NOZZLE	
100	90042-0248		1	SOLENOID VALVE OFFICIENE DI ENSINO	
110	90187-0149		1	THROTTLE VALVE, G1/4, G1/4, MALE	
120	90224-0329		5	ELBOW 90 COUPL.,EXT.THREAD 6/4-G1/4"	
130	90166-0266	MM	200	TUBE, 6 MM PA BLACK	
140	90166-0266	MM	4000	TUBE, 6 MM PA BLACK	
150	90166-0266	MM	1200	TUBE, 6 MM PA BLACK	
160	90166-0266	MM	200	TUBE, 6 MM PA BLACK	
180	312105-0289		2	SCREW M6S ISO 4017 M4X10 A470	
210	342941-0114		1	T-COUPLING,EXT.THREAD 6/4-G1/4"	

Pos	Part No	UN	Qty	Description	Page No

PIPE WORK-WATER

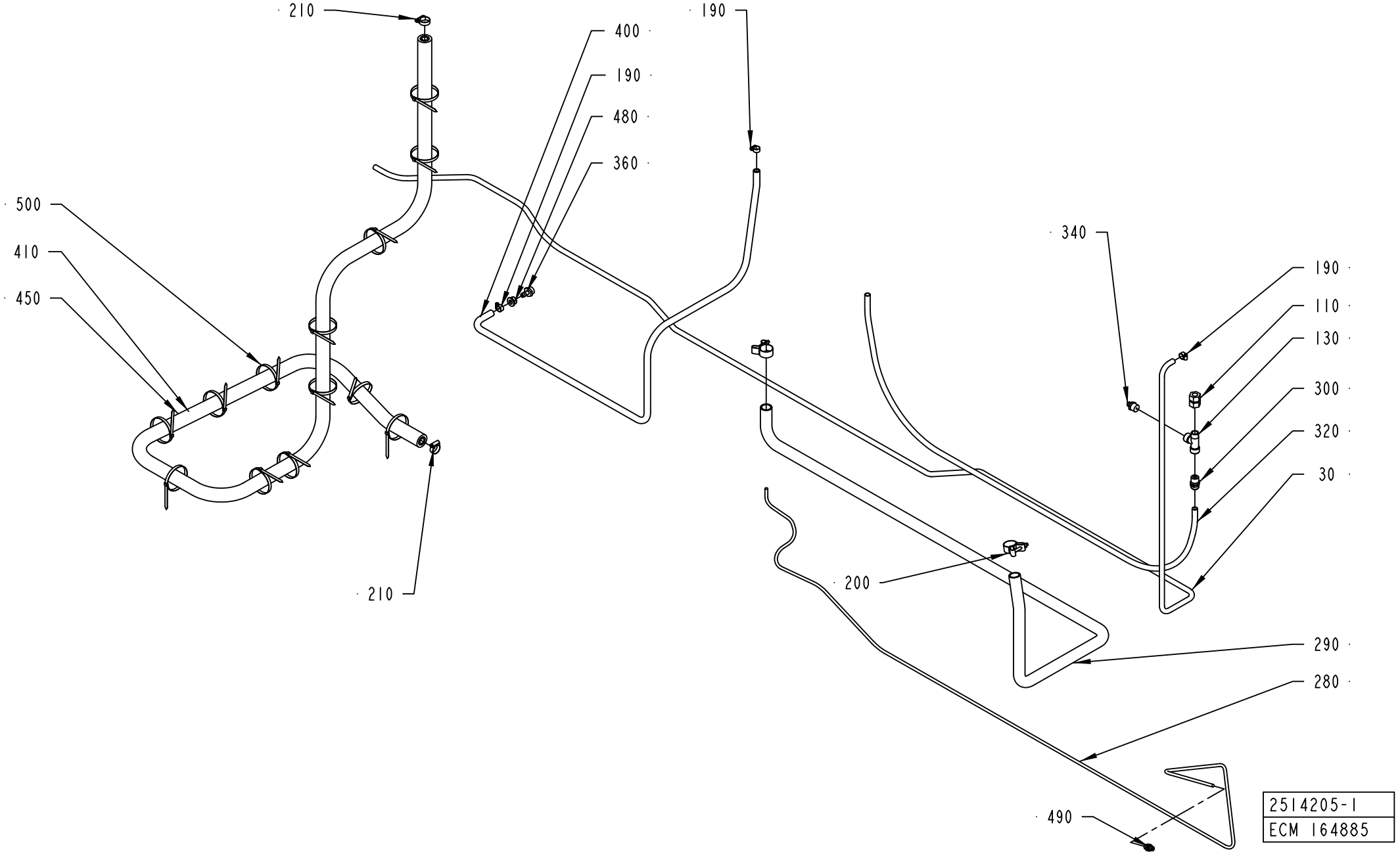

ECM: 270926 - 20060628
Group number: 2514205-0100
Assembly Drawing: 2514205-1_1_AE

Pos	Part No	UN	Qty	Description	Page No
A3/FLEX					
200	90459-2366		2	HOSE CLIP, (32)-35	
290	90166-0049	MM	2500	HOSE PVC 25/33-34	
Common Parts					
030	90459-3164	MM	5000	TUBE 14MM PA BLACK	
110	342723-0114		1	CONN. STR. PIPE GI-15-G1/2	
130	90140-0011		1	T-PIPE, INT. THREAD, NO. 2070-1/2-1/2	
190	342991-0101		3	HOSE CLIP,WORM DRIVE TYPE (13)-16	
210	342991-0104		2	HOSE CLIP,WORM DRIVE TYPE (23)-27	
280	90166-0013	MM	5000	TUBE 8 MM PA BLUE	
300	342920-0151		1	STRAIGHT COUPL.,EXT.THREAD.15/12,5-R1/2"	
320	90166-0110	MM	2200	TUBE 15 MM PA,TRANSP.	
340	342920-0116		1	STRAIGHT COUPLING,EXT.THREADED 6/4-R1/2"	
360	342901-0105		1	HOSE NIPPLE, EXT.THR. R1/2-12 MM	
400	90166-0121	MM	1850	HOSE	
410	90166-0260	MM	3300	HOSE	
450	90411-0020	MM	3300	INSULATING TUBE	
480	342713-0213		1	PLUG, EXT THREAD HEX SOCKET 8638-00-120	
490	342921-0122		1	STRAIGHT COUPLING,EXT.THREADED 8/6-G1/4"	
500	352113-0104		13	CLIP STRIP, 300X4,8 MM	

Pos	Part No	UN	Qty	Description	Page No

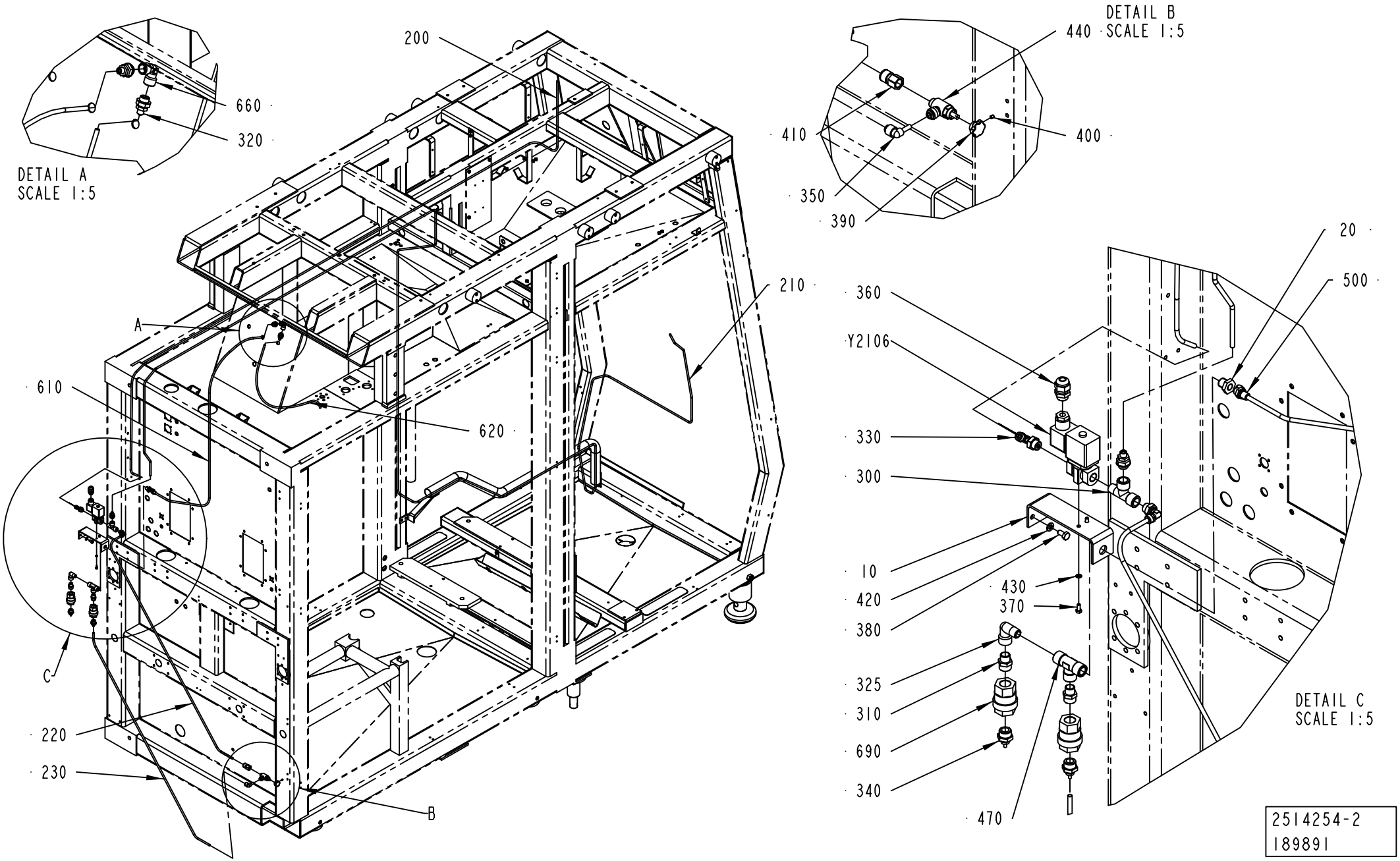
DETAIL A
SCALE 1:5
660
320
200
210
A
610
620
C
220
230
B
DETAIL B
SCALE 1:5
440
410
400
350
390
20
500
360
Y2106
330
300
10
420
380
430
370
325
310
690
340
470
DETAIL C
SCALE 1:5
2514254-2
189891

ECM: 257313 - 20060321
Group number: 2514254-0100
Assembly Drawing: 2514254-2_1_AA

Pos	Part No	UN	Qty	Description	Page No
A3/FLEX					
010	2721151-0000		1	CANTILEVER	
020	532413-0000		1	REDUCING NIPPLE	
210	90166-0132	MM	6630	TUBE 6 MM PA,TRANSP.	
230	90166-0132	MM	1200	TUBE 6 MM PA,TRANSP.	
300	342245-0102		1	T-PIPE, INT. THREAD, R1/4XKR1/4	
310	342700-0203		2	NIPPLES,HEXAGON,EXT.G-THREAD G3/8"-G1/4"	
320	342921-0114		4	STRAIGHT COUPLING,EXT.THREADED 6/4-G1/4"	
330	90224-0329		2	ELBOW 90 COUPL.,EXT.THREAD 6/4-G1/4"	
340	342921-0115		2	STRAIGHT COUPLING,EXT.THREADED 6/4-G3/8"	
470	90140-0018		1	T-PIPE, INT. THREAD, 2003-1/4	
500	342921-0113		1	STRAIGHT COUPLING,EXT.THREADED 6/4-G1/8"	
610	90166-0132	MM	1200	TUBE 6 MM PA,TRANSP.	
690	90230-0028		2	NON-RETURN VALVE H 151 R 3/8"	
Common Parts					
200	90166-0132	MM	3400	TUBE 6 MM PA,TRANSP.	
220	90166-0132	MM	1200	TUBE 6 MM PA,TRANSP.	
325	90140-0013		1	ELBOW, 90 INT/EXT, 2020-1/4-1/4	
350	90055-0268		1	ELBOW WITH TAILPIECE 6/6 MM	
360	352103-0101		1	CABLE GLAND, ST 9, PR15,2/PG9	
370	312105-0289		2	SCREW M6S ISO 4017 M4X10 A470	
380	312105-0366		2	SCREW M6S ISO 4017 M6X12 A480	
390	2710507-0000		1	KNOB	
400	90459-5076		1	SET SCREW ISO4026 M4X5 HRC 45	
410	90459-5471		1	STRAIGHT COUPLING INT, D=6 MM - G1/4	
420	315105-0153		2	WASHER BRB6,4X12RFR	
430	315105-0136		2	WASHER BRB4,3XRFR	
440	90459-5472		1	FLOW CONTROL VALVE, CFM360612E	
620	90166-0132	MM	1000	TUBE 6 MM PA,TRANSP.	
660	90140-0019		1	ELBOW, 90, INT. THREAD, NO. 2013-1/4	
Y2106	90042-0248		1	SOLENOID VALVE OFFICIENE DI ENSINO	

Pos	Part No	UN	Qty	Description	Page No

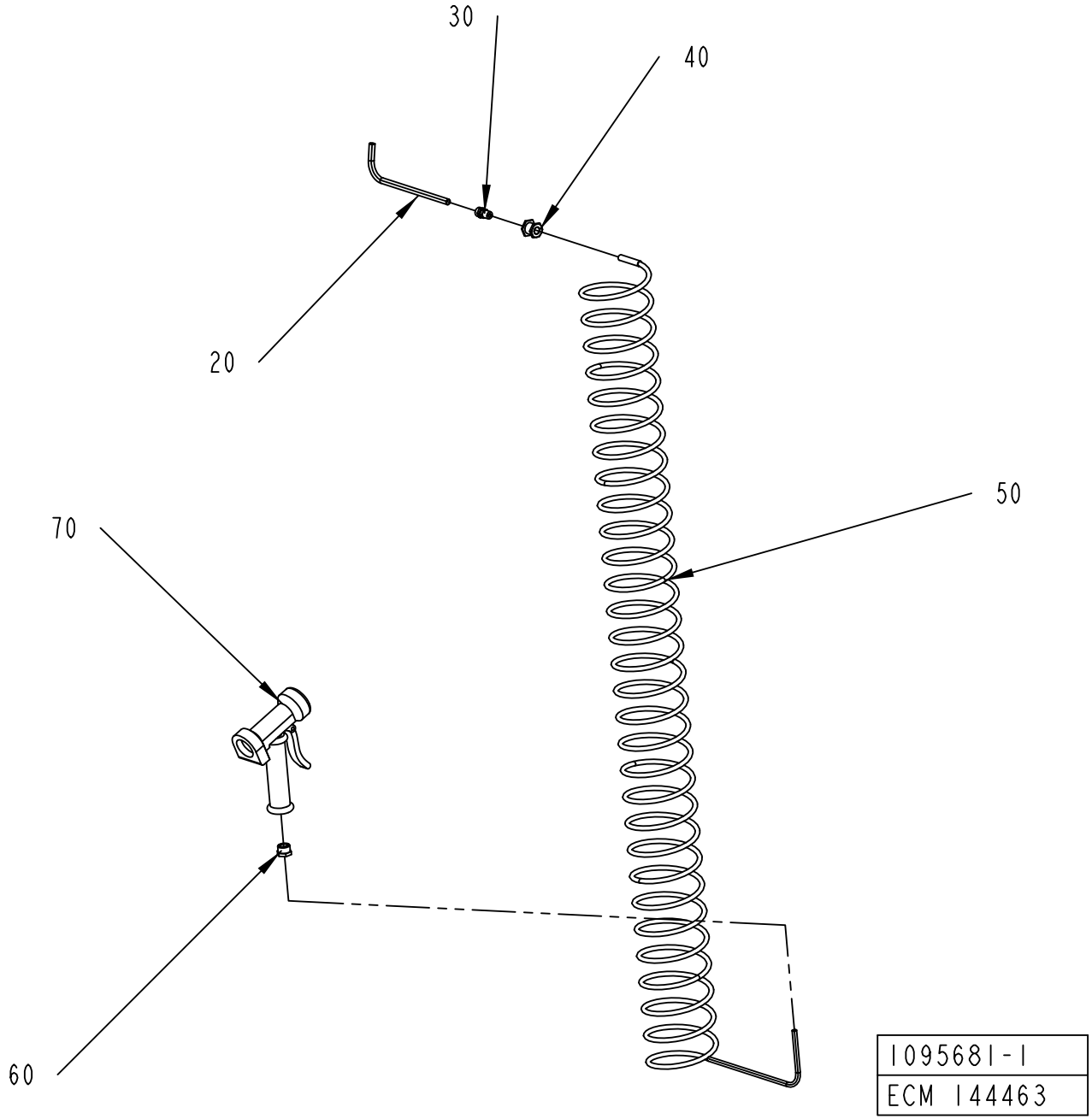
30
40
20
50
70
60
1095681-1
ECM 144463

ECM: 189878 - 20041104
Group number: 1095681-0100
Assembly Drawing: 1095681-1_1_AB

Pos	Part No	UN	Qty	Description	Page No
-					
020	90166-0141	MM	1600	TUBE 10 MM PA,TRANSP.	
030	342920-0132		1	STRAIGHT COUPL.,EXT.THREADED 10/8-R1/4"	
040	342767-0104		1	CONN. BULKHEAD G1/4	
050	90152-0017		1	HOSE (SPIRAL)	
060	342701-0205		1	BUSHING,INT./EXT.G-THREAD G1/2"-G1/4"	
070	90426-0003		1	HAND SHOWER	

Pos	Part No	UN	Qty	Description	Page No

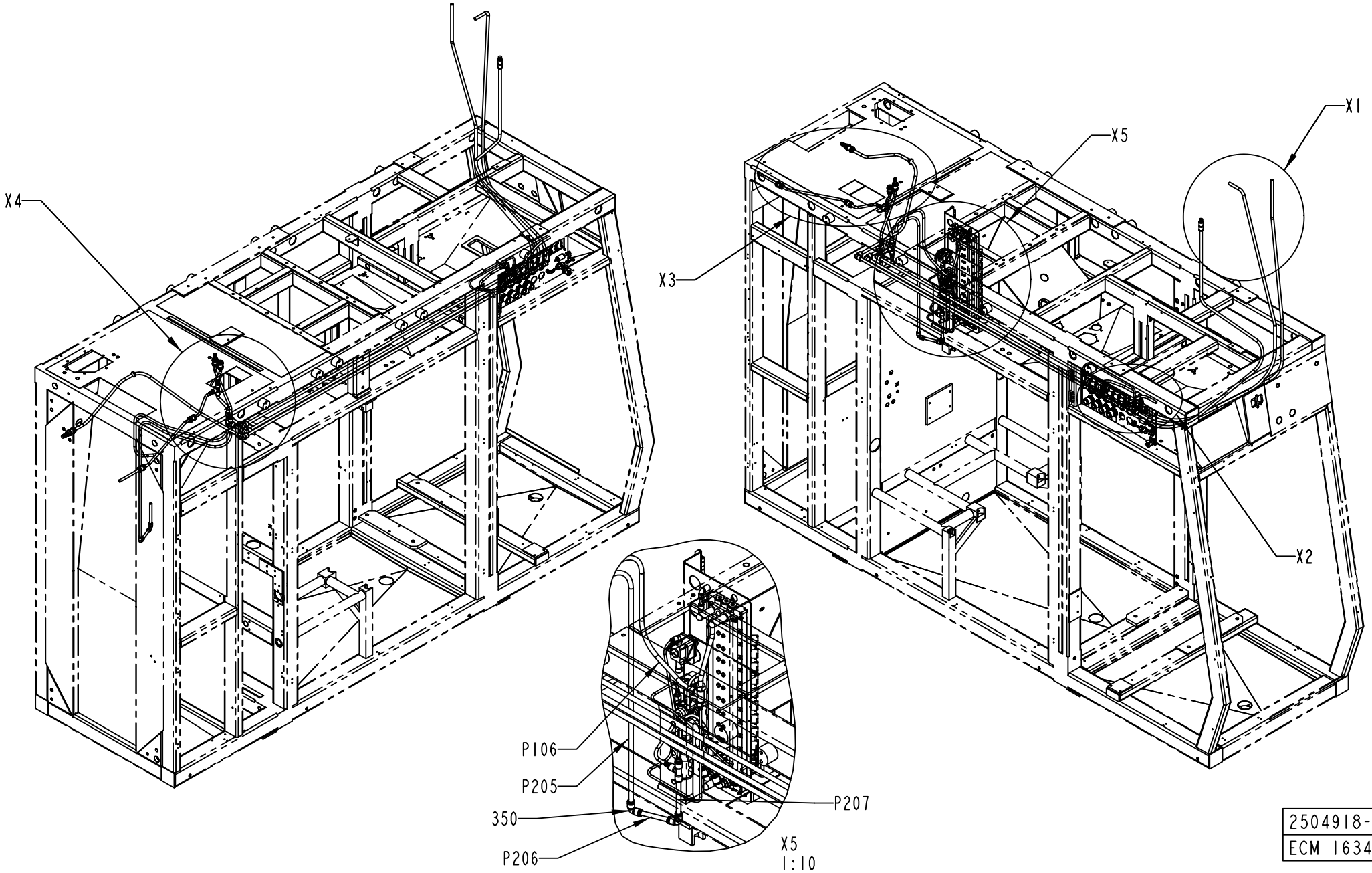

2504918-1
ECM 163462

ECM: 189881 - 20041104
Group number: 2504918-0100
Assembly Drawing: 2504918-1_1_AC

This list covers pages from 2-210 to 2-213

Pos	Part No	UN	Qty	Description	Page No
A3/FLEX (See drawing on pages: 2-210, 2-212)					
300	342715-0106		1	BLIND PLUG 14 MM	
305	342715-0105		1	BLIND PLUG 12 MM	
340	342716-0211		8	REDUCER 12-14	
360	342735-0110		3	ELBOW PIPE	
P103	90166-0196	MM	2350	TUBE 14MM PA BLUE	
P104	90166-0196	MM	120	TUBE 14MM PA BLUE	
P1ASU3	90166-0195	MM	3200	TUBE 12 MM PA BLUE	
P203	90166-0196	MM	2400	TUBE 14MM PA BLUE	
P204	90166-0195	MM	120	TUBE 12 MM PA BLUE	
P2PTDIMC	90166-0196	MM	4800	TUBE 14MM PA BLUE	
P2PTDIMC1	90166-0196	MM	1440	TUBE 14MM PA BLUE	
Common Parts					
330	342716-0209		2	REDUCER 8-12	
345	342728-0110		1	PIPE COUPLING 14 MM	
350	342735-0109		2	ELBOW PIPE JOINT	
440	342748-0110		5	T-CONNECTION 14MM	
500	90015-0021		1	LEAD-IN, TET10-14, E-1458023	
760	90458-2602		4	BULKHEAD CONNECTOR, 12 MM	
765	342768-0110		1	BULKHEAD CONNECTOR, 14 MM	
770	90055-0277		1	ELBOW WITH TAILPIECE 12/12 MM	
780	90157-0034		1	THREAD SEALANT LOCTITE 572 50 ML	
790	359000-0500		16	WIRE MARKING, YELLOW, PA3/6"0"	
800	359000-0501		16	WIRE MARKING, YELLOW, PA3/6"1"	
810	359000-0502		14	WIRE MARKING, YELLOW, PA3/6"2"	
820	359000-0503		4	WIRE MARKING, YELLOW, PA3/6"3"	
830	359000-0504		4	WIRE MARKING, YELLOW, PA3/6"4"	
840	359000-0505		4	WIRE MARKING, YELLOW, PA3/6"5"	
850	359000-0506		4	WIRE MARKING, YELLOW, PA3/6"6"	
860	359000-0507		2	WIRE MARKING, YELLOW, PA3/6"7"	
870	359000-0800		4	WIRE MARKING, YELLOW, PA3/6"A"	
880	359000-0802		4	WIRE MARKING, YELLOW, PA3/6"C"	
890	359000-0803		4	WIRE MARKING, YELLOW, PA3/6"D"	
900	359000-0808		4	WIRE MARKING, YELLOW, PA3/6"I"	
910	359000-0812		4	WIRE MARKING, YELLOW, PA3/6"M"	
920	359000-0815		30	WIRE MARKING, YELLOW, PA3/6"P"	
930	359000-0818		8	WIRE MARKING, YELLOW, PA3/6"S"	
940	359000-0819		4	WIRE MARKING, YELLOW, PA3/6"T"	
950	359000-0820		8	WIRE MARKING, YELLOW, PA3/6"U"	
960	359000-0025		30	WIRE MARKING, YELLOW, PA3/6"-"	
P101	90166-0196	MM	2410	TUBE 14MM PA BLUE	
P102	90166-0195	MM	2600	TUBE 12 MM PA BLUE	
P105	90166-0196	MM	240	TUBE 14MM PA BLUE	
P106	90166-0195	MM	1300	TUBE 12 MM PA BLUE	
P1ASU1	90166-0195	MM	230	TUBE 12 MM PA BLUE	
P1ASU2	90166-0195	MM	510	TUBE 12 MM PA BLUE	
P1SUP	90166-0195	MM	100	TUBE 12 MM PA BLUE	
P201	90166-0196	MM	2600	TUBE 14MM PA BLUE	
P202	90166-0013	MM	710	TUBE 8 MM PA BLUE	
P205	90166-0195	MM	1700	TUBE 12 MM PA BLUE	
P206	90166-0195	MM	150	TUBE 12 MM PA BLUE	
P207	90166-0195	MM	180	TUBE 12 MM PA BLUE	
P2SUP	90166-0195	MM	370	TUBE 12 MM PA BLUE	

Machine Type	Group Description	Used-In	Group Number	Page No

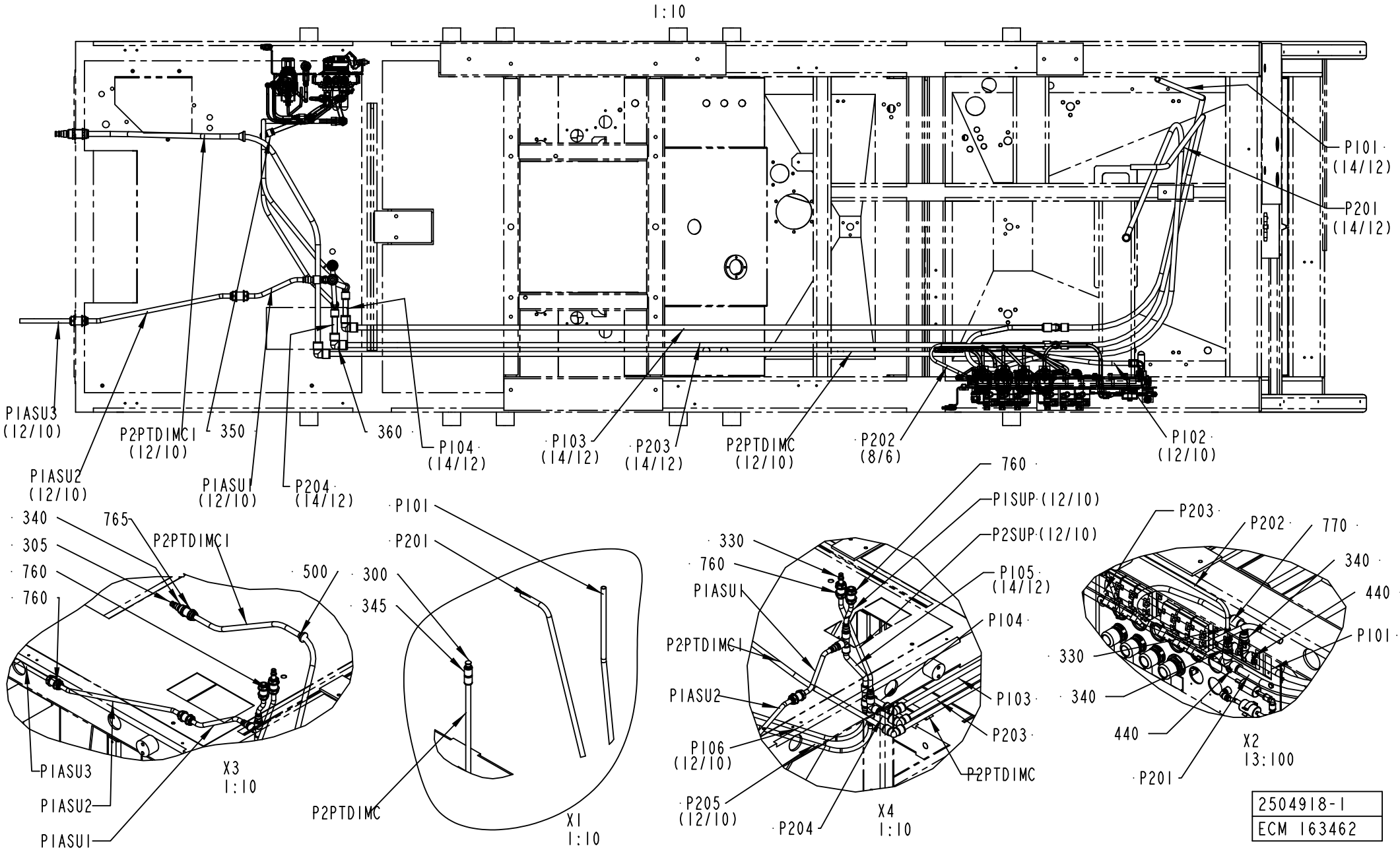

2504918-1
ECM 163462

ECM: 189881 - 20041104
Group number: 2504918-0100
Assembly Drawing: 2504918-1_2_AC

This list covers pages from 2-210 to 2-213

Pos	Part No	UN	Qty	Description	Page No
A3/FLEX (See drawing on pages: 2-210, 2-212)					
300	342715-0106		1	BLIND PLUG 14 MM	
305	342715-0105		1	BLIND PLUG 12 MM	
340	342716-0211		8	REDUCER 12-14	
360	342735-0110		3	ELBOW PIPE	
P103	90166-0196	MM	2350	TUBE 14MM PA BLUE	
P104	90166-0196	MM	120	TUBE 14MM PA BLUE	
P1ASU3	90166-0195	MM	3200	TUBE 12 MM PA BLUE	
P203	90166-0196	MM	2400	TUBE 14MM PA BLUE	
P204	90166-0195	MM	120	TUBE 12 MM PA BLUE	
P2PTDIMC	90166-0196	MM	4800	TUBE 14MM PA BLUE	
P2PTDIMC1	90166-0196	MM	1440	TUBE 14MM PA BLUE	
Common Parts					
330	342716-0209		2	REDUCER 8-12	
345	342728-0110		1	PIPE COUPLING 14 MM	
350	342735-0109		2	ELBOW PIPE JOINT	
440	342748-0110		5	T-CONNECTION 14MM	
500	90015-0021		1	LEAD-IN, TET10-14, E-1458023	
760	90458-2602		4	BULKHEAD CONNECTOR, 12 MM	
765	342768-0110		1	BULKHEAD CONNECTOR, 14 MM	
770	90055-0277		1	ELBOW WITH TAILPIECE 12/12 MM	
780	90157-0034		1	THREAD SEALANT LOCTITE 572 50 ML	
790	359000-0500		16	WIRE MARKING, YELLOW, PA3/6"0"	
800	359000-0501		16	WIRE MARKING, YELLOW, PA3/6"1"	
810	359000-0502		14	WIRE MARKING, YELLOW, PA3/6"2"	
820	359000-0503		4	WIRE MARKING, YELLOW, PA3/6"3"	
830	359000-0504		4	WIRE MARKING, YELLOW, PA3/6"4"	
840	359000-0505		4	WIRE MARKING, YELLOW, PA3/6"5"	
850	359000-0506		4	WIRE MARKING, YELLOW, PA3/6"6"	
860	359000-0507		2	WIRE MARKING, YELLOW, PA3/6"7"	
870	359000-0800		4	WIRE MARKING, YELLOW, PA3/6"A"	
880	359000-0802		4	WIRE MARKING, YELLOW, PA3/6"C"	
890	359000-0803		4	WIRE MARKING, YELLOW, PA3/6"D"	
900	359000-0808		4	WIRE MARKING, YELLOW, PA3/6"I"	
910	359000-0812		4	WIRE MARKING, YELLOW, PA3/6"M"	
920	359000-0815		30	WIRE MARKING, YELLOW, PA3/6"P"	
930	359000-0818		8	WIRE MARKING, YELLOW, PA3/6"S"	
940	359000-0819		4	WIRE MARKING, YELLOW, PA3/6"T"	
950	359000-0820		8	WIRE MARKING, YELLOW, PA3/6"U"	
960	359000-0025		30	WIRE MARKING, YELLOW, PA3/6"-"	
P101	90166-0196	MM	2410	TUBE 14MM PA BLUE	
P102	90166-0195	MM	2600	TUBE 12 MM PA BLUE	
P105	90166-0196	MM	240	TUBE 14MM PA BLUE	
P106	90166-0195	MM	1300	TUBE 12 MM PA BLUE	
P1ASU1	90166-0195	MM	230	TUBE 12 MM PA BLUE	
P1ASU2	90166-0195	MM	510	TUBE 12 MM PA BLUE	
P1SUP	90166-0195	MM	100	TUBE 12 MM PA BLUE	
P201	90166-0196	MM	2600	TUBE 14MM PA BLUE	
P202	90166-0013	MM	710	TUBE 8 MM PA BLUE	
P205	90166-0195	MM	1700	TUBE 12 MM PA BLUE	
P206	90166-0195	MM	150	TUBE 12 MM PA BLUE	
P207	90166-0195	MM	180	TUBE 12 MM PA BLUE	
P2SUP	90166-0195	MM	370	TUBE 12 MM PA BLUE	

Machine Type	Group Description	Used-In	Group Number	Page No

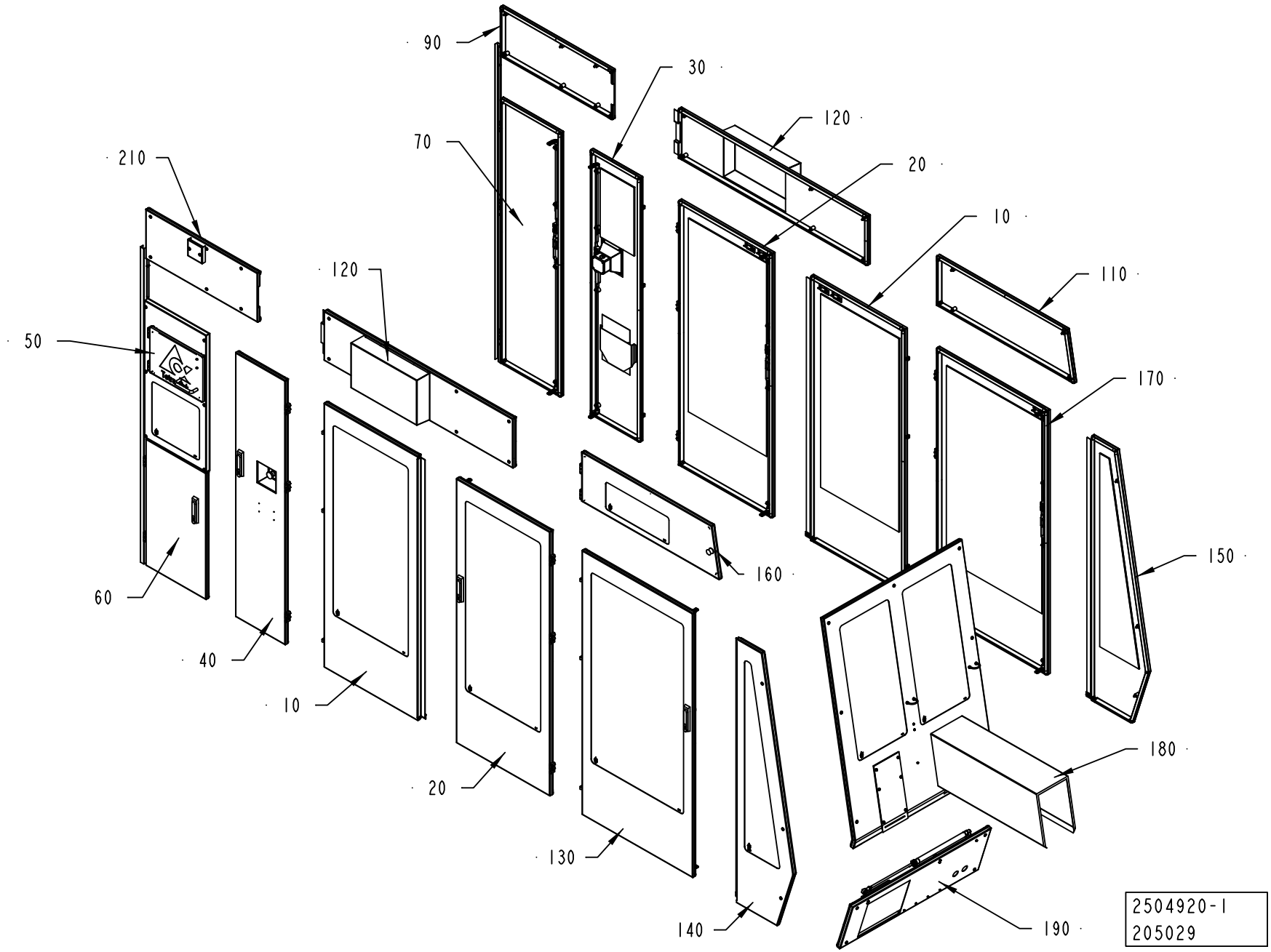
90
30
120
70
20
210
10
120
110
50
170
150
160
60
40
10
20
180
130
140
190
2504920-1
205029

ECM: 265216 - 20060702
Group number: 2504920-0100
Assembly Drawing: 2504920-1_1_AC

Pos	Part No	UN	Qty	Description	Page No
A3/FLEX TBA, A3/FLEX TPA					
010	2508129-0100		2	DOOR	**2-217**
020	2508135-0100		2	DOOR	**2-219**
040	2508141-0100		1	DOOR	**2-221**
090	2508159-0100		1	COVER	**2-225**
110	2508165-0100		1	COVER	**2-227**
120	2508168-0100		2	COVER	**2-229**
140	2508177-0100		1	DOOR	**2-231**
150	2508181-0100		1	DOOR	**2-233**
160	2774454-0100		1	COVER	**2-235**
170	2530080-0100		1	DOOR	**2-237**
180	2512830-0100		1	FRONT COVER	**2-239**
190	2510347-0100		1	FRONT GUARD	**2-247**
Common Parts					
030	2508138-0100		1	DOOR	**2-249**
050	2544310-0100		1	PROTECTIVE COVER	**2-253**
060	2508149-0200		1	DOOR	**2-255**
070	2529597-0200		1	DOOR	**2-257**
130	2508175-0100		1	DOOR	**2-259**
210	2544333-0100		1	DOOR	**2-261**

Pos	Part No	UN	Qty	Description	Page No

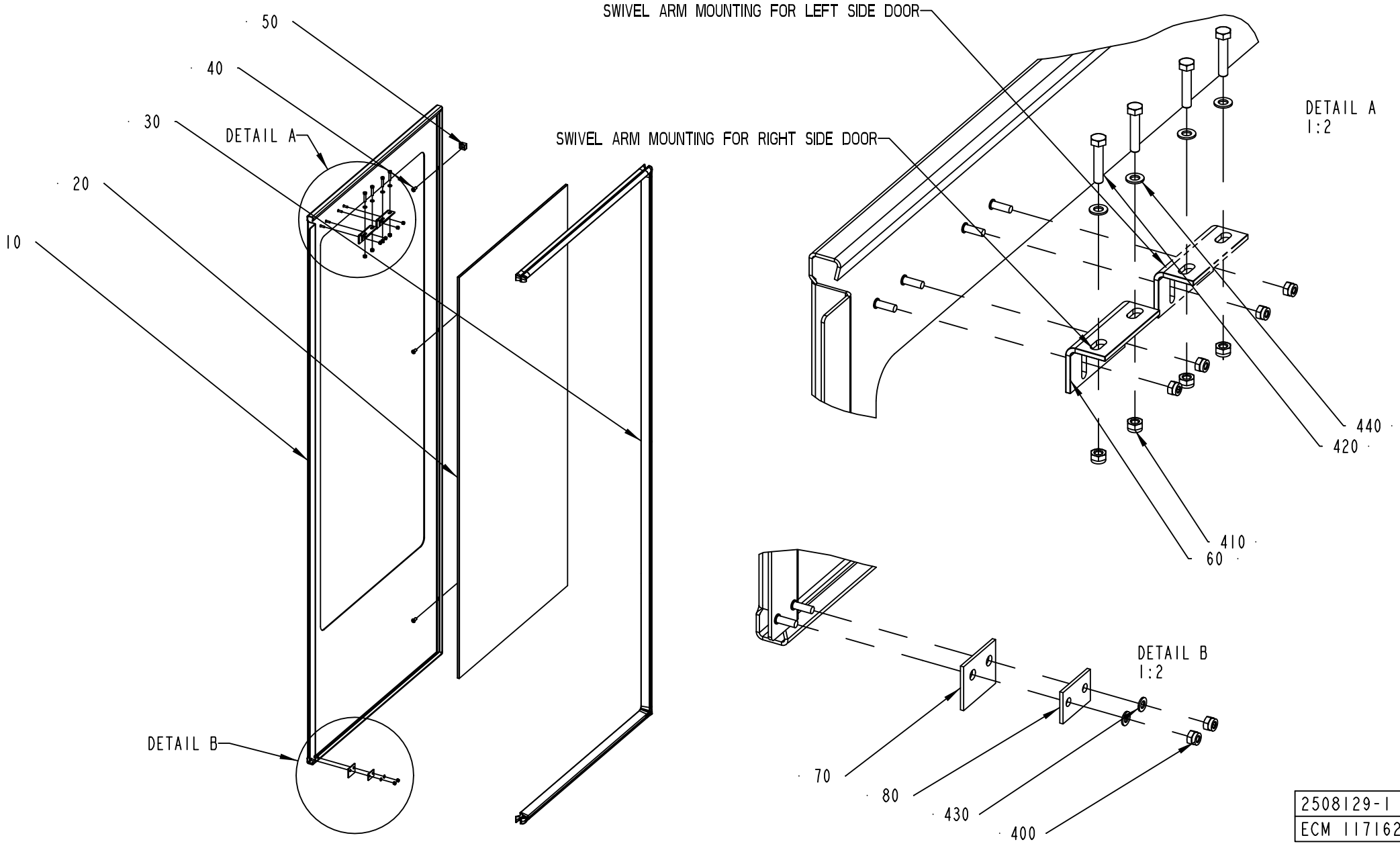

2508129-1
ECM 117162

ECM: 265694 - 20060702
Group number: 2508129-0100
Assembly Drawing: 2508129-1_1_AA

Pos	Part No	UN	Qty	Description	Page No
A3/FLEX					
010	2508130-0000		1	DOOR	
020	2508131-0000		1	GLASS PANE	
030	2508132-0000		1	RUBBER SEAL	
Common Parts					
040	1129767-0000		3	SCREW	
050	1129770-0000		3	BLOCKING PIECE	
060	1346885-0000		1	SUPPORT	
070	1129325-0000		1	SEALING FLANGE	
080	1129324-0000		1	WASHER	
300	90153-0049		1	ADHESIVE, LOCTITE 409 20G	
310	90157-0041		1	SEALING COMPOUND, RHODORSEAL 5651	
400	312812-0312		4	HEXAGON NUT, NY-LOCK M4 A480	
410	312812-0314		2	HEXAGON NUT, NY-LOCK M5 A480	
420	312105-0333		2	SCREW M6S ISO 4017 M5X25 A480	
430	315105-0136		2	WASHER BRB4,3XRFR	
440	315105-0146		2	WASHER BRB5,3X10RFR	

Pos	Part No	UN	Qty	Description	Page No

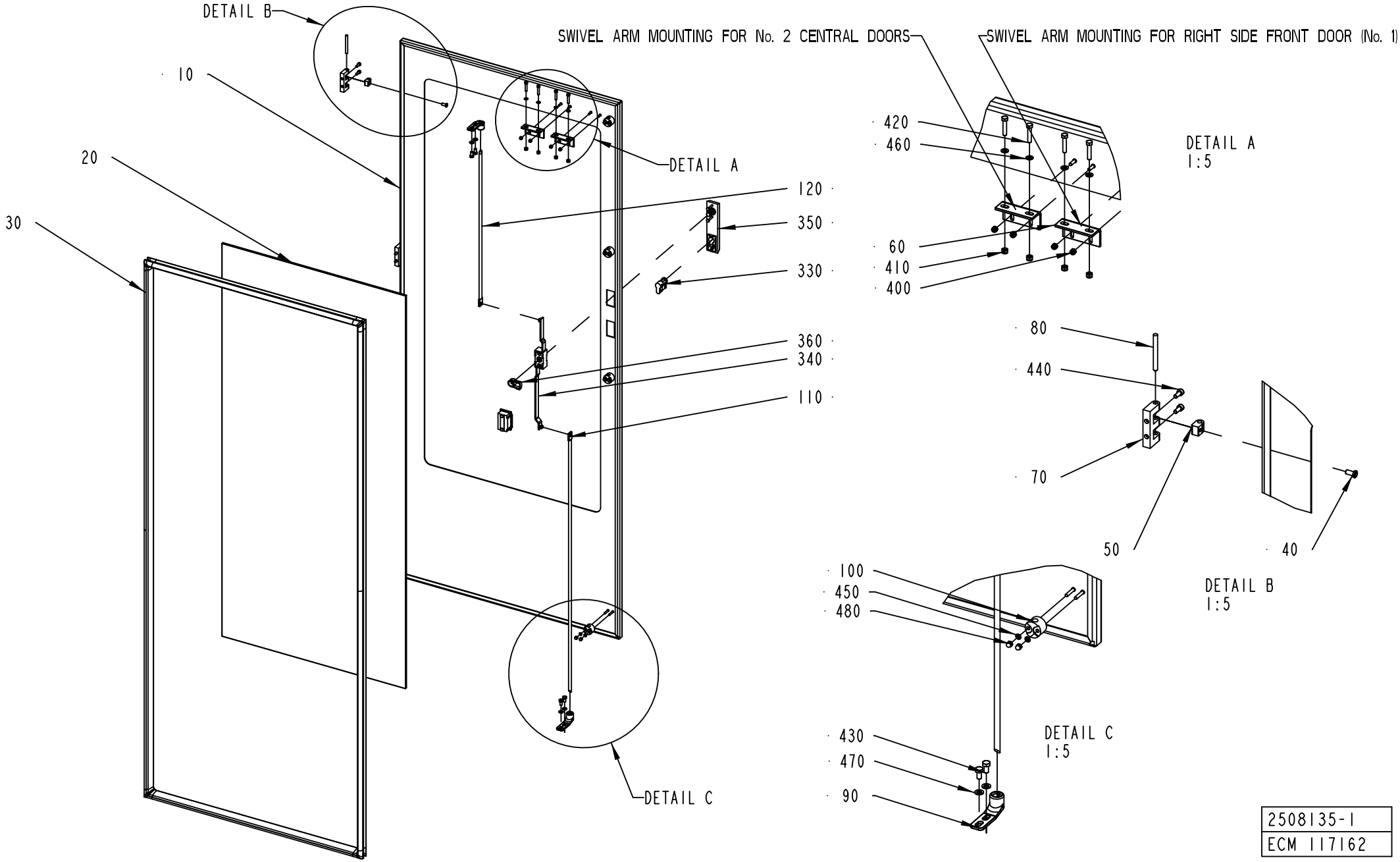

2508135-1
ECM 117162

ECM: 265693 - 20060702
Group number: 2508135-0100
Assembly Drawing: 2508135-1_1_AA

Pos	Part No	UN	Qty	Description	Page No
A3/FLEX					
010	2508136-0000		1	DOOR	
020	2508131-0000		1	GLASS PANE	
030	2508137-0000		1	RUBBER SEAL	
Common Parts					
040	1129767-0000		3	SCREW	
050	1129770-0000		3	BLOCKING PIECE	
060	1346885-0000		1	SUPPORT	
070	1035792-0000		3	E-HINGE	
080	988685-0000		3	PIN	
090	1538868-0000		2	BRACKET	
100	1129274-0000		4	GUIDE LUG	
110	2508133-0000		1	LOCKING ARM	
120	2508134-0000		1	LOCKING ARM	
300	90153-0049		1	ADHESIVE, LOCTITE 409 20G	
310	90157-0041		1	SEALING COMPOUND, RHODORSEAL 5651	
330	90237-0128		1	LOCK CYLINDER, 1109-U3	
340	90237-0153		1	LOCK HOUSING, 1121-U26-0B	
350	90237-0176		1	TURNING HANDLE, 1125-U190-A	
360	90237-0165		1	LATCH	
400	312812-0312		2	HEXAGON NUT, NY-LOCK M4 A480	
410	312812-0314		2	HEXAGON NUT, NY-LOCK M5 A480	
420	312105-0333		2	SCREW M6S ISO 4017 M5X25 A480	
430	312105-0366		4	SCREW M6S ISO 4017 M6X12 A480	
440	312115-0327		6	SCREW ISO4762 M5X12 A4 80	
450	315105-0136		8	WASHER BRB4,3XRFR	
460	315105-0146		2	WASHER BRB5,3X10RFR	
470	315105-0153		4	WASHER BRB6,4X12RFR	
480	312705-0312		8	NUT HEX. DOMED CAP MHM-6 M4 A280	

Pos	Part No	UN	Qty	Description	Page No

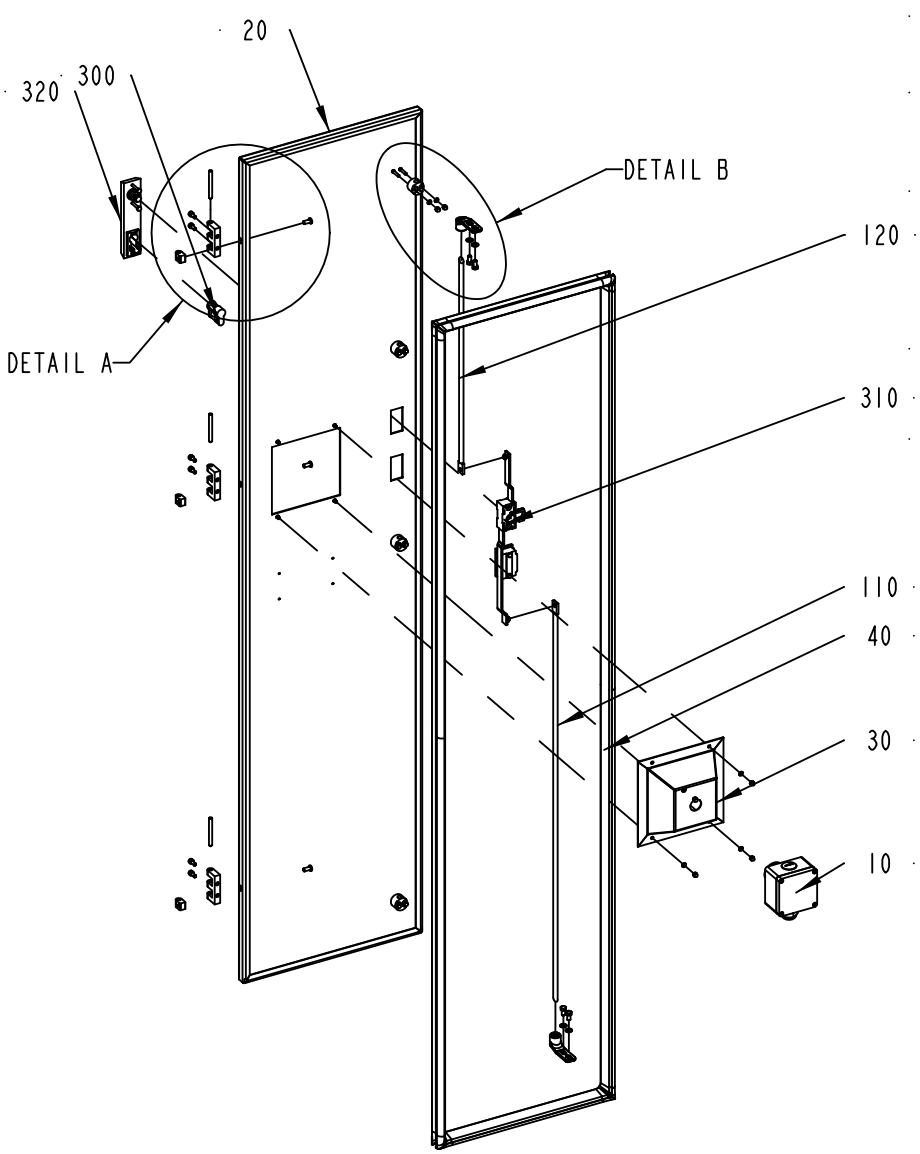

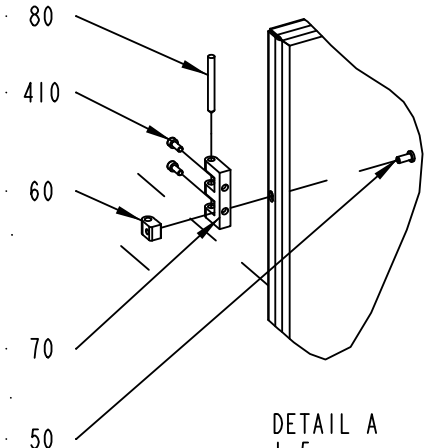

DETAIL A
1:5

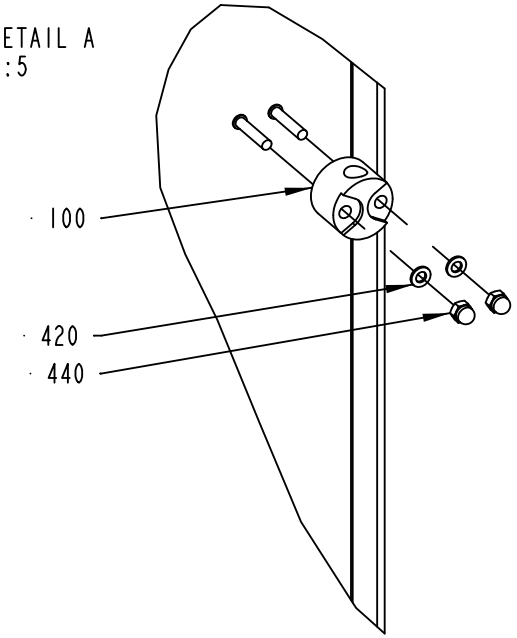

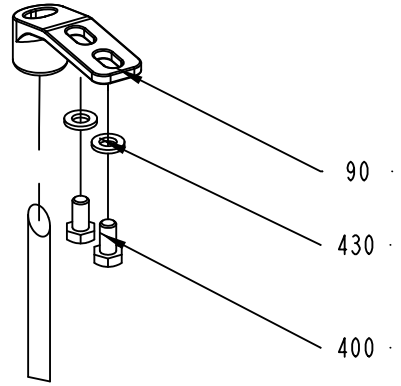

DETAIL B
1:2

2508141-1
ECM 117162

ECM: 189909 - 20041104
Group number: 2508141-0100
Assembly Drawing: 2508141-1_1_AA

Pos	Part No	UN	Qty	Description	Page No
-					
010	2593851-0100		1	EMERGENCY STOP	**2-223**
020	2508142-0000		1	DOOR	
030	2532619-0000		1	COVER	
040	2508186-0000		1	RUBBER SEAL	
050	1129767-0000		3	SCREW	
060	1129770-0000		3	BLOCKING PIECE	
070	1035792-0000		3	E-HINGE	
080	988685-0000		3	PIN	
090	1538868-0000		2	BRACKET	
100	1129274-0000		4	GUIDE LUG	
110	2508133-0000		1	LOCKING ARM	
120	2508140-0000		1	LOCKING ARM	
300	90237-0128		1	LOCK CYLINDER, 1109-U3	
310	90237-0153		1	LOCK HOUSING, 1121-U26-0B	
320	90237-0176		1	TURNING HANDLE, 1125-U190-A	
400	312105-0366		4	SCREW M6S ISO 4017 M6X12 A480	
410	312115-0327		6	SCREW ISO4762 M5X12 A4 80	
420	315105-0136		12	WASHER BRB4,3XRFR	
430	315105-0153		4	WASHER BRB6,4X12RFR	
440	312705-0312		12	NUT HEX. DOMED CAP MHM-6 M4 A280	

Pos	Part No	UN	Qty	Description	Page No

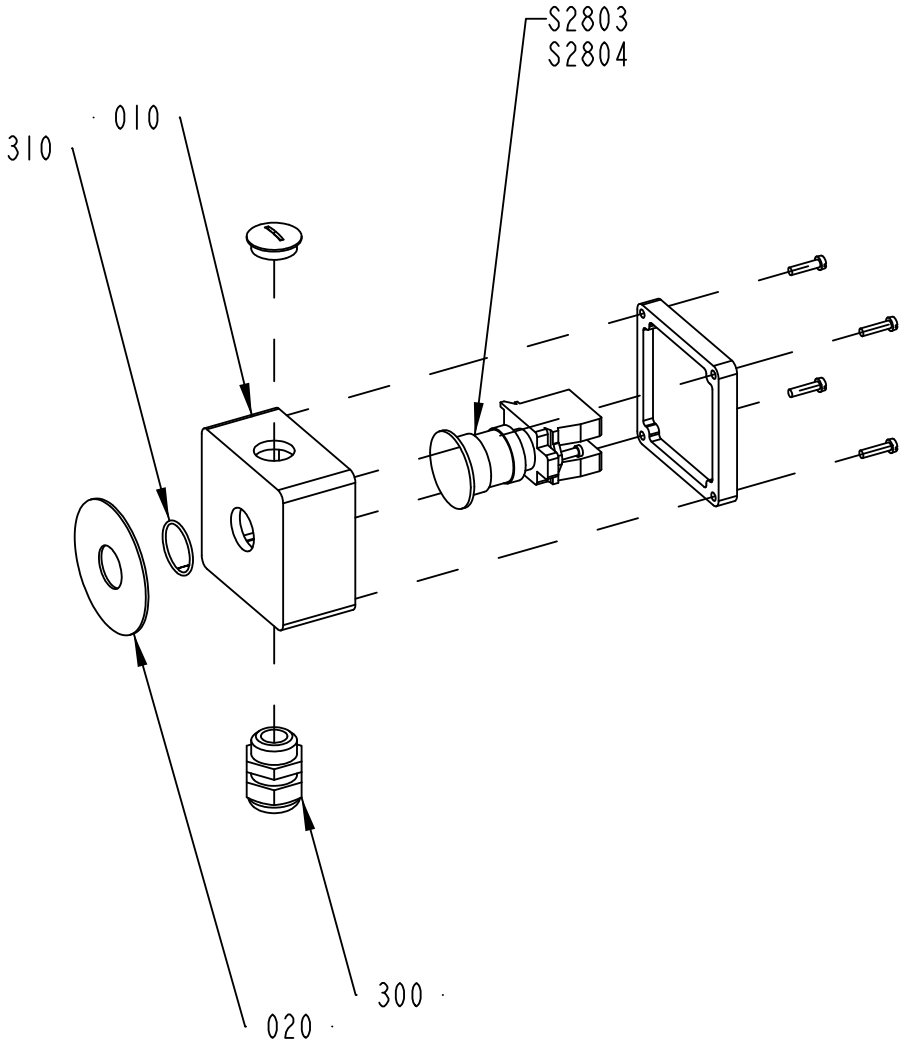

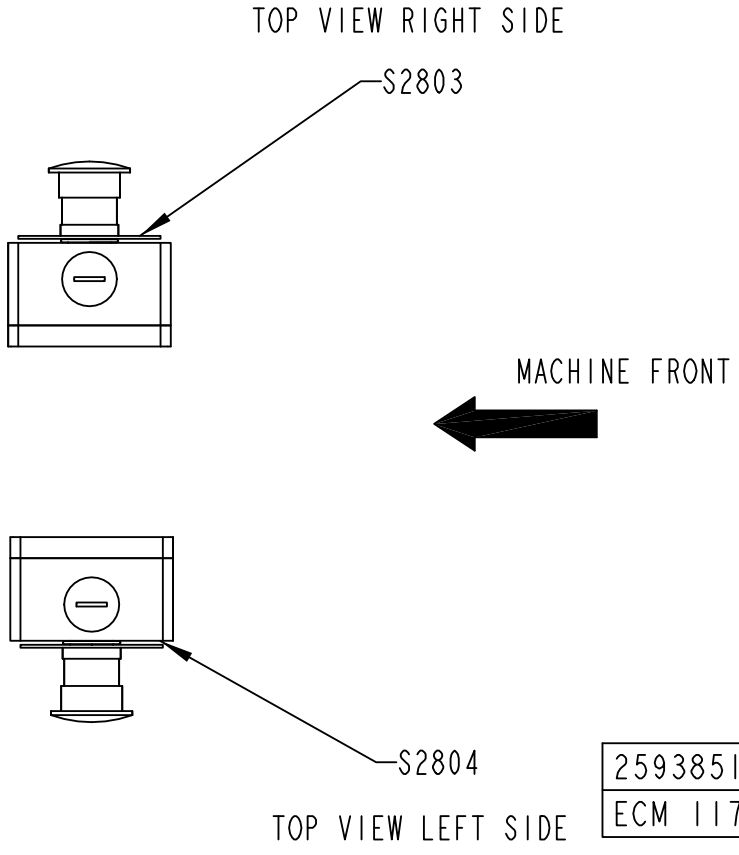

2593851-1
ECM 117744

ECM: 189908 - 20041104
Group number: 2593851-0100
Assembly Drawing: 2593851-1_1_AA

Pos	Part No	UN	Qty	Description	Page No
-					
010	1037130-0000		1	CONNECTION BOX	
020	486826-0001		1	SIGN "EMERGENCY STOP"	
300	352103-0110		1	CABLE GLAND, STR 16, PR22,5/PG16	
310	315202-0119		1	O-RING 25,1X1,6 MM	
S2803	90458-1651		1	EMERGENCY STOP, ZB4-BS-844 ZB4-BZ-104	

Pos	Part No	UN	Qty	Description	Page No

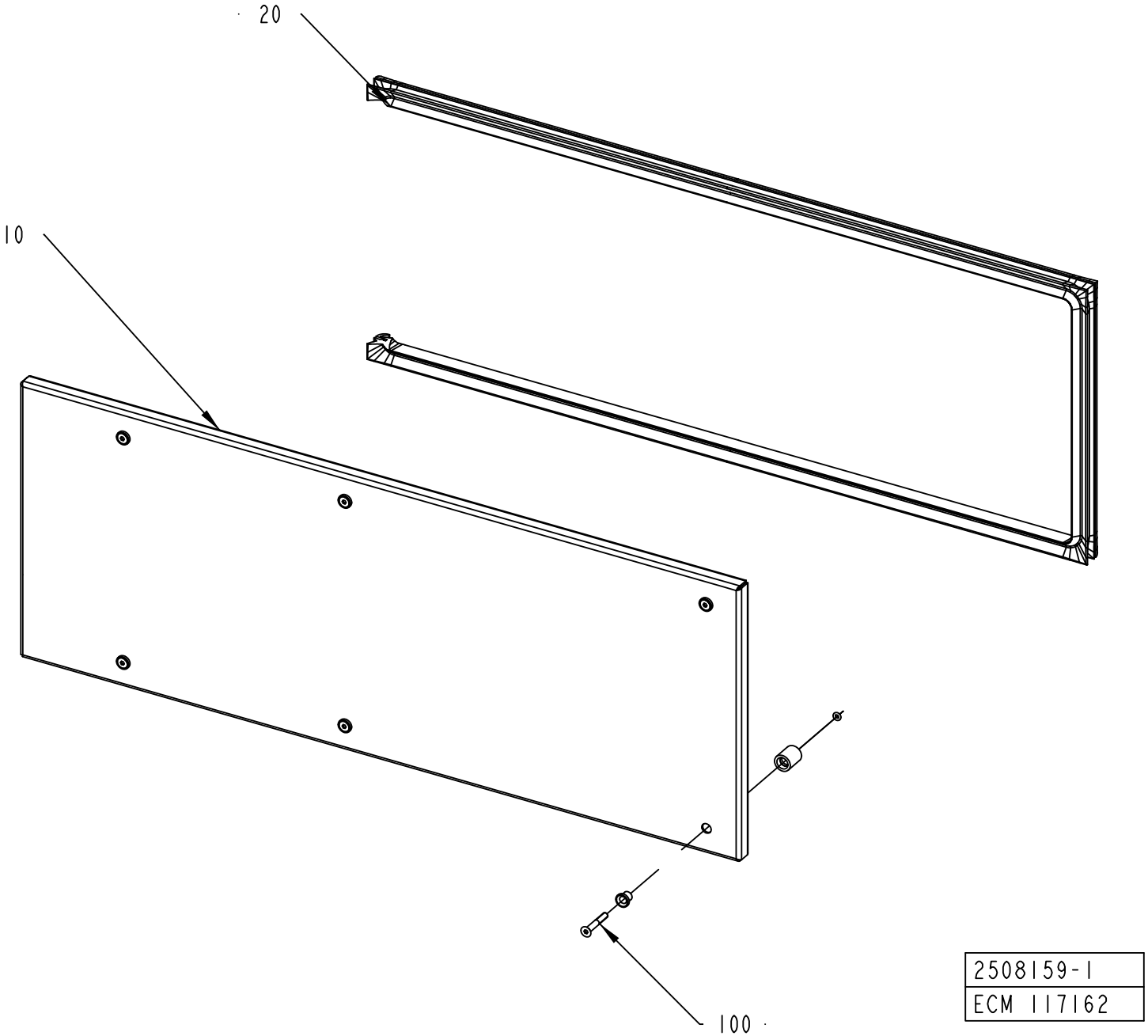

2508159-1
ECM 117162

ECM: 189915 - 20041104
Group number: 2508159-0100
Assembly Drawing: 2508159-1_1_AA

Pos	Part No	UN	Qty	Description	Page No
-					
010	2508160-0000		1	COVER	
020	2508161-0000		1	RUBBER SEAL	
100	90226-0458		6	MOUNTING SCREW	

Pos	Part No	UN	Qty	Description	Page No

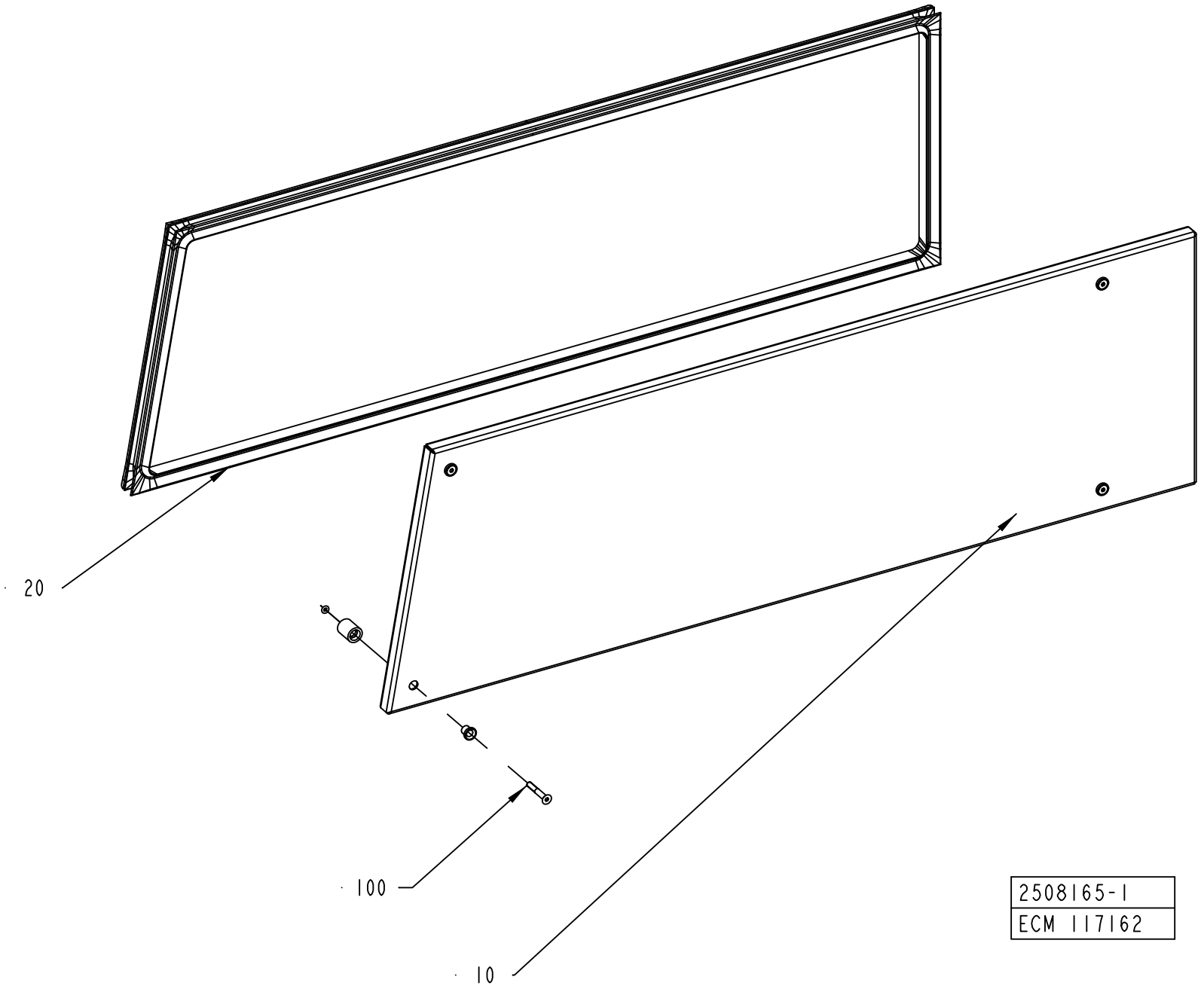
20
100
10
2508165-1
ECM 117162

ECM: 189919 - 20041104
Group number: 2508165-0100
Assembly Drawing: 2508165-1_1_AA

Pos	Part No	UN	Qty	Description	Page No
-					
010	2508166-0000		1	COVER	
020	2508167-0000		1	RUBBER SEAL	
100	90226-0458		4	MOUNTING SCREW	

Pos	Part No	UN	Qty	Description	Page No

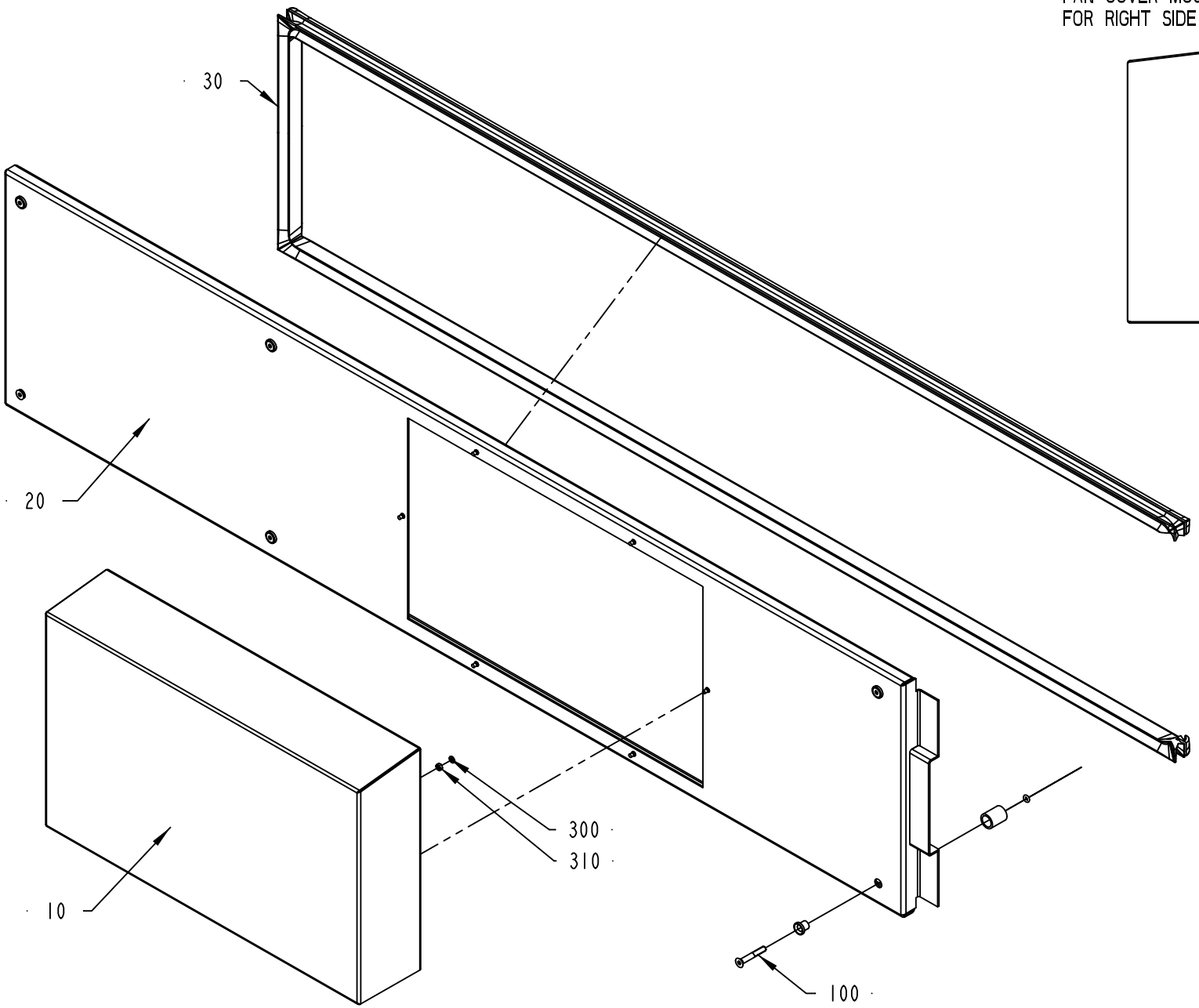

FAN COVER MOUNTING
FOR RIGHT SIDE COVER

FAN COVER MOUNTING
FOR LEFT SIDE COVER

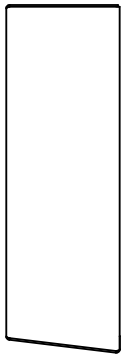

2508168-1
ECM 205029

ECM: 224422 - 20060701
Group number: 2508168-0100
Assembly Drawing: 2508168-1_1_AB

Pos	Part No	UN	Qty	Description	Page No
-					
010	2746721-0000		1	COVER	
020	2508169-0000		1	COVER	
030	2508171-0000		1	RUBBER SEAL	
100	90226-0458		6	MOUNTING SCREW	
300	315105-0136		4	WASHER BRB4,3XRFR	
310	312605-0312		4	HEXAGON NUT, M6M M4 A280	

Pos	Part No	UN	Qty	Description	Page No

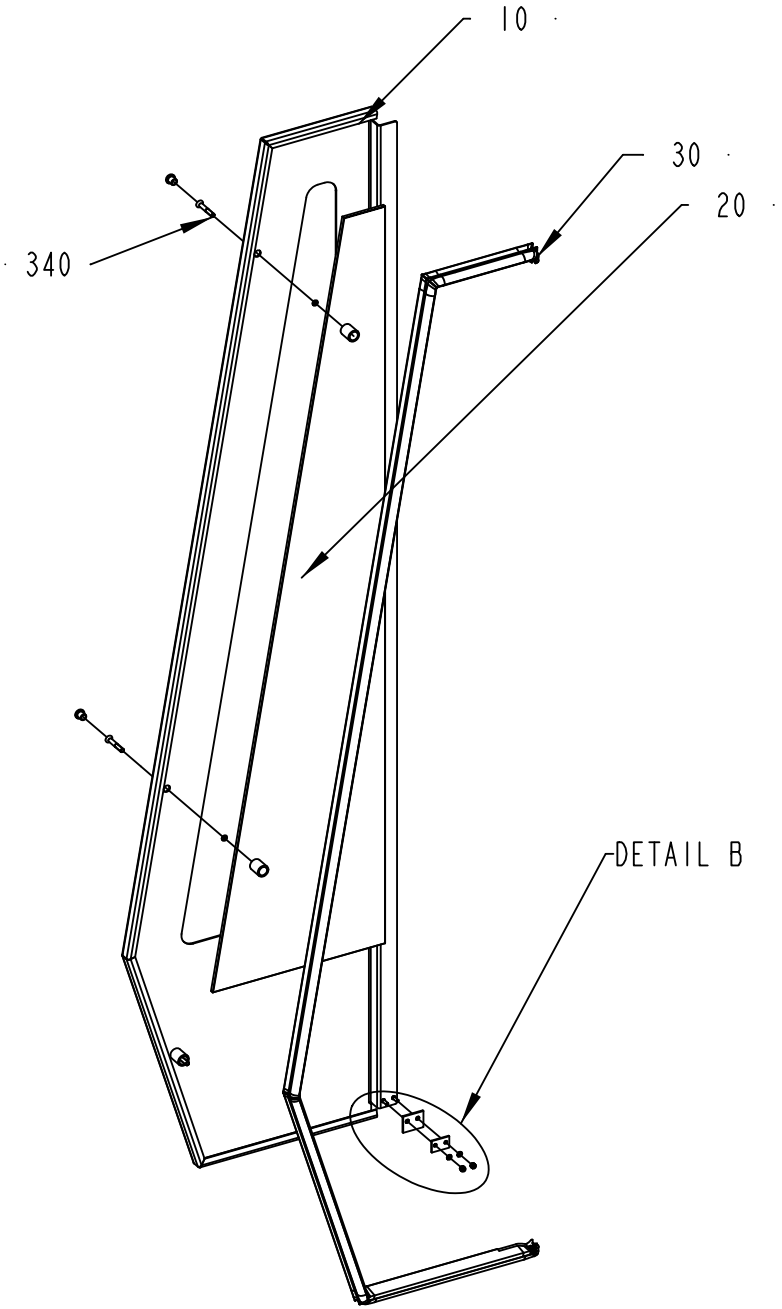

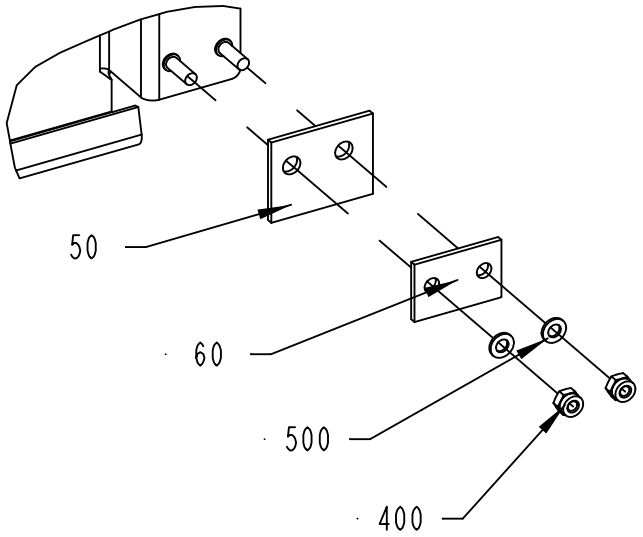

DETAIL B
1:2

2508177-1
ECM 117743

ECM: 265959 - 20060510
Group number: 2508177-0100
Assembly Drawing: 2508177-1_1_AA

Pos	Part No	UN	Qty	Description	Page No
A3/FLEX					
010	2508178-0000		1	DOOR	
020	2508180-0001		1	GLASS PANE	
030	2508179-0000		1	RUBBER SEAL	
Common Parts					
050	1129325-0000		1	SEALING FLANGE	
060	1129324-0000		1	WASHER	
300	90153-0049		1	ADHESIVE, LOCTITE 409 20G	
310	90157-0041		1	SEALING COMPOUND, RHODORSEAL 5651	
340	90226-0458		3	MOUNTING SCREW	
400	312812-0312		2	HEXAGON NUT, NY-LOCK M4 A480	
500	315105-0136		2	WASHER BRB4,3XRFR	

Pos	Part No	UN	Qty	Description	Page No

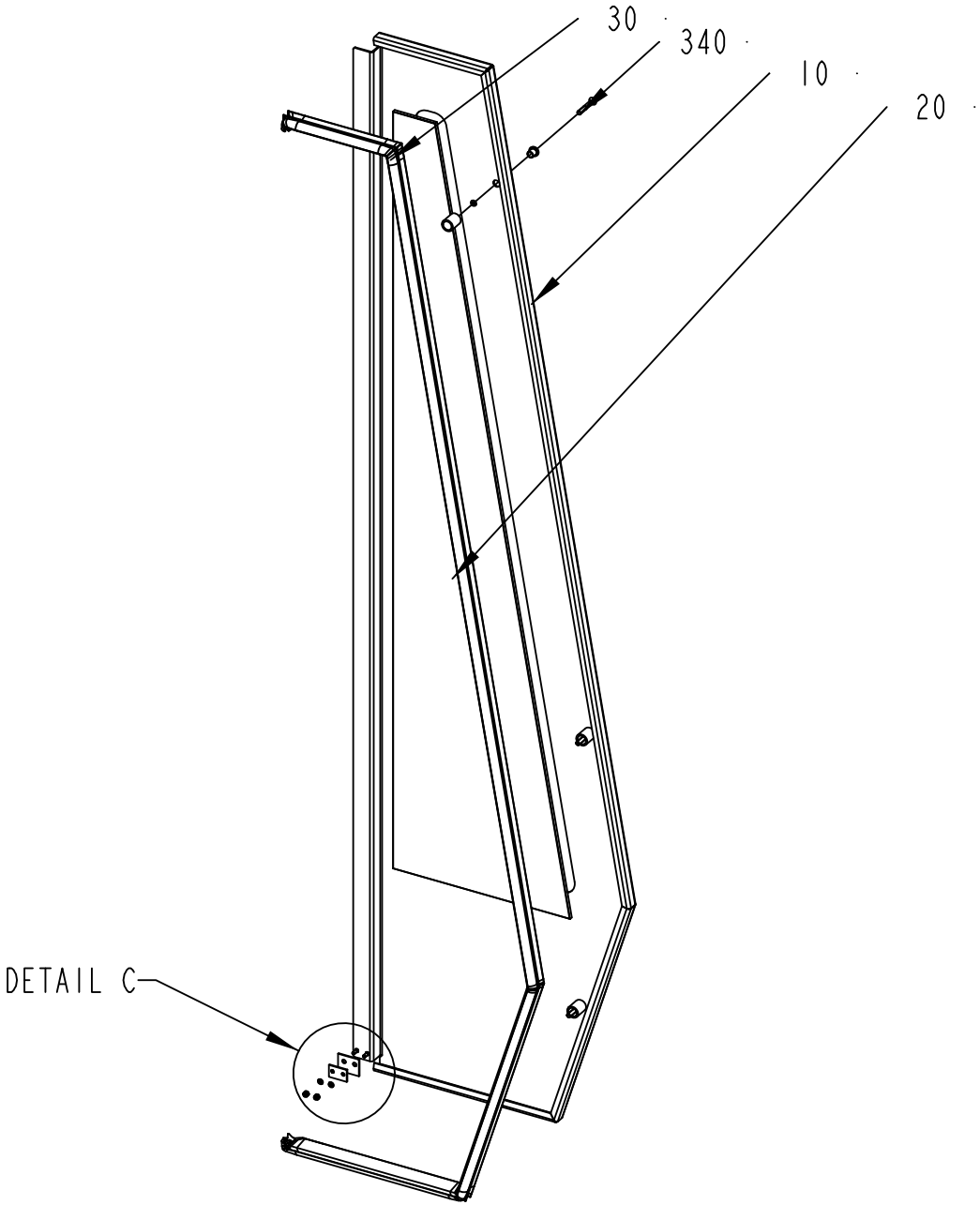

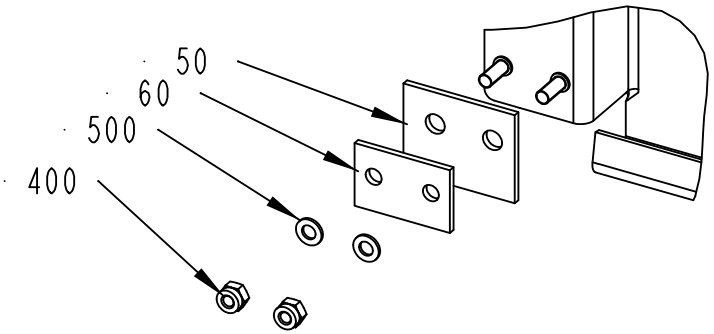

DETAIL C
1:2

2508181-1
ECM 117743

ECM: 265960 - 20060510
Group number: 2508181-0100
Assembly Drawing: 2508181-1_1_AA

Pos	Part No	UN	Qty	Description	Page No
A3/FLEX					
010	2508182-0000		1	DOOR	
020	2508180-0002		1	GLASS PANE	
030	2508183-0000		1	RUBBER SEAL	
Common Parts					
050	1129325-0000		1	SEALING FLANGE	
060	1129324-0000		1	WASHER	
300	90153-0049		1	ADHESIVE, LOCTITE 409 20G	
310	90157-0041		1	SEALING COMPOUND, RHODORSEAL 5651	
340	90226-0458		3	MOUNTING SCREW	
400	312812-0312		2	HEXAGON NUT, NY-LOCK M4 A480	
500	315105-0136		2	WASHER BRB4,3XRFR	

Pos	Part No	UN	Qty	Description	Page No

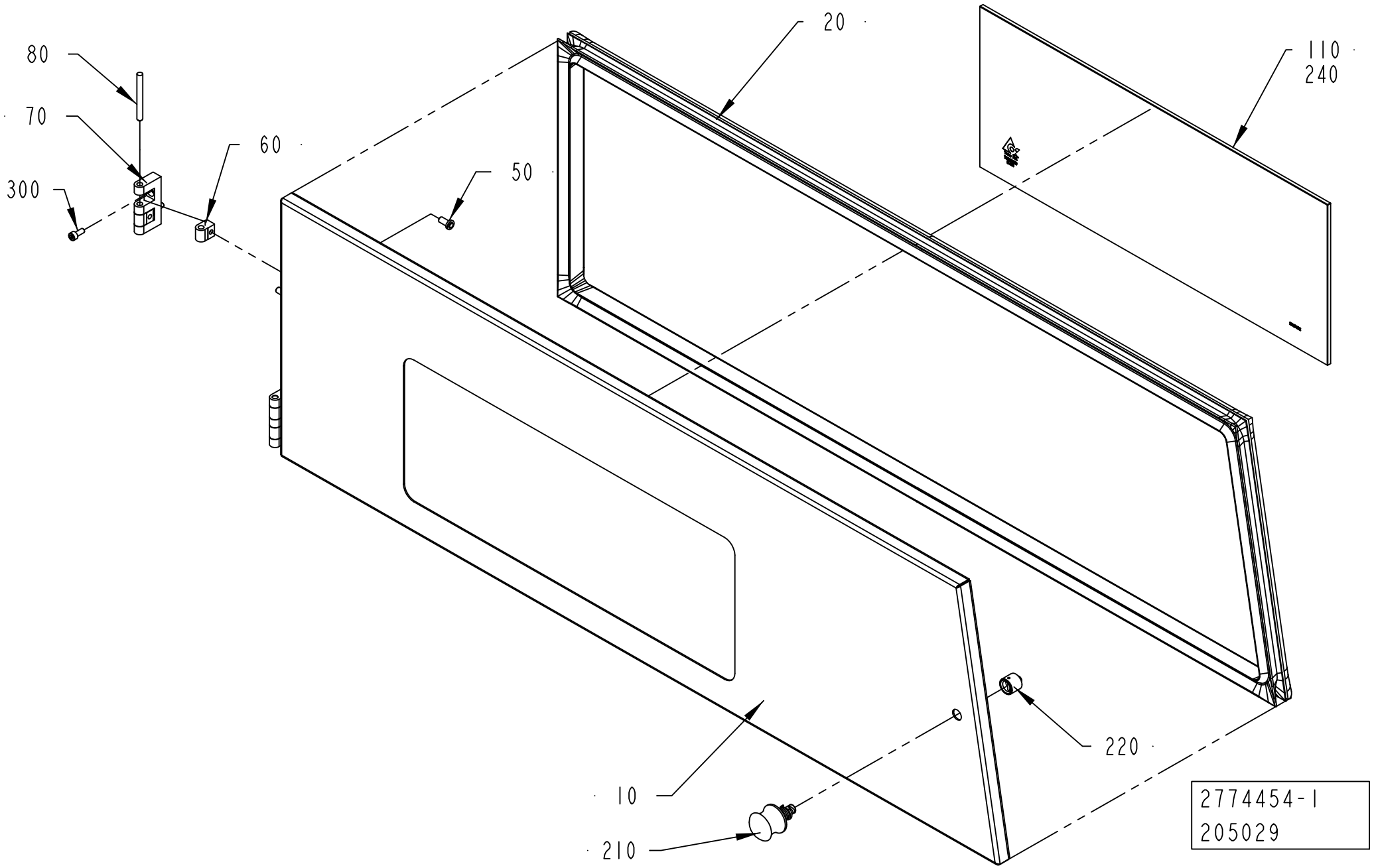
80
70
300
60
50
20
110
240
10
210
220
2774454-1
205029

ECM: 224420 - 20060701
Group number: 2774454-0100
Assembly Drawing: 2774454-1_1_AA

Pos	Part No	UN	Qty	Description	Page No
A3/FLEX					
010	2760963-0000		1	COVER	
110	2530082-0000		1	GLASS PANE	
Common Parts					
040	2760964-0000		1	RUBBER SEAL	
050	1129767-0000		4	SCREW	
060	1129770-0000		4	BLOCKING PIECE	
070	1035792-0000		2	E-HINGE	
080	988685-0000		2	PIN	
210	90237-0079		1	FAST LOCKING BOLT, FSQ -M8	
220	90237-0178		1	FAST LOCKING SOCKET,4-28599, M8	
300	312115-0327		4	SCREW ISO4762 M5X12 A4 80	

Pos	Part No	UN	Qty	Description	Page No

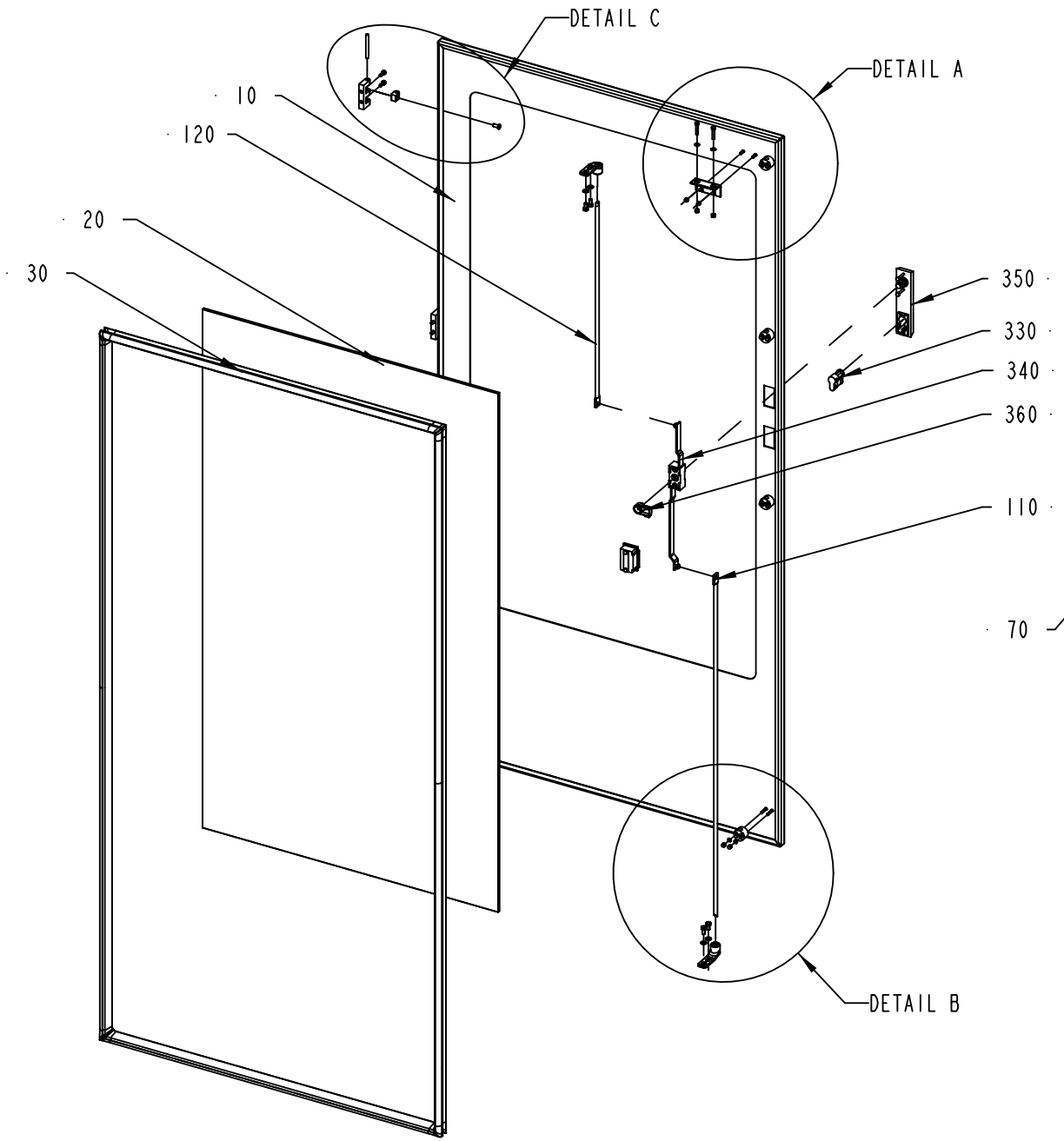

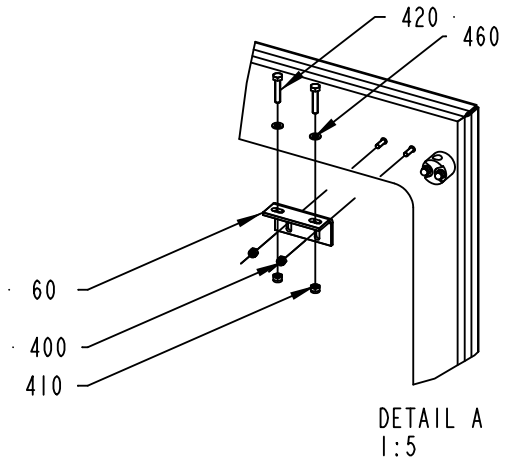

DETAIL A
1:5

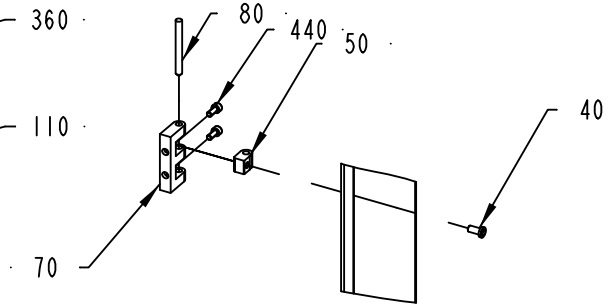

DETAIL C
1:5

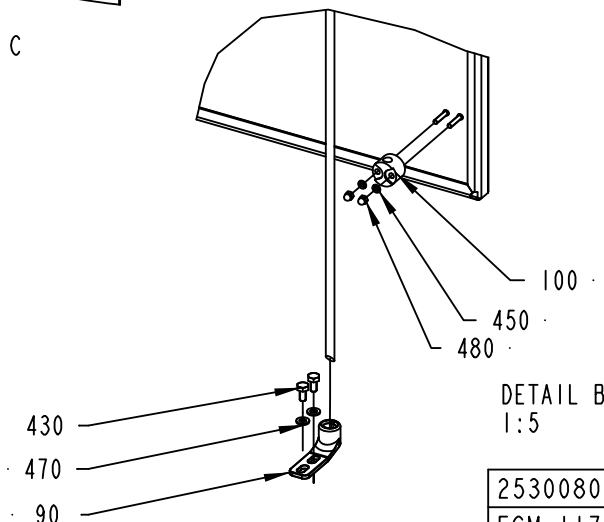

DETAIL B
1:5

2530080-1
ECM 117743

ECM: 265691 - 20060702
Group number: 2530080-0100
Assembly Drawing: 2530080-1_1_AA

Pos	Part No	UN	Qty	Description	Page No
A3/FLEX					
010	2530087-0000		1	DOOR	
020	2527640-0000		1	GLASS PANE	
030	2527639-0000		1	RUBBER SEAL	
Common Parts					
040	1129767-0000		3	SCREW	
050	1129770-0000		3	BLOCKING PIECE	
060	1346885-0000		1	SUPPORT	
070	1035792-0000		3	E-HINGE	
080	988685-0000		3	PIN	
090	1538868-0000		2	BRACKET	
100	1129274-0000		4	GUIDE LUG	
110	2508133-0000		1	LOCKING ARM	
120	2508134-0000		1	LOCKING ARM	
300	90153-0049		1	ADHESIVE, LOCTITE 409 20G	
310	90157-0041		1	SEALING COMPOUND, RHODORSEAL 5651	
330	90237-0128		1	LOCK CYLINDER, 1109-U3	
340	90237-0153		1	LOCK HOUSING, 1121-U26-0B	
350	90237-0176		1	TURNING HANDLE, 1125-U190-A	
360	90237-0165		1	LATCH	
400	312812-0312		2	HEXAGON NUT, NY-LOCK M4 A480	
410	312812-0314		2	HEXAGON NUT, NY-LOCK M5 A480	
420	312105-0333		2	SCREW M6S ISO 4017 M5X25 A480	
430	312105-0366		4	SCREW M6S ISO 4017 M6X12 A480	
440	312115-0327		6	SCREW ISO4762 M5X12 A4 80	
450	315105-0136		8	WASHER BRB4,3XRFR	
460	315105-0146		2	WASHER BRB5,3X10RFR	
470	315105-0153		4	WASHER BRB6,4X12RFR	
480	312705-0312		8	NUT HEX. DOMED CAP MHM-6 M4 A280	

Pos	Part No	UN	Qty	Description	Page No

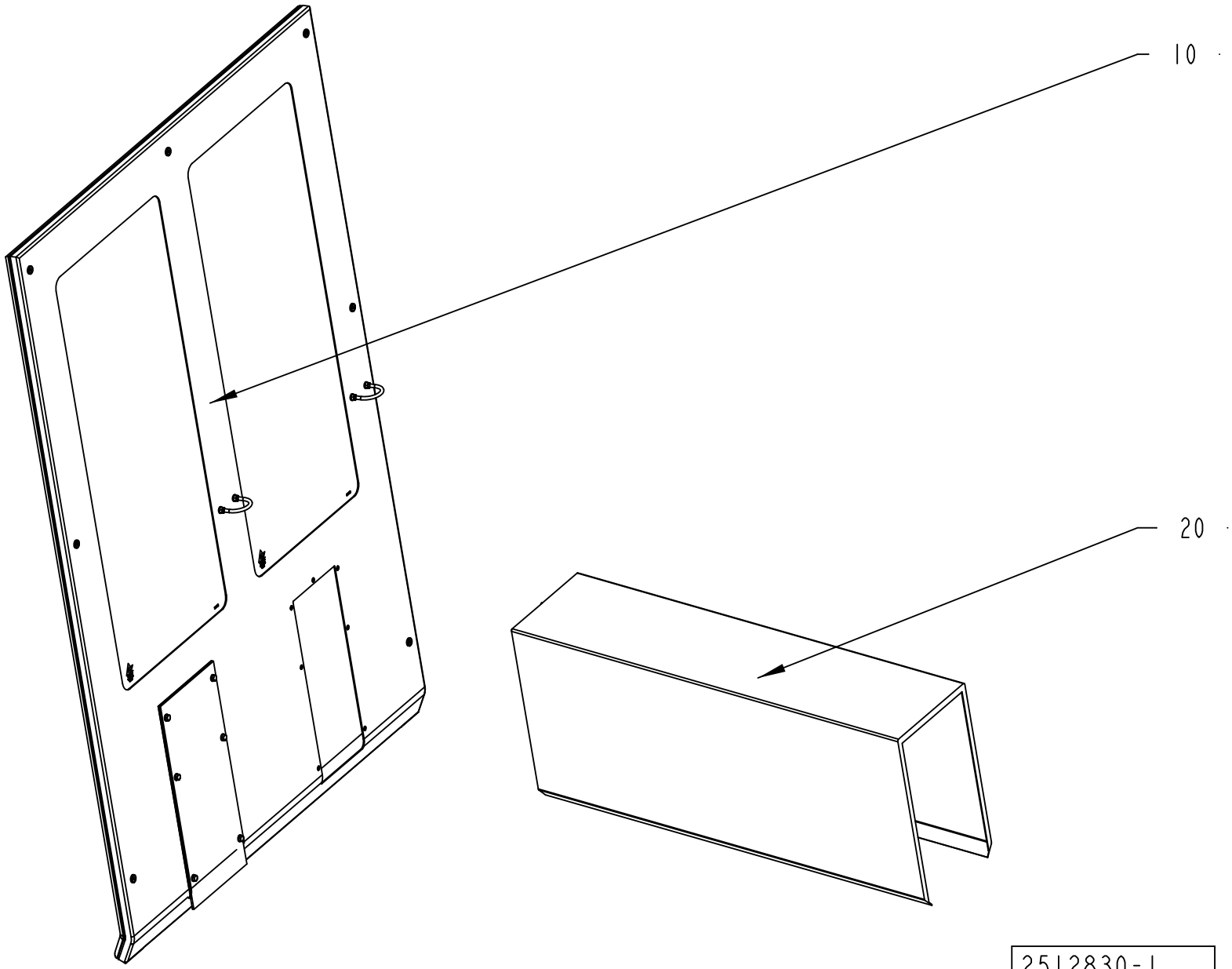

2512830-1
ECM 117743

ECM: 241432 - 20060102
Group number: 2512830-0100
Assembly Drawing: 2512830-1_1_AA

Pos	Part No	UN	Qty	Description	Page No
A3/FLEX					
020	1095738-0300		1	PROTECTIVE COVER	**2-241**
Common Parts					
010	2517062-0100		1	FRONT COVER	**2-243**

Pos	Part No	UN	Qty	Description	Page No

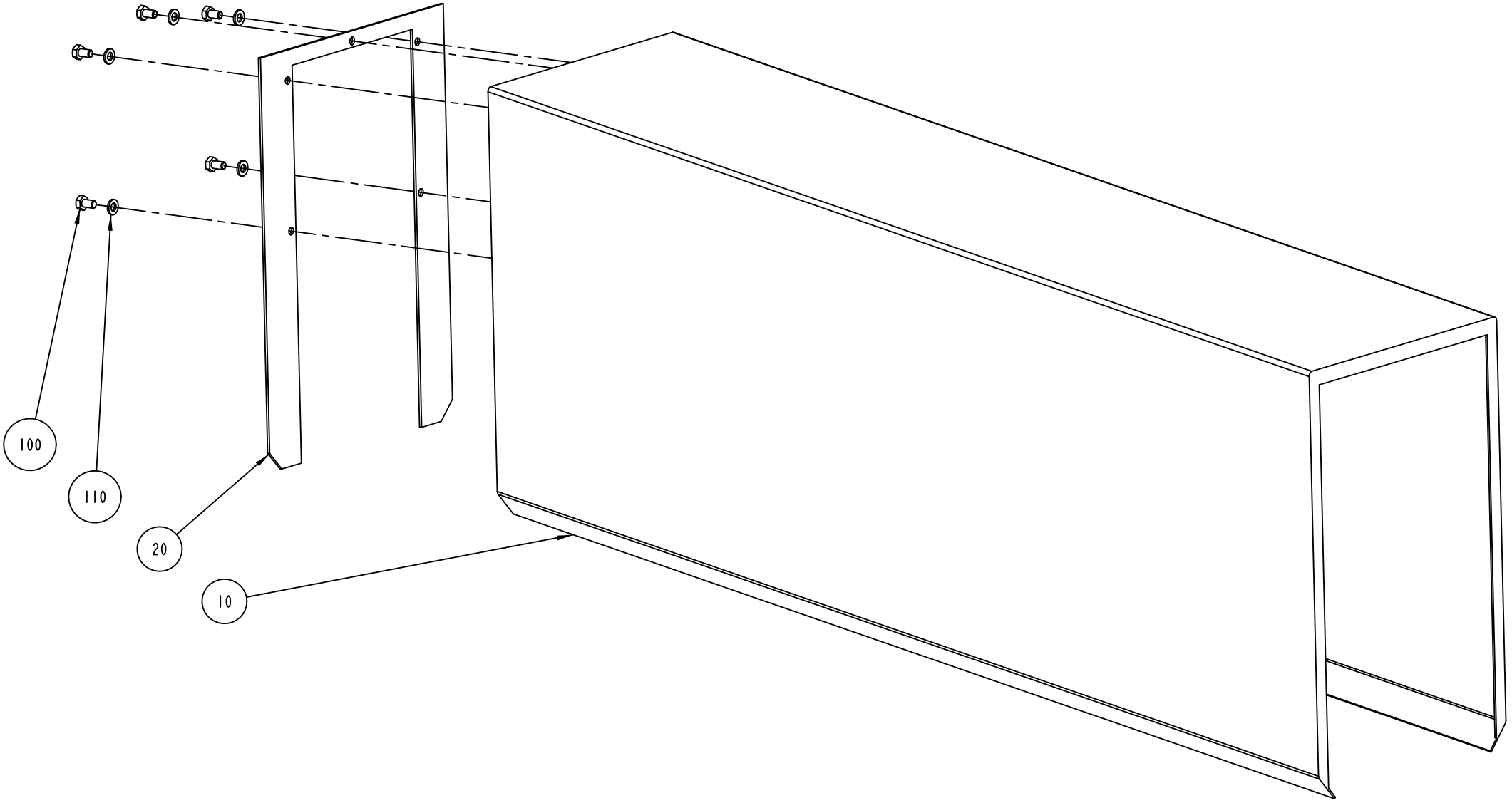

S-1095738-3
ECN 72400

ECM: 189928 - 20041104
Group number: 1095738-0300
Assembly Drawing: 1095738-3_1_AB

Pos	Part No	UN	Qty	Description	Page No
-					
010	1296289-0000		1	TUNNEL	
020	1296290-0000		1	GASKET	
100	312105-0364		5	SCREW M6S ISO 4017 M6X10 A480	
110	315105-0153		5	WASHER BRB6,4X12RFR	

Pos	Part No	UN	Qty	Description	Page No

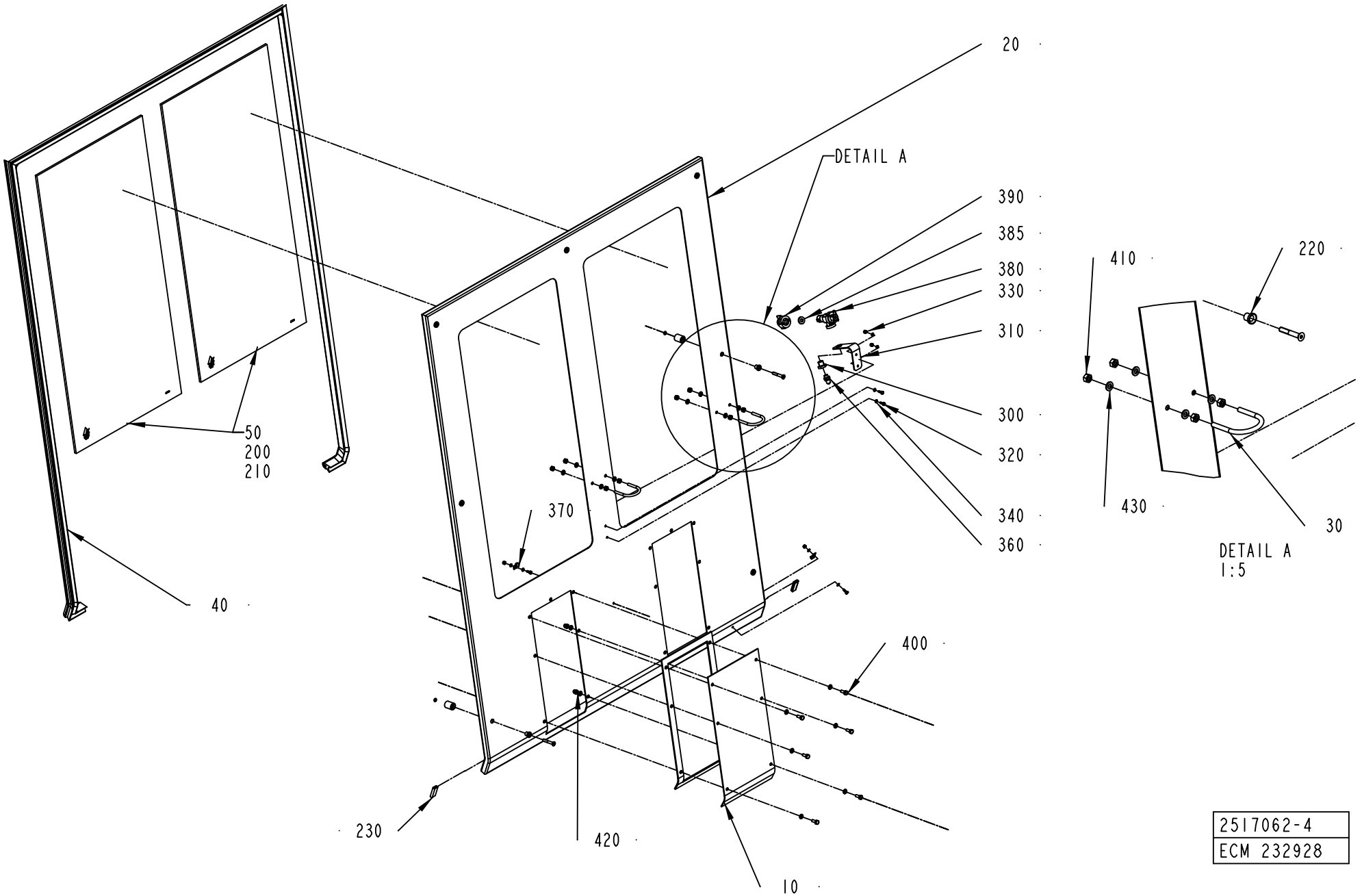

2517062-4
ECM 232928

ECM: 265962 - 20060510
Group number: 2517062-0100
Assembly Drawing: 2517062-4_1_AB

Pos	Part No	UN	Qty	Description	Page No
A3/FLEX					
010	1296218-0200		1	LID	**2-245**
020	2514830-0000		1	FRONT COVER	
040	2514831-0000		1	SEALING STRIP	
050	2514832-0000		2	GLASS PANE	
300	532413-0000		1	REDUCING NIPPLE	
310	2634536-0000		1	SUPPORT	
320	312105-0291		4	SCREW M6S ISO 4017 M4X12 A470	
330	312810-0312		4	HEXAGON NUT, NY-LOCK M4 FZB	
340	315105-0136		8	WASHER BRB4,3XRFR	
360	342921-0113		1	STRAIGHT COUPLING,EXT.THREADED 6/4-G1/8"	
370	90165-0057		2	PIPE CLIP FOR TUBE D=6 MM	
380	90230-0027		1	NON-RETURN VALVE QJ 8355-1/4"	
	90230-0300		*1*	*STRAINER*	
	90230-0301		*1*	*DIAPHRAGM*	
385	90005-0094		1	GASKET C 19438-EPR	
390	534310-0001		1	NOZZLE	
400	312105-0368		6	SCREW M6S ISO 4017 M6X16 A480	
410	312605-0316		8	HEXAGON NUT, M6M M6 A280	
430	315105-0153		20	WASHER BRB6,4X12RFR	
Common Parts					
030	531616-0000		2	HOLDER	
200	90153-0049		1	ADHESIVE, LOCTITE 409 20G	
210	90157-0041	L	1	SEALING COMPOUND, RHODORSEAL 5651	
220	90226-0458		7	MOUNTING SCREW	
230	90143-0059	MM	70	SEAL STRIP 4610069	
420	312705-0316		6	NUT HEX. DOMED CAP MHM-6 M6 A280	

Pos	Part No	UN	Qty	Description	Page No

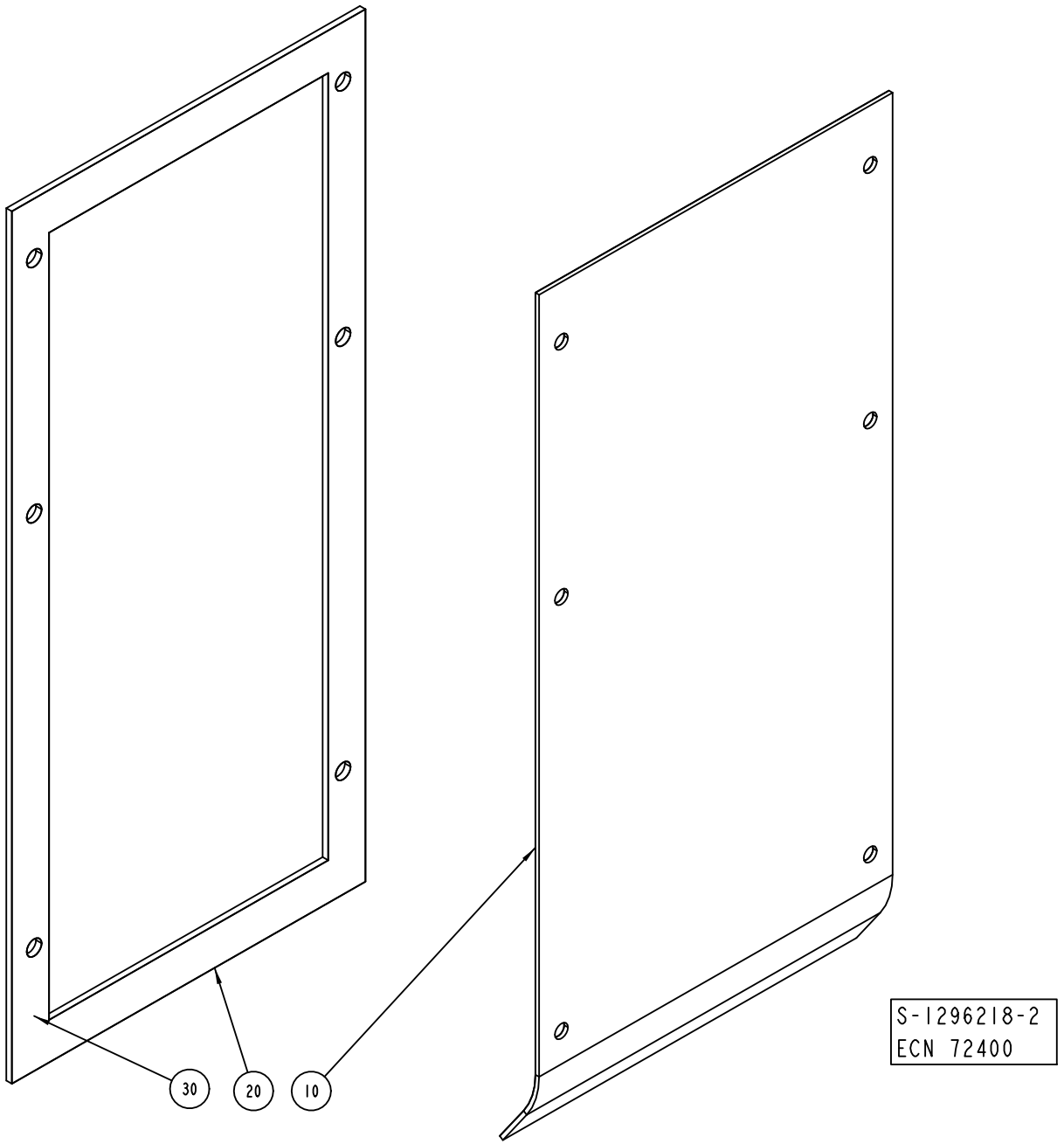
30
20
10
S-1296218-2
ECN 72400

ECM: 72400 - 19990430
Group number: 1296218-0200
Assembly Drawing: 1296218-2_1_AA

Pos	Part No	UN	Qty	Description	Page No
-					
010	1478389-0000		1	COVERING PLATE	
020	1478391-0000		1	GASKET	
030	90157-0041		1	SEALING COMPOUND, RHODORSEAL 5651	

Pos	Part No	UN	Qty	Description	Page No

FRONT GUARD

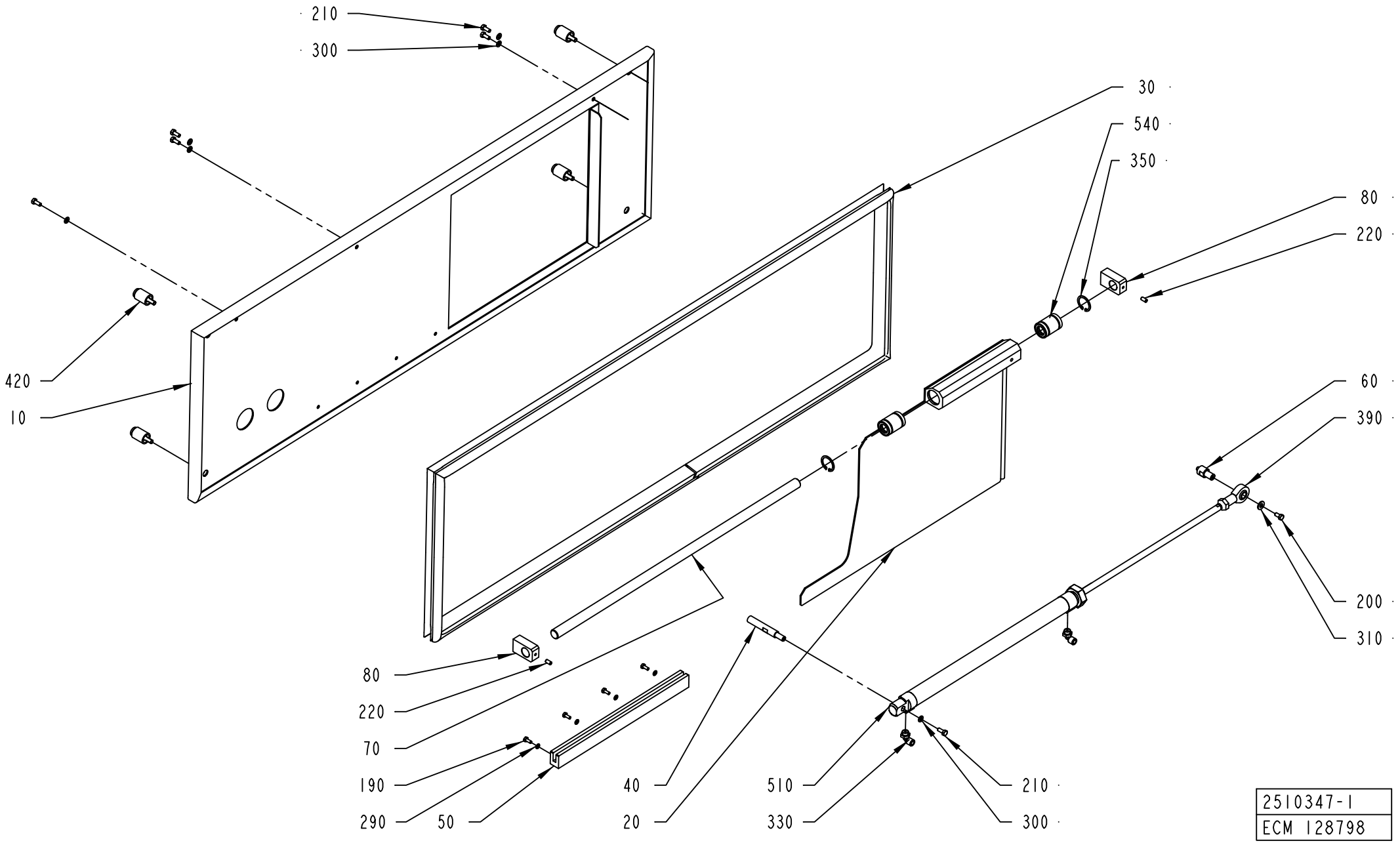
210
300
30
540
350
80
220
420
10
60
390
200
310
80
220
70
190
290
50
40
20
510
330
210
300
2510347-1
ECM 128798

ECM: 265964 - 20060510
Group number: 2510347-0100
Assembly Drawing: 2510347-1_1_AB

Pos	Part No	UN	Qty	Description	Page No
A3/FLEX					
030	2510349-0000		1	SEALING STRIP	
Common Parts					
010	2510348-0000		1	COVER	
020	2510352-0000		1	DOOR	
040	2510355-0000		1	SHAFT	
050	2510353-0000		1	GUIDE	
060	2510354-0000		1	PIN	
070	2510351-0000		1	SHAFT	
080	2510350-0000		2	SUPPORT	
190	312105-0289		4	SCREW M6S ISO 4017 M4X10 A470	
200	312101-0325		1	SCREW M6S M5X10 FZB	
210	312105-0327		6	SCREW M6S ISO 4017 M5X12 A480	
220	312318-0325		2	SCREW ISO4029 M5X10 A4	
290	315105-0136		4	WASHER BRB4,3XRFR	
300	315105-0146		10	WASHER BRB5,3X10RFR	
310	315105-0156		1	WASHER BRB 6.7X14 RFR	
330	90458-2956		2	ELBOW PIPE JOINT, EXT.THREAD, D=6MM-G1/8	
350	90458-0506		2	RETAINING RING FOR BORE DIN 472 26 A2	
390	90115-0134		1	ROD END, ID=10 MM, M10X1,25	
420	90226-0458		4	MOUNTING SCREW	
510	90459-0401		1	DOUBLE ACTING, MINI-ISO, CYL. 25-320	
540	90189-0011		2	BALL BUSHING, 16X26X36 MM	

Pos	Part No	UN	Qty	Description	Page No

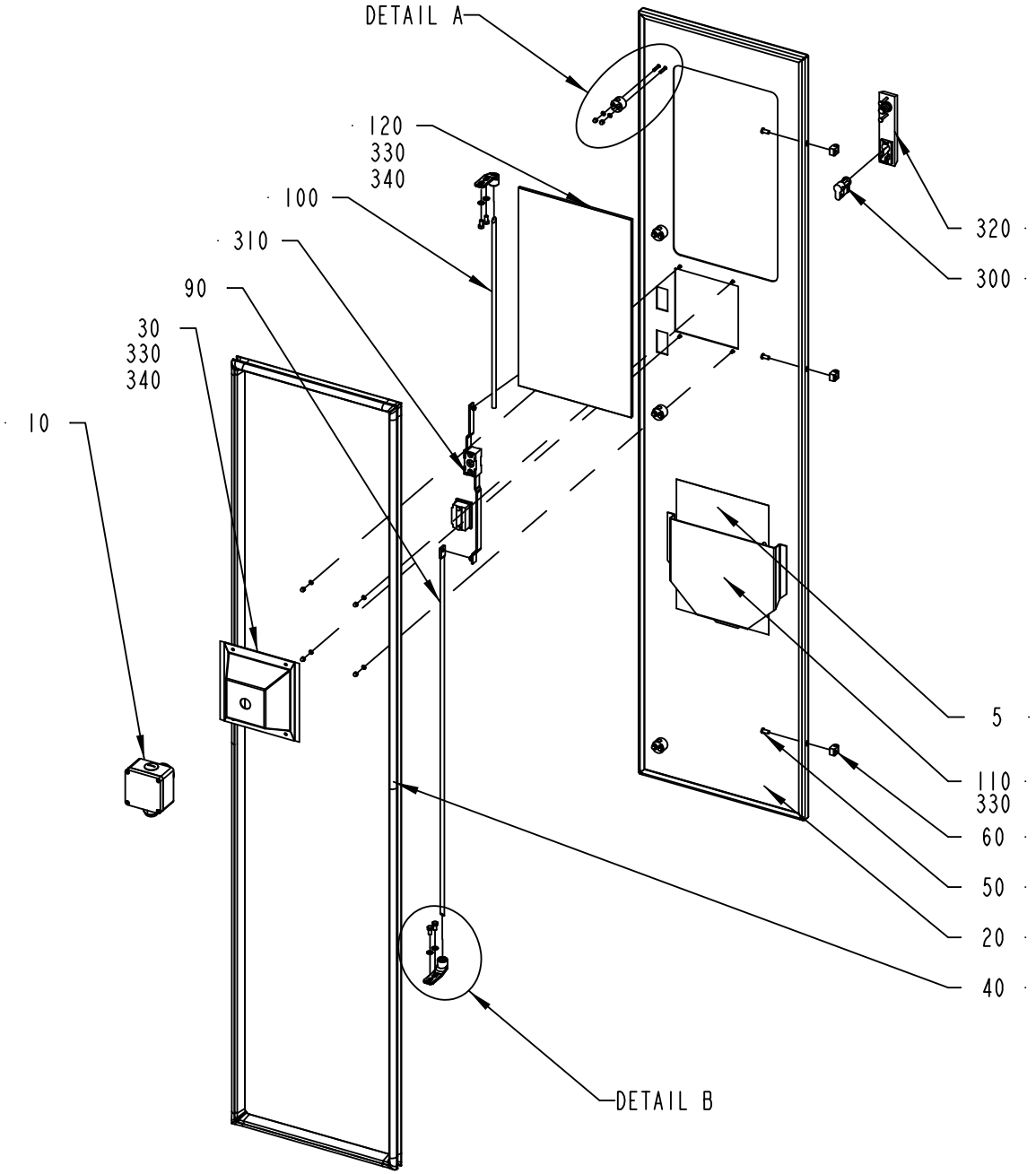

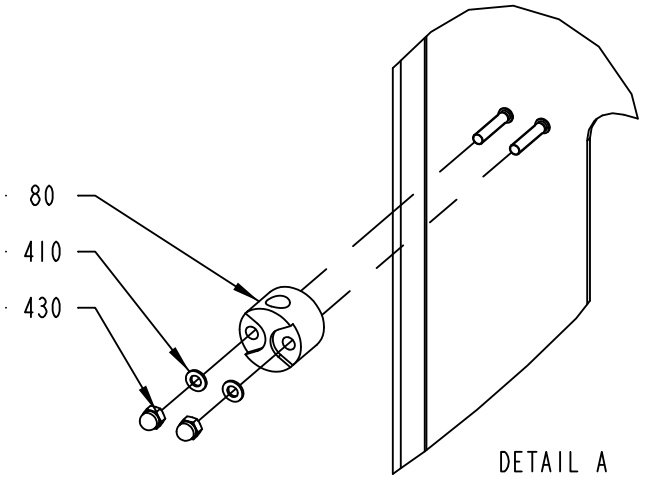

DETAIL A
1:2

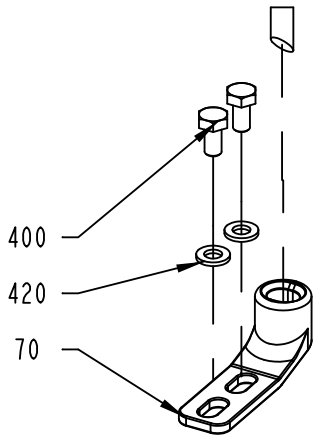

DETAIL B
1:2

2508138-1
ECM 133290

ECM: 265957 - 20060510
Group number: 2508138-0100
Assembly Drawing: 2508138-1_1_AB

Pos	Part No	UN	Qty	Description	Page No
A3/FLEX					
005	2508173-0100		1	DIAGRAM	**2-251**
020	2508139-0000		1	DOOR	
Common Parts					
010	2593851-0100		1	EMERGENCY STOP	**2-223**
030	2532619-0000		1	COVER	
040	2508186-0000		1	RUBBER SEAL	
050	1129767-0000		3	SCREW	
060	1129770-0000		3	BLOCKING PIECE	
070	1538868-0000		2	BRACKET	
080	1129274-0000		4	GUIDE LUG	
090	2508133-0000		1	LOCKING ARM	
100	2508140-0000		1	LOCKING ARM	
110	1129275-0000		1	BOX FOR DIAGRAM	
120	2532620-0000		1	GLASS PANE	
300	90237-0128		1	LOCK CYLINDER, 1109-U3	
310	90237-0153		1	LOCK HOUSING, 1121-U26-0B	
320	90237-0176		1	TURNING HANDLE, 1125-U190-A	
330	90157-0041		1	SEALING COMPOUND, RHODORSEAL 5651	
340	90153-0049		1	ADHESIVE, LOCTITE 409 20G	
400	312105-0366		4	SCREW M6S ISO 4017 M6X12 A480	
410	315105-0136		12	WASHER BRB4,3XRFR	
420	315105-0153		4	WASHER BRB6,4X12RFR	
430	312705-0312		12	NUT HEX. DOMED CAP MHM-6 M4 A280	

Pos	Part No	UN	Qty	Description	Page No

This page is intentionally left blank.

ECM: 267387 - 20060702
Group number: 2508173-0100
Assembly Drawing:

Pos	Part No	UN	Qty	Description	Page No
A3/FLEX TBA 0500B, A3/FLEX TBA 1000B, A3/FLEX TBA 1000S, A3/FLEX TBA 1000SQ, A3/FLEX TPA 1000SQ, A3/FLEX TBA 0200S, A3/FLEX TBA 1500S, A3/FLEX TBA 0200B, A3/FLEX TBA 0250B, A3/FLEX TBA 0330S, A3/FLEX TPA 0330SQ, A3/FLEX TPA 0500SQ, A3/FLEX TBA 0200M, A3/FLEX TBA 0250S, A3/FLEX TBA 0500S					
010	2550945-0000		1	WATER DIAGRAM	
010	2550944-0000		1	WATER DIAGRAM	
020	2552001-0000		1	HYDRAULIC DIAGRAM	
030	2565493-0000		1	PNEUMATIC DIAGRAM	
030	2563276-0000		1	PNEUMATIC DIAGRAM	
030	2551119-0000		1	PNEUMATIC DIAGRAM	
030	2527509-0000		1	PNEUMATIC DIAGRAM	
030	2512829-0000		1	PNEUMATIC DIAGRAM	
040	2512821-0000		1	EXTERNAL CLEANING DIAGRAM	
050	2512826-0000		1	DIAGRAM	
050	2512825-0000		1	DIAGRAM	
A3/FLEX TBA 1890S, A3/FLEX TBA 2000S					
010	2550944-0000		1	WATER DIAGRAM	
010	2550945-0000		1	WATER DIAGRAM	
020	2552001-0000		1	HYDRAULIC DIAGRAM	
030	2719737-0000		1	PNEUMATIC DIAGRAM	
030	2719738-0000		1	PNEUMATIC DIAGRAM	
030	2565493-0000		1	PNEUMATIC DIAGRAM	
030	2563276-0000		1	PNEUMATIC DIAGRAM	
030	2551119-0000		1	PNEUMATIC DIAGRAM	
040	2512821-0000		1	EXTERNAL CLEANING DIAGRAM	
050	2512825-0000		1	DIAGRAM	
050	2512826-0000		1	DIAGRAM	
Common Parts					
030	2594393-0000		1	PNEUMATIC DIAGRAM	
030	2527368-0000		1	PNEUMATIC DIAGRAM	

Pos	Part No	UN	Qty	Description	Page No

PROTECTIVE COVER

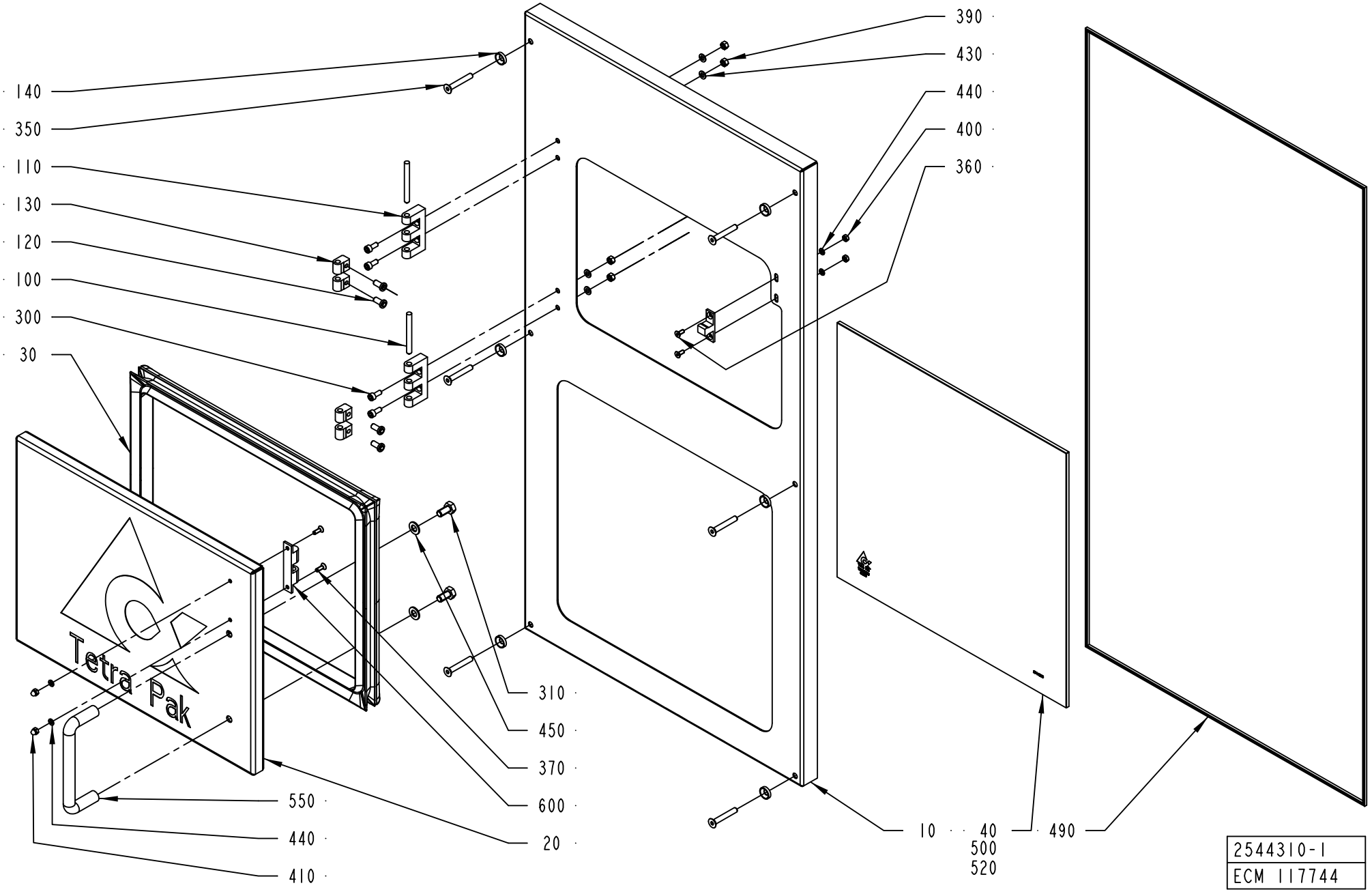

ECM: 189911 - 20041104
Group number: 2544310-0100
Assembly Drawing: 2544310-1_1_AA

Pos	Part No	UN	Qty	Description	Page No
-					
010	2544305-0000		1	PROTECTION	
020	2544306-0000		1	DOOR	
030	2544307-0000		1	RUBBER SEAL	
040	2544308-0000		1	GLASS PANE	
100	988685-0000		2	PIN	
110	1035792-0000		2	E-HINGE	
120	1129767-0000		4	SCREW	
130	1129770-0000		4	BLOCKING PIECE	
140	1317228-0000		6	WASHER	
300	312115-0327		4	SCREW ISO4762 M5X12 A4 80	
310	312105-0449		2	SCREW M6S ISO 4017 M8X16 A480	
350	312155-0378		6	SCREW DIN 7991 MF6S M6X40 A4 70	
360	312155-0289		2	SCREW DIN 7991 MF6S M4X10 A4 70	
370	312155-0291		2	SCREW DIN 7991 MF6S M4X12 A4 70	
390	312605-0314		4	HEXAGON NUT, M6M M5 A280	
400	312605-0312		2	HEXAGON NUT, M6M M4 A280	
410	312705-0312		2	NUT HEX. DOMED CAP MHM-6 M4 A280	
430	315105-0146		4	WASHER BRB5,3X10RFR	
440	315105-0136		4	WASHER BRB4,3XRFR	
450	315105-0165		2	WASHER BRB8,4X16RFR	
490	90143-0054	MM	2740	STRIP	
500	90153-0049		1	ADHESIVE, LOCTITE 409 20G	
520	90157-0041		1	SEALING COMPOUND, RHODORSEAL 5651	
550	90017-0016		1	HANDLE, NO. 14.4012.02.120	
600	90237-0070		1	SNAP-IN BALL LOCK, 69X19 MM	

Pos	Part No	UN	Qty	Description	Page No

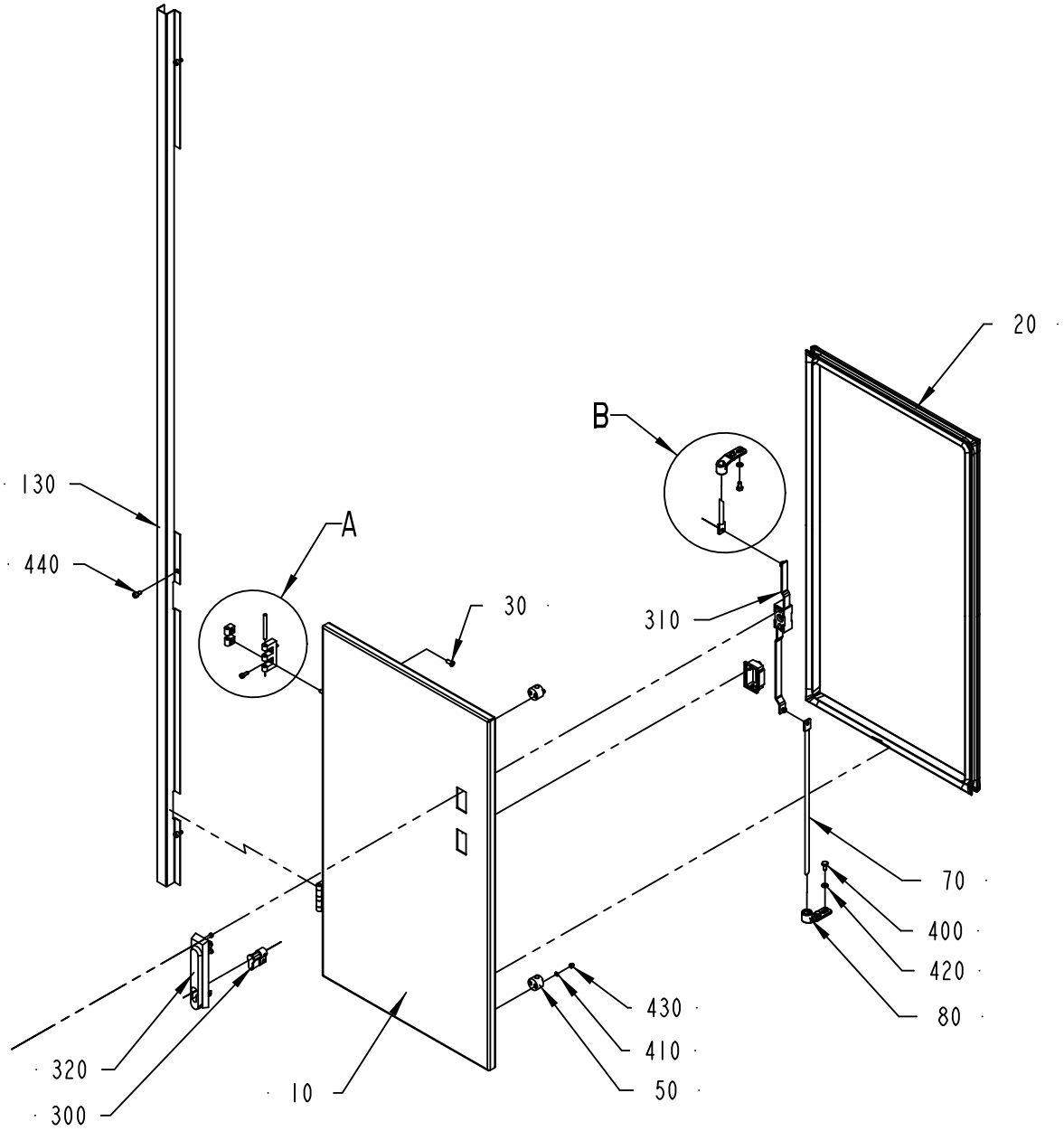

DETAIL A
SCALE 1:2

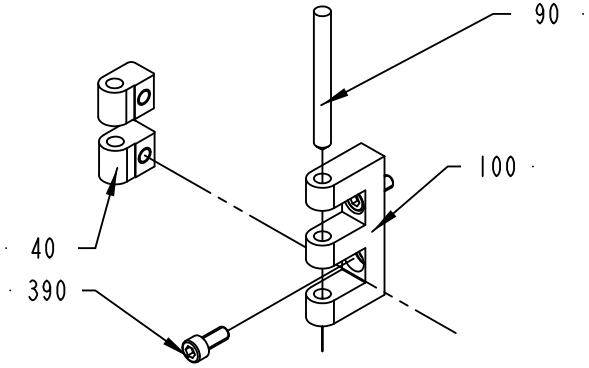

DETAIL B
SCALE 1:2

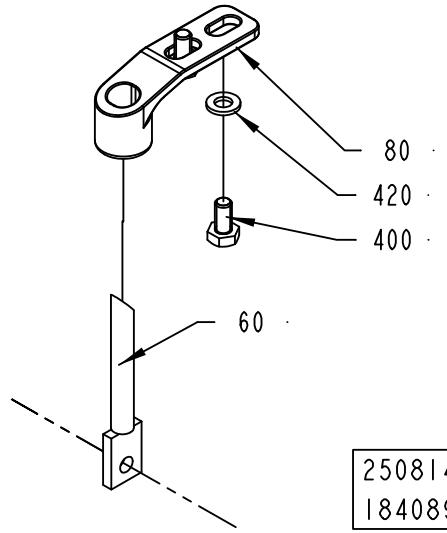

2508149-2
184089

ECM: 197124 - 20050620
Group number: 2508149-0200
Assembly Drawing: 2508149-2_1_AA

Pos	Part No	UN	Qty	Description	Page No
A3/FLEX DIMC/FLEX, A3/FLEX PT/FLEX					
130	2726296-0000		1	COVER STRIP	
A3/FLEX NOPT, A3/FLEX NODIMC					
130	2728140-0000		1	COVER STRIP	
Common Parts					
010	2508150-0000		1	DOOR	
020	2508151-0000		1	RUBBER SEAL	
030	1129767-0000		2	SCREW	
040	1129770-0000		2	BLOCKING PIECE	
050	1129274-0000		3	GUIDE LUG	
060	2508147-0000		1	LOCKING ARM	
070	2508152-0000		1	LOCKING ARM	
080	1538868-0000		2	BRACKET	
090	988685-0000		2	PIN	
100	1035792-0000		2	E-HINGE	
110	1129767-0000		2	SCREW	
120	1129770-0000		2	BLOCKING PIECE	
300	90237-0128		1	LOCK CYLINDER, 1109-U3	
310	90237-0153		1	LOCK HOUSING, 1121-U26-0B	
320	90237-0176		1	TURNING HANDLE, 1125-U190-A	
390	312115-0327		4	SCREW ISO4762 M5X12 A4 80	
400	312105-0366		4	SCREW M6S ISO 4017 M6X12 A480	
410	315105-0136		6	WASHER BRB4,3XRFR	
420	315105-0153		4	WASHER BRB6,4X12RFR	
430	312705-0312		6	NUT HEX. DOMED CAP MHM-6 M4 A280	
440	312115-0362		3	SCREW ISO4762 M6X8 A4 80	

Pos	Part No	UN	Qty	Description	Page No

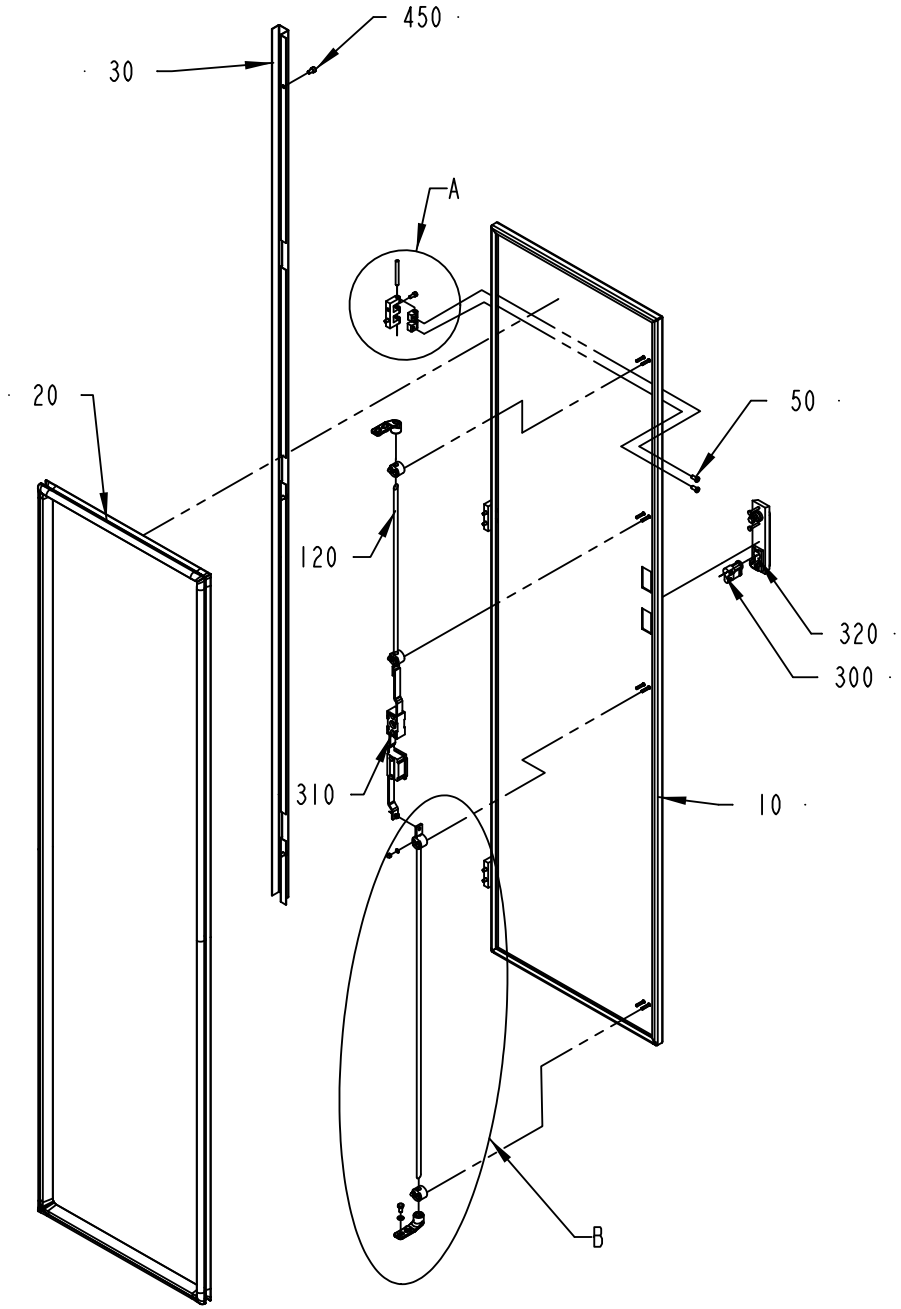

DETAIL A
SCALE 1:2

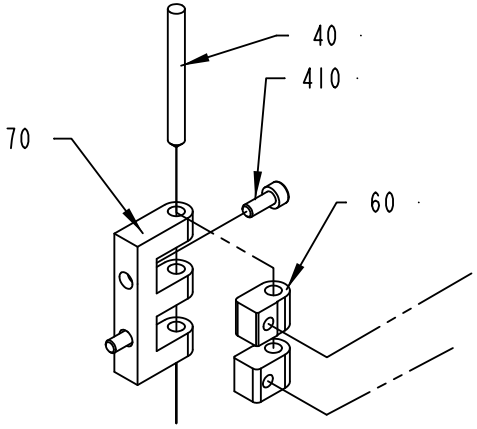

DETAIL B
SCALE 1:5

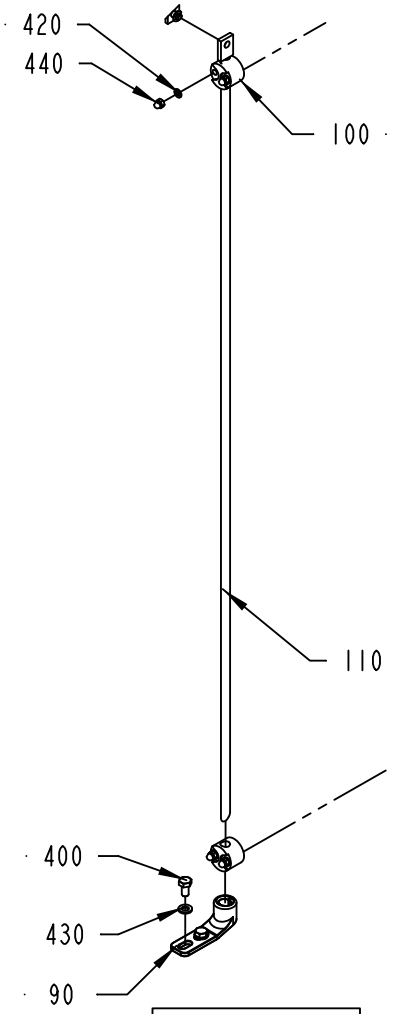

2529597-2
184089

ECM: 197125 - 20050620
Group number: 2529597-0200
Assembly Drawing: 2529597-2_1_AA

Pos	Part No	UN	Qty	Description	Page No
A3/FLEX DIMC/FLEX, A3/FLEX PT/FLEX					
030	2726295-0000		1	COVER STRIP	
A3/FLEX NOPT, A3/FLEX NODIMC					
030	2728139-0000		1	COVER STRIP	
Common Parts					
010	2529598-0000		1	DOOR	
020	2529599-0000		1	RUBBER SEAL	
040	988685-0000		3	PIN	
050	1129767-0000		6	SCREW	
060	1129770-0000		6	BLOCKING PIECE	
070	1035792-0000		3	E-HINGE	
090	1538868-0000		2	BRACKET	
100	1129274-0000		4	GUIDE LUG	
110	2508133-0000		1	LOCKING ARM	
120	2508140-0000		1	LOCKING ARM	
300	90237-0128		1	LOCK CYLINDER, 1109-U3	
310	90237-0153		1	LOCK HOUSING, 1121-U26-0B	
320	90237-0176		1	TURNING HANDLE, 1125-U190-A	
400	312115-0327		4	SCREW ISO4762 M5X12 A4 80	
410	312105-0366		6	SCREW M6S ISO 4017 M6X12 A480	
420	315105-0136		8	WASHER BRB4,3XRFR	
430	315105-0153		4	WASHER BRB6,4X12RFR	
440	312705-0312		8	NUT HEX. DOMED CAP MHM-6 M4 A280	
450	312115-0362		3	SCREW ISO4762 M6X8 A4 80	

Pos	Part No	UN	Qty	Description	Page No

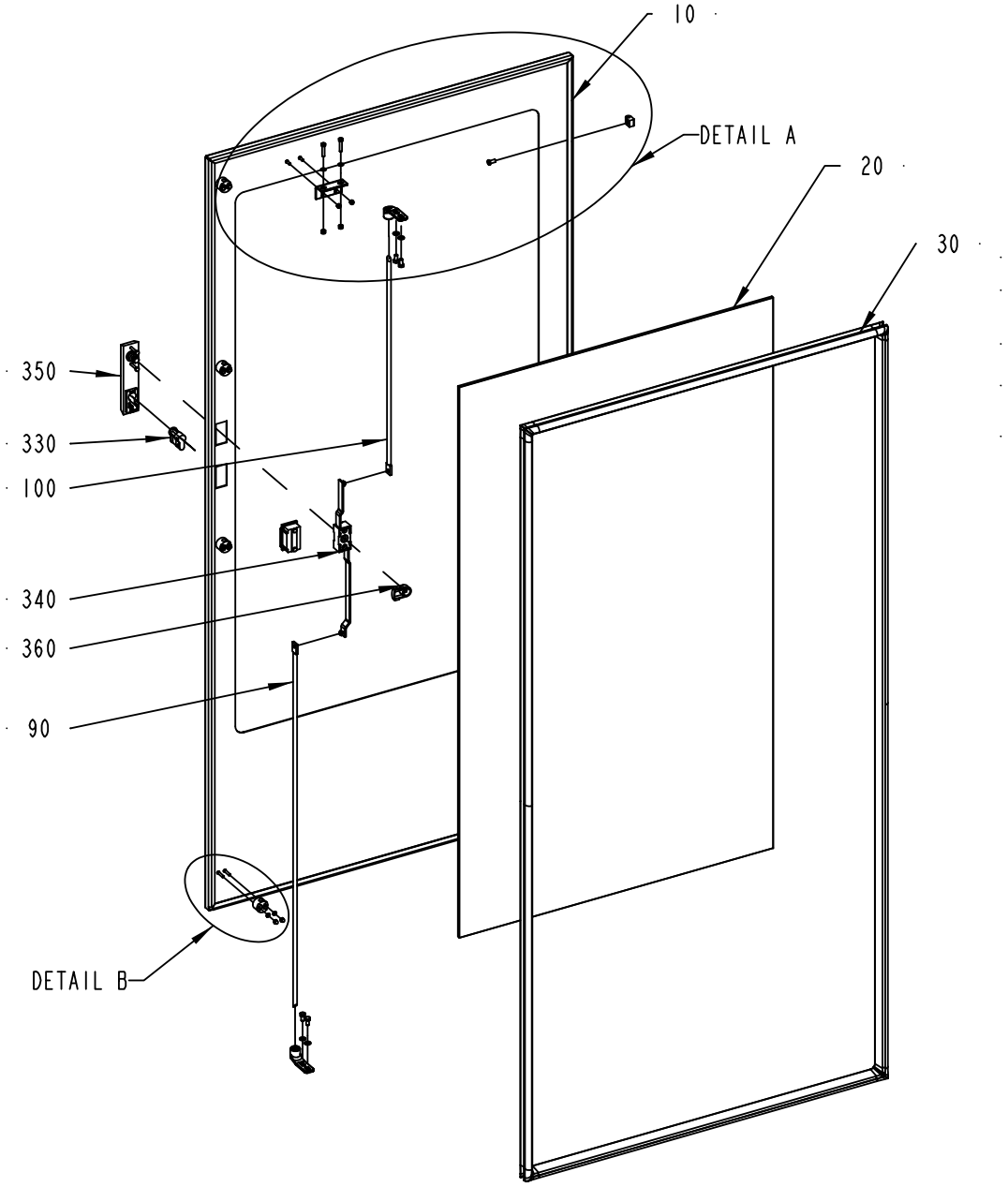

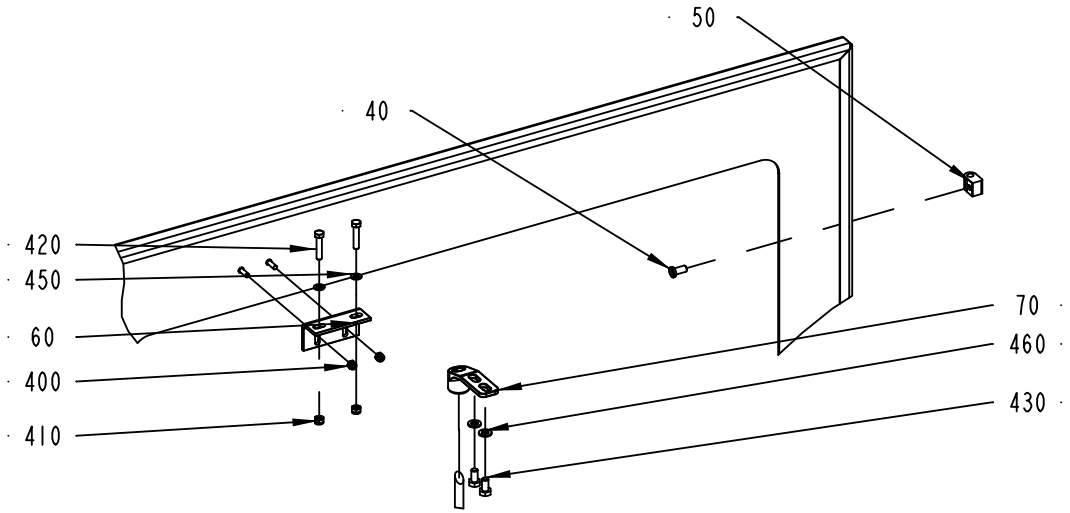

DETAIL A
1:5

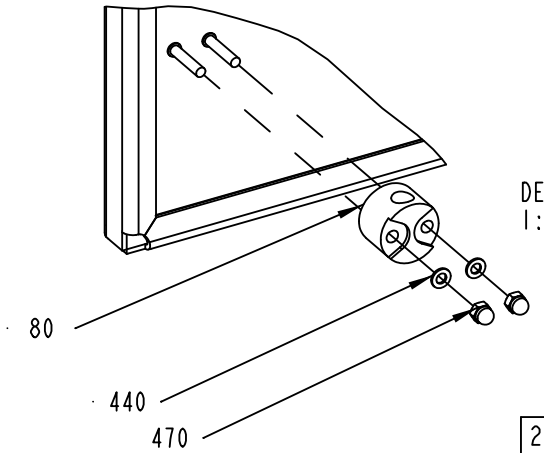

DETAIL B
1:2

2508175-1
ECM 117162

ECM: 265692 - 20060702
Group number: 2508175-0100
Assembly Drawing: 2508175-1_1_AA

Pos	Part No	UN	Qty	Description	Page No
A3/FLEX					
010	2508176-0000		1	DOOR	
020	2527640-0000		1	GLASS PANE	
030	2527639-0000		1	RUBBER SEAL	
Common Parts					
040	1129767-0000		3	SCREW	
050	1129770-0000		3	BLOCKING PIECE	
060	1346885-0000		1	SUPPORT	
070	1538868-0000		2	BRACKET	
080	1129274-0000		4	GUIDE LUG	
090	2508133-0000		1	LOCKING ARM	
100	2508134-0000		1	LOCKING ARM	
300	90153-0049		1	ADHESIVE, LOCTITE 409 20G	
310	90157-0041		1	SEALING COMPOUND, RHODORSEAL 5651	
330	90237-0128		1	LOCK CYLINDER, 1109-U3	
340	90237-0153		1	LOCK HOUSING, 1121-U26-0B	
350	90237-0176		1	TURNING HANDLE, 1125-U190-A	
360	90237-0165		1	LATCH	
400	312812-0312		2	HEXAGON NUT, NY-LOCK M4 A480	
410	312812-0314		2	HEXAGON NUT, NY-LOCK M5 A480	
420	312105-0333		2	SCREW M6S ISO 4017 M5X25 A480	
430	312105-0366		4	SCREW M6S ISO 4017 M6X12 A480	
440	315105-0136		8	WASHER BRB4,3XRFR	
450	315105-0146		2	WASHER BRB5,3X10RFR	
460	315105-0153		4	WASHER BRB6,4X12RFR	
470	312705-0312		8	NUT HEX. DOMED CAP MHM-6 M4 A280	

Pos	Part No	UN	Qty	Description	Page No

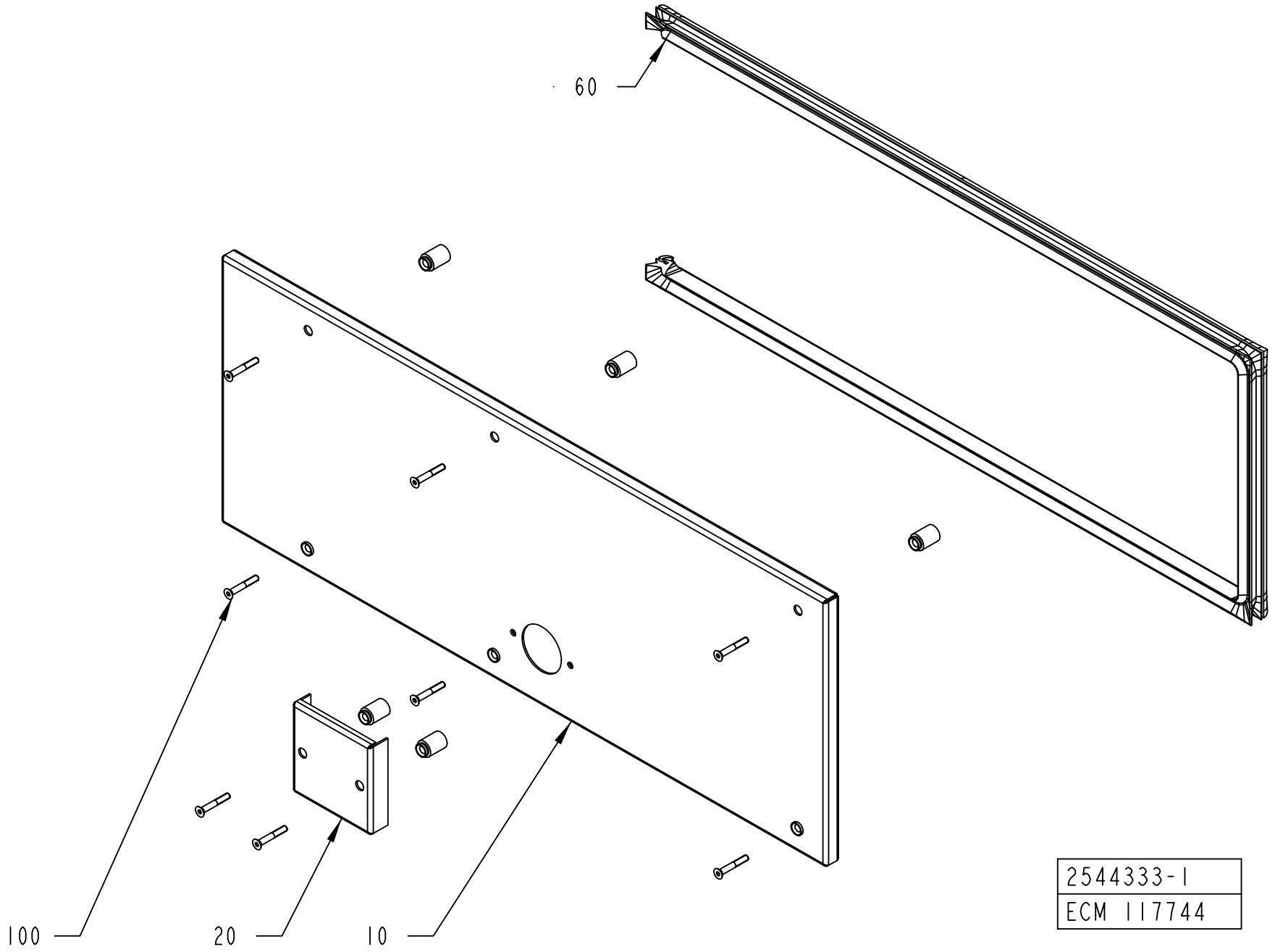
60
100
20
10
2544333-1
ECM 117744

ECM: 117744 - 20030403
Group number: 2544333-0100
Assembly Drawing: 2544333-1_1_AA

Pos	Part No	UN	Qty	Description	Page No
-					
010	2544331-0000		1	COVER	
020	2544332-0000		1	PROTECTION	
060	2508161-0000		1	RUBBER SEAL	
100	90226-0458		8	MOUNTING SCREW	

Pos	Part No	UN	Qty	Description	Page No

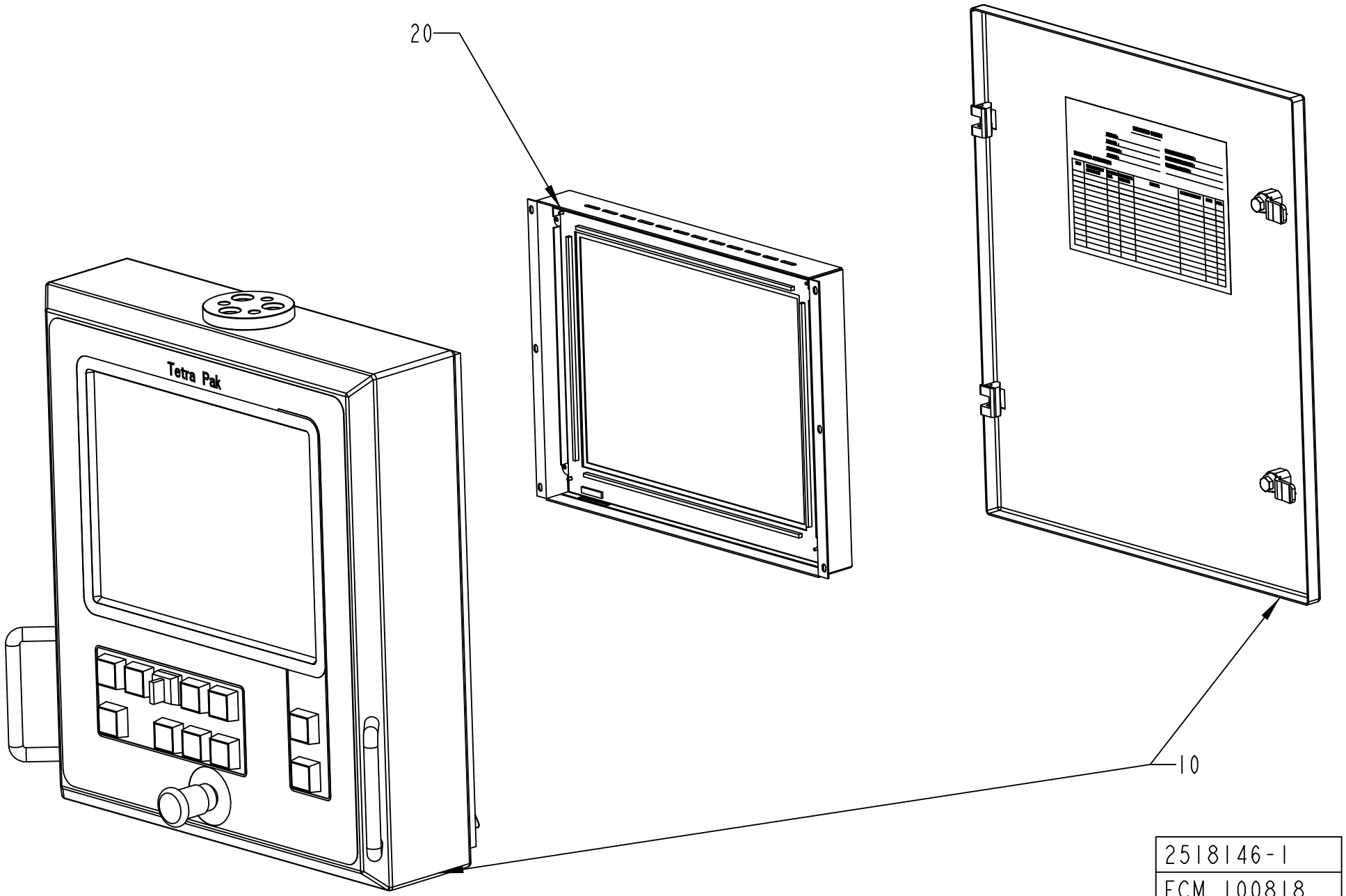
20
Tetra Pak
10
2518146-1
ECM 100818

ECM: 245343 - 20060124
Group number: 2518146-0100
Assembly Drawing: 2518146-1_1_AA

Pos	Part No	UN	Qty	Description	Page No
A3/FLEX					
0010	2518147-0101		1	PANEL UNIT 15"	**2-265**
Common Parts					
0020	90459-0287		1	DISPLAY UNIT 15", UO36419A	

Pos	Part No	UN	Qty	Description	Page No

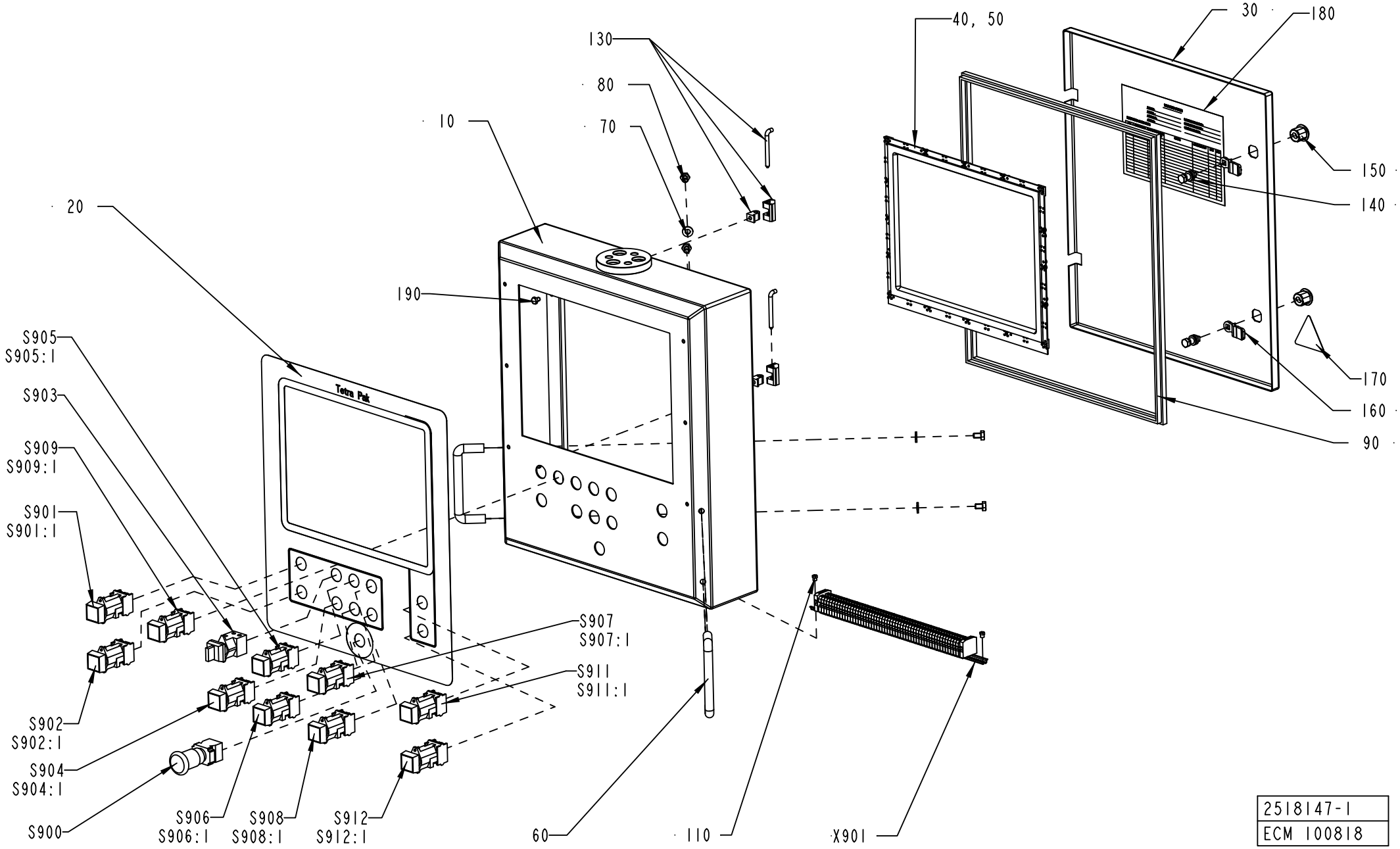

2518147-1
ECM 100818

ECM: 100818 -
Group number: 2518147-0101
Assembly Drawing: 2518147-1_1_AA

Pos	Part No	UN	Qty	Description	Page No
A3/FLEX					
S903	90111-0120		1	SWITCH, 2 POS.704.510 .0A+704.901.5/A	
S904	90064-0082		1	PUSH BUTTON, WHITE	
	90036-0057		*1*	*LIGHT BULB, BA9S 28V*	
S904:1	359301-0170		1	BUTTON SIGN, SPOOLING OF FINAL FOLDER	
S905	90064-0098		1	PUSH BUTTON, CLEAR	
S905:1	359301-0091		1	BUTTON SIGN, INCHING FINAL FOLDER	
Common Parts					
010	2518148-0000		1	PANEL	
020	2518149-0000		1	FOIL	
030	2518157-0000		1	DOOR	
040	90459-0288		1	SLIM LINE TOUCH BEZEL 15", 1511	
050	90153-0060		1	ADHESIVE, 3M DP-190 B/A	
060	90017-0016		2	HANDLE, NO. 14.4012.02.120	
070	90005-0077		4	WASHER PL.RND.NYL.8,4/7, H=2	
080	312105-0447		4	SCREW M6S ISO 4017 M8X12 A480	
090	90143-0057	MM	1800	STRIP EMKA 1011-05 21X11MM	
110	1041609-0000		2	NUT	
120	312605-0316		1	HEXAGON NUT, M6M M6 A280	
130	90248-0047		2	HINGE, 1150-U50	
140	90237-0320		2	LOCK HOUSING, 1000-U136	
150	90237-0319		2	LOCK HOUSING, 1000-U134	
160	90237-0157		2	LOCK BOLT, 1000-230	
170	359705-0015		1	WARNING SIGN ISO, RISK OF ELECTRIC SHOCK	
190	90194-0133		1	SIGN "DELIVERED DESIGN"	
220	312105-0362		2	SCREW M6S ISO 4017 M6X8 A480	
S900	90458-1651		1	EMERGENCY STOP, ZB4-BS-844 ZB4-BZ-104	
S901	90064-0082		1	PUSH BUTTON, WHITE	
	90036-0057		*1*	*LIGHT BULB, BA9S 28V*	
S901:1	359301-0519		1	SIGN "TPOP RESET"	
S902	90064-0082		1	PUSH BUTTON, WHITE	
	90036-0057		*1*	*LIGHT BULB, BA9S 28V*	
S902:1	359301-0130		1	BUTTON SIGN, LAMP TEST	
S906	90064-0082		1	PUSH BUTTON, WHITE	
	90036-0057		*1*	*LIGHT BULB, BA9S 28V*	
S906:1	359301-0050		1	BUTTON SIGN, DROP CHUTE BRIK	
S907	90064-0098		1	PUSH BUTTON, CLEAR	
S907:1	359301-0090		1	BUTTON SIGN, INCHING	
S908	90064-0084		1	PUSH BUTTON, YELLOW	
S908:1	359301-0110		1	BUTTON SIGN, SHORT STOP	
S909	90064-0086		1	PUSH BUTTON, WHITE	
	90036-0057		*1*	*LIGHT BULB, BA9S 28V*	
S909:1	359301-0160		1	BUTTON SIGN, DRAINAGE OF PRODUCT TUBE	
S911	90064-0093		1	PUSH BUTTON, GREEN	
	90036-0057		*1*	*LIGHT BULB, BA9S 28V*	
S911:1	359301-0001		1	BUTTON SIGN, UP	
S912	90064-0082		1	PUSH BUTTON, WHITE	
	90036-0057		*1*	*LIGHT BULB, BA9S 28V*	
S912:1	359301-0005		1	BUTTON SIGN, DOWN	
X901	1095597-0100		1	TERMINAL	**2-267**

Machine Type	Group Description	Used-In	Group Number	Page No

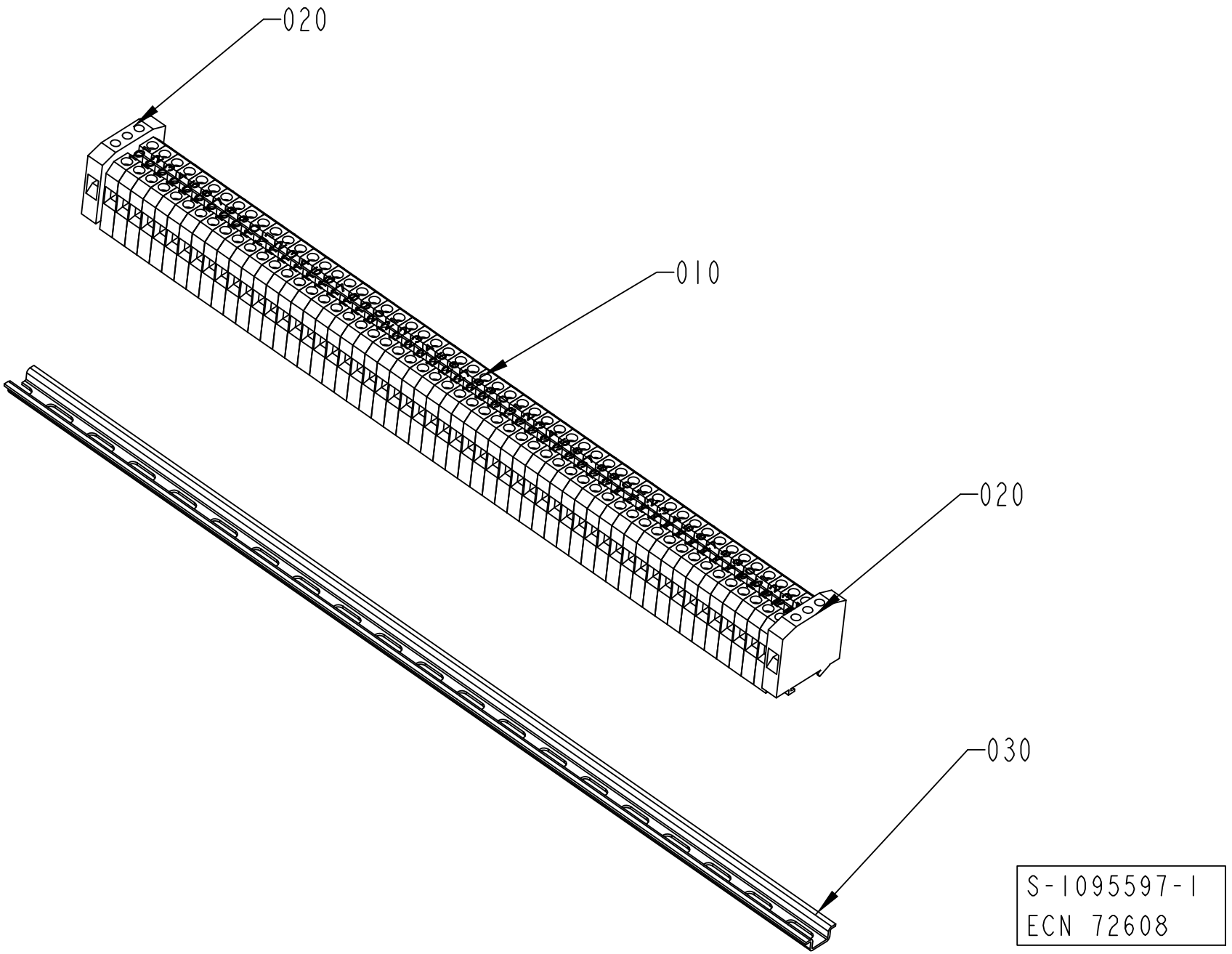
020
010
020
030
S-1095597-1
ECN 72608

ECM: 189931 - 20041104
Group number: 1095597-0100
Assembly Drawing: 1095597-1_1_AB

Pos	Part No	UN	Qty	Description	Page No
-					
010	90077-0079		56	FEED THROUGH TERMINAL, 02943.6	
020	90135-0026		2	EARTH TERMINAL, 3802.6	
030	90077-0328	MM	390	RAIL TS15/5	
040	359011-0821		2	SET OF SIGNS 6-FW 1-50	
050	359011-0819		1	MARKING PLATES 5-GW (EARTH)	

Pos	Part No	UN	Qty	Description	Page No

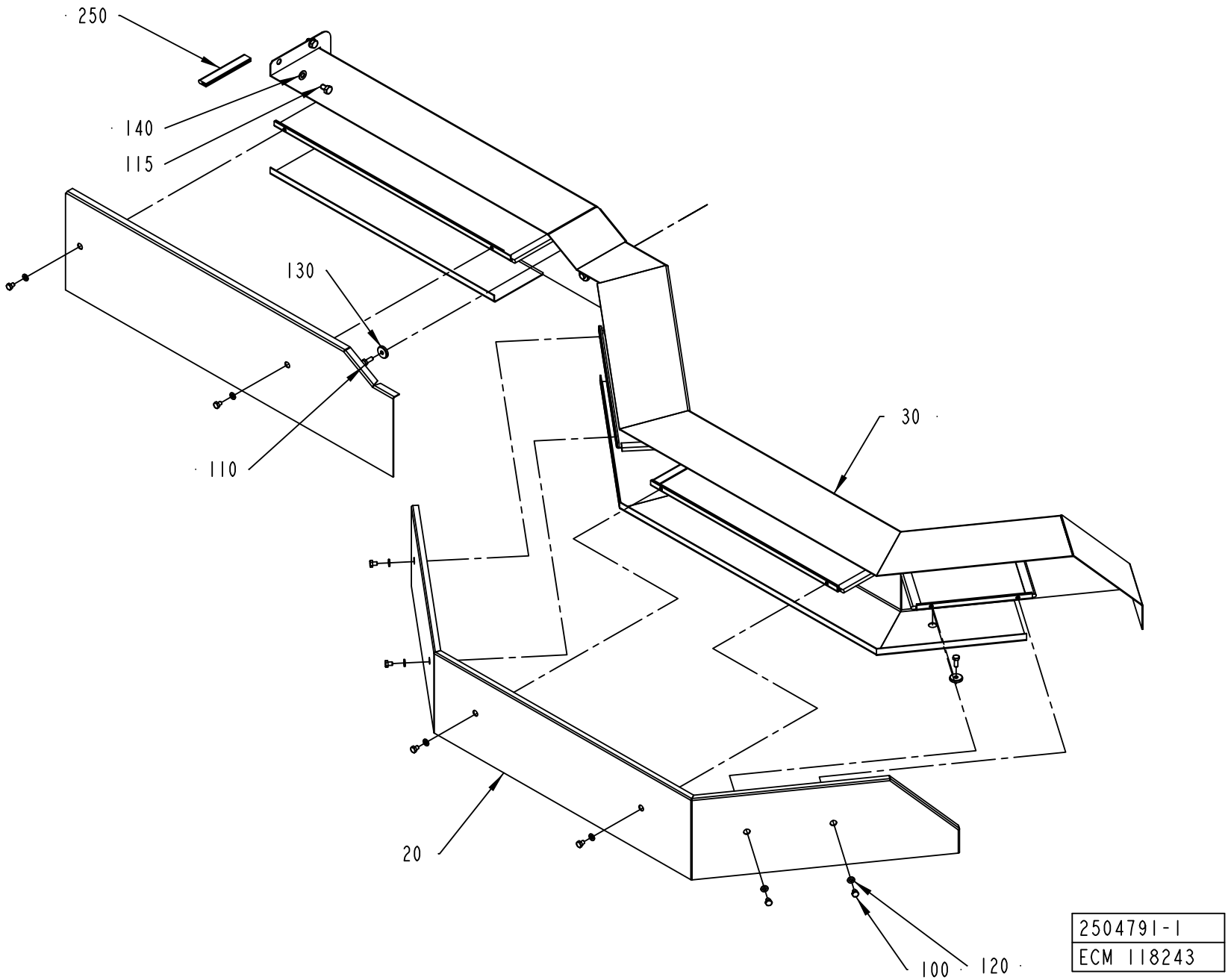
250
140
115
130
110
30
20
100
120
2504791-1
ECM 118243

ECM: 189932 - 20041104
Group number: 2504791-0100
Assembly Drawing: 2504791-1_1_AA

Pos	Part No	UN	Qty	Description	Page No
-					
010	2520181-0000		1	LID	
020	1512145-0000		1	LID	
030	2520180-0000		1	CABLE DUCT	
100	312105-0362		8	SCREW M6S ISO 4017 M6X8 A480	
110	312105-0368		3	SCREW M6S ISO 4017 M6X16 A480	
115	312105-0447		4	SCREW M6S ISO 4017 M8X12 A480	
120	315105-0153		8	WASHER BRB6,4X12RFR	
130	315125-0153		3	WASHER TBRSB 6,4X22X4 A4	
140	315105-0165		4	WASHER BRB8,4X16RFR	
250	90143-0059	MM	1200	SEAL STRIP 4610069	

Pos	Part No	UN	Qty	Description	Page No

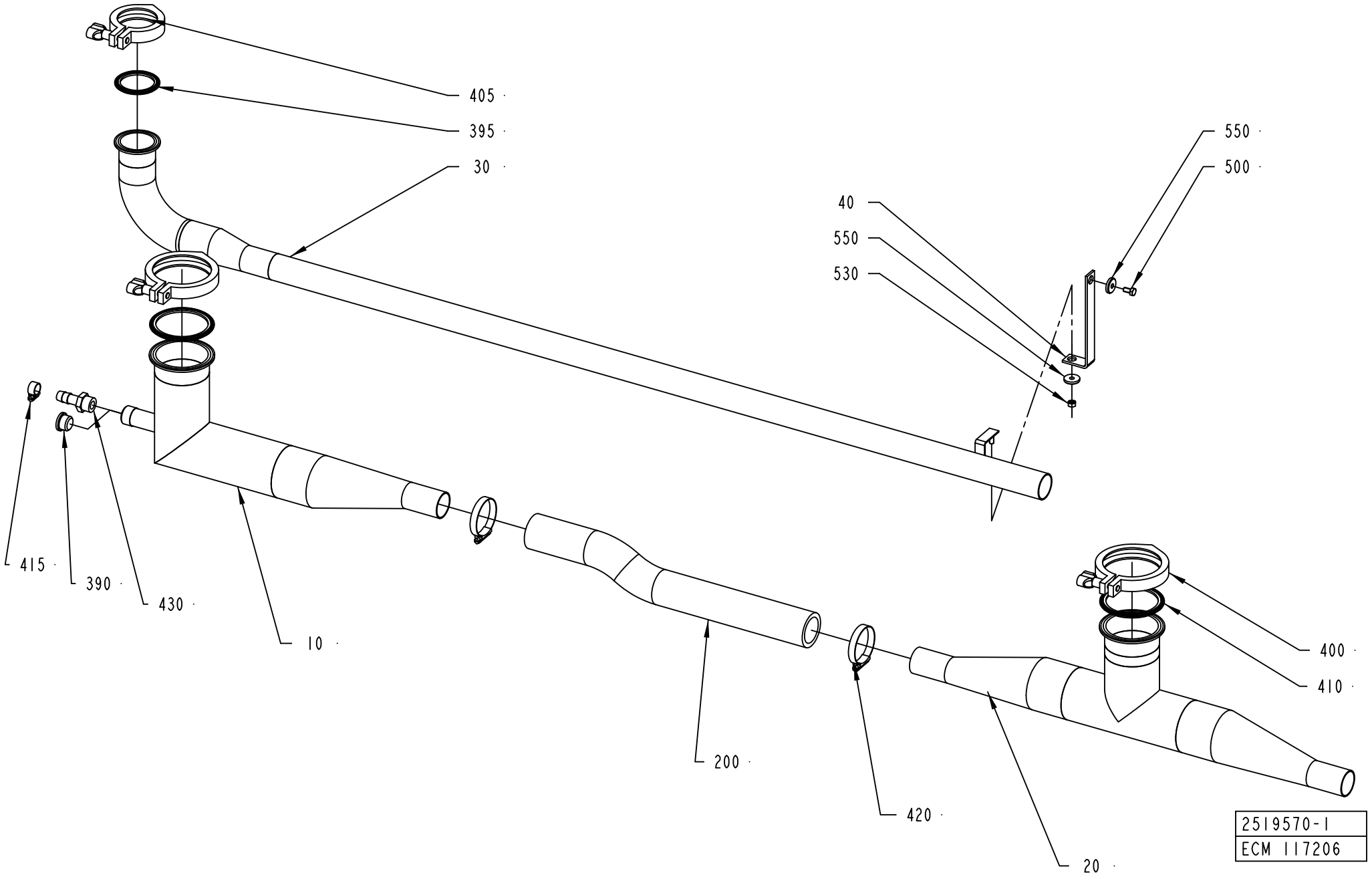
405
395
30
40
550
530
550
500
415
390
430
10
200
420
20
400
410
2519570-1
ECM 117206

ECM: 266356 - 20060702
Group number: 2519570-0100
Assembly Drawing: 2519570-1_1_AA

Pos	Part No	UN	Qty	Description	Page No
A3/FLEX TBA, A3/FLEX TPA					
010	2519571-0000		1	PIPE	
200	90166-0236	MM	500	HOSE, 38/51 REINFORCED RUBBER	
Common Parts					
020	2519572-0000		1	PIPE	
030	2594567-0000		1	PIPE	
040	2594589-0000		1	BRACKET	
390	342713-0213		1	PLUG, EXT THREAD HEX SOCKET 8638-00-120	
395	342850-0305		1	GASKET 47,8X62,6X5,2 MM 2" FDA	
400	342840-0107		2	CLAMPING PIECE	
405	342840-0105		1	CLAMPING PIECE	
410	342850-0107		2	GASKET, FDA, 3-A, 3	
415	342991-0101		1	HOSE CLIP,WORM DRIVE TYPE (13)-16	
420	342991-0109		2	HOSE CLIP,WORM DRIVE TYPE (48)-50	
430	90055-0033		1	HOSE NIPPLE, EXT.THR. R1/2-13 MM	
500	312105-0366		1	SCREW M6S ISO 4017 M6X12 A480	
530	312605-0316		1	HEXAGON NUT, M6M M6 A280	
550	315125-0153		2	WASHER TBRSB 6,4X22X4 A4	

Pos	Part No	UN	Qty	Description	Page No

WASTE CONVEYOR

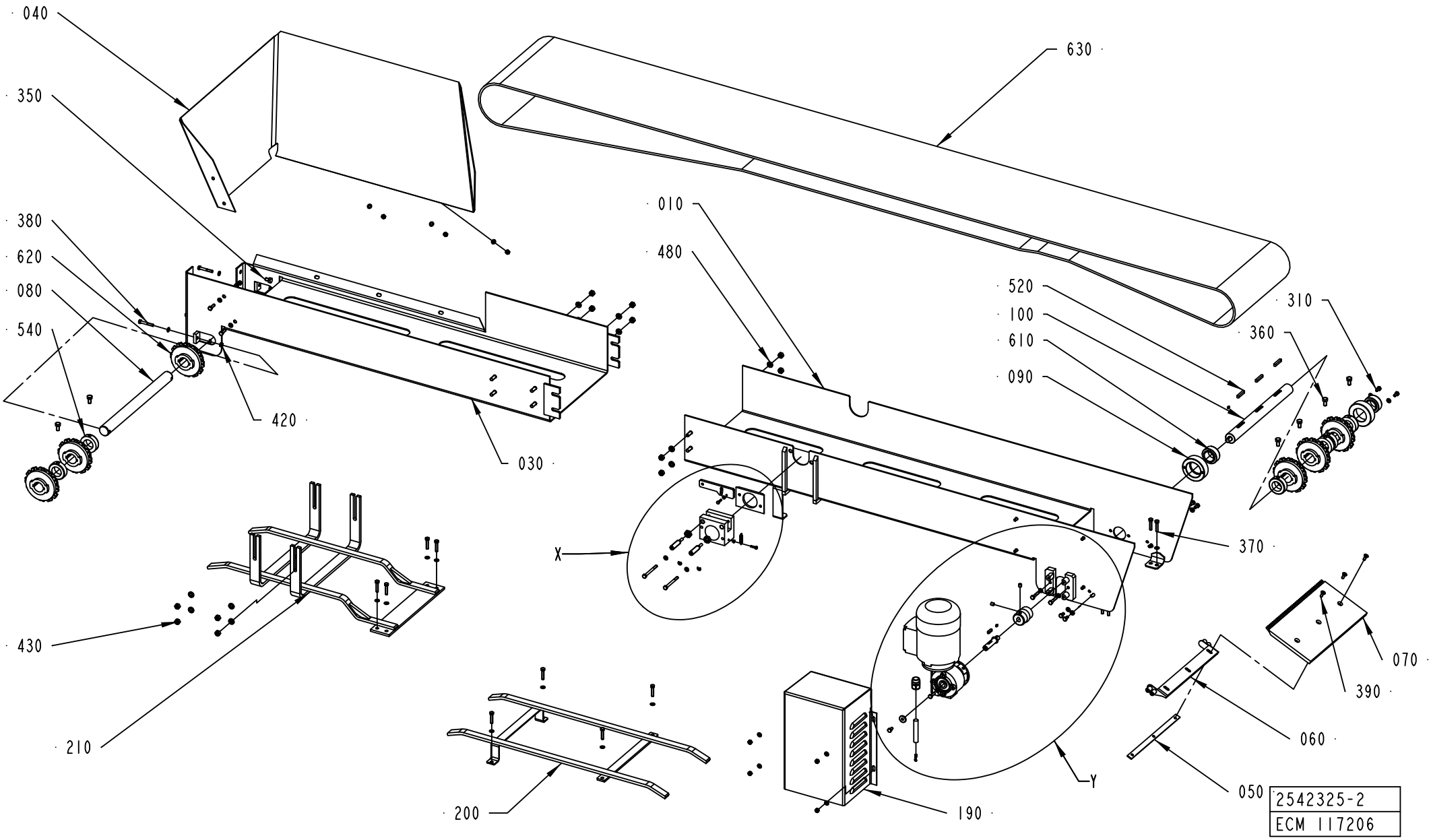

ECM: 266139 - 20060702
Group number: 2542325-0100
Assembly Drawing: 2542325-2_1_AA

This list covers pages from 2-272 to 2-275

Pos	Part No	UN	Qty	Description	Page No
A3/FLEX TBA 0500B, A3/FLEX TBA 1000B, A3/FLEX TBA 1000S, A3/FLEX TBA 1000SQ, A3/FLEX TPA 1000SQ, A3/FLEX TBA 0200S, A3/FLEX TBA 1500S, A3/FLEX TBA 0200B, A3/FLEX TBA 0250B, A3/FLEX TBA 0330S, A3/FLEX TPA 0330SQ, A3/FLEX TPA 0500SQ, A3/FLEX TBA 0200M, A3/FLEX TBA 0250S, A3/FLEX TBA 0500S, A3/FLEX TPA 0250SQ, A3/FLEX TPA 0200SQ, A3/FLEX TPA 0750SQ, A3/FLEX TBA 0200SQ, A3/FLEX TBA 0250SQ (See drawing on pages: 2-272, 2-274)					
030	2540813-0000		1	CHUTE	
040	2540814-0000		1	SPLASH PLATE	
110	2508390-0000		1	FASTENING PLATE	
120	1346313-0000		1	PLATE	
130	2508203-0000		1	HOLDER	
140	1349187-0000		1	SPRING	
150	1346312-0000		2	SCREW	
210	2540816-0000		1	BRACKET	
300	312105-0293		2	SCREW M6S ISO 4017 M4X16 A470	
310	312105-0366		7	SCREW M6S ISO 4017 M6X12 A480	
320	312105-0370		6	SCREW M6S ISO 4017 M6X20 A480	
340	312105-0383		2	SCREW M6S ISO 4014 M6X65 A480	
370	312109-0374		12	SCREW M6S ISO 4017 M6X30 A480	
410	312605-0312		2	HEXAGON NUT, M6M M4 A280	
420	312605-0316		11	HEXAGON NUT, M6M M6 A280	
430	312605-0318		12	HEXAGON NUT, M6M M8 A280	
440	312625-0322		2	HEXAGON THIN NUT, EN 24035 ML6M M12 A4	
460	315105-0153		39	WASHER BRB6,4X12RFR	
480	315115-0165		12	WASHER PLAIN, TBRB 8,4/16 H=3	
550	315755-0107		2	RETAINING RING SHAFT DIN 6799 5 A2	
630	2508201-0000		1	CONVEYOR CHAIN	
A3/FLEX TBA 1890S, A3/FLEX TBA 2000S (See drawing on pages: 2-272, 2-274)					
030	2679599-0000		1	CHUTE	
040	2679598-0000		1	SPLASH PLATE	
110	2508390-0000		1	FASTENING PLATE	
120	1346313-0000		1	PLATE	
130	2508203-0000		1	HOLDER	
140	1349187-0000		1	SPRING	
150	1346312-0000		2	SCREW	
210	2540816-0000		1	BRACKET	
300	312105-0293		2	SCREW M6S ISO 4017 M4X16 A470	
310	312105-0366		7	SCREW M6S ISO 4017 M6X12 A480	
320	312105-0370		6	SCREW M6S ISO 4017 M6X20 A480	
340	312105-0383		2	SCREW M6S ISO 4014 M6X65 A480	
370	312109-0374		12	SCREW M6S ISO 4017 M6X30 A480	
410	312605-0312		2	HEXAGON NUT, M6M M4 A280	
420	312605-0316		11	HEXAGON NUT, M6M M6 A280	
430	312605-0318		12	HEXAGON NUT, M6M M8 A280	
440	312625-0322		2	HEXAGON THIN NUT, EN 24035 ML6M M12 A4	
460	315105-0153		39	WASHER BRB6,4X12RFR	
480	315115-0165		12	WASHER PLAIN, TBRB 8,4/16 H=3	
550	315755-0107		2	RETAINING RING SHAFT DIN 6799 5 A2	
630	2508201-0000		1	CONVEYOR CHAIN	
Common Parts					
010	2540817-0000		1	CHUTE	
050	1129253-0000		1	FASTENING PLATE	
060	1296845-0000		1	BRACKET	
070	2508192-0000		1	GUARD PLATE	
080	1037562-0000		1	SHAFT	
090	1348386-0000		2	BEARING HOUSING	
100	2508196-0000		1	DRIVE SHAFT	
160	445848-0000		1	ELASTIC COUPLING	
170	2508200-0000		1	SHAFT	
180	2529670-0000		1	WASHER	
190	2529579-0000		1	COVER	
200	2540818-0000		1	BRACKET	
330	312105-0374		2	SCREW M6S ISO 4014 M6X30 A480	
350	312105-0447		2	SCREW M6S ISO 4017 M8X12 A480	
360	312105-0449		6	SCREW M6S ISO 4017 M8X16 A480	
380	312109-0378		2	SCREW M6S ISO 4017 M6X40 A480	
390	312155-0368		3	SCREW DIN 7991 MF6S M6X16 A4 70	
400	312318-0443		2	SCREW ISO4029 M8X8 A4	
470	315115-0153		2	WASHER PLAIN, TBRB 6,4/12 H=3	
500	315705-0164		2	PARALLEL KEY W. ROUND ENDS 4X4X8 MM	
510	315705-0201		1	PARALLEL KEY W. ROUND ENDS 5X5X20 MM	
520	315705-0238		3	PARALLEL KEY W. ROUND ENDS 6X6X36 MM	
540	315742-0122		6	RETAINING RING 30 SMS 199	
580	353101-0130		1	CABLE SHOE 1,5-2,5MM2 M4 BLUE	
590	353240-0002		1	GLAND W/O INSERT PG11 NORMAL	
610	90240-0315		2	SPHER. BEARING, 30X47X22 PLASTIC MM	
620	90344-0073		6	TOOTHED WHEEL	
M5503	90459-1147		1	GEARS, WORM MOTOR VF30 F1-10 P63 B14 V6	

Machine Type | Group Description | Used-In | Group Number | Page No

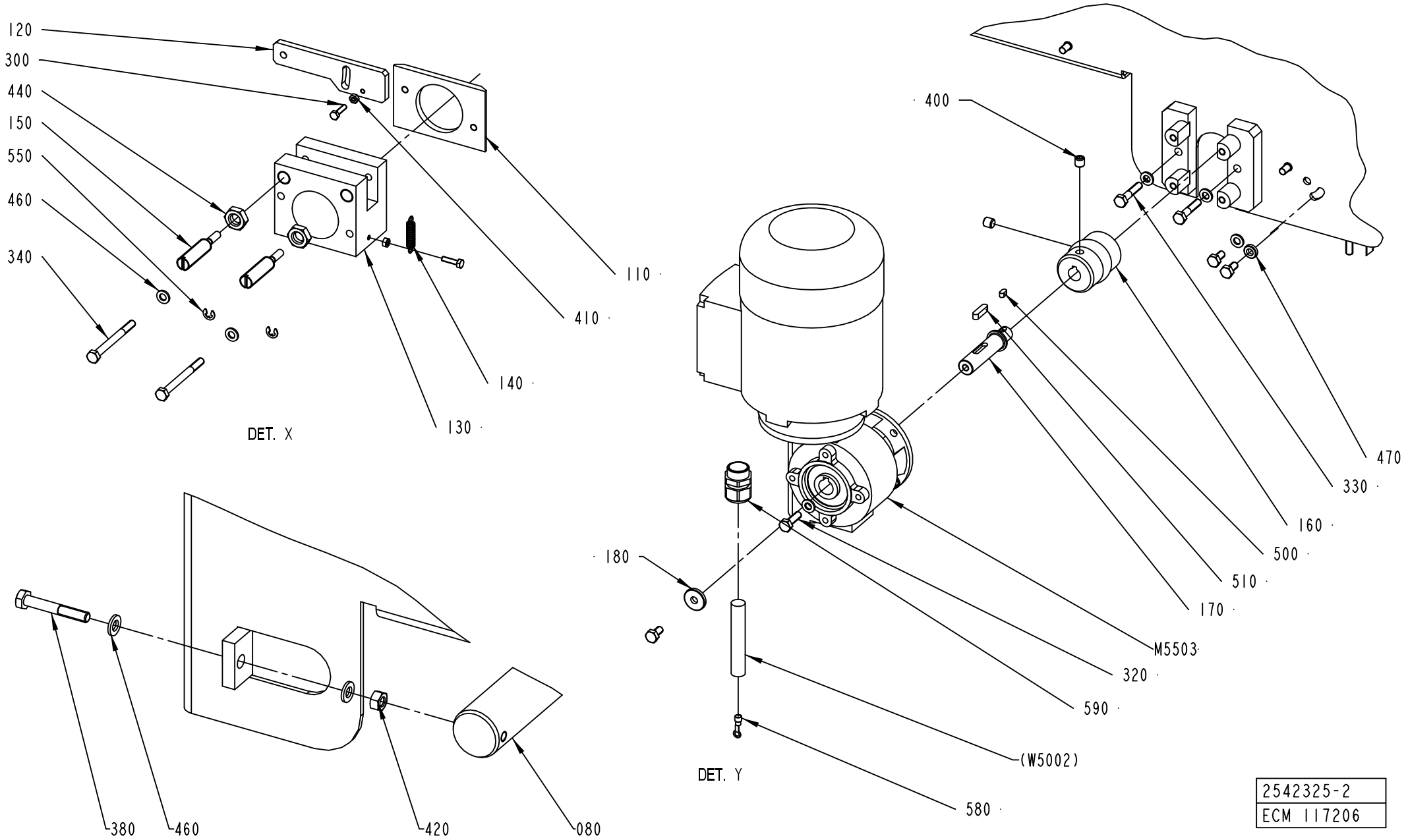
120
300
440
150
550
460
340
110
410
140
130
DET. X
400
470
330
160
500
510
170
180
M5503
320
590
(W5002)
580
DET. Y
380
460
420
080
2542325-2
ECM 117206

ECM: 266139 - 20060702
Group number: 2542325-0100
Assembly Drawing: 2542325-2_2_AA

This list covers pages from 2-272 to 2-275

Pos	Part No	UN	Qty	Description	Page No
A3/FLEX TBA 0500B, A3/FLEX TBA 1000B, A3/FLEX TBA 1000S, A3/FLEX TBA 1000SQ, A3/FLEX TPA 1000SQ, A3/FLEX TBA 0200S, A3/FLEX TBA 1500S, A3/FLEX TBA 0200B, A3/FLEX TBA 0250B, A3/FLEX TBA 0330S, A3/FLEX TPA 0330SQ, A3/FLEX TPA 0500SQ, A3/FLEX TBA 0200M, A3/FLEX TBA 0250S, A3/FLEX TBA 0500S, A3/FLEX TPA 0250SQ, A3/FLEX TPA 0200SQ, A3/FLEX TPA 0750SQ, A3/FLEX TBA 0200SQ, A3/FLEX TBA 0250SQ (See drawing on pages: 2-272, 2-274)					
030	2540813-0000		1	CHUTE	
040	2540814-0000		1	SPLASH PLATE	
110	2508390-0000		1	FASTENING PLATE	
120	1346313-0000		1	PLATE	
130	2508203-0000		1	HOLDER	
140	1349187-0000		1	SPRING	
150	1346312-0000		2	SCREW	
210	2540816-0000		1	BRACKET	
300	312105-0293		2	SCREW M6S ISO 4017 M4X16 A470	
310	312105-0366		7	SCREW M6S ISO 4017 M6X12 A480	
320	312105-0370		6	SCREW M6S ISO 4017 M6X20 A480	
340	312105-0383		2	SCREW M6S ISO 4014 M6X65 A480	
370	312109-0374		12	SCREW M6S ISO 4017 M6X30 A480	
410	312605-0312		2	HEXAGON NUT, M6M M4 A280	
420	312605-0316		11	HEXAGON NUT, M6M M6 A280	
430	312605-0318		12	HEXAGON NUT, M6M M8 A280	
440	312625-0322		2	HEXAGON THIN NUT, EN 24035 ML6M M12 A4	
460	315105-0153		39	WASHER BRB6,4X12RFR	
480	315115-0165		12	WASHER PLAIN, TBRB 8,4/16 H=3	
550	315755-0107		2	RETAINING RING SHAFT DIN 6799 5 A2	
630	2508201-0000		1	CONVEYOR CHAIN	
A3/FLEX TBA 1890S, A3/FLEX TBA 2000S (See drawing on pages: 2-272, 2-274)					
030	2679599-0000		1	CHUTE	
040	2679598-0000		1	SPLASH PLATE	
110	2508390-0000		1	FASTENING PLATE	
120	1346313-0000		1	PLATE	
130	2508203-0000		1	HOLDER	
140	1349187-0000		1	SPRING	
150	1346312-0000		2	SCREW	
210	2540816-0000		1	BRACKET	
300	312105-0293		2	SCREW M6S ISO 4017 M4X16 A470	
310	312105-0366		7	SCREW M6S ISO 4017 M6X12 A480	
320	312105-0370		6	SCREW M6S ISO 4017 M6X20 A480	
340	312105-0383		2	SCREW M6S ISO 4014 M6X65 A480	
370	312109-0374		12	SCREW M6S ISO 4017 M6X30 A480	
410	312605-0312		2	HEXAGON NUT, M6M M4 A280	
420	312605-0316		11	HEXAGON NUT, M6M M6 A280	
430	312605-0318		12	HEXAGON NUT, M6M M8 A280	
440	312625-0322		2	HEXAGON THIN NUT, EN 24035 ML6M M12 A4	
460	315105-0153		39	WASHER BRB6,4X12RFR	
480	315115-0165		12	WASHER PLAIN, TBRB 8,4/16 H=3	
550	315755-0107		2	RETAINING RING SHAFT DIN 6799 5 A2	
630	2508201-0000		1	CONVEYOR CHAIN	
Common Parts					
010	2540817-0000		1	CHUTE	
050	1129253-0000		1	FASTENING PLATE	
060	1296845-0000		1	BRACKET	
070	2508192-0000		1	GUARD PLATE	
080	1037562-0000		1	SHAFT	
090	1348386-0000		2	BEARING HOUSING	
100	2508196-0000		1	DRIVE SHAFT	
160	445848-0000		1	ELASTIC COUPLING	
170	2508200-0000		1	SHAFT	
180	2529670-0000		1	WASHER	
190	2529579-0000		1	COVER	
200	2540818-0000		1	BRACKET	
330	312105-0374		2	SCREW M6S ISO 4014 M6X30 A480	
350	312105-0447		2	SCREW M6S ISO 4017 M8X12 A480	
360	312105-0449		6	SCREW M6S ISO 4017 M8X16 A480	
380	312109-0378		2	SCREW M6S ISO 4017 M6X40 A480	
390	312155-0368		3	SCREW DIN 7991 MF6S M6X16 A4 70	
400	312318-0443		2	SCREW ISO4029 M8X8 A4	
470	315115-0153		2	WASHER PLAIN, TBRB 6,4/12 H=3	
500	315705-0164		2	PARALLEL KEY W. ROUND ENDS 4X4X8 MM	
510	315705-0201		1	PARALLEL KEY W. ROUND ENDS 5X5X20 MM	
520	315705-0238		3	PARALLEL KEY W. ROUND ENDS 6X6X36 MM	
540	315742-0122		6	RETAINING RING 30 SMS 199	
580	353101-0130		1	CABLE SHOE 1,5-2,5MM2 M4 BLUE	
590	353240-0002		1	GLAND W/O INSERT PG11 NORMAL	
610	90240-0315		2	SPHER. BEARING, 30X47X22 PLASTIC MM	
620	90344-0073		6	TOOTHED WHEEL	
M5503	90459-1147		1	GEARS, WORM MOTOR VF30 F1-10 P63 B14 V6	

Machine Type | Group Description | Used-In | Group Number | Page No

Tetra Pak

SPC
Spare Parts Catalogue

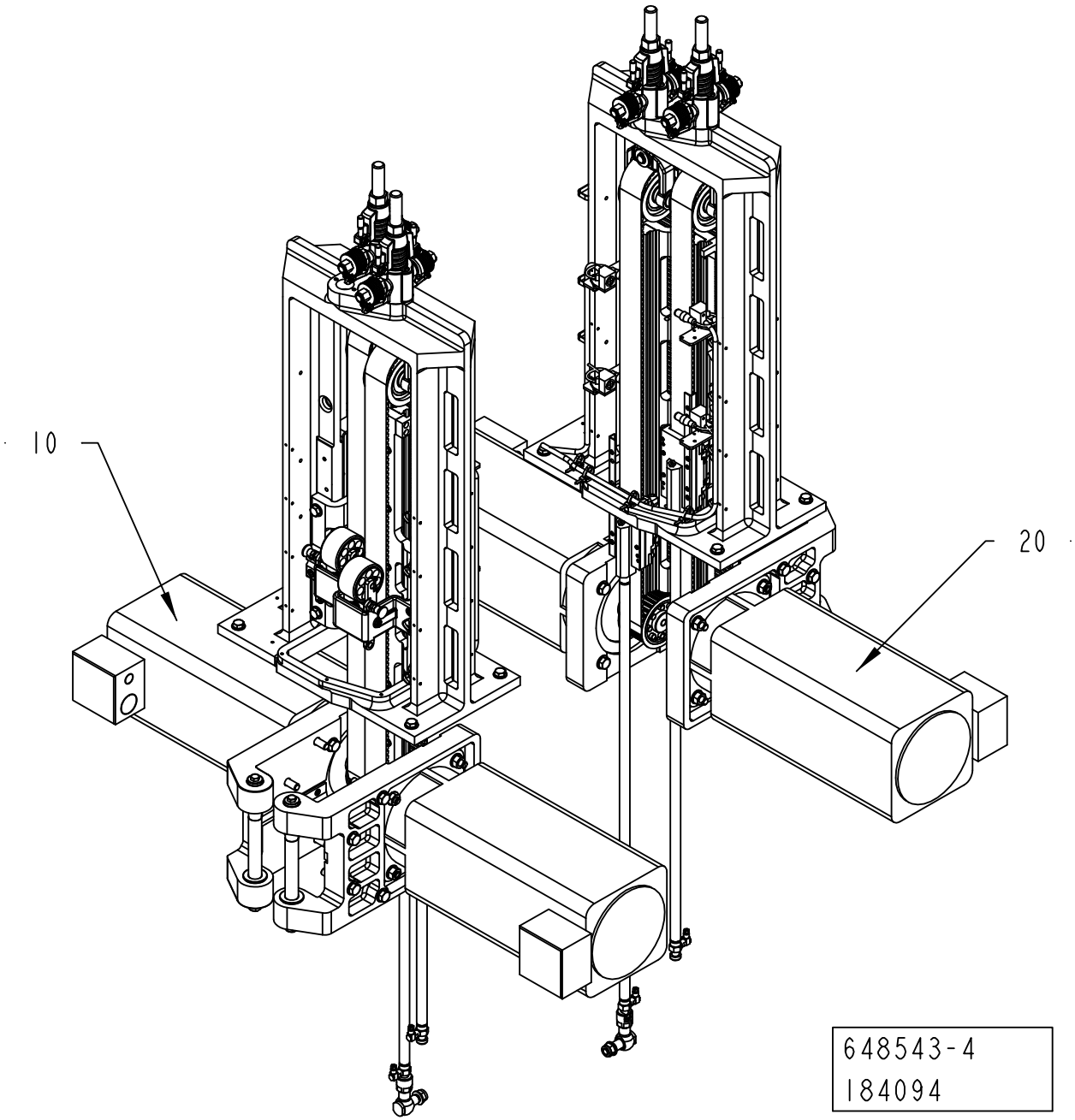
10
20
648543-4
184094

ECM: 195467 - 20050620
Group number: 648543-0400
Assembly Drawing: 648543-4_1_AA

Pos	Part No	UN	Qty	Description	Page No
-					
010	2552077-0200		1	DRIVE UNIT	**3-5**
020	2552078-0200		1	DRIVE UNIT	**3-27**

Pos	Part No	UN	Qty	Description	Page No

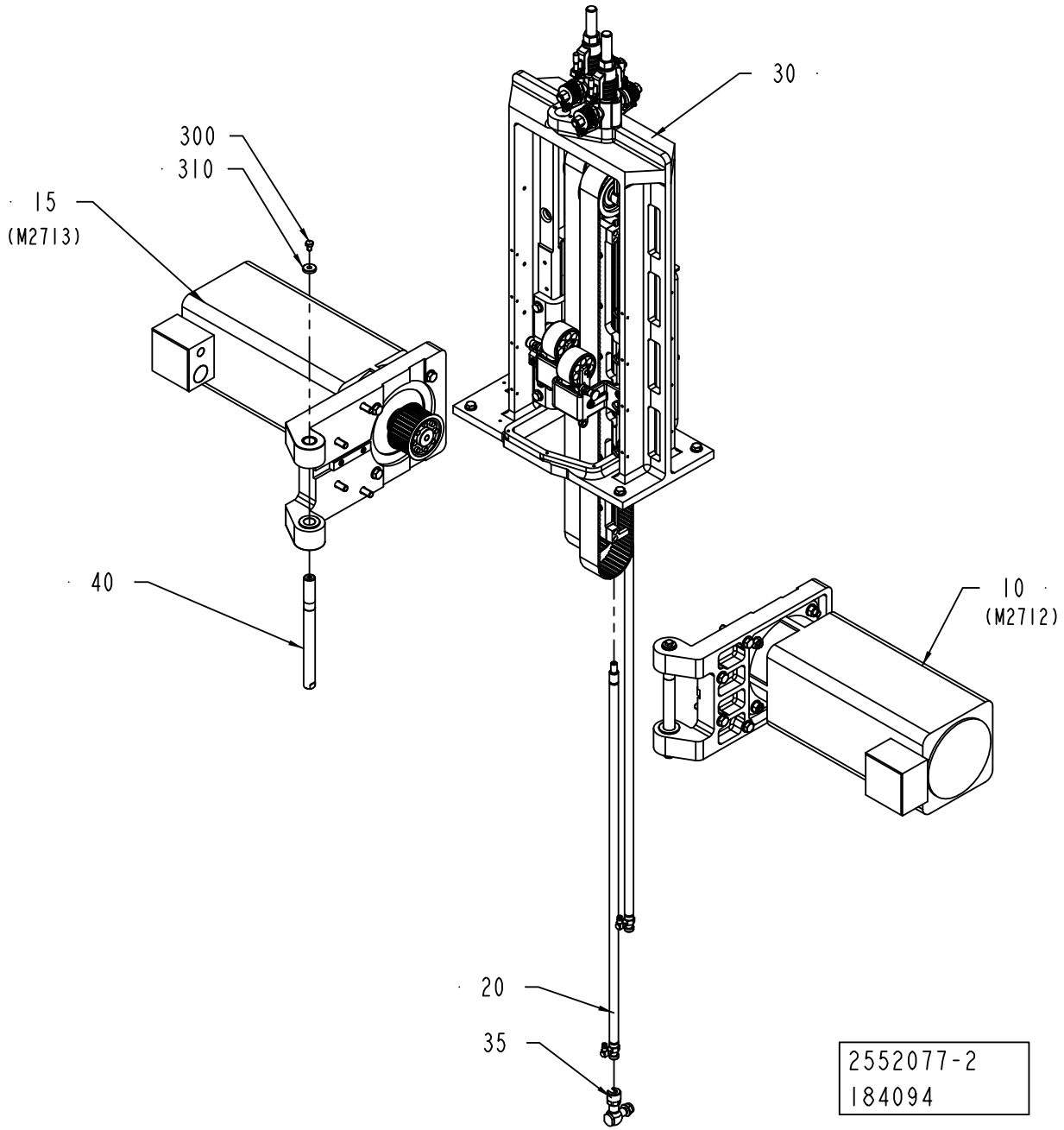
30
300
310
15
(M2713)
40
10
(M2712)
20
35
2552077-2
184094

ECM: 224592 - 20050715
Group number: 2552077-0200
Assembly Drawing: 2552077-2_1_AA

Pos	Part No	UN	Qty	Description	Page No
-					
010	2552079-0100		1	MOTOR UNIT	**3-7**
015	2688063-0100		1	MOTOR UNIT	**3-9**
020	2552080-0100		2	LINK	**3-11**
030	2552110-0100		1	SUPPORT	**3-13**
035	1490994-0100		1	LINK	**3-25**
040	2533638-0000		2	AXLE PIN	
300	312105-0447		2	SCREW M6S ISO 4017 M8X12 A480	
310	315125-0165		2	WASHER TBRSB 8,4X26X5 A4	

Pos	Part No	UN	Qty	Description	Page No

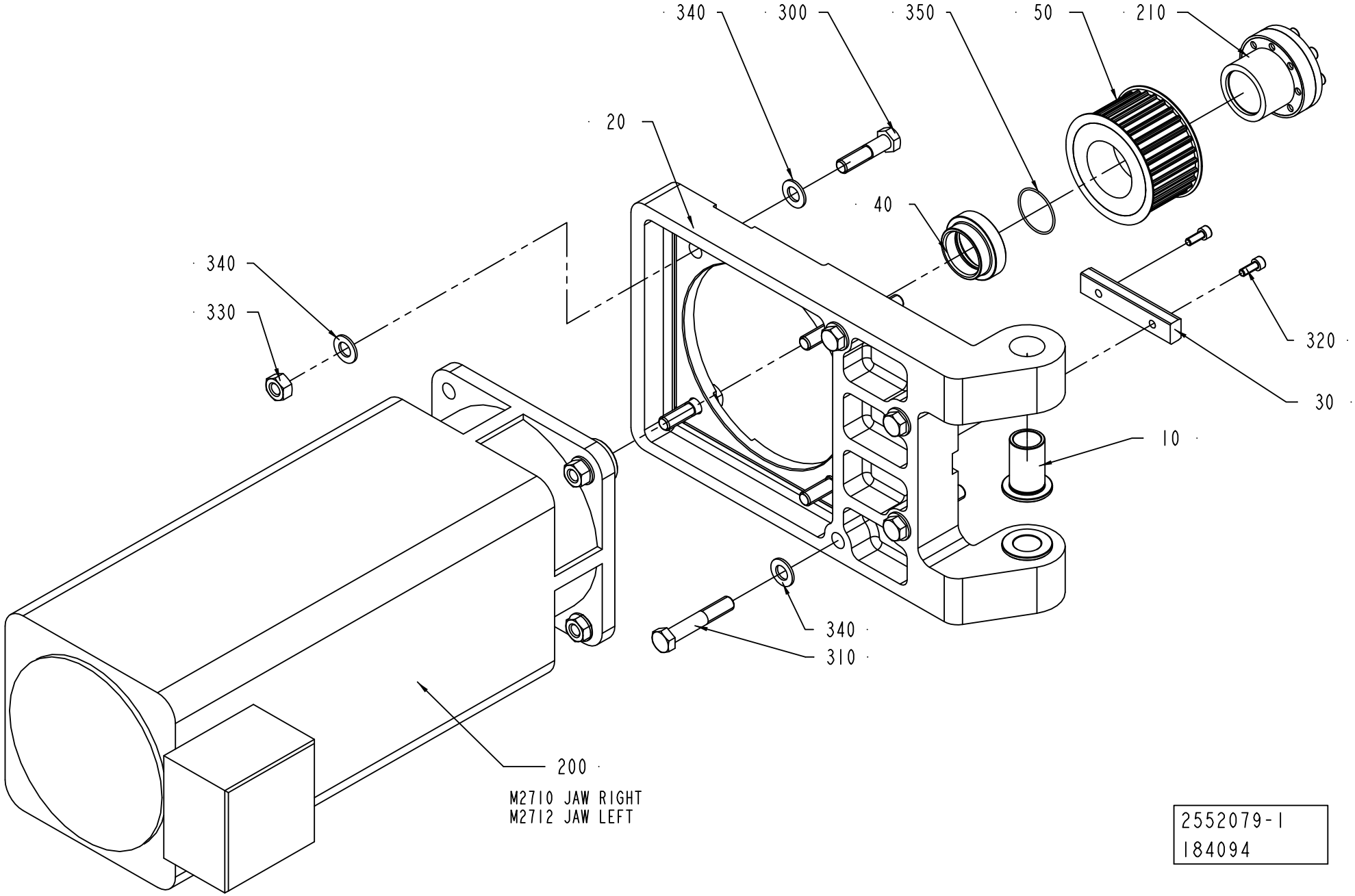
340
300
350
50
210
20
40
340
330
320
30
10
340
310
200
M2710 JAW RIGHT
M2712 JAW LEFT
2552079-1
184094

ECM: 207430 - 20050621
Group number: 2552079-0100
Assembly Drawing: 2552079-1_1_AB

Pos	Part No	UN	Qty	Description	Page No
-					
010	1255233-0000		2	BUSHING	
020	1255261-0000		1	FLANGE	
030	2545017-0000		1	PARALLEL KEYS WITH ROUND ENDS	
040	1346887-0000		1	SPACER	
050	1347839-0000		1	PULLEY	
200	90459-6130		1	SERVO MOTOR AHR190-J8-520S-F07D01K99C33B	
210	90458-2303		1	CLAMPING ELEMENT WITH SLEEVE, 38X50 MM	
300	312105-0542		4	SCREW M6S ISO 4014 M12X50 A480	
310	312105-0546		4	SCREW M6S ISO 4014 M12X70 A480	
320	312115-0368		2	SCREW ISO4762 M6X16 A4 80	
330	312601-0322		4	HEXAGON NUT, DIN 934 M12 8 FZB	
340	315105-0178		12	WASHER BRB13X24RFR	
350	315202-0124		1	O-RING 37,1X1,6 MM	

Pos	Part No	UN	Qty	Description	Page No

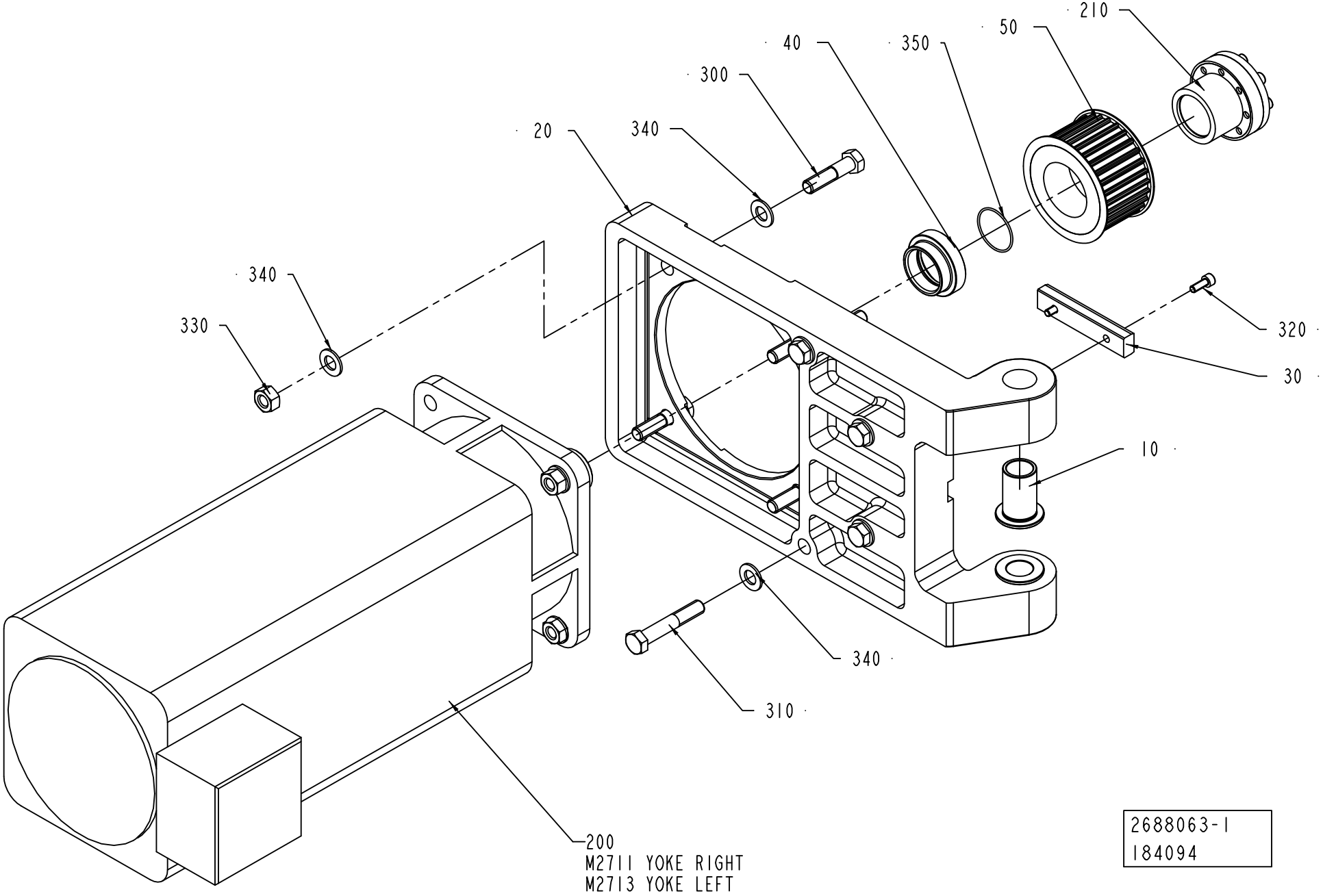
210
50
40
350
300
20
340
340
330
320
30
10
340
310
200
M2711 YOKE RIGHT
M2713 YOKE LEFT
2688063-1
184094

ECM: 224593 - 20050715
Group number: 2688063-0100
Assembly Drawing: 2688063-1_1_AA

Pos	Part No	UN	Qty	Description	Page No
-					
010	1255233-0000		2	BUSHING	
020	2686316-0000		1	FLANGE	
030	2545017-0000		1	PARALLEL KEYS WITH ROUND ENDS	
040	1346887-0000		1	SPACER	
050	1347839-0000		1	PULLEY	
200	90459-6130		1	SERVO MOTOR AHR190-J8-520S-F07D01K99C33B	
210	90458-2303		1	CLAMPING ELEMENT WITH SLEEVE, 38X50 MM	
300	312105-0542		4	SCREW M6S ISO 4014 M12X50 A480	
310	312105-0546		4	SCREW M6S ISO 4014 M12X70 A480	
320	312115-0368		2	SCREW ISO4762 M6X16 A4 80	
330	312601-0322		4	HEXAGON NUT, DIN 934 M12 8 FZB	
340	315105-0178		12	WASHER BRB13X24RFR	
350	315202-0124		1	O-RING 37,1X1,6 MM	

Pos	Part No	UN	Qty	Description	Page No

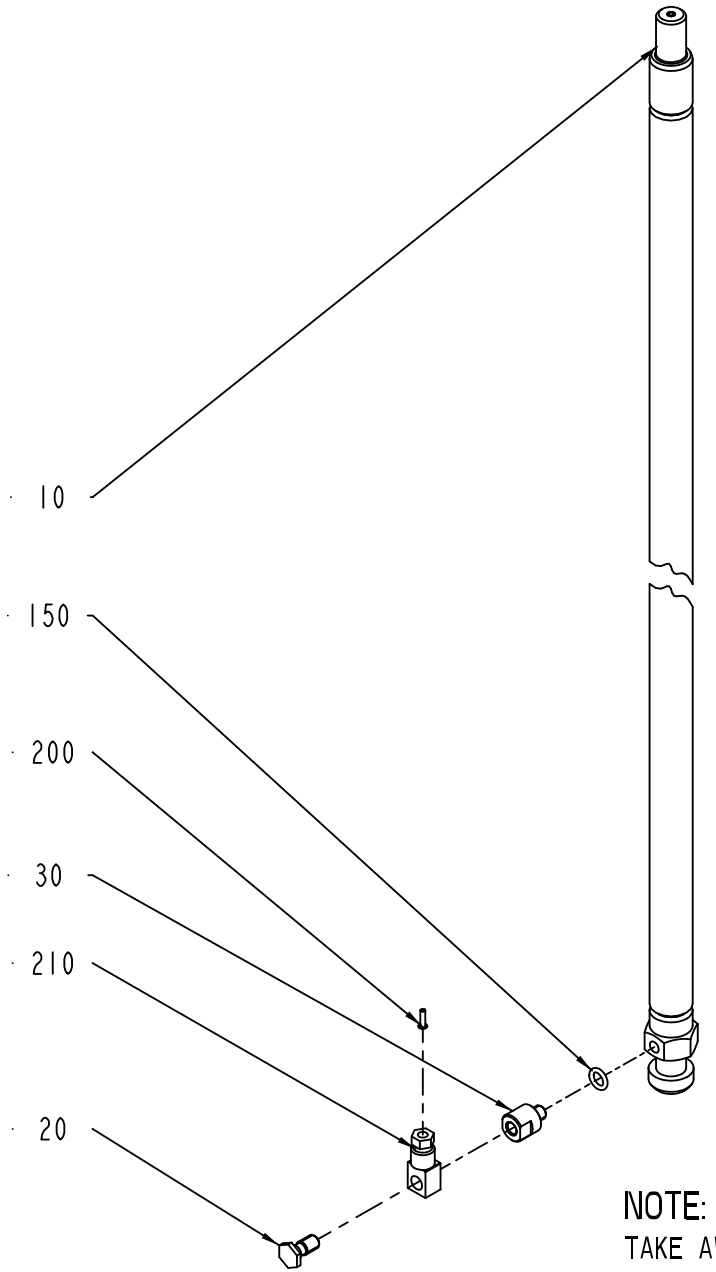

NOTE:
TAKE AWAY STANDARD SCREW
AND MOUNTED SCREW POS.20

2552080-1
ECM 106141

ECM: 189452 - 20041104
Group number: 2552080-0100
Assembly Drawing: 2552080-1_1_AA

Pos	Part No	UN	Qty	Description	Page No
-					
010	1334653-0000		1	LINK	
020	1334659-0000		1	SCREW	
030	2529187-0000		1	SPACER	
150	315202-0505		1	O-RING 6,07X1,78 MM	
200	90134-0031		1	SLEEVE FOR PLASTIC TUBE	
210	90134-0068		1	CONNECTION	

Pos	Part No	UN	Qty	Description	Page No

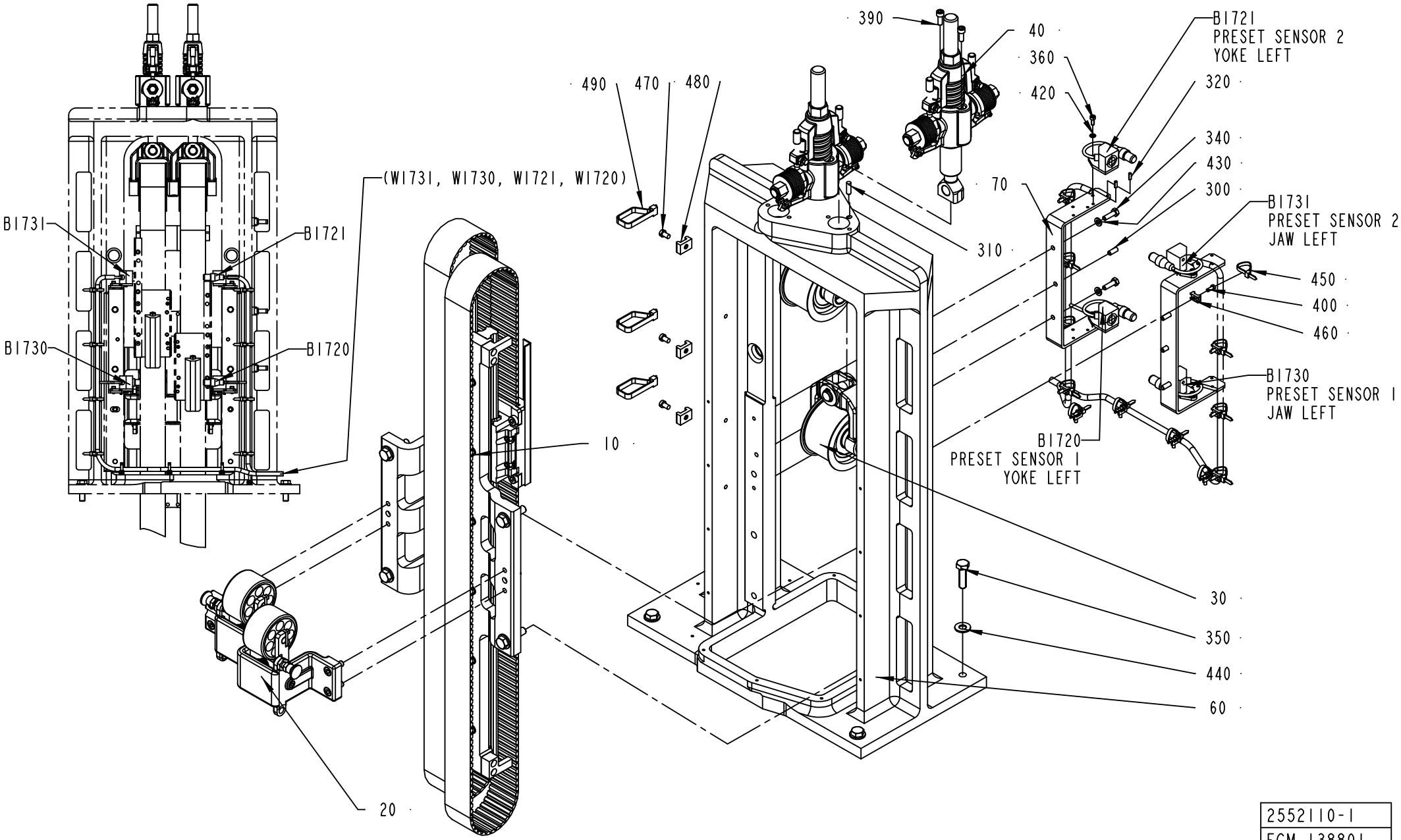

2552110-1
ECM 138801

ECM: 189453 - 20041104
Group number: 2552110-0100
Assembly Drawing: 2552110-1_1_AB

Pos	Part No	UN	Qty	Description	Page No
-					
010	1350217-0100		1	GUIDE	**3-15**
020	1487629-0100		1	DAMPER	**3-19**
030	1511197-0100		2	PULLEY	**3-21**
040	1511198-0100		2	BELT TENSIONER	**3-23**
060	1255222-0000		1	FRAME	
070	1349285-0000		2	SUPPORT	
300	311103-0351		2	PARALLEL PIN ISO 2338 6M6X16 A1	
310	311103-0353		2	PARALLEL PIN ISO 2338 6M6X20 A1	
320	311112-0205		8	SPRING PIN, ISO 8752 3X10-C	
340	312105-0370		4	SCREW M6S ISO 4017 M6X20 A480	
350	312105-0497		4	SCREW M6S ISO 4017 M10X35 A480	
360	312115-0289		4	SCREW ISO4762 M4X10 A4 80	
390	312115-0368		4	SCREW ISO4762 M6X16 A4 80	
400	312125-0289		12	SCREW ISO 1207 M4X10 A4	
420	315105-0136		4	WASHER BRB4,3XRFR	
430	315105-0153		4	WASHER BRB6,4X12RFR	
440	315105-0173		4	WASHER BRB10,5X22RFR	
450	352113-0102		12	CLIP-STRIP, BLACK 188X4,8 MM	
460	352113-0205		12	ANCHOR PLATES FOR STRIPS, TYPE TM2S8-C10	
470	312125-0364		3	SCREW ISO 1207 M6X10 A4	
480	352113-0204		3	ANCHOR PLATES FOR STRIPS, TYPE TM3S25-M	
490	352113-0103		3	CLIP STRIP, 290X7,6 MM	
B1720	90044-0195		1	PROX.SW. IO 9922 IOW2010-ARKG/M/UP/80CM	
B1721	90044-0195		1	PROX.SW. IO 9922 IOW2010-ARKG/M/UP/80CM	
B1730	90044-0195		1	PROX.SW. IO 9922 IOW2010-ARKG/M/UP/80CM	
B1731	90044-0195		1	PROX.SW. IO 9922 IOW2010-ARKG/M/UP/80CM	

Pos	Part No	UN	Qty	Description	Page No

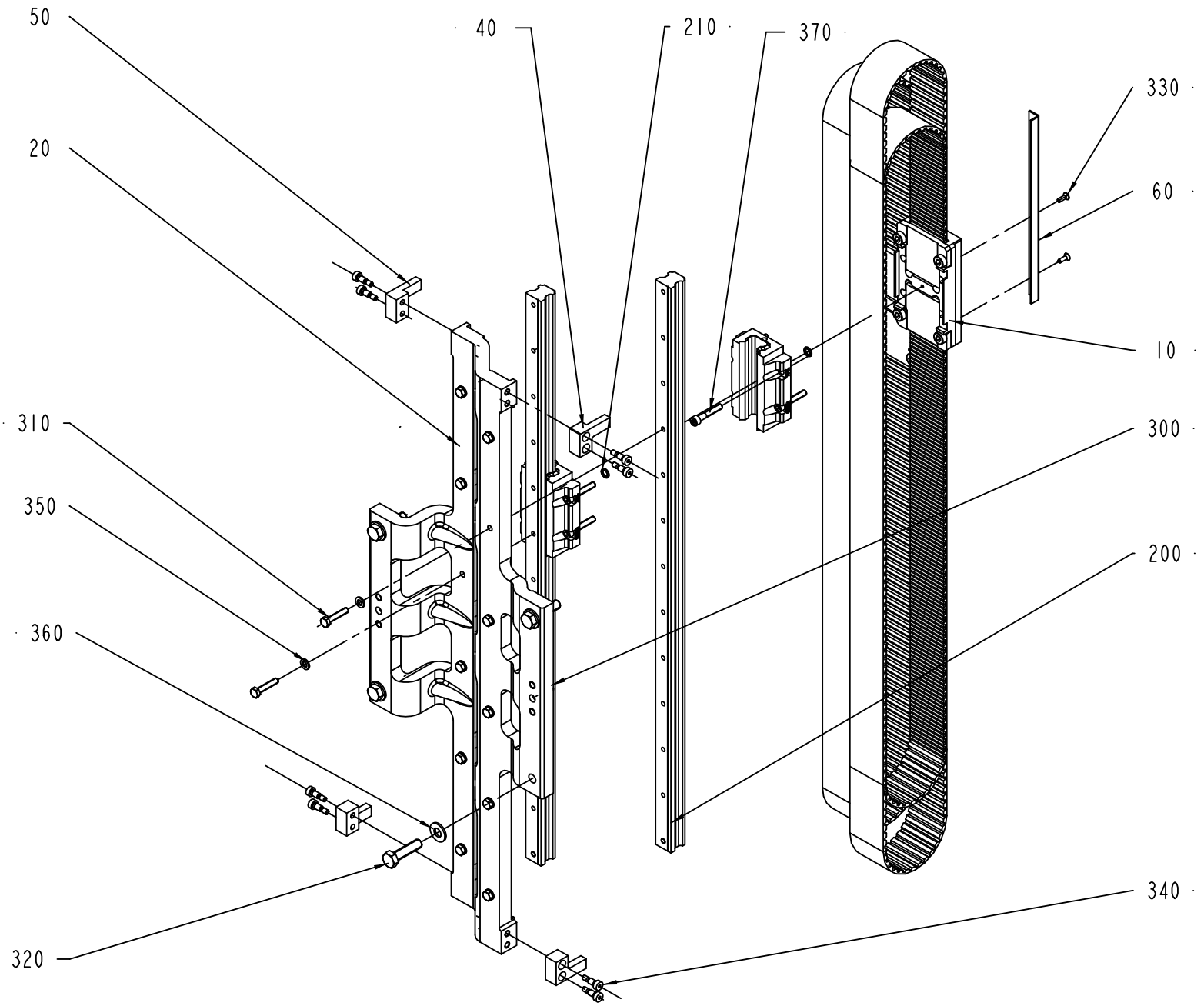

1350217-1
ECM 106141

ECM: 189454 - 20041104
Group number: 1350217-0100
Assembly Drawing: 1350217-1_1_AA

Pos	Part No	UN	Qty	Description	Page No
-					
010	1350210-0100		2	RUNNER	**3-17**
020	1255223-0000		1	HOLDER	
040	1350825-0000		2	LOCK	
050	1350826-0000		2	LOCK	
060	1490935-0000		2	BAR	
200	90458-2307		2	LINEAR UNIT HSR25	
210	90459-1411		2	O-RING 7,8X1,9 MM	
300	311103-0456		2	PARALLEL PIN ISO 2338 10M6X25 A1	
310	312109-0374		12	SCREW M6S ISO 4017 M6X30 A480	
320	312109-0499		4	SCREW M6S ISO 4017 M10X40 A480	
330	312155-0291		4	SCREW DIN 7991 MF6S M4X12 A4 70	
340	312180-0364		8	SCREW ISO7379 H6X10	
350	315105-0153		12	WASHER BRB6,4X12RFR	
360	315105-0173		4	WASHER BRB10,5X22RFR	
370	312115-0376		8	SCREW ISO4762 M6X35 A4 80	

Pos	Part No	UN	Qty	Description	Page No

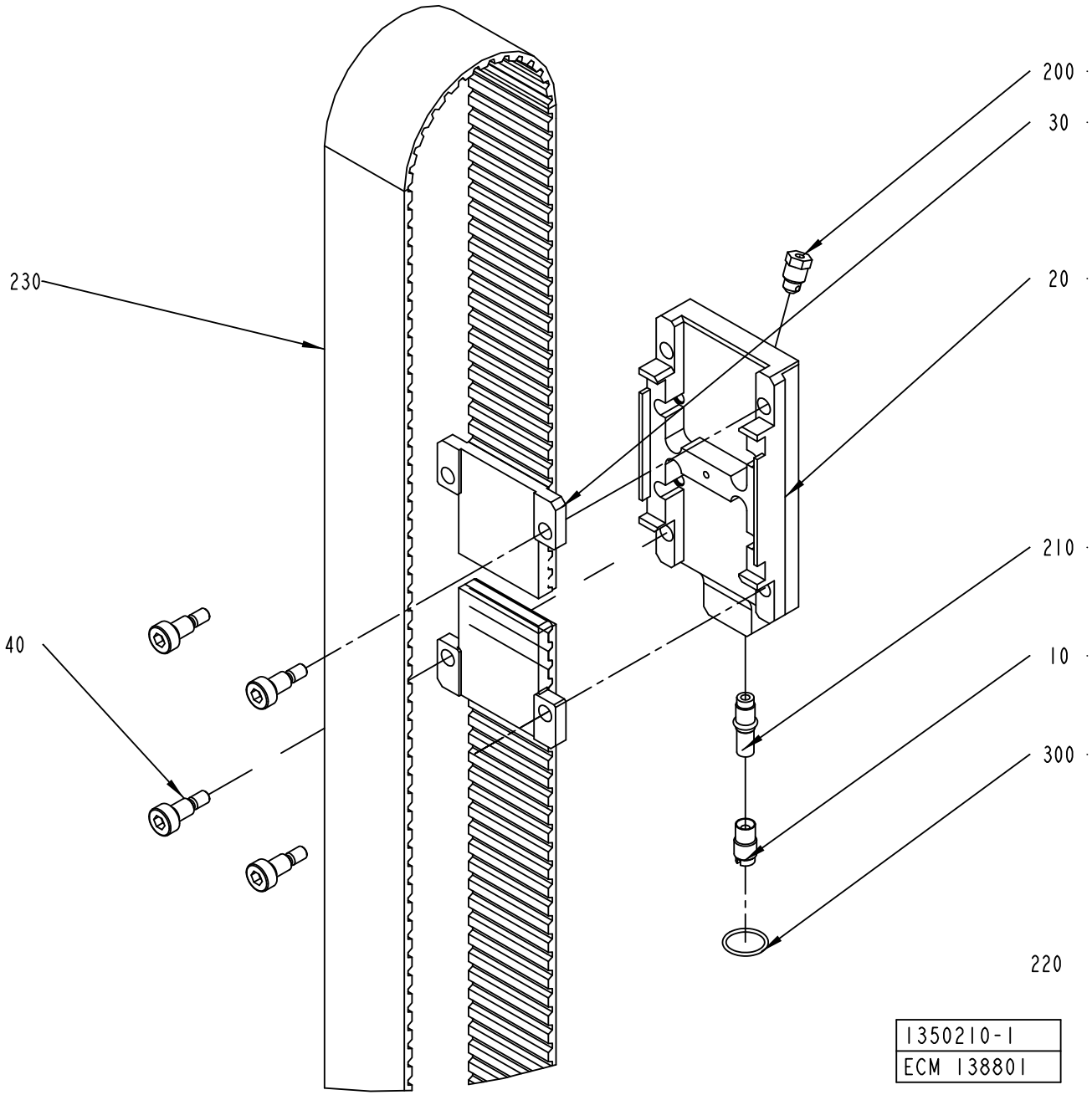
200
30
230
20
210
40
10
300
220
1350210-1
ECM 138801

ECM: 189455 - 20041104
Group number: 1350210-0100
Assembly Drawing: 1350210-1_1_AB

Pos	Part No	UN	Qty	Description	Page No
-					
010	1334939-0000		1	PLUG	
020	1346845-0000		1	PLATE	
030	1346846-0000		2	BELT HOLDER	
040	2640819-0000		4	SCREW	
200	90087-0019		1	PLUG M10X1 STAINLESS	
210	90092-0053		1	METERING VALVE 30 MM3	
220	90296-0068	G	5	SHELL ALVANIA GREASE EP 2	
230	90458-2306		1	TIMING BELT ATL10 2020X50 MM	
300	315202-0115		1	O-RING 17,1X1,6 MM	

Pos	Part No	UN	Qty	Description	Page No

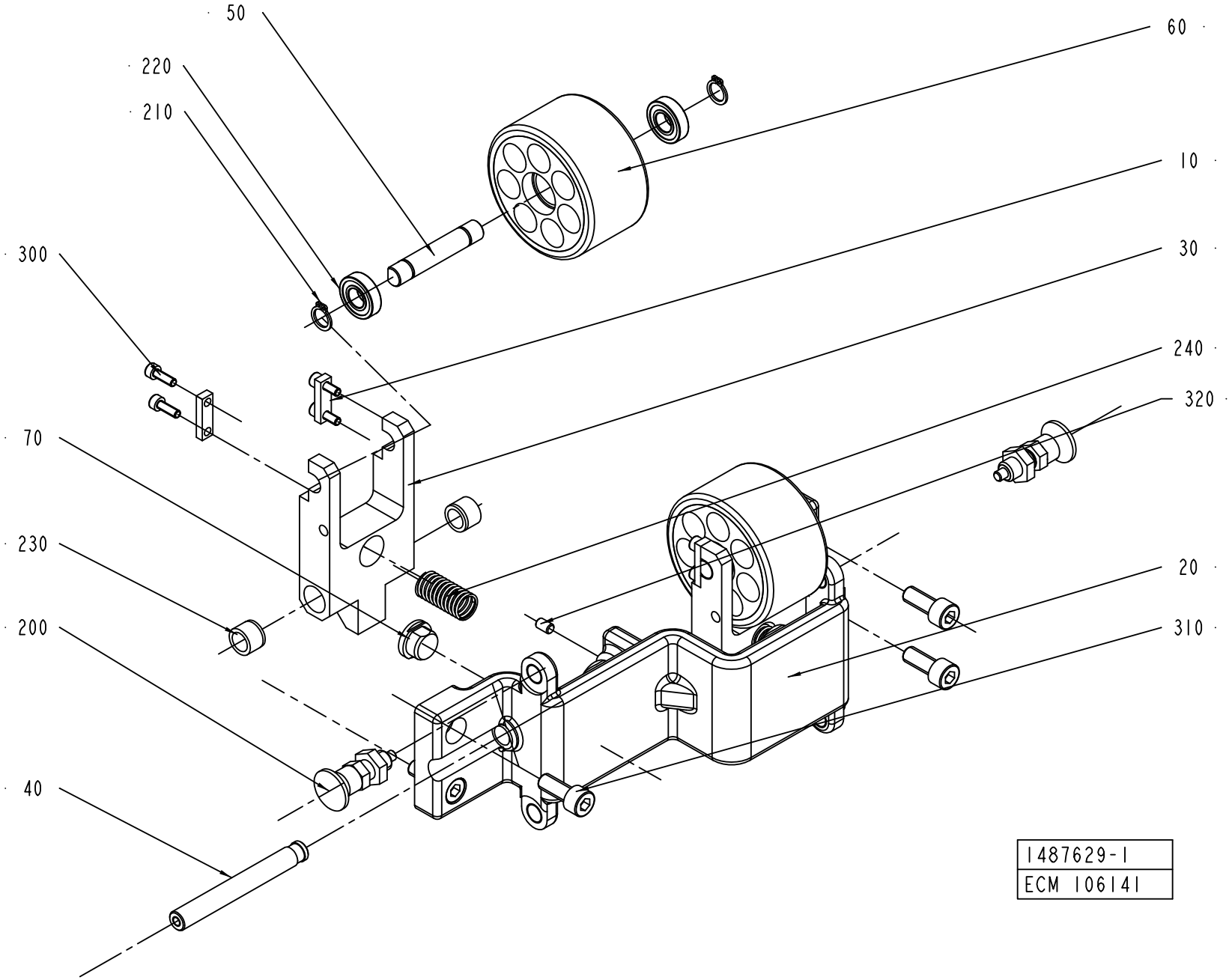
50
220
210
300
70
230
200
40
60
10
30
240
320
20
310
1487629-1
ECM 106141

ECM: 184628 - 20040916
Group number: 1487629-0100
Assembly Drawing: 1487629-1_1_AA

Pos	Part No	UN	Qty	Description	Page No
-					
010	1349266-0000		4	PLATE	
020	1487631-0000		1	BRACKET	
030	1487632-0000		2	FORK	
040	1487633-0000		2	AXLE PIN	
050	1487634-0000		2	AXLE PIN	
060	1487635-0000		2	WHEEL	
070	1487636-0000		2	STOPPER	
200	90051-0112		2	LOCK KNOB, NO. GN 617 NIK5	
210	90141-0016		4	RETAINING RING FOR SHAFT DIN 471 10 A2	
220	90214-0036		4	BALL BEARING, 10X22X6 MM	
230	90240-0119		4	BEAR. BUSHING WITHOUT FL	
240	90458-2305		2	COMP. SPRING D22280	
300	312115-0291		8	SCREW ISO4762 M4X12 A4 80	
310	312115-0451		4	SCREW ISO4762 M8X20 A4 80	
320	312318-0323		2	SCREW ISO4029 M5X8 A4	

Pos	Part No	UN	Qty	Description	Page No

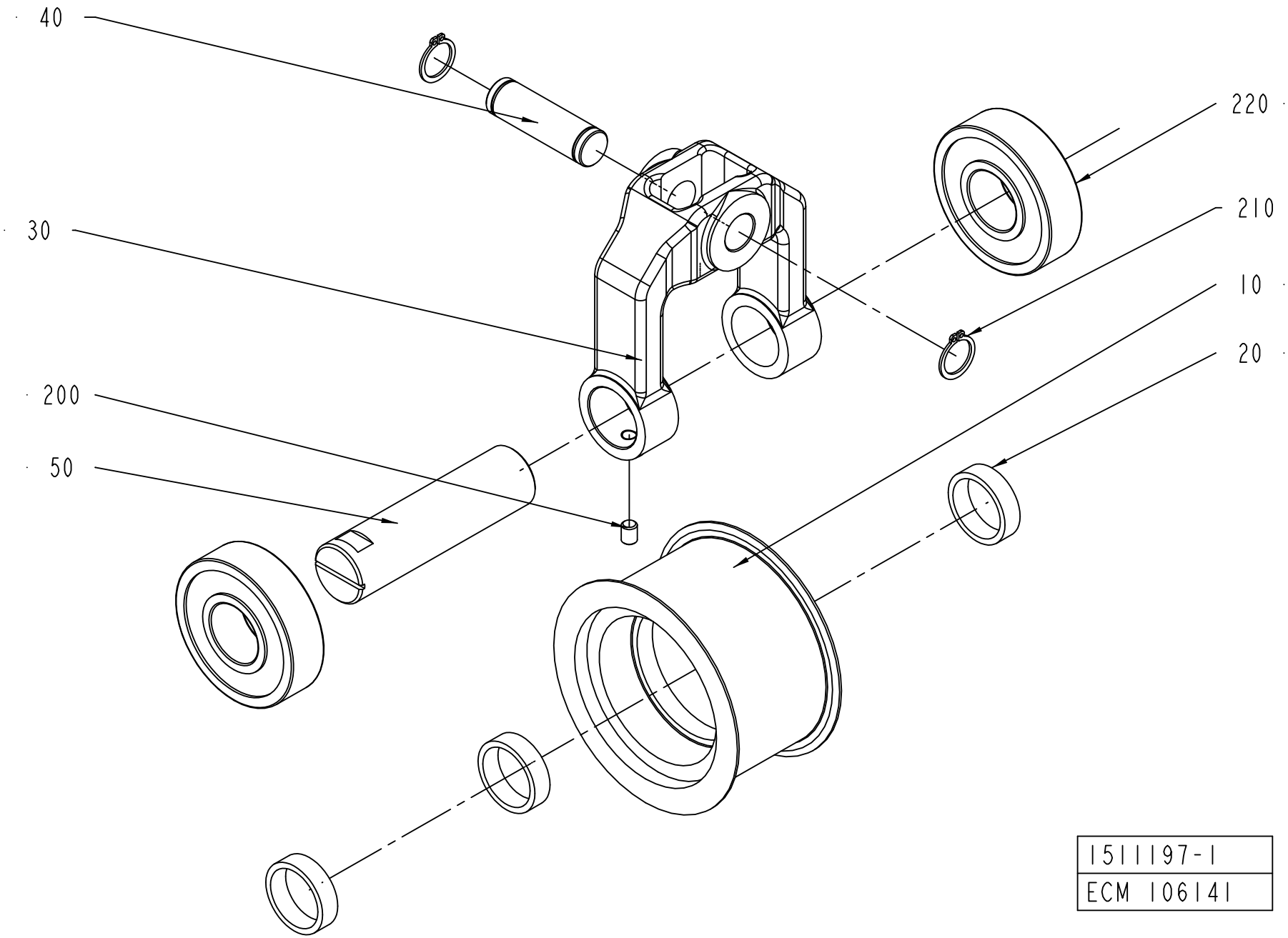
40
30
200
50
220
210
10
20
1511197-1
ECM 106141

ECM: 189456 - 20041104
Group number: 1511197-0100
Assembly Drawing: 1511197-1_1_AA

Pos	Part No	UN	Qty	Description	Page No
-					
010	1255228-0000		1	WHEEL	
020	1346890-0000		3	SPACER	
030	1511193-0000		1	SUPPORT PULLEY	
040	1511194-0000		1	AXLE PIN	
050	1511195-0000		1	SHAFT	
200	312318-0366		1	SCREW ISO4029 M6X12 A4	
210	315751-0112		2	RETAINING RING FOR SHAFT DIN 471 15 A2	
220	321316-0205		2	BALL BEARING, 25X62X17 MM	

Pos	Part No	UN	Qty	Description	Page No

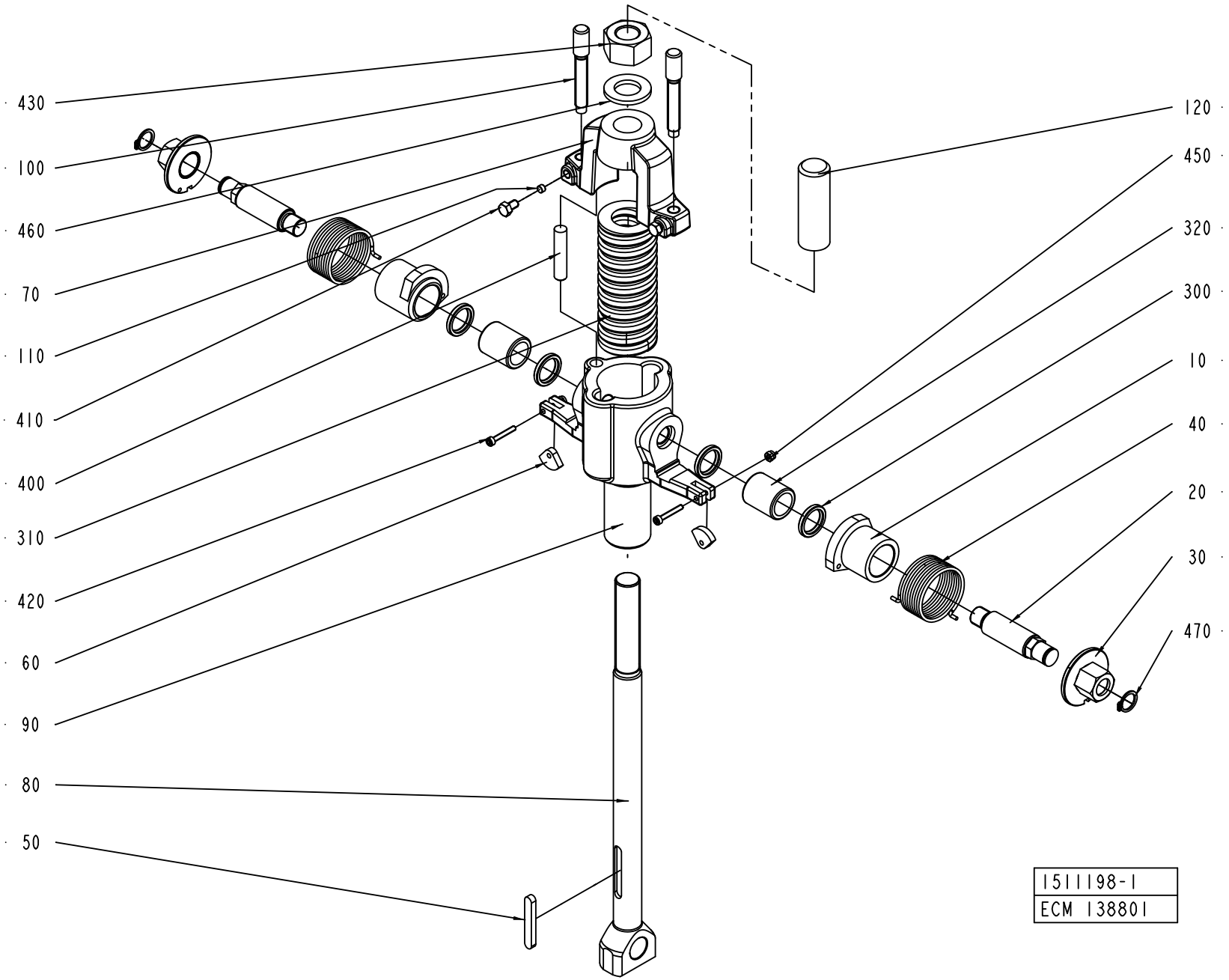
430
100
460
70
110
410
400
310
420
60
90
80
50
120
450
320
300
10
40
20
30
470
1511198-1
ECM 138801

ECM: 189457 - 20041104
Group number: 1511198-0100
Assembly Drawing: 1511198-1_1_AB

Pos	Part No	UN	Qty	Description	Page No
-					
010	1334928-0000		2	3AM	
020	1334929-0000		2	SHAFT	
030	1334932-0000		2	DISC	
040	1334941-0000		2	TORSION SPRING	
050	1334942-0000		1	WEDGE	
060	1334943-0000		2	STOP LUG	
070	1511192-0000		1	ROCKER	
080	1511196-0000		1	SHAFT	
090	1511209-0000		1	BUSHING	
100	1517350-0000		2	BULB	
110	1548454-0000		2	DISC	
120	2525570-0000		1	COVER	
300	90458-2300		4	V-RING 16X22X3 MM	
310	90458-2301		1	SPRING, YELLOW SPRING G40X115	
320	90458-2302		2	FREE-WHEEL COUPLING, 16X16 MM	
400	311103-0409		1	PARALLEL PIN ISO 2338 8M6X40 A1	
410	312105-0323		2	SCREW M6S ISO 4017 M5X8 A480	
420	312115-0230		2	SCREW ISO4762 M3X20 A4 80	
430	2640826-0000		1	NUT	
450	312810-0310		2	HEXAGON NUT, NY-LOCK M3 FZB	
460	315105-0186		1	WASHER BRB17X30RFR	
470	315751-0109		2	RETAINING RING FOR SHAFT DIN 471 12 A2	

Pos	Part No	UN	Qty	Description	Page No

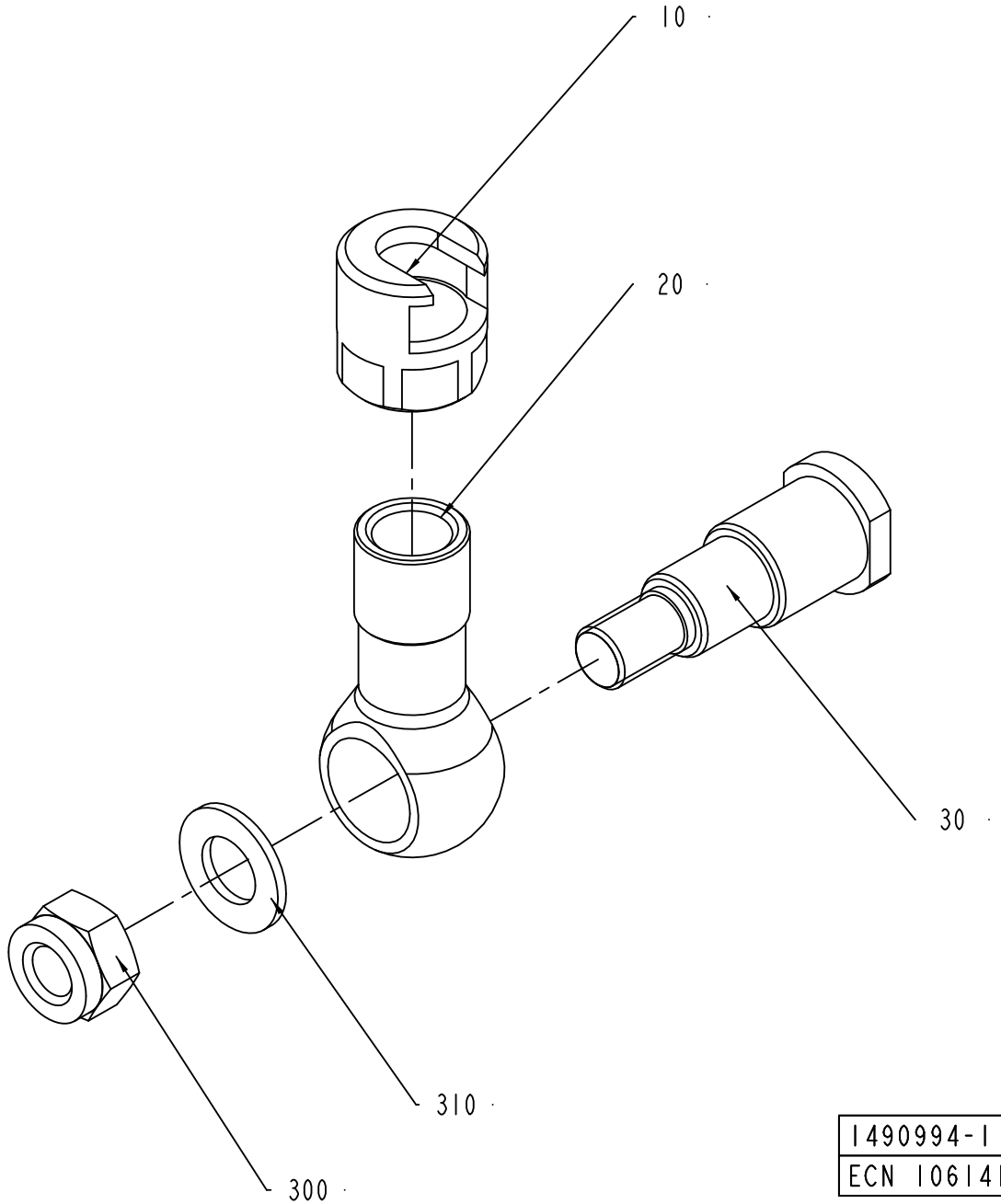
10
20
30
310
300
1490994-1
ECN 106141

ECM: 189458 - 20041104
Group number: 1490994-0100
Assembly Drawing: 1490994-1_1_AA

Pos	Part No	UN	Qty	Description	Page No
-					
010	1334654-0000		1	CONNECTION CLAMP	
020	1334655-0000		1	LINK ROD	
030	1350824-0000		1	AXLE PIN	
040	312812-0322		1	HEXAGON NUT, NY-LOCK M12 A480	
050	315105-0178		1	WASHER BRB13X24RFR	

Pos	Part No	UN	Qty	Description	Page No

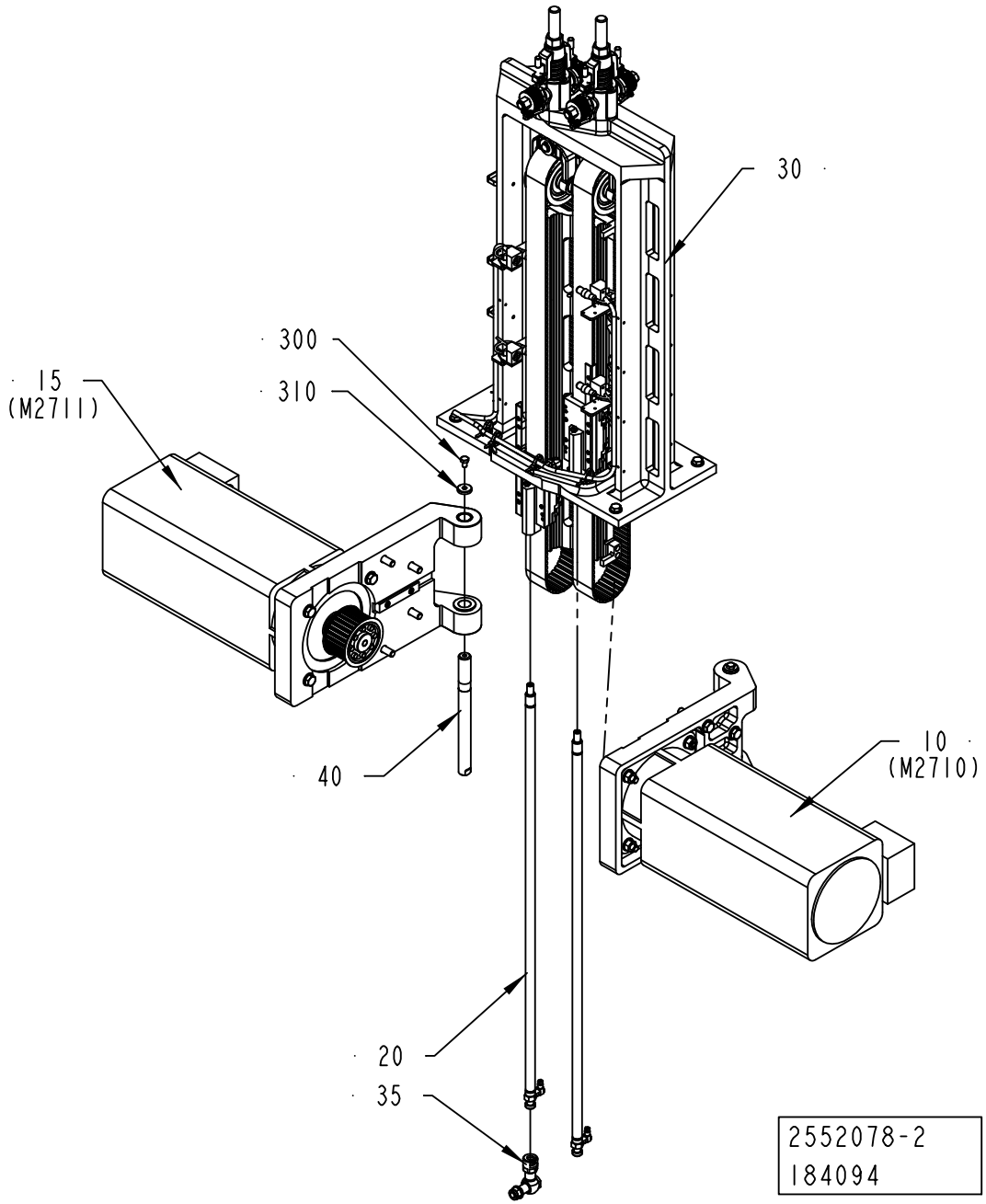
30
300
310
15
(M2711)
40
10
(M2710)
20
35
2552078-2
184094

ECM: 195465 - 20050620
Group number: 2552078-0200
Assembly Drawing: 2552078-2_1_AA

Pos	Part No	UN	Qty	Description	Page No
-					
010	2552079-0100		1	MOTOR UNIT	**3-7**
015	2688063-0100		1	MOTOR UNIT	**3-9**
020	2552080-0100		2	LINK	**3-11**
030	2552111-0100		1	SUPPORT	**3-29**
035	1490994-0100		1	LINK	**3-25**
040	2533638-0000		2	AXLE PIN	
300	312105-0447		2	SCREW M6S ISO 4017 M8X12 A480	
310	315125-0165		2	WASHER TBRSB 8,4X26X5 A4	

Pos	Part No	UN	Qty	Description	Page No

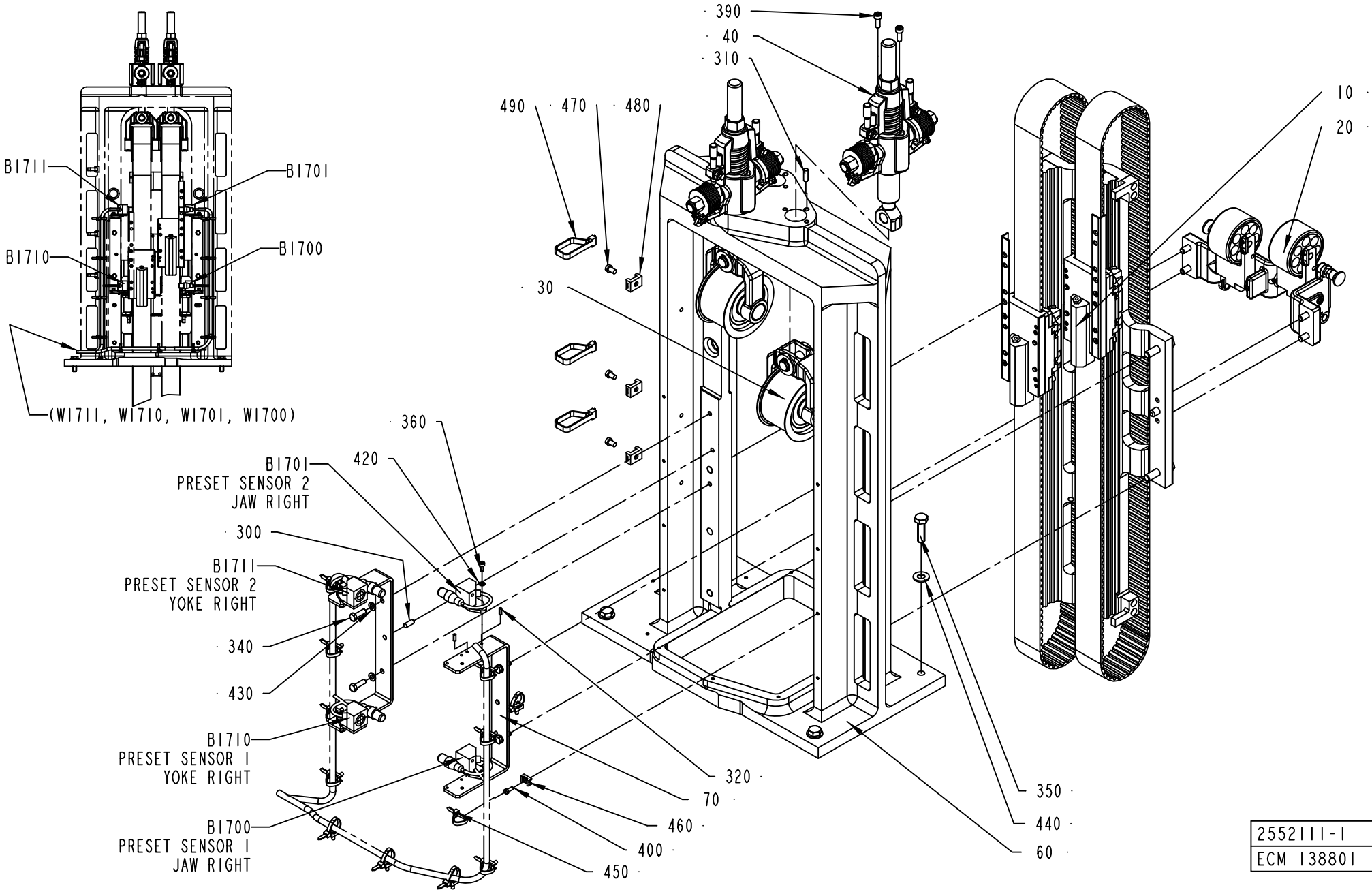

2552111-1
ECM 138801

ECM: 200407 - 20050121
Group number: 2552111-0100
Assembly Drawing: 2552111-1_1_AB

Pos	Part No	UN	Qty	Description	Page No
-					
010	1350218-0100		1	GUIDE	**3-31**
020	1487630-0100		1	DAMPER	**3-33**
030	1511197-0100		2	PULLEY	**3-21**
040	1511198-0100		2	BELT TENSIONER	**3-23**
060	1255222-0000		1	FRAME	
070	1349285-0000		2	SUPPORT	
300	311103-0351		2	PARALLEL PIN ISO 2338 6M6X16 A1	
310	311103-0353		2	PARALLEL PIN ISO 2338 6M6X20 A1	
320	311112-0205		8	SPRING PIN, ISO 8752 3X10-C	
340	312105-0370		4	SCREW M6S ISO 4017 M6X20 A480	
350	312105-0497		4	SCREW M6S ISO 4017 M10X35 A480	
360	312115-0289		4	SCREW ISO4762 M4X10 A4 80	
390	312115-0368		4	SCREW ISO4762 M6X16 A4 80	
400	312125-0289		12	SCREW ISO 1207 M4X10 A4	
420	315105-0136		4	WASHER BRB4,3XRFR	
430	315105-0153		4	WASHER BRB6,4X12RFR	
440	315105-0173		4	WASHER BRB10,5X22RFR	
450	352113-0102		12	CLIP-STRIP, BLACK 188X4,8 MM	
460	352113-0205		12	ANCHOR PLATES FOR STRIPS, TYPE TM2S8-C10	
470	312125-0364		3	SCREW ISO 1207 M6X10 A4	
480	352113-0204		3	ANCHOR PLATES FOR STRIPS, TYPE TM3S25-M	
490	352113-0103		3	CLIP STRIP, 290X7,6 MM	
B1700	90044-0195		1	PROX.SW. IO 9922 IOW2010-ARKG/M/UP/80CM	
B1701	90044-0195		1	PROX.SW. IO 9922 IOW2010-ARKG/M/UP/80CM	
B1710	90044-0195		1	PROX.SW. IO 9922 IOW2010-ARKG/M/UP/80CM	
B1711	90044-0195		1	PROX.SW. IO 9922 IOW2010-ARKG/M/UP/80CM	

Pos	Part No	UN	Qty	Description	Page No

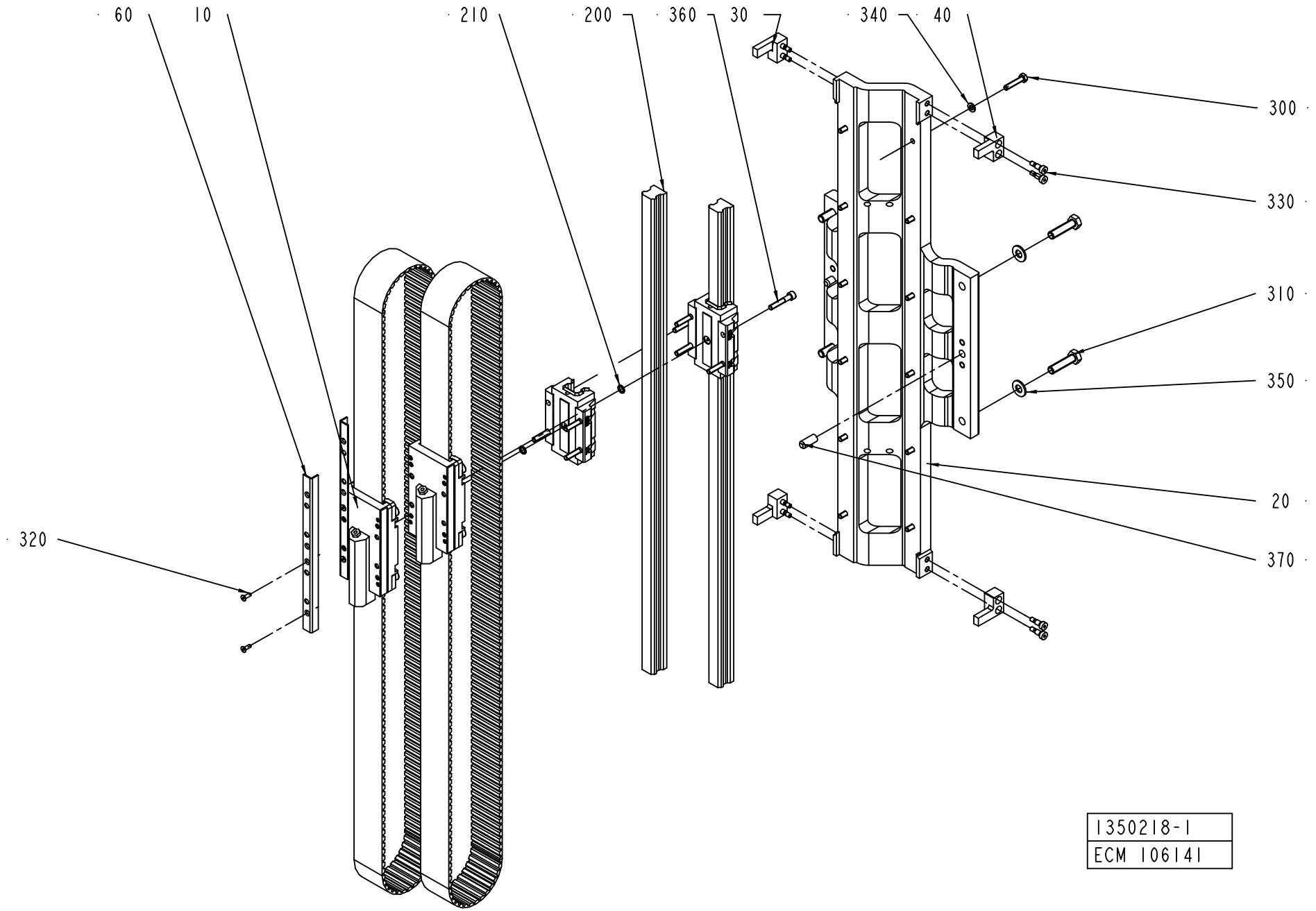
60
10
210
200
360
30
340
40
300
330
310
350
20
370
320
1350218-1
ECM 106141

ECM: 189460 - 20041104
Group number: 1350218-0100
Assembly Drawing: 1350218-1_1_AA

Pos	Part No	UN	Qty	Description	Page No
-					
010	1350210-0100		2	RUNNER	**3-17**
020	1255223-0000		1	HOLDER	
030	1350825-0000		2	LOCK	
040	1350826-0000		2	LOCK	
060	1490935-0000		2	BAR	
200	90458-2307		2	LINEAR UNIT HSR25	
210	90459-1411		2	O-RING 7,8X1,9 MM	
300	312109-0374		12	SCREW M6S ISO 4017 M6X30 A480	
310	312109-0499		4	SCREW M6S ISO 4017 M10X40 A480	
320	312155-0291		4	SCREW DIN 7991 MF6S M4X12 A4 70	
330	312180-0364		8	SCREW ISO7379 H6X10	
340	315105-0153		12	WASHER BRB6,4X12RFR	
350	315105-0173		4	WASHER BRB10,5X22RFR	
360	312115-0376		8	SCREW ISO4762 M6X35 A4 80	
370	311103-0456		2	PARALLEL PIN ISO 2338 10M6X25 A1	

Pos	Part No	UN	Qty	Description	Page No

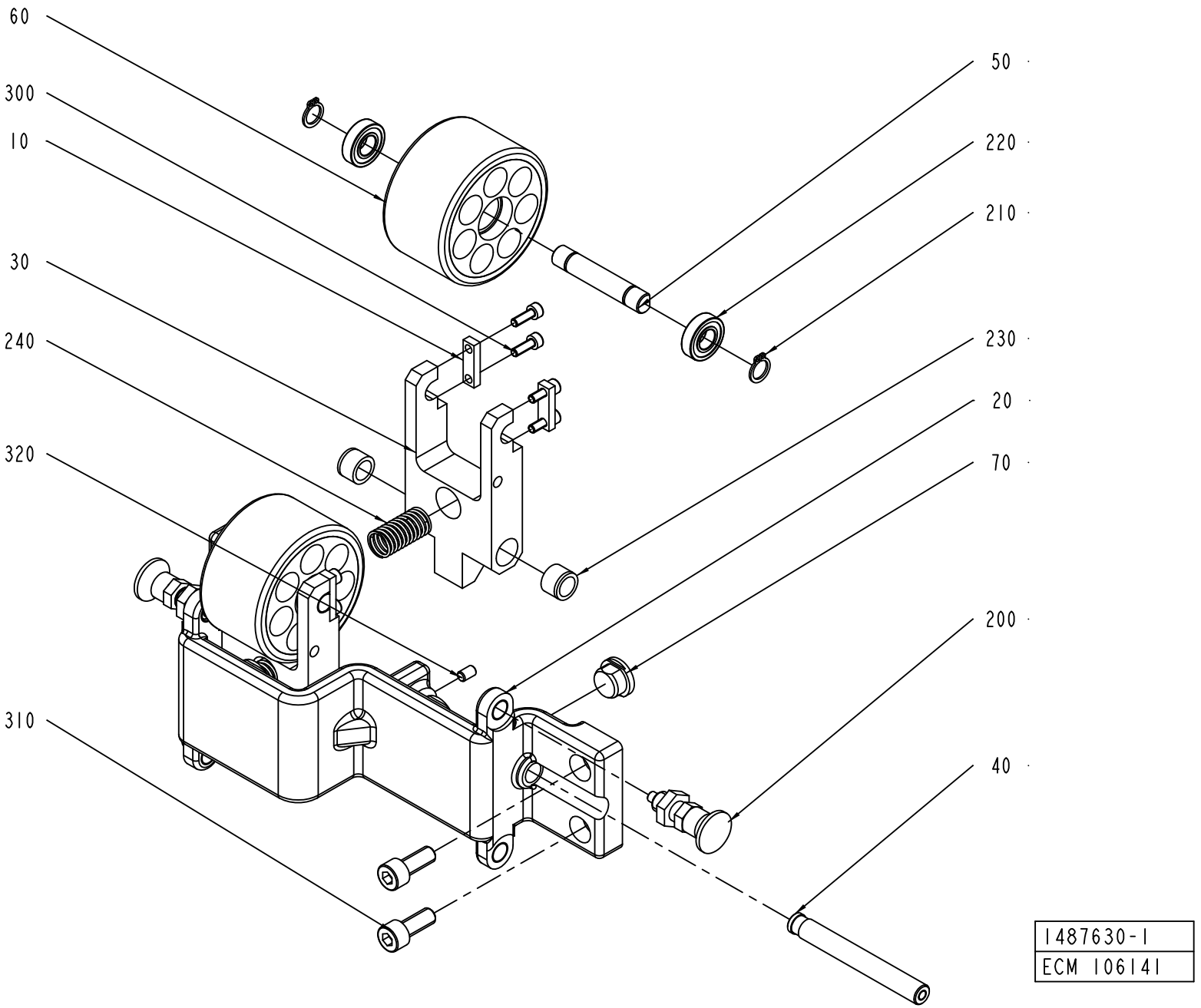
60
300
10
30
240
320
310
50
220
210
230
20
70
200
40
1487630-1
ECM 106141

ECM: 184629 - 20040916
Group number: 1487630-0100
Assembly Drawing: 1487630-1_1_AA

Pos	Part No	UN	Qty	Description	Page No
-					
010	1349266-0000		4	PLATE	
020	1487631-0000		1	BRACKET	
030	1487632-0000		2	FORK	
040	1487633-0000		2	AXLE PIN	
050	1487634-0000		2	AXLE PIN	
060	1487635-0000		2	WHEEL	
070	1487636-0000		2	STOPPER	
200	90051-0112		2	LOCK KNOB, NO. GN 617 NIK5	
210	90141-0016		4	RETAINING RING FOR SHAFT DIN 471 10 A2	
220	90214-0036		4	BALL BEARING, 10X22X6 MM	
230	90240-0119		4	BEAR. BUSHING WITHOUT FL	
240	90458-2305		2	COMP. SPRING D22280	
300	312115-0291		8	SCREW ISO4762 M4X12 A4 80	
310	312115-0451		4	SCREW ISO4762 M8X20 A4 80	
320	312318-0323		2	SCREW ISO4029 M5X8 A4	

Pos	Part No	UN	Qty	Description	Page No

Tetra Pak

SPC
Spare Parts Catalogue

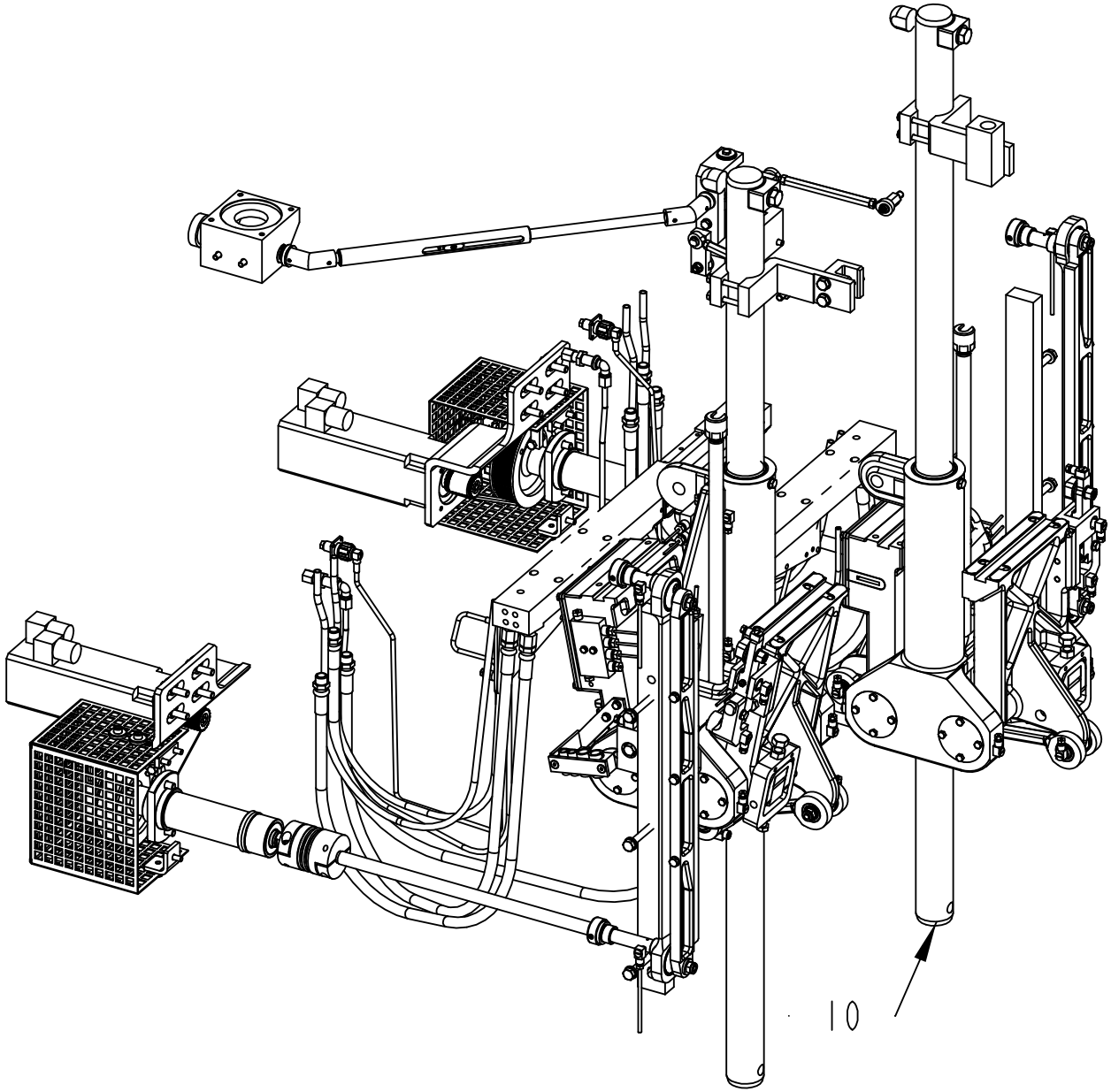

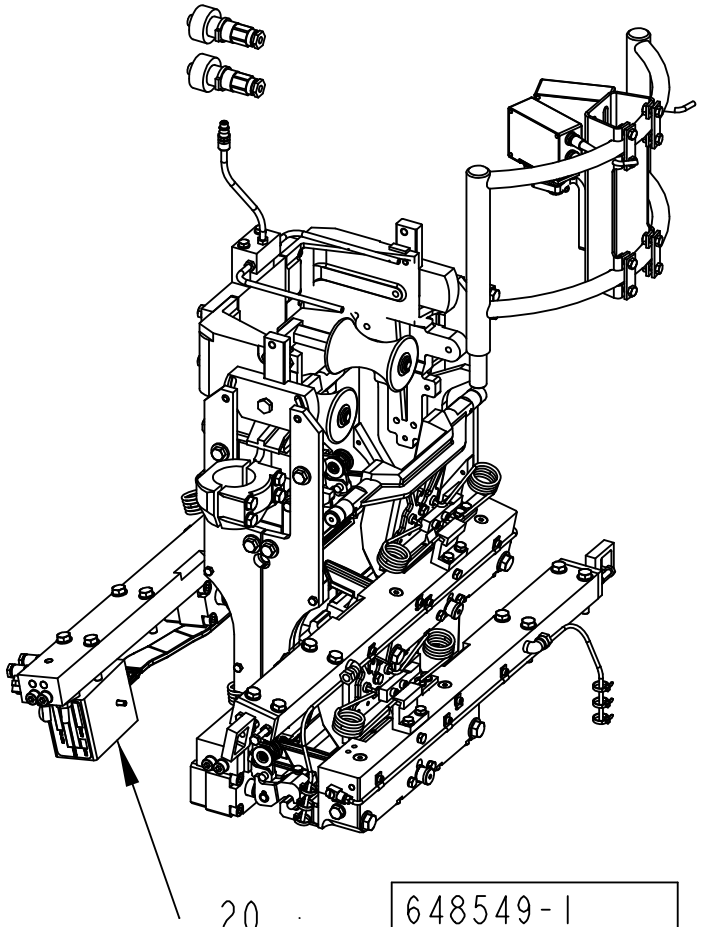

648549-1
ECM 120277

ECM: 196628 - 20050101
Group number: 648549-0300
Assembly Drawing: 648549-1_1_AA

Pos	Part No	UN	Qty	Description	Page No
A3/FLEX					
020	2552003-0100		1	FORMING UNIT	**4-5**
Common Parts					
010	2552002-0200		1	BASE UNIT	**4-195**

Pos	Part No	UN	Qty	Description	Page No

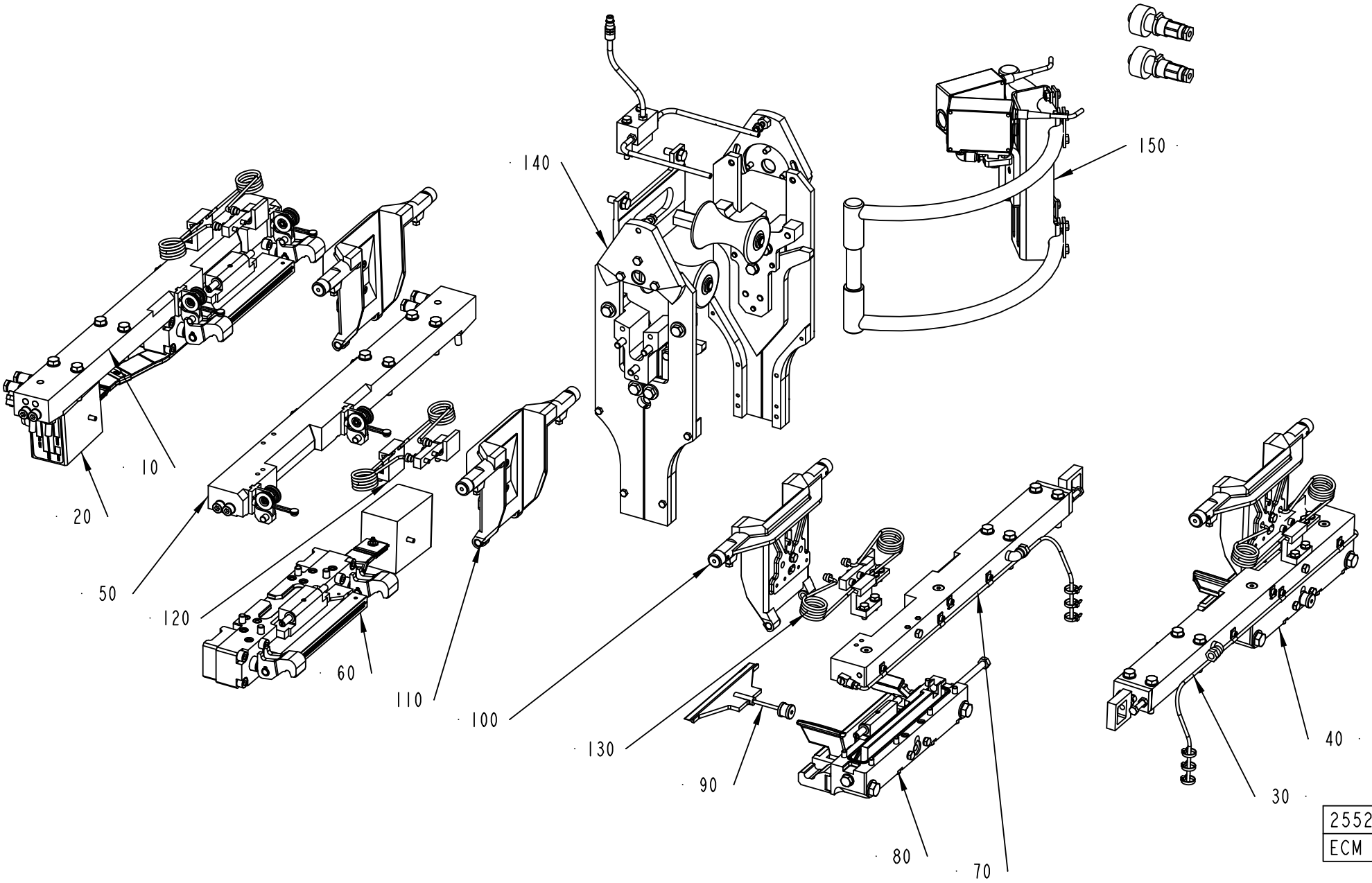
10
20
50
120
60
110
140
150
100
130
90
80
70
40
30
2552003-1
ECM 128689

ECM: 263265 - 20060702
Group number: 2552003-0100
Assembly Drawing: 2552003-1_1_AB

Pos	Part No	UN	Qty	Description	Page No
A3/FLEX NOQC					
100	1334633-0200		2	VOLUME FLAP CUTTING	**4-7, 4-9, 4-11, 4-13, 4-15**
110	1334634-0200		2	VOLUME FLAP PRESSURE ...	**4-17, 4-19, 4-21, 4-23, 4-25**
120	1334635-0200		2	SHOCK ABSORBER	**4-27, 4-29, 4-31, 4-33, 4-35, 4-37**
130	1334636-0200		2	SHOCK ABSORBER	**4-39, 4-41, 4-43, 4-45, 4-47, 4-49**
A3/FLEX TBA 0500B QC, A3/FLEX TBA 1000B QC, A3/FLEX TBA 0200B QC, A3/FLEX TBA 0250B QC, A3/FLEX TBA 0330S QC, A3/FLEX TBA 0250S QC, A3/FLEX TBA 0200M QC, A3/FLEX TPA 0750SQ QC, A3/FLEX TPA 1000SQ QC, A3/FLEX TPA 0200SQ QC, A3/FLEX TPA 0250SQ QC, A3/FLEX TBA 0250SQ QC, A3/FLEX TBA 0200SQ QC					
100	2594512-0100		2	VOLUME FLAP CUTTING	**4-51, 4-53, 4-55, 4-57**
110	1548460-0100		2	VOLUME FLAP PRESSURE	**4-61, 4-63, 4-65, 4-67**
A3/FLEX TBA 1890S QC, A3/FLEX TBA 2000S QC					
100	2597325-0100		2	VOLUME FLAP	**4-71**
110	2597324-0100		2	VOLUME FLAP	**4-77**
120	1334635-0200		2	SHOCK ABSORBER	**4-27, 4-29, 4-31, 4-33, 4-35, 4-37**
130	1334636-0200		2	SHOCK ABSORBER	**4-39, 4-41, 4-43, 4-45, 4-47, 4-49**
Common Parts					
010	2514048-0200		1	CARRIER PRESSURE LEFT	**4-81, 4-83, 4-85**
020	1512563-0200		1	PRESSURE JAW LEFT	**4-87, 4-89**
030	1512564-0200		1	CARRIER CUTTING LEFT	**4-105, 4-107, 4-109, 4-111**
040	1512565-0300		1	CUTTING JAW LEFT	**4-113**
050	2514050-0200		1	CARRIER PRESSURE RIGHT	**4-129, 4-131, 4-133**
060	1512568-0200		1	PRESSURE JAW RIGHT	**4-135, 4-137**
070	1512569-0200		1	CARRIER CUTTING RIGHT	**4-149, 4-151, 4-153, 4-155**
080	1512570-0300		1	CUTTING JAW RIGHT	**4-157**
090	1478768-0200		2	KNIFE	**4-163**
140	2613647-0100		1	VOLUME CURVE PIECE	**4-165**
150	2616224-0200		1	PHOTOCELL UNIT	**4-187, 4-189, 4-191, 4-193**

Pos	Part No	UN	Qty	Description	Page No

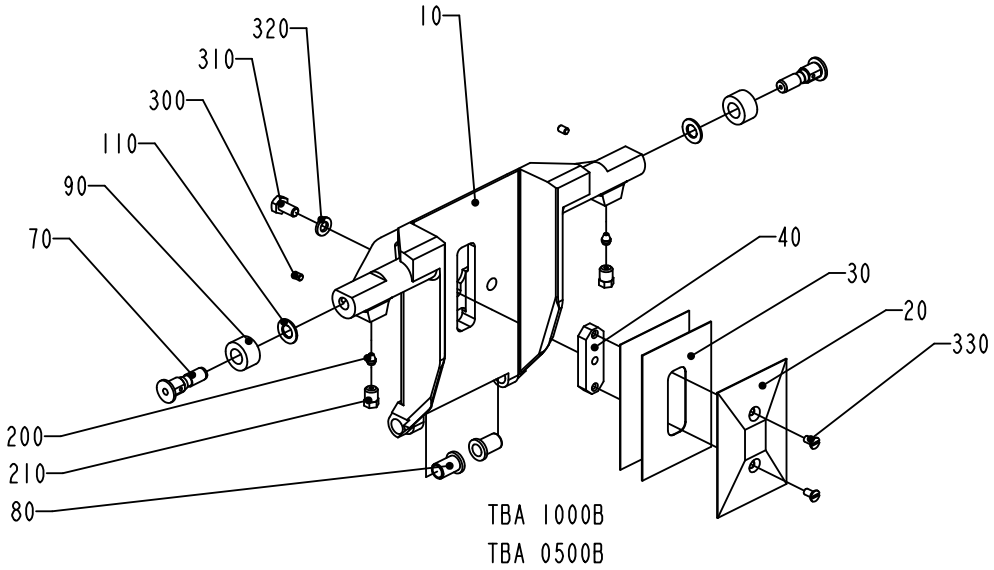

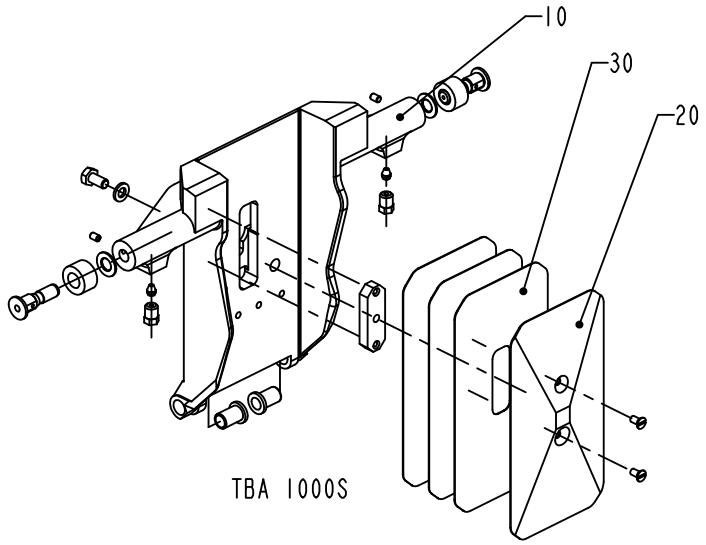

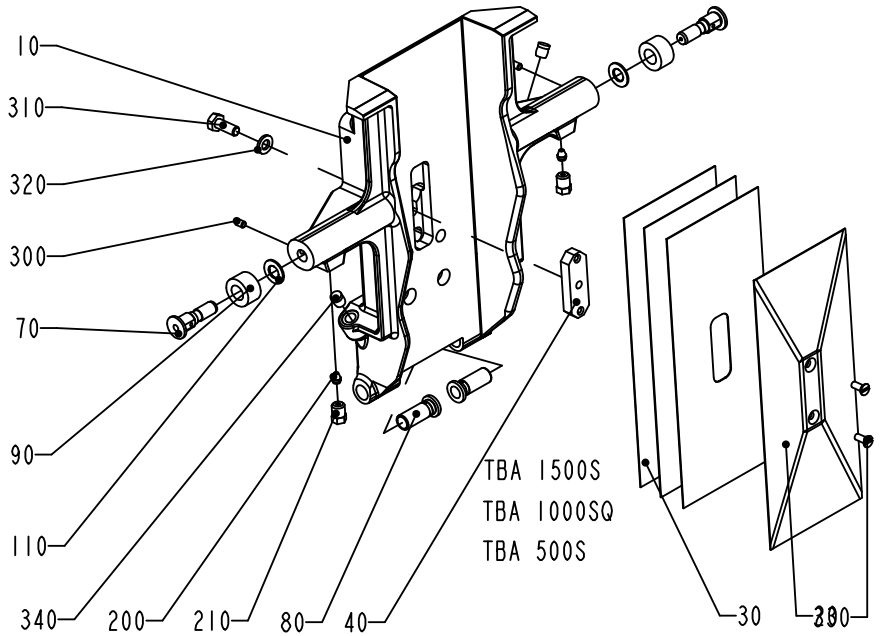

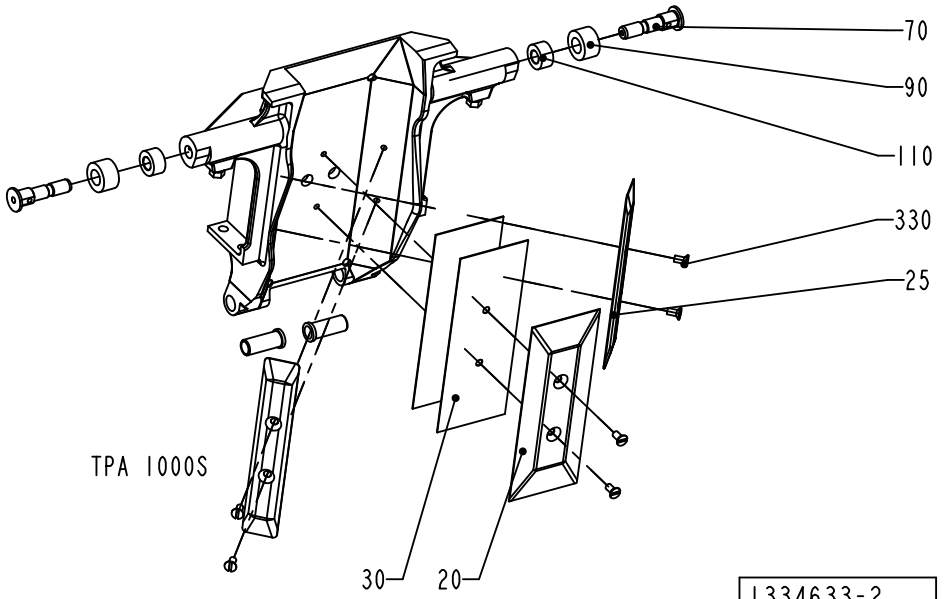

1334633-2
ECN 80471

ECM: 249473 - 20060208
Group number: 1334633-0200
Assembly Drawing: 1334633-2_1_AD

This list covers pages from 4-6 to 4-15

Pos	Part No	UN	Qty	Description	Page No
TBA 0200B (See drawing on page: 4-8)					
010	1499901-0000		1	VOLUME FLAP	
020	1038638-0000		1	VOLUME BULGE	
030	1038639-0000		2	VOLUME SHIM	
040	1038637-0000		1	WEDGE	
070	434320-0000		2	AXLE PIN	
080	1255541-0000		2	BUSHING	
090	436556-0000		2	CURVE ROLLER	
110	19972-0000		2	WASHER	
310	312105-0327		1	SCREW M6S ISO 4017 M5X12 A480	
320	315105-0146		1	WASHER BRB5,3X10RFR	
330	312145-0287		2	SCREW ISO 2009 MFS M4X8 A4	
TBA 0200S (See drawing on page: 4-8)					
010	1484866-0000		1	VOLUME FLAP	
020	1037733-0000		1	VOLUME BULGE	
030	1037735-0000		2	VOLUME SHIM	
040	1037734-0000		1	WEDGE	
070	434320-0000		2	AXLE PIN	
080	1255541-0000		2	BUSHING	
090	436556-0000		2	CURVE ROLLER	
110	19972-0000		2	WASHER	
310	312105-0327		1	SCREW M6S ISO 4017 M5X12 A480	
320	315105-0146		1	WASHER BRB5,3X10RFR	
330	312145-0287		2	SCREW ISO 2009 MFS M4X8 A4	
TBA 0250B (See drawing on page: 4-8)					
010	1484867-0000		1	VOLUME FLAP	
020	1346157-0000		1	VOLUME BULGE	
030	1346158-0000		2	VOLUME SHIM	
040	1037734-0000		1	WEDGE	
070	434320-0000		2	AXLE PIN	
080	1255541-0000		2	BUSHING	
090	436556-0000		2	CURVE ROLLER	
110	19972-0000		2	WASHER	
310	312105-0327		1	SCREW M6S ISO 4017 M5X12 A480	
320	315105-0146		1	WASHER BRB5,3X10RFR	
330	312145-0287		2	SCREW ISO 2009 MFS M4X8 A4	
TBA 0250S (See drawing on page: 4-8)					
010	2524388-0000		1	VOLUME FLAP	
020	2520473-0000		1	VOLUME BULGE	
030	2520474-0000		3	VOLUME SHIM	
040	1037734-0000		1	WEDGE	
070	434320-0000		2	AXLE PIN	
080	1255541-0000		2	BUSHING	
090	436556-0000		2	CURVE ROLLER	
110	19972-0000		2	WASHER	
310	312105-0328		1	SCREW M6S ISO 4017 M5X14 A480	
320	315105-0146		1	WASHER BRB5,3X10RFR	
330	312145-0287		2	SCREW ISO 2009 MFS M4X8 A4	
TBA 0330S (See drawing on page: 4-8)					
010	2544990-0000		1	VOLUME FLAP	
020	2544992-0000		1	VOLUME BULGE	
030	2544993-0000		3	VOLUME SHIM	
040	1037734-0000		1	WEDGE	
070	434320-0000		2	AXLE PIN	
080	1255541-0000		2	BUSHING	
090	436556-0000		2	CURVE ROLLER	
110	19972-0000		2	WASHER	
310	312105-0328		1	SCREW M6S ISO 4017 M5X14 A480	
320	315105-0146		1	WASHER BRB5,3X10RFR	
330	312145-0287		2	SCREW ISO 2009 MFS M4X8 A4	
TBA 0500B (See drawing on page: 4-6)					
010	1532287-0000		1	VOLUME FLAP	
020	1558817-0000		1	VOLUME BULGE	
030	1532293-0000		2	VOLUME SHIM	
070	434320-0000		2	AXLE PIN	
080	1255541-0000		2	BUSHING	
090	436556-0000		2	CURVE ROLLER	
110	19972-0000		2	WASHER	
310	312105-0327		1	SCREW M6S ISO 4017 M5X12 A480	
320	315105-0146		1	WASHER BRB5,3X10RFR	
TBA 0500S (See drawing on page: 4-6)					
010	1511250-0000		1	VOLUME FLAP	
020	1524035-0000		1	VOLUME BULGE	
030	1511253-0000		3	VOLUME SHIM	
040	1487628-0000		1	WEDGE	
070	434320-0000		2	AXLE PIN	
080	1511254-0000		2	BUSHING	
090	434321-0000		2	CURVE ROLLER	
110	19972-0000		2	WASHER	
310	312105-0368		1	SCREW M6S ISO 4017 M6X16 A480	
320	315105-0153		1	WASHER BRB6,4X12RFR	
330	312145-0289		2	SCREW ISO 2009 MFS M4X10 A4	
340	90261-0016		2	PLUG, BLIND, PLASTIC GPN300V2	
TBA 1000B (See drawing on page: 4-6)					

Machine Type | Group Description | Used-In | Group Number | Page No

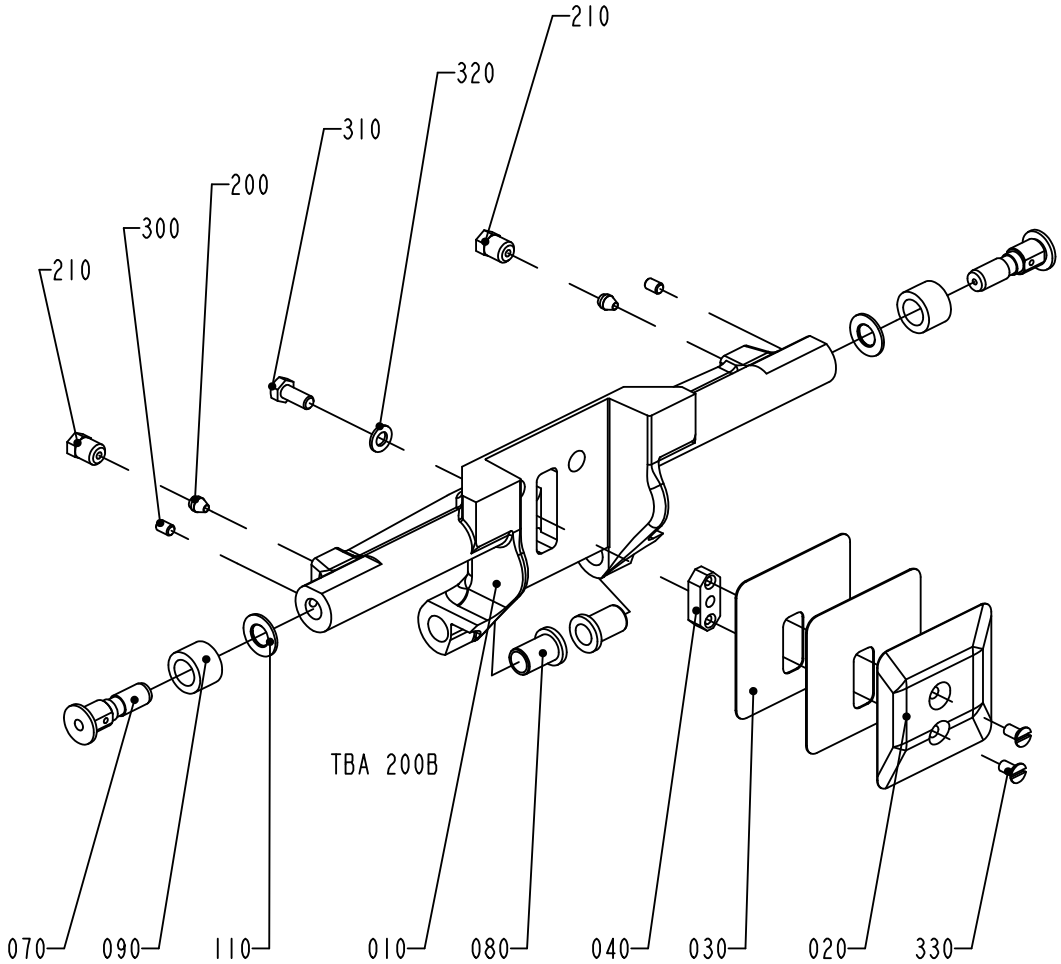

TBA 200B

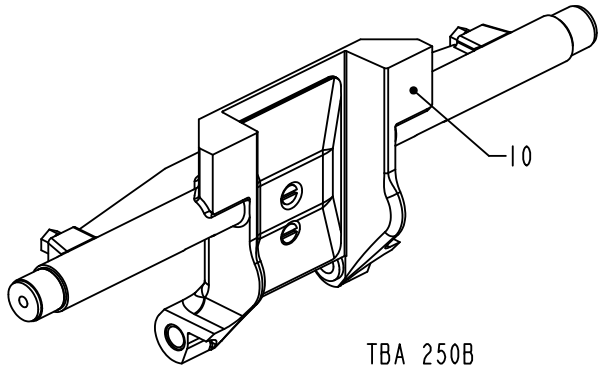

TBA 250B

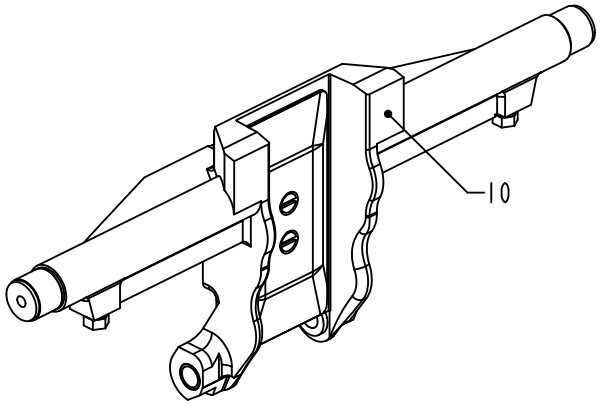

TBA 200S

1334633-3
ECN 72770

ECM: 249473 - 20060208
Group number: 1334633-0200
Assembly Drawing: 1334633-3_1_AB

This list covers pages from 4-6 to 4-15

Pos	Part No	UN	Qty	Description	Page No
TBA 1000B (Cont'd) (See drawing on page: 4-6)					
010	1478358-0000		1	VOLUME FLAP	
020	1035828-0000		1	VOLUME BULGE	
030	1035831-0000		2	VOLUME SHIM	
040	1040756-0000		1	WEDGE	
070	434320-0000		2	AXLE PIN	
080	1255541-0000		2	BUSHING	
090	434321-0000		2	CURVE ROLLER	
110	19972-0000		2	WASHER	
310	312105-0366		1	SCREW M6S ISO 4017 M6X12 A480	
320	315105-0153		1	WASHER BRB6,4X12RFR	
330	312145-0287		2	SCREW ISO 2009 MFS M4X8 A4	
TBA 1000S (See drawing on page: 4-6)					
010	1040753-0000		1	VOLUME FLAP	
020	1040754-0000		1	VOLUME BULGE	
030	1040755-0000		3	VOLUME SHIM	
040	1040756-0000		1	WEDGE	
070	434320-0000		2	AXLE PIN	
080	1255541-0000		2	BUSHING	
090	434321-0000		2	CURVE ROLLER	
110	19972-0000		2	WASHER	
310	312105-0366		1	SCREW M6S ISO 4017 M6X12 A480	
320	315105-0153		1	WASHER BRB6,4X12RFR	
330	312145-0287		2	SCREW ISO 2009 MFS M4X8 A4	
TBA 1000SQ (See drawing on page: 4-6)					
010	2606305-0000		1	VOLUME FLAP	
020	1487626-0000		1	VOLUME BULGE	
030	1487627-0000		3	VOLUME SHIM	
040	1040756-0000		1	WEDGE	
070	434320-0000		2	AXLE PIN	
080	1558701-0000		2	BUSHING	
090	434321-0000		2	CURVE ROLLER	
110	19972-0000		2	WASHER	
310	312115-0367		1	SCREW ISO4762 M6X14 A4 80	
320	315105-0153		1	WASHER BRB6,4X12RFR	
330	312145-0291		2	SCREW ISO 2009 MFS M4X12 A4	
TBA 1500S (See drawing on page: 4-6)					
010	2587236-0000		1	VOLUME FLAP	
020	1499675-0000		1	VOLUME BULGE	
030	1349208-0000		3	VOLUME SHIM	
040	1040756-0000		1	WEDGE	
070	434320-0000		2	AXLE PIN	
080	1558701-0000		2	BUSHING	
090	434321-0000		2	CURVE ROLLER	
110	19972-0000		2	WASHER	
310	312105-0368		1	SCREW M6S ISO 4017 M6X16 A480	
320	315105-0153		1	WASHER BRB6,4X12RFR	
330	312145-0289		2	SCREW ISO 2009 MFS M4X10 A4	
340	90261-0016		2	PLUG, BLIND, PLASTIC GPN300V2	
TPA 0250SQ (See drawing on page: 4-12)					
010	2530256-0000		1	VOLUME FLAP	
020	2581994-0000		2	VOLUME BULGE	
030	1549594-0000		6	VOLUME SHIM	
070	434320-0000		2	AXLE PIN	
080	1255541-0000		2	BUSHING	
090	436556-0000		2	CURVE ROLLER	
110	19972-0000		2	WASHER	
320	315105-0146		2	WASHER BRB5,3X10RFR	
325	312705-0314		2	NUT HEX. DOMED CAP MHM-6 M5 A280	
TPA 0330SQ (See drawing on page: 4-10)					
010	1539904-0000		1	VOLUME FLAP	
020	1539903-0000		2	VOLUME BULGE	
030	1539902-0000		6	VOLUME SHIM	
070	434320-0000		2	AXLE PIN	
080	1255541-0000		2	BUSHING	
090	436556-0000		2	CURVE ROLLER	
110	19972-0000		2	WASHER	
320	315105-0146		2	WASHER BRB5,3X10RFR	
325	312105-0327		2	SCREW M6S ISO 4017 M5X12 A480	
TPA 0500SQ (See drawing on page: 4-14)					
010	1549836-0000		1	VOLUME FLAP	
025	1549829-0000		2	VOLUME BULGE	
035	1549830-0000		6	VOLUME SHIM	
040	1549831-0000		2	WEDGE	
050	1549832-0000		1	PLUG	
070	434320-0000		2	AXLE PIN	
080	2530313-0000		2	BUSHING	
090	434321-0000		2	CURVE ROLLER	
110	19972-0000		2	WASHER	
310	312105-0327		3	SCREW M6S ISO 4017 M5X12 A480	
320	315105-0146		3	WASHER BRB5,3X10RFR	
370	312155-0289		4	SCREW DIN 7991 MF6S M4X10 A4 70	
TPA 1000SQ (See drawing on page: 4-14)					
010	2547011-0000		1	VOLUME FLAP	

Machine Type | Group Description | Used-In | Group Number | Page No

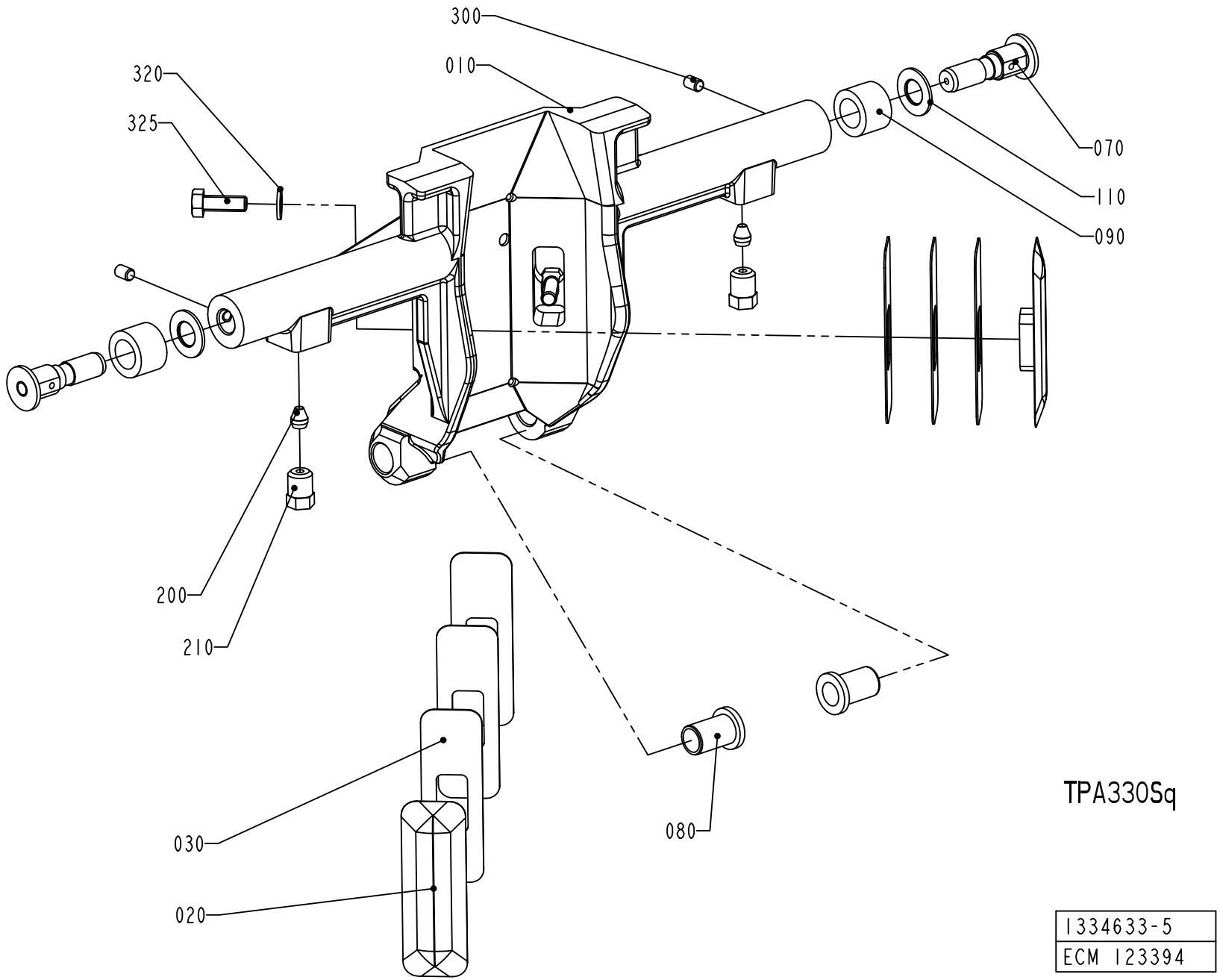
300
010
320
325
070
110
090
200
210
030
020
080
TPA330Sq
1334633-5
ECM 123394

Pos	Part No	UN	Qty	Description	Page No
TPA 1000SQ (Cont'd) (See drawing on page: 4-14)					
020	1539840-0000		1	VOLUME BULGE	
025	1539841-0000		2	VOLUME BULGE	
030	1539842-0000		3	VOLUME SHIM	
035	1539843-0000		6	VOLUME SHIM	
040	1040756-0000		3	WEDGE	
060	2547010-0000		1	BRACKET	
070	434320-0000		2	AXLE PIN	
080	1255541-0000		2	BUSHING	
090	434321-0000		2	CURVE ROLLER	
110	19972-0000		2	WASHER	
320	315105-0153		3	WASHER BRB6,4X12RFR	
360	312105-0368		3	SCREW M6S ISO 4017 M6X16 A480	
370	312155-0289		6	SCREW DIN 7991 MF6S M4X10 A4 70	
Common Parts					
200	90028-0020		2	CONE TUBE 2,5MM	
210	90134-0063		2	BUSHING/NUT M8X1, D=2,5 MM	
300	312318-0285		2	SCREW ISO4029 M4X6 A4	

Pos	Part No	UN	Qty	Description	Page No

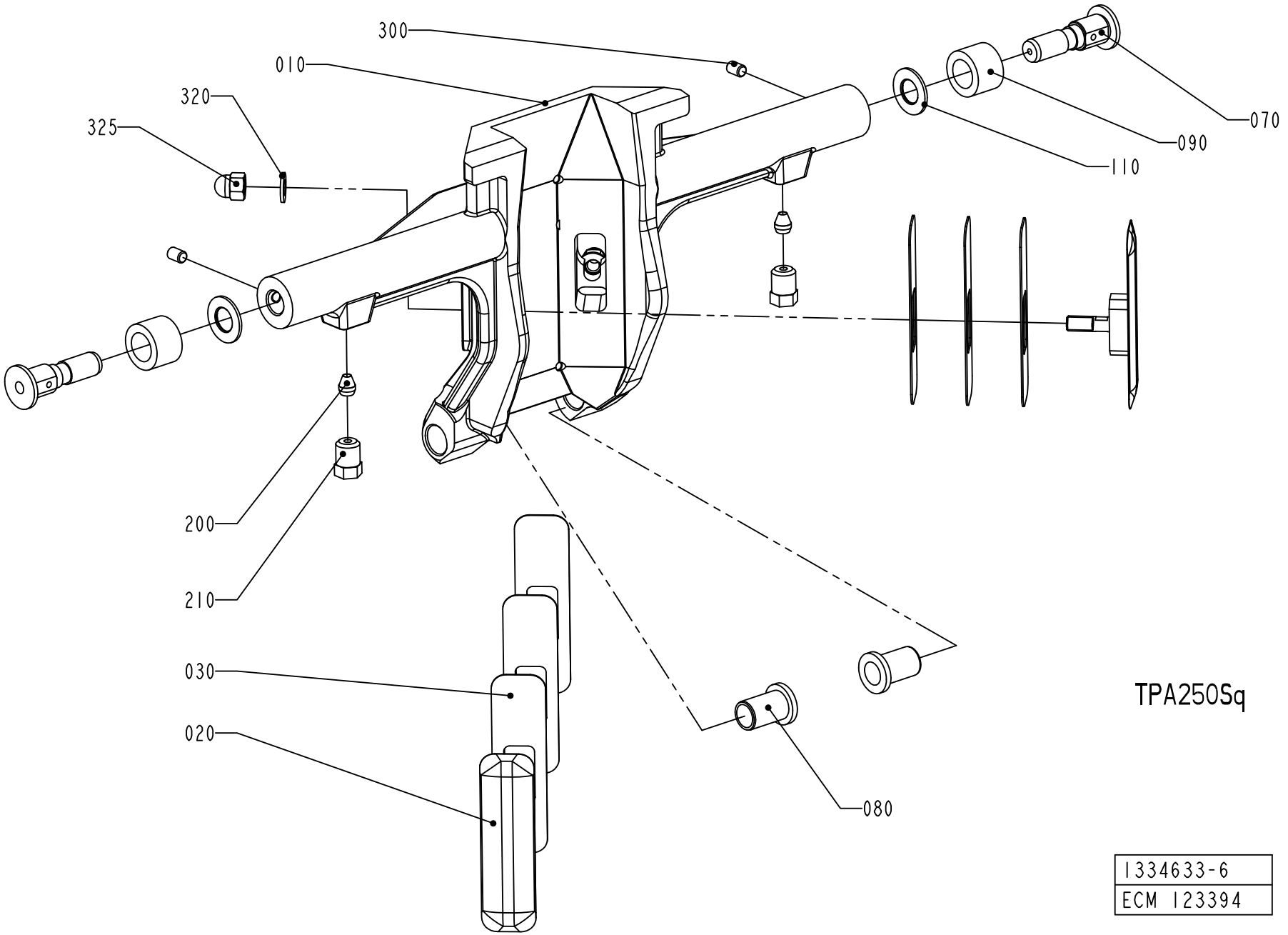
300
010
320
325
070
090
110
200
210
030
020
080
TPA250Sq
1334633-6
ECM 123394

Pos	Part No	UN	Qty	Description	Page No	Pos	Part No	UN	Qty	Description	Page No

SEE PREVIOUS LISTS PAGES: 4-7, 4-9, 4-11.

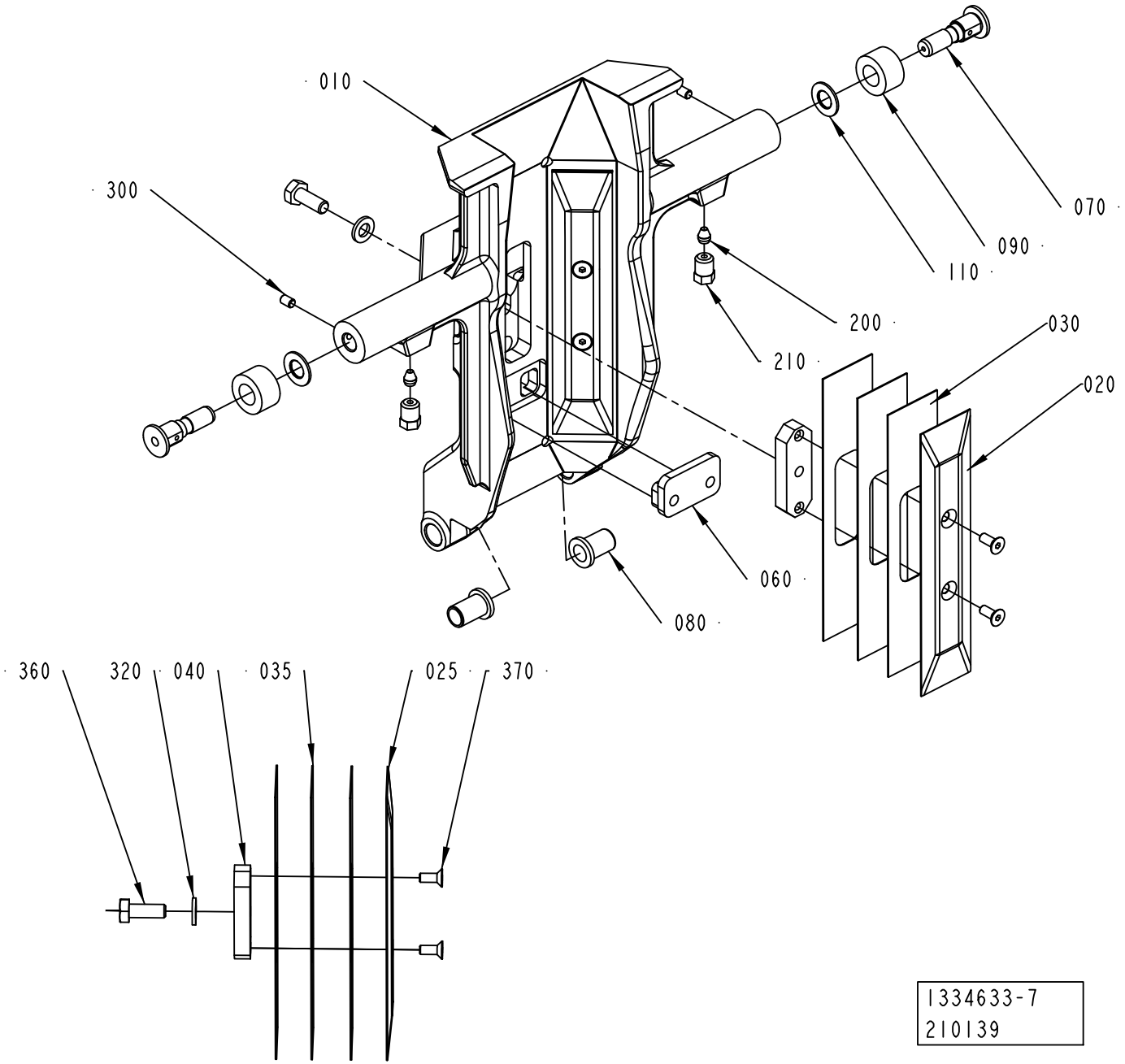
010
300
070
090
110
200
210
030
020
060
080
360
320
040
035
025
370
1334633-7
210139

ECM: 249473 - 20060208
Group number: 1334633-0200
Assembly Drawing: 1334633-7_1_AB

This list covers pages from 4-6 to 4-15

Pos	Part No	UN	Qty	Description	Page No
SEE PREVIOUS LISTS PAGES: 4-7, 4-9, 4-11.					

Pos	Part No	UN	Qty	Description	Page No

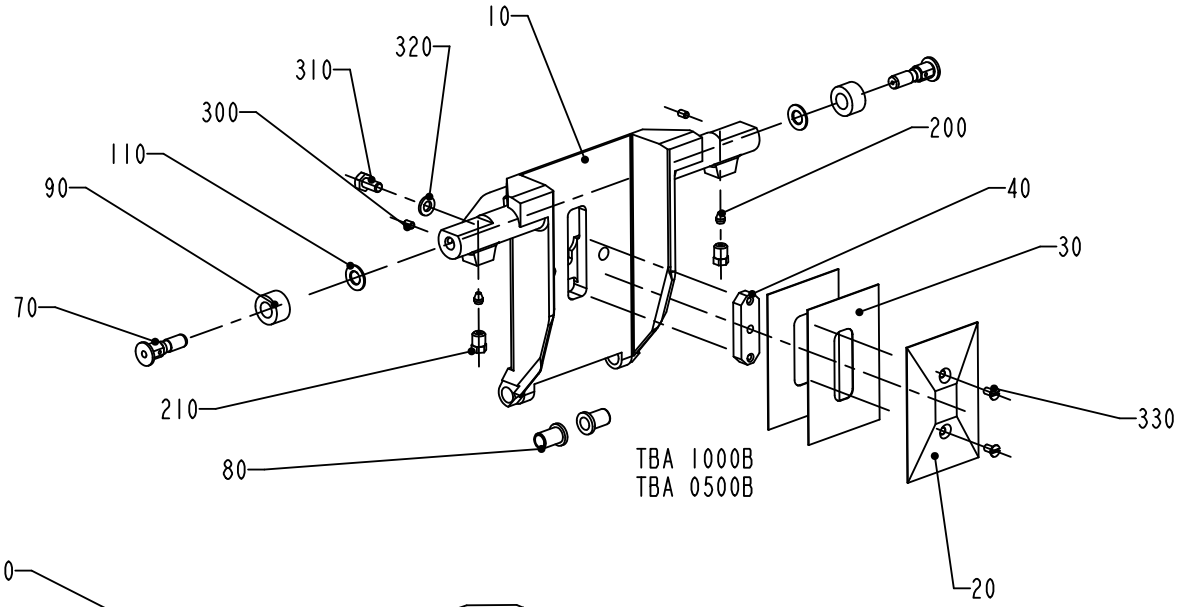

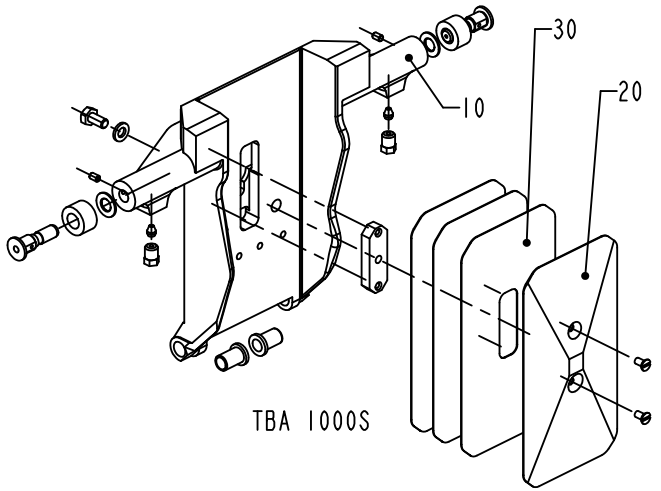

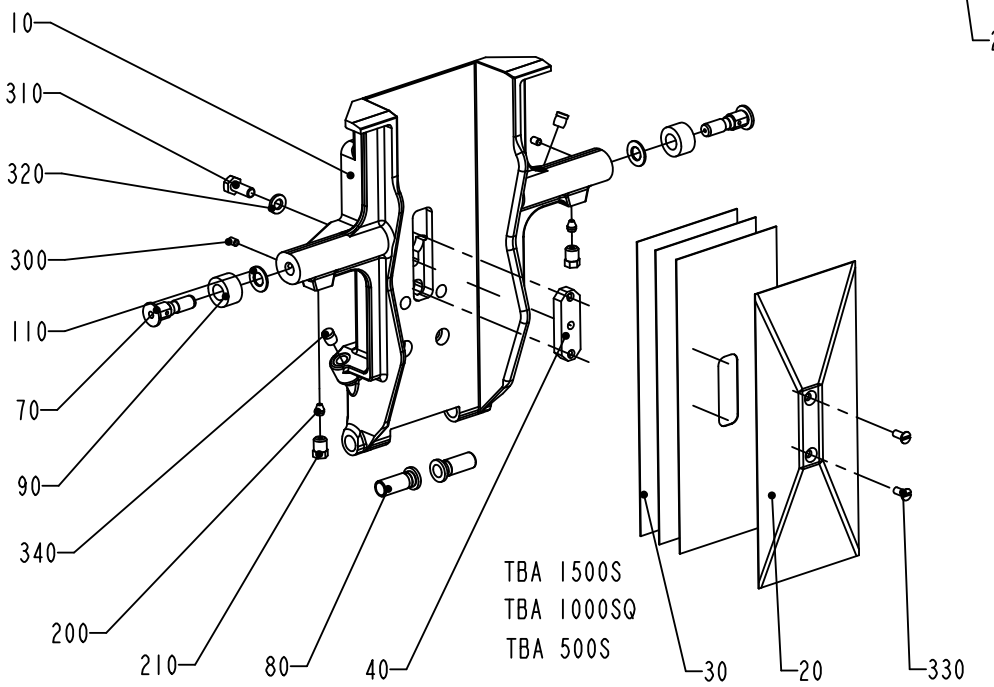

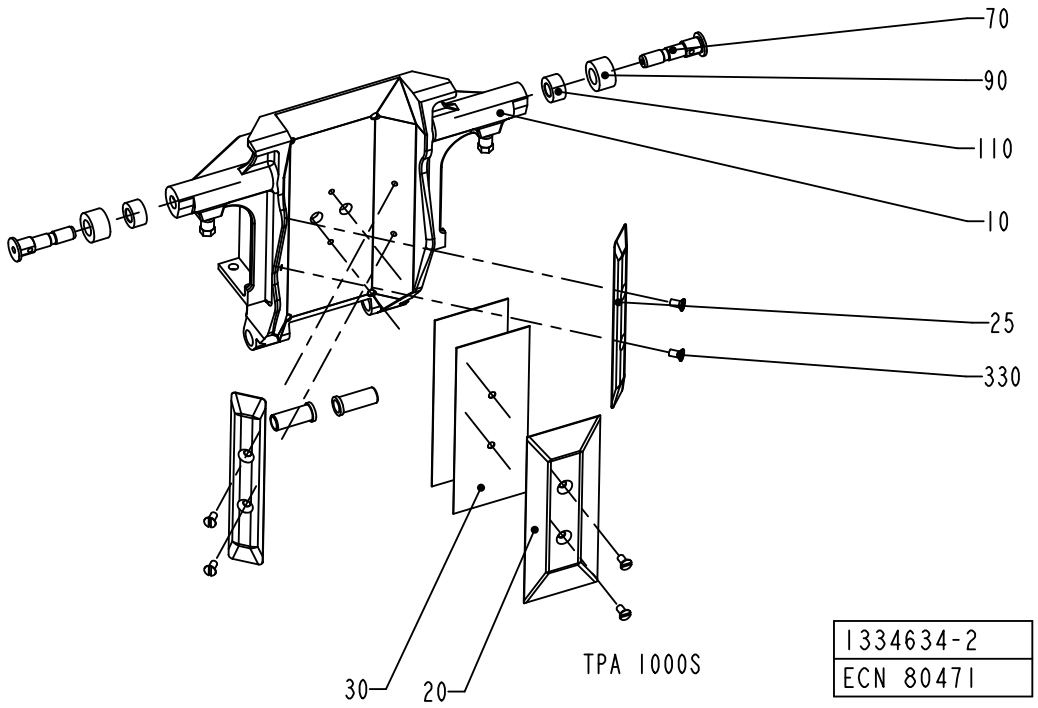

1334634-2
ECN 80471

ECM: 189486 - 20050103
Group number: 1334634-0200
Assembly Drawing: 1334634-2_1_AD

This list covers pages from 4-16 to 4-25

Pos	Part No	UN	Qty	Description	Page No
TPA 1000SQ SMILE (See drawing on page: 4-24)					
010	2582002-0000		1	VOLUME FLAP	
020	1539840-0000		1	VOLUME BULGE	
025	1539841-0000		2	VOLUME BULGE	
030	1539842-0000		3	VOLUME SHIM	
035	1539843-0000		6	VOLUME SHIM	
040	1040756-0000		3	WEDGE	
060	2547010-0000		1	BRACKET	
070	434320-0000		2	AXLE PIN	
080	1255541-0000		2	BUSHING	
090	434321-0000		2	CURVE ROLLER	
110	19972-0000		2	WASHER	
310	312105-0368		3	SCREW M6S ISO 4017 M6X16 A480	
320	315105-0153		3	WASHER BRB6,4X12RFR	
370	312155-0289		6	SCREW DIN 7991 MF6S M4X10 A4 70	
TBA 0200B (See drawing on page: 4-18)					
010	1499902-0000		1	VOLUME FLAP	
020	1038638-0000		1	VOLUME BULGE	
030	1038639-0000		2	VOLUME SHIM	
040	1038637-0000		1	WEDGE	
070	434320-0000		2	AXLE PIN	
080	1255541-0000		2	BUSHING	
090	436556-0000		2	CURVE ROLLER	
110	19972-0000		2	WASHER	
310	312105-0327		1	SCREW M6S ISO 4017 M5X12 A480	
320	315105-0146		1	WASHER BRB5,3X10RFR	
330	312145-0287		2	SCREW ISO 2009 MFS M4X8 A4	
TBA 0200S (See drawing on page: 4-18)					
010	1484865-0000		1	VOLUME FLAP	
020	1037733-0000		1	VOLUME BULGE	
030	1037735-0000		2	VOLUME SHIM	
040	1037734-0000		1	WEDGE	
070	434320-0000		2	AXLE PIN	
080	1255541-0000		2	BUSHING	
090	436556-0000		2	CURVE ROLLER	
110	19972-0000		2	WASHER	
310	312105-0327		1	SCREW M6S ISO 4017 M5X12 A480	
320	315105-0146		1	WASHER BRB5,3X10RFR	
330	312145-0287		2	SCREW ISO 2009 MFS M4X8 A4	
TBA 0250B (See drawing on page: 4-18)					
010	1484868-0000		1	VOLUME FLAP	
020	1346157-0000		1	VOLUME BULGE	
030	1346158-0000		2	VOLUME SHIM	
040	1037734-0000		1	WEDGE	
070	434320-0000		2	AXLE PIN	
080	1255541-0000		2	BUSHING	
090	436556-0000		2	CURVE ROLLER	
110	19972-0000		2	WASHER	
310	312105-0328		1	SCREW M6S ISO 4017 M5X14 A480	
320	315105-0146		1	WASHER BRB5,3X10RFR	
330	312145-0287		2	SCREW ISO 2009 MFS M4X8 A4	
TBA 0250S (See drawing on page: 4-18)					
010	2520472-0000		1	VOLUME FLAP	
020	2520473-0000		1	VOLUME BULGE	
030	2520474-0000		3	VOLUME SHIM	
040	1037734-0000		1	WEDGE	
070	434320-0000		2	AXLE PIN	
080	1255541-0000		2	BUSHING	
090	436556-0000		2	CURVE ROLLER	
110	19972-0000		2	WASHER	
310	312105-0328		1	SCREW M6S ISO 4017 M5X14 A480	
320	315105-0146		1	WASHER BRB5,3X10RFR	
330	312145-0287		2	SCREW ISO 2009 MFS M4X8 A4	
TBA 0330S (See drawing on page: 4-18)					
010	2544991-0000		1	VOLUME FLAP	
020	2544992-0000		1	VOLUME BULGE	
030	2544993-0000		3	VOLUME SHIM	
040	1037734-0000		1	WEDGE	
070	434320-0000		2	AXLE PIN	
080	1255541-0000		2	BUSHING	
090	436556-0000		2	CURVE ROLLER	
110	19972-0000		2	WASHER	
310	312105-0328		1	SCREW M6S ISO 4017 M5X14 A480	
320	315105-0146		1	WASHER BRB5,3X10RFR	
330	312145-0287		2	SCREW ISO 2009 MFS M4X8 A4	
TBA 0500B (See drawing on page: 4-16)					
010	1532287-0000		1	VOLUME FLAP	
020	1558817-0000		1	VOLUME BULGE	
030	1532293-0000		2	VOLUME SHIM	
070	434320-0000		2	AXLE PIN	
080	1255541-0000		2	BUSHING	
090	436556-0000		2	CURVE ROLLER	
110	19972-0000		2	WASHER	
310	312105-0327		1	SCREW M6S ISO 4017 M5X12 A480	

Machine Type | Group Description | Used-In | Group Number | Page No

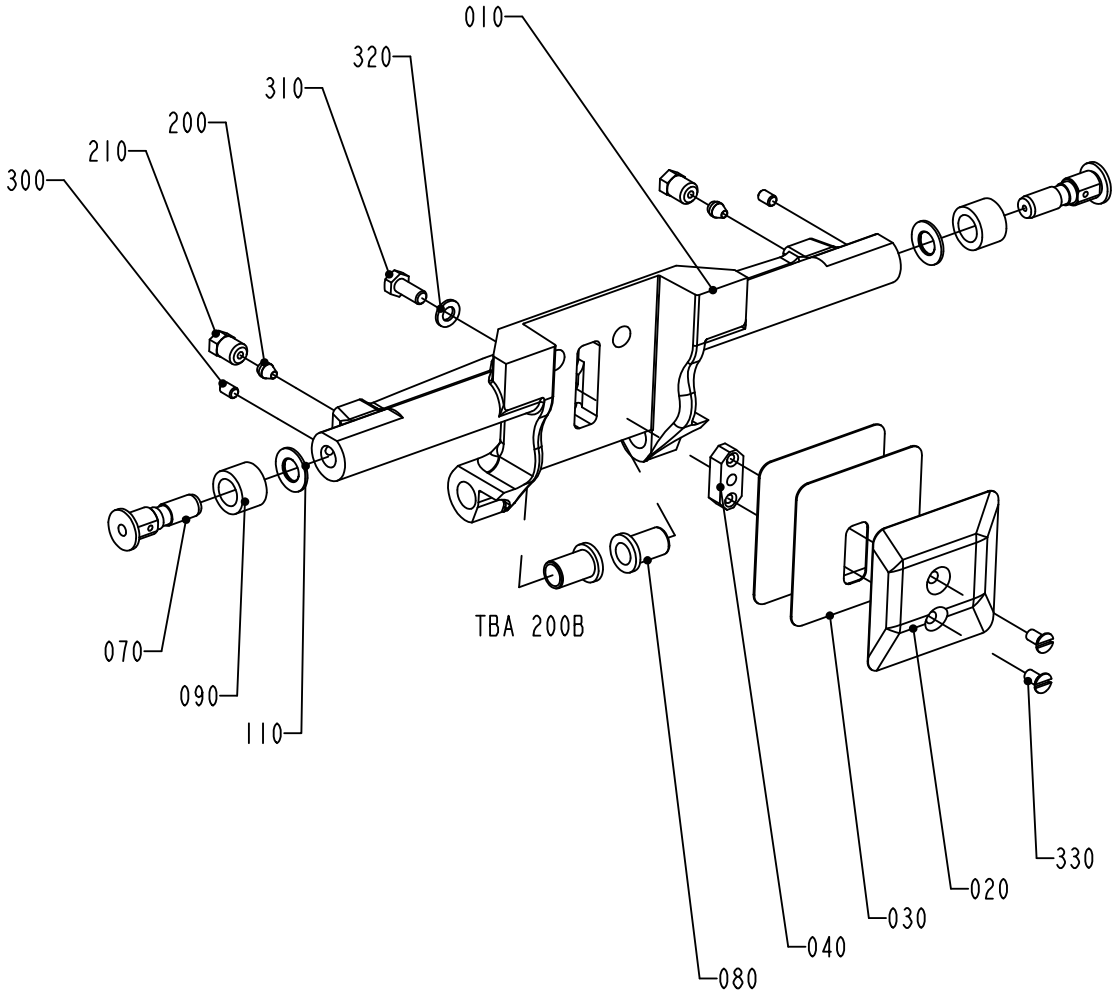

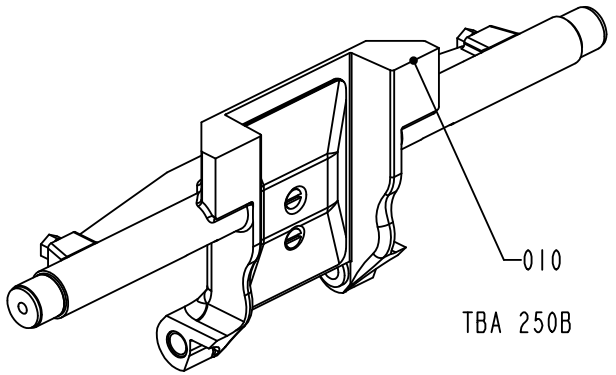

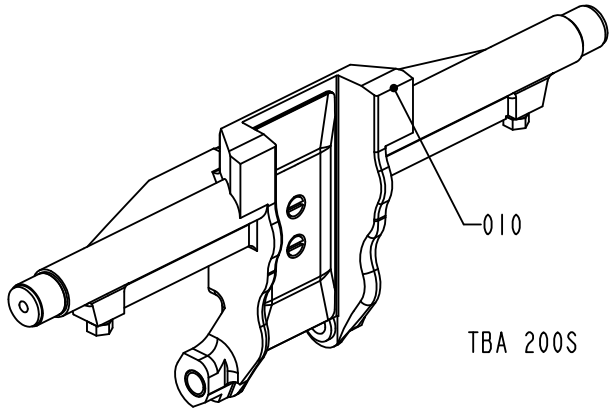

1334634-3
ECN 72770

ECM: 189486 - 20050103
Group number: 1334634-0200
Assembly Drawing: 1334634-3_1_AB

This list covers pages from 4-16 to 4-25

Pos	Part No	UN	Qty	Description	Page No
TBA 0500B (Cont'd) (See drawing on page: 4-16)					
320	315105-0146		1	WASHER BRB5,3X10RFR	
TBA 0500S (See drawing on page: 4-16)					
010	1511251-0000		1	VOLUME FLAP	
020	1524035-0000		1	VOLUME BULGE	
030	1511253-0000		3	VOLUME SHIM	
040	1487628-0000		1	WEDGE	
070	434320-0000		2	AXLE PIN	
080	1511254-0000		2	BUSHING	
090	434321-0000		2	CURVE ROLLER	
110	19972-0000		2	WASHER	
310	312105-0368		1	SCREW M6S ISO 4017 M6X16 A480	
320	315105-0153		1	WASHER BRB6,4X12RFR	
330	312145-0291		2	SCREW ISO 2009 MFS M4X12 A4	
340	90261-0016		2	PLUG, BLIND, PLASTIC GPN300V2	
TBA 1000B (See drawing on page: 4-16)					
010	1478358-0000		1	VOLUME FLAP	
020	1035828-0000		1	VOLUME BULGE	
030	1035831-0000		3	VOLUME SHIM	
040	1040756-0000		1	WEDGE	
070	434320-0000		2	AXLE PIN	
080	1255541-0000		2	BUSHING	
090	434321-0000		2	CURVE ROLLER	
110	19972-0000		2	WASHER	
310	312105-0366		1	SCREW M6S ISO 4017 M6X12 A480	
320	315105-0153		1	WASHER BRB6,4X12RFR	
330	312145-0287		2	SCREW ISO 2009 MFS M4X8 A4	
TBA 1000S (See drawing on page: 4-16)					
010	1040753-0000		1	VOLUME FLAP	
020	1040754-0000		1	VOLUME BULGE	
030	1040755-0000		3	VOLUME SHIM	
040	1040756-0000		1	WEDGE	
070	434320-0000		2	AXLE PIN	
080	1255541-0000		2	BUSHING	
090	434321-0000		2	CURVE ROLLER	
110	19972-0000		2	WASHER	
310	312105-0366		1	SCREW M6S ISO 4017 M6X12 A480	
320	315105-0153		1	WASHER BRB6,4X12RFR	
330	312145-0287		2	SCREW ISO 2009 MFS M4X8 A4	
TBA 1000SQ (See drawing on page: 4-16)					
010	2606306-0000		1	VOLUME FLAP	
020	1487626-0000		1	VOLUME BULGE	
030	1487627-0000		3	VOLUME SHIM	
040	1040756-0000		1	WEDGE	
070	434320-0000		2	AXLE PIN	
080	1558701-0000		2	BUSHING	
090	434321-0000		2	CURVE ROLLER	
110	19972-0000		2	WASHER	
310	312115-0367		1	SCREW ISO4762 M6X14 A4 80	
320	315105-0153		1	WASHER BRB6,4X12RFR	
330	312145-0291		2	SCREW ISO 2009 MFS M4X12 A4	
TBA 1500S (See drawing on page: 4-16)					
010	2587235-0000		1	VOLUME FLAP	
020	1499675-0000		1	VOLUME BULGE	
030	1349208-0000		3	VOLUME SHIM	
040	1040756-0000		1	WEDGE	
070	434320-0000		2	AXLE PIN	
080	1558701-0000		2	BUSHING	
090	434321-0000		2	CURVE ROLLER	
110	19972-0000		2	WASHER	
310	312105-0368		1	SCREW M6S ISO 4017 M6X16 A480	
320	315105-0153		1	WASHER BRB6,4X12RFR	
330	312145-0289		2	SCREW ISO 2009 MFS M4X10 A4	
340	90261-0016		2	PLUG, BLIND, PLASTIC GPN300V2	
TPA 0250SQ (See drawing on page: 4-22)					
010	2530257-0000		1	VOLUME FLAP	
020	2581994-0000		2	VOLUME BULGE	
030	1549594-0000		6	VOLUME SHIM	
070	434320-0000		2	AXLE PIN	
080	1255541-0000		2	BUSHING	
090	436556-0000		2	CURVE ROLLER	
110	19972-0000		2	WASHER	
320	315105-0146		2	WASHER BRB5,3X10RFR	
325	312705-0314		2	NUT HEX. DOMED CAP MHM-6 M5 A280	
TPA 0330SQ (See drawing on page: 4-20)					
010	1558123-0000		1	VOLUME FLAP	
020	1539903-0000		2	VOLUME BULGE	
030	1539902-0000		6	VOLUME SHIM	
070	434320-0000		2	AXLE PIN	
080	1255541-0000		2	BUSHING	
090	436556-0000		2	CURVE ROLLER	
110	19972-0000		2	WASHER	
320	315105-0146		2	WASHER BRB5,3X10RFR	
325	312105-0327		2	SCREW M6S ISO 4017 M5X12 A480	

Machine Type | Group Description | Used-In | Group Number | Page No

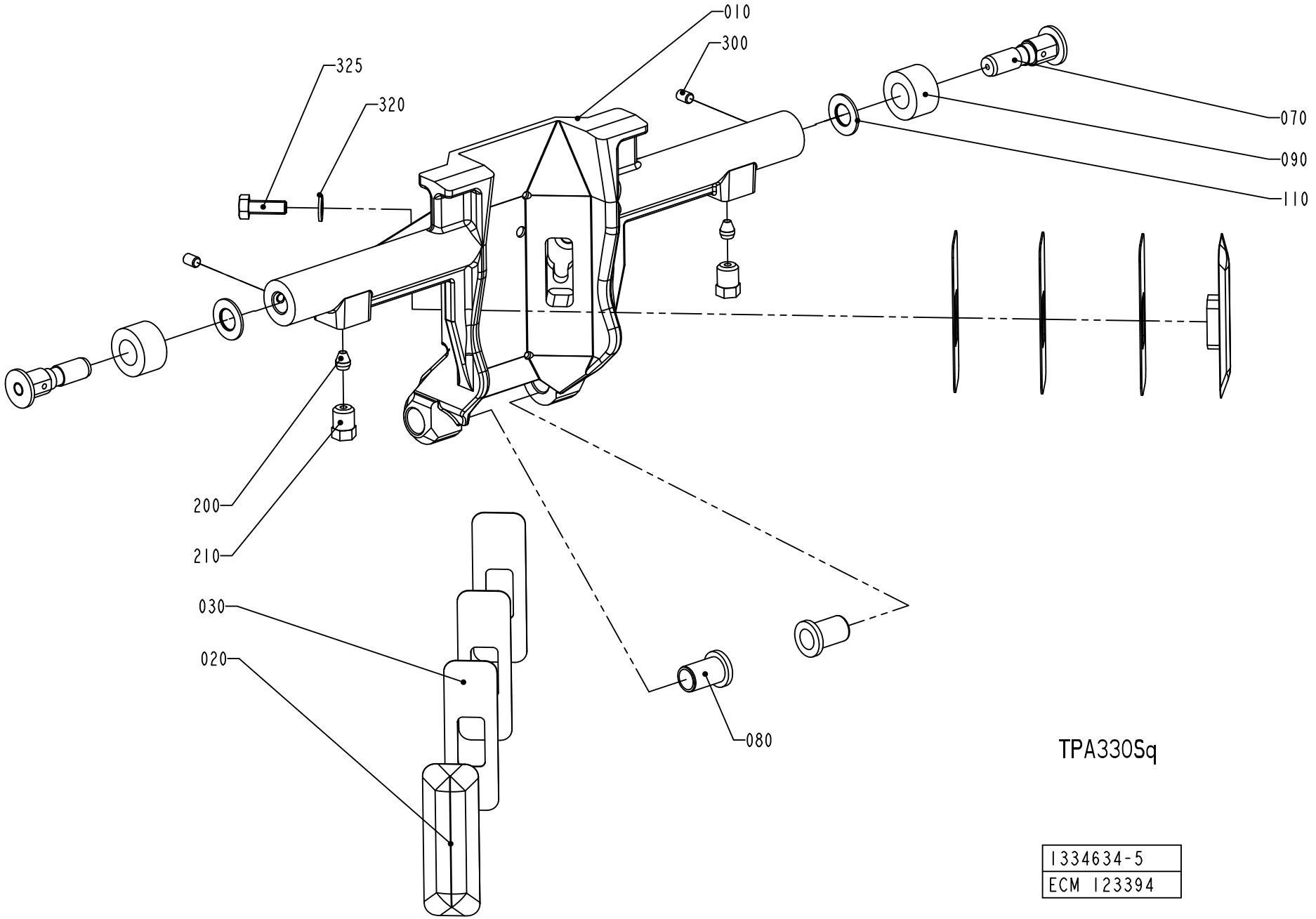
010
300
325
320
070
090
110
200
210
030
020
080
TPA330Sq
1334634-5
ECM 123394

Pos	Part No	UN	Qty	Description	Page No
TPA 0500SQ SMILE (Cont'd) (See drawing on page: 4-24)					
010	1549837-0000		1	VOLUME FLAP	
020	1549829-0000		1	VOLUME BULGE	
025	1549829-0000		2	VOLUME BULGE	
030	1549830-0000		3	VOLUME SHIM	
035	1549830-0000		6	VOLUME SHIM	
040	1549831-0000		3	WEDGE	
070	434320-0000		2	AXLE PIN	
080	2530313-0000		2	BUSHING	
090	434321-0000		2	CURVE ROLLER	
110	19972-0000		2	WASHER	
310	312105-0327		3	SCREW M6S ISO 4017 M5X12 A480	
320	315105-0146		3	WASHER BRB5,3X10RFR	
370	312155-0289		6	SCREW DIN 7991 MF6S M4X10 A4 70	
TPA 1000SQ FT (See drawing on page: 4-24)					
010	2547012-0000		1	VOLUME FLAP	
020	1539840-0000		1	VOLUME BULGE	
025	1539841-0000		2	VOLUME BULGE	
030	1539842-0000		3	VOLUME SHIM	
035	1539843-0000		6	VOLUME SHIM	
040	1040756-0000		3	WEDGE	
060	2547010-0000		1	BRACKET	
070	434320-0000		2	AXLE PIN	
080	1255541-0000		2	BUSHING	
090	434321-0000		2	CURVE ROLLER	
110	19972-0000		2	WASHER	
320	315105-0153		3	WASHER BRB6,4X12RFR	
360	312105-0368		3	SCREW M6S ISO 4017 M6X16 A480	
370	312155-0289		6	SCREW DIN 7991 MF6S M4X10 A4 70	
Common Parts					
200	90028-0020		2	CONE TUBE 2,5MM	
210	90134-0063		2	BUSHING/NUT M8X1, D=2,5 MM	
300	312318-0285		2	SCREW ISO4029 M4X6 A4	

Pos	Part No	UN	Qty	Description	Page No

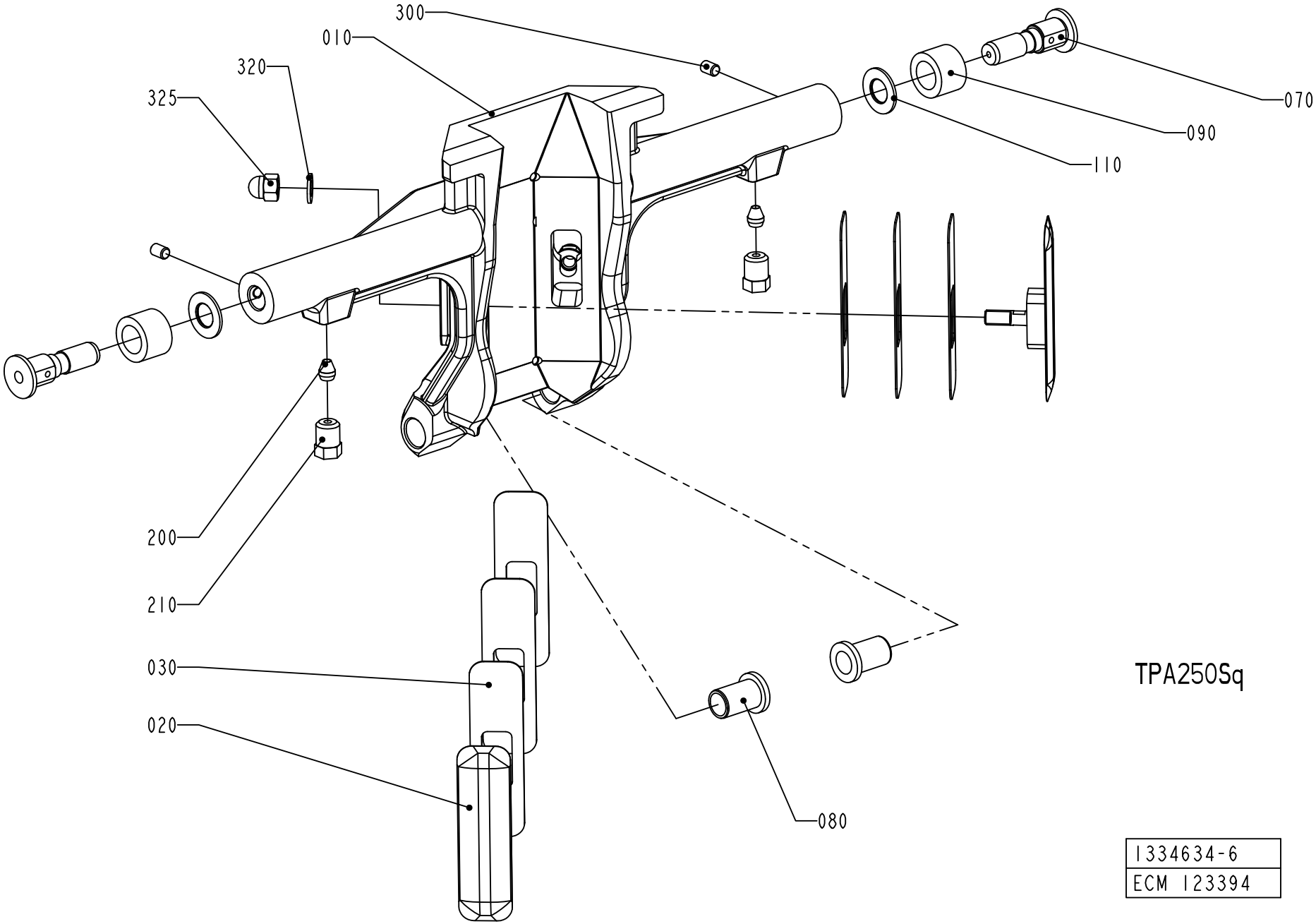
300
010
320
325
070
090
110
200
210
030
020
080
TPA250Sq
1334634-6
ECM 123394

ECM: 189486 - 20050103
Group number: 1334634-0200
Assembly Drawing: 1334634-6_1_AA

This list covers pages from 4-16 to 4-25

Pos	Part No	UN	Qty	Description	Page No	Pos	Part No	UN	Qty	Description	Page No

SEE PREVIOUS LISTS PAGES: 4-17, 4-19, 4-21.

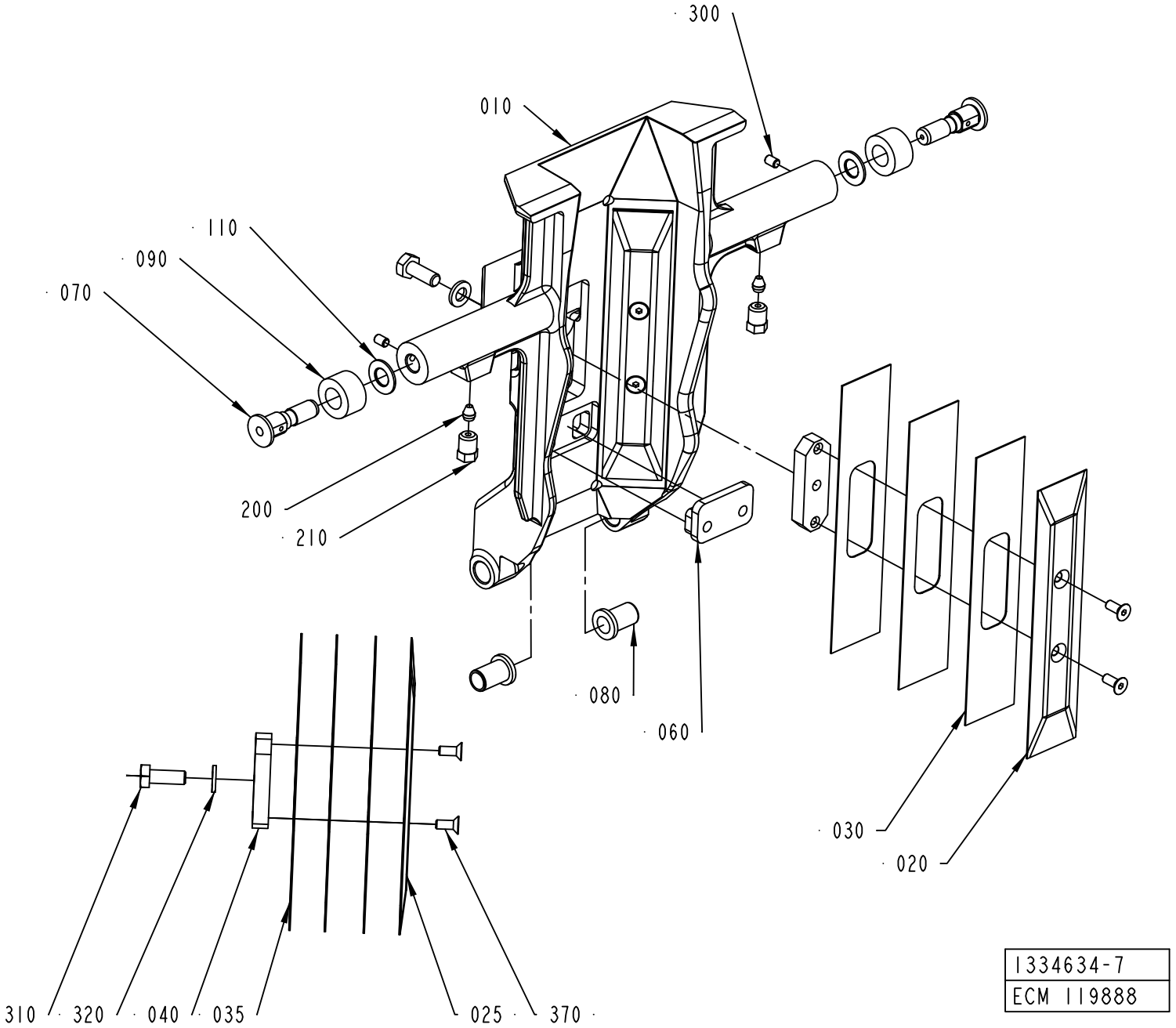
300
010
110
090
070
200
210
080
060
030
020
310
320
040
035
025
370
1334634-7
ECM 119888

ECM: 189486 - 20050103
Group number: 1334634-0200
Assembly Drawing: 1334634-7_1_AA

This list covers pages from 4-16 to 4-25

Pos	Part No	UN	Qty	Description	Page No	Pos	Part No	UN	Qty	Description	Page No

SEE PREVIOUS LISTS PAGES: 4-17, 4-19, 4-21.

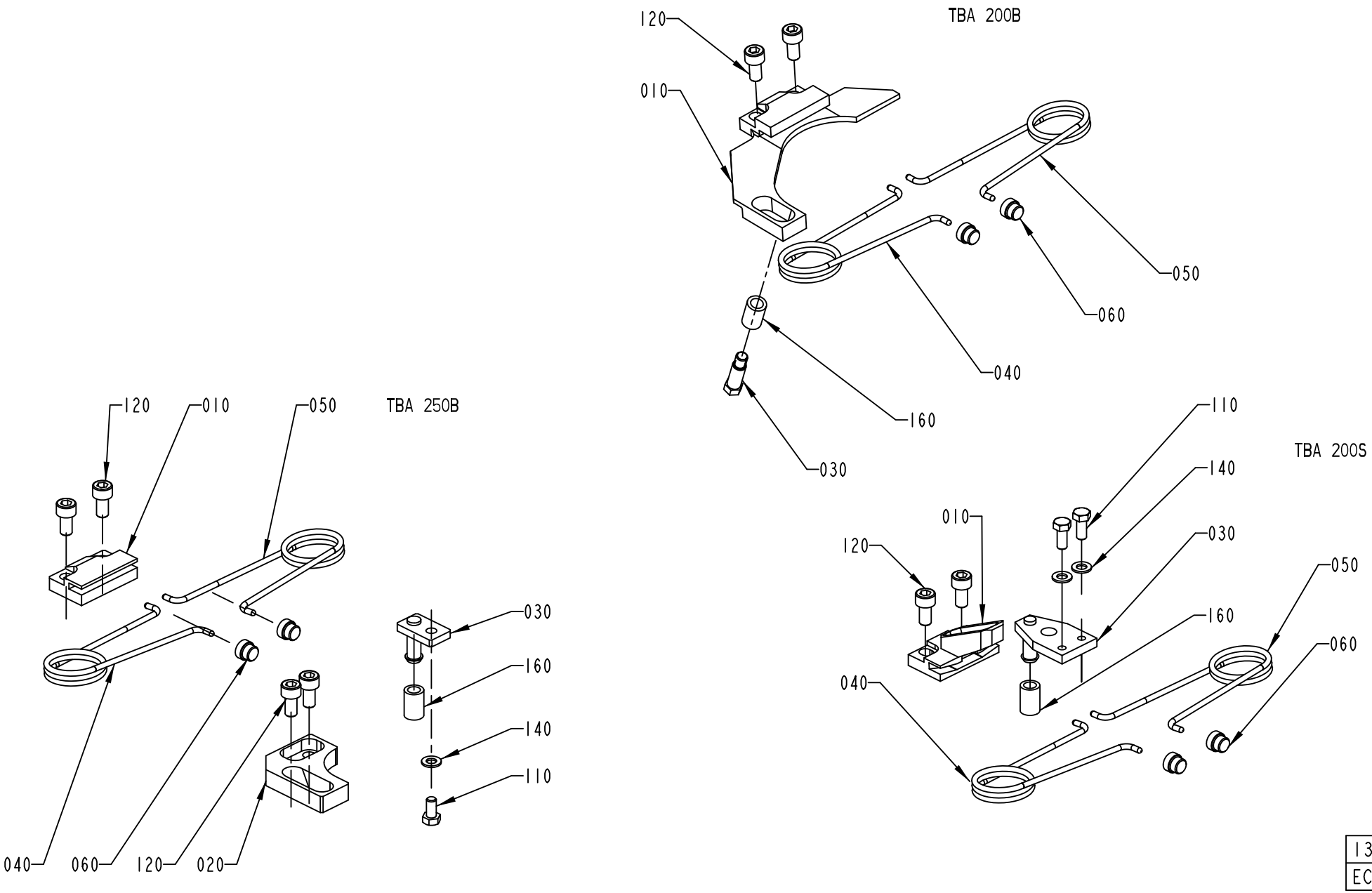

1334635-1
ECN 73647

Pos	Part No	UN	Qty	Description	Page No
TBA 0200B (See drawing on page: 4-26)					
010	1512579-0000		1	BRACKET	
030	1346153-0000		1	STOP PIN	
040	1350263-0000		1	SPRING RIGHT	
050	1350264-0000		1	SPRING LEFT	
060	1144601-0000		2	GUIDE STUD	
120	312115-0366		2	SCREW ISO4762 M6X12 A4 80	
160	1317740-0000		1	RUBBER SLEEVE	
TBA 0200S (See drawing on page: 4-26)					
010	1317823-0000		1	CANTILEVER	
030	1317824-0000		1	CATCH	
040	1350263-0000		1	SPRING RIGHT	
050	1350264-0000		1	SPRING LEFT	
060	1144601-0000		2	GUIDE STUD	
110	312105-0327		2	SCREW M6S ISO 4017 M5X12 A480	
120	312115-0366		2	SCREW ISO4762 M6X12 A4 80	
140	315105-0146		2	WASHER BRB5,3X10RFR	
160	1317740-0000		1	RUBBER SLEEVE	
TBA 0250B (See drawing on page: 4-26)					
010	1317742-0000		1	CANTILEVER	
020	1317741-0000		1	CATCH	
030	1317440-0000		1	STOP PIN	
040	1350263-0000		1	SPRING RIGHT	
050	1350264-0000		1	SPRING LEFT	
060	1144601-0000		2	GUIDE STUD	
110	312105-0325		1	SCREW M6S ISO 4017 M5X10 A480	
120	312115-0366		4	SCREW ISO4762 M6X12 A4 80	
140	315105-0146		1	WASHER BRB5,3X10RFR	
160	1317740-0000		1	RUBBER SLEEVE	
TBA 0330S, TBA 0250S, TPA 0250SQ (See drawing on page: 4-30)					
010	1539172-0000		1	CANTILEVER	
030	2527725-0000		1	CATCH	
040	1350263-0000		1	SPRING RIGHT	
050	1350264-0000		1	SPRING LEFT	
060	1144601-0000		2	GUIDE STUD	
110	312105-0328		2	SCREW M6S ISO 4017 M5X14 A480	
120	312115-0368		2	SCREW ISO4762 M6X16 A4 80	
TBA 0500B (See drawing on page: 4-30)					
010	1539886-0000		1	CANTILEVER	
030	1539887-0000		1	CATCH	
040	1350263-0000		1	SPRING RIGHT	
050	1350264-0000		1	SPRING LEFT	
060	1144601-0000		2	GUIDE STUD	
110	312105-0327		2	SCREW M6S ISO 4017 M5X12 A480	
120	312115-0366		2	SCREW ISO4762 M6X12 A4 80	
TBA 0500S (See drawing on page: 4-28)					
010	1349319-0000		1	CANTILEVER	
030	1349320-0000		1	CATCH	
040	1143216-0000		1	SPRING	
050	1143215-0000		1	SPRING	
060	1144601-0000		2	GUIDE STUD	
110	312115-0372		2	SCREW ISO4762 M6X25 A4 80	
120	312115-0378		2	SCREW ISO4762 M6X40 A4 80	
170	1511556-0000		1	SET SCREW	
180	312605-0318		1	HEXAGON NUT, M6M M8 A280	
TBA 1000B (See drawing on page: 4-28)					
010	1347526-0000		1	BRACKET	
020	1478396-0000		1	STOP	
030	1478393-0000		1	CATCH	
040	1348483-0000		1	SPRING RIGHT	
050	1348484-0000		1	SPRING LEFT	
060	1144601-0000		2	GUIDE STUD	
100	312105-0368		4	SCREW M6S ISO 4017 M6X16 A480	
110	312115-0329		2	SCREW ISO4762 M5X16 A4 80	
130	315105-0153		4	WASHER BRB6,4X12RFR	
TBA 1000S (See drawing on page: 4-28)					
010	1347526-0000		1	BRACKET	
020	1478396-0000		1	STOP	
030	1478395-0000		1	CATCH	
040	1348483-0000		1	SPRING RIGHT	
050	1348484-0000		1	SPRING LEFT	
060	1144601-0000		2	GUIDE STUD	
100	312105-0368		4	SCREW M6S ISO 4017 M6X16 A480	
110	312115-0329		2	SCREW ISO4762 M5X16 A4 80	
130	315105-0153		4	WASHER BRB6,4X12RFR	
TBA 1000SQ (See drawing on page: 4-28)					
010	1349319-0000		1	CANTILEVER	
030	1349320-0000		1	CATCH	
040	1143216-0000		1	SPRING	
050	1143215-0000		1	SPRING	
060	1144601-0000		2	GUIDE STUD	
110	312105-0366		2	SCREW M6S ISO 4017 M6X12 A480	
120	312115-0378		2	SCREW ISO4762 M6X40 A4 80	
170	1511556-0000		1	SET SCREW	

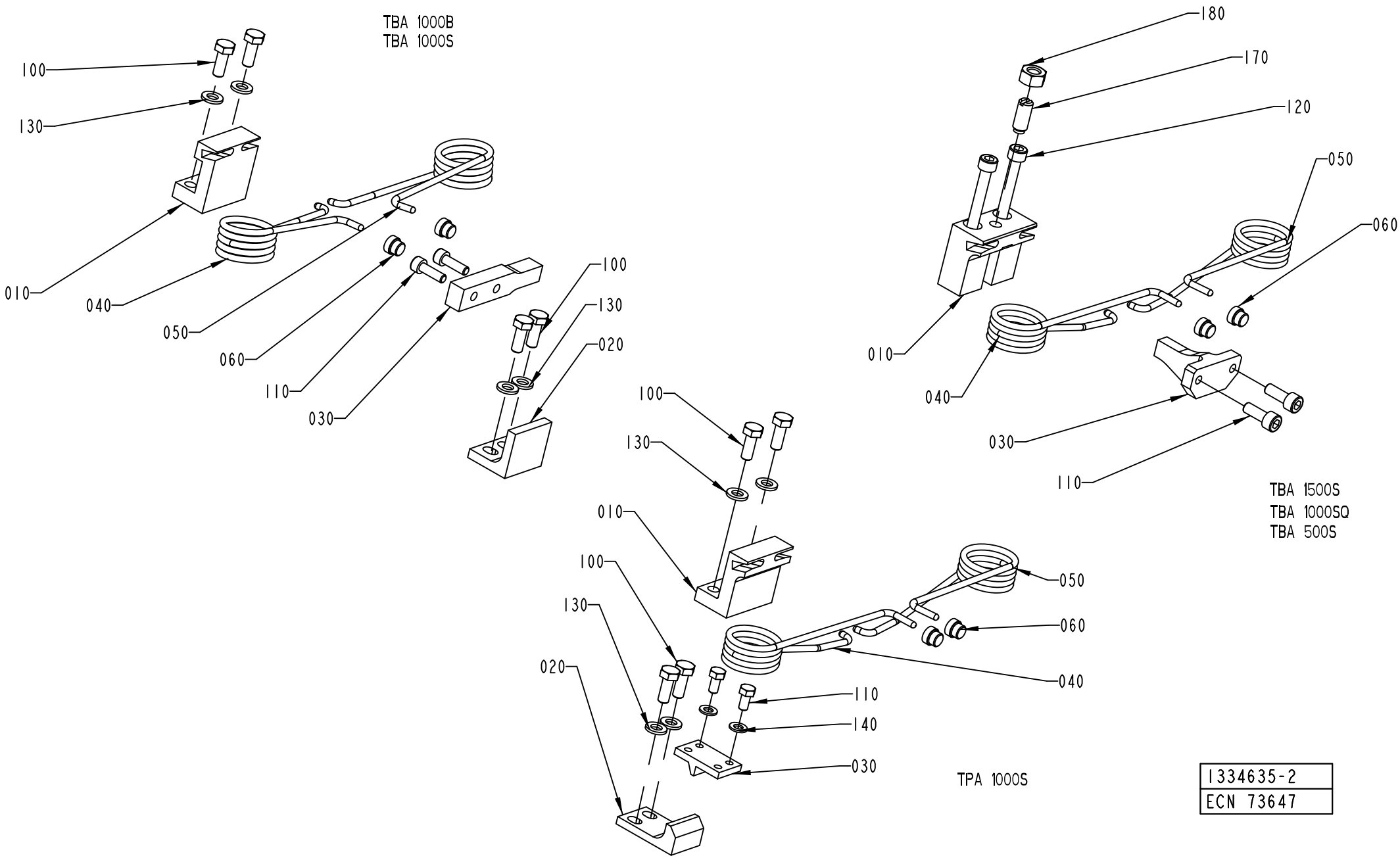

1334635-2
ECN 73647

Pos	Part No	UN	Qty	Description	Page No
TBA 1000SQ (Cont'd) (See drawing on page: 4-28)					
180	312605-0318		1	HEXAGON NUT, M6M M8 A280	
TBA 1500S (See drawing on page: 4-28)					
010	1349319-0000		1	CANTILEVER	
030	1349320-0000		1	CATCH	
040	1143216-0000		1	SPRING	
050	1143215-0000		1	SPRING	
060	1144601-0000		2	GUIDE STUD	
110	312115-0368		2	SCREW ISO4762 M6X16 A4 80	
120	312115-0378		2	SCREW ISO4762 M6X40 A4 80	
170	1511556-0000		1	SET SCREW	
180	312605-0318		1	HEXAGON NUT, M6M M8 A280	
TBA 1890S, TBA 2000S (See drawing on page: 4-36)					
010	2634515-0000		1	CANTILEVER	
040	2662165-0000		1	SPRING	
050	2662166-0000		1	SPRING	
075	2652896-0000		2	SHAFT	
080	2662167-0000		2	BUSHING	
090	2663376-0000		2	WASHER	
095	2663375-0000		2	WASHER	
100	312115-0367		2	SCREW ISO4762 M6X14 A4 80	
120	312105-0331		1	SCREW M6S ISO 4017 M5X20 A480	
125	312105-0341		2	SCREW M6S ISO 4014 M5X50 A480	
130	315105-0146		3	WASHER BRB5,3X10RFR	
190	312105-0367		2	SCREW M6S ISO 4017 M6X14 A480	
TPA 0330SQ (See drawing on page: 4-30)					
010	1539172-0000		1	CANTILEVER	
030	1539887-0000		1	CATCH	
040	1350263-0000		1	SPRING RIGHT	
050	1350264-0000		1	SPRING LEFT	
060	1144601-0000		2	GUIDE STUD	
110	312105-0325		2	SCREW M6S ISO 4017 M5X10 A480	
120	312115-0368		2	SCREW ISO4762 M6X16 A4 80	
TPA 0500SQ (See drawing on page: 4-32)					
010	2563666-0000		1	CANTILEVER	
030	2527725-0000		1	CATCH	
040	2679736-0000		1	SPRING	
050	2679735-0000		1	SPRING	
070	2563671-0000		1	SHAFT	
075	2563667-0000		2	SHAFT	
080	1538521-0000		2	BUSHING	
085	1539348-0000		2	HOLDER	
110	312105-0327		2	SCREW M6S ISO 4017 M5X12 A480	
120	312115-0366		2	SCREW ISO4762 M6X12 A4 80	
130	315105-0153		2	WASHER BRB6,4X12RFR	
190	312155-0339		2	SCREW DIN 7991 MF6S M5X40 A4 70	
200	312115-0367		2	SCREW ISO4762 M6X14 A4 80	
210	90005-0002		2	WASHER 16/6,7X1,5	
220	312105-0287		2	SCREW M6S ISO 4017 M4X8 A470	
TPA 1000SQ (See drawing on page: 4-34)					
010	1523475-0000		1	CANTILEVER	
020	2558921-0000		1	STOP	
025	2558923-0000		1	STOP	
040	2557613-0000		1	SPRING	
050	2557612-0000		1	SPRING	
060	1144601-0000		2	GUIDE STUD	
070	2558929-0000		1	BAR	
100	312105-0368		10	SCREW M6S ISO 4017 M6X16 A480	
120	312105-0364		2	SCREW M6S ISO 4017 M6X10 A480	
130	315105-0153		10	WASHER BRB6,4X12RFR	
150	90062-0061		2	LOCK WASHER NORD-LOCK,6,5/10,8, T=2,2	

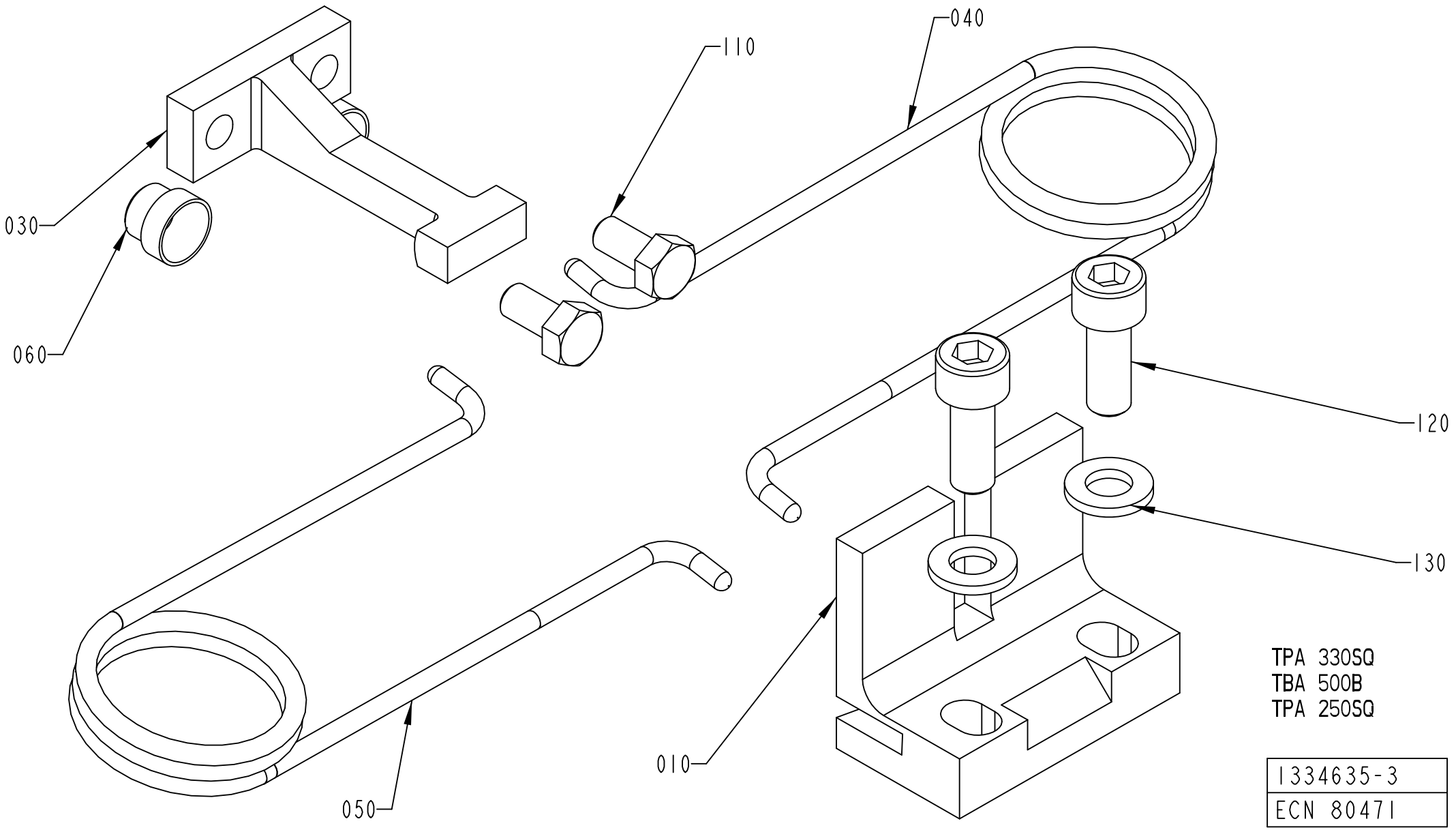
040
110
030
060
120
130
050
010
TPA 330SQ
TBA 500B
TPA 250SQ
1334635-3
ECN 80471

ECM: 210174 - 20060509
Group number: 1334635-0200
Assembly Drawing: 1334635-3_1_AA

This list covers pages from 4-26 to 4-37

Pos	Part No	UN	Qty	Description	Page No
SEE PREVIOUS LISTS PAGES: 4-27, 4-29.					

Pos	Part No	UN	Qty	Description	Page No

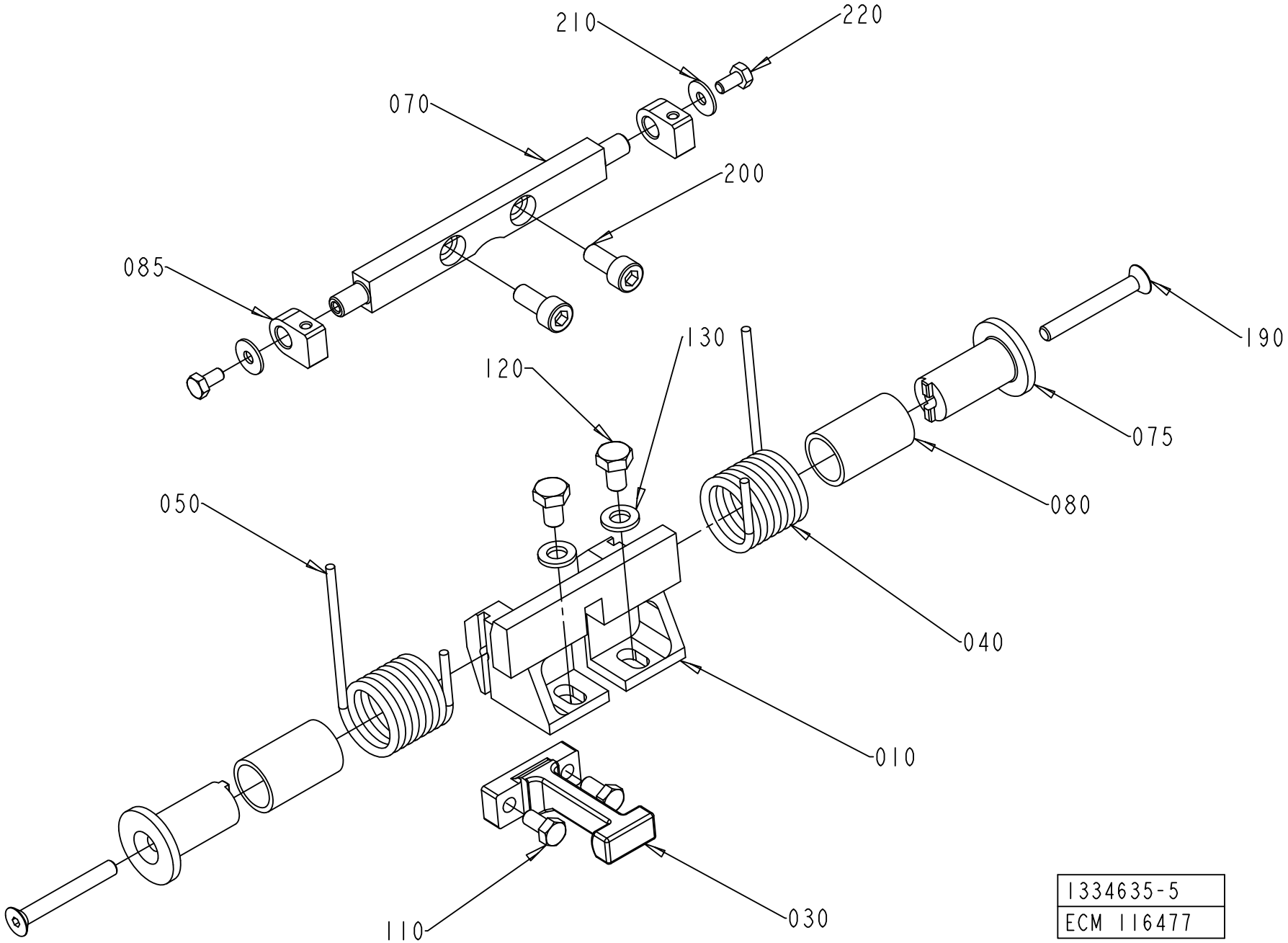

1334635-5
ECM 116477

ECM: 210174 - 20060509
Group number: 1334635-0200
Assembly Drawing: 1334635-5_1_AA

This list covers pages from 4-26 to 4-37

Pos	Part No	UN	Qty	Description	Page No
SEE PREVIOUS LISTS PAGES: 4-27, 4-29.					

Pos	Part No	UN	Qty	Description	Page No

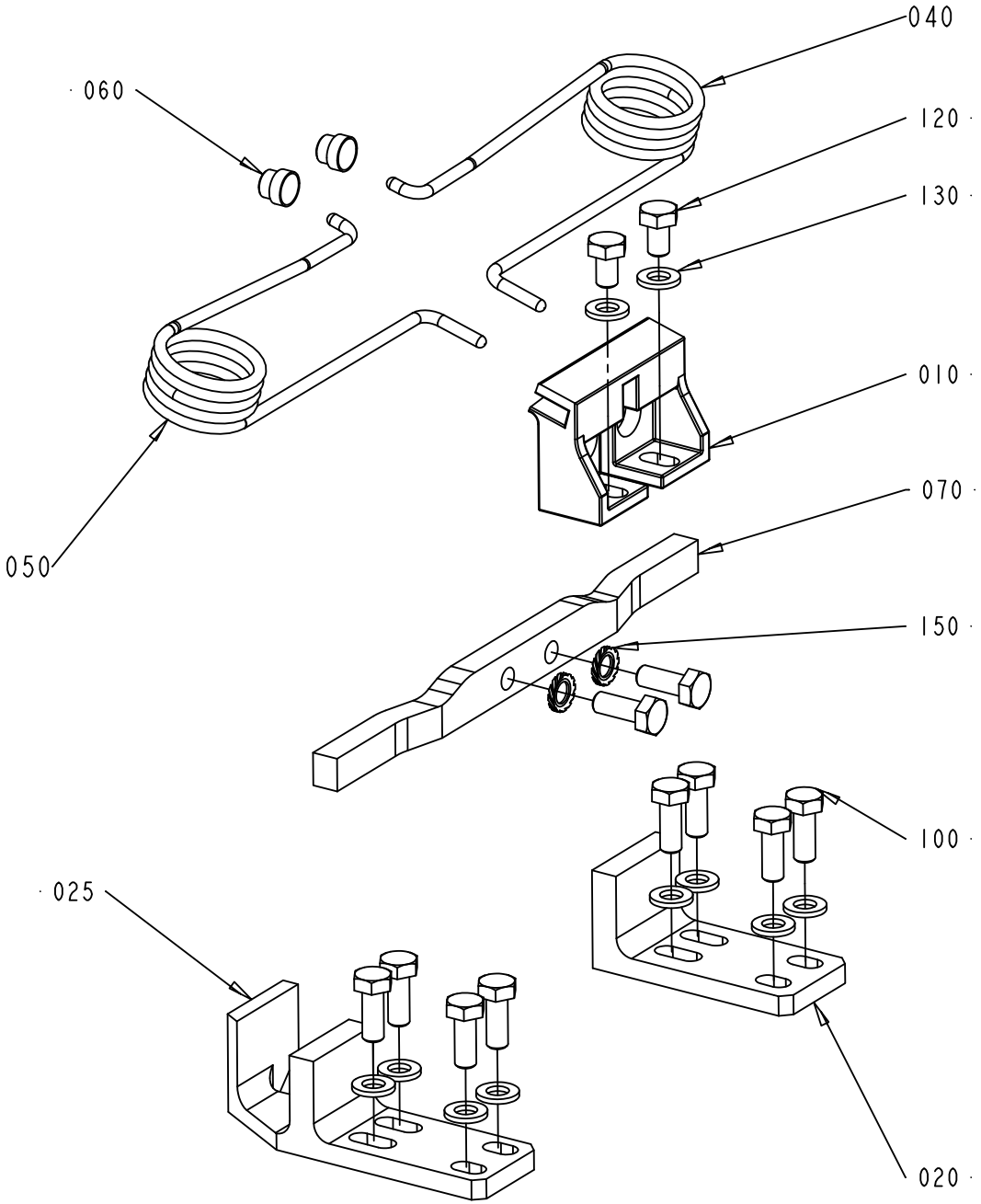

1334635-6
ECM 119888

ECM: 210174 - 20060509
Group number: 1334635-0200
Assembly Drawing: 1334635-6_1_AA

This list covers pages from 4-26 to 4-37

Pos	Part No	UN	Qty	Description	Page No
SEE PREVIOUS LISTS PAGES: 4-27, 4-29.					

Pos	Part No	UN	Qty	Description	Page No

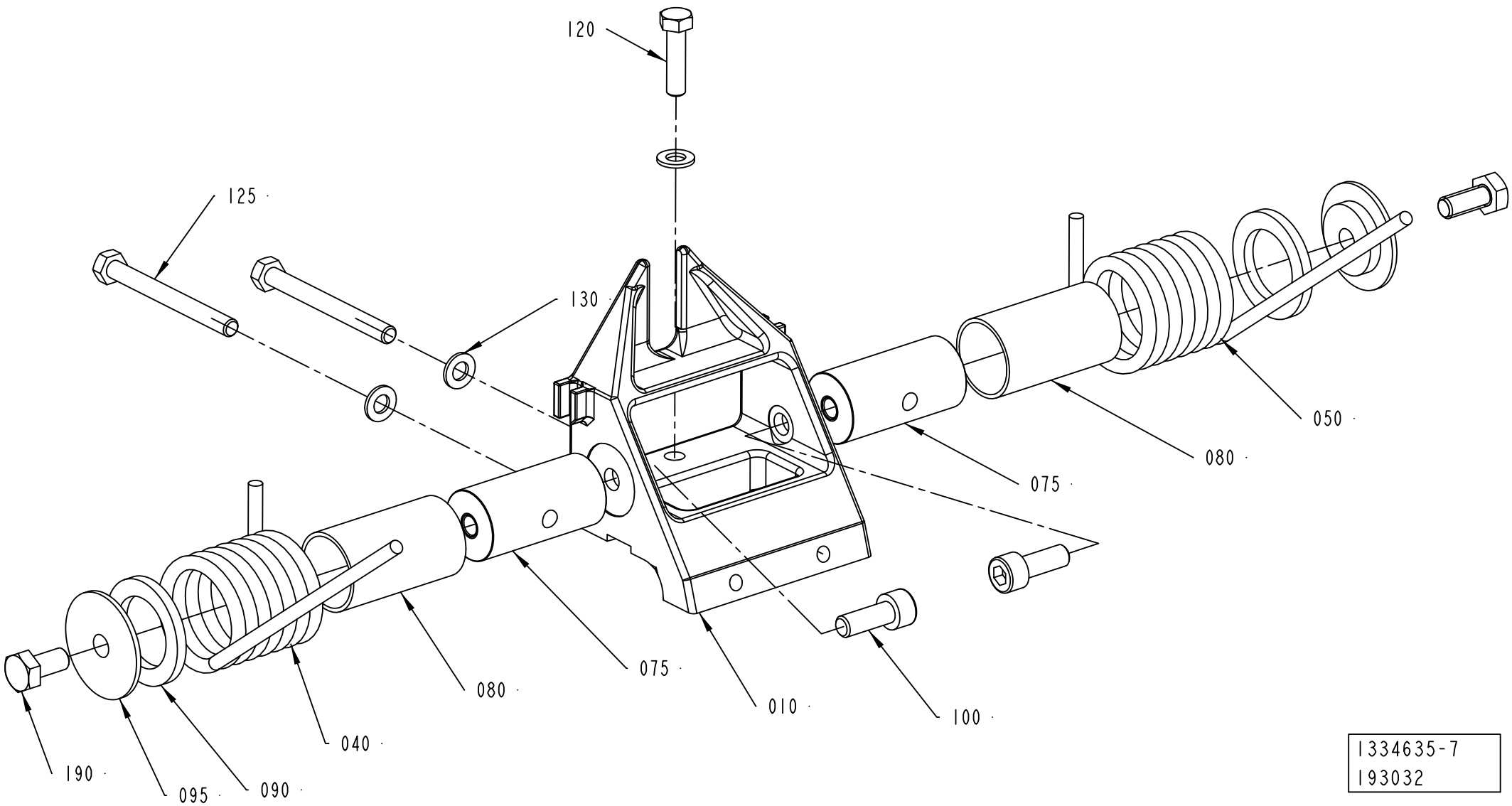

1334635-7
193032

Pos	Part No	UN	Qty	Description	Page No	Pos	Part No	UN	Qty	Description	Page No

SEE PREVIOUS LISTS PAGES: 4-27, 4-29.

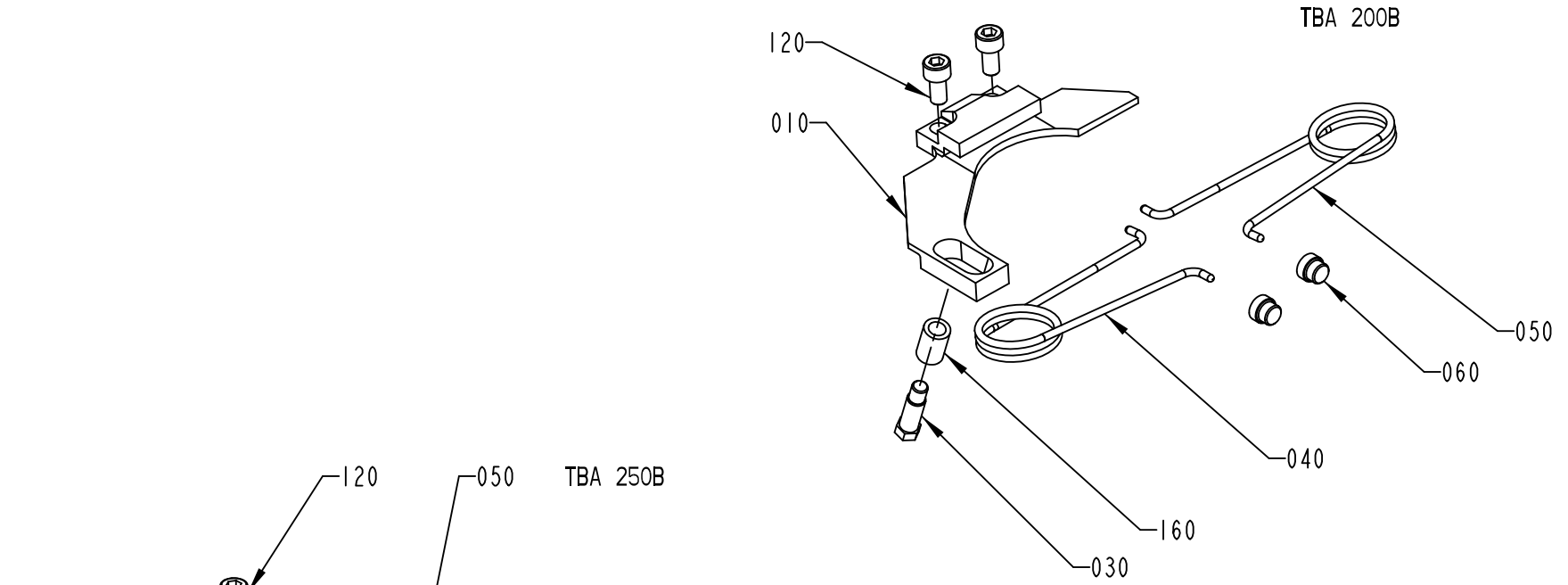

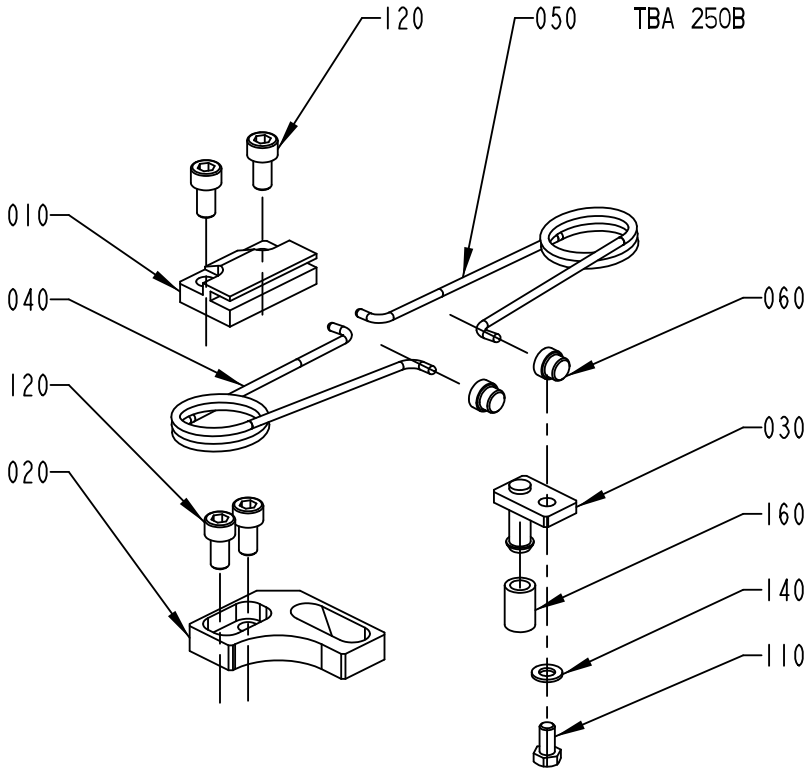

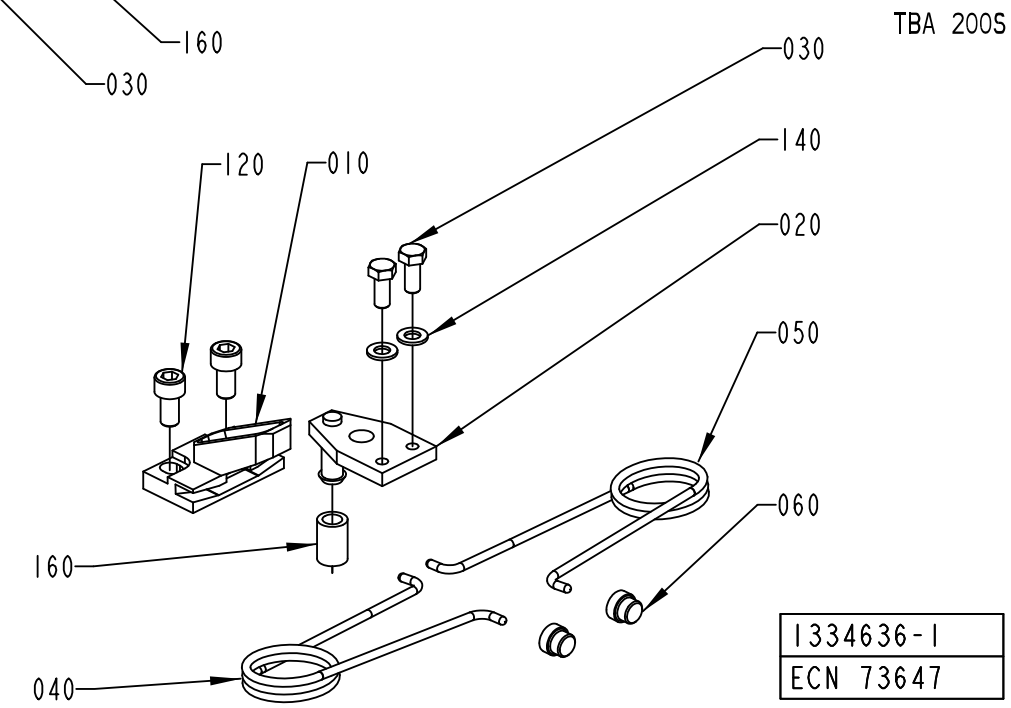

1334636-1
ECN 73647

ECM: 210175 - 20060509
Group number: 1334636-0200
Assembly Drawing: 1334636-1_1_AF

This list covers pages from 4-38 to 4-49

Pos	Part No	UN	Qty	Description	Page No
TBA 0200B (See drawing on page: 4-38)					
010	1512579-0000		1	BRACKET	
030	1346153-0000		1	STOP PIN	
040	1350263-0000		1	SPRING RIGHT	
050	1350264-0000		1	SPRING LEFT	
050	1348484-0000		1	SPRING LEFT	
060	1144601-0000		2	GUIDE STUD	
120	312115-0366		2	SCREW ISO4762 M6X12 A4 80	
160	1317740-0000		1	RUBBER SLEEVE	
TBA 0200S (See drawing on page: 4-38)					
010	1317823-0000		1	CANTILEVER	
030	1317824-0000		1	CATCH	
040	1350263-0000		1	SPRING RIGHT	
050	1350264-0000		1	SPRING LEFT	
060	1144601-0000		2	GUIDE STUD	
110	312105-0327		2	SCREW M6S ISO 4017 M5X12 A480	
120	312115-0366		2	SCREW ISO4762 M6X12 A4 80	
140	315105-0146		2	WASHER BRB5,3X10RFR	
160	1317740-0000		1	RUBBER SLEEVE	
TBA 0250B (See drawing on page: 4-38)					
010	1317742-0000		1	CANTILEVER	
020	1317439-0000		1	CATCH	
030	1317440-0000		1	STOP PIN	
040	1350263-0000		1	SPRING RIGHT	
050	1350264-0000		1	SPRING LEFT	
060	1144601-0000		2	GUIDE STUD	
110	312105-0325		1	SCREW M6S ISO 4017 M5X10 A480	
120	312115-0366		4	SCREW ISO4762 M6X12 A4 80	
140	315105-0146		1	WASHER BRB5,3X10RFR	
160	1317740-0000		1	RUBBER SLEEVE	
TBA 0330S, TBA 0250S, TPA 0250SQ (See drawing on page: 4-42)					
010	1539172-0000		1	CANTILEVER	
030	2527725-0000		1	CATCH	
040	1350263-0000		1	SPRING RIGHT	
050	1350264-0000		1	SPRING LEFT	
060	1144601-0000		2	GUIDE STUD	
110	312105-0328		2	SCREW M6S ISO 4017 M5X14 A480	
120	312115-0368		2	SCREW ISO4762 M6X16 A4 80	
TBA 0500B (See drawing on page: 4-42)					
010	1539886-0000		1	CANTILEVER	
030	1539887-0000		1	CATCH	
040	1350263-0000		1	SPRING RIGHT	
050	1350264-0000		1	SPRING LEFT	
060	1144601-0000		2	GUIDE STUD	
110	312105-0327		2	SCREW M6S ISO 4017 M5X12 A480	
120	312115-0366		2	SCREW ISO4762 M6X12 A4 80	
TBA 0500S (See drawing on page: 4-40)					
010	1349319-0000		1	CANTILEVER	
030	1349320-0000		1	CATCH	
040	1143216-0000		1	SPRING	
050	1143215-0000		1	SPRING	
060	1144601-0000		2	GUIDE STUD	
110	312115-0372		2	SCREW ISO4762 M6X25 A4 80	
120	312115-0378		2	SCREW ISO4762 M6X40 A4 80	
170	1511556-0000		1	SET SCREW	
180	312605-0318		1	HEXAGON NUT, M6M M8 A280	
TBA 1000B (See drawing on page: 4-40)					
010	1347526-0000		1	BRACKET	
020	1478396-0000		1	STOP	
030	1478393-0000		1	CATCH	
040	1348483-0000		1	SPRING RIGHT	
050	1348484-0000		1	SPRING LEFT	
060	1144601-0000		2	GUIDE STUD	
100	312105-0368		4	SCREW M6S ISO 4017 M6X16 A480	
110	312115-0329		2	SCREW ISO4762 M5X16 A4 80	
130	315105-0153		4	WASHER BRB6,4X12RFR	
TBA 1000S (See drawing on page: 4-40)					
010	1347526-0000		1	BRACKET	
020	1478396-0000		1	STOP	
030	1478395-0000		1	CATCH	
040	1348483-0000		1	SPRING RIGHT	
050	1348484-0000		1	SPRING LEFT	
060	1144601-0000		2	GUIDE STUD	
100	312105-0368		4	SCREW M6S ISO 4017 M6X16 A480	
110	312115-0329		2	SCREW ISO4762 M5X16 A4 80	
130	315105-0153		4	WASHER BRB6,4X12RFR	
TBA 1000SQ (See drawing on page: 4-40)					
010	1349319-0000		1	CANTILEVER	
030	1349320-0000		1	CATCH	
040	1143216-0000		1	SPRING	
050	1143215-0000		1	SPRING	
060	1144601-0000		2	GUIDE STUD	
110	312115-0366		2	SCREW ISO4762 M6X12 A4 80	
120	312115-0378		2	SCREW ISO4762 M6X40 A4 80	

Machine Type | Group Description | Used-In | Group Number | Page No

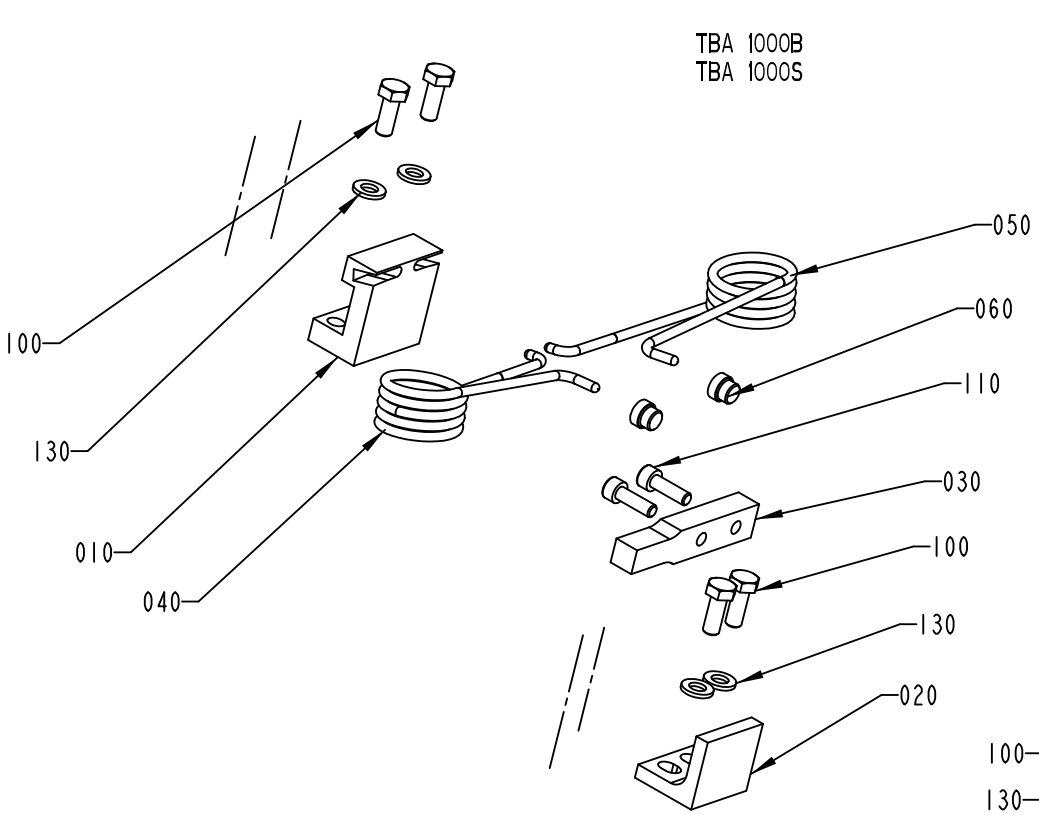

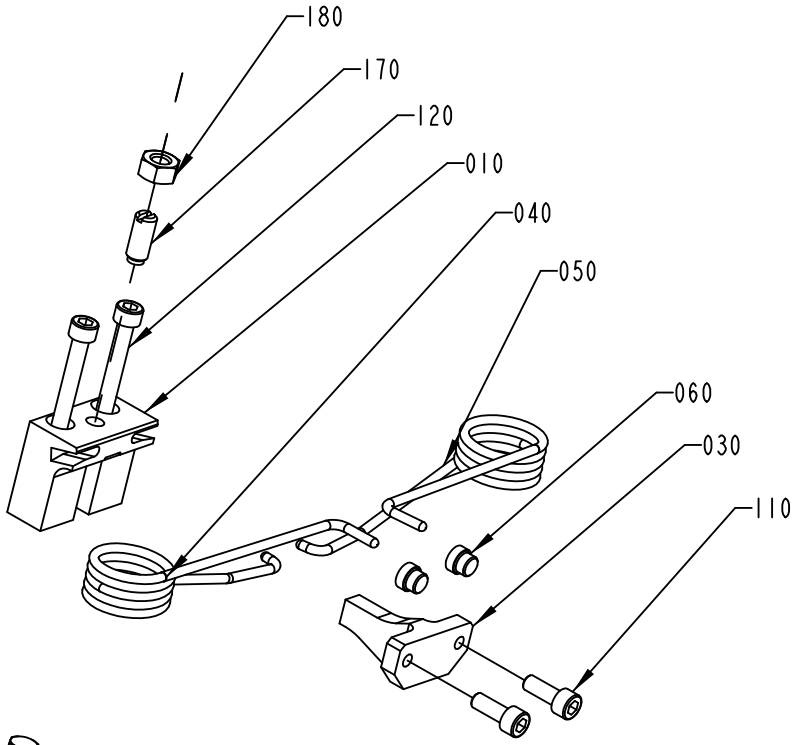

TBA 1500S
TBA 1000SQ
TBA 500S

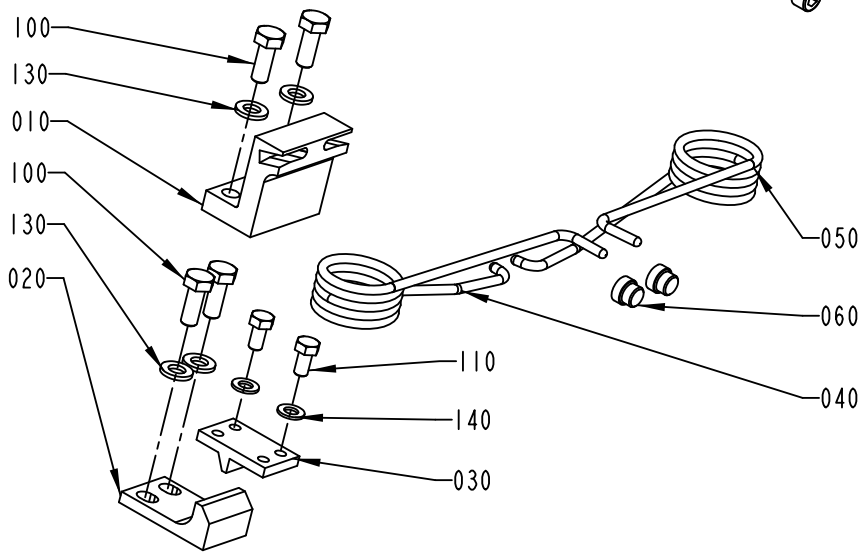

TPA 1000S

1334636-2
ECN 73647

Pos	Part No	UN	Qty	Description	Page No
TBA 1000SQ (Cont'd) (See drawing on page: 4-40)					
170	1511556-0000		1	SET SCREW	
180	312605-0318		1	HEXAGON NUT, M6M M8 A280	
TBA 1500S (See drawing on page: 4-40)					
010	1349319-0000		1	CANTILEVER	
030	1349320-0000		1	CATCH	
040	1143216-0000		1	SPRING	
050	1143215-0000		1	SPRING	
060	1144601-0000		2	GUIDE STUD	
110	312115-0368		2	SCREW ISO4762 M6X16 A4 80	
120	312115-0378		2	SCREW ISO4762 M6X40 A4 80	
170	1511556-0000		1	SET SCREW	
180	312605-0318		1	HEXAGON NUT, M6M M8 A280	
TBA 1890S, TBA 2000S (See drawing on page: 4-48)					
010	2634515-0000		1	CANTILEVER	
040	2662165-0000		1	SPRING	
050	2662166-0000		1	SPRING	
075	2652896-0000		2	SHAFT	
080	2662167-0000		2	BUSHING	
090	2663376-0000		2	WASHER	
095	2663375-0000		2	WASHER	
100	312115-0367		2	SCREW ISO4762 M6X14 A4 80	
120	312105-0331		1	SCREW M6S ISO 4017 M5X20 A480	
125	312105-0341		2	SCREW M6S ISO 4014 M5X50 A480	
130	315105-0146		3	WASHER BRB5,3X10RFR	
190	312105-0367		2	SCREW M6S ISO 4017 M6X14 A480	
TPA 0330SQ (See drawing on page: 4-42)					
010	1539172-0000		1	CANTILEVER	
030	1539887-0000		1	CATCH	
040	1350263-0000		1	SPRING RIGHT	
050	1350264-0000		1	SPRING LEFT	
060	1144601-0000		2	GUIDE STUD	
110	312105-0325		2	SCREW M6S ISO 4017 M5X10 A480	
120	312115-0368		2	SCREW ISO4762 M6X16 A4 80	
TPA 0500SQ (See drawing on page: 4-44)					
010	2563666-0000		1	CANTILEVER	
030	2527725-0000		1	CATCH	
040	2679736-0000		1	SPRING	
050	2679735-0000		1	SPRING	
070	2563671-0000		1	SHAFT	
075	2563667-0000		2	SHAFT	
080	1538521-0000		2	BUSHING	
085	1539348-0000		2	HOLDER	
110	312105-0327		2	SCREW M6S ISO 4017 M5X12 A480	
120	312115-0366		2	SCREW ISO4762 M6X12 A4 80	
130	315105-0153		2	WASHER BRB6,4X12RFR	
190	312155-0339		2	SCREW DIN 7991 MF6S M5X40 A4 70	
200	312115-0367		2	SCREW ISO4762 M6X14 A4 80	
210	90005-0002		2	WASHER 16/6,7X1,5	
220	312105-0287		2	SCREW M6S ISO 4017 M4X8 A470	
TPA 1000SQ (See drawing on page: 4-46)					
010	1523475-0000		1	CANTILEVER	
020	2558920-0000		1	STOP	
025	2558922-0000		1	STOP	
040	2557613-0000		1	SPRING	
050	2557612-0000		1	SPRING	
060	1144601-0000		2	GUIDE STUD	
070	2558929-0000		1	BAR	
100	312105-0368		10	SCREW M6S ISO 4017 M6X16 A480	
120	312105-0364		2	SCREW M6S ISO 4017 M6X10 A480	
130	315105-0153		10	WASHER BRB6,4X12RFR	
150	90062-0061		2	LOCK WASHER NORD-LOCK,6,5/10,8, T=2,2	

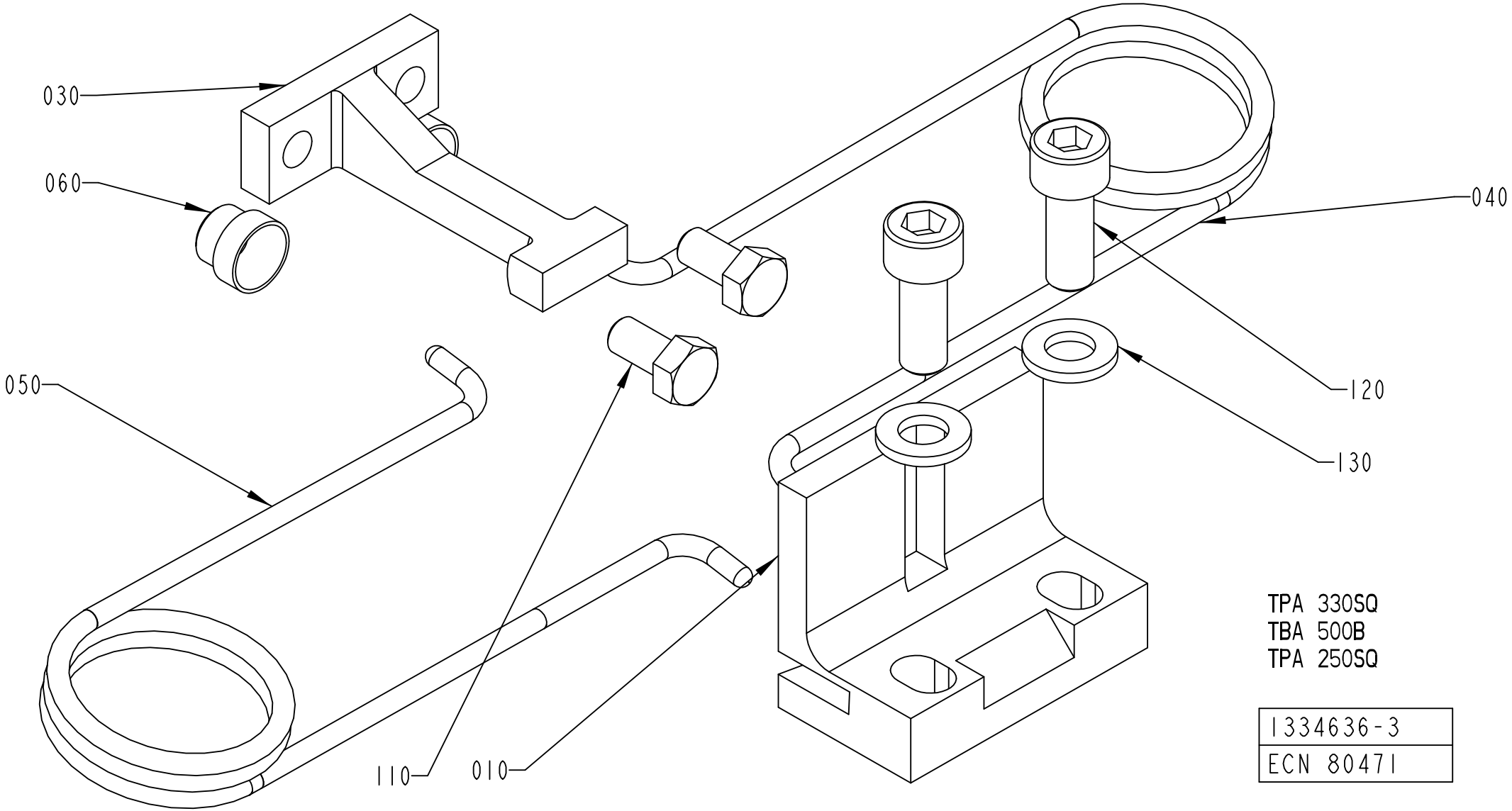
030
060
040
050
120
130
110
010
TPA 330SQ
TBA 500B
TPA 250SQ
1334636-3
ECN 80471

Pos	Part No	UN	Qty	Description	Page No	Pos	Part No	UN	Qty	Description	Page No

SEE PREVIOUS LISTS PAGES: 4-39, 4-41.

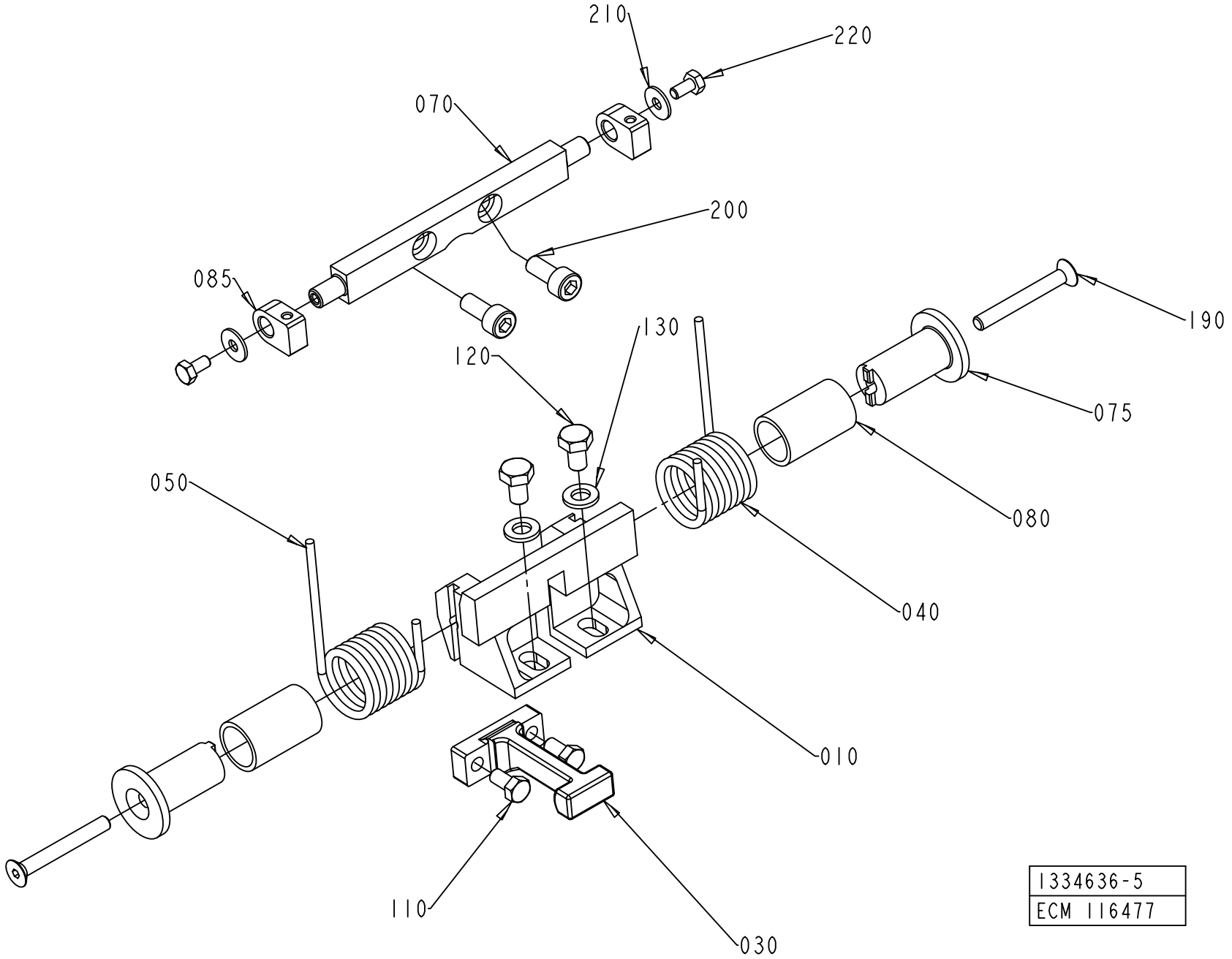
210
220
070
200
085
190
130
120
075
050
080
040
010
110
030
1334636-5
ECM 116477

Pos	Part No	UN	Qty	Description	Page No	Pos	Part No	UN	Qty	Description	Page No

SEE PREVIOUS LISTS PAGES: 4-39, 4-41.

SHOCK ABSORBER

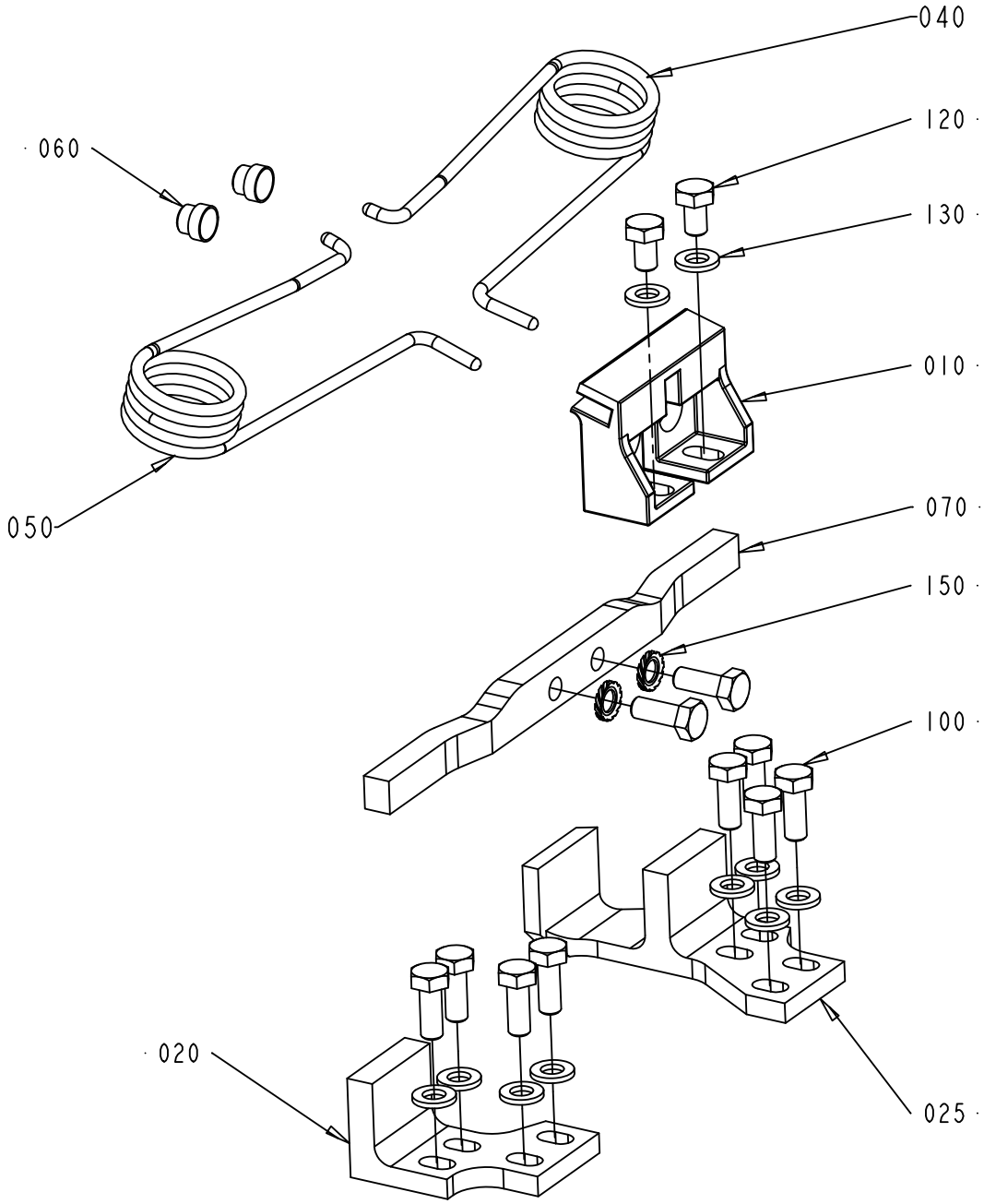

1334636-6
ECM 119888

ECM: 210175 - 20060509
Group number: 1334636-0200
Assembly Drawing: 1334636-6_1_AA

This list covers pages from 4-38 to 4-49

Pos	Part No	UN	Qty	Description	Page No	Pos	Part No	UN	Qty	Description	Page No

SEE PREVIOUS LISTS PAGES: 4-39, 4-41.

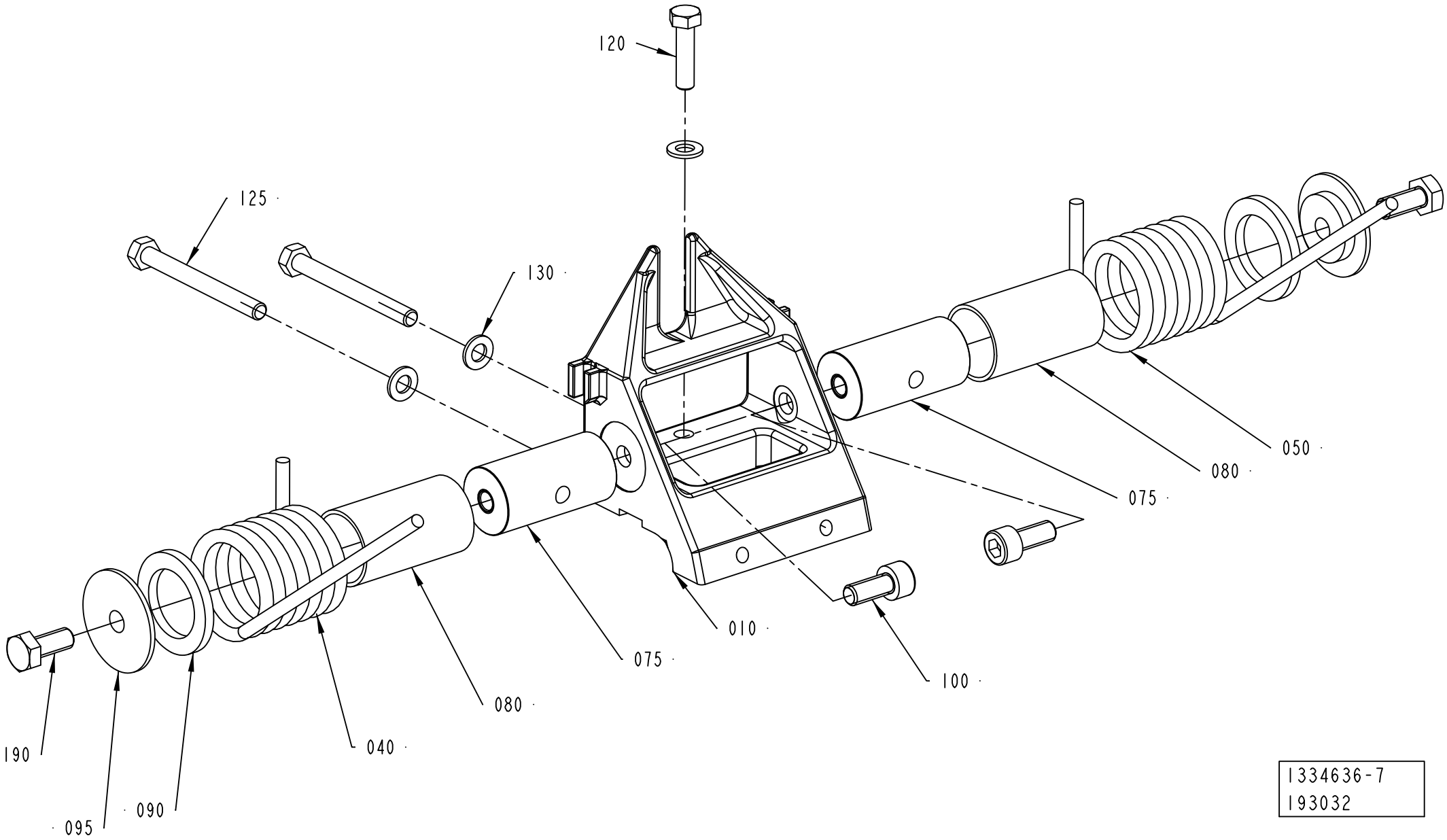

1334636-7
193032

Pos	Part No	UN	Qty	Description	Page No	Pos	Part No	UN	Qty	Description	Page No

SEE PREVIOUS LISTS PAGES: 4-39, 4-41.

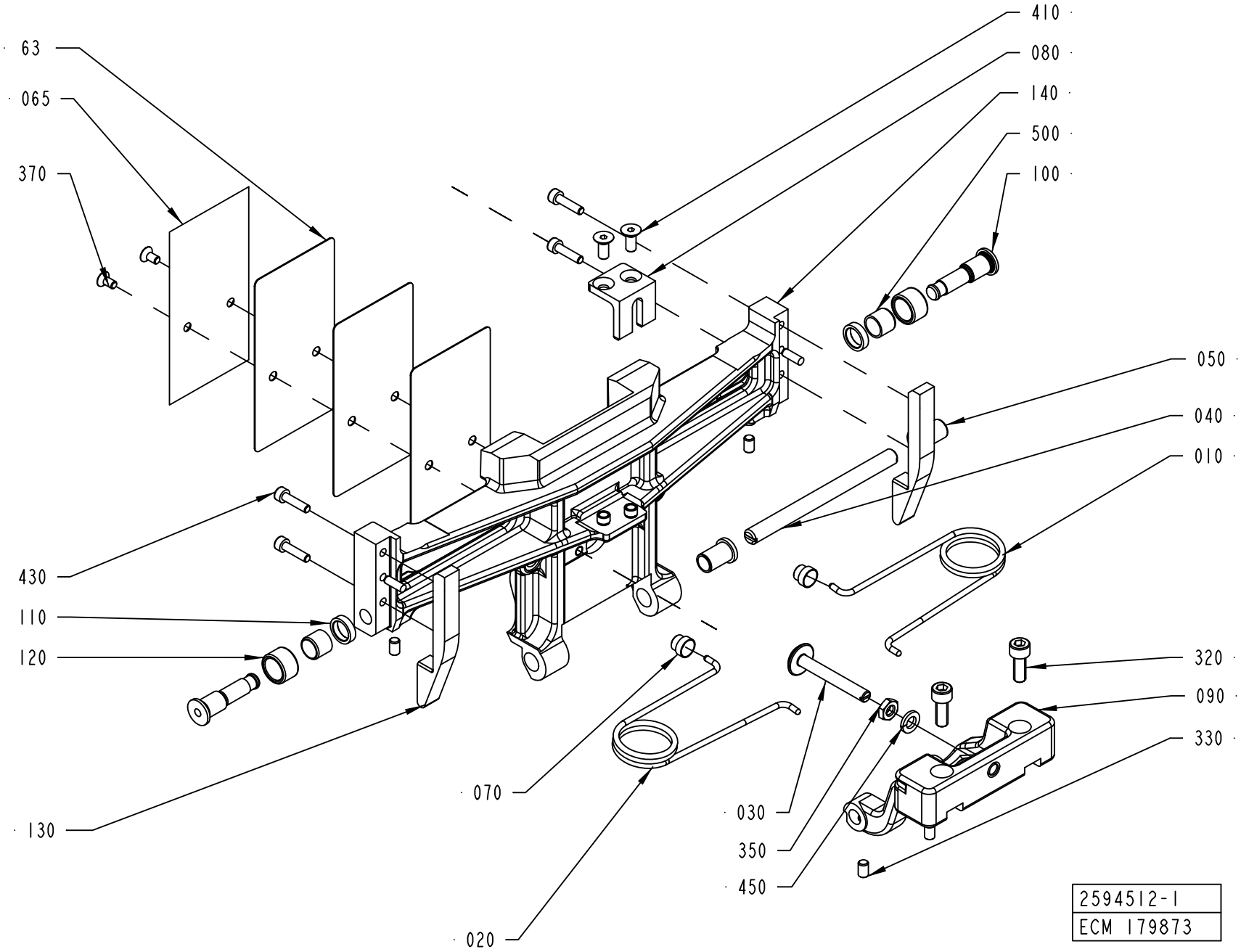
63
065
370
410
080
140
500
100
050
040
010
430
110
120
130
070
020
030
350
450
320
090
330
2594512-1
ECM 179873

ECM: 222704 - 20050713
Group number: 2594512-0100
Assembly Drawing: 2594512-1_1_AB

This list covers pages from 4-50 to 4-57

Pos	Part No	UN	Qty	Description	Page No
TBA 0200B (See drawing on page: 4-50)					
010	1350263-0000		1	SPRING RIGHT	
020	1350264-0000		1	SPRING LEFT	
030	1511339-0000		1	STOP	
040	1499327-0000		1	SHAFT	
050	2530313-0000		2	BUSHING	
063	1538637-0000		3	VOLUME SHIM	
065	1524310-0000		1	VOLUME BULGE	
070	1144601-0000		2	GUIDE STUD	
080	1499328-0000		1	STOPPER	
090	2605869-0000		1	FLAP HOLDER	
100	1512146-0000		2	AXLE PIN	
110	1512147-0000		2	WASHER	
120	1499355-0000		2	ROLLER	
130	2629237-0000		2	CAM	
140	2604493-0000		1	VOLUME FLAP	
320	312115-0368		2	SCREW ISO4762 M6X16 A4 80	
330	312318-0320		2	SCREW ISO4029 M5X5 A4	
340	312318-0323		2	SCREW ISO4029 M5X8 A4	
350	312625-0316		1	HEXAGON THIN NUT, EN 24035 ML6M M6 A4	
370	312155-0287		2	SCREW DIN 7991 MF6S M4X8 A4 70	
410	312155-0325		2	SCREW DIN 7991 MF6S M5X10 A4 70	
430	312115-0289		4	SCREW ISO4762 M4X10 A4 80	
450	315402-0156		2	LOCK WASHER FBB 6,5	
500	321136-0140		2	BUSHING, 10X12X10 MM	
TBA 0200M (See drawing on page: 4-50)					
010	1350263-0000		1	SPRING RIGHT	
020	1350264-0000		1	SPRING LEFT	
030	1511338-0000		1	STOP	
040	1499327-0000		1	SHAFT	
050	2530313-0000		2	BUSHING	
063	2640139-0000		3	VOLUME SHIM	
065	2640138-0000		1	VOLUME BULGE	
070	1144601-0000		2	GUIDE STUD	
080	2606219-0000		1	STOPPER	
090	2606102-0000		1	FLAP HOLDER	
100	1512146-0000		2	AXLE PIN	
110	1512147-0000		2	WASHER	
120	1499355-0000		2	ROLLER	
130	2649443-0000		2	CAM	
140	2639866-0000		1	VOLUME FLAP	
320	312115-0368		2	SCREW ISO4762 M6X16 A4 80	
330	312318-0320		2	SCREW ISO4029 M5X5 A4	
340	312318-0323		2	SCREW ISO4029 M5X8 A4	
350	312625-0316		1	HEXAGON THIN NUT, EN 24035 ML6M M6 A4	
370	312155-0287		2	SCREW DIN 7991 MF6S M4X8 A4 70	
410	312155-0325		2	SCREW DIN 7991 MF6S M5X10 A4 70	
430	312115-0291		4	SCREW ISO4762 M4X12 A4 80	
450	315402-0156		2	LOCK WASHER FBB 6,5	
500	321136-0140		2	BUSHING, 10X12X10 MM	
TBA 0200SQ (See drawing on page: 4-52)					
010	2746136-0000		1	SPRING	
020	2746137-0000		1	SPRING	
030	2676934-0000		1	STOP	
040	2668315-0000		1	SHAFT	
050	2676933-0000		2	BUSHING	
063	2678717-0000		6	VOLUME SHIM	
065	2678838-0000		1	VOLUME BULGE	
070	1144601-0000		2	GUIDE STUD	
080	2773929-0000		1	STOPPER	
090	2668312-0000		1	FLAP HOLDER	
130	2678713-0000		2	CAM	
140	2747138-0000		1	VOLUME FLAP	
320	312115-0368		2	SCREW ISO4762 M6X16 A4 80	
330	312318-0320		2	SCREW ISO4029 M5X5 A4	
340	312318-0320		2	SCREW ISO4029 M5X5 A4	
350	312812-0316		1	HEXAGON NUT, NY-LOCK M6 A480	
370	312155-0287		2	SCREW DIN 7991 MF6S M4X8 A4 70	
410	312155-0323		2	SCREW DIN 7991 MF6S M5X8 A4 70	
440	312115-0289		4	SCREW ISO4762 M4X10 A4 80	
500	321136-0140		2	BUSHING, 10X12X10 MM	
TBA 0250B (See drawing on page: 4-52)					
010	1350263-0000		1	SPRING RIGHT	
020	1350264-0000		1	SPRING LEFT	
030	1511338-0000		1	STOP	
040	1499327-0000		1	SHAFT	
050	2530313-0000		2	BUSHING	
063	2605166-0000		4	VOLUME SHIM	
065	2609925-0000		1	VOLUME BULGE	
070	1144601-0000		2	GUIDE STUD	
080	2693446-0000		1	STOPPER	
090	2606102-0000		1	FLAP HOLDER	
100	1512146-0000		2	AXLE PIN	
110	1512147-0000		2	WASHER	

Machine Type | Group Description | Used-In | Group Number | Page No

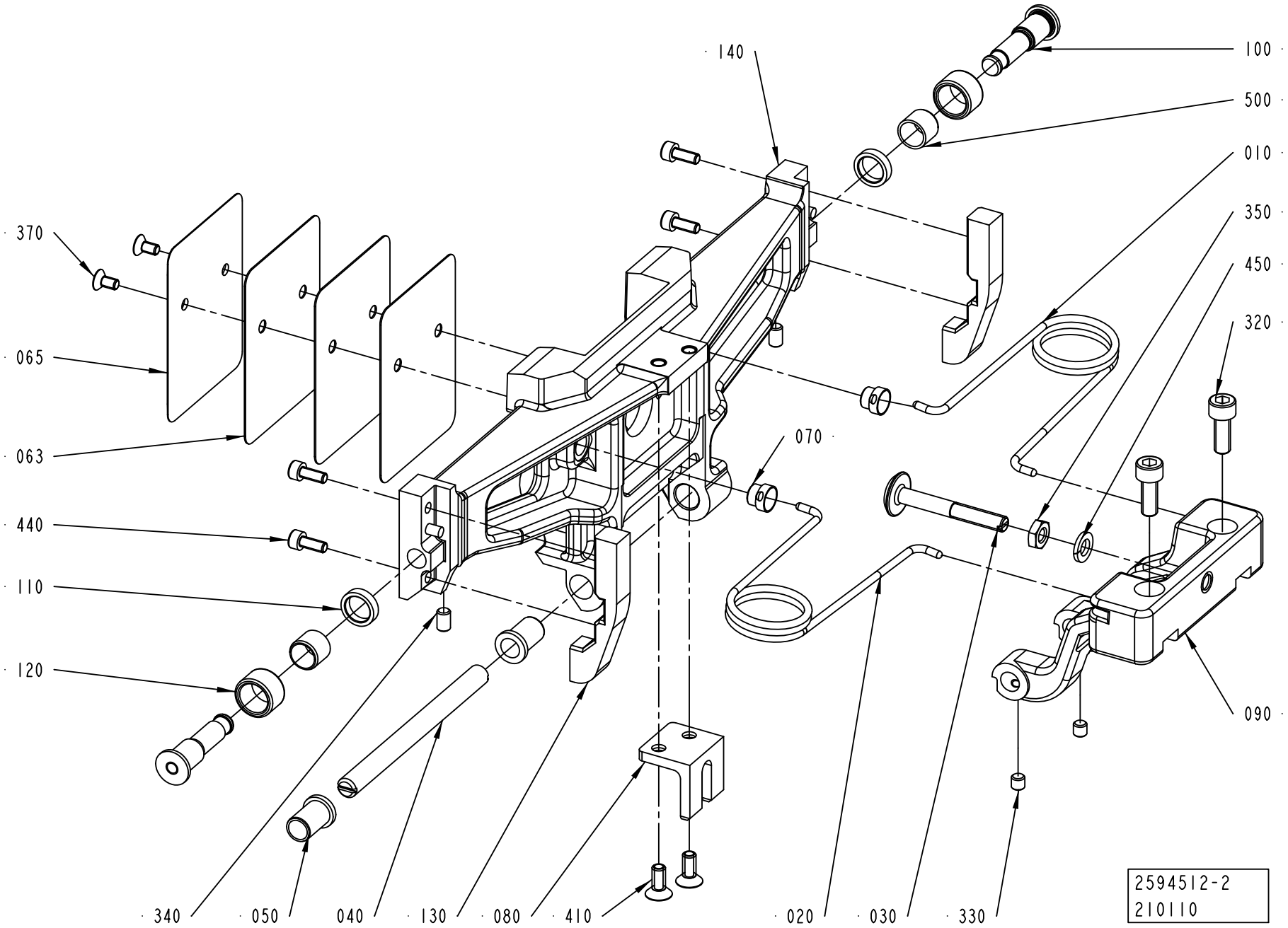
140
100
500
010
350
450
320
370
065
063
070
440
110
120
090
340
050
040
130
080
410
020
030
330
2594512-2
210110

Pos	Part No	UN	Qty	Description	Page No
TBA 0250B (Cont'd) (See drawing on page: 4-52)					
120	1499355-0000		2	ROLLER	
130	2606218-0000		2	CAM	
140	2605191-0000		1	VOLUME FLAP	
320	312115-0368		2	SCREW ISO4762 M6X16 A4 80	
330	312318-0320		2	SCREW ISO4029 M5X5 A4	
340	312318-0323		2	SCREW ISO4029 M5X8 A4	
350	312625-0316		1	HEXAGON THIN NUT, EN 24035 ML6M M6 A4	
370	312155-0287		2	SCREW DIN 7991 MF6S M4X8 A4 70	
410	312155-0327		2	SCREW DIN 7991 MF6S M5X12 A4 70	
440	312115-0289		4	SCREW ISO4762 M4X10 A4 80	
450	315402-0156		2	LOCK WASHER FBB 6,5	
500	321136-0140		2	BUSHING, 10X12X10 MM	
TBA 0250S (See drawing on page: 4-50)					
010	1350263-0000		1	SPRING RIGHT	
020	1350264-0000		1	SPRING LEFT	
030	1511338-0000		1	STOP	
040	1499327-0000		1	SHAFT	
050	2530313-0000		2	BUSHING	
063	2662169-0000		3	VOLUME SHIM	
065	2662168-0000		1	VOLUME BULGE	
070	1144601-0000		2	GUIDE STUD	
080	1499336-0000		1	STOPPER	
090	2606102-0000		1	FLAP HOLDER	
100	1512146-0000		2	AXLE PIN	
110	1512147-0000		2	WASHER	
120	1499355-0000		2	ROLLER	
130	2662431-0000		2	CAM	
140	2661451-0000		1	VOLUME FLAP	
320	312115-0368		2	SCREW ISO4762 M6X16 A4 80	
330	312318-0320		2	SCREW ISO4029 M5X5 A4	
340	312318-0323		2	SCREW ISO4029 M5X8 A4	
350	312625-0316		1	HEXAGON THIN NUT, EN 24035 ML6M M6 A4	
370	312155-0287		2	SCREW DIN 7991 MF6S M4X8 A4 70	
410	312155-0327		2	SCREW DIN 7991 MF6S M5X12 A4 70	
430	312115-0293		4	SCREW ISO4762 M4X16 A4 80	
450	315402-0156		2	LOCK WASHER FBB 6,5	
500	321136-0140		2	BUSHING, 10X12X10 MM	
TBA 0250SQ (See drawing on page: 4-52)					
010	2746136-0000		1	SPRING	
020	2746137-0000		1	SPRING	
030	2676934-0000		1	STOP	
040	2668315-0000		1	SHAFT	
050	2676933-0000		2	BUSHING	
063	2678839-0000		6	VOLUME SHIM	
065	2678840-0000		1	VOLUME BULGE	
070	1144601-0000		2	GUIDE STUD	
080	2773929-0000		1	STOPPER	
090	2668312-0000		1	FLAP HOLDER	
130	2678714-0000		2	CAM	
140	2747142-0000		1	VOLUME FLAP	
320	312115-0368		2	SCREW ISO4762 M6X16 A4 80	
330	312318-0320		2	SCREW ISO4029 M5X5 A4	
340	312318-0320		2	SCREW ISO4029 M5X5 A4	
350	312812-0316		1	HEXAGON NUT, NY-LOCK M6 A480	
370	312155-0287		2	SCREW DIN 7991 MF6S M4X8 A4 70	
410	312155-0323		2	SCREW DIN 7991 MF6S M5X8 A4 70	
440	312115-0289		4	SCREW ISO4762 M4X10 A4 80	
500	321136-0140		2	BUSHING, 10X12X10 MM	
TBA 0330S (See drawing on page: 4-50)					
010	1350263-0000		1	SPRING RIGHT	
020	1350264-0000		1	SPRING LEFT	
030	1511338-0000		1	STOP	
040	1499327-0000		1	SHAFT	
050	2530313-0000		2	BUSHING	
063	2654290-0000		3	VOLUME SHIM	
065	979931-0000		1	VOLUME BULGE	
070	1144601-0000		2	GUIDE STUD	
080	1499336-0000		1	STOPPER	
090	2606102-0000		1	FLAP HOLDER	
100	1512146-0000		2	AXLE PIN	
110	1512147-0000		2	WASHER	
120	1499355-0000		2	ROLLER	
130	2629236-0000		2	CAM	
140	2604495-0000		1	VOLUME FLAP	
320	312115-0368		2	SCREW ISO4762 M6X16 A4 80	
330	312318-0320		2	SCREW ISO4029 M5X5 A4	
340	312318-0323		2	SCREW ISO4029 M5X8 A4	
350	312625-0316		1	HEXAGON THIN NUT, EN 24035 ML6M M6 A4	
370	312155-0287		2	SCREW DIN 7991 MF6S M4X8 A4 70	
410	312155-0327		2	SCREW DIN 7991 MF6S M5X12 A4 70	
430	312115-0293		4	SCREW ISO4762 M4X16 A4 80	
450	315402-0156		2	LOCK WASHER FBB 6,5	
500	321136-0140		2	BUSHING, 10X12X10 MM	

Machine Type | Group Description | Used-In | Group Number | Page No

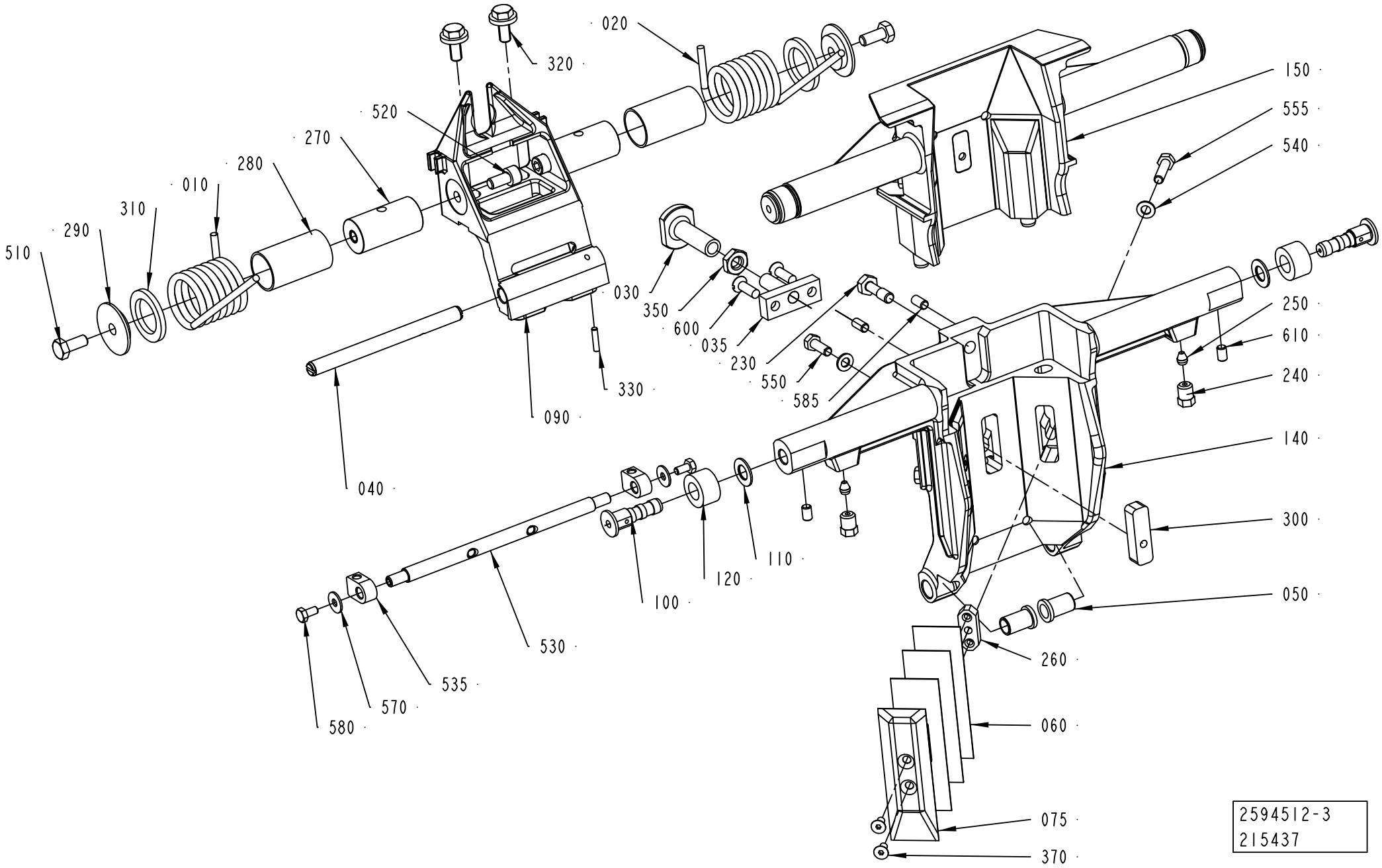
020
320
520
270
280
010
310
290
510
030
350
600
035
230
550
585
330
090
040
150
555
540
250
610
240
140
300
050
260
060
075
370
110
120
100
530
535
570
580
2594512-3
215437

Pos	Part No	UN	Qty	Description	Page No
TBA 0500B (Cont'd) (See drawing on page: 4-50)					
010	1350263-0000		1	SPRING RIGHT	
020	1350264-0000		1	SPRING LEFT	
030	1499348-0000		1	STOP	
040	1487946-0000		1	SHAFT	
050	1487948-0000		2	BUSHING	
063	1511336-0000		3	VOLUME SHIM	
065	1511335-0000		1	VOLUME BULGE	
070	1144601-0000		2	GUIDE STUD	
080	1499349-0000		1	STOPPER	
090	1499346-0000		1	FLAP HOLDER	
100	1512146-0000		2	AXLE PIN	
110	1512147-0000		2	WASHER	
120	1499355-0000		2	ROLLER	
130	1499350-0000		2	CAM	
140	1499357-0000		1	VOLUME FLAP	
320	312115-0368		2	SCREW ISO4762 M6X16 A4 80	
330	312318-0323		2	SCREW ISO4029 M5X8 A4	
340	312318-0323		2	SCREW ISO4029 M5X8 A4	
350	312625-0316		1	HEXAGON THIN NUT, EN 24035 ML6M M6 A4	
370	312145-0289		2	SCREW ISO 2009 MFS M4X10 A4	
410	312155-0323		2	SCREW DIN 7991 MF6S M5X8 A4 70	
430	312115-0291		4	SCREW ISO4762 M4X12 A4 80	
500	321136-0140		2	BUSHING, 10X12X10 MM	
TBA 1000B (See drawing on page: 4-50)					
010	1348483-0000		1	SPRING RIGHT	
020	1348484-0000		1	SPRING LEFT	
030	1487945-0000		1	STOP	
040	1487946-0000		1	SHAFT	
050	1487948-0000		2	BUSHING	
063	1511337-0000		3	VOLUME SHIM	
065	26075-0000		1	VOLUME BULGE	
070	1144601-0000		2	GUIDE STUD	
080	1487943-0000		1	STOPPER	
090	1499345-0000		1	FLAP HOLDER	
100	1512146-0000		2	AXLE PIN	
110	1512147-0000		2	WASHER	
120	1499355-0000		2	ROLLER	
130	1499356-0000		2	CAM	
140	1499358-0000		1	VOLUME FLAP	
320	312115-0368		2	SCREW ISO4762 M6X16 A4 80	
330	312318-0323		2	SCREW ISO4029 M5X8 A4	
340	312318-0323		2	SCREW ISO4029 M5X8 A4	
350	312625-0316		1	HEXAGON THIN NUT, EN 24035 ML6M M6 A4	
370	312141-0222		2	SCREW ISO 2009 MFS M3X8 4.8 EL.PL	
410	312115-0323		2	SCREW ISO4762 M5X8 A4 80	
430	312115-0287		4	SCREW ISO4762 M4X8 A4 80	
500	321136-0140		2	BUSHING, 10X12X10 MM	
TPA 0200SQ (See drawing on page: 4-56)					
010	1350263-0000		1	SPRING RIGHT	
020	1350264-0000		1	SPRING LEFT	
030	1511338-0000		1	STOP	
040	2674327-0000		1	SHAFT	
050	2530313-0000		2	BUSHING	
063	2674328-0000		6	VOLUME SHIM	
065	2674329-0000		2	VOLUME BULGE	
070	1144601-0000		2	GUIDE STUD	
080	2674322-0000		1	STOPPER	
090	2674330-0000		1	FLAP HOLDER	
100	1512146-0000		2	AXLE PIN	
110	1512147-0000		2	WASHER	
120	1499355-0000		2	ROLLER	
130	2674326-0000		2	CAM	
140	2674332-0000		1	VOLUME FLAP	
320	312115-0368		2	SCREW ISO4762 M6X16 A4 80	
330	312318-0320		2	SCREW ISO4029 M5X5 A4	
340	312318-0323		2	SCREW ISO4029 M5X8 A4	
350	312625-0316		1	HEXAGON THIN NUT, EN 24035 ML6M M6 A4	
373	315105-0146		2	WASHER BRB5,3X10RFR	
375	312705-0314		2	NUT HEX. DOMED CAP MHM-6 M5 A280	
410	312155-0327		2	SCREW DIN 7991 MF6S M5X12 A4 70	
430	312115-0291		4	SCREW ISO4762 M4X12 A4 80	
450	315402-0156		2	LOCK WASHER FBB 6,5	
500	321136-0140		2	BUSHING, 10X12X10 MM	
TPA 0250SQ (See drawing on page: 4-56)					
010	1350263-0000		1	SPRING RIGHT	
020	1350264-0000		1	SPRING LEFT	
030	1511338-0000		1	STOP	
040	2674327-0000		1	SHAFT	
050	2530313-0000		2	BUSHING	
063	1549594-0000		6	VOLUME SHIM	
065	2581994-0000		2	VOLUME BULGE	
070	1144601-0000		2	GUIDE STUD	
080	2674322-0000		1	STOPPER	

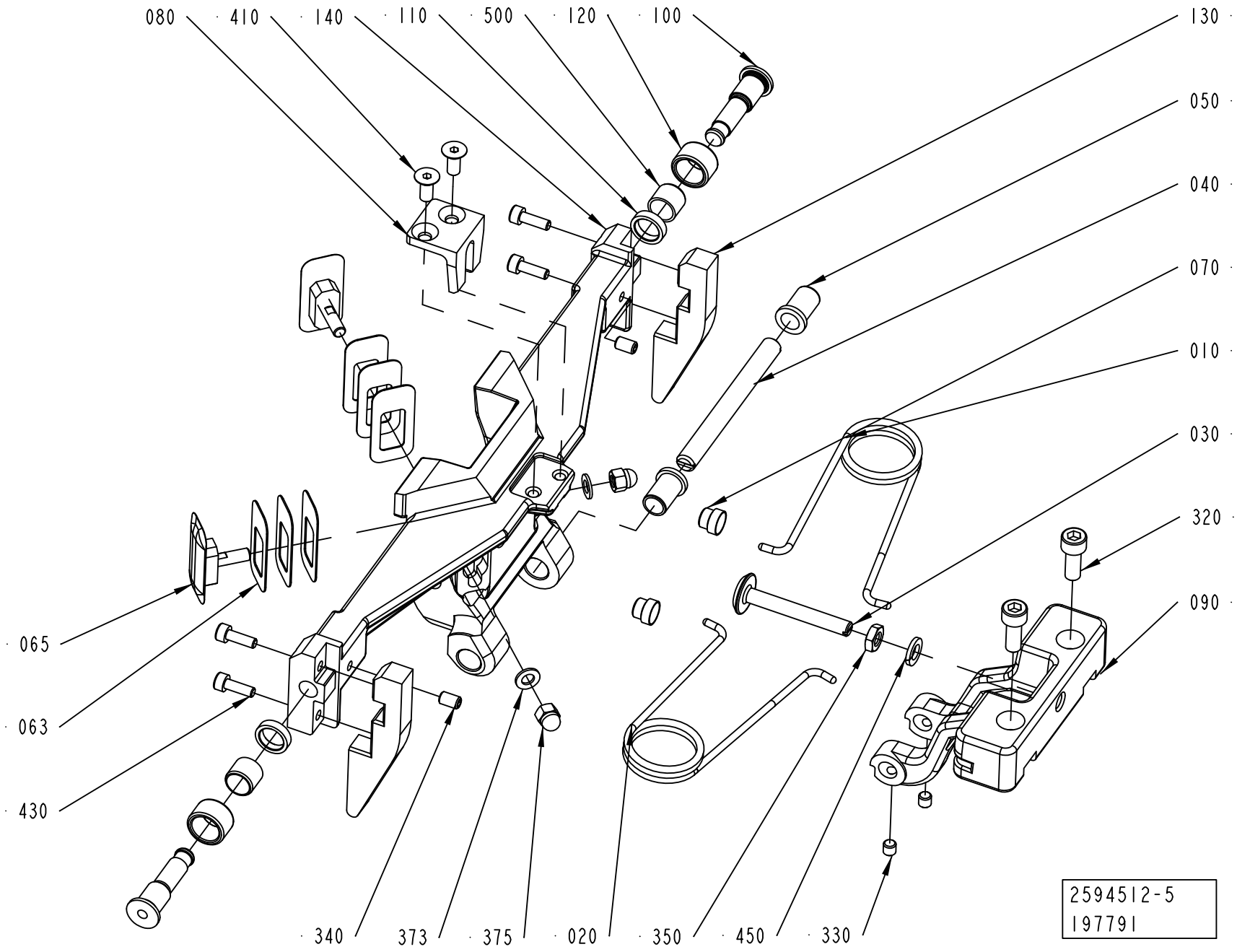
080
410
140
110
500
120
100
130
050
040
070
010
030
320
090
065
063
430
340
373
375
020
350
450
330
2594512-5
197791

Pos	Part No	UN	Qty	Description	Page No
TPA 0250SQ (Cont'd) (See drawing on page: 4-56)					
090	2674330-0000		1	FLAP HOLDER	
100	1512146-0000		2	AXLE PIN	
110	1512147-0000		2	WASHER	
120	1499355-0000		2	ROLLER	
130	2674325-0000		2	CAM	
140	2674334-0000		1	VOLUME FLAP	
320	312115-0368		2	SCREW ISO4762 M6X16 A4 80	
330	312318-0320		2	SCREW ISO4029 M5X5 A4	
340	312318-0323		2	SCREW ISO4029 M5X8 A4	
350	312625-0316		1	HEXAGON THIN NUT, EN 24035 ML6M M6 A4	
373	315105-0146		2	WASHER BRB5,3X10RFR	
375	312705-0314		2	NUT HEX. DOMED CAP MHM-6 M5 A280	
410	312155-0327		2	SCREW DIN 7991 MF6S M5X12 A4 70	
430	312115-0291		4	SCREW ISO4762 M4X12 A4 80	
450	315402-0156		2	LOCK WASHER FBB 6,5	
500	321136-0140		2	BUSHING, 10X12X10 MM	
TPA 1000SQ, TPA 0750SQ (See drawing on page: 4-54)					
010	2663360-0000		1	SPRING	
020	2663361-0000		1	SPRING	
030	2660400-0000		1	STOP	
035	2660401-0000		1	CATCH	
040	2658258-0000		1	SHAFT	
050	2530313-0000		2	BUSHING	
060	2660393-0000		6	VOLUME SHIM	
075	2660392-0000		2	VOLUME BULGE	
090	2658257-0000		1	FLAP HOLDER	
100	2759331-0000		2	SHAFT	
110	19972-0000		2	WASHER	
120	434321-0000		2	CURVE ROLLER	
140	2660379-0000		1	VOLUME FLAP	
150	2705813-0100		1	VOLUME FLAP	**4-59**
230	2660391-0000		1	SCREW	
240	90134-0063		2	BUSHING/NUT M8X1, D=2,5 MM	
250	90028-0020		2	CONE TUBE 2,5MM	
260	1037734-0000		2	WEDGE	
270	2652896-0000		2	SHAFT	
280	2662167-0000		2	BUSHING	
290	2663375-0000		2	WASHER	
300	2660397-0000		1	WEDGE	
310	2663376-0000		2	WASHER	
320	2663372-0000		2	SCREW	
330	311103-0235		1	PARALLEL PIN ISO 2338 3M6X14 A1	
340	312318-0323		2	SCREW ISO4029 M5X8 A4	
350	312625-0318		1	HEXAGON THIN NUT, EN 24035 ML6M M8 A4	
370	312155-0287		4	SCREW DIN 7991 MF6S M4X8 A4 70	
510	312105-0367		2	SCREW M6S ISO 4017 M6X14 A480	
515	312318-0285		2	SCREW ISO4029 M4X6 A4	
520	312115-0366		2	SCREW ISO4762 M6X12 A4 80	
530	2566332-0000		1	SHAFT	
535	2566333-0000		2	HOLDER (STAFFA)	
540	315105-0146		3	WASHER BRB5,3X10RFR	
550	312105-0328		1	SCREW M6S ISO 4017 M5X14 A480	
555	312105-0331		2	SCREW M6S ISO 4017 M5X20 A480	
570	90005-0082		2	WASHER PLAIN ROUND 4,3(M4)/12,H=1	
580	312105-0287		2	SCREW M6S ISO 4017 M4X8 A470	
585	312318-0325		2	SCREW ISO4029 M5X10 A4	
600	312145-0329		2	SCREW ISO 2009 MFS M5X16 A4	
610	312318-0323		2	SCREW ISO4029 M5X8 A4	

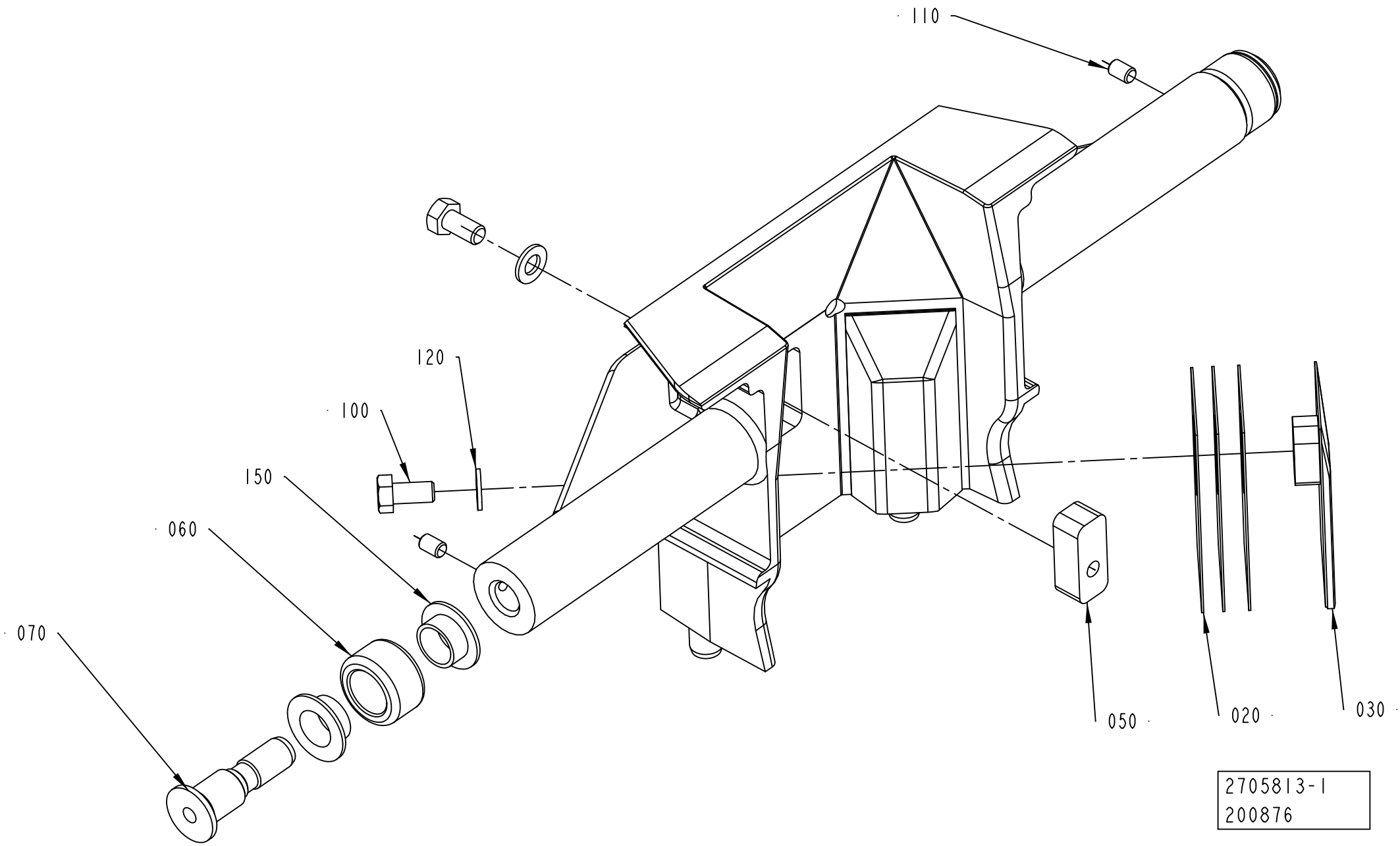
110
120
100
150
060
070
050
020
030
2705813-1
200876

ECM: 202683 - 20050402
Group number: 2705813-0100
Assembly Drawing: 2705813-1_1_AA

Pos	Part No	UN	Qty	Description	Page No
TPA 0750SQ					
010	2660384-0000		1	VOLUME FLAP	
TPA 1000SQ					
010	2660383-0000		1	VOLUME FLAP	
020	2660390-0000		6	VOLUME SHIM	
030	2660395-0000		2	VOLUME BULGE	
050	2660398-0000		1	WEDGE	
060	2660399-0000		2	ROLLER	
070	2594709-0000		2	AXLE PIN	
100	312105-0325		3	SCREW M6S ISO 4017 M5X10 A480	
110	312318-0285		2	SCREW ISO4029 M4X6 A4	
120	315105-0146		3	WASHER BRB5,3X10RFR	
150	90240-0289		4	FLANGE BUSHING, 10X12X6 MM	

Pos	Part No	UN	Qty	Description	Page No

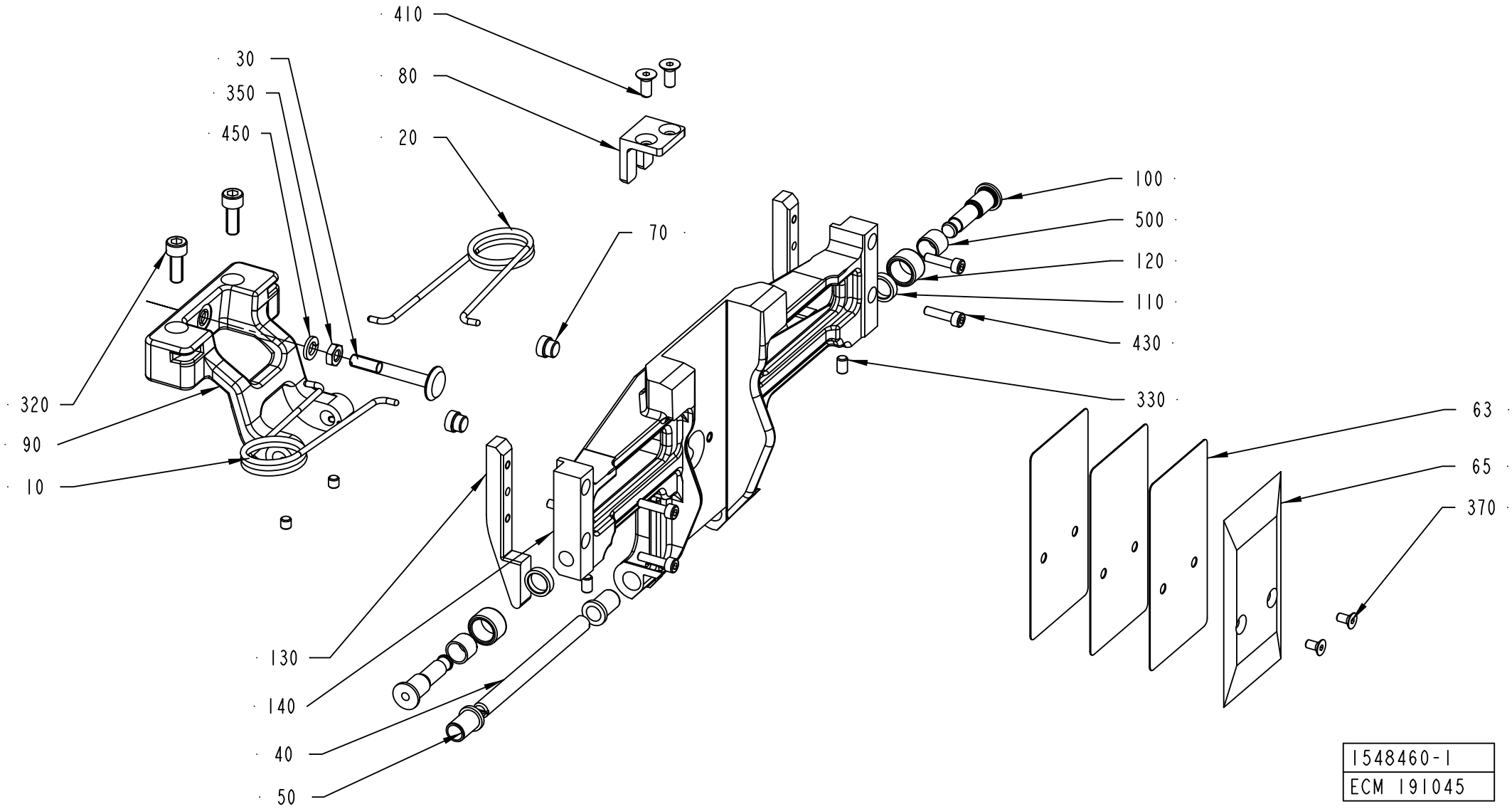
410
30
80
350
20
450
70
100
500
120
110
430
330
320
90
10
63
65
370
130
140
40
50
1548460-1
ECM 191045

ECM: 222703 - 20050713
Group number: 1548460-0100
Assembly Drawing: 1548460-1_1_AC

This list covers pages from 4-60 to 4-67

Pos	Part No	UN	Qty	Description	Page No
TBA 0200B (See drawing on page: 4-60)					
010	1350263-0000		1	SPRING RIGHT	
020	1350264-0000		1	SPRING LEFT	
030	1511339-0000		1	STOP	
040	1499327-0000		1	SHAFT	
050	2530313-0000		2	BUSHING	
063	1538637-0000		3	VOLUME SHIM	
065	1524310-0000		1	VOLUME BULGE	
070	1144601-0000		2	GUIDE STUD	
080	1499328-0000		1	STOPPER	
090	2605869-0000		1	FLAP HOLDER	
100	1512146-0000		2	AXLE PIN	
110	1512147-0000		2	WASHER	
120	1499355-0000		2	ROLLER	
130	2629237-0000		2	CAM	
140	2604494-0000		1	VOLUME FLAP	
320	312115-0368		2	SCREW ISO4762 M6X16 A4 80	
330	312318-0320		2	SCREW ISO4029 M5X5 A4	
340	312318-0323		2	SCREW ISO4029 M5X8 A4	
350	312625-0316		1	HEXAGON THIN NUT, EN 24035 ML6M M6 A4	
370	312155-0287		2	SCREW DIN 7991 MF6S M4X8 A4 70	
410	312155-0325		2	SCREW DIN 7991 MF6S M5X10 A4 70	
430	312115-0289		4	SCREW ISO4762 M4X10 A4 80	
450	315402-0156		2	LOCK WASHER FBB 6,5	
500	321136-0140		2	BUSHING, 10X12X10 MM	
TBA 0200M (See drawing on page: 4-60)					
010	1350263-0000		1	SPRING RIGHT	
020	1350264-0000		1	SPRING LEFT	
030	1511338-0000		1	STOP	
040	1499327-0000		1	SHAFT	
050	2530313-0000		2	BUSHING	
063	2640139-0000		3	VOLUME SHIM	
065	2640138-0000		1	VOLUME BULGE	
070	1144601-0000		2	GUIDE STUD	
080	2606219-0000		1	STOPPER	
090	2606102-0000		1	FLAP HOLDER	
100	1512146-0000		2	AXLE PIN	
110	1512147-0000		2	WASHER	
120	1499355-0000		2	ROLLER	
130	2649443-0000		2	CAM	
140	2639867-0000		1	VOLUME FLAP	
320	312115-0368		2	SCREW ISO4762 M6X16 A4 80	
330	312318-0320		2	SCREW ISO4029 M5X5 A4	
340	312318-0323		2	SCREW ISO4029 M5X8 A4	
350	312625-0316		1	HEXAGON THIN NUT, EN 24035 ML6M M6 A4	
370	312155-0287		2	SCREW DIN 7991 MF6S M4X8 A4 70	
410	312155-0327		2	SCREW DIN 7991 MF6S M5X12 A4 70	
430	312115-0291		4	SCREW ISO4762 M4X12 A4 80	
450	315402-0156		2	LOCK WASHER FBB 6,5	
500	321136-0140		2	BUSHING, 10X12X10 MM	
TBA 0200SQ (See drawing on page: 4-62)					
010	2746136-0000		1	SPRING	
020	2746137-0000		1	SPRING	
030	2676934-0000		1	STOP	
040	2668315-0000		1	SHAFT	
050	2676933-0000		2	BUSHING	
063	2678717-0000		6	VOLUME SHIM	
065	2678838-0000		1	VOLUME BULGE	
070	1144601-0000		2	GUIDE STUD	
080	2773929-0000		1	STOPPER	
090	2668312-0000		1	FLAP HOLDER	
130	2678713-0000		2	CAM	
140	2747138-0000		1	VOLUME FLAP	
330	312318-0320		2	SCREW ISO4029 M5X5 A4	
340	312318-0320		2	SCREW ISO4029 M5X5 A4	
350	312812-0316		1	HEXAGON NUT, NY-LOCK M6 A480	
370	312155-0287		2	SCREW DIN 7991 MF6S M4X8 A4 70	
410	312155-0323		2	SCREW DIN 7991 MF6S M5X8 A4 70	
440	312115-0289		4	SCREW ISO4762 M4X10 A4 80	
500	321136-0140		2	BUSHING, 10X12X10 MM	
TBA 0250B (See drawing on page: 4-62)					
010	1350263-0000		1	SPRING RIGHT	
020	1350264-0000		1	SPRING LEFT	
030	1511338-0000		1	STOP	
040	1499327-0000		1	SHAFT	
050	2530313-0000		2	BUSHING	
063	2605166-0000		4	VOLUME SHIM	
065	2609925-0000		1	VOLUME BULGE	
070	1144601-0000		2	GUIDE STUD	
080	2693446-0000		1	STOPPER	
090	2606102-0000		1	FLAP HOLDER	
100	1512146-0000		2	AXLE PIN	
110	1512147-0000		2	WASHER	

Machine Type | Group Description | Used-In | Group Number | Page No

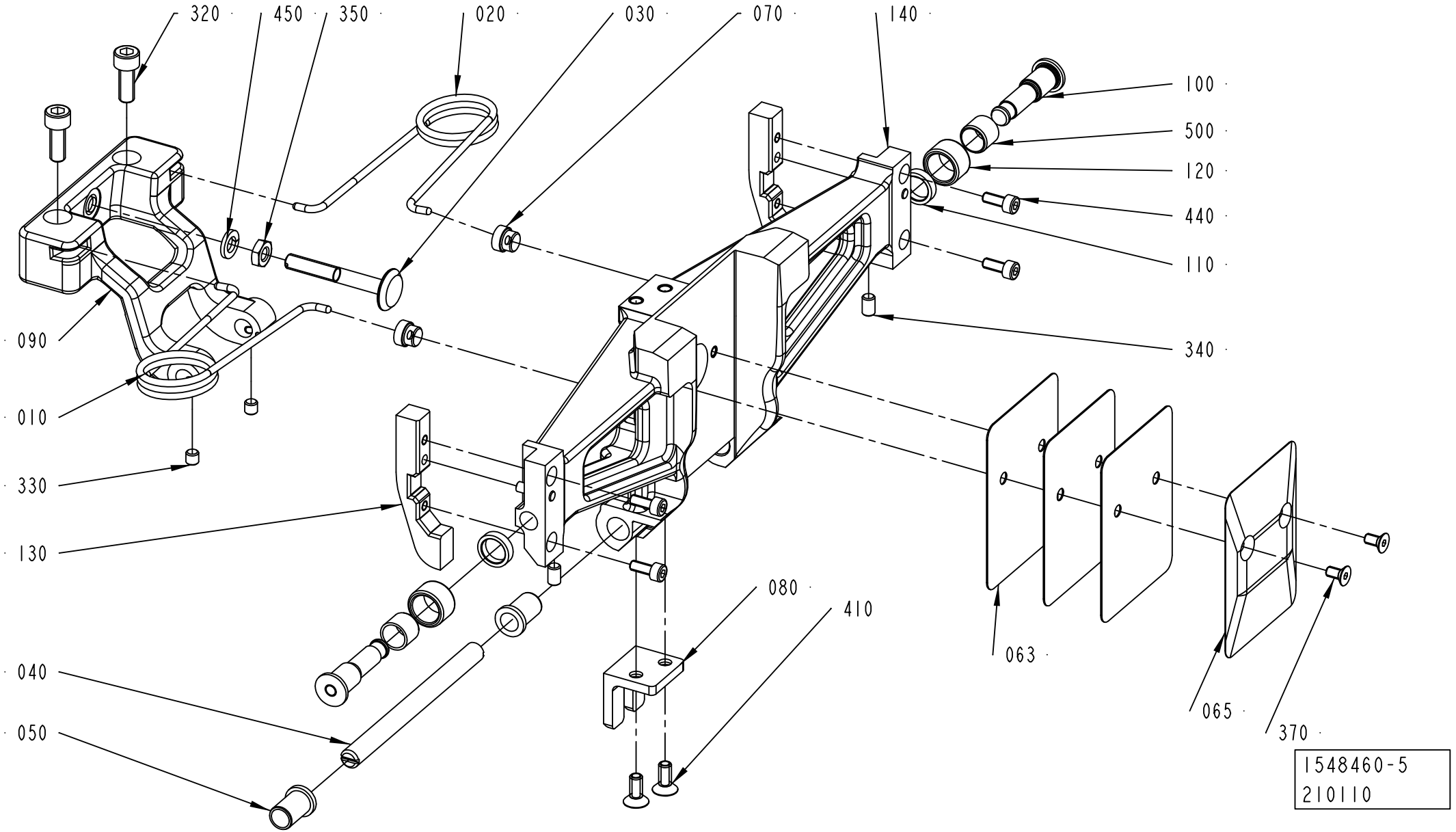
320
450
350
020
030
070
140
100
500
120
440
110
340
090
010
330
130
080
410
040
050
063
065
370
1548460-5
210110

ECM: 222703 - 20050713
Group number: 1548460-0100
Assembly Drawing: 1548460-5_1_AC

This list covers pages from 4-60 to 4-67

Pos	Part No	UN	Qty	Description	Page No
TBA 0250B (Cont'd) (See drawing on page: 4-62)					
120	1499355-0000		2	ROLLER	
130	2606218-0000		2	CAM	
140	2605192-0000		1	VOLUME FLAP	
320	312115-0368		2	SCREW ISO4762 M6X16 A4 80	
330	312318-0320		2	SCREW ISO4029 M5X5 A4	
340	312318-0323		2	SCREW ISO4029 M5X8 A4	
350	312625-0316		1	HEXAGON THIN NUT, EN 24035 ML6M M6 A4	
370	312155-0287		2	SCREW DIN 7991 MF6S M4X8 A4 70	
410	312155-0327		2	SCREW DIN 7991 MF6S M5X12 A4 70	
440	312115-0289		4	SCREW ISO4762 M4X10 A4 80	
450	315402-0156		2	LOCK WASHER FBB 6,5	
500	321136-0140		2	BUSHING, 10X12X10 MM	
TBA 0250S (See drawing on page: 4-60)					
010	1350263-0000		1	SPRING RIGHT	
020	1350264-0000		1	SPRING LEFT	
030	1511338-0000		1	STOP	
040	1499327-0000		1	SHAFT	
050	2530313-0000		2	BUSHING	
063	2662169-0000		3	VOLUME SHIM	
065	2662168-0000		1	VOLUME BULGE	
070	1144601-0000		2	GUIDE STUD	
080	1499336-0000		1	STOPPER	
090	2606102-0000		1	FLAP HOLDER	
100	1512146-0000		2	AXLE PIN	
110	1512147-0000		2	WASHER	
120	1499355-0000		2	ROLLER	
130	2662431-0000		2	CAM	
140	2661450-0000		1	VOLUME FLAP	
320	312115-0368		2	SCREW ISO4762 M6X16 A4 80	
330	312318-0320		2	SCREW ISO4029 M5X5 A4	
340	312318-0323		2	SCREW ISO4029 M5X8 A4	
350	312625-0316		1	HEXAGON THIN NUT, EN 24035 ML6M M6 A4	
370	312155-0287		2	SCREW DIN 7991 MF6S M4X8 A4 70	
430	312115-0293		4	SCREW ISO4762 M4X16 A4 80	
450	315402-0156		2	LOCK WASHER FBB 6,5	
500	321136-0140		2	BUSHING, 10X12X10 MM	
TBA 0250SQ (See drawing on page: 4-62)					
010	2746136-0000		1	SPRING	
020	2746137-0000		1	SPRING	
030	2676934-0000		1	STOP	
040	2668315-0000		1	SHAFT	
050	2676933-0000		2	BUSHING	
063	2678839-0000		6	VOLUME SHIM	
065	2678840-0000		1	VOLUME BULGE	
070	1144601-0000		2	GUIDE STUD	
080	2773929-0000		1	STOPPER	
090	2668312-0000		1	FLAP HOLDER	
130	2678714-0000		2	CAM	
140	2747142-0000		1	VOLUME FLAP	
330	312318-0320		2	SCREW ISO4029 M5X5 A4	
340	312318-0320		2	SCREW ISO4029 M5X5 A4	
350	312812-0316		1	HEXAGON NUT, NY-LOCK M6 A480	
370	312155-0287		2	SCREW DIN 7991 MF6S M4X8 A4 70	
410	312155-0323		2	SCREW DIN 7991 MF6S M5X8 A4 70	
440	312115-0289		4	SCREW ISO4762 M4X10 A4 80	
500	321136-0140		2	BUSHING, 10X12X10 MM	
TBA 0330S (See drawing on page: 4-60)					
010	1350263-0000		1	SPRING RIGHT	
020	1350264-0000		1	SPRING LEFT	
030	1511338-0000		1	STOP	
040	1499327-0000		1	SHAFT	
050	2530313-0000		2	BUSHING	
063	2654290-0000		3	VOLUME SHIM	
065	979931-0000		1	VOLUME BULGE	
070	1144601-0000		2	GUIDE STUD	
080	1499336-0000		1	STOPPER	
090	2606102-0000		1	FLAP HOLDER	
100	1512146-0000		2	AXLE PIN	
110	1512147-0000		2	WASHER	
120	1499355-0000		2	ROLLER	
130	2629236-0000		2	CAM	
140	2604496-0000		1	VOLUME FLAP	
320	312115-0368		2	SCREW ISO4762 M6X16 A4 80	
330	312318-0320		2	SCREW ISO4029 M5X5 A4	
340	312318-0323		2	SCREW ISO4029 M5X8 A4	
350	312625-0316		1	HEXAGON THIN NUT, EN 24035 ML6M M6 A4	
370	312155-0287		2	SCREW DIN 7991 MF6S M4X8 A4 70	
410	312155-0327		2	SCREW DIN 7991 MF6S M5X12 A4 70	
430	312115-0293		4	SCREW ISO4762 M4X16 A4 80	
450	315402-0156		2	LOCK WASHER FBB 6,5	
500	321136-0140		2	BUSHING, 10X12X10 MM	
TBA 0500B (See drawing on page: 4-60)					
010	1350263-0000		1	SPRING RIGHT	

VOLUME FLAP PRESSURE

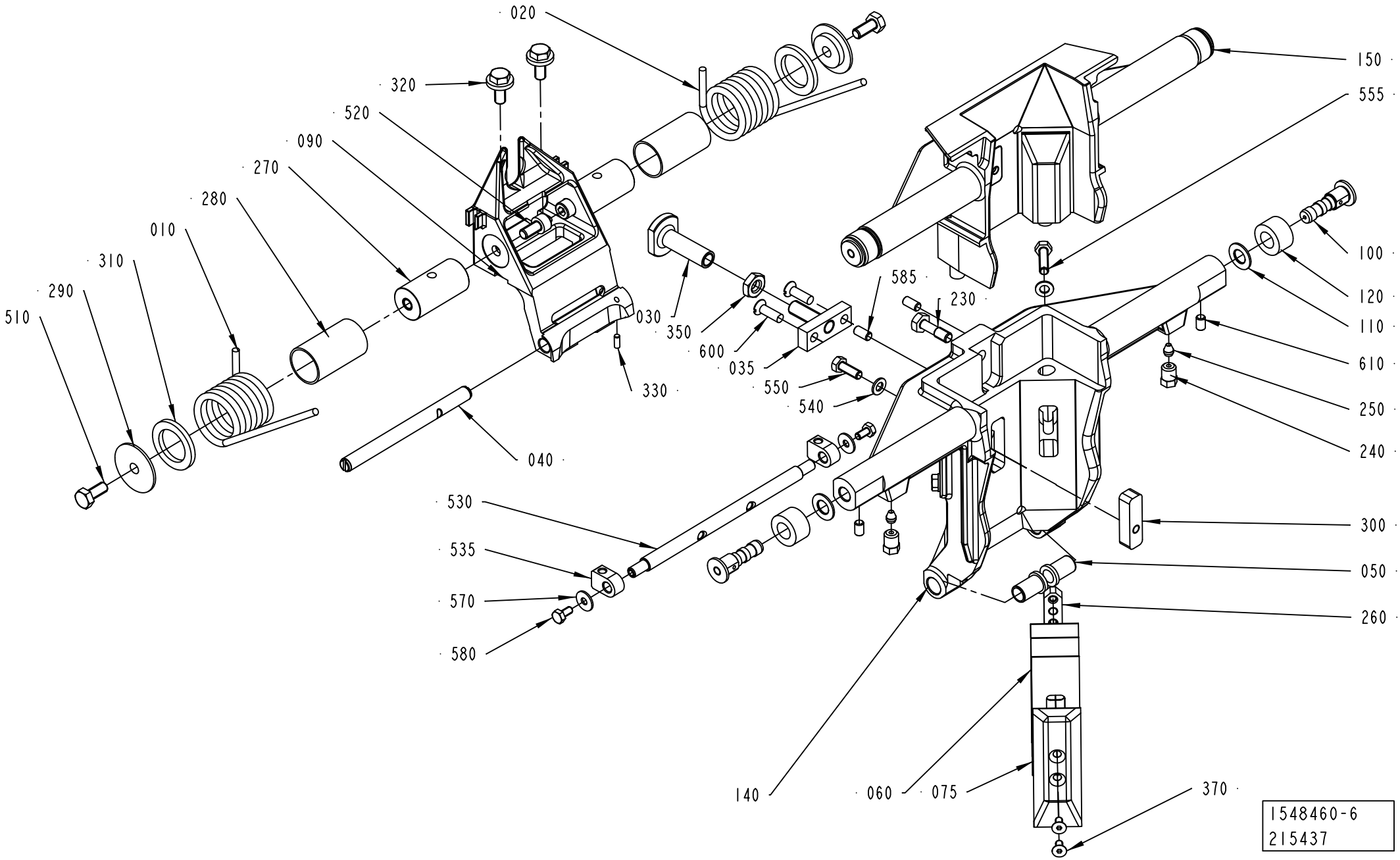

ECM: 222703 - 20050713
Group number: 1548460-0100
Assembly Drawing: 1548460-6_1_AB

This list covers pages from 4-60 to 4-67

Pos	Part No	UN	Qty	Description	Page No
TBA 0500B (Cont'd) (See drawing on page: 4-60)					
020	1350264-0000		1	SPRING LEFT	
030	1499348-0000		1	STOP	
040	1487946-0000		1	SHAFT	
050	1487948-0000		2	BUSHING	
063	1511336-0000		3	VOLUME SHIM	
065	1511335-0000		1	VOLUME BULGE	
070	1144601-0000		2	GUIDE STUD	
080	1499349-0000		1	STOPPER	
090	1499346-0000		1	FLAP HOLDER	
100	1512146-0000		2	AXLE PIN	
110	1512147-0000		2	WASHER	
120	1499355-0000		2	ROLLER	
130	1499350-0000		2	CAM	
140	1499357-0000		1	VOLUME FLAP	
320	312115-0368		2	SCREW ISO4762 M6X16 A4 80	
330	312318-0323		2	SCREW ISO4029 M5X8 A4	
340	312318-0323		2	SCREW ISO4029 M5X8 A4	
350	312625-0316		1	HEXAGON THIN NUT, EN 24035 ML6M M6 A4	
370	312145-0289		2	SCREW ISO 2009 MFS M4X10 A4	
410	312155-0323		2	SCREW DIN 7991 MF6S M5X8 A4 70	
430	312115-0291		4	SCREW ISO4762 M4X12 A4 80	
500	321136-0140		2	BUSHING, 10X12X10 MM	
TBA 1000B (See drawing on page: 4-60)					
010	1348483-0000		1	SPRING RIGHT	
020	1348484-0000		1	SPRING LEFT	
030	1487945-0000		1	STOP	
040	1487946-0000		1	SHAFT	
050	1487948-0000		2	BUSHING	
063	1511337-0000		3	VOLUME SHIM	
065	26075-0000		1	VOLUME BULGE	
070	1144601-0000		2	GUIDE STUD	
080	1487943-0000		1	STOPPER	
090	1499345-0000		1	FLAP HOLDER	
100	1512146-0000		2	AXLE PIN	
110	1512147-0000		2	WASHER	
120	1499355-0000		2	ROLLER	
130	1499356-0000		2	CAM	
140	1499358-0000		1	VOLUME FLAP	
320	312115-0368		2	SCREW ISO4762 M6X16 A4 80	
330	312318-0323		2	SCREW ISO4029 M5X8 A4	
340	312318-0323		2	SCREW ISO4029 M5X8 A4	
350	312625-0316		1	HEXAGON THIN NUT, EN 24035 ML6M M6 A4	
370	312141-0222		2	SCREW ISO 2009 MFS M3X8 4.8 EL.PL	
410	312115-0323		2	SCREW ISO4762 M5X8 A4 80	
430	312115-0287		4	SCREW ISO4762 M4X8 A4 80	
500	321136-0140		2	BUSHING, 10X12X10 MM	
TPA 0200SQ (See drawing on page: 4-66)					
010	1350263-0000		1	SPRING RIGHT	
020	1350264-0000		1	SPRING LEFT	
030	1511338-0000		1	STOP	
040	2674327-0000		1	SHAFT	
050	2530313-0000		2	BUSHING	
063	2674328-0000		6	VOLUME SHIM	
065	2674329-0000		2	VOLUME BULGE	
070	1144601-0000		2	GUIDE STUD	
080	2674322-0000		1	STOPPER	
090	2674330-0000		1	FLAP HOLDER	
100	1512146-0000		2	AXLE PIN	
110	1512147-0000		2	WASHER	
120	1499355-0000		2	ROLLER	
130	2674326-0000		2	CAM	
140	2674331-0000		1	VOLUME FLAP	
320	312115-0368		2	SCREW ISO4762 M6X16 A4 80	
330	312318-0320		2	SCREW ISO4029 M5X5 A4	
340	312318-0323		2	SCREW ISO4029 M5X8 A4	
350	312625-0316		1	HEXAGON THIN NUT, EN 24035 ML6M M6 A4	
373	315105-0146		2	WASHER BRB5,3X10RFR	
375	312705-0314		2	NUT HEX. DOMED CAP MHM-6 M5 A280	
410	312155-0327		2	SCREW DIN 7991 MF6S M5X12 A4 70	
430	312115-0291		4	SCREW ISO4762 M4X12 A4 80	
450	315402-0156		2	LOCK WASHER FBB 6,5	
500	321136-0140		2	BUSHING, 10X12X10 MM	
TPA 0250SQ (See drawing on page: 4-66)					
010	1350263-0000		1	SPRING RIGHT	
020	1350264-0000		1	SPRING LEFT	
030	1511338-0000		1	STOP	
040	2674327-0000		1	SHAFT	
050	2530313-0000		2	BUSHING	
063	1549594-0000		6	VOLUME SHIM	
065	2581994-0000		2	VOLUME BULGE	
070	1144601-0000		2	GUIDE STUD	
080	2674322-0000		1	STOPPER	
090	2674330-0000		1	FLAP HOLDER	

VOLUME FLAP PRESSURE

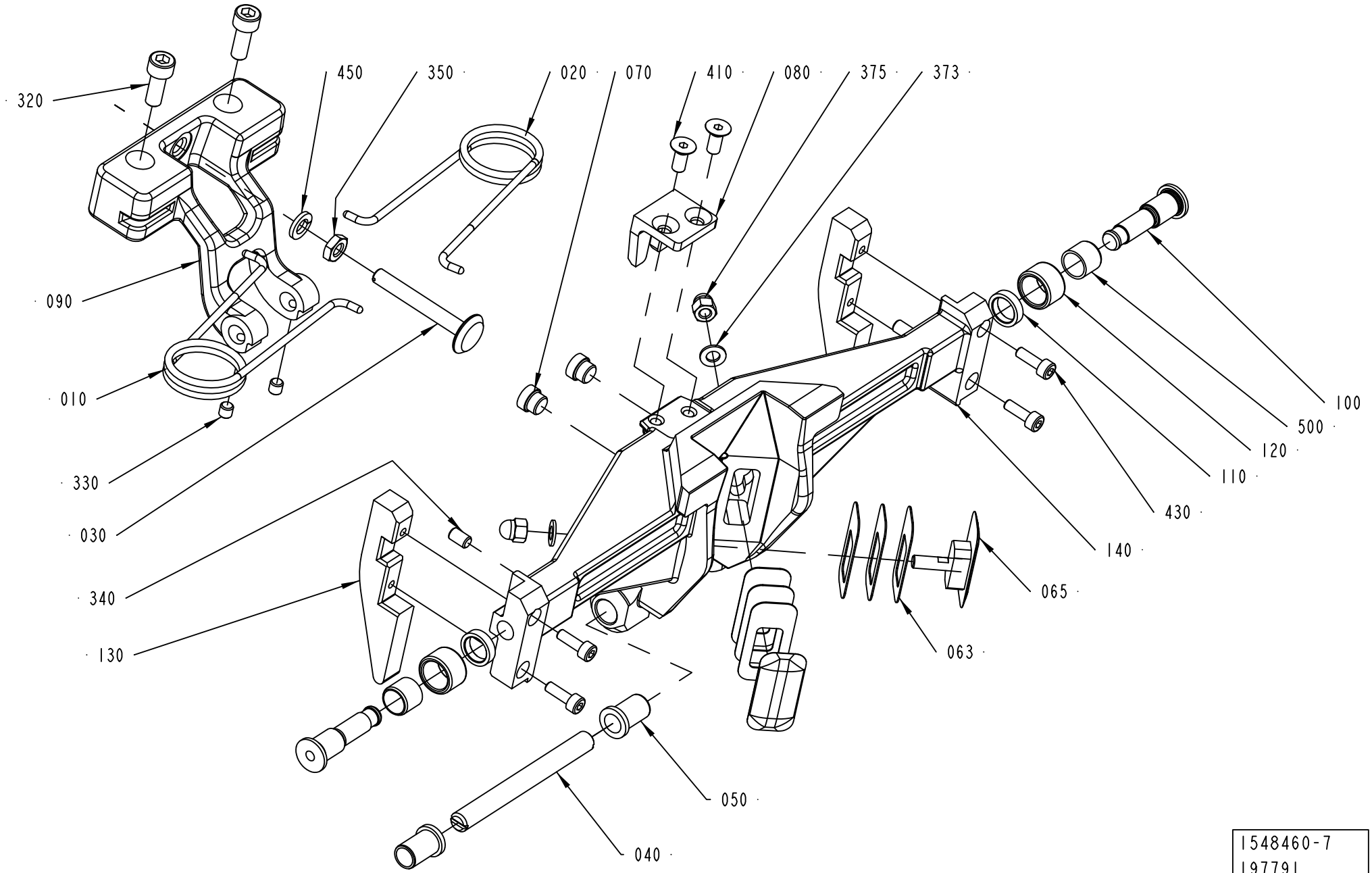

1548460-7
197791

Pos	Part No	UN	Qty	Description	Page No
TPA 0250SQ (Cont'd) (See drawing on page: 4-66)					
100	1512146-0000		2	AXLE PIN	
110	1512147-0000		2	WASHER	
120	1499355-0000		2	ROLLER	
130	2674325-0000		2	CAM	
140	2674333-0000		1	VOLUME FLAP	
320	312115-0368		2	SCREW ISO4762 M6X16 A4 80	
330	312318-0320		2	SCREW ISO4029 M5X5 A4	
340	312318-0323		2	SCREW ISO4029 M5X8 A4	
350	312625-0316		1	HEXAGON THIN NUT, EN 24035 ML6M M6 A4	
373	315105-0146		2	WASHER BRB5,3X10RFR	
375	312705-0314		2	NUT HEX. DOMED CAP MHM-6 M5 A280	
410	312155-0327		2	SCREW DIN 7991 MF6S M5X12 A4 70	
430	312115-0291		4	SCREW ISO4762 M4X12 A4 80	
450	315402-0156		2	LOCK WASHER FBB 6,5	
500	321136-0140		2	BUSHING, 10X12X10 MM	
TPA 1000SQ, TPA 0750SQ (See drawing on page: 4-64)					
010	2663360-0000		1	SPRING	
020	2663361-0000		1	SPRING	
030	2660400-0000		1	STOP	
035	2660401-0000		1	CATCH	
040	2658258-0000		1	SHAFT	
050	2530313-0000		2	BUSHING	
060	2660393-0000		6	VOLUME SHIM	
075	2660392-0000		2	VOLUME BULGE	
090	2658256-0000		1	FLAP HOLDER	
100	2759331-0000		2	SHAFT	
110	19972-0000		2	WASHER	
120	434321-0000		2	CURVE ROLLER	
140	2660380-0000		1	VOLUME FLAP	
150	2705812-0100		1	VOLUME FLAP	**4-69**
230	2660391-0000		1	SCREW	
240	90134-0063		2	BUSHING/NUT M8X1, D=2,5 MM	
250	90028-0020		2	CONE TUBE 2,5MM	
260	1037734-0000		2	WEDGE	
270	2652896-0000		2	SHAFT	
280	2662167-0000		2	BUSHING	
290	2663375-0000		2	WASHER	
300	2660397-0000		1	WEDGE	
310	2663376-0000		2	WASHER	
320	2663372-0000		2	SCREW	
330	311103-0232		1	PARALLEL PIN ISO 2338 3M6X8 A1	
340	312318-0323		2	SCREW ISO4029 M5X8 A4	
350	312625-0318		1	HEXAGON THIN NUT, EN 24035 ML6M M8 A4	
370	312155-0287		4	SCREW DIN 7991 MF6S M4X8 A4 70	
510	312105-0367		2	SCREW M6S ISO 4017 M6X14 A480	
515	312318-0285		2	SCREW ISO4029 M4X6 A4	
520	312115-0366		2	SCREW ISO4762 M6X12 A4 80	
530	2566332-0000		1	SHAFT	
535	2566333-0000		2	HOLDER (STAFFA)	
540	315105-0146		3	WASHER BRB5,3X10RFR	
550	312105-0328		1	SCREW M6S ISO 4017 M5X14 A480	
555	312105-0331		2	SCREW M6S ISO 4017 M5X20 A480	
570	90005-0082		2	WASHER PLAIN ROUND 4,3(M4)/12,H=1	
580	312105-0287		2	SCREW M6S ISO 4017 M4X8 A470	
585	312318-0325		2	SCREW ISO4029 M5X10 A4	
600	312145-0329		2	SCREW ISO 2009 MFS M5X16 A4	
610	312318-0323		2	SCREW ISO4029 M5X8 A4	

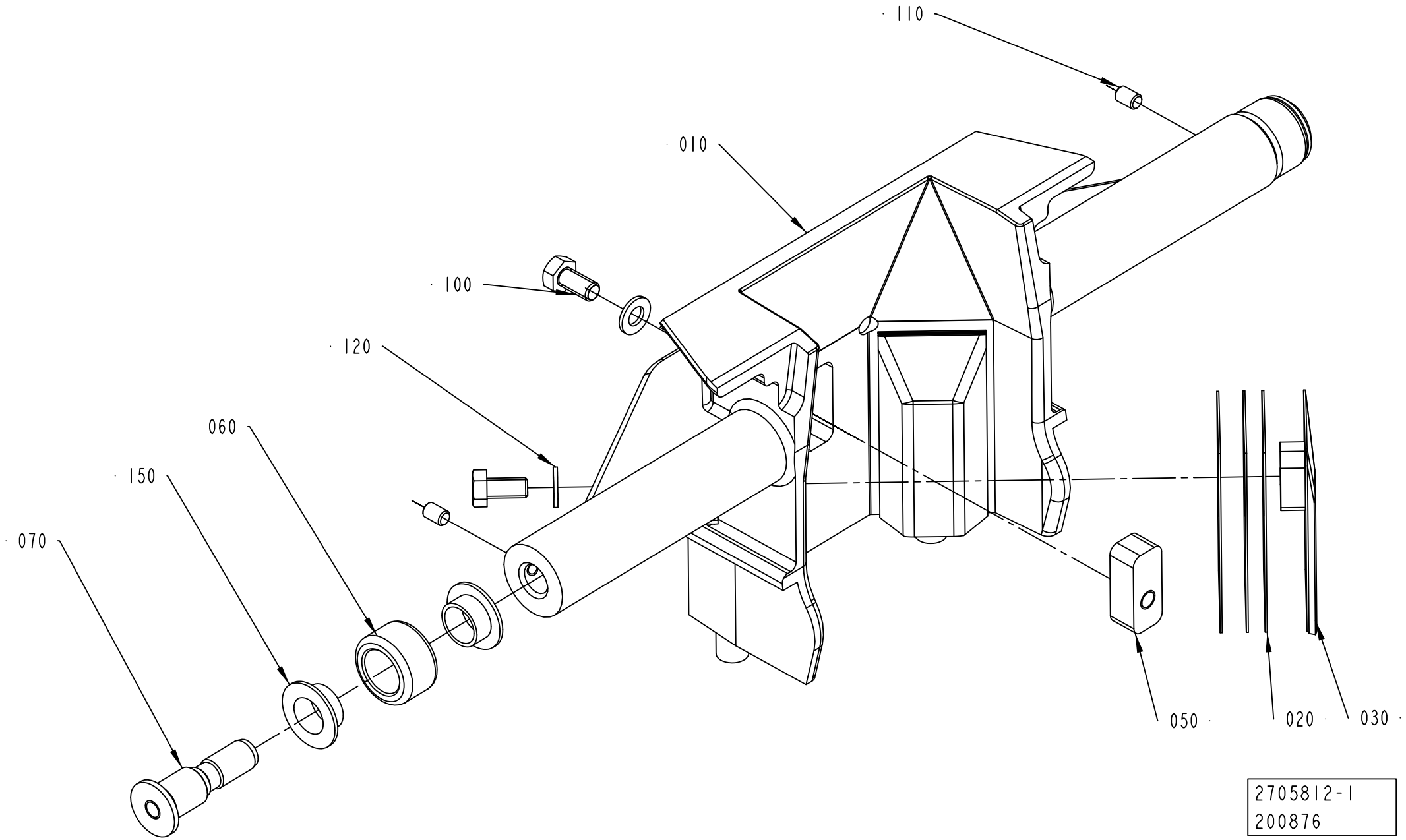
110
010
100
120
060
150
070
050
020
030
2705812-1
200876

ECM: 202682 - 20050402
Group number: 2705812-0100
Assembly Drawing: 2705812-1_1_AA

Pos	Part No	UN	Qty	Description	Page No
TPA 0750SQ					
010	2660382-0000		1	VOLUME FLAP	
TPA 1000SQ					
010	2660381-0000		1	VOLUME FLAP	
020	2660390-0000		6	VOLUME SHIM	
030	2660395-0000		2	VOLUME BULGE	
050	2660398-0000		1	WEDGE	
060	2660399-0000		2	ROLLER	
070	2594709-0000		2	AXLE PIN	
100	312105-0325		3	SCREW M6S ISO 4017 M5X10 A480	
110	312318-0285		2	SCREW ISO4029 M4X6 A4	
120	315105-0146		3	WASHER BRB5,3X10RFR	
150	90240-0289		4	FLANGE BUSHING, 10X12X6 MM	

Pos	Part No	UN	Qty	Description	Page No

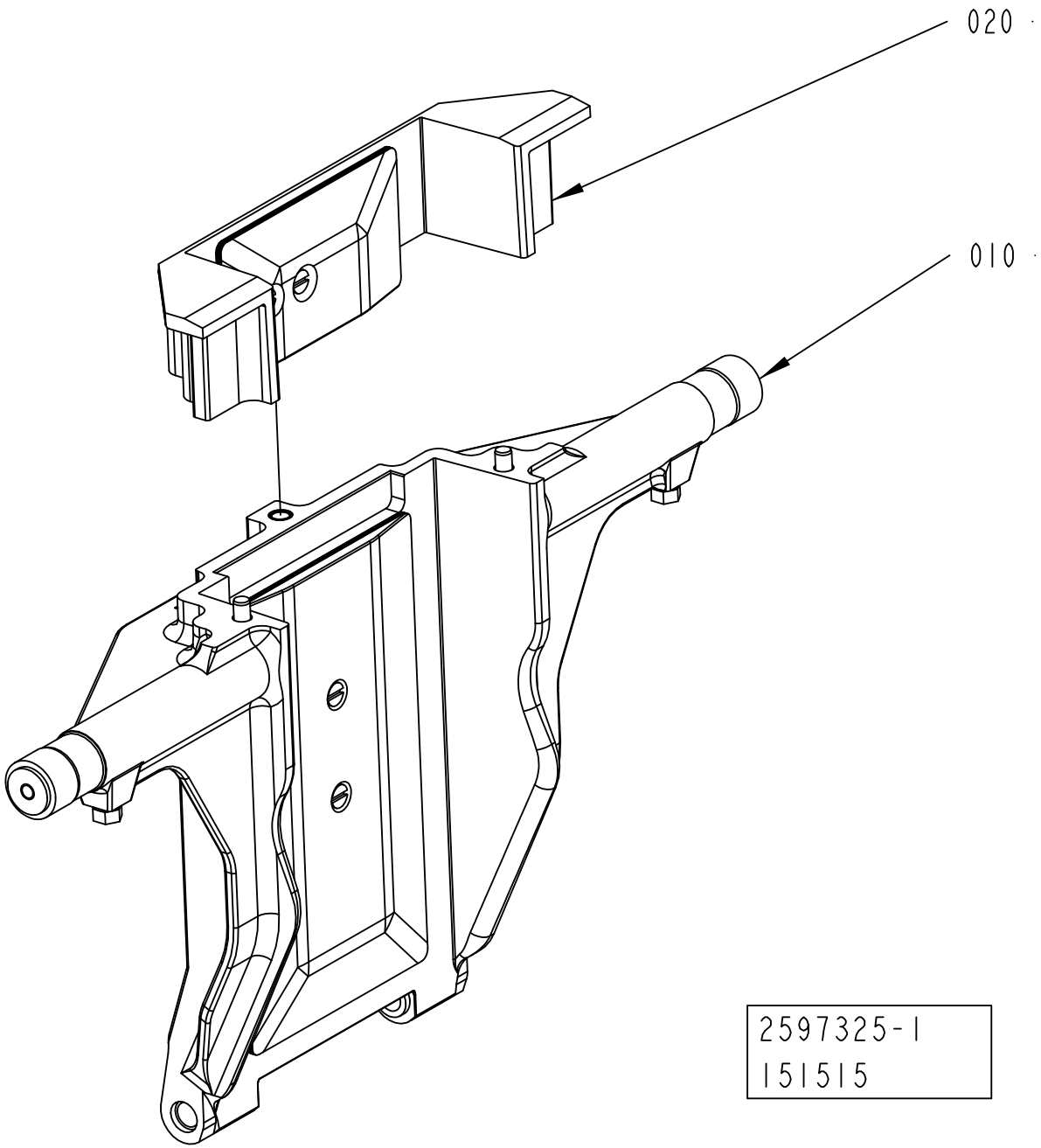
020
010
2597325-1
151515

ECM: 175826 - 20040923
Group number: 2597325-0100
Assembly Drawing: 2597325-1_1_AA

Pos	Part No	UN	Qty	Description	Page No
-					
010	2696182-0100		1	VOLUME FLAP	**4-73**
020	2695955-0100		1	VOLUME FLAP	**4-75**

Pos	Part No	UN	Qty	Description	Page No

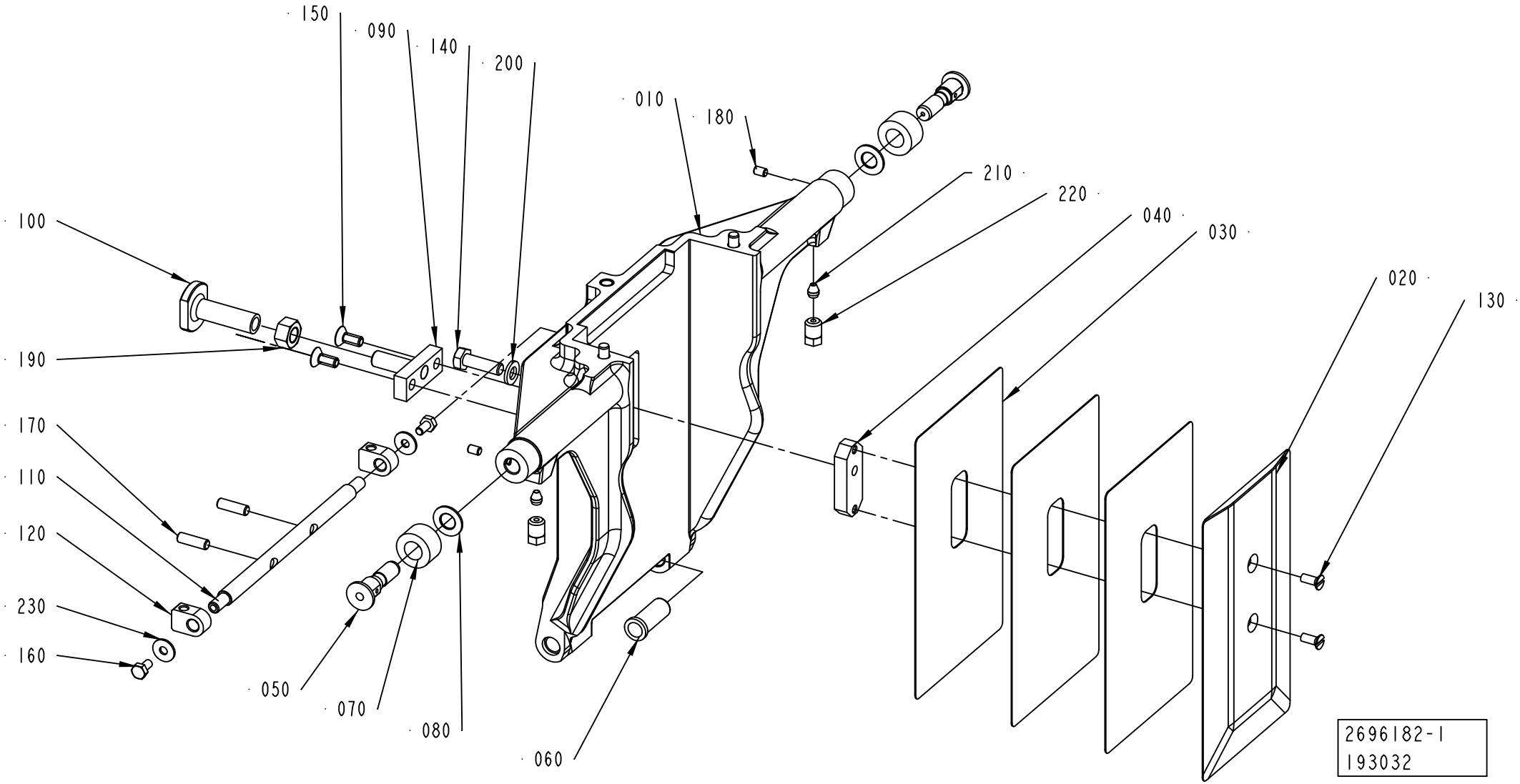
150
090
140
200
010
180
210
220
040
030
020
130
100
190
170
110
120
230
160
050
070
080
060
2696182-1
193032

ECM: 210190 - 20060509
Group number: 2696182-0100
Assembly Drawing: 2696182-1_1_AB

Pos	Part No	UN	Qty	Description	Page No
-					
010	2588304-0000		1	VOLUME FLAP	
020	2594888-0000		1	VOLUME BULGE	
030	2594890-0000		3	VOLUME SHIM	
040	2594893-0000		1	WEDGE	
050	434320-0000		2	AXLE PIN	
060	1255916-0000		2	BUSHING	
070	434321-0000		2	CURVE ROLLER	
080	19972-0000		2	WASHER	
090	2660401-0000		1	CATCH	
100	2660400-0000		1	STOP	
110	2566332-0000		1	SHAFT	
120	2566333-0000		2	HOLDER (STAFFA)	
130	312145-0289		2	SCREW ISO 2009 MFS M4X10 A4	
140	312105-0370		1	SCREW M6S ISO 4017 M6X20 A480	
150	312155-0327		2	SCREW DIN 7991 MF6S M5X12 A4 70	
160	312105-0287		2	SCREW M6S ISO 4017 M4X8 A470	
170	312318-0329		2	SCREW ISO4029 M5X16 A4	
180	312318-0285		2	SCREW ISO4029 M4X6 A4	
190	312607-0318		1	HEXAGON NUT, EN 24032 M6M M8 A480	
200	315105-0153		1	WASHER BRB6,4X12RFR	
210	90028-0020		2	CONE TUBE 2,5MM	
220	90134-0063		2	BUSHING/NUT M8X1, D=2,5 MM	
230	90005-0082		2	WASHER PLAIN ROUND 4,3(M4)/12,H=1	

Pos	Part No	UN	Qty	Description	Page No

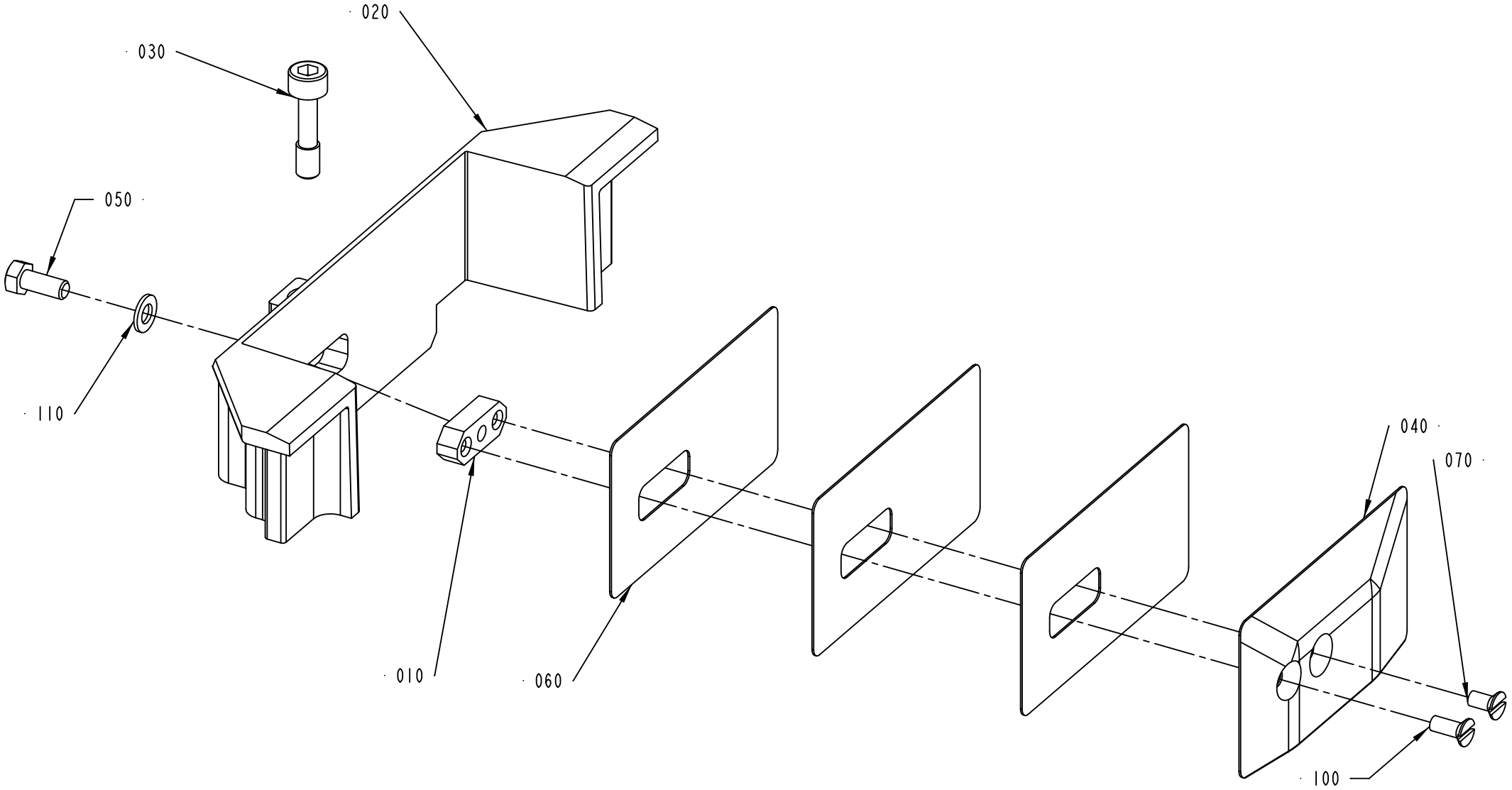
020
030
050
110
010
060
040
070
100
2695955-1
151514

ECM: 210192 - 20060509
Group number: 2695955-0100
Assembly Drawing: 2695955-1_1_AA

Pos	Part No	UN	Qty	Description	Page No
TBA 1890S					
020	2588306-0000		1	VOLUME FLAP	
040	2594889-0000		1	VOLUME BULGE	
060	2594891-0000		3	VOLUME SHIM	
TBA 2000S					
020	2588307-0000		1	VOLUME FLAP	
040	2672746-0000		1	VOLUME BULGE	
060	2672745-0000		3	VOLUME SHIM	
Common Parts					
010	1037734-0000		1	WEDGE	
030	2594896-0000		2	SCREW	
050	312105-0327		1	SCREW M6S ISO 4017 M5X12 A480	
070	312145-0287		1	SCREW ISO 2009 MFS M4X8 A4	
100	312145-0289		1	SCREW ISO 2009 MFS M4X10 A4	
110	315105-0146		1	WASHER BRB5,3X10RFR	

Pos	Part No	UN	Qty	Description	Page No

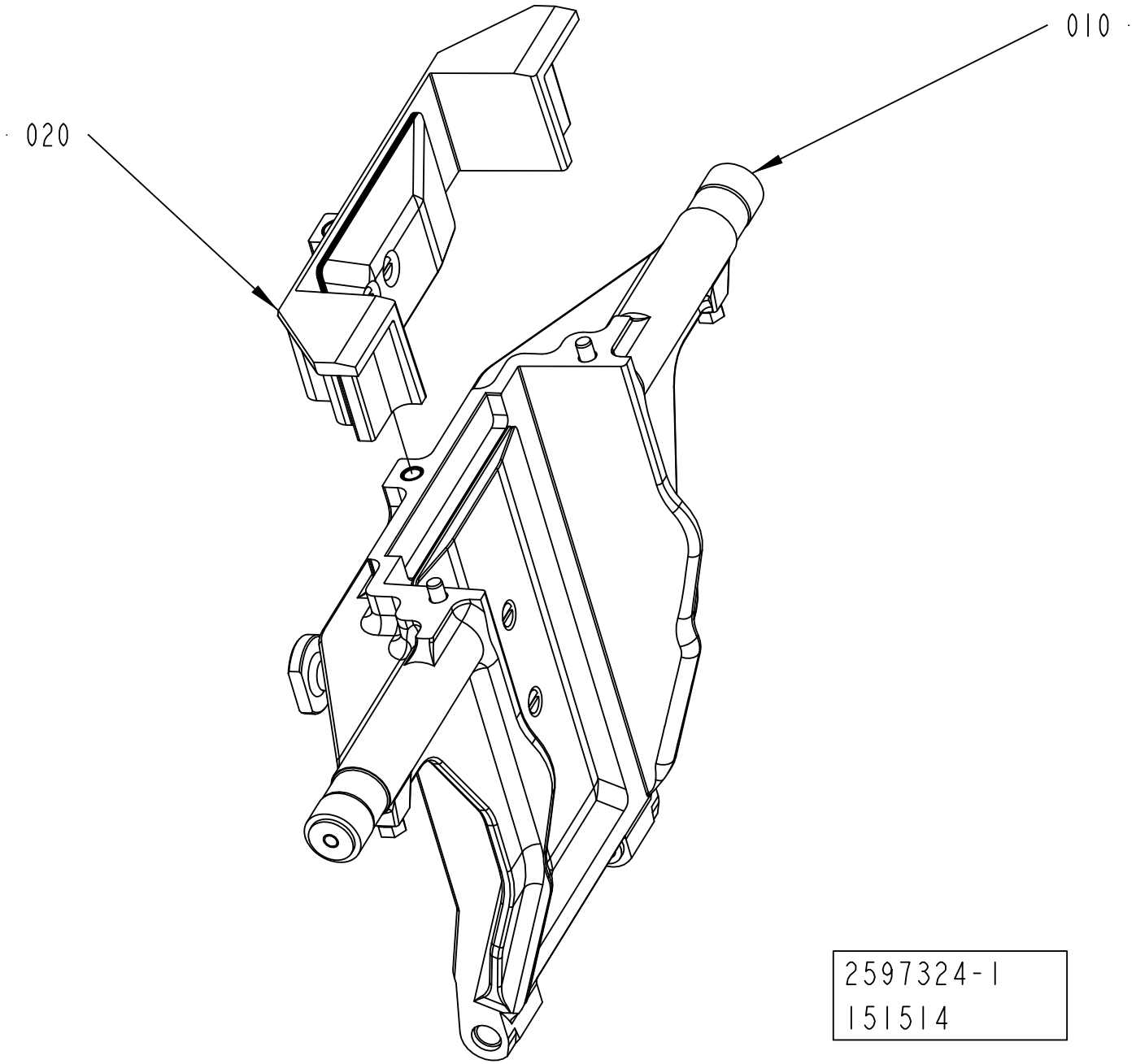
010
020
2597324-1
151514

ECM: 175825 - 20040923
Group number: 2597324-0100
Assembly Drawing: 2597324-1_1_AA

Pos	Part No	UN	Qty	Description	Page No
-					
010	2696156-0100		1	VOLUME FLAP	**4-79**
020	2695955-0100		1	VOLUME FLAP	**4-75**

Pos	Part No	UN	Qty	Description	Page No

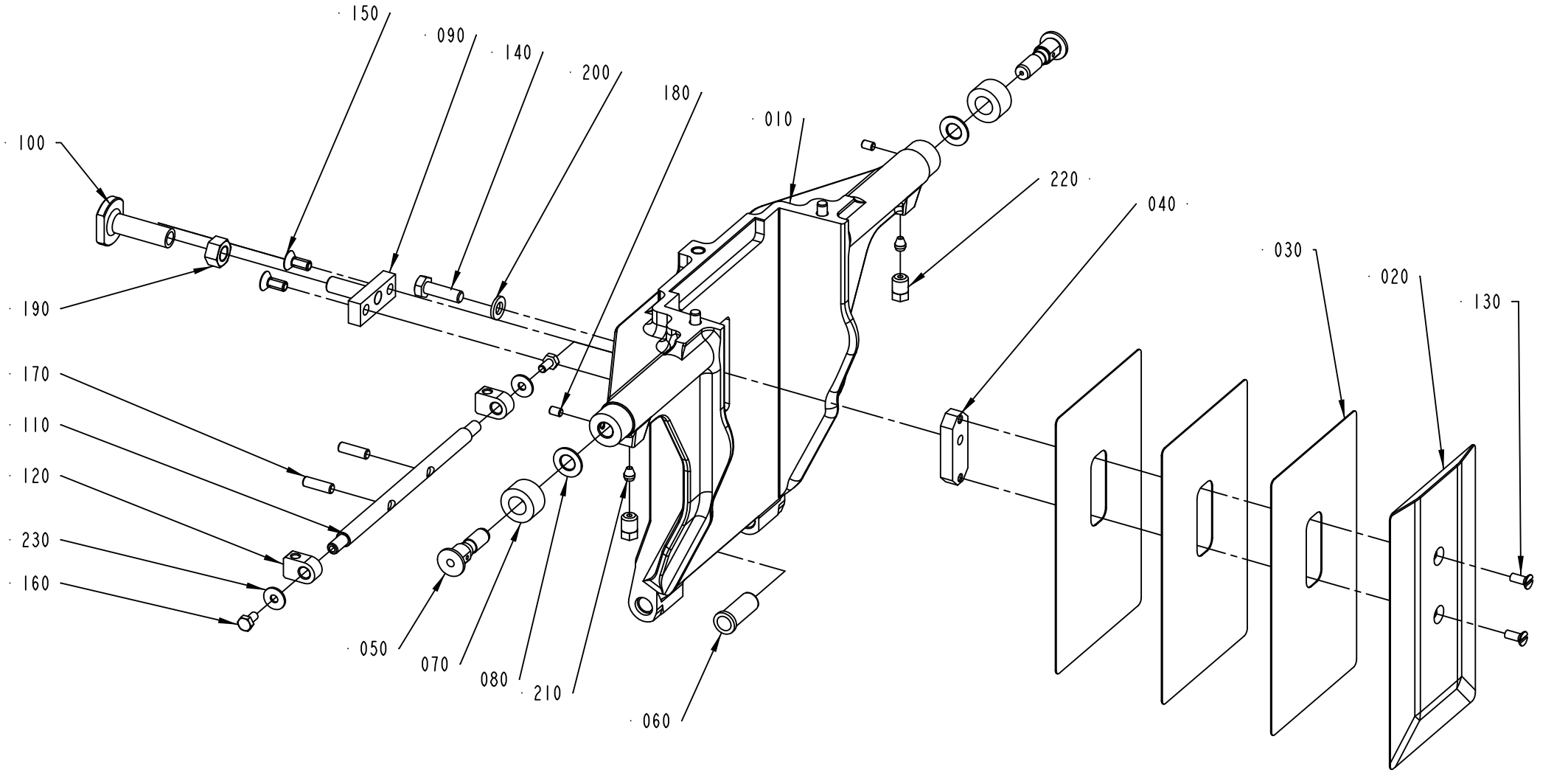

2696156-1
193032

ECM: 210189 - 20060509
Group number: 2696156-0100
Assembly Drawing: 2696156-1_1_AB

Pos	Part No	UN	Qty	Description	Page No
-					
010	2588305-0000		1	VOLUME FLAP	
020	2594888-0000		1	VOLUME BULGE	
030	2594890-0000		3	VOLUME SHIM	
040	2594893-0000		1	WEDGE	
050	434320-0000		2	AXLE PIN	
060	1255916-0000		2	BUSHING	
070	434321-0000		2	CURVE ROLLER	
080	19972-0000		2	WASHER	
090	2660401-0000		1	CATCH	
100	2660400-0000		1	STOP	
110	2566332-0000		1	SHAFT	
120	2566333-0000		2	HOLDER (STAFFA)	
130	312145-0289		2	SCREW ISO 2009 MFS M4X10 A4	
140	312105-0370		1	SCREW M6S ISO 4017 M6X20 A480	
150	312155-0327		2	SCREW DIN 7991 MF6S M5X12 A4 70	
160	312105-0287		2	SCREW M6S ISO 4017 M4X8 A470	
170	312318-0329		2	SCREW ISO4029 M5X16 A4	
180	312318-0285		2	SCREW ISO4029 M4X6 A4	
190	312607-0318		1	HEXAGON NUT, EN 24032 M6M M8 A480	
200	315105-0153		1	WASHER BRB6,4X12RFR	
210	90028-0020		2	CONE TUBE 2,5MM	
220	90134-0063		2	BUSHING/NUT M8X1, D=2,5 MM	
230	90005-0082		2	WASHER PLAIN ROUND 4,3(M4)/12,H=1	

Pos	Part No	UN	Qty	Description	Page No

CARRIER PRESSURE LEFT

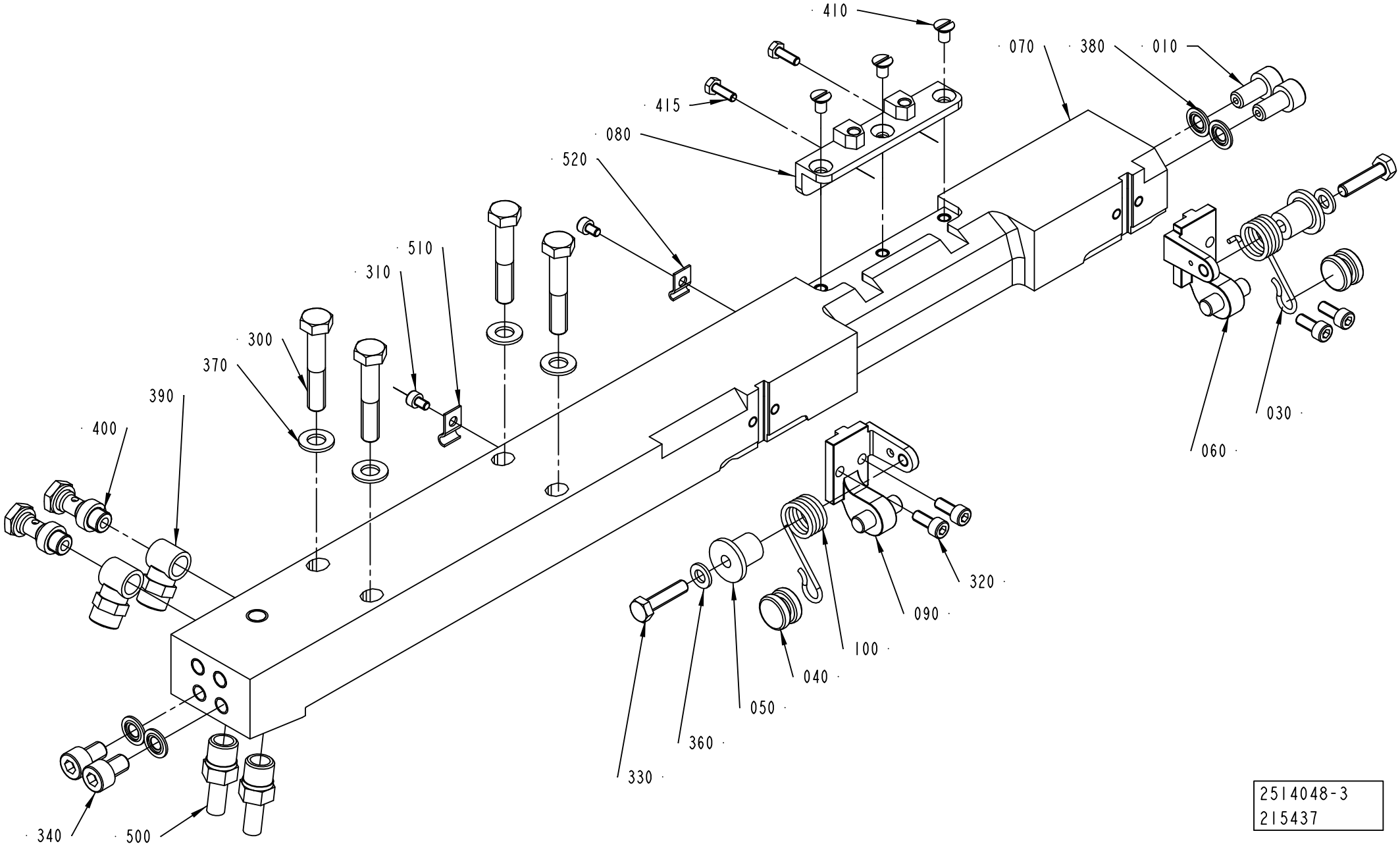

2514048-3
215437

ECM: 263260 - 20060702
Group number: 2514048-0200
Assembly Drawing: 2514048-3_1_AB

This list covers pages from 4-80 to 4-85

Pos	Part No	UN	Qty	Description	Page No
A3/FLEX NOQC (See drawing on page: 4-82)					
070	2514049-0000		1	CARRIER	
310	312115-0285		2	SCREW ISO4762 M4X6 A4 80	
510	90165-0056		1	PIPE CLIP FOR TUBE D=4 MM	
520	90165-0058		1	PIPE CLIP FOR TUBE D=2,5 MM	
A3/FLEX TBA 0250S QC, A3/FLEX TBA 0200M QC (See drawing on page: 4-84)					
070	2514045-0000		1	CARRIER	
080	2641225-0000		1	INSERT	
410	312155-0323		3	SCREW DIN 7991 MF6S M5X8 A4 70	
A3/FLEX TBA 0500B QC, A3/FLEX TBA 1000B QC, A3/FLEX TBA 0200B QC, A3/FLEX TBA 0250B QC, A3/FLEX TBA 0330S QC, A3/FLEX TPA 0200SQ QC, A3/FLEX TPA 0250SQ QC, A3/FLEX TBA 0250SQ QC, A3/FLEX TBA 0200SQ QC (See drawing on page: 4-84)					
070	2514045-0000		1	CARRIER	
080	1549312-0000		1	INSERT	
410	312155-0323		3	SCREW DIN 7991 MF6S M5X8 A4 70	
A3/FLEX TBA 1890S QC, A3/FLEX TBA 2000S QC (See drawing on page: 4-82)					
070	2566340-0000		1	CARRIER	
310	312115-0285		2	SCREW ISO4762 M4X6 A4 80	
510	90165-0056		1	PIPE CLIP FOR TUBE D=4 MM	
520	90165-0058		1	PIPE CLIP FOR TUBE D=2,5 MM	
A3/FLEX TPA 0750SQ QC, A3/FLEX TPA 1000SQ QC (See drawing on page: 4-80)					
070	2647115-0000		1	CARRIER	
080	2647114-0000		1	INSERT	
310	312115-0285		2	SCREW ISO4762 M4X6 A4 80	
410	312145-0323		3	SCREW ISO 2009 MFS M5X8 A4	
415	312105-0291		2	SCREW M6S ISO 4017 M4X12 A470	
510	90165-0056		1	PIPE CLIP FOR TUBE D=4 MM	
520	90165-0058		1	PIPE CLIP FOR TUBE D=2,5 MM	
Common Parts					
010	1036343-0000		2	SCREW	
030	2547589-0000		1	SPRING	
040	2530296-0000		2	ROLLER	
050	2532531-0000		2	ROLLER	
060	2530293-0000		1	BRACKET	
090	2530292-0000		1	BRACKET	
100	2547588-0000		1	SPRING	
300	312105-0460		4	SCREW M6S ISO 4014 M8X45 A480	
320	312115-0327		4	SCREW ISO4762 M5X12 A4 80	
330	312105-0372		2	SCREW M6S ISO 4017 M6X25 A480	
340	312115-0447		2	SCREW ISO4762 M8X12 A4 80	
360	315105-0153		2	WASHER BRB6,4X12RFR	
370	315105-0165		4	WASHER BRB8,4X16RFR	
380	315211-0104		4	BONDED SEAL SS/NBR90 M8	
390	342980-0121		2	BANJO-CONNECTION,RING 8/6-G1/8	
400	342980-0303		2	BANJO-HOLLOW BOLT COUPL,EXT.THR.01-G1/8	
500	90030-0065		2	PIPE CONNECTION	

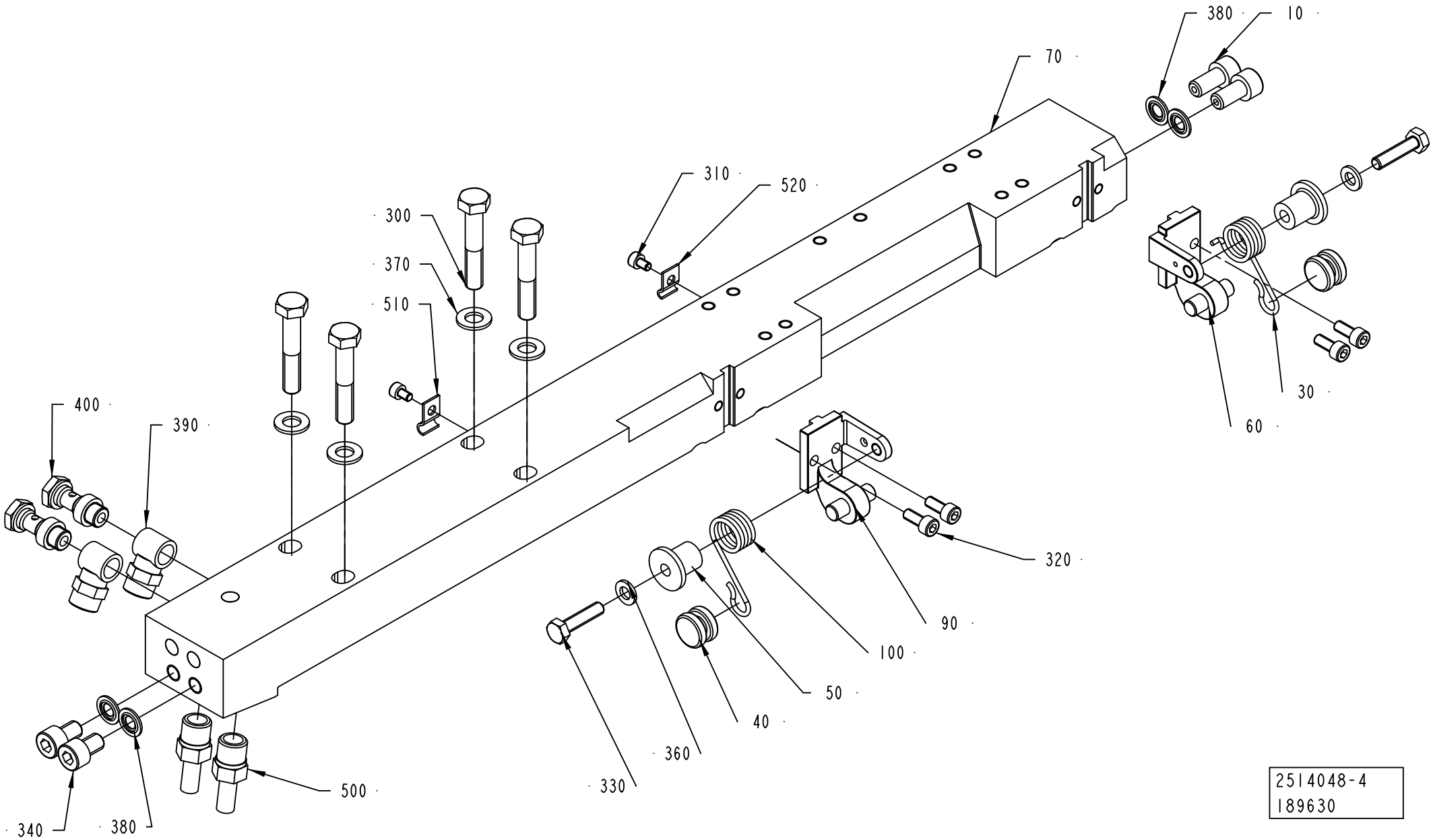
380
10
70
310
520
300
370
510
400
390
30
60
320
90
100
50
40
360
330
500
340
380
2514048-4
189630

ECM: 263260 - 20060702
Group number: 2514048-0200
Assembly Drawing: 2514048-4_1_AA

This list covers pages from 4-80 to 4-85

Pos	Part No	UN	Qty	Description	Page No
A3/FLEX NOQC (See drawing on page: 4-82)					
070	2514049-0000		1	CARRIER	
310	312115-0285		2	SCREW ISO4762 M4X6 A4 80	
510	90165-0056		1	PIPE CLIP FOR TUBE D=4 MM	
520	90165-0058		1	PIPE CLIP FOR TUBE D=2,5 MM	
A3/FLEX TBA 0250S QC, A3/FLEX TBA 0200M QC (See drawing on page: 4-84)					
070	2514045-0000		1	CARRIER	
080	2641225-0000		1	INSERT	
410	312155-0323		3	SCREW DIN 7991 MF6S M5X8 A4 70	
A3/FLEX TBA 0500B QC, A3/FLEX TBA 1000B QC, A3/FLEX TBA 0200B QC, A3/FLEX TBA 0250B QC, A3/FLEX TBA 0330S QC, A3/FLEX TPA 0200SQ QC, A3/FLEX TPA 0250SQ QC, A3/FLEX TBA 0250SQ QC, A3/FLEX TBA 0200SQ QC (See drawing on page: 4-84)					
070	2514045-0000		1	CARRIER	
080	1549312-0000		1	INSERT	
410	312155-0323		3	SCREW DIN 7991 MF6S M5X8 A4 70	
A3/FLEX TBA 1890S QC, A3/FLEX TBA 2000S QC (See drawing on page: 4-82)					
070	2566340-0000		1	CARRIER	
310	312115-0285		2	SCREW ISO4762 M4X6 A4 80	
510	90165-0056		1	PIPE CLIP FOR TUBE D=4 MM	
520	90165-0058		1	PIPE CLIP FOR TUBE D=2,5 MM	
A3/FLEX TPA 0750SQ QC, A3/FLEX TPA 1000SQ QC (See drawing on page: 4-80)					
070	2647115-0000		1	CARRIER	
080	2647114-0000		1	INSERT	
310	312115-0285		2	SCREW ISO4762 M4X6 A4 80	
410	312145-0323		3	SCREW ISO 2009 MFS M5X8 A4	
415	312105-0291		2	SCREW M6S ISO 4017 M4X12 A470	
510	90165-0056		1	PIPE CLIP FOR TUBE D=4 MM	
520	90165-0058		1	PIPE CLIP FOR TUBE D=2,5 MM	
Common Parts					
010	1036343-0000		2	SCREW	
030	2547589-0000		1	SPRING	
040	2530296-0000		2	ROLLER	
050	2532531-0000		2	ROLLER	
060	2530293-0000		1	BRACKET	
090	2530292-0000		1	BRACKET	
100	2547588-0000		1	SPRING	
300	312105-0460		4	SCREW M6S ISO 4014 M8X45 A480	
320	312115-0327		4	SCREW ISO4762 M5X12 A4 80	
330	312105-0372		2	SCREW M6S ISO 4017 M6X25 A480	
340	312115-0447		2	SCREW ISO4762 M8X12 A4 80	
360	315105-0153		2	WASHER BRB6,4X12RFR	
370	315105-0165		4	WASHER BRB8,4X16RFR	
380	315211-0104		4	BONDED SEAL SS/NBR90 M8	
390	342980-0121		2	BANJO-CONNECTION,RING 8/6-G1/8	
400	342980-0303		2	BANJO-HOLLOW BOLT COUPL,EXT.THR.01-G1/8	
500	90030-0065		2	PIPE CONNECTION	

Machine Type | Group Description | Used-In | Group Number | Page No

CARRIER PRESSURE LEFT

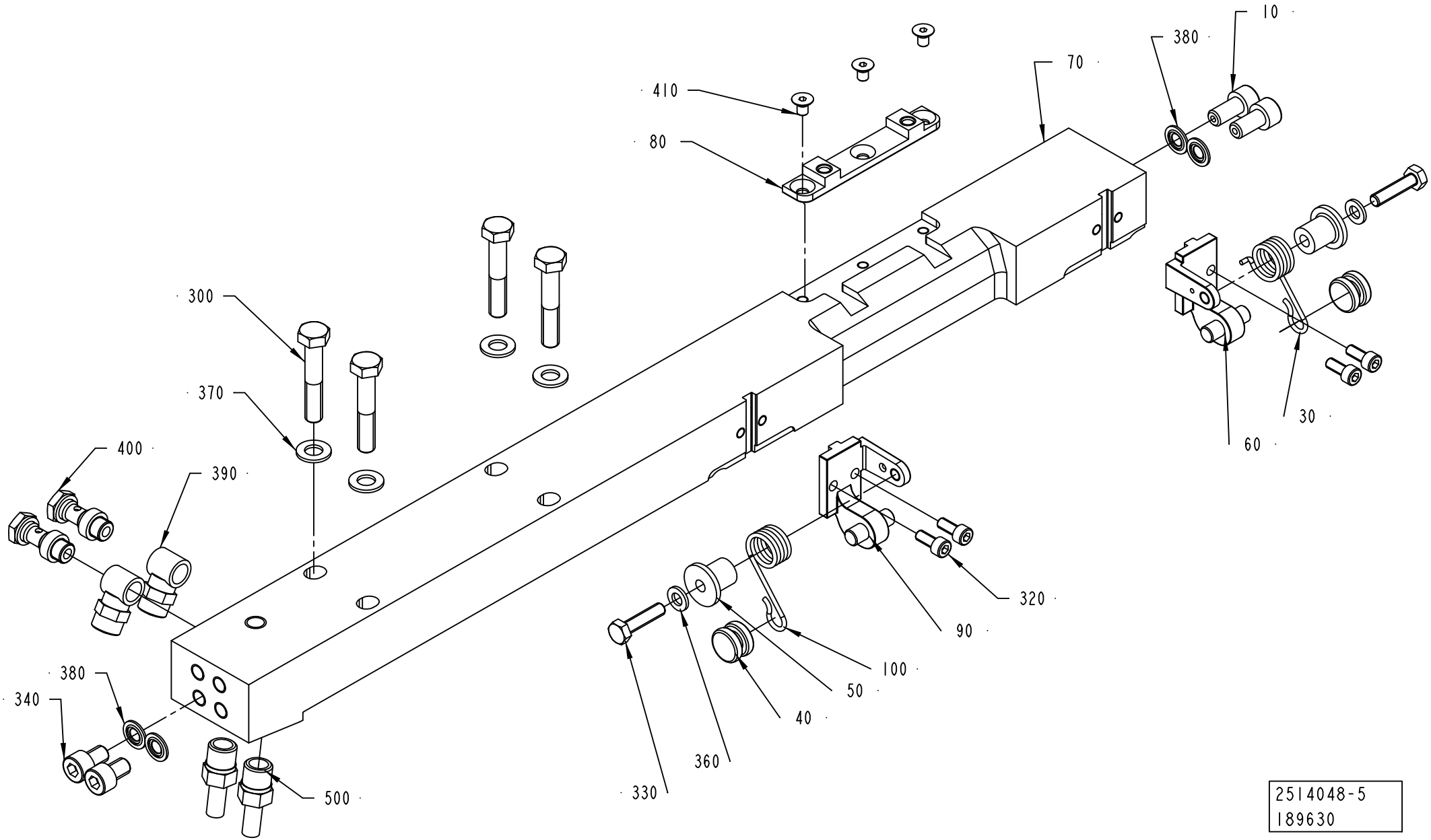

ECM: 263260 - 20060702
Group number: 2514048-0200
Assembly Drawing: 2514048-5_1_AA

This list covers pages from 4-80 to 4-85

Pos	Part No	UN	Qty	Description	Page No
A3/FLEX NOQC (See drawing on page: 4-82)					
070	2514049-0000		1	CARRIER	
310	312115-0285		2	SCREW ISO4762 M4X6 A4 80	
510	90165-0056		1	PIPE CLIP FOR TUBE D=4 MM	
520	90165-0058		1	PIPE CLIP FOR TUBE D=2,5 MM	
A3/FLEX TBA 0250S QC, A3/FLEX TBA 0200M QC (See drawing on page: 4-84)					
070	2514045-0000		1	CARRIER	
080	2641225-0000		1	INSERT	
410	312155-0323		3	SCREW DIN 7991 MF6S M5X8 A4 70	
A3/FLEX TBA 0500B QC, A3/FLEX TBA 1000B QC, A3/FLEX TBA 0200B QC, A3/FLEX TBA 0250B QC, A3/FLEX TBA 0330S QC, A3/FLEX TPA 0200SQ QC, A3/FLEX TPA 0250SQ QC, A3/FLEX TBA 0250SQ QC, A3/FLEX TBA 0200SQ QC (See drawing on page: 4-84)					
070	2514045-0000		1	CARRIER	
080	1549312-0000		1	INSERT	
410	312155-0323		3	SCREW DIN 7991 MF6S M5X8 A4 70	
A3/FLEX TBA 1890S QC, A3/FLEX TBA 2000S QC (See drawing on page: 4-82)					
070	2566340-0000		1	CARRIER	
310	312115-0285		2	SCREW ISO4762 M4X6 A4 80	
510	90165-0056		1	PIPE CLIP FOR TUBE D=4 MM	
520	90165-0058		1	PIPE CLIP FOR TUBE D=2,5 MM	
A3/FLEX TPA 0750SQ QC, A3/FLEX TPA 1000SQ QC (See drawing on page: 4-80)					
070	2647115-0000		1	CARRIER	
080	2647114-0000		1	INSERT	
310	312115-0285		2	SCREW ISO4762 M4X6 A4 80	
410	312145-0323		3	SCREW ISO 2009 MFS M5X8 A4	
415	312105-0291		2	SCREW M6S ISO 4017 M4X12 A470	
510	90165-0056		1	PIPE CLIP FOR TUBE D=4 MM	
520	90165-0058		1	PIPE CLIP FOR TUBE D=2,5 MM	
Common Parts					
010	1036343-0000		2	SCREW	
030	2547589-0000		1	SPRING	
040	2530296-0000		2	ROLLER	
050	2532531-0000		2	ROLLER	
060	2530293-0000		1	BRACKET	
090	2530292-0000		1	BRACKET	
100	2547588-0000		1	SPRING	
300	312105-0460		4	SCREW M6S ISO 4014 M8X45 A480	
320	312115-0327		4	SCREW ISO4762 M5X12 A4 80	
330	312105-0372		2	SCREW M6S ISO 4017 M6X25 A480	
340	312115-0447		2	SCREW ISO4762 M8X12 A4 80	
360	315105-0153		2	WASHER BRB6,4X12RFR	
370	315105-0165		4	WASHER BRB8,4X16RFR	
380	315211-0104		4	BONDED SEAL SS/NBR90 M8	
390	342980-0121		2	BANJO-CONNECTION,RING 8/6-G1/8	
400	342980-0303		2	BANJO-HOLLOW BOLT COUPL,EXT.THR.01-G1/8	
500	90030-0065		2	PIPE CONNECTION	

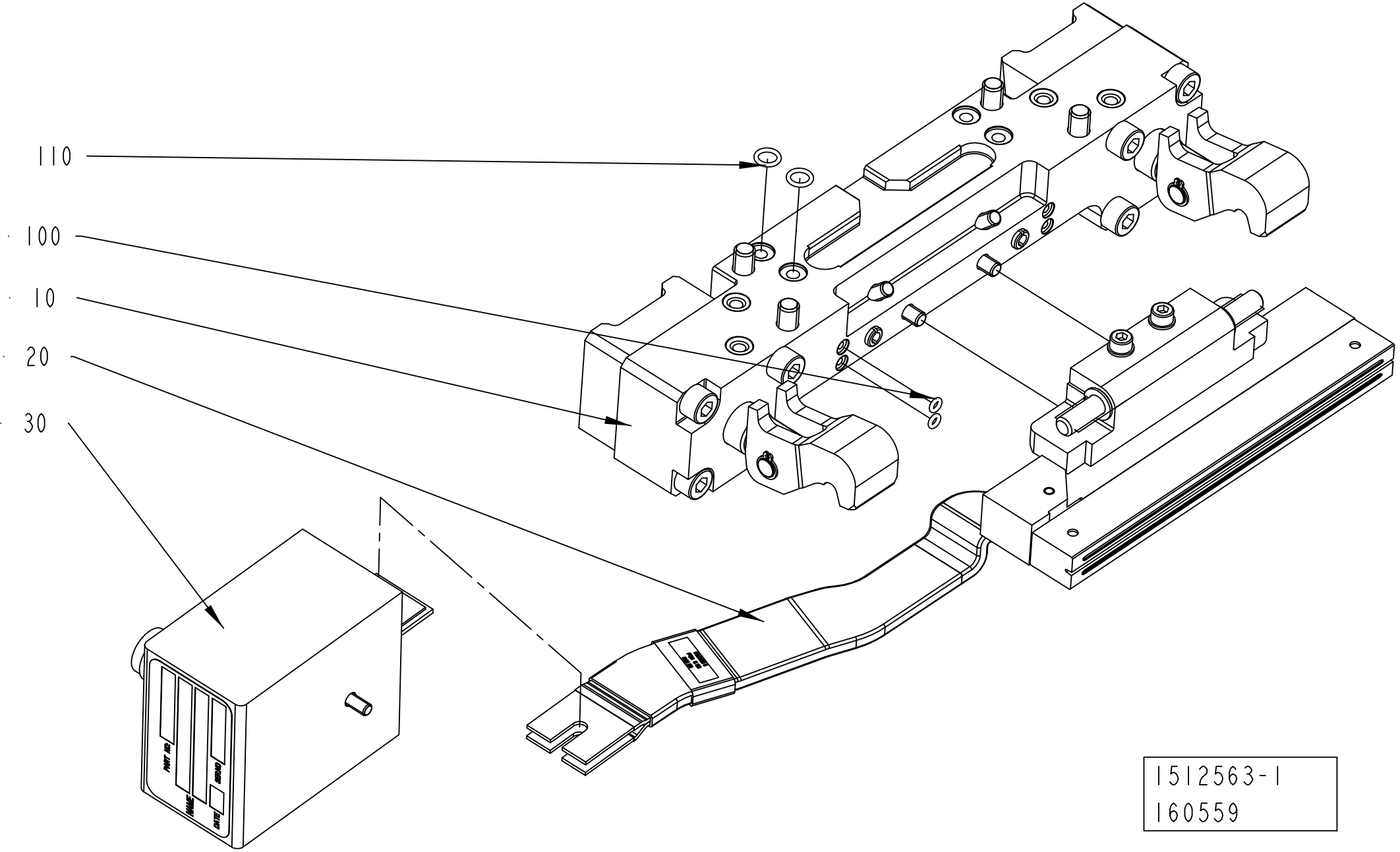

1512563-1
160559

Pos	Part No	UN	Qty	Description	Page No
TBA 1890S QC, TBA 2000S QC (See drawing on pages: 4-86, 4-88)					
120	311103-0267		1	PARALLEL PIN ISO 2338 4M6X10 A1	
Common Parts					
010	2552005-0100		1	PRESSURE JAW	**4-91**
020	2552006-0100		1	INDUCTOR LEFT	**4-93, 4-95, 4-97, 4-99, 4-101**
030	2546229-0100		1	ADAPTION TRANSFORMER	**4-103**
100	315202-0101		2	O-RING 3,1X1,6 MM	
110	315202-0105		2	O-RING 7,1X1,6 MM	

Pos	Part No	UN	Qty	Description	Page No

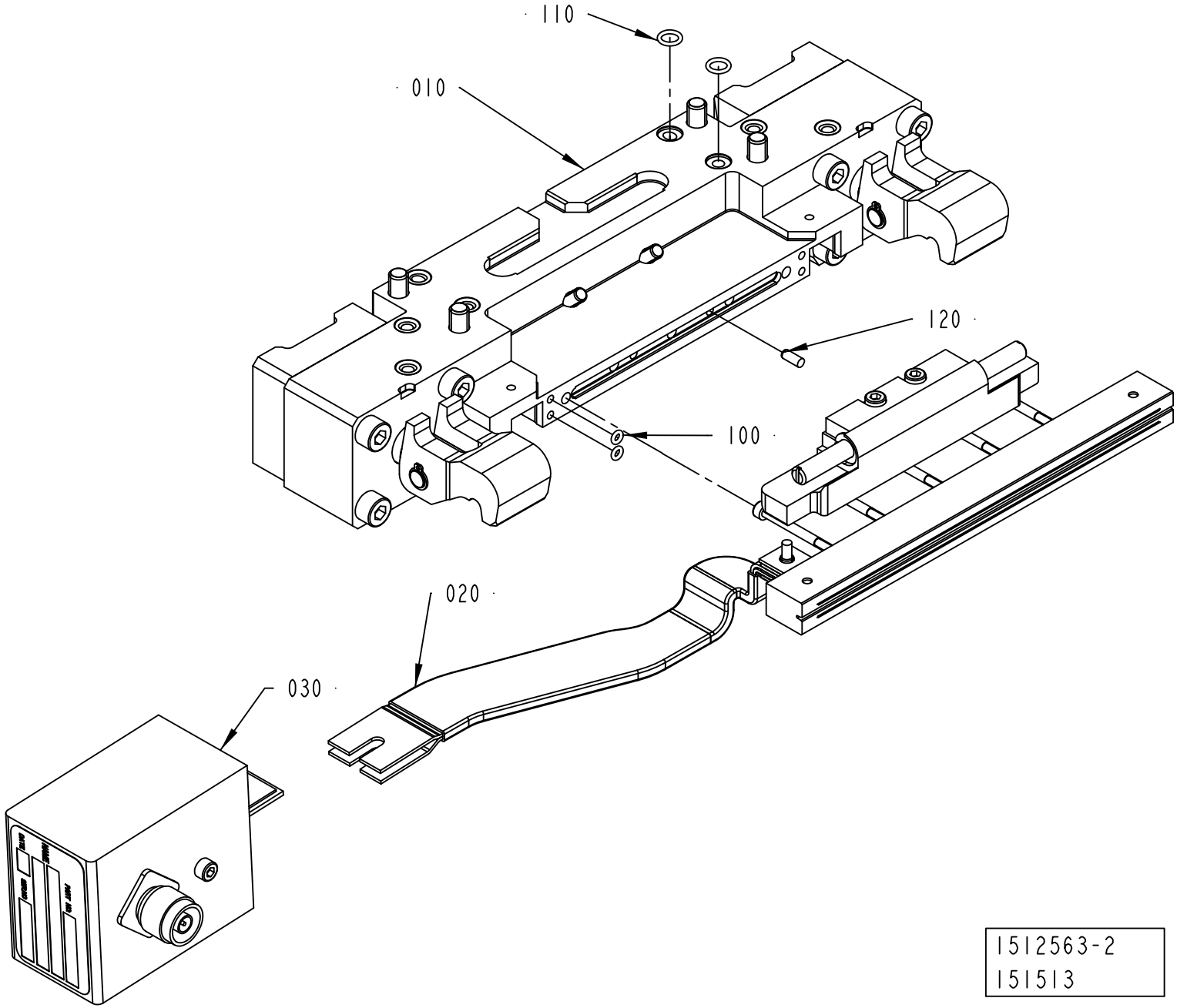
110
010
120
100
020
030
1512563-2
151513

ECM: 261874 - 20060702
Group number: 1512563-0200
Assembly Drawing: 1512563-2_1_AA

This list covers pages from 4-86 to 4-89

Pos	Part No	UN	Qty	Description	Page No
TBA 1890S QC, TBA 2000S QC (See drawing on pages: 4-86, 4-88)					
120	311103-0267		1	PARALLEL PIN ISO 2338 4M6X10 A1	
Common Parts					
010	2552005-0100		1	PRESSURE JAW	**4-91**
020	2552006-0100		1	INDUCTOR LEFT	**4-93, 4-95, 4-97, 4-99, 4-101**
030	2546229-0100		1	ADAPTION TRANSFORMER	**4-103**
100	315202-0101		2	O-RING 3,1X1,6 MM	
110	315202-0105		2	O-RING 7,1X1,6 MM	

Pos	Part No	UN	Qty	Description	Page No

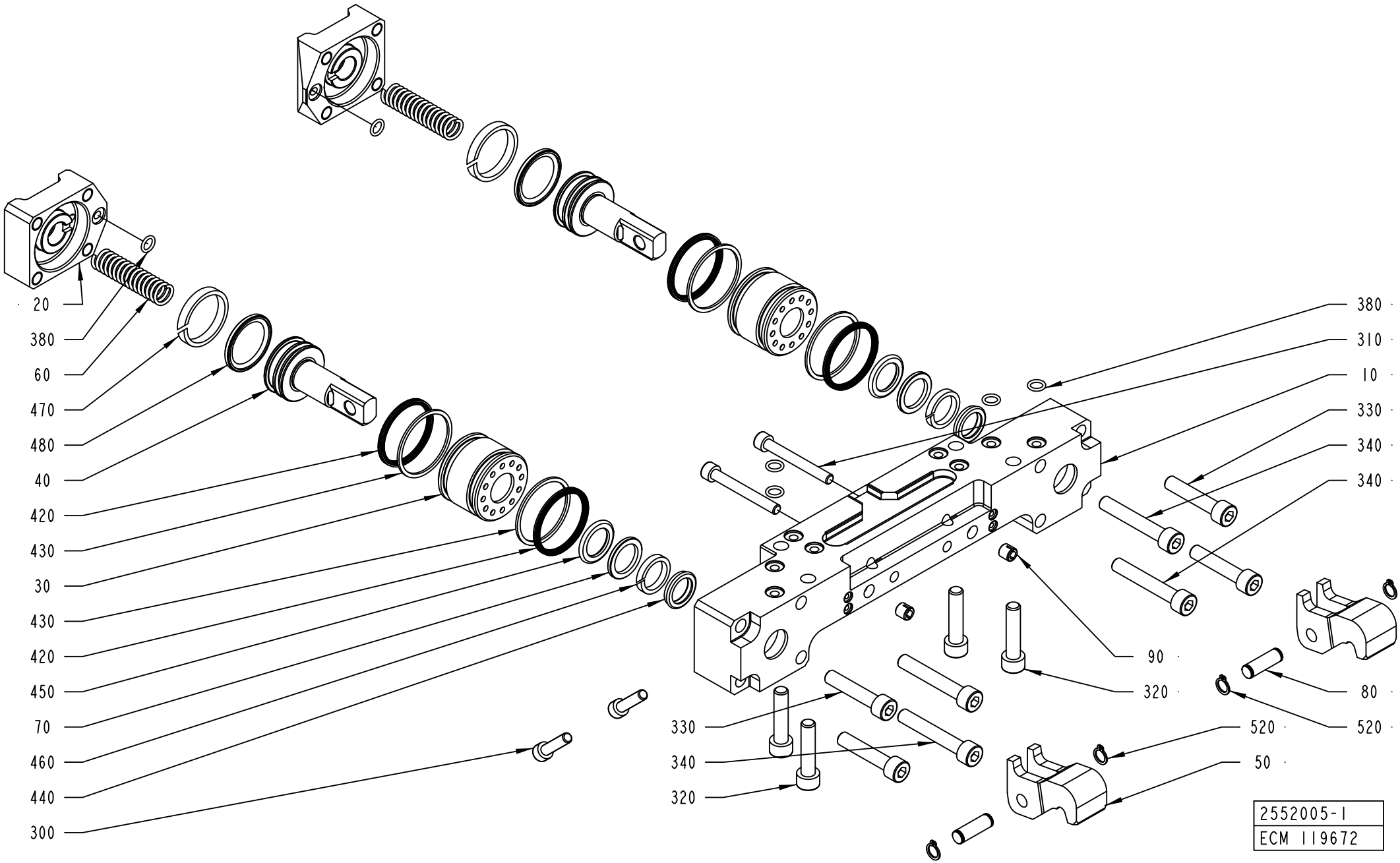
20
380
60
470
480
40
420
430
30
430
420
450
70
460
440
300
330
340
320
380
310
10
330
340
340
90
320
80
520
520
50
2552005-1
ECM 119672

ECM: 263266 - 20060702
Group number: 2552005-0100
Assembly Drawing: 2552005-1_1_AA

Pos	Part No	UN	Qty	Description	Page No
TBA 0330S, TBA 0200B, TBA 0250S, TBA 0200S, TBA 0200M, TBA 0250B, TBA 0200SQ, TPA 0250SQ, TPA 0330SQ, TPA 0200SQ, TBA 0250SQ					
010	2569908-0000		1	HOUSING	
020	2700151-0000		2	LID	
030	1349595-0000		2	SLEEVE	
040	929372-0000		2	PISTON	
050	1538349-0000		2	CATCH	
060	1260328-0000		2	SPRING	
080	950351-0000		2	SHAFT	
090	107426-0000		2	GUIDE SLEEVE	
300	312115-0372		2	SCREW ISO4762 M6X25 A4 80	
310	312115-0380		2	SCREW ISO4762 M6X50 A4 80	
330	312115-0459		4	SCREW ISO4762 M8X40 A4 80	
420	90091-0359		4	X-SEAL 36,17X2,62 MM	
430	90091-0360		4	BACK-UP RING 37,5X1,4 MM	
470	90091-0391		2	SEAL SLYDRING	
480	90091-0398		2	1PISTON SEAL GLIDE RING T 20,5X28X3,2 MM	
TBA 0500S, TBA 0500B, TBA 1000S, TBA 1000SQ, TBA 1000B, TBA 1500S, TPA 1000SQ, TPA 0500SQ, TPA 0750SQ					
010	2569908-0000		1	HOUSING	
020	2700151-0000		2	LID	
030	1348504-0000		2	SLEEVE	
040	1349612-0000		2	PISTON	
050	1538349-0000		2	CATCH	
060	1260328-0000		2	SPRING	
080	950351-0000		2	SHAFT	
090	107426-0000		2	GUIDE SLEEVE	
300	312115-0372		2	SCREW ISO4762 M6X25 A4 80	
310	312115-0380		2	SCREW ISO4762 M6X50 A4 80	
330	312115-0459		4	SCREW ISO4762 M8X40 A4 80	
420	90091-0359		4	X-SEAL 36,17X2,62 MM	
430	90091-0360		4	BACK-UP RING 37,5X1,4 MM	
470	90091-0368		2	WEAR RING 30X45X5,3 MM	
480	90091-0428		2	PISTON SEAL GLIDE RING T 27,5X34,5X3,2 M	
TBA 1890S, TBA 2000S					
010	2566336-0000		1	BEARING HOUSING	
020	2588294-0000		2	LID	
030	2588295-0000		2	SLEEVE	
040	2588296-0000		2	PISTON	
050	2566338-0000		2	CATCH	
060	2594892-0000		2	SPRING	
080	2588297-0000		2	SHAFT	
300	312115-0372		2	SCREW ISO4762 M6X25 A4 80	
420	90459-2146		4	X-SEAL 42,52X2,62 MM	
430	90459-2145		4	BACK-UP RING 43,5X1,4 MM	
470	90091-0074		2	6EAR RING 35X40X5,3 MM	
480	90459-2173		2	SEAL GLYDRING 32,5X40X3,2 MM	
Common Parts					
070	1038240-0000		2	SPACER	
320	312115-0457		4	SCREW ISO4762 M8X35 A4 80	
340	312115-0461		4	SCREW ISO4762 M8X50 A4 80	
380	315202-0105		6	O-RING 7,1X1,6 MM	
440	90091-0362		2	SCRAPER, EXCLUDER2 18X22,8X3,7 MM	
450	90091-0364		2	ROD SEAL, STEPSEAL 18X25,3X3,2 MM	
460	90091-0366		2	WEAR RING 18X23X3,9 MM	
520	90141-0015		4	RETAINING RING FOR SHAFT DIN 471 8 A2	

Machine Type | Group Description | Used-In | Group Number | Page No

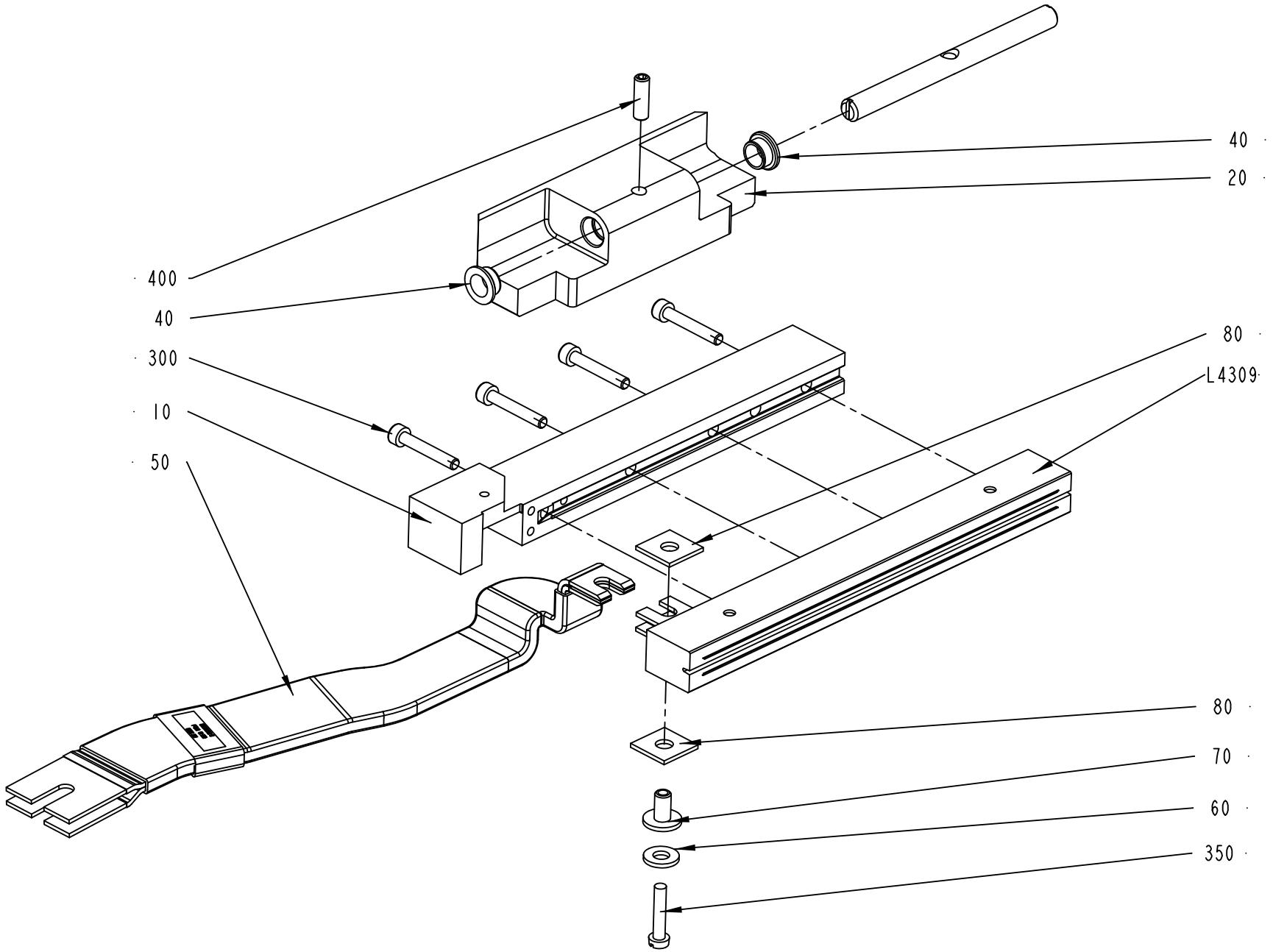

2552006-1
160559

ECM: 261760 - 20060702
Group number: 2552006-0100
Assembly Drawing: 2552006-1_1_AB

This list covers pages from 4-92 to 4-101

Pos	Part No	UN	Qty	Description	Page No
TPA 0250SQ QC, TPA 0200SQ QC (See drawing on page: 4-96)					
010	1348545-0000		1	RAIL	
020	2674335-0000		1	HOLDER	
050	1498849-0000		1	BUSBAR	
300	312115-0297		3	SCREW ISO4762 M4X25 A4 80	
L4309	1110930-0000		1	INDUCTOR	
TPA 0330SQ (See drawing on page: 4-98)					
010	1348545-0000		1	RAIL	
020	2611655-0000		1	CLAMP HOLDER	
030	2513013-0000		1	SHAFT	
040	2531703-0000		2	BUSHING	
050	1498849-0000		1	BUSBAR	
300	312115-0297		3	SCREW ISO4762 M4X25 A4 80	
400	312115-0327		2	SCREW ISO4762 M5X12 A4 80	
L4309	1520167-0000		1	INDUCTOR	
TPA 0500SQ SMILE (See drawing on page: 4-100)					
010	1558819-0000		1	RAIL	
020	2570848-0000		1	HOLDER	
030	2513013-0000		1	SHAFT	
040	2570849-0000		2	BUSHING	
050	1498849-0000		1	BUSBAR	
090	2503688-0000		1	VOLUME BULGE	
100	1549834-0000		1	VOLUME BULGE	
300	312115-0297		4	SCREW ISO4762 M4X25 A4 80	
360	311103-0234		1	PARALLEL PIN ISO 2338 3M6X12 A1	
370	312155-0287		2	SCREW DIN 7991 MF6S M4X8 A4 70	
380	312155-0325		2	SCREW DIN 7991 MF6S M5X10 A4 70	
400	312115-0329		2	SCREW ISO4762 M5X16 A4 80	
L4309	2587466-0000		1	INDUCTOR	
TPA 1000SQ FT NOQC (See drawing on page: 4-98)					
010	1558819-0000		1	RAIL	
020	2579989-0000		1	HOLDER	
030	2579990-0000		1	SHAFT	
040	2531703-0000		2	BUSHING	
050	1498849-0000		1	BUSBAR	
090	2503700-0000		1	VOLUME BULGE	
300	312115-0297		4	SCREW ISO4762 M4X25 A4 80	
370	312155-0287		2	SCREW DIN 7991 MF6S M4X8 A4 70	
400	312115-0327		2	SCREW ISO4762 M5X12 A4 80	
L4309	1520052-0000		1	INDUCTOR	
TPA 1000SQ SMILE NOQC (See drawing on page: 4-98)					
010	1558819-0000		1	RAIL	
020	2579991-0000		1	HOLDER	
030	2579990-0000		1	SHAFT	
040	2531703-0000		2	BUSHING	
050	1498849-0000		1	BUSBAR	
090	2503700-0000		1	VOLUME BULGE	
100	2500591-0000		1	VOLUME BULGE	
300	312115-0297		4	SCREW ISO4762 M4X25 A4 80	
370	312155-0287		2	SCREW DIN 7991 MF6S M4X8 A4 70	
380	312155-0325		2	SCREW DIN 7991 MF6S M5X10 A4 70	
400	312115-0327		2	SCREW ISO4762 M5X12 A4 80	
L4309	1520052-0000		1	INDUCTOR	
TPA 1000SQ SMILE QC, TPA 0750SQ SMILE QC (See drawing on page: 4-100)					
010	1558819-0000		1	RAIL	
020	2660404-0000		1	HOLDER	
050	1498849-0000		1	BUSBAR	
090	2503700-0000		1	VOLUME BULGE	
100	2500591-0000		1	VOLUME BULGE	
300	312115-0297		4	SCREW ISO4762 M4X25 A4 80	
360	311103-0234		1	PARALLEL PIN ISO 2338 3M6X12 A1	
370	312155-0287		2	SCREW DIN 7991 MF6S M4X8 A4 70	
380	312155-0325		2	SCREW DIN 7991 MF6S M5X10 A4 70	
L4309	2663378-0000		1	INDUCTOR	
TBA 0200B NOQC, TBA 0250B NOQC (See drawing on page: 4-92)					
010	1348545-0000		1	RAIL	
020	1349599-0000		1	HOLDER	
030	1349980-0000		1	SHAFT	
040	1349584-0000		2	BUSHING	
050	1498849-0000		1	BUSBAR	
300	312115-0297		3	SCREW ISO4762 M4X25 A4 80	
400	312318-0329		1	SCREW ISO4029 M5X16 A4	
L4309	1110932-0000		1	INDUCTOR	
TBA 0200B QC, TBA 0330S QC, TBA 0250B QC (See drawing on page: 4-94)					
010	1348545-0000		1	RAIL	
020	2604565-0000		1	HOLDER	
050	1498849-0000		1	BUSBAR	
300	312115-0297		3	SCREW ISO4762 M4X25 A4 80	
L4309	1110932-0000		1	INDUCTOR	
TBA 0200S (See drawing on page: 4-98)					
010	1348545-0000		1	RAIL	
020	2513015-0000		1	HOLDER	
030	2513013-0000		1	SHAFT	
040	2531703-0000		2	BUSHING	

Machine Type | Group Description | Used-In | Group Number | Page No

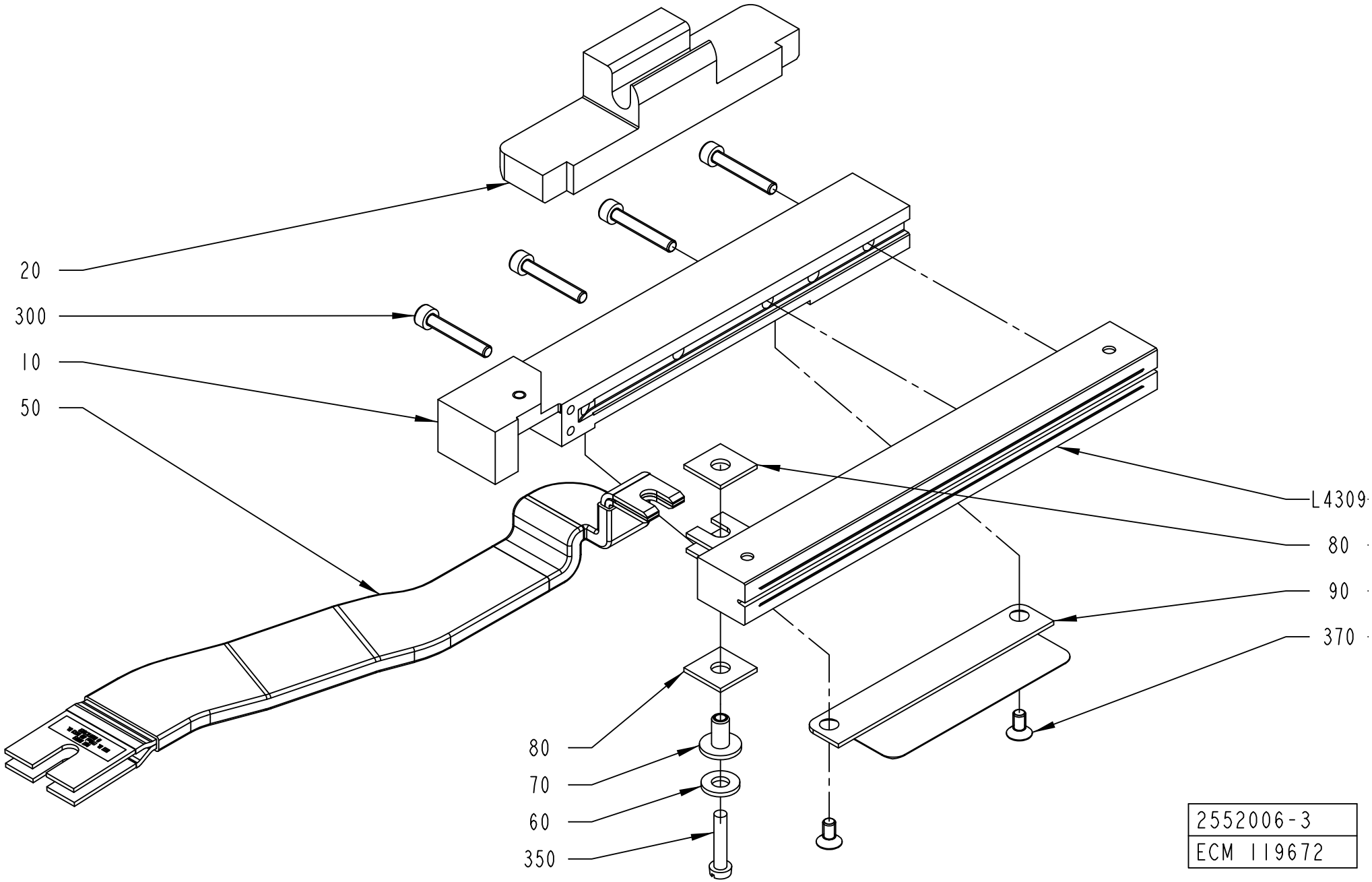
20
300
10
50
L4309
80
90
370
80
70
60
350
2552006-3
ECM 119672

ECM: 261760 - 20060702
Group number: 2552006-0100
Assembly Drawing: 2552006-3_1_AA

This list covers pages from 4-92 to 4-101

Pos	Part No	UN	Qty	Description	Page No
TBA 0200S (Cont'd) (See drawing on page: 4-98)					
050	1498849-0000		1	BUSBAR	
300	312115-0297		3	SCREW ISO4762 M4X25 A4 80	
400	312115-0329		2	SCREW ISO4762 M5X16 A4 80	
L4309	1110930-0000		1	INDUCTOR	
TBA 0200SQ, TBA 0250SQ (See drawing on page: 4-94)					
010	1558819-0000		1	RAIL	
020	2668318-0000		1	HOLDER	
050	1498849-0000		1	BUSBAR	
090	2679953-0000		1	VOLUME BULGE	
300	312115-0297		3	SCREW ISO4762 M4X25 A4 80	
370	312155-0287		2	SCREW DIN 7991 MF6S M4X8 A4 70	
L4309	2767760-0000		1	INDUCTOR	
TBA 0250S QC, TBA 0200M QC (See drawing on page: 4-96)					
010	1348545-0000		1	RAIL	
020	2644397-0000		1	HOLDER	
050	1498849-0000		1	BUSBAR	
300	312115-0297		3	SCREW ISO4762 M4X25 A4 80	
L4309	1110931-0000		1	INDUCTOR	
TBA 0500B QC, TBA 1000B QC (See drawing on page: 4-94)					
010	1558819-0000		1	RAIL	
020	1487955-0000		1	HOLDER	
050	1498849-0000		1	BUSBAR	
090	1558734-0000		1	VOLUME BULGE	
300	312115-0297		4	SCREW ISO4762 M4X25 A4 80	
370	312155-0287		2	SCREW DIN 7991 MF6S M4X8 A4 70	
L4309	1110938-0000		1	INDUCTOR	
TBA 0500S (See drawing on page: 4-98)					
010	1348545-0000		1	RAIL	
020	2611001-0000		1	CLAMP HOLDER	
030	2579990-0000		1	SHAFT	
040	2531703-0000		2	BUSHING	
050	1498849-0000		1	BUSBAR	
300	312115-0297		4	SCREW ISO4762 M4X25 A4 80	
400	312115-0327		2	SCREW ISO4762 M5X12 A4 80	
L4309	1110934-0000		1	INDUCTOR	
TBA 1000B NOQC NOMOLDEDCAP (See drawing on page: 4-98)					
010	1348545-0000		1	RAIL	
020	2664280-0000		1	HOLDER	
030	2526812-0000		1	SHAFT	
040	2531703-0000		2	BUSHING	
050	1498849-0000		1	BUSBAR	
300	312115-0297		4	SCREW ISO4762 M4X25 A4 80	
410	315105-0146		2	WASHER BRB5,3X10RFR	
L4309	1110938-0000		1	INDUCTOR	
TBA 1000B NOQC STDA7 (See drawing on page: 4-98)					
010	2610954-0000		1	RAIL	
020	2664280-0000		1	HOLDER	
030	2526812-0000		1	SHAFT	
040	2531703-0000		2	BUSHING	
050	1498849-0000		1	BUSBAR	
300	312115-0297		4	SCREW ISO4762 M4X25 A4 80	
410	315105-0146		2	WASHER BRB5,3X10RFR	
L4309	2610956-0000		1	INDUCTOR	
TBA 1000S LIGHTCAP					
010	2766751-0000		1	RAIL	
020	2559425-0000		1	CLAMP HOLDER	
030	2526812-0000		1	SHAFT	
040	2531703-0000		2	BUSHING	
050	1498849-0000		1	BUSBAR	
300	312115-0297		4	SCREW ISO4762 M4X25 A4 80	
400	312115-0327		2	SCREW ISO4762 M5X12 A4 80	
L4309	2546474-0000		1	INDUCTOR	
TBA 1000S NOMOLDEDCAP (See drawing on page: 4-98)					
010	1348545-0000		1	RAIL	
020	2559425-0000		1	CLAMP HOLDER	
030	2526812-0000		1	SHAFT	
040	2531703-0000		2	BUSHING	
050	1498849-0000		1	BUSBAR	
300	312115-0297		4	SCREW ISO4762 M4X25 A4 80	
400	312115-0327		2	SCREW ISO4762 M5X12 A4 80	
L4309	1110937-0000		1	INDUCTOR	
TBA 1000S STDA7 (See drawing on page: 4-98)					
010	2546475-0000		1	RAIL	
020	2559425-0000		1	CLAMP HOLDER	
030	2526812-0000		1	SHAFT	
040	2531703-0000		2	BUSHING	
050	1498849-0000		1	BUSBAR	
300	312115-0297		4	SCREW ISO4762 M4X25 A4 80	
400	312115-0327		2	SCREW ISO4762 M5X12 A4 80	
L4309	2546474-0000		1	INDUCTOR	
TBA 1000SQ (See drawing on page: 4-98)					
010	1348545-0000		1	RAIL	
020	2526811-0000		1	310.54HOLDER	

Machine Type | Group Description | Used-In | Group Number | Page No

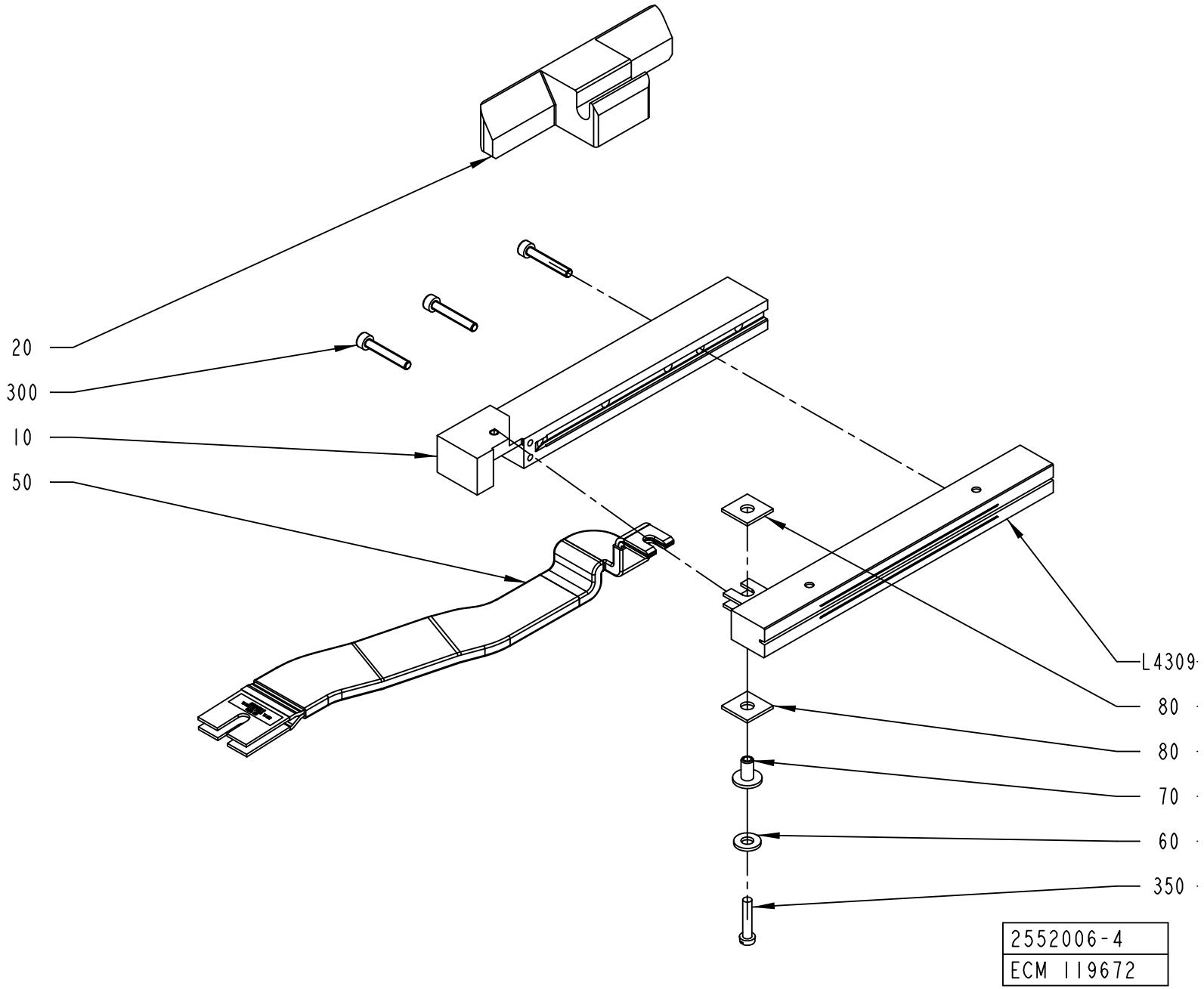
20
300
10
50
L4309
80
80
70
60
350
2552006-4
ECM 119672

Pos	Part No	UN	Qty	Description	Page No
TBA 1000SQ (Cont'd) (See drawing on page: 4-98)					
030	2526812-0000		1	SHAFT	
040	2531703-0000		2	BUSHING	
050	1498849-0000		1	BUSBAR	
300	312115-0297		4	SCREW ISO4762 M4X25 A4 80	
400	312115-0327		2	SCREW ISO4762 M5X12 A4 80	
L4309	1110936-0000		1	INDUCTOR	
TBA 1500S (See drawing on page: 4-98)					
010	1348545-0000		1	RAIL	
020	2570302-0000		1	CLAMP HOLDER	
030	2526812-0000		1	SHAFT	
040	2531703-0000		2	BUSHING	
050	1498849-0000		1	BUSBAR	
300	312115-0297		4	SCREW ISO4762 M4X25 A4 80	
400	312115-0327		2	SCREW ISO4762 M5X12 A4 80	
L4309	1110938-0000		1	INDUCTOR	
TBA 1890S QC, TBA 2000S QC (See drawing on page: 4-98)					
020	2588293-0000		1	HOLDER	
030	2686144-0000		1	SHAFT	
040	2531703-0000		2	BUSHING	
050	2698011-0000		1	BUSBAR	
300	312115-0305		5	SCREW ISO4762 M4X50 A4 80	
400	312115-0327		2	SCREW ISO4762 M5X12 A4 80	
L4309	1533046-0000		1	INDUCTOR	
Common Parts					
060	28509-0000		1	WASHER	
070	32544-0000		1	INSULATION NUT	
080	1036584-0000		2	WASHER	
350	312125-0295		1	SCREW ISO 1207 M4X20 A4	

Pos	Part No	UN	Qty	Description	Page No

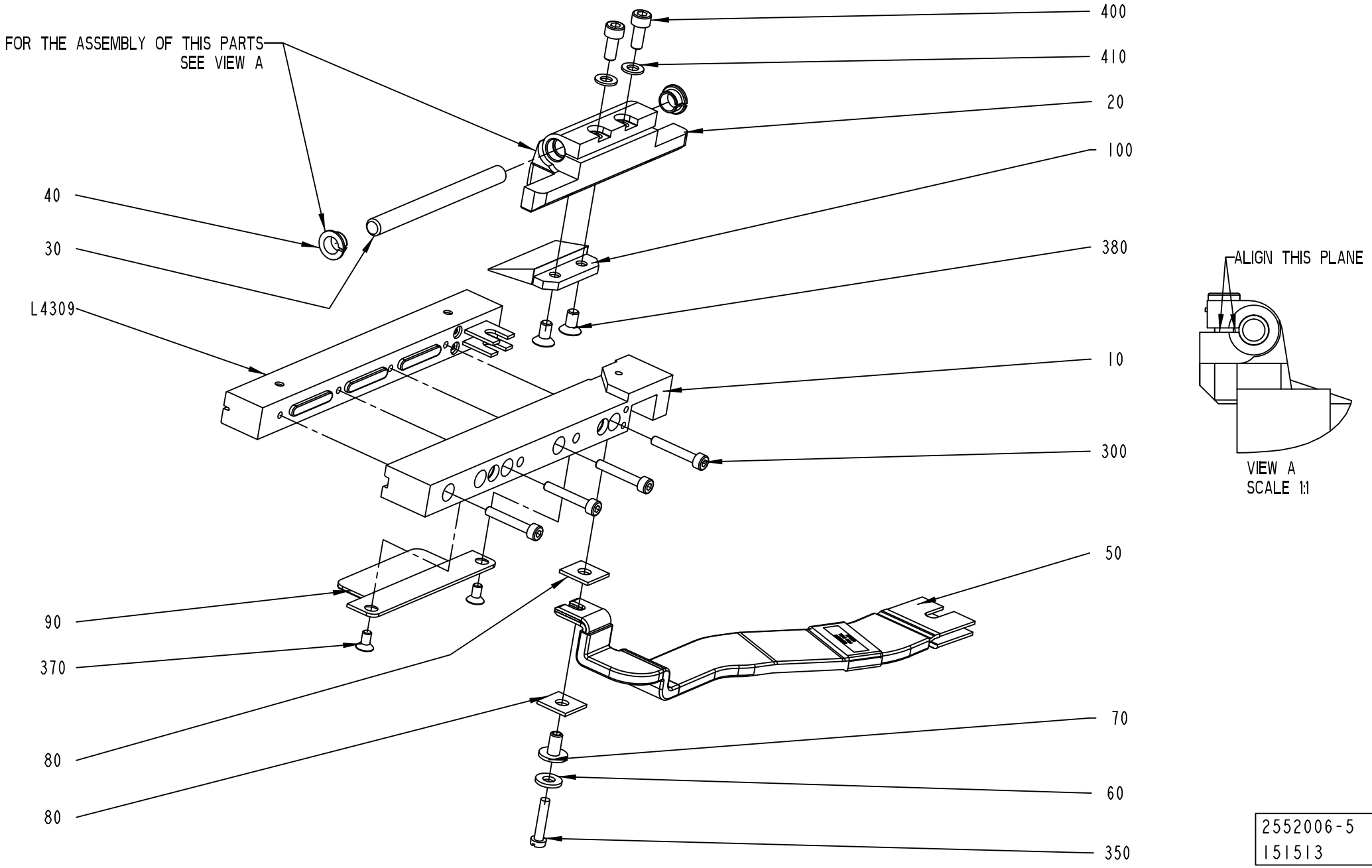

2552006-5
151513

ECM: 261760 - 20060702
Group number: 2552006-0100
Assembly Drawing: 2552006-5_1_AC

This list covers pages from 4-92 to 4-101

Pos	Part No	UN	Qty	Description	Page No
SEE PREVIOUS LISTS PAGES: 4-93, 4-95, 4-97.					

Pos	Part No	UN	Qty	Description	Page No

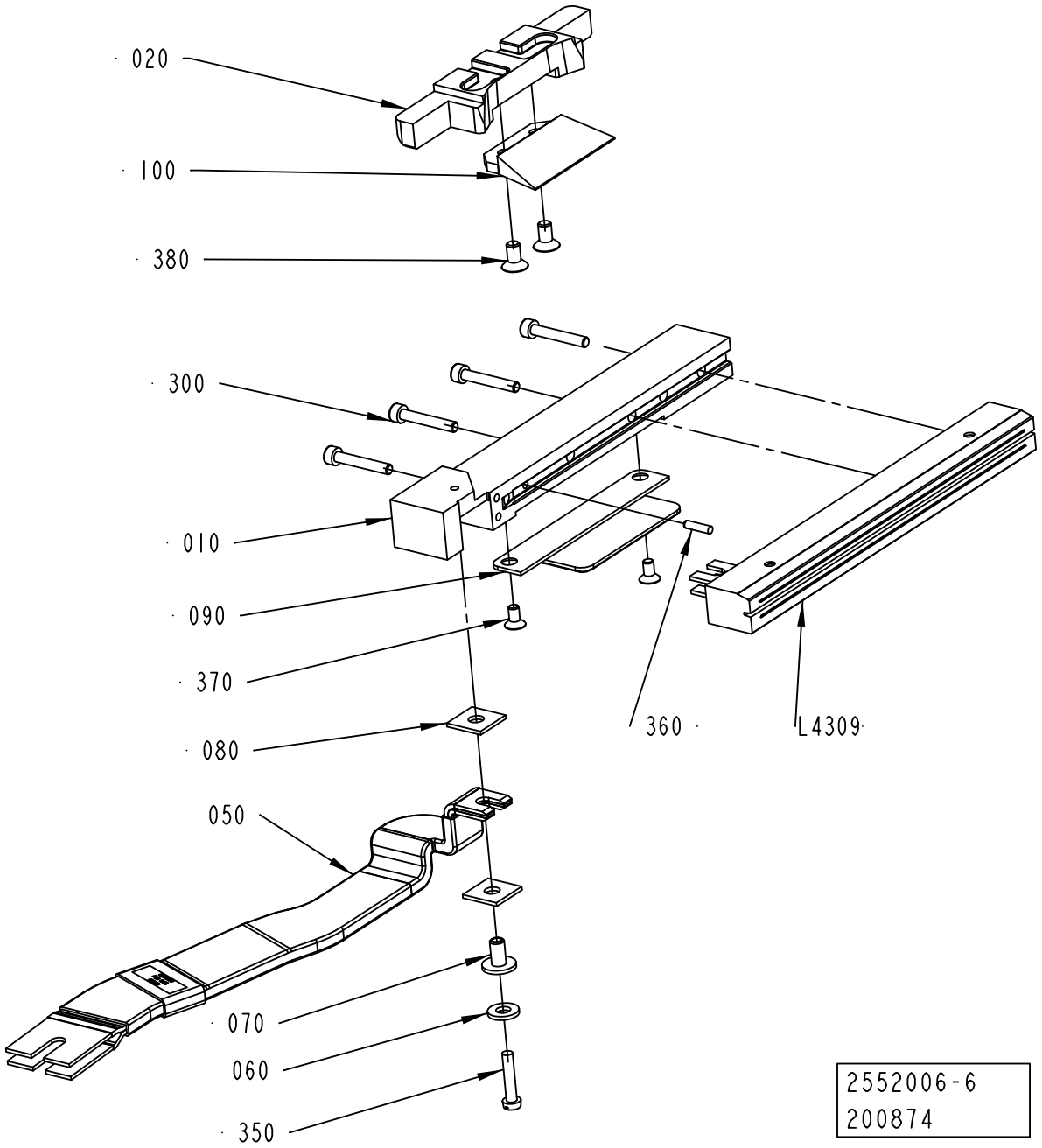
020
100
380
300
010
090
370
080
050
070
060
350
360
L4309
2552006-6
200874

ECM: 261760 - 20060702
Group number: 2552006-0100
Assembly Drawing: 2552006-6_1_AA

This list covers pages from 4-92 to 4-101

Pos	Part No	UN	Qty	Description	Page No	Pos	Part No	UN	Qty	Description	Page No

SEE PREVIOUS LISTS PAGES: 4-93, 4-95, 4-97.

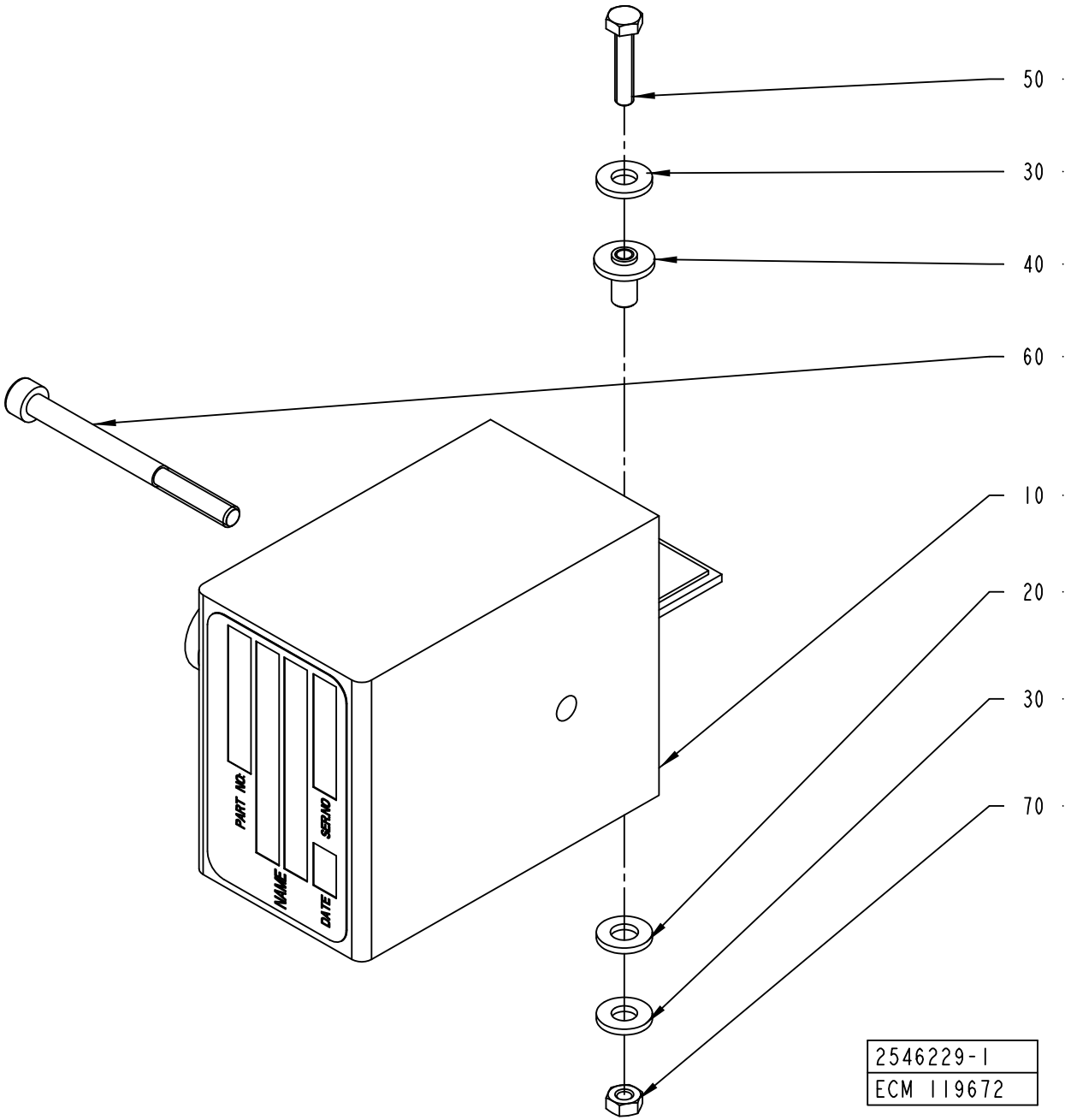
50
30
40
60
10
20
30
70
PART NO.
SER NO
NAME
DATE
2546229-1
ECM 119672

ECM: 263539 - 20060702
Group number: 2546229-0100
Assembly Drawing: 2546229-1_1_AA

Pos	Part No	UN	Qty	Description	Page No
TBA 0200S					
010	67379-0105		1	TRANSFORMER	
TBA 0200SQ, TPA 0250SQ NOQC, TBA 0250SQ					
010	67379-0114		1	TRANSFORMER	
TBA 0250S, TBA 0200M, TPA 0200SQ, TPA 0500SQ, TPA 0250SQ QC					
010	67379-0206		1	TRANSFORMER	
TBA 0330S, TBA 0200B, TBA 0250B					
010	67379-0269		1	TRANSFORMER	
TBA 0500B, TBA 1000S, TBA 1000SQ, TBA 1000B, TBA 1500S					
010	67379-0101		1	TRANSFORMER	
TBA 0500S					
010	67379-0258		1	TRANSFORMER	
TPA 0330SQ					
010	67379-0269		1	TRANSFORMER	
TPA 1000SQ, TBA 1890S, TBA 2000S, TPA 0750SQ					
010	67379-0249		1	TRANSFORMER	
Common Parts					
020	32079-0000		1	WASHER	
030	28509-0000		2	WASHER	
040	32544-0000		2	INSULATION NUT	
050	312105-0295		1	SCREW M6S ISO 4017 M4X20 A470	
060	90458-0058		1	SCREW M5X60 A280	
070	312605-0312		2	HEXAGON NUT, M6M M4 A280	

Pos	Part No	UN	Qty	Description	Page No

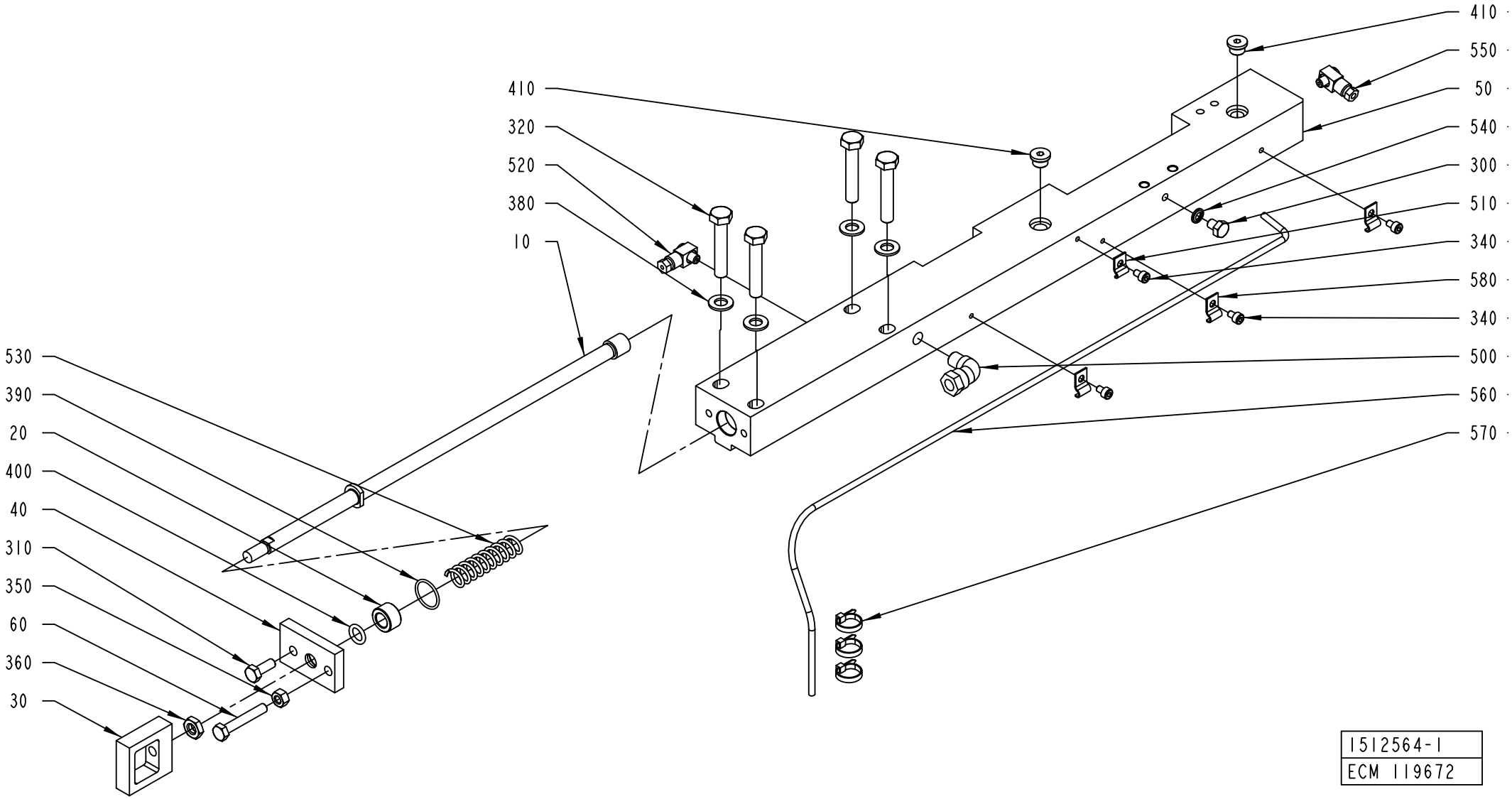
410
320
520
380
10
530
390
20
400
40
310
350
60
360
30
410
550
50
540
300
510
340
580
340
500
560
570
1512564-1
ECM 119672

ECM: 263537 - 20060702
Group number: 1512564-0200
Assembly Drawing: 1512564-1_1_AA

This list covers pages from 4-104 to 4-111

Pos	Part No	UN	Qty	Description	Page No
TBA 0200B QC, TBA 0330S QC, TBA 0250B QC, TPA 0250SQ QC, TPA 0200SQ QC (See drawing on page: 4-106)					
010	2530508-0000		1	TIE ROD	
050	2571843-0000		1	CARRIER	
070	1549312-0000		1	INSERT	
300	312105-0362		1	SCREW M6S ISO 4017 M6X8 A480	
345	312155-0323		3	SCREW DIN 7991 MF6S M5X8 A4 70	
400	315202-0208		1	O-RING 9,3X2,4 MM	
540	315211-0103		1	BONDED SEAL SS/NBR90 M6	
TBA 0200SQ QC, TBA 0250SQ QC (See drawing on page: 4-106)					
010	2737034-0000		1	TIE ROD	
050	2571843-0000		1	CARRIER	
070	1549312-0000		1	INSERT	
300	312105-0362		1	SCREW M6S ISO 4017 M6X8 A480	
345	312155-0323		3	SCREW DIN 7991 MF6S M5X8 A4 70	
400	315202-0208		1	O-RING 9,3X2,4 MM	
540	315211-0103		1	BONDED SEAL SS/NBR90 M6	
TBA 0250S, TBA 0200M (See drawing on page: 4-106)					
010	2530508-0000		1	TIE ROD	
050	2571843-0000		1	CARRIER	
070	2641225-0000		1	INSERT	
300	312105-0362		1	SCREW M6S ISO 4017 M6X8 A480	
345	312155-0323		3	SCREW DIN 7991 MF6S M5X8 A4 70	
400	315202-0208		1	O-RING 9,3X2,4 MM	
540	315211-0103		1	BONDED SEAL SS/NBR90 M6	
TBA 0500B QC, TBA 1000B QC (See drawing on page: 4-106)					
010	1499320-0000		1	TIE ROD	
050	2571843-0000		1	CARRIER	
070	1549312-0000		1	INSERT	
300	312105-0362		1	SCREW M6S ISO 4017 M6X8 A480	
345	312155-0323		3	SCREW DIN 7991 MF6S M5X8 A4 70	
400	315202-0208		1	O-RING 9,3X2,4 MM	
540	315211-0103		1	BONDED SEAL SS/NBR90 M6	
TBA 0500S, TBA 0200S, TPA 0330SQ, TPA 0500SQ, TBA 0200B NOQC, TBA 0250B NOQC (See drawing on page: 4-104)					
010	2530508-0000		1	TIE ROD	
050	2531114-0000		1	CARRIER	
300	312105-0362		1	SCREW M6S ISO 4017 M6X8 A480	
400	315202-0208		1	O-RING 9,3X2,4 MM	
540	315211-0103		1	BONDED SEAL SS/NBR90 M6	
TBA 1000S, TBA 1000SQ, TBA 1500S, TBA 1000B NOQC, TPA 1000SQ NOQC (See drawing on page: 4-104)					
010	1499320-0000		1	TIE ROD	
050	2531114-0000		1	CARRIER	
300	312105-0362		1	SCREW M6S ISO 4017 M6X8 A480	
400	315202-0208		1	O-RING 9,3X2,4 MM	
540	315211-0103		1	BONDED SEAL SS/NBR90 M6	
TBA 1890S QC, TBA 2000S QC (See drawing on page: 4-110)					
010	2588291-0000		1	TIE ROD	
050	2566329-0000		1	CARRIER	
070	2566328-0000		1	PLATE	
300	312105-0362		1	SCREW M6S ISO 4017 M6X8 A480	
400	315202-0208		1	O-RING 9,3X2,4 MM	
540	315211-0103		1	BONDED SEAL SS/NBR90 M6	
590	312155-0287		3	SCREW DIN 7991 MF6S M4X8 A4 70	
600	2603151-0000		1	SHIM	
TPA 1000SQ QC, TPA 0750SQ QC (See drawing on page: 4-108)					
010	2530508-0000		1	TIE ROD	
050	2647116-0000		1	CARRIER	
070	2647114-0000		1	INSERT	
290	312105-0291		2	SCREW M6S ISO 4017 M4X12 A470	
300	312105-0362		1	SCREW M6S ISO 4017 M6X8 A480	
345	312145-0323		3	SCREW ISO 2009 MFS M5X8 A4	
400	315202-0208		1	O-RING 9,3X2,4 MM	
540	315211-0103		1	BONDED SEAL SS/NBR90 M6	
Common Parts					
020	1036495-0000		1	BUSHING	
030	1036585-0000		1	EAR	
040	1036664-0000		1	LID	
060	1523162-0000		1	SCREW	
310	312105-0368		1	SCREW M6S ISO 4017 M6X16 A480	
320	312105-0460		4	SCREW M6S ISO 4014 M8X45 A480	
340	312115-0285		4	SCREW ISO4762 M4X6 A4 80	
350	312605-0316		1	HEXAGON NUT, M6M M6 A280	
360	312625-0318		1	HEXAGON THIN NUT, EN 24035 ML6M M8 A4	
380	315105-0165		4	WASHER BRB8,4X16RFR	
390	315202-0116		1	O-RING 18,1X1,6 MM	
410	342713-0209		2	PLUG (QUANT.MINIMA= 10PC).	
500	90030-0257		1	CONN. ELBOW, 8-R1/8, EXT.THREAD	
510	90165-0058		1	PIPE CLIP FOR TUBE D=2,5 MM	
520	90134-0058		1	CONNECTION	
530	1548940-0000		1	SPRING	
550	90134-0068		1	CONNECTION	
560	90266-0165	MM	800	BRASS PIPE	
570	352113-0101		3	CLIP STRIP, 92X2,5 MM	

CARRIER CUTTING LEFT

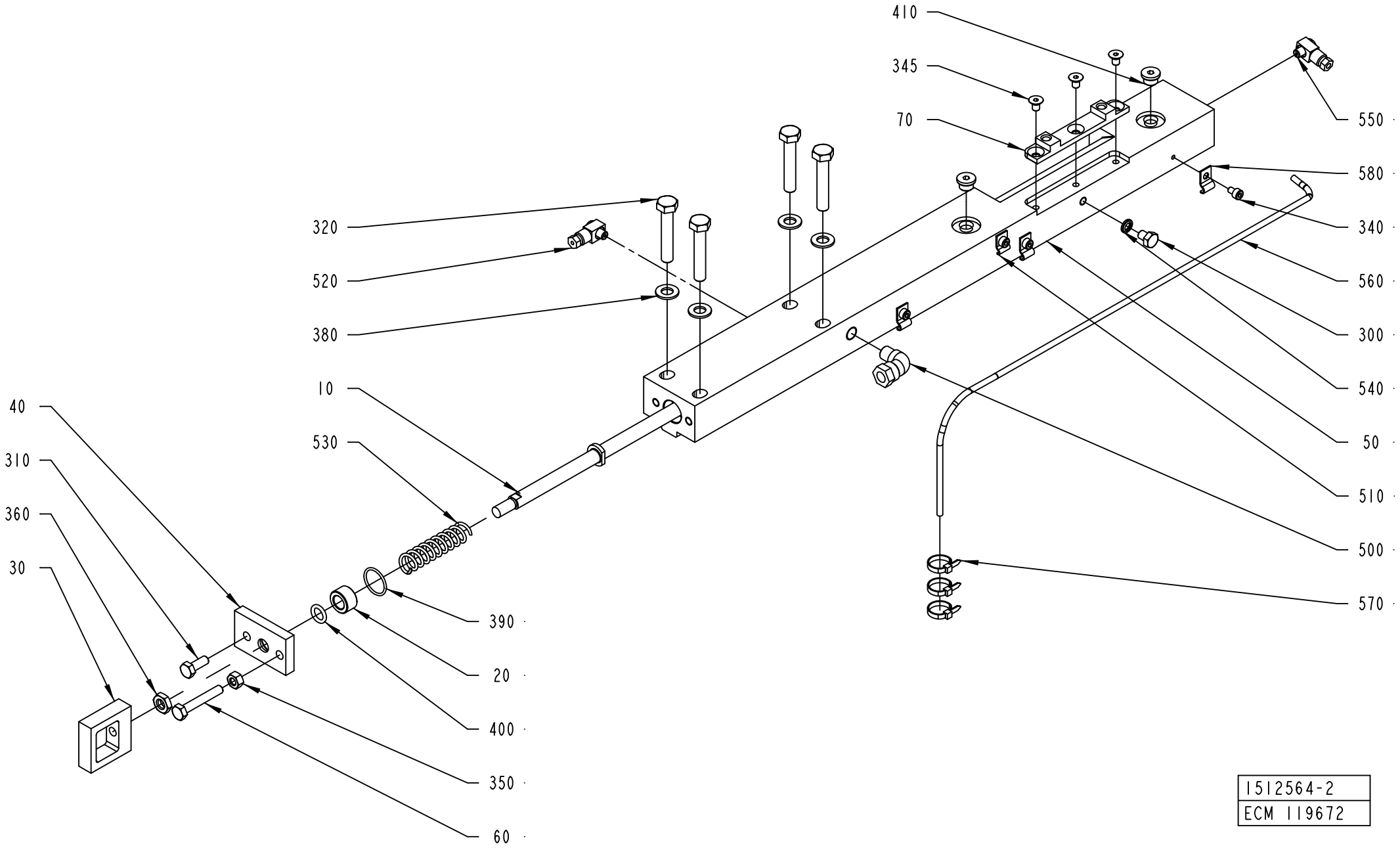

1512564-2
ECM 119672

ECM: 263537 - 20060702
Group number: 1512564-0200
Assembly Drawing: 1512564-2_1_AA

This list covers pages from 4-104 to 4-111

Pos	Part No	UN	Qty	Description	Page No
TBA 0200B QC, TBA 0330S QC, TBA 0250B QC, TPA 0250SQ QC, TPA 0200SQ QC (See drawing on page: 4-106)					
010	2530508-0000		1	TIE ROD	
050	2571843-0000		1	CARRIER	
070	1549312-0000		1	INSERT	
300	312105-0362		1	SCREW M6S ISO 4017 M6X8 A480	
345	312155-0323		3	SCREW DIN 7991 MF6S M5X8 A4 70	
400	315202-0208		1	O-RING 9,3X2,4 MM	
540	315211-0103		1	BONDED SEAL SS/NBR90 M6	
TBA 0200SQ QC, TBA 0250SQ QC (See drawing on page: 4-106)					
010	2737034-0000		1	TIE ROD	
050	2571843-0000		1	CARRIER	
070	1549312-0000		1	INSERT	
300	312105-0362		1	SCREW M6S ISO 4017 M6X8 A480	
345	312155-0323		3	SCREW DIN 7991 MF6S M5X8 A4 70	
400	315202-0208		1	O-RING 9,3X2,4 MM	
540	315211-0103		1	BONDED SEAL SS/NBR90 M6	
TBA 0250S, TBA 0200M (See drawing on page: 4-106)					
010	2530508-0000		1	TIE ROD	
050	2571843-0000		1	CARRIER	
070	2641225-0000		1	INSERT	
300	312105-0362		1	SCREW M6S ISO 4017 M6X8 A480	
345	312155-0323		3	SCREW DIN 7991 MF6S M5X8 A4 70	
400	315202-0208		1	O-RING 9,3X2,4 MM	
540	315211-0103		1	BONDED SEAL SS/NBR90 M6	
TBA 0500B QC, TBA 1000B QC (See drawing on page: 4-106)					
010	1499320-0000		1	TIE ROD	
050	2571843-0000		1	CARRIER	
070	1549312-0000		1	INSERT	
300	312105-0362		1	SCREW M6S ISO 4017 M6X8 A480	
345	312155-0323		3	SCREW DIN 7991 MF6S M5X8 A4 70	
400	315202-0208		1	O-RING 9,3X2,4 MM	
540	315211-0103		1	BONDED SEAL SS/NBR90 M6	
TBA 0500S, TBA 0200S, TPA 0330SQ, TPA 0500SQ, TBA 0200B NOQC, TBA 0250B NOQC (See drawing on page: 4-104)					
010	2530508-0000		1	TIE ROD	
050	2531114-0000		1	CARRIER	
300	312105-0362		1	SCREW M6S ISO 4017 M6X8 A480	
400	315202-0208		1	O-RING 9,3X2,4 MM	
540	315211-0103		1	BONDED SEAL SS/NBR90 M6	
TBA 1000S, TBA 1000SQ, TBA 1500S, TBA 1000B NOQC, TPA 1000SQ NOQC (See drawing on page: 4-104)					
010	1499320-0000		1	TIE ROD	
050	2531114-0000		1	CARRIER	
300	312105-0362		1	SCREW M6S ISO 4017 M6X8 A480	
400	315202-0208		1	O-RING 9,3X2,4 MM	
540	315211-0103		1	BONDED SEAL SS/NBR90 M6	
TBA 1890S QC, TBA 2000S QC (See drawing on page: 4-110)					
010	2588291-0000		1	TIE ROD	
050	2566329-0000		1	CARRIER	
070	2566328-0000		1	PLATE	
300	312105-0362		1	SCREW M6S ISO 4017 M6X8 A480	
400	315202-0208		1	O-RING 9,3X2,4 MM	
540	315211-0103		1	BONDED SEAL SS/NBR90 M6	
590	312155-0287		3	SCREW DIN 7991 MF6S M4X8 A4 70	
600	2603151-0000		1	SHIM	
TPA 1000SQ QC, TPA 0750SQ QC (See drawing on page: 4-108)					
010	2530508-0000		1	TIE ROD	
050	2647116-0000		1	CARRIER	
070	2647114-0000		1	INSERT	
290	312105-0291		2	SCREW M6S ISO 4017 M4X12 A470	
300	312105-0362		1	SCREW M6S ISO 4017 M6X8 A480	
345	312145-0323		3	SCREW ISO 2009 MFS M5X8 A4	
400	315202-0208		1	O-RING 9,3X2,4 MM	
540	315211-0103		1	BONDED SEAL SS/NBR90 M6	
Common Parts					
020	1036495-0000		1	BUSHING	
030	1036585-0000		1	EAR	
040	1036664-0000		1	LID	
060	1523162-0000		1	SCREW	
310	312105-0368		1	SCREW M6S ISO 4017 M6X16 A480	
320	312105-0460		4	SCREW M6S ISO 4014 M8X45 A480	
340	312115-0285		4	SCREW ISO4762 M4X6 A4 80	
350	312605-0316		1	HEXAGON NUT, M6M M6 A280	
360	312625-0318		1	HEXAGON THIN NUT, EN 24035 ML6M M8 A4	
380	315105-0165		4	WASHER BRB8,4X16RFR	
390	315202-0116		1	O-RING 18,1X1,6 MM	
410	342713-0209		2	PLUG (QUANT.MINIMA= 10PC).	
500	90030-0257		1	CONN. ELBOW, 8-R1/8, EXT.THREAD	
510	90165-0058		1	PIPE CLIP FOR TUBE D=2,5 MM	
520	90134-0058		1	CONNECTION	
530	1548940-0000		1	SPRING	
550	90134-0068		1	CONNECTION	
560	90266-0165	MM	800	BRASS PIPE	
570	352113-0101		3	CLIP STRIP, 92X2,5 MM	

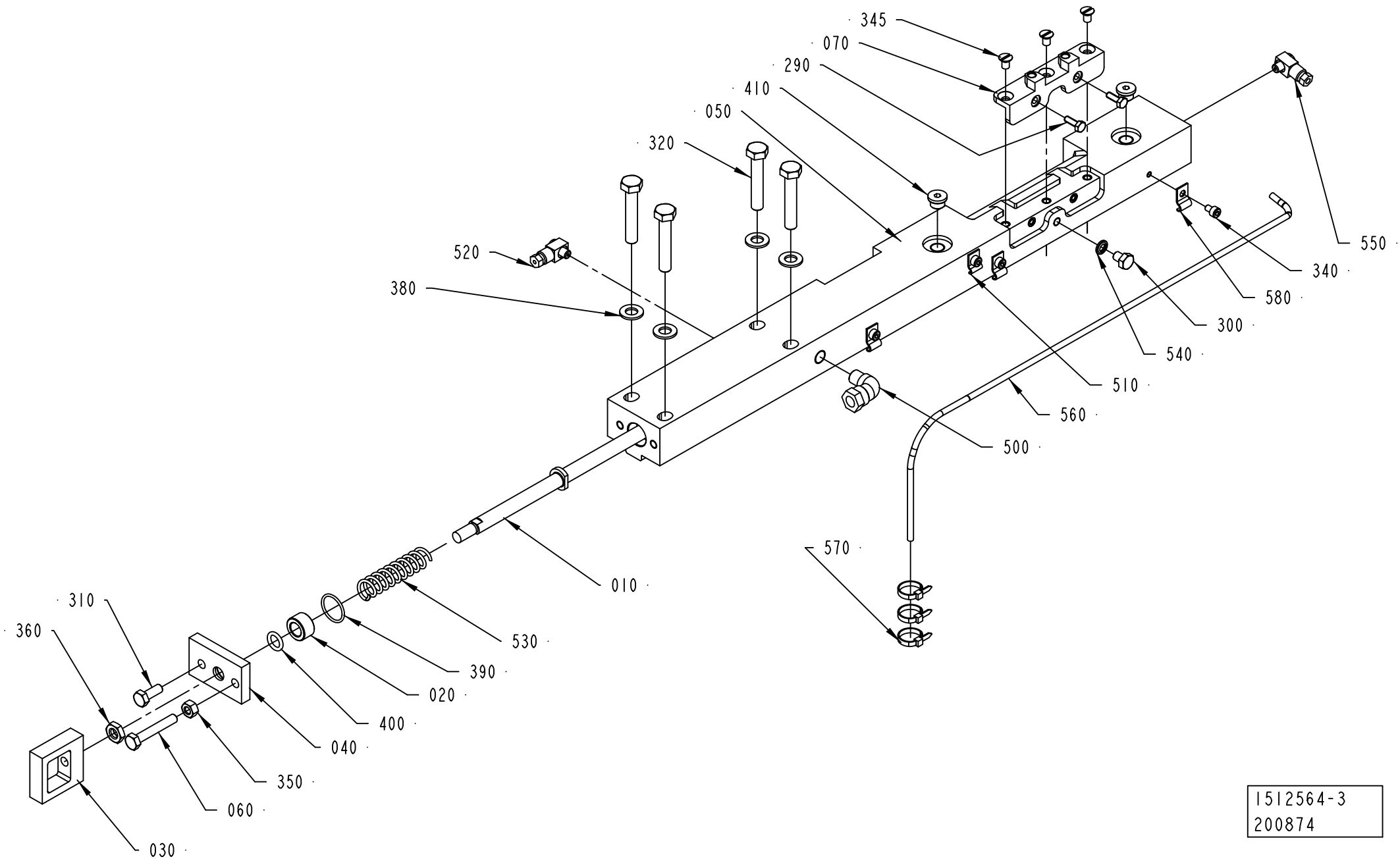

1512564-3
200874

ECM: 263537 - 20060702
Group number: 1512564-0200
Assembly Drawing: 1512564-3_1_AA

This list covers pages from 4-104 to 4-111

Pos	Part No	UN	Qty	Description	Page No
TBA 0200B QC, TBA 0330S QC, TBA 0250B QC, TPA 0250SQ QC, TPA 0200SQ QC (See drawing on page: 4-106)					
010	2530508-0000		1	TIE ROD	
050	2571843-0000		1	CARRIER	
070	1549312-0000		1	INSERT	
300	312105-0362		1	SCREW M6S ISO 4017 M6X8 A480	
345	312155-0323		3	SCREW DIN 7991 MF6S M5X8 A4 70	
400	315202-0208		1	O-RING 9,3X2,4 MM	
540	315211-0103		1	BONDED SEAL SS/NBR90 M6	
TBA 0200SQ QC, TBA 0250SQ QC (See drawing on page: 4-106)					
010	2737034-0000		1	TIE ROD	
050	2571843-0000		1	CARRIER	
070	1549312-0000		1	INSERT	
300	312105-0362		1	SCREW M6S ISO 4017 M6X8 A480	
345	312155-0323		3	SCREW DIN 7991 MF6S M5X8 A4 70	
400	315202-0208		1	O-RING 9,3X2,4 MM	
540	315211-0103		1	BONDED SEAL SS/NBR90 M6	
TBA 0250S, TBA 0200M (See drawing on page: 4-106)					
010	2530508-0000		1	TIE ROD	
050	2571843-0000		1	CARRIER	
070	2641225-0000		1	INSERT	
300	312105-0362		1	SCREW M6S ISO 4017 M6X8 A480	
345	312155-0323		3	SCREW DIN 7991 MF6S M5X8 A4 70	
400	315202-0208		1	O-RING 9,3X2,4 MM	
540	315211-0103		1	BONDED SEAL SS/NBR90 M6	
TBA 0500B QC, TBA 1000B QC (See drawing on page: 4-106)					
010	1499320-0000		1	TIE ROD	
050	2571843-0000		1	CARRIER	
070	1549312-0000		1	INSERT	
300	312105-0362		1	SCREW M6S ISO 4017 M6X8 A480	
345	312155-0323		3	SCREW DIN 7991 MF6S M5X8 A4 70	
400	315202-0208		1	O-RING 9,3X2,4 MM	
540	315211-0103		1	BONDED SEAL SS/NBR90 M6	
TBA 0500S, TBA 0200S, TPA 0330SQ, TPA 0500SQ, TBA 0200B NOQC, TBA 0250B NOQC (See drawing on page: 4-104)					
010	2530508-0000		1	TIE ROD	
050	2531114-0000		1	CARRIER	
300	312105-0362		1	SCREW M6S ISO 4017 M6X8 A480	
400	315202-0208		1	O-RING 9,3X2,4 MM	
540	315211-0103		1	BONDED SEAL SS/NBR90 M6	
TBA 1000S, TBA 1000SQ, TBA 1500S, TBA 1000B NOQC, TPA 1000SQ NOQC (See drawing on page: 4-104)					
010	1499320-0000		1	TIE ROD	
050	2531114-0000		1	CARRIER	
300	312105-0362		1	SCREW M6S ISO 4017 M6X8 A480	
400	315202-0208		1	O-RING 9,3X2,4 MM	
540	315211-0103		1	BONDED SEAL SS/NBR90 M6	
TBA 1890S QC, TBA 2000S QC (See drawing on page: 4-110)					
010	2588291-0000		1	TIE ROD	
050	2566329-0000		1	CARRIER	
070	2566328-0000		1	PLATE	
300	312105-0362		1	SCREW M6S ISO 4017 M6X8 A480	
400	315202-0208		1	O-RING 9,3X2,4 MM	
540	315211-0103		1	BONDED SEAL SS/NBR90 M6	
590	312155-0287		3	SCREW DIN 7991 MF6S M4X8 A4 70	
600	2603151-0000		1	SHIM	
TPA 1000SQ QC, TPA 0750SQ QC (See drawing on page: 4-108)					
010	2530508-0000		1	TIE ROD	
050	2647116-0000		1	CARRIER	
070	2647114-0000		1	INSERT	
290	312105-0291		2	SCREW M6S ISO 4017 M4X12 A470	
300	312105-0362		1	SCREW M6S ISO 4017 M6X8 A480	
345	312145-0323		3	SCREW ISO 2009 MFS M5X8 A4	
400	315202-0208		1	O-RING 9,3X2,4 MM	
540	315211-0103		1	BONDED SEAL SS/NBR90 M6	
Common Parts					
020	1036495-0000		1	BUSHING	
030	1036585-0000		1	EAR	
040	1036664-0000		1	LID	
060	1523162-0000		1	SCREW	
310	312105-0368		1	SCREW M6S ISO 4017 M6X16 A480	
320	312105-0460		4	SCREW M6S ISO 4014 M8X45 A480	
340	312115-0285		4	SCREW ISO4762 M4X6 A4 80	
350	312605-0316		1	HEXAGON NUT, M6M M6 A280	
360	312625-0318		1	HEXAGON THIN NUT, EN 24035 ML6M M8 A4	
380	315105-0165		4	WASHER BRB8,4X16RFR	
390	315202-0116		1	O-RING 18,1X1,6 MM	
410	342713-0209		2	PLUG (QUANT.MINIMA= 10PC).	
500	90030-0257		1	CONN. ELBOW, 8-R1/8, EXT.THREAD	
510	90165-0058		1	PIPE CLIP FOR TUBE D=2,5 MM	
520	90134-0058		1	CONNECTION	
530	1548940-0000		1	SPRING	
550	90134-0068		1	CONNECTION	
560	90266-0165	MM	800	BRASS PIPE	
570	352113-0101		3	CLIP STRIP, 92X2,5 MM	

CARRIER CUTTING LEFT

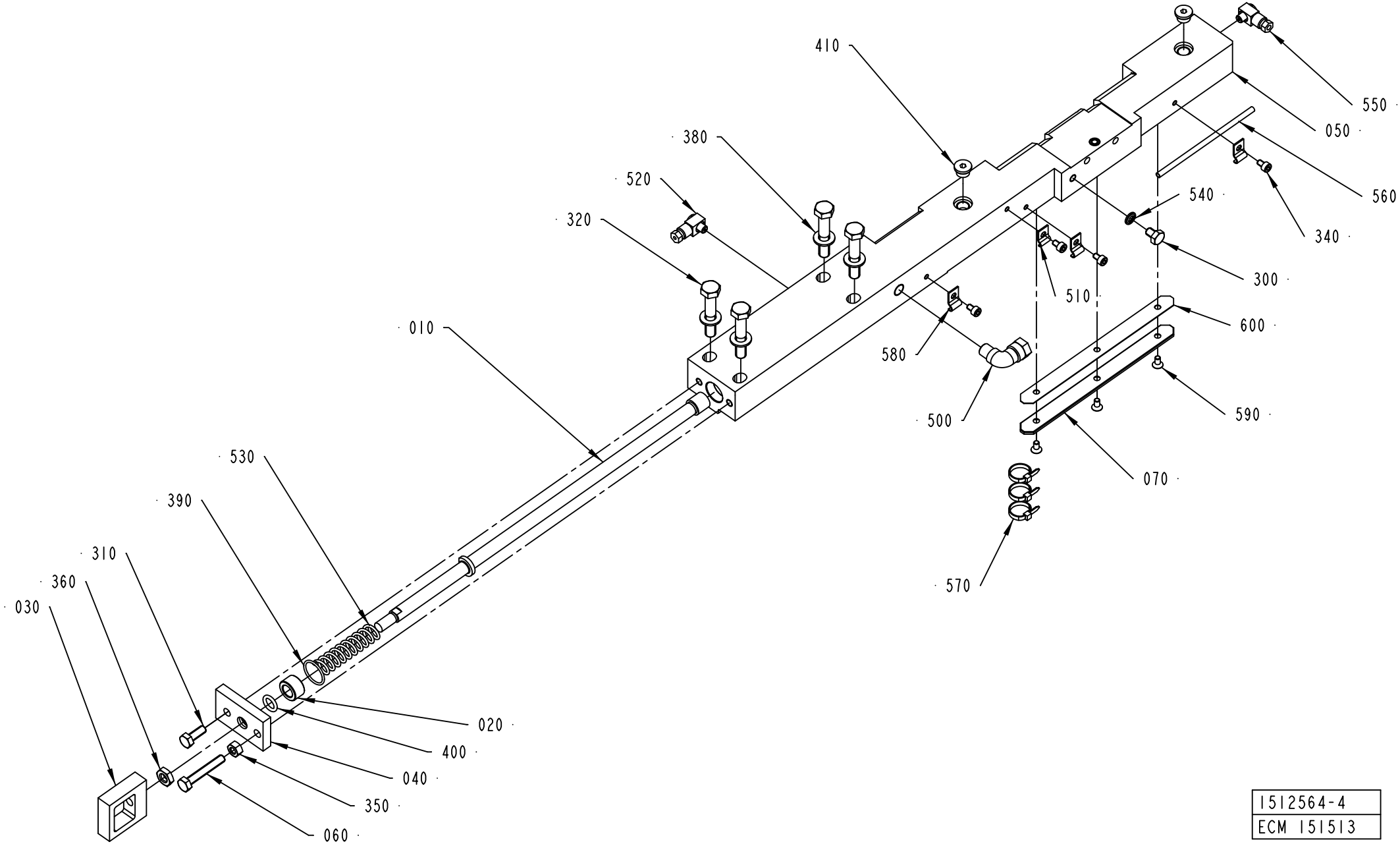

1512564-4
ECM 151513

ECM: 263537 - 20060702
Group number: 1512564-0200
Assembly Drawing: 1512564-4_1_AA

This list covers pages from 4-104 to 4-111

Pos	Part No	UN	Qty	Description	Page No
TBA 0200B QC, TBA 0330S QC, TBA 0250B QC, TPA 0250SQ QC, TPA 0200SQ QC (See drawing on page: 4-106)					
010	2530508-0000		1	TIE ROD	
050	2571843-0000		1	CARRIER	
070	1549312-0000		1	INSERT	
300	312105-0362		1	SCREW M6S ISO 4017 M6X8 A480	
345	312155-0323		3	SCREW DIN 7991 MF6S M5X8 A4 70	
400	315202-0208		1	O-RING 9,3X2,4 MM	
540	315211-0103		1	BONDED SEAL SS/NBR90 M6	
TBA 0200SQ QC, TBA 0250SQ QC (See drawing on page: 4-106)					
010	2737034-0000		1	TIE ROD	
050	2571843-0000		1	CARRIER	
070	1549312-0000		1	INSERT	
300	312105-0362		1	SCREW M6S ISO 4017 M6X8 A480	
345	312155-0323		3	SCREW DIN 7991 MF6S M5X8 A4 70	
400	315202-0208		1	O-RING 9,3X2,4 MM	
540	315211-0103		1	BONDED SEAL SS/NBR90 M6	
TBA 0250S, TBA 0200M (See drawing on page: 4-106)					
010	2530508-0000		1	TIE ROD	
050	2571843-0000		1	CARRIER	
070	2641225-0000		1	INSERT	
300	312105-0362		1	SCREW M6S ISO 4017 M6X8 A480	
345	312155-0323		3	SCREW DIN 7991 MF6S M5X8 A4 70	
400	315202-0208		1	O-RING 9,3X2,4 MM	
540	315211-0103		1	BONDED SEAL SS/NBR90 M6	
TBA 0500B QC, TBA 1000B QC (See drawing on page: 4-106)					
010	1499320-0000		1	TIE ROD	
050	2571843-0000		1	CARRIER	
070	1549312-0000		1	INSERT	
300	312105-0362		1	SCREW M6S ISO 4017 M6X8 A480	
345	312155-0323		3	SCREW DIN 7991 MF6S M5X8 A4 70	
400	315202-0208		1	O-RING 9,3X2,4 MM	
540	315211-0103		1	BONDED SEAL SS/NBR90 M6	
TBA 0500S, TBA 0200S, TPA 0330SQ, TPA 0500SQ, TBA 0200B NOQC, TBA 0250B NOQC (See drawing on page: 4-104)					
010	2530508-0000		1	TIE ROD	
050	2531114-0000		1	CARRIER	
300	312105-0362		1	SCREW M6S ISO 4017 M6X8 A480	
400	315202-0208		1	O-RING 9,3X2,4 MM	
540	315211-0103		1	BONDED SEAL SS/NBR90 M6	
TBA 1000S, TBA 1000SQ, TBA 1500S, TBA 1000B NOQC, TPA 1000SQ NOQC (See drawing on page: 4-104)					
010	1499320-0000		1	TIE ROD	
050	2531114-0000		1	CARRIER	
300	312105-0362		1	SCREW M6S ISO 4017 M6X8 A480	
400	315202-0208		1	O-RING 9,3X2,4 MM	
540	315211-0103		1	BONDED SEAL SS/NBR90 M6	
TBA 1890S QC, TBA 2000S QC (See drawing on page: 4-110)					
010	2588291-0000		1	TIE ROD	
050	2566329-0000		1	CARRIER	
070	2566328-0000		1	PLATE	
300	312105-0362		1	SCREW M6S ISO 4017 M6X8 A480	
400	315202-0208		1	O-RING 9,3X2,4 MM	
540	315211-0103		1	BONDED SEAL SS/NBR90 M6	
590	312155-0287		3	SCREW DIN 7991 MF6S M4X8 A4 70	
600	2603151-0000		1	SHIM	
TPA 1000SQ QC, TPA 0750SQ QC (See drawing on page: 4-108)					
010	2530508-0000		1	TIE ROD	
050	2647116-0000		1	CARRIER	
070	2647114-0000		1	INSERT	
290	312105-0291		2	SCREW M6S ISO 4017 M4X12 A470	
300	312105-0362		1	SCREW M6S ISO 4017 M6X8 A480	
345	312145-0323		3	SCREW ISO 2009 MFS M5X8 A4	
400	315202-0208		1	O-RING 9,3X2,4 MM	
540	315211-0103		1	BONDED SEAL SS/NBR90 M6	
Common Parts					
020	1036495-0000		1	BUSHING	
030	1036585-0000		1	EAR	
040	1036664-0000		1	LID	
060	1523162-0000		1	SCREW	
310	312105-0368		1	SCREW M6S ISO 4017 M6X16 A480	
320	312105-0460		4	SCREW M6S ISO 4014 M8X45 A480	
340	312115-0285		4	SCREW ISO4762 M4X6 A4 80	
350	312605-0316		1	HEXAGON NUT, M6M M6 A280	
360	312625-0318		1	HEXAGON THIN NUT, EN 24035 ML6M M8 A4	
380	315105-0165		4	WASHER BRB8,4X16RFR	
390	315202-0116		1	O-RING 18,1X1,6 MM	
410	342713-0209		2	PLUG (QUANT.MINIMA= 10PC).	
500	90030-0257		1	CONN. ELBOW, 8-R1/8, EXT.THREAD	
510	90165-0058		1	PIPE CLIP FOR TUBE D=2,5 MM	
520	90134-0058		1	CONNECTION	
530	1548940-0000		1	SPRING	
550	90134-0068		1	CONNECTION	
560	90266-0165	MM	800	BRASS PIPE	
570	352113-0101		3	CLIP STRIP, 92X2,5 MM	

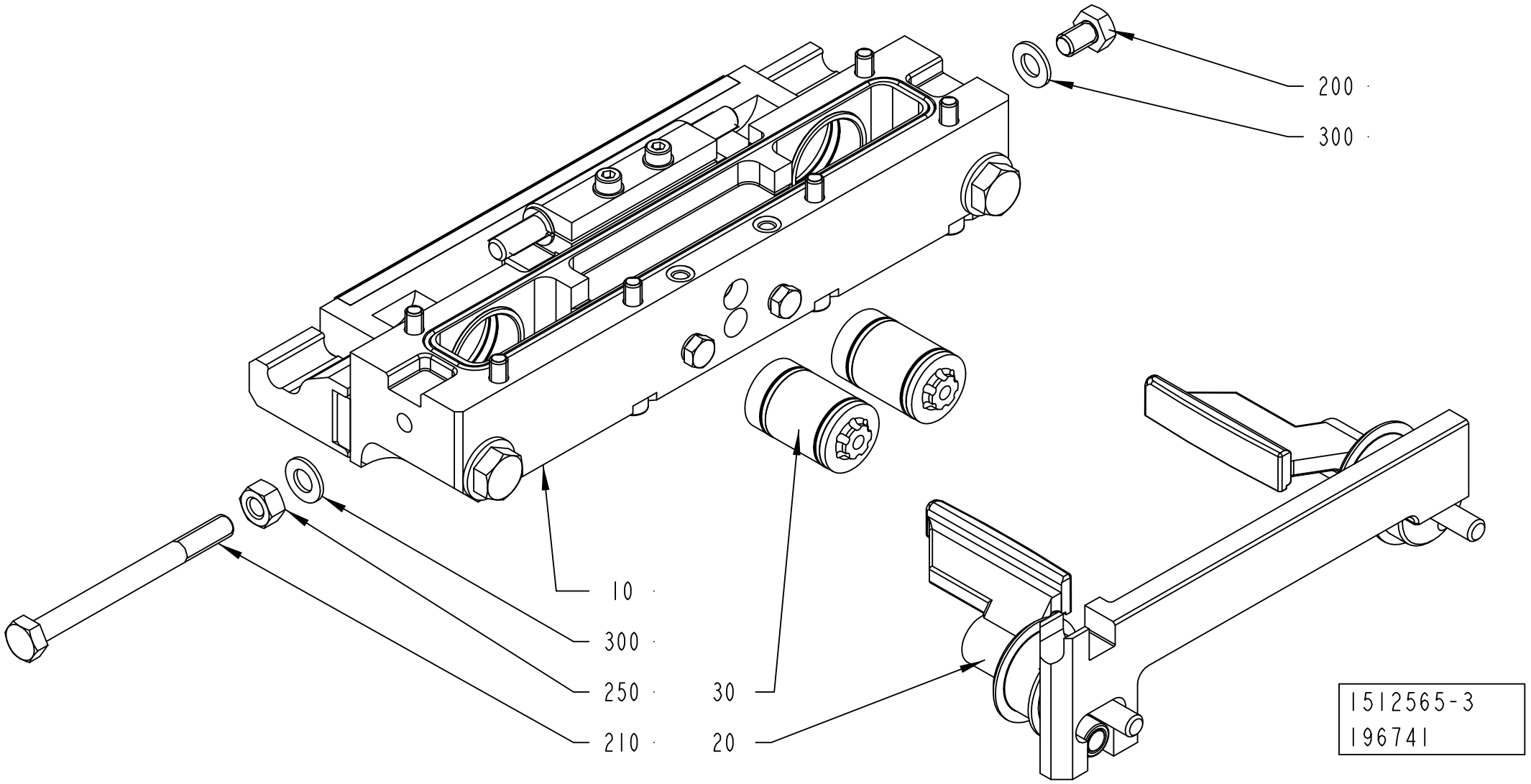
200
300
10
300
250
210
30
20
1512565-3
196741

ECM: 235786 - 20060101
Group number: 1512565-0300
Assembly Drawing: 1512565-3_1_AA

Pos	Part No	UN	Qty	Description	Page No
-					
010	2552008-0200		1	CUTTING JAW	**4-115, 4-117, 4-119, 4-121**
020	2552009-0100		1	FOLDING FLAP LEFT	**4-123, 4-125**
030	2552010-0200		2	PISTON	**4-127**
200	312105-0447		1	SCREW M6S ISO 4017 M8X12 A480	
210	312105-0469		1	SCREW M6S ISO 4014 M8X90 A480	
250	312605-0318		1	HEXAGON NUT, M6M M8 A280	
300	315105-0165		2	WASHER BRB8,4X16RFR	

Pos	Part No	UN	Qty	Description	Page No

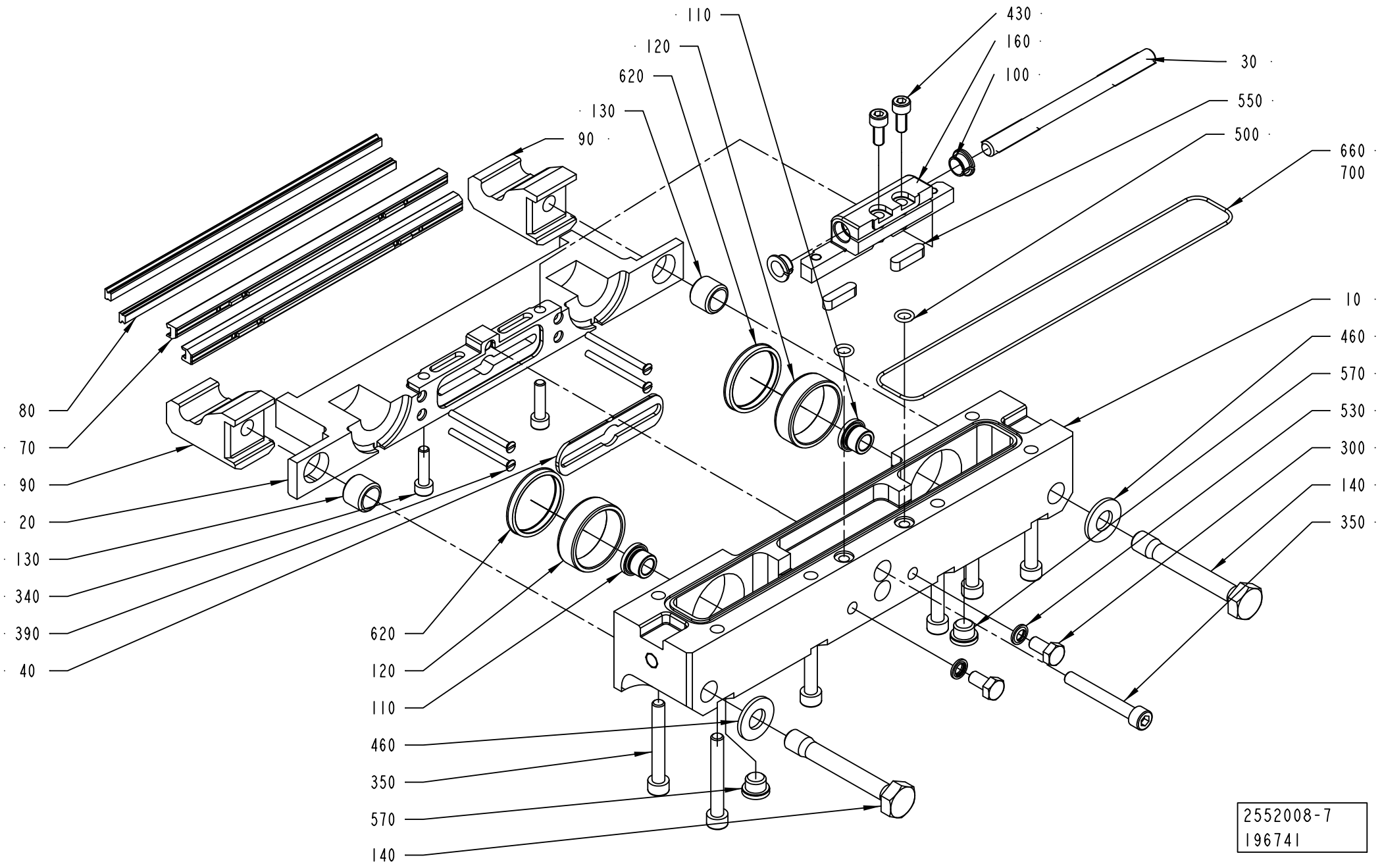
110
120
620
130
90
430
160
100
30
550
500
660
700
10
460
570
530
300
140
350
80
70
90
20
130
340
390
40
620
120
110
460
350
570
140
2552008-7
196741

ECM: 263540 - 20060702
Group number: 2552008-0200
Assembly Drawing: 2552008-7_1_AA

This list covers pages from 4-114 to 4-121

Pos	Part No	UN	Qty	Description	Page No
TPA 1000SQ QC, TPA 0750SQ QC (See drawing on page: 4-118)					
010	2775285-0000		1	BEARING HOUSING	
020	2658265-0000		1	CUTTING JAW	
040	1487619-0000		1	PLATE	
070	1520494-0000		2	CUTTING RAIL	
080	1520633-0002		2	DOLLY	
090	1538348-0000		2	CATCH	
120	1255389-0000		2	BUSHING	
140	1035871-0000		2	SCREW	
390	312145-0238		2	SCREW ISO 2009 MFS M3X40 A4	
400	1523827-0000		2	SCREW	
500	315202-0104		2	O-RING 6,1X1,6 MM	
620	90091-0361		2	SCRAPER, EXCLUDER2 30X34,8X3,7 MM	
660	90242-0093	MM	550	O-RING MATERIAL 1,5 MM	
TBA 0200B QC, TBA 0330S QC, TBA 0250B QC (See drawing on page: 4-116)					
010	2774548-0000		1	BEARING HOUSING	
020	2604564-0000		1	CUTTING JAW	
050	1484002-0000		1	PLATE	
060	1484003-0000		1	PLATE	
070	1520493-0000		2	CUTTING RAIL	
080	1110083-0002		2	DOLLY	
090	1538348-0000		2	CATCH	
120	1255389-0000		2	BUSHING	
140	1035871-0000		2	SCREW	
390	312145-0234		4	SCREW ISO 2009 MFS M3X30 A4	
500	315202-0104		2	O-RING 6,1X1,6 MM	
620	90091-0361		2	SCRAPER, EXCLUDER2 30X34,8X3,7 MM	
660	90242-0093	MM	550	O-RING MATERIAL 1,5 MM	
TBA 0200S (See drawing on page: 4-118)					
010	2775290-0000		1	BEARING HOUSING	
020	2513014-0000		1	CUTTING JAW	
030	2513013-0000		1	SHAFT	
050	1484002-0000		1	PLATE	
060	1484003-0000		1	PLATE	
070	1520493-0000		2	CUTTING RAIL	
080	1110083-0002		2	DOLLY	
090	1538348-0000		2	CATCH	
100	2531703-0000		2	BUSHING	
120	1255389-0000		2	BUSHING	
140	1035871-0000		2	SCREW	
390	312145-0234		4	SCREW ISO 2009 MFS M3X30 A4	
430	312115-0329		2	SCREW ISO4762 M5X16 A4 80	
500	315202-0104		2	O-RING 6,1X1,6 MM	
620	90091-0361		2	SCRAPER, EXCLUDER2 30X34,8X3,7 MM	
TBA 0200SQ QC, TBA 0250SQ QC (See drawing on page: 4-116)					
010	2774548-0000		1	BEARING HOUSING	
020	2668319-0000		1	CUTTING JAW	
050	1484002-0000		1	PLATE	
060	1484003-0000		1	PLATE	
070	1520493-0000		2	CUTTING RAIL	
080	1566845-0002		2	DOLLY	
090	1538348-0000		2	CATCH	
120	1255389-0000		2	BUSHING	
140	1035871-0000		2	SCREW	
150	2679952-0000		1	VOLUME BULGE	
390	312145-0234		4	SCREW ISO 2009 MFS M3X30 A4	
410	90287-0295		2	SCREW HEX.SOCK.COUNT.MF6S M3X8 A280	
500	315202-0104		2	O-RING 6,1X1,6 MM	
620	90091-0361		2	SCRAPER, EXCLUDER2 30X34,8X3,7 MM	
660	90242-0093	MM	550	O-RING MATERIAL 1,5 MM	
TBA 0250S QC, TBA 0200M QC (See drawing on page: 4-120)					
010	2775286-0000		1	BEARING HOUSING	
020	2645568-0000		1	CUTTING JAW	
050	1484002-0000		1	PLATE	
060	1484003-0000		1	PLATE	
070	1520493-0000		2	CUTTING RAIL	
080	1110083-0002		2	DOLLY	
090	1538348-0000		2	CATCH	
390	312145-0234		4	SCREW ISO 2009 MFS M3X30 A4	
TBA 0500B QC, TBA 1000B QC (See drawing on page: 4-116)					
010	2775287-0000		1	BEARING HOUSING	
020	1487954-0000		1	CUTTING JAW	
040	1349925-0000		1	PLATE	
070	1520455-0000		2	CUTTING RAIL	
080	1110083-0002		2	DOLLY	
090	1538348-0000		2	CATCH	
120	1255389-0000		2	BUSHING	
140	1035871-0000		2	SCREW	
150	1558733-0000		1	VOLUME BULGE	
390	312145-0238		4	SCREW ISO 2009 MFS M3X40 A4	
410	312155-0285		2	SCREW DIN 7991 MF6S M4X6 A4 70	
500	315202-0104		2	O-RING 6,1X1,6 MM	
620	90091-0361		2	SCRAPER, EXCLUDER2 30X34,8X3,7 MM	
660	90242-0093	MM	550	O-RING MATERIAL 1,5 MM	

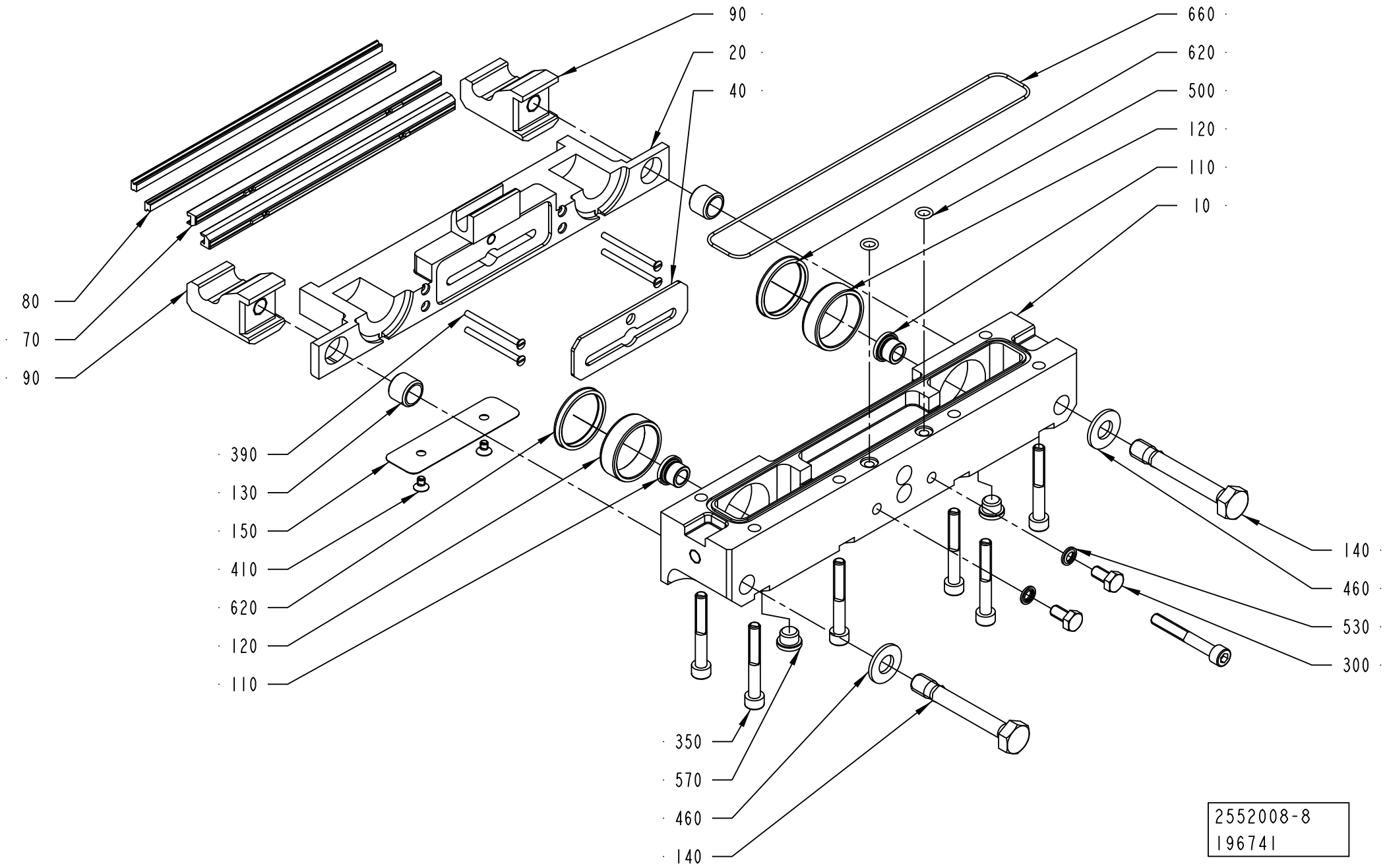
90
20
40
660
620
500
120
110
10
80
70
90
390
130
150
410
620
120
110
140
460
530
300
350
570
460
140
2552008-8
196741

ECM: 263540 - 20060702
Group number: 2552008-0200
Assembly Drawing: 2552008-8_1_AA

This list covers pages from 4-114 to 4-121

Pos	Part No	UN	Qty	Description	Page No
TBA 0500S (Cont'd) (See drawing on page: 4-118)					
010	2775292-0000		1	BEARING HOUSING	
020	2611000-0000		1	CUTTING JAW	
030	2579990-0000		1	SHAFT	
040	1487619-0000		1	PLATE	
070	1520494-0000		2	CUTTING RAIL	
080	1110083-0002		2	DOLLY	
090	1538348-0000		2	CATCH	
100	2531703-0000		2	BUSHING	
120	1255389-0000		2	BUSHING	
140	1035871-0000		2	SCREW	
390	312145-0234		4	SCREW ISO 2009 MFS M3X30 A4	
430	312115-0327		2	SCREW ISO4762 M5X12 A4 80	
500	315202-0104		2	O-RING 6,1X1,6 MM	
620	90091-0361		2	SCRAPER, EXCLUDER2 30X34,8X3,7 MM	
660	90242-0093	MM	550	O-RING MATERIAL 1,5 MM	
TBA 1000B NOQC (See drawing on page: 4-118)					
010	2775287-0000		1	BEARING HOUSING	
020	2665188-0000		1	CUTTING JAW	
030	2526812-0000		1	SHAFT	
040	1349925-0000		1	PLATE	
070	1520455-0000		2	CUTTING RAIL	
080	1110083-0002		2	DOLLY	
090	1538348-0000		2	CATCH	
100	2531703-0000		2	BUSHING	
120	1255389-0000		2	BUSHING	
140	1035871-0000		2	SCREW	
390	312145-0238		4	SCREW ISO 2009 MFS M3X40 A4	
430	312115-0329		2	SCREW ISO4762 M5X16 A4 80	
440	315105-0146		2	WASHER BRB5,3X10RFR	
500	315202-0104		2	O-RING 6,1X1,6 MM	
620	90091-0361		2	SCRAPER, EXCLUDER2 30X34,8X3,7 MM	
660	90242-0093	MM	550	O-RING MATERIAL 1,5 MM	
TBA 1000S (See drawing on page: 4-118)					
010	2775288-0000		1	BEARING HOUSING	
020	2559424-0000		1	CUTTING JAW	
030	2526812-0000		1	SHAFT	
040	1349925-0000		1	PLATE	
070	1520455-0000		2	CUTTING RAIL	
080	1110083-0002		2	DOLLY	
090	1538348-0000		2	CATCH	
100	2531703-0000		2	BUSHING	
120	1255389-0000		2	BUSHING	
140	1035871-0000		2	SCREW	
390	312145-0238		4	SCREW ISO 2009 MFS M3X40 A4	
430	312115-0327		2	SCREW ISO4762 M5X12 A4 80	
500	315202-0104		2	O-RING 6,1X1,6 MM	
620	90091-0361		2	SCRAPER, EXCLUDER2 30X34,8X3,7 MM	
660	90242-0093	MM	550	O-RING MATERIAL 1,5 MM	
TBA 1000SQ (See drawing on page: 4-114)					
010	2774547-0000		1	BEARING HOUSING	
020	1487618-0000		1	CUTTING JAW	
030	2526812-0000		1	SHAFT	
040	1487619-0000		1	PLATE	
070	1520494-0000		2	CUTTING RAIL	
080	1110083-0002		2	DOLLY	
090	1538348-0000		2	CATCH	
100	2531703-0000		2	BUSHING	
120	1255389-0000		2	BUSHING	
140	1035871-0000		2	SCREW	
160	2526810-0000		1	HOLDER	
340	312115-0331		2	SCREW ISO4762 M5X20 A4 80	
390	312145-0238		4	SCREW ISO 2009 MFS M3X40 A4	
430	312115-0327		2	SCREW ISO4762 M5X12 A4 80	
500	315202-0104		2	O-RING 6,1X1,6 MM	
550	315705-0201		2	PARALLEL KEY W. ROUND ENDS 5X5X20 MM	
620	90091-0361		2	SCRAPER, EXCLUDER2 30X34,8X3,7 MM	
660	90242-0093	MM	550	O-RING MATERIAL 1,5 MM	
TBA 1500S (See drawing on page: 4-118)					
010	2775287-0000		1	BEARING HOUSING	
020	2570301-0000		1	CUTTING JAW	
030	2526812-0000		1	SHAFT	
040	1349925-0000		1	PLATE	
070	1520455-0000		2	CUTTING RAIL	
080	1110083-0002		2	DOLLY	
090	1538348-0000		2	CATCH	
100	2531703-0000		2	BUSHING	
120	1255389-0000		2	BUSHING	
140	1035871-0000		2	SCREW	
390	312145-0238		4	SCREW ISO 2009 MFS M3X40 A4	
430	312115-0327		2	SCREW ISO4762 M5X12 A4 80	
500	315202-0104		2	O-RING 6,1X1,6 MM	
620	90091-0361		2	SCRAPER, EXCLUDER2 30X34,8X3,7 MM	
660	90242-0093	MM	550	O-RING MATERIAL 1,5 MM	

Machine Type | Group Description | Used-In | Group Number | Page No

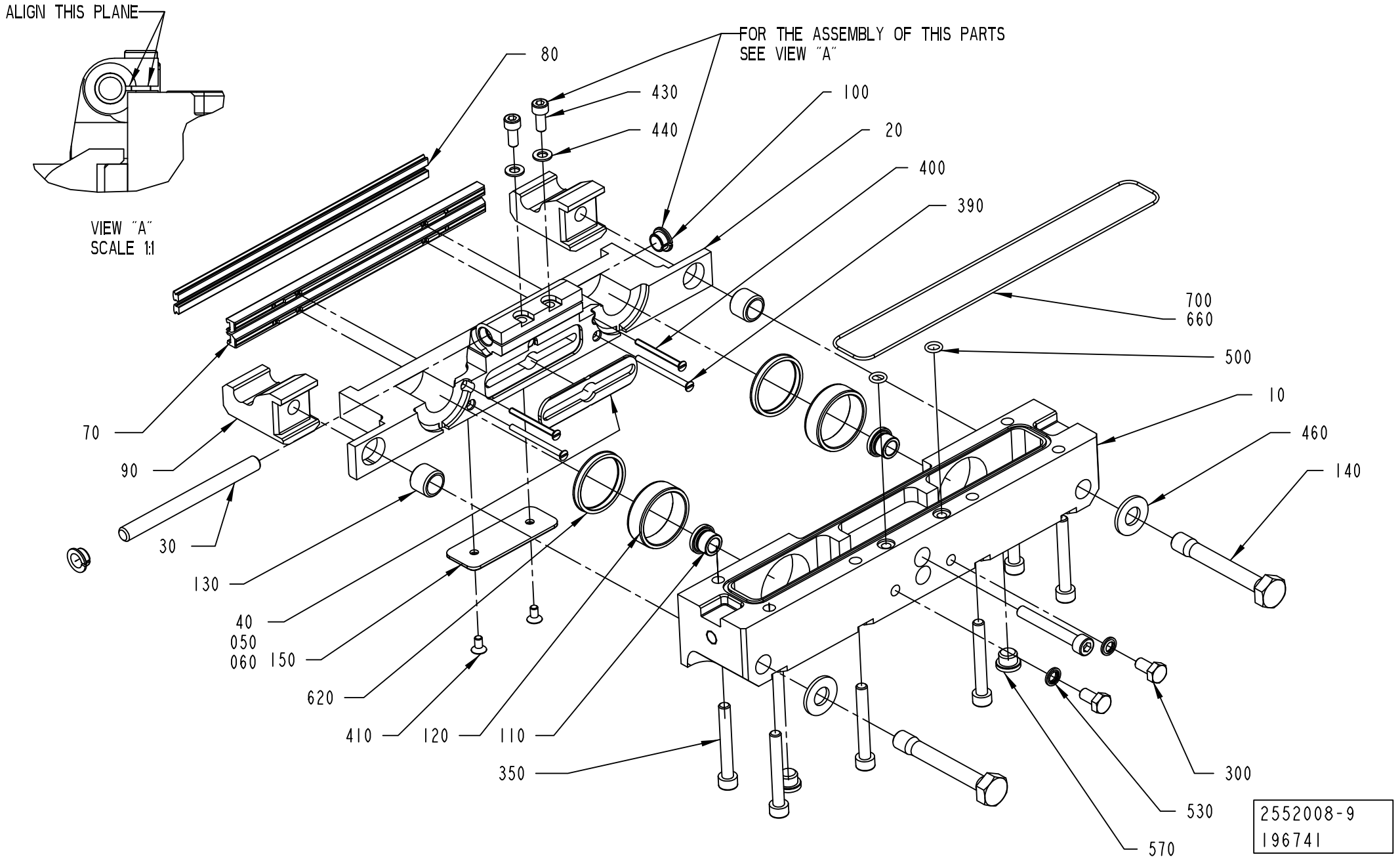
ALIGN THIS PLANE
VIEW "A"
SCALE 1:1
FOR THE ASSEMBLY OF THIS PARTS
SEE VIEW "A"
80
430
440
100
20
400
390
700
660
500
10
460
140
70
90
30
130
40
050
060
150
620
410
120
110
350
300
530
570
2552008-9
196741

Pos	Part No	UN	Qty	Description	Page No
TBA 1890S QC, TBA 2000S QC (Cont'd) (See drawing on page: 4-118)					
010	2775283-0000		1	BEARING HOUSING	
020	2664762-0000		1	CUTTING JAW	
030	2686144-0000		1	SHAFT	
040	2588292-0000		1	PLATE	
070	1533051-0000		2	CUTTING RAIL	
080	1520633-0005		2	DOLLY	
090	2566339-0000		2	CATCH	
100	2531703-0000		2	BUSHING	
120	2588299-0000		2	BUSHING	
140	2588303-0000		2	SCREW	
390	312145-0238		8	SCREW ISO 2009 MFS M3X40 A4	
430	312115-0325		2	SCREW ISO4762 M5X10 A4 80	
500	315204-0105		2	O-RING 7,1X1,6 MM	
620	90091-0361		2	SCRAPER, EXCLUDER2 30X34,8X3,7 MM	
660	90459-2363		1	O-RING MATERIAL 1,78 MM	
TPA 0250SQ QC, TPA 0200SQ QC (See drawing on page: 4-116)					
010	2775290-0000		1	BEARING HOUSING	
020	2674336-0000		1	CUTTING JAW	
050	1484002-0000		1	PLATE	
060	1484003-0000		1	PLATE	
070	1520493-0000		2	CUTTING RAIL	
080	1110083-0002		2	DOLLY	
090	1538348-0000		2	CATCH	
120	1255389-0000		2	BUSHING	
140	1035871-0000		2	SCREW	
390	312145-0234		4	SCREW ISO 2009 MFS M3X30 A4	
500	315202-0104		2	O-RING 6,1X1,6 MM	
620	90091-0361		2	SCRAPER, EXCLUDER2 30X34,8X3,7 MM	
660	90242-0093	MM	550	O-RING MATERIAL 1,5 MM	
TPA 0330SQ (See drawing on page: 4-118)					
010	2775293-0000		1	BEARING HOUSING	
020	2611710-0000		1	CUTTING JAW	
030	2513013-0000		1	SHAFT	
050	1484002-0000		1	PLATE	
060	1484003-0000		1	PLATE	
070	1520493-0000		2	CUTTING RAIL	
080	1110083-0002		2	DOLLY	
090	1538348-0000		2	CATCH	
100	2531703-0000		2	BUSHING	
120	1255389-0000		2	BUSHING	
140	1035871-0000		2	SCREW	
390	312145-0234		4	SCREW ISO 2009 MFS M3X30 A4	
430	312115-0327		2	SCREW ISO4762 M5X12 A4 80	
500	315202-0104		2	O-RING 6,1X1,6 MM	
620	90091-0361		2	SCRAPER, EXCLUDER2 30X34,8X3,7 MM	
660	90242-0093	MM	550	O-RING MATERIAL 1,5 MM	
TPA 0500SQ (See drawing on page: 4-118)					
010	2775284-0000		1	BEARING HOUSING	
020	2570850-0000		1	CUTTING JAW	
030	2513013-0000		1	SHAFT	
050	1484002-0000		1	PLATE	
060	1484003-0000		1	PLATE	
070	1520493-0000		2	CUTTING RAIL	
080	1110083-0002		2	DOLLY	
090	1538348-0000		2	CATCH	
100	2570849-0000		2	BUSHING	
120	1255389-0000		2	BUSHING	
140	1035871-0000		2	SCREW	
150	2503689-0000		1	VOLUME BULGE	
390	312145-0238		4	SCREW ISO 2009 MFS M3X40 A4	
410	312155-0287		2	SCREW DIN 7991 MF6S M4X8 A4 70	
430	312115-0327		2	SCREW ISO4762 M5X12 A4 80	
500	315202-0104		2	O-RING 6,1X1,6 MM	
620	90091-0361		2	SCRAPER, EXCLUDER2 30X34,8X3,7 MM	
660	90242-0093	MM	550	O-RING MATERIAL 1,5 MM	
TPA 1000SQ NOQC (See drawing on page: 4-118)					
010	2775285-0000		1	BEARING HOUSING	
020	2579988-0000		1	CUTTING JAW	
030	2579990-0000		1	SHAFT	
040	1487619-0000		1	PLATE	
070	1520494-0000		2	CUTTING RAIL	
080	1520633-0002		2	DOLLY	
090	1538348-0000		2	CATCH	
100	2531703-0000		2	BUSHING	
120	1255389-0000		2	BUSHING	
140	1035871-0000		2	SCREW	
150	2503699-0000		1	VOLUME BULGE	
390	312145-0238		2	SCREW ISO 2009 MFS M3X40 A4	
400	1523827-0000		2	SCREW	
410	312155-0287		2	SCREW DIN 7991 MF6S M4X8 A4 70	
430	312115-0327		2	SCREW ISO4762 M5X12 A4 80	
500	315202-0104		2	O-RING 6,1X1,6 MM	
620	90091-0361		2	SCRAPER, EXCLUDER2 30X34,8X3,7 MM	

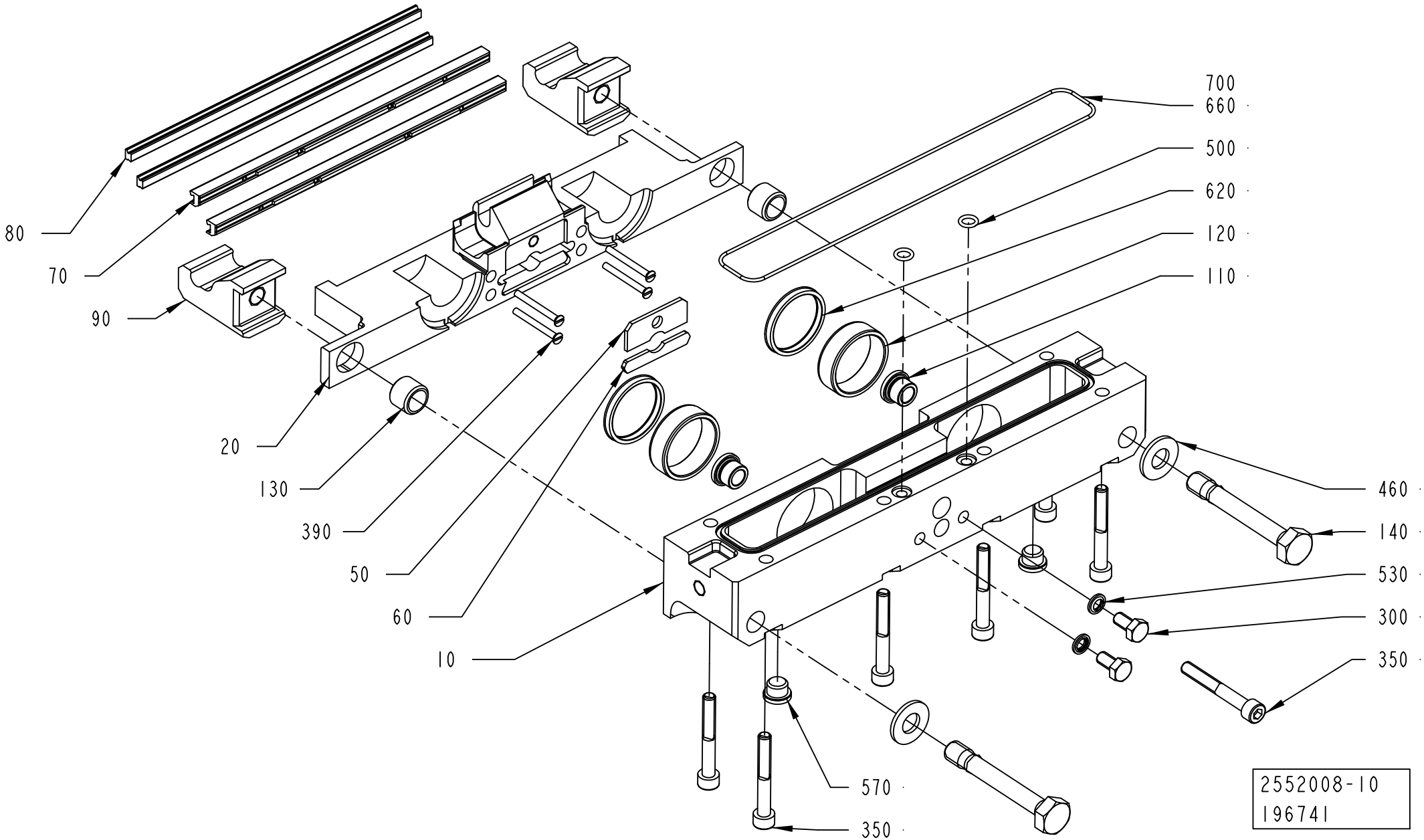
700
660
500
620
120
110
80
70
90
20
130
390
50
60
10
460
140
530
300
350
570
350
2552008-10
196741

Pos	Part No	UN	Qty	Description	Page No
TPA 1000SQ NOQC (Cont'd) (See drawing on page: 4-118)					
660	90242-0093	MM	550	O-RING MATERIAL 1,5 MM	
Common Parts					
110	1255390-0000		2	BUSHING	
130	1036494-0000		2	GUIDE BUSHING	
300	312105-0366		2	SCREW M6S ISO 4017 M6X12 A480	
350	312115-0379		7	SCREW ISO4762 M6X45 A4 80	
460	315105-0173		2	WASHER BRB10,5X22RFR	
530	315211-0103		2	BONDED SEAL SS/NBR90 M6	
570	342713-0209		2	PLUG (QUANT.MINIMA= 10PC).	
700	90153-0015		1	ADHESIVE,LOCTITE IS 496/CYANOLOT 303	

Pos	Part No	UN	Qty	Description	Page No

FOLDING FLAP LEFT

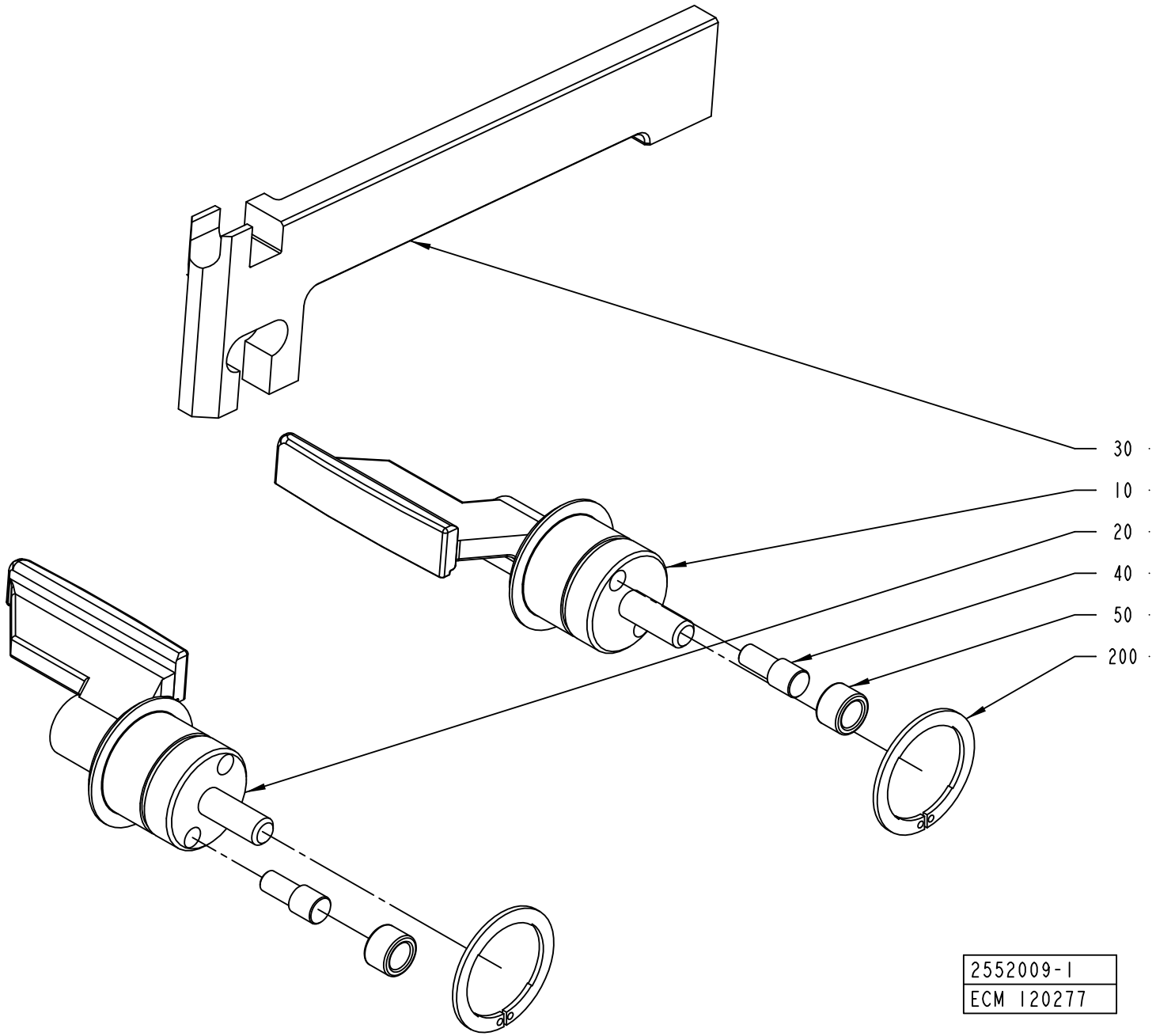

ECM: 261876 - 20060702
Group number: 2552009-0100
Assembly Drawing: 2552009-1_1_AA

This list covers pages from 4-122 to 4-125

Pos	Part No	UN	Qty	Description	Page No
TPA 0330SQ (See drawing on page: 4-122)					
010	2507096-0000		1	FOLDING FLAP	
020	2507097-0000		1	FOLDING FLAP	
030	1538256-0000		1	CARRIER RULER	
TPA 0500SQ (See drawing on page: 4-122)					
010	1549822-0000		1	FOLDING FLAP	
020	1549823-0000		1	FOLDING FLAP	
030	1549824-0000		1	CARRIER RULER	
TPA 1000SQ NOQC, TPA 1000SQ QC, TPA 0750SQ QC (See drawing on page: 4-122)					
010	1523146-0000		1	FOLDING FLAP	
020	1523147-0000		1	FOLDING FLAP	
030	1523177-0000		1	CARRIER RULER	
TBA 0200B QC, TBA 0330S QC (See drawing on page: 4-122)					
010	2605875-0000		1	FOLDING FLAP	
020	2605876-0000		1	FOLDING FLAP	
030	1255459-0000		1	CARRIER RULER	
TBA 0200S (See drawing on page: 4-122)					
010	2624554-0000		1	FOLDING FLAP	
020	2624555-0000		1	FOLDING FLAP	
030	1255458-0000		1	CARRIER RULER	
TBA 0200SQ QC, TBA 0250SQ QC (See drawing on page: 4-122)					
010	2668313-0000		1	FOLDING FLAP	
020	2668314-0000		1	FOLDING FLAP	
030	2736138-0000		1	CARRIER RULER	
TBA 0250B QC					
010	2605875-0000		1	FOLDING FLAP	
020	2605876-0000		1	FOLDING FLAP	
030	1255459-0000		1	CARRIER RULER	
TBA 0250S QC, TBA 0200M QC					
010	2624554-0000		1	FOLDING FLAP	
020	2624555-0000		1	FOLDING FLAP	
030	2520470-0000		1	CARRIER RULER	
TBA 0500B NOQC, TBA 1000B NOQC NOMOLDEDCAP (See drawing on page: 4-122)					
010	1511697-0000		1	.FOLDING FLAP	
020	1511698-0000		1	FOLDING FLAP	
030	1255457-0000		1	CARRIER RULER	
TBA 0500B QC, TBA 1000B QC (See drawing on page: 4-122)					
010	1511352-0000		1	FOLDING FLAP	
020	1511351-0000		1	FOLDING FLAP	
030	1255457-0000		1	CARRIER RULER	
TBA 0500S (See drawing on page: 4-122)					
010	2507085-0000		1	FOLDING FLAP	
020	2507086-0000		1	FOLDING FLAP	
030	1511067-0000		1	CARRIER RULER	
TBA 1000B NOQC STDA7 (See drawing on page: 4-122)					
010	1511697-0000		1	.FOLDING FLAP	
020	1511698-0000		1	FOLDING FLAP	
030	1255457-0000		1	CARRIER RULER	
TBA 1000S NOMOLDEDCAP (See drawing on page: 4-122)					
010	1511699-0000		1	FOLDING FLAP	
020	1511700-0000		1	FOLDING FLAP	
030	1255460-0000		1	CARRIER RULER	
TBA 1000S STDA7, TBA 1000S LIGHTCAP (See drawing on page: 4-122)					
010	1511699-0000		1	FOLDING FLAP	
020	2546501-0000		1	FOLDING FLAP	
030	1255460-0000		1	CARRIER RULER	
TBA 1000SQ (See drawing on page: 4-122)					
010	2507076-0000		1	FOLDING FLAP	
020	2507077-0000		1	FOLDING FLAP	
030	1360318-0000		1	CARRIER RULER	
TBA 1500S (See drawing on page: 4-122)					
010	2507092-0000		1	FOLDING FLAP	
020	2507093-0000		1	FOLDING FLAP	
030	1255457-0000		1	CARRIER RULER	
TBA 1890S QC, TBA 2000S QC (See drawing on page: 4-124)					
010	2566319-0000		1	FOLDING FLAP	
020	2566320-0000		1	FOLDING FLAP	
030	2566318-0000		1	CARRIER RULER	
210	90459-2258		2	SEAL GLYDRING 25,1X30X2,2 MM	
TPA 0250SQ QC, TPA 0200SQ QC					
010	2728883-0000		1	FOLDING FLAP	
020	2728884-0000		1	FOLDING FLAP	
030	1255458-0000		1	CARRIER RULER	
Common Parts					
040	22462-0000		2	SHAFT	
050	22463-0000		2	ROLL	
200	90141-0029		2	CIRCLIP	

Machine Type | Group Description | Used-In | Group Number | Page No

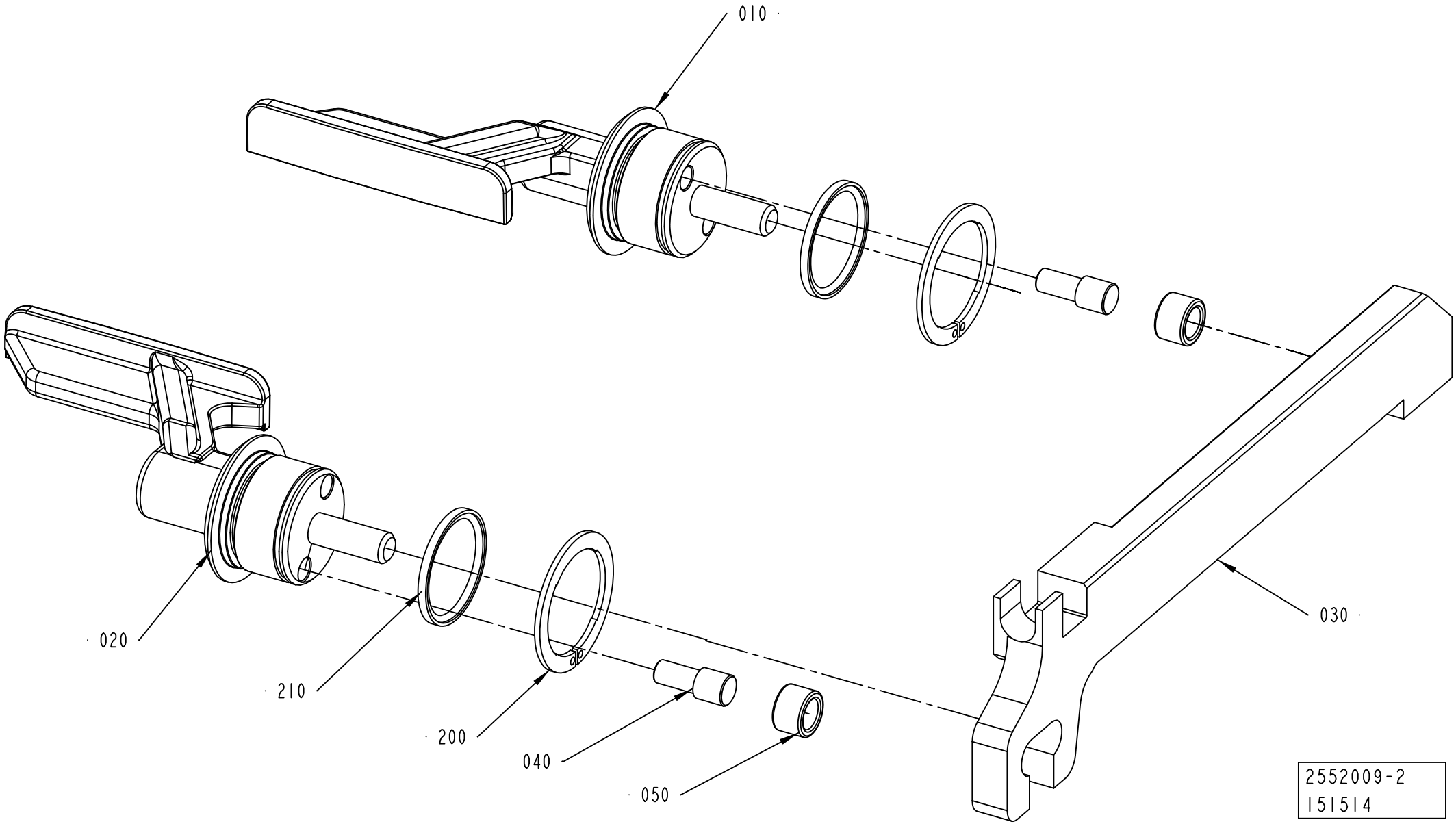
010
020
210
200
040
050
030
2552009-2
151514

ECM: 261876 - 20060702
Group number: 2552009-0100
Assembly Drawing: 2552009-2_1_AA

This list covers pages from 4-122 to 4-125

Pos	Part No	UN	Qty	Description	Page No
TPA 0330SQ (See drawing on page: 4-122)					
010	2507096-0000		1	FOLDING FLAP	
020	2507097-0000		1	FOLDING FLAP	
030	1538256-0000		1	CARRIER RULER	
TPA 0500SQ (See drawing on page: 4-122)					
010	1549822-0000		1	FOLDING FLAP	
020	1549823-0000		1	FOLDING FLAP	
030	1549824-0000		1	CARRIER RULER	
TPA 1000SQ NOQC, TPA 1000SQ QC, TPA 0750SQ QC (See drawing on page: 4-122)					
010	1523146-0000		1	FOLDING FLAP	
020	1523147-0000		1	FOLDING FLAP	
030	1523177-0000		1	CARRIER RULER	
TBA 0200B QC, TBA 0330S QC (See drawing on page: 4-122)					
010	2605875-0000		1	FOLDING FLAP	
020	2605876-0000		1	FOLDING FLAP	
030	1255459-0000		1	CARRIER RULER	
TBA 0200S (See drawing on page: 4-122)					
010	2624554-0000		1	FOLDING FLAP	
020	2624555-0000		1	FOLDING FLAP	
030	1255458-0000		1	CARRIER RULER	
TBA 0200SQ QC, TBA 0250SQ QC (See drawing on page: 4-122)					
010	2668313-0000		1	FOLDING FLAP	
020	2668314-0000		1	FOLDING FLAP	
030	2736138-0000		1	CARRIER RULER	
TBA 0250B QC					
010	2605875-0000		1	FOLDING FLAP	
020	2605876-0000		1	FOLDING FLAP	
030	1255459-0000		1	CARRIER RULER	
TBA 0250S QC, TBA 0200M QC					
010	2624554-0000		1	FOLDING FLAP	
020	2624555-0000		1	FOLDING FLAP	
030	2520470-0000		1	CARRIER RULER	
TBA 0500B NOQC, TBA 1000B NOQC NOMOLDEDCAP (See drawing on page: 4-122)					
010	1511697-0000		1	.FOLDING FLAP	
020	1511698-0000		1	FOLDING FLAP	
030	1255457-0000		1	CARRIER RULER	
TBA 0500B QC, TBA 1000B QC (See drawing on page: 4-122)					
010	1511352-0000		1	FOLDING FLAP	
020	1511351-0000		1	FOLDING FLAP	
030	1255457-0000		1	CARRIER RULER	
TBA 0500S (See drawing on page: 4-122)					
010	2507085-0000		1	FOLDING FLAP	
020	2507086-0000		1	FOLDING FLAP	
030	1511067-0000		1	CARRIER RULER	
TBA 1000B NOQC STDA7 (See drawing on page: 4-122)					
010	1511697-0000		1	.FOLDING FLAP	
020	1511698-0000		1	FOLDING FLAP	
030	1255457-0000		1	CARRIER RULER	
TBA 1000S NOMOLDEDCAP (See drawing on page: 4-122)					
010	1511699-0000		1	FOLDING FLAP	
020	1511700-0000		1	FOLDING FLAP	
030	1255460-0000		1	CARRIER RULER	
TBA 1000S STDA7, TBA 1000S LIGHTCAP (See drawing on page: 4-122)					
010	1511699-0000		1	FOLDING FLAP	
020	2546501-0000		1	FOLDING FLAP	
030	1255460-0000		1	CARRIER RULER	
TBA 1000SQ (See drawing on page: 4-122)					
010	2507076-0000		1	FOLDING FLAP	
020	2507077-0000		1	FOLDING FLAP	
030	1360318-0000		1	CARRIER RULER	
TBA 1500S (See drawing on page: 4-122)					
010	2507092-0000		1	FOLDING FLAP	
020	2507093-0000		1	FOLDING FLAP	
030	1255457-0000		1	CARRIER RULER	
TBA 1890S QC, TBA 2000S QC (See drawing on page: 4-124)					
010	2566319-0000		1	FOLDING FLAP	
020	2566320-0000		1	FOLDING FLAP	
030	2566318-0000		1	CARRIER RULER	
210	90459-2258		2	SEAL GLYDRING 25,1X30X2,2 MM	
TPA 0250SQ QC, TPA 0200SQ QC					
010	2728883-0000		1	FOLDING FLAP	
020	2728884-0000		1	FOLDING FLAP	
030	1255458-0000		1	CARRIER RULER	
Common Parts					
040	22462-0000		2	SHAFT	
050	22463-0000		2	ROLL	
200	90141-0029		2	CIRCLIP	

Machine Type | Group Description | Used-In | Group Number | Page No

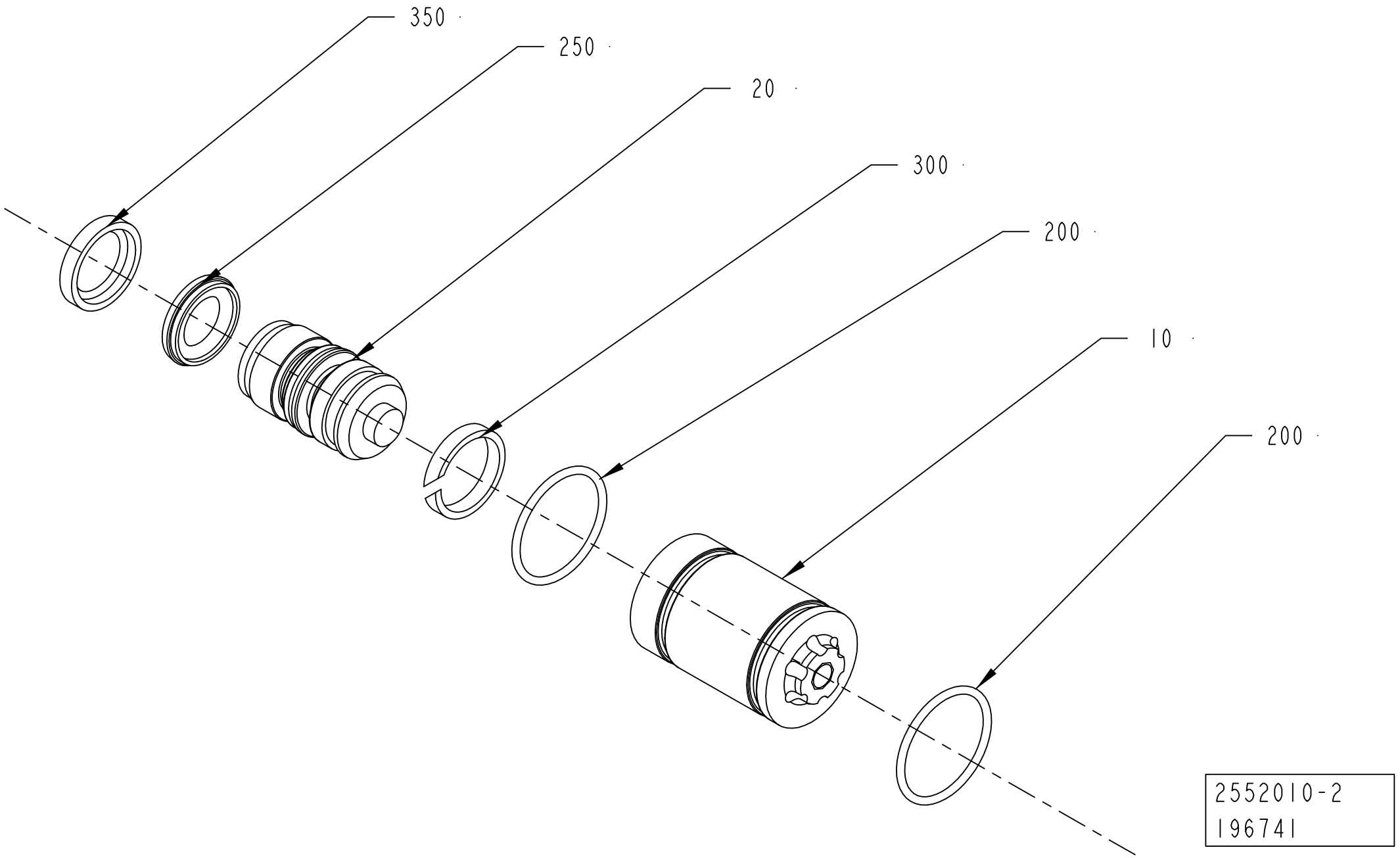
350
250
20
300
200
10
200
2552010-2
196741

ECM: 263541 - 20060702
Group number: 2552010-0200
Assembly Drawing: 2552010-2_1_AA

Pos	Part No	UN	Qty	Description	Page No
TBA 0330S, TBA 0200B, TBA 0250S, TBA 0200S, TBA 0200M, TBA 0250B, TBA 0200SQ, TPA 0250SQ, TPA 0330SQ, TPA 0200SQ, TBA 0250SQ					
010	752288-0000		1	SLEEVE	
020	2737771-0000		1	PLUNGER	
200	315202-0110		1	O-RING 12,1X1,6 MM	
250	90459-6021		1	PISTON SEAL STEPSEAL 7,2X12X2,2 MM	
300	90459-6027		1	WEAR RING 9X12X3,2 MM	
350	90459-6025		1	PISTON SEAL 6,2X12X3,2 MM	
TBA 0500S, TBA 0500B, TBA 1000S, TBA 1000SQ, TBA 1000B, TBA 1500S, TPA 1000SQ, TPA 0500SQ					
010	1036278-0000		1	SLEEVE	
020	2737773-0000		1	PLUNGER	
200	315202-0118		2	O-RING 22,1X1,6 MM	
250	90459-6019		1	PISTON SEAL STEPSEAL 11,5X19X3,2 MM	
300	90459-6026		1	WEAR RING 16X19X3,2 MM	
350	90459-6023		1	PISTON SEAL 13X19X3,2 MM	
TBA 1890S, TBA 2000S					
010	2566330-0000		1	SLEEVE	
020	2737772-0000		1	PLUNGER	
200	315202-0119		2	O-RING 25,1X1,6 MM	
250	90459-6022		1	PISTON SEAL STEPSEAL 14,5X22X3,2 MM	
300	90459-5968		1	WEAR RING 19X22X3,2 MM	
350	90459-6024		1	PISTON SEAL 16X22X3,2 MM	

Pos	Part No	UN	Qty	Description	Page No

CARRIER PRESSURE RIGHT

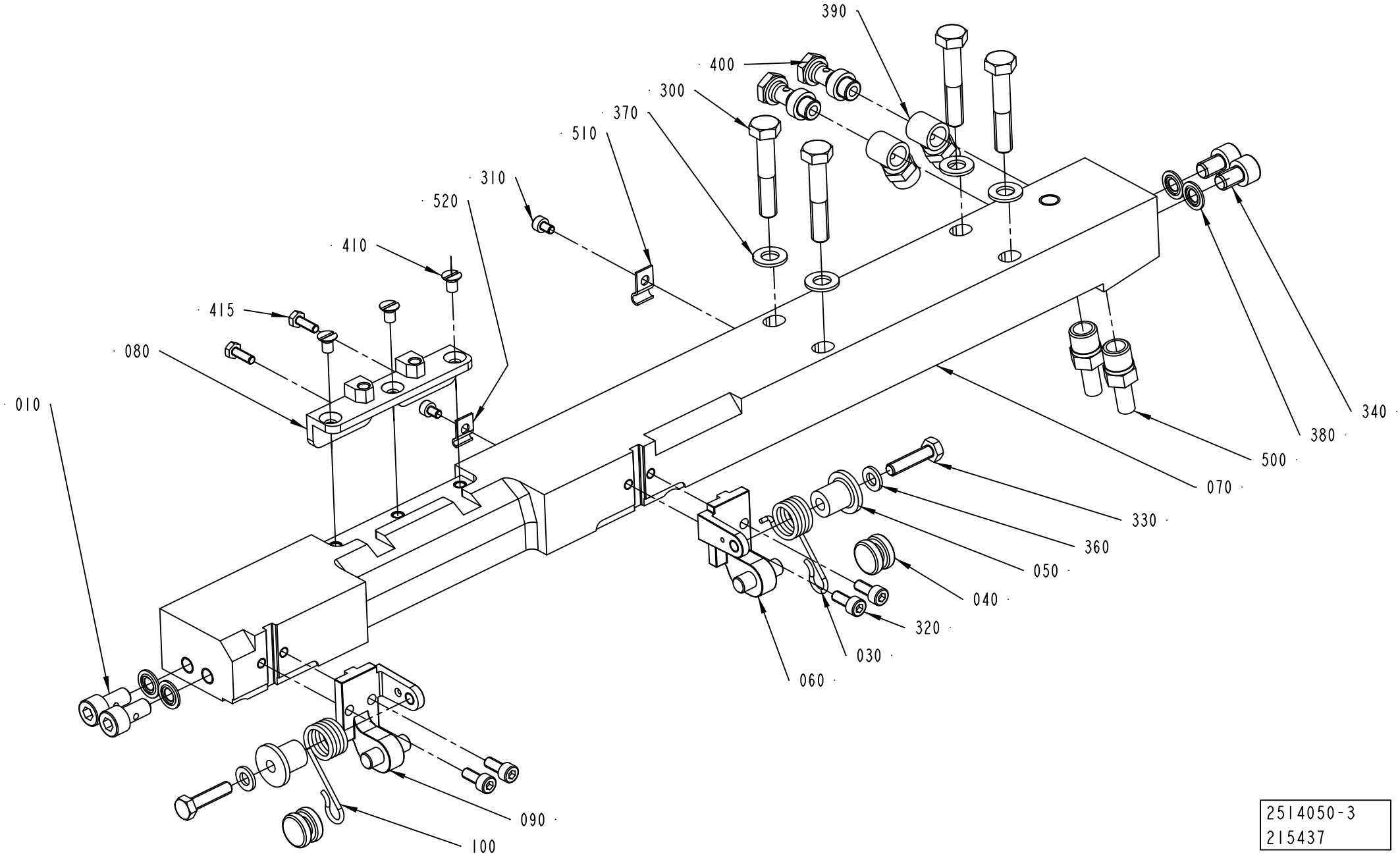

2514050-3
215437

ECM: 263261 - 20060702
Group number: 2514050-0200
Assembly Drawing: 2514050-3_1_AB

This list covers pages from 4-128 to 4-133

Pos	Part No	UN	Qty	Description	Page No
A3/FLEX NOQC (See drawing on page: 4-130)					
070	2514051-0000		1	CARRIER	
310	312115-0285		2	SCREW ISO4762 M4X6 A4 80	
510	90165-0056		1	PIPE CLIP FOR TUBE D=4 MM	
520	90165-0058		1	PIPE CLIP FOR TUBE D=2,5 MM	
A3/FLEX TBA 0250S QC, A3/FLEX TBA 0200M QC (See drawing on page: 4-132)					
070	2514047-0000		1	CARRIER	
080	2641225-0000		1	INSERT	
410	312155-0323		3	SCREW DIN 7991 MF6S M5X8 A4 70	
A3/FLEX TBA 0500B QC, A3/FLEX TBA 1000B QC, A3/FLEX TBA 0200B QC, A3/FLEX TBA 0250B QC, A3/FLEX TBA 0330S QC, A3/FLEX TPA 0200SQ QC, A3/FLEX TPA 0250SQ QC, A3/FLEX TBA 0250SQ QC, A3/FLEX TBA 0200SQ QC (See drawing on page: 4-132)					
070	2514047-0000		1	CARRIER	
080	1549312-0000		1	INSERT	
410	312155-0323		3	SCREW DIN 7991 MF6S M5X8 A4 70	
A3/FLEX TBA 1890S QC, A3/FLEX TBA 2000S QC (See drawing on page: 4-130)					
070	2566341-0000		1	CARRIER	
310	312115-0285		2	SCREW ISO4762 M4X6 A4 80	
510	90165-0056		1	PIPE CLIP FOR TUBE D=4 MM	
520	90165-0058		1	PIPE CLIP FOR TUBE D=2,5 MM	
A3/FLEX TPA 0750SQ QC, A3/FLEX TPA 1000SQ QC (See drawing on page: 4-128)					
070	2647117-0000		1	CARRIER	
080	2647114-0000		1	INSERT	
310	312115-0285		2	SCREW ISO4762 M4X6 A4 80	
410	312145-0323		3	SCREW ISO 2009 MFS M5X8 A4	
415	312105-0291		2	SCREW M6S ISO 4017 M4X12 A470	
510	90165-0056		1	PIPE CLIP FOR TUBE D=4 MM	
520	90165-0058		1	PIPE CLIP FOR TUBE D=2,5 MM	
Common Parts					
010	1036343-0000		2	SCREW	
030	2547589-0000		1	SPRING	
040	2530296-0000		2	ROLLER	
050	2532531-0000		2	ROLLER	
060	2530293-0000		1	BRACKET	
090	2530292-0000		1	BRACKET	
100	2547588-0000		1	SPRING	
300	312105-0460		4	SCREW M6S ISO 4014 M8X45 A480	
320	312115-0327		4	SCREW ISO4762 M5X12 A4 80	
330	312105-0372		2	SCREW M6S ISO 4017 M6X25 A480	
340	312115-0447		2	SCREW ISO4762 M8X12 A4 80	
360	315105-0153		2	WASHER BRB6,4X12RFR	
370	315105-0165		4	WASHER BRB8,4X16RFR	
380	315211-0104		4	BONDED SEAL SS/NBR90 M8	
390	342980-0121		2	BANJO-CONNECTION,RING 8/6-G1/8	
400	342980-0303		2	BANJO-HOLLOW BOLT COUPL,EXT.THR.01-G1/8	
500	90030-0065		2	PIPE CONNECTION	

Machine Type | Group Description | Used-In | Group Number | Page No

CARRIER PRESSURE RIGHT

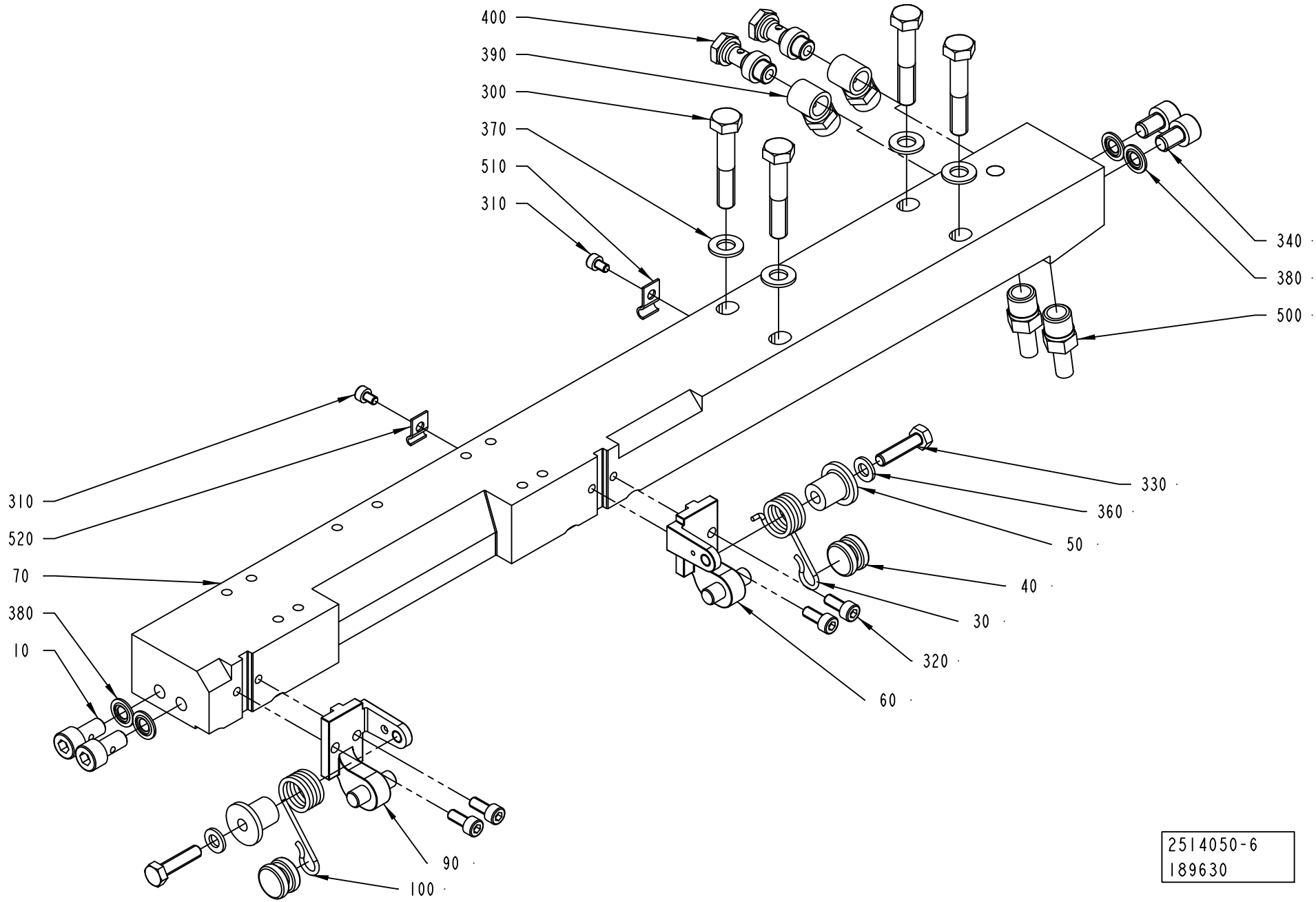

2514050-6
189630

ECM: 263261 - 20060702
Group number: 2514050-0200
Assembly Drawing: 2514050-6_1_AA

This list covers pages from 4-128 to 4-133

Pos	Part No	UN	Qty	Description	Page No
A3/FLEX NOQC (See drawing on page: 4-130)					
070	2514051-0000		1	CARRIER	
310	312115-0285		2	SCREW ISO4762 M4X6 A4 80	
510	90165-0056		1	PIPE CLIP FOR TUBE D=4 MM	
520	90165-0058		1	PIPE CLIP FOR TUBE D=2,5 MM	
A3/FLEX TBA 0250S QC, A3/FLEX TBA 0200M QC (See drawing on page: 4-132)					
070	2514047-0000		1	CARRIER	
080	2641225-0000		1	INSERT	
410	312155-0323		3	SCREW DIN 7991 MF6S M5X8 A4 70	
A3/FLEX TBA 0500B QC, A3/FLEX TBA 1000B QC, A3/FLEX TBA 0200B QC, A3/FLEX TBA 0250B QC, A3/FLEX TBA 0330S QC, A3/FLEX TPA 0200SQ QC, A3/FLEX TPA 0250SQ QC, A3/FLEX TBA 0250SQ QC, A3/FLEX TBA 0200SQ QC (See drawing on page: 4-132)					
070	2514047-0000		1	CARRIER	
080	1549312-0000		1	INSERT	
410	312155-0323		3	SCREW DIN 7991 MF6S M5X8 A4 70	
A3/FLEX TBA 1890S QC, A3/FLEX TBA 2000S QC (See drawing on page: 4-130)					
070	2566341-0000		1	CARRIER	
310	312115-0285		2	SCREW ISO4762 M4X6 A4 80	
510	90165-0056		1	PIPE CLIP FOR TUBE D=4 MM	
520	90165-0058		1	PIPE CLIP FOR TUBE D=2,5 MM	
A3/FLEX TPA 0750SQ QC, A3/FLEX TPA 1000SQ QC (See drawing on page: 4-128)					
070	2647117-0000		1	CARRIER	
080	2647114-0000		1	INSERT	
310	312115-0285		2	SCREW ISO4762 M4X6 A4 80	
410	312145-0323		3	SCREW ISO 2009 MFS M5X8 A4	
415	312105-0291		2	SCREW M6S ISO 4017 M4X12 A470	
510	90165-0056		1	PIPE CLIP FOR TUBE D=4 MM	
520	90165-0058		1	PIPE CLIP FOR TUBE D=2,5 MM	
Common Parts					
010	1036343-0000		2	SCREW	
030	2547589-0000		1	SPRING	
040	2530296-0000		2	ROLLER	
050	2532531-0000		2	ROLLER	
060	2530293-0000		1	BRACKET	
090	2530292-0000		1	BRACKET	
100	2547588-0000		1	SPRING	
300	312105-0460		4	SCREW M6S ISO 4014 M8X45 A480	
320	312115-0327		4	SCREW ISO4762 M5X12 A4 80	
330	312105-0372		2	SCREW M6S ISO 4017 M6X25 A480	
340	312115-0447		2	SCREW ISO4762 M8X12 A4 80	
360	315105-0153		2	WASHER BRB6,4X12RFR	
370	315105-0165		4	WASHER BRB8,4X16RFR	
380	315211-0104		4	BONDED SEAL SS/NBR90 M8	
390	342980-0121		2	BANJO-CONNECTION,RING 8/6-G1/8	
400	342980-0303		2	BANJO-HOLLOW BOLT COUPL,EXT.THR.01-G1/8	
500	90030-0065		2	PIPE CONNECTION	

CARRIER PRESSURE RIGHT

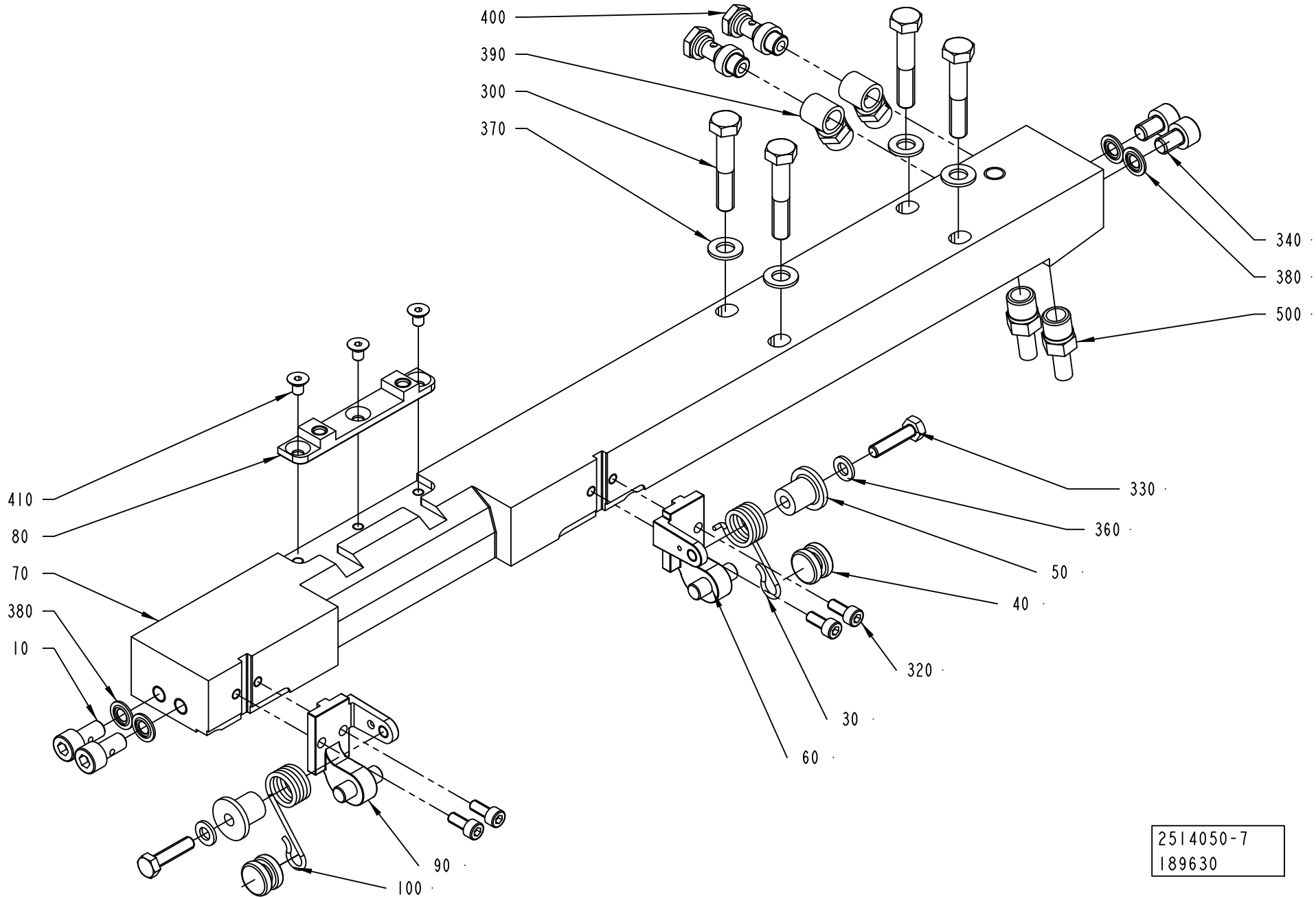

ECM: 263261 - 20060702
Group number: 2514050-0200
Assembly Drawing: 2514050-7_1_AA

This list covers pages from 4-128 to 4-133

Pos	Part No	UN	Qty	Description	Page No
A3/FLEX NOQC (See drawing on page: 4-130)					
070	2514051-0000		1	CARRIER	
310	312115-0285		2	SCREW ISO4762 M4X6 A4 80	
510	90165-0056		1	PIPE CLIP FOR TUBE D=4 MM	
520	90165-0058		1	PIPE CLIP FOR TUBE D=2,5 MM	
A3/FLEX TBA 0250S QC, A3/FLEX TBA 0200M QC (See drawing on page: 4-132)					
070	2514047-0000		1	CARRIER	
080	2641225-0000		1	INSERT	
410	312155-0323		3	SCREW DIN 7991 MF6S M5X8 A4 70	
A3/FLEX TBA 0500B QC, A3/FLEX TBA 1000B QC, A3/FLEX TBA 0200B QC, A3/FLEX TBA 0250B QC, A3/FLEX TBA 0330S QC, A3/FLEX TPA 0200SQ QC, A3/FLEX TPA 0250SQ QC, A3/FLEX TBA 0250SQ QC, A3/FLEX TBA 0200SQ QC (See drawing on page: 4-132)					
070	2514047-0000		1	CARRIER	
080	1549312-0000		1	INSERT	
410	312155-0323		3	SCREW DIN 7991 MF6S M5X8 A4 70	
A3/FLEX TBA 1890S QC, A3/FLEX TBA 2000S QC (See drawing on page: 4-130)					
070	2566341-0000		1	CARRIER	
310	312115-0285		2	SCREW ISO4762 M4X6 A4 80	
510	90165-0056		1	PIPE CLIP FOR TUBE D=4 MM	
520	90165-0058		1	PIPE CLIP FOR TUBE D=2,5 MM	
A3/FLEX TPA 0750SQ QC, A3/FLEX TPA 1000SQ QC (See drawing on page: 4-128)					
070	2647117-0000		1	CARRIER	
080	2647114-0000		1	INSERT	
310	312115-0285		2	SCREW ISO4762 M4X6 A4 80	
410	312145-0323		3	SCREW ISO 2009 MFS M5X8 A4	
415	312105-0291		2	SCREW M6S ISO 4017 M4X12 A470	
510	90165-0056		1	PIPE CLIP FOR TUBE D=4 MM	
520	90165-0058		1	PIPE CLIP FOR TUBE D=2,5 MM	
Common Parts					
010	1036343-0000		2	SCREW	
030	2547589-0000		1	SPRING	
040	2530296-0000		2	ROLLER	
050	2532531-0000		2	ROLLER	
060	2530293-0000		1	BRACKET	
090	2530292-0000		1	BRACKET	
100	2547588-0000		1	SPRING	
300	312105-0460		4	SCREW M6S ISO 4014 M8X45 A480	
320	312115-0327		4	SCREW ISO4762 M5X12 A4 80	
330	312105-0372		2	SCREW M6S ISO 4017 M6X25 A480	
340	312115-0447		2	SCREW ISO4762 M8X12 A4 80	
360	315105-0153		2	WASHER BRB6,4X12RFR	
370	315105-0165		4	WASHER BRB8,4X16RFR	
380	315211-0104		4	BONDED SEAL SS/NBR90 M8	
390	342980-0121		2	BANJO-CONNECTION,RING 8/6-G1/8	
400	342980-0303		2	BANJO-HOLLOW BOLT COUPL,EXT.THR.01-G1/8	
500	90030-0065		2	PIPE CONNECTION	

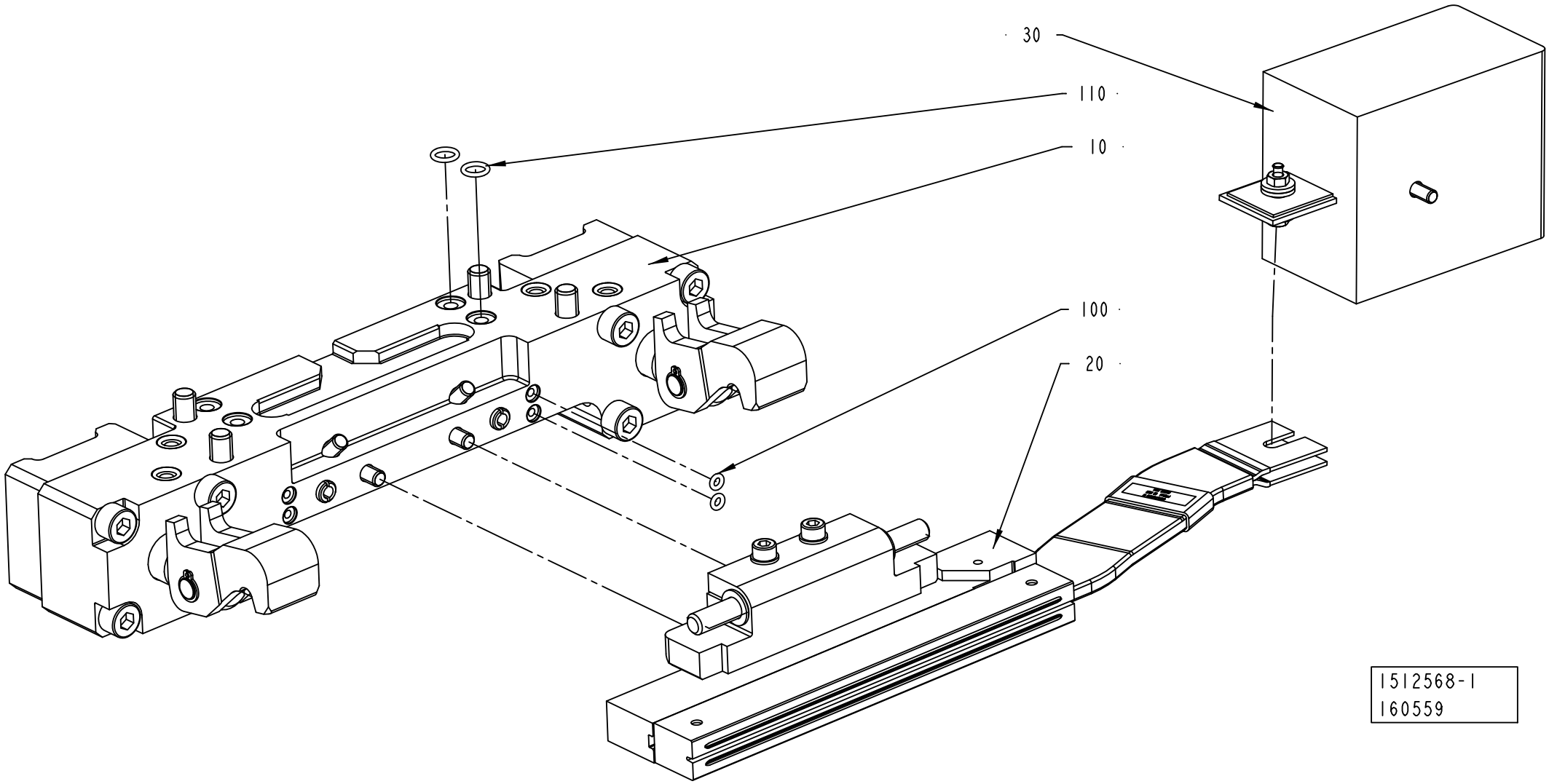
30
110
10
100
20
1512568-1
160559

ECM: 261875 - 20060702
Group number: 1512568-0200
Assembly Drawing: 1512568-1_1_AB

This list covers pages from 4-134 to 4-137

Pos	Part No	UN	Qty	Description	Page No
TBA 1890S QC, TBA 2000S QC (See drawing on pages: 4-134, 4-136)					
120	311103-0267		1	PARALLEL PIN ISO 2338 4M6X10 A1	
Common Parts					
010	2552005-0100		1	PRESSURE JAW	**4-91**
020	2552007-0100		1	INDUCTOR RIGHT	**4-139, 4-141, 4-143, 4-145, 4-147**
030	2546229-0100		1	ADAPTION TRANSFORMER	**4-103**
100	315202-0101		2	O-RING 3,1X1,6 MM	
110	315202-0105		2	O-RING 7,1X1,6 MM	

Pos	Part No	UN	Qty	Description	Page No

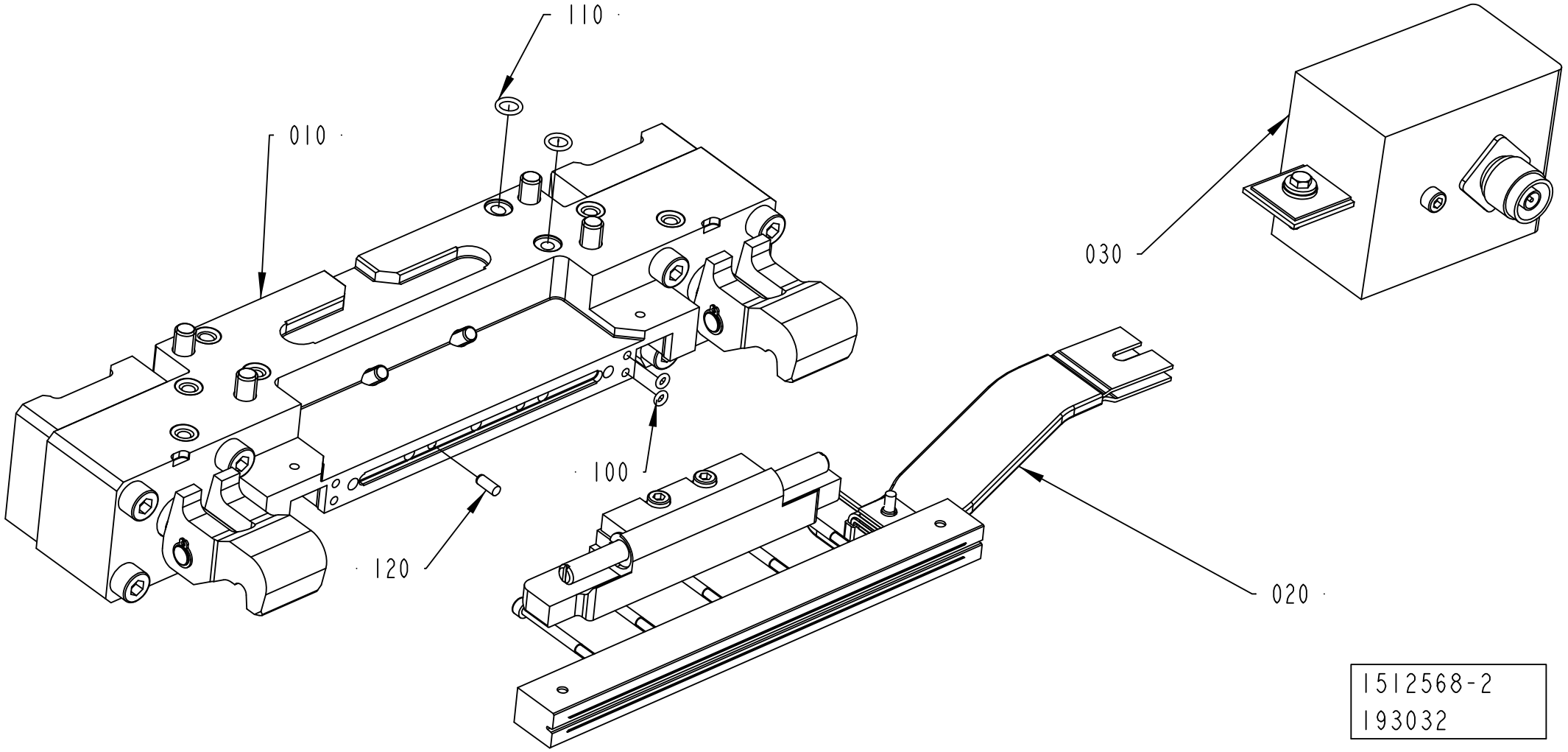
110
010
030
100
120
020
1512568-2
193032

ECM: 261875 - 20060702
Group number: 1512568-0200
Assembly Drawing: 1512568-2_1_AB

This list covers pages from 4-134 to 4-137

Pos	Part No	UN	Qty	Description	Page No
TBA 1890S QC, TBA 2000S QC (See drawing on pages: 4-134, 4-136)					
120	311103-0267		1	PARALLEL PIN ISO 2338 4M6X10 A1	
Common Parts					
010	2552005-0100		1	PRESSURE JAW	**4-91**
020	2552007-0100		1	INDUCTOR RIGHT	**4-139, 4-141, 4-143, 4-145, 4-147**
030	2546229-0100		1	ADAPTION TRANSFORMER	**4-103**
100	315202-0101		2	O-RING 3,1X1,6 MM	
110	315202-0105		2	O-RING 7,1X1,6 MM	

Pos	Part No	UN	Qty	Description	Page No

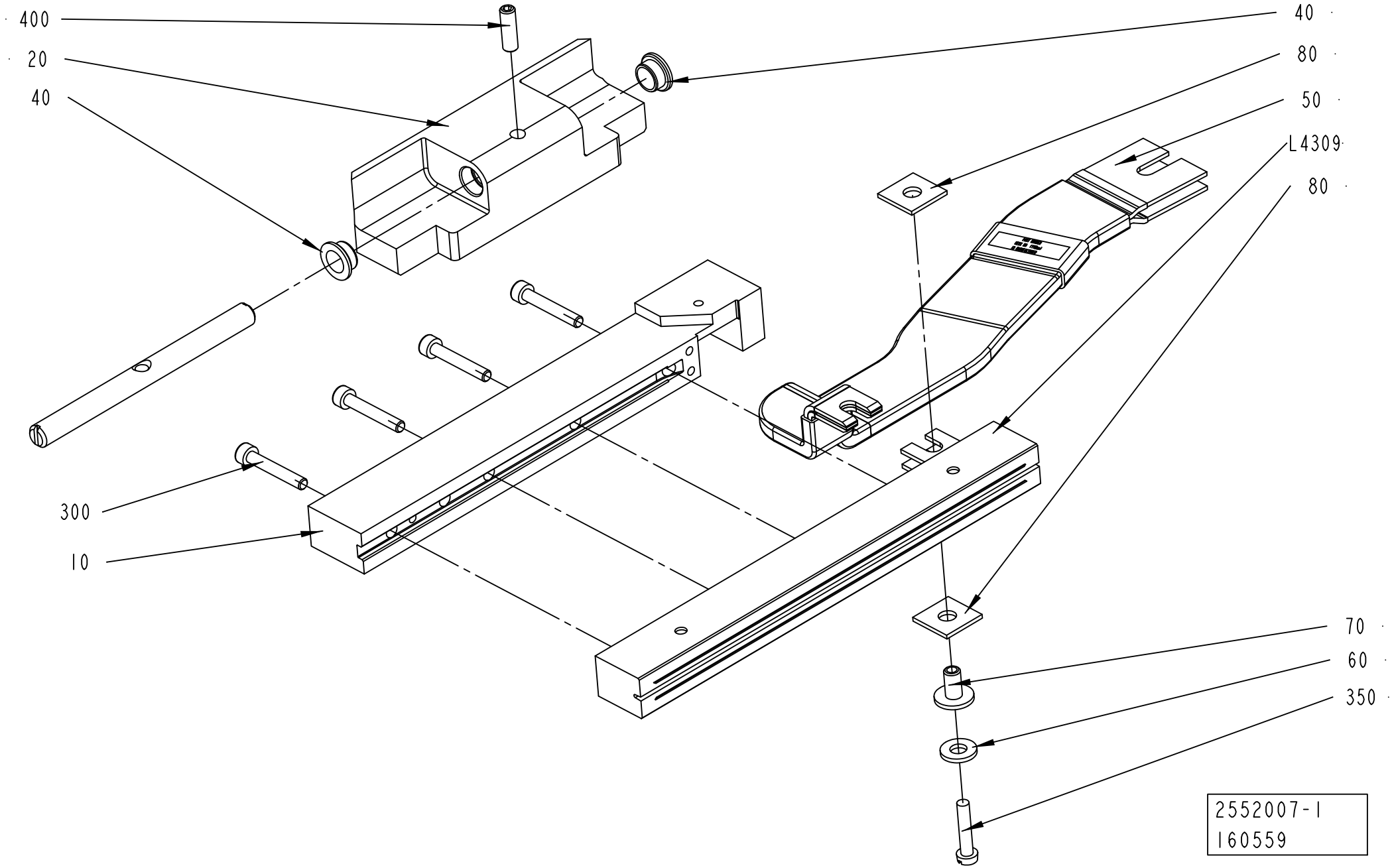
400
20
40
300
10
40
80
50
L4309
80
70
60
350
2552007-1
160559

ECM: 261760 - 20060702
Group number: 2552007-0100
Assembly Drawing: 2552007-1_1_AB

This list covers pages from 4-138 to 4-147

Pos	Part No	UN	Qty	Description	Page No
TPA 0250SQ QC, TPA 0200SQ QC (See drawing on page: 4-142)					
010	1348546-0000		1	RAIL	
020	2674335-0000		1	HOLDER	
050	1498850-0000		1	BUSBAR	
300	312115-0297		3	SCREW ISO4762 M4X25 A4 80	
L4309	1110930-0000		1	INDUCTOR	
TPA 0330SQ (See drawing on page: 4-144)					
010	1348546-0000		1	RAIL	
020	2611655-0000		1	CLAMP HOLDER	
030	2513013-0000		1	SHAFT	
040	2531703-0000		2	BUSHING	
050	1498850-0000		1	BUSBAR	
300	312115-0297		3	SCREW ISO4762 M4X25 A4 80	
400	312115-0327		2	SCREW ISO4762 M5X12 A4 80	
L4309	1520167-0000		1	INDUCTOR	
TPA 0500SQ SMILE (See drawing on page: 4-146)					
010	1558820-0000		1	RAIL	
020	2570848-0000		1	HOLDER	
030	2513013-0000		1	SHAFT	
040	2570849-0000		1	BUSHING	
050	1498850-0000		1	BUSBAR	
090	2503688-0000		1	VOLUME BULGE	
100	1549834-0000		1	VOLUME BULGE	
300	312115-0297		4	SCREW ISO4762 M4X25 A4 80	
360	311103-0234		1	PARALLEL PIN ISO 2338 3M6X12 A1	
370	312155-0287		2	SCREW DIN 7991 MF6S M4X8 A4 70	
380	312155-0325		2	SCREW DIN 7991 MF6S M5X10 A4 70	
400	312115-0329		2	SCREW ISO4762 M5X16 A4 80	
L4309	2587467-0000		1	INDUCTOR	
TPA 1000SQ FT NOQC (See drawing on page: 4-144)					
010	1558820-0000		1	RAIL	
020	2579989-0000		1	HOLDER	
030	2579990-0000		1	SHAFT	
040	2531703-0000		2	BUSHING	
050	1498850-0000		1	BUSBAR	
090	2503700-0000		1	VOLUME BULGE	
300	312115-0297		4	SCREW ISO4762 M4X25 A4 80	
370	312155-0287		2	SCREW DIN 7991 MF6S M4X8 A4 70	
400	312115-0327		2	SCREW ISO4762 M5X12 A4 80	
L4309	1520052-0000		1	INDUCTOR	
TPA 1000SQ SMILE NOQC (See drawing on page: 4-144)					
010	1558820-0000		1	RAIL	
020	2579991-0000		1	HOLDER	
030	2579990-0000		1	SHAFT	
040	2531703-0000		2	BUSHING	
050	1498850-0000		1	BUSBAR	
090	2503700-0000		1	VOLUME BULGE	
100	2500591-0000		1	VOLUME BULGE	
300	312115-0297		4	SCREW ISO4762 M4X25 A4 80	
370	312155-0287		2	SCREW DIN 7991 MF6S M4X8 A4 70	
380	312155-0325		2	SCREW DIN 7991 MF6S M5X10 A4 70	
400	312115-0327		2	SCREW ISO4762 M5X12 A4 80	
L4309	1520052-0000		1	INDUCTOR	
TPA 1000SQ SMILE QC, TPA 0750SQ SMILE QC (See drawing on page: 4-146)					
010	1558820-0000		1	RAIL	
020	2660404-0000		1	HOLDER	
050	1498850-0000		1	BUSBAR	
090	2503700-0000		1	VOLUME BULGE	
100	2500591-0000		1	VOLUME BULGE	
300	312115-0297		4	SCREW ISO4762 M4X25 A4 80	
360	311103-0234		1	PARALLEL PIN ISO 2338 3M6X12 A1	
370	312155-0287		2	SCREW DIN 7991 MF6S M4X8 A4 70	
380	312155-0325		2	SCREW DIN 7991 MF6S M5X10 A4 70	
L4309	2663377-0000		1	INDUCTOR	
TBA 0200B NOQC, TBA 0250B NOQC (See drawing on page: 4-138)					
010	1348546-0000		1	RAIL	
020	1349599-0000		1	HOLDER	
030	1349980-0000		1	SHAFT	
040	1349584-0000		2	BUSHING	
050	1498850-0000		1	BUSBAR	
300	312115-0297		3	SCREW ISO4762 M4X25 A4 80	
400	312318-0329		1	SCREW ISO4029 M5X16 A4	
L4309	1110932-0000		1	INDUCTOR	
TBA 0200B QC, TBA 0250B QC (See drawing on page: 4-140)					
010	1348546-0000		1	RAIL	
020	2604565-0000		1	HOLDER	
050	1498850-0000		1	BUSBAR	
300	312115-0297		3	SCREW ISO4762 M4X25 A4 80	
TBA 0200S (See drawing on page: 4-144)					
010	1348546-0000		1	RAIL	
020	2513015-0000		1	HOLDER	
030	2513013-0000		1	SHAFT	
040	2531703-0000		2	BUSHING	
050	1498850-0000		1	BUSBAR	

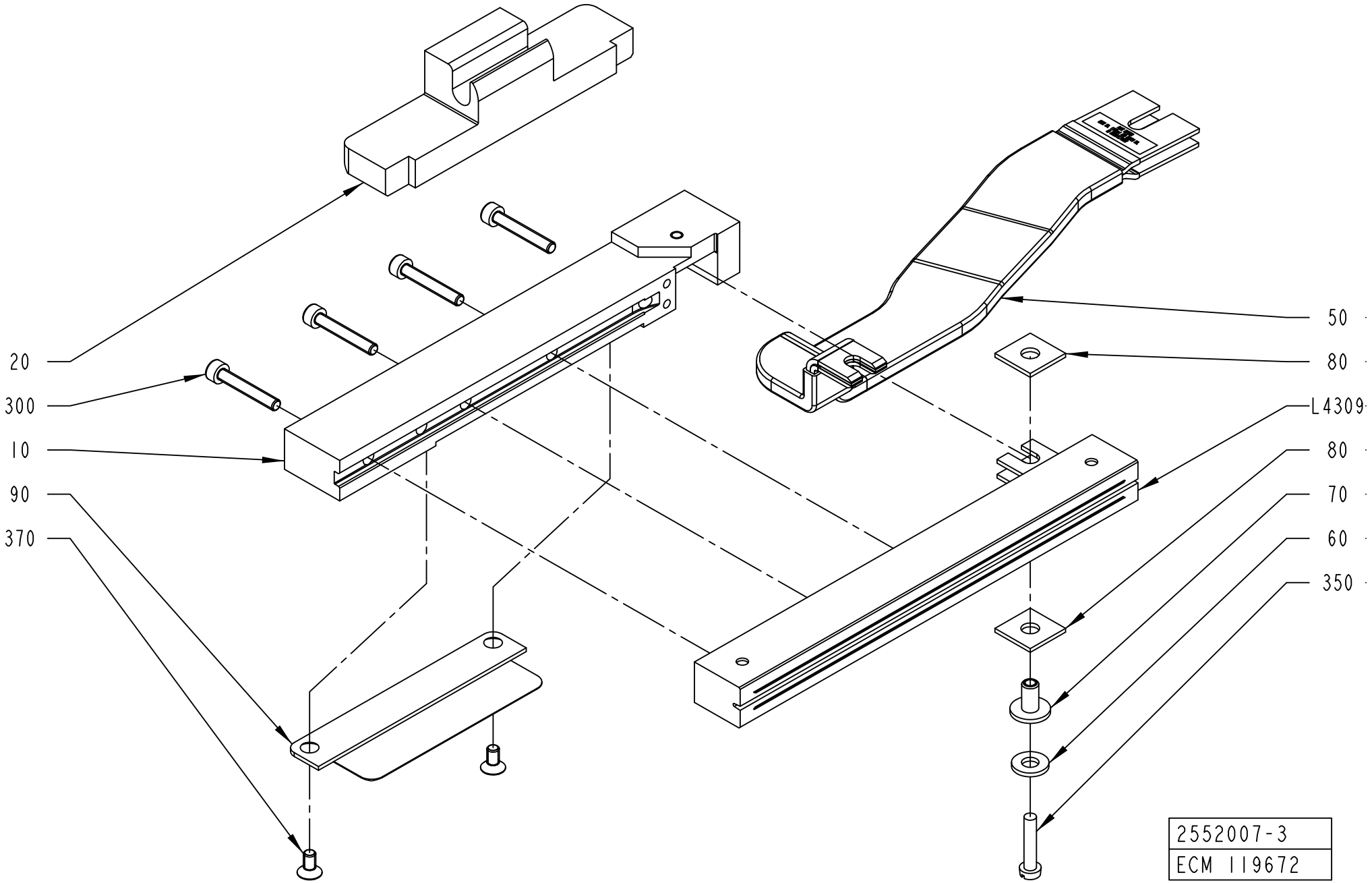
20
300
10
90
370
50
80
L4309
80
70
60
350
2552007-3
ECM 119672

Pos	Part No	UN	Qty	Description	Page No
TBA 0200S (Cont'd) (See drawing on page: 4-144)					
300	312115-0297		3	SCREW ISO4762 M4X25 A4 80	
400	312115-0329		2	SCREW ISO4762 M5X16 A4 80	
L4309	1110930-0000		1	INDUCTOR	
TBA 0200SQ, TBA 0250SQ (See drawing on page: 4-140)					
010	1558820-0000		1	RAIL	
020	2668318-0000		1	HOLDER	
050	1498850-0000		1	BUSBAR	
090	2679953-0000		1	VOLUME BULGE	
300	312115-0297		3	SCREW ISO4762 M4X25 A4 80	
370	312155-0287		2	SCREW DIN 7991 MF6S M4X8 A4 70	
L4309	2767760-0000		1	INDUCTOR	
TBA 0250S QC, TBA 0200M QC (See drawing on page: 4-142)					
010	1348546-0000		1	RAIL	
020	2644397-0000		1	HOLDER	
050	1498850-0000		1	BUSBAR	
300	312115-0297		3	SCREW ISO4762 M4X25 A4 80	
L4309	1110931-0000		1	INDUCTOR	
TBA 0330S QC (See drawing on page: 4-140)					
010	1348546-0000		1	RAIL	
020	2604565-0000		1	HOLDER	
050	1498850-0000		1	BUSBAR	
300	312115-0297		3	SCREW ISO4762 M4X25 A4 80	
L4309	1110932-0000		1	INDUCTOR	
TBA 0500B QC, TBA 1000B QC (See drawing on page: 4-140)					
010	1558820-0000		1	RAIL	
020	1487955-0000		1	HOLDER	
050	1498850-0000		1	BUSBAR	
090	1558734-0000		1	VOLUME BULGE	
300	312115-0297		4	SCREW ISO4762 M4X25 A4 80	
370	312155-0287		2	SCREW DIN 7991 MF6S M4X8 A4 70	
L4309	1110938-0000		1	INDUCTOR	
TBA 0500S (See drawing on page: 4-144)					
010	1348546-0000		1	RAIL	
020	2611001-0000		1	CLAMP HOLDER	
030	2579990-0000		1	SHAFT	
040	2531703-0000		2	BUSHING	
050	1498850-0000		1	BUSBAR	
300	312115-0297		4	SCREW ISO4762 M4X25 A4 80	
400	312115-0327		2	SCREW ISO4762 M5X12 A4 80	
L4309	1110934-0000		1	INDUCTOR	
TBA 1000B NOQC NOMOLDEDCAP (See drawing on page: 4-144)					
010	1348546-0000		1	RAIL	
020	2664280-0000		1	HOLDER	
030	2526812-0000		1	SHAFT	
040	2531703-0000		2	BUSHING	
050	1498850-0000		1	BUSBAR	
300	312115-0297		4	SCREW ISO4762 M4X25 A4 80	
400	312115-0329		2	SCREW ISO4762 M5X16 A4 80	
410	315105-0146		2	WASHER BRB5,3X10RFR	
L4309	1110938-0000		1	INDUCTOR	
TBA 1000B NOQC STDA7 (See drawing on page: 4-144)					
010	2610955-0000		1	RAIL	
020	2664280-0000		1	HOLDER	
030	2526812-0000		1	SHAFT	
040	2531703-0000		2	BUSHING	
050	1498850-0000		1	BUSBAR	
300	312115-0297		4	SCREW ISO4762 M4X25 A4 80	
400	312115-0329		2	SCREW ISO4762 M5X16 A4 80	
410	315105-0146		2	WASHER BRB5,3X10RFR	
L4309	2610956-0000		1	INDUCTOR	
TBA 1000S LIGHTCAP					
010	2766752-0000		1	RAIL	
020	2559425-0000		1	CLAMP HOLDER	
030	2526812-0000		1	SHAFT	
040	2531703-0000		2	BUSHING	
050	1498850-0000		1	BUSBAR	
300	312115-0297		4	SCREW ISO4762 M4X25 A4 80	
400	312115-0327		2	SCREW ISO4762 M5X12 A4 80	
L4309	2546474-0000		1	INDUCTOR	
TBA 1000S NOMOLDEDCAP (See drawing on page: 4-144)					
010	1348546-0000		1	RAIL	
020	2559425-0000		1	CLAMP HOLDER	
030	2526812-0000		1	SHAFT	
040	2531703-0000		2	BUSHING	
050	1498850-0000		1	BUSBAR	
300	312115-0297		4	SCREW ISO4762 M4X25 A4 80	
400	312115-0327		2	SCREW ISO4762 M5X12 A4 80	
L4309	1110937-0000		1	INDUCTOR	
TBA 1000S STDA7 (See drawing on page: 4-144)					
010	2546476-0000		1	RAIL	
020	2559425-0000		1	CLAMP HOLDER	
030	2526812-0000		1	SHAFT	
040	2531703-0000		2	BUSHING	

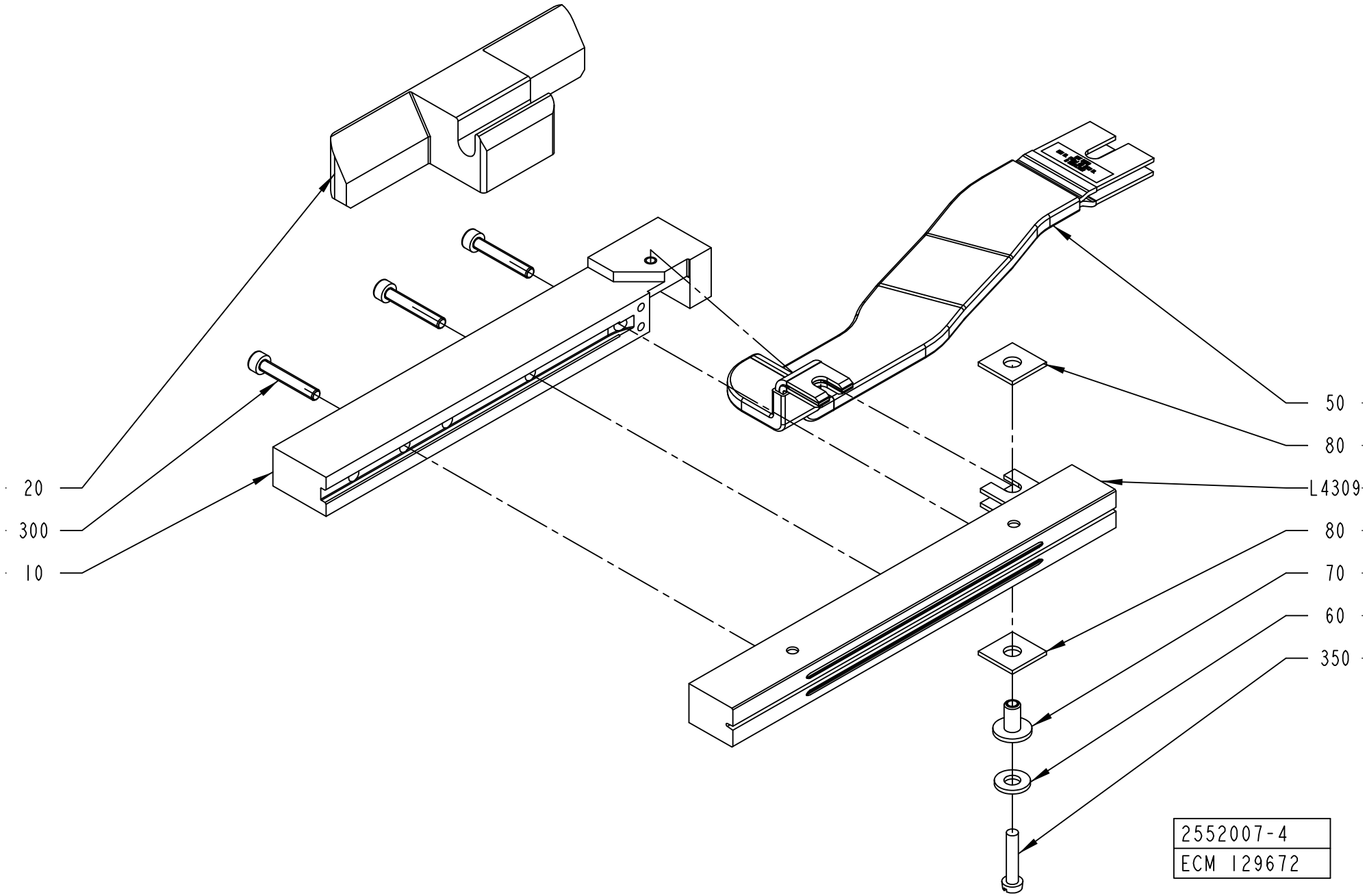
20
300
10
50
80
L4309
80
70
60
350
2552007-4
ECM 129672

Pos	Part No	UN	Qty	Description	Page No
TBA 1000S STDA7 (Cont'd) (See drawing on page: 4-144)					
050	1498850-0000		1	BUSBAR	
300	312115-0297		4	SCREW ISO4762 M4X25 A4 80	
400	312115-0327		2	SCREW ISO4762 M5X12 A4 80	
L4309	2546474-0000		1	INDUCTOR	
TBA 1000SQ (See drawing on page: 4-144)					
010	1348546-0000		1	RAIL	
020	2526811-0000		1	310.54HOLDER	
030	2526812-0000		1	SHAFT	
040	2531703-0000		2	BUSHING	
050	1498850-0000		1	BUSBAR	
300	312115-0297		4	SCREW ISO4762 M4X25 A4 80	
400	312115-0327		2	SCREW ISO4762 M5X12 A4 80	
L4309	1110936-0000		1	INDUCTOR	
TBA 1500S (See drawing on page: 4-144)					
010	1348546-0000		1	RAIL	
020	2570302-0000		1	CLAMP HOLDER	
030	2526812-0000		1	SHAFT	
040	2531703-0000		2	BUSHING	
050	1498850-0000		1	BUSBAR	
300	312115-0297		4	SCREW ISO4762 M4X25 A4 80	
400	312115-0327		2	SCREW ISO4762 M5X12 A4 80	
L4309	1110938-0000		1	INDUCTOR	
TBA 1890S QC, TBA 2000S QC (See drawing on page: 4-144)					
020	2588293-0000		1	HOLDER	
030	2686144-0000		1	SHAFT	
040	2531703-0000		2	BUSHING	
050	2698012-0000		1	BUSBAR	
300	312115-0305		5	SCREW ISO4762 M4X50 A4 80	
400	312115-0327		2	SCREW ISO4762 M5X12 A4 80	
L4309	1533046-0000		1	INDUCTOR	
Common Parts					
060	28509-0000		1	WASHER	
070	32544-0000		1	INSULATION NUT	
080	1036584-0000		2	WASHER	
350	312125-0295		1	SCREW ISO 1207 M4X20 A4	

Pos	Part No	UN	Qty	Description	Page No

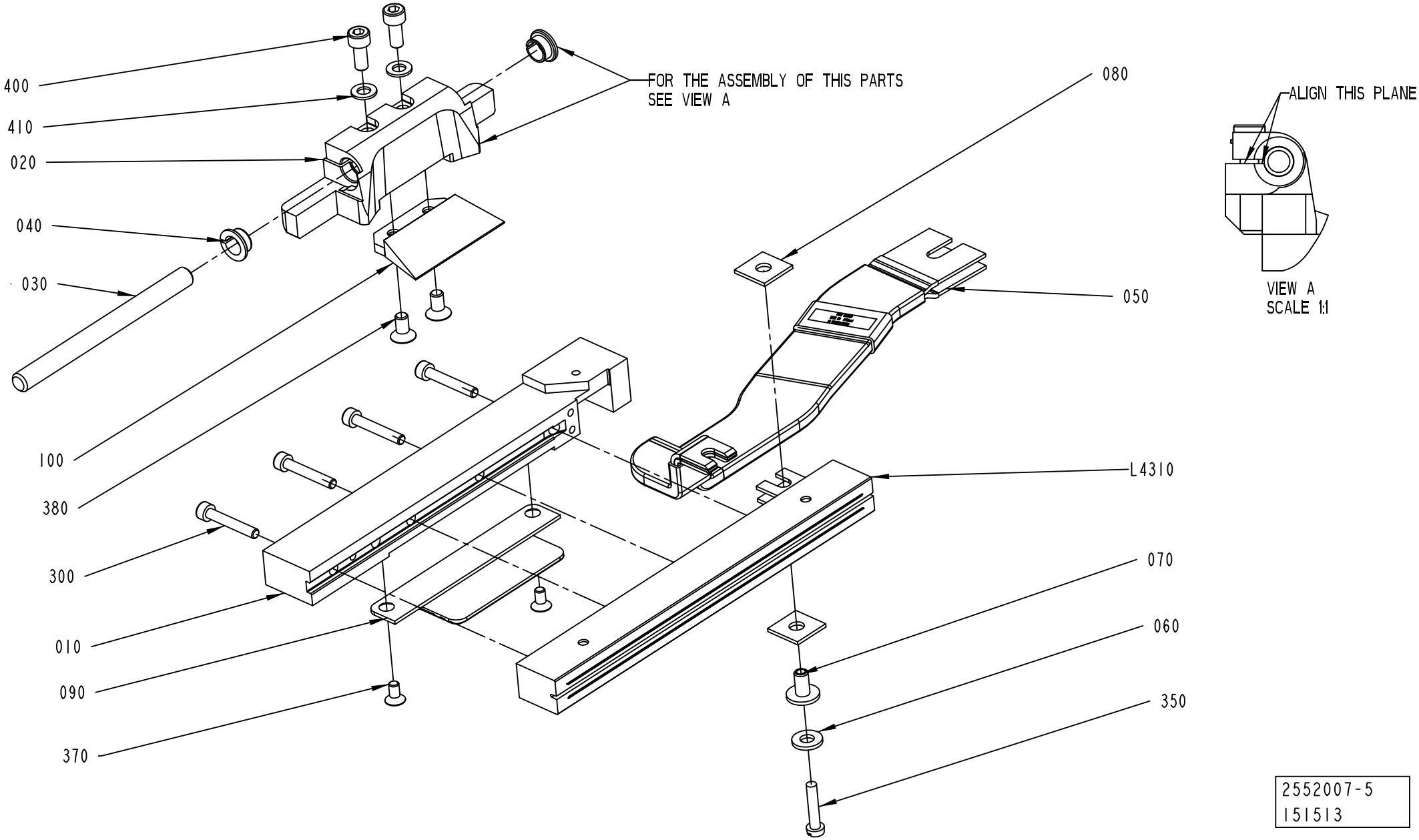
400
410
020
040
030
100
380
300
010
090
370
FOR THE ASSEMBLY OF THIS PARTS
SEE VIEW A
080
050
L4310
070
060
350
ALIGN THIS PLANE
VIEW A
SCALE 1:1
2552007-5
151513

ECM: 261760 - 20060702
Group number: 2552007-0100
Assembly Drawing: 2552007-5_1_AC

This list covers pages from 4-138 to 4-147

Pos	Part No	UN	Qty	Description	Page No
SEE PREVIOUS LISTS PAGES: 4-139, 4-141, 4-143.					

Pos	Part No	UN	Qty	Description	Page No

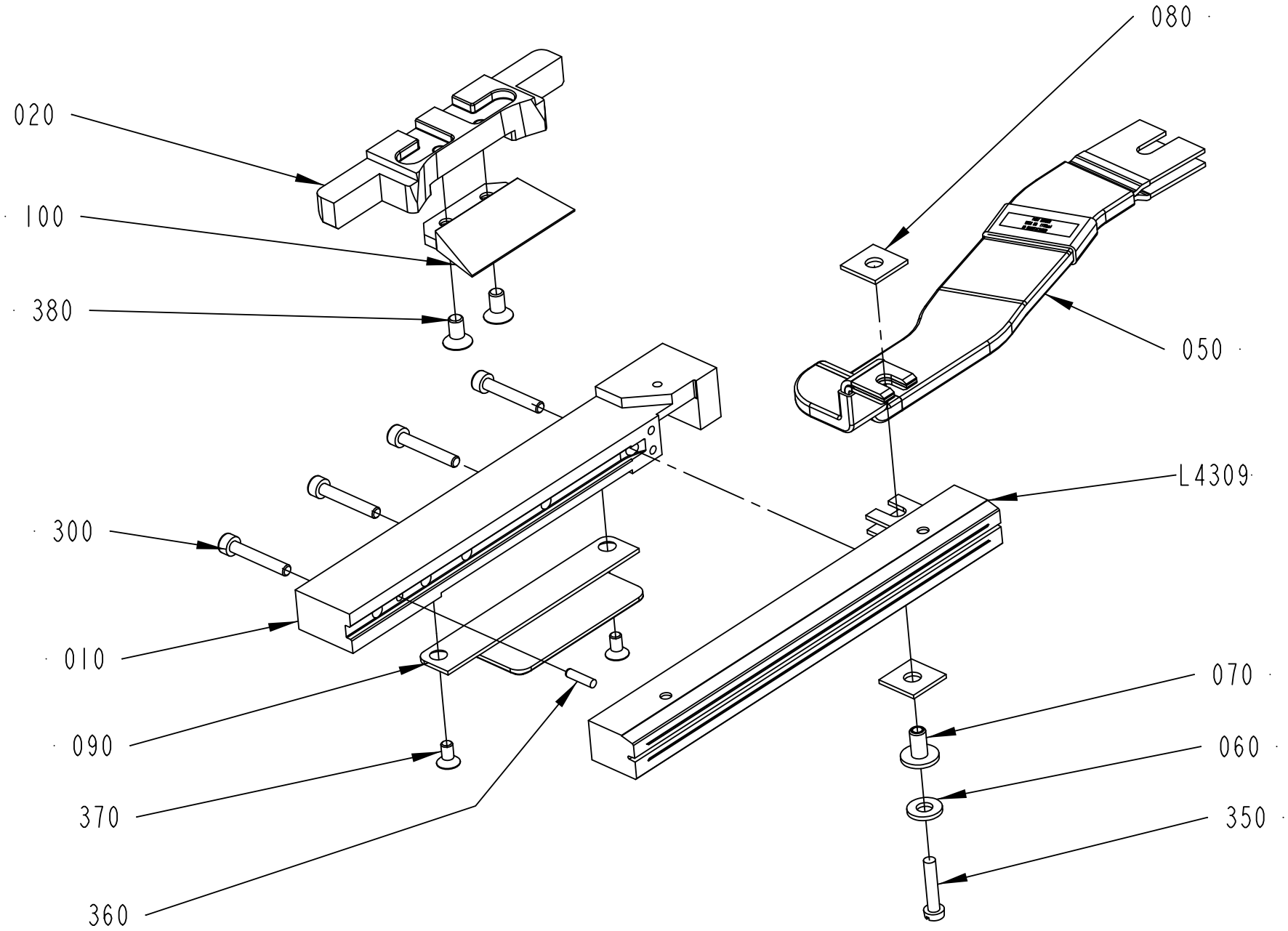

2552007-6
200874

ECM: 261760 - 20060702
Group number: 2552007-0100
Assembly Drawing: 2552007-6_1_AA

This list covers pages from 4-138 to 4-147

Pos	Part No	UN	Qty	Description	Page No	Pos	Part No	UN	Qty	Description	Page No

SEE PREVIOUS LISTS PAGES: 4-139, 4-141, 4-143.

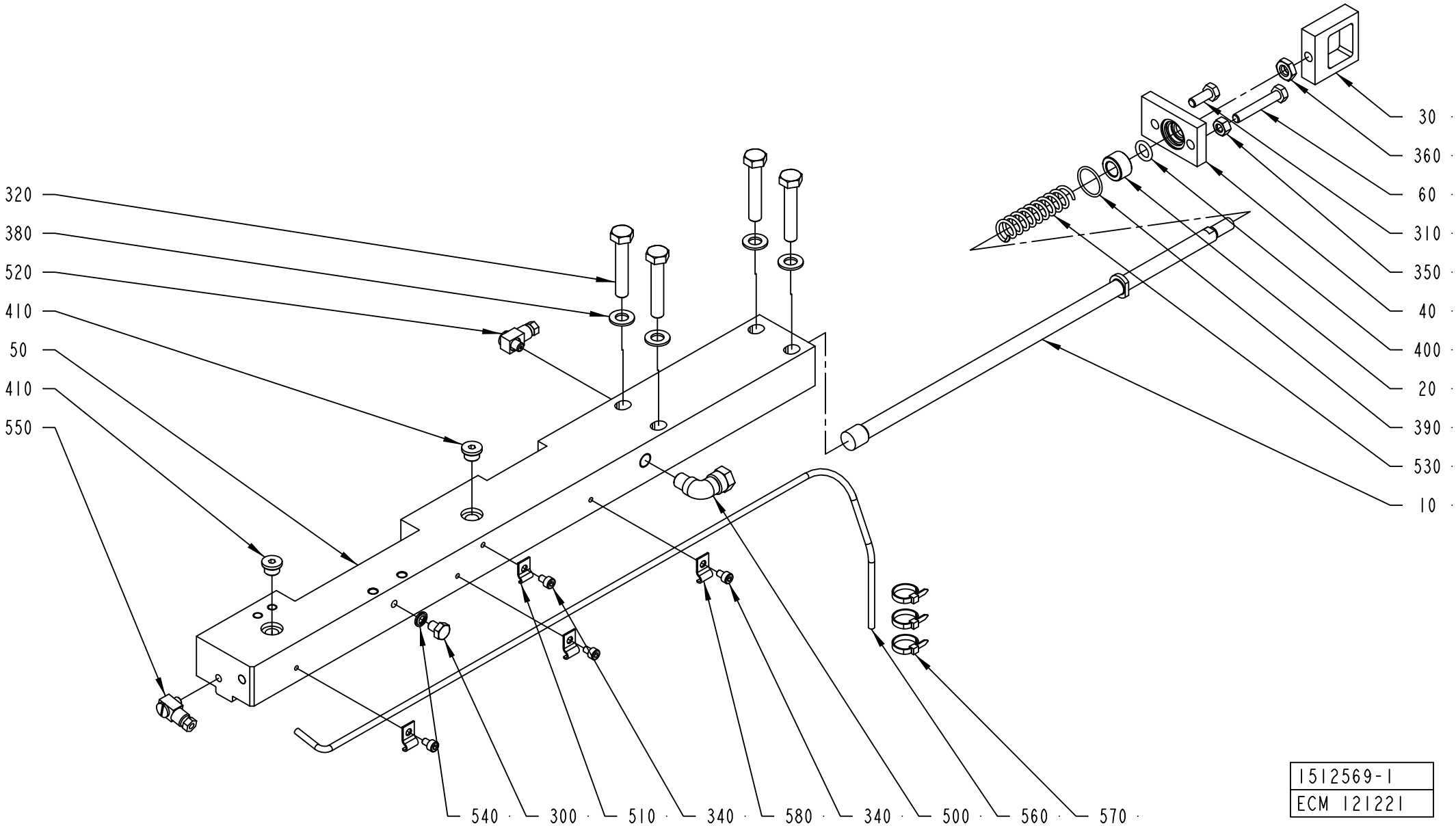
320
380
520
410
50
410
550
30
360
60
310
350
40
400
20
390
530
10
540
300
510
340
580
340
500
560
570
1512569-1
ECM 121221

ECM: 263538 - 20060702
Group number: 1512569-0200
Assembly Drawing: 1512569-1_1_AA

This list covers pages from 4-148 to 4-155

Pos	Part No	UN	Qty	Description	Page No
TBA 0200B QC, TBA 0330S QC, TBA 0250B QC, TPA 0250SQ QC, TPA 0200SQ QC (See drawing on page: 4-150)					
010	2530508-0000		1	TIE ROD	
050	2572248-0000		1	CARRIER	
070	1549312-0000		1	INSERT	
300	312105-0362		1	SCREW M6S ISO 4017 M6X8 A480	
345	312155-0323		3	SCREW DIN 7991 MF6S M5X8 A4 70	
400	315202-0208		1	O-RING 9,3X2,4 MM	
540	315211-0103		1	BONDED SEAL SS/NBR90 M6	
TBA 0200SQ QC, TBA 0250SQ QC (See drawing on page: 4-150)					
010	2737034-0000		1	TIE ROD	
050	2572248-0000		1	CARRIER	
070	1549312-0000		1	INSERT	
300	312105-0362		1	SCREW M6S ISO 4017 M6X8 A480	
345	312155-0323		3	SCREW DIN 7991 MF6S M5X8 A4 70	
400	315202-0208		1	O-RING 9,3X2,4 MM	
540	315211-0103		1	BONDED SEAL SS/NBR90 M6	
TBA 0250S QC, TBA 0200M QC (See drawing on page: 4-150)					
010	2530508-0000		1	TIE ROD	
050	2572248-0000		1	CARRIER	
070	2641225-0000		1	INSERT	
300	312105-0362		1	SCREW M6S ISO 4017 M6X8 A480	
345	312155-0323		3	SCREW DIN 7991 MF6S M5X8 A4 70	
400	315202-0208		1	O-RING 9,3X2,4 MM	
540	315211-0103		1	BONDED SEAL SS/NBR90 M6	
TBA 0500B QC, TBA 1000B QC (See drawing on page: 4-150)					
010	1499320-0000		1	TIE ROD	
050	2572248-0000		1	CARRIER	
070	1549312-0000		1	INSERT	
300	312105-0362		1	SCREW M6S ISO 4017 M6X8 A480	
345	312155-0323		3	SCREW DIN 7991 MF6S M5X8 A4 70	
400	315202-0208		1	O-RING 9,3X2,4 MM	
540	315211-0103		1	BONDED SEAL SS/NBR90 M6	
TBA 0500S, TBA 0200S, TPA 0330SQ, TPA 0500SQ, TBA 0200B NOQC, TBA 0250B NOQC (See drawing on page: 4-148)					
010	2530508-0000		1	TIE ROD	
050	2536026-0000		1	CARRIER	
300	312105-0362		1	SCREW M6S ISO 4017 M6X8 A480	
400	315202-0208		1	O-RING 9,3X2,4 MM	
540	315211-0103		1	BONDED SEAL SS/NBR90 M6	
TBA 1000S, TBA 1000SQ, TBA 1500S, TBA 1000B NOQC, TPA 1000SQ NOQC (See drawing on page: 4-148)					
010	1499320-0000		1	TIE ROD	
050	2536026-0000		1	CARRIER	
300	312105-0362		1	SCREW M6S ISO 4017 M6X8 A480	
400	315202-0208		1	O-RING 9,3X2,4 MM	
540	315211-0103		1	BONDED SEAL SS/NBR90 M6	
TBA 1890S QC, TBA 2000S QC (See drawing on page: 4-154)					
010	2588291-0000		1	TIE ROD	
050	2566327-0000		1	CARRIER	
070	2566328-0000		1	PLATE	
300	312105-0362		1	SCREW M6S ISO 4017 M6X8 A480	
400	315202-0208		1	O-RING 9,3X2,4 MM	
540	315211-0103		1	BONDED SEAL SS/NBR90 M6	
590	312155-0287		3	SCREW DIN 7991 MF6S M4X8 A4 70	
600	2603151-0000		1	SHIM	
TPA 1000SQ QC, TPA 0750SQ QC (See drawing on page: 4-152)					
010	2530508-0000		1	TIE ROD	
050	2647118-0000		1	CARRIER	
070	2647114-0000		1	INSERT	
290	312105-0291		2	SCREW M6S ISO 4017 M4X12 A470	
300	312105-0362		1	SCREW M6S ISO 4017 M6X8 A480	
345	312145-0323		3	SCREW ISO 2009 MFS M5X8 A4	
400	315202-0208		1	O-RING 9,3X2,4 MM	
540	315211-0103		1	BONDED SEAL SS/NBR90 M6	
Common Parts					
020	1036495-0000		1	BUSHING	
030	1036585-0000		1	EAR	
040	1036389-0000		1	LID	
060	1523162-0000		1	SCREW	
310	312105-0368		1	SCREW M6S ISO 4017 M6X16 A480	
320	312105-0460		4	SCREW M6S ISO 4014 M8X45 A480	
340	312115-0285		4	SCREW ISO4762 M4X6 A4 80	
350	312605-0316		1	HEXAGON NUT, M6M M6 A280	
360	312625-0318		1	HEXAGON THIN NUT, EN 24035 ML6M M8 A4	
380	315105-0165		4	WASHER BRB8,4X16RFR	
390	315202-0116		1	O-RING 18,1X1,6 MM	
410	342713-0209		2	PLUG (QUANT.MINIMA= 10PC).	
500	90030-0257		1	CONN. ELBOW, 8-R1/8, EXT.THREAD	
510	90165-0058		1	PIPE CLIP FOR TUBE D=2,5 MM	
520	90134-0058		1	CONNECTION	
530	1548940-0000		1	SPRING	
550	90134-0068		1	CONNECTION	
560	90266-0165	MM	800	BRASS PIPE	
570	352113-0101		3	CLIP STRIP, 92X2,5 MM	

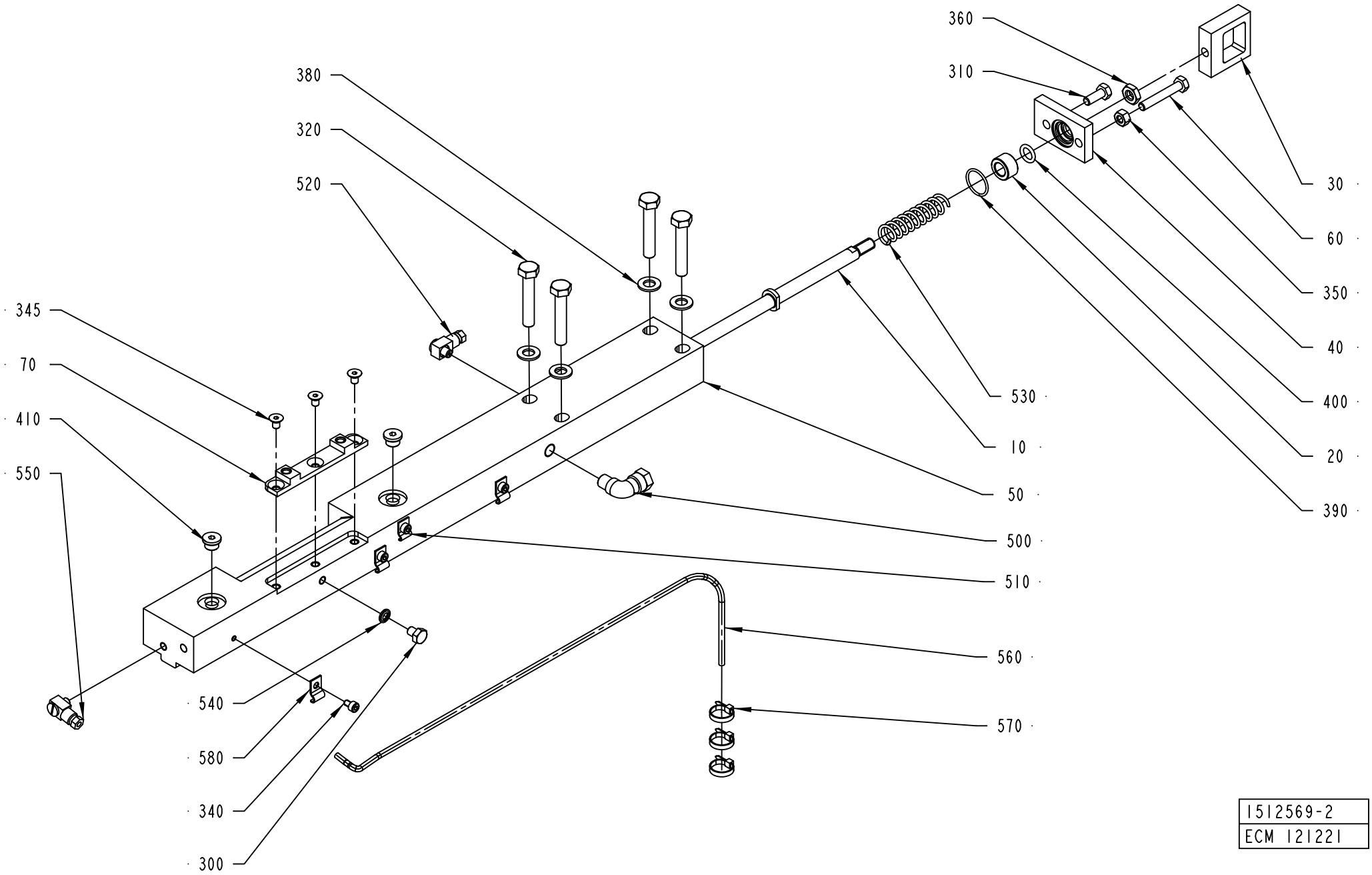

1512569-2
ECM 121221

ECM: 263538 - 20060702
Group number: 1512569-0200
Assembly Drawing: 1512569-2_1_AA

This list covers pages from 4-148 to 4-155

Pos	Part No	UN	Qty	Description	Page No
TBA 0200B QC, TBA 0330S QC, TBA 0250B QC, TPA 0250SQ QC, TPA 0200SQ QC (See drawing on page: 4-150)					
010	2530508-0000		1	TIE ROD	
050	2572248-0000		1	CARRIER	
070	1549312-0000		1	INSERT	
300	312105-0362		1	SCREW M6S ISO 4017 M6X8 A480	
345	312155-0323		3	SCREW DIN 7991 MF6S M5X8 A4 70	
400	315202-0208		1	O-RING 9,3X2,4 MM	
540	315211-0103		1	BONDED SEAL SS/NBR90 M6	
TBA 0200SQ QC, TBA 0250SQ QC (See drawing on page: 4-150)					
010	2737034-0000		1	TIE ROD	
050	2572248-0000		1	CARRIER	
070	1549312-0000		1	INSERT	
300	312105-0362		1	SCREW M6S ISO 4017 M6X8 A480	
345	312155-0323		3	SCREW DIN 7991 MF6S M5X8 A4 70	
400	315202-0208		1	O-RING 9,3X2,4 MM	
540	315211-0103		1	BONDED SEAL SS/NBR90 M6	
TBA 0250S QC, TBA 0200M QC (See drawing on page: 4-150)					
010	2530508-0000		1	TIE ROD	
050	2572248-0000		1	CARRIER	
070	2641225-0000		1	INSERT	
300	312105-0362		1	SCREW M6S ISO 4017 M6X8 A480	
345	312155-0323		3	SCREW DIN 7991 MF6S M5X8 A4 70	
400	315202-0208		1	O-RING 9,3X2,4 MM	
540	315211-0103		1	BONDED SEAL SS/NBR90 M6	
TBA 0500B QC, TBA 1000B QC (See drawing on page: 4-150)					
010	1499320-0000		1	TIE ROD	
050	2572248-0000		1	CARRIER	
070	1549312-0000		1	INSERT	
300	312105-0362		1	SCREW M6S ISO 4017 M6X8 A480	
345	312155-0323		3	SCREW DIN 7991 MF6S M5X8 A4 70	
400	315202-0208		1	O-RING 9,3X2,4 MM	
540	315211-0103		1	BONDED SEAL SS/NBR90 M6	
TBA 0500S, TBA 0200S, TPA 0330SQ, TPA 0500SQ, TBA 0200B NOQC, TBA 0250B NOQC (See drawing on page: 4-148)					
010	2530508-0000		1	TIE ROD	
050	2536026-0000		1	CARRIER	
300	312105-0362		1	SCREW M6S ISO 4017 M6X8 A480	
400	315202-0208		1	O-RING 9,3X2,4 MM	
540	315211-0103		1	BONDED SEAL SS/NBR90 M6	
TBA 1000S, TBA 1000SQ, TBA 1500S, TBA 1000B NOQC, TPA 1000SQ NOQC (See drawing on page: 4-148)					
010	1499320-0000		1	TIE ROD	
050	2536026-0000		1	CARRIER	
300	312105-0362		1	SCREW M6S ISO 4017 M6X8 A480	
400	315202-0208		1	O-RING 9,3X2,4 MM	
540	315211-0103		1	BONDED SEAL SS/NBR90 M6	
TBA 1890S QC, TBA 2000S QC (See drawing on page: 4-154)					
010	2588291-0000		1	TIE ROD	
050	2566327-0000		1	CARRIER	
070	2566328-0000		1	PLATE	
300	312105-0362		1	SCREW M6S ISO 4017 M6X8 A480	
400	315202-0208		1	O-RING 9,3X2,4 MM	
540	315211-0103		1	BONDED SEAL SS/NBR90 M6	
590	312155-0287		3	SCREW DIN 7991 MF6S M4X8 A4 70	
600	2603151-0000		1	SHIM	
TPA 1000SQ QC, TPA 0750SQ QC (See drawing on page: 4-152)					
010	2530508-0000		1	TIE ROD	
050	2647118-0000		1	CARRIER	
070	2647114-0000		1	INSERT	
290	312105-0291		2	SCREW M6S ISO 4017 M4X12 A470	
300	312105-0362		1	SCREW M6S ISO 4017 M6X8 A480	
345	312145-0323		3	SCREW ISO 2009 MFS M5X8 A4	
400	315202-0208		1	O-RING 9,3X2,4 MM	
540	315211-0103		1	BONDED SEAL SS/NBR90 M6	
Common Parts					
020	1036495-0000		1	BUSHING	
030	1036585-0000		1	EAR	
040	1036389-0000		1	LID	
060	1523162-0000		1	SCREW	
310	312105-0368		1	SCREW M6S ISO 4017 M6X16 A480	
320	312105-0460		4	SCREW M6S ISO 4014 M8X45 A480	
340	312115-0285		4	SCREW ISO4762 M4X6 A4 80	
350	312605-0316		1	HEXAGON NUT, M6M M6 A280	
360	312625-0318		1	HEXAGON THIN NUT, EN 24035 ML6M M8 A4	
380	315105-0165		4	WASHER BRB8,4X16RFR	
390	315202-0116		1	O-RING 18,1X1,6 MM	
410	342713-0209		2	PLUG (QUANT.MINIMA= 10PC).	
500	90030-0257		1	CONN. ELBOW, 8-R1/8, EXT.THREAD	
510	90165-0058		1	PIPE CLIP FOR TUBE D=2,5 MM	
520	90134-0058		1	CONNECTION	
530	1548940-0000		1	SPRING	
550	90134-0068		1	CONNECTION	
560	90266-0165	MM	800	BRASS PIPE	
570	352113-0101		3	CLIP STRIP, 92X2,5 MM	

Machine Type | Group Description | Used-In | Group Number | Page No

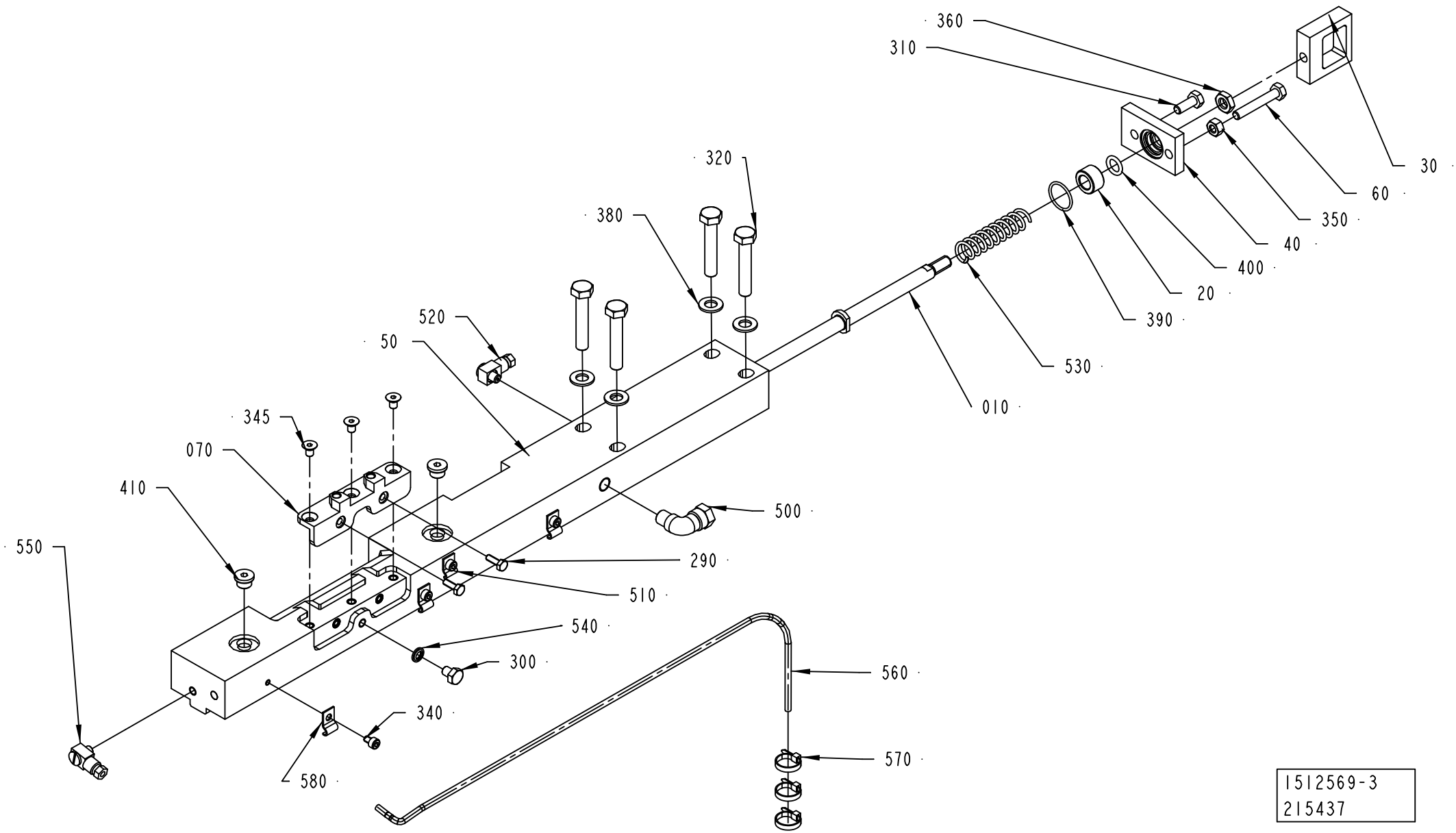
360
310
320
380
520
50
345
070
410
550
500
290
510
540
300
340
580
560
570
010
530
390
20
400
40
350
60
30
1512569-3
215437

ECM: 263538 - 20060702
Group number: 1512569-0200
Assembly Drawing: 1512569-3_1_AB

This list covers pages from 4-148 to 4-155

Pos	Part No	UN	Qty	Description	Page No
TBA 0200B QC, TBA 0330S QC, TBA 0250B QC, TPA 0250SQ QC, TPA 0200SQ QC (See drawing on page: 4-150)					
010	2530508-0000		1	TIE ROD	
050	2572248-0000		1	CARRIER	
070	1549312-0000		1	INSERT	
300	312105-0362		1	SCREW M6S ISO 4017 M6X8 A480	
345	312155-0323		3	SCREW DIN 7991 MF6S M5X8 A4 70	
400	315202-0208		1	O-RING 9,3X2,4 MM	
540	315211-0103		1	BONDED SEAL SS/NBR90 M6	
TBA 0200SQ QC, TBA 0250SQ QC (See drawing on page: 4-150)					
010	2737034-0000		1	TIE ROD	
050	2572248-0000		1	CARRIER	
070	1549312-0000		1	INSERT	
300	312105-0362		1	SCREW M6S ISO 4017 M6X8 A480	
345	312155-0323		3	SCREW DIN 7991 MF6S M5X8 A4 70	
400	315202-0208		1	O-RING 9,3X2,4 MM	
540	315211-0103		1	BONDED SEAL SS/NBR90 M6	
TBA 0250S QC, TBA 0200M QC (See drawing on page: 4-150)					
010	2530508-0000		1	TIE ROD	
050	2572248-0000		1	CARRIER	
070	2641225-0000		1	INSERT	
300	312105-0362		1	SCREW M6S ISO 4017 M6X8 A480	
345	312155-0323		3	SCREW DIN 7991 MF6S M5X8 A4 70	
400	315202-0208		1	O-RING 9,3X2,4 MM	
540	315211-0103		1	BONDED SEAL SS/NBR90 M6	
TBA 0500B QC, TBA 1000B QC (See drawing on page: 4-150)					
010	1499320-0000		1	TIE ROD	
050	2572248-0000		1	CARRIER	
070	1549312-0000		1	INSERT	
300	312105-0362		1	SCREW M6S ISO 4017 M6X8 A480	
345	312155-0323		3	SCREW DIN 7991 MF6S M5X8 A4 70	
400	315202-0208		1	O-RING 9,3X2,4 MM	
540	315211-0103		1	BONDED SEAL SS/NBR90 M6	
TBA 0500S, TBA 0200S, TPA 0330SQ, TPA 0500SQ, TBA 0200B NOQC, TBA 0250B NOQC (See drawing on page: 4-148)					
010	2530508-0000		1	TIE ROD	
050	2536026-0000		1	CARRIER	
300	312105-0362		1	SCREW M6S ISO 4017 M6X8 A480	
400	315202-0208		1	O-RING 9,3X2,4 MM	
540	315211-0103		1	BONDED SEAL SS/NBR90 M6	
TBA 1000S, TBA 1000SQ, TBA 1500S, TBA 1000B NOQC, TPA 1000SQ NOQC (See drawing on page: 4-148)					
010	1499320-0000		1	TIE ROD	
050	2536026-0000		1	CARRIER	
300	312105-0362		1	SCREW M6S ISO 4017 M6X8 A480	
400	315202-0208		1	O-RING 9,3X2,4 MM	
540	315211-0103		1	BONDED SEAL SS/NBR90 M6	
TBA 1890S QC, TBA 2000S QC (See drawing on page: 4-154)					
010	2588291-0000		1	TIE ROD	
050	2566327-0000		1	CARRIER	
070	2566328-0000		1	PLATE	
300	312105-0362		1	SCREW M6S ISO 4017 M6X8 A480	
400	315202-0208		1	O-RING 9,3X2,4 MM	
540	315211-0103		1	BONDED SEAL SS/NBR90 M6	
590	312155-0287		3	SCREW DIN 7991 MF6S M4X8 A4 70	
600	2603151-0000		1	SHIM	
TPA 1000SQ QC, TPA 0750SQ QC (See drawing on page: 4-152)					
010	2530508-0000		1	TIE ROD	
050	2647118-0000		1	CARRIER	
070	2647114-0000		1	INSERT	
290	312105-0291		2	SCREW M6S ISO 4017 M4X12 A470	
300	312105-0362		1	SCREW M6S ISO 4017 M6X8 A480	
345	312145-0323		3	SCREW ISO 2009 MFS M5X8 A4	
400	315202-0208		1	O-RING 9,3X2,4 MM	
540	315211-0103		1	BONDED SEAL SS/NBR90 M6	
Common Parts					
020	1036495-0000		1	BUSHING	
030	1036585-0000		1	EAR	
040	1036389-0000		1	LID	
060	1523162-0000		1	SCREW	
310	312105-0368		1	SCREW M6S ISO 4017 M6X16 A480	
320	312105-0460		4	SCREW M6S ISO 4014 M8X45 A480	
340	312115-0285		4	SCREW ISO4762 M4X6 A4 80	
350	312605-0316		1	HEXAGON NUT, M6M M6 A280	
360	312625-0318		1	HEXAGON THIN NUT, EN 24035 ML6M M8 A4	
380	315105-0165		4	WASHER BRB8,4X16RFR	
390	315202-0116		1	O-RING 18,1X1,6 MM	
410	342713-0209		2	PLUG (QUANT.MINIMA= 10PC).	
500	90030-0257		1	CONN. ELBOW, 8-R1/8, EXT.THREAD	
510	90165-0058		1	PIPE CLIP FOR TUBE D=2,5 MM	
520	90134-0058		1	CONNECTION	
530	1548940-0000		1	SPRING	
550	90134-0068		1	CONNECTION	
560	90266-0165	MM	800	BRASS PIPE	
570	352113-0101		3	CLIP STRIP, 92X2,5 MM	

CARRIER CUTTING RIGHT

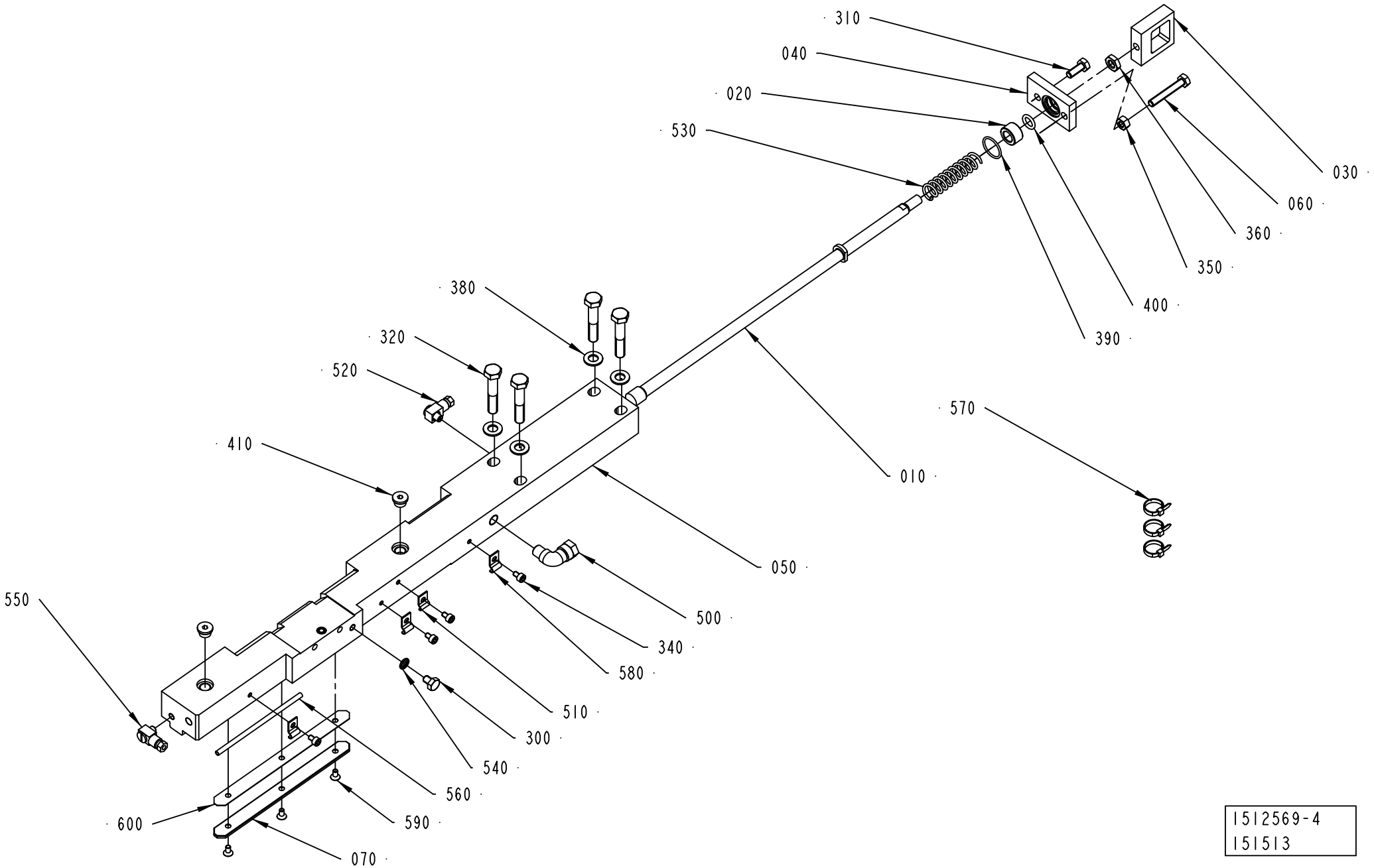

1512569-4
151513

ECM: 263538 - 20060702
Group number: 1512569-0200
Assembly Drawing: 1512569-4_1_AA

This list covers pages from 4-148 to 4-155

Pos	Part No	UN	Qty	Description	Page No
TBA 0200B QC, TBA 0330S QC, TBA 0250B QC, TPA 0250SQ QC, TPA 0200SQ QC (See drawing on page: 4-150)					
010	2530508-0000		1	TIE ROD	
050	2572248-0000		1	CARRIER	
070	1549312-0000		1	INSERT	
300	312105-0362		1	SCREW M6S ISO 4017 M6X8 A480	
345	312155-0323		3	SCREW DIN 7991 MF6S M5X8 A4 70	
400	315202-0208		1	O-RING 9,3X2,4 MM	
540	315211-0103		1	BONDED SEAL SS/NBR90 M6	
TBA 0200SQ QC, TBA 0250SQ QC (See drawing on page: 4-150)					
010	2737034-0000		1	TIE ROD	
050	2572248-0000		1	CARRIER	
070	1549312-0000		1	INSERT	
300	312105-0362		1	SCREW M6S ISO 4017 M6X8 A480	
345	312155-0323		3	SCREW DIN 7991 MF6S M5X8 A4 70	
400	315202-0208		1	O-RING 9,3X2,4 MM	
540	315211-0103		1	BONDED SEAL SS/NBR90 M6	
TBA 0250S QC, TBA 0200M QC (See drawing on page: 4-150)					
010	2530508-0000		1	TIE ROD	
050	2572248-0000		1	CARRIER	
070	2641225-0000		1	INSERT	
300	312105-0362		1	SCREW M6S ISO 4017 M6X8 A480	
345	312155-0323		3	SCREW DIN 7991 MF6S M5X8 A4 70	
400	315202-0208		1	O-RING 9,3X2,4 MM	
540	315211-0103		1	BONDED SEAL SS/NBR90 M6	
TBA 0500B QC, TBA 1000B QC (See drawing on page: 4-150)					
010	1499320-0000		1	TIE ROD	
050	2572248-0000		1	CARRIER	
070	1549312-0000		1	INSERT	
300	312105-0362		1	SCREW M6S ISO 4017 M6X8 A480	
345	312155-0323		3	SCREW DIN 7991 MF6S M5X8 A4 70	
400	315202-0208		1	O-RING 9,3X2,4 MM	
540	315211-0103		1	BONDED SEAL SS/NBR90 M6	
TBA 0500S, TBA 0200S, TPA 0330SQ, TPA 0500SQ, TBA 0200B NOQC, TBA 0250B NOQC (See drawing on page: 4-148)					
010	2530508-0000		1	TIE ROD	
050	2536026-0000		1	CARRIER	
300	312105-0362		1	SCREW M6S ISO 4017 M6X8 A480	
400	315202-0208		1	O-RING 9,3X2,4 MM	
540	315211-0103		1	BONDED SEAL SS/NBR90 M6	
TBA 1000S, TBA 1000SQ, TBA 1500S, TBA 1000B NOQC, TPA 1000SQ NOQC (See drawing on page: 4-148)					
010	1499320-0000		1	TIE ROD	
050	2536026-0000		1	CARRIER	
300	312105-0362		1	SCREW M6S ISO 4017 M6X8 A480	
400	315202-0208		1	O-RING 9,3X2,4 MM	
540	315211-0103		1	BONDED SEAL SS/NBR90 M6	
TBA 1890S QC, TBA 2000S QC (See drawing on page: 4-154)					
010	2588291-0000		1	TIE ROD	
050	2566327-0000		1	CARRIER	
070	2566328-0000		1	PLATE	
300	312105-0362		1	SCREW M6S ISO 4017 M6X8 A480	
400	315202-0208		1	O-RING 9,3X2,4 MM	
540	315211-0103		1	BONDED SEAL SS/NBR90 M6	
590	312155-0287		3	SCREW DIN 7991 MF6S M4X8 A4 70	
600	2603151-0000		1	SHIM	
TPA 1000SQ QC, TPA 0750SQ QC (See drawing on page: 4-152)					
010	2530508-0000		1	TIE ROD	
050	2647118-0000		1	CARRIER	
070	2647114-0000		1	INSERT	
290	312105-0291		2	SCREW M6S ISO 4017 M4X12 A470	
300	312105-0362		1	SCREW M6S ISO 4017 M6X8 A480	
345	312145-0323		3	SCREW ISO 2009 MFS M5X8 A4	
400	315202-0208		1	O-RING 9,3X2,4 MM	
540	315211-0103		1	BONDED SEAL SS/NBR90 M6	
Common Parts					
020	1036495-0000		1	BUSHING	
030	1036585-0000		1	EAR	
040	1036389-0000		1	LID	
060	1523162-0000		1	SCREW	
310	312105-0368		1	SCREW M6S ISO 4017 M6X16 A480	
320	312105-0460		4	SCREW M6S ISO 4014 M8X45 A480	
340	312115-0285		4	SCREW ISO4762 M4X6 A4 80	
350	312605-0316		1	HEXAGON NUT, M6M M6 A280	
360	312625-0318		1	HEXAGON THIN NUT, EN 24035 ML6M M8 A4	
380	315105-0165		4	WASHER BRB8,4X16RFR	
390	315202-0116		1	O-RING 18,1X1,6 MM	
410	342713-0209		2	PLUG (QUANT.MINIMA= 10PC).	
500	90030-0257		1	CONN. ELBOW, 8-R1/8, EXT.THREAD	
510	90165-0058		1	PIPE CLIP FOR TUBE D=2,5 MM	
520	90134-0058		1	CONNECTION	
530	1548940-0000		1	SPRING	
550	90134-0068		1	CONNECTION	
560	90266-0165	MM	800	BRASS PIPE	
570	352113-0101		3	CLIP STRIP, 92X2,5 MM	

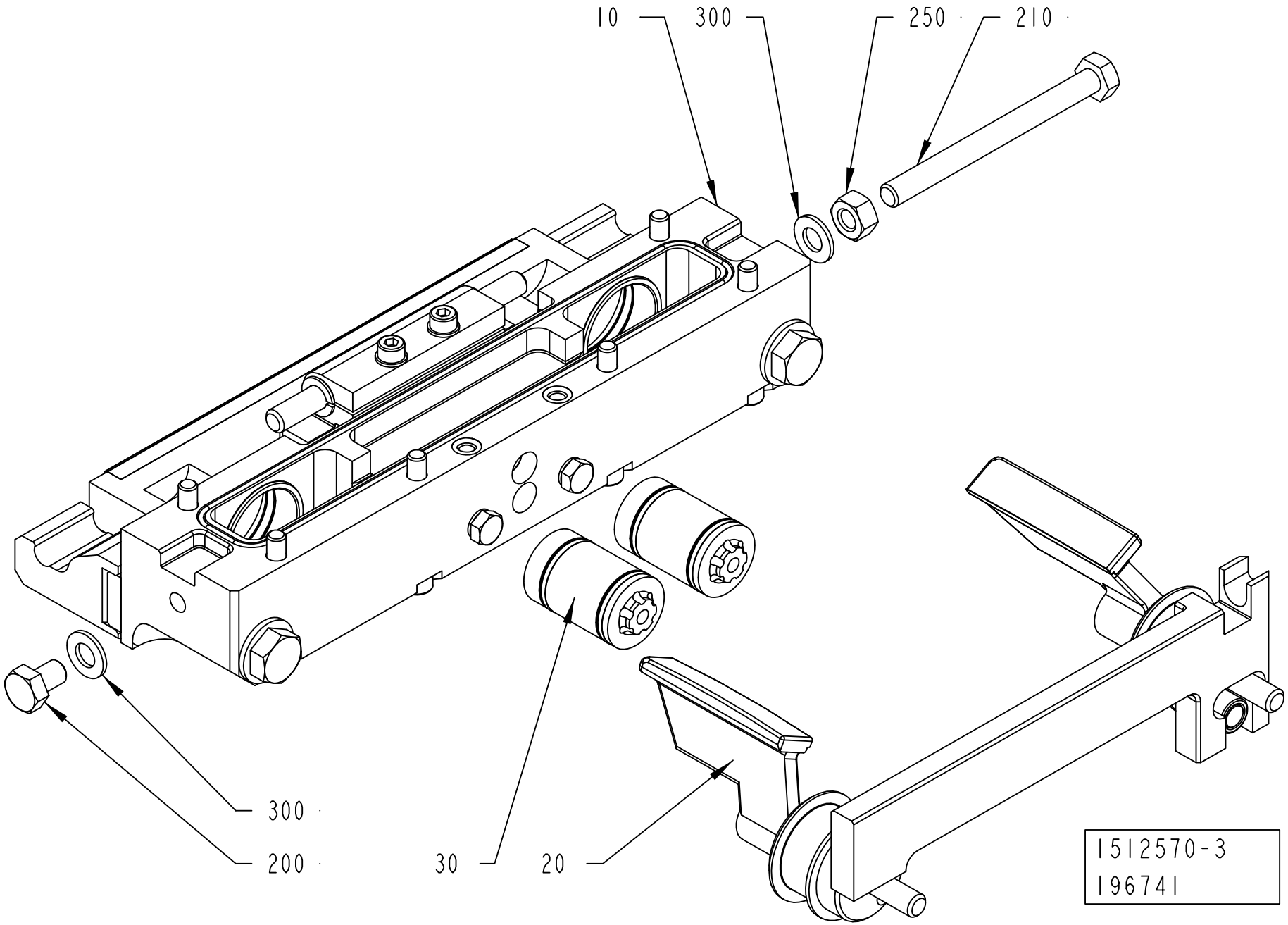
10
300
250
210
300
200
30
20
1512570-3
196741

ECM: 235785 - 20060101
Group number: 1512570-0300
Assembly Drawing: 1512570-3_1_AA

Pos	Part No	UN	Qty	Description	Page No
-					
010	2552008-0200		1	CUTTING JAW	**4-115, 4-117, 4-119, 4-121**
020	2552011-0100		1	FOLDING FLAP RIGHT	**4-159, 4-161**
030	2552010-0200		2	PISTON	**4-127**
200	312105-0447		1	SCREW M6S ISO 4017 M8X12 A480	
210	312105-0469		1	SCREW M6S ISO 4014 M8X90 A480	
250	312605-0318		1	HEXAGON NUT, M6M M8 A280	
300	315105-0165		2	WASHER BRB8,4X16RFR	

Pos	Part No	UN	Qty	Description	Page No

FOLDING FLAP RIGHT

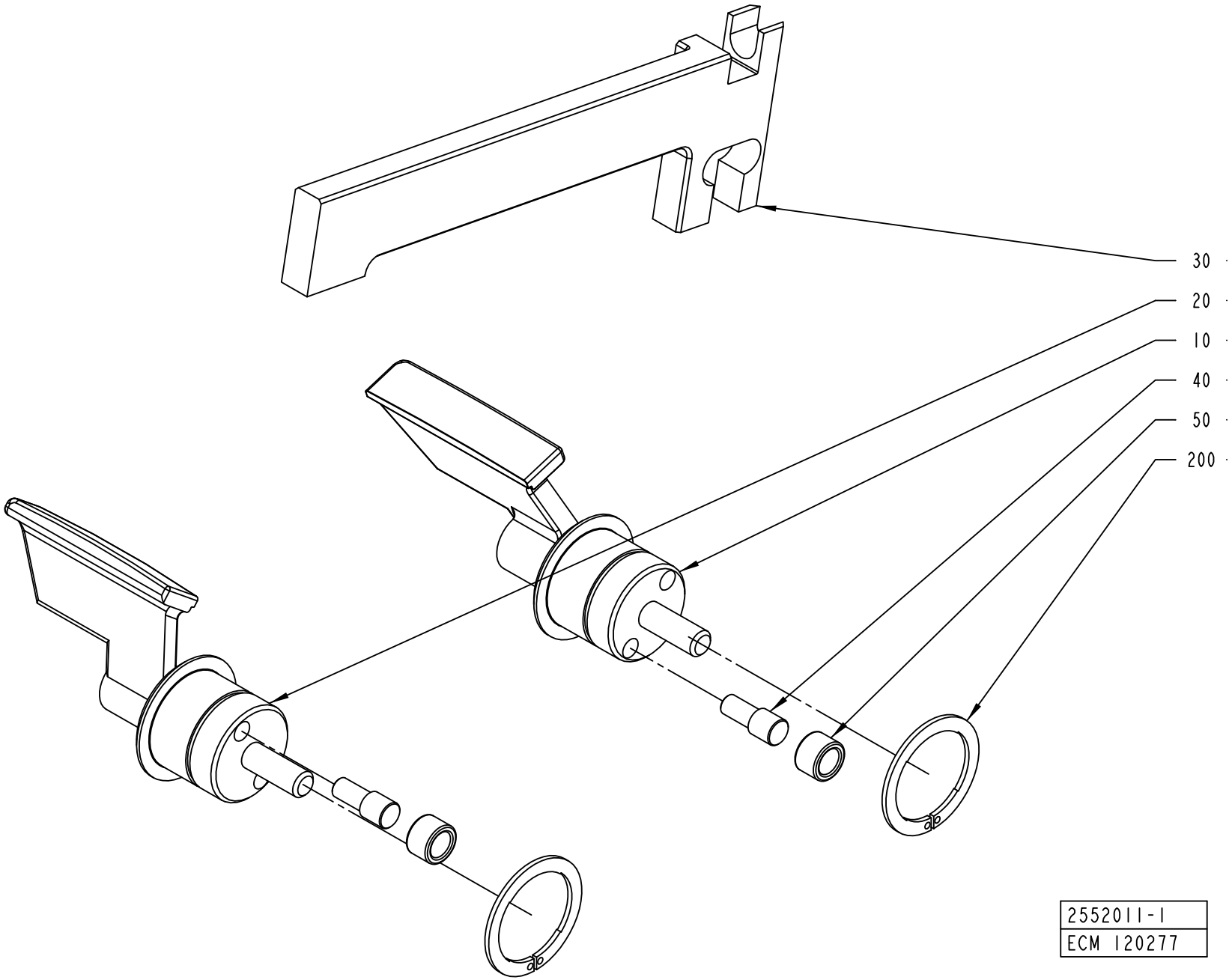

ECM: 261877 - 20060702
Group number: 2552011-0100
Assembly Drawing: 2552011-1_1_AA

This list covers pages from 4-158 to 4-161

Pos	Part No	UN	Qty	Description	Page No
TPA 0500SQ (See drawing on page: 4-158)					
010	1549822-0000		1	FOLDING FLAP	
020	1549823-0000		1	FOLDING FLAP	
030	1549825-0000		1	CARRIER RULER	
TPA 1000SQ NOQC, TPA 1000SQ QC, TPA 0750SQ QC (See drawing on page: 4-158)					
010	1523146-0000		1	FOLDING FLAP	
020	1523147-0000		1	FOLDING FLAP	
030	1523148-0000		1	CARRIER RULER	
TBA 0200B QC, TBA 0330S QC, TBA 0250B QC (See drawing on page: 4-158)					
010	2605875-0000		1	FOLDING FLAP	
020	2605876-0000		1	FOLDING FLAP	
030	1255463-0000		1	CARRIER RULER	
TBA 0200S (See drawing on page: 4-158)					
010	2624554-0000		1	FOLDING FLAP	
020	2624555-0000		1	FOLDING FLAP	
030	1255462-0000		1	CARRIER RULER	
TBA 0200SQ QC, TBA 0250SQ QC (See drawing on page: 4-158)					
010	2668313-0000		1	FOLDING FLAP	
020	2668314-0000		1	FOLDING FLAP	
030	2736139-0000		1	CARRIER RULER	
TBA 0250S QC, TBA 0200M QC					
010	2624554-0000		1	FOLDING FLAP	
020	2624555-0000		1	FOLDING FLAP	
030	2520471-0000		1	CARRIER RULER	
TBA 0500B NOQC, TBA 1000B NOQC NOMOLDEDCAP (See drawing on page: 4-158)					
010	1511697-0000		1	.FOLDING FLAP	
020	1511698-0000		1	FOLDING FLAP	
030	1255461-0000		1	CARRIER RULER	
TBA 0500B QC, TBA 1000B QC (See drawing on page: 4-158)					
010	1511352-0000		1	FOLDING FLAP	
020	1511351-0000		1	FOLDING FLAP	
030	1255461-0000		1	CARRIER RULER	
TBA 0500S (See drawing on page: 4-158)					
010	2507085-0000		1	FOLDING FLAP	
020	2507086-0000		1	FOLDING FLAP	
030	1511188-0000		1	CARRIER RULER	
TBA 1000B NOQC STDA7 (See drawing on page: 4-158)					
010	1511697-0000		1	.FOLDING FLAP	
020	1511698-0000		1	FOLDING FLAP	
030	1255461-0000		1	CARRIER RULER	
TBA 1000S NOMOLDEDCAP (See drawing on page: 4-158)					
010	1511699-0000		1	FOLDING FLAP	
020	1511700-0000		1	FOLDING FLAP	
030	1255464-0000		1	CARRIER RULER	
TBA 1000S STDA7, TBA 1000S LIGHTCAP (See drawing on page: 4-158)					
010	1511699-0000		1	FOLDING FLAP	
020	2546501-0000		1	FOLDING FLAP	
030	1255464-0000		1	CARRIER RULER	
TBA 1000SQ (See drawing on page: 4-158)					
010	2507076-0000		1	FOLDING FLAP	
020	2507077-0000		1	FOLDING FLAP	
030	1360319-0000		1	CARRIER RULER	
TBA 1500S (See drawing on page: 4-158)					
010	2507092-0000		1	FOLDING FLAP	
020	2507093-0000		1	FOLDING FLAP	
030	1255461-0000		1	CARRIER RULER	
TBA 1890S QC, TBA 2000S QC (See drawing on page: 4-160)					
010	2566319-0000		1	FOLDING FLAP	
020	2566320-0000		1	FOLDING FLAP	
030	2566317-0000		1	CARRIER RULER	
210	90459-2258		2	SEAL GLYDRING 25,1X30X2,2 MM	
TPA 0250SQ QC, TPA 0200SQ QC					
010	2728883-0000		1	FOLDING FLAP	
020	2728884-0000		1	FOLDING FLAP	
030	1255462-0000		1	CARRIER RULER	
TPA 0330SQ (See drawing on page: 4-158)					
010	2507096-0000		1	FOLDING FLAP	
020	2507097-0000		1	FOLDING FLAP	
030	1538769-0000		1	CARRIER RULER	
Common Parts					
040	22462-0000		2	SHAFT	
050	22463-0000		2	ROLL	
200	90141-0029		2	CIRCLIP	

Machine Type | Group Description | Used-In | Group Number | Page No

FOLDING FLAP RIGHT

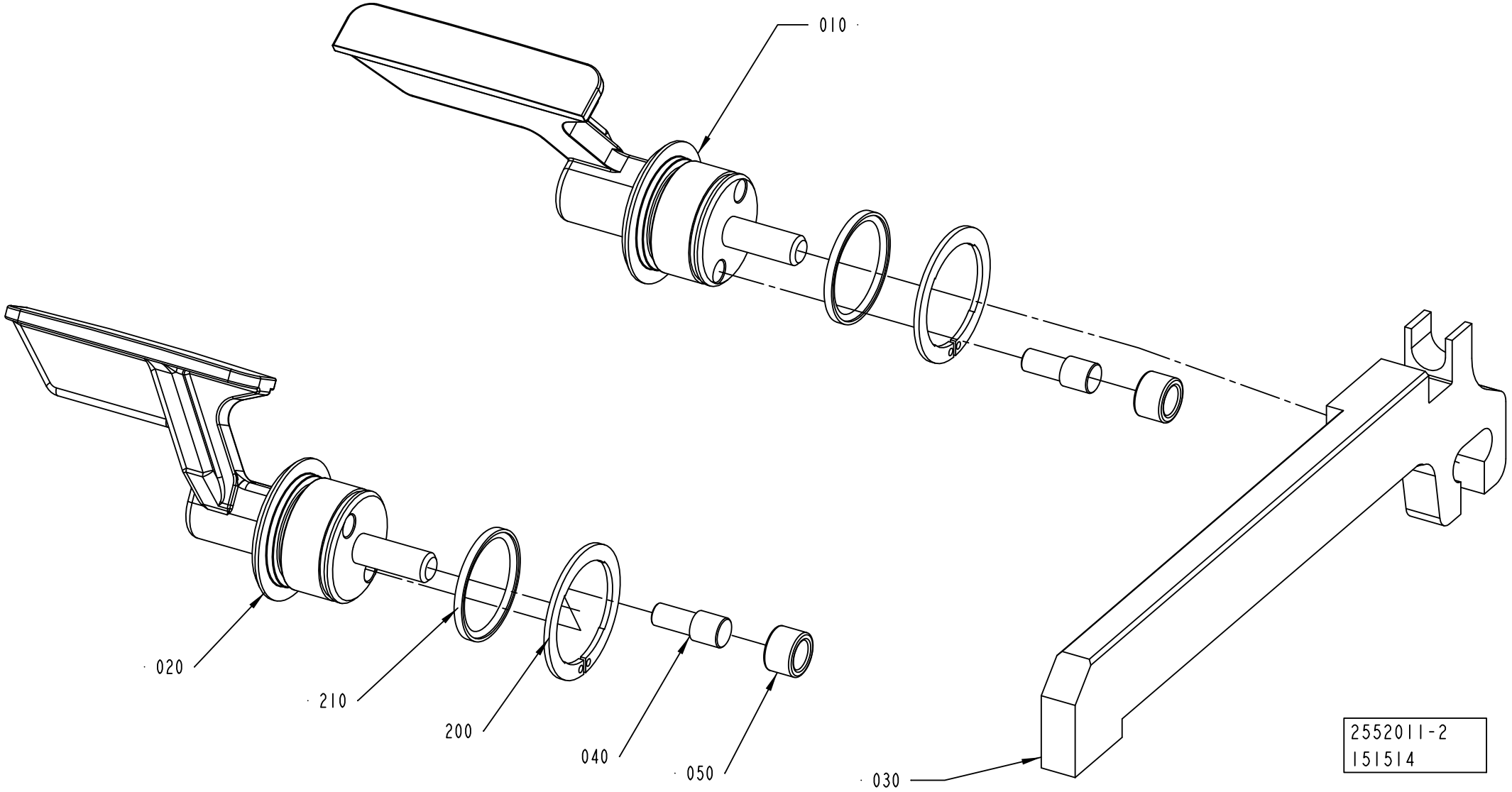

ECM: 261877 - 20060702
Group number: 2552011-0100
Assembly Drawing: 2552011-2_1_AA

This list covers pages from 4-158 to 4-161

Pos	Part No	UN	Qty	Description	Page No
TPA 0500SQ (See drawing on page: 4-158)					
010	1549822-0000		1	FOLDING FLAP	
020	1549823-0000		1	FOLDING FLAP	
030	1549825-0000		1	CARRIER RULER	
TPA 1000SQ NOQC, TPA 1000SQ QC, TPA 0750SQ QC (See drawing on page: 4-158)					
010	1523146-0000		1	FOLDING FLAP	
020	1523147-0000		1	FOLDING FLAP	
030	1523148-0000		1	CARRIER RULER	
TBA 0200B QC, TBA 0330S QC, TBA 0250B QC (See drawing on page: 4-158)					
010	2605875-0000		1	FOLDING FLAP	
020	2605876-0000		1	FOLDING FLAP	
030	1255463-0000		1	CARRIER RULER	
TBA 0200S (See drawing on page: 4-158)					
010	2624554-0000		1	FOLDING FLAP	
020	2624555-0000		1	FOLDING FLAP	
030	1255462-0000		1	CARRIER RULER	
TBA 0200SQ QC, TBA 0250SQ QC (See drawing on page: 4-158)					
010	2668313-0000		1	FOLDING FLAP	
020	2668314-0000		1	FOLDING FLAP	
030	2736139-0000		1	CARRIER RULER	
TBA 0250S QC, TBA 0200M QC					
010	2624554-0000		1	FOLDING FLAP	
020	2624555-0000		1	FOLDING FLAP	
030	2520471-0000		1	CARRIER RULER	
TBA 0500B NOQC, TBA 1000B NOQC NOMOLDEDCAP (See drawing on page: 4-158)					
010	1511697-0000		1	.FOLDING FLAP	
020	1511698-0000		1	FOLDING FLAP	
030	1255461-0000		1	CARRIER RULER	
TBA 0500B QC, TBA 1000B QC (See drawing on page: 4-158)					
010	1511352-0000		1	FOLDING FLAP	
020	1511351-0000		1	FOLDING FLAP	
030	1255461-0000		1	CARRIER RULER	
TBA 0500S (See drawing on page: 4-158)					
010	2507085-0000		1	FOLDING FLAP	
020	2507086-0000		1	FOLDING FLAP	
030	1511188-0000		1	CARRIER RULER	
TBA 1000B NOQC STDA7 (See drawing on page: 4-158)					
010	1511697-0000		1	.FOLDING FLAP	
020	1511698-0000		1	FOLDING FLAP	
030	1255461-0000		1	CARRIER RULER	
TBA 1000S NOMOLDEDCAP (See drawing on page: 4-158)					
010	1511699-0000		1	FOLDING FLAP	
020	1511700-0000		1	FOLDING FLAP	
030	1255464-0000		1	CARRIER RULER	
TBA 1000S STDA7, TBA 1000S LIGHTCAP (See drawing on page: 4-158)					
010	1511699-0000		1	FOLDING FLAP	
020	2546501-0000		1	FOLDING FLAP	
030	1255464-0000		1	CARRIER RULER	
TBA 1000SQ (See drawing on page: 4-158)					
010	2507076-0000		1	FOLDING FLAP	
020	2507077-0000		1	FOLDING FLAP	
030	1360319-0000		1	CARRIER RULER	
TBA 1500S (See drawing on page: 4-158)					
010	2507092-0000		1	FOLDING FLAP	
020	2507093-0000		1	FOLDING FLAP	
030	1255461-0000		1	CARRIER RULER	
TBA 1890S QC, TBA 2000S QC (See drawing on page: 4-160)					
010	2566319-0000		1	FOLDING FLAP	
020	2566320-0000		1	FOLDING FLAP	
030	2566317-0000		1	CARRIER RULER	
210	90459-2258		2	SEAL GLYDRING 25,1X30X2,2 MM	
TPA 0250SQ QC, TPA 0200SQ QC					
010	2728883-0000		1	FOLDING FLAP	
020	2728884-0000		1	FOLDING FLAP	
030	1255462-0000		1	CARRIER RULER	
TPA 0330SQ (See drawing on page: 4-158)					
010	2507096-0000		1	FOLDING FLAP	
020	2507097-0000		1	FOLDING FLAP	
030	1538769-0000		1	CARRIER RULER	
Common Parts					
040	22462-0000		2	SHAFT	
050	22463-0000		2	ROLL	
200	90141-0029		2	CIRCLIP	

Machine Type | Group Description | Used-In | Group Number | Page No

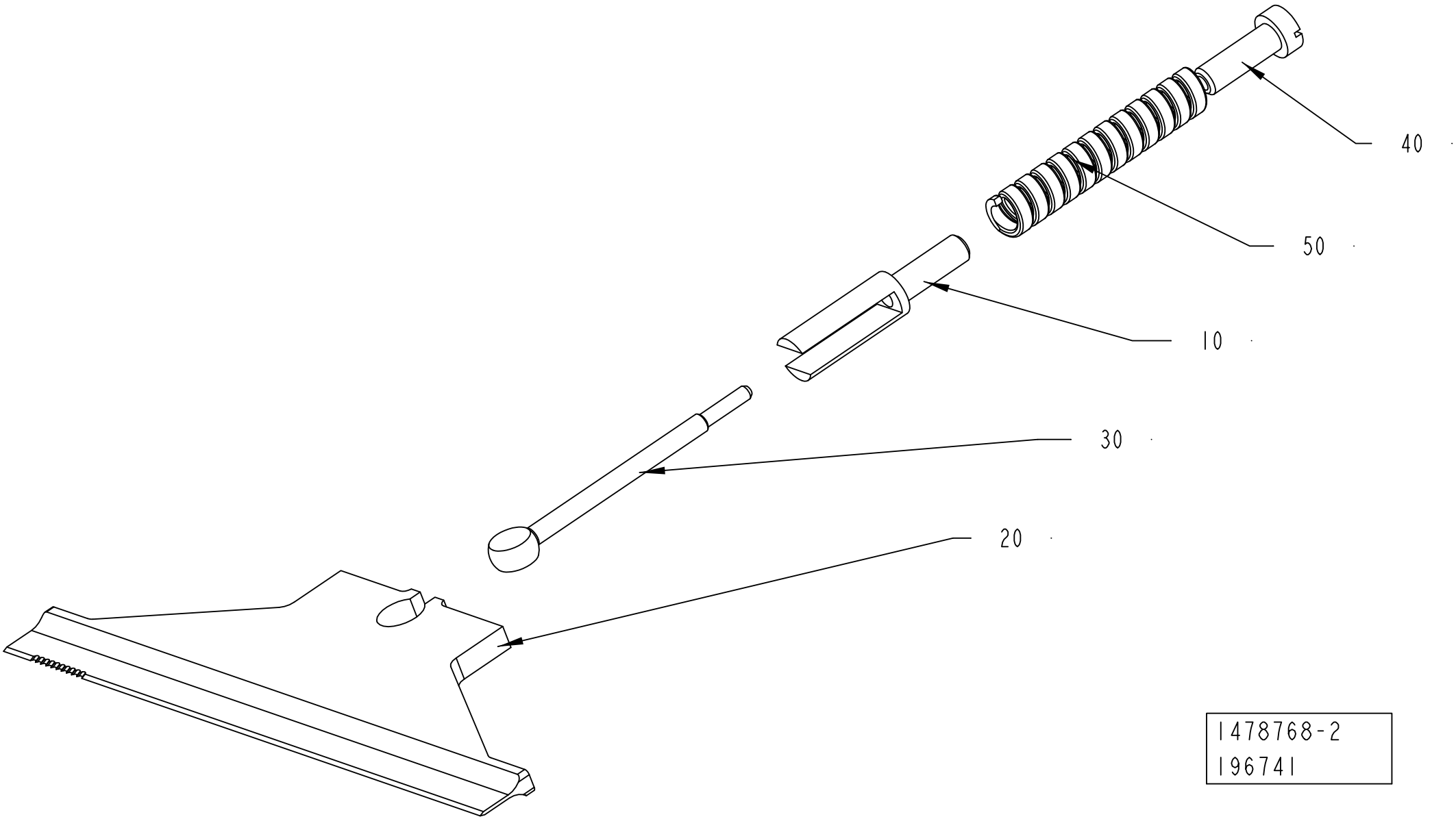
40
50
10
30
20
1478768-2
196741

ECM: 263259 - 20060702
Group number: 1478768-0200
Assembly Drawing: 1478768-2_1_AA

Pos	Part No	UN	Qty	Description	Page No
TBA 0330S, TBA 0200B, TBA 0250S, TBA 0200S, TBA 0200M, TBA 0250B, TBA 0200SQ, TPA 0250SQ, TPA 0330SQ, TPA 0200SQ, TBA 0250SQ					
020	1348966-0000		1	KNIFE	
050	2774493-0000		1	COMPRESSION SPRING	
TBA 0500B, TBA 1000S, TBA 1000SQ, TBA 1000B, TBA 1500S					
020	1348955-0000		1	KNIFE	
050	1538109-0000		1	COMPRESSION SPRING	
TBA 0500S, TPA 1000SQ, TPA 0750SQ					
020	1348956-0000		1	KNIFE	
050	1538109-0000		1	COMPRESSION SPRING	
TBA 1890S, TBA 2000S					
020	2664761-0000		1	KNIFE	
050	1538109-0000		1	COMPRESSION SPRING	
TPA 0500SQ					
020	1549828-0000		1	KNIFE	
050	1538109-0000		1	COMPRESSION SPRING	
Common Parts					
010	1285006-0000		1	SPACER	
030	1285003-0000		1	LINK	
040	1285005-0000		1	NUT	

Pos	Part No	UN	Qty	Description	Page No

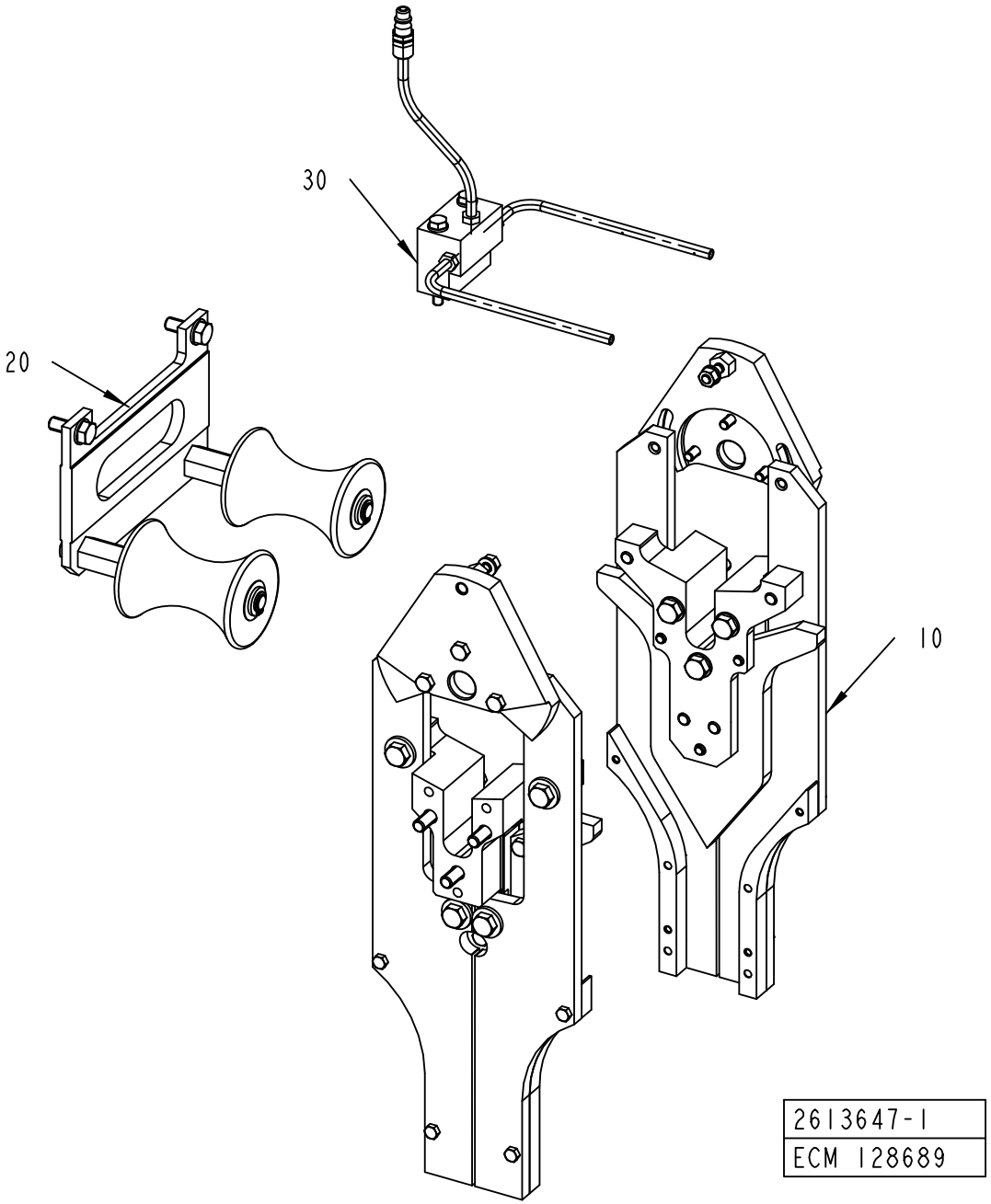
30
20
10
2613647-1
ECM 128689

ECM: 261878 - 20060702
Group number: 2613647-0100
Assembly Drawing: 2613647-1_1_AA

Pos	Part No	UN	Qty	Description	Page No
TBA 0330S, TBA 0200B, TBA 0250B, TBA 0500B QC, TBA 1000B QC, TBA 0250S QC, TBA 0200M QC, TPA 0250SQ QC, TPA 0200SQ QC, TBA 0200SQ QC, TBA 0250SQ QC					
010	2613645-0100		1	CURVE UNIT	**4-167, 4-169**
TBA 0500S, TBA 1000SQ, TBA 0200S, TBA 1500S, TPA 0330SQ, TPA 0500SQ, TBA 1000S STDA7, TBA 1000S NOMOLDEDCAP, TBA 1000B NOQC NOMOLDEDCAP, TBA 1000B NOQC STDA7, TBA 1890S QC, TBA 2000S QC, TPA 1000SQ NOQC, TPA 1000SQ QC, TPA 0750SQ QC, TBA 1000S LIGHTCAP					
010	2597329-0100		1	CURVE UNIT	**4-175, 4-177, 4-179**
Common Parts					
020	2613648-0100		1	SUPPORT ROLLER	**4-181, 4-183**
030	2556893-0100		1	TUBE FLUSHING	**4-185**

Pos	Part No	UN	Qty	Description	Page No

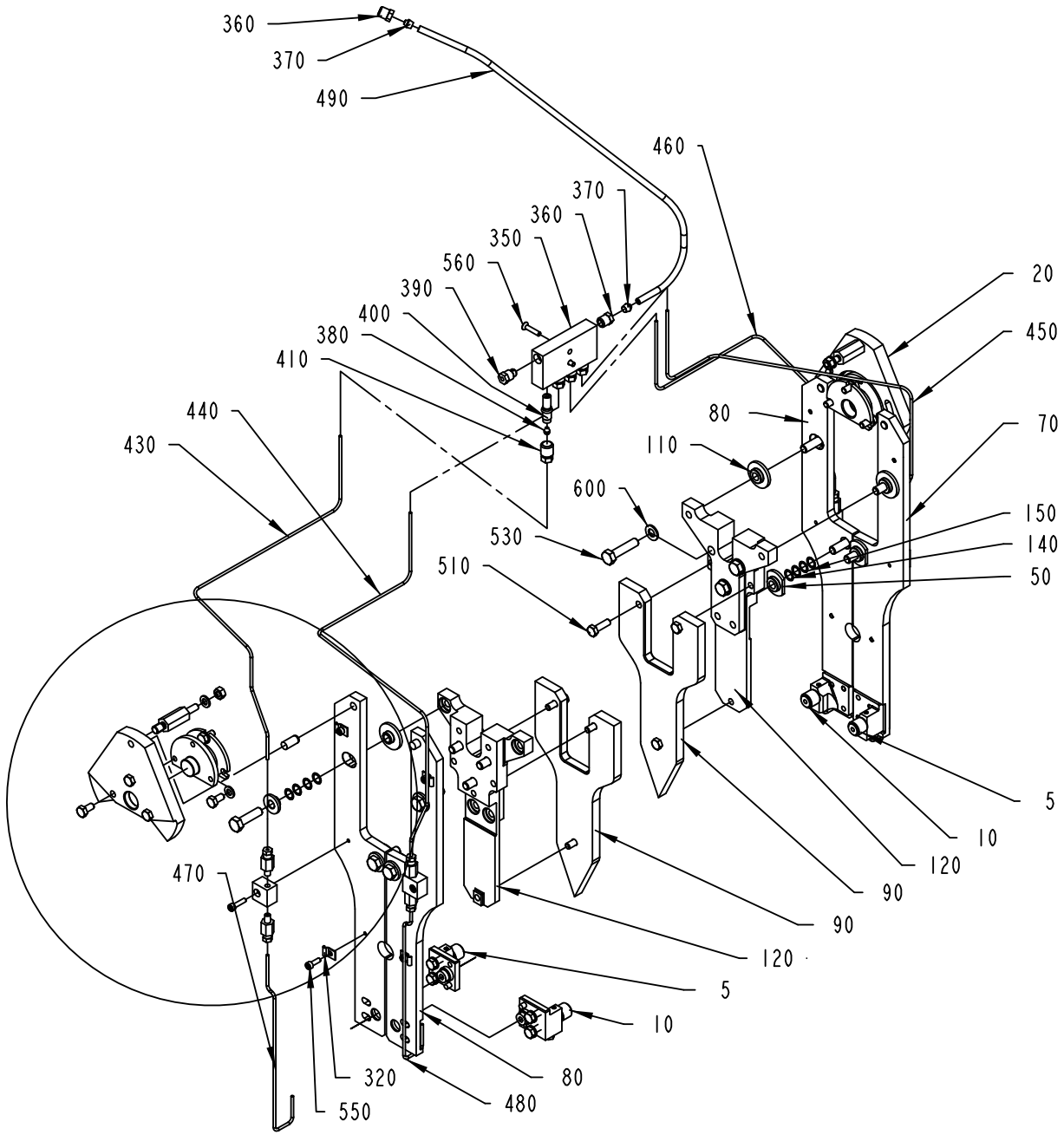

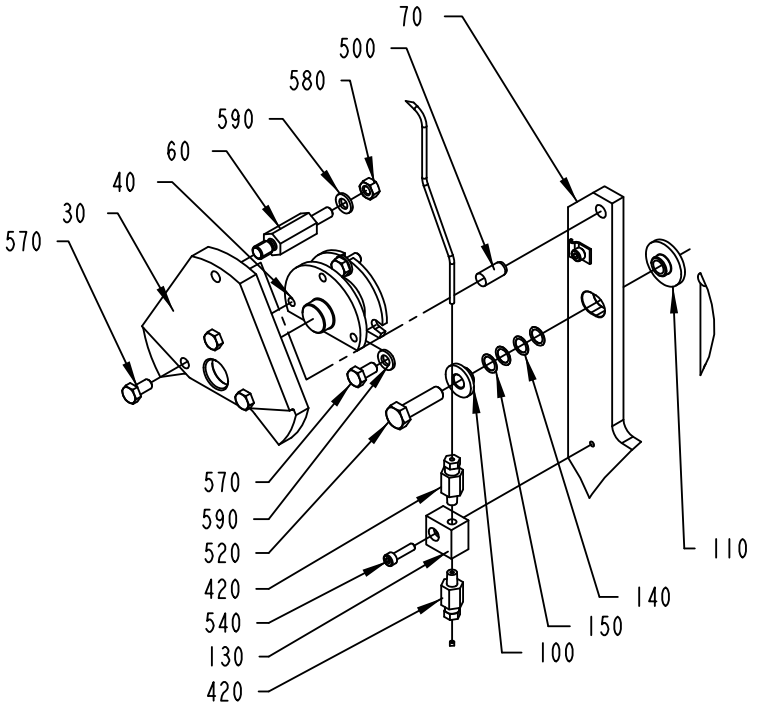

2613645-1
197791

ECM: 250874 - 20060303
Group number: 2613645-0100
Assembly Drawing: 2613645-1_1_AD

This list covers pages from 4-166 to 4-169

Pos	Part No	UN	Qty	Description	Page No
TBA 0200SQ, TBA 0250SQ (See drawing on pages: 4-166, 4-168)					
020	2618377-0000		1	ECCENTRIC	
030	2618378-0000		1	ECCENTRIC	
060	2618302-0000		2	PIVOT PIN	
090	2747139-0000		2	CAM	
360	90134-0038		1	BUSHING/NUT INLET/OUTLET 4 MM	
370	90028-0024		1	CONE TUBE 4 MM	
470	90266-0019	MM	290	PIPE	
480	90266-0019	MM	290	PIPE	
570	312105-0366		12	SCREW M6S ISO 4017 M6X12 A480	
590	315105-0153		8	WASHER BRB6,4X12RFR	
TBA 0250S, TBA 0200M (See drawing on pages: 4-166, 4-168)					
020	2618377-0000		1	ECCENTRIC	
030	2618378-0000		1	ECCENTRIC	
060	2618302-0000		2	PIVOT PIN	
090	2660222-0000		2	CAM	
360	90134-0055		2	BUSHING/NUT INLET/OUTLET 6 MM	
370	90028-0025		2	CONE TUBE 6 MM	
470	90266-0019	MM	260	PIPE	
480	90266-0019	MM	260	PIPE	
490	90166-0108	MM	500	TUBE 6 MM PA,TRANSP.	
570	312105-0366		12	SCREW M6S ISO 4017 M6X12 A480	
590	315105-0153		8	WASHER BRB6,4X12RFR	
TBA 0330S, TBA 0200B, TBA 0250B (See drawing on pages: 4-166, 4-168)					
020	2618377-0000		1	ECCENTRIC	
030	2618378-0000		1	ECCENTRIC	
060	2618302-0000		2	PIVOT PIN	
090	2664603-0000		2	CAM	
360	90134-0055		2	BUSHING/NUT INLET/OUTLET 6 MM	
370	90028-0025		2	CONE TUBE 6 MM	
470	90266-0019	MM	260	PIPE	
480	90266-0019	MM	260	PIPE	
490	90166-0108	MM	500	TUBE 6 MM PA,TRANSP.	
570	312105-0366		12	SCREW M6S ISO 4017 M6X12 A480	
590	315105-0153		8	WASHER BRB6,4X12RFR	
TBA 0500B, TBA 1000B (See drawing on pages: 4-166, 4-168)					
020	2618377-0000		1	ECCENTRIC	
030	2618378-0000		1	ECCENTRIC	
060	2618302-0000		2	PIVOT PIN	
090	2605066-0000		2	CURVE	
360	90134-0055		2	BUSHING/NUT INLET/OUTLET 6 MM	
370	90028-0025		2	CONE TUBE 6 MM	
470	90266-0019	MM	260	PIPE	
480	90266-0019	MM	260	PIPE	
490	90166-0108	MM	500	TUBE 6 MM PA,TRANSP.	
570	312105-0366		12	SCREW M6S ISO 4017 M6X12 A480	
590	315105-0153		8	WASHER BRB6,4X12RFR	
TPA 0250SQ, TPA 0200SQ (See drawing on pages: 4-166, 4-168)					
020	2618377-0000		1	ECCENTRIC	
030	2618378-0000		1	ECCENTRIC	
060	2618302-0000		2	PIVOT PIN	
090	2674324-0000		2	CAM	
360	90134-0055		2	BUSHING/NUT INLET/OUTLET 6 MM	
370	90028-0025		2	CONE TUBE 6 MM	
470	90266-0019	MM	260	PIPE	
480	90266-0019	MM	260	PIPE	
490	90166-0108	MM	500	TUBE 6 MM PA,TRANSP.	
570	312105-0366		12	SCREW M6S ISO 4017 M6X12 A480	
590	315105-0153		8	WASHER BRB6,4X12RFR	
Common Parts					
005	2605226-0200		2	ROLLER UNIT	**4-171**
010	1499351-0200		2	ROLLER UNIT	**4-173**
040	2618259-0000		2	SPACER	
050	2613763-0000		4	SLEEVE	
070	2614371-0000		2	ROLLER BRACKET	
080	2614373-0000		2	ROLLER BRACKET	
100	2614372-0000		8	SLEEVE	
110	2613764-0000		4	SLEEVE	
120	2613809-0000		2	SPACER	
130	2610793-0000		4	BLOCK	
140	2614376-0001		16	WASHER	
150	2614376-0002		16	WASHER	
320	90165-0058		8	PIPE CLIP FOR TUBE D=2,5 MM	
350	90032-0039		1	BLOCK 4 WAYS	
380	90028-0020		4	CONE TUBE 2,5MM	
390	90087-0019		1	PLUG M10X1 STAINLESS	
400	90092-0052		4	METERING VALVE 10 MM3	
410	90134-0039		4	BUSHING VALVE CONNECTION 2,5 MM	
420	90134-0065		8	CONNECTION M6 TUBE 2,5 MM	
430	90166-0143	MM	550	TUBE 2,5 MM PA,TRANSP.	
440	90166-0143	MM	650	TUBE 2,5 MM PA,TRANSP.	
450	90166-0143	MM	600	TUBE 2,5 MM PA,TRANSP.	
460	90166-0143	MM	500	TUBE 2,5 MM PA,TRANSP.	
500	311103-0400		4	PARALLEL PIN ISO 2338 8M6X18 A	

Machine Type | Group Description | Used-In | Group Number | Page No

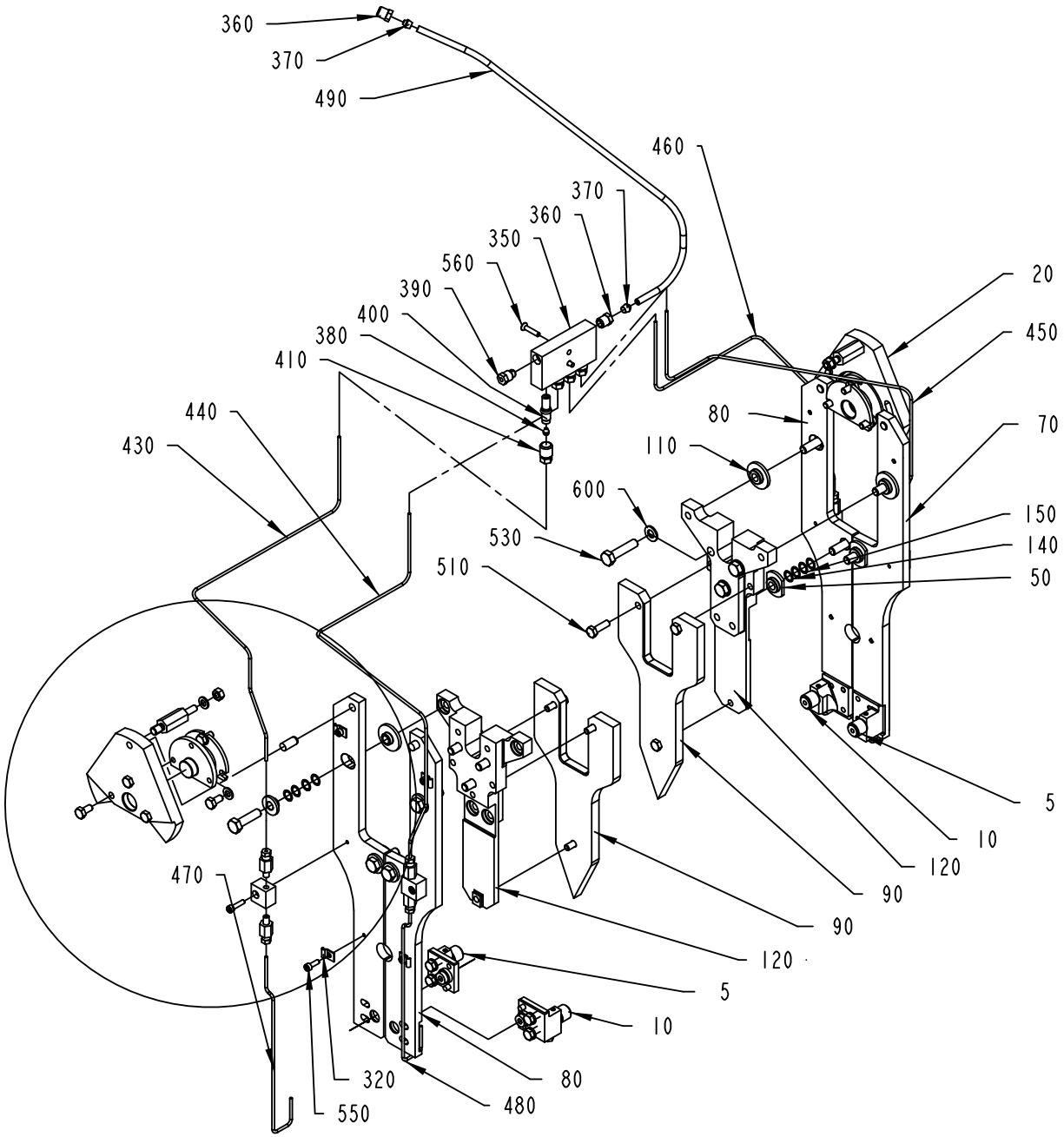

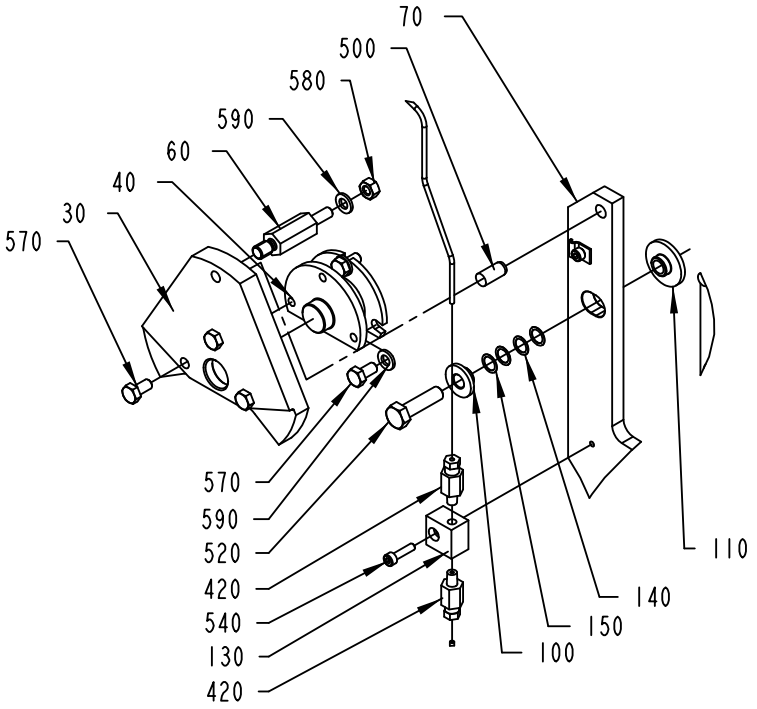

2613645-1
197791

Pos	Part No	UN	Qty	Description	Page No
Common Parts (Cont'd)					
510	312105-0370		6	SCREW M6S ISO 4017 M6X20 A480	
520	312105-0455		8	SCREW M6S ISO 4017 M8X30 A480	
530	312105-0457		6	SCREW M6S ISO 4014 M8X35 A480	
540	312115-0293		4	SCREW ISO4762 M4X16 A4 80	
550	312115-0291		8	SCREW ISO4762 M4X12 A4 80	
560	312155-0295		2	SCREW DIN 7991 MF6S M4X20 A4 70	
580	312605-0316		2	HEXAGON NUT, M6M M6 A280	
600	315105-0165		6	WASHER BRB8,4X16RFR	

Pos	Part No	UN	Qty	Description	Page No

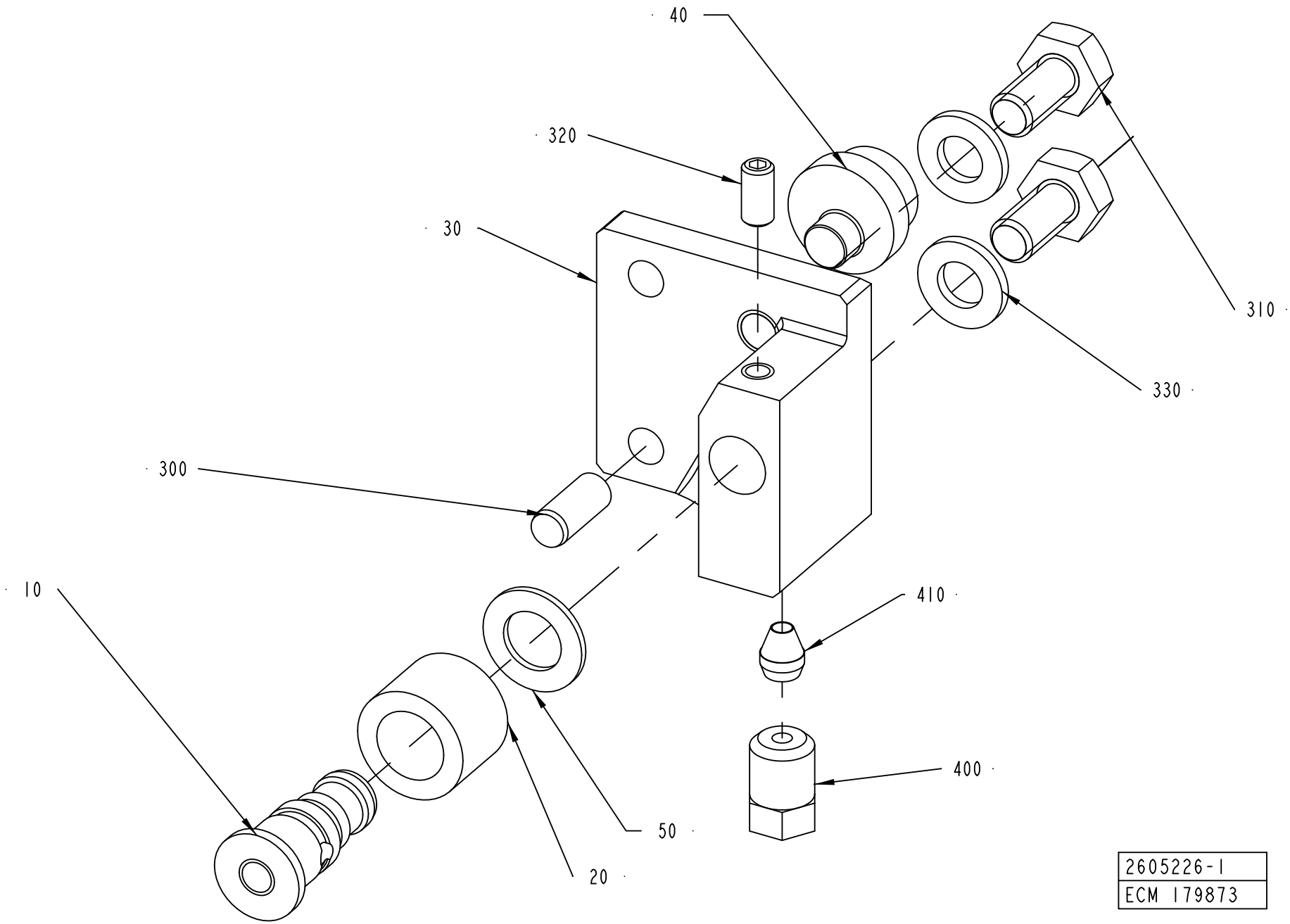
40
320
30
310
330
300
10
410
400
50
20
2605226-1
ECM 179873

ECM: 257618 - 20060303
Group number: 2605226-0200
Assembly Drawing: 2605226-1_1_AB

Pos	Part No	UN	Qty	Description	Page No
TBA 0500B, TBA 0330S, TBA 1000B, TBA 0200B, TBA 0250S, TBA 0200M, TBA 0250B, TBA 0200SQ, TPA 0250SQ, TPA 0200SQ, TBA 0250SQ					
030	2695409-0000		1	HOLDER	
Common Parts					
010	2603376-0000		1	AXLE PIN	
020	2603378-0000		1	ROLLER	
040	2603374-0000		1	ECCENTRIC	
050	2609923-0000		1	WASHER	
300	311103-0306		1	PARALLEL PIN ISO 2338 5M6X12 A1	
310	312105-0366		2	SCREW M6S ISO 4017 M6X12 A480	
320	312318-0287		1	SCREW ISO4029 M4X8 A4	
330	315105-0153		2	WASHER BRB6,4X12RFR	
400	90134-0063		1	BUSHING/NUT M8X1, D=2,5 MM	
410	90028-0020		1	CONE TUBE 2,5MM	

Pos	Part No	UN	Qty	Description	Page No

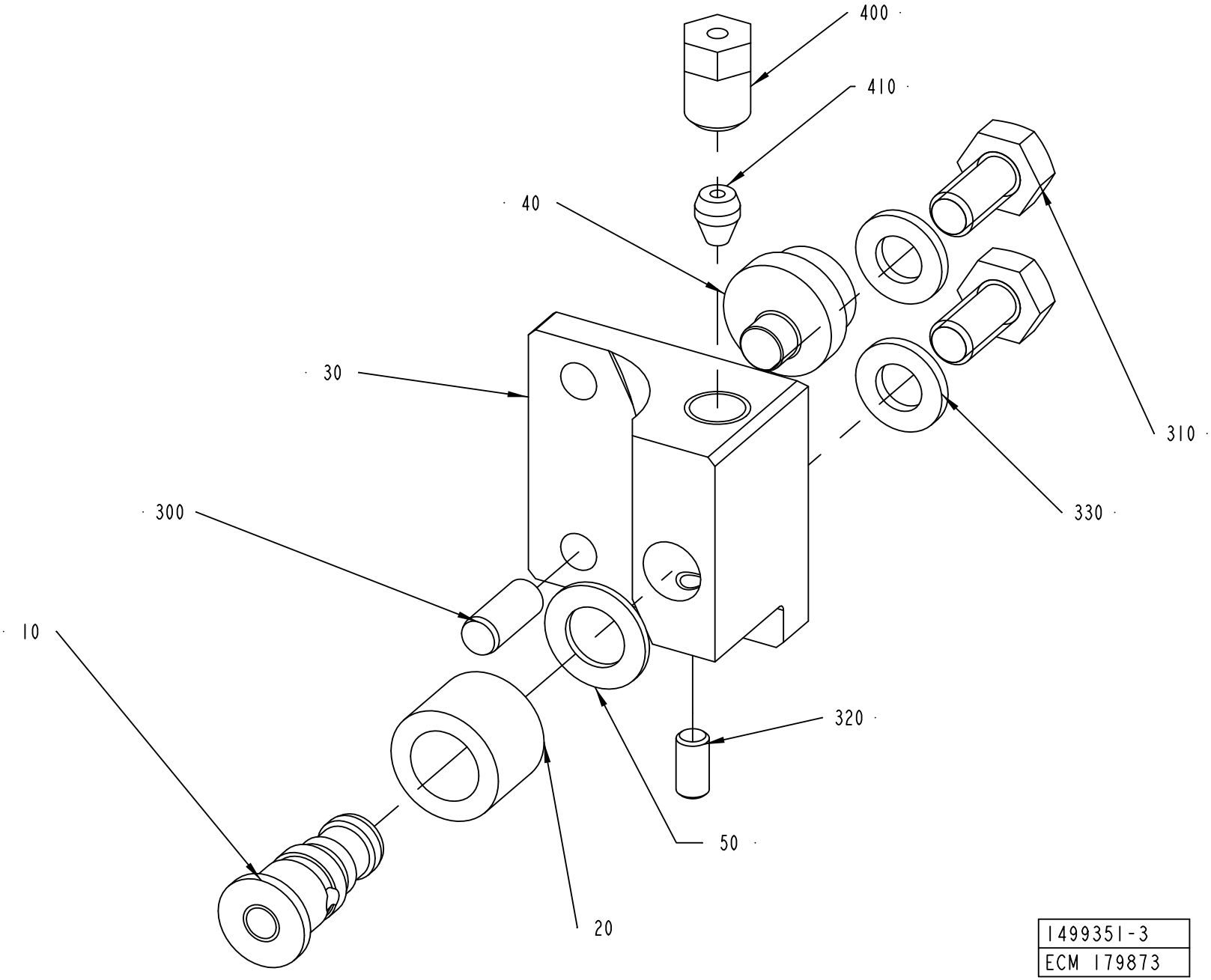

1499351-3
ECM 179873

ECM: 257619 - 20060303
Group number: 1499351-0200
Assembly Drawing: 1499351-3_1_AB

Pos	Part No	UN	Qty	Description	Page No
TBA 0500B, TBA 0330S, TBA 1000B, TBA 0200B, TBA 0250S, TBA 0200M, TBA 0250B, TBA 0200SQ, TPA 0250SQ, TPA 0200SQ, TBA 0250SQ					
030	2695408-0000		1	HOLDER	
Common Parts					
010	2603376-0000		1	AXLE PIN	
020	2603378-0000		1	ROLLER	
040	2603374-0000		1	ECCENTRIC	
050	2609923-0000		1	WASHER	
300	311103-0306		1	PARALLEL PIN ISO 2338 5M6X12 A1	
310	312105-0366		2	SCREW M6S ISO 4017 M6X12 A480	
320	312318-0287		1	SCREW ISO4029 M4X8 A4	
330	315105-0153		2	WASHER BRB6,4X12RFR	
400	90134-0063		1	BUSHING/NUT M8X1, D=2,5 MM	
410	90028-0020		1	CONE TUBE 2,5MM	

Pos	Part No	UN	Qty	Description	Page No

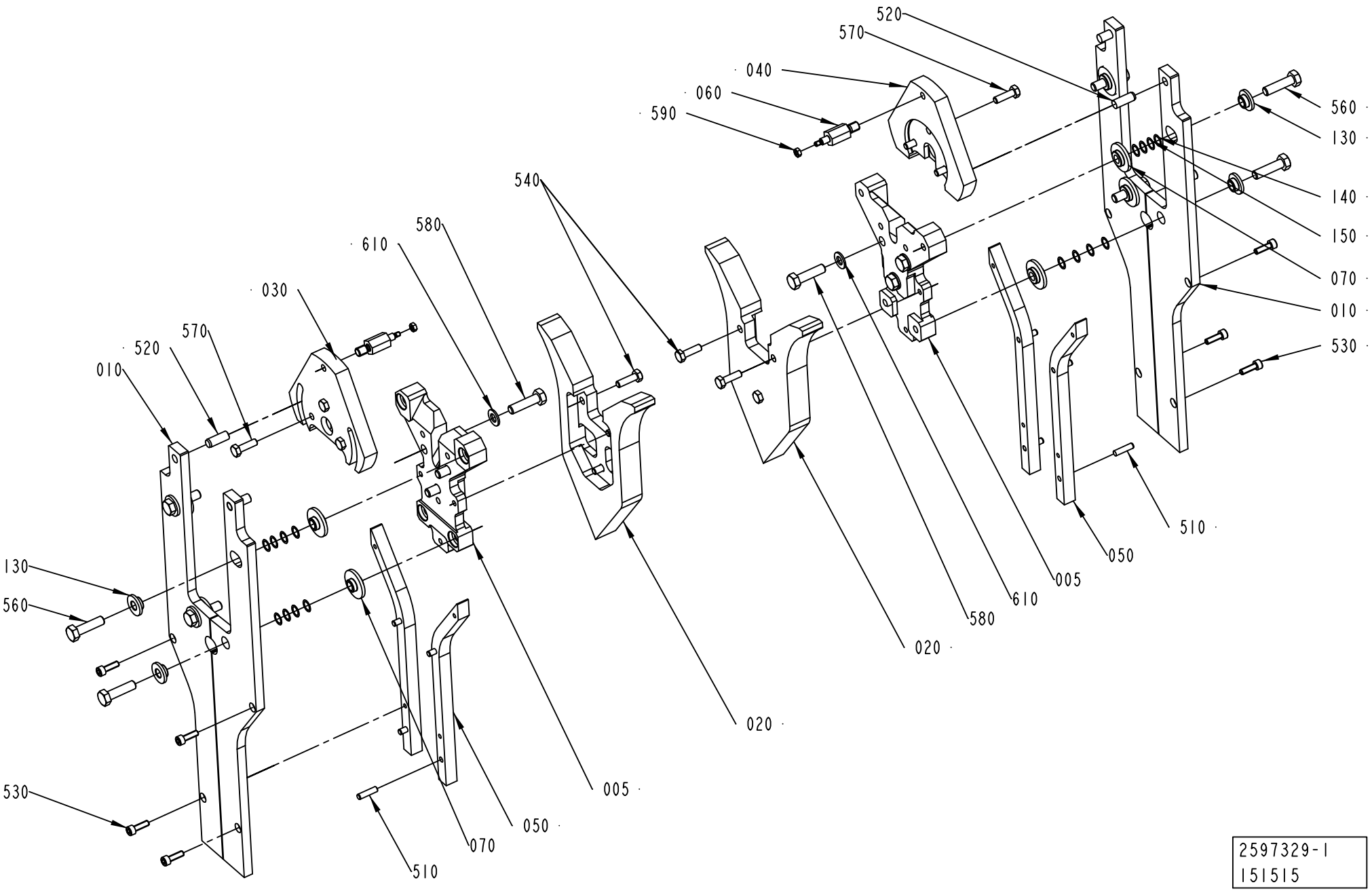

2597329-1
151515

ECM: 210184 - 20060509
Group number: 2597329-0100
Assembly Drawing: 2597329-1_1_AA

This list covers pages from 4-174 to 4-179

Pos	Part No	UN	Qty	Description	Page No
TBA 0200S (See drawing on page: 4-176)					
005	2628598-0000		2	SPACER	
010	2533740-0000		4	RAIL BRACKET	
020	1334081-0000		2	CURVE	
030	2606891-0000		1	ECCENTRIC	
040	2606892-0000		1	ECCENTRIC	
050	1478497-0000		4	VOLUME CAM	
060	2624544-0000		2	PIVOT PIN	
070	2533736-0000		8	SLEEVE	
120	321120-0108		4	BEARING BUSH W/O FLANGE, 12X14X8 MM	
130	1487504-0000		8	WASHER	
140	1487505-0001		16	WASHER	
150	1487505-0002		16	WASHER	
520	311103-0399		4	PARALLEL PIN ISO 2338 8M6X16 A1	
530	312105-0331		8	SCREW M6S ISO 4017 M5X20 A480	
560	312105-0457		8	SCREW M6S ISO 4014 M8X35 A480	
570	312105-0368		6	SCREW M6S ISO 4017 M6X16 A480	
580	312105-0464		6	SCREW M6S ISO 4014 M8X65 A480	
590	312605-0316		2	HEXAGON NUT, M6M M6 A280	
600	315105-0153		2	WASHER BRB6,4X12RFR	
TBA 0500S (See drawing on page: 4-176)					
005	2624543-0000		2	SPACER	
010	2533745-0000		4	RAIL BRACKET	
020	1512324-0000		2	CURVE	
030	2618378-0000		1	ECCENTRIC	
040	2618377-0000		1	ECCENTRIC	
050	1512325-0000		4	VOLUME CAM	
060	2624544-0000		2	PIVOT PIN	
070	2533736-0000		8	SLEEVE	
120	321120-0108		4	BEARING BUSH W/O FLANGE, 12X14X8 MM	
130	1487504-0000		8	WASHER	
140	1487505-0001		16	WASHER	
150	1487505-0002		16	WASHER	
520	311103-0399		4	PARALLEL PIN ISO 2338 8M6X16 A1	
530	312105-0331		8	SCREW M6S ISO 4017 M5X20 A480	
560	312105-0457		8	SCREW M6S ISO 4014 M8X35 A480	
570	312105-0368		6	SCREW M6S ISO 4017 M6X16 A480	
580	312105-0464		6	SCREW M6S ISO 4014 M8X65 A480	
590	312605-0316		2	HEXAGON NUT, M6M M6 A280	
600	315105-0153		2	WASHER BRB6,4X12RFR	
TBA 1000B (See drawing on page: 4-176)					
005	2624543-0000		2	SPACER	
010	2533741-0000		4	RAIL BRACKET	
020	1348808-0000		2	CURVE	
030	2618378-0000		1	ECCENTRIC	
040	2618377-0000		1	ECCENTRIC	
050	1484250-0000		4	VOLUME CAM	
060	2624544-0000		2	PIVOT PIN	
070	2533736-0000		8	SLEEVE	
120	321120-0108		4	BEARING BUSH W/O FLANGE, 12X14X8 MM	
130	1487504-0000		8	WASHER	
140	1487505-0001		16	WASHER	
150	1487505-0002		16	WASHER	
520	311103-0399		4	PARALLEL PIN ISO 2338 8M6X16 A1	
530	312105-0331		8	SCREW M6S ISO 4017 M5X20 A480	
560	312105-0457		8	SCREW M6S ISO 4014 M8X35 A480	
570	312105-0368		6	SCREW M6S ISO 4017 M6X16 A480	
580	312105-0464		6	SCREW M6S ISO 4014 M8X65 A480	
590	312605-0316		2	HEXAGON NUT, M6M M6 A280	
600	315105-0153		2	WASHER BRB6,4X12RFR	
TBA 1000S (See drawing on page: 4-176)					
005	2624543-0000		2	SPACER	
010	2533742-0000		4	RAIL BRACKET	
020	1348809-0000		2	CURVE	
030	2618378-0000		1	ECCENTRIC	
040	2618377-0000		1	ECCENTRIC	
050	1484251-0000		4	VOLUME CAM	
060	2624544-0000		2	PIVOT PIN	
070	2533736-0000		8	SLEEVE	
120	321120-0108		4	BEARING BUSH W/O FLANGE, 12X14X8 MM	
130	1487504-0000		8	WASHER	
140	1487505-0001		16	WASHER	
150	1487505-0002		16	WASHER	
520	311103-0399		4	PARALLEL PIN ISO 2338 8M6X16 A1	
530	312105-0331		8	SCREW M6S ISO 4017 M5X20 A480	
560	312105-0457		8	SCREW M6S ISO 4014 M8X35 A480	
570	312105-0368		6	SCREW M6S ISO 4017 M6X16 A480	
580	312105-0464		6	SCREW M6S ISO 4014 M8X65 A480	
590	312605-0316		2	HEXAGON NUT, M6M M6 A280	
600	315105-0153		2	WASHER BRB6,4X12RFR	
TBA 1000SQ (See drawing on page: 4-176)					
005	2624543-0000		2	SPACER	
010	2533744-0000		4	RAIL BRACKET	
020	2501851-0000		2	CURVE	

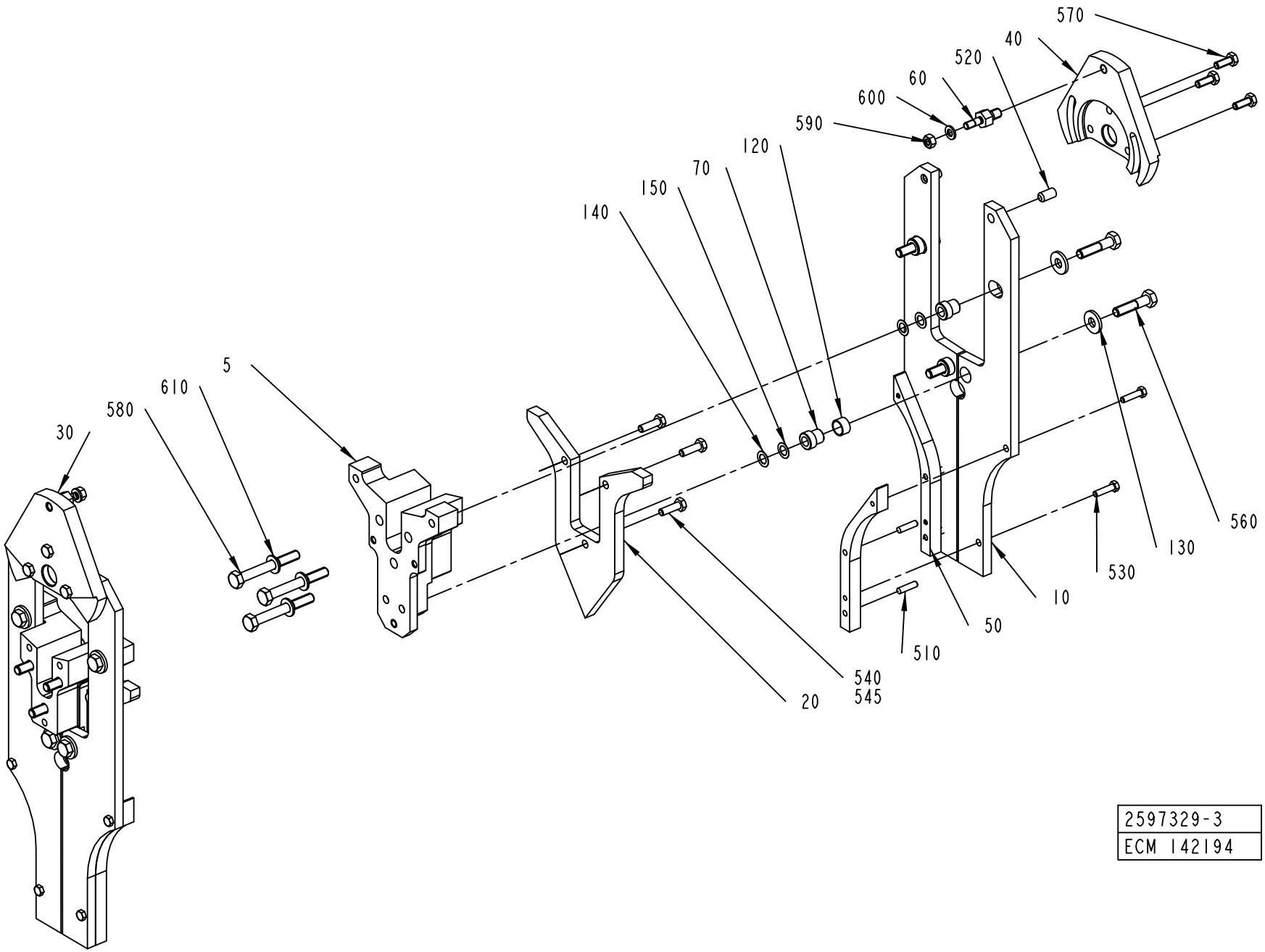

2597329-3
ECM 142194

Pos	Part No	UN	Qty	Description	Page No
TBA 1000SQ (Cont'd) (See drawing on page: 4-176)					
030	2618378-0000		1	ECCENTRIC	
040	2618377-0000		1	ECCENTRIC	
050	1499594-0000		4	VOLUME CAM	
060	2624544-0000		2	PIVOT PIN	
070	2533736-0000		8	SLEEVE	
120	321120-0108		4	BEARING BUSH W/O FLANGE, 12X14X8 MM	
130	1487504-0000		8	WASHER	
140	1487505-0001		16	WASHER	
150	1487505-0002		16	WASHER	
520	311103-0399		4	PARALLEL PIN ISO 2338 8M6X16 A1	
530	312105-0331		8	SCREW M6S ISO 4017 M5X20 A480	
560	312105-0457		8	SCREW M6S ISO 4014 M8X35 A480	
570	312105-0368		6	SCREW M6S ISO 4017 M6X16 A480	
580	312105-0464		6	SCREW M6S ISO 4014 M8X65 A480	
590	312605-0316		2	HEXAGON NUT, M6M M6 A280	
600	315105-0153		2	WASHER BRB6,4X12RFR	
TBA 1500S (See drawing on page: 4-176)					
005	2633438-0000		2	SPACER	
010	2533737-0000		4	RAIL BRACKET	
020	1349741-0000		2	CURVE	
030	2618378-0000		1	ECCENTRIC	
040	2618377-0000		1	ECCENTRIC	
050	1349744-0000		4	VOLUME CAM	
060	2624544-0000		2	PIVOT PIN	
070	2533736-0000		8	SLEEVE	
120	321120-0108		4	BEARING BUSH W/O FLANGE, 12X14X8 MM	
130	1487504-0000		8	WASHER	
140	1487505-0001		16	WASHER	
150	1487505-0002		16	WASHER	
520	311103-0399		4	PARALLEL PIN ISO 2338 8M6X16 A1	
530	312105-0331		8	SCREW M6S ISO 4017 M5X20 A480	
560	312105-0457		8	SCREW M6S ISO 4014 M8X35 A480	
570	312105-0368		6	SCREW M6S ISO 4017 M6X16 A480	
580	312105-0464		6	SCREW M6S ISO 4014 M8X65 A480	
590	312605-0316		2	HEXAGON NUT, M6M M6 A280	
600	315105-0153		2	WASHER BRB6,4X12RFR	
TBA 1890S QC, TBA 2000S QC (See drawing on page: 4-174)					
005	2594887-0000		2	SPACER	
010	2588300-0000		4	RAIL BRACKET	
020	2588301-0000		2	CURVE	
030	2599739-0000		1	ECCENTRIC	
040	2599738-0000		1	ECCENTRIC	
050	2588302-0000		4	VOLUME CAM	
060	2535443-0000		2	PIVOT PIN	
070	2613764-0000		8	SLEEVE	
130	2614372-0000		8	SLEEVE	
140	2614376-0001		32	WASHER	
150	2614376-0002		32	WASHER	
520	311103-0402		4	PARALLEL PIN ISO 2338 8M6X22 A1	
530	312105-0329		8	SCREW M6S ISO 4017 M5X16 A480	
545	90157-0021		1	LOCKING FLUID LOCTITE 270	
560	312105-0455		8	SCREW M6S ISO 4017 M8X30 A480	
570	312105-0370		6	SCREW M6S ISO 4017 M6X20 A480	
580	312105-0455		6	SCREW M6S ISO 4017 M8X30 A480	
590	312605-0312		2	HEXAGON NUT, M6M M4 A280	
TPA 0330SQ (See drawing on page: 4-176)					
005	2628598-0000		2	SPACER	
010	2533747-0000		4	RAIL BRACKET	
020	1538264-0000		2	CURVE	
030	2606891-0000		1	ECCENTRIC	
040	2606892-0000		1	ECCENTRIC	
050	1538265-0000		4	VOLUME CAM	
060	2624544-0000		2	PIVOT PIN	
070	2533736-0000		8	SLEEVE	
120	321120-0108		4	BEARING BUSH W/O FLANGE, 12X14X8 MM	
130	1487504-0000		8	WASHER	
140	1487505-0001		16	WASHER	
150	1487505-0002		16	WASHER	
520	311103-0399		4	PARALLEL PIN ISO 2338 8M6X16 A1	
530	312105-0331		8	SCREW M6S ISO 4017 M5X20 A480	
560	312105-0457		8	SCREW M6S ISO 4014 M8X35 A480	
570	312105-0368		6	SCREW M6S ISO 4017 M6X16 A480	
580	312105-0464		6	SCREW M6S ISO 4014 M8X65 A480	
590	312605-0316		2	HEXAGON NUT, M6M M6 A280	
600	315105-0153		2	WASHER BRB6,4X12RFR	
TPA 0500SQ (See drawing on page: 4-176)					
005	2624543-0000		2	SPACER	
010	2582020-0000		4	RAIL BRACKET	
020	2697307-0000		2	CURVE	
030	2618378-0000		1	ECCENTRIC	
040	2618377-0000		1	ECCENTRIC	
050	1549843-0000		4	VOLUME CAM	
060	2624544-0000		2	PIVOT PIN	

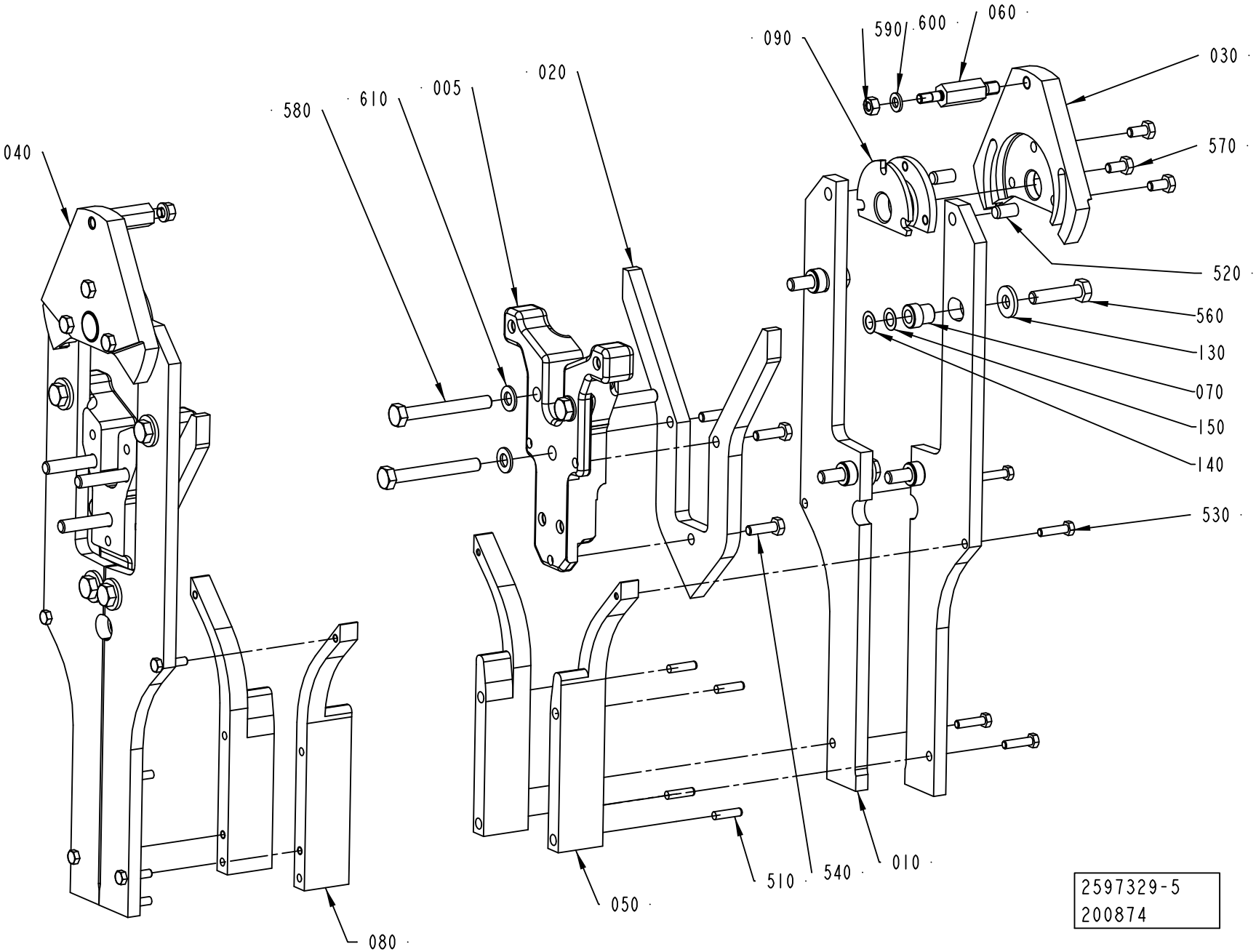
040
580
610
005
020
090
590
600
060
030
570
520
560
130
070
150
140
530
080
050
510
540
010
2597329-5
200874

Pos	Part No	UN	Qty	Description	Page No
TPA 0500SQ (Cont'd) (See drawing on page: 4-176)					
070	2533736-0000		8	SLEEVE	
120	321120-0108		4	BEARING BUSH W/O FLANGE, 12X14X8 MM	
130	1487504-0000		8	WASHER	
140	1487505-0001		16	WASHER	
150	1487505-0002		16	WASHER	
520	311103-0399		4	PARALLEL PIN ISO 2338 8M6X16 A1	
530	312105-0331		8	SCREW M6S ISO 4017 M5X20 A480	
560	312105-0457		8	SCREW M6S ISO 4014 M8X35 A480	
570	312105-0368		6	SCREW M6S ISO 4017 M6X16 A480	
580	312105-0464		6	SCREW M6S ISO 4014 M8X65 A480	
590	312605-0316		2	HEXAGON NUT, M6M M6 A280	
600	315105-0153		2	WASHER BRB6,4X12RFR	
TPA 1000SQ NOQC (See drawing on page: 4-176)					
005	2633438-0000		2	SPACER	
010	2575631-0000		4	RAIL BRACKET	
020	2564683-0000		2	CURVE	
030	2618378-0000		1	ECCENTRIC	
040	2618377-0000		1	ECCENTRIC	
050	1523490-0000		4	VOLUME BULGE	
060	2624544-0000		2	PIVOT PIN	
070	2533736-0000		8	SLEEVE	
120	321120-0108		4	BEARING BUSH W/O FLANGE, 12X14X8 MM	
130	1487504-0000		8	WASHER	
140	1487505-0001		16	WASHER	
150	1487505-0002		16	WASHER	
520	311103-0399		4	PARALLEL PIN ISO 2338 8M6X16 A1	
530	312105-0331		8	SCREW M6S ISO 4017 M5X20 A480	
560	312105-0457		8	SCREW M6S ISO 4014 M8X35 A480	
570	312105-0368		6	SCREW M6S ISO 4017 M6X16 A480	
580	312105-0464		6	SCREW M6S ISO 4014 M8X65 A480	
590	312605-0316		2	HEXAGON NUT, M6M M6 A280	
600	315105-0153		2	WASHER BRB6,4X12RFR	
TPA 1000SQ QC, TPA 0750SQ QC (See drawing on page: 4-178)					
005	2658251-0000		2	SPACER	
010	2658252-0000		4	RAIL BRACKET	
020	2658253-0000		2	CURVE	
030	2606891-0000		1	ECCENTRIC	
040	2606892-0000		1	ECCENTRIC	
050	2662640-0000		2	VOLUME CAM	
060	2618302-0000		2	PIVOT PIN	
070	2533736-0000		8	SLEEVE	
080	2662641-0000		2	VOLUME CAM	
090	2618259-0000		2	SPACER	
120	321120-0108		4	BEARING BUSH W/O FLANGE, 12X14X8 MM	
130	1487504-0000		8	WASHER	
140	1487505-0001		16	WASHER	
150	1487505-0002		16	WASHER	
520	311103-0399		4	PARALLEL PIN ISO 2338 8M6X16 A1	
530	312105-0331		8	SCREW M6S ISO 4017 M5X20 A480	
560	312105-0457		8	SCREW M6S ISO 4014 M8X35 A480	
570	312105-0366		6	SCREW M6S ISO 4017 M6X12 A480	
580	312105-0464		6	SCREW M6S ISO 4014 M8X65 A480	
590	312605-0316		2	HEXAGON NUT, M6M M6 A280	
600	315105-0153		2	WASHER BRB6,4X12RFR	
Common Parts					
510	311103-0310		8	PARALLEL PIN ISO 2338 5M6X20 A1	
540	312105-0370		6	SCREW M6S ISO 4017 M6X20 A480	
610	315105-0165		6	WASHER BRB8,4X16RFR	

SUPPORT ROLLER

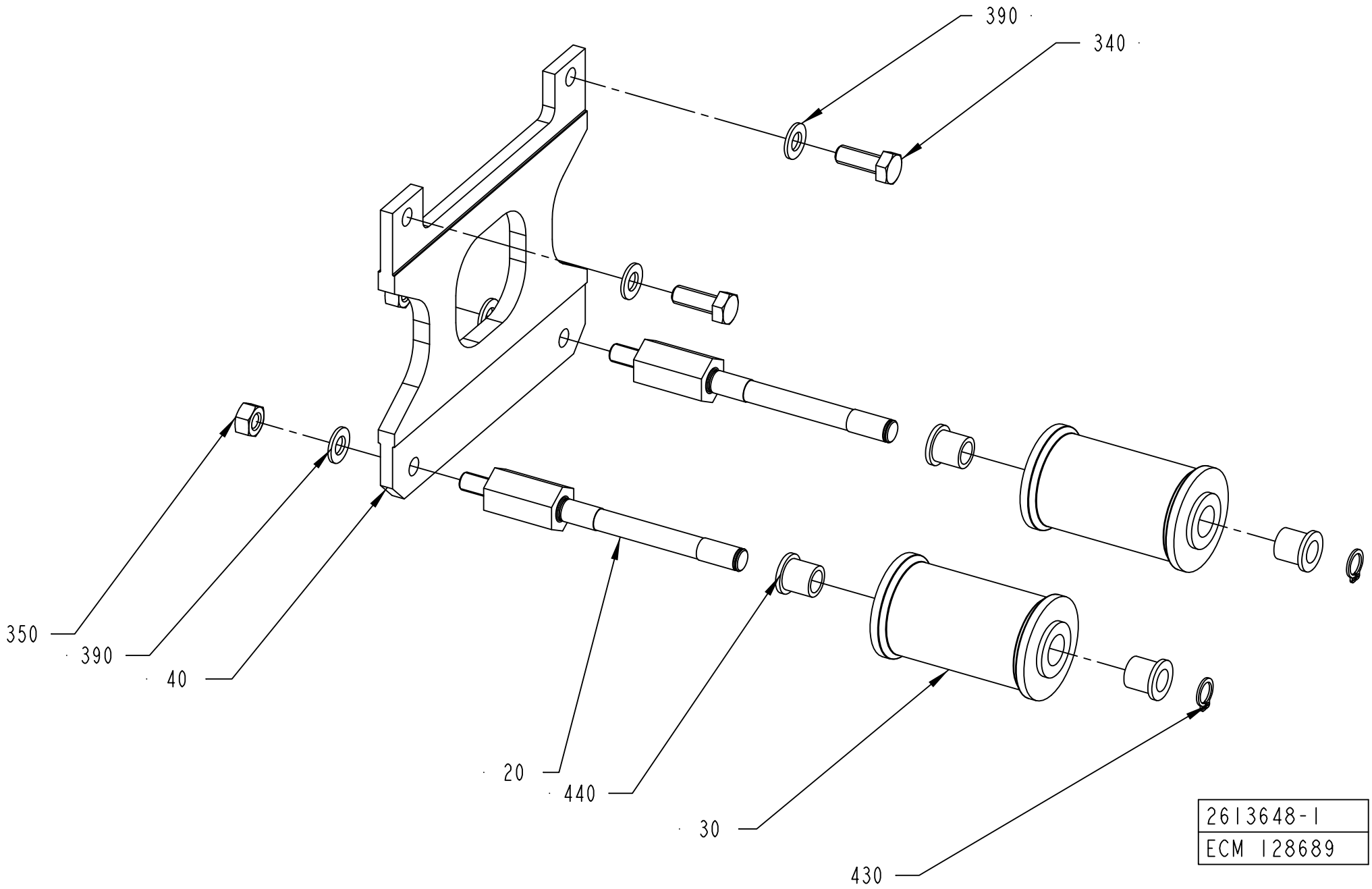

ECM: 261879 - 20060702
Group number: 2613648-0100
Assembly Drawing: 2613648-1_1_AA

This list covers pages from 4-180 to 4-183

Pos	Part No	UN	Qty	Description	Page No
TBA 1500S (See drawing on page: 4-180)					
020	2648846-0000		2	SHAFT	
030	560122-0000		2	SUPPORT ROLLER	
040	2648847-0000		1	PLATE	
390	315105-0165		2	WASHER BRB8,4X16RFR	
430	90141-0016		2	RETAINING RING FOR SHAFT DIN 471 10 A2	
440	90240-0180		4	FLANGE BUSHING 10X14X15MM	
TBA 1890S QC, TBA 2000S QC (See drawing on page: 4-180)					
020	2650812-0000		2	SHAFT	
030	2602655-0000		2	ROLLER	
040	2652892-0000		1	PLATE	
350	312605-0318		2	HEXAGON NUT, M6M M8 A280	
390	315105-0165		4	WASHER BRB8,4X16RFR	
430	90141-0016		2	RETAINING RING FOR SHAFT DIN 471 10 A2	
440	90240-0180		4	FLANGE BUSHING 10X14X15MM	
TPA 0250SQ QC, TPA 0200SQ QC (See drawing on page: 4-180)					
020	2646345-0000		2	SHAFT	
030	978760-0000		2	ROLLER TBA200SL	
040	2674323-0000		1	PLATE	
350	312605-0318		2	HEXAGON NUT, M6M M8 A280	
390	315105-0165		4	WASHER BRB8,4X16RFR	
TPA 0330SQ (See drawing on page: 4-180)					
020	2619319-0000		2	SHAFT	
030	929355-0000		2	ROLLER TPA 330	
040	2664779-0000		1	PLATE	
350	312605-0318		2	HEXAGON NUT, M6M M8 A280	
390	315105-0165		4	WASHER BRB8,4X16RFR	
430	90141-0016		2	RETAINING RING FOR SHAFT DIN 471 10 A2	
440	90240-0180		4	FLANGE BUSHING 10X14X15MM	
TPA 0500SQ (See drawing on page: 4-180)					
020	2619198-0000		2	SHAFT	
030	2688917-0000		2	ROLLER	
040	2664780-0000		1	PLATE	
350	312605-0318		2	HEXAGON NUT, M6M M8 A280	
390	315105-0165		4	WASHER BRB8,4X16RFR	
430	90141-0016		2	RETAINING RING FOR SHAFT DIN 471 10 A2	
440	90240-0180		4	FLANGE BUSHING 10X14X15MM	
TPA 1000SQ NOQC, TPA 1000SQ QC, TPA 0750SQ QC (See drawing on page: 4-180)					
020	2648846-0000		2	SHAFT	
030	1524421-0000		2	ROLLER	
040	2642097-0000		1	PLATE	
390	315105-0165		2	WASHER BRB8,4X16RFR	
430	90141-0016		2	RETAINING RING FOR SHAFT DIN 471 10 A2	
440	90240-0180		4	FLANGE BUSHING 10X14X15MM	
TBA 1000B NOQC NOMOLDEDCAP (See drawing on page: 4-180)					
020	2619198-0000		2	SHAFT	
030	560122-0000		2	SUPPORT ROLLER	
040	2623783-0000		1	PLATE	
350	312605-0318		2	HEXAGON NUT, M6M M8 A280	
390	315105-0165		4	WASHER BRB8,4X16RFR	
430	90141-0016		2	RETAINING RING FOR SHAFT DIN 471 10 A2	
440	90240-0180		4	FLANGE BUSHING 10X14X15MM	
TBA 0200B QC, TBA 0330S QC, TBA 0250B QC (See drawing on page: 4-180)					
020	2646345-0000		2	SHAFT	
030	978757-0000		2	ROLLER 180-284ML	
040	2646344-0000		1	PLATE	
350	312605-0318		2	HEXAGON NUT, M6M M8 A280	
390	315105-0165		4	WASHER BRB8,4X16RFR	
430	90141-0016		2	RETAINING RING FOR SHAFT DIN 471 10 A2	
440	90240-0180		4	FLANGE BUSHING 10X14X15MM	
TBA 0200S					
020	2632818-0000		2	SHAFT	
030	978760-0000		2	ROLLER TBA200SL	
040	2632817-0000		1	PLATE	
350	312605-0318		2	HEXAGON NUT, M6M M8 A280	
390	315105-0165		4	WASHER BRB8,4X16RFR	
430	90141-0016		2	RETAINING RING FOR SHAFT DIN 471 10 A2	
440	90240-0180		4	FLANGE BUSHING 10X14X15MM	
TBA 0200SQ QC, TBA 0250SQ QC (See drawing on page: 4-180)					
020	2646345-0000		2	SHAFT	
030	2696806-0000		2	ROLLER	
040	2681244-0000		1	PLATE	
350	312605-0318		2	HEXAGON NUT, M6M M8 A280	
390	315105-0165		4	WASHER BRB8,4X16RFR	
430	90141-0016		2	RETAINING RING FOR SHAFT DIN 471 10 A2	
440	90240-0180		4	FLANGE BUSHING 10X14X15MM	
TBA 0250S QC, TBA 0200M QC (See drawing on page: 4-180)					
020	2649441-0000		2	SHAFT	
030	2530124-0000		2	ROLLER	
040	2649442-0000		1	PLATE	
350	312605-0318		2	HEXAGON NUT, M6M M8 A280	
390	315105-0165		4	WASHER BRB8,4X16RFR	
430	90141-0016		2	RETAINING RING FOR SHAFT DIN 471 10 A2	
440	90240-0180		4	FLANGE BUSHING 10X14X15MM	

Machine Type | Group Description | Used-In | Group Number | Page No

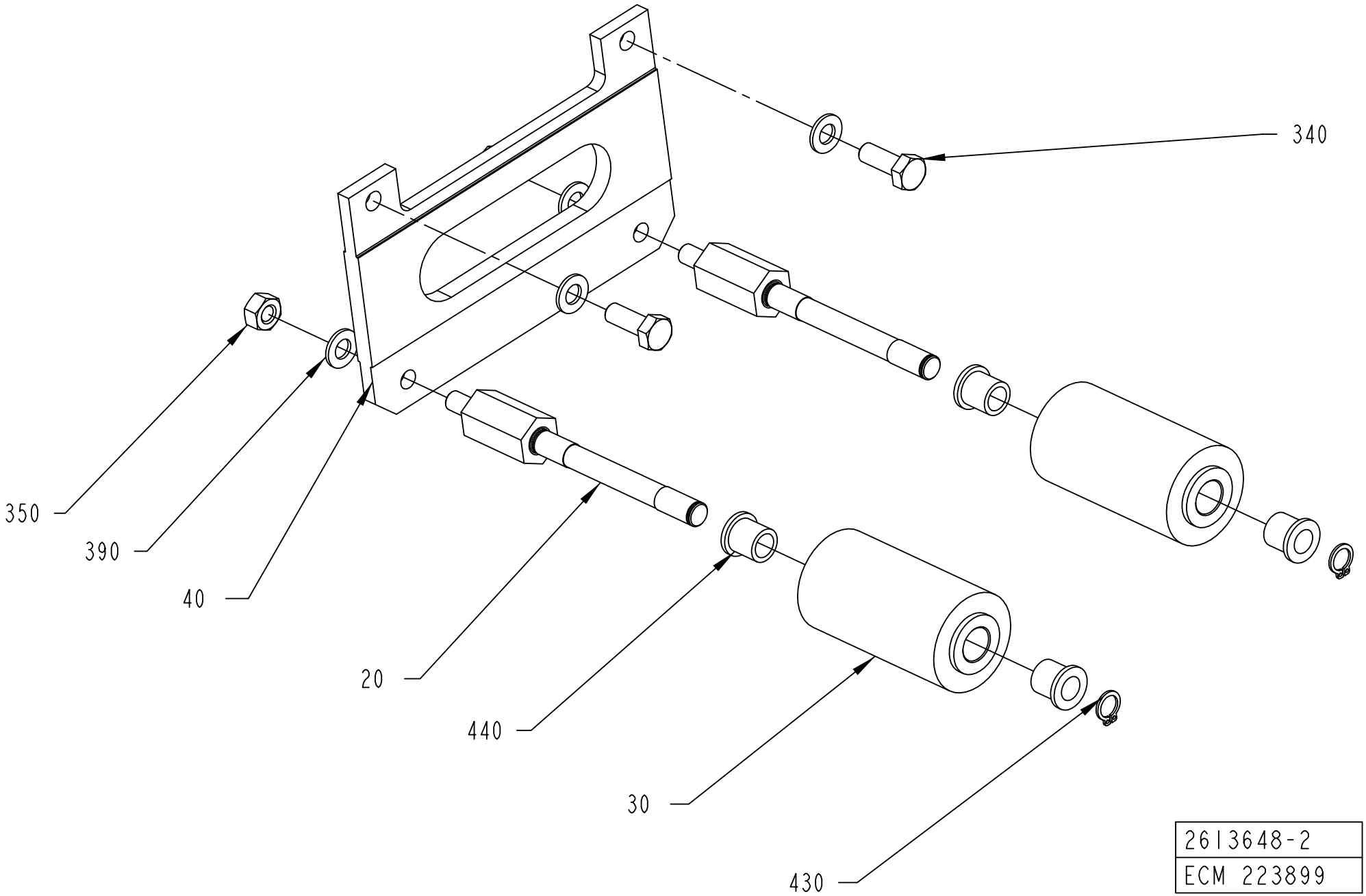
340
350
390
40
20
440
30
430
2613648-2
ECM 223899

ECM: 261879 - 20060702
Group number: 2613648-0100
Assembly Drawing: 2613648-2_1_AB

This list covers pages from 4-180 to 4-183

Pos	Part No	UN	Qty	Description	Page No
TBA 0500B QC, TBA 1000B QC (Cont'd) (See drawing on page: 4-180)					
020	2619198-0000		2	SHAFT	
030	2619199-0000		2	ROLLER	
040	2619200-0000		1	PLATE	
350	312605-0318		2	HEXAGON NUT, M6M M8 A280	
390	315105-0165		4	WASHER BRB8,4X16RFR	
430	90141-0016		2	RETAINING RING FOR SHAFT DIN 471 10 A2	
440	90240-0180		4	FLANGE BUSHING 10X14X15MM	
TBA 0500S (See drawing on page: 4-180)					
020	2619198-0000		2	SHAFT	
030	1512484-0000		2	ROLLER	
040	2664780-0000		1	PLATE	
350	312605-0318		2	HEXAGON NUT, M6M M8 A280	
390	315105-0165		6	WASHER BRB8,4X16RFR	
430	90141-0016		2	RETAINING RING FOR SHAFT DIN 471 10 A2	
440	90240-0180		4	FLANGE BUSHING 10X14X15MM	
TBA 1000B NOQC STDA7 (See drawing on page: 4-182)					
020	2619198-0000		2	SHAFT	
030	2767478-0001		2	ROLLER	
040	2623783-0000		1	PLATE	
350	312605-0318		2	HEXAGON NUT, M6M M8 A280	
390	315105-0165		4	WASHER BRB8,4X16RFR	
430	90141-0016		2	RETAINING RING FOR SHAFT DIN 471 10 A2	
440	90240-0180		4	FLANGE BUSHING 10X14X15MM	
TBA 1000S NOMOLDEDCAP (See drawing on page: 4-180)					
020	2619198-0000		2	SHAFT	
030	569058-0000		2	SUPPORT ROLLER	
040	2623783-0000		1	PLATE	
350	312605-0318		2	HEXAGON NUT, M6M M8 A280	
390	315105-0165		4	WASHER BRB8,4X16RFR	
430	90141-0016		2	RETAINING RING FOR SHAFT DIN 471 10 A2	
440	90240-0180		4	FLANGE BUSHING 10X14X15MM	
TBA 1000S STDA7, TBA 1000S LIGHTCAP (See drawing on page: 4-182)					
020	2619198-0000		2	SHAFT	
030	2767478-0002		2	ROLLER	
040	2623783-0000		1	PLATE	
350	312605-0318		2	HEXAGON NUT, M6M M8 A280	
390	315105-0165		4	WASHER BRB8,4X16RFR	
430	90141-0016		2	RETAINING RING FOR SHAFT DIN 471 10 A2	
440	90240-0180		4	FLANGE BUSHING 10X14X15MM	
TBA 1000SQ (See drawing on page: 4-180)					
020	2619198-0000		2	SHAFT	
030	1499678-0000		2	ROLLER	
040	2623783-0000		1	PLATE	
350	312605-0318		2	HEXAGON NUT, M6M M8 A280	
390	315105-0165		4	WASHER BRB8,4X16RFR	
430	90141-0016		2	RETAINING RING FOR SHAFT DIN 471 10 A2	
440	90240-0180		4	FLANGE BUSHING 10X14X15MM	
Common Parts					
340	312105-0452		2	SCREW M6S ISO 4017 M8X22 A4 80	

Machine Type | Group Description | Used-In | Group Number | Page No

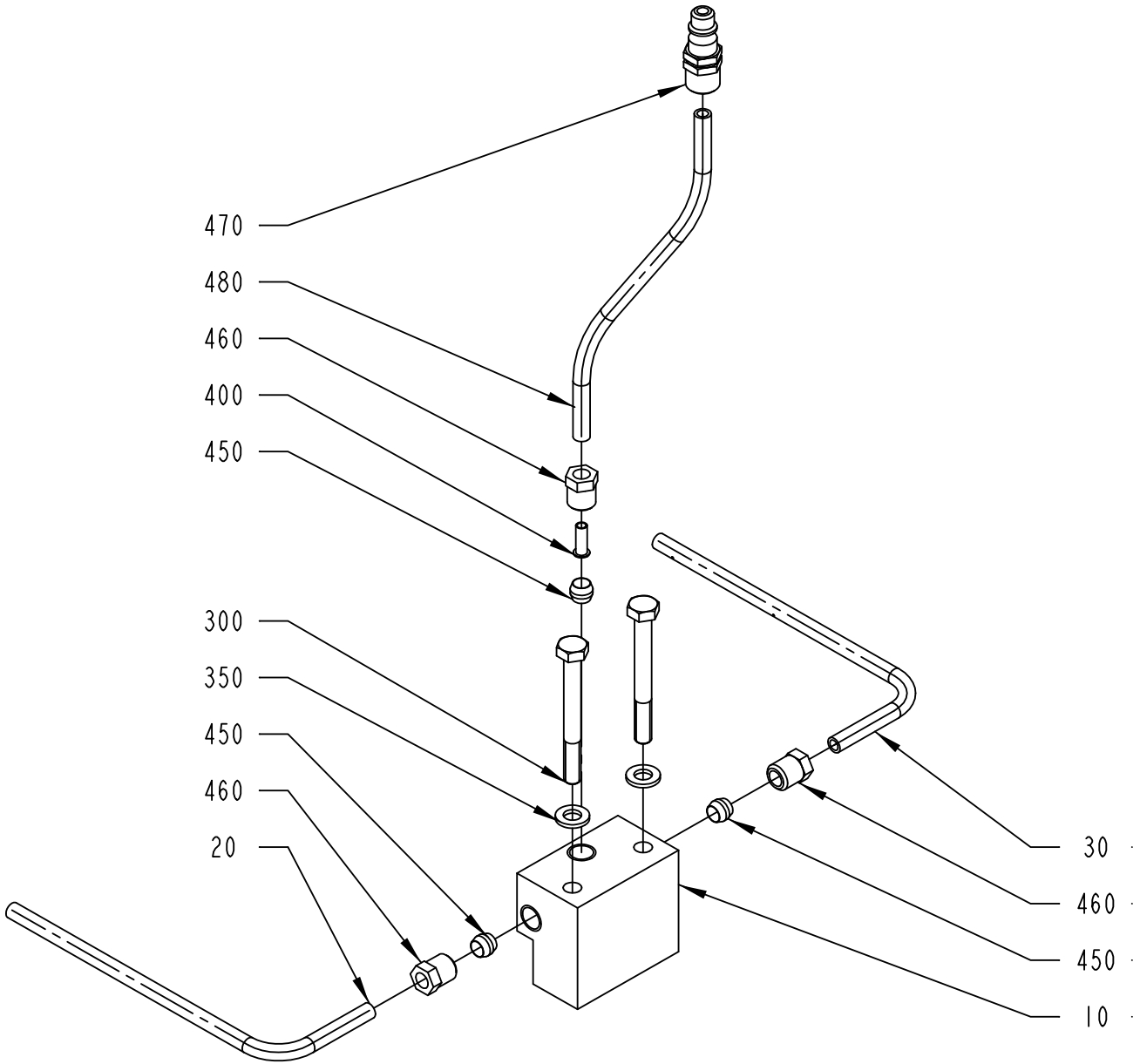

2556893-1
ECM 120277

ECM: 263536 - 20060702
Group number: 2556893-0100
Assembly Drawing: 2556893-1_1_AA

Pos	Part No	UN	Qty	Description	Page No
TBA 0500B, TBA 1000S, TBA 1000SQ, TBA 1000B, TBA 1500S, TPA 1000SQ					
020	2532837-0000		1	TUBE FLUSHING DEVICE	
030	2532838-0000		1	TUBE FLUSHING DEVICE	
TBA 0500S, TBA 0330S, TBA 0200B, TBA 0250S, TBA 0200S, TBA 0200M, TBA 0250B, TBA 0200SQ, TPA 0250SQ, TPA 0330SQ, TPA 0200SQ, TPA 0500SQ, TBA 0250SQ					
020	2556894-0000		1	TUBE FLUSHING DEVICE	
030	2556895-0000		1	TUBE FLUSHING DEVICE	
TBA 1890S, TBA 2000S					
020	2629240-0000		1	TUBE FLUSHING DEVICE	
030	2629239-0000		1	TUBE FLUSHING DEVICE	
TPA 0750SQ					
020	2658298-0000		1	TUBE FLUSHING DEVICE	
030	2658299-0000		1	TUBE FLUSHING DEVICE	
Common Parts					
010	2556615-0000		1	PIPE CONNECTION	
300	312105-0381		2	SCREW M6S ISO 4014 M6X55 A480	
350	315105-0153		2	WASHER BRB6,4X12RFR	
400	342706-0130		1	ACCESSORIES, INSERT SLEEVE 6 MM	
450	90028-0022		3	CONE TUBE 6 MM	
460	90134-0055		3	BUSHING/NUT INLET/OUTLET 6 MM	
470	90163-0063		1	QUICK COUPLING, (M) 5450-6/4	
480	90166-0132	MM	1500	TUBE 6 MM PA,TRANSP.	

Pos	Part No	UN	Qty	Description	Page No

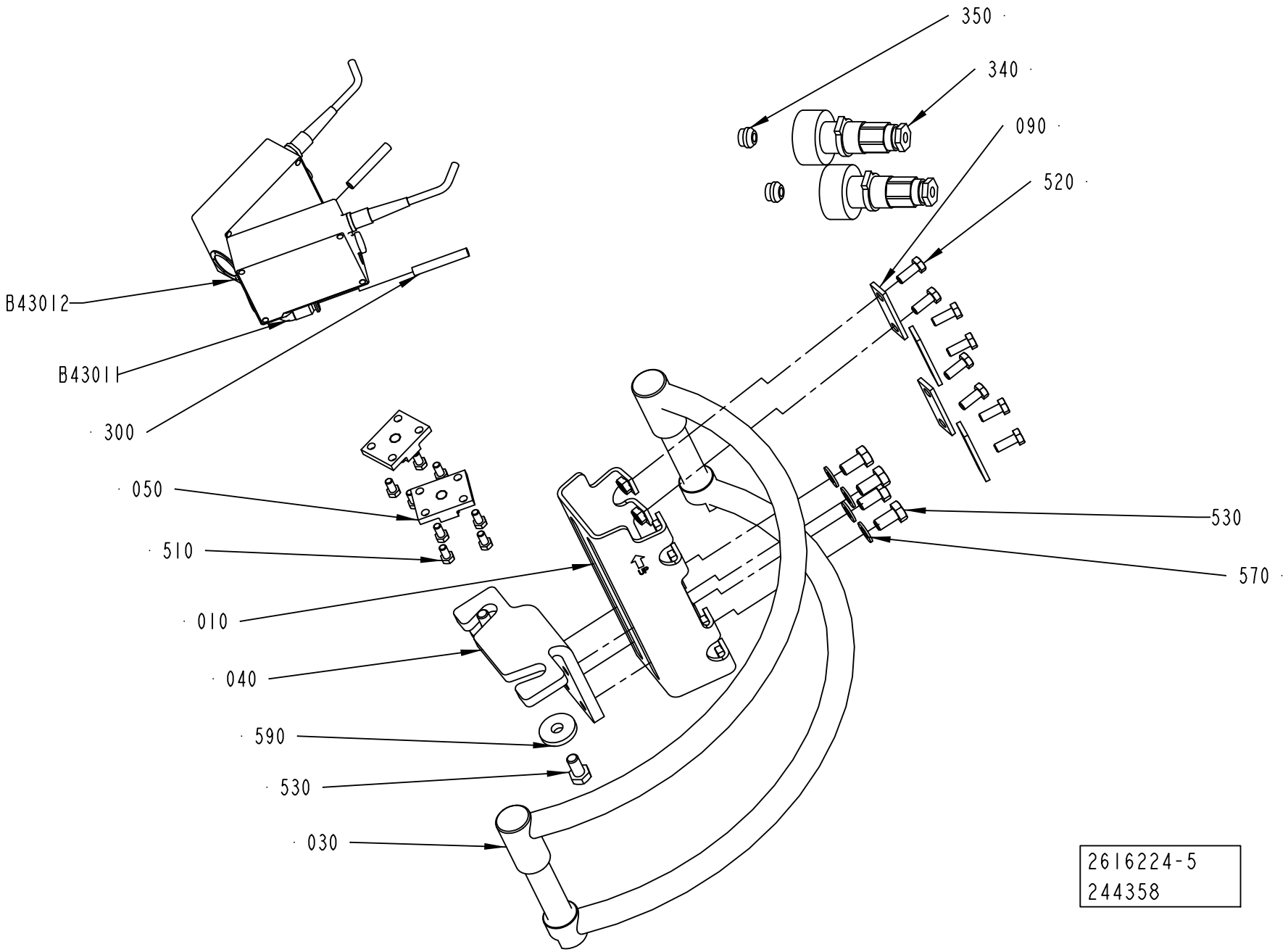
350
340
090
520
B43012
B43011
300
050
510
010
040
590
530
030
530
570
2616224-5
244358

ECM: 263257 - 20060702
Group number: 2616224-0200
Assembly Drawing: 2616224-5_1_AA

This list covers pages from 4-186 to 4-193

Pos	Part No	UN	Qty	Description	Page No
TBA 0200S (See drawing on page: 4-186)					
010	2715295-0000		1	BRACKET	
040	1254110-0000		1	BRACKET	
340	90110-0235		2	CABLE CONTACT, PX0739/P	
350	90459-1501		2	CABLE SEALING, 12023/I, ELFA. 44-625-78	
590	315125-0165		2	WASHER TBRSB 8,4X26X5 A4	
TBA 0200SQ, TBA 0250SQ (See drawing on page: 4-192)					
010	2715296-0000		1	BRACKET	
020	2735474-0000		1	SLIDE	
040	2735473-0000		1	BRACKET	
060	2724929-0000		1	KNOB	
065	2724932-0000		1	NUT	
070	2724930-0000		1	SCREW	
080	90335-0024		1	COMP. SPRING 22250, 1,25X13,75X27	
100	90287-0148		4	SCREW SPRINGLOAD. SLOTTED HEAD M5X12	
590	315125-0165		2	WASHER TBRSB 8,4X26X5 A4	
TBA 0250S, TBA 0200M (See drawing on page: 4-188)					
010	2715296-0000		1	BRACKET	
020	2679885-0000		1	SLIDE	
040	2679884-0000		1	BRACKET	
060	2679886-0000		1	KNOB	
070	2655098-0000		1	SHAFT	
080	90335-0024		1	COMP. SPRING 22250, 1,25X13,75X27	
100	90287-0148		4	SCREW SPRINGLOAD. SLOTTED HEAD M5X12	
110	312318-0323		4	SCREW ISO4029 M5X8 A4	
340	90110-0235		2	CABLE CONTACT, PX0739/P	
350	90459-1501		2	CABLE SEALING, 12023/I, ELFA. 44-625-78	
TBA 0330S, TBA 0200B, TBA 0250B (See drawing on page: 4-188)					
010	2715296-0000		1	BRACKET	
020	2655096-0000		1	SLIDE	
040	2655095-0000		1	BRACKET	
060	2655097-0000		1	KNOB	
070	2655098-0000		1	SHAFT	
080	90335-0024		1	COMP. SPRING 22250, 1,25X13,75X27	
100	90287-0148		4	SCREW SPRINGLOAD. SLOTTED HEAD M5X12	
110	312318-0323		4	SCREW ISO4029 M5X8 A4	
340	90110-0235		2	CABLE CONTACT, PX0739/P	
350	90459-1501		2	CABLE SEALING, 12023/I, ELFA. 44-625-78	
590	315125-0165		2	WASHER TBRSB 8,4X26X5 A4	
TBA 0500B, TBA 1000B, TBA 1500S (See drawing on page: 4-186)					
010	2715295-0000		1	BRACKET	
040	1254109-0000		1	BRACKET	
340	90110-0235		2	CABLE CONTACT, PX0739/P	
350	90459-1501		2	CABLE SEALING, 12023/I, ELFA. 44-625-78	
590	315125-0165		2	WASHER TBRSB 8,4X26X5 A4	
TBA 0500S, TPA 1000SQ NOQC, TPA 1000SQ QC, TPA 0750SQ QC (See drawing on page: 4-186)					
010	2715295-0000		1	BRACKET	
040	2719081-0000		1	BRACKET	
340	90110-0235		2	CABLE CONTACT, PX0739/P	
350	90459-1501		2	CABLE SEALING, 12023/I, ELFA. 44-625-78	
590	315125-0165		2	WASHER TBRSB 8,4X26X5 A4	
TBA 1000S, TBA 1000SQ (See drawing on page: 4-186)					
010	2715295-0000		1	BRACKET	
040	2694095-0000		1	BRACKET	
340	90110-0235		2	CABLE CONTACT, PX0739/P	
350	90459-1501		2	CABLE SEALING, 12023/I, ELFA. 44-625-78	
590	315125-0165		2	WASHER TBRSB 8,4X26X5 A4	
TBA 1890S, TBA 2000S (See drawing on page: 4-186)					
010	2715295-0000		1	BRACKET	
040	2715302-0000		1	BRACKET	
340	90110-0235		2	CABLE CONTACT, PX0739/P	
350	90459-1501		2	CABLE SEALING, 12023/I, ELFA. 44-625-78	
590	2677899-0000		2	WASHER	
TPA 0250SQ, TPA 0200SQ (See drawing on page: 4-192)					
010	2715296-0000		1	BRACKET	
020	2724928-0000		1	SLIDE	
040	2724927-0000		1	BRACKET	
060	2724929-0000		1	KNOB	
065	2724932-0000		1	NUT	
070	2724930-0000		1	SCREW	
080	90335-0024		1	COMP. SPRING 22250, 1,25X13,75X27	
100	90287-0148		4	SCREW SPRINGLOAD. SLOTTED HEAD M5X12	
110	312318-0323		4	SCREW ISO4029 M5X8 A4	
340	90110-0235		2	CABLE CONTACT, PX0739/P	
350	90459-1501		2	CABLE SEALING, 12023/I, ELFA. 44-625-78	
590	315125-0165		2	WASHER TBRSB 8,4X26X5 A4	
TPA 0330SQ (See drawing on page: 4-186)					
010	2715295-0000		1	BRACKET	
040	1254111-0000		1	BRACKET	
340	90110-0235		2	CABLE CONTACT, PX0739/P	
350	90459-1501		2	CABLE SEALING, 12023/I, ELFA. 44-625-78	
590	315125-0165		2	WASHER TBRSB 8,4X26X5 A4	
TPA 0500SQ (See drawing on page: 4-190)					
010	2715295-0000		1	BRACKET	

Machine Type | Group Description | Used-In | Group Number | Page No

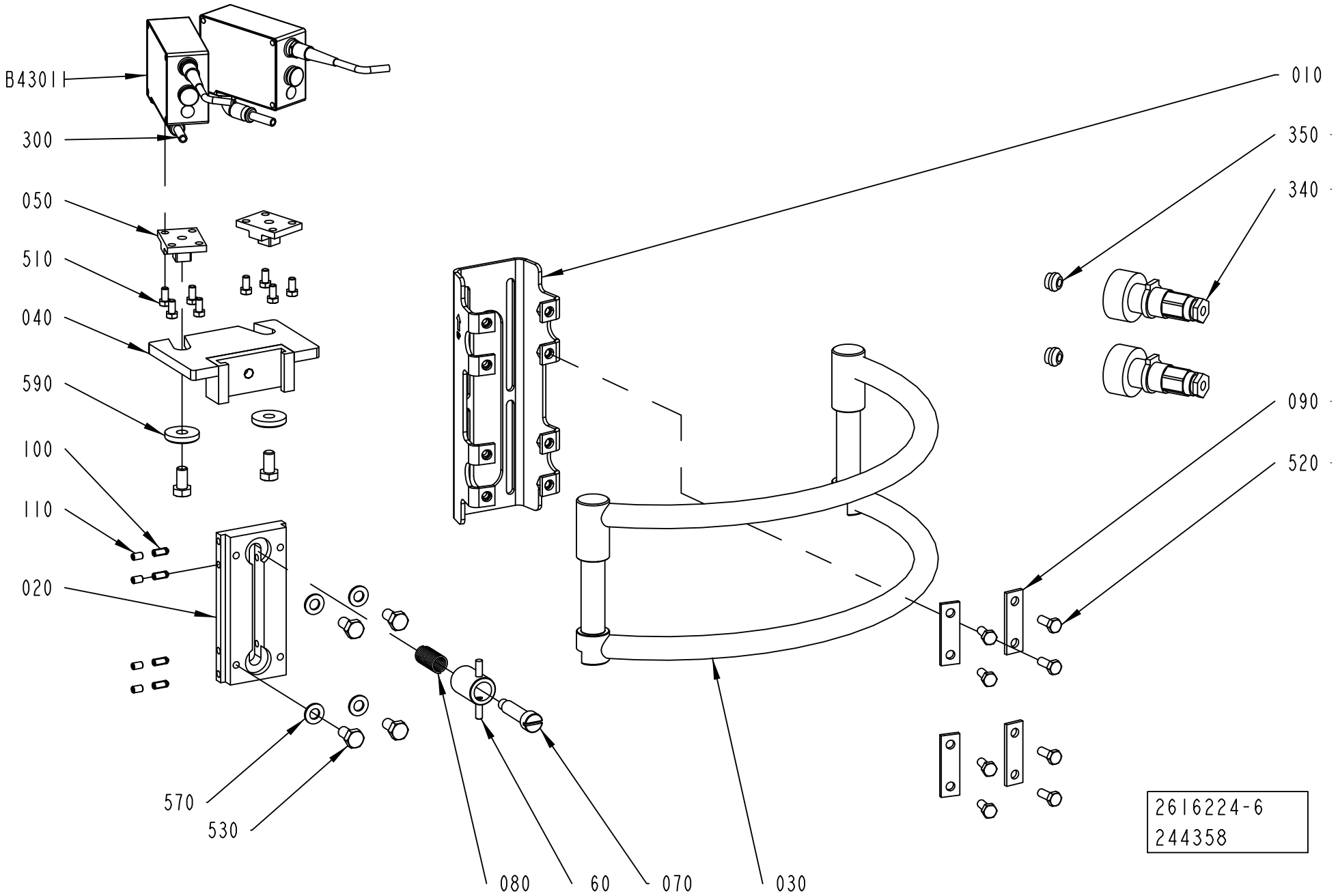
B43011
300
050
510
040
590
100
110
020
570
530
080
60
070
030
010
350
340
090
520
2616224-6
244358

Pos	Part No	UN	Qty	Description	Page No
TPA 0500SQ (Cont'd) (See drawing on page: 4-190)					
040	1254111-0000		1	BRACKET	
340	90110-0235		2	CABLE CONTACT, PX0739/P	
350	90459-1501		2	CABLE SEALING, 12023/I, ELFA. 44-625-78	
590	315125-0165		2	WASHER TBRSB 8,4X26X5 A4	
Common Parts					
030	2715297-0000		1	BOW CLAMP	
050	1036674-0000		2	FASTENING PLATE	
090	1036673-0000		4	WASHER	
300	90166-0081	MM	1500	TUBE 6 MM PA BLUE	
510	312105-0325		8	SCREW M6S ISO 4017 M5X10 A480	
520	312105-0368		8	SCREW M6S ISO 4017 M6X16 A480	
530	312105-0449		6	SCREW M6S ISO 4017 M8X16 A480	
570	315105-0165		4	WASHER BRB8,4X16RFR	
B43011	90458-0601		1	CONTRAST SCANNER, KT15W-P2110S01	
	342732-0102		*1*	*ELBOW PIPE JOINT, EXT.THREAD, D=6MM-G1/8*	
B43012	90458-0601		1	CONTRAST SCANNER, KT15W-P2110S01	
	342732-0102		*1*	*ELBOW PIPE JOINT, EXT.THREAD, D=6MM-G1/8*	

Pos	Part No	UN	Qty	Description	Page No

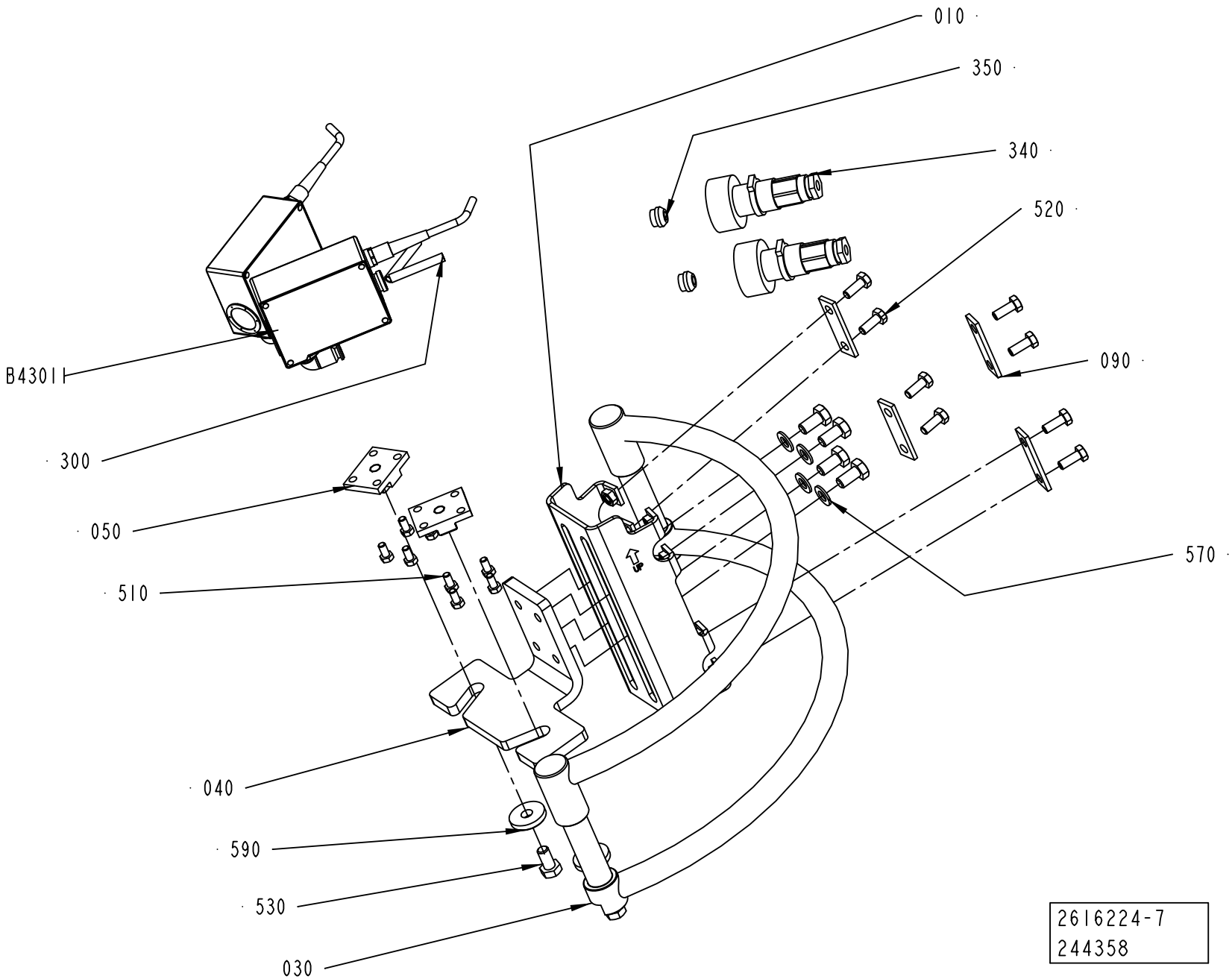
010
350
340
520
090
570
B4301
300
050
510
040
590
530
030
2616224-7
244358

ECM: 263257 - 20060702
Group number: 2616224-0200
Assembly Drawing: 2616224-7_1_AA

This list covers pages from 4-186 to 4-193

Pos	Part No	UN	Qty	Description	Page No	Pos	Part No	UN	Qty	Description	Page No

SEE PREVIOUS LISTS PAGES: 4-187, 4-189.

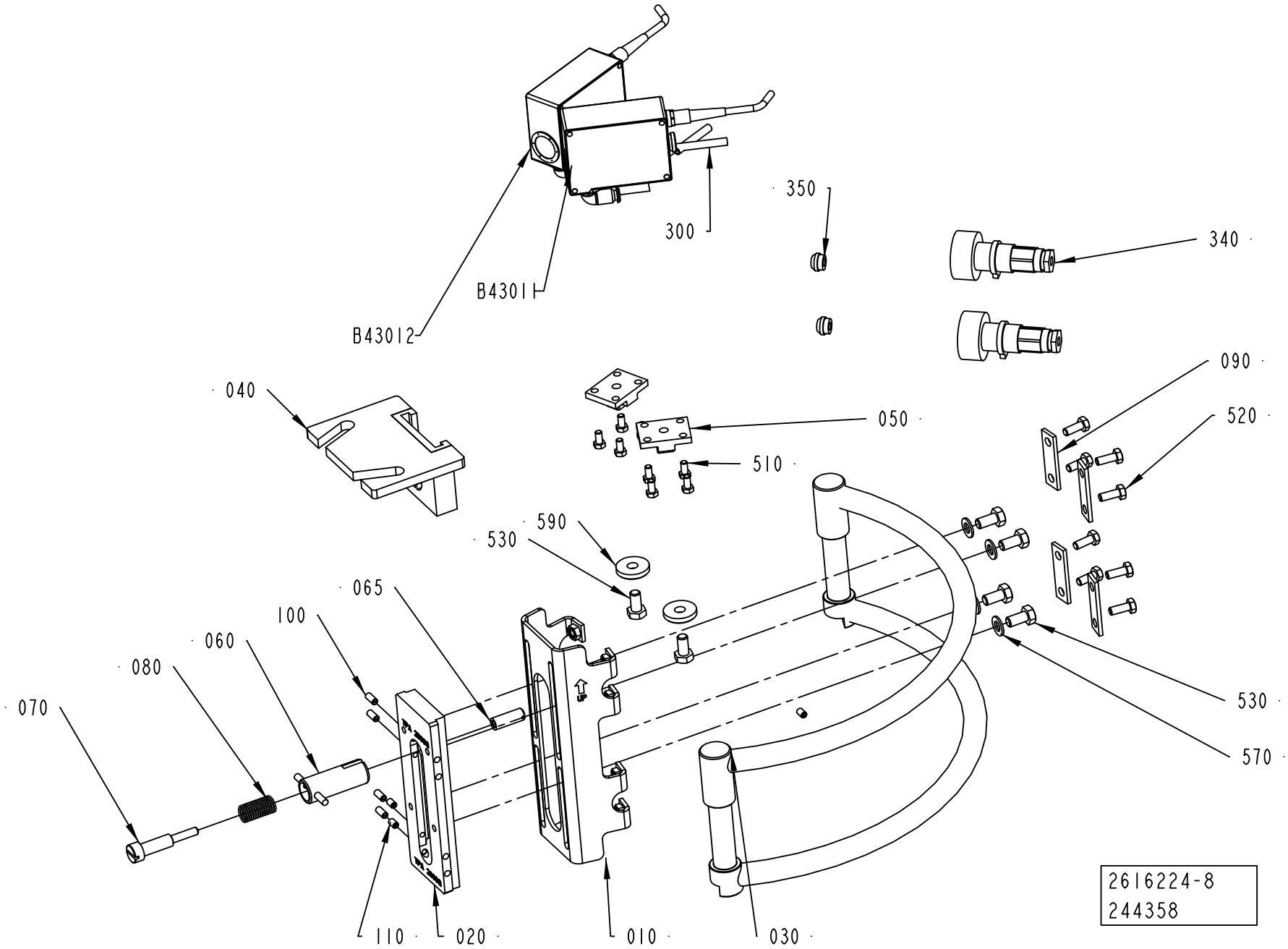
B43012
B43011
300
350
340
040
050
510
090
520
530
590
065
100
060
080
070
530
570
110
020
010
030
2616224-8
244358

Pos	Part No	UN	Qty	Description	Page No	Pos	Part No	UN	Qty	Description	Page No

SEE PREVIOUS LISTS PAGES: 4-187, 4-189.

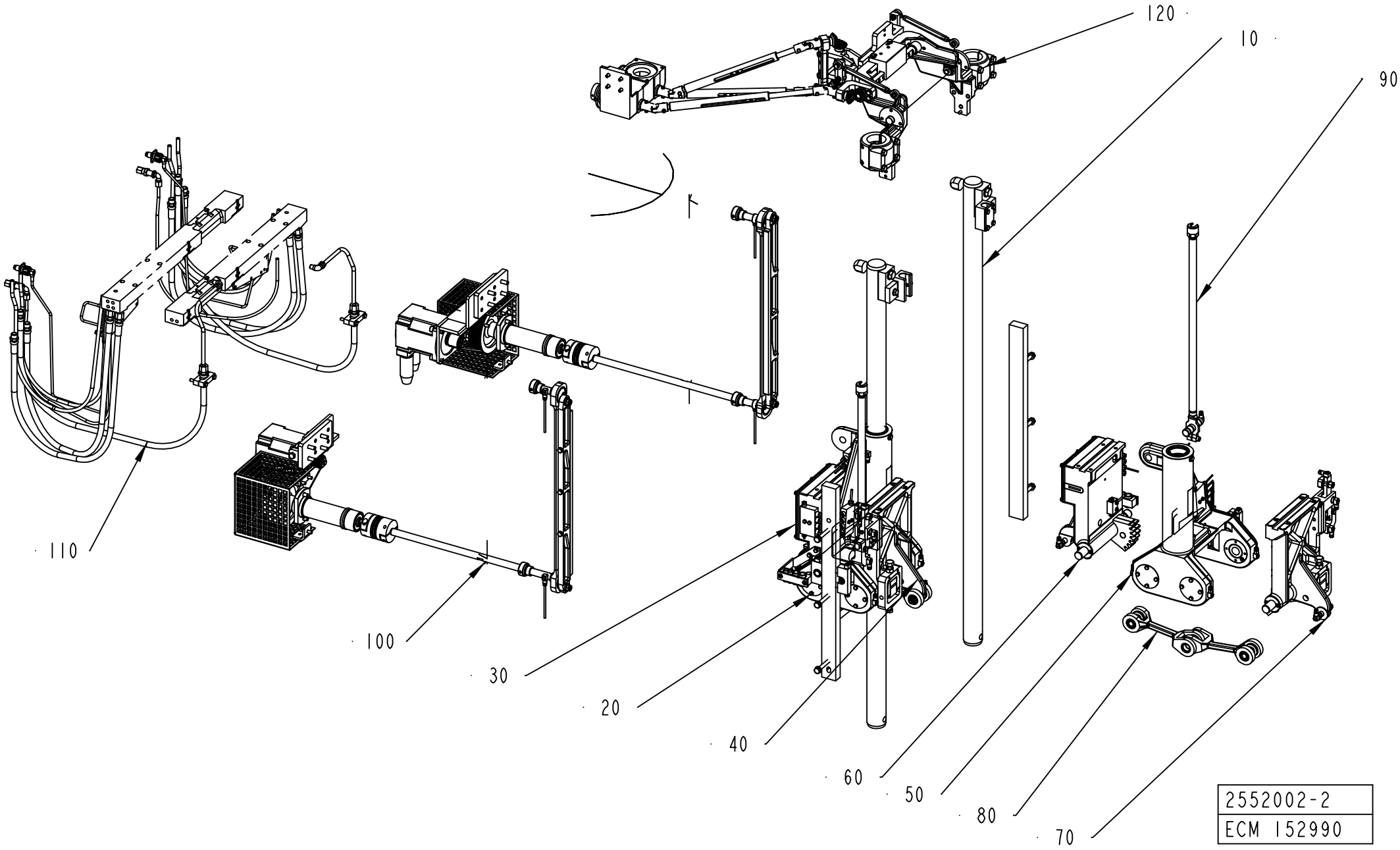
120
10
90
110
100
30
20
40
60
50
80
70
2552002-2
ECM 152990

ECM: 244368 - 20060701
Group number: 2552002-0200
Assembly Drawing: 2552002-2_1_AA

Pos	Part No	UN	Qty	Description	Page No
-					
010	2542489-0200		1	GUIDE	**4-197**
020	1348455-0200		1	YOKE LEFT	**4-199**
030	1348456-0200		1	PRESSURE ARM LEFT	**4-201, 4-203**
040	1348457-0200		1	CUTTING ARM LEFT	**4-205, 4-207**
050	1348460-0200		1	YOKE RIGHT	**4-209**
060	1348461-0200		1	PRESSURE ARM RIGHT	**4-211, 4-213**
070	1348462-0200		1	CUTTING ARM RIGHT	**4-215, 4-217**
080	1348466-0100		4	SCISSOR ARM LINK	**4-219**
090	1334651-0100		2	LINK	**4-221**
100	2650709-0100		1	DESIGN CORRECTION	**4-223**
110	2503661-0100		1	CABLE CONNECTION	**4-233**
120	2613646-0100		1	VOLUME ADJUSTER	**4-235**

Pos	Part No	UN	Qty	Description	Page No

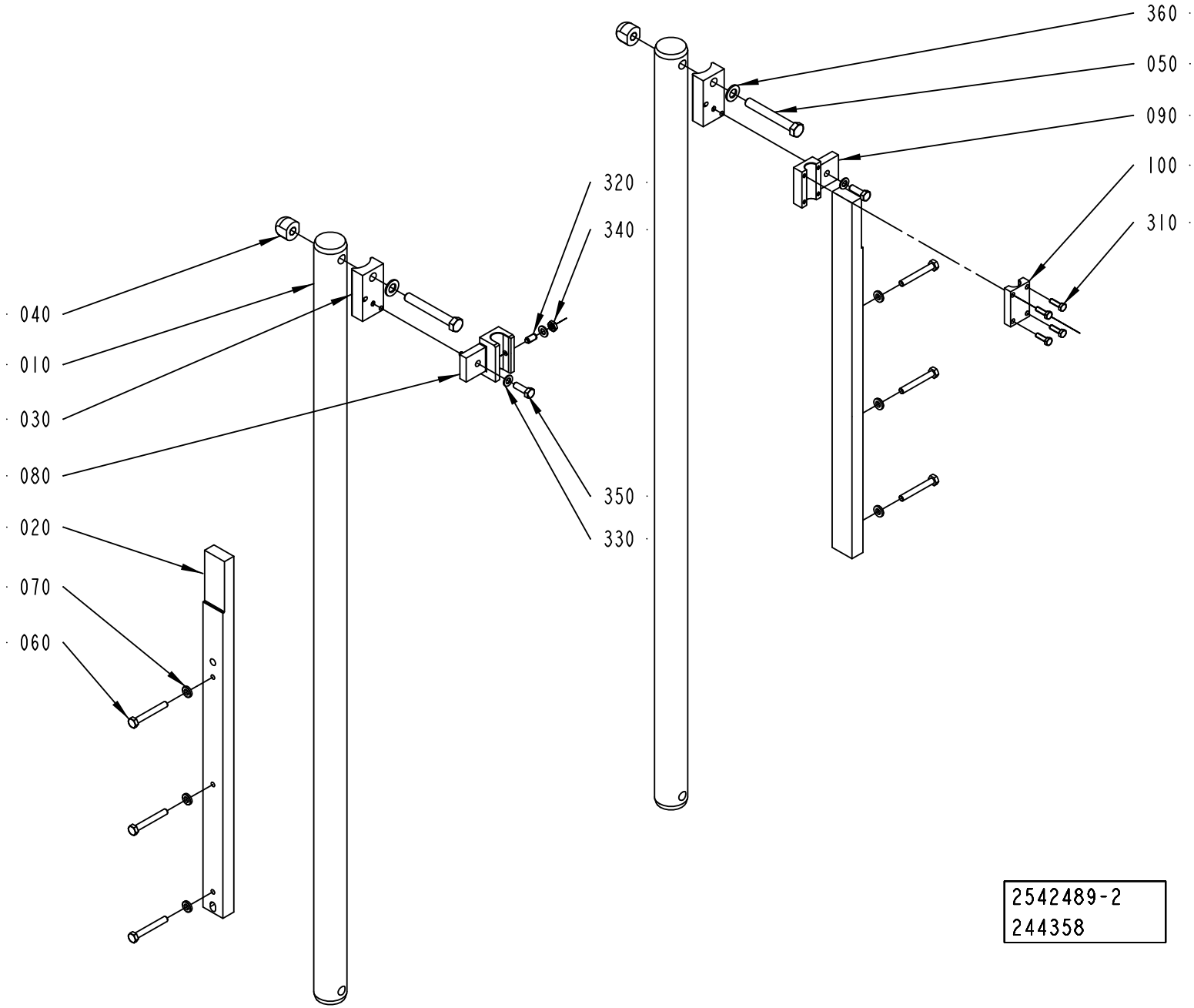
360
050
090
100
310
320
340
040
010
030
080
350
330
020
070
060
2542489-2
244358

ECM: 244367 - 20060701
Group number: 2542489-0200
Assembly Drawing: 2542489-2_1_AA

Pos	Part No	UN	Qty	Description	Page No
-					
010	2640831-0000		2	GUIDE	
020	2698628-0000		2	RULER	
030	2616225-0000		2	CLAMP	
040	2542488-0000		2	NUT	
050	312105-0550		2	SCREW M6S ISO 4014 M12X90 A480	
060	312105-0463		6	SCREW M6S ISO 4014 M8X60 A480	
070	315115-0165		6	WASHER PLAIN, TBRB 8,4/16 H=3	
080	2616221-0000		1	BRACKET	
090	2715300-0000		1	BRACKET	
100	2715301-0000		1	SUPPORT	
310	312105-0370		4	SCREW M6S ISO 4017 M6X20 A480	
320	90287-0112		1	SCREW SPRINGLOAD. SLOTTED HEAD M8X16	
330	315105-0165		3	WASHER BRB8,4X16RFR	
340	312625-0318		1	HEXAGON THIN NUT, EN 24035 ML6M M8 A4	
350	312105-0453		2	SCREW M6S ISO 4017 M8X25 A480	
360	315105-0178		2	WASHER BRB13X24RFR	

Pos	Part No	UN	Qty	Description	Page No

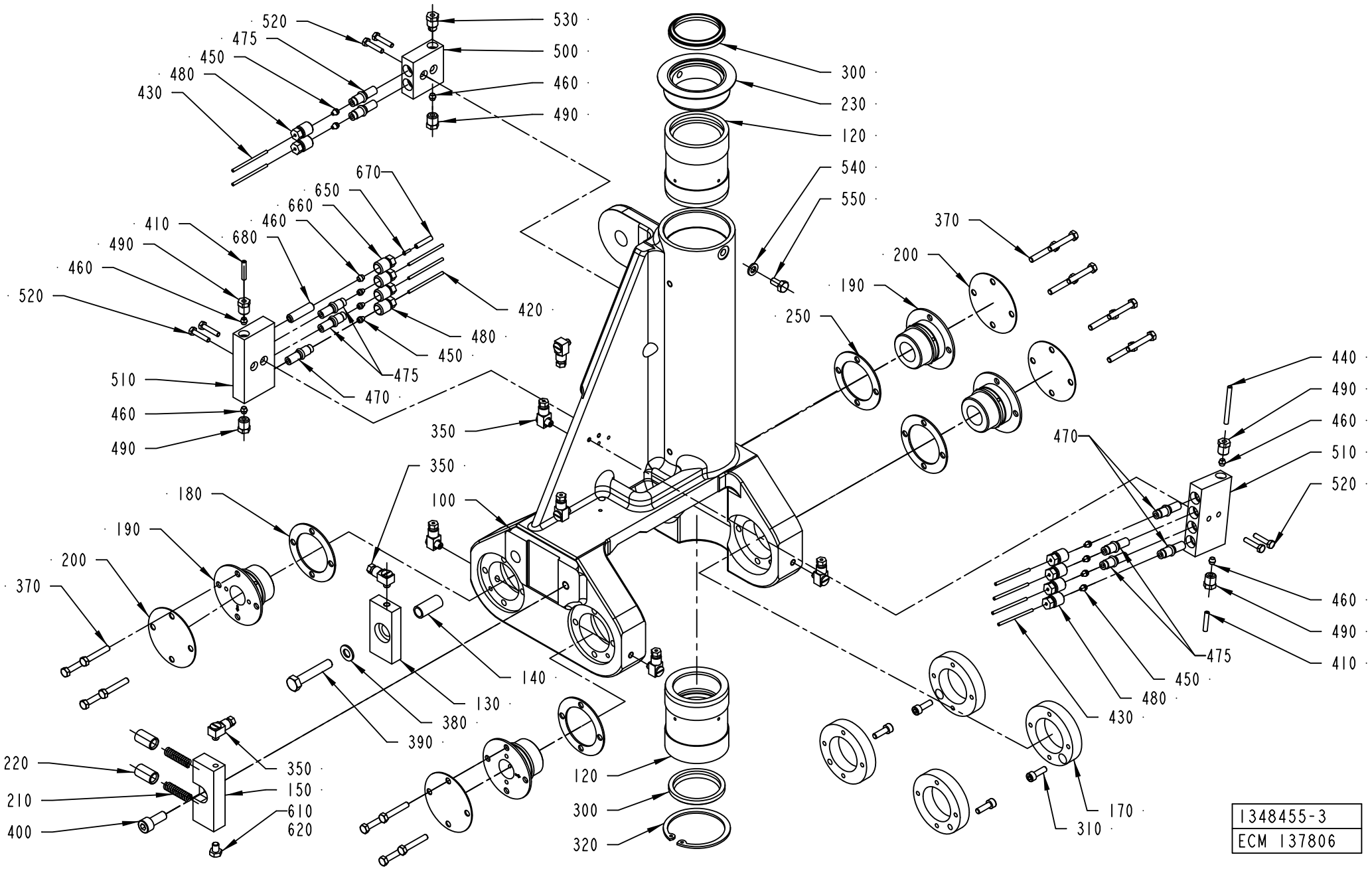
520
475
450
480
430
530
500
460
490
670
650
660
460
680
410
490
460
520
420
480
450
475
470
510
460
490
350
350
100
180
190
200
370
140
130
380
390
220
210
400
350
150
610
620
120
300
320
300
230
120
540
550
370
200
190
250
440
490
460
510
520
470
460
490
410
475
450
480
430
170
310
1348455-3
ECM 137806

ECM: 189462 - 20050103
Group number: 1348455-0200
Assembly Drawing: 1348455-3_1_AB

Pos	Part No	UN	Qty	Description	Page No
A3/FLEX					
450	90028-0020		9	CONE TUBE 2,5MM	
460	90028-0021		6	CONE TUBE 4 MM	
470	90092-0052		3	METERING VALVE 10 MM3	
480	90134-0039		9	BUSHING VALVE CONNECTION 2,5 MM	
650	90134-0031		1	SLEEVE FOR PLASTIC TUBE	
660	90134-0040		1	BUSHING VALVE CONNECTION 4 MM	
670	90166-0109	MM	1000	TUBE 4 MM PA,TRANSP.	
680	90134-0051		1	SPACING COLLAR DOSING BLOCK	
Common Parts					
100	1195360-0000		1	YOKE LEFT	
120	1035954-0000		2	BUSHING	
130	1037104-0000		1	LOCATING PIECE	
140	1037106-0000		1	SLEEVE	
150	1349972-0000		1	SPRING HOUSING	
170	36753-0000		4	RING	
180	29886-0000		2	LACE	
190	246513-0000		4	BEARING	
200	239874-0000		4	WASHER	
210	20494-0000		2	COMPRESSION SPRING	
220	31838-0000		2	PLUNGER	
230	1349780-0000		1	LID	
250	1038509-0000		2	WASHER	
300	90091-0358		2	SCRAPER, ASOB 45X53X7 MM	
310	312115-0329		4	SCREW ISO4762 M5X16 A4 80	
320	315753-0135		1	RETAINING RING FOR BORE DIN 472 60 A2	
350	90134-0058		8	CONNECTION	
370	312105-0335		16	SCREW M6S ISO 4014 M5X30 A480	
380	315105-0165		1	WASHER BRB8,4X16RFR	
390	312109-0460		1	SCREW M6S ISO 4017 M8X45 A480	
400	312115-0451		1	SCREW ISO4762 M8X20 A4 80	
410	90166-0109	MM	500	TUBE 4 MM PA,TRANSP.	
420	90166-0143	MM	500	TUBE 2,5 MM PA,TRANSP.	
430	90266-0019	MM	300	PIPE	
440	90266-0165	MM	500	BRASS PIPE	
475	90092-0054		6	METERING VALVE 50 MM3	
490	90134-0038		5	BUSHING/NUT INLET/OUTLET 4 MM	
500	90032-0038		1	BLOCK 2 WAYS	
510	90032-0039		2	BLOCK 4 WAYS	
520	312105-0295		6	SCREW M6S ISO 4017 M4X20 A470	
530	90087-0019		1	PLUG M10X1 STAINLESS	
540	315105-0153		1	WASHER BRB6,4X12RFR	
550	312105-0366		1	SCREW M6S ISO 4017 M6X12 A480	
610	312105-0362		1	SCREW M6S ISO 4017 M6X8 A480	
620	90157-0021		1	LOCKING FLUID LOCTITE 270	

Machine Type | Group Description | Used-In | Group Number | Page No

PRESSURE ARM LEFT

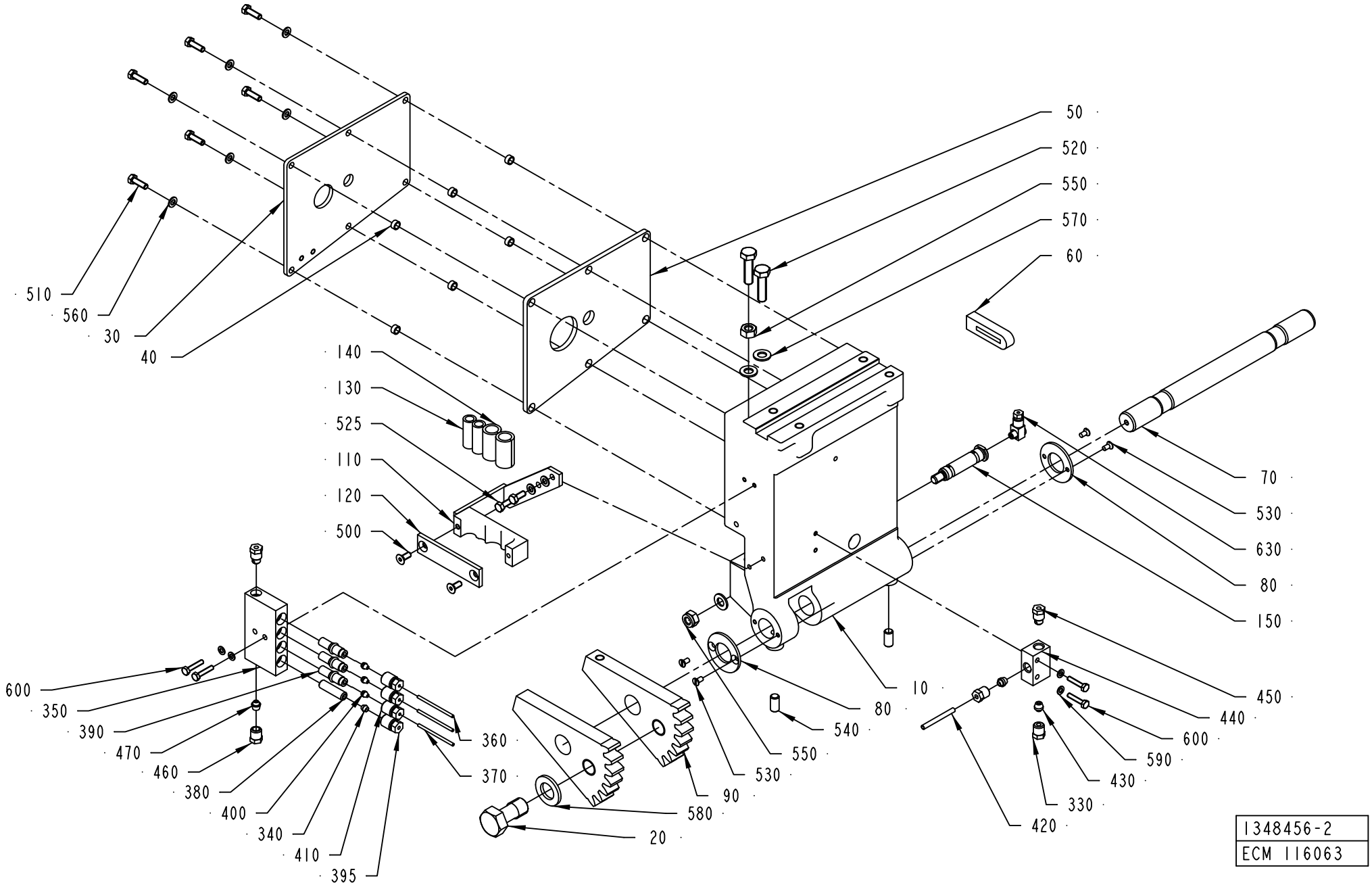

ECM: 189463 - 20050103
Group number: 1348456-0200
Assembly Drawing: 1348456-2_1_AA

This list covers pages from 4-200 to 4-203

Pos	Part No	UN	Qty	Description	Page No
A3/FLEX QC (See drawing on page: 4-202)					
030	1036485-0000		1	COVERING PLATE	
040	1036501-0000		6	SPACER	
050	1036484-0000		1	GASKET	
060	1036483-0000		1	SEAL	
390	90092-0052		1	METERING VALVE 10 MM3	
400	90028-0020		1	CONE TUBE 2,5MM	
510	312105-0329		6	SCREW M6S ISO 4017 M5X16 A480	
560	315105-0146		8	WASHER BRB5,3X10RFR	
650	90134-0052		2	PLUG DOSING BLOCK	
A3/FLEX NOQC (See drawing on page: 4-200)					
030	1036485-0000		1	COVERING PLATE	
040	1036501-0000		6	SPACER	
050	1036484-0000		1	GASKET	
060	1036483-0000		1	SEAL	
390	90092-0052		3	METERING VALVE 10 MM3	
400	90028-0020		3	CONE TUBE 2,5MM	
510	312105-0329		6	SCREW M6S ISO 4017 M5X16 A480	
560	315105-0146		8	WASHER BRB5,3X10RFR	
Common Parts					
010	1035877-0000		1	ARM LEFT	
020	1037069-0000		1	SCREW	
070	1035788-0000		1	SHAFT	
080	536704-0000		2	WASHER	
090	1036156-0000		2	TOOTH PART	
110	1349867-0000		1	FASTENING PLATE	
120	1349868-0000		1	FASTENING PLATE	
130	1478000-0000		2	HOSE	
140	1478001-0000		2	HOSE	
150	1037853-0000		1	SHAFT	
330	90134-0038		2	BUSHING/NUT INLET/OUTLET 4 MM	
340	90028-0021		1	CONE TUBE 4 MM	
350	90032-0039		1	BLOCK 4 WAYS	
360	90166-0143	MM	1500	TUBE 2,5 MM PA,TRANSP.	
370	90266-0019	MM	500	PIPE	
380	90134-0051		1	SPACING COLLAR DOSING BLOCK	
395	90134-0040		1	BUSHING VALVE CONNECTION 4 MM	
400	90028-0020		1	CONE TUBE 2,5MM	
410	90134-0039		3	BUSHING VALVE CONNECTION 2,5 MM	
420	90266-0165	MM	200	BRASS PIPE	
430	90028-0024		2	CONE TUBE 4 MM	
440	90032-0043		1	DISTRIBUTION BLOCK 3 WAYS	
450	90087-0019		2	PLUG M10X1 STAINLESS	
460	90134-0055		1	BUSHING/NUT INLET/OUTLET 6 MM	
470	90028-0025		1	CONE TUBE 6 MM	
500	312155-0327		2	SCREW DIN 7991 MF6S M5X12 A4 70	
520	312105-0455		2	SCREW M6S ISO 4017 M8X30 A480	
525	312105-0327		2	SCREW M6S ISO 4017 M5X12 A480	
530	312145-0287		4	SCREW ISO 2009 MFS M4X8 A4	
540	312318-0449		2	SCREW ISO4029 M8X16 A4	
550	312605-0318		1	HEXAGON NUT, M6M M8 A280	
570	315105-0165		1	WASHER BRB8,4X16RFR	
580	315105-0186		1	WASHER BRB17X30RFR	
590	315105-0136		4	WASHER BRB4,3XRFR	
600	312105-0295		4	SCREW M6S ISO 4017 M4X20 A470	
630	90134-0058		1	CONNECTION	
640	312812-0318		1	HEXAGON NUT, NY-LOCK M8 A480	

Machine Type | Group Description | Used-In | Group Number | Page No

PRESSURE ARM LEFT

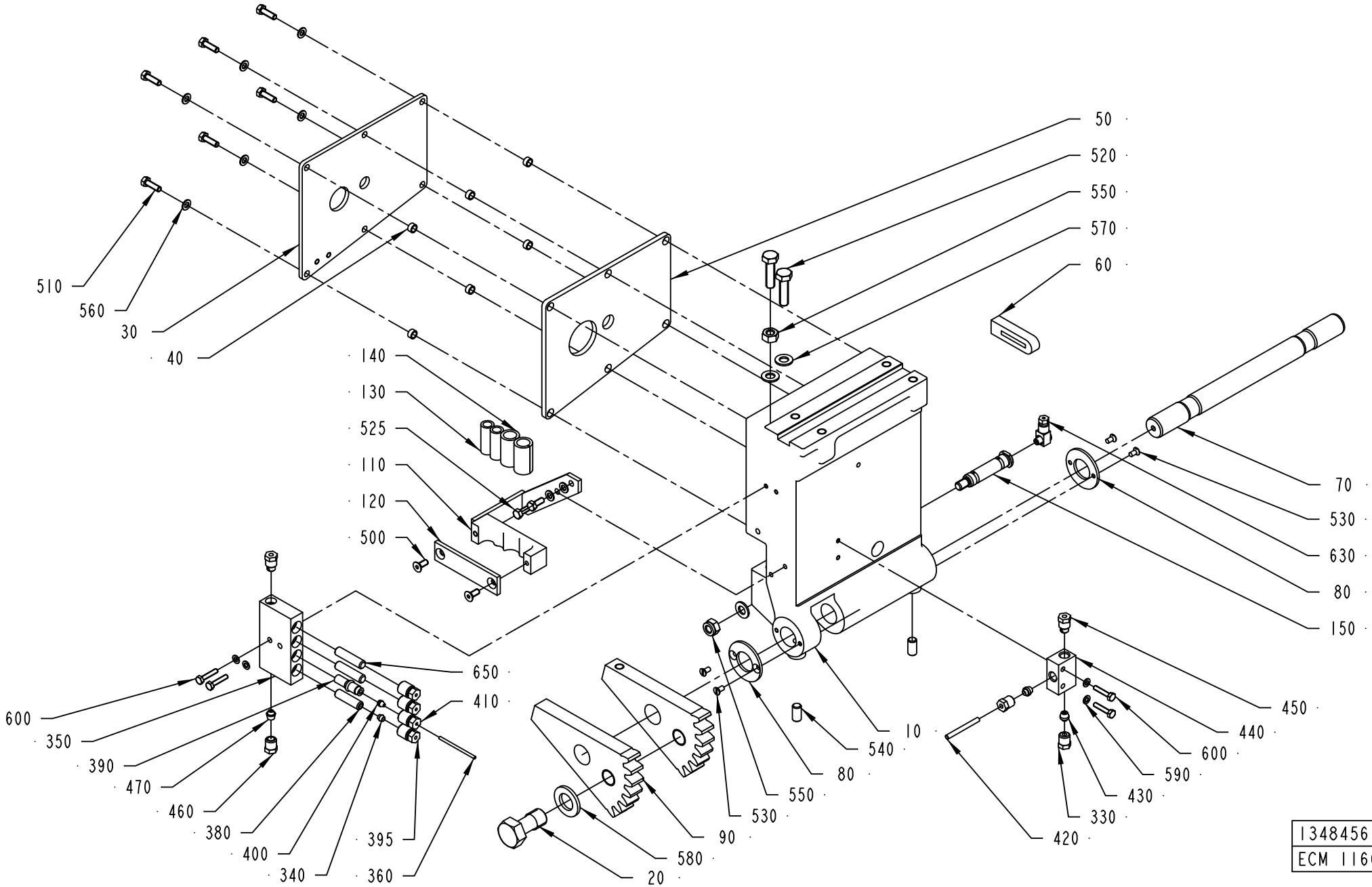

1348456-3
ECM 116063

ECM: 189463 - 20050103
Group number: 1348456-0200
Assembly Drawing: 1348456-3_1_AA

This list covers pages from 4-200 to 4-203

Pos	Part No	UN	Qty	Description	Page No
A3/FLEX QC (See drawing on page: 4-202)					
030	1036485-0000		1	COVERING PLATE	
040	1036501-0000		6	SPACER	
050	1036484-0000		1	GASKET	
060	1036483-0000		1	SEAL	
390	90092-0052		1	METERING VALVE 10 MM3	
400	90028-0020		1	CONE TUBE 2,5MM	
510	312105-0329		6	SCREW M6S ISO 4017 M5X16 A480	
560	315105-0146		8	WASHER BRB5,3X10RFR	
650	90134-0052		2	PLUG DOSING BLOCK	
A3/FLEX NOQC (See drawing on page: 4-200)					
030	1036485-0000		1	COVERING PLATE	
040	1036501-0000		6	SPACER	
050	1036484-0000		1	GASKET	
060	1036483-0000		1	SEAL	
390	90092-0052		3	METERING VALVE 10 MM3	
400	90028-0020		3	CONE TUBE 2,5MM	
510	312105-0329		6	SCREW M6S ISO 4017 M5X16 A480	
560	315105-0146		8	WASHER BRB5,3X10RFR	
Common Parts					
010	1035877-0000		1	ARM LEFT	
020	1037069-0000		1	SCREW	
070	1035788-0000		1	SHAFT	
080	536704-0000		2	WASHER	
090	1036156-0000		2	TOOTH PART	
110	1349867-0000		1	FASTENING PLATE	
120	1349868-0000		1	FASTENING PLATE	
130	1478000-0000		2	HOSE	
140	1478001-0000		2	HOSE	
150	1037853-0000		1	SHAFT	
330	90134-0038		2	BUSHING/NUT INLET/OUTLET 4 MM	
340	90028-0021		1	CONE TUBE 4 MM	
350	90032-0039		1	BLOCK 4 WAYS	
360	90166-0143	MM	1500	TUBE 2,5 MM PA,TRANSP.	
370	90266-0019	MM	500	PIPE	
380	90134-0051		1	SPACING COLLAR DOSING BLOCK	
395	90134-0040		1	BUSHING VALVE CONNECTION 4 MM	
400	90028-0020		1	CONE TUBE 2,5MM	
410	90134-0039		3	BUSHING VALVE CONNECTION 2,5 MM	
420	90266-0165	MM	200	BRASS PIPE	
430	90028-0024		2	CONE TUBE 4 MM	
440	90032-0043		1	DISTRIBUTION BLOCK 3 WAYS	
450	90087-0019		2	PLUG M10X1 STAINLESS	
460	90134-0055		1	BUSHING/NUT INLET/OUTLET 6 MM	
470	90028-0025		1	CONE TUBE 6 MM	
500	312155-0327		2	SCREW DIN 7991 MF6S M5X12 A4 70	
520	312105-0455		2	SCREW M6S ISO 4017 M8X30 A480	
525	312105-0327		2	SCREW M6S ISO 4017 M5X12 A480	
530	312145-0287		4	SCREW ISO 2009 MFS M4X8 A4	
540	312318-0449		2	SCREW ISO4029 M8X16 A4	
550	312605-0318		1	HEXAGON NUT, M6M M8 A280	
570	315105-0165		1	WASHER BRB8,4X16RFR	
580	315105-0186		1	WASHER BRB17X30RFR	
590	315105-0136		4	WASHER BRB4,3XRFR	
600	312105-0295		4	SCREW M6S ISO 4017 M4X20 A470	
630	90134-0058		1	CONNECTION	
640	312812-0318		1	HEXAGON NUT, NY-LOCK M8 A480	

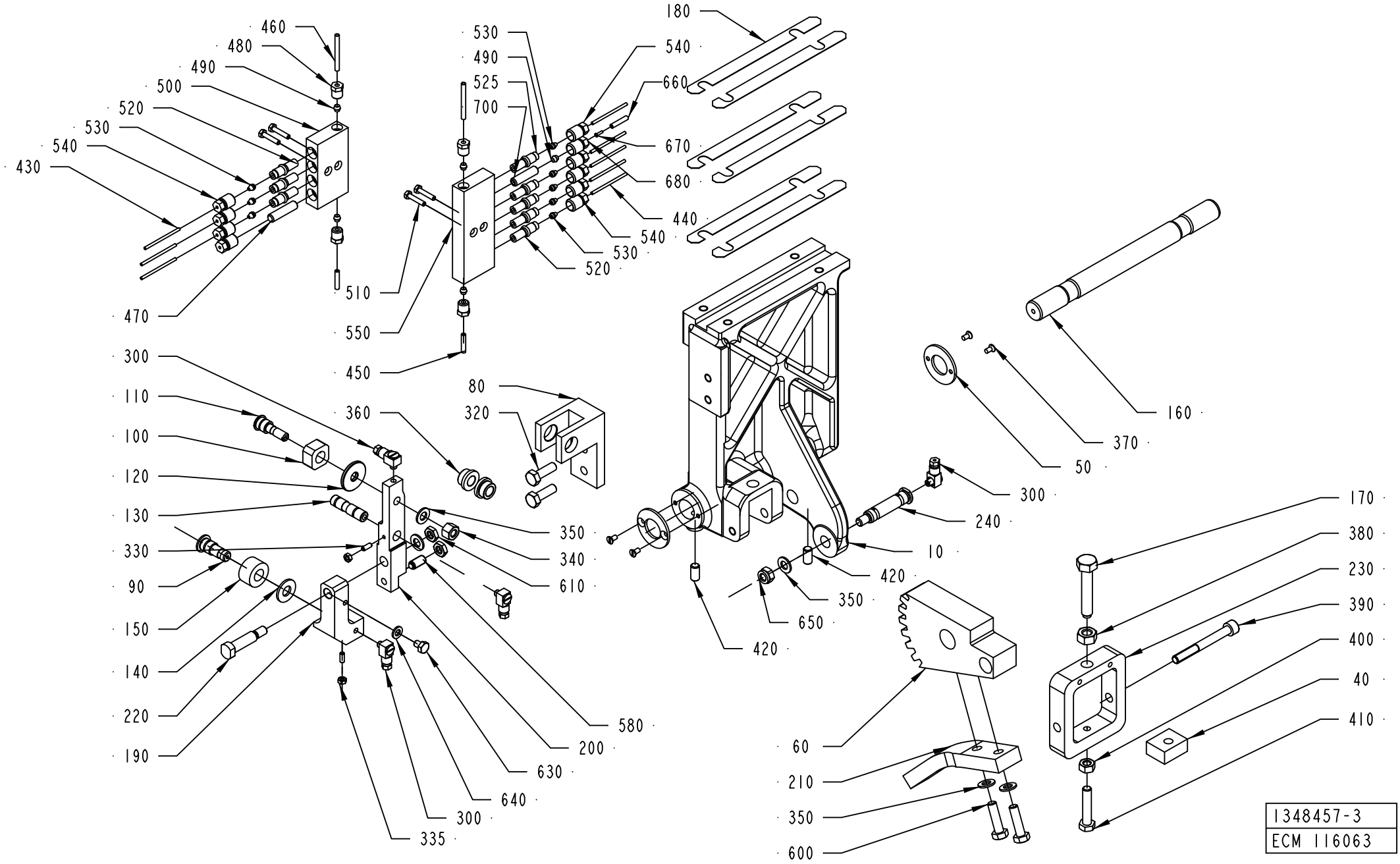
460
480
490
500
520
530
540
430
470
510
550
450
530
490
525
700
180
540
660
670
680
440
540
530
520
300
110
100
120
130
330
90
150
140
220
190
360
80
320
350
340
610
580
200
630
640
300
335
420
650
350
420
10
240
300
50
370
160
60
210
350
600
170
380
230
390
400
40
410
1348457-3
ECM 116063

ECM: 212879 - 20050520
Group number: 1348457-0200
Assembly Drawing: 1348457-3_1_AA

This list covers pages from 4-204 to 4-207

Pos	Part No	UN	Qty	Description	Page No
A3/FLEX NOQC (See drawing on page: 4-204)					
080	1036617-0000		1	BRACKET	
090	1036620-0000		1	SHAFT	
100	256628-0000		1	PIECE	
110	256629-0001		1	AXLE PIN	
120	441706-0000		1	WASHER	
130	1036615-0000		1	SHAFT	
140	1036616-0000		1	WASHER	
150	1036618-0000		1	ROLL	
190	1348671-0000		1	JOINT LEFT	
200	1512316-0000		1	ARM LEFT	
220	1348669-0000		1	SCREW	
300	90134-0058		4	CONNECTION	
320	312105-0453		2	SCREW M6S ISO 4017 M8X25 A480	
330	312318-0289		2	SCREW ISO4029 M4X10 A4	
335	312605-0312		2	HEXAGON NUT, M6M M4 A280	
340	312811-0318		1	NUT HEX.LOCK HELI COIL M8 SS	
350	315105-0165		5	WASHER BRB8,4X16RFR	
360	321101-0163		2	FLANGE BUSHING, 10X16X10 MM	
450	90166-0109	MM	600	TUBE 4 MM PA,TRANSP.	
470	90134-0052		1	PLUG DOSING BLOCK	
490	90028-0021		5	CONE TUBE 4 MM	
520	90092-0052		7	METERING VALVE 10 MM3	
525	90092-0054		1	METERING VALVE 50 MM3	
530	90028-0020		8	CONE TUBE 2,5MM	
540	90134-0039		9	BUSHING VALVE CONNECTION 2,5 MM	
580	90287-0112		1	SCREW SPRINGLOAD. SLOTTED HEAD M8X16	
610	312625-0318		2	HEXAGON THIN NUT, EN 24035 ML6M M8 A4	
630	312105-0362		1	SCREW M6S ISO 4017 M6X8 A480	
640	315105-0153		1	WASHER BRB6,4X12RFR	
660	90166-0109	MM	1000	TUBE 4 MM PA,TRANSP.	
670	90134-0031		1	SLEEVE FOR PLASTIC TUBE	
680	90134-0040		1	BUSHING VALVE CONNECTION 4 MM	
700	90134-0051		1	SPACING COLLAR DOSING BLOCK	
A3/FLEX TBA 0250SQ QC, A3/FLEX TBA 0200SQ QC (See drawing on page: 4-206)					
080	1338793-0000		1	BRACKET	
090	1036620-0000		1	SHAFT	
100	256628-0000		1	PIECE	
110	256629-0001		1	AXLE PIN	
120	441706-0000		1	WASHER	
130	1036615-0000		1	SHAFT	
140	1036616-0000		1	WASHER	
150	1036618-0000		1	ROLL	
190	1348671-0000		1	JOINT LEFT	
200	1512316-0000		1	ARM LEFT	
220	1348669-0000		1	SCREW	
300	90134-0058		4	CONNECTION	
320	312105-0453		2	SCREW M6S ISO 4017 M8X25 A480	
330	312318-0289		2	SCREW ISO4029 M4X10 A4	
335	312605-0312		2	HEXAGON NUT, M6M M4 A280	
340	312811-0318		1	NUT HEX.LOCK HELI COIL M8 SS	
350	315105-0165		5	WASHER BRB8,4X16RFR	
360	321101-0163		2	FLANGE BUSHING, 10X16X10 MM	
450	90166-0109	MM	600	TUBE 4 MM PA,TRANSP.	
470	90134-0052		3	PLUG DOSING BLOCK	
490	90028-0021		5	CONE TUBE 4 MM	
520	90092-0052		5	METERING VALVE 10 MM3	
525	90092-0054		1	METERING VALVE 50 MM3	
530	90028-0020		6	CONE TUBE 2,5MM	
540	90134-0039		9	BUSHING VALVE CONNECTION 2,5 MM	
580	90287-0112		1	SCREW SPRINGLOAD. SLOTTED HEAD M8X16	
610	312625-0318		2	HEXAGON THIN NUT, EN 24035 ML6M M8 A4	
630	312105-0362		1	SCREW M6S ISO 4017 M6X8 A480	
640	315105-0153		1	WASHER BRB6,4X12RFR	
660	90166-0109	MM	1000	TUBE 4 MM PA,TRANSP.	
670	90134-0031		1	SLEEVE FOR PLASTIC TUBE	
680	90134-0040		1	BUSHING VALVE CONNECTION 4 MM	
700	90134-0051		1	SPACING COLLAR DOSING BLOCK	
A3/FLEX TBA 0500B QC, A3/FLEX TBA 1000B QC, A3/FLEX TBA 0200B QC, A3/FLEX TBA 0250B QC, A3/FLEX TBA 0330S QC, A3/FLEX TBA 1890S QC, A3/FLEX TBA 2000S QC, A3/FLEX TBA 0250S QC, A3/FLEX TBA 0200M QC, A3/FLEX TPA 0750SQ QC, A3/FLEX TPA 1000SQ QC, A3/FLEX TPA 0200SQ QC, A3/FLEX TPA 0250SQ QC (See drawing on page: 4-206)					
080	1036617-0000		1	BRACKET	
090	1036620-0000		1	SHAFT	
100	256628-0000		1	PIECE	
110	256629-0001		1	AXLE PIN	
120	441706-0000		1	WASHER	
130	1036615-0000		1	SHAFT	
140	1036616-0000		1	WASHER	
150	1036618-0000		1	ROLL	
190	1348671-0000		1	JOINT LEFT	
200	1512316-0000		1	ARM LEFT	
220	1348669-0000		1	SCREW	
300	90134-0058		4	CONNECTION	

Machine Type | Group Description | Used-In | Group Number | Page No

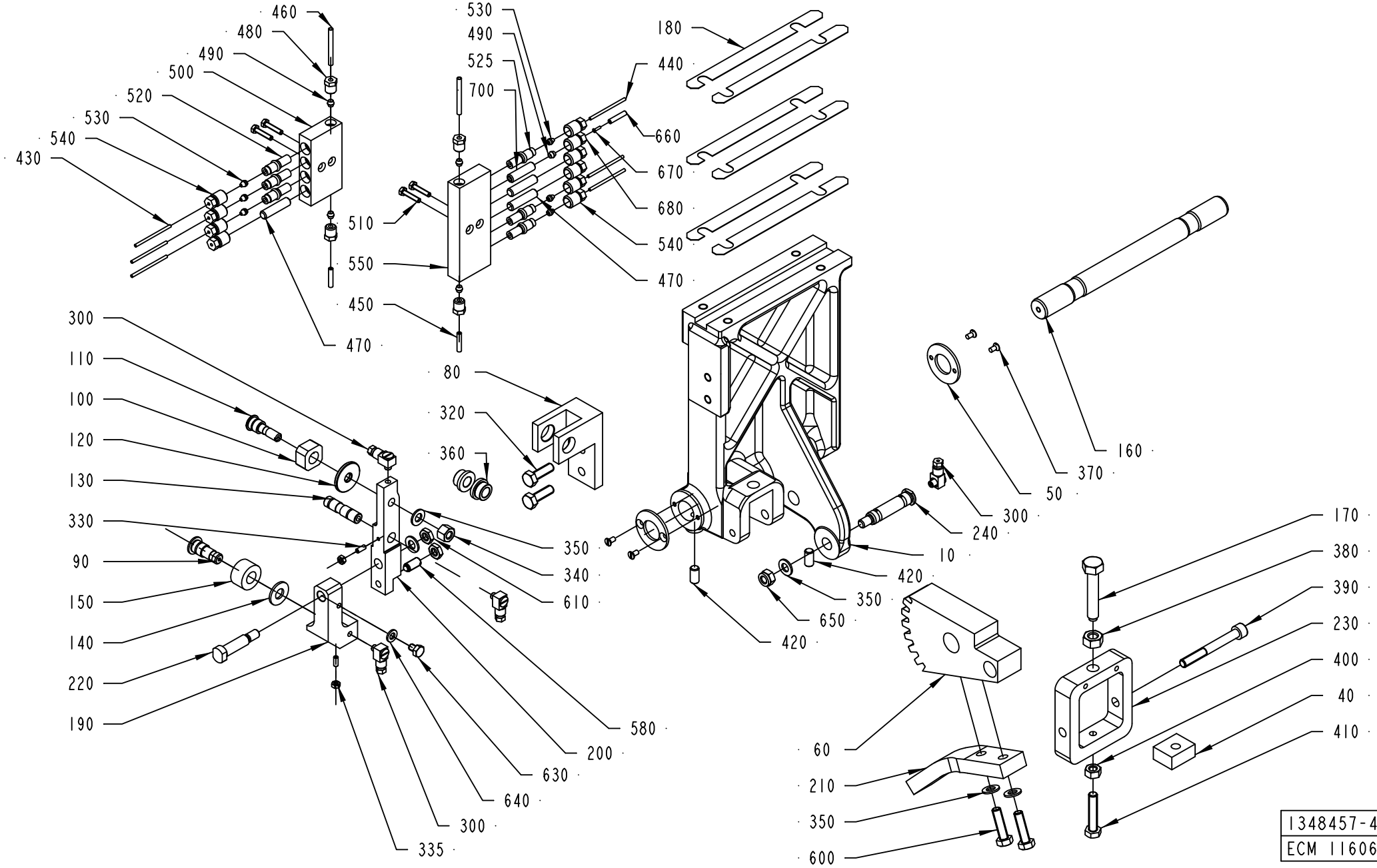
460
480
490
500
520
530
540
430
530
490
525
700
180
440
660
670
680
540
470
510
550
450
470
300
110
100
120
130
330
90
150
140
220
190
80
320
360
350
340
610
580
200
630
640
300
335
420
650
350
420
10
240
300
50
370
160
170
380
390
230
400
40
410
60
210
350
600
1348457-4
ECM 116063

Pos	Part No	UN	Qty	Description	Page No
A3/FLEX TBA 0500B QC, A3/FLEX TBA 1000B QC, A3/FLEX TBA 0200B QC, A3/FLEX TBA 0250B QC,					
A3/FLEX TBA 0330S QC, A3/FLEX TBA 1890S QC, A3/FLEX TBA 2000S QC, A3/FLEX TBA 0250S QC,					
A3/FLEX TBA 0200M QC, A3/FLEX TPA 0750SQ QC, A3/FLEX TPA 1000SQ QC, A3/FLEX TPA 0200SQ QC,					
A3/FLEX TPA 0250SQ QC (Cont'd) (See drawing on page: 4-206)					
300	90134-0058		4	CONNECTION	
320	312105-0453		2	SCREW M6S ISO 4017 M8X25 A480	
330	312318-0289		2	SCREW ISO4029 M4X10 A4	
335	312605-0312		2	HEXAGON NUT, M6M M4 A280	
340	312811-0318		1	NUT HEX.LOCK HELI COIL M8 SS	
350	315105-0165		5	WASHER BRB8,4X16RFR	
360	321101-0163		2	FLANGE BUSHING, 10X16X10 MM	
450	90166-0109	MM	600	TUBE 4 MM PA,TRANSP.	
470	90134-0052		3	PLUG DOSING BLOCK	
490	90028-0021		5	CONE TUBE 4 MM	
520	90092-0052		5	METERING VALVE 10 MM3	
525	90092-0054		1	METERING VALVE 50 MM3	
530	90028-0020		6	CONE TUBE 2,5MM	
540	90134-0039		9	BUSHING VALVE CONNECTION 2,5 MM	
580	90287-0112		1	SCREW SPRINGLOAD. SLOTTED HEAD M8X16	
610	312625-0318		2	HEXAGON THIN NUT, EN 24035 ML6M M8 A4	
630	312105-0362		1	SCREW M6S ISO 4017 M6X8 A480	
640	315105-0153		1	WASHER BRB6,4X12RFR	
660	90166-0109	MM	1000	TUBE 4 MM PA,TRANSP.	
670	90134-0031		1	SLEEVE FOR PLASTIC TUBE	
680	90134-0040		1	BUSHING VALVE CONNECTION 4 MM	
700	90134-0051		1	SPACING COLLAR DOSING BLOCK	
Common Parts					
010	2536048-0000		1	ARM	
040	14729-0000		1	NUT	
050	536704-0000		2	WASHER	
060	1036155-0000		1	TOOTH PART	
160	1035788-0000		1	SHAFT	
170	32957-0000		1	SCREW	
180	1037254-0000		6	SHIM	
210	1484320-0000		1	ROD	
230	1038867-0000		1	BOW CLAMP	
240	1037853-0000		1	SHAFT	
370	312145-0287		4	SCREW ISO 2009 MFS M4X8 A4	
380	312635-0320		1	NUT M6M 10X1 STAINLESS A2 80	
390	312115-0465		1	SCREW ISO4762 M8X70 A4 80	
400	312605-0318		1	HEXAGON NUT, M6M M8 A280	
410	312109-0459		1	SCREW M6S ISO 4017 M8X40 A480	
420	312318-0449		2	SCREW ISO4029 M8X16 A4	
430	90166-0143	M	3	TUBE 2,5 MM PA,TRANSP.	
440	90266-0019	MM	200	PIPE	
460	90266-0165	MM	100	BRASS PIPE	
480	90134-0038		4	BUSHING/NUT INLET/OUTLET 4 MM	
500	90032-0039		1	BLOCK 4 WAYS	
510	312105-0295		4	SCREW M6S ISO 4017 M4X20 A470	
550	90032-0040		1	BLOCK 6 WAYS	
600	312105-0455		2	SCREW M6S ISO 4017 M8X30 A480	
650	312812-0318		1	HEXAGON NUT, NY-LOCK M8 A480	

Machine Type | Group Description | Used-In | Group Number | Page No

YOKE RIGHT

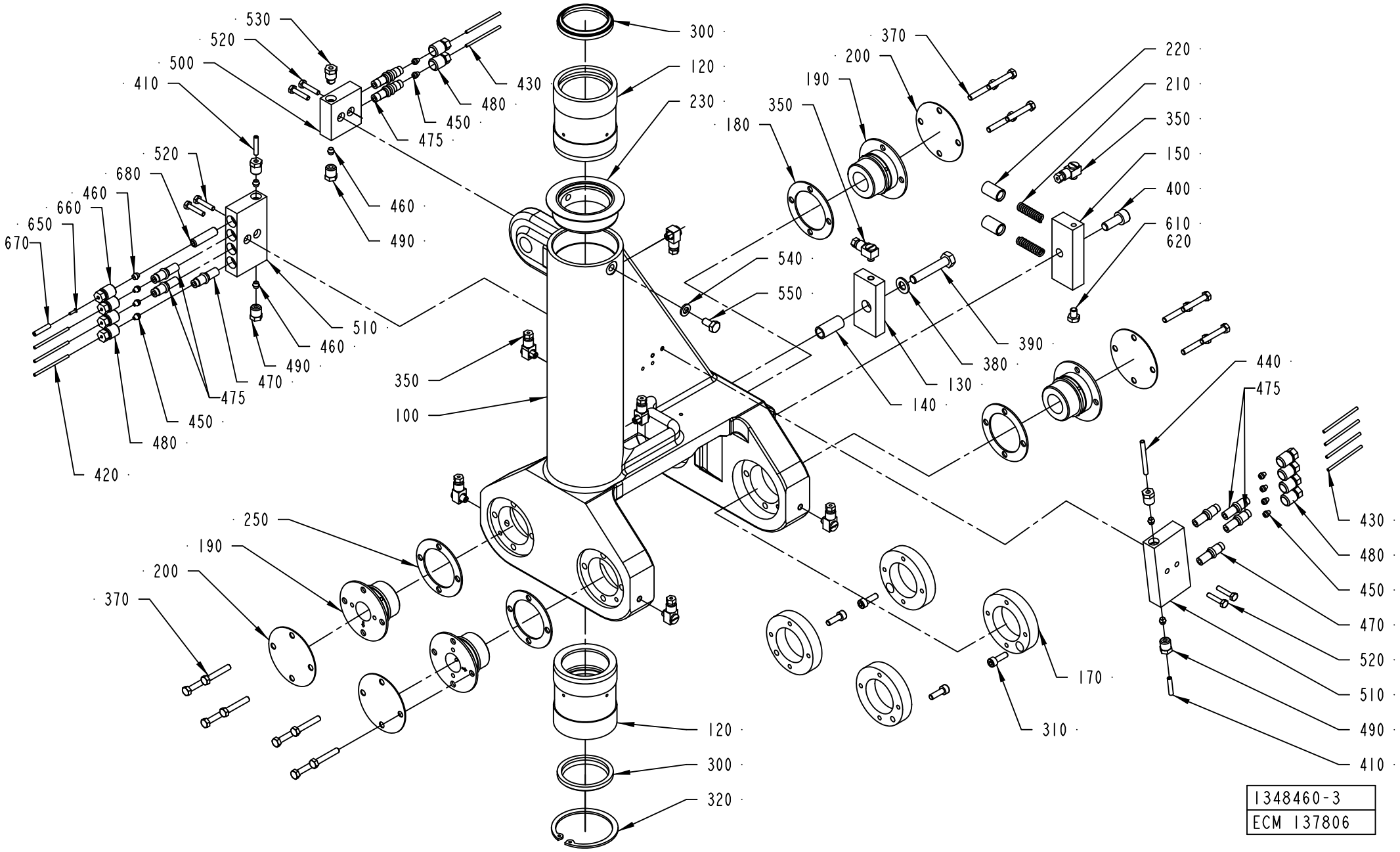
530
520
500
410
430
300
120
230
480
450
475
460
490
520
680
460
660
650
670
510
460
490
470
475
450
480
420
350
100
370
200
190
180
350
220
210
350
150
400
610
620
540
550
390
380
130
140
440
475
430
480
450
470
520
510
490
410
250
190
200
370
120
300
320
170
310
1348460-3
ECM 137806

ECM: 189464 - 20050103
Group number: 1348460-0200
Assembly Drawing: 1348460-3_1_AB

Pos	Part No	UN	Qty	Description	Page No
A3/FLEX					
450	90028-0020		9	CONE TUBE 2,5MM	
460	90028-0021		6	CONE TUBE 4 MM	
470	90092-0052		3	METERING VALVE 10 MM3	
480	90134-0039		9	BUSHING VALVE CONNECTION 2,5 MM	
650	90134-0031		1	SLEEVE FOR PLASTIC TUBE	
660	90134-0040		1	BUSHING VALVE CONNECTION 4 MM	
670	90166-0109	MM	1000	TUBE 4 MM PA,TRANSP.	
680	90134-0051		1	SPACING COLLAR DOSING BLOCK	
Common Parts					
100	1195361-0000		1	YOKE RIGHT	
120	1035954-0000		2	BUSHING	
130	1037104-0000		1	LOCATING PIECE	
140	1037106-0000		1	SLEEVE	
150	1349972-0000		1	SPRING HOUSING	
170	36753-0000		4	RING	
180	29886-0000		2	LACE	
190	246513-0000		4	BEARING	
200	239874-0000		4	WASHER	
210	20494-0000		2	COMPRESSION SPRING	
220	31838-0000		2	PLUNGER	
230	1349780-0000		1	LID	
250	1038509-0000		2	WASHER	
300	90091-0358		2	SCRAPER, ASOB 45X53X7 MM	
310	312115-0329		4	SCREW ISO4762 M5X16 A4 80	
320	315753-0135		1	RETAINING RING FOR BORE DIN 472 60 A2	
350	90134-0058		8	CONNECTION	
370	312105-0335		16	SCREW M6S ISO 4014 M5X30 A480	
380	315105-0165		1	WASHER BRB8,4X16RFR	
390	312109-0460		1	SCREW M6S ISO 4017 M8X45 A480	
400	312115-0451		1	SCREW ISO4762 M8X20 A4 80	
410	90166-0109	MM	500	TUBE 4 MM PA,TRANSP.	
420	90166-0143	MM	500	TUBE 2,5 MM PA,TRANSP.	
430	90266-0019	MM	300	PIPE	
440	90266-0165	MM	500	BRASS PIPE	
475	90092-0054		6	METERING VALVE 50 MM3	
490	90134-0038		5	BUSHING/NUT INLET/OUTLET 4 MM	
500	90032-0038		1	BLOCK 2 WAYS	
510	90032-0039		2	BLOCK 4 WAYS	
520	312105-0295		6	SCREW M6S ISO 4017 M4X20 A470	
530	90087-0019		1	PLUG M10X1 STAINLESS	
540	315105-0153		1	WASHER BRB6,4X12RFR	
550	312105-0366		1	SCREW M6S ISO 4017 M6X12 A480	
610	312105-0362		1	SCREW M6S ISO 4017 M6X8 A480	
620	90157-0021		1	LOCKING FLUID LOCTITE 270	

Machine Type | Group Description | Used-In | Group Number | Page No

PRESSURE ARM RIGHT

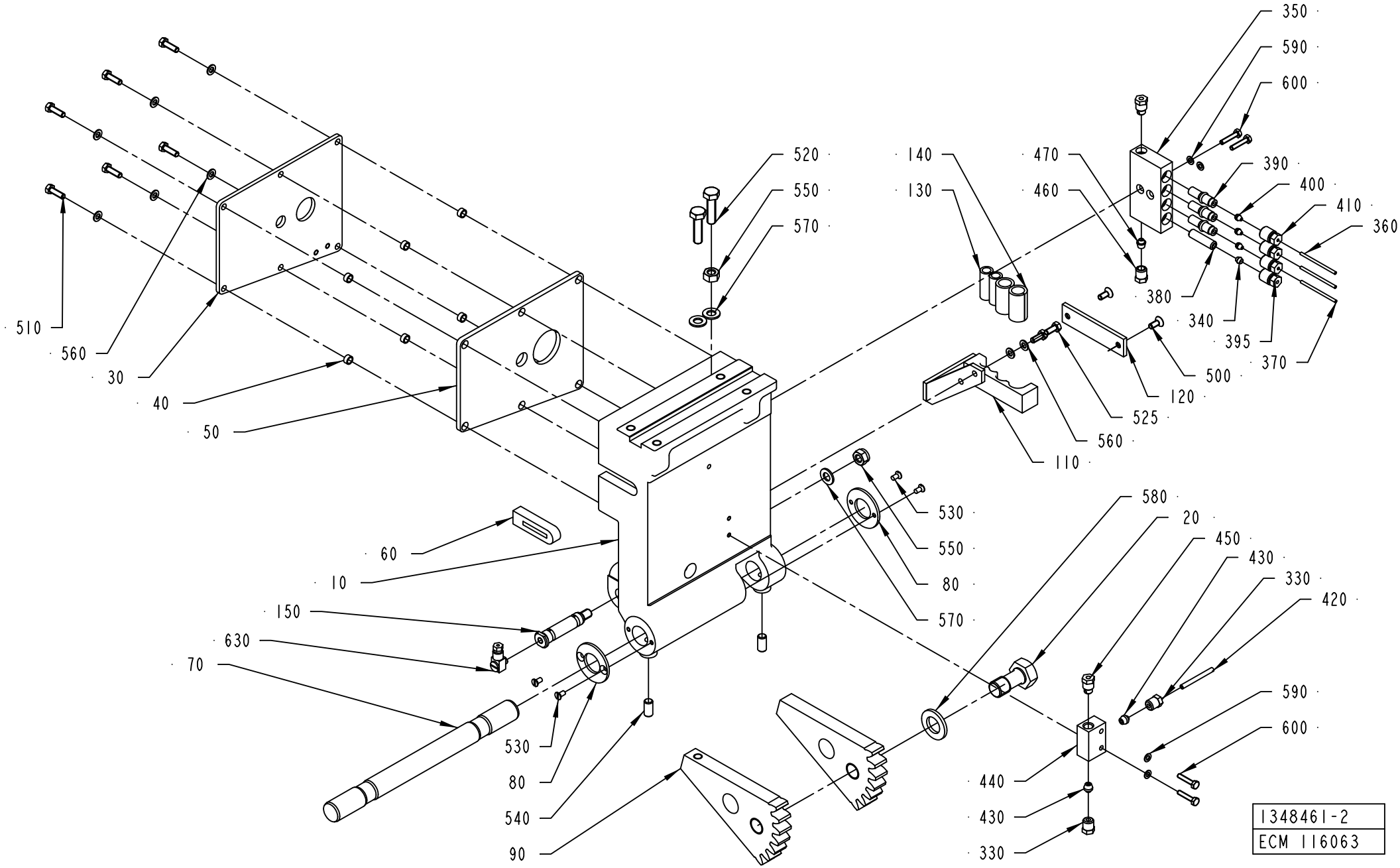

ECM: 189465 - 20050103
Group number: 1348461-0200
Assembly Drawing: 1348461-2_1_AA

This list covers pages from 4-210 to 4-213

Pos	Part No	UN	Qty	Description	Page No
A3/FLEX QC (See drawing on page: 4-212)					
030	1036485-0000		1	COVERING PLATE	
040	1036501-0000		6	SPACER	
050	1036484-0000		1	GASKET	
060	1036483-0000		1	SEAL	
390	90092-0052		1	METERING VALVE 10 MM3	
400	90028-0020		1	CONE TUBE 2,5MM	
510	312105-0329		6	SCREW M6S ISO 4017 M5X16 A480	
560	315105-0146		8	WASHER BRB5,3X10RFR	
650	90134-0052		2	PLUG DOSING BLOCK	
A3/FLEX NOQC (See drawing on page: 4-210)					
030	1036485-0000		1	COVERING PLATE	
040	1036501-0000		6	SPACER	
050	1036484-0000		1	GASKET	
060	1036483-0000		1	SEAL	
390	90092-0052		3	METERING VALVE 10 MM3	
400	90028-0020		3	CONE TUBE 2,5MM	
510	312105-0329		6	SCREW M6S ISO 4017 M5X16 A480	
560	315105-0146		8	WASHER BRB5,3X10RFR	
Common Parts					
010	1035878-0000		1	ARM RIGHT	
020	1037069-0000		1	SCREW	
070	1035788-0000		1	SHAFT	
080	536704-0000		2	WASHER	
090	1036156-0000		2	TOOTH PART	
110	1348196-0000		1	FASTENING PLATE	
120	1349868-0000		1	FASTENING PLATE	
130	1478000-0000		2	HOSE	
140	1478001-0000		2	HOSE	
150	1037853-0000		1	SHAFT	
330	90134-0038		2	BUSHING/NUT INLET/OUTLET 4 MM	
340	90028-0021		1	CONE TUBE 4 MM	
350	90032-0039		1	BLOCK 4 WAYS	
360	90166-0143	MM	1500	TUBE 2,5 MM PA,TRANSP.	
370	90266-0019	MM	500	PIPE	
380	90134-0051		1	SPACING COLLAR DOSING BLOCK	
395	90134-0040		1	BUSHING VALVE CONNECTION 4 MM	
410	90134-0039		3	BUSHING VALVE CONNECTION 2,5 MM	
420	90266-0165	MM	200	BRASS PIPE	
430	90028-0024		2	CONE TUBE 4 MM	
440	90032-0043		1	DISTRIBUTION BLOCK 3 WAYS	
450	90087-0019		2	PLUG M10X1 STAINLESS	
460	90134-0055		1	BUSHING/NUT INLET/OUTLET 6 MM	
470	90028-0025		1	CONE TUBE 6 MM	
500	312155-0327		2	SCREW DIN 7991 MF6S M5X12 A4 70	
520	312105-0455		2	SCREW M6S ISO 4017 M8X30 A480	
525	312105-0327		2	SCREW M6S ISO 4017 M5X12 A480	
530	312145-0287		4	SCREW ISO 2009 MFS M4X8 A4	
540	312318-0449		2	SCREW ISO4029 M8X16 A4	
550	312605-0318		1	HEXAGON NUT, M6M M8 A280	
570	315105-0165		1	WASHER BRB8,4X16RFR	
580	315105-0186		1	WASHER BRB17X30RFR	
590	315105-0136		4	WASHER BRB4,3XRFR	
600	312105-0295		4	SCREW M6S ISO 4017 M4X20 A470	
630	90134-0058		1	CONNECTION	
640	312812-0318		1	HEXAGON NUT, NY-LOCK M8 A480	

Machine Type | Group Description | Used-In | Group Number | Page No

PRESSURE ARM RIGHT

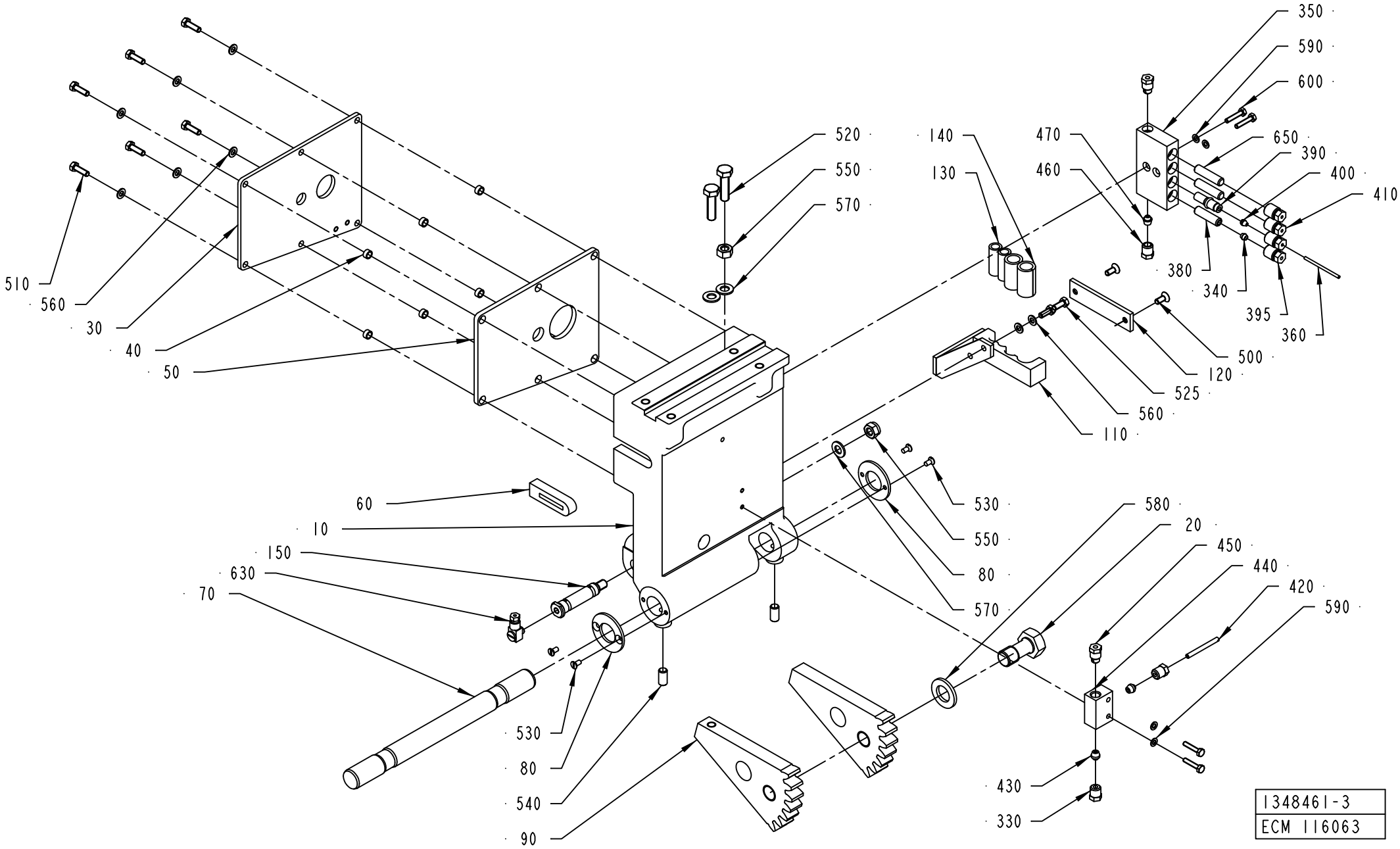

ECM: 189465 - 20050103
Group number: 1348461-0200
Assembly Drawing: 1348461-3_1_AA

This list covers pages from 4-210 to 4-213

Pos	Part No	UN	Qty	Description	Page No
A3/FLEX QC (See drawing on page: 4-212)					
030	1036485-0000		1	COVERING PLATE	
040	1036501-0000		6	SPACER	
050	1036484-0000		1	GASKET	
060	1036483-0000		1	SEAL	
390	90092-0052		1	METERING VALVE 10 MM3	
400	90028-0020		1	CONE TUBE 2,5MM	
510	312105-0329		6	SCREW M6S ISO 4017 M5X16 A480	
560	315105-0146		8	WASHER BRB5,3X10RFR	
650	90134-0052		2	PLUG DOSING BLOCK	
A3/FLEX NOQC (See drawing on page: 4-210)					
030	1036485-0000		1	COVERING PLATE	
040	1036501-0000		6	SPACER	
050	1036484-0000		1	GASKET	
060	1036483-0000		1	SEAL	
390	90092-0052		3	METERING VALVE 10 MM3	
400	90028-0020		3	CONE TUBE 2,5MM	
510	312105-0329		6	SCREW M6S ISO 4017 M5X16 A480	
560	315105-0146		8	WASHER BRB5,3X10RFR	
Common Parts					
010	1035878-0000		1	ARM RIGHT	
020	1037069-0000		1	SCREW	
070	1035788-0000		1	SHAFT	
080	536704-0000		2	WASHER	
090	1036156-0000		2	TOOTH PART	
110	1348196-0000		1	FASTENING PLATE	
120	1349868-0000		1	FASTENING PLATE	
130	1478000-0000		2	HOSE	
140	1478001-0000		2	HOSE	
150	1037853-0000		1	SHAFT	
330	90134-0038		2	BUSHING/NUT INLET/OUTLET 4 MM	
340	90028-0021		1	CONE TUBE 4 MM	
350	90032-0039		1	BLOCK 4 WAYS	
360	90166-0143	MM	1500	TUBE 2,5 MM PA,TRANSP.	
370	90266-0019	MM	500	PIPE	
380	90134-0051		1	SPACING COLLAR DOSING BLOCK	
395	90134-0040		1	BUSHING VALVE CONNECTION 4 MM	
410	90134-0039		3	BUSHING VALVE CONNECTION 2,5 MM	
420	90266-0165	MM	200	BRASS PIPE	
430	90028-0024		2	CONE TUBE 4 MM	
440	90032-0043		1	DISTRIBUTION BLOCK 3 WAYS	
450	90087-0019		2	PLUG M10X1 STAINLESS	
460	90134-0055		1	BUSHING/NUT INLET/OUTLET 6 MM	
470	90028-0025		1	CONE TUBE 6 MM	
500	312155-0327		2	SCREW DIN 7991 MF6S M5X12 A4 70	
520	312105-0455		2	SCREW M6S ISO 4017 M8X30 A480	
525	312105-0327		2	SCREW M6S ISO 4017 M5X12 A480	
530	312145-0287		4	SCREW ISO 2009 MFS M4X8 A4	
540	312318-0449		2	SCREW ISO4029 M8X16 A4	
550	312605-0318		1	HEXAGON NUT, M6M M8 A280	
570	315105-0165		1	WASHER BRB8,4X16RFR	
580	315105-0186		1	WASHER BRB17X30RFR	
590	315105-0136		4	WASHER BRB4,3XRFR	
600	312105-0295		4	SCREW M6S ISO 4017 M4X20 A470	
630	90134-0058		1	CONNECTION	
640	312812-0318		1	HEXAGON NUT, NY-LOCK M8 A480	

Machine Type	Group Description	Used-In	Group Number	Page No

CUTTING ARM RIGHT

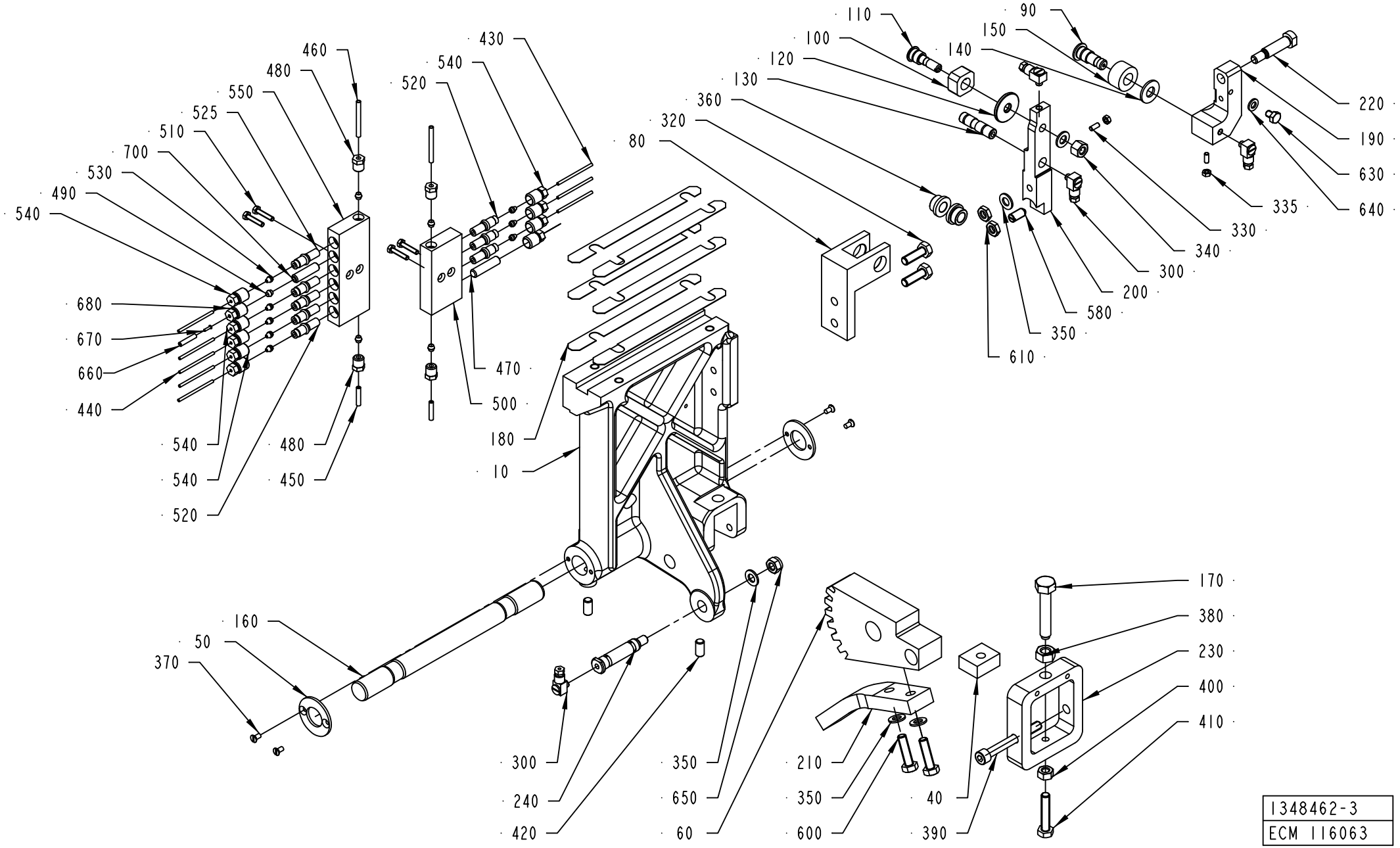

1348462-3
ECM 116063

ECM: 210191 - 20050520
Group number: 1348462-0200
Assembly Drawing: 1348462-3_1_AA

This list covers pages from 4-214 to 4-217

Pos	Part No	UN	Qty	Description	Page No
A3/FLEX NOQC (See drawing on page: 4-214)					
080	1036617-0000		1	BRACKET	
090	1036620-0000		1	SHAFT	
100	256628-0000		1	PIECE	
110	256629-0001		1	AXLE PIN	
120	441706-0000		1	WASHER	
130	1036615-0000		1	SHAFT	
140	1036616-0000		1	WASHER	
150	1036618-0000		1	ROLL	
190	1348672-0000		1	JOINT RIGHT	
200	1512315-0000		1	ARM RIGHT	
220	1348669-0000		1	SCREW	
300	90134-0058		4	CONNECTION	
320	312105-0453		2	SCREW M6S ISO 4017 M8X25 A480	
330	312318-0289		2	SCREW ISO4029 M4X10 A4	
335	312605-0312		2	HEXAGON NUT, M6M M4 A280	
340	312811-0318		1	NUT HEX.LOCK HELI COIL M8 SS	
350	315105-0165		5	WASHER BRB8,4X16RFR	
360	321101-0163		2	FLANGE BUSHING, 10X16X10 MM	
450	90166-0109	MM	600	TUBE 4 MM PA,TRANSP.	
470	90134-0052		1	PLUG DOSING BLOCK	
490	90028-0021		5	CONE TUBE 4 MM	
520	90092-0052		7	METERING VALVE 10 MM3	
525	90092-0054		1	METERING VALVE 50 MM3	
530	90028-0020		8	CONE TUBE 2,5MM	
540	90134-0039		9	BUSHING VALVE CONNECTION 2,5 MM	
580	90287-0112		1	SCREW SPRINGLOAD. SLOTTED HEAD M8X16	
610	312625-0318		2	HEXAGON THIN NUT, EN 24035 ML6M M8 A4	
630	312105-0362		1	SCREW M6S ISO 4017 M6X8 A480	
640	315105-0153		1	WASHER BRB6,4X12RFR	
660	90166-0109	MM	1000	TUBE 4 MM PA,TRANSP.	
670	90134-0031		1	SLEEVE FOR PLASTIC TUBE	
680	90134-0040		1	BUSHING VALVE CONNECTION 4 MM	
700	90134-0051		1	SPACING COLLAR DOSING BLOCK	
A3/FLEX TBA 0250SQ QC, A3/FLEX TBA 0200SQ QC (See drawing on page: 4-216)					
080	1338793-0000		1	BRACKET	
090	1036620-0000		1	SHAFT	
100	256628-0000		1	PIECE	
110	256629-0001		1	AXLE PIN	
120	441706-0000		1	WASHER	
130	1036615-0000		1	SHAFT	
140	1036616-0000		1	WASHER	
150	1036618-0000		1	ROLL	
190	1348672-0000		1	JOINT RIGHT	
200	1512315-0000		1	ARM RIGHT	
220	1348669-0000		1	SCREW	
300	90134-0058		4	CONNECTION	
320	312105-0453		2	SCREW M6S ISO 4017 M8X25 A480	
330	312318-0289		2	SCREW ISO4029 M4X10 A4	
335	312605-0312		2	HEXAGON NUT, M6M M4 A280	
340	312811-0318		1	NUT HEX.LOCK HELI COIL M8 SS	
350	315105-0165		5	WASHER BRB8,4X16RFR	
360	321101-0163		2	FLANGE BUSHING, 10X16X10 MM	
450	90166-0109	MM	600	TUBE 4 MM PA,TRANSP.	
470	90134-0052		3	PLUG DOSING BLOCK	
490	90028-0021		5	CONE TUBE 4 MM	
520	90092-0052		5	METERING VALVE 10 MM3	
525	90092-0054		1	METERING VALVE 50 MM3	
530	90028-0020		6	CONE TUBE 2,5MM	
540	90134-0039		9	BUSHING VALVE CONNECTION 2,5 MM	
580	90287-0112		1	SCREW SPRINGLOAD. SLOTTED HEAD M8X16	
610	312625-0318		2	HEXAGON THIN NUT, EN 24035 ML6M M8 A4	
630	312105-0362		1	SCREW M6S ISO 4017 M6X8 A480	
640	315105-0153		1	WASHER BRB6,4X12RFR	
660	90166-0109	MM	1000	TUBE 4 MM PA,TRANSP.	
670	90134-0031		1	SLEEVE FOR PLASTIC TUBE	
680	90134-0040		1	BUSHING VALVE CONNECTION 4 MM	
700	90134-0051		1	SPACING COLLAR DOSING BLOCK	
A3/FLEX TBA 0500B QC, A3/FLEX TBA 1000B QC, A3/FLEX TBA 0200B QC, A3/FLEX TBA 0250B QC, A3/FLEX TBA 0330S QC, A3/FLEX TBA 1890S QC, A3/FLEX TBA 2000S QC, A3/FLEX TBA 0250S QC, A3/FLEX TBA 0200M QC, A3/FLEX TPA 0750SQ QC, A3/FLEX TPA 1000SQ QC, A3/FLEX TPA 0200SQ QC, A3/FLEX TPA 0250SQ QC (See drawing on page: 4-216)					
080	1036617-0000		1	BRACKET	
090	1036620-0000		1	SHAFT	
100	256628-0000		1	PIECE	
110	256629-0001		1	AXLE PIN	
120	441706-0000		1	WASHER	
130	1036615-0000		1	SHAFT	
140	1036616-0000		1	WASHER	
150	1036618-0000		1	ROLL	
190	1348672-0000		1	JOINT RIGHT	
200	1512315-0000		1	ARM RIGHT	
220	1348669-0000		1	SCREW	
300	90134-0058		4	CONNECTION	

Machine Type | Group Description | Used-In | Group Number | Page No

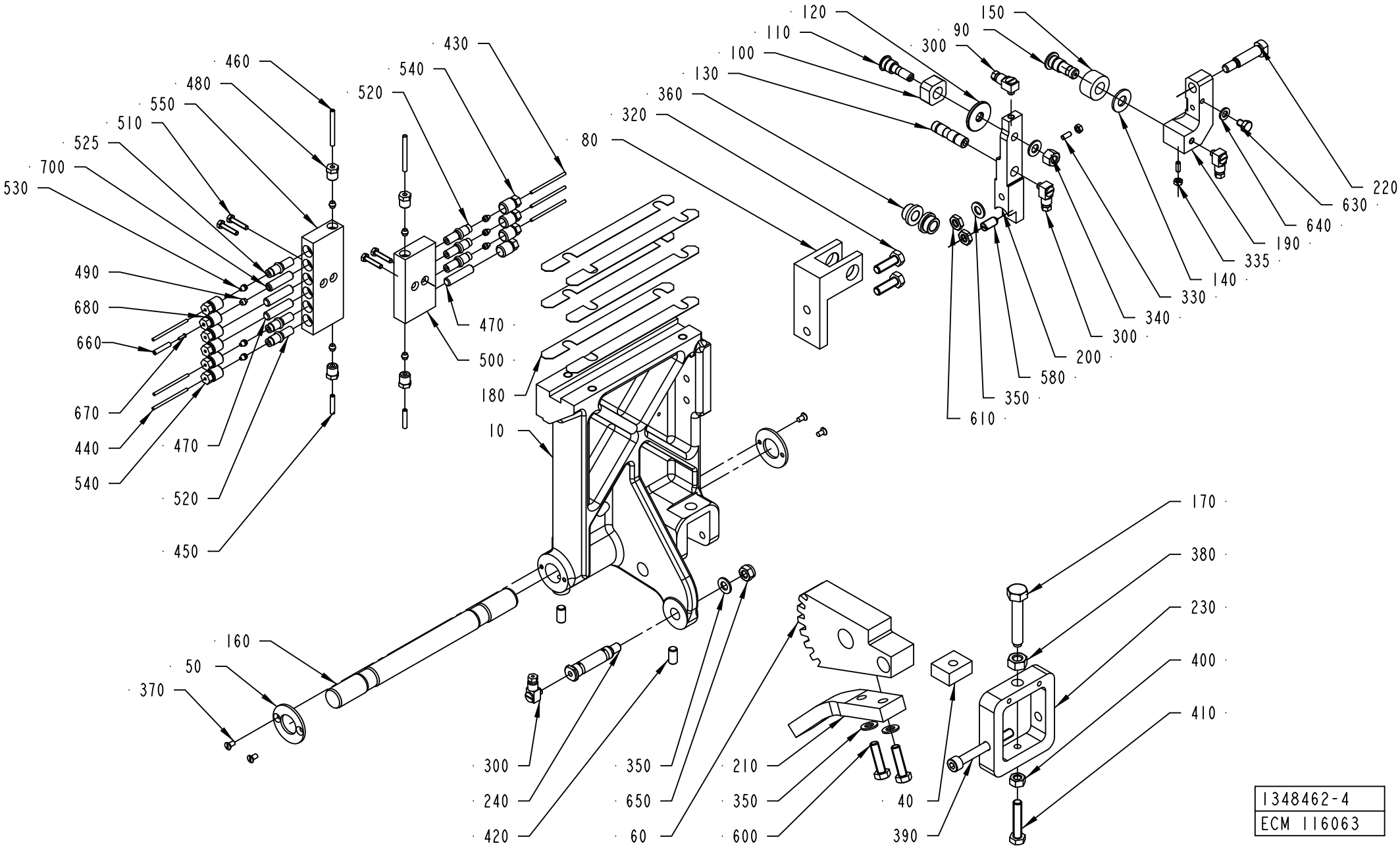
460
480
550
510
525
700
530
490
680
660
670
440
540
520
450
430
540
520
470
500
180
10
80
120
110
100
130
360
320
150
90
300
220
630
640
190
335
140
330
340
300
200
580
350
610
160
50
370
300
240
420
350
650
60
210
350
600
40
390
170
380
230
400
410
1348462-4
ECM 116063

ECM: 210191 - 20050520
Group number: 1348462-0200
Assembly Drawing: 1348462-4_1_AA

This list covers pages from 4-214 to 4-217

Pos	Part No	UN	Qty	Description	Page No
A3/FLEX TBA 0500B QC, A3/FLEX TBA 1000B QC, A3/FLEX TBA 0200B QC, A3/FLEX TBA 0250B QC,					
A3/FLEX TBA 0330S QC, A3/FLEX TBA 1890S QC, A3/FLEX TBA 2000S QC, A3/FLEX TBA 0250S QC,					
A3/FLEX TBA 0200M QC, A3/FLEX TPA 0750SQ QC, A3/FLEX TPA 1000SQ QC, A3/FLEX TPA 0200SQ QC,					
A3/FLEX TPA 0250SQ QC (Cont'd) (See drawing on page: 4-216)					
300	90134-0058		4	CONNECTION	
320	312105-0453		2	SCREW M6S ISO 4017 M8X25 A480	
330	312318-0289		2	SCREW ISO4029 M4X10 A4	
335	312605-0312		2	HEXAGON NUT, M6M M4 A280	
340	312811-0318		1	NUT HEX.LOCK HELI COIL M8 SS	
350	315105-0165		5	WASHER BRB8,4X16RFR	
360	321101-0163		2	FLANGE BUSHING, 10X16X10 MM	
450	90166-0109	MM	600	TUBE 4 MM PA,TRANSP.	
470	90134-0052		3	PLUG DOSING BLOCK	
490	90028-0021		5	CONE TUBE 4 MM	
520	90092-0052		5	METERING VALVE 10 MM3	
525	90092-0054		1	METERING VALVE 50 MM3	
530	90028-0020		6	CONE TUBE 2,5MM	
540	90134-0039		9	BUSHING VALVE CONNECTION 2,5 MM	
580	90287-0112		1	SCREW SPRINGLOAD. SLOTTED HEAD M8X16	
610	312625-0318		2	HEXAGON THIN NUT, EN 24035 ML6M M8 A4	
630	312105-0362		1	SCREW M6S ISO 4017 M6X8 A480	
640	315105-0153		1	WASHER BRB6,4X12RFR	
660	90166-0109	MM	1000	TUBE 4 MM PA,TRANSP.	
670	90134-0031		1	SLEEVE FOR PLASTIC TUBE	
680	90134-0040		1	BUSHING VALVE CONNECTION 4 MM	
700	90134-0051		1	SPACING COLLAR DOSING BLOCK	
Common Parts					
010	2536047-0000		1	ARM	
040	14729-0000		1	NUT	
050	536704-0000		2	WASHER	
060	1036155-0000		1	TOOTH PART	
160	1035788-0000		1	SHAFT	
170	32957-0000		1	SCREW	
180	1037254-0000		6	SHIM	
210	1484320-0000		1	ROD	
230	1038867-0000		1	BOW CLAMP	
240	1037853-0000		1	SHAFT	
370	312145-0287		4	SCREW ISO 2009 MFS M4X8 A4	
380	312635-0320		1	NUT M6M 10X1 STAINLESS A2 80	
390	312115-0465		1	SCREW ISO4762 M8X70 A4 80	
400	312605-0318		1	HEXAGON NUT, M6M M8 A280	
410	312109-0459		1	SCREW M6S ISO 4017 M8X40 A480	
420	312318-0449		2	SCREW ISO4029 M8X16 A4	
430	90166-0143	M	3	TUBE 2,5 MM PA,TRANSP.	
440	90266-0019	MM	200	PIPE	
460	90266-0165	MM	100	BRASS PIPE	
480	90134-0038		4	BUSHING/NUT INLET/OUTLET 4 MM	
500	90032-0039		1	BLOCK 4 WAYS	
510	312105-0295		4	SCREW M6S ISO 4017 M4X20 A470	
550	90032-0040		1	BLOCK 6 WAYS	
600	312105-0455		2	SCREW M6S ISO 4017 M8X30 A480	
650	312812-0318		1	HEXAGON NUT, NY-LOCK M8 A480	

Machine Type | Group Description | Used-In | Group Number | Page No

SCISSOR ARM LINK

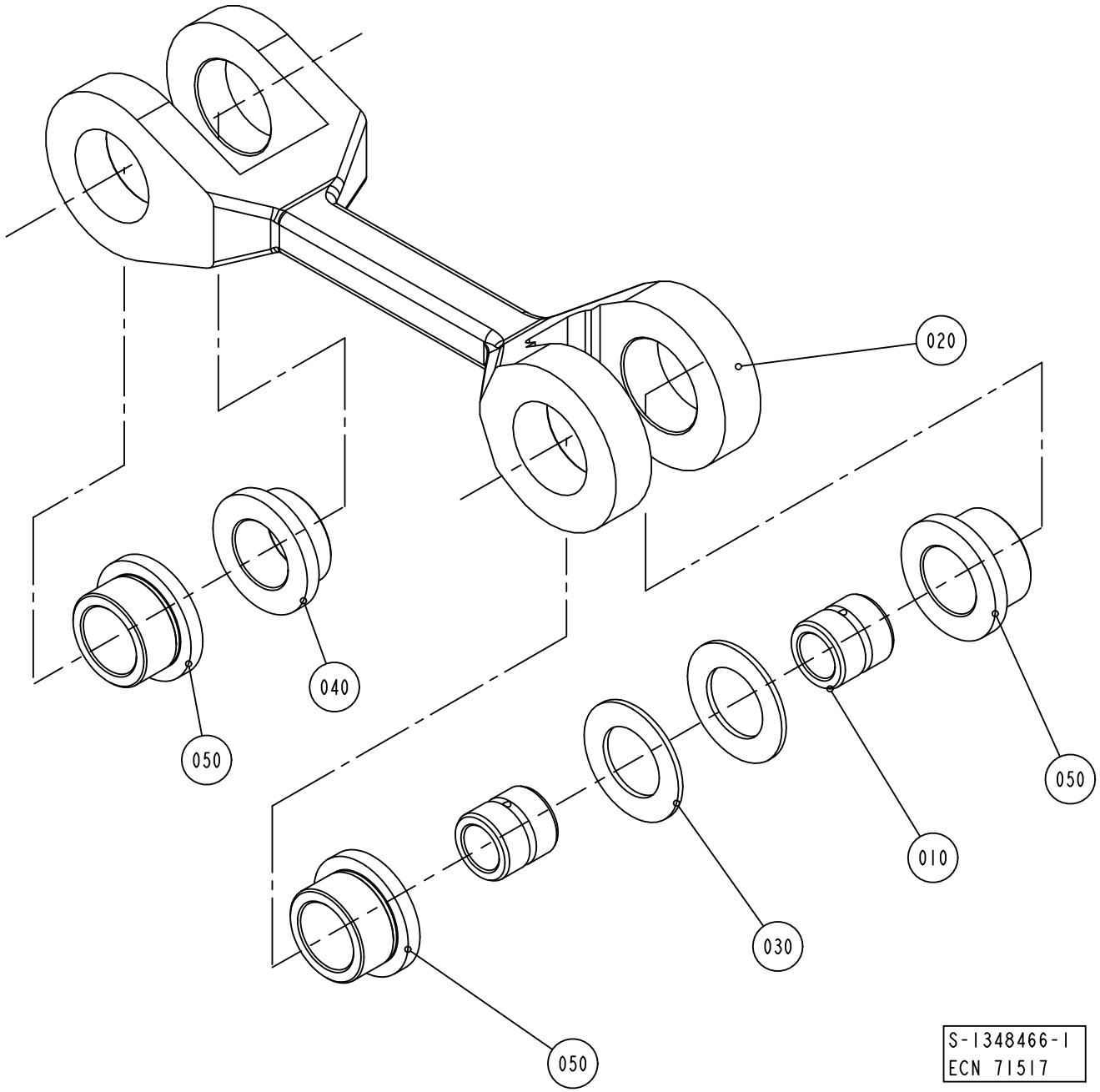

ECM: 191287 - 20041104
Group number: 1348466-0100
Assembly Drawing: 1348466-1_1_AA

Pos	Part No	UN	Qty	Description	Page No
-					
010	1037849-0000		2	SLEEVE	
020	1037851-0000		1	LINK	
030	1038021-0000		2	WASHER	
040	321101-0222		1	FLANGE BUSHING, 18X25X12	
050	321101-0223		3	FLANGE BUSHING, 18X25X16	

Pos	Part No	UN	Qty	Description	Page No

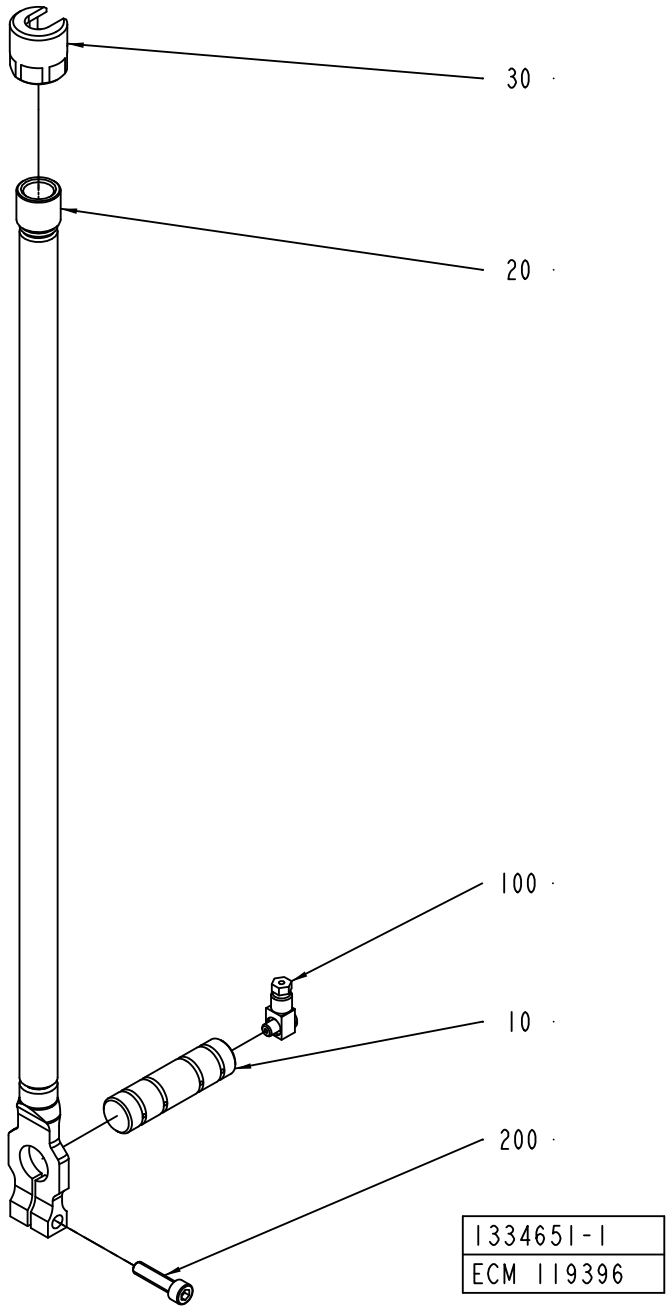
30
20
100
10
200
1334651-1
ECM 119396

ECM: 189466 - 20050103
Group number: 1334651-0100
Assembly Drawing: 1334651-1_1_AA

Pos	Part No	UN	Qty	Description	Page No
-					
010	1037852-0000		1	SHAFT	
020	1334652-0000		1	LINK	
030	1334654-0000		1	CONNECTION CLAMP	
040	312115-0372		1	SCREW ISO4762 M6X25 A4 80	
050	90134-0058		1	CONNECTION	

Pos	Part No	UN	Qty	Description	Page No

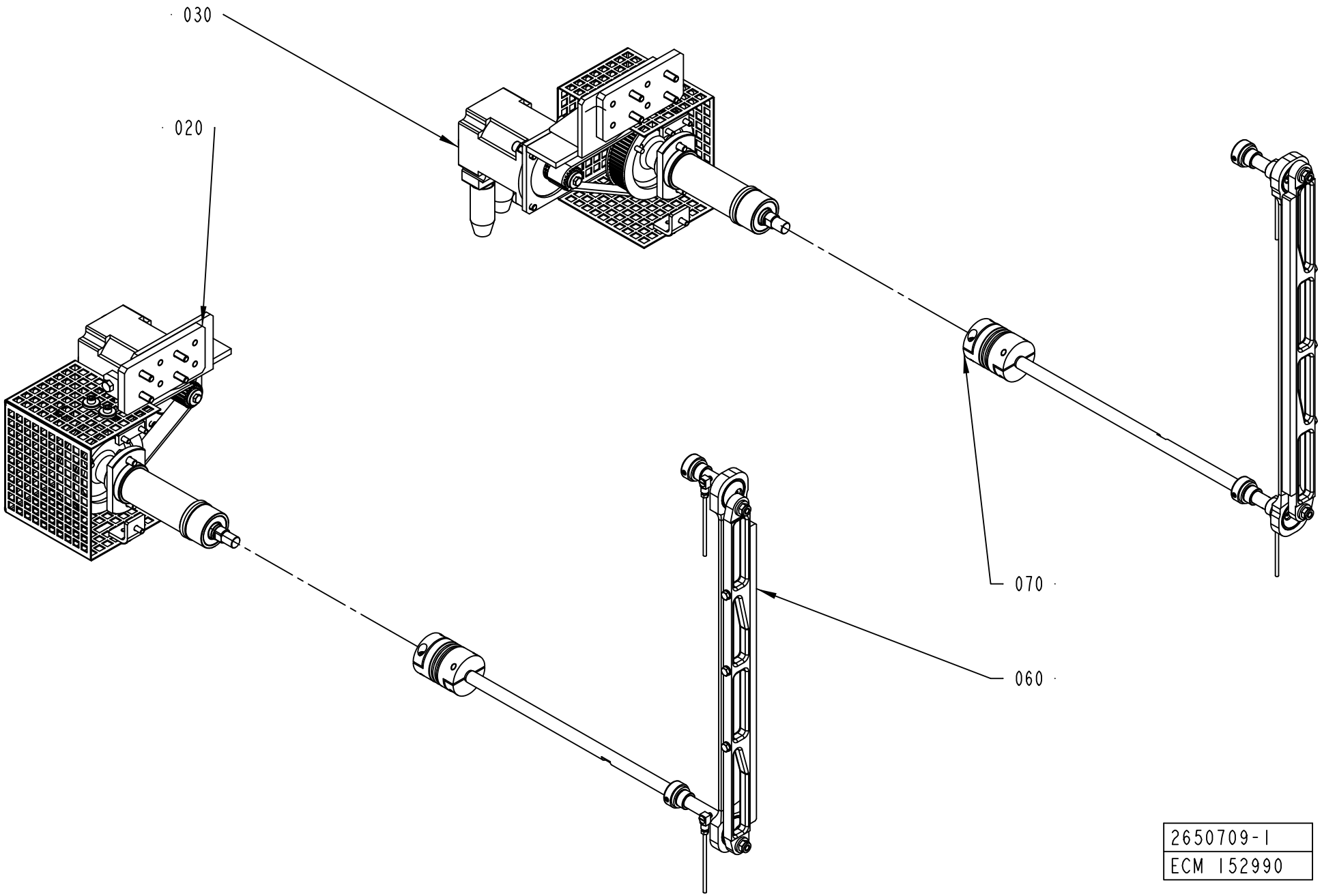
030
020
070
060
2650709-1
ECM 152990

ECM: 152994 - 20050101
Group number: 2650709-0100
Assembly Drawing: 2650709-1_1_AA

Pos	Part No	UN	Qty	Description	Page No
-					
020	2650710-0100		1	DRIVE UNIT	**4-225**
030	2650711-0100		1	DRIVE UNIT	**4-227**
060	2503665-0100		1	DESIGN CORRECTION DEVICE LEFT	**4-229**
070	2503666-0100		1	DESIGN CORRECTION DEVICE RIGHT	**4-231**

Pos	Part No	UN	Qty	Description	Page No

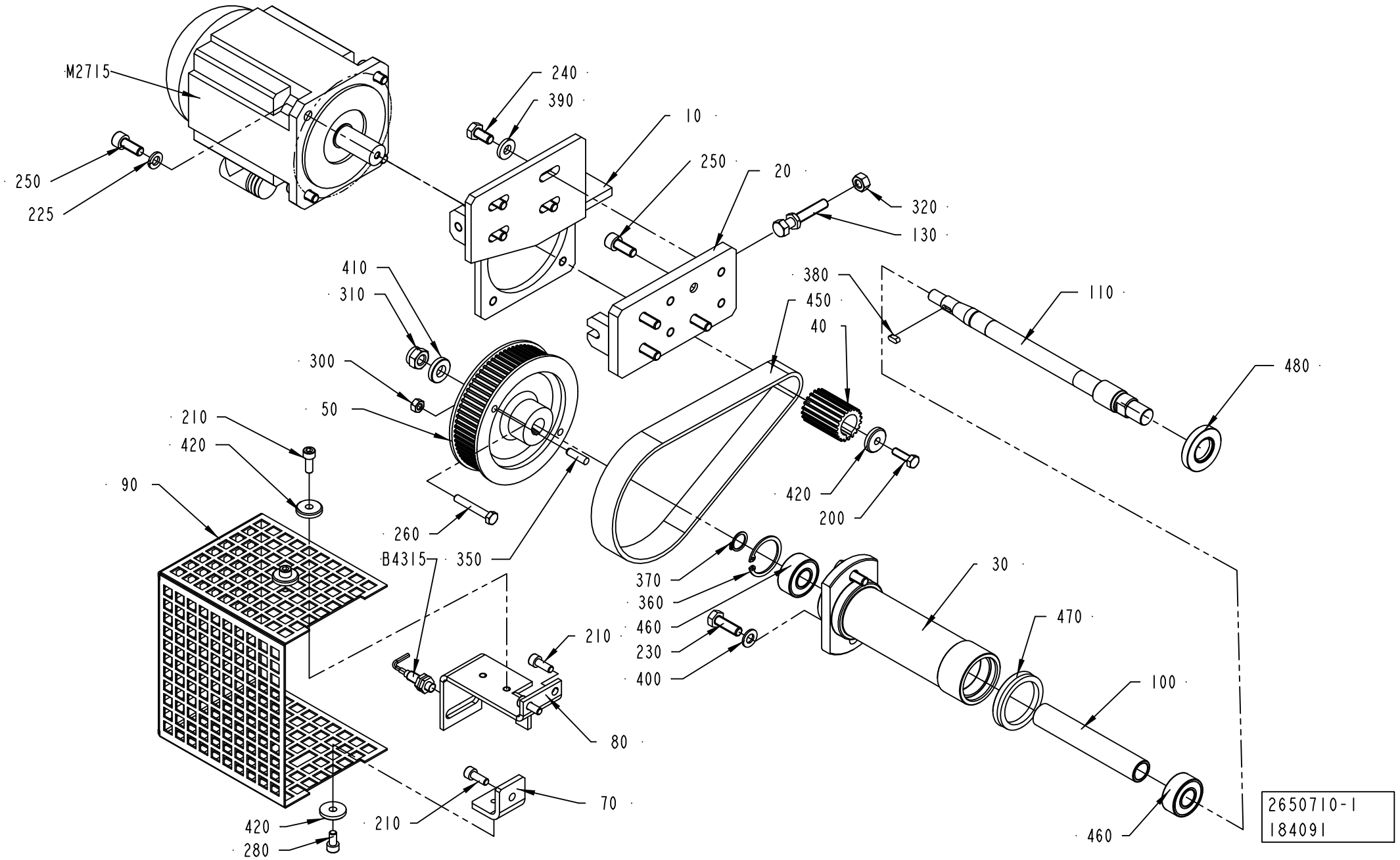
M2715
240
390
10
250
20
320
130
250
225
410
310
300
50
210
420
90
260
B4315
350
380
450
40
110
480
420
200
370
360
460
230
400
30
470
100
210
80
70
420
280
210
460
2650710-1
184091

ECM: 210187 - 20060509
Group number: 2650710-0100
Assembly Drawing: 2650710-1_1_AC

Pos	Part No	UN	Qty	Description	Page No
-					
010	2712128-0000		1	PLATE	
020	2650713-0000		1	PLATE	
030	2506334-0000		1	SUPPORT	
040	2652890-0000		1	TOOTHED PULLEY	
050	2652891-0000		1	TOOTHED PULLEY	
070	2506337-0000		1	ANGLE BRACKET	
080	2683976-0000		1	SUPPORT	
090	2506336-0000		1	PROTECTIVE COVER	
100	2506392-0000		1	SPACER	
110	2506338-0000		1	SHAFT	
130	2650717-0000		1	SCREW	
200	312105-0370		1	SCREW M6S ISO 4017 M6X20 A480	
210	312115-0368		5	SCREW ISO4762 M6X16 A4 80	
225	315402-0165		4	LOCK WASHER FBB 8,2	
230	312105-0453		2	SCREW M6S ISO 4017 M8X25 A480	
240	312105-0449		8	SCREW M6S ISO 4017 M8X16 A480	
250	312115-0451		4	SCREW ISO4762 M8X20 A4 80	
260	312109-0378		1	SCREW M6S ISO 4017 M6X40 A480	
280	312115-0366		2	SCREW ISO4762 M6X12 A4 80	
300	312605-0316		1	HEXAGON NUT, M6M M6 A280	
310	312812-0320		1	HEXAGON NUT, NY-LOCK M10 A480	
320	312605-0318		1	HEXAGON NUT, M6M M8 A280	
350	311103-0354		1	PARALLEL PIN ISO 2338 6M6X22 A1	
360	315753-0124		1	RETAINING RING FOR BORE DIN 472 35 A2	
370	315751-0112		1	RETAINING RING FOR SHAFT DIN 471 15 A2	
380	315701-0165		1	PARALLEL KEY W. ROUND ENDS 4X4X10 MM	
390	1558447-0000		4	SPACER	
400	315105-0165		2	WASHER BRB8,4X16RFR	
410	315115-0173		1	WASHER PLAIN, TBRB 10,5/22 H=4	
420	315125-0153		4	WASHER TBRSB 6,4X22X4 A4	
450	90459-3759		1	TIMING BELT 5MR-550-25	
460	90214-0194		2	SPHERICAL BALL BEARING, 15X35X1 MM	
470	90091-0138		1	V-RINGS 40X50X9 MM V-45A	
480	90091-0436		1	RADIAL SEAL 20X40X7 MM DUST LIP	
B4315	90458-0138		1	PROX. SWITCH, E2EG-X1R5B1-5M	
M2715	90459-5211		1	SERVO MOTOR AKM51E-HCS2R-02	

Pos	Part No	UN	Qty	Description	Page No

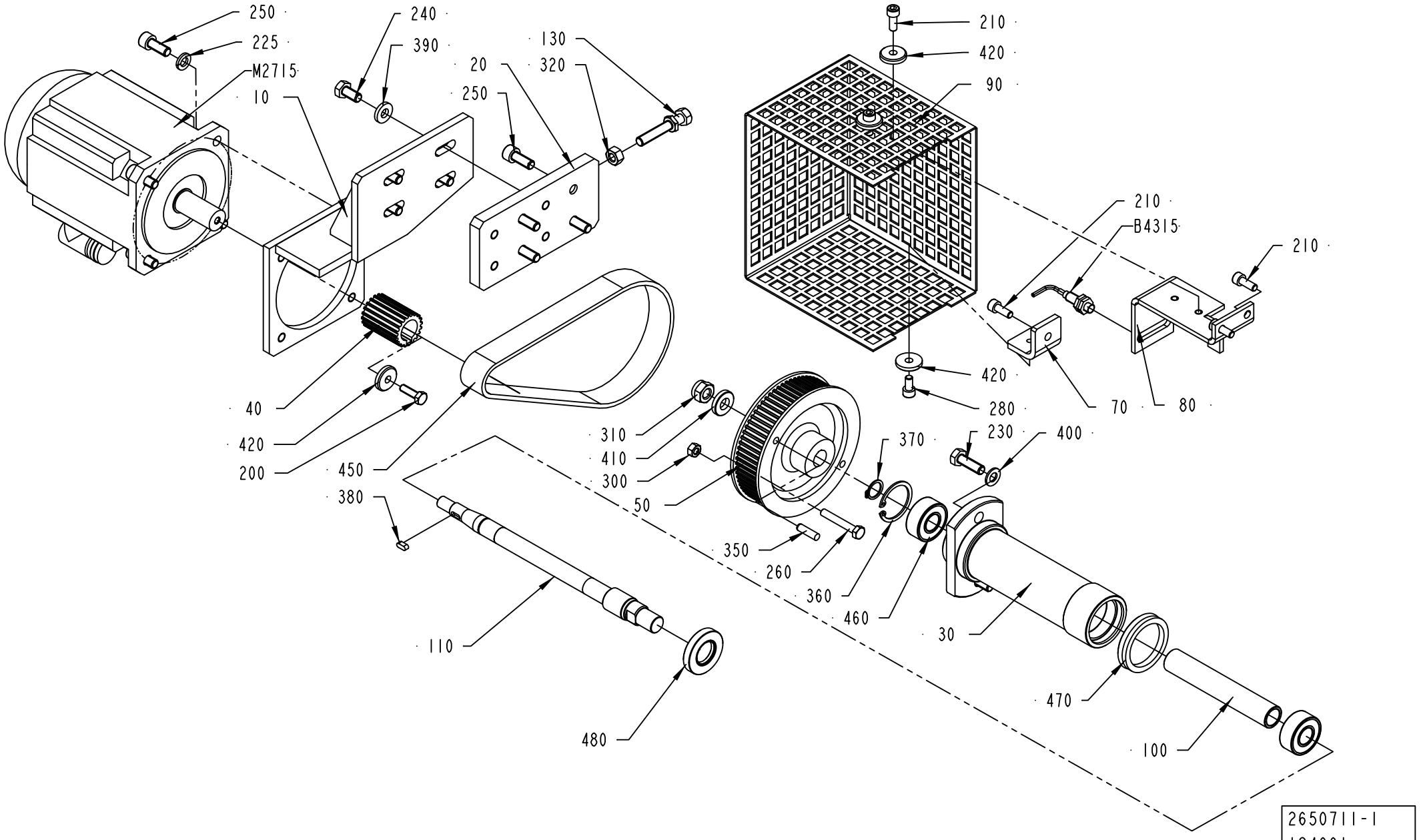
250
225
M2715
10
240
390
20
250
130
320
210
420
90
210
B4315
210
420
280
70
80
40
420
200
450
380
310
410
300
50
370
230
400
350
260
360
460
30
110
480
470
100
2650711-1
184091

ECM: 210188 - 20060509
Group number: 2650711-0100
Assembly Drawing: 2650711-1_1_AC

Pos	Part No	UN	Qty	Description	Page No
-					
010	2712129-0000		1	PLATE	
020	2650713-0000		1	PLATE	
030	2506334-0000		1	SUPPORT	
040	2652890-0000		1	TOOTHED PULLEY	
050	2652891-0000		1	TOOTHED PULLEY	
070	2506337-0000		1	ANGLE BRACKET	
080	2683976-0000		1	SUPPORT	
090	2506336-0000		1	PROTECTIVE COVER	
100	2506392-0000		1	SPACER	
110	2506338-0000		1	SHAFT	
130	2650717-0000		1	SCREW	
200	312105-0370		1	SCREW M6S ISO 4017 M6X20 A480	
210	312115-0368		5	SCREW ISO4762 M6X16 A4 80	
225	315402-0165		4	LOCK WASHER FBB 8,2	
230	312105-0453		2	SCREW M6S ISO 4017 M8X25 A480	
240	312105-0449		4	SCREW M6S ISO 4017 M8X16 A480	
250	312115-0451		8	SCREW ISO4762 M8X20 A4 80	
260	312109-0378		1	SCREW M6S ISO 4017 M6X40 A480	
280	312115-0366		2	SCREW ISO4762 M6X12 A4 80	
300	312605-0316		1	HEXAGON NUT, M6M M6 A280	
310	312812-0320		1	HEXAGON NUT, NY-LOCK M10 A480	
320	312605-0318		1	HEXAGON NUT, M6M M8 A280	
350	311103-0354		1	PARALLEL PIN ISO 2338 6M6X22 A1	
360	315753-0124		1	RETAINING RING FOR BORE DIN 472 35 A2	
370	315751-0112		1	RETAINING RING FOR SHAFT DIN 471 15 A2	
380	315701-0165		1	PARALLEL KEY W. ROUND ENDS 4X4X10 MM	
390	1558447-0000		4	SPACER	
400	315105-0165		2	WASHER BRB8,4X16RFR	
410	315115-0173		1	WASHER PLAIN, TBRB 10,5/22 H=4	
420	315125-0153		4	WASHER TBRSB 6,4X22X4 A4	
450	90459-3759		1	TIMING BELT 5MR-550-25	
460	90214-0194		2	SPHERICAL BALL BEARING, 15X35X1 MM	
470	90091-0138		1	V-RINGS 40X50X9 MM V-45A	
480	90091-0436		1	RADIAL SEAL 20X40X7 MM DUST LIP	
B4315	90458-0138		1	PROX. SWITCH, E2EG-X1R5B1-5M	
M2715	90459-5211		1	SERVO MOTOR AKM51E-HCS2R-02	

Pos	Part No	UN	Qty	Description	Page No

DESIGN CORRECTION DEVICE LEFT

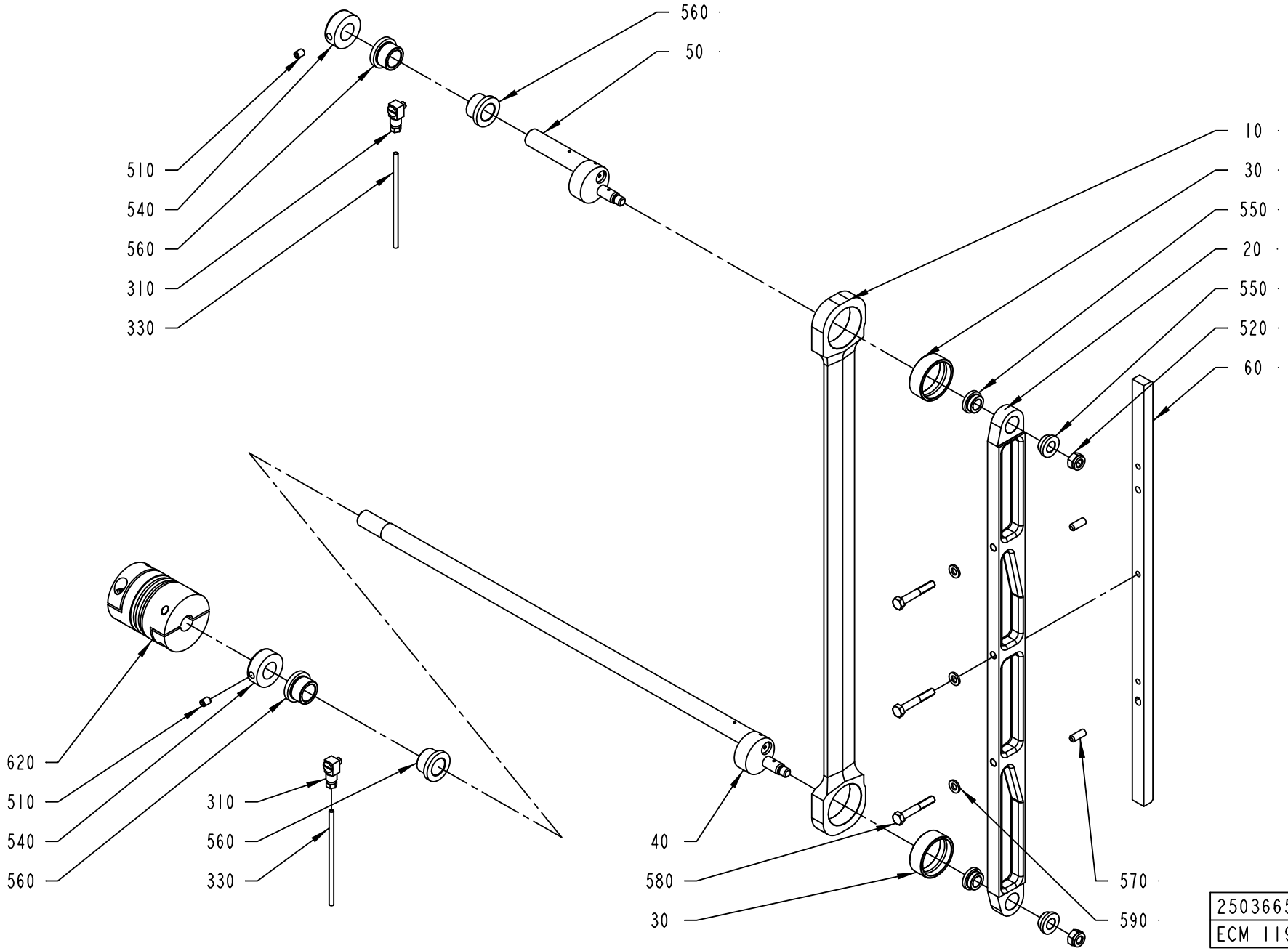

ECM: 189467 - 20050103
Group number: 2503665-0100
Assembly Drawing: 2503665-1_1_AA

Pos	Part No	UN	Qty	Description	Page No
-					
010	2508406-0000		1	STRUT	
020	2534851-0000		1	BAR	
030	1255117-0000		2	PLAIN BEARING	
040	2503669-0000		1	ECCENTRIC SHAFT	
050	2506340-0000		1	ECCENTRIC SHAFT	
060	1512998-0000		1	FOLDING FLAP CAM	
310	90134-0068		2	CONNECTION	
330	90266-0165	MM	1300	BRASS PIPE	
510	312318-0362		2	SCREW ISO4029 M6X8 A4	
520	312812-0318		2	HEXAGON NUT, NY-LOCK M8 A480	
540	315742-0112		2	RETAINING RING 16 SMS 199 RFR	
550	321101-0162		4	FLANGE BUSHING, 10X16X8 MM	
560	321101-0203		4	FLANGE BUSHING, 16X22X16 MM	
570	311103-0351		2	PARALLEL PIN ISO 2338 6M6X16 A1	
580	312105-0378		3	SCREW M6S ISO 4014 M6X40 A480	
590	315105-0153		3	WASHER BRB6,4X12RFR	
620	90459-1733		1	BELLOW COUPLING, 15X15 MM	

Pos	Part No	UN	Qty	Description	Page No

DESIGN CORRECTION DEVICE RIGHT

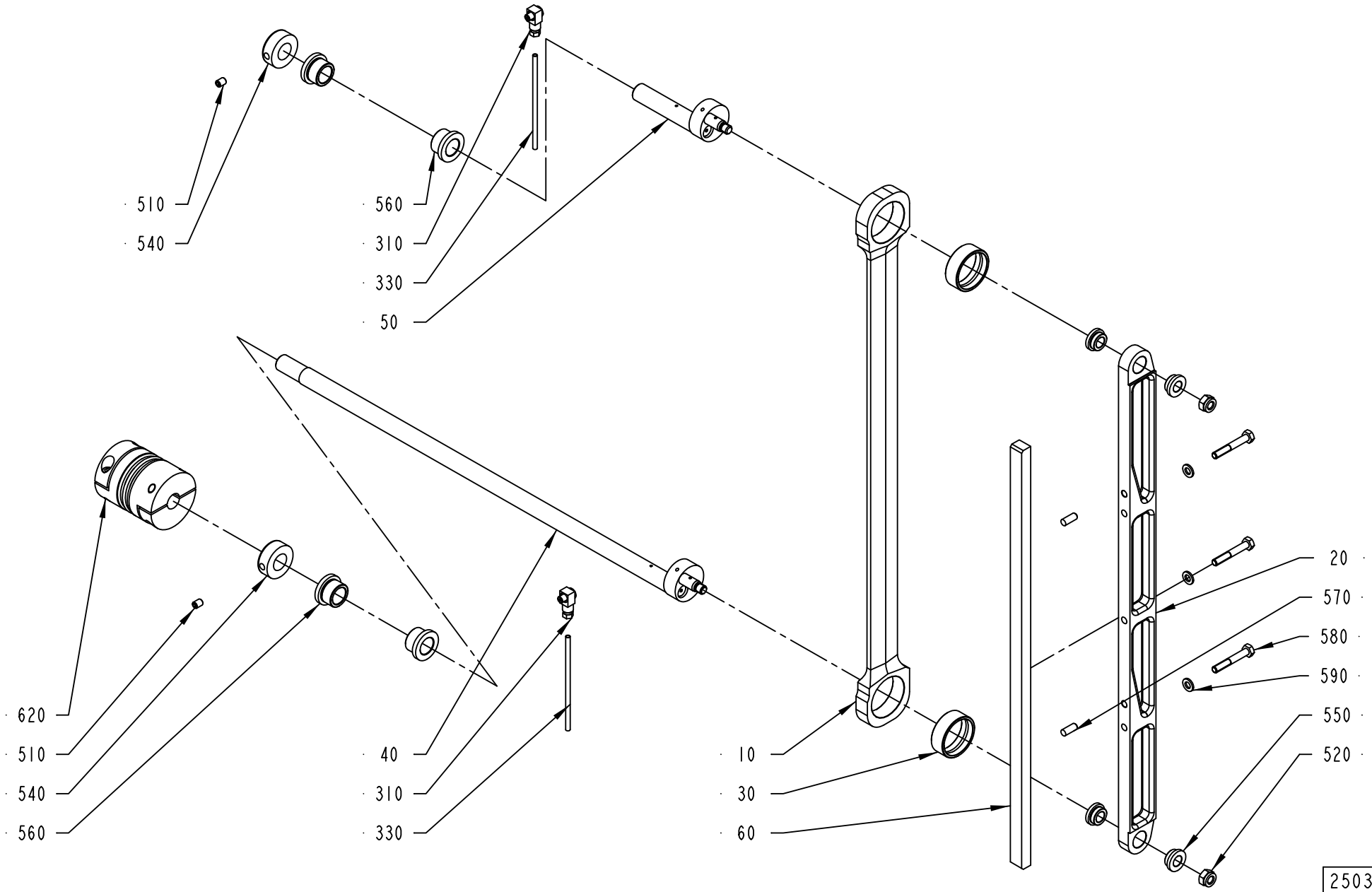

2503666-1
ECM 119396

ECM: 189481 - 20050103
Group number: 2503666-0100
Assembly Drawing: 2503666-1_1_AA

Pos	Part No	UN	Qty	Description	Page No
-					
010	2508406-0000		1	STRUT	
020	2534851-0000		1	BAR	
030	1255117-0000		2	PLAIN BEARING	
040	2503669-0000		1	ECCENTRIC SHAFT	
050	2506340-0000		1	ECCENTRIC SHAFT	
060	1512998-0000		1	FOLDING FLAP CAM	
310	90134-0068		2	CONNECTION	
330	90266-0165	MM	1300	BRASS PIPE	
510	312318-0362		2	SCREW ISO4029 M6X8 A4	
520	312812-0318		2	HEXAGON NUT, NY-LOCK M8 A480	
540	315742-0112		2	RETAINING RING 16 SMS 199 RFR	
550	321101-0162		4	FLANGE BUSHING, 10X16X8 MM	
560	321101-0203		4	FLANGE BUSHING, 16X22X16 MM	
570	311103-0351		2	PARALLEL PIN ISO 2338 6M6X16 A1	
580	312105-0378		3	SCREW M6S ISO 4014 M6X40 A480	
590	315105-0153		3	WASHER BRB6,4X12RFR	
620	90459-1733		1	BELLOW COUPLING, 15X15 MM	

Pos	Part No	UN	Qty	Description	Page No

CABLE CONNECTION

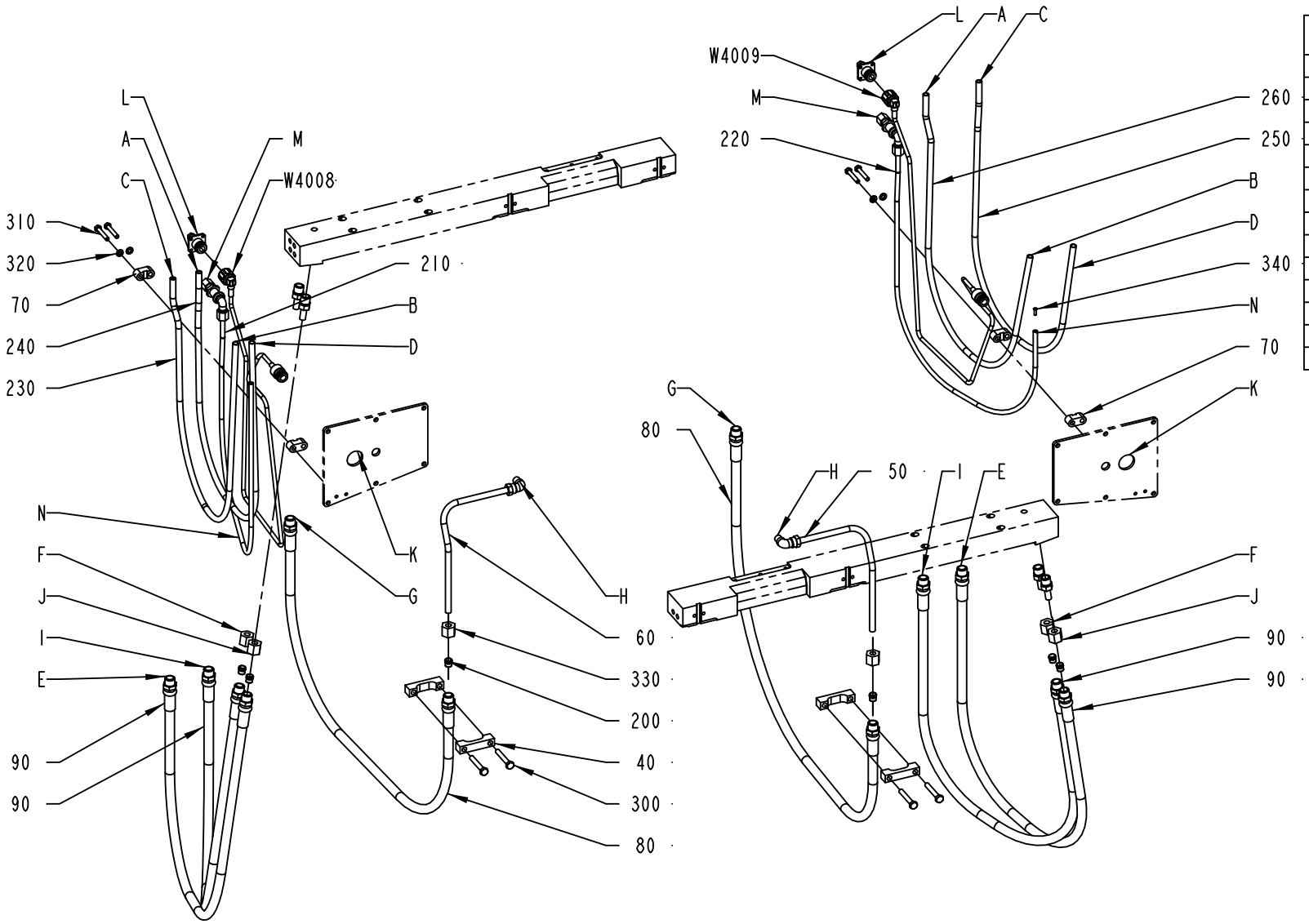

	CONNECTIONS
A	WATER OUT FRAME
B	WATER IN CARRIER
C	WATER IN FRAME
D	WATER OUT CARRIER
E	HYDRAULIC OIL FRAME PRESSURE SIDE
F	HYDRAULIC OIL CARRIER PRESSURE SIDE (CATCH OPEN)
G	HYDRAULIC OIL FRAME CUT SIDE
H	HYDRAULIC OIL CARRIER CUT SIDE
I	HYDRAULIC OIL FRAME PRESSURE SIDE
J	HYDRAULIC OIL CARRIER PRESSURE SIDE (CATCH CLOSE)
K	CONNECTION TRANSFORMER
L	CONNECTION SUPPLY FRAME
M	CENTRAL LUBRIFICATION OUT FRAME
N	CENTRAL LUBRIFICATION IN PRESSURE ARM

2503661-1
ECM 119396

ECM: 261267 - 20060517
Group number: 2503661-0100
Assembly Drawing: 2503661-1_1_AA

Pos	Part No	UN	Qty	Description	Page No
A3/FLEX					
070	464368-0000		4	CRAMP	
090	1517348-0000		4	HOSE	
200	90030-0098		12	ACCESSORIES, FERRULE 8	
230	90166-0123	MM	1440	HOSE	
240	90166-0123	MM	1390	HOSE	
250	90166-0123	MM	1440	HOSE	
260	90166-0123	MM	1390	HOSE	
310	312109-0335		4	SCREW M6S ISO 4017 M5X30 A480	
320	315105-0146		4	WASHER BRB5,3X10RFR	
330	342703-0208		12	NUT, PIPES & CONNECTORS,NUT M-8 SS	
W4008	2562736-0001		1	COAXIAL CABLE	
W4009	2562736-0001		1	COAXIAL CABLE	
Common Parts					
040	1129599-0000		4	CRAMP	
050	1038828-0000		1	PIPE	
060	1038829-0000		1	PIPE	
080	2510787-0000		2	HOSE	
210	90166-0108	MM	960	TUBE 6 MM PA,TRANSP.	
220	90166-0108	MM	960	TUBE 6 MM PA,TRANSP.	
300	312105-0378		4	SCREW M6S ISO 4014 M6X40 A480	
340	90134-0030		4	SLEEVE FOR PLASTIC TUBE	
350	352113-0101		12	CLIP STRIP, 92X2,5 MM	

Pos	Part No	UN	Qty	Description	Page No

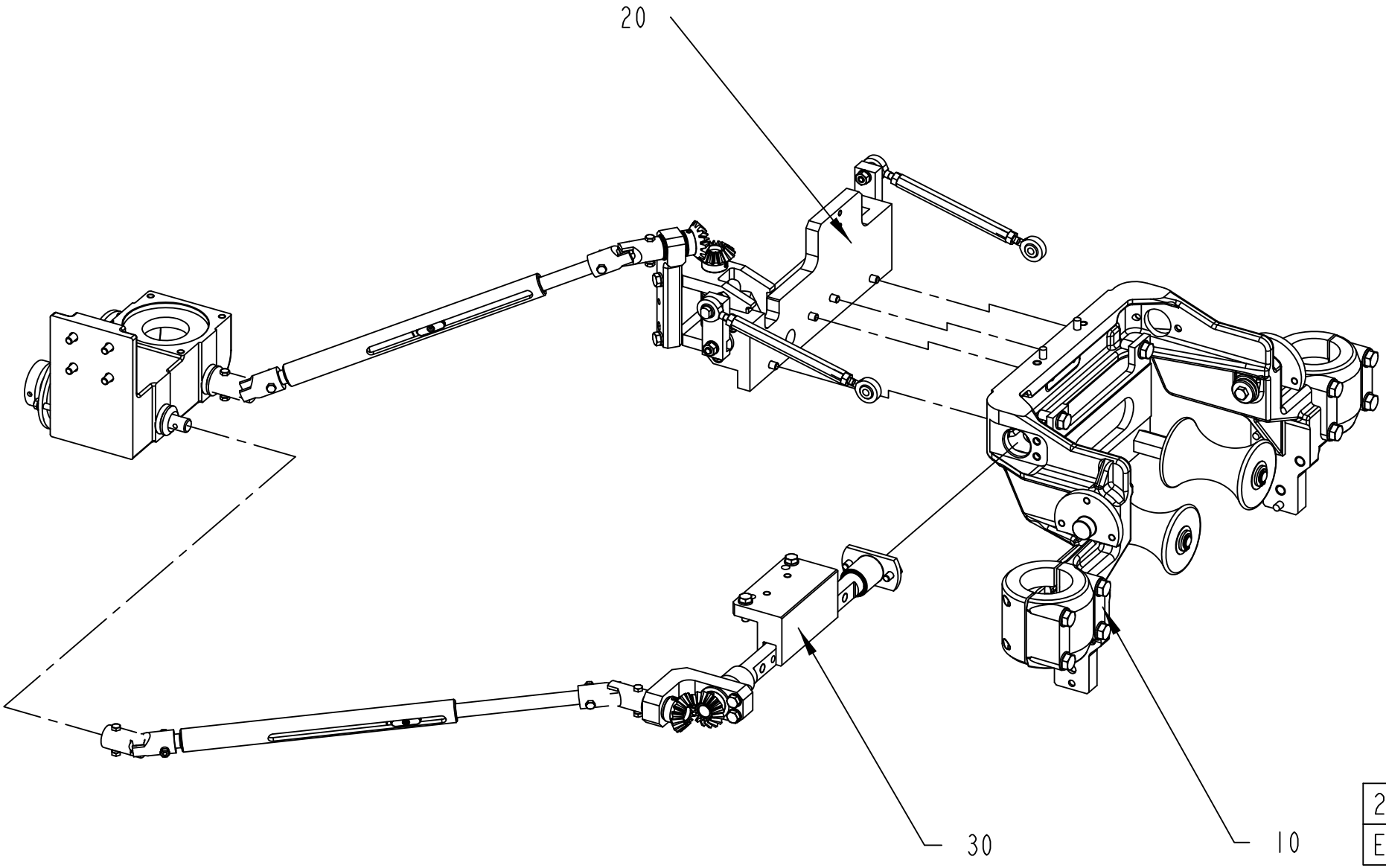
20
30
10
2613646-1
ECM 163206

ECM: 163211 - 20050101
Group number: 2613646-0100
Assembly Drawing: 2613646-1_1_AB

Pos	Part No	UN	Qty	Description	Page No
-					
10	2613644-0100		1	CANTILEVER	**4-237**
20	2597330-0100		1	CONTROL UNIT	**4-239, 4-241**
30	2597331-0100		1	CENTERING UNIT	**4-243**

Pos	Part No	UN	Qty	Description	Page No

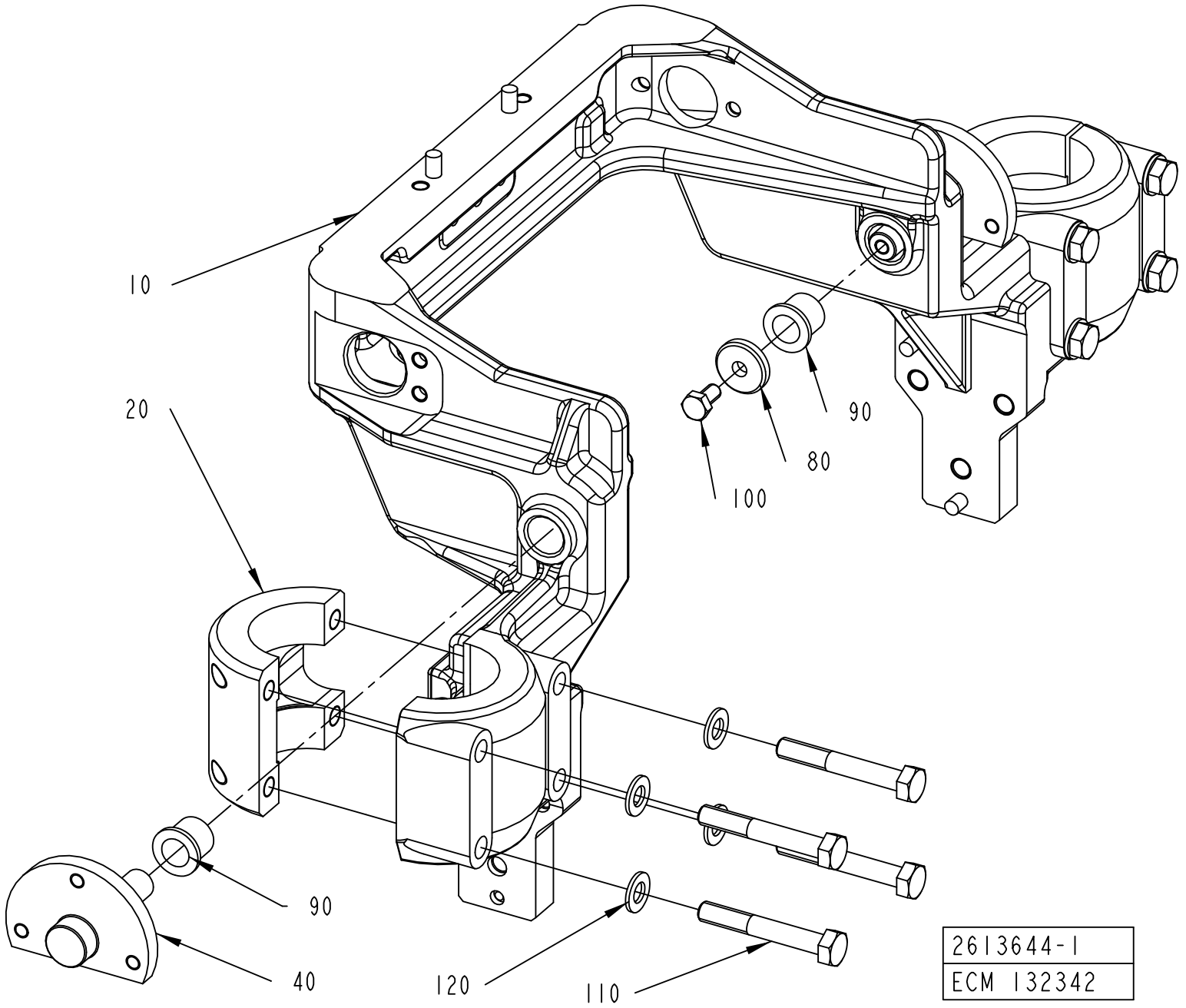
10
20
90
80
100
90
40
120
110
2613644-1
ECM 132342

ECM: 189482 - 20050103
Group number: 2613644-0100
Assembly Drawing: 2613644-1_1_AA

Pos	Part No	UN	Qty	Description	Page No
-					
010	2587464-0000		1	CANTILEVER	
020	2614039-0000		2	CLAMP	
040	2598065-0000		2	SUPPORT	
080	315125-0153		2	WASHER TBRSB 6,4X22X4 A4	
090	90458-1404		4	FLANGE BUSHING, 12X16X16 MM	
100	312105-0366		2	SCREW M6S ISO 4017 M6X12 A480	
110	312105-0462		8	SCREW M6S ISO 4014 M8X55 A480	
120	315105-0165		8	WASHER BRB8,4X16RFR	

Pos	Part No	UN	Qty	Description	Page No

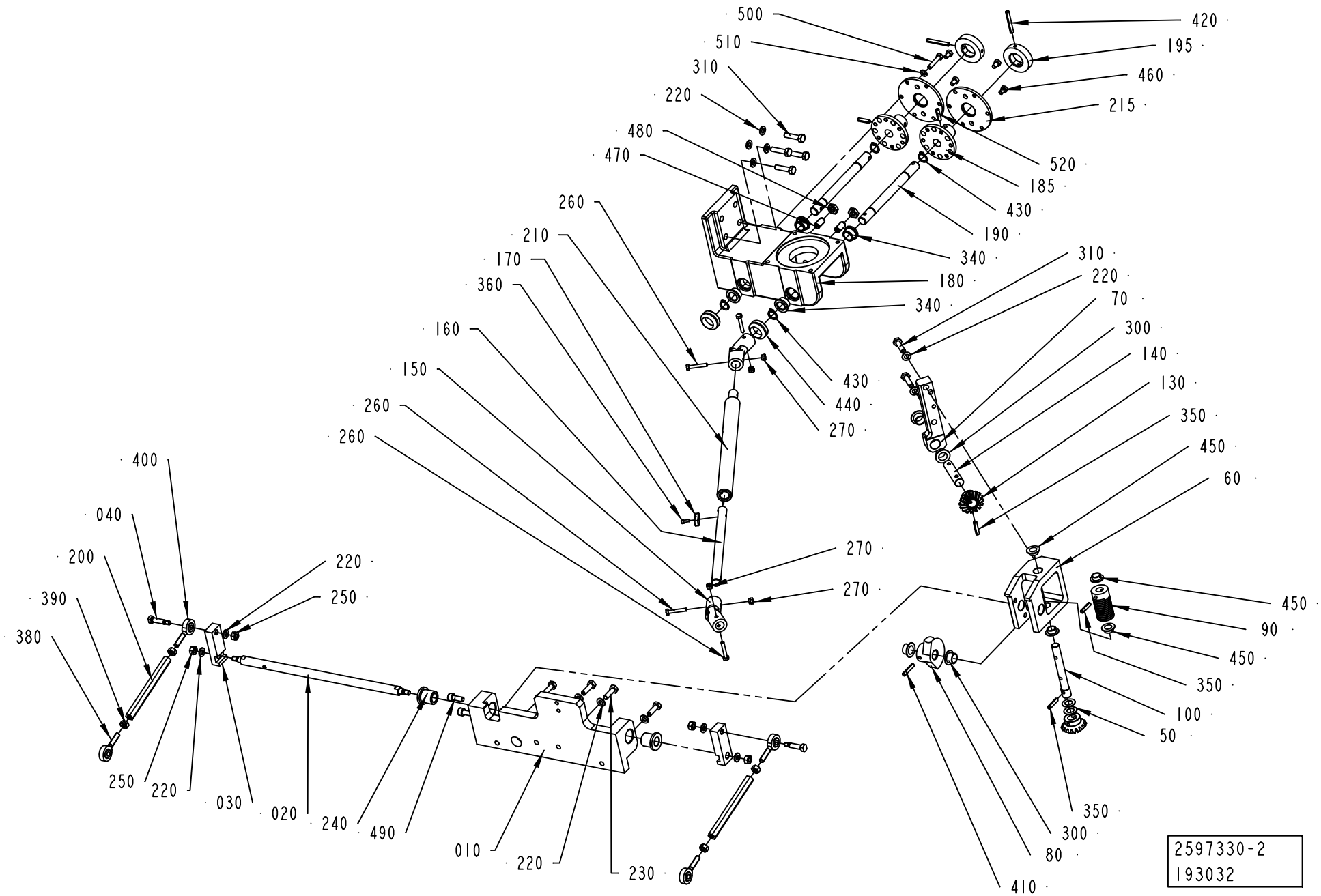
500
510
310
220
480
470
260
210
170
360
160
150
260
260
400
040
200
390
380
250
220
250
220
030
020
240
490
010
220
230
420
195
460
215
520
185
430
190
340
180
340
310
220
70
300
140
130
350
450
60
430
440
270
270
270
450
90
450
350
100
50
350
300
80
410
2597330-2
193032

ECM: 210185 - 20060509
Group number: 2597330-0100
Assembly Drawing: 2597330-2_1_AB

This list covers pages from 4-238 to 4-241

Pos	Part No	UN	Qty	Description	Page No
-					
010	2602657-0000		1	LOCK PLATE	
020	2602658-0000		1	SHAFT	
030	2535441-0000		2	LEVER	
040	2535442-0000		2	PIVOT PIN	
050	2691421-0000		2	SHIM	
060	2665720-0000		1	SUPPORT	
070	2665722-0000		1	SUPPORT	
080	2681618-0000		1	WORM WHEEL	
090	2681619-0000		1	WORM GEAR	
100	2665721-0000		1	SHAFT	
130	2681617-0000		2	GEAR WHEEL	
140	2599742-0000		1	SHAFT	
150	2535455-0000		2	LINK	
160	2602652-0000		1	SHAFT	
170	2535457-0000		1	WOODRUFF KEY	
180	2598502-0000		1	SUPPORT	
185	2618333-0000		2	PLATE	
190	2618332-0000		2	SHAFT	
195	2618330-0000		2	HANDLE	
200	2535461-0000		2	CONNECTING ROD	
210	2535458-0000		1	SHAFT	
215	2618329-0000		2	PLATE	
220	315105-0153		14	WASHER BRB6,4X12RFR	
230	312105-0370		4	SCREW M6S ISO 4017 M6X20 A480	
240	321111-0163		2	FLANGE BUSHING, 12X18X20 MM	
250	312605-0316		6	HEXAGON NUT, M6M M6 A280	
260	312105-0297		4	SCREW M6S ISO 4017 M4X25 A470	
270	312812-0312		4	HEXAGON NUT, NY-LOCK M4 A480	
300	90240-0261		4	FLANGE BUSHING, 12X14X9 MM	
310	312105-0372		6	SCREW M6S ISO 4017 M6X25 A480	
340	90240-0165		4	FLANGE BUSHING, 12X16X10 MM	
350	311112-0256		3	SPRING PIN, ISO 8752 4X20-C	
360	312115-0222		1	SCREW ISO4762 M3X8 A4 80	
380	90459-4505		2	ROD END, ID=6MM, M6X1 LH	
390	312902-0316		2	NUT HEX. LEFT THREAD, M6 A280	
400	90459-4504		2	ROD END, ID=6MM, M6X1	
410	311112-0258		1	SPRING PIN, ISO 8752 4X24-C	
420	311112-0263		2	SPRING PIN, ISO 8752 4X35-C	
430	315751-0109		4	RETAINING RING FOR SHAFT DIN 471 12 A2	
440	315220-0143		2	V-RINGS 18X26X10,5 MM V-20S	
450	90240-0289		4	FLANGE BUSHING, 10X12X6 MM	
460	312105-0323		4	SCREW M6S ISO 4017 M5X8 A480	
470	90287-0112		2	SCREW SPRINGLOAD. SLOTTED HEAD M8X16	
480	312625-0318		2	HEXAGON THIN NUT, EN 24035 ML6M M8 A4	
490	312115-0368		2	SCREW ISO4762 M6X16 A4 80	
500	312105-0333		1	SCREW M6S ISO 4017 M5X25 A480	
510	315105-0146		1	WASHER BRB5,3X10RFR	
520	311112-0255		2	SPRING PIN, ISO 8752 4X18-C	

Machine Type	Group Description	Used-In	Group Number	Page No

STANDARD MOUNTING SOLUTION

A-A
1:1

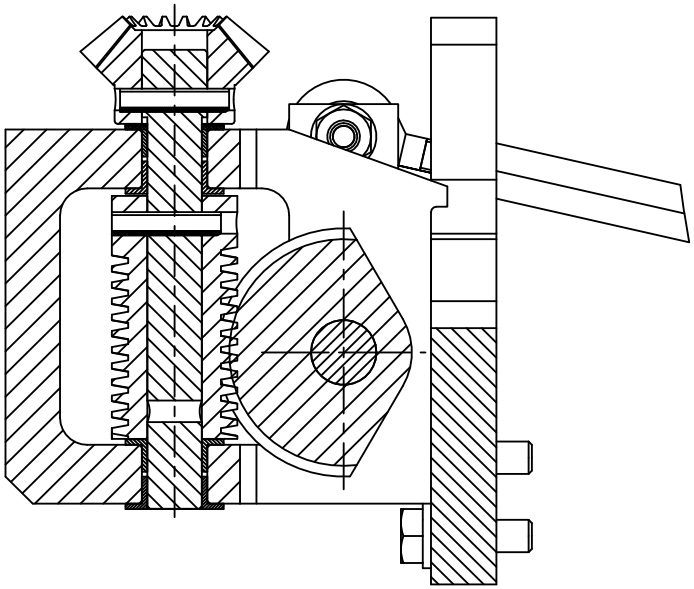

MOUNTING SOLUTION ONLY
FOR :
TBA 2000S QC
TBA 1890S QC
TBA 1500S

A-A
1:1

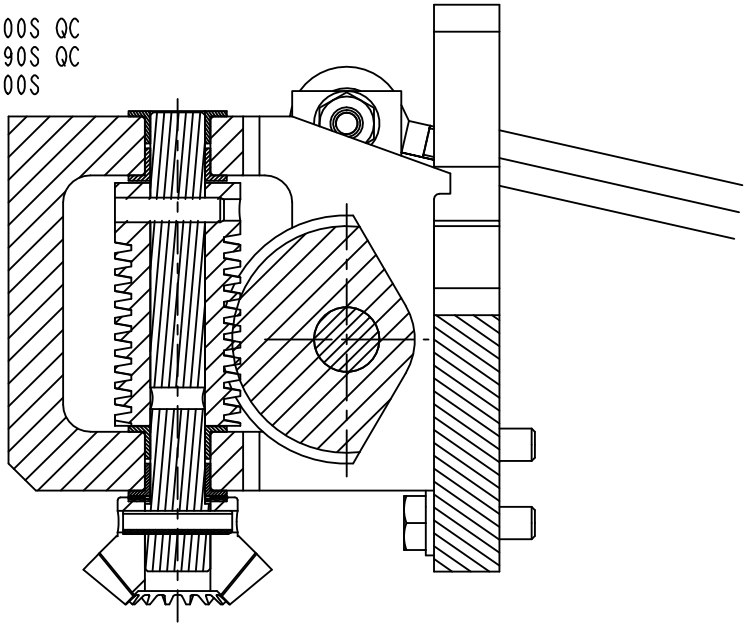

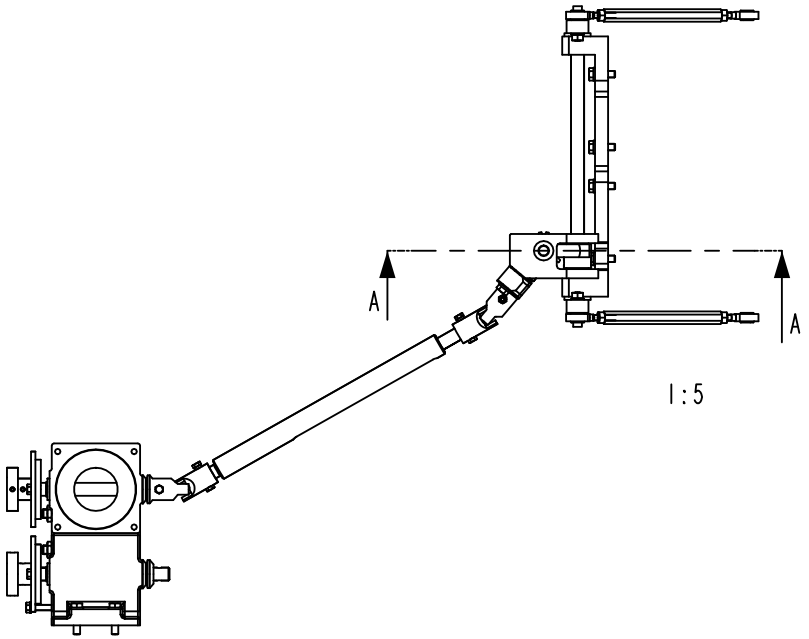

1:5

2597330-2
193032

ECM: 210185 - 20060509
Group number: 2597330-0100
Assembly Drawing: 2597330-2_2_AB

This list covers pages from 4-238 to 4-241

Pos	Part No	UN	Qty	Description	Page No
-					
010	2602657-0000		1	LOCK PLATE	
020	2602658-0000		1	SHAFT	
030	2535441-0000		2	LEVER	
040	2535442-0000		2	PIVOT PIN	
050	2691421-0000		2	SHIM	
060	2665720-0000		1	SUPPORT	
070	2665722-0000		1	SUPPORT	
080	2681618-0000		1	WORM WHEEL	
090	2681619-0000		1	WORM GEAR	
100	2665721-0000		1	SHAFT	
130	2681617-0000		2	GEAR WHEEL	
140	2599742-0000		1	SHAFT	
150	2535455-0000		2	LINK	
160	2602652-0000		1	SHAFT	
170	2535457-0000		1	WOODRUFF KEY	
180	2598502-0000		1	SUPPORT	
185	2618333-0000		2	PLATE	
190	2618332-0000		2	SHAFT	
195	2618330-0000		2	HANDLE	
200	2535461-0000		2	CONNECTING ROD	
210	2535458-0000		1	SHAFT	
215	2618329-0000		2	PLATE	
220	315105-0153		14	WASHER BRB6,4X12RFR	
230	312105-0370		4	SCREW M6S ISO 4017 M6X20 A480	
240	321111-0163		2	FLANGE BUSHING, 12X18X20 MM	
250	312605-0316		6	HEXAGON NUT, M6M M6 A280	
260	312105-0297		4	SCREW M6S ISO 4017 M4X25 A470	
270	312812-0312		4	HEXAGON NUT, NY-LOCK M4 A480	
300	90240-0261		4	FLANGE BUSHING, 12X14X9 MM	
310	312105-0372		6	SCREW M6S ISO 4017 M6X25 A480	
340	90240-0165		4	FLANGE BUSHING, 12X16X10 MM	
350	311112-0256		3	SPRING PIN, ISO 8752 4X20-C	
360	312115-0222		1	SCREW ISO4762 M3X8 A4 80	
380	90459-4505		2	ROD END, ID=6MM, M6X1 LH	
390	312902-0316		2	NUT HEX. LEFT THREAD, M6 A280	
400	90459-4504		2	ROD END, ID=6MM, M6X1	
410	311112-0258		1	SPRING PIN, ISO 8752 4X24-C	
420	311112-0263		2	SPRING PIN, ISO 8752 4X35-C	
430	315751-0109		4	RETAINING RING FOR SHAFT DIN 471 12 A2	
440	315220-0143		2	V-RINGS 18X26X10,5 MM V-20S	
450	90240-0289		4	FLANGE BUSHING, 10X12X6 MM	
460	312105-0323		4	SCREW M6S ISO 4017 M5X8 A480	
470	90287-0112		2	SCREW SPRINGLOAD. SLOTTED HEAD M8X16	
480	312625-0318		2	HEXAGON THIN NUT, EN 24035 ML6M M8 A4	
490	312115-0368		2	SCREW ISO4762 M6X16 A4 80	
500	312105-0333		1	SCREW M6S ISO 4017 M5X25 A480	
510	315105-0146		1	WASHER BRB5,3X10RFR	
520	311112-0255		2	SPRING PIN, ISO 8752 4X18-C	

Machine Type | Group Description | Used-In | Group Number | Page No

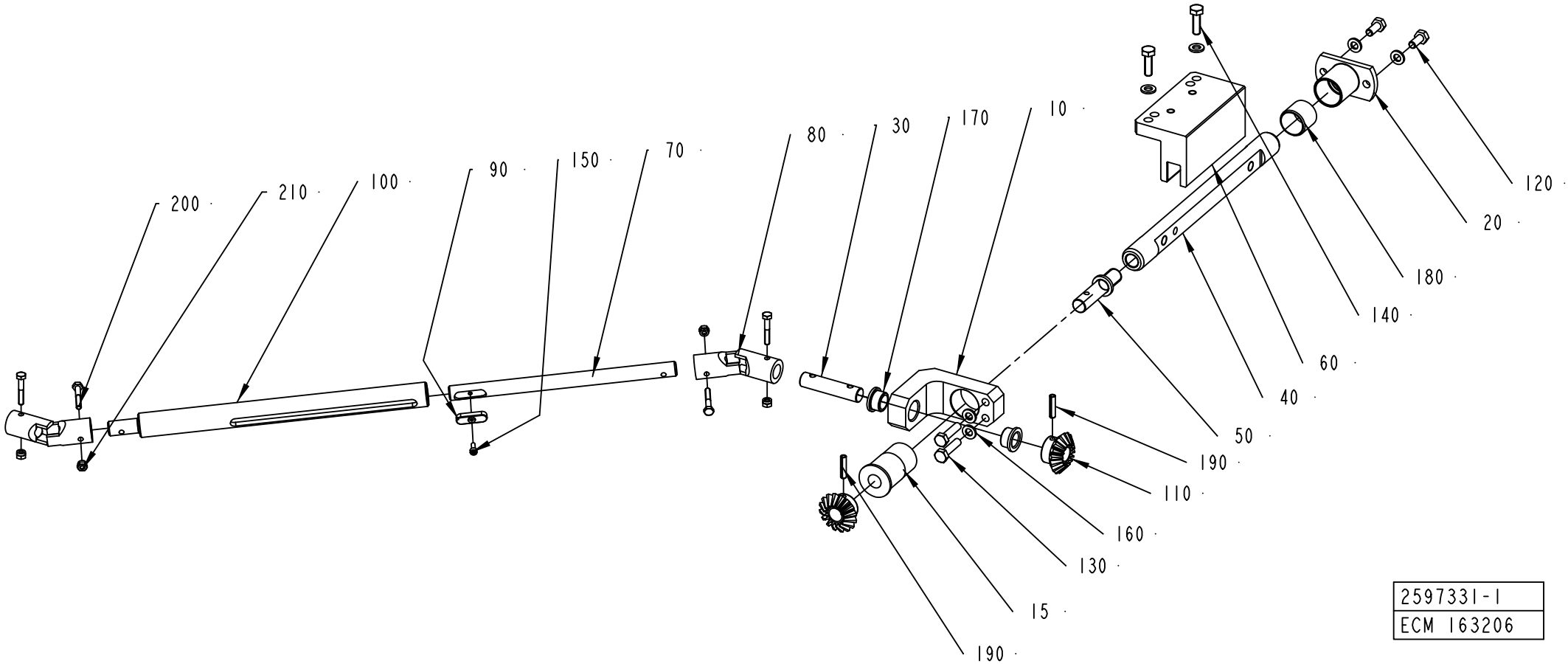
200
210
100
90
150
70
80
30
170
10
120
20
180
140
60
40
50
190
110
160
130
15
190
2597331-1
ECM 163206

ECM: 210186 - 20060509
Group number: 2597331-0100
Assembly Drawing: 2597331-1_1_AC

Pos	Part No	UN	Qty	Description	Page No
-					
010	2711289-0000		1	SUPPORT	
015	2623513-0000		1	BUSHING	
020	2599741-0000		1	SUPPORT	
030	2599742-0000		1	SHAFT	
040	2599743-0000		1	SHAFT	
050	2598067-0000		1	SHAFT	
060	2614038-0000		1	SPACER	
070	2602652-0000		1	SHAFT	
080	2535455-0000		2	LINK	
090	2535457-0000		1	WOODRUFF KEY	
100	2535458-0000		1	SHAFT	
110	2681617-0000		2	GEAR WHEEL	
120	312105-0367		2	SCREW M6S ISO 4017 M6X14 A480	
130	312105-0372		2	SCREW M6S ISO 4017 M6X25 A480	
140	312105-0370		2	SCREW M6S ISO 4017 M6X20 A480	
150	312115-0222		1	SCREW ISO4762 M3X8 A4 80	
160	315105-0153		6	WASHER BRB6,4X12RFR	
170	90240-0261		2	FLANGE BUSHING, 12X14X9 MM	
180	321133-0260		1	BUSHING, 20X23X20 MM	
190	311112-0256		2	SPRING PIN, ISO 8752 4X20-C	
200	312105-0297		4	SCREW M6S ISO 4017 M4X25 A470	
210	312812-0312		4	HEXAGON NUT, NY-LOCK M4 A480	

Pos	Part No	UN	Qty	Description	Page No

Tetra Pak

SPC

Spare Parts Catalogue

Tetra Pak A3/Flex

648575-0100

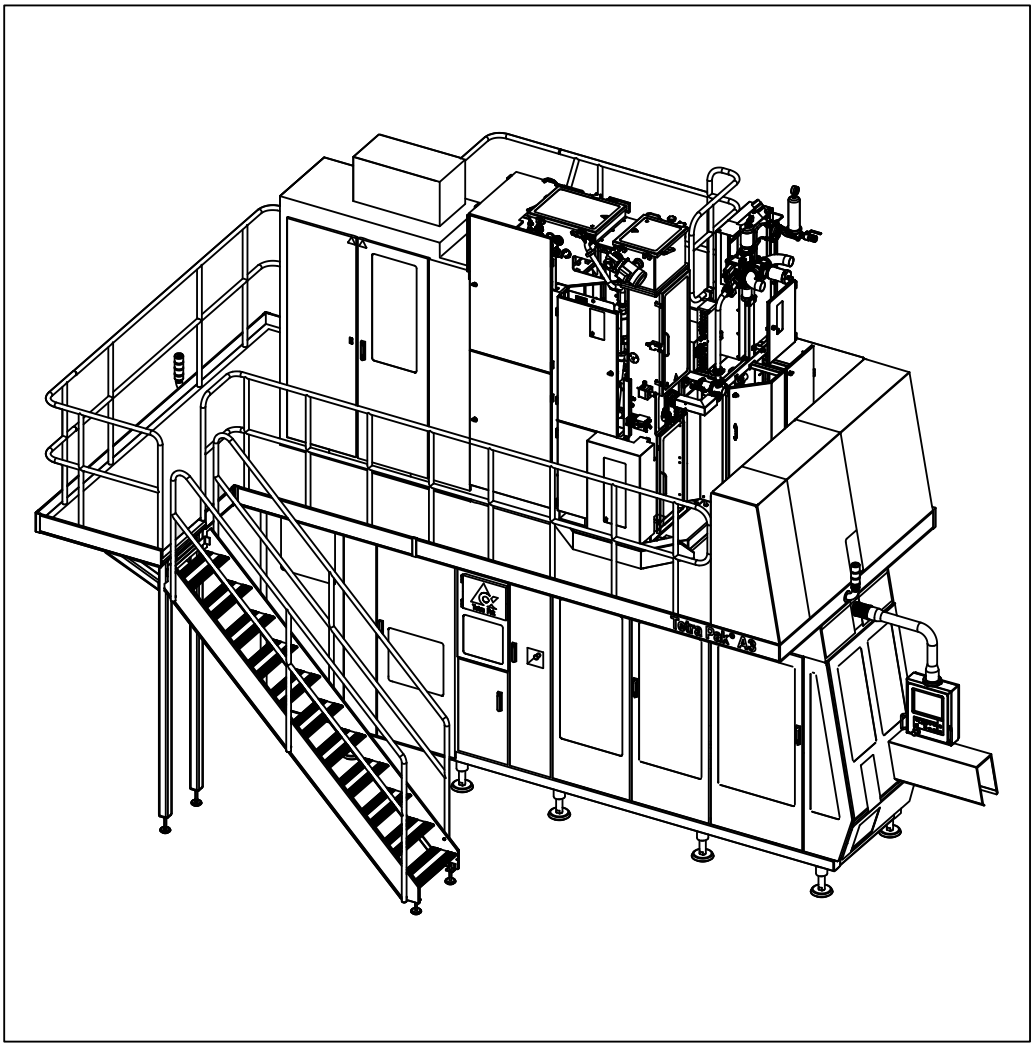

Tetra Pak

Doc. No: SPC-81806-0146

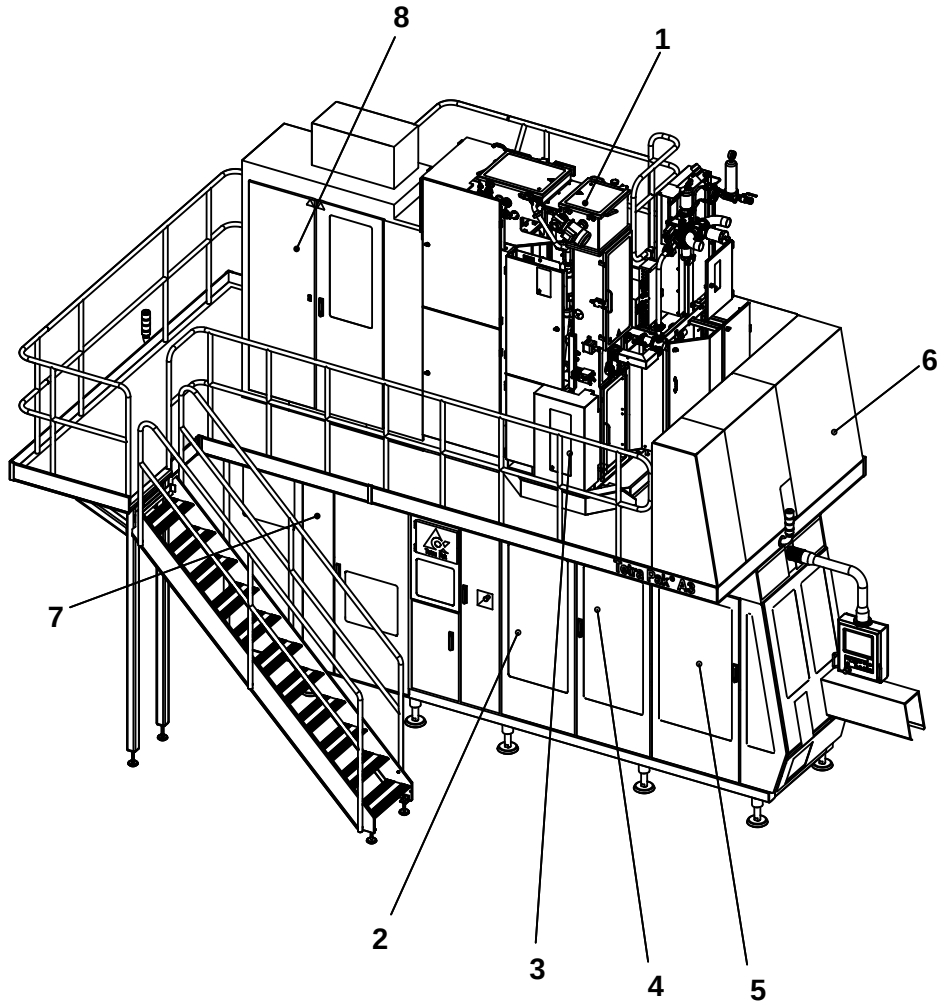

The position numbers in the illustration correspond with the chapter numbers listed on the next page.

Copyright © 2007 Tetra Pak Group

All rights reserved. No part of this document may be reproduced or copied in any form or by any means without written permission from Tetra Pak Packaging Solutions.

Tetra Pak and all Tetra Pak products are trademarks belonging to the Tetra Pak Group.

The content of this manual is in accordance with the design and construction of the machine or equipment at the time of publishing. Tetra Pak reserves the right to introduce design modifications without prior notice.

This document was produced by:

Tetra Pak Packaging Solutions
Technical Publications
Via Delfini 1
41100 Modena /Italy

Additional copies can be ordered from Tetra Pak. When ordering additional copies, always provide the document number.

Doc. No. SPC-81806-0146

Issue 2007-03

This document is valid from:

21207/00422

Series No/Machine No Sign.

SPC

Spare Parts Catalogue

BINDER 1

i Introduction

1 Superstructure

2 Machine Body

3 Drive Unit

4 Jaw System

BINDER 2

5 Final Folder

6 Service Unit

7 Automatic Splicing Unit

8 Electrical Cabinet

9 Regular Accessories

10 Optional Accessories

ii Part Number Index

iii Ref. Des. Parts Index

Machine or equipment configurations that this catalogue is valid for are described on the next page.

Doc. No: SPC-81806-0146

Issue 2007-03

Tetra Pak

Tetra Pak Packaging Solutions

Valid for:

Name	Drawing Specification and Development Step	Additional Information
Tetra Pak A3/Flex 010V	648575-0100	-

SPC
Spare Parts Catalogue

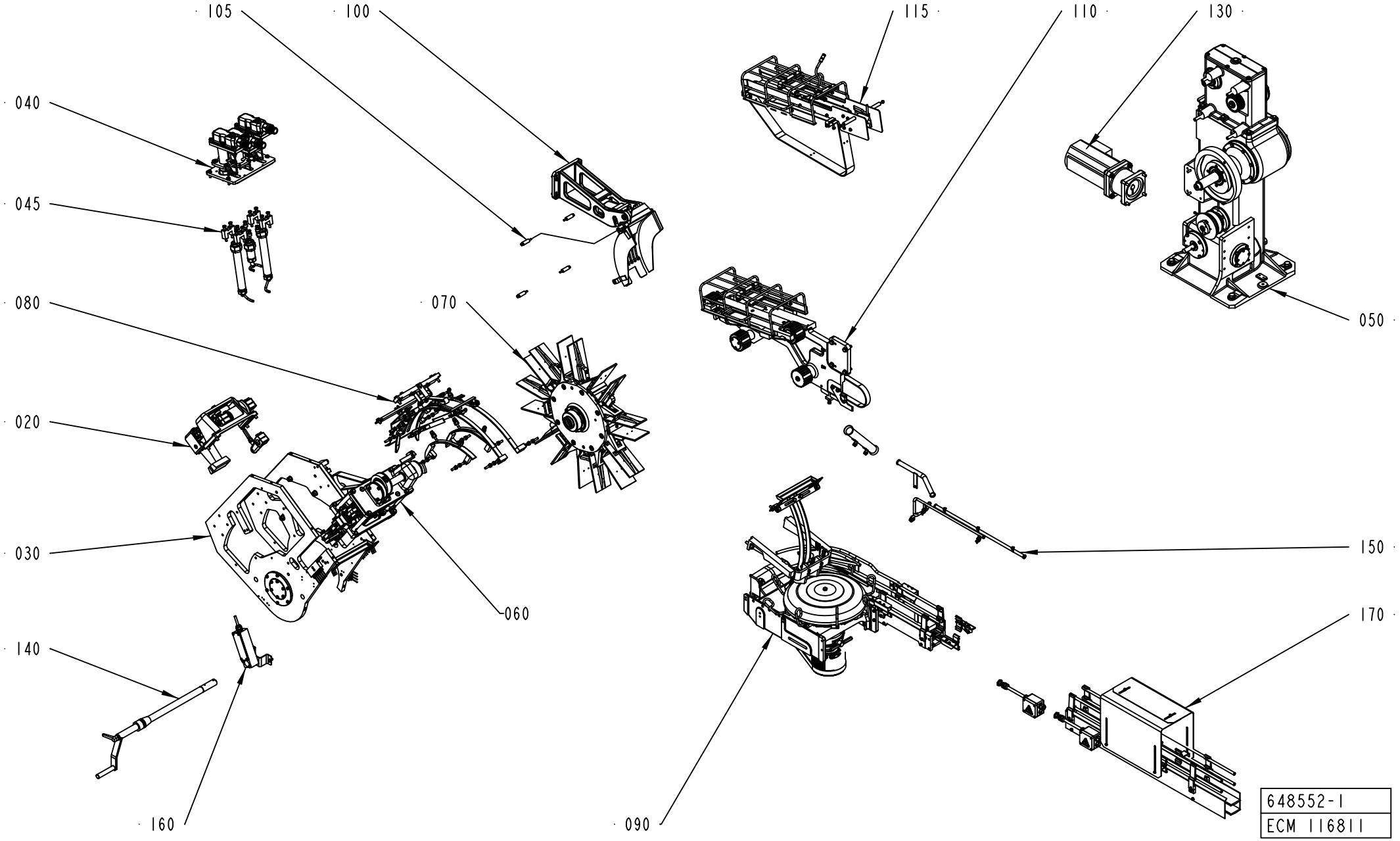
105
100
115
110
130
040
045
080
070
050
020
030
060
150
140
170
160
090
648552-1
ECM 116811

ECM: 245896 - 20060701
Group number: 648552-0100
Assembly Drawing: 648552-1_1_AA

Pos	Part No	UN	Qty	Description	Page No
A3/FLEX NOQC					
020	1144329-0300		1	PULL-DOWN DEVICE	**5-5, 5-7, 5-9**
070	1361918-0300		1	WHEEL	**5-23, 5-25**
080	1285012-0300		1	FOLDING PART	**5-27**
090	1285260-0400		1	OUT FEED	**5-57**
105	1361922-0200		1	DROP CHUTE VARIANT	**5-101**
115	1361923-0200		1	INFEED CONVEYOR VARIANT	**5-103, 5-105, 5-107, 5-109, 5-111**
A3/FLEX QC					
020	1144329-0300		1	PULL-DOWN DEVICE	**5-5, 5-7, 5-9**
070	2523811-0100		1	WHEEL	**5-113, 5-115, 5-117**
080	2543480-0100		1	FOLDING PART	**5-127**
090	1285260-0400		1	OUT FEED	**5-57**
105	2537128-0100		1	DROP CHUTE VARIANT	**5-161, 5-163**
115	2522129-0100		1	INFEED CONVEYOR VARIANT	**5-165, 5-167, 5-169**
Common Parts					
030	1144324-0300		1	FRAMEWORK	**5-185**
040	2524509-0100		1	FLAP HEATER BODY	**5-187, 5-189, 5-191**
045	1487158-0300		1	FLAP HEATER VARIANT	**5-203, 5-205, 5-207, 5-209, 5-211, 5-213**
050	2594054-0100		1	INDEXING UNIT	**5-215**
060	1144331-0300		1	PRESSURE DEVICE	**5-235, 5-237, 5-239, 5-241, 5-243, 5-245**
100	2541714-0100		1	DROP CHUTE CRADLE	**5-251, 5-253**
110	1517298-0200		1	INFEED CONVEYOR	**5-255**
130	2522128-0100		1	MOTOR UNIT	**5-267**
140	1260883-0200		1	CRANK	**5-269**
150	2531274-0100		1	ELECTRICAL CONNECTION	**5-271, 5-273**
160	1279677-0100		1	CRANK GUARD	**5-275**
170	2579995-0100		1	LAST POINT DE	**5-277**

Pos	Part No	UN	Qty	Description	Page No

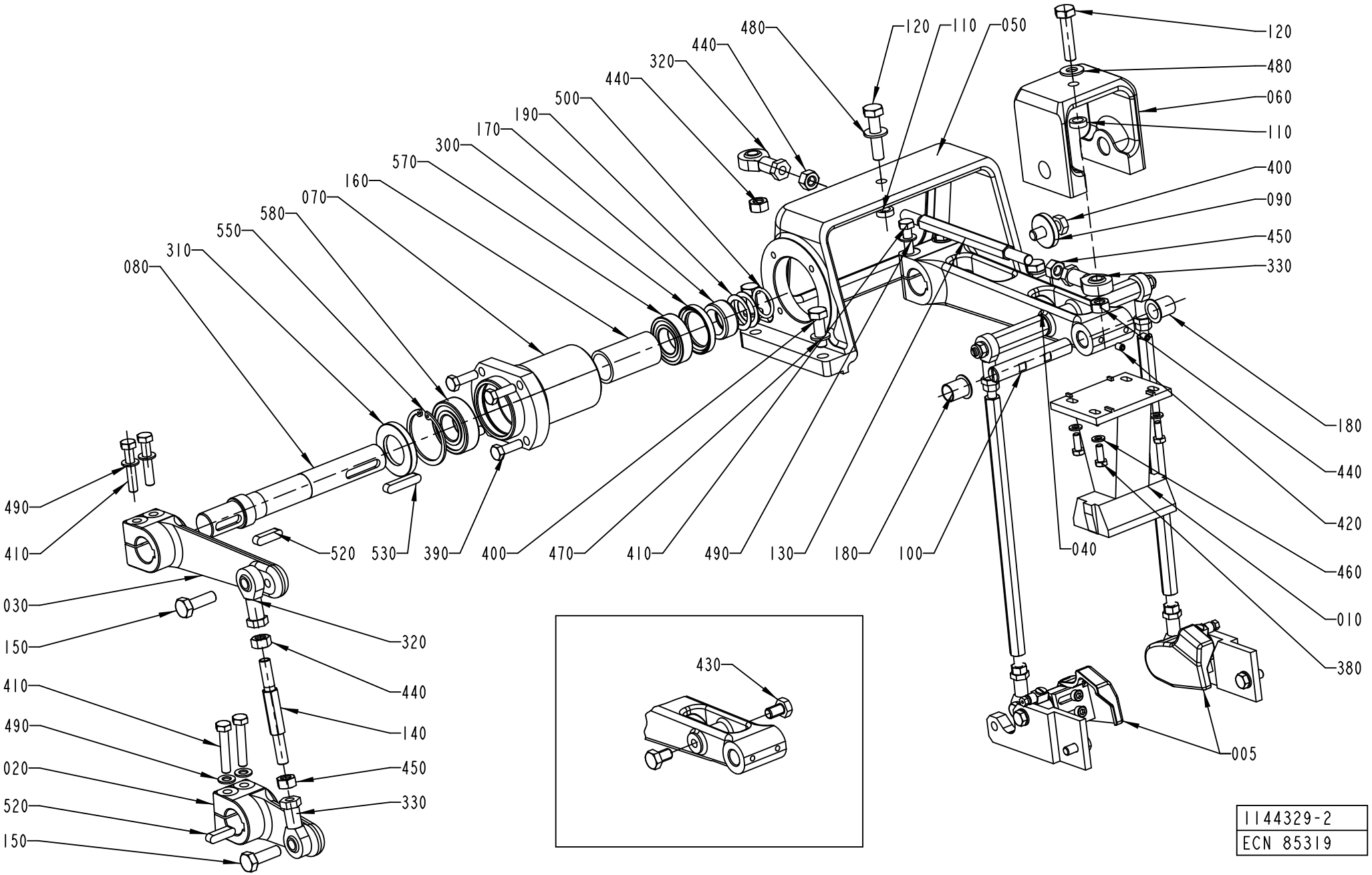
480
120
110
050
440
320
440
500
190
170
300
570
160
070
580
550
310
080
120
480
060
110
400
090
450
330
180
440
420
460
010
380
005
040
100
180
130
490
410
470
400
390
530
520
490
410
030
150
320
440
140
450
330
410
490
020
520
150
430
1144329-2
ECN 85319

ECM: 258278 - 20060702
Group number: 1144329-0300
Assembly Drawing: 1144329-2_1_AB

This list covers pages from 5-4 to 5-9

Pos	Part No	UN	Qty	Description	Page No
TPA 0330SQ (See drawing on page: 5-4)					
005	1348056-0300		1	FOLDING PART	**5-11, 5-13**
010	1532266-0000		1	BLOCK	
TPA 0500SQ (See drawing on page: 5-6)					
005	1348056-0300		1	FOLDING PART	**5-11, 5-13**
010	2610779-0000		1	BLOCK	
200	2598706-0000		2	BAR	
430	312105-0489		2	SCREW M6S ISO 4017 M10X16 A480	
590	312125-0230		4	SCREW ISO 1207 M3X20 A4	
600	315105-0124		4	WASHER BRB3,2X6RFR	
TPA 1000SQ NOQC (See drawing on page: 5-4)					
005	1348056-0300		1	FOLDING PART	**5-11, 5-13**
010	1519341-0000		1	BLOCK	
TPA 1000SQ QC, TPA 0750SQ QC (See drawing on page: 5-8)					
005	2588130-0100		1	FOLDING FIN DEVICE	**5-15**
010	2647110-0000		1	BLOCK	
610	342748-0102		1	T-CONNECTION 6MM	
620	350002-0006		2	PUSH-IN L-FITTING QSL-F-G1/8-6	
630	315400-0001	MM	1500	TUBE PUN-H-6X1-BL	
TBA 0200B NOQC, TBA 0330S NOQC, TBA 0250B NOQC (See drawing on page: 5-4)					
010	1350808-0000		1	BLOCK	
430	312105-0489		2	SCREW M6S ISO 4017 M10X16 A480	
TBA 0200B QC, TBA 0330S QC, TBA 0250B QC (See drawing on page: 5-4)					
010	2591790-0000		1	BLOCK	
430	312105-0489		2	SCREW M6S ISO 4017 M10X16 A480	
TBA 0200S (See drawing on page: 5-4)					
010	1260887-0000		1	BLOCK	
430	312105-0489		2	SCREW M6S ISO 4017 M10X16 A480	
TBA 0200SQ, TBA 0250SQ (See drawing on page: 5-8)					
005	2588130-0100		1	FOLDING FIN DEVICE	**5-15**
010	2668239-0000		1	BLOCK	
610	342748-0102		1	T-CONNECTION 6MM	
620	350002-0006		2	PUSH-IN L-FITTING QSL-F-G1/8-6	
630	315400-0001	MM	1500	TUBE PUN-H-6X1-BL	
TBA 0250S, TBA 0200M (See drawing on page: 5-4)					
010	2522199-0000		1	BLOCK	
430	312105-0489		2	SCREW M6S ISO 4017 M10X16 A480	
TBA 0500B, TBA 1000B NOMOLDEDCAP (See drawing on page: 5-4)					
010	1260700-0000		1	BLOCK	
430	312105-0489		2	SCREW M6S ISO 4017 M10X16 A480	
TBA 0500S (See drawing on page: 5-4)					
010	1499139-0000		1	BLOCK	
430	312105-0489		2	SCREW M6S ISO 4017 M10X16 A480	
TBA 1000B STDA7 (See drawing on page: 5-4)					
005	1348056-0300		1	FOLDING PART	**5-11, 5-13**
010	1260700-0000		1	BLOCK	
TBA 1000S NOMOLDEDCAP (See drawing on page: 5-4)					
010	1144933-0000		1	BLOCK	
430	312105-0489		2	SCREW M6S ISO 4017 M10X16 A480	
TBA 1000S STDA7, TBA 1000S LIGHTCAP (See drawing on page: 5-6)					
005	1348056-0300		1	FOLDING PART	**5-11, 5-13**
010	1144933-0000		1	BLOCK	
TBA 1000SQ (See drawing on page: 5-6)					
005	1348056-0300		1	FOLDING PART	**5-11, 5-13**
010	1558008-0000		1	BLOCK	
200	1558020-0000		2	ROD	
590	312125-0234		4	SCREW ISO 1207 M3X30 A4	
600	315105-0124		4	WASHER BRB3,2X6RFR	
TBA 1500S (See drawing on page: 5-4)					
010	1317789-0000		1	BLOCK	
430	312105-0489		2	SCREW M6S ISO 4017 M10X16 A480	
TBA 1890S QC, TBA 2000S QC (See drawing on page: 5-6)					
010	2616229-0000		1	BLOCK	
430	312105-0489		2	SCREW M6S ISO 4017 M10X16 A480	
590	312125-0234		4	SCREW ISO 1207 M3X30 A4	
600	315105-0124		4	WASHER BRB3,2X6RFR	
TPA 0250SQ NOQC (See drawing on page: 5-4)					
005	1348056-0300		1	FOLDING PART	**5-11, 5-13**
010	1549846-0000		1	BLOCK	
TPA 0250SQ QC, TPA 0200SQ QC (See drawing on page: 5-8)					
005	2588130-0100		1	FOLDING FIN DEVICE	**5-15**
010	2674253-0000		1	BLOCK	
Common Parts					
020	1144472-0000		1	LEVER	
030	1144473-0000		1	LEVER	
040	1499635-0000		1	LEVER	
050	1144475-0000		1	BRACKET	
060	1144476-0000		1	BRACKET	
070	1144566-0000		1	FLANGE	
080	1144678-0000		1	SHAFT	
090	1144681-0000		1	WASHER	
100	1144683-0000		1	AXLE PIN	
110	1144684-0000		2	SPACER	
120	1144685-0000		2	SCREW	

Machine Type | Group Description | Used-In | Group Number | Page No

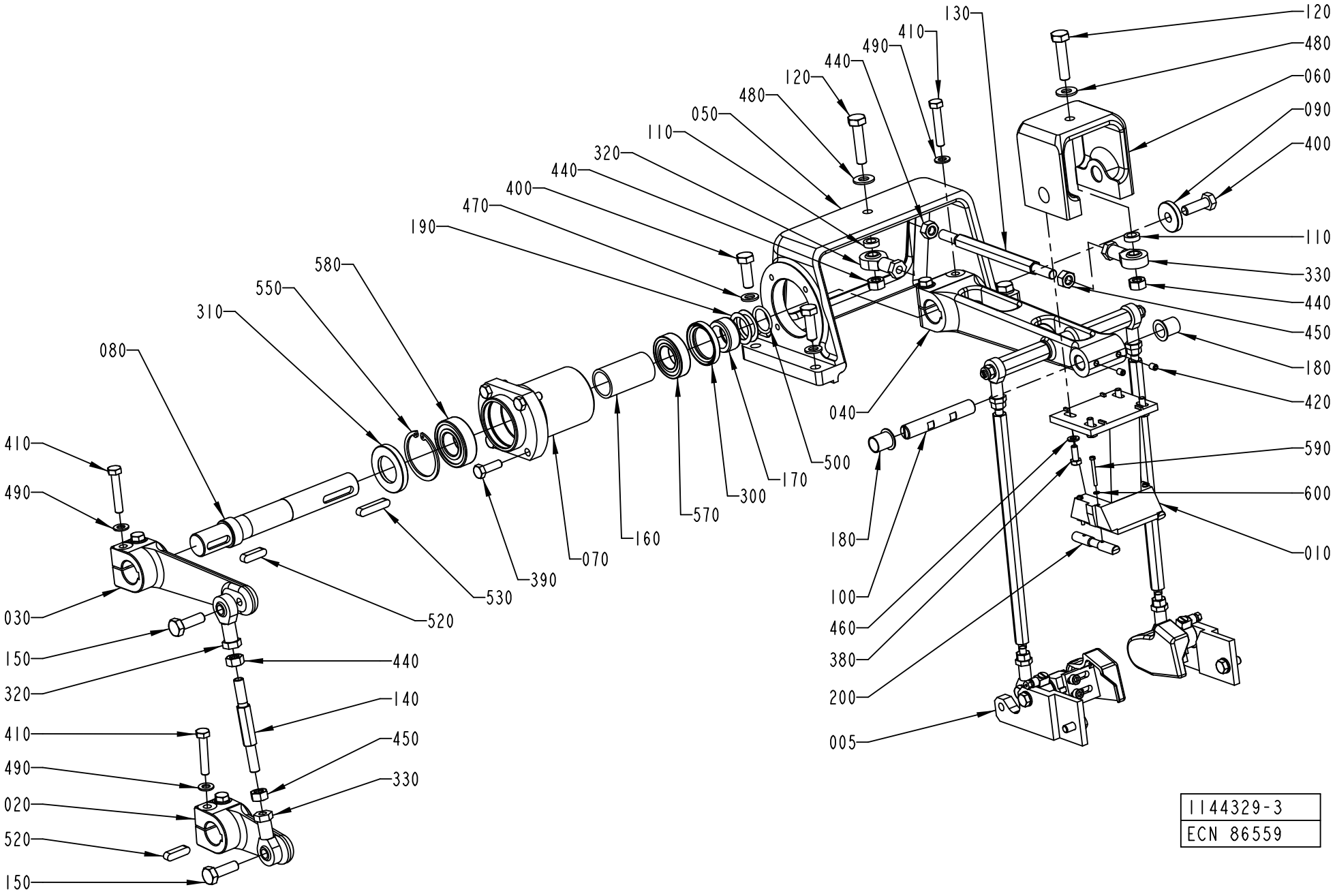
130
120
480
410
490
060
440
090
120
400
480
050
110
110
320
330
440
400
440
450
470
180
190
420
580
040
550
590
310
500
600
080
170
300
570
160
070
390
530
520
010
410
180
490
100
460
030
380
150
200
320
440
005
140
410
450
490
330
020
520
150
1144329-3
ECN 86559

Pos	Part No	UN	Qty	Description	Page No
Common Parts (Cont'd)					
130	1144686-0000		1	TIE ROD	
140	1144687-0000		1	TIE ROD	
150	1144688-0000		2	SCREW	
160	1260824-0000		1	SPACER RING	
170	1334328-0000		1	SPACER	
180	1260944-0000		2	BUSHING	
190	1334018-0000		4	SHIM	
300	90091-0297		1	RADIAL SEAL 35X47X7 MM DUST LIP	
310	90091-0299		1	RADIAL SEAL 30X52X7 MM DUST LIP	
320	90115-0181		2	ROD END, ID=10 MM M10X1,5	
330	90115-0182		2	ROD END, ID=10 MM M10X1,5LH	
380	312105-0368		4	SCREW M6S ISO 4017 M6X16 A480	
390	312105-0453		4	SCREW M6S ISO 4017 M8X25 A480	
400	312105-0495		5	SCREW M6S ISO 4017 M10X30 A480	
410	312109-0460		6	SCREW M6S ISO 4017 M8X45 A480	
420	312318-0362		2	SCREW ISO4029 M6X8 A4	
440	312605-0320		4	HEXAGON NUT, M6M M10 A280	
450	312902-0320		2	NUT HEX. LEFT THREAD, M10 A280	
460	315105-0153		4	WASHER BRB6,4X12RFR	
470	315105-0171		4	WASHER BRB10X18	
480	315105-0173		2	WASHER BRB10,5X22RFR	
490	315105-0165		6	WASHER BRB8,4X16RFR	
500	315202-0217		1	O-RING 24,2X3 MM	
520	315705-0267		1	PARALLEL KEY W. ROUND ENDS 8X7X30 MM	
530	315705-0270		1	PARALLEL KEY W. ROUND ENDS 8X7X40 MM	
550	315753-0132		1	RETAINING RING FOR BORE DIN 472 52 A2	
570	321308-0205		1	BALL BEARING, 25X47X12MM	
580	321313-0105		1	BALL BEARING, 25X52X15MM	

Pos	Part No	UN	Qty	Description	Page No

PULL-DOWN DEVICE

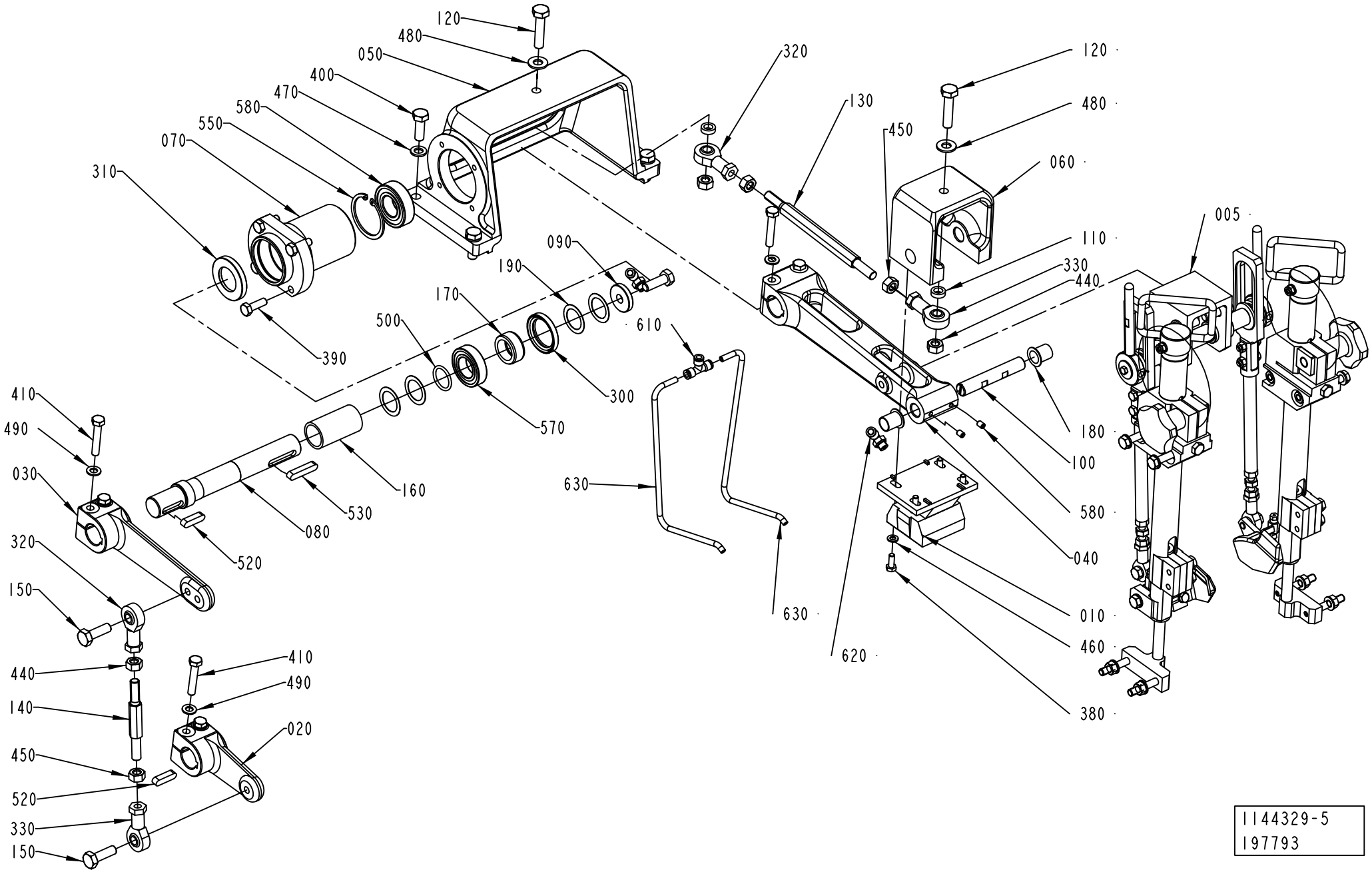

1144329-5
197793

ECM: 258278 - 20060702
Group number: 1144329-0300
Assembly Drawing: 1144329-5_1_AA

This list covers pages from 5-4 to 5-9

Pos	Part No	UN	Qty	Description	Page No	Pos	Part No	UN	Qty	Description	Page No

SEE PREVIOUS LISTS PAGES: 5-5, 5-7.

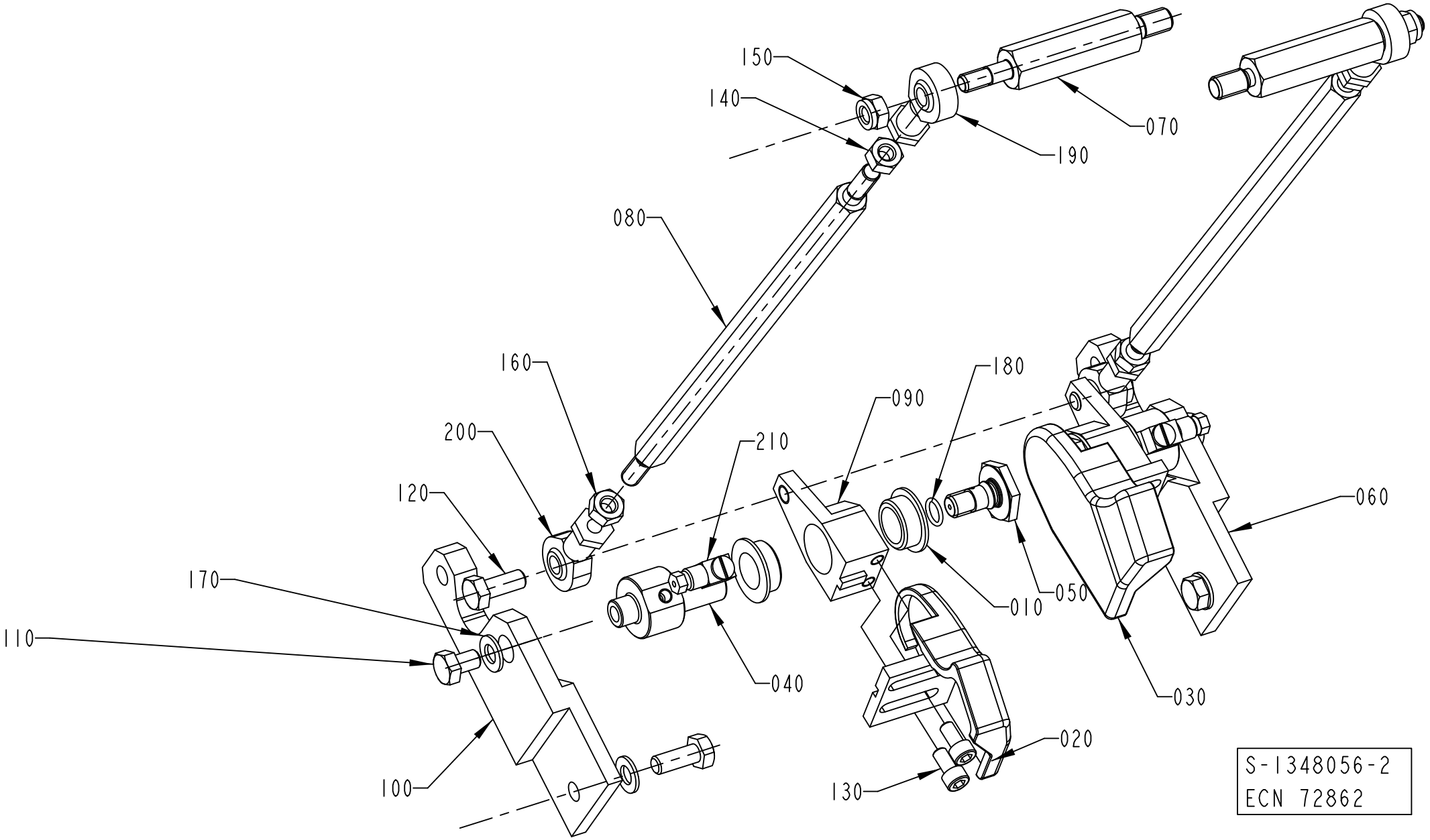
150
140
070
190
080
160
180
090
200
210
120
060
170
010
050
110
040
030
020
100
130
S-1348056-2
ECN 72862

Pos	Part No	UN	Qty	Description	Page No
TBA 1000B STDA7 (See drawing on page: 5-10)					
020	1487922-0000		1	FOLDING DEVICE	
030	1487923-0000		1	FOLDING DEVICE	
060	1347600-0000		1	SUPPORT	
070	1499765-0000		2	AXLE LINK	
080	2609368-0000		2	TIE ROD	
090	1350440-0000		2	LEVER	
100	1350441-0000		1	SUPPORT	
TBA 1000SQ, TBA 1000S STDA7, TBA 1000S LIGHTCAP (See drawing on page: 5-10)					
020	1487922-0000		1	FOLDING DEVICE	
030	1487923-0000		1	FOLDING DEVICE	
060	1347600-0000		1	SUPPORT	
070	1499765-0000		2	AXLE LINK	
080	1499103-0000		2	TIE ROD	
090	1350440-0000		2	LEVER	
100	1350441-0000		1	SUPPORT	
TPA 0250SQ (See drawing on page: 5-10)					
020	1296180-0000		1	FOLDING DEVICE	
030	1296181-0000		1	FOLDING DEVICE	
060	1532267-0000		1	SUPPORT	
070	1532268-0000		2	AXLE LINK	
080	1532269-0000		2	TIE ROD	
090	1350440-0000		2	LEVER	
100	1532270-0000		1	SUPPORT	
TPA 0330SQ (See drawing on page: 5-10)					
020	1296180-0000		1	FOLDING DEVICE	
030	1296181-0000		1	FOLDING DEVICE	
060	1532267-0000		1	SUPPORT	
070	1532268-0000		2	AXLE LINK	
080	1532269-0000		2	TIE ROD	
090	1350440-0000		2	LEVER	
100	1532270-0000		1	SUPPORT	
TPA 0500SQ SMILE (See drawing on page: 5-12)					
020	2606277-0000		1	FOLDING DEVICE	
030	2606278-0000		1	FOLDING DEVICE	
060	2529673-0000		1	SUPPORT	
070	1532268-0000		2	AXLE LINK	
080	2527531-0000		2	TIE ROD	
090	2529676-0000		1	LEVER	
100	2529674-0000		1	SUPPORT	
220	2529675-0000		1	LEVER	
TPA 1000SQ (See drawing on page: 5-10)					
020	1296180-0000		1	FOLDING DEVICE	
030	1296181-0000		1	FOLDING DEVICE	
060	1347600-0000		1	SUPPORT	
070	1499765-0000		2	AXLE LINK	
080	1519340-0000		2	TIE ROD	
090	1350440-0000		2	LEVER	
100	1350441-0000		1	SUPPORT	
TPA 1000SQ SMILE (See drawing on page: 5-12)					
020	2529671-0000		1	FOLDING DEVICE	
030	2529672-0000		1	FOLDING DEVICE	
060	2553343-0000		1	SUPPORT	
070	2553346-0000		2	AXLE LINK	
080	2553345-0000		2	TIE ROD	
090	2529676-0000		1	LEVER	
100	2553344-0000		1	SUPPORT	
220	2529675-0000		1	LEVER	
Common Parts					
010	1282708-0000		4	BUSHING	
040	1347495-0000		2	AXLE PIN	
050	1347496-0000		2	SCREW	
110	312105-0447		2	SCREW M6S ISO 4017 M8X12 A480	
120	312105-0451		4	SCREW M6S ISO 4017 M8X20 A480	
130	312115-0366		4	SCREW ISO4762 M6X12 A4 80	
140	312605-0318		2	HEXAGON NUT, M6M M8 A280	
150	312812-0318		2	HEXAGON NUT, NY-LOCK M8 A480	
160	312902-0318		2	NUT HEX. LEFT THREAD, M8 A280	
170	315105-0165		4	WASHER BRB8,4X16RFR	
180	315202-0107		2	O-RING 9,1X1,6 MM	
190	90115-0139		2	ROD END, ID=8 MM, M8X1,25	
200	90115-0180		2	ROD END, ID=8 MM, M8X1,25 LH	
210	90134-0058		2	CONNECTION	

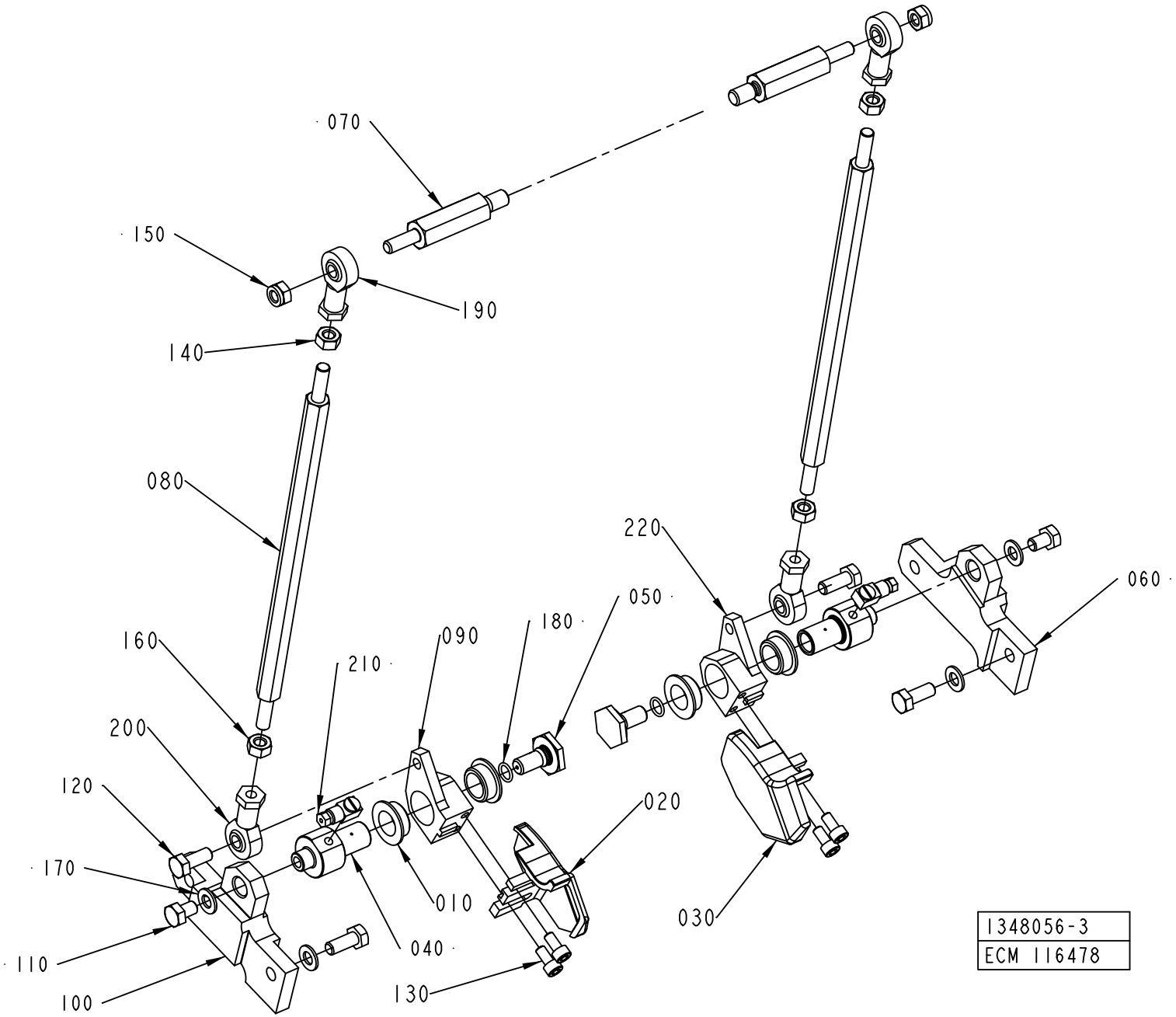
070
150
190
140
080
160
210
090
180
050
220
060
200
120
170
110
100
040
010
020
030
130
1348056-3
ECM 116478

ECM: 258279 - 20060702
Group number: 1348056-0300
Assembly Drawing: 1348056-3_1_AA

This list covers pages from 5-10 to 5-13

Pos	Part No	UN	Qty	Description	Page No
TBA 1000B STDA7 (See drawing on page: 5-10)					
020	1487922-0000		1	FOLDING DEVICE	
030	1487923-0000		1	FOLDING DEVICE	
060	1347600-0000		1	SUPPORT	
070	1499765-0000		2	AXLE LINK	
080	2609368-0000		2	TIE ROD	
090	1350440-0000		2	LEVER	
100	1350441-0000		1	SUPPORT	
TBA 1000SQ, TBA 1000S STDA7, TBA 1000S LIGHTCAP (See drawing on page: 5-10)					
020	1487922-0000		1	FOLDING DEVICE	
030	1487923-0000		1	FOLDING DEVICE	
060	1347600-0000		1	SUPPORT	
070	1499765-0000		2	AXLE LINK	
080	1499103-0000		2	TIE ROD	
090	1350440-0000		2	LEVER	
100	1350441-0000		1	SUPPORT	
TPA 0250SQ (See drawing on page: 5-10)					
020	1296180-0000		1	FOLDING DEVICE	
030	1296181-0000		1	FOLDING DEVICE	
060	1532267-0000		1	SUPPORT	
070	1532268-0000		2	AXLE LINK	
080	1532269-0000		2	TIE ROD	
090	1350440-0000		2	LEVER	
100	1532270-0000		1	SUPPORT	
TPA 0330SQ (See drawing on page: 5-10)					
020	1296180-0000		1	FOLDING DEVICE	
030	1296181-0000		1	FOLDING DEVICE	
060	1532267-0000		1	SUPPORT	
070	1532268-0000		2	AXLE LINK	
080	1532269-0000		2	TIE ROD	
090	1350440-0000		2	LEVER	
100	1532270-0000		1	SUPPORT	
TPA 0500SQ SMILE (See drawing on page: 5-12)					
020	2606277-0000		1	FOLDING DEVICE	
030	2606278-0000		1	FOLDING DEVICE	
060	2529673-0000		1	SUPPORT	
070	1532268-0000		2	AXLE LINK	
080	2527531-0000		2	TIE ROD	
090	2529676-0000		1	LEVER	
100	2529674-0000		1	SUPPORT	
220	2529675-0000		1	LEVER	
TPA 1000SQ (See drawing on page: 5-10)					
020	1296180-0000		1	FOLDING DEVICE	
030	1296181-0000		1	FOLDING DEVICE	
060	1347600-0000		1	SUPPORT	
070	1499765-0000		2	AXLE LINK	
080	1519340-0000		2	TIE ROD	
090	1350440-0000		2	LEVER	
100	1350441-0000		1	SUPPORT	
TPA 1000SQ SMILE (See drawing on page: 5-12)					
020	2529671-0000		1	FOLDING DEVICE	
030	2529672-0000		1	FOLDING DEVICE	
060	2553343-0000		1	SUPPORT	
070	2553346-0000		2	AXLE LINK	
080	2553345-0000		2	TIE ROD	
090	2529676-0000		1	LEVER	
100	2553344-0000		1	SUPPORT	
220	2529675-0000		1	LEVER	
Common Parts					
010	1282708-0000		4	BUSHING	
040	1347495-0000		2	AXLE PIN	
050	1347496-0000		2	SCREW	
110	312105-0447		2	SCREW M6S ISO 4017 M8X12 A480	
120	312105-0451		4	SCREW M6S ISO 4017 M8X20 A480	
130	312115-0366		4	SCREW ISO4762 M6X12 A4 80	
140	312605-0318		2	HEXAGON NUT, M6M M8 A280	
150	312812-0318		2	HEXAGON NUT, NY-LOCK M8 A480	
160	312902-0318		2	NUT HEX. LEFT THREAD, M8 A280	
170	315105-0165		4	WASHER BRB8,4X16RFR	
180	315202-0107		2	O-RING 9,1X1,6 MM	
190	90115-0139		2	ROD END, ID=8 MM, M8X1,25	
200	90115-0180		2	ROD END, ID=8 MM, M8X1,25 LH	
210	90134-0058		2	CONNECTION	

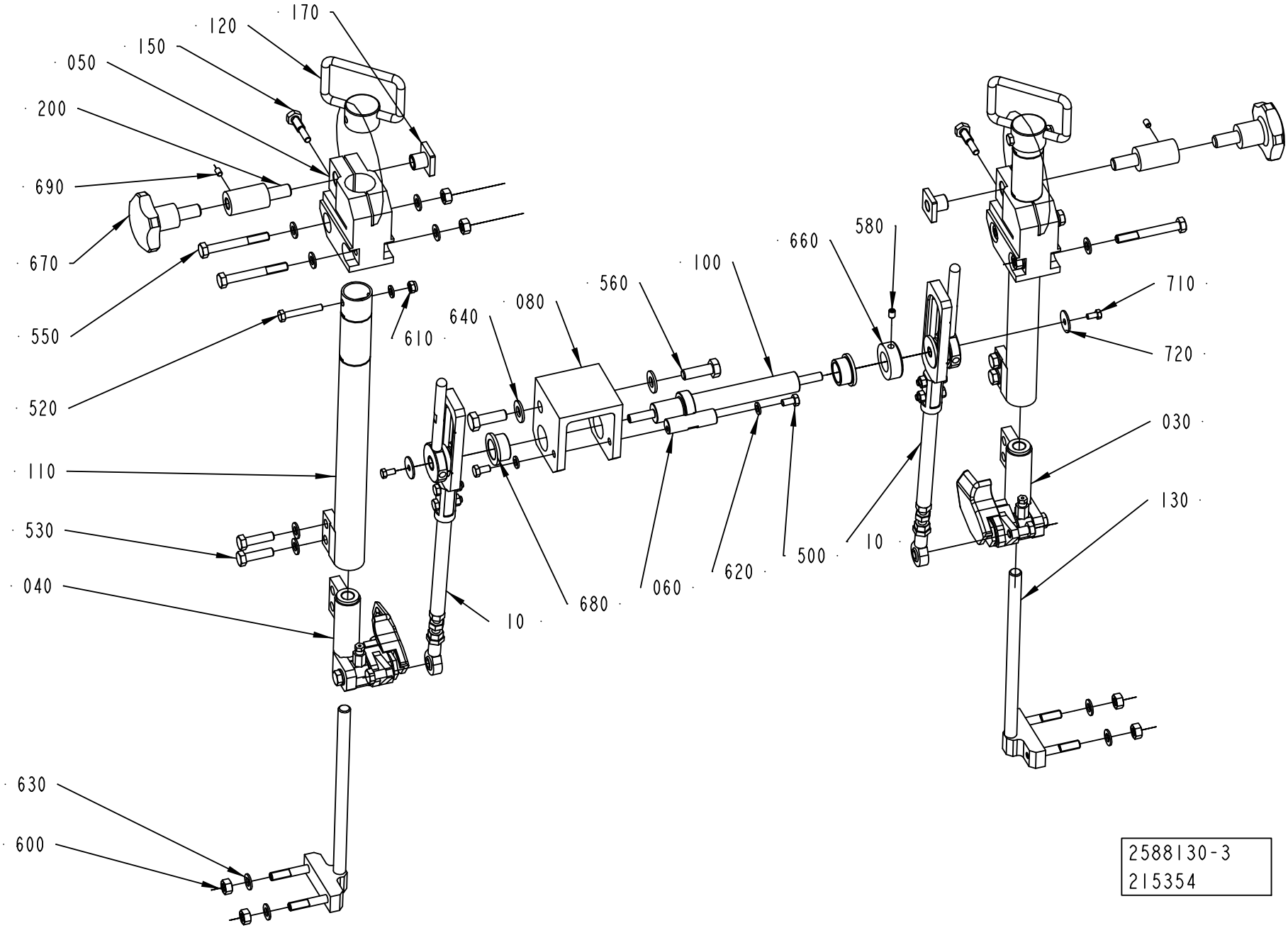
170
120
150
050
200
690
670
550
520
110
530
040
630
600
610
640
080
560
100
660
580
710
720
030
130
10
680
060
620
500
10
2588130-3
215354

ECM: 245046 - 20060208
Group number: 2588130-0100
Assembly Drawing: 2588130-3_1_AB

Pos	Part No	UN	Qty	Description	Page No
TBA 0200SQ, TBA 0250SQ (See drawing on page: 5-14)					
010	2619584-0100		2	STRUT	**5-17**
045	2668238-0000		2	PIPE	
055	2663367-0000		2	NUT	
100	2647103-0000		1	SHAFT	
110	2619588-0000		2	PIPE	
140	2663371-0000		2	SCREW	
200	2739682-0000		2	SPACER SCREW	
300	312105-0366		4	SCREW M6S ISO 4017 M6X12 A480	
320	312105-0378		2	SCREW M6S ISO 4014 M6X40 A480	
337	312105-0464		4	SCREW M6S ISO 4014 M8X65 A480	
340	312105-0495		2	SCREW M6S ISO 4017 M10X30 A480	
380	312318-0362		1	SCREW ISO4029 M6X8 A4	
400	312605-0318		8	HEXAGON NUT, M6M M8 A280	
405	315105-0153		2	WASHER BRB6,4X12RFR	
410	315105-0153		8	WASHER BRB6,4X12RFR	
420	315105-0165		16	WASHER BRB8,4X16RFR	
430	315105-0173		2	WASHER BRB10,5X22RFR	
470	315742-0116		2	RETAINING RING 20 SMS 199 RFR	
475	318856-0115		2	KNOB, EXTERNAL THREAD. NO. 8306-0278	
510	312105-0325		2	SCREW M6S ISO 4017 M5X10 A480	
520	90005-0125		2	WASHER PLAIN ROUND 5,5/22, H=1,5 FZB	
530	312105-0455		4	SCREW M6S ISO 4017 M8X30 A480	
690	312318-0323		2	SCREW ISO4029 M5X8 A4	
TPA 0250SQ, TPA 0200SQ (See drawing on page: 5-14)					
010	2619584-0100		2	STRUT	**5-17**
100	2647103-0000		1	SHAFT	
110	2674257-0000		2	PIPE	
120	2619589-0000		2	HANDLE	
150	2663371-0000		2	SCREW	
170	2663367-0000		2	NUT	
200	2739682-0000		2	SPACER SCREW	
500	312105-0366		2	SCREW M6S ISO 4017 M6X12 A480	
520	312105-0378		2	SCREW M6S ISO 4014 M6X40 A480	
530	312105-0455		4	SCREW M6S ISO 4017 M8X30 A480	
550	312105-0464		4	SCREW M6S ISO 4014 M8X65 A480	
580	312318-0362		5	SCREW ISO4029 M6X8 A4	
600	312605-0318		9	HEXAGON NUT, M6M M8 A280	
610	312812-0316		2	HEXAGON NUT, NY-LOCK M6 A480	
620	315105-0153		4	WASHER BRB6,4X12RFR	
630	315105-0165		16	WASHER BRB8,4X16RFR	
640	315105-0173		2	WASHER BRB10,5X22RFR	
660	315742-0116		1	RETAINING RING 20 SMS 199 RFR	
670	318856-0115		2	KNOB, EXTERNAL THREAD. NO. 8306-0278	
680	321111-0302		2	FLANGE BUSHING, 20X26X15 MM	
690	312318-0323		2	SCREW ISO4029 M5X8 A4	
710	312105-0325		2	SCREW M6S ISO 4017 M5X10 A480	
720	90005-0125		2	WASHER PLAIN ROUND 5,5/22, H=1,5 FZB	
TPA 1000SQ, TPA 0750SQ (See drawing on page: 5-14)					
010	2619584-0100		2	STRUT	**5-17**
045	2647102-0000		2	PIPE	
100	2647103-0000		1	SHAFT	
120	2619589-0000		2	HANDLE	
150	2663371-0000		2	SCREW	
170	2663367-0000		2	NUT	
200	2739682-0000		2	SPACER SCREW	
500	312105-0366		2	SCREW M6S ISO 4017 M6X12 A480	
520	312105-0378		2	SCREW M6S ISO 4014 M6X40 A480	
550	312105-0464		4	SCREW M6S ISO 4014 M8X65 A480	
560	312105-0495		2	SCREW M6S ISO 4017 M10X30 A480	
580	312318-0362		5	SCREW ISO4029 M6X8 A4	
600	312605-0318		8	HEXAGON NUT, M6M M8 A280	
610	312812-0316		2	HEXAGON NUT, NY-LOCK M6 A480	
620	315105-0153		8	WASHER BRB6,4X12RFR	
630	315105-0165		16	WASHER BRB8,4X16RFR	
640	315105-0173		2	WASHER BRB10,5X22RFR	
660	315742-0116		1	RETAINING RING 20 SMS 199 RFR	
670	318856-0115		2	KNOB, EXTERNAL THREAD. NO. 8306-0278	
680	321111-0302		2	FLANGE BUSHING, 20X26X15 MM	
690	312318-0323		2	SCREW ISO4029 M5X8 A4	
710	312105-0325		2	SCREW M6S ISO 4017 M5X10 A480	
720	90005-0125		2	WASHER PLAIN ROUND 5,5/22, H=1,5 FZB	
730	312105-0455		4	SCREW M6S ISO 4017 M8X30 A480	
Common Parts					
030	2619597-0100		1	FLAP GUIDE	**5-19**
040	2619598-0100		1	FLAP GUIDE	**5-21**
050	2663369-0000		2	BLOCK	
060	2588127-0000		1	AXLE PIN	
080	2588134-0000		1	YOKE	
130	2663370-0000		2	SUPPORT	

Machine Type	Group Description	Used-In	Group Number	Page No

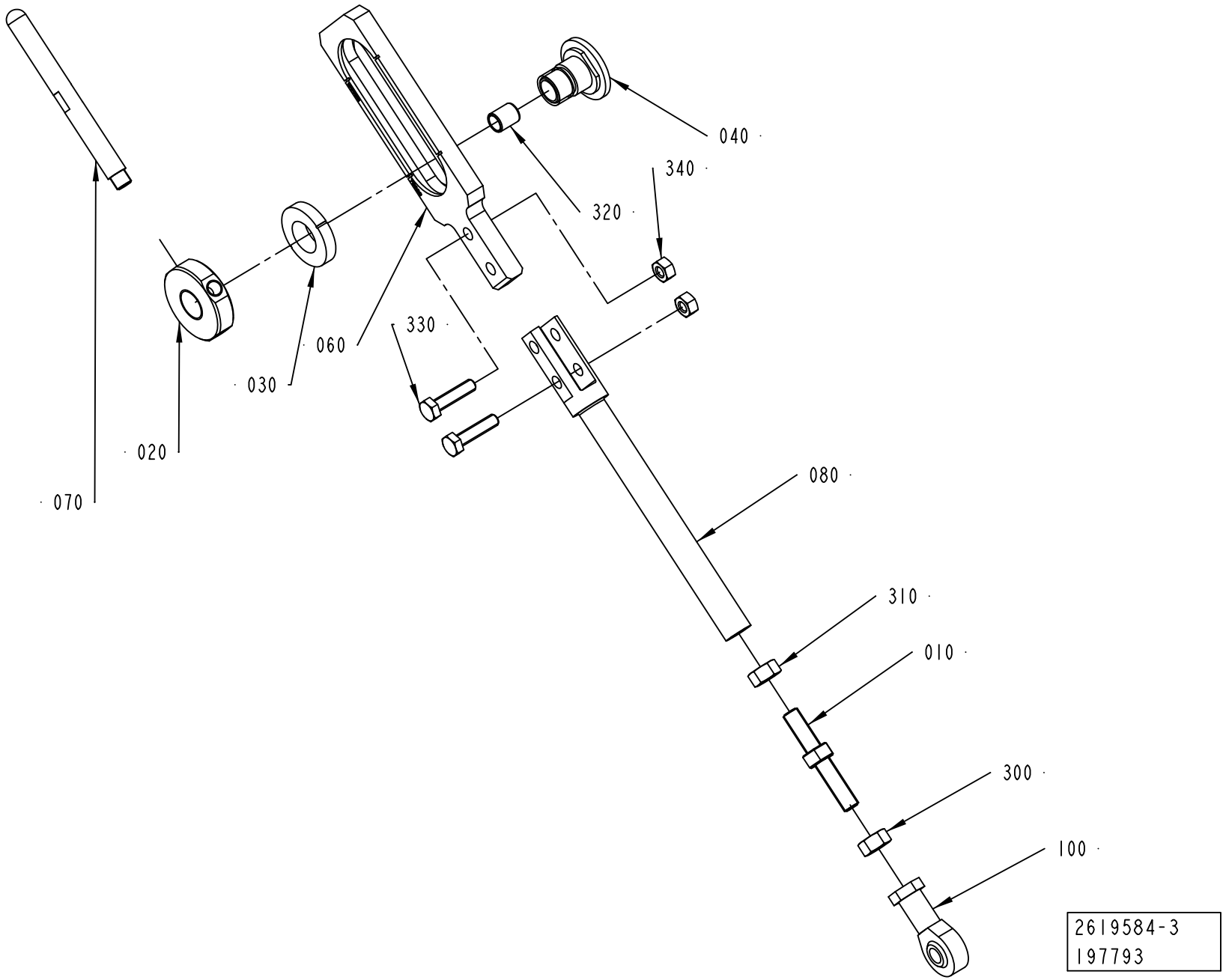
040
340
320
330
060
030
020
070
080
310
010
300
100
2619584-3
197793

ECM: 210089 - 20050520
Group number: 2619584-0100
Assembly Drawing: 2619584-3_1_AA

Pos	Part No	UN	Qty	Description	Page No
TBA 0200SQ, TBA 0250SQ (See drawing on page: 5-16)					
060	2668236-0000		1	LEVER	
080	2668237-0000		1	SHAFT	
200	90115-0021		1	ROD END, ID=8 MM, M8X1,25 LH	
330	312105-0372		2	SCREW M6S ISO 4017 M6X25 A480	
340	312605-0316		2	HEXAGON NUT, M6M M6 A280	
TPA 0250SQ, TPA 0200SQ (See drawing on page: 5-16)					
060	2674255-0000		1	STRUT	
080	2674256-0000		1	SHAFT	
200	90115-0021		1	ROD END, ID=8 MM, M8X1,25 LH	
330	312105-0372		2	SCREW M6S ISO 4017 M6X25 A480	
340	312605-0316		2	HEXAGON NUT, M6M M6 A280	
TPA 1000SQ, TPA 0750SQ (See drawing on page: 5-16)					
060	2647108-0000		1	STRUT	
080	2647109-0000		1	SHAFT	
200	90115-0021		1	ROD END, ID=8 MM, M8X1,25 LH	
330	312105-0372		2	SCREW M6S ISO 4017 M6X25 A480	
340	312605-0316		2	HEXAGON NUT, M6M M6 A280	
Common Parts					
010	2598880-0000		1	SETTING SCREW	
020	2619528-0000		1	LOCKING CIRCLIP	
030	2619529-0000		1	SLEEVE	
040	2619530-0000		1	SLEEVE	
070	2619596-0000		1	HANDLE	
300	312605-0318		1	HEXAGON NUT, M6M M8 A280	
310	312902-0318		1	NUT HEX. LEFT THREAD, M8 A280	
320	321141-0104		1	BEARING BUSH W/O FLANGE, 8X10X12 MM	

Pos	Part No	UN	Qty	Description	Page No

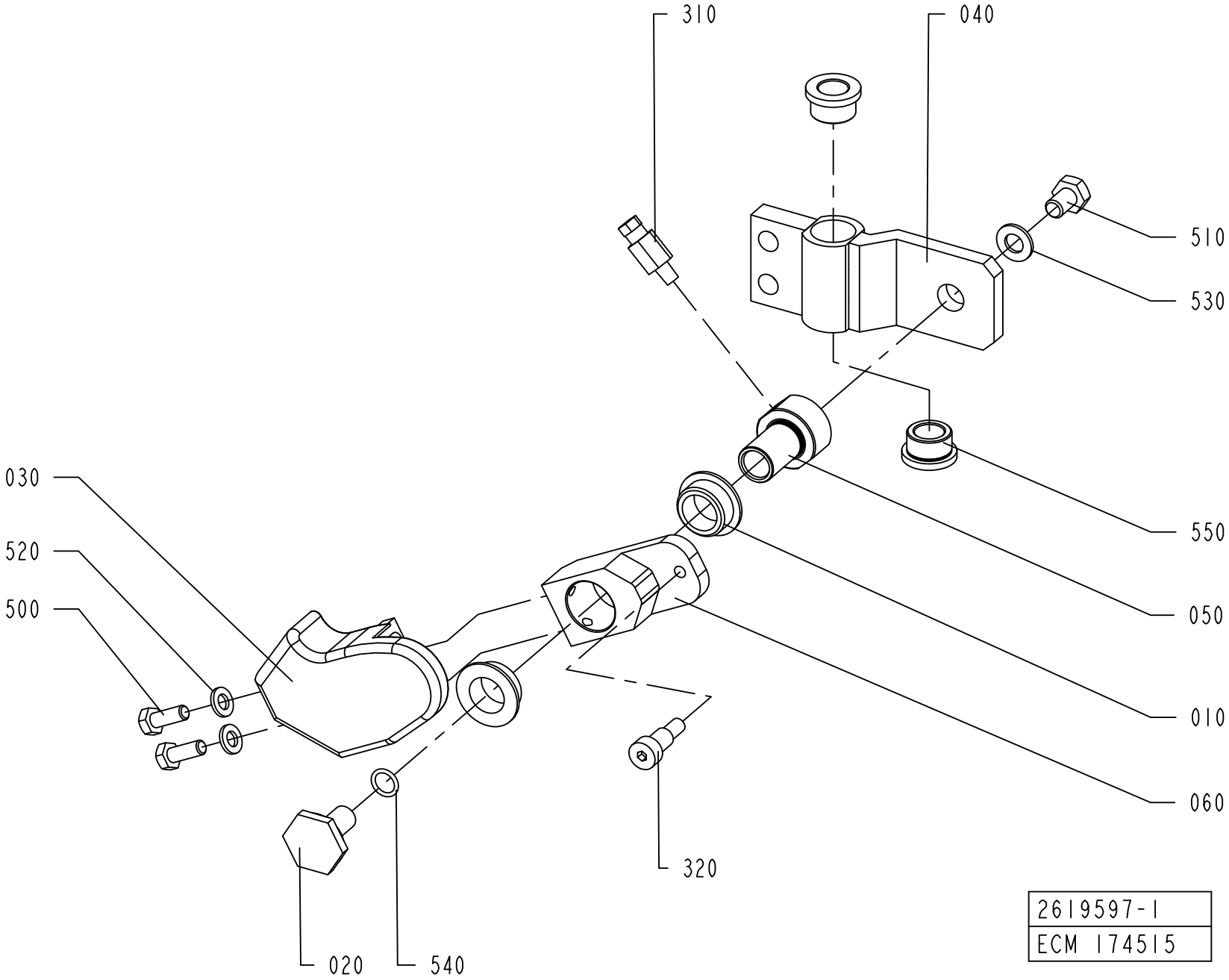
310
040
510
530
030
520
500
550
050
010
060
320
020
540
2619597-1
ECM 174515

ECM: 213700 - 20050520
Group number: 2619597-0100
Assembly Drawing: 2619597-1_1_AA

Pos	Part No	UN	Qty	Description	Page No
TBA 0200SQ, TBA 0250SQ					
030	2746790-0000		1	FOLDING DEVICE	
040	2668245-0000		1	SLIDER	
050	2647105-0000		1	AXLE PIN	
060	1350440-0000		1	LEVER	
320	312151-0451		1	SCREW EN 10642 MF6S M8X20 10.9 EL.PL	
500	312105-0367		2	SCREW M6S ISO 4017 M6X14 A480	
510	312105-0451		1	SCREW M6S ISO 4017 M8X20 A480	
TPA 0250SQ, TPA 0200SQ					
030	2698293-0000		1	FOLDING DEVICE	
040	2674258-0000		1	SLIDER	
050	2647105-0000		1	AXLE PIN	
060	1350440-0000		1	LEVER	
320	312151-0451		1	SCREW EN 10642 MF6S M8X20 10.9 EL.PL	
500	312105-0367		2	SCREW M6S ISO 4017 M6X14 A480	
510	312105-0449		1	SCREW M6S ISO 4017 M8X16 A480	
TPA 1000SQ, TPA 0750SQ					
030	2529671-0000		1	FOLDING DEVICE	
040	2647107-0000		1	SLIDER	
050	2647105-0000		1	AXLE PIN	
060	2647104-0000		1	LEVER	
320	312105-0451		1	SCREW M6S ISO 4017 M8X20 A480	
500	312105-0367		2	SCREW M6S ISO 4017 M6X14 A480	
510	312105-0447		1	SCREW M6S ISO 4017 M8X12 A480	
Common Parts					
010	1282708-0000		2	BUSHING	
020	1347496-0000		1	SCREW	
310	90134-0065		1	CONNECTION M6 TUBE 2,5 MM	
520	315101-0153		2	WASHER PLAIN, BRB, 6,4/12 H=1,5	
530	315105-0165		1	WASHER BRB8,4X16RFR	
540	315202-0107		1	O-RING 9,1X1,6 MM	
550	321101-0173		2	FLANGE BUSHING, 12X18X12 MM	

Pos	Part No	UN	Qty	Description	Page No

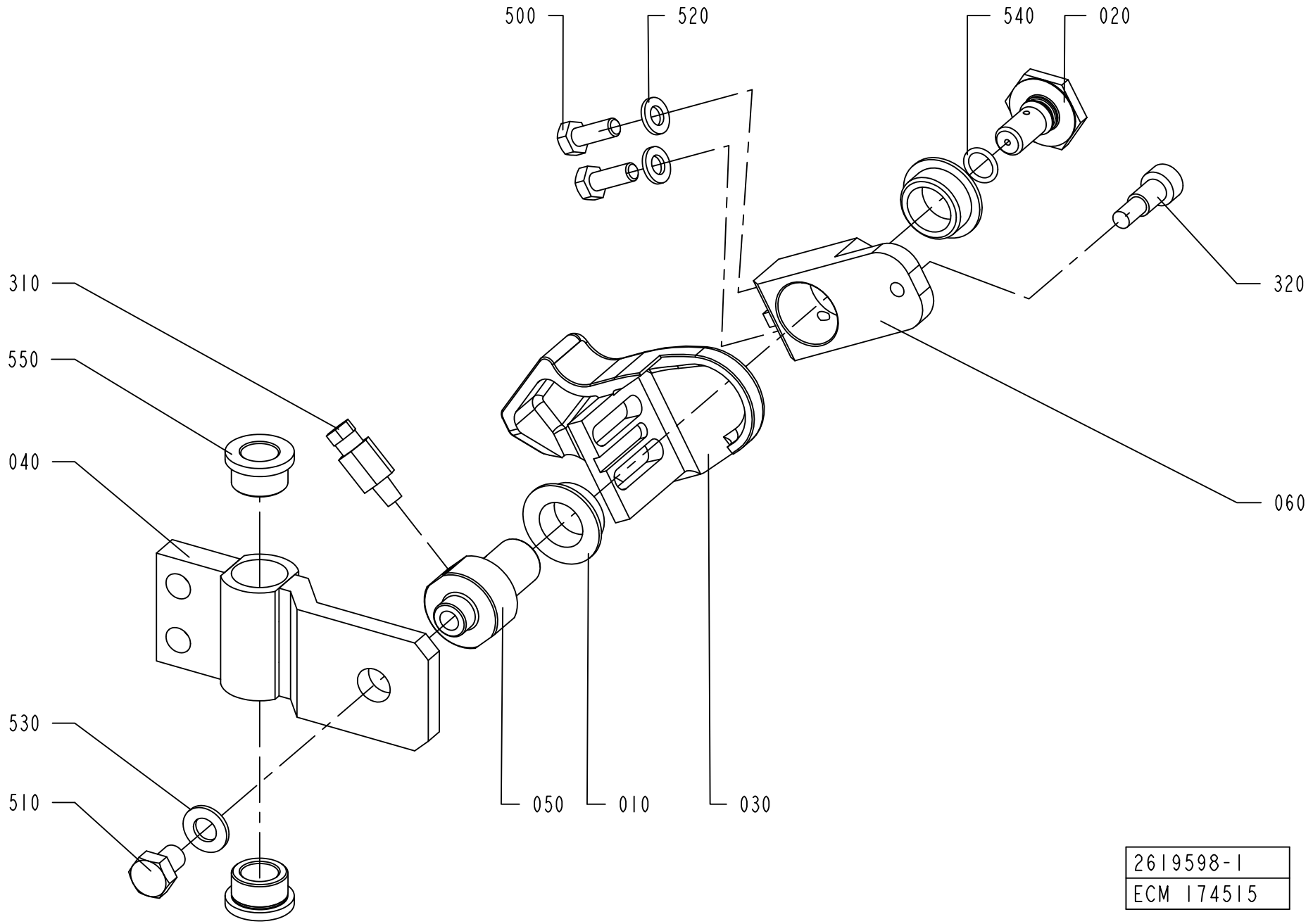
500
520
540
020
320
310
550
040
060
530
510
050
010
030
2619598-1
ECM 174515

ECM: 213701 - 20050520
Group number: 2619598-0100
Assembly Drawing: 2619598-1_1_AA

Pos	Part No	UN	Qty	Description	Page No
TBA 0200SQ, TBA 0250SQ					
030	2746791-0000		1	FOLDING DEVICE	
040	2668246-0000		1	SLIDER	
050	2647105-0000		1	AXLE PIN	
060	1350440-0000		1	LEVER	
320	312105-0451		1	SCREW M6S ISO 4017 M8X20 A480	
500	312105-0367		2	SCREW M6S ISO 4017 M6X14 A480	
510	312105-0451		1	SCREW M6S ISO 4017 M8X20 A480	
TPA 0250SQ, TPA 0200SQ					
030	2698294-0000		1	FOLDING DEVICE	
040	2674254-0000		1	SLIDER	
050	2647105-0000		1	AXLE PIN	
060	1350440-0000		1	LEVER	
320	312105-0451		1	SCREW M6S ISO 4017 M8X20 A480	
500	312105-0367		2	SCREW M6S ISO 4017 M6X14 A480	
510	312105-0449		1	SCREW M6S ISO 4017 M8X16 A480	
TPA 1000SQ, TPA 0750SQ					
030	2529672-0000		1	FOLDING DEVICE	
040	2647106-0000		1	SLIDER	
050	2647105-0000		1	AXLE PIN	
060	2647104-0000		1	LEVER	
320	312105-0451		1	SCREW M6S ISO 4017 M8X20 A480	
500	312105-0367		2	SCREW M6S ISO 4017 M6X14 A480	
510	312105-0447		1	SCREW M6S ISO 4017 M8X12 A480	
Common Parts					
010	1282708-0000		2	BUSHING	
020	1347496-0000		1	SCREW	
310	90134-0065		1	CONNECTION M6 TUBE 2,5 MM	
520	315101-0153		2	WASHER PLAIN, BRB, 6,4/12 H=1,5	
530	315105-0165		1	WASHER BRB8,4X16RFR	
540	315202-0107		1	O-RING 9,1X1,6 MM	
550	321101-0173		2	FLANGE BUSHING, 12X18X12 MM	

Pos	Part No	UN	Qty	Description	Page No

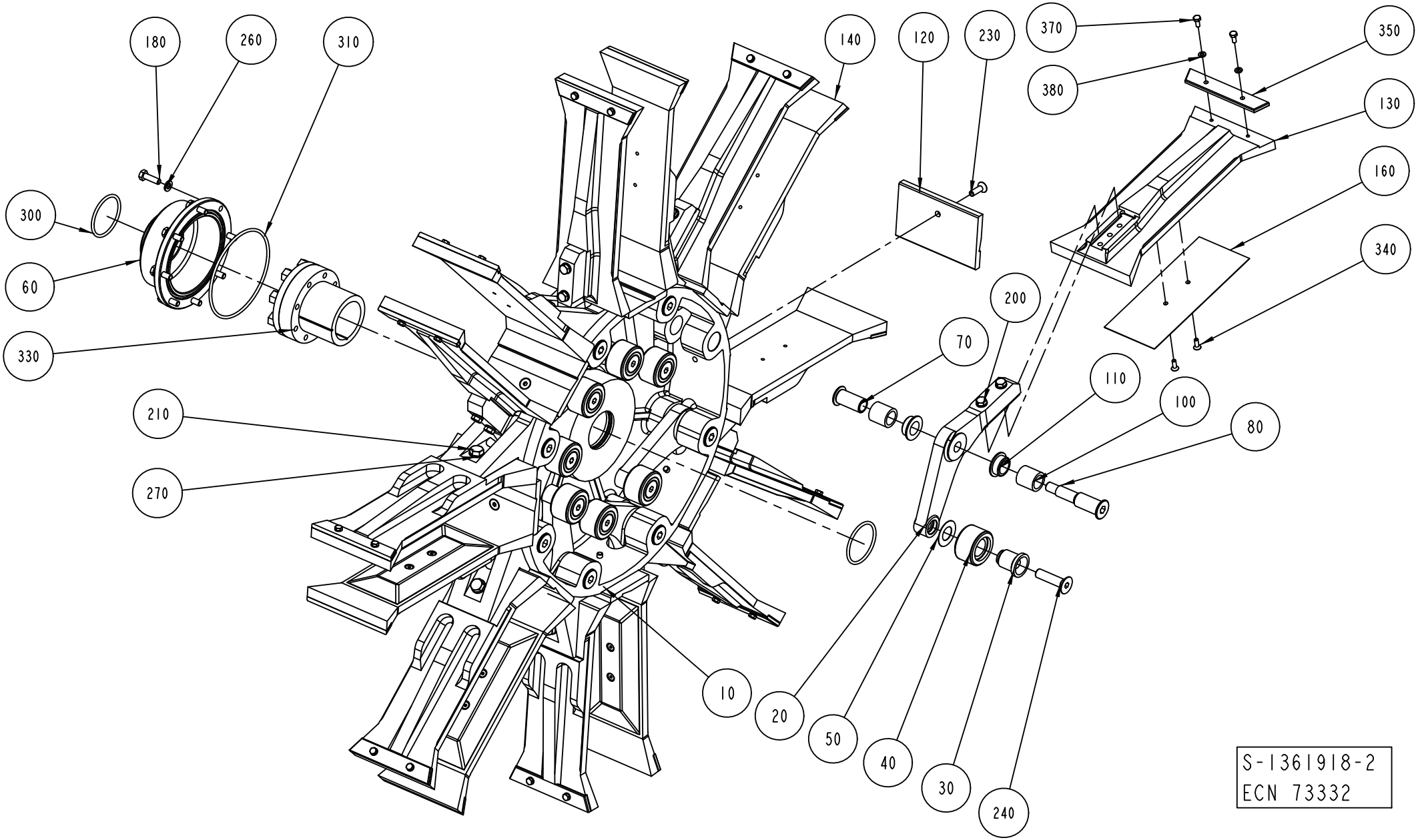
180
260
310
140
120
230
370
350
380
130
160
300
340
60
200
330
70
110
210
100
80
270
10
20
50
40
30
240
S-1361918-2
ECN 73332

ECM: 244839 - 20060702
Group number: 1361918-0300
Assembly Drawing: 1361918-2_1_AB

This list covers pages from 5-22 to 5-25

Pos	Part No	UN	Qty	Description	Page No
A3/FLEX TPA 0330SQ					
010	1144264-0000		1	HUB	
130	1532297-0000		8	FLAP	
140	1532298-0000		8	FLAP	
200	312105-0376		16	SCREW M6S ISO 4014 M6X35 A480	
210	312105-0453		8	SCREW M6S ISO 4017 M8X25 A480	
260	315105-0153		24	WASHER BRB6,4X12RFR	
A3/FLEX TPA 1000SQ					
010	1144264-0000		1	HUB	
120	1538770-0000		8	BOTTOM	
130	2555404-0000		8	FLAP	
140	1524484-0000		8	FLAP	
160	1523467-0000		8	VOLUME BULGE	
200	312105-0378		16	SCREW M6S ISO 4014 M6X40 A480	
210	312105-0453		8	SCREW M6S ISO 4017 M8X25 A480	
230	312155-0378		8	SCREW DIN 7991 MF6S M6X40 A4 70	
260	315105-0153		24	WASHER BRB6,4X12RFR	
340	312155-0289		16	SCREW DIN 7991 MF6S M4X10 A4 70	
A3/FLEX TBA 1000B STDA7					
010	1144264-0000		1	HUB	
120	2606289-0000		8	BOTTOM	
130	1260704-0000		8	FLAP	
140	1260705-0000		8	FLAP	
200	312105-0376		16	SCREW M6S ISO 4014 M6X35 A480	
210	312105-0453		8	SCREW M6S ISO 4017 M8X25 A480	
230	312155-0380		8	SCREW DIN 7991 MF6S M6X50 A4 70	
260	315105-0153		24	WASHER BRB6,4X12RFR	
A3/FLEX TBA 1000S LIGHTCAP					
010	1144264-0000		1	HUB	
120	2727874-0000		8	BOTTOM	
130	1144926-0000		8	FLAP	
140	1144927-0000		8	FLAP	
160	2550211-0000		8	VOLUME BULGE	
200	312105-0376		16	SCREW M6S ISO 4014 M6X35 A480	
210	312105-0453		8	SCREW M6S ISO 4017 M8X25 A480	
230	312155-0370		8	SCREW DIN 7991 MF6S M6X20 A4 70	
260	315105-0153		24	WASHER BRB6,4X12RFR	
340	312155-0287		16	SCREW DIN 7991 MF6S M4X8 A4 70	
A3/FLEX TBA 1000S STDA7					
010	1144264-0000		1	HUB	
120	2509938-0000		8	BOTTOM	
130	1144926-0000		8	FLAP	
140	1144927-0000		8	FLAP	
160	2550211-0000		8	VOLUME BULGE	
200	312105-0376		16	SCREW M6S ISO 4014 M6X35 A480	
210	312105-0453		8	SCREW M6S ISO 4017 M8X25 A480	
230	312155-0370		8	SCREW DIN 7991 MF6S M6X20 A4 70	
260	315105-0153		24	WASHER BRB6,4X12RFR	
340	312155-0287		16	SCREW DIN 7991 MF6S M4X8 A4 70	
A3/FLEX TPA 0500SQ SMILE					
010	1144264-0000		1	HUB	
120	2602614-0000		8	BOTTOM	
130	1549844-0000		8	FLAP	
140	2564347-0000		8	FLAP	
200	312105-0376		16	SCREW M6S ISO 4014 M6X35 A480	
210	312105-0453		8	SCREW M6S ISO 4017 M8X25 A480	
230	312105-0368		8	SCREW M6S ISO 4017 M6X16 A480	
260	315103-0153		32	WASHER, BRB, 6,4/12,H=1,5 NIPL BR	
A3/FLEX TPA 1000SQ SMILE					
010	1144264-0000		1	HUB	
120	2558144-0000		8	BOTTOM	
130	2558145-0000		8	FLAP	
140	1524484-0000		8	FLAP	
160	1523467-0000		8	VOLUME BULGE	
210	312105-0453		8	SCREW M6S ISO 4017 M8X25 A480	
230	312105-0368		8	SCREW M6S ISO 4017 M6X16 A480	
260	315103-0153		32	WASHER, BRB, 6,4/12,H=1,5 NIPL BR	
340	312155-0289		16	SCREW DIN 7991 MF6S M4X10 A4 70	
A3/FLEX TBA 0200S					
010	1144264-0000		1	HUB	
130	1260885-0000		8	FLAP	
140	1260886-0000		8	FLAP	
200	312105-0376		16	SCREW M6S ISO 4014 M6X35 A480	
210	312105-0453		8	SCREW M6S ISO 4017 M8X25 A480	
260	315105-0153		24	WASHER BRB6,4X12RFR	
A3/FLEX TBA 0500S					
010	1144264-0000		1	HUB	
130	1499141-0000		8	FLAP	
140	1499142-0000		8	FLAP	
160	1524035-0000		8	VOLUME BULGE	
200	312105-0376		16	SCREW M6S ISO 4014 M6X35 A480	
210	312105-0453		8	SCREW M6S ISO 4017 M8X25 A480	
260	315105-0153		24	WASHER BRB6,4X12RFR	
340	312155-0289		16	SCREW DIN 7991 MF6S M4X10 A4 70	

Machine Type | Group Description | Used-In | Group Number | Page No

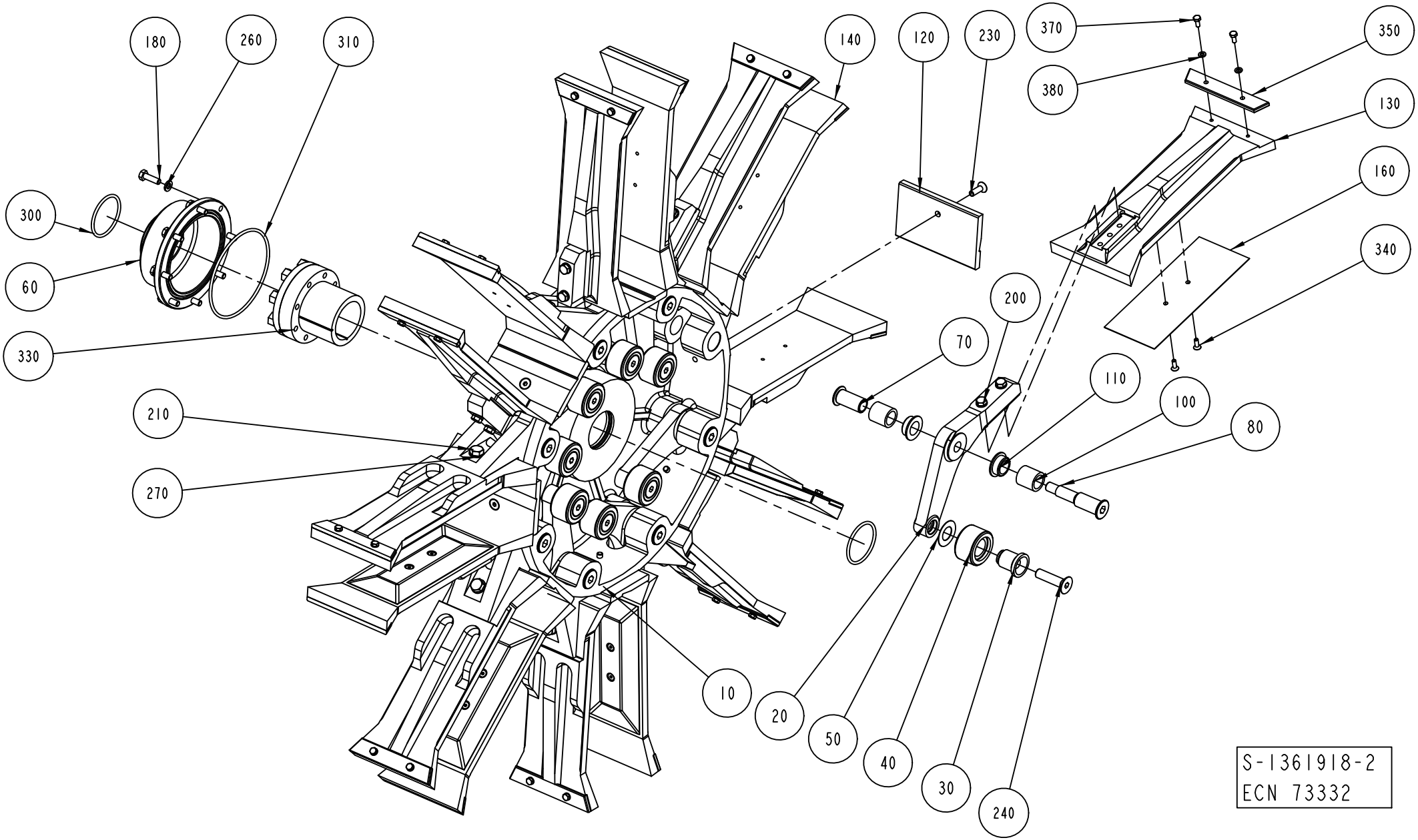
180
260
310
140
120
230
370
350
380
130
160
300
340
60
200
70
330
110
100
80
210
270
10
20
50
40
30
240
S-1361918-2
ECN 73332

Pos	Part No	UN	Qty	Description	Page No
A3/FLEX TBA 1000B NOMOLDEDCAP (Cont'd)					
010	1144264-0000		1	HUB	
120	1260703-0000		8	BOTTOM	
130	1260704-0000		8	FLAP	
140	1260705-0000		8	FLAP	
200	312105-0376		16	SCREW M6S ISO 4014 M6X35 A480	
210	312105-0453		8	SCREW M6S ISO 4017 M8X25 A480	
230	312155-0380		8	SCREW DIN 7991 MF6S M6X50 A4 70	
260	315105-0153		24	WASHER BRB6,4X12RFR	
A3/FLEX TBA 1000S NOMOLDEDCAP					
010	1144264-0000		1	HUB	
120	1144924-0000		8	BOTTOM	
130	1144926-0000		8	FLAP	
140	1144927-0000		8	FLAP	
160	2550211-0000		8	VOLUME BULGE	
200	312105-0376		16	SCREW M6S ISO 4014 M6X35 A480	
210	312105-0453		8	SCREW M6S ISO 4017 M8X25 A480	
230	312155-0370		8	SCREW DIN 7991 MF6S M6X20 A4 70	
260	315105-0153		24	WASHER BRB6,4X12RFR	
340	312155-0287		16	SCREW DIN 7991 MF6S M4X8 A4 70	
A3/FLEX TBA 1000SQ					
010	1144264-0000		1	HUB	
120	1511558-0000		8	BOTTOM	
130	1487739-0000		8	FLAP	
140	1487738-0000		8	FLAP	
200	312105-0376		16	SCREW M6S ISO 4014 M6X35 A480	
210	312105-0453		8	SCREW M6S ISO 4017 M8X25 A480	
230	312155-0370		8	SCREW DIN 7991 MF6S M6X20 A4 70	
260	315105-0153		24	WASHER BRB6,4X12RFR	
A3/FLEX TBA 1500S					
010	1144264-0000		1	HUB	
120	1317556-0000		8	BOTTOM	
130	1317554-0000		8	FLAP	
140	1317555-0000		8	FLAP	
200	312105-0376		16	SCREW M6S ISO 4014 M6X35 A480	
210	312105-0453		8	SCREW M6S ISO 4017 M8X25 A480	
230	312155-0376		8	SCREW DIN 7991 MF6S M6X35 A4 70	
260	315105-0153		24	WASHER BRB6,4X12RFR	
350	1317656-0000		16	INSERT	
370	312105-0289		32	SCREW M6S ISO 4017 M4X10 A470	
380	315105-0136		32	WASHER BRB4,3XRFR	
Common Parts					

Pos	Part No	UN	Qty	Description	Page No
020	1279559-0000		8	ARM	
030	1144312-0000		8	AXLE PIN	
040	1144335-0000		8	ROLLER	
050	1144354-0000		8	WASHER	
060	1144356-0000		1	COVER	
070	1296970-0000		8	SCREW BUSHING	
080	1296969-0000		8	SCREW HOLDER	
100	1144417-0000		16	BUSHING	
110	1282708-0000		16	BUSHING	
180	312105-0370		8	SCREW M6S ISO 4017 M6X20 A480	
240	312155-0499		8	SCREW DIN 7991 MF6S M10X40 A4 70	
270	315105-0165		8	WASHER BRB8,4X16RFR	
300	315202-0225		2	O-RING 44,2X3 MM	
310	315202-0311		1	O-RING 99,5X3 MM	
330	90208-0087		1	CLAMPING ELEMENT WITH SLEEVE, 45X59 MM	

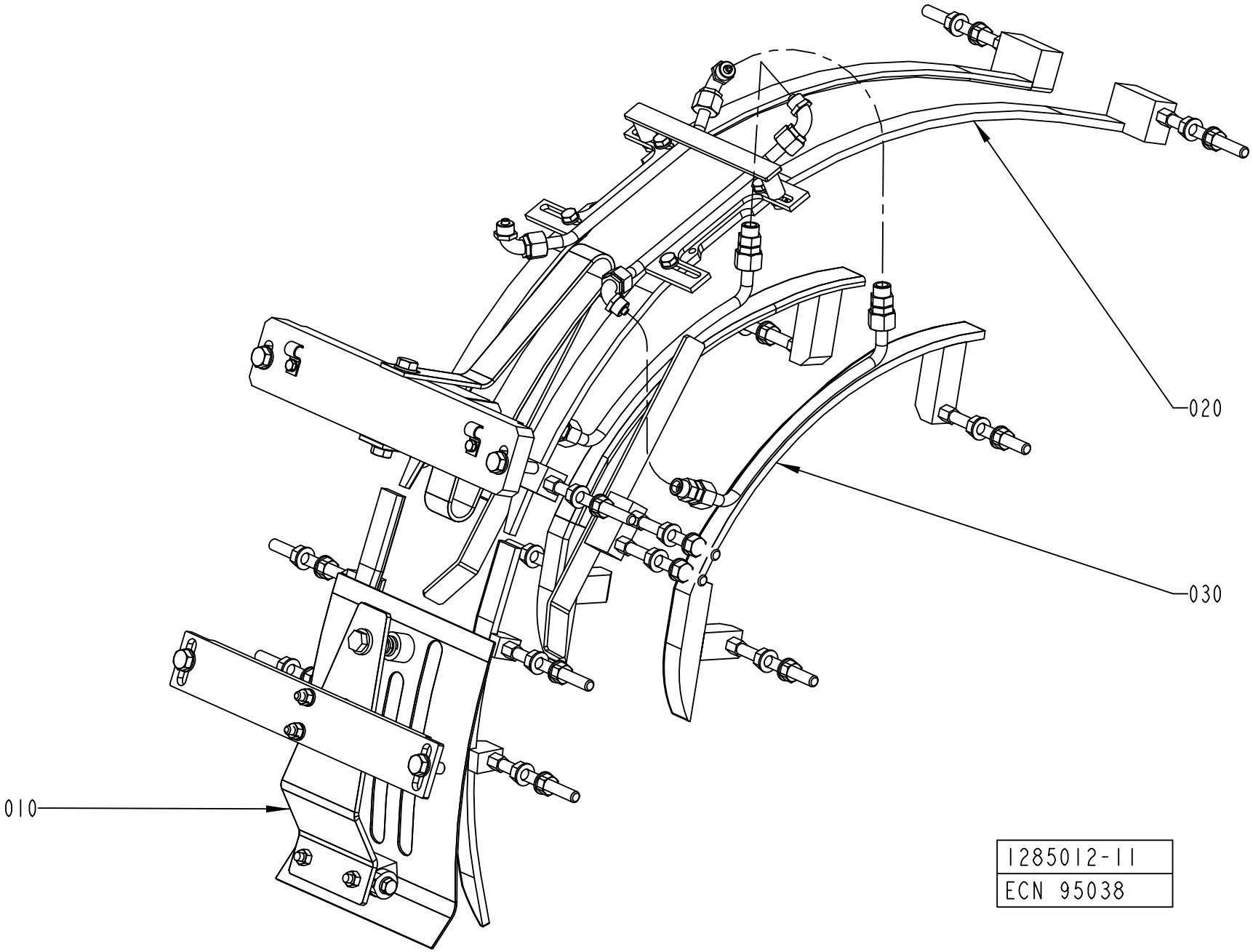
020
030
010
1285012-11
ECN 95038

ECM: 110175 - 20030403
Group number: 1285012-0300
Assembly Drawing: 1285012-11_1_AA

Pos	Part No	UN	Qty	Description	Page No
-					
010	1558932-0100		1	TOP SECTION	**5-29, 5-31, 5-33**
020	1558935-0100		1	TOP RAIL	**5-35, 5-37, 5-39, 5-41, 5-43**
030	1558940-0200		1	FLAP GUIDE	**5-45, 5-47, 5-49, 5-51, 5-53, 5-55**

Pos	Part No	UN	Qty	Description	Page No

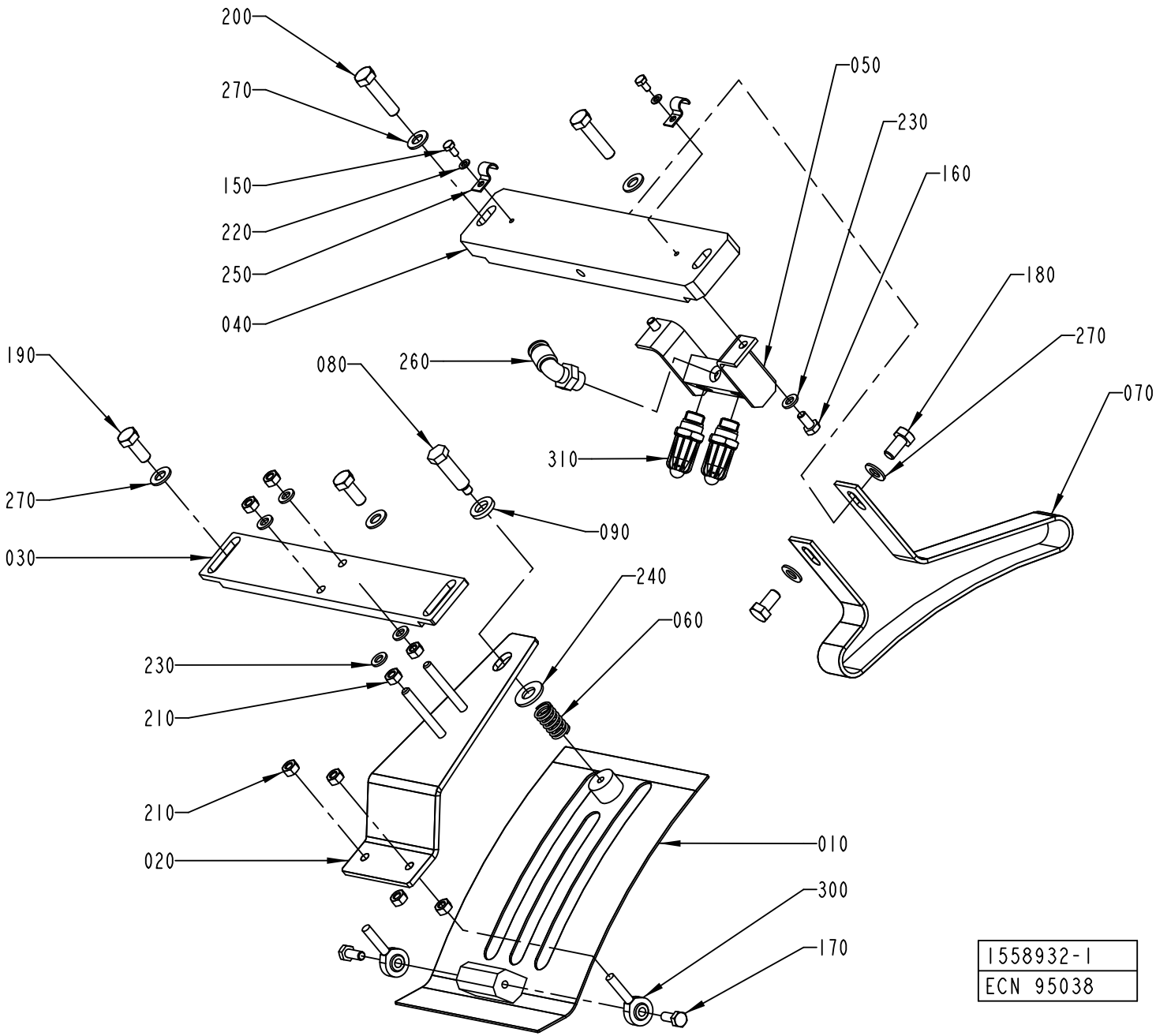
200
270
150
220
250
040
050
230
160
180
270
070
190
080
260
310
270
090
030
240
060
230
210
210
020
010
300
170
1558932-1
ECN 95038

ECM: 213808 - 20060101
Group number: 1558932-0100
Assembly Drawing: 1558932-1_1_AA

This list covers pages from 5-28 to 5-33

Pos	Part No	UN	Qty	Description	Page No
TBA 0200B, TBA 0250B (See drawing on page: 5-28)					
010	1317211-0000		1	COVERING PLATE	
020	1317213-0000		1	ADJUSTING PLATE	
030	1144975-0000		1	ATTACHMENT PLATE	
040	1144902-0000		1	SUPPORT	
060	1317633-0000		1	SPRING	
150	312105-0287		2	SCREW M6S ISO 4017 M4X8 A470	
190	312105-0451		2	SCREW M6S ISO 4017 M8X20 A480	
210	312605-0316		8	HEXAGON NUT, M6M M6 A280	
220	315105-0136		2	WASHER BRB4,3XRFR	
230	315105-0153		4	WASHER BRB6,4X12RFR	
250	90165-0057		2	PIPE CLIP FOR TUBE D=6 MM	
270	315105-0165		4	WASHER BRB8,4X16RFR	
TBA 0200S (See drawing on page: 5-28)					
010	1317211-0000		1	COVERING PLATE	
020	1317213-0000		1	ADJUSTING PLATE	
030	1144975-0000		1	ATTACHMENT PLATE	
040	1144902-0000		1	SUPPORT	
060	1317633-0000		1	SPRING	
070	1144901-0000		1	GUIDE	
150	312105-0287		2	SCREW M6S ISO 4017 M4X8 A470	
180	312105-0449		2	SCREW M6S ISO 4017 M8X16 A480	
190	312105-0451		2	SCREW M6S ISO 4017 M8X20 A480	
210	312605-0316		8	HEXAGON NUT, M6M M6 A280	
220	315105-0136		2	WASHER BRB4,3XRFR	
230	315105-0153		4	WASHER BRB6,4X12RFR	
250	90165-0057		2	PIPE CLIP FOR TUBE D=6 MM	
270	315105-0165		6	WASHER BRB8,4X16RFR	
TBA 0250S (See drawing on page: 5-32)					
010	1317211-0000		1	COVERING PLATE	
020	1317213-0000		1	ADJUSTING PLATE	
030	1144975-0000		1	ATTACHMENT PLATE	
040	1144902-0000		1	SUPPORT	
060	90335-0036		1	COMP. SPRING 22450, 1,6X14,1X24	
070	2555637-0000		1	GUIDE	
150	312105-0287		2	SCREW M6S ISO 4017 M4X8 A470	
180	312105-0451		1	SCREW M6S ISO 4017 M8X20 A480	
190	312105-0451		2	SCREW M6S ISO 4017 M8X20 A480	
210	312605-0316		8	HEXAGON NUT, M6M M6 A280	
220	315105-0136		2	WASHER BRB4,3XRFR	
230	315105-0153		4	WASHER BRB6,4X12RFR	
250	90165-0057		2	PIPE CLIP FOR TUBE D=6 MM	
270	315105-0165		6	WASHER BRB8,4X16RFR	
TBA 0330S (See drawing on page: 5-32)					
010	1317211-0000		1	COVERING PLATE	
020	1317213-0000		1	ADJUSTING PLATE	
030	1144975-0000		1	ATTACHMENT PLATE	
040	1144902-0000		1	SUPPORT	
050	1349087-0000		1	DISTRIBUTOR	
060	90335-0036		1	COMP. SPRING 22450, 1,6X14,1X24	
070	2552022-0000		1	GUIDE	
150	312105-0287		2	SCREW M6S ISO 4017 M4X8 A470	
160	312105-0366		2	SCREW M6S ISO 4017 M6X12 A480	
180	312105-0451		1	SCREW M6S ISO 4017 M8X20 A480	
190	312105-0451		2	SCREW M6S ISO 4017 M8X20 A480	
210	312605-0316		8	HEXAGON NUT, M6M M6 A280	
220	315105-0136		2	WASHER BRB4,3XRFR	
230	315105-0153		6	WASHER BRB6,4X12RFR	
250	90165-0057		2	PIPE CLIP FOR TUBE D=6 MM	
260	342732-0104		1	ELBOW PIPE JOINT, EXT.THREAD, D=8MM-G1/4	
270	315105-0165		6	WASHER BRB8,4X16RFR	
310	90424-0068		1	AIR NOZZLE, G1/4, MOD. 216 BSP	
320	2553284-0000		1	BLOCK	
TBA 0500S, TBA 0500B, TBA 1000S, TBA 1000B (See drawing on page: 5-28)					
010	1144941-0000		1	COVERING PLATE	
020	1144974-0000		1	ADJUSTING PLATE	
030	1144975-0000		1	ATTACHMENT PLATE	
040	1144902-0000		1	SUPPORT	
050	1285014-0000		1	DISTRIBUTOR	
060	90335-0036		1	COMP. SPRING 22450, 1,6X14,1X24	
070	1144901-0000		1	GUIDE	
150	312105-0287		2	SCREW M6S ISO 4017 M4X8 A470	
160	312105-0366		2	SCREW M6S ISO 4017 M6X12 A480	
180	312105-0449		2	SCREW M6S ISO 4017 M8X16 A480	
190	312105-0451		2	SCREW M6S ISO 4017 M8X20 A480	
210	312605-0316		8	HEXAGON NUT, M6M M6 A280	
220	315105-0136		2	WASHER BRB4,3XRFR	
230	315105-0153		6	WASHER BRB6,4X12RFR	
250	90165-0057		2	PIPE CLIP FOR TUBE D=6 MM	
260	342732-0104		1	ELBOW PIPE JOINT, EXT.THREAD, D=8MM-G1/4	
270	315105-0165		6	WASHER BRB8,4X16RFR	
310	90424-0068		2	AIR NOZZLE, G1/4, MOD. 216 BSP	
TBA 1000SQ (See drawing on page: 5-28)					
010	1144941-0000		1	COVERING PLATE	

Machine Type | Group Description | Used-In | Group Number | Page No

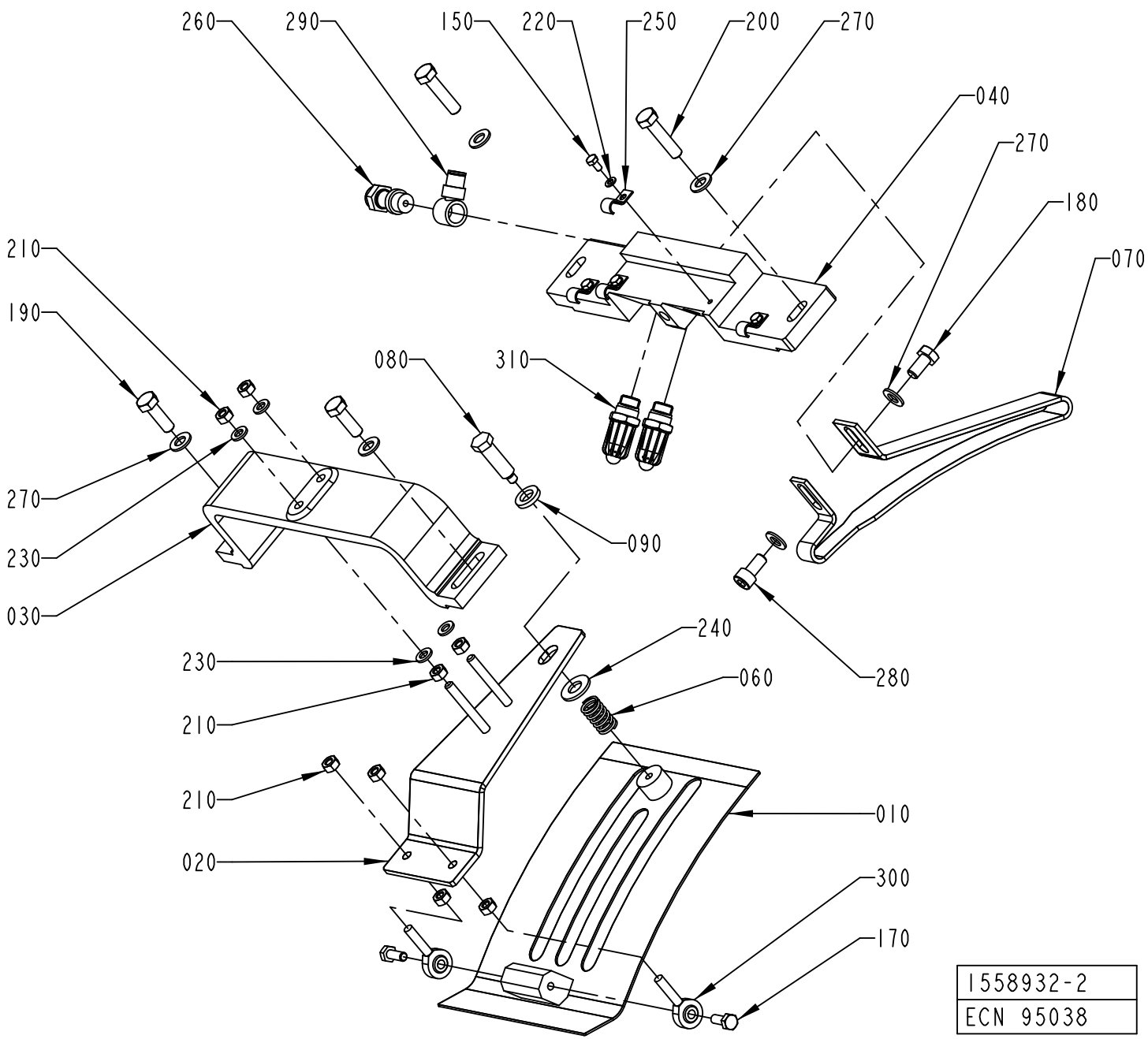
260
290
150
220
250
200
270
040
270
180
070
210
190
080
310
270
230
030
090
240
230
060
280
210
210
020
010
300
170
1558932-2
ECN 95038

Pos	Part No	UN	Qty	Description	Page No
TBA 1000SQ (Cont'd) (See drawing on page: 5-28)					
020	1144974-0000		1	ADJUSTING PLATE	
030	1144975-0000		1	ATTACHMENT PLATE	
040	1144902-0000		1	SUPPORT	
050	1349087-0000		1	DISTRIBUTOR	
060	90335-0036		1	COMP. SPRING 22450, 1,6X14,1X24	
150	312105-0287		2	SCREW M6S ISO 4017 M4X8 A470	
160	312105-0366		2	SCREW M6S ISO 4017 M6X12 A480	
190	312105-0451		2	SCREW M6S ISO 4017 M8X20 A480	
210	312605-0316		8	HEXAGON NUT, M6M M6 A280	
220	315105-0136		2	WASHER BRB4,3XRFR	
230	315105-0153		6	WASHER BRB6,4X12RFR	
250	90165-0057		2	PIPE CLIP FOR TUBE D=6 MM	
260	342732-0104		1	ELBOW PIPE JOINT, EXT.THREAD, D=8MM-G1/4	
270	315105-0165		4	WASHER BRB8,4X16RFR	
310	90424-0068		1	AIR NOZZLE, G1/4, MOD. 216 BSP	
TPA 0250SQ (See drawing on page: 5-28)					
010	1317211-0000		1	COVERING PLATE	
020	1317213-0000		1	ADJUSTING PLATE	
030	1144975-0000		1	ATTACHMENT PLATE	
040	1144902-0000		1	SUPPORT	
060	90335-0036		1	COMP. SPRING 22450, 1,6X14,1X24	
070	2555637-0000		1	GUIDE	
150	312105-0287		2	SCREW M6S ISO 4017 M4X8 A470	
180	312105-0449		2	SCREW M6S ISO 4017 M8X16 A480	
190	312105-0451		2	SCREW M6S ISO 4017 M8X20 A480	
210	312605-0316		8	HEXAGON NUT, M6M M6 A280	
220	315105-0136		2	WASHER BRB4,3XRFR	
230	315105-0153		4	WASHER BRB6,4X12RFR	
250	90165-0057		2	PIPE CLIP FOR TUBE D=6 MM	
270	315105-0165		6	WASHER BRB8,4X16RFR	
TPA 0330SQ (See drawing on page: 5-28)					
010	1317211-0000		1	COVERING PLATE	
020	1317213-0000		1	ADJUSTING PLATE	
030	1144975-0000		1	ATTACHMENT PLATE	
040	1144902-0000		1	SUPPORT	
050	1349087-0000		1	DISTRIBUTOR	
060	90335-0036		1	COMP. SPRING 22450, 1,6X14,1X24	
070	1558934-0000		1	GUIDE	
150	312105-0287		2	SCREW M6S ISO 4017 M4X8 A470	
160	312105-0366		2	SCREW M6S ISO 4017 M6X12 A480	
180	312105-0449		1	SCREW M6S ISO 4017 M8X16 A480	
190	312105-0451		2	SCREW M6S ISO 4017 M8X20 A480	
210	312605-0316		8	HEXAGON NUT, M6M M6 A280	
220	315105-0136		2	WASHER BRB4,3XRFR	
230	315105-0153		6	WASHER BRB6,4X12RFR	
250	90165-0057		2	PIPE CLIP FOR TUBE D=6 MM	
260	342732-0104		1	ELBOW PIPE JOINT, EXT.THREAD, D=8MM-G1/4	
270	315105-0165		5	WASHER BRB8,4X16RFR	
310	90424-0068		1	AIR NOZZLE, G1/4, MOD. 216 BSP	
TPA 0500SQ (See drawing on page: 5-32)					
010	1548612-0000		1	COVERING PLATE	
020	1144974-0000		1	ADJUSTING PLATE	
030	1144975-0000		1	ATTACHMENT PLATE	
040	1144902-0000		1	SUPPORT	
050	1349087-0000		1	DISTRIBUTOR	
060	90335-0036		1	COMP. SPRING 22450, 1,6X14,1X24	
070	2552022-0000		1	GUIDE	
150	312105-0287		2	SCREW M6S ISO 4017 M4X8 A470	
160	312105-0366		2	SCREW M6S ISO 4017 M6X12 A480	
180	312105-0451		1	SCREW M6S ISO 4017 M8X20 A480	
190	312105-0451		2	SCREW M6S ISO 4017 M8X20 A480	
210	312605-0316		8	HEXAGON NUT, M6M M6 A280	
220	315105-0136		2	WASHER BRB4,3XRFR	
230	315105-0153		6	WASHER BRB6,4X12RFR	
250	90165-0057		2	PIPE CLIP FOR TUBE D=6 MM	
260	342732-0104		1	ELBOW PIPE JOINT, EXT.THREAD, D=8MM-G1/4	
270	315105-0165		6	WASHER BRB8,4X16RFR	
310	90424-0068		1	AIR NOZZLE, G1/4, MOD. 216 BSP	
320	2553284-0000		1	BLOCK	
TPA 1000SQ (See drawing on page: 5-30)					
010	1548612-0000		1	COVERING PLATE	
020	1144974-0000		1	ADJUSTING PLATE	
030	1285299-0000		1	BRACKET	
040	2618424-0000		1	SUPPORT	
060	90335-0036		1	COMP. SPRING 22450, 1,6X14,1X24	
070	2618425-0000		1	GUIDE	
150	312105-0287		4	SCREW M6S ISO 4017 M4X8 A470	
180	312105-0449		1	SCREW M6S ISO 4017 M8X16 A480	
190	312105-0453		2	SCREW M6S ISO 4017 M8X25 A480	
210	312605-0316		10	HEXAGON NUT, M6M M6 A280	
220	315105-0136		4	WASHER BRB4,3XRFR	
230	315105-0153		4	WASHER BRB6,4X12RFR	
250	90165-0057		4	PIPE CLIP FOR TUBE D=6 MM	

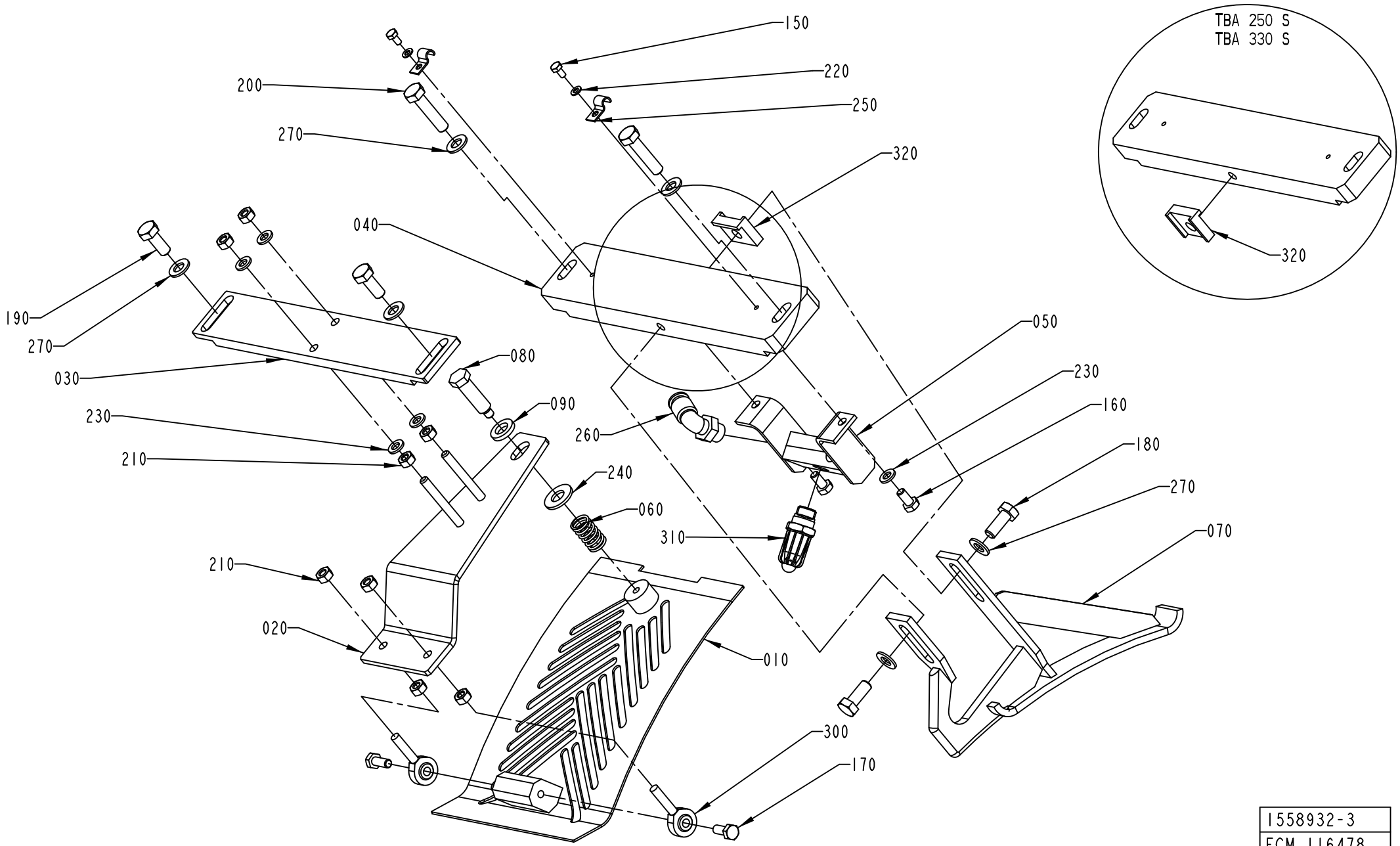

1558932-3
ECM 116478

Pos	Part No	UN	Qty	Description	Page No
TPA 1000SQ (Cont'd) (See drawing on page: 5-30)					
260	90235-0731		1	THROTTLE CHECK VALVE, G1/4", SCO-606-1/4	
270	315105-0165		5	WASHER BRB8,4X16RFR	
280	312115-0449		1	SCREW ISO4762 M8X16 A4 80	
290	342981-0122		1	BANJO CONNEC,RING,FOR PLAST.TUBE 8-G1/4"	
310	90424-0068		2	AIR NOZZLE, G1/4, MOD. 216 BSP	
TBA 1500S (See drawing on page: 5-30)					
010	1144941-0000		1	COVERING PLATE	
020	1144974-0000		1	ADJUSTING PLATE	
030	1285299-0000		1	BRACKET	
040	1334480-0000		1	SUPPORT	
060	90335-0036		1	COMP. SPRING 22450, 1,6X14,1X24	
070	1347057-0000		1	GUIDE	
150	312105-0287		4	SCREW M6S ISO 4017 M4X8 A470	
180	312105-0449		1	SCREW M6S ISO 4017 M8X16 A480	
190	312105-0453		2	SCREW M6S ISO 4017 M8X25 A480	
210	312605-0316		8	HEXAGON NUT, M6M M6 A280	
220	315105-0136		4	WASHER BRB4,3XRFR	
230	315105-0153		4	WASHER BRB6,4X12RFR	
250	90165-0057		4	PIPE CLIP FOR TUBE D=6 MM	
260	90235-0731		1	THROTTLE CHECK VALVE, G1/4", SCO-606-1/4	
270	315105-0165		6	WASHER BRB8,4X16RFR	
280	312115-0449		1	SCREW ISO4762 M8X16 A4 80	
290	342981-0122		1	BANJO CONNEC,RING,FOR PLAST.TUBE 8-G1/4"	
310	90424-0068		2	AIR NOZZLE, G1/4, MOD. 216 BSP	
Common Parts					
080	1144976-0000		1	STOP SCREW	
090	1144979-0000		1	WASHER	
170	312105-0368		2	SCREW M6S ISO 4017 M6X16 A480	
200	312105-0457		2	SCREW M6S ISO 4014 M8X35 A480	
240	315105-0173		1	WASHER BRB10,5X22RFR	
300	90115-0137		2	ROD END, ID=6 MM, M6X1	

Pos	Part No	UN	Qty	Description	Page No

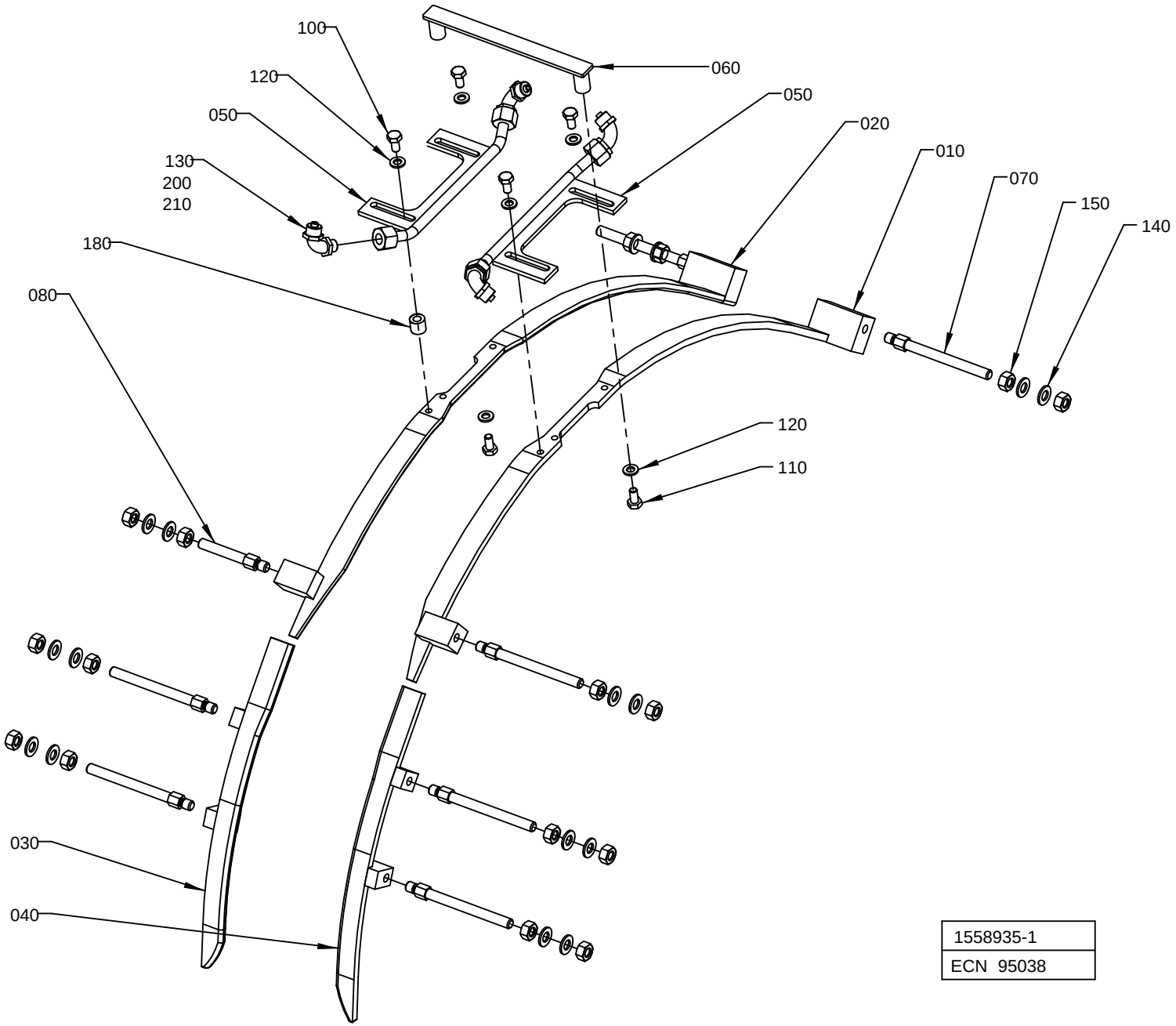

1558935-1
ECN 95038

ECM: 189494 - 20041104
Group number: 1558935-0100
Assembly Drawing: 1558935-1_1_AA

This list covers pages from 5-34 to 5-43

Pos	Part No	UN	Qty	Description	Page No
TPA 1000SQ (See drawing on page: 5-36)					
010	1350424-0000		1	GUIDE RIGHT	
020	1350425-0000		1	GUIDE LEFT	
030	1519358-0000		1	GUIDE	
040	1519359-0000		1	GUIDE	
060	1346340-0000		1	BRACKET	
090	1523926-0000		8	SPACER	
100	312105-0368		4	SCREW M6S ISO 4017 M6X16 A480	
140	315105-0165		8	WASHER BRB8,4X16RFR	
160	2541125-0000		8	SCREW	
180	1282705-0000		4	SUPPORT	
TBA 0200B, TBA 0200S, TBA 0250B (See drawing on page: 5-34)					
010	1478926-0000		1	GUIDE RIGHT	
020	1478927-0000		1	GUIDE LEFT	
030	1334013-0000		1	GUIDE UPPER R	
040	1334012-0000		1	GUIDE UPPER L	
060	1346340-0000		1	BRACKET	
070	1144555-0000		7	STUD SCREW	
080	1334523-0000		1	SUPPORT	
100	312105-0366		4	SCREW M6S ISO 4017 M6X12 A480	
140	315105-0165		16	WASHER BRB8,4X16RFR	
150	312605-0318		16	HEXAGON NUT, M6M M8 A280	
TBA 0250S (See drawing on page: 5-34)					
010	1478926-0000		1	GUIDE RIGHT	
020	1478927-0000		1	GUIDE LEFT	
030	1539900-0000		1	RIGHT UPPER GUIDE	
040	1549614-0000		1	LEFT UPPER GUIDE	
060	1346340-0000		1	BRACKET	
070	1144555-0000		7	STUD SCREW	
080	1334523-0000		1	SUPPORT	
100	312105-0366		4	SCREW M6S ISO 4017 M6X12 A480	
140	315105-0165		16	WASHER BRB8,4X16RFR	
150	312605-0318		16	HEXAGON NUT, M6M M8 A280	
TBA 0330S (See drawing on page: 5-34)					
010	1144892-0000		1	GUIDE RIGHT	
020	1144893-0000		1	GUIDE LEFT	
030	1539900-0000		1	RIGHT UPPER GUIDE	
040	1549614-0000		1	LEFT UPPER GUIDE	
060	1346340-0000		1	BRACKET	
070	1144555-0000		8	STUD SCREW	
100	312105-0366		4	SCREW M6S ISO 4017 M6X12 A480	
140	315105-0165		16	WASHER BRB8,4X16RFR	
150	312605-0318		16	HEXAGON NUT, M6M M8 A280	
TBA 0500B (See drawing on page: 5-38)					
010	1144892-0000		1	GUIDE RIGHT	
020	1144893-0000		1	GUIDE LEFT	
030	1539900-0000		1	RIGHT UPPER GUIDE	
040	1549614-0000		1	LEFT UPPER GUIDE	
060	1144905-0000		1	SUPPORT	
090	1539871-0000		4	SPACER	
095	1334447-0000		4	SPACER	
140	315105-0165		8	WASHER BRB8,4X16RFR	
160	312105-0465		8	SCREW M6S ISO 4014 M8X70 A480	
TBA 0500S (See drawing on page: 5-38)					
010	1144892-0000		1	GUIDE RIGHT	
020	1144893-0000		1	GUIDE LEFT	
030	1260709-0000		1	GUIDE UPPER R	
040	1260710-0000		1	GUIDE UPPER L	
060	1144905-0000		1	SUPPORT	
090	1499071-0000		4	SPACER	
095	1523498-0000		4	SPACER	
100	312105-0366		4	SCREW M6S ISO 4017 M6X12 A480	
140	315105-0165		8	WASHER BRB8,4X16RFR	
160	312105-0466		8	SCREW M6S ISO 4014 M8X75 A480	
TBA 1000B (See drawing on page: 5-36)					
010	1144892-0000		1	GUIDE RIGHT	
020	1144893-0000		1	GUIDE LEFT	
030	1260709-0000		1	GUIDE UPPER R	
040	1260710-0000		1	GUIDE UPPER L	
060	1144905-0000		1	SUPPORT	
090	2603663-0000		8	SPACER	
100	312105-0366		4	SCREW M6S ISO 4017 M6X12 A480	
140	315105-0165		8	WASHER BRB8,4X16RFR	
160	312105-0465		8	SCREW M6S ISO 4014 M8X70 A480	
TBA 1000S (See drawing on page: 5-34)					
010	1144892-0000		1	GUIDE RIGHT	
020	1144893-0000		1	GUIDE LEFT	
030	1260709-0000		1	GUIDE UPPER R	
040	1260710-0000		1	GUIDE UPPER L	
060	1144905-0000		1	SUPPORT	
070	1144555-0000		7	STUD SCREW	
080	1350721-0000		1	STUD SCREW	
100	312105-0366		4	SCREW M6S ISO 4017 M6X12 A480	
140	315105-0165		16	WASHER BRB8,4X16RFR	

Machine Type | Group Description | Used-In | Group Number | Page No

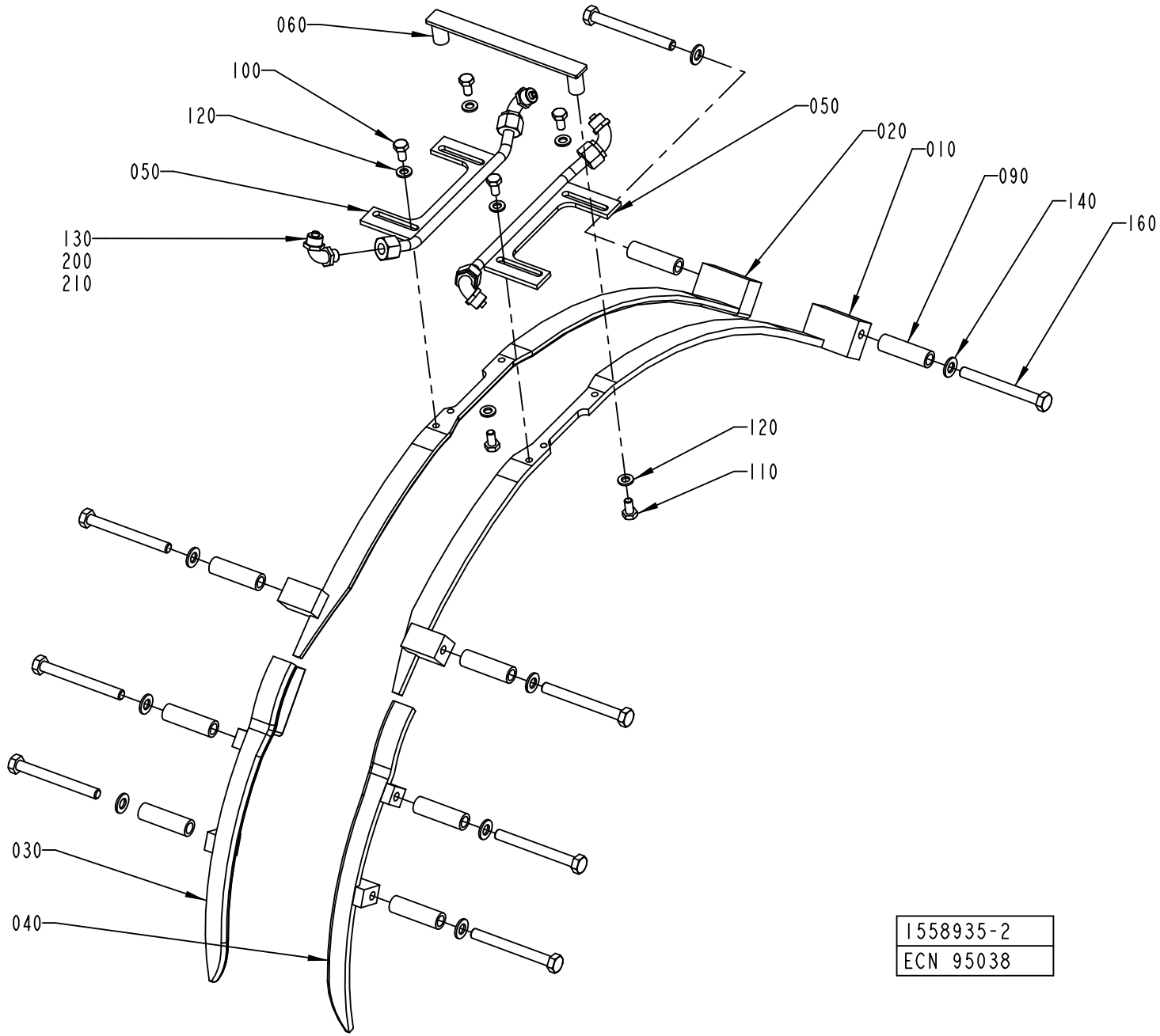
060
100
120
050
130
200
210
050
020
010
090
140
160
120
110
030
040
1558935-2
ECN 95038

ECM: 189494 - 20041104
Group number: 1558935-0100
Assembly Drawing: 1558935-2_1_AA

This list covers pages from 5-34 to 5-43

Pos	Part No	UN	Qty	Description	Page No
TBA 1000S (Cont'd) (See drawing on page: 5-34)					
150	312605-0318		16	HEXAGON NUT, M6M M8 A280	
TBA 1000SQ (See drawing on page: 5-36)					
010	1144892-0000		1	GUIDE RIGHT	
020	1144893-0000		1	GUIDE LEFT	
030	1549411-0000		1	PACKAGE GUIDE	
040	1549406-0000		1	PACKAGE GUIDE	
060	1498161-0000		1	SUPPORT	
090	1499071-0000		8	SPACER	
100	312105-0366		4	SCREW M6S ISO 4017 M6X12 A480	
140	315105-0165		8	WASHER BRB8,4X16RFR	
160	312105-0466		8	SCREW M6S ISO 4014 M8X75 A480	
TBA 1500S (See drawing on page: 5-40)					
010	1350424-0000		1	GUIDE RIGHT	
020	1350425-0000		1	GUIDE LEFT	
030	1334559-0000		1	GUIDE UPPER R	
040	1334560-0000		1	GUIDE UPPER L	
060	1285267-0000		1	SUPPORT	
090	1317088-0000		4	SPACER	
095	1348041-0000		2	SPACER	
098	1317088-0000		2	SPACER	
100	312105-0368		4	SCREW M6S ISO 4017 M6X16 A480	
140	315105-0165		8	WASHER BRB8,4X16RFR	
160	312105-0465		4	SCREW M6S ISO 4014 M8X70 A480	
165	312105-0465		2	SCREW M6S ISO 4014 M8X70 A480	
170	312105-0467		2	SCREW M6S ISO 4014 M8X80 A480	
180	1282705-0000		4	SUPPORT	
TPA 0250SQ (See drawing on page: 5-40)					
010	1144892-0000		1	GUIDE RIGHT	
020	1144893-0000		1	GUIDE LEFT	
030	1539900-0000		1	RIGHT UPPER GUIDE	
040	1549614-0000		1	LEFT UPPER GUIDE	
060	1346340-0000		1	BRACKET	
090	1539898-0000		4	SPACER	
095	1558526-0000		2	SPACER	
098	1558735-0000		2	SPACER	
100	312105-0366		4	SCREW M6S ISO 4017 M6X12 A480	
140	315105-0165		8	WASHER BRB8,4X16RFR	
160	312105-0469		4	SCREW M6S ISO 4014 M8X90 A480	
165	312105-0467		2	SCREW M6S ISO 4014 M8X80 A480	
170	312105-0469		2	SCREW M6S ISO 4014 M8X90 A480	
TPA 0330SQ (See drawing on page: 5-40)					
010	1144892-0000		1	GUIDE RIGHT	
020	1144893-0000		1	GUIDE LEFT	
030	1539900-0000		1	RIGHT UPPER GUIDE	
040	1549614-0000		1	LEFT UPPER GUIDE	
060	1346340-0000		1	BRACKET	
090	1558735-0000		4	SPACER	
095	1558736-0000		2	SPACER	
098	1558910-0000		2	SPACER	
100	312105-0366		4	SCREW M6S ISO 4017 M6X12 A480	
140	315105-0165		8	WASHER BRB8,4X16RFR	
160	312105-0469		4	SCREW M6S ISO 4014 M8X90 A480	
165	312105-0467		2	SCREW M6S ISO 4014 M8X80 A480	
170	312105-0469		2	SCREW M6S ISO 4014 M8X90 A480	
TPA 0500SQ (See drawing on page: 5-42)					
010	1144892-0000		1	GUIDE RIGHT	
020	1144893-0000		1	GUIDE LEFT	
030	2527530-0000		1	GUIDE UPPER R	
040	2527529-0000		1	GUIDE UPPER L	
060	1346340-0000		1	BRACKET	
070	1144555-0000		3	STUD SCREW	
080	1334523-0000		1	SUPPORT	
090	1558910-0000		4	SPACER	
100	312105-0366		4	SCREW M6S ISO 4017 M6X12 A480	
140	315105-0165		12	WASHER BRB8,4X16RFR	
150	312605-0318		8	HEXAGON NUT, M6M M8 A280	
160	312105-0467		4	SCREW M6S ISO 4014 M8X80 A480	
Common Parts					
050	1350423-0000		2	FOLDING BAR	
110	312105-0366		2	SCREW M6S ISO 4017 M6X12 A480	
120	315105-0153		6	WASHER BRB6,4X12RFR	
130	342931-0121		4	ELBOW 90 COUPL.,EXT.THREAD 8/6-G1/8"	
200	90166-0118	MM	1500	TUBE 8 MM PA BLACK	
210	352113-0102		10	CLIP-STRIP, BLACK 188X4,8 MM	

Machine Type | Group Description | Used-In | Group Number | Page No

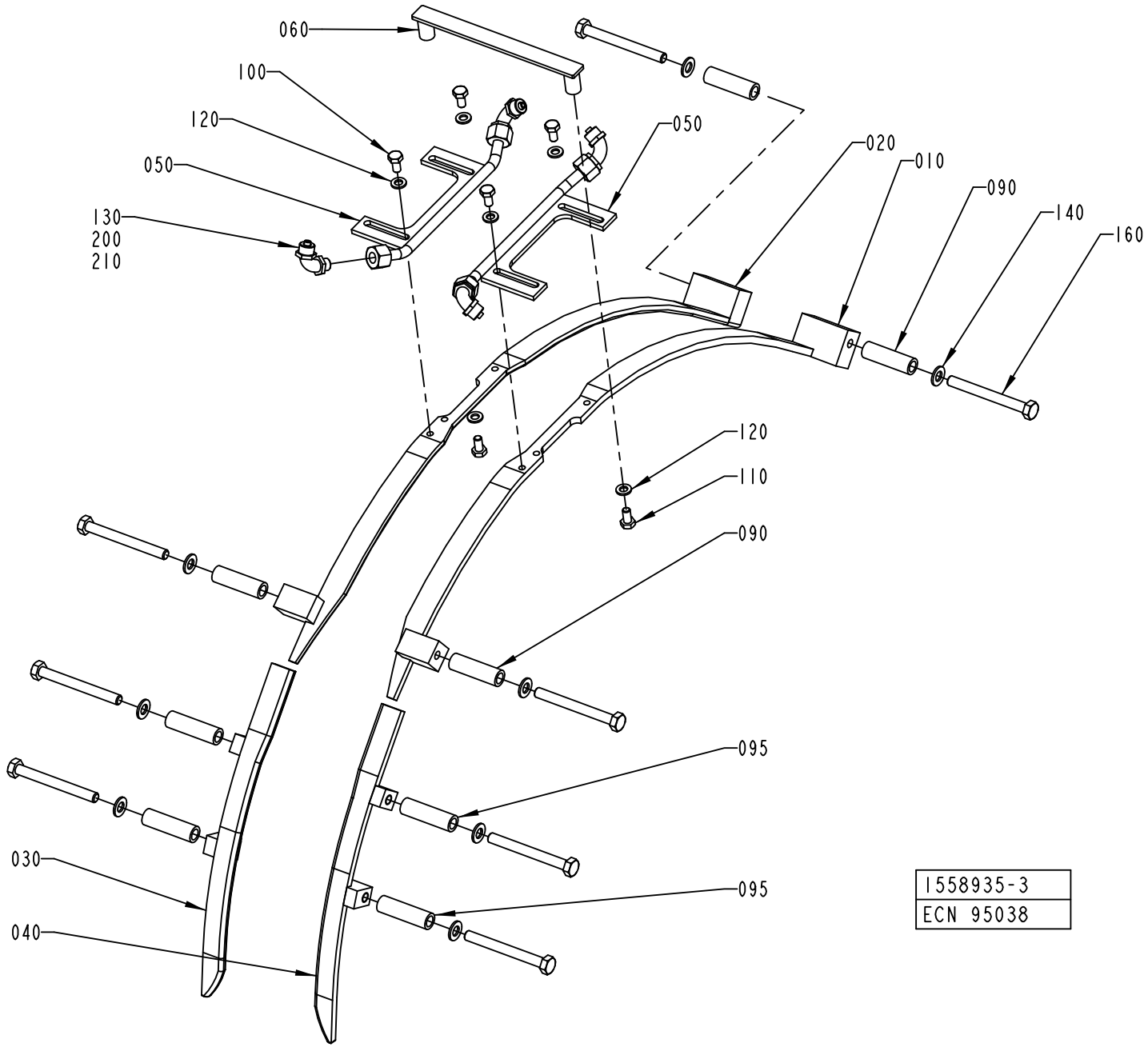
060
100
120
050
130
200
210
050
020
010
090
140
160
120
110
090
095
095
030
040
1558935-3
ECN 95038

Pos	Part No	UN	Qty	Description	Page No	Pos	Part No	UN	Qty	Description	Page No

SEE PREVIOUS LISTS PAGES: 5-35, 5-37.

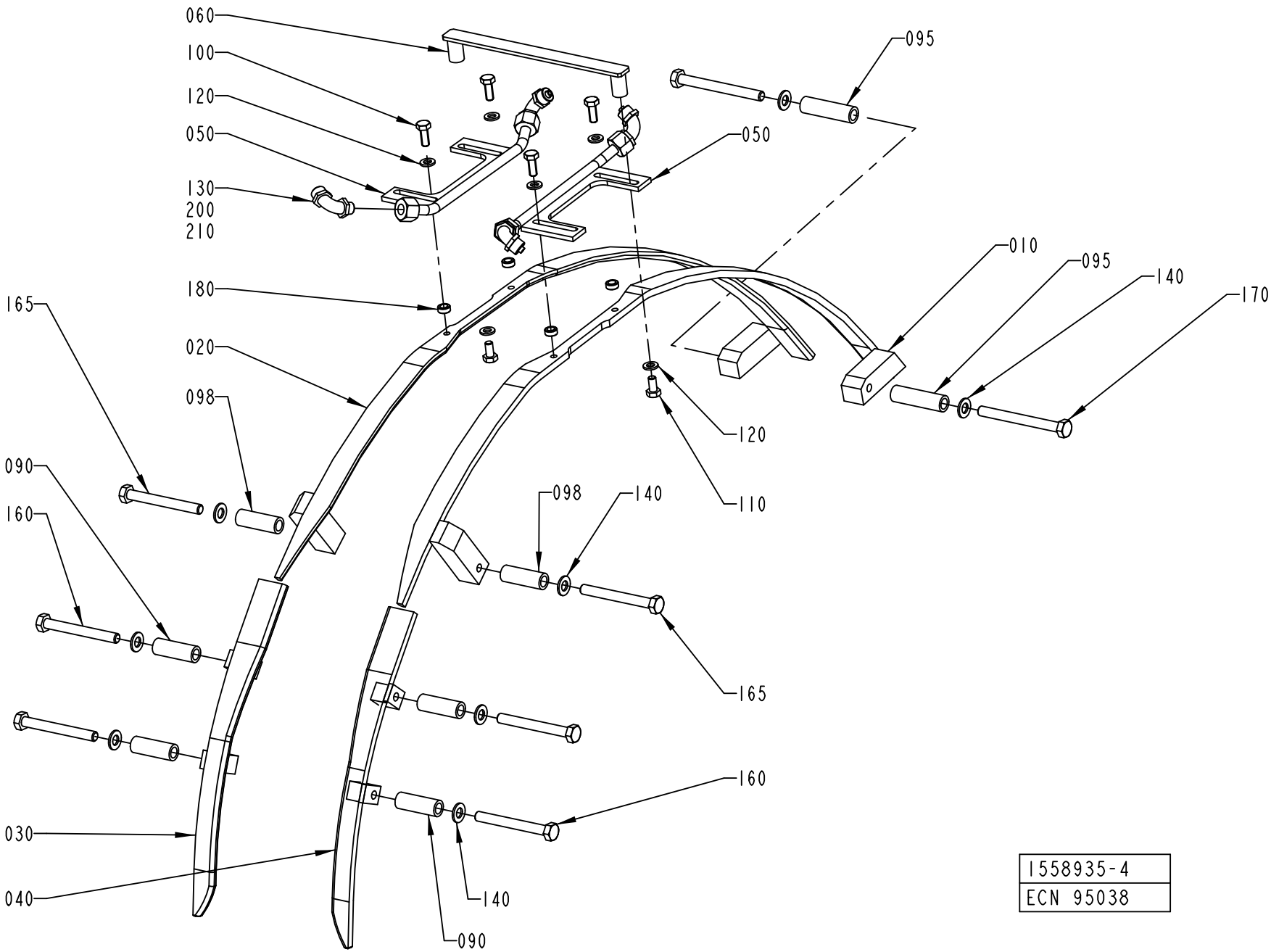
060
100
120
050
130
200
210
180
165
020
098
090
160
030
040
095
050
010
095
140
170
120
110
098
140
165
160
140
090
1558935-4
ECN 95038

ECM: 189494 - 20041104
Group number: 1558935-0100
Assembly Drawing: 1558935-4_1_AA

This list covers pages from 5-34 to 5-43

Pos	Part No	UN	Qty	Description	Page No
SEE PREVIOUS LISTS PAGES: 5-35, 5-37.					

Pos	Part No	UN	Qty	Description	Page No

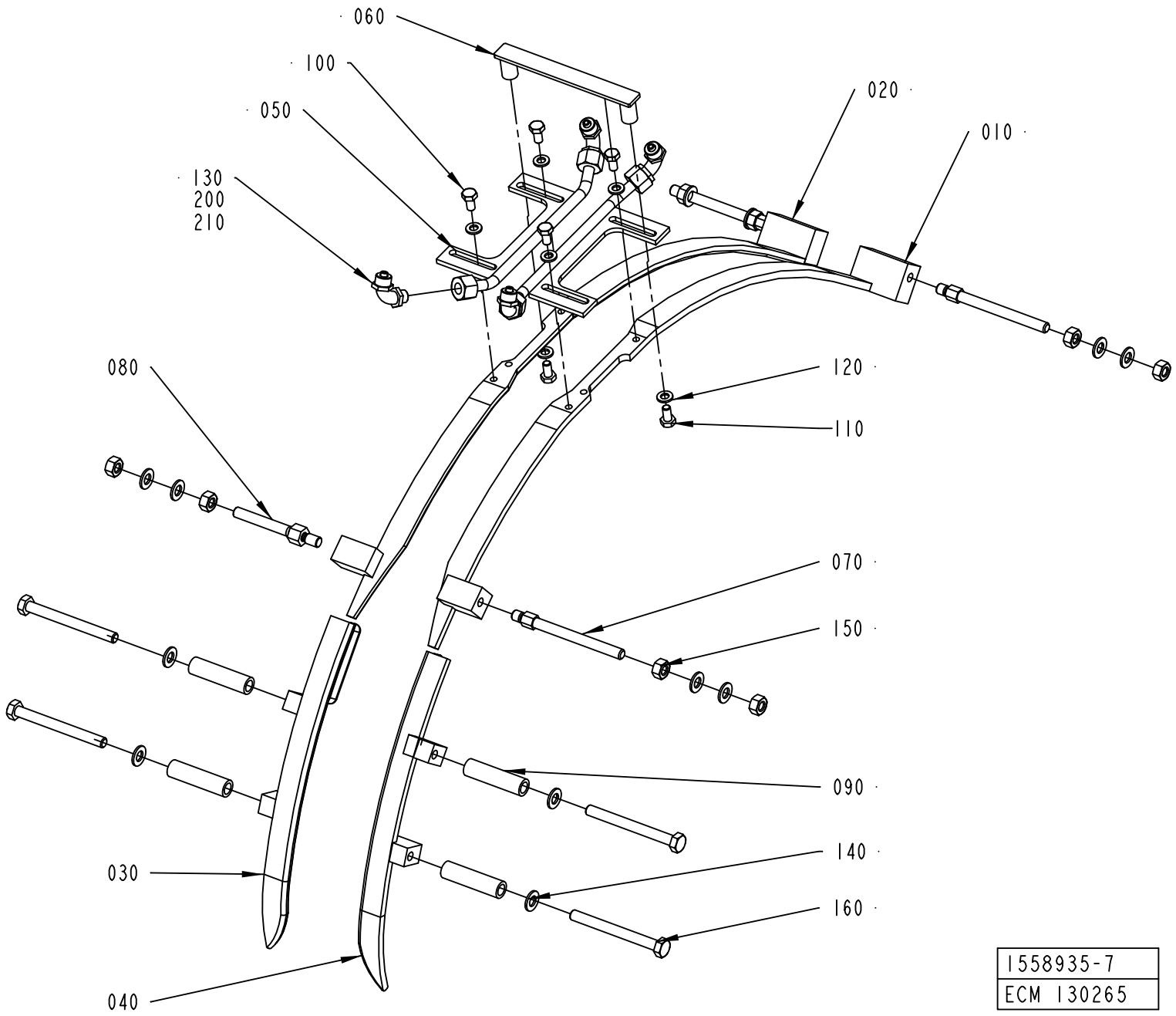
060
100
050
130
200
210
020
010
080
120
110
070
150
090
140
160
030
040
1558935-7
ECM 130265

Pos	Part No	UN	Qty	Description	Page No
SEE PREVIOUS LISTS PAGES: 5-35, 5-37.					

Pos	Part No	UN	Qty	Description	Page No

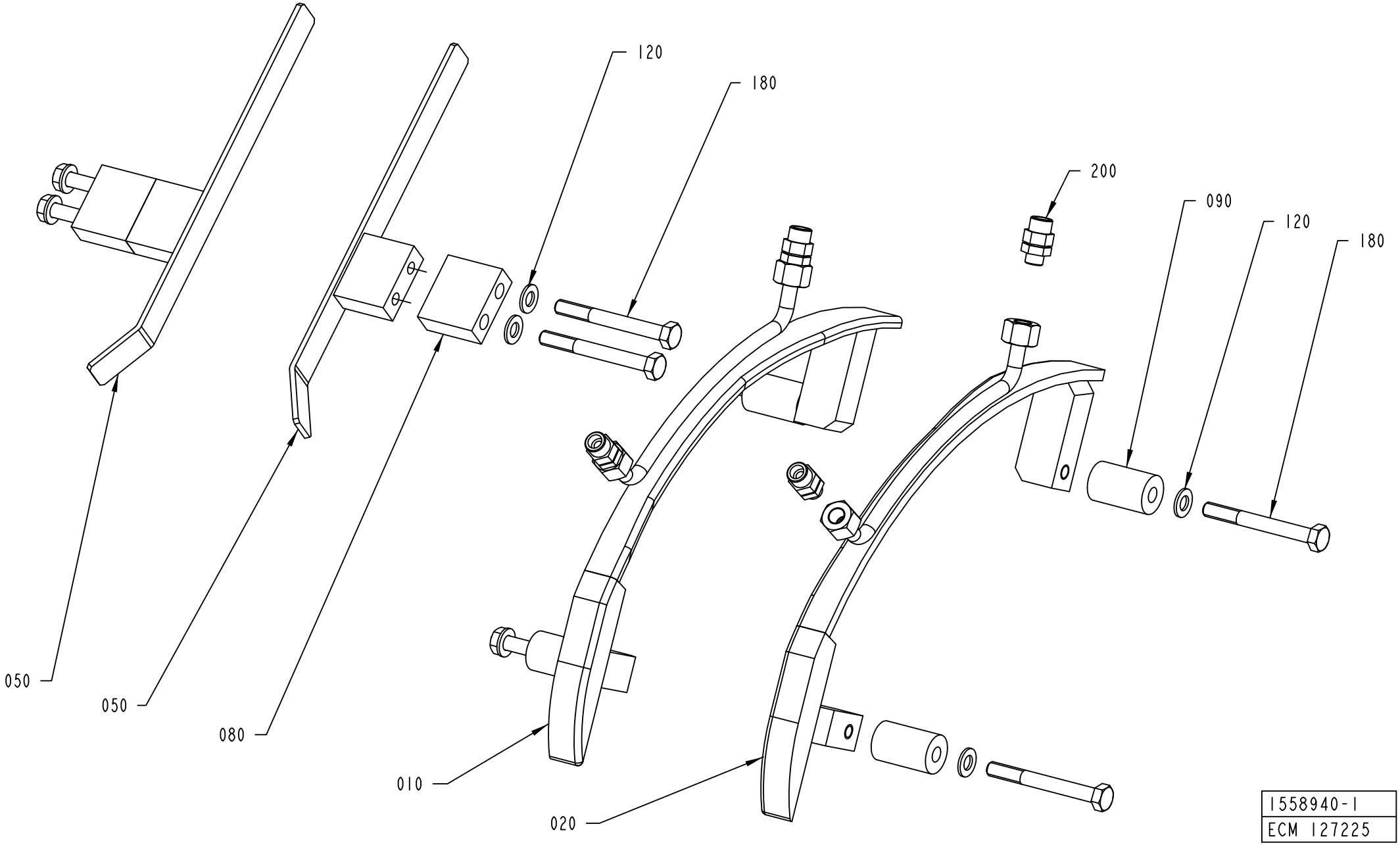

1558940-1
ECM 127225

ECM: 261786 - 20060702
Group number: 1558940-0200
Assembly Drawing: 1558940-1_1_AB

This list covers pages from 5-44 to 5-55

Pos	Part No	UN	Qty	Description	Page No
TPA 1000SQ (See drawing on page: 5-52)					
010	1548527-0000		1	FOLDING BAR	
020	1548528-0000		1	FOLDING BAR	
030	1317043-0000		2	SUPPORT	
040	1499150-0000		1	RAIL	
050	1499151-0000		1	RAIL	
060	1523927-0000		2	SPACER SCREW	
080	1519355-0000		4	SPACER	
090	1523926-0000		2	SPACER	
100	312109-0457		4	SCREW M6S ISO 4017 M8X35 A480	
110	312105-0462		4	SCREW M6S ISO 4014 M8X55 A480	
120	315105-0165		20	WASHER BRB8,4X16RFR	
130	312605-0318		2	HEXAGON NUT, M6M M8 A280	
160	312155-0459		2	SCREW DIN 7991 MF6S M8X40 A4 70	
170	312105-0453		2	SCREW M6S ISO 4017 M8X25 A480	
180	312105-0467		2	SCREW M6S ISO 4014 M8X80 A480	
200	342921-0121		4	STRAIGHT CPLNG,EXT.THREADED 8/6-G1/8INCH	
210	1538890-0000		1	RAIL	
220	1538891-0000		1	RAIL	
230	1519355-0000		4	SPACER	
240	1538186-0000		2	BRACKET	
250	312105-0462		4	SCREW M6S ISO 4014 M8X55 A480	
260	312105-0455		2	SCREW M6S ISO 4017 M8X30 A480	
TPA 1000SQ SMILE (See drawing on page: 5-52)					
010	2553347-0000		1	FOLDING BAR	
020	2553348-0000		1	FOLDING BAR	
030	1317043-0000		2	SUPPORT	
040	1499150-0000		1	RAIL	
050	1499151-0000		1	RAIL	
060	1523927-0000		2	SPACER SCREW	
080	1519355-0000		4	SPACER	
090	1523926-0000		2	SPACER	
100	312109-0457		4	SCREW M6S ISO 4017 M8X35 A480	
110	312105-0462		4	SCREW M6S ISO 4014 M8X55 A480	
120	315105-0165		20	WASHER BRB8,4X16RFR	
130	312605-0318		2	HEXAGON NUT, M6M M8 A280	
160	312155-0459		2	SCREW DIN 7991 MF6S M8X40 A4 70	
170	312105-0453		2	SCREW M6S ISO 4017 M8X25 A480	
180	312105-0467		2	SCREW M6S ISO 4014 M8X80 A480	
200	342921-0121		4	STRAIGHT CPLNG,EXT.THREADED 8/6-G1/8INCH	
210	1538890-0000		1	RAIL	
220	1538891-0000		1	RAIL	
230	1519355-0000		4	SPACER	
240	1538186-0000		2	BRACKET	
250	312105-0462		4	SCREW M6S ISO 4014 M8X55 A480	
260	312105-0455		2	SCREW M6S ISO 4017 M8X30 A480	
TBA 0200B (See drawing on page: 5-46)					
010	1346149-0000		1	FOLDING BAR	
020	1346150-0000		1	FOLDING BAR	
040	1346343-0000		1	RAIL	
050	1346344-0000		1	RAIL	
060	1144555-0000		7	STUD SCREW	
065	1350721-0000		1	STUD SCREW	
070	1144990-0000		2	FOLDING BAR	
120	315105-0165		16	WASHER BRB8,4X16RFR	
130	312605-0318		16	HEXAGON NUT, M6M M8 A280	
140	315105-0153		4	WASHER BRB6,4X12RFR	
150	312105-0364		4	SCREW M6S ISO 4017 M6X10 A480	
200	342931-0121		4	ELBOW 90 COUPL.,EXT.THREAD 8/6-G1/8"	
TBA 0200S (See drawing on page: 5-46)					
010	1282294-0000		1	FOLDING BAR	
020	1282295-0000		1	FOLDING BAR	
040	1346343-0000		1	RAIL	
050	1346344-0000		1	RAIL	
060	1144555-0000		7	STUD SCREW	
065	1350721-0000		1	STUD SCREW	
070	1144990-0000		2	FOLDING BAR	
120	315105-0165		16	WASHER BRB8,4X16RFR	
130	312605-0318		16	HEXAGON NUT, M6M M8 A280	
140	315105-0153		4	WASHER BRB6,4X12RFR	
150	312105-0364		4	SCREW M6S ISO 4017 M6X10 A480	
200	342931-0121		4	ELBOW 90 COUPL.,EXT.THREAD 8/6-G1/8"	
TBA 0250B (See drawing on page: 5-46)					
010	1317217-0000		1	FOLDING BAR	
020	1317216-0000		1	FOLDING BAR	
040	1346343-0000		1	RAIL	
050	1346344-0000		1	RAIL	
060	1144555-0000		7	STUD SCREW	
065	1350721-0000		1	STUD SCREW	
070	1144990-0000		2	FOLDING BAR	
120	315105-0165		16	WASHER BRB8,4X16RFR	
130	312605-0318		16	HEXAGON NUT, M6M M8 A280	
140	315105-0153		4	WASHER BRB6,4X12RFR	
150	312105-0364		4	SCREW M6S ISO 4017 M6X10 A480	

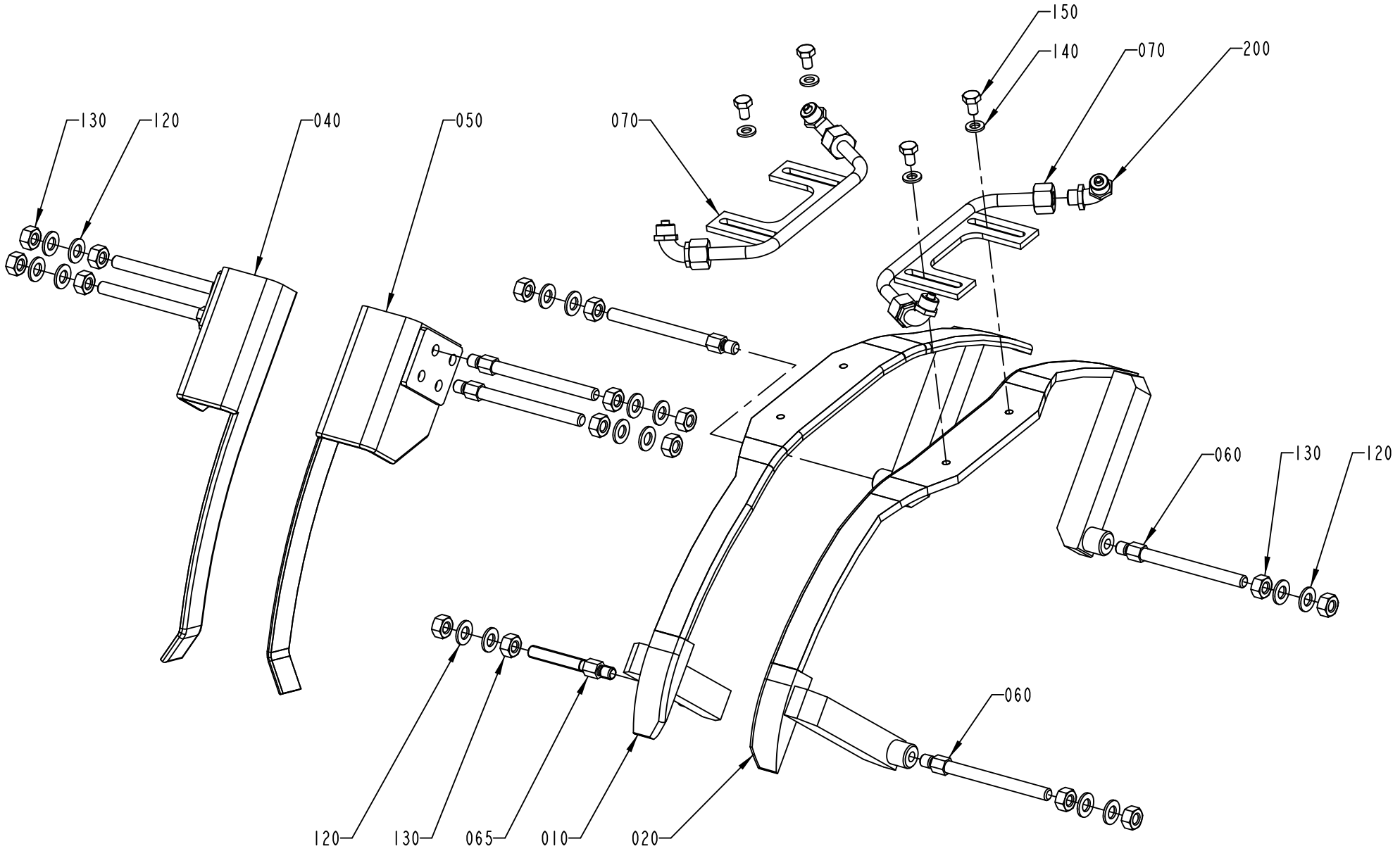

1558940-3
ECN 95038

Pos	Part No	UN	Qty	Description	Page No
TBA 0250B (Cont'd) (See drawing on page: 5-46)					
200	342931-0121		4	ELBOW 90 COUPL.,EXT.THREAD 8/6-G1/8"	
TBA 0500B (See drawing on page: 5-50)					
010	1539881-0000		1	FOLDING BAR	
020	1539882-0000		1	FOLDING BAR	
040	1346343-0000		1	RAIL	
050	1346344-0000		1	RAIL	
060	1558713-0000		2	SPACER SCREW	
080	1539873-0000		4	SPACER	
090	1539871-0000		2	SPACER	
110	312109-0461		4	SCREW M6S ISO 4017 M8X50 A480	
120	315105-0165		8	WASHER BRB8,4X16RFR	
130	312605-0318		2	HEXAGON NUT, M6M M8 A280	
180	312105-0464		2	SCREW M6S ISO 4014 M8X65 A480	
200	342921-0121		4	STRAIGHT CPLNG,EXT.THREADED 8/6-G1/8INCH	
TBA 0500S (See drawing on page: 5-48)					
010	1519770-0000		1	FOLDING BAR	
020	1519769-0000		1	FOLDING BAR	
030	1317043-0000		2	SUPPORT	
040	1499150-0000		1	RAIL	
050	1499151-0000		1	RAIL	
060	1499402-0000		2	SPACER	
080	1499072-0000		4	SPACER	
090	1499071-0000		2	SPACER	
100	312109-0457		4	SCREW M6S ISO 4017 M8X35 A480	
110	312105-0463		4	SCREW M6S ISO 4014 M8X60 A480	
120	315105-0165		12	WASHER BRB8,4X16RFR	
130	312605-0318		2	HEXAGON NUT, M6M M8 A280	
180	312105-0466		2	SCREW M6S ISO 4014 M8X75 A480	
200	342921-0121		4	STRAIGHT CPLNG,EXT.THREADED 8/6-G1/8INCH	
TBA 1000B NOMOLDEDCAP (See drawing on page: 5-44)					
010	2639127-0000		1	FOLDING BAR	
020	2639128-0000		1	FOLDING BAR	
050	1144719-0000		2	RAIL	
080	2639393-0000		2	SPACER	
090	2603663-0000		4	SPACER	
120	315105-0165		8	WASHER BRB8,4X16RFR	
180	312105-0465		8	SCREW M6S ISO 4014 M8X70 A480	
200	342921-0121		4	STRAIGHT CPLNG,EXT.THREADED 8/6-G1/8INCH	
TBA 1000B STDA7 (See drawing on page: 5-48)					
010	2609370-0000		1	FOLDING BAR	
020	2609369-0000		1	FOLDING BAR	
030	1317043-0000		2	SUPPORT	
040	1499150-0000		1	RAIL	
050	1499151-0000		1	RAIL	
060	2509936-0000		2	SPACER SCREW	
080	2609371-0000		4	SPACER	
090	2603663-0000		2	SPACER	
100	312109-0457		4	SCREW M6S ISO 4017 M8X35 A480	
120	315105-0165		14	WASHER BRB8,4X16RFR	
130	312605-0318		2	HEXAGON NUT, M6M M8 A280	
160	312155-0459		2	SCREW DIN 7991 MF6S M8X40 A4 70	
170	312105-0453		2	SCREW M6S ISO 4017 M8X25 A480	
180	312105-0466		2	SCREW M6S ISO 4014 M8X75 A480	
200	342931-0121		4	ELBOW 90 COUPL.,EXT.THREAD 8/6-G1/8"	
250	312105-0462		4	SCREW M6S ISO 4014 M8X55 A480	
TBA 1000S NOMOLDEDCAP (See drawing on page: 5-54)					
010	1144897-0000		1	FOLDING BAR	
020	1144898-0000		1	FOLDING BAR	
050	1144719-0000		2	RAIL	
060	1144555-0000		8	STUD SCREW	
120	315105-0165		16	WASHER BRB8,4X16RFR	
130	312605-0318		16	HEXAGON NUT, M6M M8 A280	
200	342921-0121		4	STRAIGHT CPLNG,EXT.THREADED 8/6-G1/8INCH	
TBA 1000S STDA7, TBA 1000S LIGHTCAP (See drawing on page: 5-48)					
010	1498827-0000		1	FOLDING BAR	
020	1498828-0000		1	FOLDING BAR	
030	1317043-0000		2	SUPPORT	
050	1317047-0000		1	RAIL	
060	2509936-0000		2	SPACER SCREW	
080	2509937-0000		4	SPACER	
090	2509935-0000		2	SPACER	
100	312109-0457		4	SCREW M6S ISO 4017 M8X35 A480	
110	312105-0461		4	SCREW M6S ISO 4014 M8X50 A480	
120	315105-0165		14	WASHER BRB8,4X16RFR	
130	312605-0318		2	HEXAGON NUT, M6M M8 A280	
160	312155-0459		2	SCREW DIN 7991 MF6S M8X40 A4 70	
170	312105-0451		2	SCREW M6S ISO 4017 M8X20 A480	
180	312105-0464		2	SCREW M6S ISO 4014 M8X65 A480	
200	342931-0121		4	ELBOW 90 COUPL.,EXT.THREAD 8/6-G1/8"	
TBA 1000SQ (See drawing on page: 5-48)					
010	1498827-0000		1	FOLDING BAR	
020	1498828-0000		1	FOLDING BAR	
030	1317043-0000		2	SUPPORT	

FLAP GUIDE

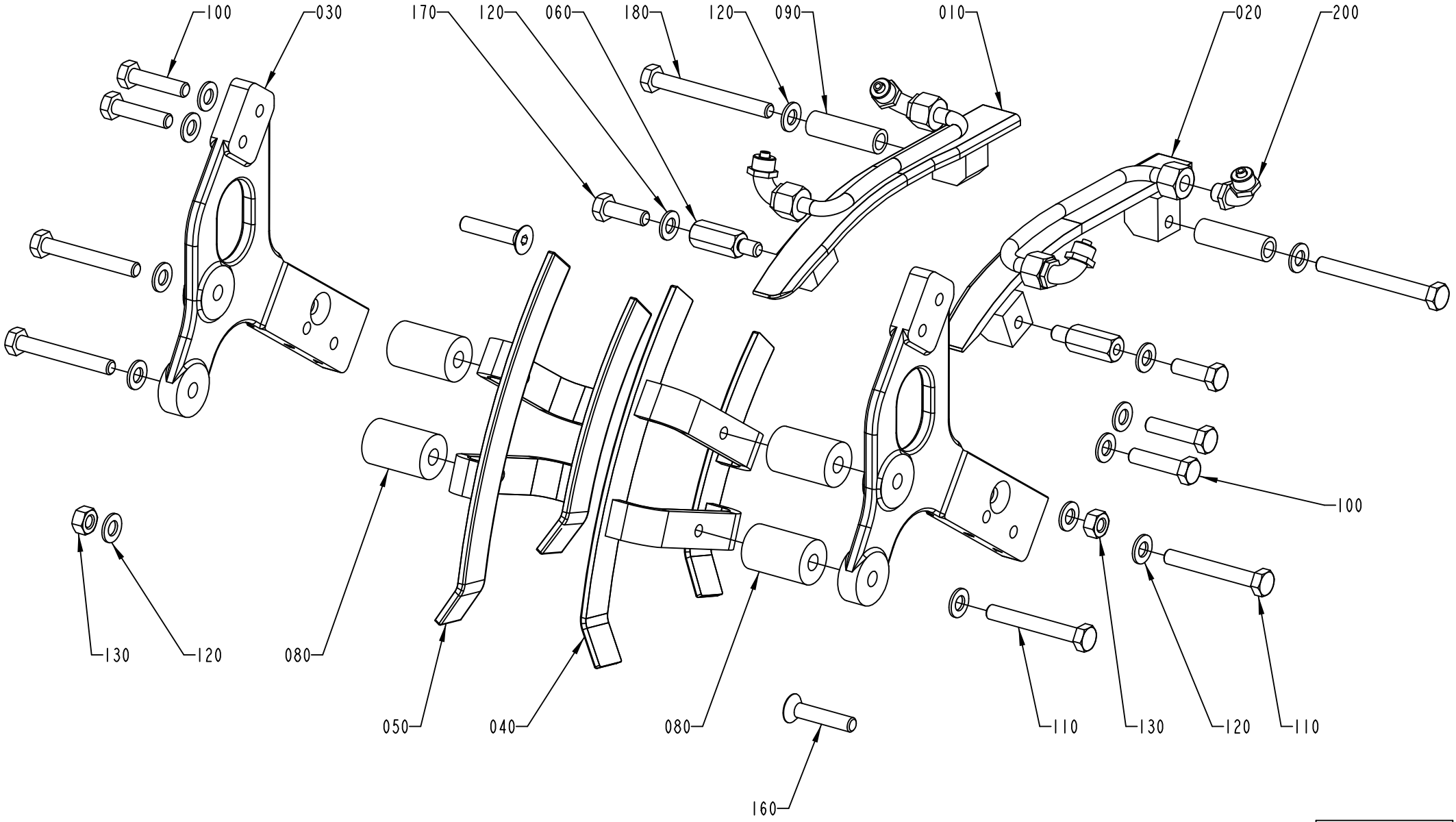

1558940-4
ECN 95038

Pos	Part No	UN	Qty	Description	Page No
TBA 1000SQ (Cont'd) (See drawing on page: 5-48)					
050	1317047-0000		1	RAIL	
060	1499094-0000		2	SPACER SCREW	
080	1499072-0000		4	SPACER	
090	1499071-0000		2	SPACER	
100	312109-0457		4	SCREW M6S ISO 4017 M8X35 A480	
110	312105-0463		4	SCREW M6S ISO 4014 M8X60 A480	
120	315105-0165		14	WASHER BRB8,4X16RFR	
130	312605-0318		2	HEXAGON NUT, M6M M8 A280	
160	312155-0459		2	SCREW DIN 7991 MF6S M8X40 A4 70	
170	312105-0451		2	SCREW M6S ISO 4017 M8X20 A480	
180	312105-0466		2	SCREW M6S ISO 4014 M8X75 A480	
200	342931-0121		4	ELBOW 90 COUPL.,EXT.THREAD 8/6-G1/8"	
TBA 1500S (See drawing on page: 5-48)					
010	1317653-0000		1	FOLDING BAR	
020	1317652-0000		1	FOLDING BAR	
030	1317043-0000		2	SUPPORT	
040	1317042-0000		1	RAIL	
050	1317047-0000		1	RAIL	
060	1348042-0000		2	SPACER	
080	1334718-0000		4	SPACER	
090	1317088-0000		2	SPACER	
100	312109-0457		4	SCREW M6S ISO 4017 M8X35 A480	
110	312109-0461		4	SCREW M6S ISO 4017 M8X50 A480	
120	315105-0165		12	WASHER BRB8,4X16RFR	
130	312605-0318		2	HEXAGON NUT, M6M M8 A280	
180	312105-0465		2	SCREW M6S ISO 4014 M8X70 A480	
200	342931-0121		4	ELBOW 90 COUPL.,EXT.THREAD 8/6-G1/8"	
TPA 0250SQ (See drawing on page: 5-48)					
010	1532275-0000		1	FOLDING BAR	
020	1532276-0000		1	FOLDING BAR	
030	1317043-0000		2	SUPPORT	
040	1532281-0000		1	RAIL	
050	1532280-0000		1	RAIL	
060	1558889-0000		2	SPACER SCREW	
080	1558527-0000		4	SPACER	
090	1539898-0000		2	SPACER	
100	312109-0457		4	SCREW M6S ISO 4017 M8X35 A480	
110	312105-0464		4	SCREW M6S ISO 4014 M8X65 A480	
120	315105-0165		14	WASHER BRB8,4X16RFR	
130	312605-0318		2	HEXAGON NUT, M6M M8 A280	
160	312155-0459		2	SCREW DIN 7991 MF6S M8X40 A4 70	
170	312105-0453		2	SCREW M6S ISO 4017 M8X25 A480	
180	312105-0469		2	SCREW M6S ISO 4014 M8X90 A480	
200	342921-0121		4	STRAIGHT CPLNG,EXT.THREADED 8/6-G1/8INCH	
TPA 0330SQ (See drawing on page: 5-48)					
010	1532275-0000		1	FOLDING BAR	
020	1532276-0000		1	FOLDING BAR	
030	1317043-0000		2	SUPPORT	
040	1532281-0000		1	RAIL	
050	1532280-0000		1	RAIL	
060	1499094-0000		2	SPACER SCREW	
080	1499072-0000		4	SPACER	
090	1558735-0000		2	SPACER	
100	312109-0457		4	SCREW M6S ISO 4017 M8X35 A480	
110	312105-0463		4	SCREW M6S ISO 4014 M8X60 A480	
120	315105-0165		14	WASHER BRB8,4X16RFR	
130	312605-0318		2	HEXAGON NUT, M6M M8 A280	
160	312155-0459		2	SCREW DIN 7991 MF6S M8X40 A4 70	
170	312105-0453		2	SCREW M6S ISO 4017 M8X25 A480	
180	312105-0469		2	SCREW M6S ISO 4014 M8X90 A480	
200	342921-0121		4	STRAIGHT CPLNG,EXT.THREADED 8/6-G1/8INCH	
TPA 0500SQ SMILE (See drawing on page: 5-48)					
010	2529910-0000		1	FOLDING BAR	
020	2529909-0000		1	FOLDING BAR	
030	1317043-0000		2	SUPPORT	
040	1499150-0000		1	RAIL	
050	1499151-0000		1	RAIL	
060	2530201-0000		2	SPACER SCREW	
080	1549508-0000		4	SPACER SCREW	
100	312109-0457		4	SCREW M6S ISO 4017 M8X35 A480	
110	312105-0451		4	SCREW M6S ISO 4017 M8X20 A480	
120	315105-0165		14	WASHER BRB8,4X16RFR	
130	312605-0318		2	HEXAGON NUT, M6M M8 A280	
160	312155-0459		2	SCREW DIN 7991 MF6S M8X40 A4 70	
170	312105-0453		2	SCREW M6S ISO 4017 M8X25 A480	
180	312105-0467		2	SCREW M6S ISO 4014 M8X80 A480	
200	342921-0121		4	STRAIGHT CPLNG,EXT.THREADED 8/6-G1/8INCH	

Machine Type | Group Description | Used-In | Group Number | Page No

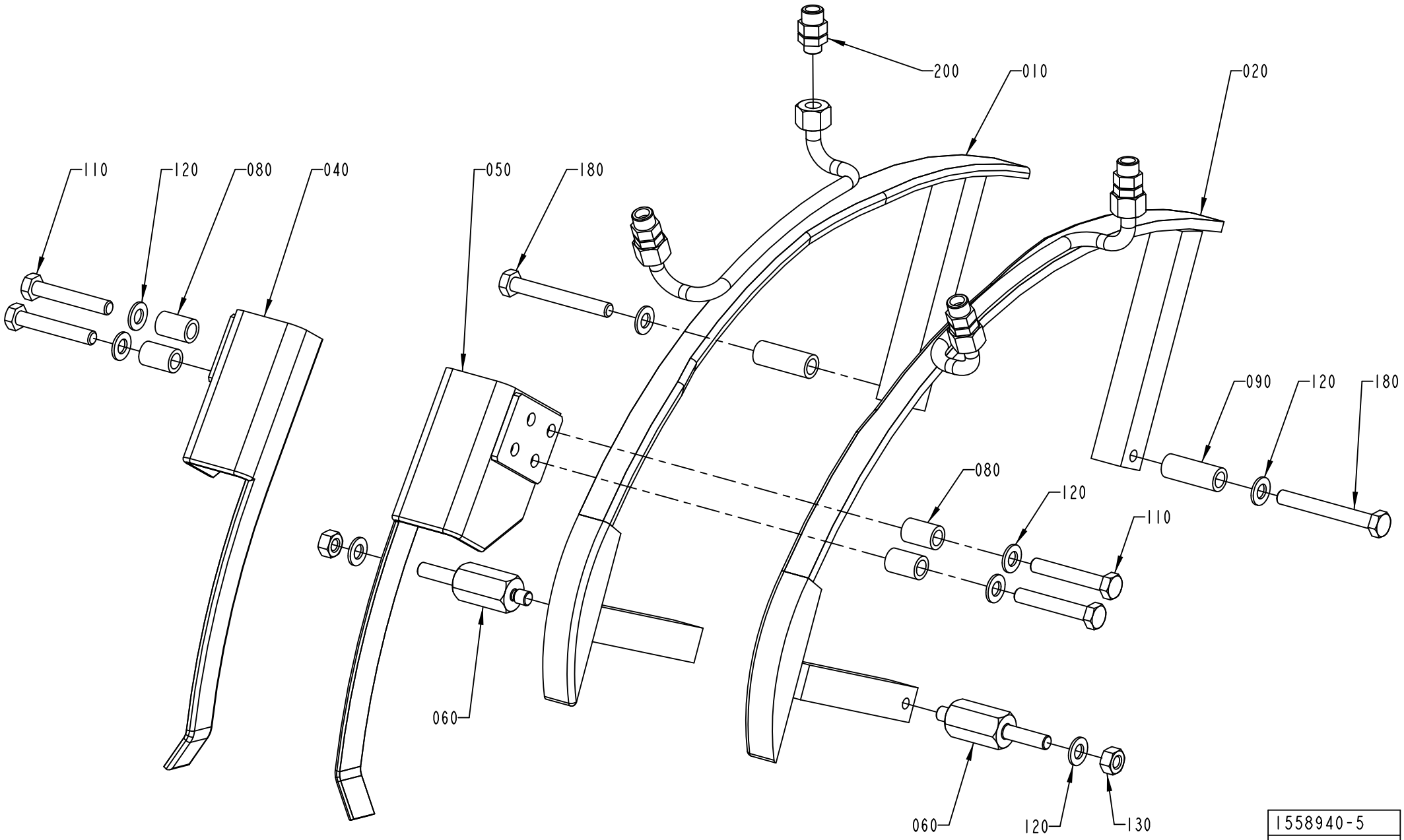

1558940-5
ECN 95038

Pos	Part No	UN	Qty	Description	Page No
SEE PREVIOUS LISTS PAGES: 5-45, 5-47, 5-49.					

Pos	Part No	UN	Qty	Description	Page No

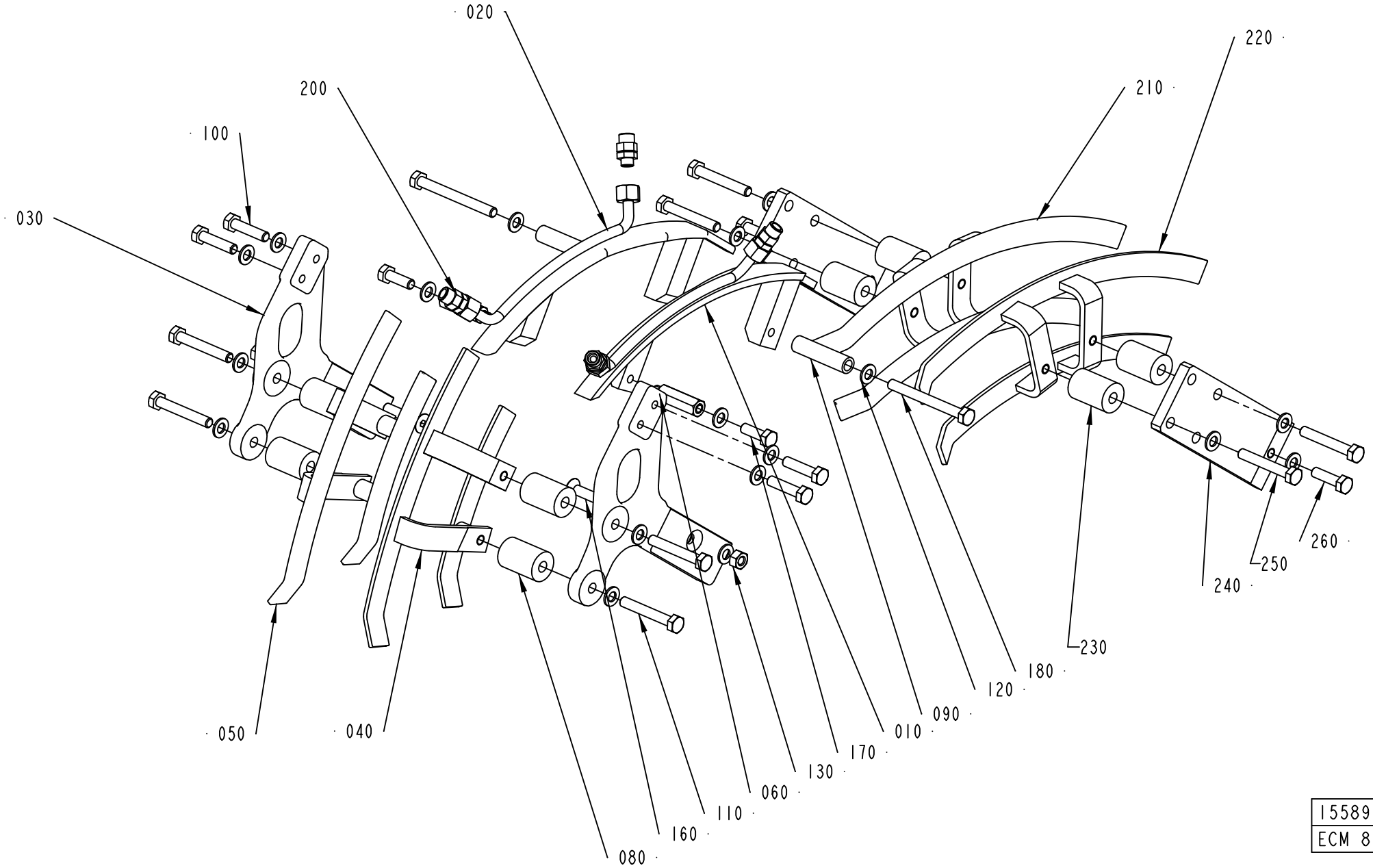

1558940-6
ECM 80646

Pos	Part No	UN	Qty	Description	Page No
SEE PREVIOUS LISTS PAGES: 5-45, 5-47, 5-49.					

Pos	Part No	UN	Qty	Description	Page No

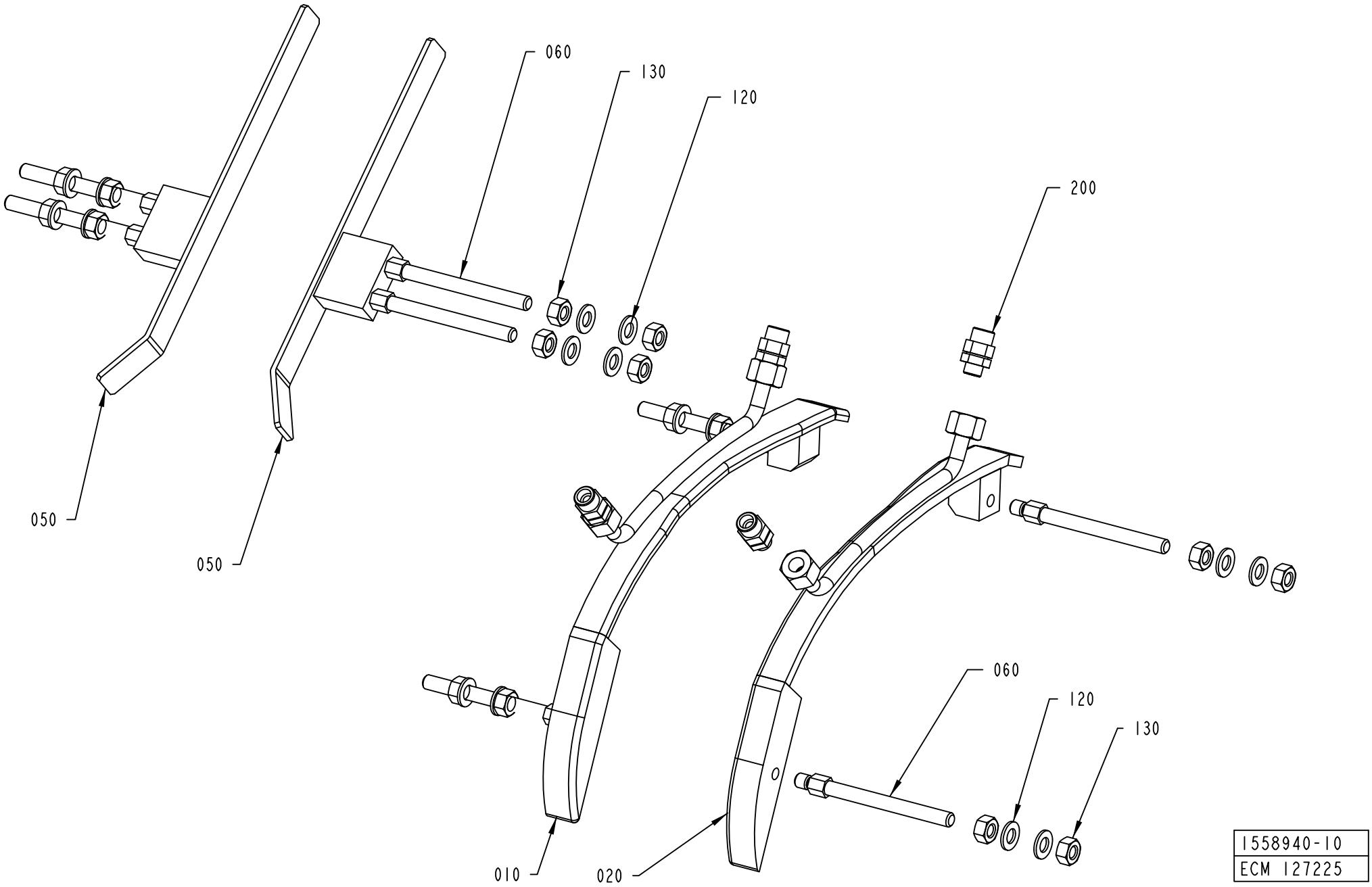
060
130
120
200
050
050
060
120
130
010
020
1558940-10
ECM 127225

ECM: 261786 - 20060702
Group number: 1558940-0200
Assembly Drawing: 1558940-10_1_AA

This list covers pages from 5-44 to 5-55

Pos	Part No	UN	Qty	Description	Page No	Pos	Part No	UN	Qty	Description	Page No

SEE PREVIOUS LISTS PAGES: 5-45, 5-47, 5-49.

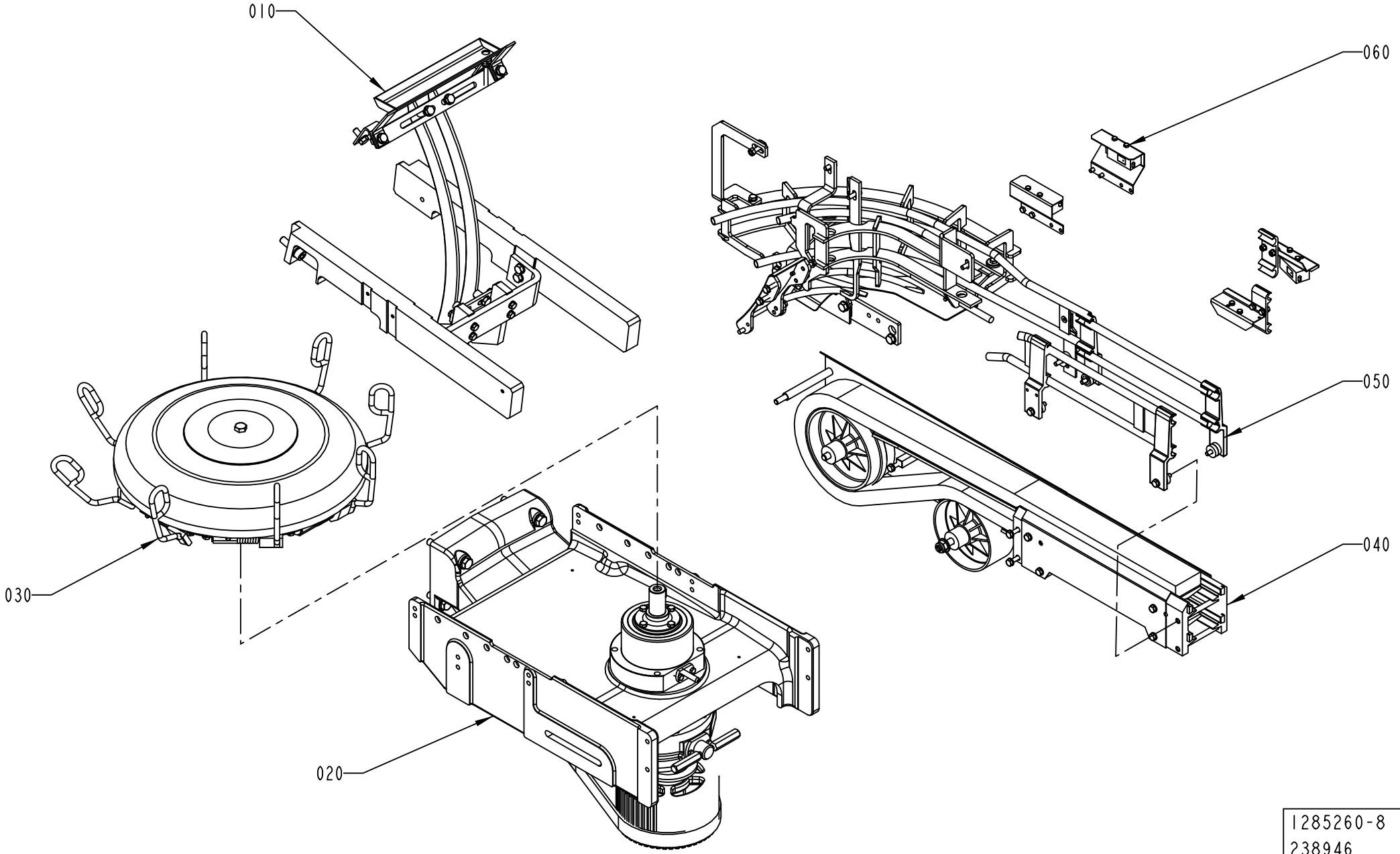

1285260-8
238946

ECM: 242274 - 20060701
Group number: 1285260-0400
Assembly Drawing: 1285260-8_1_AA

Pos	Part No	UN	Qty	Description	Page No
A3/FLEX TBA 0500B, A3/FLEX TBA 1000B, A3/FLEX TBA 1000S, A3/FLEX TBA 1000SQ, A3/FLEX TPA 1000SQ, A3/FLEX TBA 0200S, A3/FLEX TBA 1500S, A3/FLEX TBA 0200B, A3/FLEX TBA 0250B, A3/FLEX TBA 0330S, A3/FLEX TPA 0330SQ, A3/FLEX TPA 0500SQ, A3/FLEX TBA 0200M, A3/FLEX TBA 0250S, A3/FLEX TBA 0500S, A3/FLEX TPA 0250SQ, A3/FLEX TPA 0200SQ, A3/FLEX TPA 0750SQ, A3/FLEX TBA 0200SQ, A3/FLEX TBA 0250SQ					
040	1490112-0100		1	OUTFEED CONVEYOR	**5-59, 5-61**
A3/FLEX TBA 1890S, A3/FLEX TBA 2000S					
040	2598508-0100		1	INFEED/OUTFEED CONVEYOR	**5-63**
Common Parts					
010	2732825-0100		1	RAIL	**5-65, 5-67**
020	1484210-0200		1	OUT FEED DRIVING SYSTEM	**5-69**
030	1487038-0200		1	OUTFEED WHEEL	**5-75, 5-77, 5-79, 5-81**
050	2732820-0100		1	RAIL OUT FEED	**5-83, 5-85, 5-87, 5-89, 5-91**
060	1512339-0100		1	PHOTOCELL OUTFEED	**5-97, 5-99**

Pos	Part No	UN	Qty	Description	Page No

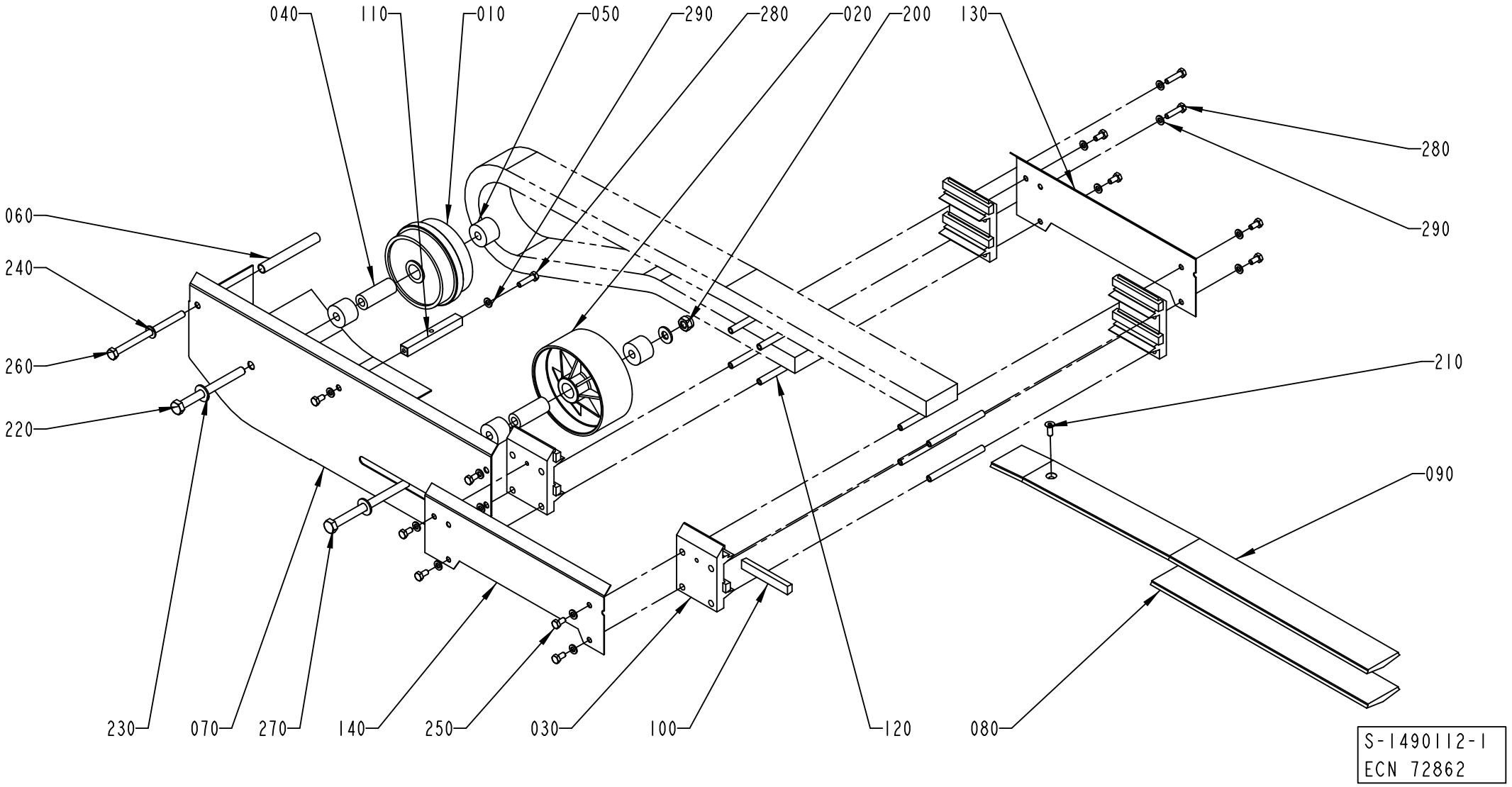
040
110
010
050
290
280
020
200
130
280
290
060
240
260
220
210
090
230
070
270
140
250
030
100
120
080
S-1490112-1
ECN 72862

Pos	Part No	UN	Qty	Description	Page No
TBA 0200SQ, TPA 0250SQ, TPA 0200SQ, TPA 1000SQ, TPA 0500SQ, TPA 0750SQ, TBA 0250SQ (See drawing on page: 5-58)					
010	2678417-0000		1	WHEEL	
070	1548354-0000		1	COVER	
090	1548353-0000		1	SLIDE RAIL	
TBA 0500S, TBA 0500B, TBA 0330S, TBA 1000S, TBA 1000B, TBA 0200B, TBA 0250S, TBA 0200S, TBA 0200M, TBA 0250B, TBA 1500S (See drawing on page: 5-60)					
010	245039-0000		1	GUIDE WHEEL	
070	1285265-0000		1	PLATE	
090	1279573-0000		1	SLIDE RAIL UPPER	
TBA 1000SQ, TPA 0330SQ (See drawing on page: 5-58)					
010	2678417-0000		1	WHEEL	
070	1296081-0000		1	PLATE	
090	1279573-0000		1	SLIDE RAIL UPPER	
Common Parts					
020	476975-0000		1	WHEEL	
030	457696-0001		4	JOINT PIECE	
040	229207-0000		2	BEARING SLEEVE	
050	1144943-0000		4	SPACER	
060	1285306-0000		1	SPACER	
080	1279587-0000		1	SLIDE RAIL UPPER	
100	466074-0002		8	SLIDER	
110	1285266-0000		1	SPACER	
120	476220-0000		8	SPACER	
130	1279585-0000		1	SUPPORT	
140	1279586-0000		1	SUPPORT	
150	90165-0056		3	PIPE CLIP FOR TUBE D=4 MM	
200	312812-0320		1	HEXAGON NUT, NY-LOCK M10 A480	
210	312155-0368		1	SCREW DIN 7991 MF6S M6X16 A4 70	
220	312105-0513		1	SCREW M6S ISO 4014 M10X110 A480	
230	315105-0173		3	WASHER BRB10,5X22RFR	
240	315105-0165		1	WASHER BRB8,4X16RFR	
250	312105-0366		11	SCREW M6S ISO 4017 M6X12 A480	
260	312105-0475		1	SCREW M6S ISO 4014 M8X120 A480	
270	312105-0517		1	SCREW M6S ISO 4014 M10X130 A480	
280	312105-0372		3	SCREW M6S ISO 4017 M6X25 A480	
285	312105-0323		3	SCREW M6S ISO 4017 M5X8 A480	
290	315105-0153		14	WASHER BRB6,4X12RFR	
300	315105-0146		3	WASHER BRB5,3X10RFR	
310	312605-0314		3	HEXAGON NUT, M6M M5 A280	

Pos	Part No	UN	Qty	Description	Page No

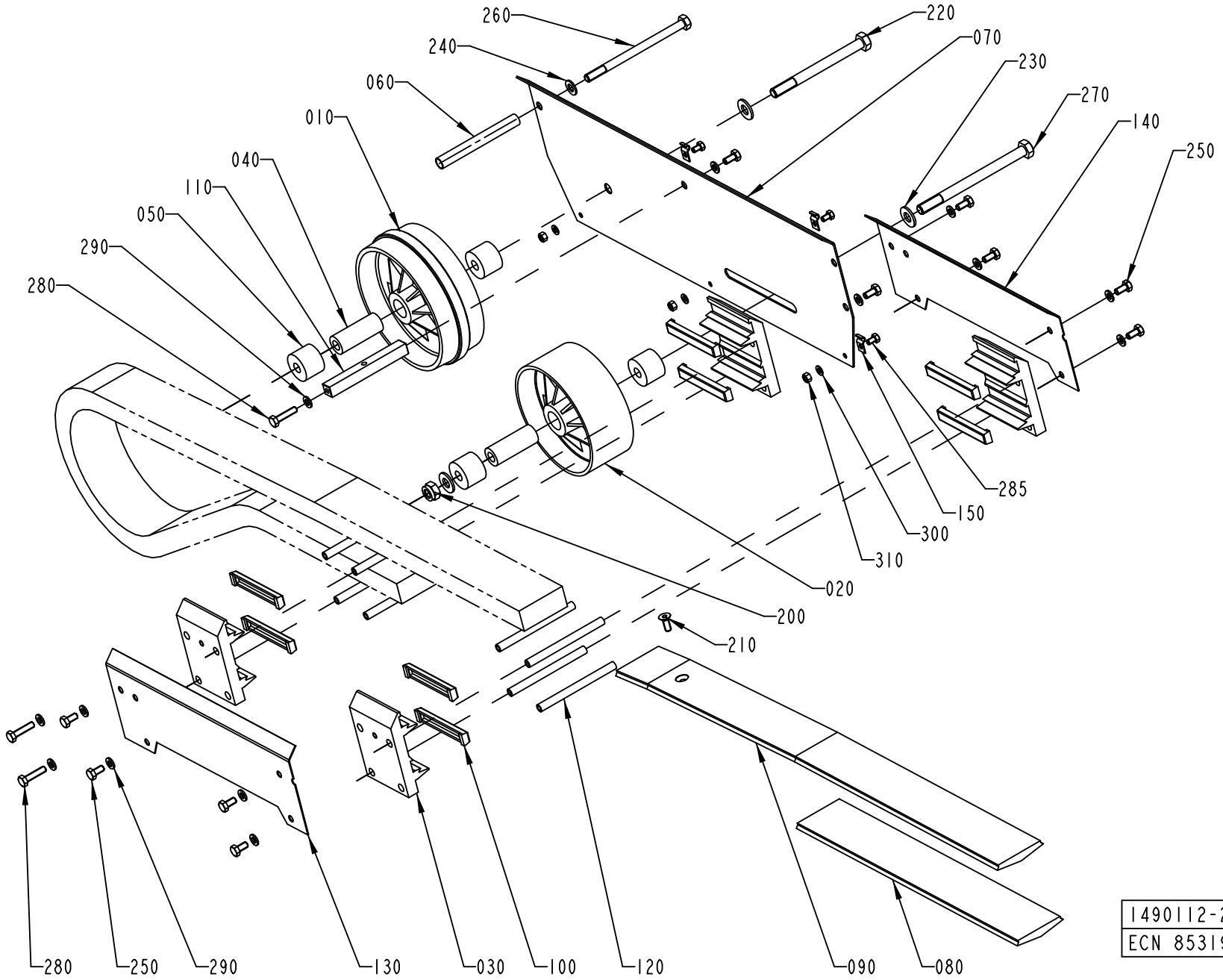

1490112-2
ECN 85319

Pos	Part No	UN	Qty	Description	Page No
TBA 0200SQ, TPA 0250SQ, TPA 0200SQ, TPA 1000SQ, TPA 0500SQ, TPA 0750SQ, TBA 0250SQ (See drawing on page: 5-58)					
010	2678417-0000		1	WHEEL	
070	1548354-0000		1	COVER	
090	1548353-0000		1	SLIDE RAIL	
TBA 0500S, TBA 0500B, TBA 0330S, TBA 1000S, TBA 1000B, TBA 0200B, TBA 0250S, TBA 0200S, TBA 0200M, TBA 0250B, TBA 1500S (See drawing on page: 5-60)					
010	245039-0000		1	GUIDE WHEEL	
070	1285265-0000		1	PLATE	
090	1279573-0000		1	SLIDE RAIL UPPER	
TBA 1000SQ, TPA 0330SQ (See drawing on page: 5-58)					
010	2678417-0000		1	WHEEL	
070	1296081-0000		1	PLATE	
090	1279573-0000		1	SLIDE RAIL UPPER	
Common Parts					
020	476975-0000		1	WHEEL	
030	457696-0001		4	JOINT PIECE	
040	229207-0000		2	BEARING SLEEVE	
050	1144943-0000		4	SPACER	
060	1285306-0000		1	SPACER	
080	1279587-0000		1	SLIDE RAIL UPPER	
100	466074-0002		8	SLIDER	
110	1285266-0000		1	SPACER	
120	476220-0000		8	SPACER	
130	1279585-0000		1	SUPPORT	
140	1279586-0000		1	SUPPORT	
150	90165-0056		3	PIPE CLIP FOR TUBE D=4 MM	
200	312812-0320		1	HEXAGON NUT, NY-LOCK M10 A480	
210	312155-0368		1	SCREW DIN 7991 MF6S M6X16 A4 70	
220	312105-0513		1	SCREW M6S ISO 4014 M10X110 A480	
230	315105-0173		3	WASHER BRB10,5X22RFR	
240	315105-0165		1	WASHER BRB8,4X16RFR	
250	312105-0366		11	SCREW M6S ISO 4017 M6X12 A480	
260	312105-0475		1	SCREW M6S ISO 4014 M8X120 A480	
270	312105-0517		1	SCREW M6S ISO 4014 M10X130 A480	
280	312105-0372		3	SCREW M6S ISO 4017 M6X25 A480	
285	312105-0323		3	SCREW M6S ISO 4017 M5X8 A480	
290	315105-0153		14	WASHER BRB6,4X12RFR	
300	315105-0146		3	WASHER BRB5,3X10RFR	
310	312605-0314		3	HEXAGON NUT, M6M M5 A280	

Pos	Part No	UN	Qty	Description	Page No

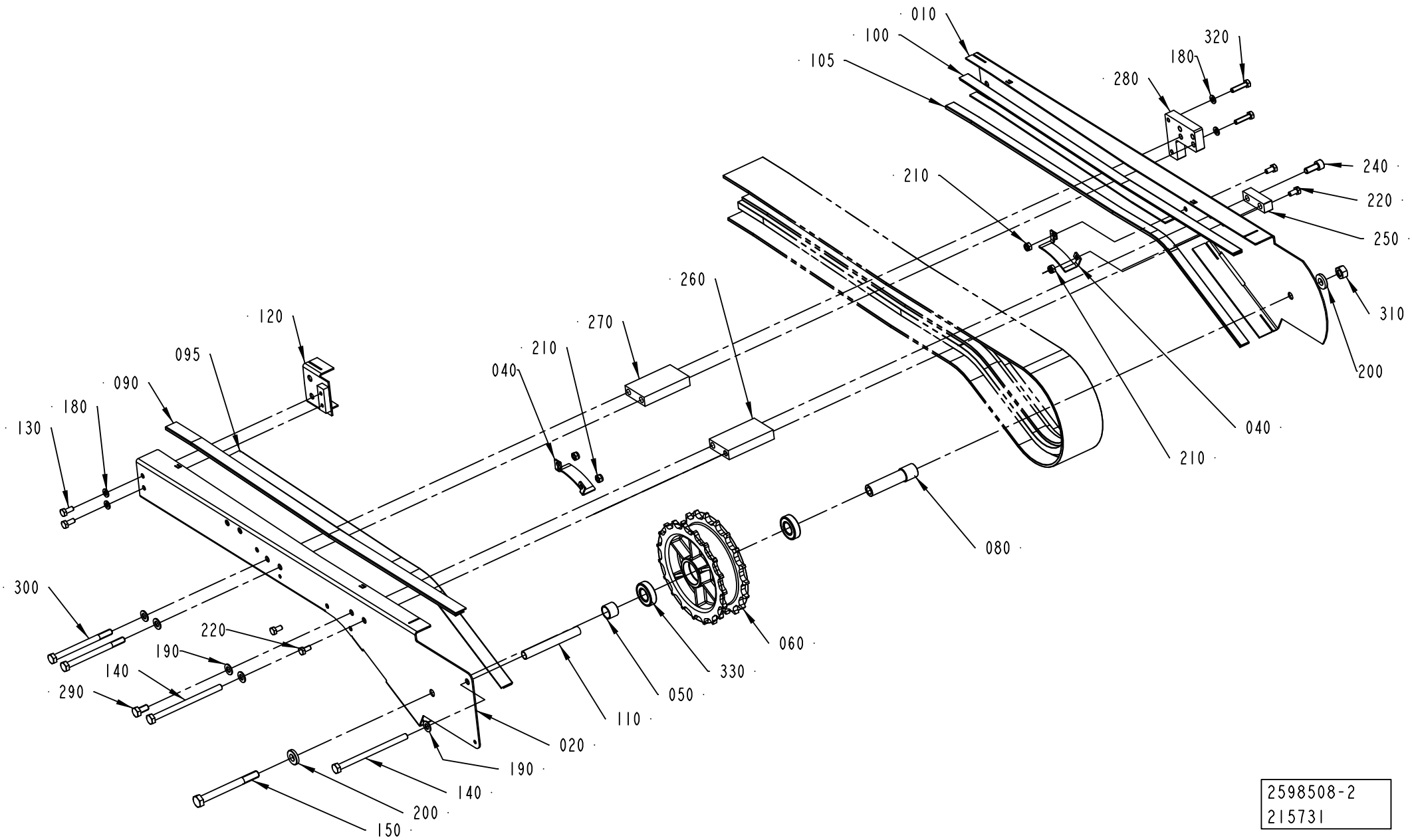

2598508-2
215731

ECM: 215731 - 20050527
Group number: 2598508-0100
Assembly Drawing: 2598508-2_1_AC

Pos	Part No	UN	Qty	Description	Page No
-					
010	2699107-0000		1	SIDE PLATE	
020	2699106-0000		1	SIDE PLATE	
040	2652311-0000		1	PLATE	
050	2699109-0000		1	SPACER	
060	2656672-0000		1	SPROCKET	
080	2699108-0000		1	SHAFT	
090	1550595-6600		1	SLIDING STRIP	
095	1550595-6700		1	SLIDING STRIP	
100	1550595-7000		1	SLIDING STRIP	
105	1550595-7110		1	SLIDING STRIP	
110	2598513-0000		2	SPACER	
120	2598514-0000		1	COVER	
130	312105-0367		2	SCREW M6S ISO 4017 M6X14 A480	
140	312105-0475		2	SCREW M6S ISO 4014 M8X120 A480	
150	312105-0511		1	SCREW M6S ISO 4014 M10X100 A480	
180	315105-0153		4	WASHER BRB6,4X12RFR	
190	315105-0165		5	WASHER BRB8,4X16RFR	
200	315111-0173		2	WASHER PLAIN, TBRB 10,5/22 H=4	
210	312812-0316		4	HEXAGON NUT, NY-LOCK M6 A480	
220	312105-0366		4	SCREW M6S ISO 4017 M6X12 A480	
240	312115-0451		1	SCREW ISO4762 M8X20 A4 80	
250	2619210-0000		1	SPACER	
260	2619211-0000		1	SPACER	
270	2619212-0000		1	SPACER	
280	2619213-0000		1	SPACER	
290	312105-0449		1	SCREW M6S ISO 4017 M8X16 A480	
300	312105-0471		2	SCREW M6S ISO 4014 M8X100 A480	
310	312605-0320		1	HEXAGON NUT, M6M M10 A280	
320	312105-0372		2	SCREW M6S ISO 4017 M6X25 A480	
330	1550348-0002		2	BEARING	

Pos	Part No	UN	Qty	Description	Page No

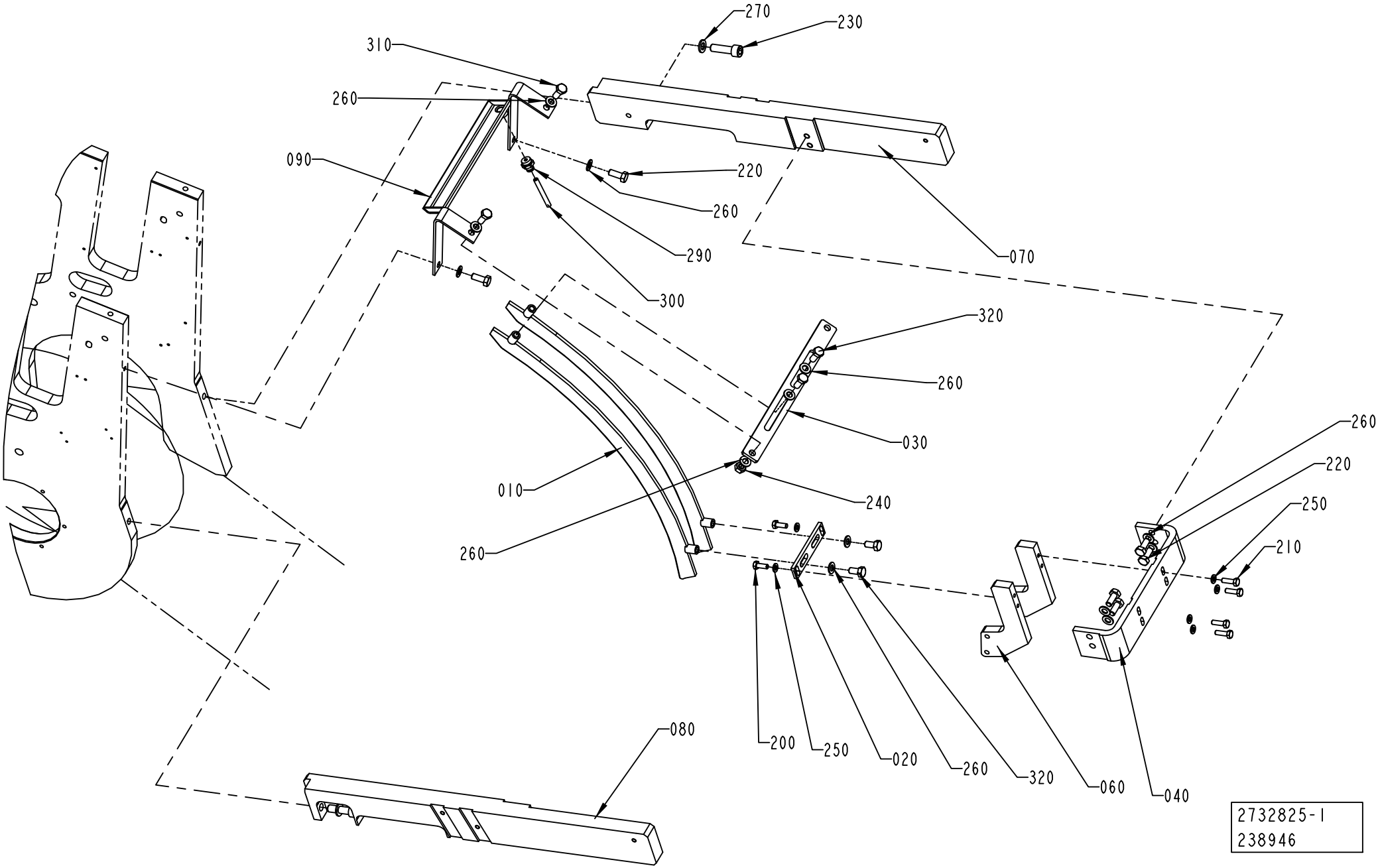
270
230
310
260
090
220
260
290
070
300
320
260
030
260
220
250
210
010
240
260
200
250
020
260
320
060
040
080
2732825-1
238946

ECM: 242275 - 20060701
Group number: 2732825-0100
Assembly Drawing: 2732825-1_1_AA

This list covers pages from 5-64 to 5-67

Pos	Part No	UN	Qty	Description	Page No
TBA 0500S, TBA 0500B, TBA 0330S, TBA 1000S, TBA 1000SQ, TBA 1000B, TBA 0200B, TBA 0250S, TBA 0200S, TBA 0200M, TBA 0250B, TBA 0200SQ, TPA 0250SQ, TPA 0330SQ, TPA 0200SQ, TBA 0250SQ (See drawing on page: 5-66)					
010	1558941-0000		2	RAIL	
050	1144899-0000		2	SUPPORT	
070	2724937-0000		1	SUPPORTING ARM	
080	2715499-0000		1	SUPPORTING ARM	
090	1478127-0000		1	DRIP PLATE	
220	312105-0451		6	SCREW M6S ISO 4017 M8X20 A480	
240	312605-0318		2	HEXAGON NUT, M6M M8 A280	
260	315105-0165		14	WASHER BRB8,4X16RFR	
310	312105-0453		2	SCREW M6S ISO 4017 M8X25 A480	
320	312105-0449		4	SCREW M6S ISO 4017 M8X16 A480	
TBA 1500S, TPA 1000SQ, TBA 1890S, TBA 2000S, TPA 0750SQ (See drawing on page: 5-64)					
010	1538963-0000		2	RAIL	
050	1346588-0000		1	DRIP PLATE	
070	2724952-0000		1	SUPPORTING ARM	
080	2715502-0000		1	SUPPORTING ARM	
220	312105-0451		10	SCREW M6S ISO 4017 M8X20 A480	
240	312605-0318		2	HEXAGON NUT, M6M M8 A280	
260	315105-0165		14	WASHER BRB8,4X16RFR	
320	312105-0449		2	SCREW M6S ISO 4017 M8X16 A480	
TPA 0500SQ (See drawing on page: 5-66)					
010	1558941-0000		2	RAIL	
050	1144899-0000		1	SUPPORT	
080	2715499-0000		1	SUPPORTING ARM	
090	1478127-0000		1	DRIP PLATE	
220	312105-0451		5	SCREW M6S ISO 4017 M8X20 A480	
240	312605-0318		1	HEXAGON NUT, M6M M8 A280	
260	315105-0165		12	WASHER BRB8,4X16RFR	
310	312105-0453		2	SCREW M6S ISO 4017 M8X25 A480	
320	312105-0449		4	SCREW M6S ISO 4017 M8X16 A480	
Common Parts					
020	1517567-0000		1	PLATE	
030	1144552-0000		1	PLATE	
040	1517563-0000		1	BRACKET	
060	1517302-0000		2	SUPPORT PLATE	
200	312105-0368		2	SCREW M6S ISO 4017 M6X16 A480	
210	312105-0370		4	SCREW M6S ISO 4017 M6X20 A480	
230	312115-0497		2	SCREW ISO4762 M10X35 A4 80	
250	315105-0153		6	WASHER BRB6,4X12RFR	
270	315105-0171		2	WASHER BRB10X18	
290	342722-0203		1	STRAIGHT COUPLING	
300	90166-0132	MM	2000	TUBE 6 MM PA,TRANSP.	

Machine Type | Group Description | Used-In | Group Number | Page No

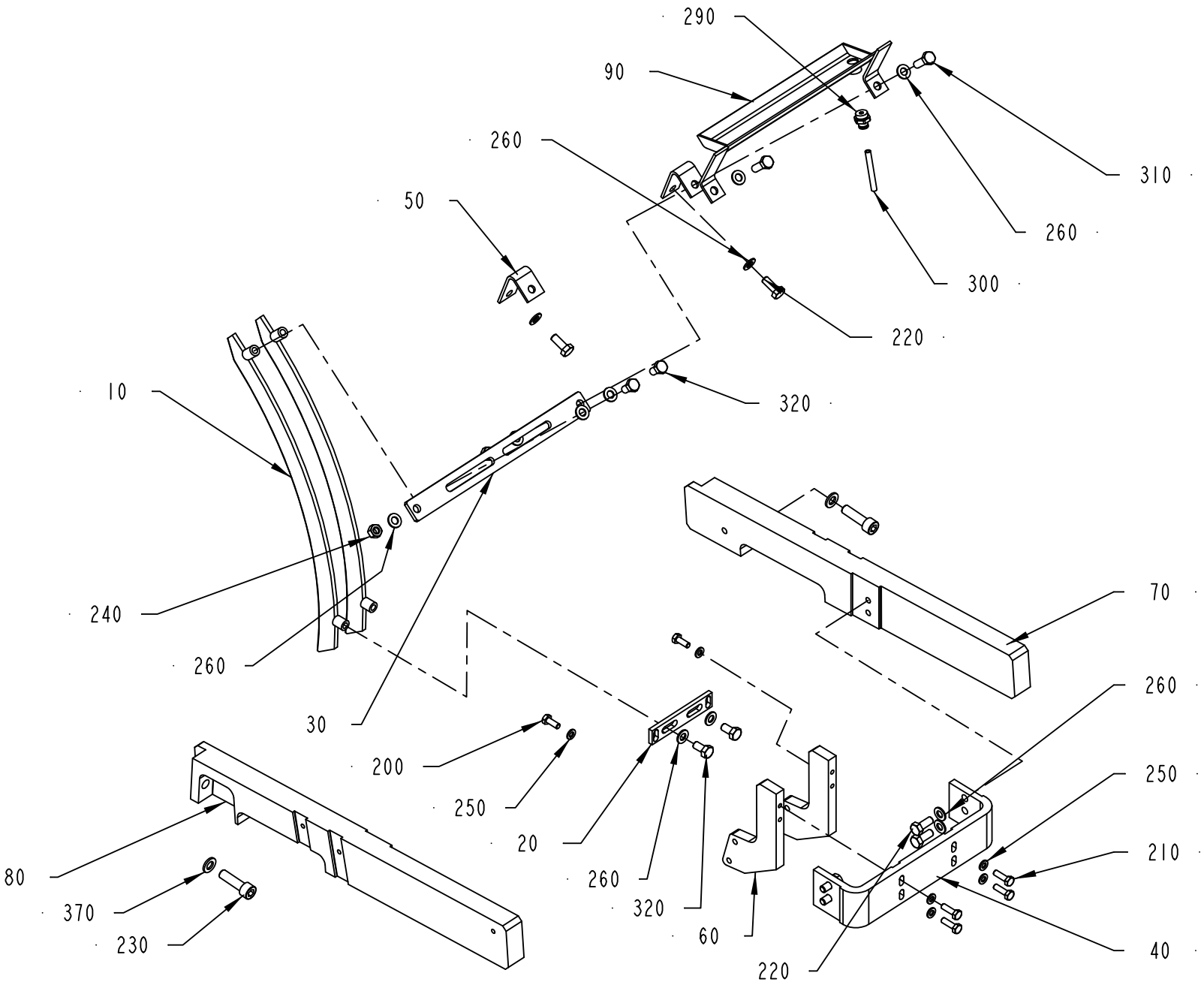

2732825-2
238946

ECM: 242275 - 20060701
Group number: 2732825-0100
Assembly Drawing: 2732825-2_1_AA

This list covers pages from 5-64 to 5-67

Pos	Part No	UN	Qty	Description	Page No
TBA 0500S, TBA 0500B, TBA 0330S, TBA 1000S, TBA 1000SQ, TBA 1000B, TBA 0200B, TBA 0250S, TBA 0200S, TBA 0200M, TBA 0250B, TBA 0200SQ, TPA 0250SQ, TPA 0330SQ, TPA 0200SQ, TBA 0250SQ (See drawing on page: 5-66)					
010	1558941-0000		2	RAIL	
050	1144899-0000		2	SUPPORT	
070	2724937-0000		1	SUPPORTING ARM	
080	2715499-0000		1	SUPPORTING ARM	
090	1478127-0000		1	DRIP PLATE	
220	312105-0451		6	SCREW M6S ISO 4017 M8X20 A480	
240	312605-0318		2	HEXAGON NUT, M6M M8 A280	
260	315105-0165		14	WASHER BRB8,4X16RFR	
310	312105-0453		2	SCREW M6S ISO 4017 M8X25 A480	
320	312105-0449		4	SCREW M6S ISO 4017 M8X16 A480	
TBA 1500S, TPA 1000SQ, TBA 1890S, TBA 2000S, TPA 0750SQ (See drawing on page: 5-64)					
010	1538963-0000		2	RAIL	
050	1346588-0000		1	DRIP PLATE	
070	2724952-0000		1	SUPPORTING ARM	
080	2715502-0000		1	SUPPORTING ARM	
220	312105-0451		10	SCREW M6S ISO 4017 M8X20 A480	
240	312605-0318		2	HEXAGON NUT, M6M M8 A280	
260	315105-0165		14	WASHER BRB8,4X16RFR	
320	312105-0449		2	SCREW M6S ISO 4017 M8X16 A480	
TPA 0500SQ (See drawing on page: 5-66)					
010	1558941-0000		2	RAIL	
050	1144899-0000		1	SUPPORT	
080	2715499-0000		1	SUPPORTING ARM	
090	1478127-0000		1	DRIP PLATE	
220	312105-0451		5	SCREW M6S ISO 4017 M8X20 A480	
240	312605-0318		1	HEXAGON NUT, M6M M8 A280	
260	315105-0165		12	WASHER BRB8,4X16RFR	
310	312105-0453		2	SCREW M6S ISO 4017 M8X25 A480	
320	312105-0449		4	SCREW M6S ISO 4017 M8X16 A480	
Common Parts					
020	1517567-0000		1	PLATE	
030	1144552-0000		1	PLATE	
040	1517563-0000		1	BRACKET	
060	1517302-0000		2	SUPPORT PLATE	
200	312105-0368		2	SCREW M6S ISO 4017 M6X16 A480	
210	312105-0370		4	SCREW M6S ISO 4017 M6X20 A480	
230	312115-0497		2	SCREW ISO4762 M10X35 A4 80	
250	315105-0153		6	WASHER BRB6,4X12RFR	
270	315105-0171		2	WASHER BRB10X18	
290	342722-0203		1	STRAIGHT COUPLING	
300	90166-0132	MM	2000	TUBE 6 MM PA,TRANSP.	

Machine Type | Group Description | Used-In | Group Number | Page No

OUT FEED DRIVING SYSTEM

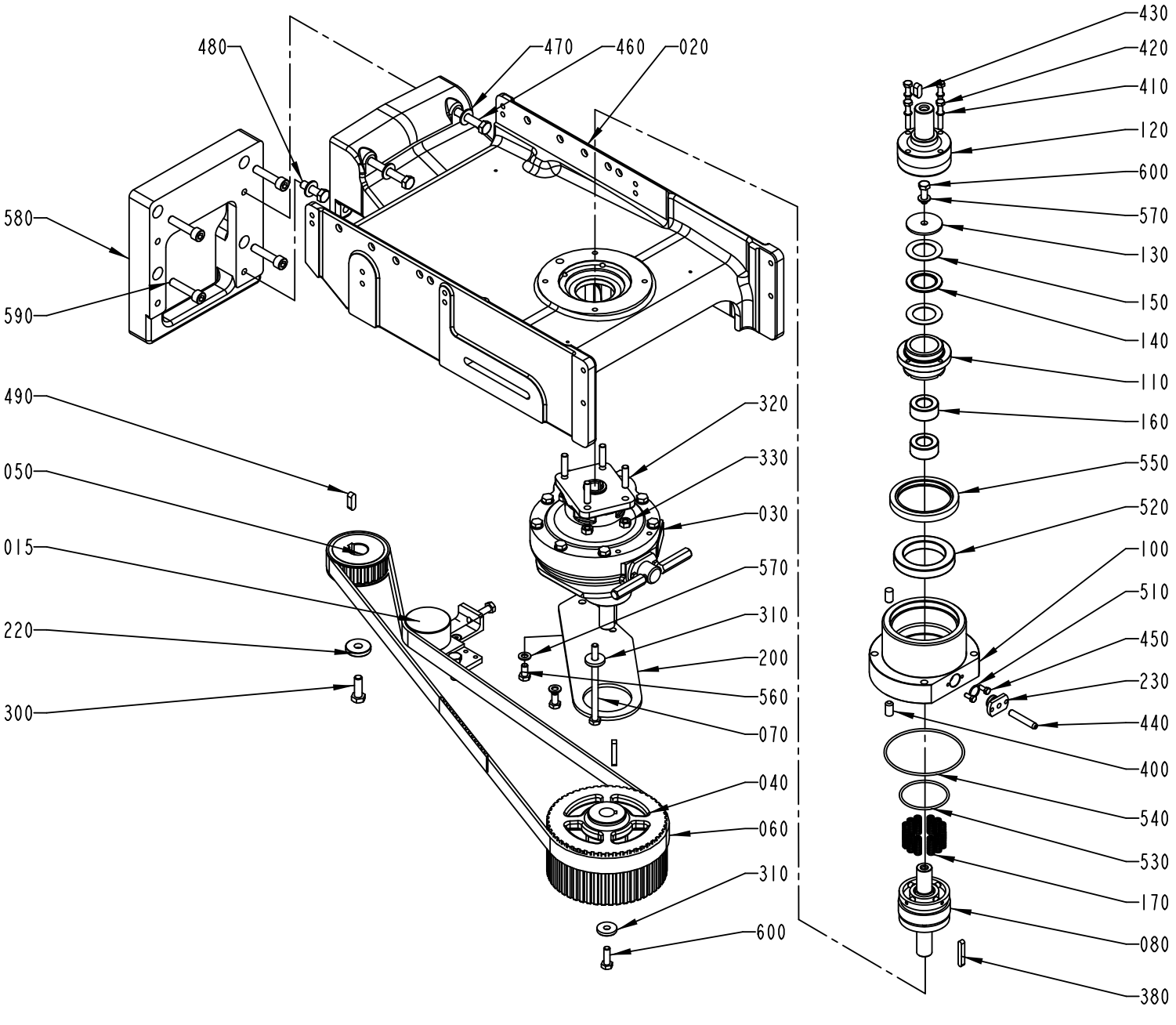

1484210-4
ECM 95375

ECM: 272390 - 20060626
Group number: 1484210-0200
Assembly Drawing: 1484210-4_1_AA

Pos	Part No	UN	Qty	Description	Page No
TBA 0250S, TBA 0200S, TBA 0200M, TBA 0200SQ, TPA 0250SQ, TPA 0330SQ, TPA 0200SQ, TBA 0250SQ					
040	1499064-0000		1	PULLEY	
050	1144802-0000		1	PULLEY	
060	1499059-0000		1	TIMING BELT	
080	1282343-0000		1	BLOCK	
110	1350564-0000		1	CLAMP HUB	
TBA 0500S, TBA 0500B, TBA 0330S, TBA 1000S, TBA 1000SQ, TBA 1000B, TBA 0200B, TBA 0250B, TPA 0500SQ					
040	1498620-0000		1	PULLEY	
050	1144802-0000		1	PULLEY	
060	1498529-0000		1	TIMING BELT	
080	1282343-0000		1	BLOCK	
110	1350564-0000		1	CLAMP HUB	
TBA 1500S, TPA 1000SQ, TPA 0750SQ					
040	1498620-0000		1	PULLEY	
050	1144802-0000		1	PULLEY	
060	1498528-0000		1	TIMING BELT	
080	1282343-0000		1	BLOCK	
110	1350564-0000		1	CLAMP HUB	
580	1349160-0000		1	SPACER	
590	312115-0500		4	SCREW ISO4762 M10X45 A4 80	
TBA 1890S, TBA 2000S					
040	2588329-0000		1	PULLEY	
050	2588328-0000		1	PULLEY	
060	2616227-0000		1	TIMING BELT	
080	2644178-0000		1	BLOCK	
110	2644177-0000		1	CLAMP HUB	
580	1349160-0000		1	SPACER	
590	312115-0500		4	SCREW ISO4762 M10X45 A4 80	
Common Parts					
015	1285875-0200		1	BELT TENSIONER	**5-71**
020	1478908-0000		1	SUPPORT	
030	1490085-0000		1	GEAR BOX	**5-73**
070	312105-0475		1	SCREW M6S ISO 4014 M8X120 A480	
100	1478905-0000		1	FLANGE	
120	1478753-0000		1	SHAFT	
130	1260832-0000		1	WASHER	
140	90083-0052		1	NEEDLE ROLLER THRUST BEARING, 30X47X2 MM	
150	90083-0053		2	SHAFT LOCATING WASHER, 30X47X1MM	
160	1484448-0000		2	ROLLER BEARING	
170	1282345-0000		12	SPRING	
200	1499043-0000		1	BRACKET	
220	1144681-0000		1	WASHER	
230	1282335-0000		1	FLANGE	
300	312105-0495		1	SCREW M6S ISO 4017 M10X30 A480	
310	315125-0165		2	WASHER TBRSB 8,4X26X5 A4	
320	1490442-0000		4	STUD SCREW 8X20	
330	312605-0318		4	HEXAGON NUT, M6M M8 A280	
380	315705-0239		2	PARALLEL KEY W. ROUND ENDS 6X6X40 MM	
400	311103-0454		2	PARALLEL PIN ISO 2338 10M6X20 A1	
410	315211-0103		4	BONDED SEAL SS/NBR90 M6	
420	312109-0378		4	SCREW M6S ISO 4017 M6X40 A480	
430	315705-0263		1	PARALLEL KEY W. ROUND ENDS 8X7X20 MM	
440	90044-0117		1	PROX.SW. IX 0208	
450	312105-0327		2	SCREW M6S ISO 4017 M5X12 A480	
460	312105-0507		2	SCREW M6S ISO 4014 M10X80 A480	
470	315105-0173		4	WASHER BRB10,5X22RFR	
480	312115-0497		2	SCREW ISO4762 M10X35 A4 80	
490	315705-0265		1	PARALLEL KEY W. ROUND ENDS 8X7X25 MM	
510	315202-0113		1	O-RING 15,1X1,6 MM	
520	1484447-0000		1	BALL BEARING	
530	315202-0303		1	O-RING 59,5X3 MM	
540	315202-0311		1	O-RING 99,5X3 MM	
550	90091-0416		1	RADIAL SEAL 70X90X10 MM DUST LIP	
560	312105-0449		2	SCREW M6S ISO 4017 M8X16 A480	
570	315105-0165		3	WASHER BRB8,4X16RFR	
600	312105-0453		2	SCREW M6S ISO 4017 M8X25 A480	

Machine Type | Group Description | Used-In | Group Number | Page No

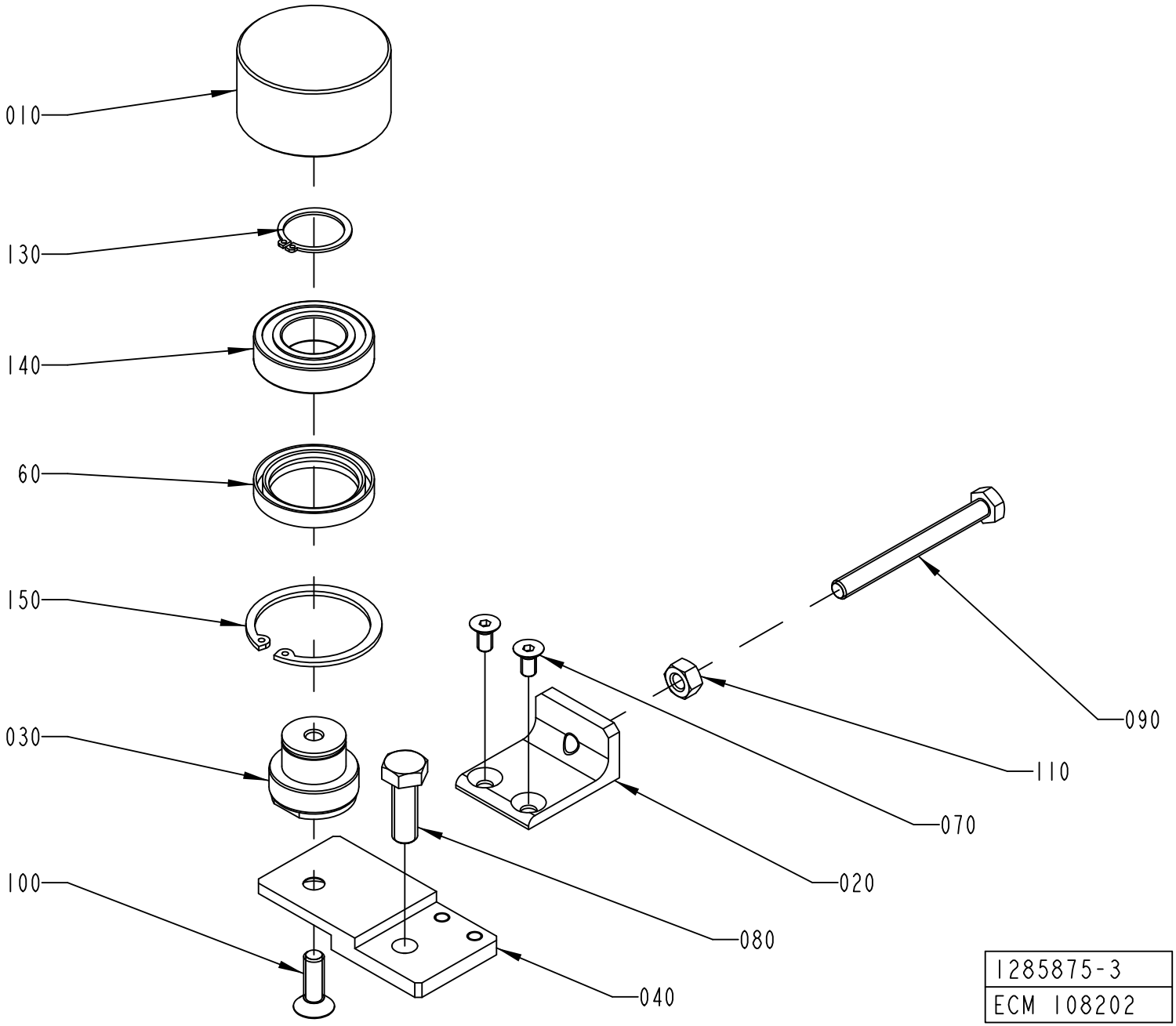
010
130
140
60
150
030
100
040
080
020
070
110
090
1285875-3
ECM 108202

ECM: 181279 - 20041104
Group number: 1285875-0200
Assembly Drawing: 1285875-3_1_AA

Pos	Part No	UN	Qty	Description	Page No
-					
010	1144581-0000		1	ROLLER	
020	1498064-0000		1	BLOCK	
030	1478302-0000		1	AXLE BOLT	
040	1498067-0000		1	PLATE	
060	1350305-0000		1	SEALING RING	
070	312155-0366		2	SCREW DIN 7991 MF6S M6X12 A4 70	
080	312105-0495		1	SCREW M6S ISO 4017 M10X30 A480	
090	1498066-0000		1	SCREW	
100	312155-0453		1	SCREW DIN 7991 MF6S M8X25 A4 70	
110	312605-0318		1	HEXAGON NUT, M6M M8 A280	
130	315751-0119		1	RETAINING RING FOR SHAFT DIN 471 25 A2	
140	321308-0205		1	BALL BEARING, 25X47X12MM	
150	90141-0019		1	RETAINING RING FOR BORE DIN 472 50 A2	

Pos	Part No	UN	Qty	Description	Page No

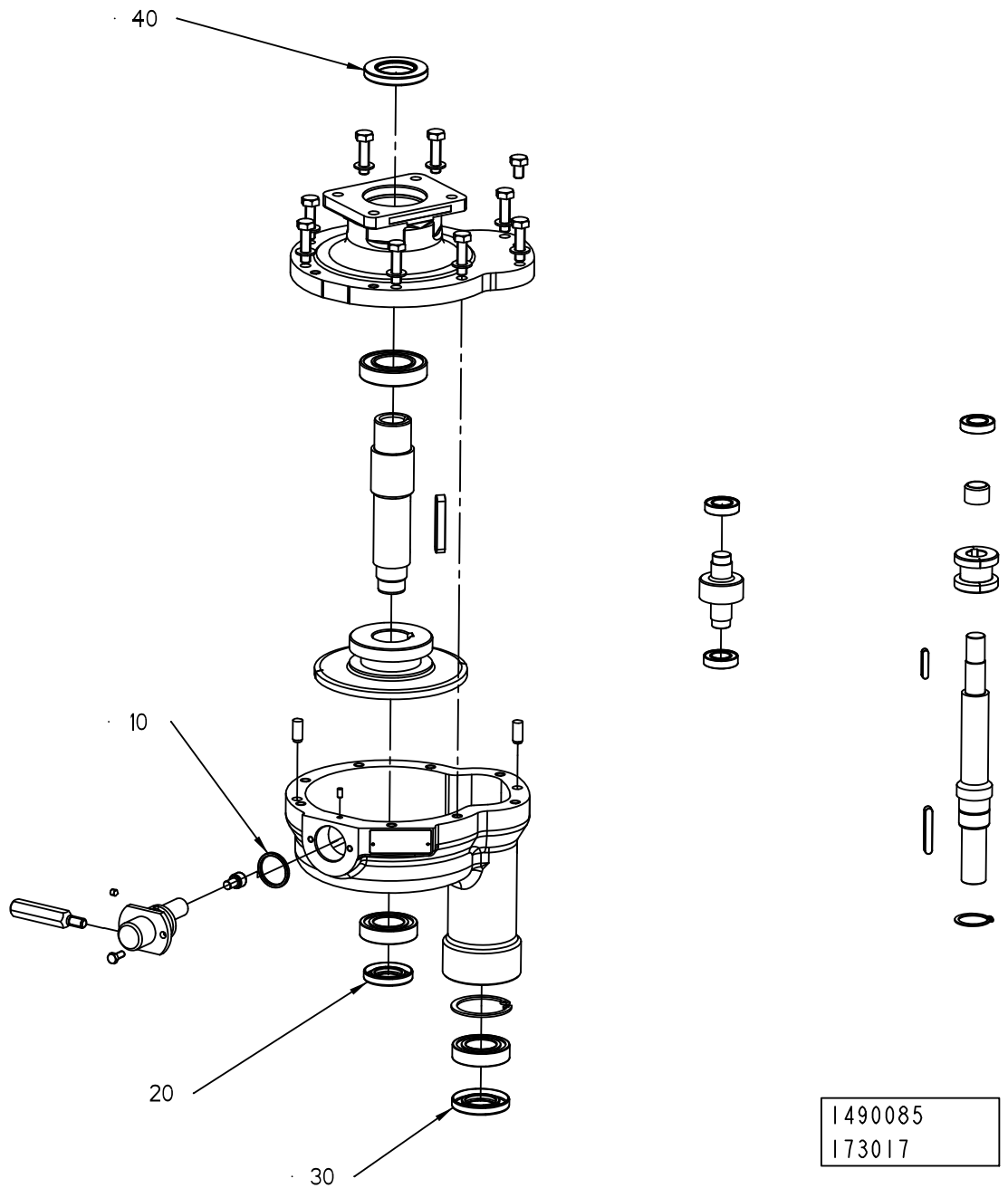
40
10
20
30
1490085
173017

ECM: 190921 - 20041104
Group number: 1490085-0000
Assembly Drawing: 1490085_2_AB

Pos	Part No	UN	Qty	Description	Page No
-					
010	315202-0217		1	O-RING 24,2X3 MM	
020	90091-0404		1	RADIAL SEAL 22X40X7 MM DUST LIP	
030	90091-0148		1	RADIAL SEAL 25X47X7 MM DUST LIP	
040	90091-0299		1	RADIAL SEAL 30X52X7 MM DUST LIP	

Pos	Part No	UN	Qty	Description	Page No

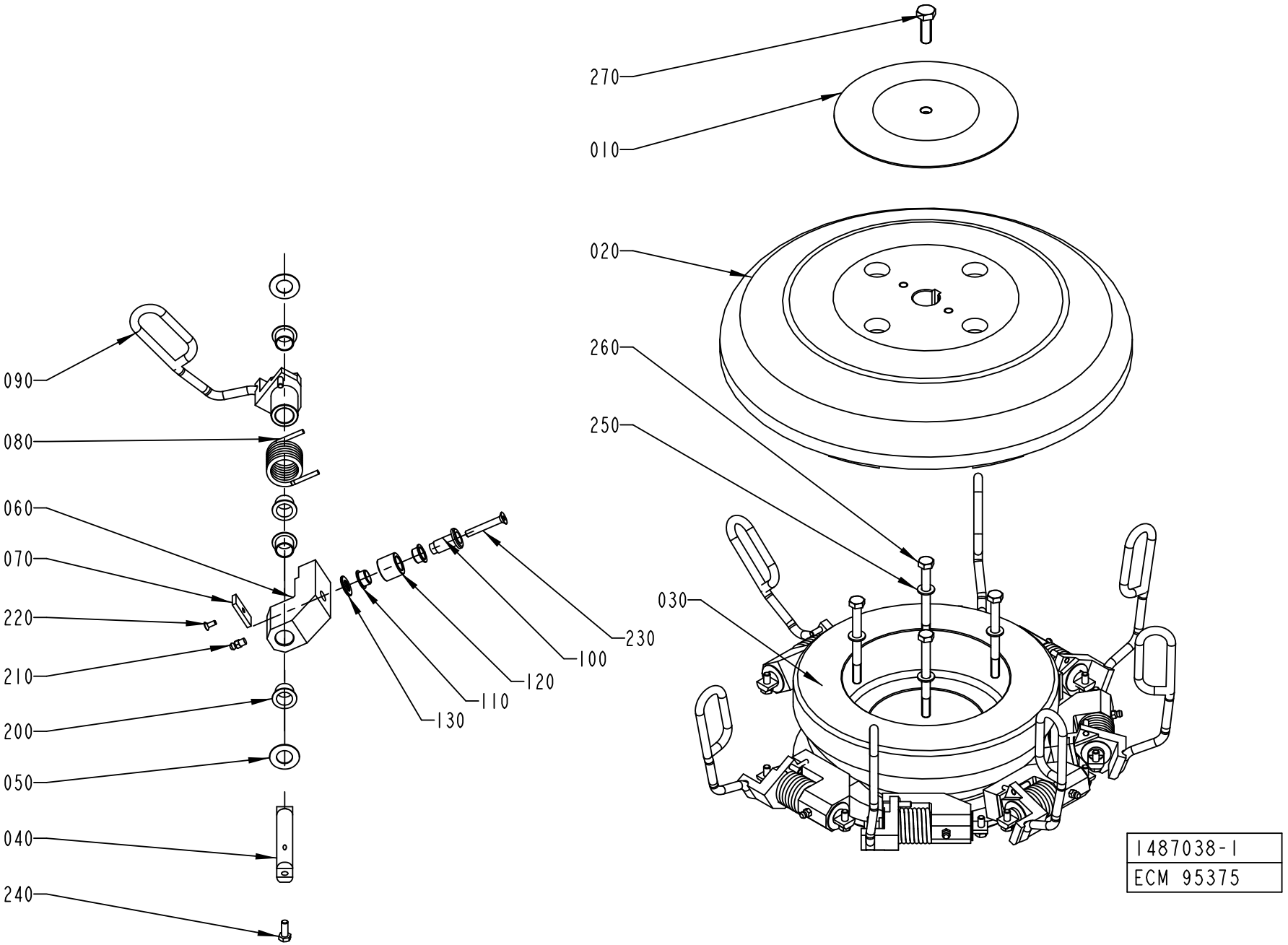
270
010
020
260
250
090
080
060
070
220
210
200
050
040
240
230
100
120
110
130
030
1487038-1
ECM 95375

ECM: 270840 - 20060626
Group number: 1487038-0200
Assembly Drawing: 1487038-1_1_AB

This list covers pages from 5-74 to 5-81

Pos	Part No	UN	Qty	Description	Page No
TBA 0200B QC, TBA 0330S QC, TBA 0330S NOQC, TBA 0250B QC (See drawing on page: 5-80)					
020	2532580-0000		1	HATCH	
030	2540593-0000		1	CAM	
040	1350543-0000		8	AXLE PIN	
050	1260852-0000		16	WASHER	
060	2556526-0000		8	LEVER	
080	1349985-0000		8	SPRING	
090	2563274-0000		8	CARRIER	
100	1260851-0000		8	AXLE PIN	
110	1144662-0000		16	BUSHING	
120	1260853-0000		8	RING	
130	1285254-0000		8	WASHER	
200	90240-0263		16	FLANGE BUSHING, 15X17X12 MM	
210	344502-0021		8	GREASE NIPPLE STRAIGHT M6	
230	312155-0378		8	SCREW DIN 7991 MF6S M6X40 A4 70	
240	312105-0368		16	SCREW M6S ISO 4017 M6X16 A480	
280	2545245-0000		8	BUSHING	
290	90240-0258		8	BUSHING, 15X17X15 MM	
TBA 0200B NOQC, TBA 0250B NOQC (See drawing on page: 5-76)					
020	1484289-0000		1	HATCH	
030	1478228-0000		1	CAM	
040	1348540-0000		8	PIVOT AXLE	
050	1260852-0000		16	WASHER	
060	1348538-0000		8	LEVER	
070	1348631-0000		8	PLATE	
080	1282864-0000		8	SPRING	
090	1532516-0000		8	CARRIER	
100	1260851-0000		8	AXLE PIN	
110	1144662-0000		16	BUSHING	
120	1260853-0000		8	RING	
130	1285254-0000		8	WASHER	
200	90240-0263		32	FLANGE BUSHING, 15X17X12 MM	
210	344502-0021		8	GREASE NIPPLE STRAIGHT M6	
220	312155-0289		8	SCREW DIN 7991 MF6S M4X10 A4 70	
230	312155-0378		8	SCREW DIN 7991 MF6S M6X40 A4 70	
240	312105-0368		16	SCREW M6S ISO 4017 M6X16 A480	
TBA 0200SQ QC, TBA 0250SQ QC (See drawing on page: 5-78)					
020	1478925-0000		1	HATCH	
030	2540594-0000		1	CAM	
040	1350543-0000		12	AXLE PIN	
050	1260852-0000		24	WASHER	
060	2556525-0000		12	LEVER	
080	1549615-0000		12	SPRING	
090	2682222-0000		12	CARRIER	
100	1260851-0000		12	AXLE PIN	
110	1144662-0000		24	BUSHING	
120	1260853-0000		12	RING	
130	1285254-0000		12	WASHER	
200	90240-0263		24	FLANGE BUSHING, 15X17X12 MM	
210	344502-0021		12	GREASE NIPPLE STRAIGHT M6	
230	312155-0378		12	SCREW DIN 7991 MF6S M6X40 A4 70	
240	312105-0368		12	SCREW M6S ISO 4017 M6X16 A480	
280	2545245-0000		12	BUSHING	
290	90240-0258		12	BUSHING, 15X17X15 MM	
TBA 0250S, TBA 0200S, TBA 0200M (See drawing on page: 5-78)					
020	1478925-0000		1	HATCH	
030	2540593-0000		1	CAM	
040	1350543-0000		12	AXLE PIN	
050	1260852-0000		24	WASHER	
060	2556526-0000		12	LEVER	
080	1349985-0000		12	SPRING	
090	2563274-0000		12	CARRIER	
100	1260851-0000		12	AXLE PIN	
110	1144662-0000		24	BUSHING	
120	1260853-0000		12	RING	
130	1285254-0000		12	WASHER	
200	90240-0263		24	FLANGE BUSHING, 15X17X12 MM	
210	344502-0021		12	GREASE NIPPLE STRAIGHT M6	
230	312155-0378		12	SCREW DIN 7991 MF6S M6X40 A4 70	
240	312105-0368		12	SCREW M6S ISO 4017 M6X16 A480	
280	2545245-0000		12	BUSHING	
290	90240-0258		12	BUSHING, 15X17X15 MM	
TBA 0500S, TBA 0500B, TBA 1000S, TBA 1000B (See drawing on page: 5-76)					
020	1484289-0000		1	HATCH	
030	1478228-0000		1	CAM	
040	1348540-0000		8	PIVOT AXLE	
050	1260852-0000		16	WASHER	
060	1348538-0000		8	LEVER	
070	1348631-0000		8	PLATE	
080	1282864-0000		8	SPRING	
090	1511225-0000		8	CARRIER	
100	1260851-0000		8	AXLE PIN	
110	1144662-0000		16	BUSHING	
120	1260853-0000		8	RING	

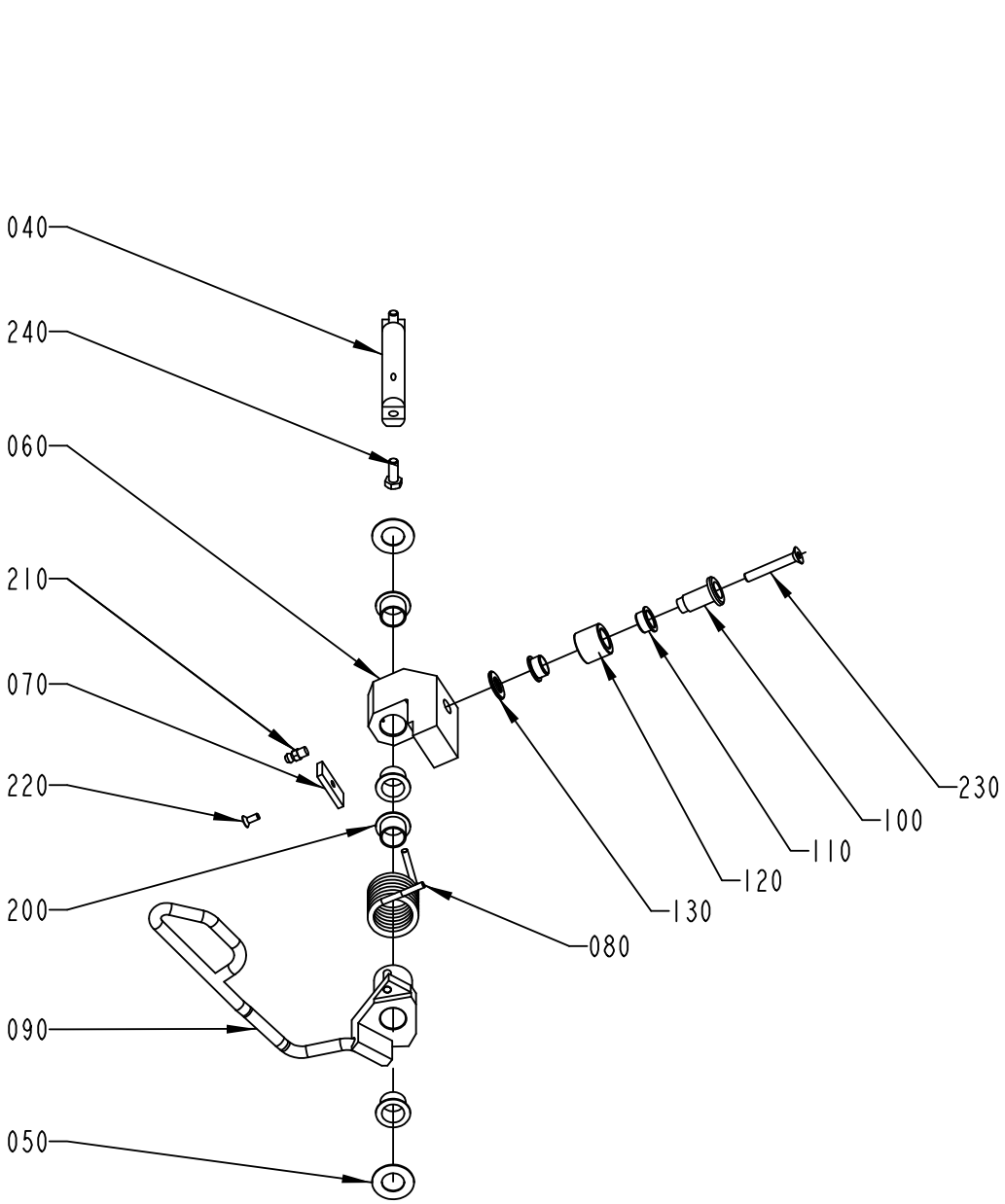
040
240
060
210
070
220
200
090
050
080
130
120
110
100
230

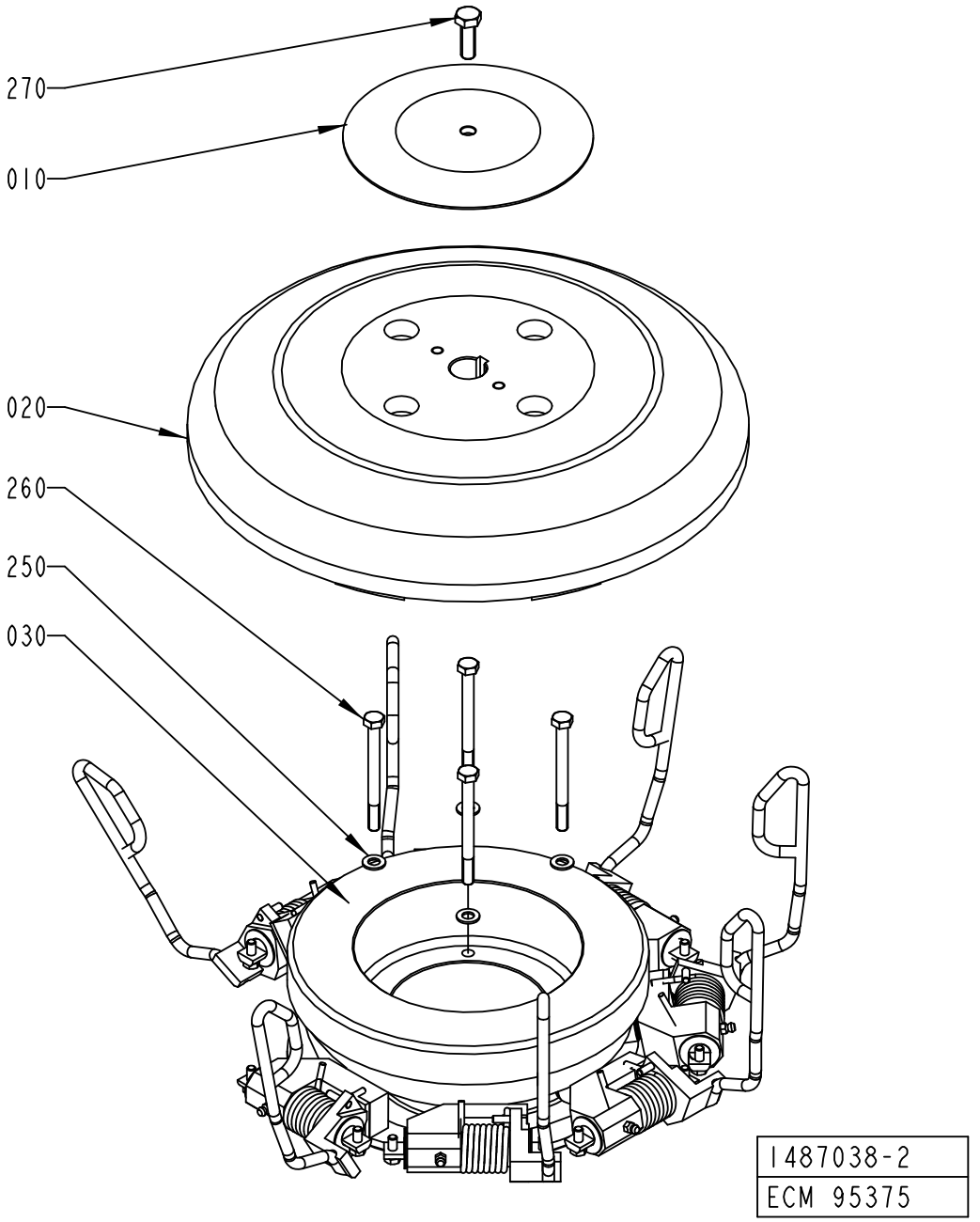
270
010
020
260
250
030
1487038-2
ECM 95375

ECM: 270840 - 20060626
Group number: 1487038-0200
Assembly Drawing: 1487038-2_1_AB

This list covers pages from 5-74 to 5-81

Pos	Part No	UN	Qty	Description	Page No
TBA 0500S, TBA 0500B, TBA 1000S, TBA 1000B (Cont'd) (See drawing on page: 5-76)					
120	1260853-0000		8	RING	
130	1285254-0000		8	WASHER	
200	90240-0263		32	FLANGE BUSHING, 15X17X12 MM	
210	344502-0021		8	GREASE NIPPLE STRAIGHT M6	
220	312155-0289		8	SCREW DIN 7991 MF6S M4X10 A4 70	
230	312155-0378		8	SCREW DIN 7991 MF6S M6X40 A4 70	
240	312105-0368		16	SCREW M6S ISO 4017 M6X16 A480	
TBA 1000SQ (See drawing on page: 5-74)					
020	1484289-0000		1	HATCH	
030	1478228-0000		1	CAM	
040	1348540-0000		8	PIVOT AXLE	
050	1260852-0000		16	WASHER	
060	1348538-0000		8	LEVER	
070	1348631-0000		8	PLATE	
080	1296176-0000		8	SPRING	
090	1478227-0000		8	CARRIER	
100	1260851-0000		8	AXLE PIN	
110	1144662-0000		16	BUSHING	
120	1260853-0000		8	RING	
130	1285254-0000		8	WASHER	
200	90240-0263		32	FLANGE BUSHING, 15X17X12 MM	
210	344502-0021		8	GREASE NIPPLE STRAIGHT M6	
220	312155-0289		8	SCREW DIN 7991 MF6S M4X10 A4 70	
230	312155-0378		8	SCREW DIN 7991 MF6S M6X40 A4 70	
240	312105-0368		16	SCREW M6S ISO 4017 M6X16 A480	
TBA 1500S (See drawing on page: 5-76)					
020	1484289-0000		1	HATCH	
030	1478228-0000		1	CAM	
040	1348540-0000		8	PIVOT AXLE	
050	1260852-0000		16	WASHER	
060	1348538-0000		8	LEVER	
070	1348631-0000		8	PLATE	
080	1282864-0000		8	SPRING	
090	1487159-0000		8	CARRIER	
100	1260851-0000		8	AXLE PIN	
110	1144662-0000		16	BUSHING	
120	1260853-0000		8	RING	
130	1285254-0000		8	WASHER	
200	90240-0263		32	FLANGE BUSHING, 15X17X12 MM	
210	344502-0021		8	GREASE NIPPLE STRAIGHT M6	
220	312155-0289		8	SCREW DIN 7991 MF6S M4X10 A4 70	
230	312155-0378		8	SCREW DIN 7991 MF6S M6X40 A4 70	
240	312105-0368		16	SCREW M6S ISO 4017 M6X16 A480	
TBA 1890S QC, TBA 2000S QC (See drawing on page: 5-80)					
020	2594911-0000		1	HATCH	
030	2540593-0000		1	CAM	
040	1348540-0000		6	PIVOT AXLE	
050	1260852-0000		12	WASHER	
060	2594910-0000		6	LEVER	
080	1349985-0000		6	SPRING	
090	2664596-0000		6	CARRIER	
100	1260851-0000		6	AXLE PIN	
110	1144662-0000		12	BUSHING	
120	1260853-0000		6	RING	
130	1285254-0000		6	WASHER	
200	90240-0263		12	FLANGE BUSHING, 15X17X12 MM	
210	344502-0021		6	GREASE NIPPLE STRAIGHT M6	
230	312155-0378		6	SCREW DIN 7991 MF6S M6X40 A4 70	
240	312105-0368		12	SCREW M6S ISO 4017 M6X16 A480	
280	2545245-0000		6	BUSHING	
290	90240-0258		6	BUSHING, 15X17X15 MM	
TPA 0250SQ QC, TPA 0200SQ QC, TPA 0250SQ NOQC (See drawing on page: 5-78)					
020	1478925-0000		1	HATCH	
030	2540594-0000		1	CAM	
040	1350543-0000		12	AXLE PIN	
050	1260852-0000		24	WASHER	
060	2556525-0000		12	LEVER	
080	1549615-0000		12	SPRING	
090	2552018-0000		12	CARRIER	
100	1260851-0000		12	AXLE PIN	
110	1144662-0000		24	BUSHING	
120	1260853-0000		12	RING	
130	1285254-0000		12	WASHER	
200	90240-0263		24	FLANGE BUSHING, 15X17X12 MM	
210	344502-0021		12	GREASE NIPPLE STRAIGHT M6	
230	312155-0378		12	SCREW DIN 7991 MF6S M6X40 A4 70	
240	312105-0368		12	SCREW M6S ISO 4017 M6X16 A480	
280	2545245-0000		12	BUSHING	
290	90240-0258		12	BUSHING, 15X17X15 MM	
TPA 0330SQ (See drawing on page: 5-78)					
020	1478925-0000		1	HATCH	
030	1478228-0000		1	CAM	
040	1350543-0000		12	AXLE PIN	

Machine Type | Group Description | Used-In | Group Number | Page No

OUTFEED WHEEL

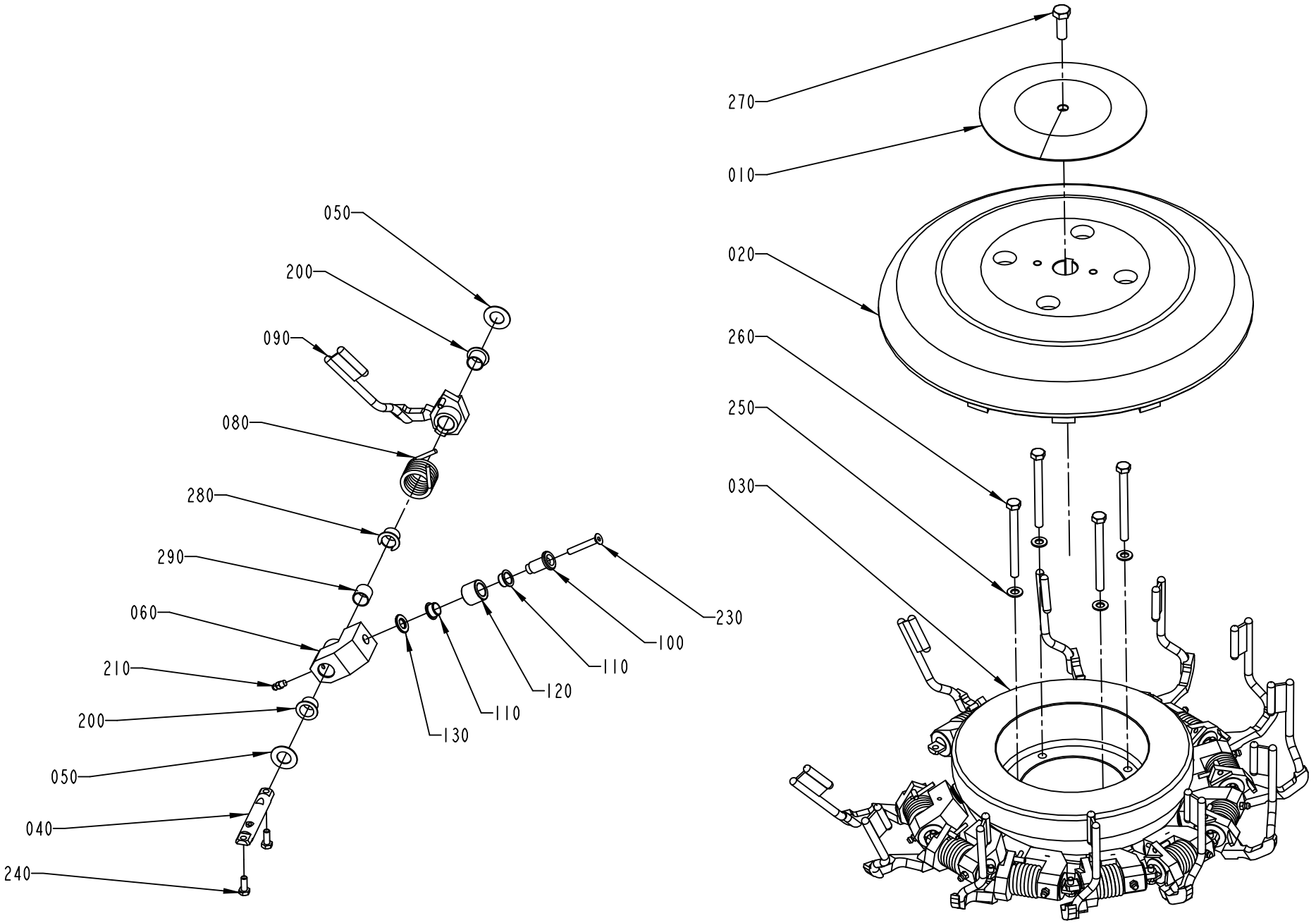

1487038-3
ECM 95375

Pos	Part No	UN	Qty	Description	Page No
TPA 0330SQ (Cont'd) (See drawing on page: 5-78)					
050	1260852-0000		24	WASHER	
060	2556525-0000		12	LEVER	
080	1549615-0000		12	SPRING	
090	2545382-0000		12	CARRIER	
100	1260851-0000		12	AXLE PIN	
110	1144662-0000		24	BUSHING	
120	1260853-0000		12	RING	
130	1285254-0000		12	WASHER	
200	90240-0263		24	FLANGE BUSHING, 15X17X12 MM	
210	344502-0021		12	GREASE NIPPLE STRAIGHT M6	
230	312155-0378		12	SCREW DIN 7991 MF6S M6X40 A4 70	
240	312105-0368		12	SCREW M6S ISO 4017 M6X16 A480	
280	2545245-0000		12	BUSHING	
290	90240-0258		12	BUSHING, 15X17X15 MM	
TPA 0500SQ (See drawing on page: 5-80)					
020	2532580-0000		1	HATCH	
030	2540594-0000		1	CAM	
040	1350543-0000		8	AXLE PIN	
050	1260852-0000		16	WASHER	
060	2556525-0000		8	LEVER	
080	1549615-0000		8	SPRING	
090	2529664-0000		8	CARRIER	
100	1260851-0000		8	AXLE PIN	
110	1144662-0000		16	BUSHING	
120	1260853-0000		8	RING	
130	1285254-0000		8	WASHER	
200	90240-0263		16	FLANGE BUSHING, 15X17X12 MM	
210	344502-0021		8	GREASE NIPPLE STRAIGHT M6	
230	312155-0378		8	SCREW DIN 7991 MF6S M6X40 A4 70	
240	312105-0368		16	SCREW M6S ISO 4017 M6X16 A480	
280	2545245-0000		8	BUSHING	
290	90240-0258		8	BUSHING, 15X17X15 MM	
TPA 1000SQ NOQC, TPA 1000SQ QC, TPA 0750SQ QC (See drawing on page: 5-80)					
020	2532580-0000		1	HATCH	
030	2540594-0000		1	CAM	
040	1350543-0000		8	AXLE PIN	
050	1260852-0000		16	WASHER	
060	2556525-0000		8	LEVER	
080	1549615-0000		8	SPRING	
090	2543231-0000		8	CARRIER	
100	1260851-0000		8	AXLE PIN	
110	1144662-0000		16	BUSHING	
120	1260853-0000		8	RING	
130	1285254-0000		8	WASHER	
200	90240-0263		16	FLANGE BUSHING, 15X17X12 MM	
210	344502-0021		8	GREASE NIPPLE STRAIGHT M6	
230	312155-0378		8	SCREW DIN 7991 MF6S M6X40 A4 70	
240	312105-0368		16	SCREW M6S ISO 4017 M6X16 A480	
280	2545245-0000		8	BUSHING	
290	90240-0258		8	BUSHING, 15X17X15 MM	
Common Parts					
010	1478558-0000		1	WASHER	
250	315105-0165		4	WASHER BRB8,4X16RFR	
260	312105-0469		4	SCREW M6S ISO 4014 M8X90 A480	
270	312105-0495		1	SCREW M6S ISO 4017 M10X30 A480	

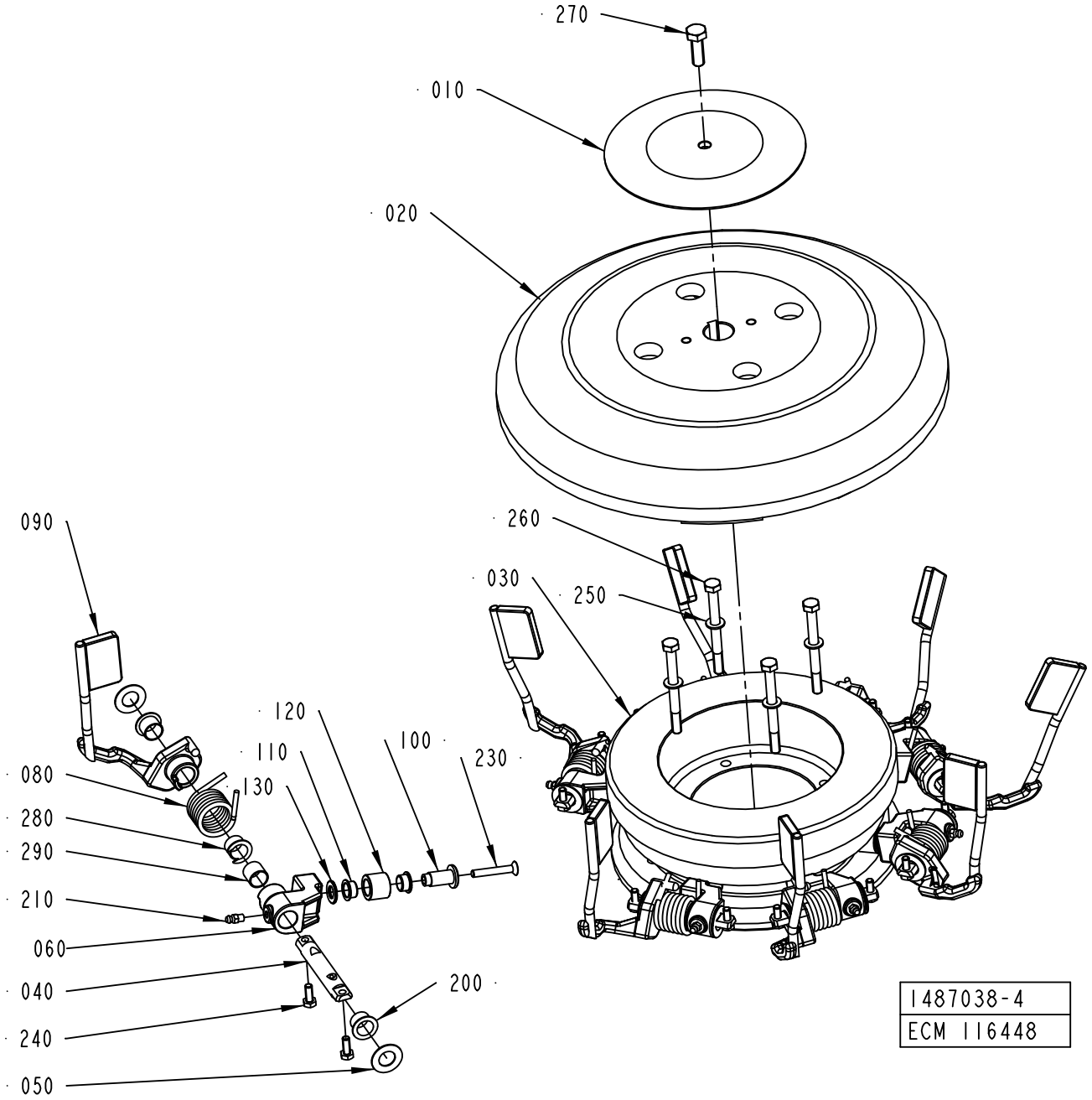
270
010
020
090
260
030
250
120
110
100
230
080
130
280
290
210
060
040
200
240
050
1487038-4
ECM 116448

ECM: 270840 - 20060626
Group number: 1487038-0200
Assembly Drawing: 1487038-4_1_AA

This list covers pages from 5-74 to 5-81

Pos	Part No	UN	Qty	Description	Page No	Pos	Part No	UN	Qty	Description	Page No

SEE PREVIOUS LISTS PAGES: 5-75, 5-77, 5-79.

RAIL OUT FEED

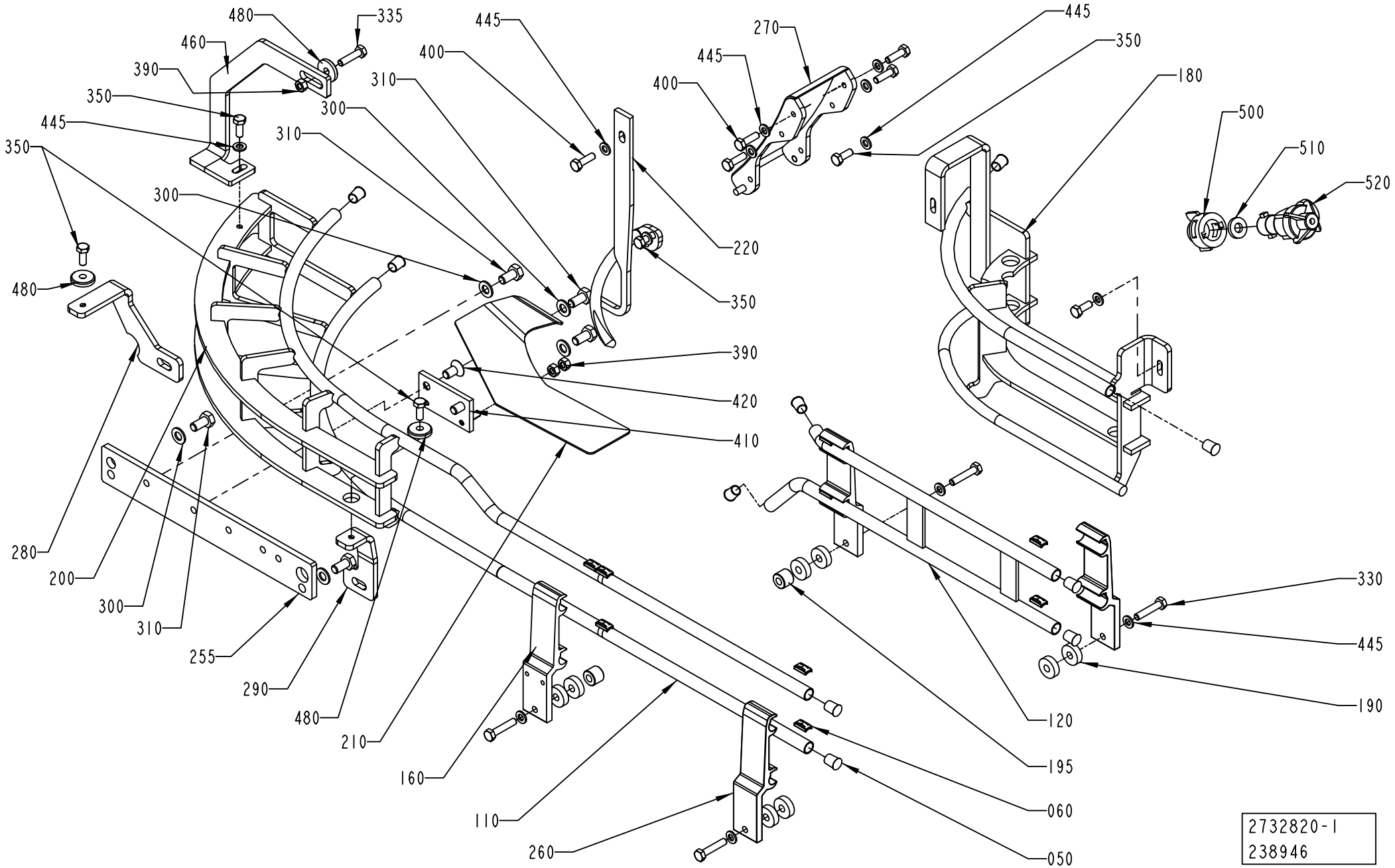

ECM: 242276 - 20060701
Group number: 2732820-0100
Assembly Drawing: 2732820-1_1_AA

This list covers pages from 5-82 to 5-91

Pos	Part No	UN	Qty	Description	Page No
TBA 0200B QC, TBA 0330S QC, TBA 0250B QC (See drawing on page: 5-84)					
050	484701-0000		13	SHUTTER	
060	1020146-0000		10	LOCKING BLOCK REPL BY 1020290-101	
110	1279582-0000		2	RAIL	
120	2558754-0000		1	RAIL	
160	1285009-0000		2	HOLDER	
180	2752760-0000		1	RAIL	
200	2732826-0000		1	RAIL	
210	2538110-0000		1	RAIL	
220	2732811-0000		1	RAIL	
260	1020142-0002		2	RAIL HOLDER, B55 WIDTH 30 MM	
270	2523480-0000		1	SLIDE	
280	2804308-0000		1	BRACKET	
300	315105-0165		5	WASHER BRB8,4X16RFR	
310	312105-0449		5	SCREW M6S ISO 4017 M8X16 A480	
330	312105-0370		4	SCREW M6S ISO 4017 M6X20 A480	
350	312105-0368		4	SCREW M6S ISO 4017 M6X16 A480	
390	312605-0316		1	HEXAGON NUT, M6M M6 A280	
400	312105-0370		5	SCREW M6S ISO 4017 M6X20 A480	
445	315105-0153		13	WASHER BRB6,4X12RFR	
460	2732827-0000		1	BRACKET	
TBA 0200S (See drawing on page: 5-84)					
050	484701-0000		14	SHUTTER	
060	1020146-0000		10	LOCKING BLOCK REPL BY 1020290-101	
110	1279582-0000		2	RAIL	
120	1487684-0000		1	RAIL	
160	1285009-0000		2	HOLDER	
180	2732812-0000		1	RAIL	
200	2715497-0000		1	RAIL	
210	2538110-0000		1	RAIL	
220	2732811-0000		1	RAIL	
260	1020142-0002		2	RAIL HOLDER, B55 WIDTH 30 MM	
270	2523480-0000		1	SLIDE	
280	2804301-0000		1	BRACKET	
290	2804302-0000		1	BRACKET	
300	315105-0165		5	WASHER BRB8,4X16RFR	
310	312105-0449		5	SCREW M6S ISO 4017 M8X16 A480	
330	312105-0370		4	SCREW M6S ISO 4017 M6X20 A480	
350	312105-0368		4	SCREW M6S ISO 4017 M6X16 A480	
390	312605-0316		1	HEXAGON NUT, M6M M6 A280	
400	312105-0370		5	SCREW M6S ISO 4017 M6X20 A480	
445	315105-0153		13	WASHER BRB6,4X12RFR	

Pos	Part No	UN	Qty	Description	Page No
TBA 0200SQ QC, TBA 0250SQ QC (See drawing on page: 5-82)					
050	484701-0000		10	SHUTTER	
060	1020146-0000		6	LOCKING BLOCK REPL BY 1020290-101	
120	1548550-0000		1	RAIL	
160	1285009-0000		2	HOLDER	
180	2752758-0000		1	RAIL	
190	315105-0153		2	WASHER BRB6,4X12RFR	
195	315105-0153		2	WASHER BRB6,4X12RFR	
200	2752756-0000		1	RAIL	
220	2752757-0000		1	RAIL	
260	1285009-0000		2	HOLDER	
270	2523480-0000		1	SLIDE	
280	2804311-0000		1	BRACKET	
290	2804312-0000		1	BRACKET	
300	315105-0165		3	WASHER BRB8,4X16RFR	
310	312105-0449		3	SCREW M6S ISO 4017 M8X16 A480	
330	312105-0374		4	SCREW M6S ISO 4014 M6X30 A480	
390	312605-0316		1	HEXAGON NUT, M6M M6 A280	
400	312105-0370		5	SCREW M6S ISO 4017 M6X20 A480	
445	315105-0153		13	WASHER BRB6,4X12RFR	
460	2752759-0000		1	BRACKET	
TBA 0250S, TBA 0200M (See drawing on page: 5-84)					
050	484701-0000		13	SHUTTER	
060	1020146-0000		10	LOCKING BLOCK REPL BY 1020290-101	
110	1279582-0000		2	RAIL	
120	2558754-0000		1	RAIL	
160	1285009-0000		2	HOLDER	
180	2732812-0000		1	RAIL	
200	2678414-0000		1	RAIL	
210	2538110-0000		1	RAIL	
260	1020142-0002		2	RAIL HOLDER, B55 WIDTH 30 MM	
270	2523480-0000		1	SLIDE	
300	315105-0165		5	WASHER BRB8,4X16RFR	
330	312105-0370		4	SCREW M6S ISO 4017 M6X20 A480	
350	312105-0368		4	SCREW M6S ISO 4017 M6X16 A480	
390	312605-0316		1	HEXAGON NUT, M6M M6 A280	
400	312105-0370		5	SCREW M6S ISO 4017 M6X20 A480	
445	315105-0153		13	WASHER BRB6,4X12RFR	
TBA 0250S QC, TBA 0200M QC					
220	2732811-0000		1	RAIL	
280	2804303-0000		1	BRACKET	
460	2732814-0000		1	BRACKET	

Machine Type | Group Description | Used-In | Group Number | Page No

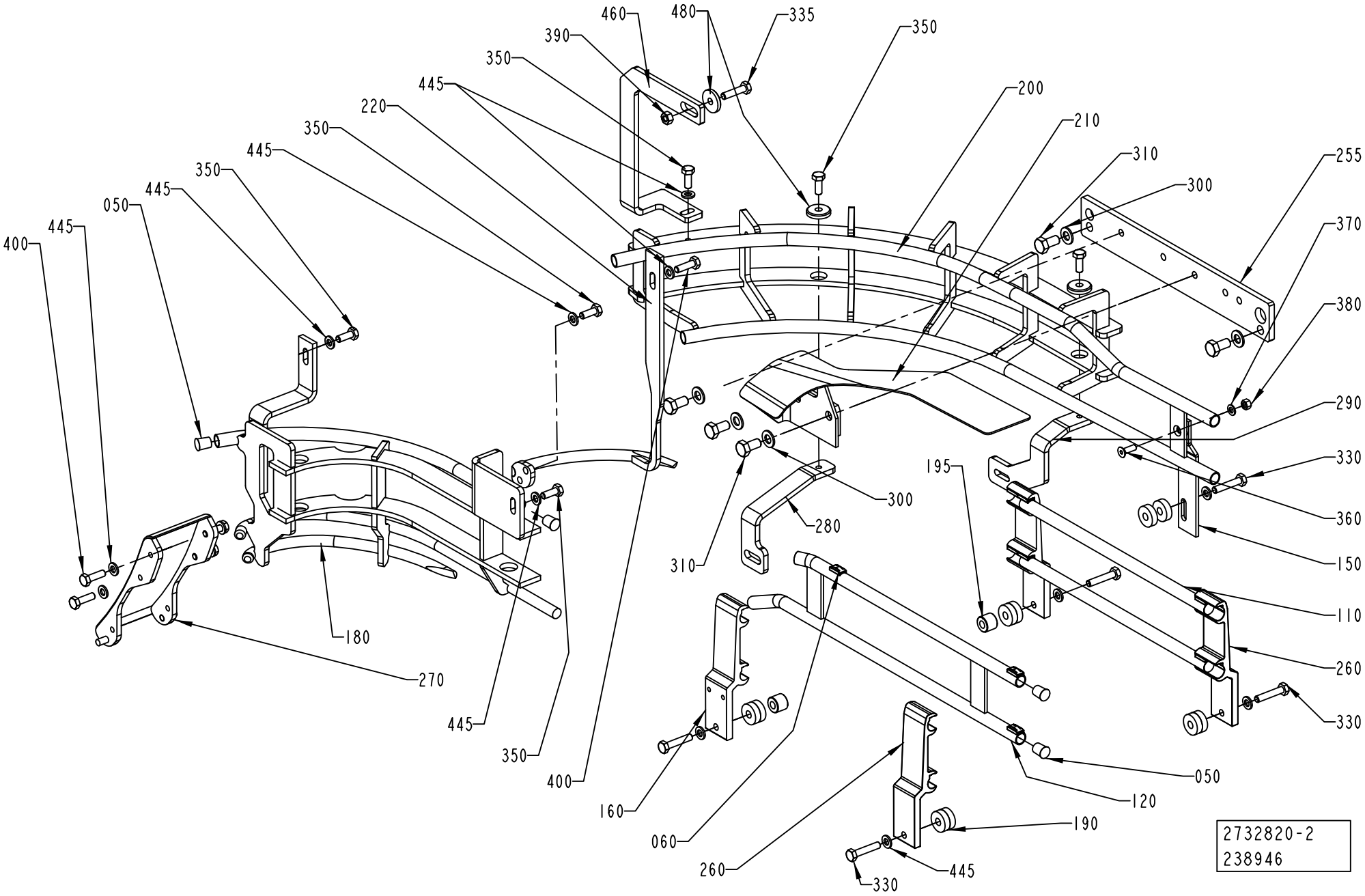
460
480
335
350
390
350
445
200
220
210
350
310
445
255
350
300
445
370
050
400
445
380
290
330
195
300
280
310
360
150
180
110
270
260
445
350
400
330
050
160
120
060
190
260
445
330
2732820-2
238946

Pos	Part No	UN	Qty	Description	Page No
TBA 0500B QC, TBA 1000B QC (Cont'd) (See drawing on page: 5-84)					
050	484701-0000		14	SHUTTER	
060	1020146-0000		10	LOCKING BLOCK REPL BY 1020290-101	
110	1279582-0000		2	RAIL	
120	1487684-0000		1	RAIL	
150	1499413-0000		1	HOLDER	
160	1285009-0000		2	HOLDER	
180	2724944-0000		1	RAIL	
190	1285253-0000		10	SPACER	
200	2693463-0000		1	RAIL	
210	1487177-0000		1	GUIDE	
220	2724951-0000		1	RAIL	
260	1020142-0002		2	RAIL HOLDER, B55 WIDTH 30 MM	
270	1538970-0000		1	SLIDE	
280	2804298-0000		1	BRACKET	
300	315105-0165		5	WASHER BRB8,4X16RFR	
310	312105-0449		5	SCREW M6S ISO 4017 M8X16 A480	
330	312105-0374		5	SCREW M6S ISO 4014 M6X30 A480	
350	312105-0368		4	SCREW M6S ISO 4017 M6X16 A480	
360	312155-0329		1	SCREW DIN 7991 MF6S M5X16 A4 70	
370	315105-0146		1	WASHER BRB5,3X10RFR	
380	312605-0314		1	HEXAGON NUT, M6M M5 A280	
390	312605-0316		1	HEXAGON NUT, M6M M6 A280	
400	312105-0370		5	SCREW M6S ISO 4017 M6X20 A480	
445	315105-0153		14	WASHER BRB6,4X12RFR	
460	2732810-0000		1	BRACKET	
TBA 0500S (See drawing on page: 5-84)					
050	484701-0000		10	SHUTTER	
060	1020146-0000		10	LOCKING BLOCK REPL BY 1020290-101	
110	1279582-0000		2	RAIL	
120	1487684-0000		1	RAIL	
160	1285009-0000		2	HOLDER	
180	2732821-0000		1	RAIL	
200	2732819-0000		1	RAIL	
210	1487177-0000		1	GUIDE	
220	2724951-0000		1	RAIL	
260	1020142-0002		2	RAIL HOLDER, B55 WIDTH 30 MM	
270	1538970-0000		1	SLIDE	
280	2804304-0000		1	BRACKET	
290	2804305-0000		1	BRACKET	
300	315105-0165		5	WASHER BRB8,4X16RFR	
310	312105-0449		5	SCREW M6S ISO 4017 M8X16 A480	
350	312105-0368		4	SCREW M6S ISO 4017 M6X16 A480	
390	312605-0316		1	HEXAGON NUT, M6M M6 A280	
400	312105-0370		9	SCREW M6S ISO 4017 M6X20 A480	
445	315105-0153		13	WASHER BRB6,4X12RFR	
460	2732822-0000		1	BRACKET	
TBA 1000S, TBA 1000B NOQC (See drawing on page: 5-84)					
050	484701-0000		14	SHUTTER	
060	1020146-0000		10	LOCKING BLOCK REPL BY 1020290-101	
110	1279582-0000		2	RAIL	
120	1487684-0000		1	RAIL	
150	1499413-0000		1	HOLDER	
160	1285009-0000		2	HOLDER	
180	2724944-0000		1	RAIL	
190	1285253-0000		10	SPACER	
200	2693462-0000		1	RAIL	
210	1487177-0000		1	GUIDE	
220	2724951-0000		1	RAIL	
260	1020142-0002		2	RAIL HOLDER, B55 WIDTH 30 MM	
270	1538970-0000		1	SLIDE	
280	2804290-0000		1	BRACKET	
290	2804291-0000		1	BRACKET	
300	315105-0165		5	WASHER BRB8,4X16RFR	
310	312105-0449		5	SCREW M6S ISO 4017 M8X16 A480	
330	312105-0374		5	SCREW M6S ISO 4014 M6X30 A480	
350	312105-0368		4	SCREW M6S ISO 4017 M6X16 A480	
360	312155-0329		1	SCREW DIN 7991 MF6S M5X16 A4 70	
370	315105-0146		1	WASHER BRB5,3X10RFR	
380	312605-0314		1	HEXAGON NUT, M6M M5 A280	
390	312605-0316		1	HEXAGON NUT, M6M M6 A280	
400	312105-0370		5	SCREW M6S ISO 4017 M6X20 A480	
445	315105-0153		14	WASHER BRB6,4X12RFR	
460	2732810-0000		1	BRACKET	
TBA 1000SQ (See drawing on page: 5-82)					
050	484701-0000		14	SHUTTER	
060	1020146-0000		10	LOCKING BLOCK REPL BY 1020290-101	
110	1279582-0000		2	RAIL	
120	1296079-0000		1	RAIL	
160	1285009-0000		2	HOLDER	
180	2715500-0000		1	RAIL	
190	1285253-0000		8	SPACER	
200	2693457-0000		1	RAIL	
210	1349806-0000		1	GUIDE	

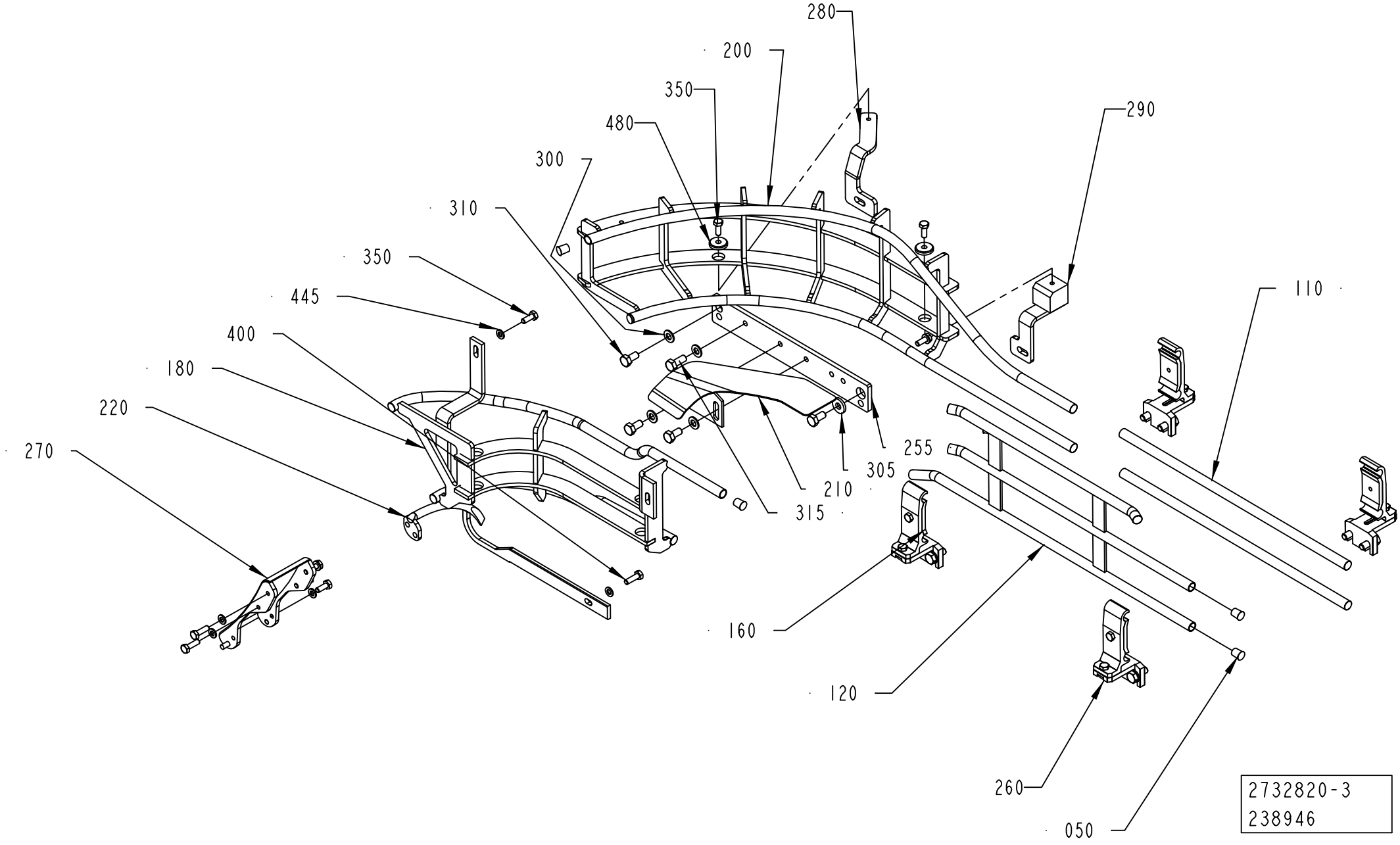
280
200
350
480
290
300
310
350
445
110
400
180
220
270
255
305
210
315
160
120
260
050
2732820-3
238946

Pos	Part No	UN	Qty	Description	Page No
TBA 1000SQ (Cont'd) (See drawing on page: 5-82)					
220	2715498-0000		1	RAIL	
260	1020142-0002		2	RAIL HOLDER, B55 WIDTH 30 MM	
270	1538970-0000		1	SLIDE	
280	2804288-0000		1	BRACKET	
290	2804289-0000		1	BRACKET	
300	315105-0165		5	WASHER BRB8,4X16RFR	
310	312105-0449		5	SCREW M6S ISO 4017 M8X16 A480	
330	312105-0374		4	SCREW M6S ISO 4014 M6X30 A480	
350	312105-0368		4	SCREW M6S ISO 4017 M6X16 A480	
390	312605-0316		1	HEXAGON NUT, M6M M6 A280	
400	312105-0370		5	SCREW M6S ISO 4017 M6X20 A480	
445	315105-0153		13	WASHER BRB6,4X12RFR	
460	2732815-0000		1	BRACKET	
TBA 1500S (See drawing on page: 5-84)					
050	484701-0000		16	SHUTTER	
060	1020146-0000		10	LOCKING BLOCK REPL BY 1020290-101	
110	1279582-0000		2	RAIL	
120	1487684-0000		1	RAIL	
150	1499413-0000		1	HOLDER	
160	1285009-0000		2	HOLDER	
180	2724949-0000		1	RAIL	
190	1317218-0000		5	SPACER	
200	2693462-0000		1	RAIL	
210	1487177-0000		1	GUIDE	
220	2724950-0000		1	RAIL	
260	1020142-0002		2	RAIL HOLDER, B55 WIDTH 30 MM	
270	1538970-0000		1	SLIDE	
280	2804290-0000		1	BRACKET	
290	2804291-0000		1	BRACKET	
300	315105-0165		5	WASHER BRB8,4X16RFR	
310	312105-0449		5	SCREW M6S ISO 4017 M8X16 A480	
330	312105-0374		5	SCREW M6S ISO 4014 M6X30 A480	
350	312105-0368		4	SCREW M6S ISO 4017 M6X16 A480	
360	312155-0329		1	SCREW DIN 7991 MF6S M5X16 A4 70	
370	315105-0146		1	WASHER BRB5,3X10RFR	
380	312605-0314		1	HEXAGON NUT, M6M M5 A280	
390	312605-0316		1	HEXAGON NUT, M6M M6 A280	
400	312105-0370		5	SCREW M6S ISO 4017 M6X20 A480	
445	315105-0153		14	WASHER BRB6,4X12RFR	
460	2724936-0000		1	BRACKET	
TBA 1890S QC, TBA 2000S QC (See drawing on page: 5-86)					
050	484701-0000		18	SHUTTER	
110	2640076-0000		2	RAIL	
120	2639832-0000		1	RAIL	
160	1550743-0100		2	RAIL HOLDER	**5-93**
180	2724940-0000		1	RAIL	
200	2693464-0000		1	RAIL	
210	2652206-0000		1	GUIDE	
220	2724941-0000		1	RAIL	
260	1550743-0100		2	RAIL HOLDER	**5-93**
270	1538970-0000		1	SLIDE	
280	2804292-0000		1	BRACKET	
290	2804293-0000		1	BRACKET	
300	315105-0165		4	WASHER BRB8,4X16RFR	
305	2655500-0000		1	WASHER	
310	312105-0449		4	SCREW M6S ISO 4017 M8X16 A480	
315	312105-0451		1	SCREW M6S ISO 4017 M8X20 A480	
350	312105-0368		3	SCREW M6S ISO 4017 M6X16 A480	
390	312605-0316		1	HEXAGON NUT, M6M M6 A280	
400	312105-0370		5	SCREW M6S ISO 4017 M6X20 A480	
445	315105-0153		9	WASHER BRB6,4X12RFR	
TPA 0250SQ QC, TPA 0200SQ QC (See drawing on page: 5-82)					
050	484701-0000		10	SHUTTER	
060	1020146-0000		6	LOCKING BLOCK REPL BY 1020290-101	
120	1548550-0000		1	RAIL	
160	1285009-0000		2	HOLDER	
180	2724942-0000		1	RAIL	
200	2732824-0000		1	RAIL	
220	2724943-0000		1	RAIL	
260	1366777-0101		2	ANGLED RAIL HOLDER TPC21	**5-95**
270	2523480-0000		1	SLIDE	
280	2804306-0000		1	BRACKET	
290	2804307-0000		1	BRACKET	
300	315105-0165		3	WASHER BRB8,4X16RFR	
310	312105-0449		3	SCREW M6S ISO 4017 M8X16 A480	
335	312105-0372		1	SCREW M6S ISO 4017 M6X25 A480	
390	312605-0316		2	HEXAGON NUT, M6M M6 A280	
400	312105-0370		9	SCREW M6S ISO 4017 M6X20 A480	
445	315105-0153		14	WASHER BRB6,4X12RFR	
460	2693459-0000		1	BRACKET	
460	2543234-0000		1	BRACKET	
480	315125-0153		1	WASHER TBRSB 6,4X22X4 A4	
TPA 0330SQ (See drawing on page: 5-82)					

See previous drawings pages: 5-82, 5-84, 5-86.

Pos	Part No	UN	Qty	Description	Page No
TPA 0330SQ (Cont'd) (See drawing on page: 5-82)					
050	484701-0000		10	SHUTTER	
060	1020146-0000		6	LOCKING BLOCK REPL BY 1020290-101	
110	1279582-0000		2	RAIL	
120	1296079-0000		1	RAIL	
160	1285009-0000		2	HOLDER	
180	2724948-0000		1	RAIL	
190	1285253-0000		2	SPACER	
200	2693461-0000		1	RAIL	
220	2724947-0000		1	RAIL	
260	1366777-0101		2	ANGLED RAIL HOLDER TPC21	**5-95**
270	2523480-0000		1	SLIDE	
280	2804294-0000		1	BRACKET	
290	2804295-0000		1	BRACKET	
300	315105-0165		3	WASHER BRB8,4X16RFR	
310	312105-0449		3	SCREW M6S ISO 4017 M8X16 A480	
330	312105-0370		4	SCREW M6S ISO 4017 M6X20 A480	
350	312105-0368		4	SCREW M6S ISO 4017 M6X16 A480	
390	312605-0316		1	HEXAGON NUT, M6M M6 A280	
400	312105-0370		9	SCREW M6S ISO 4017 M6X20 A480	
445	315105-0153		13	WASHER BRB6,4X12RFR	
460	2724934-0000		1	BRACKET	
TPA 0500SQ (See drawing on page: 5-82)					
050	484701-0000		8	SHUTTER	
110	1279582-0000		2	RAIL	
120	1296079-0000		1	RAIL	
160	1334113-0000		2	HOLDER	
180	2529115-0000		1	RAIL	
190	1285253-0000		4	SPACER	
200	2652893-0000		1	RAIL	
220	2724933-0000		1	RAIL	
260	1366777-0101		2	ANGLED RAIL HOLDER TPC21	**5-95**
270	1538970-0000		1	SLIDE	
280	2804299-0000		1	BRACKET	
290	2804300-0000		1	BRACKET	
300	315105-0165		3	WASHER BRB8,4X16RFR	
310	312105-0449		3	SCREW M6S ISO 4017 M8X16 A480	
330	312105-0370		4	SCREW M6S ISO 4017 M6X20 A480	
335	312105-0372		1	SCREW M6S ISO 4017 M6X25 A480	
350	312105-0368		3	SCREW M6S ISO 4017 M6X16 A480	
390	312605-0316		2	HEXAGON NUT, M6M M6 A280	
400	312105-0370		6	SCREW M6S ISO 4017 M6X20 A480	
445	315105-0153		14	WASHER BRB6,4X12RFR	
460	2554263-0000		1	BRACKET	
480	315125-0153		1	WASHER TBRSB 6,4X22X4 A4	
500	534310-0001		1	NOZZLE	
510	90005-0095		1	WASHER PLAIN BLACK PVC, (M)6X14 H=3	
520	90230-0027		1	NON-RETURN VALVE QJ 8355-1/4"	
	90230-0300		*1*	*STRAINER*	
	90230-0301		*1*	*DIAPHRAGM*	
TPA 1000SQ NOQC (See drawing on page: 5-82)					
050	484701-0000		10	SHUTTER	
060	1020146-0000		6	LOCKING BLOCK REPL BY 1020290-101	
110	1279582-0000		2	RAIL	
120	1548550-0000		1	RAIL	
160	1334113-0000		2	HOLDER	
180	2715503-0000		1	RAIL	
190	1285253-0000		2	SPACER	
195	1317218-0000		2	SPACER	
200	2687787-0000		1	RAIL	
210	1548348-0000		1	GUIDE	
220	2715504-0000		1	RAIL	
260	1366777-0101		2	ANGLED RAIL HOLDER TPC21	**5-95**
270	1538970-0000		1	SLIDE	
280	2804313-0000		1	BRACKET	
290	2804314-0000		1	BRACKET	
300	315105-0165		3	WASHER BRB8,4X16RFR	
310	312105-0449		3	SCREW M6S ISO 4017 M8X16 A480	
330	312105-0374		2	SCREW M6S ISO 4014 M6X30 A480	
335	312105-0372		3	SCREW M6S ISO 4017 M6X25 A480	
350	312105-0368		4	SCREW M6S ISO 4017 M6X16 A480	
390	312605-0316		6	HEXAGON NUT, M6M M6 A280	
400	312105-0370		5	SCREW M6S ISO 4017 M6X20 A480	
410	1548551-0000		1	SPACER	
420	312155-0449		2	SCREW DIN 7991 MF6S M8X16 A4 70	
445	315105-0153		14	WASHER BRB6,4X12RFR	
460	2693460-0000		1	BRACKET	
460	2532864-0000		1	BRACKET	
480	315125-0153		1	WASHER TBRSB 6,4X22X4 A4	
500	534310-0001		1	NOZZLE	
510	90005-0095		1	WASHER PLAIN BLACK PVC, (M)6X14 H=3	
520	90230-0027		1	NON-RETURN VALVE QJ 8355-1/4"	
	90230-0300		*1*	*STRAINER*	
	90230-0301		*1*	*DIAPHRAGM*	

See previous drawings pages: 5-82, 5-84, 5-86.

Pos	Part No	UN	Qty	Description	Page No
TPA 1000SQ QC, TPA 0750SQ QC (Cont'd) (See drawing on page: 5-82)					
050	484701-0000		10	SHUTTER	
060	1020146-0000		6	LOCKING BLOCK REPL BY 1020290-101	
110	1279582-0000		2	RAIL	
120	1548550-0000		1	RAIL	
160	1334113-0000		2	HOLDER	
180	2752754-0000		1	RAIL	
190	1285253-0000		2	SPACER	
195	1317218-0000		2	SPACER	
200	2732828-0000		1	RAIL	
210	1548348-0000		1	GUIDE	
220	2715504-0000		1	RAIL	
260	1366777-0101		2	ANGLED RAIL HOLDER TPC21	**5-95**
270	1538970-0000		1	SLIDE	
280	2804309-0000		1	BRACKET	
290	2804310-0000		1	BRACKET	
300	315105-0165		3	WASHER BRB8,4X16RFR	
310	312105-0449		3	SCREW M6S ISO 4017 M8X16 A480	
330	312105-0374		2	SCREW M6S ISO 4014 M6X30 A480	
335	312105-0372		3	SCREW M6S ISO 4017 M6X25 A480	
350	312105-0368		4	SCREW M6S ISO 4017 M6X16 A480	
390	312605-0316		6	HEXAGON NUT, M6M M6 A280	
400	312105-0370		5	SCREW M6S ISO 4017 M6X20 A480	
410	1548551-0000		1	SPACER	
420	312155-0449		2	SCREW DIN 7991 MF6S M8X16 A4 70	
445	315105-0153		14	WASHER BRB6,4X12RFR	
460	2532864-0000		1	BRACKET	
480	315125-0153		1	WASHER TBRSB 6,4X22X4 A4	
500	534310-0001		1	NOZZLE	
510	90005-0095		1	WASHER PLAIN BLACK PVC, (M)6X14 H=3	
520	90230-0027		1	NON-RETURN VALVE QJ 8355-1/4"	
	90230-0300		*1*	*STRAINER*	
	90230-0301		*1*	*DIAPHRAGM*	
Common Parts					
255	1478235-0000		1	PLATE	

Pos	Part No	UN	Qty	Description	Page No

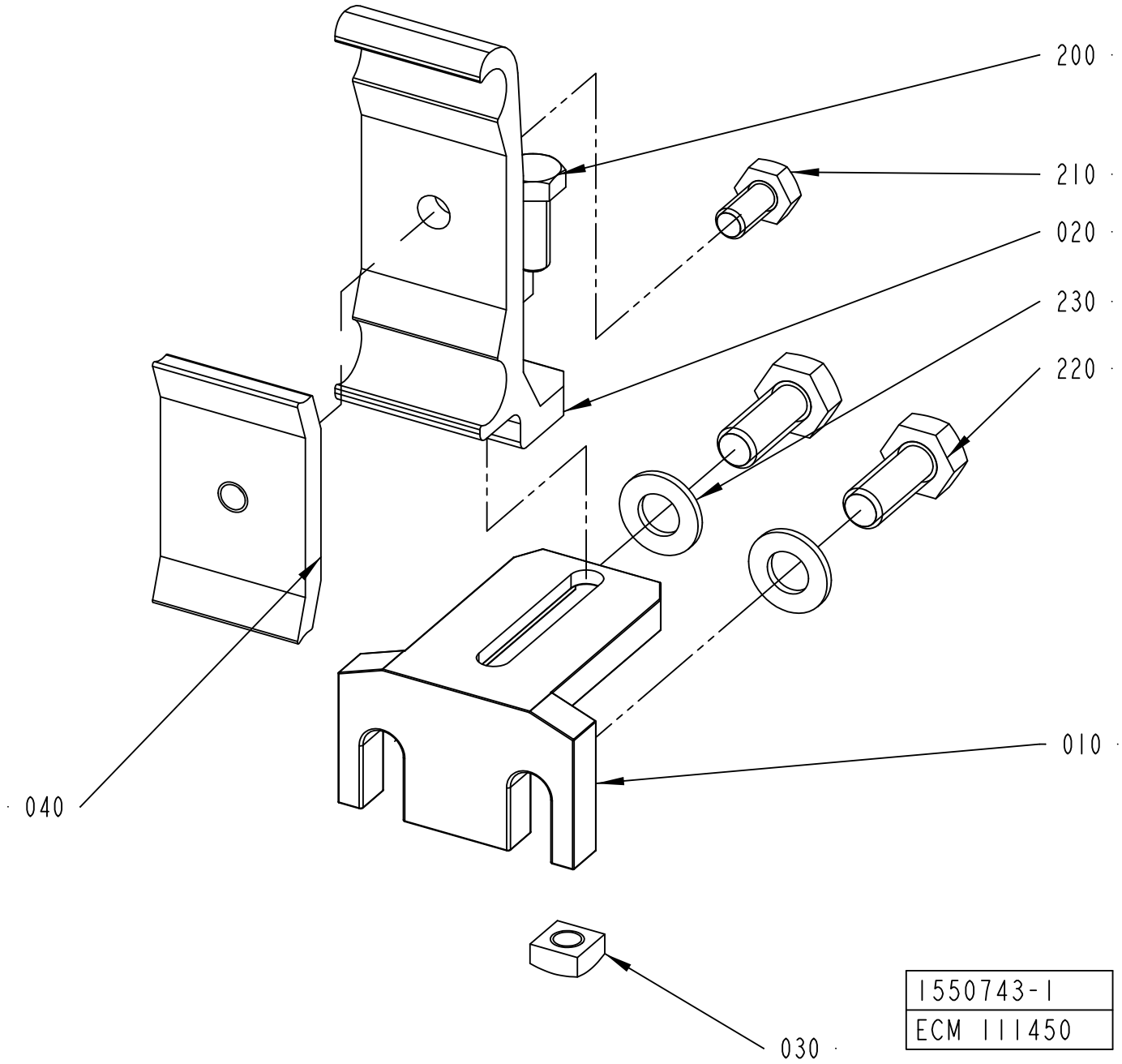
200
210
020
230
220
040
010
030
1550743-1
ECM 111450

ECM: 129860 - 20031113
Group number: 1550743-0100
Assembly Drawing: 1550743-1_1_AB

Pos	Part No	UN	Qty	Description	Page No
-					
010	1550772-0000		1	HOLDER	
020	1550773-0000		1	RAIL HOLDER	
030	1359565-0000		1	NUT	
040	1366727-0000		1	CLAMP	
200	312105-0368		1	SCREW M6S ISO 4017 M6X16 A480	
210	312105-0366		1	SCREW M6S ISO 4017 M6X12 A480	
220	312105-0451		2	SCREW M6S ISO 4017 M8X20 A480	
230	315105-0165		2	WASHER BRB8,4X16RFR	

Pos	Part No	UN	Qty	Description	Page No

ANGLED RAIL HOLDER TPC21

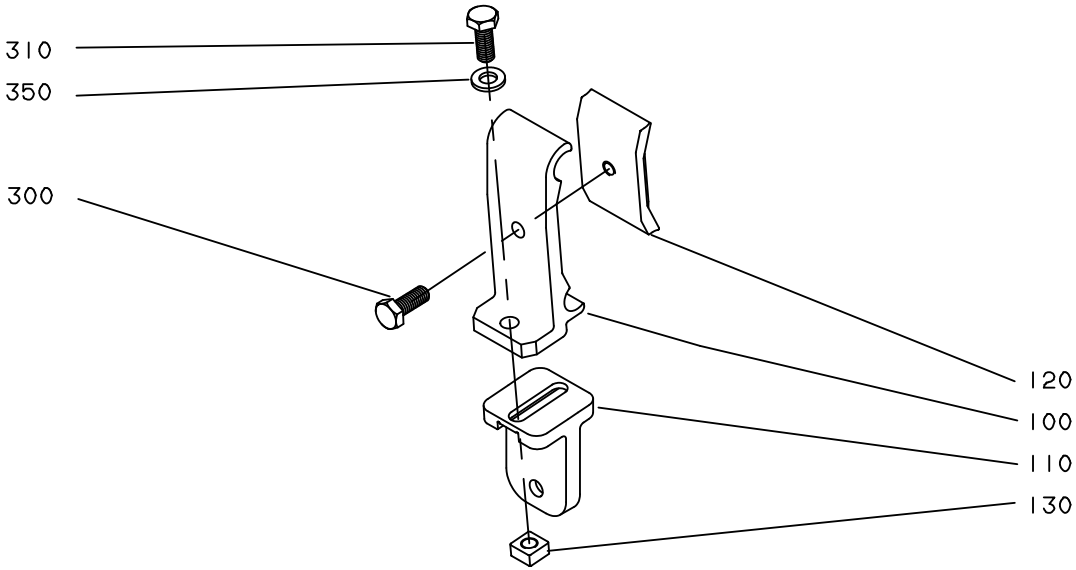

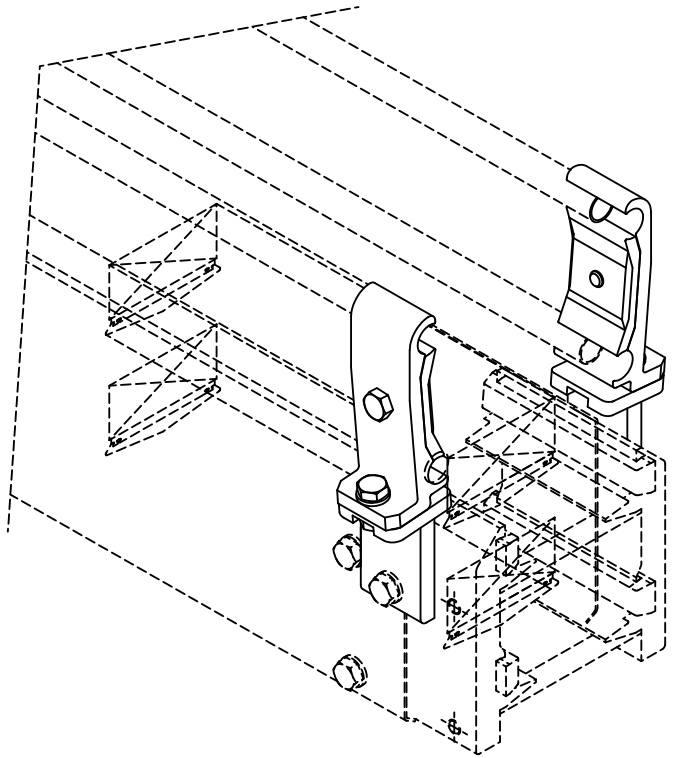

S-1366777-1
ECN 81455

ECM: 189515 - 20041104
Group number: 1366777-0101
Assembly Drawing: 1366777-1_1_AA

Pos	Part No	UN	Qty	Description	Page No
-					
100	1366726-0000		1	HOLDER	
110	1359085-0000		1	T-HOLDER	
120	1366727-0000		1	CLAMP	
130	1359565-0000		1	NUT	
300	312105-0366		1	SCREW M6S ISO 4017 M6X12 A480	
310	312105-0368		1	SCREW M6S ISO 4017 M6X16 A480	
350	315105-0153		1	WASHER BRB6,4X12RFR	

Pos	Part No	UN	Qty	Description	Page No

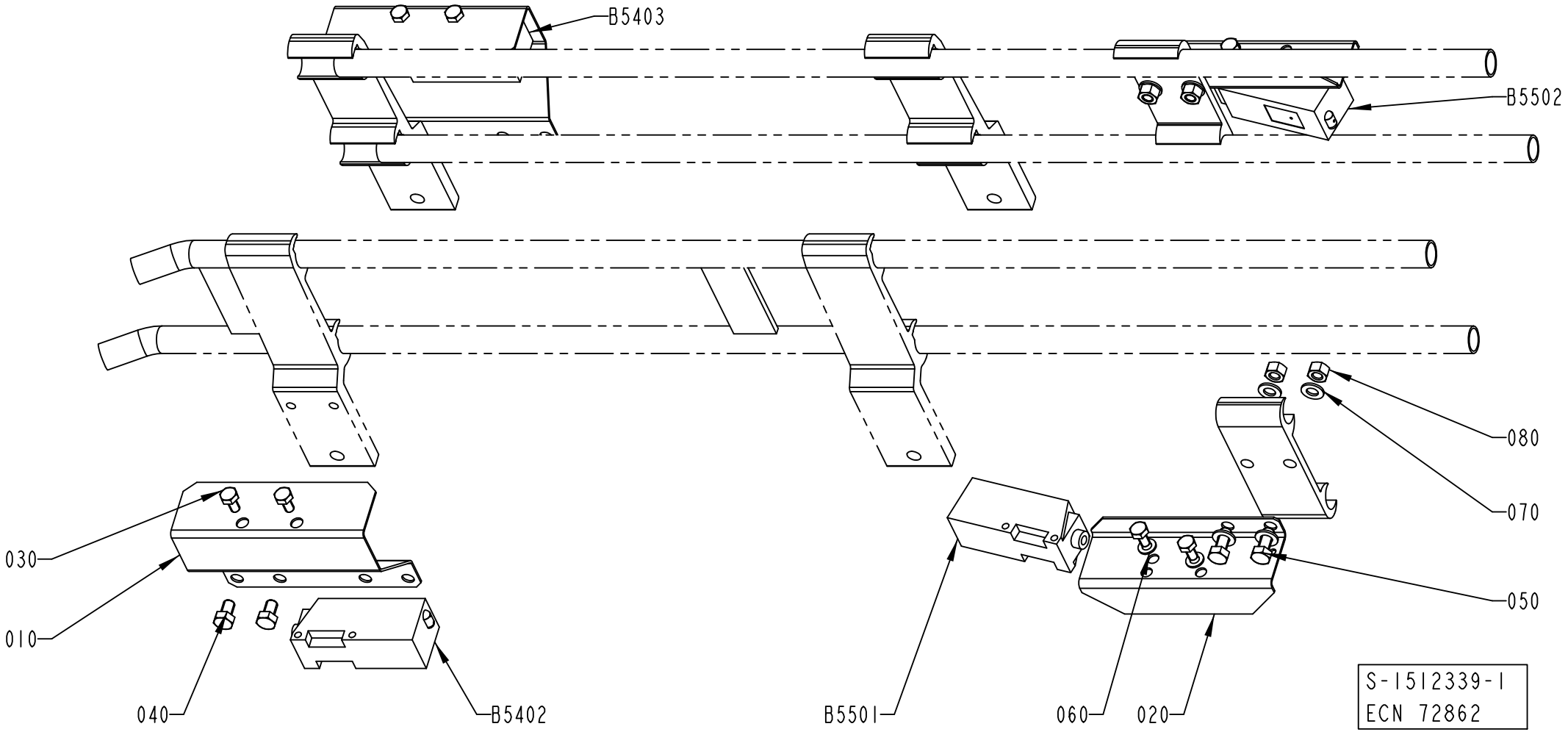
B5403
B5502
080
070
050
030
010
040
B5402
B5501
060
020
S-1512339-1
ECN 72862

Pos	Part No	UN	Qty	Description	Page No
A3/FLEX TBA 1890S, A3/FLEX TBA 2000S (See drawing on page: 5-98)					
010	1285010-0000		2	HOLDER	
020	1086889-0000		2	COVER	
025	1020637-0000		4	HOLDER	
A3/FLEX TBA 0500B, A3/FLEX TBA 1000B, A3/FLEX TBA 1000S, A3/FLEX TBA 1000SQ, A3/FLEX TPA 1000SQ, A3/FLEX TBA 0200S, A3/FLEX TBA 1500S, A3/FLEX TBA 0200B, A3/FLEX TBA 0250B, A3/FLEX TBA 0330S, A3/FLEX TPA 0330SQ, A3/FLEX TPA 0500SQ, A3/FLEX TBA 0200M, A3/FLEX TBA 0250S, A3/FLEX TBA 0500S, A3/FLEX TPA 0250SQ, A3/FLEX TPA 0200SQ, A3/FLEX TPA 0750SQ, A3/FLEX TBA 0200SQ, A3/FLEX TBA 0250SQ (See drawing on page: 5-96)					
010	1285010-0000		2	HOLDER	
020	1086889-0000		2	COVER	
025	1020637-0000		2	HOLDER	
Common Parts					
030	312105-0287		8	SCREW M6S ISO 4017 M4X8 A470	
040	312105-0323		4	SCREW M6S ISO 4017 M5X8 A480	
050	312105-0327		4	SCREW M6S ISO 4017 M5X12 A480	
060	315105-0136		4	WASHER BRB4,3XRFR	
070	315105-0146		8	WASHER BRB5,3X10RFR	
080	312605-0314		4	HEXAGON NUT, M6M M5 A280	
B5402	90232-0104		1	PH.CELL E3S-CT61-D-5M	
B5403	90232-0103		1	PH.CELL E3S-CT61-L-5M	
B5501	90232-0104		1	PH.CELL E3S-CT61-D-5M	
B5502	90232-0103		1	PH.CELL E3S-CT61-L-5M	

Pos	Part No	UN	Qty	Description	Page No

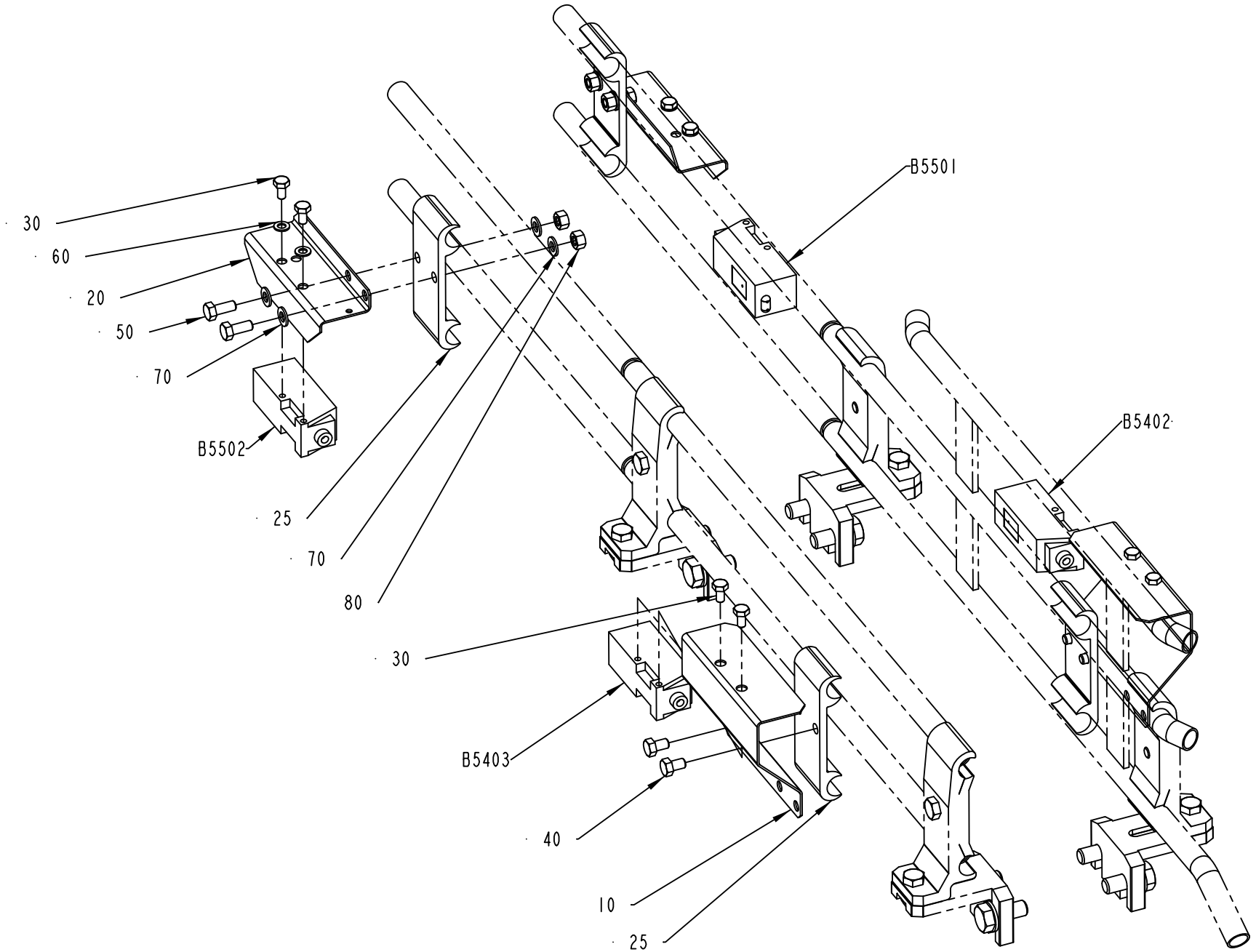

1512339-3
193145

ECM: 272103 - 20060626
Group number: 1512339-0100
Assembly Drawing: 1512339-3_1_AA

This list covers pages from 5-96 to 5-99

Pos	Part No	UN	Qty	Description	Page No
A3/FLEX TBA 1890S, A3/FLEX TBA 2000S (See drawing on page: 5-98)					
010	1285010-0000		2	HOLDER	
020	1086889-0000		2	COVER	
025	1020637-0000		4	HOLDER	
A3/FLEX TBA 0500B, A3/FLEX TBA 1000B, A3/FLEX TBA 1000S, A3/FLEX TBA 1000SQ, A3/FLEX TPA 1000SQ, A3/FLEX TBA 0200S, A3/FLEX TBA 1500S, A3/FLEX TBA 0200B, A3/FLEX TBA 0250B, A3/FLEX TBA 0330S, A3/FLEX TPA 0330SQ, A3/FLEX TPA 0500SQ, A3/FLEX TBA 0200M, A3/FLEX TBA 0250S, A3/FLEX TBA 0500S, A3/FLEX TPA 0250SQ, A3/FLEX TPA 0200SQ, A3/FLEX TPA 0750SQ, A3/FLEX TBA 0200SQ, A3/FLEX TBA 0250SQ (See drawing on page: 5-96)					
010	1285010-0000		2	HOLDER	
020	1086889-0000		2	COVER	
025	1020637-0000		2	HOLDER	
Common Parts					
030	312105-0287		8	SCREW M6S ISO 4017 M4X8 A470	
040	312105-0323		4	SCREW M6S ISO 4017 M5X8 A480	
050	312105-0327		4	SCREW M6S ISO 4017 M5X12 A480	
060	315105-0136		4	WASHER BRB4,3XRFR	
070	315105-0146		8	WASHER BRB5,3X10RFR	
080	312605-0314		4	HEXAGON NUT, M6M M5 A280	
B5402	90232-0104		1	PH.CELL E3S-CT61-D-5M	
B5403	90232-0103		1	PH.CELL E3S-CT61-L-5M	
B5501	90232-0104		1	PH.CELL E3S-CT61-D-5M	
B5502	90232-0103		1	PH.CELL E3S-CT61-L-5M	

Pos	Part No	UN	Qty	Description	Page No

DROP CHUTE VARIANT

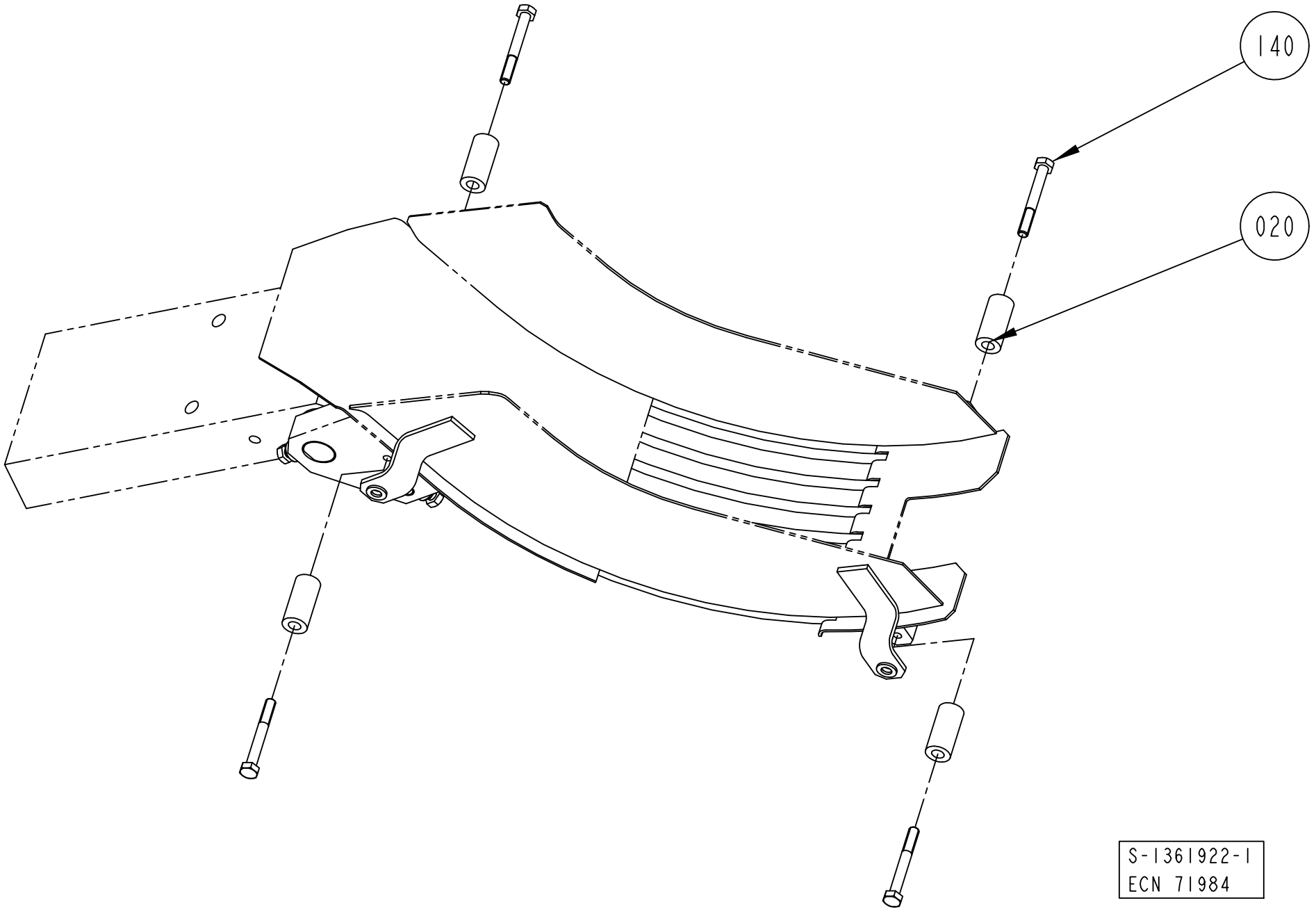

ECM: 189517 - 20041104
Group number: 1361922-0200
Assembly Drawing: 1361922-1_1_AC

Pos	Part No	UN	Qty	Description	Page No
TBA 0200S					
020	315115-0153		4	WASHER PLAIN, TBRB 6,4/12 H=3	
140	312105-0370		4	SCREW M6S ISO 4017 M6X20 A480	
TBA 0250S					
020	2522202-0000		4	SPACER	
140	312105-0374		4	SCREW M6S ISO 4014 M6X30 A480	
TBA 0330S, TBA 0200B, TBA 0250B					
020	1317218-0000		4	SPACER	
140	312105-0374		4	SCREW M6S ISO 4014 M6X30 A480	
TBA 0500B, TBA 1000B					
020	1260714-0000		4	SPACER	
140	312105-0382		4	SCREW M6S ISO 4014 M6X60 A480	
TBA 0500S					
020	1499140-0000		4	SPACER	
140	312105-0379		4	SCREW M6S ISO 4014 M6X45 A480	
TBA 1000S					
020	1279670-0000		4	SPACER	
140	312105-0382		4	SCREW M6S ISO 4014 M6X60 A480	
TBA 1000SQ					
020	1487929-0000		4	SPACER	
140	312105-0379		4	SCREW M6S ISO 4014 M6X45 A480	
TBA 1500S					
140	312105-0366		4	SCREW M6S ISO 4017 M6X12 A480	
TPA 0250SQ					
020	315115-0153		4	WASHER PLAIN, TBRB 6,4/12 H=3	
140	312105-0370		4	SCREW M6S ISO 4017 M6X20 A480	
TPA 0330SQ					
020	1532254-0000		4	SPACER	
140	312105-0374		4	SCREW M6S ISO 4014 M6X30 A480	
TPA 0500SQ					
020	1549512-0000		4	SPACER	
140	312105-0374		4	SCREW M6S ISO 4014 M6X30 A480	
TPA 1000SQ					
140	312105-0366		4	SCREW M6S ISO 4017 M6X12 A480	

Pos	Part No	UN	Qty	Description	Page No

INFEED CONVEYOR VARIANT

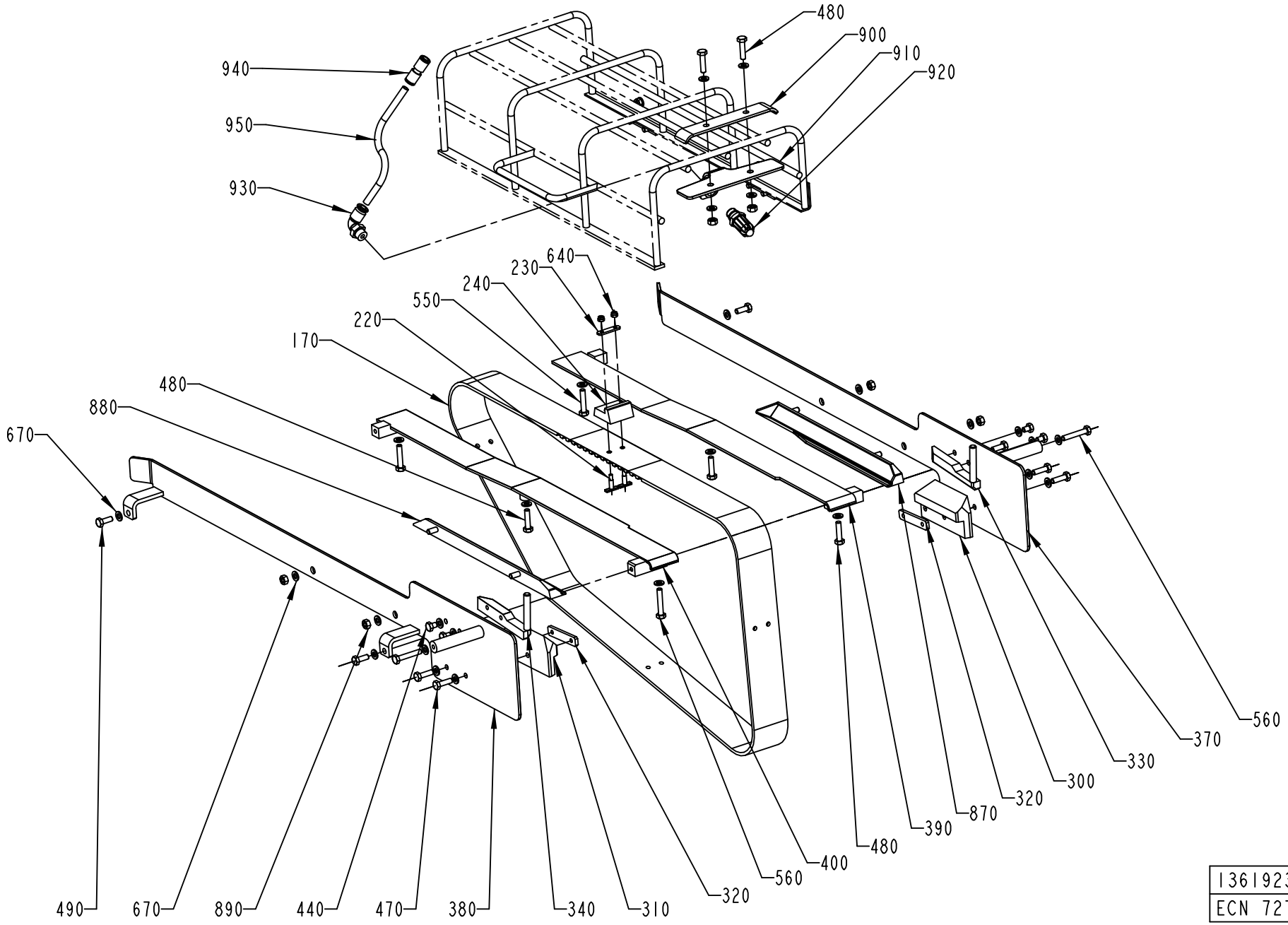

1361923-2
ECN 72769

ECM: 213807 - 20060101
Group number: 1361923-0200
Assembly Drawing: 1361923-2_1_AC

This list covers pages from 5-102 to 5-111

Pos	Part No	UN	Qty	Description	Page No
TPA 1000SQ (See drawing on page: 5-102)					
170	1519338-0000		1	TIMING BELT	
220	1517476-0000		6	WEDGE	
230	1517477-0000		3	PLATE	
240	1519344-0000		3	CARRIER	
300	1517481-0000		1	SLIDE	
310	1517480-0000		1	SLIDE	
320	2543242-0000		2	ANGLE BLOCK	
330	1517478-0000		1	BAR	
340	1517479-0000		1	BAR	
370	1517474-0000		1	GUIDE	
380	1517475-0000		1	GUIDE	
390	1519345-0000		1	GUIDE	
400	1519346-0000		1	GUIDE	
440	312105-0366		4	SCREW M6S ISO 4017 M6X12 A480	
470	312105-0368		4	SCREW M6S ISO 4017 M6X16 A480	
480	312105-0372		3	SCREW M6S ISO 4017 M6X25 A480	
500	312105-0364		4	SCREW M6S ISO 4017 M6X10 A480	
550	312109-0376		2	SCREW M6S ISO 4017 M6X35 A480	
560	312105-0376		3	SCREW M6S ISO 4014 M6X35 A480	
640	312812-0312		6	HEXAGON NUT, NY-LOCK M4 A480	
670	315105-0153		20	WASHER BRB6,4X12RFR	
870	2637665-0000		1	GUIDE	
880	2637666-0000		1	GUIDE	
TBA 0200B (See drawing on page: 5-102)					
170	1144783-0000		1	TIMING BELT	
220	1346736-0000		8	WEDGE	
230	1144918-0000		4	PLATE	
240	1282287-0000		4	CARRIER	
300	1348136-0000		1	SLIDE	
310	1348142-0000		1	SLIDE	
320	1348169-0000		2	PLATE	
330	1348148-0000		1	BAR	
340	1348154-0000		1	BAR	
370	1499427-0000		1	GUIDE	
380	1499426-0000		1	GUIDE	
390	1282290-0000		1	GUIDE	
400	1282291-0000		1	GUIDE	
440	312105-0362		4	SCREW M6S ISO 4017 M6X8 A480	
470	312105-0370		4	SCREW M6S ISO 4017 M6X20 A480	
480	312105-0372		5	SCREW M6S ISO 4017 M6X25 A480	
550	312109-0374		2	SCREW M6S ISO 4017 M6X30 A480	
560	312105-0376		3	SCREW M6S ISO 4014 M6X35 A480	
640	312812-0312		8	HEXAGON NUT, NY-LOCK M4 A480	
670	315105-0153		28	WASHER BRB6,4X12RFR	
870	1517526-0000		1	GUIDE	
880	1517527-0000		1	GUIDE	
890	312605-0316		6	HEXAGON NUT, M6M M6 A280	
900	1499476-0000		1	HOLDER	
910	1499475-0000		1	HOLDER	
920	90424-0068		1	AIR NOZZLE, G1/4, MOD. 216 BSP	
930	342732-0104		1	ELBOW PIPE JOINT, EXT.THREAD, D=8MM-G1/4	
940	342728-0103		1	PIPE COUPLING 8 MM	
950	90166-0013	MM	700	TUBE 8 MM PA BLUE	
TBA 0200S (See drawing on page: 5-102)					
170	1144783-0000		1	TIMING BELT	
220	1346736-0000		8	WEDGE	
230	1144918-0000		4	PLATE	
240	1282287-0000		4	CARRIER	
300	1348134-0000		1	SLIDE	
310	1348140-0000		1	SLIDE	
320	1348169-0000		2	PLATE	
330	1348146-0000		1	BAR	
340	1348152-0000		1	BAR	
370	1499136-0000		1	GUIDE	
380	1499135-0000		1	GUIDE	
390	1282290-0000		1	GUIDE	
400	1282291-0000		1	GUIDE	
440	312105-0362		4	SCREW M6S ISO 4017 M6X8 A480	
470	312105-0370		4	SCREW M6S ISO 4017 M6X20 A480	
480	312105-0372		5	SCREW M6S ISO 4017 M6X25 A480	
550	312109-0374		2	SCREW M6S ISO 4017 M6X30 A480	
560	312105-0376		3	SCREW M6S ISO 4014 M6X35 A480	
640	312812-0312		8	HEXAGON NUT, NY-LOCK M4 A480	
670	315105-0153		28	WASHER BRB6,4X12RFR	
870	1517524-0000		1	GUIDE	
880	1517525-0000		1	GUIDE	
890	312605-0316		6	HEXAGON NUT, M6M M6 A280	
900	1499476-0000		1	HOLDER	
910	1499475-0000		1	HOLDER	
920	90424-0068		1	AIR NOZZLE, G1/4, MOD. 216 BSP	
930	342732-0104		1	ELBOW PIPE JOINT, EXT.THREAD, D=8MM-G1/4	
940	342728-0103		1	PIPE COUPLING 8 MM	
950	90166-0013	MM	700	TUBE 8 MM PA BLUE	

Machine Type | Group Description | Used-In | Group Number | Page No

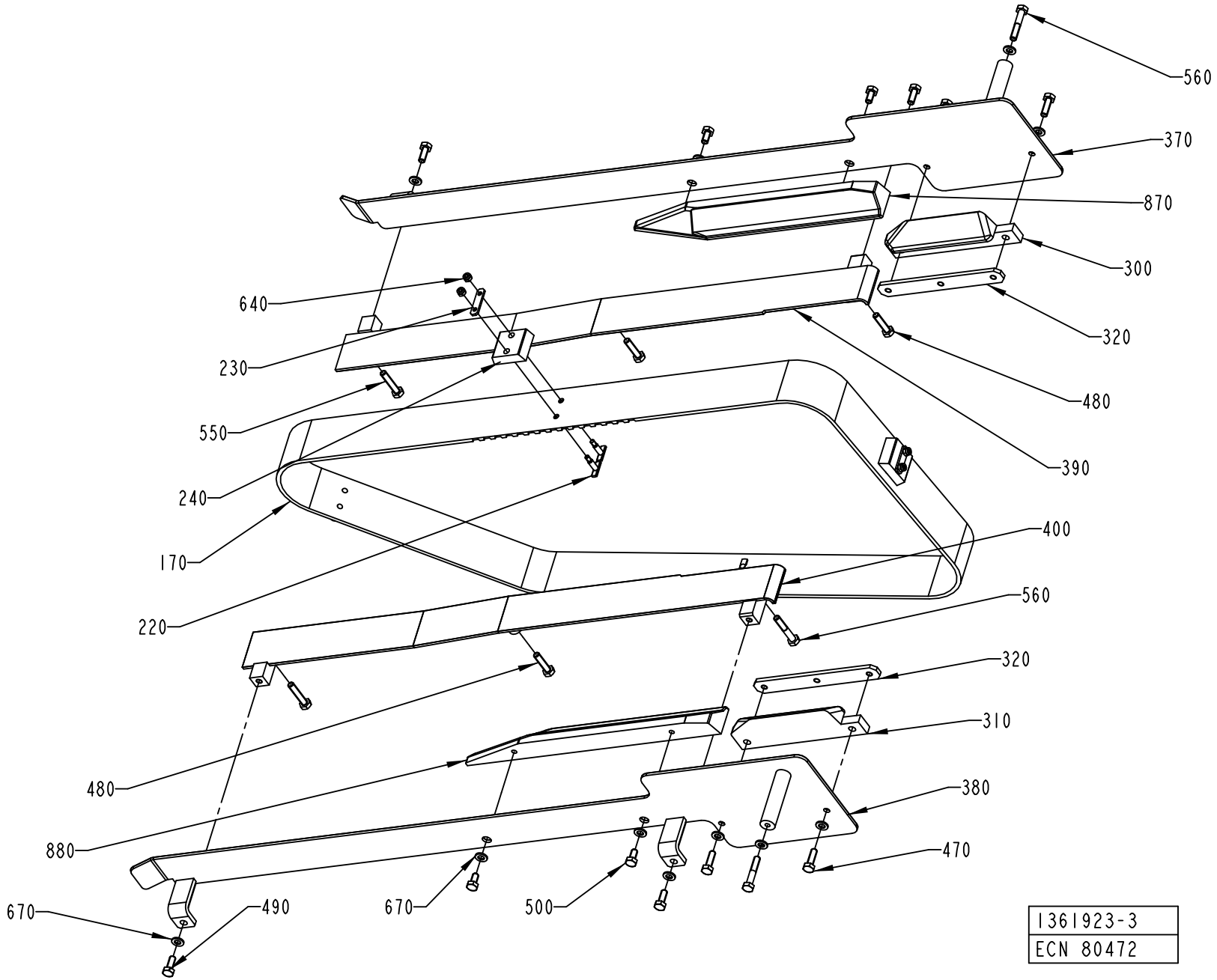
560
370
870
300
320
480
390
400
560
320
310
380
470
640
230
550
240
170
220
480
880
670
490
670
500
1361923-3
ECN 80472

ECM: 213807 - 20060101
Group number: 1361923-0200
Assembly Drawing: 1361923-3_1_AA

This list covers pages from 5-102 to 5-111

Pos	Part No	UN	Qty	Description	Page No
TBA 0250B (Cont'd) (See drawing on page: 5-102)					
170	1144783-0000		1	TIMING BELT	
220	1346736-0000		8	WEDGE	
230	1144918-0000		4	PLATE	
240	1282287-0000		4	CARRIER	
300	1348135-0000		1	SLIDE	
310	1348141-0000		1	SLIDE	
320	1348169-0000		2	PLATE	
330	1348147-0000		1	BAR	
340	1348153-0000		1	BAR	
370	1499427-0000		1	GUIDE	
380	1499426-0000		1	GUIDE	
390	1282290-0000		1	GUIDE	
400	1282291-0000		1	GUIDE	
440	312105-0362		4	SCREW M6S ISO 4017 M6X8 A480	
470	312105-0370		4	SCREW M6S ISO 4017 M6X20 A480	
480	312105-0372		5	SCREW M6S ISO 4017 M6X25 A480	
550	312109-0374		2	SCREW M6S ISO 4017 M6X30 A480	
560	312105-0376		3	SCREW M6S ISO 4014 M6X35 A480	
640	312812-0312		8	HEXAGON NUT, NY-LOCK M4 A480	
670	315105-0153		28	WASHER BRB6,4X12RFR	
870	1517526-0000		1	GUIDE	
880	1517527-0000		1	GUIDE	
890	312605-0316		6	HEXAGON NUT, M6M M6 A280	
900	1499476-0000		1	HOLDER	
910	1499475-0000		1	HOLDER	
920	90424-0068		1	AIR NOZZLE, G1/4, MOD. 216 BSP	
930	342732-0104		1	ELBOW PIPE JOINT, EXT.THREAD, D=8MM-G1/4	
940	342728-0103		1	PIPE COUPLING 8 MM	
950	90166-0013	MM	700	TUBE 8 MM PA BLUE	
TBA 0250S (See drawing on page: 5-102)					
170	1144783-0000		1	TIMING BELT	
220	1346736-0000		8	WEDGE	
230	1144918-0000		4	PLATE	
240	2551120-0000		4	CARRIER	
300	2529605-0000		1	SLIDE	
310	2529606-0000		1	SLIDE	
320	1279409-0000		2	PLATE	
330	2529608-0000		1	BAR	
340	2529607-0000		1	BAR	
370	2529603-0000		1	GUIDE	
380	2529604-0000		1	GUIDE	
390	1282290-0000		1	GUIDE	
400	1282291-0000		1	GUIDE	
440	312105-0362		4	SCREW M6S ISO 4017 M6X8 A480	
480	312105-0372		4	SCREW M6S ISO 4017 M6X25 A480	
640	312812-0312		8	HEXAGON NUT, NY-LOCK M4 A480	
670	315105-0153		28	WASHER BRB6,4X12RFR	
870	1517524-0000		1	GUIDE	
880	1517525-0000		1	GUIDE	
890	312605-0316		6	HEXAGON NUT, M6M M6 A280	
900	1499476-0000		1	HOLDER	
910	1499475-0000		1	HOLDER	
920	90424-0068		1	AIR NOZZLE, G1/4, MOD. 216 BSP	
930	342732-0104		1	ELBOW PIPE JOINT, EXT.THREAD, D=8MM-G1/4	
940	342728-0103		1	PIPE COUPLING 8 MM	
950	90166-0013	MM	700	TUBE 8 MM PA BLUE	
TBA 0330S (See drawing on page: 5-102)					
170	1144783-0000		1	TIMING BELT	
230	1144918-0000		4	PLATE	
240	1282287-0000		4	CARRIER	
300	2544997-0000		1	SLIDE	
310	2544998-0000		1	SLIDE	
320	1279409-0000		2	PLATE	
330	2545000-0000		1	BAR	
340	2544999-0000		1	BAR	
370	2544996-0000		1	GUIDE	
380	2544995-0000		1	GUIDE	
390	2529610-0000		1	GUIDE	
400	2529609-0000		1	GUIDE	
440	312105-0362		4	SCREW M6S ISO 4017 M6X8 A480	
470	312105-0370		4	SCREW M6S ISO 4017 M6X20 A480	
480	312105-0372		3	SCREW M6S ISO 4017 M6X25 A480	
550	312109-0374		2	SCREW M6S ISO 4017 M6X30 A480	
560	312105-0376		3	SCREW M6S ISO 4014 M6X35 A480	
640	312812-0312		8	HEXAGON NUT, NY-LOCK M4 A480	
670	315105-0153		16	WASHER BRB6,4X12RFR	
890	312605-0316		2	HEXAGON NUT, M6M M6 A280	
TBA 0500B (See drawing on page: 5-102)					
170	1144783-0000		1	TIMING BELT	
220	1346471-0000		8	WEDGE	
230	1144918-0000		4	PLATE	
240	1558700-0000		4	CARRIER	
300	1539874-0000		1	SLIDE	

Machine Type | Group Description | Used-In | Group Number | Page No

INFEED CONVEYOR VARIANT

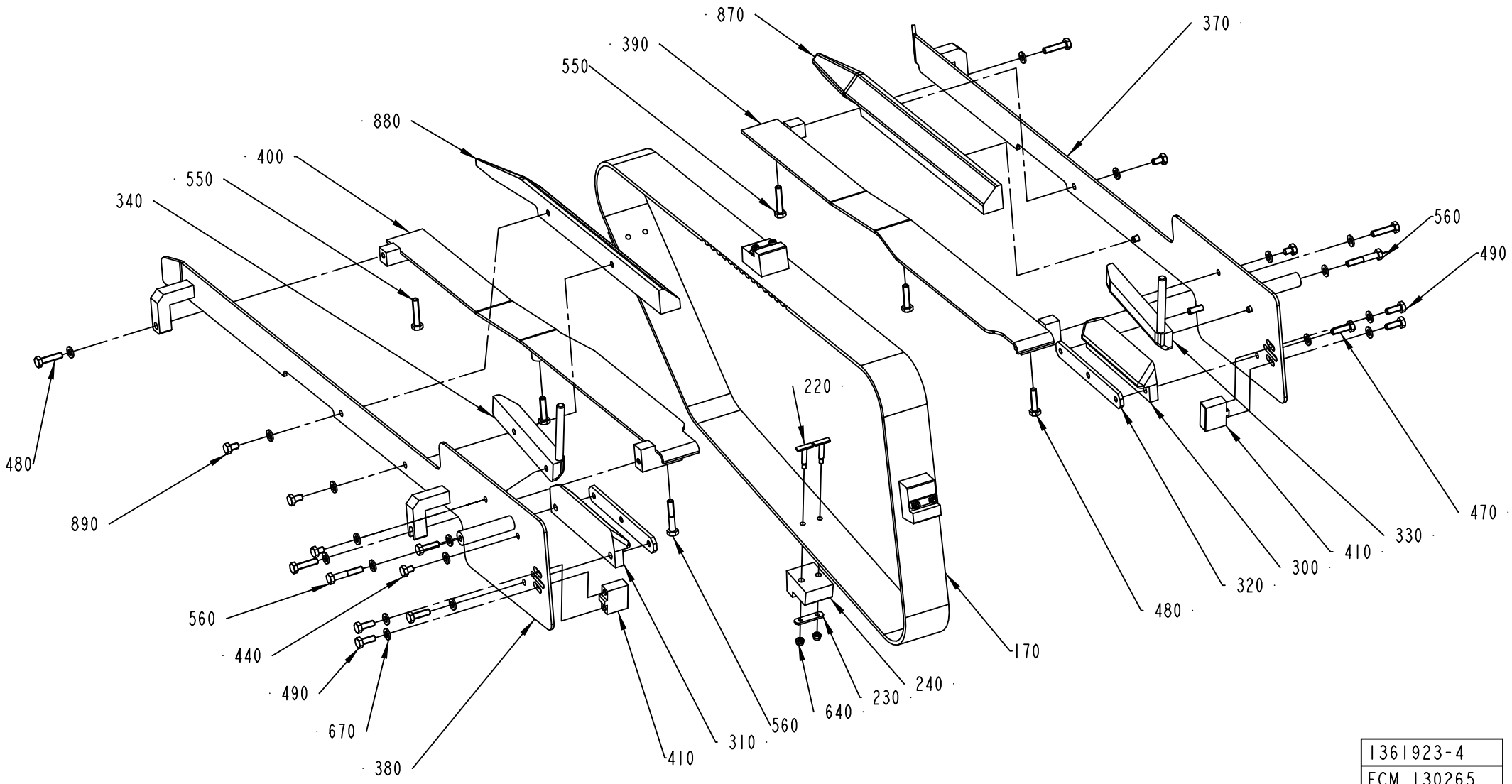

1361923-4
ECM 130265

ECM: 213807 - 20060101
Group number: 1361923-0200
Assembly Drawing: 1361923-4_1_AB

This list covers pages from 5-102 to 5-111

Pos	Part No	UN	Qty	Description	Page No
TBA 0500B (Cont'd) (See drawing on page: 5-102)					
310	1539875-0000		1	SLIDE	
320	1539876-0000		2	PLATE	
330	1539877-0000		1	BAR	
340	1539878-0000		1	BAR	
370	1539879-0000		1	GUIDE	
380	1539880-0000		1	GUIDE	
390	1317651-0000		1	GUIDE	
400	1317650-0000		1	GUIDE	
470	312105-0370		4	SCREW M6S ISO 4017 M6X20 A480	
480	312105-0372		3	SCREW M6S ISO 4017 M6X25 A480	
550	312109-0374		2	SCREW M6S ISO 4017 M6X30 A480	
560	312105-0376		3	SCREW M6S ISO 4014 M6X35 A480	
640	312812-0312		8	HEXAGON NUT, NY-LOCK M4 A480	
670	315105-0153		20	WASHER BRB6,4X12RFR	
TBA 0500S (See drawing on page: 5-102)					
170	1144783-0000		1	TIMING BELT	
220	1346736-0000		8	WEDGE	
230	1144918-0000		4	PLATE	
240	1282287-0000		4	CARRIER	
300	1499418-0000		1	SLIDE	
310	1499422-0000		1	SLIDE	
320	1144621-0000		2	PLATE	
330	1499417-0000		1	BAR	
340	1499423-0000		1	BAR	
370	1499401-0000		1	GUIDE	
380	1499400-0000		1	GUIDE	
390	1317651-0000		1	GUIDE	
400	1317650-0000		1	GUIDE	
440	312105-0362		4	SCREW M6S ISO 4017 M6X8 A480	
470	312105-0370		4	SCREW M6S ISO 4017 M6X20 A480	
480	312105-0372		3	SCREW M6S ISO 4017 M6X25 A480	
550	312109-0374		2	SCREW M6S ISO 4017 M6X30 A480	
560	312105-0376		3	SCREW M6S ISO 4014 M6X35 A480	
640	312812-0312		8	HEXAGON NUT, NY-LOCK M4 A480	
670	315105-0153		20	WASHER BRB6,4X12RFR	
TBA 1000B (See drawing on page: 5-102)					
170	1144783-0000		1	TIMING BELT	
220	1346471-0000		8	WEDGE	
230	1144918-0000		4	PLATE	
240	1144919-0000		4	CARRIER	
300	1348133-0000		1	SLIDE	
310	1348139-0000		1	SLIDE	
320	1279409-0000		2	PLATE	
330	1348144-0000		1	BAR	
340	1348150-0000		1	BAR	
370	1519089-0000		1	GUIDE	
380	1519090-0000		1	GUIDE	
390	1282290-0000		1	GUIDE	
400	1282291-0000		1	GUIDE	
440	312105-0362		4	SCREW M6S ISO 4017 M6X8 A480	
470	312105-0370		4	SCREW M6S ISO 4017 M6X20 A480	
480	312105-0372		3	SCREW M6S ISO 4017 M6X25 A480	
550	312109-0374		2	SCREW M6S ISO 4017 M6X30 A480	
560	312105-0376		3	SCREW M6S ISO 4014 M6X35 A480	
640	312812-0312		8	HEXAGON NUT, NY-LOCK M4 A480	
670	315105-0153		20	WASHER BRB6,4X12RFR	
TBA 1000S (See drawing on page: 5-102)					
170	1144783-0000		1	TIMING BELT	
220	1346471-0000		8	WEDGE	
230	1144918-0000		4	PLATE	
240	1144919-0000		4	CARRIER	
300	1348132-0000		1	SLIDE	
310	1348138-0000		1	SLIDE	
320	1279409-0000		2	PLATE	
330	1348145-0000		1	BAR	
340	1348151-0000		1	BAR	
370	1517242-0000		1	GUIDE	
380	1517243-0000		1	GUIDE	
390	1317651-0000		1	GUIDE	
400	1317650-0000		1	GUIDE	
440	312105-0362		4	SCREW M6S ISO 4017 M6X8 A480	
470	312105-0370		4	SCREW M6S ISO 4017 M6X20 A480	
480	312105-0372		3	SCREW M6S ISO 4017 M6X25 A480	
550	312109-0374		2	SCREW M6S ISO 4017 M6X30 A480	
560	312105-0376		3	SCREW M6S ISO 4014 M6X35 A480	
640	312812-0312		8	HEXAGON NUT, NY-LOCK M4 A480	
670	315105-0153		20	WASHER BRB6,4X12RFR	
TBA 1000SQ (See drawing on page: 5-102)					
170	1144783-0000		1	TIMING BELT	
220	1346471-0000		8	WEDGE	
230	1144918-0000		4	PLATE	
240	1282848-0000		4	CARRIER	
300	1490033-0000		1	SLIDE	

Machine Type | Group Description | Used-In | Group Number | Page No

See previous drawings pages: 5-102, 5-104, 5-106.

Pos	Part No	UN	Qty	Description	Page No
TBA 1000SQ (Cont'd) (See drawing on page: 5-102)					
310	1490034-0000		1	SLIDE	
320	1144621-0000		2	PLATE	
330	1490035-0000		1	BAR	
340	1490036-0000		1	BAR	
370	1512308-0000		1	GUIDE	
380	1512307-0000		1	GUIDE	
390	1317651-0000		1	GUIDE	
400	1317650-0000		1	GUIDE	
440	312105-0362		4	SCREW M6S ISO 4017 M6X8 A480	
470	312105-0370		4	SCREW M6S ISO 4017 M6X20 A480	
480	312105-0372		3	SCREW M6S ISO 4017 M6X25 A480	
550	312109-0374		2	SCREW M6S ISO 4017 M6X30 A480	
560	312105-0376		3	SCREW M6S ISO 4014 M6X35 A480	
640	312812-0312		8	HEXAGON NUT, NY-LOCK M4 A480	
670	315105-0153		20	WASHER BRB6,4X12RFR	
TBA 1500S (See drawing on page: 5-102)					
170	1349152-0000		1	TIMING BELT	
220	1346471-0000		6	WEDGE	
230	1144918-0000		3	PLATE	
240	1282848-0000		3	CARRIER	
300	1334561-0000		1	SLIDE	
310	1334562-0000		1	SLIDE	
320	1144621-0000		2	PLATE	
330	1317805-0000		1	BAR	
340	1334271-0000		1	BAR	
370	1519093-0000		1	GUIDE	
380	1519094-0000		1	GUIDE	
390	1478215-0000		1	SLIDE	
400	1478214-0000		1	SLIDE	
440	312105-0362		4	SCREW M6S ISO 4017 M6X8 A480	
470	312105-0370		4	SCREW M6S ISO 4017 M6X20 A480	
480	312105-0372		3	SCREW M6S ISO 4017 M6X25 A480	
550	312109-0374		2	SCREW M6S ISO 4017 M6X30 A480	
560	312105-0376		3	SCREW M6S ISO 4014 M6X35 A480	
640	312812-0312		6	HEXAGON NUT, NY-LOCK M4 A480	
670	315105-0153		20	WASHER BRB6,4X12RFR	
TPA 0250SQ (See drawing on page: 5-102)					
170	1144783-0000		1	TIMING BELT	
220	1346736-0000		8	WEDGE	
230	1144918-0000		4	PLATE	
240	1558864-0000		4	CARRIER	
300	1549852-0000		1	SLIDE	
310	1549853-0000		1	SLIDE	
320	1144621-0000		2	PLATE	
330	1549854-0000		1	BAR	
340	1549855-0000		1	BAR	
370	1549856-0000		1	GUIDE	
380	1549857-0000		1	GUIDE	
390	1317651-0000		1	GUIDE	
400	1317650-0000		1	GUIDE	
440	312105-0362		4	SCREW M6S ISO 4017 M6X8 A480	
480	312105-0372		5	SCREW M6S ISO 4017 M6X25 A480	
500	312105-0364		4	SCREW M6S ISO 4017 M6X10 A480	
550	312109-0374		2	SCREW M6S ISO 4017 M6X30 A480	
640	312812-0312		8	HEXAGON NUT, NY-LOCK M4 A480	
670	315105-0153		24	WASHER BRB6,4X12RFR	
870	1539894-0000		1	GUIDE	
880	1539895-0000		1	GUIDE	
890	312605-0316		2	HEXAGON NUT, M6M M6 A280	
900	1499476-0000		1	HOLDER	
910	1499475-0000		1	HOLDER	
920	90424-0068		1	AIR NOZZLE, G1/4, MOD. 216 BSP	
930	342732-0104		1	ELBOW PIPE JOINT, EXT.THREAD, D=8MM-G1/4	
940	342728-0103		1	PIPE COUPLING 8 MM	
950	90166-0013	MM	700	TUBE 8 MM PA BLUE	
TPA 0330SQ (See drawing on page: 5-104)					
170	1144783-0000		1	TIMING BELT	
220	1346736-0000		8	WEDGE	
230	1144918-0000		4	PLATE	
240	1558864-0000		4	CARRIER	
300	1532257-0000		1	SLIDE	
310	1532258-0000		1	SLIDE	
320	1144621-0000		2	PLATE	
370	1532261-0000		1	GUIDE	
380	1532262-0000		1	GUIDE	
390	1317651-0000		1	GUIDE	
400	1317650-0000		1	GUIDE	
470	312105-0370		4	SCREW M6S ISO 4017 M6X20 A480	
480	312105-0372		3	SCREW M6S ISO 4017 M6X25 A480	
500	312105-0366		4	SCREW M6S ISO 4017 M6X12 A480	
550	312109-0374		2	SCREW M6S ISO 4017 M6X30 A480	
560	312105-0376		3	SCREW M6S ISO 4014 M6X35 A480	
640	312812-0312		8	HEXAGON NUT, NY-LOCK M4 A480	

See previous drawings pages: 5-102, 5-104, 5-106.

Pos	Part No	UN	Qty	Description	Page No
TPA 0330SQ (Cont'd) (See drawing on page: 5-104)					
670	315105-0153		20	WASHER BRB6,4X12RFR	
870	1532263-0000		1	GUIDE	
880	1532264-0000		1	GUIDE	
TPA 0500SQ (See drawing on page: 5-106)					
170	1144783-0000		1	TIMING BELT	
220	1346471-0000		8	WEDGE	
230	1144918-0000		4	PLATE	
240	1532256-0000		4	CARRIER	
300	1549513-0000		1	SLIDE	
310	1549514-0000		1	SLIDE	
320	1144621-0000		2	PLATE	
330	1549515-0000		1	BAR	
340	1549516-0000		1	BAR	
370	1549517-0000		1	GUIDE	
380	1549518-0000		1	GUIDE	
390	1549523-0000		1	GUIDE	
400	1549522-0000		1	GUIDE	
410	2545545-0000		2	INSERT	
440	312105-0362		4	SCREW M6S ISO 4017 M6X8 A480	
470	312105-0370		4	SCREW M6S ISO 4017 M6X20 A480	
480	312105-0372		7	SCREW M6S ISO 4017 M6X25 A480	
550	312109-0374		2	SCREW M6S ISO 4017 M6X30 A480	
560	312105-0376		3	SCREW M6S ISO 4014 M6X35 A480	
640	312812-0312		8	HEXAGON NUT, NY-LOCK M4 A480	
670	315105-0153		28	WASHER BRB6,4X12RFR	
870	1539983-0000		1	GUIDE	
880	1539984-0000		1	GUIDE	
890	312105-0364		4	SCREW M6S ISO 4017 M6X10 A480	
Common Parts					
490	312105-0368		4	SCREW M6S ISO 4017 M6X16 A480	

Pos	Part No	UN	Qty	Description	Page No

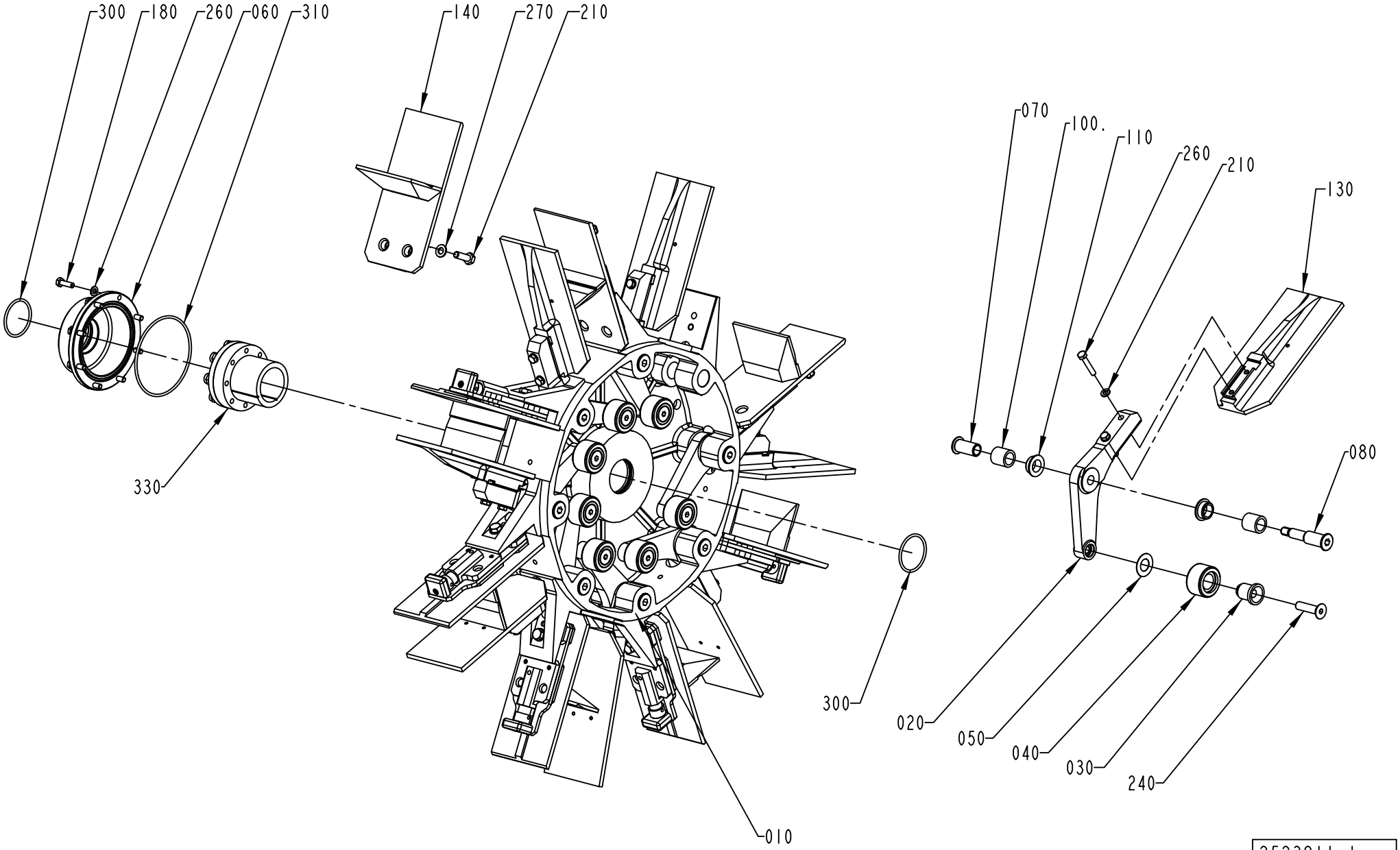

2523811-1
ECM 110155

ECM: 270842 - 20060626
Group number: 2523811-0100
Assembly Drawing: 2523811-1_1_AA

This list covers pages from 5-112 to 5-117

Pos	Part No	UN	Qty	Description	Page No
1000SQ NODIMC (See drawing on page: 5-114)					
010	1144264-0000		1	HUB	
120	2539277-0000		8	SHIM	
130	2518035-0000		8	FLAP	
140	2523812-0100		8	FLAP	**5-119, 5-121**
160	1511558-0000		8	BOTTOM	
190	312155-0370		8	SCREW DIN 7991 MF6S M6X20 A4 70	
200	312105-0376		16	SCREW M6S ISO 4014 M6X35 A480	
260	315105-0153		24	WASHER BRB6,4X12RFR	
0500SQ NODIMC (See drawing on page: 5-114)					
010	1144264-0000		1	HUB	
120	2539277-0000		8	SHIM	
130	2518035-0000		8	FLAP	
140	2523812-0100		8	FLAP	**5-119, 5-121**
200	312105-0376		16	SCREW M6S ISO 4014 M6X35 A480	
260	315105-0153		24	WASHER BRB6,4X12RFR	
0500B NODIMC, 1000B NODIMC (See drawing on page: 5-114)					
010	1144264-0000		1	HUB	
120	2539277-0000		8	SHIM	
130	1260704-0000		8	FLAP	
140	2523812-0100		8	FLAP	**5-119, 5-121**
200	312105-0376		16	SCREW M6S ISO 4014 M6X35 A480	
260	315105-0153		24	WASHER BRB6,4X12RFR	
TBA 0200SQ, TBA 0250SQ (See drawing on page: 5-112)					
010	1144264-0000		1	HUB	
130	2668223-0000		8	FLAP	
140	2523812-0100		8	FLAP	**5-119, 5-121**
190	312155-0370		8	SCREW DIN 7991 MF6S M6X20 A4 70	
200	312105-0376		16	SCREW M6S ISO 4014 M6X35 A480	
260	315105-0153		24	WASHER BRB6,4X12RFR	
TBA 0250S, TBA 0200M (See drawing on page: 5-112)					
010	1144264-0000		1	HUB	
130	2522201-0000		8	FLAP	
140	2523812-0100		8	FLAP	**5-119, 5-121**
190	312155-0370		8	SCREW DIN 7991 MF6S M6X20 A4 70	
TBA 0330S, TBA 0200B, TBA 0250B (See drawing on page: 5-112)					
010	1144264-0000		1	HUB	
130	2651146-0000		8	FLAP	
140	2523812-0100		8	FLAP	**5-119, 5-121**
190	312155-0370		8	SCREW DIN 7991 MF6S M6X20 A4 70	
200	312105-0376		16	SCREW M6S ISO 4014 M6X35 A480	
260	315105-0153		24	WASHER BRB6,4X12RFR	
TBA 0500B, TBA 1000B (See drawing on page: 5-114)					
010	1144264-0000		1	HUB	
130	1260704-0000		8	FLAP	
140	2523812-0100		8	FLAP	**5-119, 5-121**
200	312105-0376		16	SCREW M6S ISO 4014 M6X35 A480	
260	315105-0153		24	WASHER BRB6,4X12RFR	
TBA 1890S, TBA 2000S (See drawing on page: 5-116)					
010	1144264-0000		1	HUB	
090	2693197-0000		32	INSERT	
130	2566321-0000		8	FLAP	
140	2566323-0000		8	FLAP	
150	2638180-0000		16	INSERT	
160	2658390-0100		8	BOTTOM	**5-123**
170	2588327-0000		8	INSERT	
190	312115-0370		8	SCREW ISO4762 M6X20 A4 80	
200	2693200-0000		16	SCREW	
205	315115-0153		16	WASHER PLAIN, TBRB 6,4/12 H=3	
250	312155-0287		32	SCREW DIN 7991 MF6S M4X8 A4 70	
260	315105-0153		8	WASHER BRB6,4X12RFR	
TPA 0250SQ, TPA 0200SQ (See drawing on page: 5-112)					
010	1558737-0000		1	HUB	
130	2658237-0100		8	FLAP	**5-125**
140	2523812-0100		8	FLAP	**5-119, 5-121**
200	312105-0376		16	SCREW M6S ISO 4014 M6X35 A480	
260	315105-0153		24	WASHER BRB6,4X12RFR	
TPA 1000SQ, TPA 0750SQ (See drawing on page: 5-112)					
010	1144264-0000		1	HUB	
130	2658237-0100		8	FLAP	**5-125**
140	2523812-0100		8	FLAP	**5-119, 5-121**
160	2698292-0000		8	BOTTOM	
190	312155-0379		8	SCREW DIN 7991 MF6S M6X45 A4 70	
200	312105-0378		16	SCREW M6S ISO 4014 M6X40 A480	
260	315105-0153		24	WASHER BRB6,4X12RFR	
Common Parts					
020	1279559-0000		8	ARM	
030	1144312-0000		8	AXLE PIN	
040	1144335-0000		8	ROLLER	
050	1144354-0000		8	WASHER	
060	1144356-0000		1	COVER	
070	1296970-0000		8	SCREW BUSHING	
080	1296969-0000		8	SCREW HOLDER	
100	1144417-0000		16	BUSHING	

Machine Type | Group Description | Used-In | Group Number | Page No

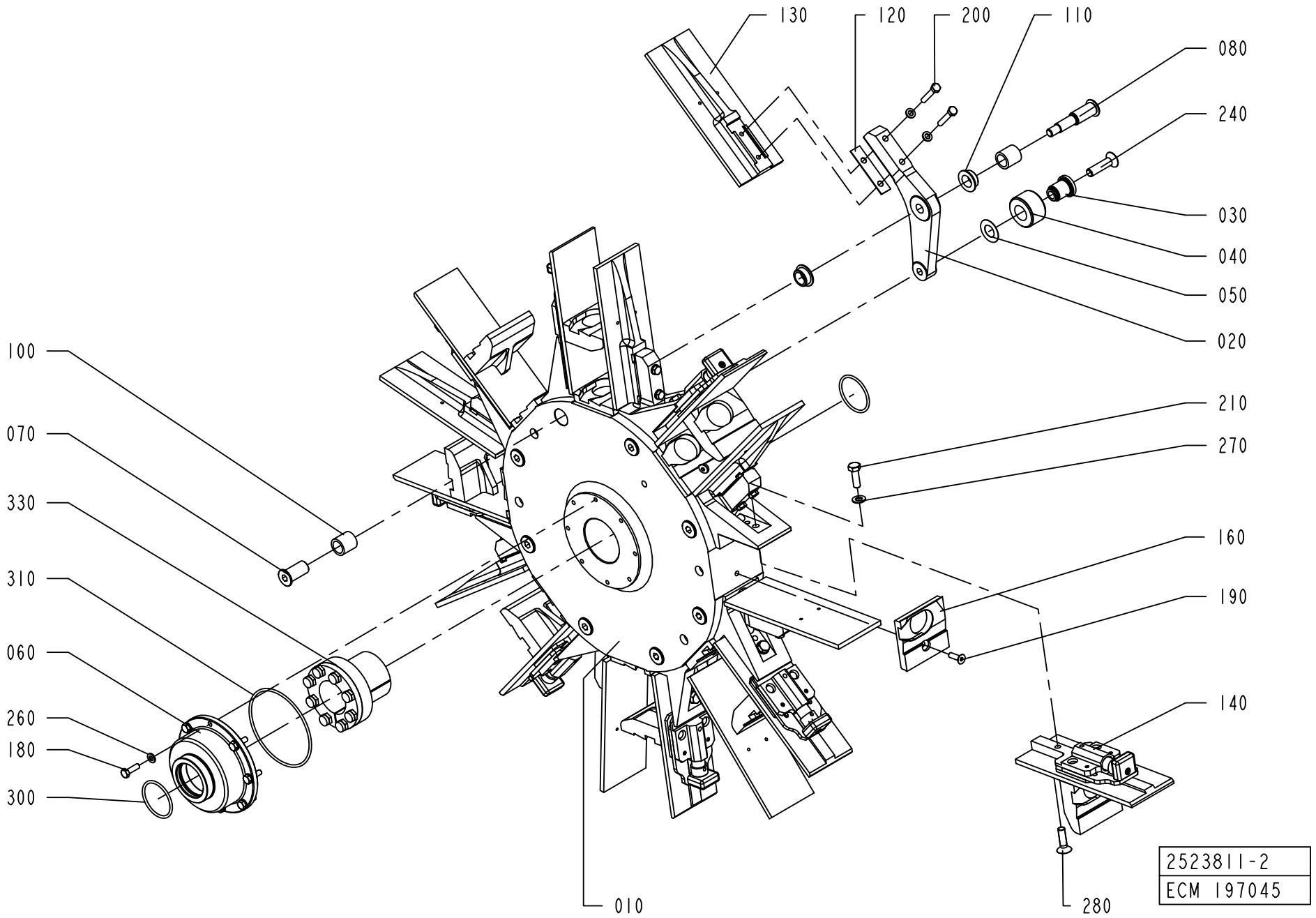
130
120
200
110
080
240
030
040
050
020
100
070
330
310
060
260
180
300
210
270
160
190
140
010
280
2523811-2
ECM 197045

ECM: 270842 - 20060626
Group number: 2523811-0100
Assembly Drawing: 2523811-2_1_AB

This list covers pages from 5-112 to 5-117

Pos	Part No	UN	Qty	Description	Page No
Common Parts (Cont'd)					
110	1282708-0000		16	BUSHING	
180	312105-0370		8	SCREW M6S ISO 4017 M6X20 A480	
210	312105-0453		8	SCREW M6S ISO 4017 M8X25 A480	
240	312155-0499		8	SCREW DIN 7991 MF6S M10X40 A4 70	
270	315105-0165		8	WASHER BRB8,4X16RFR	
300	315202-0225		2	O-RING 44,2X3 MM	
310	315202-0311		1	O-RING 99,5X3 MM	
330	90208-0087		1	CLAMPING ELEMENT WITH SLEEVE, 45X59 MM	

Pos	Part No	UN	Qty	Description	Page No

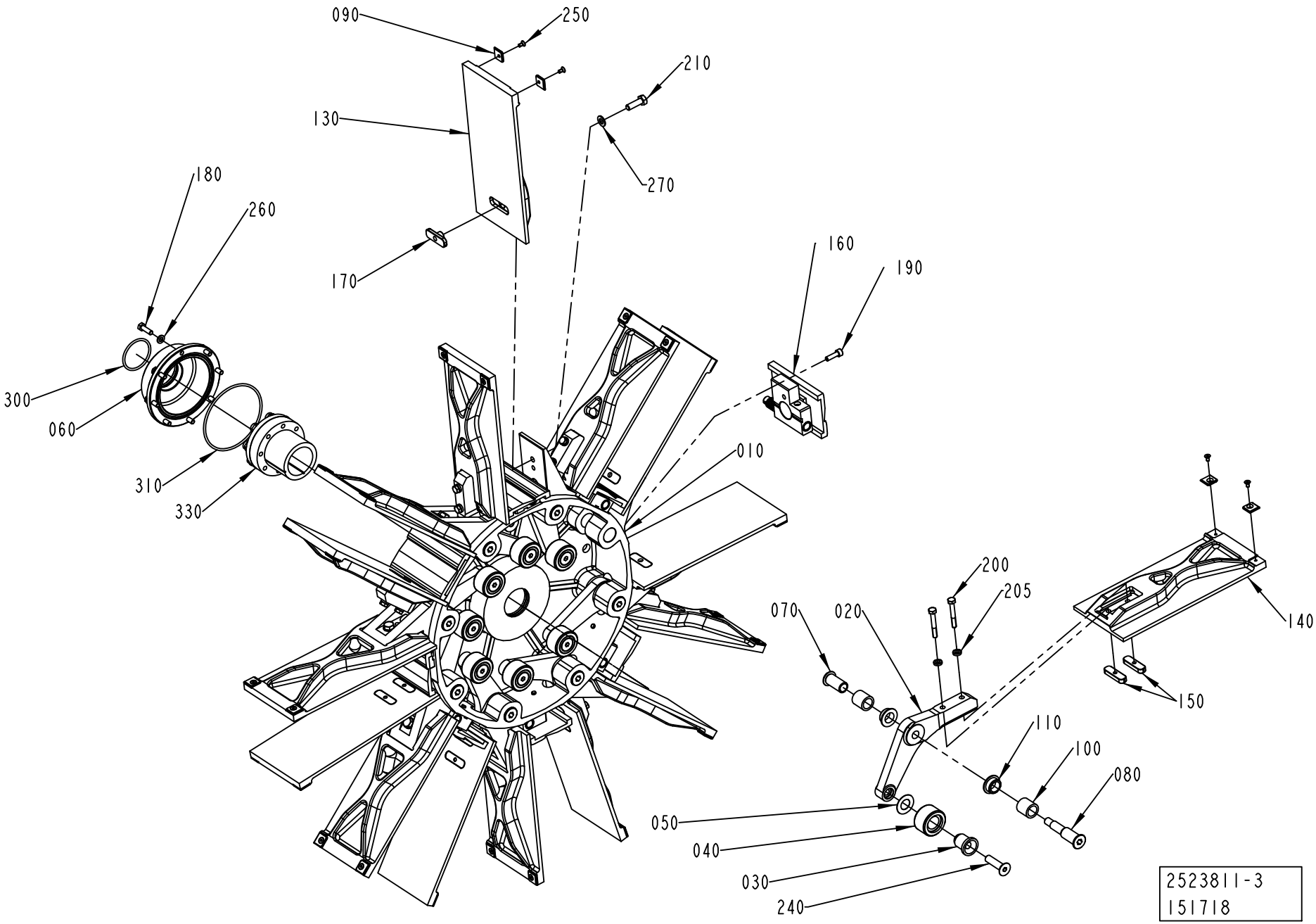
090
250
210
130
270
180
260
170
160
190
300
060
010
310
330
200
205
070
020
140
150
110
100
080
050
040
030
240
2523811-3
151718

ECM: 270842 - 20060626
Group number: 2523811-0100
Assembly Drawing: 2523811-3_1_AA

This list covers pages from 5-112 to 5-117

Pos	Part No	UN	Qty	Description	Page No
SEE PREVIOUS LISTS PAGES: 5-113, 5-115.					

Pos	Part No	UN	Qty	Description	Page No

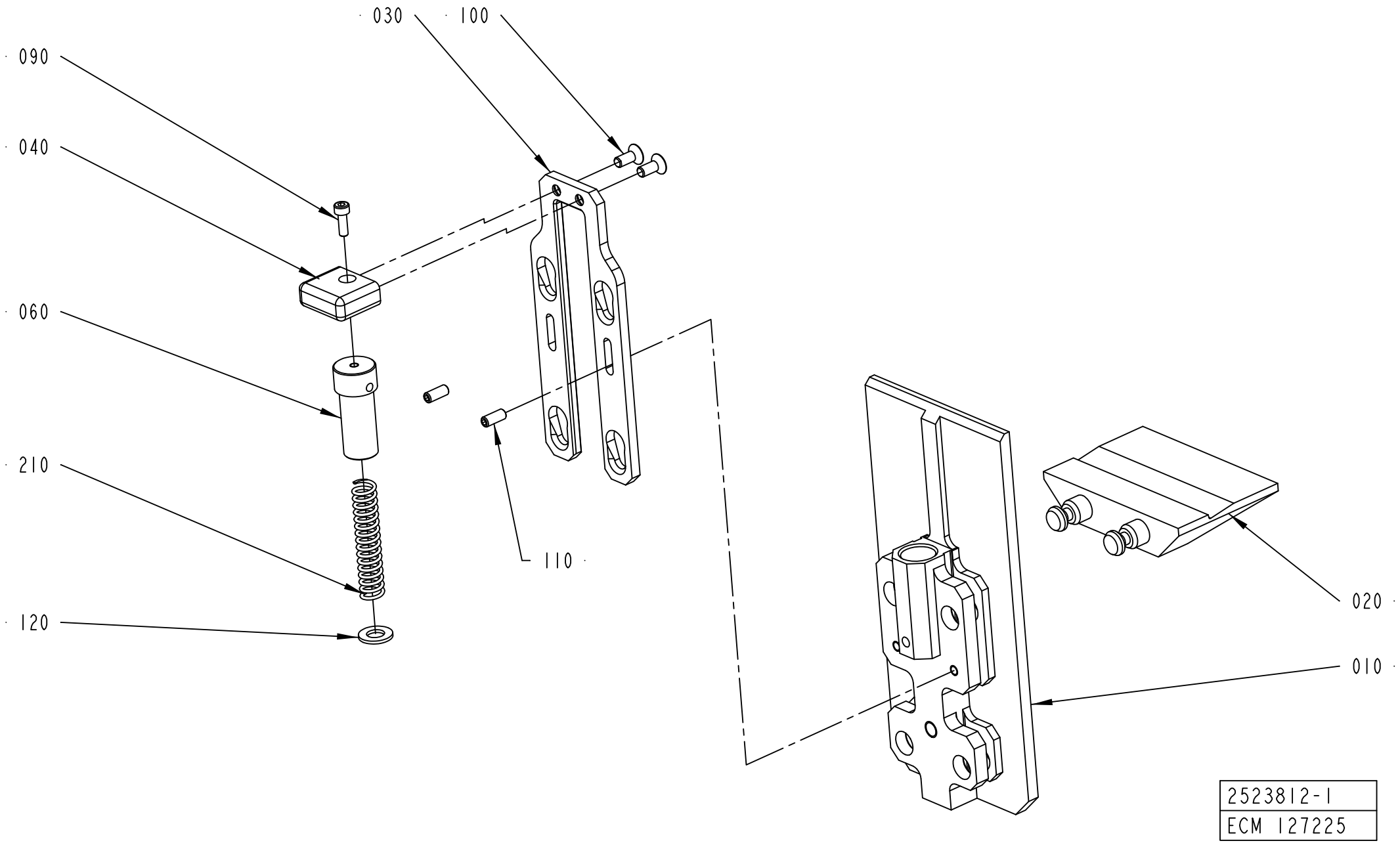
030
100
090
040
060
210
120
110
020
010
2523812-1
ECM 127225

ECM: 251561 - 20060222
Group number: 2523812-0100
Assembly Drawing: 2523812-1_1_AB

This list covers pages from 5-118 to 5-121

Pos	Part No	UN	Qty	Description	Page No
TPA 0250SQ, TPA 0200SQ (See drawing on page: 5-118)					
010	2674240-0000		1	FLAP	
020	2674241-0000		1	BOTTOM	
030	2674239-0000		1	SLIDE	
100	312155-0327		2	SCREW DIN 7991 MF6S M5X12 A4 70	
110	312318-0325		2	SCREW ISO4029 M5X10 A4	
120	315105-0165		1	WASHER BRB8,4X16RFR	
TPA 0750SQ (See drawing on page: 5-120)					
010	2658242-0000		1	FLAP	
020	2663373-0000		1	BOTTOM	
030	2658241-0000		1	SLIDE	
100	312155-0327		2	SCREW DIN 7991 MF6S M5X12 A4 70	
110	312318-0327		2	SCREW ISO4029 M5X12 A4	
120	315105-0165		1	WASHER BRB8,4X16RFR	
200	90157-0021		1	LOCKING FLUID LOCTITE 270	
TPA 1000SQ (See drawing on page: 5-120)					
010	2658242-0000		1	FLAP	
020	2658240-0000		1	BOTTOM	
030	2658241-0000		1	SLIDE	
100	312155-0327		2	SCREW DIN 7991 MF6S M5X12 A4 70	
110	312318-0327		2	SCREW ISO4029 M5X12 A4	
120	315105-0165		1	WASHER BRB8,4X16RFR	
200	90157-0021		1	LOCKING FLUID LOCTITE 270	
0500B NODIMC, 1000B NODIMC (See drawing on page: 5-118)					
010	2598805-0000		1	FLAP	
020	2629336-0000		1	BOTTOM	
030	2598807-0000		1	SLIDE	
100	312155-0327		2	SCREW DIN 7991 MF6S M5X12 A4 70	
110	312318-0327		2	SCREW ISO4029 M5X12 A4	
120	315105-0165		1	WASHER BRB8,4X16RFR	
0500SQ NODIMC (See drawing on page: 5-118)					
010	2553615-0000		1	FLAP	
020	2796652-0000		1	BOTTOM	
030	2553617-0000		1	SLIDE	
100	312155-0327		2	SCREW DIN 7991 MF6S M5X12 A4 70	
110	312318-0327		2	SCREW ISO4029 M5X12 A4	
120	315105-0165		1	WASHER BRB8,4X16RFR	
1000SQ NODIMC					
010	2553615-0000		1	FLAP	
020	1511558-0000		1	BOTTOM	
030	2553617-0000		1	SLIDE	
100	312155-0327		2	SCREW DIN 7991 MF6S M5X12 A4 70	
110	312318-0327		2	SCREW ISO4029 M5X12 A4	
120	315105-0165		1	WASHER BRB8,4X16RFR	
TBA 0200SQ, TBA 0250SQ (See drawing on page: 5-118)					
010	2668221-0000		1	FLAP	
020	2668220-0000		1	BOTTOM	
030	2668222-0000		1	SLIDE	
100	312155-0327		2	SCREW DIN 7991 MF6S M5X12 A4 70	
110	312318-0327		2	SCREW ISO4029 M5X12 A4	
120	315105-0165		1	WASHER BRB8,4X16RFR	
TBA 0250S, TBA 0200M (See drawing on page: 5-118)					
010	2636399-0000		1	FLAP	
020	2636400-0000		1	BOTTOM	
030	2636401-0000		1	SLIDE	
100	312155-0327		2	SCREW DIN 7991 MF6S M5X12 A4 70	
110	312318-0327		2	SCREW ISO4029 M5X12 A4	
120	315105-0165		1	WASHER BRB8,4X16RFR	
TBA 0330S, TBA 0200B, TBA 0250B (See drawing on page: 5-118)					
010	2603488-0000		1	FLAP	
020	2603489-0000		1	BOTTOM	
030	2603490-0000		1	SLIDE	
100	312155-0327		16	SCREW DIN 7991 MF6S M5X12 A4 70	
110	312318-0327		16	SCREW ISO4029 M5X12 A4	
120	315105-0165		8	WASHER BRB8,4X16RFR	
TBA 0500B, TBA 1000B (See drawing on page: 5-118)					
010	2520170-0000		1	FLAP	
020	2629336-0000		1	BOTTOM	
030	2520168-0000		1	SLIDE	
100	312155-0327		2	SCREW DIN 7991 MF6S M5X12 A4 70	
110	312318-0327		2	SCREW ISO4029 M5X12 A4	
120	315105-0165		1	WASHER BRB8,4X16RFR	
Common Parts					
040	2526563-0000		1	HANDLE	
060	2526567-0000		1	CYLINDER	
090	312115-0291		1	SCREW ISO4762 M4X12 A4 80	
210	90459-0969		1	COMP. SPRING A D22430, 1,6X11,6X58,5	

Machine Type | Group Description | Used-In | Group Number | Page No

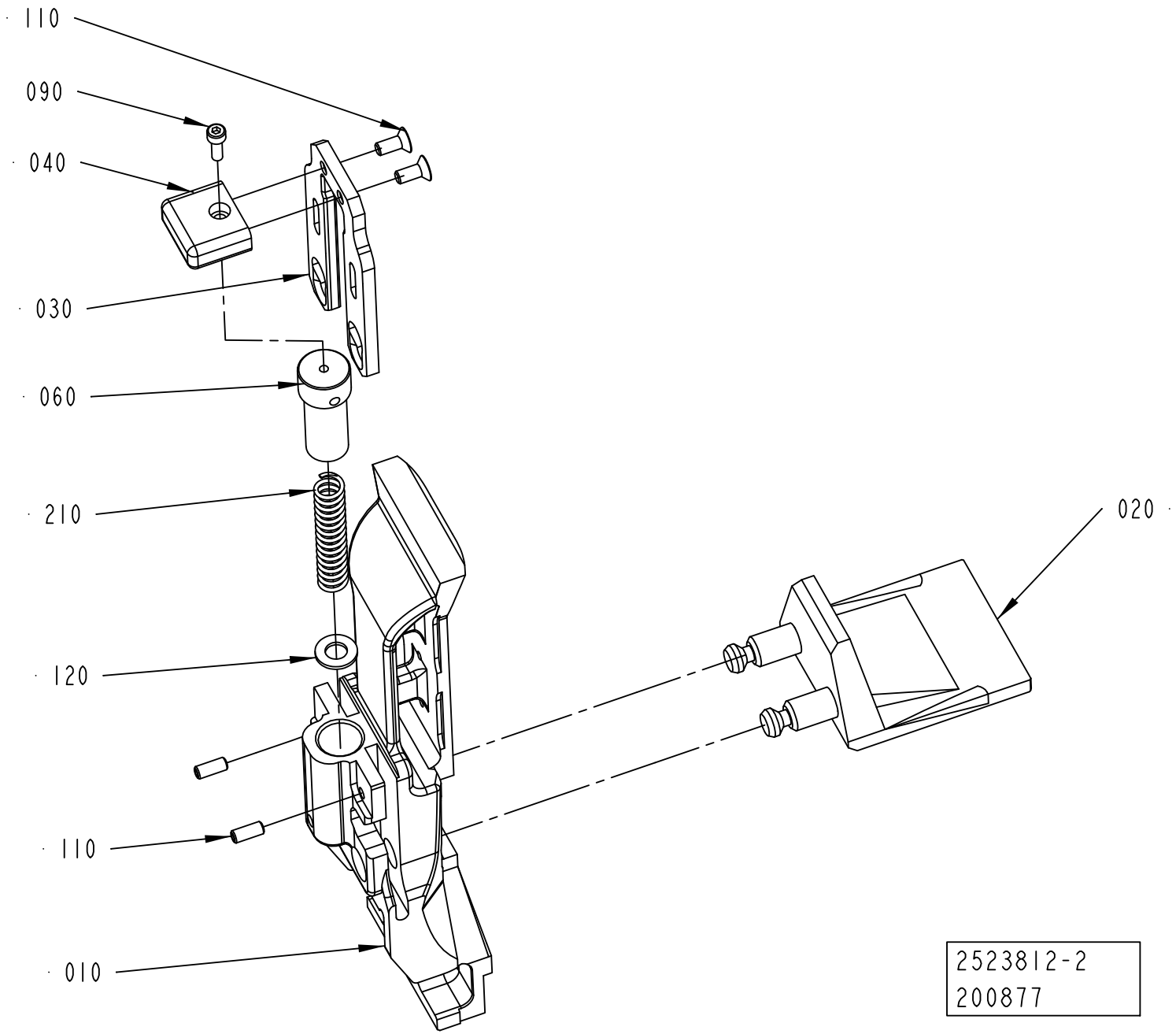
110
090
040
030
060
210
020
120
110
010
2523812-2
200877

ECM: 251561 - 20060222
Group number: 2523812-0100
Assembly Drawing: 2523812-2_1_AA

This list covers pages from 5-118 to 5-121

Pos	Part No	UN	Qty	Description	Page No
TPA 0250SQ, TPA 0200SQ (See drawing on page: 5-118)					
010	2674240-0000		1	FLAP	
020	2674241-0000		1	BOTTOM	
030	2674239-0000		1	SLIDE	
100	312155-0327		2	SCREW DIN 7991 MF6S M5X12 A4 70	
110	312318-0325		2	SCREW ISO4029 M5X10 A4	
120	315105-0165		1	WASHER BRB8,4X16RFR	
TPA 0750SQ (See drawing on page: 5-120)					
010	2658242-0000		1	FLAP	
020	2663373-0000		1	BOTTOM	
030	2658241-0000		1	SLIDE	
100	312155-0327		2	SCREW DIN 7991 MF6S M5X12 A4 70	
110	312318-0327		2	SCREW ISO4029 M5X12 A4	
120	315105-0165		1	WASHER BRB8,4X16RFR	
200	90157-0021		1	LOCKING FLUID LOCTITE 270	
TPA 1000SQ (See drawing on page: 5-120)					
010	2658242-0000		1	FLAP	
020	2658240-0000		1	BOTTOM	
030	2658241-0000		1	SLIDE	
100	312155-0327		2	SCREW DIN 7991 MF6S M5X12 A4 70	
110	312318-0327		2	SCREW ISO4029 M5X12 A4	
120	315105-0165		1	WASHER BRB8,4X16RFR	
200	90157-0021		1	LOCKING FLUID LOCTITE 270	
0500B NODIMC, 1000B NODIMC (See drawing on page: 5-118)					
010	2598805-0000		1	FLAP	
020	2629336-0000		1	BOTTOM	
030	2598807-0000		1	SLIDE	
100	312155-0327		2	SCREW DIN 7991 MF6S M5X12 A4 70	
110	312318-0327		2	SCREW ISO4029 M5X12 A4	
120	315105-0165		1	WASHER BRB8,4X16RFR	
0500SQ NODIMC (See drawing on page: 5-118)					
010	2553615-0000		1	FLAP	
020	2796652-0000		1	BOTTOM	
030	2553617-0000		1	SLIDE	
100	312155-0327		2	SCREW DIN 7991 MF6S M5X12 A4 70	
110	312318-0327		2	SCREW ISO4029 M5X12 A4	
120	315105-0165		1	WASHER BRB8,4X16RFR	
1000SQ NODIMC					
010	2553615-0000		1	FLAP	
020	1511558-0000		1	BOTTOM	
030	2553617-0000		1	SLIDE	
100	312155-0327		2	SCREW DIN 7991 MF6S M5X12 A4 70	
110	312318-0327		2	SCREW ISO4029 M5X12 A4	
120	315105-0165		1	WASHER BRB8,4X16RFR	
TBA 0200SQ, TBA 0250SQ (See drawing on page: 5-118)					
010	2668221-0000		1	FLAP	
020	2668220-0000		1	BOTTOM	
030	2668222-0000		1	SLIDE	
100	312155-0327		2	SCREW DIN 7991 MF6S M5X12 A4 70	
110	312318-0327		2	SCREW ISO4029 M5X12 A4	
120	315105-0165		1	WASHER BRB8,4X16RFR	
TBA 0250S, TBA 0200M (See drawing on page: 5-118)					
010	2636399-0000		1	FLAP	
020	2636400-0000		1	BOTTOM	
030	2636401-0000		1	SLIDE	
100	312155-0327		2	SCREW DIN 7991 MF6S M5X12 A4 70	
110	312318-0327		2	SCREW ISO4029 M5X12 A4	
120	315105-0165		1	WASHER BRB8,4X16RFR	
TBA 0330S, TBA 0200B, TBA 0250B (See drawing on page: 5-118)					
010	2603488-0000		1	FLAP	
020	2603489-0000		1	BOTTOM	
030	2603490-0000		1	SLIDE	
100	312155-0327		16	SCREW DIN 7991 MF6S M5X12 A4 70	
110	312318-0327		16	SCREW ISO4029 M5X12 A4	
120	315105-0165		8	WASHER BRB8,4X16RFR	
TBA 0500B, TBA 1000B (See drawing on page: 5-118)					
010	2520170-0000		1	FLAP	
020	2629336-0000		1	BOTTOM	
030	2520168-0000		1	SLIDE	
100	312155-0327		2	SCREW DIN 7991 MF6S M5X12 A4 70	
110	312318-0327		2	SCREW ISO4029 M5X12 A4	
120	315105-0165		1	WASHER BRB8,4X16RFR	
Common Parts					
040	2526563-0000		1	HANDLE	
060	2526567-0000		1	CYLINDER	
090	312115-0291		1	SCREW ISO4762 M4X12 A4 80	
210	90459-0969		1	COMP. SPRING A D22430, 1,6X11,6X58,5	

Machine Type | Group Description | Used-In | Group Number | Page No

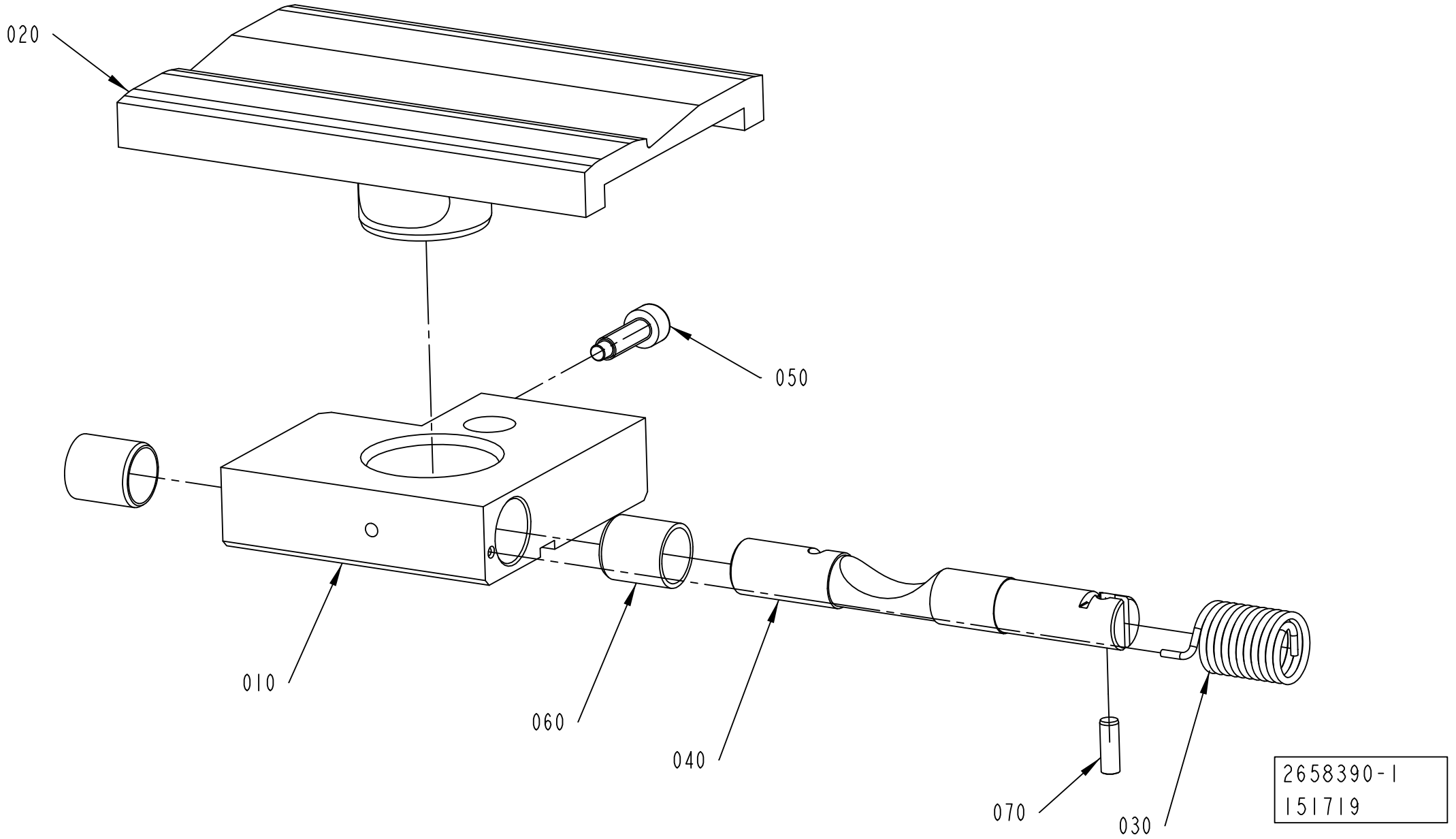
020
050
010
060
040
070
030
2658390-1
151719

ECM: 190929 - 20041104
Group number: 2658390-0100
Assembly Drawing: 2658390-1_1_AA

Pos	Part No	UN	Qty	Description	Page No
TBA 1890S					
020	2616218-0000		1	BOTTOM	
TBA 2000S					
020	2616219-0000		1	BOTTOM	
Common Parts					
010	2616217-0000		1	BOTTOM	
030	2650817-0000		1	SPRING	
040	2652888-0000		1	SHAFT	
050	2652889-0000		1	SCREW	
060	321138-0183		2	BUSHING, 12X14X15 MM	
070	311103-0268		1	PARALLEL PIN ISO 2338 4M6X12 A1	

Pos	Part No	UN	Qty	Description	Page No

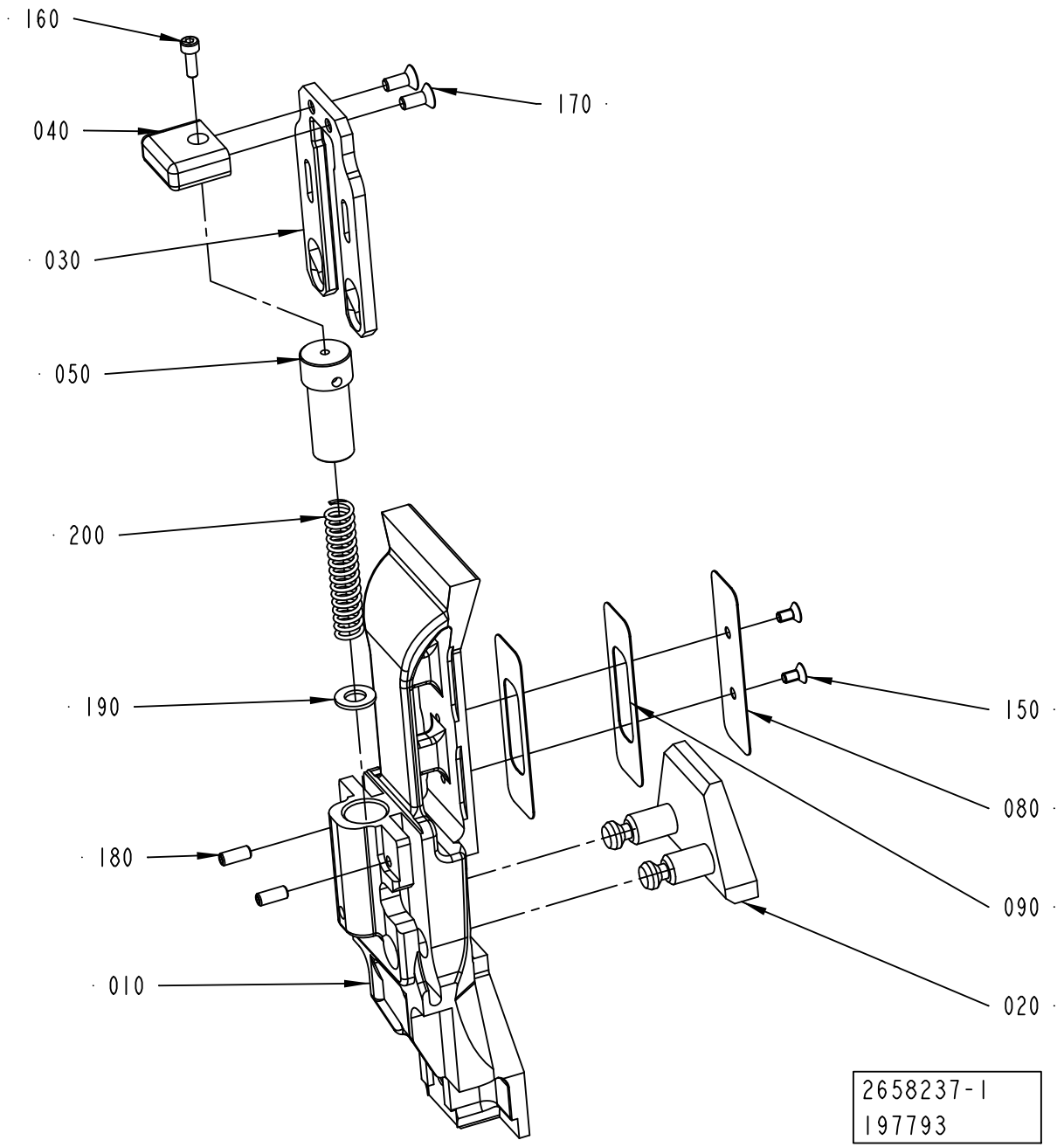
160
170
040
030
050
200
190
150
080
180
090
010
020
2658237-1
197793

ECM: 202650 - 20050224
Group number: 2658237-0100
Assembly Drawing: 2658237-1_1_AA

Pos	Part No	UN	Qty	Description	Page No
TPA 0250SQ, TPA 0200SQ					
010	2674237-0000		1	FLAP	
020	2674238-0000		1	BOTTOM	
030	2674239-0000		1	SLIDE	
TPA 0750SQ					
010	2658238-0000		1	FLAP	
020	2658239-0000		1	BOTTOM	
030	2658241-0000		1	SLIDE	
080	1549829-0000		1	VOLUME BULGE	
090	1549830-0000		2	VOLUME SHIM	
150	312155-0287		2	SCREW DIN 7991 MF6S M4X8 A4 70	
TPA 1000SQ					
010	2658238-0000		1	FLAP	
020	2658240-0000		1	BOTTOM	
030	2658241-0000		1	SLIDE	
080	1549829-0000		1	VOLUME BULGE	
090	1549830-0000		2	VOLUME SHIM	
150	312155-0287		2	SCREW DIN 7991 MF6S M4X8 A4 70	
Common Parts					
040	2526563-0000		1	HANDLE	
050	2526567-0000		1	CYLINDER	
160	312115-0291		1	SCREW ISO4762 M4X12 A4 80	
170	312155-0327		2	SCREW DIN 7991 MF6S M5X12 A4 70	
180	312318-0323		2	SCREW ISO4029 M5X8 A4	
190	315105-0165		1	WASHER BRB8,4X16RFR	
200	90459-0969		1	COMP. SPRING A D22430, 1,6X11,6X58,5	

Pos	Part No	UN	Qty	Description	Page No

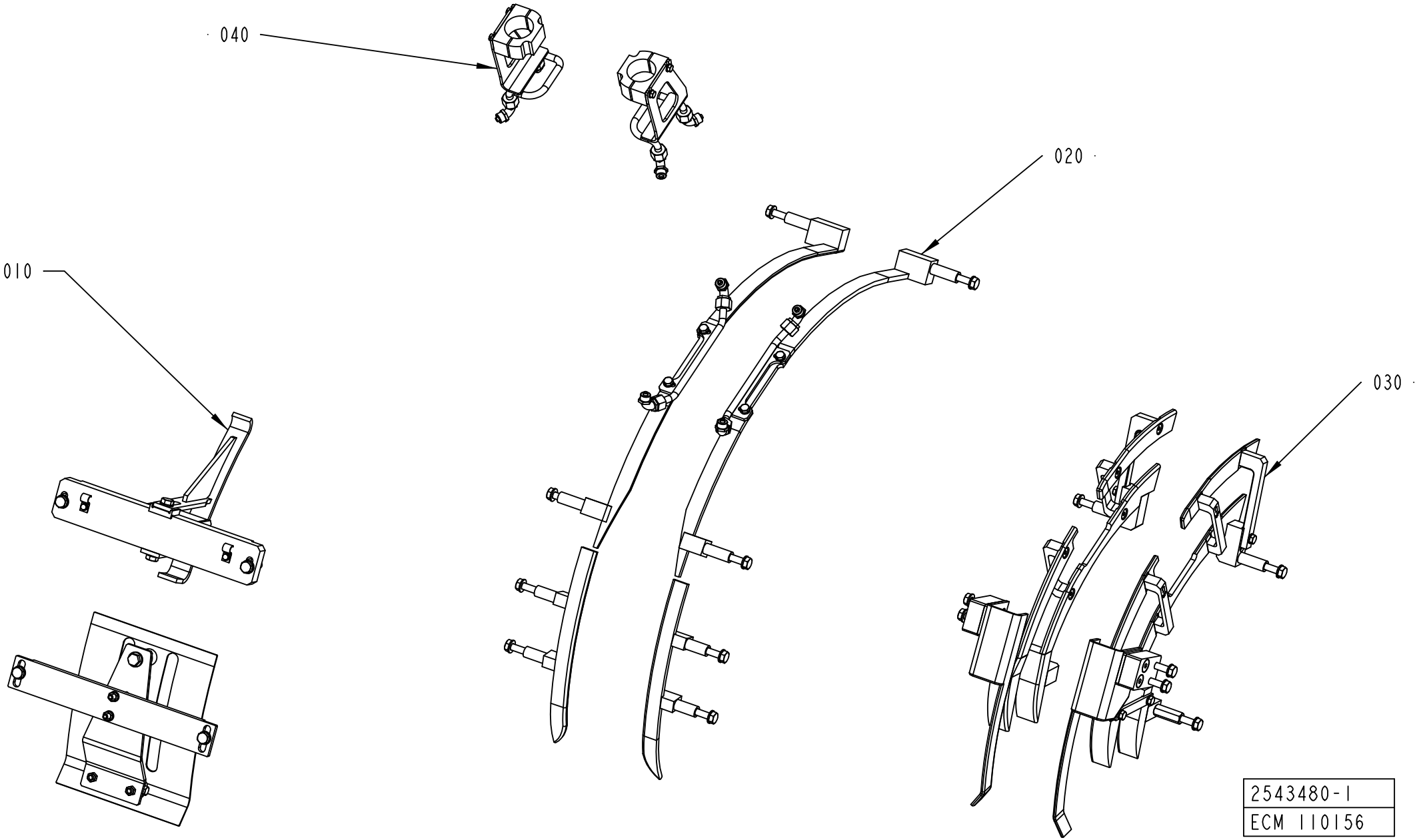
040
020
010
030
2543480-1
ECM 110156

ECM: 127231 - 20031103
Group number: 2543480-0100
Assembly Drawing: 2543480-1_1_AA

Pos	Part No	UN	Qty	Description	Page No
-					
010	2543481-0100		1	TOP SECTION	**5-129, 5-131, 5-133, 5-135**
020	2543482-0100		1	TOP RAIL	**5-137, 5-139, 5-141, 5-143**
030	2603827-0100		1	FLAP GUIDE	**5-145, 5-147, 5-149, 5-151, 5-153, 5-155**
040	2603826-0100		1	FOLDING PART	**5-157, 5-159**

Pos	Part No	UN	Qty	Description	Page No

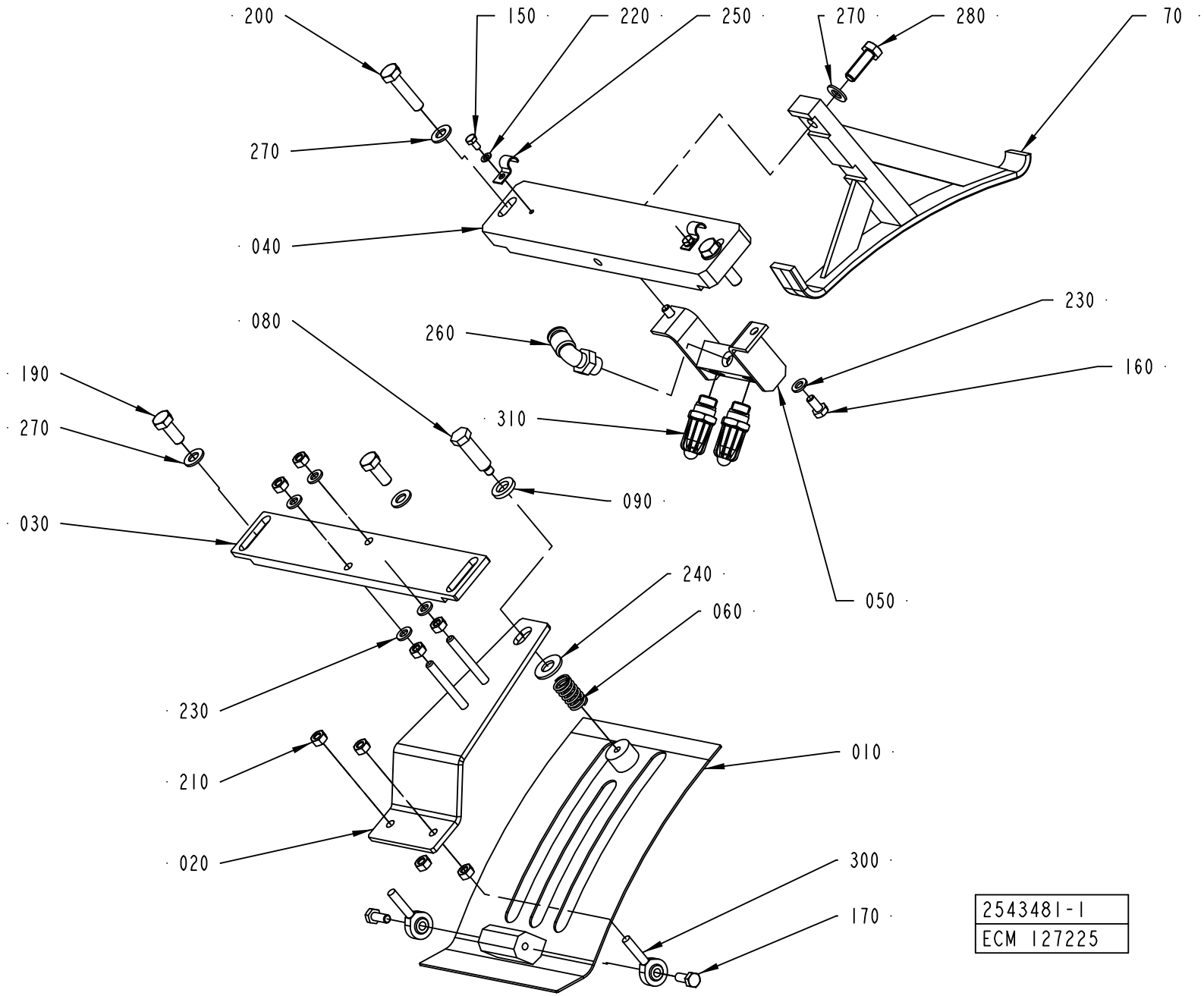
200
150
220
250
270
280
70
270
040
080
260
230
160
190
270
310
090
030
240
060
050
230
210
010
020
300
170
2543481-1
ECM 127225

ECM: 210086 - 20050520
Group number: 2543481-0100
Assembly Drawing: 2543481-1_1_AB

This list covers pages from 5-128 to 5-135

Pos	Part No	UN	Qty	Description	Page No
TBA 0200SQ, TPA 0250SQ, TPA 0200SQ, TBA 0250SQ (See drawing on page: 5-132)					
010	1317211-0000		1	COVERING PLATE	
020	1317213-0000		1	ADJUSTING PLATE	
030	1144975-0000		1	ATTACHMENT PLATE	
040	2647111-0000		1	SUPPORT	
070	2668243-0000		1	GUIDE	
100	2668242-0000		1	BLOCK	
150	312105-0287		2	SCREW M6S ISO 4017 M4X8 A470	
190	312105-0451		2	SCREW M6S ISO 4017 M8X20 A480	
220	315105-0136		2	WASHER BRB4,3XRFR	
230	315105-0153		4	WASHER BRB6,4X12RFR	
250	90165-0057		2	PIPE CLIP FOR TUBE D=6 MM	
270	315105-0165		6	WASHER BRB8,4X16RFR	
280	312105-0451		2	SCREW M6S ISO 4017 M8X20 A480	
TBA 0250S, TBA 0200M (See drawing on page: 5-134)					
010	1317211-0000		1	COVERING PLATE	
020	1317213-0000		1	ADJUSTING PLATE	
030	1144975-0000		1	ATTACHMENT PLATE	
040	1144902-0000		1	SUPPORT	
070	2555637-0000		1	GUIDE	
150	312105-0287		2	SCREW M6S ISO 4017 M4X8 A470	
190	312105-0451		4	SCREW M6S ISO 4017 M8X20 A480	
220	315105-0136		2	WASHER BRB4,3XRFR	
230	315105-0153		4	WASHER BRB6,4X12RFR	
250	90165-0057		2	PIPE CLIP FOR TUBE D=6 MM	
270	315105-0165		6	WASHER BRB8,4X16RFR	
TBA 0330S, TBA 0200B, TBA 0250B (See drawing on page: 5-132)					
010	1317211-0000		1	COVERING PLATE	
020	1317213-0000		1	ADJUSTING PLATE	
030	1144975-0000		1	ATTACHMENT PLATE	
040	1144902-0000		1	SUPPORT	
050	1349087-0000		1	DISTRIBUTOR	
070	2552022-0000		1	GUIDE	
100	2553284-0000		1	BLOCK	
150	312105-0287		2	SCREW M6S ISO 4017 M4X8 A470	
160	312105-0366		2	SCREW M6S ISO 4017 M6X12 A480	
190	312105-0451		2	SCREW M6S ISO 4017 M8X20 A480	
220	315105-0136		2	WASHER BRB4,3XRFR	
230	315105-0153		6	WASHER BRB6,4X12RFR	
250	90165-0057		2	PIPE CLIP FOR TUBE D=6 MM	
260	90458-2958		1	ELBOW PIPE JOINT, EXT.THREAD, D=8MM-G1/4	
270	315105-0165		6	WASHER BRB8,4X16RFR	
280	312105-0451		2	SCREW M6S ISO 4017 M8X20 A480	
310	90424-0068		1	AIR NOZZLE, G1/4, MOD. 216 BSP	
TBA 0500B, TBA 1000B (See drawing on page: 5-128)					
010	1144941-0000		1	COVERING PLATE	
020	1144974-0000		1	ADJUSTING PLATE	
030	1144975-0000		1	ATTACHMENT PLATE	
040	1144902-0000		1	SUPPORT	
050	1285014-0000		1	DISTRIBUTOR	
070	2609372-0000		1	GUIDE	
150	312105-0287		2	SCREW M6S ISO 4017 M4X8 A470	
160	312105-0366		2	SCREW M6S ISO 4017 M6X12 A480	
180	312105-0449		1	SCREW M6S ISO 4017 M8X16 A480	
190	312105-0451		2	SCREW M6S ISO 4017 M8X20 A480	
220	315105-0136		2	WASHER BRB4,3XRFR	
230	315105-0153		6	WASHER BRB6,4X12RFR	
250	90165-0057		2	PIPE CLIP FOR TUBE D=6 MM	
260	90458-2958		1	ELBOW PIPE JOINT, EXT.THREAD, D=8MM-G1/4	
270	315105-0165		5	WASHER BRB8,4X16RFR	
280	312105-0453		1	SCREW M6S ISO 4017 M8X25 A480	
310	90424-0068		2	AIR NOZZLE, G1/4, MOD. 216 BSP	
TBA 1890S, TBA 2000S (See drawing on page: 5-130)					
010	1548612-0000		1	COVERING PLATE	
020	1144974-0000		1	ADJUSTING PLATE	
030	1285299-0000		1	BRACKET	
040	1334480-0000		1	SUPPORT	
070	1347057-0000		1	GUIDE	
150	312105-0287		4	SCREW M6S ISO 4017 M4X8 A470	
180	312105-0449		1	SCREW M6S ISO 4017 M8X16 A480	
190	312105-0453		2	SCREW M6S ISO 4017 M8X25 A480	
220	315105-0136		4	WASHER BRB4,3XRFR	
230	315105-0153		4	WASHER BRB6,4X12RFR	
250	316810-0106		4	PIPE CLIP FOR TUBE D=8 MM	
270	315105-0165		6	WASHER BRB8,4X16RFR	
280	312115-0449		1	SCREW ISO4762 M8X16 A4 80	
310	90424-0068		2	AIR NOZZLE, G1/4, MOD. 216 BSP	
320	342981-0122		1	BANJO CONNEC,RING,FOR PLAST.TUBE 8-G1/4"	
330	90235-0731		1	THROTTLE CHECK VALVE, G1/4", SCO-606-1/4	
TPA 1000SQ, TPA 0750SQ (See drawing on page: 5-130)					
010	2629303-0000		1	COVERING PLATE	
020	1144974-0000		1	ADJUSTING PLATE	
030	1285299-0000		1	BRACKET	
040	2647111-0000		1	SUPPORT	

Machine Type | Group Description | Used-In | Group Number | Page No

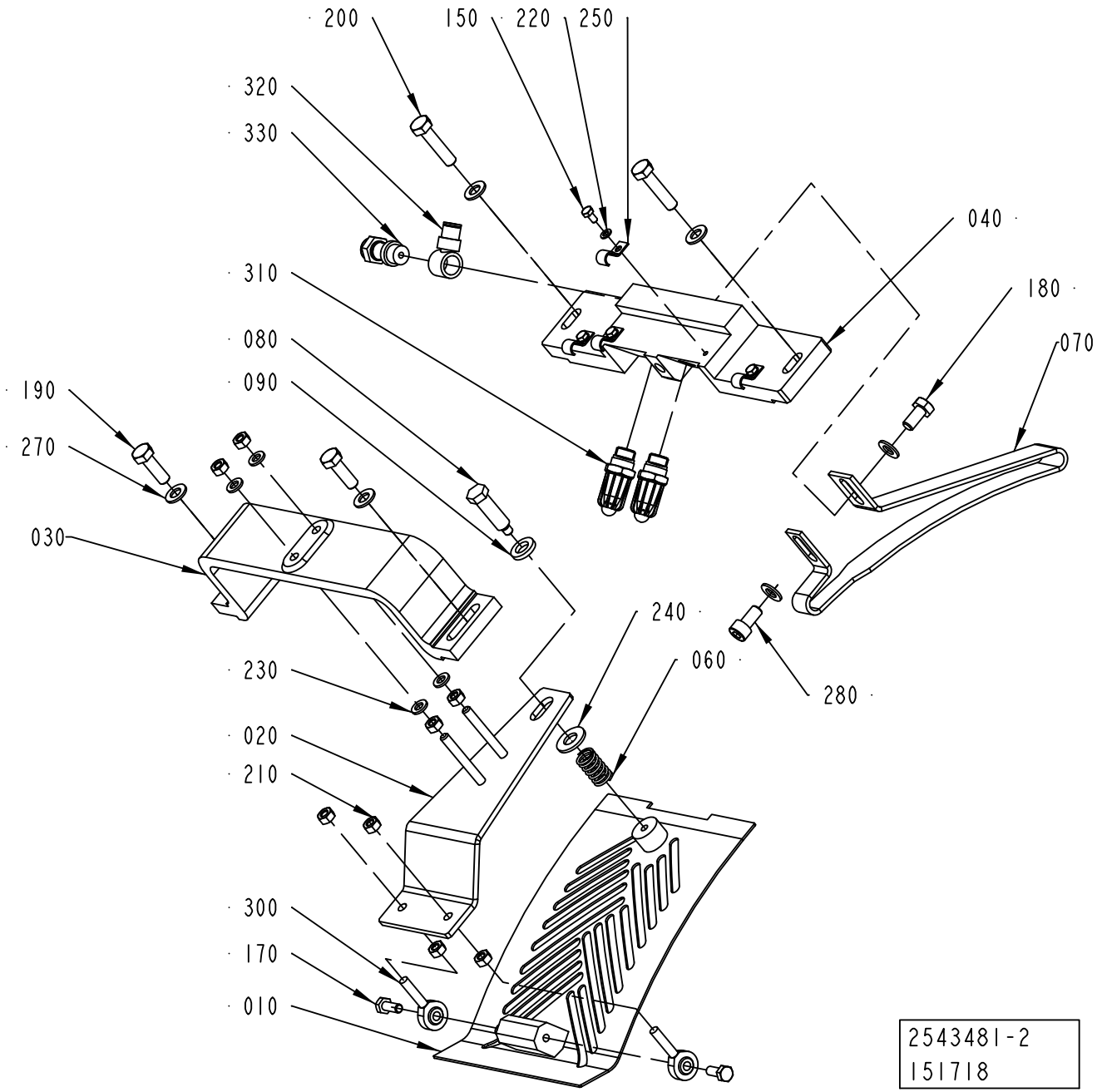
200
150
220
250
320
330
310
080
090
190
270
030
040
180
070
240
060
280
230
020
210
300
170
010
2543481-2
151718

Pos	Part No	UN	Qty	Description	Page No
TPA 1000SQ, TPA 0750SQ (Cont'd) (See drawing on page: 5-130)					
070	2647112-0000		1	GUIDE	
150	312105-0287		2	SCREW M6S ISO 4017 M4X8 A470	
180	312105-0449		1	SCREW M6S ISO 4017 M8X16 A480	
190	312105-0453		2	SCREW M6S ISO 4017 M8X25 A480	
220	315105-0136		2	WASHER BRB4,3XRFR	
230	315105-0153		4	WASHER BRB6,4X12RFR	
250	90165-0057		2	PIPE CLIP FOR TUBE D=6 MM	
270	315105-0165		6	WASHER BRB8,4X16RFR	
280	312105-0449		1	SCREW M6S ISO 4017 M8X16 A480	
Common Parts					
060	90335-0036		1	COMP. SPRING 22450, 1,6X14,1X24	
080	1144976-0000		1	STOP SCREW	
090	1144979-0000		1	WASHER	
170	312105-0368		2	SCREW M6S ISO 4017 M6X16 A480	
200	312105-0457		2	SCREW M6S ISO 4014 M8X35 A480	
210	312605-0316		8	HEXAGON NUT, M6M M6 A280	
240	315105-0173		1	WASHER BRB10,5X22RFR	
300	90115-0137		2	ROD END, ID=6 MM, M6X1	

Pos	Part No	UN	Qty	Description	Page No

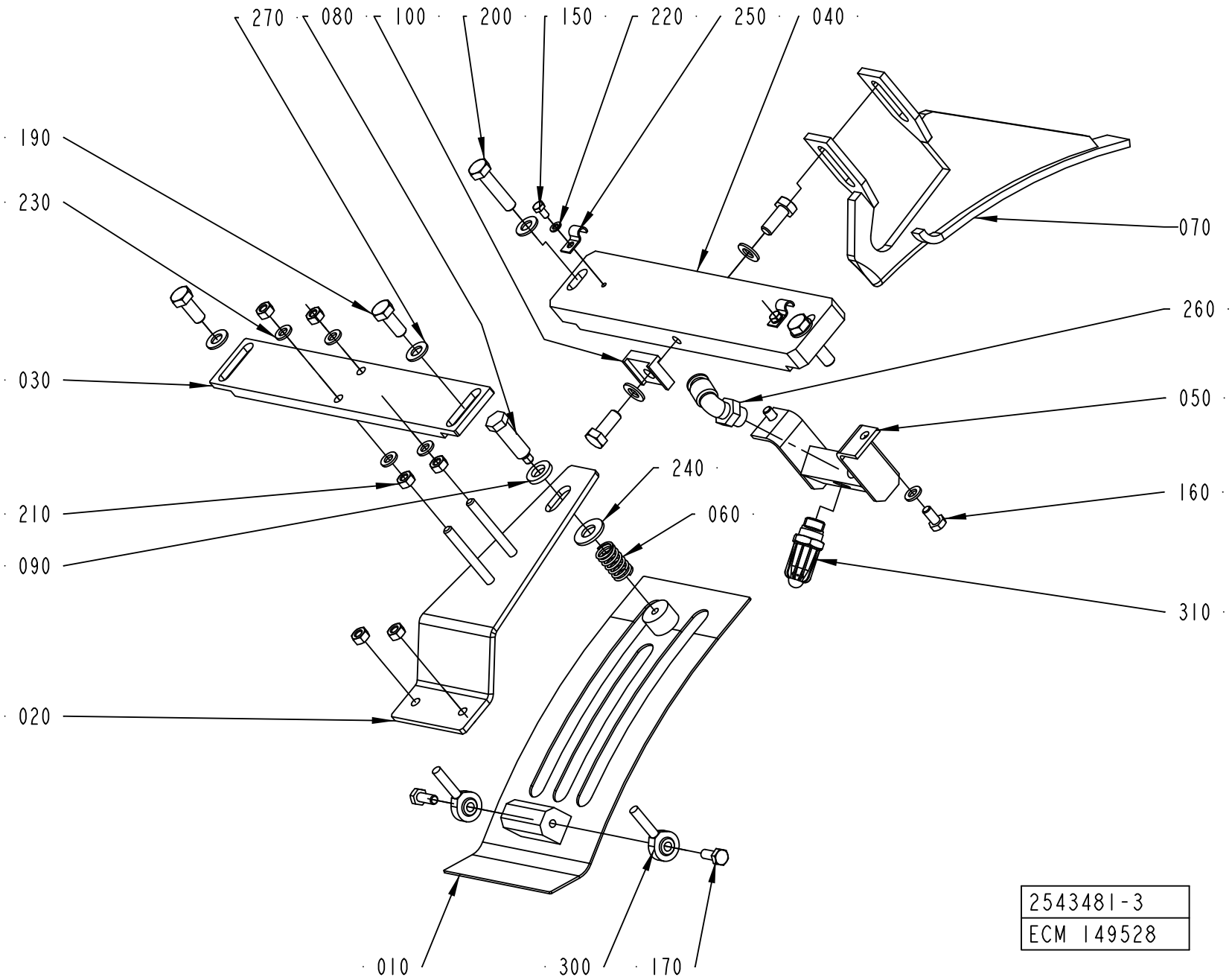
270
080
100
200
150
220
250
040
190
230
070
260
030
050
240
160
060
210
090
310
020
010
300
170
2543481-3
ECM 149528

Pos	Part No	UN	Qty	Description	Page No
SEE PREVIOUS LISTS PAGES: 5-129, 5-131.					

Pos	Part No	UN	Qty	Description	Page No

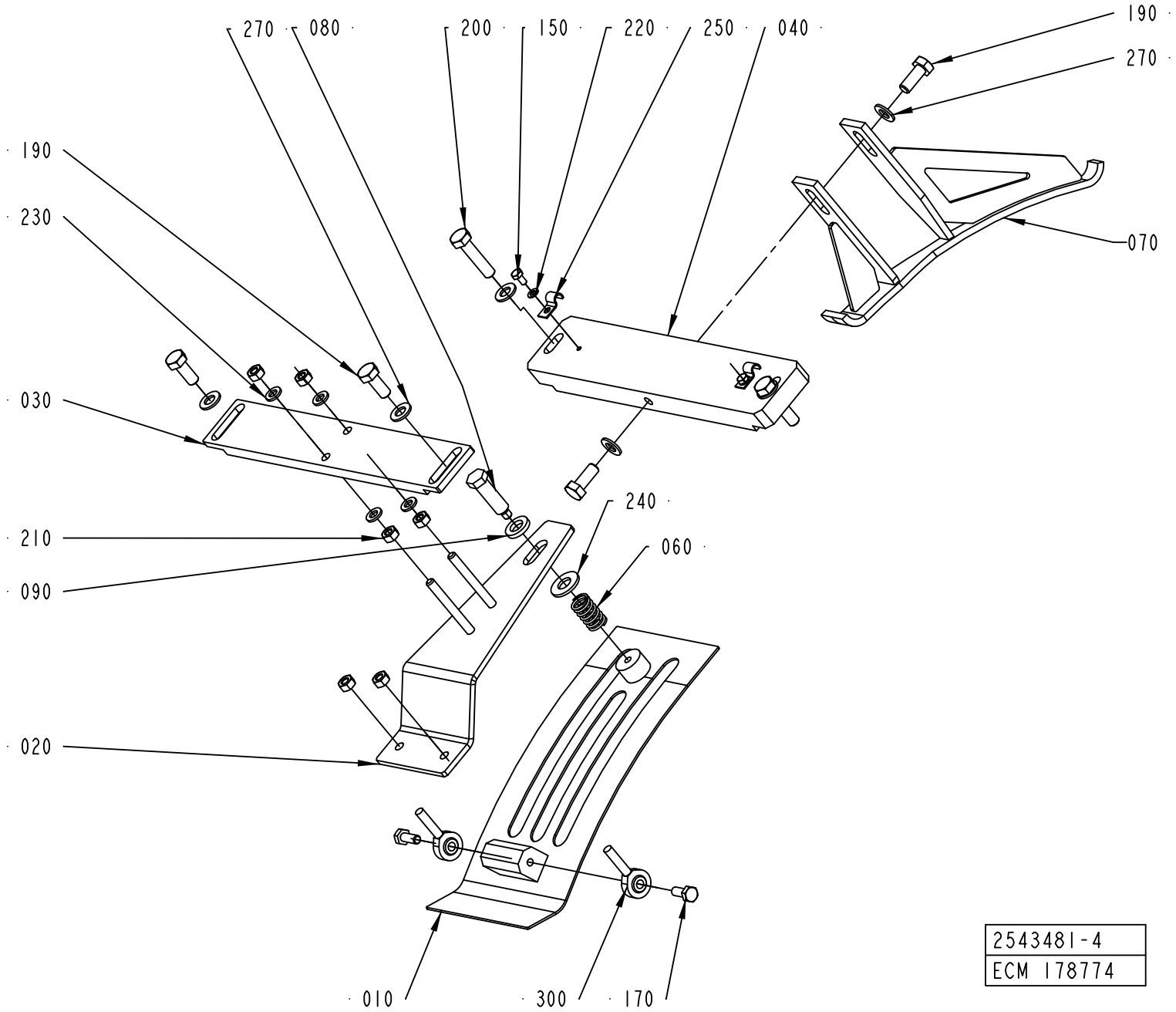
270
080
200
150
220
250
040
190
270
190
230
070
030
240
210
060
090
020
010
300
170
2543481-4
ECM 178774

Pos	Part No	UN	Qty	Description	Page No	Pos	Part No	UN	Qty	Description	Page No

SEE PREVIOUS LISTS PAGES: 5-129, 5-131.

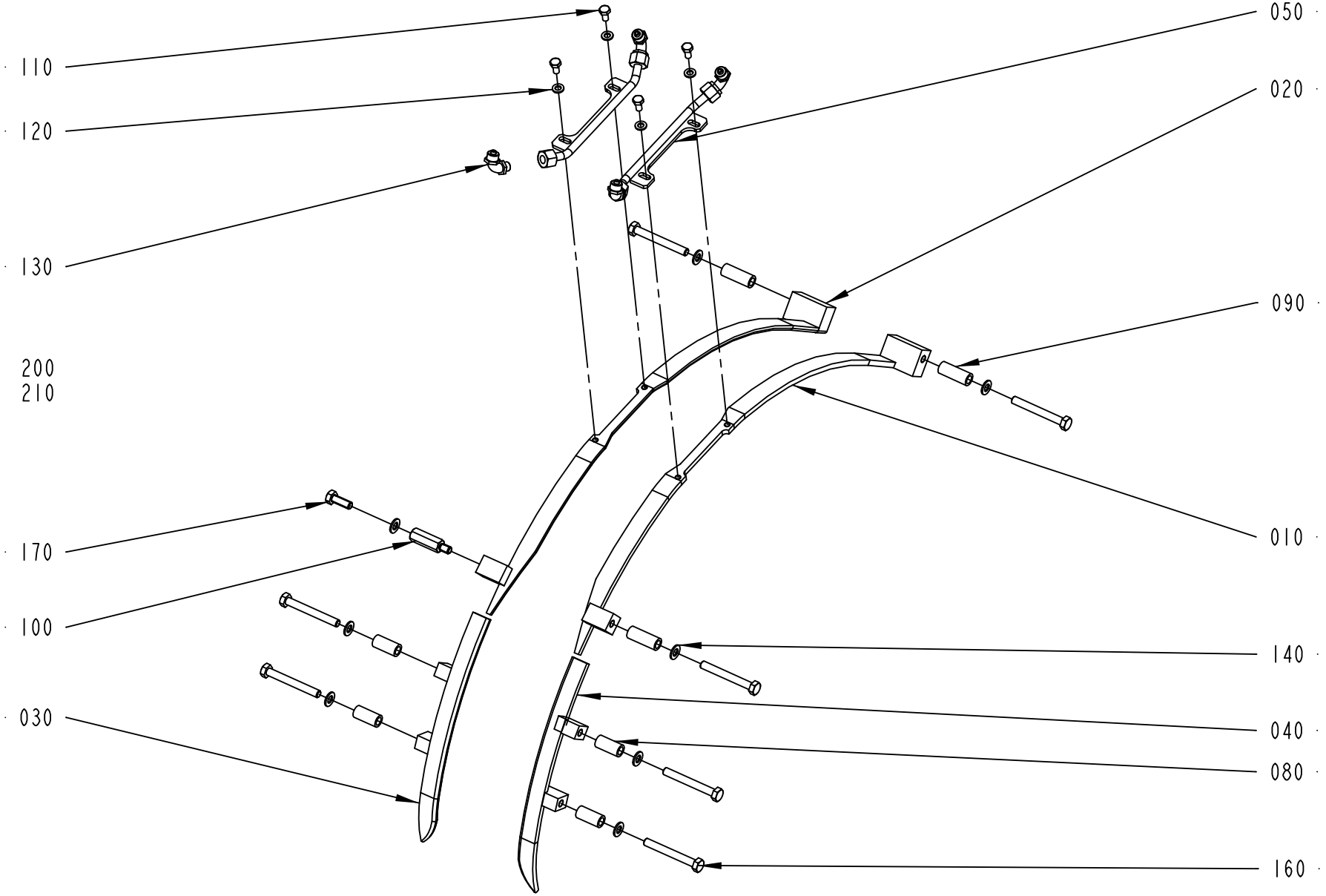

2543482-1
ECM 110156

ECM: 245134 - 20060208
Group number: 2543482-0100
Assembly Drawing: 2543482-1_1_AA

This list covers pages from 5-136 to 5-143

Pos	Part No	UN	Qty	Description	Page No
TBA 0200SQ, TBA 0250SQ (See drawing on page: 5-142)					
010	1144892-0000		1	GUIDE RIGHT	
020	1144893-0000		1	GUIDE LEFT	
030	2558704-0000		1	GUIDE UPPER R	
040	2558703-0000		1	GUIDE UPPER L	
050	2676815-0000		1	FOLDING BAR	
055	2676816-0000		1	FOLDING BAR	
060	1346340-0000		1	BRACKET	
080	2750544-0000		4	SPACER	
090	1539898-0000		2	SPACER	
110	312105-0366		6	SCREW M6S ISO 4017 M6X12 A480	
120	315105-0153		6	WASHER BRB6,4X12RFR	
140	315105-0165		8	WASHER BRB8,4X16RFR	
160	312105-0467		6	SCREW M6S ISO 4014 M8X80 A480	
170	312105-0451		1	SCREW M6S ISO 4017 M8X20 A480	
175	312155-0449		2	SCREW DIN 7991 MF6S M8X16 A4 70	
180	2698299-0000		2	BRACKET	
190	312105-0455		1	SCREW M6S ISO 4017 M8X30 A480	
TBA 0250S, TBA 0200M (See drawing on page: 5-140)					
010	1478926-0000		1	GUIDE RIGHT	
020	1478927-0000		1	GUIDE LEFT	
030	1539900-0000		1	RIGHT UPPER GUIDE	
040	1549614-0000		1	LEFT UPPER GUIDE	
050	2676815-0000		1	FOLDING BAR	
055	2676816-0000		1	FOLDING BAR	
060	1346340-0000		1	BRACKET	
070	1144555-0000		7	STUD SCREW	
075	1334523-0000		1	SUPPORT	
110	312105-0366		6	SCREW M6S ISO 4017 M6X12 A480	
120	315105-0153		6	WASHER BRB6,4X12RFR	
140	315105-0165		16	WASHER BRB8,4X16RFR	
150	312605-0318		16	HEXAGON NUT, M6M M8 A280	
TBA 0330S, TBA 0200B, TBA 0250B (See drawing on page: 5-140)					
010	1144892-0000		1	GUIDE RIGHT	
020	1144893-0000		1	GUIDE LEFT	
030	2558704-0000		1	GUIDE UPPER R	
040	2558703-0000		1	GUIDE UPPER L	
050	2676815-0000		1	FOLDING BAR	
055	2676816-0000		1	FOLDING BAR	
060	1346340-0000		1	BRACKET	
070	1144555-0000		7	STUD SCREW	
075	1334523-0000		1	SUPPORT	
110	312105-0366		6	SCREW M6S ISO 4017 M6X12 A480	
120	315105-0153		6	WASHER BRB6,4X12RFR	
140	315105-0165		16	WASHER BRB8,4X16RFR	
150	312605-0318		16	HEXAGON NUT, M6M M8 A280	
TBA 0500B, TBA 1000B (See drawing on page: 5-136)					
010	2520178-0000		1	GUIDE	
020	2520179-0000		1	GUIDE	
030	1539900-0000		1	RIGHT UPPER GUIDE	
040	1549614-0000		1	LEFT UPPER GUIDE	
050	2526575-0000		2	FOLDING BAR	
080	1334447-0000		4	SPACER	
090	2603663-0000		3	SPACER	
100	2555082-0000		1	SPACER SCREW	
110	312105-0366		4	SCREW M6S ISO 4017 M6X12 A480	
120	315105-0153		4	WASHER BRB6,4X12RFR	
140	315105-0165		8	WASHER BRB8,4X16RFR	
160	312105-0464		7	SCREW M6S ISO 4014 M8X65 A480	
170	312105-0452		1	SCREW M6S ISO 4017 M8X22 A4 80	
TBA 1890S, TBA 2000S (See drawing on page: 5-138)					
010	1350424-0000		1	GUIDE RIGHT	
020	1350425-0000		1	GUIDE LEFT	
030	1334559-0000		1	GUIDE UPPER R	
040	1334560-0000		1	GUIDE UPPER L	
050	1350423-0000		2	FOLDING BAR	
080	1334447-0000		4	SPACER	
090	2752533-0000		4	SPACER	
110	312105-0368		4	SCREW M6S ISO 4017 M6X16 A480	
120	315105-0153		6	WASHER BRB6,4X12RFR	
140	315105-0165		8	WASHER BRB8,4X16RFR	
160	312105-0463		8	SCREW M6S ISO 4014 M8X60 A480	
220	1282705-0000		4	SUPPORT	
230	1285267-0000		1	SUPPORT	
240	312105-0366		2	SCREW M6S ISO 4017 M6X12 A480	
TPA 0250SQ, TPA 0200SQ (See drawing on page: 5-142)					
010	1144892-0000		1	GUIDE RIGHT	
020	1144893-0000		1	GUIDE LEFT	
030	2735125-0000		1	GUIDE UPPER	
040	2735126-0000		1	GUIDE UPPER	
050	2676815-0000		1	FOLDING BAR	
055	2676816-0000		1	FOLDING BAR	
060	1346340-0000		1	BRACKET	
080	1558910-0000		4	SPACER	

Machine Type | Group Description | Used-In | Group Number | Page No

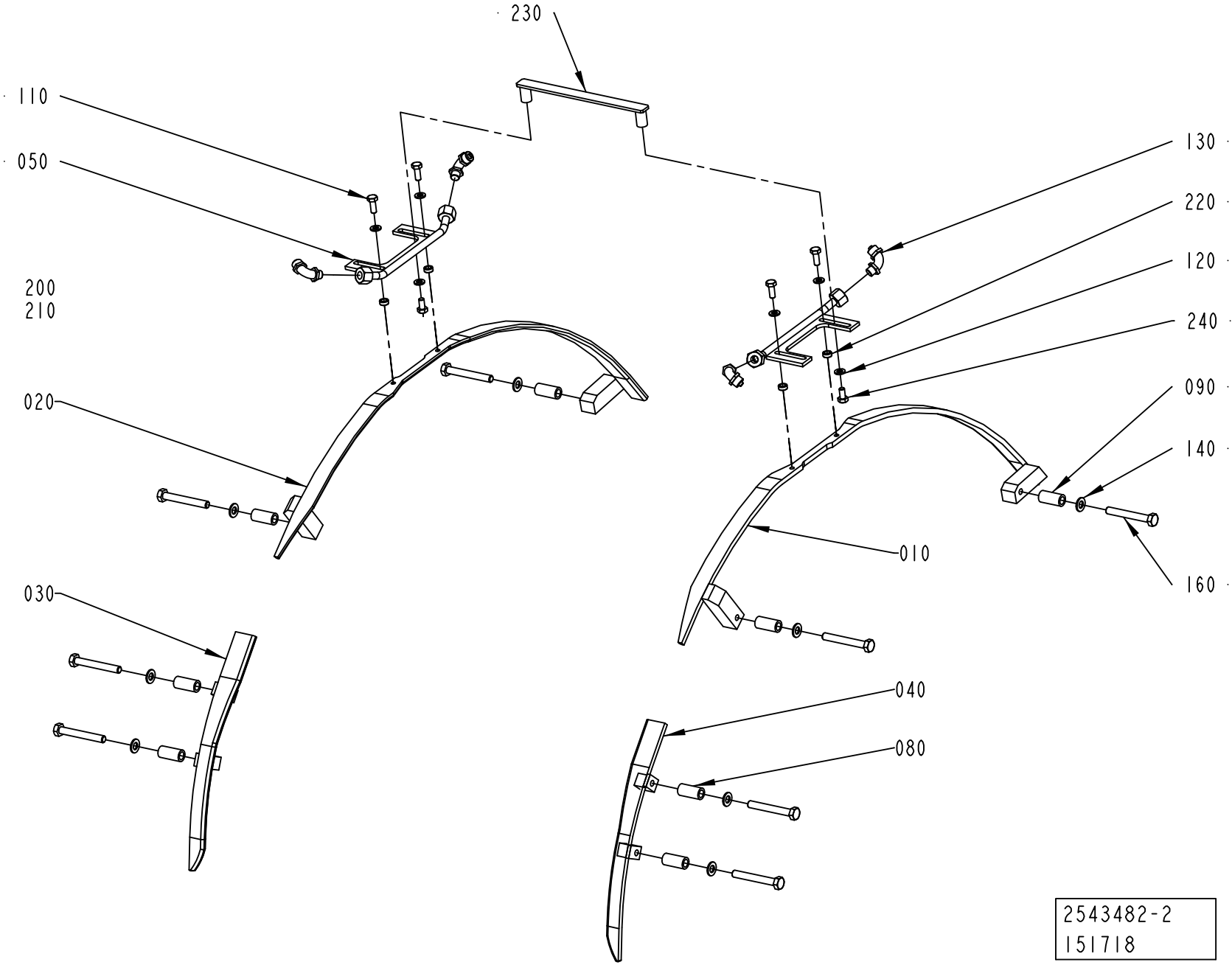
230
110
050
200
210
020
030
130
220
120
240
090
140
010
160
040
080
2543482-2
151718

Pos	Part No	UN	Qty	Description	Page No
TPA 0250SQ, TPA 0200SQ (Cont'd) (See drawing on page: 5-142)					
090	1558526-0000		2	SPACER	
110	312105-0366		4	SCREW M6S ISO 4017 M6X12 A480	
120	315105-0153		6	WASHER BRB6,4X12RFR	
140	315105-0165		8	WASHER BRB8,4X16RFR	
160	312105-0469		6	SCREW M6S ISO 4014 M8X90 A480	
170	312105-0451		1	SCREW M6S ISO 4017 M8X20 A480	
175	312105-0449		2	SCREW M6S ISO 4017 M8X16 A480	
180	2698299-0000		2	BRACKET	
190	312105-0455		1	SCREW M6S ISO 4017 M8X30 A480	
TPA 1000SQ, TPA 0750SQ (See drawing on page: 5-138)					
010	2647120-0000		1	GUIDE	
020	2647119-0000		1	GUIDE	
030	2642178-0000		1	GUIDE UPPER	
040	2642177-0000		1	GUIDE UPPER	
050	1350423-0000		2	FOLDING BAR	
090	1539898-0000		8	SPACER	
110	312105-0368		4	SCREW M6S ISO 4017 M6X16 A480	
120	315105-0153		6	WASHER BRB6,4X12RFR	
140	315105-0165		8	WASHER BRB8,4X16RFR	
160	2541125-0000		8	SCREW	
220	1282705-0000		4	SUPPORT	
230	1346340-0000		1	BRACKET	
240	312105-0366		2	SCREW M6S ISO 4017 M6X12 A480	
Common Parts					
130	342931-0121		4	ELBOW 90 COUPL.,EXT.THREAD 8/6-G1/8"	
200	90166-0118	MM	1500	TUBE 8 MM PA BLACK	
210	352113-0102		10	CLIP-STRIP, BLACK 188X4,8 MM	

Pos	Part No	UN	Qty	Description	Page No

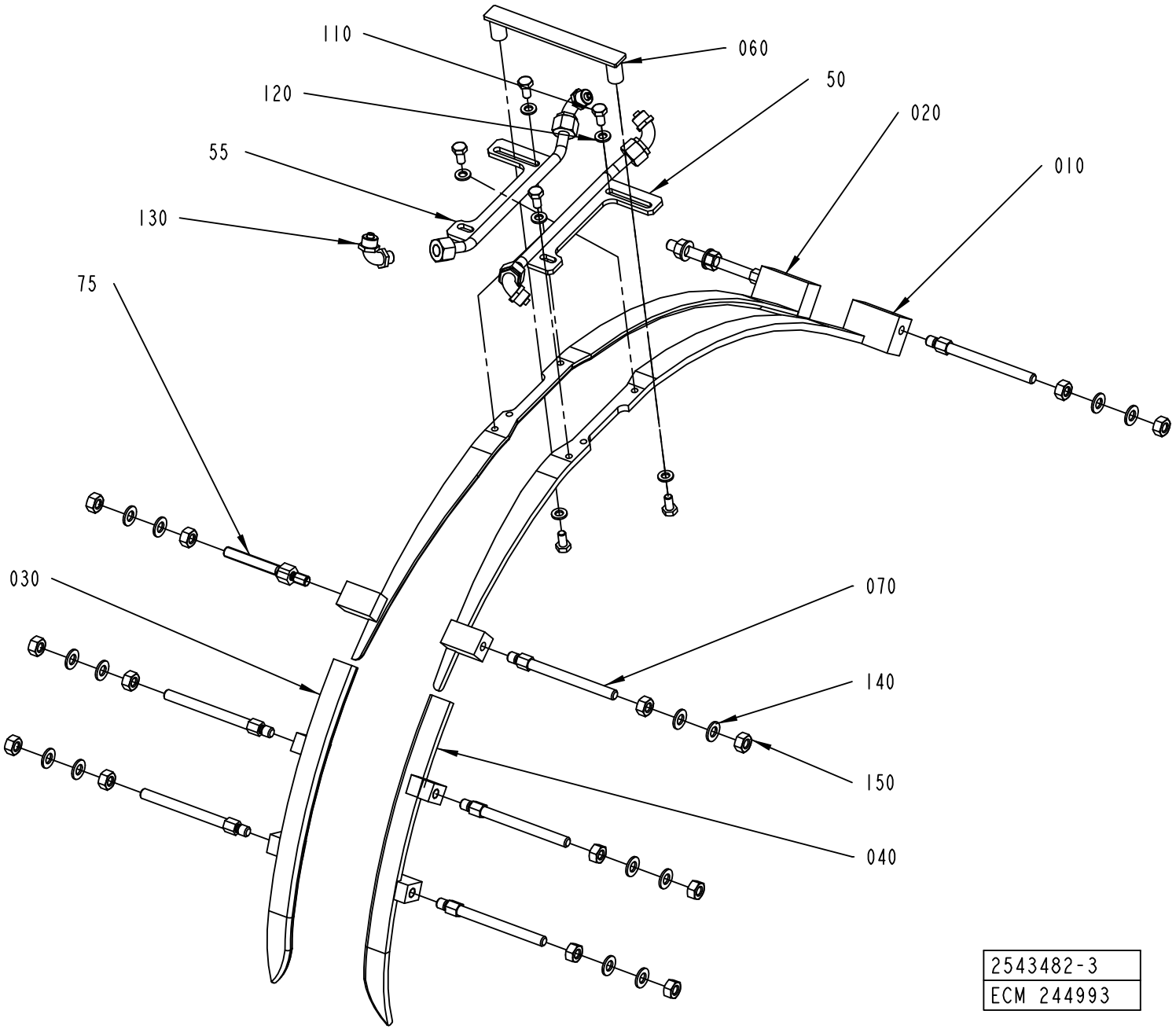
110
060
120
50
020
55
010
130
75
030
070
140
150
040
2543482-3
ECM 244993

Pos	Part No	UN	Qty	Description	Page No	Pos	Part No	UN	Qty	Description	Page No

SEE PREVIOUS LISTS PAGES: 5-137, 5-139.

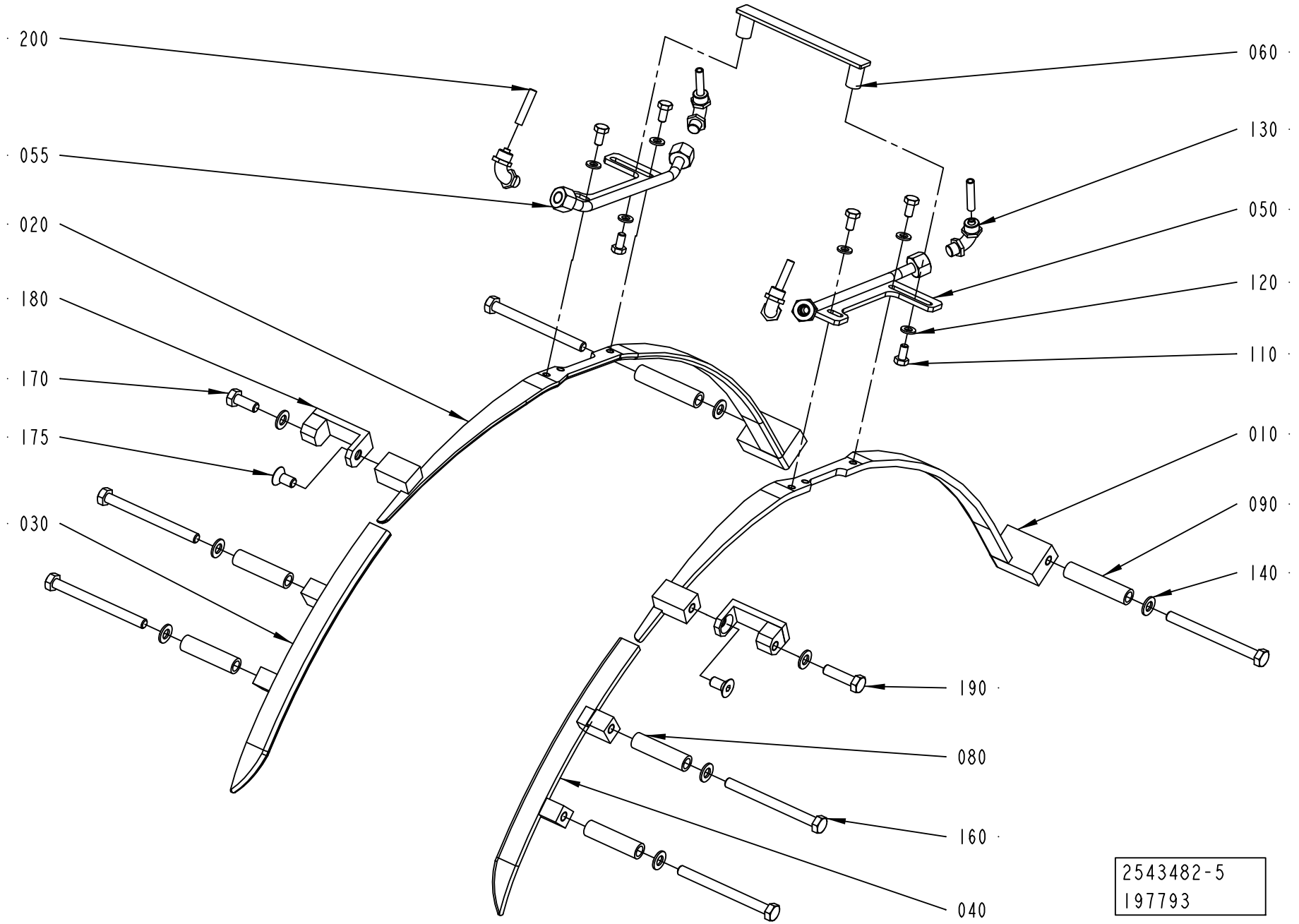
200
055
020
180
170
175
030
060
130
050
120
110
010
090
140
190
080
160
040
2543482-5
197793

Pos	Part No	UN	Qty	Description	Page No	Pos	Part No	UN	Qty	Description	Page No

SEE PREVIOUS LISTS PAGES: 5-137, 5-139.

FLAP GUIDE

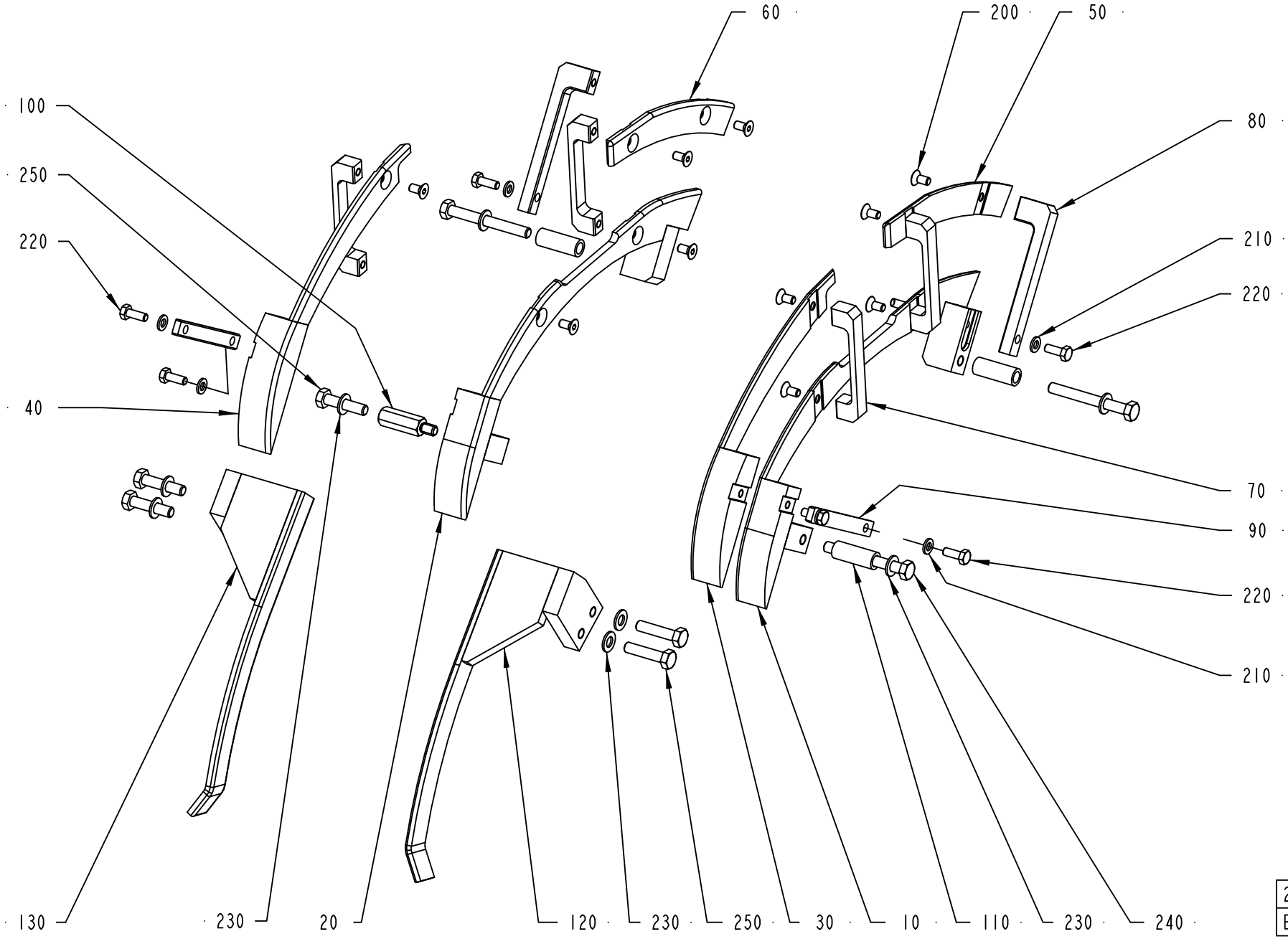

2603827-1
ECM 127225

ECM: 255432 - 20060310
Group number: 2603827-0100
Assembly Drawing: 2603827-1_1_AA

This list covers pages from 5-144 to 5-155

Pos	Part No	UN	Qty	Description	Page No
TBA 0200SQ, TBA 0250SQ (See drawing on page: 5-154)					
010	2668248-0000		1	FOLDING PART	
020	2668251-0000		1	FOLDING PART	
030	2668250-0000		1	GUIDE RAIL	
040	2668252-0000		1	GUIDE RAIL	
050	2668249-0000		1	GUIDE RAIL	
060	2668253-0000		1	GUIDE RAIL	
090	2647126-0000		2	BRACKET	
110	2674267-0000		2	SPACER	
115	2752534-0000		4	SPACER	
120	2708323-0000		1	RAIL	
130	2708322-0000		1	RAIL	
180	2668254-0000		2	BRACKET	
190	2674266-0000		2	SPACER	
210	315105-0153		8	WASHER BRB6,4X12RFR	
220	312105-0370		8	SCREW M6S ISO 4017 M6X20 A480	
230	315105-0165		12	WASHER BRB8,4X16RFR	
240	312105-0469		2	SCREW M6S ISO 4014 M8X90 A480	
250	312105-0455		4	SCREW M6S ISO 4017 M8X30 A480	
260	312105-0466		4	SCREW M6S ISO 4014 M8X75 A480	
270	312105-0465		2	SCREW M6S ISO 4014 M8X70 A480	
TBA 0250S, TBA 0200M (See drawing on page: 5-152)					
010	2595707-0000		1	FOLDING PART	
020	2601445-0000		1	FOLDING PART	
030	2649130-0000		1	GUIDE RAIL	
040	2649132-0000		1	GUIDE RAIL	
050	2649131-0000		1	GUIDE RAIL	
060	2649133-0000		1	GUIDE RAIL	
070	2649134-0000		1	BRACKET	
110	2804857-0000		4	SPACER SCREW	
120	1346344-0000		1	RAIL	
130	1346343-0000		1	RAIL	
180	2649139-0000		2	SPACER	
210	315105-0153		16	WASHER BRB6,4X12RFR	
220	312105-0370		16	SCREW M6S ISO 4017 M6X20 A480	
230	315105-0165		8	WASHER BRB8,4X16RFR	
240	312105-0457		4	SCREW M6S ISO 4014 M8X35 A480	
250	312105-0457		4	SCREW M6S ISO 4014 M8X35 A480	
260	312155-0461		4	SCREW DIN 7991 MF6S M8X50A4 70	
TBA 0330S, TBA 0200B, TBA 0250B (See drawing on page: 5-148)					
010	2595707-0000		1	FOLDING PART	
020	2601445-0000		1	FOLDING PART	
030	2595704-0000		1	FOLDING PART	
040	2601455-0000		1	FOLDING PART	
050	2595705-0000		1	FOLDING PART	
060	2601465-0000		1	FOLDING PART	
070	2595706-0000		8	BRACKET	
110	2599847-0000		3	SPACER	
120	1346344-0000		1	RAIL	
130	1346343-0000		1	RAIL	
140	2595708-0000		1	FOLDING PART	
150	2602592-0000		1	FOLDING PART	
160	2595709-0000		1	FOLDING PART	
170	2601464-0000		1	FOLDING PART	
180	2558127-0000		2	SPACER	
190	2664035-0000		1	SPACER SCREW	
210	315105-0153		24	WASHER BRB6,4X12RFR	
220	312105-0370		24	SCREW M6S ISO 4017 M6X20 A480	
230	315105-0165		8	WASHER BRB8,4X16RFR	
240	312105-0467		3	SCREW M6S ISO 4014 M8X80 A480	
250	312105-0457		4	SCREW M6S ISO 4014 M8X35 A480	
260	312155-0461		4	SCREW DIN 7991 MF6S M8X50A4 70	
270	312105-0455		1	SCREW M6S ISO 4017 M8X30 A480	
TBA 0500B, TBA 1000B (See drawing on page: 5-144)					
010	2520175-0000		1	FOLDING PART	
020	2520172-0000		1	FOLDING PART	
030	2603659-0000		1	FOLDING PART	
040	2603660-0000		1	FOLDING PART	
050	2603548-0000		1	FOLDING PART	
060	2603547-0000		1	FOLDING PART	
070	2603662-0000		4	BRACKET	
080	2603661-0000		2	BRACKET	
090	2544342-0000		2	BRACKET	
100	2555082-0000		1	SPACER SCREW	
110	1539871-0000		3	SPACER	
120	2603664-0000		1	RAIL	
130	2605213-0000		1	RAIL	
200	312155-0366		10	SCREW DIN 7991 MF6S M6X12 A4 70	
210	315105-0153		6	WASHER BRB6,4X12RFR	
220	312105-0368		6	SCREW M6S ISO 4017 M6X16 A480	
230	315105-0165		8	WASHER BRB8,4X16RFR	
240	312105-0465		3	SCREW M6S ISO 4014 M8X70 A480	
250	312105-0457		5	SCREW M6S ISO 4014 M8X35 A480	
TBA 1890S, TBA 2000S (See drawing on page: 5-146)					

Machine Type | Group Description | Used-In | Group Number | Page No

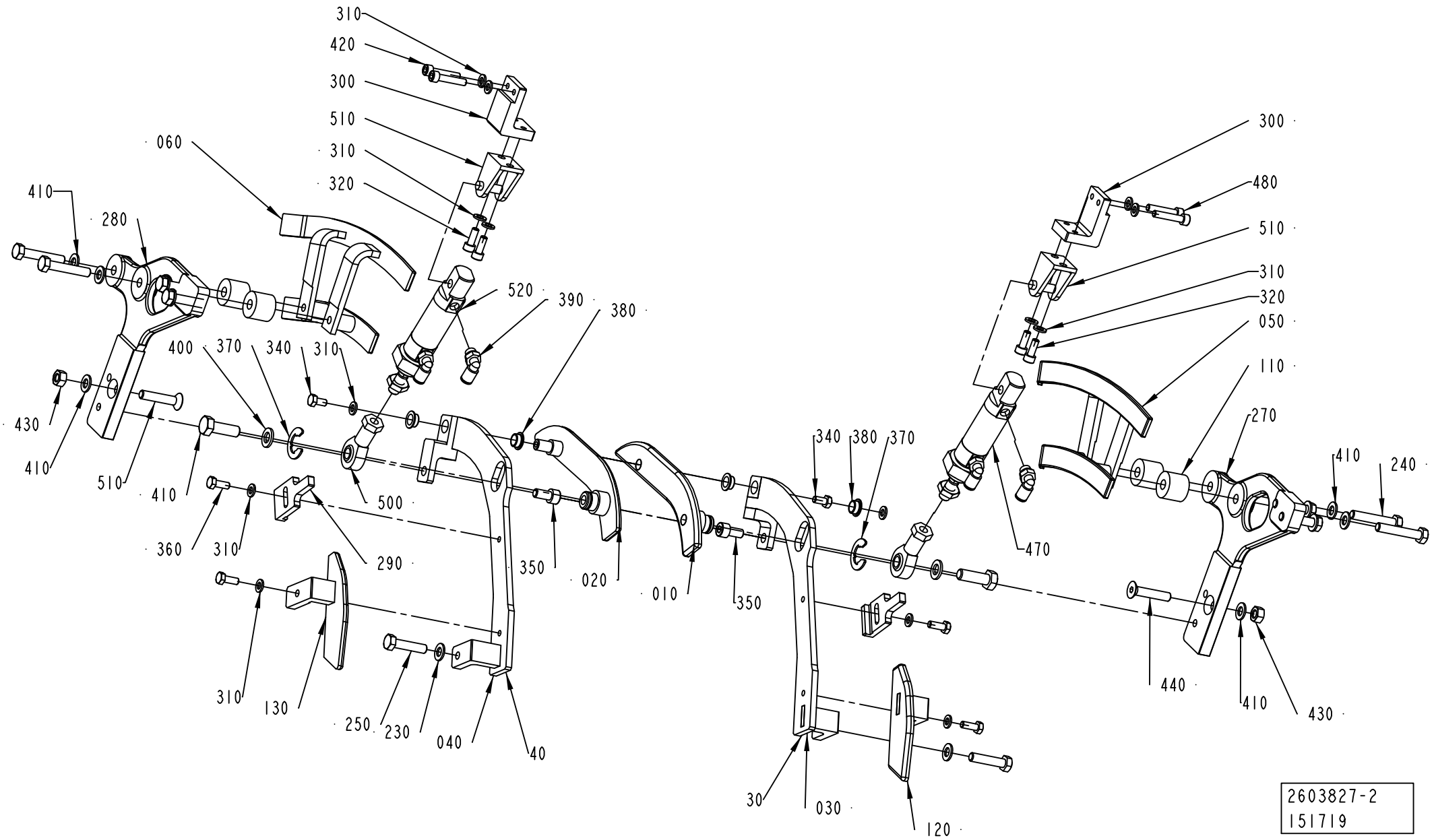
310
420
300
510
310
320
060
410
280
520
390
380
400
370
340
310
430
410
510
410
500
360
310
290
350
020
010
350
340
380
370
470
300
480
510
310
320
050
110
270
410
240
410
440
410
430
310
130
250
230
040
40
30
030
120
2603827-2
151719

ECM: 255432 - 20060310
Group number: 2603827-0100
Assembly Drawing: 2603827-2_1_AA

This list covers pages from 5-144 to 5-155

Pos	Part No	UN	Qty	Description	Page No
TBA 1890S, TBA 2000S (Cont'd) (See drawing on page: 5-146)					
010	2598497-0000		1	FOLDING PART	
020	2598496-0000		1	FOLDING PART	
030	2598495-0000		1	FOLDING PART	
040	2598494-0000		1	FOLDING PART	
050	1499151-0000		1	RAIL	
060	1499150-0000		1	RAIL	
110	2629344-0000		4	SPACER	
120	2598492-0000		1	FOLDING PART	
130	2598491-0000		1	FOLDING PART	
230	315105-0165		12	WASHER BRB8,4X16RFR	
240	312109-0460		4	SCREW M6S ISO 4017 M8X45 A480	
250	312109-0457		6	SCREW M6S ISO 4017 M8X35 A480	
280	1317043-0000		2	SUPPORT	
290	2603147-0000		2	PLATE	
300	2598493-0000		2	BRACKET	
310	315105-0153		14	WASHER BRB6,4X12RFR	
320	312115-0368		4	SCREW ISO4762 M6X16 A4 80	
340	312105-0366		2	SCREW M6S ISO 4017 M6X12 A480	
350	312115-0449		2	SCREW ISO4762 M8X16 A4 80	
360	312105-0368		4	SCREW M6S ISO 4017 M6X16 A480	
370	315755-0113		2	RETAINING RING SHAFT DIN 6799 15 A2	
380	321153-0136		4	FLANGE BUSHING, 10X12X6 MM	
390	350002-0006		4	PUSH-IN L-FITTING QSL-F-G1/8-6	
400	315105-0171		2	WASHER BRB10X18	
410	312105-0495		2	SCREW M6S ISO 4017 M10X30 A480	
420	312115-0374		4	SCREW ISO4762 M6X30 A4 80	
430	312605-0318		2	HEXAGON NUT, M6M M8 A280	
440	312155-0459		2	SCREW DIN 7991 MF6S M8X40 A4 70	
500	90115-0134		2	ROD END, ID=10 MM, M10X1,25	
510	90459-4932		2	REAR CLEVIS FOOT MOUNTING , CRLBN-20/25	
520	90459-1953		2	DOUBLE ACTING, MINI-ISO, CYL. 25-10	
TPA 0250SQ, TPA 0200SQ (See drawing on page: 5-154)					
010	2674260-0000		1	FOLDING PART	
020	2674261-0000		1	FOLDING PART	
030	2674262-0000		1	FOLDING PART	
040	2674263-0000		1	FOLDING PART	
050	2674264-0000		1	FOLDING PART	
060	2674265-0000		1	FOLDING PART	
090	2647126-0000		2	BRACKET	
110	2674267-0000		2	SPACER	
120	2735128-0000		1	RAIL	
130	2735127-0000		1	RAIL	
180	2674268-0000		2	SPACER	
190	2674266-0000		2	SPACER	
210	315105-0153		8	WASHER BRB6,4X12RFR	
220	312105-0370		8	SCREW M6S ISO 4017 M6X20 A480	
230	315105-0165		8	WASHER BRB8,4X16RFR	
240	312105-0469		2	SCREW M6S ISO 4014 M8X90 A480	
250	312105-0455		4	SCREW M6S ISO 4017 M8X30 A480	
260	312155-0455		4	SCREW DIN 7991 MF6S M8X30 A4 70	
270	312105-0465		2	SCREW M6S ISO 4014 M8X70 A480	
TPA 1000SQ, TPA 0750SQ (See drawing on page: 5-150)					
010	2647128-0000		1	FOLDING PART	
020	2647127-0000		1	FOLDING PART	
030	2647122-0000		1	FOLDING PART	
040	2647121-0000		1	FOLDING PART	
050	2647130-0000		1	FOLDING PART	
060	2647129-0000		1	FOLDING PART	
070	2647126-0000		2	BRACKET	
080	2644368-0000		2	BRACKET	
110	1519355-0000		12	SPACER	
220	312105-0455		6	SCREW M6S ISO 4017 M8X30 A480	
230	315105-0165		18	WASHER BRB8,4X16RFR	
240	312105-0462		12	SCREW M6S ISO 4014 M8X55 A480	

Machine Type | Group Description | Used-In | Group Number | Page No

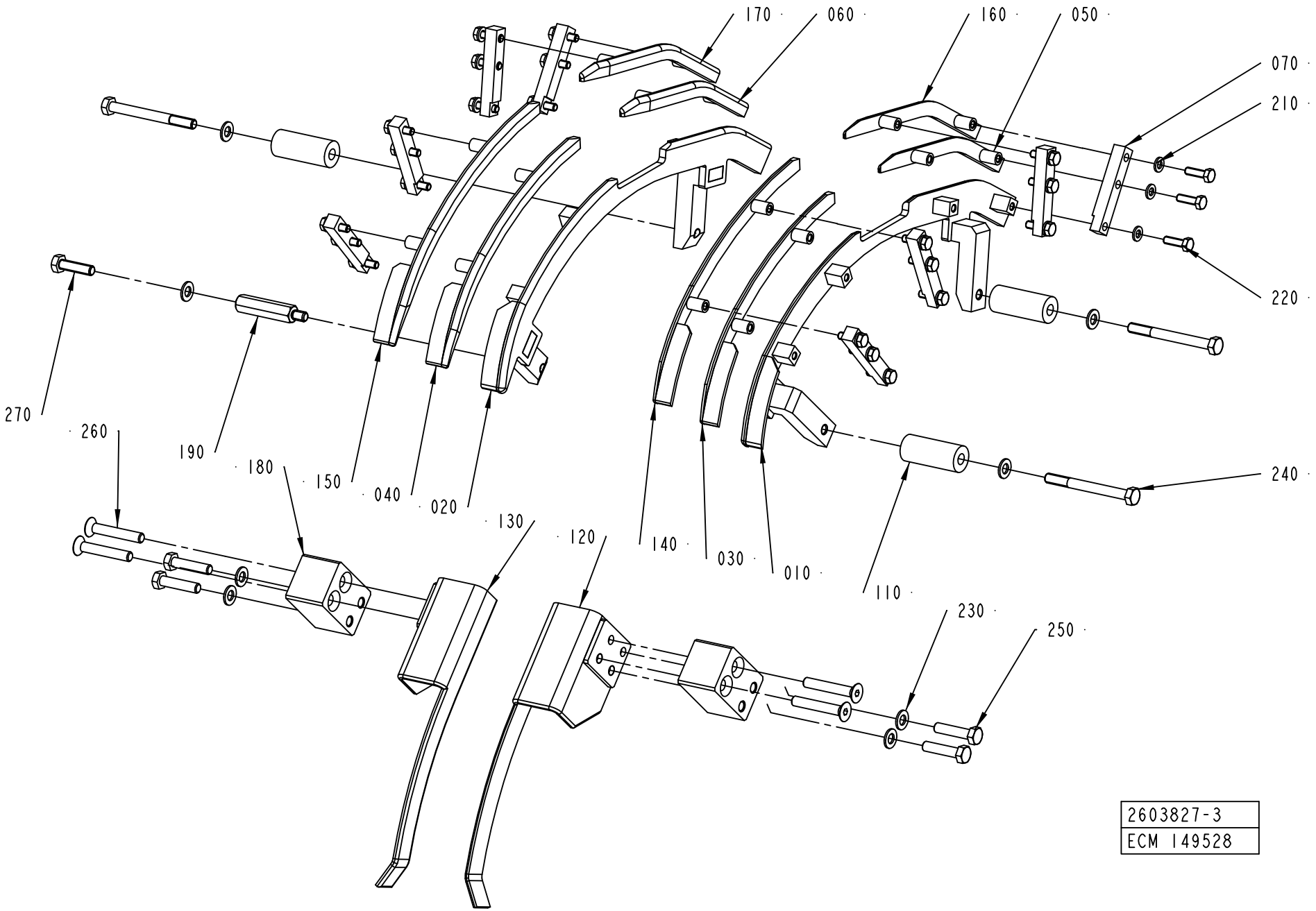
170
060
160
050
070
210
220
240
270
260
190
180
150
040
020
130
120
140
030
010
110
230
250
2603827-3
ECM 149528

Pos	Part No	UN	Qty	Description	Page No	Pos	Part No	UN	Qty	Description	Page No

SEE PREVIOUS LISTS PAGES: 5-145, 5-147.

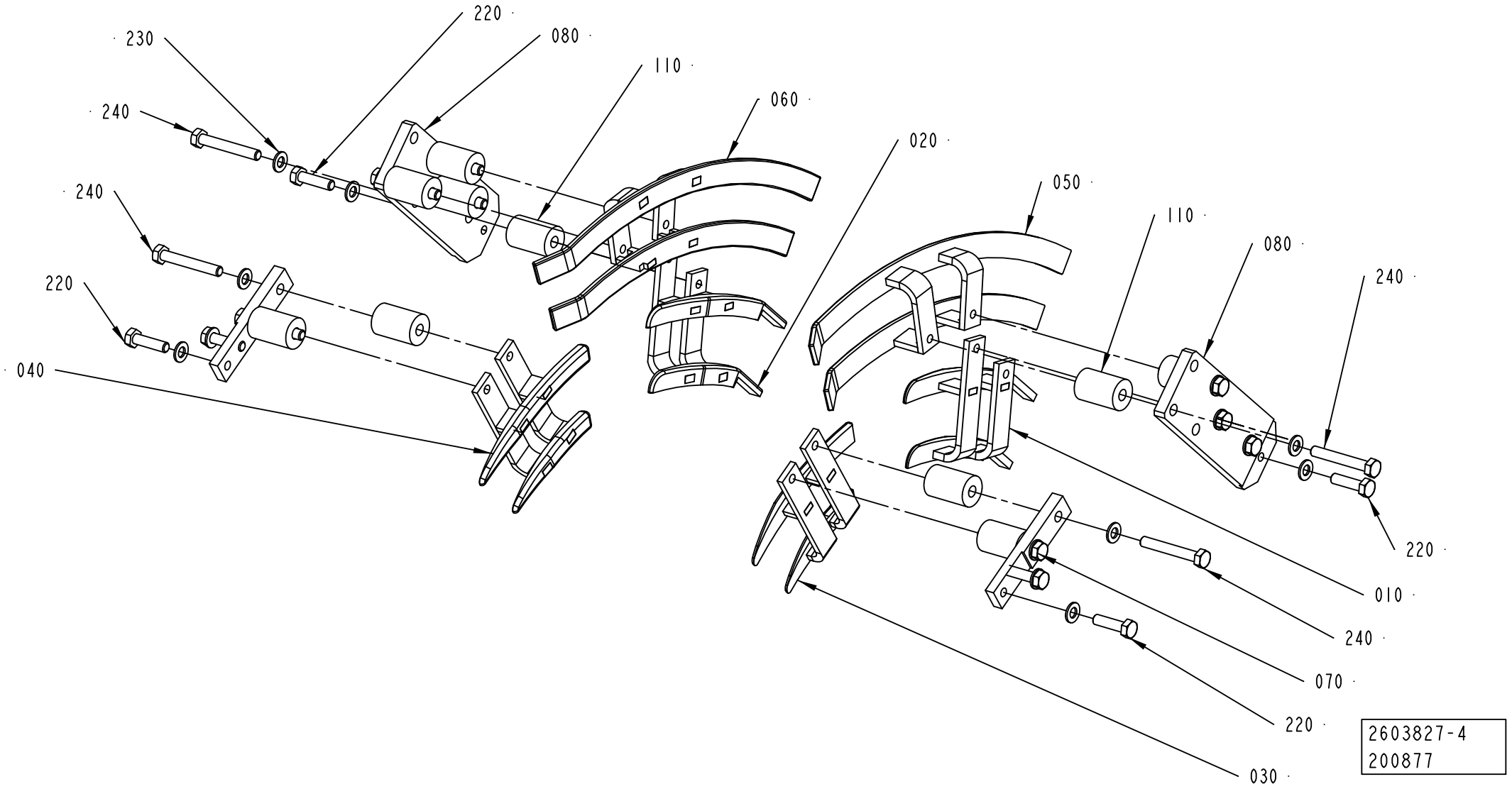
220
230
080
110
240
060
240
020
050
110
080
240
220
040
220
010
240
070
220
030
2603827-4
200877

Pos	Part No	UN	Qty	Description	Page No
SEE PREVIOUS LISTS PAGES: 5-145, 5-147.					

Pos	Part No	UN	Qty	Description	Page No

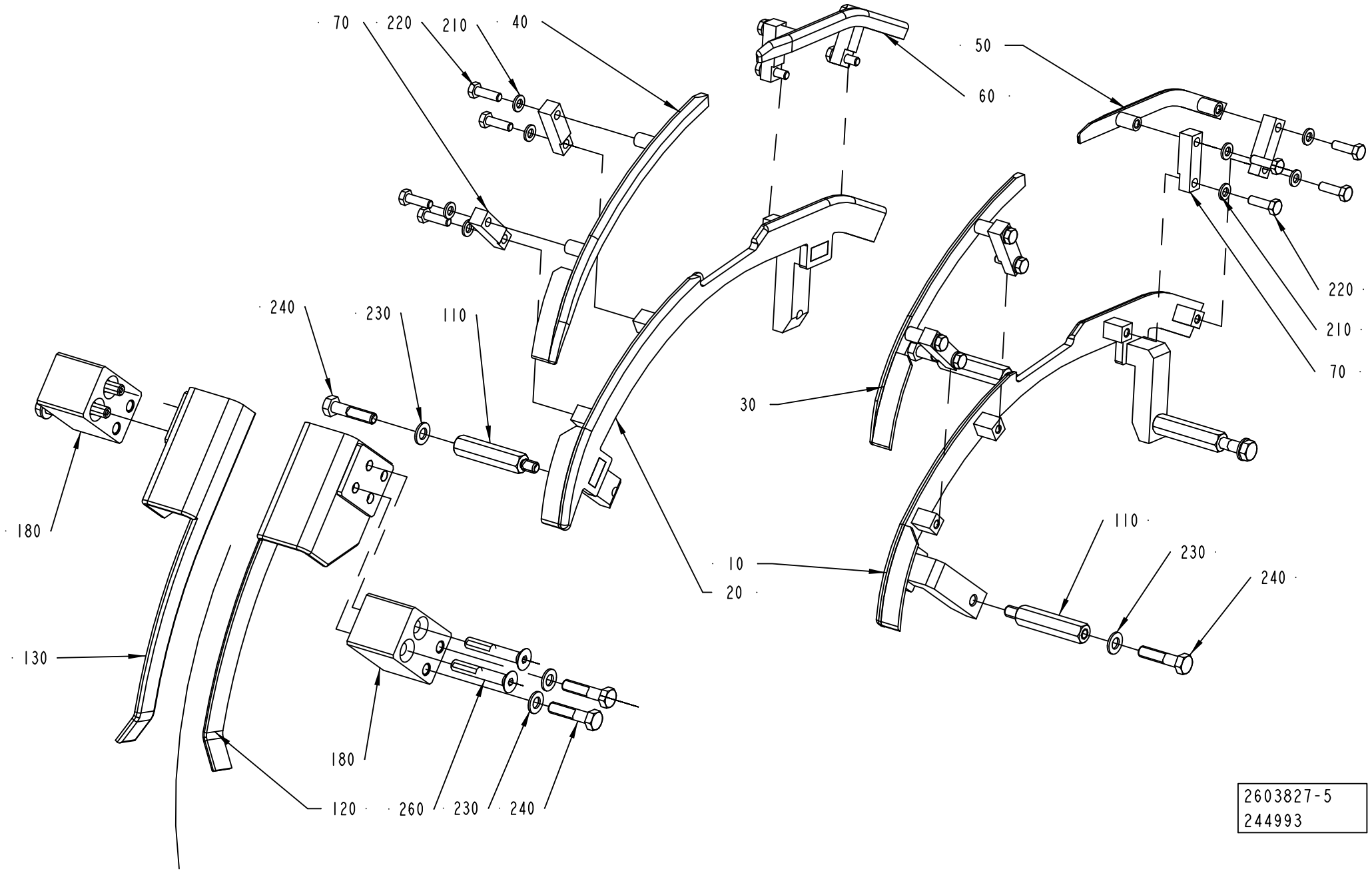
70
220
210
40
50
60
240
230
110
30
220
210
70
180
10
20
110
230
240
130
180
120
260
230
240
2603827-5
244993

Pos	Part No	UN	Qty	Description	Page No	Pos	Part No	UN	Qty	Description	Page No

SEE PREVIOUS LISTS PAGES: 5-145, 5-147.

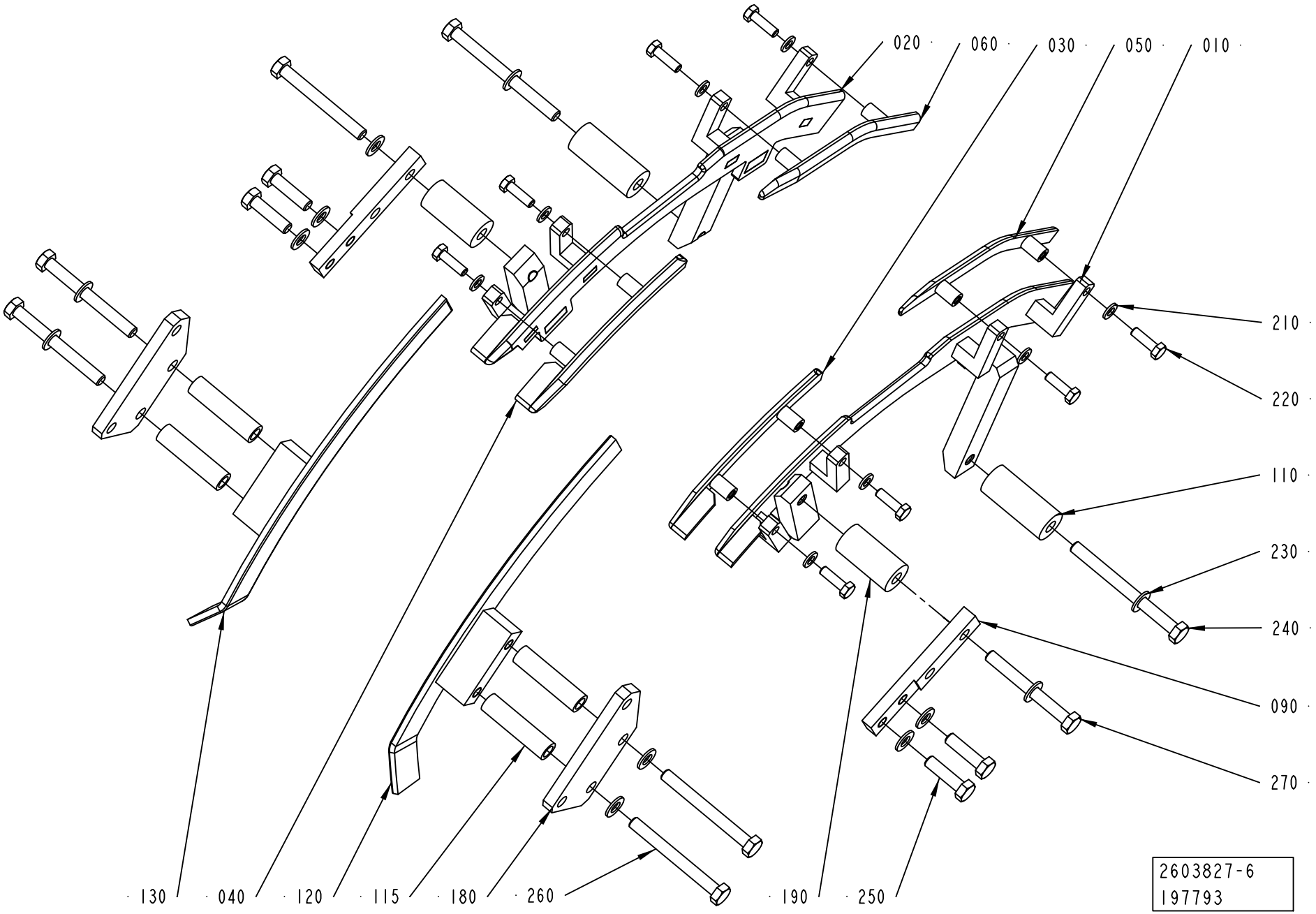
020
060
030
050
010
210
220
110
230
240
090
270
130
040
120
115
180
260
190
250
2603827-6
197793

Pos	Part No	UN	Qty	Description	Page No
SEE PREVIOUS LISTS PAGES: 5-145, 5-147.					

Pos	Part No	UN	Qty	Description	Page No

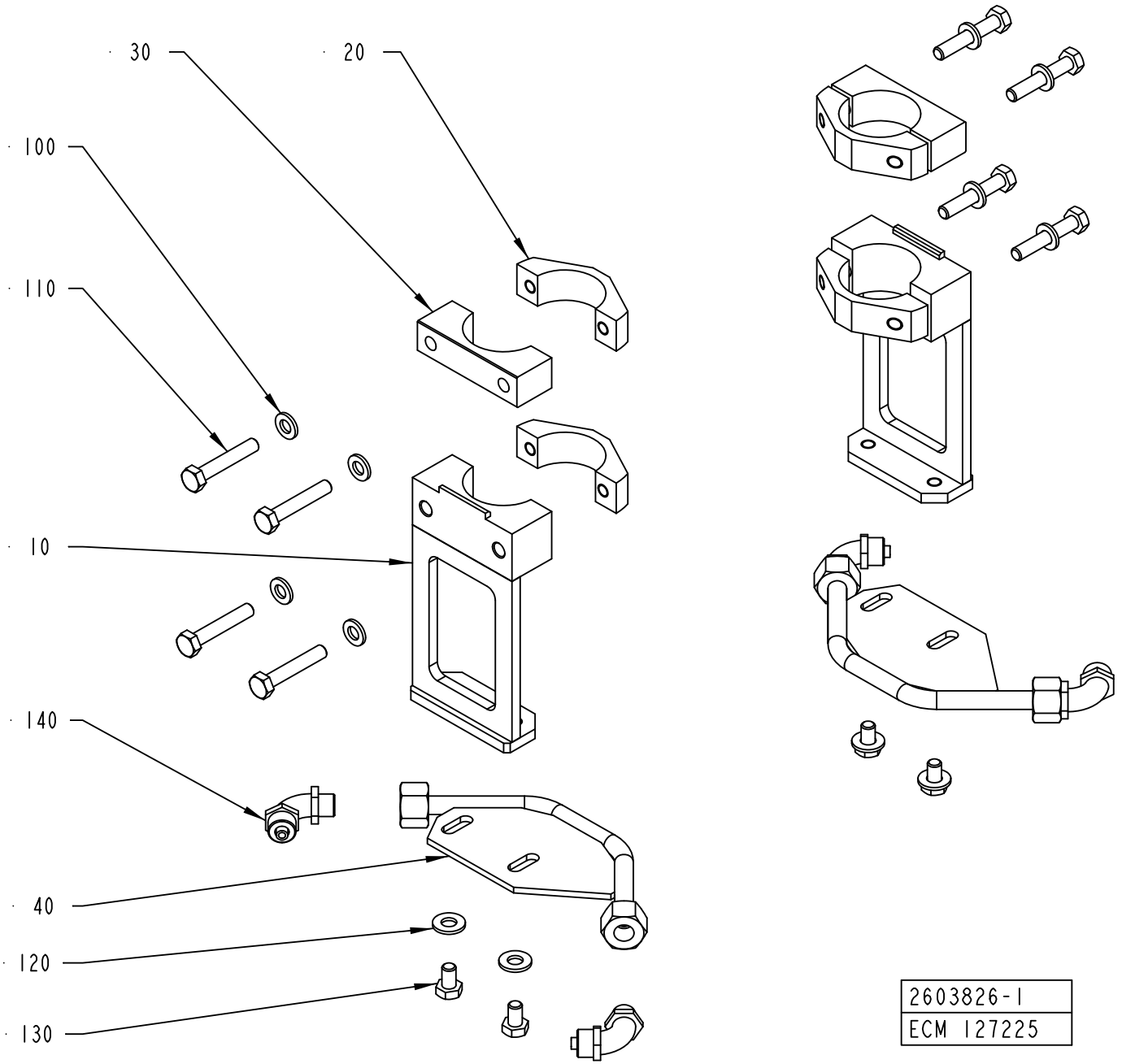

2603826-1
ECM 127225

ECM: 255433 - 20060310
Group number: 2603826-0100
Assembly Drawing: 2603826-1_1_AA

This list covers pages from 5-156 to 5-159

Pos	Part No	UN	Qty	Description	Page No
TBA 0200SQ, TBA 0250SQ (See drawing on page: 5-156)					
010	2599044-0000		2	BRACKET	
020	2598486-0000		4	CLAMP	
030	2598485-0000		2	CLAMP	
040	2668247-0000		2	GUIDE	
100	315105-0153		8	WASHER BRB6,4X12RFR	
110	312105-0376		8	SCREW M6S ISO 4014 M6X35 A480	
120	315105-0156		4	WASHER BRB 6.7X14 RFR	
130	312105-0364		4	SCREW M6S ISO 4017 M6X10 A480	
TBA 0330S, TBA 0200B, TBA 0250S, TBA 0200M, TBA 0250B (See drawing on page: 5-156)					
010	2599044-0000		2	BRACKET	
020	2598486-0000		4	CLAMP	
030	2598485-0000		2	CLAMP	
040	2594058-0000		2	GUIDE	
100	315105-0153		8	WASHER BRB6,4X12RFR	
110	312105-0376		8	SCREW M6S ISO 4014 M6X35 A480	
120	315105-0156		4	WASHER BRB 6.7X14 RFR	
130	312105-0364		4	SCREW M6S ISO 4017 M6X10 A480	
TBA 0500B, TBA 1000B (See drawing on page: 5-156)					
010	2597768-0000		2	BRACKET	
020	2598486-0000		4	CLAMP	
030	2598485-0000		2	CLAMP	
040	2597769-0000		2	GUIDE	
100	315105-0153		8	WASHER BRB6,4X12RFR	
110	312105-0376		8	SCREW M6S ISO 4014 M6X35 A480	
120	315105-0156		4	WASHER BRB 6.7X14 RFR	
130	312105-0364		4	SCREW M6S ISO 4017 M6X10 A480	
TBA 1890S, TBA 2000S (See drawing on page: 5-156)					
010	2603138-0000		2	BRACKET	
020	2603148-0000		2	CLAMP	
040	2603140-0000		2	GUIDE	
110	312115-0333		4	SCREW ISO4762 M5X25 A4 80	
120	315105-0146		4	WASHER BRB5,3X10RFR	
130	312115-0327		4	SCREW ISO4762 M5X12 A4 80	
TPA 0250SQ, TPA 0200SQ (See drawing on page: 5-158)					
010	2599044-0000		2	BRACKET	
020	2598486-0000		4	CLAMP	
030	2598485-0000		2	CLAMP	
040	2674259-0000		2	GUIDE	
100	315105-0153		4	WASHER BRB6,4X12RFR	
110	312105-0376		4	SCREW M6S ISO 4014 M6X35 A480	
130	312105-0325		4	SCREW M6S ISO 4017 M5X10 A480	
150	312115-0372		4	SCREW ISO4762 M6X25 A4 80	
TPA 1000SQ, TPA 0750SQ (See drawing on page: 5-156)					
010	2597768-0000		2	BRACKET	
020	2598486-0000		4	CLAMP	
030	2598485-0000		2	CLAMP	
040	2647131-0000		2	GUIDE	
100	315105-0153		8	WASHER BRB6,4X12RFR	
110	312105-0376		8	SCREW M6S ISO 4014 M6X35 A480	
120	315105-0156		4	WASHER BRB 6.7X14 RFR	
130	312105-0364		4	SCREW M6S ISO 4017 M6X10 A480	
Common Parts					
140	342931-0121		4	ELBOW 90 COUPL.,EXT.THREAD 8/6-G1/8"	

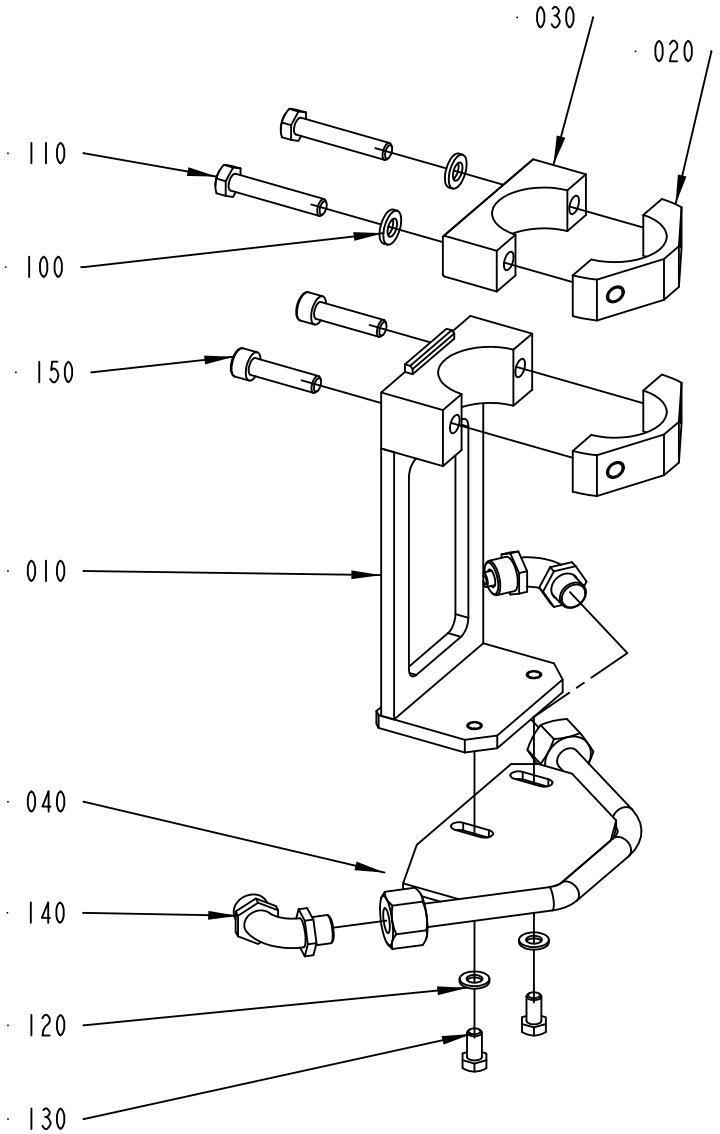
030
020
110
100
150
010
040
140
120
130

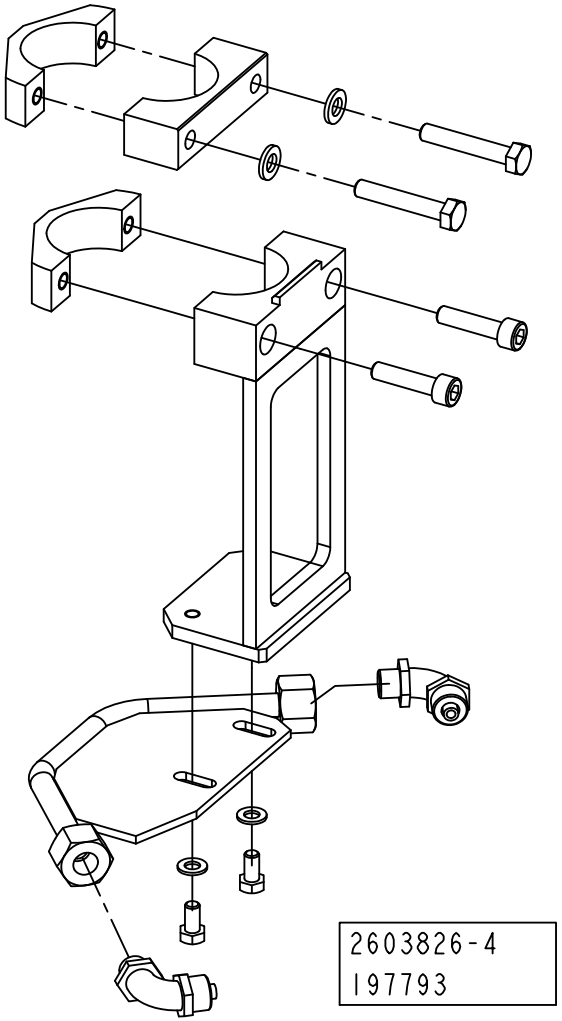
2603826-4
197793

ECM: 255433 - 20060310
Group number: 2603826-0100
Assembly Drawing: 2603826-4_1_AA

This list covers pages from 5-156 to 5-159

Pos	Part No	UN	Qty	Description	Page No
TBA 0200SQ, TBA 0250SQ (See drawing on page: 5-156)					
010	2599044-0000		2	BRACKET	
020	2598486-0000		4	CLAMP	
030	2598485-0000		2	CLAMP	
040	2668247-0000		2	GUIDE	
100	315105-0153		8	WASHER BRB6,4X12RFR	
110	312105-0376		8	SCREW M6S ISO 4014 M6X35 A480	
120	315105-0156		4	WASHER BRB 6.7X14 RFR	
130	312105-0364		4	SCREW M6S ISO 4017 M6X10 A480	
TBA 0330S, TBA 0200B, TBA 0250S, TBA 0200M, TBA 0250B (See drawing on page: 5-156)					
010	2599044-0000		2	BRACKET	
020	2598486-0000		4	CLAMP	
030	2598485-0000		2	CLAMP	
040	2594058-0000		2	GUIDE	
100	315105-0153		8	WASHER BRB6,4X12RFR	
110	312105-0376		8	SCREW M6S ISO 4014 M6X35 A480	
120	315105-0156		4	WASHER BRB 6.7X14 RFR	
130	312105-0364		4	SCREW M6S ISO 4017 M6X10 A480	
TBA 0500B, TBA 1000B (See drawing on page: 5-156)					
010	2597768-0000		2	BRACKET	
020	2598486-0000		4	CLAMP	
030	2598485-0000		2	CLAMP	
040	2597769-0000		2	GUIDE	
100	315105-0153		8	WASHER BRB6,4X12RFR	
110	312105-0376		8	SCREW M6S ISO 4014 M6X35 A480	
120	315105-0156		4	WASHER BRB 6.7X14 RFR	
130	312105-0364		4	SCREW M6S ISO 4017 M6X10 A480	
TBA 1890S, TBA 2000S (See drawing on page: 5-156)					
010	2603138-0000		2	BRACKET	
020	2603148-0000		2	CLAMP	
040	2603140-0000		2	GUIDE	
110	312115-0333		4	SCREW ISO4762 M5X25 A4 80	
120	315105-0146		4	WASHER BRB5,3X10RFR	
130	312115-0327		4	SCREW ISO4762 M5X12 A4 80	
TPA 0250SQ, TPA 0200SQ (See drawing on page: 5-158)					
010	2599044-0000		2	BRACKET	
020	2598486-0000		4	CLAMP	
030	2598485-0000		2	CLAMP	
040	2674259-0000		2	GUIDE	
100	315105-0153		4	WASHER BRB6,4X12RFR	
110	312105-0376		4	SCREW M6S ISO 4014 M6X35 A480	
130	312105-0325		4	SCREW M6S ISO 4017 M5X10 A480	
150	312115-0372		4	SCREW ISO4762 M6X25 A4 80	
TPA 1000SQ, TPA 0750SQ (See drawing on page: 5-156)					
010	2597768-0000		2	BRACKET	
020	2598486-0000		4	CLAMP	
030	2598485-0000		2	CLAMP	
040	2647131-0000		2	GUIDE	
100	315105-0153		8	WASHER BRB6,4X12RFR	
110	312105-0376		8	SCREW M6S ISO 4014 M6X35 A480	
120	315105-0156		4	WASHER BRB 6.7X14 RFR	
130	312105-0364		4	SCREW M6S ISO 4017 M6X10 A480	
Common Parts					
140	342931-0121		4	ELBOW 90 COUPL.,EXT.THREAD 8/6-G1/8"	

DROP CHUTE VARIANT

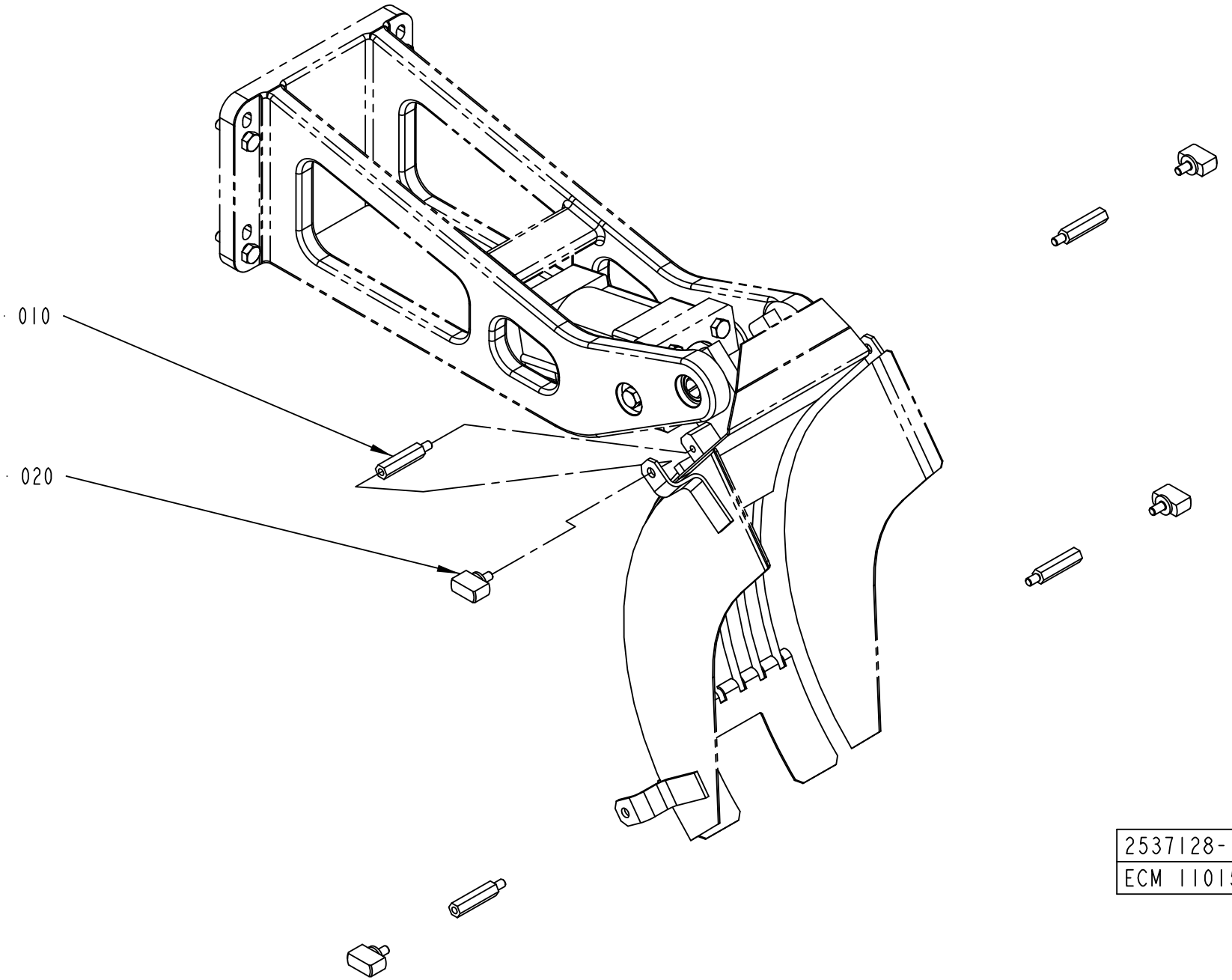

2537128-1
ECM 110157

Pos	Part No	UN	Qty	Description	Page No
TBA 0200SQ, TBA 0250SQ (See drawing on page: 5-160)					
010	1317218-0000		4	SPACER	
020	2652191-0000		4	KNOB	
TBA 0250S, TBA 0200M					
010	2522202-0000		4	SPACER	
020	2652191-0000		4	KNOB	
TBA 0330S, TBA 0200B, TBA 0250B (See drawing on page: 5-160)					
010	1317218-0000		4	SPACER	
020	2540609-0000		4	KNOB	
TBA 0500B, TBA 1000B (See drawing on page: 5-160)					
010	2537129-0000		4	SPACER	
020	2540609-0000		4	KNOB	
TBA 1000SQ (See drawing on page: 5-162)					
010	2598820-0000		2	SPACER	
020	2540609-0000		4	KNOB	
030	2619574-0000		2	SPACER	
TBA 1890S, TBA 2000S (See drawing on page: 5-160)					
010	2661153-0000		4	SPACER	
020	2540609-0000		4	KNOB	
TPA 0250SQ, TPA 0200SQ (See drawing on page: 5-160)					
010	2598819-0000		4	SPACER	
020	2652191-0000		4	KNOB	
TPA 1000SQ, TPA 0750SQ (See drawing on page: 5-160)					
020	2540609-0000		4	KNOB	

Pos	Part No	UN	Qty	Description	Page No

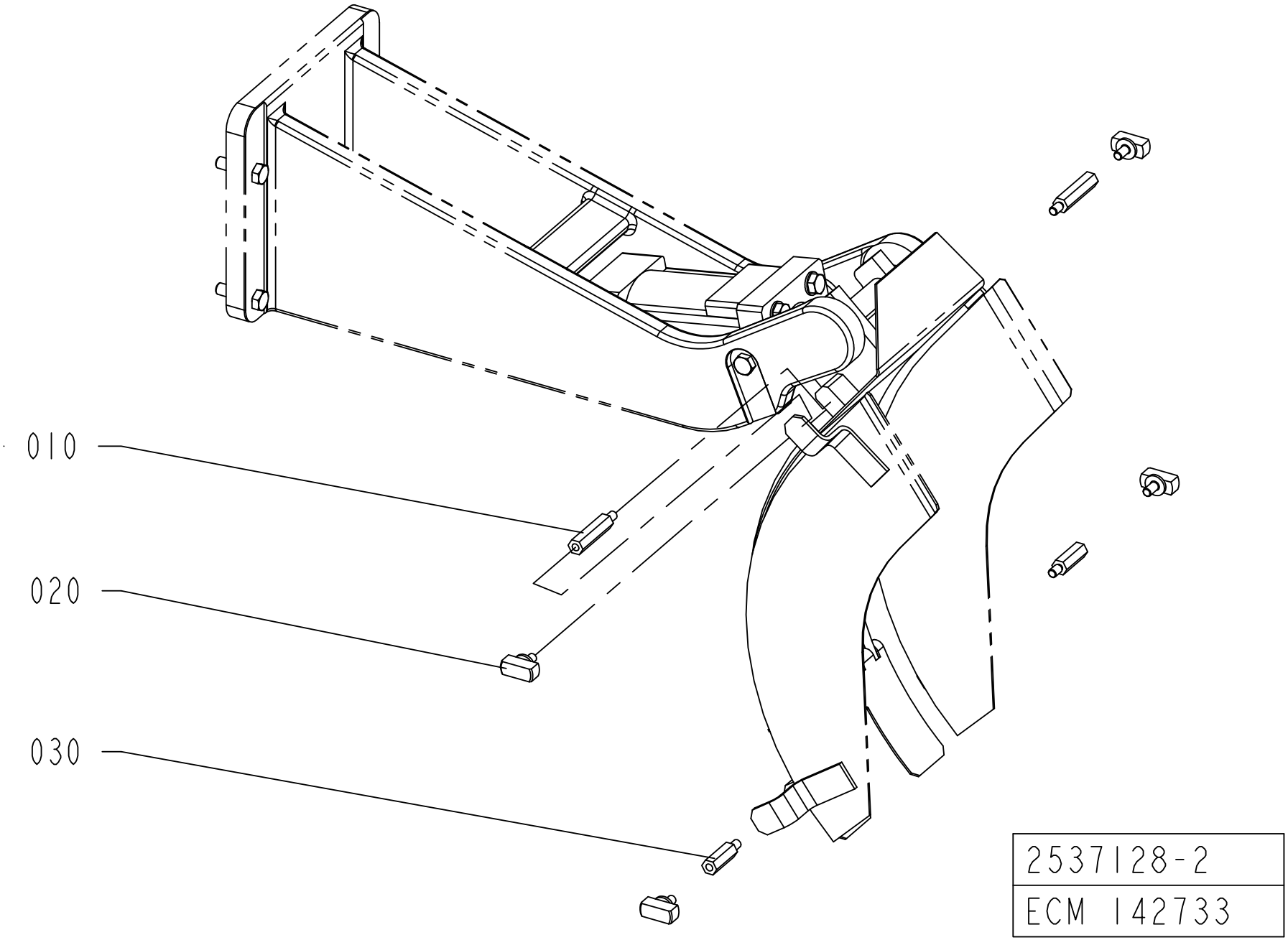
010
020
030
2537128-2
ECM 142733

Pos	Part No	UN	Qty	Description	Page No
TBA 0200SQ, TBA 0250SQ (See drawing on page: 5-160)					
010	1317218-0000		4	SPACER	
020	2652191-0000		4	KNOB	
TBA 0250S, TBA 0200M					
010	2522202-0000		4	SPACER	
020	2652191-0000		4	KNOB	
TBA 0330S, TBA 0200B, TBA 0250B (See drawing on page: 5-160)					
010	1317218-0000		4	SPACER	
020	2540609-0000		4	KNOB	
TBA 0500B, TBA 1000B (See drawing on page: 5-160)					
010	2537129-0000		4	SPACER	
020	2540609-0000		4	KNOB	
TBA 1000SQ (See drawing on page: 5-162)					
010	2598820-0000		2	SPACER	
020	2540609-0000		4	KNOB	
030	2619574-0000		2	SPACER	
TBA 1890S, TBA 2000S (See drawing on page: 5-160)					
010	2661153-0000		4	SPACER	
020	2540609-0000		4	KNOB	
TPA 0250SQ, TPA 0200SQ (See drawing on page: 5-160)					
010	2598819-0000		4	SPACER	
020	2652191-0000		4	KNOB	
TPA 1000SQ, TPA 0750SQ (See drawing on page: 5-160)					
020	2540609-0000		4	KNOB	

Pos	Part No	UN	Qty	Description	Page No

INFEED CONVEYOR VARIANT

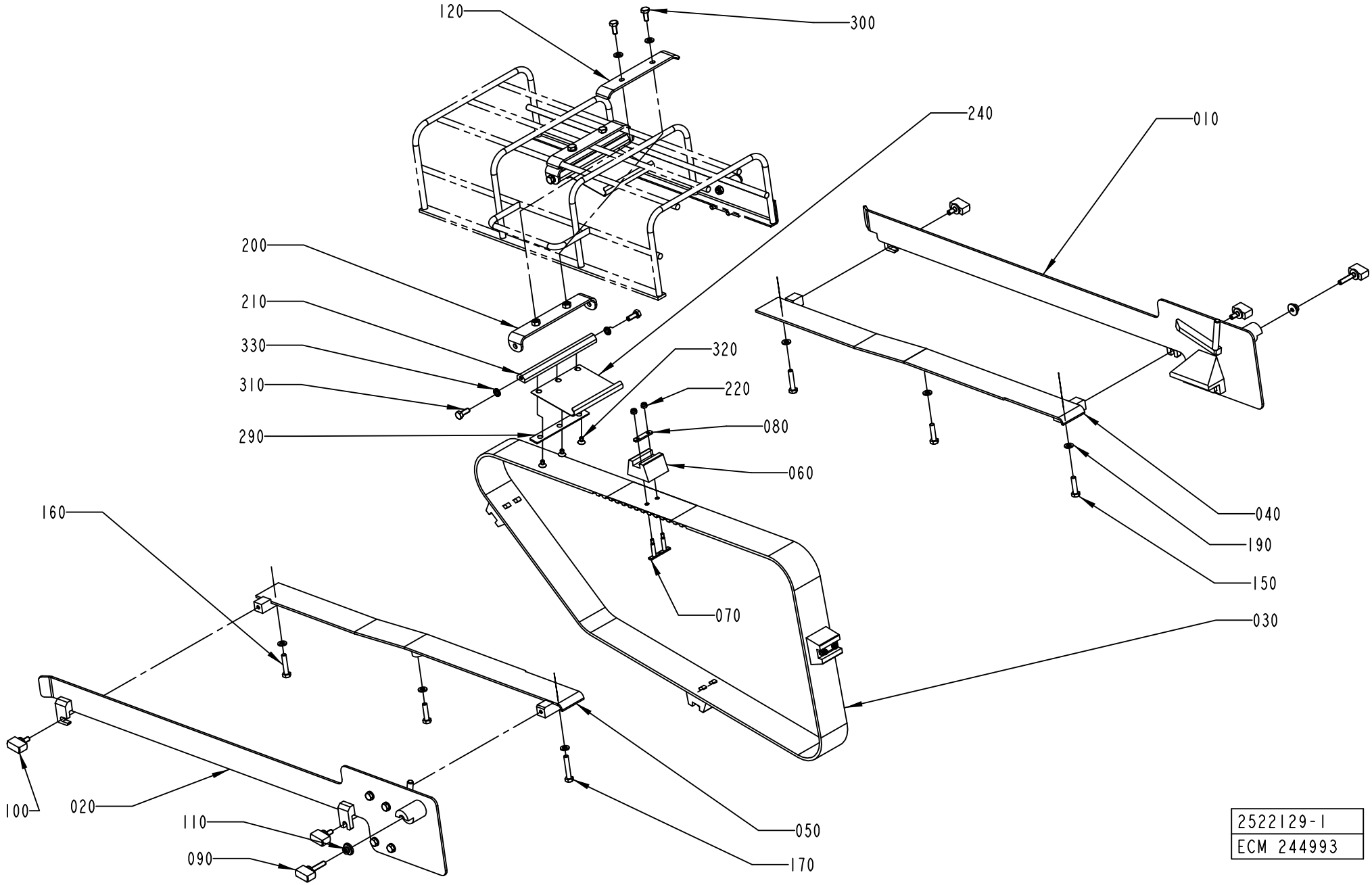

ECM: 272803 - 20060626
Group number: 2522129-0100
Assembly Drawing: 2522129-1_1_AB

This list covers pages from 5-164 to 5-169

Pos	Part No	UN	Qty	Description	Page No
TBA 0200SQ, TBA 0250SQ (See drawing on page: 5-168)					
030	1144783-0000		1	TIMING BELT	
040	1317651-0000		1	GUIDE	
050	1317650-0000		1	GUIDE	
060	1282287-0000		4	CARRIER	
070	1346471-0000		8	WEDGE	
080	1144918-0000		4	PLATE	
090	2652191-0000		2	KNOB	
100	2529786-0000		4	KNOB	
110	2725826-0000		2	CLAMP	
115	2725827-0000		2	SPACER	
120	1499476-0000		1	HOLDER	
120	2668244-0000		1	HOLDER	
150	312105-0372		3	SCREW M6S ISO 4017 M6X25 A480	
160	312109-0374		2	SCREW M6S ISO 4017 M6X30 A480	
190	315105-0153		6	WASHER BRB6,4X12RFR	
220	312812-0312		8	HEXAGON NUT, NY-LOCK M4 A480	
230	312605-0316		2	HEXAGON NUT, M6M M6 A280	
250	90424-0068		1	AIR NOZZLE, G1/4, MOD. 216 BSP	
260	342732-0104		1	ELBOW PIPE JOINT, EXT.THREAD, D=8MM-G1/4	
270	342728-0102		1	PIPE COUPLING 6 MM	
275	350015-0001		1	Y-FITTING QSY-F-6	
280	315400-0001	MM	700	TUBE PUN-H-6X1-BL	
285	342716-0200		1	REDUCER 4-5	
TBA 0250S, TBA 0200M (See drawing on page: 5-168)					
030	1144783-0000		1	TIMING BELT	
040	1282290-0000		1	GUIDE	
050	1282291-0000		1	GUIDE	
060	1282287-0000		4	CARRIER	
070	1346736-0000		8	WEDGE	
080	1144918-0000		4	PLATE	
090	2652191-0000		2	KNOB	
100	2529786-0000		4	KNOB	
110	2520160-0000		2	CLAMP	
120	1499476-0000		1	HOLDER	
130	1499475-0000		1	HOLDER	
150	312105-0372		5	SCREW M6S ISO 4017 M6X25 A480	
160	312109-0374		2	SCREW M6S ISO 4017 M6X30 A480	
190	315105-0153		10	WASHER BRB6,4X12RFR	
220	312812-0312		8	HEXAGON NUT, NY-LOCK M4 A480	
230	312605-0316		2	HEXAGON NUT, M6M M6 A280	
250	90424-0068		1	AIR NOZZLE, G1/4, MOD. 216 BSP	
260	90458-2958		1	ELBOW PIPE JOINT, EXT.THREAD, D=8MM-G1/4	
270	342728-0102		1	PIPE COUPLING 6 MM	
275	350015-0001		1	Y-FITTING QSY-F-6	
280	315400-0001	MM	700	TUBE PUN-H-6X1-BL	
285	342716-0200		1	REDUCER 4-5	
TBA 0330S, TBA 0200B, TBA 0250B (See drawing on page: 5-168)					
030	1144783-0000		1	TIMING BELT	
040	1282290-0000		1	GUIDE	
050	1282291-0000		1	GUIDE	
060	1282287-0000		4	CARRIER	
070	1346736-0000		8	WEDGE	
080	1144918-0000		4	PLATE	
090	2652191-0000		2	KNOB	
110	2520160-0000		2	CLAMP	
120	1499476-0000		1	HOLDER	
130	1499475-0000		1	HOLDER	
150	312105-0372		5	SCREW M6S ISO 4017 M6X25 A480	
160	312109-0374		2	SCREW M6S ISO 4017 M6X30 A480	
190	315105-0153		10	WASHER BRB6,4X12RFR	
220	312812-0312		8	HEXAGON NUT, NY-LOCK M4 A480	
230	312605-0316		2	HEXAGON NUT, M6M M6 A280	
250	90424-0068		1	AIR NOZZLE, G1/4, MOD. 216 BSP	
260	90458-2958		1	ELBOW PIPE JOINT, EXT.THREAD, D=8MM-G1/4	
270	342728-0102		1	PIPE COUPLING 6 MM	
275	350015-0001		1	Y-FITTING QSY-F-6	
280	315400-0001	MM	700	TUBE PUN-H-6X1-BL	
285	342716-0200		1	REDUCER 4-5	
TBA 0500B (See drawing on page: 5-164)					
030	1144783-0000		1	TIMING BELT	
040	2779739-0000		1	GUIDE	
050	2779738-0000		1	GUIDE	
060	1144919-0000		4	CARRIER	
070	1346471-0000		8	WEDGE	
080	1144918-0000		4	PLATE	
090	2619737-0000		2	KNOB	
090	2529785-0000		2	KNOB	
110	2520160-0000		2	CLAMP	
120	1499476-0000		1	HOLDER	
150	312105-0372		3	SCREW M6S ISO 4017 M6X25 A480	
160	312109-0374		2	SCREW M6S ISO 4017 M6X30 A480	
190	315105-0153		10	WASHER BRB6,4X12RFR	
200	2527792-0000		1	SUPPORT	

INFEED CONVEYOR VARIANT

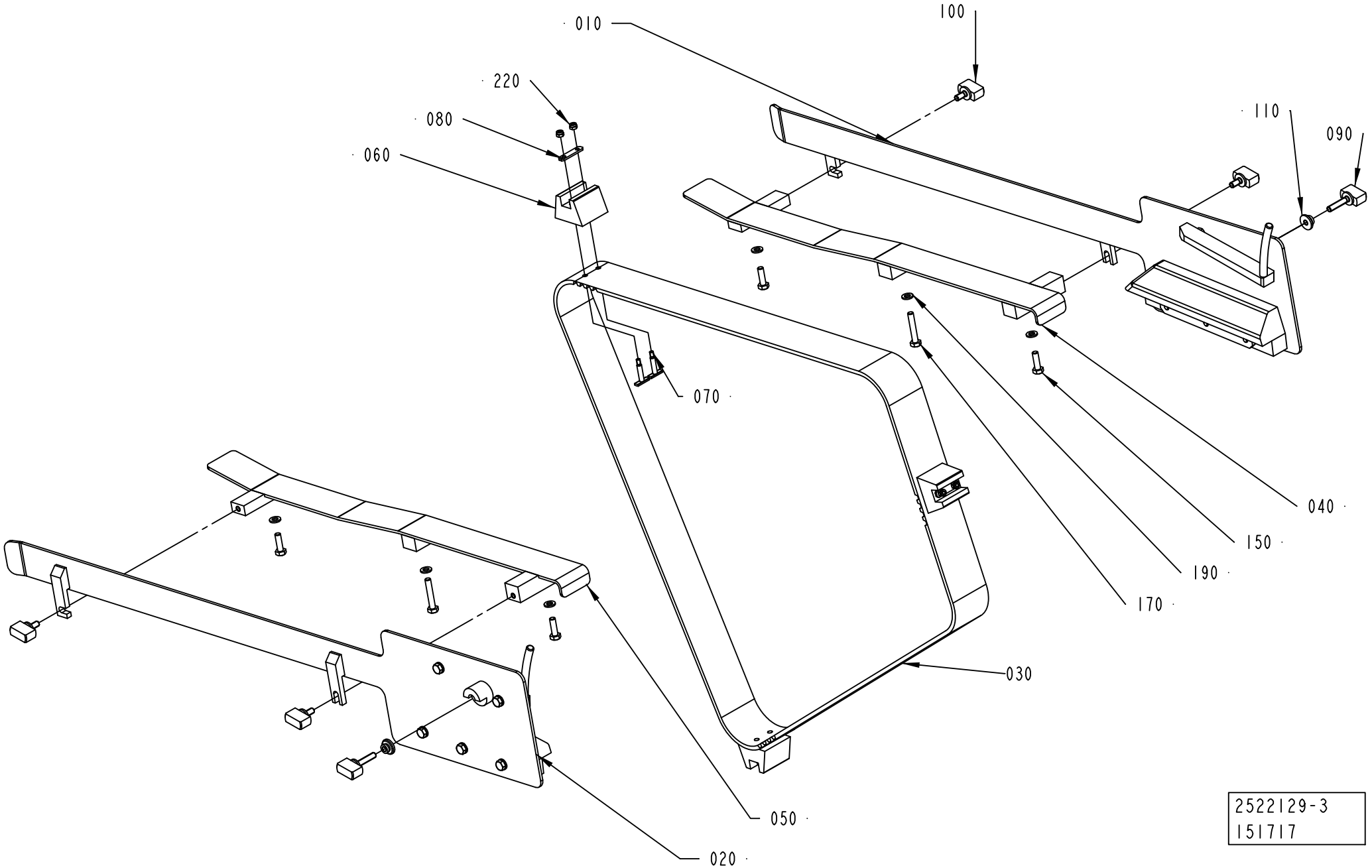

Pos	Part No	UN	Qty	Description	Page No
TBA 0500B (Cont'd) (See drawing on page: 5-164)					
210	2527793-0000		1	SHAFT	
220	312812-0312		8	HEXAGON NUT, NY-LOCK M4 A480	
240	2530418-0000		1	SPRING	
290	2540612-0000		1	PLATE	
300	312105-0367		2	SCREW M6S ISO 4017 M6X14 A480	
310	312105-0368		2	SCREW M6S ISO 4017 M6X16 A480	
320	312155-0323		3	SCREW DIN 7991 MF6S M5X8 A4 70	
330	90062-0061		2	LOCK WASHER NORD-LOCK,6,5/10,8, T=2,2	
TBA 1000B (See drawing on page: 5-164)					
030	1144783-0000		1	TIMING BELT	
040	2779739-0000		1	GUIDE	
050	2779738-0000		1	GUIDE	
060	1144919-0000		4	CARRIER	
070	1346471-0000		8	WEDGE	
080	1144918-0000		4	PLATE	
090	2619737-0000		2	KNOB	
090	2529785-0000		2	KNOB	
110	2520160-0000		2	CLAMP	
150	312105-0372		3	SCREW M6S ISO 4017 M6X25 A480	
160	312109-0374		2	SCREW M6S ISO 4017 M6X30 A480	
190	315105-0153		6	WASHER BRB6,4X12RFR	
220	312812-0312		8	HEXAGON NUT, NY-LOCK M4 A480	
TBA 1890S, TBA 2000S (See drawing on page: 5-166)					
030	1349152-0000		1	TIMING BELT	
040	2665201-0000		1	GUIDE	
050	2665200-0000		1	GUIDE	
060	1282848-0000		3	CARRIER	
070	1346471-0000		6	WEDGE	
080	1144918-0000		3	PLATE	
090	2529785-0000		2	KNOB	
100	2529786-0000		4	KNOB	
110	2520160-0000		2	CLAMP	
150	312105-0370		4	SCREW M6S ISO 4017 M6X20 A480	
190	315105-0153		6	WASHER BRB6,4X12RFR	
220	312812-0312		6	HEXAGON NUT, NY-LOCK M4 A480	
TPA 0250SQ, TPA 0200SQ (See drawing on page: 5-168)					
030	1144783-0000		1	TIMING BELT	
040	1317651-0000		1	GUIDE	
050	1317650-0000		1	GUIDE	
060	1282287-0000		4	CARRIER	
070	1346736-0000		8	WEDGE	
080	1144918-0000		4	PLATE	
090	2652191-0000		2	KNOB	
100	2529786-0000		4	KNOB	
110	2725826-0000		2	CLAMP	
115	2725827-0000		2	SPACER	
120	1499476-0000		1	HOLDER	
120	2668244-0000		1	HOLDER	
130	1499475-0000		1	HOLDER	
150	312105-0372		5	SCREW M6S ISO 4017 M6X25 A480	
160	312109-0374		2	SCREW M6S ISO 4017 M6X30 A480	
190	315105-0153		10	WASHER BRB6,4X12RFR	
220	312812-0312		8	HEXAGON NUT, NY-LOCK M4 A480	
230	312605-0316		2	HEXAGON NUT, M6M M6 A280	
250	90424-0068		1	AIR NOZZLE, G1/4, MOD. 216 BSP	
260	90458-2958		1	ELBOW PIPE JOINT, EXT.THREAD, D=8MM-G1/4	
270	342728-0102		1	PIPE COUPLING 6 MM	
275	350015-0001		1	Y-FITTING QSY-F-6	
280	315400-0001	MM	700	TUBE PUN-H-6X1-BL	
285	342716-0200		1	REDUCER 4-5	
TPA 1000SQ, TPA 0750SQ (See drawing on page: 5-164)					
030	1519338-0000		1	TIMING BELT	
040	1519346-0000		1	GUIDE	
050	1519345-0000		1	GUIDE	
060	1519344-0000		3	CARRIER	
070	1517476-0000		6	WEDGE	
080	1517477-0000		3	PLATE	
090	2529785-0000		2	KNOB	
100	2529786-0000		4	KNOB	
110	2520160-0000		2	CLAMP	
150	312105-0372		3	SCREW M6S ISO 4017 M6X25 A480	
160	312109-0374		2	SCREW M6S ISO 4017 M6X30 A480	
190	315105-0153		6	WASHER BRB6,4X12RFR	
220	312812-0312		6	HEXAGON NUT, NY-LOCK M4 A480	
Common Parts					
010	2527704-0100		1	GUIDE	**5-171, 5-173, 5-175**
020	2527703-0100		1	GUIDE	**5-177, 5-179, 5-181, 5-183**
170	312109-0376		1	SCREW M6S ISO 4017 M6X35 A480	
190	315105-0153		12	WASHER BRB6,4X12RFR	

Machine Type | Group Description | Used-In | Group Number | Page No

INFEED CONVEYOR VARIANT

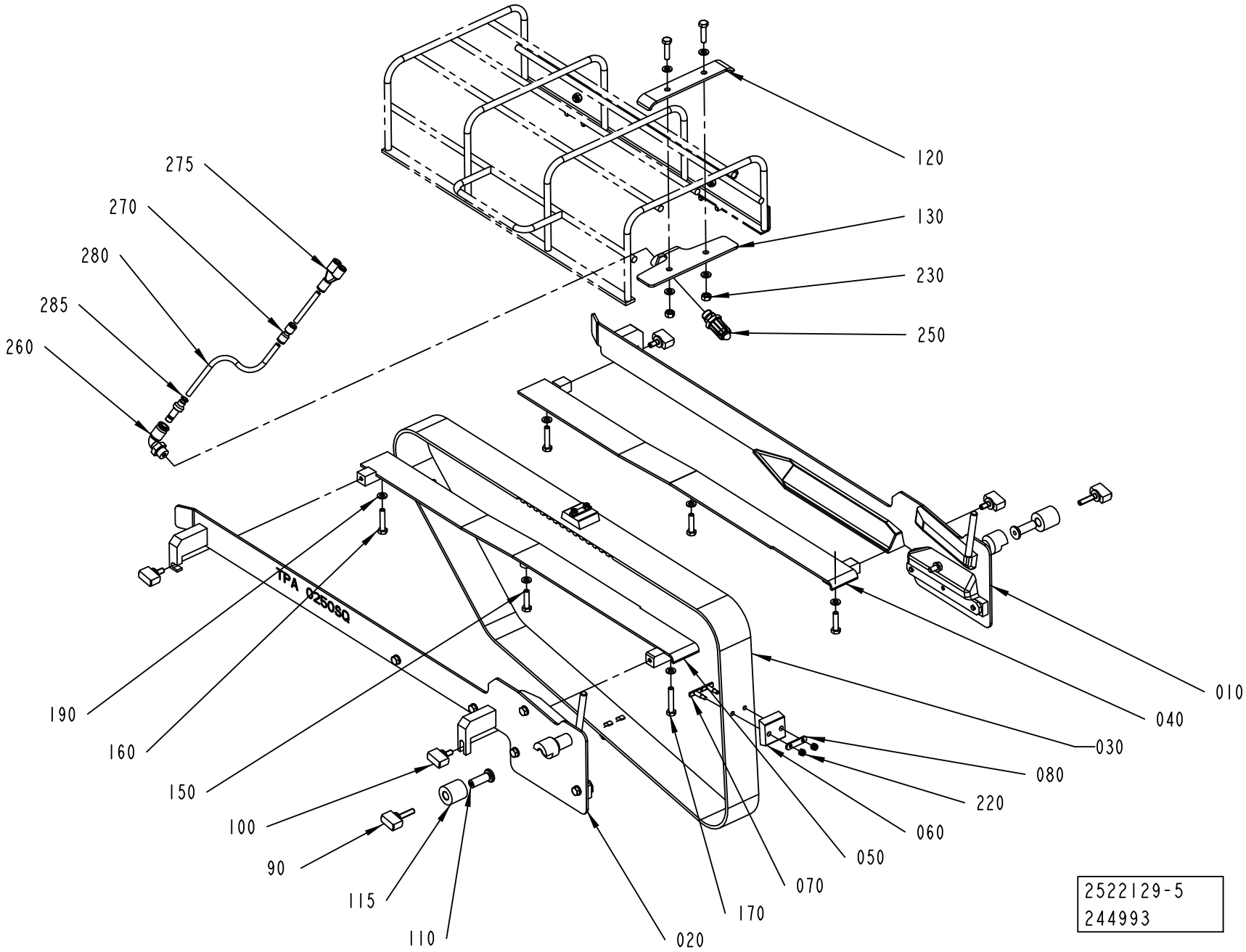

Pos	Part No	UN	Qty	Description	Page No	Pos	Part No	UN	Qty	Description	Page No

SEE PREVIOUS LISTS PAGES: 5-165, 5-167.

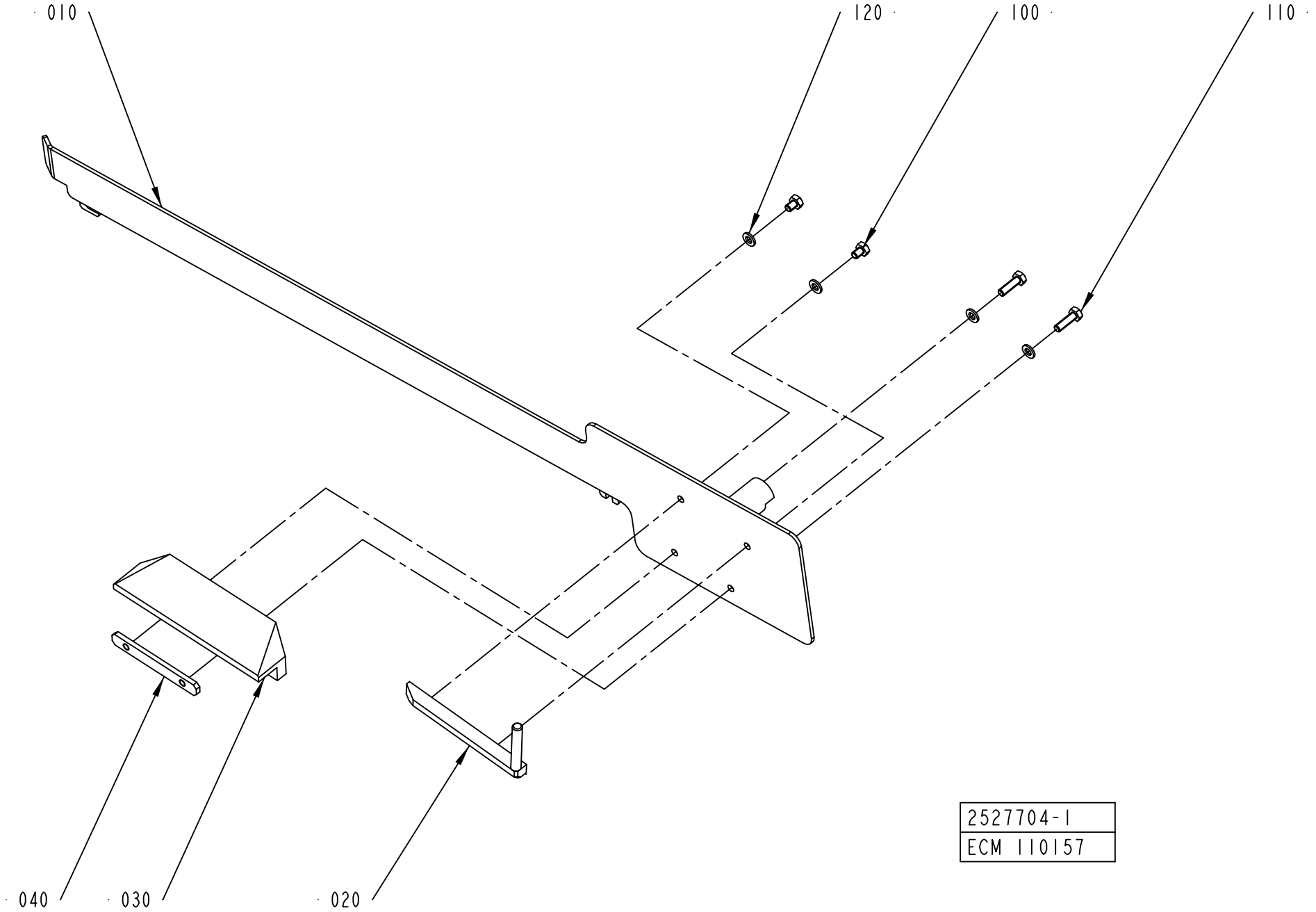
010
120
100
110
040
030
020
2527704-1
ECM 110157

ECM: 272805 - 20060626
Group number: 2527704-0100
Assembly Drawing: 2527704-1_1_AA

This list covers pages from 5-170 to 5-175

Pos	Part No	UN	Qty	Description	Page No
TBA 0250SQ (See drawing on page: 5-174)					
010	2668224-0000		1	GUIDE	
020	2668232-0000		1	BAR	
030	2668233-0000		1	SLIDE	
040	1348169-0000		1	PLATE	
050	2668225-0000		1	GUIDE	
100	312105-0364		2	SCREW M6S ISO 4017 M6X10 A480	
110	312105-0370		2	SCREW M6S ISO 4017 M6X20 A480	
120	315105-0153		6	WASHER BRB6,4X12RFR	
140	312105-0364		2	SCREW M6S ISO 4017 M6X10 A480	
TBA 0330S (See drawing on page: 5-172)					
010	2526578-0000		1	GUIDE	
020	2545000-0000		1	BAR	
030	2544997-0000		1	SLIDE	
040	1279409-0000		1	PLATE	
050	2664200-0000		1	GUIDE	
100	312105-0362		2	SCREW M6S ISO 4017 M6X8 A480	
120	315105-0153		6	WASHER BRB6,4X12RFR	
130	312605-0316		2	HEXAGON NUT, M6M M6 A280	
TBA 0500B (See drawing on page: 5-170)					
010	2522166-0000		1	GUIDE	
020	1539877-0000		1	BAR	
030	1539874-0000		1	SLIDE	
040	1539876-0000		1	PLATE	
100	312105-0362		2	SCREW M6S ISO 4017 M6X8 A480	
110	312105-0370		2	SCREW M6S ISO 4017 M6X20 A480	
120	315105-0153		6	WASHER BRB6,4X12RFR	
TBA 1000B (See drawing on page: 5-170)					
010	2518129-0000		1	GUIDE	
020	1348144-0000		1	BAR	
030	1348133-0000		1	SLIDE	
040	1279409-0000		1	PLATE	
100	312105-0362		2	SCREW M6S ISO 4017 M6X8 A480	
110	312105-0370		2	SCREW M6S ISO 4017 M6X20 A480	
120	315105-0153		6	WASHER BRB6,4X12RFR	
TBA 1890S (See drawing on page: 5-170)					
010	2665202-0000		1	GUIDE	
020	1317805-0000		1	BAR	
030	2594905-0000		1	SLIDE	
040	1144621-0000		1	PLATE	
100	312105-0362		2	SCREW M6S ISO 4017 M6X8 A480	
110	312109-0374		3	SCREW M6S ISO 4017 M6X30 A480	
120	315105-0153		5	WASHER BRB6,4X12RFR	
TBA 2000S (See drawing on page: 5-170)					
010	2678622-0000		1	GUIDE	
020	1317805-0000		1	BAR	
030	2598487-0000		1	SLIDE	
040	1144621-0000		1	PLATE	
100	312105-0362		2	SCREW M6S ISO 4017 M6X8 A480	
110	312109-0374		3	SCREW M6S ISO 4017 M6X30 A480	
120	315105-0153		5	WASHER BRB6,4X12RFR	
TPA 0200SQ (See drawing on page: 5-172)					
010	2674250-0000		1	GUIDE	
020	2674251-0000		1	BAR	
030	2674252-0000		1	SLIDE	
040	2674248-0000		1	PLATE	
050	1539894-0000		1	GUIDE	
100	312105-0366		2	SCREW M6S ISO 4017 M6X12 A480	
110	312105-0370		2	SCREW M6S ISO 4017 M6X20 A480	
120	315105-0153		6	WASHER BRB6,4X12RFR	
130	312105-0366		2	SCREW M6S ISO 4017 M6X12 A480	
TPA 0250SQ (See drawing on page: 5-172)					
010	2674249-0000		1	GUIDE	
020	1549854-0000		1	BAR	
030	1549852-0000		1	SLIDE	
040	1144621-0000		1	PLATE	
050	1539894-0000		1	GUIDE	
100	312105-0366		2	SCREW M6S ISO 4017 M6X12 A480	
110	312105-0370		2	SCREW M6S ISO 4017 M6X20 A480	
120	315105-0153		6	WASHER BRB6,4X12RFR	
130	312105-0366		2	SCREW M6S ISO 4017 M6X12 A480	
TPA 0750SQ (See drawing on page: 5-174)					
010	2647087-0000		1	GUIDE	
020	2647088-0000		1	BAR	
030	2647090-0000		1	SLIDE	
040	2647092-0000		1	ANGLE BLOCK	
050	2637665-0000		1	GUIDE	
100	312105-0364		2	SCREW M6S ISO 4017 M6X10 A480	
110	312105-0368		4	SCREW M6S ISO 4017 M6X16 A480	
120	315105-0153		6	WASHER BRB6,4X12RFR	
TPA 1000SQ (See drawing on page: 5-174)					
010	2647083-0000		1	GUIDE	
020	2647084-0000		1	BAR	
030	2675323-0000		1	SLIDE	

Machine Type | Group Description | Used-In | Group Number | Page No

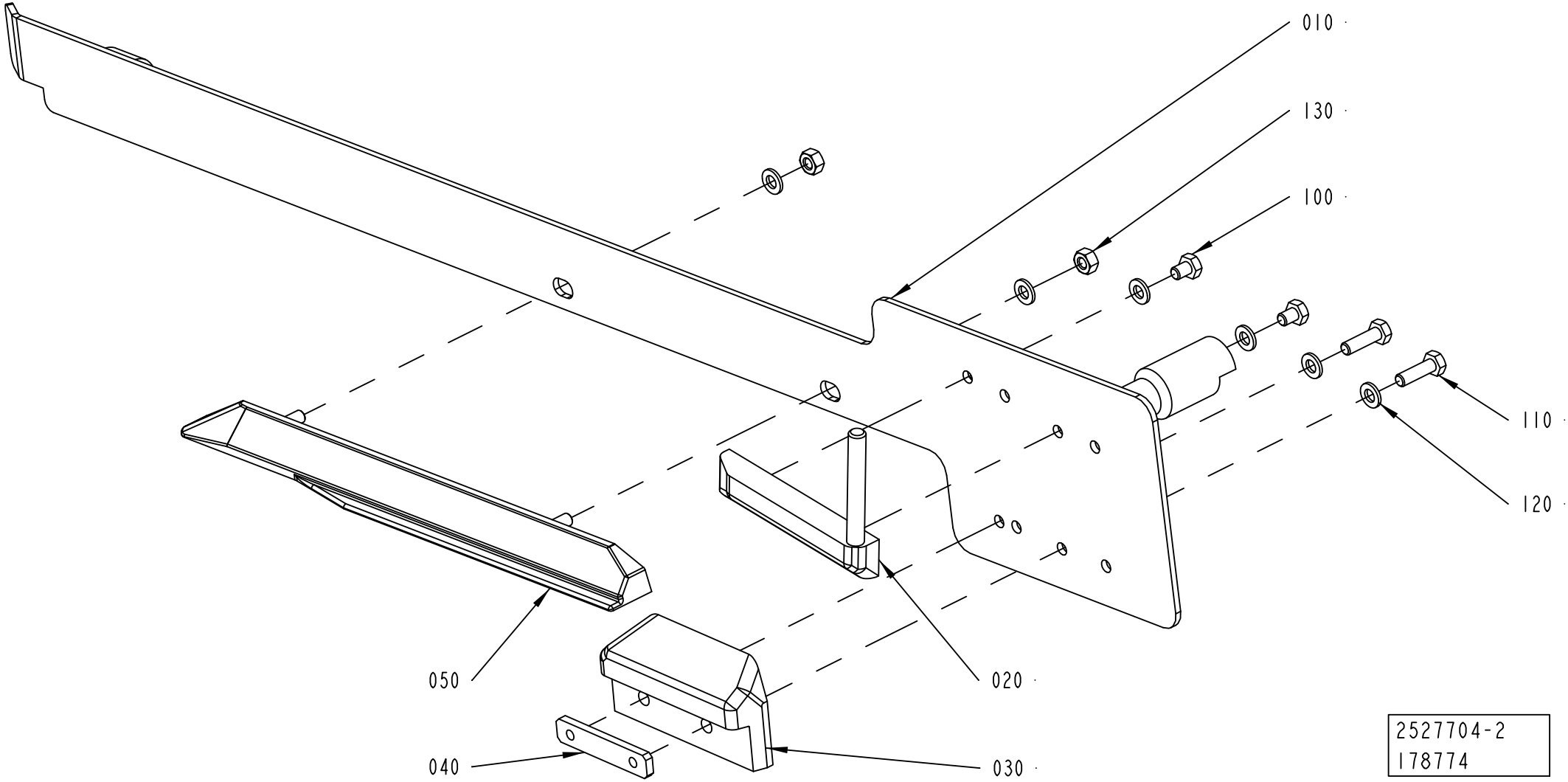
010
130
100
110
120
050
020
040
030
2527704-2
178774

Pos	Part No	UN	Qty	Description	Page No
TPA 1000SQ (Cont'd) (See drawing on page: 5-174)					
040	2543242-0000		1	ANGLE BLOCK	
050	2637665-0000		1	GUIDE	
100	312105-0364		2	SCREW M6S ISO 4017 M6X10 A480	
110	312105-0368		4	SCREW M6S ISO 4017 M6X16 A480	
120	315105-0153		6	WASHER BRB6,4X12RFR	
TBA 0200B (See drawing on page: 5-172)					
010	2526578-0000		1	GUIDE	
020	1348148-0000		1	BAR	
030	1348136-0000		1	SLIDE	
040	1348169-0000		1	PLATE	
050	2664200-0000		1	GUIDE	
100	312105-0362		2	SCREW M6S ISO 4017 M6X8 A480	
120	315105-0153		6	WASHER BRB6,4X12RFR	
130	312605-0316		2	HEXAGON NUT, M6M M6 A280	
TBA 0200M (See drawing on page: 5-172)					
010	2657937-0000		1	GUIDE	
020	2657932-0000		1	BAR	
030	2657935-0000		1	SLIDE	
040	1348169-0000		1	PLATE	
050	1517526-0000		1	GUIDE	
100	312105-0362		2	SCREW M6S ISO 4017 M6X8 A480	
110	312105-0370		2	SCREW M6S ISO 4017 M6X20 A480	
120	315105-0153		6	WASHER BRB6,4X12RFR	
130	312605-0316		2	HEXAGON NUT, M6M M6 A280	
TBA 0200SQ (See drawing on page: 5-174)					
010	2752647-0000		1	GUIDE	
020	2668226-0000		1	BAR	
030	2668227-0000		1	SLIDE	
040	1348169-0000		1	PLATE	
050	2668225-0000		1	GUIDE	
100	312105-0364		2	SCREW M6S ISO 4017 M6X10 A480	
110	312105-0370		2	SCREW M6S ISO 4017 M6X20 A480	
120	315105-0153		6	WASHER BRB6,4X12RFR	
140	312105-0364		2	SCREW M6S ISO 4017 M6X10 A480	
TBA 0250B (See drawing on page: 5-172)					
010	2526578-0000		1	GUIDE	
020	1348147-0000		1	BAR	
030	1348135-0000		1	SLIDE	
040	1348169-0000		1	PLATE	
050	2664200-0000		1	GUIDE	
100	312105-0362		2	SCREW M6S ISO 4017 M6X8 A480	
120	315105-0153		6	WASHER BRB6,4X12RFR	
130	312605-0316		2	HEXAGON NUT, M6M M6 A280	
TBA 0250S (See drawing on page: 5-172)					
010	2657937-0000		1	GUIDE	
020	2529608-0000		1	BAR	
030	2529605-0000		1	SLIDE	
040	1279409-0000		1	PLATE	
050	1517526-0000		1	GUIDE	
100	312105-0362		2	SCREW M6S ISO 4017 M6X8 A480	
110	312105-0370		2	SCREW M6S ISO 4017 M6X20 A480	
120	315105-0153		6	WASHER BRB6,4X12RFR	
130	312605-0316		2	HEXAGON NUT, M6M M6 A280	

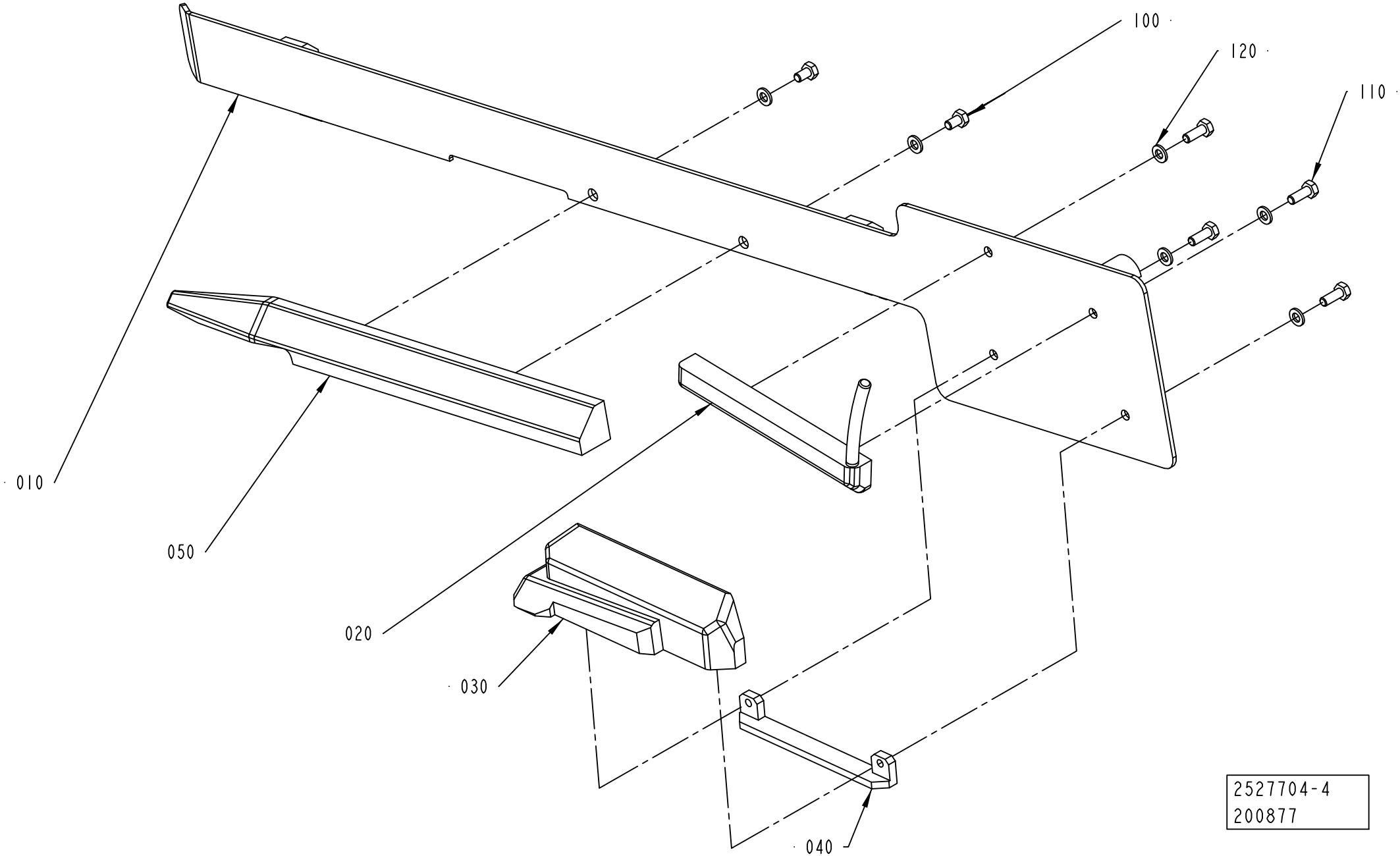
100
120
110
010
050
020
030
040
2527704-4
200877

Pos	Part No	UN	Qty	Description	Page No	Pos	Part No	UN	Qty	Description	Page No

SEE PREVIOUS LISTS PAGES: 5-171, 5-173.

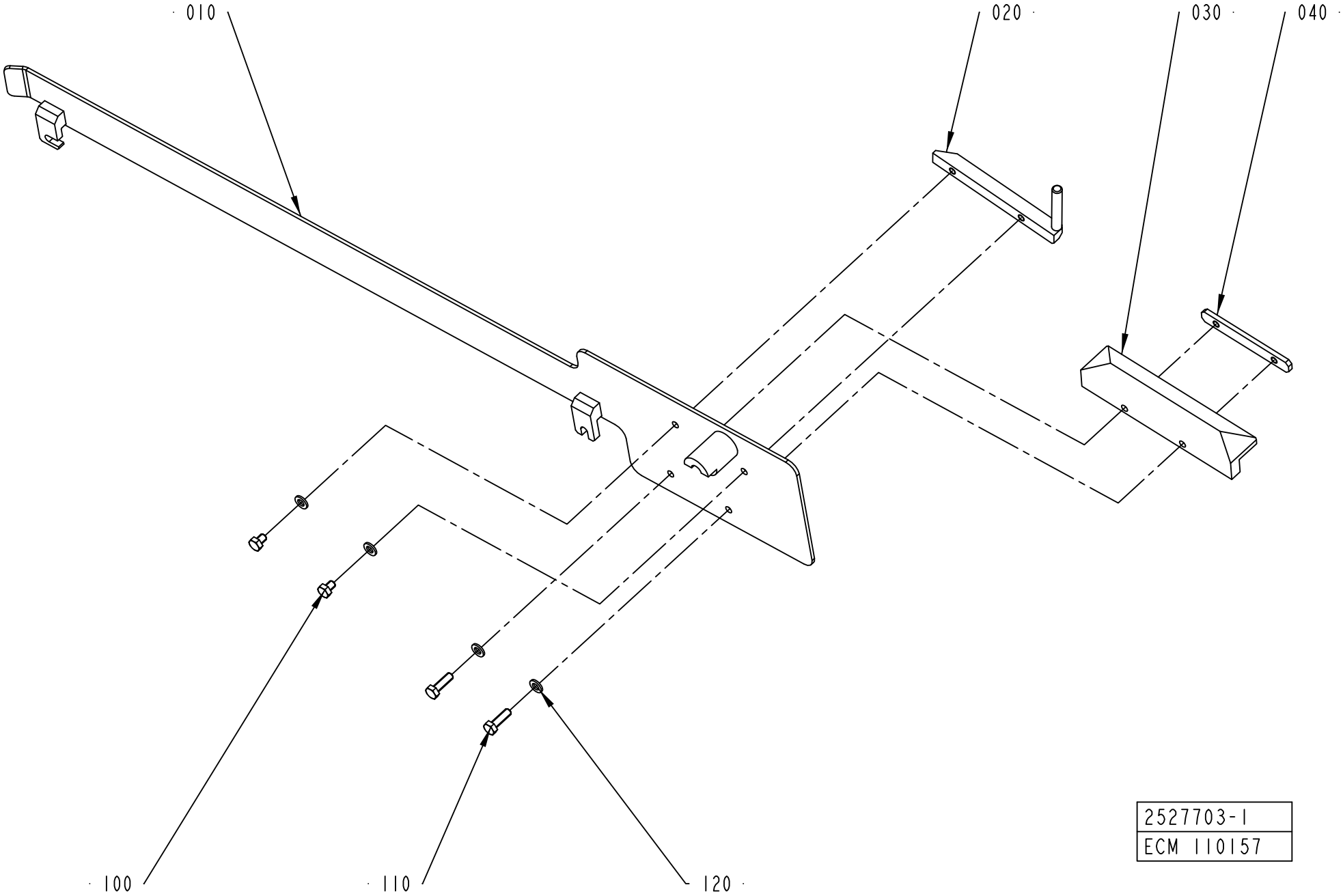
010
020
030
040
100
110
120
2527703-1
ECM 110157

ECM: 272804 - 20060626
Group number: 2527703-0100
Assembly Drawing: 2527703-1_1_AA

This list covers pages from 5-176 to 5-183

Pos	Part No	UN	Qty	Description	Page No
TBA 0250S (See drawing on page: 5-178)					
010	2657936-0000		1	GUIDE	
020	2529607-0000		1	BAR	
030	2529606-0000		1	SLIDE	
040	1279409-0000		1	PLATE	
050	1517527-0000		1	GUIDE	
100	312105-0362		2	SCREW M6S ISO 4017 M6X8 A480	
110	312105-0370		2	SCREW M6S ISO 4017 M6X20 A480	
120	315105-0153		6	WASHER BRB6,4X12RFR	
130	312605-0316		2	HEXAGON NUT, M6M M6 A280	
TBA 0250SQ (See drawing on page: 5-182)					
010	2668228-0000		1	GUIDE	
020	2668234-0000		1	BAR	
030	2668235-0000		1	SLIDE	
040	1348169-0000		1	PLATE	
050	2668229-0000		1	GUIDE	
100	312105-0366		2	SCREW M6S ISO 4017 M6X12 A480	
110	312105-0370		2	SCREW M6S ISO 4017 M6X20 A480	
120	315105-0153		6	WASHER BRB6,4X12RFR	
140	312105-0364		2	SCREW M6S ISO 4017 M6X10 A480	
TBA 0330S (See drawing on page: 5-178)					
010	2526579-0000		1	GUIDE	
020	2544999-0000		1	BAR	
030	2544998-0000		1	SLIDE	
040	1279409-0000		1	PLATE	
050	2664201-0000		1	GUIDE	
100	312105-0362		2	SCREW M6S ISO 4017 M6X8 A480	
110	312105-0370		2	SCREW M6S ISO 4017 M6X20 A480	
120	315105-0153		6	WASHER BRB6,4X12RFR	
130	312605-0316		2	HEXAGON NUT, M6M M6 A280	
TBA 0500B (See drawing on page: 5-176)					
010	2522167-0000		1	GUIDE	
020	1539878-0000		1	BAR	
030	1539875-0000		1	SLIDE	
040	1539876-0000		1	PLATE	
100	312105-0362		2	SCREW M6S ISO 4017 M6X8 A480	
110	312105-0370		2	SCREW M6S ISO 4017 M6X20 A480	
120	315105-0153		6	WASHER BRB6,4X12RFR	
TBA 1000B (See drawing on pages: 5-176, 5-180)					
010	2518130-0000		1	GUIDE	
020	1348150-0000		1	BAR	
030	1348139-0000		1	SLIDE	
040	1279409-0000		1	PLATE	
100	312105-0362		2	SCREW M6S ISO 4017 M6X8 A480	
110	312105-0370		2	SCREW M6S ISO 4017 M6X20 A480	
120	315105-0153		6	WASHER BRB6,4X12RFR	
TBA 1000SQ					
100	312105-0362		2	SCREW M6S ISO 4017 M6X8 A480	
120	315105-0153		7	WASHER BRB6,4X12RFR	
TBA 1890S (See drawing on page: 5-176)					
010	2665203-0000		1	GUIDE	
020	1334271-0000		1	BAR	
030	2594906-0000		1	SLIDE	
040	1144621-0000		1	PLATE	
100	312105-0362		2	SCREW M6S ISO 4017 M6X8 A480	
110	312109-0374		3	SCREW M6S ISO 4017 M6X30 A480	
120	315105-0153		5	WASHER BRB6,4X12RFR	
TBA 2000S (See drawing on page: 5-176)					
010	2678621-0000		1	GUIDE	
020	1334271-0000		1	BAR	
030	2598488-0000		1	SLIDE	
040	1144621-0000		1	PLATE	
100	312105-0362		2	SCREW M6S ISO 4017 M6X8 A480	
110	312109-0374		3	SCREW M6S ISO 4017 M6X30 A480	
120	315105-0153		5	WASHER BRB6,4X12RFR	
TPA 0200SQ (See drawing on page: 5-178)					
010	2674245-0000		1	GUIDE	
020	2674246-0000		1	BAR	
030	2674247-0000		1	SLIDE	
040	2674248-0000		1	PLATE	
050	1539895-0000		1	GUIDE	
100	312105-0366		2	SCREW M6S ISO 4017 M6X12 A480	
110	312105-0370		2	SCREW M6S ISO 4017 M6X20 A480	
120	315105-0153		6	WASHER BRB6,4X12RFR	
130	312105-0366		2	SCREW M6S ISO 4017 M6X12 A480	
TPA 0250SQ (See drawing on page: 5-178)					
010	2674244-0000		1	GUIDE	
020	1549855-0000		1	BAR	
030	1549853-0000		1	SLIDE	
040	1144621-0000		1	PLATE	
050	1539895-0000		1	GUIDE	
100	312105-0366		2	SCREW M6S ISO 4017 M6X12 A480	
110	312105-0370		2	SCREW M6S ISO 4017 M6X20 A480	
120	315105-0153		6	WASHER BRB6,4X12RFR	

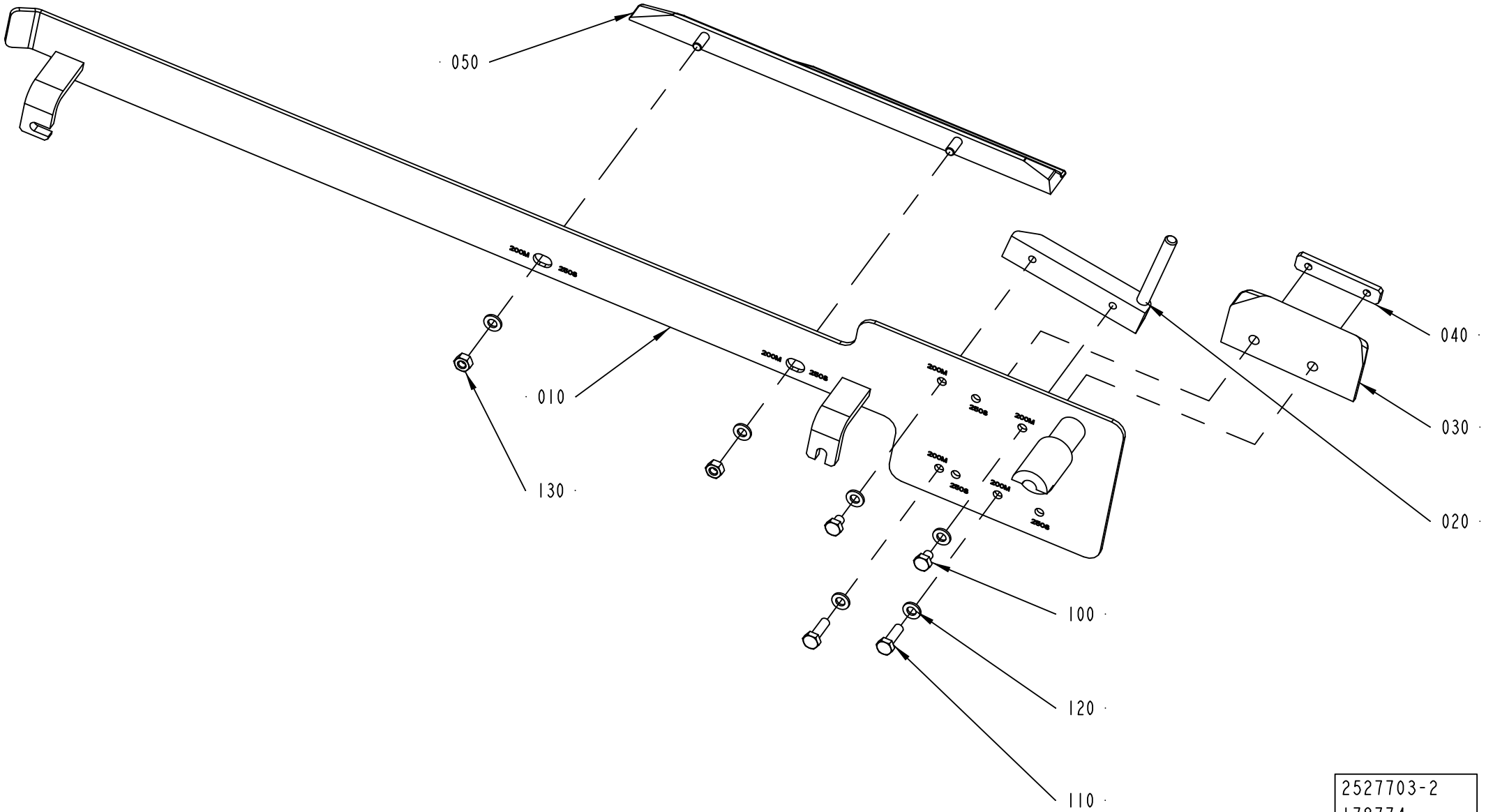
050
010
130
040
030
020
100
120
110
2527703-2
178774

Pos	Part No	UN	Qty	Description	Page No
TPA 0250SQ (Cont'd) (See drawing on page: 5-178)					
130	312105-0366		2	SCREW M6S ISO 4017 M6X12 A480	
TPA 0750SQ (See drawing on page: 5-182)					
010	2647086-0000		1	GUIDE	
020	2647089-0000		1	BAR	
030	2647091-0000		1	SLIDE	
040	2647092-0000		1	ANGLE BLOCK	
050	2637666-0000		1	GUIDE	
100	312105-0364		2	SCREW M6S ISO 4017 M6X10 A480	
110	312105-0368		4	SCREW M6S ISO 4017 M6X16 A480	
120	315105-0153		6	WASHER BRB6,4X12RFR	
TPA 1000SQ (See drawing on page: 5-182)					
010	2647082-0000		1	GUIDE	
020	2647085-0000		1	BAR	
030	2675322-0000		1	SLIDE	
040	2543242-0000		1	ANGLE BLOCK	
050	2637666-0000		1	GUIDE	
100	312105-0364		2	SCREW M6S ISO 4017 M6X10 A480	
110	312105-0368		4	SCREW M6S ISO 4017 M6X16 A480	
120	315105-0153		6	WASHER BRB6,4X12RFR	
TBA 0200B (See drawing on page: 5-178)					
010	2526579-0000		1	GUIDE	
020	1348154-0000		1	BAR	
030	1348142-0000		1	SLIDE	
040	1348169-0000		1	PLATE	
050	2664201-0000		1	GUIDE	
100	312105-0362		2	SCREW M6S ISO 4017 M6X8 A480	
110	312105-0370		2	SCREW M6S ISO 4017 M6X20 A480	
120	315105-0153		6	WASHER BRB6,4X12RFR	
130	312605-0316		2	HEXAGON NUT, M6M M6 A280	
TBA 0200M (See drawing on page: 5-178)					
010	2657936-0000		1	GUIDE	
020	2657933-0000		1	BAR	
030	2657934-0000		1	SLIDE	
040	1348169-0000		1	PLATE	
050	1517527-0000		1	GUIDE	
100	312105-0362		2	SCREW M6S ISO 4017 M6X8 A480	
110	312105-0370		2	SCREW M6S ISO 4017 M6X20 A480	
120	315105-0153		6	WASHER BRB6,4X12RFR	
130	312605-0316		2	HEXAGON NUT, M6M M6 A280	
TBA 0200SQ (See drawing on page: 5-182)					
010	2752648-0000		1	GUIDE	
020	2668230-0000		1	BAR	
030	2668231-0000		1	SLIDE	
040	1348169-0000		1	PLATE	
050	2668229-0000		1	GUIDE	
100	312105-0366		2	SCREW M6S ISO 4017 M6X12 A480	
110	312105-0370		2	SCREW M6S ISO 4017 M6X20 A480	
120	315105-0153		6	WASHER BRB6,4X12RFR	
140	312105-0364		2	SCREW M6S ISO 4017 M6X10 A480	
TBA 0250B (See drawing on page: 5-178)					
010	2526579-0000		1	GUIDE	
020	1348153-0000		1	BAR	
030	1348141-0000		1	SLIDE	
040	1348169-0000		1	PLATE	
050	2664201-0000		1	GUIDE	
100	312105-0362		2	SCREW M6S ISO 4017 M6X8 A480	
110	312105-0370		2	SCREW M6S ISO 4017 M6X20 A480	
120	315105-0153		6	WASHER BRB6,4X12RFR	
130	312605-0316		2	HEXAGON NUT, M6M M6 A280	

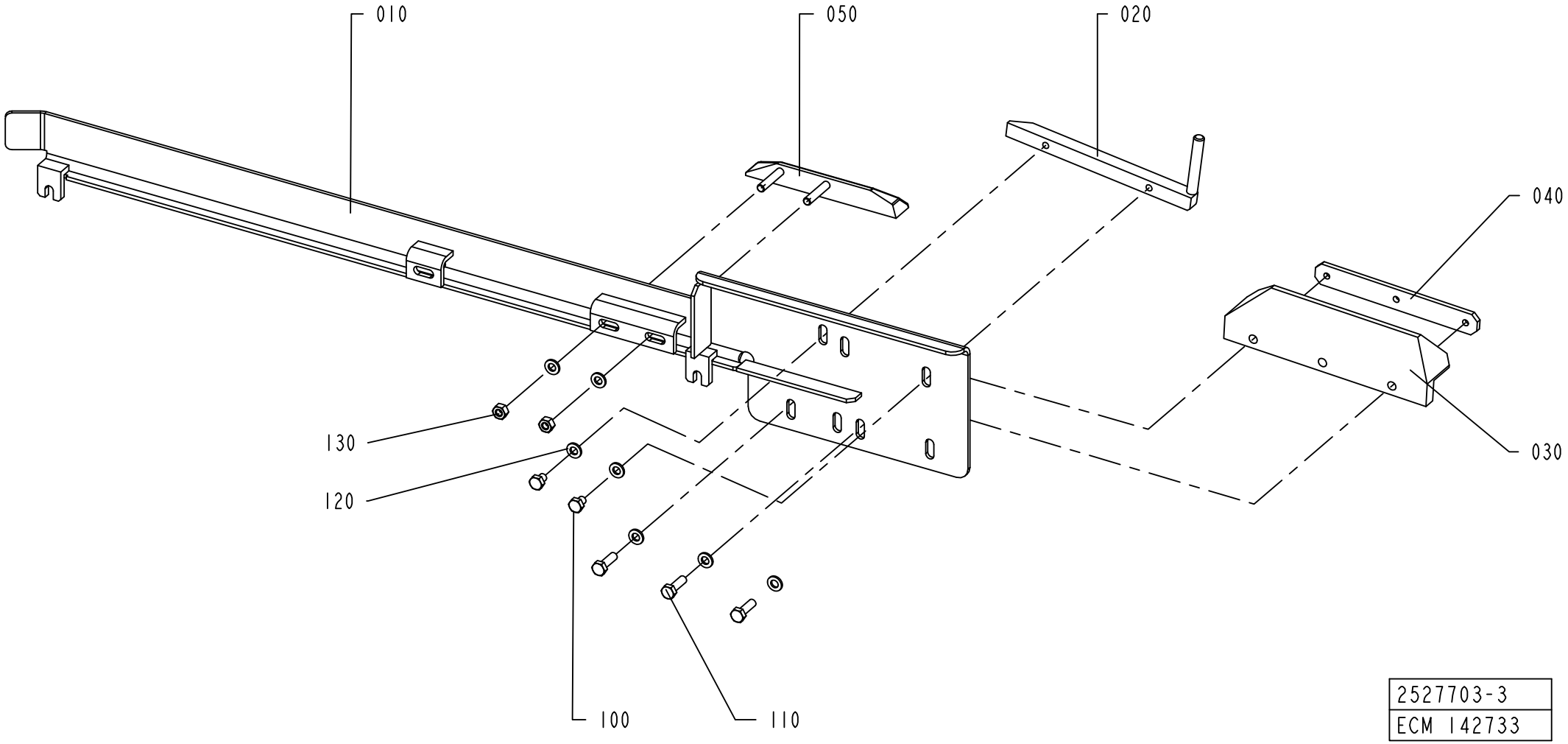

2527703-3
ECM 142733

Pos	Part No	UN	Qty	Description	Page No
SEE PREVIOUS LISTS PAGES: 5-177, 5-179.					

Pos	Part No	UN	Qty	Description	Page No

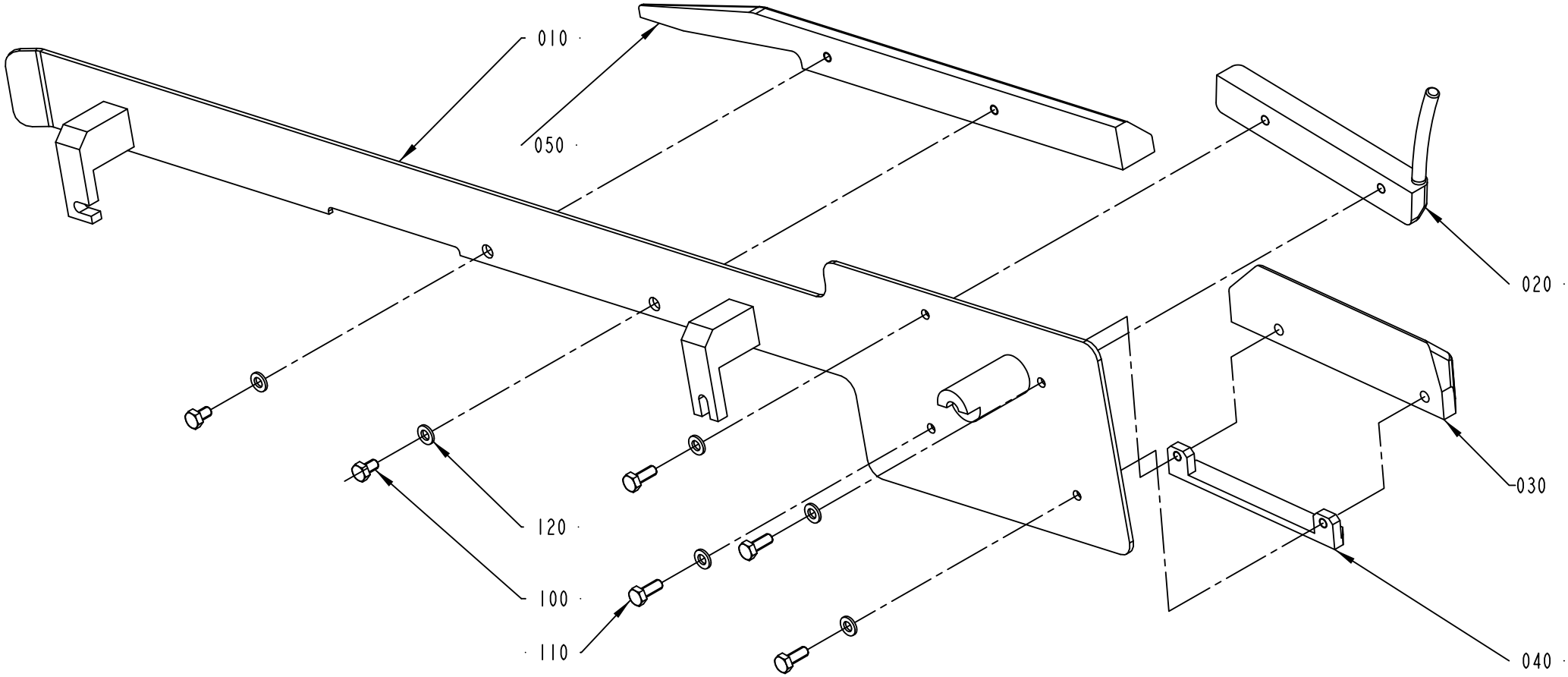

2527703-4
200877

Pos	Part No	UN	Qty	Description	Page No
SEE PREVIOUS LISTS PAGES: 5-177, 5-179.					

Pos	Part No	UN	Qty	Description	Page No

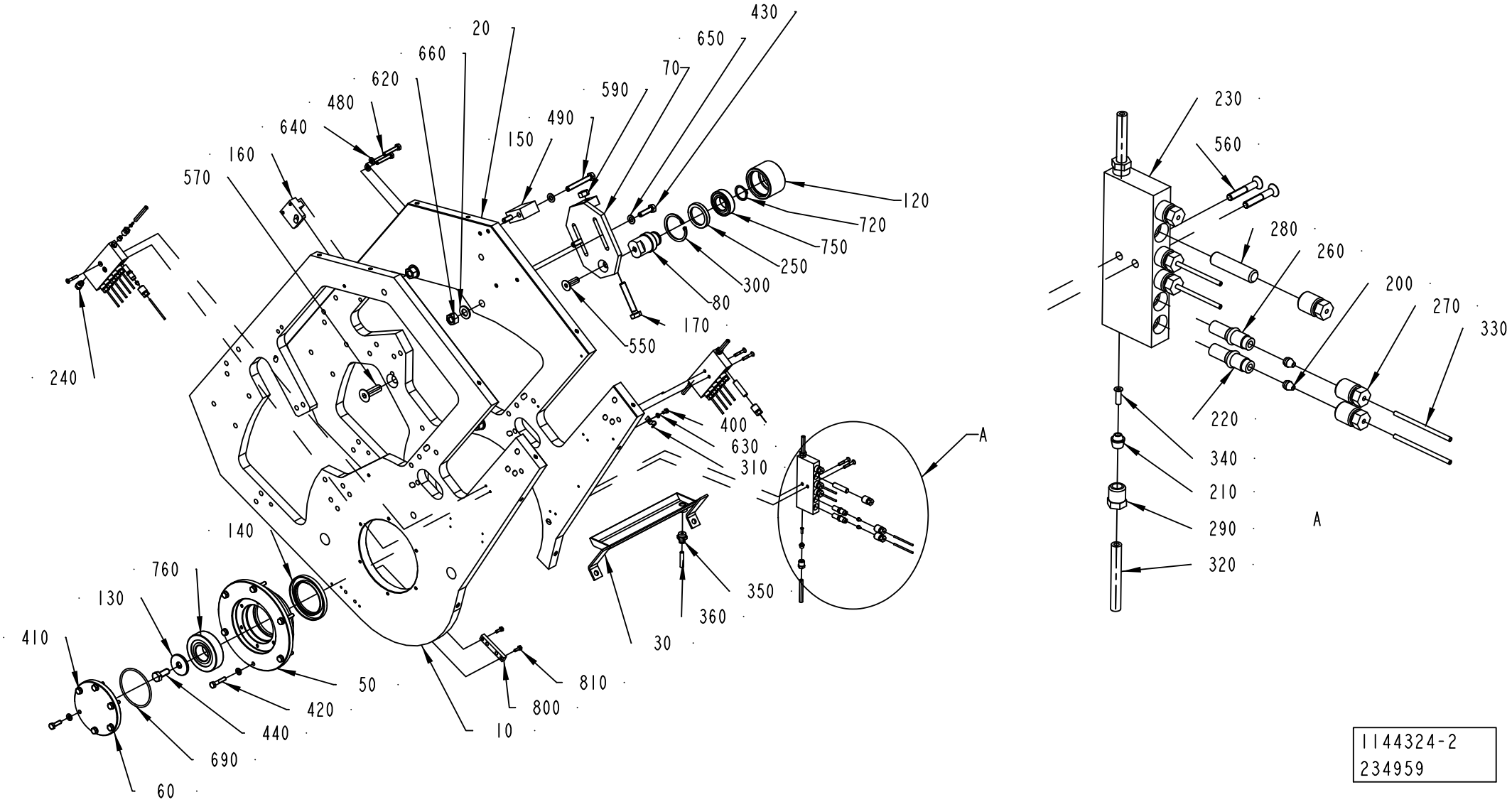

1144324-2
234959

ECM: 272391 - 20060626
Group number: 1144324-0300
Assembly Drawing: 1144324-2_1_AD

Pos	Part No	UN	Qty	Description	Page No
A3/FLEX TBA 1890S QC, A3/FLEX TBA 2000S QC (See drawing on page: 5-184)					
160	1282844-0000		1	SUPPORT	
260	90092-0052		13	METERING VALVE 10 MM3	
270	90134-0039		18	BUSHING VALVE CONNECTION 2,5 MM	
280	90134-0052		4	PLUG DOSING BLOCK	
A3/FLEX TBA 1000B, A3/FLEX TBA 1000S, A3/FLEX TBA 0200S, A3/FLEX TBA 1500S, A3/FLEX TBA 0200B QC, A3/FLEX TBA 0250B QC, A3/FLEX TBA 0330S QC, A3/FLEX TBA 0250S QC, A3/FLEX TBA 0200M QC (See drawing on page: 5-184)					
160	1144900-0000		1	SUPPORT	
260	90092-0052		14	METERING VALVE 10 MM3	
270	90134-0039		18	BUSHING VALVE CONNECTION 2,5 MM	
280	90134-0052		4	PLUG DOSING BLOCK	
A3/FLEX TBA 1000SQ, A3/FLEX TPA 0330SQ, A3/FLEX TPA 0500SQ, A3/FLEX TPA 0750SQ QC, A3/FLEX TPA 1000SQ QC, A3/FLEX TPA 0200SQ QC, A3/FLEX TPA 0250SQ QC, A3/FLEX TPA 1000SQ NOQC, A3/FLEX TBA 0250SQ QC, A3/FLEX TBA 0200SQ QC (See drawing on page: 5-184)					
160	1282844-0000		1	SUPPORT	
260	90092-0052		16	METERING VALVE 10 MM3	
270	90134-0039		18	BUSHING VALVE CONNECTION 2,5 MM	
280	90134-0052		2	PLUG DOSING BLOCK	
A3/FLEX TBA 0500B QC, A3/FLEX TBA 1000B QC, A3/FLEX TBA 0500S (See drawing on page: 5-184)					
160	1282844-0000		1	SUPPORT	
260	90092-0052		14	METERING VALVE 10 MM3	
270	90134-0039		18	BUSHING VALVE CONNECTION 2,5 MM	
280	90134-0052		4	PLUG DOSING BLOCK	
Common Parts					
010	1347109-0000		1	PLATE	
020	1347108-0000		1	PLATE	
050	598101-0000		1	BEARING HOUSING	
060	1144618-0000		1	FLANGE	
070	1144797-0000		1	SUPPORT	
080	1478418-0000		1	AXLE BOLT	
120	1478417-0000		1	ROLLER	
130	1144620-0000		1	WASHER	
140	1144665-0000		1	SEAL RING	
150	1144839-0000		1	BLOCK	
170	1260931-0000		1	SCREW	
180	2727659-0000		1	PROTECTION PLATE	
190	2767105-0000		1	PROTECTION PLATE	
200	90028-0020		14	CONE TUBE 2,5MM	
210	90028-0025		5	CONE TUBE 6 MM	
220	90092-0054		1	METERING VALVE 50 MM3	
230	90032-0040		3	BLOCK 6 WAYS	
240	90087-0019		1	PLUG M10X1 STAINLESS	
250	90091-0297		1	RADIAL SEAL 35X47X7 MM DUST LIP	
290	90134-0055		5	BUSHING/NUT INLET/OUTLET 6 MM	
300	90141-0019		1	RETAINING RING FOR BORE DIN 472 50 A2	
310	316810-0106		5	PIPE CLIP FOR TUBE D=8 MM	
320	90166-0108	M	4	TUBE 6 MM PA,TRANSP.	
330	90166-0143	M	4	TUBE 2,5 MM PA,TRANSP.	
340	90134-0030		5	SLEEVE FOR PLASTIC TUBE	
400	312105-0287		5	SCREW M6S ISO 4017 M4X8 A470	
410	312105-0370		6	SCREW M6S ISO 4017 M6X20 A480	
420	312105-0374		6	SCREW M6S ISO 4014 M6X30 A480	
430	312105-0455		2	SCREW M6S ISO 4017 M8X30 A480	
440	312105-0493		1	SCREW M6S ISO 4017 M10X25 A480	
480	312109-0376		2	SCREW M6S ISO 4017 M6X35 A480	
490	312109-0463		2	SCREW M6S ISO 4017 M8X60 A480	
550	312155-0495		1	SCREW DIN 7991 MF6S M10X30 A4 70	
560	312155-0297		6	SCREW DIN 7991 MF6S M4X25 A4 70	
570	312155-0540		1	SCREW DIN 7991 MF6S M12X40 A4 70	
590	312605-0320		1	HEXAGON NUT, M6M M10 A280	
620	312605-0322		3	HEXAGON NUT, M6M M12 A280	
630	315105-0136		5	WASHER BRB4,3XRFR	
640	315105-0153		14	WASHER BRB6,4X12RFR	
650	315105-0165		4	WASHER BRB8,4X16RFR	
660	315105-0178		3	WASHER BRB13X24RFR	
690	315202-0305		1	O-RING 69,5X3 MM	
720	315751-0119		1	RETAINING RING FOR SHAFT DIN 471 25 A2	
750	321308-0205		1	BALL BEARING, 25X47X12MM	
760	321316-0206		1	BALL BEARING, 30X72X19 MM	
780	352113-0102		3	CLIP-STRIP, BLACK 188X4,8 MM	
790	352113-0101		7	CLIP STRIP, 92X2,5 MM	
800	1487821-0000		1	SPACER	
810	312105-0291		2	SCREW M6S ISO 4017 M4X12 A470	

Machine Type | Group Description | Used-In | Group Number | Page No

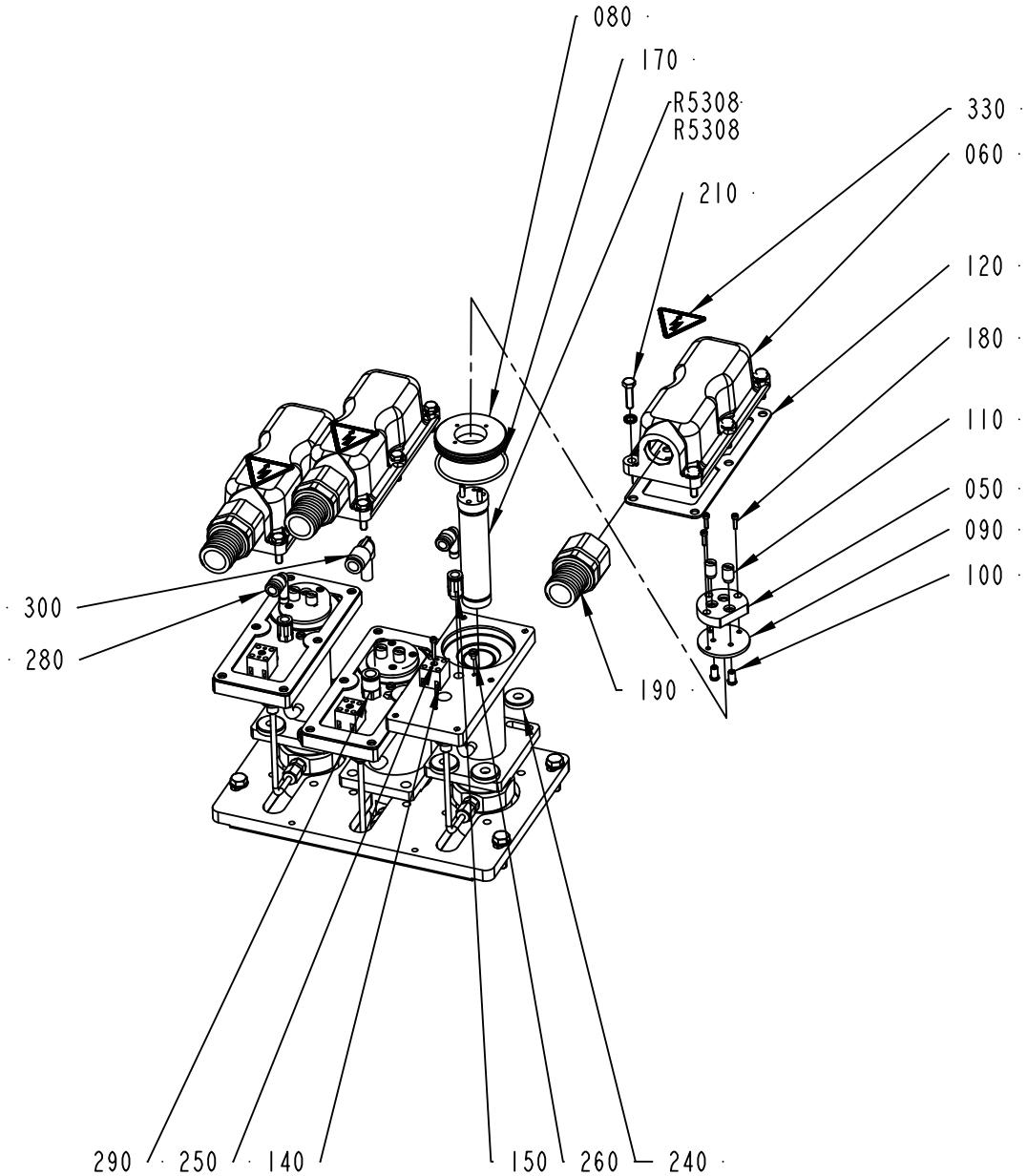
080
170
R5308
R5308
210
330
060
120
180
110
050
090
100
300
280
190
290
250
140
150
260
240

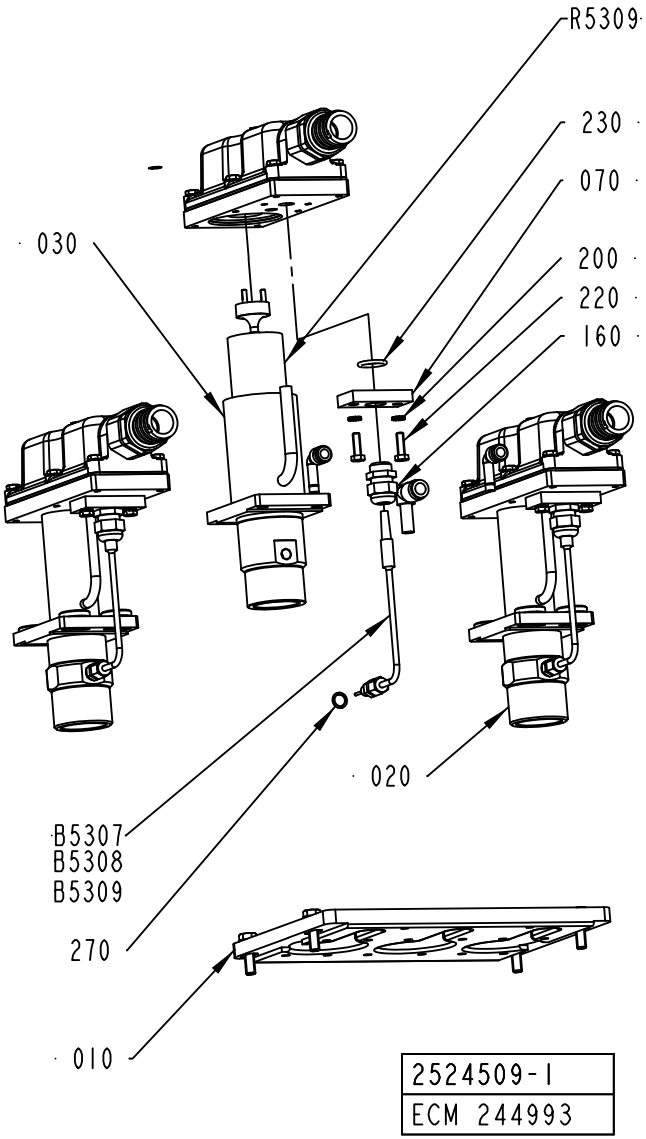
R5309
230
070
200
220
160
030
020
B5307
B5308
B5309
270
010
2524509-1
ECM 244993

ECM: 271779 - 20060626
Group number: 2524509-0100
Assembly Drawing: 2524509-1_1_AB

This list covers pages from 5-186 to 5-191

Pos	Part No	UN	Qty	Description	Page No
A3/FLEX NOQC (See drawing on page: 5-186)					
010	2544339-0100		1	FRAME	**5-193**
020	1296070-0000		2	HEATING PIPE	
A3/FLEX TBA 0500B QC, A3/FLEX TBA 1000B QC, A3/FLEX TBA 0200B QC, A3/FLEX TBA 0250B QC, A3/FLEX TBA 0330S QC, A3/FLEX TBA 0250S QC, A3/FLEX TBA 0200M QC, A3/FLEX TPA 0200SQ QC, A3/FLEX TPA 0250SQ QC, A3/FLEX TBA 0250SQ QC, A3/FLEX TBA 0200SQ QC (See drawing on pages: 5-188, 5-190)					
010	2535538-0100		1	FRAME	**5-195, 5-197, 5-199**
020	1296070-0000		2	HEATING PIPE	
A3/FLEX TBA 1890S QC, A3/FLEX TBA 2000S QC (See drawing on pages: 5-188, 5-190)					
010	2535538-0100		1	FRAME	**5-195, 5-197, 5-199**
020	1296070-0000		2	HEATING PIPE	
A3/FLEX TPA 0750SQ QC, A3/FLEX TPA 1000SQ QC (See drawing on pages: 5-188, 5-190)					
010	2535538-0100		1	FRAME	**5-195, 5-197, 5-199**
020	1296070-0000		2	HEATING PIPE	
Common Parts					
030	1285293-0000		1	HEATING PIPE	
050	294464-0000		3	BASE PLATE	
060	1484096-0000		3	COVER	
070	1285311-0000		3	PLATE	
080	1285307-0000		3	SPACER	
090	1285308-0000		3	GASKET	
100	270927-0000		6	SCREW	
110	266739-0000		6	CABLE GLAND	
120	1285312-0000		3	GASKET	
140	90195-0020		3	TERMINAL BLOCK, 1977.2	
150	342722-0204		2	PIPE COUPLING	
160	352103-0106		3	CABLE GLAND, ST 11, PR18,6/PG11	
170	315204-0303		3	O-RING 59,5X3 MM	
180	312115-0226		9	SCREW ISO4762 M3X12 A4 80	
190	353247-0005		3	HOSE GLAND EMC PG21 EXTENDED	
200	90062-0015		24	LOCK WASHER SERRAT.EXT.GEAR,6,4/11 H=0,7	
210	312105-0372		18	SCREW M6S ISO 4017 M6X25 A480	
220	312105-0370		6	SCREW M6S ISO 4017 M6X20 A480	
230	315204-0215		3	O-RING 19,2X3 MM	
240	315125-0165		8	WASHER TBRSB 8,4X26X5 A4	
250	312115-0230		3	SCREW ISO4762 M3X20 A4 80	
260	312132-0284		3	SCREW SLOT. PAN HEAD MSCS M4X5	
270	315234-0109		3	WASHER,PL.RND.CU.10,3/13,5 H=1,0	
280	90055-0204		2	ELBOW WITH TAILPIECE 8/8 MM LONG	
290	342722-0211		1	STRAIGHT COUPLING D=10-G1/4"	
300	90459-1506		1	ELBOW WITH TAILPIECE 10/10 MM	
330	359705-0015		3	WARNING SIGN ISO, RISK OF ELECTRIC SHOCK	
B5307	90326-0081		1	THERMOCOUPLE, ISA TYPE K.	
B5308	90326-0081		1	THERMOCOUPLE, ISA TYPE K.	
B5309	90326-0081		1	THERMOCOUPLE, ISA TYPE K.	
R5307	2514149-0000		1	HEATING ELEMENT	
R5308	2514149-0000		1	HEATING ELEMENT	
R5309	90206-0030		1	HEATING ELEMENT 3000W, 220V	

Machine Type | Group Description | Used-In | Group Number | Page No

FLAP HEATER BODY

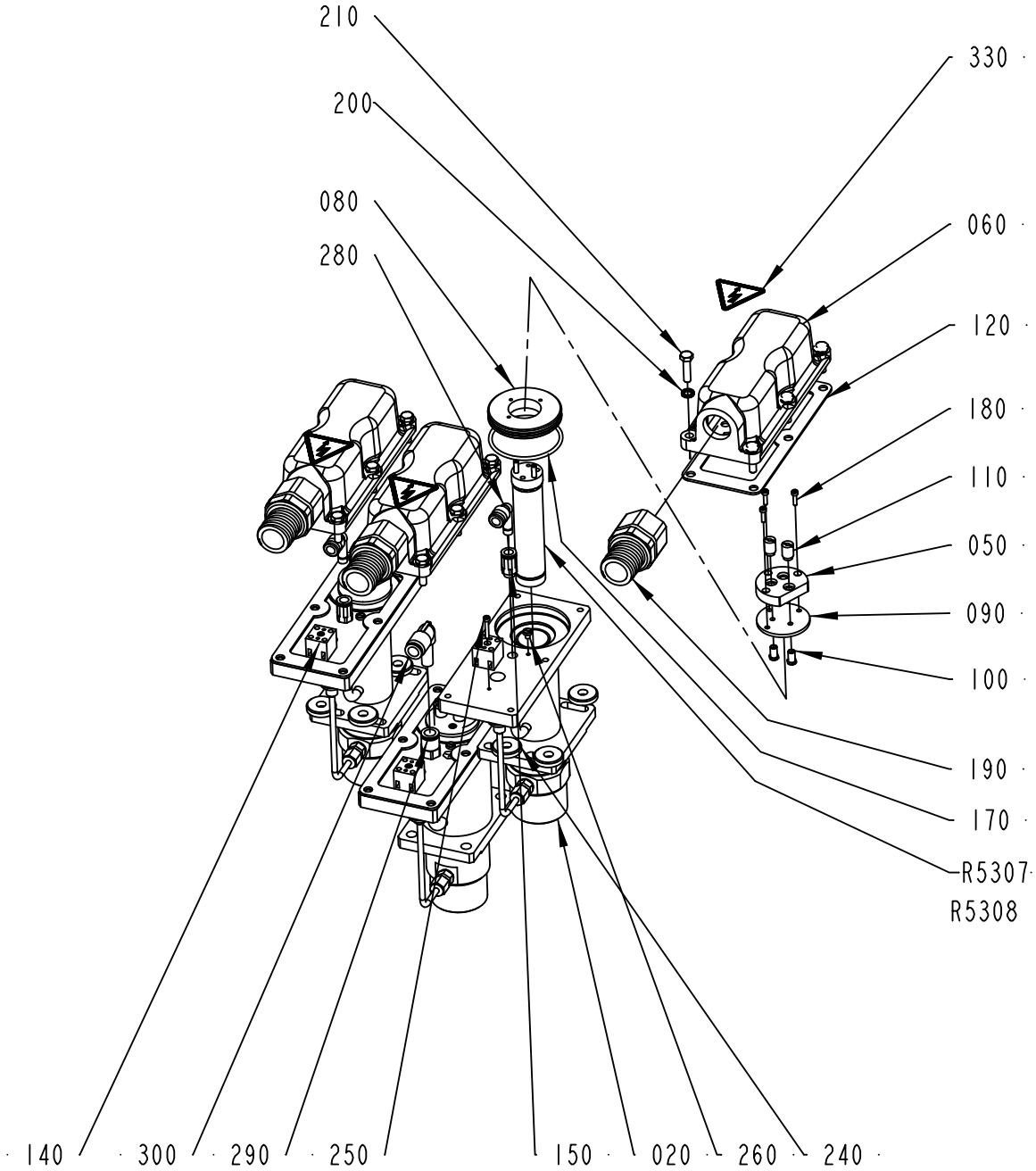

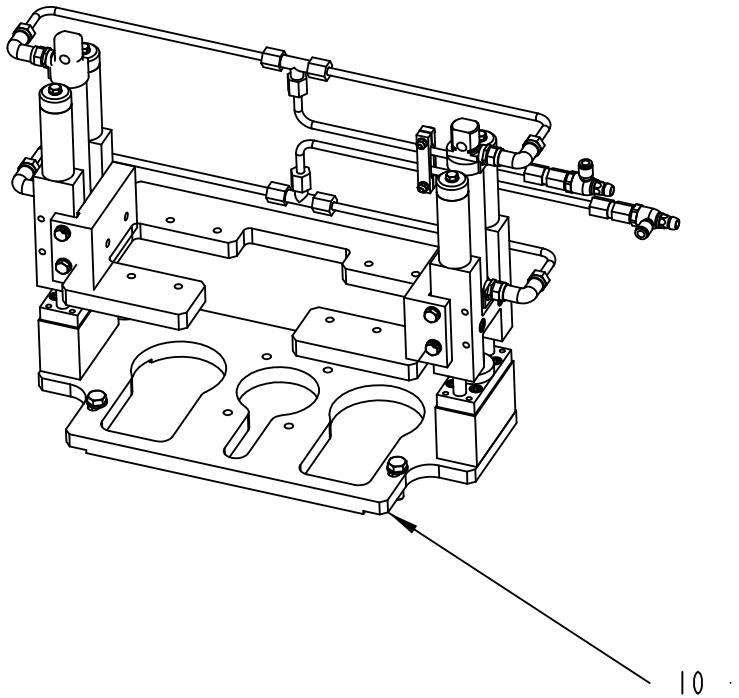

2524509-2
ECM 244993

ECM: 271779 - 20060626
Group number: 2524509-0100
Assembly Drawing: 2524509-2_1_AC

This list covers pages from 5-186 to 5-191

Pos	Part No	UN	Qty	Description	Page No
A3/FLEX NOQC (See drawing on page: 5-186)					
010	2544339-0100		1	FRAME	**5-193**
020	1296070-0000		2	HEATING PIPE	
A3/FLEX TBA 0500B QC, A3/FLEX TBA 1000B QC, A3/FLEX TBA 0200B QC, A3/FLEX TBA 0250B QC, A3/FLEX TBA 0330S QC, A3/FLEX TBA 0250S QC, A3/FLEX TBA 0200M QC, A3/FLEX TPA 0200SQ QC, A3/FLEX TPA 0250SQ QC, A3/FLEX TBA 0250SQ QC, A3/FLEX TBA 0200SQ QC (See drawing on pages: 5-188, 5-190)					
010	2535538-0100		1	FRAME	**5-195, 5-197, 5-199**
020	1296070-0000		2	HEATING PIPE	
A3/FLEX TBA 1890S QC, A3/FLEX TBA 2000S QC (See drawing on pages: 5-188, 5-190)					
010	2535538-0100		1	FRAME	**5-195, 5-197, 5-199**
020	1296070-0000		2	HEATING PIPE	
A3/FLEX TPA 0750SQ QC, A3/FLEX TPA 1000SQ QC (See drawing on pages: 5-188, 5-190)					
010	2535538-0100		1	FRAME	**5-195, 5-197, 5-199**
020	1296070-0000		2	HEATING PIPE	
Common Parts					
030	1285293-0000		1	HEATING PIPE	
050	294464-0000		3	BASE PLATE	
060	1484096-0000		3	COVER	
070	1285311-0000		3	PLATE	
080	1285307-0000		3	SPACER	
090	1285308-0000		3	GASKET	
100	270927-0000		6	SCREW	
110	266739-0000		6	CABLE GLAND	
120	1285312-0000		3	GASKET	
140	90195-0020		3	TERMINAL BLOCK, 1977.2	
150	342722-0204		2	PIPE COUPLING	
160	352103-0106		3	CABLE GLAND, ST 11, PR18,6/PG11	
170	315204-0303		3	O-RING 59,5X3 MM	
180	312115-0226		9	SCREW ISO4762 M3X12 A4 80	
190	353247-0005		3	HOSE GLAND EMC PG21 EXTENDED	
200	90062-0015		24	LOCK WASHER SERRAT.EXT.GEAR,6,4/11 H=0,7	
210	312105-0372		18	SCREW M6S ISO 4017 M6X25 A480	
220	312105-0370		6	SCREW M6S ISO 4017 M6X20 A480	
230	315204-0215		3	O-RING 19,2X3 MM	
240	315125-0165		8	WASHER TBRSB 8,4X26X5 A4	
250	312115-0230		3	SCREW ISO4762 M3X20 A4 80	
260	312132-0284		3	SCREW SLOT. PAN HEAD MSCS M4X5	
270	315234-0109		3	WASHER,PL.RND.CU.10,3/13,5 H=1,0	
280	90055-0204		2	ELBOW WITH TAILPIECE 8/8 MM LONG	
290	342722-0211		1	STRAIGHT COUPLING D=10-G1/4"	
300	90459-1506		1	ELBOW WITH TAILPIECE 10/10 MM	
330	359705-0015		3	WARNING SIGN ISO, RISK OF ELECTRIC SHOCK	
B5307	90326-0081		1	THERMOCOUPLE, ISA TYPE K.	
B5308	90326-0081		1	THERMOCOUPLE, ISA TYPE K.	
B5309	90326-0081		1	THERMOCOUPLE, ISA TYPE K.	
R5307	2514149-0000		1	HEATING ELEMENT	
R5308	2514149-0000		1	HEATING ELEMENT	
R5309	90206-0030		1	HEATING ELEMENT 3000W, 220V	

Machine Type | Group Description | Used-In | Group Number | Page No

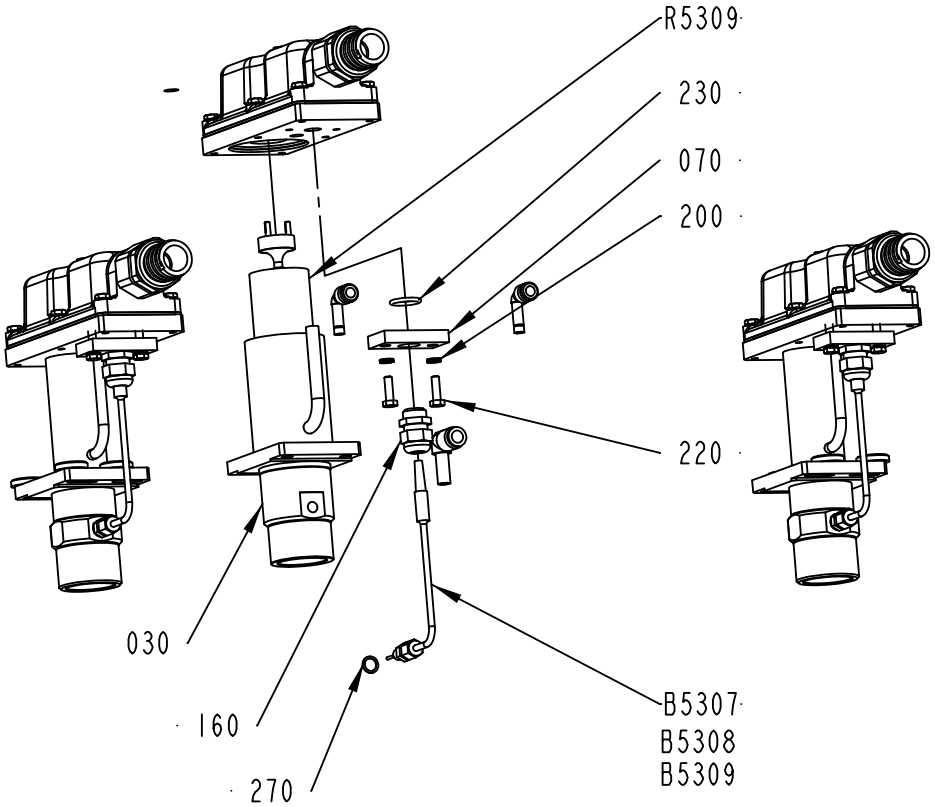

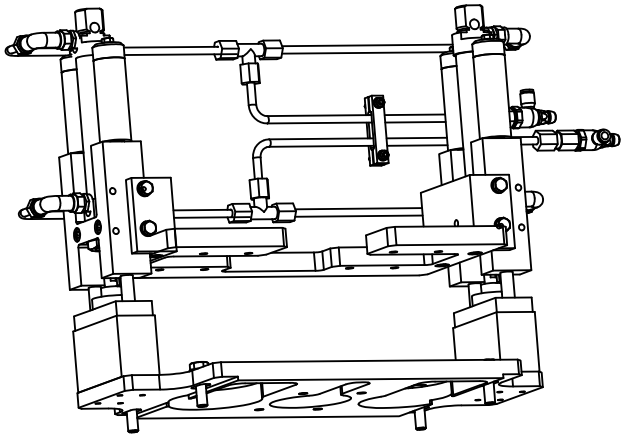

2524509-2
ECM 244993

ECM: 271779 - 20060626
Group number: 2524509-0100
Assembly Drawing: 2524509-2_2_AC

This list covers pages from 5-186 to 5-191

Pos	Part No	UN	Qty	Description	Page No
A3/FLEX NOQC (See drawing on page: 5-186)					
010	2544339-0100		1	FRAME	**5-193**
020	1296070-0000		2	HEATING PIPE	
A3/FLEX TBA 0500B QC, A3/FLEX TBA 1000B QC, A3/FLEX TBA 0200B QC, A3/FLEX TBA 0250B QC, A3/FLEX TBA 0330S QC, A3/FLEX TBA 0250S QC, A3/FLEX TBA 0200M QC, A3/FLEX TPA 0200SQ QC, A3/FLEX TPA 0250SQ QC, A3/FLEX TBA 0250SQ QC, A3/FLEX TBA 0200SQ QC (See drawing on pages: 5-188, 5-190)					
010	2535538-0100		1	FRAME	**5-195, 5-197, 5-199**
020	1296070-0000		2	HEATING PIPE	
A3/FLEX TBA 1890S QC, A3/FLEX TBA 2000S QC (See drawing on pages: 5-188, 5-190)					
010	2535538-0100		1	FRAME	**5-195, 5-197, 5-199**
020	1296070-0000		2	HEATING PIPE	
A3/FLEX TPA 0750SQ QC, A3/FLEX TPA 1000SQ QC (See drawing on pages: 5-188, 5-190)					
010	2535538-0100		1	FRAME	**5-195, 5-197, 5-199**
020	1296070-0000		2	HEATING PIPE	
Common Parts					
030	1285293-0000		1	HEATING PIPE	
050	294464-0000		3	BASE PLATE	
060	1484096-0000		3	COVER	
070	1285311-0000		3	PLATE	
080	1285307-0000		3	SPACER	
090	1285308-0000		3	GASKET	
100	270927-0000		6	SCREW	
110	266739-0000		6	CABLE GLAND	
120	1285312-0000		3	GASKET	
140	90195-0020		3	TERMINAL BLOCK, 1977.2	
150	342722-0204		2	PIPE COUPLING	
160	352103-0106		3	CABLE GLAND, ST 11, PR18,6/PG11	
170	315204-0303		3	O-RING 59,5X3 MM	
180	312115-0226		9	SCREW ISO4762 M3X12 A4 80	
190	353247-0005		3	HOSE GLAND EMC PG21 EXTENDED	
200	90062-0015		24	LOCK WASHER SERRAT.EXT.GEAR,6,4/11 H=0,7	
210	312105-0372		18	SCREW M6S ISO 4017 M6X25 A480	
220	312105-0370		6	SCREW M6S ISO 4017 M6X20 A480	
230	315204-0215		3	O-RING 19,2X3 MM	
240	315125-0165		8	WASHER TBRSB 8,4X26X5 A4	
250	312115-0230		3	SCREW ISO4762 M3X20 A4 80	
260	312132-0284		3	SCREW SLOT. PAN HEAD MSCS M4X5	
270	315234-0109		3	WASHER,PL.RND.CU.10,3/13,5 H=1,0	
280	90055-0204		2	ELBOW WITH TAILPIECE 8/8 MM LONG	
290	342722-0211		1	STRAIGHT COUPLING D=10-G1/4"	
300	90459-1506		1	ELBOW WITH TAILPIECE 10/10 MM	
330	359705-0015		3	WARNING SIGN ISO, RISK OF ELECTRIC SHOCK	
B5307	90326-0081		1	THERMOCOUPLE, ISA TYPE K.	
B5308	90326-0081		1	THERMOCOUPLE, ISA TYPE K.	
B5309	90326-0081		1	THERMOCOUPLE, ISA TYPE K.	
R5307	2514149-0000		1	HEATING ELEMENT	
R5308	2514149-0000		1	HEATING ELEMENT	
R5309	90206-0030		1	HEATING ELEMENT 3000W, 220V	

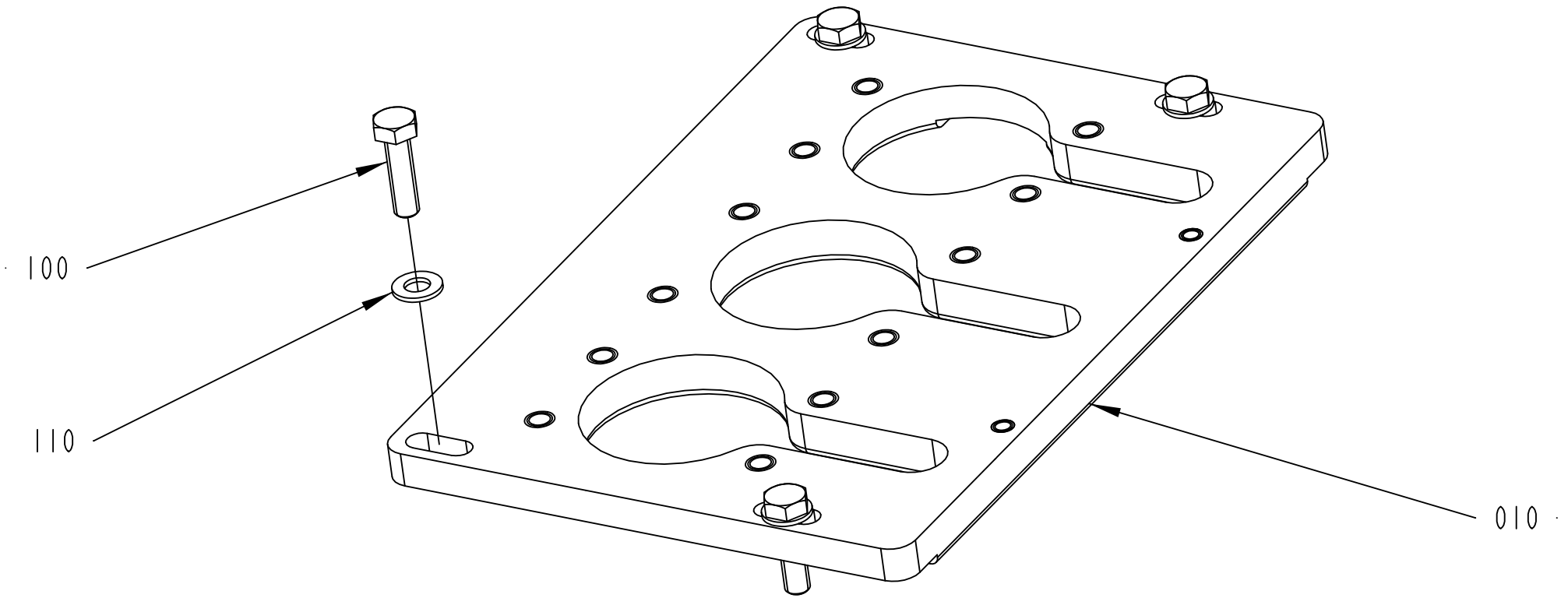

2544339-1
ECM 116811

ECM: 189491 - 20041104
Group number: 2544339-0100
Assembly Drawing: 2544339-1_1_AA

Pos	Part No	UN	Qty	Description	Page No
-					
010	1285291-0000		1	PLATE	
100	315105-0165		4	WASHER BRB8,4X16RFR	
110	312105-0453		4	SCREW M6S ISO 4017 M8X25 A480	

Pos	Part No	UN	Qty	Description	Page No

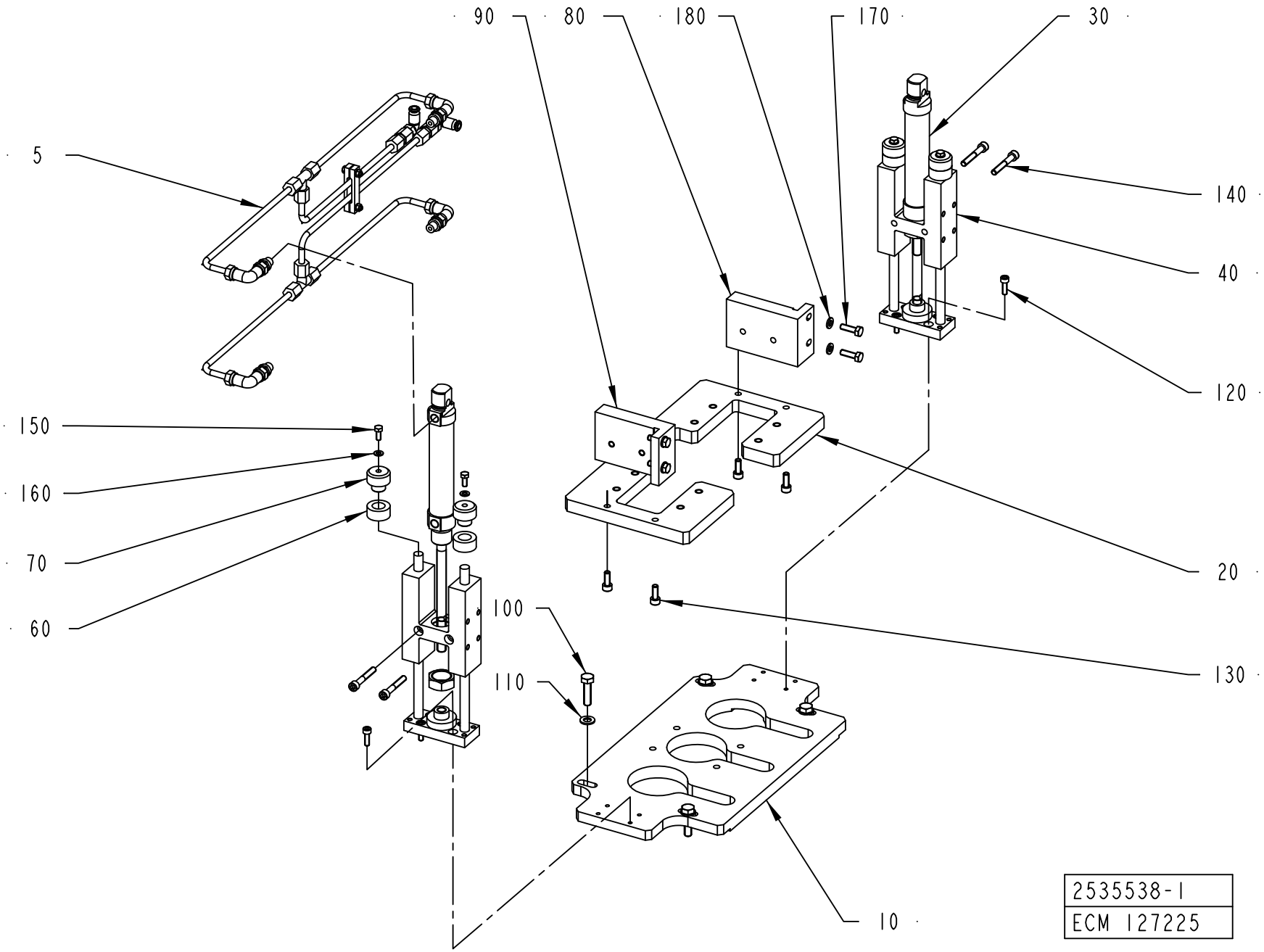
90
80
180
170
30
5
140
40
120
150
160
70
60
20
100
110
130
10
2535538-1
ECM 127225

ECM: 252420 - 20060222
Group number: 2535538-0100
Assembly Drawing: 2535538-1_1_AB

This list covers pages from 5-194 to 5-199

Pos	Part No	UN	Qty	Description	Page No
A3/FLEX TBA 0200B, A3/FLEX TBA 0250B, A3/FLEX TBA 0330S (See drawing on page: 5-196)					
010	2520163-0000		1	PLATE	
020	2520165-0000		1	GUIDE PLATE	
030	90459-0953		2	DOUBLE ACTING, ROUND, CYL 25-80	
040	90459-0952		2	LINEAR GUIDE UNIT, BORE 25-STROKE 80	
060	2599020-0000		4	STOP	
065	2604507-0000		2	SPACER	
075	2604508-0000		2	SPACER	
100	312105-0327		4	SCREW M6S ISO 4017 M5X12 A480	
120	90458-0058		8	SCREW M5X60 A280	
170	312105-0370		4	SCREW M6S ISO 4017 M6X20 A480	
190	90335-0178		2	COMP. SPRING 22060, 1X13,5X36,5	
200	2604509-0000		2	KNOB	
210	2604510-0000		2	SHAFT	
A3/FLEX TBA 0200M, A3/FLEX TBA 0250S (See drawing on page: 5-198)					
010	2520163-0000		1	PLATE	
020	2520165-0000		1	GUIDE PLATE	
030	90459-0953		2	DOUBLE ACTING, ROUND, CYL 25-80	
040	90459-0952		2	LINEAR GUIDE UNIT, BORE 25-STROKE 80	
060	2646470-0000		4	RUBBER DAMPER	
065	2656985-0000		2	SPACER	
100	312105-0327		4	SCREW M6S ISO 4017 M5X12 A480	
120	90458-0058		8	SCREW M5X60 A280	
170	312105-0370		8	SCREW M6S ISO 4017 M6X20 A480	
A3/FLEX TBA 0200SQ, A3/FLEX TBA 0250SQ (See drawing on page: 5-194)					
010	2520163-0000		1	PLATE	
020	2520165-0000		1	GUIDE PLATE	
030	90459-0953		2	DOUBLE ACTING, ROUND, CYL 25-80	
040	90459-0952		2	LINEAR GUIDE UNIT, BORE 25-STROKE 80	
060	2676619-0000		4	STOP	
100	312105-0455		4	SCREW M6S ISO 4017 M8X30 A480	
120	312115-0333		8	SCREW ISO4762 M5X25 A4 80	
170	312105-0370		4	SCREW M6S ISO 4017 M6X20 A480	
A3/FLEX TBA 0500B, A3/FLEX TBA 1000B (See drawing on page: 5-194)					
010	2520163-0000		1	PLATE	
020	2520165-0000		1	GUIDE PLATE	
030	90459-0953		2	DOUBLE ACTING, ROUND, CYL 25-80	
040	90459-0952		2	LINEAR GUIDE UNIT, BORE 25-STROKE 80	
060	2623870-0000		4	RUBBER DAMPER	
100	312105-0327		4	SCREW M6S ISO 4017 M5X12 A480	
120	312115-0329		8	SCREW ISO4762 M5X16 A4 80	
170	312105-0370		4	SCREW M6S ISO 4017 M6X20 A480	

Pos	Part No	UN	Qty	Description	Page No
A3/FLEX TBA 1890S, A3/FLEX TBA 2000S (See drawing on page: 5-198)					
010	2520163-0000		1	PLATE	
020	2520165-0000		1	GUIDE PLATE	
030	90459-0953		2	DOUBLE ACTING, ROUND, CYL 25-80	
040	90459-0952		2	LINEAR GUIDE UNIT, BORE 25-STROKE 80	
060	2710505-0000		4	STOP	
065	2598505-0000		2	SPACER	
100	312105-0327		4	SCREW M6S ISO 4017 M5X12 A480	
120	312115-0333		8	SCREW ISO4762 M5X25 A4 80	
170	312105-0370		4	SCREW M6S ISO 4017 M6X20 A480	
260	312318-0285		4	SCREW ISO4029 M4X6 A4	
A3/FLEX TPA 0250SQ, A3/FLEX TPA 0200SQ (See drawing on page: 5-194)					
010	2520163-0000		1	PLATE	
020	2520165-0000		1	GUIDE PLATE	
030	90459-0953		2	DOUBLE ACTING, ROUND, CYL 25-80	
040	90459-0952		2	LINEAR GUIDE UNIT, BORE 25-STROKE 80	
060	2674243-0000		4	STOP	
100	312105-0327		4	SCREW M6S ISO 4017 M5X12 A480	
120	312115-0333		8	SCREW ISO4762 M5X25 A4 80	
170	312105-0370		4	SCREW M6S ISO 4017 M6X20 A480	
A3/FLEX TPA 1000SQ, A3/FLEX TPA 0750SQ (See drawing on page: 5-194)					
010	2520163-0000		1	PLATE	
020	2520165-0000		1	GUIDE PLATE	
030	90459-0953		2	DOUBLE ACTING, ROUND, CYL 25-80	
040	90459-0952		2	LINEAR GUIDE UNIT, BORE 25-STROKE 80	
060	2658255-0000		4	RUBBER DAMPER	
120	312115-0329		8	SCREW ISO4762 M5X16 A4 80	
170	312105-0370		4	SCREW M6S ISO 4017 M6X20 A480	
Common Parts					
005	2535540-0100		1	PNEUMATIC CIRCUIT	**5-201**
070	2623869-0000		4	RUBBER HOLDER	
080	2623623-0000		1	CYLINDER BRACKET	
090	2623624-0000		1	CYLINDER BRACKET	
110	312105-0455		4	SCREW M6S ISO 4017 M8X30 A480	
130	312115-0368		4	SCREW ISO4762 M6X16 A4 80	
140	312115-0378		4	SCREW ISO4762 M6X40 A4 80	
150	315105-0146		4	WASHER BRB5,3X10RFR	
160	315105-0165		4	WASHER BRB8,4X16RFR	
180	315105-0153		4	WASHER BRB6,4X12RFR	

Machine Type | Group Description | Used-In | Group Number | Page No

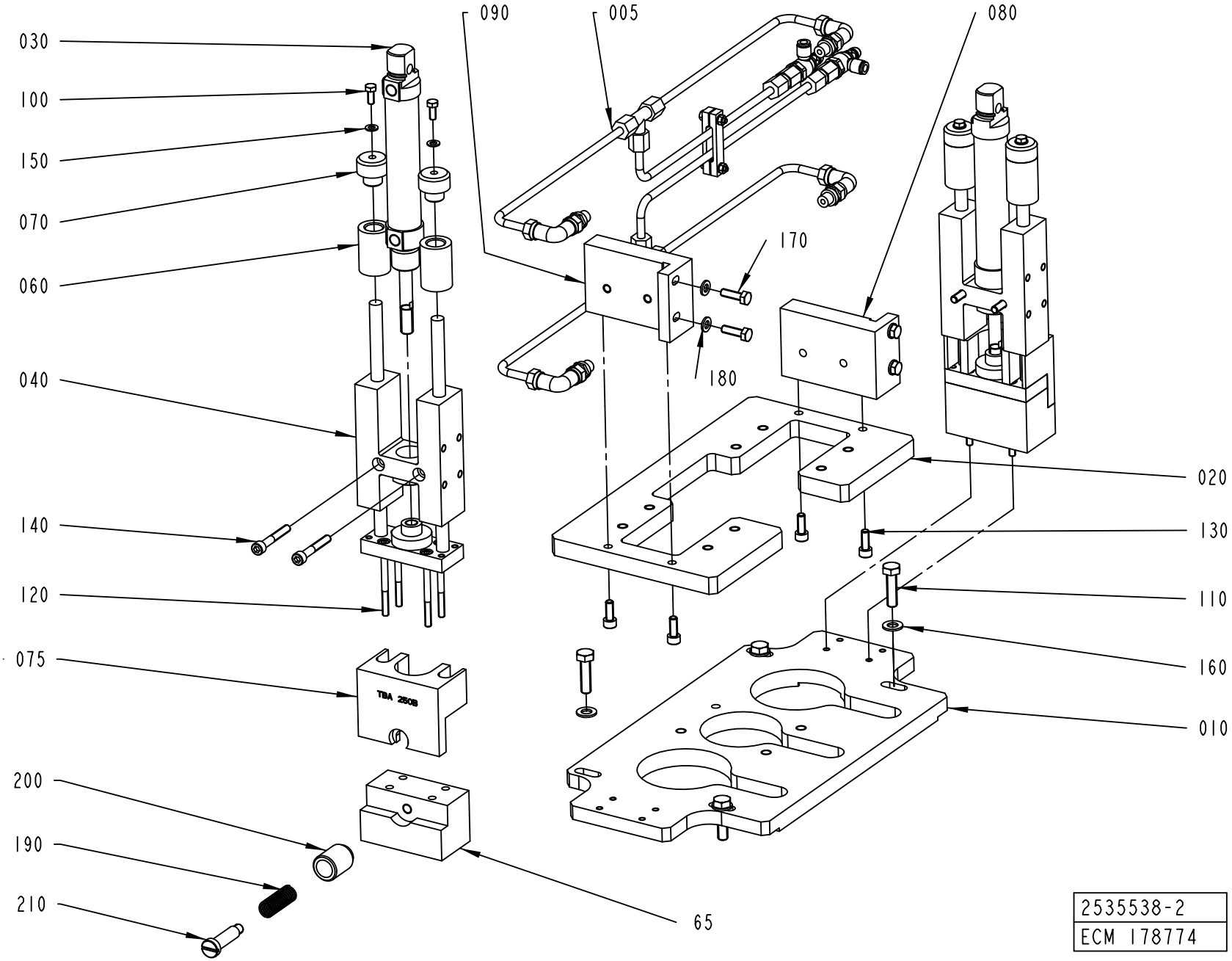
090
005
080
030
100
150
070
060
170
180
040
020
140
130
120
110
075
160
010
200
190
210
65
TBA 260B
2535538-2
ECM 178774

ECM: 252420 - 20060222
Group number: 2535538-0100
Assembly Drawing: 2535538-2_1_AB

This list covers pages from 5-194 to 5-199

Pos	Part No	UN	Qty	Description	Page No
A3/FLEX TBA 0200B, A3/FLEX TBA 0250B, A3/FLEX TBA 0330S (See drawing on page: 5-196)					
010	2520163-0000		1	PLATE	
020	2520165-0000		1	GUIDE PLATE	
030	90459-0953		2	DOUBLE ACTING, ROUND, CYL 25-80	
040	90459-0952		2	LINEAR GUIDE UNIT, BORE 25-STROKE 80	
060	2599020-0000		4	STOP	
065	2604507-0000		2	SPACER	
075	2604508-0000		2	SPACER	
100	312105-0327		4	SCREW M6S ISO 4017 M5X12 A480	
120	90458-0058		8	SCREW M5X60 A280	
170	312105-0370		4	SCREW M6S ISO 4017 M6X20 A480	
190	90335-0178		2	COMP. SPRING 22060, 1X13,5X36,5	
200	2604509-0000		2	KNOB	
210	2604510-0000		2	SHAFT	
A3/FLEX TBA 0200M, A3/FLEX TBA 0250S (See drawing on page: 5-198)					
010	2520163-0000		1	PLATE	
020	2520165-0000		1	GUIDE PLATE	
030	90459-0953		2	DOUBLE ACTING, ROUND, CYL 25-80	
040	90459-0952		2	LINEAR GUIDE UNIT, BORE 25-STROKE 80	
060	2646470-0000		4	RUBBER DAMPER	
065	2656985-0000		2	SPACER	
100	312105-0327		4	SCREW M6S ISO 4017 M5X12 A480	
120	90458-0058		8	SCREW M5X60 A280	
170	312105-0370		8	SCREW M6S ISO 4017 M6X20 A480	
A3/FLEX TBA 0200SQ, A3/FLEX TBA 0250SQ (See drawing on page: 5-194)					
010	2520163-0000		1	PLATE	
020	2520165-0000		1	GUIDE PLATE	
030	90459-0953		2	DOUBLE ACTING, ROUND, CYL 25-80	
040	90459-0952		2	LINEAR GUIDE UNIT, BORE 25-STROKE 80	
060	2676619-0000		4	STOP	
100	312105-0455		4	SCREW M6S ISO 4017 M8X30 A480	
120	312115-0333		8	SCREW ISO4762 M5X25 A4 80	
170	312105-0370		4	SCREW M6S ISO 4017 M6X20 A480	
A3/FLEX TBA 0500B, A3/FLEX TBA 1000B (See drawing on page: 5-194)					
010	2520163-0000		1	PLATE	
020	2520165-0000		1	GUIDE PLATE	
030	90459-0953		2	DOUBLE ACTING, ROUND, CYL 25-80	
040	90459-0952		2	LINEAR GUIDE UNIT, BORE 25-STROKE 80	
060	2623870-0000		4	RUBBER DAMPER	
100	312105-0327		4	SCREW M6S ISO 4017 M5X12 A480	
120	312115-0329		8	SCREW ISO4762 M5X16 A4 80	
170	312105-0370		4	SCREW M6S ISO 4017 M6X20 A480	

Pos	Part No	UN	Qty	Description	Page No
A3/FLEX TBA 1890S, A3/FLEX TBA 2000S (See drawing on page: 5-198)					
010	2520163-0000		1	PLATE	
020	2520165-0000		1	GUIDE PLATE	
030	90459-0953		2	DOUBLE ACTING, ROUND, CYL 25-80	
040	90459-0952		2	LINEAR GUIDE UNIT, BORE 25-STROKE 80	
060	2710505-0000		4	STOP	
065	2598505-0000		2	SPACER	
100	312105-0327		4	SCREW M6S ISO 4017 M5X12 A480	
120	312115-0333		8	SCREW ISO4762 M5X25 A4 80	
170	312105-0370		4	SCREW M6S ISO 4017 M6X20 A480	
260	312318-0285		4	SCREW ISO4029 M4X6 A4	
A3/FLEX TPA 0250SQ, A3/FLEX TPA 0200SQ (See drawing on page: 5-194)					
010	2520163-0000		1	PLATE	
020	2520165-0000		1	GUIDE PLATE	
030	90459-0953		2	DOUBLE ACTING, ROUND, CYL 25-80	
040	90459-0952		2	LINEAR GUIDE UNIT, BORE 25-STROKE 80	
060	2674243-0000		4	STOP	
100	312105-0327		4	SCREW M6S ISO 4017 M5X12 A480	
120	312115-0333		8	SCREW ISO4762 M5X25 A4 80	
170	312105-0370		4	SCREW M6S ISO 4017 M6X20 A480	
A3/FLEX TPA 1000SQ, A3/FLEX TPA 0750SQ (See drawing on page: 5-194)					
010	2520163-0000		1	PLATE	
020	2520165-0000		1	GUIDE PLATE	
030	90459-0953		2	DOUBLE ACTING, ROUND, CYL 25-80	
040	90459-0952		2	LINEAR GUIDE UNIT, BORE 25-STROKE 80	
060	2658255-0000		4	RUBBER DAMPER	
120	312115-0329		8	SCREW ISO4762 M5X16 A4 80	
170	312105-0370		4	SCREW M6S ISO 4017 M6X20 A480	
Common Parts					
005	2535540-0100		1	PNEUMATIC CIRCUIT	**5-201**
070	2623869-0000		4	RUBBER HOLDER	
080	2623623-0000		1	CYLINDER BRACKET	
090	2623624-0000		1	CYLINDER BRACKET	
110	312105-0455		4	SCREW M6S ISO 4017 M8X30 A480	
130	312115-0368		4	SCREW ISO4762 M6X16 A4 80	
140	312115-0378		4	SCREW ISO4762 M6X40 A4 80	
150	315105-0146		4	WASHER BRB5,3X10RFR	
160	315105-0165		4	WASHER BRB8,4X16RFR	
180	315105-0153		4	WASHER BRB6,4X12RFR	

Machine Type | Group Description | Used-In | Group Number | Page No

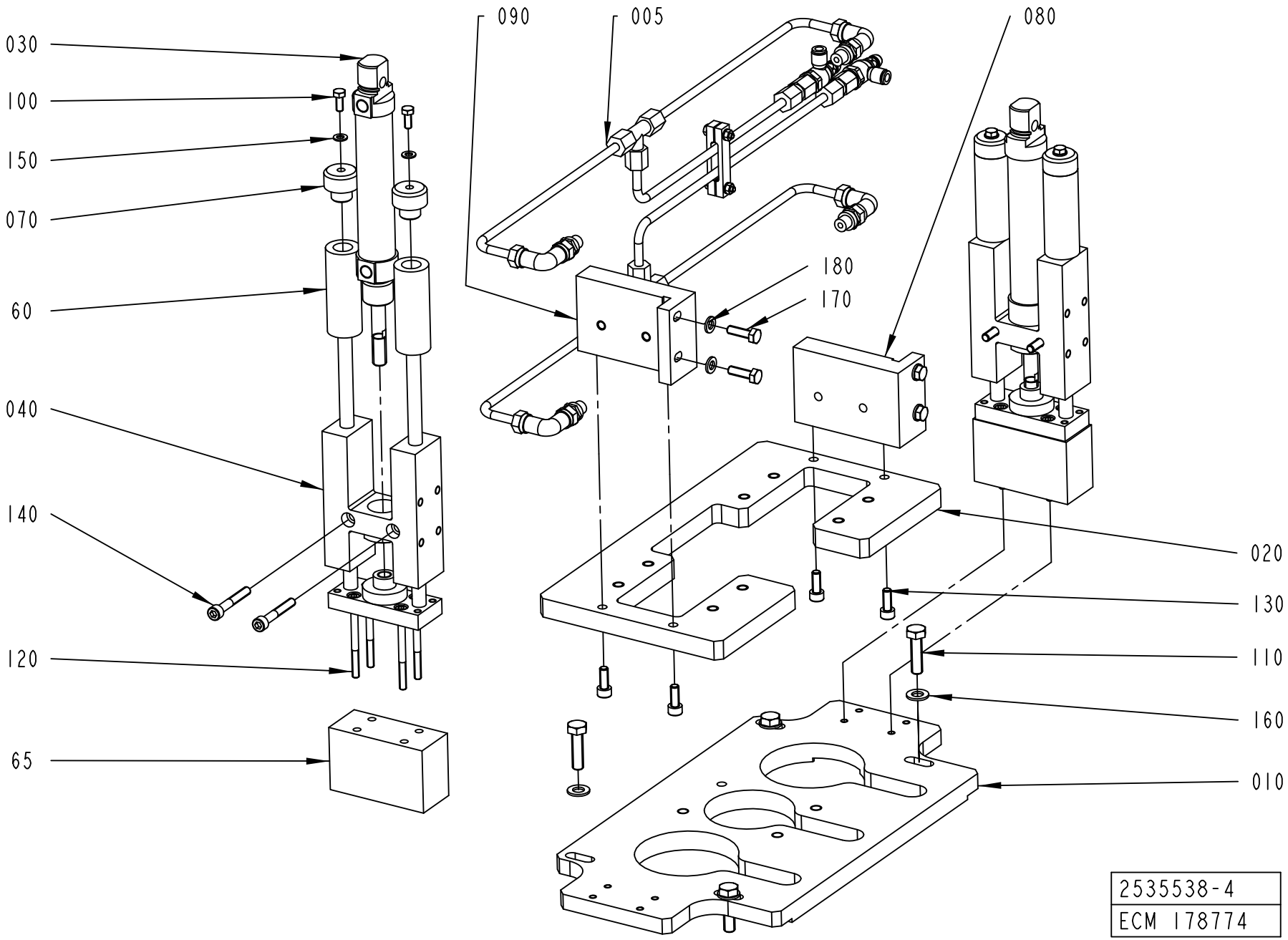
030
100
150
070
60
040
140
120
65
090
005
080
180
170
020
130
110
160
010
2535538-4
ECM 178774

ECM: 252420 - 20060222
Group number: 2535538-0100
Assembly Drawing: 2535538-4_1_AA

This list covers pages from 5-194 to 5-199

Pos	Part No	UN	Qty	Description	Page No
A3/FLEX TBA 0200B, A3/FLEX TBA 0250B, A3/FLEX TBA 0330S (See drawing on page: 5-196)					
010	2520163-0000		1	PLATE	
020	2520165-0000		1	GUIDE PLATE	
030	90459-0953		2	DOUBLE ACTING, ROUND, CYL 25-80	
040	90459-0952		2	LINEAR GUIDE UNIT, BORE 25-STROKE 80	
060	2599020-0000		4	STOP	
065	2604507-0000		2	SPACER	
075	2604508-0000		2	SPACER	
100	312105-0327		4	SCREW M6S ISO 4017 M5X12 A480	
120	90458-0058		8	SCREW M5X60 A280	
170	312105-0370		4	SCREW M6S ISO 4017 M6X20 A480	
190	90335-0178		2	COMP. SPRING 22060, 1X13,5X36,5	
200	2604509-0000		2	KNOB	
210	2604510-0000		2	SHAFT	
A3/FLEX TBA 0200M, A3/FLEX TBA 0250S (See drawing on page: 5-198)					
010	2520163-0000		1	PLATE	
020	2520165-0000		1	GUIDE PLATE	
030	90459-0953		2	DOUBLE ACTING, ROUND, CYL 25-80	
040	90459-0952		2	LINEAR GUIDE UNIT, BORE 25-STROKE 80	
060	2646470-0000		4	RUBBER DAMPER	
065	2656985-0000		2	SPACER	
100	312105-0327		4	SCREW M6S ISO 4017 M5X12 A480	
120	90458-0058		8	SCREW M5X60 A280	
170	312105-0370		8	SCREW M6S ISO 4017 M6X20 A480	
A3/FLEX TBA 0200SQ, A3/FLEX TBA 0250SQ (See drawing on page: 5-194)					
010	2520163-0000		1	PLATE	
020	2520165-0000		1	GUIDE PLATE	
030	90459-0953		2	DOUBLE ACTING, ROUND, CYL 25-80	
040	90459-0952		2	LINEAR GUIDE UNIT, BORE 25-STROKE 80	
060	2676619-0000		4	STOP	
100	312105-0455		4	SCREW M6S ISO 4017 M8X30 A480	
120	312115-0333		8	SCREW ISO4762 M5X25 A4 80	
170	312105-0370		4	SCREW M6S ISO 4017 M6X20 A480	
A3/FLEX TBA 0500B, A3/FLEX TBA 1000B (See drawing on page: 5-194)					
010	2520163-0000		1	PLATE	
020	2520165-0000		1	GUIDE PLATE	
030	90459-0953		2	DOUBLE ACTING, ROUND, CYL 25-80	
040	90459-0952		2	LINEAR GUIDE UNIT, BORE 25-STROKE 80	
060	2623870-0000		4	RUBBER DAMPER	
100	312105-0327		4	SCREW M6S ISO 4017 M5X12 A480	
120	312115-0329		8	SCREW ISO4762 M5X16 A4 80	
170	312105-0370		4	SCREW M6S ISO 4017 M6X20 A480	

Pos	Part No	UN	Qty	Description	Page No
A3/FLEX TBA 1890S, A3/FLEX TBA 2000S (See drawing on page: 5-198)					
010	2520163-0000		1	PLATE	
020	2520165-0000		1	GUIDE PLATE	
030	90459-0953		2	DOUBLE ACTING, ROUND, CYL 25-80	
040	90459-0952		2	LINEAR GUIDE UNIT, BORE 25-STROKE 80	
060	2710505-0000		4	STOP	
065	2598505-0000		2	SPACER	
100	312105-0327		4	SCREW M6S ISO 4017 M5X12 A480	
120	312115-0333		8	SCREW ISO4762 M5X25 A4 80	
170	312105-0370		4	SCREW M6S ISO 4017 M6X20 A480	
260	312318-0285		4	SCREW ISO4029 M4X6 A4	
A3/FLEX TPA 0250SQ, A3/FLEX TPA 0200SQ (See drawing on page: 5-194)					
010	2520163-0000		1	PLATE	
020	2520165-0000		1	GUIDE PLATE	
030	90459-0953		2	DOUBLE ACTING, ROUND, CYL 25-80	
040	90459-0952		2	LINEAR GUIDE UNIT, BORE 25-STROKE 80	
060	2674243-0000		4	STOP	
100	312105-0327		4	SCREW M6S ISO 4017 M5X12 A480	
120	312115-0333		8	SCREW ISO4762 M5X25 A4 80	
170	312105-0370		4	SCREW M6S ISO 4017 M6X20 A480	
A3/FLEX TPA 1000SQ, A3/FLEX TPA 0750SQ (See drawing on page: 5-194)					
010	2520163-0000		1	PLATE	
020	2520165-0000		1	GUIDE PLATE	
030	90459-0953		2	DOUBLE ACTING, ROUND, CYL 25-80	
040	90459-0952		2	LINEAR GUIDE UNIT, BORE 25-STROKE 80	
060	2658255-0000		4	RUBBER DAMPER	
120	312115-0329		8	SCREW ISO4762 M5X16 A4 80	
170	312105-0370		4	SCREW M6S ISO 4017 M6X20 A480	
Common Parts					
005	2535540-0100		1	PNEUMATIC CIRCUIT	**5-201**
070	2623869-0000		4	RUBBER HOLDER	
080	2623623-0000		1	CYLINDER BRACKET	
090	2623624-0000		1	CYLINDER BRACKET	
110	312105-0455		4	SCREW M6S ISO 4017 M8X30 A480	
130	312115-0368		4	SCREW ISO4762 M6X16 A4 80	
140	312115-0378		4	SCREW ISO4762 M6X40 A4 80	
150	315105-0146		4	WASHER BRB5,3X10RFR	
160	315105-0165		4	WASHER BRB8,4X16RFR	
180	315105-0153		4	WASHER BRB6,4X12RFR	

Machine Type | Group Description | Used-In | Group Number | Page No

PNEUMATIC CIRCUIT

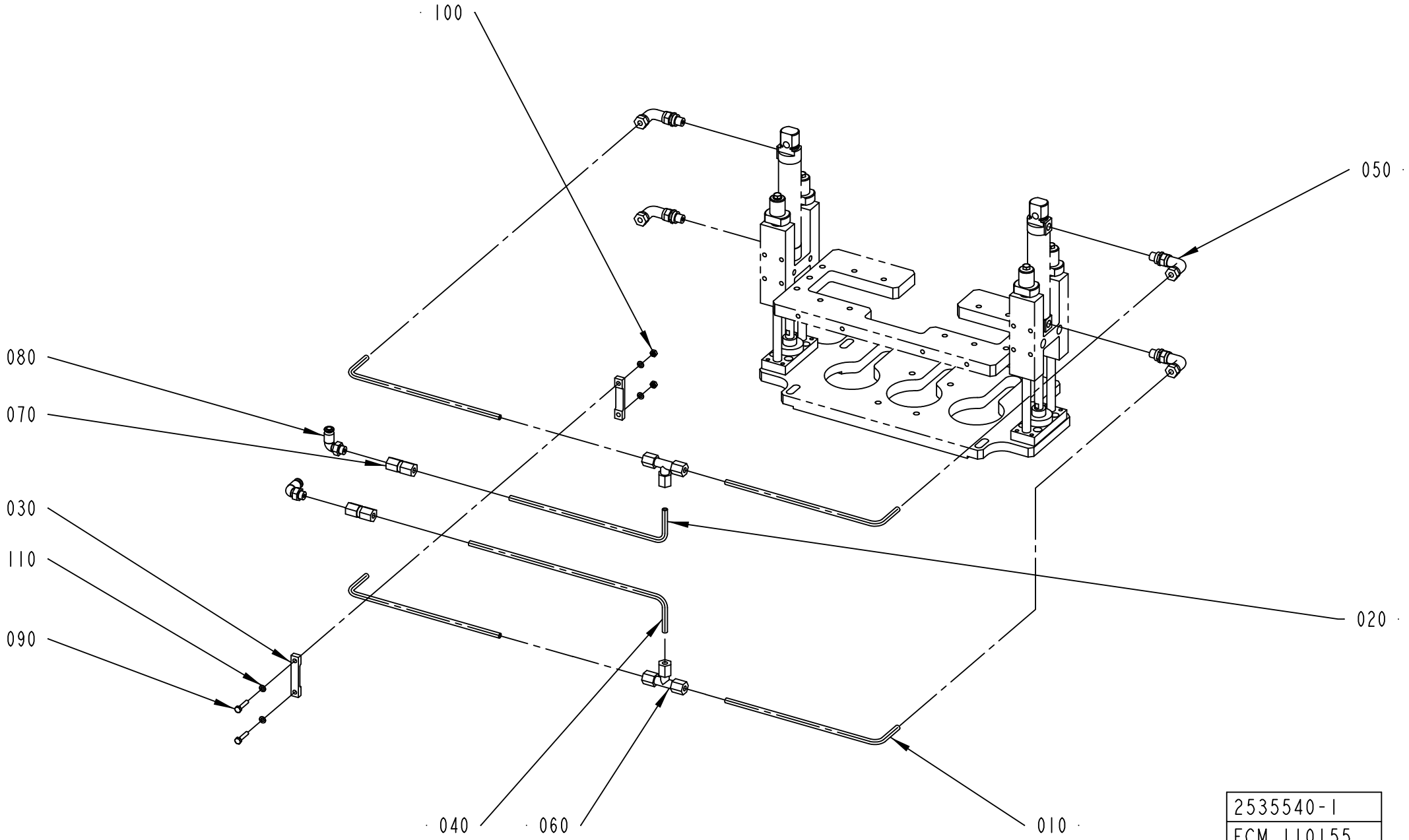

ECM: 256374 - 20060310
Group number: 2535540-0100
Assembly Drawing: 2535540-1_1_AA

Pos	Part No	UN	Qty	Description	Page No
A3/FLEX					
010	2535757-0000		4	PIPE	
020	2535758-0000		1	PIPE	
040	2535937-0000		1	PIPE	
080	90235-0846		2	THROTTLE CHECK VALVE G1/8", MANUAL, 6	
Common Parts					
030	2535759-0000		2	BRACKET	
050	90030-0171		4	ADJUSTABLE ELBOW CONNECTION,EXT 6-G1/8	
060	90030-0076		2	CONN. T-PIPE T-6	
070	342725-0102		2	CONN. STR. PIPE GI-6-G1/8	
090	312105-0295		2	SCREW M6S ISO 4017 M4X20 A470	
100	312605-0312		2	HEXAGON NUT, M6M M4 A280	
110	315105-0136		4	WASHER BRB4,3XRFR	

Pos	Part No	UN	Qty	Description	Page No

FLAP HEATER VARIANT

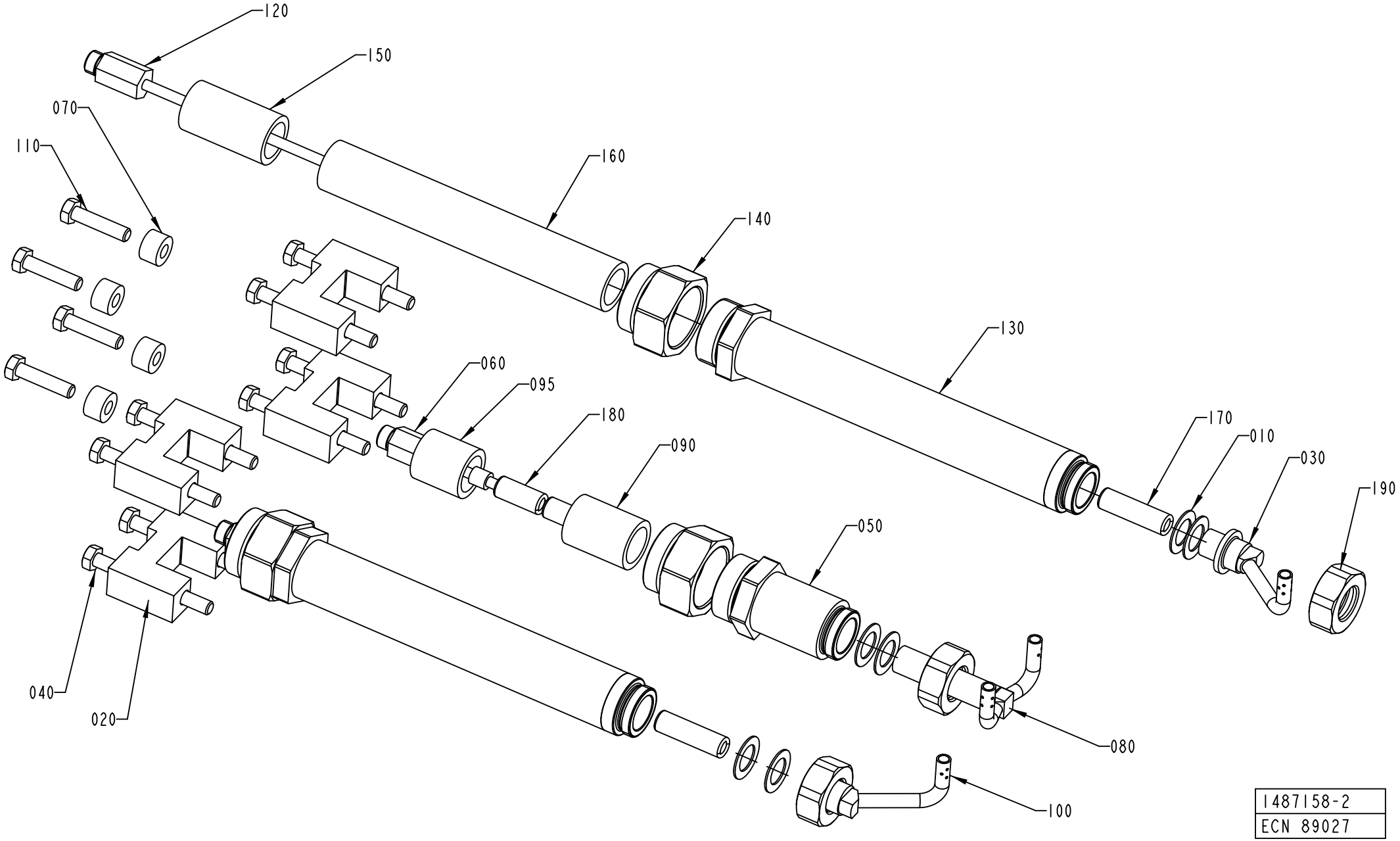

1487158-2
ECN 89027

ECM: 270841 - 20060626
Group number: 1487158-0300
Assembly Drawing: 1487158-2_1_AA

This list covers pages from 5-202 to 5-213

Pos	Part No	UN	Qty	Description	Page No
TBA 1000S (See drawing on page: 5-202)					
010	263673-0000		6	GASKET	
020	1348043-0000		8	SPACER	
030	1296068-0000		1	NOZZLE	
040	312109-0460		8	SCREW M6S ISO 4017 M8X45 A480	
050	1549389-0000		1	SPACER	
060	1296072-0000		1	EXTENSION	
080	1296066-0000		1	NOZZLE	
090	23765-0004		1	INSULATING PIPE	
095	23765-0005		1	INSULATING PIPE	
100	1296067-0000		1	NOZZLE	
110	312109-0457		4	SCREW M6S ISO 4017 M8X35 A480	
120	1285310-0000		2	EXTENSION	
130	2545135-0000		2	SPACER	
140	1549390-0000		3	NUT	
150	23765-0003		2	INSULATING PIPE	
160	23765-0001		2	INSULATING PIPE	
170	252766-0002		2	INSULATING PIPE	
180	252766-0001		2	INSULATING PIPE	
190	1317085-0000		2	NUT	
200	359710-0001		3	WARNING SIGN ISO, HOT SURFACE	
TBA 1000SQ (See drawing on page: 5-202)					
010	263673-0000		6	GASKET	
020	1285874-0000		8	SPACER	
030	1498147-0000		1	NOZZLE	
040	312109-0457		8	SCREW M6S ISO 4017 M8X35 A480	
050	1549389-0000		1	SPACER	
060	1296072-0000		1	EXTENSION	
070	1285874-0000		4	SPACER	
080	1490039-0000		1	NOZZLE	
090	23765-0004		1	INSULATING PIPE	
095	23765-0005		1	INSULATING PIPE	
100	1498146-0000		1	NOZZLE	
110	312109-0457		4	SCREW M6S ISO 4017 M8X35 A480	
120	1285310-0000		2	EXTENSION	
130	2545135-0000		2	SPACER	
140	1549390-0000		3	NUT	
150	23765-0003		2	INSULATING PIPE	
160	23765-0001		2	INSULATING PIPE	
170	252766-0002		2	INSULATING PIPE	
180	252766-0001		2	INSULATING PIPE	
190	1317085-0000		2	NUT	
200	359710-0001		3	WARNING SIGN ISO, HOT SURFACE	
TBA 1500S (See drawing on page: 5-202)					
010	263673-0000		9	GASKET	
020	1317804-0000		8	SPACER	
030	1317802-0000		1	NOZZLE	
040	312109-0461		8	SCREW M6S ISO 4017 M8X50 A480	
050	2545433-0000		1	SPACER	
060	1285870-0000		1	EXTENSION	
070	2545537-0000		4	SPACER	
080	1317801-0000		1	NOZZLE	
095	23765-0005		1	INSULATING PIPE	
100	1317803-0000		1	NOZZLE	
110	312109-0463		4	SCREW M6S ISO 4017 M8X60 A480	
120	1285310-0000		2	EXTENSION	
130	2545135-0000		2	SPACER	
140	1549390-0000		3	NUT	
150	23765-0003		2	INSULATING PIPE	
160	23765-0001		2	INSULATING PIPE	
170	252766-0002		2	INSULATING PIPE	
180	252766-0001		2	INSULATING PIPE	
190	1317085-0000		2	NUT	
200	359710-0001		3	WARNING SIGN ISO, HOT SURFACE	
TBA 1890S QC, TBA 2000S QC (See drawing on page: 5-204)					
010	263673-0000		9	GASKET	
030	2598500-0000		1	NOZZLE	
050	2545433-0000		1	SPACER	
060	1296072-0000		1	EXTENSION	
070	2618683-0000		4	SPACER	
075	1498163-0000		8	SPACER	
080	2598498-0000		1	NOZZLE	
090	23765-0004		1	INSULATING PIPE	
100	2598499-0000		1	NOZZLE	
110	312109-0463		4	SCREW M6S ISO 4017 M8X60 A480	
115	312109-0459		8	SCREW M6S ISO 4017 M8X40 A480	
120	2598503-0000		2	EXTENSION	
130	2545135-0000		2	SPACER	
140	1549390-0000		3	NUT	
150	23765-0003		2	INSULATING PIPE	
160	23765-0001		2	INSULATING PIPE	
170	252766-0002		2	INSULATING PIPE	
180	252766-0004		1	INSULATING PIPE	
190	1317085-0000		2	NUT	

Machine Type | Group Description | Used-In | Group Number | Page No

FLAP HEATER VARIANT

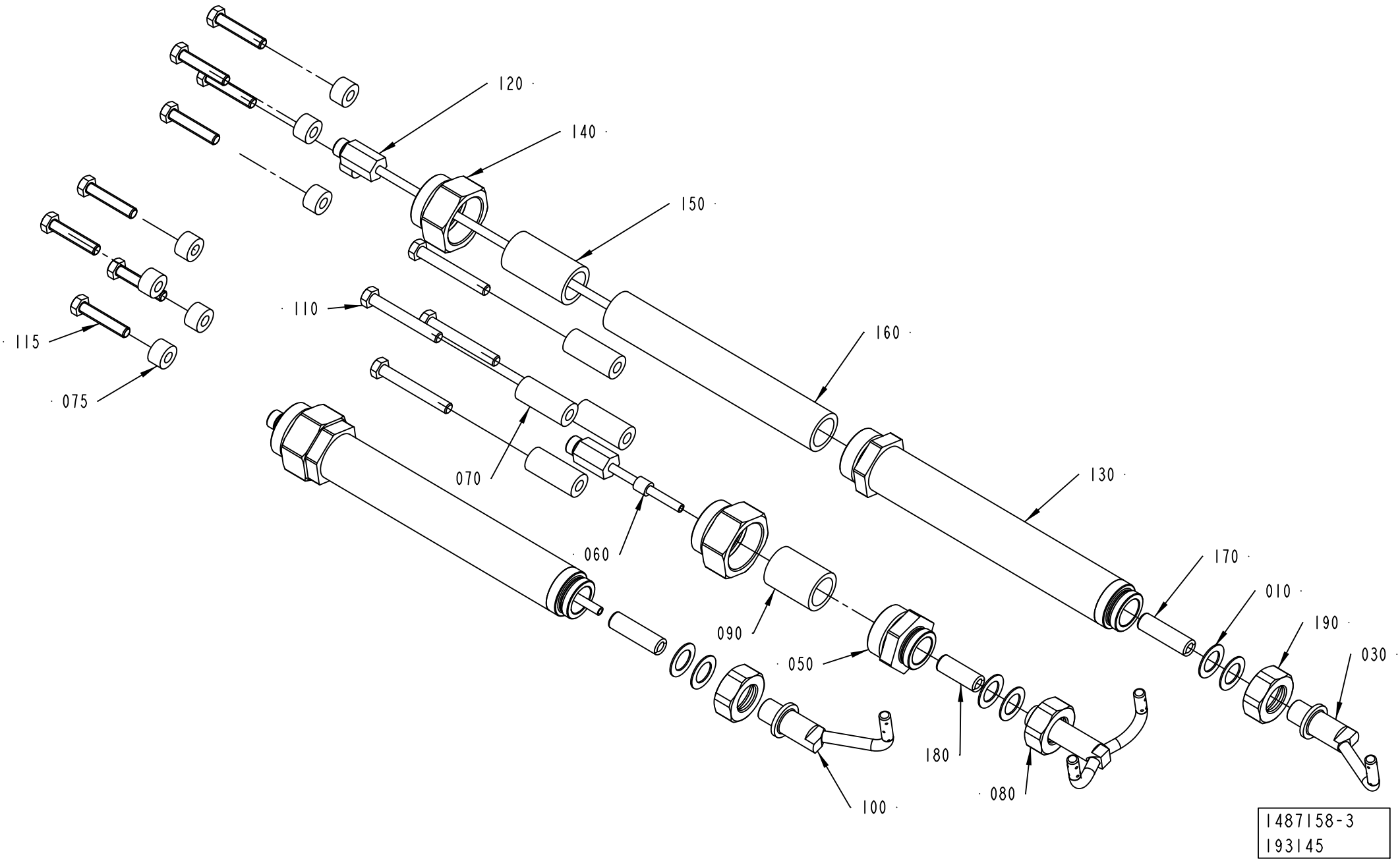

ECM: 270841 - 20060626
Group number: 1487158-0300
Assembly Drawing: 1487158-3_1_AB

This list covers pages from 5-202 to 5-213

Pos	Part No	UN	Qty	Description	Page No
TPA 0250SQ NOQC (Cont'd) (See drawing on page: 5-202)					
010	263673-0000		6	GASKET	
020	1558447-0000		8	SPACER	
030	1346679-0000		1	NOZZLE	
040	312105-0455		4	SCREW M6S ISO 4017 M8X30 A480	
050	1549389-0000		1	SPACER	
060	1296072-0000		1	EXTENSION	
070	2543240-0000		4	SPACER	
080	2524339-0000		1	NOZZLE	
090	23765-0005		1	INSULATING PIPE	
095	23765-0004		1	INSULATING PIPE	
100	1346678-0000		1	NOZZLE	
110	312109-0457		4	SCREW M6S ISO 4017 M8X35 A480	
120	1346646-0000		2	EXTENSION	
130	1549388-0000		2	SPACER	
140	1549390-0000		3	NUT	
150	23765-0003		2	INSULATING PIPE	
160	23765-0002		2	INSULATING PIPE	
170	252766-0001		2	INSULATING PIPE	
180	252766-0001		1	INSULATING PIPE	
200	359710-0001		3	WARNING SIGN ISO, HOT SURFACE	
TPA 0250SQ QC, TPA 0200SQ QC (See drawing on page: 5-202)					
010	263673-0000		6	GASKET	
020	2674242-0000		8	SPACER	
030	1346679-0000		1	NOZZLE	
040	312105-0467		8	SCREW M6S ISO 4014 M8X80 A480	
050	1549389-0000		1	SPACER	
060	1296072-0000		1	EXTENSION	
070	2543240-0000		4	SPACER	
080	2524339-0000		1	NOZZLE	
090	23765-0005		1	INSULATING PIPE	
095	23765-0004		1	INSULATING PIPE	
100	1346678-0000		1	NOZZLE	
110	312109-0457		4	SCREW M6S ISO 4017 M8X35 A480	
120	1285310-0000		2	EXTENSION	
130	2545135-0000		2	SPACER	
140	1549390-0000		3	NUT	
160	23765-0001		2	INSULATING PIPE	
170	252766-0001		2	INSULATING PIPE	
180	252766-0001		1	INSULATING PIPE	
190	1317085-0000		2	NUT	
TPA 0330SQ (See drawing on page: 5-202)					
010	263673-0000		6	GASKET	
020	1498163-0000		8	SPACER	
030	1532284-0000		1	NOZZLE	
040	312109-0460		8	SCREW M6S ISO 4017 M8X45 A480	
050	1549389-0000		1	SPACER	
060	1296072-0000		1	EXTENSION	
070	1285874-0000		4	SPACER	
080	1532285-0000		1	NOZZLE	
090	23765-0005		1	INSULATING PIPE	
095	23765-0004		1	INSULATING PIPE	
100	1532286-0000		1	NOZZLE	
110	312109-0457		4	SCREW M6S ISO 4017 M8X35 A480	
120	1346646-0000		2	EXTENSION	
130	1549388-0000		2	SPACER	
140	1549390-0000		3	NUT	
150	23765-0003		2	INSULATING PIPE	
160	23765-0002		2	INSULATING PIPE	
170	252766-0001		2	INSULATING PIPE	
180	252766-0001		2	INSULATING PIPE	
190	1317085-0000		2	NUT	
200	359710-0001		3	WARNING SIGN ISO, HOT SURFACE	
TPA 0500SQ (See drawing on page: 5-202)					
010	263673-0000		6	GASKET	
020	1285874-0000		8	SPACER	
030	1558328-0000		1	NOZZLE	
040	312109-0457		8	SCREW M6S ISO 4017 M8X35 A480	
050	1549389-0000		1	SPACER	
060	1296072-0000		1	EXTENSION	
070	1285874-0000		4	SPACER	
080	2501612-0000		1	NOZZLE	
090	23765-0004		1	INSULATING PIPE	
095	23765-0005		1	INSULATING PIPE	
100	1558329-0000		1	NOZZLE	
110	312109-0457		4	SCREW M6S ISO 4017 M8X35 A480	
120	1346646-0000		2	EXTENSION	
130	1549388-0000		2	SPACER	
140	1549390-0000		3	NUT	
150	23765-0003		2	INSULATING PIPE	
160	23765-0002		2	INSULATING PIPE	
170	252766-0002		2	INSULATING PIPE	
180	252766-0001		2	INSULATING PIPE	
190	1317085-0000		2	NUT	

Machine Type | Group Description | Used-In | Group Number | Page No

FLAP HEATER VARIANT

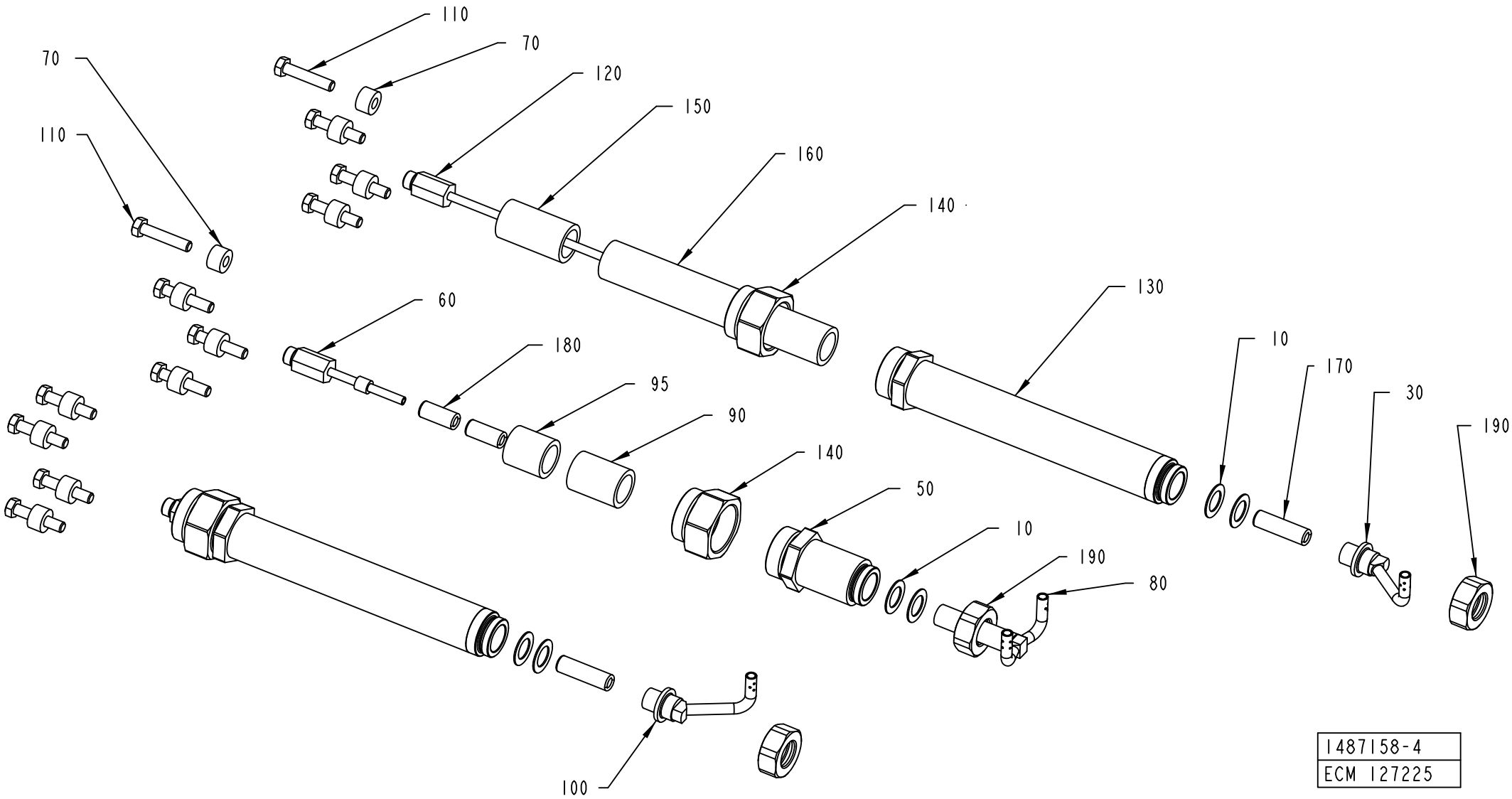

Pos	Part No	UN	Qty	Description	Page No
TPA 0500SQ (Cont'd) (See drawing on page: 5-202)					
200	359710-0001		3	WARNING SIGN ISO, HOT SURFACE	
TPA 1000SQ NOQC (See drawing on page: 5-202)					
010	263673-0000		9	GASKET	
020	1519339-0000		8	SPACER	
030	1549127-0000		1	NOZZLE	
040	312105-0465		8	SCREW M6S ISO 4014 M8X70 A480	
050	2545433-0000		1	SPACER	
060	1285870-0000		1	EXTENSION	
070	1334632-0000		4	SPACER	
080	1519336-0000		1	NOZZLE	
095	23765-0005		1	INSULATING PIPE	
100	1549126-0000		1	NOZZLE	
110	312109-0461		4	SCREW M6S ISO 4017 M8X50 A480	
120	1285310-0000		2	EXTENSION	
130	2545135-0000		2	SPACER	
140	1549390-0000		3	NUT	
150	23765-0003		2	INSULATING PIPE	
160	23765-0001		2	INSULATING PIPE	
170	252766-0002		2	INSULATING PIPE	
180	252766-0002		1	INSULATING PIPE	
190	1317085-0000		2	NUT	
200	359710-0001		3	WARNING SIGN ISO, HOT SURFACE	
TPA 1000SQ QC, TPA 0750SQ QC (See drawing on page: 5-204)					
010	263673-0000		9	GASKET	
020	2522196-0000		8	SPACER	
030	1549127-0000		1	NOZZLE	
040	312109-0460		8	SCREW M6S ISO 4017 M8X45 A480	
050	2545433-0000		1	SPACER	
060	1285870-0000		1	EXTENSION	
070	1334632-0000		4	SPACER	
080	1519336-0000		1	NOZZLE	
095	23765-0005		1	INSULATING PIPE	
100	1549126-0000		1	NOZZLE	
110	312109-0461		4	SCREW M6S ISO 4017 M8X50 A480	
120	1285310-0000		2	EXTENSION	
130	2545135-0000		2	SPACER	
140	1549390-0000		3	NUT	
150	23765-0003		2	INSULATING PIPE	
160	23765-0001		2	INSULATING PIPE	
170	252766-0002		2	INSULATING PIPE	
180	252766-0002		1	INSULATING PIPE	
190	1317085-0000		2	NUT	
200	359710-0001		3	WARNING SIGN ISO, HOT SURFACE	
TBA 0200B NOQC (See drawing on page: 5-202)					
010	263673-0000		6	GASKET	
020	1346642-0000		4	SPACER	
030	1346644-0000		1	NOZZLE	
040	312105-0471		8	SCREW M6S ISO 4014 M8X100 A480	
050	1549389-0000		1	SPACER	
060	1296072-0000		1	EXTENSION	
070	1285874-0000		4	SPACER	
080	1346581-0000		1	NOZZLE	
090	23765-0005		1	INSULATING PIPE	
095	23765-0004		1	INSULATING PIPE	
100	1346643-0000		1	NOZZLE	
110	312109-0457		4	SCREW M6S ISO 4017 M8X35 A480	
120	1346646-0000		2	EXTENSION	
130	1549388-0000		2	SPACER	
140	1549390-0000		3	NUT	
150	23765-0003		2	INSULATING PIPE	
160	23765-0002		2	INSULATING PIPE	
170	252766-0001		2	INSULATING PIPE	
180	252766-0001		2	INSULATING PIPE	
190	1317085-0000		2	NUT	
200	359710-0001		3	WARNING SIGN ISO, HOT SURFACE	
TBA 0200B QC, TBA 0330S QC, TBA 0250B QC (See drawing on page: 5-202)					
010	263673-0000		6	GASKET	
020	1285874-0000		8	SPACER	
030	1346644-0000		1	NOZZLE	
040	312105-0457		4	SCREW M6S ISO 4014 M8X35 A480	
050	1549389-0000		1	SPACER	
060	1296072-0000		1	EXTENSION	
070	2545006-0000		4	SPACER	
080	1346581-0000		1	NOZZLE	
090	23765-0005		1	INSULATING PIPE	
095	23765-0004		1	INSULATING PIPE	
100	1346643-0000		1	NOZZLE	
110	312105-0459		8	SCREW M6S ISO 4014 M8X40 A480	
120	1285310-0000		2	EXTENSION	
130	2545135-0000		2	SPACER	
140	1549390-0000		3	NUT	
150	23765-0003		2	INSULATING PIPE	
160	23765-0001		2	INSULATING PIPE	

FLAP HEATER VARIANT

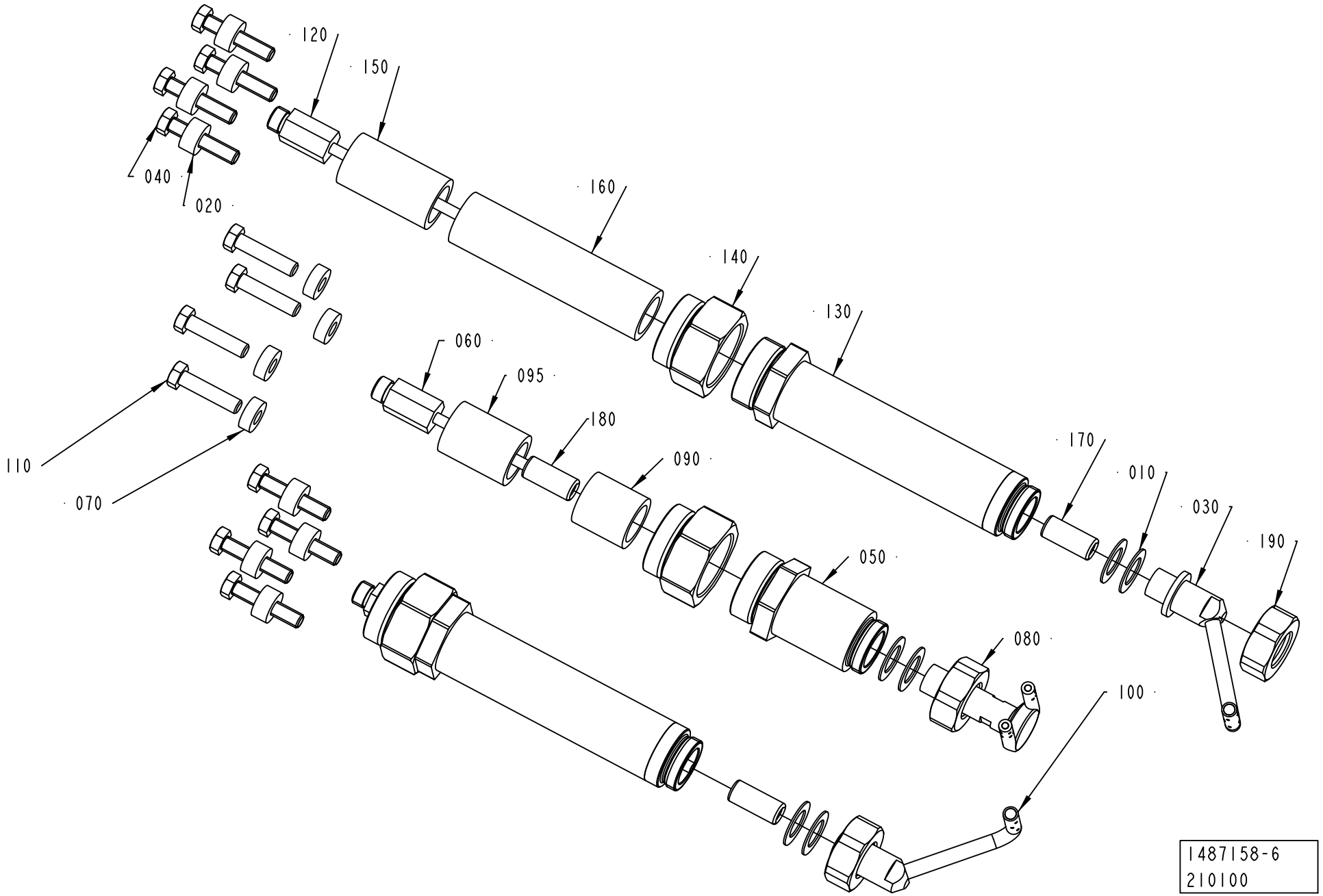

Pos	Part No	UN	Qty	Description	Page No
TBA 0200B QC, TBA 0330S QC, TBA 0250B QC (Cont'd) (See drawing on page: 5-202)					
180	252766-0001		2	INSULATING PIPE	
190	1317085-0000		2	NUT	
200	359710-0001		3	WARNING SIGN ISO, HOT SURFACE	
TBA 0200S (See drawing on page: 5-202)					
010	263673-0000		6	GASKET	
020	1285874-0000		8	SPACER	
030	1346679-0000		1	NOZZLE	
040	312109-0457		8	SCREW M6S ISO 4017 M8X35 A480	
050	1549389-0000		1	SPACER	
060	1296072-0000		1	EXTENSION	
070	1285874-0000		4	SPACER	
080	1346580-0000		1	NOZZLE	
090	23765-0005		1	INSULATING PIPE	
095	23765-0004		1	INSULATING PIPE	
100	1346678-0000		1	NOZZLE	
110	312109-0457		4	SCREW M6S ISO 4017 M8X35 A480	
120	1346646-0000		2	EXTENSION	
130	1549388-0000		2	SPACER	
140	1549390-0000		3	NUT	
150	23765-0003		2	INSULATING PIPE	
160	23765-0002		2	INSULATING PIPE	
170	252766-0001		2	INSULATING PIPE	
180	252766-0001		1	INSULATING PIPE	
190	1317085-0000		2	NUT	
200	359710-0001		3	WARNING SIGN ISO, HOT SURFACE	
TBA 0200SQ QC, TBA 0250SQ QC (See drawing on page: 5-208)					
010	263673-0000		6	GASKET	
020	2545006-0000		8	SPACER	
030	2676617-0000		1	NOZZLE	
040	312109-0459		8	SCREW M6S ISO 4017 M8X40 A480	
050	1549389-0000		1	SPACER	
060	1296072-0000		1	EXTENSION	
070	1523497-0000		4	SPACER	
080	2676616-0000		1	NOZZLE	
090	23765-0005		1	INSULATING PIPE	
095	23765-0004		1	INSULATING PIPE	
100	2676615-0000		1	NOZZLE	
110	312109-0457		4	SCREW M6S ISO 4017 M8X35 A480	
120	1346646-0000		2	EXTENSION	
130	1549388-0000		2	SPACER	
140	1549390-0000		3	NUT	
150	23765-0003		2	INSULATING PIPE	
160	23765-0002		2	INSULATING PIPE	
180	252766-0001		1	INSULATING PIPE	
190	1317085-0000		2	NUT	
200	359710-0001		3	WARNING SIGN ISO, HOT SURFACE	
TBA 0250B NOQC (See drawing on page: 5-202)					
010	263673-0000		6	GASKET	
020	1346641-0000		4	SPACER	
030	1346644-0000		1	NOZZLE	
040	312105-0466		8	SCREW M6S ISO 4014 M8X75 A480	
050	1549389-0000		1	SPACER	
060	1296072-0000		1	EXTENSION	
070	1285874-0000		4	SPACER	
080	1346581-0000		1	NOZZLE	
090	23765-0005		1	INSULATING PIPE	
095	23765-0004		1	INSULATING PIPE	
100	1346643-0000		1	NOZZLE	
110	312109-0457		4	SCREW M6S ISO 4017 M8X35 A480	
120	1346646-0000		2	EXTENSION	
130	1549388-0000		2	SPACER	
140	1549390-0000		3	NUT	
150	23765-0003		2	INSULATING PIPE	
160	23765-0002		2	INSULATING PIPE	
170	252766-0001		2	INSULATING PIPE	
180	252766-0001		2	INSULATING PIPE	
190	1317085-0000		2	NUT	
200	359710-0001		3	WARNING SIGN ISO, HOT SURFACE	
TBA 0250S QC, TBA 0200M QC (See drawing on page: 5-202)					
010	263673-0000		6	GASKET	
020	1498163-0000		8	SPACER	
030	1346644-0000		1	NOZZLE	
040	312105-0457		4	SCREW M6S ISO 4014 M8X35 A480	
050	1549389-0000		1	SPACER	
060	1296072-0000		1	EXTENSION	
070	1285874-0000		4	SPACER	
080	2545236-0000		1	NOZZLE	
090	23765-0005		1	INSULATING PIPE	
100	1346643-0000		1	NOZZLE	
110	312105-0459		8	SCREW M6S ISO 4014 M8X40 A480	
120	1285310-0000		2	EXTENSION	
130	2545135-0000		2	SPACER	
140	1549390-0000		3	NUT	

See previous drawings pages: 5-202, 5-204, 5-206, 5-208.

ECM: 270841 - 20060626
Group number: 1487158-0300
Assembly Drawing: 1487158-6_1_AA

This list covers pages from 5-202 to 5-213

Pos	Part No	UN	Qty	Description	Page No
TBA 0250S QC, TBA 0200M QC (Cont'd) (See drawing on page: 5-202)					
160	23765-0001		2	INSULATING PIPE	
170	252766-0002		2	INSULATING PIPE	
180	252766-0001		1	INSULATING PIPE	
190	1317085-0000		2	NUT	
TBA 0500B NOQC (See drawing on page: 5-202)					
010	263673-0000		6	GASKET	
020	1296153-0000		4	GUIDE	
030	1350422-0000		1	NOZZLE	
040	312105-0466		8	SCREW M6S ISO 4014 M8X75 A480	
050	1549389-0000		1	SPACER	
060	1296072-0000		1	EXTENSION	
080	1296387-0000		1	NOZZLE	
090	23765-0004		1	INSULATING PIPE	
095	23765-0005		1	INSULATING PIPE	
100	1350421-0000		1	NOZZLE	
110	312109-0457		4	SCREW M6S ISO 4017 M8X35 A480	
120	1346646-0000		2	EXTENSION	
130	1549388-0000		2	SPACER	
140	1549390-0000		3	NUT	
150	23765-0003		2	INSULATING PIPE	
160	23765-0002		2	INSULATING PIPE	
170	252766-0001		2	INSULATING PIPE	
180	252766-0001		2	INSULATING PIPE	
190	1317085-0000		2	NUT	
200	359710-0001		3	WARNING SIGN ISO, HOT SURFACE	
TBA 0500B QC, TBA 1000B QC (See drawing on page: 5-206)					
010	263673-0000		6	GASKET	
030	1350422-0000		1	NOZZLE	
050	1549389-0000		1	SPACER	
060	1296072-0000		1	EXTENSION	
070	1498163-0000		12	SPACER	
080	1296387-0000		1	NOZZLE	
090	23765-0004		1	INSULATING PIPE	
095	23765-0005		1	INSULATING PIPE	
100	1350421-0000		1	NOZZLE	
110	312105-0459		12	SCREW M6S ISO 4014 M8X40 A480	
120	1285310-0000		2	EXTENSION	
130	2545135-0000		2	SPACER	
140	1549390-0000		3	NUT	
150	23765-0003		2	INSULATING PIPE	
160	23765-0001		2	INSULATING PIPE	
170	252766-0002		2	INSULATING PIPE	
180	252766-0001		2	INSULATING PIPE	
190	1317085-0000		2	NUT	
200	359710-0001		3	WARNING SIGN ISO, HOT SURFACE	
TBA 0500S (See drawing on page: 5-202)					
010	263673-0000		6	GASKET	
020	1511692-0000		8	SPACER	
030	1499446-0000		1	NOZZLE	
040	312105-0464		8	SCREW M6S ISO 4014 M8X65 A480	
050	1549389-0000		1	SPACER	
060	1296072-0000		1	EXTENSION	
070	1523497-0000		4	SPACER	
080	1499445-0000		1	NOZZLE	
090	23765-0004		1	INSULATING PIPE	
095	23765-0005		1	INSULATING PIPE	
100	1499444-0000		1	NOZZLE	
110	312109-0457		4	SCREW M6S ISO 4017 M8X35 A480	
120	1285310-0000		2	EXTENSION	
130	2545135-0000		2	SPACER	
140	1549390-0000		3	NUT	
150	23765-0003		2	INSULATING PIPE	
160	23765-0001		2	INSULATING PIPE	
170	252766-0002		2	INSULATING PIPE	
180	252766-0001		2	INSULATING PIPE	
190	1317085-0000		2	NUT	
200	359710-0001		3	WARNING SIGN ISO, HOT SURFACE	
TBA 1000B NOQC (See drawing on page: 5-202)					
010	263673-0000		6	GASKET	
020	1296153-0000		4	GUIDE	
030	1350422-0000		1	NOZZLE	
040	312105-0466		8	SCREW M6S ISO 4014 M8X75 A480	
050	1549389-0000		1	SPACER	
060	1296072-0000		1	EXTENSION	
080	1296387-0000		1	NOZZLE	
090	23765-0004		1	INSULATING PIPE	
095	23765-0005		1	INSULATING PIPE	
100	1350421-0000		1	NOZZLE	
110	312109-0457		4	SCREW M6S ISO 4017 M8X35 A480	
120	1285310-0000		2	EXTENSION	
130	2545135-0000		2	SPACER	
140	1549390-0000		3	NUT	
150	23765-0003		2	INSULATING PIPE	

See previous drawings pages: 5-202, 5-204, 5-206, 5-208.

Pos	Part No	UN	Qty	Description	Page No
TBA 1000B NOQC (Cont'd) (See drawing on page: 5-202)					
160	23765-0001		2	INSULATING PIPE	
170	252766-0002		2	INSULATING PIPE	
180	252766-0001		2	INSULATING PIPE	
190	1317085-0000		2	NUT	
200	359710-0001		3	WARNING SIGN ISO, HOT SURFACE	

Pos	Part No	UN	Qty	Description	Page No

INDEXING UNIT

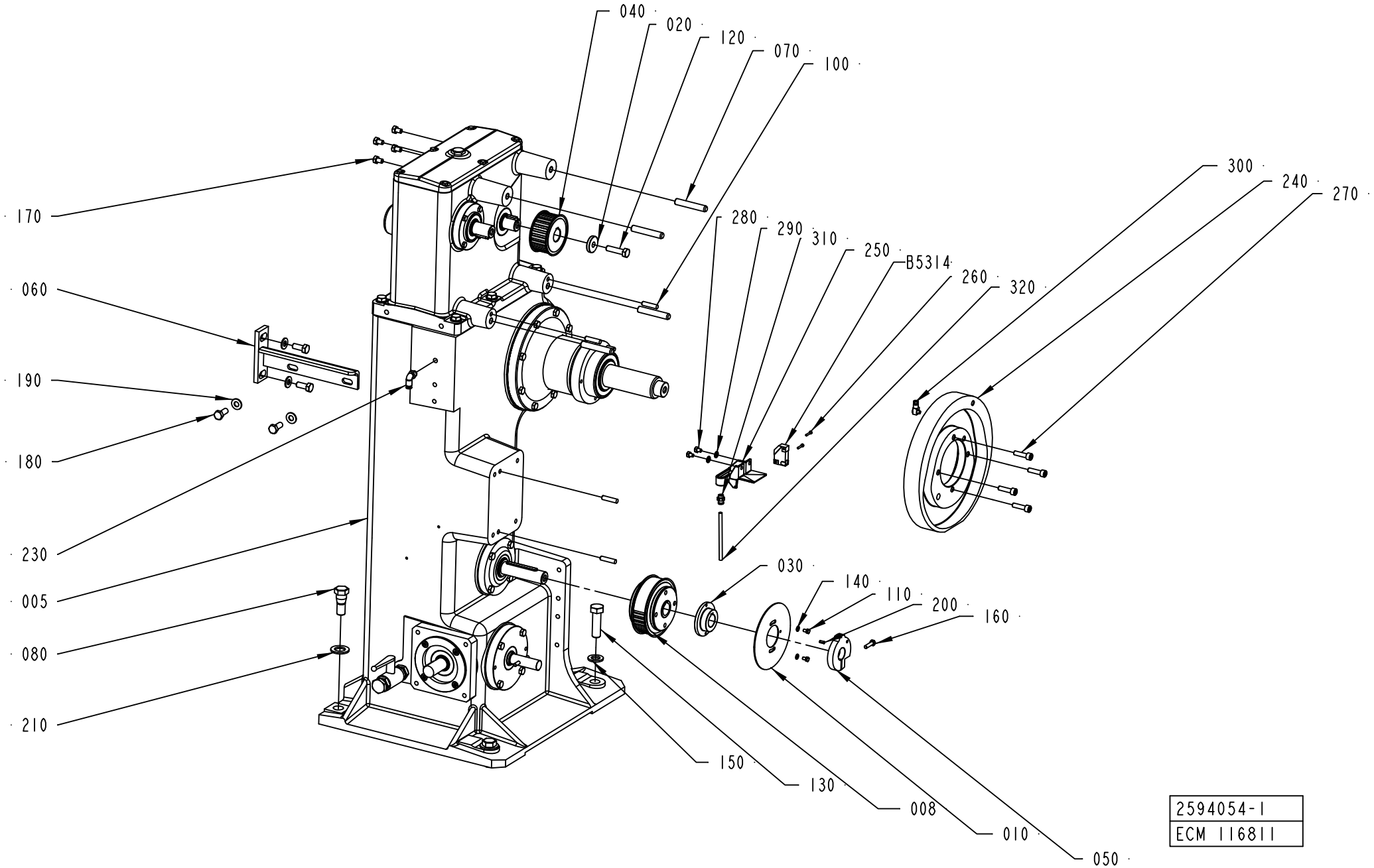

ECM: 177677 - 20040705
Group number: 2594054-0100
Assembly Drawing: 2594054-1_1_AA

Pos	Part No	UN	Qty	Description	Page No
-					
005	2680390-0000		1	INDEXING DEVICE	**5-217, 5-219, 5-221, 5-223, 5-225 ..... 5-227**
008	2552794-0000		1	PULLEY	
010	2604539-0000		1	PROTRACTOR	
020	1144681-0000		1	WASHER	
030	2634894-0000		1	FLANGE	
040	1347017-0000		1	PULLEY	
050	1144849-0000		1	SWITCH	
060	2544902-0000		1	BRACKET	
070	1348303-0000		4	STUD SCREW	
080	598549-0000		2	SCREW	
100	311103-0407		4	PARALLEL PIN ISO 2338 8M6X35 A1	
110	90287-0199		2	SCREW M6S ISO 4017 M5X6 A480	
120	312105-0499		1	SCREW M6S ISO 4014 M10X40 A480	
130	312105-0631		2	SCREW M6S ISO 4014 M16X55 A480	
140	315105-0146		2	WASHER BRB5,3X10RFR	
150	315105-0186		2	WASHER BRB17X30RFR	
160	312105-0370		1	SCREW M6S ISO 4017 M6X20 A480	
170	312105-0451		4	SCREW M6S ISO 4017 M8X20 A480	
180	312105-0453		4	SCREW M6S ISO 4017 M8X25 A480	
190	315105-0165		8	WASHER BRB8,4X16RFR	
200	311112-0251		1	SPRING PIN, ISO 8752 4X10-C	
210	315105-0192		2	WASHER BRB21X36RFR	
230	90458-2956		1	ELBOW PIPE JOINT, EXT.THREAD, D=6MM-G1/8	
240	1548002-0000		1	CAM	
250	1348072-0000		1	DRIP PLATE	
260	312125-0228		2	SCREW ISO 1207 M3X16 A4	
270	312115-0455		4	SCREW ISO4762 M8X30 A4 80	
280	312105-0362		2	SCREW M6S ISO 4017 M6X8 A480	
290	315105-0153		2	WASHER BRB6,4X12RFR	
300	90134-0058		1	CONNECTION	
310	342722-0202		1	PIPE COUPLING 1/8" D=6MM	
320	90266-0166	MM	1500	PIPE	
B5314	90044-0194		1	PROX.SW. IN5329/IN3002-BPKG(EX90044-104)	

Pos	Part No	UN	Qty	Description	Page No

Machine Type | Group Description | Used-In | Group Number | Page No

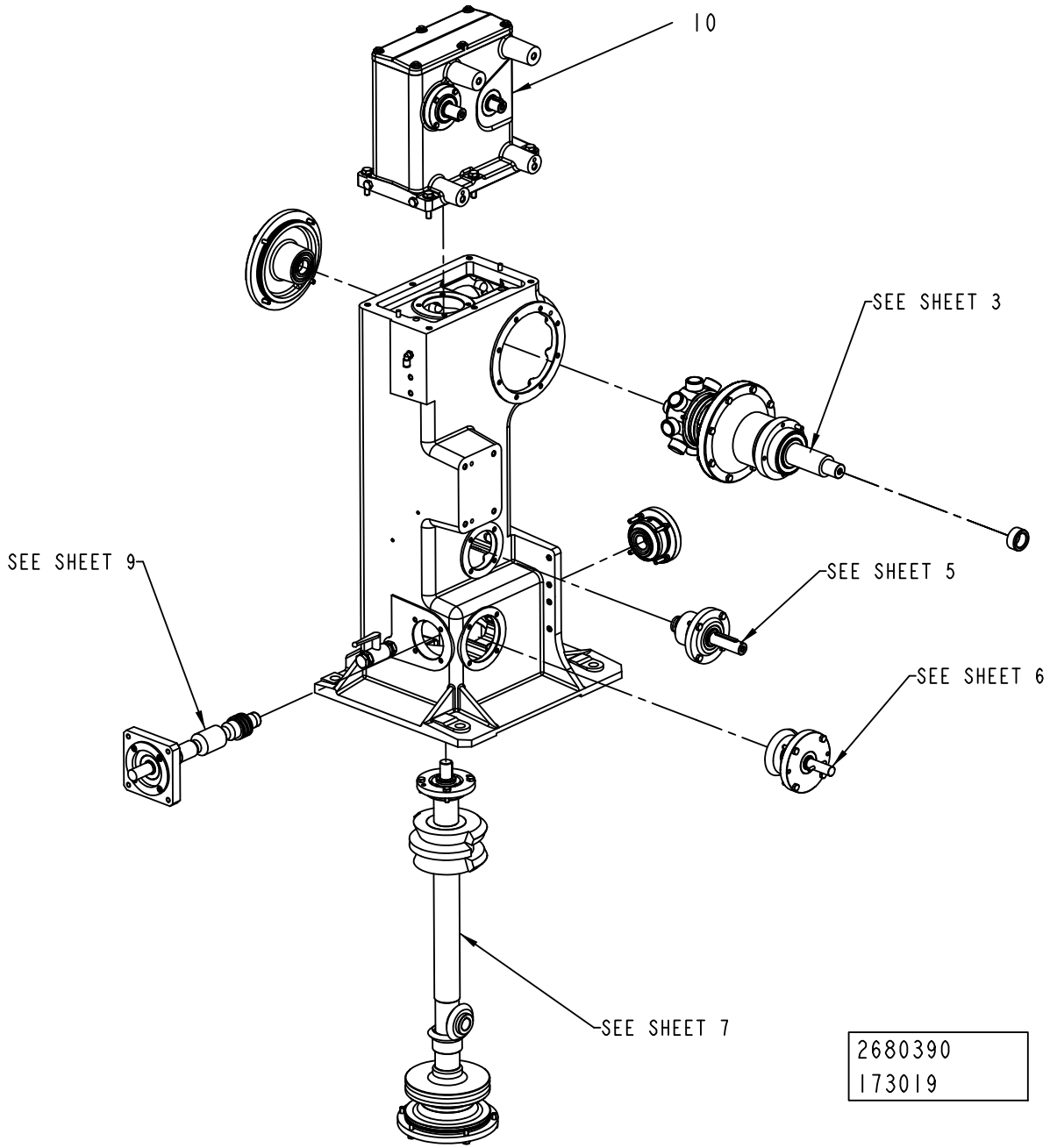
10
SEE SHEET 3
SEE SHEET 9
SEE SHEET 5
SEE SHEET 6
SEE SHEET 7
2680390
173019

ECM: 190932 - 20041104
Group number: 2680390-0000
Assembly Drawing: 2680390_2_AA

This list covers pages from 5-216 to 5-227

Pos	Part No	UN	Qty	Description	Page No
-					
010	2680391-0000		1	HEAD	**5-229, 5-231, 5-233**
020	315202-0225		1	O-RING 44,2X3 MM	
030	90459-4580		3	O-RING 165X4 MM	
040	90459-4588		1	RADIAL SEAL 60X85X8 MM DUST LIP	
050	1498929-0000		12	SPRING	
050	2895146-0000		12	SPRING	
	Remark : Valid only for Volume TPA 0750SQ QC and TPA 1000 SQ QC				
060	312805-0107		1	NUT ROUND WITH SLOTS M35X1,5 FE	
070	312805-0110		1	NUT ROUND WITH SLOTS M50X1,5 FE	
080	2687110-0000		1	LOCK WASHER	
090	2687111-0000		1	LOCK WASHER	
100	90459-4578		3	O-RING 78X3 MM	
110	90459-4587		1	RADIAL SEAL 35X52X7 MM DUST LIP	
120	90459-4579		1	O-RING 94X3 MM	
130	90091-0148		1	RADIAL SEAL 25X47X7 MM DUST LIP	
140	2680401-0000		1	SPRING	
150	90459-4577		1	O-RING 64X3 MM	
160	90091-0306		1	RADIAL SEAL 30X47X7 MM DUST LIP	
170	90459-4585		1	RADIAL SEAL 25X52X7 MM DUST LIP	
180	315202-0302		1	O-RING 54,5X3 MM	

Pos	Part No	UN	Qty	Description	Page No

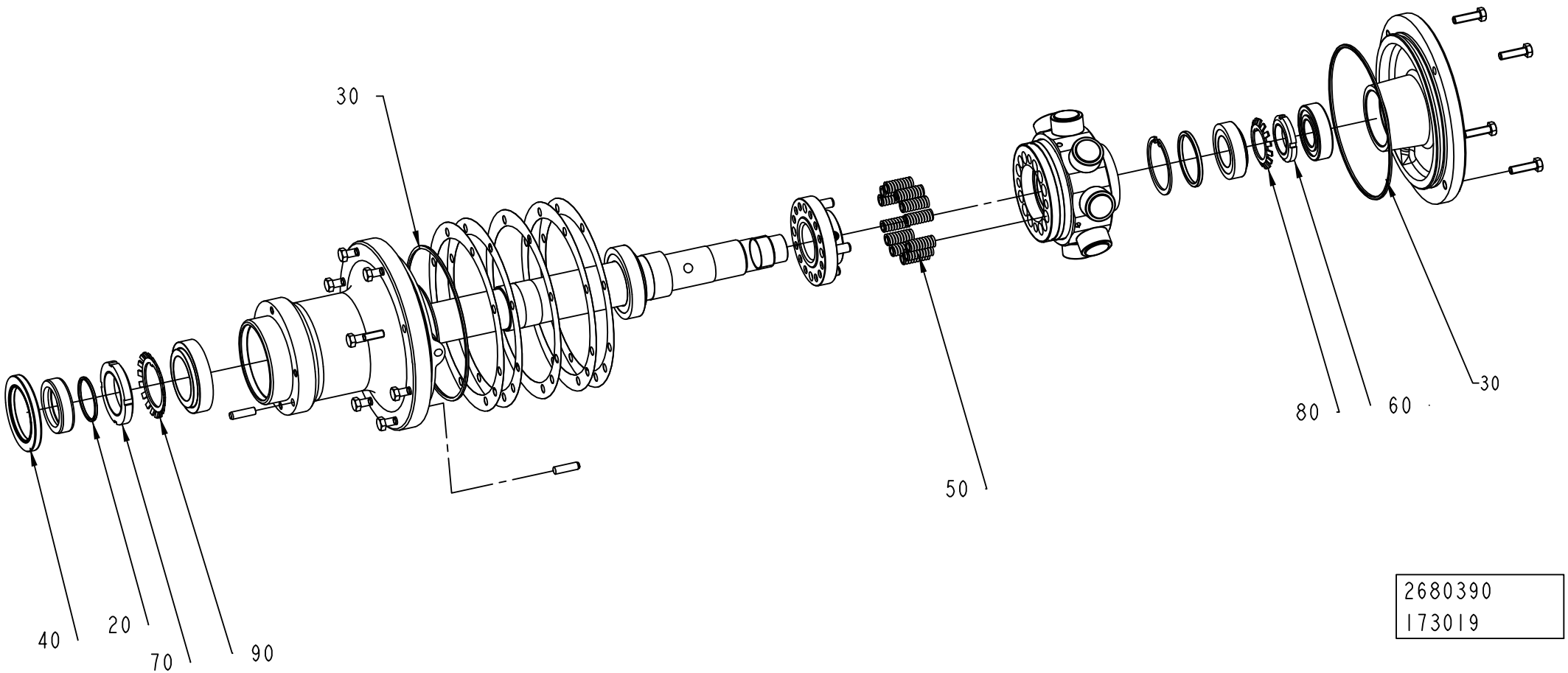

2680390
173019

Pos	Part No	UN	Qty	Description	Page No
-					
010	2680391-0000		1	HEAD	**5-229, 5-231, 5-233**
020	315202-0225		1	O-RING 44,2X3 MM	
030	90459-4580		3	O-RING 165X4 MM	
040	90459-4588		1	RADIAL SEAL 60X85X8 MM DUST LIP	
050	1498929-0000		12	SPRING	
050	2895146-0000		12	SPRING	
	Remark : Valid only for Volume TPA 0750SQ QC and TPA 1000 SQ QC				
060	312805-0107		1	NUT ROUND WITH SLOTS M35X1,5 FE	
070	312805-0110		1	NUT ROUND WITH SLOTS M50X1,5 FE	
080	2687110-0000		1	LOCK WASHER	
090	2687111-0000		1	LOCK WASHER	
100	90459-4578		3	O-RING 78X3 MM	
110	90459-4587		1	RADIAL SEAL 35X52X7 MM DUST LIP	
120	90459-4579		1	O-RING 94X3 MM	
130	90091-0148		1	RADIAL SEAL 25X47X7 MM DUST LIP	
140	2680401-0000		1	SPRING	
150	90459-4577		1	O-RING 64X3 MM	
160	90091-0306		1	RADIAL SEAL 30X47X7 MM DUST LIP	
170	90459-4585		1	RADIAL SEAL 25X52X7 MM DUST LIP	
180	315202-0302		1	O-RING 54,5X3 MM	

Pos	Part No	UN	Qty	Description	Page No

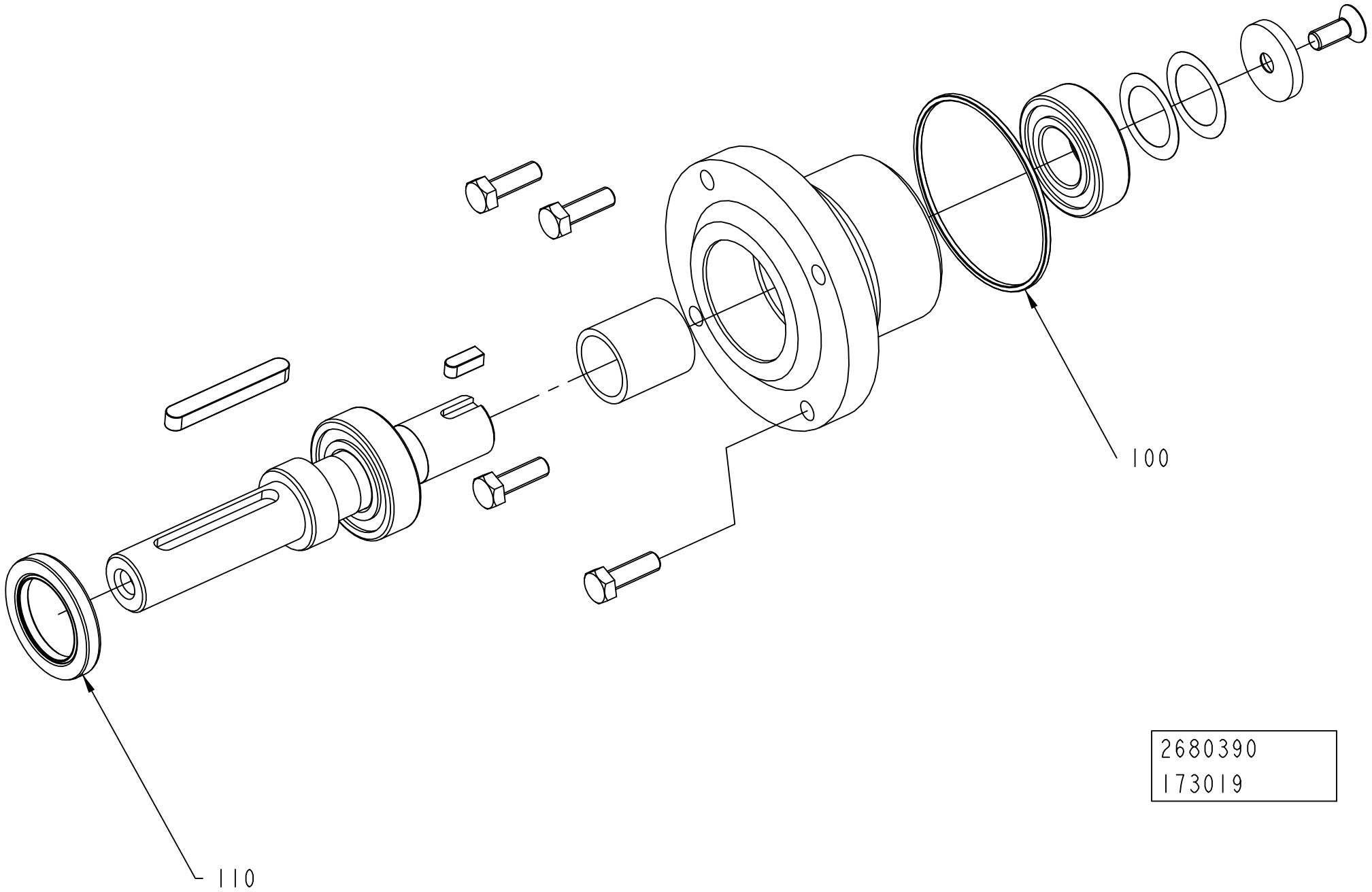
100
110
2680390
173019

ECM: 190932 - 20041104
Group number: 2680390-0000
Assembly Drawing: 2680390_5_AA

This list covers pages from 5-216 to 5-227

Pos	Part No	UN	Qty	Description	Page No
-					
010	2680391-0000		1	HEAD	**5-229, 5-231, 5-233**
020	315202-0225		1	O-RING 44,2X3 MM	
030	90459-4580		3	O-RING 165X4 MM	
040	90459-4588		1	RADIAL SEAL 60X85X8 MM DUST LIP	
050	1498929-0000		12	SPRING	
050	2895146-0000		12	SPRING	
	Remark : Valid only for Volume TPA 0750SQ QC and TPA 1000 SQ QC				
060	312805-0107		1	NUT ROUND WITH SLOTS M35X1,5 FE	
070	312805-0110		1	NUT ROUND WITH SLOTS M50X1,5 FE	
080	2687110-0000		1	LOCK WASHER	
090	2687111-0000		1	LOCK WASHER	
100	90459-4578		3	O-RING 78X3 MM	
110	90459-4587		1	RADIAL SEAL 35X52X7 MM DUST LIP	
120	90459-4579		1	O-RING 94X3 MM	
130	90091-0148		1	RADIAL SEAL 25X47X7 MM DUST LIP	
140	2680401-0000		1	SPRING	
150	90459-4577		1	O-RING 64X3 MM	
160	90091-0306		1	RADIAL SEAL 30X47X7 MM DUST LIP	
170	90459-4585		1	RADIAL SEAL 25X52X7 MM DUST LIP	
180	315202-0302		1	O-RING 54,5X3 MM	

Pos	Part No	UN	Qty	Description	Page No

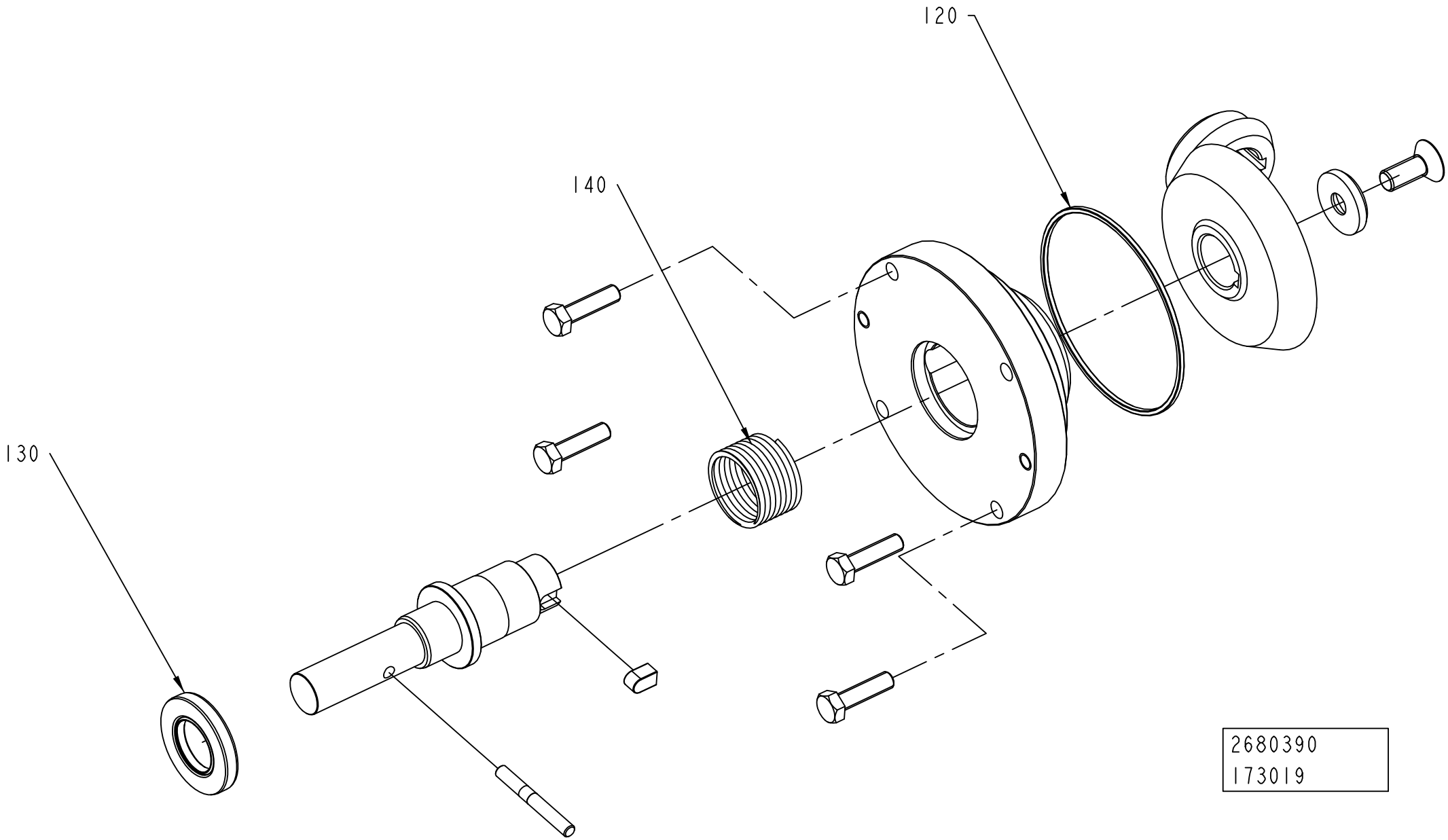
120
140
130
2680390
173019

ECM: 190932 - 20041104
Group number: 2680390-0000
Assembly Drawing: 2680390_6_AA

This list covers pages from 5-216 to 5-227

Pos	Part No	UN	Qty	Description	Page No
-					
010	2680391-0000		1	HEAD	**5-229, 5-231, 5-233**
020	315202-0225		1	O-RING 44,2X3 MM	
030	90459-4580		3	O-RING 165X4 MM	
040	90459-4588		1	RADIAL SEAL 60X85X8 MM DUST LIP	
050	1498929-0000		12	SPRING	
050	2895146-0000		12	SPRING	
	Remark : Valid only for Volume TPA 0750SQ QC and TPA 1000 SQ QC				
060	312805-0107		1	NUT ROUND WITH SLOTS M35X1,5 FE	
070	312805-0110		1	NUT ROUND WITH SLOTS M50X1,5 FE	
080	2687110-0000		1	LOCK WASHER	
090	2687111-0000		1	LOCK WASHER	
100	90459-4578		3	O-RING 78X3 MM	
110	90459-4587		1	RADIAL SEAL 35X52X7 MM DUST LIP	
120	90459-4579		1	O-RING 94X3 MM	
130	90091-0148		1	RADIAL SEAL 25X47X7 MM DUST LIP	
140	2680401-0000		1	SPRING	
150	90459-4577		1	O-RING 64X3 MM	
160	90091-0306		1	RADIAL SEAL 30X47X7 MM DUST LIP	
170	90459-4585		1	RADIAL SEAL 25X52X7 MM DUST LIP	
180	315202-0302		1	O-RING 54,5X3 MM	

Pos	Part No	UN	Qty	Description	Page No

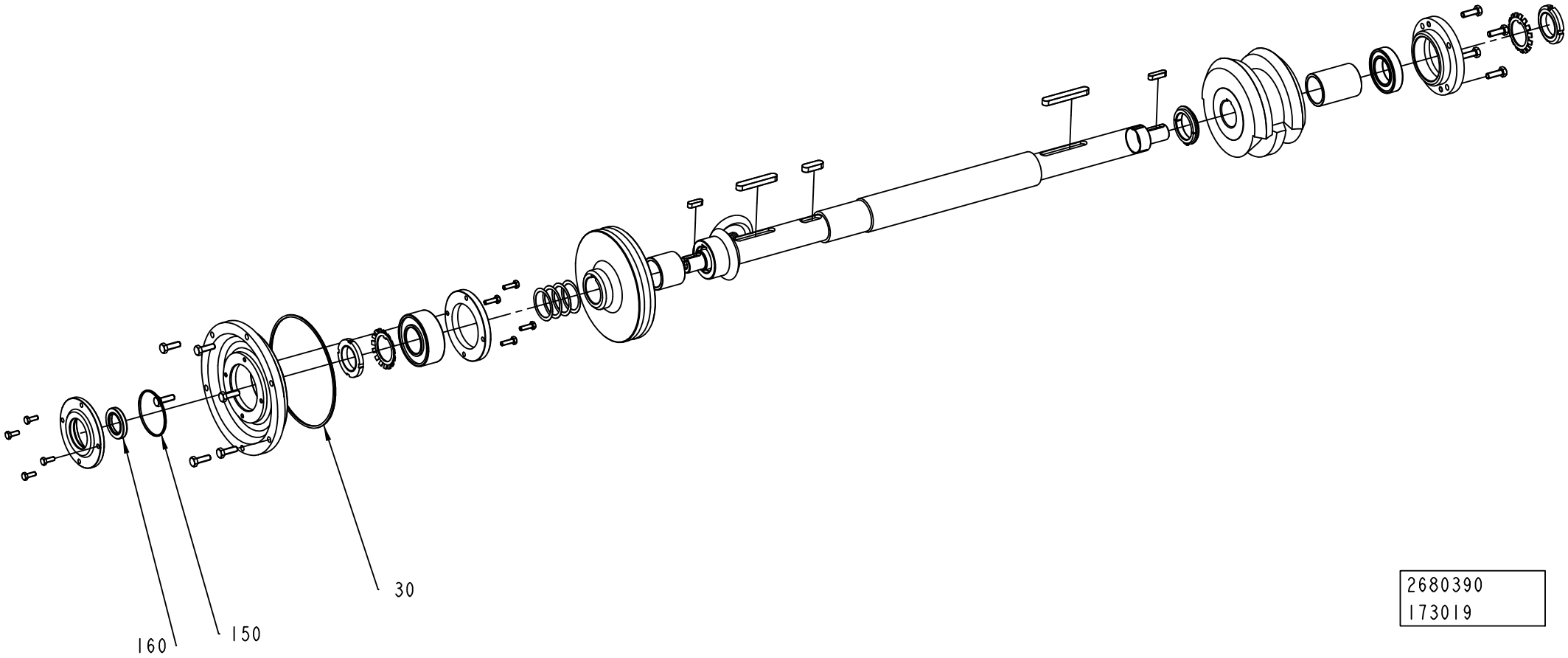

2680390
173019

ECM: 190932 - 20041104
Group number: 2680390-0000
Assembly Drawing: 2680390_7_AA

This list covers pages from 5-216 to 5-227

Pos	Part No	UN	Qty	Description	Page No
-					
010	2680391-0000		1	HEAD	**5-229, 5-231, 5-233**
020	315202-0225		1	O-RING 44,2X3 MM	
030	90459-4580		3	O-RING 165X4 MM	
040	90459-4588		1	RADIAL SEAL 60X85X8 MM DUST LIP	
050	1498929-0000		12	SPRING	
050	2895146-0000		12	SPRING	
	Remark : Valid only for Volume TPA 0750SQ QC and TPA 1000 SQ QC				
060	312805-0107		1	NUT ROUND WITH SLOTS M35X1,5 FE	
070	312805-0110		1	NUT ROUND WITH SLOTS M50X1,5 FE	
080	2687110-0000		1	LOCK WASHER	
090	2687111-0000		1	LOCK WASHER	
100	90459-4578		3	O-RING 78X3 MM	
110	90459-4587		1	RADIAL SEAL 35X52X7 MM DUST LIP	
120	90459-4579		1	O-RING 94X3 MM	
130	90091-0148		1	RADIAL SEAL 25X47X7 MM DUST LIP	
140	2680401-0000		1	SPRING	
150	90459-4577		1	O-RING 64X3 MM	
160	90091-0306		1	RADIAL SEAL 30X47X7 MM DUST LIP	
170	90459-4585		1	RADIAL SEAL 25X52X7 MM DUST LIP	
180	315202-0302		1	O-RING 54,5X3 MM	

Pos	Part No	UN	Qty	Description	Page No

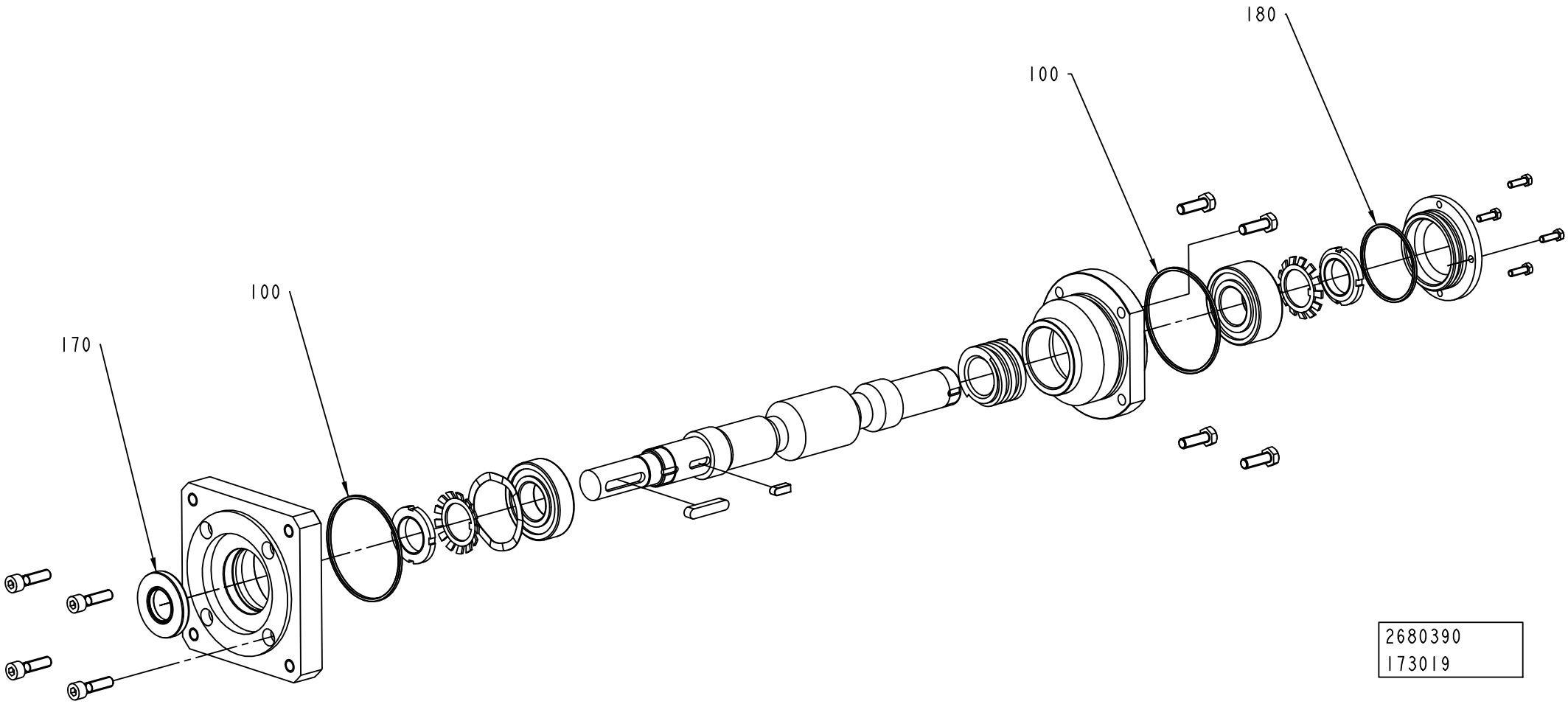
180
100
100
170
2680390
173019

Pos	Part No	UN	Qty	Description	Page No
-					
010	2680391-0000		1	HEAD	**5-229, 5-231, 5-233**
020	315202-0225		1	O-RING 44,2X3 MM	
030	90459-4580		3	O-RING 165X4 MM	
040	90459-4588		1	RADIAL SEAL 60X85X8 MM DUST LIP	
050	1498929-0000		12	SPRING	
050	2895146-0000		12	SPRING	
	Remark : Valid only for Volume TPA 0750SQ QC and TPA 1000 SQ QC				
060	312805-0107		1	NUT ROUND WITH SLOTS M35X1,5 FE	
070	312805-0110		1	NUT ROUND WITH SLOTS M50X1,5 FE	
080	2687110-0000		1	LOCK WASHER	
090	2687111-0000		1	LOCK WASHER	
100	90459-4578		3	O-RING 78X3 MM	
110	90459-4587		1	RADIAL SEAL 35X52X7 MM DUST LIP	
120	90459-4579		1	O-RING 94X3 MM	
130	90091-0148		1	RADIAL SEAL 25X47X7 MM DUST LIP	
140	2680401-0000		1	SPRING	
150	90459-4577		1	O-RING 64X3 MM	
160	90091-0306		1	RADIAL SEAL 30X47X7 MM DUST LIP	
170	90459-4585		1	RADIAL SEAL 25X52X7 MM DUST LIP	
180	315202-0302		1	O-RING 54,5X3 MM	

Pos	Part No	UN	Qty	Description	Page No

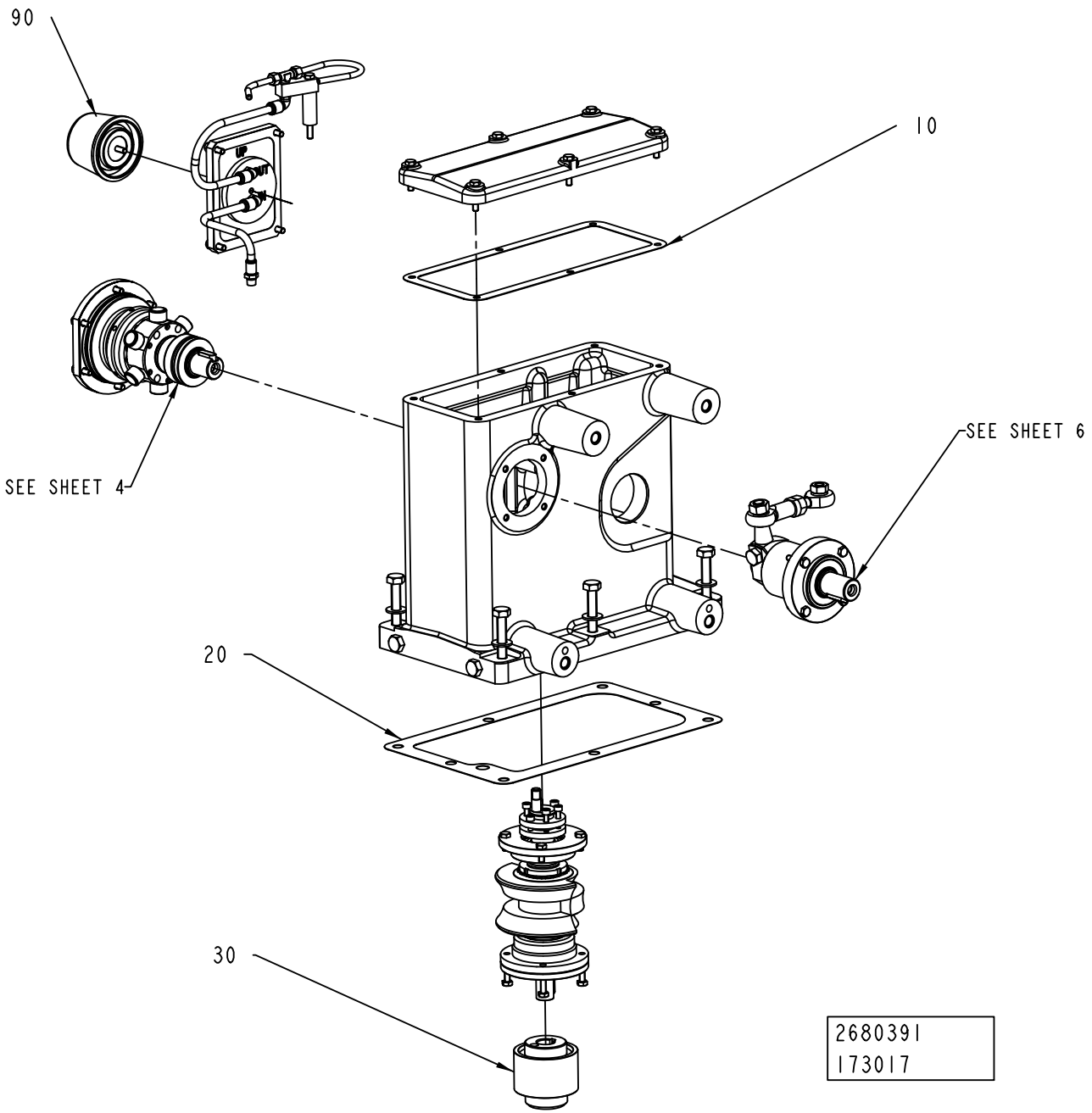
90
10
SEE SHEET 4
SEE SHEET 6
20
30
2680391
173017

ECM: 190933 - 20041104
Group number: 2680391-0000
Assembly Drawing: 2680391_3_AA

This list covers pages from 5-228 to 5-233

Pos	Part No	UN	Qty	Description	Page No
-					
010	1350042-0000		1	GASKET	
020	2680394-0000		1	GASKET	
030	2687109-0000		1	COUPLING	
040	90459-4576		1	O-RING 55X3 MM	
050	90459-4586		1	RADIAL SEAL 30X55X7 MM DUST LIP	
060	2680393-0000		1	LEVER	
070	90242-0281		1	O-RING 58X3 MM	
080	90091-0299		1	RADIAL SEAL 30X52X7 MM DUST LIP	
090	2680392-0000		1	FILTER	

Pos	Part No	UN	Qty	Description	Page No

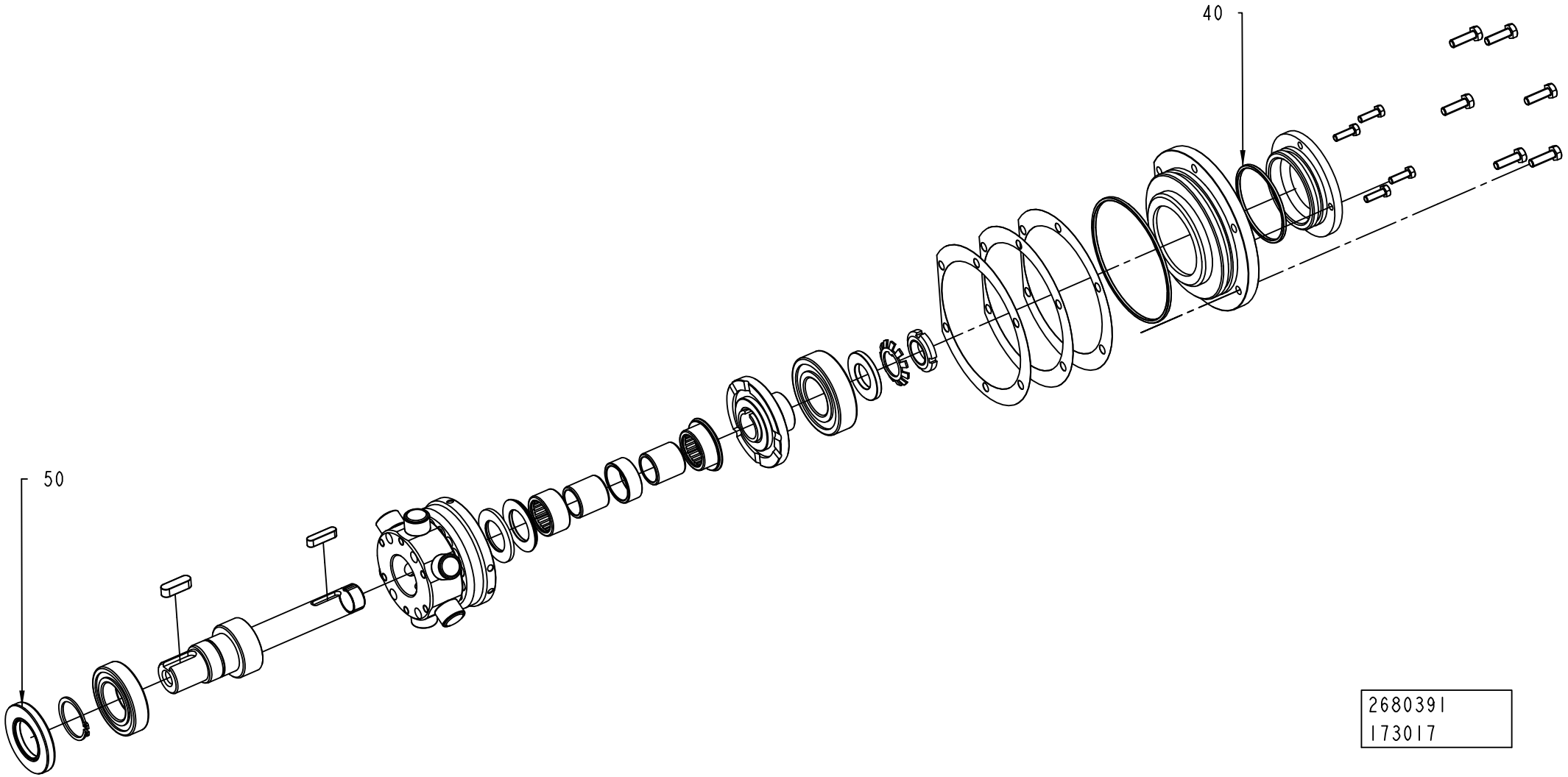
40
50
2680391
173017

ECM: 190933 - 20041104
Group number: 2680391-0000
Assembly Drawing: 2680391_4_AA

This list covers pages from 5-228 to 5-233

Pos	Part No	UN	Qty	Description	Page No
-					
010	1350042-0000		1	GASKET	
020	2680394-0000		1	GASKET	
030	2687109-0000		1	COUPLING	
040	90459-4576		1	O-RING 55X3 MM	
050	90459-4586		1	RADIAL SEAL 30X55X7 MM DUST LIP	
060	2680393-0000		1	LEVER	
070	90242-0281		1	O-RING 58X3 MM	
080	90091-0299		1	RADIAL SEAL 30X52X7 MM DUST LIP	
090	2680392-0000		1	FILTER	

Pos	Part No	UN	Qty	Description	Page No

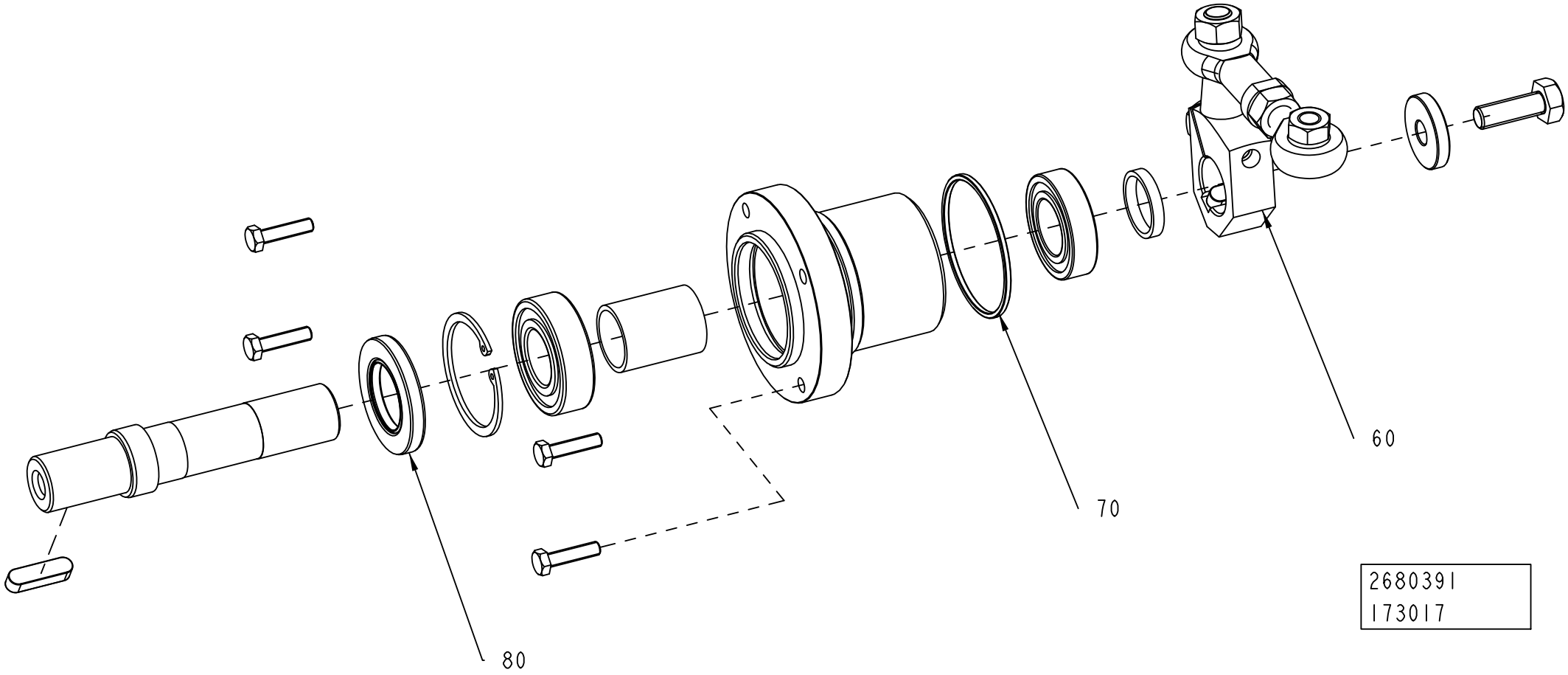
60
70
80
2680391
173017

ECM: 190933 - 20041104
Group number: 2680391-0000
Assembly Drawing: 2680391_6_AA

This list covers pages from 5-228 to 5-233

Pos	Part No	UN	Qty	Description	Page No
-					
010	1350042-0000		1	GASKET	
020	2680394-0000		1	GASKET	
030	2687109-0000		1	COUPLING	
040	90459-4576		1	O-RING 55X3 MM	
050	90459-4586		1	RADIAL SEAL 30X55X7 MM DUST LIP	
060	2680393-0000		1	LEVER	
070	90242-0281		1	O-RING 58X3 MM	
080	90091-0299		1	RADIAL SEAL 30X52X7 MM DUST LIP	
090	2680392-0000		1	FILTER	

Pos	Part No	UN	Qty	Description	Page No

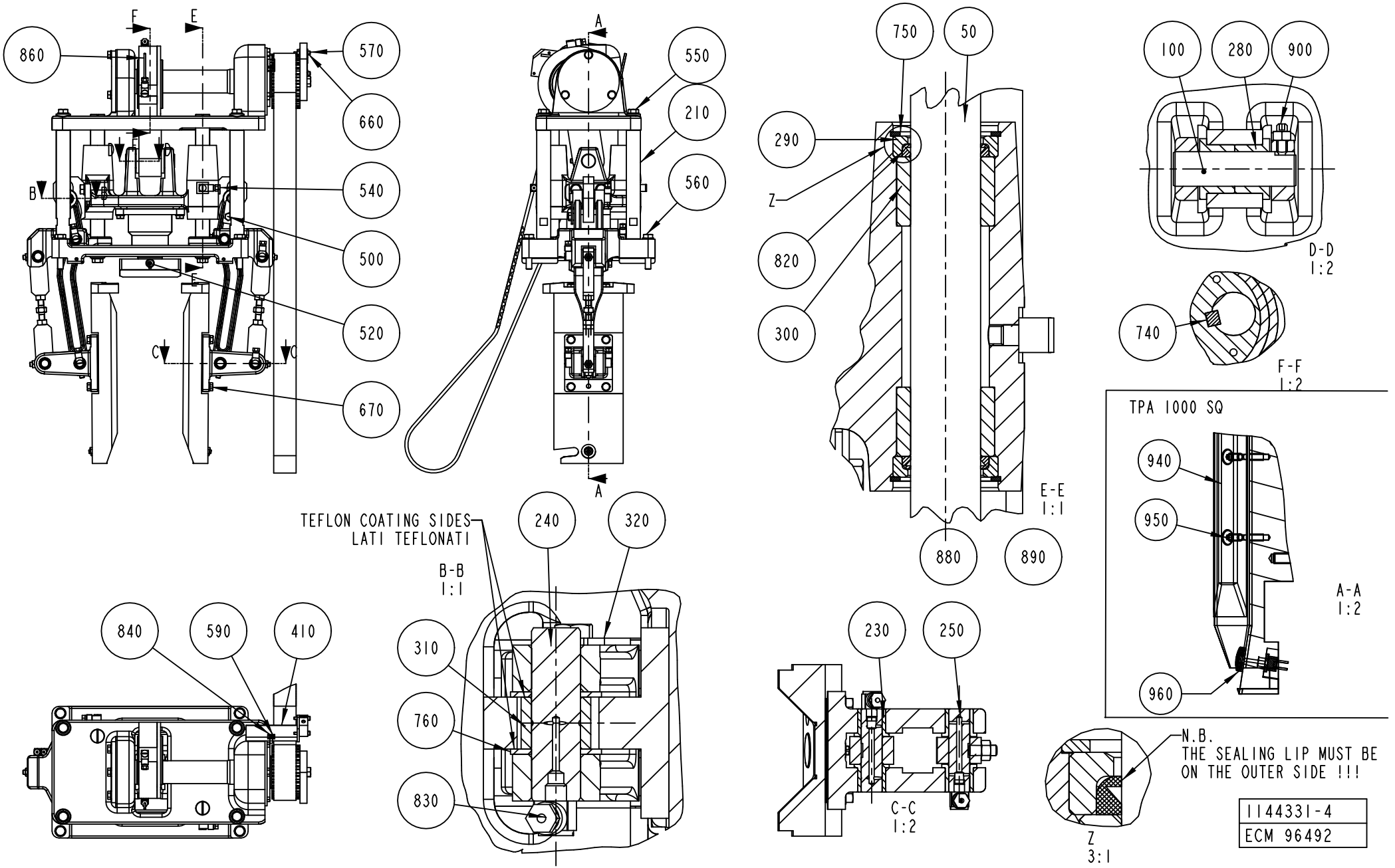
860
570
660
540
500
520
670
550
210
560
750
50
290
Z
820
300
880
890
E-E
1:1
100
280
900
D-D
1:2
740
F-F
1:2
TPA 1000 SQ
940
950
960
A-A
1:2
TEFLON COATING SIDES
LATI TEFLONATI
240
320
B-B
1:1
310
760
830
840
590
410
230
250
C-C
1:2
Z
3:1
N.B.
THE SEALING LIP MUST BE
ON THE OUTER SIDE !!!
1144331-4
ECM 96492

ECM: 270837 - 20060626
Group number: 1144331-0300
Assembly Drawing: 1144331-4_1_AE

This list covers pages from 5-234 to 5-245

Pos	Part No	UN	Qty	Description	Page No
TBA 1000B NOQC (See drawing on pages: 5-234, 5-236)					
010	1144482-0000		2	SUPPORT	
080	1144492-0000		1	SPRING	
260	1144511-0000		6	SHIM	
350	1349519-0000		1	ACTIVATOR	
360	90240-0317		1	BUSHING, 35X39X30 MM	
450	1144978-0000		2	CAM	
470	1260701-0000		1	PUSHER	
475	1260701-0000		1	PUSHER	
480	1260702-0000		1	PLATE	
500	312105-0366		8	SCREW M6S ISO 4017 M6X12 A480	
520	312105-0370		11	SCREW M6S ISO 4017 M6X20 A480	
530	312105-0372		8	SCREW M6S ISO 4017 M6X25 A480	
580	312115-0370		1	SCREW ISO4762 M6X20 A4 80	
630	312605-0316		9	HEXAGON NUT, M6M M6 A280	
650	315103-0153		3	WASHER, BRB, 6,4/12,H=1,5 NIPL BR	
670	315105-0153		15	WASHER BRB6,4X12RFR	
TBA 1000S (See drawing on pages: 5-234, 5-236)					
010	1144482-0000		2	SUPPORT	
080	1144492-0000		1	SPRING	
260	1144511-0000		6	SHIM	
350	1349519-0000		1	ACTIVATOR	
360	90240-0317		1	BUSHING, 35X39X30 MM	
450	1144978-0000		2	CAM	
470	1144928-0000		1	PUSHER	
475	1144928-0000		1	PUSHER	
480	1144932-0000		1	PLATE	
500	312105-0366		8	SCREW M6S ISO 4017 M6X12 A480	
520	312105-0370		11	SCREW M6S ISO 4017 M6X20 A480	
530	312105-0372		8	SCREW M6S ISO 4017 M6X25 A480	
580	312115-0370		1	SCREW ISO4762 M6X20 A4 80	
630	312605-0316		9	HEXAGON NUT, M6M M6 A280	
650	315103-0153		3	WASHER, BRB, 6,4/12,H=1,5 NIPL BR	
670	315105-0153		15	WASHER BRB6,4X12RFR	
TBA 1000SQ (See drawing on pages: 5-234, 5-236)					
010	1144482-0000		2	SUPPORT	
080	1144492-0000		1	SPRING	
260	1144511-0000		6	SHIM	
350	1349519-0000		1	ACTIVATOR	
360	90240-0317		1	BUSHING, 35X39X30 MM	
450	1144978-0000		2	CAM	
470	1490032-0000		2	PUSHER	
475	1490032-0000		1	PUSHER	
480	1490031-0000		1	PLATE	
480	1549940-0000		1	PUSHER	
500	312105-0366		8	SCREW M6S ISO 4017 M6X12 A480	
520	312105-0370		14	SCREW M6S ISO 4017 M6X20 A480	
530	312105-0372		8	SCREW M6S ISO 4017 M6X25 A480	
580	312115-0370		1	SCREW ISO4762 M6X20 A4 80	
630	312605-0316		9	HEXAGON NUT, M6M M6 A280	
650	315103-0153		3	WASHER, BRB, 6,4/12,H=1,5 NIPL BR	
670	315105-0153		15	WASHER BRB6,4X12RFR	
TBA 1500S (See drawing on pages: 5-234, 5-236)					
010	1144482-0000		2	SUPPORT	
080	1144492-0000		1	SPRING	
260	1144511-0000		6	SHIM	
350	1349519-0000		1	ACTIVATOR	
360	90240-0317		1	BUSHING, 35X39X30 MM	
450	1144978-0000		2	CAM	
470	1317654-0000		1	PUSHER	
475	1317654-0000		1	PUSHER	
480	1317655-0000		1	PLATE	
500	312105-0366		8	SCREW M6S ISO 4017 M6X12 A480	
520	312105-0370		15	SCREW M6S ISO 4017 M6X20 A480	
530	312105-0372		8	SCREW M6S ISO 4017 M6X25 A480	
580	312115-0370		1	SCREW ISO4762 M6X20 A4 80	
630	312605-0316		9	HEXAGON NUT, M6M M6 A280	
650	315103-0153		3	WASHER, BRB, 6,4/12,H=1,5 NIPL BR	
655	1317787-0000		2	CATCH	
670	315105-0153		15	WASHER BRB6,4X12RFR	
TBA 1890S QC, TBA 2000S QC (See drawing on pages: 5-234, 5-236)					
010	1144482-0000		2	SUPPORT	
080	2662142-0000		1	SPRING	
260	1144511-0000		6	SHIM	
350	1349519-0000		1	ACTIVATOR	
360	90240-0317		1	BUSHING, 35X39X30 MM	
450	1144978-0000		2	CAM	
470	2661429-0000		1	PUSHER	
475	2661429-0000		1	PUSHER	
480	2660841-0000		1	PUSHER	
500	312105-0366		7	SCREW M6S ISO 4017 M6X12 A480	
520	312105-0370		3	SCREW M6S ISO 4017 M6X20 A480	
530	312605-0316		8	HEXAGON NUT, M6M M6 A280	
580	312115-0370		5	SCREW ISO4762 M6X20 A4 80	

Machine Type | Group Description | Used-In | Group Number | Page No

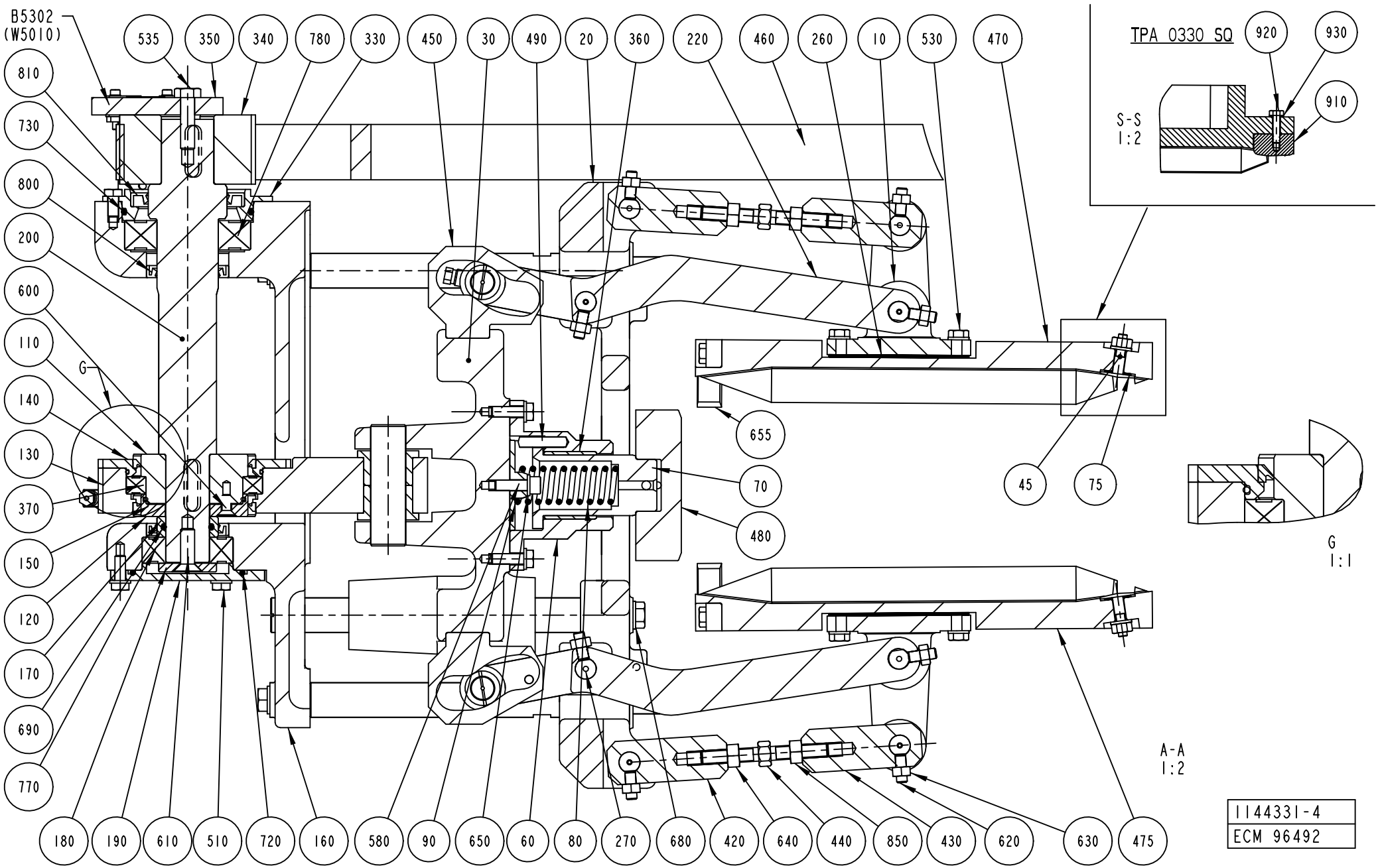
B5302
(W5010)
535
350
340
780
330
450
30
490
20
360
220
460
260
10
530
470
810
730
800
200
600
110
140
130
370
150
120
170
690
770
G
655
70
480
45
75
180
190
610
510
720
160
580
90
650
60
80
270
680
420
640
440
850
430
620
630
475
TPA 0330 SQ
920
930
910
S-S
1:2
G
1:1
A-A
1:2
1144331-4
ECM 96492

Pos	Part No	UN	Qty	Description	Page No
TBA 1890S QC, TBA 2000S QC (Cont'd) (See drawing on pages: 5-234, 5-236)					
630	312605-0316		9	HEXAGON NUT, M6M M6 A280	
650	315103-0153		3	WASHER, BRB, 6,4/12,H=1,5 NIPL BR	
655	2594902-0000		2	CATCH	
670	315105-0153		14	WASHER BRB6,4X12RFR	
TPA 0250SQ NOQC (See drawing on pages: 5-234, 5-236)					
010	1144482-0000		2	SUPPORT	
080	1144492-0000		1	SPRING	
260	1144511-0000		6	SHIM	
350	1349519-0000		1	ACTIVATOR	
360	90240-0317		1	BUSHING, 35X39X30 MM	
450	1144486-0000		2	CAM	
470	1549847-0000		1	PUSHER	
475	1549848-0000		1	PUSHER	
480	1549849-0000		1	PLATE	
500	312105-0366		8	SCREW M6S ISO 4017 M6X12 A480	
520	312105-0370		11	SCREW M6S ISO 4017 M6X20 A480	
530	312105-0372		8	SCREW M6S ISO 4017 M6X25 A480	
580	312115-0370		1	SCREW ISO4762 M6X20 A4 80	
630	312605-0316		9	HEXAGON NUT, M6M M6 A280	
650	315103-0153		3	WASHER, BRB, 6,4/12,H=1,5 NIPL BR	
670	315105-0153		15	WASHER BRB6,4X12RFR	
TPA 0250SQ QC, TPA 0200SQ QC (See drawing on pages: 5-238, 5-240)					
010	2647101-0000		2	SUPPORT	
080	1144492-0000		1	SPRING	
1000	2647099-0000		2	GUIDE	
1010	312105-0368		4	SCREW M6S ISO 4017 M6X16 A480	
1020	90459-3940		2	LEVER, GN 612-6-M16X1.5-A-NI	
260	2658249-0000		6	SHIM	
350	1349519-0000		1	ACTIVATOR	
360	90240-0317		1	BUSHING, 35X39X30 MM	
450	1144486-0000		2	CAM	
470	2705814-0100		1	PUSHER	**5-247, 5-249**
480	1549849-0000		1	PLATE	
500	312105-0366		7	SCREW M6S ISO 4017 M6X12 A480	
520	312105-0370		3	SCREW M6S ISO 4017 M6X20 A480	
530	312105-0372		4	SCREW M6S ISO 4017 M6X25 A480	
580	312115-0370		1	SCREW ISO4762 M6X20 A4 80	
630	312605-0316		9	HEXAGON NUT, M6M M6 A280	
650	315103-0153		3	WASHER, BRB, 6,4/12,H=1,5 NIPL BR	
670	315105-0153		14	WASHER BRB6,4X12RFR	
TPA 0330SQ (See drawing on pages: 5-234, 5-236)					
010	1144482-0000		2	SUPPORT	
080	1260895-0000		1	SPRING	
260	1144511-0000		6	SHIM	
350	1349519-0000		1	ACTIVATOR	
360	90240-0317		1	BUSHING, 35X39X30 MM	
450	1144486-0000		2	CAM	
470	1532289-0000		1	PUSHER	
475	1532290-0000		1	PUSHER	
480	1532291-0000		1	PLATE	
500	312105-0366		8	SCREW M6S ISO 4017 M6X12 A480	
520	312105-0370		11	SCREW M6S ISO 4017 M6X20 A480	
530	312105-0372		8	SCREW M6S ISO 4017 M6X25 A480	
580	312115-0370		1	SCREW ISO4762 M6X20 A4 80	
630	312605-0316		9	HEXAGON NUT, M6M M6 A280	
650	315103-0153		3	WASHER, BRB, 6,4/12,H=1,5 NIPL BR	
670	315105-0153		15	WASHER BRB6,4X12RFR	
910	1558821-0000		2	VOLUME BULGE	
920	312105-0293		2	SCREW M6S ISO 4017 M4X16 A470	
930	315105-0136		2	WASHER BRB4,3XRFR	
TPA 0500SQ (See drawing on pages: 5-234, 5-236)					
010	1144482-0000		2	SUPPORT	
045	2541877-0000		2	NAIL	
080	1144492-0000		1	SPRING	
260	1144511-0000		6	SHIM	
350	1349519-0000		1	ACTIVATOR	
360	90240-0317		1	BUSHING, 35X39X30 MM	
400	2635167-0000		8	VOLUME BULGE	
450	1144486-0000		2	CAM	
470	1558178-0000		1	PUSHER	
475	1558047-0000		1	PUSHER	
480	1558184-0000		1	PLATE	
500	312105-0366		8	SCREW M6S ISO 4017 M6X12 A480	
520	312105-0370		3	SCREW M6S ISO 4017 M6X20 A480	
530	312105-0372		8	SCREW M6S ISO 4017 M6X25 A480	
580	312115-0370		1	SCREW ISO4762 M6X20 A4 80	
630	312605-0316		11	HEXAGON NUT, M6M M6 A280	
650	315103-0153		5	WASHER, BRB, 6,4/12,H=1,5 NIPL BR	
670	315105-0153		15	WASHER BRB6,4X12RFR	
940	2602613-0000		4	VOLUME BULGE	
943	2559008-0000		2	VOLUME BULGE	
945	2611875-0000		2	SHIM	
950	312145-0289		12	SCREW ISO 2009 MFS M4X10 A4	

PRESSURE DEVICE

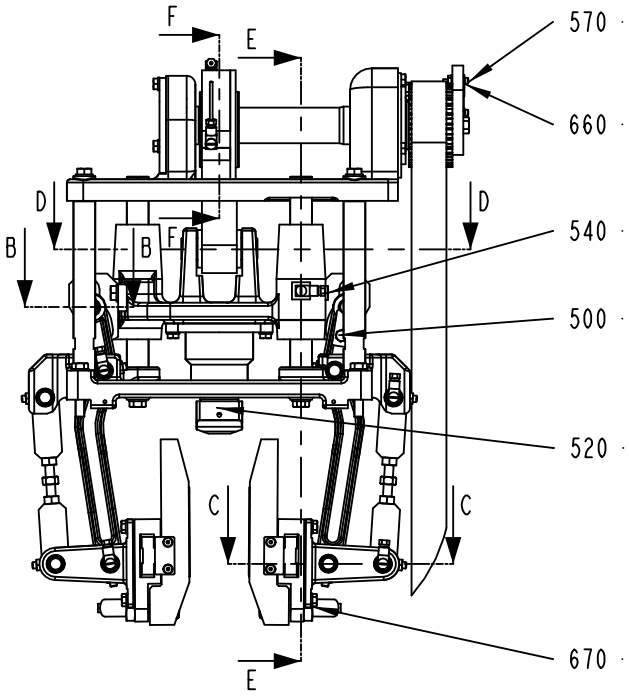

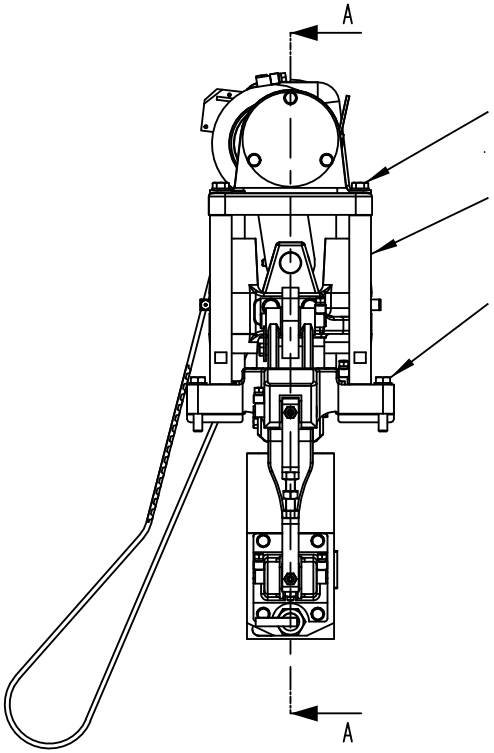

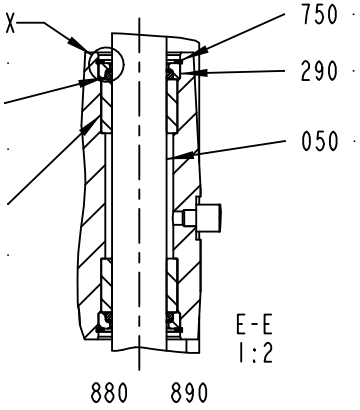

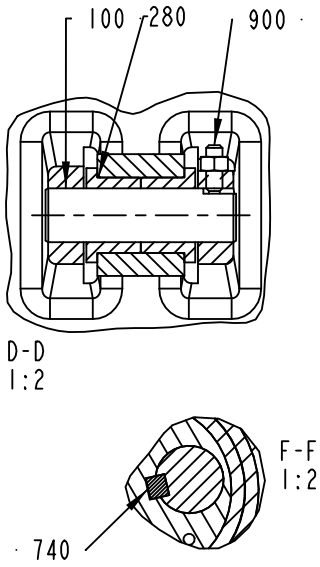

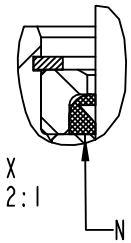

N.B.
THE SEALING LIP MUST BE
ON THE OUTER SIDE!!

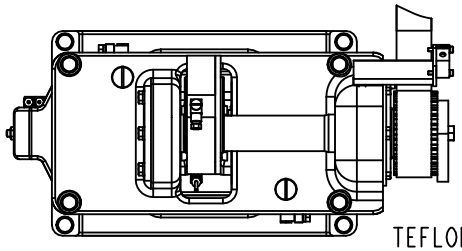

TEFLON COATING SIDES

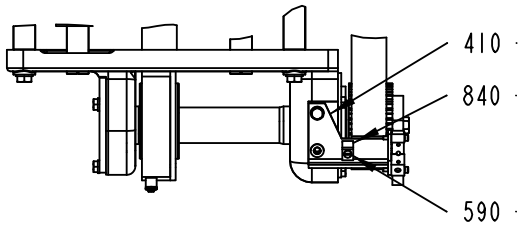

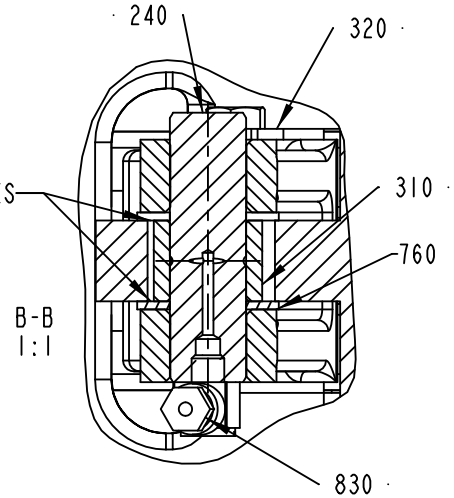

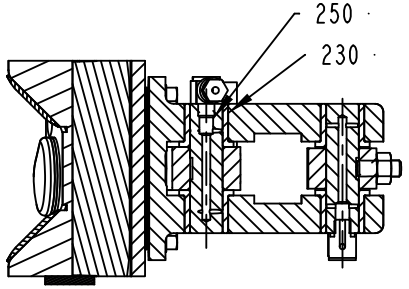

1144331-6
197793

Pos	Part No	UN	Qty	Description	Page No
TPA 0500SQ (Cont'd) (See drawing on pages: 5-234, 5-236)					
960	2541878-0000		6	WASHER	
970	312105-0287		10	SCREW M6S ISO 4017 M4X8 A470	
980	315105-0136		10	WASHER BRB4,3XRFR	
990	2640075-0000		2	VOLUME BULGE	
TPA 1000SQ NOQC (See drawing on pages: 5-234, 5-236)					
010	1144482-0000		2	SUPPORT	
045	2541877-0000		2	NAIL	
080	1143530-0000		1	SPRING	
260	1144511-0000		6	SHIM	
350	1349519-0000		1	ACTIVATOR	
360	90240-0317		1	BUSHING, 35X39X30 MM	
450	1144486-0000		2	CAM	
470	1523884-0000		1	FLAP	
475	1523885-0000		1	PUSHER	
480	1523826-0000		1	PUSHER	
500	312105-0366		8	SCREW M6S ISO 4017 M6X12 A480	
520	312105-0370		3	SCREW M6S ISO 4017 M6X20 A480	
530	312105-0372		8	SCREW M6S ISO 4017 M6X25 A480	
580	312115-0370		1	SCREW ISO4762 M6X20 A4 80	
630	312605-0316		11	HEXAGON NUT, M6M M6 A280	
650	315103-0153		3	WASHER, BRB, 6,4/12,H=1,5 NIPL BR	
670	315105-0153		15	WASHER BRB6,4X12RFR	
940	1523467-0000		4	VOLUME BULGE	
950	312155-0289		8	SCREW DIN 7991 MF6S M4X10 A4 70	
960	2541878-0000		6	WASHER	
TPA 1000SQ QC, TPA 0750SQ QC (See drawing on pages: 5-238, 5-240)					
010	2647101-0000		2	SUPPORT	
080	1143530-0000		1	SPRING	
1000	2647099-0000		2	GUIDE	
1010	312105-0368		4	SCREW M6S ISO 4017 M6X16 A480	
1020	90459-3940		2	LEVER, GN 612-6-M16X1.5-A-NI	
260	2658249-0000		6	SHIM	
350	1349519-0000		1	ACTIVATOR	
360	90240-0317		1	BUSHING, 35X39X30 MM	
450	1144486-0000		2	CAM	
470	2705814-0100		1	PUSHER	**5-247, 5-249**
480	2698300-0000		1	PLATE	
500	312105-0366		7	SCREW M6S ISO 4017 M6X12 A480	
520	312105-0370		3	SCREW M6S ISO 4017 M6X20 A480	
530	312105-0372		4	SCREW M6S ISO 4017 M6X25 A480	
580	312115-0370		1	SCREW ISO4762 M6X20 A4 80	
630	312605-0316		9	HEXAGON NUT, M6M M6 A280	
650	315103-0153		3	WASHER, BRB, 6,4/12,H=1,5 NIPL BR	
670	315105-0153		14	WASHER BRB6,4X12RFR	
TBA 0200B NOQC (See drawing on pages: 5-234, 5-236)					
010	1144482-0000		2	SUPPORT	
080	1260895-0000		1	SPRING	
260	1144511-0000		6	SHIM	
350	1349519-0000		1	ACTIVATOR	
360	90240-0317		1	BUSHING, 35X39X30 MM	
450	1144978-0000		2	CAM	
470	1334999-0000		1	PUSHER	
475	1334999-0000		1	PUSHER	
480	1350809-0000		1	BLOCK	
500	312105-0366		8	SCREW M6S ISO 4017 M6X12 A480	
520	312105-0370		11	SCREW M6S ISO 4017 M6X20 A480	
530	312105-0372		8	SCREW M6S ISO 4017 M6X25 A480	
580	312115-0370		1	SCREW ISO4762 M6X20 A4 80	
630	312605-0316		9	HEXAGON NUT, M6M M6 A280	
650	315103-0153		3	WASHER, BRB, 6,4/12,H=1,5 NIPL BR	
670	315105-0153		15	WASHER BRB6,4X12RFR	
TBA 0200B QC, TBA 0330S QC, TBA 0250B QC (See drawing on pages: 5-234, 5-236)					
010	1144482-0000		2	SUPPORT	
080	1144492-0000		1	SPRING	
260	1144511-0000		6	SHIM	
350	1349519-0000		1	ACTIVATOR	
360	90240-0317		1	BUSHING, 35X39X30 MM	
450	1144978-0000		2	CAM	
470	2605125-0000		1	PUSHER	
475	2605125-0000		1	PUSHER	
480	2651145-0000		1	BLOCK	
500	312105-0366		8	SCREW M6S ISO 4017 M6X12 A480	
520	312105-0370		11	SCREW M6S ISO 4017 M6X20 A480	
530	312105-0372		8	SCREW M6S ISO 4017 M6X25 A480	
580	312115-0370		1	SCREW ISO4762 M6X20 A4 80	
630	312605-0316		9	HEXAGON NUT, M6M M6 A280	
650	315103-0153		3	WASHER, BRB, 6,4/12,H=1,5 NIPL BR	
670	315105-0153		15	WASHER BRB6,4X12RFR	
TBA 0200S (See drawing on pages: 5-234, 5-236)					
010	1144482-0000		2	SUPPORT	
080	1260895-0000		1	SPRING	
260	1144511-0000		6	SHIM	
350	1349519-0000		1	ACTIVATOR	

PRESSURE DEVICE

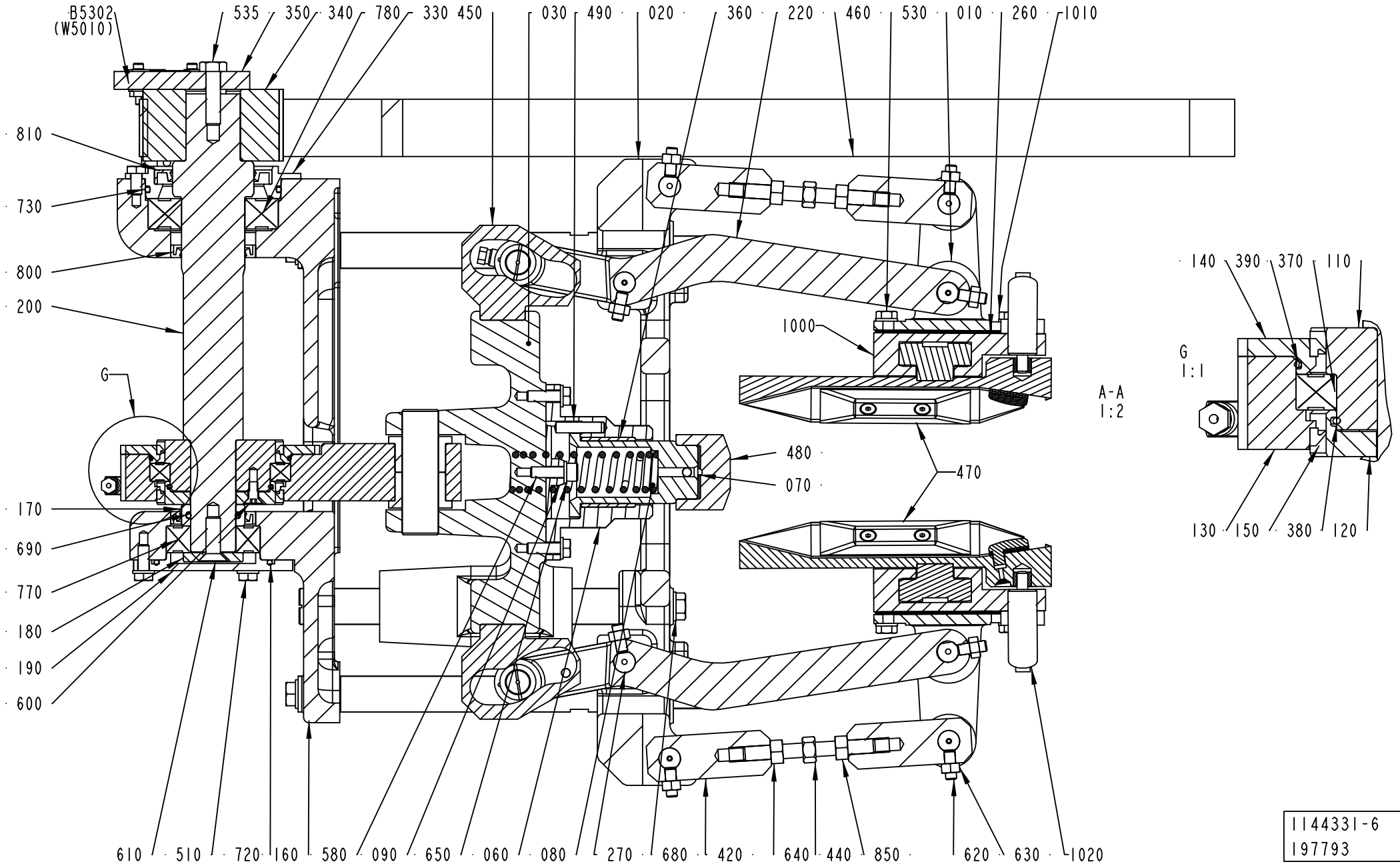

1144331-6
197793

ECM: 270837 - 20060626
Group number: 1144331-0300
Assembly Drawing: 1144331-6_2_AA

This list covers pages from 5-234 to 5-245

Pos	Part No	UN	Qty	Description	Page No
TBA 0200S (Cont'd) (See drawing on pages: 5-234, 5-236)					
360	90240-0317		1	BUSHING, 35X39X30 MM	
450	1144978-0000		2	CAM	
470	1260889-0000		1	PUSHER	
475	1260889-0000		1	PUSHER	
480	1260888-0000		1	BLOCK	
500	312105-0366		8	SCREW M6S ISO 4017 M6X12 A480	
520	312105-0370		11	SCREW M6S ISO 4017 M6X20 A480	
530	312105-0372		8	SCREW M6S ISO 4017 M6X25 A480	
580	312115-0370		1	SCREW ISO4762 M6X20 A4 80	
630	312605-0316		9	HEXAGON NUT, M6M M6 A280	
650	315103-0153		3	WASHER, BRB, 6,4/12,H=1,5 NIPL BR	
670	315105-0153		15	WASHER BRB6,4X12RFR	
TBA 0200SQ QC, TBA 0250SQ QC (See drawing on pages: 5-234, 5-236)					
010	1144482-0000		2	SUPPORT	
080	1144492-0000		1	SPRING	
260	1144511-0000		6	SHIM	
350	1349519-0000		1	ACTIVATOR	
360	90240-0317		1	BUSHING, 35X39X30 MM	
450	1144978-0000		2	CAM	
470	2757847-0000		1	PUSHER	
475	2757847-0000		1	PUSHER	
480	2668240-0000		1	BLOCK	
500	312105-0366		8	SCREW M6S ISO 4017 M6X12 A480	
520	312105-0370		11	SCREW M6S ISO 4017 M6X20 A480	
530	312105-0372		8	SCREW M6S ISO 4017 M6X25 A480	
580	312115-0370		1	SCREW ISO4762 M6X20 A4 80	
630	312605-0316		9	HEXAGON NUT, M6M M6 A280	
650	315103-0153		3	WASHER, BRB, 6,4/12,H=1,5 NIPL BR	
670	315105-0153		15	WASHER BRB6,4X12RFR	
TBA 0250B NOQC (See drawing on pages: 5-234, 5-236)					
010	1144482-0000		2	SUPPORT	
080	1260895-0000		1	SPRING	
260	1144511-0000		6	SHIM	
350	1349519-0000		1	ACTIVATOR	
360	90240-0317		1	BUSHING, 35X39X30 MM	
450	1144978-0000		2	CAM	
470	1350810-0000		1	PUSHER	
475	1350810-0000		1	PUSHER	
480	1350809-0000		1	BLOCK	
500	312105-0366		8	SCREW M6S ISO 4017 M6X12 A480	
520	312105-0370		11	SCREW M6S ISO 4017 M6X20 A480	
530	312105-0372		8	SCREW M6S ISO 4017 M6X25 A480	
580	312115-0370		1	SCREW ISO4762 M6X20 A4 80	
630	312605-0316		9	HEXAGON NUT, M6M M6 A280	
650	315103-0153		3	WASHER, BRB, 6,4/12,H=1,5 NIPL BR	
670	315105-0153		15	WASHER BRB6,4X12RFR	
TBA 0250S, TBA 0200M (See drawing on pages: 5-234, 5-236)					
010	1144482-0000		2	SUPPORT	
080	1144492-0000		1	SPRING	
260	1144511-0000		6	SHIM	
350	1349519-0000		1	ACTIVATOR	
360	90240-0317		1	BUSHING, 35X39X30 MM	
450	1144978-0000		2	CAM	
470	2686876-0000		1	PUSHER	
475	2686876-0000		1	PUSHER	
480	2522197-0000		1	PLATE	
520	312105-0370		3	SCREW M6S ISO 4017 M6X20 A480	
530	312105-0372		8	SCREW M6S ISO 4017 M6X25 A480	
630	312605-0316		9	HEXAGON NUT, M6M M6 A280	
650	315103-0153		3	WASHER, BRB, 6,4/12,H=1,5 NIPL BR	
TBA 0500B NOQC (See drawing on pages: 5-234, 5-236)					
010	1144482-0000		2	SUPPORT	
080	1144492-0000		1	SPRING	
260	1144511-0000		6	SHIM	
350	1349519-0000		1	ACTIVATOR	
360	90240-0317		1	BUSHING, 35X39X30 MM	
450	1144978-0000		2	CAM	
470	1539872-0000		1	PUSHER	
475	1539872-0000		1	PUSHER	
480	1260702-0000		1	PLATE	
500	312105-0366		8	SCREW M6S ISO 4017 M6X12 A480	
520	312105-0370		11	SCREW M6S ISO 4017 M6X20 A480	
530	312105-0372		8	SCREW M6S ISO 4017 M6X25 A480	
580	312115-0370		1	SCREW ISO4762 M6X20 A4 80	
630	312605-0316		9	HEXAGON NUT, M6M M6 A280	
650	315103-0153		3	WASHER, BRB, 6,4/12,H=1,5 NIPL BR	
670	315105-0153		15	WASHER BRB6,4X12RFR	
TBA 0500B QC, TBA 1000B QC (See drawing on pages: 5-234, 5-236)					
010	1144482-0000		2	SUPPORT	
080	1144492-0000		1	SPRING	
260	1144511-0000		6	SHIM	
350	1349519-0000		1	ACTIVATOR	
360	90240-0317		1	BUSHING, 35X39X30 MM	

Machine Type | Group Description | Used-In | Group Number | Page No

See previous drawings pages: 5-234, 5-236, 5-238, 5-240.

ECM: 270837 - 20060626
Group number: 1144331-0300
Assembly Drawing: 1144331-6_2_AA

This list covers pages from 5-234 to 5-245

Pos	Part No	UN	Qty	Description	Page No
TBA 0500B QC, TBA 1000B QC (Cont'd) (See drawing on pages: 5-234, 5-236)					
450	1144978-0000		2	CAM	
470	2524512-0000		1	PUSHER	
475	2524512-0000		1	PUSHER	
480	1260702-0000		1	PLATE	
500	312105-0366		8	SCREW M6S ISO 4017 M6X12 A480	
520	312105-0370		11	SCREW M6S ISO 4017 M6X20 A480	
530	312105-0372		8	SCREW M6S ISO 4017 M6X25 A480	
580	312115-0370		1	SCREW ISO4762 M6X20 A4 80	
630	312605-0316		9	HEXAGON NUT, M6M M6 A280	
650	315103-0153		3	WASHER, BRB, 6,4/12,H=1,5 NIPL BR	
670	315105-0153		15	WASHER BRB6,4X12RFR	
TBA 0500S (See drawing on pages: 5-234, 5-236)					
010	1144482-0000		2	SUPPORT	
080	1144492-0000		1	SPRING	
260	1144511-0000		6	SHIM	
350	1349519-0000		1	ACTIVATOR	
360	90240-0317		1	BUSHING, 35X39X30 MM	
450	1144978-0000		2	CAM	
470	1499144-0000		2	PUSHER	
475	1499144-0000		1	PUSHER	
480	1499143-0000		1	PLATE	
500	312105-0366		8	SCREW M6S ISO 4017 M6X12 A480	
520	312105-0370		11	SCREW M6S ISO 4017 M6X20 A480	
530	312105-0372		8	SCREW M6S ISO 4017 M6X25 A480	
580	312115-0370		1	SCREW ISO4762 M6X20 A4 80	
630	312605-0316		9	HEXAGON NUT, M6M M6 A280	
650	315103-0153		3	WASHER, BRB, 6,4/12,H=1,5 NIPL BR	
670	315105-0153		15	WASHER BRB6,4X12RFR	
Common Parts					
020	1144483-0000		1	PLATE	
030	1144485-0000		1	SUPPORT	
050	1144488-0000		2	COLUMN	
060	1144489-0000		1	FLANGE	
070	1478189-0000		1	SUPPORT	
090	1144493-0000		1	WASHER	
100	1144494-0000		1	AXLE PIN	
110	1144495-0000		1	ECCENTRIC	
120	1144496-0000		1	ECCENTRIC	
130	1346539-0000		1	CONNECTING ROD	
140	1144498-0000		1	FLANGE	
150	90091-0408		2	BEARING SEAL 70X78X5 MM	
160	1144500-0000		1	SUPPORT	
170	1144501-0000		1	SPACER	
180	1144502-0000		1	WASHER	
190	1144503-0000		1	FLANGE	
200	1349516-0000		1	SHAFT	
210	1144505-0000		4	COLUMN	
220	1144506-0000		2	LEVER	
230	1144507-0000		16	BUSHING	
240	1144508-0000		2	AXLE PIN	
250	1317362-0000		6	SHAFT	
270	1317363-0000		2	SHAFT	
280	1144514-0000		2	BUSHING	
290	1144515-0000		4	INSERT	
300	1144517-0000		4	BUSHING	
310	1144520-0000		2	ROLLER	
320	1144521-0000		2	CLAMP	
330	1347018-0000		1	PLUG	
340	1349517-0000		1	TOOTHED PULLEY	
370	90214-0229		1	BALL BEARING, 65X85X10 MM	
380	90242-0271		1	O-RING 63,22X1,78 MM	
390	90242-0270		1	O-RING 82,27X1,78 MM	
410	1349518-0000		1	SUPPORT	
420	1144914-0000		2	LEVER	
430	1144915-0000		2	LEVER	
440	1144916-0000		2	ADJUSTING SCREW	
460	1348537-0000		1	TIMING BELT	
490	1498029-0000		1	PIN	
510	312105-0368		3	SCREW M6S ISO 4017 M6X16 A480	
535	312105-0455		1	SCREW M6S ISO 4017 M8X30 A480	
540	312105-0451		4	SCREW M6S ISO 4017 M8X20 A480	
550	312105-0457		6	SCREW M6S ISO 4014 M8X35 A480	
560	312109-0460		4	SCREW M6S ISO 4017 M8X45 A480	
570	312115-0230		2	SCREW ISO4762 M3X20 A4 80	
590	312125-0287		1	SCREW ISO 1207 M4X8 A4	
600	312155-0327		6	SCREW DIN 7991 MF6S M5X12 A4 70	
610	312155-0453		1	SCREW DIN 7991 MF6S M8X25 A4 70	
620	312318-0368		9	SCREW ISO4029 M6X16 A4	
640	312605-0318		2	HEXAGON NUT, M6M M8 A280	
660	315105-0124		2	WASHER BRB3,2X6RFR	
680	315105-0165		14	WASHER BRB8,4X16RFR	
690	315202-0217		1	O-RING 24,2X3 MM	
720	315202-0303		1	O-RING 59,5X3 MM	

Machine Type | Group Description | Used-In | Group Number | Page No

See previous drawings pages: 5-234, 5-236, 5-238, 5-240.

Pos	Part No	UN	Qty	Description	Page No
Common Parts (Cont'd)					
730	315202-0305		1	O-RING 69,5X3 MM	
740	315705-0267		2	PARALLEL KEY W. ROUND ENDS 8X7X30 MM	
750	315753-0122		4	RETAINING RING FOR BORE DIN 472 30 A2	
760	321130-0200		4	THRUST WASHER, 14X26X1,5 MM	
770	321313-0105		1	BALL BEARING, 25X52X15MM	
780	321313-0107		1	BALL BEARING, 35X72X17MM	
800	90091-0297		2	RADIAL SEAL 35X47X7 MM DUST LIP	
810	90091-0298		1	RADIAL SEAL 45X65X8 MM DUST LIP	
820	90091-0380		4	SCRAPER, EXCLUDER 20X24,8X3,7 MM	
830	90134-0058		14	CONNECTION	
840	90165-0056		1	PIPE CLIP FOR TUBE D=4 MM	
850	312902-0318		2	NUT HEX. LEFT THREAD, M8 A280	
880	352113-0102		5	CLIP-STRIP, BLACK 188X4,8 MM	
890	352113-0101		8	CLIP STRIP, 92X2,5 MM	
900	312311-0370		1	SCREW ISO4028 M6X20 FZB	
B5302	90044-0194		1	PROX.SW. IN5329/IN3002-BPKG(EX90044-104)	

Pos	Part No	UN	Qty	Description	Page No

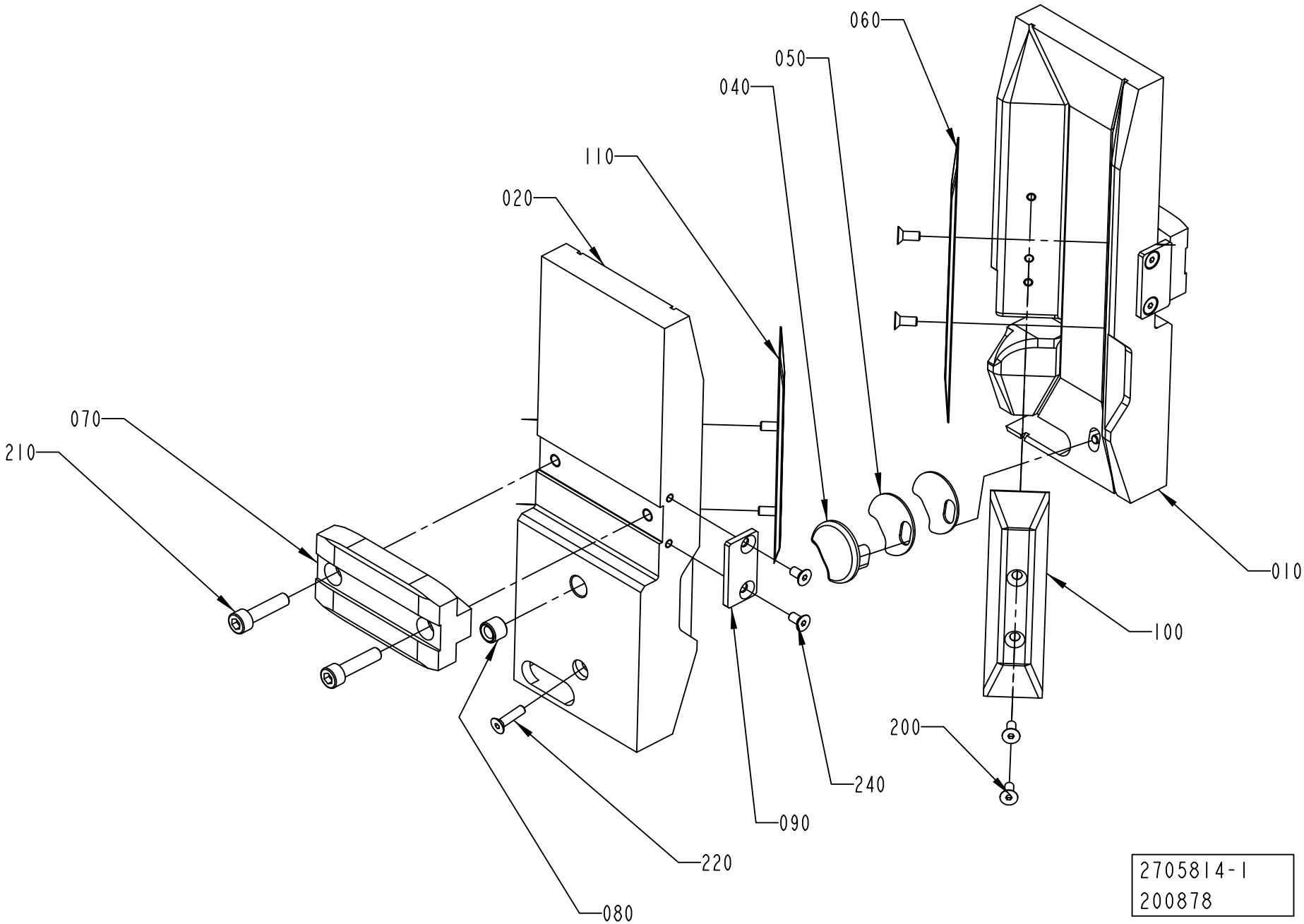
060
050
040
110
020
070
210
010
100
200
240
090
220
080
2705814-1
200878

ECM: 202651 - 20050224
Group number: 2705814-0100
Assembly Drawing: 2705814-1_1_AA

This list covers pages from 5-246 to 5-249

Pos	Part No	UN	Qty	Description	Page No
TPA 0200SQ (See drawing on page: 5-248)					
010	2674272-0000		1	PUSHER	
020	2674273-0000		1	PUSHER	
040	2674269-0000		2	NAIL	
220	312115-0297		2	SCREW ISO4762 M4X25 A4 80	
250	315105-0136		2	WASHER BRB4,3XRFR	
TPA 0250SQ (See drawing on page: 5-248)					
010	2674271-0000		1	PUSHER	
020	2674270-0000		1	PUSHER	
040	2674269-0000		2	NAIL	
220	312105-0295		2	SCREW M6S ISO 4017 M4X20 A470	
250	315105-0136		2	WASHER BRB4,3XRFR	
TPA 0750SQ (See drawing on page: 5-246)					
010	2647094-0000		1	PUSHER	
020	2647093-0000		1	PUSHER	
040	2647097-0000		2	NAIL	
050	2658247-0000		6	WASHER	
060	2647100-0000		4	VOLUME BULGE	
090	2698319-0000		2	BLOCK	
200	312155-0289		8	SCREW DIN 7991 MF6S M4X10 A4 70	
220	312155-0293		2	SCREW DIN 7991 MF6S M4X16 A4 70	
240	312155-0287		4	SCREW DIN 7991 MF6S M4X8 A4 70	
TPA 1000SQ (See drawing on page: 5-246)					
010	2647096-0000		1	PUSHER	
020	2647095-0000		1	PUSHER	
040	2647097-0000		2	NAIL	
050	2658247-0000		6	WASHER	
060	1523467-0000		2	VOLUME BULGE	
090	2698319-0000		2	BLOCK	
100	2658263-0000		1	VOLUME BULGE	
110	2658264-0000		1	VOLUME BULGE	
200	312155-0289		8	SCREW DIN 7991 MF6S M4X10 A4 70	
220	312155-0293		2	SCREW DIN 7991 MF6S M4X16 A4 70	
240	312155-0287		4	SCREW DIN 7991 MF6S M4X8 A4 70	
Common Parts					
070	2647098-0000		2	BLOCK	
080	2647113-0000		2	BUSHING	
210	312115-0372		4	SCREW ISO4762 M6X25 A4 80	

Pos	Part No	UN	Qty	Description	Page No

Machine Type | Group Description | Used-In | Group Number | Page No

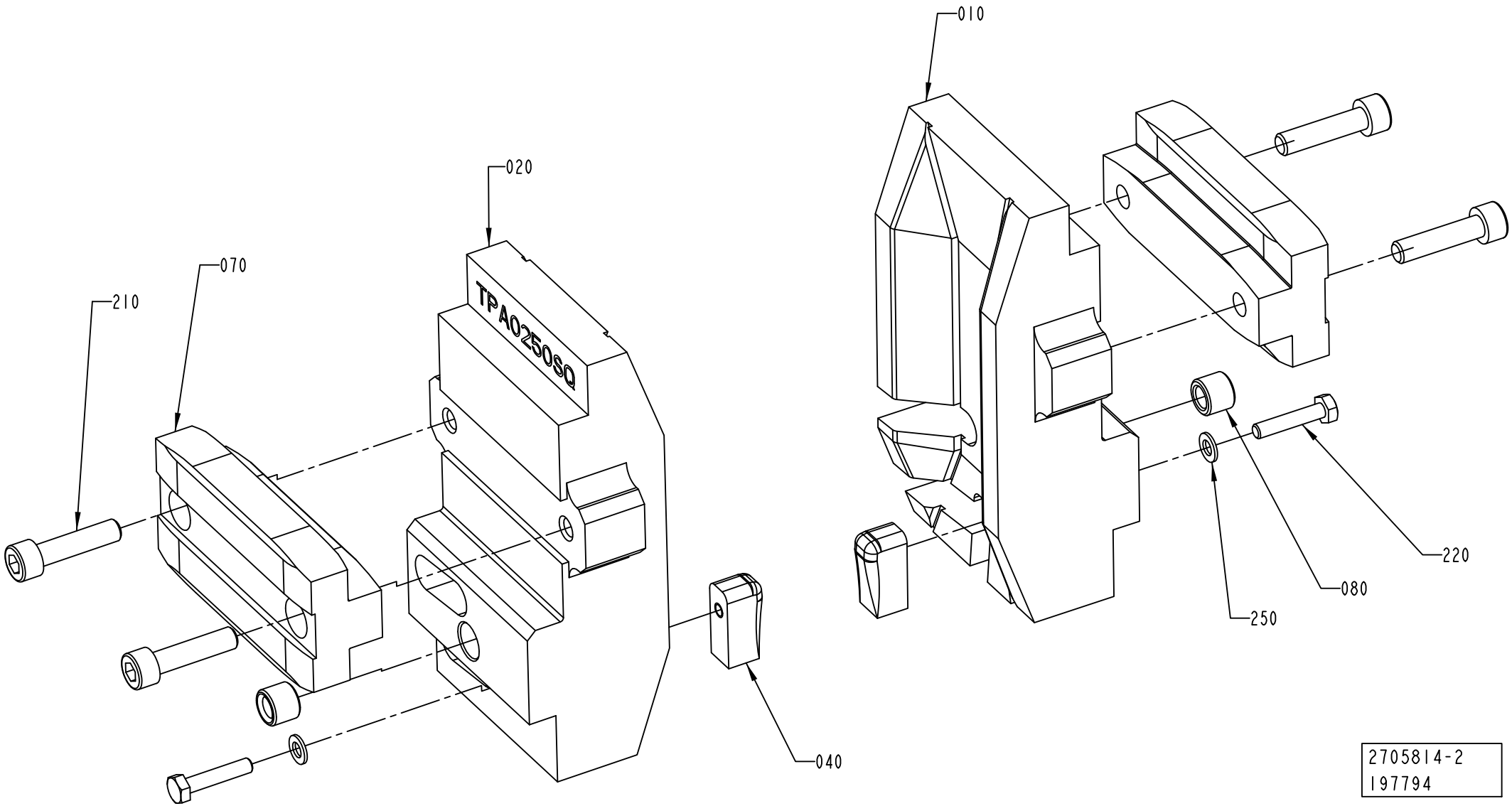

2705814-2
197794

ECM: 202651 - 20050224
Group number: 2705814-0100
Assembly Drawing: 2705814-2_1_AA

This list covers pages from 5-246 to 5-249

Pos	Part No	UN	Qty	Description	Page No
TPA 0200SQ (See drawing on page: 5-248)					
010	2674272-0000		1	PUSHER	
020	2674273-0000		1	PUSHER	
040	2674269-0000		2	NAIL	
220	312115-0297		2	SCREW ISO4762 M4X25 A4 80	
250	315105-0136		2	WASHER BRB4,3XRFR	
TPA 0250SQ (See drawing on page: 5-248)					
010	2674271-0000		1	PUSHER	
020	2674270-0000		1	PUSHER	
040	2674269-0000		2	NAIL	
220	312105-0295		2	SCREW M6S ISO 4017 M4X20 A470	
250	315105-0136		2	WASHER BRB4,3XRFR	
TPA 0750SQ (See drawing on page: 5-246)					
010	2647094-0000		1	PUSHER	
020	2647093-0000		1	PUSHER	
040	2647097-0000		2	NAIL	
050	2658247-0000		6	WASHER	
060	2647100-0000		4	VOLUME BULGE	
090	2698319-0000		2	BLOCK	
200	312155-0289		8	SCREW DIN 7991 MF6S M4X10 A4 70	
220	312155-0293		2	SCREW DIN 7991 MF6S M4X16 A4 70	
240	312155-0287		4	SCREW DIN 7991 MF6S M4X8 A4 70	
TPA 1000SQ (See drawing on page: 5-246)					
010	2647096-0000		1	PUSHER	
020	2647095-0000		1	PUSHER	
040	2647097-0000		2	NAIL	
050	2658247-0000		6	WASHER	
060	1523467-0000		2	VOLUME BULGE	
090	2698319-0000		2	BLOCK	
100	2658263-0000		1	VOLUME BULGE	
110	2658264-0000		1	VOLUME BULGE	
200	312155-0289		8	SCREW DIN 7991 MF6S M4X10 A4 70	
220	312155-0293		2	SCREW DIN 7991 MF6S M4X16 A4 70	
240	312155-0287		4	SCREW DIN 7991 MF6S M4X8 A4 70	
Common Parts					
070	2647098-0000		2	BLOCK	
080	2647113-0000		2	BUSHING	
210	312115-0372		4	SCREW ISO4762 M6X25 A4 80	

Pos	Part No	UN	Qty	Description	Page No

DROP CHUTE CRADLE

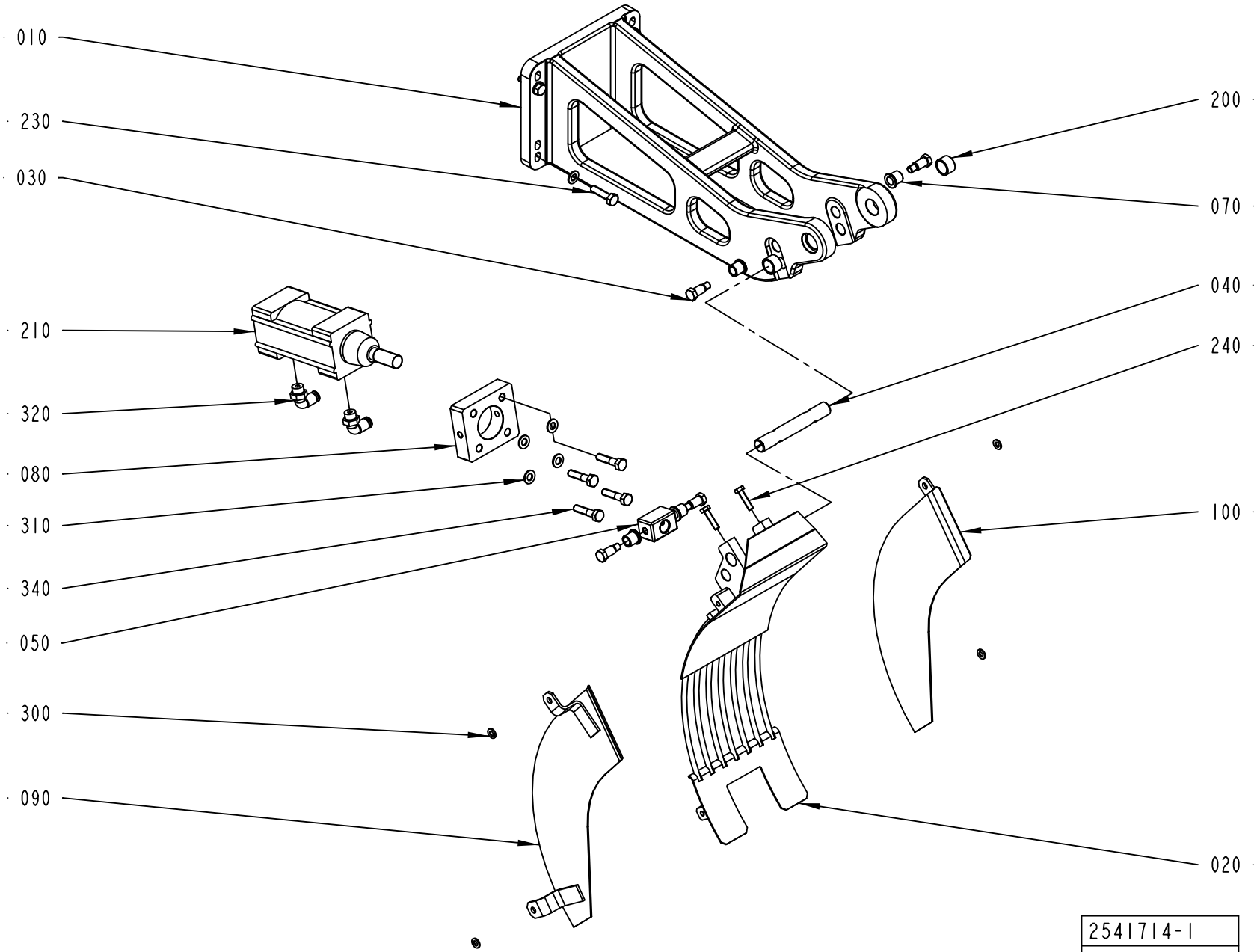

ECM: 267803 - 20060702
Group number: 2541714-0100
Assembly Drawing: 2541714-1_1_AA

This list covers pages from 5-250 to 5-253

Pos	Part No	UN	Qty	Description	Page No
TPA 1000SQ NOQC, TPA 1000SQ QC, TPA 0750SQ QC (See drawing on page: 5-250)					
020	1348920-0000		1	CRADLE	
090	1517472-0000		1	SIDE PLATE	
100	1517473-0000		1	SIDE PLATE	
300	315105-0153		4	WASHER BRB6,4X12RFR	
TBA 0200B QC, TBA 0330S QC, TBA 0250B QC (See drawing on page: 5-250)					
020	2751788-0000		1	CRADLE	
090	2650807-0000		1	SIDE PLATE	
100	2650808-0000		1	SIDE PLATE	
300	315105-0153		4	WASHER BRB6,4X12RFR	
TBA 0200SQ, TBA 0250SQ (See drawing on page: 5-252)					
020	2751788-0000		1	CRADLE	
030	449190-0000		4	SHAFT	
070	1478928-0000		4	BUSHING	
090	1285023-0000		1	SIDE PLATE	
100	1285022-0000		1	SIDE PLATE	
TBA 0500B QC (See drawing on pages: 5-250)					
020	2751788-0000		1	CRADLE	
090	2605993-0000		1	SIDE PLATE	
100	2605994-0000		1	SIDE PLATE	
TBA 0500S, TBA 1000SQ, TBA 0250S, TBA 0200S, TBA 0200M, TPA 0330SQ, TPA 0500SQ, TBA 0500B NOQC, TBA 1000B NOQC, TBA 1000S STDA7, TBA 1000S NOMOLDEDCAP, TBA 0200B NOQC, TBA 0330S NOQC, TBA 0250B NOQC, TPA 0200SQ QC, TPA 0250SQ NOQC (See drawing on page: 5-250)					
020	2751788-0000		1	CRADLE	
030	449190-0000		4	SHAFT	
070	1478928-0000		4	BUSHING	
090	1285023-0000		1	SIDE PLATE	
100	1285022-0000		1	SIDE PLATE	
300	315105-0153		4	WASHER BRB6,4X12RFR	
TBA 1000B QC (See drawing on page: 5-250)					
020	2751788-0000		1	CRADLE	
090	1285023-0000		1	SIDE PLATE	
100	1285022-0000		1	SIDE PLATE	
TBA 1000S LIGHTCAP (See drawing on page: 5-250)					
020	2748115-0000		1	CRADLE	
030	449190-0000		4	SHAFT	
070	1478928-0000		4	BUSHING	
090	1285023-0000		1	SIDE PLATE	
100	1285022-0000		1	SIDE PLATE	
300	315105-0153		4	WASHER BRB6,4X12RFR	
TBA 1500S (See drawing on page: 5-250)					
020	1348920-0000		1	CRADLE	
090	1348854-0000		1	PLATE	
100	1349017-0000		1	PLATE	
300	315105-0153		4	WASHER BRB6,4X12RFR	
TBA 1890S QC, TBA 2000S QC (See drawing on page: 5-250)					
020	2665204-0000		1	CRADLE	
090	2665205-0000		1	PLATE	
100	2665206-0000		1	PLATE	
TPA 0250SQ QC (See drawing on page: 5-250)					
020	2751788-0000		1	CRADLE	
090	1285023-0000		1	SIDE PLATE	
100	1285022-0000		1	SIDE PLATE	
300	315105-0153		4	WASHER BRB6,4X12RFR	
Common Parts					
010	2540823-0000		1	BRACKET	
040	1144579-0000		1	AXLE	
050	1144577-0000		1	BLOCK	
080	2594886-0000		1	PLATE	
200	321116-0234		2	BEARING BUSH W/O FLANGE, 16X20X12 MM	
210	90450-0504		1	DOUBLE ACTING, PROFILE, CYL 50-25	
230	312105-0455		4	SCREW M6S ISO 4017 M8X30 A480	
240	312105-0372		2	SCREW M6S ISO 4017 M6X25 A480	
310	315105-0165		8	WASHER BRB8,4X16RFR	
320	90458-2957		2	ELBOW PIPE JOINT, EXT.THREAD, D=6MM-G1/4	
340	312105-0457		4	SCREW M6S ISO 4014 M8X35 A480	

Machine Type | Group Description | Used-In | Group Number | Page No

DROP CHUTE CRADLE

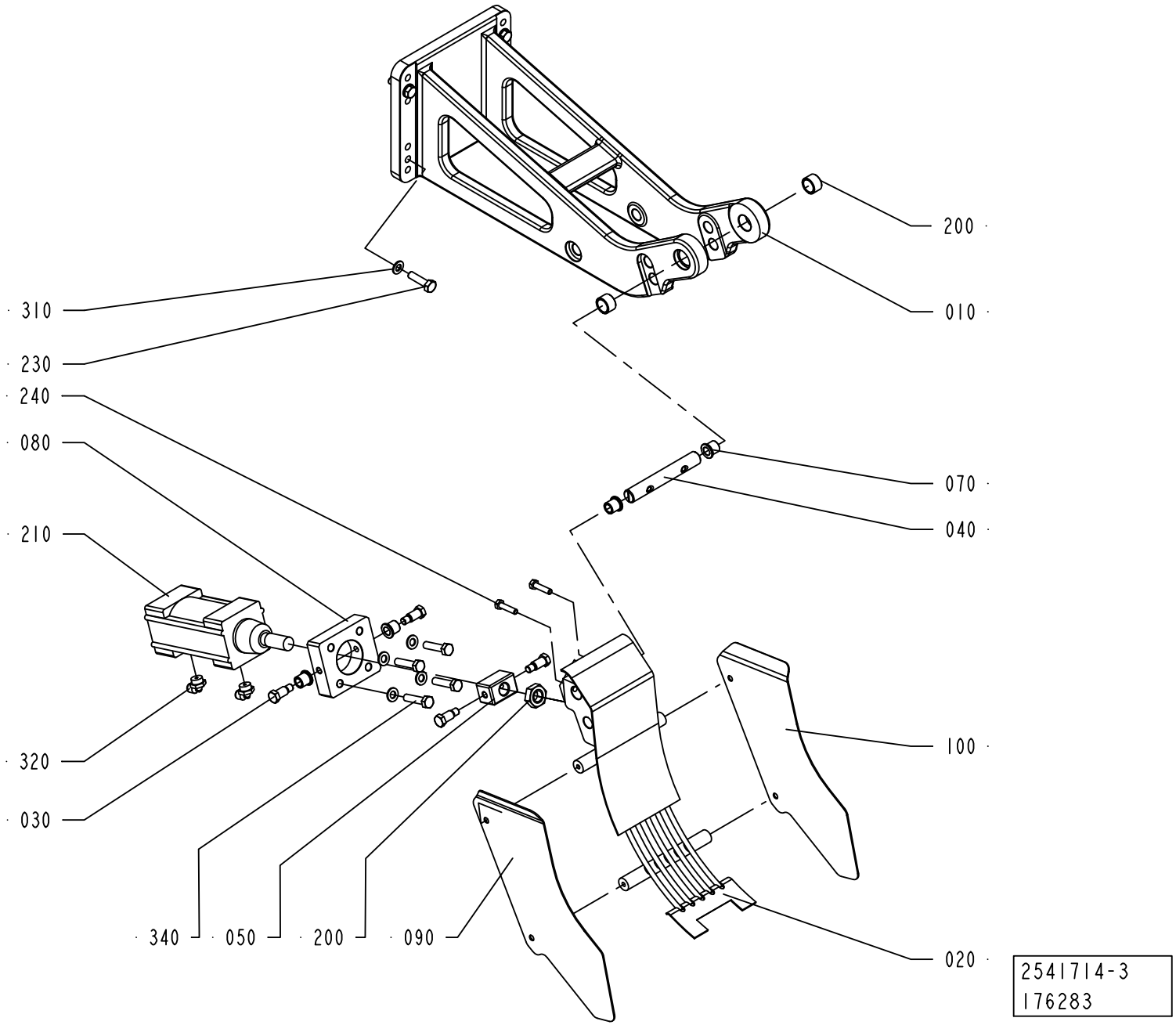

ECM: 267803 - 20060702
Group number: 2541714-0100
Assembly Drawing: 2541714-3_1_AA

This list covers pages from 5-250 to 5-253

Pos	Part No	UN	Qty	Description	Page No
TPA 1000SQ NOQC, TPA 1000SQ QC, TPA 0750SQ QC (See drawing on page: 5-250)					
020	1348920-0000		1	CRADLE	
090	1517472-0000		1	SIDE PLATE	
100	1517473-0000		1	SIDE PLATE	
300	315105-0153		4	WASHER BRB6,4X12RFR	
TBA 0200B QC, TBA 0330S QC, TBA 0250B QC (See drawing on page: 5-250)					
020	2751788-0000		1	CRADLE	
090	2650807-0000		1	SIDE PLATE	
100	2650808-0000		1	SIDE PLATE	
300	315105-0153		4	WASHER BRB6,4X12RFR	
TBA 0200SQ, TBA 0250SQ (See drawing on page: 5-252)					
020	2751788-0000		1	CRADLE	
030	449190-0000		4	SHAFT	
070	1478928-0000		4	BUSHING	
090	1285023-0000		1	SIDE PLATE	
100	1285022-0000		1	SIDE PLATE	
TBA 0500B QC (See drawing on pages: 5-250)					
020	2751788-0000		1	CRADLE	
090	2605993-0000		1	SIDE PLATE	
100	2605994-0000		1	SIDE PLATE	
TBA 0500S, TBA 1000SQ, TBA 0250S, TBA 0200S, TBA 0200M, TPA 0330SQ, TPA 0500SQ, TBA 0500B NOQC, TBA 1000B NOQC, TBA 1000S STDA7, TBA 1000S NOMOLDEDCAP, TBA 0200B NOQC, TBA 0330S NOQC, TBA 0250B NOQC, TPA 0200SQ QC, TPA 0250SQ NOQC (See drawing on page: 5-250)					
020	2751788-0000		1	CRADLE	
030	449190-0000		4	SHAFT	
070	1478928-0000		4	BUSHING	
090	1285023-0000		1	SIDE PLATE	
100	1285022-0000		1	SIDE PLATE	
300	315105-0153		4	WASHER BRB6,4X12RFR	
TBA 1000B QC (See drawing on page: 5-250)					
020	2751788-0000		1	CRADLE	
090	1285023-0000		1	SIDE PLATE	
100	1285022-0000		1	SIDE PLATE	
TBA 1000S LIGHTCAP (See drawing on page: 5-250)					
020	2748115-0000		1	CRADLE	
030	449190-0000		4	SHAFT	
070	1478928-0000		4	BUSHING	
090	1285023-0000		1	SIDE PLATE	
100	1285022-0000		1	SIDE PLATE	
300	315105-0153		4	WASHER BRB6,4X12RFR	
TBA 1500S (See drawing on page: 5-250)					
020	1348920-0000		1	CRADLE	
090	1348854-0000		1	PLATE	
100	1349017-0000		1	PLATE	
300	315105-0153		4	WASHER BRB6,4X12RFR	
TBA 1890S QC, TBA 2000S QC (See drawing on page: 5-250)					
020	2665204-0000		1	CRADLE	
090	2665205-0000		1	PLATE	
100	2665206-0000		1	PLATE	
TPA 0250SQ QC (See drawing on page: 5-250)					
020	2751788-0000		1	CRADLE	
090	1285023-0000		1	SIDE PLATE	
100	1285022-0000		1	SIDE PLATE	
300	315105-0153		4	WASHER BRB6,4X12RFR	
Common Parts					
010	2540823-0000		1	BRACKET	
040	1144579-0000		1	AXLE	
050	1144577-0000		1	BLOCK	
080	2594886-0000		1	PLATE	
200	321116-0234		2	BEARING BUSH W/O FLANGE, 16X20X12 MM	
210	90450-0504		1	DOUBLE ACTING, PROFILE, CYL 50-25	
230	312105-0455		4	SCREW M6S ISO 4017 M8X30 A480	
240	312105-0372		2	SCREW M6S ISO 4017 M6X25 A480	
310	315105-0165		8	WASHER BRB8,4X16RFR	
320	90458-2957		2	ELBOW PIPE JOINT, EXT.THREAD, D=6MM-G1/4	
340	312105-0457		4	SCREW M6S ISO 4014 M8X35 A480	

Machine Type | Group Description | Used-In | Group Number | Page No

This page is intentionally left blank.

ECM: 272923 - 20060626
Group number: 1517298-0200
Assembly Drawing:

Pos	Part No	UN	Qty	Description	Page No
TBA 0500S, TBA 0500B, TBA 1000S, TBA 1000SQ, TBA 1000B, TBA 0200B, TBA 0250S, TBA 0200S, TBA 0200M, TBA 0250B, TBA 0200SQ, TPA 0250SQ, TPA 0330SQ, TPA 0200SQ, TPA 0500SQ, TBA 0250SQ					
010	1517299-0200		1	INFEED CONVEYOR LONG	**5-257**
TBA 1500S, TPA 1000SQ, TPA 0750SQ					
020	1517300-0300		1	INFEED CONVEYOR SHORT	**5-261**
TBA 1890S, TBA 2000S					
030	2678710-0100		1	INFEED CONVEYOR SHORT	**5-263**

Pos	Part No	UN	Qty	Description	Page No

INFEED CONVEYOR LONG

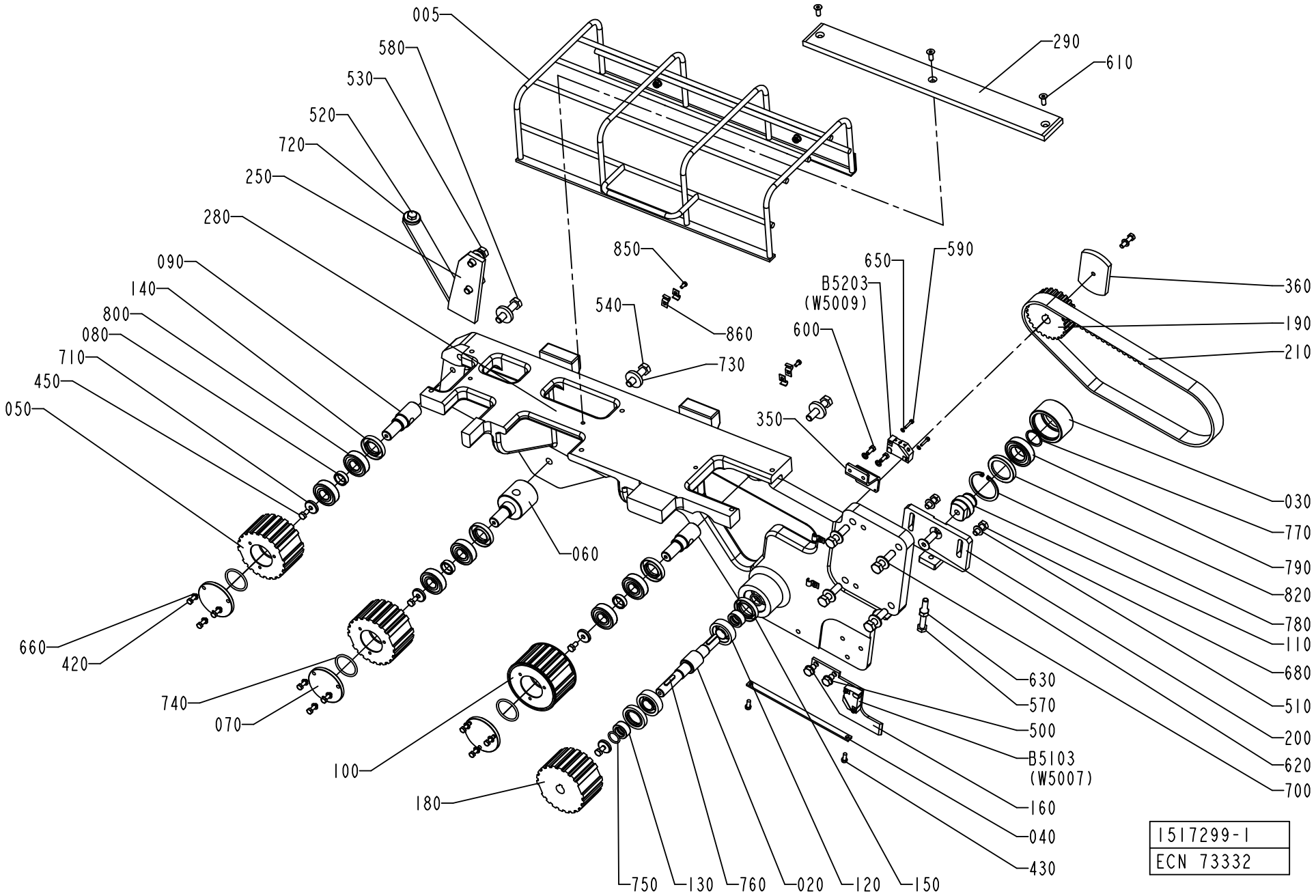

ECM: 217689 - 20051017
Group number: 1517299-0200
Assembly Drawing: 1517299-1_1_AA

Pos	Part No	UN	Qty	Description	Page No
A3/FLEX					
250	2552445-0000		1	SUPPORT	
360	1347410-0000		1	ACTIVATOR	
Common Parts					
005	1144645-0200		1	PROTECTIVE COVER	**5-259**
020	1144470-0000		1	SHAFT	
030	1144581-0000		1	ROLLER	
040	1144593-0000		1	PLATE	
050	1348921-0000		2	TOOTHED PULLEY	
060	1144595-0000		1	ECCENTRIC SHAFT	
070	1144596-0000		3	PLUG	
080	1144597-0000		3	SPACER	
090	1484620-0000		2	SHAFT	
100	1348922-0000		1	TOOTHED PULLEY	
110	1144619-0000		1	SHAFT	
120	90214-0219		2	CYL.ROLLER BEARING, 17X40X12 MM	
130	1144625-0000		2	SPACER	
140	90091-0440		3	RADIAL SEAL 22X40X7 MM DUST LIP	
150	1498068-0000		2	SEAL RING	
160	1144760-0000		1	PLATE	
180	1144784-0000		1	TOOTHED PULLEY	
190	1144788-0000		1	TOOTHED PULLEY	
200	1144794-0000		1	SUPPORT	
210	1144841-0000		1	TIMING BELT	
280	1347699-0000		1	PLATE	
290	1260941-0000		1	SLIDE	
350	1279688-0000		1	SUPPORT	
420	312105-0329		9	SCREW M6S ISO 4017 M5X16 A480	
430	312105-0327		2	SCREW M6S ISO 4017 M5X12 A480	
450	312105-0366		4	SCREW M6S ISO 4017 M6X12 A480	
500	312105-0447		2	SCREW M6S ISO 4017 M8X12 A480	
510	312105-0451		2	SCREW M6S ISO 4017 M8X20 A480	
520	312105-0453		1	SCREW M6S ISO 4017 M8X25 A480	
530	312105-0495		2	SCREW M6S ISO 4017 M10X30 A480	
540	312109-0499		5	SCREW M6S ISO 4017 M10X40 A480	
570	312109-0463		1	SCREW M6S ISO 4017 M8X60 A480	
580	312109-0500		2	SCREW M6S ISO 4017 M10X45 A480	
590	312115-0228		4	SCREW ISO4762 M3X16 A4 80	
600	312125-0327		2	SCREW ISO 1207 M5X12 A4	
610	312151-0368		3	SCREW EN 10642 MF6S M6X16 10.9 EL.PL	
620	312155-0495		1	SCREW DIN 7991 MF6S M10X30 A4 70	
630	312605-0318		1	HEXAGON NUT, M6M M8 A280	
650	315105-0124		4	WASHER BRB3,2X6RFR	
660	315105-0146		11	WASHER BRB5,3X10RFR	
680	315105-0165		4	WASHER BRB8,4X16RFR	
700	315105-0173		6	WASHER BRB10,5X22RFR	
710	315125-0153		4	WASHER TBRSB 6,4X22X4 A4	
720	315125-0165		1	WASHER TBRSB 8,4X26X5 A4	
730	315125-0173		3	WASHER TBRSB 10,5X28X6 A4	
740	315202-0221		3	O-RING 34,2X3 MM	
750	315202-0267		2	O-RING 16,3X2,4 MM	
760	315705-0202		2	PARALLEL KEY W ROUND ENDS 5X5X25MM	
770	315751-0119		1	RETAINING RING FOR SHAFT DIN 471 25 A2	
780	90141-0019		1	RETAINING RING FOR BORE DIN 472 50 A2	
790	321308-0205		1	BALL BEARING, 25X47X12MM	
800	321313-0103		6	BALL BEARING, 17X40X12MM	
820	90091-0297		1	RADIAL SEAL 35X47X7 MM DUST LIP	
850	312125-0287		4	SCREW ISO 1207 M4X8 A4	
860	90165-0057		6	PIPE CLIP FOR TUBE D=6 MM	
B5103	90044-0194		1	PROX.SW. IN5329/IN3002-BPKG(EX90044-104)	
B5203	90044-0194		1	PROX.SW. IN5329/IN3002-BPKG(EX90044-104)	

Machine Type | Group Description | Used-In | Group Number | Page No

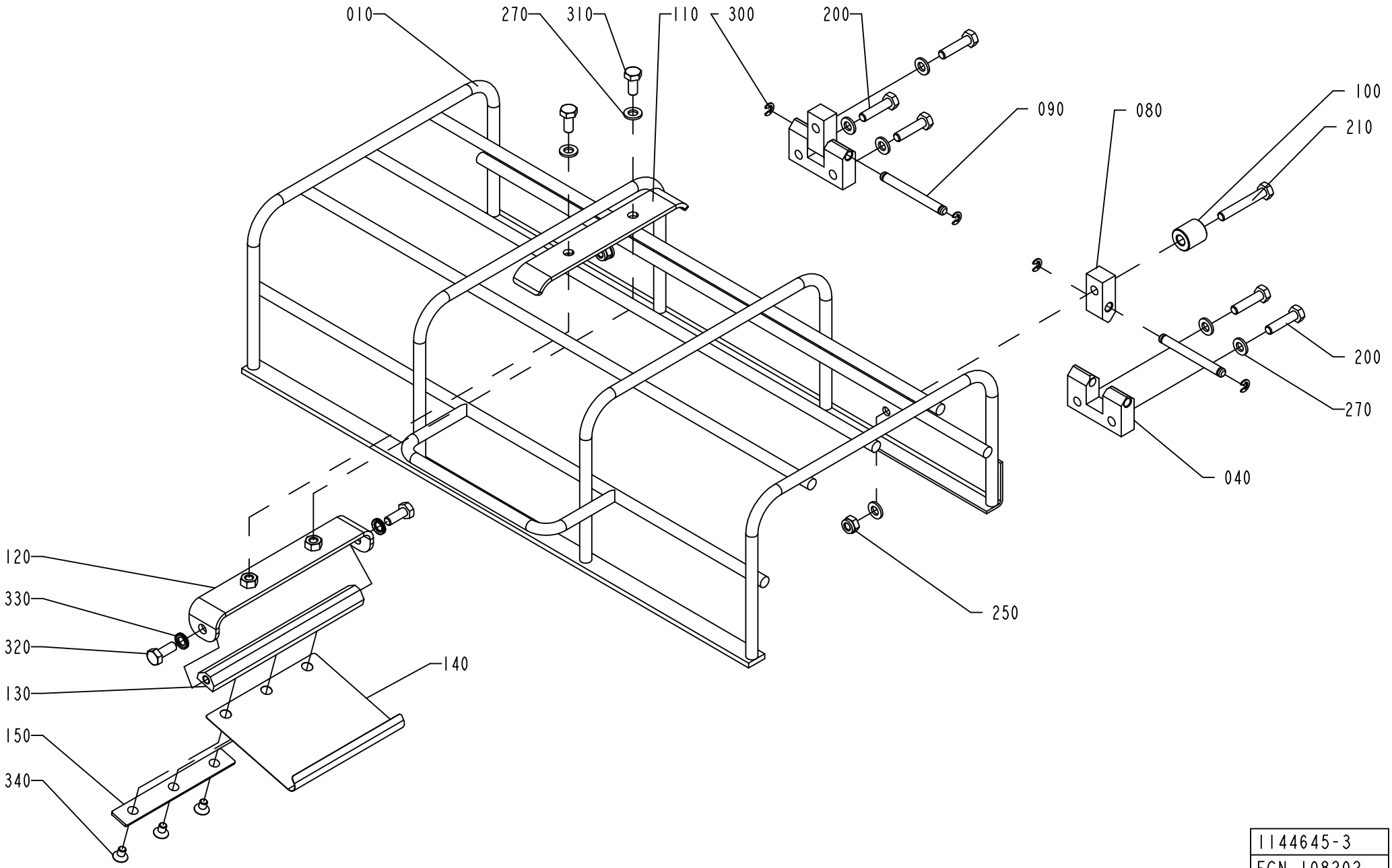

1144645-3
ECN 108202

ECM: 270838 - 20060626
Group number: 1144645-0200
Assembly Drawing: 1144645-3_1_AC

Pos	Part No	UN	Qty	Description	Page No
A3/FLEX					
110	1499476-0000		1	HOLDER	
120	2527792-0000		1	SUPPORT	
130	2527793-0000		1	SHAFT	
140	2530418-0000		1	SPRING	
150	2540612-0000		1	PLATE	
270	315105-0153		9	WASHER BRB6,4X12RFR	
310	312105-0367		2	SCREW M6S ISO 4017 M6X14 A480	
320	312105-0368		2	SCREW M6S ISO 4017 M6X16 A480	
330	90062-0061		2	LOCK WASHER NORD-LOCK,6,5/10,8, T=2,2	
340	312155-0323		3	SCREW DIN 7991 MF6S M5X8 A4 70	
Common Parts					
010	1260894-0000		1	PROTECTION	
040	1144667-0000		2	HINGE	
080	1144668-0000		2	HINGE	
090	1144669-0000		2	PIN	
100	1360149-0000		1	SPACER	
200	312105-0372		5	SCREW M6S ISO 4017 M6X25 A480	
210	312105-0378		1	SCREW M6S ISO 4014 M6X40 A480	
250	312812-0316		2	HEXAGON NUT, NY-LOCK M6 A480	
300	315755-0106		4	RETAINING RING SHAFT DIN 6799 4 A2	

Pos	Part No	UN	Qty	Description	Page No

INFEED CONVEYOR SHORT

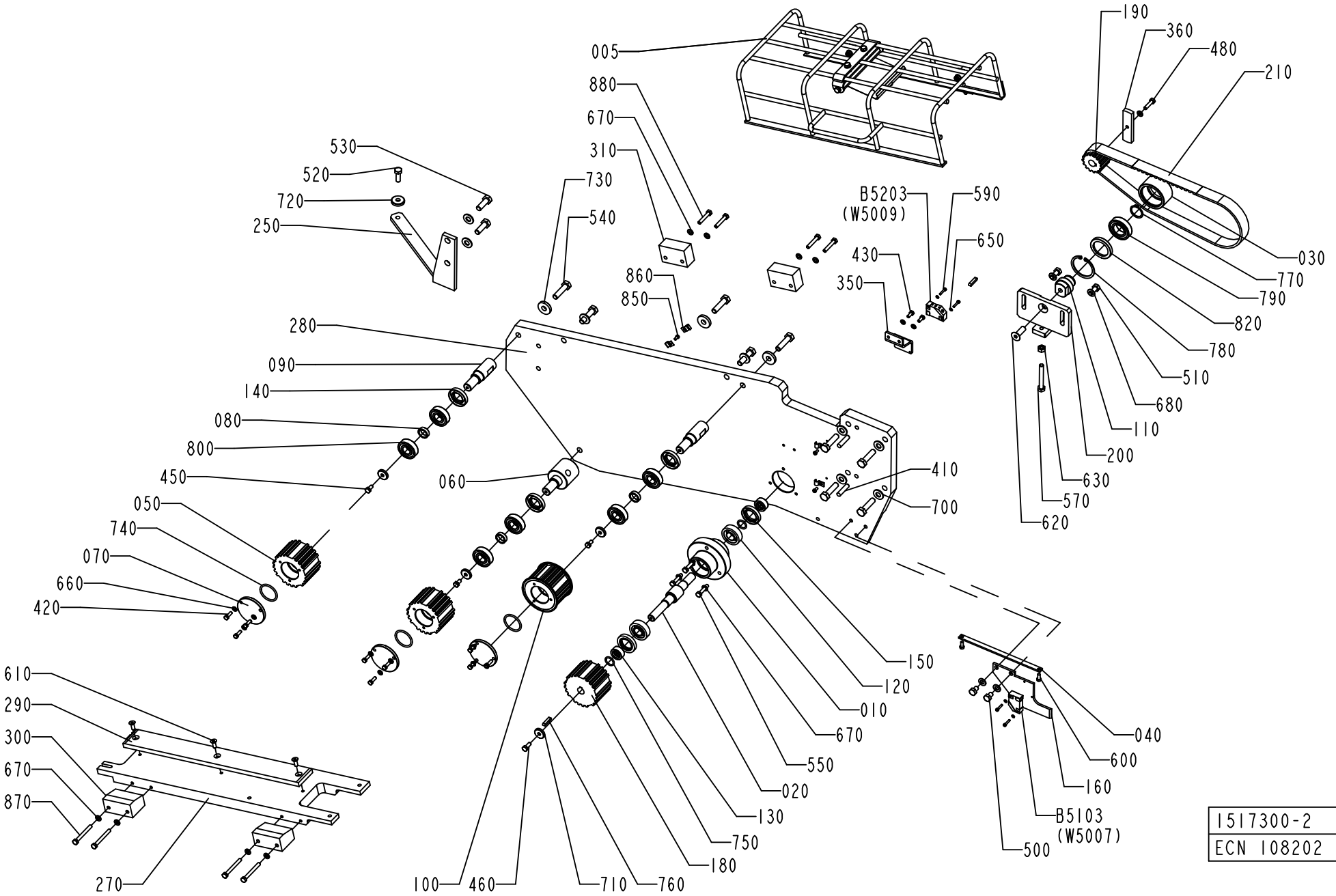

1517300-2
ECN 108202

ECM: 203278 - 20050329
Group number: 1517300-0300
Assembly Drawing: 1517300-2_1_AA

Pos	Part No	UN	Qty	Description	Page No
A3/FLEX					
250	2572563-0000		1	SUPPORT	
Common Parts					
005	1144645-0200		1	PROTECTIVE COVER	**5-259**
010	1144468-0000		1	BEARING HOUSING	
020	1144470-0000		1	SHAFT	
030	1144581-0000		1	ROLLER	
040	1144593-0000		1	PLATE	
050	2547015-0000		2	TOOTHED PULLEY	
060	1144595-0000		1	ECCENTRIC SHAFT	
070	1144596-0000		3	PLUG	
080	1144597-0000		3	SPACER	
090	1144598-0000		2	SHAFT	
100	2547017-0000		1	TOOTHED PULLEY	
110	1144619-0000		1	SHAFT	
120	90214-0219		2	CYL.ROLLER BEARING, 17X40X12 MM	
130	1144625-0000		2	SPACER	
140	90091-0404		3	RADIAL SEAL 22X40X7 MM DUST LIP	
150	90091-0406		2	RADIAL SEAL 25X40X7 MM DUST LIP	
160	1144760-0000		1	PLATE	
180	927859-0000		1	TOOTHED PULLY	
190	1282681-0000		1	TOOTHED PULLEY	
200	1144794-0000		1	SUPPORT	
210	1144841-0000		1	TIMING BELT	
270	1348957-0000		1	BRACKET	
280	2547187-0000		1	PLATE	
290	1348963-0000		1	SLIDE	
300	1285956-0000		2	BLOCK	
310	1285955-0000		2	PLATE	
350	1279688-0000		1	SUPPORT	
360	1279689-0000		1	ACTIVATOR	
410	311103-0407		2	PARALLEL PIN ISO 2338 8M6X35 A1	
420	312105-0329		9	SCREW M6S ISO 4017 M5X16 A480	
430	312105-0327		2	SCREW M6S ISO 4017 M5X12 A480	
450	312105-0366		3	SCREW M6S ISO 4017 M6X12 A480	
460	312105-0368		1	SCREW M6S ISO 4017 M6X16 A480	
480	312105-0372		1	SCREW M6S ISO 4017 M6X25 A480	
500	312105-0447		2	SCREW M6S ISO 4017 M8X12 A480	
510	312105-0451		2	SCREW M6S ISO 4017 M8X20 A480	
520	312105-0453		1	SCREW M6S ISO 4017 M8X25 A480	
530	312105-0495		2	SCREW M6S ISO 4017 M10X30 A480	
540	312109-0499		9	SCREW M6S ISO 4017 M10X40 A480	
550	312109-0374		3	SCREW M6S ISO 4017 M6X30 A480	
570	312109-0463		1	SCREW M6S ISO 4017 M8X60 A480	
590	312115-0228		4	SCREW ISO4762 M3X16 A4 80	
600	312125-0327		2	SCREW ISO 1207 M5X12 A4	
610	312151-0368		3	SCREW EN 10642 MF6S M6X16 10.9 EL.PL	
620	312155-0495		1	SCREW DIN 7991 MF6S M10X30 A4 70	
630	312605-0318		1	HEXAGON NUT, M6M M8 A280	
650	315105-0124		4	WASHER BRB3,2X6RFR	
660	315105-0146		11	WASHER BRB5,3X10RFR	
670	315105-0153		12	WASHER BRB6,4X12RFR	
680	315105-0165		4	WASHER BRB8,4X16RFR	
700	315105-0173		8	WASHER BRB10,5X22RFR	
710	315125-0153		4	WASHER TBRSB 6,4X22X4 A4	
720	315125-0165		1	WASHER TBRSB 8,4X26X5 A4	
730	315125-0173		3	WASHER TBRSB 10,5X28X6 A4	
740	315202-0221		3	O-RING 34,2X3 MM	
750	315202-0267		2	O-RING 16,3X2,4 MM	
760	315705-0202		2	PARALLEL KEY W ROUND ENDS 5X5X25MM	
770	315751-0119		1	RETAINING RING FOR SHAFT DIN 471 25 A2	
780	90141-0019		1	RETAINING RING FOR BORE DIN 472 50 A2	
790	321308-0205		1	BALL BEARING, 25X47X12MM	
800	321313-0103		6	BALL BEARING, 17X40X12MM	
820	90091-0297		1	RADIAL SEAL 35X47X7 MM DUST LIP	
850	312125-0287		4	SCREW ISO 1207 M4X8 A4	
860	90165-0057		6	PIPE CLIP FOR TUBE D=6 MM	
870	312105-0381		4	SCREW M6S ISO 4014 M6X55 A480	
880	312105-0376		4	SCREW M6S ISO 4014 M6X35 A480	
B5103	90044-0194		1	PROX.SW. IN5329/IN3002-BPKG(EX90044-104)	
B5203	90044-0194		1	PROX.SW. IN5329/IN3002-BPKG(EX90044-104)	

Machine Type | Group Description | Used-In | Group Number | Page No

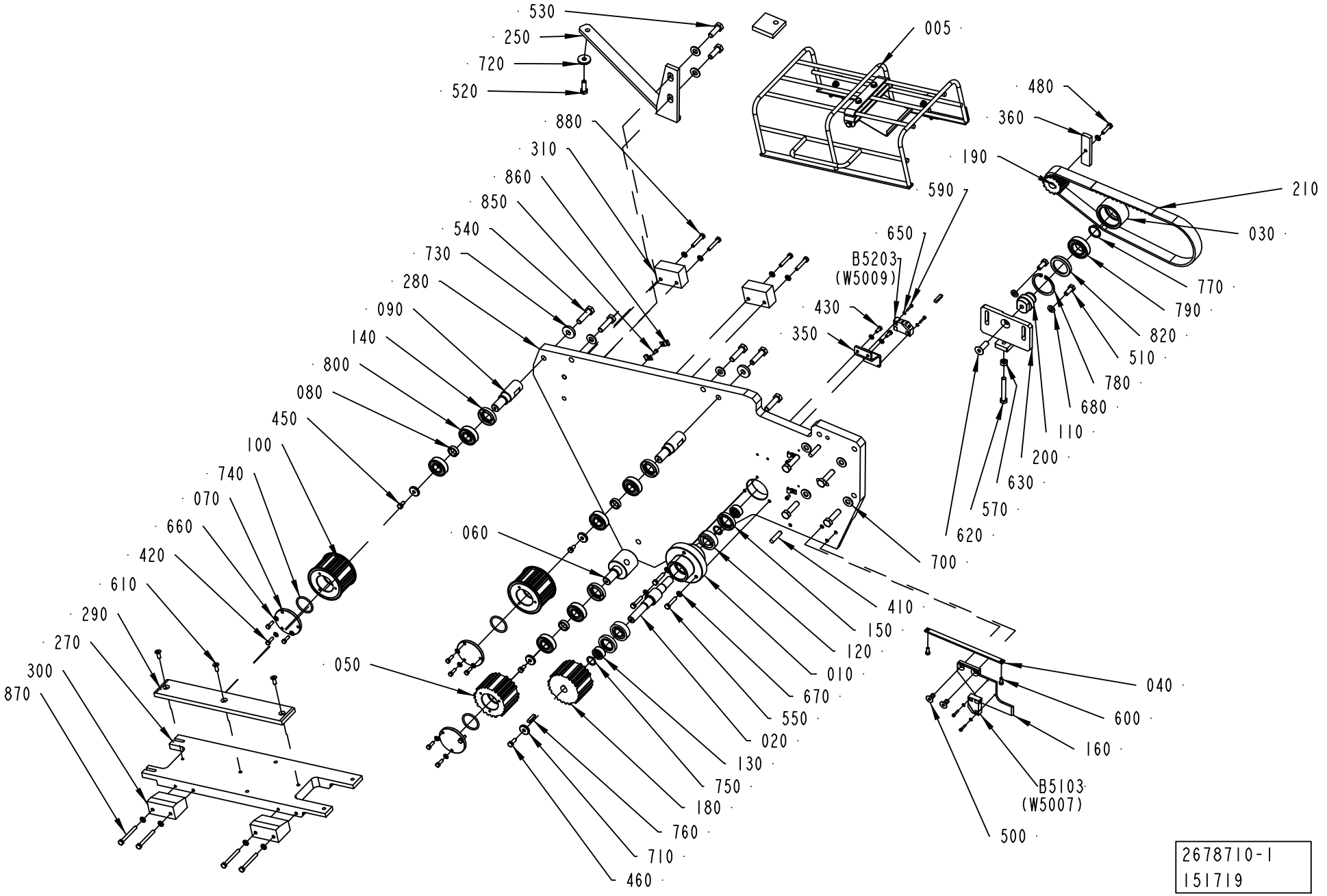
530
250
720
520
880
310
860
850
540
730
280
090
140
800
080
450
100
740
070
660
420
610
290
270
300
870
005
590
480
360
190
210
030
770
790
820
510
780
680
110
200
630
570
620
650
B5203
(W5009)
430
350
700
410
150
120
010
670
550
020
130
750
180
760
710
460
060
050
040
600
160
B5103
(W5007)
500
2678710-1
151719

ECM: 190931 - 20041104
Group number: 2678710-0100
Assembly Drawing: 2678710-1_1_AA

Pos	Part No	UN	Qty	Description	Page No
A3/FLEX					
250	2678708-0000		1	SUPPORT	
Common Parts					
005	2678709-0100		1	PROTECTIVE COVER	**5-265**
010	1144468-0000		1	BEARING HOUSING	
020	1144470-0000		1	SHAFT	
030	1144581-0000		1	ROLLER	
040	1144593-0000		1	PLATE	
050	2547015-0000		1	TOOTHED PULLEY	
060	1144595-0000		1	ECCENTRIC SHAFT	
070	1144596-0000		3	PLUG	
080	1144597-0000		3	SPACER	
090	1144598-0000		2	SHAFT	
100	2547017-0000		2	TOOTHED PULLEY	
110	1144619-0000		1	SHAFT	
120	90214-0219		2	CYL.ROLLER BEARING, 17X40X12 MM	
130	1144625-0000		2	SPACER	
140	90091-0404		3	RADIAL SEAL 22X40X7 MM DUST LIP	
150	90091-0406		2	RADIAL SEAL 25X40X7 MM DUST LIP	
160	2610764-0000		1	PLATE	
180	927859-0000		1	TOOTHED PULLY	
190	1282681-0000		1	TOOTHED PULLEY	
200	1144794-0000		1	SUPPORT	
210	1144841-0000		1	TIMING BELT	
270	2665197-0000		1	BRACKET	
280	2678753-0000		1	PLATE	
290	2665199-0000		1	SLIDE	
300	1285956-0000		2	BLOCK	
310	1285955-0000		2	PLATE	
350	1279688-0000		1	SUPPORT	
360	1279689-0000		1	ACTIVATOR	
410	311103-0407		2	PARALLEL PIN ISO 2338 8M6X35 A1	
420	312105-0329		9	SCREW M6S ISO 4017 M5X16 A480	
430	312105-0327		2	SCREW M6S ISO 4017 M5X12 A480	
450	312105-0366		3	SCREW M6S ISO 4017 M6X12 A480	
460	312105-0368		1	SCREW M6S ISO 4017 M6X16 A480	
480	312105-0372		1	SCREW M6S ISO 4017 M6X25 A480	
500	312155-0449		2	SCREW DIN 7991 MF6S M8X16 A4 70	
510	312105-0451		2	SCREW M6S ISO 4017 M8X20 A480	
520	312105-0453		1	SCREW M6S ISO 4017 M8X25 A480	
530	312105-0495		2	SCREW M6S ISO 4017 M10X30 A480	
540	312109-0499		9	SCREW M6S ISO 4017 M10X40 A480	
550	312109-0374		3	SCREW M6S ISO 4017 M6X30 A480	
570	312109-0463		1	SCREW M6S ISO 4017 M8X60 A480	
590	312115-0228		4	SCREW ISO4762 M3X16 A4 80	
600	312125-0327		2	SCREW ISO 1207 M5X12 A4	
610	312151-0368		3	SCREW EN 10642 MF6S M6X16 10.9 EL.PL	
620	312155-0495		1	SCREW DIN 7991 MF6S M10X30 A4 70	
630	312605-0318		1	HEXAGON NUT, M6M M8 A280	
650	315105-0124		4	WASHER BRB3,2X6RFR	
660	315105-0146		11	WASHER BRB5,3X10RFR	
670	315105-0153		12	WASHER BRB6,4X12RFR	
680	315105-0165		2	WASHER BRB8,4X16RFR	
700	315105-0173		8	WASHER BRB10,5X22RFR	
710	315125-0153		4	WASHER TBRSB 6,4X22X4 A4	
720	315125-0165		1	WASHER TBRSB 8,4X26X5 A4	
730	315125-0173		3	WASHER TBRSB 10,5X28X6 A4	
740	315202-0221		3	O-RING 34,2X3 MM	
750	315202-0267		2	O-RING 16,3X2,4 MM	
760	315705-0202		2	PARALLEL KEY W ROUND ENDS 5X5X25MM	
770	315751-0119		1	RETAINING RING FOR SHAFT DIN 471 25 A2	
780	90141-0019		1	RETAINING RING FOR BORE DIN 472 50 A2	
790	321308-0205		1	BALL BEARING, 25X47X12MM	
800	321313-0103		6	BALL BEARING, 17X40X12MM	
820	90091-0297		1	RADIAL SEAL 35X47X7 MM DUST LIP	
850	312125-0287		4	SCREW ISO 1207 M4X8 A4	
860	90165-0057		6	PIPE CLIP FOR TUBE D=6 MM	
870	312105-0381		4	SCREW M6S ISO 4014 M6X55 A480	
880	312105-0376		4	SCREW M6S ISO 4014 M6X35 A480	
B5103	90044-0194		1	PROX.SW. IN5329/IN3002-BPKG(EX90044-104)	
B5203	90044-0194		1	PROX.SW. IN5329/IN3002-BPKG(EX90044-104)	

Machine Type	Group Description	Used-In	Group Number	Page No

PROTECTIVE COVER

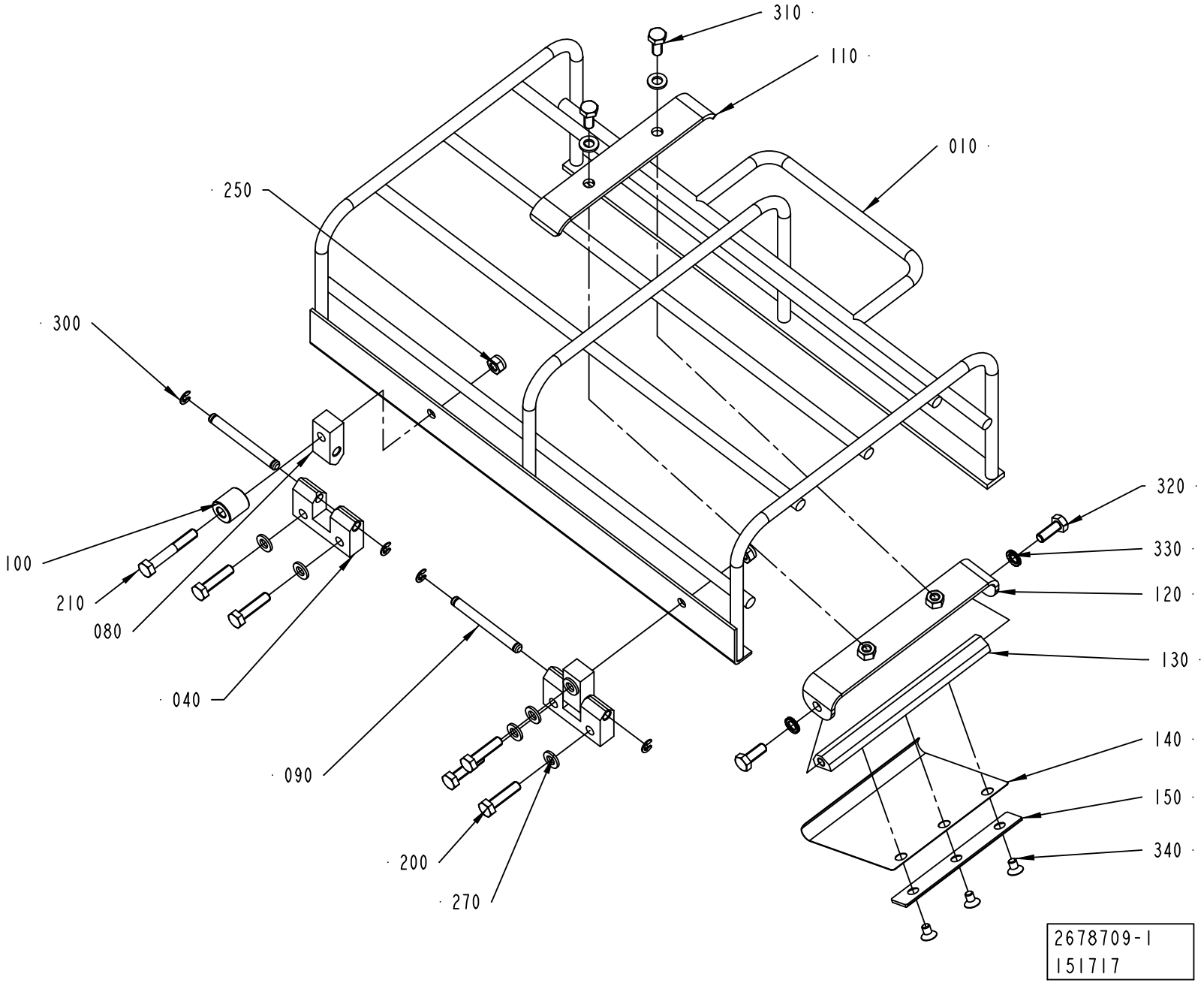

ECM: 190930 - 20041104
Group number: 2678709-0100
Assembly Drawing: 2678709-1_1_AA

Pos	Part No	UN	Qty	Description	Page No
-					
010	2665198-0000		1	PROTECTION	
040	1144667-0000		2	HINGE	
080	1144668-0000		2	HINGE	
090	1144669-0000		2	PIN	
100	1360149-0000		1	SPACER	
110	1499476-0000		1	HOLDER	
120	2527792-0000		1	SUPPORT	
130	2527793-0000		1	SHAFT	
140	2530418-0000		1	SPRING	
150	2540612-0000		1	PLATE	
200	312105-0372		5	SCREW M6S ISO 4017 M6X25 A480	
210	312105-0378		1	SCREW M6S ISO 4014 M6X40 A480	
250	312812-0316		2	HEXAGON NUT, NY-LOCK M6 A480	
270	315105-0153		9	WASHER BRB6,4X12RFR	
300	315755-0106		4	RETAINING RING SHAFT DIN 6799 4 A2	
310	312105-0367		2	SCREW M6S ISO 4017 M6X14 A480	
320	312105-0368		2	SCREW M6S ISO 4017 M6X16 A480	
330	90062-0061		2	LOCK WASHER NORD-LOCK,6,5/10,8, T=2,2	
340	312155-0323		3	SCREW DIN 7991 MF6S M5X8 A4 70	

Pos	Part No	UN	Qty	Description	Page No

MOTOR UNIT

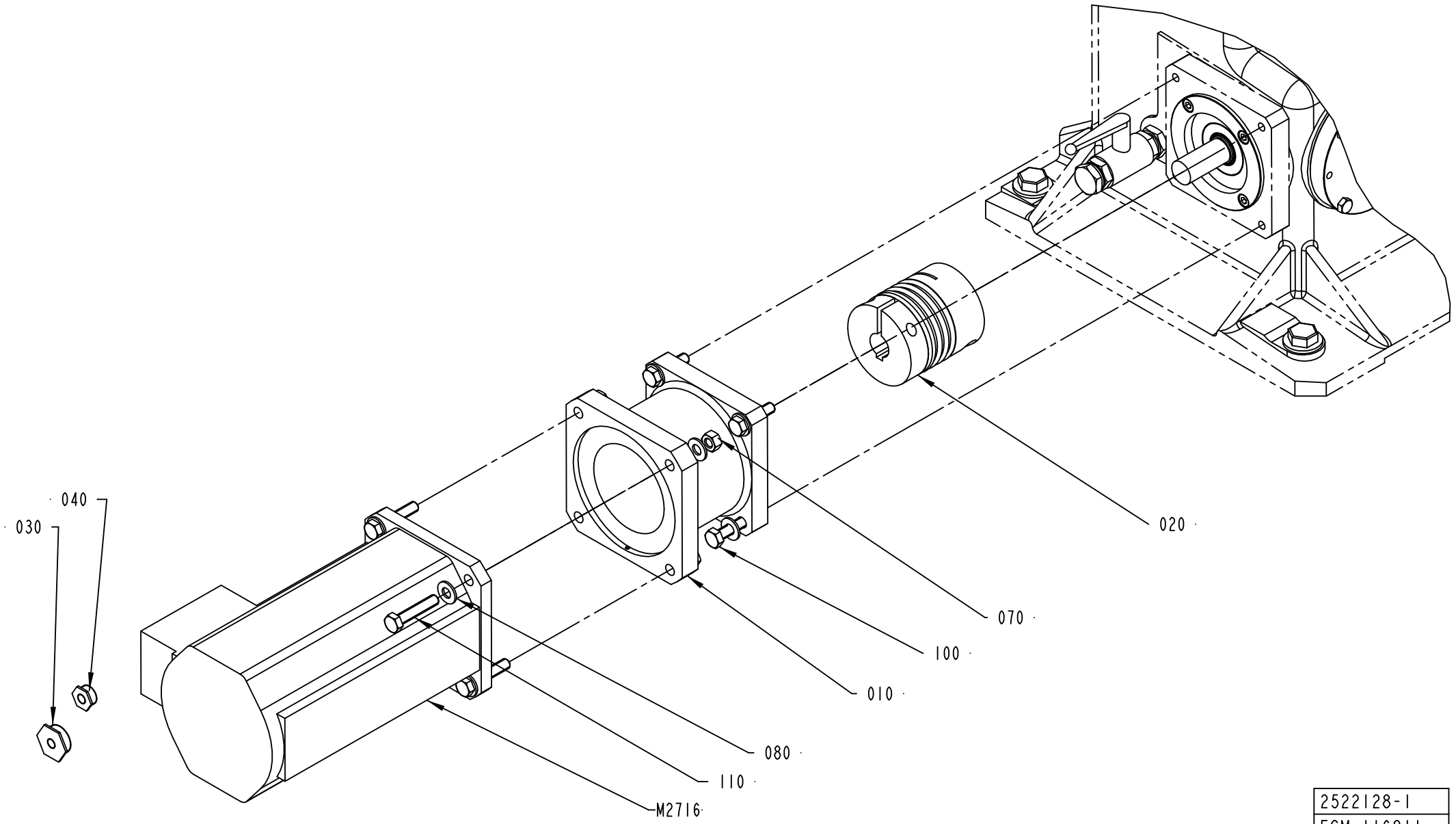

2522128-1
ECM 116811

ECM: 189521 - 20041104
Group number: 2522128-0100
Assembly Drawing: 2522128-1_1_AA

Pos	Part No	UN	Qty	Description	Page No
-					
010	1346882-0000		1	FLANGE	
020	90459-1566		1	BELLOW COUPLING, 24X24 MM	
030	2543473-0000		1	PLUG	
040	2543474-0000		1	PLUG	
070	312605-0320		4	HEXAGON NUT, M6M M10 A280	
080	315105-0173		12	WASHER BRB10,5X22RFR	
100	312109-0499		4	SCREW M6S ISO 4017 M10X40 A480	
110	312109-0501		4	SCREW M6S ISO 4017 M10X50 A480	
M2716	90458-0761		1	SERVO MOTOR EP 165-090-62L3B-X-C33	

Pos	Part No	UN	Qty	Description	Page No

CRANK

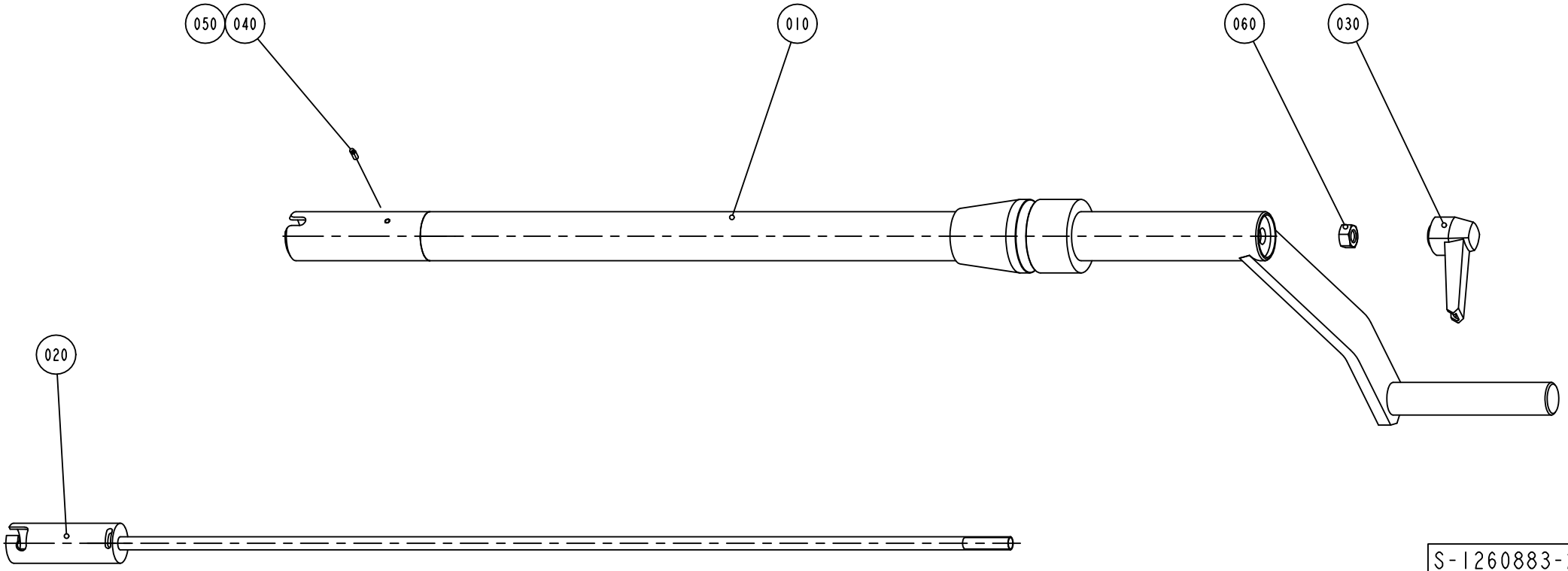

S-1260883-2
ECN 72704

ECM: 181277 - 20041104
Group number: 1260883-0200
Assembly Drawing: 1260883-2_1_AA

Pos	Part No	UN	Qty	Description	Page No
-					
010	1260712-0000		1	CRANK	
020	1140082-0000		1	LOCK SHAFT	
030	90117-0030		1	LOCKING HANDLE, M8/F	
040	90157-0016		1	LOCKING FLUID LOCTITE 242 50 ML	
050	312318-0220		1	SCREW ISO4029 M3X6 A4	
060	312605-0318		1	HEXAGON NUT, M6M M8 A280	

Pos	Part No	UN	Qty	Description	Page No

ELECTRICAL CONNECTION

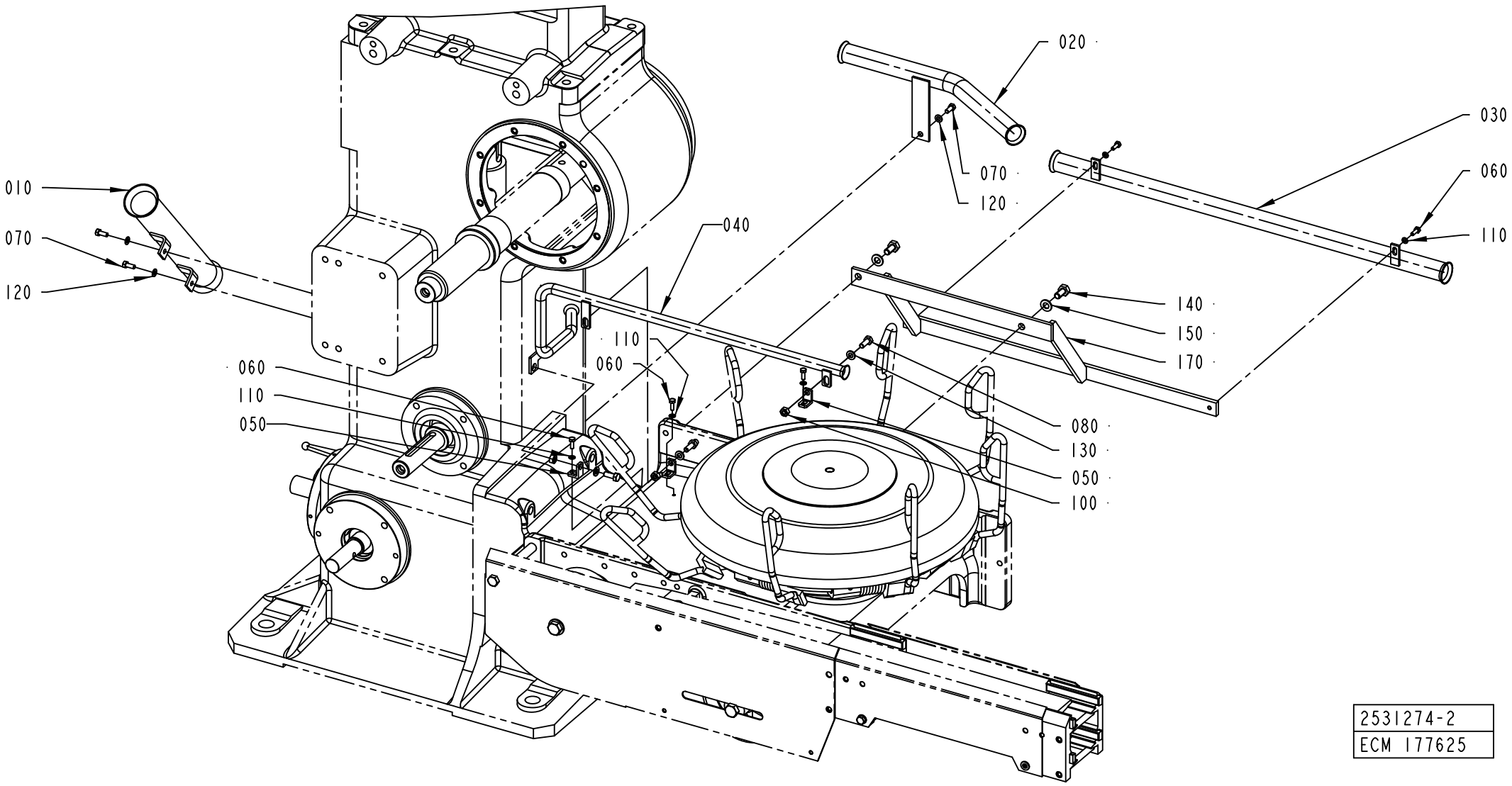

2531274-2
ECM 177625

Pos	Part No	UN	Qty	Description	Page No
TBA 0500S, TBA 0500B, TBA 0330S, TBA 1000S, TBA 1000B, TBA 0200B, TBA 0250S, TBA 0200S, TBA 0200M, TBA 0250B, TBA 1500S (See drawing on page: 5-270)					
010	1279680-0000		1	PIPE	
020	2633439-0000		1	PIPE	
030	2633440-0000		1	PIPE	
040	2693322-0000		1	PIPE	
050	2531276-0000		3	BRACKET	
060	312105-0291		5	SCREW M6S ISO 4017 M4X12 A470	
070	312105-0327		3	SCREW M6S ISO 4017 M5X12 A480	
080	312105-0368		3	SCREW M6S ISO 4017 M6X16 A480	
090	312605-0312		2	HEXAGON NUT, M6M M4 A280	
100	312605-0316		3	HEXAGON NUT, M6M M6 A280	
110	315105-0136		5	WASHER BRB4,3XRFR	
120	315105-0146		3	WASHER BRB5,3X10RFR	
130	315105-0153		3	WASHER BRB6,4X12RFR	
TBA 1000SQ, TBA 0200SQ, TPA 0250SQ, TPA 0330SQ, TPA 0200SQ, TPA 1000SQ, TPA 0500SQ, TPA 0750SQ, TBA 0250SQ (See drawing on page: 5-270)					
010	1279680-0000		1	PIPE	
020	2633439-0000		1	PIPE	
030	2633440-0000		1	PIPE	
040	2693322-0000		1	PIPE	
050	2531276-0000		3	BRACKET	
060	312105-0291		5	SCREW M6S ISO 4017 M4X12 A470	
070	312105-0327		3	SCREW M6S ISO 4017 M5X12 A480	
080	312105-0368		3	SCREW M6S ISO 4017 M6X16 A480	
100	312605-0316		3	HEXAGON NUT, M6M M6 A280	
110	315105-0136		5	WASHER BRB4,3XRFR	
120	315105-0146		3	WASHER BRB5,3X10RFR	
130	315105-0153		3	WASHER BRB6,4X12RFR	
140	312105-0449		2	SCREW M6S ISO 4017 M8X16 A480	
150	315105-0165		2	WASHER BRB8,4X16RFR	
170	2633441-0000		1	BRACKET	
TBA 1890S, TBA 2000S (See drawing on page: 5-272)					
010	1279680-0000		1	PIPE	
020	2633439-0000		1	PIPE	
030	2633440-0000		1	PIPE	
040	2693322-0000		1	PIPE	
050	2531276-0000		3	BRACKET	
060	312105-0291		6	SCREW M6S ISO 4017 M4X12 A470	
070	312105-0327		3	SCREW M6S ISO 4017 M5X12 A480	
080	312105-0368		3	SCREW M6S ISO 4017 M6X16 A480	
090	312605-0312		1	HEXAGON NUT, M6M M4 A280	
100	312605-0316		3	HEXAGON NUT, M6M M6 A280	
110	315105-0136		7	WASHER BRB4,3XRFR	
120	315105-0146		3	WASHER BRB5,3X10RFR	
130	315105-0153		6	WASHER BRB6,4X12RFR	
170	2728241-0000		1	BRACKET	

ELECTRICAL CONNECTION

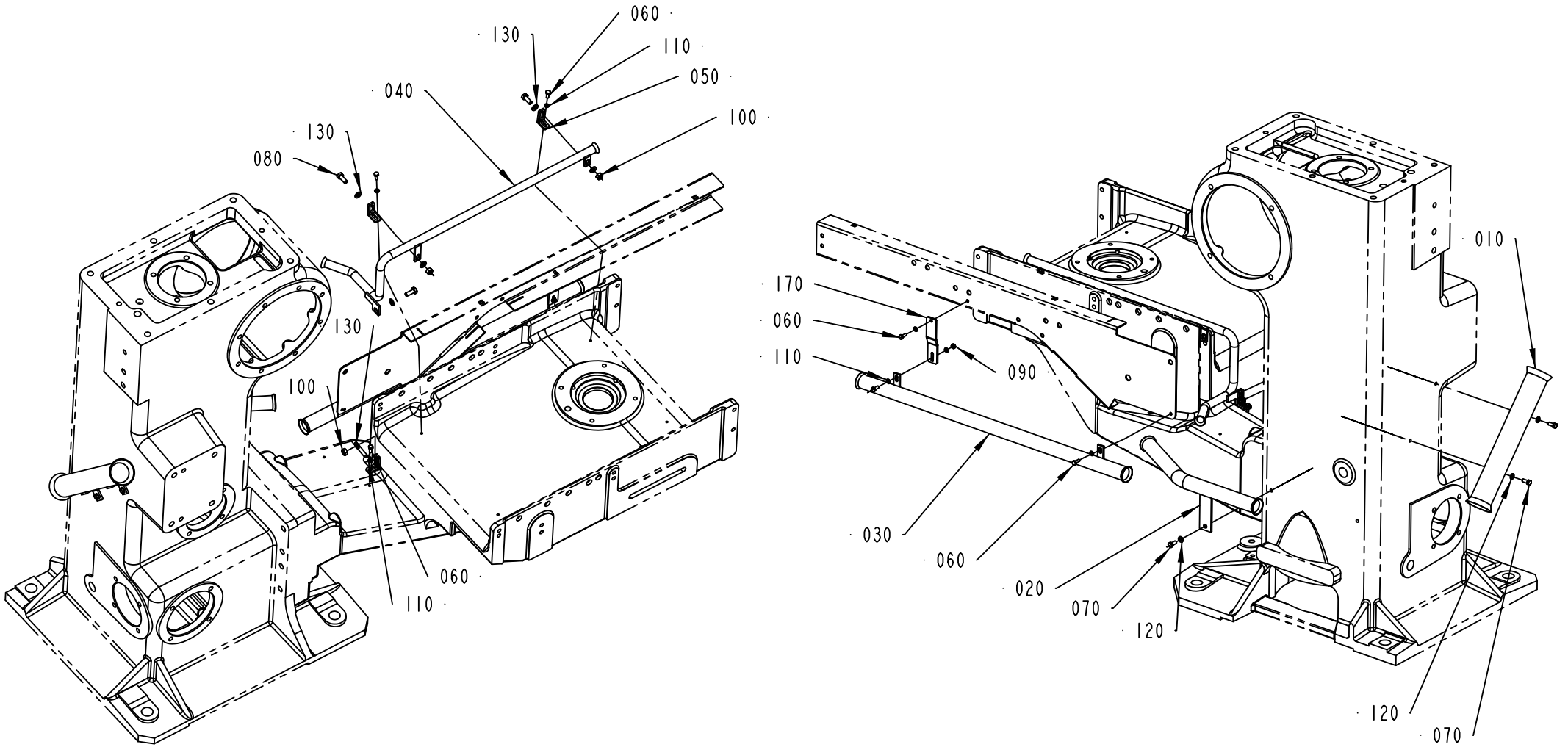

2531274-3
215731

Pos	Part No	UN	Qty	Description	Page No
TBA 0500S, TBA 0500B, TBA 0330S, TBA 1000S, TBA 1000B, TBA 0200B, TBA 0250S, TBA 0200S, TBA 0200M, TBA 0250B, TBA 1500S (See drawing on page: 5-270)					
010	1279680-0000		1	PIPE	
020	2633439-0000		1	PIPE	
030	2633440-0000		1	PIPE	
040	2693322-0000		1	PIPE	
050	2531276-0000		3	BRACKET	
060	312105-0291		5	SCREW M6S ISO 4017 M4X12 A470	
070	312105-0327		3	SCREW M6S ISO 4017 M5X12 A480	
080	312105-0368		3	SCREW M6S ISO 4017 M6X16 A480	
090	312605-0312		2	HEXAGON NUT, M6M M4 A280	
100	312605-0316		3	HEXAGON NUT, M6M M6 A280	
110	315105-0136		5	WASHER BRB4,3XRFR	
120	315105-0146		3	WASHER BRB5,3X10RFR	
130	315105-0153		3	WASHER BRB6,4X12RFR	
TBA 1000SQ, TBA 0200SQ, TPA 0250SQ, TPA 0330SQ, TPA 0200SQ, TPA 1000SQ, TPA 0500SQ, TPA 0750SQ, TBA 0250SQ (See drawing on page: 5-270)					
010	1279680-0000		1	PIPE	
020	2633439-0000		1	PIPE	
030	2633440-0000		1	PIPE	
040	2693322-0000		1	PIPE	
050	2531276-0000		3	BRACKET	
060	312105-0291		5	SCREW M6S ISO 4017 M4X12 A470	
070	312105-0327		3	SCREW M6S ISO 4017 M5X12 A480	
080	312105-0368		3	SCREW M6S ISO 4017 M6X16 A480	
100	312605-0316		3	HEXAGON NUT, M6M M6 A280	
110	315105-0136		5	WASHER BRB4,3XRFR	
120	315105-0146		3	WASHER BRB5,3X10RFR	
130	315105-0153		3	WASHER BRB6,4X12RFR	
140	312105-0449		2	SCREW M6S ISO 4017 M8X16 A480	
150	315105-0165		2	WASHER BRB8,4X16RFR	
170	2633441-0000		1	BRACKET	
TBA 1890S, TBA 2000S (See drawing on page: 5-272)					
010	1279680-0000		1	PIPE	
020	2633439-0000		1	PIPE	
030	2633440-0000		1	PIPE	
040	2693322-0000		1	PIPE	
050	2531276-0000		3	BRACKET	
060	312105-0291		6	SCREW M6S ISO 4017 M4X12 A470	
070	312105-0327		3	SCREW M6S ISO 4017 M5X12 A480	
080	312105-0368		3	SCREW M6S ISO 4017 M6X16 A480	
090	312605-0312		1	HEXAGON NUT, M6M M4 A280	
100	312605-0316		3	HEXAGON NUT, M6M M6 A280	
110	315105-0136		7	WASHER BRB4,3XRFR	
120	315105-0146		3	WASHER BRB5,3X10RFR	
130	315105-0153		6	WASHER BRB6,4X12RFR	
170	2728241-0000		1	BRACKET	

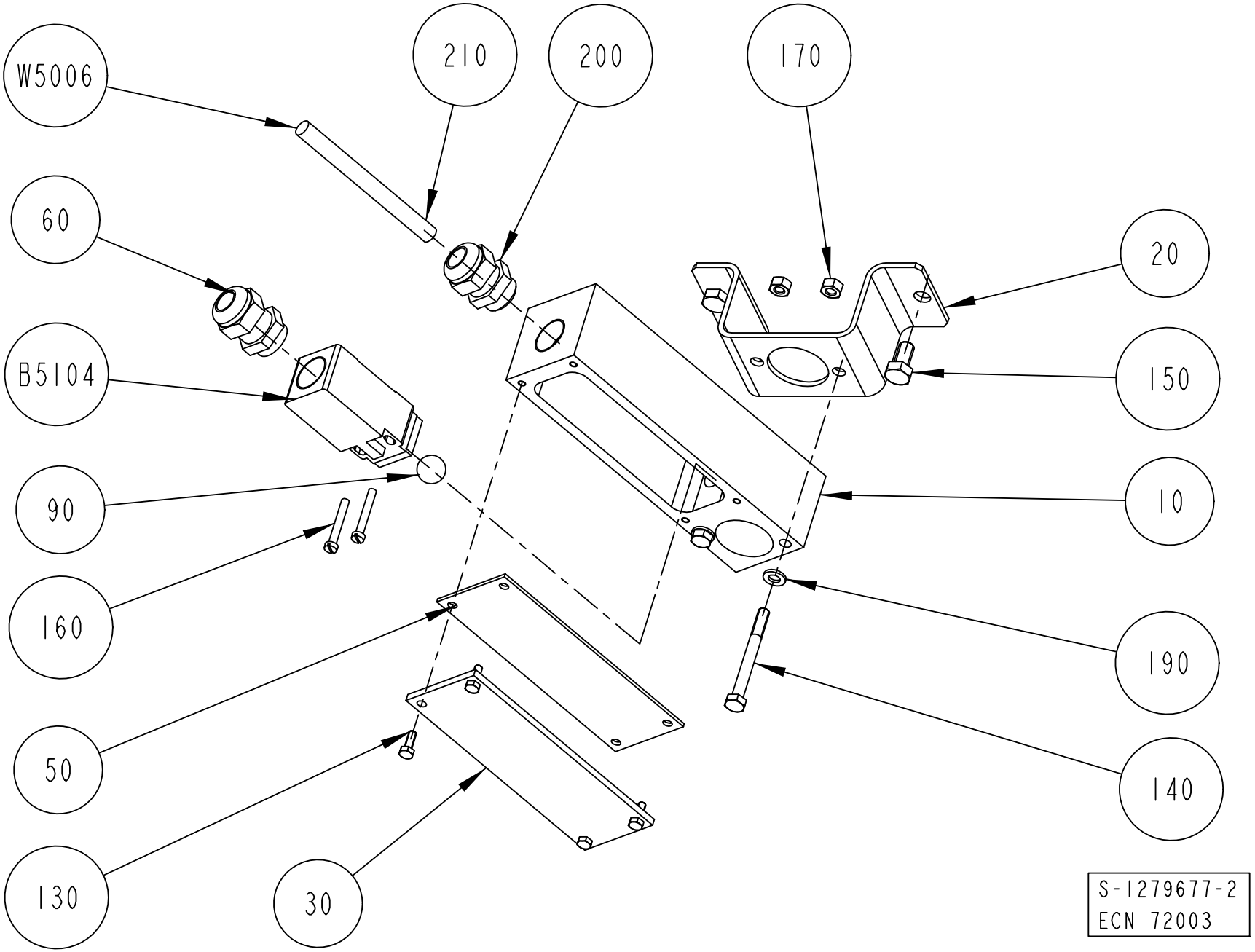
W5006
210
200
170
60
20
B5104
150
90
10
160
190
50
140
130
30
S-1279677-2
ECN 72003

ECM: 181278 - 20041104
Group number: 1279677-0100
Assembly Drawing: 1279677-2_1_AB

Pos	Part No	UN	Qty	Description	Page No
-					
010	1346307-0000		1	HOLDER	
020	1348990-0000		1	SUPPORT	
030	1348663-0000		1	PLATE	
050	1348635-0000		1	RUBBER SEAL	
060	1349020-0000		1	GLAND FITTING	
090	90090-0016		1	BALL, D=15 MM	
130	312105-0291		4	SCREW M6S ISO 4017 M4X12 A470	
140	312105-0382		2	SCREW M6S ISO 4014 M6X60 A480	
150	312105-0449		2	SCREW M6S ISO 4017 M8X16 A480	
160	312125-0299		2	SCREW ISO 1207 M4X30 A4	
170	312605-0316		2	HEXAGON NUT, M6M M6 A280	
190	315105-0153		2	WASHER BRB6,4X12RFR	
200	352103-0108		1	CABLE GLAND, ST 13,5 , PR20,4/PG13,5	
210	353001-0103		4	END SLEEVE 0,75 MM2	
B 5104	1144653-0000		1	SWITCH	
W 5006	351150-0405	MM	5000	CABLE OLFLEX 5X0,75 MM2 LIGHT/GREY	

Pos	Part No	UN	Qty	Description	Page No

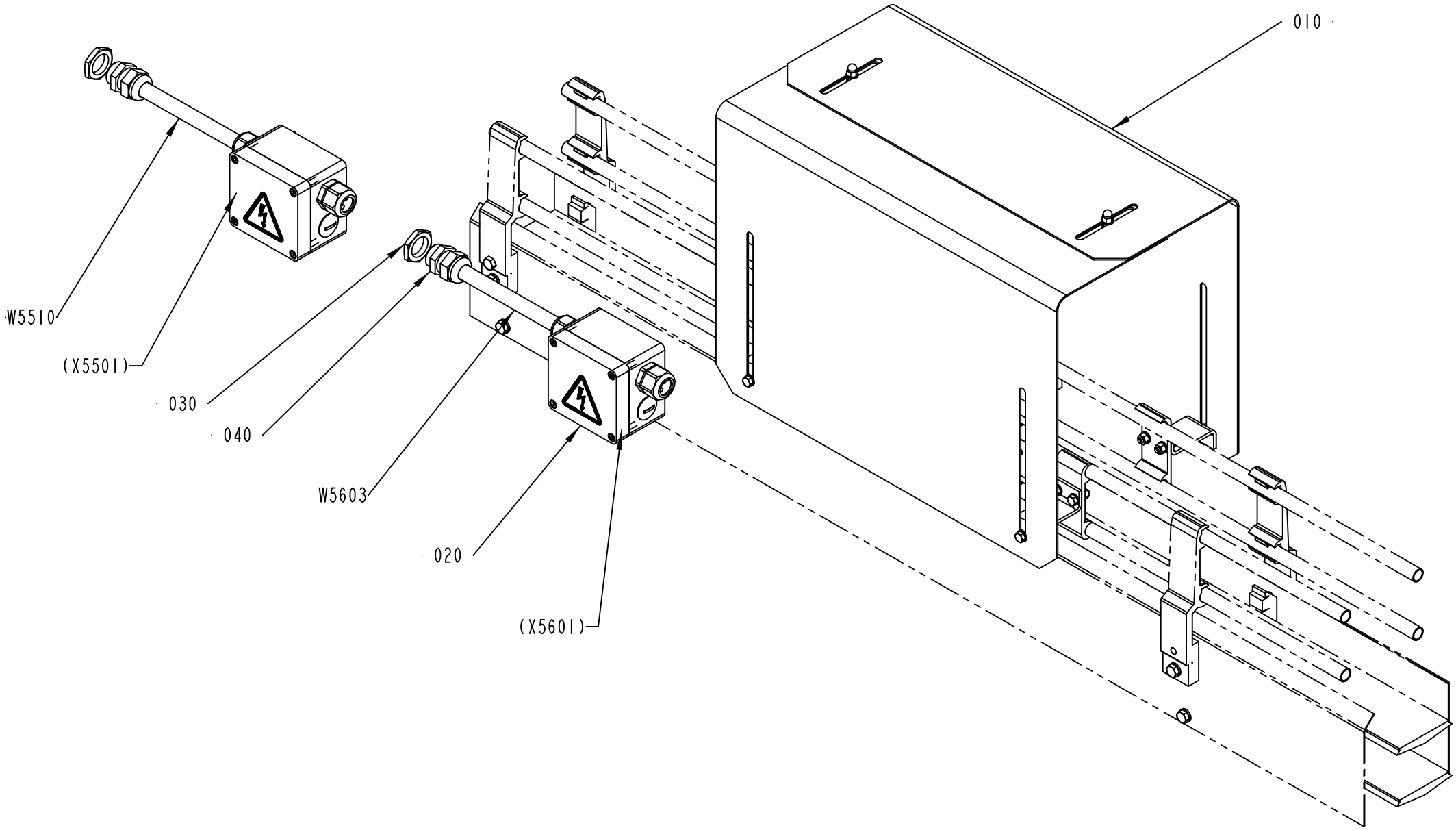

2579995-1
ECM 116811

ECM: 189522 - 20041104
Group number: 2579995-0100
Assembly Drawing: 2579995-1_1_AA

Pos	Part No	UN	Qty	Description	Page No
-					
010	1484196-0100		1	PACK COUNTER	**5-279**
020	1484197-0100		2	CONNECTION BOX	**5-281**
030	90099-0118		2	NUT, PR 20,4 (PG13,5)	
040	352103-0108		2	CABLE GLAND, ST 13,5 , PR20,4/PG13,5	
W5510	351150-0405	M	10	CABLE OLFLEX 5X0,75 MM2 LIGHT/GREY	
W5603	351150-0405	M	100	CABLE OLFLEX 5X0,75 MM2 LIGHT/GREY	

Pos	Part No	UN	Qty	Description	Page No

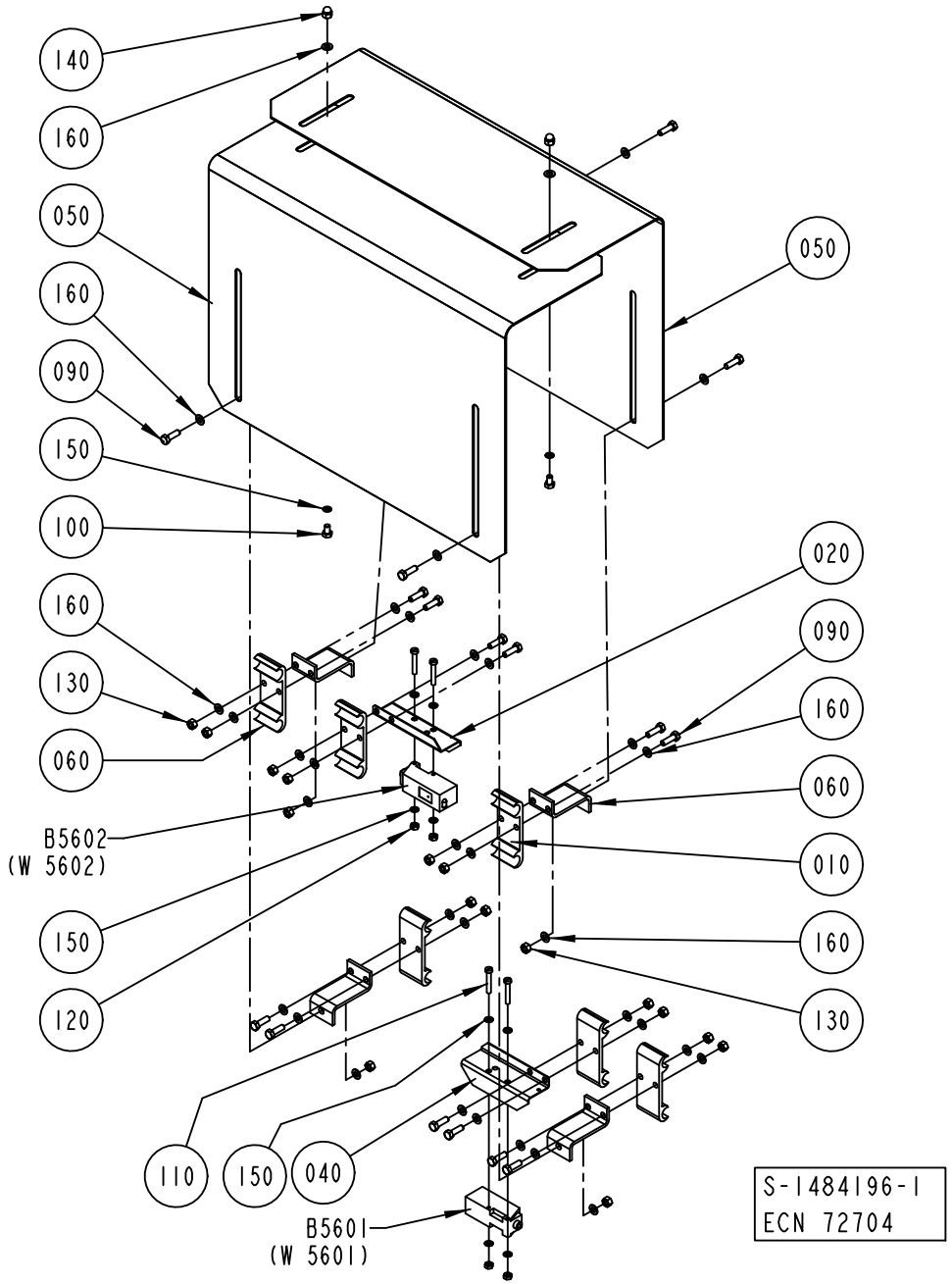
140
160
050
160
090
150
100
160
130
060
B5602
(W 5602)
150
120
110
150
040
B5601
(W 5601)
050
020
090
160
060
010
160
130
S-1484196-1
ECN 72704

ECM: 189523 - 20041104
Group number: 1484196-0100
Assembly Drawing: 1484196-1_1_AA

Pos	Part No	UN	Qty	Description	Page No
-					
010	1020637-0000		6	HOLDER	
020	1086889-0000		1	COVER	
030	1020638-0000		6	HOLDER	
040	1086888-0000		1	COVER	
050	1349566-0000		2	COVER	
060	1478659-0000		4	BRACKET	
090	312105-0329		16	SCREW M6S ISO 4017 M5X16 A480	
100	312105-0323		2	SCREW M6S ISO 4017 M5X8 A480	
110	312125-0297		4	SCREW ISO 1207 M4X25 A4	
120	312605-0312		4	HEXAGON NUT, M6M M4 A280	
130	312605-0314		16	HEXAGON NUT, M6M M5 A280	
140	312705-0314		2	NUT HEX. DOMED CAP MHM-6 M5 A280	
150	315105-0136		8	WASHER BRB4,3XRFR	
160	315105-0146		42	WASHER BRB5,3X10RFR	
B5601	90232-0103		1	PH.CELL E3S-CT61-L-5M	
B5602	90232-0104		1	PH.CELL E3S-CT61-D-5M	

Pos	Part No	UN	Qty	Description	Page No

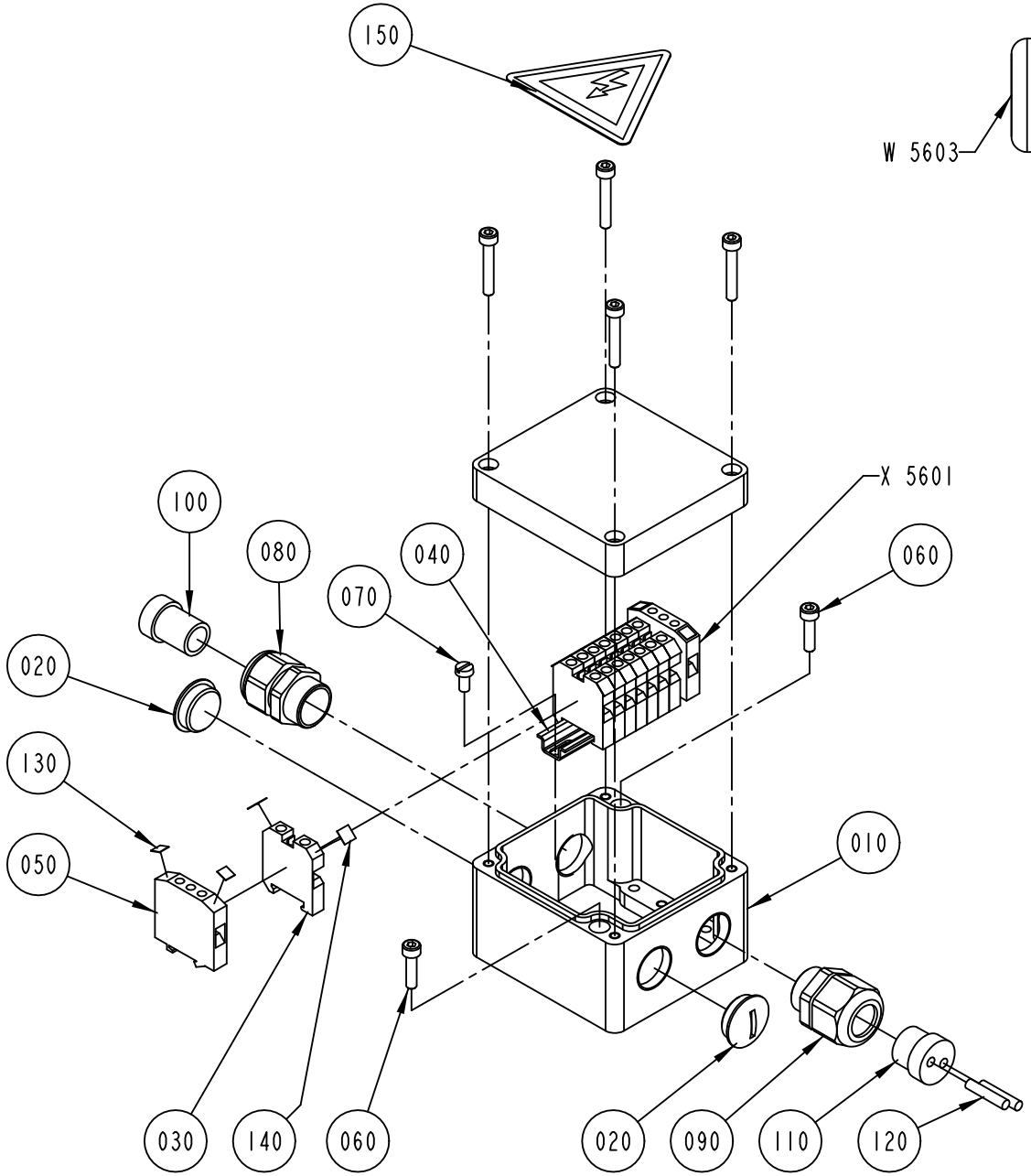

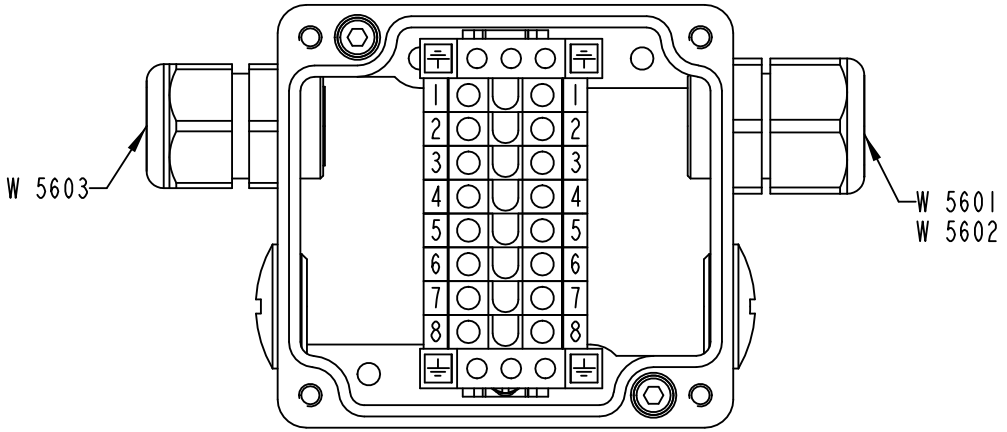

S-1484197-1
ECN 72704

ECM: 189524 - 20041104
Group number: 1484197-0100
Assembly Drawing: 1484197-1_1_AA

Pos	Part No	UN	Qty	Description	Page No
-					
010	1349568-0000		1	CONNECTION BOX	
020	90002-0009		2	BLANK-OFF PLUG, PR 18.6 SKINDICHT-BLK11	
030	90077-0079		8	FEED THROUGH TERMINAL, 02943.6	
040	90077-0328	MM	65	RAIL TS15/5	
050	90135-0026		2	EARTH TERMINAL, 3802.6	
060	312115-0293		2	SCREW ISO4762 M4X16 A4 80	
070	312125-0287		2	SCREW ISO 1207 M4X8 A4	
080	353240-0002		1	GLAND W/O INSERT PG11 NORMAL	
090	353241-0002		1	GLAND W/O INSERT PG11 EXTENDED	
100	353249-0003		1	INSERT, SINGEL HOLE, E151/11	
110	353249-0036		1	INSERT, MULTI HOLE, EK152 M 2X4	
120	353249-0301		2	SEALING PIN, 4X20	
130	359011-0819		4	MARKING PLATES 5-GW (EARTH)	
140	359011-0821		2	SET OF SIGNS 6-FW 1-50	
150	359705-0015		1	WARNING SIGN ISO, RISK OF ELECTRIC SHOCK	

Pos	Part No	UN	Qty	Description	Page No

Tetra Pak

SPC
Spare Parts Catalogue

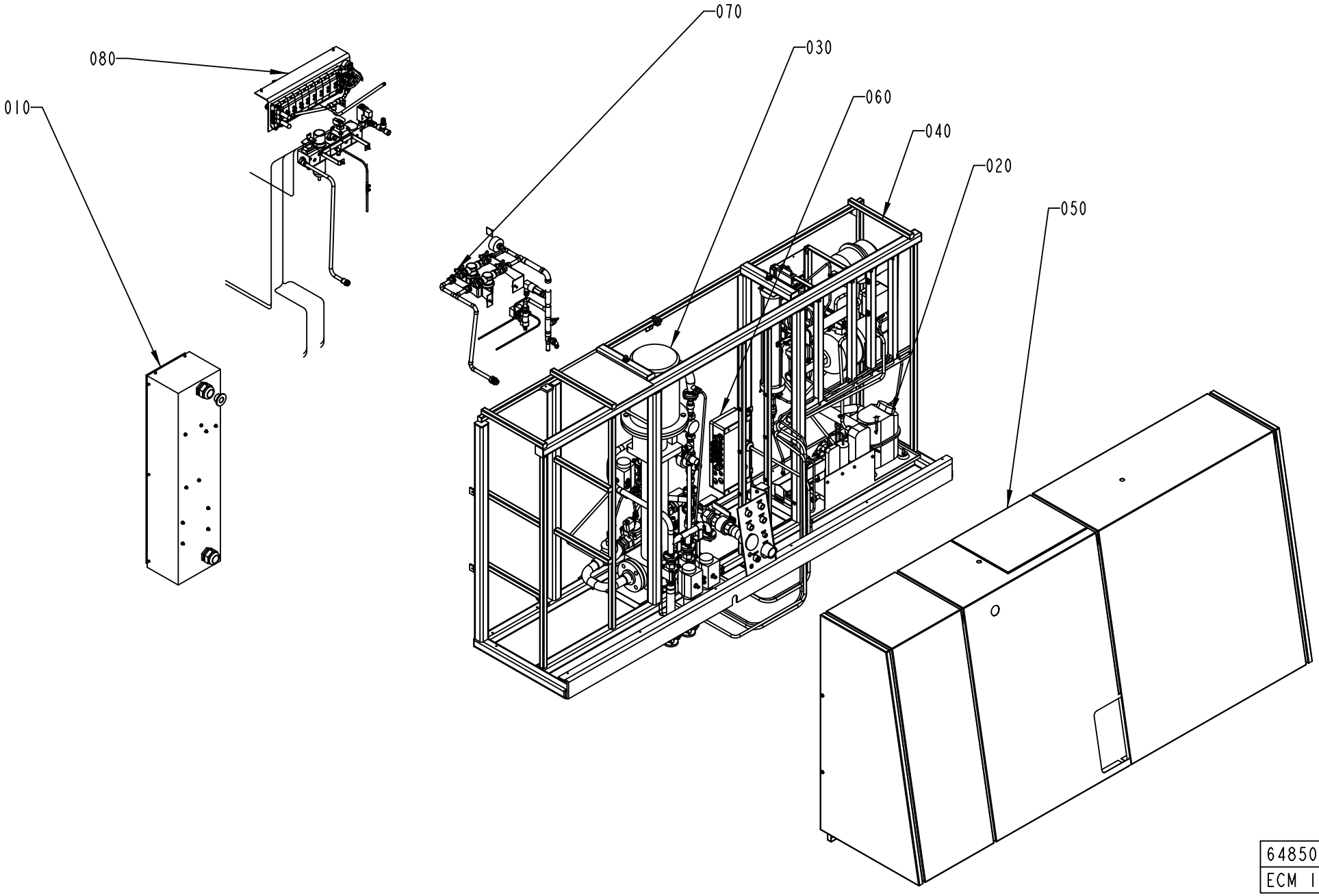

648506-2
ECM 139813

ECM: 211077 - 20050517
Group number: 648506-0400
Assembly Drawing: 648506-2_1_AD

This list covers pages from 6-2 to 6-5

Pos	Part No	UN	Qty	Description	Page No
A3/FLEX DIMC/FLEX, A3/FLEX TBA 2000S NODIMC, A3/FLEX TBA 1890S NODIMC (See drawing on page: 6-4)					
090	2623714-0100		1	PEROXIDE REDUCER	**6-7**
100	2623718-0100		1	PEROXIDE REDUCER	**6-9**
Common Parts					
010	1095610-0300		1	MAIN SWITCH	**6-11**
020	1095612-0300		1	COOLING WATER SYSTEM	**6-13, 6-15**
030	1095627-0300		1	FOAM CLEANING UNIT	**6-33**
040	2613034-0100		1	MACHINE BODY	**6-49**
050	1095607-0200		1	COVERING PANEL	**6-51**
060	1095630-0200		1	CONNECTION BOX	**6-67**
070	1095608-0100		1	WATER PANEL	**6-69, 6-71**
080	1095714-0300		1	SUPPLY SYSTEM	**6-73**

Pos	Part No	UN	Qty	Description	Page No

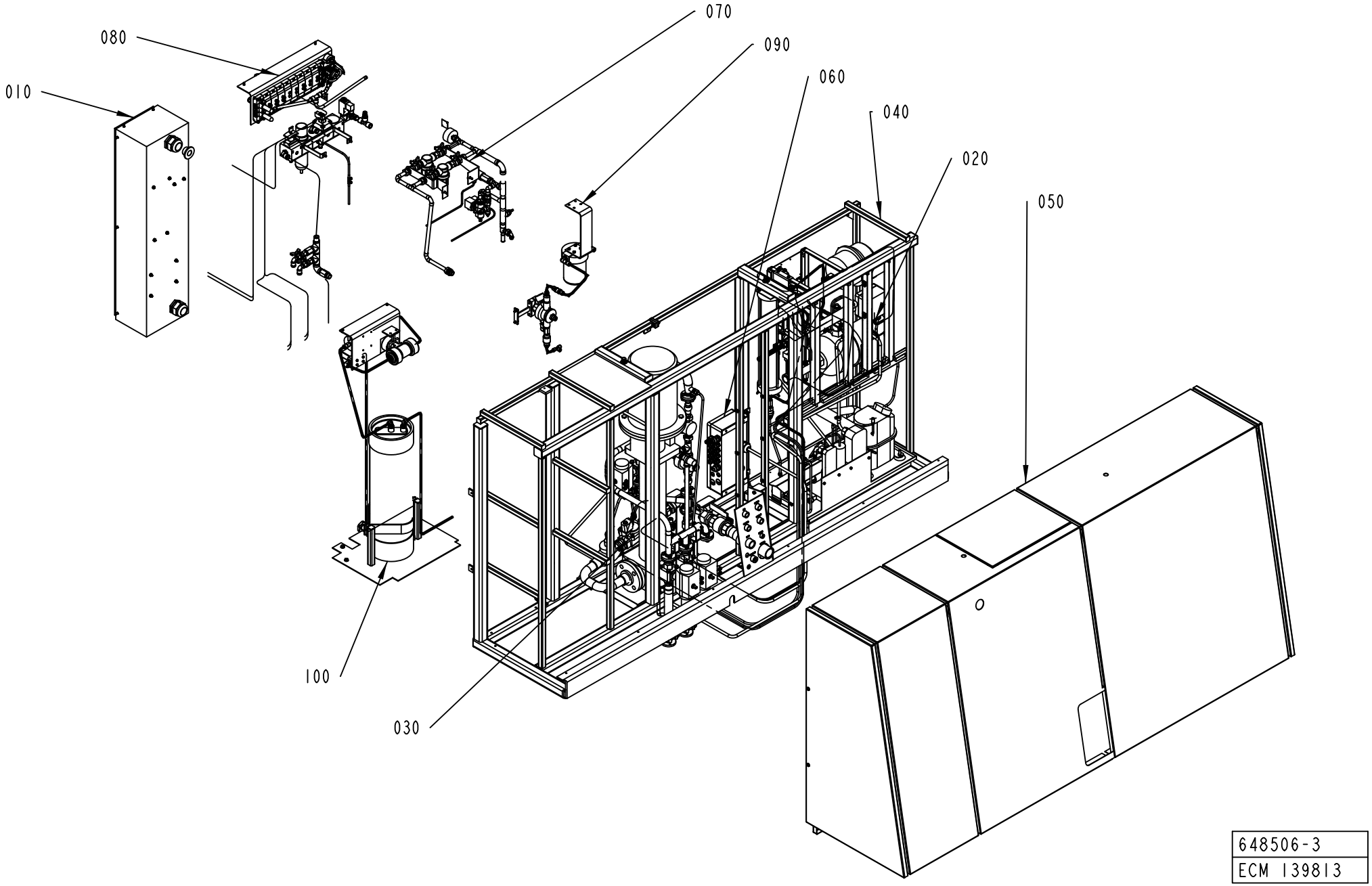
070
080
090
060
010
040
020
050
100
030
648506-3
ECM 139813

Pos	Part No	UN	Qty	Description	Page No
A3/FLEX DIMC/FLEX, A3/FLEX TBA 2000S NODIMC, A3/FLEX TBA 1890S NODIMC (See drawing on page: 6-4)					
090	2623714-0100		1	PEROXIDE REDUCER	**6-7**
100	2623718-0100		1	PEROXIDE REDUCER	**6-9**
Common Parts					
010	1095610-0300		1	MAIN SWITCH	**6-11**
020	1095612-0300		1	COOLING WATER SYSTEM	**6-13, 6-15**
030	1095627-0300		1	FOAM CLEANING UNIT	**6-33**
040	2613034-0100		1	MACHINE BODY	**6-49**
050	1095607-0200		1	COVERING PANEL	**6-51**
060	1095630-0200		1	CONNECTION BOX	**6-67**
070	1095608-0100		1	WATER PANEL	**6-69, 6-71**
080	1095714-0300		1	SUPPLY SYSTEM	**6-73**

Pos	Part No	UN	Qty	Description	Page No

PEROXIDE REDUCER

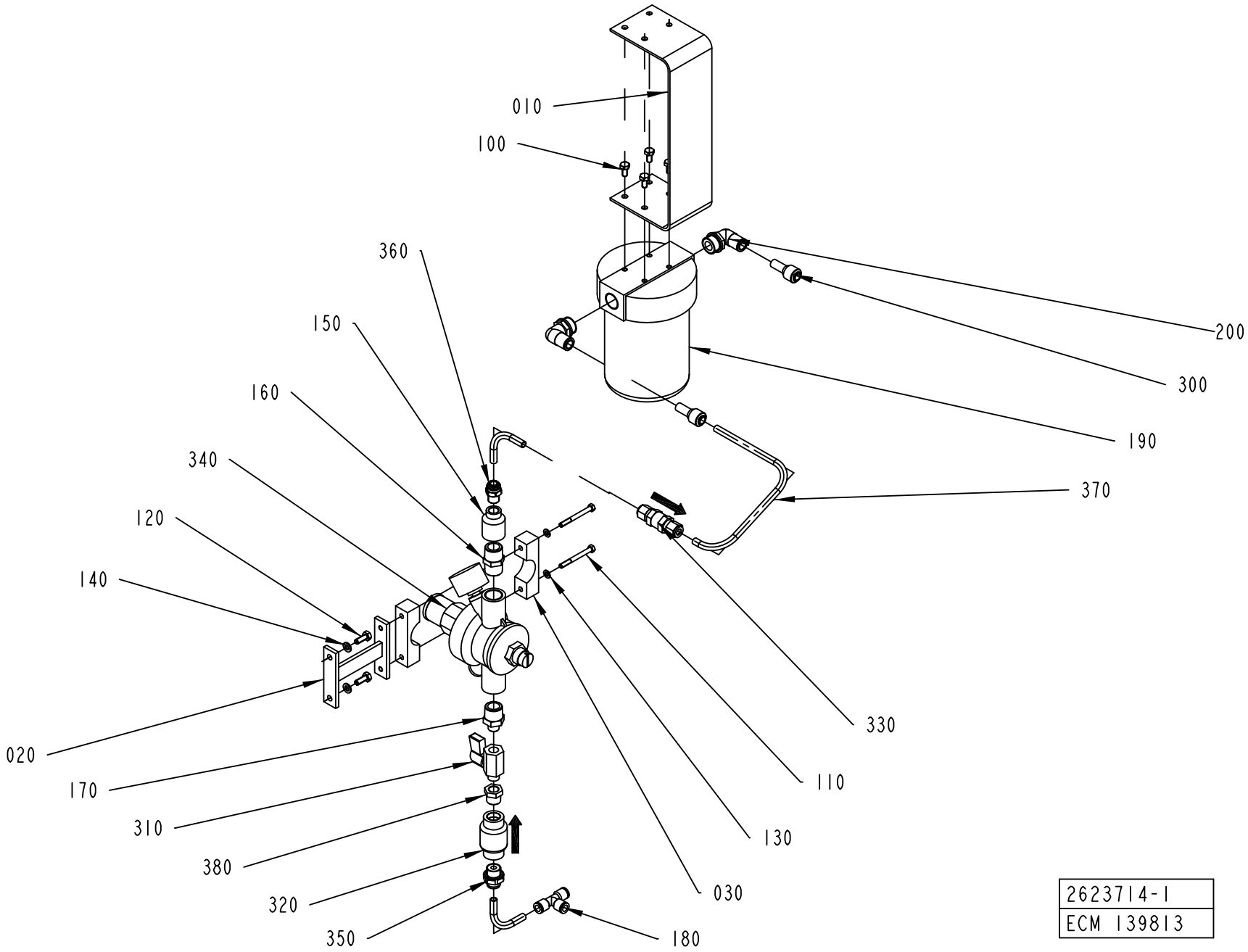

2623714-1
ECM 139813

ECM: 189445 - 20041104
Group number: 2623714-0100
Assembly Drawing: 2623714-1_1_AB

Pos	Part No	UN	Qty	Description	Page No
-					
010	2604069-0000		1	BRACKET	
020	2623715-0000		1	HOLDER	
030	2623717-0000		2	HOLDER	
100	312105-0366		4	SCREW M6S ISO 4017 M6X12 A480	
110	312105-0341		2	SCREW M6S ISO 4014 M5X50 A480	
120	312105-0368		2	SCREW M6S ISO 4017 M6X16 A480	
130	315105-0146		2	WASHER BRB5,3X10RFR	
140	315105-0153		2	WASHER BRB6,4X12RFR	
150	342217-0103		1	SLEEVE, REDUCTION, INT, R-2021/2X1/4	
160	90330-0021		1	NIPPLES, EXT. THREAD. R-207R1/2	
170	342203-0107		1	NIPPLES, EXT. THREAD, HEXAGON,Ã¿NO. 209	
180	90055-0276		1	T-CONNECTION 8 MM	
190	90415-0065		1	FILTER	
010	*90415-0357*		*1*	*FILTER INSERT*	
200	90459-2769		2	ELBOW PIPE JOINT, EXT.THREAD,D=10MM-G1/2	
300	90055-0249		2	REDUCER 8-10	
310	90187-0045		1	BALL VALVE G1/4 CR PL	
320	90230-0040		1	NON-RETURN VALVE, R3/8, L=55	
330	90230-0032		1	NON-RETURN VALVE, 8MM, L=63,25	
340	90458-0201		1	FLUID AUT. FEEDER, ALINOX 1/2 46.04.00	
350	90458-1963		1	STRAIGHT COUPLING D=8-G3/8"	
360	90459-0997		1	STRAIGHT COUPLING D=8-R1/4"	
370	90166-0188	MM	700	PLASTIC HOSE	
380	90330-0042		1	BUSHING, INT/EXT. THR. R3/8-RP1/4	

Pos	Part No	UN	Qty	Description	Page No

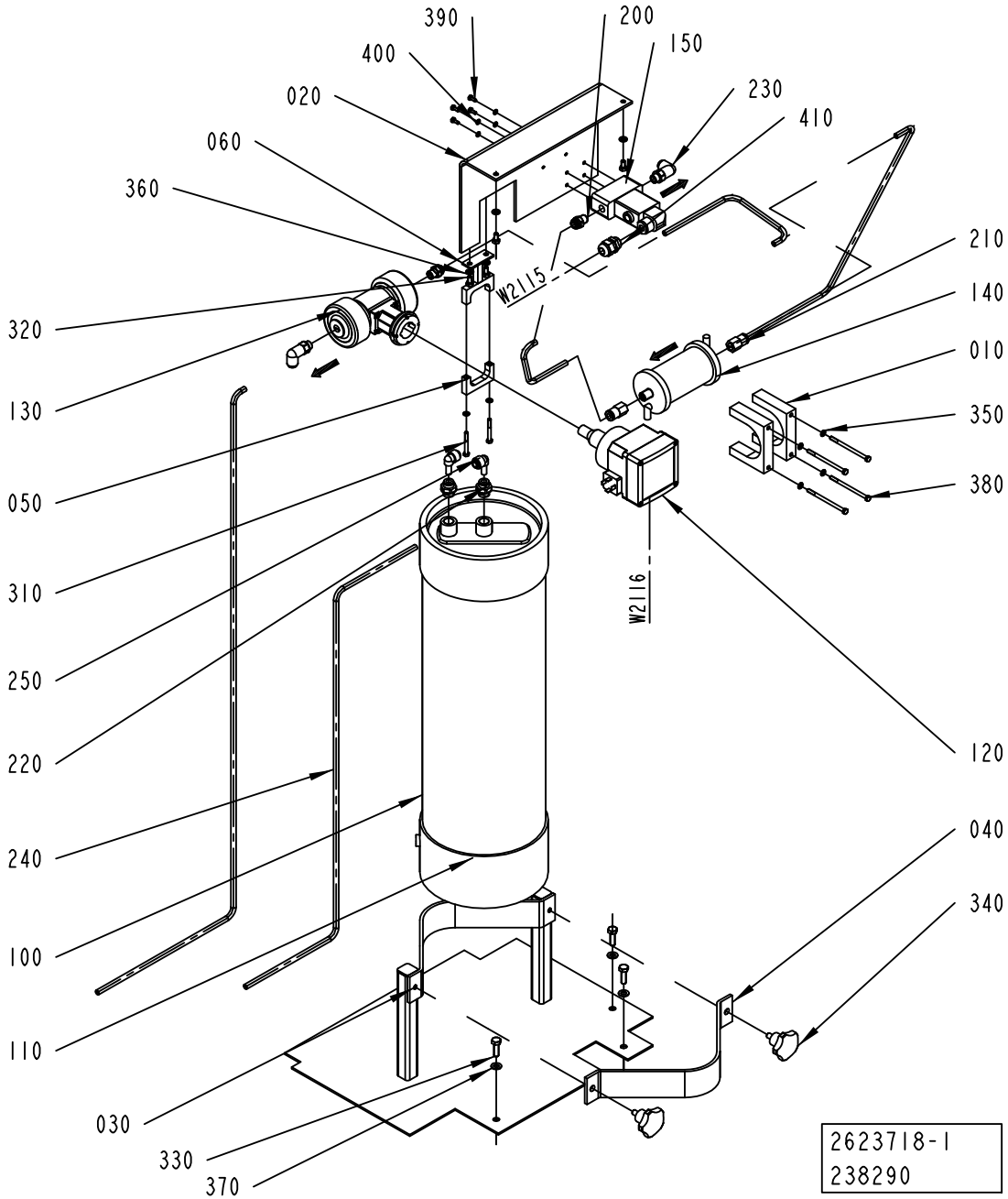
390
200
400
150
020
230
060
410
360
210
W2115
320
140
130
010
350
050
380
310
W2116
250
120
220
040
240
340
100
110
030
330
370
2623718-1
238290

ECM: 243415 - 20051220
Group number: 2623718-0100
Assembly Drawing: 2623718-1_1_AC

Pos	Part No	UN	Qty	Description	Page No
-					
010	2623712-0000		2	HANGER	
020	2623713-0000		1	HOLDER	
030	2623719-0000		1	HOLDER	
040	2623720-0000		1	HOLDER	
050	1549344-0000		1	HOLDER	
060	2510755-0000		1	BRACKET	
100	90459-1996		1	FILTER CULLIGAN REFILL LINE 10 760665	
	90459-2004		*1*	*FILTER CARTRIDGE ION-EXCHANGE, 759807*	
110	90459-2004		1	FILTER CARTRIDGE ION-EXCHANGE, 759807	
120	90458-2174		1	CONDUCTIVITY TRANSMITTER, 418962Z	
130	90458-2173		1	PIPE CONNECTION, 552608M	
140	90459-1472		1	FILTER, KW0604NP3	
150	90042-0170		1	SOLENOID VALVE BÃ¼RKERT	
200	90459-0997		2	STRAIGHT COUPLING D=8-R1/4"	
210	90055-0266		2	STRAIGHT CONNECTION	
220	90458-1963		2	STRAIGHT COUPLING D=8-G3/8"	
230	90055-0267		2	ELBOW PIPE JOINT,EXT.THREAD,D=8 MM G1/4	
240	90166-0118	M	10	TUBE 8 MM PA BLACK	
250	90055-0250		2	ELBOW WITH TAILPIECE 8/8 MM	
310	312105-0339		2	SCREW M6S ISO 4014 M5X40 A480	
320	312105-0366		4	SCREW M6S ISO 4017 M6X12 A480	
330	312105-0453		3	SCREW M6S ISO 4017 M8X25 A480	
340	318856-0112		2	KNOB, EXTERNAL THREAD. NO. 8306-0227	
350	315105-0146		6	WASHER BRB5,3X10RFR	
360	315105-0153		4	WASHER BRB6,4X12RFR	
370	315105-0165		3	WASHER BRB8,4X16RFR	
380	90458-1614		4	SCREW M6S ISO 4014 M5X80 A480	
390	312105-0289		4	SCREW M6S ISO 4017 M4X10 A470	
400	315105-0136		4	WASHER BRB4,3XRFR	
410	352103-0106		1	CABLE GLAND, ST 11, PR18,6/PG11	

Pos	Part No	UN	Qty	Description	Page No

MAIN SWITCH

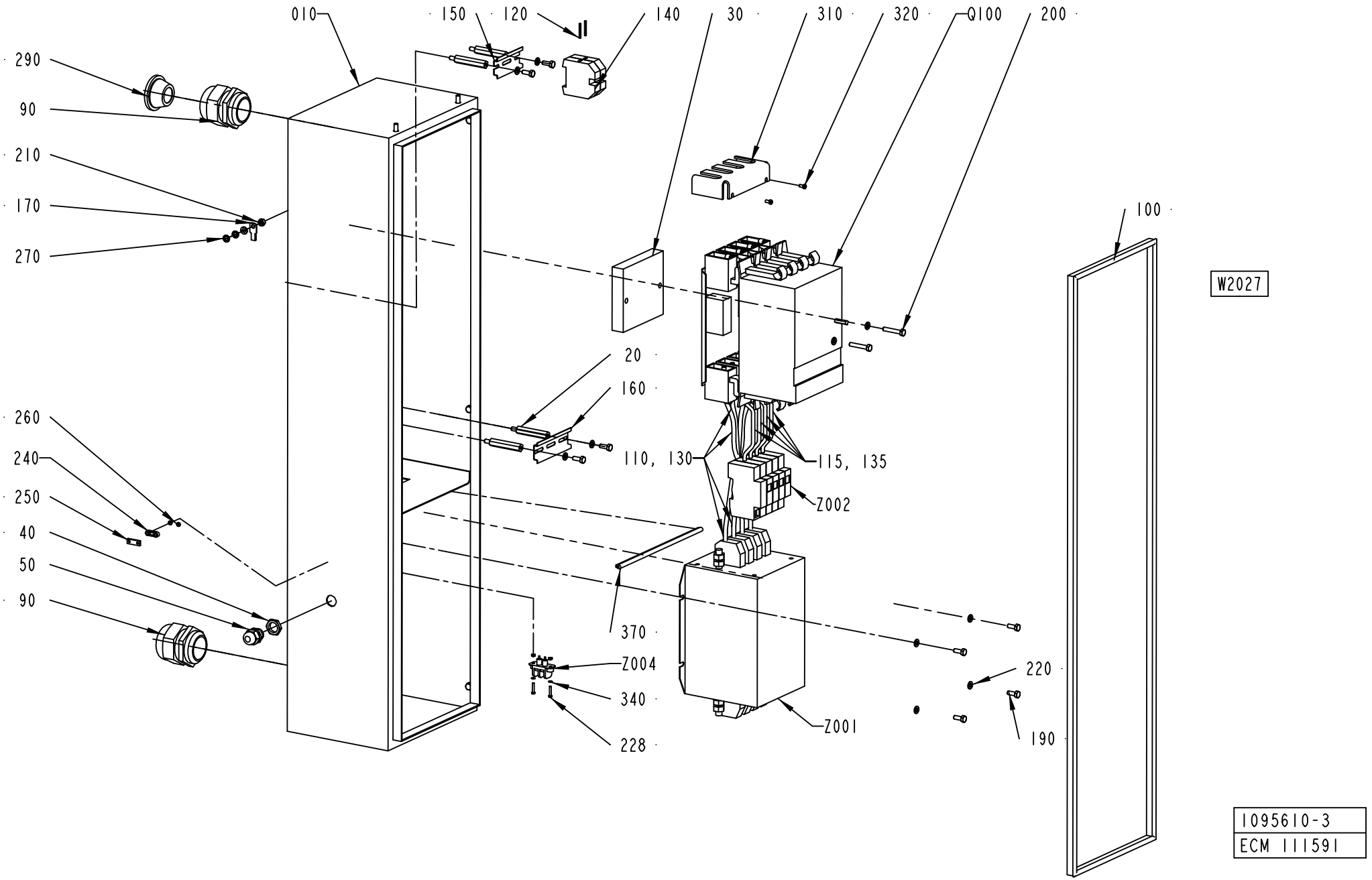

1095610-3
ECM 111591

ECM: 190044 - 20041122
Group number: 1095610-0300
Assembly Drawing: 1095610-3_1_AC

Pos	Part No	UN	Qty	Description	Page No	Pos	Part No	UN	Qty	Description	Page No
-											
010	2524515-0000		1	CABINET							
020	1037184-0000		4	SPACER SCREW							
030	1037531-0000		1	SPACER PLATE							
040	90099-0117		1	NUT, PR 18,6 (PG11)							
050	352103-0106		1	CABLE GLAND, ST 11, PR18,6/PG11							
060	90099-0085		1	NUT							
070	90099-0096		1	NUT							
090	352103-0123		2	CABLE GLAND, ST 42, PR54,0/PG42							
100	90143-0057	MM	2600	STRIP EMKA 1011-05 21X11MM							
110	351161-0110	MM	2400	CABLE AWM 1X25 MM2 LIGHTBLUE							
115	351161-0111	MM	240	CABLE AWM 1X35 MM2 LIGHTBLUE							
120	351162-0109	MM	850	CABLE AWM 1X16 MM2 YELLOW-GREEN							
130	351164-0111	MM	6000	8ABLE AWM 1X35 MM2 BLACK							
135	351164-0111	MM	600	8ABLE AWM 1X35 MM2 BLACK							
140	353024-0209		2	EARTH TERMINAL, 1010.5							
150	353042-0005	MM	75	RAIL TS 35/7.5							
160	353042-0005	MM	100	RAIL TS 35/7.5							
170	353104-0168		1	CABLE SHOE, RING UNINS., YAV 16 M 6							
180	353105-0200		9	PIN CABLE SHOE A4630SR							
190	312105-0368		13	SCREW M6S ISO 4017 M6X16 A480							
200	312105-0376		2	SCREW M6S ISO 4014 M6X35 A480							
210	312605-0316		1	HEXAGON NUT, M6M M6 A280							
220	315105-0153		16	WASHER BRB6,4X12RFR							
230	90143-0060	MM	600	EDGE STRIP 9,5X6,3MM BLACK PVC							
240	90220-0303		1	CLAMP FOR SCR.CABLE, 10MM, 55-016-22							
250	90220-0305		1	CLAMP FOR SCR.CABLE, 16MM,							
260	312605-0310		2	HEXAGON NUT, M6M M3 A280							
270	90062-0015		2	LOCK WASHER SERRAT.EXT.GEAR,6,4/11 H=0,7							
280	90166-0232	MM	500	SHRINKABLE HOSE							
290	90015-0025		1	LEAD-IN, TET26-35, E-1458041							
300	1129402-0000		4	SPACER SCREW							
310	1255866-0000		1	PROTECTION							
320	312125-0287		2	SCREW ISO 1207 M4X8 A4							
340	315105-0124		4	WASHER BRB3,2X6RFR							
370	90143-0060	MM	250	EDGE STRIP 9,5X6,3MM BLACK PVC							
Q100	90111-0173		1	MAIN SW.NZM64-100/ZM64-100-760+AS4-NZM64							
W2027	90220-0095	MM	3000	SCR. CABLE 3X0,75MM2							
Z001	90024-0060		1	POWER LINE FILTER, 80 A 250/440 VAC							
Z002	90082-0013		1	OVER VOLT. PROTECT. PU 4C-R 230 VAC							
	90082-0301		*3*	*OVER VOLT. PROTECT. PU 0 C 833951*							
Z004	90024-0036		1	FILTERED TERMINAL BLOCK							

Machine Type	Group Description	Used-In	Group Number	Page No

COOLING WATER SYSTEM

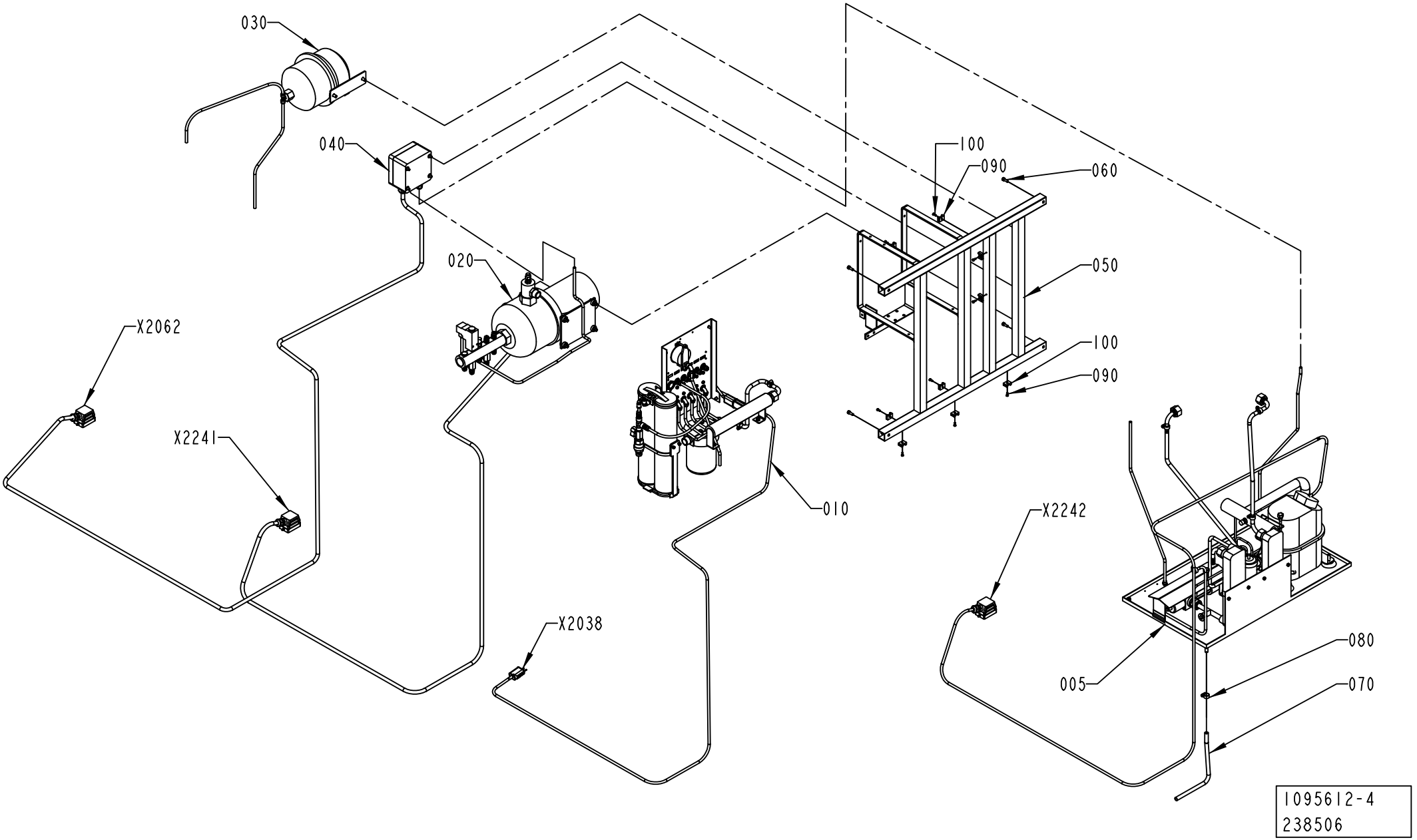

ECM: 247807 - 20060220
Group number: 1095612-0300
Assembly Drawing: 1095612-4_1_AD

This list covers pages from 6-12 to 6-15

Pos	Part No	UN	Qty	Description	Page No
A3/FLEX COMPRESSOR (See drawing on page: 6-12)					
005	1095710-0300		1	COMPRESSOR UNIT	**6-17**
010	2552113-0100		1	FLOW METER	**6-19**
A3/FLEX ICE-WATER (See drawing on page: 6-14)					
007	1260547-0100		1	ICE WATER UNIT	**6-23**
010	2552113-0100		1	FLOW METER	**6-19**
Common Parts					
020	1095706-0300		1	COOLING WATER PUMP	**6-27**
030	2514077-0100		1	EXPANSION VESSEL	**6-29**
040	1095709-0200		1	CONNECTION BOX	**6-31**
050	1129141-0000		1	MACHINE BODY	
060	312115-0368		4	SCREW ISO4762 M6X16 A4 80	
070	90166-0121	MM	1000	HOSE	
080	342991-0101		1	HOSE CLIP,WORM DRIVE TYPE (13)-16	
090	352113-0203		9	ANCHOR PLATES FOR STRIPS, TYPE TM3S8-M0	
100	312125-0289		9	SCREW ISO 1207 M4X10 A4	

Pos	Part No	UN	Qty	Description	Page No

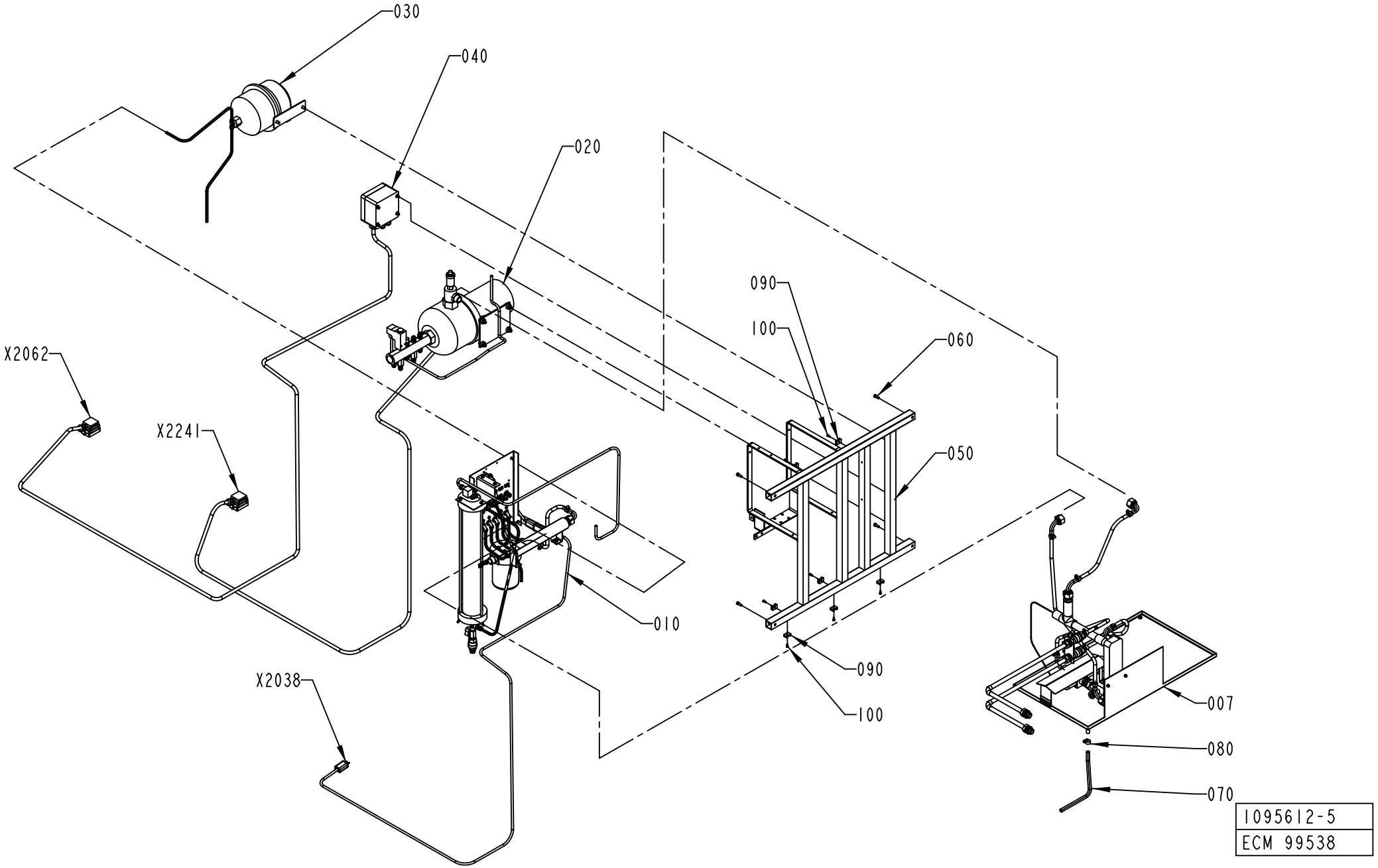
030
040
020
090
100
060
X2062
X2241
050
010
090
100
X2038
007
080
070
1095612-5
ECM 99538

ECM: 247807 - 20060220
Group number: 1095612-0300
Assembly Drawing: 1095612-5_1_AC

This list covers pages from 6-12 to 6-15

Pos	Part No	UN	Qty	Description	Page No
A3/FLEX COMPRESSOR (See drawing on page: 6-12)					
005	1095710-0300		1	COMPRESSOR UNIT	**6-17**
010	2552113-0100		1	FLOW METER	**6-19**
A3/FLEX ICE-WATER (See drawing on page: 6-14)					
007	1260547-0100		1	ICE WATER UNIT	**6-23**
010	2552113-0100		1	FLOW METER	**6-19**
Common Parts					
020	1095706-0300		1	COOLING WATER PUMP	**6-27**
030	2514077-0100		1	EXPANSION VESSEL	**6-29**
040	1095709-0200		1	CONNECTION BOX	**6-31**
050	1129141-0000		1	MACHINE BODY	
060	312115-0368		4	SCREW ISO4762 M6X16 A4 80	
070	90166-0121	MM	1000	HOSE	
080	342991-0101		1	HOSE CLIP,WORM DRIVE TYPE (13)-16	
090	352113-0203		9	ANCHOR PLATES FOR STRIPS, TYPE TM3S8-M0	
100	312125-0289		9	SCREW ISO 1207 M4X10 A4	

Pos	Part No	UN	Qty	Description	Page No

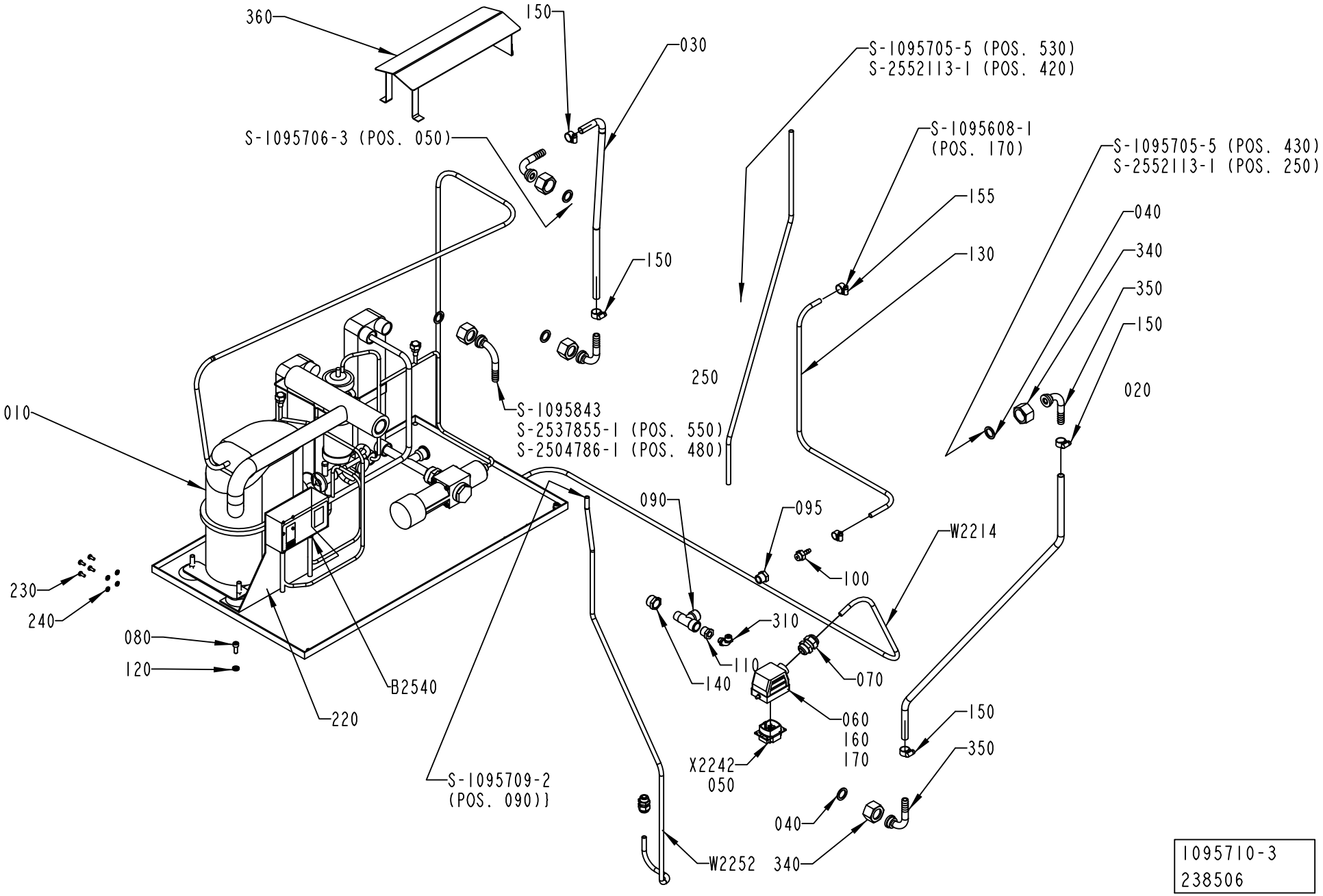

1095710-3
238506

ECM: 254525 - 20060221
Group number: 1095710-0300
Assembly Drawing: 1095710-3_1_AF

Pos	Part No	UN	Qty	Description	Page No
A3/FLEX					
010	1140603-0000		1	COMPRESSOR UNIT	
	342713-0213		*1*	*PLUG, EXT THREAD HEX SOCKET 8638-00-120*	
	90459-6809		*1*	*EXP. VALVE TUB ORIF 5 R134A, 068U2004*	
	90459-6804		*1*	*CONDENSER, B8/14 CONNECTION 2/22U + 2/1/*	
	90459-6802		*1*	*COMPRESSOR, TAJ4511Y*	
	90459-6800		*1*	*CAPACITY REGULATOR, KVP 12*	
	90459-6799		*1*	*THERMOST. VALVE,WVFX 15 3.5-16 BAR 1/2"*	
	90459-6798		*1*	*DRYING FILTER, DMC 2032S*	
	90422-0037		*1*	*HEAT EXCHANGER*	
	90274-0123		*1*	*PRESSURE SWITCH, KP 1560-1254*	
W 2214	351150-0418	MM	4000	CABLE OLFLEX 4X2,5 MM2 LIGHT/GREY	
Common Parts					
020	90166-0121	MM	930	HOSE	
030	90166-0121	MM	840	HOSE	
040	90459-3339		5	GASKET NBR/PTFE 17X24X2 MM 3/4"	
050	90110-0159		1	MALE INSERT 70.310.0640.0	
060	90110-0226		1	CABLE HOOD 6-POL 70.350.0628.0	
070	352103-0108		1	CABLE GLAND, ST 13,5 , PR20,4/PG13,5	
080	312115-0368		2	SCREW ISO4762 M6X16 A4 80	
090	90140-0023		1	T-PIPE, INT. THREAD, NO. 2070-3/8-3/8	
095	90330-0042		1	BUSHING, INT/EXT. THR. R3/8-RP1/4	
100	342901-0102		1	HOSE NIPPLE, EXT.THR. R1/4-7 MM	
110	342701-0202		1	BUSHING,INT./EXT.G-THREAD G3/8"-G1/8"	
120	315115-0153		2	WASHER PLAIN, TBRB 6,4/12 H=3	
130	90166-0045	MM	705	HOSE PVC TRANSP. 6/12	
140	342701-0206		1	BUSHING,INT./EXT.G-THREAD G1/2"-G3/8"	
150	342991-0101		4	HOSE CLIP,WORM DRIVE TYPE (13)-16	
155	342991-0100		2	HOSE CLIP,WORM DRIVE TYPE 10-13	
160	359005-0050		1	MARKING LABEL KIT X, 04.841.4550.0	
170	359005-0010		1	MARKING LABEL KIT 0 - 9, 04.841.2150.0	
220	1361560-0000		1	PLATE	
230	312132-0289		4	SCREW SLOT. PAN HEAD MSCS M4X10	
240	90062-0029		4	LOCK WASHER 5,1X 8,6, T= 1,5 DIN 7980	
250	90166-0118	MM	500	TUBE 8 MM PA BLACK	
310	342931-0121		1	ELBOW 90 COUPL.,EXT.THREAD 8/6-G1/8"	
340	2531423-0000		5	NUT	
350	2531245-0000		5	HOSE NIPPLE	
360	2532574-0000		1	COVER	
B2540	90274-0108		1	DUAL PRESSURE GUARD, -20 - 2800 KPA	
W2252	351150-0431	MM	1000	CABLE OLFLEX 2X0,75 MM2 LIGHT/GREY	

Pos	Part No	UN	Qty	Description	Page No

Machine Type | Group Description | Used-In | Group Number | Page No

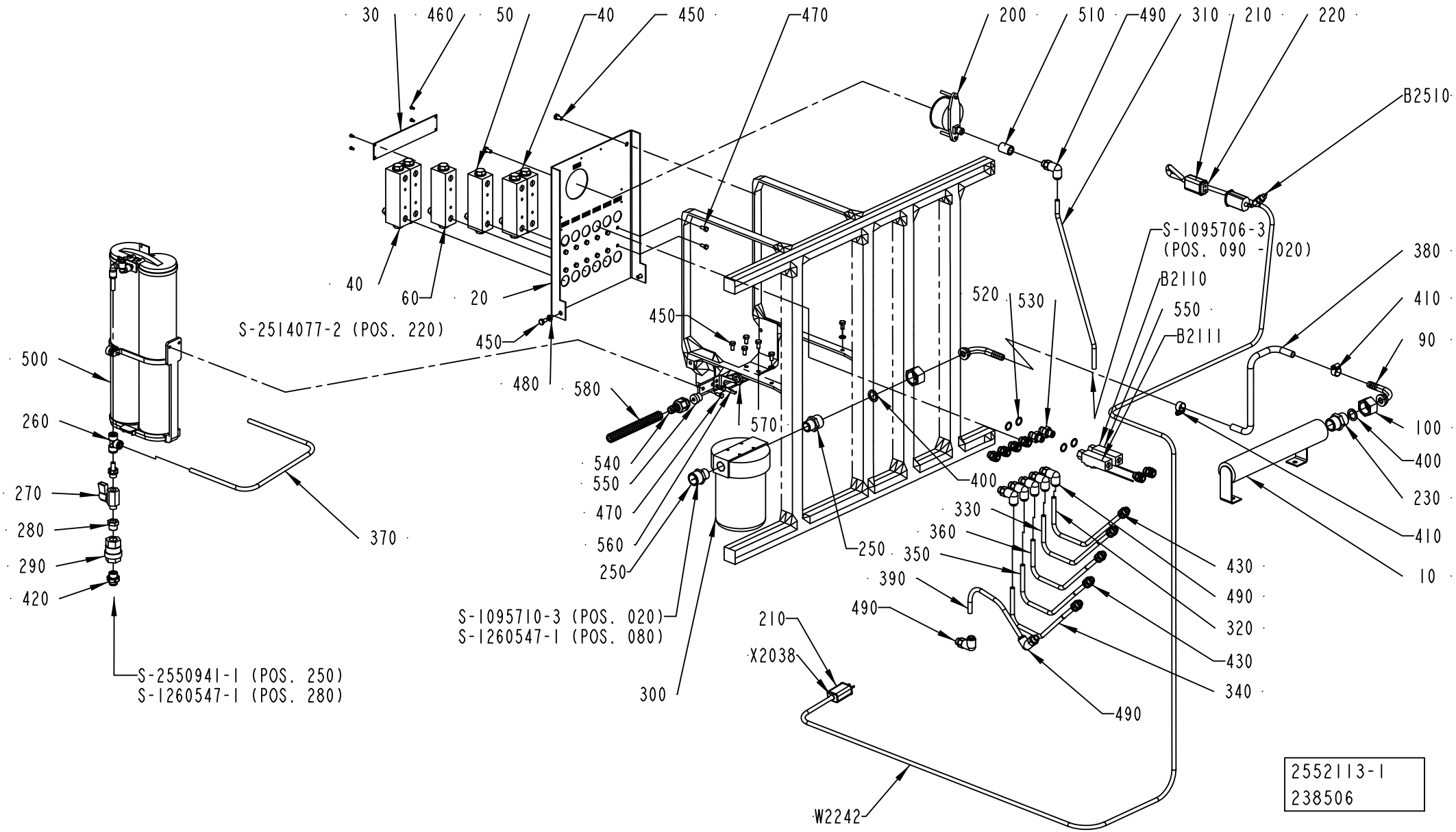
30
460
50
40
450
470
200
510
490
310
210
220
B2510
S-1095706-3
(POS. 090 - 020)
380
410
90
100
400
230
410
10
B2110
550
B2111
520
530
40
60
20
S-2514077-2 (POS. 220)
450
450
480
580
570
540
550
470
560
250
400
330
360
350
390
490
430
490
320
430
340
490
500
260
270
280
290
420
370
S-2550941-1 (POS. 250)
S-1260547-1 (POS. 280)
S-1095710-3 (POS. 020)
S-1260547-1 (POS. 080)
300
210
X2038
W2242
2552113-1
238506

ECM: 247179 - 20060220
Group number: 2552113-0100
Assembly Drawing: 2552113-1_1_AD

Pos	Part No	UN	Qty	Description	Page No
A3/FLEX					
020	2579861-0003		1	PIVOT BRACKET	
030	2547474-0000		1	SIGN LANGUAGE INDEPENDENT	
040	1129079-0000		4	FLOW METER	
050	1041046-0000		1	FLOW METER	
060	1129079-0000		1	FLOW METER	
320	90166-0118	MM	255	TUBE 8 MM PA BLACK	
330	90166-0118	MM	255	TUBE 8 MM PA BLACK	
450	312105-0366		10	SCREW M6S ISO 4017 M6X12 A480	
470	312105-0327		14	SCREW M6S ISO 4017 M5X12 A480	
490	90055-0267		8	ELBOW PIPE JOINT,EXT.THREAD,D=8 MM G1/4	
520	315233-0110		4	WASHER CAPTIVE SEALING G1/4	
530	90055-0042		2	NIPPLES, EXT. THREAD, HEXAGON, NO. 6835-	
540	353242-0005		1	HOSE GLAND W/O INSERT PG9 NORMAL	
550	353249-0067		1	INSERT, SINGEL HOLE, E150/7	
560	977527-0000		1	BRACKET	
570	90099-0104		1	NUT, PR 15,2 (PG9)	
580	90152-0058	M	1	SPIRAL CONDUIT, 15X9, UL 0909	
B2110	90459-0180		1	FLOW SWITCH, 0,1 - 2,5 L/MIN	
B2111	90459-0180		1	FLOW SWITCH, 0,1 - 2,5 L/MIN	
Common Parts					
010	1041984-0000		1	ATTACHMENT PIPE	
090	2531245-0000		2	HOSE NIPPLE	
100	2531423-0000		2	NUT	
200	90043-0100		1	PRESSURE GAUGE, 2948 D=63 MM	
210	90326-0012		2	PROTECTIVE COVER, T31A4618	
220	90326-0020		1	PLUG, FEMALE YELLOW CR-AL	
230	90330-0004		1	NIPPLES,HEXAGON,EXT.R-THREAD R3/4"-R3/4"	
250	90358-0091		2	REDUCING NIPPLE	
260	90055-0276		1	T-CONNECTION 8 MM	
270	90187-0045		1	BALL VALVE G1/4 CR PL	
280	90330-0042		1	BUSHING, INT/EXT. THR. R3/8-RP1/4	
290	90230-0028		1	NON-RETURN VALVE H 151 R 3/8"	
300	90415-0065		1	FILTER	
010	*90415-0357*		*1*	*FILTER INSERT*	
310	90166-0118	MM	490	TUBE 8 MM PA BLACK	
340	90166-0118	MM	255	TUBE 8 MM PA BLACK	
350	90166-0118	MM	255	TUBE 8 MM PA BLACK	
360	90166-0118	MM	255	TUBE 8 MM PA BLACK	
370	90166-0118	MM	800	TUBE 8 MM PA BLACK	
380	90166-0121	MM	400	HOSE	
390	90166-0118	MM	700	TUBE 8 MM PA BLACK	
400	315229-0102		2	GASKETS, 16,8X23,8X3,7 MM 3/4" FDA	
410	342991-0101		2	HOSE CLIP,WORM DRIVE TYPE (13)-16	
420	90458-1963		1	STRAIGHT COUPLING D=8-G3/8"	
430	90055-0274		11	STRAIGHT COUPLING, D=8 MM - G1/4"	
460	312125-0220		4	SCREW ISO 1207 M3X6 A4	
480	315105-0153		4	WASHER BRB6,4X12RFR	
500	2792119-0100		1	FILTER	**6-21**
510	90330-0102		1	SLEEVE, INT, THREAD, NO., R-201R1/4	
B2510	90326-0057		1	THERMOCOUPLE, CR-AL	
W2242	90220-0034	MM	3700	THERMOCABLE TEX/SITW-20F-KX 2X0,5MM2	
X2038	90326-0022		1	PLUG, MALE YELLOW CR-AL	

Machine Type	Group Description	Used-In	Group Number	Page No

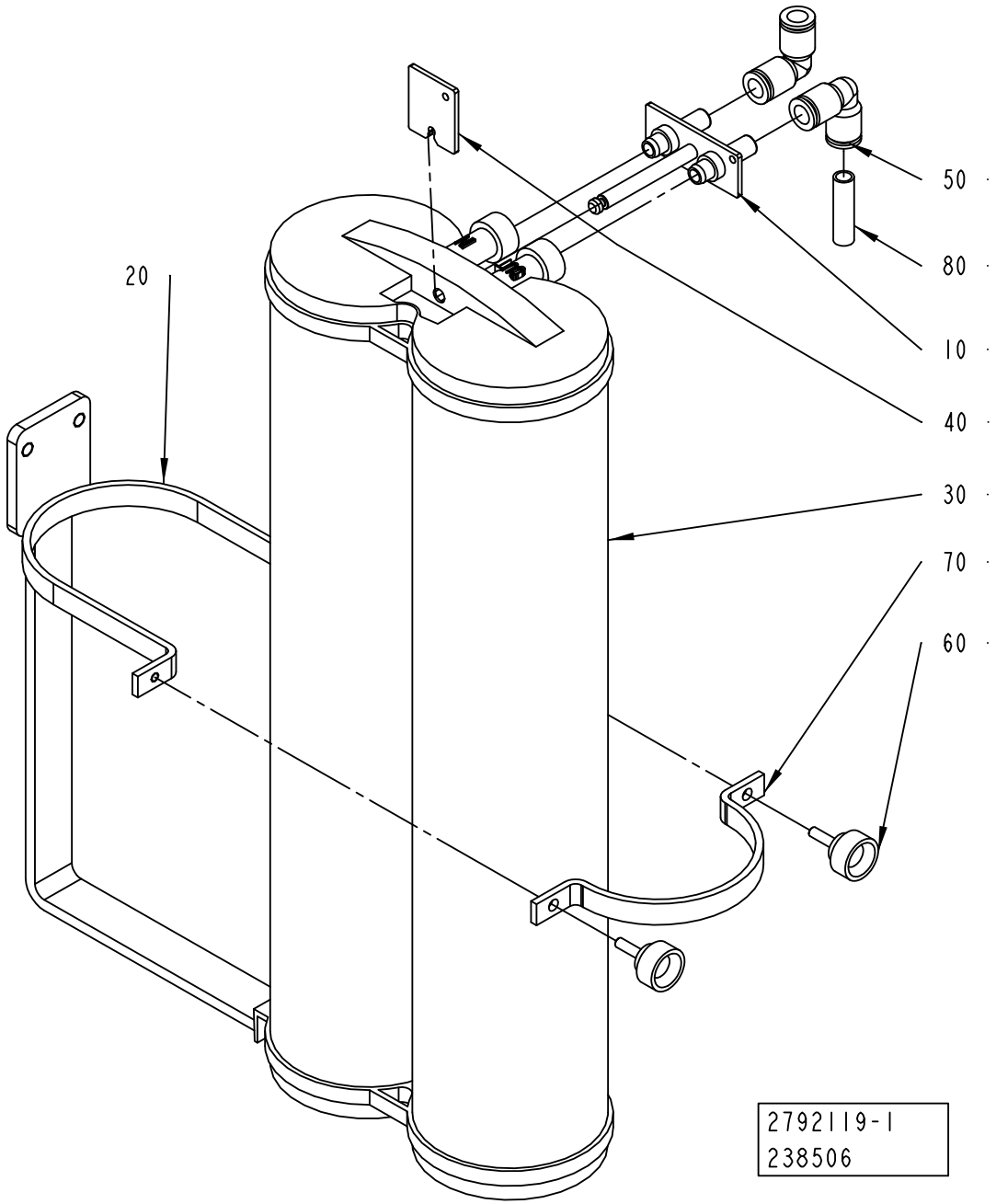
50
80
10
40
30
70
60
20
2792119-1
238506

ECM: 247177 - 20060220
Group number: 2792119-0100
Assembly Drawing: 2792119-1_1_AA

Pos	Part No	UN	Qty	Description	Page No
-					
010	2793908-0000		1	CONNECTOR	
020	2792118-0000		1	SUPPORT	
030	90459-7084		1	FILTER, CPDI000M1	
040	2793907-0000		1	FASTENING PLATE	
050	342735-0103		2	ELBOW PIPE JOINT	
060	318856-0101		2	KNOB, EXTERNAL THREAD. NO. 8308-1011	
070	2792120-0000		1	SUPPORT	
080	90166-0118	MM	200	TUBE 8 MM PA BLACK	

Pos	Part No	UN	Qty	Description	Page No

ICE WATER UNIT

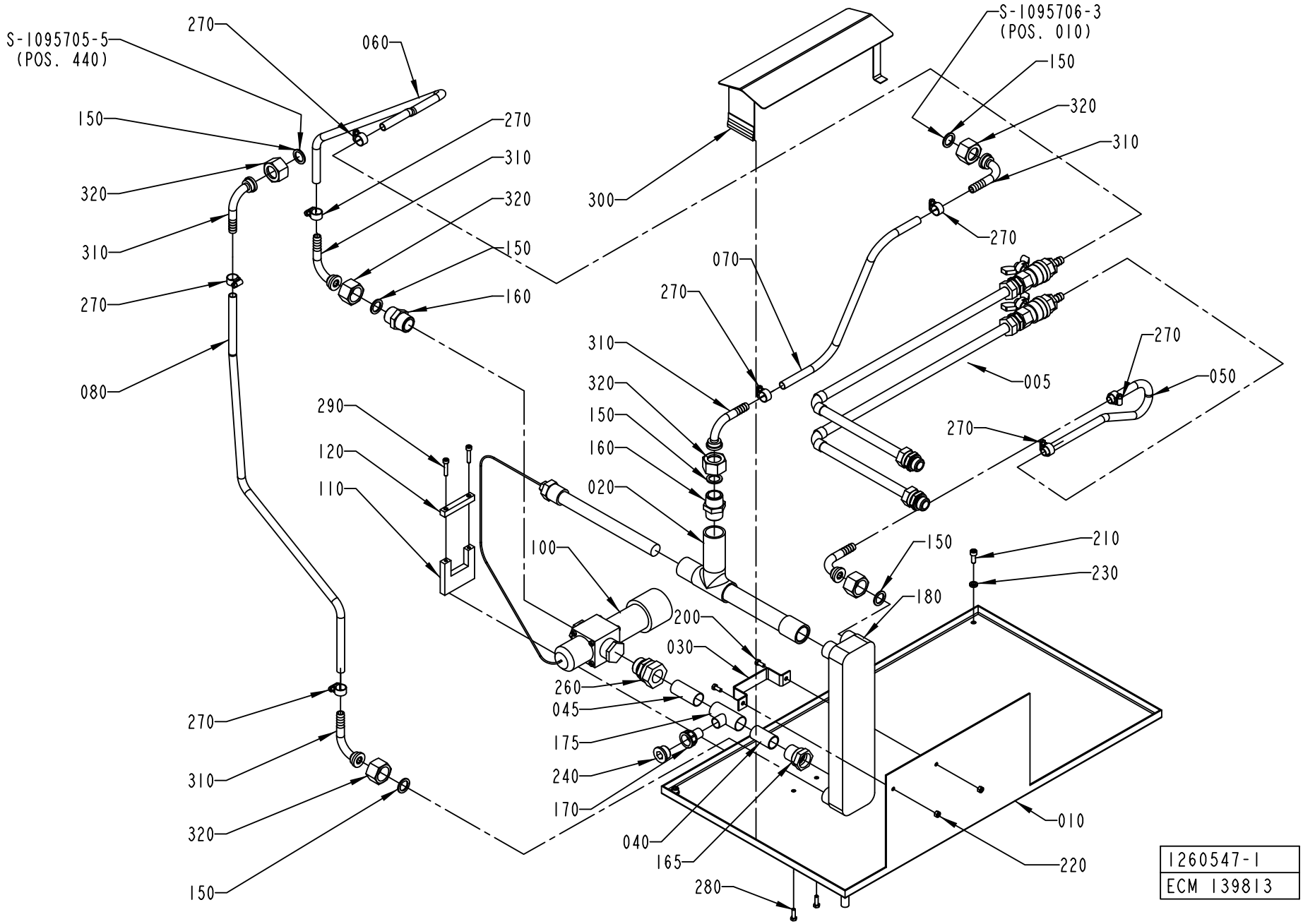

ECM: 189412 - 20041104
Group number: 1260547-0100
Assembly Drawing: 1260547-1_1_AG

Pos	Part No	UN	Qty	Description	Page No
-					
005	1095715-0100		1	ICE WATER	**6-25**
010	1255365-0000		1	MOUNTING PLATE	
020	1511680-0000		1	TUBE	
030	1260247-0000		1	CLIP	
040	1260327-0000		1	TUBE	
045	1285363-0000		1	TUBE	
050	90166-0121	MM	400	HOSE	
060	90166-0121	MM	550	HOSE	
070	90166-0121	MM	600	HOSE	
080	90166-0121	MM	850	HOSE	
100	90187-0130		1	TEMP. CONTR. VALVE, R3/4 0-30Ã¸C	
110	1511615-0000		1	BRACKET	
120	1511616-0000		1	BRACKET	
150	90459-3339		6	GASKET NBR/PTFE 17X24X2 MM 3/4"	
160	90330-0004		2	NIPPLES,HEXAGON,EXT.R-THREAD R3/4"-R3/4"	
165	90418-0045		1	ADAPTER, INT. CONN. NO. 7272CU/22-G3/4	
170	90418-0057		1	ADAPTER, EXT. CONN. NO. 7276CU / 15-G1/2	
175	90418-0062		1	T-PIPE, REDUCTION, INT, NO. 7130-22X15X2	
180	90422-0037		1	HEAT EXCHANGER	
200	312105-0327		2	SCREW M6S ISO 4017 M5X12 A480	
210	312105-0368		2	SCREW M6S ISO 4017 M6X16 A480	
220	312605-0314		2	HEXAGON NUT, M6M M5 A280	
230	315115-0153		2	WASHER PLAIN, TBRB 6,4/12 H=3	
240	342713-0213		1	PLUG, EXT THREAD HEX SOCKET 8638-00-120	
260	342720-0119		1	CONN. STR., GA-22-G3/4	
270	342991-0101		8	HOSE CLIP,WORM DRIVE TYPE (13)-16	
280	312105-0329		2	SCREW M6S ISO 4017 M5X16 A480	
290	312115-0333		2	SCREW ISO4762 M5X25 A4 80	
300	2532574-0000		1	COVER	
310	2531245-0000		6	HOSE NIPPLE	
320	2531423-0000		6	NUT	

Pos	Part No	UN	Qty	Description	Page No

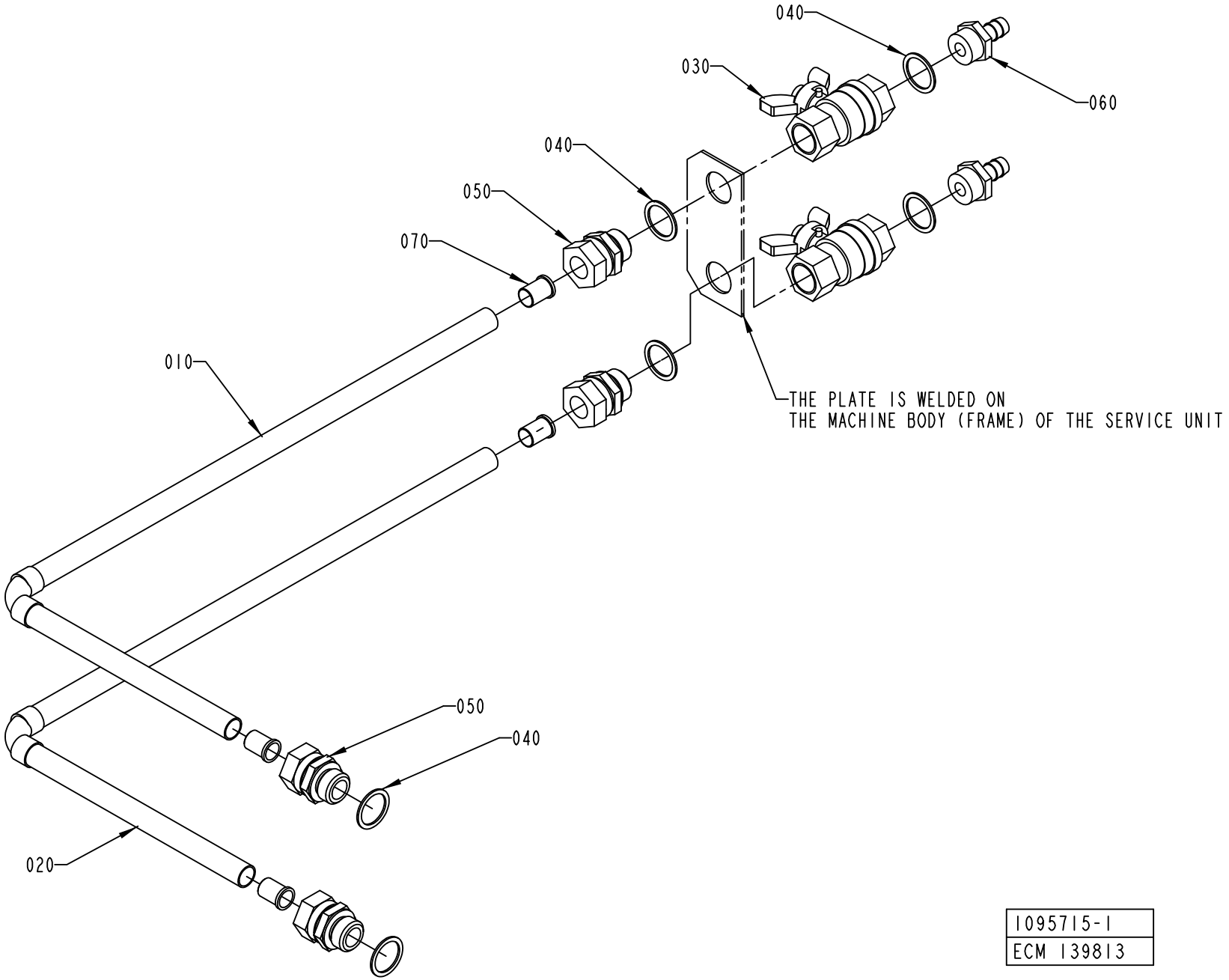

1095715-1
ECM 139813

ECM: 224833 - 20050831
Group number: 1095715-0100
Assembly Drawing: 1095715-1_1_AD

Pos	Part No	UN	Qty	Description	Page No
-					
010	1041930-0000		1	PIPE	
020	1041931-0000		1	PIPE	
030	90187-0029		2	BALL VALVE G1/2, NPBR	
040	315233-0113		6	WASHER CAPTIVE SEALING G1/2	
050	342720-0114		4	CONN. STR. GA-15-G1/2	
060	342901-0105		2	HOSE NIPPLE, EXT.THR. R1/2-12 MM	
070	342708-0109		4	REINFORCING RING VSH 15X1 MM	

Pos	Part No	UN	Qty	Description	Page No

COOLING WATER PUMP

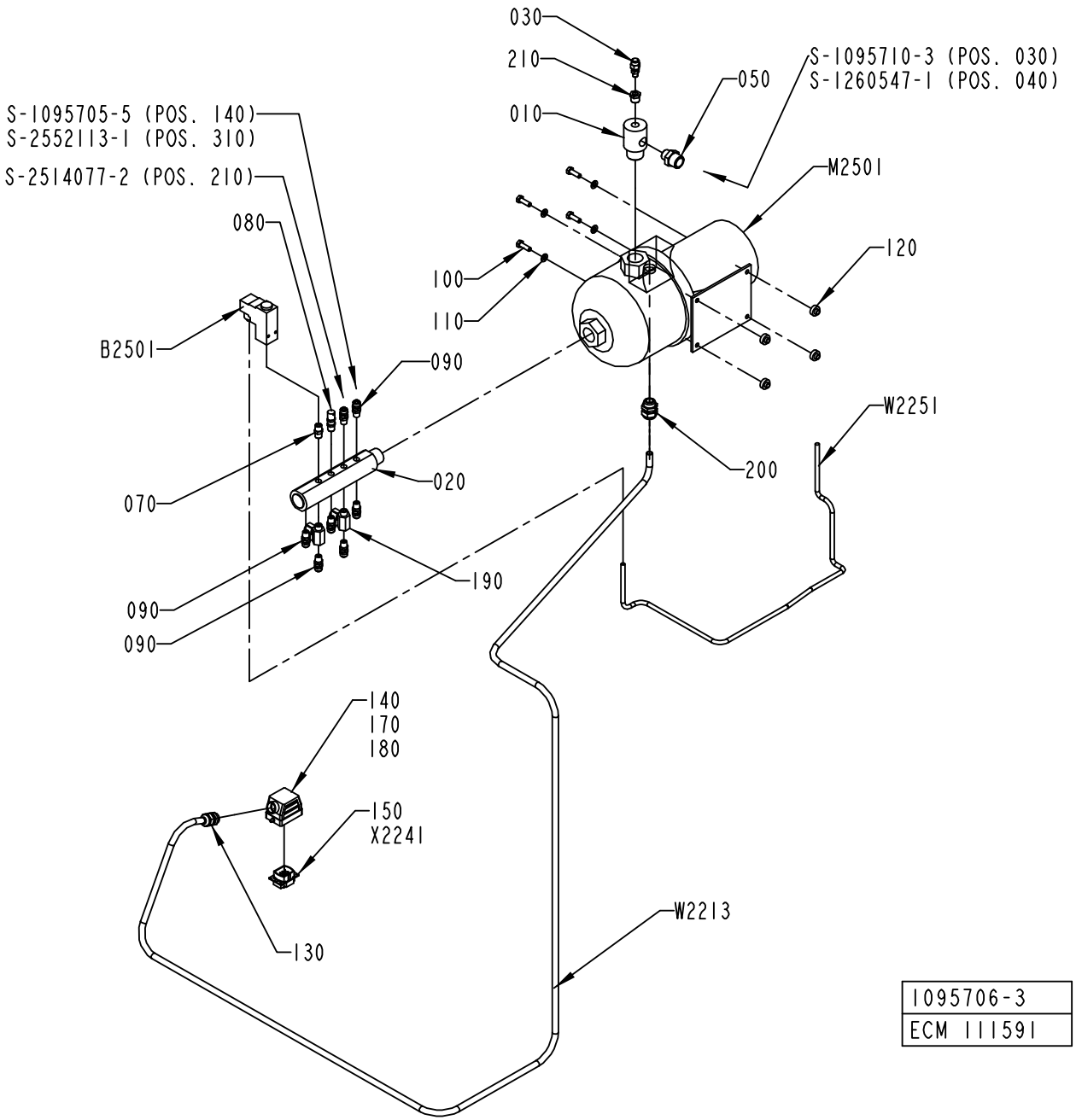

1095706-3
ECM 111591

ECM: 224832 - 20050831
Group number: 1095706-0300
Assembly Drawing: 1095706-3_1_AD

Pos	Part No	UN	Qty	Description	Page No
A3/FLEX					
090	90055-0274		7	STRAIGHT COUPLING, D=8 MM - G1/4"	
190	90187-0045		2	BALL VALVE G1/4 CR PL	
220	90330-0026		1	PLUG, EXT. G-THREAD, G1/4	
W 2213	351150-0418	MM	3500	CABLE OLFLEX 4X2,5 MM2 LIGHT/GREY	
Common Parts					
010	2532806-0000		1	ATTACHMENT PIPE	
020	1129066-0000		1	RETURN PIPE	
030	90459-1736		1	PURGE VALVE, 2RM-PG4L-SS	
050	90330-0080		1	NIPPLES, EXT. THREAD. R3/4-R1/2	
070	90330-0043		1	NIPPLES, EXT. THREAD. R-207R1/4	
080	90230-0041		1	OVERPRESSURE VALVE SS-4 CPA2-RTDG-3	
100	312105-0453		4	SCREW M6S ISO 4017 M8X25 A480	
110	315105-0165		4	WASHER BRB8,4X16RFR	
120	90015-0037		4	RUBBER BUSHING	
130	352103-0108		1	CABLE GLAND, ST 13,5 , PR20,4/PG13,5	
140	90110-0226		1	CABLE HOOD 6-POL 70.350.0628.0	
150	90110-0159		1	MALE INSERT 70.310.0640.0	
170	359005-0050		1	MARKING LABEL KIT X, 04.841.4550.0	
180	359005-0010		1	MARKING LABEL KIT 0 - 9, 04.841.2150.0	
200	352103-0110		1	CABLE GLAND, STR 16, PR22,5/PG16	
210	342701-0202		1	BUSHING,INT./EXT.G-THREAD G3/8"-G1/8"	
B 2501	90274-0056		1	PRESSURE SWITCH, 100 - 1200 KPA	
M 2501	90321-0116		1	PUMP GRUNDFOS CHI 2-60	
	90321-0618		*1*	*SEAL KIT FOR REPAIR OF PUMP*	
W 2251	351150-0431	MM	1000	CABLE OLFLEX 2X0,75 MM2 LIGHT/GREY	

Pos	Part No	UN	Qty	Description	Page No

Machine Type | Group Description | Used-In | Group Number | Page No

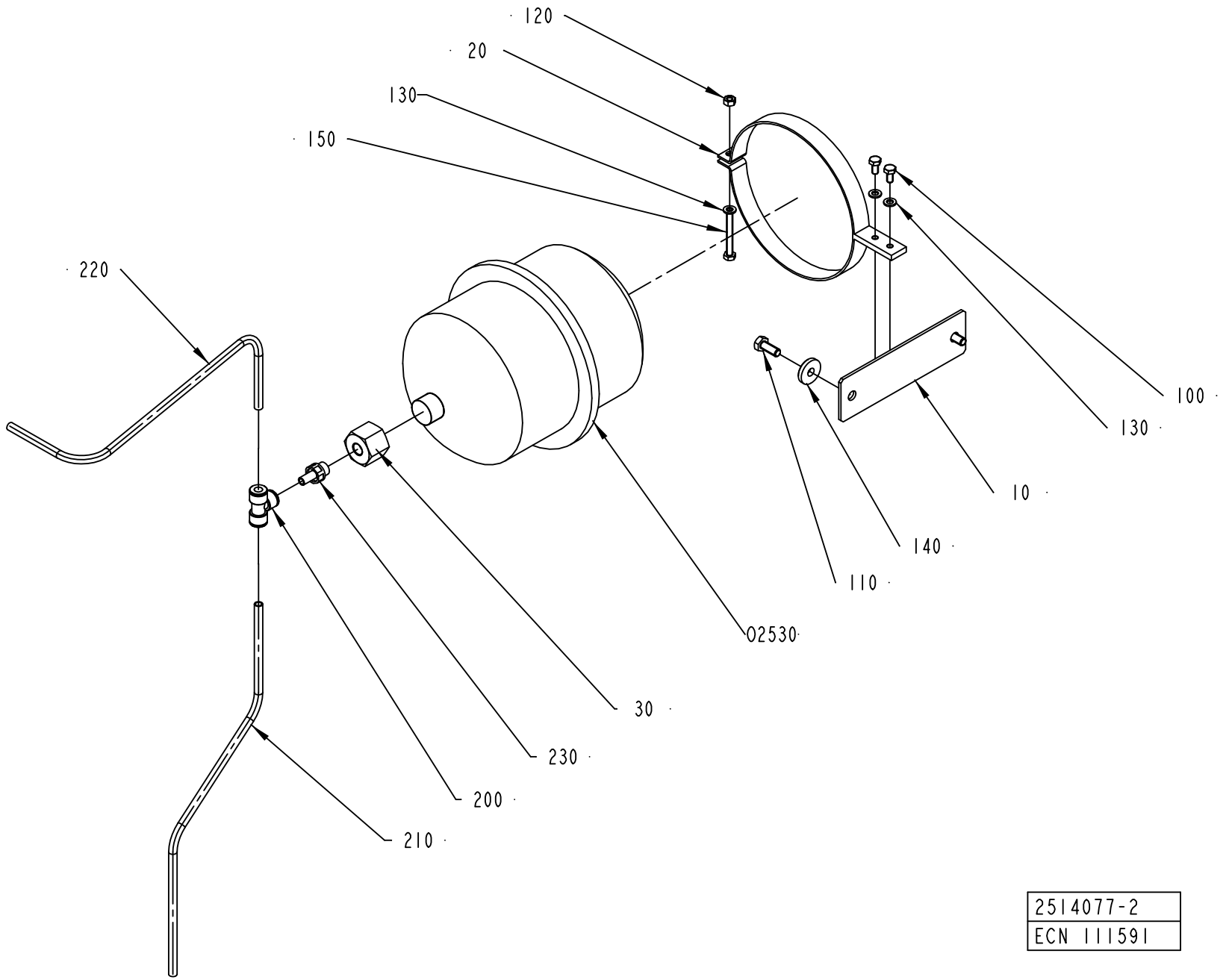

2514077-2
ECN 111591

ECM: 189417 - 20041104
Group number: 2514077-0100
Assembly Drawing: 2514077-2_1_AA

Pos	Part No	UN	Qty	Description	Page No
A3/FLEX					
200	90055-0276		1	T-CONNECTION 8 MM	
230	90055-0260		1	NIPPLE-8 MM G1/4"	
Common Parts					
010	2514087-0000		1	PLATE	
020	1484081-0000		1	BRACKET	
030	2514083-0000		1	REDUCTION NIPPLE	
100	312105-0366		2	SCREW M6S ISO 4017 M6X12 A480	
110	312105-0451		2	SCREW M6S ISO 4017 M8X20 A480	
120	312605-0316		1	HEXAGON NUT, M6M M6 A280	
130	315105-0153		3	WASHER BRB6,4X12RFR	
140	315125-0165		2	WASHER TBRSB 8,4X26X5 A4	
150	312109-0380		1	SCREW M6S ISO 4017 M6X50 A480	
210	90166-0118	MM	450	TUBE 8 MM PA BLACK	
220	90166-0118	MM	500	TUBE 8 MM PA BLACK	
O2530	90304-0020		1	LIQUID CONTAINER	

Pos	Part No	UN	Qty	Description	Page No

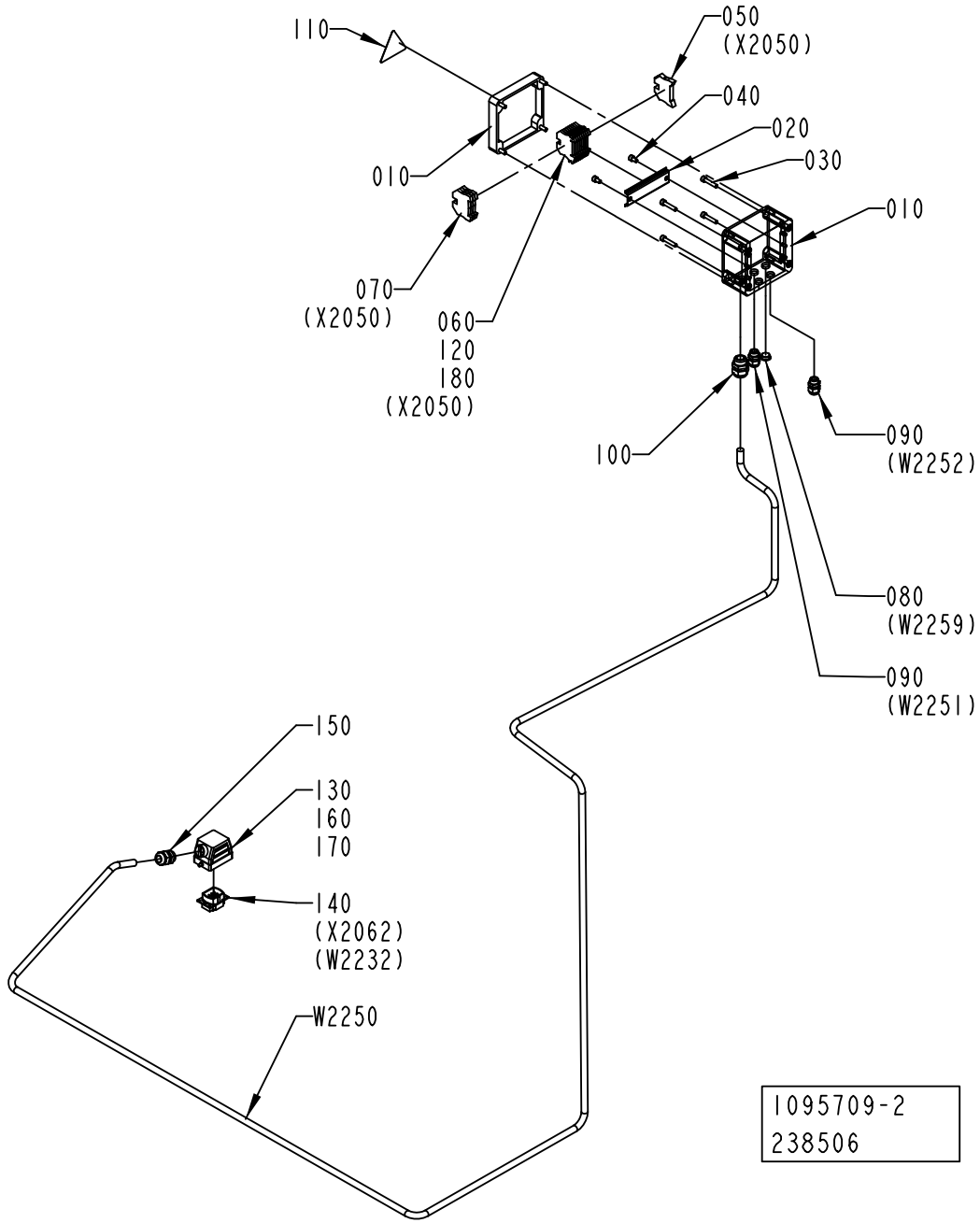
110
050
(X2050)
040
020
030
010
010
070
(X2050)
060
120
180
(X2050)
100
090
(W2252)
080
(W2259)
090
(W2251)
150
130
160
170
140
(X2062)
(W2232)
W2250
1095709-2
238506

ECM: 247180 - 20060220
Group number: 1095709-0200
Assembly Drawing: 1095709-2_1_AC

Pos	Part No	UN	Qty	Description	Page No
A3/FLEX					
W2250	351150-0406	MM	4000	CABLE OLFLEX 7X0,75 MM2 LIGHT/GREY	
Common Parts					
010	1041943-0000		1	CONNECTION BOX	
020	1129210-0000		1	MOUNTING RAIL	
030	312115-0374		4	SCREW ISO4762 M6X30 A4 80	
040	312115-0364		2	SCREW ISO4762 M6X10 A4 80	
050	353031-0203		1	END SUPPORT, WEW 35/2	
060	353021-0216		8	FEED THROUGH TERMINAL, 10200.8	
070	353024-0205		3	EARTH TERMINAL, 1010.1	
080	90002-0013		2	BLANK-OFF PLUG, PR 15,2 SKINDICHT-BLK9	
090	352103-0101		2	CABLE GLAND, ST 9, PR15,2/PG9	
100	352103-0110		1	CABLE GLAND, STR 16, PR22,5/PG16	
110	90194-0016		1	WARNING SIGN, RISK OF ELECTRIC SHOCK	
120	359011-0809		1	MARKING PLATES 5-FW 101-150	
130	90110-0226		1	CABLE HOOD 6-POL 70.350.0628.0	
140	90110-0159		1	MALE INSERT 70.310.0640.0	
150	352103-0108		1	CABLE GLAND, ST 13,5 , PR20,4/PG13,5	
160	359005-0050		1	MARKING LABEL KIT X, 04.841.4550.0	
170	359005-0010		1	MARKING LABEL KIT 0 - 9, 04.841.2150.0	
180	353034-0030		1	BRIDGE CONNECTOR WQV 2,5/10, 10544.6	

Pos	Part No	UN	Qty	Description	Page No

FOAM CLEANING UNIT

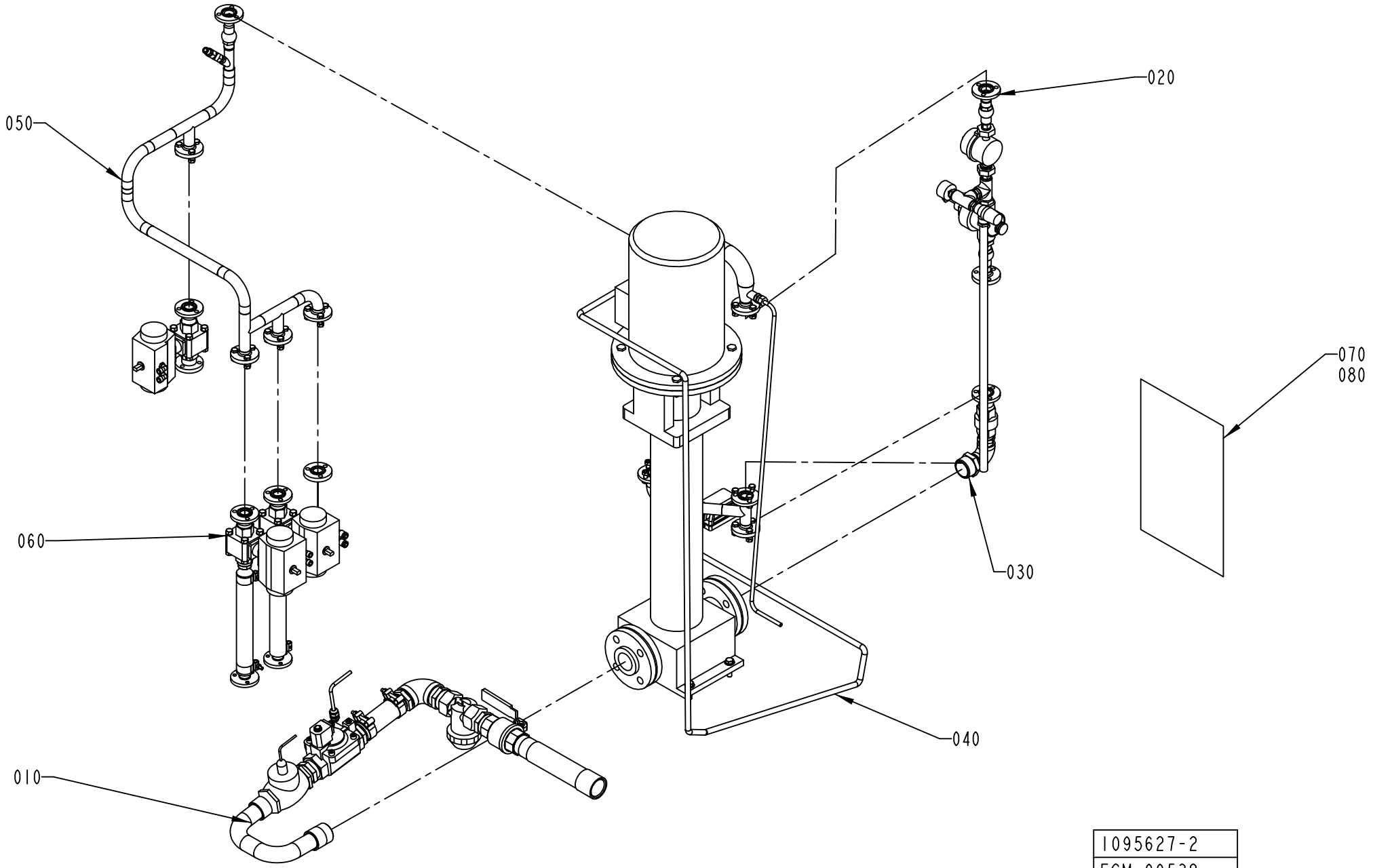

ECM: 139558 - 20030711
Group number: 1095627-0300
Assembly Drawing: 1095627-2_1_AB

Pos	Part No	UN	Qty	Description	Page No
A3/FLEX 50HZ					
080	2512821-0000		1	EXTERNAL CLEANING DIAGRAM	
A3/FLEX 60HZ					
080	2512821-0000		1	EXTERNAL CLEANING DIAGRAM	
Common Parts					
010	1095672-0100		1	PIPE	**6-35**
020	1095673-0100		1	SIDE	**6-37**
030	1095675-0100		1	PIPE	**6-39**
040	1095676-0100		1	PUMP	**6-41, 6-43**
050	1095677-0100		1	BRANCHING PIPE	**6-45**
060	1095678-0300		1	BALL VALVE	**6-47**

Pos	Part No	UN	Qty	Description	Page No

Machine Type | Group Description | Used-In | Group Number | Page No

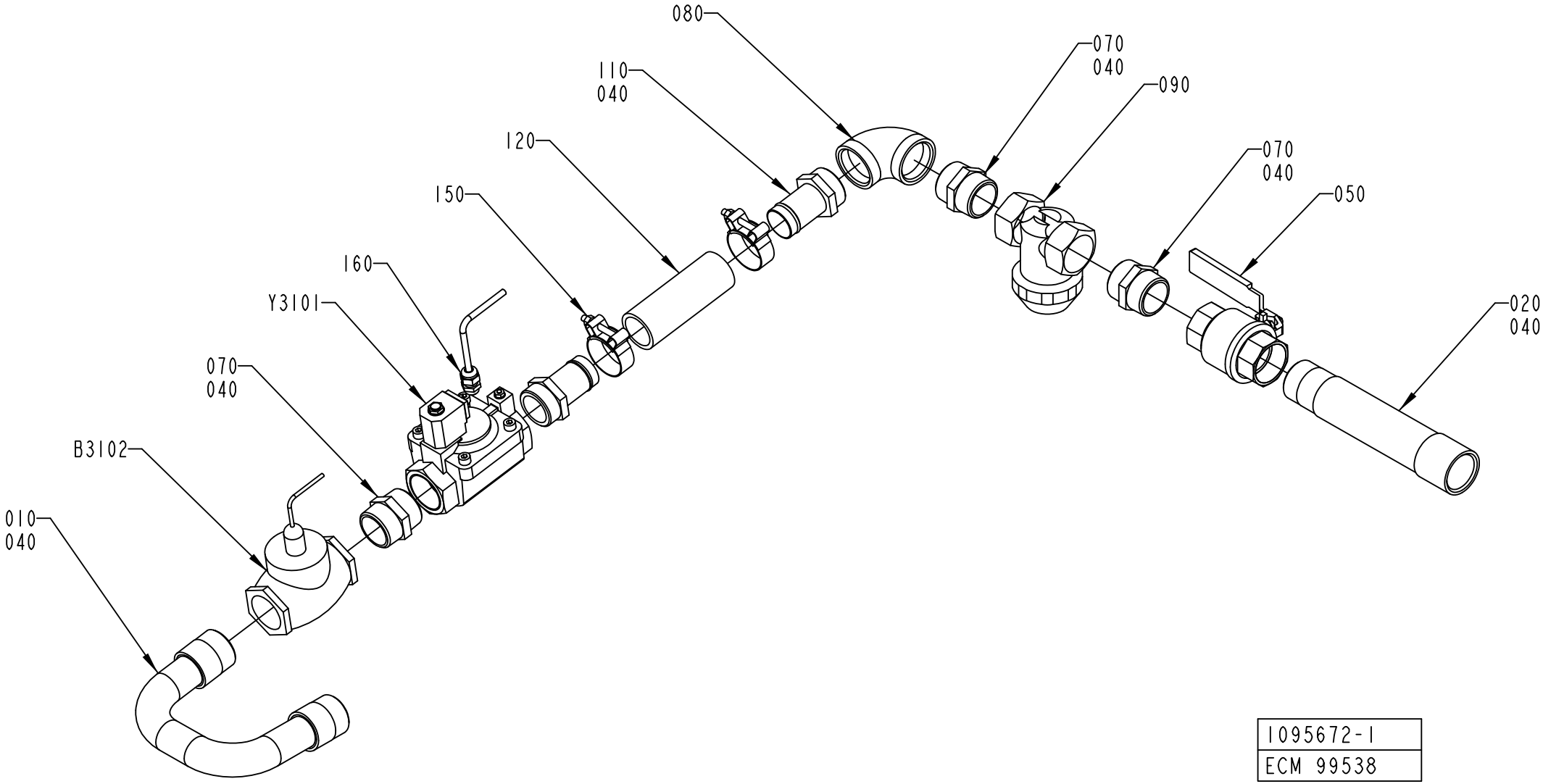
080
110
040
070
040
090
120
150
070
040
050
160
Y3101
020
040
070
040
B3102
010
040
1095672-1
ECM 99538

ECM: 224829 - 20050831
Group number: 1095672-0100
Assembly Drawing: 1095672-1_1_AD

Pos	Part No	UN	Qty	Description	Page No
-					
010	1041925-0000		1	PIPE	
020	1041926-0000		1	PIPE	
040	90144-0007	MM	1	TAPE	
050	90187-0147		1	BALL VALVE G11/2	
070	90330-0056		3	NIPPLES, EXT. THREAD. R-207 KR11/2	
080	90330-0057		1	ELBOW, 90 INT. THREAD, R-222R11/2	
090	90415-0032		1	FILTER / 3-02-00-1 1/2"	
	90415-0328		*1*	*FILTER INSERT*	
110	90055-0166		2	HOSE NIPPLE, EXT.THR. R11/2X38 MM	
120	90166-0236	MM	150	HOSE, 38/51 REINFORCED RUBBER	
150	90458-2850		2	HOSE CLIP , 51 MM	
160	352103-0101		1	CABLE GLAND, ST 9, PR15,2/PG9	
B3102	90274-0082		1	FLOW SWITCH, 2 - 3 L/MIN	
	90274-0322		*1*	*SPARE PART KIT*	
W2222	351150-0403	M	2	CABLE OLFLEX 3X0,75 MM2 LIGHT/GREY	
Y3101	90042-0254		1	SOLENOID VALVE, R1 1/2	
	90042-0557		*1*	*COIL V24DC-N3*	
	90458-2575		*1*	*DIAPHRAGM, R450466/B FOR 90042-0254*	

Pos	Part No	UN	Qty	Description	Page No

Machine Type | Group Description | Used-In | Group Number | Page No

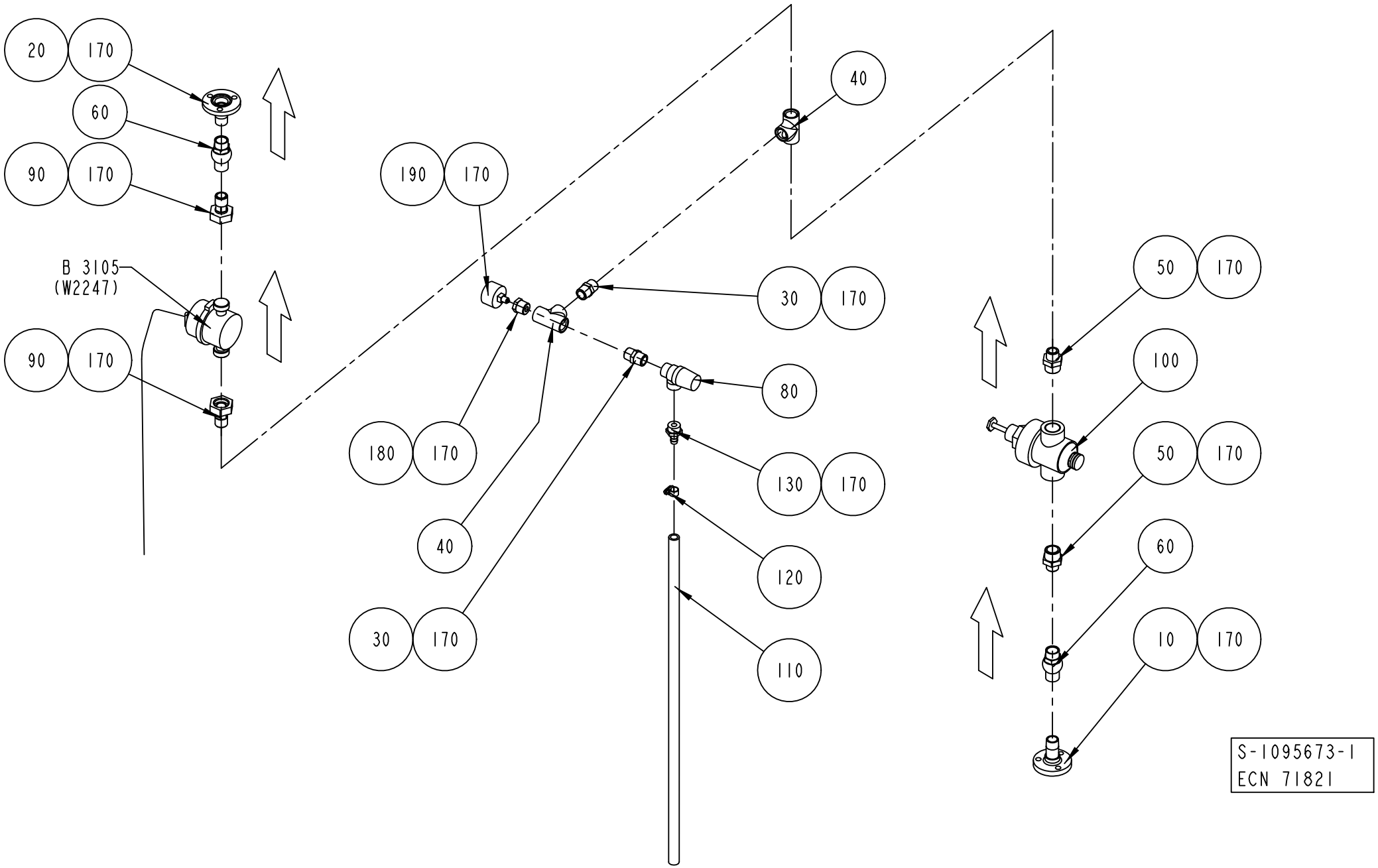
20
170
60
90
170
B 3105
(W2247)
90
170
190
170
40
30
170
80
180
170
130
170
40
120
30
170
110
50
170
100
50
170
60
10
170
S-1095673-1
ECN 71821

ECM: 224830 - 20050831
Group number: 1095673-0100
Assembly Drawing: 1095673-1_1_AD

Pos	Part No	UN	Qty	Description	Page No
-					
010	1036826-0000		1	PIPE	
020	1036827-0000		1	PIPE	
030	90330-0021		2	NIPPLES, EXT. THREAD. R-207R1/2	
040	90330-0049		2	T-PIPE, INT. THREAD, R-221R1/2	
050	90330-0080		2	NIPPLES, EXT. THREAD. R3/4-R1/2	
060	90230-0042		2	NON-RETURN VALVE 1/2"	
080	90187-0133		1	SAFETY VALVE, 10 BARS, R1/2, R1/2	
090	90030-0465		2	STRAIGHT CONNECTION, MAD DN 15	
	90005-0156		*1*	*WASHER PLAIN ROUND 16/24, H=1,5*	
100	90113-0098		1	PRESSURE REGULATOR	
110	90166-0121	MM	700	HOSE	
120	342991-0100		1	HOSE CLIP,WORM DRIVE TYPE 10-13	
130	342901-0105		1	HOSE NIPPLE, EXT.THR. R1/2-12 MM	
170	90144-0007	MM	1	TAPE	
180	90330-0036		1	BUSHING, INT/EXT. THR. RP1/8-RP1/2	
190	90043-0043		1	PRESSURE GAUGE 0-10 BAR 1/8"	
B3105	90243-0245		1	MEASURING INSTRUMENT	

Pos	Part No	UN	Qty	Description	Page No

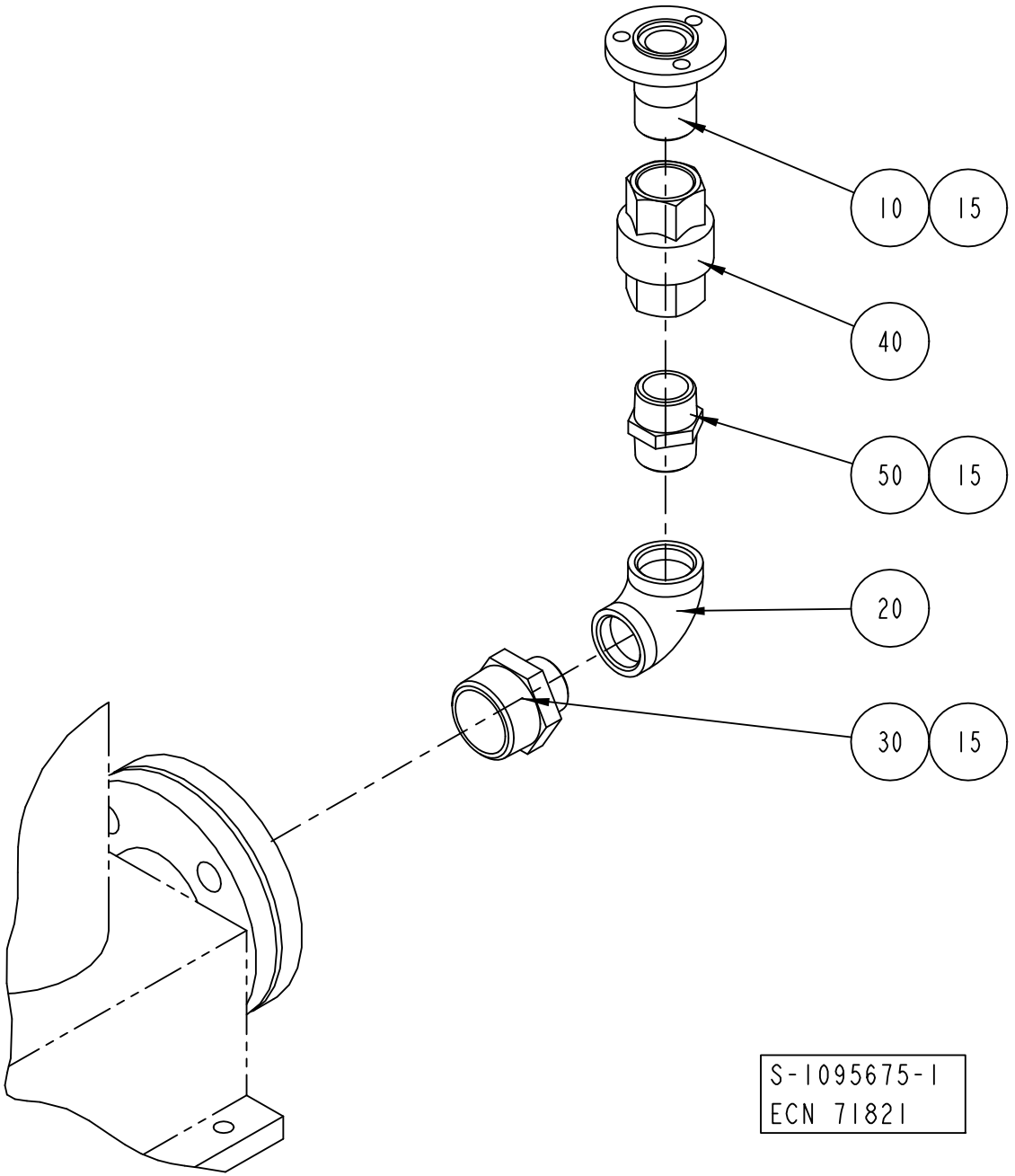
10
15
40
50
15
20
30
15
S-1095675-1
ECN 71821

ECM: 189421 - 20041104
Group number: 1095675-0100
Assembly Drawing: 1095675-1_1_AB

Pos	Part No	UN	Qty	Description	Page No
-					
010	1036794-0000		1	PIPE	
015	90144-0007	MM	1	TAPE	
020	90330-0014		1	ELBOW, 90 INT. THREAD, R-222R1	
030	90330-0045		1	NIPPLES, EXT. THREAD. R-209 KR11/2- KR1	
040	90230-0044		1	NON-RETURN VALVE 1"	
	90230-0308		*1*	*GASKET KIT*	
050	342203-0120		1	NIPPLES, EXT. THREAD, HEXAGON,Ã¿NO. 209	

Pos	Part No	UN	Qty	Description	Page No

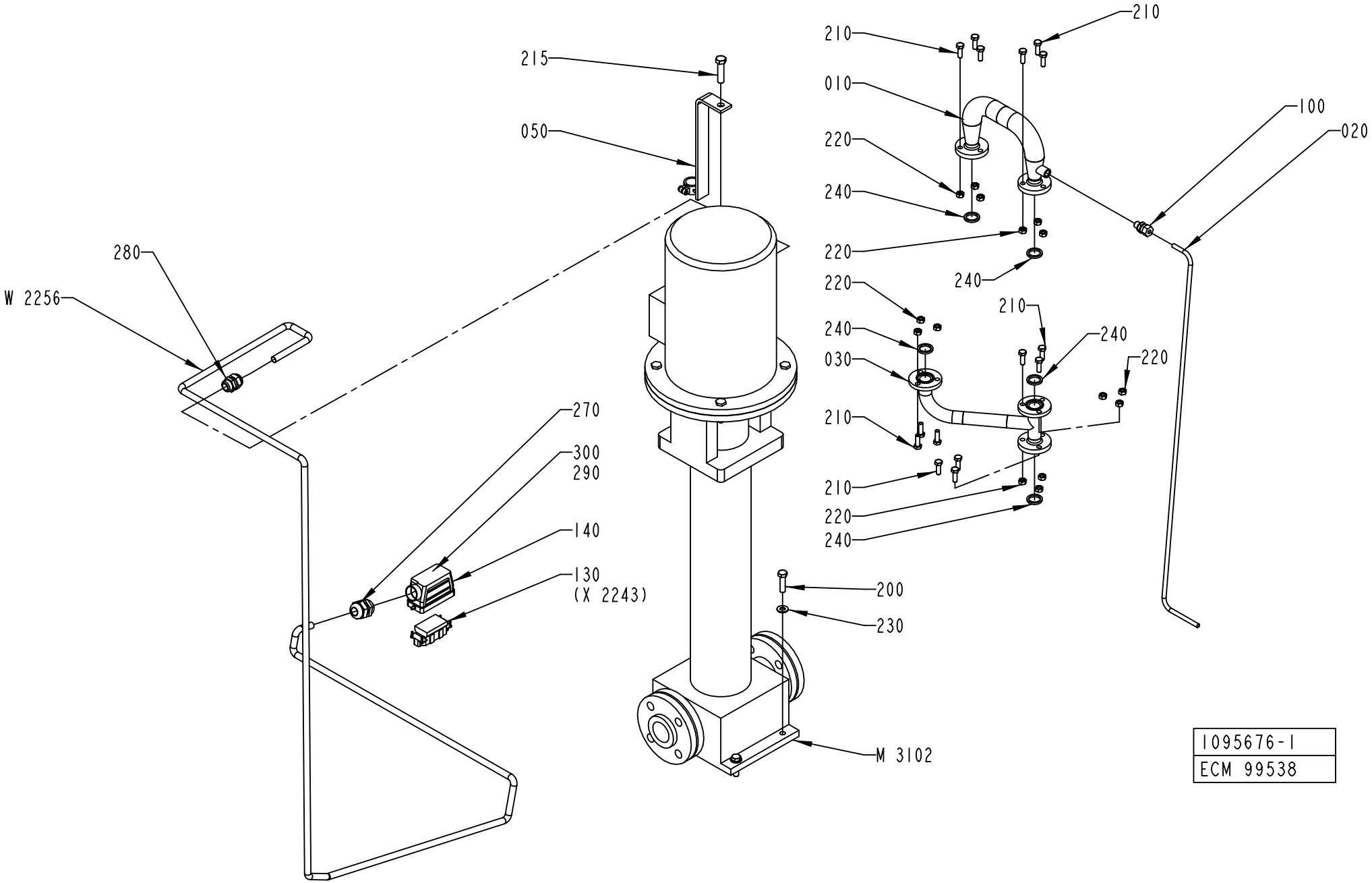
210
210
215
010
050
220
240
100
020
220
240
280
W 2256
220
240
210
240
030
220
270
210
300
290
210
220
240
140
130
(X 2243)
200
230
M 3102
1095676-1
ECM 99538

ECM: 189422 - 20041104
Group number: 1095676-0100
Assembly Drawing: 1095676-1_1_AC

This list covers pages from 6-40 to 6-43

Pos	Part No	UN	Qty	Description	Page No
A3/FLEX 50HZ (See drawing on page: 6-40)					
020	1140642-0000		1	PIPE	
050	1140670-0000		1	BRACKET	
M3102	90321-0117		1	PUMP LOWARA SV8-14 F75T	
	90321-0593		*1*	*SEAL*	
W2256	351150-0166	MM	4000	CABLE OLFLEX 4X4 MM2 LIGHT/GREY	
A3/FLEX 60HZ (See drawing on page: 6-42)					
020	1140642-0000		1	PIPE	
050	1499786-0000		1	BRACKET	
M3102	90321-0120		1	PUMP SV8-09 F756T, 380V60HZ	
	90321-0593		*1*	*SEAL*	
W2256	351150-0166	MM	4000	CABLE OLFLEX 4X4 MM2 LIGHT/GREY	
Common Parts					
010	1036828-0000		1	TANK	
030	1041946-0000		1	PIPE	
100	90030-0185		1	CONN. STR. GA-8-G1/4	
130	90110-0156		1	MALE INSERT 70.210.0653.0	
140	90110-0227		1	CABLE HOOD 6-16-POL 71.350.1628.0	
200	312105-0499		4	SCREW M6S ISO 4014 M10X40 A480	
210	312105-0453		15	SCREW M6S ISO 4017 M8X25 A480	
215	312105-0542		1	SCREW M6S ISO 4014 M12X50 A480	
220	312605-0318		15	HEXAGON NUT, M6M M8 A280	
230	315105-0173		4	WASHER BRB10,5X22RFR	
240	315229-0103		5	GASKETS, 23,1X30,1X3,7 MM 1" FDA	
270	352103-0115		1	CABLE GLAND, STR 21, PR28,3/PG21	
280	352103-0111		1	CABLE GLAND, ST 16, PR22,5/PG16	
290	359005-0010		2	MARKING LABEL KIT 0 - 9, 04.841.2150.0	
300	359005-0050		1	MARKING LABEL KIT X, 04.841.4550.0	

Pos	Part No	UN	Qty	Description	Page No

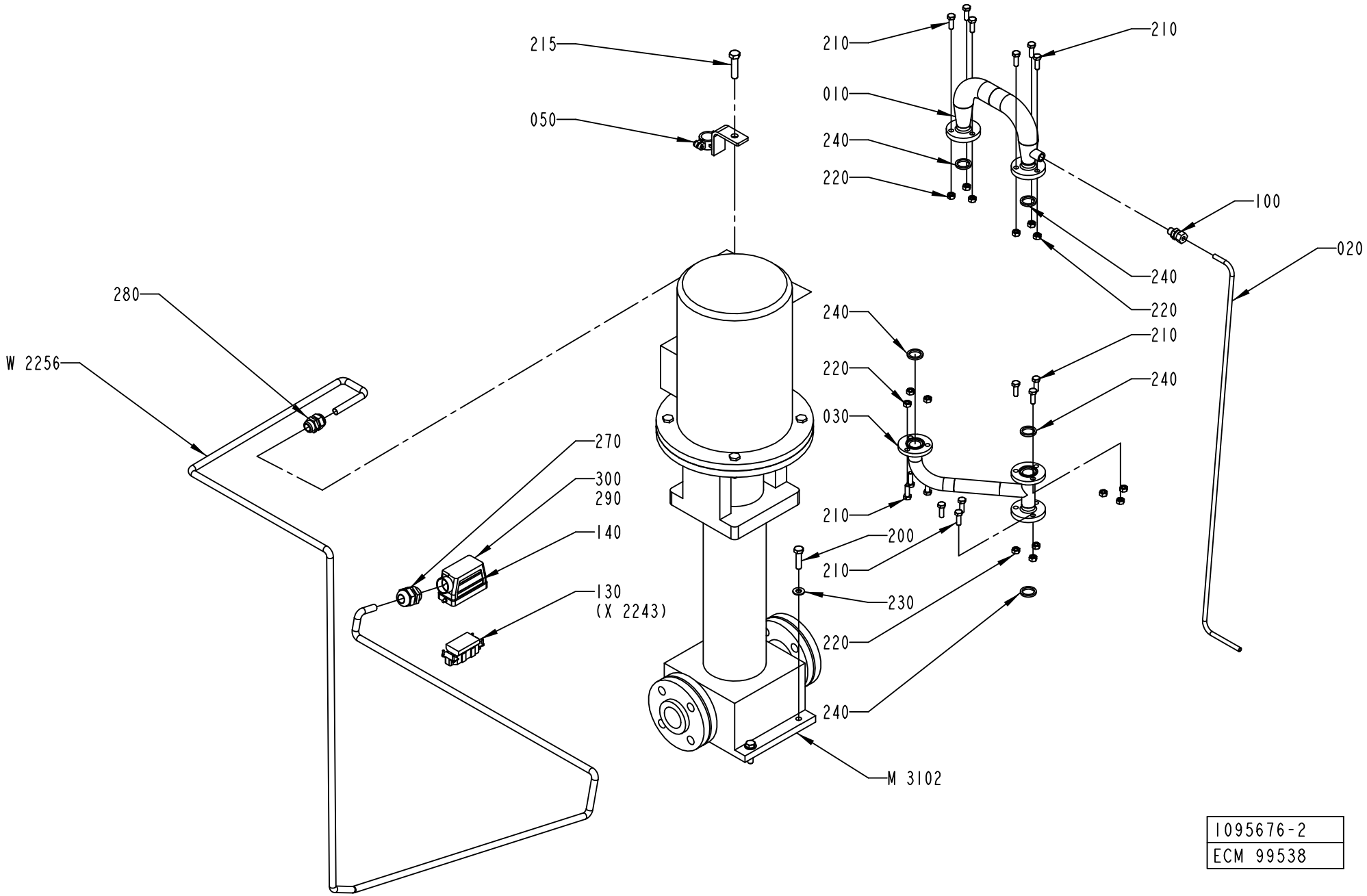
215
050
210
010
240
220
210
100
020
240
220
280
W 2256
240
210
220
240
030
270
300
290
140
210
200
210
130
(X 2243)
230
220
240
M 3102
1095676-2
ECM 99538

ECM: 189422 - 20041104
Group number: 1095676-0100
Assembly Drawing: 1095676-2_1_AA

This list covers pages from 6-40 to 6-43

Pos	Part No	UN	Qty	Description	Page No
A3/FLEX 50HZ (See drawing on page: 6-40)					
020	1140642-0000		1	PIPE	
050	1140670-0000		1	BRACKET	
M3102	90321-0117		1	PUMP LOWARA SV8-14 F75T	
	90321-0593		*1*	*SEAL*	
W2256	351150-0166	MM	4000	CABLE OLFLEX 4X4 MM2 LIGHT/GREY	
A3/FLEX 60HZ (See drawing on page: 6-42)					
020	1140642-0000		1	PIPE	
050	1499786-0000		1	BRACKET	
M3102	90321-0120		1	PUMP SV8-09 F756T, 380V60HZ	
	90321-0593		*1*	*SEAL*	
W2256	351150-0166	MM	4000	CABLE OLFLEX 4X4 MM2 LIGHT/GREY	
Common Parts					
010	1036828-0000		1	TANK	
030	1041946-0000		1	PIPE	
100	90030-0185		1	CONN. STR. GA-8-G1/4	
130	90110-0156		1	MALE INSERT 70.210.0653.0	
140	90110-0227		1	CABLE HOOD 6-16-POL 71.350.1628.0	
200	312105-0499		4	SCREW M6S ISO 4014 M10X40 A480	
210	312105-0453		15	SCREW M6S ISO 4017 M8X25 A480	
215	312105-0542		1	SCREW M6S ISO 4014 M12X50 A480	
220	312605-0318		15	HEXAGON NUT, M6M M8 A280	
230	315105-0173		4	WASHER BRB10,5X22RFR	
240	315229-0103		5	GASKETS, 23,1X30,1X3,7 MM 1" FDA	
270	352103-0115		1	CABLE GLAND, STR 21, PR28,3/PG21	
280	352103-0111		1	CABLE GLAND, ST 16, PR22,5/PG16	
290	359005-0010		2	MARKING LABEL KIT 0 - 9, 04.841.2150.0	
300	359005-0050		1	MARKING LABEL KIT X, 04.841.4550.0	

Pos	Part No	UN	Qty	Description	Page No

BRANCHING PIPE

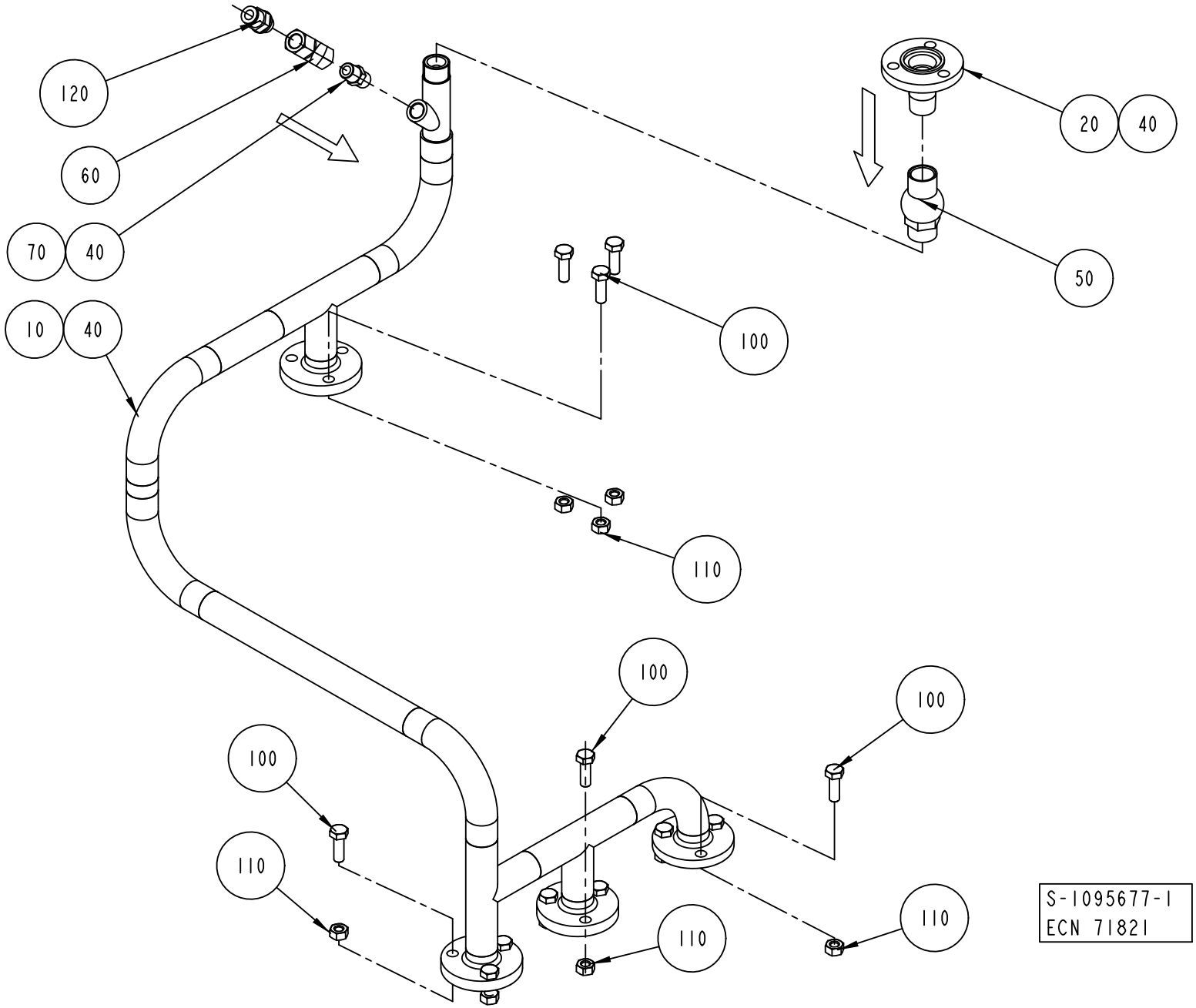

ECM: 224831 - 20050831
Group number: 1095677-0100
Assembly Drawing: 1095677-1_1_AB

Pos	Part No	UN	Qty	Description	Page No
-					
010	1041934-0000		1	PIPE	
020	1036827-0000		1	PIPE	
040	90144-0007	MM	1	TAPE	
050	90230-0042		1	NON-RETURN VALVE 1/2"	
060	90235-0151		1	NON-RETURN VALVE, 534 098 110 0	
070	90330-0043		1	NIPPLES, EXT. THREAD. R-207R1/4	
100	312115-0453		12	SCREW ISO4762 M8X25 A4 80	
110	312605-0318		12	HEXAGON NUT, M6M M8 A280	
120	342722-0205		1	STRAIGHT COUPLING D=8-G1/4"	

Pos	Part No	UN	Qty	Description	Page No

Machine Type | Group Description | Used-In | Group Number | Page No

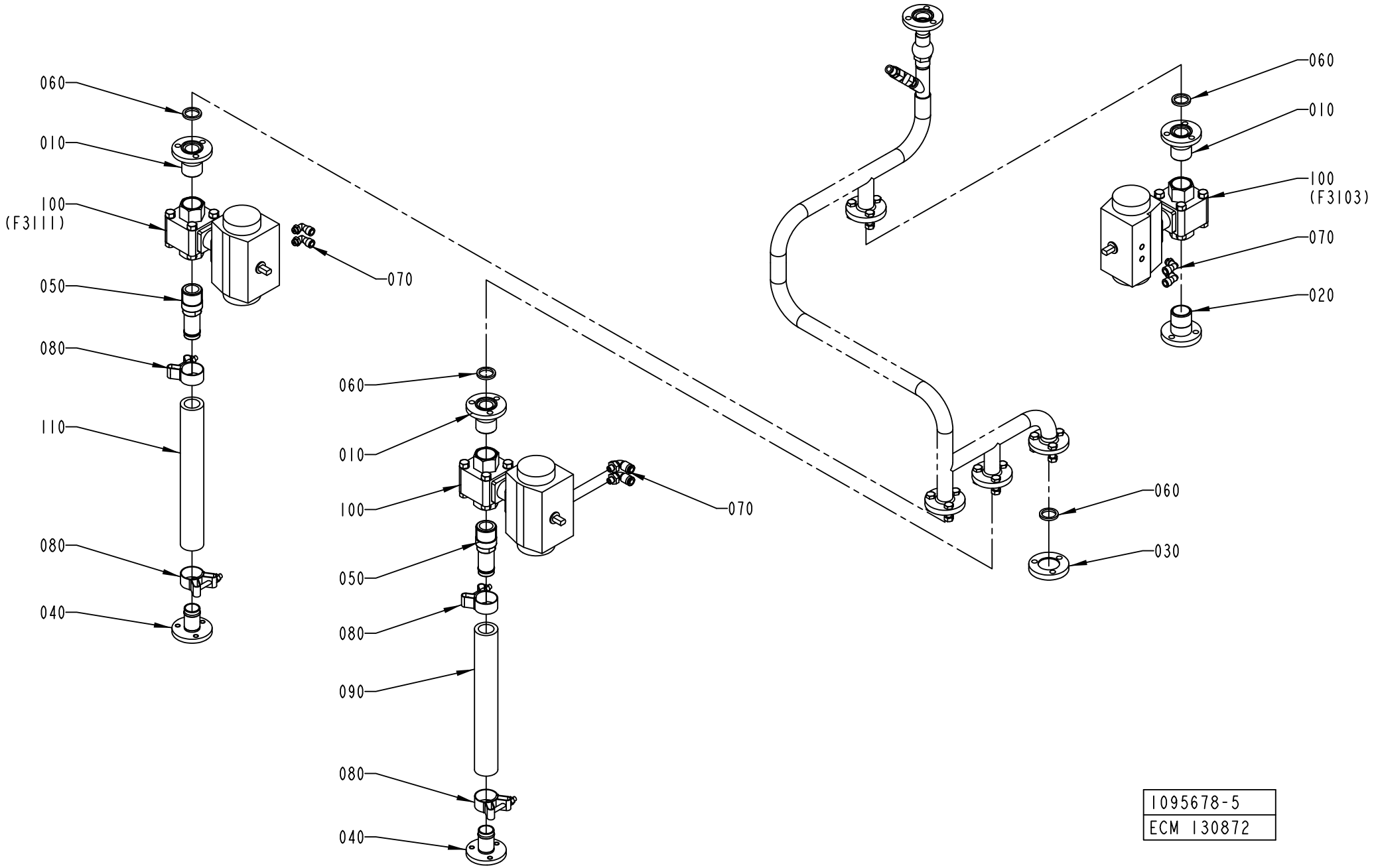

1095678-5
ECM 130872

ECM: 189424 - 20041104
Group number: 1095678-0300
Assembly Drawing: 1095678-5_1_AC

Pos	Part No	UN	Qty	Description	Page No
A3/FLEX					
010	2522148-0000		3	PIPE	
020	2522184-0000		1	PIPE	
030	1037129-0000		1	LID	
040	1195466-0000		2	PIPE	
050	1487023-0000		2	PIPE	
070	90458-2964		6	ELBOW PIPE JOINT, EXT.THREAD, D=8MM-G1/8	
080	90459-2366		4	HOSE CLIP, (32)-35	
100	90187-0148		3	BALL VALVE G1	
	90187-0319		*1*	*GASKET UNIT*	
Common Parts					
060	315229-0103		4	GASKETS, 23,1X30,1X3,7 MM 1" FDA	
090	90166-0233	MM	300	HOSE	
110	90166-0233	MM	300	HOSE	

Pos	Part No	UN	Qty	Description	Page No

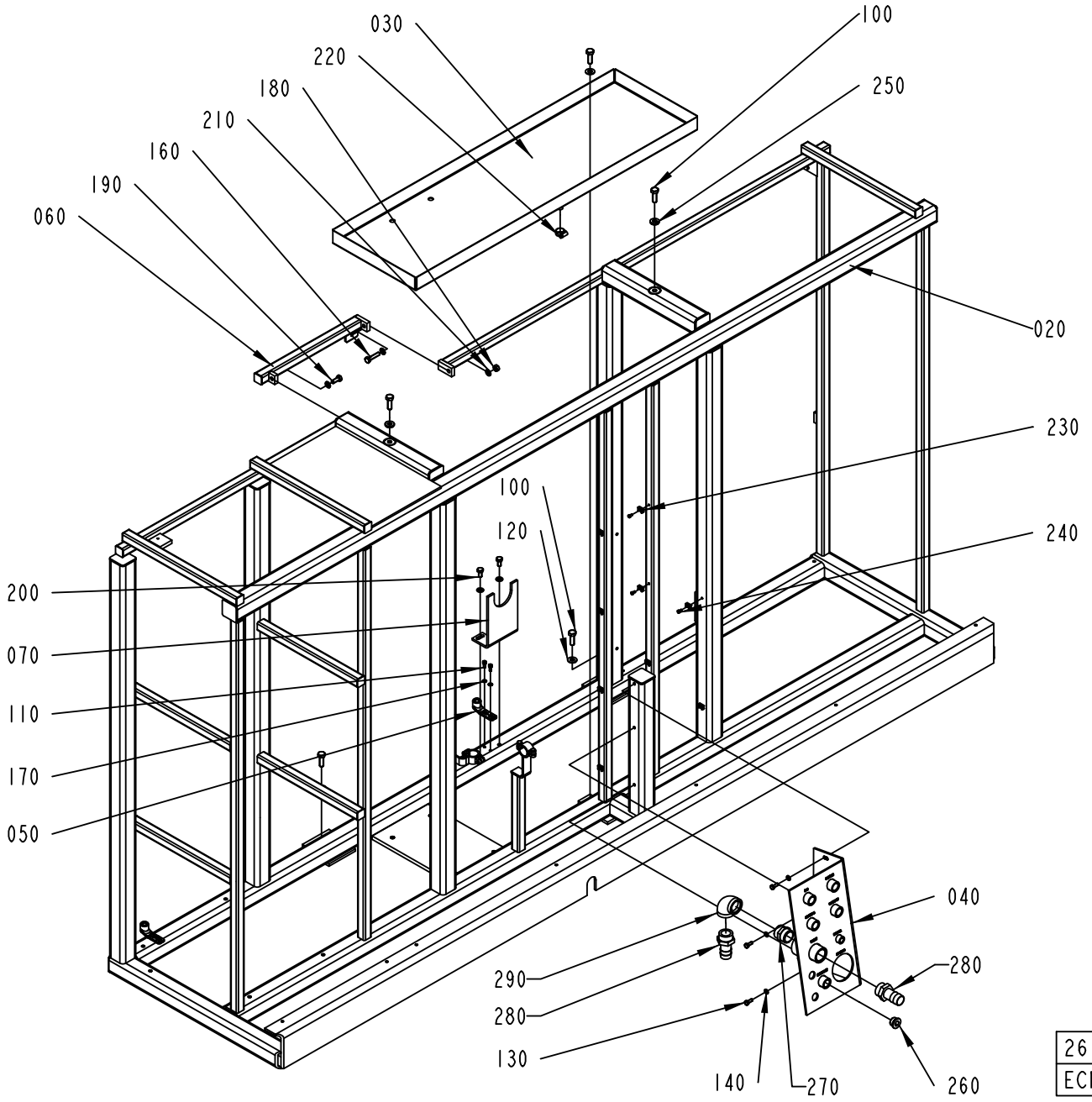

2613034-2
ECM 164885

ECM: 189425 - 20041104
Group number: 2613034-0100
Assembly Drawing: 2613034-2_1_AA

Pos	Part No	UN	Qty	Description	Page No
A3/FLEX					
270	342700-0116		1	NIPPLES,HEXAGON,EXT.G-THREAD G1"-G1"	
280	90055-0053		2	HOSE NIPPLE, EXT.THR. R1-25 MM	
290	90330-0014		1	ELBOW, 90 INT. THREAD, R-222R1	
Common Parts					
020	2613033-0000		1	MACHINE BODY	
030	1041963-0000		1	WASTE BOX	
040	1129387-0000		1	CONNECTION TABLE	
050	1538868-0000		3	BRACKET	
060	1255293-0000		1	CROSS BAR	
070	2524363-0000		1	HANGER	
100	312105-0495		5	SCREW M6S ISO 4017 M10X30 A480	
110	312115-0327		6	SCREW ISO4762 M5X12 A4 80	
120	315105-0173		3	WASHER BRB10,5X22RFR	
130	312105-0368		3	SCREW M6S ISO 4017 M6X16 A480	
140	315105-0153		3	WASHER BRB6,4X12RFR	
150	90261-0069		1	PLUG, BLIND, PLASTIC, NO. 055-0615	
160	312109-0457		1	SCREW M6S ISO 4017 M8X35 A480	
170	315105-0146		6	WASHER BRB5,3X10RFR	
180	312605-0318		1	HEXAGON NUT, M6M M8 A280	
190	312105-0451		1	SCREW M6S ISO 4017 M8X20 A480	
200	312105-0449		2	SCREW M6S ISO 4017 M8X16 A480	
210	315105-0165		5	WASHER BRB8,4X16RFR	
220	342991-0102		1	HOSE CLIP,WORM DRIVE TYPE (16)-19	
230	352113-0205		15	ANCHOR PLATES FOR STRIPS, TYPE TM2S8-C10	
240	312125-0287		15	SCREW ISO 1207 M4X8 A4	
250	315115-0173		2	WASHER PLAIN, TBRB 10,5/22 H=4	
260	342713-0213		1	PLUG, EXT THREAD HEX SOCKET 8638-00-120	

Pos	Part No	UN	Qty	Description	Page No

Machine Type | Group Description | Used-In | Group Number | Page No

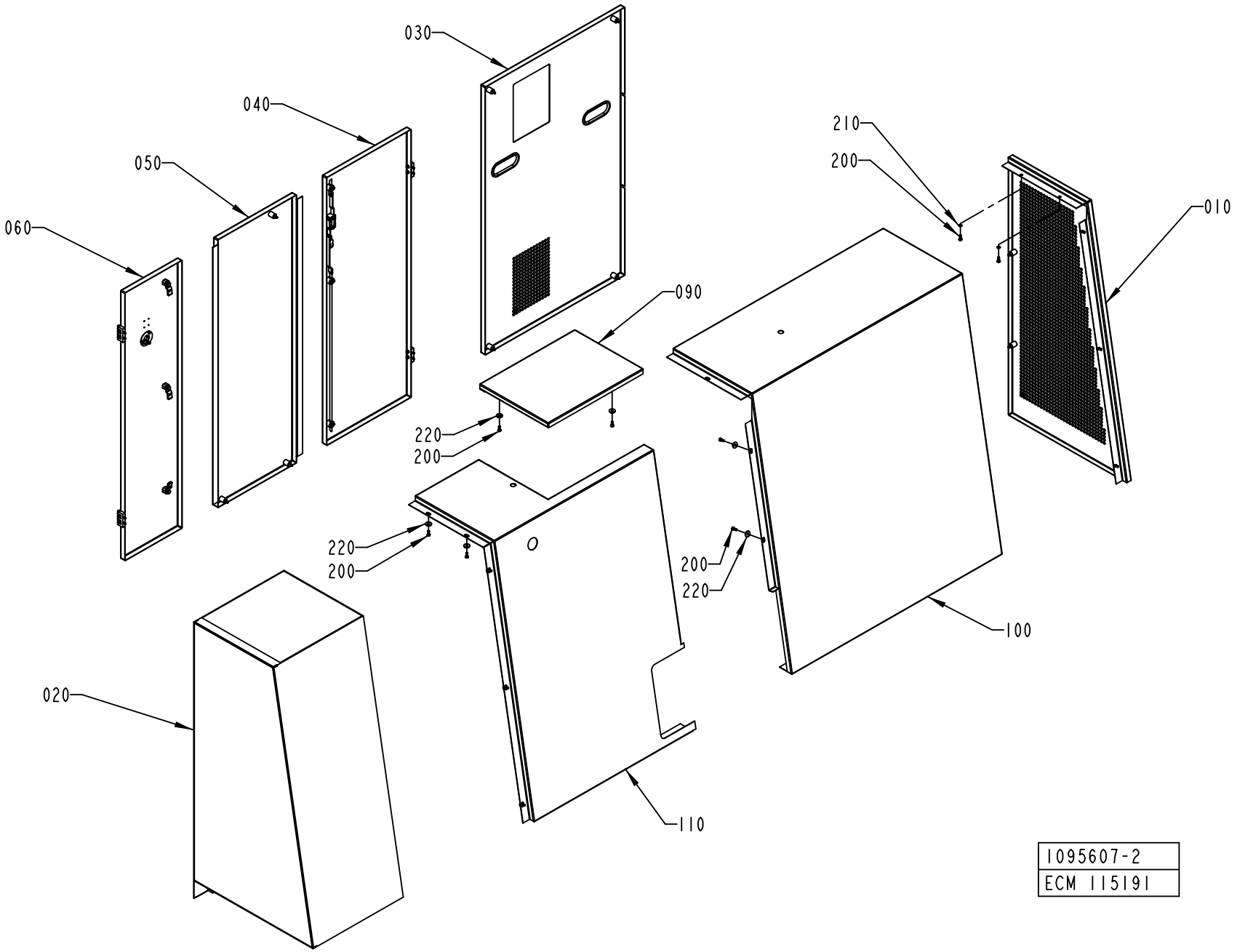
030
040
050
060
210
200
010
090
220
200
220
200
200
220
100
020
110
1095607-2
ECM 115191

ECM: 189432 - 20041104
Group number: 1095607-0200
Assembly Drawing: 1095607-2_1_AC

Pos	Part No	UN	Qty	Description	Page No
-					
010	1095883-0200		1	GABLE PLATE	**6-53**
020	1095886-0200		1	COVERING PANEL	**6-55**
030	1095888-0200		1	HATCH	**6-59**
040	1095889-0100		1	DOOR	**6-61**
050	1095890-0200		1	HATCH	**6-63**
060	1095891-0200		1	DOOR	**6-65**
090	1255637-0000		1	COVER	
100	1255636-0000		1	COVERING PANEL	
110	1255638-0000		1	COVERING PANEL	
200	312105-0368		19	SCREW M6S ISO 4017 M6X16 A480	
210	315105-0153		5	WASHER BRB6,4X12RFR	
220	315125-0153		14	WASHER TBRSB 6,4X22X4 A4	

Pos	Part No	UN	Qty	Description	Page No

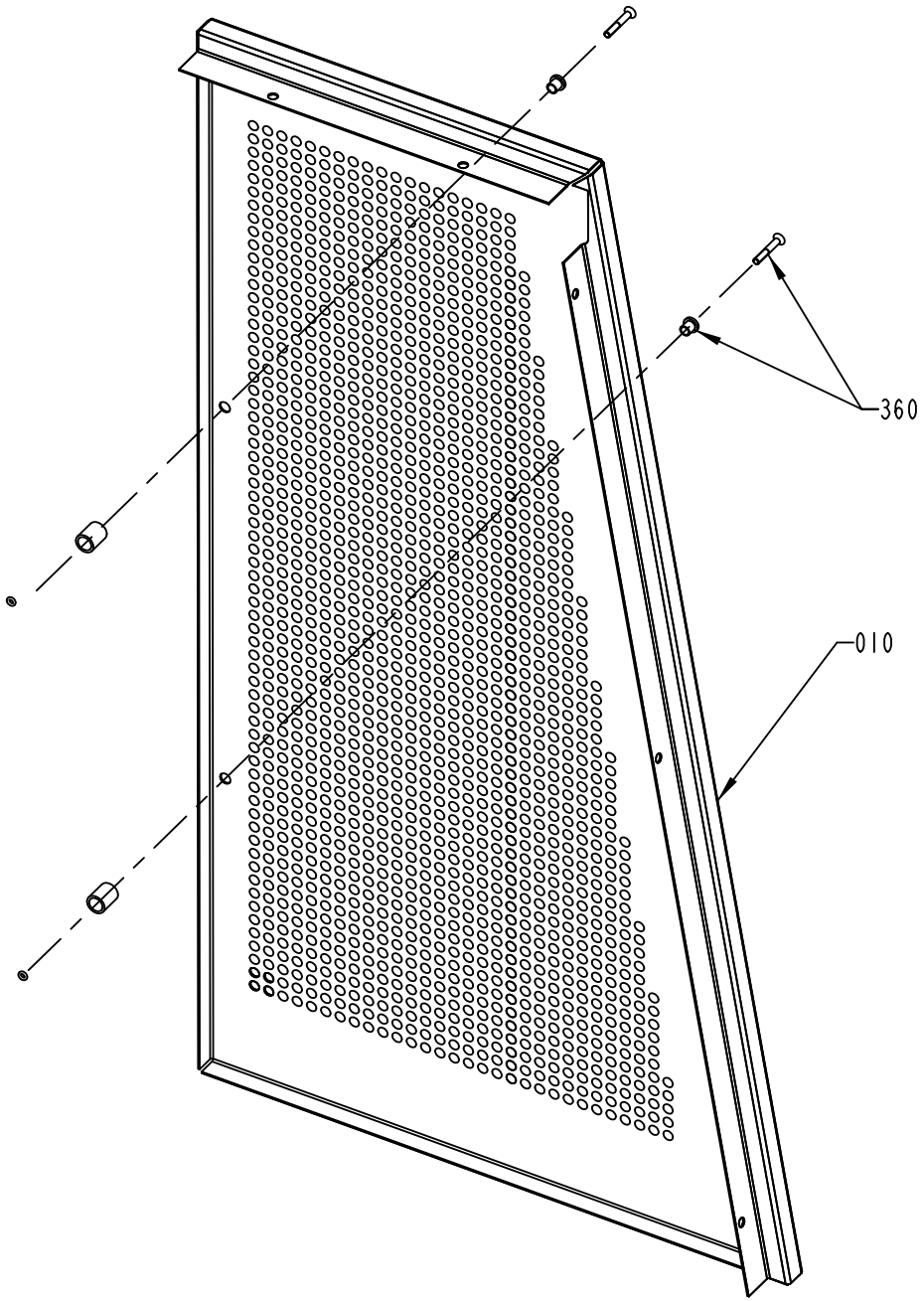
360
010

ECM: 189435 - 20041104
Group number: 1095883-0200
Assembly Drawing: 1095883-2_1_AA

Pos	Part No	UN	Qty	Description	Page No
-					
010	1255671-0000		1	GABLE PLATE	
360	90226-0458		2	MOUNTING SCREW	

Pos	Part No	UN	Qty	Description	Page No

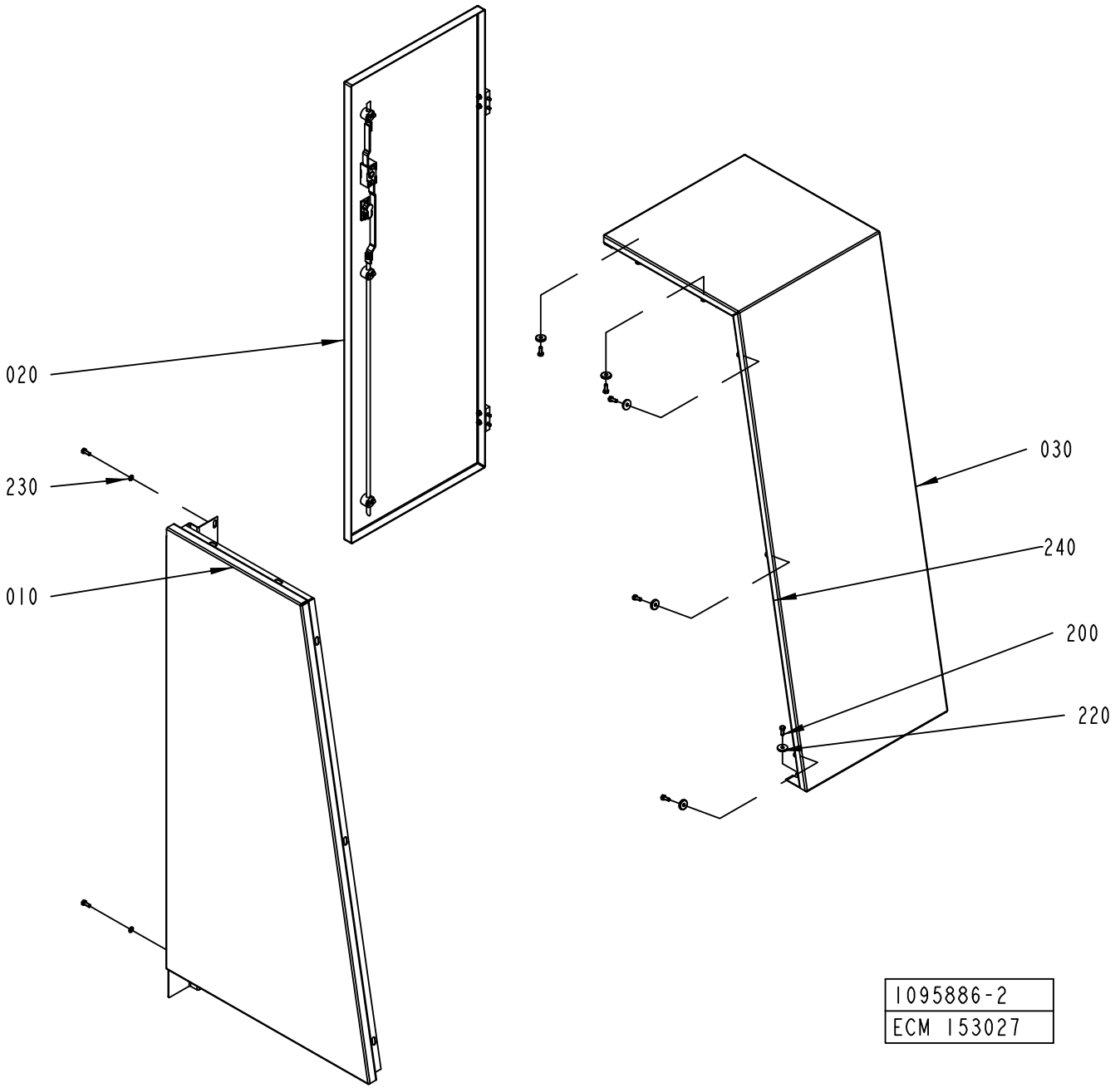
020
230
010
030
240
200
220
1095886-2
ECM 153027

ECM: 189436 - 20041104
Group number: 1095886-0200
Assembly Drawing: 1095886-2_1_AF

Pos	Part No	UN	Qty	Description	Page No
-					
010	2665129-0000		1	GABLE PLATE	
020	1484889-0100		1	DOOR	**6-57**
030	1041967-0000		1	COVERING PANEL	
200	312105-0368		7	SCREW M6S ISO 4017 M6X16 A480	
220	315125-0153		7	WASHER TBRSB 6,4X22X4 A4	
230	315105-0153		2	WASHER BRB6,4X12RFR	
240	90143-0060	MM	1120	EDGE STRIP 9,5X6,3MM BLACK PVC	

Pos	Part No	UN	Qty	Description	Page No

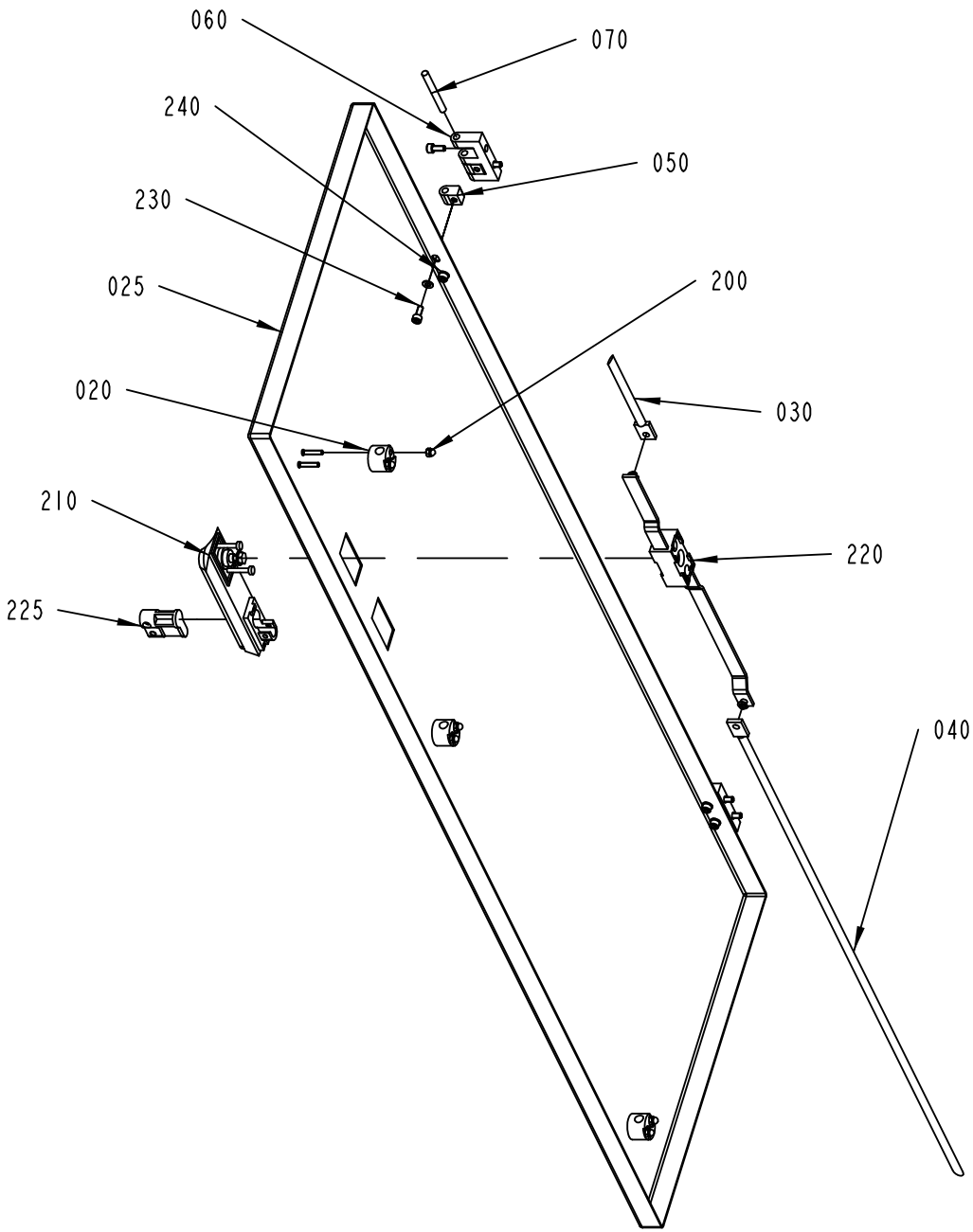

1484889-1
ECM 153027

ECM: 189437 - 20041104
Group number: 1484889-0100
Assembly Drawing: 1484889-1_1_AB

Pos	Part No	UN	Qty	Description	Page No
-					
020	1129274-0000		3	GUIDE LUG	
025	1484890-0000		1	DOOR	
030	2665132-0000		1	LOCKING ARM	
040	2665131-0000		1	LOCKING ARM	
050	1035794-0000		4	BLOCKING PIECE	
060	1035792-0000		2	E-HINGE	
070	988685-0000		2	PIN	
200	312705-0312		6	NUT HEX. DOMED CAP MHM-6 M4 A280	
210	90237-0126		1	TURNING HANDLE "REPBY 90237-175"	
220	90237-0153		1	LOCK HOUSING, 1121-U26-0B	
225	90237-0128		1	LOCK CYLINDER, 1109-U3	
230	312115-0327		8	SCREW ISO4762 M5X12 A4 80	
240	315105-0146		4	WASHER BRB5,3X10RFR	

Pos	Part No	UN	Qty	Description	Page No

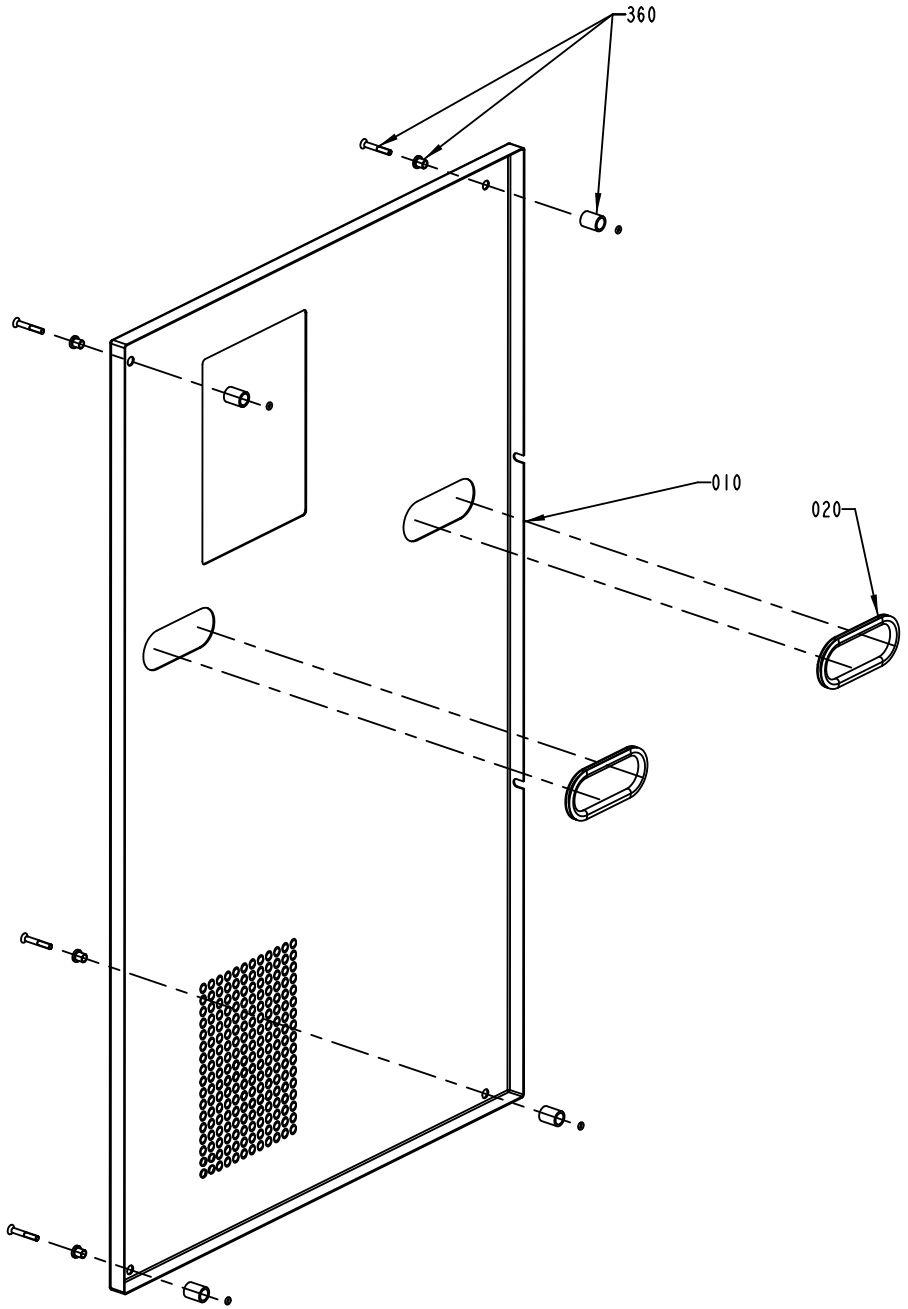
360
010
020

ECM: 189438 - 20041104
Group number: 1095888-0200
Assembly Drawing: 1095888-2_1_AB

Pos	Part No	UN	Qty	Description	Page No
-					
010	1255633-0000		1	HATCH	
020	90143-0060	M	1	EDGE STRIP 9,5X6,3MM BLACK PVC	
360	90226-0458		4	MOUNTING SCREW	

Pos	Part No	UN	Qty	Description	Page No

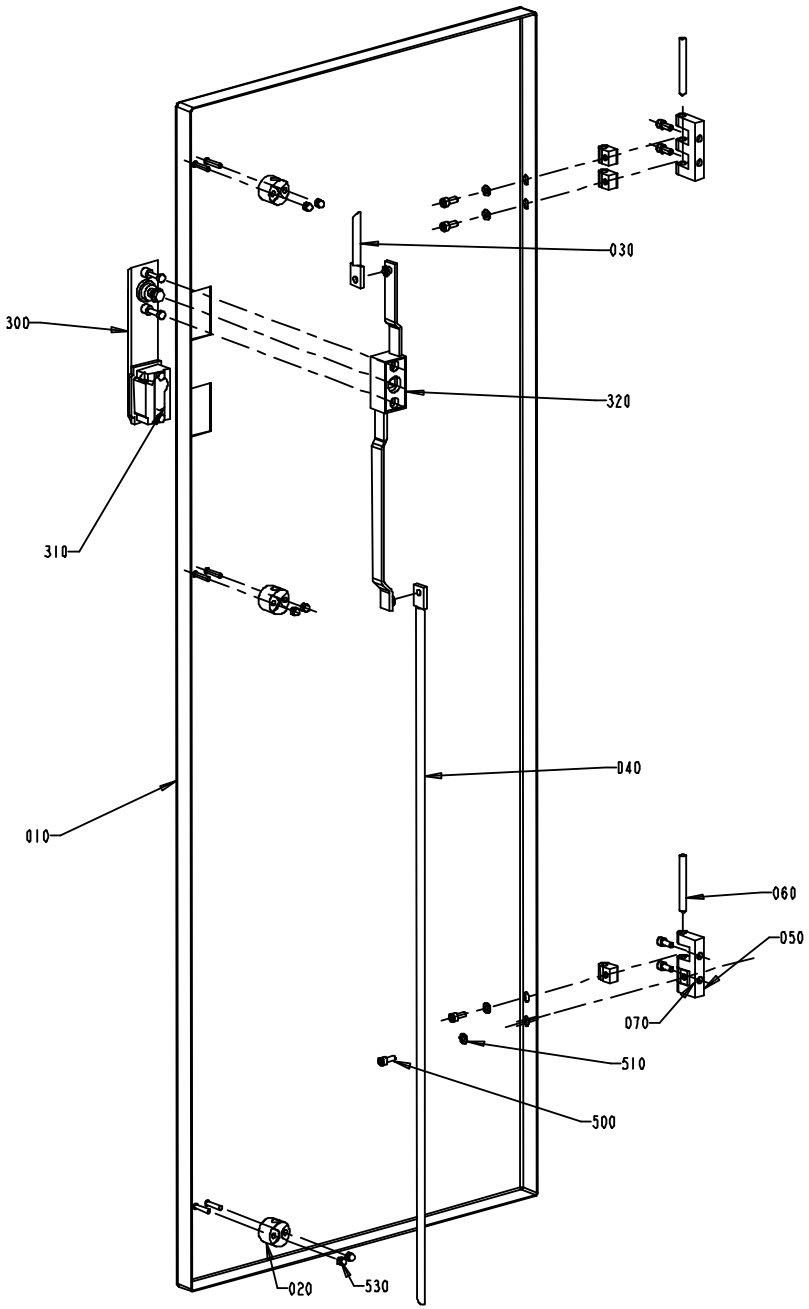
030
300
320
310
040
010
060
050
070
510
500
020
530

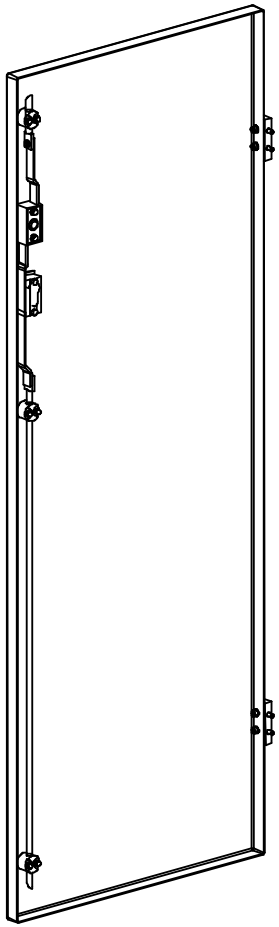

ECM: 189433 - 20041104
Group number: 1095889-0100
Assembly Drawing: 1095889-1_1_AA

Pos	Part No	UN	Qty	Description	Page No
-					
010	1041970-0000		1	DOOR	
020	1129274-0000		1	GUIDE LUG	
030	1036304-0001		1	LOCKING ARM	
040	1036304-0014		1	LOCKING ARM	
050	1035792-0000		2	E-HINGE	
060	988685-0000		2	PIN	
070	1035794-0000		4	BLOCKING PIECE	
300	90237-0126		1	TURNING HANDLE "REPBY 90237-175"	
310	90237-0128		1	LOCK CYLINDER, 1109-U3	
320	90237-0153		1	LOCK HOUSING, 1121-U26-0B	
500	312115-0327		8	SCREW ISO4762 M5X12 A4 80	
510	315105-0146		4	WASHER BRB5,3X10RFR	
530	312705-0312		6	NUT HEX. DOMED CAP MHM-6 M4 A280	

Pos	Part No	UN	Qty	Description	Page No

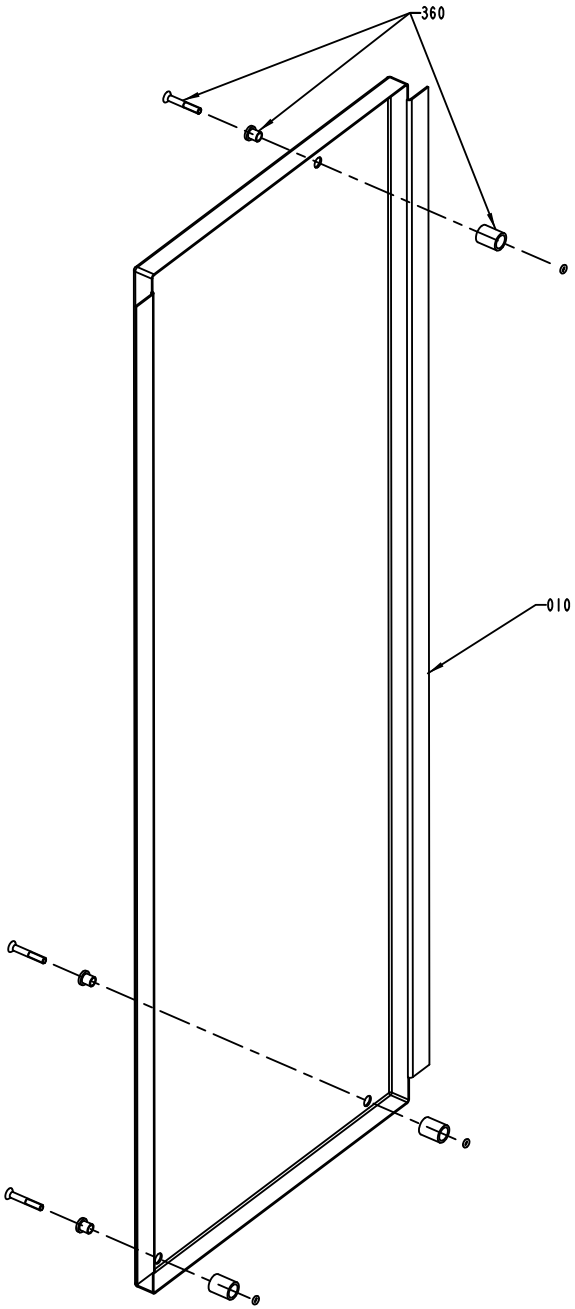
360
010

ECM: 189439 - 20041104
Group number: 1095890-0200
Assembly Drawing: 1095890-2_1_AA

Pos	Part No	UN	Qty	Description	Page No
-					
010	1255635-0000		1	HATCH	
360	90226-0458		3	MOUNTING SCREW	

Pos	Part No	UN	Qty	Description	Page No

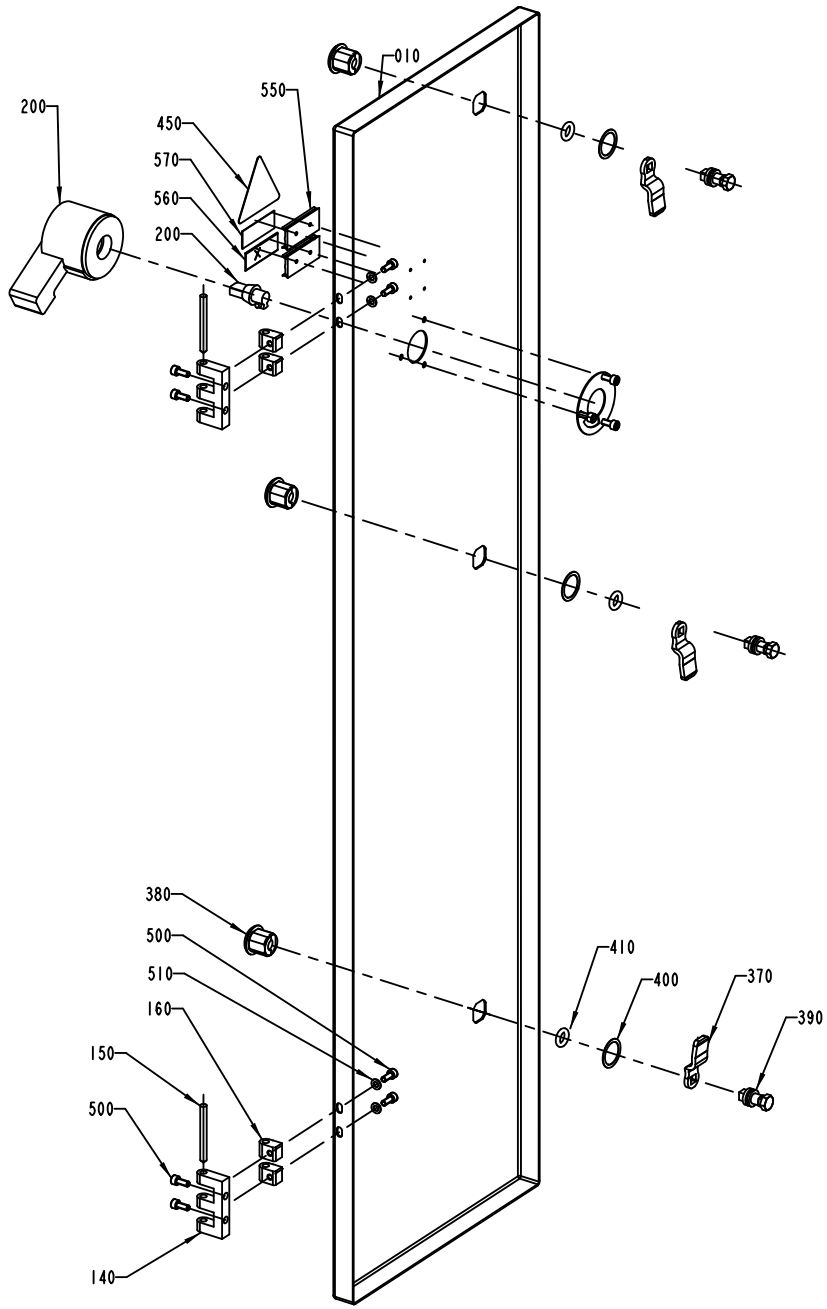
010
550
200
450
570
560
200
380
500
510
160
150
500
140
410
400
370
390

ECM: 189434 - 20041104
Group number: 1095891-0200
Assembly Drawing: 1095891-1_1_AB

Pos	Part No	UN	Qty	Description	Page No
50HZ					
570	359243-0917		1	SIGN"400V, 50HZ, 100A"	
60HZ					
570	359243-0918		1	SIGN"400V, 60HZ, 100A"	
Common Parts					
010	1041972-0000		1	DOOR	
140	1035792-0000		2	E-HINGE	
150	988685-0000		2	PIN	
160	1035794-0000		4	BLOCKING PIECE	
200	90051-0106		1	COCK HANDLE, NO. H6	
370	90237-0157		3	LOCK BOLT, 1000-230	
380	90237-0319		3	LOCK HOUSING, 1000-U134	
390	90237-0320		3	LOCK HOUSING, 1000-U136	
400	90237-0322		3	LOCK GASKET, 1000-U137	
410	90237-0323		3	LOCK O-RING, 1000-24	
450	90194-0016		1	WARNING SIGN, RISK OF ELECTRIC SHOCK	
490	311520-0329		4	RIVET, BLANK 2,4X8	
500	312115-0327		8	SCREW ISO4762 M5X12 A4 80	
510	315105-0146		4	WASHER BRB5,3X10RFR	
550	359240-0100		2	SIGN HOLDER FOR 359240-0001	
560	359241-0431		1	SIGN: " MAIN SWITCH"	

Pos	Part No	UN	Qty	Description	Page No

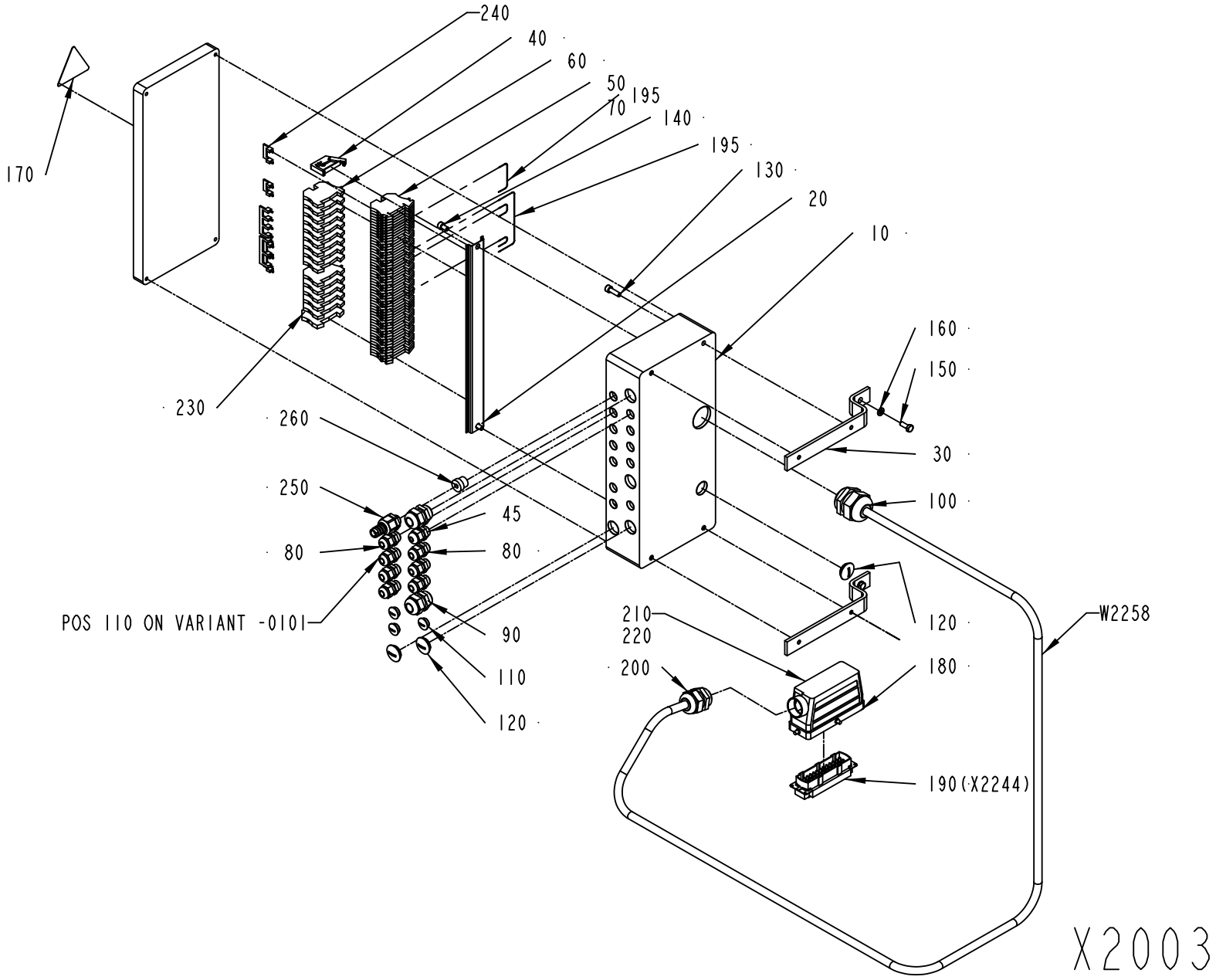

1095630-3
ECM 139813

ECM: 189440 - 20041104
Group number: 1095630-0200
Assembly Drawing: 1095630-3_1_AC

Pos	Part No	UN	Qty	Description	Page No
A3/FLEX					
080	352103-0101		7	CABLE GLAND, ST 9, PR15,2/PG9	
110	90002-0013		3	BLANK-OFF PLUG, PR 15,2 SKINDICHT-BLK9	
250	353242-0005		1	HOSE GLAND W/O INSERT PG9 NORMAL	
260	353249-0067		1	INSERT, SINGEL HOLE, E150/7	
W2258	351150-0425	MM	3000	CABLE OLFLEX 25X0,75 MM2 LIGHT/GREY	
Common Parts					
010	1129202-0000		1	CONNECTION BOX	
020	1129209-0000		1	MOUNTING RAIL	
030	1129182-0000		2	BRACKET	
040	353031-0201		1	END BRACKET EW35	
045	352103-0100		1	CABLE GLAND, STR 9, PR15,2/PG9	
050	353021-0216		40	FEED THROUGH TERMINAL, 10200.8	
060	353024-0204		14	EARTH TERMINAL WPE 2,5	
070	359011-0809		2	MARKING PLATES 5-FW 101-150	
090	352103-0110		2	CABLE GLAND, STR 16, PR22,5/PG16	
100	352103-0120		1	CABLE GLAND, STR 29, PR37,0/PG29	
120	90002-0004		3	BLANK-OFF PLUG, PR 22,5 SKINDICHT-BLK16	
130	312115-0370		4	SCREW ISO4762 M6X20 A4 80	
140	312115-0364		2	SCREW ISO4762 M6X10 A4 80	
150	312105-0368		2	SCREW M6S ISO 4017 M6X16 A480	
160	315105-0153		2	WASHER BRB6,4X12RFR	
170	90194-0016		1	WARNING SIGN, RISK OF ELECTRIC SHOCK	
180	90110-0228		1	CABLE HOOD 24-POL 71.350.2428.0	
190	90110-0150		1	MALE INSERT 121110 0000	
195	351172-0102	M	1	CABLE AWM 1X 0,75 MM2 DARKBLUE	
200	352103-0116		1	CABLE GLAND, ST 21, PR28,3/PG21	
210	359005-0050		1	MARKING LABEL KIT X, 04.841.4550.0	
220	359005-0010		1	MARKING LABEL KIT 0 - 9, 04.841.2150.0	
230	353024-0205		1	EARTH TERMINAL, 1010.1	
240	353034-0030		4	BRIDGE CONNECTOR WQV 2,5/10, 10544.6	

Pos	Part No	UN	Qty	Description	Page No

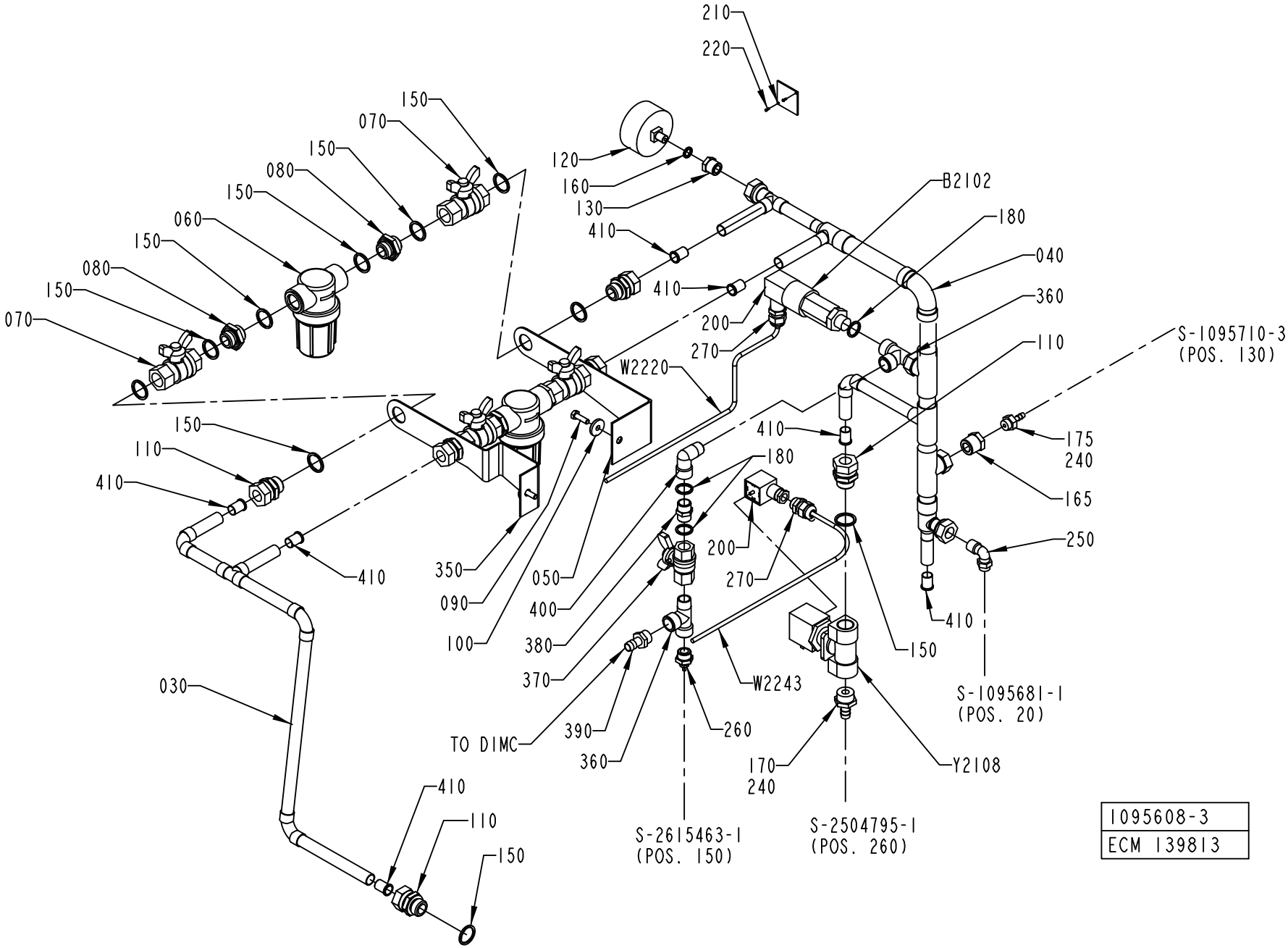

1095608-3
ECM 139813

ECM: 244165 - 20051128
Group number: 1095608-0100
Assembly Drawing: 1095608-3_1_AC

This list covers pages from 6-68 to 6-71

Pos	Part No	UN	Qty	Description	Page No
A3/FLEX COMPRESSOR (See drawing on page: 6-68)					
165	342901-0102		1	HOSE NIPPLE, EXT.THR. R1/4-7 MM	
175	90330-0085		1	BUSHING, INT/EXT. THR. R1/2-RP1/4	
180	315239-0111		3	NYLON WASHER G3/8	
260	342921-0115		1	STRAIGHT COUPLING,EXT.THREADED 6/4-G3/8"	
330	2550944-0000		1	WATER DIAGRAM	
360	90140-0023		2	T-PIPE, INT. THREAD, NO. 2070-3/8-3/8	
370	90187-0089		1	BALL VALVE G3/8, NPBR	
380	342700-0111		1	NIPPLES,HEXAGON,EXT.G-THREAD G3/8"-G3/8"	
390	90163-0041		1	HOSE NIPPLE, EXT.THR. 3/8-12 MM	
400	90140-0020		1	ELBOW, 90, INT/EXT. THREAD, NO. 2020-3/8	
A3/FLEX ICE-WATER (See drawing on page: 6-70)					
180	315239-0111		3	NYLON WASHER G3/8	
235	342920-0124		1	STRAIGHT COUPLING,EXT.THREADED 8/6-R1/2"	
260	342921-0115		1	STRAIGHT COUPLING,EXT.THREADED 6/4-G3/8"	
320	90166-0118	MM	900	TUBE 8 MM PA BLACK	
330	2550945-0000		1	WATER DIAGRAM	
360	90140-0023		2	T-PIPE, INT. THREAD, NO. 2070-3/8-3/8	
370	90187-0089		1	BALL VALVE G3/8, NPBR	
380	342700-0111		1	NIPPLES,HEXAGON,EXT.G-THREAD G3/8"-G3/8"	
390	90163-0041		1	HOSE NIPPLE, EXT.THR. 3/8-12 MM	
400	90140-0020		1	ELBOW, 90, INT/EXT. THREAD, NO. 2020-3/8	
Common Parts					
030	1041932-0000		1	PIPE	
040	1041933-0000		1	PIPE	
050	1037583-0000		1	HOLDER	
060	90458-0921		2	FILTER SP 122-200	
	90458-2541		*1*	*FILTER, CP23174-7-304SS*	
070	90187-0029		4	BALL VALVE G1/2, NPBR	
080	479261-0000		4	NIPPLE	
090	312105-0370		2	SCREW M6S ISO 4017 M6X20 A480	
100	315125-0153		2	WASHER TBRSB 6,4X22X4 A4	
110	342720-0114		6	CONN. STR. GA-15-G1/2	
120	90043-0006		1	PRESSURE GAUGE, 2041 D=63 MM	
130	342701-0202		1	BUSHING,INT./EXT.G-THREAD G3/8"-G1/8"	
150	315239-0113		18	NYLON WASHER G1/2	
160	315239-0109		1	NYLON WASHER G1/8	
170	342901-0105		1	HOSE NIPPLE, EXT.THR. R1/2-12 MM	
200	90110-0095		1	CONNECTOR 3 POLE + EARTH	
210	273455-0000		1	SIGN, COLD WATER	
220	312502-0120		2	DRIVE SCREW ROUND HEAD KDS 0X5	
240	90157-0016		1	LOCKING FLUID LOCTITE 242 50 ML	
250	342930-0133		1	ELBOW 90 COUPL.,EXT.THREADED 10/8-R3/8"	
270	352103-0101		2	CABLE GLAND, ST 9, PR15,2/PG9	
350	2547061-0000		1	HOLDER	
410	342708-0109		7	REINFORCING RING VSH 15X1 MM	
B 2102	90274-0042		1	PRESSURE GUARD, 200 KPA	
W 2220	351150-0403	MM	2000	CABLE OLFLEX 3X0,75 MM2 LIGHT/GREY	
W 2243	351150-0403	MM	2000	CABLE OLFLEX 3X0,75 MM2 LIGHT/GREY	
Y 2108	90042-0249		1	SOLENOID VALVE OFFICINE DI ENSINO	

Machine Type	Group Description	Used-In	Group Number	Page No

WATER PANEL

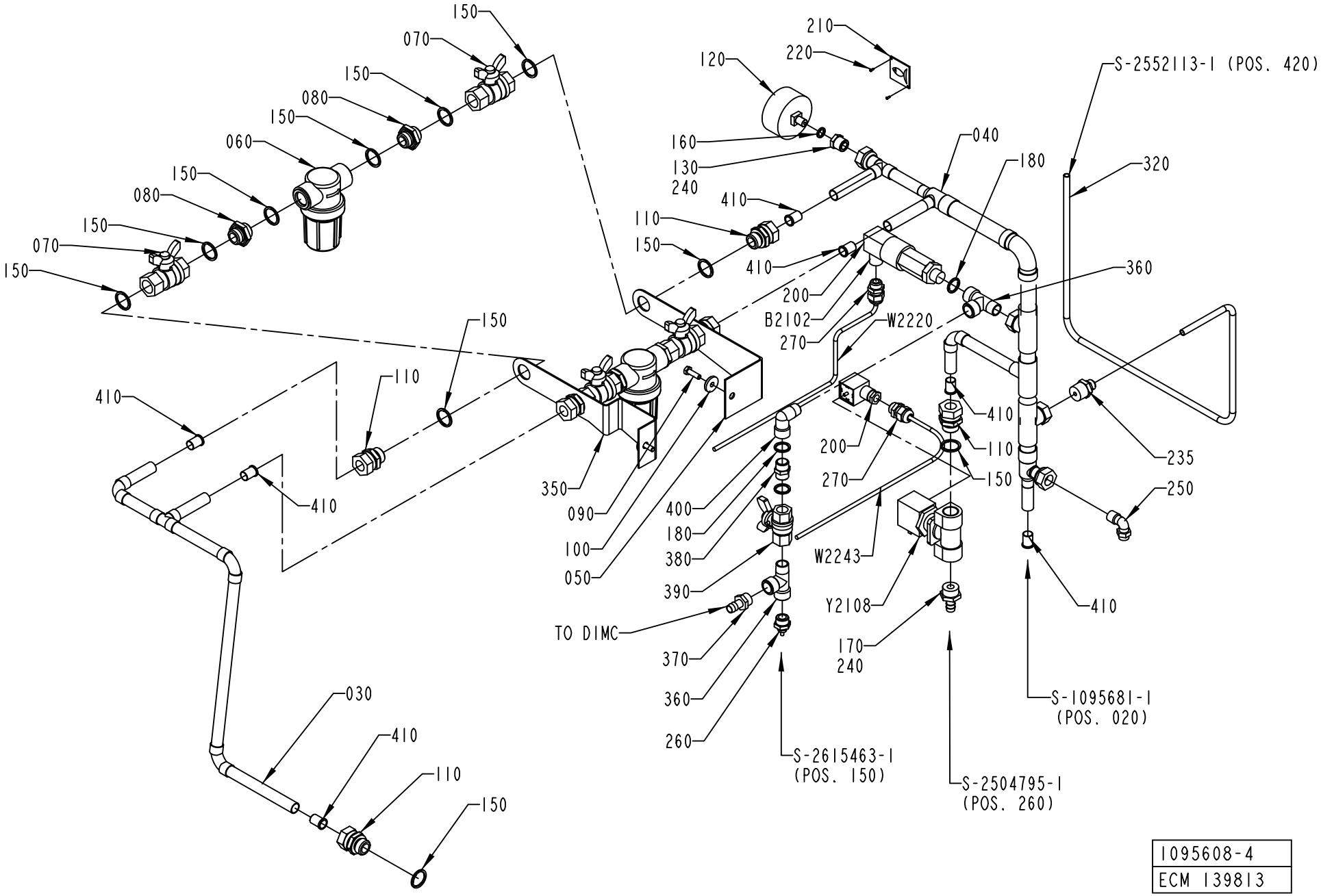

1095608-4
ECM 139813

ECM: 244165 - 20051128
Group number: 1095608-0100
Assembly Drawing: 1095608-4_1_AC

This list covers pages from 6-68 to 6-71

Pos	Part No	UN	Qty	Description	Page No
A3/FLEX COMPRESSOR (See drawing on page: 6-68)					
165	342901-0102		1	HOSE NIPPLE, EXT.THR. R1/4-7 MM	
175	90330-0085		1	BUSHING, INT/EXT. THR. R1/2-RP1/4	
180	315239-0111		3	NYLON WASHER G3/8	
260	342921-0115		1	STRAIGHT COUPLING,EXT.THREADED 6/4-G3/8"	
330	2550944-0000		1	WATER DIAGRAM	
360	90140-0023		2	T-PIPE, INT. THREAD, NO. 2070-3/8-3/8	
370	90187-0089		1	BALL VALVE G3/8, NPBR	
380	342700-0111		1	NIPPLES,HEXAGON,EXT.G-THREAD G3/8"-G3/8"	
390	90163-0041		1	HOSE NIPPLE, EXT.THR. 3/8-12 MM	
400	90140-0020		1	ELBOW, 90, INT/EXT. THREAD, NO. 2020-3/8	
A3/FLEX ICE-WATER (See drawing on page: 6-70)					
180	315239-0111		3	NYLON WASHER G3/8	
235	342920-0124		1	STRAIGHT COUPLING,EXT.THREADED 8/6-R1/2"	
260	342921-0115		1	STRAIGHT COUPLING,EXT.THREADED 6/4-G3/8"	
320	90166-0118	MM	900	TUBE 8 MM PA BLACK	
330	2550945-0000		1	WATER DIAGRAM	
360	90140-0023		2	T-PIPE, INT. THREAD, NO. 2070-3/8-3/8	
370	90187-0089		1	BALL VALVE G3/8, NPBR	
380	342700-0111		1	NIPPLES,HEXAGON,EXT.G-THREAD G3/8"-G3/8"	
390	90163-0041		1	HOSE NIPPLE, EXT.THR. 3/8-12 MM	
400	90140-0020		1	ELBOW, 90, INT/EXT. THREAD, NO. 2020-3/8	
Common Parts					
030	1041932-0000		1	PIPE	
040	1041933-0000		1	PIPE	
050	1037583-0000		1	HOLDER	
060	90458-0921		2	FILTER SP 122-200	
	90458-2541		*1*	*FILTER, CP23174-7-304SS*	
070	90187-0029		4	BALL VALVE G1/2, NPBR	
080	479261-0000		4	NIPPLE	
090	312105-0370		2	SCREW M6S ISO 4017 M6X20 A480	
100	315125-0153		2	WASHER TBRSB 6,4X22X4 A4	
110	342720-0114		6	CONN. STR. GA-15-G1/2	
120	90043-0006		1	PRESSURE GAUGE, 2041 D=63 MM	
130	342701-0202		1	BUSHING,INT./EXT.G-THREAD G3/8"-G1/8"	
150	315239-0113		18	NYLON WASHER G1/2	
160	315239-0109		1	NYLON WASHER G1/8	
170	342901-0105		1	HOSE NIPPLE, EXT.THR. R1/2-12 MM	
200	90110-0095		1	CONNECTOR 3 POLE + EARTH	
210	273455-0000		1	SIGN, COLD WATER	
220	312502-0120		2	DRIVE SCREW ROUND HEAD KDS 0X5	
240	90157-0016		1	LOCKING FLUID LOCTITE 242 50 ML	
250	342930-0133		1	ELBOW 90 COUPL.,EXT.THREADED 10/8-R3/8"	
270	352103-0101		2	CABLE GLAND, ST 9, PR15,2/PG9	
350	2547061-0000		1	HOLDER	
410	342708-0109		7	REINFORCING RING VSH 15X1 MM	
B 2102	90274-0042		1	PRESSURE GUARD, 200 KPA	
W 2220	351150-0403	MM	2000	CABLE OLFLEX 3X0,75 MM2 LIGHT/GREY	
W 2243	351150-0403	MM	2000	CABLE OLFLEX 3X0,75 MM2 LIGHT/GREY	
Y 2108	90042-0249		1	SOLENOID VALVE OFFICINE DI ENSINO	

Machine Type | Group Description | Used-In | Group Number | Page No

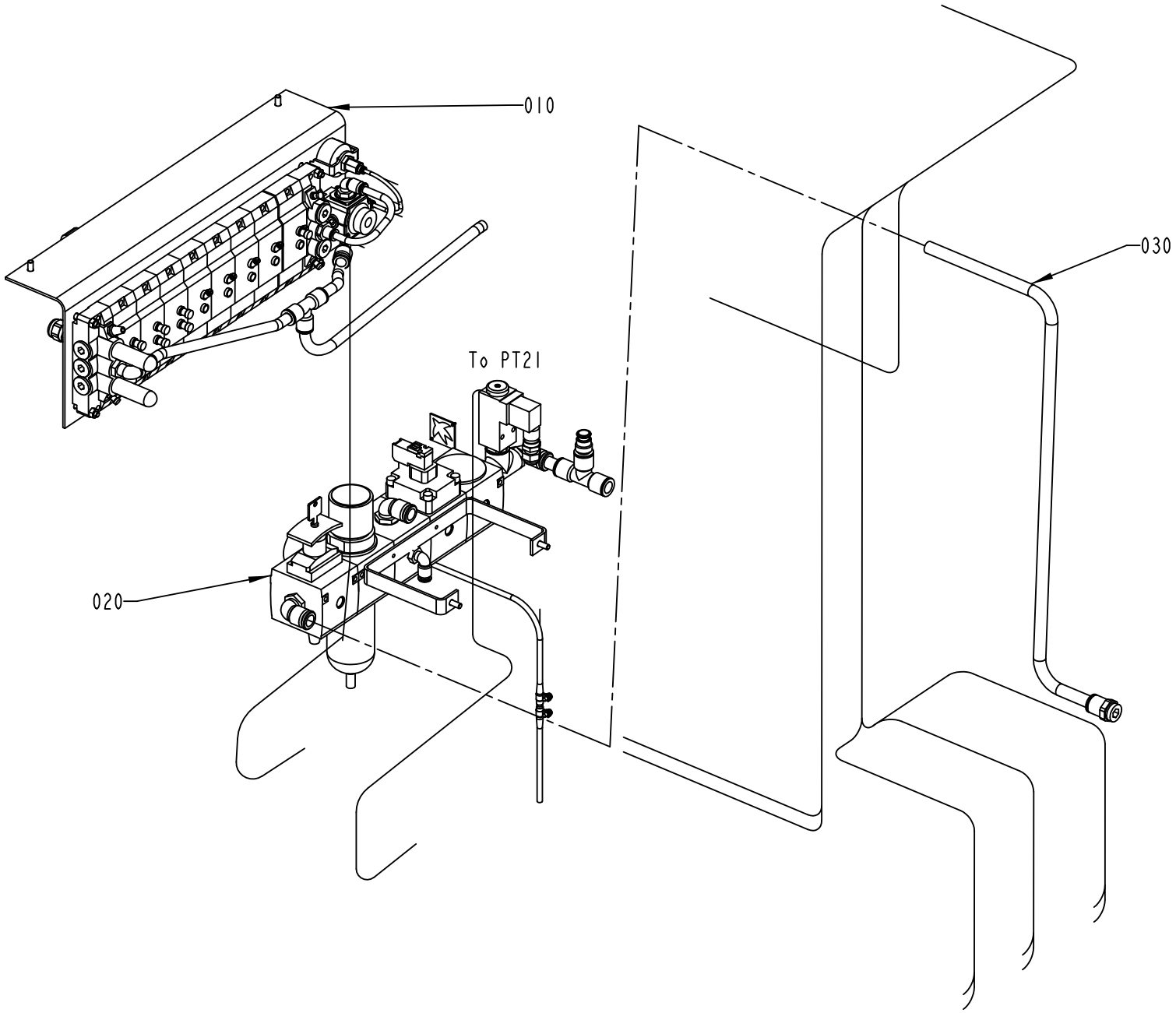

1095714-2
ECM 115191

ECM: 139561 - 20030711
Group number: 1095714-0300
Assembly Drawing: 1095714-2_1_AD

Pos	Part No	UN	Qty	Description	Page No
-					
010	1095611-0300		1	VALVE PANEL	**6-75**
020	1095609-0200		1	PNEUMATIC UNIT	**6-77**
030	1095716-0100		1	PIPE WORK-AIR	**6-79**

Pos	Part No	UN	Qty	Description	Page No

VALVE PANEL

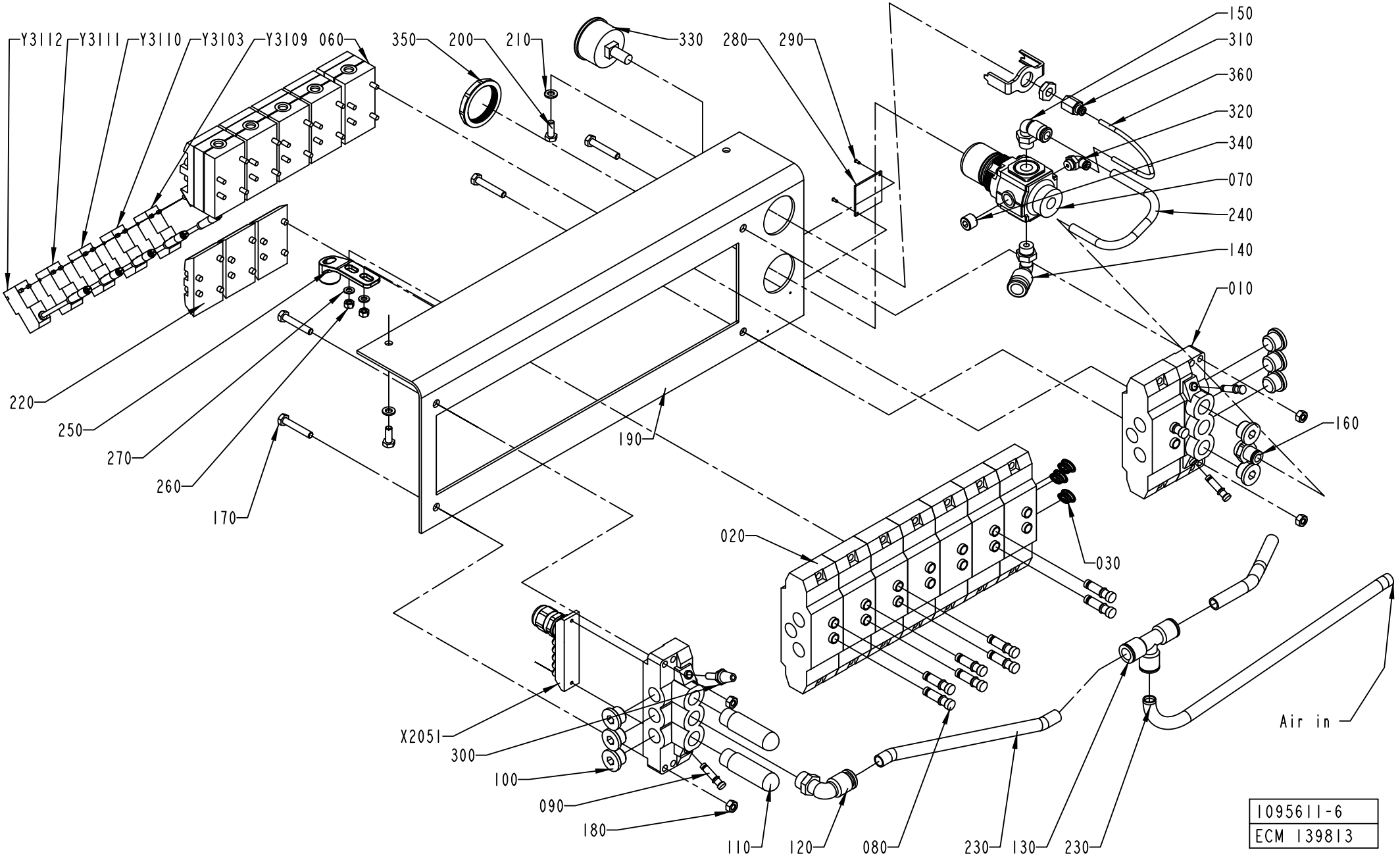
Y3112
Y3111
Y3110
Y3103
Y3109
060
350
200
210
330
280
290
150
310
360
320
340
070
240
140
010
160
220
250
270
260
170
190
020
030
X2051
300
100
090
180
110
120
080
230
130
230
Air in
1095611-6
ECM 139813

ECM: 189442 - 20041104
Group number: 1095611-0300
Assembly Drawing: 1095611-6_1_AC

Pos	Part No	UN	Qty	Description	Page No
A3/FLEX					
005	2551119-0000		1	PNEUMATIC DIAGRAM	
060	90042-0215		5	VALVE BODY 5/2 UNISTABLE	
080	342715-0103		11	BLIND PLUG 8 MM	
220	90042-0519		3	BLANK PLATE ISO SIZE 1	
250	1538868-0000		1	BRACKET	
Y3110	90042-0538		1	PILOT VALVE L=500MM	
Common Parts					
010	90042-0522		2	PORTED END PIECE ISO SIZE 1	
020	90042-0532		8	BASE PLATE ISO SIZE 1	
030	90042-0528		1	BLANKING KIT SEALS ISO SIZE 1	
050	90042-0526		5	PROTECTIVE SLEEVE MECMAN, 04938 294 08	
070	90113-0470		1	MANIFOLD REGULATOR 10 BAR	
090	342715-0102		3	BLIND PLUG 6 MM	
100	342713-0211		8	PLUG, EXT THREAD HEX SOCKET 8638-00-380	
110	90328-0024		2	SILENCER G3/8"	
120	342732-0110		1	ELBOW PIPE JOINT, EXT.THREAD,D=12MM-G3/8	
130	342748-0109		1	T-CONNECTION 12MM	
140	342732-0109		1	ELBOW PIPE JOINT, EXT.THREAD, D=1MM-G1/4	
150	342732-0104		1	ELBOW PIPE JOINT, EXT.THREAD, D=8MM-G1/4	
160	342722-0206		1	STRAIGHT COUPLING D=8-G3/8"	
170	312105-0376		4	SCREW M6S ISO 4014 M6X35 A480	
180	312605-0316		4	HEXAGON NUT, M6M M6 A280	
190	1517295-0000		1	SHEET	
200	312105-0368		2	SCREW M6S ISO 4017 M6X16 A480	
210	315105-0153		2	WASHER BRB6,4X12RFR	
230	90166-0068	MM	1000	TUBE 12 MM PA BLUE	
240	90166-0194	MM	400	TUBE 8 MM PUR BLUE	
260	312605-0314		2	HEXAGON NUT, M6M M5 A280	
270	315105-0146		2	WASHER BRB5,3X10RFR	
280	1041938-0000		1	SIGN	
290	312502-0120		2	DRIVE SCREW ROUND HEAD KDS 0X5	
300	90328-0017		1	SILENCER, D=6 MM	
310	342770-0101		1	STRAIGHT COUPLING INT, D=4 MM - G1/8	
320	342732-0100		1	ELBOW PIPE JOINT, EXT.THREAD, D=4MM-G1/8	
330	90043-0065		1	MKC NEW FILL PUMP VACUUM PRESSURE GAUGE	
340	90087-0036		1	PLUG, KR 1/4	
350	90457-0078		1	PANEL NUT	
360	90166-0095	MM	200	TUBE 4 MM PA BLUE (50M)	
X2051	90042-0535		1	TERMINAL BOARD 19 CORDS	
Y3103	90042-0538		1	PILOT VALVE L=500MM	
Y3109	90042-0538		1	PILOT VALVE L=500MM	
Y3111	90042-0538		1	PILOT VALVE L=500MM	
Y3112	90042-0538		1	PILOT VALVE L=500MM	

Machine Type	Group Description	Used-In	Group Number	Page No

PNEUMATIC UNIT

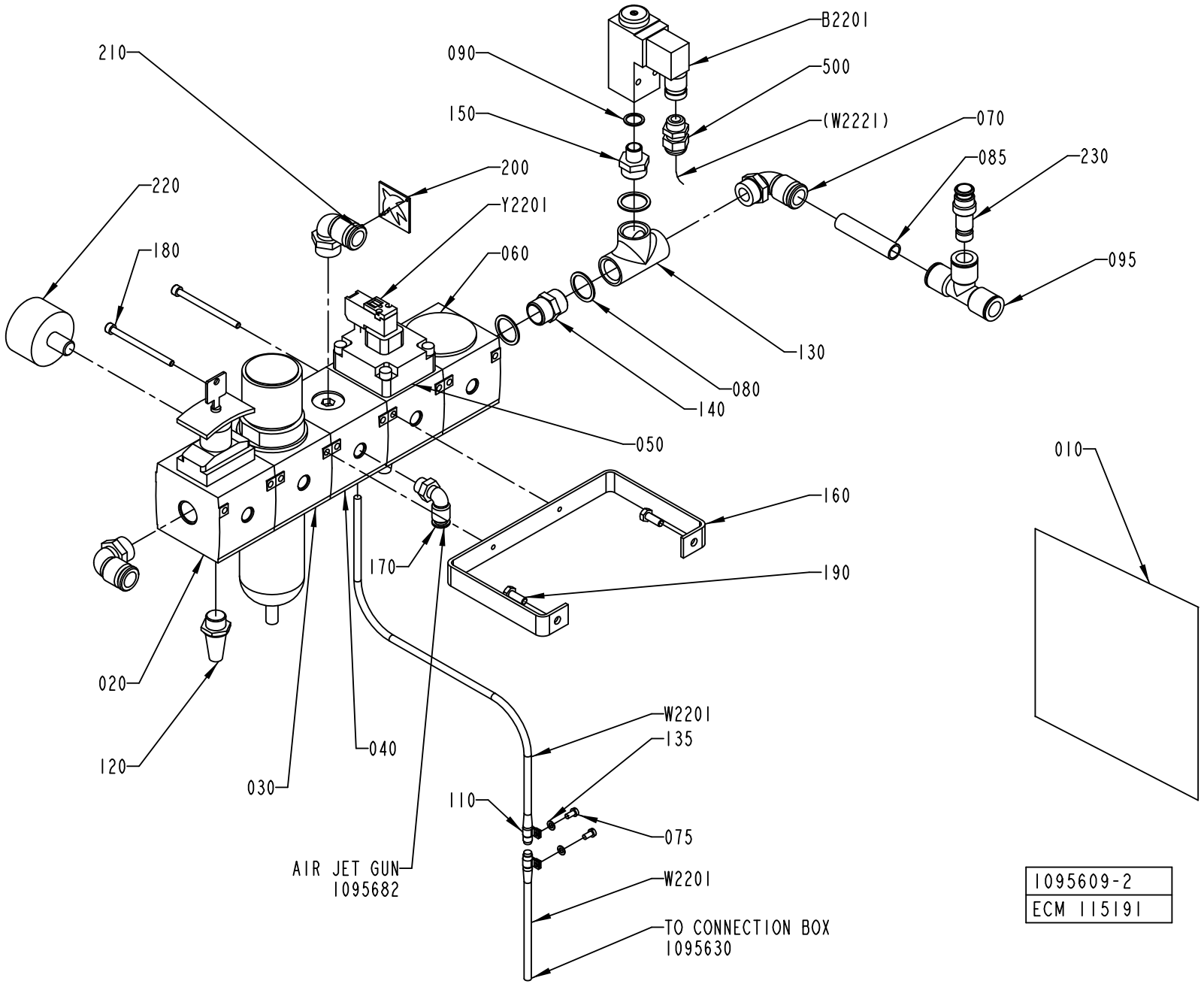

ECM: 224828 - 20050831
Group number: 1095609-0200
Assembly Drawing: 1095609-2_1_AF

Pos	Part No	UN	Qty	Description	Page No
A3/FLEX					
010	2527368-0000		1	PNEUMATIC DIAGRAM	
Common Parts					
020	90113-0377		1	SHUT OFF VALVE G1/2, 915-331053	
030	90113-0072		1	FILTER REGULATOR 40Âµ, 915-331242	
	90113-0459		*1*	*O-RING*	
	90113-0387		*1*	*FILTER ELEMENT 40UM FOR 90113-0094*	
040	90113-0375		1	PRESSURE DISTRIBUTION	
050	90113-0423		1	HIGH SPEED VENTING VALVE G1/2, R40403053	
060	90113-0374		1	SLOW STARTING VALVE	
070	342732-0161		3	ELBOW PIPE JOINT,EXT.THREAD,D=14 MM-G1/2	
075	312125-0287		2	SCREW ISO 1207 M4X8 A4	
080	315233-0113		3	WASHER CAPTIVE SEALING G1/2	
085	90166-0196	MM	70	TUBE 14MM PA BLUE	
090	315233-0110		1	WASHER CAPTIVE SEALING G1/4	
095	342748-0110		1	T-CONNECTION 14MM	
110	90074-0025		2	CLIPS, CABLE CLIPS DI=8 MM	
120	90328-0007		1	SILENCER, 338/125 B140-00-380	
130	90330-0049		1	T-PIPE, INT. THREAD, R-221R1/2	
135	315105-0136		2	WASHER BRB4,3XRFR	
140	342700-0113		1	NIPPLES,HEXAGON,EXT.G-THREAD G1/2"-G1/2"	
150	342700-0205		1	NIPPLES,HEXAGON,EXT.G-THREAD G1/2"-G1/4"	
160	1041921-0000		1	HOLDER	
170	342732-0104		1	ELBOW PIPE JOINT, EXT.THREAD, D=8MM-G1/4	
180	90287-0073		2	SCREW MC6S M5X70 129	
190	312105-0368		2	SCREW M6S ISO 4017 M6X16 A480	
200	273458-0000		1	SIGN, AIR	
210	312502-0120		2	DRIVE SCREW ROUND HEAD KDS 0X5	
220	90043-0107		1	PRESSURE GAUGE	
230	342716-0211		1	REDUCER 12-14	
500	352103-0101		1	CABLE GLAND, ST 9, PR15,2/PG9	
B2201	90274-0074		1	PRESSURE GUARD, 530 KPA	
W2201	90042-0583		1	CABLE MECMAN 440-827 000-1	
Y2201	90042-0585		1	PILOT VALVE L=5M	

Pos	Part No	UN	Qty	Description	Page No

Machine Type	Group Description	Used-In	Group Number	Page No

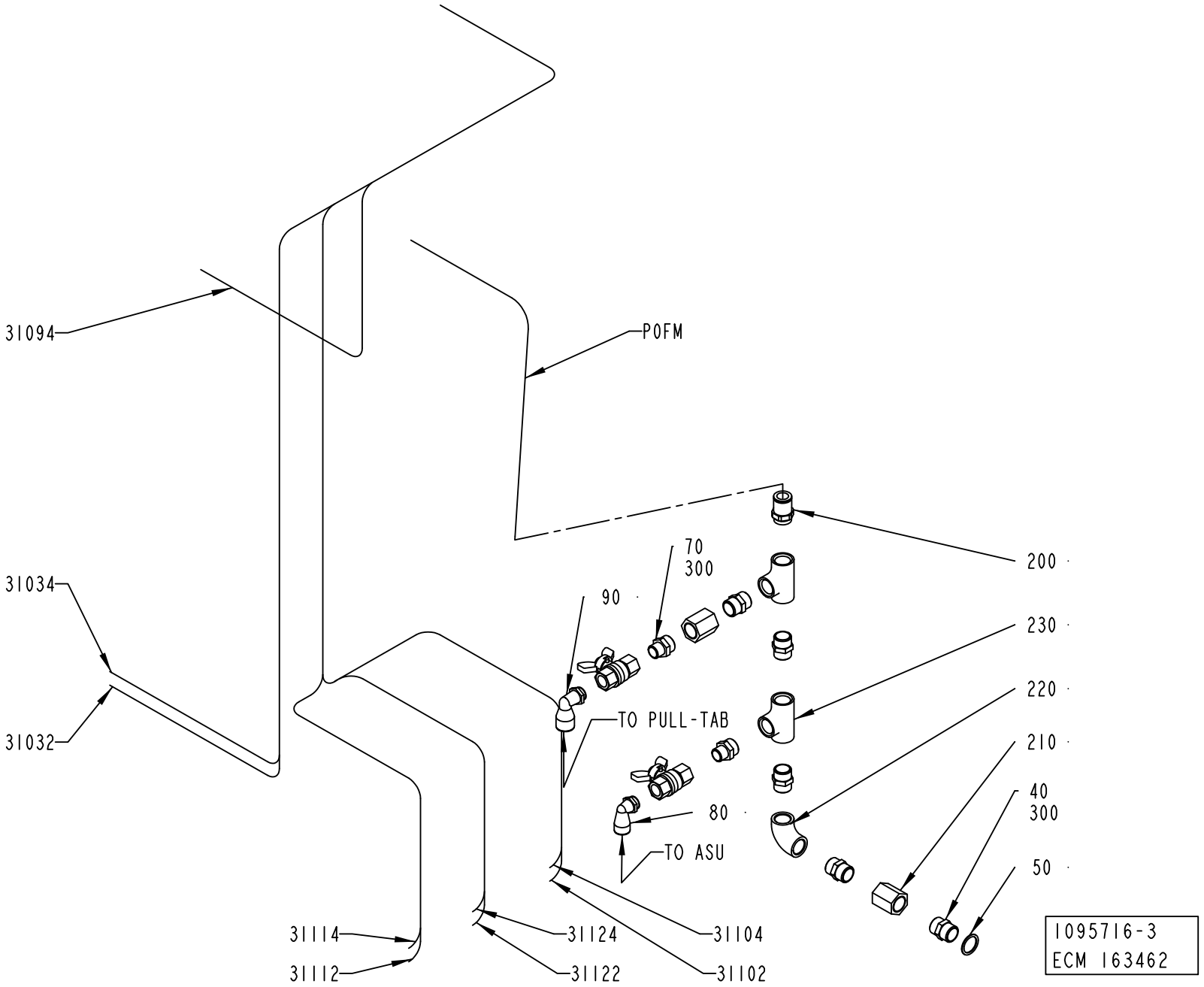
31094
P0FM
31034
31032
70
300
90
200
230
220
210
40
300
50
80
TO PULL-TAB
TO ASU
31114
31112
31124
31122
31104
31102
1095716-3
ECM 163462

ECM: 189444 - 20041104
Group number: 1095716-0100
Assembly Drawing: 1095716-3_1_AB

Pos	Part No	UN	Qty	Description	Page No
A3/FLEX					
040	342700-0113		5	NIPPLES,HEXAGON,EXT.G-THREAD G1/2"-G1/2"	
050	315233-0113		1	WASHER CAPTIVE SEALING G1/2	
070	342700-0206		2	NIPPLES,HEXAGON,EXT.G-THREAD G1/2"-G3/8"	
080	90458-2960		1	ELBOW PIPE JOINT, EXT.THREAD,D=12MM-G3/8	
090	90458-2963		1	ELBOW PIPE JOINT, EXT.THREAD,D=14MM-G3/8	
200	90055-0097		1	STRAIGHT COUPLING	
210	90140-0079		2	SLEEVE, INT. THREAD, NO. 501-08	
220	90330-0020		1	ELBOW, 90 INT. THREAD, R-2221/2	
230	90330-0049		2	T-PIPE, INT. THREAD, R-221R1/2	
300	90144-0007		1	TAPE	
P0FM	90166-0196	MM	770	TUBE 14MM PA BLUE	
Common Parts					
31032	90166-0013	MM	1400	TUBE 8 MM PA BLUE	
31034	90166-0013	MM	1400	TUBE 8 MM PA BLUE	
31094	90166-0013	MM	1400	TUBE 8 MM PA BLUE	
31112	90166-0013	MM	1500	TUBE 8 MM PA BLUE	
31114	90166-0013	MM	1500	TUBE 8 MM PA BLUE	
31122	90166-0013	MM	1500	TUBE 8 MM PA BLUE	
31124	90166-0013	MM	1500	TUBE 8 MM PA BLUE	

Pos	Part No	UN	Qty	Description	Page No

Tetra Pak

SPC
Spare Parts Catalogue

Automatic Splicing Unit

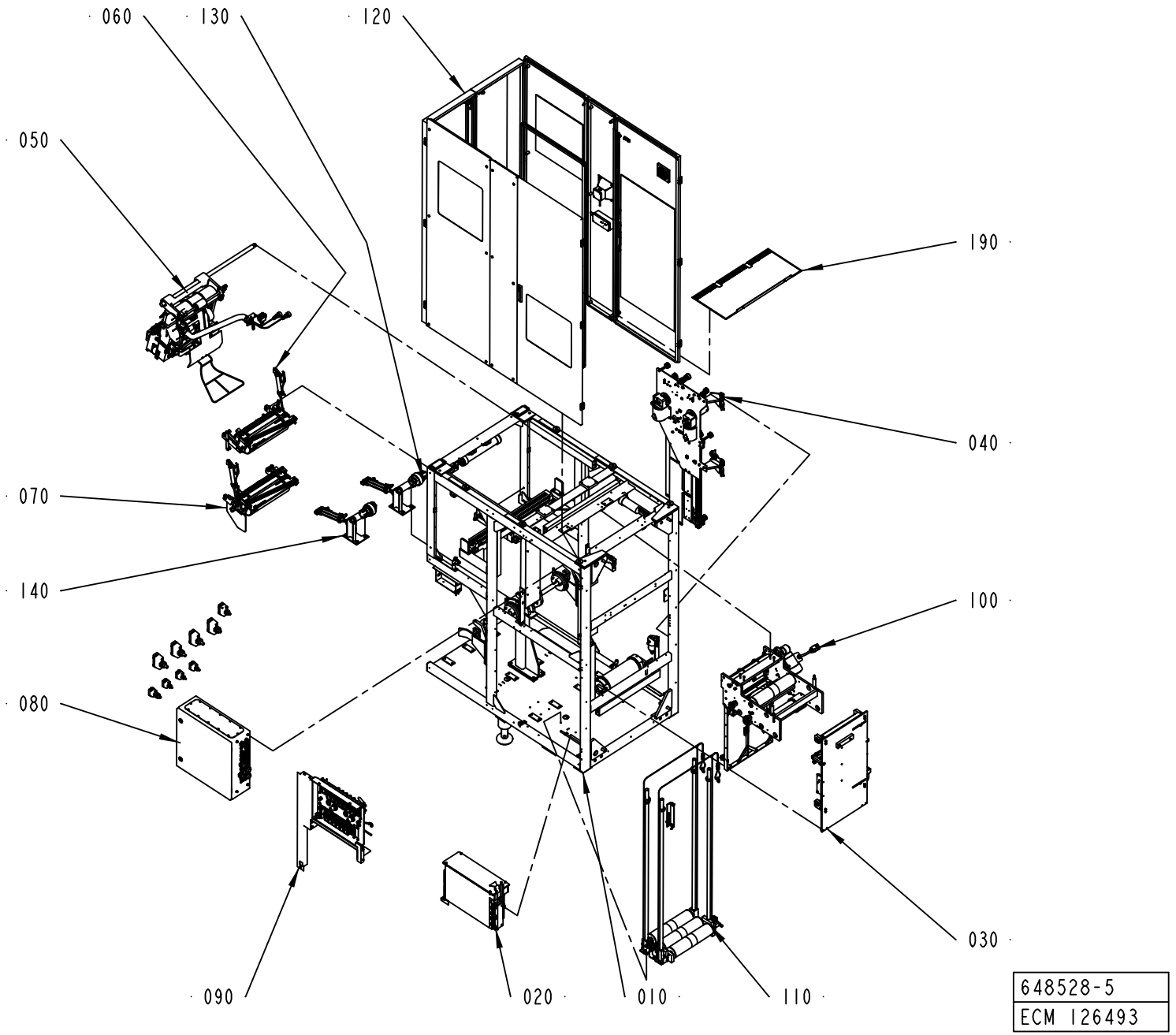

ECM: 180482 - 20050101
Group number: 648528-0200
Assembly Drawing: 648528-5_1_AC

This list covers pages from 7-2 to 7-5

Pos	Part No	UN	Qty	Description	Page No
A3/FLEX WITH ARL (See drawing on page: 7-4)					
020	2501222-0100		1	GENERATOR CABINET	**7-7**
030	2506668-0200		1	STRIP APPLICATOR	**7-9**
190	2613749-0100		1	COVER	**7-29**
210	2538072-0100		1	AUTOMATIC REEL LOADING	**7-31**
A3/FLEX WITHOUT ARL (See drawing on page: 7-2)					
020	2501222-0100		1	GENERATOR CABINET	**7-7**
030	2506668-0200		1	STRIP APPLICATOR	**7-9**
130	2506614-0100		1	BOBBIN BRAKE	**7-41**
140	2506615-0100		1	BOBBIN BRAKE	**7-43**
190	2613749-0100		1	COVER	**7-29**
Common Parts					
010	1487560-0200		1	MACHINE BODY	**7-45, 7-47, 7-49, 7-51**
040	1484707-0200		1	STRIP MAGAZINE	**7-73**
050	2588946-0100		1	SPLICING DEVICE	**7-89, 7-91**
060	2588422-0100		1	MATERIAL HOLDER L1	**7-117**
070	2588423-0100		1	MATERIAL HOLDER L2	**7-125**
080	1548491-0200		1	ELECTRICAL CABINET	**7-133, 7-135, 7-137, 7-139, 7-141**
090	2564633-0100		1	VALVE PANEL	**7-155, 7-157**
100	1487808-0200		1	BRACKET	**7-173**
110	1490831-0200		1	MAGAZINE	**7-183, 7-185**
120	1490215-0200		1	COVERING PANEL	**7-189, 7-191**

Pos	Part No	UN	Qty	Description	Page No

Automatic Splicing Unit

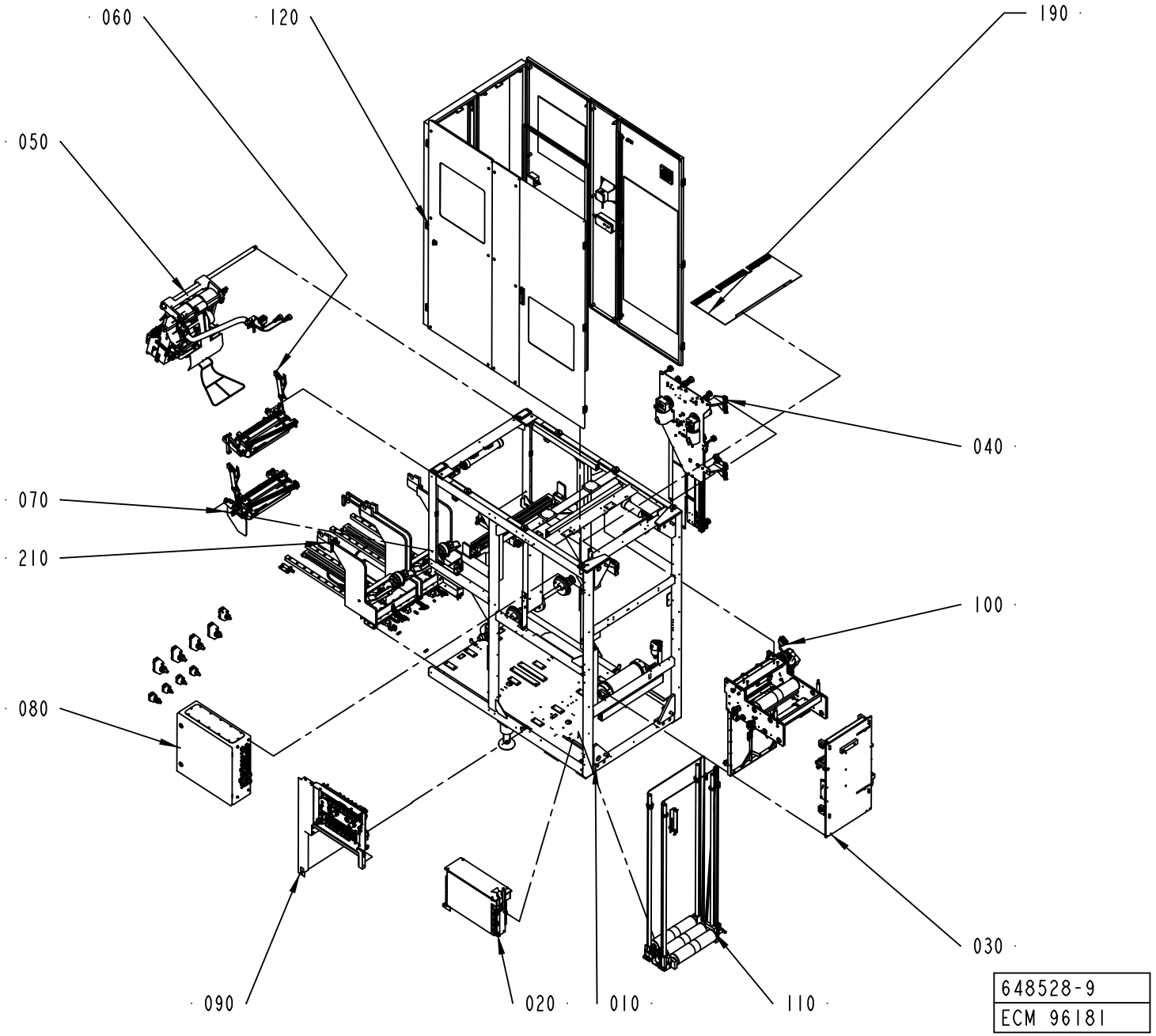

ECM: 180482 - 20050101
Group number: 648528-0200
Assembly Drawing: 648528-9_1_AA

This list covers pages from 7-2 to 7-5

Pos	Part No	UN	Qty	Description	Page No
A3/FLEX WITH ARL (See drawing on page: 7-4)					
020	2501222-0100		1	GENERATOR CABINET	**7-7**
030	2506668-0200		1	STRIP APPLICATOR	**7-9**
190	2613749-0100		1	COVER	**7-29**
210	2538072-0100		1	AUTOMATIC REEL LOADING	**7-31**
A3/FLEX WITHOUT ARL (See drawing on page: 7-2)					
020	2501222-0100		1	GENERATOR CABINET	**7-7**
030	2506668-0200		1	STRIP APPLICATOR	**7-9**
130	2506614-0100		1	BOBBIN BRAKE	**7-41**
140	2506615-0100		1	BOBBIN BRAKE	**7-43**
190	2613749-0100		1	COVER	**7-29**
Common Parts					
010	1487560-0200		1	MACHINE BODY	**7-45, 7-47, 7-49, 7-51**
040	1484707-0200		1	STRIP MAGAZINE	**7-73**
050	2588946-0100		1	SPLICING DEVICE	**7-89, 7-91**
060	2588422-0100		1	MATERIAL HOLDER L1	**7-117**
070	2588423-0100		1	MATERIAL HOLDER L2	**7-125**
080	1548491-0200		1	ELECTRICAL CABINET	**7-133, 7-135, 7-137, 7-139, 7-141**
090	2564633-0100		1	VALVE PANEL	**7-155, 7-157**
100	1487808-0200		1	BRACKET	**7-173**
110	1490831-0200		1	MAGAZINE	**7-183, 7-185**
120	1490215-0200		1	COVERING PANEL	**7-189, 7-191**

Pos	Part No	UN	Qty	Description	Page No

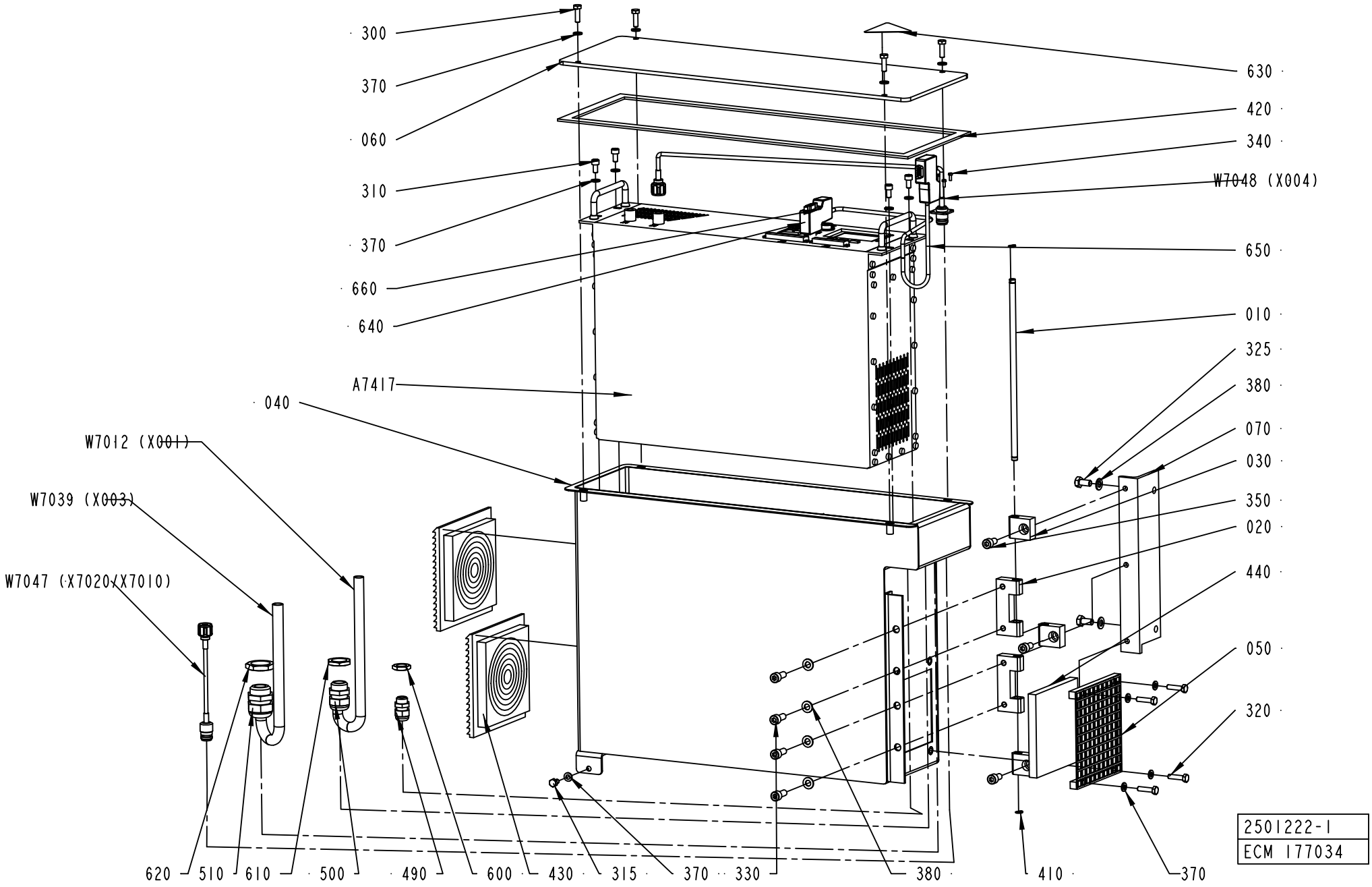
300
370
060
310
370
660
640
A7417
040
W7012 (X001)
W7039 (X003)
W7047 (X7020/X7010)
620
510
610
500
490
600
430
315
370
330
380
410
370
630
420
340
W7048 (X004)
650
010
325
380
070
030
350
020
440
050
320
2501222-1
ECM 177034

ECM: 252630 - 20060102
Group number: 2501222-0100
Assembly Drawing: 2501222-1_1_AC

Pos	Part No	UN	Qty	Description	Page No
-					
010	1558485-0000		1	AXLE PIN	
020	1334189-0000		2	BLOCK	
030	1334190-0000		3	BLOCK	
040	1548587-0000		1	APPLIANCE BOX	
050	1548588-0000		1	GRID ELEMENT	
060	1548592-0000		1	LID	
070	2510393-0000		1	BRACKET	
300	312105-0370		4	SCREW M6S ISO 4017 M6X20 A480	
310	312115-0366		4	SCREW ISO4762 M6X12 A4 80	
315	312105-0364		1	SCREW M6S ISO 4017 M6X10 A480	
320	312105-0372		4	SCREW M6S ISO 4017 M6X25 A480	
325	312105-0449		2	SCREW M6S ISO 4017 M8X16 A480	
330	312115-0451		4	SCREW ISO4762 M8X20 A4 80	
340	312125-0222		4	SCREW ISO 1207 M3X8 A4	
350	312115-0449		3	SCREW ISO4762 M8X16 A4 80	
370	315105-0153		13	WASHER BRB6,4X12RFR	
380	315105-0165		6	WASHER BRB8,4X16RFR	
410	90141-0015		2	RETAINING RING FOR SHAFT DIN 471 8 A2	
420	90143-0073	MM	1600	RUBBER STRIP	
430	90277-0129		2	EXHAUST FILTER / SK 3322.200	
440	90458-2395		1	FILTER INSERT SK 3171 100	
490	352103-0101		1	CABLE GLAND, ST 9, PR15,2/PG9	
500	352103-0111		1	CABLE GLAND, ST 16, PR22,5/PG16	
510	352103-0115		1	CABLE GLAND, STR 21, PR28,3/PG21	
600	90099-0104		1	NUT, PR 15,2 (PG9)	
610	90099-0110		1	NUT, PR 22,5 (PG16)	
620	90099-0119		1	NUT, PR 28,3 (PG21)	
630	90194-0016		1	WARNING SIGN, RISK OF ELECTRIC SHOCK	
640	90459-0184		2	INTERFACE CONNECTOR FOR TPIH 2500 GENER.	
650	90458-2894	MM	8000	PAIR TWISTED CABLE 1X2X0,2MM2	
660	90459-1297		1	RESISTANCE FIXED, 120 OHM, 0,25 W	
670	2801571-0100		1	SOFTWARE TPIH	**8-21**
A7417	1499642-0201		1	TPIH GENERATOR	
W7012	90220-0105	MM	2500	SCR. CABLE 4X2,5MM2	
W7039	90220-0115	MM	2200	SCR. CABLE 12X0,75MM2	
W7047	2540595-0001		1	COAXIAL CABLE	
W7048	2540596-0001		1	2COAXIAL CABLE	

Pos	Part No	UN	Qty	Description	Page No

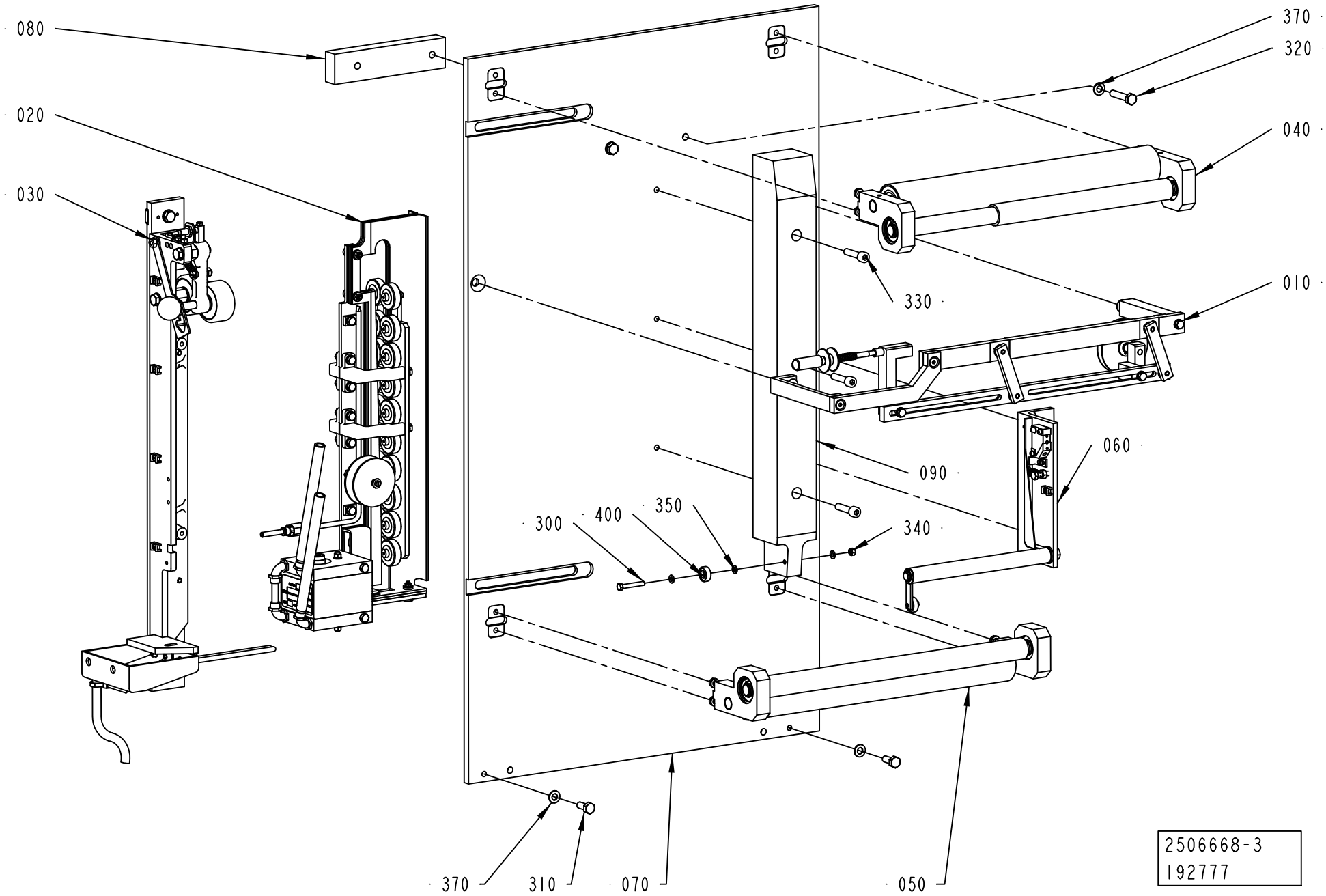
080
020
030
370
320
040
330
010
060
090
300
400
350
340
370
310
070
050
2506668-3
192777

ECM: 195229 - 20041203
Group number: 2506668-0200
Assembly Drawing: 2506668-3_1_AB

Pos	Part No	UN	Qty	Description	Page No
-					
010	2530410-0200		1	STRIP GUIDE	**7-11**
020	2529569-0100		1	INDUCTOR	**7-13**
030	2529571-0100		1	PRESSURE ROLLER	**7-21**
040	2507019-0100		1	ROLLER	**7-23**
050	2507020-0100		1	ROLLER	**7-25**
060	2507022-0200		1	SPLICE DETECTOR	**7-27**
070	2602990-0000		1	SHEET	
080	2506660-0000		1	SPACER	
090	2506664-0000		1	STEERING	
300	312105-0337		1	SCREW M6S ISO 4014 M5X35 A480	
310	312105-0451		2	SCREW M6S ISO 4017 M8X20 A480	
320	312109-0459		2	SCREW M6S ISO 4017 M8X40 A480	
330	312115-0457		3	SCREW ISO4762 M8X35 A4 80	
340	312605-0314		1	HEXAGON NUT, M6M M5 A280	
350	315105-0146		3	WASHER BRB5,3X10RFR	
370	315105-0165		4	WASHER BRB8,4X16RFR	
400	90214-0138		1	BALL BEARING, 5X19X6 MM	

Pos	Part No	UN	Qty	Description	Page No

STRIP GUIDE

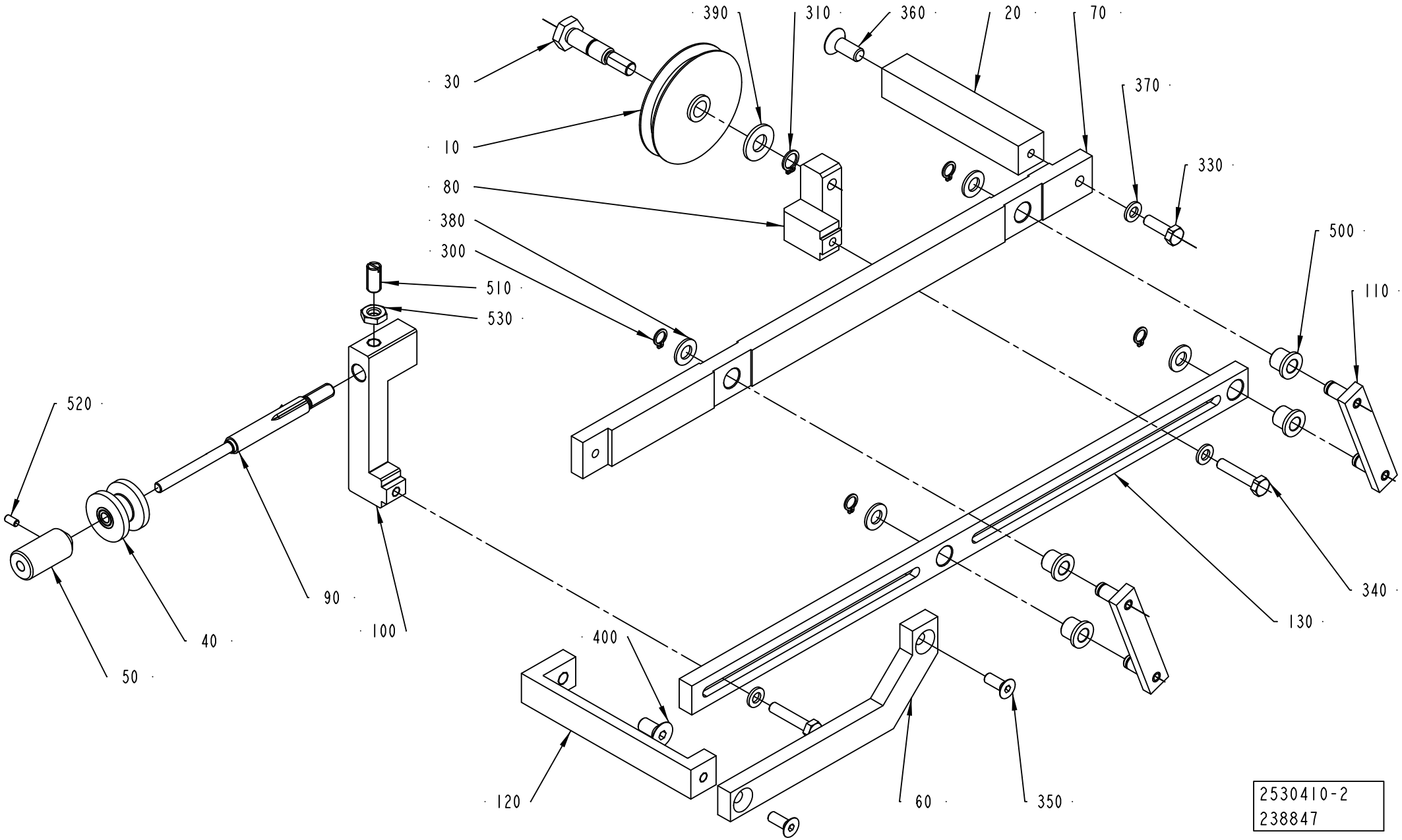
390
310
360
20
70
30
370
10
330
80
380
500
300
110
510
530
520
340
130
90
100
40
400
50
120
60
350
2530410-2
238847

ECM: 238882 - 20060101
Group number: 2530410-0200
Assembly Drawing: 2530410-2_1_AC

Pos	Part No	UN	Qty	Description	Page No
-					
010	282635-0000		1	GUIDE WHEEL	
020	2504801-0000		1	BRACKET	
030	2504807-0000		1	AXLE PIN	
040	2774708-0000		1	ROLLER	
050	2748699-0000		1	KNOB	
060	2530399-0000		1	HANGER	
070	2602992-0000		1	ROD	
080	2530405-0000		1	BRACKET	
090	2748698-0000		1	ADJUSTING SCREW	
100	2748697-0000		1	BRACKET	
110	2530408-0000		2	LEVER	
120	2504808-0000		1	BRACKET	
130	2602991-0000		1	ROD	
300	90141-0015		4	RETAINING RING FOR SHAFT DIN 471 8 A2	
310	90141-0016		1	RETAINING RING FOR SHAFT DIN 471 10 A2	
330	312105-0370		1	SCREW M6S ISO 4017 M6X20 A480	
340	312109-0374		2	SCREW M6S ISO 4017 M6X30 A480	
350	312155-0368		2	SCREW DIN 7991 MF6S M6X16 A4 70	
360	312155-0451		1	SCREW DIN 7991 MF6S M8X20 A4 70	
370	315105-0153		4	WASHER BRB6,4X12RFR	
380	315105-0165		4	WASHER BRB8,4X16RFR	
390	315105-0173		1	WASHER BRB10,5X22RFR	
400	312155-0449		1	SCREW DIN 7991 MF6S M8X16 A4 70	
500	321111-0097		4	FLANGE BUSHING, 8X12X12 MM	
510	90287-0334		1	SCREW SPRINGLOAD. SLOTTED HEAD M8X16	
520	312318-0287		1	SCREW ISO4029 M4X8 A4	
530	312625-0318		1	HEXAGON THIN NUT, EN 24035 ML6M M8 A4	

Pos	Part No	UN	Qty	Description	Page No

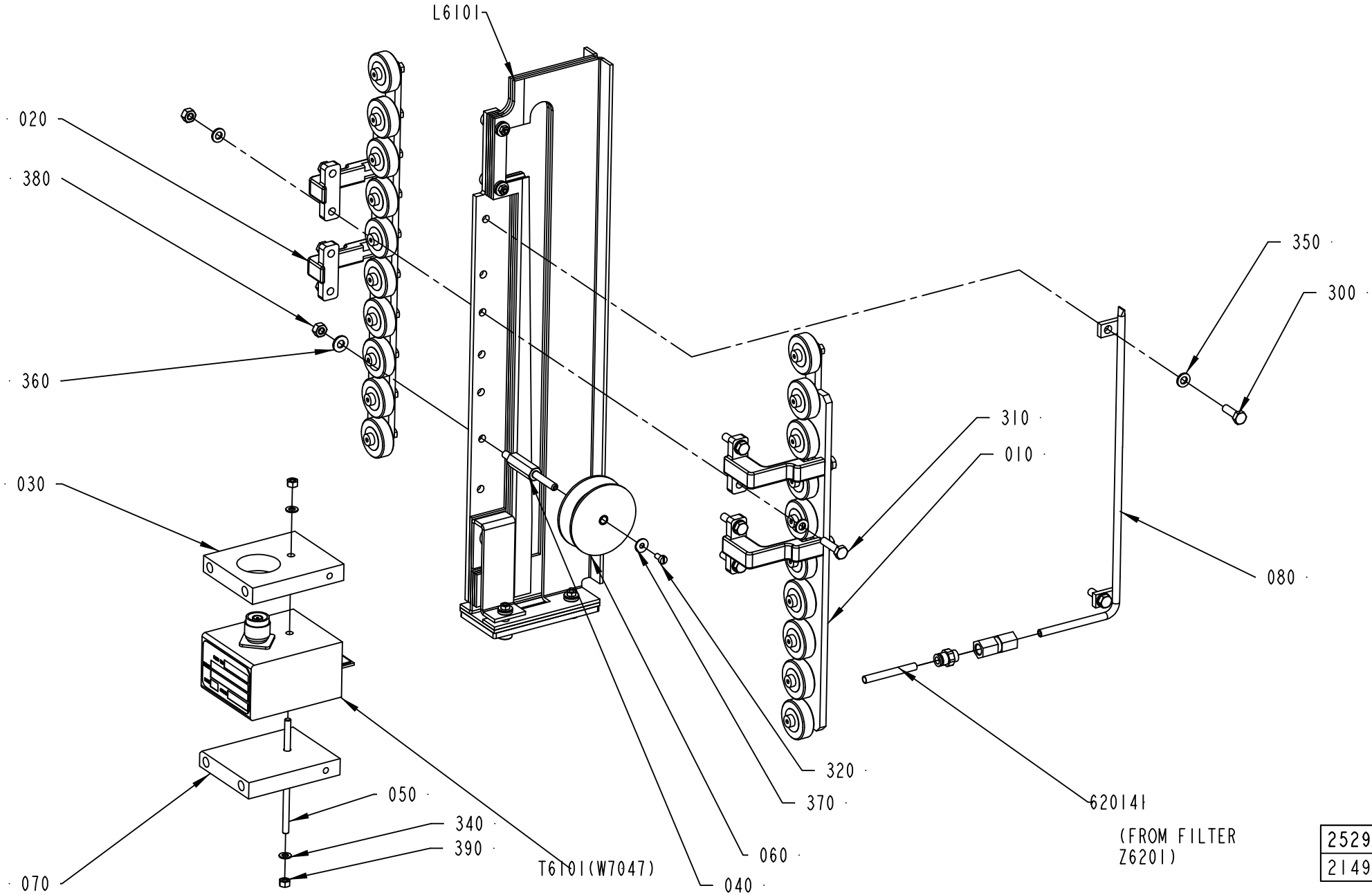

2529569-2
214980

ECM: 224780 - 20050831
Group number: 2529569-0100
Assembly Drawing: 2529569-2_1_AA

Pos	Part No	UN	Qty	Description	Page No
A3/FLEX TBA 0200B, A3/FLEX TBA 0250B, A3/FLEX TBA 0330S (See drawing on page: 7-12)					
T6101	67380-0214		1	TRANSFORMER	
A3/FLEX TBA 0500B, A3/FLEX TBA 1000B, A3/FLEX TBA 1000S, A3/FLEX TBA 1000SQ, A3/FLEX TPA 1000SQ, A3/FLEX TBA 0200S, A3/FLEX TBA 1500S, A3/FLEX TPA 0330SQ, A3/FLEX TPA 0500SQ, A3/FLEX TBA 1890S, A3/FLEX TBA 2000S, A3/FLEX TBA 0200M, A3/FLEX TBA 0250S, A3/FLEX TBA 0500S, A3/FLEX TPA 0250SQ, A3/FLEX TPA 0200SQ, A3/FLEX TPA 0750SQ, A3/FLEX TBA 0200SQ, A3/FLEX TBA 0250SQ (See drawing on page: 7-12)					
T6101	67380-0207		1	TRANSFORMER	
Common Parts					
010	2506496-0100		1	PRESSURE ROLLER	**7-15**
020	2506497-0100		1	PRESSURE ROLLER	**7-17**
030	1129839-0000		1	COOLING PLATE	
040	2510366-0000		1	SHAFT	
050	1498430-0000		1	ROD	
060	2510365-0000		1	ROLLER	
070	1129869-0000		1	COOLING PLATE	
080	2529930-0000		1	AIR NOZZLE	
300	312105-0370		2	SCREW M6S ISO 4017 M6X20 A480	
310	312105-0372		4	SCREW M6S ISO 4017 M6X25 A480	
320	312125-0287		1	SCREW ISO 1207 M4X8 A4	
340	315105-0146		2	WASHER BRB5,3X10RFR	
350	315105-0153		10	WASHER BRB6,4X12RFR	
360	315105-0156		1	WASHER BRB 6.7X14 RFR	
370	90005-0082		1	WASHER PLAIN ROUND 4,3(M4)/12,H=1	
380	312605-0316		5	HEXAGON NUT, M6M M6 A280	
390	312605-0314		2	HEXAGON NUT, M6M M5 A280	
620141	90166-0193	MM	850	TUBE 6 MM PUR BLUE	
650	342722-0202		1	PIPE COUPLING 1/8" D=6MM	
660	342725-0102		1	CONN. STR. PIPE GI-6-G1/8	
L6101	2509617-0100		1	INDUCTOR	**7-19**

Pos	Part No	UN	Qty	Description	Page No

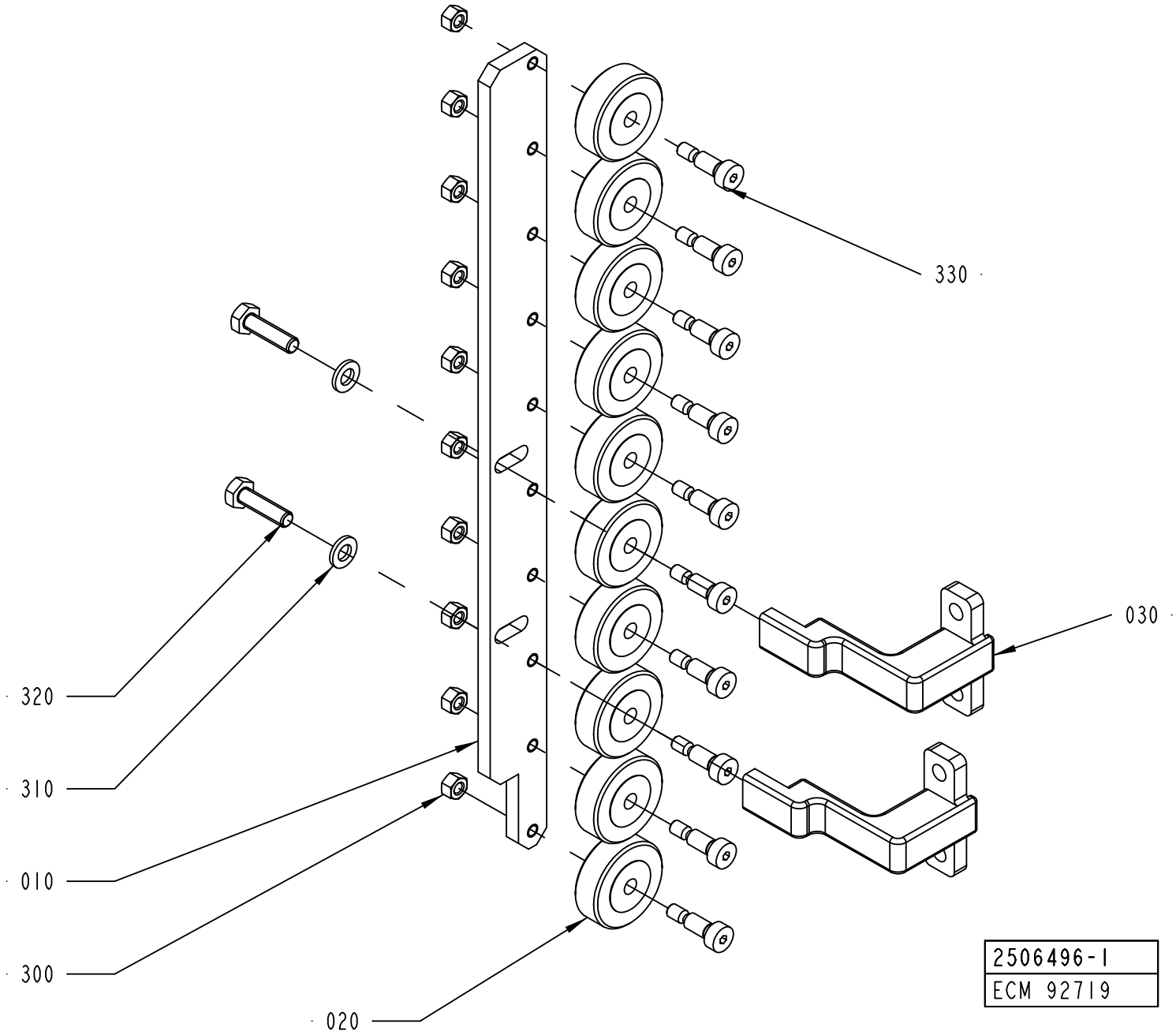
330
030
320
310
010
300
020
2506496-1
ECM 92719

ECM: 177216 - 20041005
Group number: 2506496-0100
Assembly Drawing: 2506496-1_1_AA

Pos	Part No	UN	Qty	Description	Page No
-					
010	1558914-0000		1	ROLLER BRACKET	
020	1558911-0000		10	PRESSURE ROLLER	
030	2529573-0000		2	BRACKET	
300	312605-0314		10	HEXAGON NUT, M6M M5 A280	
310	315105-0153		2	WASHER BRB6,4X12RFR	
320	312105-0371		2	SCREW M6S ISO 4017 M6X22 A480	
330	312180-0366		10	SCREW ISO7379 H6X12	

Pos	Part No	UN	Qty	Description	Page No

PRESSURE ROLLER

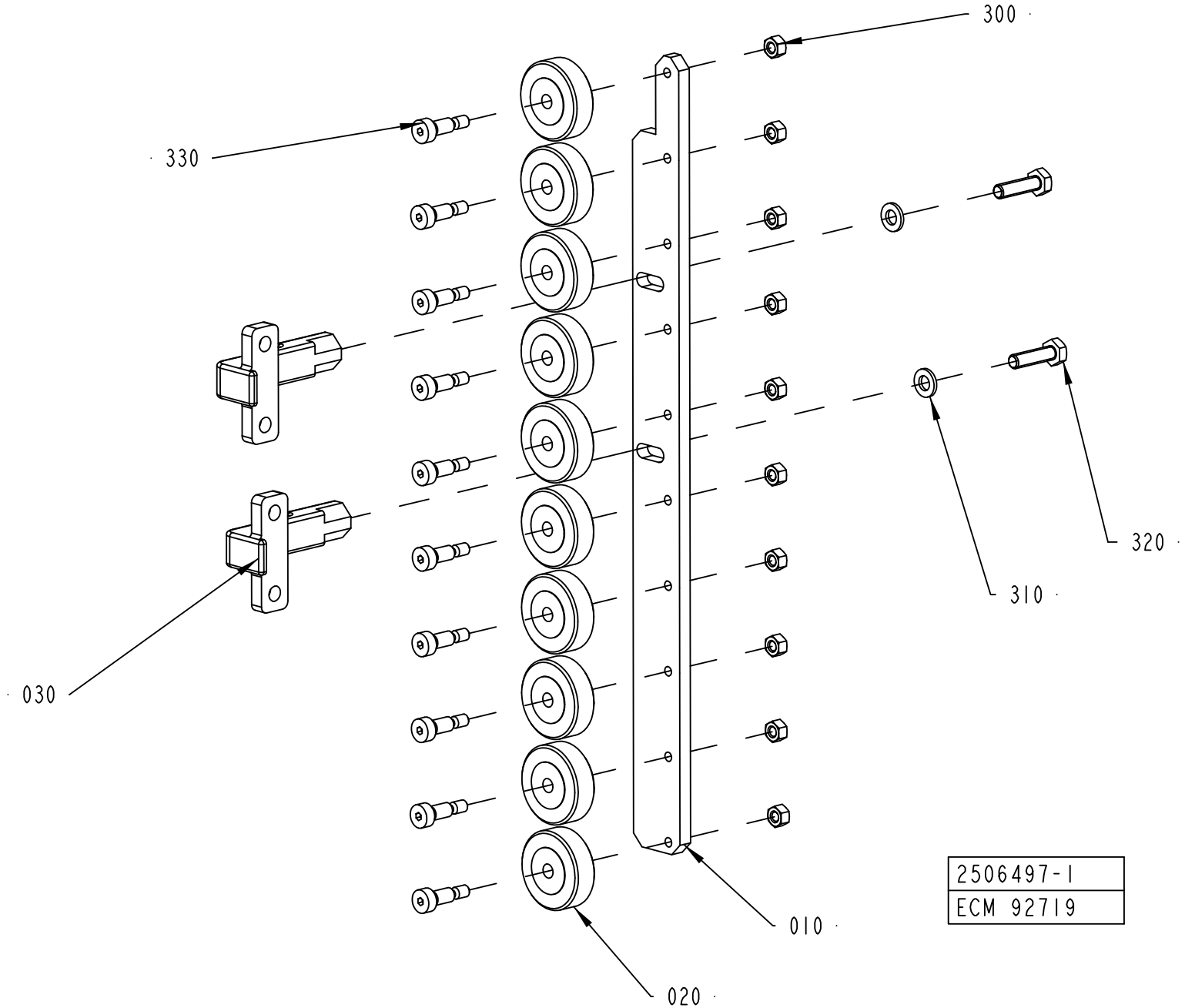

ECM: 177217 - 20041005
Group number: 2506497-0100
Assembly Drawing: 2506497-1_1_AA

Pos	Part No	UN	Qty	Description	Page No
-					
010	1558914-0000		1	ROLLER BRACKET	
020	1558911-0000		10	PRESSURE ROLLER	
030	2529572-0000		2	BRACKET	
300	312605-0314		10	HEXAGON NUT, M6M M5 A280	
310	315105-0153		2	WASHER BRB6,4X12RFR	
320	312105-0371		2	SCREW M6S ISO 4017 M6X22 A480	
330	312180-0366		10	SCREW ISO7379 H6X12	

Pos	Part No	UN	Qty	Description	Page No

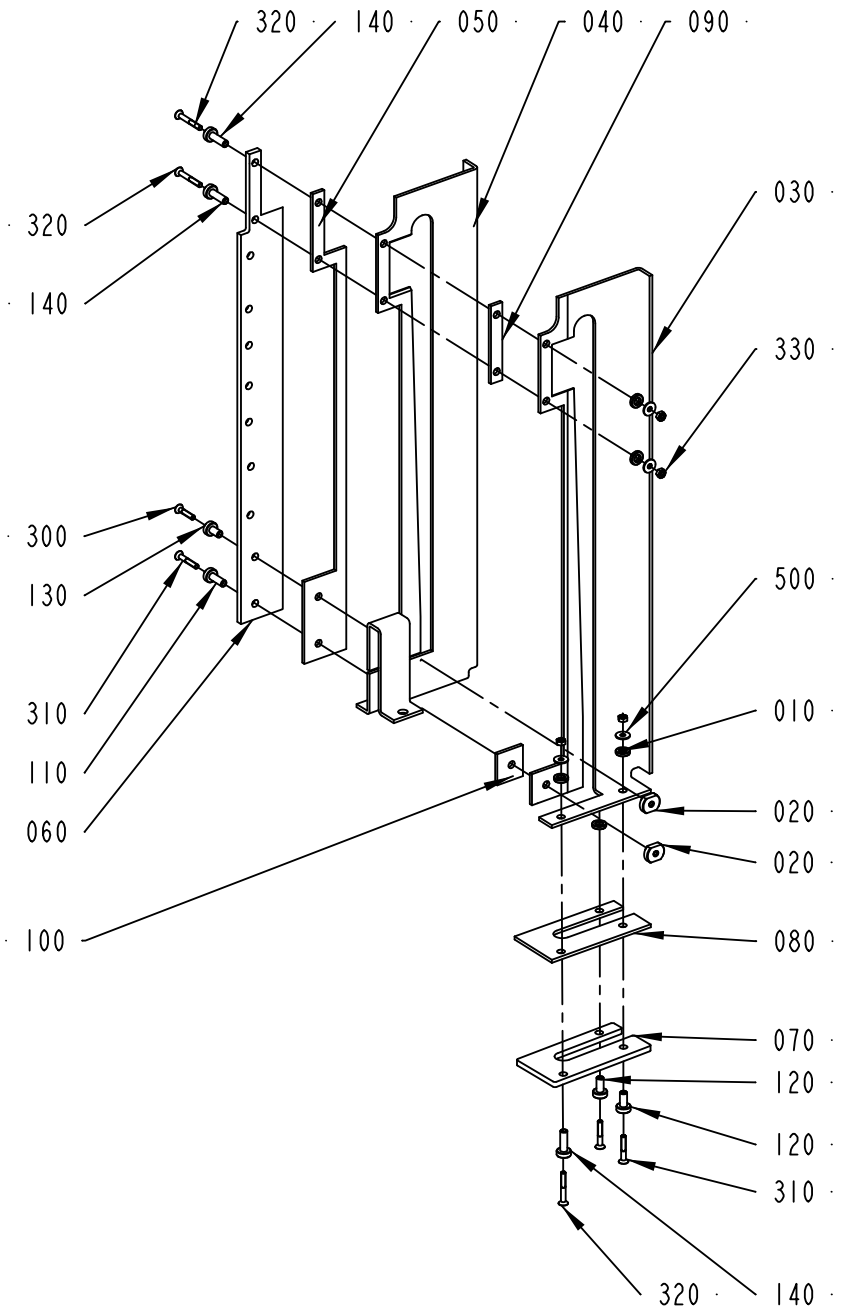

2509617-1
ECM 124683

ECM: 177218 - 20041005
Group number: 2509617-0100
Assembly Drawing: 2509617-1_1_AB

Pos	Part No	UN	Qty	Description	Page No
-					
010	1558917-0000		5	SPACER DISC	
020	1558918-0000		2	TIGHTENING NUT	
030	2506498-0000		1	SEALING PLATE	
040	2506499-0000		1	SEALING PLATE	
050	2506500-0000		1	PLATE	
060	2506501-0000		1	PLATE	
070	2506502-0000		1	PLATE	
080	2506503-0000		1	PLATE	
090	2506504-0000		1	PLATE	
100	2506505-0000		1	PLATE	
110	2509613-0000		1	BUSHING	
120	2509614-0000		2	BUSHING	
130	2529578-0000		1	BUSHING	
140	2597600-0000		3	BUSHING	
300	312155-0295		1	SCREW DIN 7991 MF6S M4X20 A4 70	
310	312155-0297		3	SCREW DIN 7991 MF6S M4X25 A4 70	
320	312155-0299		3	SCREW DIN 7991 MF6S M4X30 A4 70	
330	312605-0312		5	HEXAGON NUT, M6M M4 A280	
500	90005-0082		5	WASHER PLAIN ROUND 4,3(M4)/12,H=1	

Pos	Part No	UN	Qty	Description	Page No

PRESSURE ROLLER

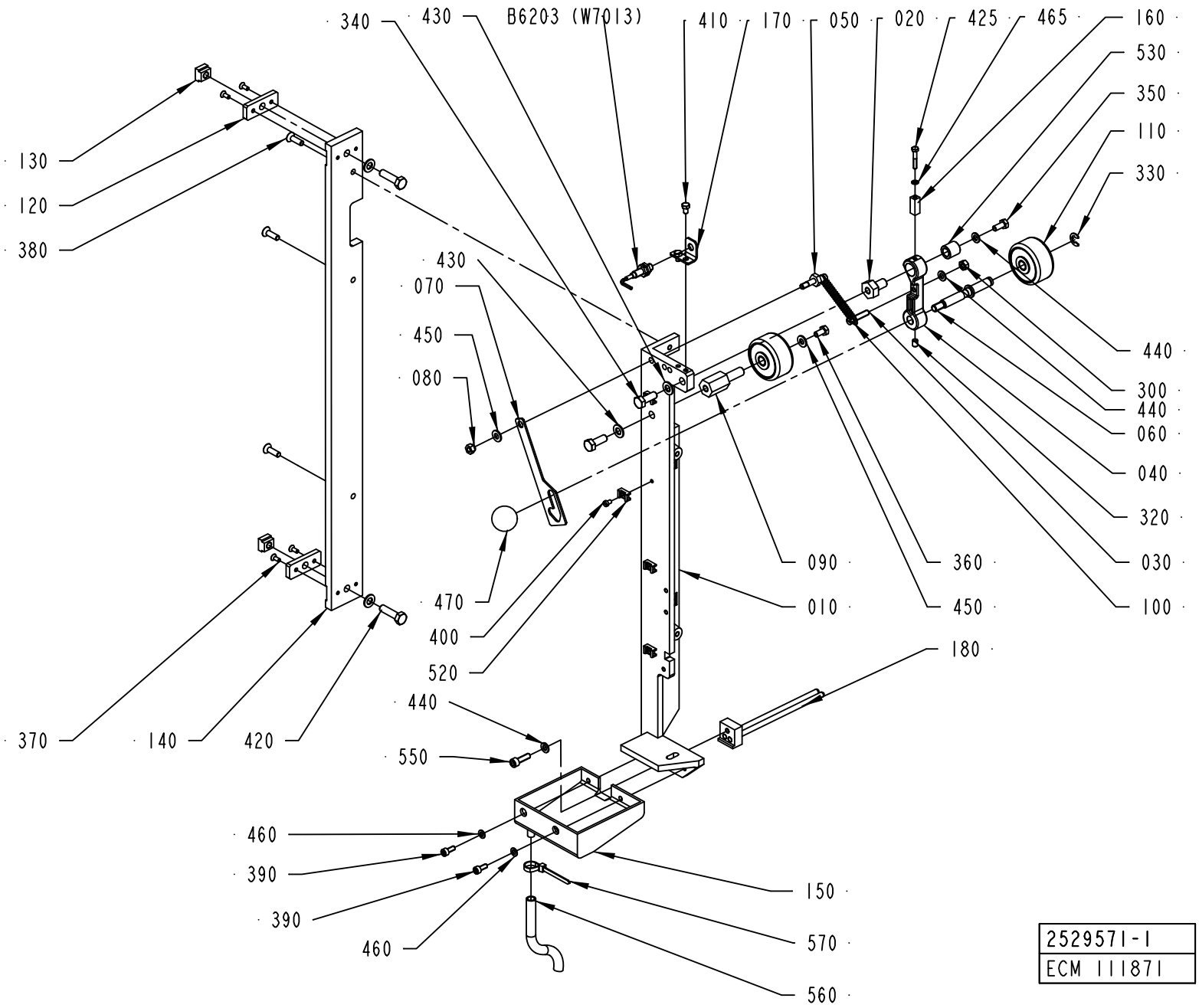

ECM: 190955 - 20041104
Group number: 2529571-0100
Assembly Drawing: 2529571-1_1_AB

Pos	Part No	UN	Qty	Description	Page No
-					
010	2510359-0000		1	FASTENING BRACKET	
020	2510360-0000		1	SHAFT	
030	2510362-0000		1	SHAFT	
040	2510361-0000		1	CONNECTING ROD	
050	2510363-0000		1	SHAFT	
060	2510364-0000		1	SHAFT	
070	1349432-0000		1	CATCH	
080	1349994-0000		1	NUT	
090	1035895-0000		1	SHAFT	
100	1478303-0000		1	TENSION SPRING	
110	1346988-0000		2	ROLL	
010	*90166-0056*	*MM*	*40*	*SHRINKABLE HOSE (2,5")*	
020	*321120-0104*		*2*	*BEARING BUSH W/O FLANGE, 10X12X10 MM*	
120	2506656-0000		2	PLATE	
130	2506654-0000		2	BLOCK	
140	2506657-0000		1	SPACER	
150	2529550-0000		1	SUPPORT	
160	2535932-0000		1	CAM	
170	2564504-0000		1	SUPPORT	
180	1349672-0000		1	GUIDE	
300	312605-0316		1	HEXAGON NUT, M6M M6 A280	
320	312318-0362		1	SCREW ISO4029 M6X8 A4	
330	315755-0801		1	RETAINING RING SHAFT DIN 6799 8 A2	
340	312105-0452		2	SCREW M6S ISO 4017 M8X22 A4 80	
350	312105-0367		1	SCREW M6S ISO 4017 M6X14 A480	
360	312105-0366		1	SCREW M6S ISO 4017 M6X12 A480	
370	312155-0289		4	SCREW DIN 7991 MF6S M4X10 A4 70	
380	312155-0370		3	SCREW DIN 7991 MF6S M6X20 A4 70	
390	312115-0327		2	SCREW ISO4762 M5X12 A4 80	
400	312125-0285		4	SCREW ISO 1207 M4X6 A4	
410	312105-0323		2	SCREW M6S ISO 4017 M5X8 A480	
420	312105-0455		2	SCREW M6S ISO 4017 M8X30 A480	
425	312105-0297		1	SCREW M6S ISO 4017 M4X25 A470	
430	315105-0165		4	WASHER BRB8,4X16RFR	
440	315105-0153		3	WASHER BRB6,4X12RFR	
450	315105-0156		2	WASHER BRB 6.7X14 RFR	
460	315105-0146		2	WASHER BRB5,3X10RFR	
465	315105-0136		1	WASHER BRB4,3XRFR	
470	318800-0104		1	HANDLE,SPHERICAL KNOB,INT.THRE.,D.30-M8	
520	352113-0205		4	ANCHOR PLATES FOR STRIPS, TYPE TM2S8-C10	
530	321105-0164		1	BEARING BUSH W/O FLANGE, 10X16X16 MM	
550	312115-0370		1	SCREW ISO4762 M6X20 A4 80	
560	90459-1126	MM	3000	PLASTIC HOSE PVC TRANSPARENT, 8X11MM	
570	352113-0102		1	CLIP-STRIP, BLACK 188X4,8 MM	
B6203	90458-0138		1	PROX. SWITCH	

Machine Type | Group Description | Used-In | Group Number | Page No

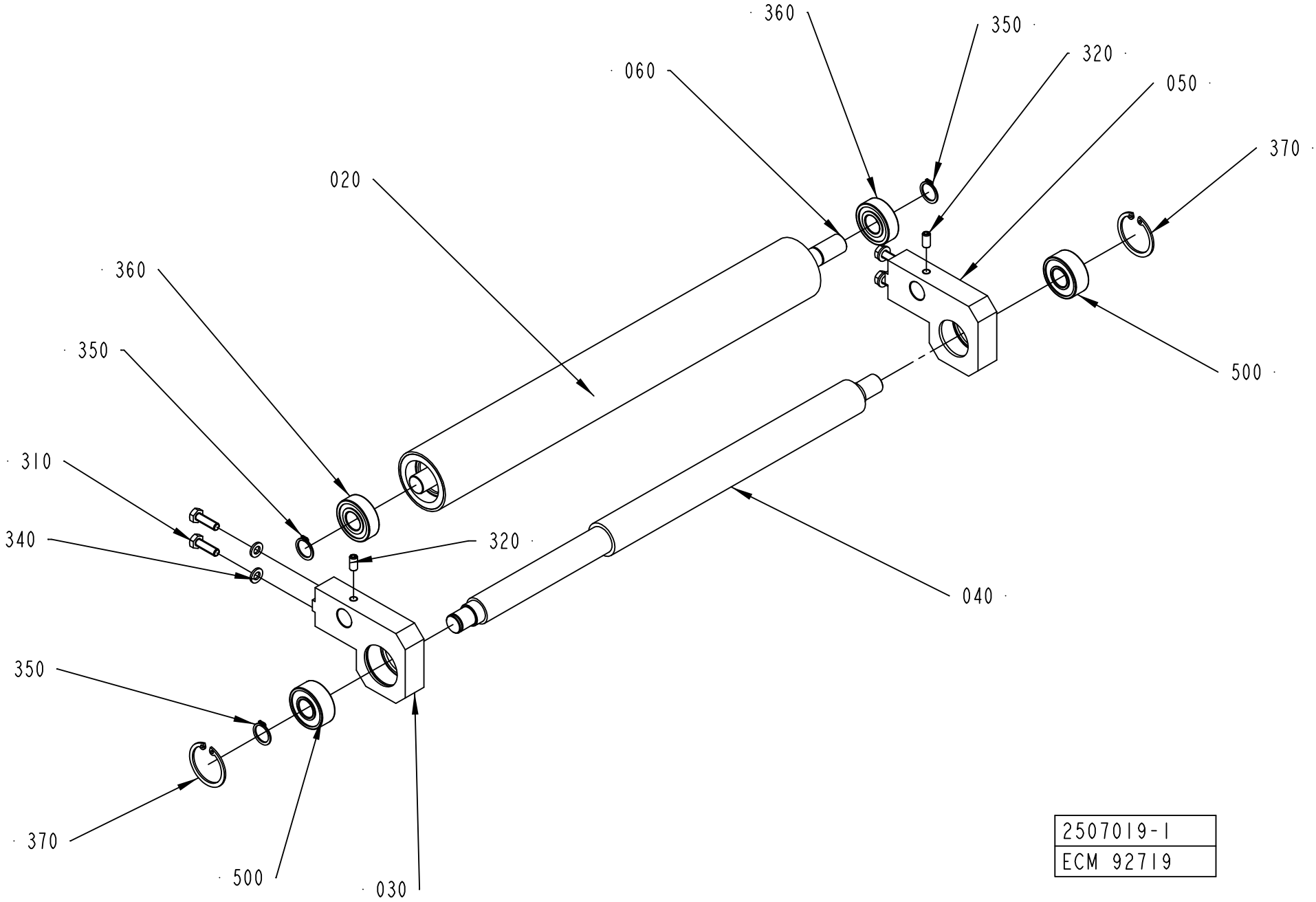
360
350
320
060
050
370
020
360
350
500
310
340
320
040
350
370
500
030
2507019-1
ECM 92719

ECM: 190951 - 20041104
Group number: 2507019-0100
Assembly Drawing: 2507019-1_1_AA

Pos	Part No	UN	Qty	Description	Page No
-					
020	2506661-0000		1	ROLLER	
030	2510404-0000		1	SUPPORT	
040	2506663-0000		1	SUPPORT	
050	2510405-0000		1	SUPPORT	
060	2506666-0000		1	AXEL	
310	312105-0370		4	SCREW M6S ISO 4017 M6X20 A480	
320	312318-0366		2	SCREW ISO4029 M6X12 A4	
340	315105-0153		4	WASHER BRB6,4X12RFR	
350	315751-0112		3	RETAINING RING FOR SHAFT DIN 471 15 A2	
360	321313-0102		2	BALL BEARING, 15X35X11 MM	
370	315753-0124		2	RETAINING RING FOR BORE DIN 472 35 A2	
500	90458-2737		2	SPHERICAL BALL BEARING, 15X35X14 MM	

Pos	Part No	UN	Qty	Description	Page No

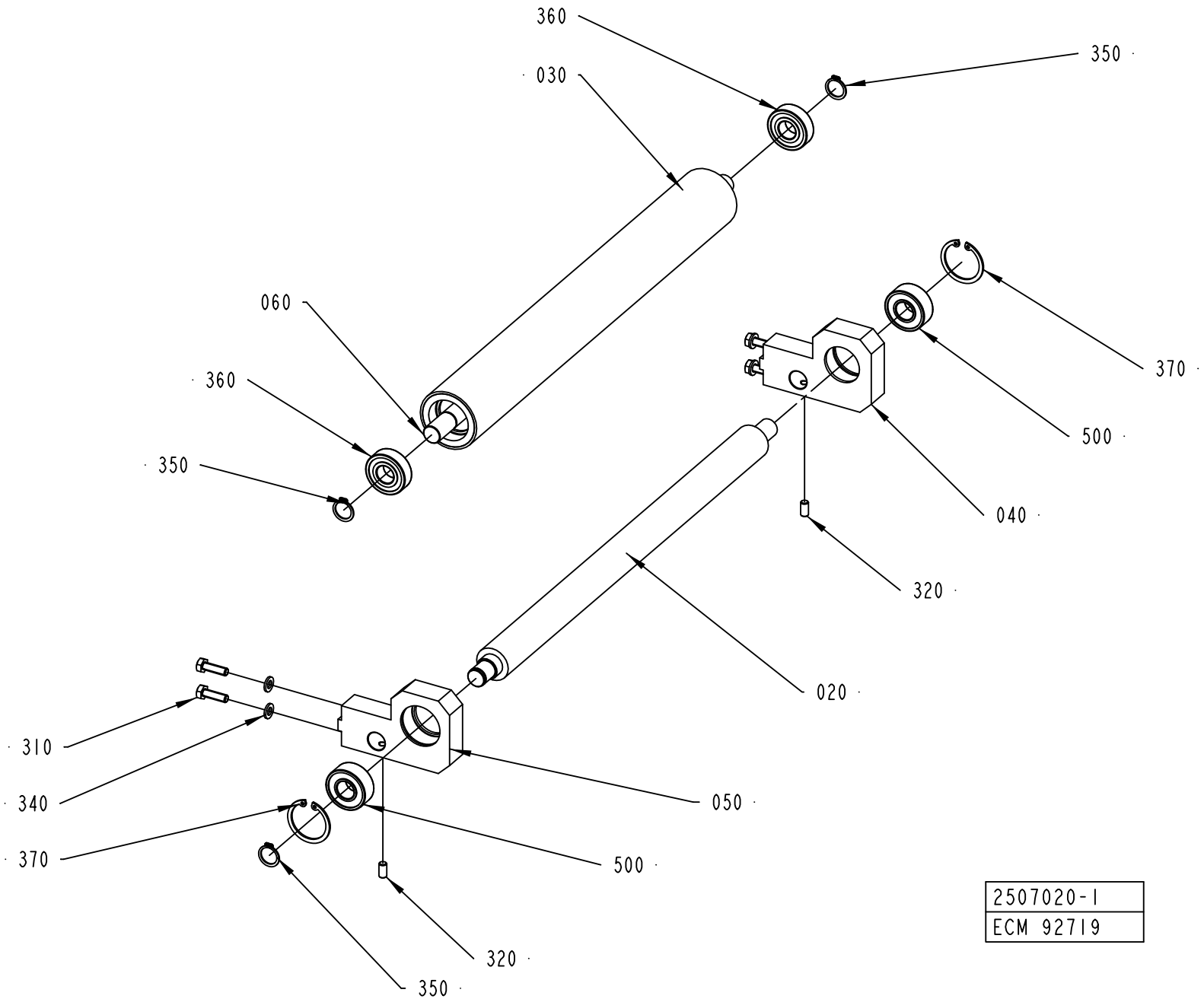
360
030
350
060
360
350
370
500
040
320
020
310
340
370
050
500
320
350
2507020-1
ECM 92719

ECM: 190952 - 20041104
Group number: 2507020-0100
Assembly Drawing: 2507020-1_1_AA

Pos	Part No	UN	Qty	Description	Page No
-					
020	2506659-0000		1	ROLLER	
030	2506661-0000		1	ROLLER	
040	2510404-0000		1	SUPPORT	
050	2510405-0000		1	SUPPORT	
060	2506666-0000		1	AXEL	
310	312105-0370		4	SCREW M6S ISO 4017 M6X20 A480	
320	312318-0366		2	SCREW ISO4029 M6X12 A4	
340	315105-0153		4	WASHER BRB6,4X12RFR	
350	315751-0112		3	RETAINING RING FOR SHAFT DIN 471 15 A2	
360	321313-0102		2	BALL BEARING, 15X35X11 MM	
370	315753-0124		2	RETAINING RING FOR BORE DIN 472 35 A2	
500	90458-2737		2	SPHERICAL BALL BEARING, 15X35X14 MM	

Pos	Part No	UN	Qty	Description	Page No

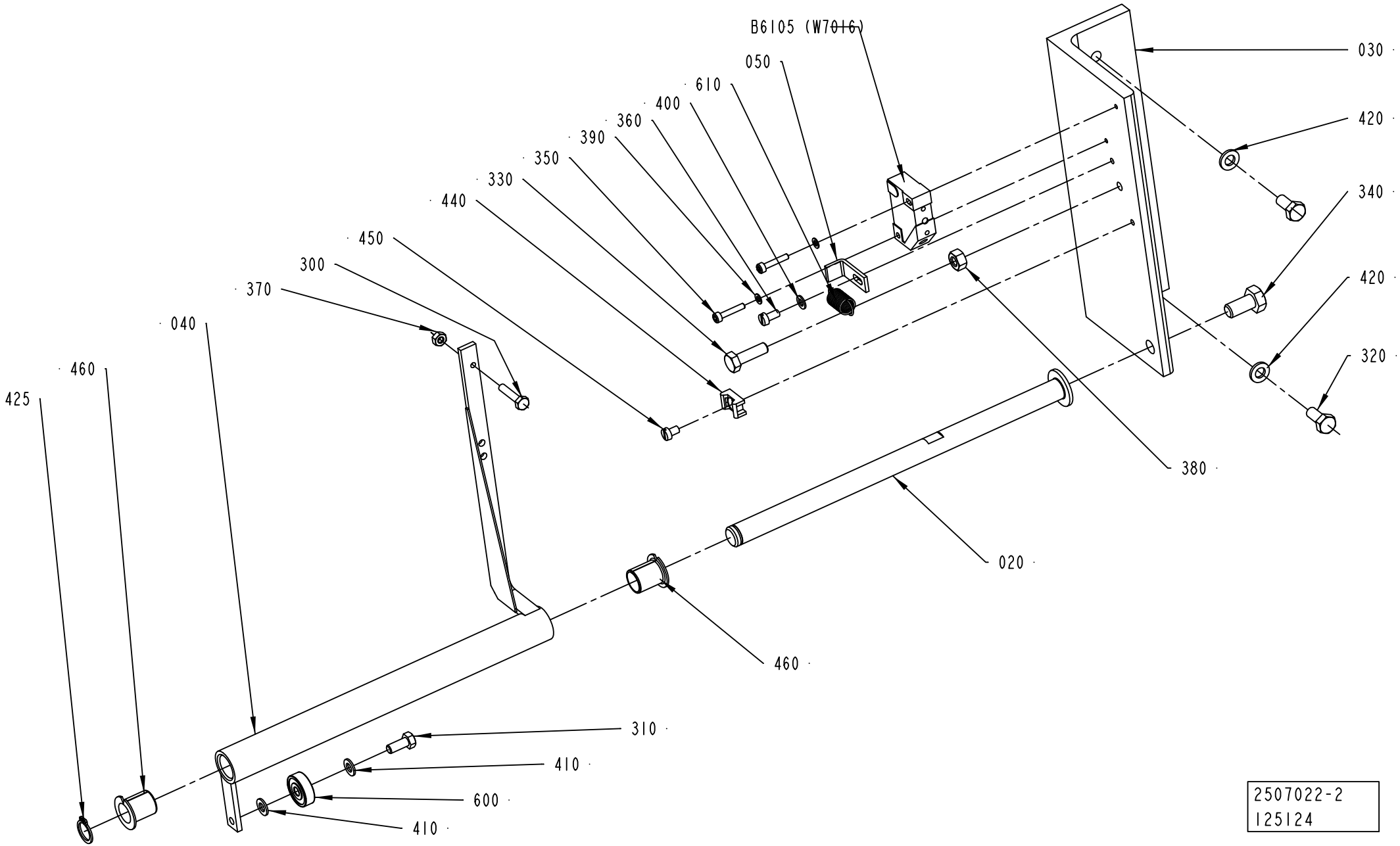
B6105 (W7016)
050
610
400
360
390
350
330
440
450
300
370
040
460
425
030
420
340
420
320
380
020
460
310
410
600
410
2507022-2
125124

ECM: 190953 - 20041104
Group number: 2507022-0200
Assembly Drawing: 2507022-2_1_AA

Pos	Part No	UN	Qty	Description	Page No
-					
020	2602995-0000		1	AXLE	
030	2602994-0000		1	BRACKET	
040	2602993-0000		1	LEVER	
050	2504812-0000		1	BLOCK	
300	312105-0295		1	SCREW M6S ISO 4017 M4X20 A470	
310	312105-0327		1	SCREW M6S ISO 4017 M5X12 A480	
320	312105-0367		2	SCREW M6S ISO 4017 M6X14 A480	
330	312105-0370		1	SCREW M6S ISO 4017 M6X20 A480	
340	312105-0449		1	SCREW M6S ISO 4017 M8X16 A480	
350	312115-0228		2	SCREW ISO4762 M3X16 A4 80	
360	312125-0287		1	SCREW ISO 1207 M4X8 A4	
370	312605-0312		1	HEXAGON NUT, M6M M4 A280	
380	312605-0316		1	HEXAGON NUT, M6M M6 A280	
390	315105-0124		2	WASHER BRB3,2X6RFR	
400	315105-0136		1	WASHER BRB4,3XRFR	
410	315105-0146		2	WASHER BRB5,3X10RFR	
420	315105-0153		2	WASHER BRB6,4X12RFR	
425	315751-0109		1	RETAINING RING FOR SHAFT DIN 471 12 A2	
440	352113-0205		1	ANCHOR PLATES FOR STRIPS, TYPE TM2S8-C10	
450	312121-0285		1	SCREW ISO 1207 M4X6 4.8 - 5.8 Z.PL.	
460	321161-0185		2	FLANGE BUSHING, 12X14X17 MM	
600	90214-0138		1	BALL BEARING, 5X19X6 MM	
610	90335-0089		1	TENSION SPRING 41490, 0,9X10X23	
B6105	90044-0194		1	PROX.SW. IN5329/IN3002-BPKG(EX90044-104)	

Pos	Part No	UN	Qty	Description	Page No

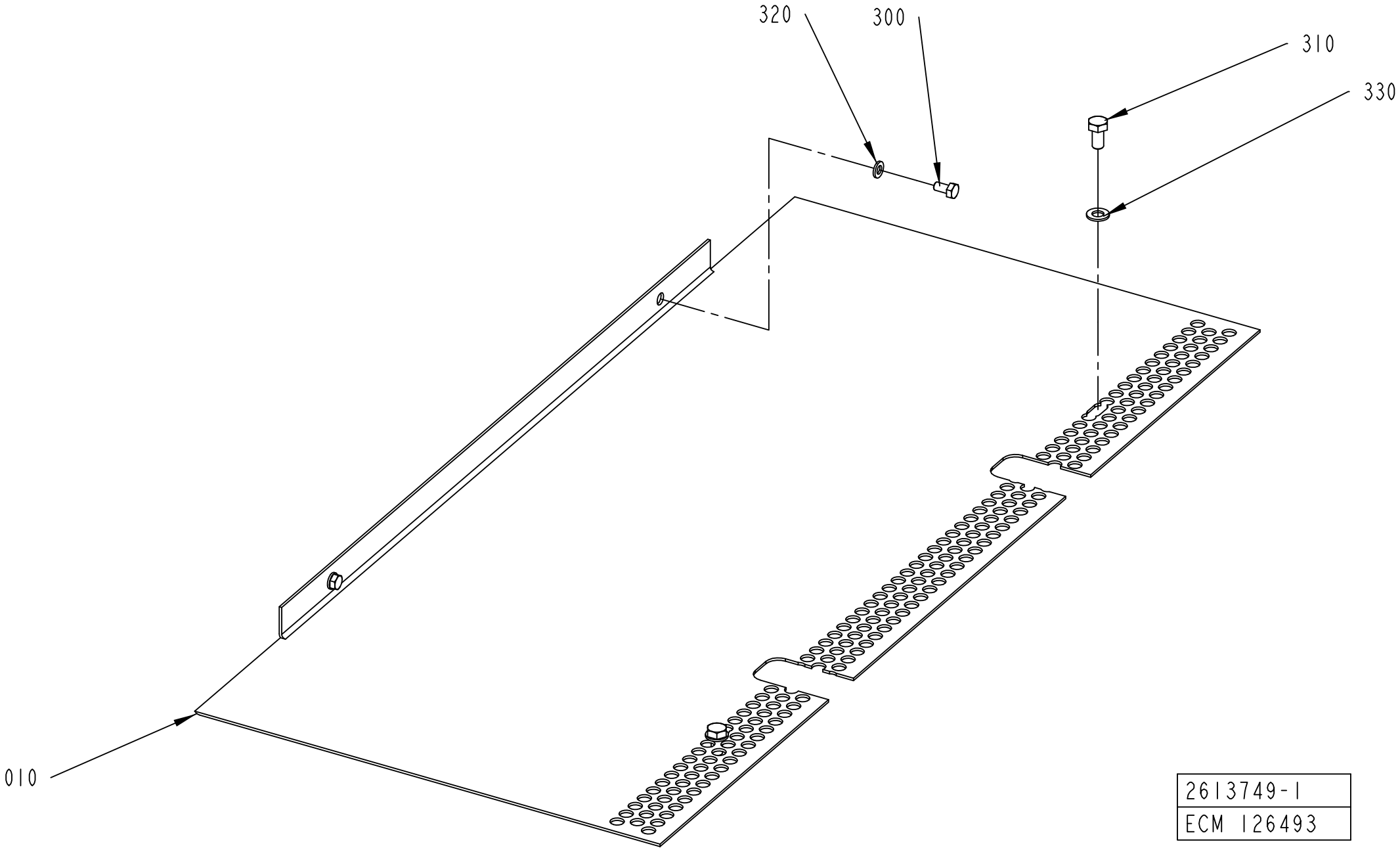
320
300
310
330
010
2613749-1
ECM 126493

ECM: 177222 - 20041005
Group number: 2613749-0100
Assembly Drawing: 2613749-1_1_AA

Pos	Part No	UN	Qty	Description	Page No
-					
010	2579996-0000		1	PLATE	
300	312105-0366		2	SCREW M6S ISO 4017 M6X12 A480	
310	312105-0449		2	SCREW M6S ISO 4017 M8X16 A480	
320	315105-0153		2	WASHER BRB6,4X12RFR	
330	315105-0165		2	WASHER BRB8,4X16RFR	

Pos	Part No	UN	Qty	Description	Page No

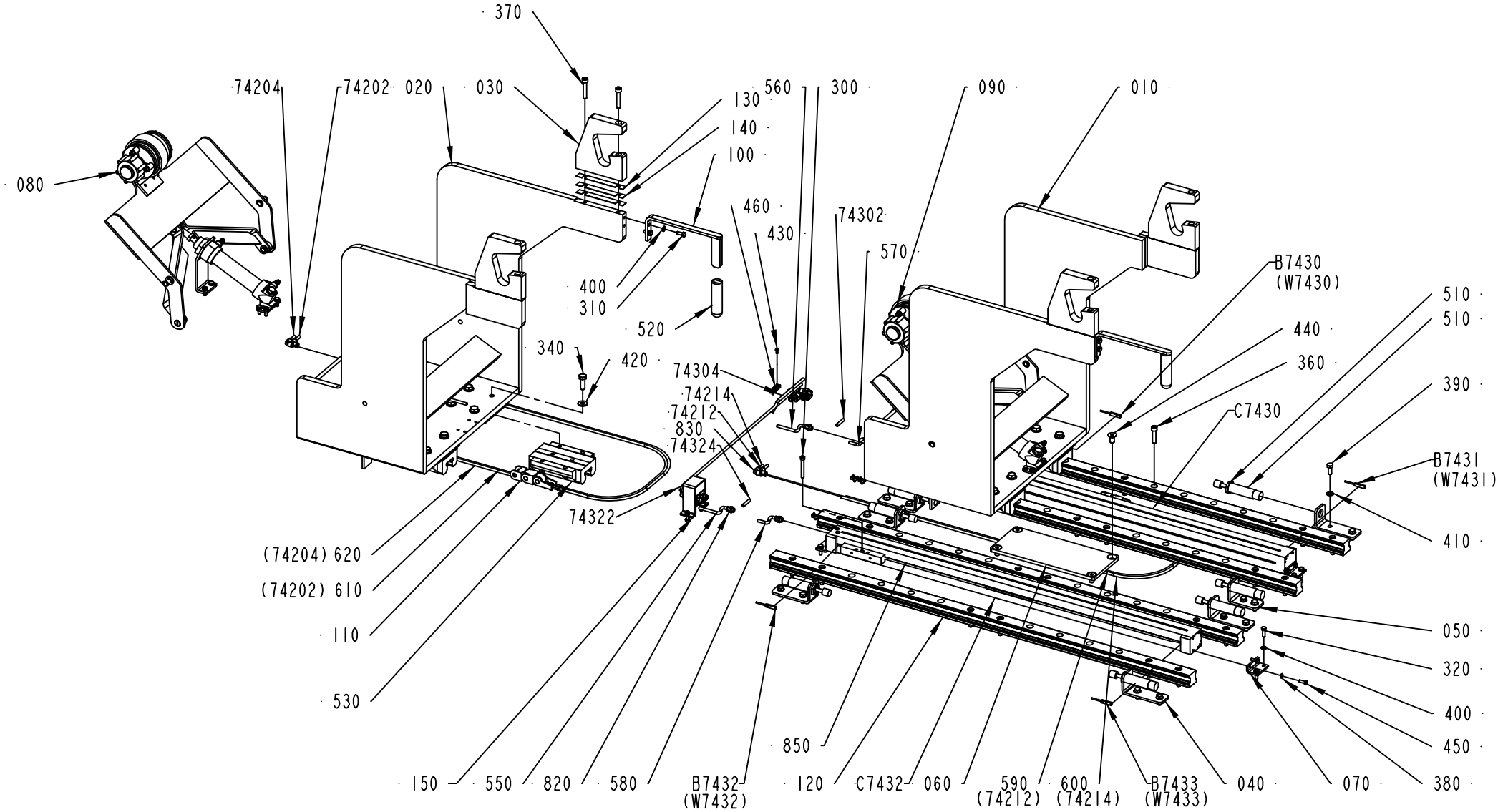

2538072-1
196210

ECM: 196222 - 20051128
Group number: 2538072-0100
Assembly Drawing: 2538072-1_1_AC

Pos	Part No	UN	Qty	Description	Page No
-					
010	2556496-0000		1	CARRIAGE	
020	2556497-0000		1	CARRIAGE	
030	2660776-0000		4	BEARING BLOCK	
040	2556499-0000		7	BRACKET	
050	2623883-0000		1	BRACKET	
060	2623884-0000		1	PLATE	
070	2556512-0000		4	BRACKET	
080	2629315-0100		1	PAPER BRAKE	**7-33**
090	2556503-0100		1	PAPER BRAKE	**7-35**
100	2564623-0000		2	HANDLE	
110	2564630-0100		2	CABLE DRAG CHAIN	**7-37**
120	2629338-0000		4	GUIDE RAIL	
130	2731880-0001		4	SHIM	
140	2731880-0002		8	SHIM	
150	2711993-0100		2	AIR SUPPLY	**7-39**
300	312115-0380		2	SCREW ISO4762 M6X50 A4 80	
310	312105-0368		4	SCREW M6S ISO 4017 M6X16 A480	
320	312105-0370		8	SCREW M6S ISO 4017 M6X20 A480	
340	312105-0495		32	SCREW M6S ISO 4017 M10X30 A480	
360	312115-0457		24	SCREW ISO4762 M8X35 A4 80	
370	312115-0460		8	SCREW ISO4762 M8X45 A4 80	
380	315105-0146		8	WASHER BRB5,3X10RFR	
390	312105-0451		16	SCREW M6S ISO 4017 M8X20 A480	
400	315105-0153		12	WASHER BRB6,4X12RFR	
410	315105-0165		16	WASHER BRB8,4X16RFR	
420	315105-0173		32	WASHER BRB10,5X22RFR	
430	312125-0287		11	SCREW ISO 1207 M4X8 A4	
440	312155-0491		4	SCREW DIN 7991 MF6S M10X20 A4 70	
450	312105-0329		8	SCREW M6S ISO 4017 M5X16 A480	
460	352113-0205		11	ANCHOR PLATES FOR STRIPS, TYPE TM2S8-C10	
510	90347-0182		8	SHOCK ABSORBER, YSR-16-20-C	
520	90459-1544		2	HANDLE, GR/10	
530	90459-1545		8	CARRIAGE, 1653-314-20	
550	90166-0193	MM	500	TUBE 6 MM PUR BLUE	
560	90166-0193	MM	500	TUBE 6 MM PUR BLUE	
570	90166-0193	MM	500	TUBE 6 MM PUR BLUE	
580	90166-0193	MM	500	TUBE 6 MM PUR BLUE	
590	90166-0193	MM	1800	TUBE 6 MM PUR BLUE	
600	90166-0193	MM	1800	TUBE 6 MM PUR BLUE	
610	90166-0193	MM	1800	TUBE 6 MM PUR BLUE	
620	90166-0193	MM	1800	TUBE 6 MM PUR BLUE	
74202	90166-0193	MM	4000	TUBE 6 MM PUR BLUE	
74204	90166-0193	MM	4000	TUBE 6 MM PUR BLUE	
74212	90166-0193	MM	4000	TUBE 6 MM PUR BLUE	
74214	90166-0193	MM	4000	TUBE 6 MM PUR BLUE	
74302	90166-0193	MM	4000	TUBE 6 MM PUR BLUE	
74304	90166-0193	MM	4000	TUBE 6 MM PUR BLUE	
74322	90166-0193	MM	4000	TUBE 6 MM PUR BLUE	
74324	90166-0193	MM	4000	TUBE 6 MM PUR BLUE	
810	90235-0846		4	THROTTLE CHECK VALVE G1/8", MANUAL, 6	
820	342722-0202		4	PIPE COUPLING 1/8" D=6MM	
830	342735-0102		12	ELBOW PIPE JOINT	
840	342770-0105		4	STRAIGHT COUPLING INT, D=6 MM - G1/8	
850	90458-0273		4	COVER STRIP	
B7430	90044-0165		1	PROXIMITY SENSOR, SME-8-K5-LED-24	
B7431	90044-0165		1	PROXIMITY SENSOR, SME-8-K5-LED-24	
B7432	90044-0165		1	PROXIMITY SENSOR, SME-8-K5-LED-24	
B7433	90044-0165		1	PROXIMITY SENSOR, SME-8-K5-LED-24	
C7430	90459-2647		1	DOUBLE ACTING, SHUTTLE, CYL. 25-780	
C7432	90459-2647		1	DOUBLE ACTING, SHUTTLE, CYL. 25-780	

Machine Type | Group Description | Used-In | Group Number | Page No

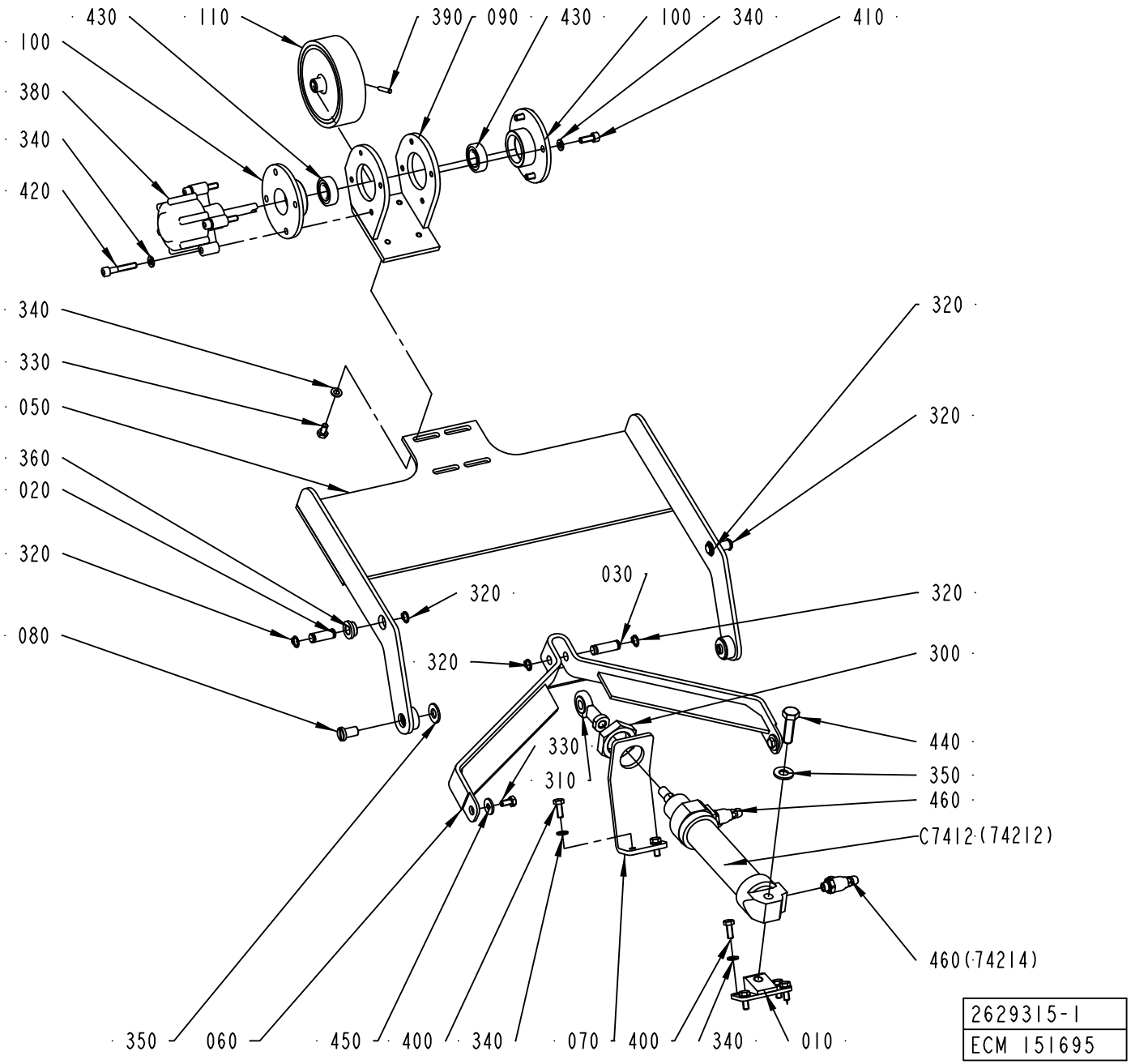
430
110
390
090
430
100
340
410
100
380
340
420
340
330
050
360
020
320
080
320
320
320
320
320
030
300
440
350
460
C7412 (74212)
460 (74214)
330
310
350
060
450
400
340
070
400
340
010
2629315-1
ECM 151695

ECM: 177928 - 20041005
Group number: 2629315-0100
Assembly Drawing: 2629315-1_1_AA

Pos	Part No	UN	Qty	Description	Page No
-					
010	2556504-0000		1	BRACKET	
020	2556505-0002		2	PIN	
030	2556505-0003		1	PIN	
050	2556507-0000		1	LEVER	
060	2556506-0000		1	LINK	
070	2556508-0000		1	BRACKET	
080	2556509-0000		2	SHAFT	
090	2556510-0000		1	BRACKET	
100	1512363-0000		2	BEARING HOUSING	
110	1523483-0000		1	ROLLER	
310	90239-0405		1	ROD END,BALL JOINT EYE M10X1,25	
320	90141-0016		6	RETAINING RING FOR SHAFT DIN 471 10 A2	
330	312105-0366		6	SCREW M6S ISO 4017 M6X12 A480	
340	315105-0153		18	WASHER BRB6,4X12RFR	
350	315105-0173		3	WASHER BRB10,5X22RFR	
360	321101-0162		2	FLANGE BUSHING, 10X16X8 MM	
380	90347-0054		1	DAMPER	
390	311103-1274		1	PARALLEL PIN ISO 2338 4M6X24 A1	
400	312105-0368		6	SCREW M6S ISO 4017 M6X16 A480	
410	312115-0368		4	SCREW ISO4762 M6X16 A4 80	
420	312115-0376		4	SCREW ISO4762 M6X35 A4 80	
430	321308-0202		2	BALL BEARING, 15X32X9 MM	
440	312105-0497		1	SCREW M6S ISO 4017 M10X35 A480	
450	6278-0000		2	WASHER	
460	90235-0846		2	THROTTLE CHECK VALVE G1/8", MANUAL, 6	
C7412	90239-0861		1	DOUBLE ACTING, MINI-ISO, CYL. 32-125	

Pos	Part No	UN	Qty	Description	Page No

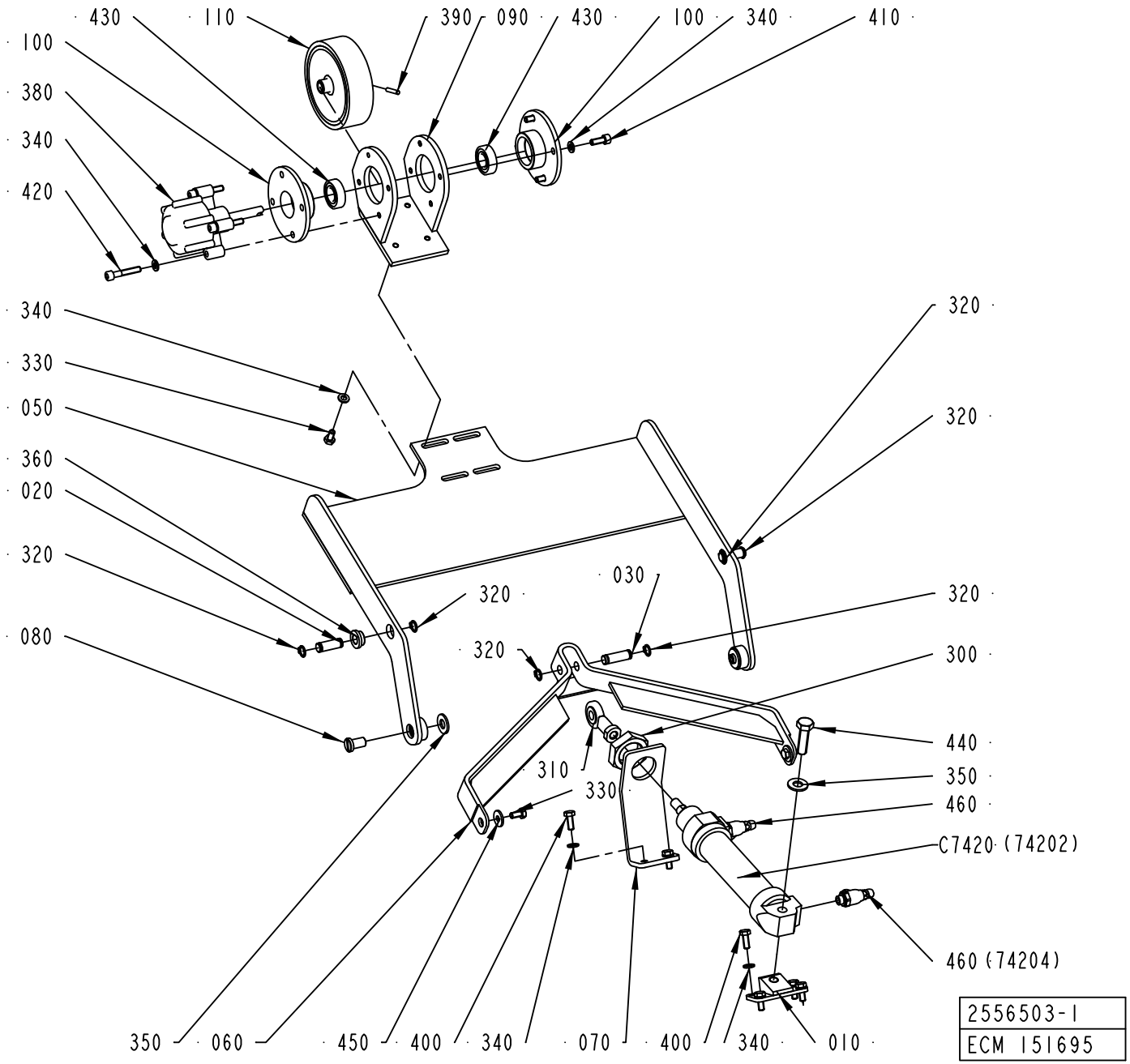
430
110
390
090
430
100
340
410
100
380
340
420
340
330
050
360
020
320
080
320
320
320
320
030
320
300
440
350
460
C7420 (74202)
460 (74204)
310
330
350
060
450
400
340
070
400
340
010
2556503-1
ECM 151695

ECM: 177929 - 20041005
Group number: 2556503-0100
Assembly Drawing: 2556503-1_1_AA

Pos	Part No	UN	Qty	Description	Page No
-					
010	2556504-0000		1	BRACKET	
020	2556505-0002		2	PIN	
030	2556505-0003		1	PIN	
050	2556507-0000		1	LEVER	
060	2556506-0000		1	LINK	
070	2556508-0000		1	BRACKET	
080	2556509-0000		2	SHAFT	
090	2556510-0000		1	BRACKET	
100	1512363-0000		2	BEARING HOUSING	
110	1523483-0000		1	ROLLER	
310	90239-0405		1	ROD END,BALL JOINT EYE M10X1,25	
320	90141-0016		6	RETAINING RING FOR SHAFT DIN 471 10 A2	
330	312105-0366		6	SCREW M6S ISO 4017 M6X12 A480	
340	315105-0153		18	WASHER BRB6,4X12RFR	
350	315105-0173		3	WASHER BRB10,5X22RFR	
360	321101-0162		2	FLANGE BUSHING, 10X16X8 MM	
380	90347-0054		1	DAMPER	
390	311103-1274		4	PARALLEL PIN ISO 2338 4M6X24 A1	
400	312105-0368		6	SCREW M6S ISO 4017 M6X16 A480	
410	312115-0368		4	SCREW ISO4762 M6X16 A4 80	
420	312115-0376		4	SCREW ISO4762 M6X35 A4 80	
430	321308-0202		2	BALL BEARING, 15X32X9 MM	
440	312105-0497		1	SCREW M6S ISO 4017 M10X35 A480	
450	6278-0000		2	WASHER	
460	90235-0846		2	THROTTLE CHECK VALVE G1/8", MANUAL, 6	
C7420	90239-0861		1	DOUBLE ACTING, MINI-ISO, CYL. 32-125	

Pos	Part No	UN	Qty	Description	Page No

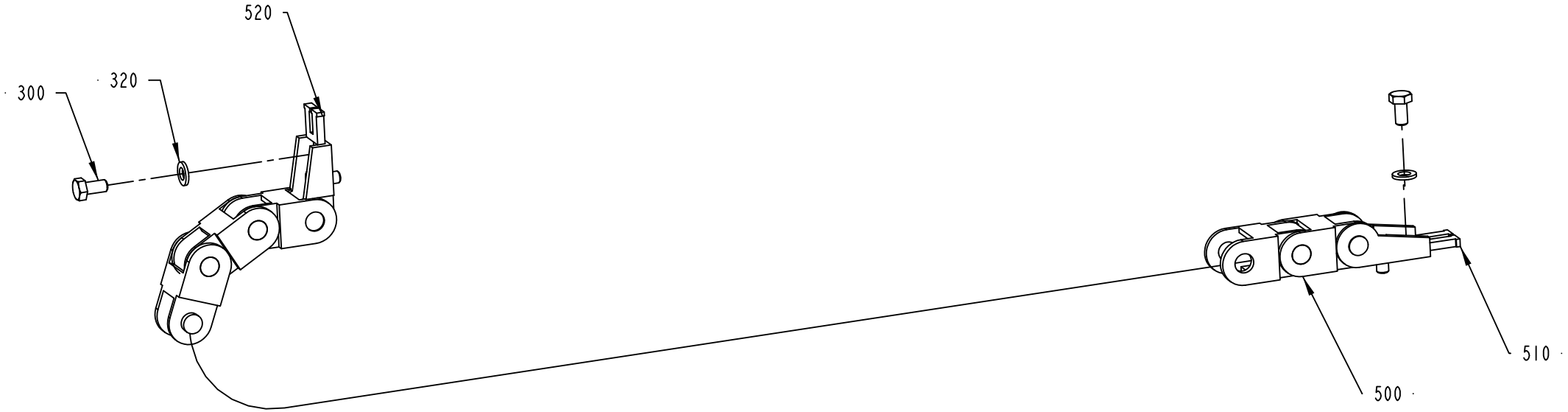

2564630-1
ECM 151695

ECM: 177930 - 20041025
Group number: 2564630-0100
Assembly Drawing: 2564630-1_1_AA

Pos	Part No	UN	Qty	Description	Page No
-					
300	312105-0366		4	SCREW M6S ISO 4017 M6X12 A480	
310	312115-0378		2	SCREW ISO4762 M6X40 A4 80	
320	315105-0153		4	WASHER BRB6,4X12RFR	
500	90181-0199		1	FLEXIBLE CHAIN, LINK 15	
510	90181-0202		1	FLEXIBLE CHAIN, BRACKET 1015. 1PZ	
520	90181-0203		1	FLEXIBLE CHAIN, BRACKET 1015. 2PZ	

Pos	Part No	UN	Qty	Description	Page No

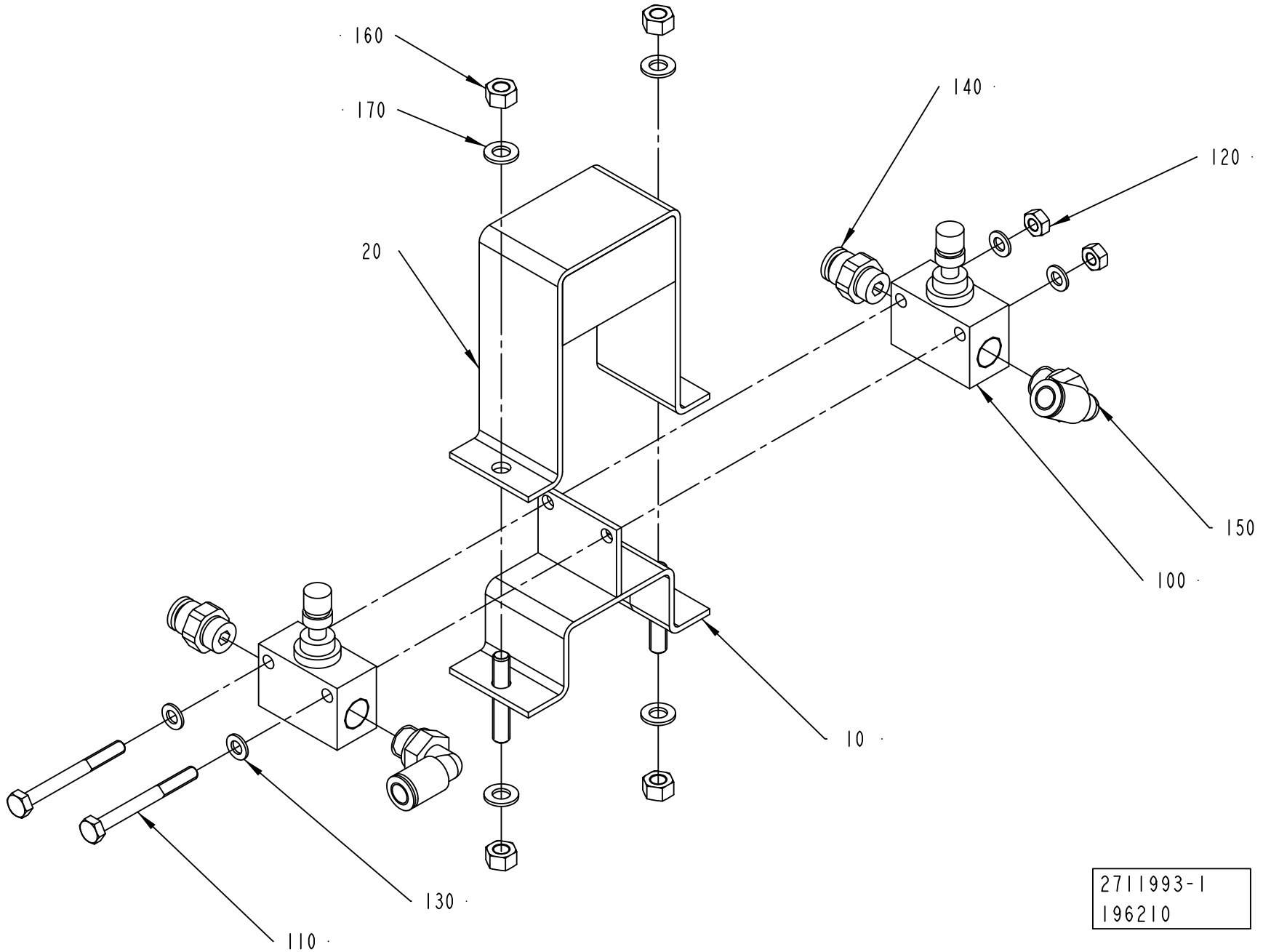
160
170
20
140
120
150
100
10
130
110
2711993-1
196210

ECM: 196221 - 20051128
Group number: 2711993-0100
Assembly Drawing: 2711993-1_1_AA

Pos	Part No	UN	Qty	Description	Page No
-					
010	2711991-0000		1	SUPPORT	
020	2711992-0000		1	COVER	
100	90235-0250		2	THROTTLE CHECK VALVE, GR-1/8-B FESTO	
	90235-0401		*1*	*PROTECTIVE COVER*	
110	312105-0303		2	SCREW M6S ISO 4017 M4X40 A470	
120	312607-0312		2	HEXAGON NUT, EN 24032 M6M M4 A480	
130	315105-0136		4	WASHER BRB4,3XRFR	
140	342722-0202		2	PIPE COUPLING 1/8" D=6MM	
150	350002-0006		2	PUSH-IN L-FITTING QSL-F-G1/8-6	
160	312607-0314		4	HEXAGON NUT, EN 24032 M6M M5 A480	
170	315105-0146		4	WASHER BRB5,3X10RFR	

Pos	Part No	UN	Qty	Description	Page No

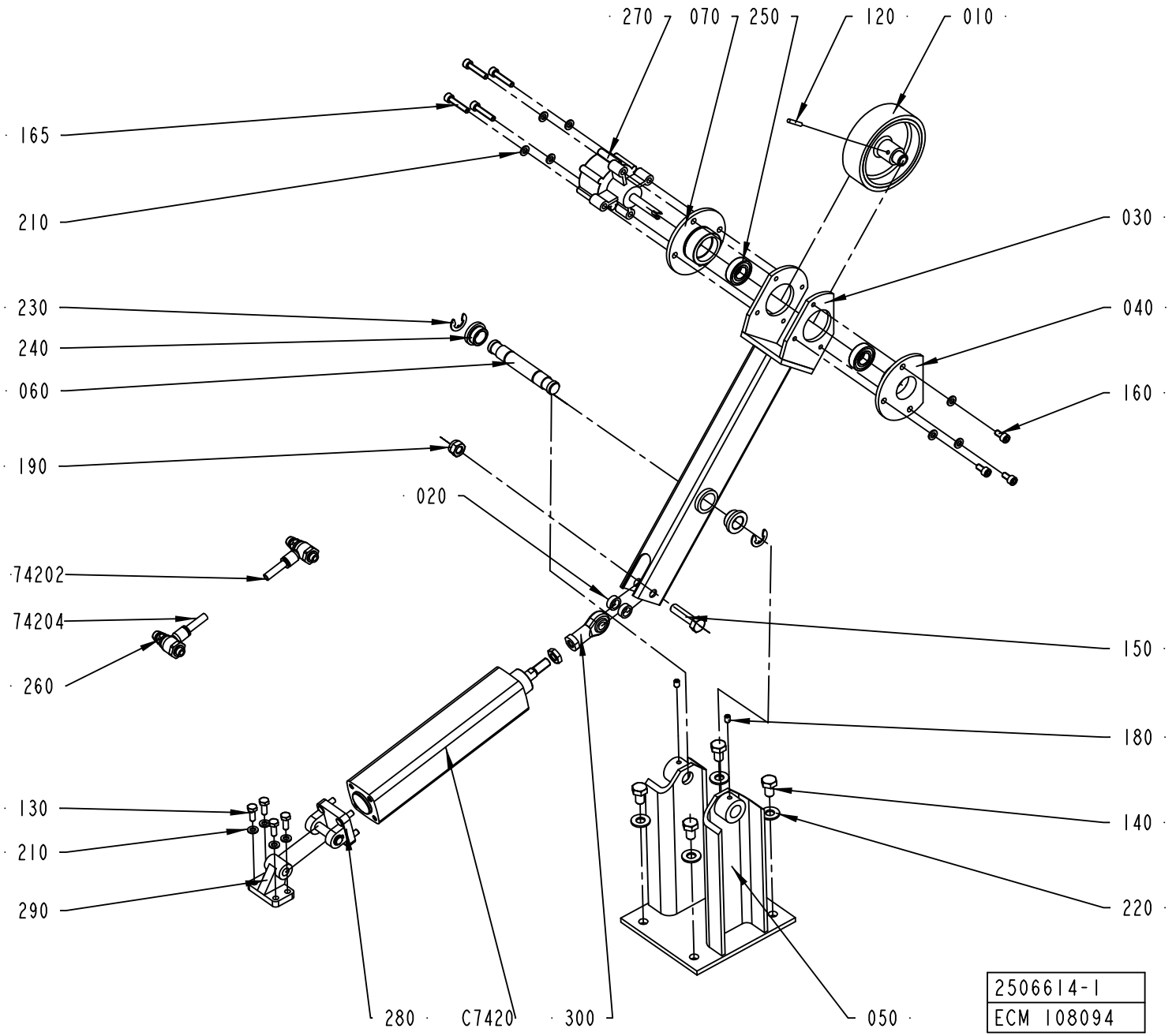
270
070
250
120
010
165
210
030
230
240
040
060
160
190
020
74202
74204
150
260
180
130
140
210
220
290
280
C7420
300
050
2506614-1
ECM 108094

ECM: 177219 - 20041025
Group number: 2506614-0100
Assembly Drawing: 2506614-1_1_AB

Pos	Part No	UN	Qty	Description	Page No
-					
010	1523483-0000		1	ROLLER	
020	1523486-0000		2	SPACER	
030	2506647-0000		1	LEVER	
040	2506649-0000		1	BEARING FLANGE	
050	2506650-0000		1	FRAME	
060	2506652-0000		1	AXLE PIN	
070	2507103-0000		1	BEARING FLANGE	
120	311103-1274		1	PARALLEL PIN ISO 2338 4M6X24 A1	
130	312105-0370		4	SCREW M6S ISO 4017 M6X20 A480	
140	312105-0491		4	SCREW M6S ISO 4017 M10X20 A480	
150	312105-0499		1	SCREW M6S ISO 4014 M10X40 A480	
160	312115-0366		3	SCREW ISO4762 M6X12 A4 80	
165	312115-0374		4	SCREW ISO4762 M6X30 A4 80	
180	312318-0362		2	SCREW ISO4029 M6X8 A4	
190	312812-0320		1	HEXAGON NUT, NY-LOCK M10 A480	
210	315105-0153		11	WASHER BRB6,4X12RFR	
220	315105-0173		4	WASHER BRB10,5X22RFR	
230	315755-0112		2	RETAINING RING SHAFT DIN 6799 12 A2	
240	321101-0202		2	FLANGE BUSHING, 16X22X12 MM	
250	321308-0202		2	BALL BEARING, 15X32X9 MM	
260	90235-0848		2	THROTTLE CHECK VALVE, G1/8", MANUAL,8	
270	90347-0054		1	DAMPER	
280	90450-0654		1	BRACKET,REAR,EYE WITH AXLE 32	
290	90450-0655		1	BRACKET,REAR,CLEVIS FLANGE WITH FOOT 32	
300	90450-0723		1	ROD END,BALL JOINT EYE M10X1,25	
74202	90166-0194	MM	7000	TUBE 8 MM PUR BLUE	
74204	90166-0194	MM	7000	TUBE 8 MM PUR BLUE	
C7420	90459-3370		1	DOUBLE ACTING, PROFILE,CYL 32-140	

Pos	Part No	UN	Qty	Description	Page No

Machine Type	Group Description	Used-In	Group Number	Page No

BOBBIN BRAKE

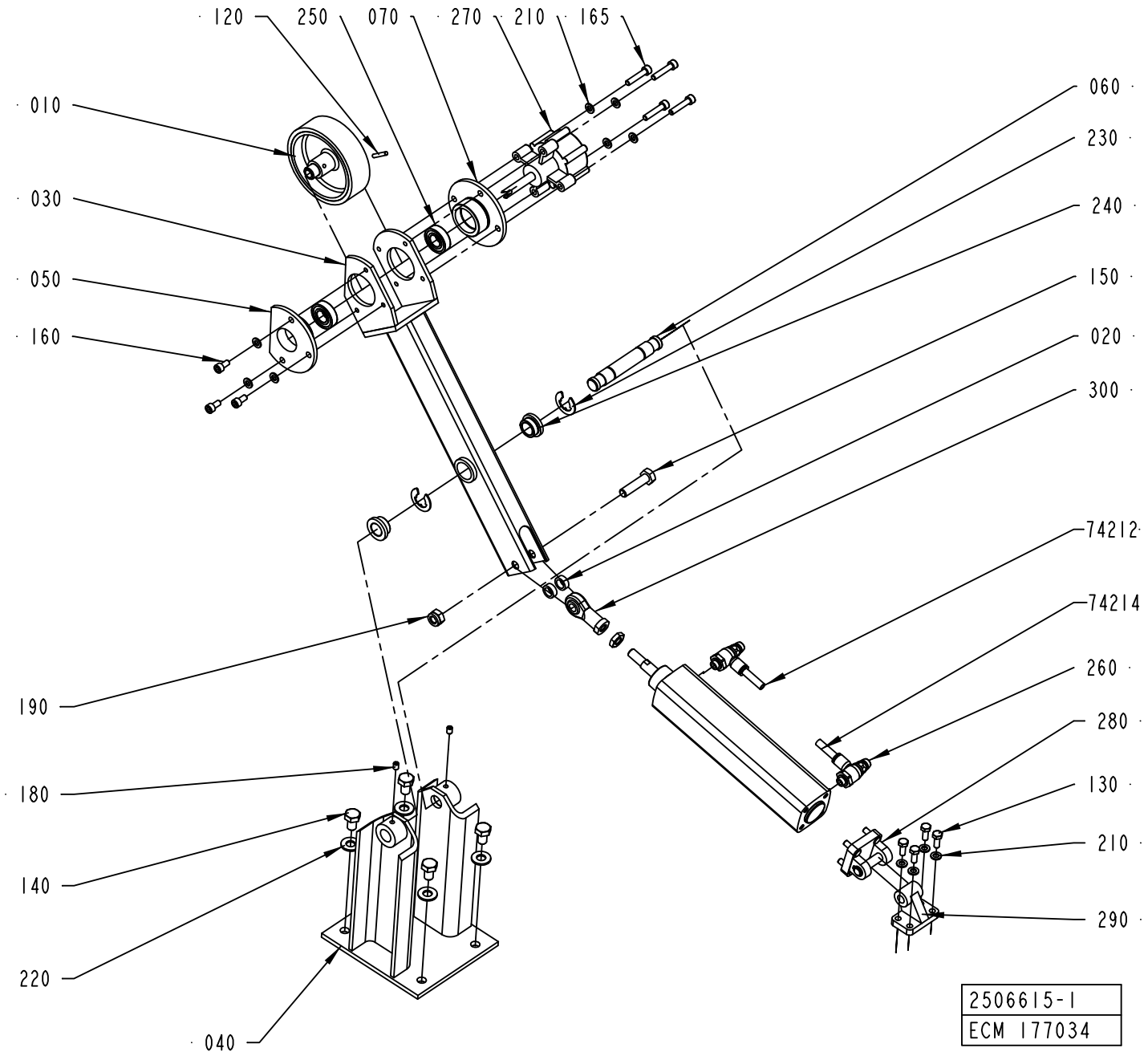

ECM: 177220 - 20041025
Group number: 2506615-0100
Assembly Drawing: 2506615-1_1_AC

Pos	Part No	UN	Qty	Description	Page No
-					
010	1523483-0000		1	ROLLER	
020	1523486-0000		2	SPACER	
030	2506648-0000		1	LEVER	
040	2506650-0000		1	FRAME	
050	2506651-0000		1	BEARING FLANGE	
060	2506652-0000		1	AXLE PIN	
070	2507103-0000		1	BEARING FLANGE	
120	311103-1274		1	PARALLEL PIN ISO 2338 4M6X24 A1	
130	312105-0370		4	SCREW M6S ISO 4017 M6X20 A480	
140	312105-0491		4	SCREW M6S ISO 4017 M10X20 A480	
150	312105-0499		1	SCREW M6S ISO 4014 M10X40 A480	
160	312115-0366		3	SCREW ISO4762 M6X12 A4 80	
165	312115-0374		4	SCREW ISO4762 M6X30 A4 80	
180	312318-0362		2	SCREW ISO4029 M6X8 A4	
190	312812-0320		1	HEXAGON NUT, NY-LOCK M10 A480	
210	315105-0153		11	WASHER BRB6,4X12RFR	
220	315105-0173		4	WASHER BRB10,5X22RFR	
230	315755-0112		2	RETAINING RING SHAFT DIN 6799 12 A2	
240	321101-0202		2	FLANGE BUSHING, 16X22X12 MM	
250	321308-0202		2	BALL BEARING, 15X32X9 MM	
260	90235-0848		2	THROTTLE CHECK VALVE, G1/8", MANUAL,8	
270	90347-0054		1	DAMPER	
280	90450-0654		1	BRACKET,REAR,EYE WITH AXLE 32	
290	90450-0655		1	BRACKET,REAR,CLEVIS FLANGE WITH FOOT 32	
300	90450-0723		1	ROD END,BALL JOINT EYE M10X1,25	
74212	90166-0194	MM	7000	TUBE 8 MM PUR BLUE	
74214	90166-0194	MM	7000	TUBE 8 MM PUR BLUE	
C7421	90459-3370		1	DOUBLE ACTING, PROFILE,CYL 32-140	

Pos	Part No	UN	Qty	Description	Page No

MACHINE BODY

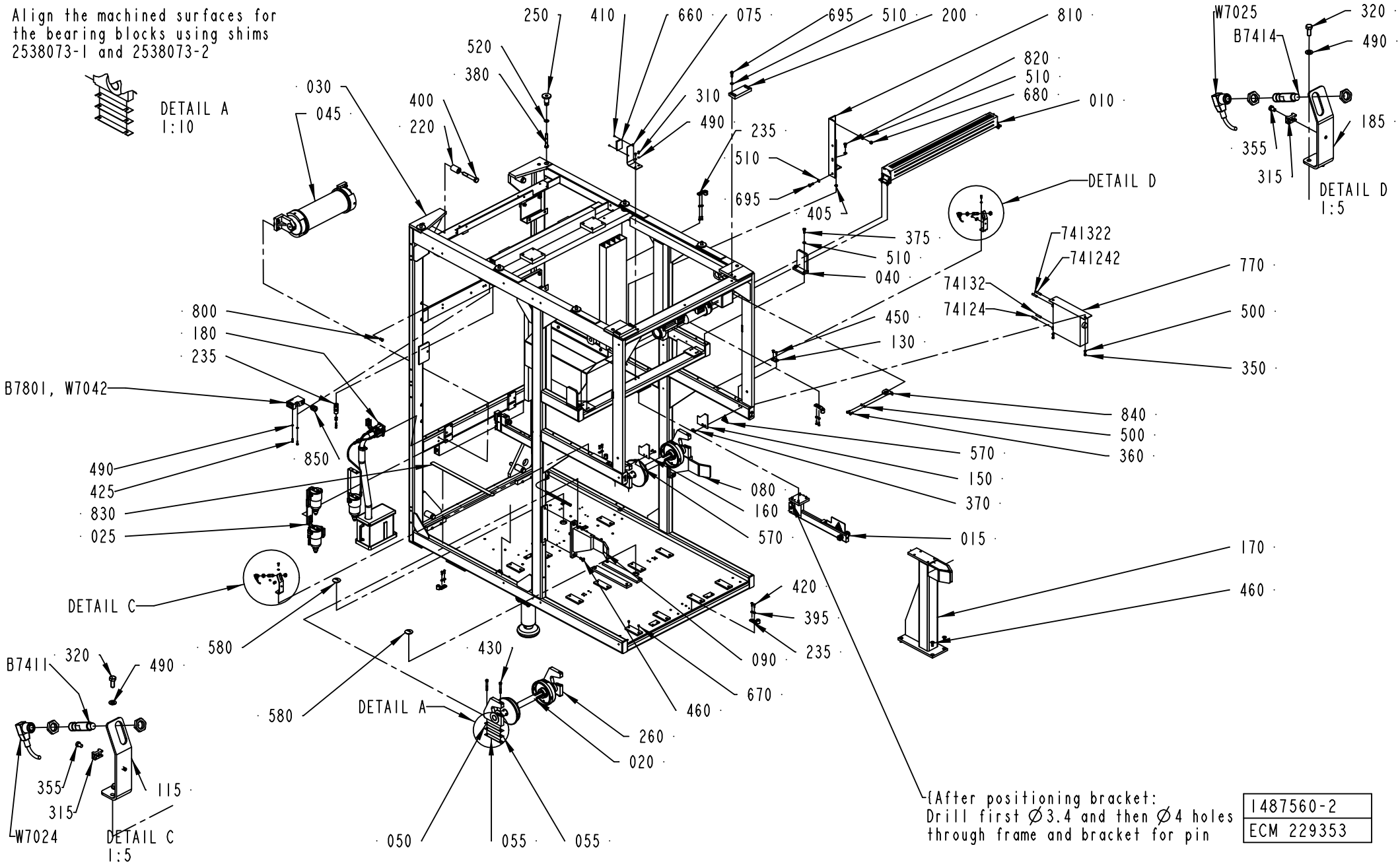

1487560-2
ECM 229353

ECM: 233032 - 20051129
Group number: 1487560-0200
Assembly Drawing: 1487560-2_1_AJ

This list covers pages from 7-44 to 7-51

Pos	Part No	UN	Qty	Description	Page No
A3/FLEX WITH ARL (See drawing on pages: 7-48, 7-50)					
025	2541891-0100		1	FILTER	**7-53**
045	2541083-0100		1	BENDING ROLLER	**7-55**
200	985756-0000		2	KEY	
250	2599941-0000		6	SPACER	
380	312105-0548		6	SCREW M6S ISO 4014 M12X80 A480	
500	315105-0153		16	WASHER BRB6,4X12RFR	
510	315105-0165		14	WASHER BRB8,4X16RFR	
520	315105-0178		6	WASHER BRB13X24RFR	
695	312105-0452		2	SCREW M6S ISO 4017 M8X22 A4 80	
780	2693153-0100		2	FOOT	**7-57**
860	2690494-0100		1	PNEUMATIC SYSTEM	**7-59**
A3/FLEX WITHOUT ARL (See drawing on pages: 7-44, 7-46)					
025	2541891-0100		1	FILTER	**7-53**
045	2541083-0100		1	BENDING ROLLER	**7-55**
050	2538073-0001		4	SHIMS	
055	2538073-0002		8	SHIMS	
080	2553107-0000		1	HOLDER	
090	2553108-0000		1	HOLDER	
170	2553109-0000		1	HOLDER	
200	985756-0000		2	KEY	
250	2599941-0000		6	SPACER	
380	312105-0548		6	SCREW M6S ISO 4014 M12X80 A480	
460	312155-0493		8	SCREW DIN 7991 MF6S M10X25 A4 70	
500	315105-0153		16	WASHER BRB6,4X12RFR	
510	315105-0165		14	WASHER BRB8,4X16RFR	
520	315105-0178		6	WASHER BRB13X24RFR	
695	312105-0452		2	SCREW M6S ISO 4017 M8X22 A4 80	
780	2693153-0100		2	FOOT	**7-57**
Common Parts					
010	1487544-0200		1	SIDE FEEDER	**7-65**
015	2541890-0100		1	BRACKET	**7-67**
020	1499571-0100		2	PAPER REEL HOLDER	**7-69**
030	1512279-0200		1	MACHINE BODY	**7-71**
040	2552821-0000		2	BRACKET	
070	1558487-0000		2	SUPPORT	
075	1548200-0000		1	BRACKET	
100	1499570-0000		1	HOLDER	
115	2538076-0000		1	BRACKET	
130	1512420-0000		2	PLATE	
140	1517101-0000		1	PIPE	
150	1558484-0000		1	PROTECTION PLATE	
160	2529551-0000		1	PROTECTION PLATE	
185	2538075-0000		1	BRACKET	
190	1519588-0000		1	PROTECTION PLATE	
220	1038865-0000		4	SPACER DISC	
235	1538868-0000		6	BRACKET	
260	1488005-0000		4	BEARING BLOCK	
310	312105-0323		5	SCREW M6S ISO 4017 M5X8 A480	
315	352113-0205		2	ANCHOR PLATES FOR STRIPS, TYPE TM2S8-C10	
320	312105-0327		4	SCREW M6S ISO 4017 M5X12 A480	
350	312105-0366		4	SCREW M6S ISO 4017 M6X12 A480	
355	312125-0285		2	SCREW ISO 1207 M4X6 A4	
360	312105-0368		8	SCREW M6S ISO 4017 M6X16 A480	
370	312145-0327		4	SCREW ISO 2009 MFS M5X12 A4	
375	312105-0451		4	SCREW M6S ISO 4017 M8X20 A480	
385	312105-0453		1	SCREW M6S ISO 4017 M8X25 A480	
395	315115-0153		12	WASHER PLAIN, TBRB 6,4/12 H=3	
400	312105-0640		4	SCREW M6S ISO 4014 M16X100 A480	
405	90062-0016		5	LOCK WASHER SERRAT.EXT.GEAR,8,4/15 H=0,8	
410	312125-0220		2	SCREW ISO 1207 M3X6 A4	
420	312105-0329		12	SCREW M6S ISO 4017 M5X16 A480	
425	312115-0329		10	SCREW ISO4762 M5X16 A4 80	
430	312115-0463		8	SCREW ISO4762 M8X60 A4 80	
450	312155-0366		4	SCREW DIN 7991 MF6S M6X12 A4 70	
470	312318-0455		4	SCREW ISO4029 M8X30 A4	
490	315105-0146		19	WASHER BRB5,3X10RFR	
570	359705-0005		2	WARNING SIGN ISO, MOVING PART	
580	90002-0010		2	LANK-OFF PLUG, PR 37 SKINDICHT-BLK29	
590	90458-0323		1	NUT, M20X1,5	
630	90164-0303		4	BRACKET SK2202 WALDMANN	
640	90165-0009		3	PIPE CLIP FOR TUBE D=12 MM	
660	90232-0333		1	REFLECTOR E39-R1	
670	90261-0016		24	PLUG, BLIND, PLASTIC GPN300V2	
680	312605-0318		6	HEXAGON NUT, M6M M8 A280	
74124	90166-0194	MM	3000	TUBE 8 MM PUR BLUE	
741242	90166-0194	MM	1500	TUBE 8 MM PUR BLUE	
74132	90166-0194	MM	3000	TUBE 8 MM PUR BLUE	
741322	90166-0194	MM	1500	TUBE 8 MM PUR BLUE	
770	90459-3832		1	VENTING BOX, P9852	
800	312927-0150		4	RIVET NUT M8, CLAMP. LENGTH 3,0 - 4,5	
810	1549324-0000		1	BRACKET	
820	312105-0449		1	SCREW M6S ISO 4017 M8X16 A480	
830	90459-1848		1	TAPE, SAFETY WALK R25MM X 18,3M	

Machine Type | Group Description | Used-In | Group Number | Page No

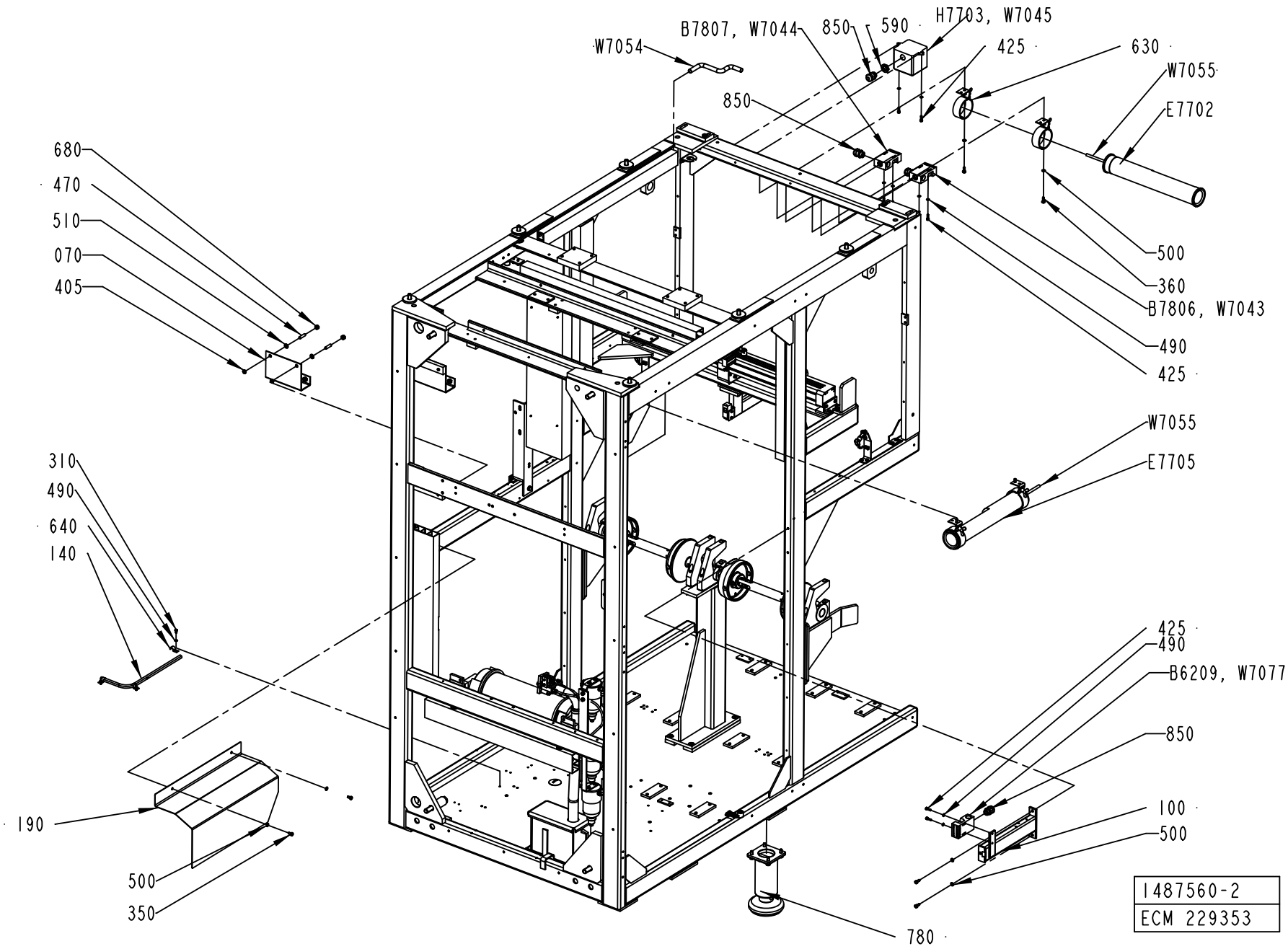
W7054
B7807, W7044
850
590
H7703, W7045
425
630
W7055
E7702
850
680
470
510
070
405
500
360
B7806, W7043
490
425
W7055
E7705
310
490
640
140
425
490
B6209, W7077
850
190
100
500
500
350
780
1487560-2
ECM 229353

Pos	Part No	UN	Qty	Description	Page No
Common Parts (Cont'd)					
840	1558798-0000		1	BRACKET	
850	90458-0315		5	CABLE GLAND, M20X1,5, NO.5311 1120	
B6209	90459-0472		1	KEY SAF.SW. AZ 16 02ZVRK-M20-2152-2254	
B7411	90458-0677		1	PROXIMITY SWITCH, E2EG-X5MB1-M1	
B7414	90458-0677		1	PROXIMITY SWITCH, E2EG-X5MB1-M1	
B7801	90459-0472		1	KEY SAF.SW. AZ 16 02ZVRK-M20-2152-2254	
B7806	90459-0472		1	KEY SAF.SW. AZ 16 02ZVRK-M20-2152-2254	
B7807	90459-0472		1	KEY SAF.SW. AZ 16 02ZVRK-M20-2152-2254	
E7702	90164-0015		1	LIGHT FIXTURE, DWDCV111B/230V 50HZ	
	90297-0007		*1*	*FLUORESCENT TUBE, PLS 11*	
E7705	90164-0015		1	LIGHT FIXTURE, DWDCV111B/230V 50HZ	
	90297-0007		*1*	*FLUORESCENT TUBE, PLS 11*	
H7703	90052-0011		1	HORN HOOTERT 24:48VDC.PT NO.1YA030221	
W7014	351150-0412	MM	4000	CABLE OLFLEX 3X1,5 MM2 LIGHT/GREY	
W7024	90458-1076		1	L-SHAPED CONNECTOR CABLE 933 235-042	
W7025	90458-1076		1	L-SHAPED CONNECTOR CABLE 933 235-042	
W7042	351150-0405	MM	4000	CABLE OLFLEX 5X0,75 MM2 LIGHT/GREY	
W7043	351150-0405	MM	4000	CABLE OLFLEX 5X0,75 MM2 LIGHT/GREY	
W7044	351150-0405	MM	4000	CABLE OLFLEX 5X0,75 MM2 LIGHT/GREY	
W7045	351150-0431	MM	4000	CABLE OLFLEX 2X0,75 MM2 LIGHT/GREY	
W7054	351150-0406	MM	8000	CABLE OLFLEX 7X0,75 MM2 LIGHT/GREY	
W7055	351150-0412	MM	4000	CABLE OLFLEX 3X1,5 MM2 LIGHT/GREY	
W7077	351150-0405	MM	5000	CABLE OLFLEX 5X0,75 MM2 LIGHT/GREY	

Pos	Part No	UN	Qty	Description	Page No

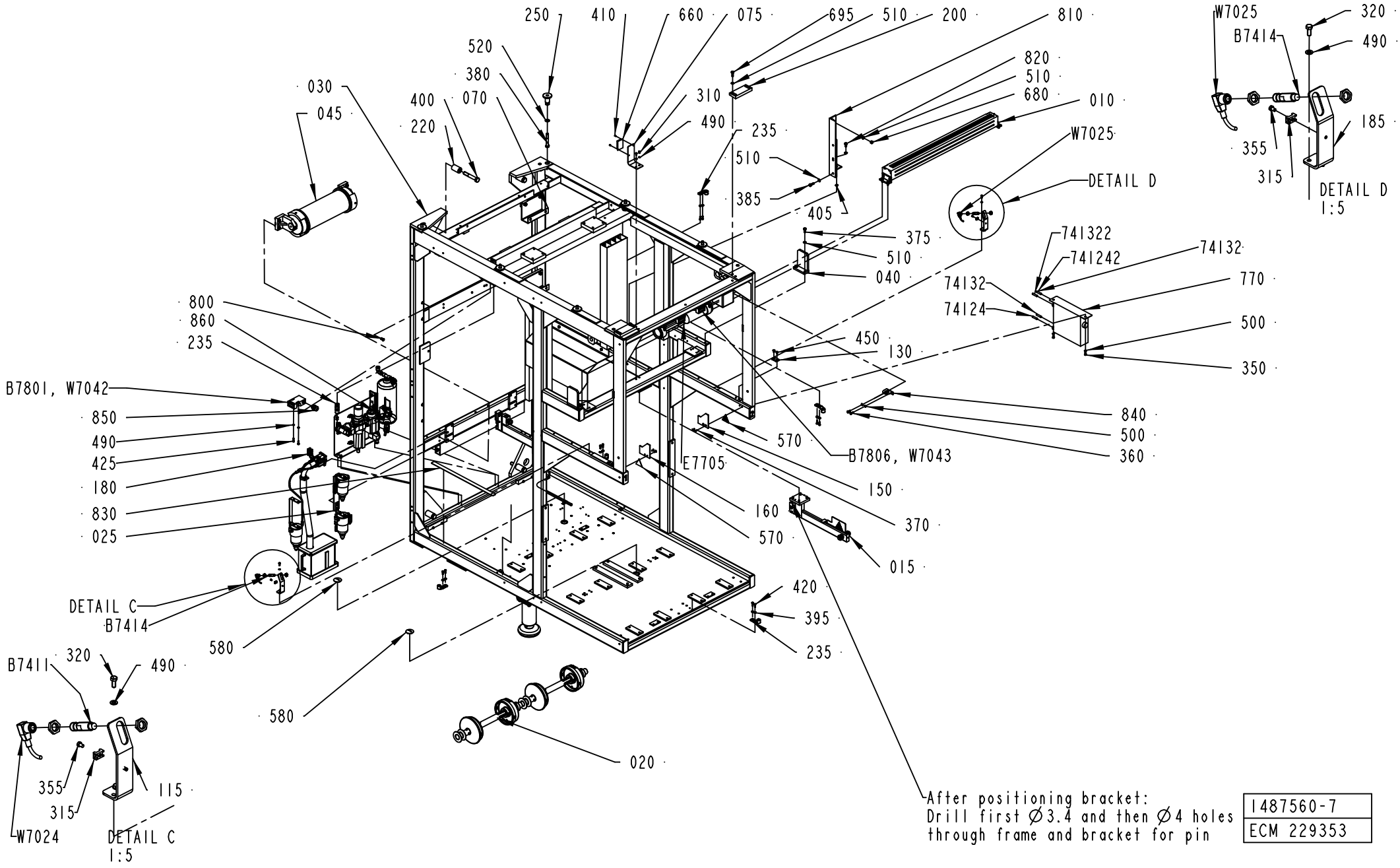
250
410
660
075
695
510
200
810
520
380
030
045
400
070
220
310
490
235
510
385
405
820
510
680
010
W7025
DETAIL D
375
510
040
741322
741242
74132
74132
74124
770
500
350
450
130
840
500
360
800
860
235
B7801, W7042
850
490
425
180
830
025
570
B7806, W7043
E7705
150
160
570
370
015
420
395
235
DETAIL C
B7414
580
580
020
B7411
320
490
355
315
115
W7024
DETAIL C
1:5
W7025
B7414
320
490
185
355
315
DETAIL D
1:5
After positioning bracket:
Drill first ∅3.4 and then ∅4 holes
through frame and bracket for pin
1487560-7
ECM 229353

Pos	Part No	UN	Qty	Description	Page No
SEE PREVIOUS LISTS PAGES: 7-45, 7-47.					

Pos	Part No	UN	Qty	Description	Page No

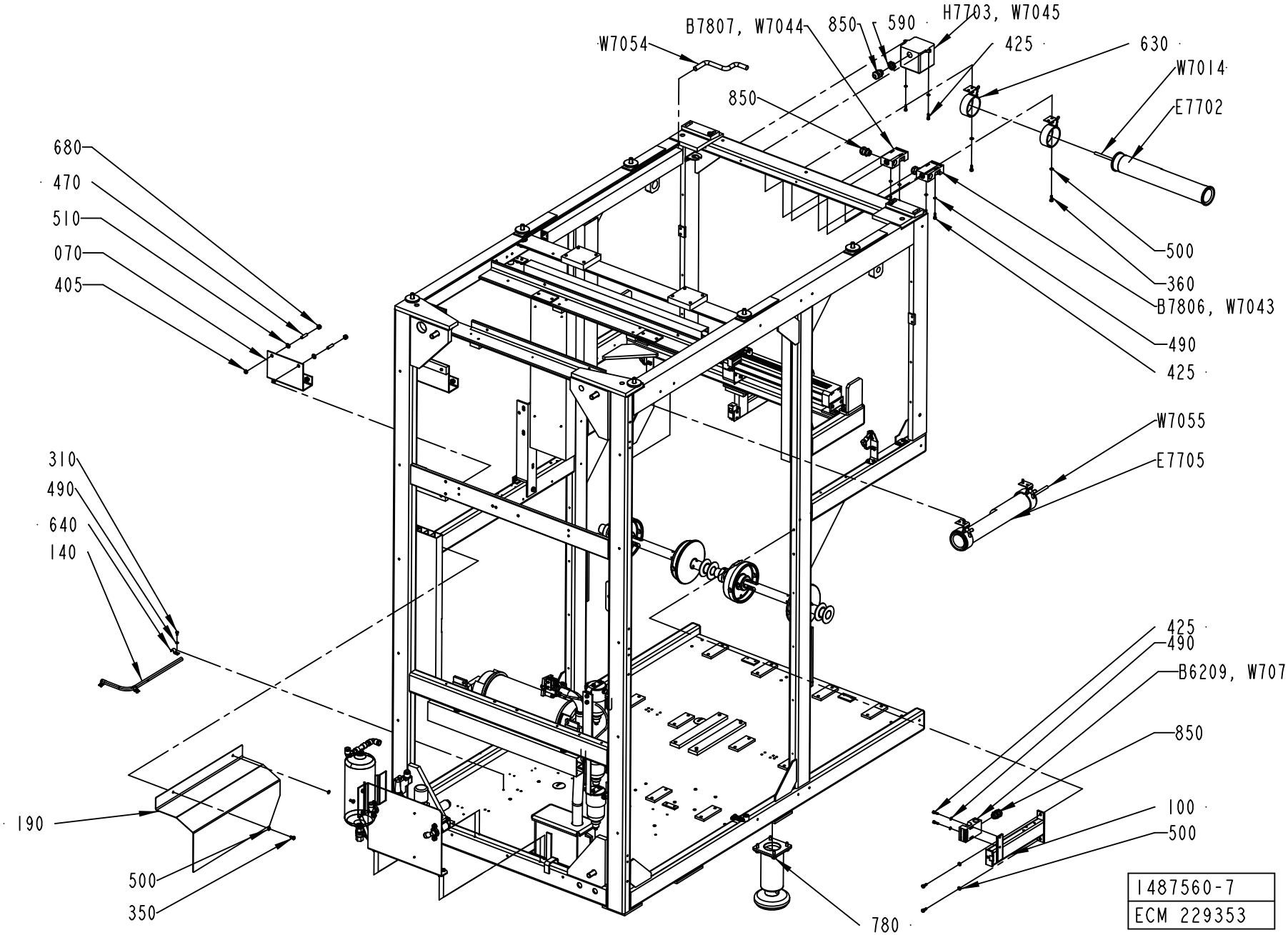
W7054
B7807, W7044
850
590
H7703, W7045
425
630
W7014
E7702
850
680
470
510
070
405
500
360
B7806, W7043
490
425
W7055
E7705
310
490
640
140
425
490
B6209, W7077
850
100
500
190
500
350
780
1487560-7
ECM 229353

Pos	Part No	UN	Qty	Description	Page No	Pos	Part No	UN	Qty	Description	Page No

SEE PREVIOUS LISTS PAGES: 7-45, 7-47.

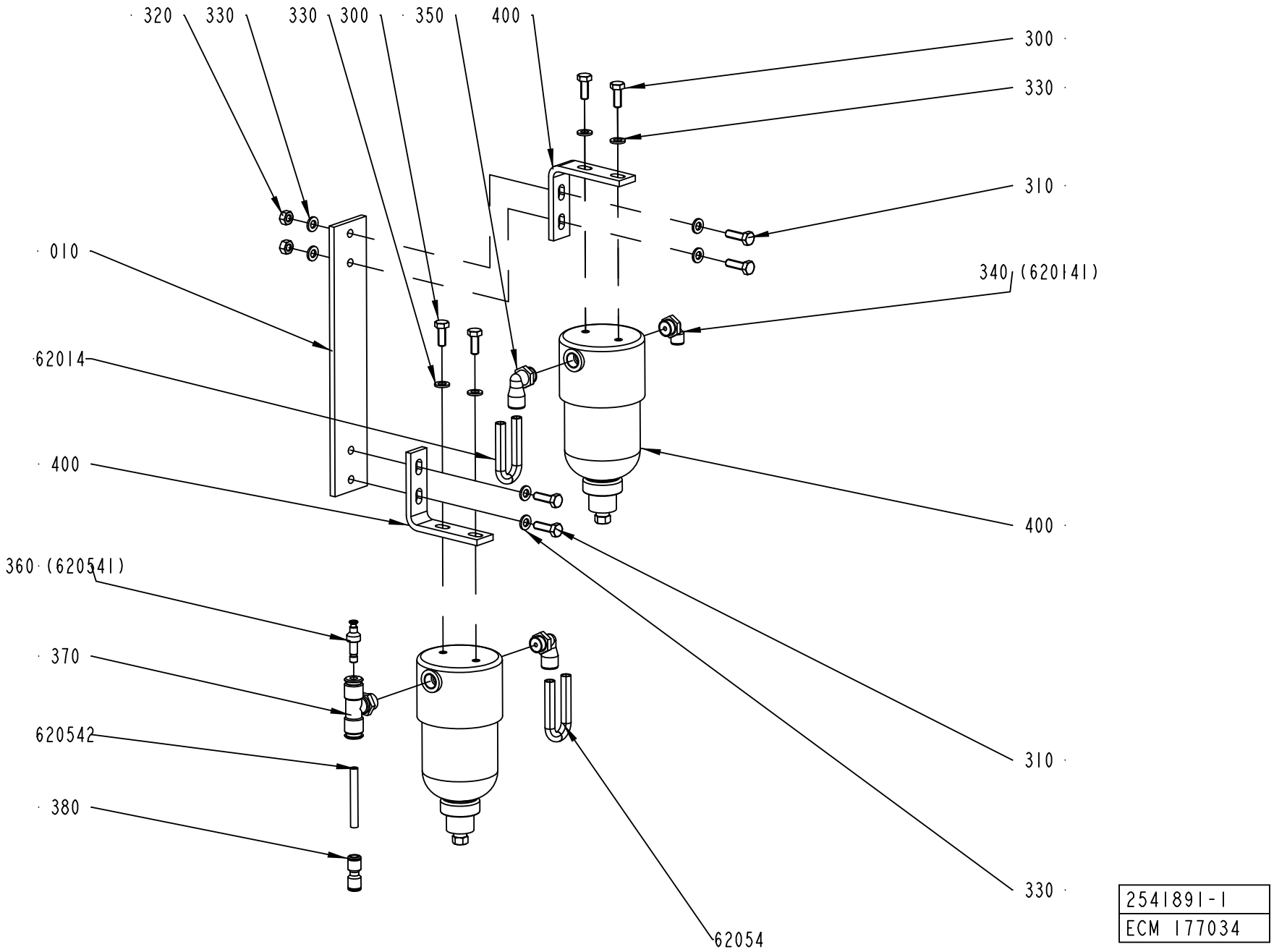
320
330
330
300
350
400
300
330
310
340 (620141)
010
62014
400
400
360 (620541)
370
620542
380
310
330
62054
2541891-1
ECM 177034

ECM: 178372 - 20041025
Group number: 2541891-0100
Assembly Drawing: 2541891-1_1_AC

Pos	Part No	UN	Qty	Description	Page No
-					
010	2518119-0000		1	PLATE	
300	312105-0368		4	SCREW M6S ISO 4017 M6X16 A480	
310	312105-0370		4	SCREW M6S ISO 4017 M6X20 A480	
320	312605-0316		2	HEXAGON NUT, M6M M6 A280	
330	315105-0153		10	WASHER BRB6,4X12RFR	
340	90458-2957		1	ELBOW PIPE JOINT, EXT.THREAD, D=6MM-G1/4	
350	90458-2958		2	ELBOW PIPE JOINT, EXT.THREAD, D=8MM-G1/4	
360	342716-0202		1	REDUCER 4-6	
370	342742-0103		1	T-COUPLING,ADJUST,F.PLASTIC TUBE 6-G1/4"	
380	342728-0102		1	PIPE COUPLING 6 MM	
400	90277-0116		2	FILTER HOUSING / ART.NO FILTER 58P-S5430	
	90277-0406		*1*	*CARTRIDGE 100-12-BX*	
62014	90166-0194	MM	3500	TUBE 8 MM PUR BLUE	
62054	90166-0194	MM	3500	TUBE 8 MM PUR BLUE	
620542	90166-0193	MM	2000	TUBE 6 MM PUR BLUE	

Pos	Part No	UN	Qty	Description	Page No

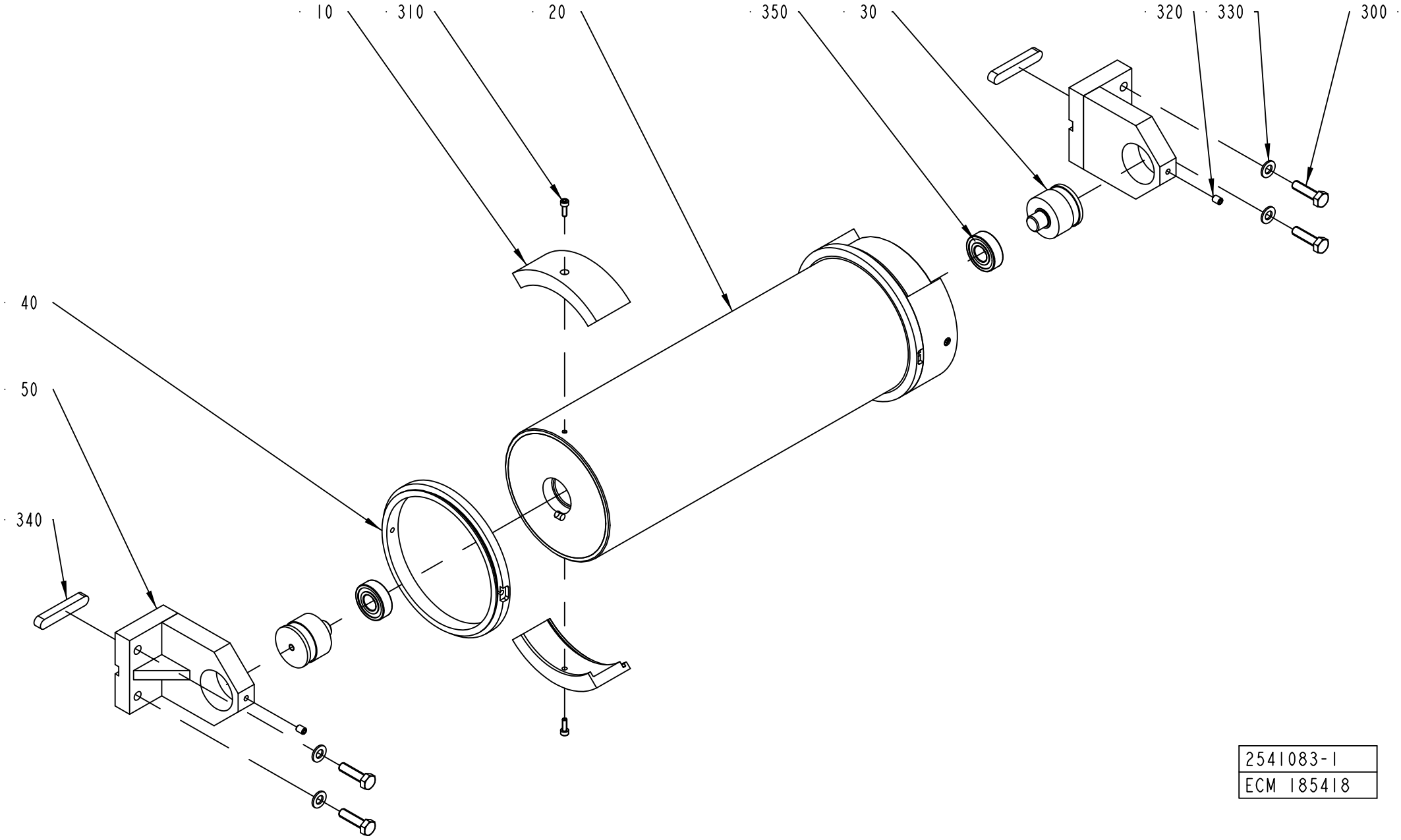

2541083-1
ECM 185418

ECM: 210998 - 20050517
Group number: 2541083-0100
Assembly Drawing: 2541083-1_1_AB

Pos	Part No	UN	Qty	Description	Page No
TBA 0200S, TPA 0250SQ, TPA 0200SQ					
010	2523766-0010		4	BRACKET	
TBA 0250S, TBA 0200M					
010	2523766-0009		4	BRACKET	
TBA 0330S, TBA 0200B, TBA 0250B, TBA 0200SQ, TBA 0250SQ					
010	2523766-0007		4	BRACKET	
TPA 0500SQ					
010	2523766-0006		4	BRACKET	
TBA 0500S					
010	2523766-0005		4	BRACKET	
TBA 1000B, TBA 1500S					
010	2523766-0001		4	BRACKET	
TBA 1000S					
010	2523766-0002		4	BRACKET	
TBA 1000SQ					
010	2523766-0003		4	BRACKET	
TBA 1890S, TBA 2000S					
010	2701881-0000		4	BRACKET	
TPA 0330SQ					
010	2523766-0008		4	BRACKET	
TPA 1000SQ, TPA 0750SQ					
010	2523766-0012		4	BRACKET	
Common Parts					
020	2523765-0000		1	BENDING ROLLER	
030	1499584-0000		2	AXLE PIN	
040	2701880-0000		2	FLANGE	
050	2506328-0000		2	BRACKET	
300	312105-0455		4	SCREW M6S ISO 4017 M8X30 A480	
310	312115-0291		4	SCREW ISO4762 M4X12 A4 80	
320	312318-0362		2	SCREW ISO4029 M6X8 A4	
330	315105-0165		4	WASHER BRB8,4X16RFR	
340	315705-0305		2	PARALLEL KEY W. ROUND ENDS 10X8X60 MM	
350	321313-0102		2	BALL BEARING, 15X35X11 MM	

Pos	Part No	UN	Qty	Description	Page No

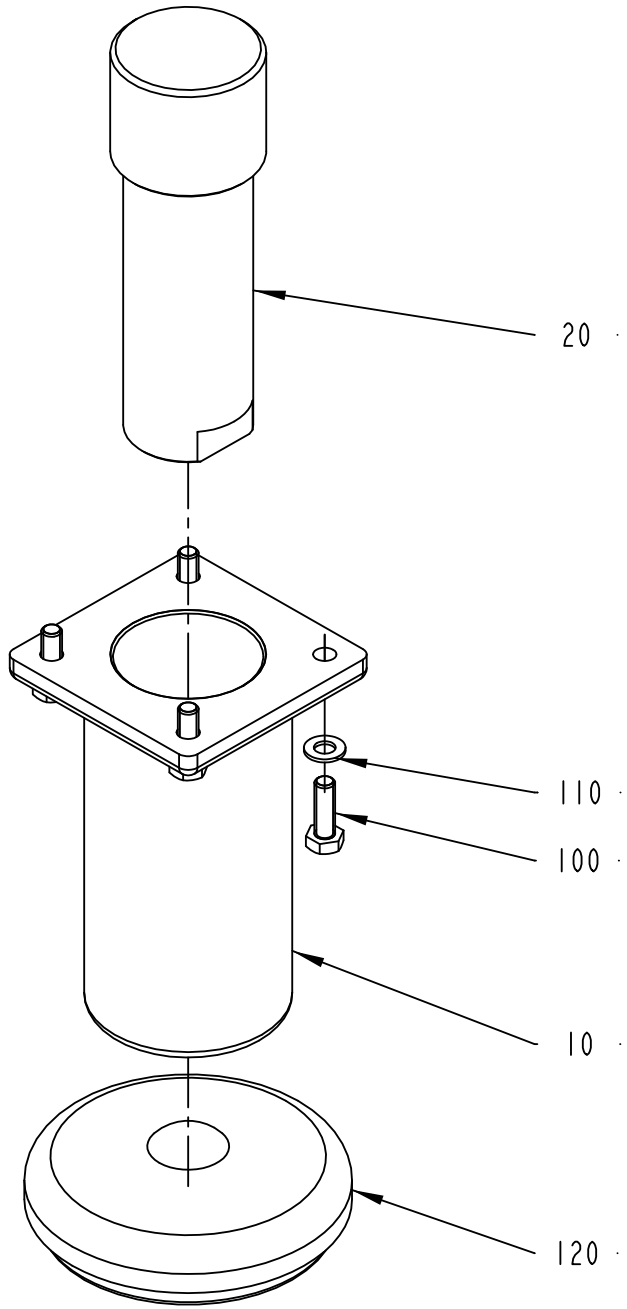

2693153-1
186851

ECM: 210987 - 20050808
Group number: 2693153-0100
Assembly Drawing: 2693153-1_1_AA

Pos	Part No	UN	Qty	Description	Page No
-					
010	2698383-0000		1	SLEEVE	
020	2693155-0000		1	LEG	
100	312105-0453		4	SCREW M6S ISO 4017 M8X25 A480	
110	315105-0165		4	WASHER BRB8,4X16RFR	
120	90347-0175		1	MACHINE SHOE BRIK T 125	

Pos	Part No	UN	Qty	Description	Page No

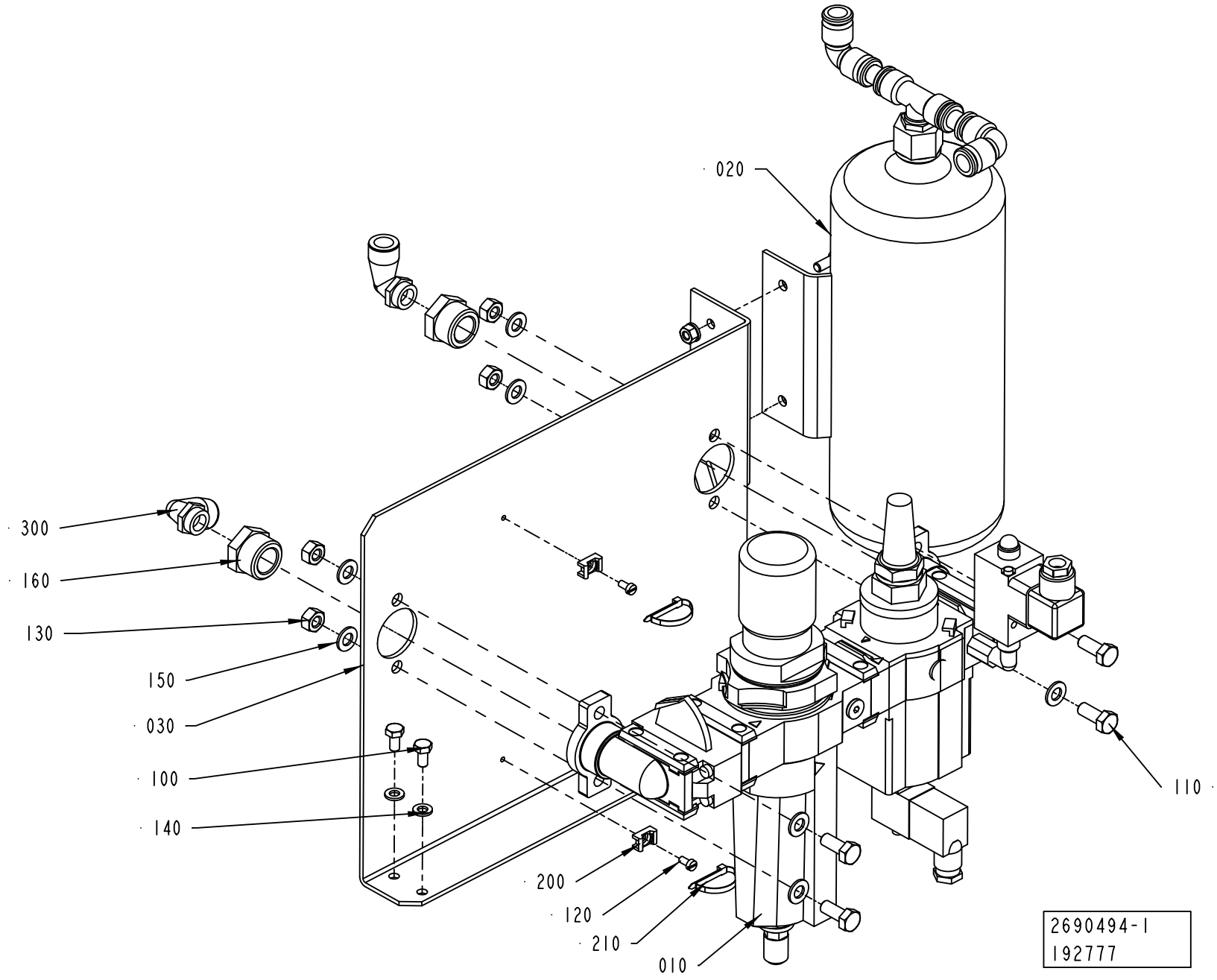
020
300
160
130
150
030
100
140
200
120
210
010
110
2690494-1
192777

ECM: 211005 - 20050517
Group number: 2690494-0100
Assembly Drawing: 2690494-1_1_AB

Pos	Part No	UN	Qty	Description	Page No
TBA 1890S, TBA 2000S					
010	2564054-0100		1	AIR INLET	**7-61**
020	2506578-0100		1	TANK	**7-63**
030	1558221-0000		1	BRACKET	
100	312105-0366		4	SCREW M6S ISO 4017 M6X12 A480	
110	312105-0451		4	SCREW M6S ISO 4017 M8X20 A480	
120	312125-0287		2	SCREW ISO 1207 M4X8 A4	
130	312605-0318		4	HEXAGON NUT, M6M M8 A280	
140	315105-0153		4	WASHER BRB6,4X12RFR	
150	315105-0165		8	WASHER BRB8,4X16RFR	
160	342701-0209		2	BUSHING,INT./EXT.G-THREAD G3/4"-G3/8"	
200	352113-0205		2	ANCHOR PLATES FOR STRIPS, TYPE TM2S8-C10	
210	352113-0102		2	CLIP-STRIP, BLACK 188X4,8 MM	
300	90458-2960		2	ELBOW PIPE JOINT, EXT.THREAD,D=12MM-G3/8	

Pos	Part No	UN	Qty	Description	Page No

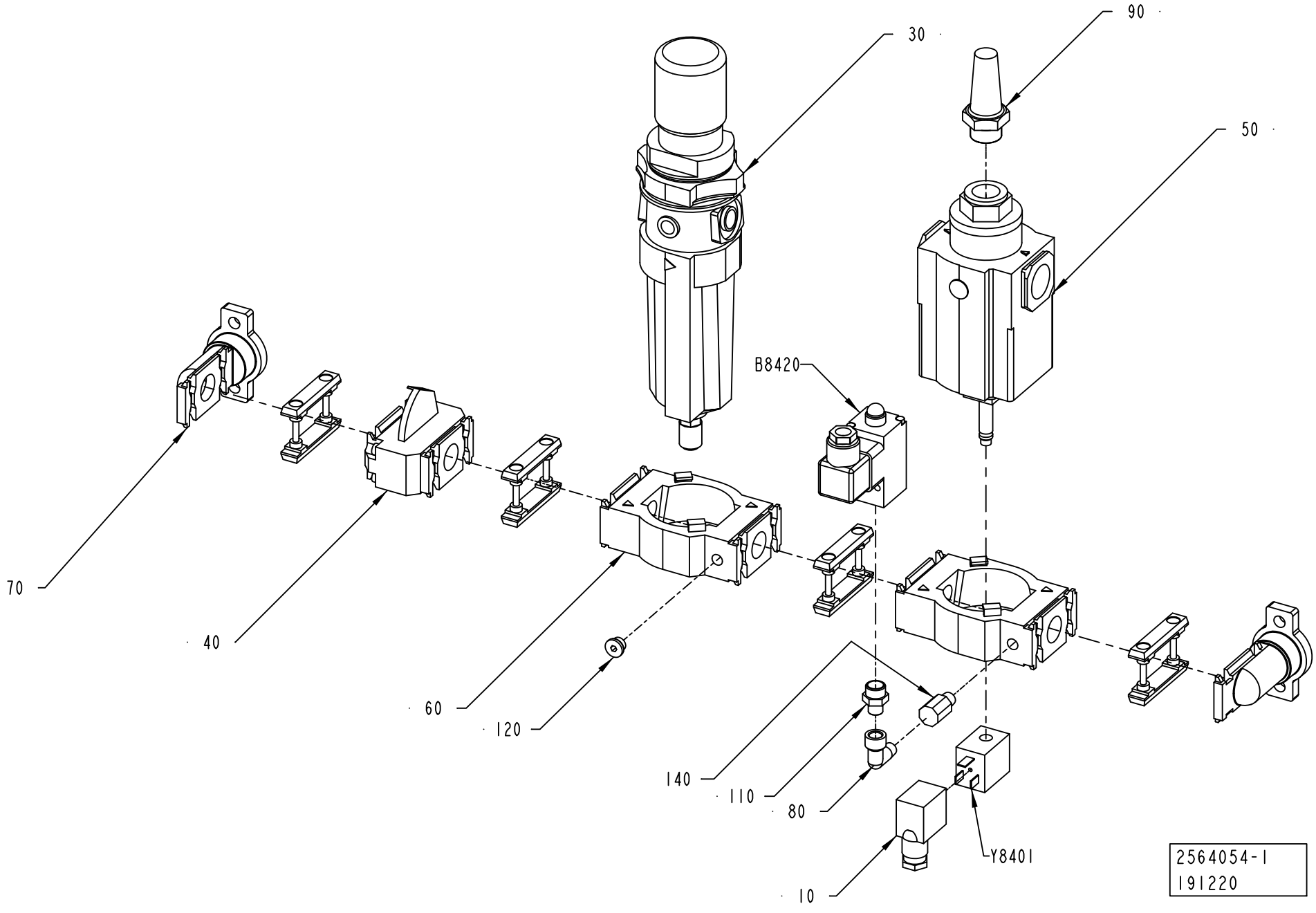
30
90
50
B8420
70
40
60
120
140
110
80
Y8401
10
2564054-1
191220

ECM: 191371 - 20041214
Group number: 2564054-0100
Assembly Drawing: 2564054-1_1_AD

Pos	Part No	UN	Qty	Description	Page No
-					
010	90042-0392		1	CONTACT 2 POLE + EARTH	
030	90113-0113		1	FILTER REGULATOR, B64G-NNK-AD3-RMN	
040	90113-0427		1	SHUT OFF VALVE G1/8, T64T-NNS-001	
050	90113-0155		1	SOFT START VALVE	
060	90113-0407		2	YOKE SINGLE, Y64A-4GA-N1N	
070	90113-0413		2	END CONNECTOR G3/4, 18-026-981	
080	90140-0021		1	ELBOW, 90 INT/EXT, 20201/8-1/8	
090	90328-0001		1	SILENCER, 338/130 B140-00-120	
110	342700-0201		1	NIPPLES,HEXAGON,EXT.G-THREAD G1/4"-G1/8"	
120	342713-0209		1	PLUG (QUANT.MINIMA= 10PC).	
140	90330-0185		1	NIPPLES,REDUCING,INT THR, RC1/8 - R 1/8	
B8420	90458-2241		1	PRESSURE SWITCH 0,5-10 BAR ADJUSTABLE	
Y8401	90042-0582		1	COIL NORGREN QM/48/127/21	

Pos	Part No	UN	Qty	Description	Page No

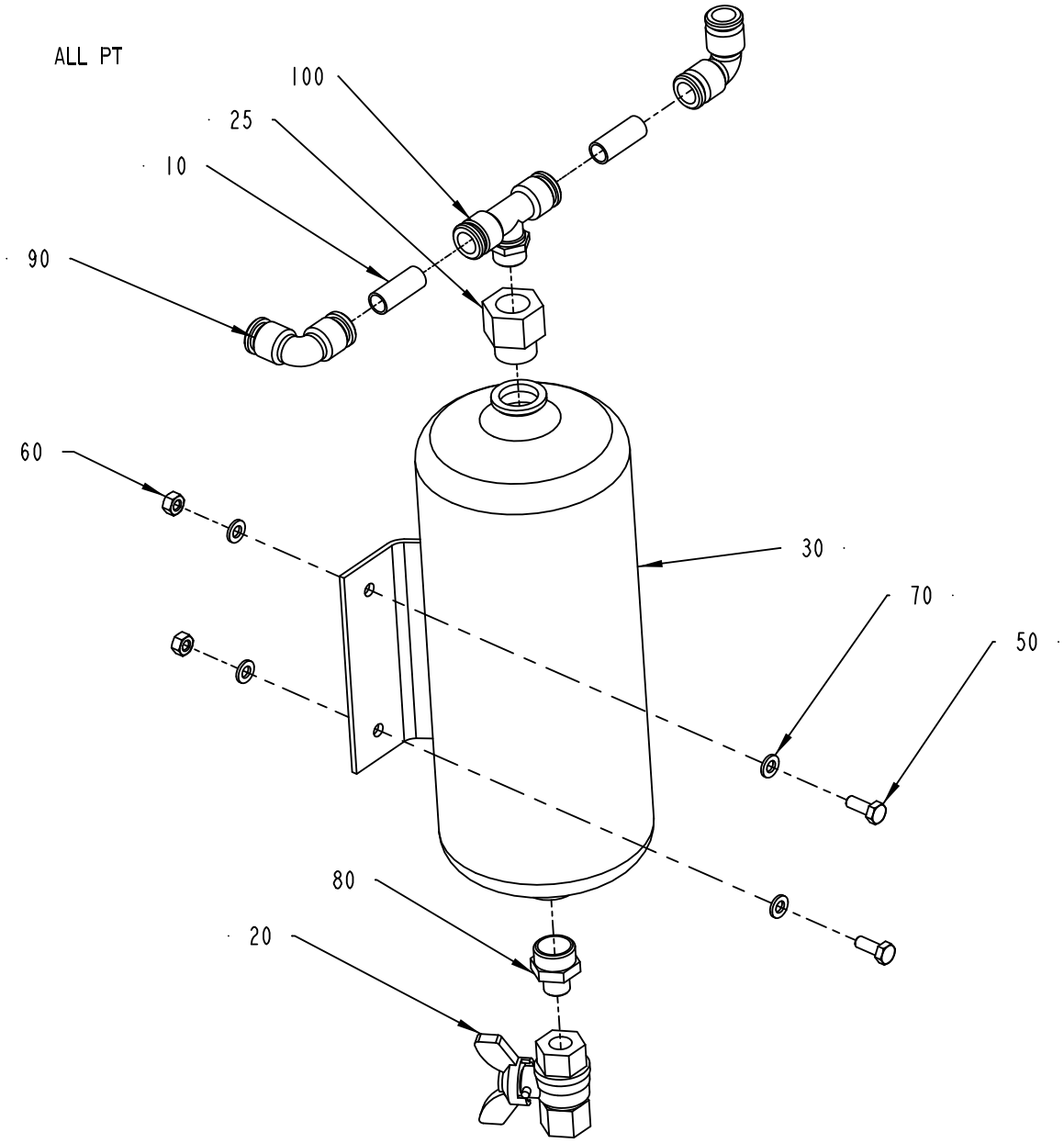

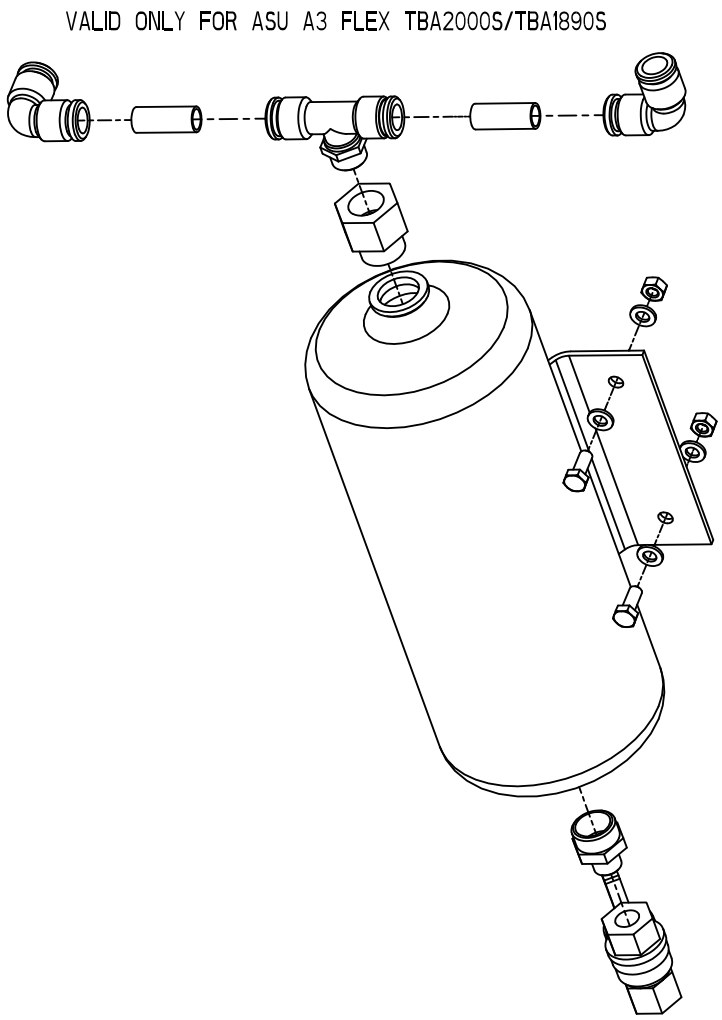

2506578-1
192777

ECM: 195228 - 20041203
Group number: 2506578-0100
Assembly Drawing: 2506578-1_1_AB

Pos	Part No	UN	Qty	Description	Page No
-					
010	90166-0068	MM	150	TUBE 12 MM PA BLUE	
020	90187-0088		1	BALL VALVE G1/4, NPBR	
025	90224-0229		1	REDUCER, ART.NO RMM 1238	
030	90457-0100		1	RESERVATORVZS-2	
050	312105-0368		2	SCREW M6S ISO 4017 M6X16 A480	
060	312605-0316		2	HEXAGON NUT, M6M M6 A280	
070	315105-0153		4	WASHER BRB6,4X12RFR	
080	342700-0205		1	NIPPLES,HEXAGON,EXT.G-THREAD G1/2"-G1/4"	
090	342735-0109		2	ELBOW PIPE JOINT	
100	342742-0110		1	T-COUPLING,ADJUST,F.PLAST.TUBE 12-G3/8"	

Pos	Part No	UN	Qty	Description	Page No

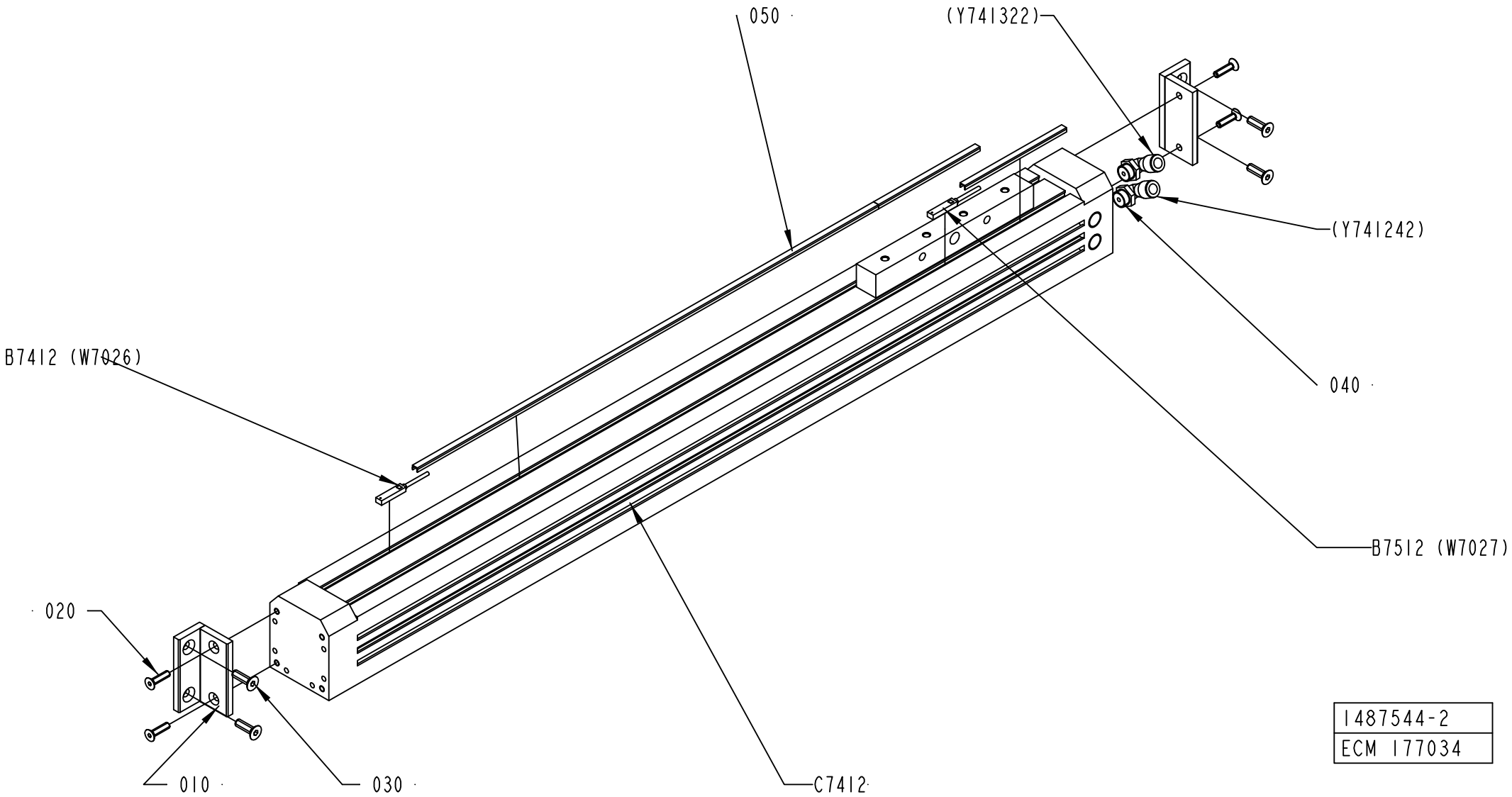
050
(Y741322)
(Y741242)
040
B7412 (W7026)
B7512 (W7027)
020
010
030
C7412
1487544-2
ECM 177034

ECM: 177932 - 20041025
Group number: 1487544-0200
Assembly Drawing: 1487544-2_1_AB

Pos	Part No	UN	Qty	Description	Page No
-					
010	1498457-0000		2	BRACKET	
020	312155-0331		4	SCREW DIN 7991 MF6S M5X20 A4 70	
030	312155-0370		4	SCREW DIN 7991 MF6S M6X20 A4 70	
040	90458-2958		2	ELBOW PIPE JOINT, EXT.THREAD, D=8MM-G1/4	
050	90458-0273		1	COVER STRIP	
B7412	90044-0165		1	PROXIMITY SENSOR, SME-8-K5-LED-24	
B7512	90044-0165		1	PROXIMITY SENSOR, SME-8-K5-LED-24	
C7412	90459-1849		1	DOUBLE ACTING SHUTTLE CYL. 40-550 MM	

Pos	Part No	UN	Qty	Description	Page No

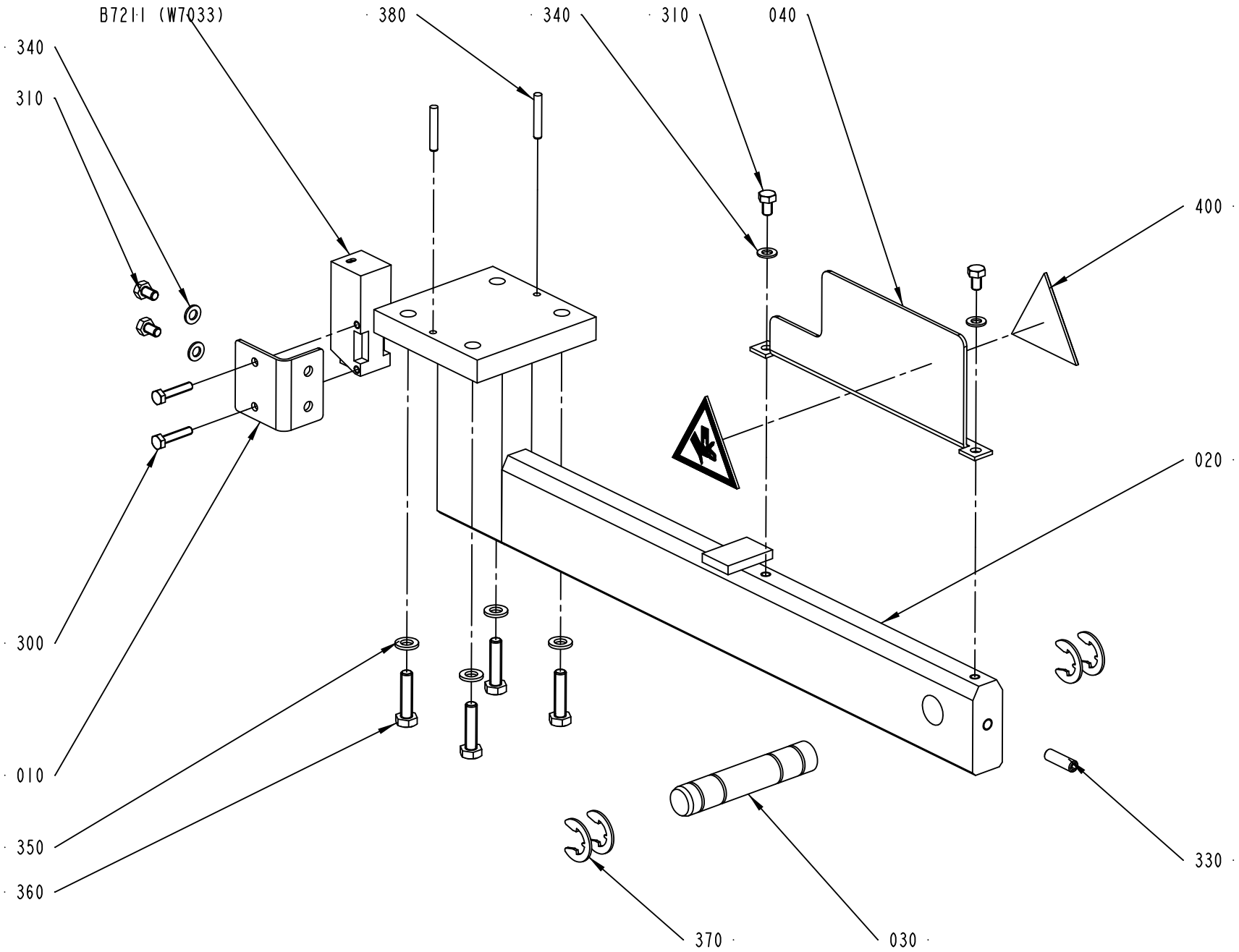

2541890-1
ECM 121839

ECM: 178370 - 20041005
Group number: 2541890-0100
Assembly Drawing: 2541890-1_1_AB

Pos	Part No	UN	Qty	Description	Page No
-					
010	1490210-0000		1	PLATE	
020	1490219-0000		1	BRACKET	
030	1499573-0000		1	PIN	
040	1512275-0000		1	PROTECTION PLATE	
300	312105-0295		2	SCREW M6S ISO 4017 M4X20 A470	
310	312105-0323		4	SCREW M6S ISO 4017 M5X8 A480	
330	312318-0370		1	SCREW ISO4029 M6X20 A4	
340	315105-0146		4	WASHER BRB5,3X10RFR	
350	315105-0153		4	WASHER BRB6,4X12RFR	
360	312105-0372		4	SCREW M6S ISO 4017 M6X25 A480	
370	315755-0112		4	RETAINING RING SHAFT DIN 6799 12 A2	
380	311103-0274		2	PARALLEL PIN ISO 2338 4M6X25 A1	
400	359705-0005		2	WARNING SIGN ISO, MOVING PART	
B7211	90232-0129		1	PH.CELL E3S-CR61-5M	

Pos	Part No	UN	Qty	Description	Page No

PAPER REEL HOLDER

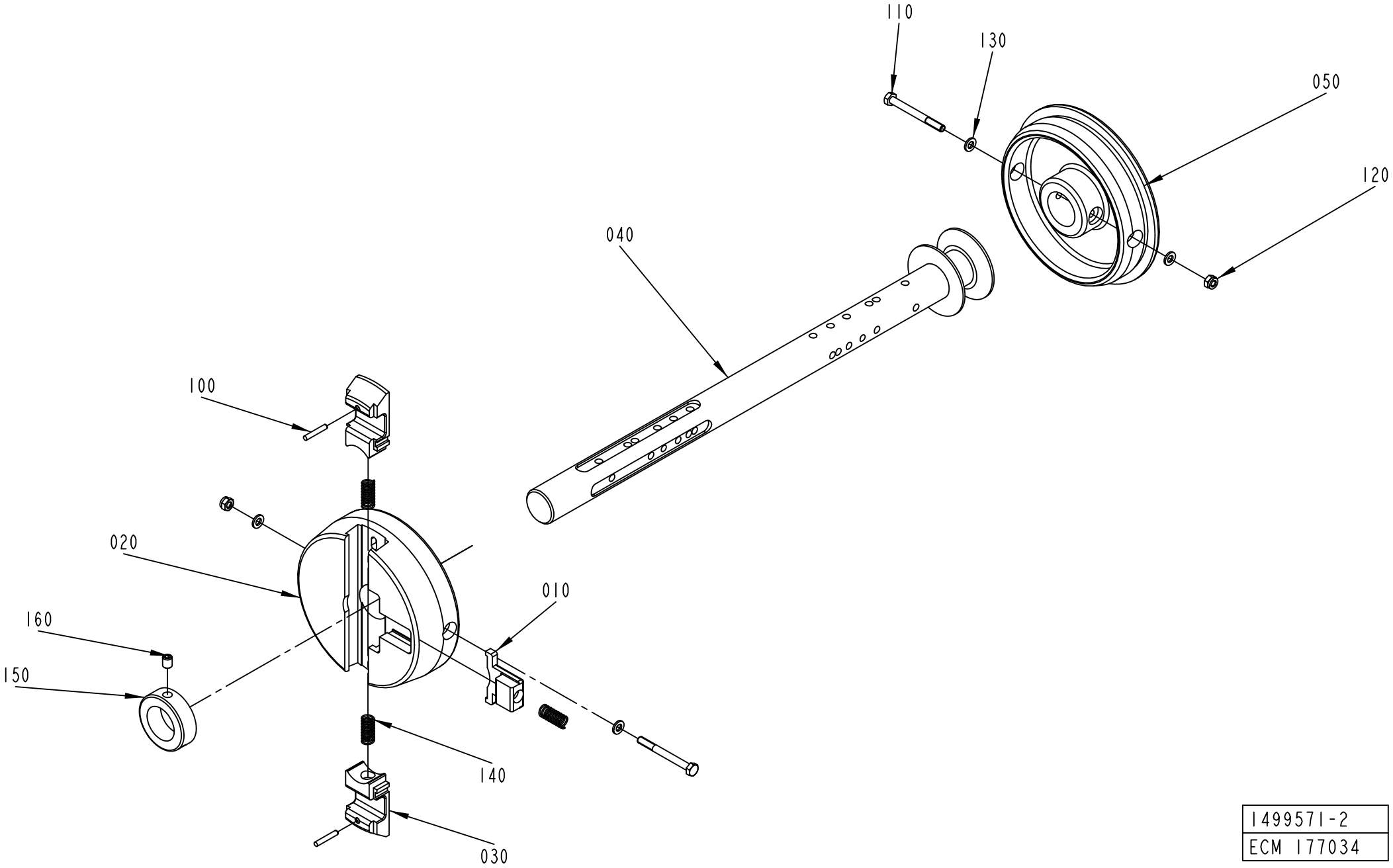

1499571-2
ECM 177034

ECM: 210983 - 20050808
Group number: 1499571-0100
Assembly Drawing: 1499571-2_1_AF

Pos	Part No	UN	Qty	Description	Page No
A3/FLEX					
040	2656299-0000		1	SHAFT	
150	315742-0123		1	RETAINING RING 32 SMS 199 RFR	
160	312318-0445		1	SCREW ISO4029 M8X10 A4	
Common Parts					
010	272728-0000		1	BARRIER	
020	1512265-0000		1	SLEEVE	
030	575002-0000		2	PLUNGER	
050	1512266-0000		1	SLEEVE	
100	311103-0274		2	PARALLEL PIN ISO 2338 4M6X25 A1	
110	312105-0382		2	SCREW M6S ISO 4014 M6X60 A480	
120	312812-0316		2	HEXAGON NUT, NY-LOCK M6 A480	
130	315105-0153		4	WASHER BRB6,4X12RFR	
140	90335-0025		3	COMP. SPRING 22010, 1X11X26	

Pos	Part No	UN	Qty	Description	Page No

MACHINE BODY

080
W7011
W7020
W7024
W7028
W7031
W7042
W7055
W7077
74202
74204
73032
73034
74142
74144

050
W7014
W7025
W7026
W7027
W7029
W7033
W7043
W7044
W7045
W7054
74154
74152
73154
73152

030

W7010	W7028	W7042	74204	74074
W7011	W7029	W7043	74202	74084
W7014	W7030	W7044	74154	74104
W7020	W7031	W7045	74152	74142
W7023	W7033	W7054	73034	74144
W7024	W7035	W7055	73032	74072
W7025	W7036	W7077	73154	74102
W7026	W7040	W7304	73152	620542
W7027	W7041	W7305		

040
W7024
W7028
W7031
W7077
73034
73032
74204
74202
74144
74142

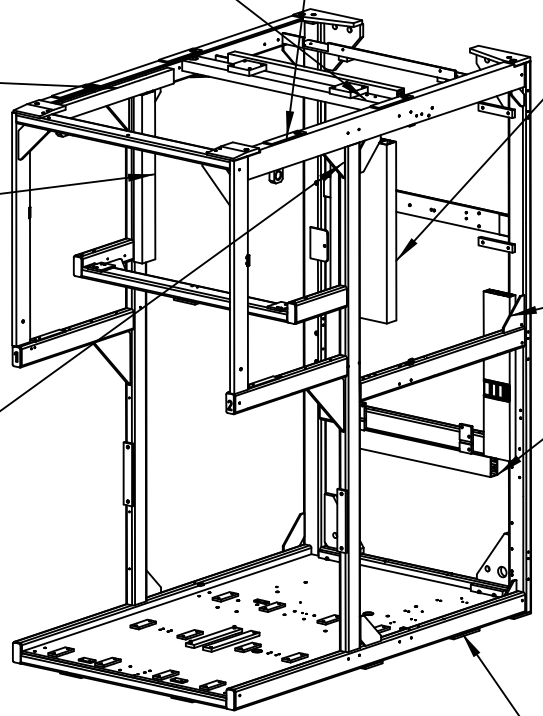

060
W7024
W7028
W7031
W7077
74204
74202

100
W7046 62034
W7049 62032
W7013 62054
W7012 62014
W7015 MAIN AIR
W7017 620542
W7018
W7022
W7038
W7034
W7039
W7050
W7056
W7072
W7073
W7019
W7417

020
W7013
W7046
W7049
W7017
W7018
W7022
W7050
W7047
W7072
W7073
W7019
62034
62032
62054
62014
620542

060
W7025
W7026
W7027
W7033

INSIDE CABLE CONDUIT:
620542 W7010
74072 W7040
74074 W7041
74102 W7304
74104 W7305
74084

010

1512279-2
ECM 177034

ECM: 178375 - 20041025
Group number: 1512279-0200
Assembly Drawing: 1512279-2_1_AD

Pos	Part No	UN	Qty	Description	Page No
-					
010	2529990-0000		1	FRAME	
020	1512421-0000		1	CABLE DUCT	
030	2524606-0000		1	CABLE DUCT	
040	1512423-0000		1	CABLE DUCT	
050	2524607-0000		1	CABLE DUCT	
060	1512425-0000		2	CABLE DUCT	
080	1512426-0000		1	CABLE DUCT	
100	2529544-0000		1	CABLE DUCT	
110	312105-0364		2	SCREW M6S ISO 4017 M6X10 A480	
120	312115-0364		16	SCREW ISO4762 M6X10 A4 80	
130	312503-0275		4	TAPPING SCREW ISO 7049-ST3,5X6,5-C-Z	
150	90143-0060	MM	2600	EDGE STRIP 9,5X6,3MM BLACK PVC	
160	315125-0153		2	WASHER TBRSB 6,4X22X4 A4	
170	352113-0205		25	ANCHOR PLATES FOR STRIPS, TYPE TM2S8-C10	
180	312125-0285		25	SCREW ISO 1207 M4X6 A4	
190	352113-0102		25	CLIP-STRIP, BLACK 188X4,8 MM	

Pos	Part No	UN	Qty	Description	Page No

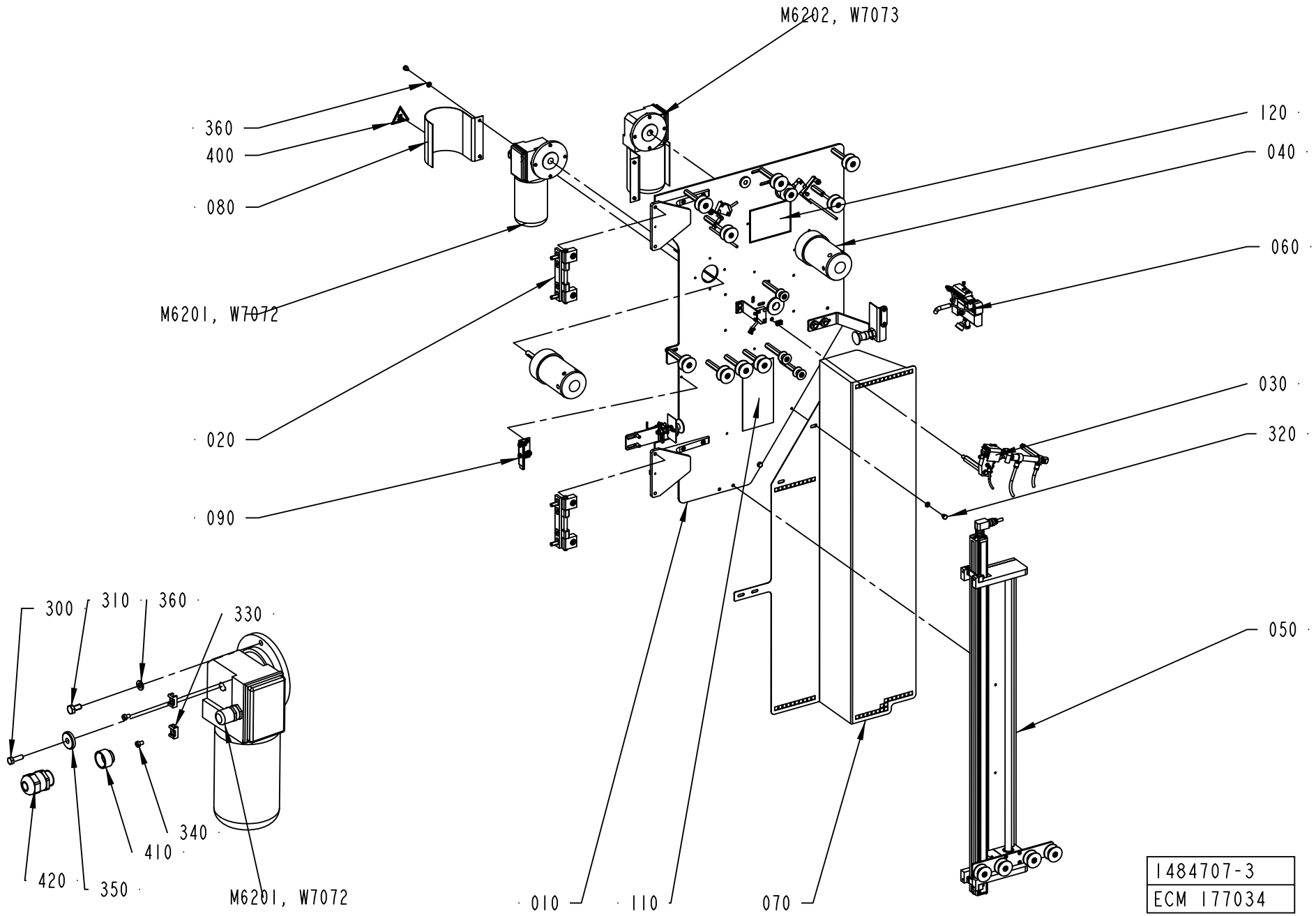
M6202, W7073
360
400
080
M6201, W7072
020
090
120
040
060
030
320
050
300
310
360
330
340
410
420
350
M6201, W7072
010
110
070
1484707-3
ECM 177034

ECM: 178402 - 20041025
Group number: 1484707-0200
Assembly Drawing: 1484707-3_1_AE

Pos	Part No	UN	Qty	Description	Page No
-					
010	1512428-0200		1	MOUNTING SHEET	**7-75**
020	1484720-0100		2	HINGE	**7-77**
030	1490806-0200		1	HEATING DEVICE	**7-79**
040	1484725-0100		2	HUB	**7-81**
050	1511585-0200		1	STRIP GUIDE	**7-83**
060	1524477-0200		1	CUTTING TABLE	**7-85**
070	1517107-0000		1	PROTECTION	
080	1498445-0000		2	COVER	
090	2510401-0100		1	HOLDER	**7-87**
110	2558879-0000		1	SIGN	
120	2558878-0000		1	SIGN	
300	312105-0329		2	SCREW M6S ISO 4017 M5X16 A480	
310	312105-0366		8	SCREW M6S ISO 4017 M6X12 A480	
320	312105-0362		6	SCREW M6S ISO 4017 M6X8 A480	
330	352113-0205		4	ANCHOR PLATES FOR STRIPS, TYPE TM2S8-C10	
340	312125-0285		4	SCREW ISO 1207 M4X6 A4	
350	315125-0153		2	WASHER TBRSB 6,4X22X4 A4	
360	315105-0153		14	WASHER BRB6,4X12RFR	
400	359705-0007		2	WARNING SIGN ISO, HOT SURFACE	
410	90458-1155		2	ENLARGING SLEEVE, 7216220	
420	90458-0307		2	CABLE GLAND, M20X1,5, NO.5311 1020	
430	312125-0285		4	SCREW ISO 1207 M4X6 A4	
440	352113-0205		4	ANCHOR PLATES FOR STRIPS, TYPE TM2S8-C10	
M6201	90069-0614		1	GEARS, WORM MOTOR MC320P2T	
M6202	90457-0921		1	WORM GEAR MOTOR MC320P2TB5/D	
W7072	90220-0104	MM	4000	SCR. CABLE 4X1,5MM2	
W7073	90220-0104	MM	4000	SCR. CABLE 4X1,5MM2	

Pos	Part No	UN	Qty	Description	Page No

MOUNTING SHEET

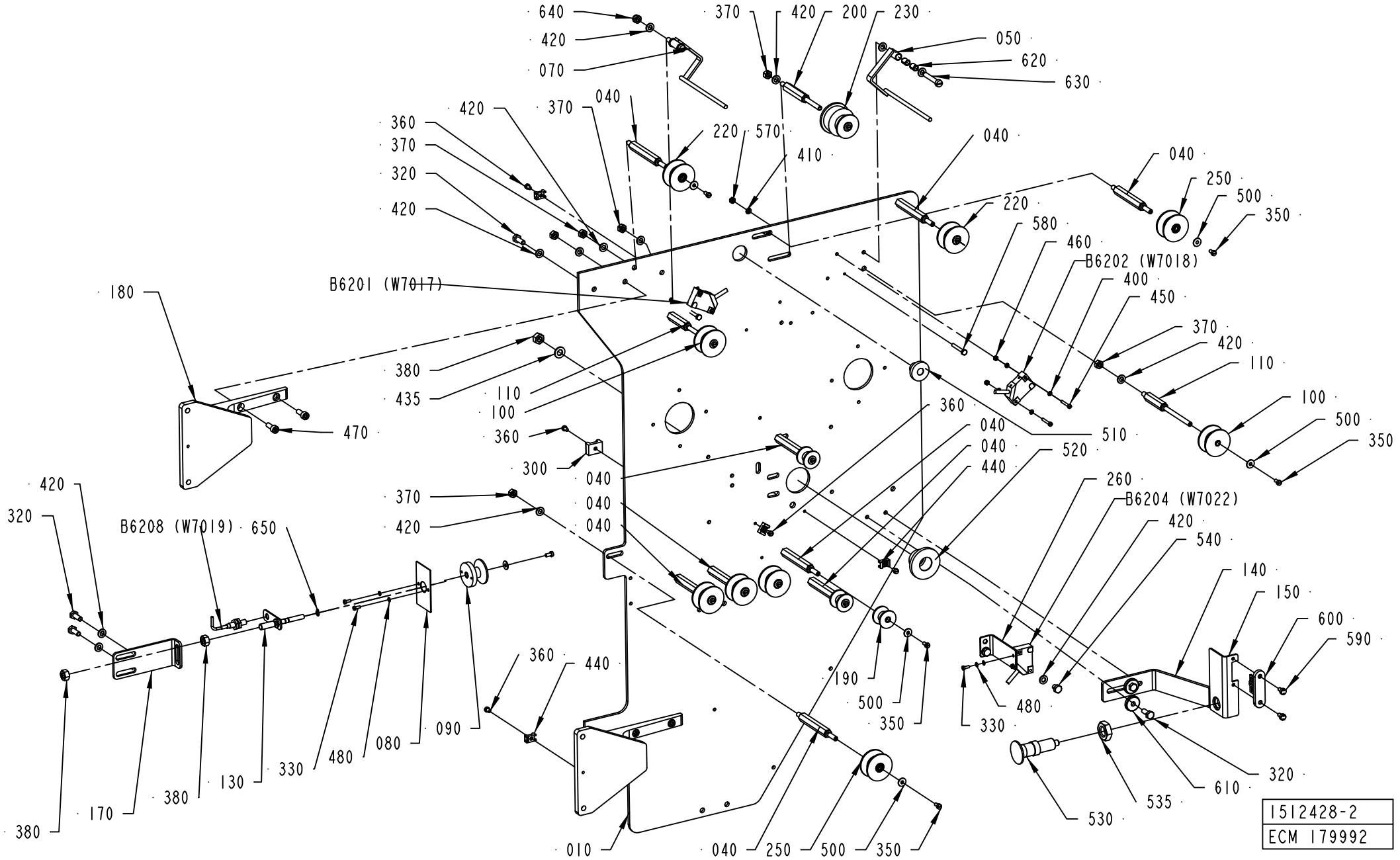

ECM: 179992 - 20050301
Group number: 1512428-0200
Assembly Drawing: 1512428-2_1_AD

Pos	Part No	UN	Qty	Description	Page No
A3/FLEX					
170	2525339-0000		1	BRACKET	
Common Parts					
010	1484708-0000		1	MOUNTING PLATE	
040	536916-0000		10	AXLE PIN	
050	1490818-0000		1	ARM	
070	1490187-0000		1	ROCKER ARM	
080	1349581-0000		1	FLAG	
090	1349986-0000		1	ROLLER	
100	583986-0000		2	ROLL	
110	544725-0000		2	AXLE PIN	
130	1484718-0000		1	AXLE PIN	
140	1499569-0000		1	BRACKET	
150	1484740-0000		1	BRACKET	
180	1517087-0000		2	HINGE	
190	1548197-0000		3	ROLL	
200	1538202-0000		1	AXLE PIN	
220	1548195-0000		2	ROLL	
230	2675238-0000		1	ROLL	
250	1523487-0000		5	ROLL	
260	2515289-0000		1	BRACKET	
300	352113-0203		4	ANCHOR PLATES FOR STRIPS, TYPE TM3S8-M0	
320	312105-0366		6	SCREW M6S ISO 4017 M6X12 A480	
330	312125-0222		4	SCREW ISO 1207 M3X8 A4	
350	312125-0287		14	SCREW ISO 1207 M4X8 A4	
360	312125-0285		8	SCREW ISO 1207 M4X6 A4	
370	312605-0316		16	HEXAGON NUT, M6M M6 A280	
380	312605-0318		3	HEXAGON NUT, M6M M8 A280	
400	315103-0124		8	WASHER, BRB, 3,2/6,H=0,5 NI PL BR	
410	315105-0136		2	WASHER BRB4,3XRFR	
420	315105-0153		28	WASHER BRB6,4X12RFR	
435	315105-0165		1	WASHER BRB8,4X16RFR	
440	352113-0205		4	ANCHOR PLATES FOR STRIPS, TYPE TM2S8-C10	
450	312125-0230		4	SCREW ISO 1207 M3X20 A4	
460	312605-0310		4	HEXAGON NUT, M6M M3 A280	
470	312115-0368		4	SCREW ISO4762 M6X16 A4 80	
480	315105-0124		6	WASHER BRB3,2X6RFR	
500	90005-0082		14	WASHER PLAIN ROUND 4,3(M4)/12,H=1	
510	90015-0021		1	LEAD-IN, TET10-14, E-1458023	
520	90015-0024		1	LEAD-IN, TET20-26, E-1458035	
530	90051-0088		1	ADJUSTMENT SCREW	
535	90099-0131		1	NUT HEX. M16X2 SS	
540	312105-0362		2	SCREW M6S ISO 4017 M6X8 A480	
570	312605-0312		2	HEXAGON NUT, M6M M4 A280	
580	312105-0299		2	SCREW M6S ISO 4017 M4X30 A470	
590	1539387-0000		2	SCREW	
600	90044-0310		1	KEY FOR SAFETY SWITCH AZ 15/16 B1	
610	315125-0153		2	WASHER TBRSB 6,4X22X4 A4	
620	321141-0064		4	BEARING BUSH W/O FLANGE, 6X8X10 MM	
630	312125-0376		2	SCREW ISO 1207 M6X35 A4	
640	312812-0316		2	HEXAGON NUT, NY-LOCK M6 A480	
650	315751-0103		1	RETAINING RING FOR SHAFT DIN 471 6 A2	
B6201	90044-0194		1	PROX.SW. IN5329/IN3002-BPKG(EX90044-104)	
B6202	90044-0194		1	PROX.SW. IN5329/IN3002-BPKG(EX90044-104)	
B6204	90044-0194		1	PROX.SW. IN5329/IN3002-BPKG(EX90044-104)	
B6208	90458-0138		1	PROX. SWITCH	

Machine Type	Group Description	Used-In	Group Number	Page No

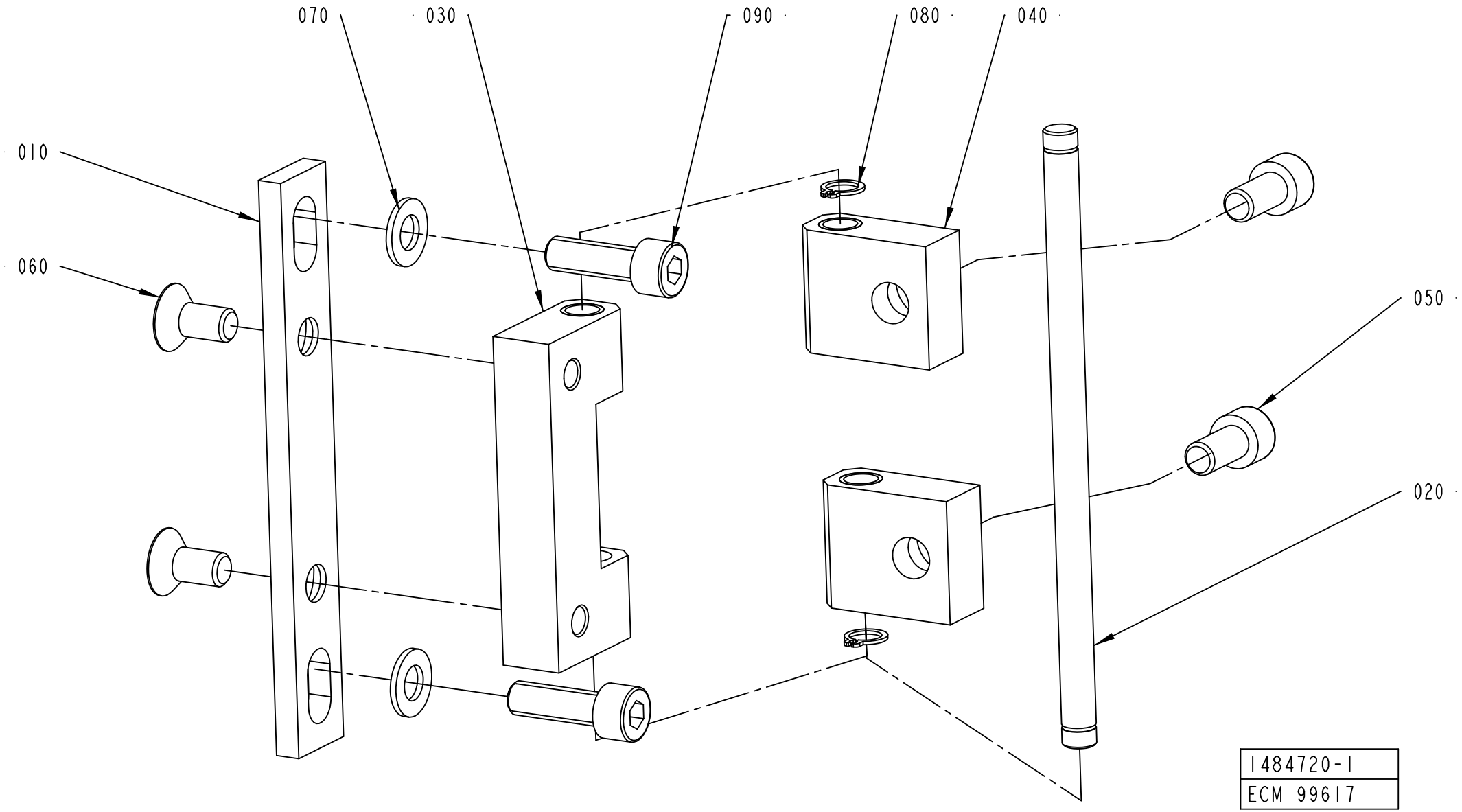
070
030
090
080
040
010
060
050
020
1484720-1
ECM 99617

ECM: 178404 - 20041005
Group number: 1484720-0100
Assembly Drawing: 1484720-1_1_AB

Pos	Part No	UN	Qty	Description	Page No
-					
010	1334187-0000		1	PLATE	
020	1334188-0000		1	AXLE PIN	
030	1334189-0000		1	BLOCK	
040	1334190-0000		2	BLOCK	
050	312115-0449		2	SCREW ISO4762 M8X16 A4 80	
060	312155-0449		2	SCREW DIN 7991 MF6S M8X16 A4 70	
070	315105-0165		2	WASHER BRB8,4X16RFR	
080	90141-0015		2	RETAINING RING FOR SHAFT DIN 471 8 A2	
090	312115-0453		2	SCREW ISO4762 M8X25 A4 80	

Pos	Part No	UN	Qty	Description	Page No

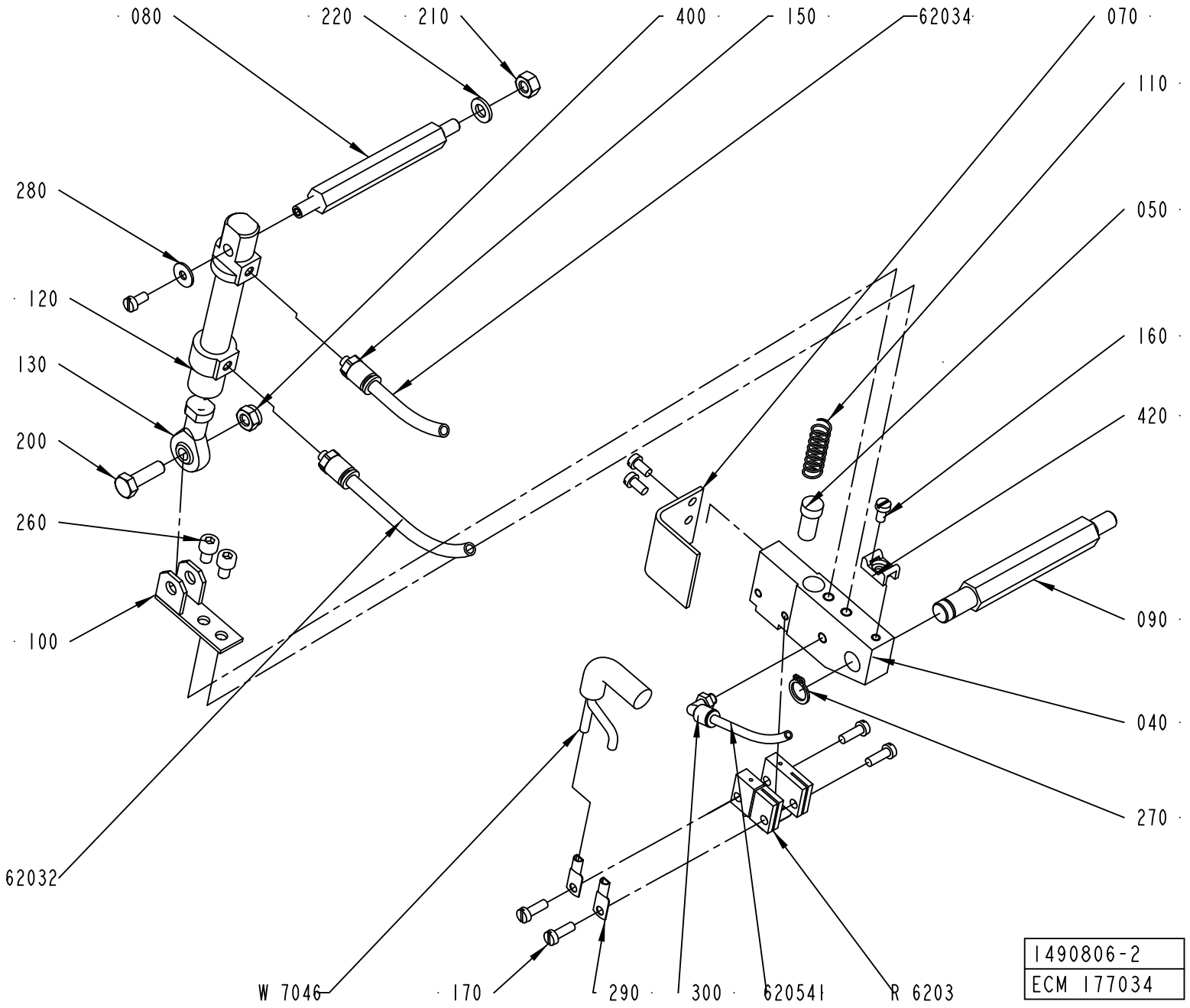
080
220
210
400
150
62034
070
110
280
050
120
160
130
420
200
260
090
100
040
270
62032
W 7046
170
290
300
620541
R 6203
1490806-2
ECM 177034

ECM: 178405 - 20041025
Group number: 1490806-0200
Assembly Drawing: 1490806-2_1_AC

Pos	Part No	UN	Qty	Description	Page No
-					
040	1490804-0000		1	HOLDER	
050	400833-0000		1	PLUNGER	
070	1349181-0000		1	TOUCH GUARD	
080	1037121-0000		1	SHAFT	
090	1037120-0000		1	SHAFT	
100	1037124-0000		1	HOLDER	
110	400828-0000		1	SPRING	
120	90450-0306		1	DOUBLE ACTING, MINI-ISO, CYL. 12-25	
130	90239-0491		1	ROD END,BALL JOINT EYE,MINI-ISO M6	
150	342722-0197		2	STRAIGHT COUPLING	
160	312125-0287		4	SCREW ISO 1207 M4X8 A4	
170	312125-0291		4	SCREW ISO 1207 M4X12 A4	
200	312105-0370		1	SCREW M6S ISO 4017 M6X20 A480	
210	312605-0316		1	HEXAGON NUT, M6M M6 A280	
220	315105-0153		1	WASHER BRB6,4X12RFR	
260	312115-0323		2	SCREW ISO4762 M5X8 A4 80	
270	90141-0016		1	RETAINING RING FOR SHAFT DIN 471 10 A2	
280	90005-0082		1	WASHER PLAIN ROUND 4,3(M4)/12,H=1	
290	353104-0140		2	CABLE SHOE, RING UNINS., YAV 06 M 4	
300	90458-2954		1	ELBOW PIPE JOINT, EXT.THREAD, D=4MM M5	
400	312812-0316		1	HEXAGON NUT, NY-LOCK M6 A480	
420	352113-0205		1	ANCHOR PLATES FOR STRIPS, TYPE TM2S8-C10	
62032	90166-0193	MM	4500	TUBE 6 MM PUR BLUE	
62034	90166-0193	MM	4500	TUBE 6 MM PUR BLUE	
620541	90166-0095	MM	1500	TUBE 4 MM PA BLUE (50M)	
R6203	1498047-0000		1	SEALING BLOCK	
W7046	351120-0126	MM	4000	CABLE SILFLEX SIHF 2X4 0046025	

Pos	Part No	UN	Qty	Description	Page No

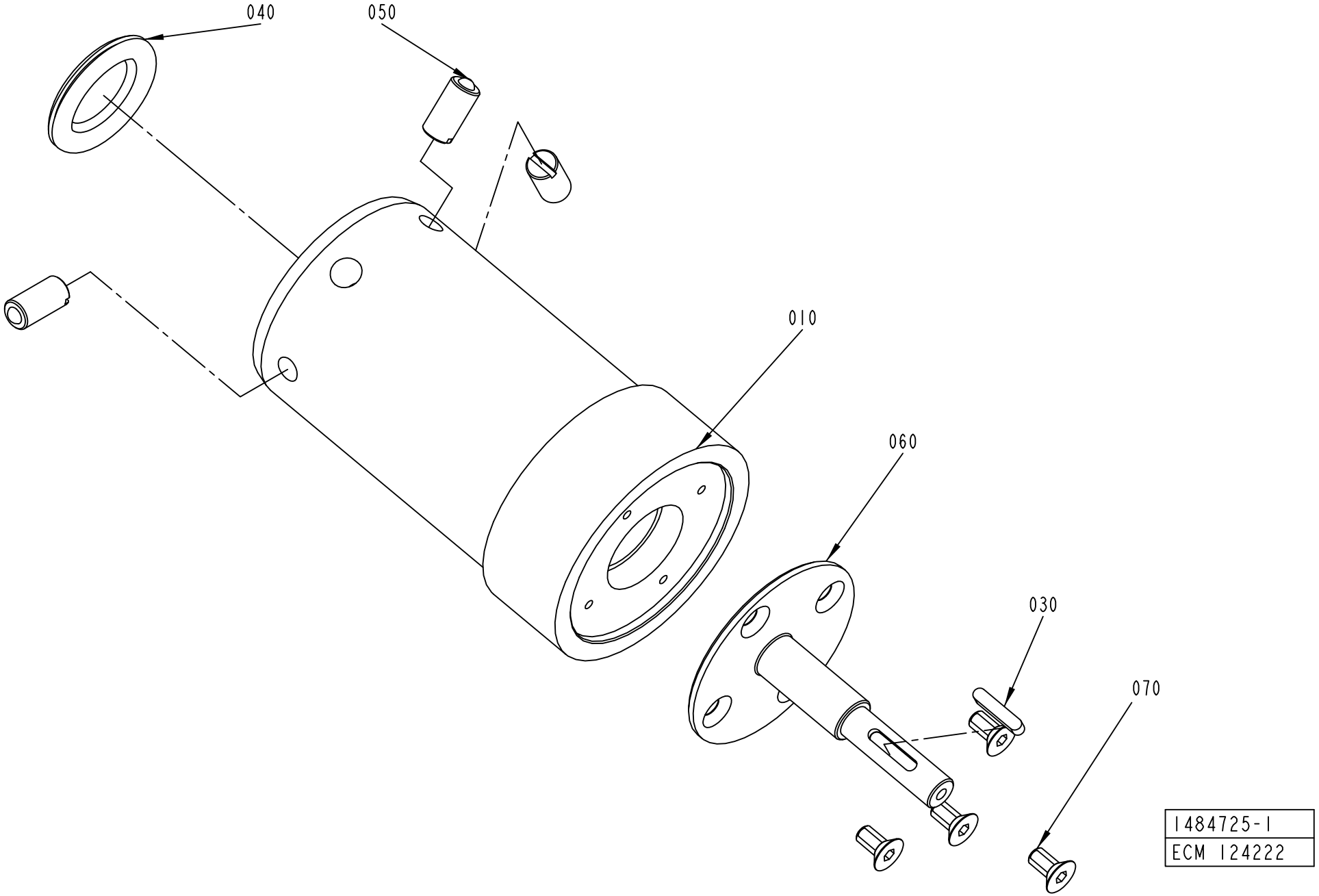
040
050
010
060
030
070
1484725-1
ECM 124222

ECM: 178406 - 20041005
Group number: 1484725-0100
Assembly Drawing: 1484725-1_1_AD

Pos	Part No	UN	Qty	Description	Page No
-					
010	1484724-0000		1	HUB	
030	315701-0170		1	PARALLEL KEY W. ROUND ENDS 4X4X20 MM	
040	90261-0049		1	PLUG, BLIND, PLASTIC, NO. SR1750	
050	90287-0106		3	SCREW SPRINGLOAD. SLOTTED HEAD M10X21	
060	1484726-0000		1	SHAFT	
070	312155-0366		4	SCREW DIN 7991 MF6S M6X12 A4 70	

Pos	Part No	UN	Qty	Description	Page No

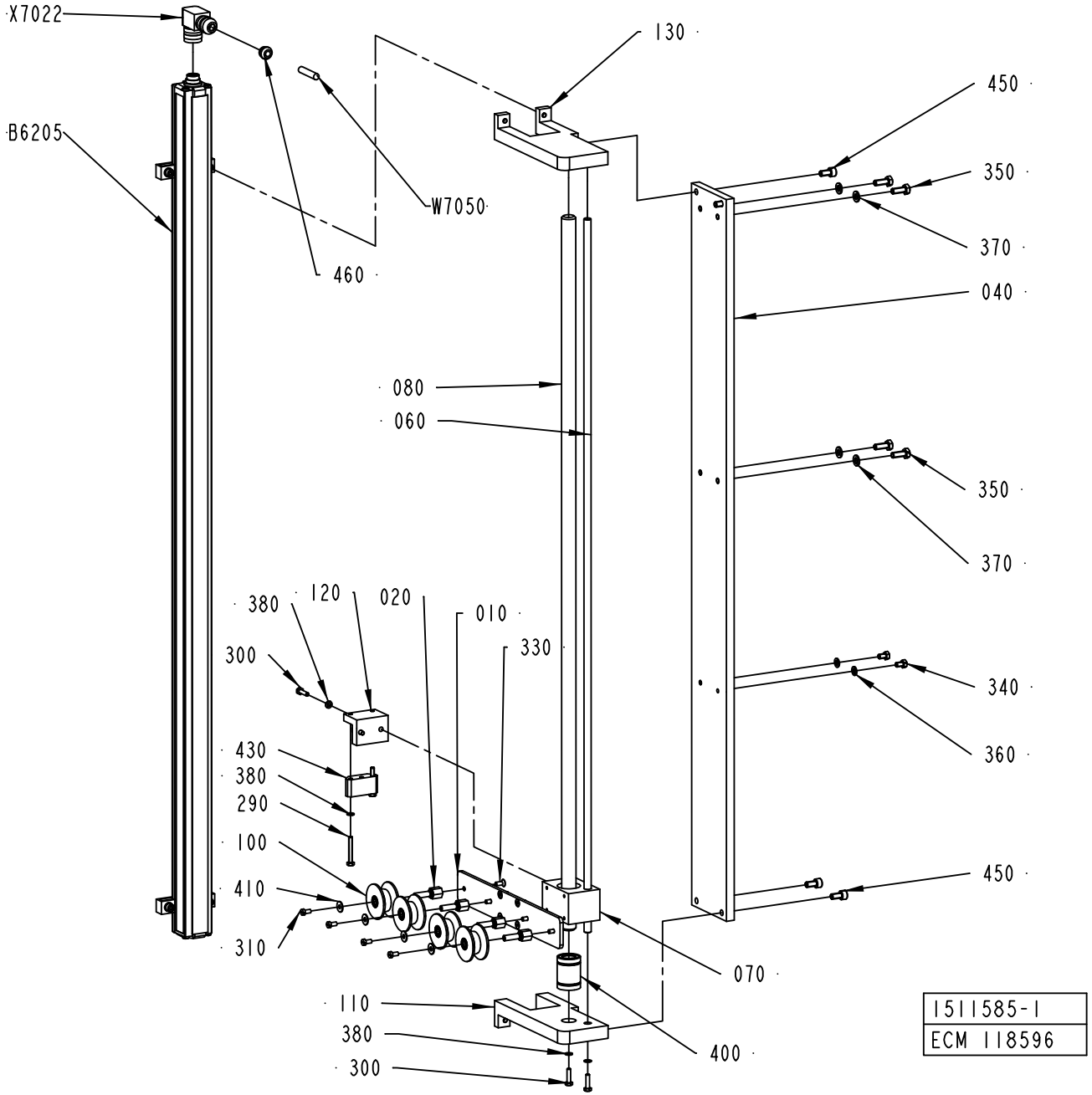
X7022
B6205
460
W7050
130
450
350
370
040
080
060
350
370
380
120
020
010
330
300
340
360
430
380
290
100
410
310
450
070
110
380
300
400
1511585-1
ECM 118596

ECM: 178407 - 20041005
Group number: 1511585-0200
Assembly Drawing: 1511585-1_1_AB

Pos	Part No	UN	Qty	Description	Page No
-					
010	1484711-0000		1	BRACKET	
020	1484719-0000		4	AXLE PIN	
040	1498450-0001		1	PLATE	
060	1498451-0001		1	SHAFT	
070	1511587-0000		1	BUSHING BLOCK	
080	1511586-0001		1	BAR	
100	1523487-0000		4	ROLL	
110	2501220-0000		1	BRACKET	
120	2501221-0000		1	BRACKET	
130	2501219-0000		1	BRACKET	
290	312105-0299		2	SCREW M6S ISO 4017 M4X30 A470	
300	312105-0293		4	SCREW M6S ISO 4017 M4X16 A470	
310	312125-0287		4	SCREW ISO 1207 M4X8 A4	
330	312155-0289		8	SCREW DIN 7991 MF6S M4X10 A4 70	
340	312105-0323		2	SCREW M6S ISO 4017 M5X8 A480	
350	312105-0368		4	SCREW M6S ISO 4017 M6X16 A480	
360	315105-0146		2	WASHER BRB5,3X10RFR	
370	315105-0153		4	WASHER BRB6,4X12RFR	
380	315105-0136		6	WASHER BRB4,3XRFR	
400	90189-0011		1	BALL BUSHING, 16X26X36 MM	
410	90005-0082		4	WASHER PLAIN ROUND 4,3(M4)/12,H=1	
430	90458-1592		1	FLOATING MAGNET, BTL5-P-3800-2	
450	312115-0366		4	SCREW ISO4762 M6X12 A4 80	
460	90459-1501		1	CABLE SEALING, 12023/I, ELFA. 44-625-78	
B6205	90458-1535		1	TRANSDUCER, BTL5-A11-M0850-P-S32	
W7050	90220-0092	MM	4000	PAIR TWISTED CABLE 3X2X0,25MM2	
X7022	90458-1595		1	CONNECTION, BKS-S 33M-00	

Pos	Part No	UN	Qty	Description	Page No

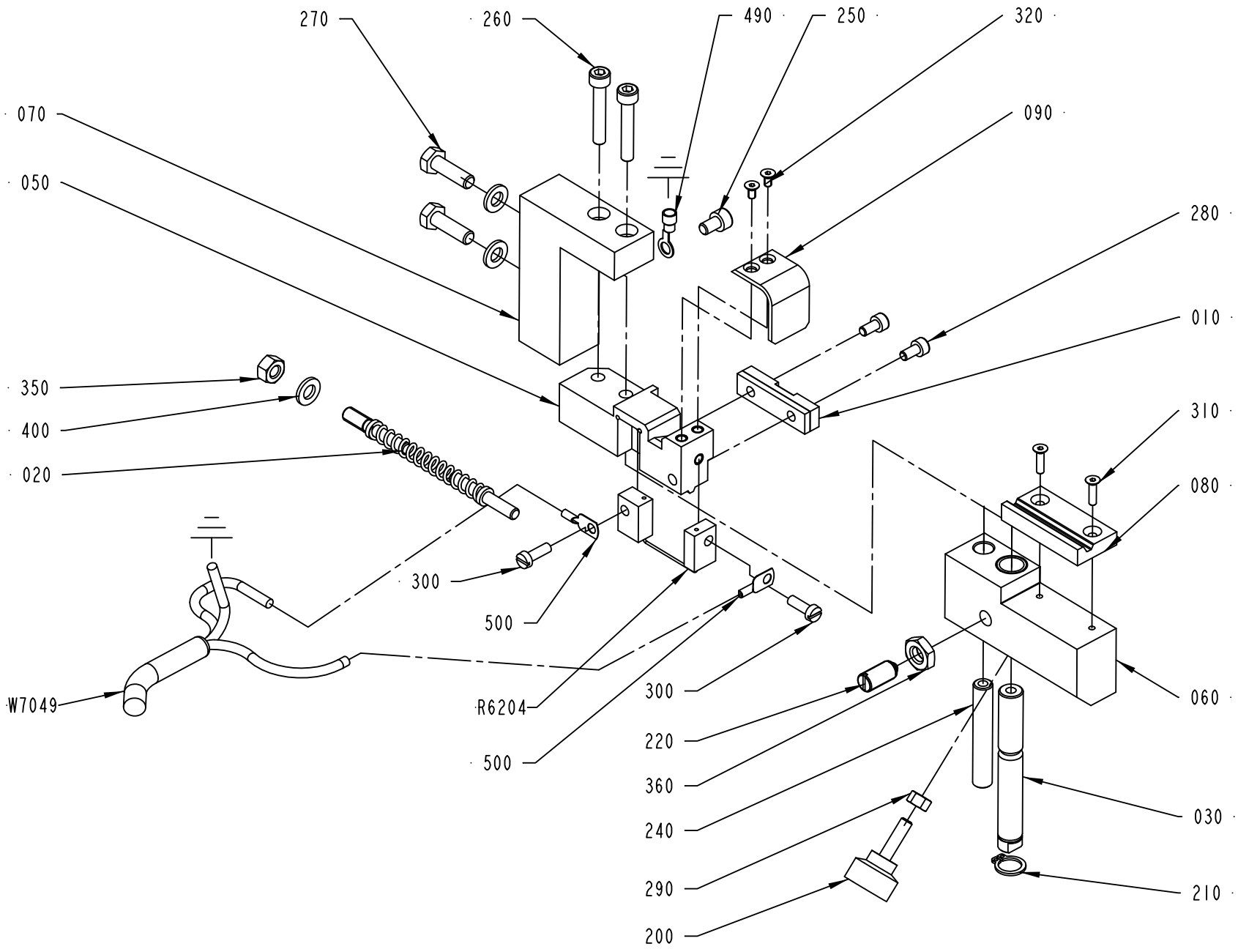

1524477-2
ECM 118596

ECM: 178409 - 20041005
Group number: 1524477-0200
Assembly Drawing: 1524477-2_1_AB

Pos	Part No	UN	Qty	Description	Page No
-					
010	1349014-0000		1	PAD	
020	1538194-0000		1	FINGER	
030	1517751-0000		1	SHAFT	
050	2523598-0000		1	84LICING TABLE	
060	2523597-0000		1	SLIDER	
070	2531493-0000		1	BRACKET	
080	2523601-0000		1	PAD	
090	2579838-0000		1	TOUCH GUARD	
200	90051-0035		1	KNOB, EXTERNAL THREAD. NO. 8308-1135	
210	90141-0016		1	RETAINING RING FOR SHAFT DIN 471 10 A2	
220	90287-0112		1	SCREW SPRINGLOAD. SLOTTED HEAD M8X16	
240	2523600-0000		1	PIN	
250	312115-0323		1	SCREW ISO4762 M5X8 A4 80	
260	312115-0335		2	SCREW ISO4762 M5X30 A4 80	
270	312105-0370		2	SCREW M6S ISO 4017 M6X20 A480	
280	312115-0287		2	SCREW ISO4762 M4X8 A4 80	
290	312605-0314		1	HEXAGON NUT, M6M M5 A280	
300	312125-0291		2	SCREW ISO 1207 M4X12 A4	
310	312155-0226		2	SCREW DIN 7991 MF6S M3X12 A4 70	
320	312155-0220		2	SCREW DIN 7991 MF6S M3X6 A4 70	
350	312605-0316		1	HEXAGON NUT, M6M M6 A280	
360	312625-0318		1	HEXAGON THIN NUT, EN 24035 ML6M M8 A4	
400	315105-0153		3	WASHER BRB6,4X12RFR	
490	353101-0132		1	CABLE SHOE 1,5-2,5MM2 M5 BLUE	
500	353104-0130		2	CABLE SHOE, RING UNINS., YAV 025 M 4	
R6204	1524481-0000		1	SEALING BLOCK	
W7049	351120-0145	MM	4000	CABLE SILFLEX SIHF 3X2,5 0046020	

Pos	Part No	UN	Qty	Description	Page No

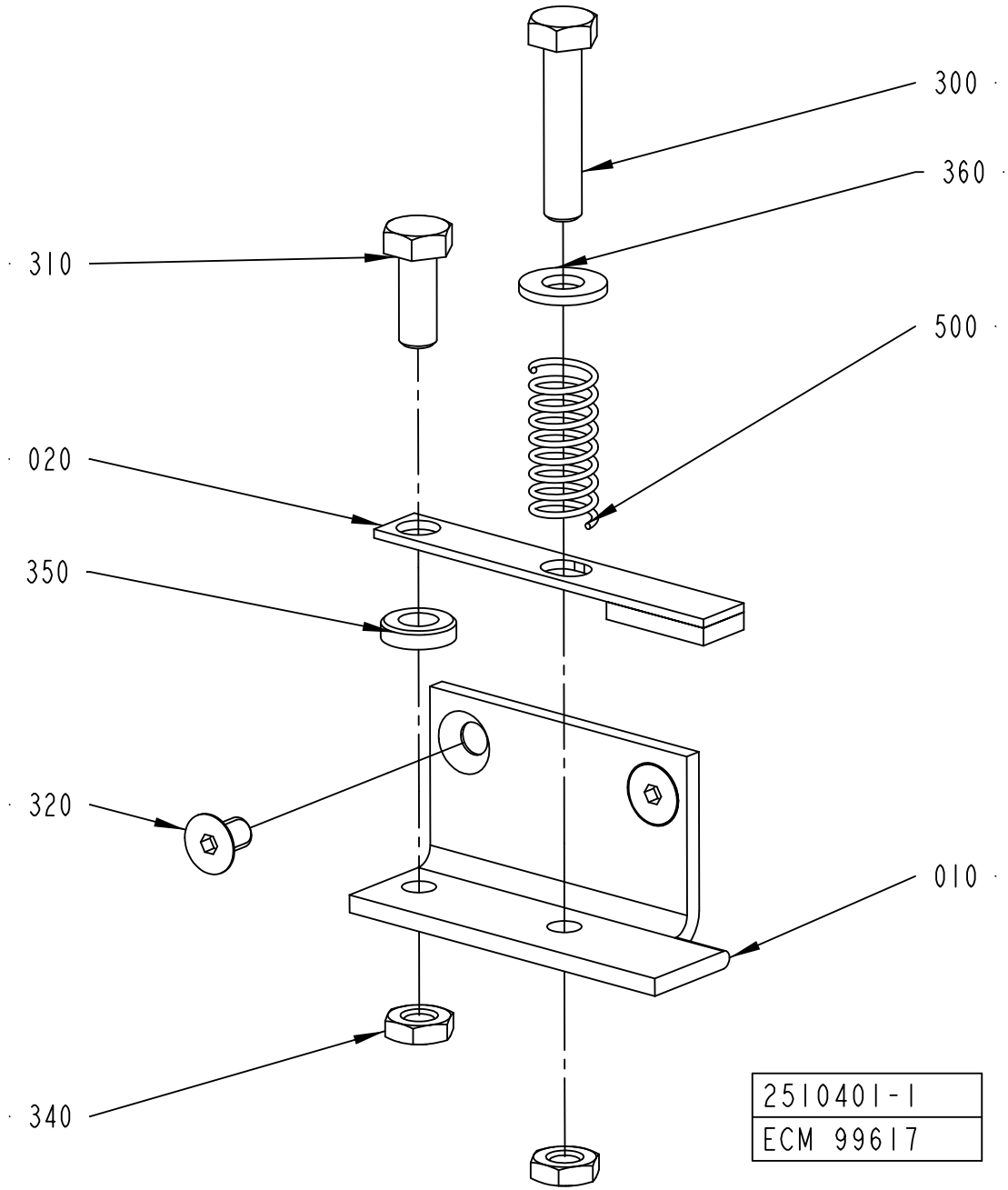
300
360
310
500
020
350
320
010
340
2510401-1
ECM 99617

ECM: 178408 - 20041005
Group number: 2510401-0100
Assembly Drawing: 2510401-1_1_AA

Pos	Part No	UN	Qty	Description	Page No
-					
010	2510399-0000		1	BRACKET	
020	2510400-0000		1	HOLDER	
300	312109-0374		1	SCREW M6S ISO 4017 M6X30 A480	
310	312105-0368		1	SCREW M6S ISO 4017 M6X16 A480	
320	312155-0323		2	SCREW DIN 7991 MF6S M5X8 A4 70	
340	312625-0316		2	HEXAGON THIN NUT, EN 24035 ML6M M6 A4	
350	315115-0153		1	WASHER PLAIN, TBRB 6,4/12 H=3	
360	315105-0156		1	WASHER BRB 6.7X14 RFR	
500	90335-0025		1	COMP. SPRING 22010, 1X11X26	

Pos	Part No	UN	Qty	Description	Page No

SPLICING DEVICE

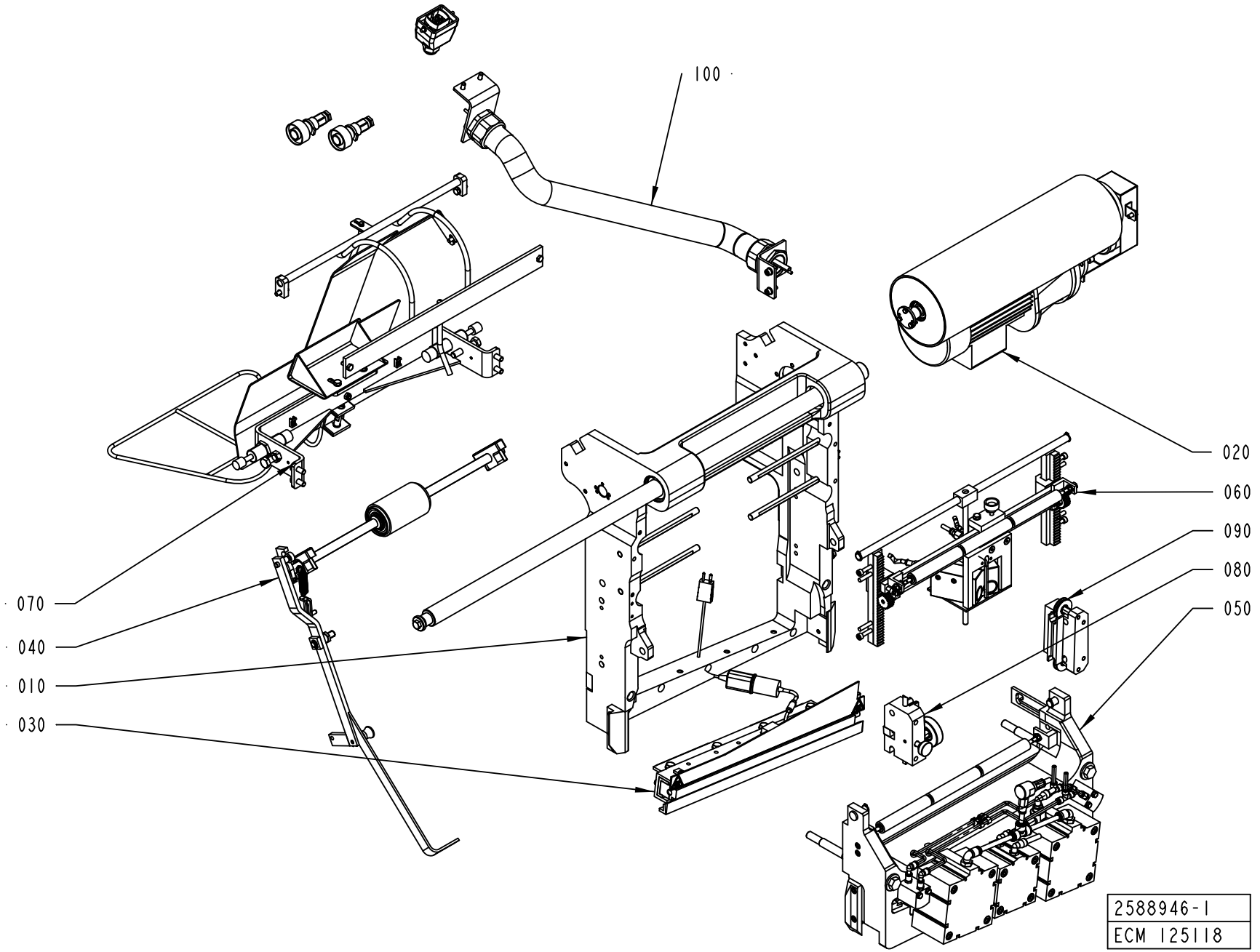

ECM: 211001 - 20050517
Group number: 2588946-0100
Assembly Drawing: 2588946-1_1_AB

This list covers pages from 7-88 to 7-91

Pos	Part No	UN	Qty	Description	Page No
A3/FLEX TBA 1890S, A3/FLEX TBA 2000S (See drawing on page: 7-90)					
080	1484745-0100		1	WEB GUIDE	**7-93**
A3/FLEX TBA 0500B, A3/FLEX TBA 1000B, A3/FLEX TBA 1000S, A3/FLEX TBA 1000SQ, A3/FLEX TPA 1000SQ, A3/FLEX TBA 0200S, A3/FLEX TBA 1500S, A3/FLEX TBA 0200B, A3/FLEX TBA 0250B, A3/FLEX TBA 0330S, A3/FLEX TPA 0330SQ, A3/FLEX TPA 0500SQ, A3/FLEX TBA 0200M, A3/FLEX TBA 0250S, A3/FLEX TBA 0500S, A3/FLEX TPA 0250SQ, A3/FLEX TPA 0200SQ, A3/FLEX TPA 0750SQ, A3/FLEX TBA 0200SQ, A3/FLEX TBA 0250SQ (See drawing on page: 7-88)					
080	1484745-0100		1	WEB GUIDE	**7-93**
Common Parts					
010	2589104-0100		1	FRAME	**7-95**
020	2589105-0100		1	DRIVE UNIT	**7-97**
030	2589106-0100		1	HEATING UNIT	**7-99**
040	2524600-0100		1	PRESSURE ROLLER	**7-101, 7-103**
050	2592567-0100		1	PRESSURE JAW	**7-105**
060	2592568-0100		1	BAR CODE READER	**7-107**
070	2582003-0100		1	GUIDE RAIL	**7-109, 7-111**
090	2529547-0100		1	PAPER GUIDE	**7-113**
100	1499578-0300		1	CABLE CONDUIT	**7-115**

Pos	Part No	UN	Qty	Description	Page No

SPLICING DEVICE

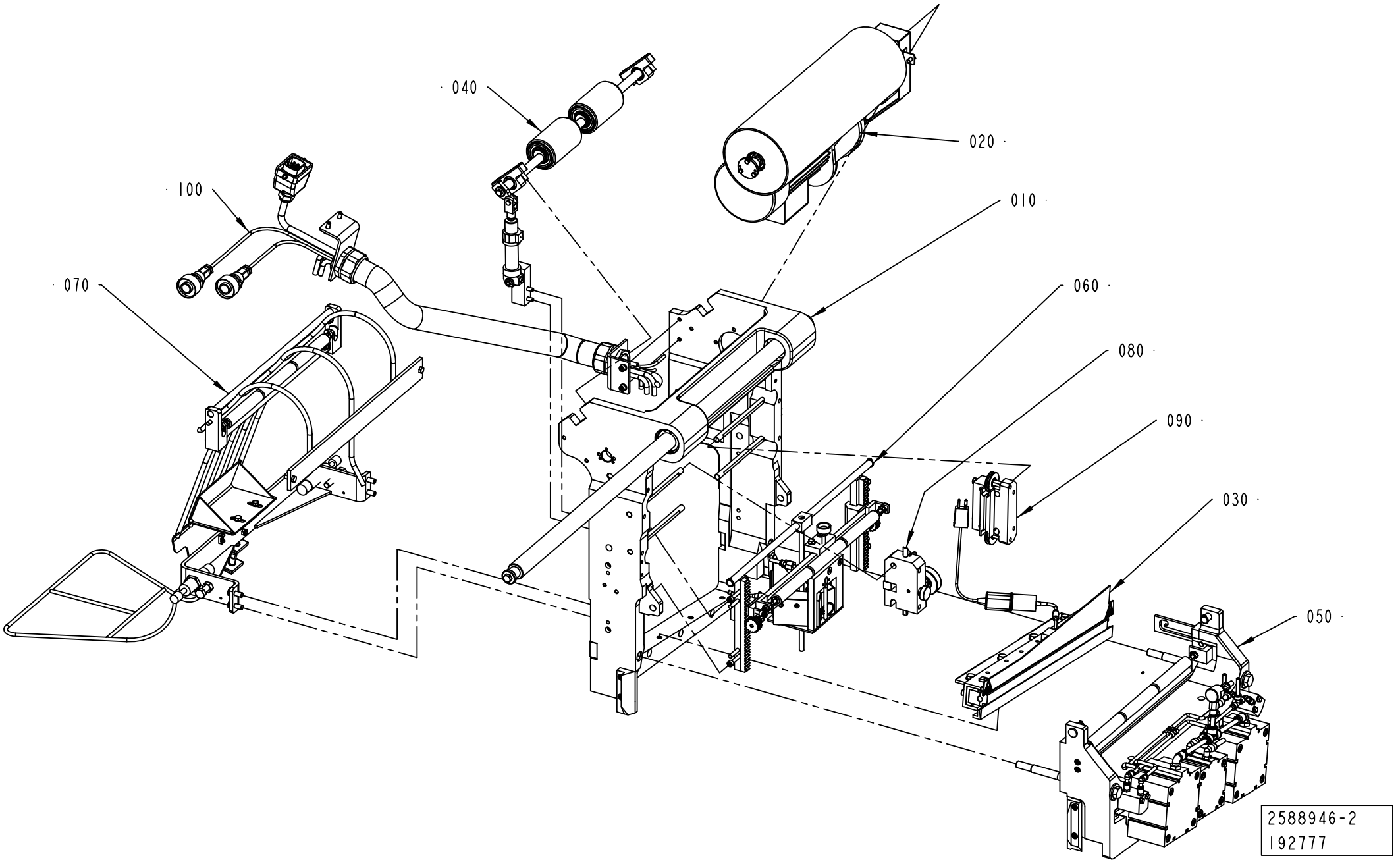

Pos	Part No	UN	Qty	Description	Page No
A3/FLEX TBA 1890S, A3/FLEX TBA 2000S (See drawing on page: 7-90)					
080	1484745-0100		1	WEB GUIDE	**7-93**
A3/FLEX TBA 0500B, A3/FLEX TBA 1000B, A3/FLEX TBA 1000S, A3/FLEX TBA 1000SQ, A3/FLEX TPA 1000SQ, A3/FLEX TBA 0200S, A3/FLEX TBA 1500S, A3/FLEX TBA 0200B, A3/FLEX TBA 0250B, A3/FLEX TBA 0330S, A3/FLEX TPA 0330SQ, A3/FLEX TPA 0500SQ, A3/FLEX TBA 0200M, A3/FLEX TBA 0250S, A3/FLEX TBA 0500S, A3/FLEX TPA 0250SQ, A3/FLEX TPA 0200SQ, A3/FLEX TPA 0750SQ, A3/FLEX TBA 0200SQ, A3/FLEX TBA 0250SQ (See drawing on page: 7-88)					
080	1484745-0100		1	WEB GUIDE	**7-93**
Common Parts					
010	2589104-0100		1	FRAME	**7-95**
020	2589105-0100		1	DRIVE UNIT	**7-97**
030	2589106-0100		1	HEATING UNIT	**7-99**
040	2524600-0100		1	PRESSURE ROLLER	**7-101, 7-103**
050	2592567-0100		1	PRESSURE JAW	**7-105**
060	2592568-0100		1	BAR CODE READER	**7-107**
070	2582003-0100		1	GUIDE RAIL	**7-109, 7-111**
090	2529547-0100		1	PAPER GUIDE	**7-113**
100	1499578-0300		1	CABLE CONDUIT	**7-115**

Pos	Part No	UN	Qty	Description	Page No

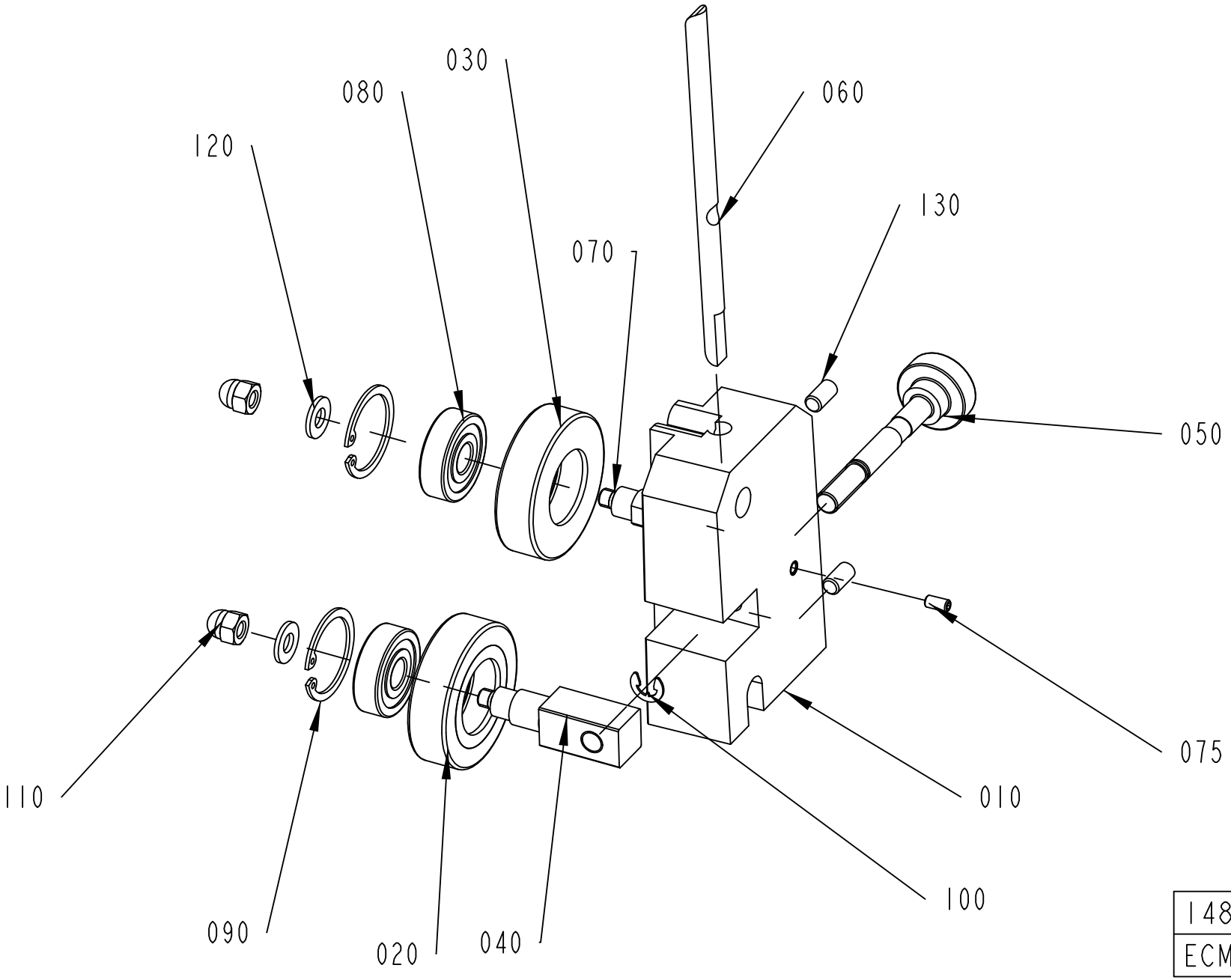

1484745-1
ECM 124748

ECM: 210994 - 20050517
Group number: 1484745-0100
Assembly Drawing: 1484745-1_1_AD

Pos	Part No	UN	Qty	Description	Page No
A3/FLEX TBA 1890S, A3/FLEX TBA 2000S					
010	2713376-0000		1	BRACKET	
A3/FLEX TBA 0500B, A3/FLEX TBA 1000B, A3/FLEX TBA 1000S, A3/FLEX TBA 1000SQ, A3/FLEX TPA 1000SQ, A3/FLEX TBA 0200S, A3/FLEX TBA 1500S, A3/FLEX TBA 0200B, A3/FLEX TBA 0250B, A3/FLEX TBA 0330S, A3/FLEX TPA 0330SQ, A3/FLEX TPA 0500SQ, A3/FLEX TBA 0200M, A3/FLEX TBA 0250S, A3/FLEX TBA 0500S, A3/FLEX TPA 0250SQ, A3/FLEX TPA 0200SQ, A3/FLEX TPA 0750SQ, A3/FLEX TBA 0200SQ, A3/FLEX TBA 0250SQ					
010	1484750-0000		1	BRACKET	
Common Parts					
020	1036623-0000		1	GUIDE ROLLER	
030	1036622-0000		1	GUIDE ROLLER	
040	1317711-0000		1	SHAFT	
050	1317712-0000		1	SHAFT	
060	1512526-0000		1	STEERING	
070	583727-0000		1	SHAFT	
075	312318-0287		1	SCREW ISO4029 M4X8 A4	
080	321313-0100		2	BALL BEARING, 10X30X9 MM	
090	315753-0122		2	RETAINING RING FOR BORE DIN 472 30 A2	
100	315755-0108		1	RETAINING RING SHAFT DIN 6799 6 A2	
110	312705-0316		2	NUT HEX. DOMED CAP MHM-6 M6 A280	
120	315105-0156		2	WASHER BRB 6.7X14 RFR	
130	312318-0366		2	SCREW ISO4029 M6X12 A4	

Pos	Part No	UN	Qty	Description	Page No

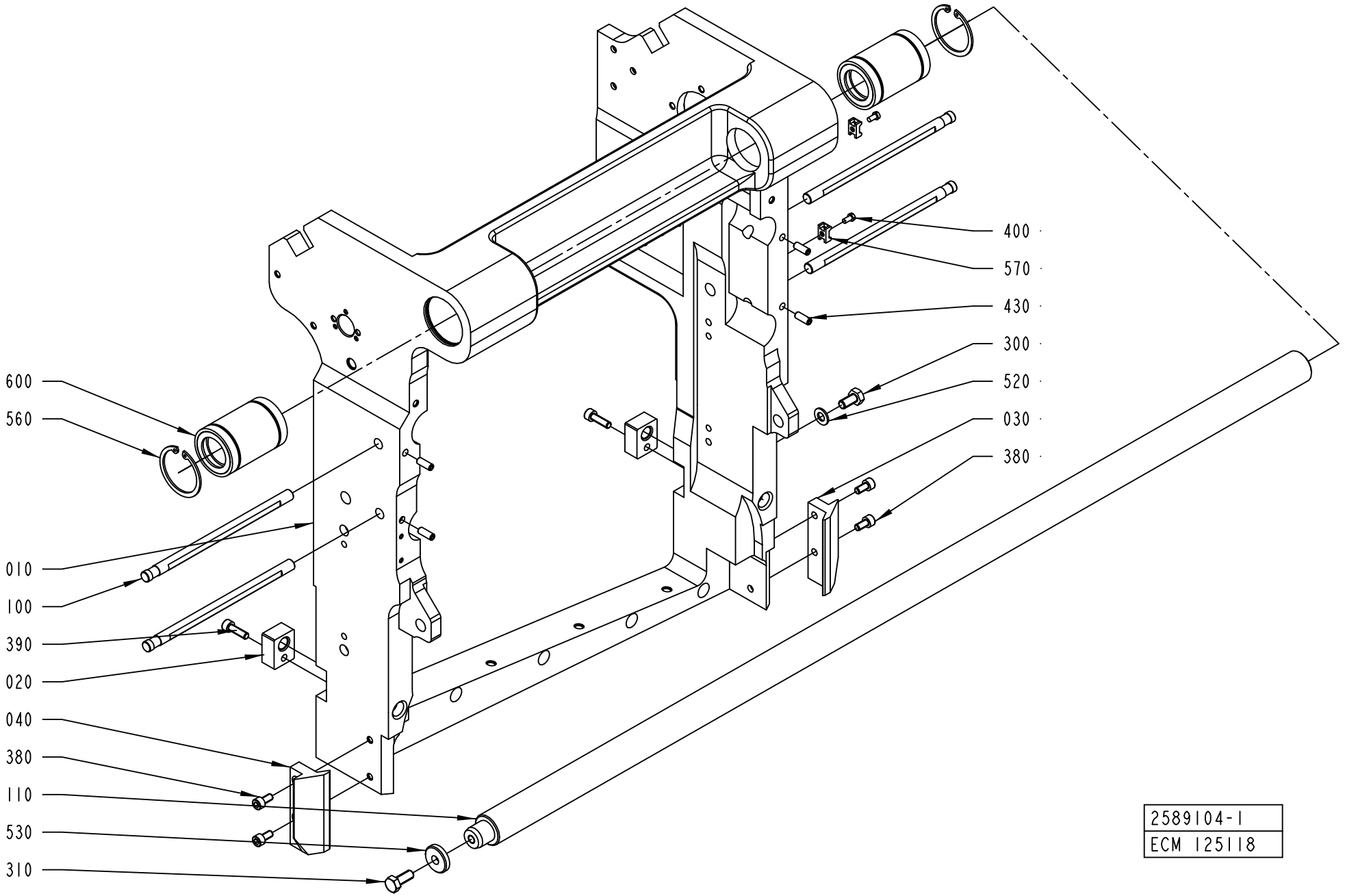
600
560
010
100
390
020
040
380
110
530
310
400
570
430
300
520
030
380
2589104-1
ECM 125118

ECM: 211002 - 20050517
Group number: 2589104-0100
Assembly Drawing: 2589104-1_1_AB

Pos	Part No	UN	Qty	Description	Page No
A3/FLEX TBA 1890S, A3/FLEX TBA 2000S (See drawing on page: 7-94)					
010	2687960-0000		1	FRAME	
100	1484704-0000		4	SHAFT	
A3/FLEX TPA 0750SQ					
010	2574401-0000		1	FRAME	
A3/FLEX TBA 0500B, A3/FLEX TBA 1000B, A3/FLEX TBA 1000S, A3/FLEX TBA 1000SQ, A3/FLEX TPA 1000SQ, A3/FLEX TBA 0200S, A3/FLEX TBA 1500S, A3/FLEX TBA 0200B, A3/FLEX TBA 0250B, A3/FLEX TBA 0330S, A3/FLEX TPA 0330SQ, A3/FLEX TPA 0500SQ, A3/FLEX TBA 0200M, A3/FLEX TBA 0250S, A3/FLEX TBA 0500S, A3/FLEX TPA 0250SQ, A3/FLEX TPA 0200SQ, A3/FLEX TBA 0200SQ, A3/FLEX TBA 0250SQ (See drawing on page: 7-94)					
010	2574401-0000		1	FRAME	
100	1484704-0000		4	SHAFT	
Common Parts					
020	2589119-0000		2	NUT	
030	2562551-0000		1	SLIDE PLANE	
040	2562552-0000		1	SLIDE PLANE	
110	1490820-0000		1	SHAFT	
300	312105-0449		1	SCREW M6S ISO 4017 M8X16 A480	
310	312105-0451		1	SCREW M6S ISO 4017 M8X20 A480	
380	312115-0366		4	SCREW ISO4762 M6X12 A4 80	
390	312115-0370		2	SCREW ISO4762 M6X20 A4 80	
400	312125-0287		2	SCREW ISO 1207 M4X8 A4	
430	312318-0368		4	SCREW ISO4029 M6X16 A4	
520	315105-0165		1	WASHER BRB8,4X16RFR	
530	315125-0165		1	WASHER TBRSB 8,4X26X5 A4	
560	315753-0130		2	RETAINING RING FOR BORE DIN 472 47 A2	
570	352113-0205		2	ANCHOR PLATES FOR STRIPS, TYPE TM2S8-C10	
600	90189-0005		2	BALL BUSHING, 30X47X68 MM	

Pos	Part No	UN	Qty	Description	Page No

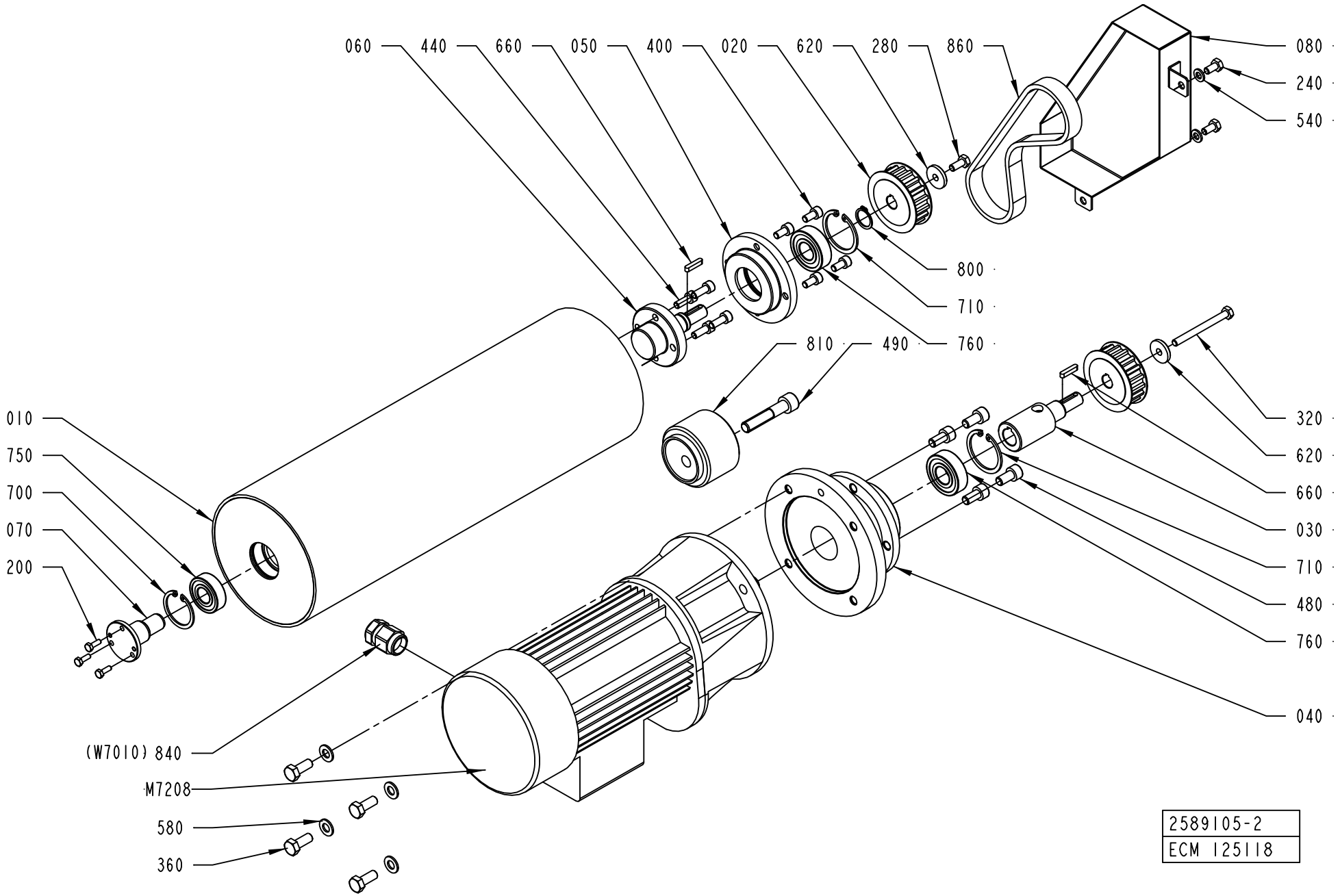
060
440
660
050
400
020
620
280
860
080
240
540
800
710
760
810
490
010
750
700
070
200
320
620
660
030
710
480
760
040
(W7010) 840
M7208
580
360
2589105-2
ECM 125118

ECM: 211003 - 20050517
Group number: 2589105-0100
Assembly Drawing: 2589105-2_1_AA

Pos	Part No	UN	Qty	Description	Page No
A3/FLEX TBA 1890S, A3/FLEX TBA 2000S					
010	2665624-0000		1	BENDING ROLLER	
A3/FLEX TBA 0500B, A3/FLEX TBA 1000B, A3/FLEX TBA 1000S, A3/FLEX TBA 1000SQ, A3/FLEX TPA 1000SQ, A3/FLEX TBA 0200S, A3/FLEX TBA 1500S, A3/FLEX TBA 0200B, A3/FLEX TBA 0250B, A3/FLEX TBA 0330S, A3/FLEX TPA 0330SQ, A3/FLEX TPA 0500SQ, A3/FLEX TBA 0200M, A3/FLEX TBA 0250S, A3/FLEX TBA 0500S, A3/FLEX TPA 0250SQ, A3/FLEX TPA 0200SQ, A3/FLEX TPA 0750SQ, A3/FLEX TBA 0200SQ, A3/FLEX TBA 0250SQ					
010	2589108-0000		1	BENDING ROLLER	
Common Parts					
020	2589109-0000		2	TOOTHED PULLEY	
030	2589110-0000		1	SHAFT	
040	2589111-0000		1	FLANGE	
050	2589112-0000		1	FLANGE	
060	2589113-0000		1	SHAFT	
070	2589114-0000		1	SHAFT	
080	2589115-0000		1	COVER	
200	312105-0291		3	SCREW M6S ISO 4017 M4X12 A470	
240	312105-0366		2	SCREW M6S ISO 4017 M6X12 A480	
280	312105-0367		1	SCREW M6S ISO 4017 M6X14 A480	
320	312105-0383		1	SCREW M6S ISO 4014 M6X65 A480	
360	312105-0451		4	SCREW M6S ISO 4017 M8X20 A480	
400	312115-0366		4	SCREW ISO4762 M6X12 A4 80	
440	312115-0368		4	SCREW ISO4762 M6X16 A4 80	
480	312115-0449		4	SCREW ISO4762 M8X16 A4 80	
490	312115-0501		1	SCREW ISO4762 M10X50 A4 80	
540	315105-0153		2	WASHER BRB6,4X12RFR	
580	315105-0165		4	WASHER BRB8,4X16RFR	
620	315125-0153		2	WASHER TBRSB 6,4X22X4 A4	
660	315701-0170		2	PARALLEL KEY W. ROUND ENDS 4X4X20 MM	
700	315753-0124		1	RETAINING RING FOR BORE DIN 472 35 A2	
710	315753-0127		2	RETAINING RING FOR BORE DIN 472 40 A2	
750	321313-0102		1	BALL BEARING, 15X35X11 MM	
760	321313-0103		2	BALL BEARING, 17X40X12MM	
800	90141-0017		1	RETAINING RING FOR SHAFT DIN 471 17 A2	
810	90344-0078		1	PULLEY	
840	90458-0438		1	GLAND, EXTENDED WITH INSERT, M20X1,5	
860	90459-2198		1	TIMING BELT T10X480X16 POLYURETHANE	
M7208	90459-2826		1	GEARS, HELICAL MOTOR ME0102210012	

Pos	Part No	UN	Qty	Description	Page No

Machine Type | Group Description | Used-In | Group Number | Page No

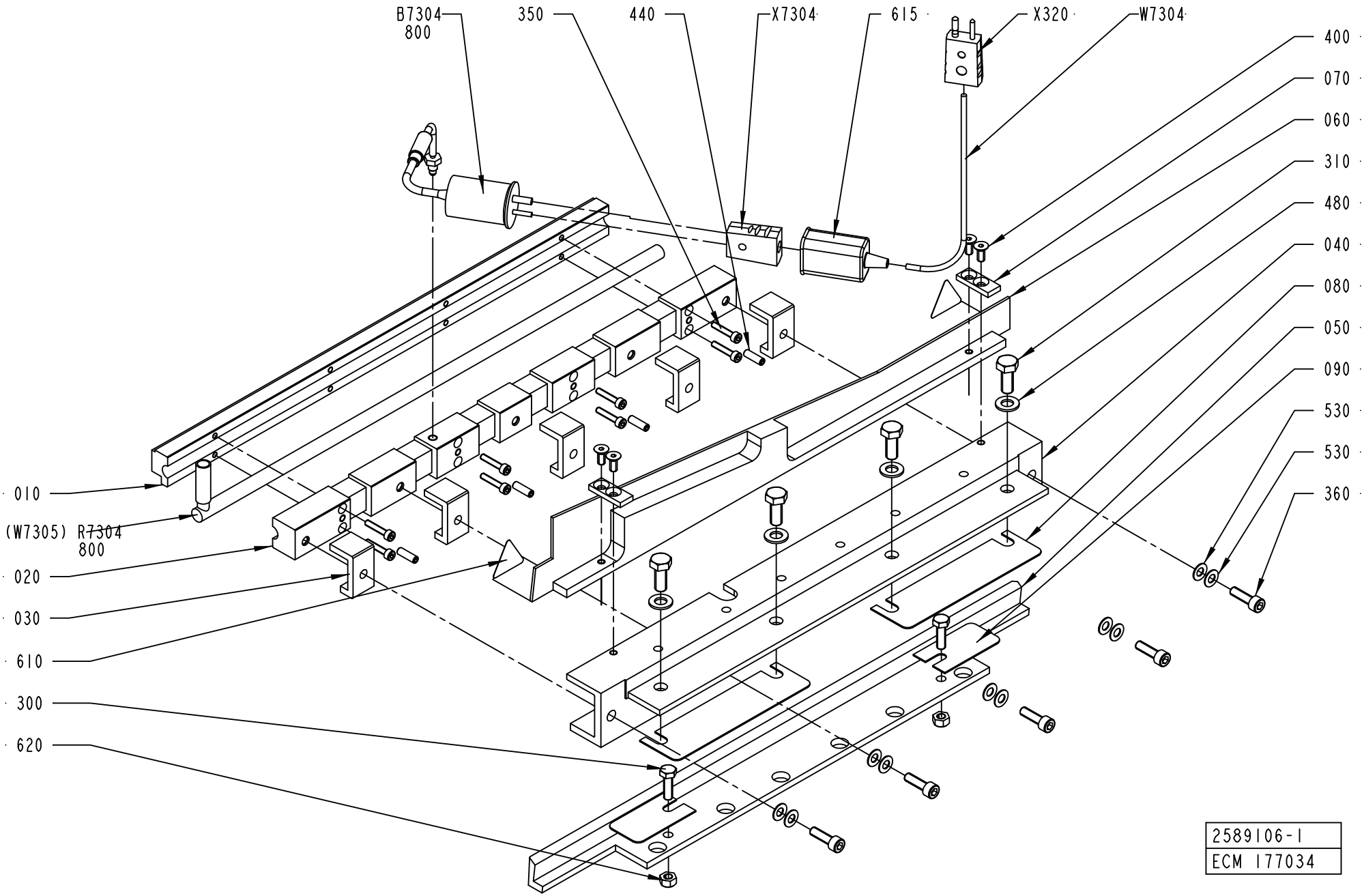
B7304
800
350
440
X7304
615
X320
W7304
400
070
060
310
480
040
080
050
090
530
530
360
010
(W7305) R7304
800
020
030
610
300
620
2589106-1
ECM 177034

ECM: 178410 - 20041025
Group number: 2589106-0100
Assembly Drawing: 2589106-1_1_AD

Pos	Part No	UN	Qty	Description	Page No
A3/FLEX					
X320	90326-0022		1	PLUG, MALE YELLOW CR-AL	
Common Parts					
010	2559986-0000		1	SEALING PLATE	
020	2559987-0000		1	SEALING PLATE	
030	2566127-0000		5	SPACER	
040	2566128-0000		1	HOUSING	
050	2566129-0000		1	ADJUSTMENT ANGLE	
060	2566130-0000		1	PLATE	
070	2576396-0000		2	PLATE	
080	2588947-0000		2	SHIMS	
090	2588948-0000		2	SHIMS	
300	312105-0370		2	SCREW M6S ISO 4017 M6X20 A480	
310	312105-0451		4	SCREW M6S ISO 4017 M8X20 A480	
350	312115-0295		8	SCREW ISO4762 M4X20 A4 80	
360	312115-0370		5	SCREW ISO4762 M6X20 A4 80	
400	312155-0327		4	SCREW DIN 7991 MF6S M5X12 A4 70	
440	312318-0329		4	SCREW ISO4029 M5X16 A4	
480	315105-0165		4	WASHER BRB8,4X16RFR	
530	319030-0125		10	DISC SPRING, CONICAL 12,5X6,2X0,5 MM	
610	90194-0143		2	WARNING SIGN ISO, HOT SURFACE	
615	90326-0012		1	PROTECTIVE COVER, T31A4618	
620	90459-2635		2	NUT, HEX.LOCK "CONELOCK" M6 DIN 980V	
800	90296-0051	G	1	PASTE	
B7304	90326-0054		1	THERMOCOUPLE, CR-AL STD.GR, 12826-36	
R7304	90459-2843		1	HEATING CARTRIDGE, 800W 240V	
W7304	90220-0034	MM	9500	THERMOCABLE TEX/SITW-20F-KX 2X0,5MM2	
X7304	90326-0020		1	PLUG, FEMALE YELLOW CR-AL	

Pos	Part No	UN	Qty	Description	Page No

PRESSURE ROLLER

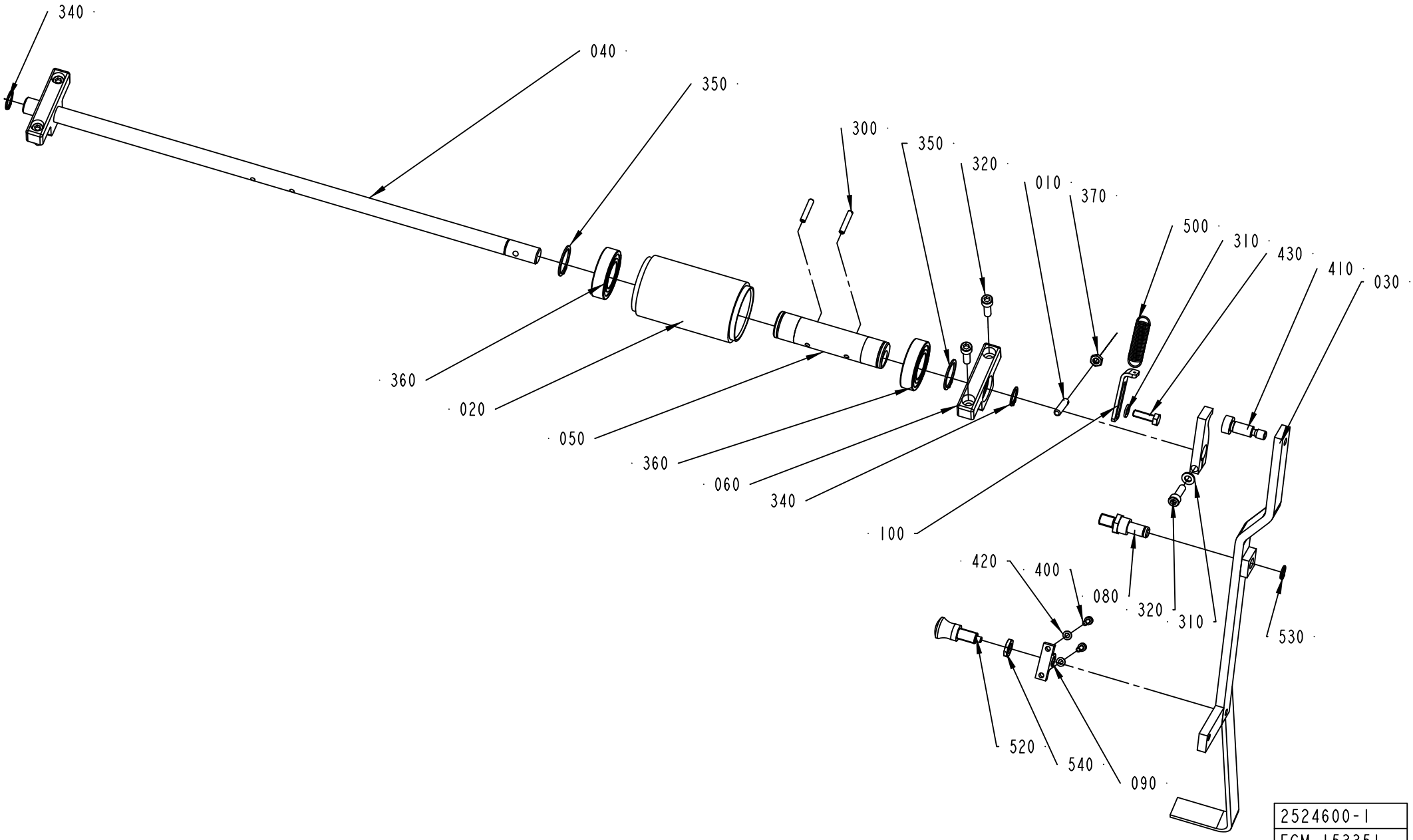

ECM: 218297 - 20050601
Group number: 2524600-0100
Assembly Drawing: 2524600-1_1_AB

This list covers pages from 7-100 to 7-103

Pos	Part No	UN	Qty	Description	Page No
A3/FLEX TBA 1890S, A3/FLEX TBA 2000S (See drawing on page: 7-102)					
020	906254-0000		2	ROLLER	
030	90450-0003		1	SINGLE ACTING, MINI-ISO, CYL 20-25	
040	2681261-0000		1	SHAFT	
050	1512267-0000		2	ECCENTRIC BUSHING	
060	2681262-0000		2	BRACKET	
070	2703095-0000		1	ROCKER ARM	
080	2703096-0000		1	SUPPORT	
090	2681263-0000		2	BUSHING	
100	2681266-0000		1	WASHER	
300	311112-0258		4	SPRING PIN, ISO 8752 4X24-C	
310	315755-0109		1	RETAINING RING SHAFT DIN 6799 7 A2	
320	312115-0374		2	SCREW ISO4762 M6X30 A4 80	
350	315751-0119		4	RETAINING RING FOR SHAFT DIN 471 25 A2	
360	321308-0205		4	BALL BEARING, 25X47X12MM	
370	315105-0165		1	WASHER BRB8,4X16RFR	
400	312105-0367		1	SCREW M6S ISO 4017 M6X14 A480	
410	90459-2590		1	ROD END, CLEVIS WITH AXLE M8	
420	312115-0370		4	SCREW ISO4762 M6X20 A4 80	
560	350002-0006		1	PUSH-IN L-FITTING QSL-F-G1/8-6	
A3/FLEX TBA 0500B, A3/FLEX TBA 1000B, A3/FLEX TBA 1000S, A3/FLEX TBA 1000SQ, A3/FLEX TPA 1000SQ, A3/FLEX TBA 0200S, A3/FLEX TBA 1500S, A3/FLEX TBA 0200B, A3/FLEX TBA 0250B, A3/FLEX TBA 0330S, A3/FLEX TPA 0330SQ, A3/FLEX TPA 0500SQ, A3/FLEX TBA 0200M, A3/FLEX TBA 0250S, A3/FLEX TBA 0500S, A3/FLEX TPA 0250SQ, A3/FLEX TPA 0200SQ, A3/FLEX TPA 0750SQ, A3/FLEX TBA 0200SQ, A3/FLEX TBA 0250SQ (See drawing on page: 7-100)					
010	578684-0000		1	SPRING BRACKET	
020	906254-0000		1	ROLLER	
030	2524602-0000		1	HANDLE	
040	1487763-0000		1	SHAFT	
050	1512267-0000		1	ECCENTRIC BUSHING	
060	1519583-0000		2	BRACKET	
070	2524604-0000		1	ROCKER ARM	
080	2524601-0000		1	AXLE PIN	
090	2524603-0000		1	HOLDER	
100	2529549-0000		1	PLATE	
300	311112-0258		2	SPRING PIN, ISO 8752 4X24-C	
310	315105-0153		2	WASHER BRB6,4X12RFR	
320	312115-0370		5	SCREW ISO4762 M6X20 A4 80	
350	315751-0119		2	RETAINING RING FOR SHAFT DIN 471 25 A2	
360	321308-0205		2	BALL BEARING, 25X47X12MM	
370	312625-0316		1	HEXAGON THIN NUT, EN 24035 ML6M M6 A4	
400	312115-0291		2	SCREW ISO4762 M4X12 A4 80	
410	312180-0491		1	SCREW ISO7379 H10X20	
420	315105-0136		2	WASHER BRB4,3XRFR	
430	312105-0370		1	SCREW M6S ISO 4017 M6X20 A480	
500	90335-0091		1	TENSION SPRING 41890, 1,2X13X48,2	
520	90051-0087		1	LOCK KNOB, NO. GN 617 A5	
530	90141-0016		1	RETAINING RING FOR SHAFT DIN 471 10 A2	
540	90099-0007		1	HEXAGON NUT, M10X1, E 63 137 10	
Common Parts					
340	315751-0112		2	RETAINING RING FOR SHAFT DIN 471 15 A2	

Machine Type | Group Description | Used-In | Group Number | Page No

PRESSURE ROLLER

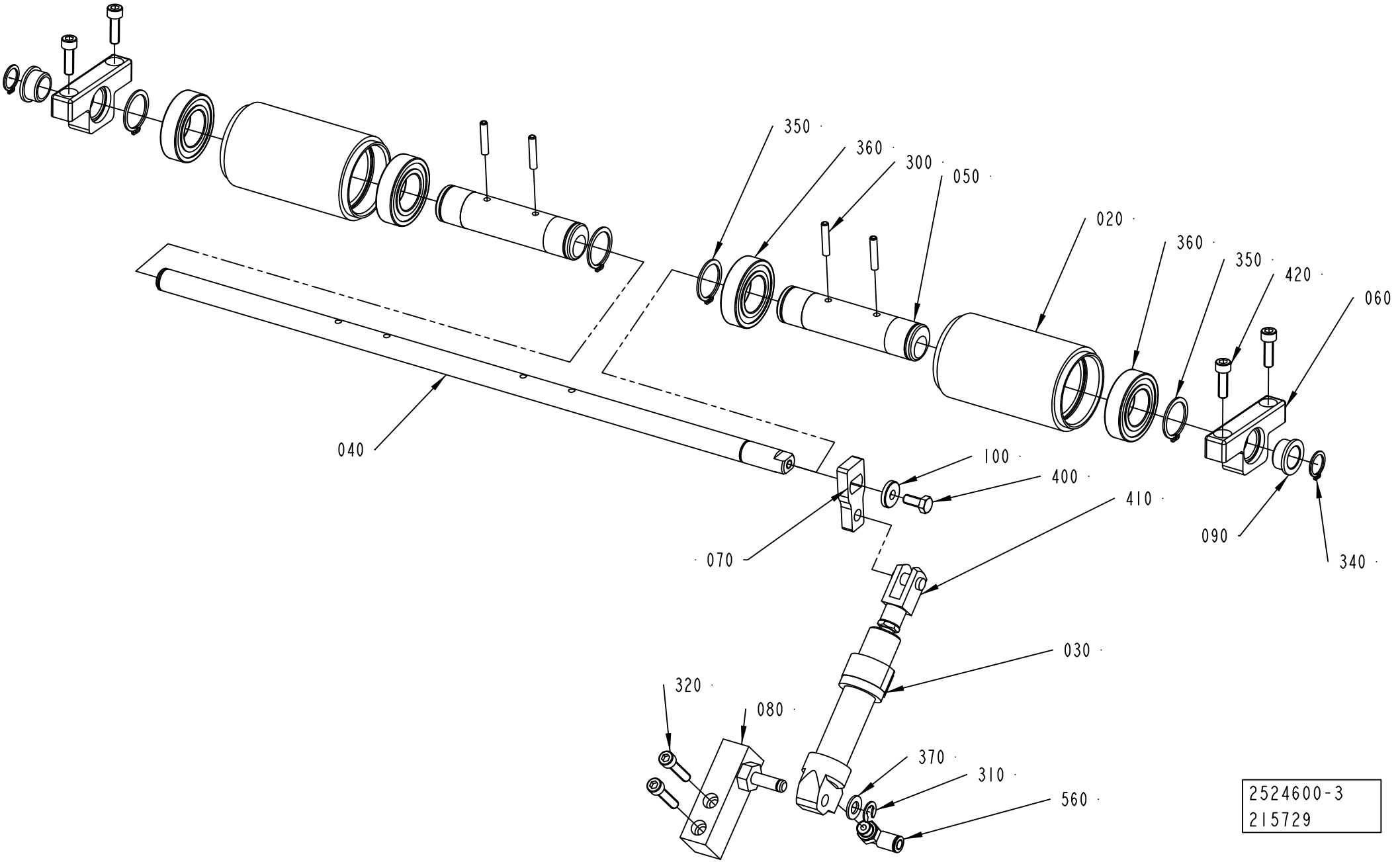

ECM: 218297 - 20050601
Group number: 2524600-0100
Assembly Drawing: 2524600-3_1_AC

This list covers pages from 7-100 to 7-103

Pos	Part No	UN	Qty	Description	Page No
A3/FLEX TBA 1890S, A3/FLEX TBA 2000S (See drawing on page: 7-102)					
020	906254-0000		2	ROLLER	
030	90450-0003		1	SINGLE ACTING, MINI-ISO, CYL 20-25	
040	2681261-0000		1	SHAFT	
050	1512267-0000		2	ECCENTRIC BUSHING	
060	2681262-0000		2	BRACKET	
070	2703095-0000		1	ROCKER ARM	
080	2703096-0000		1	SUPPORT	
090	2681263-0000		2	BUSHING	
100	2681266-0000		1	WASHER	
300	311112-0258		4	SPRING PIN, ISO 8752 4X24-C	
310	315755-0109		1	RETAINING RING SHAFT DIN 6799 7 A2	
320	312115-0374		2	SCREW ISO4762 M6X30 A4 80	
350	315751-0119		4	RETAINING RING FOR SHAFT DIN 471 25 A2	
360	321308-0205		4	BALL BEARING, 25X47X12MM	
370	315105-0165		1	WASHER BRB8,4X16RFR	
400	312105-0367		1	SCREW M6S ISO 4017 M6X14 A480	
410	90459-2590		1	ROD END, CLEVIS WITH AXLE M8	
420	312115-0370		4	SCREW ISO4762 M6X20 A4 80	
560	350002-0006		1	PUSH-IN L-FITTING QSL-F-G1/8-6	
A3/FLEX TBA 0500B, A3/FLEX TBA 1000B, A3/FLEX TBA 1000S, A3/FLEX TBA 1000SQ, A3/FLEX TPA 1000SQ, A3/FLEX TBA 0200S, A3/FLEX TBA 1500S, A3/FLEX TBA 0200B, A3/FLEX TBA 0250B, A3/FLEX TBA 0330S, A3/FLEX TPA 0330SQ, A3/FLEX TPA 0500SQ, A3/FLEX TBA 0200M, A3/FLEX TBA 0250S, A3/FLEX TBA 0500S, A3/FLEX TPA 0250SQ, A3/FLEX TPA 0200SQ, A3/FLEX TPA 0750SQ, A3/FLEX TBA 0200SQ, A3/FLEX TBA 0250SQ (See drawing on page: 7-100)					
010	578684-0000		1	SPRING BRACKET	
020	906254-0000		1	ROLLER	
030	2524602-0000		1	HANDLE	
040	1487763-0000		1	SHAFT	
050	1512267-0000		1	ECCENTRIC BUSHING	
060	1519583-0000		2	BRACKET	
070	2524604-0000		1	ROCKER ARM	
080	2524601-0000		1	AXLE PIN	
090	2524603-0000		1	HOLDER	
100	2529549-0000		1	PLATE	
300	311112-0258		2	SPRING PIN, ISO 8752 4X24-C	
310	315105-0153		2	WASHER BRB6,4X12RFR	
320	312115-0370		5	SCREW ISO4762 M6X20 A4 80	
350	315751-0119		2	RETAINING RING FOR SHAFT DIN 471 25 A2	
360	321308-0205		2	BALL BEARING, 25X47X12MM	
370	312625-0316		1	HEXAGON THIN NUT, EN 24035 ML6M M6 A4	
400	312115-0291		2	SCREW ISO4762 M4X12 A4 80	
410	312180-0491		1	SCREW ISO7379 H10X20	
420	315105-0136		2	WASHER BRB4,3XRFR	
430	312105-0370		1	SCREW M6S ISO 4017 M6X20 A480	
500	90335-0091		1	TENSION SPRING 41890, 1,2X13X48,2	
520	90051-0087		1	LOCK KNOB, NO. GN 617 A5	
530	90141-0016		1	RETAINING RING FOR SHAFT DIN 471 10 A2	
540	90099-0007		1	HEXAGON NUT, M10X1, E 63 137 10	
Common Parts					
340	315751-0112		2	RETAINING RING FOR SHAFT DIN 471 15 A2	

Machine Type | Group Description | Used-In | Group Number | Page No

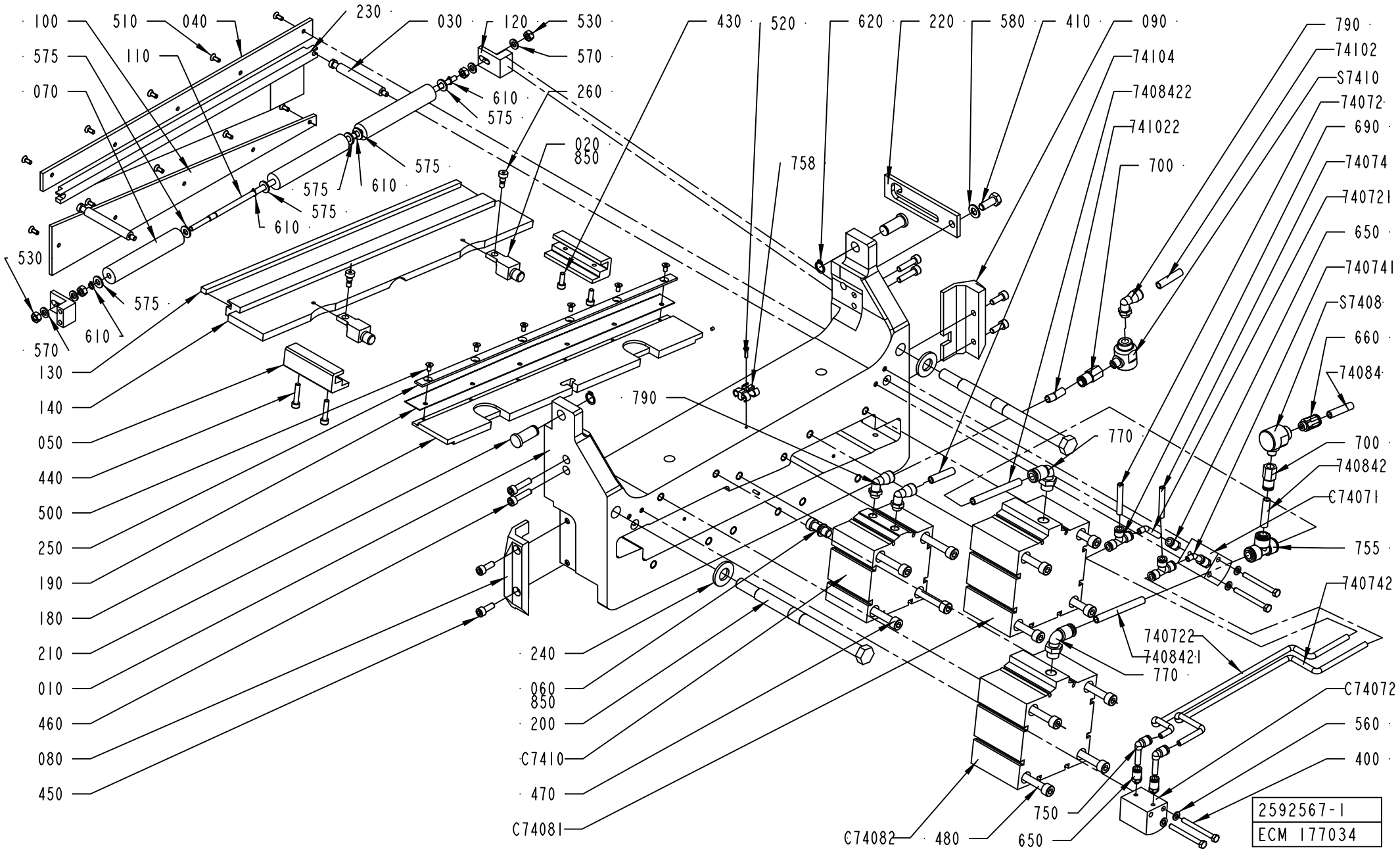
100
510
040
230
030
120
530
570
260
610
575
020
850
575
575
610
575
610
530
575
610
570
130
140
050
440
500
250
190
180
210
010
460
080
450
240
060
850
200
C7410
470
C74081
430
520
620
220
580
410
090
790
74102
S7410
74072
690
74074
740721
650
740741
S7408
660
74084
700
740842
C74071
755
740742
740722
740842-1
770
C74072
560
400
750
650
C74082
480
758
790
770
74104
7408422
741022
700
2592567-1
ECM 177034

ECM: 178411 - 20041025
Group number: 2592567-0100
Assembly Drawing: 2592567-1_1_AE

Pos	Part No	UN	Qty	Description	Page No
-					
010	2574402-0000		1	PRESSURE JAW	
020	2549829-0000		2	SPACER	
030	2552798-0000		2	COMPRESSION ROD	
040	2552802-0000		1	SLIDE PLATE	
050	2558148-0000		2	SLIDING STRIP	
060	2559439-0000		1	COUPLING BOLT	
070	2564562-0000		3	ROLLER	
080	2566123-0000		1	SLIDE PLANE	
090	2566124-0000		1	SLIDE PLANE	
100	2566125-0000		1	SLIDE PLATE	
110	2588046-0000		1	SHAFT	
120	2588290-0000		2	BRACKET	
130	2592780-0000		1	DOLLY	
140	2546463-0000		1	PRESSURE RAIL	
180	1484693-0000		1	KNIFE HOLDER	
190	1484695-0000		1	KNIFE	
200	1484703-0000		2	TIE ROD	
210	1484781-0000		2	PIN	
220	1487517-0000		1	CATCH	
230	2658058-0000		1	RAIL	
240	1519955-0000		2	WASHER	
250	1519967-0000		1	CLAMP	
260	1558801-0000		2	SHOULDER SCREW	
400	312105-0341		4	SCREW M6S ISO 4014 M5X50 A480	
410	312105-0451		1	SCREW M6S ISO 4017 M8X20 A480	
430	312115-0328		2	SCREW ISO4762 M5X14 A4	
440	312115-0333		2	SCREW ISO4762 M5X25 A4 80	
450	312115-0368		4	SCREW ISO4762 M6X16 A4 80	
460	312115-0372		4	SCREW ISO4762 M6X25 A4 80	
470	312115-0465		4	SCREW ISO4762 M8X70 A4 80	
480	312115-0467		8	SCREW ISO4762 M8X80 A4 80	
500	312155-0287		6	SCREW DIN 7991 MF6S M4X8 A4 70	
510	312155-0289		10	SCREW DIN 7991 MF6S M4X10 A4 70	
520	312145-0226		1	SCREW ISO 2009 MFS M3X12 A4	
530	312605-0316		4	HEXAGON NUT, M6M M6 A280	
560	315105-0146		4	WASHER BRB5,3X10RFR	
570	315105-0153		4	WASHER BRB6,4X12RFR	
575	315105-0156		6	WASHER BRB 6.7X14 RFR	
580	315105-0165		1	WASHER BRB8,4X16RFR	
610	315751-0103		4	RETAINING RING FOR SHAFT DIN 471 6 A2	
620	315751-0109		2	RETAINING RING FOR SHAFT DIN 471 12 A2	
650	342722-0197		4	STRAIGHT COUPLING	
660	342722-0204		1	PIPE COUPLING	
690	342748-0102		2	T-CONNECTION 6MM	
700	342770-0107		2	STRAIGHT COUPLING INT, D=8 MM - G1/8	
74072	90166-0193	MM	5000	TUBE 6 MM PUR BLUE	
740721	90166-0193	MM	60	TUBE 6 MM PUR BLUE	
740722	90166-0193	MM	400	TUBE 6 MM PUR BLUE	
74074	90166-0193	MM	5000	TUBE 6 MM PUR BLUE	
740741	90166-0193	MM	80	TUBE 6 MM PUR BLUE	
740742	90166-0193	MM	400	TUBE 6 MM PUR BLUE	
74084	90166-0194	MM	5000	TUBE 8 MM PUR BLUE	
740842	90166-0194	MM	40	TUBE 8 MM PUR BLUE	
7408421	90166-0194	MM	150	TUBE 8 MM PUR BLUE	
7408422	90166-0194	MM	150	TUBE 8 MM PUR BLUE	
74102	90166-0194	MM	5000	TUBE 8 MM PUR BLUE	
741022	90166-0194	MM	200	TUBE 8 MM PUR BLUE	
74104	90166-0194	MM	5000	TUBE 8 MM PUR BLUE	
750	90055-0217		2	ELBOW PIPE JOINT	
755	90055-0276		1	T-CONNECTION 8 MM	
758	90165-0087		1	T-CLIP T6 FOR TUBE D=6 - 7 MM	
770	90458-2448		2	ELBOW PIPE JOINT,EXT.THREAD,D=8 MM G1/4	
790	90458-2964		3	ELBOW PIPE JOINT, EXT.THREAD, D=8MM-G1/8	
850	90157-0016	ML	1	LOCKING FLUID LOCTITE 242 50 ML	
C74071	90459-1509		1	CYLINDER, ADVC-20-20-I-P	
C74072	90459-1509		1	CYLINDER, ADVC-20-20-I-P	
C74081	90459-2102		1	CYLINDER, AEVC 100-25-I-P	
C74082	90459-2102		1	CYLINDER, AEVC 100-25-I-P	
C7410	90459-2101		1	CYLINDER, ADVC-80-25-I-P	
S7408	90235-0206		1	QUICK EXHAUST VALVE, SEU-1/8	
S7410	90235-0206		1	QUICK EXHAUST VALVE, SEU-1/8	

Machine Type	Group Description	Used-In	Group Number	Page No

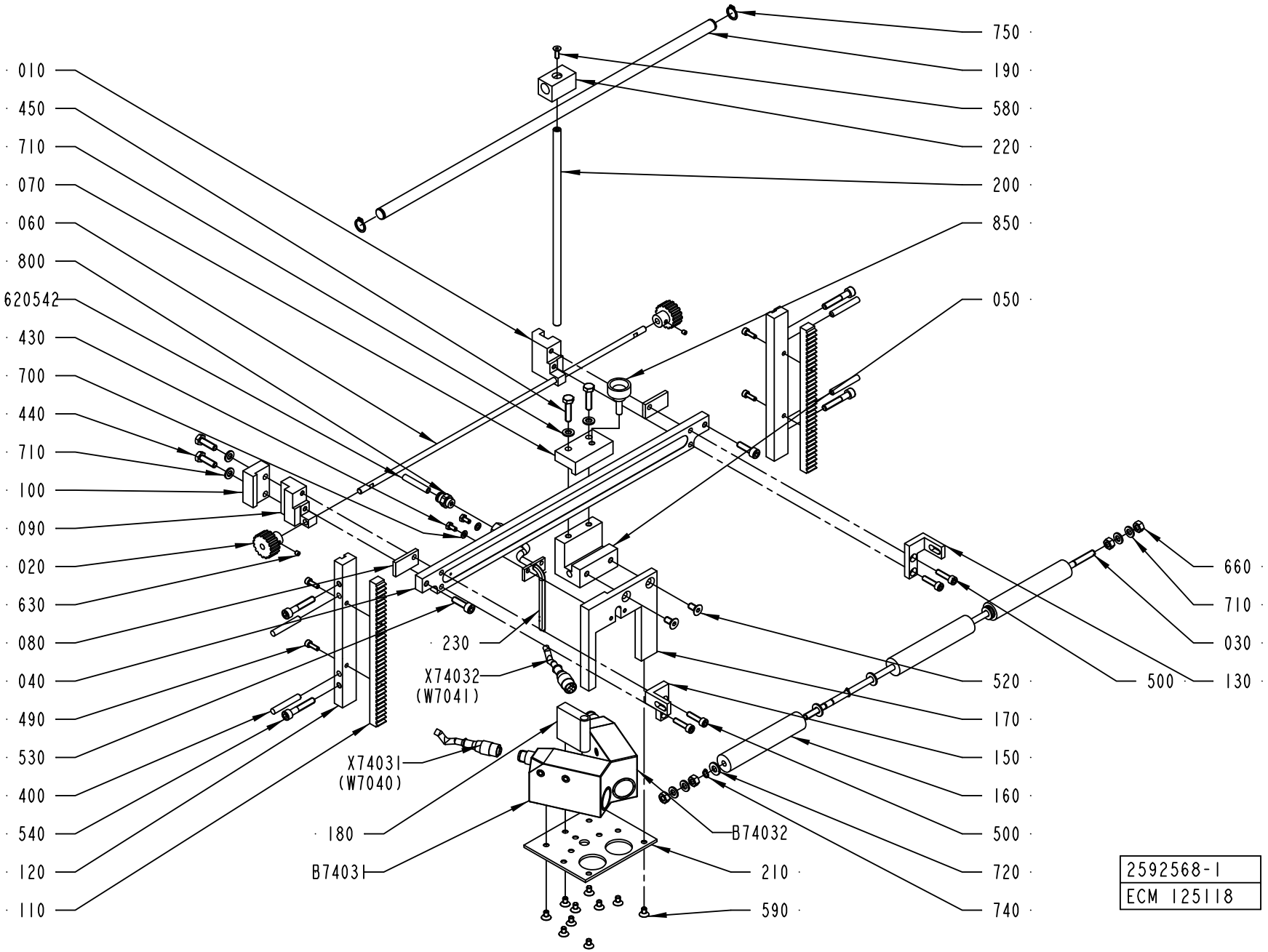
750
190
580
220
200
850
050
660
710
030
130
500
520
170
150
160
500
720
740
590
210
B74032
180
B74031
X74031
(W7040)
230
X74032
(W7041)
010
450
710
070
060
800
620542
430
700
440
710
100
090
020
630
080
040
490
530
400
540
120
110
2592568-1
ECM 125118

ECM: 190961 - 20041104
Group number: 2592568-0100
Assembly Drawing: 2592568-1_1_AB

Pos	Part No	UN	Qty	Description	Page No
A3/FLEX					
X74031	90458-0603		1	CONNECTOR FEMALE 5 PINS	
X74032	90458-0603		1	CONNECTOR FEMALE 5 PINS	
Common Parts					
010	1484705-0000		1	SLIDER	
020	1484706-0000		2	GEAR WHEEL	
030	2588046-0000		1	SHAFT	
040	1484776-0000		1	RAIL	
050	1484777-0000		1	SLIDER	
060	1484779-0000		1	ROD	
070	1484782-0000		1	CLAMP BLOCK	
080	1484783-0000		2	CLAMPING ELEMENT	
090	1484784-0000		1	LOCATING PIECE	
100	1484785-0000		1	LOCATING PIECE	
110	1487510-0000		2	RACK GEAR	
120	1487511-0000		2	BRACKET	
130	2588044-0000		1	BRACKET	
150	2588045-0000		1	BRACKET	
160	2564562-0000		3	ROLLER	
170	1487554-0000		1	BRACKET	
180	1487555-0000		1	BUSHING	
190	1487556-0000		1	BAR	
200	1487557-0000		1	BAR	
210	1487558-0000		1	FASTENING PLATE	
220	1487559-0000		1	SLIDER	
230	1519580-0000		1	GUIDE FINGER	
400	311103-0361		4	PARALLEL PIN ISO 2338 6M6X40 A1	
430	312105-0287		2	SCREW M6S ISO 4017 M4X8 A470	
440	312105-0370		2	SCREW M6S ISO 4017 M6X20 A480	
450	312105-0372		2	SCREW M6S ISO 4017 M6X25 A480	
490	312115-0291		4	SCREW ISO4762 M4X12 A4 80	
500	312115-0331		4	SCREW ISO4762 M5X20 A4 80	
520	312155-0366		2	SCREW DIN 7991 MF6S M6X12 A4 70	
530	312115-0370		2	SCREW ISO4762 M6X20 A4 80	
540	312115-0376		4	SCREW ISO4762 M6X35 A4 80	
580	312155-0291		1	SCREW DIN 7991 MF6S M4X12 A4 70	
590	312155-0323		10	SCREW DIN 7991 MF6S M5X8 A4 70	
620542	90166-0193	MM	4500	TUBE 6 MM PUR BLUE	
630	312318-0283		2	SCREW ISO4029 M4X4 A4	
660	312605-0316		4	HEXAGON NUT, M6M M6 A280	
700	315105-0136		2	WASHER BRB4,3XRFR	
710	315105-0153		8	WASHER BRB6,4X12RFR	
720	315105-0156		6	WASHER BRB 6.7X14 RFR	
740	315751-0103		4	RETAINING RING FOR SHAFT DIN 471 6 A2	
750	315751-0109		2	RETAINING RING FOR SHAFT DIN 471 12 A2	
800	342722-0202		1	PIPE COUPLING 1/8" D=6MM	
850	90051-0083		1	KNOB, EXTERNAL THREAD. NO. 8308-1321	
B74031	90458-0602		1	CONTRAST SCANNER, KT15W-P2110S01	
B74032	90458-0602		1	CONTRAST SCANNER, KT15W-P2110S01	

Machine Type	Group Description	Used-In	Group Number	Page No

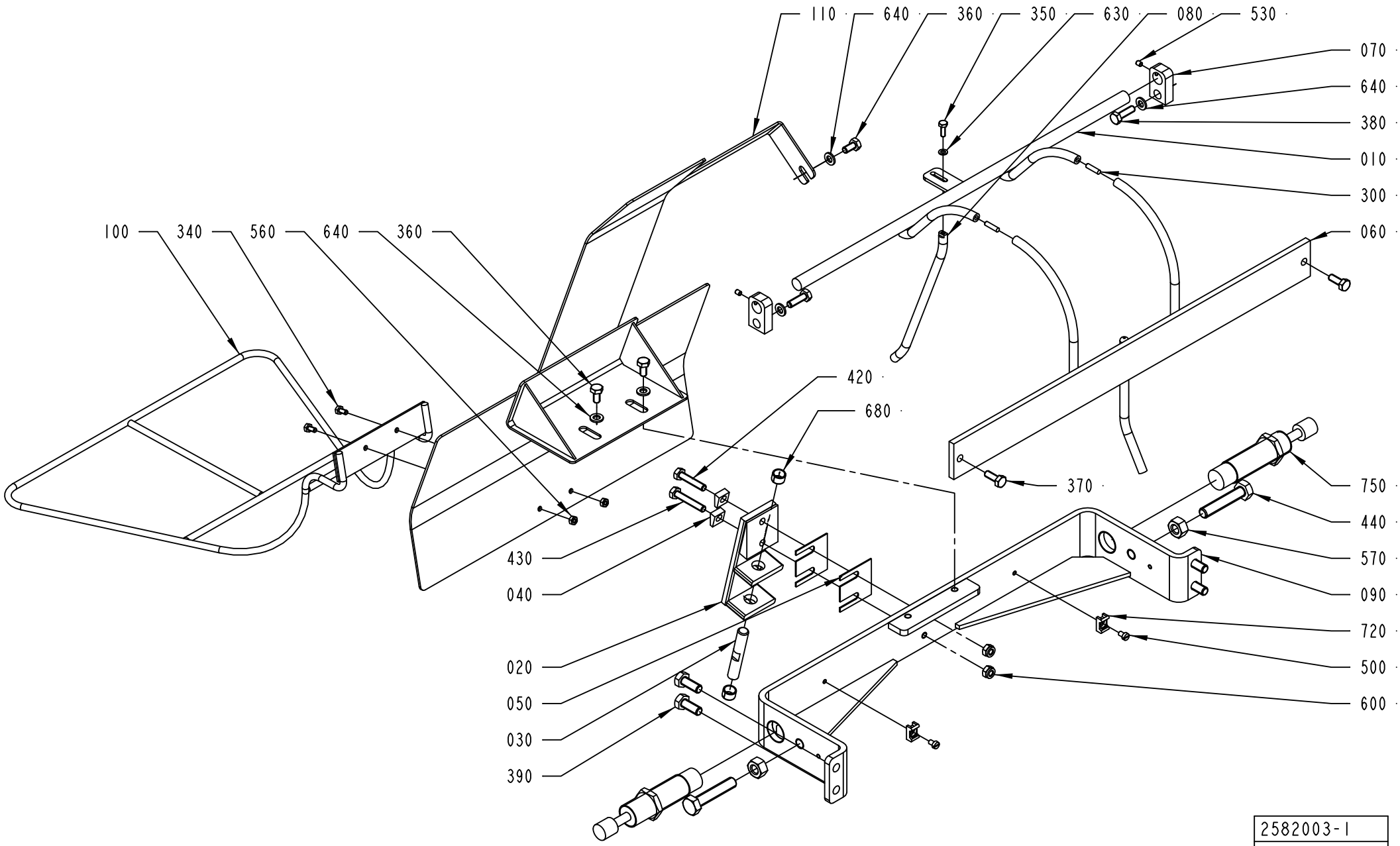
110
640
360
350
630
080
530
070
640
380
010
300
060
100
340
560
640
360
420
680
370
750
440
570
090
720
500
600
430
040
020
050
030
390
2582003-1
ECM 125118

ECM: 218256 - 20050601
Group number: 2582003-0100
Assembly Drawing: 2582003-1_1_AB

This list covers pages from 7-108 to 7-111

Pos	Part No	UN	Qty	Description	Page No
A3/FLEX TBA 1890S, A3/FLEX TBA 2000S (See drawing on page: 7-110)					
010	2681260-0000		1	RAIL	
060	2681259-0000		1	RAIL	
070	2689138-0000		1	MOUNTING BLOCK	
080	2689173-0000		1	MOUNTING BLOCK	
110	2681267-0000		1	PLATE	
130	2564562-0000		3	ROLLER	
170	2693199-0000		2	PLATE	
180	2681535-0000		1	SHAFT	
300	311103-0270		3	PARALLEL PIN ISO 2338 4M6X16 A1	
310	315105-0156		6	WASHER BRB 6.7X14 RFR	
330	315751-0103		4	RETAINING RING FOR SHAFT DIN 471 6 A2	
350	312605-0316		4	HEXAGON NUT, M6M M6 A280	
360	312115-0366		2	SCREW ISO4762 M6X12 A4 80	
400	312105-0366		2	SCREW M6S ISO 4017 M6X12 A480	
640	315105-0153		8	WASHER BRB6,4X12RFR	
A3/FLEX TBA 0500B, A3/FLEX TBA 1000B, A3/FLEX TBA 1000S, A3/FLEX TBA 1000SQ, A3/FLEX TPA 1000SQ, A3/FLEX TBA 0200S, A3/FLEX TBA 1500S, A3/FLEX TBA 0200B, A3/FLEX TBA 0250B, A3/FLEX TBA 0330S, A3/FLEX TPA 0330SQ, A3/FLEX TPA 0500SQ, A3/FLEX TBA 0200M, A3/FLEX TBA 0250S, A3/FLEX TBA 0500S, A3/FLEX TPA 0250SQ, A3/FLEX TPA 0200SQ, A3/FLEX TPA 0750SQ, A3/FLEX TBA 0200SQ, A3/FLEX TBA 0250SQ (See drawing on page: 7-108)					
010	1484697-0000		1	RAIL	
060	1517113-0000		1	RAIL	
070	1519578-0000		2	MOUNTING BLOCK	
080	1519591-0000		1	RAIL PIN	
110	2582668-0000		1	PLATE	
300	311103-0270		2	PARALLEL PIN ISO 2338 4M6X16 A1	
350	312105-0291		1	SCREW M6S ISO 4017 M4X12 A470	
360	312105-0366		3	SCREW M6S ISO 4017 M6X12 A480	
630	315105-0136		1	WASHER BRB4,3XRFR	
640	315105-0153		5	WASHER BRB6,4X12RFR	
Common Parts					
020	1490220-0000		1	ANGLE BRACKET	
030	1494664-0000		1	AXLE LINK	
040	1499566-0000		2	WASHER	
050	1512430-0000		2	VOLUME SHIM	
090	1519944-0000		1	BRACKET	
100	2563183-0000		1	GUIDE RAIL	
340	312105-0287		2	SCREW M6S ISO 4017 M4X8 A470	
370	312105-0368		4	SCREW M6S ISO 4017 M6X16 A480	
380	312105-0370		2	SCREW M6S ISO 4017 M6X20 A480	
390	312105-0451		4	SCREW M6S ISO 4017 M8X20 A480	
420	312109-0374		1	SCREW M6S ISO 4017 M6X30 A480	
430	312109-0376		1	SCREW M6S ISO 4017 M6X35 A480	
440	312109-0501		2	SCREW M6S ISO 4017 M10X50 A480	
500	312125-0285		2	SCREW ISO 1207 M4X6 A4	
530	312318-0284		2	SCREW ISO4029 M4X5 A4	
560	312605-0312		2	HEXAGON NUT, M6M M4 A280	
570	312605-0320		2	HEXAGON NUT, M6M M10 A280	
600	312812-0316		2	HEXAGON NUT, NY-LOCK M6 A480	
680	321141-0138		2	BEARING BUSH W/O FLANGE, 10X12X8 MM	
720	352113-0205		2	ANCHOR PLATES FOR STRIPS, TYPE TM2S8-C10	
750	90347-0182		2	SHOCK ABSORBER, YSR-16-20-C	

Machine Type | Group Description | Used-In | Group Number | Page No

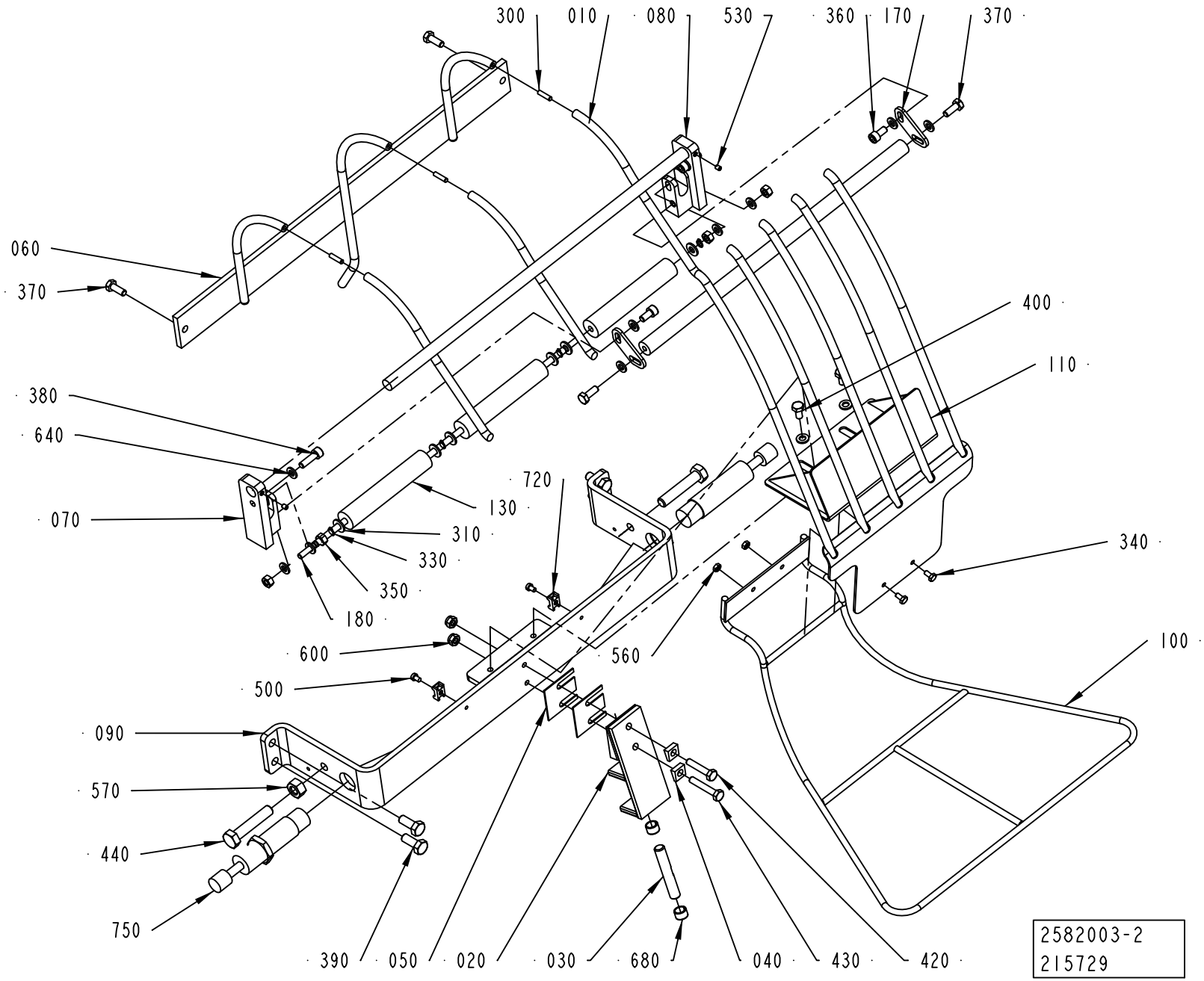
300
010
080
530
360
170
370
060
370
400
110
380
640
720
130
070
310
330
340
350
180
600
560
100
500
090
570
440
750
390
050
020
030
680
040
430
420
2582003-2
215729

ECM: 218256 - 20050601
Group number: 2582003-0100
Assembly Drawing: 2582003-2_1_AB

This list covers pages from 7-108 to 7-111

Pos	Part No	UN	Qty	Description	Page No
A3/FLEX TBA 1890S, A3/FLEX TBA 2000S (See drawing on page: 7-110)					
010	2681260-0000		1	RAIL	
060	2681259-0000		1	RAIL	
070	2689138-0000		1	MOUNTING BLOCK	
080	2689173-0000		1	MOUNTING BLOCK	
110	2681267-0000		1	PLATE	
130	2564562-0000		3	ROLLER	
170	2693199-0000		2	PLATE	
180	2681535-0000		1	SHAFT	
300	311103-0270		3	PARALLEL PIN ISO 2338 4M6X16 A1	
310	315105-0156		6	WASHER BRB 6.7X14 RFR	
330	315751-0103		4	RETAINING RING FOR SHAFT DIN 471 6 A2	
350	312605-0316		4	HEXAGON NUT, M6M M6 A280	
360	312115-0366		2	SCREW ISO4762 M6X12 A4 80	
400	312105-0366		2	SCREW M6S ISO 4017 M6X12 A480	
640	315105-0153		8	WASHER BRB6,4X12RFR	
A3/FLEX TBA 0500B, A3/FLEX TBA 1000B, A3/FLEX TBA 1000S, A3/FLEX TBA 1000SQ, A3/FLEX TPA 1000SQ, A3/FLEX TBA 0200S, A3/FLEX TBA 1500S, A3/FLEX TBA 0200B, A3/FLEX TBA 0250B, A3/FLEX TBA 0330S, A3/FLEX TPA 0330SQ, A3/FLEX TPA 0500SQ, A3/FLEX TBA 0200M, A3/FLEX TBA 0250S, A3/FLEX TBA 0500S, A3/FLEX TPA 0250SQ, A3/FLEX TPA 0200SQ, A3/FLEX TPA 0750SQ, A3/FLEX TBA 0200SQ, A3/FLEX TBA 0250SQ (See drawing on page: 7-108)					
010	1484697-0000		1	RAIL	
060	1517113-0000		1	RAIL	
070	1519578-0000		2	MOUNTING BLOCK	
080	1519591-0000		1	RAIL PIN	
110	2582668-0000		1	PLATE	
300	311103-0270		2	PARALLEL PIN ISO 2338 4M6X16 A1	
350	312105-0291		1	SCREW M6S ISO 4017 M4X12 A470	
360	312105-0366		3	SCREW M6S ISO 4017 M6X12 A480	
630	315105-0136		1	WASHER BRB4,3XRFR	
640	315105-0153		5	WASHER BRB6,4X12RFR	
Common Parts					
020	1490220-0000		1	ANGLE BRACKET	
030	1494664-0000		1	AXLE LINK	
040	1499566-0000		2	WASHER	
050	1512430-0000		2	VOLUME SHIM	
090	1519944-0000		1	BRACKET	
100	2563183-0000		1	GUIDE RAIL	
340	312105-0287		2	SCREW M6S ISO 4017 M4X8 A470	
370	312105-0368		4	SCREW M6S ISO 4017 M6X16 A480	
380	312105-0370		2	SCREW M6S ISO 4017 M6X20 A480	
390	312105-0451		4	SCREW M6S ISO 4017 M8X20 A480	
420	312109-0374		1	SCREW M6S ISO 4017 M6X30 A480	
430	312109-0376		1	SCREW M6S ISO 4017 M6X35 A480	
440	312109-0501		2	SCREW M6S ISO 4017 M10X50 A480	
500	312125-0285		2	SCREW ISO 1207 M4X6 A4	
530	312318-0284		2	SCREW ISO4029 M4X5 A4	
560	312605-0312		2	HEXAGON NUT, M6M M4 A280	
570	312605-0320		2	HEXAGON NUT, M6M M10 A280	
600	312812-0316		2	HEXAGON NUT, NY-LOCK M6 A480	
680	321141-0138		2	BEARING BUSH W/O FLANGE, 10X12X8 MM	
720	352113-0205		2	ANCHOR PLATES FOR STRIPS, TYPE TM2S8-C10	
750	90347-0182		2	SHOCK ABSORBER, YSR-16-20-C	

Machine Type | Group Description | Used-In | Group Number | Page No

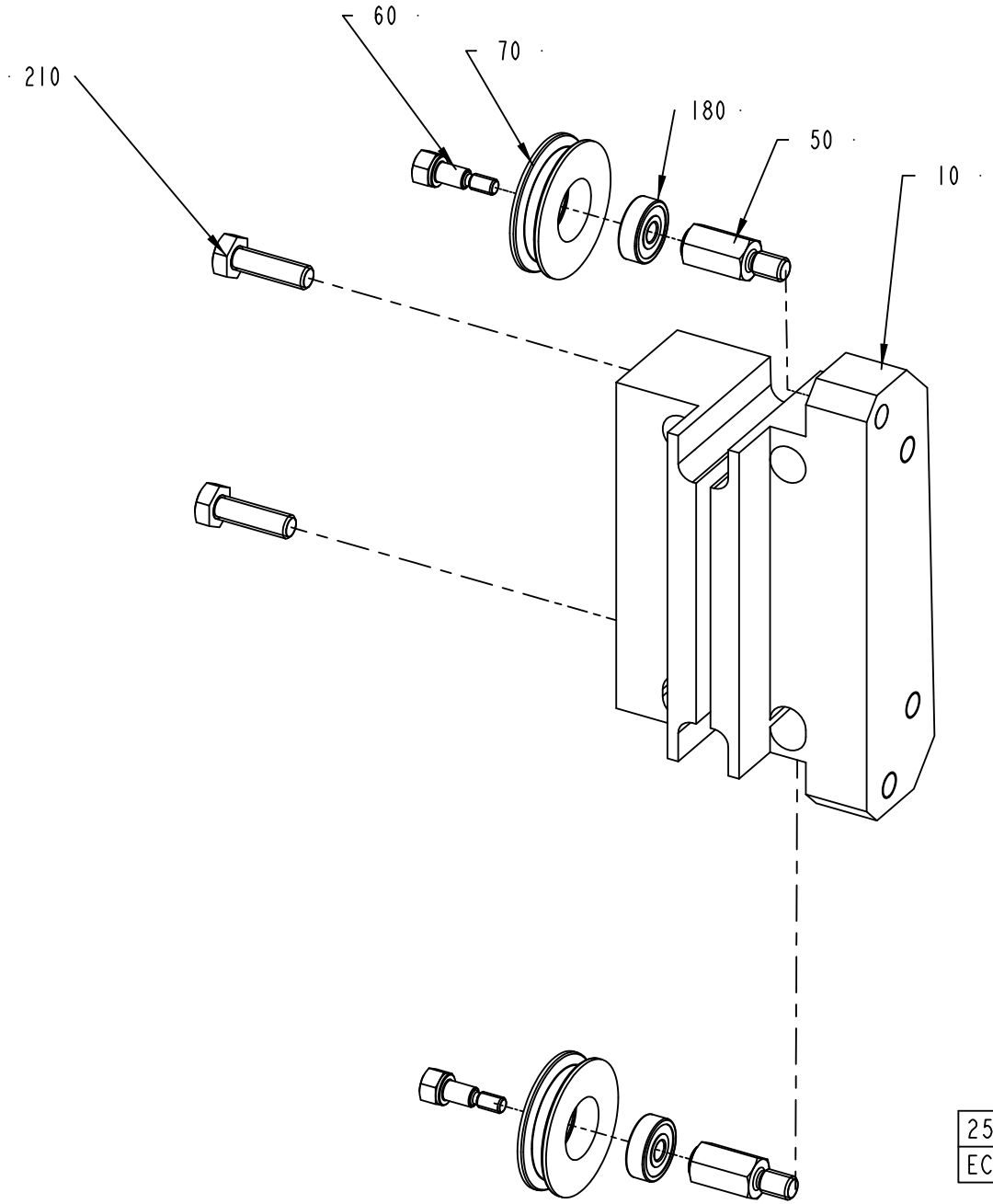
60
70
180
50
10
210
2529547-1
ECM 124748

ECM: 224779 - 20050831
Group number: 2529547-0100
Assembly Drawing: 2529547-1_1_AB

Pos	Part No	UN	Qty	Description	Page No
A3/FLEX TBA 1890S, A3/FLEX TBA 2000S					
010	2713377-0000		1	SUPPORT	
A3/FLEX TBA 0500B, A3/FLEX TBA 1000B, A3/FLEX TBA 1000S, A3/FLEX TBA 1000SQ, A3/FLEX TPA 1000SQ, A3/FLEX TBA 0200S, A3/FLEX TBA 1500S, A3/FLEX TBA 0200B, A3/FLEX TBA 0250B, A3/FLEX TPA 0330SQ, A3/FLEX TPA 0500SQ, A3/FLEX TBA 0200M, A3/FLEX TBA 0250S, A3/FLEX TBA 0500S, A3/FLEX TPA 0250SQ, A3/FLEX TPA 0200SQ, A3/FLEX TPA 0750SQ, A3/FLEX TBA 0200SQ, A3/FLEX TBA 0250SQ					
010	2529546-0000		1	SUPPORT	
Common Parts					
050	1558251-0000		2	SHAFT	
060	1558252-0000		2	SCREW	
070	1558253-0000		2	ROLLER	
180	90458-2950		2	BALL BEARING, 5X16X5 MM	
210	312105-0370		2	SCREW M6S ISO 4017 M6X20 A480	

Pos	Part No	UN	Qty	Description	Page No

CABLE CONDUIT

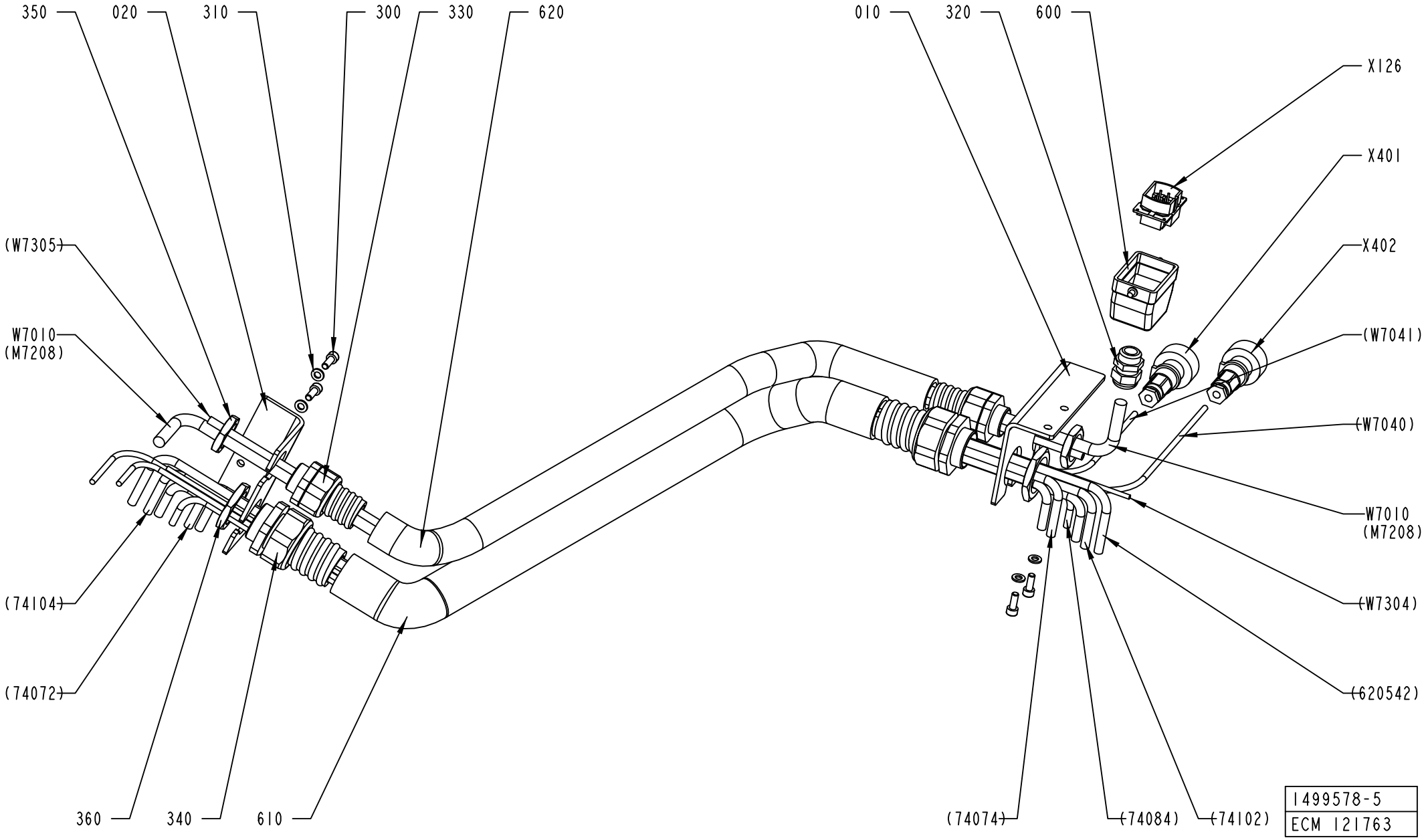

ECM: 195268 - 20041207
Group number: 1499578-0300
Assembly Drawing: 1499578-5_1_AA

Pos	Part No	UN	Qty	Description	Page No
A3/FLEX					
W7010	90220-0104	M	9	SCR. CABLE 4X1,5MM2	
Common Parts					
010	2628989-0000		1	BRACKET	
020	2628990-0000		1	BRACKET	
300	312115-0368		4	SCREW ISO4762 M6X16 A4 80	
310	315105-0153		4	WASHER BRB6,4X12RFR	
320	352103-0108		1	CABLE GLAND, ST 13,5 , PR20,4/PG13,5	
330	353243-0007		2	HOSE GLAND W/O INSERT PG21 EXTENDED	
340	353243-0008		2	HOSE GLAND W/O INSERT PG29 EXTENDED	
350	90099-0119		2	NUT, PR 28,3 (PG21)	
360	90099-0120		2	NUT PR 37 (PG29)	
600	90110-0157		1	CABLE HOOD 6-POL 70.352.0628.1	
610	90152-0060	MM	850	SPIRAL CONDUIT, 42X35, UL3529	
620	90152-0070	MM	850	METAL HOSE, 32,5X26, UL 2621	
X126	90110-0159		1	MALE INSERT 70.310.0640.0	
X401	90110-0235		1	CABLE CONTACT, PX0739/S	
X402	90110-0235		1	CABLE CONTACT, PX0739/S	

Pos	Part No	UN	Qty	Description	Page No

MATERIAL HOLDER L1

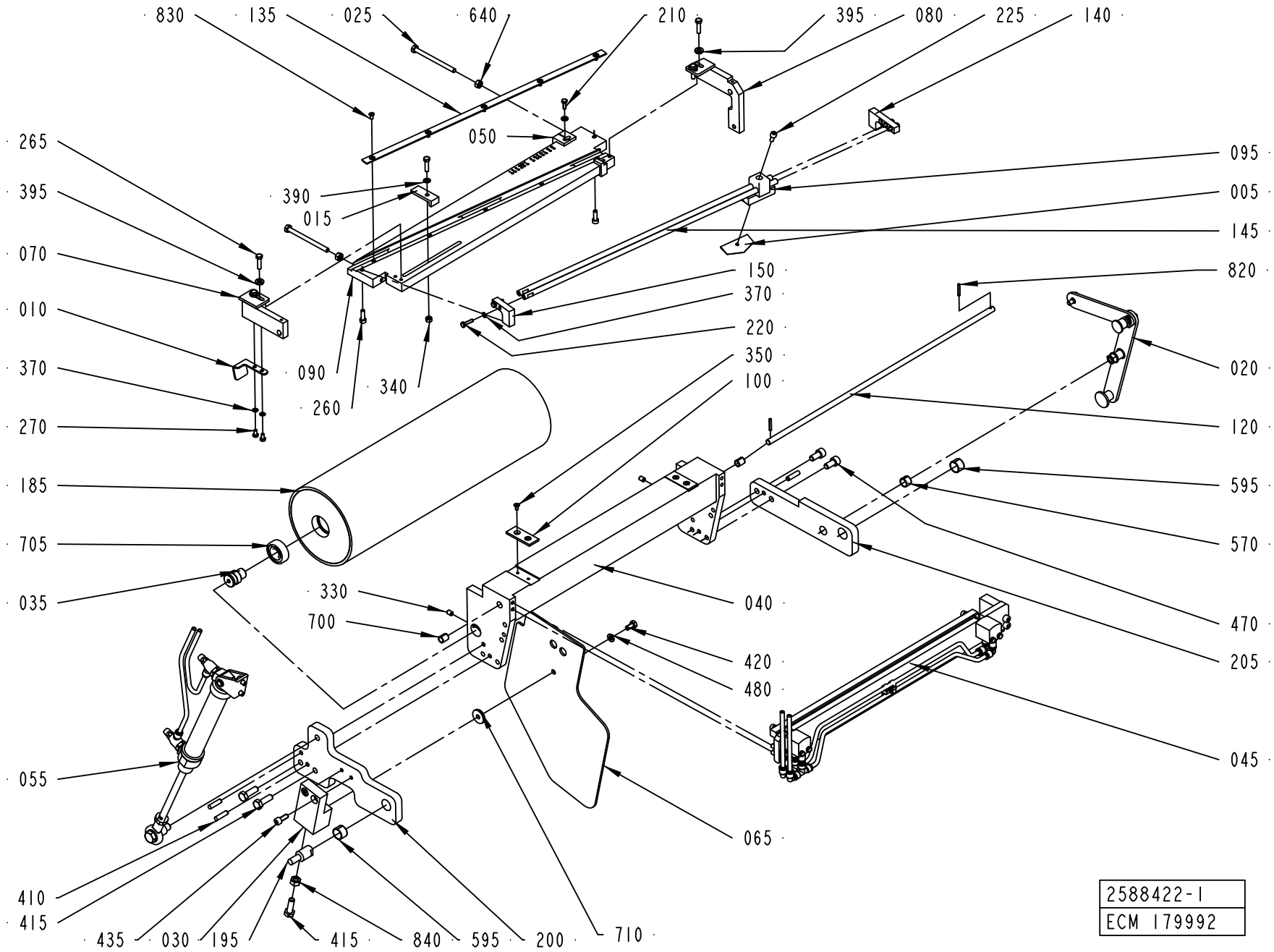

ECM: 215276 - 20050531
Group number: 2588422-0100
Assembly Drawing: 2588422-1_1_AE

Pos	Part No	UN	Qty	Description	Page No
A3/FLEX WITH ARL, A3/FLEX WITHOUT ARL					
005	596678-0000		1	KNIFE	
050	2587251-0000		1	ANGLE PIECE	
095	2589791-0000		1	KNIFE HOLDER	
140	1487781-0000		1	BRACKET	
145	1487782-0000		2	SHAFT	
150	2566118-0000		1	BRACKET	
220	312105-0293		4	SCREW M6S ISO 4017 M4X16 A470	
225	312115-0327		1	SCREW ISO4762 M5X12 A4 80	
260	312115-0329		2	SCREW ISO4762 M5X16 A4 80	
370	315105-0136		6	WASHER BRB4,3XRFR	
Common Parts					
010	2538065-0000		1	REFLECTOR	
015	1490821-0000		1	ANGLE PIECE	
020	1524398-0100		1	HANDLE	**7-119**
025	312109-0386		2	SCREW M6S ISO 4017 M6X80 A480	
030	2699996-0000		1	BLOCK	
035	1499582-0000		2	AXLE PIN	
040	1487770-0000		1	BRACKET	
045	2588383-0100		1	MATERIAL HOLDER	**7-121**
055	1524394-0100		1	CYLINDER	**7-123**
065	1512276-0000		1	PROTECTION PLATE	
070	2700019-0000		1	ROCKER ARM	
080	2700030-0000		1	ROCKER ARM	
090	2566117-0000		1	CUTTING TABLE	
100	2553275-0000		2	SLIDE PLATE	
120	1487779-0000		1	SHAFT	
135	1487518-0000		1	RULER	
185	1499588-0000		1	BENDING ROLLER	
195	1511568-0000		1	PIN	
200	2587250-0000		1	ARM	
205	1511575-0000		1	ARM	
210	312105-0291		1	SCREW M6S ISO 4017 M4X12 A470	
265	312105-0331		5	SCREW M6S ISO 4017 M5X20 A480	
270	312105-0287		2	SCREW M6S ISO 4017 M4X8 A470	
330	312318-0362		2	SCREW ISO4029 M6X8 A4	
340	312605-0314		1	HEXAGON NUT, M6M M5 A280	
350	312155-0287		4	SCREW DIN 7991 MF6S M4X8 A4 70	
390	315105-0146		2	WASHER BRB5,3X10RFR	
395	315115-0153		4	WASHER PLAIN, TBRB 6,4/12 H=3	
410	311103-1355		3	PARALLEL PIN ISO 2338 6M6X24 A1	
415	312105-0453		3	SCREW M6S ISO 4017 M8X25 A480	
420	312105-0366		1	SCREW M6S ISO 4017 M6X12 A480	
435	312105-0368		2	SCREW M6S ISO 4017 M6X16 A480	
470	312115-0449		2	SCREW ISO4762 M8X16 A4 80	
480	315105-0153		1	WASHER BRB6,4X12RFR	
570	321141-0178		1	BEARING BUSH W/O FLANGE, 12X14X10 MM	
595	321141-0216		2	BEARING BUSH W/O FLANGE, 16X18X12 MM	
640	312605-0316		2	HEXAGON NUT, M6M M6 A280	
700	321141-0104		2	BEARING BUSH W/O FLANGE, 8X10X12 MM	
705	321313-0102		2	BALL BEARING, 15X35X11 MM	
710	315125-0153		1	WASHER TBRSB 6,4X22X4 A4	
820	90258-0031		2	PIN, STRAIGHT SLOTTED SPRING FRP 3X20	
830	312145-0287		5	SCREW ISO 2009 MFS M4X8 A4	
840	312605-0318		1	HEXAGON NUT, M6M M8 A280	

Machine Type | Group Description | Used-In | Group Number | Page No

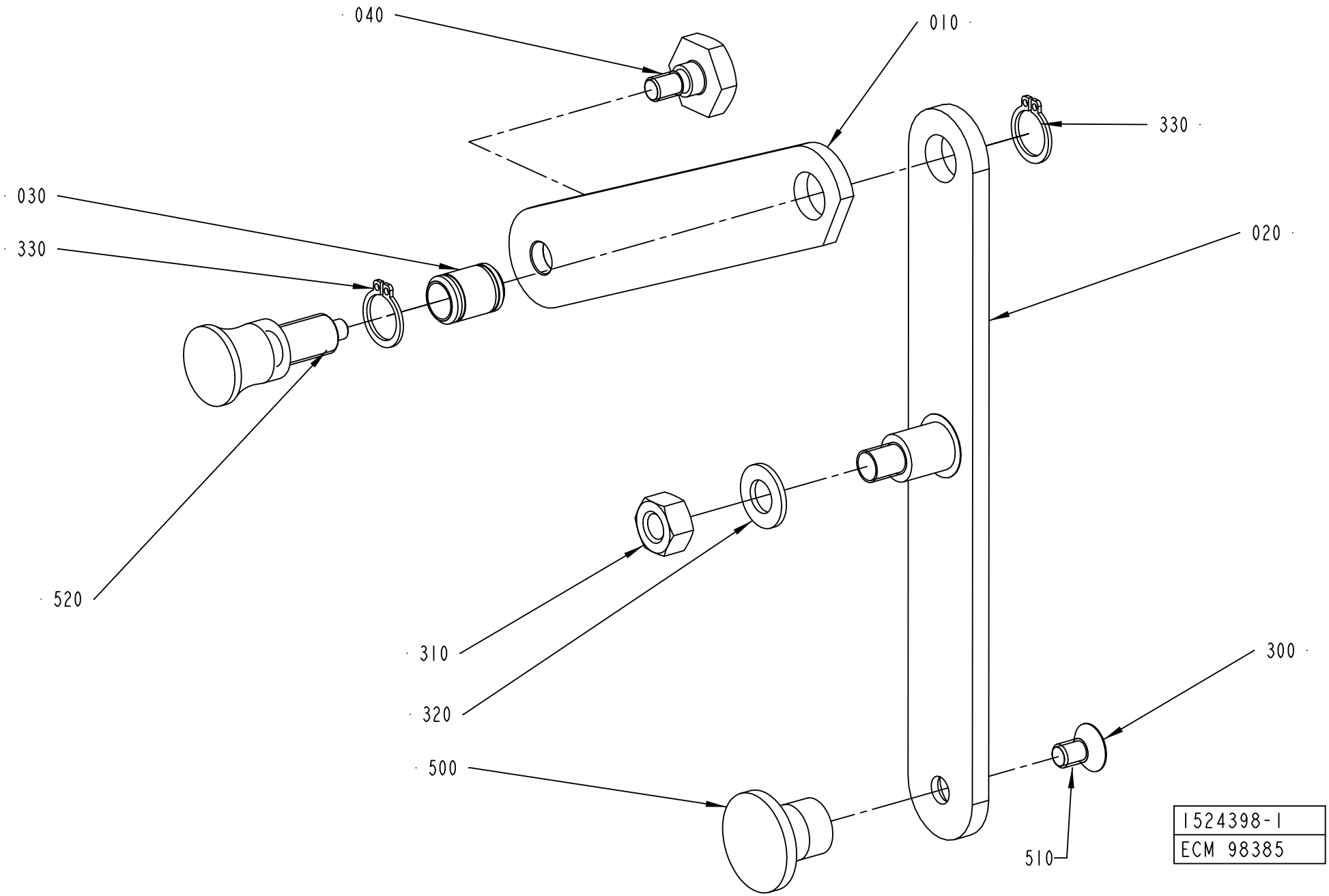
040
010
330
030
330
020
520
310
320
300
500
510
1524398-1
ECM 98385

ECM: 180696 - 20040910
Group number: 1524398-0100
Assembly Drawing: 1524398-1_1_AC

Pos	Part No	UN	Qty	Description	Page No
-					
010	1490809-0000		1	ARM	
020	1490810-0000		1	ARM	
030	1490812-0000		1	AXLE	
040	1490813-0000		1	SCREW	
300	312155-0364		1	SCREW DIN 7991 MF6S M6X10 A4 70	
310	312605-0318		1	HEXAGON NUT, M6M M8 A280	
320	315105-0165		1	WASHER BRB8,4X16RFR	
330	315751-0109		2	RETAINING RING FOR SHAFT DIN 471 12 A2	
500	90051-0082		1	KNOB, CIRCUL, THREADED BUSH, M6 25X21 MM	
510	90157-0016		1	LOCKING FLUID LOCTITE 242 50 ML	
520	90051-0087		1	LOCK KNOB, NO. GN 617 A5	

Pos	Part No	UN	Qty	Description	Page No

MATERIAL HOLDER

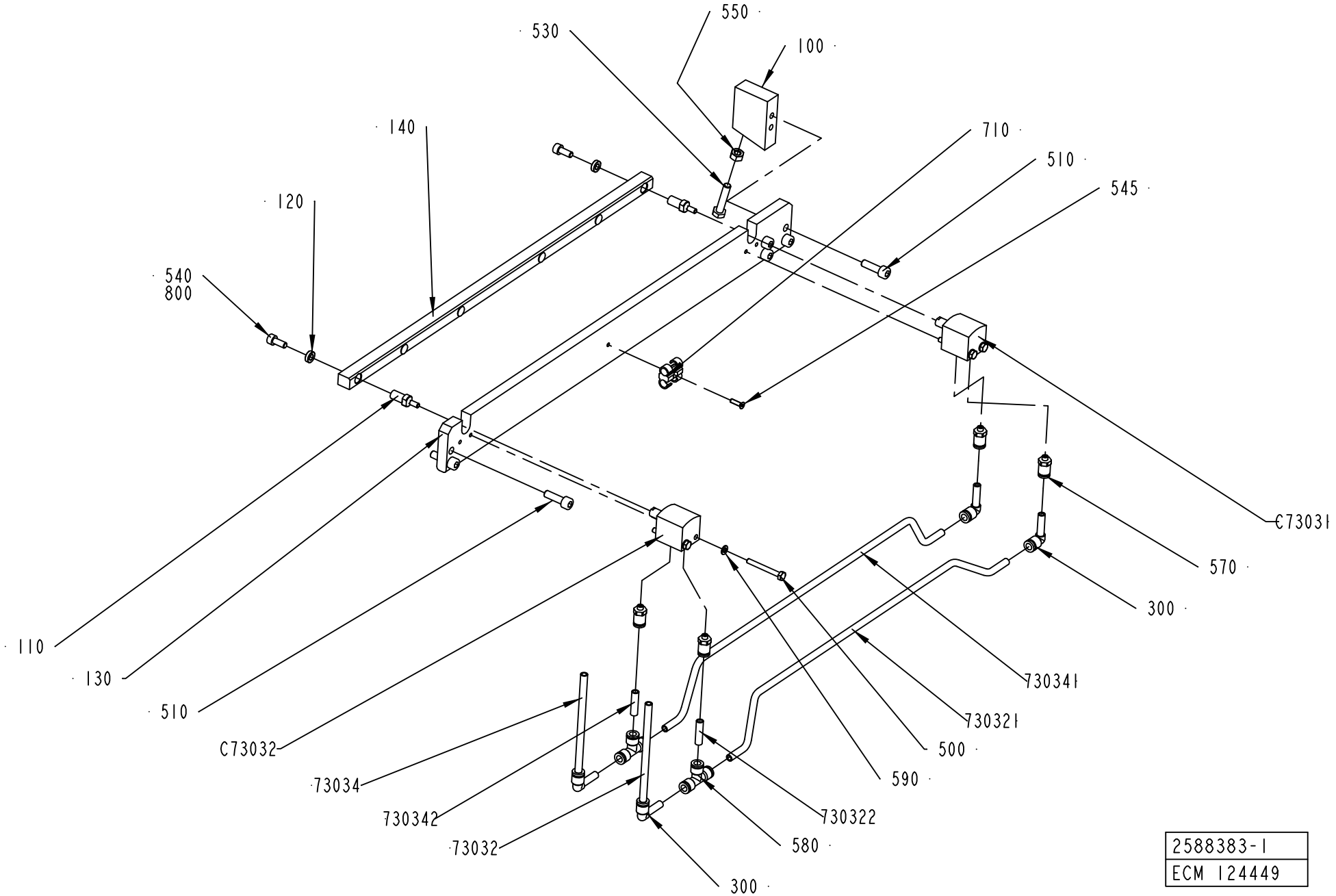

2588383-1
ECM 124449

ECM: 180657 - 20041005
Group number: 2588383-0100
Assembly Drawing: 2588383-1_1_AC

Pos	Part No	UN	Qty	Description	Page No
-					
100	2553272-0000		1	SUPPORT BLOCK	
110	2553273-0000		2	AXLE PIN	
120	2553799-0000		2	WASHER	
130	2582558-0000		1	BASE PLATE	
140	2582559-0000		1	RAIL	
300	90055-0217		4	ELBOW PIPE JOINT	
500	312105-0301		4	SCREW M6S ISO 4017 M4X35 A470	
510	312115-0370		6	SCREW ISO4762 M6X20 A4 80	
530	312109-0374		1	SCREW M6S ISO 4017 M6X30 A480	
540	312115-0327		2	SCREW ISO4762 M5X12 A4 80	
545	312155-0226		1	SCREW DIN 7991 MF6S M3X12 A4 70	
550	312605-0316		1	HEXAGON NUT, M6M M6 A280	
570	342722-0197		4	STRAIGHT COUPLING	
580	342748-0102		2	T-CONNECTION 6MM	
590	315105-0136		4	WASHER BRB4,3XRFR	
710	90165-0087		1	T-CLIP T6 FOR TUBE D=6 - 7 MM	
73032	90166-0193	MM	6500	TUBE 6 MM PUR BLUE	
730321	90166-0193	MM	400	TUBE 6 MM PUR BLUE	
730322	90166-0193	MM	30	TUBE 6 MM PUR BLUE	
73034	90166-0193	MM	6500	TUBE 6 MM PUR BLUE	
730341	90166-0193	MM	400	TUBE 6 MM PUR BLUE	
730342	90166-0193	MM	30	TUBE 6 MM PUR BLUE	
800	90157-0016	ML	1	LOCKING FLUID LOCTITE 242 50 ML	
C73031	90459-0503		1	CYLINDER, ADVC-16-10-I-P	
C73032	90459-0503		1	CYLINDER, ADVC-16-10-I-P	

Pos	Part No	UN	Qty	Description	Page No

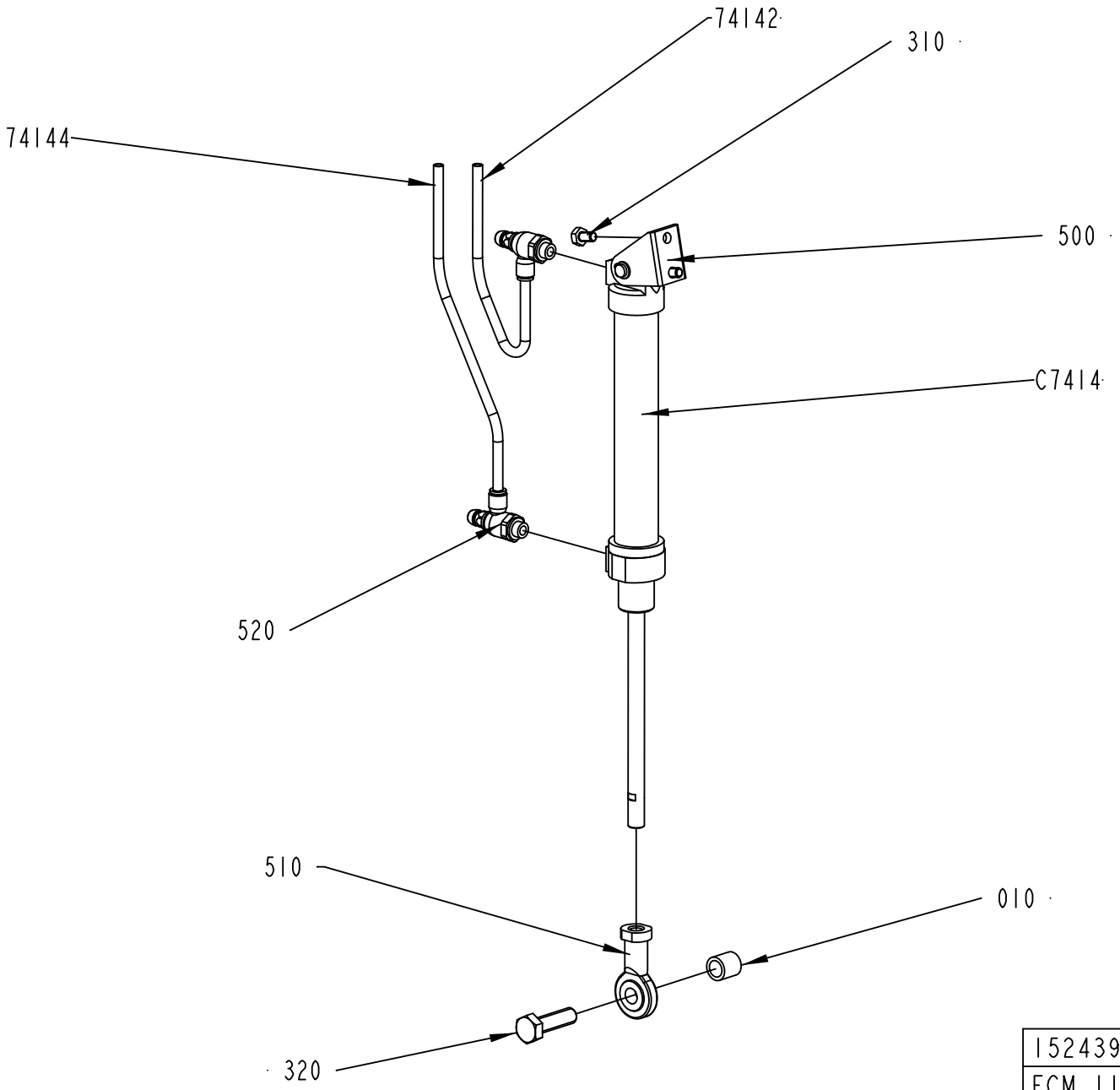
74142
310
74144
500
C7414
520
510
010
320
1524394-1
ECM 111238

ECM: 180659 - 20041005
Group number: 1524394-0100
Assembly Drawing: 1524394-1_1_AE

Pos	Part No	UN	Qty	Description	Page No
A3/FLEX					
74142	90166-0193	MM	6000	TUBE 6 MM PUR BLUE	
74144	90166-0193	MM	6000	TUBE 6 MM PUR BLUE	
C7414	90239-0832		1	DOUBLE ACTING, MINI-ISO, CYL. 25-125	
Common Parts					
010	1511569-0000		1	SPACER	
310	312105-0364		2	SCREW M6S ISO 4017 M6X10 A480	
320	312105-0497		1	SCREW M6S ISO 4017 M10X35 A480	
500	90239-0487		1	REAR,CLEVIS,MINI-ISO 20-25	
510	90239-0405		1	ROD END,BALL JOINT EYE M10X1,25	
520	90235-0846		2	THROTTLE CHECK VALVE G1/8", MANUAL, 6	

Pos	Part No	UN	Qty	Description	Page No

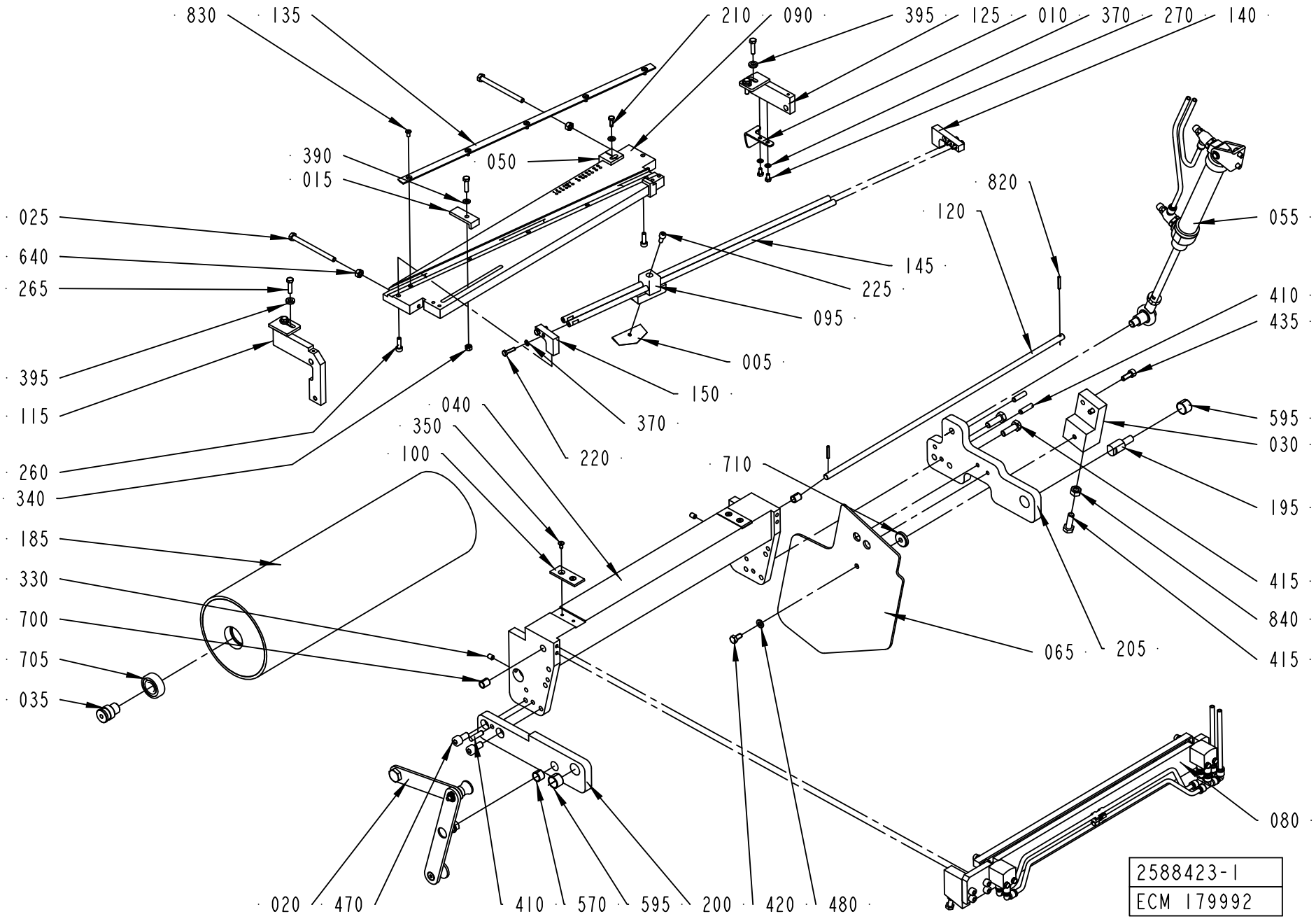
830
135
210
090
395
125
010
370
270
140
390
015
050
820
120
055
025
640
265
145
225
095
005
150
370
220
040
350
100
410
435
395
115
260
340
710
595
030
195
185
330
700
705
035
415
840
415
065
205
080
020
470
410
570
595
200
420
480
2588423-1
ECM 179992

ECM: 215275 - 20050531
Group number: 2588423-0100
Assembly Drawing: 2588423-1_1_AE

Pos	Part No	UN	Qty	Description	Page No
A3/FLEX WITH ARL, A3/FLEX WITHOUT ARL					
005	596678-0000		1	KNIFE	
050	2587251-0000		1	ANGLE PIECE	
095	2589791-0000		1	KNIFE HOLDER	
140	1487781-0000		1	BRACKET	
145	1487782-0000		2	SHAFT	
150	2566118-0000		1	BRACKET	
220	312105-0293		4	SCREW M6S ISO 4017 M4X16 A470	
225	312115-0327		1	SCREW ISO4762 M5X12 A4 80	
260	312115-0329		2	SCREW ISO4762 M5X16 A4 80	
370	315105-0136		6	WASHER BRB4,3XRFR	
Common Parts					
010	2538064-0000		1	REFLECTOR	
015	1490821-0000		1	ANGLE PIECE	
020	1519589-0100		1	HANDLE	**7-127**
025	312109-0386		2	SCREW M6S ISO 4017 M6X80 A480	
030	2699996-0000		1	BLOCK	
035	1499582-0000		2	AXLE PIN	
040	1487770-0000		1	BRACKET	
055	1487528-0100		1	CYLINDER	**7-129**
065	1512276-0000		1	PROTECTION PLATE	
080	2588379-0100		1	MATERIAL HOLDER	**7-131**
090	2566117-0000		1	CUTTING TABLE	
100	2553275-0000		2	SLIDE PLATE	
115	2700034-0000		1	ROCKER ARM	
120	1487779-0000		1	SHAFT	
125	2700035-0000		1	ROCKER ARM	
135	1487518-0000		1	RULER	
185	1499588-0000		1	BENDING ROLLER	
195	1511568-0000		1	PIN	
200	1499577-0000		1	ARM	
205	2587250-0000		1	ARM	
210	312105-0291		1	SCREW M6S ISO 4017 M4X12 A470	
265	312105-0331		5	SCREW M6S ISO 4017 M5X20 A480	
270	312105-0287		2	SCREW M6S ISO 4017 M4X8 A470	
330	312318-0362		2	SCREW ISO4029 M6X8 A4	
340	312605-0314		1	HEXAGON NUT, M6M M5 A280	
350	312155-0287		4	SCREW DIN 7991 MF6S M4X8 A4 70	
390	315105-0146		2	WASHER BRB5,3X10RFR	
395	315115-0153		4	WASHER PLAIN, TBRB 6,4/12 H=3	
410	311103-1355		3	PARALLEL PIN ISO 2338 6M6X24 A1	
415	312105-0453		3	SCREW M6S ISO 4017 M8X25 A480	
420	312105-0366		1	SCREW M6S ISO 4017 M6X12 A480	
435	312105-0368		2	SCREW M6S ISO 4017 M6X16 A480	
470	312115-0449		2	SCREW ISO4762 M8X16 A4 80	
480	315105-0153		1	WASHER BRB6,4X12RFR	
570	321141-0178		1	BEARING BUSH W/O FLANGE, 12X14X10 MM	
595	321141-0216		2	BEARING BUSH W/O FLANGE, 16X18X12 MM	
640	312605-0316		2	HEXAGON NUT, M6M M6 A280	
700	321141-0104		2	BEARING BUSH W/O FLANGE, 8X10X12 MM	
705	321313-0102		2	BALL BEARING, 15X35X11 MM	
710	315125-0153		1	WASHER TBRSB 6,4X22X4 A4	
820	90258-0031		2	PIN, STRAIGHT SLOTTED SPRING FRP 3X20	
830	312145-0287		5	SCREW ISO 2009 MFS M4X8 A4	
840	312605-0318		1	HEXAGON NUT, M6M M8 A280	

Machine Type | Group Description | Used-In | Group Number | Page No

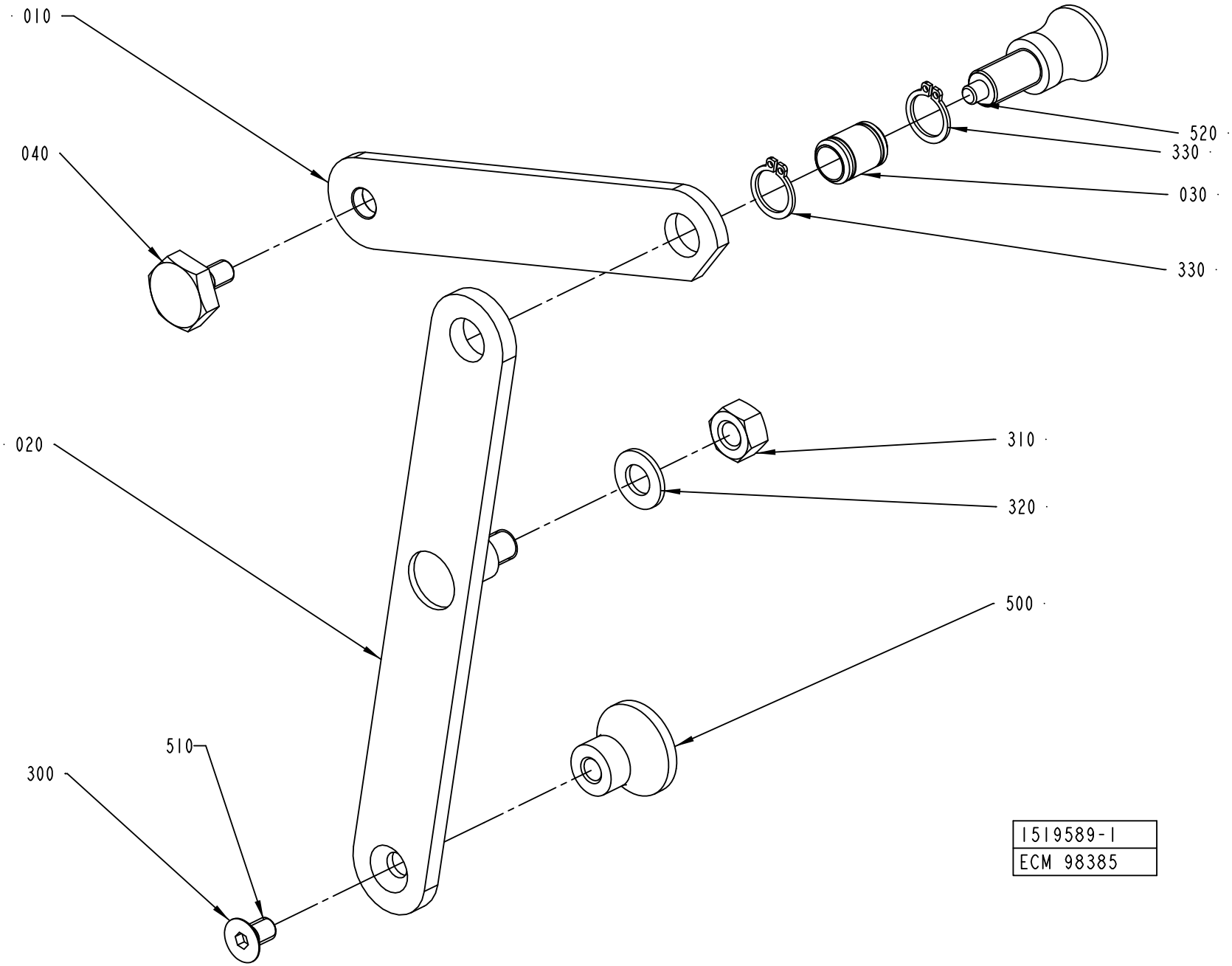
010
040
020
300
510
520
330
030
330
310
320
500
1519589-1
ECM 98385

ECM: 180681 - 20040910
Group number: 1519589-0100
Assembly Drawing: 1519589-1_1_AC

Pos	Part No	UN	Qty	Description	Page No
-					
010	1490809-0000		1	ARM	
020	1490810-0000		1	ARM	
030	1490812-0000		1	AXLE	
040	1490813-0000		1	SCREW	
300	312155-0364		1	SCREW DIN 7991 MF6S M6X10 A4 70	
310	312605-0318		1	HEXAGON NUT, M6M M8 A280	
320	315105-0165		1	WASHER BRB8,4X16RFR	
330	315751-0109		2	RETAINING RING FOR SHAFT DIN 471 12 A2	
500	90051-0082		1	KNOB, CIRCUL, THREADED BUSH, M6 25X21 MM	
510	90157-0016		1	LOCKING FLUID LOCTITE 242 50 ML	
520	90051-0087		1	LOCK KNOB, NO. GN 617 A5	

Pos	Part No	UN	Qty	Description	Page No

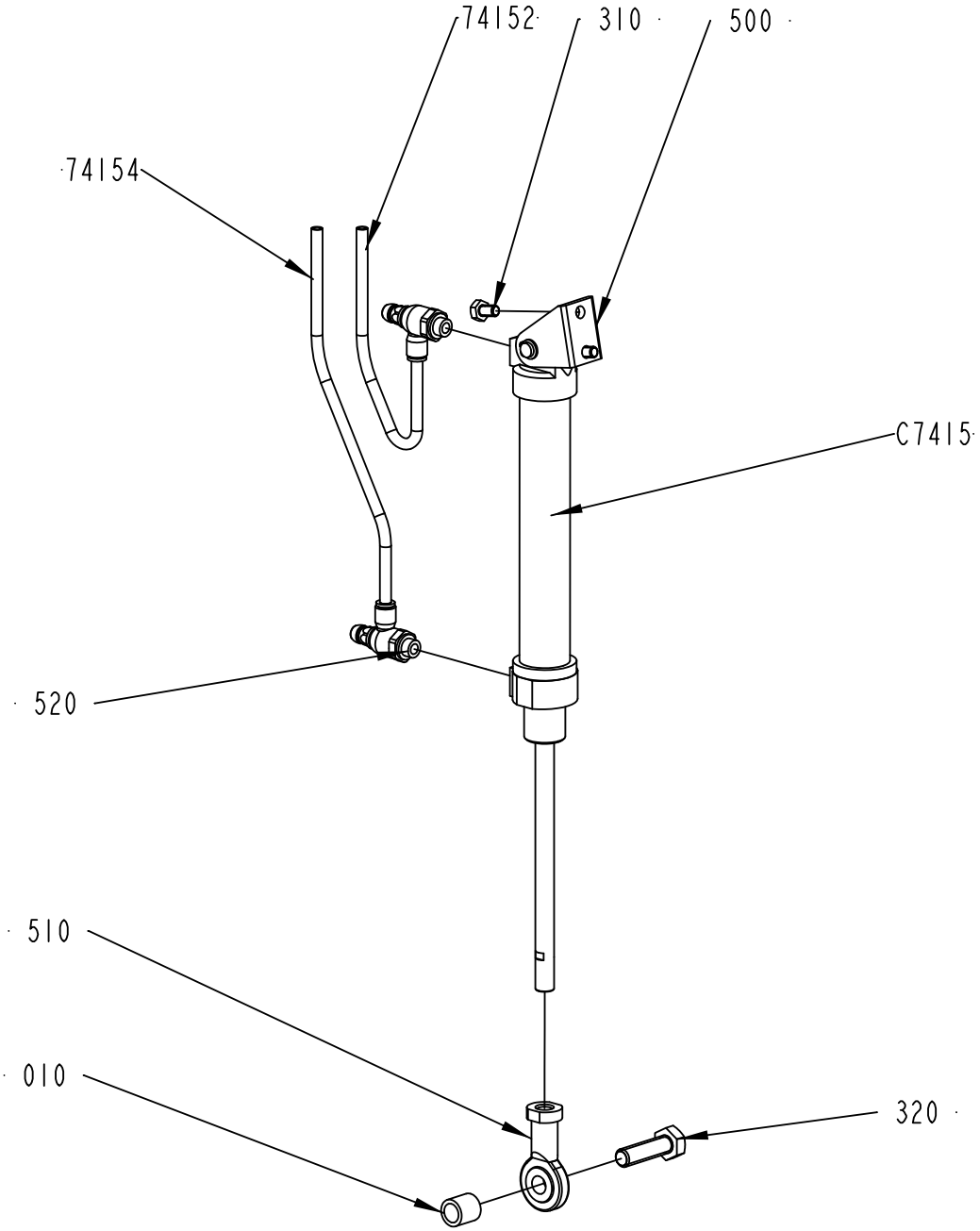

1487528-1
ECM 111238

ECM: 180662 - 20041005
Group number: 1487528-0100
Assembly Drawing: 1487528-1_1_AE

Pos	Part No	UN	Qty	Description	Page No
A3/FLEX					
74152	90166-0193	MM	5000	TUBE 6 MM PUR BLUE	
74154	90166-0193	MM	5000	TUBE 6 MM PUR BLUE	
C7415	90239-0832		1	DOUBLE ACTING, MINI-ISO, CYL. 25-125	
Common Parts					
010	1511569-0000		1	SPACER	
310	312105-0364		2	SCREW M6S ISO 4017 M6X10 A480	
320	312105-0497		1	SCREW M6S ISO 4017 M10X35 A480	
500	90239-0487		1	REAR,CLEVIS,MINI-ISO 20-25	
510	90239-0405		1	ROD END,BALL JOINT EYE M10X1,25	
520	90235-0846		2	THROTTLE CHECK VALVE G1/8", MANUAL, 6	

Pos	Part No	UN	Qty	Description	Page No

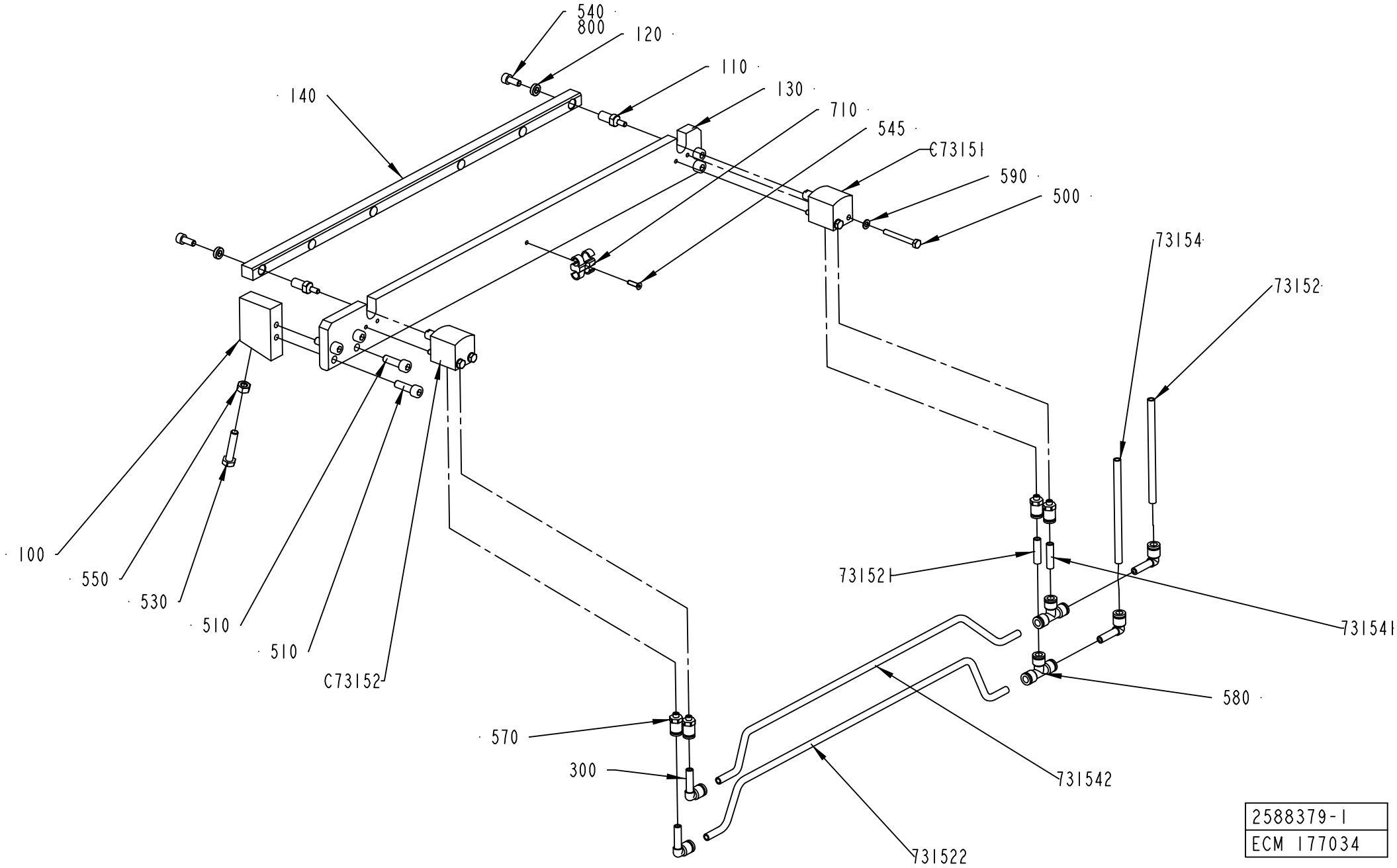
540
800
120
110
130
710
545
C73151
590
500
140
73154
73152
100
550
530
510
510
C73152
73152I
731541
580
570
300
731542
731522
2588379-1
ECM 177034

ECM: 180663 - 20041025
Group number: 2588379-0100
Assembly Drawing: 2588379-1_1_AD

Pos	Part No	UN	Qty	Description	Page No
-					
100	2553272-0000		1	SUPPORT BLOCK	
110	2553273-0000		2	AXLE PIN	
120	2553799-0000		2	WASHER	
130	2582558-0000		1	BASE PLATE	
140	2582559-0000		1	RAIL	
300	90055-0217		4	ELBOW PIPE JOINT	
500	312105-0301		4	SCREW M6S ISO 4017 M4X35 A470	
510	312115-0370		6	SCREW ISO4762 M6X20 A4 80	
530	312109-0374		1	SCREW M6S ISO 4017 M6X30 A480	
540	312115-0327		2	SCREW ISO4762 M5X12 A4 80	
545	312155-0226		1	SCREW DIN 7991 MF6S M3X12 A4 70	
550	312605-0316		1	HEXAGON NUT, M6M M6 A280	
570	342722-0197		4	STRAIGHT COUPLING	
580	342748-0102		2	T-CONNECTION 6MM	
590	315105-0136		4	WASHER BRB4,3XRFR	
710	90165-0087		1	T-CLIP T6 FOR TUBE D=6 - 7 MM	
73152	90166-0193	MM	5500	TUBE 6 MM PUR BLUE	
731521	90166-0193	MM	30	TUBE 6 MM PUR BLUE	
731522	90166-0193	MM	400	TUBE 6 MM PUR BLUE	
73154	90166-0193	MM	5500	TUBE 6 MM PUR BLUE	
731541	90166-0193	MM	30	TUBE 6 MM PUR BLUE	
731542	90166-0193	MM	400	TUBE 6 MM PUR BLUE	
800	90157-0016	ML	1	LOCKING FLUID LOCTITE 242 50 ML	
C73151	90459-0503		1	CYLINDER, ADVC-16-10-I-P	
C73152	90459-0503		1	CYLINDER, ADVC-16-10-I-P	

Pos	Part No	UN	Qty	Description	Page No

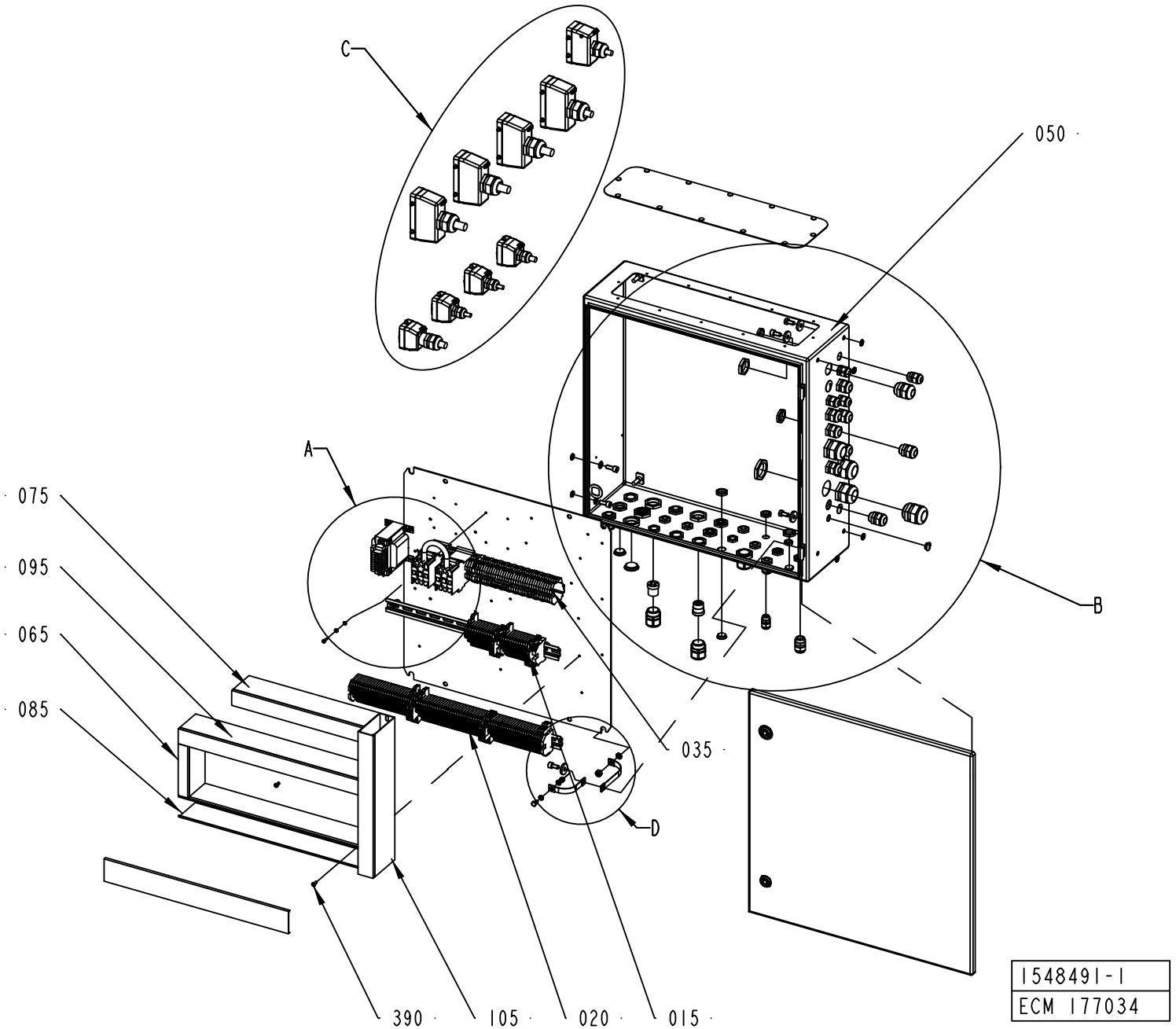
C
050
A
075
095
065
085
B
035
D
390
105
020
015
1548491-1
ECM 177034

ECM: 224784 - 20050831
Group number: 1548491-0200
Assembly Drawing: 1548491-1_1_AD

This list covers pages from 7-132 to 7-141

Pos	Part No	UN	Qty	Description	Page No
A3/FLEX (See drawing on pages: 7-132, 7-134, 7-136, 7-138, 7-140)					
180	352103-0101		3	CABLE GLAND, ST 9, PR15,2/PG9	
200	352103-0111		10	CABLE GLAND, ST 16, PR22,5/PG16	
215	352103-0116		1	CABLE GLAND, ST 21, PR28,3/PG21	
230	353240-0005		4	GLAND W/O INSERT PG21 NORMAL	
250	90002-0004		5	BLANK-OFF PLUG, PR 22,5 SKINDICHT-BLK16	
270	90002-0012		1	BLANK-OFF PLUG, PR 28,3 SKINDICHT-BLK21	
280	90002-0013		2	BLANK-OFF PLUG, PR 15,2 SKINDICHT-BLK9	
450	90110-0157		4	CABLE HOOD 6-POL 70.352.0628.1	
460	90110-0385		9	MARKING HOLDER, 4.242.3853.0	
W7003	351150-0420	M	5	CABLE OLFLEX 7X2,5 MM2 LIGHT/GREY	
W7004	351150-0413	M	5	CABLE OLFLEX 4X1,5 MM2 LIGHT/GREY	
W7005	351150-0412	M	5	CABLE OLFLEX 3X1,5 MM2 LIGHT/GREY	
W7006	351150-0425	M	6	CABLE OLFLEX 25X0,75 MM2 LIGHT/GREY	
W7007	351150-0425	M	6	CABLE OLFLEX 25X0,75 MM2 LIGHT/GREY	
W7008	351150-0425	M	6	CABLE OLFLEX 25X0,75 MM2 LIGHT/GREY	
W7009	351150-0425	M	6	CABLE OLFLEX 25X0,75 MM2 LIGHT/GREY	
W7037	351150-0415	M	6	CABLE OLFLEX 7X1,5 MM2 LIGHT/GREY	
W7076	90220-0104	M	6	SCR. CABLE 4X1,5MM2	
X128	90110-0159		1	MALE INSERT 70.310.0640.0	
X134	90110-0159		1	MALE INSERT 70.310.0640.0	
X213	90110-0150		1	MALE INSERT 121110 0000	
X214	90110-0150		1	MALE INSERT 121110 0000	
X219	90110-0150		1	MALE INSERT 121110 0000	
Common Parts					
015	2611462-0100		1	TERMINAL BLOCK	**7-143, 7-145**
020	1548496-0100		1	TERMINAL	**7-147, 7-149**
035	2611463-0100		1	TERMINAL BLOCK	**7-151, 7-153**
050	1548492-0000		1	ELECTRICAL CABINET	
065	2611461-0000		1	CABLE DUCT	
075	2611458-0000		1	CABLE DUCT	
085	2611460-0000		1	CABLE DUCT	
095	2611459-0000		1	CABLE DUCT	
105	2611457-0000		1	CABLE DUCT	
115	312115-0449		2	SCREW ISO4762 M8X16 A4 80	
120	312115-0291		4	SCREW ISO4762 M4X12 A4 80	
135	312105-0449		2	SCREW M6S ISO 4017 M8X16 A480	
145	312115-0451		2	SCREW ISO4762 M8X20 A4 80	
150	312605-0318		1	HEXAGON NUT, M6M M8 A280	
160	315105-0136		4	WASHER BRB4,3XRFR	
165	315105-0153		1	WASHER BRB6,4X12RFR	
170	315105-0165		2	WASHER BRB8,4X16RFR	
175	315125-0165		4	WASHER TBRSB 8,4X26X5 A4	
190	352103-0106		12	CABLE GLAND, ST 11, PR18,6/PG11	
195	352103-0108		4	CABLE GLAND, ST 13,5 , PR20,4/PG13,5	
210	352103-0115		2	CABLE GLAND, STR 21, PR28,3/PG21	
220	352103-0121		8	CABLE GLAND, ST 29, PR37,0/PG29	
240	353249-0051		1	INSERT, MULTI HOLE, E154M4X6	
260	90002-0009		4	BLANK-OFF PLUG, PR 18.6 SKINDICHT-BLK11	
290	90012-0125		2	GLAND FITTING	
310	90062-0016		7	LOCK WASHER SERRAT.EXT.GEAR,8,4/15 H=0,8	
320	90062-0059		4	LOCK WASKER SERRAT.EXT.GEAR,4,3/8 H=0,5	
330	90099-0104		5	NUT, PR 15,2 (PG9)	
340	90099-0110		18	NUT, PR 22,5 (PG16)	
350	90099-0117		12	NUT, PR 18,6 (PG11)	
355	90099-0118		2	NUT, PR 20,4 (PG13,5)	
360	90099-0119		6	NUT, PR 28,3 (PG21)	
370	90099-0120		4	NUT PR 37 (PG29)	
380	90135-0040		2	EARTH WIRE, L=150 MM 16 MM2	
390	90181-0313		12	RIVET DUCTAFIX R4	
400	359005-0010		9	MARKING LABEL KIT 0 - 9, 04.841.2150.0	
410	359005-0050		1	MARKING LABEL KIT X, 04.841.4550.0	
420	90089-0028		1	REDUCER, SKINDICHT-ME 13.5/21	
440	90110-0152		4	CABLE HOOD 24-POL 70.352.2428.1	
470	90110-0160		1	CABLE HOOD 6-16-POL 70.352.1628.1	
490	312605-0316		1	HEXAGON NUT, M6M M6 A280	
500	312105-0366		1	SCREW M6S ISO 4017 M6X12 A480	
510	90062-0015		1	LOCK WASHER SERRAT.EXT.GEAR,6,4/11 H=0,7	
T6203	90458-0258		1	TRANSFORMER, 220VAC/6-9-12VAC	
X132	90110-0159		1	MALE INSERT 70.310.0640.0	
X133	90110-0159		1	MALE INSERT 70.310.0640.0	
X220	90110-0150		1	MALE INSERT 121110 0000	
X504	90110-0156		1	MALE INSERT 70.210.0653.0	

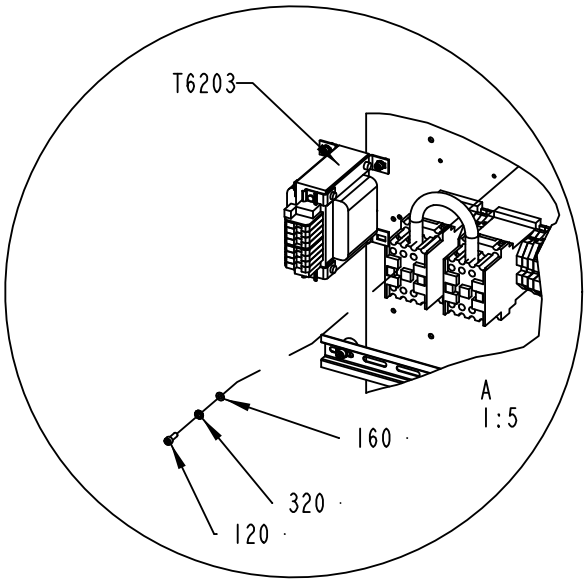
T6203
A
1:5
160
320
120

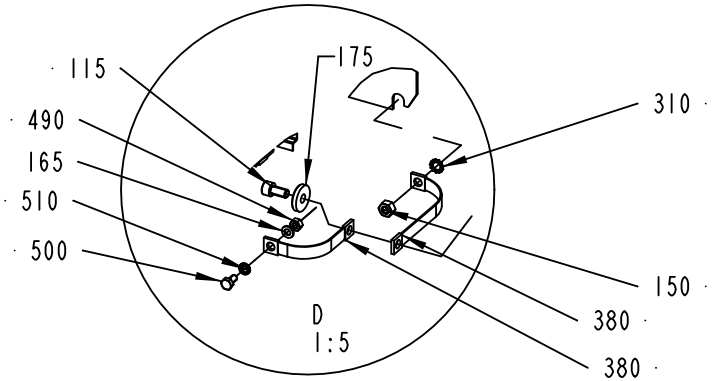
115
175
310
490
165
510
500
150
380
380
D
1:5

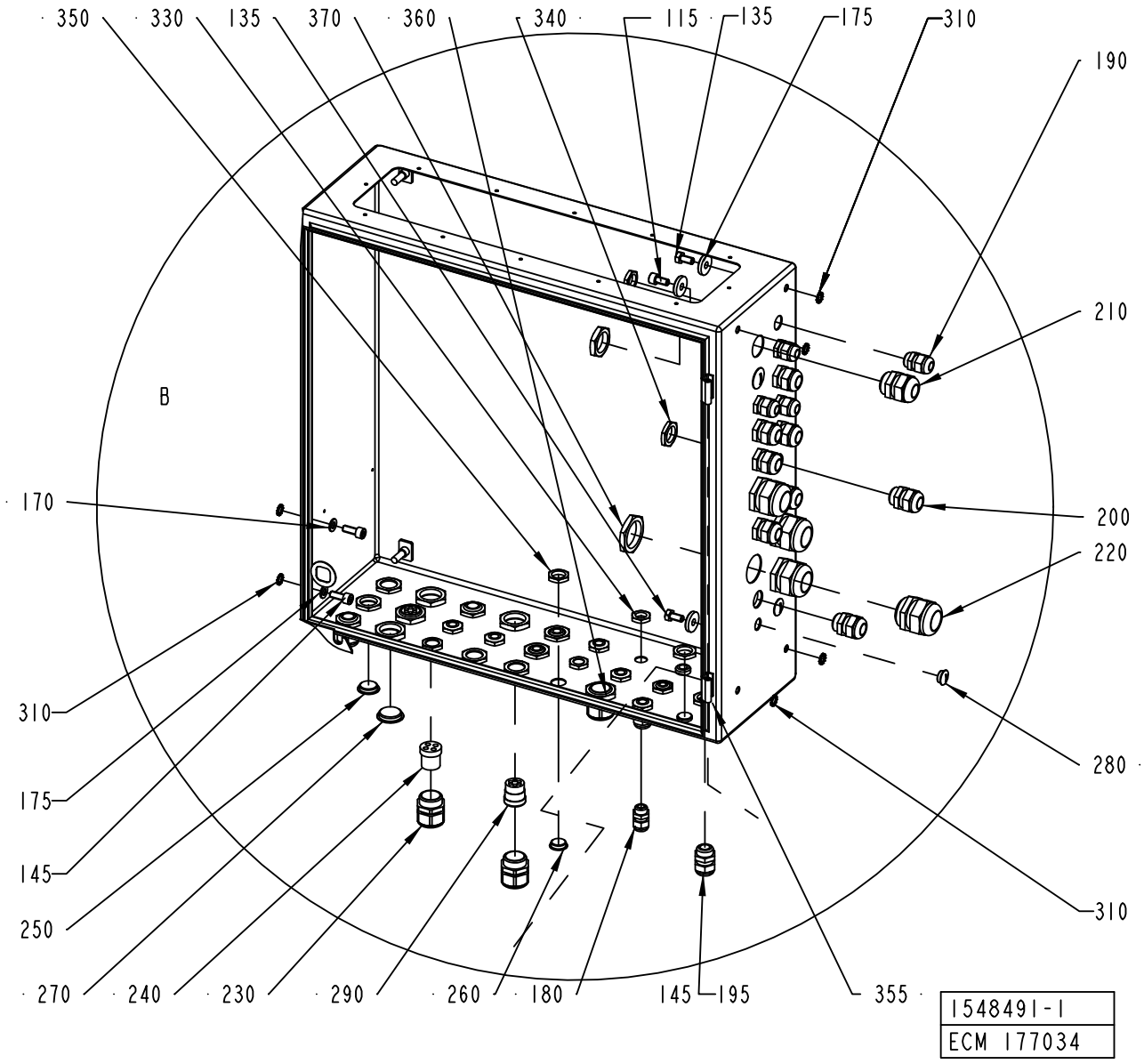
350
330
135
370
360
340
115
135
175
310
190
210
B
170
200
220
310
280
175
145
250
310
270
240
230
290
260
180
145
195
355
1548491-1
ECM 177034

ECM: 224784 - 20050831
Group number: 1548491-0200
Assembly Drawing: 1548491-1_2_AD

This list covers pages from 7-132 to 7-141

Pos	Part No	UN	Qty	Description	Page No
A3/FLEX (See drawing on pages: 7-132, 7-134, 7-136, 7-138, 7-140)					
180	352103-0101		3	CABLE GLAND, ST 9, PR15,2/PG9	
200	352103-0111		10	CABLE GLAND, ST 16, PR22,5/PG16	
215	352103-0116		1	CABLE GLAND, ST 21, PR28,3/PG21	
230	353240-0005		4	GLAND W/O INSERT PG21 NORMAL	
250	90002-0004		5	BLANK-OFF PLUG, PR 22,5 SKINDICHT-BLK16	
270	90002-0012		1	BLANK-OFF PLUG, PR 28,3 SKINDICHT-BLK21	
280	90002-0013		2	BLANK-OFF PLUG, PR 15,2 SKINDICHT-BLK9	
450	90110-0157		4	CABLE HOOD 6-POL 70.352.0628.1	
460	90110-0385		9	MARKING HOLDER, 4.242.3853.0	
W7003	351150-0420	M	5	CABLE OLFLEX 7X2,5 MM2 LIGHT/GREY	
W7004	351150-0413	M	5	CABLE OLFLEX 4X1,5 MM2 LIGHT/GREY	
W7005	351150-0412	M	5	CABLE OLFLEX 3X1,5 MM2 LIGHT/GREY	
W7006	351150-0425	M	6	CABLE OLFLEX 25X0,75 MM2 LIGHT/GREY	
W7007	351150-0425	M	6	CABLE OLFLEX 25X0,75 MM2 LIGHT/GREY	
W7008	351150-0425	M	6	CABLE OLFLEX 25X0,75 MM2 LIGHT/GREY	
W7009	351150-0425	M	6	CABLE OLFLEX 25X0,75 MM2 LIGHT/GREY	
W7037	351150-0415	M	6	CABLE OLFLEX 7X1,5 MM2 LIGHT/GREY	
W7076	90220-0104	M	6	SCR. CABLE 4X1,5MM2	
X128	90110-0159		1	MALE INSERT 70.310.0640.0	
X134	90110-0159		1	MALE INSERT 70.310.0640.0	
X213	90110-0150		1	MALE INSERT 121110 0000	
X214	90110-0150		1	MALE INSERT 121110 0000	
X219	90110-0150		1	MALE INSERT 121110 0000	
Common Parts					
015	2611462-0100		1	TERMINAL BLOCK	**7-143, 7-145**
020	1548496-0100		1	TERMINAL	**7-147, 7-149**
035	2611463-0100		1	TERMINAL BLOCK	**7-151, 7-153**
050	1548492-0000		1	ELECTRICAL CABINET	
065	2611461-0000		1	CABLE DUCT	
075	2611458-0000		1	CABLE DUCT	
085	2611460-0000		1	CABLE DUCT	
095	2611459-0000		1	CABLE DUCT	
105	2611457-0000		1	CABLE DUCT	
115	312115-0449		2	SCREW ISO4762 M8X16 A4 80	
120	312115-0291		4	SCREW ISO4762 M4X12 A4 80	
135	312105-0449		2	SCREW M6S ISO 4017 M8X16 A480	
145	312115-0451		2	SCREW ISO4762 M8X20 A4 80	
150	312605-0318		1	HEXAGON NUT, M6M M8 A280	
160	315105-0136		4	WASHER BRB4,3XRFR	
165	315105-0153		1	WASHER BRB6,4X12RFR	
170	315105-0165		2	WASHER BRB8,4X16RFR	
175	315125-0165		4	WASHER TBRSB 8,4X26X5 A4	
190	352103-0106		12	CABLE GLAND, ST 11, PR18,6/PG11	
195	352103-0108		4	CABLE GLAND, ST 13,5 , PR20,4/PG13,5	
210	352103-0115		2	CABLE GLAND, STR 21, PR28,3/PG21	
220	352103-0121		8	CABLE GLAND, ST 29, PR37,0/PG29	
240	353249-0051		1	INSERT, MULTI HOLE, E154M4X6	
260	90002-0009		4	BLANK-OFF PLUG, PR 18.6 SKINDICHT-BLK11	
290	90012-0125		2	GLAND FITTING	
310	90062-0016		7	LOCK WASHER SERRAT.EXT.GEAR,8,4/15 H=0,8	
320	90062-0059		4	LOCK WASKER SERRAT.EXT.GEAR,4,3/8 H=0,5	
330	90099-0104		5	NUT, PR 15,2 (PG9)	
340	90099-0110		18	NUT, PR 22,5 (PG16)	
350	90099-0117		12	NUT, PR 18,6 (PG11)	
355	90099-0118		2	NUT, PR 20,4 (PG13,5)	
360	90099-0119		6	NUT, PR 28,3 (PG21)	
370	90099-0120		4	NUT PR 37 (PG29)	
380	90135-0040		2	EARTH WIRE, L=150 MM 16 MM2	
390	90181-0313		12	RIVET DUCTAFIX R4	
400	359005-0010		9	MARKING LABEL KIT 0 - 9, 04.841.2150.0	
410	359005-0050		1	MARKING LABEL KIT X, 04.841.4550.0	
420	90089-0028		1	REDUCER, SKINDICHT-ME 13.5/21	
440	90110-0152		4	CABLE HOOD 24-POL 70.352.2428.1	
470	90110-0160		1	CABLE HOOD 6-16-POL 70.352.1628.1	
490	312605-0316		1	HEXAGON NUT, M6M M6 A280	
500	312105-0366		1	SCREW M6S ISO 4017 M6X12 A480	
510	90062-0015		1	LOCK WASHER SERRAT.EXT.GEAR,6,4/11 H=0,7	
T6203	90458-0258		1	TRANSFORMER, 220VAC/6-9-12VAC	
X132	90110-0159		1	MALE INSERT 70.310.0640.0	
X133	90110-0159		1	MALE INSERT 70.310.0640.0	
X220	90110-0150		1	MALE INSERT 121110 0000	
X504	90110-0156		1	MALE INSERT 70.210.0653.0	

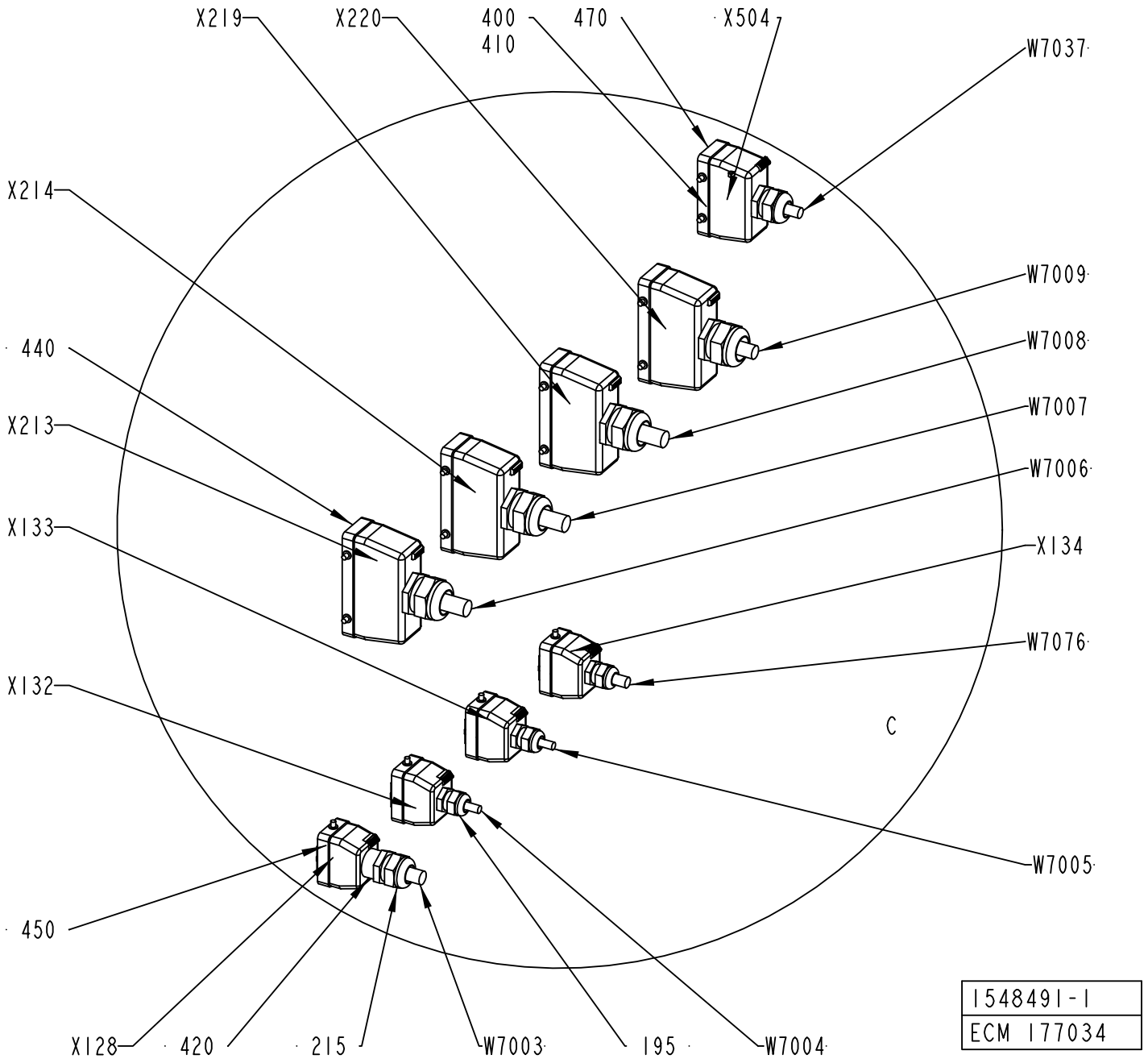
X219
X220
400
410
470
X504
W7037
X214
W7009
440
W7008
X213
W7007
X133
W7006
X134
W7076
X132
C
W7005
450
X128
420
215
W7003
195
W7004
1548491-1
ECM 177034

ECM: 224784 - 20050831
Group number: 1548491-0200
Assembly Drawing: 1548491-1_3_AD

This list covers pages from 7-132 to 7-141

Pos	Part No	UN	Qty	Description	Page No
A3/FLEX (See drawing on pages: 7-132, 7-134, 7-136, 7-138, 7-140)					
180	352103-0101		3	CABLE GLAND, ST 9, PR15,2/PG9	
200	352103-0111		10	CABLE GLAND, ST 16, PR22,5/PG16	
215	352103-0116		1	CABLE GLAND, ST 21, PR28,3/PG21	
230	353240-0005		4	GLAND W/O INSERT PG21 NORMAL	
250	90002-0004		5	BLANK-OFF PLUG, PR 22,5 SKINDICHT-BLK16	
270	90002-0012		1	BLANK-OFF PLUG, PR 28,3 SKINDICHT-BLK21	
280	90002-0013		2	BLANK-OFF PLUG, PR 15,2 SKINDICHT-BLK9	
450	90110-0157		4	CABLE HOOD 6-POL 70.352.0628.1	
460	90110-0385		9	MARKING HOLDER, 4.242.3853.0	
W7003	351150-0420	M	5	CABLE OLFLEX 7X2,5 MM2 LIGHT/GREY	
W7004	351150-0413	M	5	CABLE OLFLEX 4X1,5 MM2 LIGHT/GREY	
W7005	351150-0412	M	5	CABLE OLFLEX 3X1,5 MM2 LIGHT/GREY	
W7006	351150-0425	M	6	CABLE OLFLEX 25X0,75 MM2 LIGHT/GREY	
W7007	351150-0425	M	6	CABLE OLFLEX 25X0,75 MM2 LIGHT/GREY	
W7008	351150-0425	M	6	CABLE OLFLEX 25X0,75 MM2 LIGHT/GREY	
W7009	351150-0425	M	6	CABLE OLFLEX 25X0,75 MM2 LIGHT/GREY	
W7037	351150-0415	M	6	CABLE OLFLEX 7X1,5 MM2 LIGHT/GREY	
W7076	90220-0104	M	6	SCR. CABLE 4X1,5MM2	
X128	90110-0159		1	MALE INSERT 70.310.0640.0	
X134	90110-0159		1	MALE INSERT 70.310.0640.0	
X213	90110-0150		1	MALE INSERT 121110 0000	
X214	90110-0150		1	MALE INSERT 121110 0000	
X219	90110-0150		1	MALE INSERT 121110 0000	
Common Parts					
015	2611462-0100		1	TERMINAL BLOCK	**7-143, 7-145**
020	1548496-0100		1	TERMINAL	**7-147, 7-149**
035	2611463-0100		1	TERMINAL BLOCK	**7-151, 7-153**
050	1548492-0000		1	ELECTRICAL CABINET	
065	2611461-0000		1	CABLE DUCT	
075	2611458-0000		1	CABLE DUCT	
085	2611460-0000		1	CABLE DUCT	
095	2611459-0000		1	CABLE DUCT	
105	2611457-0000		1	CABLE DUCT	
115	312115-0449		2	SCREW ISO4762 M8X16 A4 80	
120	312115-0291		4	SCREW ISO4762 M4X12 A4 80	
135	312105-0449		2	SCREW M6S ISO 4017 M8X16 A480	
145	312115-0451		2	SCREW ISO4762 M8X20 A4 80	
150	312605-0318		1	HEXAGON NUT, M6M M8 A280	
160	315105-0136		4	WASHER BRB4,3XRFR	
165	315105-0153		1	WASHER BRB6,4X12RFR	
170	315105-0165		2	WASHER BRB8,4X16RFR	
175	315125-0165		4	WASHER TBRSB 8,4X26X5 A4	
190	352103-0106		12	CABLE GLAND, ST 11, PR18,6/PG11	
195	352103-0108		4	CABLE GLAND, ST 13,5 , PR20,4/PG13,5	
210	352103-0115		2	CABLE GLAND, STR 21, PR28,3/PG21	
220	352103-0121		8	CABLE GLAND, ST 29, PR37,0/PG29	
240	353249-0051		1	INSERT, MULTI HOLE, E154M4X6	
260	90002-0009		4	BLANK-OFF PLUG, PR 18.6 SKINDICHT-BLK11	
290	90012-0125		2	GLAND FITTING	
310	90062-0016		7	LOCK WASHER SERRAT.EXT.GEAR,8,4/15 H=0,8	
320	90062-0059		4	LOCK WASKER SERRAT.EXT.GEAR,4,3/8 H=0,5	
330	90099-0104		5	NUT, PR 15,2 (PG9)	
340	90099-0110		18	NUT, PR 22,5 (PG16)	
350	90099-0117		12	NUT, PR 18,6 (PG11)	
355	90099-0118		2	NUT, PR 20,4 (PG13,5)	
360	90099-0119		6	NUT, PR 28,3 (PG21)	
370	90099-0120		4	NUT PR 37 (PG29)	
380	90135-0040		2	EARTH WIRE, L=150 MM 16 MM2	
390	90181-0313		12	RIVET DUCTAFIX R4	
400	359005-0010		9	MARKING LABEL KIT 0 - 9, 04.841.2150.0	
410	359005-0050		1	MARKING LABEL KIT X, 04.841.4550.0	
420	90089-0028		1	REDUCER, SKINDICHT-ME 13.5/21	
440	90110-0152		4	CABLE HOOD 24-POL 70.352.2428.1	
470	90110-0160		1	CABLE HOOD 6-16-POL 70.352.1628.1	
490	312605-0316		1	HEXAGON NUT, M6M M6 A280	
500	312105-0366		1	SCREW M6S ISO 4017 M6X12 A480	
510	90062-0015		1	LOCK WASHER SERRAT.EXT.GEAR,6,4/11 H=0,7	
T6203	90458-0258		1	TRANSFORMER, 220VAC/6-9-12VAC	
X132	90110-0159		1	MALE INSERT 70.310.0640.0	
X133	90110-0159		1	MALE INSERT 70.310.0640.0	
X220	90110-0150		1	MALE INSERT 121110 0000	
X504	90110-0156		1	MALE INSERT 70.210.0653.0	

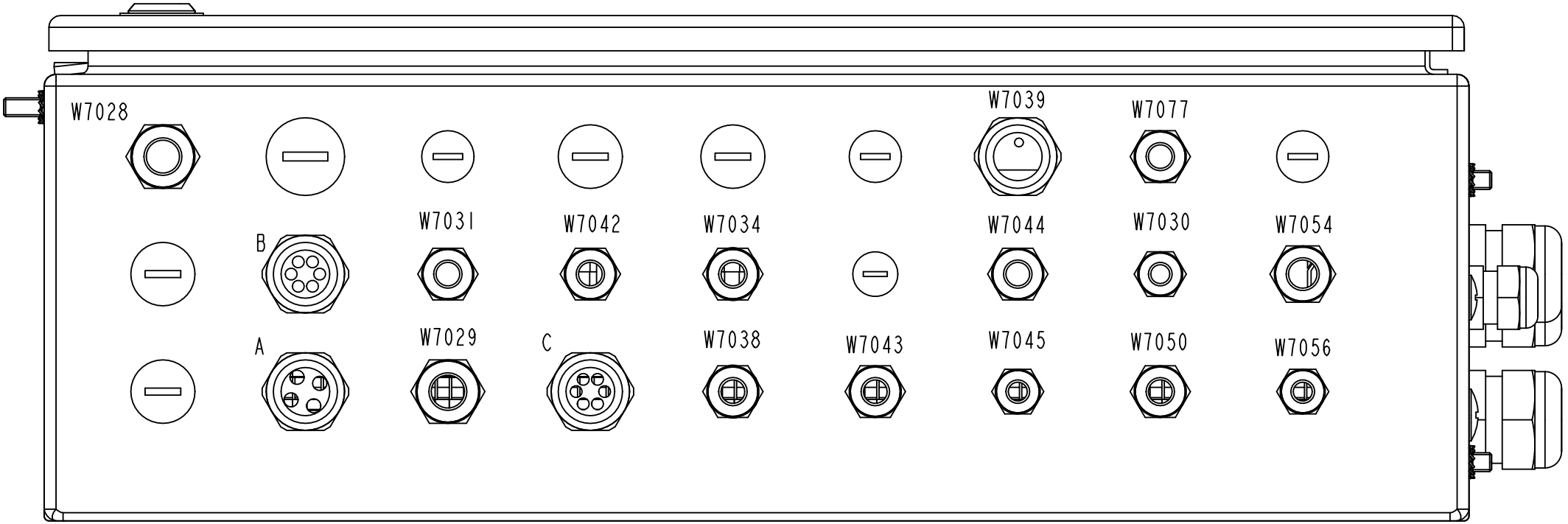

A*	B*	C*
W7016	W7020	W7015
W7017	W7023	W7019
W7018	W7024	W7013
W7022	W7025	W7033
	W7026	W7035
	W7027	W7036

1548491-1
ECM 177034

ECM: 224784 - 20050831
Group number: 1548491-0200
Assembly Drawing: 1548491-1_4_AD

This list covers pages from 7-132 to 7-141

Pos	Part No	UN	Qty	Description	Page No
A3/FLEX (See drawing on pages: 7-132, 7-134, 7-136, 7-138, 7-140)					
180	352103-0101		3	CABLE GLAND, ST 9, PR15,2/PG9	
200	352103-0111		10	CABLE GLAND, ST 16, PR22,5/PG16	
215	352103-0116		1	CABLE GLAND, ST 21, PR28,3/PG21	
230	353240-0005		4	GLAND W/O INSERT PG21 NORMAL	
250	90002-0004		5	BLANK-OFF PLUG, PR 22,5 SKINDICHT-BLK16	
270	90002-0012		1	BLANK-OFF PLUG, PR 28,3 SKINDICHT-BLK21	
280	90002-0013		2	BLANK-OFF PLUG, PR 15,2 SKINDICHT-BLK9	
450	90110-0157		4	CABLE HOOD 6-POL 70.352.0628.1	
460	90110-0385		9	MARKING HOLDER, 4.242.3853.0	
W7003	351150-0420	M	5	CABLE OLFLEX 7X2,5 MM2 LIGHT/GREY	
W7004	351150-0413	M	5	CABLE OLFLEX 4X1,5 MM2 LIGHT/GREY	
W7005	351150-0412	M	5	CABLE OLFLEX 3X1,5 MM2 LIGHT/GREY	
W7006	351150-0425	M	6	CABLE OLFLEX 25X0,75 MM2 LIGHT/GREY	
W7007	351150-0425	M	6	CABLE OLFLEX 25X0,75 MM2 LIGHT/GREY	
W7008	351150-0425	M	6	CABLE OLFLEX 25X0,75 MM2 LIGHT/GREY	
W7009	351150-0425	M	6	CABLE OLFLEX 25X0,75 MM2 LIGHT/GREY	
W7037	351150-0415	M	6	CABLE OLFLEX 7X1,5 MM2 LIGHT/GREY	
W7076	90220-0104	M	6	SCR. CABLE 4X1,5MM2	
X128	90110-0159		1	MALE INSERT 70.310.0640.0	
X134	90110-0159		1	MALE INSERT 70.310.0640.0	
X213	90110-0150		1	MALE INSERT 121110 0000	
X214	90110-0150		1	MALE INSERT 121110 0000	
X219	90110-0150		1	MALE INSERT 121110 0000	
Common Parts					
015	2611462-0100		1	TERMINAL BLOCK	**7-143, 7-145**
020	1548496-0100		1	TERMINAL	**7-147, 7-149**
035	2611463-0100		1	TERMINAL BLOCK	**7-151, 7-153**
050	1548492-0000		1	ELECTRICAL CABINET	
065	2611461-0000		1	CABLE DUCT	
075	2611458-0000		1	CABLE DUCT	
085	2611460-0000		1	CABLE DUCT	
095	2611459-0000		1	CABLE DUCT	
105	2611457-0000		1	CABLE DUCT	
115	312115-0449		2	SCREW ISO4762 M8X16 A4 80	
120	312115-0291		4	SCREW ISO4762 M4X12 A4 80	
135	312105-0449		2	SCREW M6S ISO 4017 M8X16 A480	
145	312115-0451		2	SCREW ISO4762 M8X20 A4 80	
150	312605-0318		1	HEXAGON NUT, M6M M8 A280	
160	315105-0136		4	WASHER BRB4,3XRFR	
165	315105-0153		1	WASHER BRB6,4X12RFR	
170	315105-0165		2	WASHER BRB8,4X16RFR	
175	315125-0165		4	WASHER TBRSB 8,4X26X5 A4	
190	352103-0106		12	CABLE GLAND, ST 11, PR18,6/PG11	
195	352103-0108		4	CABLE GLAND, ST 13,5 , PR20,4/PG13,5	
210	352103-0115		2	CABLE GLAND, STR 21, PR28,3/PG21	
220	352103-0121		8	CABLE GLAND, ST 29, PR37,0/PG29	
240	353249-0051		1	INSERT, MULTI HOLE, E154M4X6	
260	90002-0009		4	BLANK-OFF PLUG, PR 18.6 SKINDICHT-BLK11	
290	90012-0125		2	GLAND FITTING	
310	90062-0016		7	LOCK WASHER SERRAT.EXT.GEAR,8,4/15 H=0,8	
320	90062-0059		4	LOCK WASKER SERRAT.EXT.GEAR,4,3/8 H=0,5	
330	90099-0104		5	NUT, PR 15,2 (PG9)	
340	90099-0110		18	NUT, PR 22,5 (PG16)	
350	90099-0117		12	NUT, PR 18,6 (PG11)	
355	90099-0118		2	NUT, PR 20,4 (PG13,5)	
360	90099-0119		6	NUT, PR 28,3 (PG21)	
370	90099-0120		4	NUT PR 37 (PG29)	
380	90135-0040		2	EARTH WIRE, L=150 MM 16 MM2	
390	90181-0313		12	RIVET DUCTAFIX R4	
400	359005-0010		9	MARKING LABEL KIT 0 - 9, 04.841.2150.0	
410	359005-0050		1	MARKING LABEL KIT X, 04.841.4550.0	
420	90089-0028		1	REDUCER, SKINDICHT-ME 13.5/21	
440	90110-0152		4	CABLE HOOD 24-POL 70.352.2428.1	
470	90110-0160		1	CABLE HOOD 6-16-POL 70.352.1628.1	
490	312605-0316		1	HEXAGON NUT, M6M M6 A280	
500	312105-0366		1	SCREW M6S ISO 4017 M6X12 A480	
510	90062-0015		1	LOCK WASHER SERRAT.EXT.GEAR,6,4/11 H=0,7	
T6203	90458-0258		1	TRANSFORMER, 220VAC/6-9-12VAC	
X132	90110-0159		1	MALE INSERT 70.310.0640.0	
X133	90110-0159		1	MALE INSERT 70.310.0640.0	
X220	90110-0150		1	MALE INSERT 121110 0000	
X504	90110-0156		1	MALE INSERT 70.210.0653.0	

ELECTRICAL CABINET

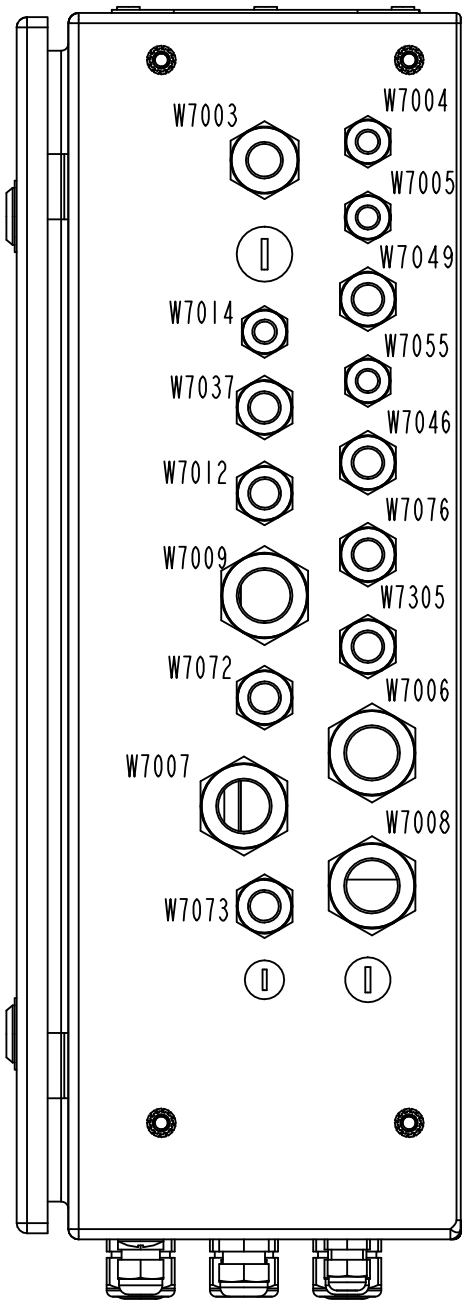

1548491-1
ECM 177034

ECM: 224784 - 20050831
Group number: 1548491-0200
Assembly Drawing: 1548491-1_5_AD

This list covers pages from 7-132 to 7-141

Pos	Part No	UN	Qty	Description	Page No
A3/FLEX (See drawing on pages: 7-132, 7-134, 7-136, 7-138, 7-140)					
180	352103-0101		3	CABLE GLAND, ST 9, PR15,2/PG9	
200	352103-0111		10	CABLE GLAND, ST 16, PR22,5/PG16	
215	352103-0116		1	CABLE GLAND, ST 21, PR28,3/PG21	
230	353240-0005		4	GLAND W/O INSERT PG21 NORMAL	
250	90002-0004		5	BLANK-OFF PLUG, PR 22,5 SKINDICHT-BLK16	
270	90002-0012		1	BLANK-OFF PLUG, PR 28,3 SKINDICHT-BLK21	
280	90002-0013		2	BLANK-OFF PLUG, PR 15,2 SKINDICHT-BLK9	
450	90110-0157		4	CABLE HOOD 6-POL 70.352.0628.1	
460	90110-0385		9	MARKING HOLDER, 4.242.3853.0	
W7003	351150-0420	M	5	CABLE OLFLEX 7X2,5 MM2 LIGHT/GREY	
W7004	351150-0413	M	5	CABLE OLFLEX 4X1,5 MM2 LIGHT/GREY	
W7005	351150-0412	M	5	CABLE OLFLEX 3X1,5 MM2 LIGHT/GREY	
W7006	351150-0425	M	6	CABLE OLFLEX 25X0,75 MM2 LIGHT/GREY	
W7007	351150-0425	M	6	CABLE OLFLEX 25X0,75 MM2 LIGHT/GREY	
W7008	351150-0425	M	6	CABLE OLFLEX 25X0,75 MM2 LIGHT/GREY	
W7009	351150-0425	M	6	CABLE OLFLEX 25X0,75 MM2 LIGHT/GREY	
W7037	351150-0415	M	6	CABLE OLFLEX 7X1,5 MM2 LIGHT/GREY	
W7076	90220-0104	M	6	SCR. CABLE 4X1,5MM2	
X128	90110-0159		1	MALE INSERT 70.310.0640.0	
X134	90110-0159		1	MALE INSERT 70.310.0640.0	
X213	90110-0150		1	MALE INSERT 121110 0000	
X214	90110-0150		1	MALE INSERT 121110 0000	
X219	90110-0150		1	MALE INSERT 121110 0000	
Common Parts					
015	2611462-0100		1	TERMINAL BLOCK	**7-143, 7-145**
020	1548496-0100		1	TERMINAL	**7-147, 7-149**
035	2611463-0100		1	TERMINAL BLOCK	**7-151, 7-153**
050	1548492-0000		1	ELECTRICAL CABINET	
065	2611461-0000		1	CABLE DUCT	
075	2611458-0000		1	CABLE DUCT	
085	2611460-0000		1	CABLE DUCT	
095	2611459-0000		1	CABLE DUCT	
105	2611457-0000		1	CABLE DUCT	
115	312115-0449		2	SCREW ISO4762 M8X16 A4 80	
120	312115-0291		4	SCREW ISO4762 M4X12 A4 80	
135	312105-0449		2	SCREW M6S ISO 4017 M8X16 A480	
145	312115-0451		2	SCREW ISO4762 M8X20 A4 80	
150	312605-0318		1	HEXAGON NUT, M6M M8 A280	
160	315105-0136		4	WASHER BRB4,3XRFR	
165	315105-0153		1	WASHER BRB6,4X12RFR	
170	315105-0165		2	WASHER BRB8,4X16RFR	
175	315125-0165		4	WASHER TBRSB 8,4X26X5 A4	
190	352103-0106		12	CABLE GLAND, ST 11, PR18,6/PG11	
195	352103-0108		4	CABLE GLAND, ST 13,5 , PR20,4/PG13,5	
210	352103-0115		2	CABLE GLAND, STR 21, PR28,3/PG21	
220	352103-0121		8	CABLE GLAND, ST 29, PR37,0/PG29	
240	353249-0051		1	INSERT, MULTI HOLE, E154M4X6	
260	90002-0009		4	BLANK-OFF PLUG, PR 18.6 SKINDICHT-BLK11	
290	90012-0125		2	GLAND FITTING	
310	90062-0016		7	LOCK WASHER SERRAT.EXT.GEAR,8,4/15 H=0,8	
320	90062-0059		4	LOCK WASKER SERRAT.EXT.GEAR,4,3/8 H=0,5	
330	90099-0104		5	NUT, PR 15,2 (PG9)	
340	90099-0110		18	NUT, PR 22,5 (PG16)	
350	90099-0117		12	NUT, PR 18,6 (PG11)	
355	90099-0118		2	NUT, PR 20,4 (PG13,5)	
360	90099-0119		6	NUT, PR 28,3 (PG21)	
370	90099-0120		4	NUT PR 37 (PG29)	
380	90135-0040		2	EARTH WIRE, L=150 MM 16 MM2	
390	90181-0313		12	RIVET DUCTAFIX R4	
400	359005-0010		9	MARKING LABEL KIT 0 - 9, 04.841.2150.0	
410	359005-0050		1	MARKING LABEL KIT X, 04.841.4550.0	
420	90089-0028		1	REDUCER, SKINDICHT-ME 13.5/21	
440	90110-0152		4	CABLE HOOD 24-POL 70.352.2428.1	
470	90110-0160		1	CABLE HOOD 6-16-POL 70.352.1628.1	
490	312605-0316		1	HEXAGON NUT, M6M M6 A280	
500	312105-0366		1	SCREW M6S ISO 4017 M6X12 A480	
510	90062-0015		1	LOCK WASHER SERRAT.EXT.GEAR,6,4/11 H=0,7	
T6203	90458-0258		1	TRANSFORMER, 220VAC/6-9-12VAC	
X132	90110-0159		1	MALE INSERT 70.310.0640.0	
X133	90110-0159		1	MALE INSERT 70.310.0640.0	
X220	90110-0150		1	MALE INSERT 121110 0000	
X504	90110-0156		1	MALE INSERT 70.210.0653.0	

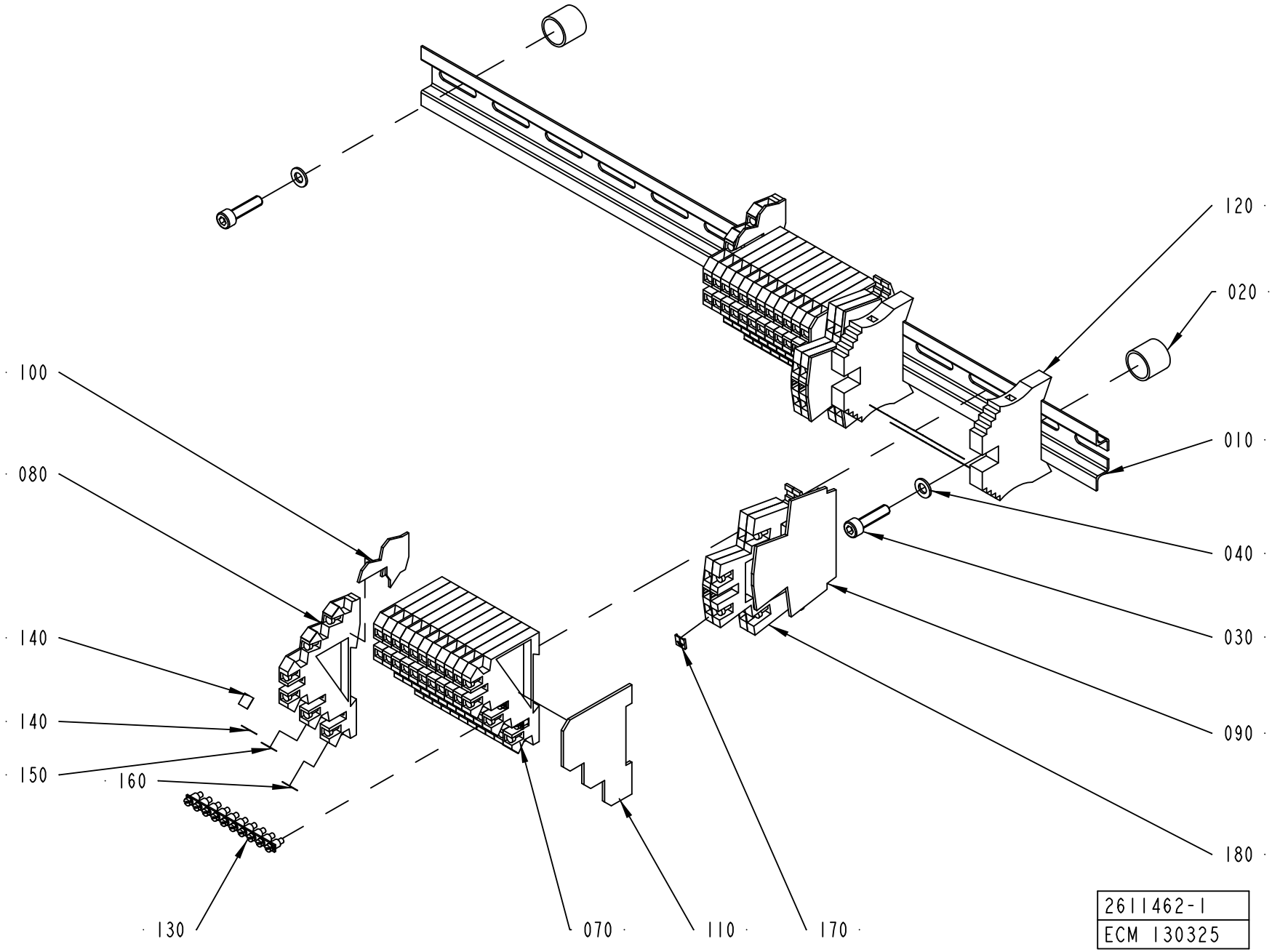
120
020
010
040
030
090
180
100
080
140
140
150
160
130
070
110
170
2611462-1
ECM 130325

ECM: 180665 - 20041005
Group number: 2611462-0100
Assembly Drawing: 2611462-1_1_AA

This list covers pages from 7-142 to 7-145

Pos	Part No	UN	Qty	Description	Page No
-					
010	2611464-0000		1	RAIL	
020	495118-0014		2	DISTANCE PIPE L=14 MM	
030	312115-0331		2	SCREW ISO4762 M5X20 A4 80	
040	315105-0146		2	WASHER BRB5,3X10RFR	
070	353021-0301		22	TERMINALS,TRIPLE-LEVEL, DLI 2,5/35 PA	
080	353021-0302		2	TERMINALS,TRIPLE-LEVEL, DLD 2,5/35 PA	
090	353032-0009		2	END PLATE, WAP FOR WDK	
100	353032-0013		2	END PLATE, 13818.6	
110	353032-0301		2	END PLATE WAP, 13132.6	
120	353031-0203		2	END SUPPORT, WEW 35/2	
130	353034-0404		4	BRIDGE CONNECTOR Q10, 13131.0	
140	359011-0824		2	SET OF SIGNS 6-FW 151-200	
150	359011-0832		26	SET OF SIGNS 6-GW (+)	
160	359011-0833		26	SET OF SIGNS 6-GW (-)	
170	359011-0834		1	SET OF SIGNS 6-GW(EARTH)	
180	90458-1136		4	TERMINAL BLOCK, 103630	
190	359011-0825		2	SET OF SIGNS 6-FW 201-250	

Pos	Part No	UN	Qty	Description	Page No

TERMINAL BLOCK

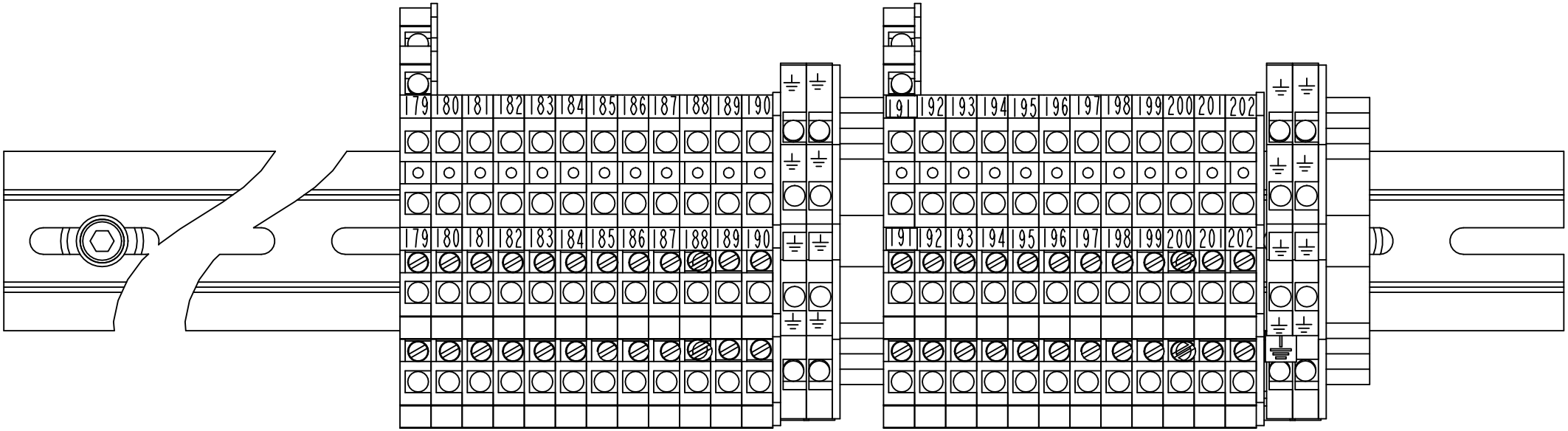

2611462-1
ECM 130325

ECM: 180665 - 20041005
Group number: 2611462-0100
Assembly Drawing: 2611462-1_2_AA

This list covers pages from 7-142 to 7-145

Pos	Part No	UN	Qty	Description	Page No
-					
010	2611464-0000		1	RAIL	
020	495118-0014		2	DISTANCE PIPE L=14 MM	
030	312115-0331		2	SCREW ISO4762 M5X20 A4 80	
040	315105-0146		2	WASHER BRB5,3X10RFR	
070	353021-0301		22	TERMINALS,TRIPLE-LEVEL, DLI 2,5/35 PA	
080	353021-0302		2	TERMINALS,TRIPLE-LEVEL, DLD 2,5/35 PA	
090	353032-0009		2	END PLATE, WAP FOR WDK	
100	353032-0013		2	END PLATE, 13818.6	
110	353032-0301		2	END PLATE WAP, 13132.6	
120	353031-0203		2	END SUPPORT, WEW 35/2	
130	353034-0404		4	BRIDGE CONNECTOR Q10, 13131.0	
140	359011-0824		2	SET OF SIGNS 6-FW 151-200	
150	359011-0832		26	SET OF SIGNS 6-GW (+)	
160	359011-0833		26	SET OF SIGNS 6-GW (-)	
170	359011-0834		1	SET OF SIGNS 6-GW(EARTH)	
180	90458-1136		4	TERMINAL BLOCK, 103630	
190	359011-0825		2	SET OF SIGNS 6-FW 201-250	

Pos	Part No	UN	Qty	Description	Page No

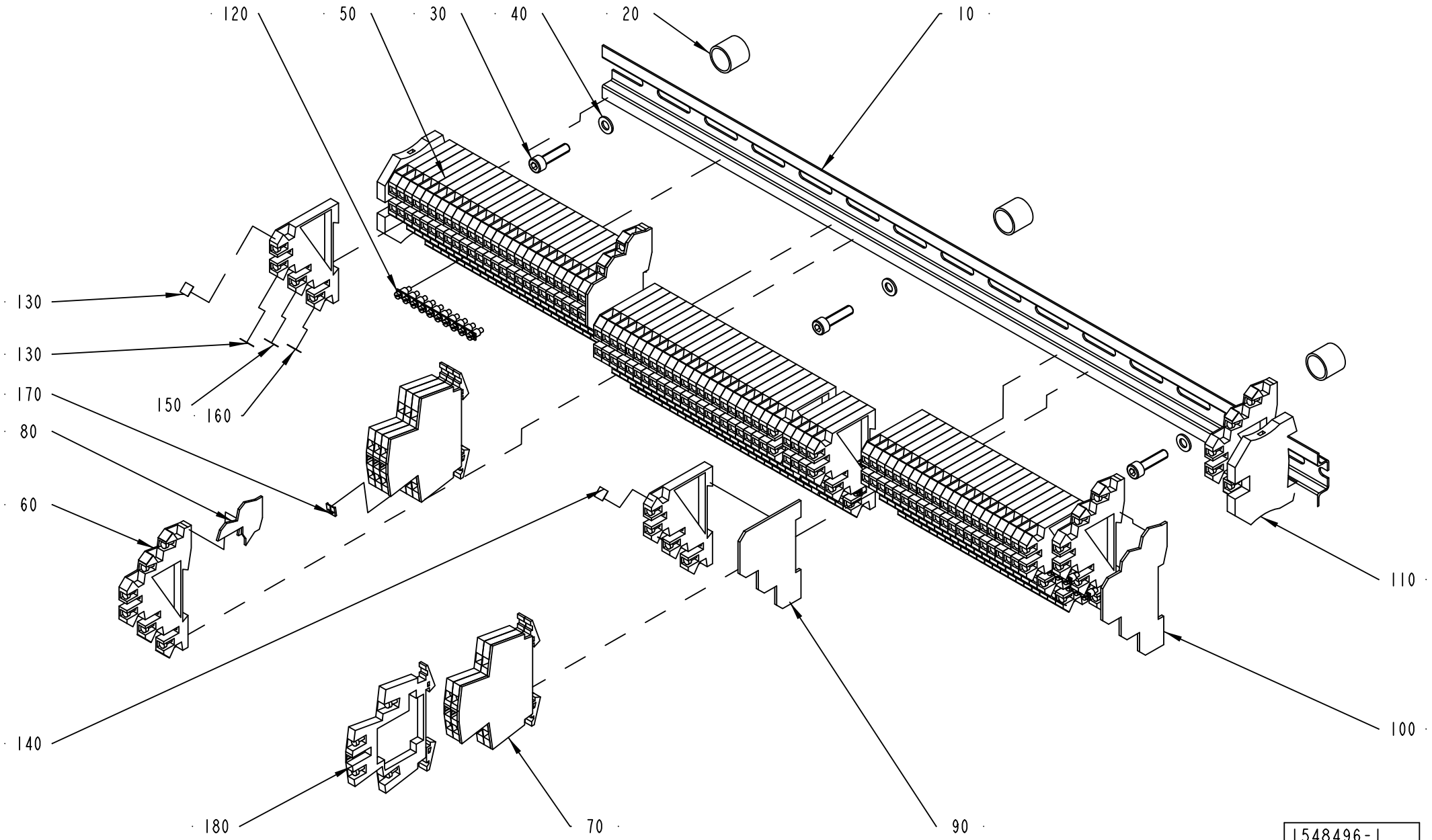

1548496-1
ECM 130325

ECM: 224785 - 20050831
Group number: 1548496-0100
Assembly Drawing: 1548496-1_1_AB

This list covers pages from 7-146 to 7-149

Pos	Part No	UN	Qty	Description	Page No
-					
010	2503654-0000		1	RAIL	
020	495118-0014		3	DISTANCE PIPE L=14 MM	
030	312115-0331		3	SCREW ISO4762 M5X20 A4 80	
040	315105-0146		3	WASHER BRB5,3X10RFR	
050	353021-0301		74	TERMINALS,TRIPLE-LEVEL, DLI 2,5/35 PA	
060	353021-0302		4	TERMINALS,TRIPLE-LEVEL, DLD 2,5/35 PA	
070	353032-0009		2	END PLATE, WAP FOR WDK	
080	353032-0013		1	END PLATE, 13818.6	
090	353032-0301		1	END PLATE WAP, 13132.6	
100	353032-0302		2	END PLATE WAP, 13176.6	
110	353024-0205		2	EARTH TERMINAL, 1010.1	
120	353034-0404		17	BRIDGE CONNECTOR Q10, 13131.0	
130	359011-0823		2	SET OF SIGNS 6-FW 101-150	
140	359011-0824		2	SET OF SIGNS 6-FW 151-200	
150	359011-0832		2	SET OF SIGNS 6-GW (+)	
160	359011-0833		2	SET OF SIGNS 6-GW (-)	
170	359011-0834		1	SET OF SIGNS 6-GW(EARTH)	
180	90458-1136		6	TERMINAL BLOCK, 103630	

Pos	Part No	UN	Qty	Description	Page No

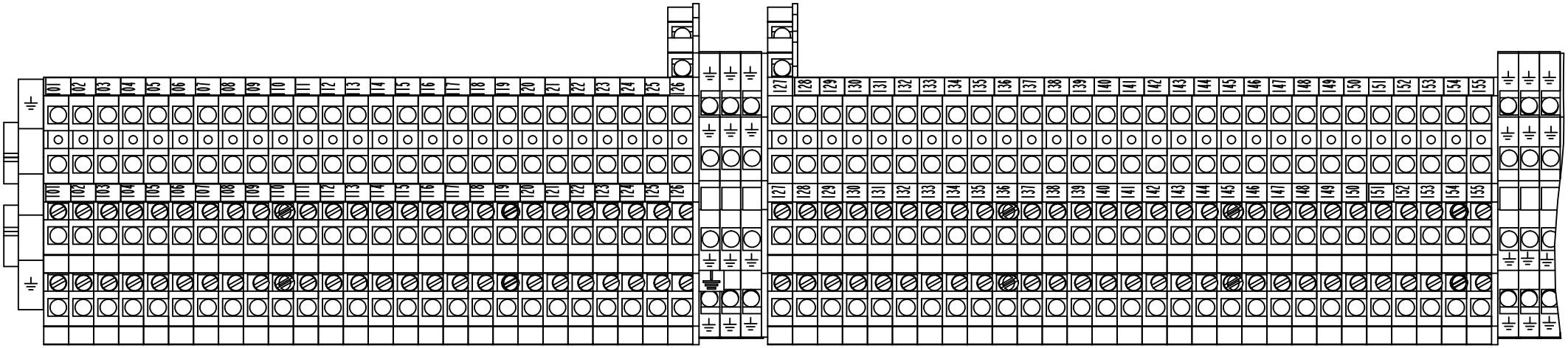

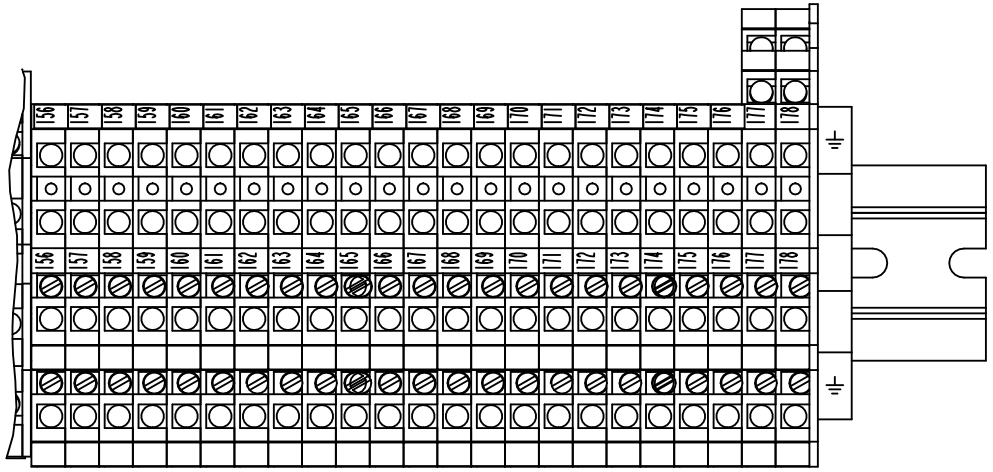

1548496-1
ECM 130325

ECM: 224785 - 20050831
Group number: 1548496-0100
Assembly Drawing: 1548496-1_2_AB

This list covers pages from 7-146 to 7-149

Pos	Part No	UN	Qty	Description	Page No
-					
010	2503654-0000		1	RAIL	
020	495118-0014		3	DISTANCE PIPE L=14 MM	
030	312115-0331		3	SCREW ISO4762 M5X20 A4 80	
040	315105-0146		3	WASHER BRB5,3X10RFR	
050	353021-0301		74	TERMINALS,TRIPLE-LEVEL, DLI 2,5/35 PA	
060	353021-0302		4	TERMINALS,TRIPLE-LEVEL, DLD 2,5/35 PA	
070	353032-0009		2	END PLATE, WAP FOR WDK	
080	353032-0013		1	END PLATE, 13818.6	
090	353032-0301		1	END PLATE WAP, 13132.6	
100	353032-0302		2	END PLATE WAP, 13176.6	
110	353024-0205		2	EARTH TERMINAL, 1010.1	
120	353034-0404		17	BRIDGE CONNECTOR Q10, 13131.0	
130	359011-0823		2	SET OF SIGNS 6-FW 101-150	
140	359011-0824		2	SET OF SIGNS 6-FW 151-200	
150	359011-0832		2	SET OF SIGNS 6-GW (+)	
160	359011-0833		2	SET OF SIGNS 6-GW (-)	
170	359011-0834		1	SET OF SIGNS 6-GW(EARTH)	
180	90458-1136		6	TERMINAL BLOCK, 103630	

Pos	Part No	UN	Qty	Description	Page No

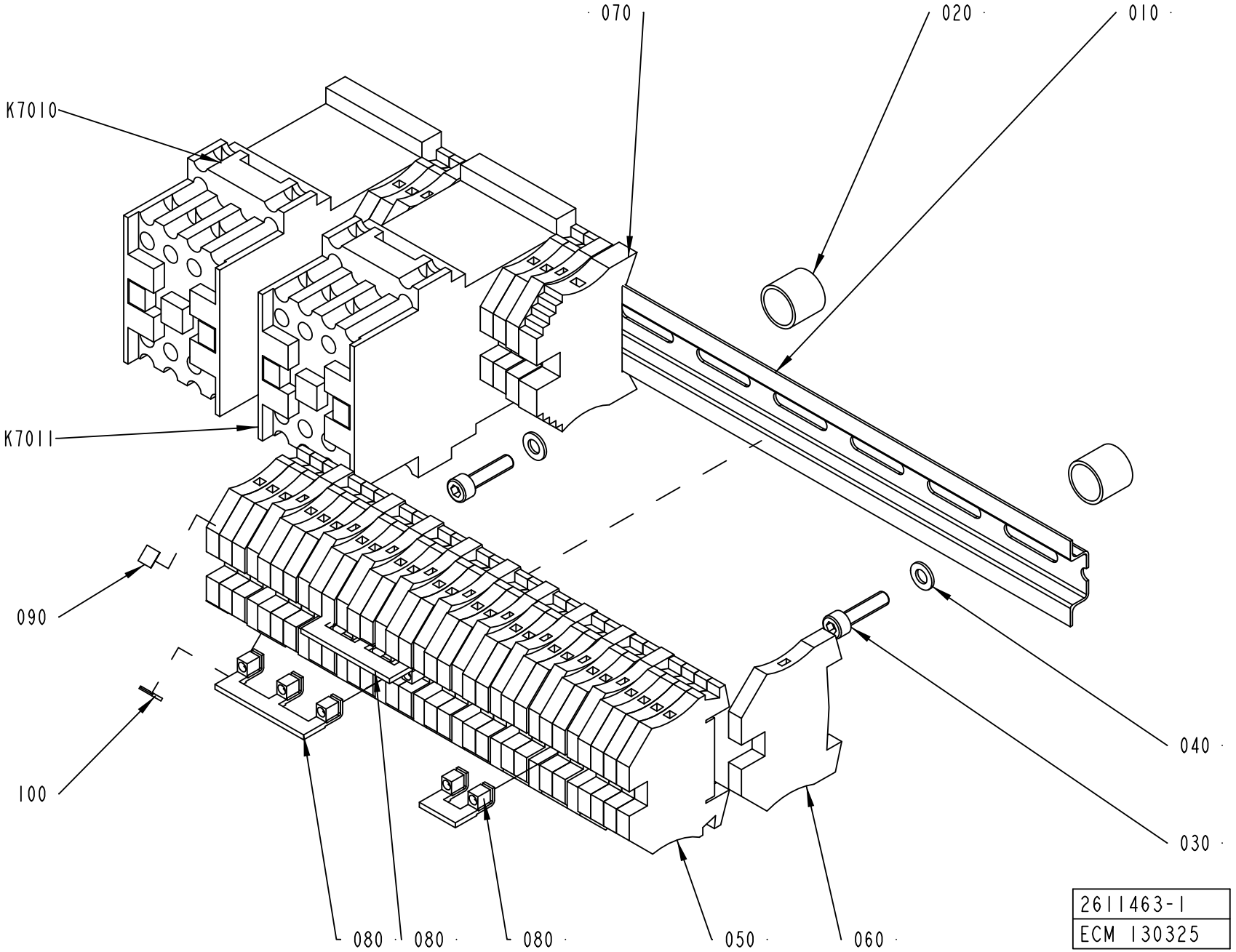
070
020
010
K7010
K7011
090
100
040
030
080
080
080
050
060
2611463-1
ECM 130325

ECM: 180667 - 20041025
Group number: 2611463-0100
Assembly Drawing: 2611463-1_1_AA

This list covers pages from 7-150 to 7-153

Pos	Part No	UN	Qty	Description	Page No
-					
010	2611465-0000		1	RAIL	
020	495118-0014		2	DISTANCE PIPE L=14 MM	
030	312115-0331		2	SCREW ISO4762 M5X20 A4 80	
040	315105-0146		2	WASHER BRB5,3X10RFR	
050	353021-0213		28	FEED THROUGH TERMINAL, 10201.0	
060	353024-0205		12	EARTH TERMINAL, 1010.1	
070	353031-0203		1	END SUPPORT, WEW 35/2	
080	353034-0031		3	BRIDGE CONNECTOR, WQV 4/10, 10520.6	
090	359011-0821		2	SET OF SIGNS 6-FW 1-50	
100	359011-0834		1	SET OF SIGNS 6-GW(EARTH)	
K7010	90075-0127		1	CONTACTOR, 4KW 24VDC	
K7011	90075-0127		1	CONTACTOR, 4KW 24VDC	
W7075	90220-0104	MM	250	SCR. CABLE 4X1,5MM2	

Pos	Part No	UN	Qty	Description	Page No

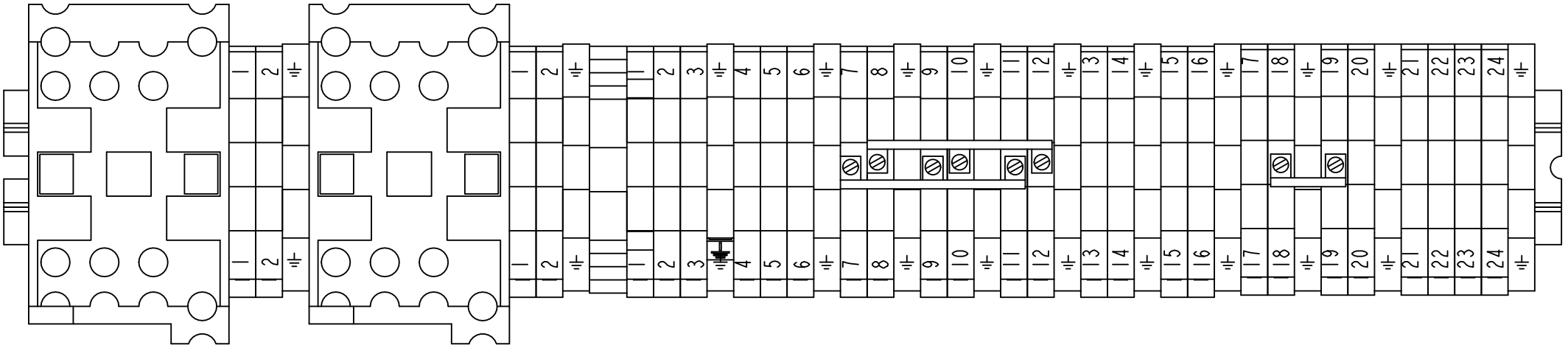

2611463-1
ECM 130325

ECM: 180667 - 20041025
Group number: 2611463-0100
Assembly Drawing: 2611463-1_2_AA

This list covers pages from 7-150 to 7-153

Pos	Part No	UN	Qty	Description	Page No
-					
010	2611465-0000		1	RAIL	
020	495118-0014		2	DISTANCE PIPE L=14 MM	
030	312115-0331		2	SCREW ISO4762 M5X20 A4 80	
040	315105-0146		2	WASHER BRB5,3X10RFR	
050	353021-0213		28	FEED THROUGH TERMINAL, 10201.0	
060	353024-0205		12	EARTH TERMINAL, 1010.1	
070	353031-0203		1	END SUPPORT, WEW 35/2	
080	353034-0031		3	BRIDGE CONNECTOR, WQV 4/10, 10520.6	
090	359011-0821		2	SET OF SIGNS 6-FW 1-50	
100	359011-0834		1	SET OF SIGNS 6-GW(EARTH)	
K7010	90075-0127		1	CONTACTOR, 4KW 24VDC	
K7011	90075-0127		1	CONTACTOR, 4KW 24VDC	
W7075	90220-0104	MM	250	SCR. CABLE 4X1,5MM2	

Pos	Part No	UN	Qty	Description	Page No

VALVE PANEL

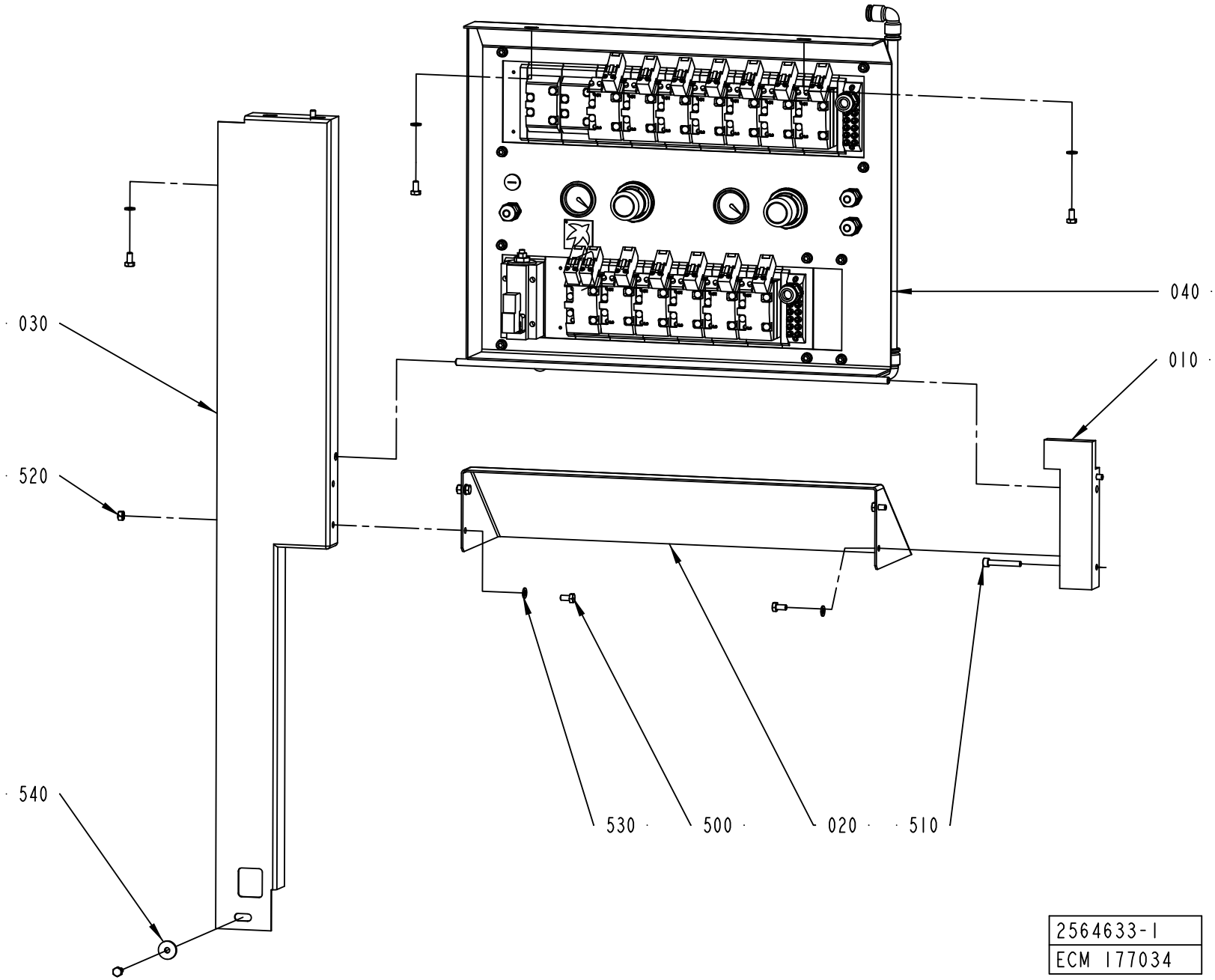

ECM: 224835 - 20051128
Group number: 2564633-0100
Assembly Drawing: 2564633-1_1_AB

This list covers pages from 7-154 to 7-157

Pos	Part No	UN	Qty	Description	Page No
With ARL (See drawing on page: 7-156)					
050	2742200-0100		1	VALVE PANEL	**7-159**
500	312105-0366		7	SCREW M6S ISO 4017 M6X12 A480	
530	315105-0153		6	WASHER BRB6,4X12RFR	
Without ARL (See drawing on page: 7-154)					
500	312105-0366		9	SCREW M6S ISO 4017 M6X12 A480	
530	315105-0153		8	WASHER BRB6,4X12RFR	
Common Parts					
010	2564634-0000		1	BEARING BLOCK	
020	2570834-0000		1	PROTECTIVE CASING	
030	2570836-0000		1	PROTECTION PLATE	
040	2564632-0100		1	VALVE PANEL	**7-161, 7-163, 7-165, 7-167, 7-169, 7-171**
510	312115-0378		2	SCREW ISO4762 M6X40 A4 80	
520	312605-0316		2	HEXAGON NUT, M6M M6 A280	
540	315125-0153		1	WASHER TBRSB 6,4X22X4 A4	

Pos	Part No	UN	Qty	Description	Page No

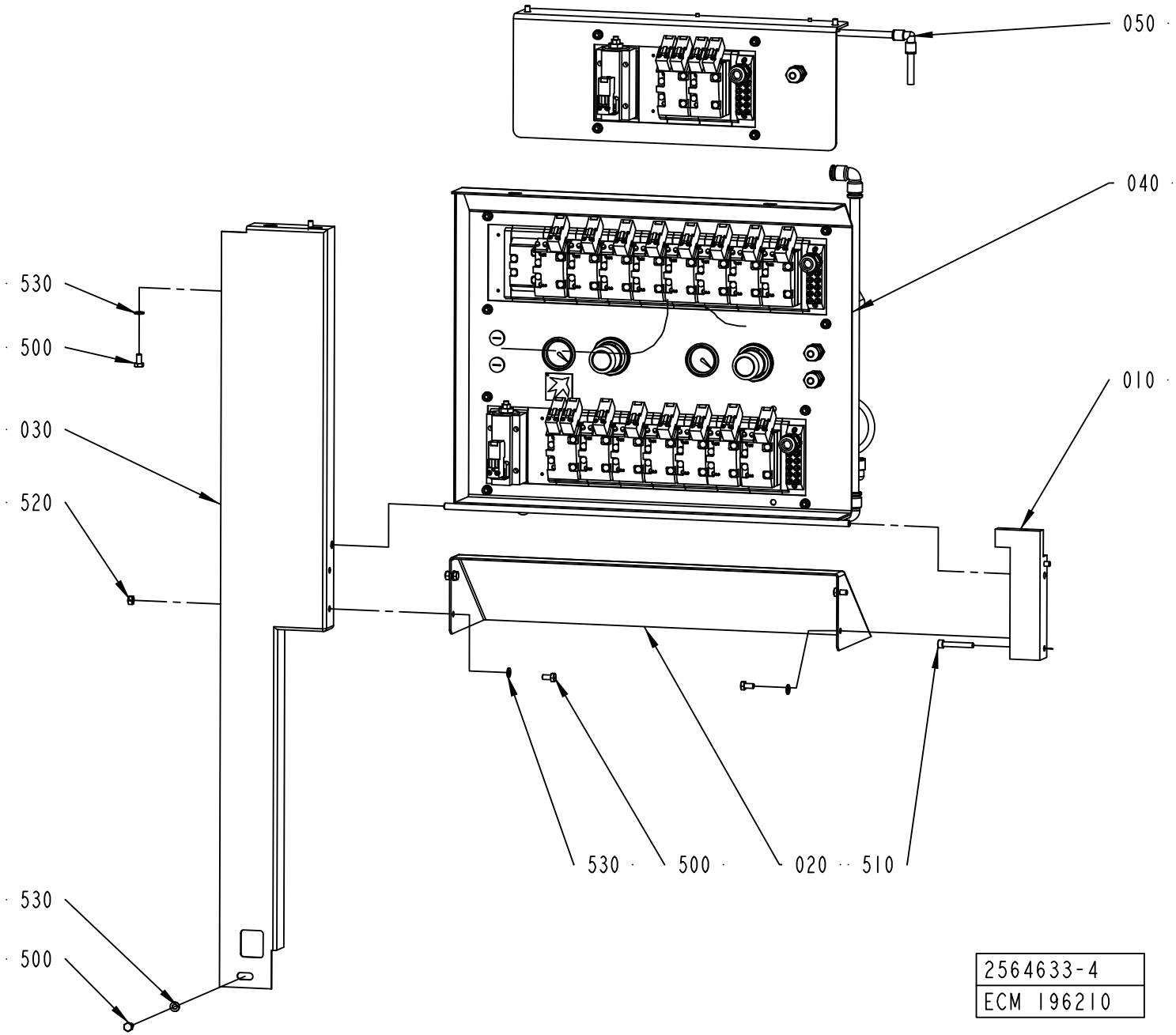
050
040
010
530
500
030
520
530
500
530
500
020
510
2564633-4
ECM 196210

ECM: 224835 - 20051128
Group number: 2564633-0100
Assembly Drawing: 2564633-4_1_AA

This list covers pages from 7-154 to 7-157

Pos	Part No	UN	Qty	Description	Page No
With ARL (See drawing on page: 7-156)					
050	2742200-0100		1	VALVE PANEL	**7-159**
500	312105-0366		7	SCREW M6S ISO 4017 M6X12 A480	
530	315105-0153		6	WASHER BRB6,4X12RFR	
Without ARL (See drawing on page: 7-154)					
500	312105-0366		9	SCREW M6S ISO 4017 M6X12 A480	
530	315105-0153		8	WASHER BRB6,4X12RFR	
Common Parts					
010	2564634-0000		1	BEARING BLOCK	
020	2570834-0000		1	PROTECTIVE CASING	
030	2570836-0000		1	PROTECTION PLATE	
040	2564632-0100		1	VALVE PANEL	**7-161, 7-163, 7-165, 7-167, 7-169, 7-171**
510	312115-0378		2	SCREW ISO4762 M6X40 A4 80	
520	312605-0316		2	HEXAGON NUT, M6M M6 A280	
540	315125-0153		1	WASHER TBRSB 6,4X22X4 A4	

Pos	Part No	UN	Qty	Description	Page No

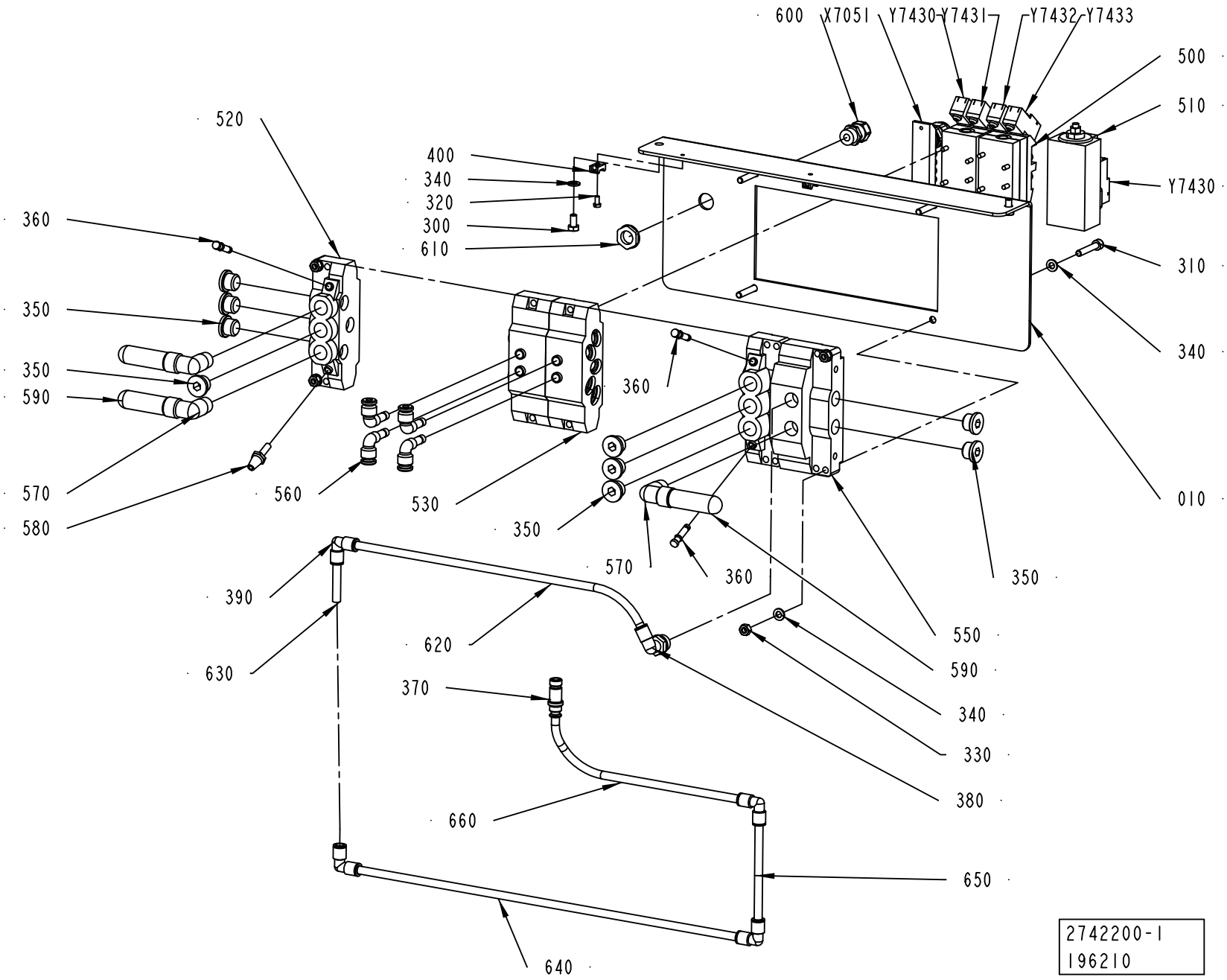
600
X7051
Y7430
Y7431
Y7432
Y7433
500
510
Y7430
310
340
010
520
400
340
320
300
610
360
350
350
590
570
580
560
530
360
350
570
360
350
550
590
340
330
380
390
620
630
370
660
650
640
2742200-1
196210

ECM: 196210 - 20051128
Group number: 2742200-0100
Assembly Drawing: 2742200-1_1_AA

Pos	Part No	UN	Qty	Description	Page No
-					
010	2742199-0000		1	BRACKET	
300	312105-0366		2	SCREW M6S ISO 4017 M6X12 A480	
310	312115-0376		4	SCREW ISO4762 M6X35 A4 80	
320	312125-0287		2	SCREW ISO 1207 M4X8 A4	
330	312605-0316		4	HEXAGON NUT, M6M M6 A280	
340	315105-0153		10	WASHER BRB6,4X12RFR	
350	342713-0211		9	PLUG, EXT THREAD HEX SOCKET 8638-00-380	
360	342715-0102		3	BLIND PLUG 6 MM	
370	342716-0209		1	REDUCER 8-12	
380	350002-0012		1	PUSH-IN L-FITTING QSL-F-G3/8-8	
390	350004-0003		4	PUSH-IN L-FITTING QSL-F-8	
400	352113-0205		2	ANCHOR PLATES FOR STRIPS, TYPE TM2S8-C10	
500	90042-0230		2	VALVE BODY 5/3 OPEN CENTRE	
510	90042-0265		1	HIGH SPEED VENTING VALVE 583-590-000-1	
520	90042-0522		2	PORTED END PIECE ISO SIZE 1	
530	90042-0532		2	BASE PLATE ISO SIZE 1	
550	90042-0545		1	SUB-BASE SOFT START ISO 1 AND VDMA 01	
560	90055-0173		4	ELBOW WITH TAILPIECE 8/6 MM	
570	90140-0020		3	ELBOW, 90, INT/EXT. THREAD, NO. 2020-3/8	
580	90328-0017		1	SILENCER, D=6 MM	
590	90328-0024		3	SILENCER G3/8"	
600	90458-0306		1	CABLE GLAND, M16X1,5, NO.5311 1010	
610	90458-0322		1	NUT, M16X1,5	
620	90166-0194	MM	1000	TUBE 8 MM PUR BLUE	
630	90166-0194	MM	1400	TUBE 8 MM PUR BLUE	
640	90166-0194	MM	1400	TUBE 8 MM PUR BLUE	
650	90166-0194	MM	350	TUBE 8 MM PUR BLUE	
660	90166-0068	MM	400	TUBE 12 MM PA BLUE	
X7051	90042-0535		1	TERMINAL BOARD 19 CORDS	
Y7430	90042-0539		1	PILOT VALVE L=350MM	
Y7431	90042-0539		1	PILOT VALVE L=350MM	
Y7432	90042-0539		1	PILOT VALVE L=350MM	
Y7433	90042-0539		1	PILOT VALVE L=350MM	
Y7435	90042-0539		1	PILOT VALVE L=350MM	

Pos	Part No	UN	Qty	Description	Page No

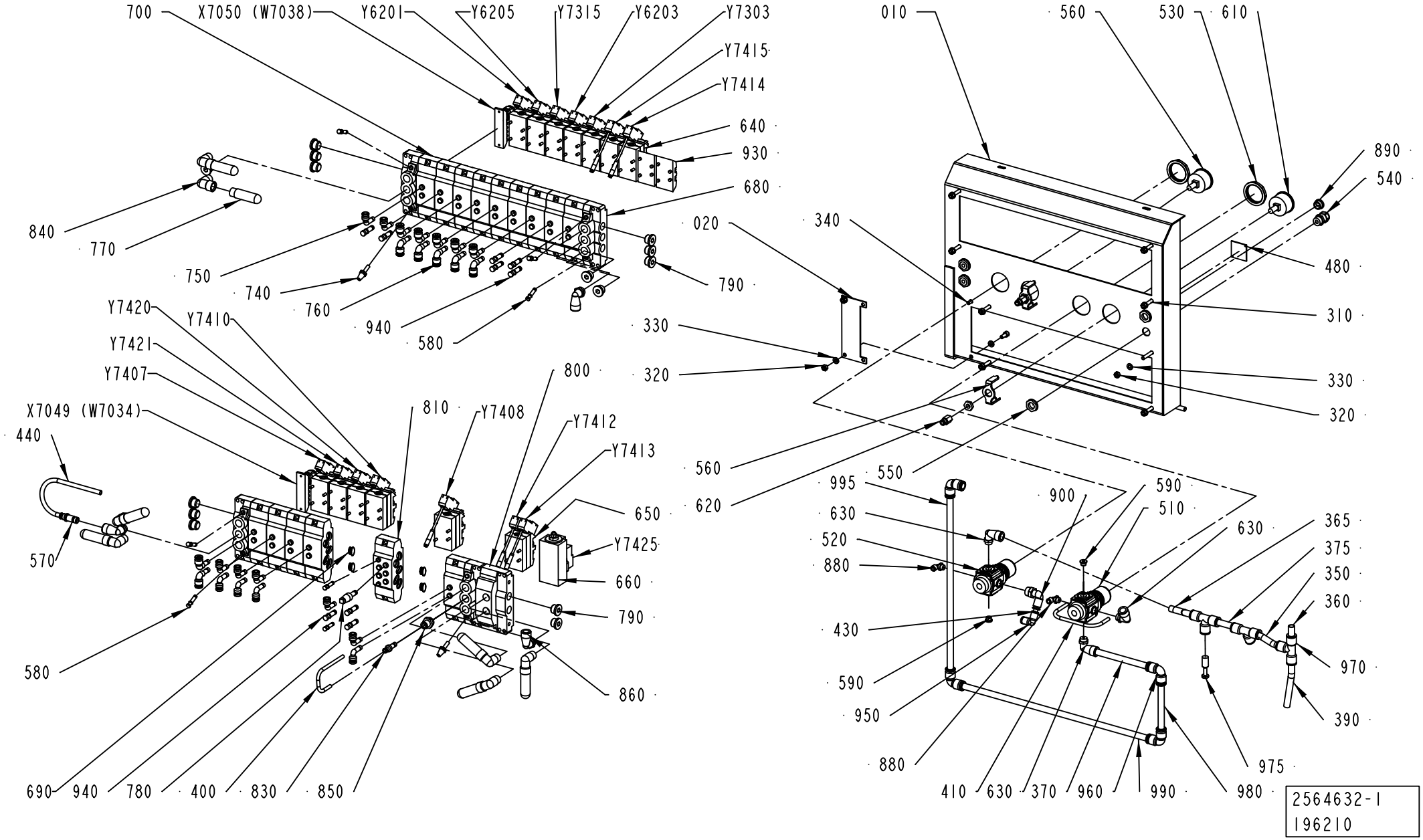
700
X7050 (W7038)
Y6201
Y6205
Y7315
Y6203
Y7303
Y7415
Y7414
640
930
680
840
770
750
740
760
940
580
020
790
010
560
530
610
890
540
340
480
310
330
320
Y7420
Y7410
Y7421
Y7407
X7049 (W7034)
440
570
580
690
940
780
400
830
850
800
810
Y7408
Y7412
Y7413
650
Y7425
660
790
860
995
630
520
880
430
590
950
880
900
590
510
630
365
375
350
360
970
390
975
410
630
370
960
990
980
560
620
550
2564632-1
196210

ECM: 234399 - 20051129
Group number: 2564632-0100
Assembly Drawing: 2564632-1_1_AD

This list covers pages from 7-160 to 7-171

Pos	Part No	UN	Qty	Description	Page No
A3/FLEX TBA 1890S WITH ARL, A3/FLEX TBA 2000S WITH ARL (See drawing on pages: 7-168, 7-170)					
020	2616034-0000		1	COVER PLATE	
100	2691105-0000		1	PNEUMATIC DIAGRAM	
1010	350005-0002		1	PUSH-IN T-FITTING QST-F-6	
1020	350006-0007		1	PUSH-IN FITTING QS-F-12H-6	
1030	90166-0117	MM	220	HOSE 4/6 PVC BLUE	
1040	90166-0117	MM	310	HOSE 4/6 PVC BLUE	
320	312605-0316		10	HEXAGON NUT, M6M M6 A280	
330	315105-0153		20	WASHER BRB6,4X12RFR	
340	312115-0367		2	SCREW ISO4762 M6X14 A4 80	
370	90166-0068	MM	300	TUBE 12 MM PA BLUE	
390	90166-0068	MM	160	TUBE 12 MM PA BLUE	
410	90166-0117	MM	120	HOSE 4/6 PVC BLUE	
450	90166-0068	MM	260	TUBE 12 MM PA BLUE	
510	90002-0010		1	LANK-OFF PLUG, PR 37 SKINDICHT-BLK29	
520	90457-0144		1	REGULATOR 0,3-2 BAR	
530	90457-0078		1	PANEL NUT	
540	90458-0306		3	CABLE GLAND, M16X1,5, NO.5311 1010	
560	90043-0064		1	PRESSURE GAUGE, 2048 D=40 MM	
570	342716-0209		1	REDUCER 8-12	
580	342715-0102		7	BLIND PLUG 6 MM	
590	342713-0209		1	PLUG (QUANT.MINIMA= 10PC).	
610	90043-0065		1	MKC NEW FILL PUMP VACUUM PRESSURE GAUGE	
630	90458-2959		1	ELBOW PIPE JOINT, EXT.THREAD,D=12MM-G1/4	
640	90042-0215		13	VALVE BODY 5/2 UNISTABLE	
690	90042-0528		5	BLANKING KIT SEALS ISO SIZE 1	
750	90055-0172		11	ELBOW WITH TAILPIECE 8/8 MM	
760	90055-0173		14	ELBOW WITH TAILPIECE 8/6 MM	
790	342713-0211		14	PLUG, EXT THREAD HEX SOCKET 8638-00-380	
810	90042-0520		1	BASE PLATE ISO SIZE 1	
860	90458-2960		3	ELBOW PIPE JOINT, EXT.THREAD,D=12MM-G3/8	
880	90458-2956		1	ELBOW PIPE JOINT, EXT.THREAD, D=6MM-G1/8	
890	90458-1307		1	BLIND PLUG CIRCULAR, M16X1,5 514GFK/216	
900	350002-0009		1	PUSH-IN L-FITTING QSL-F-G1/4-8	
930	90042-0519		1	BLANK PLATE ISO SIZE 1	
940	342715-0103		7	BLIND PLUG 8 MM	
960	342735-0109		3	ELBOW PIPE JOINT	
970	342748-0109		4	T-CONNECTION 12MM	
Y6201	90042-0591		1	PILOT VALVE, 04938-333-08	
Y7402	90042-0591		1	PILOT VALVE, 04938-333-08	
Y7415	90042-0538		1	PILOT VALVE L=500MM	
Y7425	90042-0585		1	PILOT VALVE L=5M	

Pos	Part No	UN	Qty	Description	Page No
A3/FLEX WITHOUT ARL (See drawing on pages: 7-160, 7-162)					
020	2616034-0000		1	COVER PLATE	
100	2594393-0000		1	PNEUMATIC DIAGRAM	
320	312605-0316		10	HEXAGON NUT, M6M M6 A280	
330	315105-0153		20	WASHER BRB6,4X12RFR	
340	312115-0367		2	SCREW ISO4762 M6X14 A4 80	
370	90166-0068	MM	200	TUBE 12 MM PA BLUE	
390	90166-0068	MM	160	TUBE 12 MM PA BLUE	
410	90166-0117	MM	220	HOSE 4/6 PVC BLUE	
450	90166-0068	MM	30	TUBE 12 MM PA BLUE	
510	90113-0470		1	MANIFOLD REGULATOR 10 BAR	
520	90457-0144		1	REGULATOR 0,3-2 BAR	
530	90457-0078		2	PANEL NUT	
540	90458-0306		3	CABLE GLAND, M16X1,5, NO.5311 1010	
560	90043-0064		1	PRESSURE GAUGE, 2048 D=40 MM	
570	342716-0209		1	REDUCER 8-12	
580	342715-0102		7	BLIND PLUG 6 MM	
590	342713-0209		2	PLUG (QUANT.MINIMA= 10PC).	
610	90043-0065		1	MKC NEW FILL PUMP VACUUM PRESSURE GAUGE	
630	90458-2959		3	ELBOW PIPE JOINT, EXT.THREAD,D=12MM-G1/4	
640	90042-0215		12	VALVE BODY 5/2 UNISTABLE	
690	90042-0528		4	BLANKING KIT SEALS ISO SIZE 1	
750	90055-0172		11	ELBOW WITH TAILPIECE 8/8 MM	
760	90055-0173		12	ELBOW WITH TAILPIECE 8/6 MM	
790	342713-0211		14	PLUG, EXT THREAD HEX SOCKET 8638-00-380	
810	90042-0520		1	BASE PLATE ISO SIZE 1	
860	90458-2960		3	ELBOW PIPE JOINT, EXT.THREAD,D=12MM-G3/8	
880	90458-2956		2	ELBOW PIPE JOINT, EXT.THREAD, D=6MM-G1/8	
890	90458-1307		1	BLIND PLUG CIRCULAR, M16X1,5 514GFK/216	
900	350002-0009		1	PUSH-IN L-FITTING QSL-F-G1/4-8	
930	90042-0519		2	BLANK PLATE ISO SIZE 1	
940	342715-0103		9	BLIND PLUG 8 MM	
960	342735-0109		4	ELBOW PIPE JOINT	
970	342748-0109		3	T-CONNECTION 12MM	
975	350013-0005		1	PLUG QSC-12H	
990	90166-0068	MM	600	TUBE 12 MM PA BLUE	
995	90166-0068	MM	2000	TUBE 12 MM PA BLUE	
Y6201	90042-0591		1	PILOT VALVE, 04938-333-08	
Y7415	90042-0538		1	PILOT VALVE L=500MM	
Y7425	90042-0585		1	PILOT VALVE L=5M	
A3/FLEX TBA 0200B WITH ARL, A3/FLEX TBA 0200S WITH ARL, A3/FLEX TBA 0200M WITH ARL, A3/FLEX TBA 0250B WITH ARL, A3/FLEX TBA 0250S WITH ARL, A3/FLEX TBA 0330S WITH ARL, A3/FLEX TBA					

Machine Type	Group Description	Used-In	Group Number	Page No

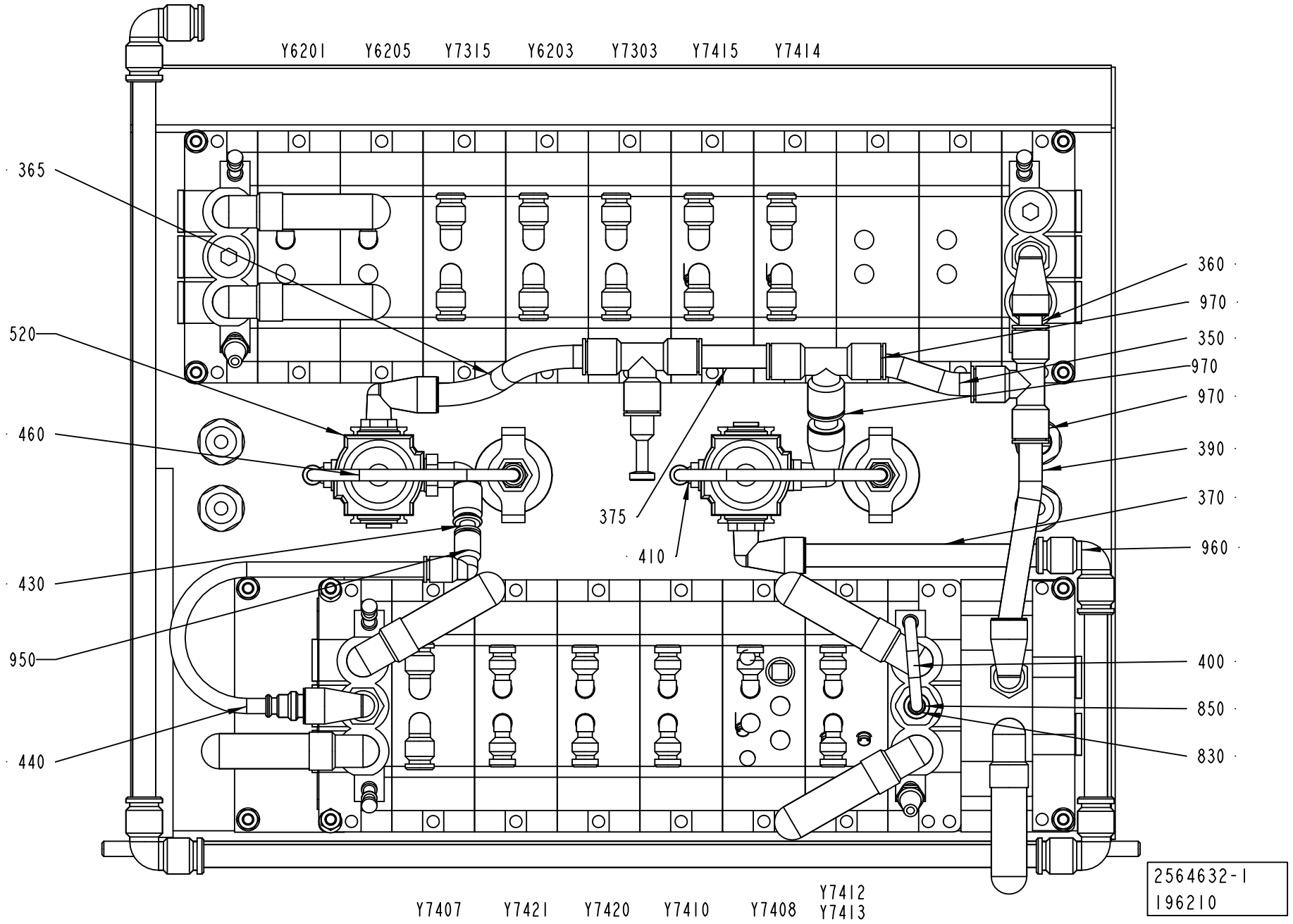
Y6201
Y6205
Y7315
Y6203
Y7303
Y7415
Y7414
365
520
460
430
950
440
360
970
350
970
970
390
370
960
400
850
830
375
410
Y7407
Y7421
Y7420
Y7410
Y7408
Y7412
Y7413
2564632-1
196210

ECM: 234399 - 20051129
Group number: 2564632-0100
Assembly Drawing: 2564632-1_2_AD

This list covers pages from 7-160 to 7-171

Pos	Part No	UN	Qty	Description	Page No
A3/FLEX TBA 0200B WITH ARL, A3/FLEX TBA 0200S WITH ARL, A3/FLEX TBA 0200M WITH ARL, A3/FLEX TBA 0250B WITH ARL, A3/FLEX TBA 0250S WITH ARL, A3/FLEX TBA 0330S WITH ARL, A3/FLEX TBA 0500B WITH ARL, A3/FLEX TBA 0500S WITH ARL, A3/FLEX TBA 1000B WITH ARL, A3/FLEX TBA 1000S WITH ARL, A3/FLEX TBA 1000SQ WITH ARL, A3/FLEX TBA 1500S WITH ARL, A3/FLEX TPA 0330SQ WITH ARL, A3/FLEX TPA 0500SQ WITH ARL, A3/FLEX TPA 1000SQ WITH ARL, A3/FLEX TPA 0200SQ WITH ARL, A3/FLEX TPA 0250SQ WITH ARL, A3/FLEX TPA 0750SQ WITH ARL, A3/FLEX TBA 0200SQ WITH ARL, A3/FLEX TBA 0250SQ WITH ARL (Cont'd) (See drawing on pages: 7-164, 7-166)					
020	2616034-0000		1	COVER PLATE	
100	2633328-0000		1	PNEUMATIC DIAGRAM	
320	312605-0316		10	HEXAGON NUT, M6M M6 A280	
330	315105-0153		20	WASHER BRB6,4X12RFR	
340	312115-0367		2	SCREW ISO4762 M6X14 A4 80	
370	90166-0068	MM	200	TUBE 12 MM PA BLUE	
390	90166-0068	MM	160	TUBE 12 MM PA BLUE	
410	90166-0117	MM	220	HOSE 4/6 PVC BLUE	
450	90166-0068	MM	30	TUBE 12 MM PA BLUE	
510	90113-0470		1	MANIFOLD REGULATOR 10 BAR	
520	90457-0144		1	REGULATOR 0,3-2 BAR	
530	90457-0078		2	PANEL NUT	
540	90458-0306		3	CABLE GLAND, M16X1,5, NO.5311 1010	
560	90043-0064		1	PRESSURE GAUGE, 2048 D=40 MM	
570	342716-0209		1	REDUCER 8-12	
580	342715-0102		7	BLIND PLUG 6 MM	
590	342713-0209		2	PLUG (QUANT.MINIMA= 10PC).	
610	90043-0065		1	MKC NEW FILL PUMP VACUUM PRESSURE GAUGE	
630	90458-2959		3	ELBOW PIPE JOINT, EXT.THREAD,D=12MM-G1/4	
640	90042-0215		12	VALVE BODY 5/2 UNISTABLE	
690	90042-0528		4	BLANKING KIT SEALS ISO SIZE 1	
750	90055-0172		11	ELBOW WITH TAILPIECE 8/8 MM	
760	90055-0173		12	ELBOW WITH TAILPIECE 8/6 MM	
790	342713-0211		14	PLUG, EXT THREAD HEX SOCKET 8638-00-380	
810	90042-0520		1	BASE PLATE ISO SIZE 1	
860	90458-2960		3	ELBOW PIPE JOINT, EXT.THREAD,D=12MM-G3/8	
880	90458-2956		2	ELBOW PIPE JOINT, EXT.THREAD, D=6MM-G1/8	
890	90458-1307		1	BLIND PLUG CIRCULAR, M16X1,5 514GFK/216	
900	350002-0009		1	PUSH-IN L-FITTING QSL-F-G1/4-8	
930	90042-0519		2	BLANK PLATE ISO SIZE 1	
940	342715-0103		9	BLIND PLUG 8 MM	
960	342735-0109		4	ELBOW PIPE JOINT	
970	342748-0109		3	T-CONNECTION 12MM	
990	90166-0068	MM	600	TUBE 12 MM PA BLUE	
995	90166-0068	MM	2000	TUBE 12 MM PA BLUE	
Y6201	90042-0591		1	PILOT VALVE, 04938-333-08	
Y7415	90042-0538		1	PILOT VALVE L=500MM	
Y7425	90042-0585		1	PILOT VALVE L=5M	
Common Parts					
010	2570821-0000		1	SHEET	
310	312115-0376		8	SCREW ISO4762 M6X35 A4 80	
350	90166-0068	MM	100	TUBE 12 MM PA BLUE	
360	90166-0068	MM	30	TUBE 12 MM PA BLUE	
365	90166-0068	MM	120	TUBE 12 MM PA BLUE	
375	90166-0068	MM	50	TUBE 12 MM PA BLUE	
400	90166-0117	MM	200	HOSE 4/6 PVC BLUE	
430	90166-0194	MM	30	TUBE 8 MM PUR BLUE	
440	90166-0194	MM	270	TUBE 8 MM PUR BLUE	
460	90166-0117	MM	220	HOSE 4/6 PVC BLUE	
480	273458-0000		1	SIGN, AIR	
550	90458-0322		4	NUT, M16X1,5	
620	342770-0105		2	STRAIGHT COUPLING INT, D=6 MM - G1/8	
650	90042-0221		1	MKC MAGAZINE PNEUMATIC VALVE	
660	90042-0265		1	HIGH SPEED VENTING VALVE 583-590-000-1	
680	90042-0522		4	PORTED END PIECE ISO SIZE 1	
700	90042-0532		14	BASE PLATE ISO SIZE 1	
740	90328-0017		2	SILENCER, D=6 MM	
770	90328-0024		7	SILENCER G3/8"	
780	90328-0038		1	SILENCER, D=8 MM	
800	90042-0545		1	SUB-BASE SOFT START ISO 1 AND VDMA 01	
830	342716-0203		1	REDUCER 6-8	
840	90140-0020		7	ELBOW, 90, INT/EXT. THREAD, NO. 2020-3/8	
850	342722-0206		1	STRAIGHT COUPLING D=8-G3/8"	
950	342735-0103		1	ELBOW PIPE JOINT	
980	90166-0068	MM	200	TUBE 12 MM PA BLUE	
X7049	90042-0535		1	TERMINAL BOARD 19 CORDS	
X7050	90042-0535		1	TERMINAL BOARD 19 CORDS	
Y6203	90042-0539		1	PILOT VALVE L=350MM	
Y6205	90042-0591		1	PILOT VALVE, 04938-333-08	
Y7303	90042-0539		1	PILOT VALVE L=350MM	
Y7315	90042-0591		1	PILOT VALVE, 04938-333-08	
Y7407	90042-0591		1	PILOT VALVE, 04938-333-08	
Y7408	90042-0538		1	PILOT VALVE L=500MM	
Y7410	90042-0539		1	PILOT VALVE L=350MM	
Y7412	90042-0538		1	PILOT VALVE L=500MM	
Y7413	90042-0538		1	PILOT VALVE L=500MM	
Y7414	90042-0538		1	PILOT VALVE L=500MM	

Machine Type | Group Description | Used-In | Group Number | Page No

VALVE PANEL

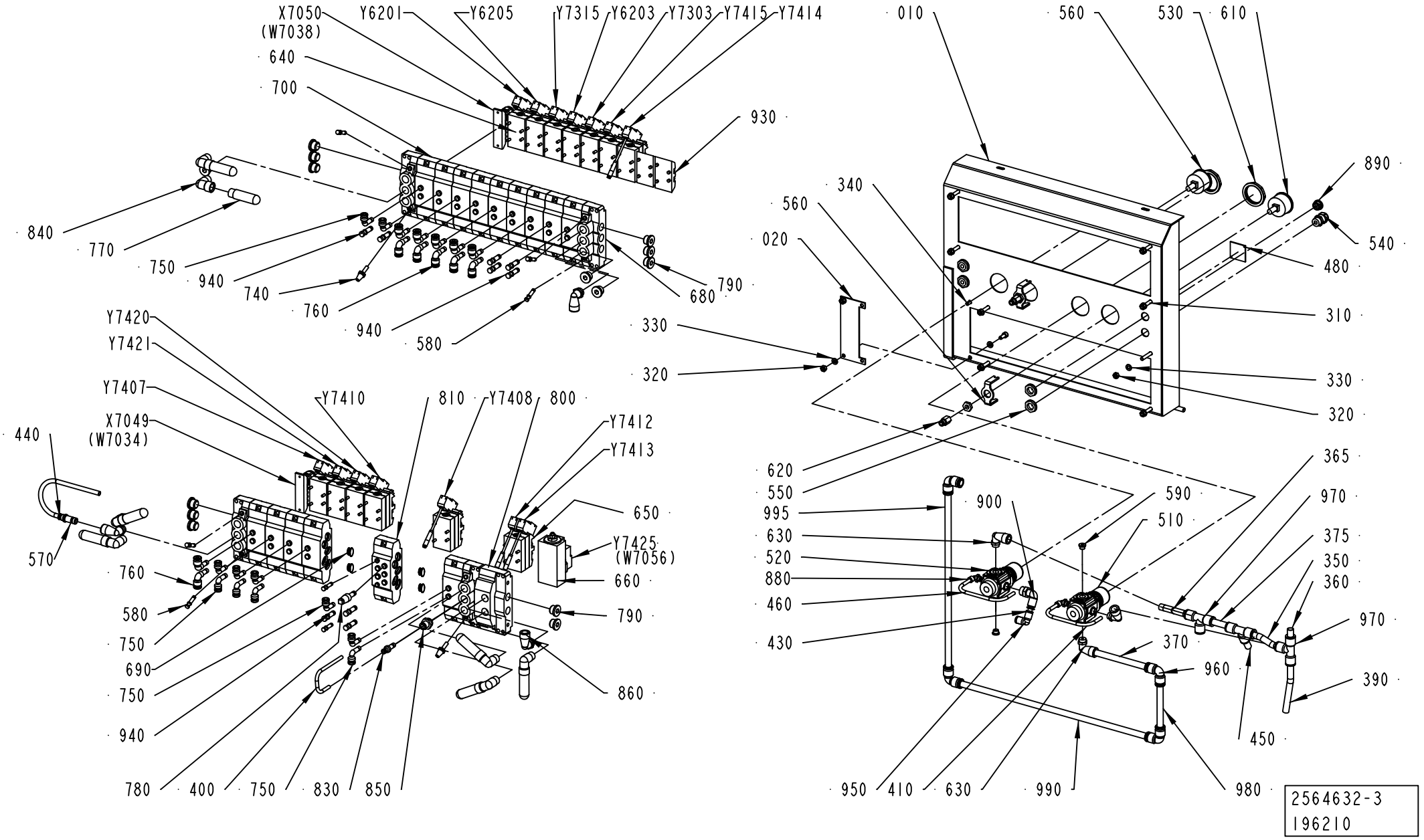
X7050
(W7038)
Y6201
Y6205
Y7315
Y6203
Y7303
Y7415
Y7414
640
700
930
840
770
750
940
740
760
940
580
680
790
Y7420
Y7421
Y7407
X7049
(W7034)
Y7410
810
Y7408
800
Y7412
Y7413
440
570
650
Y7425
(W7056)
660
790
760
580
750
690
750
940
860
780
400
750
830
850
010
560
530
610
890
340
560
020
540
480
310
330
320
330
320
620
550
995
630
520
880
460
430
900
590
510
365
970
375
350
360
970
370
960
390
450
950
410
630
990
980
2564632-3
196210

Pos	Part No	UN	Qty	Description	Page No
Common Parts (Cont'd)					
Y7413	90042-0538		1	PILOT VALVE L=500MM	
Y7414	90042-0538		1	PILOT VALVE L=500MM	
Y7420	90042-0591		1	PILOT VALVE, 04938-333-08	
Y7421	90042-0591		1	PILOT VALVE, 04938-333-08	

Pos	Part No	UN	Qty	Description	Page No

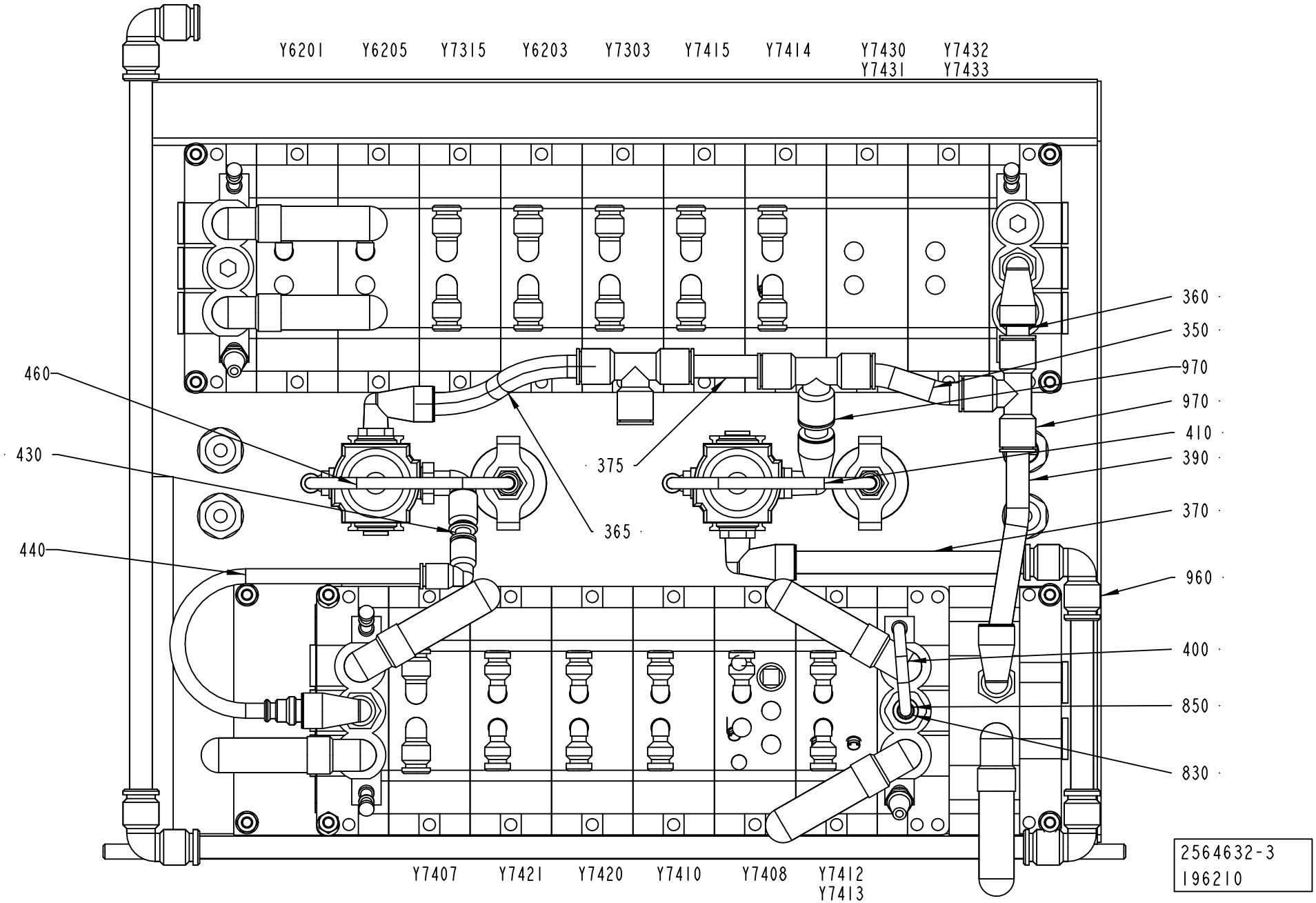
Y6201
Y6205
Y7315
Y6203
Y7303
Y7415
Y7414
Y7430
Y7431
Y7432
Y7433
360
350
970
970
410
390
370
960
400
850
830
460
430
440
375
365
Y7407
Y7421
Y7420
Y7410
Y7408
Y7412
Y7413
2564632-3
196210

ECM: 234399 - 20051129
Group number: 2564632-0100
Assembly Drawing: 2564632-3_2_AC

This list covers pages from 7-160 to 7-171

Pos	Part No	UN	Qty	Description	Page No
SEE PREVIOUS LISTS PAGES: 7-161, 7-163, 7-165.					

Pos	Part No	UN	Qty	Description	Page No

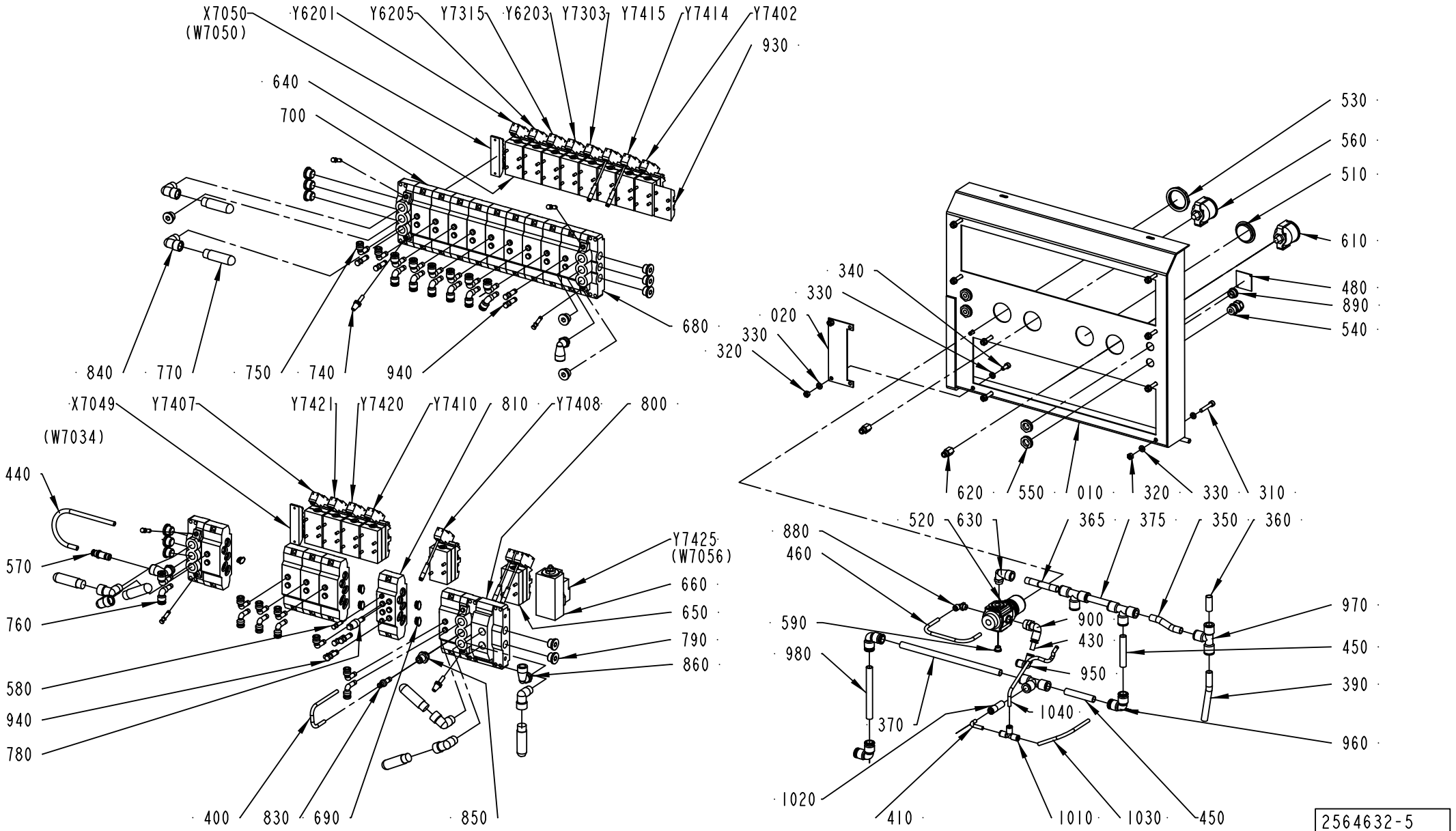
X7050
(W7050)
Y6201
Y6205
Y7315
Y6203
Y7303
Y7415
Y7414
Y7402
930
640
700
680
840
770
750
740
940
X7049
(W7034)
Y7407
Y7421
Y7420
Y7410
810
Y7408
800
440
570
760
580
940
780
Y7425
(W7056)
660
650
790
860
400
830
690
850
530
560
510
610
480
890
540
340
330
020
330
320
620
550
010
320
330
310
520
630
365
375
350
360
880
460
590
980
370
900
430
950
1040
970
450
390
960
1020
410
1010
1030
450
2564632-5
196210

Pos	Part No	UN	Qty	Description	Page No
SEE PREVIOUS LISTS PAGES: 7-161, 7-163, 7-165.					

Pos	Part No	UN	Qty	Description	Page No

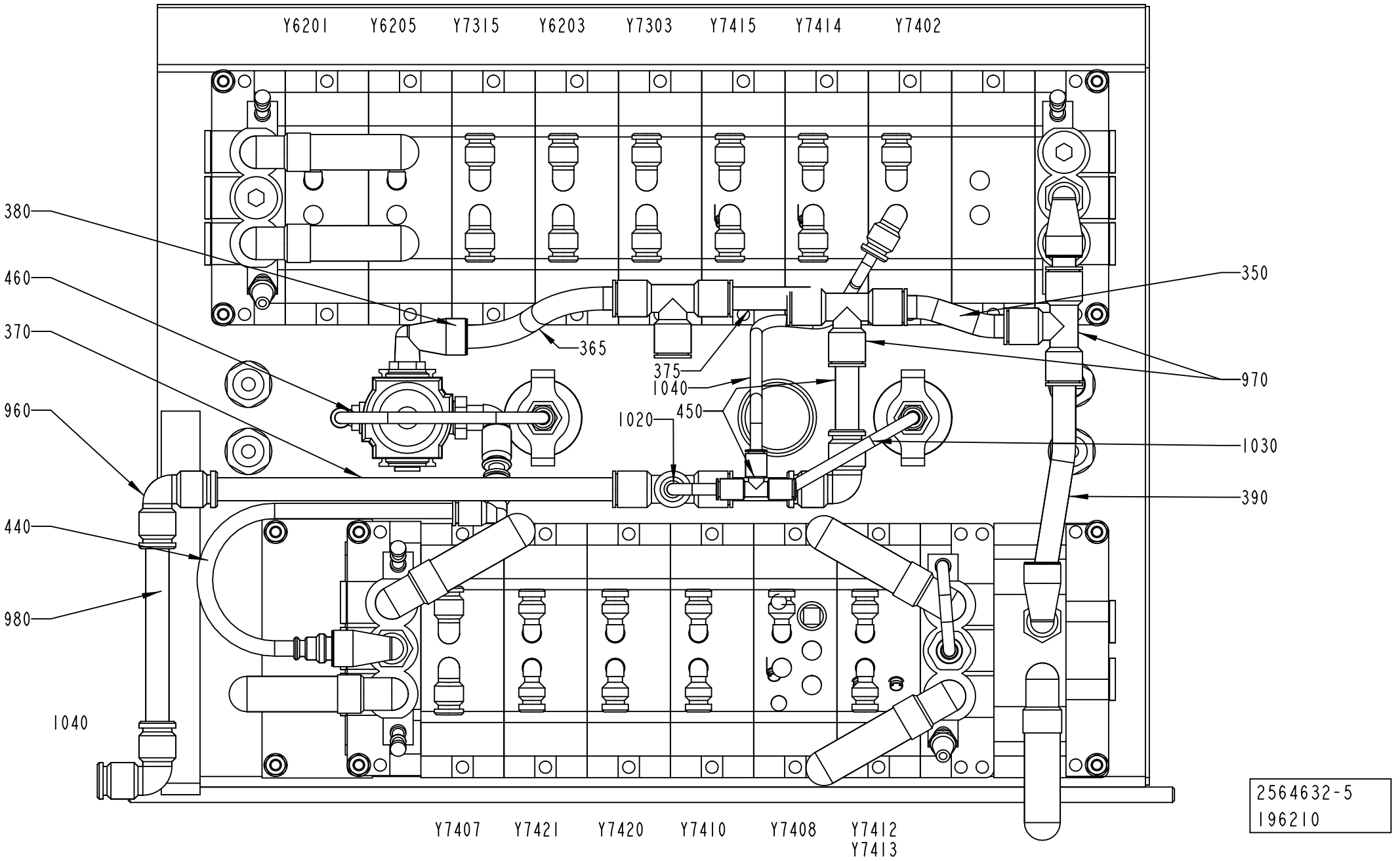
Y6201
Y6205
Y7315
Y6203
Y7303
Y7415
Y7414
Y7402
380
460
370
960
440
980
1040
365
375
1040
1020
450
350
970
1030
390
Y7407
Y7421
Y7420
Y7410
Y7408
Y7412
Y7413
2564632-5
196210

Pos	Part No	UN	Qty	Description	Page No
SEE PREVIOUS LISTS PAGES: 7-161, 7-163, 7-165.					

Pos	Part No	UN	Qty	Description	Page No

BRACKET

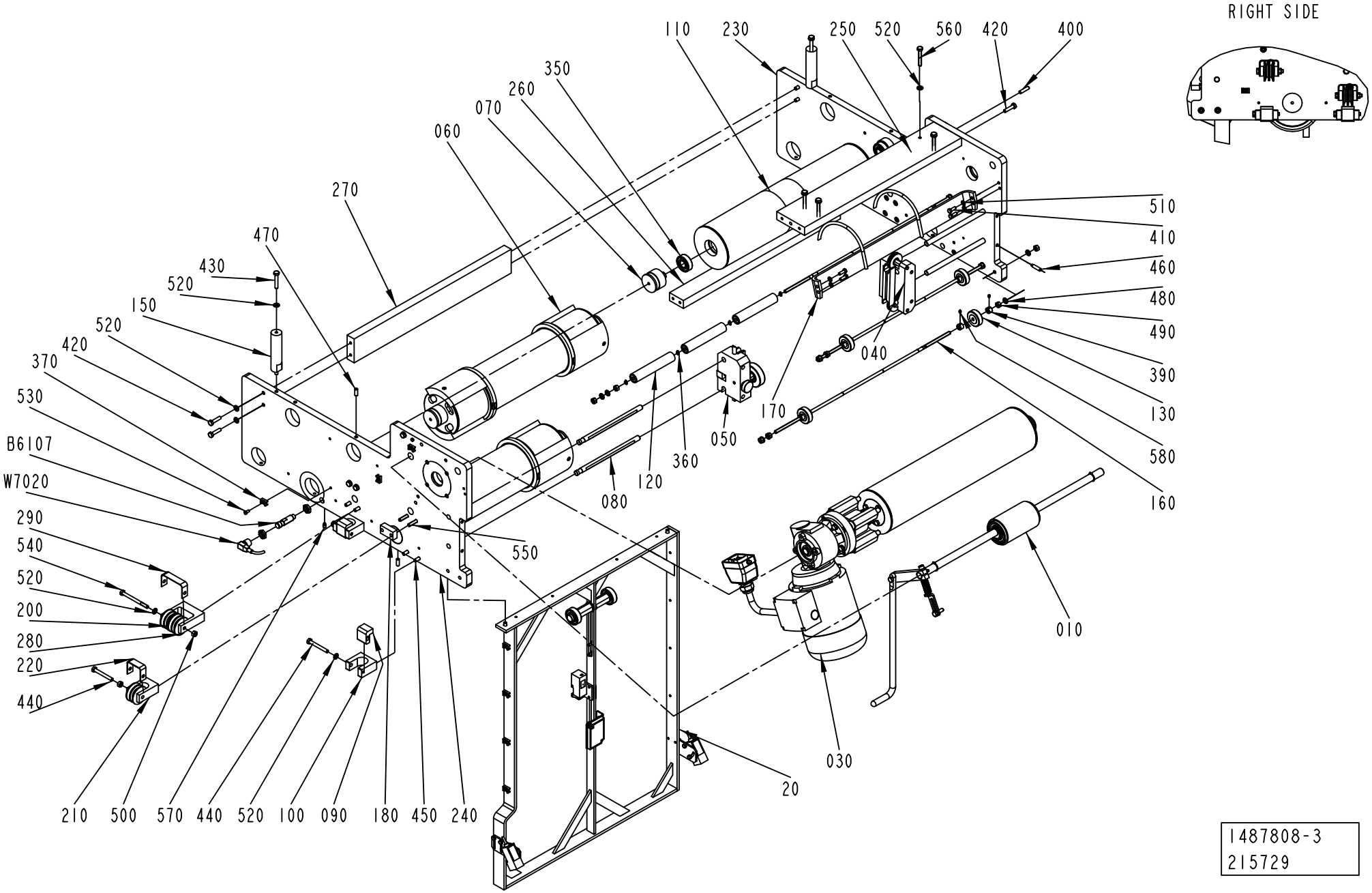

1487808-3
215729

ECM: 235940 - 20051102
Group number: 1487808-0200
Assembly Drawing: 1487808-3_1_AE

Pos	Part No	UN	Qty	Description	Page No
A3/FLEX					
050	1484745-0100		1	WEB GUIDE	**7-93**
070	1499584-0000		2	AXLE PIN	
080	1484704-0000		4	SHAFT	
350	321313-0102		2	BALL BEARING, 15X35X11 MM	
Common Parts					
010	1512429-0100		1	PRESSURE ROLLER	**7-175**
020	1524731-0300		1	BRACKET	**7-177**
030	1524732-0200		1	DRIVE UNIT	**7-179**
040	2529547-0100		1	PAPER GUIDE	**7-113**
060	2605228-0100		2	BENDING ROLLER	**7-181**
090	1484728-0000		4	BRACKET	
100	1484738-0000		4	BRACKET	
110	1484766-0000		1	DANCE ROLLER	
120	1145391-0000		3	ROLLER	
130	1558911-0000		4	PRESSURE ROLLER	
150	1487802-0000		2	SPACER	
160	2701319-0000		3	GUIDE PIN	
170	2550896-0000		1	RAIL	
180	1519960-0000		1	SPACER	
200	1519581-0000		5	ROLLER BAR	
210	1519586-0000		3	BRACKET	
220	1519592-0000		4	BOW	
230	1490814-0000		1	PLATE	
240	1490815-0000		1	PLATE	
250	1487795-0000		1	PLATE	
260	1487796-0000		1	PLATE	
270	1487800-0000		1	PLATE	
280	1538192-0000		1	BRACKET	
290	1539396-0000		1	BOW CLAMP	
360	315751-0103		4	RETAINING RING FOR SHAFT DIN 471 6 A2	
370	352113-0205		6	ANCHOR PLATES FOR STRIPS, TYPE TM2S8-C10	
390	315741-0102		8	RETAINING RING DIN 705 A2 6	
400	311103-0355		2	PARALLEL PIN ISO 2338 6M6X25 A1	
410	312105-0328		4	SCREW M6S ISO 4017 M5X14 A480	
420	312105-0372		11	SCREW M6S ISO 4017 M6X25 A480	
430	312105-0376		2	SCREW M6S ISO 4014 M6X35 A480	
440	312105-0380		8	SCREW M6S ISO 4014 M6X50 A480	
450	312115-0370		14	SCREW ISO4762 M6X20 A4 80	
460	312311-0372		4	SCREW ISO4028 M6X25 FZB	
470	312318-0368		5	SCREW ISO4029 M6X16 A4	
480	315103-0153		12	WASHER, BRB, 6,4/12,H=1,5 NIPL BR	
490	312607-0316		12	HEXAGON NUT, EN 24032 M6M M6 A480	
500	312605-0316		5	HEXAGON NUT, M6M M6 A280	
510	315105-0146		4	WASHER BRB5,3X10RFR	
520	315105-0153		25	WASHER BRB6,4X12RFR	
530	312125-0287		6	SCREW ISO 1207 M4X8 A4	
540	312105-0384		1	SCREW M6S ISO 4014 M6X70 A480	
550	312115-0374		2	SCREW ISO4762 M6X30 A4 80	
560	312109-0378		4	SCREW M6S ISO 4017 M6X40 A480	
570	90287-0154		1	SCREW, SOCK.SET DOGPOINT M6X10	
580	312318-0283		8	SCREW ISO4029 M4X4 A4	
B6107	90458-0677		1	PROXIMITY SWITCH, E2EG-X5MB1-M1	
W7020	90458-1076		1	L-SHAPED CONNECTOR CABLE 933 235-042	

PRESSURE ROLLER

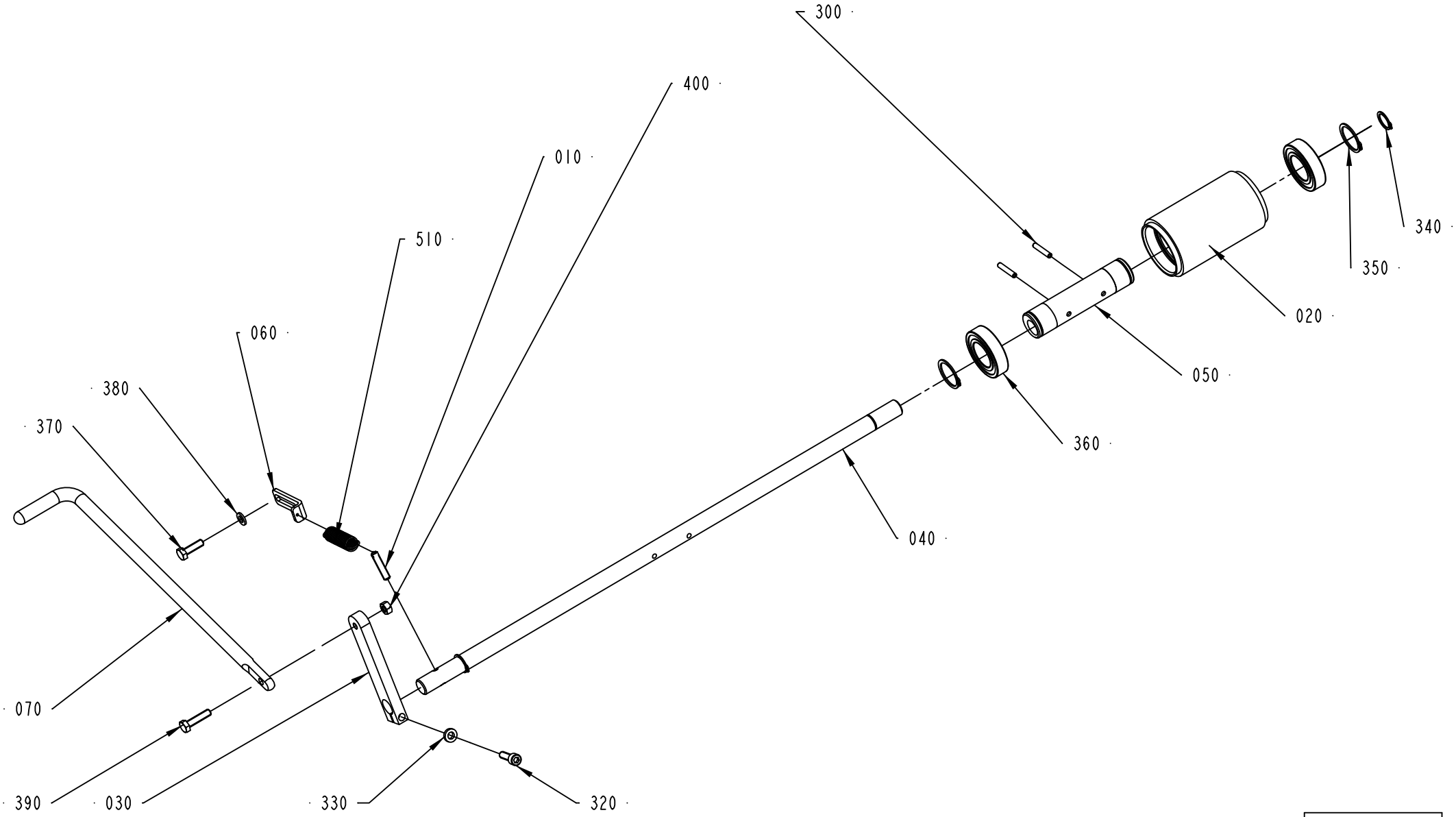

1512429-1
ECM 118625

ECM: 180671 - 20041005
Group number: 1512429-0100
Assembly Drawing: 1512429-1_1_AC

Pos	Part No	UN	Qty	Description	Page No
-					
010	578684-0000		1	SPRING BRACKET	
020	906254-0000		1	ROLLER	
030	2576379-0000		1	ROCKER ARM	
040	1487521-0000		1	SHAFT	
050	1512267-0000		1	ECCENTRIC BUSHING	
060	2529549-0000		1	PLATE	
070	2578455-0000		1	LIFTING HANDLE	
300	311112-0258		2	SPRING PIN, ISO 8752 4X24-C	
310	312105-0368		1	SCREW M6S ISO 4017 M6X16 A480	
320	312115-0370		1	SCREW ISO4762 M6X20 A4 80	
330	315115-0153		1	WASHER PLAIN, TBRB 6,4/12 H=3	
340	315751-0112		2	RETAINING RING FOR SHAFT DIN 471 15 A2	
350	315751-0119		2	RETAINING RING FOR SHAFT DIN 471 25 A2	
360	321308-0205		2	BALL BEARING, 25X47X12MM	
370	312105-0370		1	SCREW M6S ISO 4017 M6X20 A480	
380	315105-0153		1	WASHER BRB6,4X12RFR	
390	312105-0372		1	SCREW M6S ISO 4017 M6X25 A480	
400	312605-0316		1	HEXAGON NUT, M6M M6 A280	
500	90051-0082		1	KNOB, CIRCUL, THREADED BUSH, M6 25X21 MM	
510	90335-0091		1	TENSION SPRING 41890, 1,2X13X48,2	

Pos	Part No	UN	Qty	Description	Page No

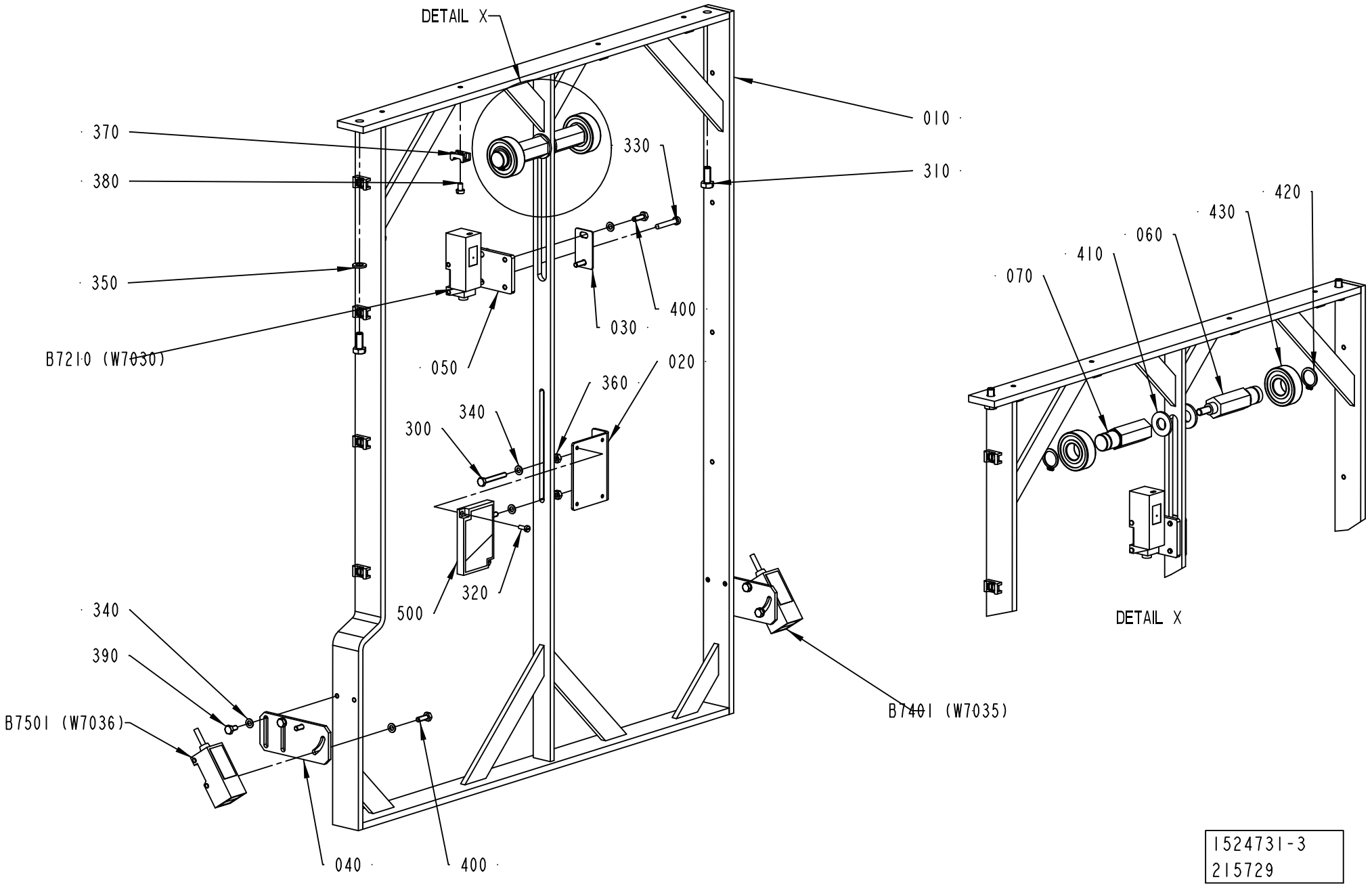

1524731-3
215729

ECM: 215729 - 20050601
Group number: 1524731-0300
Assembly Drawing: 1524731-3_1_AA

Pos	Part No	UN	Qty	Description	Page No
-					
010	2541942-0000		1	BRACKET	
020	1487784-0000		1	BRACKET	
030	1517105-0000		1	PLATE	
040	2542496-0000		2	BRACKET	
050	2651925-0000		1	PLATE	
060	2737841-0000		1	BRACKET	
070	2737842-0000		1	BRACKET	
300	312105-0299		2	SCREW M6S ISO 4017 M4X30 A470	
310	312105-0367		2	SCREW M6S ISO 4017 M6X14 A480	
320	312125-0222		2	SCREW ISO 1207 M3X8 A4	
330	312125-0297		2	SCREW ISO 1207 M4X25 A4	
340	315105-0136		14	WASHER BRB4,3XRFR	
350	315105-0153		2	WASHER BRB6,4X12RFR	
360	312605-0312		4	HEXAGON NUT, M6M M4 A280	
370	352113-0205		12	ANCHOR PLATES FOR STRIPS, TYPE TM2S8-C10	
380	312125-0285		12	SCREW ISO 1207 M4X6 A4	
390	312105-0287		4	SCREW M6S ISO 4017 M4X8 A470	
400	312105-0291		6	SCREW M6S ISO 4017 M4X12 A470	
410	315105-0173		2	WASHER BRB10,5X22RFR	
420	315750-0112		2	RETAINING RING SHAFT DIN 471 ST 15	
430	321313-0102		2	BALL BEARING, 15X35X11 MM	
500	90232-0333		1	REFLECTOR E39-R1	
B7210	90232-0129		1	PH.CELL E3S-CR61-5M	
B7401	90232-0106		1	PH.CELL E3S-CR11-5M	
B7501	90232-0106		1	PH.CELL E3S-CR11-5M	

Pos	Part No	UN	Qty	Description	Page No

Machine Type | Group Description | Used-In | Group Number | Page No

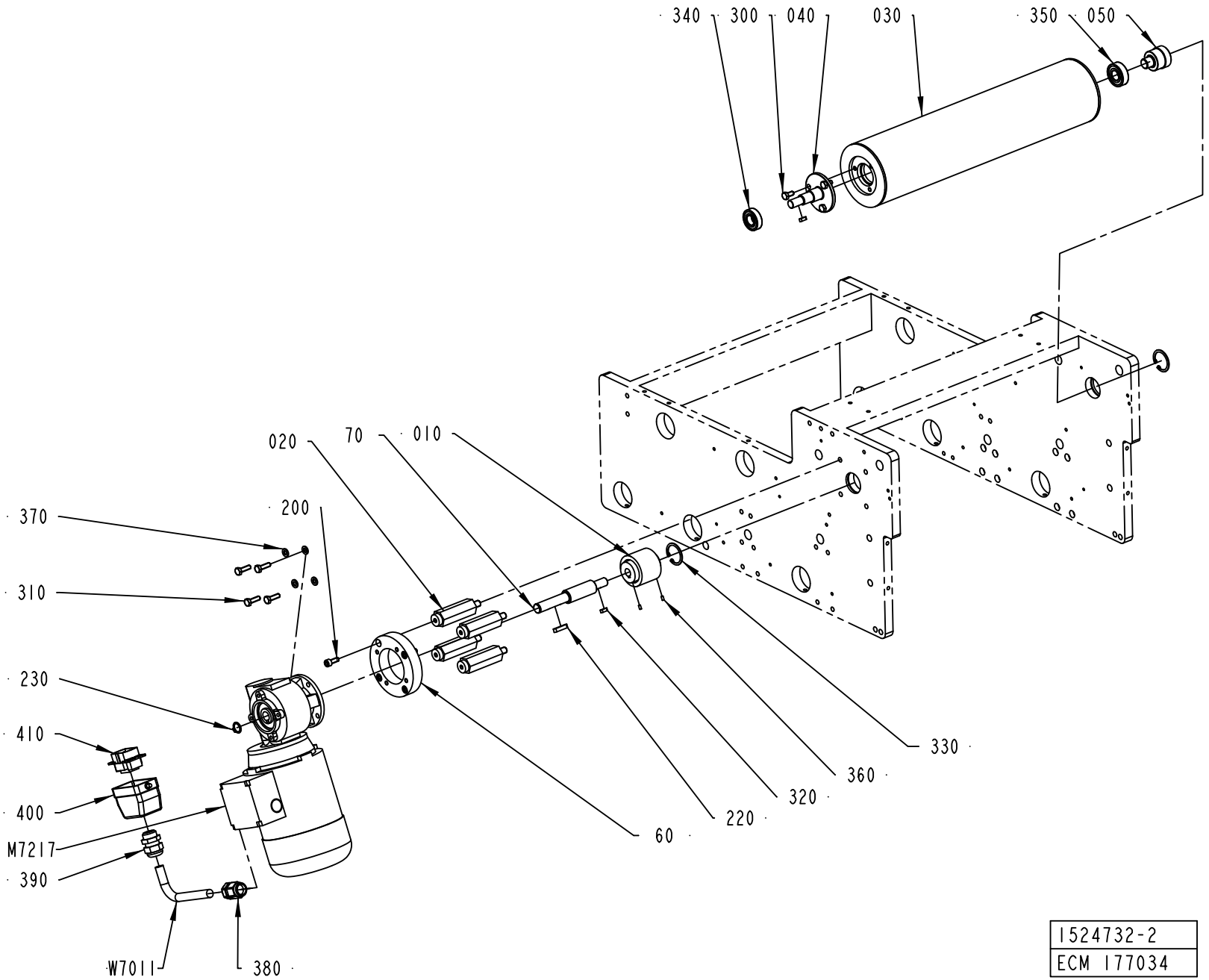
340
300
040
030
350
050
020
70
010
200
370
310
230
410
400
M7217
390
W7011
380
60
220
320
360
330
1524732-2
ECM 177034

ECM: 197693 - 20050509
Group number: 1524732-0200
Assembly Drawing: 1524732-2_1_AD

Pos	Part No	UN	Qty	Description	Page No
A3/FLEX					
030	2523497-0000		1	BENDING ROLLER	
W7011	90220-0104	M	9	SCR. CABLE 4X1,5MM2	
Common Parts					
010	979847-0000		1	SHAFT COUPLING	
020	1487788-0000		4	SPACER	
040	2523499-0000		1	SHAFT	
050	2523500-0000		1	AXLE PIN	
060	2532561-0000		1	SPACER	
070	2588067-0000		1	SHAFT	
200	312115-0368		4	SCREW ISO4762 M6X16 A4 80	
220	315705-0202		1	PARALLEL KEY W ROUND ENDS 5X5X25MM	
230	315751-0111		1	RETAINING RING FOR SHAFT DIN 471 14 A2	
300	312105-0366		3	SCREW M6S ISO 4017 M6X12 A480	
310	312105-0370		4	SCREW M6S ISO 4017 M6X20 A480	
320	315701-0166		2	PARALLEL KEY W. ROUND ENDS 4X4X12 MM	
330	315753-0123		2	RETAINING RING FOR BORE DIN 472 32 A2	
340	321308-0202		1	BALL BEARING, 15X32X9 MM	
350	321313-0102		1	BALL BEARING, 15X35X11 MM	
360	312318-0220		2	SCREW ISO4029 M3X6 A4	
370	315105-0153		4	WASHER BRB6,4X12RFR	
380	90458-0438		1	GLAND, EXTENDED WITH INSERT, M20X1,5	
390	352103-0108		1	CABLE GLAND, ST 13,5 , PR20,4/PG13,5	
400	90110-0157		1	CABLE HOOD 6-POL 70.352.0628.1	
410	90110-0159		1	MALE INSERT 70.310.0640.0	
M7217	90459-2096		1	GEARS, WORM MOTOR F2 15 P63 B14 B8 PV 75	

Pos	Part No	UN	Qty	Description	Page No

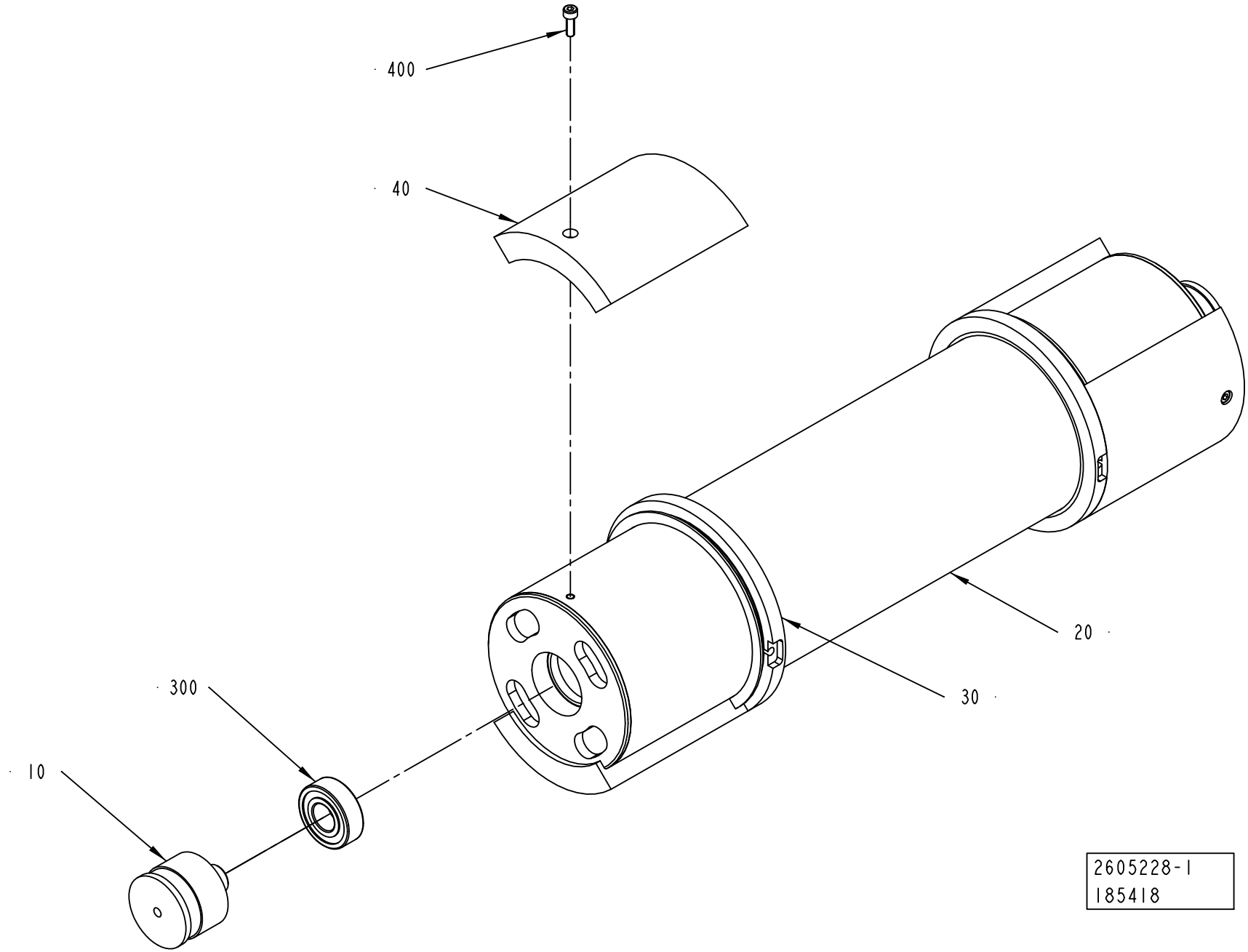
400
40
20
30
300
10
2605228-1
185418

ECM: 224781 - 20050831
Group number: 2605228-0100
Assembly Drawing: 2605228-1_1_AB

Pos	Part No	UN	Qty	Description	Page No
TPA 1000SQ, TPA 0750SQ (See drawing on page: 7-180)					
040	2508205-0012		4	BRACKET	
TBA 0200S, TPA 0250SQ, TPA 0200SQ (See drawing on page: 7-180)					
040	2508205-0010		4	BRACKET	
TBA 0250S, TBA 0200M (See drawing on page: 7-180)					
040	2508205-0009		4	BRACKET	
TBA 0330S, TBA 0200B, TBA 0250B, TBA 0200SQ, TBA 0250SQ (See drawing on page: 7-180)					
040	2508205-0007		4	BRACKET	
TPA 0500SQ (See drawing on page: 7-180)					
040	2508205-0006		4	BRACKET	
TBA 0500S (See drawing on page: 7-180)					
040	2508205-0005		4	BRACKET	
TBA 1000B, TBA 1500S (See drawing on page: 7-180)					
040	2508205-0001		4	BRACKET	
TBA 1000S (See drawing on page: 7-180)					
040	2508205-0002		4	BRACKET	
TBA 1000SQ (See drawing on page: 7-180)					
040	2508205-0003		4	BRACKET	
TBA 1890S, TBA 2000S					
040	2701847-0000		4	BRACKET	
TPA 0330SQ (See drawing on page: 7-180)					
040	2508205-0008		4	BRACKET	
Common Parts					
010	1499584-0000		2	AXLE PIN	
020	2508206-0000		1	BENDING ROLLER	
030	2701846-0000		2	FLANGE	
300	321313-0102		2	BALL BEARING, 15X35X11 MM	
400	312115-0291		4	SCREW ISO4762 M4X12 A4 80	

Pos	Part No	UN	Qty	Description	Page No

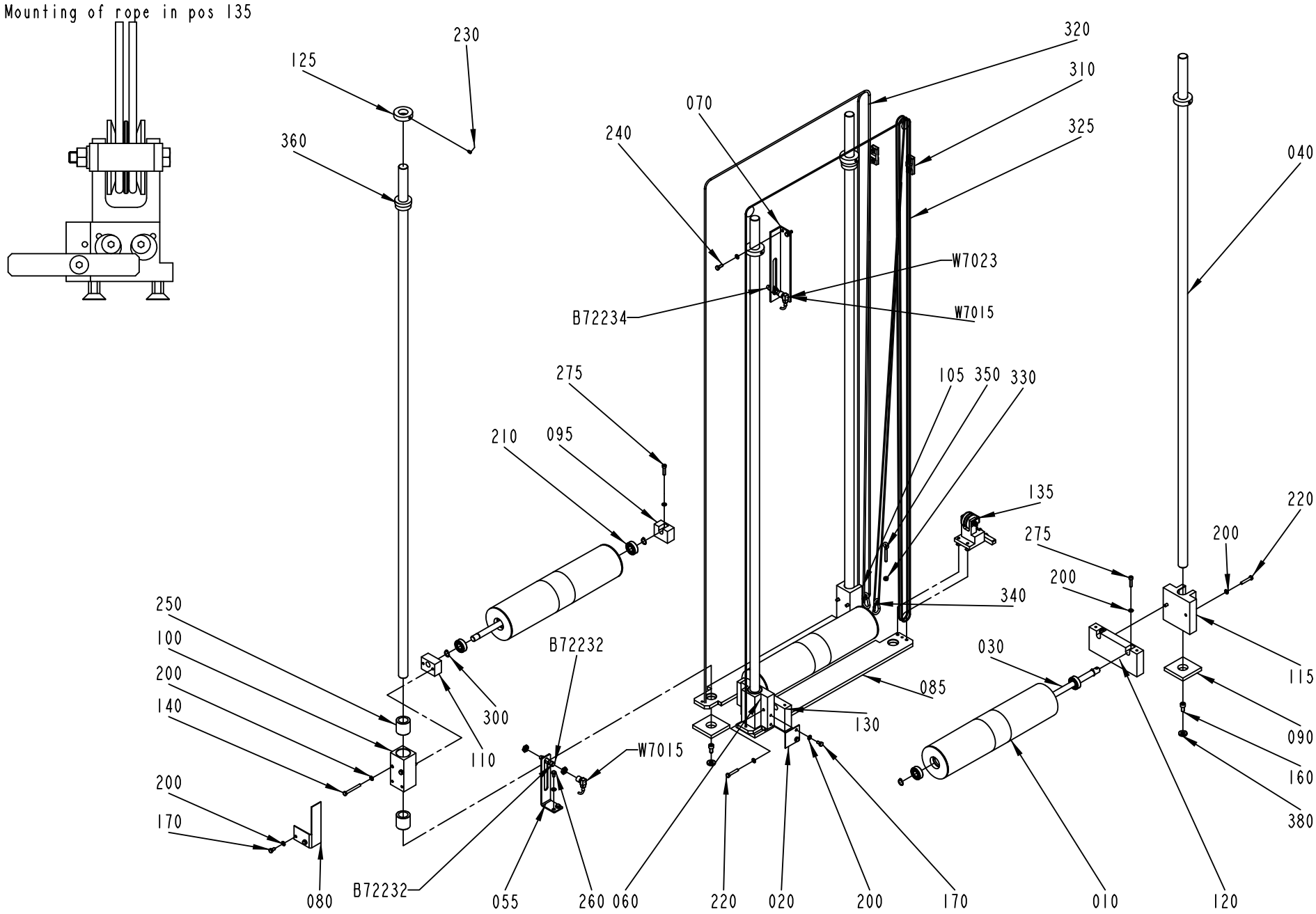
Mounting of rope in pos 135
230
125
360
320
310
325
070
240
040
W7023
B72234
W7015
275
105 350 330
210
095
135
220
275
200
200
340
250
100
200
140
B72232
030
085
300
130
115
110
W7015
090
160
380
200
170
080
B72232
055
260 060
220
020
200
170
010
120
1490831-2
ECM 172866

ECM: 210995 - 20050517
Group number: 1490831-0200
Assembly Drawing: 1490831-2_1_AD

This list covers pages from 7-182 to 7-185

Pos	Part No	UN	Qty	Description	Page No
TBA 1890S, TBA 2000S (See drawing on pages: 7-182, 7-184)					
150	2609303-0000		2	WEIGHT	
290	90287-0261		4	SCREW MC6S M5X55 A270	
Common Parts					
010	1484766-0000		3	DANCE ROLLER	
020	1484778-0000		1	PLATE	
030	1487519-0000		3	SHAFT	
040	1487530-0001		4	GUIDE ROD	
055	1484761-0000		1	ANGLE BRACKET	
060	1487536-0000		1	GUIDE BRACKET	
070	1487550-0000		1	ANGLE BRACKET	
080	1487551-0000		1	PLATE	
085	1519942-0000		2	PLATE	
090	1487765-0000		4	SPACER	
095	1511579-0000		1	BRACKET	
100	1484752-0000		1	SLIDER	
105	1484760-0000		1	SLIDER	
110	1490183-0000		1	BRACKET	
115	1511564-0000		1	BRACKET	
120	1487537-0000		1	BRACKET	
125	1487769-0000		4	SPACER	
130	1487538-0000		1	BRACKET	
135	1548210-0100		1	LOCKING DEVICE	**7-187**
140	312105-0381		4	SCREW M6S ISO 4014 M6X55 A480	
160	312115-0489		4	SCREW ISO4762 M10X16 A4 80	
170	312105-0366		4	SCREW M6S ISO 4017 M6X12 A480	
200	315105-0153		19	WASHER BRB6,4X12RFR	
210	321313-0102		6	BALL BEARING, 15X35X11 MM	
220	312105-0376		4	SCREW M6S ISO 4014 M6X35 A480	
230	90287-0154		4	SCREW, SOCK.SET DOGPOINT M6X10	
240	312105-0368		2	SCREW M6S ISO 4017 M6X16 A480	
250	90189-0025		4	BALL BUSHING, 25X37X37 MM	
260	312105-0364		2	SCREW M6S ISO 4017 M6X10 A480	
275	312115-0372		3	SCREW ISO4762 M6X25 A4 80	
300	315751-0112		6	RETAINING RING FOR SHAFT DIN 471 15 A2	
310	90211-0002		2	WIRE LOCK, 5 MM	
320	90319-0013	M	12	ROPE 4MM BLUE 3700N	
325	90319-0013	M	8	ROPE 4MM BLUE 3700N	
330	312605-0316		1	HEXAGON NUT, M6M M6 A280	
340	90459-2704		2	SNAP HOOK STAINLESS 50X5MM	
350	90459-2705		1	LIFTING EYE BOLT, M6X40MM	
360	353249-0054		2	INSERT, SINGEL HOLE, EK 156/25	
380	315115-0173		4	WASHER PLAIN, TBRB 10,5/22 H=4	
B72232	90458-0677		1	PROXIMITY SWITCH, E2EG-X5MB1-M1	
B72234	90458-0677		1	PROXIMITY SWITCH, E2EG-X5MB1-M1	
W7015	90458-1076		1	L-SHAPED CONNECTOR CABLE 933 235-042	
W7023	90458-1076		1	L-SHAPED CONNECTOR CABLE 933 235-042	

Machine Type | Group Description | Used-In | Group Number | Page No

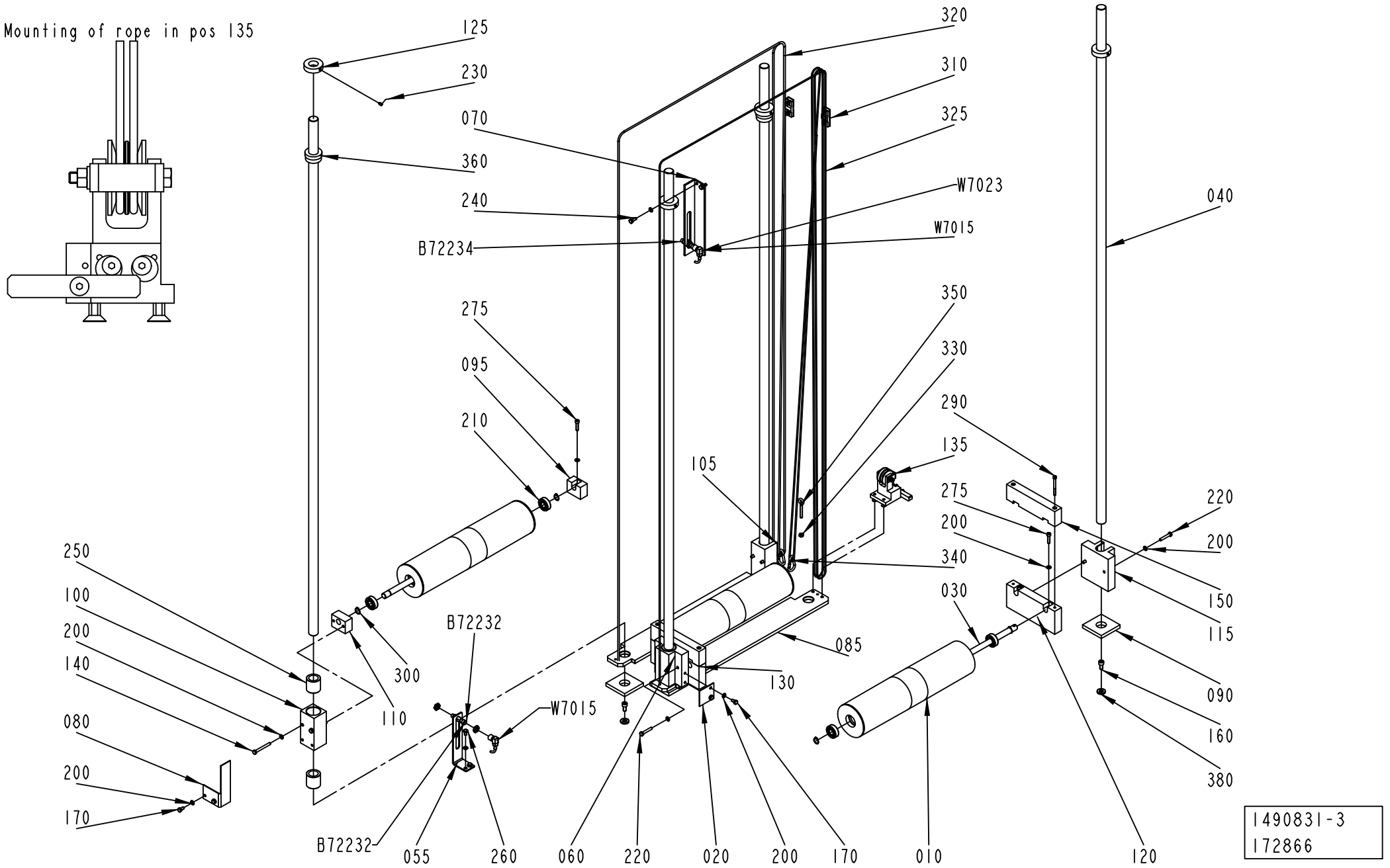
Mounting of rope in pos 135
125
230
070
360
240
B72234
320
310
325
W7023
W7015
040
275
095
210
105
350
330
290
135
275
200
340
030
220
200
150
115
250
100
200
140
080
200
170
300
110
B72232
W7015
B72232
055
260
060
220
020
200
170
085
130
010
120
090
160
380
1490831-3
172866

ECM: 210995 - 20050517
Group number: 1490831-0200
Assembly Drawing: 1490831-3_1_AA

This list covers pages from 7-182 to 7-185

Pos	Part No	UN	Qty	Description	Page No
TBA 1890S, TBA 2000S (See drawing on pages: 7-182, 7-184)					
150	2609303-0000		2	WEIGHT	
290	90287-0261		4	SCREW MC6S M5X55 A270	
Common Parts					
010	1484766-0000		3	DANCE ROLLER	
020	1484778-0000		1	PLATE	
030	1487519-0000		3	SHAFT	
040	1487530-0001		4	GUIDE ROD	
055	1484761-0000		1	ANGLE BRACKET	
060	1487536-0000		1	GUIDE BRACKET	
070	1487550-0000		1	ANGLE BRACKET	
080	1487551-0000		1	PLATE	
085	1519942-0000		2	PLATE	
090	1487765-0000		4	SPACER	
095	1511579-0000		1	BRACKET	
100	1484752-0000		1	SLIDER	
105	1484760-0000		1	SLIDER	
110	1490183-0000		1	BRACKET	
115	1511564-0000		1	BRACKET	
120	1487537-0000		1	BRACKET	
125	1487769-0000		4	SPACER	
130	1487538-0000		1	BRACKET	
135	1548210-0100		1	LOCKING DEVICE	**7-187**
140	312105-0381		4	SCREW M6S ISO 4014 M6X55 A480	
160	312115-0489		4	SCREW ISO4762 M10X16 A4 80	
170	312105-0366		4	SCREW M6S ISO 4017 M6X12 A480	
200	315105-0153		19	WASHER BRB6,4X12RFR	
210	321313-0102		6	BALL BEARING, 15X35X11 MM	
220	312105-0376		4	SCREW M6S ISO 4014 M6X35 A480	
230	90287-0154		4	SCREW, SOCK.SET DOGPOINT M6X10	
240	312105-0368		2	SCREW M6S ISO 4017 M6X16 A480	
250	90189-0025		4	BALL BUSHING, 25X37X37 MM	
260	312105-0364		2	SCREW M6S ISO 4017 M6X10 A480	
275	312115-0372		3	SCREW ISO4762 M6X25 A4 80	
300	315751-0112		6	RETAINING RING FOR SHAFT DIN 471 15 A2	
310	90211-0002		2	WIRE LOCK, 5 MM	
320	90319-0013	M	12	ROPE 4MM BLUE 3700N	
325	90319-0013	M	8	ROPE 4MM BLUE 3700N	
330	312605-0316		1	HEXAGON NUT, M6M M6 A280	
340	90459-2704		2	SNAP HOOK STAINLESS 50X5MM	
350	90459-2705		1	LIFTING EYE BOLT, M6X40MM	
360	353249-0054		2	INSERT, SINGEL HOLE, EK 156/25	
380	315115-0173		4	WASHER PLAIN, TBRB 10,5/22 H=4	
B72232	90458-0677		1	PROXIMITY SWITCH, E2EG-X5MB1-M1	
B72234	90458-0677		1	PROXIMITY SWITCH, E2EG-X5MB1-M1	
W7015	90458-1076		1	L-SHAPED CONNECTOR CABLE 933 235-042	
W7023	90458-1076		1	L-SHAPED CONNECTOR CABLE 933 235-042	

Machine Type | Group Description | Used-In | Group Number | Page No

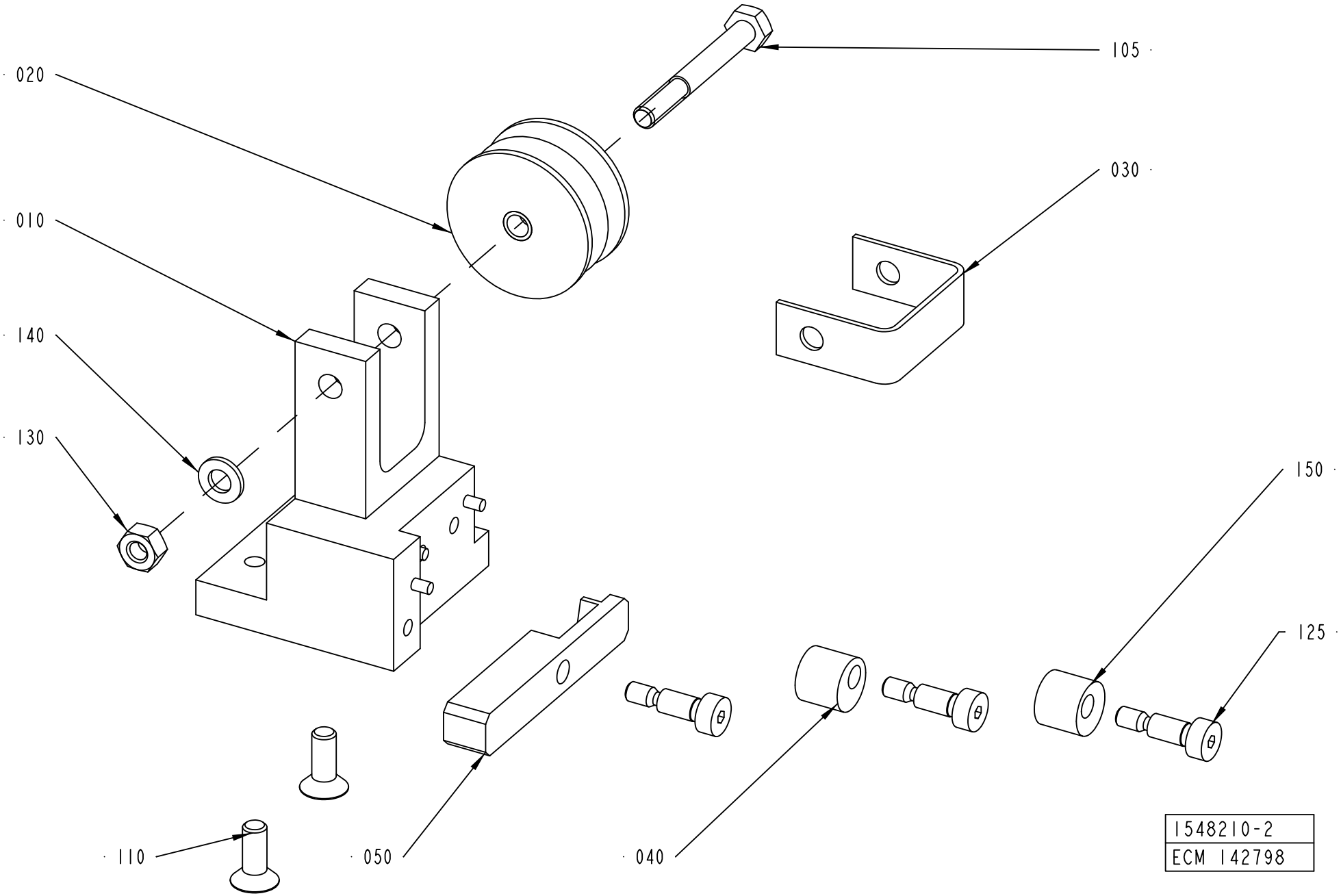
020
105
030
010
140
130
150
125
110
050
040
1548210-2
ECM 142798

ECM: 181010 - 20041005
Group number: 1548210-0100
Assembly Drawing: 1548210-2_1_AB

Pos	Part No	UN	Qty	Description	Page No
-					
010	2576244-0000		1	BRACKET	
020	1519581-0000		1	ROLLER BAR	
030	1519592-0000		1	BOW	
040	1539397-0000		1	ROLLER	
050	2576245-0000		1	ARM	
105	312105-0380		1	SCREW M6S ISO 4014 M6X50 A480	
110	312155-0368		2	SCREW DIN 7991 MF6S M6X16 A4 70	
125	312180-0366		3	SCREW ISO7379 H6X12	
130	312605-0316		1	HEXAGON NUT, M6M M6 A280	
140	315105-0153		1	WASHER BRB6,4X12RFR	
150	1549332-0000		1	ROLLER	

Pos	Part No	UN	Qty	Description	Page No

COVERING PANEL

Drawing file: 1490215-1_1_AC.hpgl

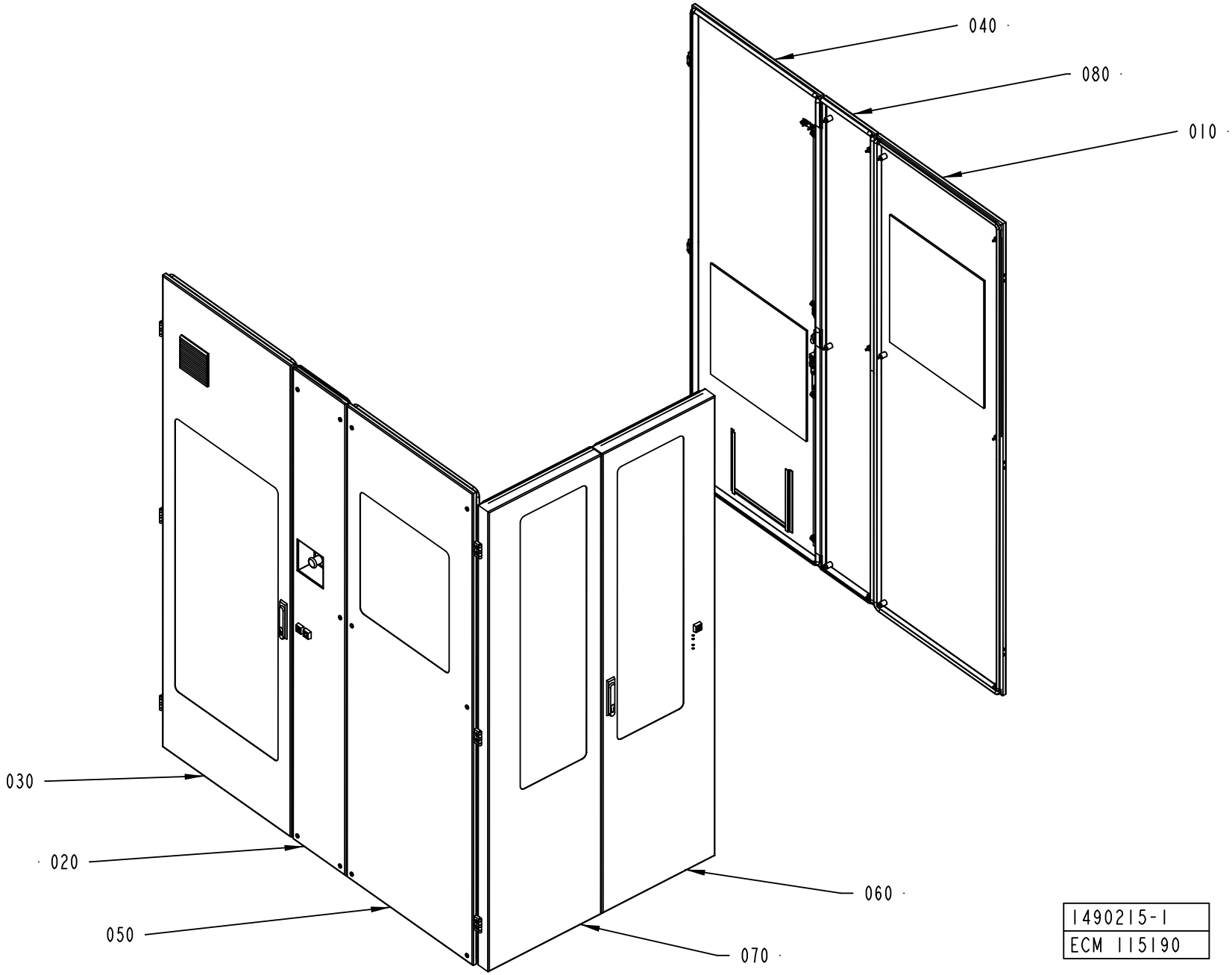

ECM: 181011 - 20041005
Group number: 1490215-0200
Assembly Drawing: 1490215-1_1_AC

This list covers pages from 7-188 to 7-191

Pos	Part No	UN	Qty	Description	Page No
A3/FLEX WITH ARL (See drawing on page: 7-190)					
085	2591680-0100		1	HOLDER	**7-193**
Common Parts					
010	1499564-0100		1	COVER	**7-195, 7-197**
020	1490190-0200		1	HATCH	**7-201**
030	1490191-0100		1	DOOR	**7-207**
040	1558988-0100		1	DOOR	**7-209**
050	1490193-0100		1	COVER	**7-211, 7-213**
060	1498453-0200		1	DOOR	**7-217**
070	1498454-0200		1	DOOR	**7-221**
080	1490188-0100		1	COVER	**7-223**

Pos	Part No	UN	Qty	Description	Page No

COVERING PANEL

Drawing file: 1490215-10_1_AA.hpgl

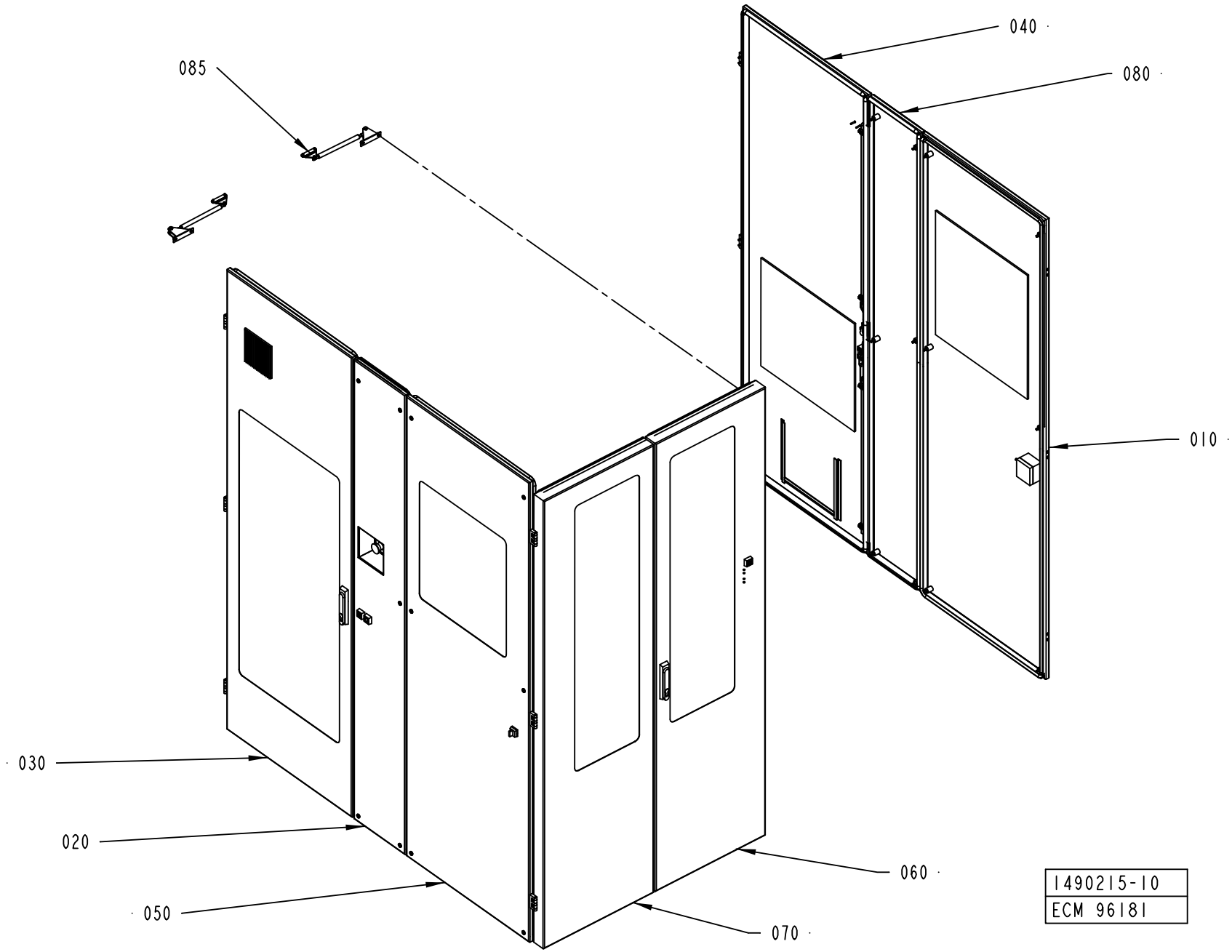

ECM: 181011 - 20041005
Group number: 1490215-0200
Assembly Drawing: 1490215-10_1_AA

This list covers pages from 7-188 to 7-191

Pos	Part No	UN	Qty	Description	Page No
A3/FLEX WITH ARL (See drawing on page: 7-190)					
085	2591680-0100		1	HOLDER	**7-193**
Common Parts					
010	1499564-0100		1	COVER	**7-195, 7-197**
020	1490190-0200		1	HATCH	**7-201**
030	1490191-0100		1	DOOR	**7-207**
040	1558988-0100		1	DOOR	**7-209**
050	1490193-0100		1	COVER	**7-211, 7-213**
060	1498453-0200		1	DOOR	**7-217**
070	1498454-0200		1	DOOR	**7-221**
080	1490188-0100		1	COVER	**7-223**

Pos	Part No	UN	Qty	Description	Page No

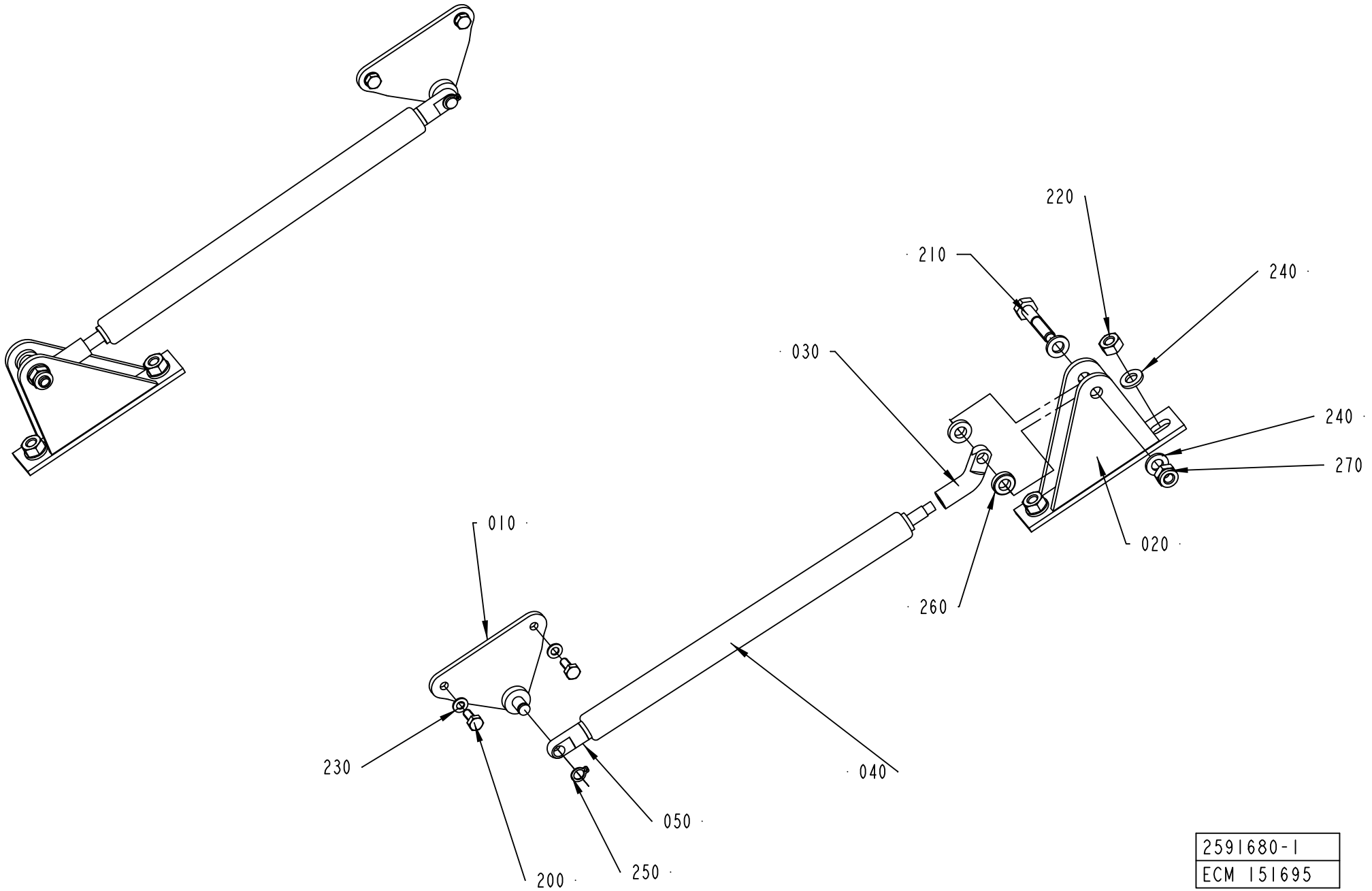

2591680-1
ECM 151695

ECM: 181166 - 20041005
Group number: 2591680-0100
Assembly Drawing: 2591680-1_1_AA

Pos	Part No	UN	Qty	Description	Page No
-					
010	90459-3179		2	GAS SPRING BRACKET, BES/AUG/06/001	
020	2589786-0000		2	BRACKET	
030	2589787-0000		2	FITTING	
040	90459-3181		2	GAS SPRING, G15-150-50N STAINLESS STEEL	
050	90459-3182		2	GAS SPRING FITTNG, AU16 STAINLESS STEEL	
200	312105-0289		4	SCREW M6S ISO 4017 M4X10 A470	
210	312105-0374		2	SCREW M6S ISO 4014 M6X30 A480	
220	312605-0316		4	HEXAGON NUT, M6M M6 A280	
230	315105-0136		4	WASHER BRB4,3XRFR	
240	315105-0153		8	WASHER BRB6,4X12RFR	
250	315751-0103		2	RETAINING RING FOR SHAFT DIN 471 6 A2	
260	315115-0153		4	WASHER PLAIN, TBRB 6,4/12 H=3	
270	312812-0316		2	HEXAGON NUT, NY-LOCK M6 A480	

Pos	Part No	UN	Qty	Description	Page No

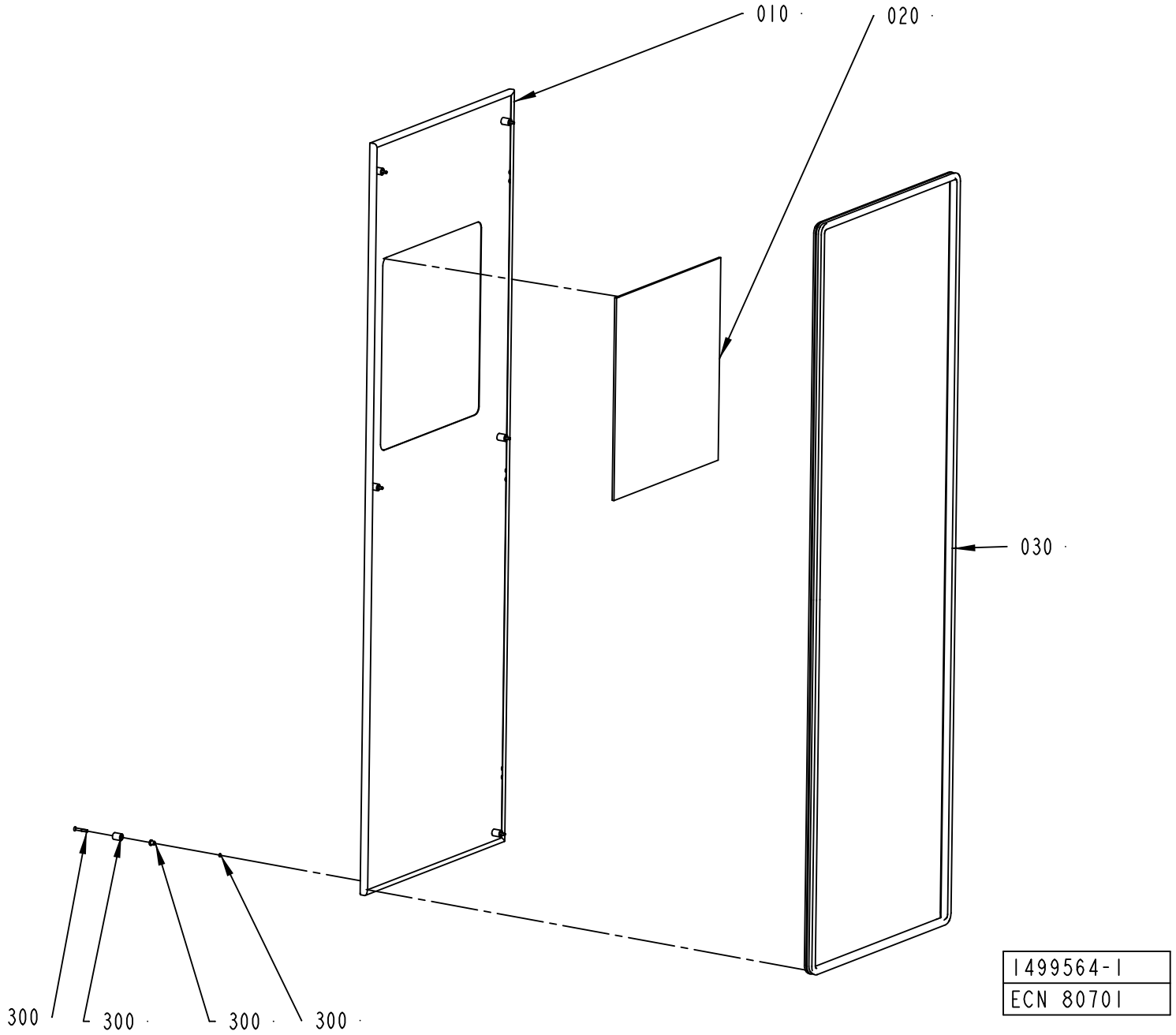
010
020
030
300
300
300
300
1499564-1
ECN 80701

ECM: 181012 - 20041005
Group number: 1499564-0100
Assembly Drawing: 1499564-1_1_AB

This list covers pages from 7-194 to 7-197

Pos	Part No	UN	Qty	Description	Page No
With ARL (See drawing on page: 7-196)					
010	2632542-0000		1	HATCH	
040	2632543-0100		1	CONTROL PANEL	**7-199**
Without ARL (See drawing on page: 7-194)					
010	1487995-0000		1	HATCH	
Common Parts					
020	1498459-0003		1	GLASS PANE	
030	1498461-0002		1	SEALING STRIP	
300	90226-0458		6	MOUNTING SCREW	

Pos	Part No	UN	Qty	Description	Page No

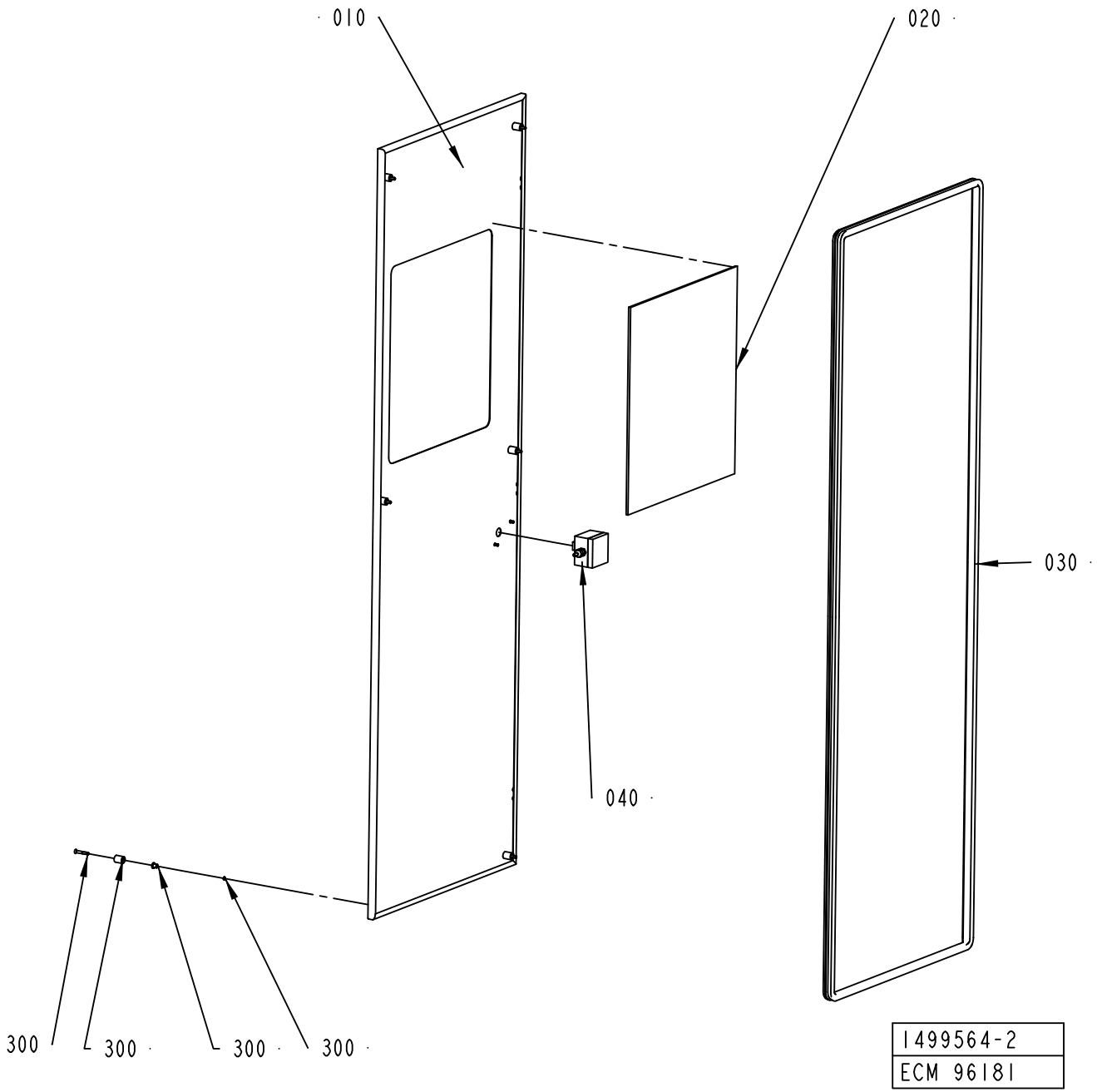
010
020
030
040
300
300
300
300
1499564-2
ECM 96181

ECM: 181012 - 20041005
Group number: 1499564-0100
Assembly Drawing: 1499564-2_1_AA

This list covers pages from 7-194 to 7-197

Pos	Part No	UN	Qty	Description	Page No
With ARL (See drawing on page: 7-196)					
010	2632542-0000		1	HATCH	
040	2632543-0100		1	CONTROL PANEL	**7-199**
Without ARL (See drawing on page: 7-194)					
010	1487995-0000		1	HATCH	
Common Parts					
020	1498459-0003		1	GLASS PANE	
030	1498461-0002		1	SEALING STRIP	
300	90226-0458		6	MOUNTING SCREW	

Pos	Part No	UN	Qty	Description	Page No

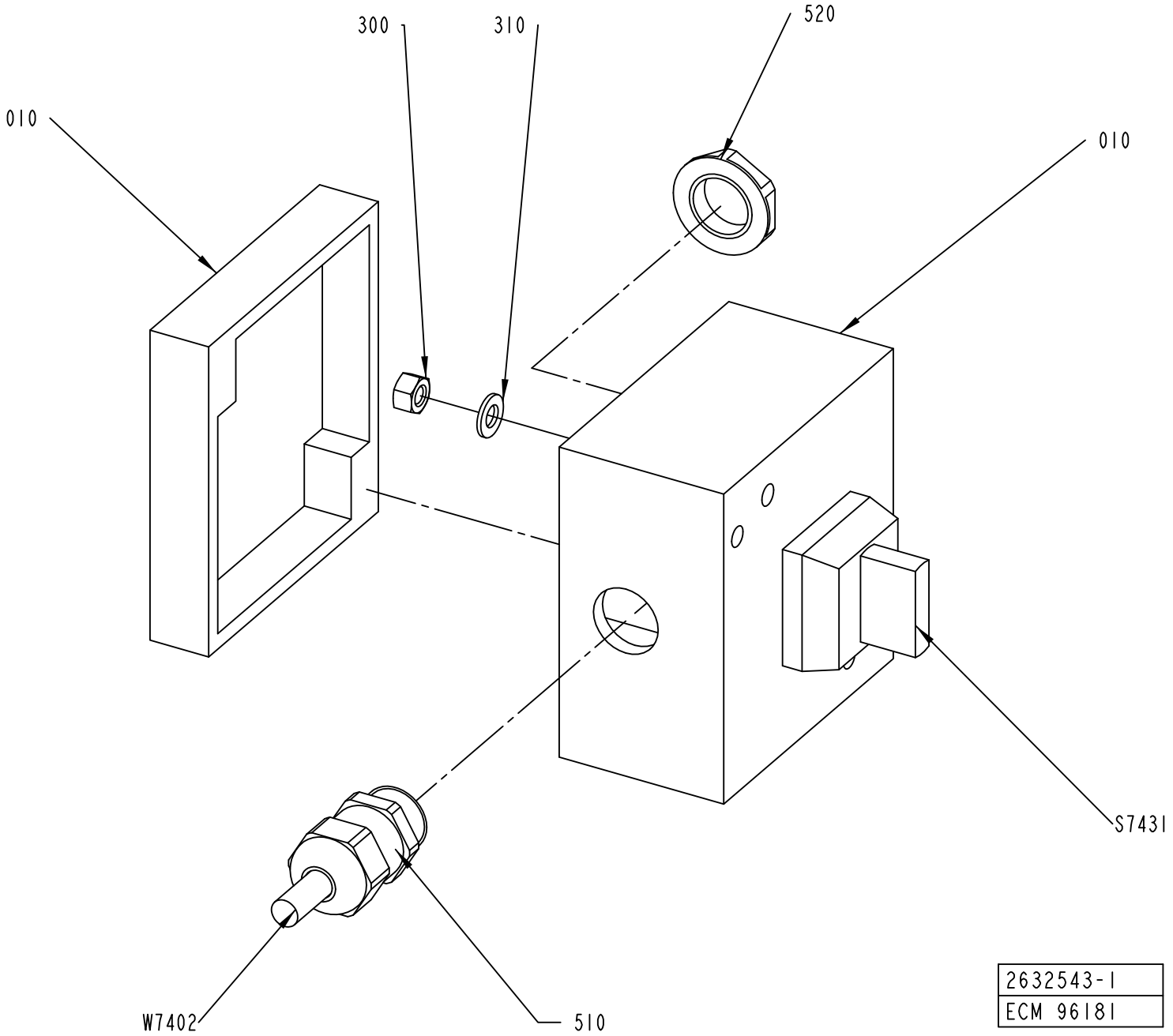
300
310
520
010
010
S7431
W7402
510
2632543-1
ECM 96181

ECM: 181013 - 20041005
Group number: 2632543-0100
Assembly Drawing: 2632543-1_1_AA

Pos	Part No	UN	Qty	Description	Page No
-					
010	2632535-0000		1	CONNECTION BOX	
300	312605-0314		2	HEXAGON NUT, M6M M5 A280	
310	315105-0146		2	WASHER BRB5,3X10RFR	
510	90458-0306		1	CABLE GLAND, M16X1,5, NO.5311 1010	
520	90458-0322		1	NUT, M16X1,5	
S7431	90111-0120		1	SWITCH, 2 POS.704.510 .0A+704.901.5/A	
W7402	351150-0403	MM	8000	CABLE OLFLEX 3X0,75 MM2 LIGHT/GREY	

Pos	Part No	UN	Qty	Description	Page No

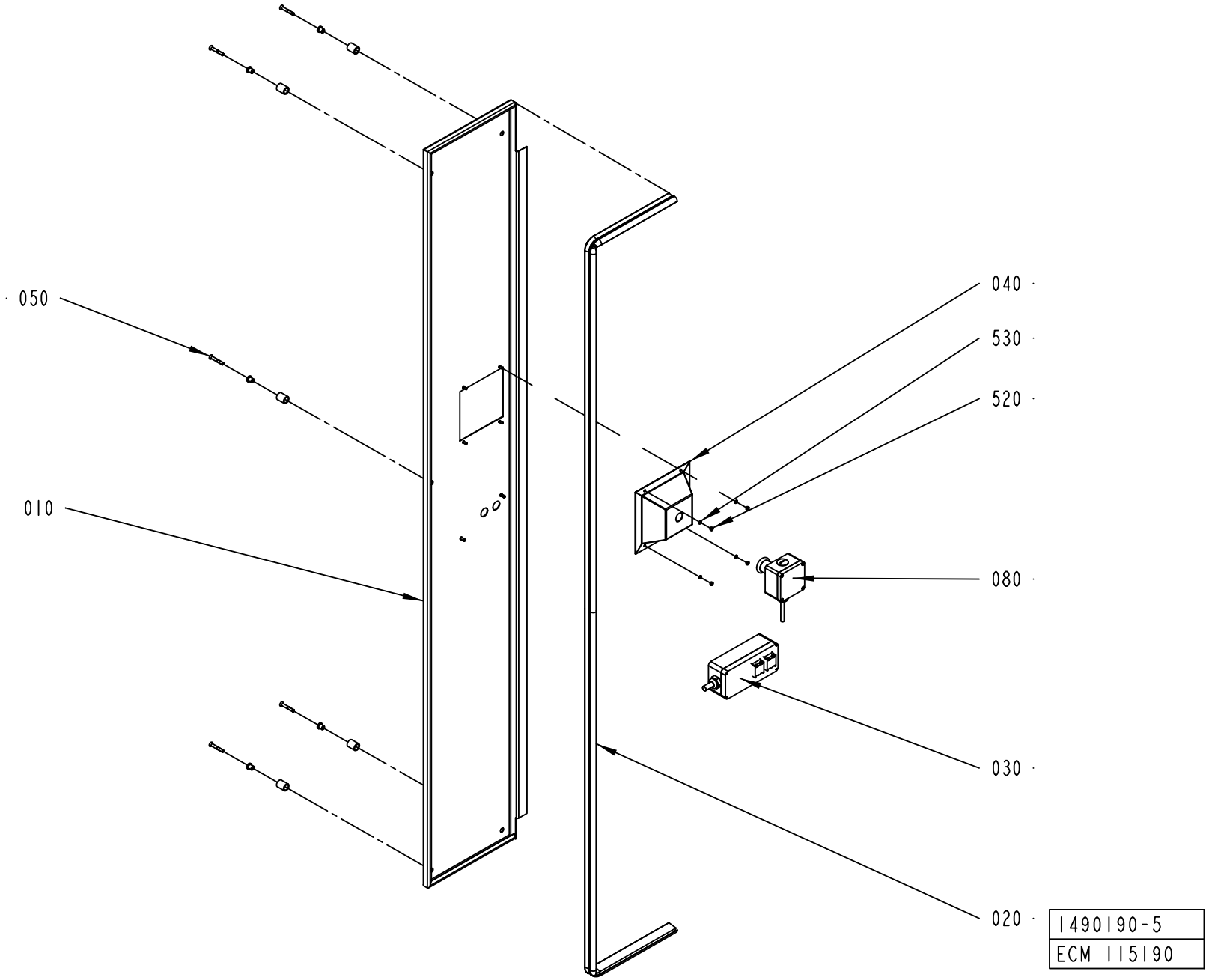
050
010
040
530
520
080
030
020
1490190-5
ECM 115190

ECM: 224783 - 20050831
Group number: 1490190-0200
Assembly Drawing: 1490190-5_1_AB

Pos	Part No	UN	Qty	Description	Page No
A3/FLEX					
010	2532535-0000		1	HATCH	
Common Parts					
020	1512414-0000		1	SEALING STRIP	
030	1512413-0200		1	CONTROL PANEL	**7-203**
040	1484363-0000		1	COVER	
050	90226-0458		5	MOUNTING SCREW	
080	2508187-0100		1	EMERGENCY STOP	**7-205**
520	312605-0312		4	HEXAGON NUT, M6M M4 A280	
530	315105-0136		4	WASHER BRB4,3XRFR	

Pos	Part No	UN	Qty	Description	Page No

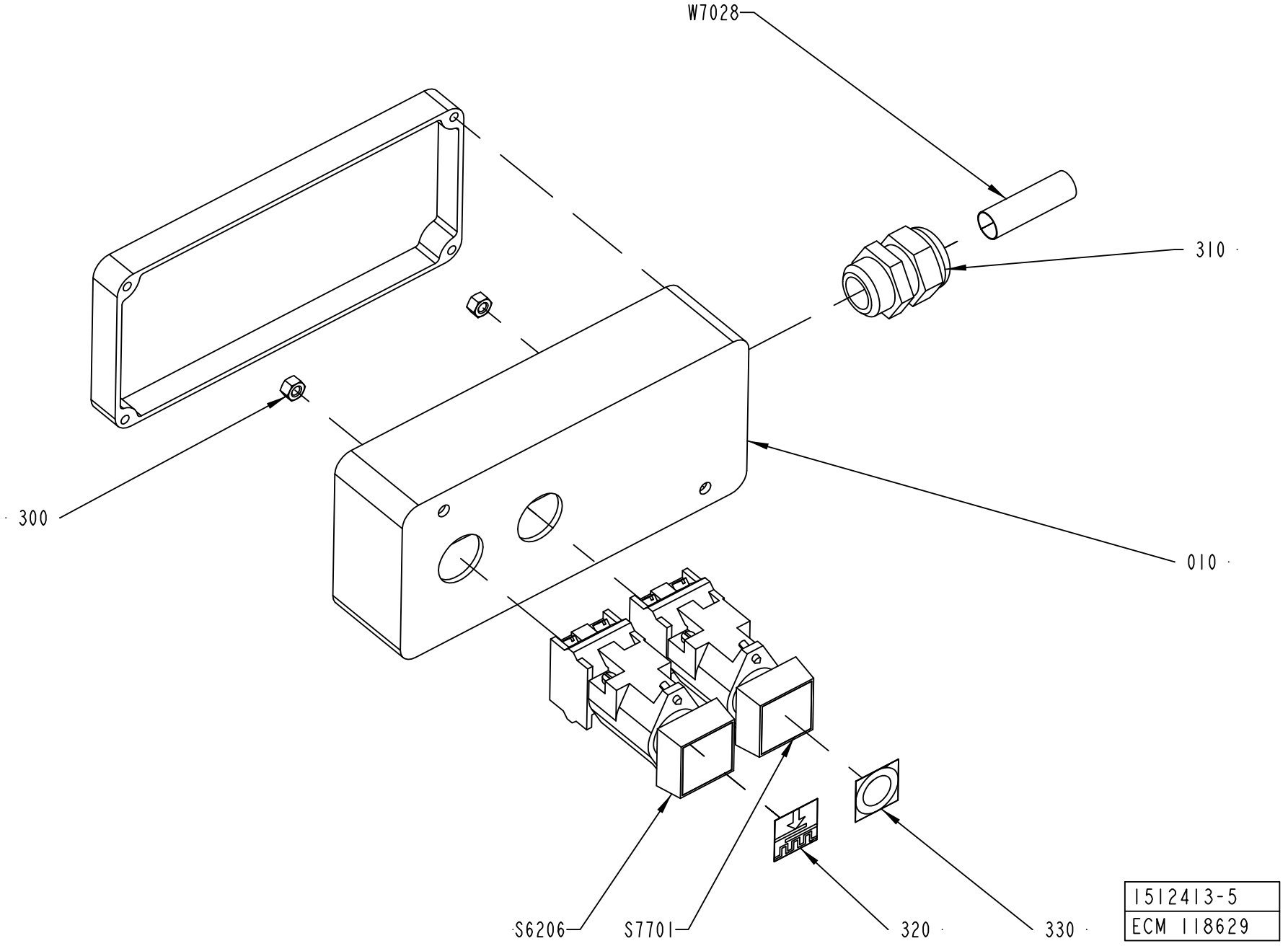
W7028
310
300
010
S6206
S7701
320
330
1512413-5
ECM 118629

ECM: 181015 - 20041005
Group number: 1512413-0200
Assembly Drawing: 1512413-5_1_AA

Pos	Part No	UN	Qty	Description	Page No
A3/FLEX					
010	2578785-0000		1	PUSH BUTTON BOX	
Common Parts					
300	312605-0314		2	HEXAGON NUT, M6M M5 A280	
310	352103-0111		1	CABLE GLAND, ST 16, PR22,5/PG16	
320	359301-0101		1	BUTTON SIGN, STRIP SPLICING ON	
330	359301-0110		1	BUTTON SIGN, SHORT STOP	
S6206	90064-0082		1	PUSH BUTTON, WHITE	
	90036-0057		*1*	*LIGHT BULB, BA9S 28V*	
S7701	90064-0084		1	PUSH BUTTON, YELLOW	
W7028	351150-0407	MM	5000	CABLE OLFLEX 12X0,75 MM2 LIGHT/GREY	

Pos	Part No	UN	Qty	Description	Page No

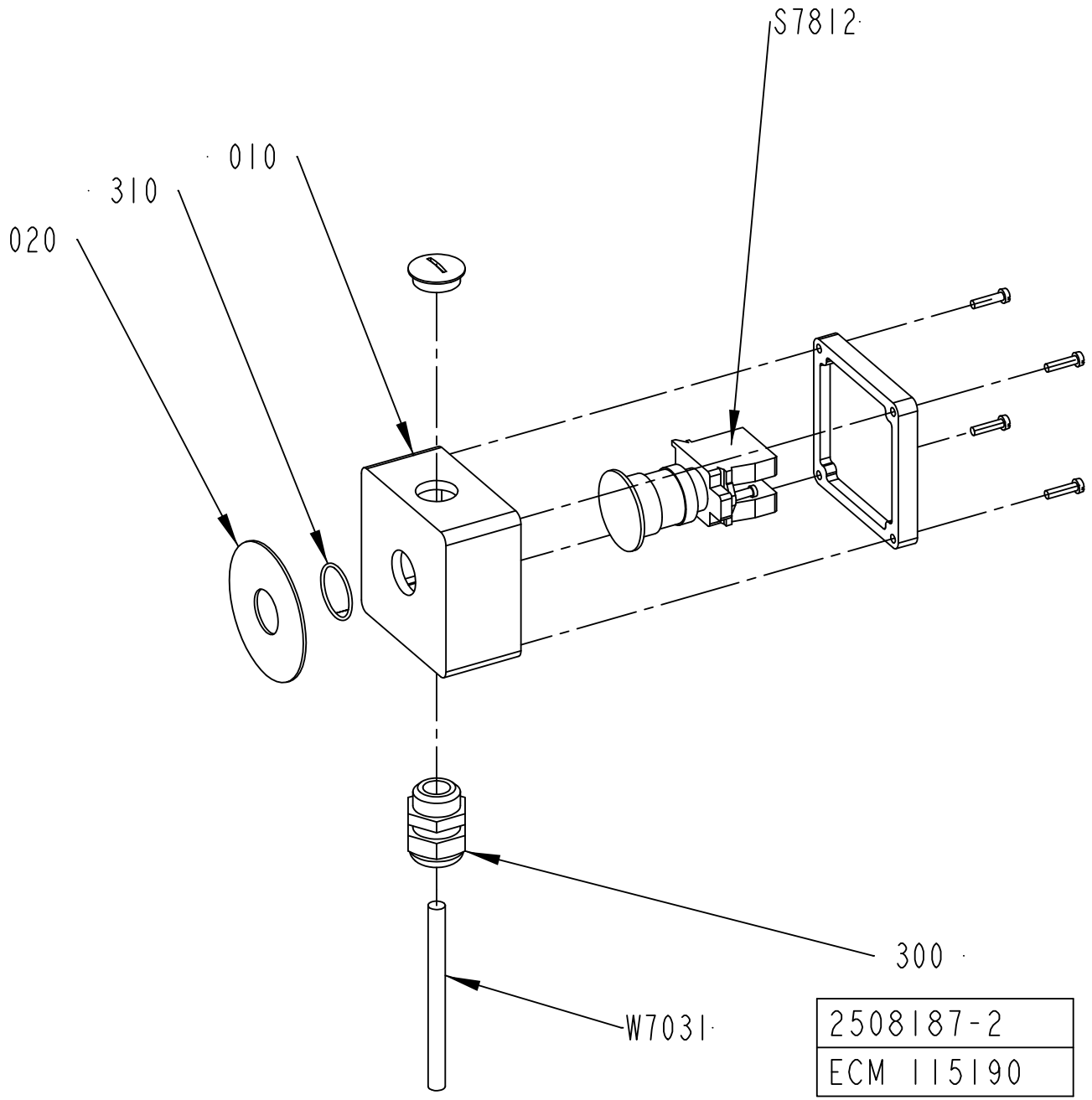
S7812
010
310
020
300
W7031
2508187-2
ECM 115190

ECM: 181016 - 20041005
Group number: 2508187-0100
Assembly Drawing: 2508187-2_1_AB

Pos	Part No	UN	Qty	Description	Page No
-					
010	1037130-0000		1	CONNECTION BOX	
020	486826-0001		1	SIGN "EMERGENCY STOP"	
300	352103-0110		1	CABLE GLAND, STR 16, PR22,5/PG16	
310	315202-0119		1	O-RING 25,1X1,6 MM	
S7812	90458-1651		1	EMERGENCY STOP, ZB4-BS-844 ZB4-BZ-104	
W7031	351150-0405	MM	5000	CABLE OLFLEX 5X0,75 MM2 LIGHT/GREY	

Pos	Part No	UN	Qty	Description	Page No

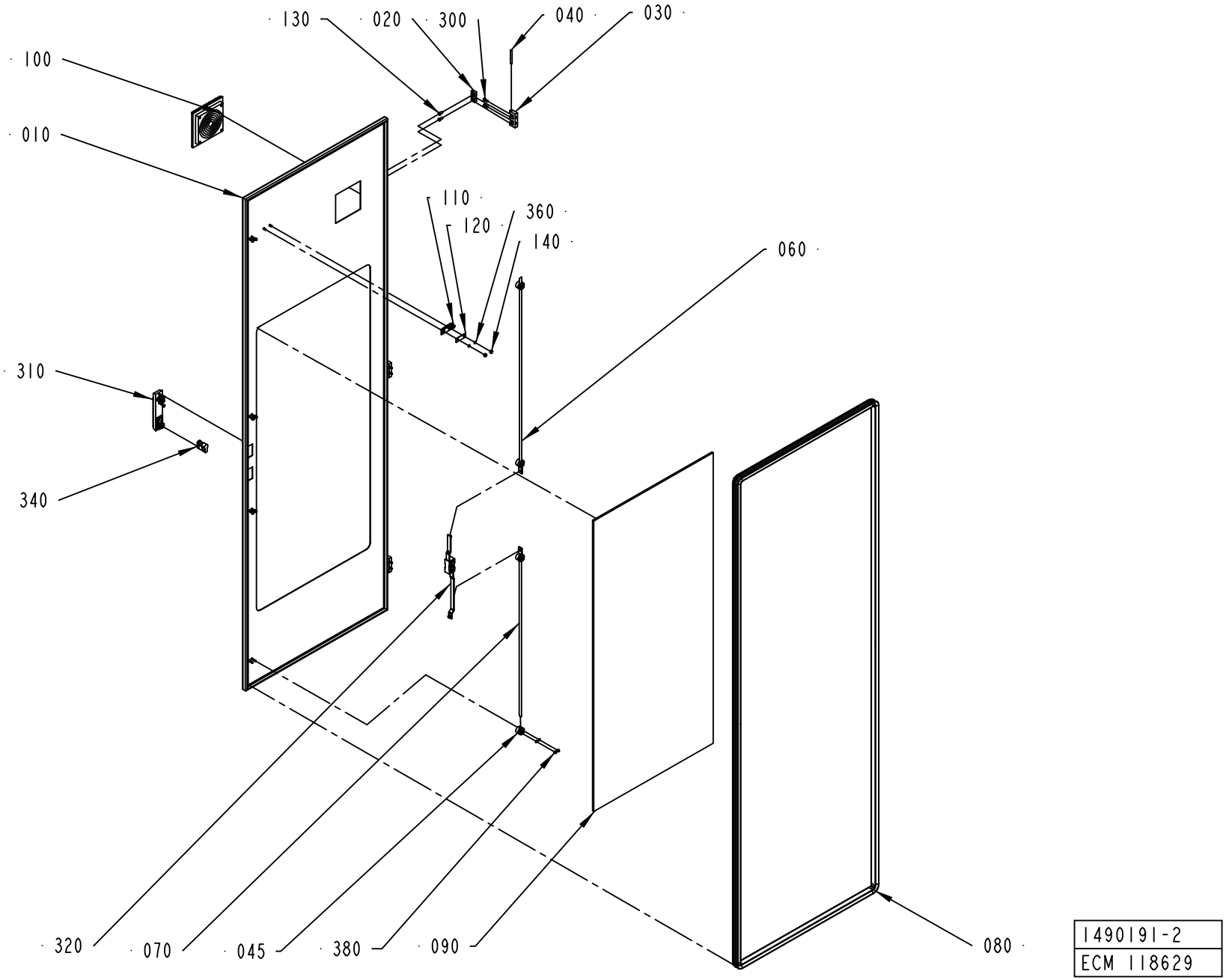
130
020
300
040
030
100
010
110
120
360
140
060
310
340
320
070
045
380
090
080
1490191-2
ECM 118629

ECM: 181017 - 20041005
Group number: 1490191-0100
Assembly Drawing: 1490191-2_1_AF

Pos	Part No	UN	Qty	Description	Page No
-					
010	1488000-0000		1	DOOR	
020	1129770-0000		6	BLOCKING PIECE	
030	1035792-0000		3	E-HINGE	
040	988685-0000		3	PIN	
045	2550333-0000		4	GUIDE LUG	
060	1499562-0003		1	LOCKING ARM	
070	1499562-0004		1	LOCKING ARM	
080	1498461-0005		1	SEALING STRIP	
090	1498459-0002		1	GLASS PANE	
100	1490226-0000		1	FILTER	
110	975917-0000		1	KEY FOR SAFETY SWITCH 90044-103	
120	1036563-0000		1	WASHER	
130	1129767-0000		6	SCREW	
140	1539391-0000		2	ROUND NUT	
300	312115-0327		6	SCREW ISO4762 M5X12 A4 80	
310	90237-0175		1	TURNING HANDLE, 1125-U185-0A	
320	90237-0153		1	LOCK HOUSING, 1121-U26-0B	
340	90237-0128		1	LOCK CYLINDER, 1109-U3	
360	315105-0136		10	WASHER BRB4,3XRFR	
380	312705-0312		8	NUT HEX. DOMED CAP MHM-6 M4 A280	

Pos	Part No	UN	Qty	Description	Page No

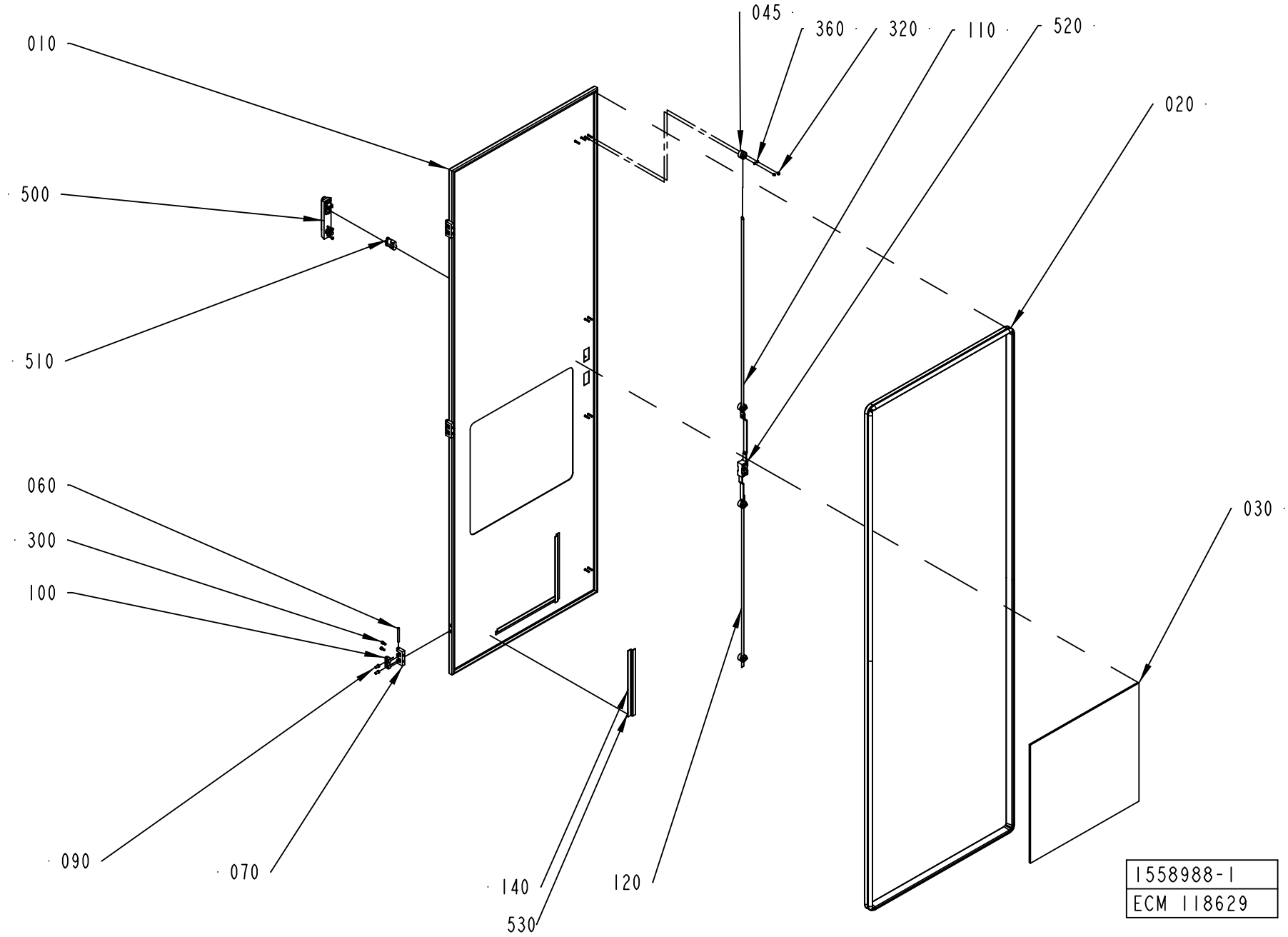
045
360
320
110
520
010
020
500
510
060
300
100
030
090
070
140
120
530
1558988-1
ECM 118629

ECM: 181018 - 20041005
Group number: 1558988-0100
Assembly Drawing: 1558988-1_1_AD

Pos	Part No	UN	Qty	Description	Page No
-					
010	1558983-0000		1	DOOR	
020	1498461-0005		1	SEALING STRIP	
030	1498459-0004		1	GLASS PANE	
045	2550333-0000		4	GUIDE LUG	
060	988685-0000		3	PIN	
070	1035792-0000		3	E-HINGE	
090	1129767-0000		6	SCREW	
100	1129770-0000		6	BLOCKING PIECE	
110	1499562-0003		1	LOCKING ARM	
120	1499562-0004		1	LOCKING ARM	
140	988690-0000		3	RIM	
300	312115-0327		6	SCREW ISO4762 M5X12 A4 80	
320	312705-0312		8	NUT HEX. DOMED CAP MHM-6 M4 A280	
360	315105-0136		8	WASHER BRB4,3XRFR	
500	90237-0175		1	TURNING HANDLE, 1125-U185-0A	
510	90237-0128		1	LOCK CYLINDER, 1109-U3	
520	90237-0153		1	LOCK HOUSING, 1121-U26-0B	
530	90144-0072	MM	840	TAPE SCOTCH VHBS 4945 W=12,7MM	

Pos	Part No	UN	Qty	Description	Page No

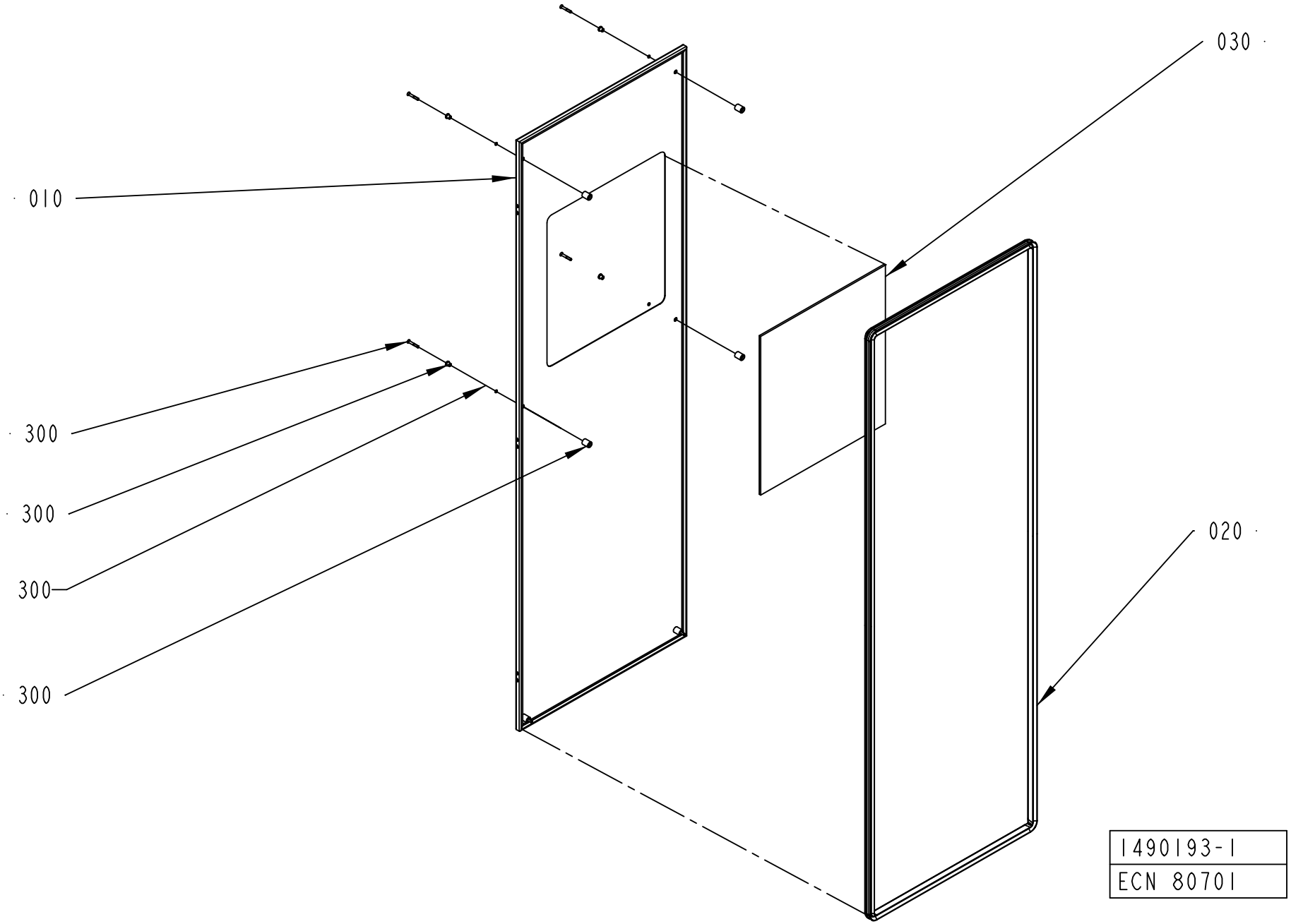
030
010
300
300
300
300
020
1490193-1
ECN 80701

ECM: 181019 - 20041005
Group number: 1490193-0100
Assembly Drawing: 1490193-1_1_AB

This list covers pages from 7-210 to 7-213

Pos	Part No	UN	Qty	Description	Page No
With ARL (See drawing on page: 7-212)					
010	2632534-0000		1	HATCH	
040	2632536-0100		1	CONTROL PANEL	**7-215**
Without ARL (See drawing on page: 7-210)					
010	1498460-0000		1	HATCH	
Common Parts					
020	1498461-0002		1	SEALING STRIP	
030	1498459-0003		1	GLASS PANE	
300	90226-0458		6	MOUNTING SCREW	

Pos	Part No	UN	Qty	Description	Page No

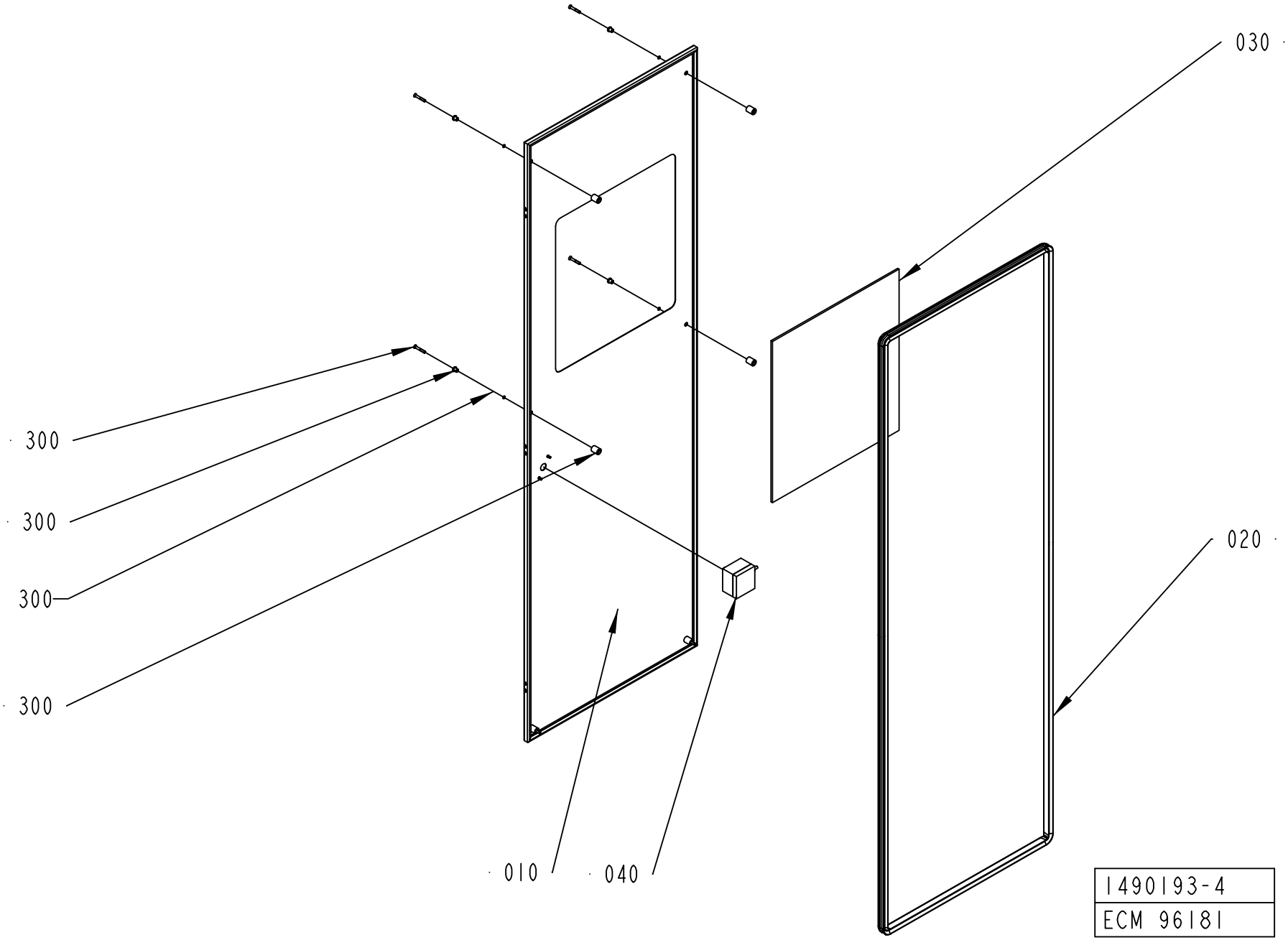
030
300
300
300
300
020
010
040
1490193-4
ECM 96181

ECM: 181019 - 20041005
Group number: 1490193-0100
Assembly Drawing: 1490193-4_1_AA

This list covers pages from 7-210 to 7-213

Pos	Part No	UN	Qty	Description	Page No
With ARL (See drawing on page: 7-212)					
010	2632534-0000		1	HATCH	
040	2632536-0100		1	CONTROL PANEL	**7-215**
Without ARL (See drawing on page: 7-210)					
010	1498460-0000		1	HATCH	
Common Parts					
020	1498461-0002		1	SEALING STRIP	
030	1498459-0003		1	GLASS PANE	
300	90226-0458		6	MOUNTING SCREW	

Pos	Part No	UN	Qty	Description	Page No

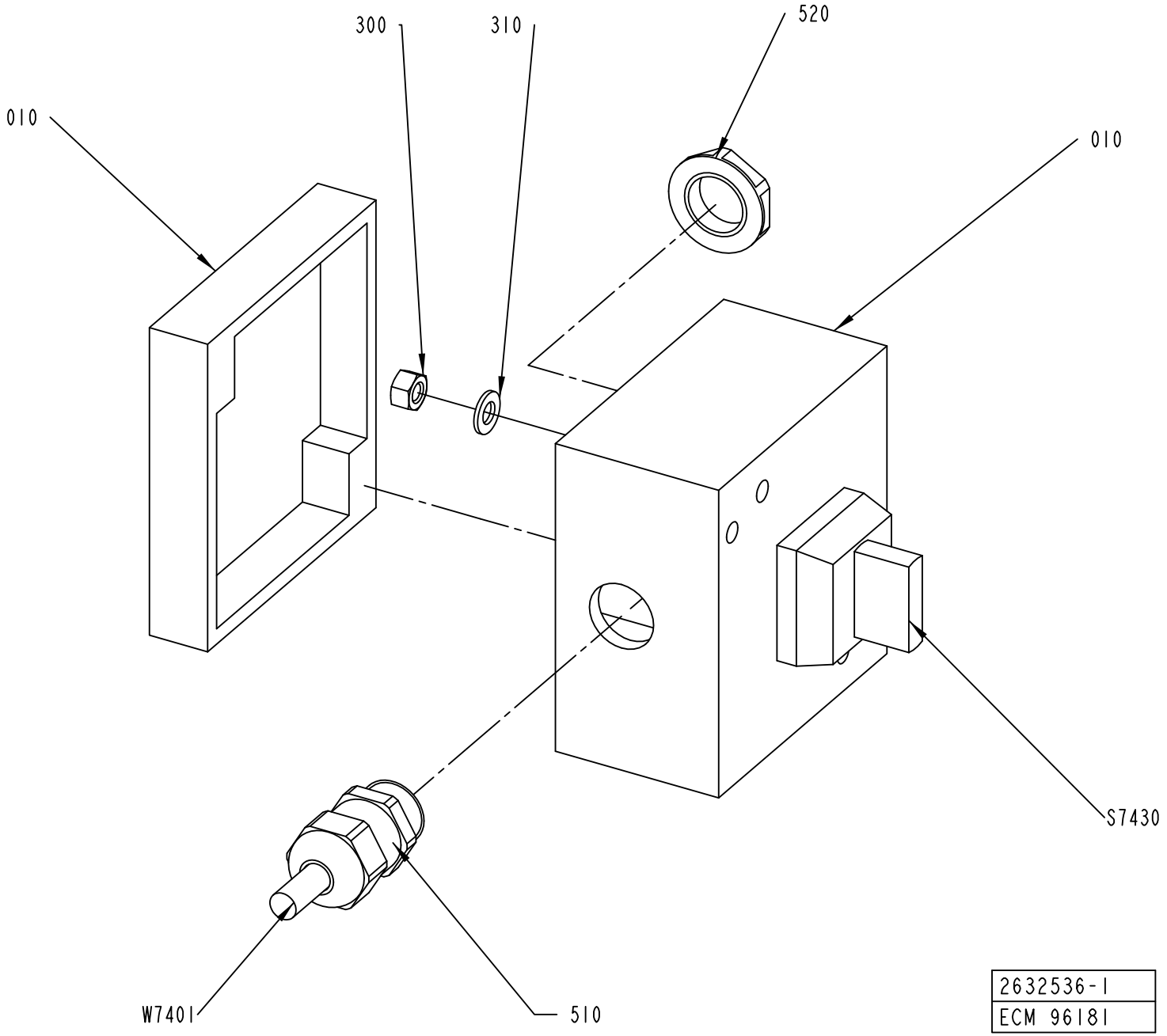
300
310
520
010
010
S7430
W7401
510
2632536-1
ECM 96181

ECM: 181020 - 20041005
Group number: 2632536-0100
Assembly Drawing: 2632536-1_1_AA

Pos	Part No	UN	Qty	Description	Page No
-					
010	2632535-0000		1	CONNECTION BOX	
300	312605-0314		2	HEXAGON NUT, M6M M5 A280	
310	315105-0146		2	WASHER BRB5,3X10RFR	
510	90458-0306		1	CABLE GLAND, M16X1,5, NO.5311 1010	
520	90458-0322		1	NUT, M16X1,5	
S7430	90111-0120		1	SWITCH, 2 POS.704.510 .0A+704.901.5/A	
W7401	351150-0403	MM	8000	CABLE OLFLEX 3X0,75 MM2 LIGHT/GREY	

Pos	Part No	UN	Qty	Description	Page No

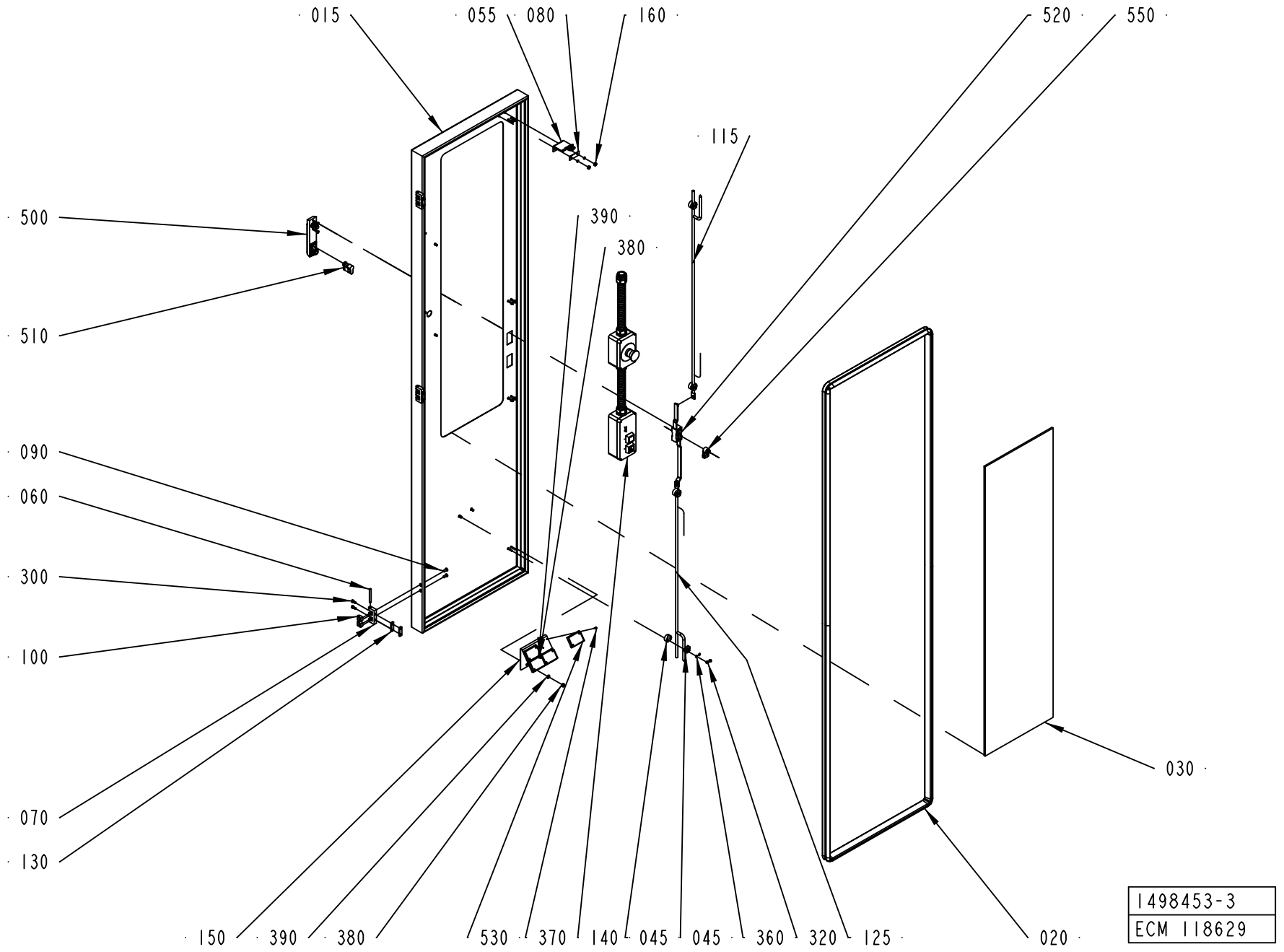
015
055
080
160
520
550
115
500
390
380
510
090
060
300
100
070
130
030
150
390
380
530
370
140
045
045
360
320
125
020
1498453-3
ECM 118629

ECM: 181021 - 20041005
Group number: 1498453-0200
Assembly Drawing: 1498453-3_1_AD

Pos	Part No	UN	Qty	Description	Page No
-					
015	2547666-0000		1	DOOR	
020	1498461-0001		1	SEALING STRIP	
030	1498459-0001		1	GLASS PANE	
045	2550333-0000		4	GUIDE LUG	
055	2553072-0000		1	KEY FOR SAFETY SWITCH	
060	988685-0000		3	PIN	
070	1035792-0000		3	E-HINGE	
080	1036563-0000		1	WASHER	
090	1129767-0000		6	SCREW	
100	1129770-0000		6	BLOCKING PIECE	
115	2550269-0001		1	LOCKING ARM	
125	2550269-0002		1	LOCKING ARM	
130	1147253-0000		3	NUT	
140	1517088-0200		1	CONTROL PANEL	**7-219**
150	2541943-0000		1	BRACKET	
160	1539391-0000		2	ROUND NUT	
300	312115-0327		6	SCREW ISO4762 M5X12 A4 80	
320	312705-0312		8	NUT HEX. DOMED CAP MHM-6 M4 A280	
360	315105-0136		10	WASHER BRB4,3XRFR	
370	312125-0222		8	SCREW ISO 1207 M3X8 A4	
380	312605-0316		2	HEXAGON NUT, M6M M6 A280	
390	315105-0153		2	WASHER BRB6,4X12RFR	
500	90237-0175		1	TURNING HANDLE, 1125-U185-0A	
510	90237-0128		1	LOCK CYLINDER, 1109-U3	
520	90237-0153		1	LOCK HOUSING, 1121-U26-0B	
530	90232-0333		4	REFLECTOR E39-R1	
550	90237-0165		1	LATCH	

Pos	Part No	UN	Qty	Description	Page No

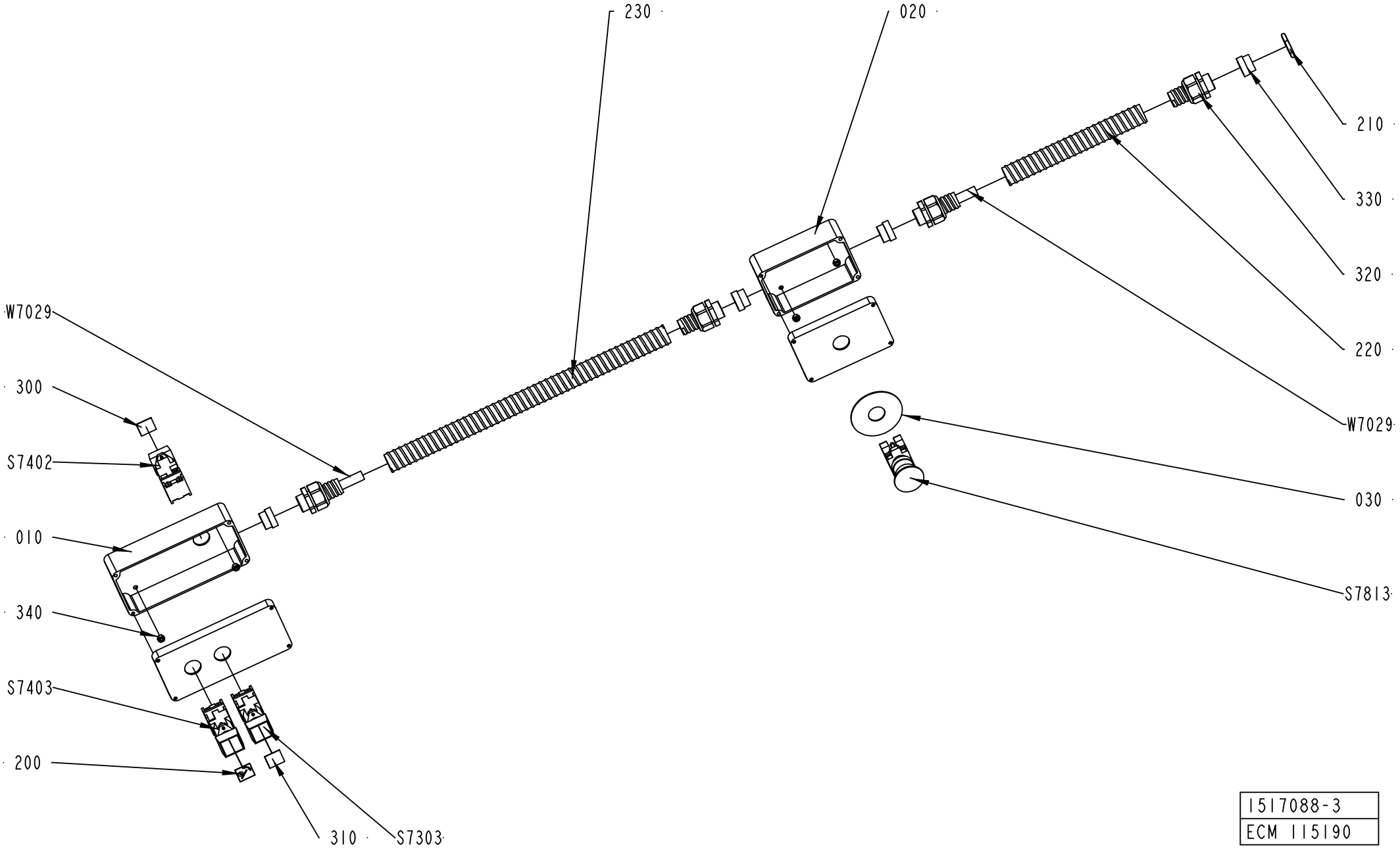

1517088-3
ECM 115190

ECM: 181022 - 20041005
Group number: 1517088-0200
Assembly Drawing: 1517088-3_1_AC

Pos	Part No	UN	Qty	Description	Page No
-					
010	2523482-0000		1	PUSH BUTTON BOX	
020	2523483-0000		1	PUSH BUTTON BOX	
030	486826-0001		1	SIGN "EMERGENCY STOP"	
200	90457-0920		1	BUTTON SIGN, ROTATION OF MATERIAL HOLDER	
210	90099-0110		1	NUT, PR 22,5 (PG16)	
220	90152-0051	MM	500	SPIRAL CONDUIT, 25X18, UL 1816	
230	90152-0051	MM	170	SPIRAL CONDUIT, 25X18, UL 1816	
300	359301-0100		1	BUTTON SIGN, SPLICING	
310	359301-0488		1	BUTTON SIGN, MATERIAL LOCKING	
320	353243-0005		4	HOSE GLAND W/O INSERT PG16 EXTENDED	
330	353249-0014		4	INSERT, SINGEL HOLE, EK 154/16	
340	312605-0314		4	HEXAGON NUT, M6M M5 A280	
S7303	90064-0082		1	PUSH BUTTON, WHITE	
	90036-0057		*1*	*LIGHT BULB, BA9S 28V*	
S7402	90064-0082		1	PUSH BUTTON, WHITE	
	90036-0057		*1*	*LIGHT BULB, BA9S 28V*	
S7403	90064-0082		1	PUSH BUTTON, WHITE	
	90036-0057		*1*	*LIGHT BULB, BA9S 28V*	
S7813	90458-1651		1	EMERGENCY STOP, ZB4-BS-844 ZB4-BZ-104	
W7029	351150-0407	MM	5000	CABLE OLFLEX 12X0,75 MM2 LIGHT/GREY	

Pos	Part No	UN	Qty	Description	Page No

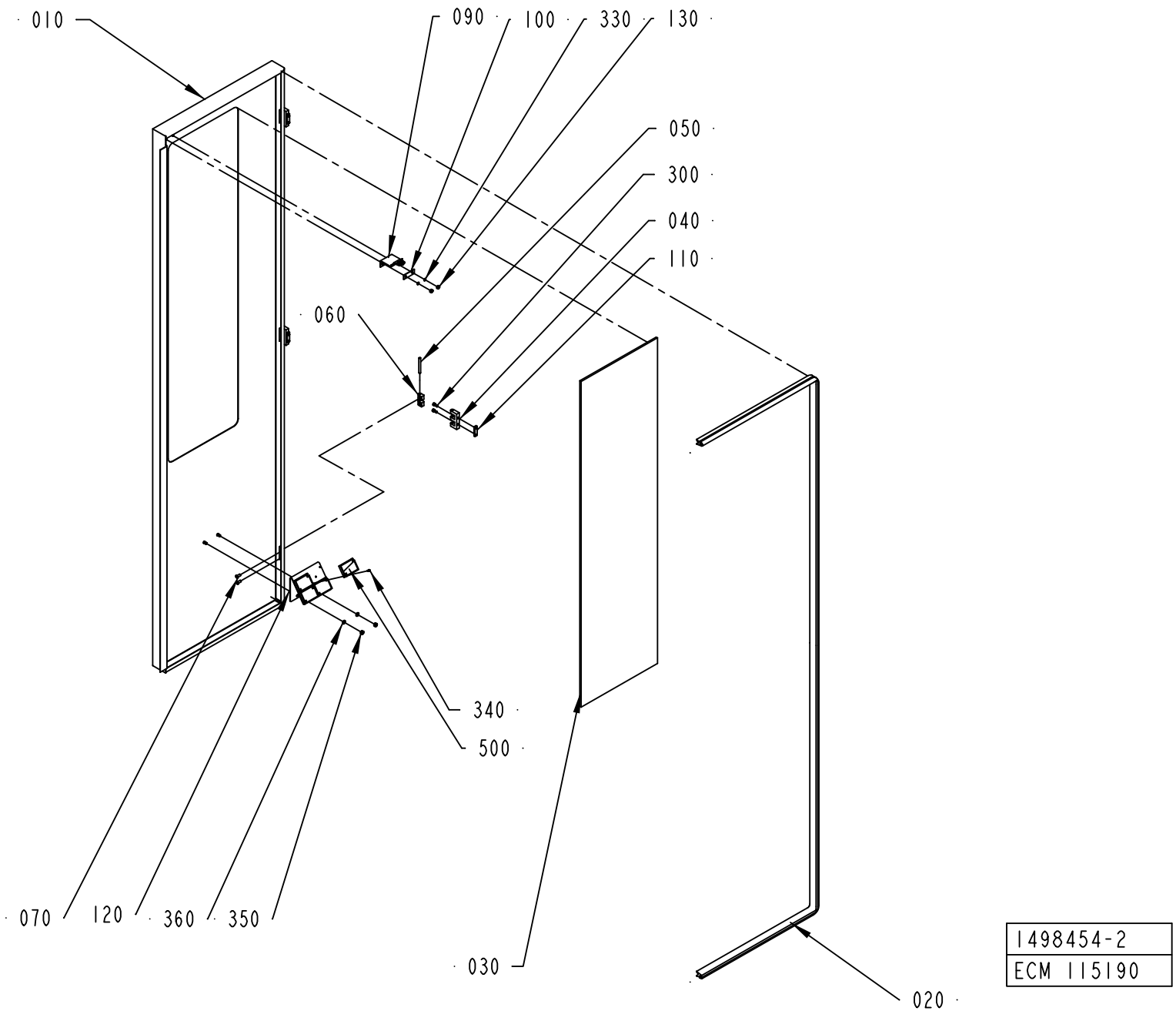

1498454-2
ECM 115190

ECM: 181162 - 20041005
Group number: 1498454-0200
Assembly Drawing: 1498454-2_1_AB

Pos	Part No	UN	Qty	Description	Page No
-					
010	2547667-0000		1	DOOR	
020	1499579-0000		1	SEALING STRIP	
030	1498459-0001		1	GLASS PANE	
040	1035792-0000		3	E-HINGE	
050	988685-0000		3	PIN	
060	1129770-0000		6	BLOCKING PIECE	
070	1129767-0000		6	SCREW	
090	2553072-0000		1	KEY FOR SAFETY SWITCH	
100	1036563-0000		1	WASHER	
110	1147253-0000		3	NUT	
120	2541943-0000		1	BRACKET	
130	1539391-0000		2	ROUND NUT	
300	312115-0327		6	SCREW ISO4762 M5X12 A4 80	
330	315105-0136		2	WASHER BRB4,3XRFR	
340	312125-0222		8	SCREW ISO 1207 M3X8 A4	
350	312605-0316		2	HEXAGON NUT, M6M M6 A280	
360	315105-0153		2	WASHER BRB6,4X12RFR	
500	90232-0333		4	REFLECTOR E39-R1	

Pos	Part No	UN	Qty	Description	Page No

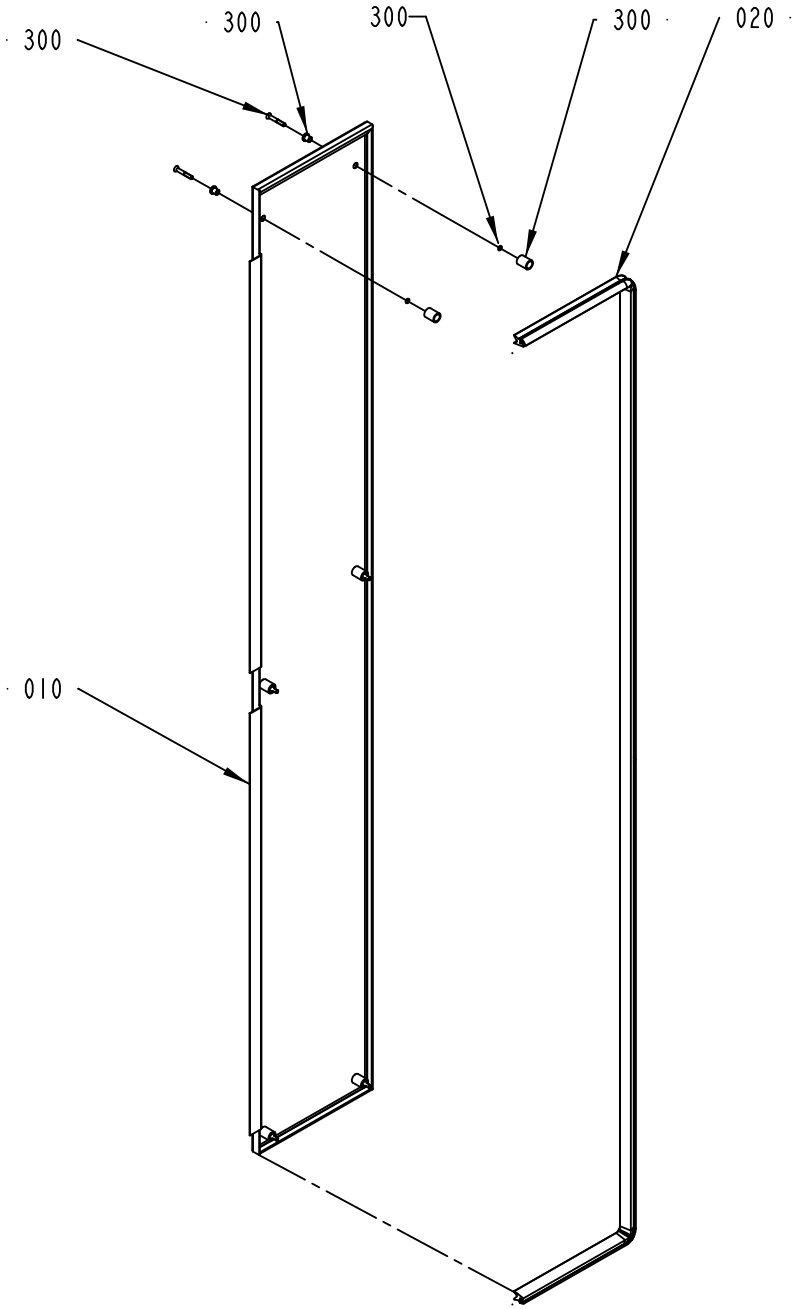

1490188-1
ECN 80701

ECM: 181163 - 20041005
Group number: 1490188-0100
Assembly Drawing: 1490188-1_1_AB

Pos	Part No	UN	Qty	Description	Page No
-					
010	1499568-0000		1	HATCH	
020	1512278-0000		1	SEALING STRIP	
300	90226-0458		6	MOUNTING SCREW	

Pos	Part No	UN	Qty	Description	Page No

Tetra Pak

SPC
Spare Parts Catalogue

Electrical Cabinet

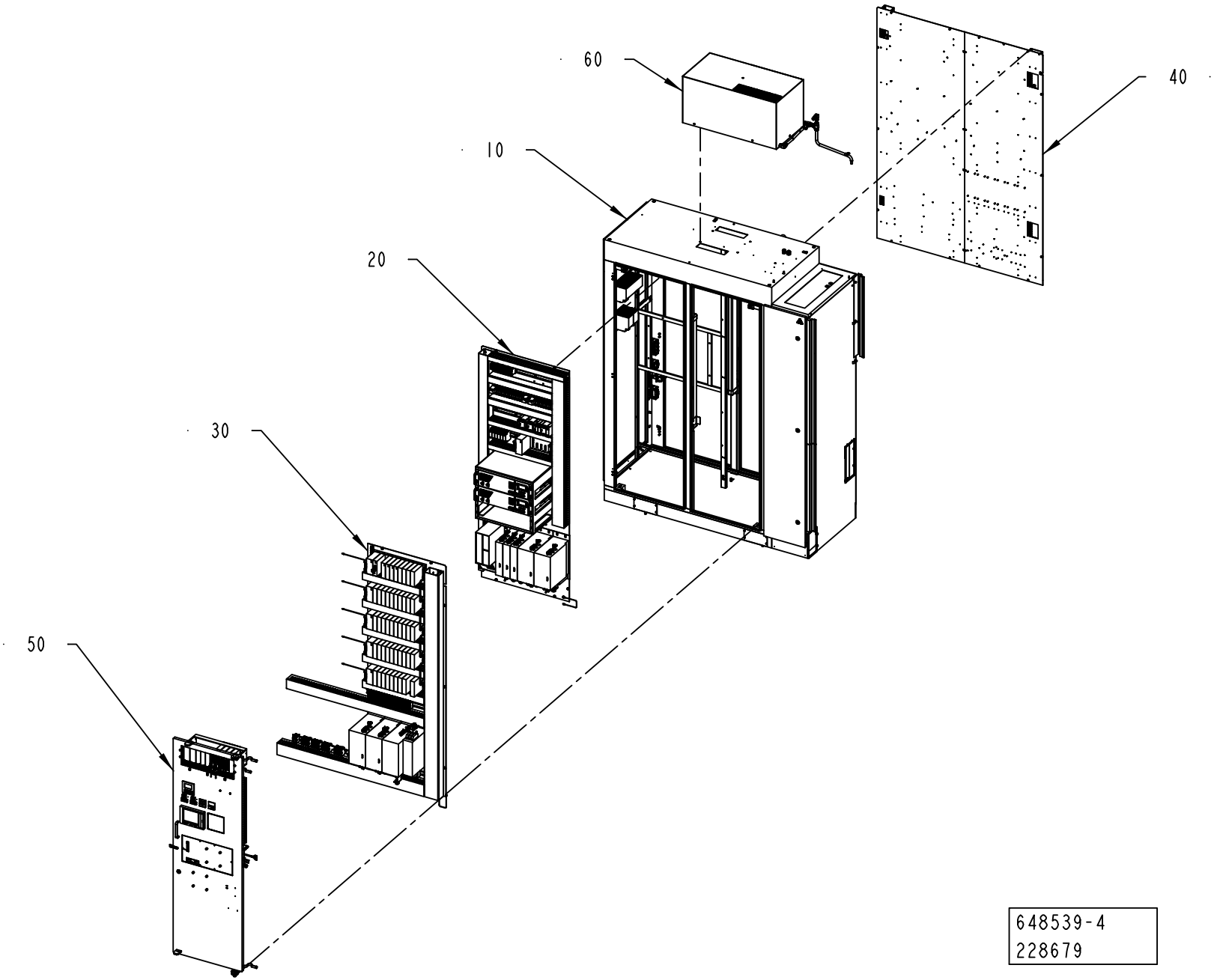

ECM: 260029 - 20060412
Group number: 648539-0200
Assembly Drawing: 648539-4_1_AA

Pos	Part No	UN	Qty	Description	Page No
A3/FLEX					
080	2576335-0100		1	TPOP LINE SUPERVISION	**8-5**
090	2565624-0300		1	SOFTWARE	**8-7**
Common Parts					
	2635131-0100		1	CABLE SET	**8-23**
010	1532902-0200		1	CABINET	**8-25**
020	1532908-0200		1	CONTROL BOARD LEFT	**8-51, 8-53, 8-55**
030	1548123-0100		1	CONTROL BOARD RIGHT	**8-67, 8-69**
040	1548127-0200		1	POWER SUPPLY UNIT	**8-77, 8-79**
050	1548136-0100		1	DOOR	**8-97, 8-99**
060	2550125-0100		1	COOLING UNIT	**8-111**
070	2576334-0100		1	TPOP DATA COLLECTION	**8-113**

Pos	Part No	UN	Qty	Description	Page No

This page is intentionally left blank.

ECM: 185550 - 20041104
Group number: 2576335-0100
Assembly Drawing:

Pos	Part No	UN	Qty	Description	Page No	Pos	Part No	UN	Qty	Description	Page No
-											
010	90220-0091	M	200	PAIR TWISTED CABLE 2X2X0,25MM2							
020	90110-0518		5	CONNECTOR D-SUB, SUBCON 15/M-SH							
030	90110-0383		5	CONTACT COVER 15 PIN, SUB-D SUBCON							

This page is intentionally left blank.

ECM: 242776 - 20060116
Group number: 2565624-0300
Assembly Drawing:

Pos	Part No	UN	Qty	Description	Page No
-					
	2633186-0200		1	SOFTWARE TPOP	**8-9**
	2633187-0200		1	SOFTWARE TMCC	**8-11**
	2633188-0200		1	SOFTWARE PLC	**8-13**
	2633189-0300		1	SOFTWARE PAM-SAM	**8-15, 8-17**
	2639498-0200		1	SOFTWARE RECORDER	**8-19**
	2801571-0100		1	SOFTWARE TPIH	**8-21**

Pos	Part No	UN	Qty	Description	Page No

This page is intentionally left blank.

ECM: 274251 - 20060821
Group number: 2633186-0200
Assembly Drawing:

Pos	Part No	UN	Qty	Description	Page No
-					
0010	2814681-0002		1	TPOP CD	
0010	*2814684-0002*		*1*	*LABEL CD*	
0020	*2565558-0009*		*1*	*LABEL FLEXBOX*	
0030	*2635175-0009*		*1*	*LABEL FLEXBOX*	
0040	*2803096-0000*		*1*	*LABEL FLEXBOX*	
0050	*2803097-0000*		*1*	*SHORT FORM INSTRUCTIONS*	
0060	*2589408-0000*		*1*	*LABEL FLEXBOX*	
0070	*2589409-0000*		*1*	*SHORT FORM INSTRUCTION*	
0080	*90458-0118*		*1*	*COMPACT DISC RECORDABLE*	
0090	*2814681-1001*		*1*	*PROGRAM OBJECT CODE*	
0100	*2565563-1009*		*1*	*PROGRAM OBJECT CODE*	
0110	*2565566-1009*		*1*	*PROGRAM OBJECT CODE*	
0120	*2547131-1006*		*1*	*SOFTWARE PLMS LOGGER*	
0130	*1190006-1402*		*1*	*SOFTWARE PLMS SEND*	
0020	2545065-0001		1	TPOP BASIC PROGRAM	
0020	*2545067-0000*		*1*	*DOCUMENTATION DISKETTE*	
0030	*2545068-0000*		*1*	*LABEL CD*	
0040	*2545069-0000*		*1*	*LABEL DISKETTE*	
0050	*2545070-0000*		*1*	*LABEL FLEXBOX*	
0060	*2545071-0000*		*1*	*SHORT FORM INSTRUCTION*	
0070	*2545065-1001*		*1*	*MASTER CD, TPOP BASIC*	
0030	2589391-0001		1	TPOP BASIC START PROGRAM	
0020	*2589393-0000*		*1*	*DOCUMENTATION DISKETTE*	
0030	*2589394-0000*		*1*	*LABEL DISKETTE*	
0040	*2589425-0000*		*1*	*LABEL FLEXBOX*	
0050	*2589395-0000*		*1*	*SHORT FORM INSTRUCTION*	
0060	*2589391-1001*		*1*	*MASTER DISKETTE, TPOP BASIC START*	
0040	2547125-0001		1	WINDOWS OEM W2000 PROGRAM	
0020	*2547127-0000*		*1*	*DOCUMENTATION DISKETTE*	
0030	*2547128-0000*		*1*	*LABEL CD*	
0040	*2547129-0000*		*1*	*LABEL FLEXBOX*	
0050	*2547130-0000*		*1*	*SHORT FORM INSTRUCTION*	

Pos	Part No	UN	Qty	Description	Page No

Machine Type | Group Description | Used-In | Group Number | Page No

This page is intentionally left blank.

ECM: 254355 - 20060116
Group number: 2633187-0200
Assembly Drawing:

Pos	Part No	UN	Qty	Description	Page No
-					
0010	2722583-0001		1	TMCC CD	
0010	*2722582-0001*		*1*	*LABEL CD*	
0020	*90458-0118*		*1*	*COMPACT DISC RECORDABLE*	
0030	*2565569-1002*		*1*	*PROGRAM OBJECT CODE*	
0040	*2634683-1004*		*1*	*PROGRAM OBJECT CODE*	
0050	*2565577-1004*		*1*	*PROGRAM OBJECT CODE*	
0060	*2565573-1004*		*1*	*PROGRAM OBJECT CODE*	

Pos	Part No	UN	Qty	Description	Page No

This page is intentionally left blank.

ECM: 254477 - 20060116
Group number: 2633188-0200
Assembly Drawing:

Pos	Part No	UN	Qty	Description	Page No
-					
0010	1591270-0001		1	PLC CD	
0010	*1591270-1001*		*1*	*PROGRAM OBJECT CODE*	
0020	*2741056-0001*		*1*	*LABEL CD*	
0030	*90458-0118*		*1*	*COMPACT DISC RECORDABLE*	

Pos	Part No	UN	Qty	Description	Page No

This page is intentionally left blank.

ECM: 274252 - 20060821
Group number: 2633189-0300
Assembly Drawing:

This list covers pages from 8-14 to 8-17

Pos	Part No	UN	Qty	Description	Page No
TBA 0200B QC, TBA 0330S QC, TBA 0250B QC					
0170	2674566-0008		1	PAM - SAM EASY DOWNLOAD	
0010	*2674567-0008*		*1*	*LABEL DISKETTE*	
0020	*90458-2027*		*1*	*FLOPPY DISK, 3,5" 1,44MB FOR PC*	
0030	*2674566-1008*		*1*	*PROGRAM OBJECT CODE*	
0040	*2565559-0000*		*1*	*MANUFACTURING INSTRUCTION*	
TBA 0200S					
0110	2634581-0007		1	PAM - SAM EASY DOWNLOAD	
0010	*2634582-0007*		*1*	*LABEL DISKETTE*	
0020	*90458-2027*		*1*	*FLOPPY DISK, 3,5" 1,44MB FOR PC*	
0030	*2634581-1007*		*1*	*PROGRAM OBJECT CODE*	
0040	*2565559-0000*		*1*	*MANUFACTURING INSTRUCTION*	
TBA 0200SQ QC, TBA 0250SQ QC					
0320	2764456-0004		1	PAM - SAM EASY DOWNLOAD	
0010	*2770496-0004*		*1*	*LABEL DISKETTE*	
0020	*90458-2027*		*1*	*FLOPPY DISK, 3,5" 1,44MB FOR PC*	
0030	*2764456-1004*		*1*	*PROGRAM OBJECT CODE*	
0040	*2565559-0000*		*1*	*MANUFACTURING INSTRUCTION*	
TBA 0250S QC, TBA 0200M QC					
0230	2699873-0007		1	PAM - SAM EASY DOWNLOAD	
0010	*2699875-0007*		*1*	*LABEL DISKETTE*	
0020	*90458-2027*		*1*	*FLOPPY DISK, 3,5" 1,44MB FOR PC*	
0030	*2699873-1007*		*1*	*PROGRAM OBJECT CODE*	
0040	*2565559-0000*		*1*	*MANUFACTURING INSTRUCTION*	
TBA 0500B QC, TBA 1000B QC					
0090	2634577-0008		1	PAM - SAM EASY DOWNLOAD	
0010	*2634578-0008*		*1*	*LABEL DISKETTE*	
0020	*90458-2027*		*1*	*FLOPPY DISK, 3,5" 1,44MB FOR PC*	
0030	*2634577-1008*		*1*	*PROGRAM OBJECT CODE*	
0040	*2565559-0000*		*1*	*MANUFACTURING INSTRUCTION*	
TBA 0500S					
0260	2716449-0006		1	PAM - SAM EASY DOWNLOAD	
0010	*2716450-0006*		*1*	*LABEL DISKETTE*	
0020	*90458-2027*		*1*	*FLOPPY DISK, 3,5" 1,44MB FOR PC*	
0030	*2716449-1006*		*1*	*PROGRAM OBJECT CODE*	
0040	*2565559-0000*		*1*	*MANUFACTURING INSTRUCTION*	
TBA 1000B					
0030	2634565-0007		1	PAM - SAM EASY DOWNLOAD	
0010	*2634566-0007*		*1*	*LABEL DISKETTE*	
0020	*90458-2027*		*1*	*FLOPPY DISK, 3,5" 1,44MB FOR PC*	
0030	*2634565-1007*		*1*	*PROGRAM OBJECT CODE*	
0040	*2565559-0000*		*1*	*MANUFACTURING INSTRUCTION*	
TBA 1000S					
0050	2634569-0008		1	PAM - SAM EASY DOWNLOAD	
0010	*2634570-0008*		*1*	*LABEL DISKETTE*	
0020	*90458-2027*		*1*	*FLOPPY DISK, 3,5" 1,44MB FOR PC*	
0030	*2634569-1008*		*1*	*PROGRAM OBJECT CODE*	
0040	*2565559-0000*		*1*	*MANUFACTURING INSTRUCTION*	
TBA 1000SQ					
0070	2634573-0008		1	PAM - SAM EASY DOWNLOAD	
0010	*2634574-0008*		*1*	*LABEL DISKETTE*	
0020	*90458-2027*		*1*	*FLOPPY DISK, 3,5" 1,44MB FOR PC*	
0030	*2634573-1008*		*1*	*PROGRAM OBJECT CODE*	
0040	*2565559-0000*		*1*	*MANUFACTURING INSTRUCTION*	
TBA 1500S					
0150	2652199-0007		1	PAM - SAM EASY DOWNLOAD	
0010	*2652200-0007*		*1*	*LABEL DISKETTE*	
0020	*90458-2027*		*1*	*FLOPPY DISK, 3,5" 1,44MB FOR PC*	
0030	*2652199-1007*		*1*	*PROGRAM OBJECT CODE*	
0040	*2565559-0000*		*1*	*MANUFACTURING INSTRUCTION*	
TBA 1890S, TBA 2000S					
0340	2701758-0005		1	PAM - SAM EASY DOWNLOAD	
0010	*2701760-0005*		*1*	*LABEL DISKETTE*	
0020	*90458-2027*		*1*	*FLOPPY DISK, 3,5" 1,44MB FOR PC*	
0030	*2701758-1005*		*1*	*PROGRAM OBJECT CODE*	
0040	*2565559-0000*		*1*	*MANUFACTURING INSTRUCTION*	
TPA 0250SQ QC, TPA 0200SQ QC					
0300	2736597-0003		1	PAM - SAM EASY DOWNLOAD	
0010	*2736598-0003*		*1*	*LABEL DISKETTE*	
0020	*90458-2027*		*1*	*FLOPPY DISK, 3,5" 1,44MB FOR PC*	
0030	*2736597-1003*		*1*	*PROGRAM OBJECT CODE*	
0040	*2565559-0000*		*1*	*MANUFACTURING INSTRUCTION*	
TPA 0330SQ					
0190	2687100-0007		1	PAM - SAM EASY DOWNLOAD	
0010	*2687102-0007*		*1*	*LABEL DISKETTE*	
0020	*90458-2027*		*1*	*FLOPPY DISK, 3,5" 1,44MB FOR PC*	
0030	*2687100-1007*		*1*	*PROGRAM OBJECT CODE*	
0040	*2565559-0000*		*1*	*MANUFACTURING INSTRUCTION*	
TPA 0500SQ					
0210	2687106-0007		1	PAM - SAM EASY DOWNLOAD	
0010	*2687108-0007*		*1*	*LABEL DISKETTE*	
0020	*90458-2027*		*1*	*FLOPPY DISK, 3,5" 1,44MB FOR PC*	
0030	*2687106-1007*		*1*	*PROGRAM OBJECT CODE*	
0040	*2565559-0000*		*1*	*MANUFACTURING INSTRUCTION*	

Machine Type | Group Description | Used-In | Group Number | Page No

This page is intentionally left blank.

Pos	Part No	UN	Qty	Description	Page No
TPA 1000SQ (Cont'd)					
0130	2634585-0008		1	PAM - SAM EASY DOWNLOAD	
0010	*2634586-0008*		*1*	*LABEL DISKETTE*	
0020	*90458-2027*		*1*	*FLOPPY DISK, 3,5" 1,44MB FOR PC*	
0030	*2634585-1008*		*1*	*PROGRAM OBJECT CODE*	
0040	*2565559-0000*		*1*	*MANUFACTURING INSTRUCTION*	
TPA 1000SQ QC, TPA 0750SQ QC					
0280	2734424-0006		1	PAM - SAM EASY DOWNLOAD	
0010	*2734425-0006*		*1*	*LABEL DISKETTE*	
0020	*90458-2027*		*1*	*FLOPPY DISK, 3,5" 1,44MB FOR PC*	
0030	*2734424-1006*		*1*	*PROGRAM OBJECT CODE*	
0040	*2565559-0000*		*1*	*MANUFACTURING INSTRUCTION*	
Common Parts					
0010	2814509-0002		1	PAM SAM CD	
0010	*2814509-1002*		*1*	*PROGRAM OBJECT CODE*	
0020	*2814510-0002*		*1*	*LABEL CD*	
0030	*90458-0118*		*1*	*COMPACT DISC RECORDABLE*	

Pos	Part No	UN	Qty	Description	Page No

This page is intentionally left blank.

ECM: 252511 - 20060116
Group number: 2639498-0200
Assembly Drawing:

Pos	Part No	UN	Qty	Description	Page No
A3/FLEX USA					
0020	2699092-0001		1	RECORDER	
0030	2699090-0001		1	RECORDER	
0040	2701169-0002		1	RECORDER	
HI					
0010	2811834-0001		1	RECORDER CD	
0010	*2811835-0001*		*1*	*LABEL CD*	
0020	*90458-0118*		*1*	*COMPACT DISC RECORDABLE*	
0030	*2811834-1001*		*1*	*PROGRAM OBJECT CODE*	
0040	*2811834-2001*		*1*	*PROGRAM SOURCE CODE*	
0030	2699090-0001		1	RECORDER	
NOHI					
0010	2811834-0001		1	RECORDER CD	
0010	*2811835-0001*		*1*	*LABEL CD*	
0020	*90458-0118*		*1*	*COMPACT DISC RECORDABLE*	
0030	*2811834-1001*		*1*	*PROGRAM OBJECT CODE*	
0040	*2811834-2001*		*1*	*PROGRAM SOURCE CODE*	
0020	2699092-0001		1	RECORDER	

Pos	Part No	UN	Qty	Description	Page No

This page is intentionally left blank.

ECM: 272726 - 20060712
Group number: 2801571-0100
Assembly Drawing:

Pos	Part No	UN	Qty	Description	Page No	Pos	Part No	UN	Qty	Description	Page No
-											
	2801770-0001		1	TPIH CD							

Machine Type	Group Description	Used-In	Group Number	Page No

This page is intentionally left blank.

ECM: 185589 - 20041104
Group number: 2635131-0100
Assembly Drawing:

Pos	Part No	UN	Qty	Description	Page No
A3/FLEX					
	351161-0111	M	8	CABLE AWM 1X35 MM2 LIGHTBLUE	
	351162-0107	M	34	CABLE AWM 1X6 MM2 YELLOW-GREEN	
	351162-0109	M	7	CABLE AWM 1X16 MM2 YELLOW-GREEN	
	351161-0105	M	6	CABLE AWM 1X2,5 MM2 LIGHTBLUE	
	351162-0106	M	5	CABLE AWM 1X4 MM2 YELLOW-GREEN	
	351164-0102	M	75	CABLE AWM 1X0,75 MM2 BLACK	
	351161-0104	M	75	CABLE AWM LIGHTBLUE 1,5MM2	
	351162-0102	M	120	CABLE AWM 1X0,75 MM2 YELLOW-GREEN	
	351164-0104	M	120	CABLE AWM 1X1,5 MM2 BLACK	
	351161-0102	M	35	CABLE (1UNIT = 100M)	
	351160-0102	M	2645	CABLE (1UNIT = 100M)	
	351164-0107	M	78	CABLE AWM 1X6 MM2 BLACK	
	351160-0104	M	15	CABLE AWM 1X1,5 MM2 DARKBLUE	
	351162-0104	M	70	CABLE AWM 1X1,5 MM2 YELLOW-GREEN	
	351160-0105	M	25	CABLE AWM 1X2,5 MM2 DARKBLUE	
	351164-0106	M	41	CABLE AWM 1X4 MM2 BLACK	
	351162-0105	M	54	CABLE AWM 1X2,5 MM2 YELLOW-GREEN	
	351160-0106	M	15	CABLE AWM 1X4 MM2 DARKBLUE	
	351164-0105	M	130	CABLE (1UNIT = 100M)	
Common Parts					
	351164-0111	M	15	CABLE AWM 1X35 MM2 BLACK	

Pos	Part No	UN	Qty	Description	Page No

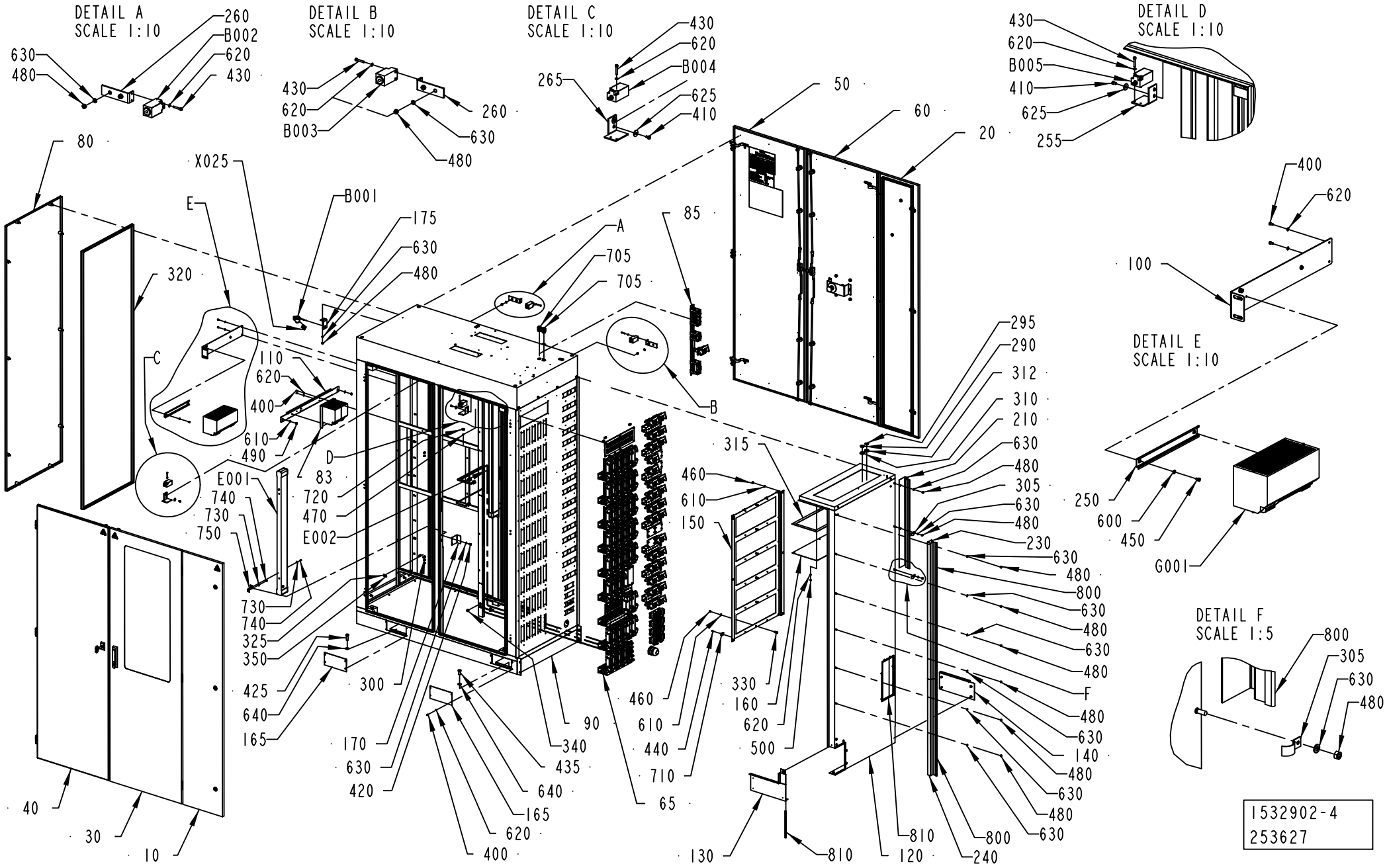
DETAIL A
SCALE 1:10
260
B002
620
430
630
480
DETAIL B
SCALE 1:10
430
620
B003
260
630
480
DETAIL C
SCALE 1:10
430
620
B004
265
625
410
DETAIL D
SCALE 1:10
430
620
B005
410
625
255
50
60
20
80
X025
E
B001
175
630
480
320
C
110
620
400
610
490
D
83
720
470
E002
E001
740
730
750
730
740
325
350
425
640
165
300
170
630
420
340
435
640
165
620
400
90
65
A
705
705
85
B
315
460
610
150
460
610
440
710
330
160
620
500
130
810
120
810
240
800
295
290
312
310
210
630
480
305
630
480
230
630
480
800
630
480
630
480
F
480
630
140
480
630
480
630
400
620
100
DETAIL E
SCALE 1:10
250
600
450
G001
DETAIL F
SCALE 1:5
800
305
630
480
40
30
10
1532902-4
253627

ECM: 260030 - 20060412
Group number: 1532902-0200
Assembly Drawing: 1532902-4_1_AB

Pos	Part No	UN	Qty	Description	Page No
A3/FLEX					
090	2765460-0001		1	WELDED CABINET	
120	2765462-0001		1	COVERING PANEL	
210	2748701-0000		1	BRACKET	
230	2747630-0000		1	BRACKET	
240	2748702-0000		1	BRACKET	
290	90002-0004		1	BLANK-OFF PLUG, PR 22,5 SKINDICHT-BLK16	
295	90002-0016		1	BLANK-OFF PLUG PR 20.4 SKINDICHT-BLK13,5	
705	352103-0108		2	CABLE GLAND, ST 13,5 , PR20,4/PG13,5	
720	352113-0205		6	ANCHOR PLATES FOR STRIPS, TYPE TM2S8-C10	
800	90143-0059	MM	2550	SEAL STRIP 4610069	
Common Parts					
010	2789109-0100		1	DOOR	**8-27**
020	2789107-0100		1	DOOR	**8-29**
030	1532920-0100		1	DOOR	**8-31**
040	1532923-0100		1	DOOR	**8-33**
050	1532932-0200		1	DOOR	**8-35**
060	1532935-0100		1	DOOR	**8-37**
065	2563166-0200		1	CONNECTOR	**8-39, 8-41, 8-43**
080	1532904-0100		1	DOOR	**8-45**
083	2624549-0100		1	POWER SUPPLY UNIT	**8-47**
085	2624551-0200		1	CONNECTION DEVICE	**8-49**
100	1532927-0000		1	FASTENING PLATE	
110	2530287-0000		1	PLATE	
130	1532928-0000		1	COVERING PLATE	
140	1532929-0000		1	COVERING PLATE	
150	1532911-0000		1	FASTENING PLATE	
160	1532909-0000		1	PLATE	
165	1038408-0000		4	COVERING PLATE	
170	1140769-0000		1	DOOR STOPPER	
175	1129318-0000		1	BRACKET	
250	2530286-0000		1	RAIL	
255	2606215-0000		1	BRACKET	
260	2608106-0000		2	BRACKET	
265	2608107-0000		1	BRACKET	
300	90062-0015		11	LOCK WASHER SERRAT.EXT.GEAR,6,4/11 H=0,7	
305	90074-0011		2	CABLE CLIPS, D=14 MM	
310	90099-0110		3	NUT, PR 22,5 (PG16)	
312	90099-0118		1	NUT, PR 20,4 (PG13,5)	
315	1532926-0000		1	GASKET	
320	90143-0057	M	36	STRIP EMKA 1011-05 21X11MM	
325	90194-0152		14	SIGN, EARTH	
330	90287-0137		6	SPACER BOLT DSSM60100	
340	90287-0157		2	SCREW M6SF FLAT HEAD M6X10 88	
350	2608177-0000		11	SIGN	
400	312105-0287		20	SCREW M6S ISO 4017 M4X8 A470	
410	312105-0323		4	SCREW M6S ISO 4017 M5X8 A480	
420	312105-0364		2	SCREW M6S ISO 4017 M6X10 A480	
425	312105-0538		2	SCREW M6S ISO 4017 M12X35 A480	
430	312111-0297		8	SCREW HEX.SOCK.HD.MC6S-TT 4X25 88 FZB	
435	312105-0534		2	SCREW M6S ISO 4017 M12X25 A480	
440	312121-0289		24	SCREW ISO 1207 M4X10 4.8 - 5.8 Z.PL.	
450	312121-0323		2	SCREW ISO 1207 M5X8 4.8 - 5.8 Z.PL.	
460	312601-0316		12	HEXAGON NUT, DIN 934 M6 8 FZB	
470	312605-0312		9	HEXAGON NUT, M6M M4 A280	
480	312605-0316		37	HEXAGON NUT, M6M M6 A280	
490	312810-0316		6	HEXAGON NUT, NY-LOCK M6 FZB	
500	312812-0312		6	HEXAGON NUT, NY-LOCK M4 A480	
600	315101-0146		2	WASHER PLAIN, BRB, 5,3/10 H=1	
610	315101-0153		18	WASHER PLAIN, BRB, 6,4/12 H=1,5	
620	315105-0136		34	WASHER BRB 4,3X9 RFR	
625	90005-0060		4	WASHER PLAIN, RBS 6,4/M6)/18,H=1,5	
630	315105-0153		39	WASHER BRB 6,4X12 RFR	
640	315105-0178		4	WASHER BRB 13X24 RFR	
710	352113-0203		27	ANCHOR PLATES FOR STRIPS, TYPE TM3S8-M0	
730	90005-0082		8	WASHER PLAIN ROUND 4,3(M4)/12,H=1	
740	312125-0289		8	SCREW ISO 1207 M4X10 A4	
750	2675516-0000		4	BRACKET	
810	90143-0060	MM	1550	EDGE STRIP 9,5X6,3MM BLACK PVC	
B001	90326-0053		1	THERMOCOUPLE, 12826-35	
B002	90044-0192		1	LIMIT SW. SZ2586.000	
B003	90044-0192		1	LIMIT SW. SZ2586.000	
B004	90044-0192		1	LIMIT SW. SZ2586.000	
B005	90044-0192		1	LIMIT SW. SZ2586.000	
E001	90459-2560		1	LIGHT FIXTURE, TMS121 1XTL-D30W/830 IP	
E002	90459-2560		1	LIGHT FIXTURE, TMS121 1XTL-D30W/830 IP	
G001	90459-2938		1	POWER SUPPLY, 6EP1437-3BA00	
X025	90326-0020		1	PLUG, FEMALE YELLOW CR-AL	

Machine Type | Group Description | Used-In | Group Number | Page No

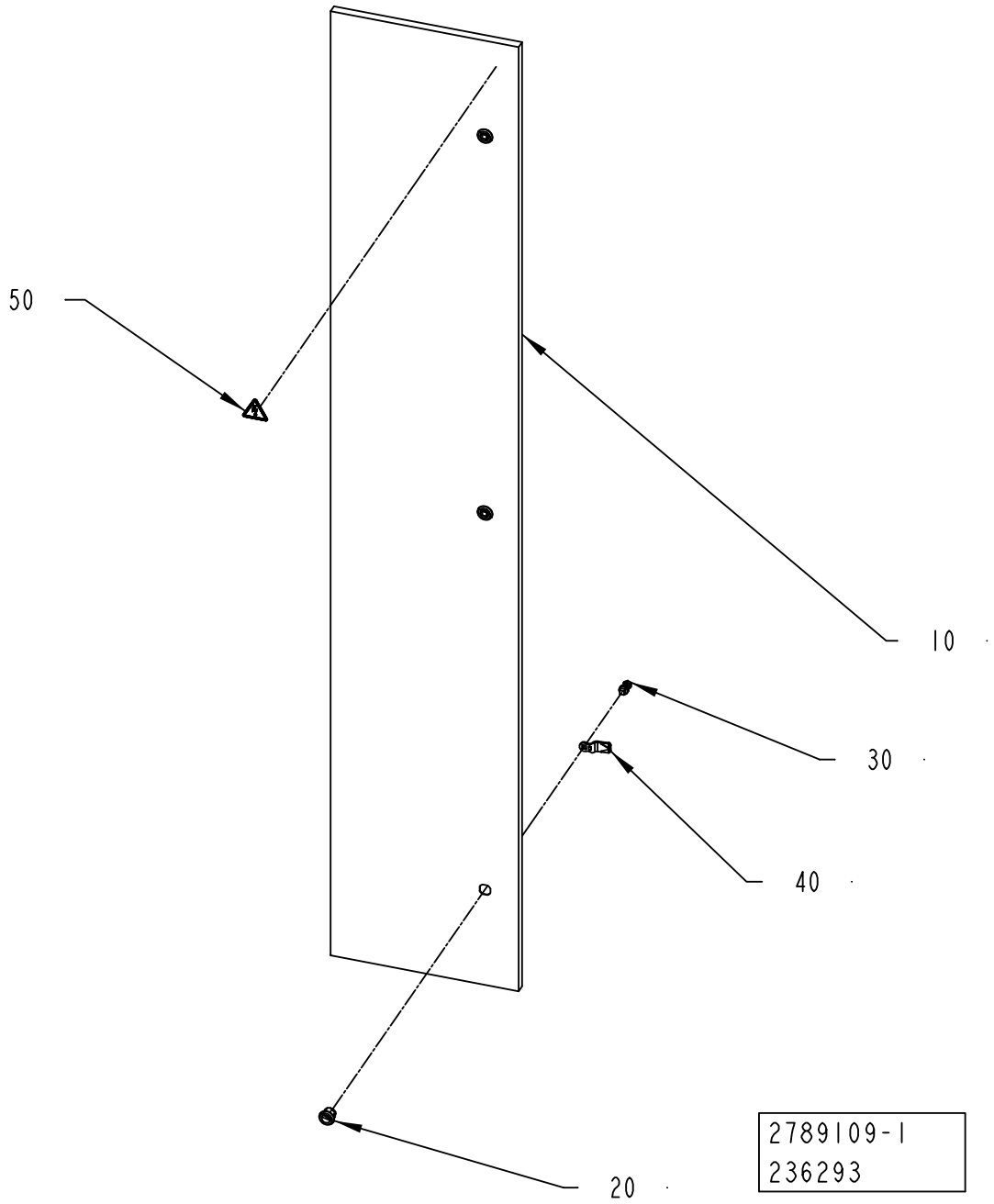
50
10
30
40
20
2789109-1
236293

ECM: 236483 - 20060101
Group number: 2789109-0100
Assembly Drawing: 2789109-1_1_AA

Pos	Part No	UN	Qty	Description	Page No
-					
010	2789110-0000		1	DOOR	
020	90237-0319		3	LOCK HOUSING, 1000-U134	
030	90237-0320		3	LOCK HOUSING, 1000-U136	
040	90237-0157		3	LOCK BOLT, 1000-230	
050	359705-0015		1	WARNING SIGN ISO, RISK OF ELECTRIC SHOCK	

Pos	Part No	UN	Qty	Description	Page No

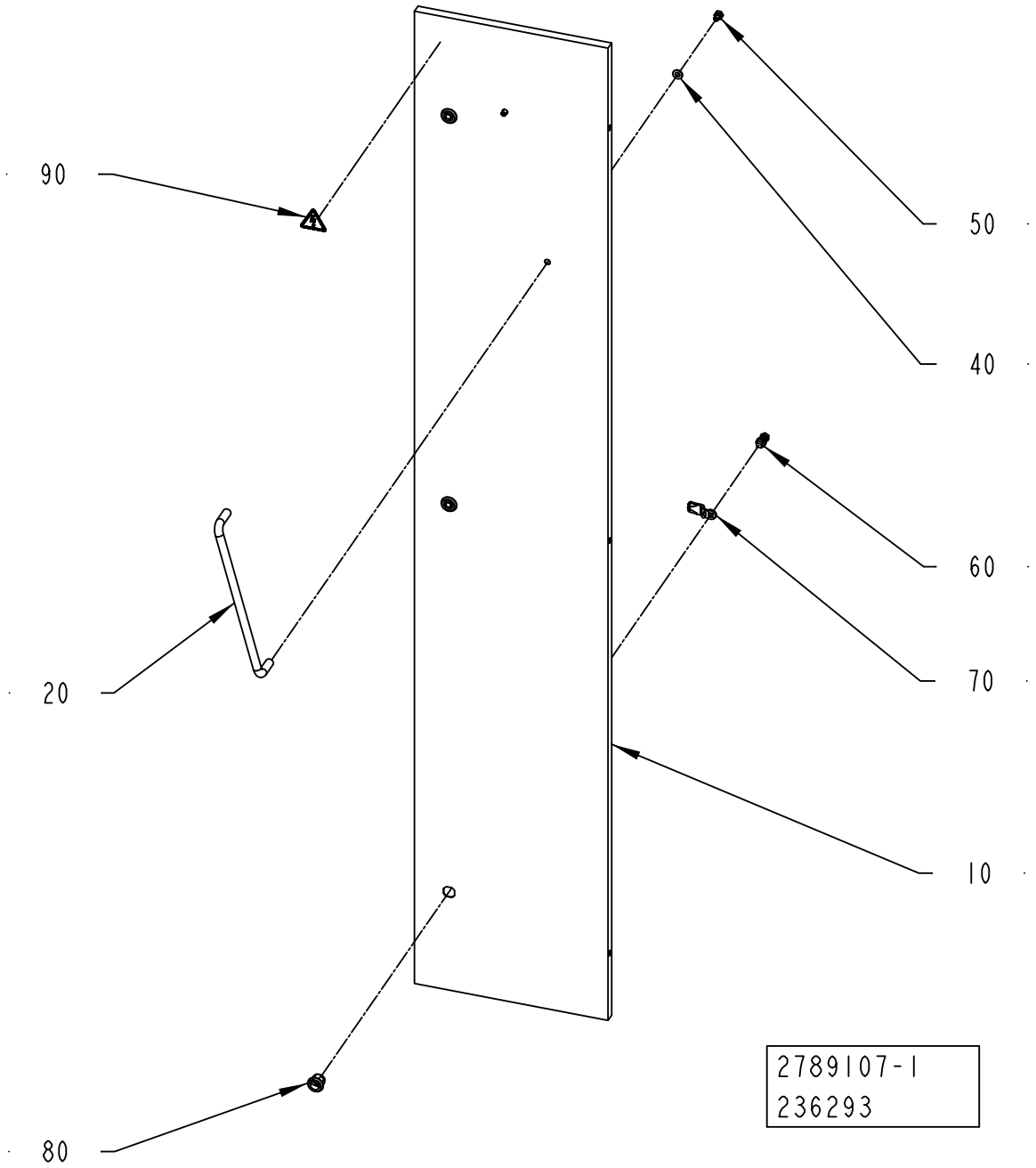
90
50
40
20
60
70
10
80
2789107-1
236293

ECM: 236293 - 20060101
Group number: 2789107-0100
Assembly Drawing: 2789107-1_1_AA

Pos	Part No	UN	Qty	Description	Page No
-					
010	2789108-0000		1	DOOR	
020	90017-0015		1	HANDLE, NO. 14.4012.02.308	
040	90005-0077		2	WASHER PL.RND.NYL.8,4/7, H=2	
050	312105-0447		2	SCREW M6S ISO 4017 M8X12 A480	
060	90237-0320		3	LOCK HOUSING, 1000-U136	
070	90237-0157		3	LOCK BOLT, 1000-230	
080	90237-0319		3	LOCK HOUSING, 1000-U134	
090	359705-0015		1	WARNING SIGN ISO, RISK OF ELECTRIC SHOCK	

Pos	Part No	UN	Qty	Description	Page No

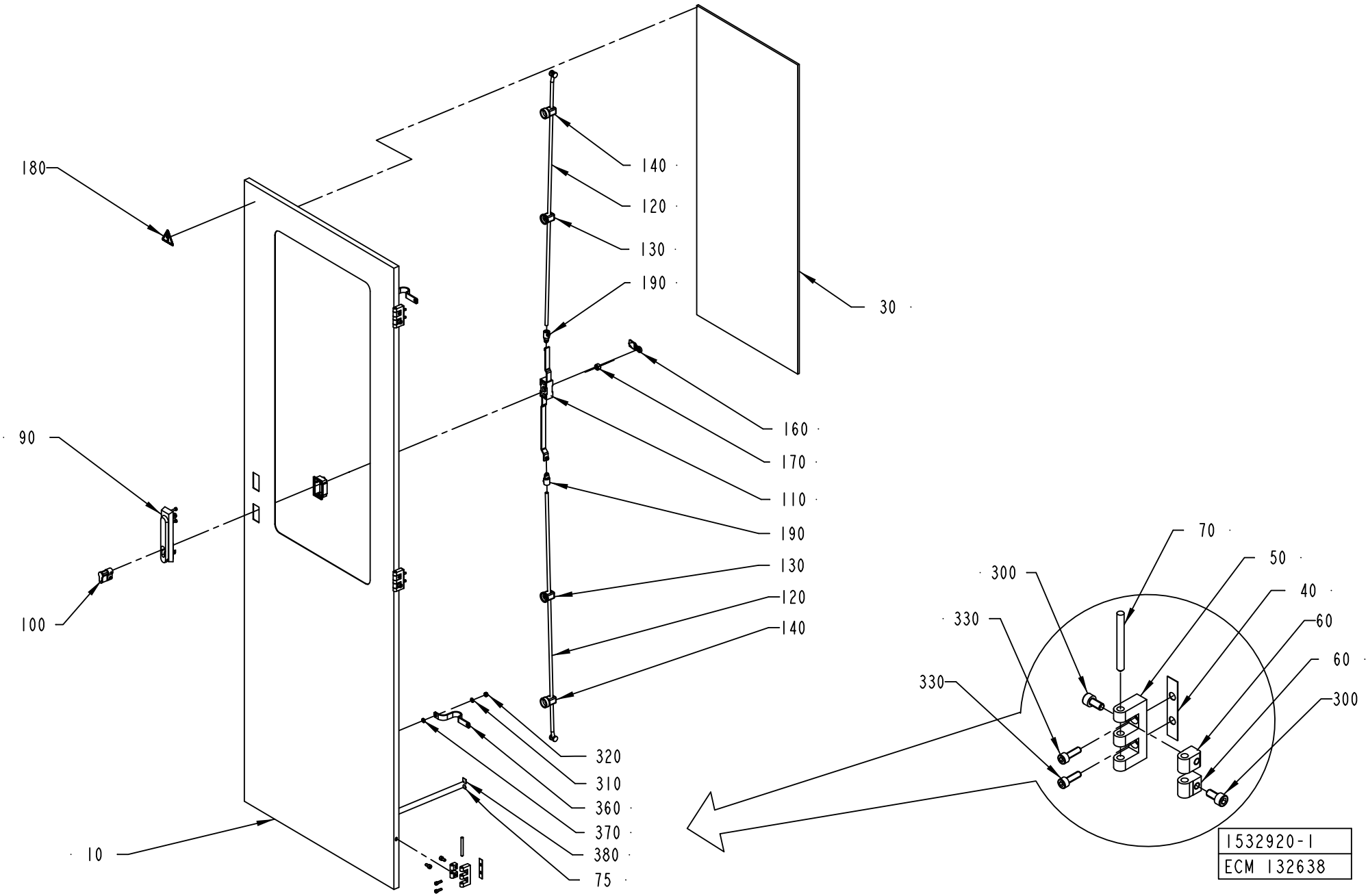
180
140
120
130
190
30
160
170
110
190
130
120
140
90
100
10
320
310
360
370
380
75
70
50
40
60
60
300
330
300
330
1532920-1
ECM 132638

ECM: 184926 - 20040928
Group number: 1532920-0100
Assembly Drawing: 1532920-1_1_AB

Pos	Part No	UN	Qty	Description	Page No
-					
010	1532921-0000		1	DOOR	
030	2530288-0000		1	GLASS PANE	
040	988666-0000		3	GASKET	
050	1035792-0000		3	E-HINGE	
060	1129770-0000		6	BLOCKING PIECE	
070	988685-0000		3	PIN	
075	2608177-0000		2	SIGN	
090	90237-0176		1	TURNING HANDLE, 1125-U190-A	
100	90237-0128		1	LOCK CYLINDER, 1109-U3	
110	90237-0153		1	LOCK HOUSING, 1121-U26-0B	
120	90237-0168		2	ROUND BAR WITH END WHEEL, 1049-U5	
130	90237-0151		2	GUIDE, 1001-U11	
140	90237-0152		2	GUIDE, 1001-U12	
160	90237-0156		1	LOCK BOLT, 1000-16	
170	90237-0155		1	LOCK ADAPTER, 1121-U40	
180	359705-0015		1	WARNING SIGN ISO, RISK OF ELECTRIC SHOCK	
190	90237-0169		2	LOCK ADAPTER, 1000-U49	
300	312115-0366		6	SCREW ISO4762 M6X12 A4 80	
310	315105-0153		2	WASHER BRB 6,4X12 RFR	
320	312605-0316		2	HEXAGON NUT, M6M M6 A280	
330	312115-0329		6	SCREW ISO4762 M5X16 A4 80	
360	90135-0035		2	EARTH WIRE, L=250 MM 16 MM2	
370	90062-0015		2	LOCK WASHER SERRAT.EXT.GEAR,6,4/11 H=0,7	
380	90194-0152		2	SIGN, EARTH	

Pos	Part No	UN	Qty	Description	Page No

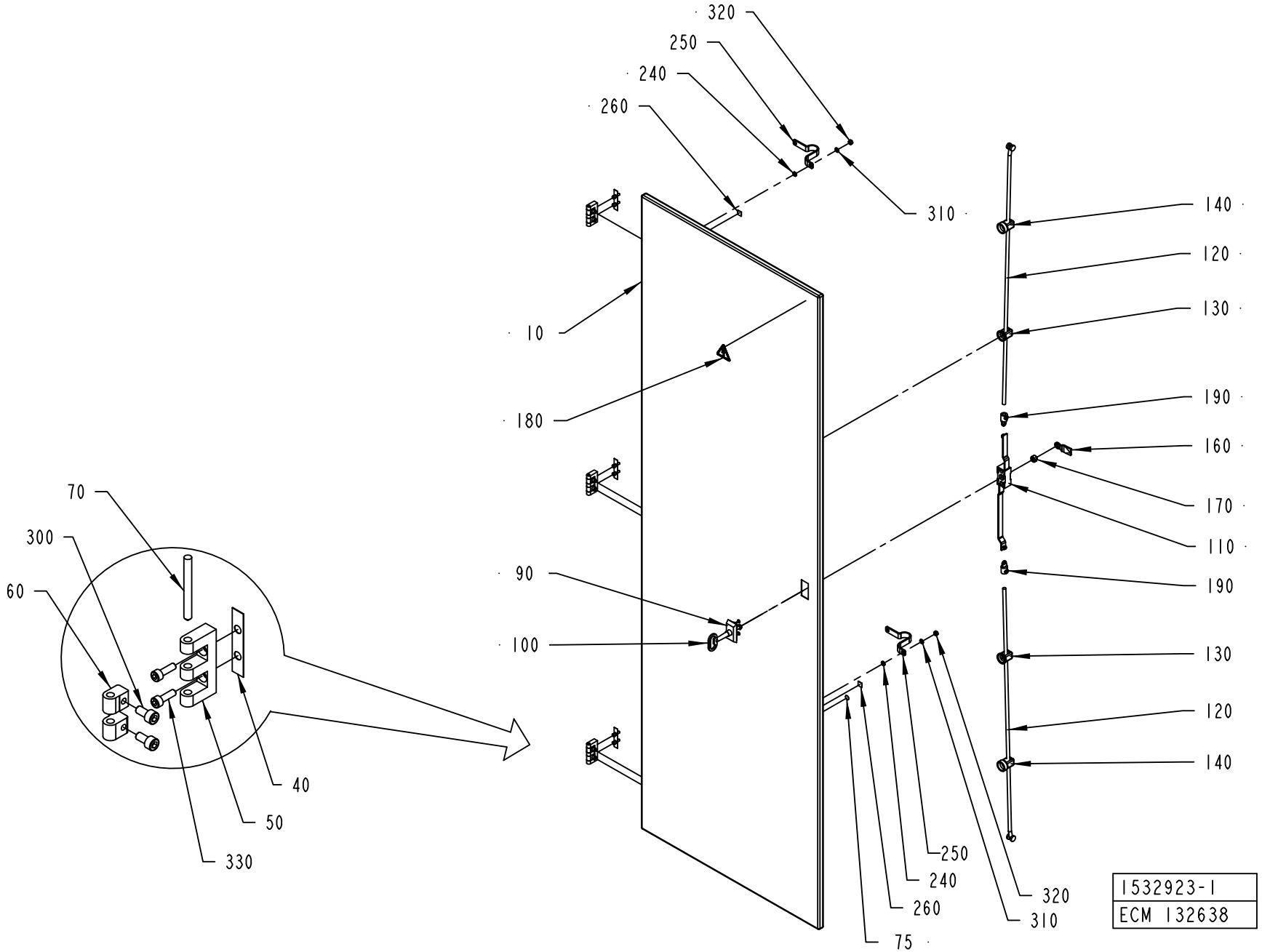
320
250
240
260
310
140
120
130
10
180
190
160
170
110
190
90
100
130
120
140
70
300
60
40
50
330
250
240
260
320
310
75
1532923-1
ECM 132638

ECM: 184927 - 20040928
Group number: 1532923-0100
Assembly Drawing: 1532923-1_1_AB

Pos	Part No	UN	Qty	Description	Page No
-					
010	1532924-0000		1	DOOR	
040	988666-0000		3	GASKET	
050	1035792-0000		3	E-HINGE	
060	1129770-0000		6	BLOCKING PIECE	
070	988685-0000		1	PIN	
075	2608177-0000		2	SIGN	
090	90237-0160		1	ESCUTCHEON WITH SQUARE, 1121-U23/U13	
100	90237-0324		1	KEY, 1104-02 FOR SQUARE 8 MM	
110	90237-0153		1	LOCK HOUSING, 1121-U26-0B	
120	90237-0168		2	ROUND BAR WITH END WHEEL, 1049-U5	
130	90237-0151		2	GUIDE, 1001-U11	
140	90237-0152		2	GUIDE, 1001-U12	
160	90237-0156		1	LOCK BOLT, 1000-16	
170	90237-0155		1	LOCK ADAPTER, 1121-U40	
180	359705-0015		1	WARNING SIGN ISO, RISK OF ELECTRIC SHOCK	
190	90237-0169		2	LOCK ADAPTER, 1000-U49	
240	90062-0015		2	LOCK WASHER SERRAT.EXT.GEAR,6,4/11 H=0,7	
250	90135-0035		2	EARTH WIRE, L=250 MM 16 MM2	
260	90194-0152		2	SIGN, EARTH	
300	312115-0366		6	SCREW ISO4762 M6X12 A4 80	
310	315105-0153		2	WASHER BRB 6,4X12 RFR	
320	312605-0316		2	HEXAGON NUT, M6M M6 A280	
330	312115-0329		6	SCREW ISO4762 M5X16 A4 80	

Pos	Part No	UN	Qty	Description	Page No

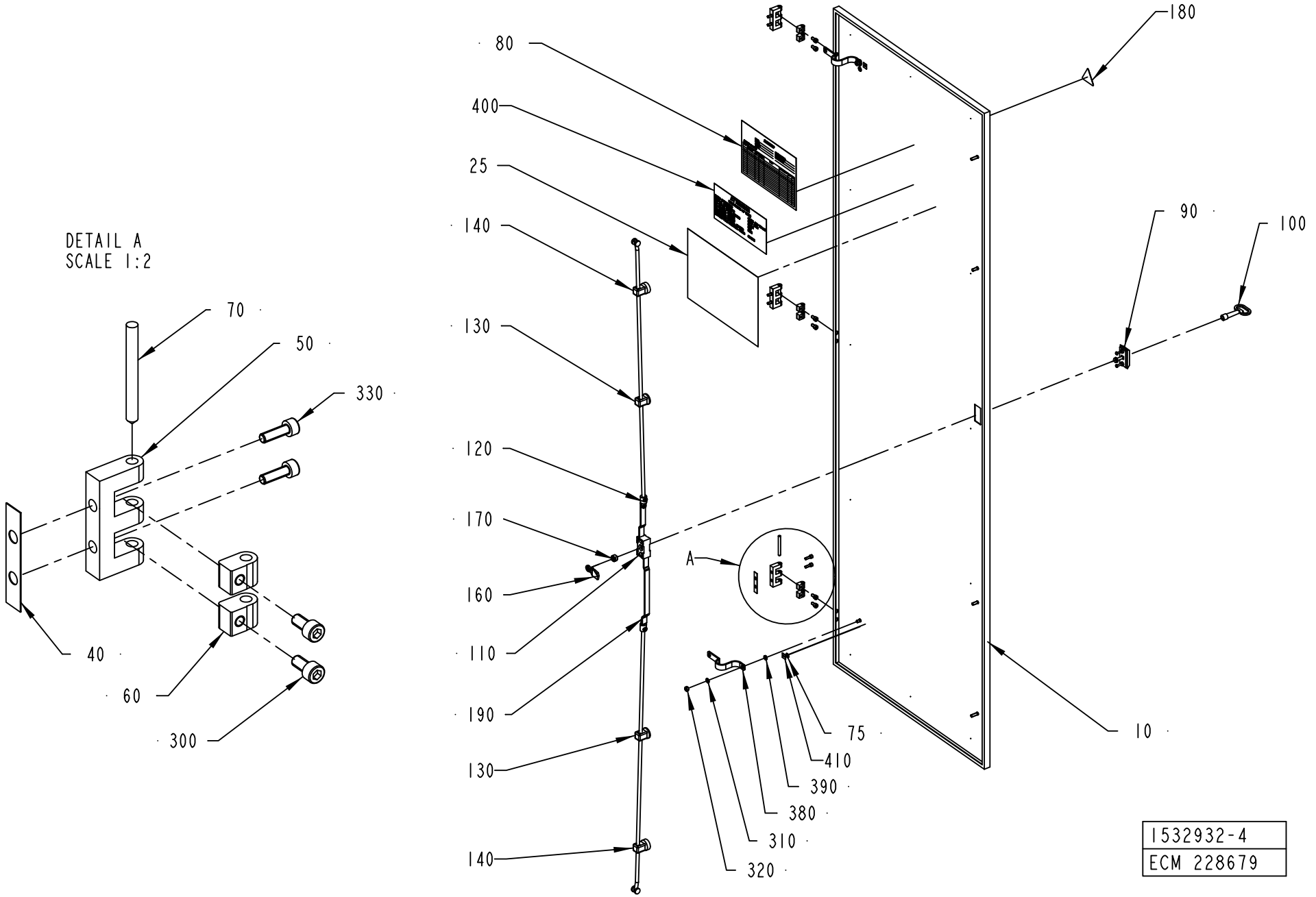
DETAIL A
SCALE 1:2
70
50
330
40
60
300
80
400
25
140
130
120
170
160
110
190
130
140
180
90
100
A
75
410
390
380
310
320
10
1532932-4
ECM 228679

ECM: 260032 - 20060412
Group number: 1532932-0200
Assembly Drawing: 1532932-4_1_AA

Pos	Part No	UN	Qty	Description	Page No
A3/FLEX					
025	2789125-0000		1	FUSE PANEL LABEL	
Common Parts					
010	1532933-0000		1	DOOR	
040	988666-0000		3	GASKET	
050	1035792-0000		3	E-HINGE	
060	1129770-0000		6	BLOCKING PIECE	
070	988685-0000		3	PIN	
075	2608177-0000		2	SIGN	
080	90194-0133		1	SIGN "DELIVERED DESIGN"	
090	90237-0160		1	ESCUTCHEON WITH SQUARE, 1121-U23/U13	
100	90237-0324		1	KEY, 1104-02 FOR SQUARE 8 MM	
110	90237-0153		1	LOCK HOUSING, 1121-U26-0B	
120	90237-0168		2	ROUND BAR WITH END WHEEL, 1049-U5	
130	90237-0151		2	GUIDE, 1001-U11	
140	90237-0152		2	GUIDE, 1001-U12	
160	90237-0156		1	LOCK BOLT, 1000-16	
170	90237-0155		1	LOCK ADAPTER, 1121-U40	
180	359705-0015		1	WARNING SIGN ISO, RISK OF ELECTRIC SHOCK	
190	90237-0169		2	LOCK ADAPTER, 1000-U49	
300	312115-0366		6	SCREW ISO4762 M6X12 A4 80	
310	315105-0153		2	WASHER BRB 6,4X12 RFR	
320	312605-0316		2	HEXAGON NUT, M6M M6 A280	
330	312115-0329		6	SCREW ISO4762 M5X16 A4 80	
380	90135-0035		2	EARTH WIRE, L=250 MM 16 MM2	
390	90062-0015		2	LOCK WASHER SERRAT.EXT.GEAR,6,4/11 H=0,7	
400	90194-0080		1	SIGN, IDENTIFICATION OF WIRING	
410	90194-0152		2	SIGN, EARTH	

Pos	Part No	UN	Qty	Description	Page No

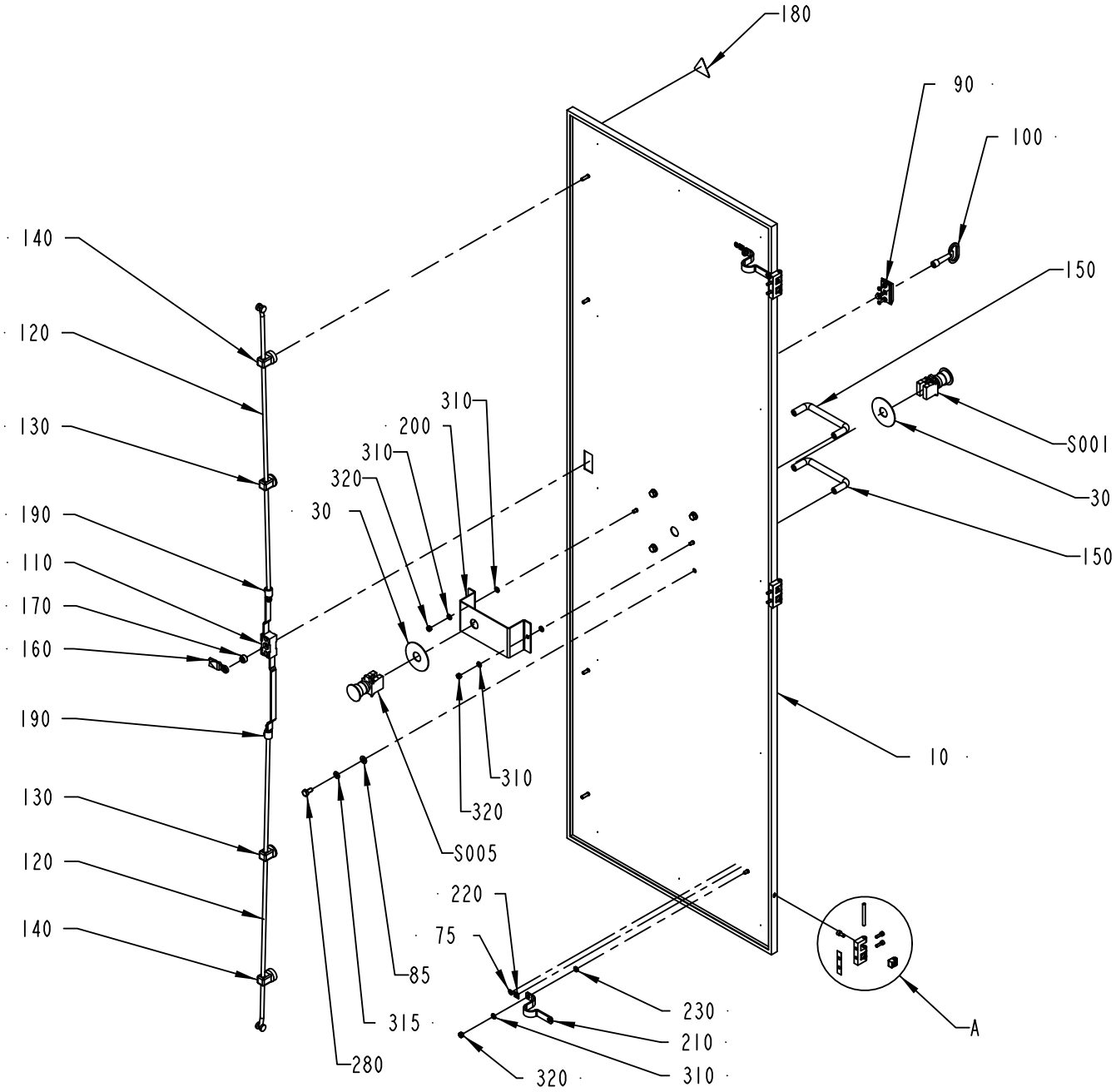

DETAIL A
SCALE 1:2

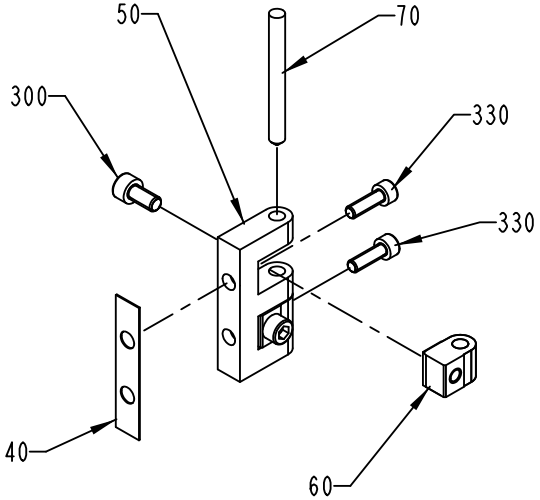

1532935-1
ECM 132638

ECM: 184929 - 20040928
Group number: 1532935-0100
Assembly Drawing: 1532935-1_1_AB

Pos	Part No	UN	Qty	Description	Page No
-					
010	1532936-0000		1	DOOR	
030	486826-0001		2	SIGN "EMERGENCY STOP"	
040	988666-0000		3	GASKET	
050	1035792-0000		3	E-HINGE	
060	1129770-0000		6	BLOCKING PIECE	
070	988685-0000		3	PIN	
075	2608177-0000		2	SIGN	
085	90005-0077		4	WASHER PL.RND.NYL.8,4/7, H=2	
090	90237-0160		1	ESCUTCHEON WITH SQUARE, 1121-U23/U13	
100	90237-0324		1	KEY, 1104-02 FOR SQUARE 8 MM	
110	90237-0153		1	LOCK HOUSING, 1121-U26-0B	
120	90237-0168		2	ROUND BAR WITH END WHEEL, 1049-U5	
130	90237-0151		2	GUIDE, 1001-U11	
140	90237-0152		2	GUIDE, 1001-U12	
150	90017-0016		2	HANDLE, NO. 14.4012.02.120	
160	90237-0156		1	LOCK BOLT, 1000-16	
170	90237-0155		1	LOCK ADAPTER, 1121-U40	
180	359705-0015		1	WARNING SIGN ISO, RISK OF ELECTRIC SHOCK	
190	90237-0169		2	LOCK ADAPTER, 1000-U49	
200	1038699-0000		1	BRACKET	
210	90135-0035		2	EARTH WIRE, L=250 MM 16 MM2	
220	90194-0152		2	SIGN, EARTH	
230	90062-0015		2	LOCK WASHER SERRAT.EXT.GEAR,6,4/11 H=0,7	
280	312105-0449		4	SCREW M6S ISO 4017 M8X16 A480	
300	312115-0366		6	SCREW ISO4762 M6X12 A4 80	
310	315105-0153		6	WASHER BRB 6,4X12 RFR	
315	315105-0165		4	WASHER BRB 8,4X16 RFR	
320	312605-0316		4	HEXAGON NUT, M6M M6 A280	
330	312115-0329		6	SCREW ISO4762 M5X16 A4 80	
S001	90458-1651		1	EMERGENCY STOP, ZB4-BS-844 ZB4-BZ-104	
S005	90458-1651		1	EMERGENCY STOP, ZB4-BS-844 ZB4-BZ-104	

Pos	Part No	UN	Qty	Description	Page No

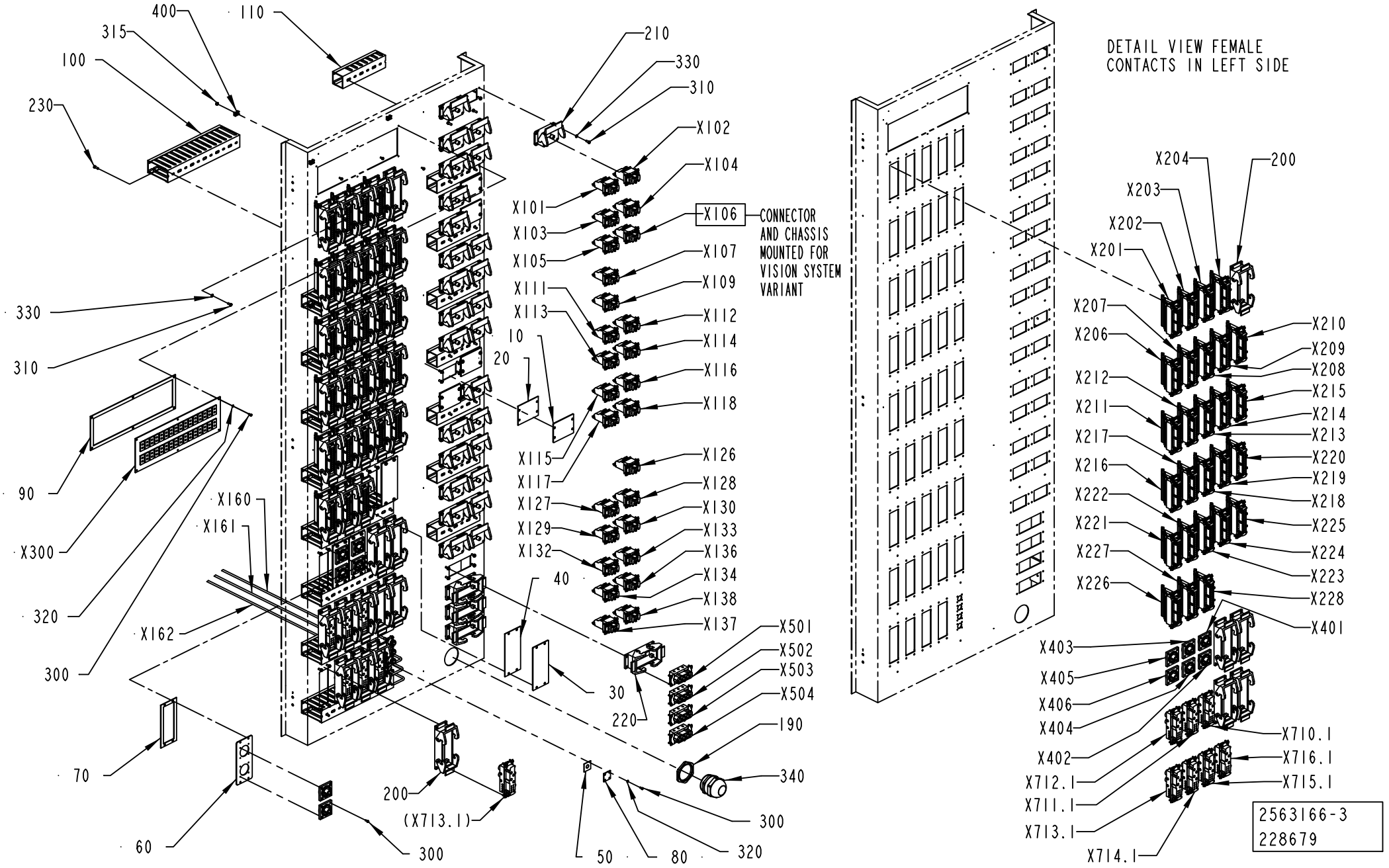
400
110
315
100
230
210
330
310
X102
X104
X101
X103
X105
X106
CONNECTOR AND CHASSIS MOUNTED FOR VISION SYSTEM VARIANT
X107
X109
X111
X113
X112
X114
X116
X118
10
20
X115
X117
X126
X128
X127
X130
X129
X133
X132
X136
X134
X138
X137
X501
X502
X503
X504
190
340
300
320
50
80
30
220
40
330
310
90
X300
320
300
X160
X161
X162
70
60
200
(X713.1)
300
DETAIL VIEW FEMALE CONTACTS IN LEFT SIDE
X204
200
X203
X202
X201
X207
X206
X212
X211
X217
X216
X222
X221
X227
X226
X210
X209
X208
X215
X214
X213
X220
X219
X218
X225
X224
X223
X228
X401
X403
X405
X406
X404
X402
X712.1
X711.1
X713.1
X714.1
X710.1
X716.1
X715.1
2563166-3
228679

ECM: 260031 - 20060412
Group number: 2563166-0200
Assembly Drawing: 2563166-3_1_AA

This list covers pages from 8-38 to 8-43

Pos	Part No	UN	Qty	Description	Page No
A3/FLEX NOVISION SYS (See drawing on pages: 8-38, 8-40, 8-42)					
010	1037572-0000		6	COVER PLATE	
020	1037573-0000		6	GASKET	
030	1037574-0000		2	COVER PLATE	
040	1037575-0000		2	GASKET	
050	1129276-0000		1	GASKET	
080	1548139-0000		1	COVER PLATE	
200	90459-6639		39	HOUSING 24B BULKHEAD, 09 30 024 0301	
210	90110-0123		26	HOUSING, 09 30 006 0301	
220	90459-6638		4	HOUSING 16B BULKHEAD, 09 30 016 0301	
300	312125-0222		46	SCREW ISO 1207 M3X8 A4	
310	312125-0289		320	SCREW ISO 1207 M4X10 A4	
320	315105-0124		22	WASHER BRB 3,2X7 RFR	
330	315105-0136		321	WASHER BRB 4,3X9 RFR	
W106	90220-0183	MM	3200	SCR. CABLE 2X0,34MM2	
W120	90220-0183	MM	3500	SCR. CABLE 2X0,34MM2	
W121	90220-0183	MM	3500	SCR. CABLE 2X0,34MM2	
W122	90220-0183	MM	3600	SCR. CABLE 2X0,34MM2	
W124	90220-0183	MM	2400	SCR. CABLE 2X0,34MM2	
W125	90220-0183	MM	2400	SCR. CABLE 2X0,34MM2	
W126	90220-0183	MM	2200	SCR. CABLE 2X0,34MM2	
W127	90220-0183	MM	2200	SCR. CABLE 2X0,34MM2	
W130	90220-0183	MM	2700	SCR. CABLE 2X0,34MM2	
W133	90220-0183	MM	3500	SCR. CABLE 2X0,34MM2	
W135	90220-0183	MM	2100	SCR. CABLE 2X0,34MM2	
W138	90220-0183	MM	2500	SCR. CABLE 2X0,34MM2	
W139	90220-0183	MM	2400	SCR. CABLE 2X0,34MM2	
W213	90220-0104	MM	1150	SCR. CABLE 4X1,5MM2	
W215	90220-0104	MM	1200	SCR. CABLE 4X1,5MM2	
W300	90220-0034	MM	1200	THERMOCABLE TEX/SITW-20F-KX 2X0,5MM2	
W301	90220-0034	MM	1200	THERMOCABLE TEX/SITW-20F-KX 2X0,5MM2	
W302	90220-0034	MM	1200	THERMOCABLE TEX/SITW-20F-KX 2X0,5MM2	
W303	90220-0034	MM	1200	THERMOCABLE TEX/SITW-20F-KX 2X0,5MM2	
W304	90220-0034	MM	1200	THERMOCABLE TEX/SITW-20F-KX 2X0,5MM2	
W305	90220-0034	MM	1200	THERMOCABLE TEX/SITW-20F-KX 2X0,5MM2	
W313	90220-0034	MM	1200	THERMOCABLE TEX/SITW-20F-KX 2X0,5MM2	
W314	90220-0034	MM	1200	THERMOCABLE TEX/SITW-20F-KX 2X0,5MM2	
W316	90220-0034	MM	1200	THERMOCABLE TEX/SITW-20F-KX 2X0,5MM2	
W317	90220-0034	MM	1200	THERMOCABLE TEX/SITW-20F-KX 2X0,5MM2	
W318	90220-0034	MM	1000	THERMOCABLE TEX/SITW-20F-KX 2X0,5MM2	
W319	90220-0034	MM	1000	THERMOCABLE TEX/SITW-20F-KX 2X0,5MM2	
W320	90220-0034	MM	1000	THERMOCABLE TEX/SITW-20F-KX 2X0,5MM2	
W321	90220-0034	MM	3000	THERMOCABLE TEX/SITW-20F-KX 2X0,5MM2	
W322	90220-0034	MM	3000	THERMOCABLE TEX/SITW-20F-KX 2X0,5MM2	
W323	90220-0034	MM	3000	THERMOCABLE TEX/SITW-20F-KX 2X0,5MM2	
W331	90220-0034	MM	1000	THERMOCABLE TEX/SITW-20F-KX 2X0,5MM2	
W332	90220-0034	MM	1000	THERMOCABLE TEX/SITW-20F-KX 2X0,5MM2	
W333	90220-0034	MM	1000	THERMOCABLE TEX/SITW-20F-KX 2X0,5MM2	
W382	90220-0034	MM	3000	THERMOCABLE TEX/SITW-20F-KX 2X0,5MM2	
W710	90220-0125	MM	1250	MOTOR CABLE 4X4,0+2X1,0+2X0,75+SHIELD	
W711	90220-0125	MM	1500	MOTOR CABLE 4X4,0+2X1,0+2X0,75+SHIELD	
W712	90220-0125	MM	1650	MOTOR CABLE 4X4,0+2X1,0+2X0,75+SHIELD	
W713	90220-0125	MM	1850	MOTOR CABLE 4X4,0+2X1,0+2X0,75+SHIELD	
W714	90220-0116	MM	1900	MOTOR CABLE 4X1,0+2(2X0,5)+SHIELD	
W715	90220-0116	MM	1950	MOTOR CABLE 4X1,0+2(2X0,5)+SHIELD	
W716	90220-0084	MM	1900	MOTOR CABLE 4X2,5+2(2X0.75)+SHIELD	
X105	90459-6624		1	FEMALE INSERT HAN E AV, 09 33 006 4735	
X113	90459-6624		1	FEMALE INSERT HAN E AV, 09 33 006 4735	
X114	90459-6624		1	FEMALE INSERT HAN E AV, 09 33 006 4735	
X118	90459-6624		1	FEMALE INSERT HAN E AV, 09 33 006 4735	
X129	90459-6624		1	FEMALE INSERT HAN E AV, 09 33 006 4735	
X138	90459-6624		1	FEMALE INSERT HAN E AV, 09 33 006 4735	
X160	2540596-0002		1	COAXIAL CABLE	
X161	2540596-0002		1	COAXIAL CABLE	
X162	2540596-0002		1	COAXIAL CABLE	
X501	90110-0055		1	FEMALE INSERT HAN 6 HSB 09 31 006 2701	
X502	90110-0055		1	FEMALE INSERT HAN 6 HSB 09 31 006 2701	
X710.1	90459-6623		1	FEMALE INSERT HAN K 4/8, 09 38 012 2701	
X711.1	90459-6623		1	FEMALE INSERT HAN K 4/8, 09 38 012 2701	
X712.1	90459-6623		1	FEMALE INSERT HAN K 4/8, 09 38 012 2701	
X713.1	90459-6623		1	FEMALE INSERT HAN K 4/8, 09 38 012 2701	
X714.1	90459-6623		1	FEMALE INSERT HAN K 4/8, 09 38 012 2701	
X715.1	90459-6623		1	FEMALE INSERT HAN K 4/8, 09 38 012 2701	
X716.1	90459-6623		1	FEMALE INSERT HAN K 4/8, 09 38 012 2701	
A3/FLEX VISION SYS (See drawing on pages: 8-38, 8-40, 8-42)					
010	1037572-0000		5	COVER PLATE	
020	1037573-0000		5	GASKET	
030	1037574-0000		2	COVER PLATE	
040	1037575-0000		2	GASKET	
050	1129276-0000		1	GASKET	
080	1548139-0000		1	COVER PLATE	
200	90459-6639		39	HOUSING 24B BULKHEAD, 09 30 024 0301	
210	90110-0123		27	HOUSING, 09 30 006 0301	
220	90459-6638		4	HOUSING 16B BULKHEAD, 09 30 016 0301	

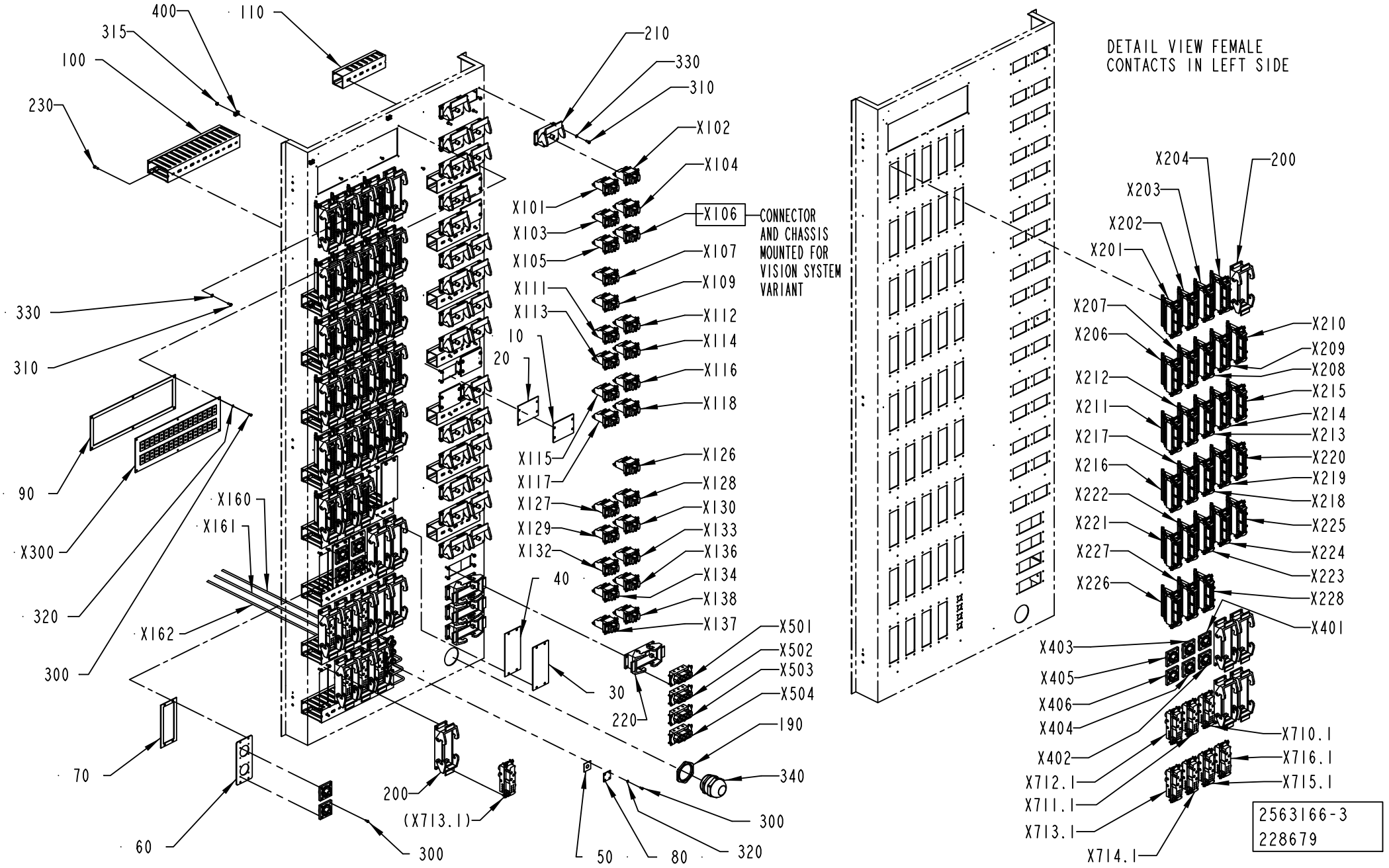
400
110
315
100
230
210
330
310
X102
X104
X101
X103
X105
X106
CONNECTOR AND CHASSIS MOUNTED FOR VISION SYSTEM VARIANT
X107
X109
X111
X113
X112
X114
X116
X118
10
20
X115
X117
X126
X128
X127
X130
X129
X133
X132
X136
X134
X138
X137
X501
X502
X503
X504
190
340
300
320
330
310
90
X300
320
300
X160
X161
X162
40
30
220
70
60
200
(X713.1)
300
50
80
DETAIL VIEW FEMALE CONTACTS IN LEFT SIDE
X204
200
X203
X202
X201
X207
X206
X210
X209
X208
X212
X215
X211
X214
X217
X213
X216
X220
X222
X219
X221
X218
X227
X225
X226
X224
X223
X228
X401
X403
X405
X406
X404
X402
X712.1
X711.1
X713.1
X714.1
X710.1
X716.1
X715.1
2563166-3
228679

Pos	Part No	UN	Qty	Description	Page No
A3/FLEX VISION SYS (Cont'd) (See drawing on pages: 8-38, 8-40, 8-42)					
300	312125-0222		46	SCREW ISO 1207 M3X8 A4	
310	312125-0289		320	SCREW ISO 1207 M4X10 A4	
320	315105-0124		22	WASHER BRB 3,2X7 RFR	
330	315105-0136		321	WASHER BRB 4,3X9 RFR	
W106	90220-0183	MM	3200	SCR. CABLE 2X0,34MM2	
W120	90220-0183	MM	3500	SCR. CABLE 2X0,34MM2	
W121	90220-0183	MM	3500	SCR. CABLE 2X0,34MM2	
W122	90220-0183	MM	3600	SCR. CABLE 2X0,34MM2	
W124	90220-0183	MM	2400	SCR. CABLE 2X0,34MM2	
W125	90220-0183	MM	2400	SCR. CABLE 2X0,34MM2	
W126	90220-0183	MM	2200	SCR. CABLE 2X0,34MM2	
W127	90220-0183	MM	2200	SCR. CABLE 2X0,34MM2	
W130	90220-0183	MM	2700	SCR. CABLE 2X0,34MM2	
W133	90220-0183	MM	3500	SCR. CABLE 2X0,34MM2	
W135	90220-0183	MM	2100	SCR. CABLE 2X0,34MM2	
W138	90220-0183	MM	2500	SCR. CABLE 2X0,34MM2	
W139	90220-0183	MM	2400	SCR. CABLE 2X0,34MM2	
W213	90220-0104	MM	1150	SCR. CABLE 4X1,5MM2	
W215	90220-0104	MM	1200	SCR. CABLE 4X1,5MM2	
W300	90220-0034	MM	1200	THERMOCABLE TEX/SITW-20F-KX 2X0,5MM2	
W301	90220-0034	MM	1200	THERMOCABLE TEX/SITW-20F-KX 2X0,5MM2	
W302	90220-0034	MM	1200	THERMOCABLE TEX/SITW-20F-KX 2X0,5MM2	
W303	90220-0034	MM	1200	THERMOCABLE TEX/SITW-20F-KX 2X0,5MM2	
W304	90220-0034	MM	1200	THERMOCABLE TEX/SITW-20F-KX 2X0,5MM2	
W305	90220-0034	MM	1200	THERMOCABLE TEX/SITW-20F-KX 2X0,5MM2	
W313	90220-0034	MM	1200	THERMOCABLE TEX/SITW-20F-KX 2X0,5MM2	
W314	90220-0034	MM	1200	THERMOCABLE TEX/SITW-20F-KX 2X0,5MM2	
W316	90220-0034	MM	1200	THERMOCABLE TEX/SITW-20F-KX 2X0,5MM2	
W317	90220-0034	MM	1200	THERMOCABLE TEX/SITW-20F-KX 2X0,5MM2	
W318	90220-0034	MM	1000	THERMOCABLE TEX/SITW-20F-KX 2X0,5MM2	
W319	90220-0034	MM	1000	THERMOCABLE TEX/SITW-20F-KX 2X0,5MM2	
W320	90220-0034	MM	1000	THERMOCABLE TEX/SITW-20F-KX 2X0,5MM2	
W321	90220-0034	MM	3000	THERMOCABLE TEX/SITW-20F-KX 2X0,5MM2	
W322	90220-0034	MM	3000	THERMOCABLE TEX/SITW-20F-KX 2X0,5MM2	
W323	90220-0034	MM	3000	THERMOCABLE TEX/SITW-20F-KX 2X0,5MM2	
W331	90220-0034	MM	1000	THERMOCABLE TEX/SITW-20F-KX 2X0,5MM2	
W332	90220-0034	MM	1000	THERMOCABLE TEX/SITW-20F-KX 2X0,5MM2	
W333	90220-0034	MM	1000	THERMOCABLE TEX/SITW-20F-KX 2X0,5MM2	
W382	90220-0034	MM	3000	THERMOCABLE TEX/SITW-20F-KX 2X0,5MM2	
W710	90220-0125	MM	1250	MOTOR CABLE 4X4,0+2X1,0+2X0,75+SHIELD	
W711	90220-0125	MM	1500	MOTOR CABLE 4X4,0+2X1,0+2X0,75+SHIELD	
W712	90220-0125	MM	1650	MOTOR CABLE 4X4,0+2X1,0+2X0,75+SHIELD	
W713	90220-0125	MM	1850	MOTOR CABLE 4X4,0+2X1,0+2X0,75+SHIELD	
W714	90220-0116	MM	1900	MOTOR CABLE 4X1,0+2(2X0,5)+SHIELD	
W715	90220-0116	MM	1950	MOTOR CABLE 4X1,0+2(2X0,5)+SHIELD	
W716	90220-0084	MM	1900	MOTOR CABLE 4X2,5+2(2X0.75)+SHIELD	
X105	90459-6624		1	FEMALE INSERT HAN E AV, 09 33 006 4735	
X106	90459-6624		1	FEMALE INSERT HAN E AV, 09 33 006 4735	
X113	90459-6624		1	FEMALE INSERT HAN E AV, 09 33 006 4735	
X114	90459-6624		1	FEMALE INSERT HAN E AV, 09 33 006 4735	
X118	90459-6624		1	FEMALE INSERT HAN E AV, 09 33 006 4735	
X129	90459-6624		1	FEMALE INSERT HAN E AV, 09 33 006 4735	
X138	90459-6624		1	FEMALE INSERT HAN E AV, 09 33 006 4735	
X160	2540596-0002		1	COAXIAL CABLE	
X161	2540596-0002		1	COAXIAL CABLE	
X162	2540596-0002		1	COAXIAL CABLE	
X501	90110-0055		1	FEMALE INSERT HAN 6 HSB 09 31 006 2701	
X502	90110-0055		1	FEMALE INSERT HAN 6 HSB 09 31 006 2701	
X710.1	90459-6623		1	FEMALE INSERT HAN K 4/8, 09 38 012 2701	
X711.1	90459-6623		1	FEMALE INSERT HAN K 4/8, 09 38 012 2701	
X712.1	90459-6623		1	FEMALE INSERT HAN K 4/8, 09 38 012 2701	
X713.1	90459-6623		1	FEMALE INSERT HAN K 4/8, 09 38 012 2701	
X714.1	90459-6623		1	FEMALE INSERT HAN K 4/8, 09 38 012 2701	
X715.1	90459-6623		1	FEMALE INSERT HAN K 4/8, 09 38 012 2701	
X716.1	90459-6623		1	FEMALE INSERT HAN K 4/8, 09 38 012 2701	
Common Parts					
060	1129549-0000		3	SHEET	
070	1129550-0000		3	GASKET	
090	2539532-0000		1	GASKET	
100	2551988-0000		9	CABLE DUCT	
110	2551989-0000		8	CABLE DUCT	
120	2608173-0000		1	GASKET	
190	353250-0050		1	GLAND, LOCK NUT M50X1,5	
230	90287-0124		34	SCREW PAN HEAD MSCS M4X12 NYLON	
315	312605-0312		4	HEXAGON NUT, M6M M4 A280	
340	90458-0311		1	CABLE GLAND, M50X1,5, NO.5311 1060	
400	352113-0205		4	ANCHOR PLATES FOR STRIPS, TYPE TM2S8-C10	
W118	90220-0183	MM	3700	SCR. CABLE 2X0,34MM2	
W119	90220-0183	MM	3100	SCR. CABLE 2X0,34MM2	
W123	90220-0183	MM	3500	SCR. CABLE 2X0,34MM2	
W137	90220-0183	MM	3000	SCR. CABLE 2X0,34MM2	
W210	90220-0104	MM	1050	SCR. CABLE 4X1,5MM2	
W211	90220-0104	MM	1000	SCR. CABLE 4X1,5MM2	

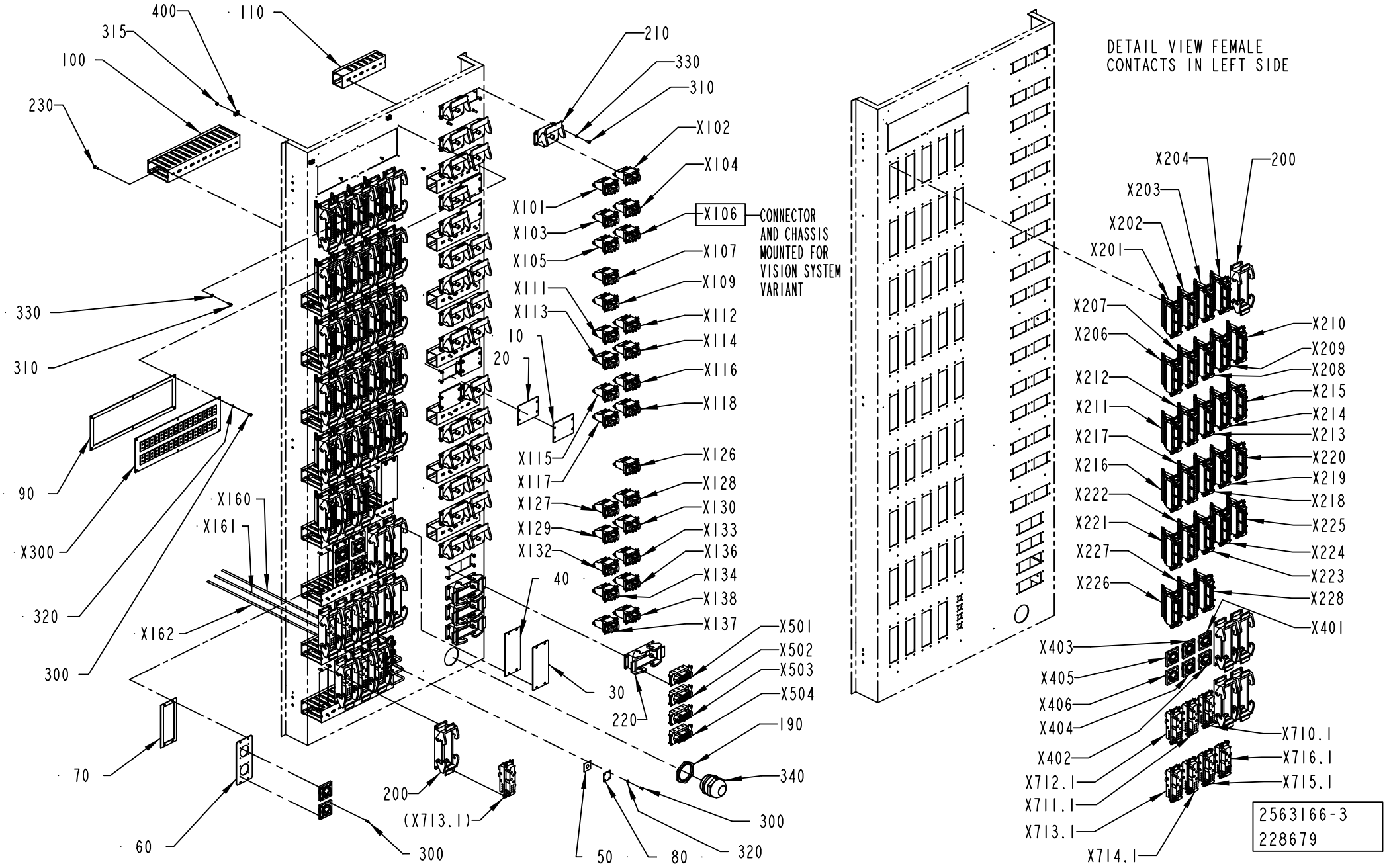
400
110
315
100
230
210
330
310
X102
X104
X101
X103
X105
X106
CONNECTOR AND CHASSIS MOUNTED FOR VISION SYSTEM VARIANT
X107
X109
X111
X113
X112
X114
X116
X118
10
20
X115
X117
X126
X128
X127
X130
X129
X133
X132
X136
X134
X138
X137
X501
X502
X503
X504
190
340
300
320
50
80
30
220
40
330
310
90
X300
320
300
X160
X161
X162
70
60
200
(X713.1)
300
DETAIL VIEW FEMALE CONTACTS IN LEFT SIDE
X204
200
X203
X202
X201
X207
X206
X212
X211
X217
X216
X222
X221
X227
X226
X210
X209
X208
X215
X214
X213
X220
X219
X218
X225
X224
X223
X228
X401
X403
X405
X406
X404
X402
X712.1
X711.1
X713.1
X714.1
X710.1
X716.1
X715.1
2563166-3
228679

Pos	Part No	UN	Qty	Description	Page No
Common Parts (Cont'd)					
W212	90220-0104	MM	1000	SCR. CABLE 4X1,5MM2	
W214	90220-0104	MM	1950	SCR. CABLE 4X1,5MM2	
W306	90220-0034	MM	1200	THERMOCABLE TEX/SITW-20F-KX 2X0,5MM2	
W307	90220-0034	MM	2200	THERMOCABLE TEX/SITW-20F-KX 2X0,5MM2	
W308	90220-0034	MM	1200	THERMOCABLE TEX/SITW-20F-KX 2X0,5MM2	
W309	90220-0034	MM	1200	THERMOCABLE TEX/SITW-20F-KX 2X0,5MM2	
W310	90220-0034	MM	1200	THERMOCABLE TEX/SITW-20F-KX 2X0,5MM2	
W312	90220-0034	MM	1200	THERMOCABLE TEX/SITW-20F-KX 2X0,5MM2	
W315	90220-0034	MM	1200	THERMOCABLE TEX/SITW-20F-KX 2X0,5MM2	
X101	90459-6624		1	FEMALE INSERT HAN E AV, 09 33 006 4735	
X102	90459-6624		1	FEMALE INSERT HAN E AV, 09 33 006 4735	
X103	90459-6624		1	FEMALE INSERT HAN E AV, 09 33 006 4735	
X104	90459-6624		1	FEMALE INSERT HAN E AV, 09 33 006 4735	
X107	90459-6624		1	FEMALE INSERT HAN E AV, 09 33 006 4735	
X109	90459-6624		1	FEMALE INSERT HAN E AV, 09 33 006 4735	
X111	90459-6624		1	FEMALE INSERT HAN E AV, 09 33 006 4735	
X112	90459-6624		1	FEMALE INSERT HAN E AV, 09 33 006 4735	
X115	90459-6624		1	FEMALE INSERT HAN E AV, 09 33 006 4735	
X116	90459-6624		1	FEMALE INSERT HAN E AV, 09 33 006 4735	
X117	90459-6624		1	FEMALE INSERT HAN E AV, 09 33 006 4735	
X126	90459-6624		1	FEMALE INSERT HAN E AV, 09 33 006 4735	
X127	90459-6624		1	FEMALE INSERT HAN E AV, 09 33 006 4735	
X128	90459-6624		1	FEMALE INSERT HAN E AV, 09 33 006 4735	
X130	90459-6624		1	FEMALE INSERT HAN E AV, 09 33 006 4735	
X132	90459-6624		1	FEMALE INSERT HAN E AV, 09 33 006 4735	
X133	90459-6624		1	FEMALE INSERT HAN E AV, 09 33 006 4735	
X134	90459-6624		1	FEMALE INSERT HAN E AV, 09 33 006 4735	
X136	90459-6624		1	FEMALE INSERT HAN E AV, 09 33 006 4735	
X137	90459-6624		1	FEMALE INSERT HAN E AV, 09 33 006 4735	
X201	90459-6627		1	FEMALE INSERT HAN E AV, 09 33 024 4735	
X202	90459-6627		1	FEMALE INSERT HAN E AV, 09 33 024 4735	
X203	90459-6627		1	FEMALE INSERT HAN E AV, 09 33 024 4735	
X204	90459-6627		1	FEMALE INSERT HAN E AV, 09 33 024 4735	
X206	90459-6627		1	FEMALE INSERT HAN E AV, 09 33 024 4735	
X207	90459-6627		1	FEMALE INSERT HAN E AV, 09 33 024 4735	
X208	90459-6627		1	FEMALE INSERT HAN E AV, 09 33 024 4735	
X209	90459-6627		1	FEMALE INSERT HAN E AV, 09 33 024 4735	
X210	90459-6627		1	FEMALE INSERT HAN E AV, 09 33 024 4735	
X211	90459-6627		1	FEMALE INSERT HAN E AV, 09 33 024 4735	
X212	90459-6627		1	FEMALE INSERT HAN E AV, 09 33 024 4735	
X213	90459-6627		1	FEMALE INSERT HAN E AV, 09 33 024 4735	
X214	90459-6627		1	FEMALE INSERT HAN E AV, 09 33 024 4735	
X215	90459-6627		1	FEMALE INSERT HAN E AV, 09 33 024 4735	
X216	90459-6627		1	FEMALE INSERT HAN E AV, 09 33 024 4735	
X217	90459-6627		1	FEMALE INSERT HAN E AV, 09 33 024 4735	
X218	90459-6627		1	FEMALE INSERT HAN E AV, 09 33 024 4735	
X219	90459-6627		1	FEMALE INSERT HAN E AV, 09 33 024 4735	
X220	90459-6627		1	FEMALE INSERT HAN E AV, 09 33 024 4735	
X221	90459-6627		1	FEMALE INSERT HAN E AV, 09 33 024 4735	
X222	90459-6627		1	FEMALE INSERT HAN E AV, 09 33 024 4735	
X223	90459-6627		1	FEMALE INSERT HAN E AV, 09 33 024 4735	
X224	90459-6627		1	FEMALE INSERT HAN E AV, 09 33 024 4735	
X225	90459-6627		1	FEMALE INSERT HAN E AV, 09 33 024 4735	
X226	90459-6627		1	FEMALE INSERT HAN E AV, 09 33 024 4735	
X227	90459-6627		1	FEMALE INSERT HAN E AV, 09 33 024 4735	
X228	90459-6627		1	FEMALE INSERT HAN E AV, 09 33 024 4735	
X300	90459-0835		1	THERMO CONTACT PANEL, 16 CONTACTS 2 ROWS	
X401	90110-0236		1	CHASSIS CONTACT PX0767/S	
X402	90110-0236		1	CHASSIS CONTACT PX0767/S	
X403	90110-0236		1	CHASSIS CONTACT PX0767/S	
X404	90110-0236		1	CHASSIS CONTACT PX0767/S	
X405	90110-0236		1	CHASSIS CONTACT PX0767/S	
X406	90110-0236		1	CHASSIS CONTACT PX0767/S	
X503	90110-0055		1	FEMALE INSERT HAN 6 HSB 09 31 006 2701	
X504	90110-0055		1	FEMALE INSERT HAN 6 HSB 09 31 006 2701	

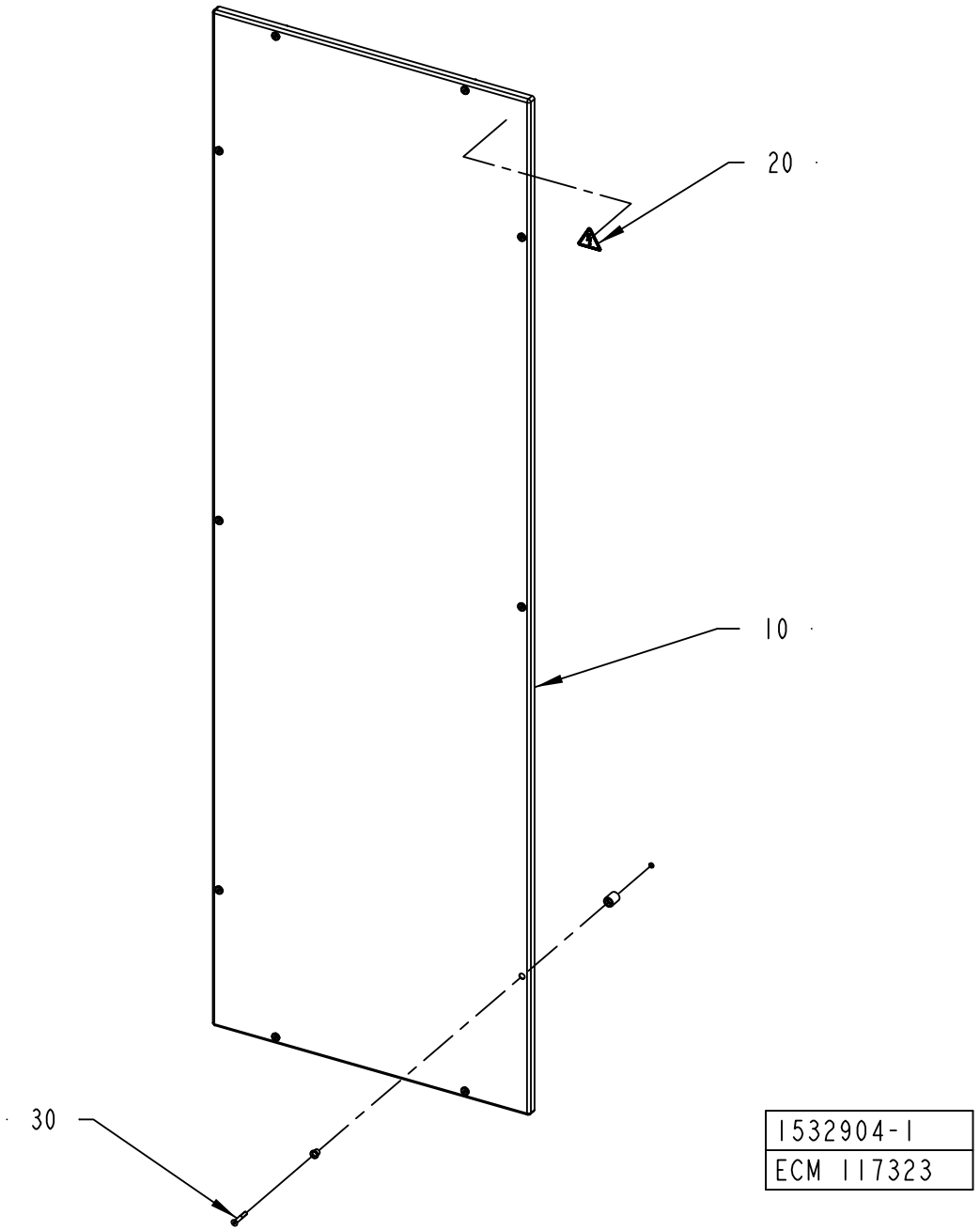
20
10
30
1532904-1
ECM 117323

ECM: 184923 - 20040928
Group number: 1532904-0100
Assembly Drawing: 1532904-1_1_AA

Pos	Part No	UN	Qty	Description	Page No
-					
010	1532905-0000		1	PLATE	
020	359705-0015		1	WARNING SIGN ISO, RISK OF ELECTRIC SHOCK	
030	90226-0458		10	MOUNTING SCREW	

Pos	Part No	UN	Qty	Description	Page No

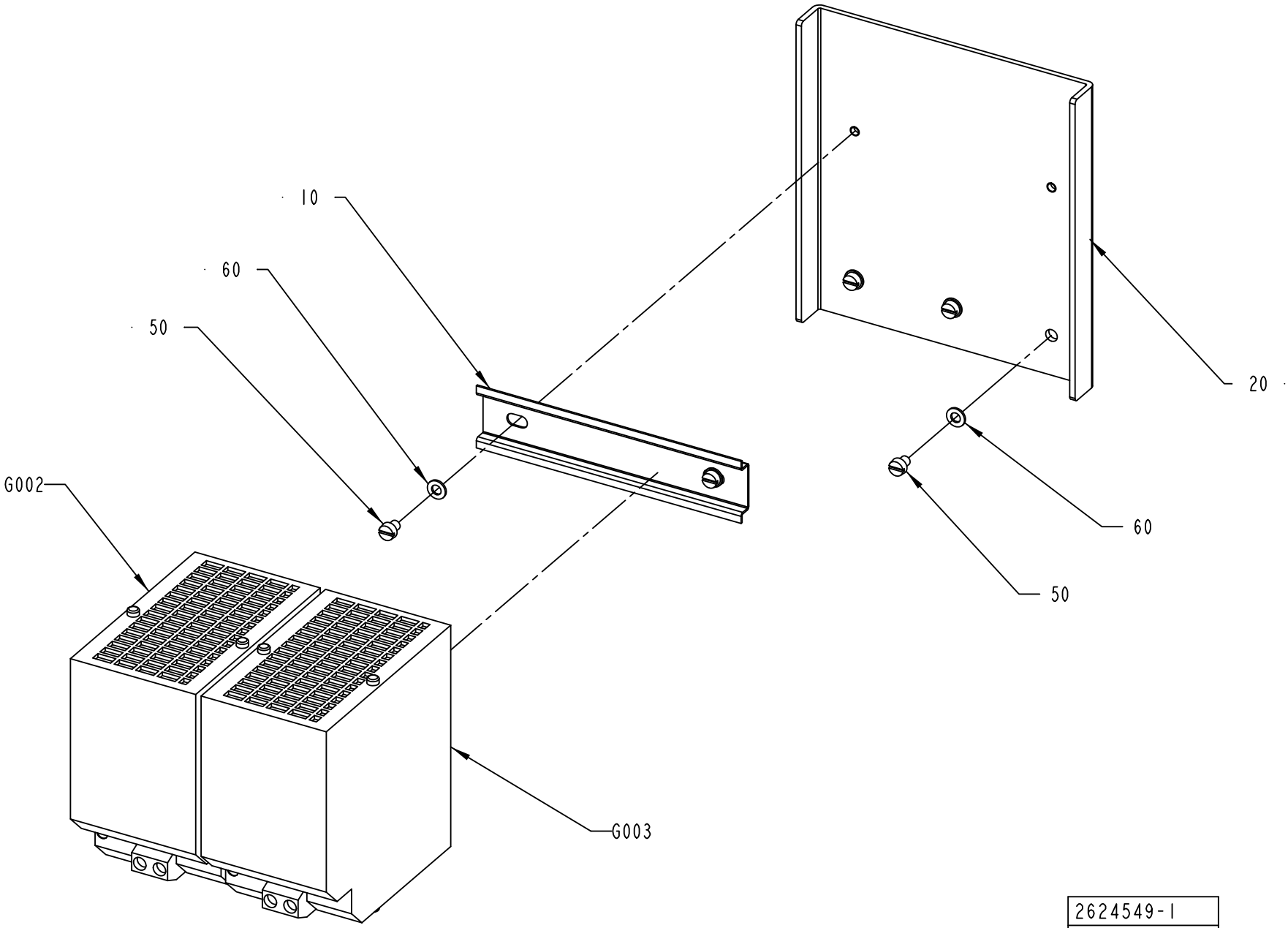

2624549-1
ECM 132638

ECM: 185565 - 20041104
Group number: 2624549-0100
Assembly Drawing: 2624549-1_1_AA

Pos	Part No	UN	Qty	Description	Page No
-					
010	2624550-0000		1	RAIL	
020	2619170-0000		1	PLATE	
050	312121-0321		5	SCREW ISO 1207 M5X6 4.8 - 5.8 Z.PL.	
060	315101-0146		5	WASHER PLAIN, BRB, 5,3/10 H=1	
G002	90459-2939		1	POWER SUPPLY UNIT 6EP1961-3BA00	
G003	90459-2939		1	POWER SUPPLY UNIT 6EP1961-3BA00	

Pos	Part No	UN	Qty	Description	Page No

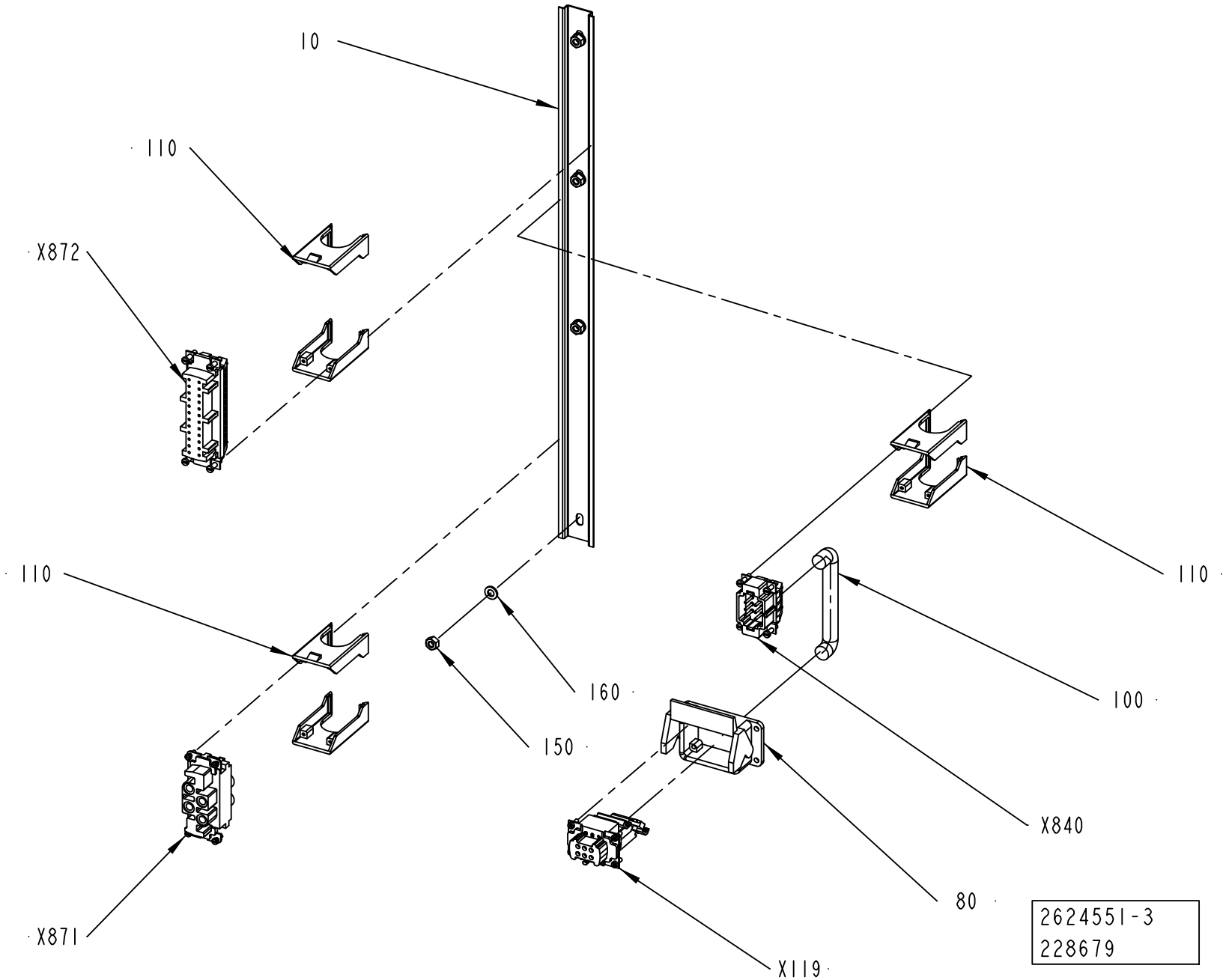
10
110
X872
110
110
160
150
100
X840
80
X871
X119
2624551-3
228679

ECM: 260071 - 20060412
Group number: 2624551-0200
Assembly Drawing: 2624551-3_1_AA

Pos	Part No	UN	Qty	Description	Page No
A3/FLEX DIMC/FLEX (See drawing on page: 8-48)					
080	90110-0123		1	HOUSING, 09 30 006 0301	
100	90220-0105	MM	2250	SCR. CABLE 4X2,5MM2	
110	90459-6859		3	HOUS.SIZE 6-24B HAN-SNAP, 09 33 000 9980	
X119	90459-6624		1	FEMALE INSERT HAN E AV, 09 33 006 4735	
X840	90110-0052		1	MALE INSERT HAN 6E 09 33 006 2601	
A3/FLEX NODIMC (See drawing on page: 8-48)					
110	90459-6859		2	HOUS.SIZE 6-24B HAN-SNAP, 09 33 000 9980	
Common Parts					
010	2789126-0000		1	RAIL	
150	312605-0316		4	HEXAGON NUT, M6M M6 A280	
160	315105-0153		4	WASHER BRB 6,4X12 RFR	
X871	90459-1452		1	FEMALE INSERT HAN K 09 38 006 2711	
X872	90110-0057		1	FEMALE INSERT HAN 24 E 09 33 002 4201	

Pos	Part No	UN	Qty	Description	Page No

CONTROL BOARD LEFT

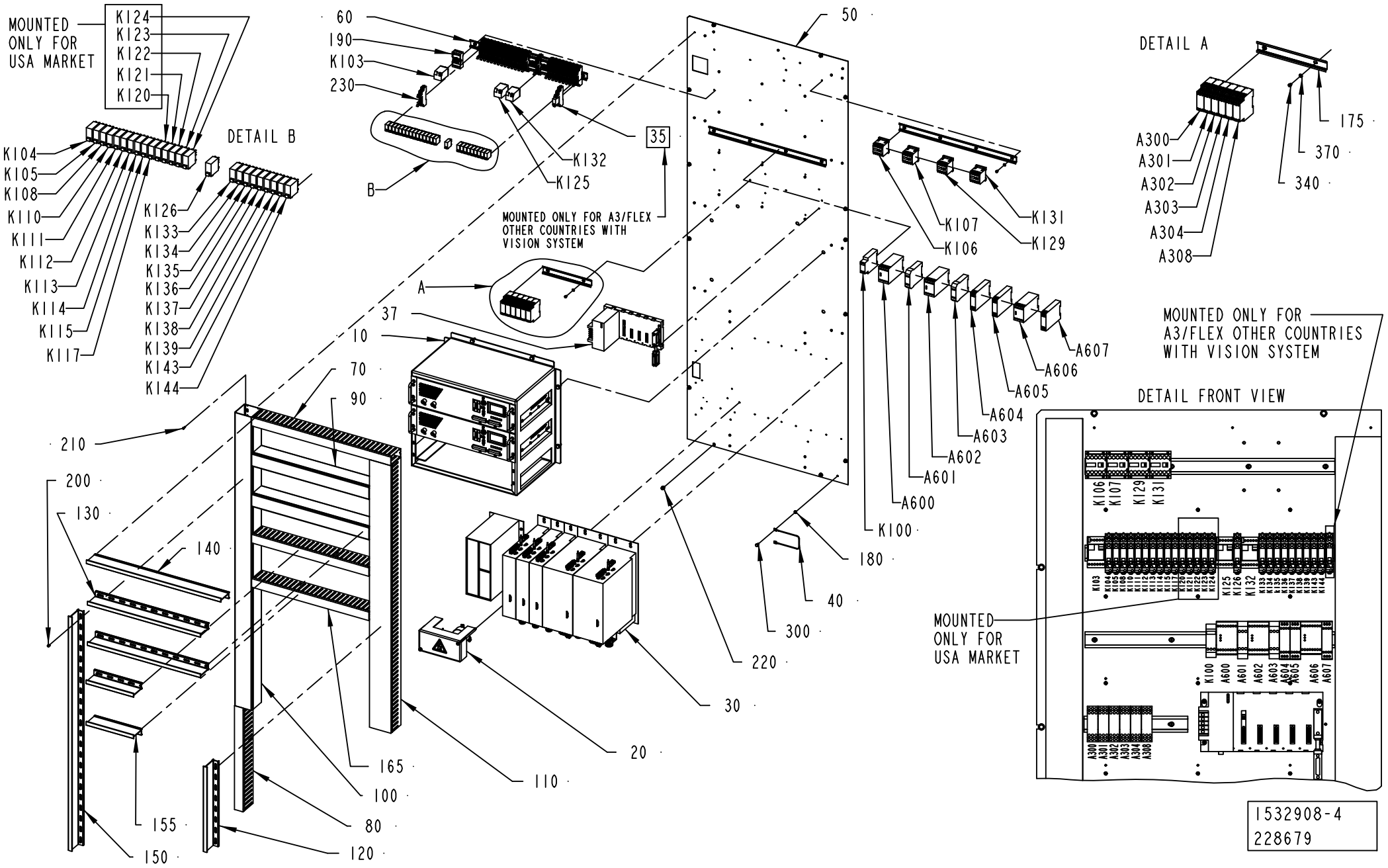

ECM: 260033 - 20060412
Group number: 1532908-0200
Assembly Drawing: 1532908-4_1_AA

This list covers pages from 8-50 to 8-55

Pos	Part No	UN	Qty	Description	Page No
A3/FLEX OTHER COUNTRIES (See drawing on pages: 8-50, 8-52, 8-54)					
010	2533651-0100		1	IH EQUIPMENT	**8-57**
020	2563167-0100		1	MOTOR DRIVE CONTROL	**8-59**
030	2563168-0100		1	MOTOR DRIVE CONTROL	**8-61**
035	2789127-0100		1	RELAY	**8-63**
037	2675518-0100		1	PLC	**8-65**
050	1532916-0000		1	MOUNTING PLATE	
090	2550129-0000		2	CABLE DUCT	
130	2550133-0000		2	DIVIDER	
155	2557591-0000		2	DIVIDER	
165	2675519-0000		2	CABLE DUCT	
175	2675520-0000		1	RAIL	
190	90129-0006		3	BASE, S3-B	
200	90181-0064		20	LOCK ZP1 FOR CHANNEL T1	
230	90129-0018		20	BASE OMRON P2RF-08-E	
340	312121-0321		14	SCREW ISO 1207 M5X6 4.8 - 5.8 Z.PL.	
370	315101-0146		14	WASHER PLAIN, BRB, 5,3/10 H=1	
A300	90458-2580		1	LEVEL CONTROL RELAY RM4-LA32M	
A302	90458-2580		1	LEVEL CONTROL RELAY RM4-LA32M	
A600	90119-0072		1	SAFETY RELAY, JSBR4	
A601	90119-0105		1	SAFETY RELAY JOKAB JSR 3T	
A602	90119-0072		1	SAFETY RELAY, JSBR4	
A603	90119-0105		1	SAFETY RELAY JOKAB JSR 3T	
A605	90457-0092		1	SAFETY RELAY RT9-24VDC	
A606	90119-0089		1	SAFETY RELAY, JSBT4 24VDC	
A607	90457-0092		1	SAFETY RELAY RT9-24VDC	
K100	90060-0080		1	RELAY, TIME H3DE-S1 24VDC	
K103	90119-0056		1	RELAY, AUXILIARY MK3P5-S 24VDC	
K104	90119-0108		1	RELAY OMRON G2R-2-SNI-24DC	
	90129-0018		*1*	*BASE OMRON P2RF-08-E*	
K105	90119-0108		1	RELAY OMRON G2R-2-SNI-24DC	
	90129-0018		*1*	*BASE OMRON P2RF-08-E*	
K106	90075-0141		1	CONTACTOR, 4KW 24VDC	
K107	90075-0141		1	CONTACTOR, 4KW 24VDC	
K110	90119-0108		1	RELAY OMRON G2R-2-SNI-24DC	
	90129-0018		*1*	*BASE OMRON P2RF-08-E*	
K111	90119-0108		1	RELAY OMRON G2R-2-SNI-24DC	
	90129-0018		*1*	*BASE OMRON P2RF-08-E*	
K112	90119-0108		1	RELAY OMRON G2R-2-SNI-24DC	
	90129-0018		*1*	*BASE OMRON P2RF-08-E*	
K113	90119-0108		1	RELAY OMRON G2R-2-SNI-24DC	
	90129-0018		*1*	*BASE OMRON P2RF-08-E*	
K114	90119-0108		1	RELAY OMRON G2R-2-SNI-24DC	
	90129-0018		*1*	*BASE OMRON P2RF-08-E*	
K115	90119-0108		1	RELAY OMRON G2R-2-SNI-24DC	
	90129-0018		*1*	*BASE OMRON P2RF-08-E*	
K117	90119-0108		1	RELAY OMRON G2R-2-SNI-24DC	
	90129-0018		*1*	*BASE OMRON P2RF-08-E*	
K129	90075-0141		1	CONTACTOR, 4KW 24VDC	
K131	90075-0141		1	CONTACTOR, 4KW 24VDC	
K134	90119-0108		1	RELAY OMRON G2R-2-SNI-24DC	
	90129-0018		*1*	*BASE OMRON P2RF-08-E*	
K135	90119-0108		1	RELAY OMRON G2R-2-SNI-24DC	
	90129-0018		*1*	*BASE OMRON P2RF-08-E*	
K136	90119-0108		1	RELAY OMRON G2R-2-SNI-24DC	
	90129-0018		*1*	*BASE OMRON P2RF-08-E*	
K137	90119-0108		1	RELAY OMRON G2R-2-SNI-24DC	
	90129-0018		*1*	*BASE OMRON P2RF-08-E*	
K138	90119-0108		1	RELAY OMRON G2R-2-SNI-24DC	
	90129-0018		*1*	*BASE OMRON P2RF-08-E*	
K139	90119-0108		1	RELAY OMRON G2R-2-SNI-24DC	
	90129-0018		*1*	*BASE OMRON P2RF-08-E*	
K144	90119-0108		1	RELAY OMRON G2R-2-SNI-24DC	
	90129-0018		*1*	*BASE OMRON P2RF-08-E*	
A3/FLEX USA (See drawing on pages: 8-50, 8-52, 8-54)					
010	2533651-0100		1	IH EQUIPMENT	**8-57**
020	2563167-0100		1	MOTOR DRIVE CONTROL	**8-59**
030	2563168-0100		1	MOTOR DRIVE CONTROL	**8-61**
035	2789127-0100		1	RELAY	**8-63**
037	2675518-0100		1	PLC	**8-65**
050	1532916-0000		1	MOUNTING PLATE	
090	2550129-0000		2	CABLE DUCT	
130	2550133-0000		2	DIVIDER	
155	2557591-0000		2	DIVIDER	
165	2675519-0000		2	CABLE DUCT	
175	2675520-0000		1	RAIL	
190	90129-0006		3	BASE, S3-B	
200	90181-0064		20	LOCK ZP1 FOR CHANNEL T1	
230	90129-0018		25	BASE OMRON P2RF-08-E	
340	312121-0321		14	SCREW ISO 1207 M5X6 4.8 - 5.8 Z.PL.	
370	315101-0146		14	WASHER PLAIN, BRB, 5,3/10 H=1	
A300	90458-2580		1	LEVEL CONTROL RELAY RM4-LA32M	
A302	90458-2580		1	LEVEL CONTROL RELAY RM4-LA32M	
A600	90119-0072		1	SAFETY RELAY, JSBR4	

Machine Type | Group Description | Used-In | Group Number | Page No

CONTROL BOARD LEFT

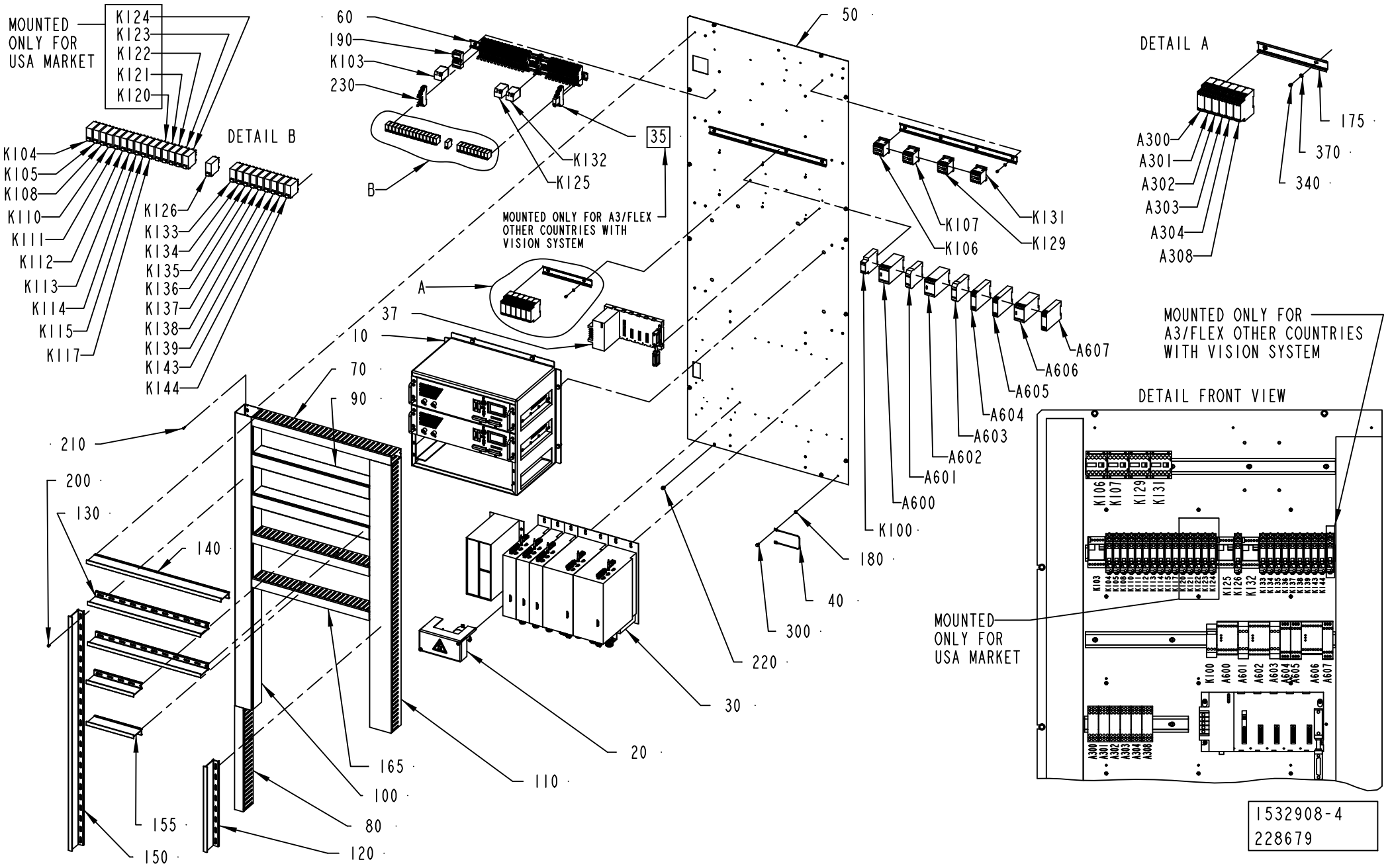

ECM: 260033 - 20060412
Group number: 1532908-0200
Assembly Drawing: 1532908-4_1_AA

This list covers pages from 8-50 to 8-55

Pos	Part No	UN	Qty	Description	Page No
A3/FLEX USA (Cont'd) (See drawing on pages: 8-50, 8-52, 8-54)					
A601	90119-0105		1	SAFETY RELAY JOKAB JSR 3T	
A602	90119-0072		1	SAFETY RELAY, JSBR4	
A603	90119-0105		1	SAFETY RELAY JOKAB JSR 3T	
A605	90457-0092		1	SAFETY RELAY RT9-24VDC	
A606	90119-0089		1	SAFETY RELAY, JSBT4 24VDC	
A607	90457-0092		1	SAFETY RELAY RT9-24VDC	
K100	90060-0080		1	RELAY, TIME H3DE-S1 24VDC	
K103	90119-0056		1	RELAY, AUXILIARY MK3P5-S 24VDC	
K104	90119-0108		1	RELAY OMRON G2R-2-SNI-24DC	
	90129-0018		*1*	*BASE OMRON P2RF-08-E*	
K105	90119-0108		1	RELAY OMRON G2R-2-SNI-24DC	
	90129-0018		*1*	*BASE OMRON P2RF-08-E*	
K106	90075-0141		1	CONTACTOR, 4KW 24VDC	
K107	90075-0141		1	CONTACTOR, 4KW 24VDC	
K110	90119-0108		1	RELAY OMRON G2R-2-SNI-24DC	
	90129-0018		*1*	*BASE OMRON P2RF-08-E*	
K111	90119-0108		1	RELAY OMRON G2R-2-SNI-24DC	
	90129-0018		*1*	*BASE OMRON P2RF-08-E*	
K112	90119-0108		1	RELAY OMRON G2R-2-SNI-24DC	
	90129-0018		*1*	*BASE OMRON P2RF-08-E*	
K113	90119-0108		1	RELAY OMRON G2R-2-SNI-24DC	
	90129-0018		*1*	*BASE OMRON P2RF-08-E*	
K114	90119-0108		1	RELAY OMRON G2R-2-SNI-24DC	
	90129-0018		*1*	*BASE OMRON P2RF-08-E*	
K115	90119-0108		1	RELAY OMRON G2R-2-SNI-24DC	
	90129-0018		*1*	*BASE OMRON P2RF-08-E*	
K117	90119-0108		1	RELAY OMRON G2R-2-SNI-24DC	
	90129-0018		*1*	*BASE OMRON P2RF-08-E*	
K120	90119-0108		1	RELAY OMRON G2R-2-SNI-24DC	
	90129-0018		*1*	*BASE OMRON P2RF-08-E*	
K121	90119-0108		1	RELAY OMRON G2R-2-SNI-24DC	
	90129-0018		*1*	*BASE OMRON P2RF-08-E*	
K122	90119-0108		1	RELAY OMRON G2R-2-SNI-24DC	
	90129-0018		*1*	*BASE OMRON P2RF-08-E*	
K123	90119-0108		1	RELAY OMRON G2R-2-SNI-24DC	
	90129-0018		*1*	*BASE OMRON P2RF-08-E*	
K124	90119-0108		1	RELAY OMRON G2R-2-SNI-24DC	
	90129-0018		*1*	*BASE OMRON P2RF-08-E*	
K129	90075-0141		1	CONTACTOR, 4KW 24VDC	
K131	90075-0141		1	CONTACTOR, 4KW 24VDC	
K134	90119-0108		1	RELAY OMRON G2R-2-SNI-24DC	
	90129-0018		*1*	*BASE OMRON P2RF-08-E*	
K135	90119-0108		1	RELAY OMRON G2R-2-SNI-24DC	
	90129-0018		*1*	*BASE OMRON P2RF-08-E*	
K136	90119-0108		1	RELAY OMRON G2R-2-SNI-24DC	
	90129-0018		*1*	*BASE OMRON P2RF-08-E*	
K137	90119-0108		1	RELAY OMRON G2R-2-SNI-24DC	
	90129-0018		*1*	*BASE OMRON P2RF-08-E*	
K138	90119-0108		1	RELAY OMRON G2R-2-SNI-24DC	
	90129-0018		*1*	*BASE OMRON P2RF-08-E*	
K139	90119-0108		1	RELAY OMRON G2R-2-SNI-24DC	
	90129-0018		*1*	*BASE OMRON P2RF-08-E*	
K144	90119-0108		1	RELAY OMRON G2R-2-SNI-24DC	
	90129-0018		*1*	*BASE OMRON P2RF-08-E*	
Common Parts					
040	1038714-0000		1	CABLE	
060	2550126-0000		3	RAIL	
070	2550127-0000		1	CABLE DUCT	
080	2550128-0000		1	CABLE DUCT	
100	2550130-0000		1	CABLE DUCT	
110	2550131-0000		1	CABLE DUCT	
120	2550132-0000		1	DIVIDER	
140	2550134-0000		1	DIVIDER	
150	2550135-0000		1	DIVIDER	
180	90062-0022		1	LOCKING WASHER D=6,4/11	
210	90287-0124		39	SCREW PAN HEAD MSCS M4X12 NYLON	
220	90287-0157		13	SCREW M6SF FLAT HEAD M6X10 88	
300	312101-0364		1	SCREW M6S M6X10 FZB	
380	312145-0285		4	SCREW ISO 2009 MFS M4X6 A4	
A301	90458-2580		1	LEVEL CONTROL RELAY RM4-LA32M	
A303	90458-2580		1	LEVEL CONTROL RELAY RM4-LA32M	
A304	90458-2580		1	LEVEL CONTROL RELAY RM4-LA32M	
A308	90458-2580		1	LEVEL CONTROL RELAY RM4-LA32M	
A604	90457-0092		1	SAFETY RELAY RT9-24VDC	
K108	90119-0108		1	RELAY OMRON G2R-2-SNI-24DC	
	90129-0018		*1*	*BASE OMRON P2RF-08-E*	
K125	90119-0056		1	RELAY, AUXILIARY MK3P5-S 24VDC	
K126	90119-0108		1	RELAY OMRON G2R-2-SNI-24DC	
	90129-0018		*1*	*BASE OMRON P2RF-08-E*	
K132	90119-0056		1	RELAY, AUXILIARY MK3P5-S 24VDC	
K133	90119-0108		1	RELAY OMRON G2R-2-SNI-24DC	
	90129-0018		*1*	*BASE OMRON P2RF-08-E*	
K143	90119-0108		1	RELAY OMRON G2R-2-SNI-24DC	

Machine Type | Group Description | Used-In | Group Number | Page No

CONTROL BOARD LEFT

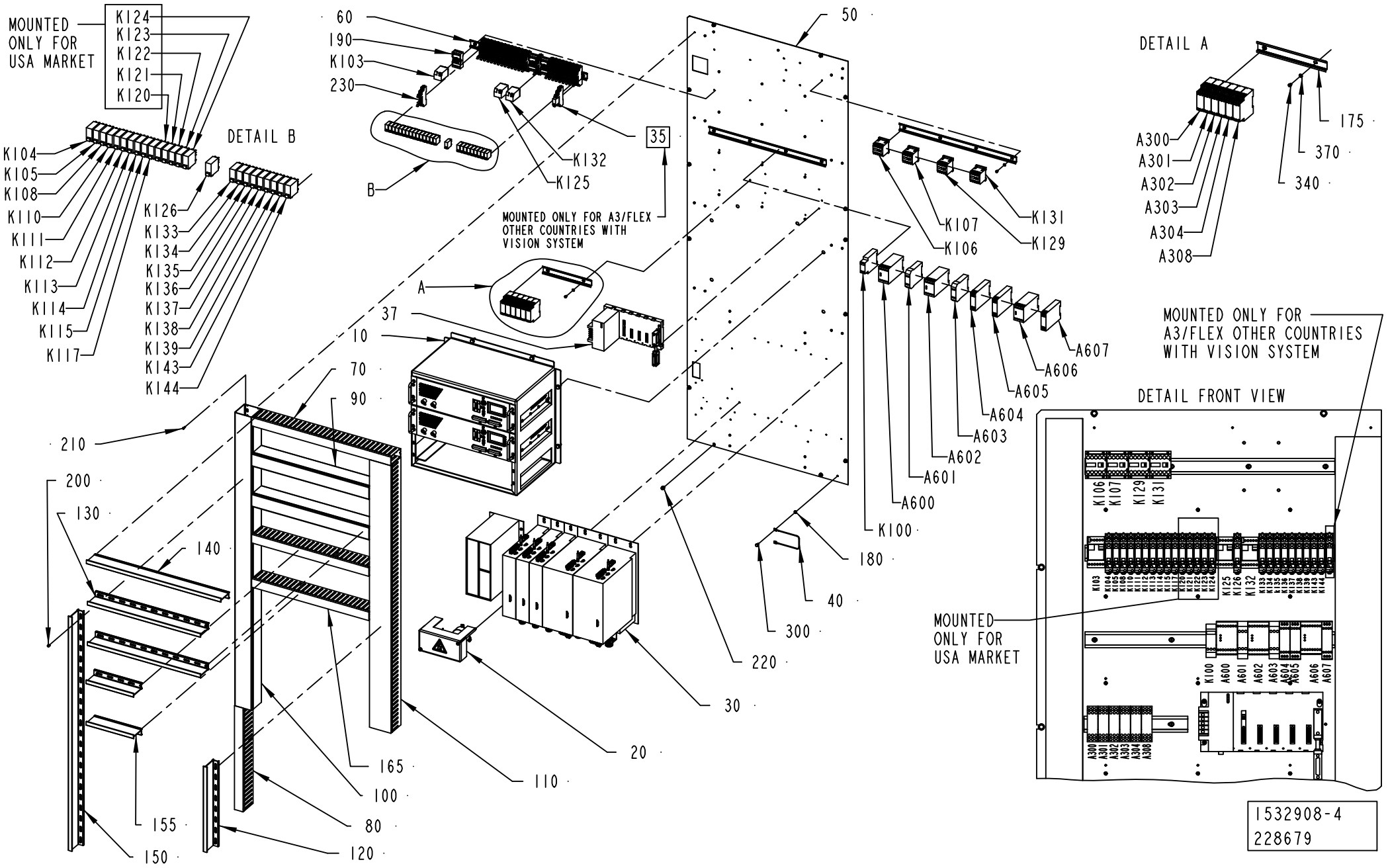

ECM: 260033 - 20060412
Group number: 1532908-0200
Assembly Drawing: 1532908-4_1_AA

This list covers pages from 8-50 to 8-55

Pos	Part No	UN	Qty	Description	Page No
Common Parts (Cont'd)					
K143	90119-0108		1	RELAY OMRON G2R-2-SNI-24DC	
	90129-0018		*1*	*BASE OMRON P2RF-08-E*	

Pos	Part No	UN	Qty	Description	Page No

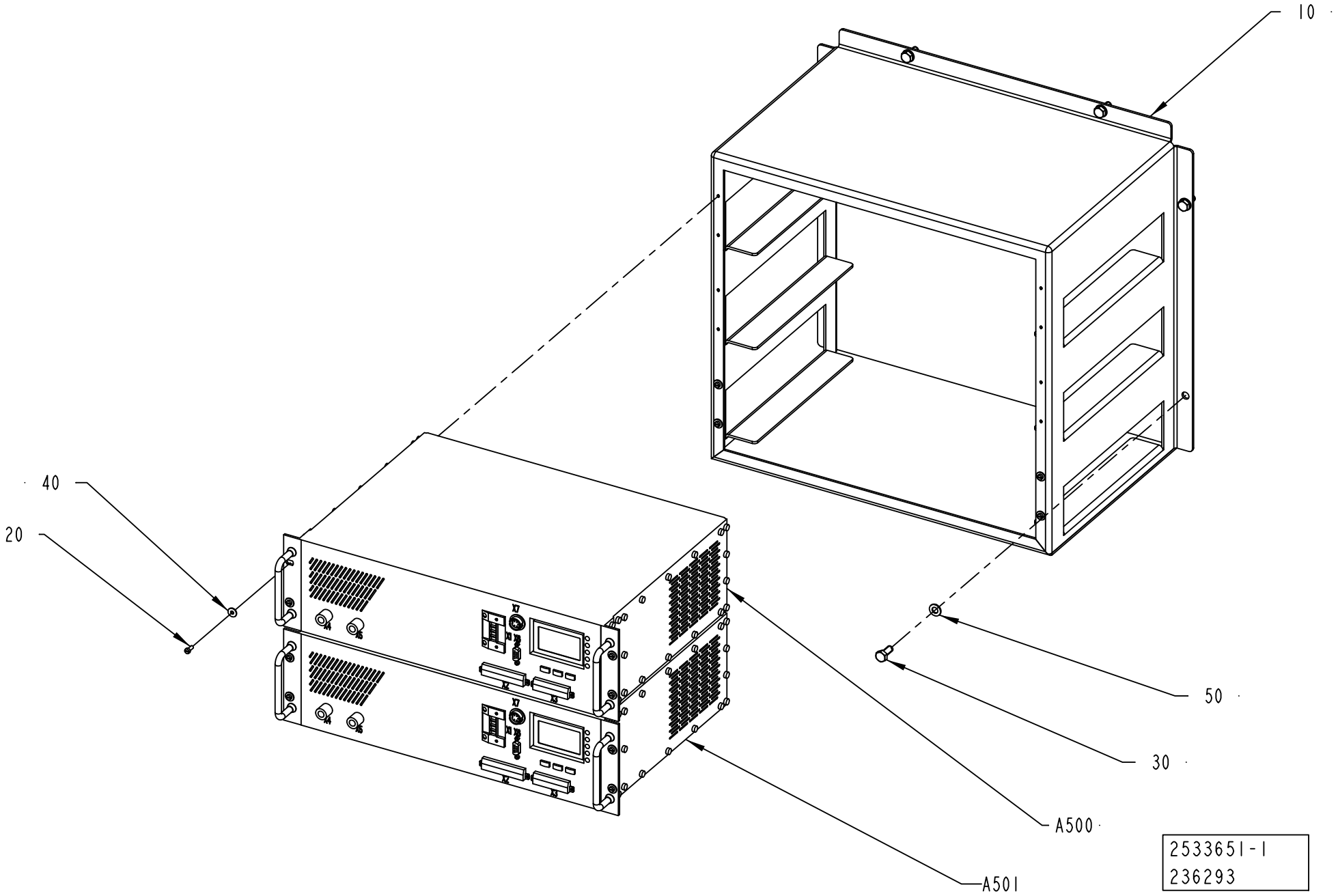
10
40
20
50
30
A500
A501
2533651-1
236293

ECM: 241700 - 20060101
Group number: 2533651-0100
Assembly Drawing: 2533651-1_1_AC

Pos	Part No	UN	Qty	Description	Page No
-					
010	1532912-0000		1	FRAME	
020	312125-0289		12	SCREW ISO 1207 M4X10 A4	
030	312105-0451		6	SCREW M6S ISO 4017 M8X20 A480	
040	90005-0082		12	WASHER PLAIN ROUND 4,3(M4)/12,H=1	
050	315105-0165		6	WASHER BRB 8,4X16 RFR	
A500	1499642-0201		1	TPIH GENERATOR	
A501	1499642-0201		1	TPIH GENERATOR	

Pos	Part No	UN	Qty	Description	Page No

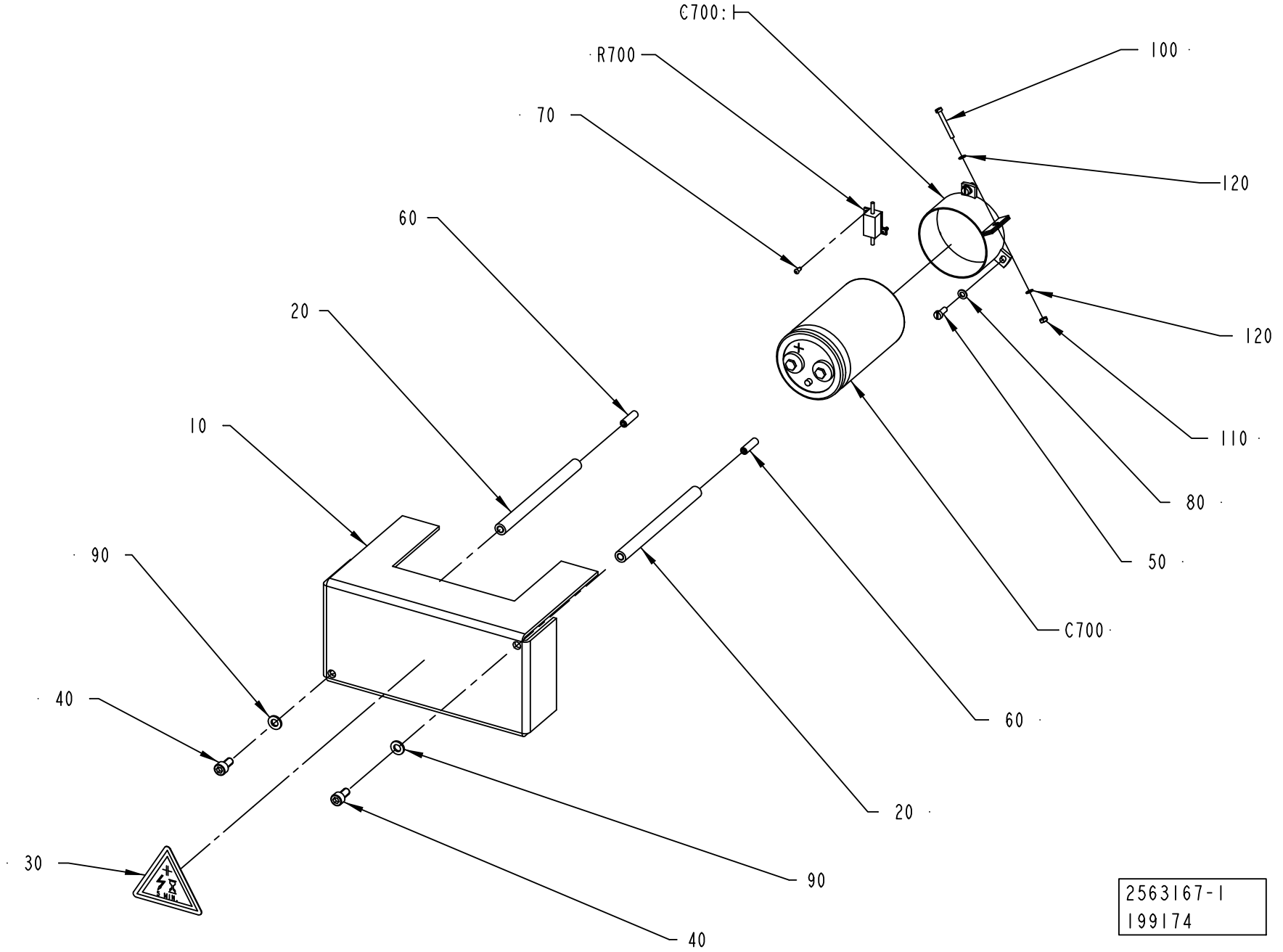
C700:1
R700
70
60
20
10
90
40
30
100
120
120
110
80
50
C700
60
20
90
40
2563167-1
199174

ECM: 200219 - 20050101
Group number: 2563167-0100
Assembly Drawing: 2563167-1_1_AB

Pos	Part No	UN	Qty	Description	Page No
-					
010	1548121-0000		1	PROTECTION	
020	1038275-0021		2	SPACER	
030	90194-0118		1	SIGN, RESIDUAL VOLTAGE, WAIT 5 MIN.	
040	312111-0366		2	SCREW HEX.SOCK.HD.MC6S-TT 6X12 88 FZB	
050	312121-0289		3	SCREW ISO 1207 M4X10 4.8 - 5.8 Z.PL.	
060	312318-0370		2	SCREW ISO4029 M6X20 A4	
070	312502-0171		2	DRIVE SCREW ROUND HEAD KDS 2X6	
080	315101-0136		3	WASHER BRB, 4,3/8 H=0,8	
090	315101-0153		2	WASHER PLAIN, BRB, 6,4/12 H=1,5	
100	312125-0232		1	SCREW ISO 1207 M3X25 A4	
110	312605-0310		1	HEXAGON NUT, M6M M3 A280	
120	315105-0124		2	WASHER BRB 3,2X7 RFR	
C700	90459-5691		1	CAPACITOR , 100000ÂµF 40VDC	
C700:1	90459-5693		1	CAPACITOR BRACKET Ã¸63, 39522101300	
R700	90121-0137		1	RESISTANCE FIXED, 2,2 OHM, 15 W	

Pos	Part No	UN	Qty	Description	Page No

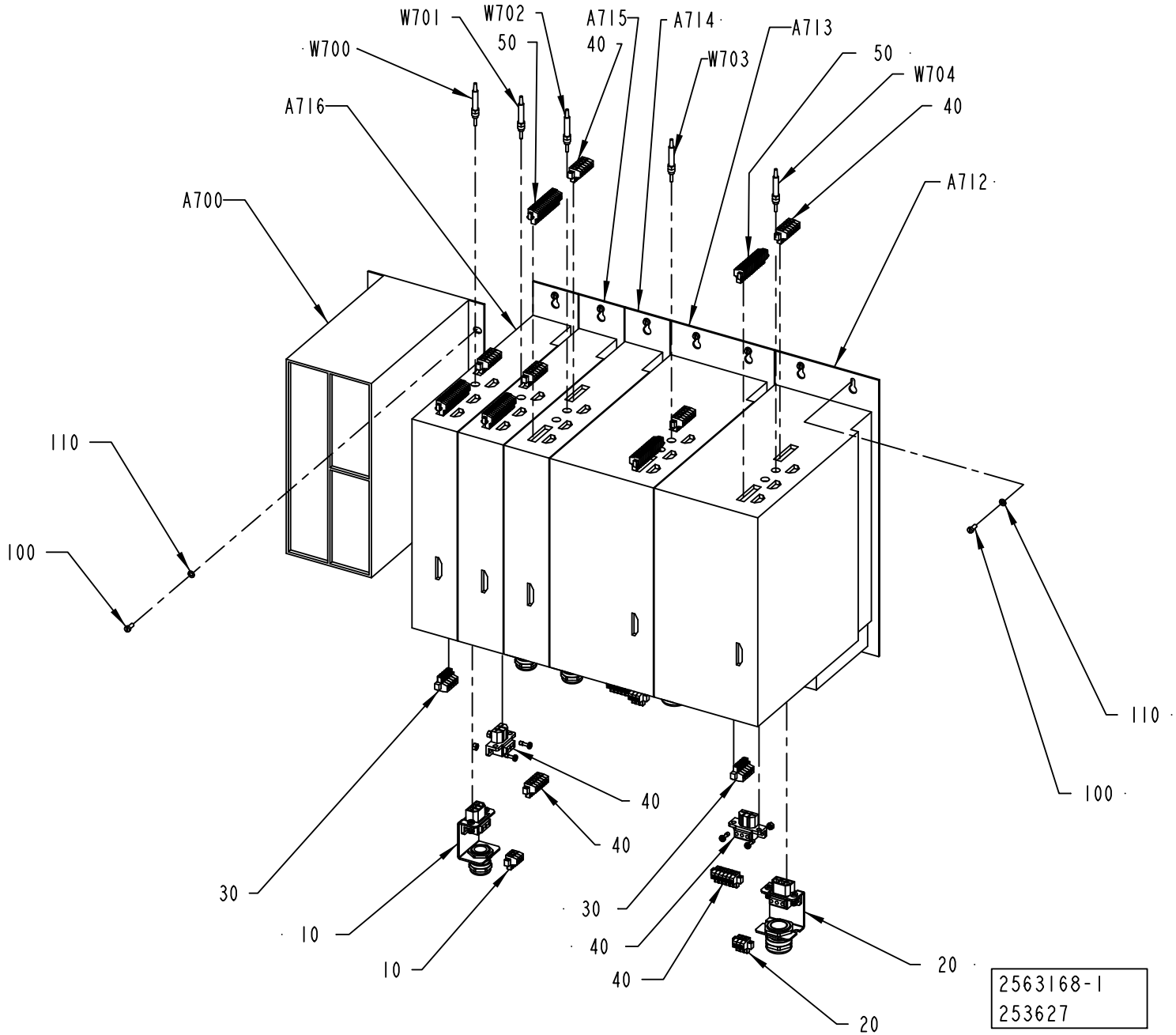
W701
W702
50
A715
40
A714
A713
W700
W703
50
W704
40
A716
A712
A700
110
100
110
100
40
40
30
10
10
30
40
40
20
20
2563168-1
253627

ECM: 261038 - 20060412
Group number: 2563168-0100
Assembly Drawing: 2563168-1_1_AD

Pos	Part No	UN	Qty	Description	Page No
-					
010	90100-0047		3	CONNECTOR, DRIVE END SAM 4/7/14,10-14MM	
020	90100-0048		2	CONNECTOR, DRIVE END SAM 4/7/14, 9-16MM	
030	90100-0051		5	CONNECTOR KIT, BRAKE	
040	90100-0054		5	CONNECTOR KIT, SUPPLY (SAM 4-7-14)	
050	90100-0056		5	CONNECTOR KIT, OPTION	
100	312121-0289		18	SCREW ISO 1207 M4X10 4.8 - 5.8 Z.PL.	
110	315101-0136		18	WASHER BRB, 4,3/8 H=0,8	
A700	90100-0069		1	SERVO CONTROLLER PAM F37, 006.758	
A712	90100-0042		1	SERVO DRIVE SAM-DA-400-014B-P4N-F	
A713	90100-0042		1	SERVO DRIVE SAM-DA-400-014B-P4N-F	
A714	90100-0041		1	SERVO DRIVE SAM-DA-400-07B-P4N-F	
A715	90100-0041		1	SERVO DRIVE SAM-DA-400-07B-P4N-F	
A716	90100-0041		1	SERVO DRIVE SAM-DA-400-07B-P4N-F	
W700	90100-0074		1	EASYBUS SAM 1,0M	
W701	90100-0072		1	EASYBUS SAM 0,3M	
W702	90100-0072		1	EASYBUS SAM 0,3M	
W703	90100-0072		1	EASYBUS SAM 0,3M	
W704	90100-0072		1	EASYBUS SAM 0,3M	

Pos	Part No	UN	Qty	Description	Page No

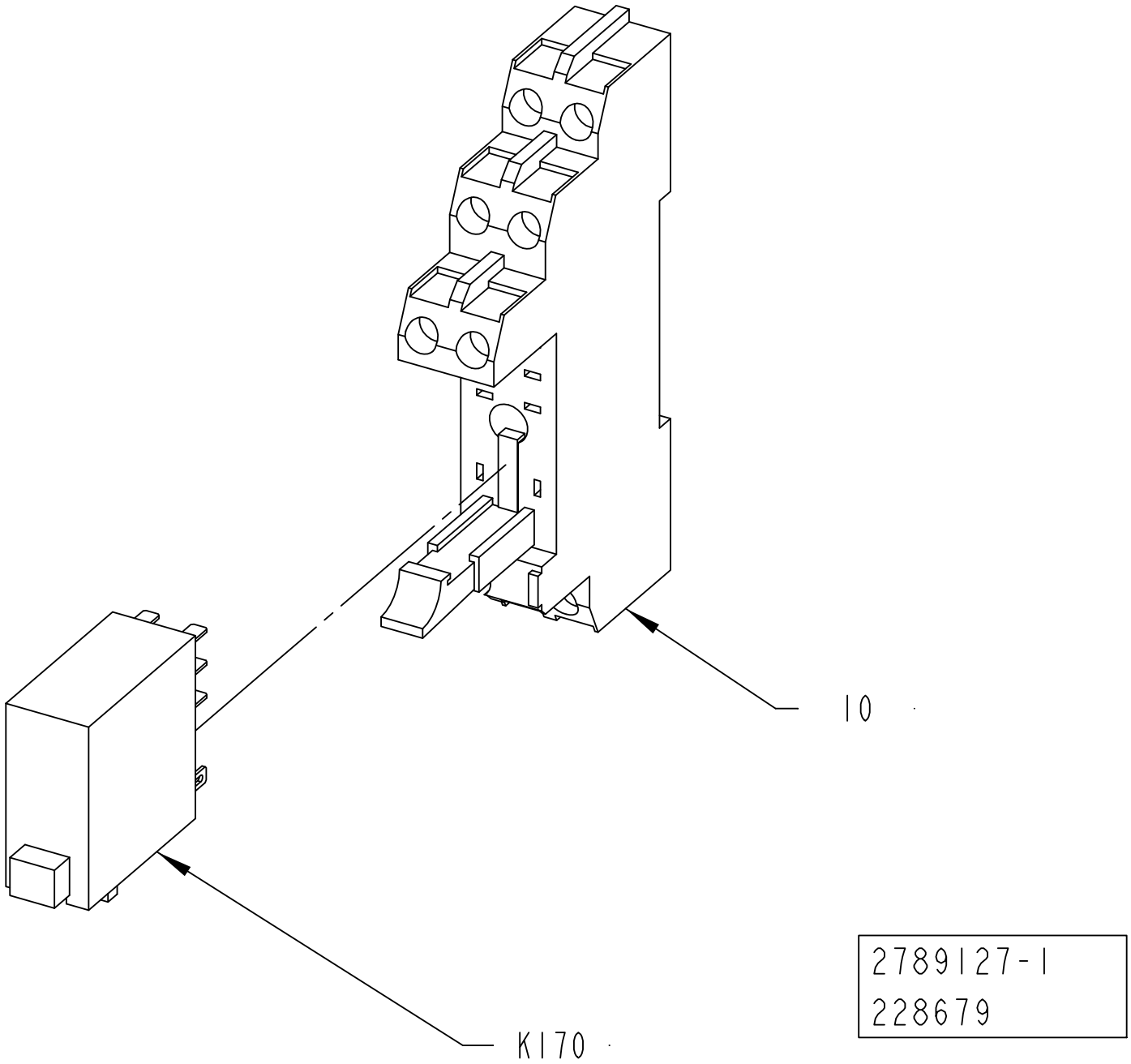
10
K170
2789127-1
228679

ECM: 235074 - 20060101
Group number: 2789127-0100
Assembly Drawing: 2789127-1_1_AA

Pos	Part No	UN	Qty	Description	Page No
VISION SYSTEM					
10	90129-0018		1	BASE OMRON P2RF-08-E	
K170	90119-0108		1	RELAY OMRON G2R-2-SNI-24DC	
	90129-0018		*1*	*BASE OMRON P2RF-08-E*	

Pos	Part No	UN	Qty	Description	Page No

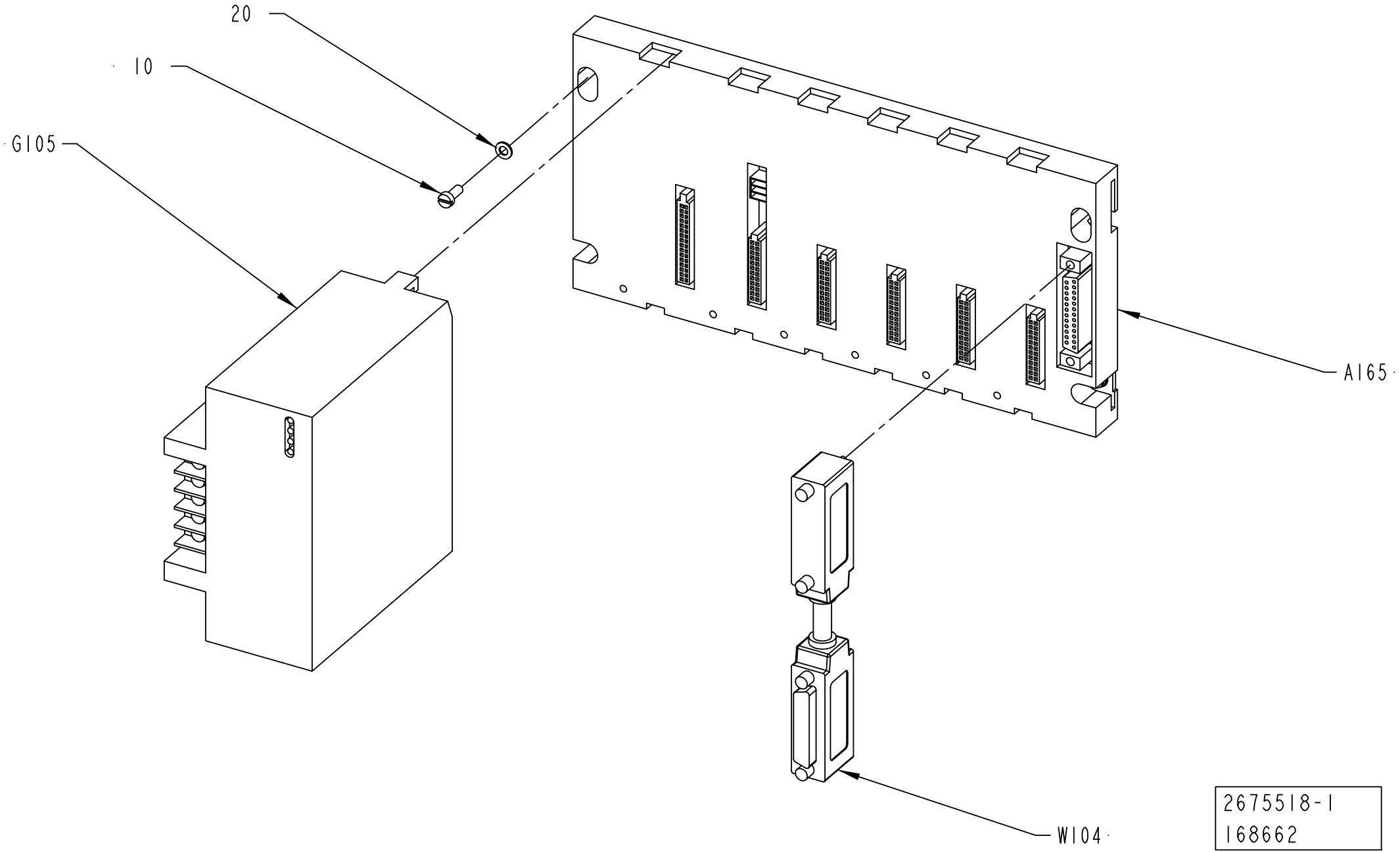
20
10
G105
A165
W104
2675518-1
168662

ECM: 190910 - 20041104
Group number: 2675518-0100
Assembly Drawing: 2675518-1_1_AA

Pos	Part No	UN	Qty	Description	Page No
-					
010	312121-0289		4	SCREW ISO 1207 M4X10 4.8 - 5.8 Z.PL.	
020	315101-0136		4	WASHER BRB, 4,3/8 H=0,8	
A165	90031-0052		1	BASEPLATE, 5-SLOT	
	90031-0302		*1*	*I/O BUS TERMINATION PLUG*	
G105	90031-0068		1	PLC, POWER SUPPLY	
	90031-0301		*1*	*SPARE BATTERY CPU,PCM,2PCS*	
	352551-0134		*1*	*FINE-WIRE FUSE 2 A SLOW,5X20MM*	
W104	90458-1314		1	I/O EXPANSION CABLE	

Pos	Part No	UN	Qty	Description	Page No

CONTROL BOARD RIGHT

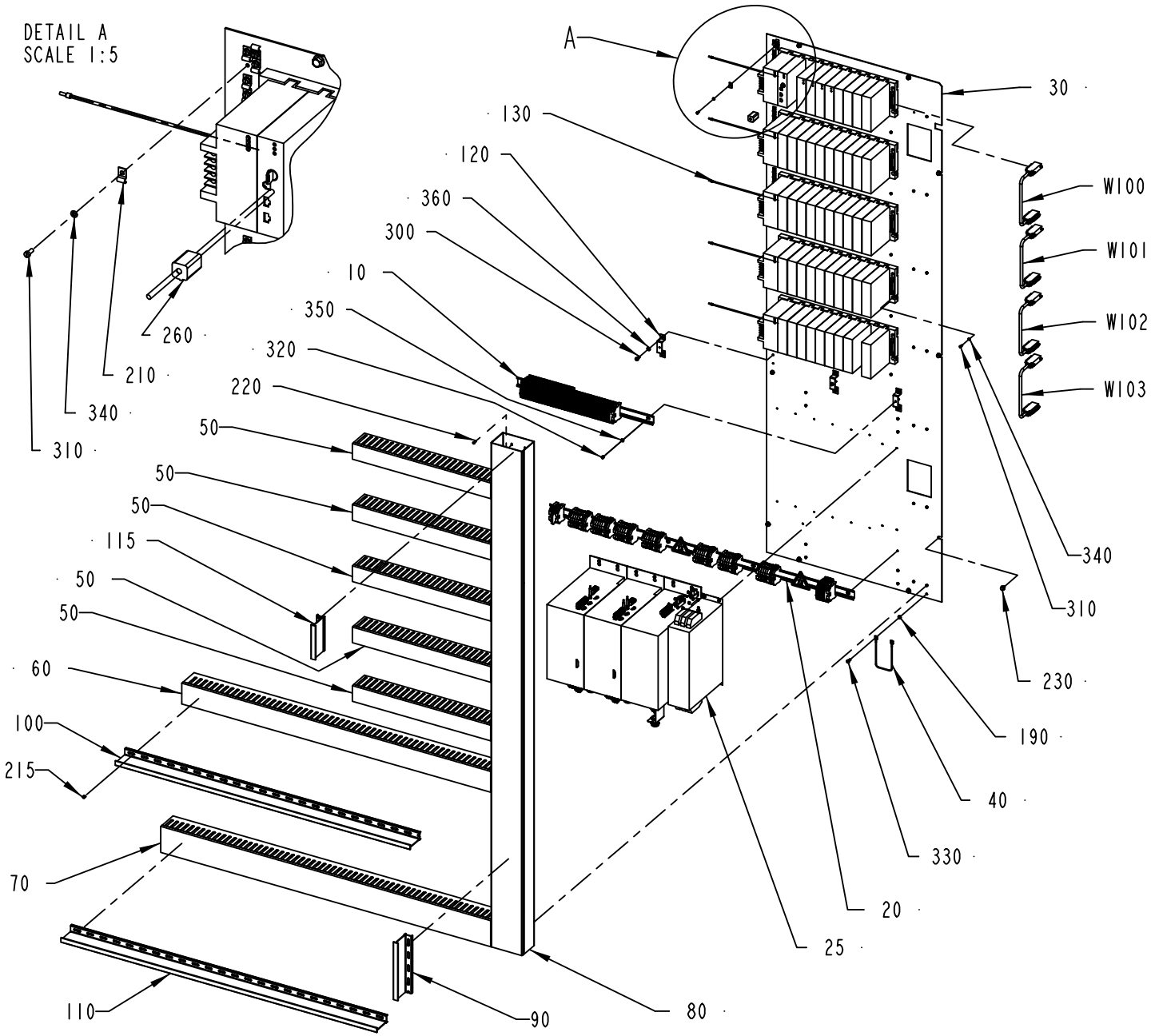

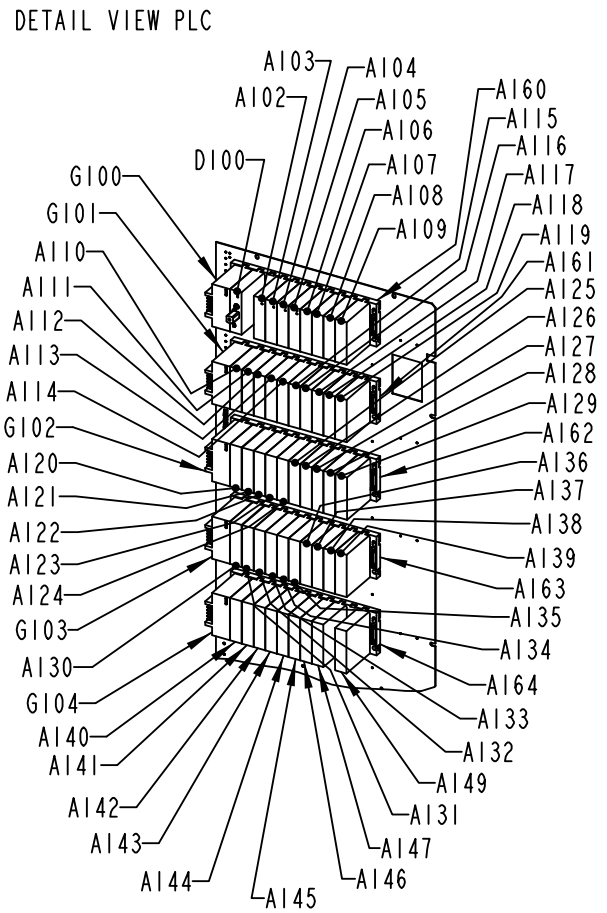

1548123-1
228679

ECM: 260034 - 20060412
Group number: 1548123-0100
Assembly Drawing: 1548123-1_1_AF

This list covers pages from 8-66 to 8-69

Pos	Part No	UN	Qty	Description	Page No
A3/FLEX					
020	1548124-0100		1	PLINTH	**8-71**
025	2563169-0100		1	MOTOR DRIVE CONTROL	**8-73**
030	1532917-0000		1	MOUNTING PLATE	
120	90458-1447		3	MOUNTING RAIL SUPPORT TST 128660	
310	312121-0289		63	SCREW ISO 1207 M4X10 4.8 - 5.8 Z.PL.	
340	315101-0136		63	WASHER BRB, 4,3/8 H=0,8	
Common Parts					
010	1548125-0100		1	PLINTH	**8-75**
040	1038714-0000		1	CABLE	
050	2557587-0000		5	CABLE DUCT	
060	2557588-0000		1	CABLE DUCT	
070	2557589-0000		1	CABLE DUCT	
080	2557590-0000		1	CABLE DUCT	
090	2557591-0000		1	DIVIDER	
100	2557592-0000		1	DIVIDER	
110	2557593-0000		1	DIVIDER	
115	2675522-0000		1	DIVIDER	
130	1512322-0000		5	COPPER BRAID	
190	90062-0022		1	LOCKING WASHER D=6,4/11	
210	90165-0003		34	PIPE CLIP FOR TUBE D=4 MM	
215	90181-0064		12	LOCK ZP1 FOR CHANNEL T1	
220	90287-0124		37	SCREW PAN HEAD MSCS M4X12 NYLON	
230	90287-0157		11	SCREW M6SF FLAT HEAD M6X10 88	
260	90458-1170		1	FERRITE, SFC-6	
300	312111-0366		6	SCREW HEX.SOCK.HD.MC6S-TT 6X12 88 FZB	
320	312121-0321		3	SCREW ISO 1207 M5X6 4.8 - 5.8 Z.PL.	
330	312121-0366		1	SCREW ISO 1207 M6X12 4.8 - 5.8 Z.PL.	
350	315101-0146		3	WASHER PLAIN, BRB, 5,3/10 H=1	
360	315101-0153		6	WASHER PLAIN, BRB, 6,4/12 H=1,5	
A102	90031-0062		1	PLC, ANALOG OUTPUT MODULE 8PT/CURR/VOLT	
A103	90031-0062		1	PLC, ANALOG OUTPUT MODULE 8PT/CURR/VOLT	
A104	90031-0061		1	PLC,ANALOG INPUT MODULE 16 PT/CURRENT	
A105	90031-0060		1	PLC,ANALOG INPUT MODULE 16 PT/VOLTAGE	
A106	90031-0065		1	PLC,TEMPERATUR CONTROL,INPUT MODULE 8 PT	
A107	90031-0065		1	PLC,TEMPERATUR CONTROL,INPUT MODULE 8 PT	
A108	90031-0065		1	PLC,TEMPERATUR CONTROL,INPUT MODULE 8 PT	
A109	90031-0058		1	PLC, DIGITAL INPUT MODULE	
A110	90031-0057		1	PLC, DIGITAL INPUT MODULE	
A111	90031-0057		1	PLC, DIGITAL INPUT MODULE	
A112	90031-0057		1	PLC, DIGITAL INPUT MODULE	
A113	90031-0057		1	PLC, DIGITAL INPUT MODULE	
A114	90031-0057		1	PLC, DIGITAL INPUT MODULE	
A115	90031-0057		1	PLC, DIGITAL INPUT MODULE	
A116	90031-0057		1	PLC, DIGITAL INPUT MODULE	
A117	90031-0057		1	PLC, DIGITAL INPUT MODULE	
A118	90031-0057		1	PLC, DIGITAL INPUT MODULE	
A119	90031-0057		1	PLC, DIGITAL INPUT MODULE	
A120	90031-0057		1	PLC, DIGITAL INPUT MODULE	
A121	90031-0057		1	PLC, DIGITAL INPUT MODULE	
A122	90031-0057		1	PLC, DIGITAL INPUT MODULE	
A123	90031-0057		1	PLC, DIGITAL INPUT MODULE	
A124	90031-0057		1	PLC, DIGITAL INPUT MODULE	
A125	90031-0057		1	PLC, DIGITAL INPUT MODULE	
A126	90031-0057		1	PLC, DIGITAL INPUT MODULE	
A127	90031-0057		1	PLC, DIGITAL INPUT MODULE	
A128	90031-0057		1	PLC, DIGITAL INPUT MODULE	
A129	90031-0057		1	PLC, DIGITAL INPUT MODULE	
A130	90031-0059		1	PLC, DIGITAL OUTPUT MODULE	
A131	90031-0059		1	PLC, DIGITAL OUTPUT MODULE	
A132	90031-0059		1	PLC, DIGITAL OUTPUT MODULE	
A133	90031-0059		1	PLC, DIGITAL OUTPUT MODULE	
A134	90031-0059		1	PLC, DIGITAL OUTPUT MODULE	
A135	90031-0059		1	PLC, DIGITAL OUTPUT MODULE	
A136	90031-0059		1	PLC, DIGITAL OUTPUT MODULE	
A137	90031-0059		1	PLC, DIGITAL OUTPUT MODULE	
A138	90031-0059		1	PLC, DIGITAL OUTPUT MODULE	
A139	90031-0059		1	PLC, DIGITAL OUTPUT MODULE	
A140	90031-0059		1	PLC, DIGITAL OUTPUT MODULE	
A141	90031-0059		1	PLC, DIGITAL OUTPUT MODULE	
A142	90031-0059		1	PLC, DIGITAL OUTPUT MODULE	
A143	90031-0059		1	PLC, DIGITAL OUTPUT MODULE	
A144	90031-0059		1	PLC, DIGITAL OUTPUT MODULE	
A145	90031-0059		1	PLC, DIGITAL OUTPUT MODULE	
A146	90031-0059		1	PLC, DIGITAL OUTPUT MODULE	
A147	90031-0059		1	PLC, DIGITAL OUTPUT MODULE	
A149	90031-0059		1	PLC, DIGITAL OUTPUT MODULE	
A160	90031-0051		1	BASEPLATE, 10-SLOT	
A161	90031-0053		1	BASEPLATE,10-SLOT	
	90031-0302		*1*	*I/O BUS TERMINATION PLUG*	
A162	90031-0053		1	BASEPLATE,10-SLOT	
	90031-0302		*1*	*I/O BUS TERMINATION PLUG*	
A163	90031-0053		1	BASEPLATE,10-SLOT	
	90031-0302		*1*	*I/O BUS TERMINATION PLUG*	

Machine Type | Group Description | Used-In | Group Number | Page No

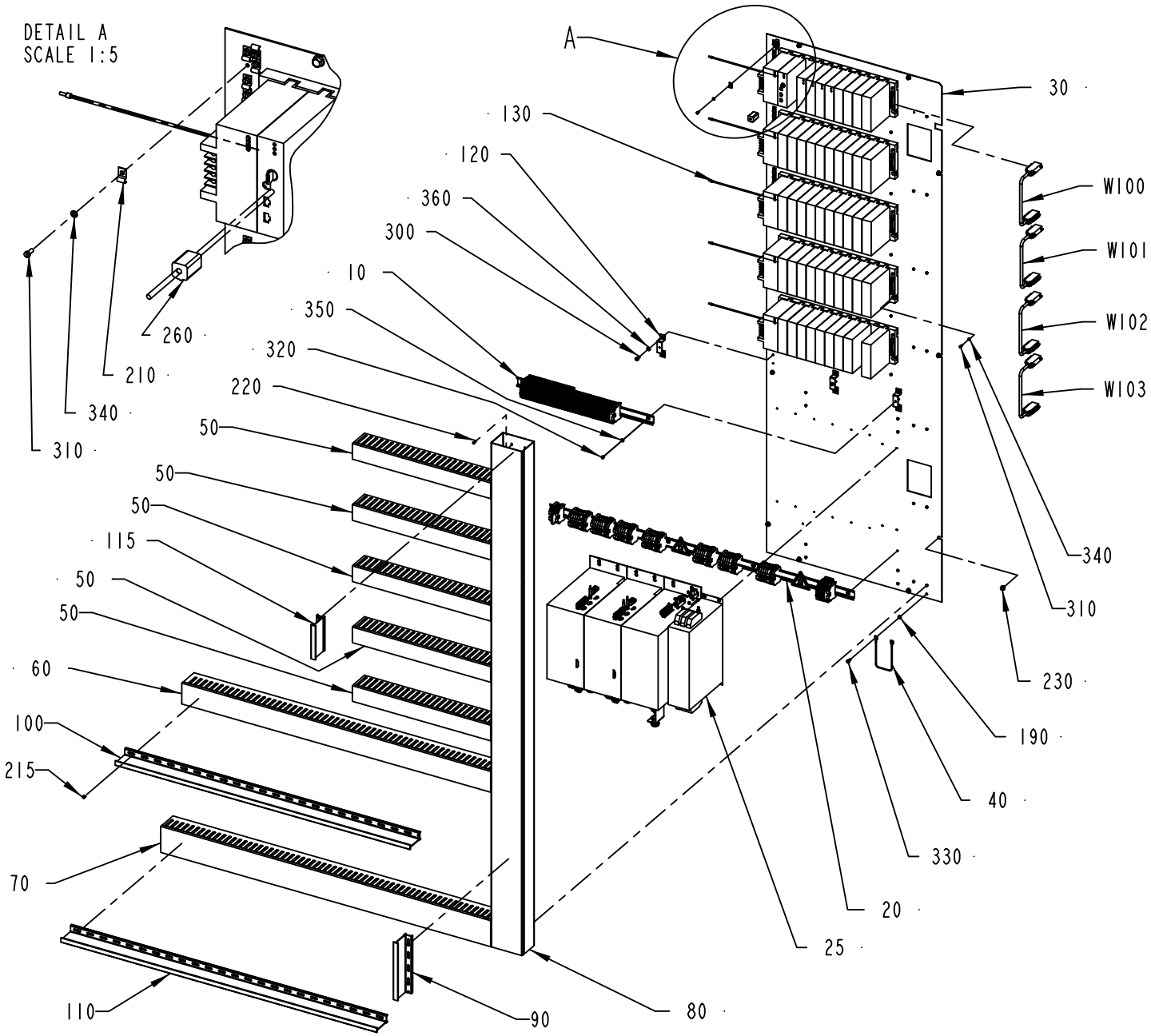

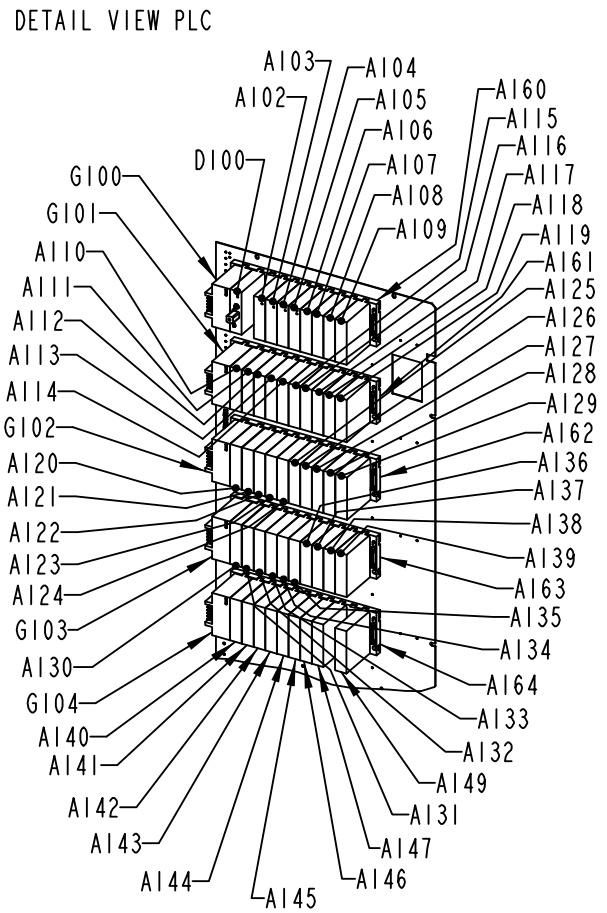

1548123-1
228679

ECM: 260034 - 20060412
Group number: 1548123-0100
Assembly Drawing: 1548123-1_1_AF

This list covers pages from 8-66 to 8-69

Pos	Part No	UN	Qty	Description	Page No
Common Parts (Cont'd)					
A164	90031-0053		1	BASEPLATE,10-SLOT	
	90031-0302		*1*	*I/O BUS TERMINATION PLUG*	
D100	90459-2185		1	CPU374, ETHERNET COMMUNICATION	
G100	90031-0068		1	PLC, POWER SUPPLY	
	90031-0301		*1*	*SPARE BATTERY CPU,PCM,2PCS*	
	352551-0134		*1*	*FINE-WIRE FUSE 2 A SLOW,5X20MM*	
G101	90031-0068		1	PLC, POWER SUPPLY	
	90031-0301		*1*	*SPARE BATTERY CPU,PCM,2PCS*	
	352551-0134		*1*	*FINE-WIRE FUSE 2 A SLOW,5X20MM*	
G102	90031-0068		1	PLC, POWER SUPPLY	
	90031-0301		*1*	*SPARE BATTERY CPU,PCM,2PCS*	
	352551-0134		*1*	*FINE-WIRE FUSE 2 A SLOW,5X20MM*	
G103	90031-0068		1	PLC, POWER SUPPLY	
	90031-0301		*1*	*SPARE BATTERY CPU,PCM,2PCS*	
	352551-0134		*1*	*FINE-WIRE FUSE 2 A SLOW,5X20MM*	
G104	90031-0068		1	PLC, POWER SUPPLY	
	90031-0301		*1*	*SPARE BATTERY CPU,PCM,2PCS*	
	352551-0134		*1*	*FINE-WIRE FUSE 2 A SLOW,5X20MM*	
W100	90031-0305		1	I/O EXPANSION CABLE	
W101	90031-0305		1	I/O EXPANSION CABLE	
W102	90031-0305		1	I/O EXPANSION CABLE	
W103	90031-0305		1	I/O EXPANSION CABLE	

Pos	Part No	UN	Qty	Description	Page No

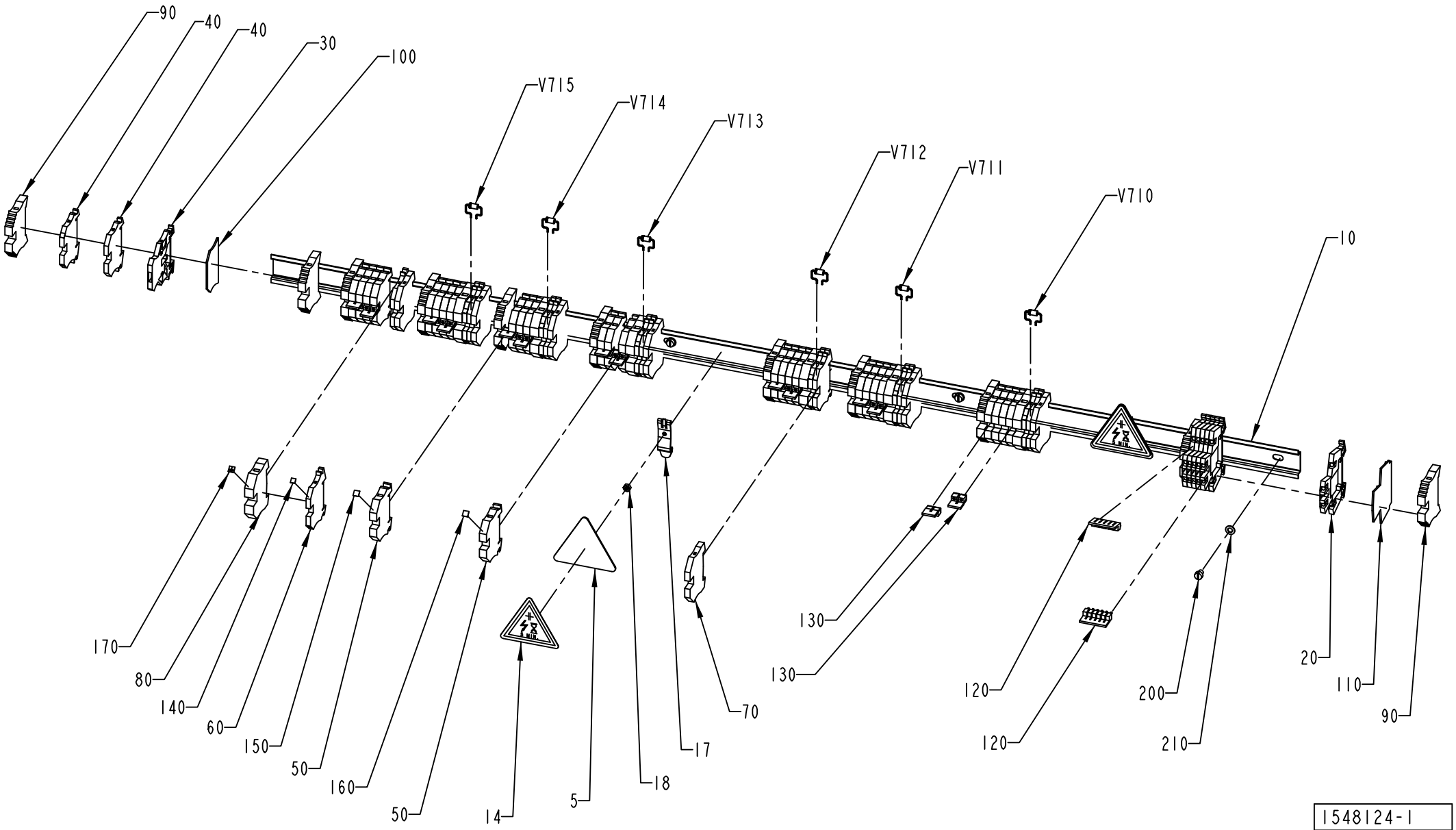

1548124-1
ECM 149421

ECM: 184965 - 20040928
Group number: 1548124-0100
Assembly Drawing: 1548124-1_1_AD

Pos	Part No	UN	Qty	Description	Page No
-					
005	2563175-0000		2	BRACKET	
010	2563171-0000		1	RAIL	
014	90194-0118		2	SIGN, RESIDUAL VOLTAGE, WAIT 5 MIN.	
017	90459-2563		2	BRACKET FOR RAIL, TYPE FM 4	
018	312605-0312		2	HEXAGON NUT, M6M M4 A280	
020	90077-0113		6	FEED THROUGH TERMINAL, 10-00102150-1	
030	353021-0122		1	TERMINAL DISCONNECTBLE, WTR 2,5 D	
040	353021-0212		2	FEED THROUGH TERMINAL, 10200.0	
050	353021-0214		28	FEED THROUGH TERMINAL, 10202.0	
060	353021-0216		14	FEED THROUGH TERMINAL, 10200.8	
070	353024-0205		7	EARTH TERMINAL, 1010.1	
080	353024-0207		7	EARTH TERMINAL, 1010.3	
090	353031-0203		11	END SUPPORT, WEW 35/2	
100	353032-0004		1	END PLATE WAP 2,5-10 BEIGE	
110	353032-0009		1	END PLATE, WAP FOR WDK	
120	353034-0030		2	BRIDGE CONNECTOR WQV 2,5/10, 10544.6	
130	353034-0018		14	BRIDGE CONNECTOR WQV 6/2	
140	359011-0807		17	MARKING PLATES 5-FW 1-50	
150	359011-0832		1	SET OF SIGNS 6-GW (+)	
160	359011-0833		1	SET OF SIGNS 6-GW (-)	
170	359011-0834		1	SET OF SIGNS 6-GW(EARTH)	
200	312121-0321		4	SCREW ISO 1207 M5X6 4.8 - 5.8 Z.PL.	
210	315101-0146		4	WASHER PLAIN, BRB, 5,3/10 H=1	
V710	90459-1620		1	DIODE, 3A 100V	
V711	90459-1620		1	DIODE, 3A 100V	
V712	90459-1620		1	DIODE, 3A 100V	
V713	90459-1620		1	DIODE, 3A 100V	
V714	90459-1620		1	DIODE, 3A 100V	
V715	90459-1620		1	DIODE, 3A 100V	

Pos	Part No	UN	Qty	Description	Page No

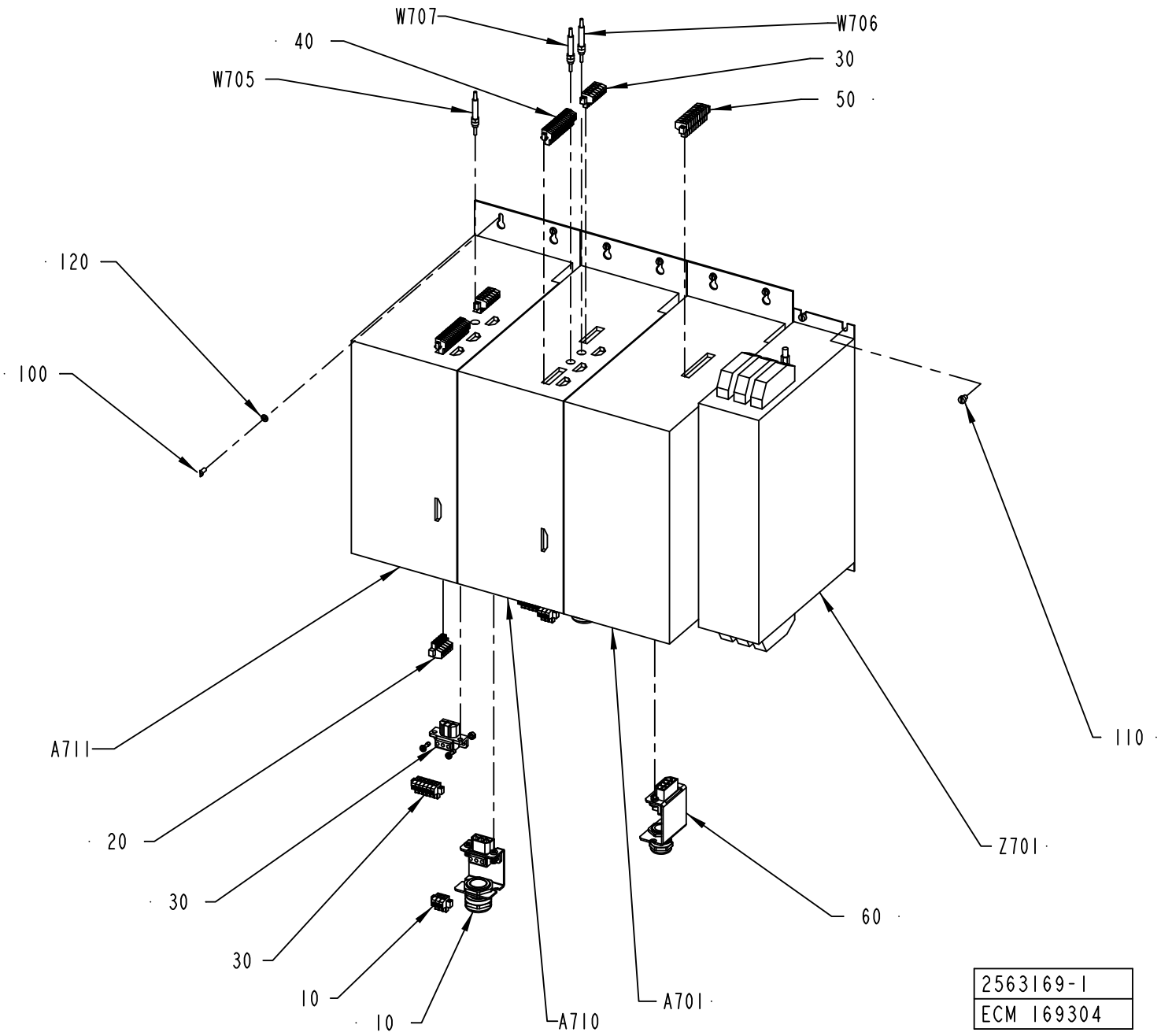
W707
W706
40
30
W705
50
120
100
110
A711
20
30
30
10
10
A710
A701
Z701
60
2563169-1
ECM 169304

ECM: 190908 - 20041104
Group number: 2563169-0100
Assembly Drawing: 2563169-1_1_AC

Pos	Part No	UN	Qty	Description	Page No
-					
010	90100-0048		2	CONNECTOR, DRIVE END SAM 4/7/14, 9-16MM	
020	90100-0051		2	CONNECTOR KIT, BRAKE	
030	90100-0054		2	CONNECTOR KIT, SUPPLY (SAM 4-7-14)	
040	90100-0056		2	CONNECTOR KIT, OPTION	
050	90100-0064		1	CONNECTOR SAM-P_-30, 4MM2	
060	90459-1619		1	CONNECTOR 9-032-001-0698	
100	312121-0289		12	SCREW ISO 1207 M4X10 4.8 - 5.8 Z.PL.	
110	312121-0321		4	SCREW ISO 1207 M5X6 4.8 - 5.8 Z.PL.	
120	315101-0136		12	WASHER BRB, 4,3/8 H=0,8	
A701	90100-0059		1	SAM SUPPLY SAM-PA-400-80-E	
A710	90100-0042		1	SERVO DRIVE SAM-DA-400-014B-P4N-F	
A711	90100-0042		1	SERVO DRIVE SAM-DA-400-014B-P4N-F	
W705	90100-0072		1	EASYBUS SAM 0,3M	
W706	90100-0072		1	EASYBUS SAM 0,3M	
W707	90100-0075		1	EASYBUS SAM 2,0M	
Z701	90100-0068		1	EMC FILTER 90A, 258-75-34	

Pos	Part No	UN	Qty	Description	Page No

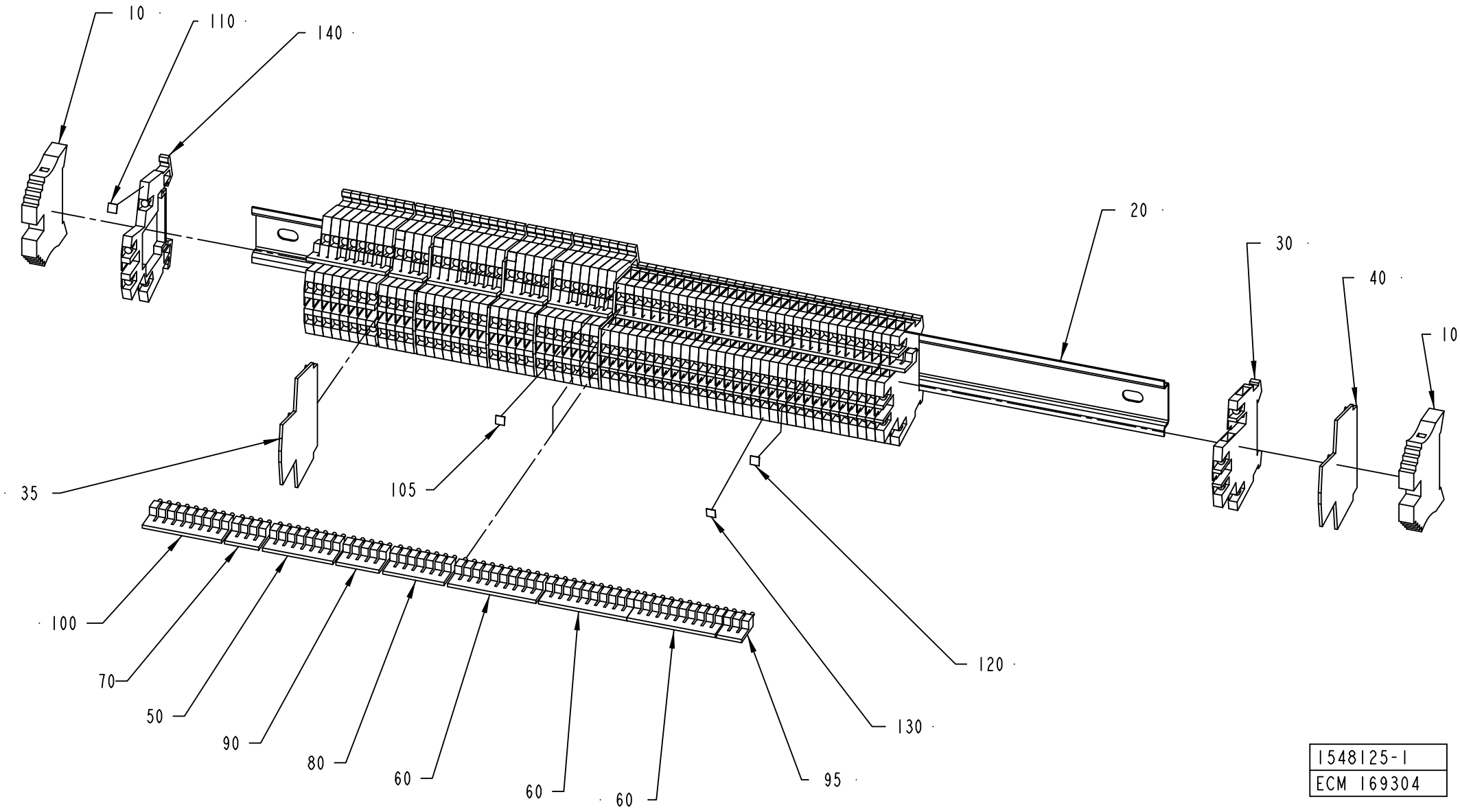
10
110
140
20
30
40
10
35
105
100
70
50
90
80
60
60
60
95
120
130
1548125-1
ECM 169304

ECM: 190893 - 20041104
Group number: 1548125-0100
Assembly Drawing: 1548125-1_1_AC

Pos	Part No	UN	Qty	Description	Page No
-					
010	353031-0203		2	END SUPPORT, WEW 35/2	
020	2557594-0000		1	RAIL	
030	353021-0120		33	FEED THROUGH TERMINAL, 10215.8	
035	353032-0009		5	END PLATE, WAP FOR WDK	
040	353032-0010		1	END PLATE WAP	
050	353034-0030		2	BRIDGE CONNECTOR WQV 2,5/10, 10544.6	
060	353034-0030		6	BRIDGE CONNECTOR WQV 2,5/10, 10544.6	
070	353034-0030		2	BRIDGE CONNECTOR WQV 2,5/10, 10544.6	
080	353034-0030		2	BRIDGE CONNECTOR WQV 2,5/10, 10544.6	
090	353034-0030		2	BRIDGE CONNECTOR WQV 2,5/10, 10544.6	
095	353034-0030		2	BRIDGE CONNECTOR WQV 2,5/10, 10544.6	
100	353034-0030		2	BRIDGE CONNECTOR WQV 2,5/10, 10544.6	
105	359011-0808		1	MARKING PLATES 5-FW 51-100	
110	359011-0809		6	MARKING PLATES 5-FW 101-150	
120	359011-0810		1	MARKING PLATES 5-FW 151-200	
130	359011-0811		1	MARKING PLATES 5-FW 201-2	
140	90077-0113		33	FEED THROUGH TERMINAL, 10-00102150-1	

Pos	Part No	UN	Qty	Description	Page No

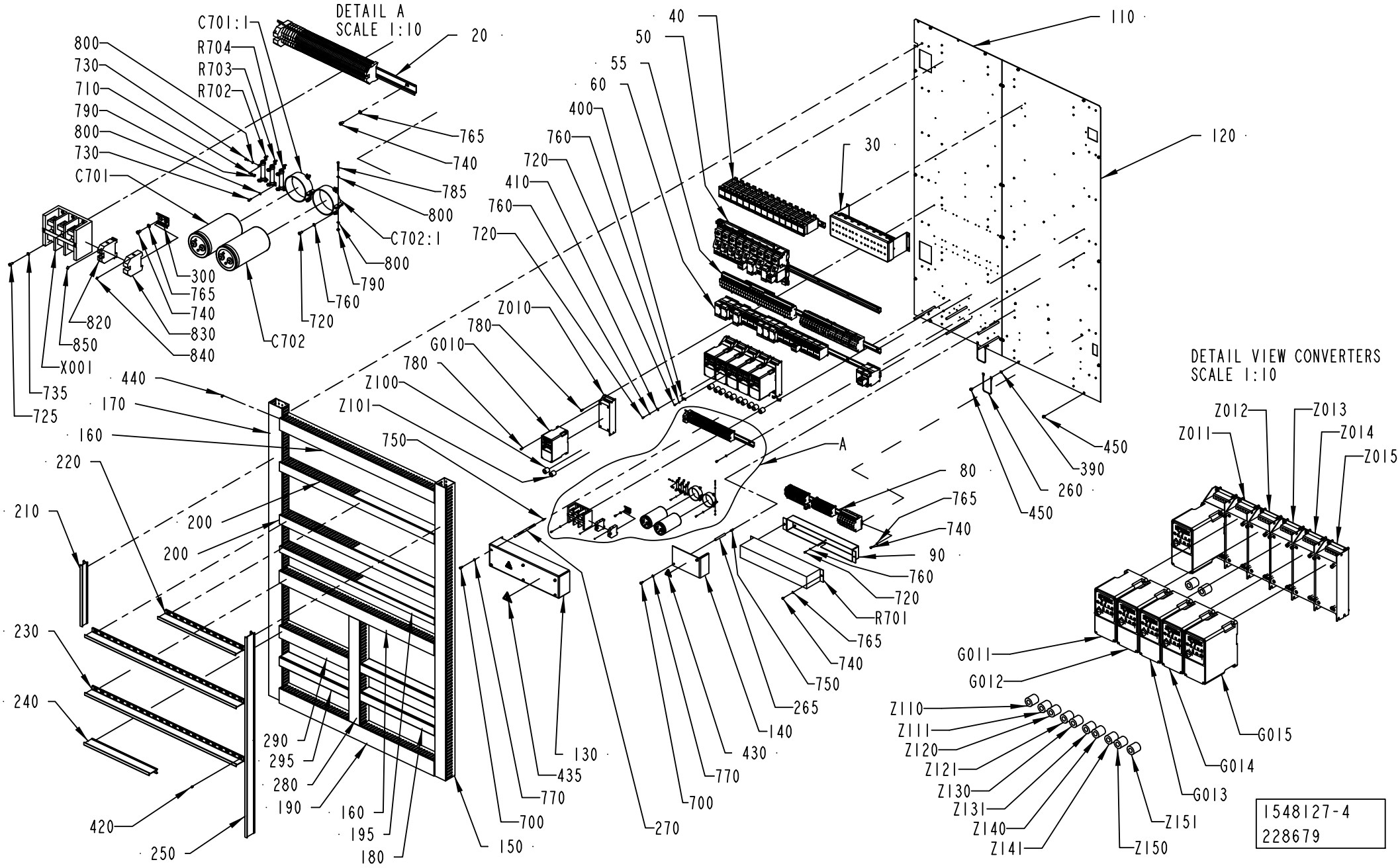
DETAIL A
SCALE 1:10
DETAIL VIEW CONVERTERS
SCALE 1:10
1548127-4
228679

ECM: 260035 - 20060412
Group number: 1548127-0200
Assembly Drawing: 1548127-4_1_AA

This list covers pages from 8-76 to 8-79

Pos	Part No	UN	Qty	Description	Page No
A3/FLEX					
030	1548129-0100		1	RELAY UNIT 2	**8-81**
040	2563170-0100		1	RELAY UNIT 1	**8-83**
080	1548134-0200		1	PLINTH	**8-85**
090	1548138-0000		1	BRACKET	
110	2765463-0000		1	MOUNTING PLATE	
120	2765464-0000		1	MOUNTING PLATE	
140	1532930-0000		1	PROTECTION	
265	1038275-0012		2	SPACER	
400	90165-0007		6	PIPE CLIP FOR TUBE D=8 MM	
410	90165-0022		6	PIPE CLIP, FOR TUBE D=2,5 MM, B-3570	
435	90194-0118		1	SIGN, RESIDUAL VOLTAGE, WAIT 5 MIN.	
700	312111-0366		8	SCREW HEX.SOCK.HD.MC6S-TT 6X12 88 FZB	
720	312121-0289		24	SCREW ISO 1207 M4X10 4.8 - 5.8 Z.PL.	
725	312125-0289		6	SCREW ISO 1207 M4X10 A4	
735	315105-0136		6	WASHER BRB 4,3X9 RFR	
740	312121-0323		10	SCREW ISO 1207 M5X8 4.8 - 5.8 Z.PL.	
750	312318-0370		8	SCREW ISO4029 M6X20 A4	
760	315101-0136		24	WASHER BRB, 4,3/8 H=0,8	
765	315101-0146		14	WASHER PLAIN, BRB, 5,3/10 H=1	
770	315101-0153		8	WASHER PLAIN, BRB, 6,4/12 H=1,5	
780	312115-0327		48	SCREW ISO4762 M5X12 A4 80	
785	312125-0232		2	SCREW ISO 1207 M3X25 A4	
790	312605-0310		8	HEXAGON NUT, M6M M3 A280	
800	315105-0124		16	WASHER BRB 3,2X7 RFR	
C701	90459-5692		1	CAPACITOR, 6800ÂµF 400VDC	
C701:1	90459-5694		1	CAPACITOR BRACKET Ã¸76, 39522101500	
C702	90459-5692		1	CAPACITOR, 6800ÂµF 400VDC	
C702:1	90459-5694		1	CAPACITOR BRACKET Ã¸76, 39522101500	
G015	90459-3451		1	VARIABLE FREQUENCY DRIVE 22A-D4P0N104	
R701	90100-0062		1	EXTERNAL DB RESISTOR FWA 60-500 6,8 OHM	
Z015	90459-3461		1	FOOTPRINT FILTER 22-RF5P7-AL	
Z150	90458-1140		1	FERRITE, RI-26-28-13	
Z151	90458-1140		1	FERRITE, RI-26-28-13	
Common Parts					
020	1548133-0100		1	PLINTH	**8-87**
050	1548130-0200		1	FUSE BOARD 1	**8-89**
055	1548131-0200		1	FUSE BOARD 2	**8-91, 8-93**
060	1548132-0200		1	FUSE BOARD 3	**8-95**
130	2789128-0000		1	PROTECTION	
150	2558761-0000		1	CABLE DUCT	
160	2558762-0000		2	CABLE DUCT	
170	2558760-0000		1	CABLE DUCT	
180	2558764-0000		2	CABLE DUCT	
190	2558766-0000		1	CABLE DUCT	
195	2777369-0000		1	CABLE DUCT	
200	2777368-0000		2	CABLE DUCT	
210	2558769-0000		1	DIVIDER	
220	2558770-0000		1	DIVIDER	
230	2558771-0000		2	DIVIDER	
240	2558772-0000		1	DIVIDER	
250	2558773-0000		1	DIVIDER	
260	1038714-0000		2	CABLE	
270	1038275-0030		6	SPACER	
280	2558763-0000		1	CABLE DUCT	
290	2558765-0000		1	CABLE DUCT	
295	2558768-0000		1	CABLE DUCT	
300	2789106-0000		1	RAIL	
390	90062-0015		2	LOCK WASHER SERRAT.EXT.GEAR,6,4/11 H=0,7	
420	90181-0064		20	LOCK ZP1 FOR CHANNEL T1	
430	359705-0015		2	WARNING SIGN ISO, RISK OF ELECTRIC SHOCK	
440	90287-0124		82	SCREW PAN HEAD MSCS M4X12 NYLON	
450	90287-0157		22	SCREW M6SF FLAT HEAD M6X10 88	
710	90062-0058		6	LOCK WASHER SERRAT.EXT.GEAR,3,2/6 H=0,4	
730	312125-0222		12	SCREW ISO 1207 M3X8 A4	
820	353021-0226		1	BY-PASS TERMINAL WDU 35	
830	353024-0209		1	EARTH TERMINAL, 1010.5	
840	359011-0819		1	MARKING PLATES 5-GW (EARTH)	
850	359011-0821		1	SET OF SIGNS 6-FW 1-50	
G010	90459-3449		1	VARIABLE FREQUENCY DRIVE 22A-A2P3N104	
G011	90459-3449		1	VARIABLE FREQUENCY DRIVE 22A-A2P3N104	
G012	90459-3449		1	VARIABLE FREQUENCY DRIVE 22A-A2P3N104	
G013	90459-3450		1	VARIABLE FREQUENCY DRIVE 22A-A4P5N104	
G014	90459-3450		1	VARIABLE FREQUENCY DRIVE 22A-A4P5N104	
R702	90121-0114		1	RESISTANCE FIXED, 0,22 KOHM, 25 W	
R703	90121-0114		1	RESISTANCE FIXED, 0,22 KOHM, 25 W	
R704	90121-0114		1	RESISTANCE FIXED, 0,22 KOHM, 25 W	
X001	90459-0959		1	DISTRIBUTOR BLOCK 1492-PD3163	
Z010	90459-3460		1	FOOTPRINT FILTER 22-RF010-AL	
Z011	90459-3460		1	FOOTPRINT FILTER 22-RF010-AL	
Z012	90459-3460		1	FOOTPRINT FILTER 22-RF010-AL	
Z013	90459-3460		1	FOOTPRINT FILTER 22-RF010-AL	
Z014	90459-3460		1	FOOTPRINT FILTER 22-RF010-AL	
Z100	90458-1140		1	FERRITE, RI-26-28-13	

Machine Type | Group Description | Used-In | Group Number | Page No

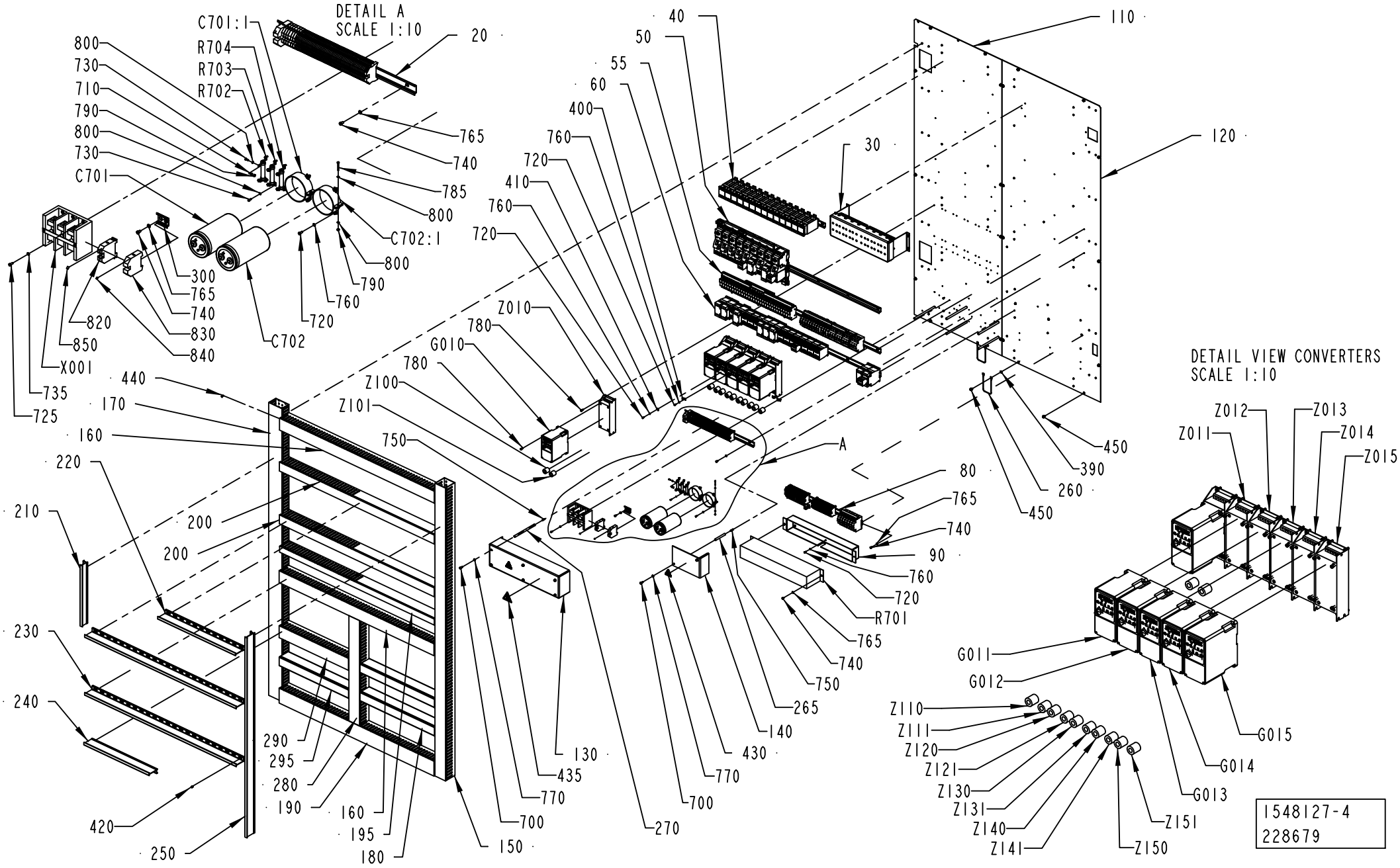
DETAIL A
SCALE 1:10
C701:1
R704
R703
R702
800
730
710
790
800
730
C701
765
740
785
800
C702:1
800
790
760
720
C702
300
765
740
830
840
820
850
X001
735
725
20
40
50
55
60
400
760
720
410
760
720
Z010
780
G010
780
Z100
Z101
750
110
120
30
450
390
260
450
A
80
765
740
90
760
720
R701
765
740
750
265
140
430
770
700
270
130
435
770
700
150
440
170
160
220
210
200
200
230
240
290
295
280
190
160
195
180
420
250
DETAIL VIEW CONVERTERS
SCALE 1:10
Z012
Z013
Z011
Z014
Z015
G011
G012
G015
G014
G013
Z110
Z111
Z120
Z121
Z130
Z131
Z140
Z141
Z151
Z150
1548127-4
228679

Pos	Part No	UN	Qty	Description	Page No
Common Parts (Cont'd)					
Z101	90458-1140		1	FERRITE, RI-26-28-13	
Z110	90458-1140		1	FERRITE, RI-26-28-13	
Z111	90458-1140		1	FERRITE, RI-26-28-13	
Z120	90458-1140		1	FERRITE, RI-26-28-13	
Z121	90458-1140		1	FERRITE, RI-26-28-13	
Z130	90458-1140		1	FERRITE, RI-26-28-13	
Z131	90458-1140		1	FERRITE, RI-26-28-13	
Z140	90458-1140		1	FERRITE, RI-26-28-13	
Z141	90458-1140		1	FERRITE, RI-26-28-13	

Pos	Part No	UN	Qty	Description	Page No

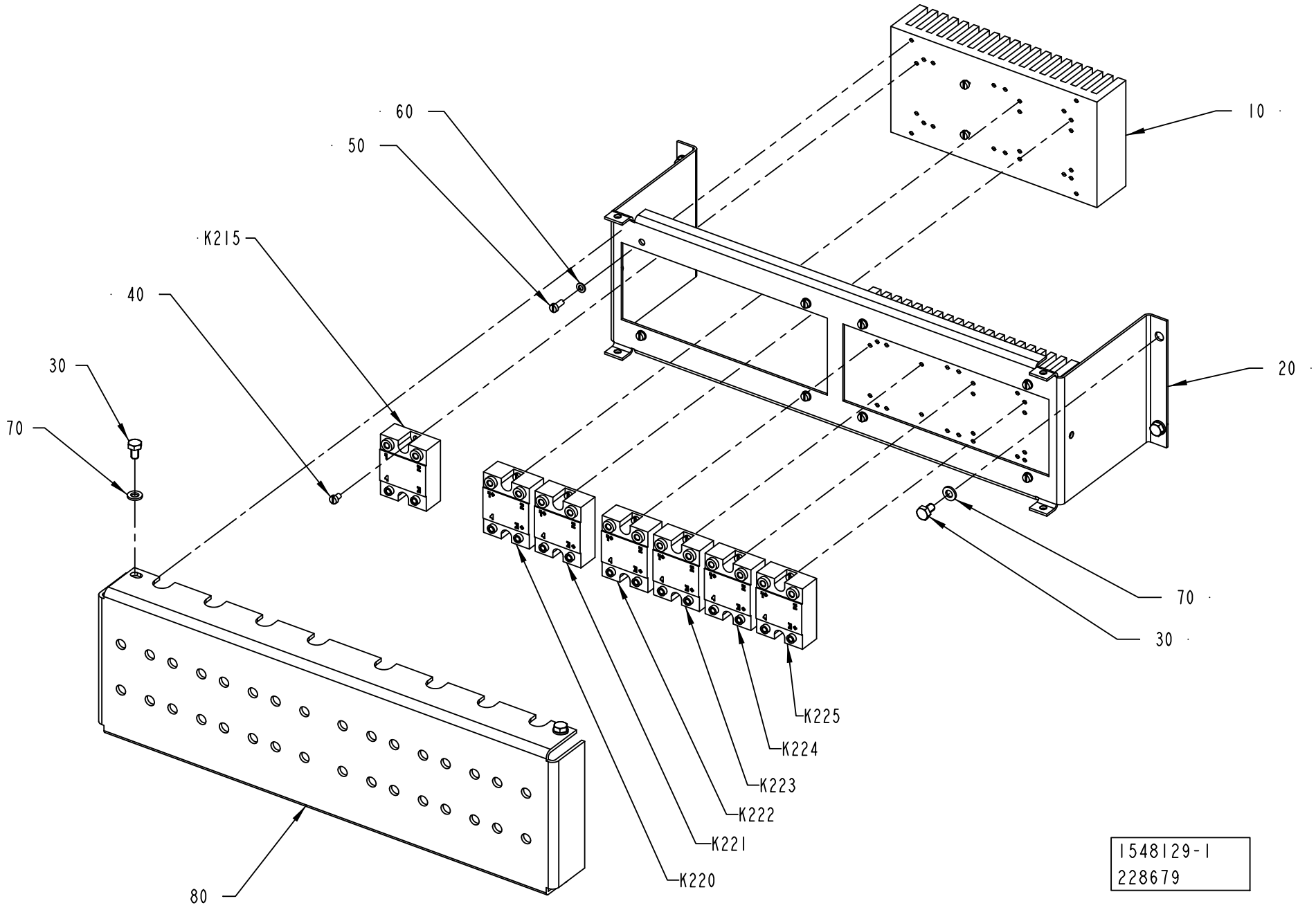
60
50
K215
40
30
70
10
20
70
30
K225
K224
K223
K222
K221
K220
80
1548129-1
228679

ECM: 234967 - 20060101
Group number: 1548129-0100
Assembly Drawing: 1548129-1_1_AC

Pos	Part No	UN	Qty	Description	Page No
A3/FLEX					
K215	90119-0067		1	SOLID-STATE RELAY, H12WD4850	
Common Parts					
010	495495-0000		2	COOLING ELEMENT SSR	
020	1347673-0000		1	BRACKET	
030	312101-0364		8	SCREW M6S M6X10 FZB	
040	312121-0285		16	SCREW ISO 1207 M4X6 4.8 - 5.8 Z.PL.	
050	312121-0289		8	SCREW ISO 1207 M4X10 4.8 - 5.8 Z.PL.	
060	315101-0136		8	WASHER BRB, 4,3/8 H=0,8	
070	315101-0153		8	WASHER PLAIN, BRB, 6,4/12 H=1,5	
080	1129342-0000		1	PROTECTION	
K220	90119-0043		1	OPTO-RELAY, 22DC 60S-3/32VDC	
K221	90119-0043		1	OPTO-RELAY, 22DC 60S-3/32VDC	
K222	90119-0043		1	OPTO-RELAY, 22DC 60S-3/32VDC	
K223	90119-0043		1	OPTO-RELAY, 22DC 60S-3/32VDC	
K224	90119-0043		1	OPTO-RELAY, 22DC 60S-3/32VDC	
K225	90119-0043		1	OPTO-RELAY, 22DC 60S-3/32VDC	

Pos	Part No	UN	Qty	Description	Page No

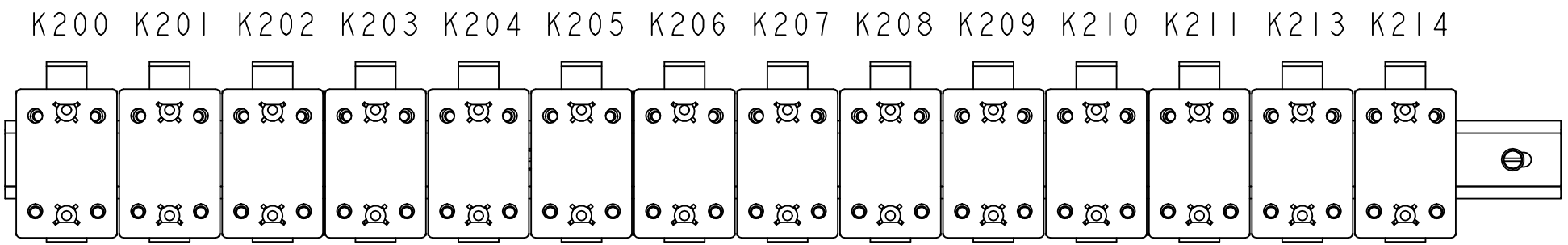

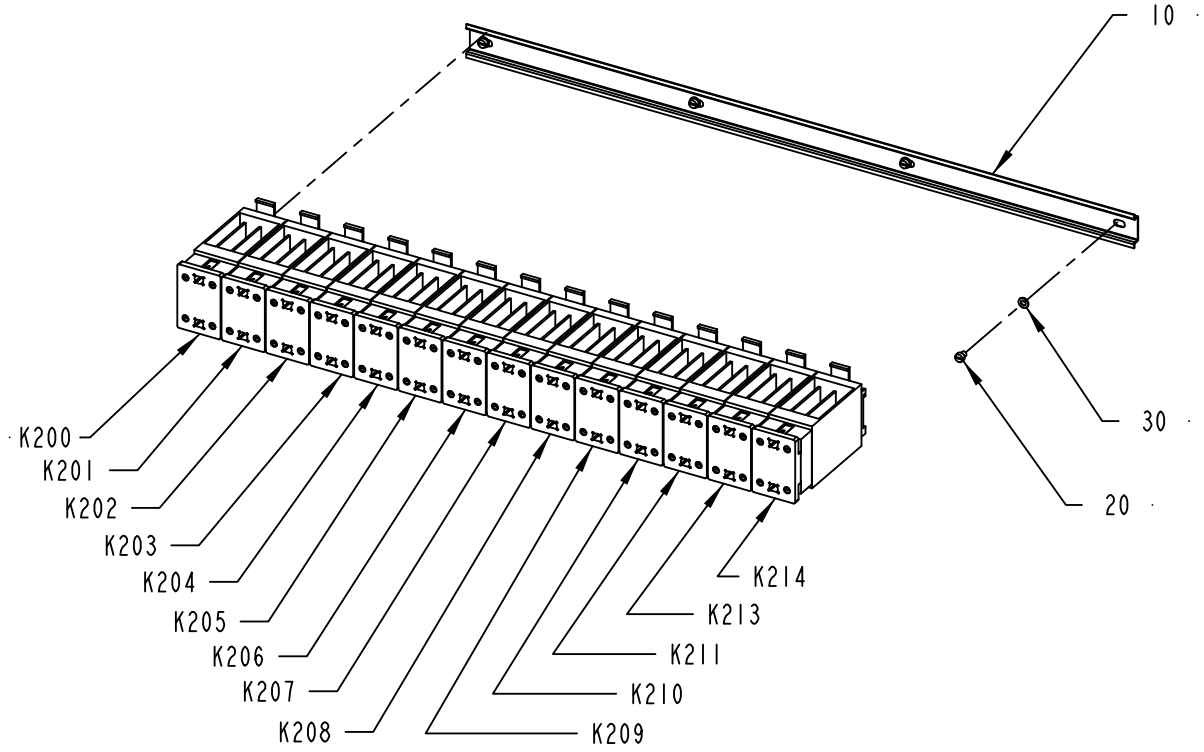

2563170-1
ECM 117324

ECM: 185515 - 20040930
Group number: 2563170-0100
Assembly Drawing: 2563170-1_1_AA

Pos	Part No	UN	Qty	Description	Page No
A3/FLEX					
K200	90119-0082		1	SSR 90119-67 + HEAT SINK	
K201	90119-0082		1	SSR 90119-67 + HEAT SINK	
K202	90119-0082		1	SSR 90119-67 + HEAT SINK	
K203	90119-0082		1	SSR 90119-67 + HEAT SINK	
K204	90119-0082		1	SSR 90119-67 + HEAT SINK	
K205	90119-0082		1	SSR 90119-67 + HEAT SINK	
K206	90119-0082		1	SSR 90119-67 + HEAT SINK	
K207	90119-0082		1	SSR 90119-67 + HEAT SINK	
K213	90119-0082		1	SSR 90119-67 + HEAT SINK	
K214	90119-0082		1	SSR 90119-67 + HEAT SINK	
Common Parts					
010	2558932-0000		1	RAIL	
020	312121-0321		4	SCREW ISO 1207 M5X6 4.8 - 5.8 Z.PL.	
030	315105-0146		4	WASHER BRB 5,3X10 RFR	
K208	90119-0082		1	SSR 90119-67 + HEAT SINK	
K209	90119-0082		1	SSR 90119-67 + HEAT SINK	
K210	90119-0082		1	SSR 90119-67 + HEAT SINK	
K211	90119-0082		1	SSR 90119-67 + HEAT SINK	

Pos	Part No	UN	Qty	Description	Page No

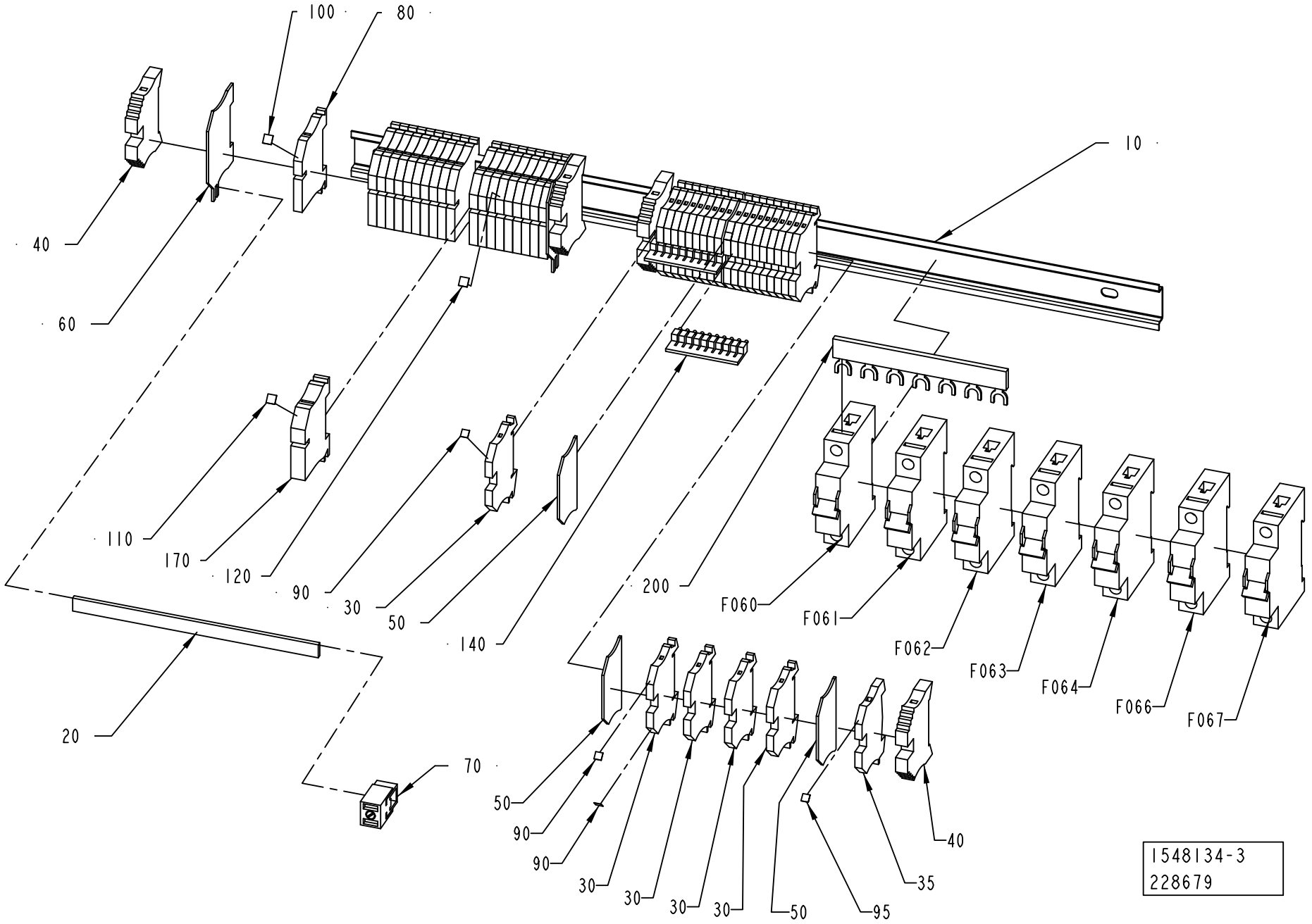
100
80
10
40
60
110
170
120
90
30
50
140
200
F060
F061
F062
F063
F064
F066
F067
20
70
50
90
90
30
30
30
30
50
95
35
40
1548134-3
228679

ECM: 260069 - 20060412
Group number: 1548134-0200
Assembly Drawing: 1548134-3_1_AA

Pos	Part No	UN	Qty	Description	Page No
A3/FLEX					
080	353022-0002		20	NEUTRAL TERMINAL, 10107.8	
095	359011-0819		2	MARKING PLATES 5-GW (EARTH)	
120	359011-0823		1	SET OF SIGNS 6-FW 101-150	
150	353034-0030		1	BRIDGE CONNECTOR WQV 2,5/10, 10544.6	
200	90459-6853		1	COMMONING BUSBAR, 1-P 1-PH 1X12 MOD 85A	
F063	354000-0100		1	MINIATURE CIRCUIT BREAKER, FAZ-C10/1	
F064	354000-0160		1	MINIATURE CIRCUIT BREAKER, FAZ-C16/1	
Common Parts					
010	2558933-0000		1	RAIL	
020	353041-0001	MM	170	BUS BAR RAIL 10X3MM SSCH	
030	353021-0212		24	FEED THROUGH TERMINAL, 10200.0	
035	353024-0204		1	EARTH TERMINAL WPE 2,5	
040	353031-0203		4	END SUPPORT, WEW 35/2	
050	353032-0004		3	END PLATE WAP 2,5-10 BEIGE	
060	353033-0104		2	END PLATE, 10502.8	
070	353041-0106		1	HOLDER ZB35 K 5026.8	
090	359011-0807		4	MARKING PLATES 5-FW 1-50	
100	359011-0821		1	SET OF SIGNS 6-FW 1-50	
110	359011-0822		1	SET OF SIGNS 6-FW 51-100	
140	353034-0030		2	BRIDGE CONNECTOR WQV 2,5/10, 10544.6	
170	353022-0004		1	NEUTRAL TERMINAL, 10109.8	
F060	354000-0100		1	MINIATURE CIRCUIT BREAKER, FAZ-C10/1	
F061	354000-0100		1	MINIATURE CIRCUIT BREAKER, FAZ-C10/1	
F062	354000-0100		1	MINIATURE CIRCUIT BREAKER, FAZ-C10/1	
F066	354000-0060		1	MINIATURE CIRCUIT BREAKER, FAZ-C6/1	
F067	354000-0040		1	MINIATURE CIRCUIT BREAKER, FAZ-C4/1	

Pos	Part No	UN	Qty	Description	Page No

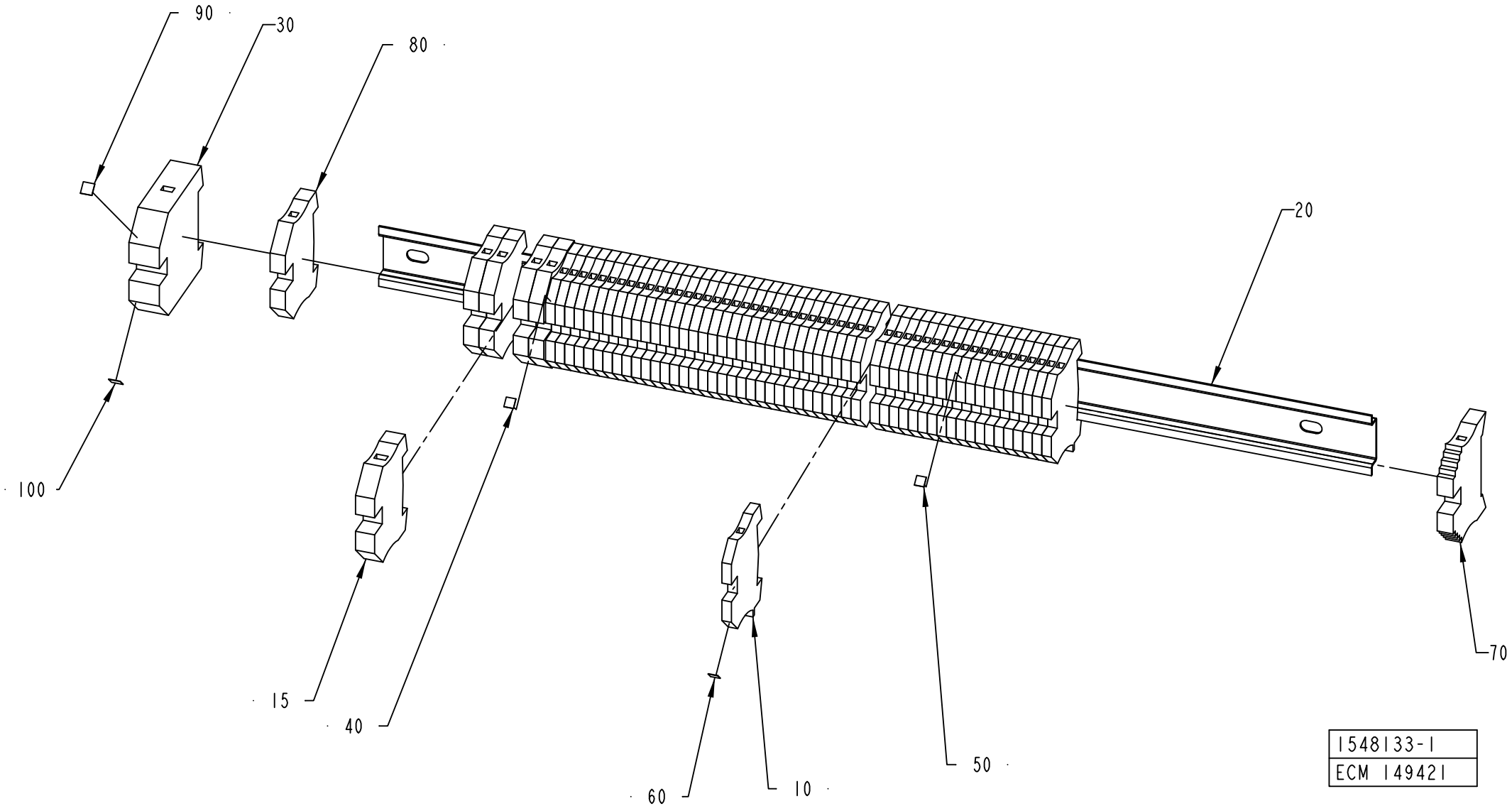
90
30
80
20
100
15
40
60
10
50
70
1548133-1
ECM 149421

ECM: 260068 - 20060412
Group number: 1548133-0100
Assembly Drawing: 1548133-1_1_AB

Pos	Part No	UN	Qty	Description	Page No
A3/FLEX					
040	359011-0807		1	MARKING PLATES 5-FW 1-50	
070	353031-0203		1	END SUPPORT, WEW 35/2	
090	359011-0821		1	SET OF SIGNS 6-FW 1-50	
Common Parts					
010	353024-0204		53	EARTH TERMINAL WPE 2,5	
015	353024-0207		1	EARTH TERMINAL, 1010.3	
020	2558934-0000		1	RAIL	
030	353024-0209		1	EARTH TERMINAL, 1010.5	
050	359011-0808		1	MARKING PLATES 5-FW 51-100	
060	359011-0809		1	MARKING PLATES 5-FW 101-150	
080	353024-0206		5	EARTH TERMINAL, 1010.2	
100	359011-0822		1	SET OF SIGNS 6-FW 51-100	

Pos	Part No	UN	Qty	Description	Page No

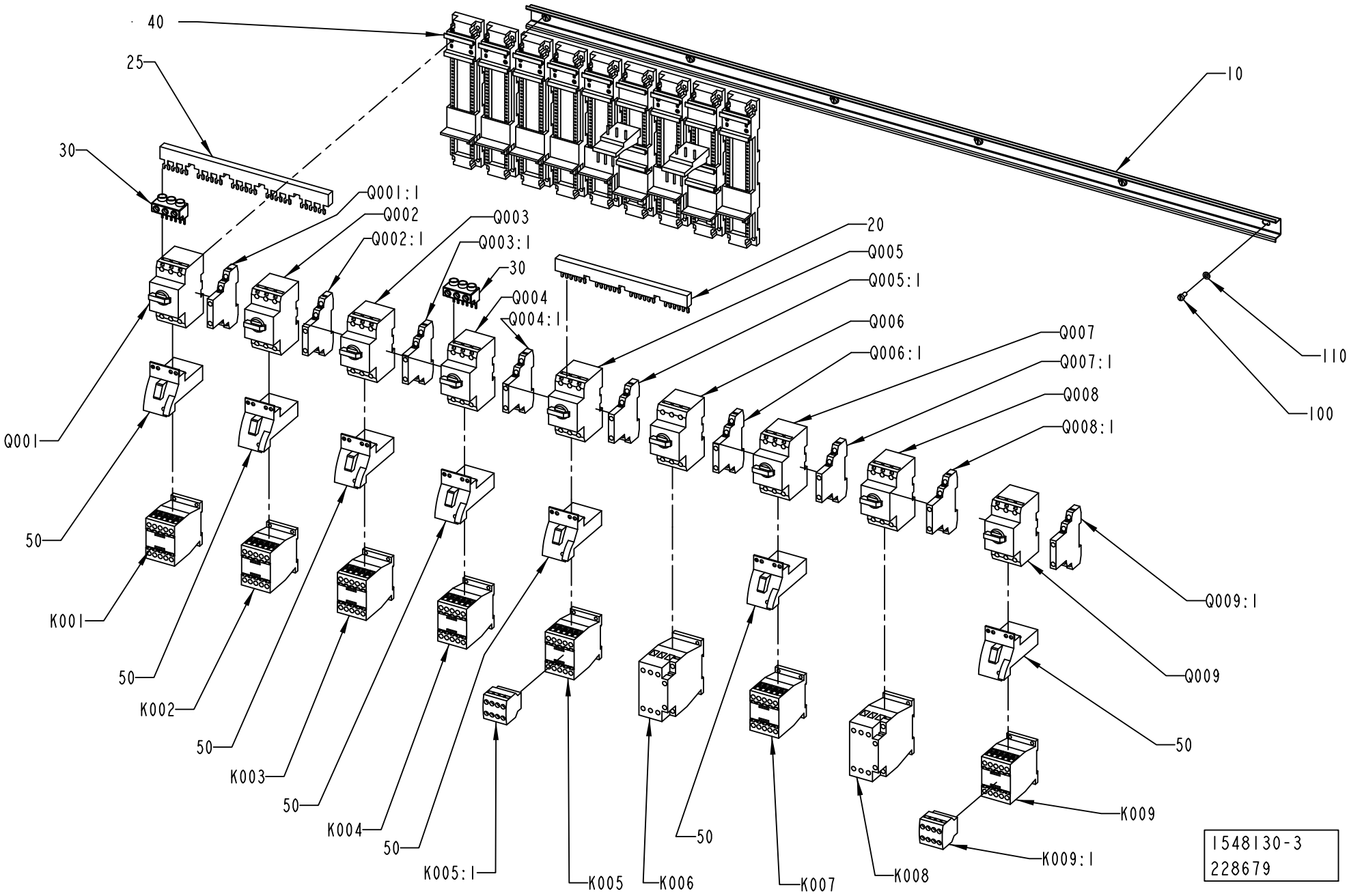
40
25
30
Q001:1
Q002
Q002:1
Q003
Q003:1
30
Q004
Q004:1
20
Q005
Q005:1
Q006
Q006:1
Q007
Q007:1
Q008
Q008:1
10
110
100
Q001
50
K001
50
K002
50
K003
50
K004
50
K005:1
K005
K006
50
K007
K008
Q009:1
Q009
50
K009
K009:1
1548130-3
228679

ECM: 260036 - 20060412
Group number: 1548130-0200
Assembly Drawing: 1548130-3_1_AA

Pos	Part No	UN	Qty	Description	Page No
A3/FLEX					
020	90259-0309		1	3 POLE BUSBAR, K&M B3.1/4	
025	90259-0311		1	3 POLE BUSBAR K&M B3.1/5	
030	90458-0577		2	CONNECTION TERMINAL BK 25/3-PKZ 0	
040	90459-6851		9	BASE UNIT, PKZM0-XDM32	
050	90459-6850		7	CONNECTION, PKZM0-XDM12	
K002	90459-5440		1	CONTACTOR 4KW 24VDC, DILM9-01	
K007	90459-5440		1	CONTACTOR 4KW 24VDC, DILM9-01	
K008	90459-5441		1	CONTACTOR 7,5KW 24VDC, DILM17-01	
K009	90459-5440		1	CONTACTOR 4KW 24VDC, DILM9-01	
K009:1	90459-6852		1	AUXILIARY CONTACT, DILA-XHI22	
Q002	90459-5326		1	OVERLOAD PROTECTION, PKZM0-4	
Q002:1	90259-0313		1	AUX. CONTACT K&M NHI21-PKZM0	
Q004	90459-5325		1	OVERLOAD PROTECTION, PKZM0-2,5	
Q007	90459-5324		1	OVERLOAD PROTECTION, PKZM0-1,6	
Q007:1	90259-0313		1	AUX. CONTACT K&M NHI21-PKZM0	
Q008	90459-5328		1	OVERLOAD PROTECTION, PKZM0-10	
Q008:1	90259-0313		1	AUX. CONTACT K&M NHI21-PKZM0	
Q009	90459-5323		1	OVERLOAD PROTECTION, PKZM0-1	
Q009:1	90259-0313		1	AUX. CONTACT K&M NHI21-PKZM0	
Common Parts					
010	2777370-0000		1	RAIL	
100	312125-0325		6	SCREW ISO 1207 M5X10 A4	
110	315105-0146		6	WASHER BRB 5,3X10 RFR	
K001	90459-5440		1	CONTACTOR 4KW 24VDC, DILM9-01	
K003	90459-5440		1	CONTACTOR 4KW 24VDC, DILM9-01	
K004	90459-5440		1	CONTACTOR 4KW 24VDC, DILM9-01	
K005	90459-5440		1	CONTACTOR 4KW 24VDC, DILM9-01	
K005:1	90459-6852		1	AUXILIARY CONTACT, DILA-XHI22	
K006	90459-5441		1	CONTACTOR 7,5KW 24VDC, DILM17-01	
Q001	90459-5324		1	OVERLOAD PROTECTION, PKZM0-1,6	
Q001:1	90259-0313		1	AUX. CONTACT K&M NHI21-PKZM0	
Q003	90459-5325		1	OVERLOAD PROTECTION, PKZM0-2,5	
Q003:1	90259-0313		1	AUX. CONTACT K&M NHI21-PKZM0	
Q004:1	90259-0313		1	AUX. CONTACT K&M NHI21-PKZM0	
Q005	90459-5326		1	OVERLOAD PROTECTION, PKZM0-4	
Q005:1	90259-0313		1	AUX. CONTACT K&M NHI21-PKZM0	
Q006	90459-5330		1	OVERLOAD PROTECTION, PKZM0-16	
Q006:1	90259-0313		1	AUX. CONTACT K&M NHI21-PKZM0	

Pos	Part No	UN	Qty	Description	Page No

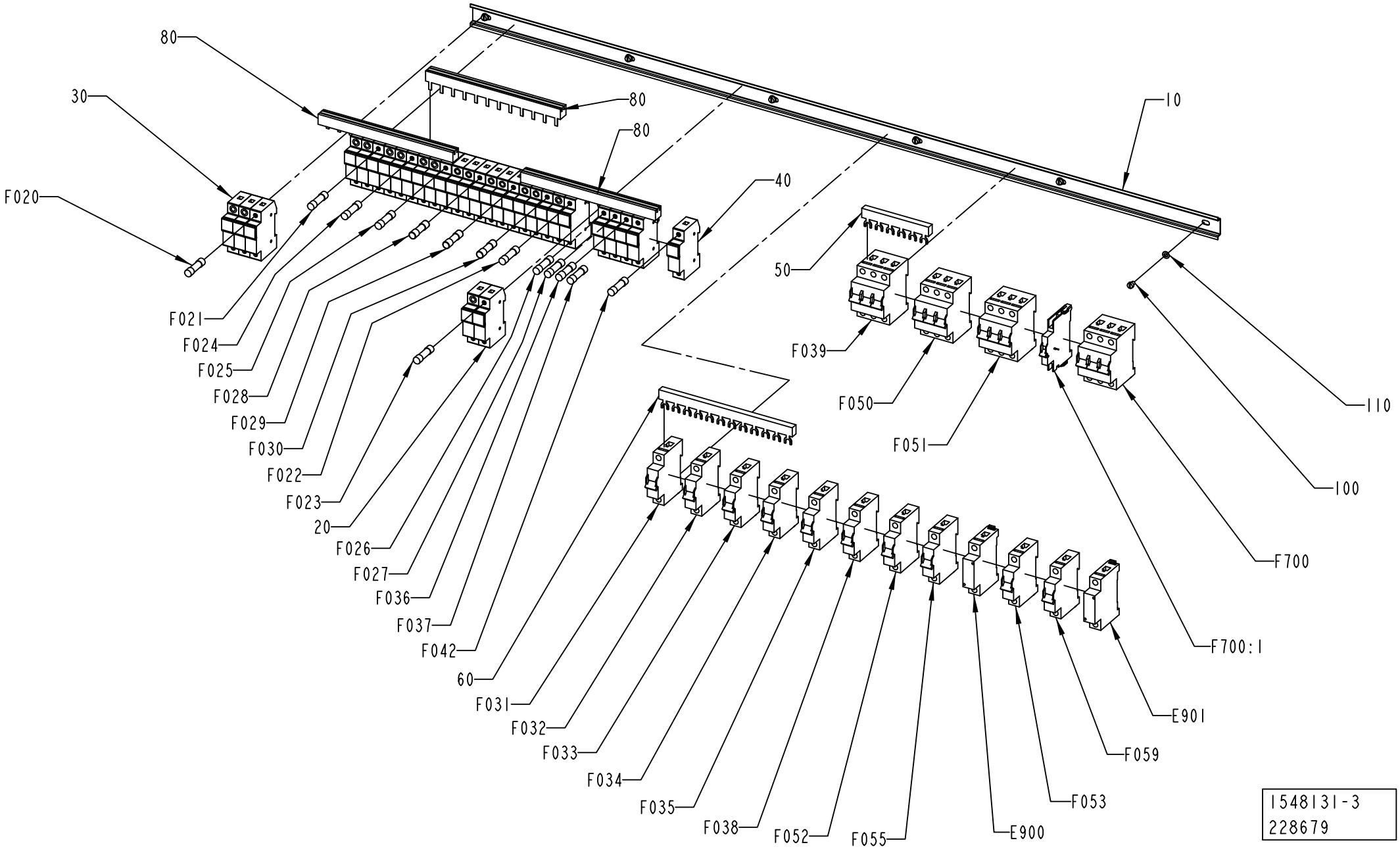
80
30
80
80
10
F020
40
50
F021
F024
F025
F028
F029
F030
F022
F023
20
F026
F027
F036
F037
F042
60
F031
F032
F033
F034
F035
F038
F052
F055
E900
F053
F059
E901
F700:1
F700
100
110
F050
F051
F039
1548131-3
228679

ECM: 260037 - 20060412
Group number: 1548131-0200
Assembly Drawing: 1548131-3_1_AA

This list covers pages from 8-90 to 8-93

Pos	Part No	UN	Qty	Description	Page No
A3/FLEX NOVISION SYS (See drawing on page: 8-90)					
020	90459-3800		7	FUSE HOLDER, MSC 10 3-POLE D250151	
030	90459-4553		2	FUSE HOLDER, MSC 10 2-POLE C250150	
040	90459-3799		5	FUSE HOLDER, MSC 10 1-POLE A250148	
050	90459-6854		1	COMMONING BUSBAR, 3-P 3-PH 6 100A	
060	90459-6855		1	COMMONING BUSBAR, 3-P 3-PH 12 100A	
080	90459-6857		3	BUSBAR, 3-P 12 100A	
E900	90459-6856		1	FEEDER BLOCK, FAZ/FIP-XVS-KL	
E901	90459-6856		1	FEEDER BLOCK, FAZ/FIP-XVS-KL	
F020	90233-0028		3	TUBE FUSE, 10A	
F021	90233-0028		3	TUBE FUSE, 10A	
F022	90233-0029		2	TUBE FUSE, 25A	
F023	90233-0029		2	TUBE FUSE, 25A	
F024	90233-0028		3	TUBE FUSE, 10A	
F025	90233-0029		3	TUBE FUSE, 25A	
F027	90233-0027		1	TUBE FUSE, 16A	
	90233-0305		*1*	*INDICATOR*	
F028	90459-1254		3	TUBE FUSE, 4A 500V	
F029	90459-1254		3	TUBE FUSE, 4A 500V	
F030	90459-1254		3	TUBE FUSE, 4A 500V	
F038	351416-0010		1	MINIATURE CIRC. BREAK., FAZ -D1 1-POLE	
F039	351418-0100		1	MINIATURE CIRC. BREAK., FAZ-D10/3 3-POLE	
F042	90233-0027		1	TUBE FUSE, 16A	
	90233-0305		*1*	*INDICATOR*	
A3/FLEX VISION SYS (See drawing on page: 8-92)					
020	90459-3800		7	FUSE HOLDER, MSC 10 3-POLE D250151	
030	90459-4553		2	FUSE HOLDER, MSC 10 2-POLE C250150	
040	90459-3799		5	FUSE HOLDER, MSC 10 1-POLE A250148	
050	90459-6854		1	COMMONING BUSBAR, 3-P 3-PH 6 100A	
060	90459-6855		1	COMMONING BUSBAR, 3-P 3-PH 12 100A	
080	90459-6857		3	BUSBAR, 3-P 12 100A	
E900	90459-6856		1	FEEDER BLOCK, FAZ/FIP-XVS-KL	
F020	90233-0028		3	TUBE FUSE, 10A	
F021	90233-0028		3	TUBE FUSE, 10A	
F022	90233-0029		2	TUBE FUSE, 25A	
F023	90233-0029		2	TUBE FUSE, 25A	
F024	90233-0028		3	TUBE FUSE, 10A	
F025	90233-0029		3	TUBE FUSE, 25A	
F027	90233-0027		1	TUBE FUSE, 16A	
	90233-0305		*1*	*INDICATOR*	
F028	90459-1254		3	TUBE FUSE, 4A 500V	
F029	90459-1254		3	TUBE FUSE, 4A 500V	
F030	90459-1254		3	TUBE FUSE, 4A 500V	
F038	351416-0010		1	MINIATURE CIRC. BREAK., FAZ -D1 1-POLE	
F039	351418-0100		1	MINIATURE CIRC. BREAK., FAZ-D10/3 3-POLE	
F042	90233-0027		1	TUBE FUSE, 16A	
	90233-0305		*1*	*INDICATOR*	
F070	354000-0005		1	MINIATURE CIRCUIT BREAKER, FAZ-C0,5/1	
Common Parts					
010	2777371-0000		1	RAIL	
100	312121-0321		6	SCREW ISO 1207 M5X6 4.8 - 5.8 Z.PL.	
110	315101-0146		6	WASHER PLAIN, BRB, 5,3/10 H=1	
F026	90233-0027		1	TUBE FUSE, 16A	
	90233-0305		*1*	*INDICATOR*	
F031	351416-0100		1	MINIATURE CIRC. BREAK., FAZ -D10 1-POLE	
F032	351416-0100		1	MINIATURE CIRC. BREAK., FAZ -D10 1-POLE	
F033	351416-0100		1	MINIATURE CIRC. BREAK., FAZ -D10 1-POLE	
F034	351416-0160		1	MINIATURE CIRC. BREAK., FAZ -D16 1-POLE	
F035	351416-0160		1	MINIATURE CIRC. BREAK., FAZ -D16 1-POLE	
F036	90459-5687		1	FUSE 1 A 250 VAC	
F037	90233-0062		1	TUBE FUSE, 4A 600V	
F050	351418-0060		1	MINIATURE CIRC. BREAK., FAZ-D6/3 3-POLE	
F051	351418-0400		1	MINIATURE CIRC. BREAK.,FAZ-D40/3 3-POLE	
F052	351416-0060		1	MINIATURE CIRC. BREAK., FAZ -D6 1-POLE	
F053	354000-0100		1	MINIATURE CIRCUIT BREAKER, FAZ-C10/1	
F055	351416-0020		1	MINIATURE CIRC. BREAK., FAZ -D2 1-POLE	
F059	351416-0060		1	MINIATURE CIRC. BREAK., FAZ -D6 1-POLE	
F700	351418-0250		1	MINIATURE CIRC. BREAK.,FAZ-D25/3 3-POLE	
F700:1	90459-5813		1	AUXILARY CONTACT, FAZ-XHI11	

Machine Type | Group Description | Used-In | Group Number | Page No

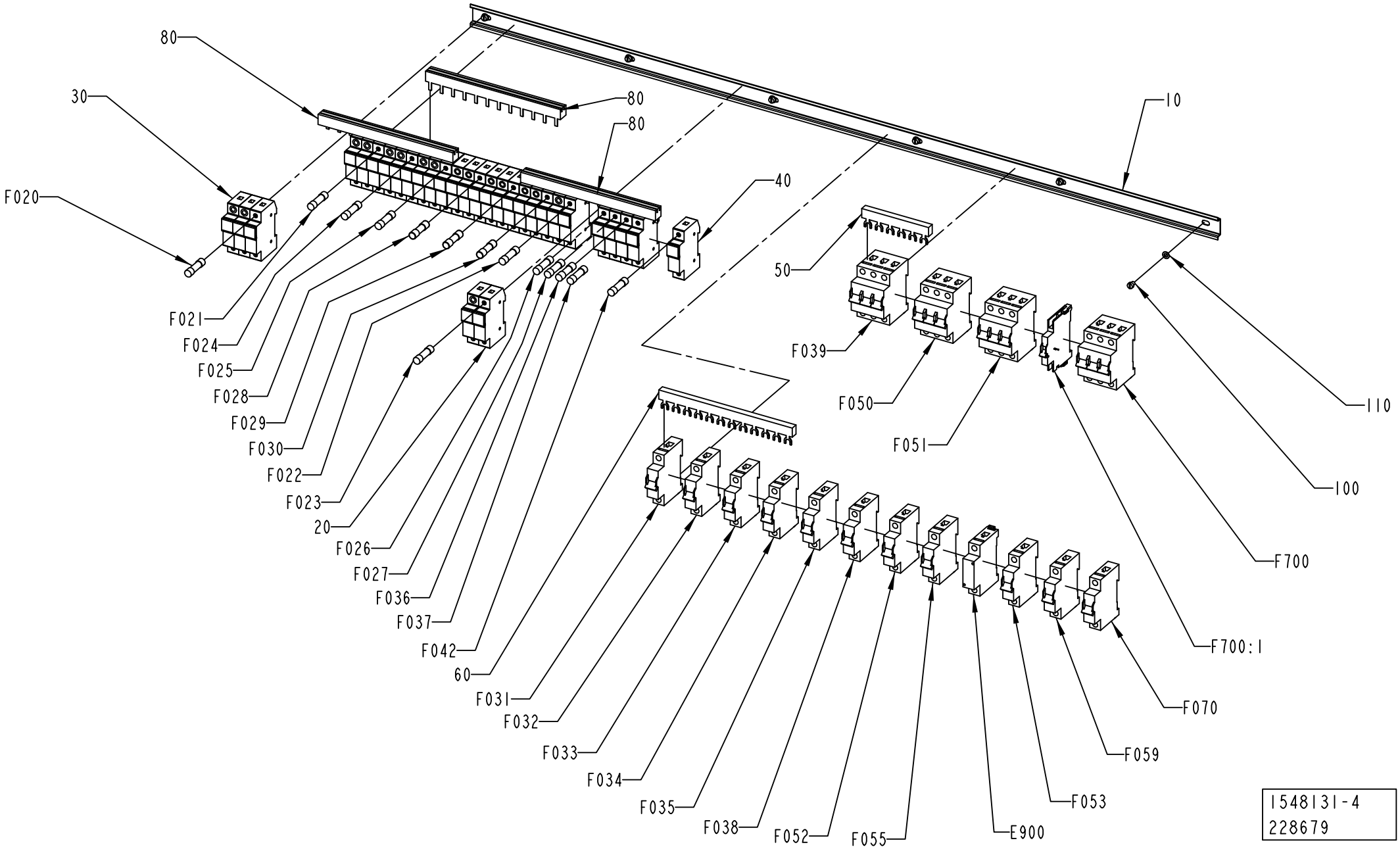
80
30
80
80
10
F020
40
50
F021
F024
F025
F028
F029
F030
F022
F023
20
F026
F027
F036
F037
F042
60
F031
F032
F033
F034
F035
F038
F052
F055
E900
F053
F059
F070
F700:1
F700
100
110
F039
F050
F051
1548131-4
228679

ECM: 260037 - 20060412
Group number: 1548131-0200
Assembly Drawing: 1548131-4_1_AA

This list covers pages from 8-90 to 8-93

Pos	Part No	UN	Qty	Description	Page No
A3/FLEX NOVISION SYS (See drawing on page: 8-90)					
020	90459-3800		7	FUSE HOLDER, MSC 10 3-POLE D250151	
030	90459-4553		2	FUSE HOLDER, MSC 10 2-POLE C250150	
040	90459-3799		5	FUSE HOLDER, MSC 10 1-POLE A250148	
050	90459-6854		1	COMMONING BUSBAR, 3-P 3-PH 6 100A	
060	90459-6855		1	COMMONING BUSBAR, 3-P 3-PH 12 100A	
080	90459-6857		3	BUSBAR, 3-P 12 100A	
E900	90459-6856		1	FEEDER BLOCK, FAZ/FIP-XVS-KL	
E901	90459-6856		1	FEEDER BLOCK, FAZ/FIP-XVS-KL	
F020	90233-0028		3	TUBE FUSE, 10A	
F021	90233-0028		3	TUBE FUSE, 10A	
F022	90233-0029		2	TUBE FUSE, 25A	
F023	90233-0029		2	TUBE FUSE, 25A	
F024	90233-0028		3	TUBE FUSE, 10A	
F025	90233-0029		3	TUBE FUSE, 25A	
F027	90233-0027		1	TUBE FUSE, 16A	
	90233-0305		*1*	*INDICATOR*	
F028	90459-1254		3	TUBE FUSE, 4A 500V	
F029	90459-1254		3	TUBE FUSE, 4A 500V	
F030	90459-1254		3	TUBE FUSE, 4A 500V	
F038	351416-0010		1	MINIATURE CIRC. BREAK., FAZ -D1 1-POLE	
F039	351418-0100		1	MINIATURE CIRC. BREAK., FAZ-D10/3 3-POLE	
F042	90233-0027		1	TUBE FUSE, 16A	
	90233-0305		*1*	*INDICATOR*	
A3/FLEX VISION SYS (See drawing on page: 8-92)					
020	90459-3800		7	FUSE HOLDER, MSC 10 3-POLE D250151	
030	90459-4553		2	FUSE HOLDER, MSC 10 2-POLE C250150	
040	90459-3799		5	FUSE HOLDER, MSC 10 1-POLE A250148	
050	90459-6854		1	COMMONING BUSBAR, 3-P 3-PH 6 100A	
060	90459-6855		1	COMMONING BUSBAR, 3-P 3-PH 12 100A	
080	90459-6857		3	BUSBAR, 3-P 12 100A	
E900	90459-6856		1	FEEDER BLOCK, FAZ/FIP-XVS-KL	
F020	90233-0028		3	TUBE FUSE, 10A	
F021	90233-0028		3	TUBE FUSE, 10A	
F022	90233-0029		2	TUBE FUSE, 25A	
F023	90233-0029		2	TUBE FUSE, 25A	
F024	90233-0028		3	TUBE FUSE, 10A	
F025	90233-0029		3	TUBE FUSE, 25A	
F027	90233-0027		1	TUBE FUSE, 16A	
	90233-0305		*1*	*INDICATOR*	
F028	90459-1254		3	TUBE FUSE, 4A 500V	
F029	90459-1254		3	TUBE FUSE, 4A 500V	
F030	90459-1254		3	TUBE FUSE, 4A 500V	
F038	351416-0010		1	MINIATURE CIRC. BREAK., FAZ -D1 1-POLE	
F039	351418-0100		1	MINIATURE CIRC. BREAK., FAZ-D10/3 3-POLE	
F042	90233-0027		1	TUBE FUSE, 16A	
	90233-0305		*1*	*INDICATOR*	
F070	354000-0005		1	MINIATURE CIRCUIT BREAKER, FAZ-C0,5/1	
Common Parts					
010	2777371-0000		1	RAIL	
100	312121-0321		6	SCREW ISO 1207 M5X6 4.8 - 5.8 Z.PL.	
110	315101-0146		6	WASHER PLAIN, BRB, 5,3/10 H=1	
F026	90233-0027		1	TUBE FUSE, 16A	
	90233-0305		*1*	*INDICATOR*	
F031	351416-0100		1	MINIATURE CIRC. BREAK., FAZ -D10 1-POLE	
F032	351416-0100		1	MINIATURE CIRC. BREAK., FAZ -D10 1-POLE	
F033	351416-0100		1	MINIATURE CIRC. BREAK., FAZ -D10 1-POLE	
F034	351416-0160		1	MINIATURE CIRC. BREAK., FAZ -D16 1-POLE	
F035	351416-0160		1	MINIATURE CIRC. BREAK., FAZ -D16 1-POLE	
F036	90459-5687		1	FUSE 1 A 250 VAC	
F037	90233-0062		1	TUBE FUSE, 4A 600V	
F050	351418-0060		1	MINIATURE CIRC. BREAK., FAZ-D6/3 3-POLE	
F051	351418-0400		1	MINIATURE CIRC. BREAK.,FAZ-D40/3 3-POLE	
F052	351416-0060		1	MINIATURE CIRC. BREAK., FAZ -D6 1-POLE	
F053	354000-0100		1	MINIATURE CIRCUIT BREAKER, FAZ-C10/1	
F055	351416-0020		1	MINIATURE CIRC. BREAK., FAZ -D2 1-POLE	
F059	351416-0060		1	MINIATURE CIRC. BREAK., FAZ -D6 1-POLE	
F700	351418-0250		1	MINIATURE CIRC. BREAK.,FAZ-D25/3 3-POLE	
F700:1	90459-5813		1	AUXILARY CONTACT, FAZ-XHI11	

Machine Type | Group Description | Used-In | Group Number | Page No

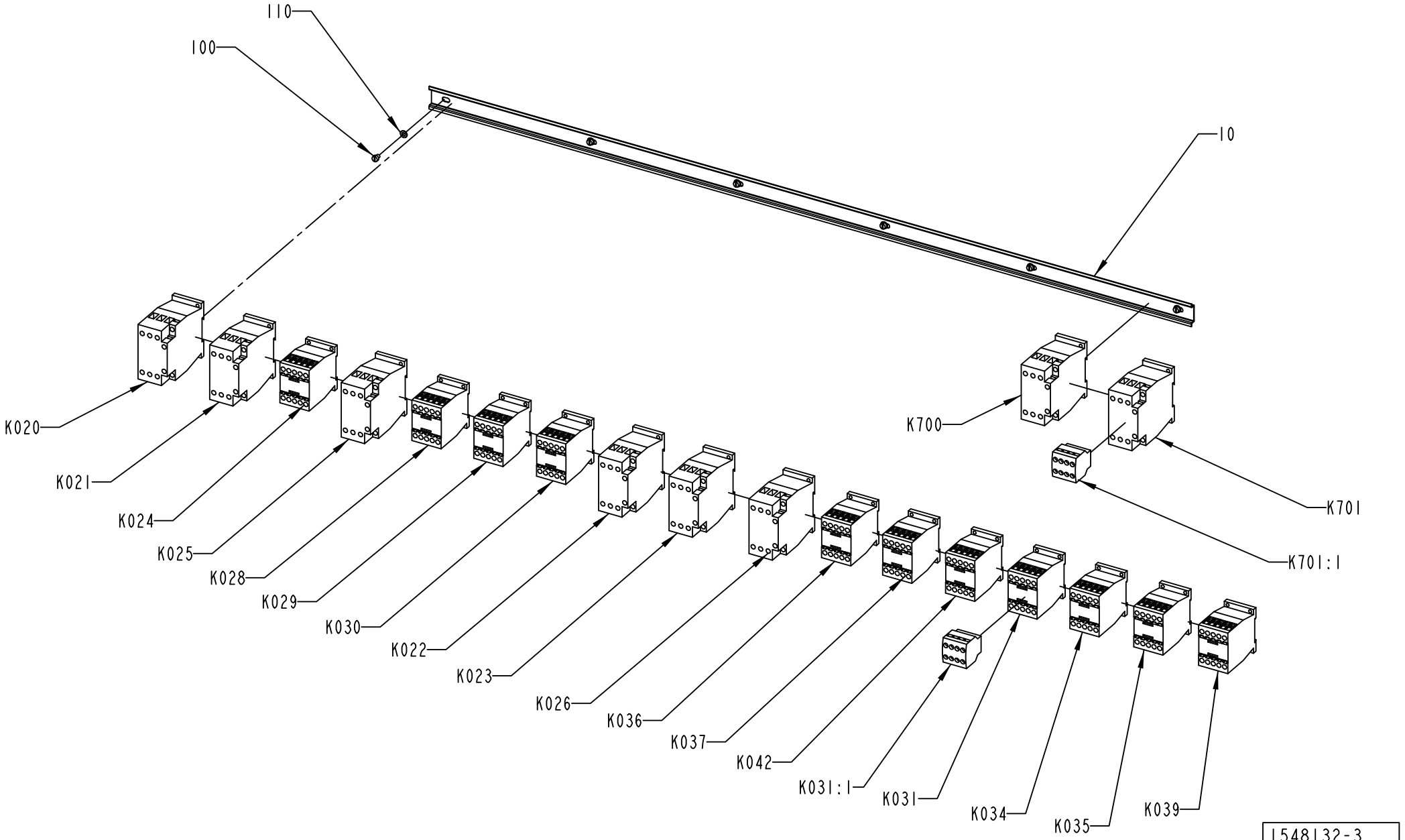

1548132-3
228679

ECM: 260038 - 20060412
Group number: 1548132-0200
Assembly Drawing: 1548132-3_1_AA

Pos	Part No	UN	Qty	Description	Page No
A3/FLEX					
K020	90459-5441		1	CONTACTOR 7,5KW 24VDC, DILM17-01	
K021	90459-5441		1	CONTACTOR 7,5KW 24VDC, DILM17-01	
K022	90459-5441		1	CONTACTOR 7,5KW 24VDC, DILM17-01	
K023	90459-5441		1	CONTACTOR 7,5KW 24VDC, DILM17-01	
K024	90459-5440		1	CONTACTOR 4KW 24VDC, DILM9-01	
K025	90459-5441		1	CONTACTOR 7,5KW 24VDC, DILM17-01	
K026	90459-5441		1	CONTACTOR 7,5KW 24VDC, DILM17-01	
K028	90459-5440		1	CONTACTOR 4KW 24VDC, DILM9-01	
K029	90459-5440		1	CONTACTOR 4KW 24VDC, DILM9-01	
K030	90459-5440		1	CONTACTOR 4KW 24VDC, DILM9-01	
K031:1	90459-6852		1	AUXILIARY CONTACT, DILA-XHI22	
K037	90459-5440		1	CONTACTOR 4KW 24VDC, DILM9-01	
K039	90459-5440		1	CONTACTOR 4KW 24VDC, DILM9-01	
K042	90459-5440		1	CONTACTOR 4KW 24VDC, DILM9-01	
K701:1	90459-6852		1	AUXILIARY CONTACT, DILA-XHI22	
Common Parts					
010	2777371-0000		1	RAIL	
100	312121-0321		6	SCREW ISO 1207 M5X6 4.8 - 5.8 Z.PL.	
110	315101-0146		6	WASHER PLAIN, BRB, 5,3/10 H=1	
K031	90459-5440		1	CONTACTOR 4KW 24VDC, DILM9-01	
K034	90459-5440		1	CONTACTOR 4KW 24VDC, DILM9-01	
K035	90459-5440		1	CONTACTOR 4KW 24VDC, DILM9-01	
K036	90459-5440		1	CONTACTOR 4KW 24VDC, DILM9-01	
K700	90459-5444		1	CONTACTOR 15KW 24VDC, DILM32-01	
K701	90459-5444		1	CONTACTOR 15KW 24VDC, DILM32-01	

Pos	Part No	UN	Qty	Description	Page No

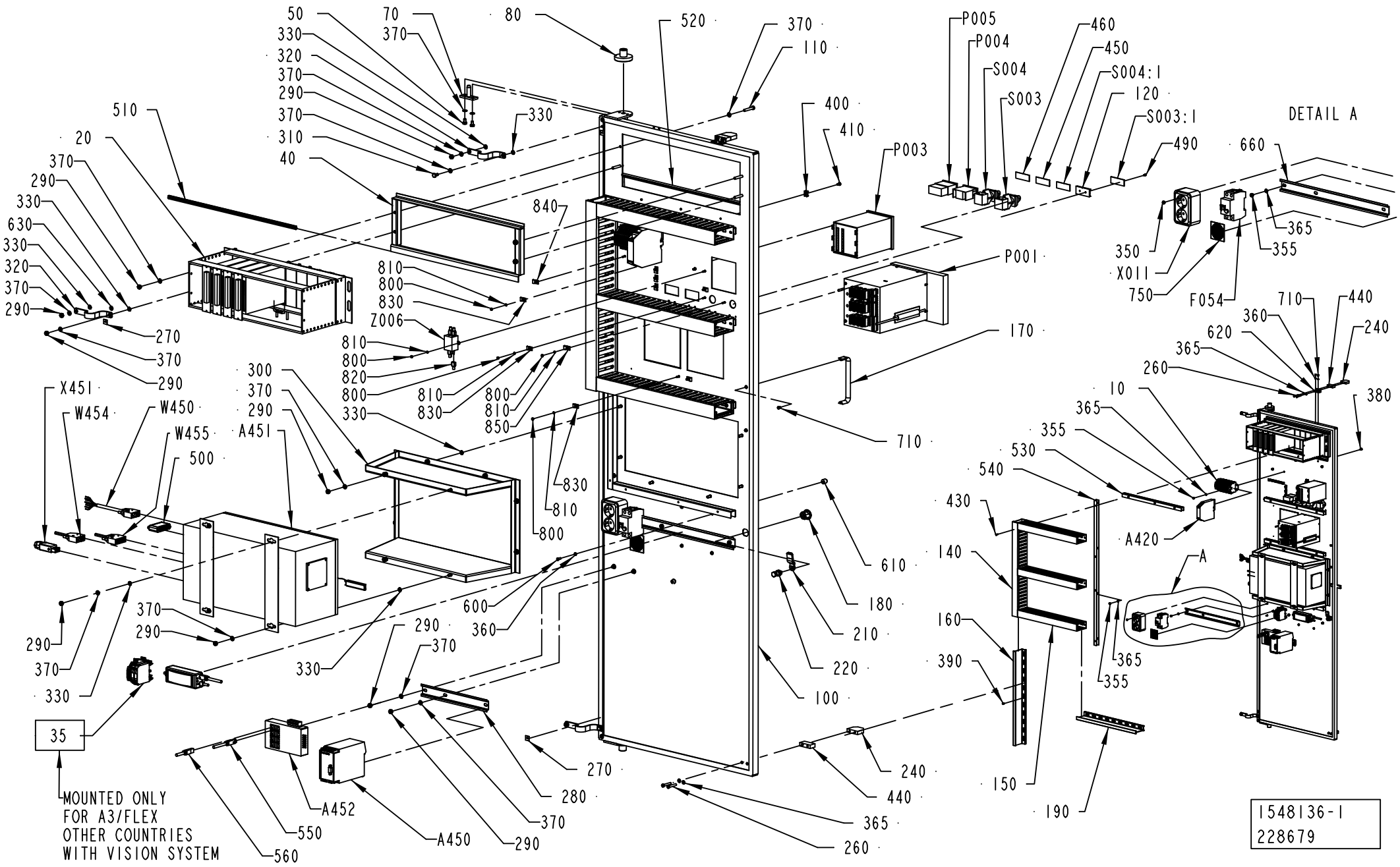
50
330
320
370
290
370
310
40
70
370
80
520
370
110
330
510
20
370
290
330
630
330
320
370
290
270
370
290
840
810
800
830
Z006
810
800
820
800
330
810
830
810
800
850
300
370
290
A451
X451
W454
W450
W455
500
400
410
P003
P005
P004
S004
S003
460
450
S004:1
120
S003:1
490
DETAIL A
660
365
355
350
X011
750
F054
P001
170
710
440
240
360
620
365
260
380
710
10
365
355
530
540
430
A420
A
140
160
390
365
355
150
190
610
180
210
220
100
600
360
290
370
330
370
290
330
290
370
330
35
MOUNTED ONLY
FOR A3/FLEX
OTHER COUNTRIES
WITH VISION SYSTEM
560
550
A452
A450
290
370
280
270
240
440
365
260
1548136-1
228679

ECM: 260070 - 20060412
Group number: 1548136-0100
Assembly Drawing: 1548136-1_1_AF

This list covers pages from 8-96 to 8-99

Pos	Part No	UN	Qty	Description	Page No
A3/FLEX OTHER COUNTRIES (See drawing on page: 8-96)					
35	2658743-0100		1	ELECTRICAL CONNECTION	**8-101**
355	312605-0314		21	HEXAGON NUT, M6M M5 A280	
360	315105-0136		10	WASHER BRB 4,3X9 RFR	
365	315105-0146		25	WASHER BRB 5,3X10 RFR	
370	315105-0153		35	WASHER BRB 6,4X12 RFR	
550	90220-0180		1	CABLE, ETHERNET RJ 45 CONNECT. 3 M	
560	90459-1621		1	CABLE, ETHERNET RJ 45 CONNECT. 1 M	
800	312605-0310		15	HEXAGON NUT, M6M M3 A280	
810	315105-0124		15	WASHER BRB 3,2X7 RFR	
830	90165-0003		11	PIPE CLIP FOR TUBE D=4 MM	
A420	90459-0183		1	TRANSMITTER , TRANS T02 PCP	
P001	90459-6436		1	RECORDER 12-CHANNEL, LOGOSCREEN CF	
P003	90459-5187		1	CONDUCTIVITY TRANSMITTER CLM223-ID7105	
W153	90220-0183	MM	4500	SCR. CABLE 2X0,34MM2	
A3/FLEX USA (See drawing on page: 8-98)					
355	312605-0314		21	HEXAGON NUT, M6M M5 A280	
360	315105-0136		10	WASHER BRB 4,3X9 RFR	
365	315105-0146		25	WASHER BRB 5,3X10 RFR	
370	315105-0153		35	WASHER BRB 6,4X12 RFR	
550	90220-0180		1	CABLE, ETHERNET RJ 45 CONNECT. 3 M	
560	90459-1621		1	CABLE, ETHERNET RJ 45 CONNECT. 1 M	
800	312605-0310		15	HEXAGON NUT, M6M M3 A280	
810	315105-0124		15	WASHER BRB 3,2X7 RFR	
830	90165-0003		11	PIPE CLIP FOR TUBE D=4 MM	
A420	90459-0183		1	TRANSMITTER , TRANS T02 PCP	
P003	90459-5187		1	CONDUCTIVITY TRANSMITTER CLM223-ID7105	
P900	90332-0020		1	RECORDER, 6 CHANNELS 85-264VAC/DC	
	90332-0328		*1*	*RECORDER CASSETTE PAPER ROLL FOR 90332-2*	
	90332-0326		*1*	*DOWNLOADE INTRFACE FOR RECORDER 90332-20*	
	90332-0325		*1*	*PAPER FOR RECORDER 90332-20*	
	90332-0324		*1*	*INK WHEEL*	
P901	90332-0020		1	RECORDER, 6 CHANNELS 85-264VAC/DC	
	90332-0328		*1*	*RECORDER CASSETTE PAPER ROLL FOR 90332-2*	
	90332-0326		*1*	*DOWNLOADE INTRFACE FOR RECORDER 90332-20*	
	90332-0325		*1*	*PAPER FOR RECORDER 90332-20*	
	90332-0324		*1*	*INK WHEEL*	
W153	90220-0183	MM	4500	SCR. CABLE 2X0,34MM2	
Common Parts					
010	1532901-0100		1	PLINTH	**8-103**
020	1532906-0100		1	RACK	**8-105**
040	1038355-0000		1	FRAME	

Pos	Part No	UN	Qty	Description	Page No
050	312105-0364		4	SCREW M6S ISO 4017 M6X10 A480	
070	971346-0000		2	GUIDE PIN	
080	495377-0000		2	BUSH	
100	2765461-0000		1	SWING FRAME	
110	312125-0376		4	SCREW ISO 1207 M6X35 A4	
120	359240-0100		4	SIGN HOLDER FOR 359240-0001	
140	2558939-0000		1	CABLE DUCT	
150	2558938-0000		3	CABLE DUCT	
160	2558941-0000		1	DIVIDER	
170	90017-0017		1	HANDLE, NO. 547-128	
180	90237-0319		1	LOCK HOUSING, 1000-U134	
190	2558940-0000		1	DIVIDER	
210	90237-0157		1	LOCK BOLT, 1000-230	
220	90237-0320		1	LOCK HOUSING, 1000-U136	
240	970215-0000		2	STOP BLOCK	
260	312125-0335		4	SCREW ISO 1207 M5X30 A4	
270	90194-0152		3	SIGN, EARTH	
280	2780072-0000		1	RAIL	
290	312605-0316		22	HEXAGON NUT, M6M M6 A280	
300	2601232-0000		1	FRAME	
310	312105-0366		2	SCREW M6S ISO 4017 M6X12 A480	
320	90135-0035		3	EARTH WIRE, L=250 MM 16 MM2	
330	90062-0022		18	LOCKING WASHER D=6,4/11	
350	312605-0312		2	HEXAGON NUT, M6M M4 A280	
380	312125-0325		2	SCREW ISO 1207 M5X10 A4	
390	90181-0064		6	LOCK ZP1 FOR CHANNEL T1	
400	352113-0205		3	ANCHOR PLATES FOR STRIPS, TYPE TM2S8-C10	
410	312132-0287		3	SCREW SLOT. PAN HEAD MSCS M4X8	
430	90287-0124		12	SCREW PAN HEAD MSCS M4X12 NYLON	
440	1548116-0000		2	SPACER	
450	359241-0201		1	SIGN: " HOUR METER"	
460	359241-0482		1	SIGN "PACKAGE COUNTER"	
490	311520-0320		8	RIVET, BLANK 2,4X6	
500	90458-1102		1	INTOUCH OEM 2000 V.7.0/7.1 HW KEY	
510	2530284-0000		1	GASKET	
520	2530285-0000		1	GASKET	
530	2563173-0000		4	PROFILE	
540	2563174-0000		1	PROFILE	
600	312125-0289		4	SCREW ISO 1207 M4X10 A4	
610	2601230-0000		4	BRACKET	
620	2606216-0000		1	BRACKET	
630	2608177-0000		3	SIGN	

Machine Type | Group Description | Used-In | Group Number | Page No

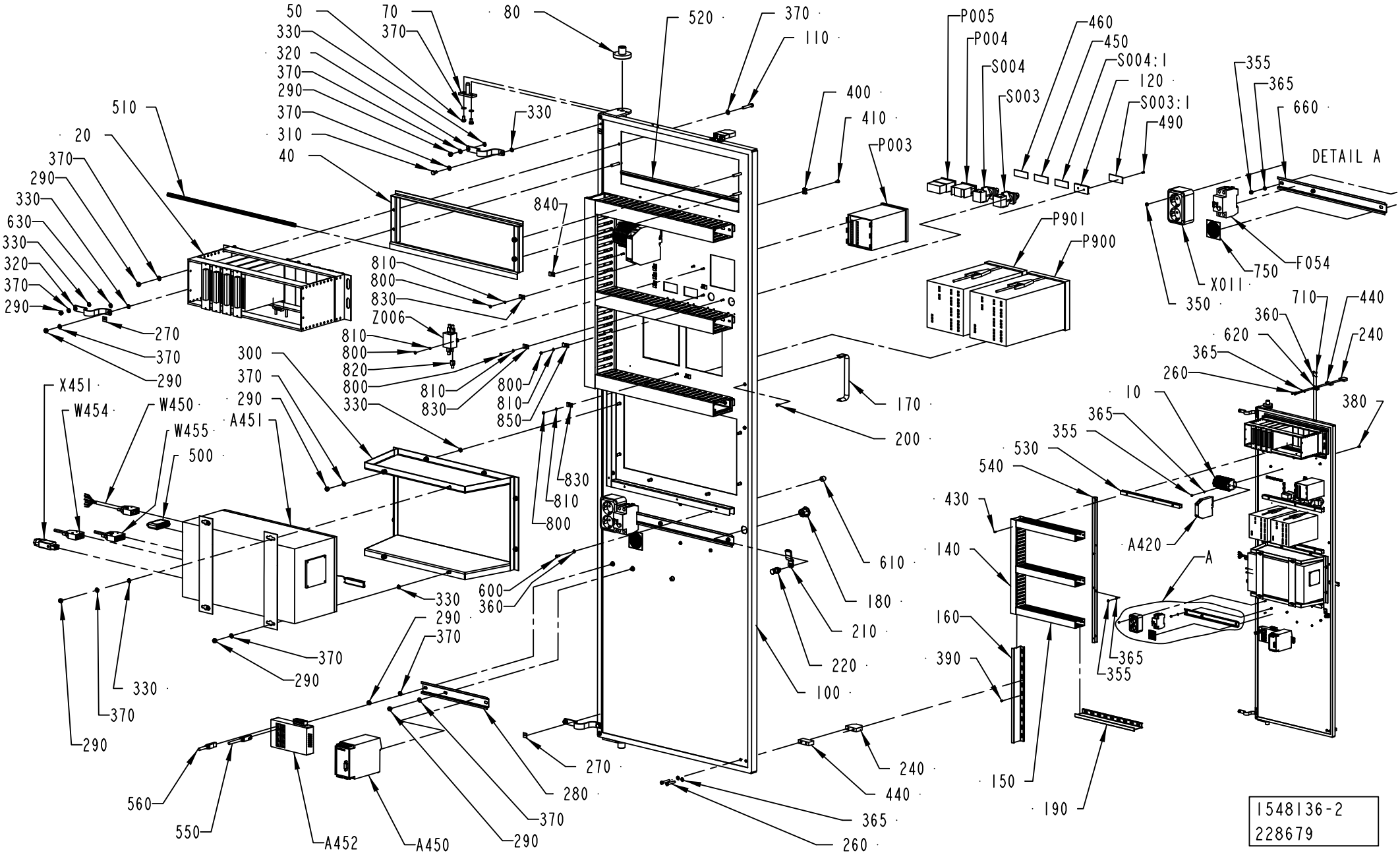
DETAIL A
A
1548136-2
228679

Pos	Part No	UN	Qty	Description	Page No
Common Parts (Cont'd)					
660	2675521-0000		1	RAIL	
710	312125-0285		4	SCREW ISO 1207 M4X6 A4	
750	90459-1738		1	MANDATORY ACTION SIGN ISO, READ MAINTENA	
820	90459-3352		5	FLAT PIN SOCKET, 6,3X0,8	
840	90165-0024		1	PIPE CLIP FOR TUBE D=5 MM	
850	90165-0057		1	PIPE CLIP FOR TUBE D=6 MM	
A450	90453-0002		1	MODEM MD-12 DC	
A451	2518145-0101		1	FLEXBOX TETRA BRIK	**8-107**
A452	90459-6858		1	ETHERNET SW, FL SWITCH SF 8TX FROM V 14	
F054	90459-5811		1	RESIDUAL CURRENT DEVICE, FI-25/2/003-A	
P004	90053-0031		1	HOUR COUNTER, B 609.10 10-50VDC	
P005	90053-0029		1	COUNTER, F524.800FA3C 24VDC	
S003	90111-0122		1	KEY SWITCH, 2 NO CONTACTS	
S003:1	359241-0133		1	SIGN: " SERVICE SWITCH"	
S004	90111-0124		1	KEY SWITCH, 1NO,1NC CONTACT	
S004:1	359241-0122		1	SIGN: " CLEANING STEAM BARRIER SPACE"	
W151	90220-0183	MM	4500	SCR. CABLE 2X0,34MM2	
W152	90220-0183	MM	4800	SCR. CABLE 2X0,34MM2	
W450	1254442-0000		1	CABLE SERIAL	
W454	2623591-0000		1	CABLE	
W455	2623590-0000		1	CABLE	
X011	90001-0033		1	WALL SOCKET OUTLET	
X451	90110-0028		1	CONTACT UNIT 4-POLEADAPTER	
Z006	90459-1359		1	FILTER, 1 A, 250 VAC	

Pos	Part No	UN	Qty	Description	Page No

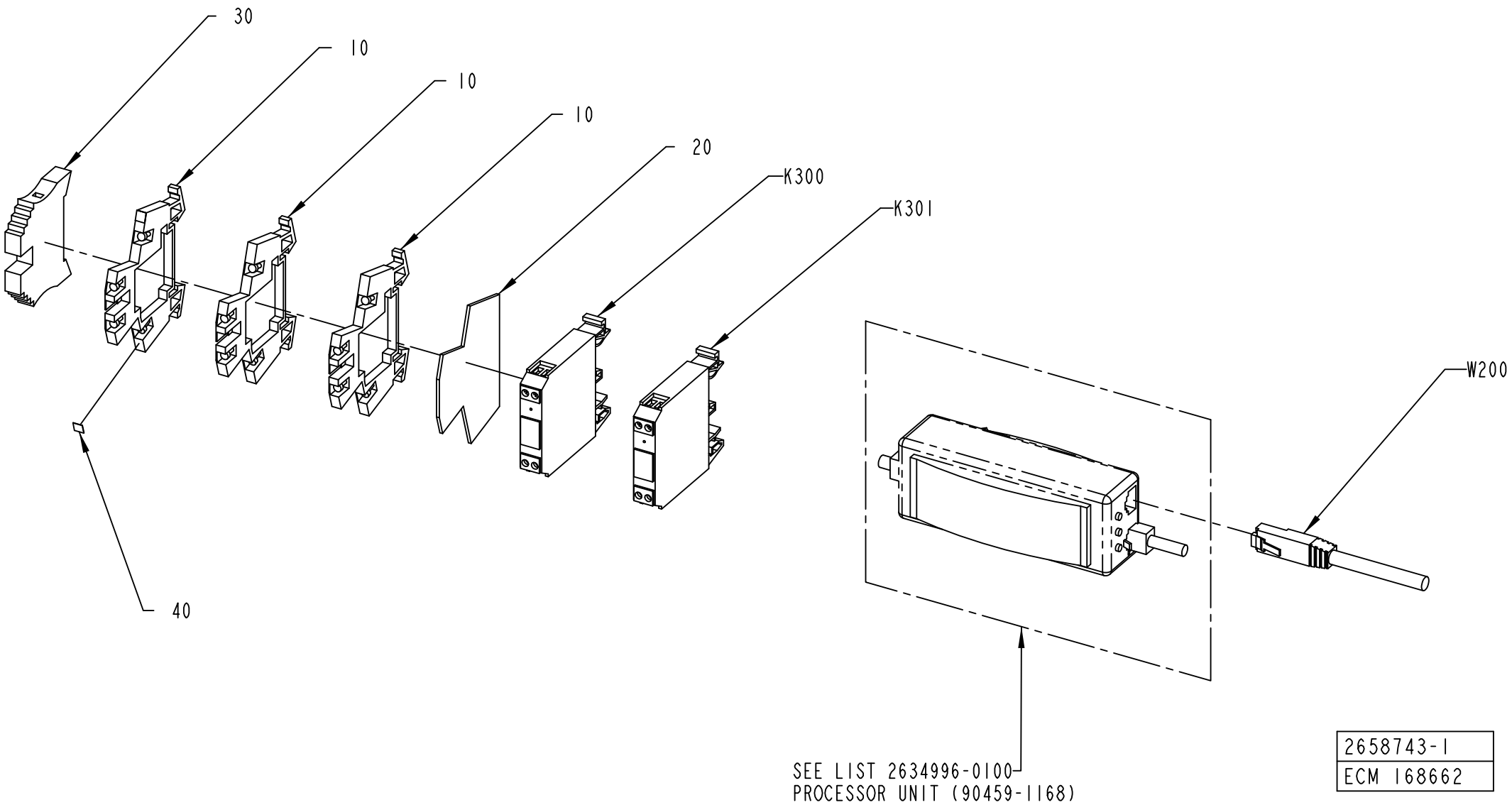
30
10
10
10
20
K300
K301
40
W200
SEE LIST 2634996-0100
PROCESSOR UNIT (90459-1168)
2658743-1
ECM 168662

ECM: 185596 - 20041104
Group number: 2658743-0100
Assembly Drawing: 2658743-1_1_AB

Pos	Part No	UN	Qty	Description	Page No
VISION SYSTEM					
010	90077-0113		3	FEED THROUGH TERMINAL, 10-00102150-1	
020	90077-0114		1	END PLATE, WAP/WDK 2,5	
030	353031-0203		1	END SUPPORT, WEW 35/2	
040	359011-0807		2	MARKING PLATES 5-FW 1-50	
K300	90119-0063		1	OPTO-RELAY, DC/DC AMMS-10-1/30VDC	
K301	90119-0063		1	OPTO-RELAY, DC/DC AMMS-10-1/30VDC	
W200	90459-1621		1	CABLE, ETHERNET RJ 45 CONNECT. 1 M	

Pos	Part No	UN	Qty	Description	Page No

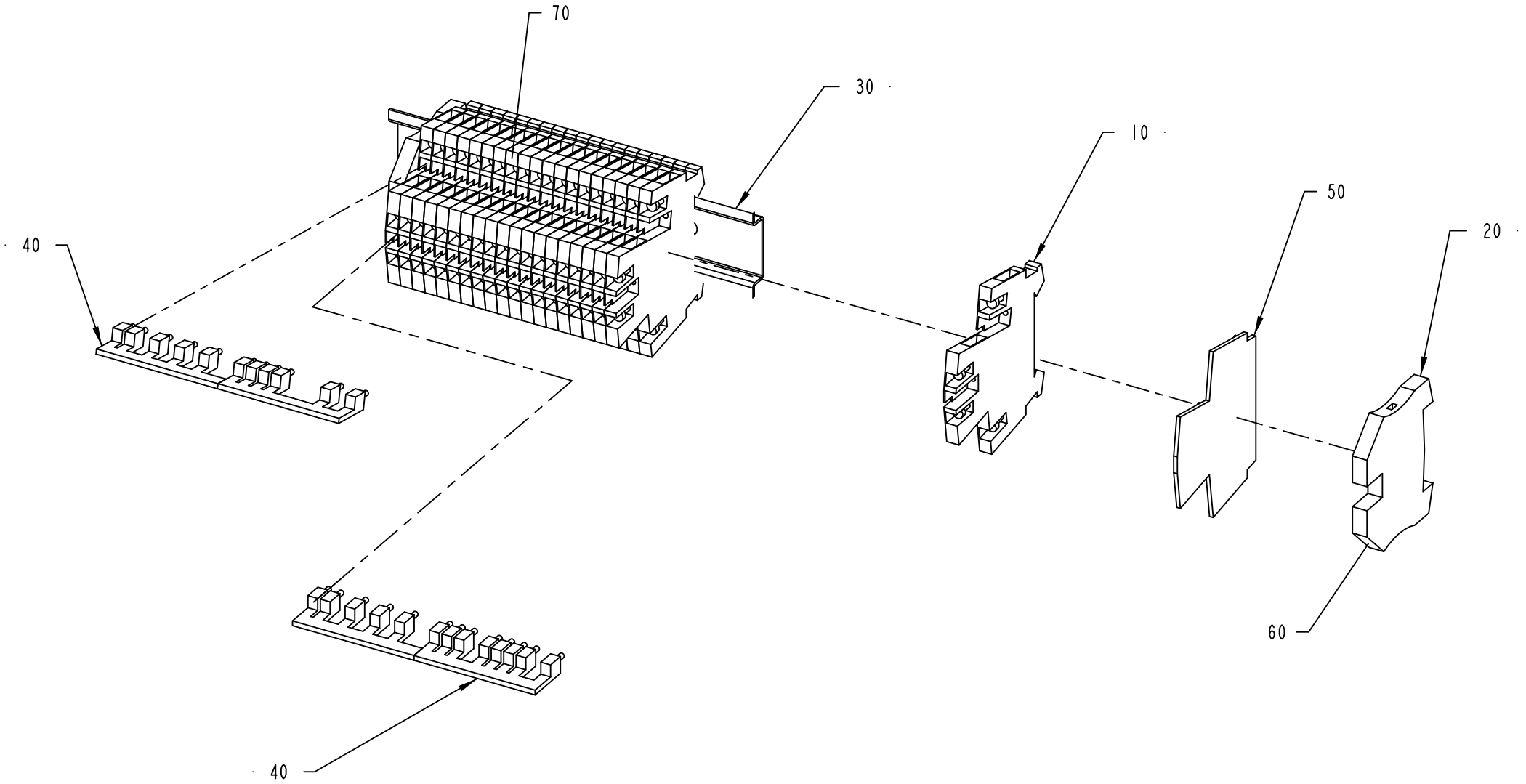

1532901-1
ECM 117324

ECM: 184921 - 20040928
Group number: 1532901-0100
Assembly Drawing: 1532901-1_1_AA

Pos	Part No	UN	Qty	Description	Page No
-					
010	353021-0120		20	FEED THROUGH TERMINAL, 10215.8	
020	353024-0205		2	EARTH TERMINAL, 1010.1	
030	2558937-0000		1	RAIL	
040	353034-0030		4	BRIDGE CONNECTOR WQV 2,5/10, 10544.6	
050	353032-0010		1	END PLATE WAP	
060	359011-0834		1	SET OF SIGNS 6-GW(EARTH)	
070	359011-0807		2	MARKING PLATES 5-FW 1-50	

Pos	Part No	UN	Qty	Description	Page No

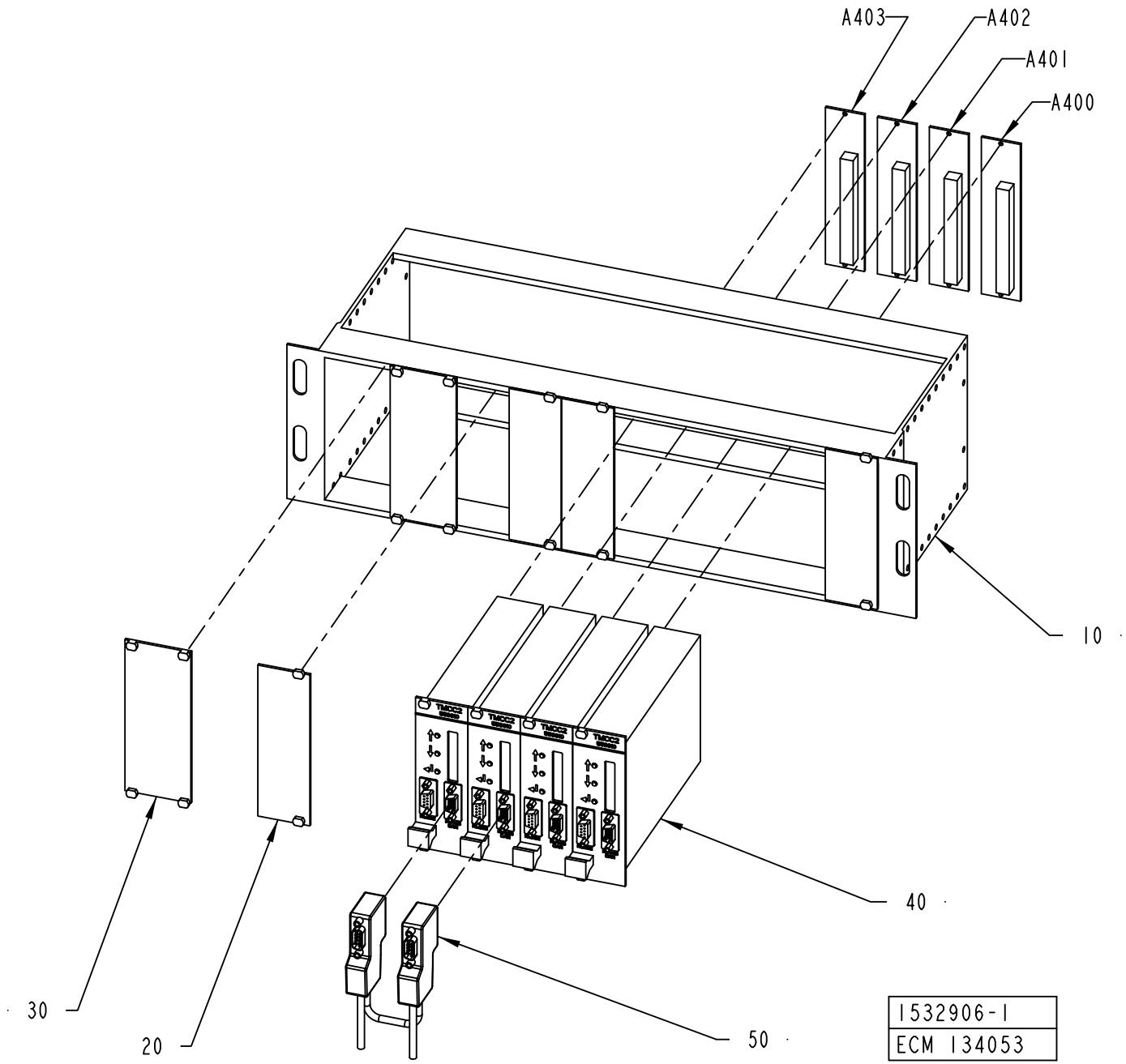
A403
A402
A401
A400
10
40
30
20
50
1532906-1
ECM 134053

ECM: 190890 - 20041104
Group number: 1532906-0100
Assembly Drawing: 1532906-1_1_AA

Pos	Part No	UN	Qty	Description	Page No
A3/FLEX					
020	68445-0104		4	FRONT PLATE 8 TE	
010 4	*543921-0004*		*1*	*COMPONENTS WITHOUT TP-NO*	
030	68445-0105		2	FRONT PLATE 10TE	
010 5	*543921-0005*		*1*	*COMPONENTS WITHOUT TP-NO*	
040	559810-0101		4	TMCC2 CONTROLLER	
010	*559809-0101*		*1*	*CIRCUIT BOARD*	
150	*559807-0000*		*1*	*PRINTED CIRCUIT BOARD*	
180	*559811-0101*		*1*	*CIRCUIT BOARD*	
130	*559808-0000*		*1*	*PRINTED CIRCUIT BOARD*	
020	*2524654-0000*		*1*	*PLATE*	
030	*2524660-0000*		*1*	*CASING*	
070	*2524662-0000*		*1*	*COOLING BLOCK*	
100	*2524658-0000*		*1*	*COVER*	
170	*2524659-0000*		*1*	*CABLE*	
050	2624552-0000		1	CABLE	
A400	68262-0101		1	BACKPLANE FRONT RACK 8TE	
100	*543371-0000*		*1*	*CIRCUIT BOARD 8TE*	
110	*551927-0001*		*1*	*COMPONENTS WITHOUT TP-NO*	
120	*551928-0000*		*1*	*TERMINAL LABELS 8TE*	
A401	68262-0101		1	BACKPLANE FRONT RACK 8TE	
100	*543371-0000*		*1*	*CIRCUIT BOARD 8TE*	
110	*551927-0001*		*1*	*COMPONENTS WITHOUT TP-NO*	
120	*551928-0000*		*1*	*TERMINAL LABELS 8TE*	
A402	68262-0101		1	BACKPLANE FRONT RACK 8TE	
100	*543371-0000*		*1*	*CIRCUIT BOARD 8TE*	
110	*551927-0001*		*1*	*COMPONENTS WITHOUT TP-NO*	
120	*551928-0000*		*1*	*TERMINAL LABELS 8TE*	
A403	68262-0101		1	BACKPLANE FRONT RACK 8TE	
100	*543371-0000*		*1*	*CIRCUIT BOARD 8TE*	
110	*551927-0001*		*1*	*COMPONENTS WITHOUT TP-NO*	
120	*551928-0000*		*1*	*TERMINAL LABELS 8TE*	
Common Parts					
010	67388-0102		1	RACK FRONTMOUNTED 84TE	
020 2	*542038-0002*		*1*	*COMPONENTS WITHOUT TP-NO*	

Pos	Part No	UN	Qty	Description	Page No

Machine Type | Group Description | Used-In | Group Number | Page No

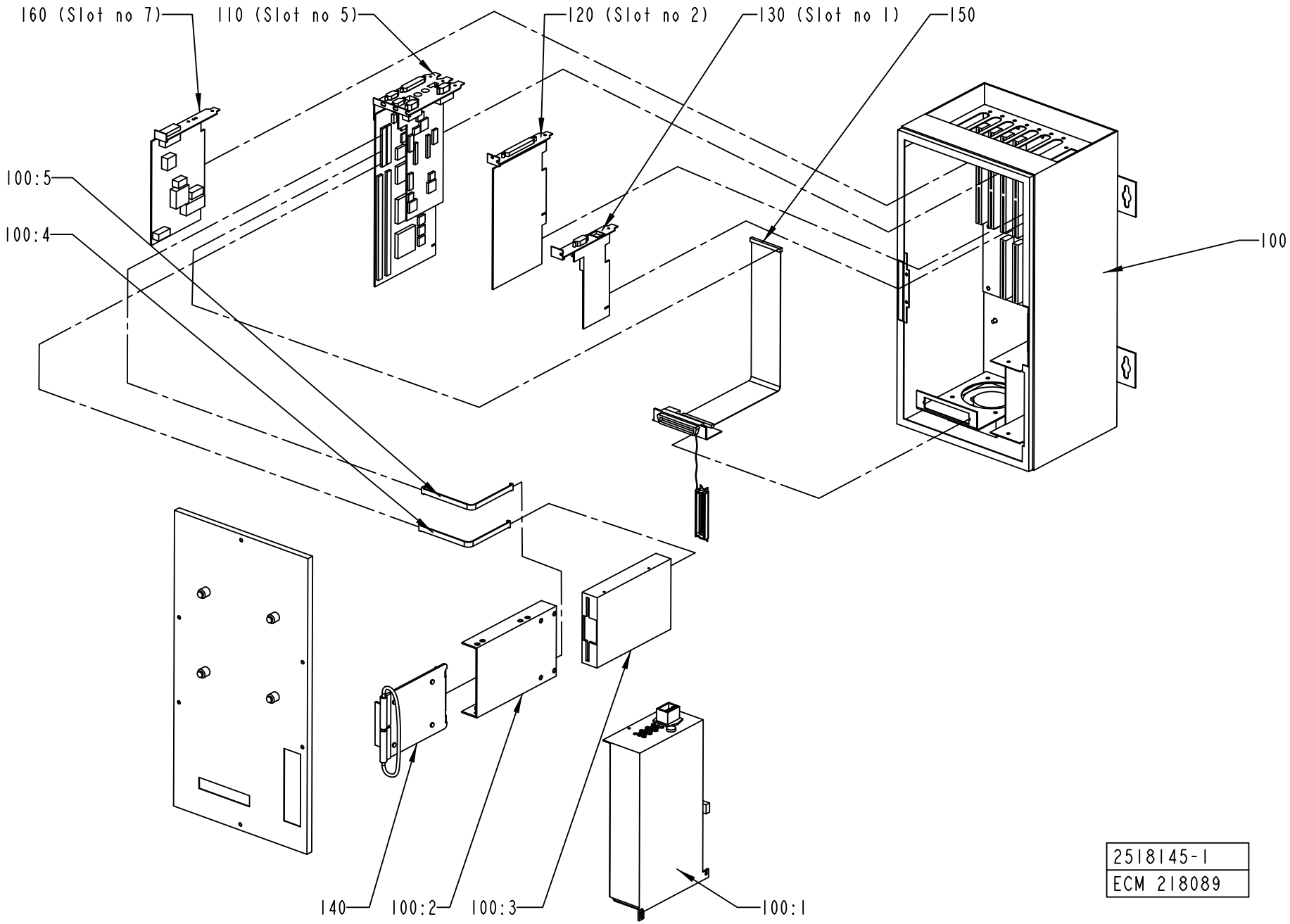
160 (Slot no 7)
110 (Slot no 5)
120 (Slot no 2)
130 (Slot no 1)
150
100:5
100:4
100
140
100:2
100:3
100:1
2518145-1
ECM 218089

ECM: 236016 - 20051006
Group number: 2518145-0101
Assembly Drawing: 2518145-1_1_AC

Pos	Part No	UN	Qty	Description	Page No
-					
100	90459-0275		1	PC ENCLOSURE FLEX BOX ISC E100008A	**8-109**
110	90459-0284		1	PROCESSOR BOARD CLIPS V, UO36418C	
120	90459-1352		1	PCI COMMUNICATION INTERFACE PCI-1612B-A	
130	90459-0261		1	ETHERNET NETWORK INTERFACE CARD 50101034	
140	90459-6472		1	HARD DISC 2,5" , 03589-000	
150	90459-0291		1	CABLE CD UNIT 50400002	

Pos	Part No	UN	Qty	Description	Page No

PC ENCLOSURE FLEX BOX ISC E100008A

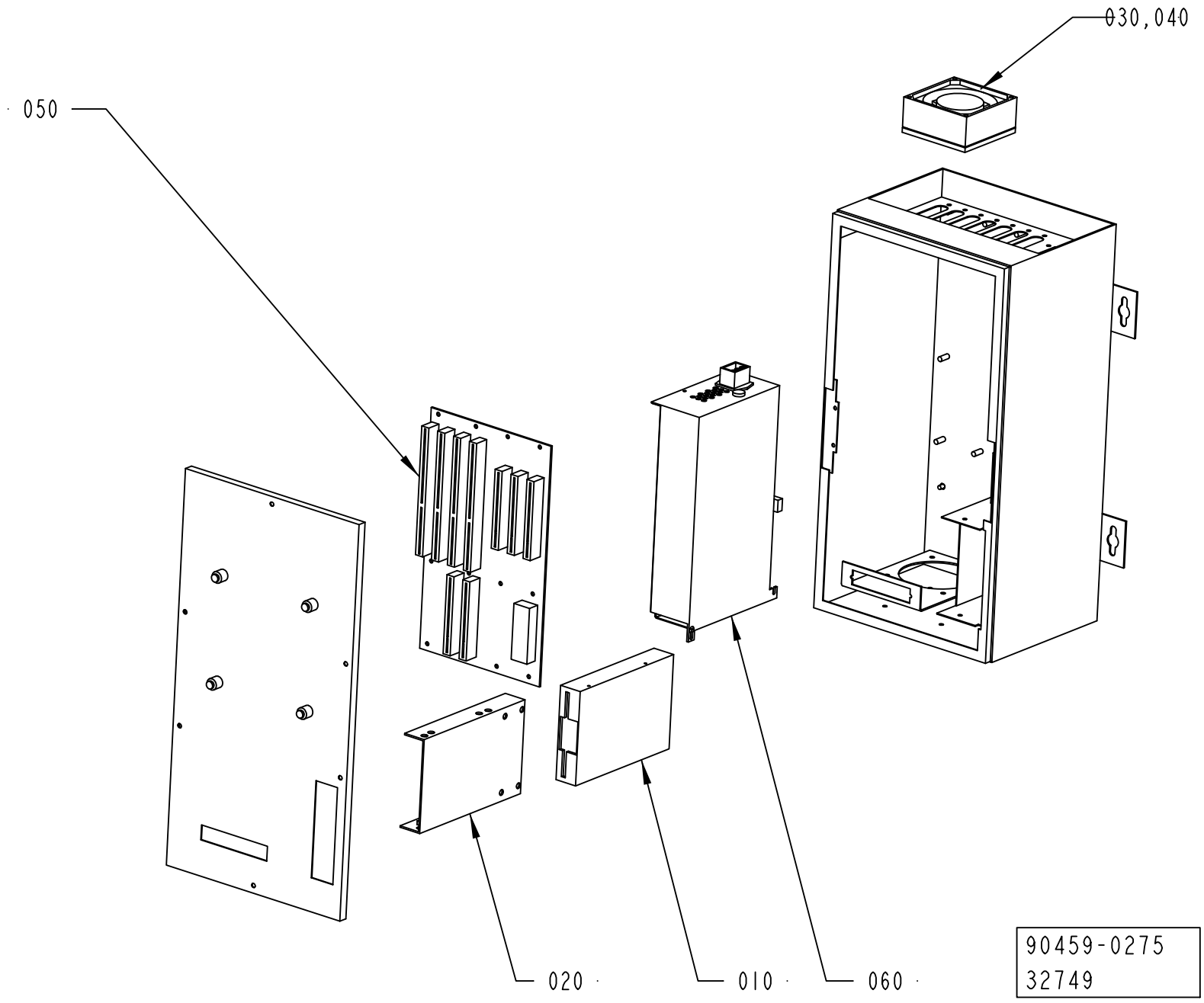

ECM: 190912 - 20041104
Group number: 90459-0275
Assembly Drawing: 90459-275_1_AB

Pos	Part No	UN	Qty	Description	Page No
-					
010	90041-0029		1	FLOPPY DISC UNIT FD-235HF 1,4MB	
020	90041-0091		1	PC 2,5" HD BAY, 3016-0028-013	
030	90264-0064		1	FAN / FL 12G308	
040	90264-0350		1	FILTER / 554141	
050	90459-0262		1	BACKPLANE CARD AR-MB7P	
060	90459-0283		1	POWER SUPPLY UNIT UO36422A	

Pos	Part No	UN	Qty	Description	Page No

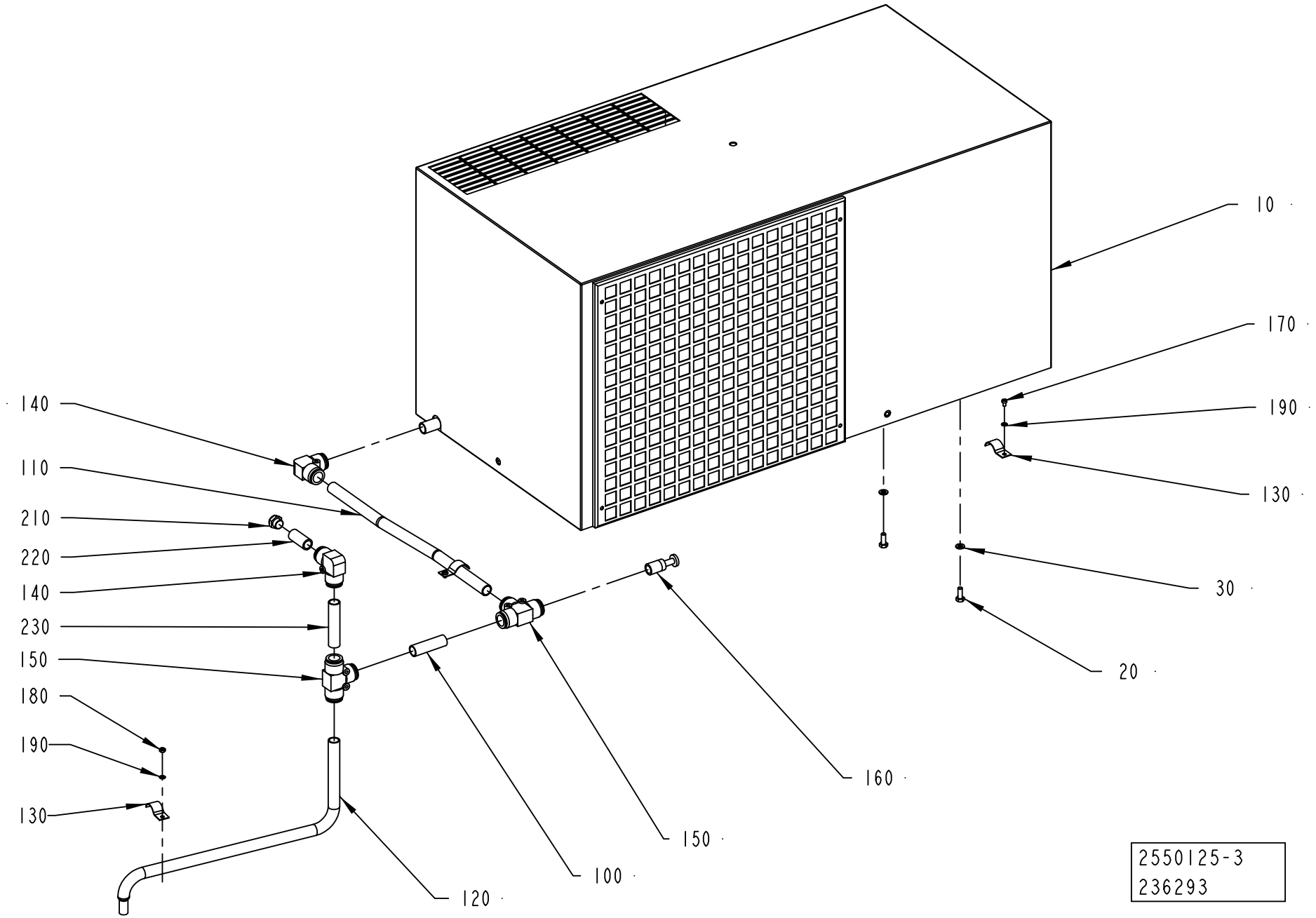
10
170
190
130
30
20
140
110
210
220
140
230
150
180
190
130
160
150
100
120
2550125-3
236293

ECM: 260073 - 20060412
Group number: 2550125-0100
Assembly Drawing: 2550125-3_1_AA

Pos	Part No	UN	Qty	Description	Page No
A3/FLEX					
100	2601580-0000		1	HOSE	
110	2601581-0000		1	HOSE	
120	2601582-0000		1	HOSE	
130	90074-0011		3	CABLE CLIPS, D=14 MM	
140	90459-2553		2	ELBOW PIPE JOINT 16 MM	
180	312605-0312		1	HEXAGON NUT, M6M M4 A280	
190	315105-0136		3	WASHER BRB 4,3X9 RFR	
Common Parts					
010	90459-0363		1	COOLING UNIT, KB40A0721.03	
	90459-0364		*1*	*FILTER KB20/30/40 POLYURETH. FILTER 2001*	
	90600-0670		*1*	*FAN, VBA0001508*	
	90600-0676		*1*	*GRID, DISA1880AA*	
020	312105-0368		6	SCREW M6S ISO 4017 M6X16 A480	
030	315105-0153		6	WASHER BRB 6,4X12 RFR	
150	90459-2555		2	T-CONNECTION 16MM	
160	90459-2557		1	BLIND PLUG 16 MM	
170	312125-0285		2	SCREW ISO 1207 M4X6 A4	
210	90257-0001		1	FILTER PLUG ART.NO.8145-00-140 TYPE F14	
220	2800104-0000		1	HOSE	
230	2800116-0000		1	HOSE	

Pos	Part No	UN	Qty	Description	Page No

This page is intentionally left blank.

ECM: 205009 - 20050131
Group number: 2576334-0100
Assembly Drawing:

Pos	Part No	UN	Qty	Description	Page No
-					
010	90453-0001		1	MODEM MA-12	
020	90041-0068		1	DATACABLE MODEM PC	
030	90220-0091	M	200	PAIR TWISTED CABLE 2X2X0,25MM2	
040	1190007-0402		1	PLMS RECEIVE	
050	82197-0103		1	UM DOCUMENT SERIAL COMUNICATION ONLY EN	
060	47937-0411		1	PLMS OFF-LINE PROGRAM	
0020	*2710271-0000*		*1*	*DOCUMENTATION DISKETTE*	
0030	*2710272-0000*		*1*	*LABELS, DISKETTE*	
0040	*2710273-0000*		*1*	*LABELS, CD*	
0050	*2710274-0000*		*1*	*SHORT FORM INSTRUCTIONS*	
0060	*47937-1411*		*1*	*SOFTWARE PLMS OFF-LINE*	
0070	*47937-2411*		*1*	*SOFTWARE 47937-1411 (PART 1)*	
0080	*47937-3411*		*1*	*SOFTWARE 47937-1411 (PART 2)*	
070	82351-0106		1	USER MANUAL PLMS OFF-LINE	

Pos	Part No	UN	Qty	Description	Page No

Machine Type | Group Description | Used-In | Group Number | Page No

Tetra Pak

SPC
Spare Parts Catalogue

This page is intentionally left blank.

ECM: 223568 - 20060701
Group number: 648561-0100
Assembly Drawing:

Pos	Part No	UN	Qty	Description	Page No
A3/FLEX DIMC/FLEX					
130	1558933-0000		1	FRAME	
140	90458-2138		2	SCREW M6S M12X120 A280	
150	312605-0322		4	HEXAGON NUT, M6M M12 A280	
160	315105-0178		4	WASHER BRB13X24RFR	
A3/FLEX NOPT, A3/FLEX NODIMC					
130	1558933-0000		1	FRAME	
140	90458-2138		2	SCREW M6S M12X120 A280	
150	312605-0322		4	HEXAGON NUT, M6M M12 A280	
160	315105-0178		4	WASHER BRB13X24RFR	
A3/FLEX PT/FLEX					
130	1558933-0000		2	FRAME	
140	90458-2138		4	SCREW M6S M12X120 A280	
150	312605-0322		8	HEXAGON NUT, M6M M12 A280	
160	315105-0178		8	WASHER BRB13X24RFR	
Common Parts					
010	2555393-0100		1	START-UP KIT	**9-5**
030	531345-0200		1	PERSONAL PROTECT. EQ H2O2	**9-27**
040	2574483-0200		1	TOOLS AND TEMPLATES	**9-29**
050	2544873-0100		1	CONNECTION PIPE	**9-35**
100	598878-0000		1	MACHINE SIGN 2 ADR. EEA	
110	311521-0142		4	BLANK RIVET 3,2X6	
120	2550979-0000		1	TRANSPORT EQUIPMENT	
170	312105-0503		2	SCREW M6S ISO 4014 M10X60 A480	
180	315105-0173		2	WASHER BRB10,5X22RFR	
200	90100-0303		1	SAM TO PC TEST MONITORING CABLE	
210	2764527-0100		1	ACCESSORIES	**9-37**

Pos	Part No	UN	Qty	Description	Page No

This page is intentionally left blank.

ECM: 129589 - 20030505
Group number: 2555393-0100
Assembly Drawing:

Pos	Part No	UN	Qty	Description	Page No
A3/FLEX QC					
020	2593831-0100		1	VOLUME KIT	**9-7, 9-9**
Common Parts					
010	2555394-0100		1	START-UP KIT	**9-11, 9-13, 9-15, 9-17, 9-19**
100	90296-0009		1	SILICONE GREASE DOW CORNING 150 GR.	
AS010	1484695-0000		1	KNIFE	
AS020	2592780-0000		1	DOLLY	
DS010	90296-0068		1	SHELL ALVANIA GREASE EP 2	
DS020	1548454-0000		8	DISC	
EC010	90233-0028		10	TUBE FUSE, 10A	
EC020	90233-0029		3	TUBE FUSE, 25A	
EC030	90233-0027		3	TUBE FUSE, 16A	
	90233-0305		*1*	*INDICATOR*	
EC040	90459-1254		10	TUBE FUSE, 4A 500V	
JS010	28509-0000		2	WASHER	
JS020	32544-0000		2	INSULATION NUT	
JS030	107426-0000		4	GUIDE SLEEVE	
JS040	1036584-0000		4	WASHER	
JS050	315211-0104		4	BONDED SEAL SS/NBR90 M8	
JS060	312115-0297		8	SCREW ISO4762 M4X25 A4 80	
JS070	312125-0295		2	SCREW ISO 1207 M4X20 A4	
JS080	315211-0103		4	BONDED SEAL SS/NBR90 M6	
JS090	315202-0101		8	O-RING 3,1X1,6 MM	
MB010	315229-0105		5	GASKETS, 48,5X55,5X3,7 MM 2" FDA	
MB020	315229-0104		2	GASKETS, 35,8X42,8X3,7 MM 1"1/2 FD	
MB030	315229-0103		2	GASKETS, 23,1X30,1X3,7 MM 1" FDA	
MB040	315229-0107		1	GASKETS, 73,9X80,9X3,7 MM 2"1/2 FD	
MB050	90036-0057		3	LIGHT BULB, BA9S 28V	
SA010	1498047-0000		1	SEALING BLOCK	
SU010	1296877-0100		1	SEAL KIT	**9-21**
SU020	1296878-0100		1	SEAL KIT	**9-23**
SU030	1296879-0100		1	SEAL KIT	**9-25**
SU040	90217-0348		4	GASKET 35,4X46,8X4 MM	
SU050	342850-0304		5	GASKET 35,4X49,1X5,2 1"1/2 FDA	
SU060	925998-0000		2	DIAPHRAGM	
SU070	342850-0306		4	GASKET 60,3X76,1X5,2 MM 2"1/2 FDA	
SU080	342850-0304		4	GASKET 35,4X49,1X5,2 1"1/2 FDA	

Pos	Part No	UN	Qty	Description	Page No

This page is intentionally left blank.

ECM: 223573 - 20050701
Group number: 2593831-0100
Assembly Drawing:

This list covers pages from 9-6 to 9-9

Pos	Part No	UN	Qty	Description	Page No
TBA 0200B					
010	2594512-0103		2	VOLUME FLAP	
010	2594512-0105		2	VOLUME FLAP	
020	1548460-0103		2	VOLUME FLAP	
020	1548460-0105		2	VOLUME FLAP	
030	2527703-0103		1	GUIDE	
030	2527703-0104		1	GUIDE	
040	2527704-0103		1	GUIDE	
040	2527704-0104		1	GUIDE	
TBA 0200M					
010	2594512-0106		2	VOLUME FLAP	
020	1548460-0106		2	VOLUME FLAP	
030	2527703-0110		1	GUIDE	
040	2527704-0110		1	GUIDE	
TBA 0200SQ					
010	2594512-0111		2	VOLUME FLAP	
020	1548460-0111		2	VOLUME FLAP	
030	2527703-0128		1	GUIDE	
040	2527704-0128		1	GUIDE	
TBA 0250B					
010	2594512-0103		2	VOLUME FLAP	
010	2594512-0104		2	VOLUME FLAP	
020	1548460-0103		2	VOLUME FLAP	
020	1548460-0104		2	VOLUME FLAP	
030	2527703-0103		1	GUIDE	
030	2527703-0105		1	GUIDE	
040	2527704-0103		1	GUIDE	
040	2527704-0105		1	GUIDE	
TBA 0250S					
010	2594512-0107		2	VOLUME FLAP	
020	1548460-0107		2	VOLUME FLAP	
030	2527703-0111		1	GUIDE	
040	2527704-0111		1	GUIDE	
TBA 0250SQ					
010	2594512-0110		2	VOLUME FLAP	
020	1548460-0110		2	VOLUME FLAP	
030	2527703-0127		1	GUIDE	
040	2527704-0127		1	GUIDE	
TBA 0330S					
010	2594512-0104		2	VOLUME FLAP	
010	2594512-0105		2	VOLUME FLAP	
020	1548460-0104		2	VOLUME FLAP	
020	1548460-0105		2	VOLUME FLAP	
030	2527703-0104		1	GUIDE	
030	2527703-0105		1	GUIDE	
040	2527704-0104		1	GUIDE	
040	2527704-0105		1	GUIDE	
080	2603489-0000		8	BOTTOM	
TBA 0500B					
010	2594512-0101		2	VOLUME FLAP	
020	1548460-0101		2	VOLUME FLAP	
030	2527703-0101		1	GUIDE	
040	2527704-0101		1	GUIDE	
050	1285023-0000		1	SIDE PLATE	
060	1285022-0000		1	SIDE PLATE	
TBA 1000B					
010	2594512-0102		2	VOLUME FLAP	
020	1548460-0102		2	VOLUME FLAP	
030	2527703-0102		1	GUIDE	
040	2527704-0102		1	GUIDE	
050	2605993-0000		1	SIDE PLATE	
060	2605994-0000		1	SIDE PLATE	
TBA 1890S					
010	2695955-0102		2	VOLUME FLAP	
020	2695955-0102		2	VOLUME FLAP	
030	2527703-0109		1	GUIDE	
040	2527704-0109		1	GUIDE	
080	2616219-0000		8	BOTTOM	
TBA 2000S					
010	2695955-0101		2	VOLUME FLAP	
020	2695955-0101		2	VOLUME FLAP	
030	2527703-0108		1	GUIDE	
040	2527704-0108		1	GUIDE	
080	2616218-0000		8	BOTTOM	
TPA 0200SQ					
010	2594512-0108		2	VOLUME FLAP	
020	1548460-0108		2	VOLUME FLAP	
030	2527703-0120		1	GUIDE	
040	2527704-0120		1	GUIDE	
100	2705814-0102		1	PUSHER	
TPA 0250SQ					
010	2594512-0109		2	VOLUME FLAP	
020	1548460-0109		2	VOLUME FLAP	
030	2527703-0121		1	GUIDE	

Machine Type | Group Description | Used-In | Group Number | Page No

This page is intentionally left blank.

ECM: 223573 - 20050701
Group number: 2593831-0100
Assembly Drawing:

This list covers pages from 9-6 to 9-9

Pos	Part No	UN	Qty	Description	Page No
TPA 0250SQ (Cont'd)					
040	2527704-0121		1	GUIDE	
100	2705814-0101		1	PUSHER	
TPA 0750SQ					
010	2705813-0102		2	VOLUME FLAP	
020	2705812-0102		2	VOLUME FLAP	
030	2527703-0126		1	GUIDE	
040	2527704-0126		1	GUIDE	
080	2658240-0000		8	BOTTOM	
100	2705814-0104		1	PUSHER	
110	2658240-0000		8	BOTTOM	
TPA 1000SQ					
010	2705813-0101		2	VOLUME FLAP	
020	2705812-0101		2	VOLUME FLAP	
030	2527703-0125		1	GUIDE	
040	2527704-0125		1	GUIDE	
080	2663373-0000		8	BOTTOM	
100	2705814-0103		1	PUSHER	
110	2658239-0000		8	BOTTOM	

Pos	Part No	UN	Qty	Description	Page No

This page is intentionally left blank.

ECM: 268277 - 20060702
Group number: 2555394-0100
Assembly Drawing:

This list covers pages from 9-10 to 9-19

Pos	Part No	UN	Qty	Description	Page No
TPA 1000SQ NOQC HI					
JS010	1520633-0002		12	DOLLY	
JS020	1520052-0000		8	INDUCTOR	
JS035	1539843-0000		6	VOLUME SHIM	
JS040	1348956-0000		2	KNIFE	
JS060	1260659-0000		2	SPRING	
SU010	257330-0000		2	PRESSURE ROLLER	
SU020	2529420-0000		1	SHAFT	
SU030	315204-0219		2	O-RING 29,2X3 MM	
SU040	2500081-0000		1	ELBOW PIPE	
SU050	2529750-0000		1	COVERING PANEL	
SU060	979813-0000		1	PLUG	
SU070	342850-0304		1	GASKET 35,4X49,1X5,2 1"1/2 FDA	
TPA 1000SQ QC HI, TPA 0750SQ QC HI					
JS010	1520633-0002		12	DOLLY	
JS020	2663378-0000		1	INDUCTOR	
JS020	2663377-0000		1	INDUCTOR	
JS030	2660393-0000		12	VOLUME SHIM	
JS035	2660390-0000		12	VOLUME SHIM	
JS040	1348956-0000		2	KNIFE	
JS060	1260659-0000		2	SPRING	
SU010	257330-0000		2	PRESSURE ROLLER	
SU020	2529420-0000		1	SHAFT	
SU030	315204-0219		2	O-RING 29,2X3 MM	
SU040	2500081-0000		1	ELBOW PIPE	
SU050	2529750-0000		1	COVERING PANEL	
SU060	979813-0000		1	PLUG	
SU070	342850-0304		1	GASKET 35,4X49,1X5,2 1"1/2 FDA	
TBA 1000S NOMOLDEDCAP HI					
JS010	1110083-0002		12	DOLLY	
JS020	1110937-0000		2	INDUCTOR	
JS030	1040755-0000		8	VOLUME SHIM	
JS040	1348955-0000		2	KNIFE	
JS060	1260659-0000		2	SPRING	
SU010	499387-0000		3	PRESSURE ROLLER	
SU020	2529419-0000		1	SHAFT	
SU030	315204-0219		2	O-RING 29,2X3 MM	
SU040	2500081-0000		1	ELBOW PIPE	
SU050	2529750-0000		1	COVERING PANEL	
SU060	979813-0000		1	PLUG	
SU070	342850-0304		1	GASKET 35,4X49,1X5,2 1"1/2 FDA	
TBA 1000S NOMOLDEDCAP NOHI					
JS010	1110083-0002		12	DOLLY	
JS020	1110937-0000		2	INDUCTOR	
JS030	1040755-0000		8	VOLUME SHIM	
JS040	1348955-0000		2	KNIFE	
JS060	1260659-0000		2	SPRING	
SU010	499387-0000		3	PRESSURE ROLLER	
SU020	2529419-0000		1	SHAFT	
SU030	315204-0219		2	O-RING 29,2X3 MM	
TBA 1000S STDA7 HI					
	90240-0180		12	FLANGE BUSHING 10X14X15MM	
JS010	1110083-0002		12	DOLLY	
JS020	2546474-0000		2	INDUCTOR	
JS030	1040755-0000		8	VOLUME SHIM	
JS040	1348955-0000		2	KNIFE	
JS060	1260659-0000		2	SPRING	
JS100	2767478-0003		2	ROLLER	
JS100	2767478-0001		2	ROLLER	
JS100	2767478-0004		2	ROLLER	
SU010	499387-0000		3	PRESSURE ROLLER	
SU020	2529419-0000		1	SHAFT	
SU030	315204-0219		2	O-RING 29,2X3 MM	
SU040	2500081-0000		1	ELBOW PIPE	
SU050	2529750-0000		1	COVERING PANEL	
SU060	979813-0000		1	PLUG	
SU070	342850-0304		1	GASKET 35,4X49,1X5,2 1"1/2 FDA	
TBA 1000S STDA7 NOHI					
	90240-0180		12	FLANGE BUSHING 10X14X15MM	
JS010	1110083-0002		12	DOLLY	
JS020	2546474-0000		2	INDUCTOR	
JS030	1040755-0000		8	VOLUME SHIM	
JS040	1348955-0000		2	KNIFE	
JS060	1260659-0000		2	SPRING	
JS100	2767478-0001		2	ROLLER	
JS100	2767478-0003		2	ROLLER	
JS100	2767478-0004		2	ROLLER	
SU010	499387-0000		3	PRESSURE ROLLER	
SU020	2529419-0000		1	SHAFT	
SU030	315204-0219		2	O-RING 29,2X3 MM	
TBA 1000SQ HI					
JS010	1110083-0002		12	DOLLY	
JS020	1110936-0000		2	INDUCTOR	
JS030	1487627-0000		8	VOLUME SHIM	

Machine Type | Group Description | Used-In | Group Number | Page No

This page is intentionally left blank.

Pos	Part No	UN	Qty	Description	Page No
TBA 1000SQ HI (Cont'd)					
JS040	1348955-0000		2	KNIFE	
JS060	1260659-0000		2	SPRING	
SU010	257330-0000		3	PRESSURE ROLLER	
SU020	2529420-0000		1	SHAFT	
SU030	315204-0219		2	O-RING 29,2X3 MM	
SU040	2500081-0000		1	ELBOW PIPE	
SU050	2529750-0000		1	COVERING PANEL	
SU060	979813-0000		1	PLUG	
SU070	342850-0304		1	GASKET 35,4X49,1X5,2 1"1/2 FDA	
TBA 1000SQ NOHI					
JS010	1110083-0002		12	DOLLY	
JS020	1110936-0000		2	INDUCTOR	
JS030	1487627-0000		8	VOLUME SHIM	
JS040	1348955-0000		2	KNIFE	
JS060	1260659-0000		2	SPRING	
SU010	257330-0000		3	PRESSURE ROLLER	
SU020	2529420-0000		1	SHAFT	
SU030	315204-0219		2	O-RING 29,2X3 MM	
TBA 1500S HI					
JS010	1110083-0002		12	DOLLY	
JS020	1110938-0000		2	INDUCTOR	
JS030	1349208-0000		8	VOLUME SHIM	
JS040	1348955-0000		2	KNIFE	
JS060	1260659-0000		2	SPRING	
SU010	232979-0000		3	PRESSURE ROLLER (PAK OF 10)	
SU020	2523268-0000		1	SHAFT	
SU030	315204-0219		2	O-RING 29,2X3 MM	
SU040	2500081-0000		1	ELBOW PIPE	
SU050	2529750-0000		1	COVERING PANEL	
SU060	979813-0000		1	PLUG	
SU070	342850-0304		1	GASKET 35,4X49,1X5,2 1"1/2 FDA	
TBA 1500S NOHI					
JS010	1110083-0002		12	DOLLY	
JS020	1110938-0000		2	INDUCTOR	
JS030	1349208-0000		8	VOLUME SHIM	
JS040	1348955-0000		2	KNIFE	
JS060	1260659-0000		2	SPRING	
SU010	232979-0000		3	PRESSURE ROLLER (PAK OF 10)	
SU020	2523268-0000		1	SHAFT	
SU030	315204-0219		2	O-RING 29,2X3 MM	
TBA 1890S HI, TBA 2000S HI					
FF010	2662142-0000		1	SPRING	
FF020	2650817-0000		4	SPRING	
FF030	2664596-0000		2	CARRIER	
JS010	1520633-0005		12	DOLLY	
JS020	1533046-0000		2	INDUCTOR	
JS030	2594891-0000		8	VOLUME SHIM	
JS035	2594890-0000		8	VOLUME SHIM	
JS035	2672745-0000		8	VOLUME SHIM	
JS040	2664761-0000		2	KNIFE	
JS060	927252-0000		2	COMPRESSION SPRING	
JS070	2662165-0000		2	SPRING	
JS080	2662166-0000		2	SPRING	
JS090	1549378-0000		2	SPRING	
SU010	232979-0000		6	PRESSURE ROLLER (PAK OF 10)	
SU030	315204-0223		2	O-RING 39,2X3 MM	
SU040	2500081-0000		1	ELBOW PIPE	
SU050	2529750-0000		1	COVERING PANEL	
SU060	979813-0000		1	PLUG	
SU070	342850-0304		1	GASKET 35,4X49,1X5,2 1"1/2 FDA	
TPA 0200SQ QC HI, TPA 0250SQ QC HI					
JS010	1110083-0002		12	DOLLY	
JS020	1110930-0000		2	INDUCTOR	
JS030	2674328-0000		16	VOLUME SHIM	
JS030	1549594-0000		16	VOLUME SHIM	
JS040	1348966-0000		2	KNIFE	
JS060	1260659-0000		2	SPRING	
SU010	272479-0000		3	PRESSURE ROLLER	
SU020	2529416-0000		1	SHAFT	
SU030	315204-0219		2	O-RING 29,2X3 MM	
SU040	2500081-0000		1	ELBOW PIPE	
SU050	2529750-0000		1	COVERING PANEL	
SU060	979813-0000		1	PLUG	
SU070	342850-0304		1	GASKET 35,4X49,1X5,2 1"1/2 FDA	
TPA 0250SQ HI					
JS010	1110083-0002		12	DOLLY	
TPA 0330SQ HI					
JS010	1110083-0002		12	DOLLY	
JS020	1520167-0000		2	INDUCTOR	
JS030	1539902-0000		8	VOLUME SHIM	
JS040	1348966-0000		2	KNIFE	
JS060	1260659-0000		2	SPRING	
SU010	257330-0000		3	PRESSURE ROLLER	

This page is intentionally left blank.

ECM: 268277 - 20060702
Group number: 2555394-0100
Assembly Drawing:

This list covers pages from 9-10 to 9-19

Pos	Part No	UN	Qty	Description	Page No
TPA 0330SQ HI (Cont'd)					
SU020	2529417-0000		1	SHAFT	
SU030	315204-0215		2	O-RING 19,2X3 MM	
SU040	2500081-0000		1	ELBOW PIPE	
SU050	2529750-0000		1	COVERING PANEL	
SU060	979813-0000		1	PLUG	
SU070	342850-0304		1	GASKET 35,4X49,1X5,2 1"1/2 FDA	
TPA 0500SQ HI					
JS010	1110083-0002		12	DOLLY	
JS020	2587466-0000		1	INDUCTOR	
JS020	2587467-0000		1	INDUCTOR	
JS030	1549830-0000		24	VOLUME SHIM	
JS040	1549828-0000		2	KNIFE	
JS060	1260659-0000		2	SPRING	
SU010	257330-0000		3	PRESSURE ROLLER	
SU020	2529420-0000		1	SHAFT	
SU030	315204-0219		2	O-RING 29,2X3 MM	
SU040	2500081-0000		1	ELBOW PIPE	
SU050	2529750-0000		1	COVERING PANEL	
SU060	979813-0000		1	PLUG	
SU070	342850-0304		1	GASKET 35,4X49,1X5,2 1"1/2 FDA	
TPA 0500SQ NOHI					
JS010	1110083-0002		12	DOLLY	
JS020	2587466-0000		1	INDUCTOR	
JS020	2587467-0000		1	INDUCTOR	
JS030	1549830-0000		24	VOLUME SHIM	
JS040	1549828-0000		2	KNIFE	
JS060	1260659-0000		2	SPRING	
SU010	257330-0000		3	PRESSURE ROLLER	
SU020	2529420-0000		1	SHAFT	
SU030	315204-0219		2	O-RING 29,2X3 MM	
TBA 0200B HI, TBA 0250B HI, TBA 0330S HI					
JS010	1110083-0002		12	DOLLY	
JS020	1110932-0000		2	INDUCTOR	
JS030	2605166-0000		8	VOLUME SHIM	
JS030	2654290-0000		8	VOLUME SHIM	
JS030	1346158-0000		8	VOLUME SHIM	
JS030	1538637-0000		8	VOLUME SHIM	
JS040	1348966-0000		2	KNIFE	
JS060	1260659-0000		2	SPRING	
SU010	257330-0000		3	PRESSURE ROLLER	
SU020	2529418-0000		1	SHAFT	
SU030	315204-0215		2	O-RING 19,2X3 MM	
SU040	2500081-0000		1	ELBOW PIPE	
SU050	2529750-0000		1	COVERING PANEL	
SU060	979813-0000		1	PLUG	
SU070	342850-0304		1	GASKET 35,4X49,1X5,2 1"1/2 FDA	
TBA 0200S HI					
JS010	1110083-0002		12	DOLLY	
JS020	1110930-0000		2	INDUCTOR	
JS030	1037735-0000		8	VOLUME SHIM	
JS040	1348966-0000		2	KNIFE	
JS060	1260659-0000		2	SPRING	
SU010	272479-0000		3	PRESSURE ROLLER	
SU020	2529416-0000		1	SHAFT	
SU030	315204-0215		2	O-RING 19,2X3 MM	
SU040	2500081-0000		1	ELBOW PIPE	
SU050	2529750-0000		1	COVERING PANEL	
SU060	979813-0000		1	PLUG	
SU070	342850-0304		1	GASKET 35,4X49,1X5,2 1"1/2 FDA	
TBA 0200S NOHI					
JS010	1110083-0002		12	DOLLY	
JS020	1110930-0000		2	INDUCTOR	
JS030	1037735-0000		8	VOLUME SHIM	
JS040	1348966-0000		2	KNIFE	
JS060	1260659-0000		2	SPRING	
SU010	272479-0000		3	PRESSURE ROLLER	
SU020	2529416-0000		1	SHAFT	
SU030	315204-0215		2	O-RING 19,2X3 MM	
TBA 0200SQ NOHI, TBA 0250SQ NOHI					
JS010	1566845-0002		12	DOLLY	
JS020	2767760-0000		2	INDUCTOR	
JS030	2678717-0000		16	VOLUME SHIM	
JS030	2678839-0000		16	VOLUME SHIM	
JS040	1348966-0000		2	KNIFE	
JS060	1260659-0000		2	SPRING	
SU010	2607089-0000		3	PRESSURE ROLLER	
SU020	2529418-0000		1	SHAFT	
SU030	315204-0215		2	O-RING 19,2X3 MM	
TBA 0250B NOHI, TBA 0200B NOHI, TBA 0330S NOHI					
JS010	1110083-0002		12	DOLLY	
JS020	1110932-0000		2	INDUCTOR	
JS030	1346158-0000		8	VOLUME SHIM	
JS030	2605166-0000		8	VOLUME SHIM	

Machine Type | Group Description | Used-In | Group Number | Page No

This page is intentionally left blank.

ECM: 268277 - 20060702
Group number: 2555394-0100
Assembly Drawing:

This list covers pages from 9-10 to 9-19

Pos	Part No	UN	Qty	Description	Page No
TBA 0250B NOHI, TBA 0200B NOHI, TBA 0330S NOHI (Cont'd)					
JS030	1538637-0000		8	VOLUME SHIM	
JS030	2654290-0000		8	VOLUME SHIM	
JS040	1348966-0000		2	KNIFE	
JS060	1260659-0000		2	SPRING	
SU010	257330-0000		3	PRESSURE ROLLER	
SU020	2529418-0000		1	SHAFT	
SU030	315204-0215		2	O-RING 19,2X3 MM	
TBA 0250S HI, TBA 0200M HI					
JS010	1110083-0002		12	DOLLY	
JS020	1110931-0000		2	INDUCTOR	
JS030	2640139-0000		8	VOLUME SHIM	
JS030	2662169-0000		8	VOLUME SHIM	
JS040	1348966-0000		2	KNIFE	
SU010	272479-0000		3	PRESSURE ROLLER	
SU020	2529416-0000		1	SHAFT	
SU040	2500081-0000		1	ELBOW PIPE	
SU050	2529750-0000		1	COVERING PANEL	
SU060	979813-0000		1	PLUG	
SU070	342850-0304		1	GASKET 35,4X49,1X5,2 1"1/2 FDA	
TBA 0250S NOHI, TBA 0200M NOHI					
JS010	1110083-0002		12	DOLLY	
JS020	1110931-0000		2	INDUCTOR	
JS030	2640139-0000		8	VOLUME SHIM	
JS030	2662169-0000		8	VOLUME SHIM	
JS040	1348966-0000		2	KNIFE	
SU010	272479-0000		3	PRESSURE ROLLER	
SU020	2529416-0000		1	SHAFT	
TBA 0500B QC HI, TBA 1000B QC HI					
JS010	1110083-0002		12	DOLLY	
JS020	1110938-0000		2	INDUCTOR	
JS030	1511336-0000		8	VOLUME SHIM	
JS030	1511337-0000		8	VOLUME SHIM	
JS040	1348955-0000		2	KNIFE	
JS060	1260659-0000		2	SPRING	
SU010	232979-0000		3	PRESSURE ROLLER (PAK OF 10)	
SU020	2523268-0000		1	SHAFT	
SU030	315204-0219		2	O-RING 29,2X3 MM	
SU040	2500081-0000		1	ELBOW PIPE	
SU050	2529750-0000		1	COVERING PANEL	
SU060	979813-0000		1	PLUG	
SU070	342850-0304		1	GASKET 35,4X49,1X5,2 1"1/2 FDA	

Pos	Part No	UN	Qty	Description	Page No
TBA 0500B QC NOHI, TBA 1000B QC NOHI					
JS010	1110083-0002		12	DOLLY	
JS020	1110938-0000		2	INDUCTOR	
JS030	1511336-0000		8	VOLUME SHIM	
JS030	1511337-0000		8	VOLUME SHIM	
JS040	1348955-0000		2	KNIFE	
JS060	1260659-0000		2	SPRING	
SU010	232979-0000		3	PRESSURE ROLLER (PAK OF 10)	
SU020	2523268-0000		1	SHAFT	
SU030	315204-0219		2	O-RING 29,2X3 MM	
TBA 0500S HI					
JS010	1110083-0002		12	DOLLY	
JS020	1110934-0000		2	INDUCTOR	
JS030	1511253-0000		8	VOLUME SHIM	
JS040	1348956-0000		2	KNIFE	
JS060	1260659-0000		2	SPRING	
SU010	499387-0000		3	PRESSURE ROLLER	
SU020	2529420-0000		1	SHAFT	
SU030	315204-0219		2	O-RING 29,2X3 MM	
SU040	2500081-0000		1	ELBOW PIPE	
SU050	2529750-0000		1	COVERING PANEL	
SU060	979813-0000		1	PLUG	
SU070	342850-0304		1	GASKET 35,4X49,1X5,2 1"1/2 FDA	
TBA 0500S NOHI					
JS010	1110083-0002		12	DOLLY	
JS020	1110934-0000		2	INDUCTOR	
JS030	1511253-0000		8	VOLUME SHIM	
JS040	1348956-0000		2	KNIFE	
JS060	1260659-0000		2	SPRING	
SU010	499387-0000		3	PRESSURE ROLLER	
SU020	2529420-0000		1	SHAFT	
SU030	315204-0219		2	O-RING 29,2X3 MM	
TBA 1000B NOQC NOMOLDEDCAP HI					
JS010	1110083-0002		12	DOLLY	
JS020	1110938-0000		2	INDUCTOR	
JS030	1035831-0000		8	VOLUME SHIM	
JS040	1348955-0000		2	KNIFE	
JS060	1260659-0000		2	SPRING	
SU010	232979-0000		3	PRESSURE ROLLER (PAK OF 10)	
SU020	2523268-0000		1	SHAFT	
SU030	315204-0219		2	O-RING 29,2X3 MM	
SU040	2500081-0000		1	ELBOW PIPE	

This page is intentionally left blank.

Pos	Part No	UN	Qty	Description	Page No
TBA 1000B NOQC NOMOLDEDCAP HI (Cont'd)					
SU050	2529750-0000		1	COVERING PANEL	
SU060	979813-0000		1	PLUG	
SU070	342850-0304		1	GASKET 35,4X49,1X5,2 1"1/2 FDA	
TBA 1000B NOQC NOMOLDEDCAP NOHI					
JS010	1110083-0002		12	DOLLY	
JS020	1110938-0000		2	INDUCTOR	
JS030	1035831-0000		8	VOLUME SHIM	
JS040	1348955-0000		2	KNIFE	
JS060	1260659-0000		2	SPRING	
SU010	232979-0000		3	PRESSURE ROLLER (PAK OF 10)	
SU020	2523268-0000		1	SHAFT	
SU030	315204-0219		2	O-RING 29,2X3 MM	
TBA 1000B NOQC STDA7 HI					
	90240-0180		8	FLANGE BUSHING 10X14X15MM	
JS010	1110083-0002		12	DOLLY	
JS020	2610956-0000		2	INDUCTOR	
JS030	1035831-0000		8	VOLUME SHIM	
JS040	1348955-0000		2	KNIFE	
JS060	1260659-0000		2	SPRING	
JS100	2767478-0002		2	ROLLER	
JS100	2767478-0003		2	ROLLER	
SU010	232979-0000		3	PRESSURE ROLLER (PAK OF 10)	
SU020	2523268-0000		1	SHAFT	
SU030	315204-0219		2	O-RING 29,2X3 MM	
SU040	2500081-0000		1	ELBOW PIPE	
SU050	2529750-0000		1	COVERING PANEL	
SU060	979813-0000		1	PLUG	
SU070	342850-0304		1	GASKET 35,4X49,1X5,2 1"1/2 FDA	
TBA 1000B NOQC STDA7 NOHI					
	90240-0180		8	FLANGE BUSHING 10X14X15MM	
JS010	1110083-0002		12	DOLLY	
JS020	2610956-0000		2	INDUCTOR	
JS030	1035831-0000		8	VOLUME SHIM	
JS040	1348955-0000		2	KNIFE	
JS060	1260659-0000		2	SPRING	
JS100	2767478-0003		2	ROLLER	
JS100	2767478-0002		2	ROLLER	
SU010	232979-0000		3	PRESSURE ROLLER (PAK OF 10)	
SU020	2523268-0000		1	SHAFT	
SU030	315204-0219		2	O-RING 29,2X3 MM	
TBA 1000S LIGHTCAP					
	90240-0180		12	FLANGE BUSHING 10X14X15MM	
JS010	1110083-0002		12	DOLLY	
JS020	2546474-0000		2	INDUCTOR	
JS030	1040755-0000		8	VOLUME SHIM	
JS040	1348955-0000		2	KNIFE	
JS060	1260659-0000		2	SPRING	
JS100	2767478-0004		2	ROLLER	
JS100	2767478-0003		2	ROLLER	
JS100	2767478-0001		2	ROLLER	
SU010	499387-0000		3	PRESSURE ROLLER	
SU020	2529419-0000		1	SHAFT	
SU030	315204-0219		2	O-RING 29,2X3 MM	
SU080	2795266-0000		5	SEAL	
Common Parts					
JS050	1037254-0000		12	SHIM	

This page is intentionally left blank.

ECM: 70850 - 19970729
Group number: 1296877-0100
Assembly Drawing:

Pos	Part No	UN	Qty	Description	Page No
-					
010	530589-0000		4	SEAL RING	
020	530588-0000		1	SEAL RING	
030	533169-0000		1	DIAPHRAGM	
040	539212-0000		1	GASKET	
050	90091-0266		2	SEAL RING 10,4X16,3X2,5 MM	
060	90207-0363		1	GASKET	
070	90207-0365		1	GASKET	
100	315204-0215		1	O-RING 19,2X3 MM	
110	315204-0301		1	O-RING 49,5X3 MM	

Pos	Part No	UN	Qty	Description	Page No

Machine Type	Group Description	Used-In	Group Number	Page No

This page is intentionally left blank.

ECM: 70850 - 19970729
Group number: 1296878-0100
Assembly Drawing:

Pos	Part No	UN	Qty	Description	Page No	Pos	Part No	UN	Qty	Description	Page No
-											
080	90030-0336		2	CONN. STRAIGHT, 316L-12M-BVCO-3							
090	90091-0237		5	ROD SEAL, GLIDORING 20X27,5X3 MM							
100	315204-0215		2	O-RING 19,2X3 MM							
120	90091-0238		4	WEAR RING 20X22X10 MM							
140	315204-0308		2	O-RING 84,5X3 MM							

This page is intentionally left blank.

ECM: 70850 - 19970729
Group number: 1296879-0100
Assembly Drawing:

Pos	Part No	UN	Qty	Description	Page No
-					
090	90091-0237		3	ROD SEAL, GLIDORING 20X27,5X3 MM	
100	315204-0215		1	O-RING 19,2X3 MM	
120	90091-0238		2	WEAR RING 20X22X10 MM	
130	90091-0335		1	PISTON SEAL GLIDE RING 62,5X70X3 MM	
150	90091-0304		1	RADIAL SEAL 45X65X8 MM DUST LIP	

Pos	Part No	UN	Qty	Description	Page No

This page is intentionally left blank.

ECM: 72190 - 19990628
Group number: 531345-0200
Assembly Drawing:

Pos	Part No	UN	Qty	Description	Page No
-					
	90303-0011		1	PROTECTIVE GOGGLES	
	90303-0012		1	PROTECTIVE GLOVES	
	90303-0013		1	APRON	

Pos	Part No	UN	Qty	Description	Page No

Machine Type	Group Description	Used-In	Group Number	Page No

This page is intentionally left blank.

ECM: 223567 - 20060701
Group number: 2574483-0200
Assembly Drawing:

Pos	Part No	UN	Qty	Description	Page No
-					
SU010	1349914-0100		1	TEMPLATE FILLING PIPE	**9-31**
SU020	2793320-0100		1	TEMPLATE	**9-33**

Pos	Part No	UN	Qty	Description	Page No

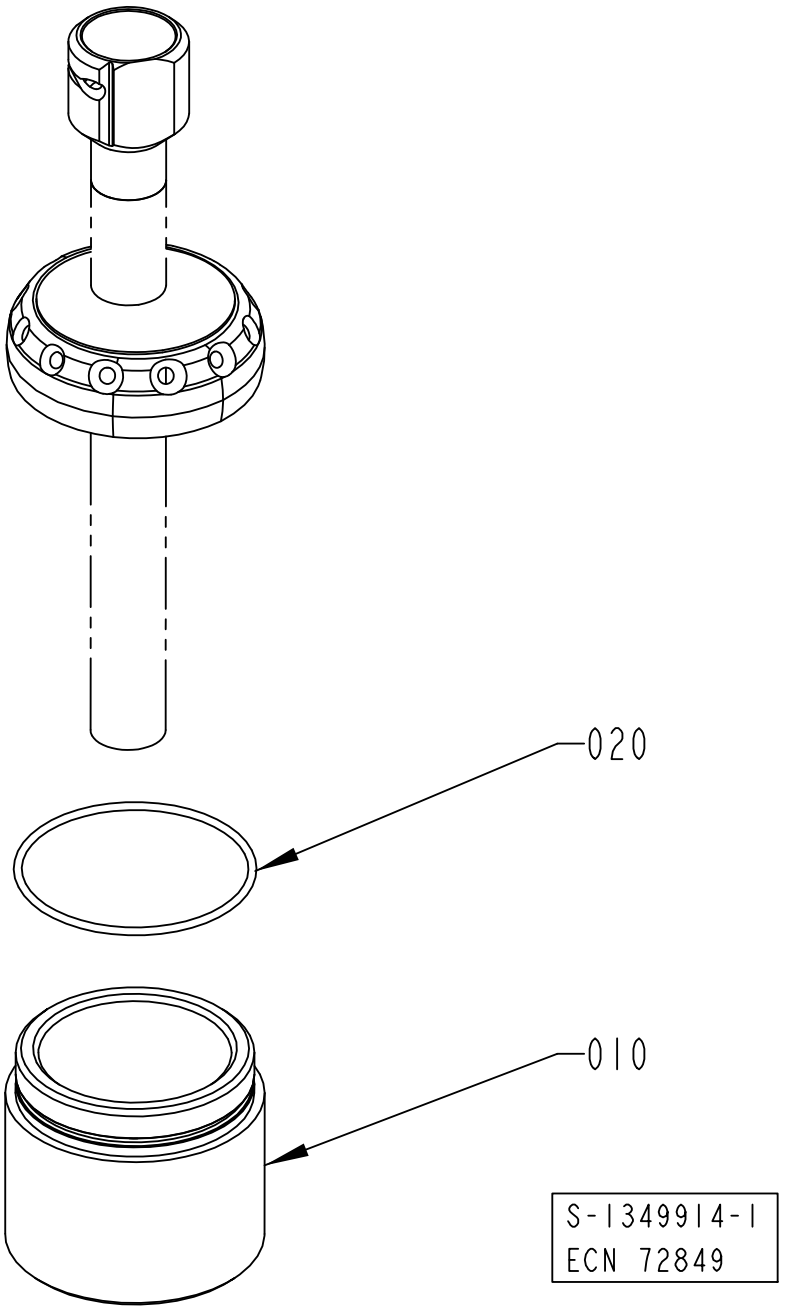
020
010
S-1349914-1
ECN 72849

ECM: 244262 - 20060701
Group number: 1349914-0100
Assembly Drawing: 1349914-1_1_AA

Pos	Part No	UN	Qty	Description	Page No
TBA 0200SQ, TBA 0250SQ					
010	2799729-0000		1	TEMPLATE	
020	315202-0217		1	O-RING 24,2X3 MM	
TBA 0250S, TBA 0200S, TBA 0200M, TPA 0250SQ, TPA 0200SQ					
010	1558304-0000		1	TEMPLATE	
020	315202-0214		1	O-RING 17,3X2,4 MM	
TBA 0330S, TBA 0200B, TBA 0250B					
010	1498149-0000		1	TEMPLATE	
020	315202-0217		1	O-RING 24,2X3 MM	
TBA 0500B QC, TBA 1000B QC					
010	2774372-0000		1	TEMPLATE	
020	315202-0233		1	O-RING 79,2X5,7 MM	
TBA 0500S					
010	1524840-0000		1	TEMPLATE	
020	315202-0303		1	O-RING 59,5X3 MM	
TBA 1000B STDA7					
010	2774374-0000		1	TEMPLATE	
020	315202-0308		1	O-RING 84,5X3 MM	
TBA 1000S NOMOLDEDCAP					
010	1498151-0000		1	TEMPLATE	
020	315202-0307		1	O-RING 79,5X3 MM	
TBA 1000S STDA7					
010	2774373-0000		1	TEMPLATE	
020	315202-0307		1	O-RING 79,5X3 MM	
TBA 1000SQ					
010	1517987-0000		1	TEMPLATE	
020	315202-0305		1	O-RING 69,5X3 MM	
TBA 1500S, TBA 1000B NOQC NOMOLDEDCAP					
010	1498150-0000		1	TEMPLATE	
020	315202-0308		1	O-RING 84,5X3 MM	
TBA 1890S, TBA 2000S					
010	2660843-0000		1	TEMPLATE	
020	315202-0310		1	O-RING 94,5X3 MM	
TPA 0330SQ					
010	1532299-0000		1	TEMPLATE	
020	315202-0217		1	O-RING 24,2X3 MM	
TPA 0500SQ					
010	2545352-0000		1	TEMPLATE	
020	315202-0302		1	O-RING 54,5X3 MM	
TPA 1000SQ, TPA 0750SQ					
010	1524841-0000		1	TEMPLATE	
020	315202-0303		1	O-RING 59,5X3 MM	

Pos	Part No	UN	Qty	Description	Page No

Machine Type | Group Description | Used-In | Group Number | Page No

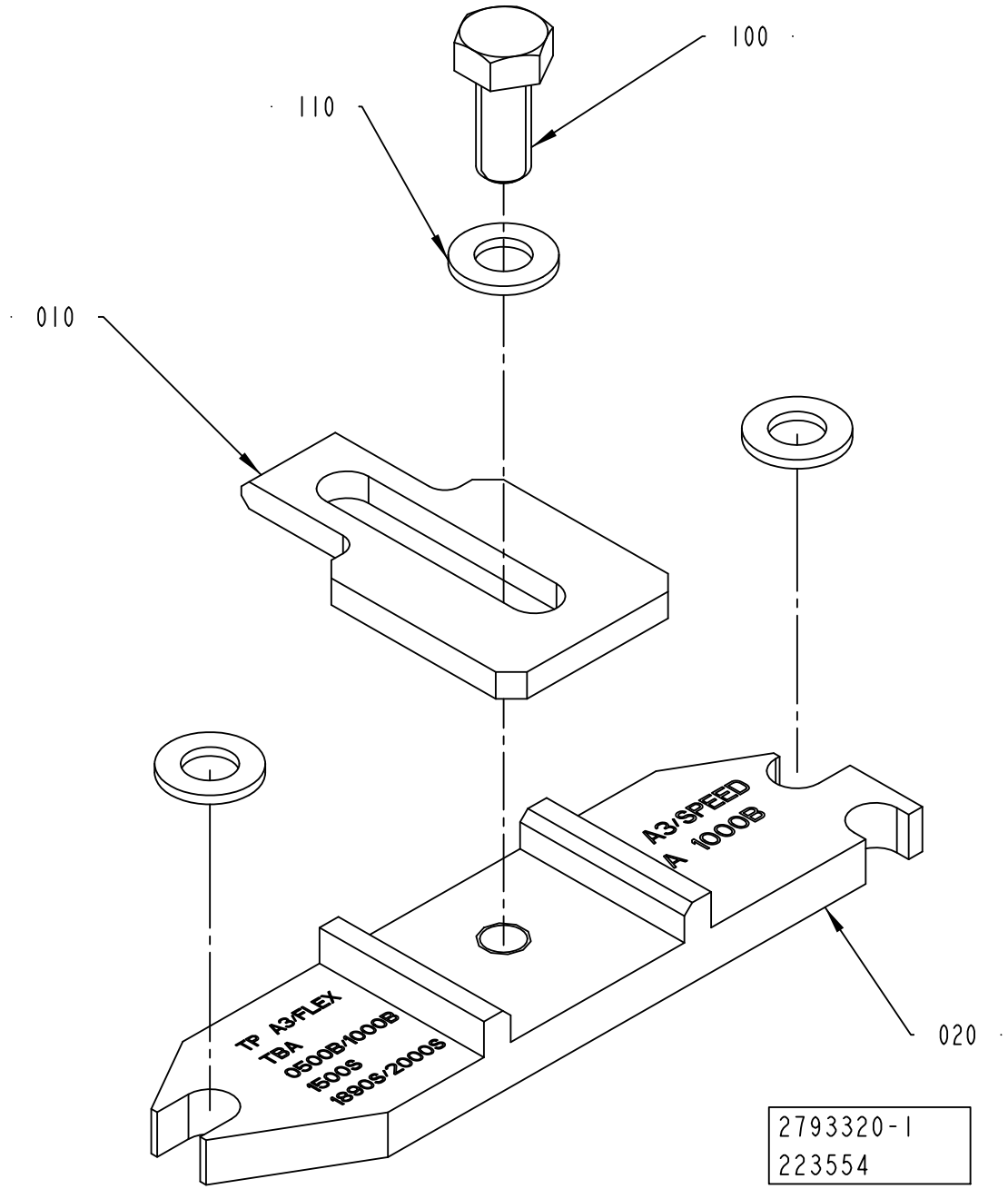
100
110
010
020
A3/SPEED
A 1000B
TP A3/FLEX
TBA
0500B/1000B
1500S
1890S/2000S
2793320-1
223554

ECM: 241083 - 20060701
Group number: 2793320-0100
Assembly Drawing: 2793320-1_1_AA

Pos	Part No	UN	Qty	Description	Page No
TBA 0200SQ, TBA 0250SQ					
020	2793331-0000		1	PLATE	
TBA 0250S, TBA 0200S, TBA 0200M					
020	2793325-0000		1	PLATE	
TBA 0330S, TBA 0200B, TBA 0250B					
020	2793328-0000		1	PLATE	
TBA 0500B, TBA 1000B, TBA 1500S, TBA 1890S, TBA 2000S					
020	2793321-0000		1	PLATE	
TBA 0500S					
020	2793326-0000		1	PLATE	
TBA 1000S					
020	2793322-0000		1	PLATE	
TBA 1000SQ					
020	2793319-0000		1	PLATE	
TPA 0250SQ, TPA 0200SQ					
020	2793327-0000		1	PLATE	
TPA 0330SQ					
020	2793324-0000		1	PLATE	
TPA 0500SQ					
020	2793323-0000		1	PLATE	
TPA 1000SQ, TPA 0750SQ, TPA 1000SQ NOQC					
020	2793329-0000		1	PLATE	
Common Parts					
010	2736719-0000		1	PLATE	
100	312105-0327		1	SCREW M6S ISO 4017 M5X12 A480	
110	315105-0146		3	WASHER BRB5,3X10RFR	

Pos	Part No	UN	Qty	Description	Page No

Machine Type | Group Description | Used-In | Group Number | Page No

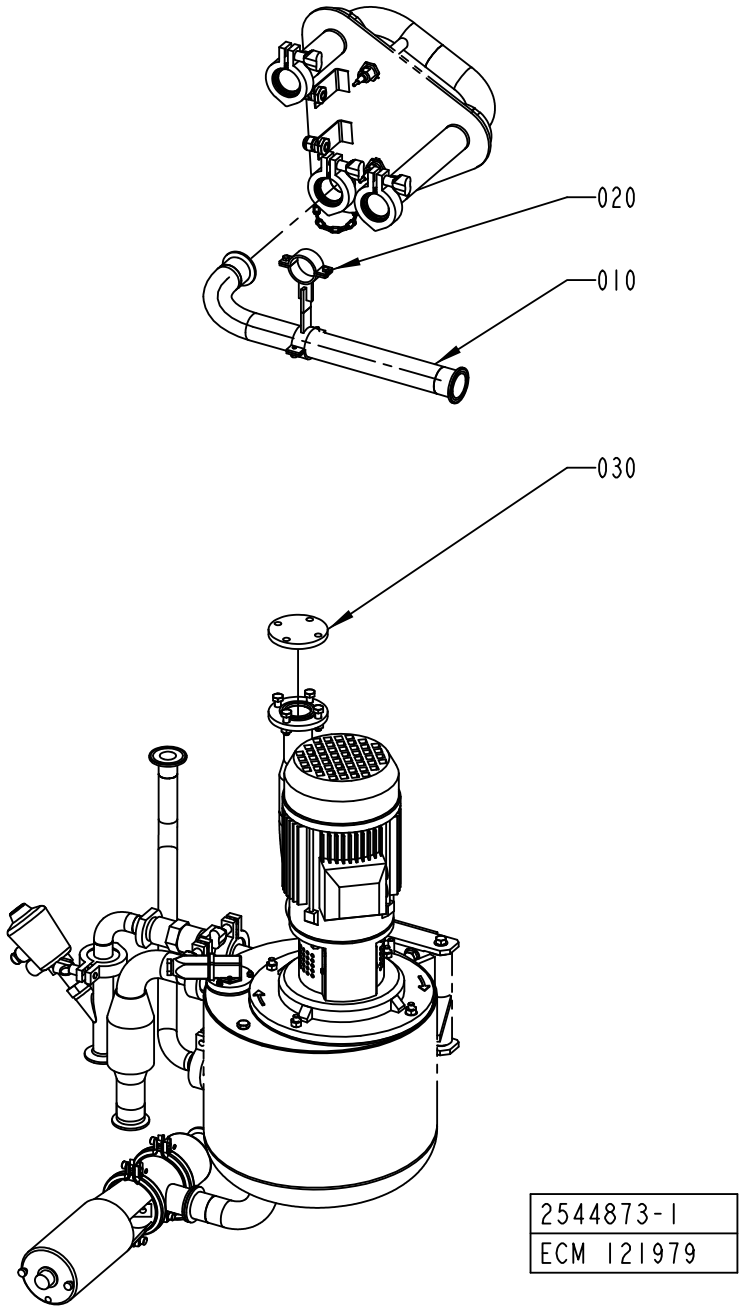
020
010
030
2544873-1
ECM 121979

ECM: 121994 - 20030403
Group number: 2544873-0100
Assembly Drawing: 2544873-1_1_AA

Pos	Part No	UN	Qty	Description	Page No
-					
010	2500089-0000		1	PIPE	
020	2539459-0000		1	HOLDER	
030	2539457-0000		1	LID	

Pos	Part No	UN	Qty	Description	Page No

This page is intentionally left blank.

ECM: 190637 - 20050520
Group number: 2764527-0100
Assembly Drawing:

Pos	Part No	UN	Qty	Description	Page No
A3/FLEX TBA 0250SQ QC, A3/FLEX TBA 0200SQ QC					
080	1512315-0000		1	ARM RIGHT	
080	1512316-0000		1	ARM LEFT	
200	1036617-0000		2	BRACKET	

Pos	Part No	UN	Qty	Description	Page No

Machine Type | Group Description | Used-In | Group Number | Page No

Tetra Pak

SPC
Spare Parts Catalogue

This page is intentionally left blank.

ECM: 195354 - 20050103
Group number: 648564-0100
Assembly Drawing:

Pos	Part No	UN	Qty	Description	Page No
-					
010	2556260-0200		1	TOOLS AND TEMPLATES	**10-5**
020	2556261-0100		1	ACCESSORIES	**10-67**

Pos	Part No	UN	Qty	Description	Page No

Machine Type | Group Description | Used-In | Group Number | Page No

This page is intentionally left blank.

ECM: 254657 - 20060303
Group number: 2556260-0200
Assembly Drawing:

Pos	Part No	UN	Qty	Description	Page No
TBA 0330S, TBA 0200B, TBA 0250S, TBA 0200S, TBA 0200M, TBA 0250B, TPA 0330SQ					
SU070	2552154-0000		1	BRACKET	
TBA 0500B					
SU070	2552151-0000		1	BRACKET	
TBA 1000B					
DC020	2641204-0000		1	TEMPLATE	
SU070	2552151-0000		1	BRACKET	
TBA 1000S					
DC010	2641203-0000		1	TEMPLATE	
SU070	2552152-0000		1	BRACKET	
TBA 1000SQ					
SU070	2552153-0000		1	BRACKET	
TBA 1500S					
SU070	2552152-0000		1	BRACKET	
TBA 1890S, TBA 2000S					
SU090	90459-7315		1	PUSH DYNAMOMETER 20 - 200N, DT120	
TPA 0500SQ					
SU070	2685310-0000		1	BRACKET	
TPA 1000SQ, TPA 0750SQ					
SU070	2582613-0000		1	BRACKET	
SU090	90459-7315		1	PUSH DYNAMOMETER 20 - 200N, DT120	
Common Parts					
	90459-6473		1	HARDDISK COPYING TOOL, 03607-000	
AS010	2564232-0100		1	LEG STAND	**10-7**
DC030	2642146-0000		1	TEMPLATE	
DC040	2503720-0100		1	OPENING FORCE TESTER	**10-9**
DS010	90459-2181		1	BELT TENSION METER, TSM 4	
DS020	2646428-0100		1	LIFTING UNIT	**10-17, 10-19**
EC010	90243-0203		1	MEASURING INSTRUMENT	
EC020	2559112-0100		1	CALIBRATION EQUIPMENT	**10-21**
FF010	1478583-0100		1	PRESSURE GAUGE	**10-23**
FF020	1350497-0000		1	ASSEMBLY TOOL	
FF030	1350498-0000		1	ASSEMBLY TOOL	
JS010	2725981-0100		1	SETTING TOOL	**10-25**
JS020	1035362-0100		1	MEASURING DEVICE	**10-33**
JS030	72846-0101		1	COMPRESSION SPRING	**10-35**
JS040	90243-0146		1	TOOL	
JS050	90206-0330		1	SOCKET WRENCH 2"9	
JS060	1095884-0100		1	ASSEMBLY TOOL	**10-37**
JS070	2637599-0100		1	ALIGNMENT TOOL	**10-39**
JS080	2637602-0100		1	DRILLING JIG	**10-41**
MB030	90459-1037		1	CRIMP TOOL FOR COAX. CONN. HTG 58-901200	
MB040	2588426-0100		1	ALIGNMENT TEMPLATE	**10-43**
PT010	2564074-0100		1	TOOLS AND TEMPLATES	**10-45**
PT020	90459-5181		1	GREASE LUBRICATION KIT , 400999139	
PT030	2764526-0000		1	TOOL	
	312105-0291		*2*	*SCREW M6S ISO 4017 M4X12 A470*	
SU010	1349738-0100		1	PRESSURE TEST EQUIPMENT	**10-51**
SU010	90243-0447		1	LASER EQUIPMENT	
	90243-0450		*1*	*RIDGE BED*	
	90243-0449		*1*	*ANGLE PLATE*	
	90243-0448		*1*	*ANGLE PLATE*	
	90243-0330		*1*	*CABLE*	
	90243-0329		*1*	*CABLE*	
	90243-0328		*1*	*PAPER ROLL*	
SU020	74305-0100		1	PULLER	**10-53**
SU030	777200-0101		1	PIPE WRENCH	
SU040	449969-0100		1	TOOL DISMOUNTING	**10-55**
SU050	533014-0100		1	LEAK FINDING EQUIPMENT (SUPERSTRUCTURE)	**10-57**
				.....	**10-59**
SU060	90459-1467		1	FORCE GAUGE 0-250N, AFG 250N	
SU080	2532974-0000		1	SETTING TOOL	
SU120	2569982-0100		1	SETTING TOOL	**10-63**
SU130	90243-0328		1	PAPER ROLL	
SU140	90243-0329		1	CABLE	
SU150	90243-0330		1	CABLE	
SU160	2579687-0100		1	SETTING TOOL	**10-65**

Machine Type | Group Description | Used-In | Group Number | Page No

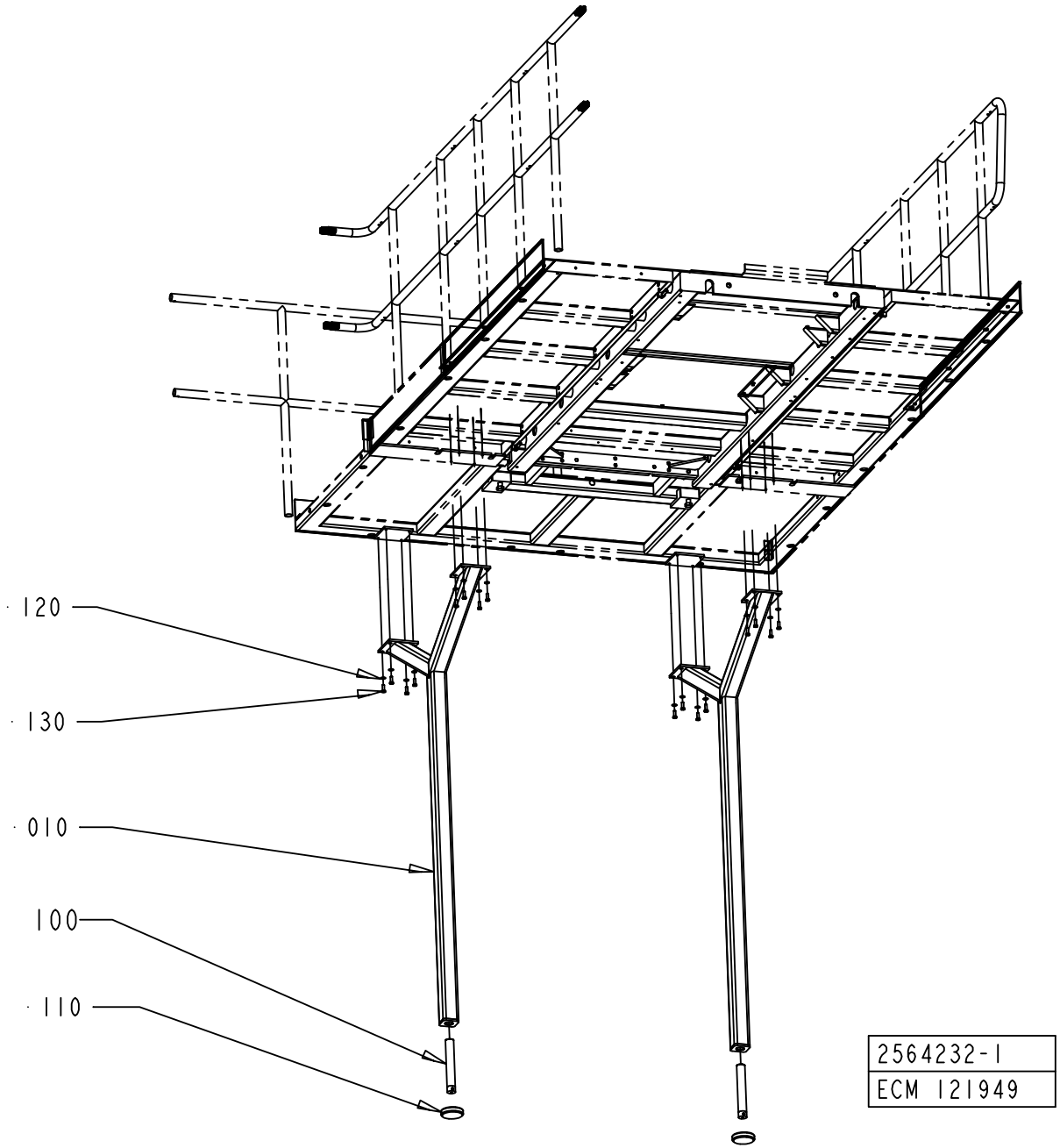
120
130
010
100
110
2564232-1
ECM 121949

ECM: 121959 - 20030403
Group number: 2564232-0100
Assembly Drawing: 2564232-1_1_AA

Pos	Part No	UN	Qty	Description	Page No
-					
10	2553117-0000		2	LEG	
100	90347-0080		2	DAMPER TFE 1201	
110	905373-0000		2	SCREW - LEG	
120	315105-0173		16	WASHER BRB10,5X22RFR	
130	312105-0495		16	SCREW M6S ISO 4017 M10X30 A480	

Pos	Part No	UN	Qty	Description	Page No

OPENING FORCE TESTER

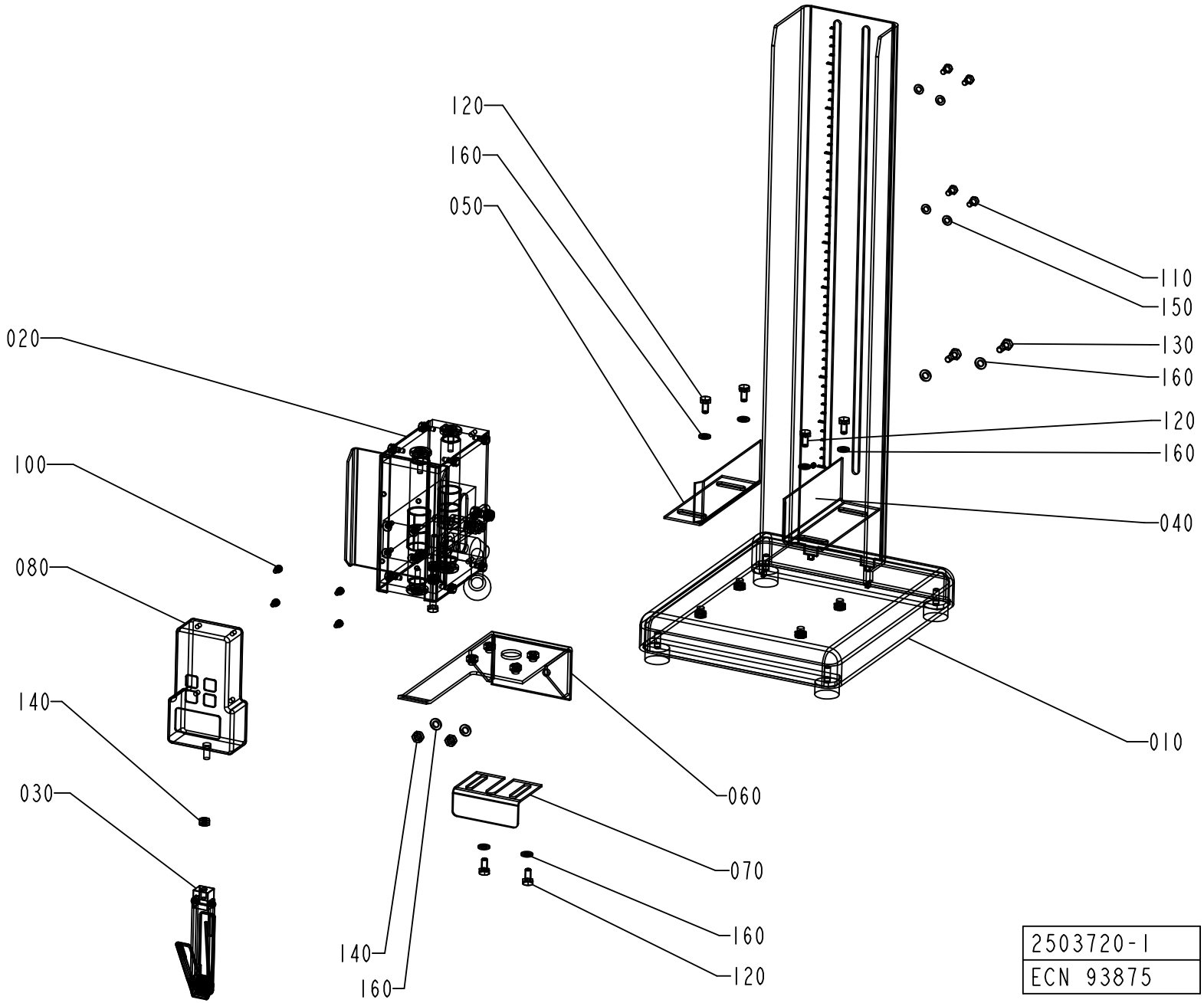

ECM: 94503 - 20010621
Group number: 2503720-0100
Assembly Drawing: 2503720-1_1_AA

Pos	Part No	UN	Qty	Description	Page No
-					
010	2503735-0100		1	FRAME	**10-11**
020	2503722-0100		1	HOLDER	**10-13**
030	2503721-0100		1	GRIPPING DEVICE	**10-15**
040	1338402-0000		1	GUIDE	
050	1338403-0000		1	GUIDE	
060	1338404-0000		1	BRACKET	
070	1338405-0000		1	BRACKET	
080	90243-0456		1	FORCE GAUGE	
100	312155-0285		4	SCREW DIN 7991 MF6S M4X6 A4 70	
110	312105-0325		4	SCREW M6S ISO 4017 M5X10 A480	
120	312105-0366		6	SCREW M6S ISO 4017 M6X12 A480	
130	312105-0368		2	SCREW M6S ISO 4017 M6X16 A480	
140	312605-0316		3	HEXAGON NUT, M6M M6 A280	
150	315105-0146		4	WASHER BRB5,3X10RFR	
160	315105-0153		10	WASHER BRB6,4X12RFR	

Pos	Part No	UN	Qty	Description	Page No

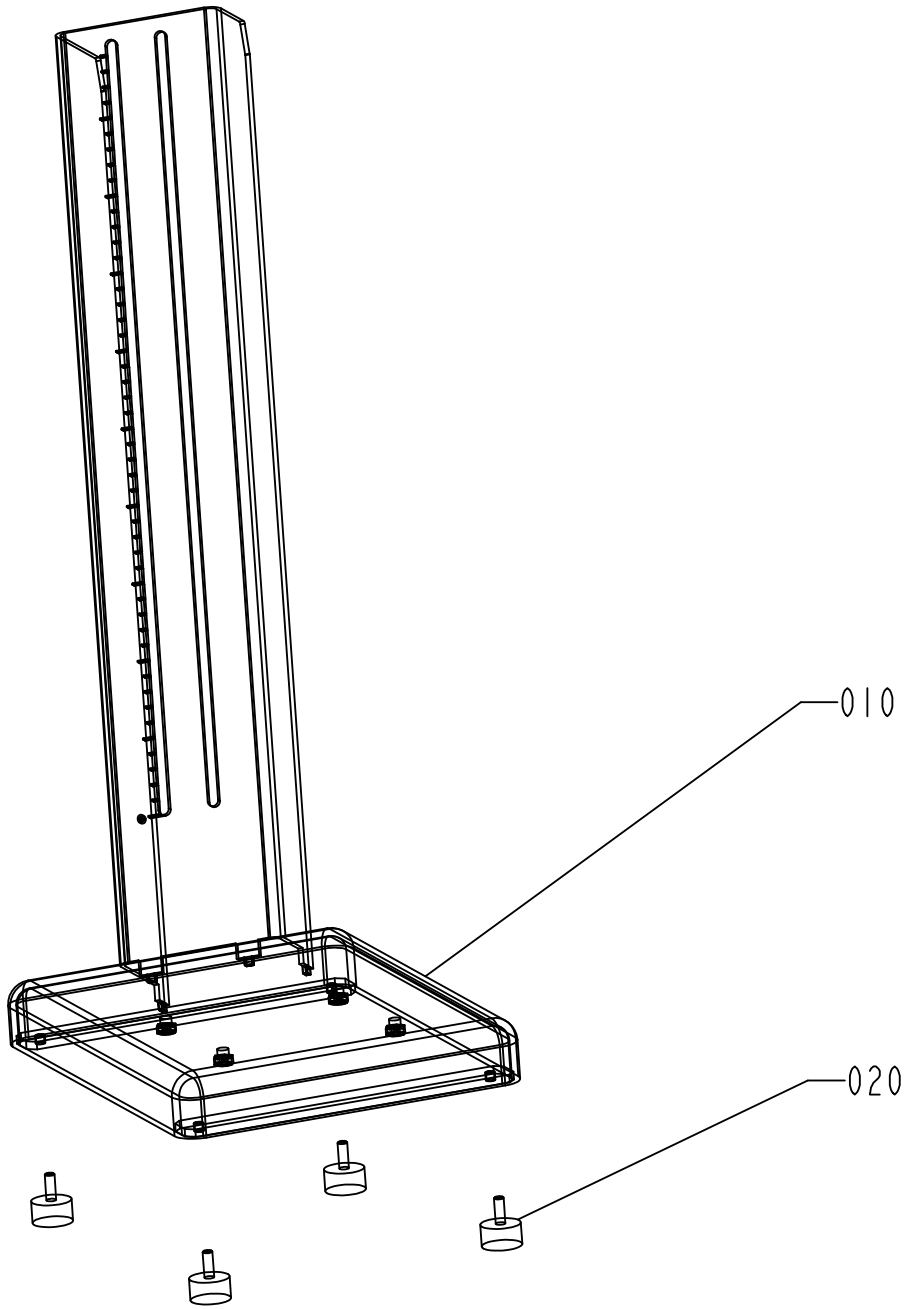

2503735-1
ECN 93875

ECM: 94506 - 20010621
Group number: 2503735-0100
Assembly Drawing: 2503735-1_1_AA

Pos	Part No	UN	Qty	Description	Page No
-					
010	2503719-0000		1	FRAME	
020	90347-0034		4	VIBRATION DAMPER	

Pos	Part No	UN	Qty	Description	Page No

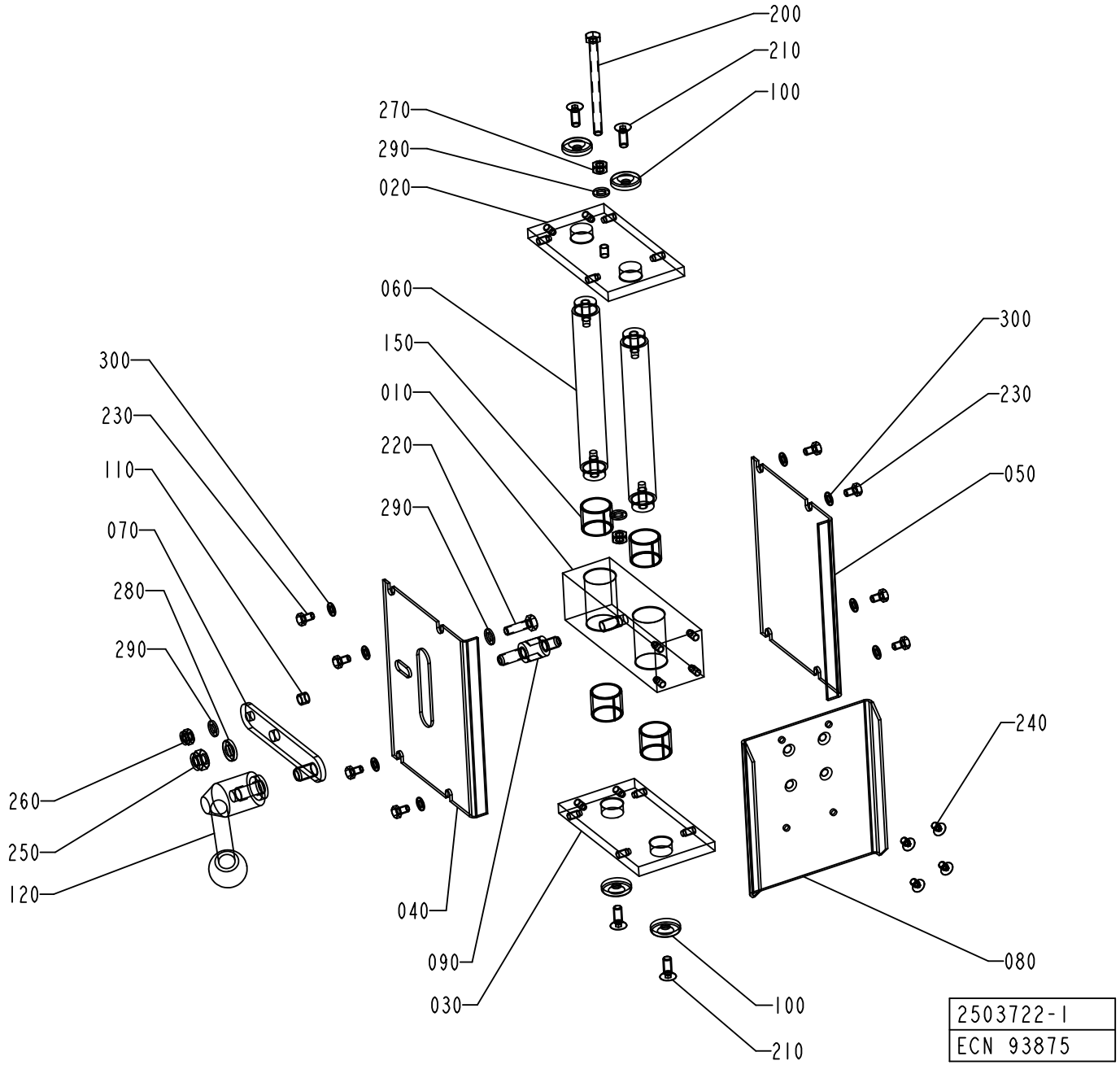
200
210
100
270
290
020
060
150
010
220
290
300
230
110
070
280
290
260
250
120
040
090
030
300
230
050
240
080
100
210
2503722-1
ECN 93875

ECM: 94505 - 20010621
Group number: 2503722-0100
Assembly Drawing: 2503722-1_1_AA

Pos	Part No	UN	Qty	Description	Page No
-					
010	2503723-0000		1	BLOCK	
020	2503725-0000		1	END PLATE	
030	2503724-0000		1	END PLATE	
040	2503727-0000		1	PLATE	
050	2503726-0000		1	PLATE	
060	2503732-0000		2	SHAFT	
070	2503728-0000		1	ARM	
080	2503729-0000		1	MOUNTING PLATE	
090	2503730-0000		1	SPACER	
100	2503734-0000		4	WASHER	
110	2503731-0000		1	SLEEVE	
120	2503733-0000		1	HANDLE	
150	321141-0260		4	BEARING BUSH W/O FLANGE, 20X23X20 MM	
200	312109-0386		1	SCREW M6S ISO 4017 M6X80 A480	
210	312155-0368		4	SCREW DIN 7991 MF6S M6X16 A4 70	
220	312105-0370		1	SCREW M6S ISO 4017 M6X20 A480	
230	312105-0323		8	SCREW M6S ISO 4017 M5X8 A480	
240	312155-0323		4	SCREW DIN 7991 MF6S M5X8 A4 70	
250	312812-0318		1	HEXAGON NUT, NY-LOCK M8 A480	
260	312812-0316		1	HEXAGON NUT, NY-LOCK M6 A480	
270	312605-0316		2	HEXAGON NUT, M6M M6 A280	
280	315115-0165		1	WASHER PLAIN, TBRB 8,4/16 H=3	
290	315105-0153		4	WASHER BRB6,4X12RFR	
300	315105-0146		8	WASHER BRB5,3X10RFR	

Pos	Part No	UN	Qty	Description	Page No

GRIPPING DEVICE

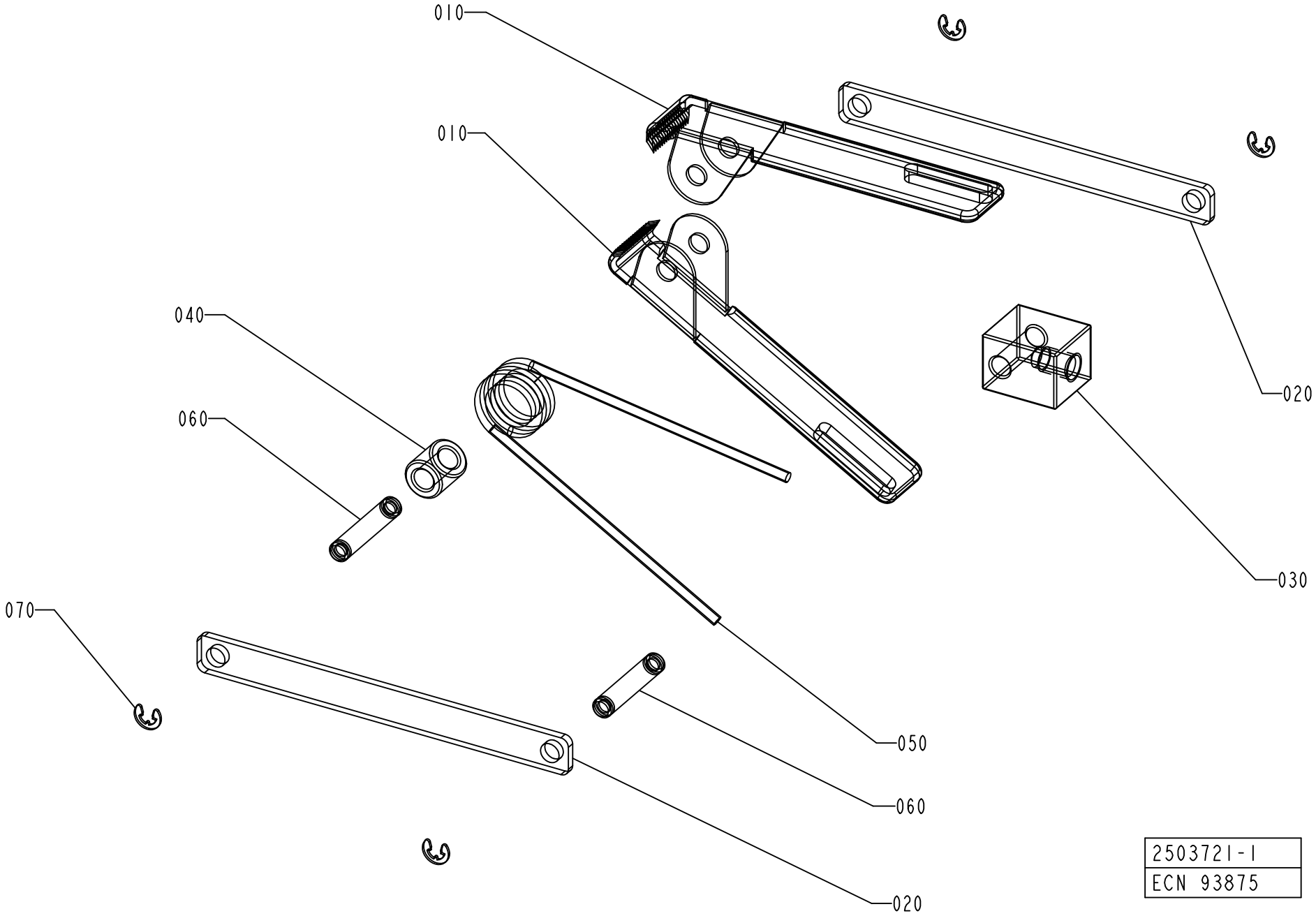

ECM: 94504 - 20010621
Group number: 2503721-0100
Assembly Drawing: 2503721-1_1_AA

Pos	Part No	UN	Qty	Description	Page No
-					
010	1528838-0000		2	CLAMP	
020	1528840-0000		2	LEVER	
030	1528841-0000		1	HOLDER	
040	1528839-0000		1	SLEEVE	
050	1528887-0000		1	TORSION SPRING	
060	1528842-0000		2	PIN	
070	315755-0105		4	RETAINING RING SHAFT DIN 6799 3,2 A2	

Pos	Part No	UN	Qty	Description	Page No

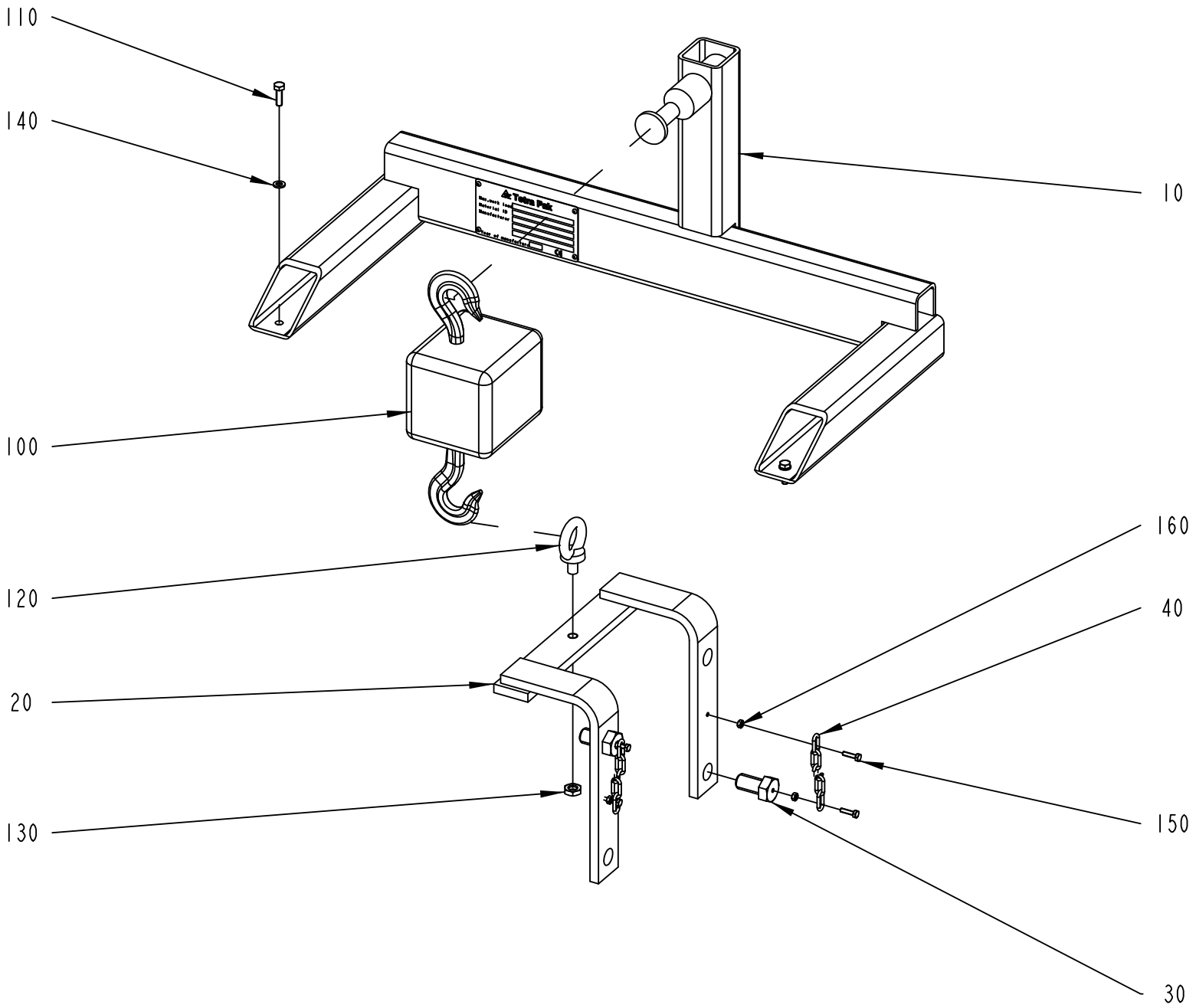

2646428-1
ECM 152887

ECM: 153155 - 20040511
Group number: 2646428-0100
Assembly Drawing: 2646428-1_1_AA

This list covers pages from 10-16 to 10-19

Pos	Part No	UN	Qty	Description	Page No
-					
010	2587286-0000		1	HOLDER	
020	2630482-0000		1	BRACKET	
030	2661094-0000		2	SCREW	
040	2662211-0000		2	CHAIN	
050	2675434-0000		1	SUPPORT	
100	90459-3618		1	HAND OPERATED CHAIN-HOIST, P.H.D. 250KG	
110	312105-0370		2	SCREW M6S ISO 4017 M6X20 A480	
120	318301-0120		1	LIFTING EYE BOLT, TYPE, LT, M10	
130	312625-0320		1	HEXAGON THIN NUT, EN 24035 ML6M M10 A4	
140	315105-0153		2	WASHER BRB6,4X12RFR	
150	312101-0293		4	SCREW M6S M4X16 FZB	
160	312607-0312		4	HEXAGON NUT, EN 24032 M6M M4 A480	
170	312105-0455		2	SCREW M6S ISO 4017 M8X30 A480	
200	2690557-0101		1	DOCUMENT FOLDER	

Pos	Part No	UN	Qty	Description	Page No

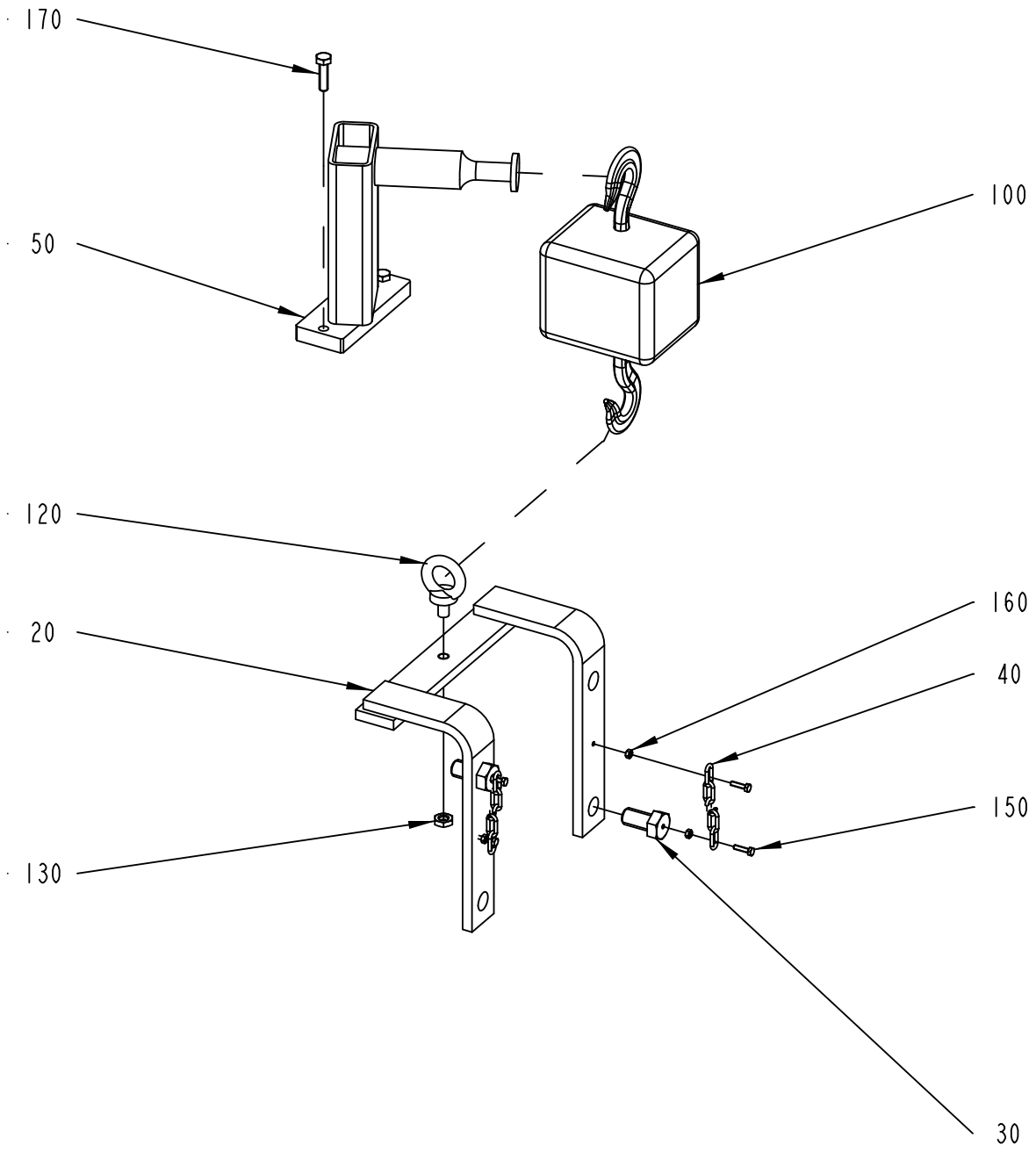

2646428-2
ECM 152887

ECM: 153155 - 20040511
Group number: 2646428-0100
Assembly Drawing: 2646428-2_1_AA

This list covers pages from 10-16 to 10-19

Pos	Part No	UN	Qty	Description	Page No
-					
010	2587286-0000		1	HOLDER	
020	2630482-0000		1	BRACKET	
030	2661094-0000		2	SCREW	
040	2662211-0000		2	CHAIN	
050	2675434-0000		1	SUPPORT	
100	90459-3618		1	HAND OPERATED CHAIN-HOIST, P.H.D. 250KG	
110	312105-0370		2	SCREW M6S ISO 4017 M6X20 A480	
120	318301-0120		1	LIFTING EYE BOLT, TYPE, LT, M10	
130	312625-0320		1	HEXAGON THIN NUT, EN 24035 ML6M M10 A4	
140	315105-0153		2	WASHER BRB6,4X12RFR	
150	312101-0293		4	SCREW M6S M4X16 FZB	
160	312607-0312		4	HEXAGON NUT, EN 24032 M6M M4 A480	
170	312105-0455		2	SCREW M6S ISO 4017 M8X30 A480	
200	2690557-0101		1	DOCUMENT FOLDER	

Pos	Part No	UN	Qty	Description	Page No

This page is intentionally left blank.

ECM: 121958 - 20030403
Group number: 2559112-0100
Assembly Drawing:

Pos	Part No	UN	Qty	Description	Page No
-					
10	90410-0338		1	PORTABLE INDICATOR, MICROMITE II	
20	90326-0308		1	THERMOCOUPLE CABLE FOR CE-557793/MALE 5M	
30	90326-0309		1	THERMOCOUPLE CABLE FOR CE-557793/FEMALE	
40	90194-0113		1	ADHESIVE LABEL, CALIBRATED & DATE	
50	90410-0337		1	CALIBRATION INSTRUMENT 5100071-001	
60	90326-0310		1	THERMOCOUPLE, 5130020-000	

Pos	Part No	UN	Qty	Description	Page No

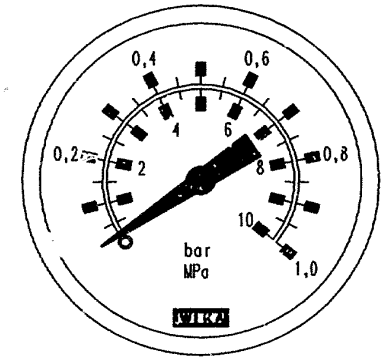
0,4
0,6
0,2
0,8
1
2
4
6
8
10
bar
MPa
1,0
WIKA

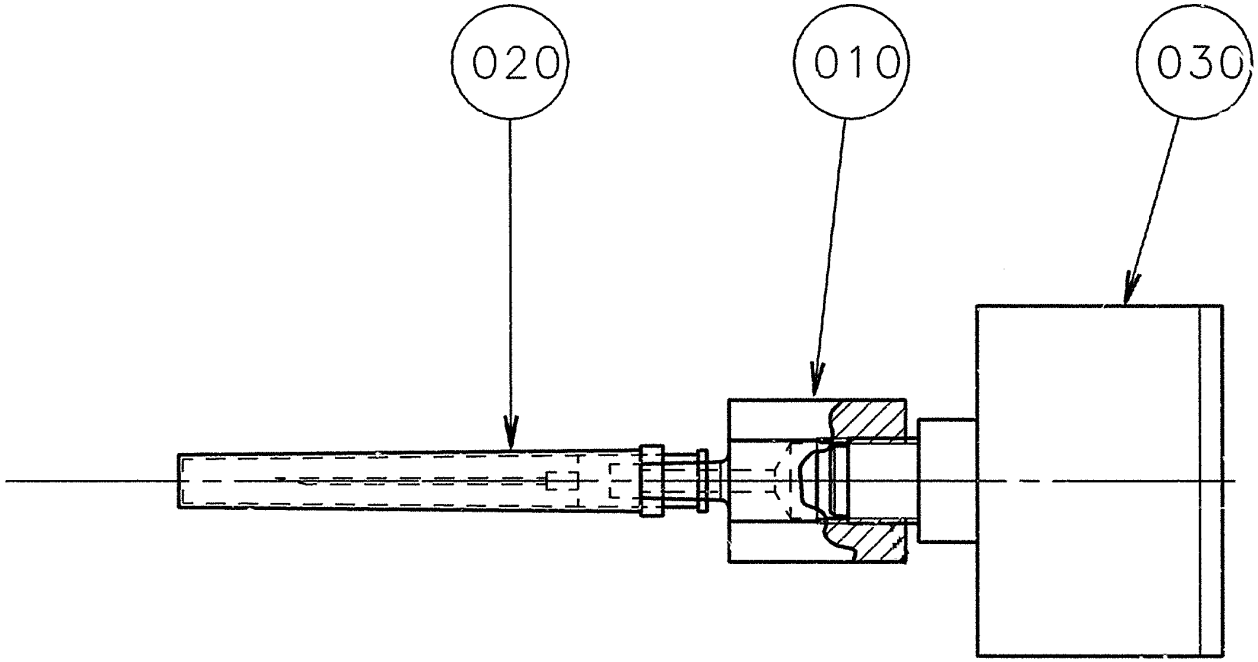
020
010
030

ECM: 110000 - 20030514
Group number: 1478583-0100
Assembly Drawing: 1478583-1_1_AA

Pos	Part No	UN	Qty	Description	Page No
-					
010	1478584-0000		1	NIPPLE	
020	1478585-0000		1	NEEDLE	
030	90043-0043		1	PRESSURE GAUGE 0-10 BAR 1/8"	

Pos	Part No	UN	Qty	Description	Page No

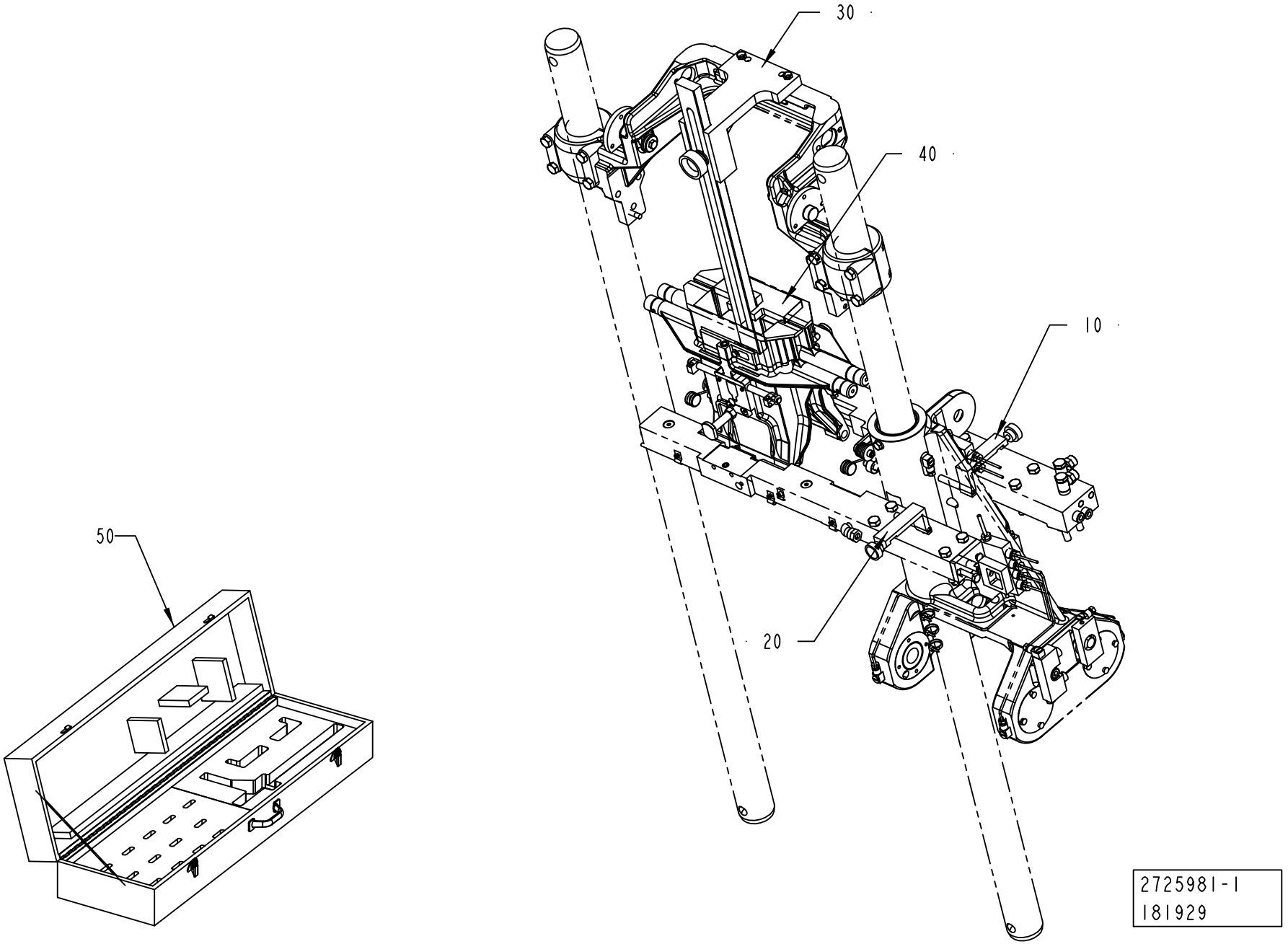
30
40
10
20
50
2725981-1
181929

ECM: 218478 - 20050527
Group number: 2725981-0100
Assembly Drawing: 2725981-1_1_AA

Pos	Part No	UN	Qty	Description	Page No
TBA 0200S					
040	1140283-0000		1	TEMPLATE	
TBA 0200SQ, TBA 0250SQ					
040	2751518-0000		1	TEMPLATE	
TBA 0250S, TBA 0200M					
040	574455-0000		1	TEMPLATE	
TBA 0330S, TBA 0200B, TBA 0250B					
040	1523091-0000		1	TEMPLATE	
TBA 0500B, TBA 1000B					
040	1140268-0000		1	TEMPLATE	
TBA 0500S					
040	1532998-0000		1	TEMPLATE	
TBA 1000S					
040	1140320-0000		1	TEMPLATE	
TBA 1000SQ					
040	1498117-0000		1	TEMPLATE	
TBA 1500S					
040	1478190-0000		1	TEMPLATE	
TBA 1890S, TBA 2000S					
040	2649440-0000		1	TEMPLATE	
TPA 0250SQ, TPA 0200SQ					
040	1539893-0000		1	TEMPLATE	
TPA 0330SQ					
040	1539892-0000		1	TEMPLATE	
TPA 0500SQ					
040	2503692-0000		1	TEMPLATE	
TPA 1000SQ, TPA 0750SQ					
040	2503694-0000		1	TEMPLATE	
Common Parts					
010	2644317-0100		1	TEMPLATE	**10-27**
020	2644318-0100		1	TEMPLATE	**10-29**
030	2725982-0100		1	TEMPLATE	**10-31**
050	2710508-0000		1	TOOL BOX	

Pos	Part No	UN	Qty	Description	Page No

Machine Type | Group Description | Used-In | Group Number | Page No

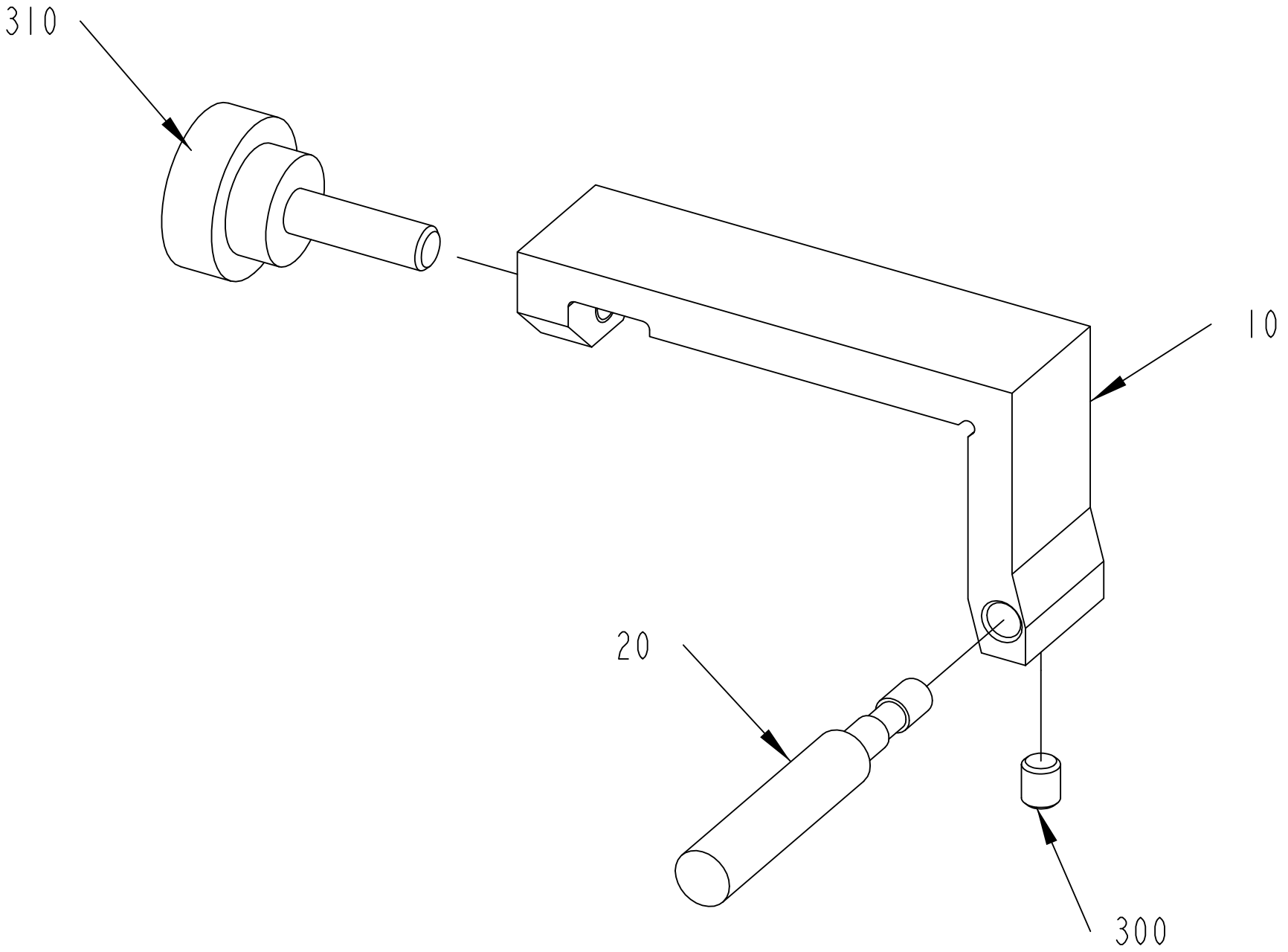
310
10
20
300
2644317-1
181929

ECM: 195311 - 20041203
Group number: 2644317-0100
Assembly Drawing: 2644317-1_1_AA

Pos	Part No	UN	Qty	Description	Page No
-					
010	2640116-0000		1	TOOL	
020	2640186-0000		1	TOOL	
300	312318-0321		1	SCREW ISO4029 M5X6 A4	
310	90051-0035		1	KNOB, EXTERNAL THREAD. NO. 8308-1135	

Pos	Part No	UN	Qty	Description	Page No

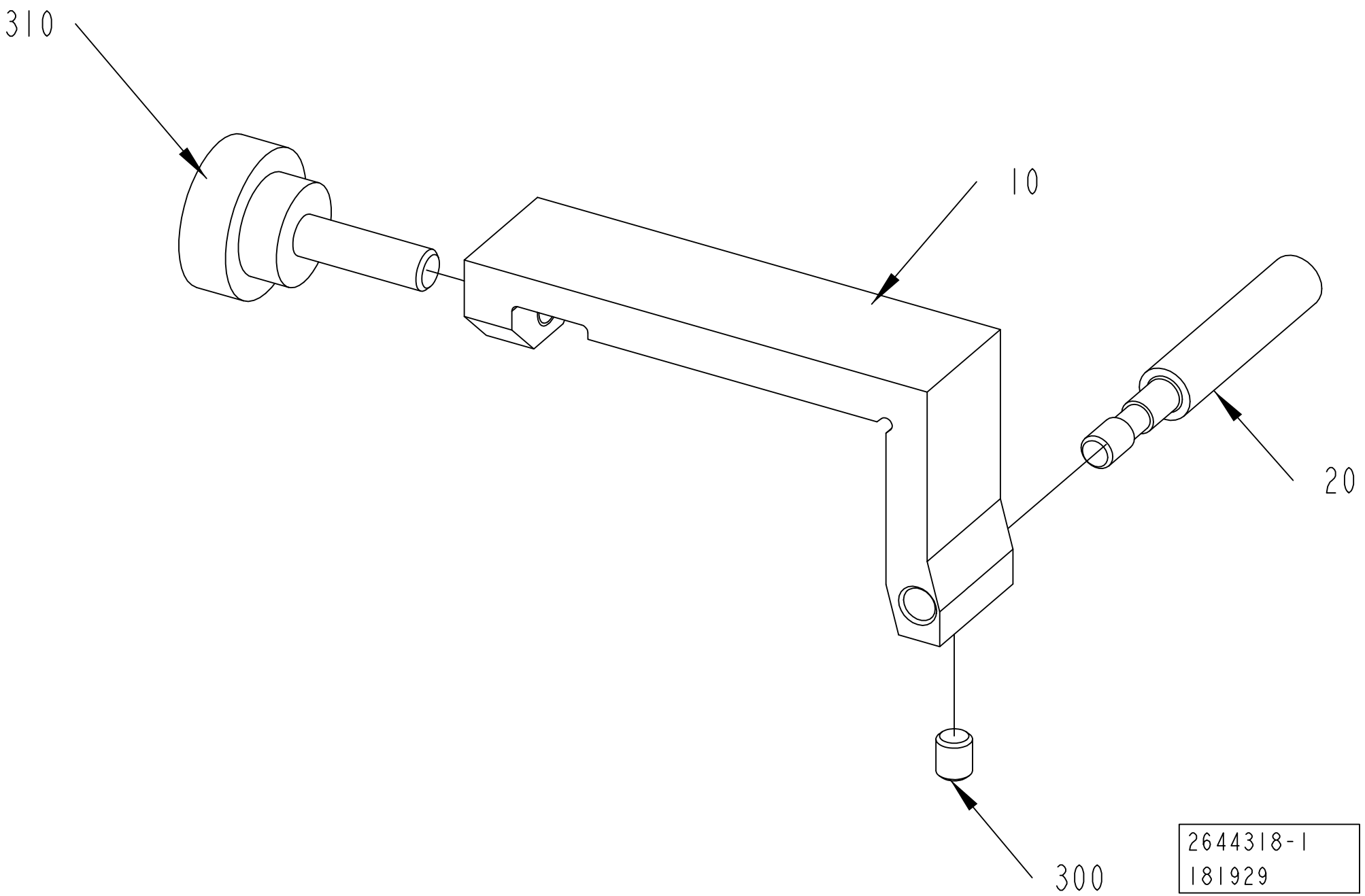
310
10
20
300
2644318-1
181929

ECM: 195312 - 20041203
Group number: 2644318-0100
Assembly Drawing: 2644318-1_1_AA

Pos	Part No	UN	Qty	Description	Page No
-					
010	2640116-0000		1	TOOL	
020	2640186-0000		1	TOOL	
300	312318-0321		1	SCREW ISO4029 M5X6 A4	
310	90051-0035		1	KNOB, EXTERNAL THREAD. NO. 8308-1135	

Pos	Part No	UN	Qty	Description	Page No

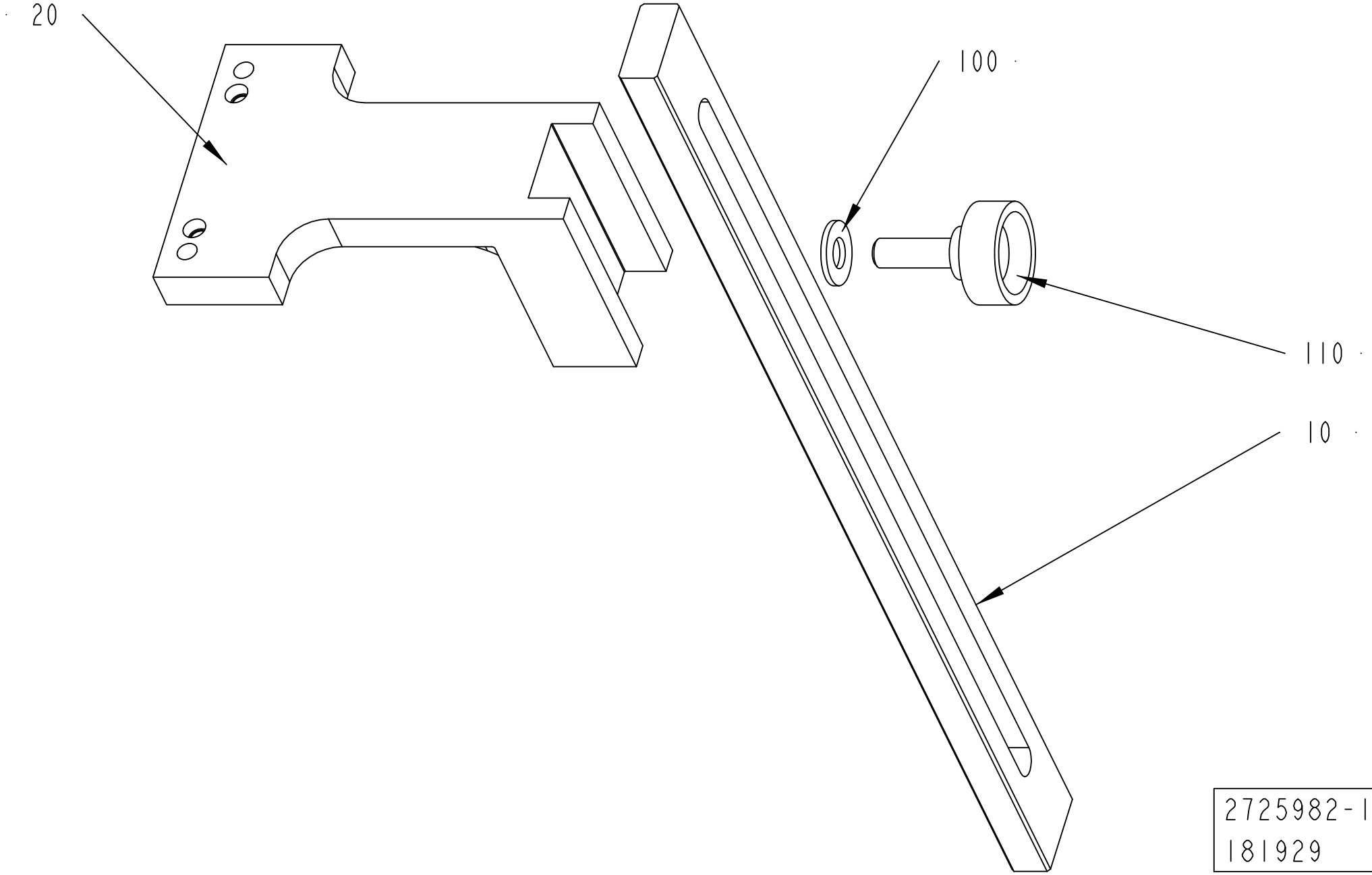
20
100
110
10
2725982-1
181929

ECM: 195314 - 20041203
Group number: 2725982-0100
Assembly Drawing: 2725982-1_1_AA

Pos	Part No	UN	Qty	Description	Page No
-					
010	2640814-0000		1	RULER	
020	2640292-0000		1	TOOL	
100	315105-0173		1	WASHER BRB10,5X22RFR	
110	318856-0109		1	KNOB, EXTERNAL THREAD. NO. 8308-1658	

Pos	Part No	UN	Qty	Description	Page No

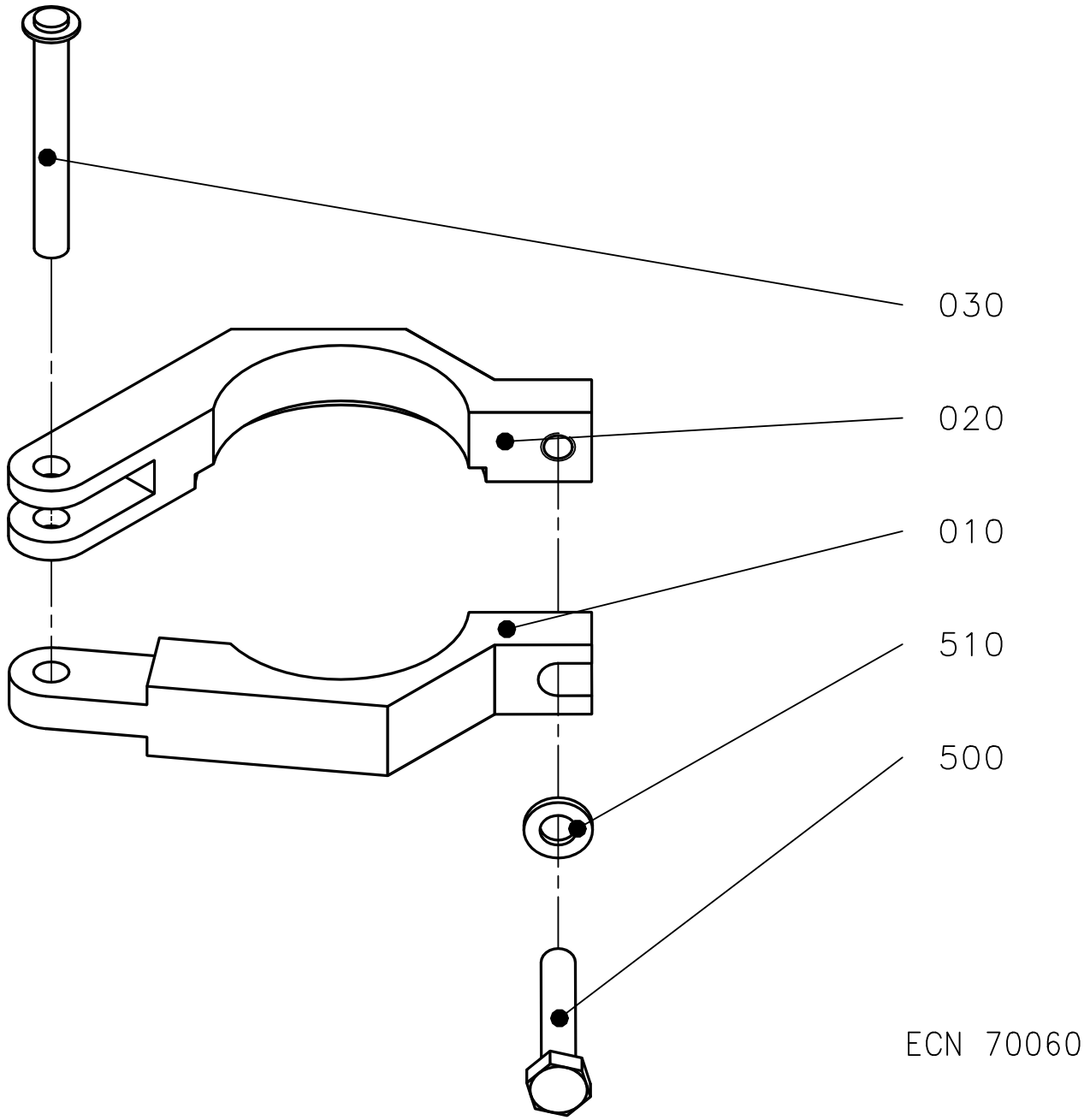
030
020
010
510
500
ECN 70060

ECM: 70060 - 19960315
Group number: 1035362-0100
Assembly Drawing: 1035362-1_1_AA

Pos	Part No	UN	Qty	Description	Page No
-					
010	1037696-0000		1	CLAMPING PIECE	
020	1037697-0000		1	CLAMPING PIECE	
030	74655-0000		1	SHAFT	
500	312105-0374		1	SCREW M6S ISO 4014 M6X30 A480	
510	315105-0153		1	WASHER BRB6,4X12RFR	

Pos	Part No	UN	Qty	Description	Page No

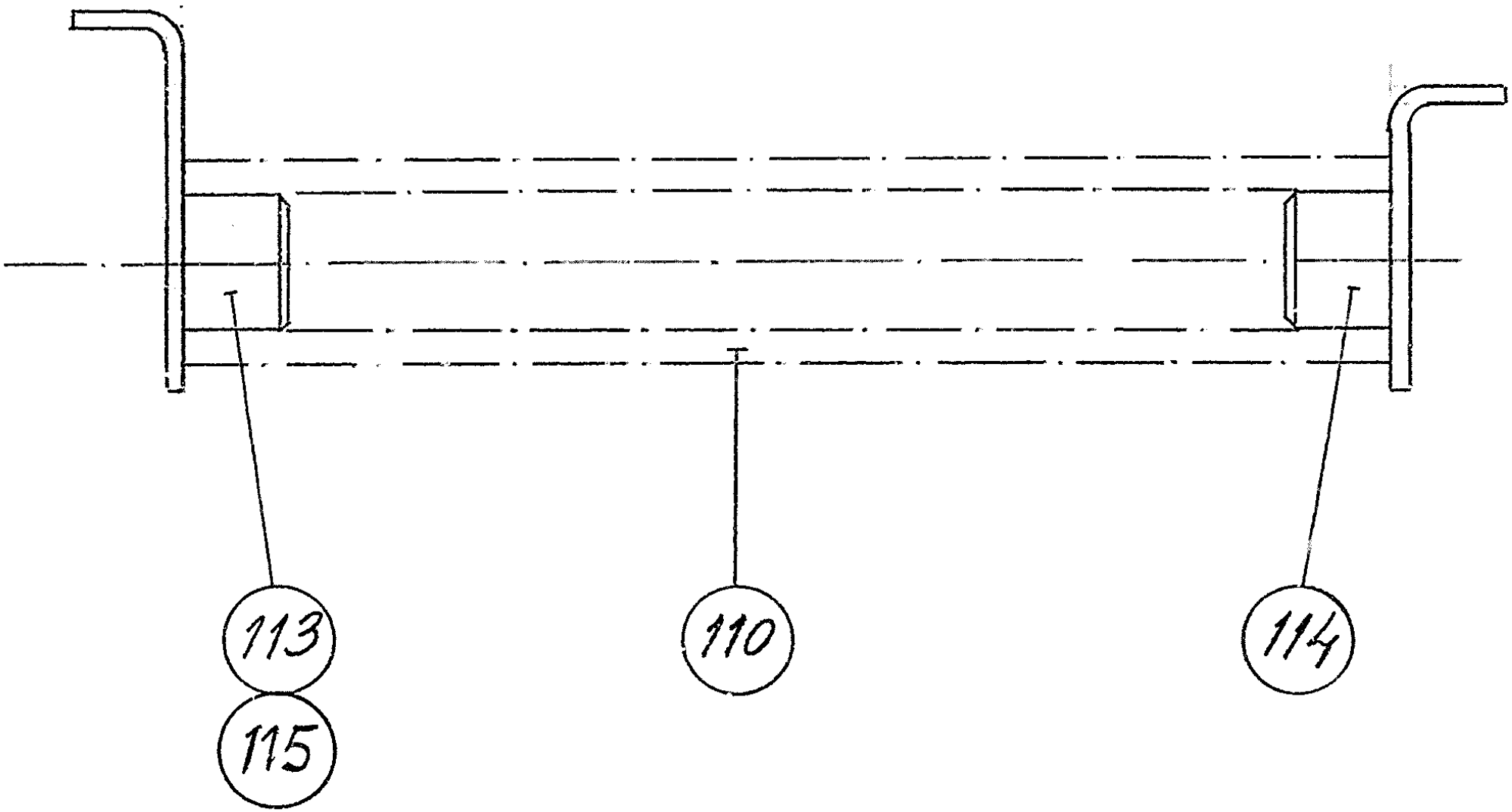
113
115
110
114

ECM: 71001 - 19970802
Group number: 72846-0101
Assembly Drawing: 72846-1_1_AA

Pos	Part No	UN	Qty	Description	Page No
-					
110	72887-0000		1	COMPRESSION SPRING	
113	72888-0001		1	SPRING BRACKET	
114	72888-0002		1	SPRING BRACKET	

Pos	Part No	UN	Qty	Description	Page No

This page is intentionally left blank.

ECM: 226370 - 20050805
Group number: 1095884-0100
Assembly Drawing:

Pos	Part No	UN	Qty	Description	Page No
TBA 0330S, TBA 0200B, TBA 0250S, TBA 0200S, TBA 0200M, TBA 0250B, TBA 0200SQ, TPA 0250SQ, TPA 0330SQ, TPA 0200SQ, TBA 0250SQ					
010	76131-0000		1	ASSEMBLY CONE	
011	76132-0000		1	ASSEMBLY TOOL	
012	78801-0000		1	CALIBRATION TOOL	
030	90091-0387		1	ASSEMBLY TOOL	
TBA 0500S, TBA 0500B, TBA 1000S, TBA 1000SQ, TBA 1000B, TBA 1500S, TPA 1000SQ, TPA 0500SQ, TPA 0750SQ					
020	90091-0377		1	ASSEMBLY TOOL SLEEVE GLYD RING	
040	90091-0378		1	ASSEMBLY TOOL SLEEVE AQ-SEAL	
TBA 1890S, TBA 2000S					
020	2764475-0000		1	ASSEMBLY TOOL	
040	90091-0378		1	ASSEMBLY TOOL SLEEVE AQ-SEAL	
040	2778300-0000		1	ASSEMBLY TOOL	

Pos	Part No	UN	Qty	Description	Page No

Machine Type | Group Description | Used-In | Group Number | Page No

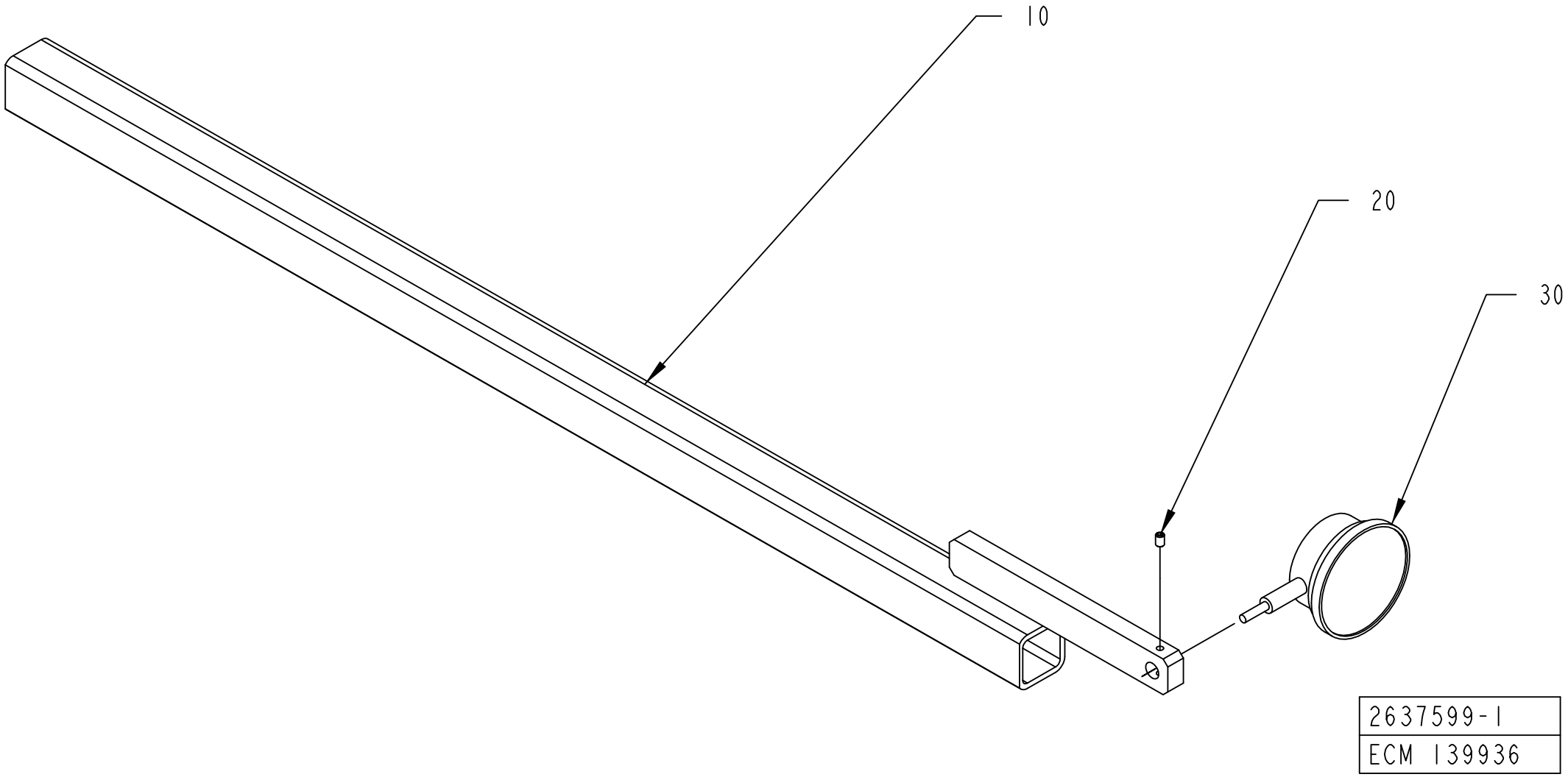
10
20
30
2637599-1
ECM 139936

ECM: 139936 - 20031001
Group number: 2637599-0100
Assembly Drawing: 2637599-1_1_AA

Pos	Part No	UN	Qty	Description	Page No	Pos	Part No	UN	Qty	Description	Page No
-											
010	2637600-0000		1	TOOL							
020	312318-0285		1	SCREW ISO4029 M4X6 A4							
030	90243-0461		1	MEASURE GAUGE,6916-0109							

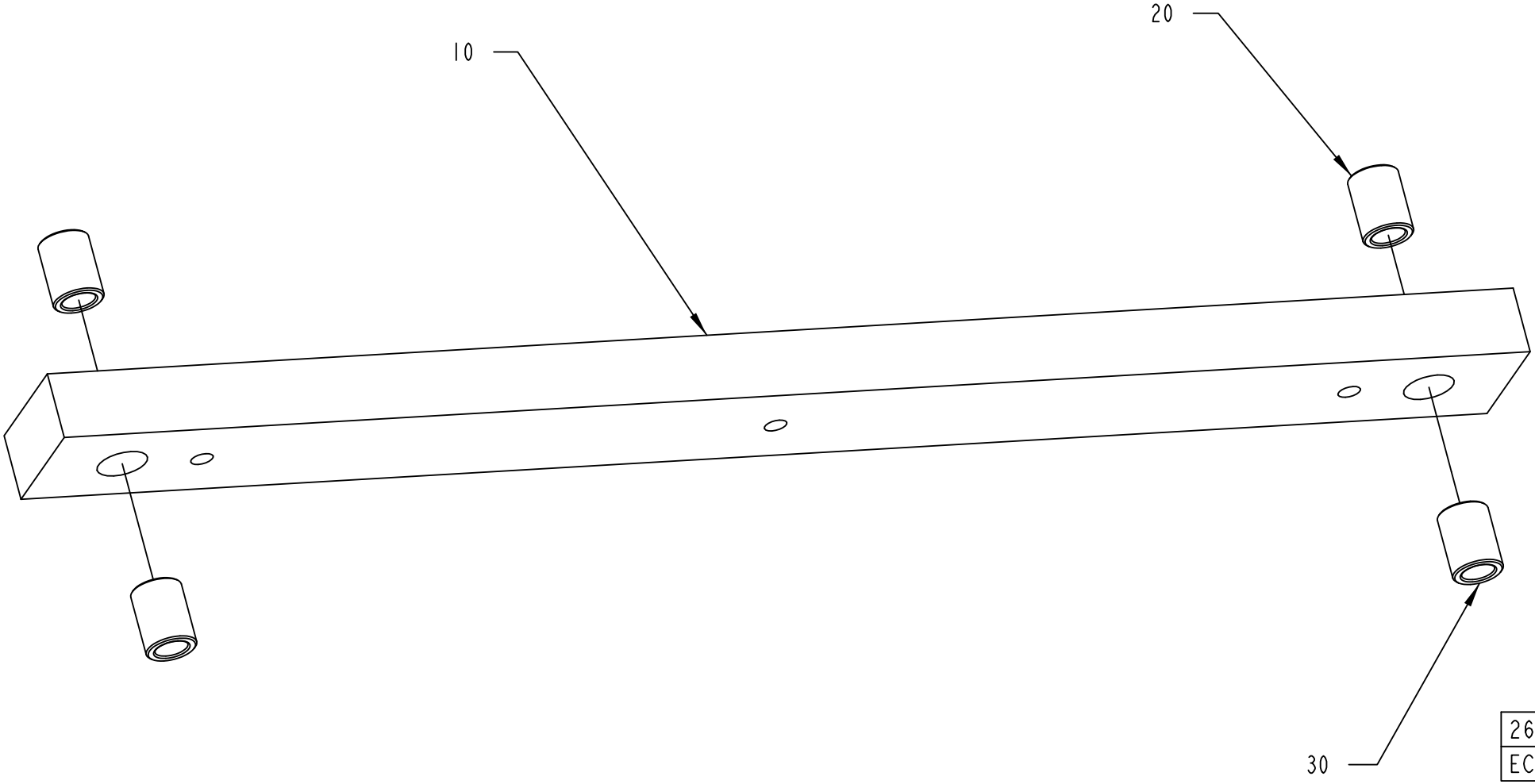

2637602-1
ECM 139936

ECM: 139936 - 20031001
Group number: 2637602-0100
Assembly Drawing: 2637602-1_1_AA

Pos	Part No	UN	Qty	Description	Page No
-					
010	2637603-0000		1	TOOL	
020	2637604-0000		2	BUSHING	
030	2637605-0000		2	BUSHING	

Pos	Part No	UN	Qty	Description	Page No

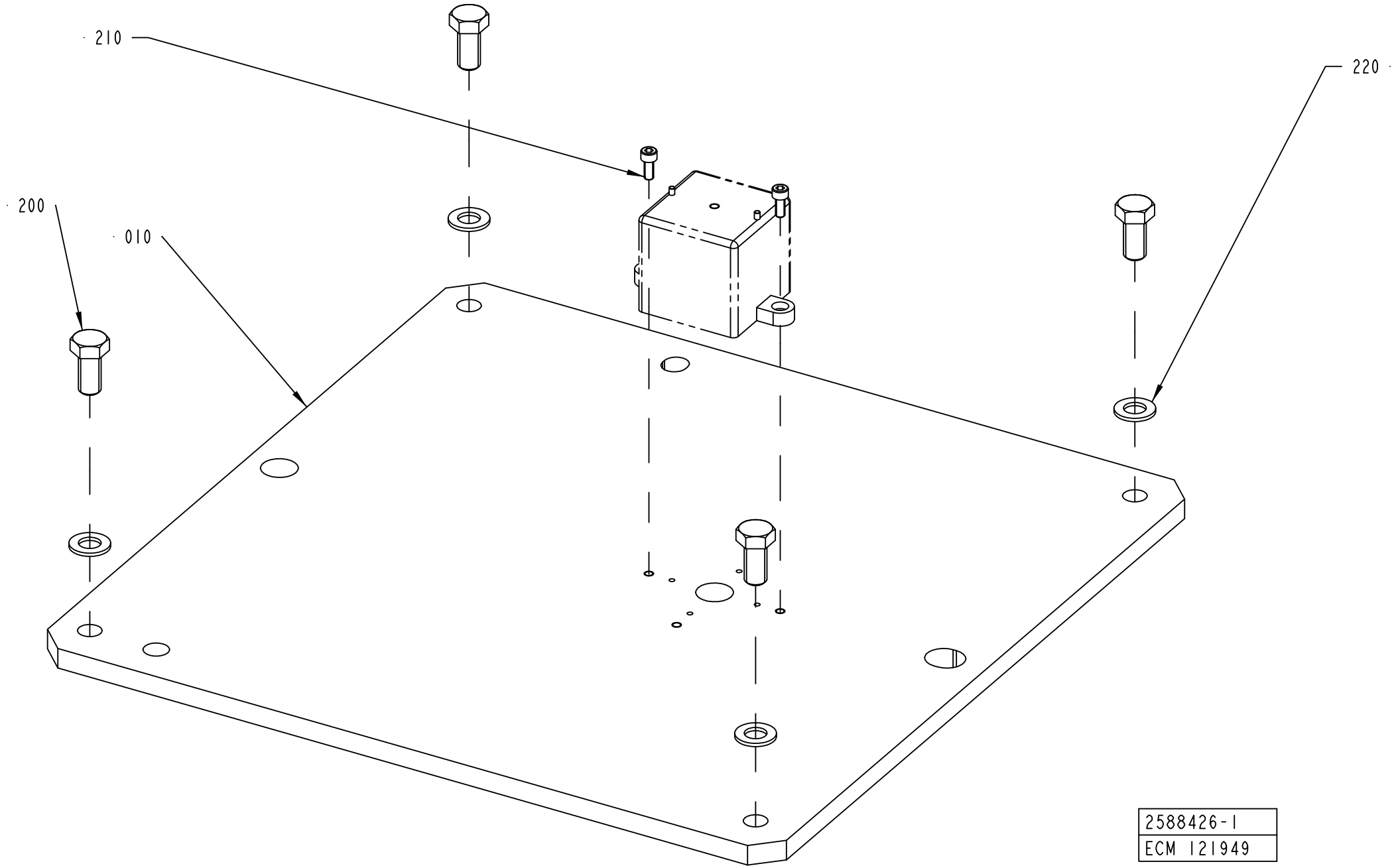
210
220
200
010
2588426-1
ECM 121949

ECM: 121961 - 20030403
Group number: 2588426-0100
Assembly Drawing: 2588426-1_1_AA

Pos	Part No	UN	Qty	Description	Page No
-					
010	2588425-0000		1	PLATE	
200	312105-0534		4	SCREW M6S ISO 4017 M12X25 A480	
210	312115-0327		2	SCREW ISO4762 M5X12 A4 80	
220	315101-0176		4	WASHER PLAIN, BRB, 12/22 H=2	

Pos	Part No	UN	Qty	Description	Page No

This page is intentionally left blank.

ECM: 188276 - 20041104
Group number: 2564074-0100
Assembly Drawing:

Pos	Part No	UN	Qty	Description	Page No
-					
010	1532459-0100		1	SETTING TOOL	**10-47**
020	2644202-0100		1	SETTING TOOL	**10-49**
100	777170-0107		1	HOOK SPANNER	

Pos	Part No	UN	Qty	Description	Page No

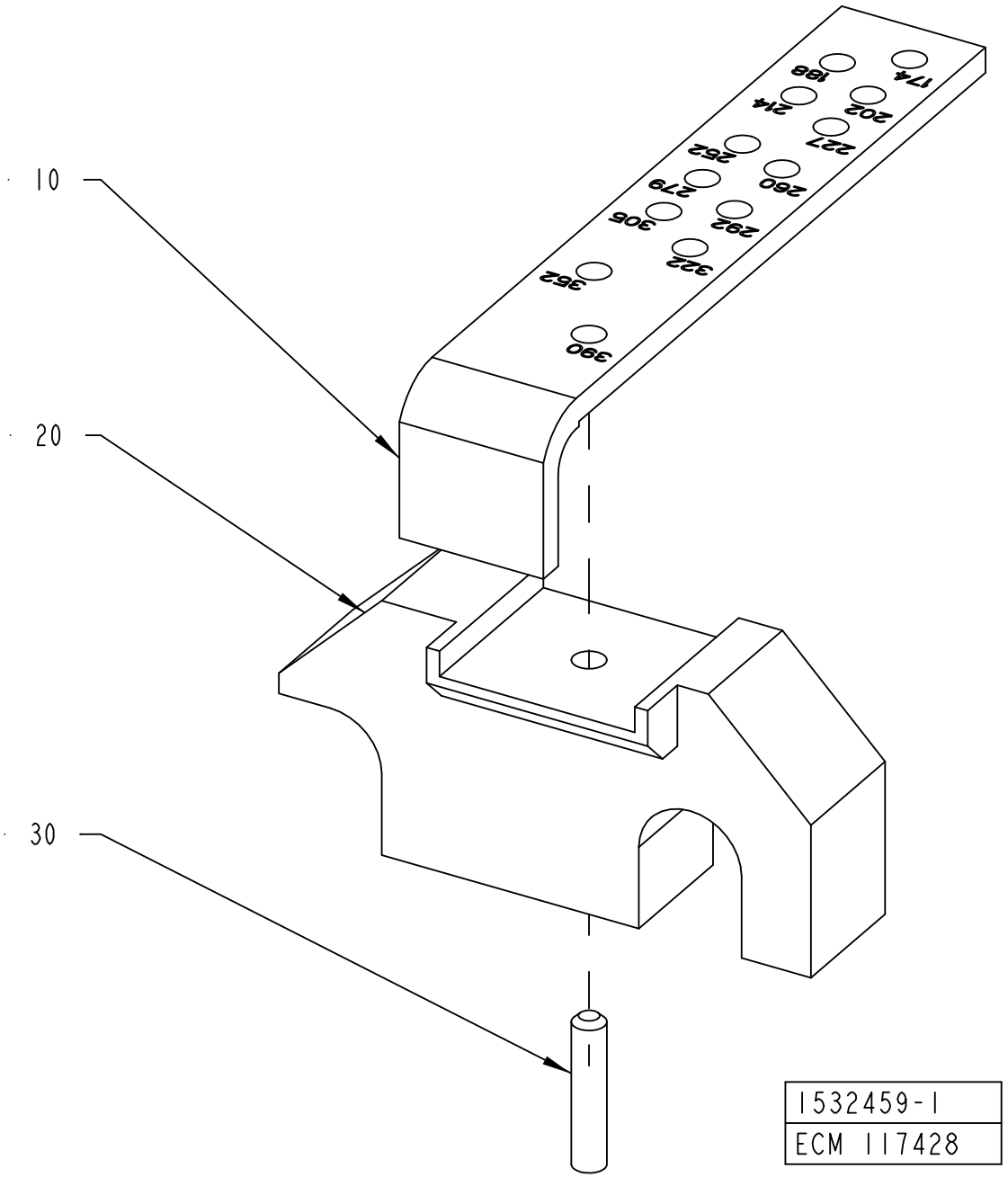
10
20
30
174
188
202
214
227
262
260
279
306
292
322
362
390
1532459-1
ECM 117428

ECM: 185718 - 20041005
Group number: 1532459-0100
Assembly Drawing: 1532459-1_1_AB

Pos	Part No	UN	Qty	Description	Page No
-					
010	1538234-0000		1	SPACER	
020	1532466-0000		1	BRACKET	
030	311103-0351		1	PARALLEL PIN ISO 2338 6M6X16 A1	

Pos	Part No	UN	Qty	Description	Page No

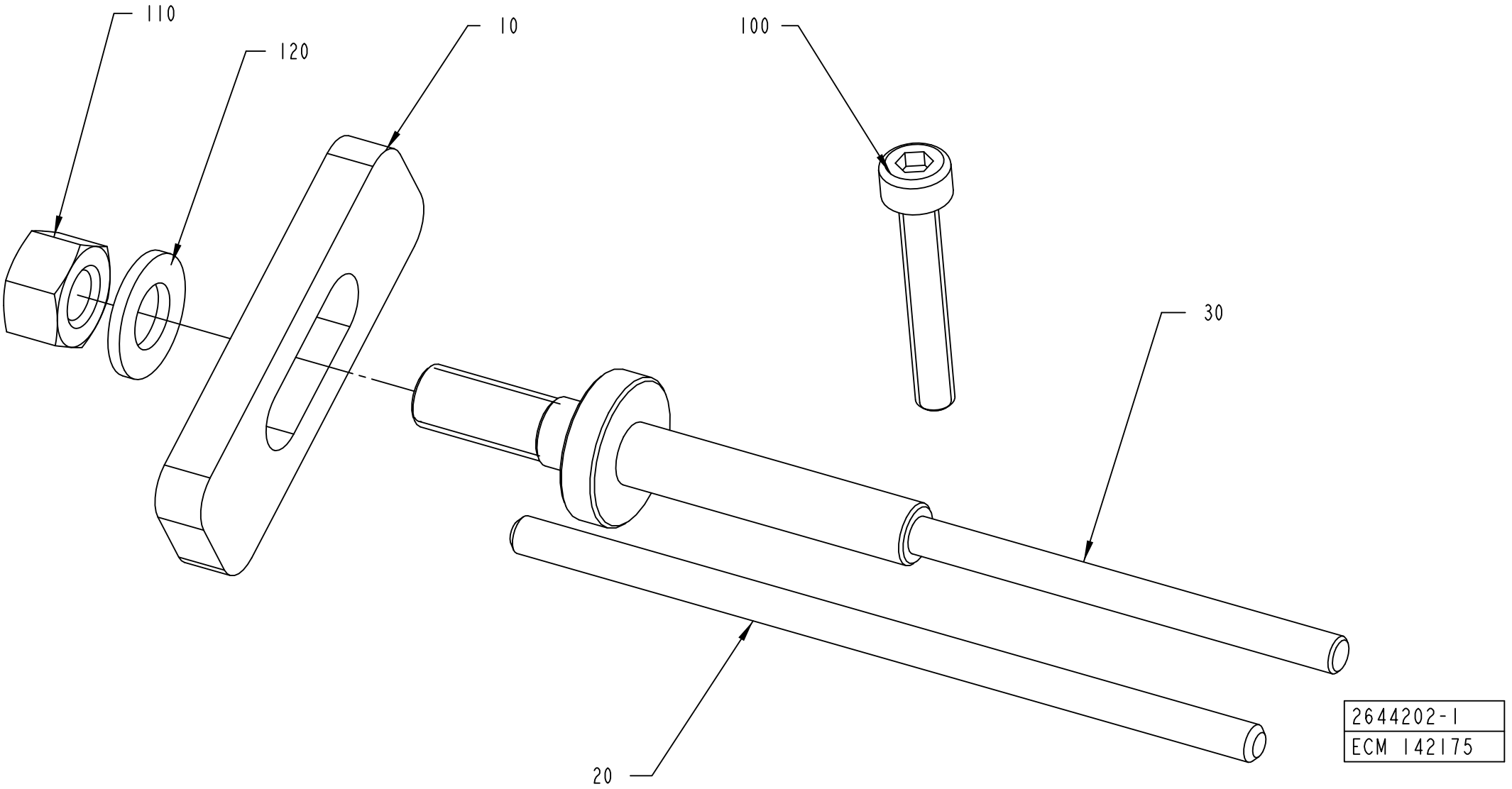
110
120
10
100
30
20
2644202-1
ECM 142175

ECM: 188277 - 20041104
Group number: 2644202-0100
Assembly Drawing: 2644202-1_1_AA

Pos	Part No	UN	Qty	Description	Page No
-					
010	2644203-0000		1	PLATE	
020	2644204-0000		1	SPINDLE	
030	2644205-0000		1	SPINDLE	
100	312115-0230		1	SCREW ISO4762 M3X20 A4 80	
110	312605-0314		1	HEXAGON NUT, M6M M5 A280	
120	315105-0146		1	WASHER BRB5,3X10RFR	

Pos	Part No	UN	Qty	Description	Page No

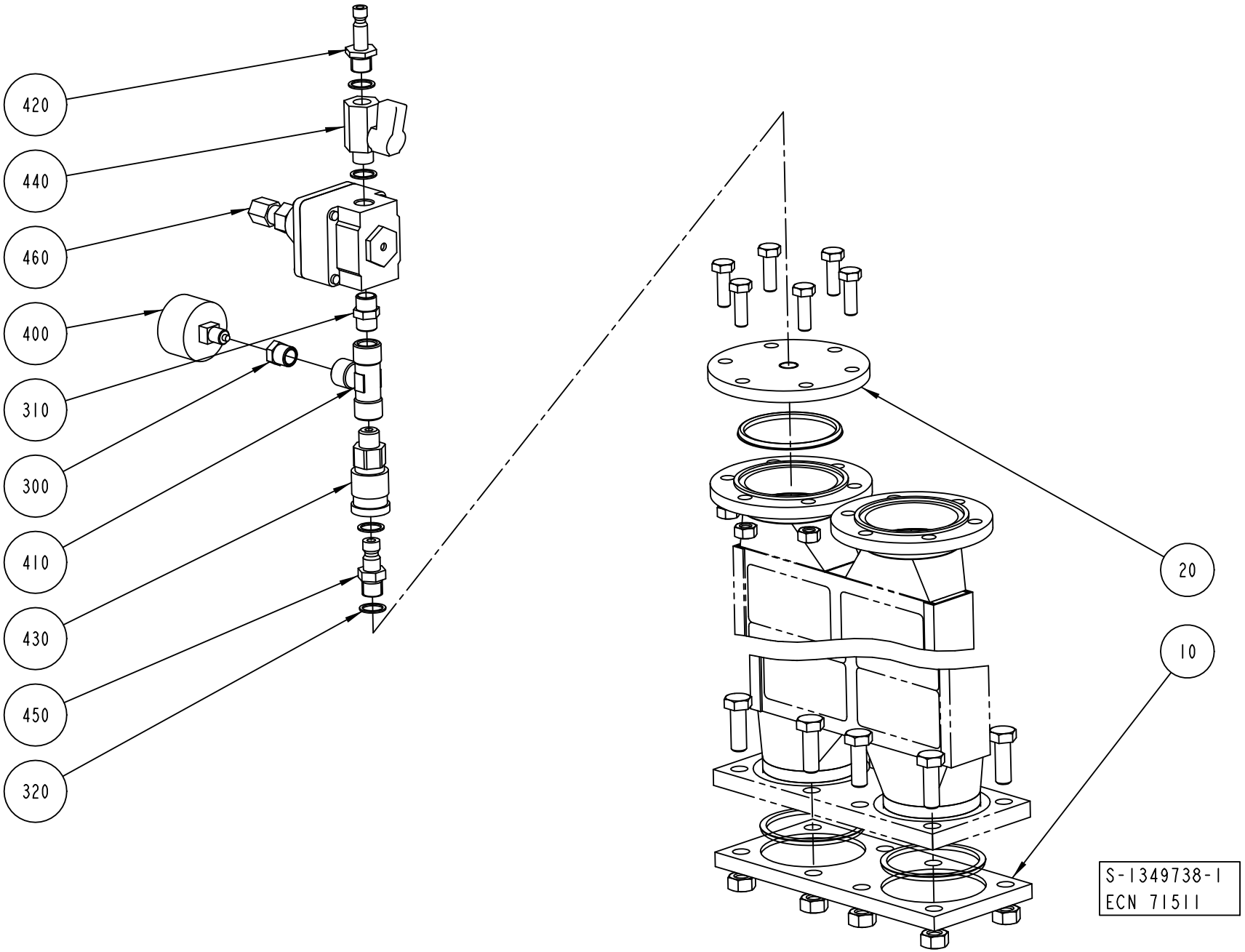
420
440
460
400
310
300
410
430
450
320
20
10
S-1349738-1
ECN 71511

ECM: 71511 - 19981102
Group number: 1349738-0100
Assembly Drawing: 1349738-1_1_AA

Pos	Part No	UN	Qty	Description	Page No
-					
010	1348263-0000		1	FLANGE	
020	979951-0000		1	FLANGE	
300	342701-0201		1	BUSHING,INT./EXT.G-THREAD G1/4"-G1/8"	
310	342700-0110		1	NIPPLES,HEXAGON,EXT.G-THREAD G1/4"-G1/4"	
320	315233-0110		4	WASHER CAPTIVE SEALING G1/4	
400	90043-0021		1	PRESSURE GAUGE 0-1 BAR 1/8" D=40	
410	90140-0018		1	T-PIPE, INT. THREAD, 2003-1/4	
420	90163-0007		1	CONNECTION	
430	90163-0016		1	QUICK COUPLING, (F) LP 006-0-WR013	
440	90187-0045		1	BALL VALVE G1/4 CR PL	
450	90163-0113		1	QUICK COUPLING, (M) LP-006-1-WR013-22	
460	90113-0056		1	REGULATOR, 11-818-998	
500	567372-0000		1	INSTRUCTION FOR USE	

Pos	Part No	UN	Qty	Description	Page No

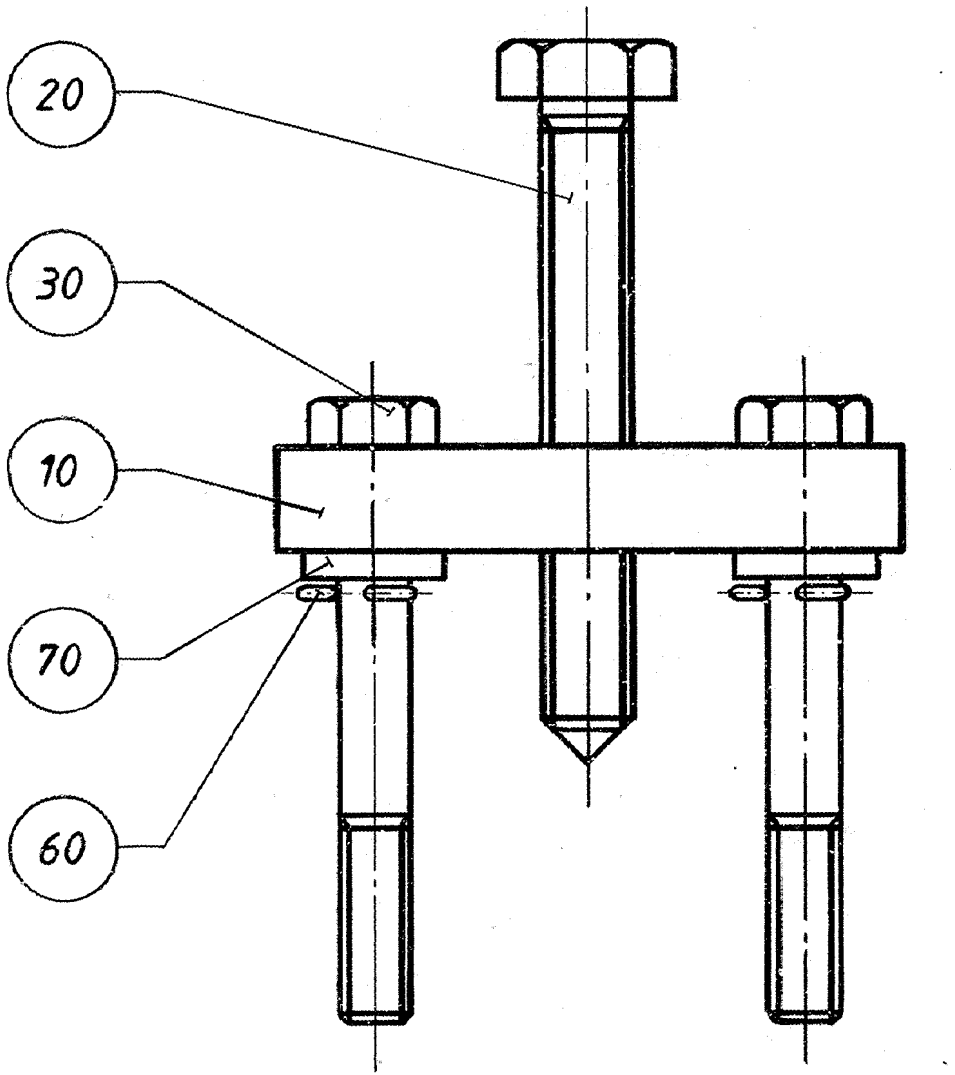
20
30
10
70
60

ECM: - -
Group number: 74305-0100
Assembly Drawing: 74305-1_1_AA

Pos	Part No	UN	Qty	Description	Page No
-					
010	74363-0000		1	FASTENING PLATE	
020	74364-0000		1	EXTRACTOR BOLT	
030	74365-0000		2	SCREW	
060	311411-0152		2	SPLIT PIN SP2X16RFR	
070	315115-0165		2	WASHER PLAIN, TBRB 8,4/16 H=3	

Pos	Part No	UN	Qty	Description	Page No

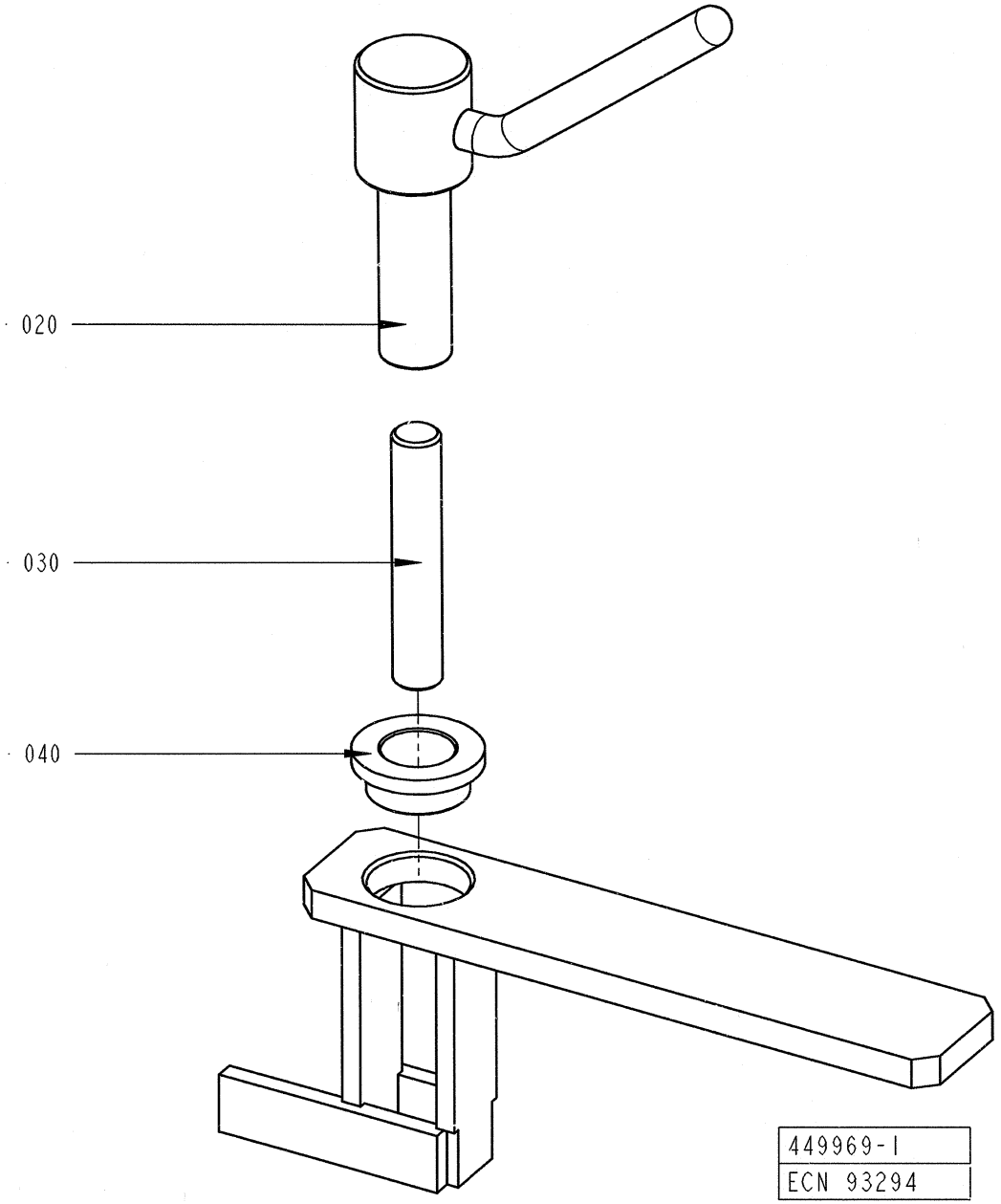
020
030
040
449969-1
ECN 93294

ECM: 6514 -
Group number: 449969-0100
Assembly Drawing: 449969-1_1_AA

Pos	Part No	UN	Qty	Description	Page No
-					
010	449970-0000		1	HOLDER	
020	449971-0000		1	SPINDLE	
030	312306-0546		1	SCREW ISO4026 M12X70 FZB	
040	321101-0222		1	FLANGE BUSHING, 18X25X12	

Pos	Part No	UN	Qty	Description	Page No

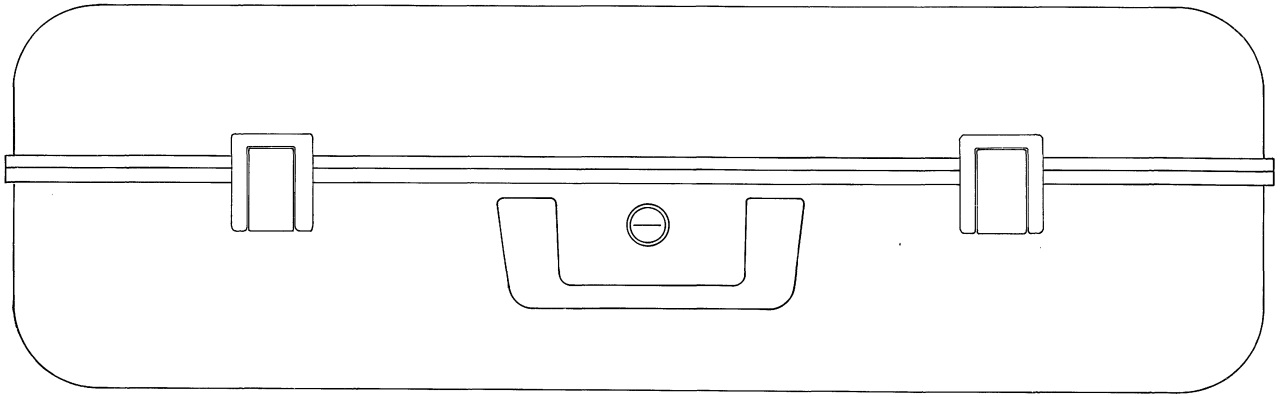

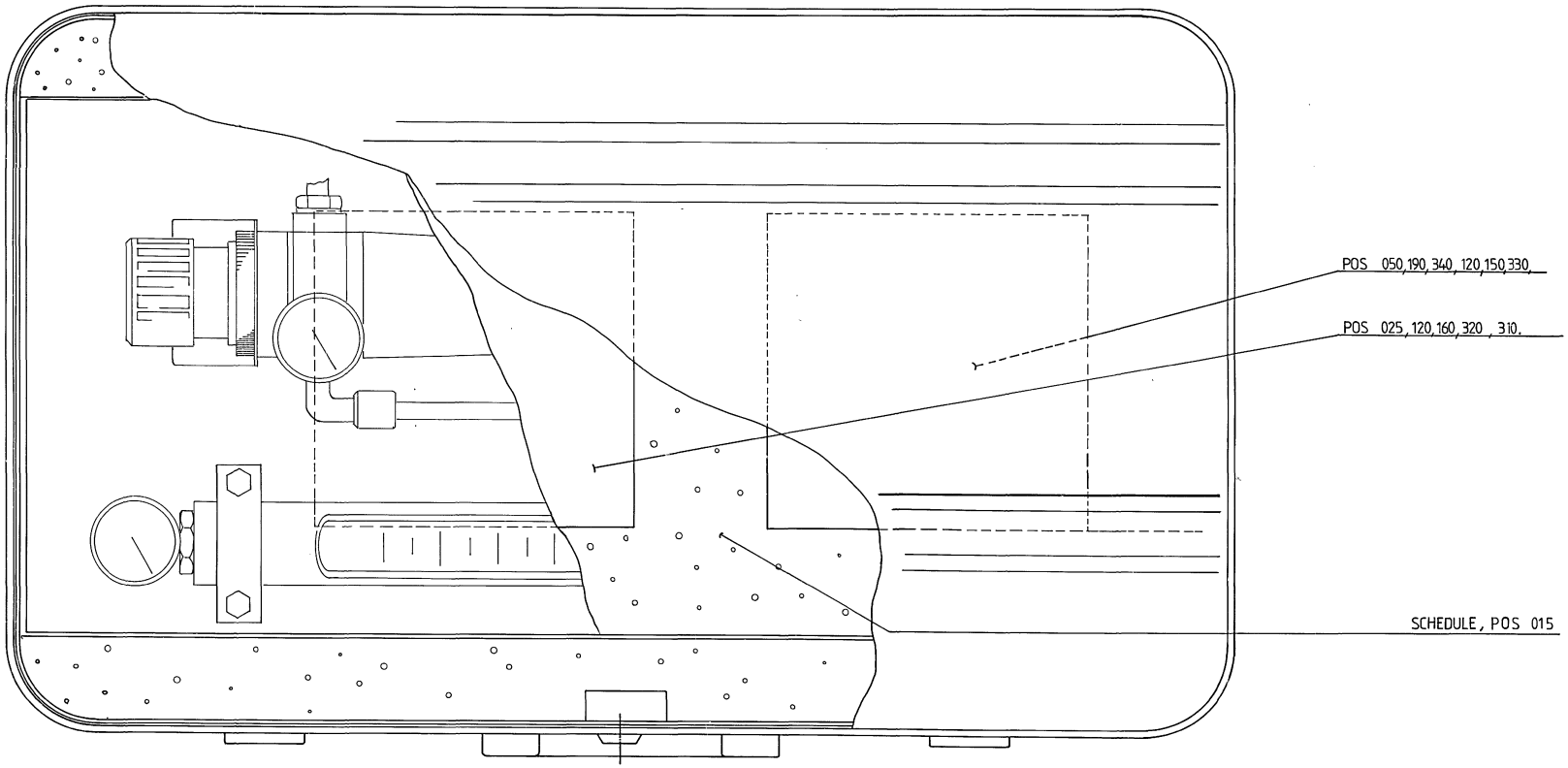
POS 050,190,340,120,150,330,
POS 025,120,160,320,310,
SCHEDULE, POS 015

ECM: 71889 - 19980924
Group number: 533014-0100
Assembly Drawing: 533014-1_1_AA

This list covers pages from 10-56 to 10-59

Pos	Part No	UN	Qty	Description	Page No
-					
010	533905-0100		1	PONCH	**10-61**
010	532676-0000		1	SHEET	
015	533015-0000		1	WIRING DIAGRAM	
020	1360399-0000		4	PIPE HOLDER	
025	493735-0000		1	NIPPLE	
030	532677-0000		1	PIPE	
040	532678-0000		1	DOWEL	
050	532679-0000		1	PLATE	
060	90030-0223		1	BUSHING, INT/EXT. G-THREAD NO. 2531	
070	90030-0224		1	NIPPLES, EXT. THREAD, HEXAGON, NO. 2511	
075	90030-0225		2	BUSHING, INT/EXT. R-THREAD 1/4X3/8	
080	90043-0021		1	PRESSURE GAUGE 0-1 BAR 1/8" D=40	
090	90043-0043		1	PRESSURE GAUGE 0-10 BAR 1/8"	
100	90113-0059		1	FILTER REGULATOR 50UM, B08-396-A3MG	
110	90140-0015		1	T-PIPE, INT. THREAD, 2003-1/8	
120	90163-0056		2	QUICK COUPLING, (F) 5054-6/4	
130	90163-0057		1	QUICK COUPLING, (M) 5150-1/8	
140	90163-0087		1	QUICK COUPLING, (M) 5150-1/4	
150	90166-0124	MM	1250	TUBE 6 MM PA,TRANSP.	
160	90166-0124	MM	1250	TUBE 6 MM PA,TRANSP.	
170	90224-0303		2	CONN. ELBOW 1020-8-1/4	
172	90113-0384		1	BRACKET FOR R11, 5203-06	
175	90243-0137		1	PRESSURE GAUGE KIT 0-50 MM WC, 229900	
180	90243-0147		1	FLOW METER	
190	90330-0029		1	PLUG, EXT. G-THREAD, R-236R3/8	
200	312105-0325		2	SCREW M6S ISO 4017 M5X10 A480	
210	312105-0383		4	SCREW M6S ISO 4014 M6X65 A480	
220	312602-0312		1	HEXAGON NUT, EN 24032 M6M M4 NIPLBR	
230	312605-0314		2	HEXAGON NUT, M6M M5 A280	
240	312605-0316		4	HEXAGON NUT, M6M M6 A280	
250	315103-0136		1	WASHER PLAIN, BRB, 4,3/8,H=0,8 NI PL BR	
260	315105-0146		4	WASHER BRB5,3X10RFR	
270	315105-0153		8	WASHER BRB6,4X12RFR	
280	315233-0109		2	WASHER CAPTIVE SEALING G1/8	
290	315233-0110		1	WASHER CAPTIVE SEALING G1/4	
295	315233-0111		2	WASHER CAPTIVE SEALING G3/8	
300	315233-0113		2	WASHER CAPTIVE SEALING G1/2	
310	342921-0113		1	STRAIGHT COUPLING,EXT.THREADED 6/4-G1/8"	
320	342921-0114		1	STRAIGHT COUPLING,EXT.THREADED 6/4-G1/4"	
330	342980-0114		1	BANJO-CONNECTION,RING 6/4-G1/4"	
340	342980-0314		1	BANJO-HOLLOW BOLT COUPL,EXT.THR.02-G1/4	
350	342701-0201		1	BUSHING,INT./EXT.G-THREAD G1/4"-G1/8"	

Machine Type	Group Description	Used-In	Group Number	Page No

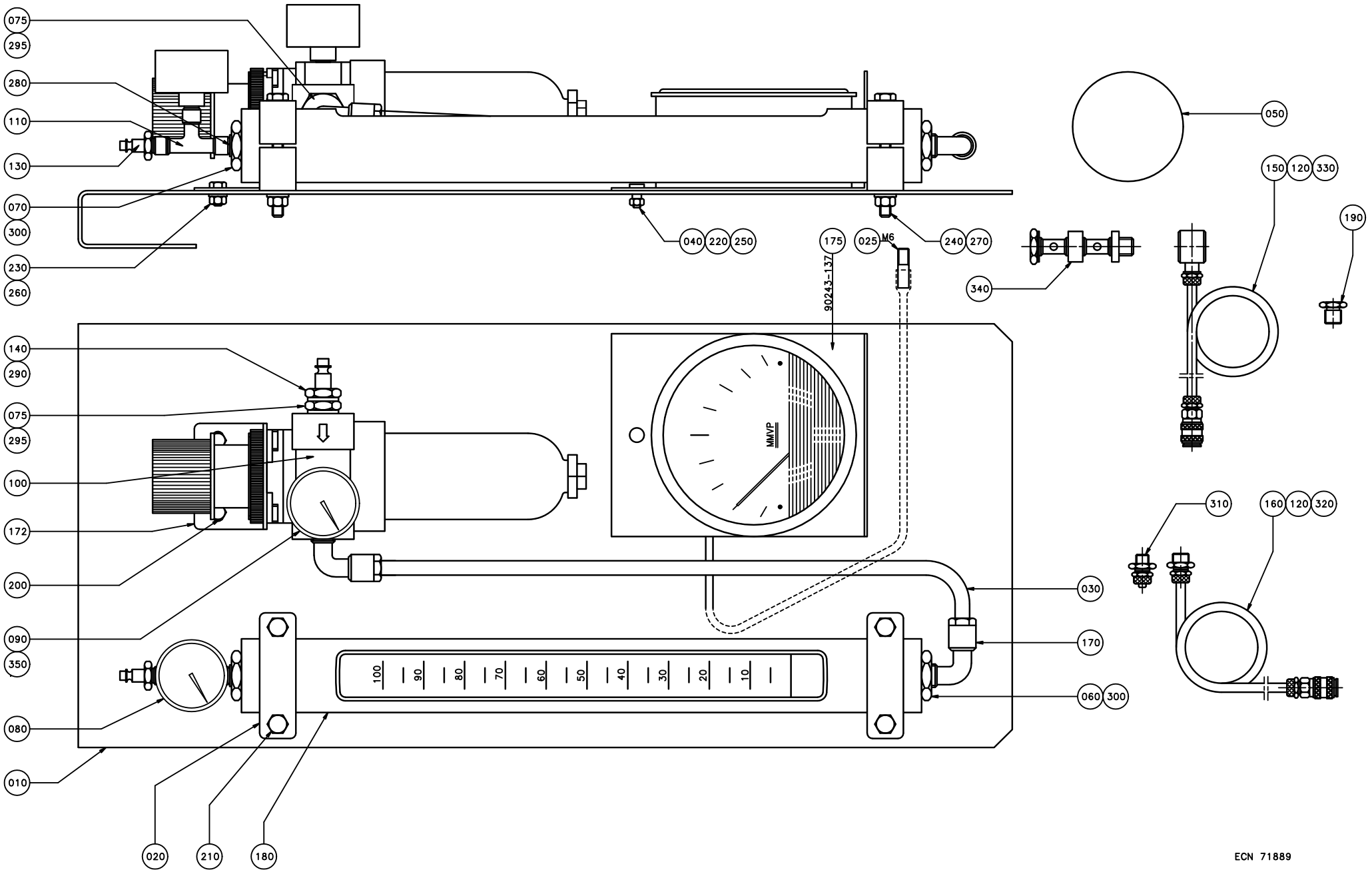
075
295
280
110
130
070
300
230
260
040
220
250
175
025
M6
240
270
90243-137
050
150
120
330
190
340
140
290
075
295
100
172
200
090
350
080
010
020
210
180
MMVP
100
90
80
70
60
50
40
30
20
10
030
170
060
300
310
160
120
320
ECN 71889

ECM: 71889 - 19980924
Group number: 533014-0100
Assembly Drawing: 533014-2_1_AB

This list covers pages from 10-56 to 10-59

Pos	Part No	UN	Qty	Description	Page No
-					
010	533905-0100		1	PONCH	**10-61**
010	532676-0000		1	SHEET	
015	533015-0000		1	WIRING DIAGRAM	
020	1360399-0000		4	PIPE HOLDER	
025	493735-0000		1	NIPPLE	
030	532677-0000		1	PIPE	
040	532678-0000		1	DOWEL	
050	532679-0000		1	PLATE	
060	90030-0223		1	BUSHING, INT/EXT. G-THREAD NO. 2531	
070	90030-0224		1	NIPPLES, EXT. THREAD, HEXAGON, NO. 2511	
075	90030-0225		2	BUSHING, INT/EXT. R-THREAD 1/4X3/8	
080	90043-0021		1	PRESSURE GAUGE 0-1 BAR 1/8" D=40	
090	90043-0043		1	PRESSURE GAUGE 0-10 BAR 1/8"	
100	90113-0059		1	FILTER REGULATOR 50UM, B08-396-A3MG	
110	90140-0015		1	T-PIPE, INT. THREAD, 2003-1/8	
120	90163-0056		2	QUICK COUPLING, (F) 5054-6/4	
130	90163-0057		1	QUICK COUPLING, (M) 5150-1/8	
140	90163-0087		1	QUICK COUPLING, (M) 5150-1/4	
150	90166-0124	MM	1250	TUBE 6 MM PA,TRANSP.	
160	90166-0124	MM	1250	TUBE 6 MM PA,TRANSP.	
170	90224-0303		2	CONN. ELBOW 1020-8-1/4	
172	90113-0384		1	BRACKET FOR R11, 5203-06	
175	90243-0137		1	PRESSURE GAUGE KIT 0-50 MM WC, 229900	
180	90243-0147		1	FLOW METER	
190	90330-0029		1	PLUG, EXT. G-THREAD, R-236R3/8	
200	312105-0325		2	SCREW M6S ISO 4017 M5X10 A480	
210	312105-0383		4	SCREW M6S ISO 4014 M6X65 A480	
220	312602-0312		1	HEXAGON NUT, EN 24032 M6M M4 NIPLBR	
230	312605-0314		2	HEXAGON NUT, M6M M5 A280	
240	312605-0316		4	HEXAGON NUT, M6M M6 A280	
250	315103-0136		1	WASHER PLAIN, BRB, 4,3/8,H=0,8 NI PL BR	
260	315105-0146		4	WASHER BRB5,3X10RFR	
270	315105-0153		8	WASHER BRB6,4X12RFR	
280	315233-0109		2	WASHER CAPTIVE SEALING G1/8	
290	315233-0110		1	WASHER CAPTIVE SEALING G1/4	
295	315233-0111		2	WASHER CAPTIVE SEALING G3/8	
300	315233-0113		2	WASHER CAPTIVE SEALING G1/2	
310	342921-0113		1	STRAIGHT COUPLING,EXT.THREADED 6/4-G1/8"	
320	342921-0114		1	STRAIGHT COUPLING,EXT.THREADED 6/4-G1/4"	
330	342980-0114		1	BANJO-CONNECTION,RING 6/4-G1/4"	
340	342980-0314		1	BANJO-HOLLOW BOLT COUPL,EXT.THR.02-G1/4	
350	342701-0201		1	BUSHING,INT./EXT.G-THREAD G1/4"-G1/8"	

Machine Type	Group Description	Used-In	Group Number	Page No

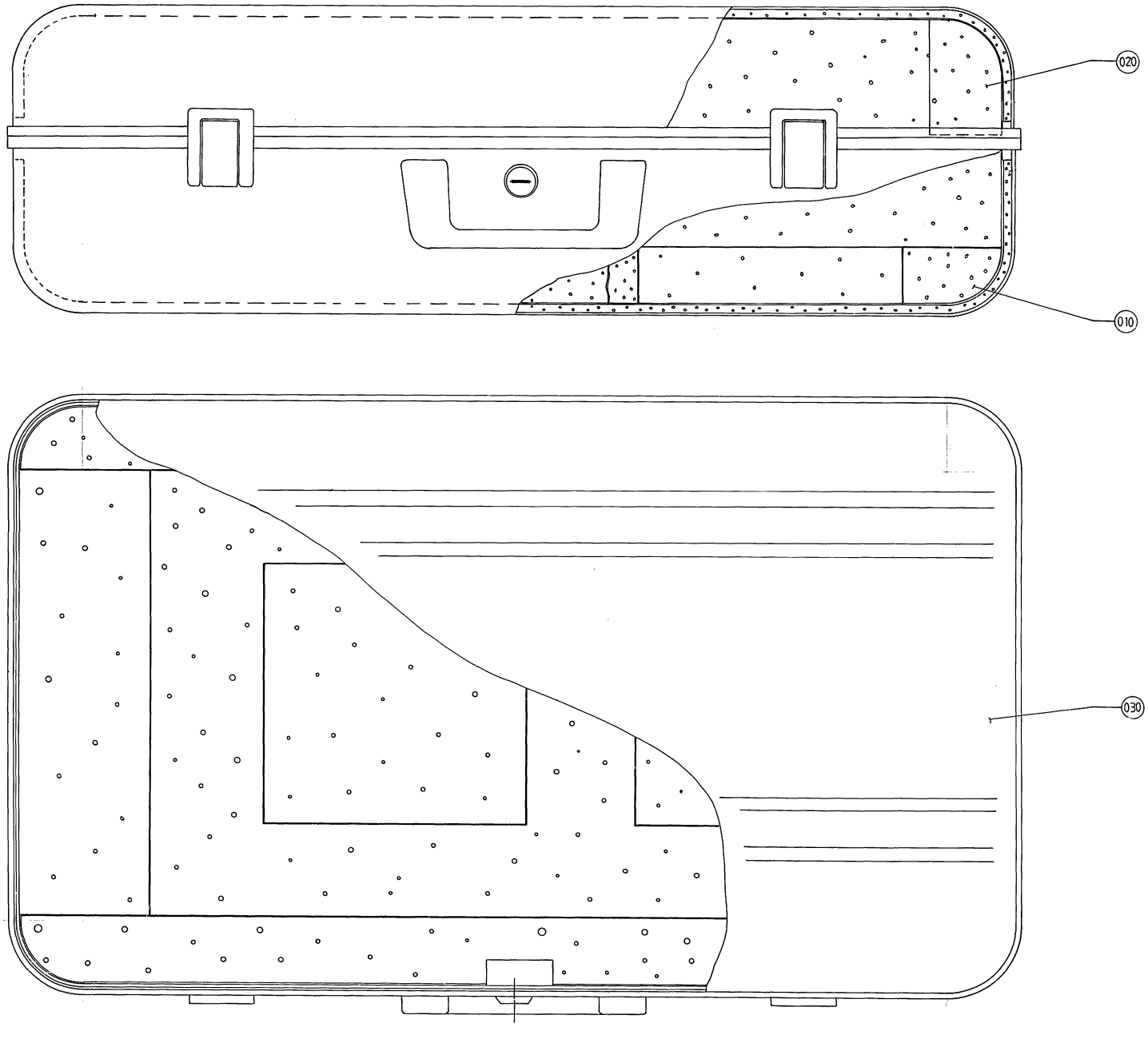
020
010
030

ECM: - -
Group number: 533905-0100
Assembly Drawing: 533905-1_1_AA

Pos	Part No	UN	Qty	Description	Page No	Pos	Part No	UN	Qty	Description	Page No
-											
010	533374-0000		1	FITMENT BOTTOM							
020	533906-0000		1	FITMENT COVER							
030	90243-0118		1	TOOL BOX, NO. ZERO 105X-SI							

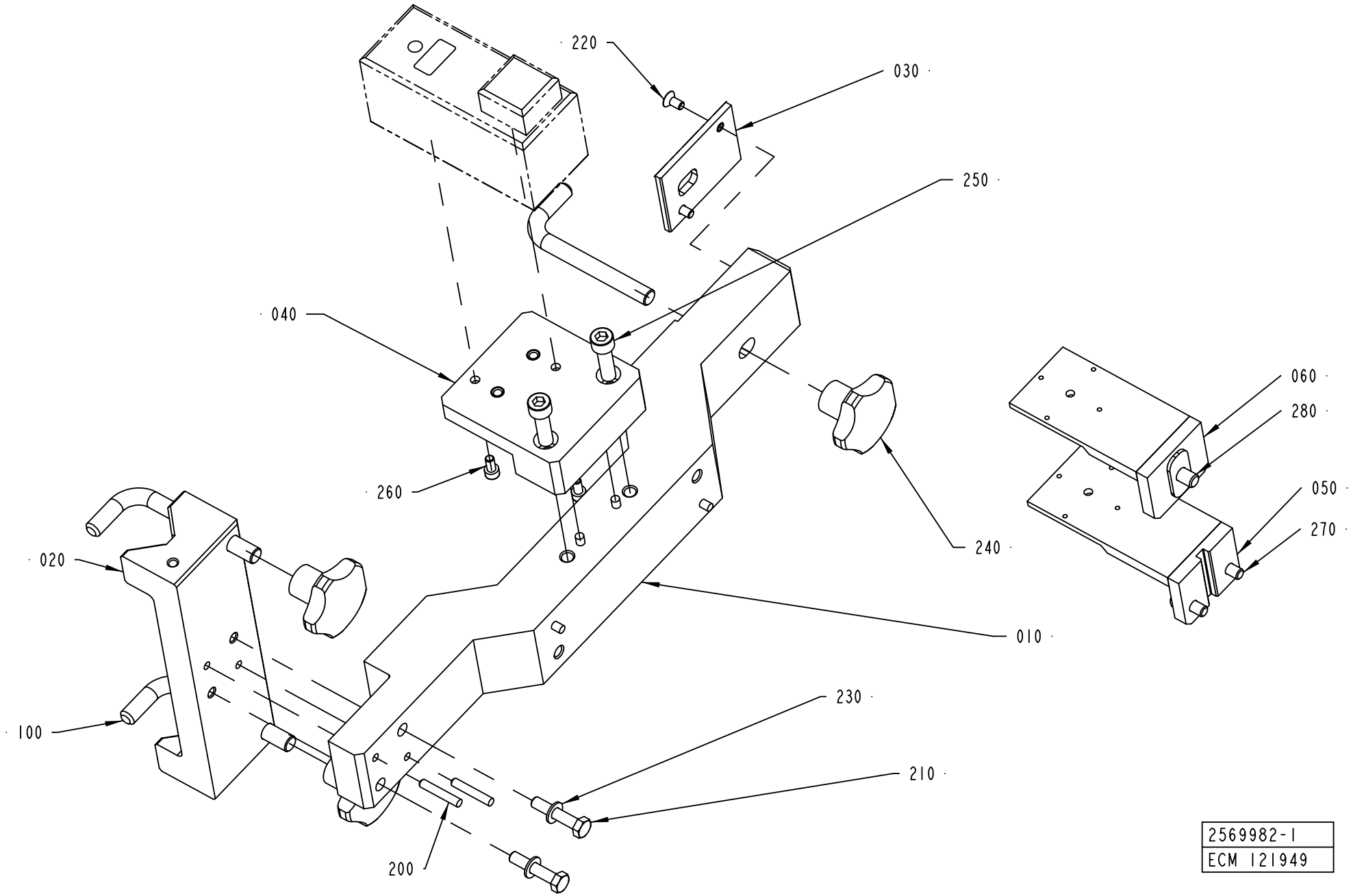
220
030
250
040
060
280
260
050
270
240
020
010
100
230
210
200
2569982-1
ECM 121949

ECM: 121962 - 20030403
Group number: 2569982-0100
Assembly Drawing: 2569982-1_1_AA

Pos	Part No	UN	Qty	Description	Page No
-					
010	2570741-0000		1	HOLDER	
020	2570746-0000		1	BRACKET	
030	2570747-0000		1	PLATE	
040	2570743-0000		1	BRACKET	
050	2515291-0000		1	BRACKET	
060	2515292-0000		1	BRACKET	
100	2523265-0000		3	HOOK	
200	311103-0359		2	PARALLEL PIN ISO 2338 6M6X35 A1	
210	312109-0459		2	SCREW M6S ISO 4017 M8X40 A480	
220	312155-0366		2	SCREW DIN 7991 MF6S M6X12 A4 70	
230	315105-0165		2	WASHER BRB8,4X16RFR	
240	318850-0113		3	STELLAR KNOB, INT. THREAD, NO. 8306-0367	
250	312111-0497		2	SCREW HEX.SOCK.HD.MC6S-TT 10X35 88 FZ	
260	312111-0366		2	SCREW HEX.SOCK.HD.MC6S-TT 6X12 88 FZB	
270	312105-0451		2	SCREW M6S ISO 4017 M8X20 A480	
280	312105-0493		1	SCREW M6S ISO 4017 M10X25 A480	

Pos	Part No	UN	Qty	Description	Page No

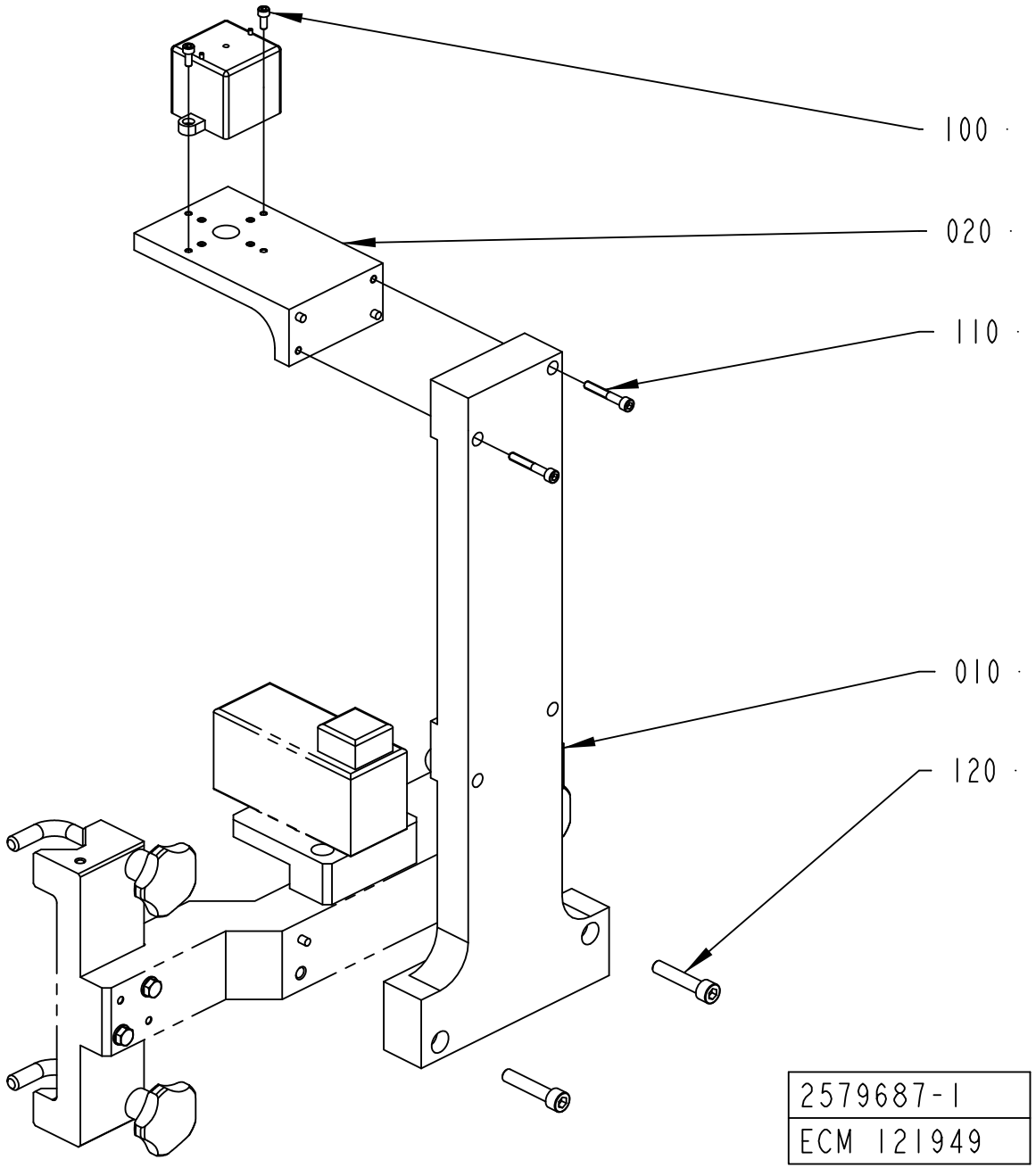
100
020
110
010
120
2579687-1
ECM 121949

ECM: 124333 - 20030403
Group number: 2579687-0100
Assembly Drawing: 2579687-1_1_AA

Pos	Part No	UN	Qty	Description	Page No
-					
010	2570744-0000		1	HOLDER	
020	2579688-0000		1	HOLDER	
100	312111-0327		2	SCREW HEX.SOCK.HD.MC6S-TT 5X12 88 FZB	
110	312115-0378		2	SCREW ISO4762 M6X40 A4 80	
120	312111-0501		2	SCREW HEX.SOCK.HD.MC6S-TT 10X50 88 FZ	

Pos	Part No	UN	Qty	Description	Page No

This page is intentionally left blank.

ECM: 211826 - 20051216
Group number: 2556261-0100
Assembly Drawing:

Pos	Part No	UN	Qty	Description	Page No
-					
010	527898-0100		1	MKS CONTAINER H2O2	**2-35, 10-69**
020	529345-0100		1	FILLING STATION H2O2	**10-71**
030	532210-0100		1	PEROXIDE CONTAINER TROLLEY	**10-73**
040	1035201-0100		1	PAPER REEL HOLDER	**10-75**
050	1538186-0100		1	PAPER TROLLEY	**10-77**
070	2720716-0000		1	LIFTING DEVICE	
080	2514392-0100		1	MACHINE CARRIAGE	**10-89**
090	90031-0300		1	PLC,COMM.CABLE AND ADAPTER	
100	90427-0014		1	INK JET PRINTER A300 STD 3M CONDUIT	
110	90459-0285		1	CD UNIT E100009A	
120	1369439-0102		1	PLMS ON-LINE	
0010	*48633-0102*		*1*	*PLMS ON-LINE CLIENT PROGRAM*	
0020	*58789-0000*		*1*	*DOCUMENTATION DISKETT*	
0030	*1369432-0000*		*1*	*LABELS, DISKETT*	
0040	*58787-0000*		*1*	*SHORT FORM INSTRUCTIONS*	
0050	*58788-0000*		*1*	*MASTER DISKETT*	
0020	*48635-0102*		*1*	*PLMS ON-LINE SERVER PROGRAM*	
0020	*58801-0000*		*1*	*DOCUMENTATION DISKETT*	
0030	*1369437-0000*		*1*	*LABELS, DISKETT*	
0040	*58799-0000*		*1*	*SHORT FORM INSTRUCTIONS*	
0050	*58800-0000*		*1*	*MASTER DISKETT*	
0030	*81595-0101*		*1*	*USER MANUAL PLMS ON-LINE*	
0040	*81596-0101*		*1*	*INSTALLATION MANUAL PLMS ON-LINE*	
130	1520633-0002		12	DOLLY	
140	2587326-0000		2	BRACKET	
150	312105-0489		8	SCREW M6S ISO 4017 M10X16 A480	
160	90459-1898		4	LIFTING EYE BOLT, VLBG(1)1.0T M12 TURN.	
170	2756247-0000		8	WASHER	
180	318302-0120		4	EYE BOLT NUT, TYPE, LH, M10	
190	312105-0507		4	SCREW M6S ISO 4014 M10X80 A480	

Pos	Part No	UN	Qty	Description	Page No

Machine Type | Group Description | Used-In | Group Number | Page No

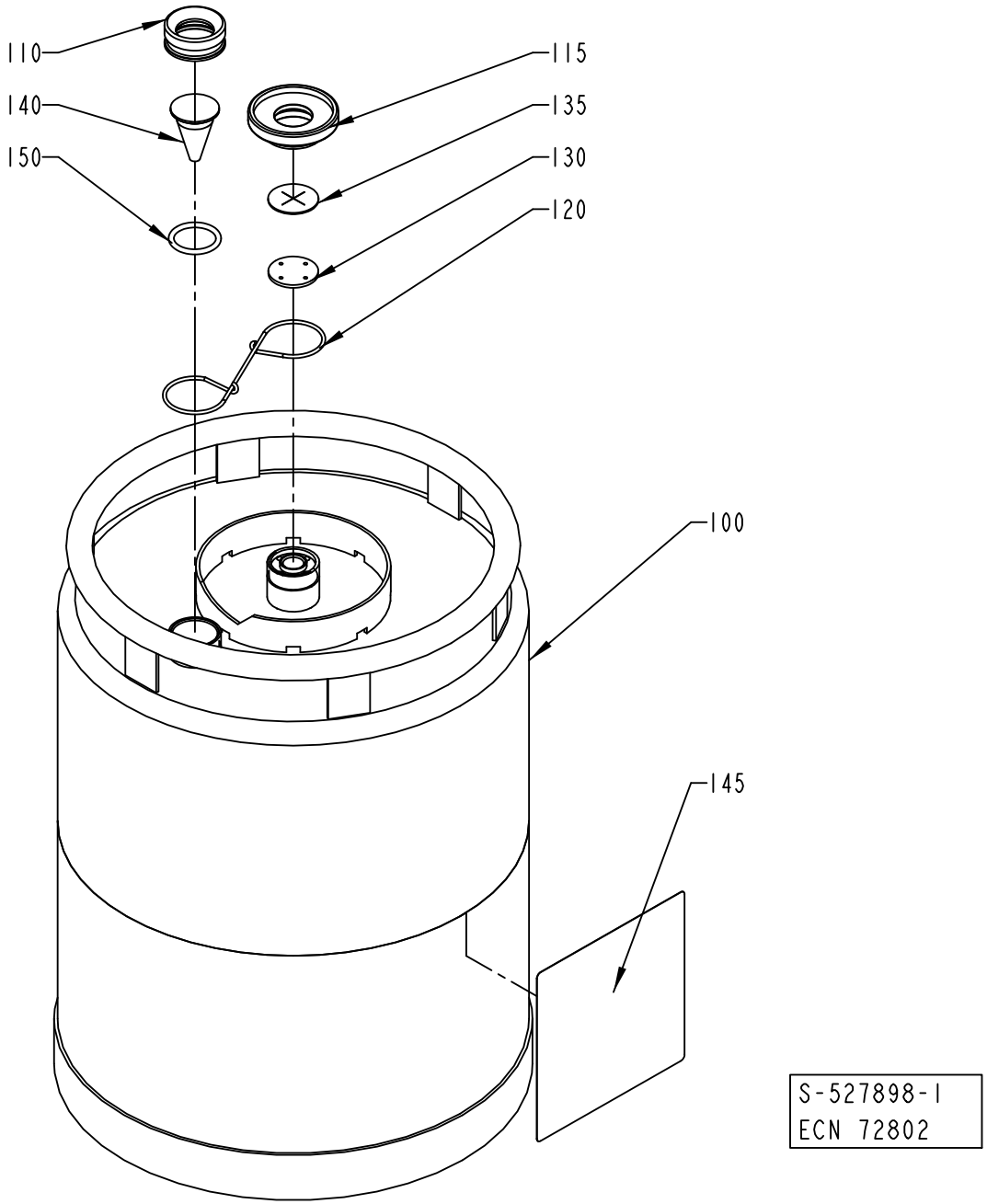
110
140
150
115
135
130
120
100
145
S-527898-1
ECN 72802

ECM: 224840 - 20050831
Group number: 527898-0100
Assembly Drawing: 527898-1_1_AB

Pos	Part No	UN	Qty	Description	Page No	Pos	Part No	UN	Qty	Description	Page No
-											
100	561427-0000		1	CONTAINER							
110	273977-0000		1	NUT							
115	273996-0000		1	NUT							
120	273980-0000		1	SPRING							
130	565250-0000		1	WASHER							
135	565251-0000		1	VALVE							
140	273978-0000		1	LEVEL GLAS							
145	532655-0000		1	CAUTION SIGN							
150	927422-0003		1	O.RING 24.2X3 SILICONE							

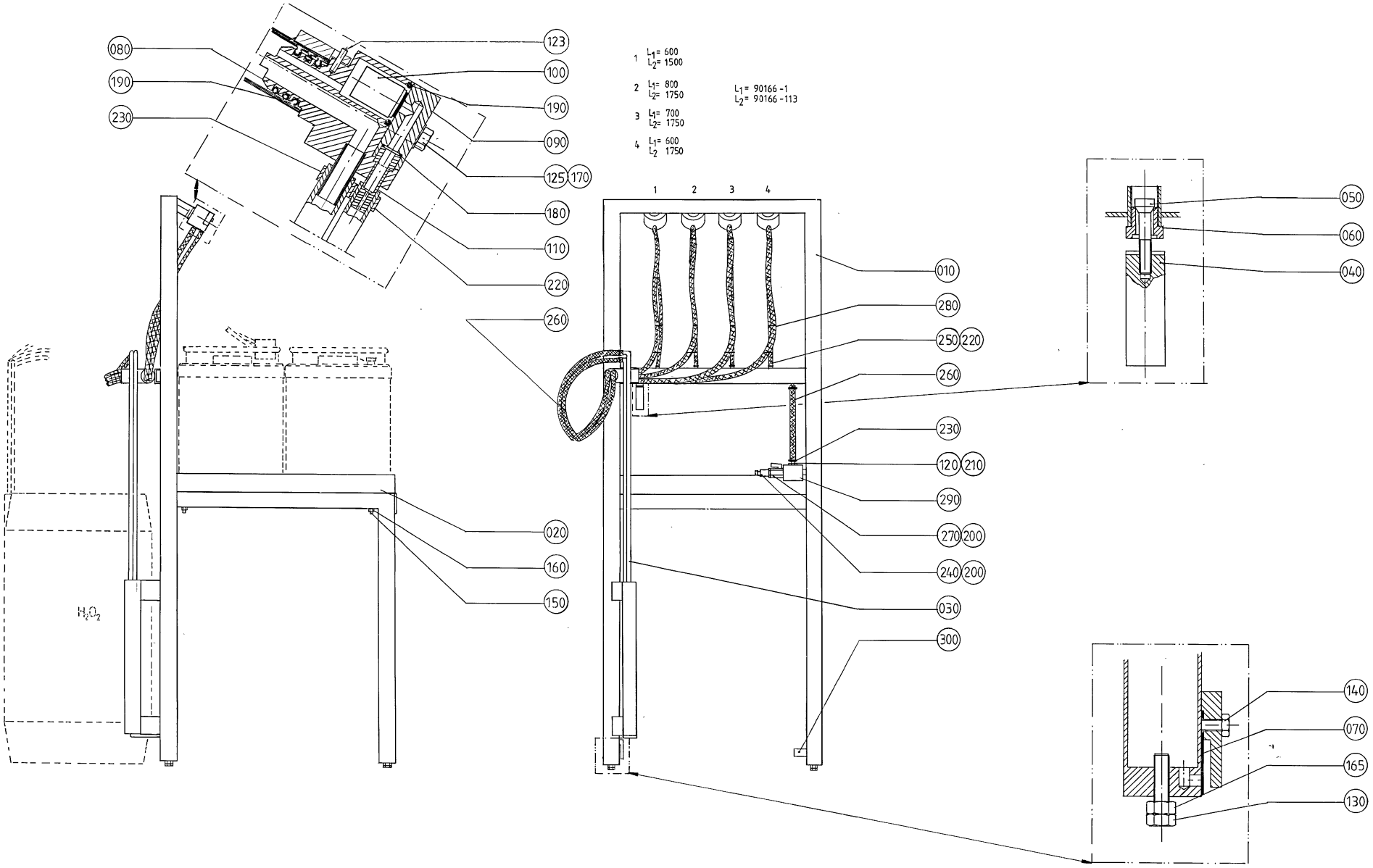
080
190
230
123
100
190
090
125
170
180
110
220
260
020
160
150
H_2O_2
1 L_1= 600 L_2= 1500
2 L_1= 800 L_2= 1750
3 L_1= 700 L_2= 1750
4 L_1= 600 L_2 1750
L_1= 90166-1
L_2= 90166-113
1 2 3 4
010
280
250 220
260
230
120 210
290
270 200
240 200
030
300
050
060
040
140
070
165
130

ECM: - -
Group number: 529345-0100
Assembly Drawing: 529345-1_1_AA

Pos	Part No	UN	Qty	Description	Page No
-					
010	534692-0000		1	FRAME SECTION	
020	534693-0000		1	PLATE	
030	534694-0000		1	SUCTIONPIPE	
040	534695-0000		1	WEIGHT	
050	534696-0000		1	VALVE	
060	534697-0000		1	VALVE HOUSING	
070	534691-0000		1	DIAPHRAGM	
080	534637-0000		4	ATTACHMENT	
090	534636-0000		4	LEVEL GLAS	
100	534635-0000		4	VALVE	
110	534634-0000		4	PIPE	
120	534698-0000		1	NIPPLE	
123	311103-0235		1	PARALLEL PIN ISO 2338 3M6X14 A1	
125	312105-0374		8	SCREW M6S ISO 4014 M6X30 A480	
130	312105-0455		4	SCREW M6S ISO 4017 M8X30 A480	
140	312125-0327		1	SCREW ISO 1207 M5X12 A4	
150	312145-0380		4	SCREW ISO 2009 MFS M6X50 A4	
160	312812-0316		4	HEXAGON NUT, NY-LOCK M6 A480	
165	312605-0318		4	HEXAGON NUT, M6M M8 A280	
170	315105-0153		8	WASHER BRB6,4X12RFR	
180	927421-0005		4	O-RING 7.3X2.4 SILICONE	
190	927422-0001		16	O-RING 19.2X3 SILICONE	
200	315233-0110		2	WASHER CAPTIVE SEALING G1/4	
210	315233-0113		2	WASHER CAPTIVE SEALING G1/2	
220	342991-0100		8	HOSE CLIP,WORM DRIVE TYPE 10-13	
230	342991-0101		10	HOSE CLIP,WORM DRIVE TYPE (13)-16	
240	90163-0007		1	CONNECTION	
250	90166-0045	MM	3500	HOSE PVC TRANSP. 6/12	
260	90166-0113	MM	7500	HOSE	
270	90187-0045		1	BALL VALVE G1/4 CR PL	
280	352113-0102		30	CLIP-STRIP, BLACK 188X4,8 MM	
290	90425-0016		1	MECMAN TYPE E120 735-120-000	
300	90328-0025		1	SILENCER G1/2"	

Pos	Part No	UN	Qty	Description	Page No

Machine Type | Group Description | Used-In | Group Number | Page No

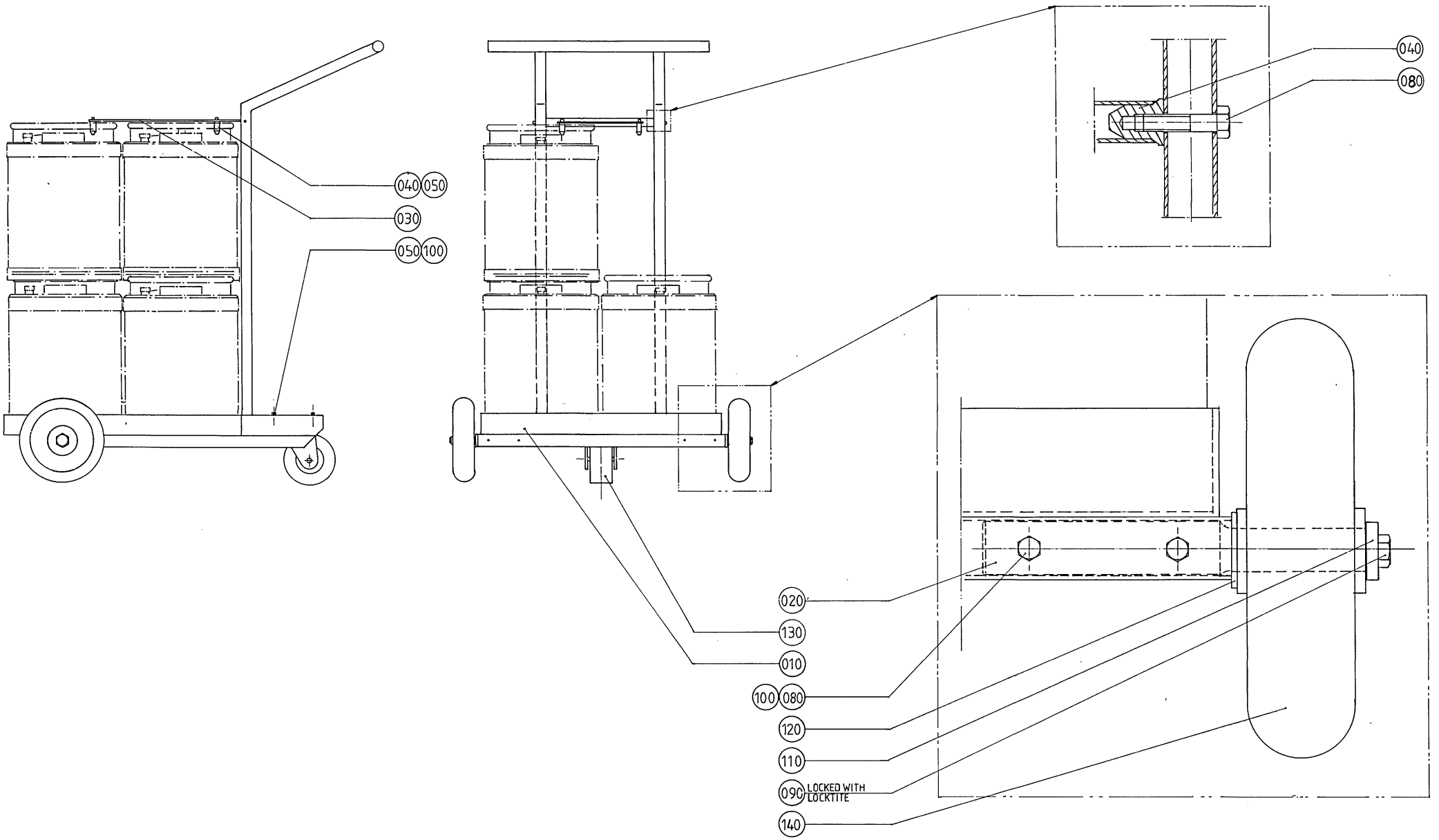
040
050
030
050
100
040
080
020
130
010
100
080
120
110
090
LOCKED WITH LOCKTITE
140

ECM: - -
Group number: 532210-0100
Assembly Drawing: 532210-1_1_AA

Pos	Part No	UN	Qty	Description	Page No
-					
010	273985-0000		1	CARRIAGE	
020	532208-0000		2	SHAFT	
030	532209-0000		1	SHEET	
040	532211-0000		6	DOWEL	
050	312105-0449		8	SCREW M6S ISO 4017 M8X16 A480	
080	312105-0459		6	SCREW M6S ISO 4014 M8X40 A480	
090	312105-0491		2	SCREW M6S ISO 4017 M10X20 A480	
100	312605-0318		4	HEXAGON NUT, M6M M8 A280	
110	315115-0173		2	WASHER PLAIN, TBRB 10,5/22 H=4	
120	315105-0192		2	WASHER BRB21X36RFR	
130	90191-0060		1	CASTOR WHEEL, NO. 1599PRT	
140	90191-0047		2	WHEEL, NO. 442-200-113	

Pos	Part No	UN	Qty	Description	Page No

PAPER REEL HOLDER

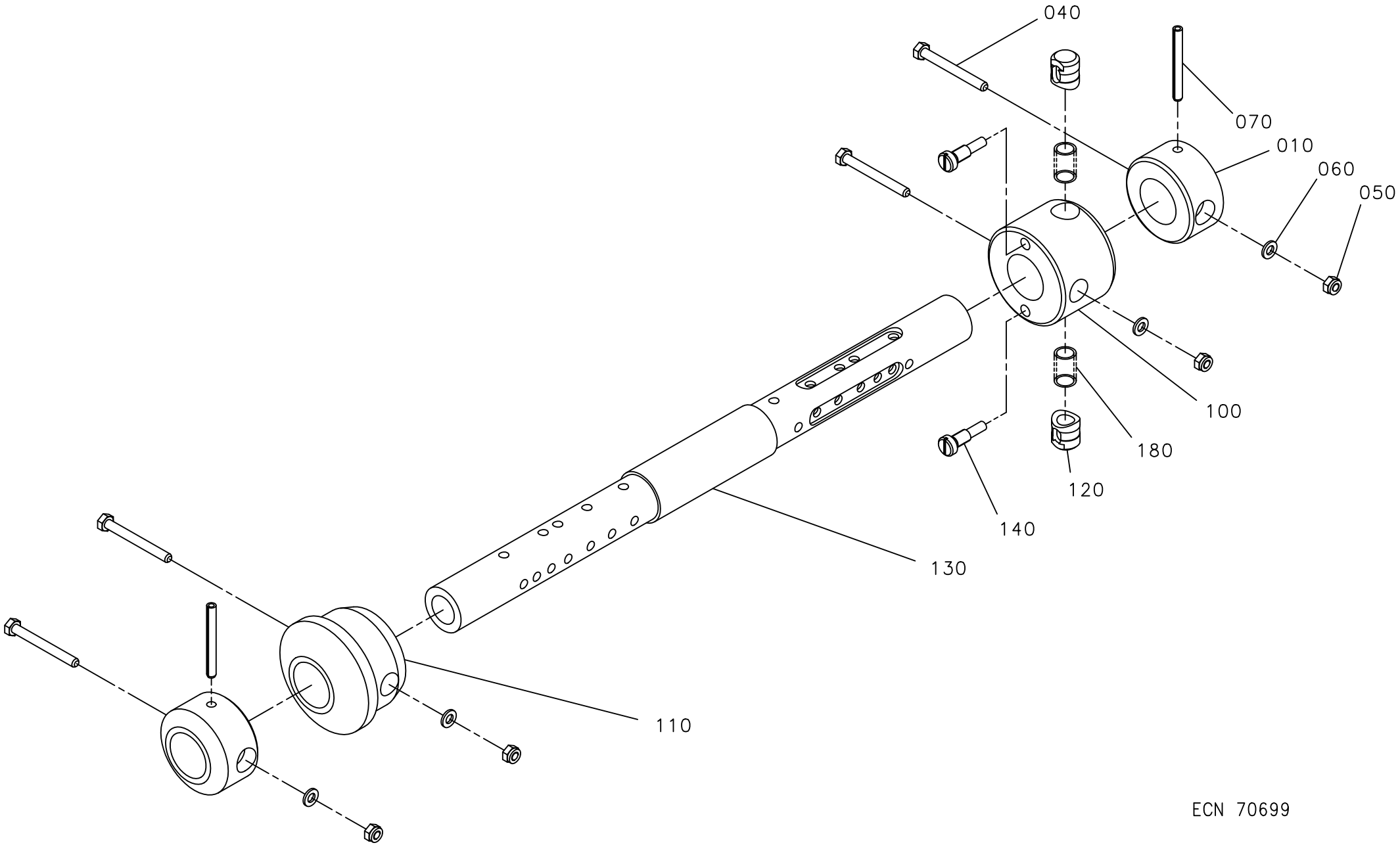

ECN 70699

ECM: 202694 - 20050224
Group number: 1035201-0100
Assembly Drawing: 1035201-1_1_AA

Pos	Part No	UN	Qty	Description	Page No
0200S, 0200B, 0500S, 0250S, 0250B, 0200SQ, 0250SQ, 0330SQ					
010	440259-0000		2	RETAINING RING	
040	312101-0381		4	SCREW M6S M6X55 FZB	
050	312812-0316		4	HEXAGON NUT, NY-LOCK M6 A480	
060	315101-0153		4	WASHER PLAIN, BRB, 6,4/12 H=1,5	
100	271239-0000		1	SLEEVE	
110	272810-0001		1	SLEEVE	
0500B, 1000B					
040	312101-0381		2	SCREW M6S M6X55 FZB	
050	312812-0316		2	HEXAGON NUT, NY-LOCK M6 A480	
060	315101-0153		2	WASHER PLAIN, BRB, 6,4/12 H=1,5	
100	271239-0000		1	SLEEVE	
110	272810-0001		1	SLEEVE	
1000S					
040	312101-0381		2	SCREW M6S M6X55 FZB	
050	312812-0316		2	HEXAGON NUT, NY-LOCK M6 A480	
060	315101-0153		2	WASHER PLAIN, BRB, 6,4/12 H=1,5	
100	569942-0000		1	SLEEVE	
110	569943-0000		1	SLEEVE	
1000SQ, 0750SQ					
010	574051-0000		2	RETAINING RING	
040	312101-0381		2	SCREW M6S M6X55 FZB	
050	312812-0316		2	HEXAGON NUT, NY-LOCK M6 A480	
060	315101-0153		2	WASHER PLAIN, BRB, 6,4/12 H=1,5	
070	311112-0350		2	SPRING PIN, ISO 8752 6X55-C	
100	271239-0000		1	SLEEVE	
110	272810-0001		1	SLEEVE	
Common Parts					
120	272813-0000		2	PLUNGER	
130	1538597-0000		1	SHAFT	
140	271241-0000		2	SCREW	
180	90335-0025		2	COMP. SPRING 22010, 1X11X26	

Pos	Part No	UN	Qty	Description	Page No

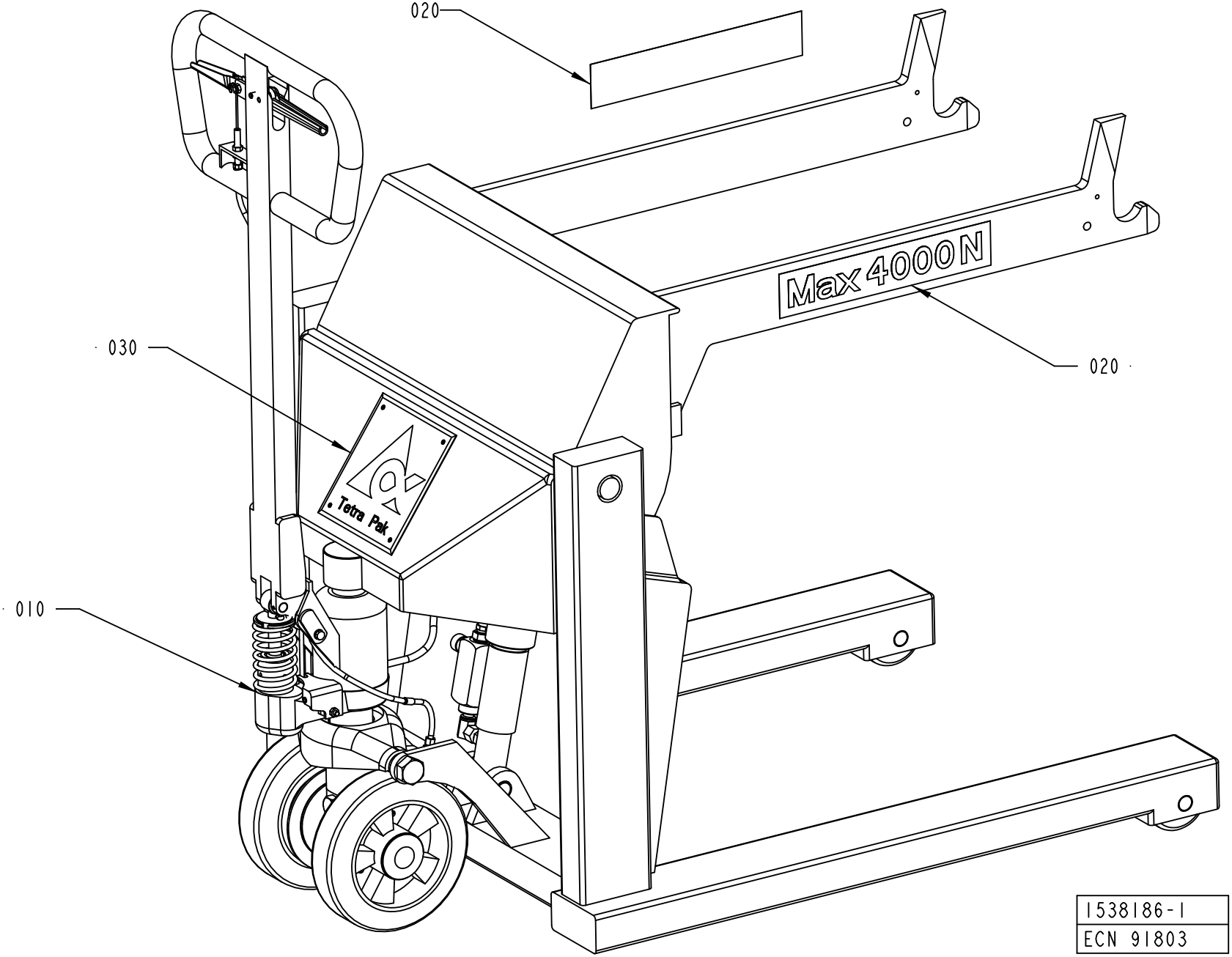
020
Max 4000N
020
030
Tetra Pak
010
1538186-1
ECN 91803

ECM: 211196 - 20050520
Group number: 1538186-0100
Assembly Drawing: 1538186-1_1_AA

Pos	Part No	UN	Qty	Description	Page No
A3/FLEX TBA 1890S, A3/FLEX TBA 2000S					
010	797090-0401		1	JUMBO REEL TRUCK	
A3/FLEX TBA 0500B, A3/FLEX TBA 1000B, A3/FLEX TBA 1000S, A3/FLEX TBA 1000SQ, A3/FLEX TPA 1000SQ, A3/FLEX TBA 0200S, A3/FLEX TBA 1500S, A3/FLEX TBA 0200B, A3/FLEX TBA 0250B, A3/FLEX TBA 0330S, A3/FLEX TPA 0330SQ, A3/FLEX TPA 0500SQ, A3/FLEX TBA 0200M, A3/FLEX TBA 0250S, A3/FLEX TBA 0500S, A3/FLEX TPA 0250SQ, A3/FLEX TPA 0200SQ, A3/FLEX TPA 0750SQ, A3/FLEX TBA 0200SQ, A3/FLEX TBA 0250SQ					
010	90458-1474		1	PAPER TROLLEY, 32 04 192 3	**10-79**
Common Parts					
020	522308-0000		2	SIGN	
030	574658-0000		1	LOGOTYPE TP	

Pos	Part No	UN	Qty	Description	Page No

PAPER TROLLEY, 32 04 192 3

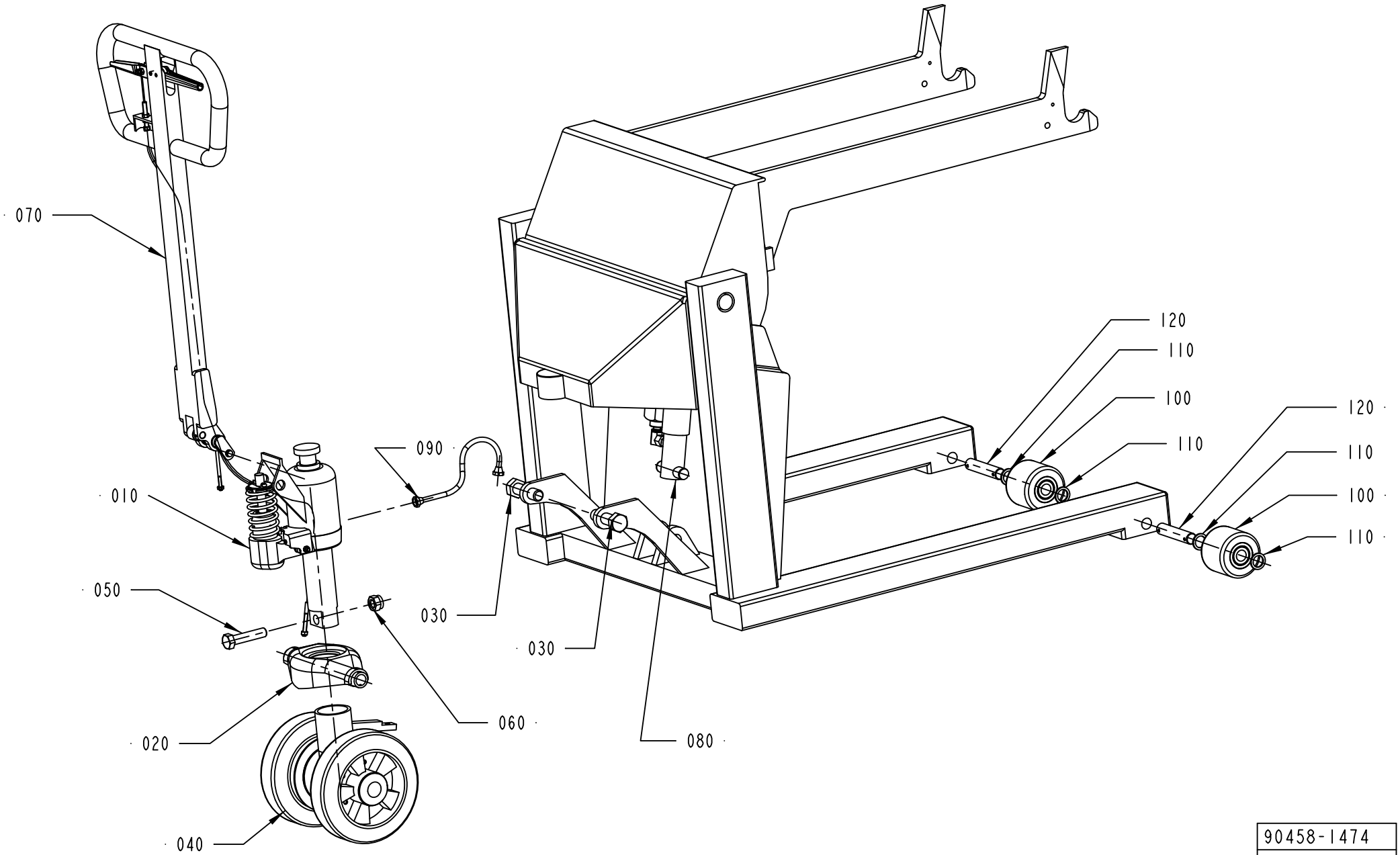

90458-1474
ECM 133556

ECM: 133556 - 20030513
Group number: 90458-1474
Assembly Drawing: 90458-1474_1_AB

Pos	Part No	UN	Qty	Description	Page No
-					
010	90458-1473		1	PUMP, 34 73 521 7	**10-81**
020	90067-0368		1	YOKE	
030	312101-0678		2	SCREW M6S M20X70 FZB	
040	1558477-0100		1	WHEEL	**10-83**
050	312105-0634		1	SCREW M6S ISO 4014 M16X70 A480	
060	312812-0324		1	HEXAGON NUT, NY-LOCK M16 A480	
070	1558479-0100		1	HANDLE	**10-85**
080	1558480-0100		1	LIFTING CYLINDER	**10-87**
090	90067-0365		1	HYDRAULIC HOSE, 32 04 169 1	
100	90067-0370		2	WHEEL, 32 04 176 6	
110	90067-0371		4	SLEEVE, 32 04 175 8	
120	90067-0372		2	SHAFT, 32 04 174 1	

Pos	Part No	UN	Qty	Description	Page No

PUMP, 34 73 521 7

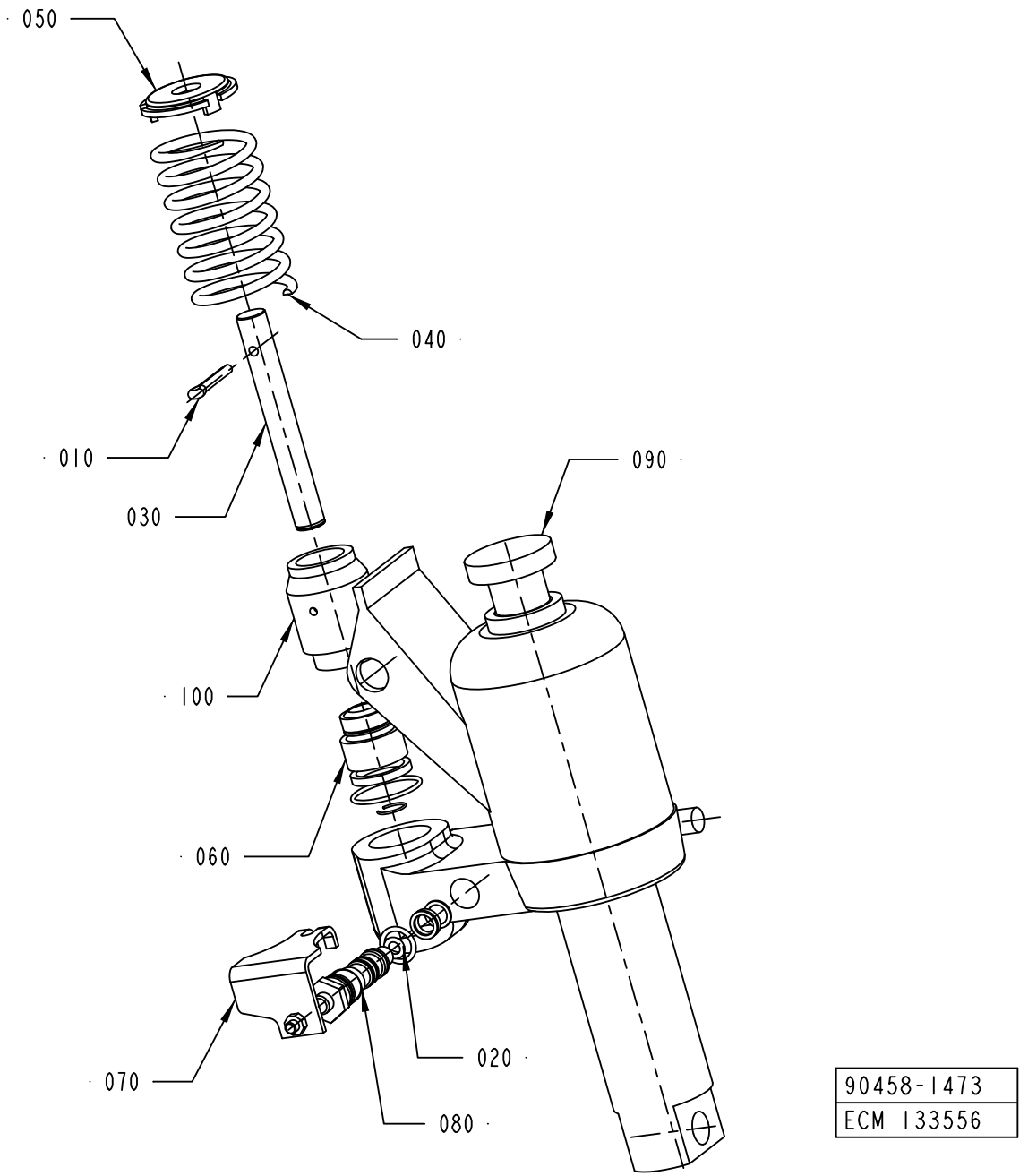

90458-1473
ECM 133556

ECM: 133556 - 20030513
Group number: 90458-1473
Assembly Drawing: 90458-1473_1_AB

Pos	Part No	UN	Qty	Description	Page No
-					
010	90458-1468		1	SPLIT PIN, 43 71 234 8	
020	90067-0351		1	SEAL KIT	
030	90067-0354		1	PUMP PISTON	
040	90067-0355		1	COMPRESSION SPRING	
050	90067-0356		1	TOP WASHER	
060	90067-0357		1	REPAIR KIT	
070	90067-0369		1	VALVE ARM	
080	90458-1470		1	SINK VALVE COMPL, 34 73 094 5	
090	90458-1469		1	PUMP HOUSING, 34 73 517 5	
100	90458-1393		1	PUMP CYLINDER, 34 73 522 5	

Pos	Part No	UN	Qty	Description	Page No

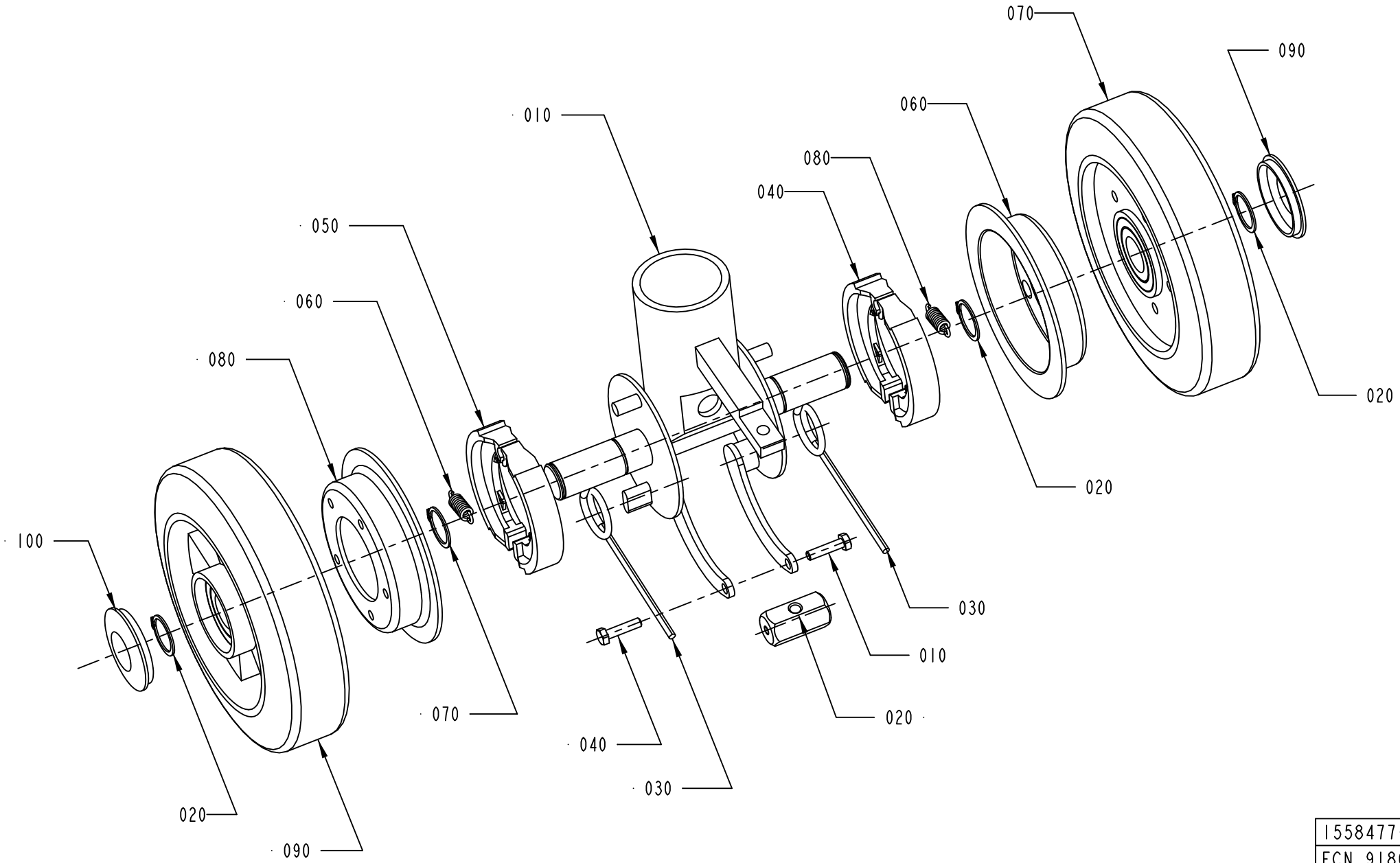

1558477-1
ECN 91803

ECM: 91832 - 20010504
Group number: 1558477-0100
Assembly Drawing: 1558477-1_1_AA

Pos	Part No	UN	Qty	Description	Page No
-					
010	90067-0336		1	GUIDE SHAFT UNIT, 32 82 123 3	
030	90067-0302		2	TORSION SPRING	
040	312105-0372		2	SCREW M6S ISO 4017 M6X25 A480	
050	90067-0317		2	BRAKE LINING	
060	90067-0342		2	TENSION SPRING	
070	315750-0119		4	RETAINING RING SHAFT DIN 471 ST 25	
080	90067-0337		2	BRAKE DRUM	
090	90067-0338		2	GUIDE ROLLER 32 44 117 2	
100	90458-1467		2	CAP, 32 44 129 7	

Pos	Part No	UN	Qty	Description	Page No

HANDLE

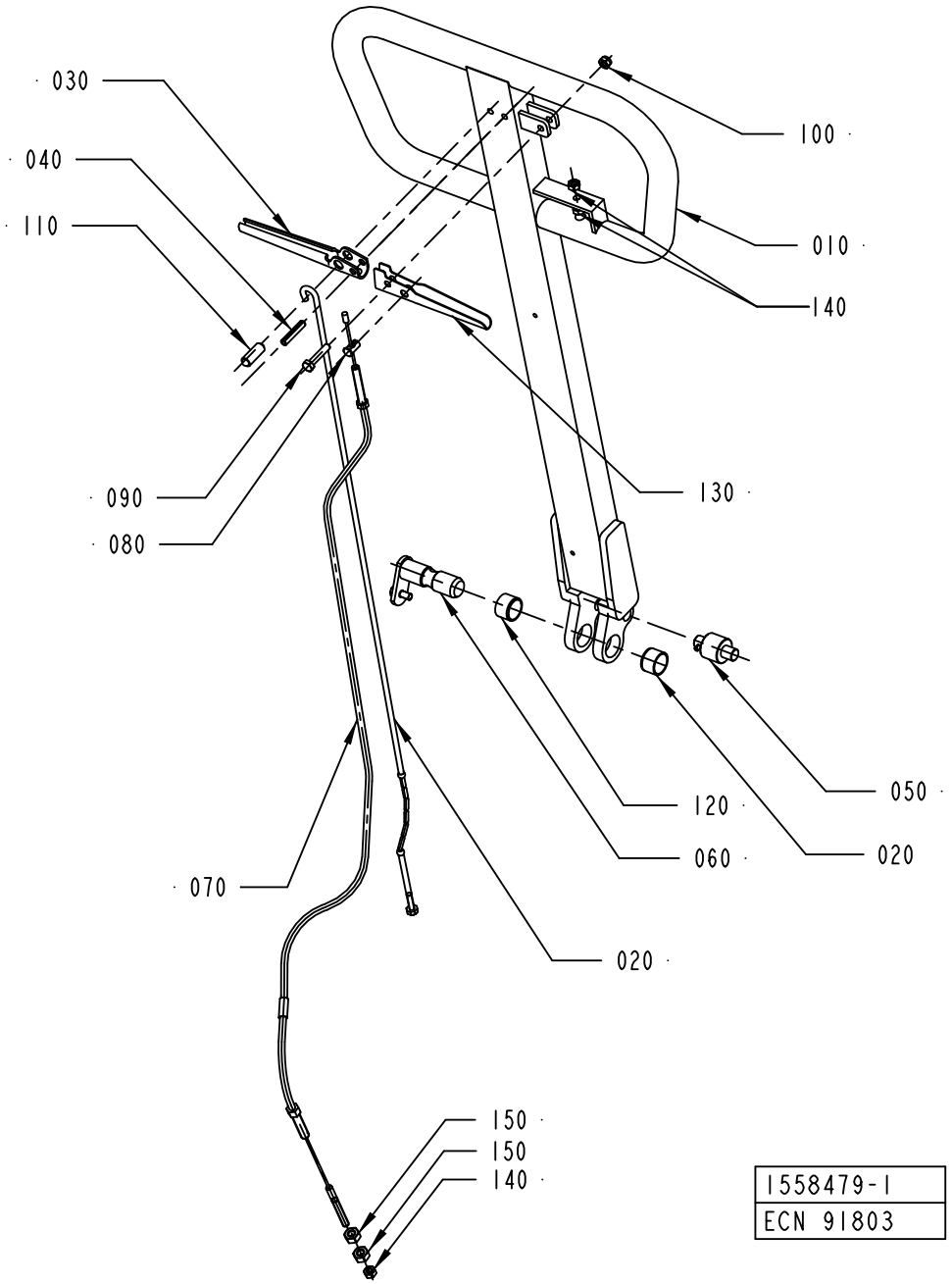
030
040
110
100
010
140
090
080
130
120
060
070
020
050
020
150
150
140
1558479-1
ECN 91803

ECM: 91830 - 20010504
Group number: 1558479-0100
Assembly Drawing: 1558479-1_1_AA

Pos	Part No	UN	Qty	Description	Page No
-					
010	90067-0361		1	TIE ROD	
020	90067-0359		1	SINK ROD, 34 74 021 7	
030	90067-0358		1	SINK HANDLE	
040	311111-0345		1	SPRING PIN ISO 8752 6X32-ST	
050	90067-0349		1	ROLLER KIT, 34 73 050 7	
060	90067-0350		1	AXLE PIN	
070	90067-0301		1	BRAKE WIRE, 32 82 138 1	
080	90067-0320		1	COTTER FOR 90067-301	
090	312109-0374		1	SCREW M6S ISO 4017 M6X30 A480	
100	312812-0316		1	HEXAGON NUT, NY-LOCK M6 A480	
110	90067-0360		1	MOUNTING KIT, 34 74 022 5	
120	321120-0137		2	BEARING BUSH W/O FLANGE, 20X23X15 MM	
130	90067-0364		1	BRAKE HANDLE	
140	312602-0316		3	NUT, EN 24032 M6M M6 NIPLBR	
150	312602-0318		2	HEXAGON NUT, EN 24032 M6M M8 NIPLBR	

Pos	Part No	UN	Qty	Description	Page No

LIFTING CYLINDER

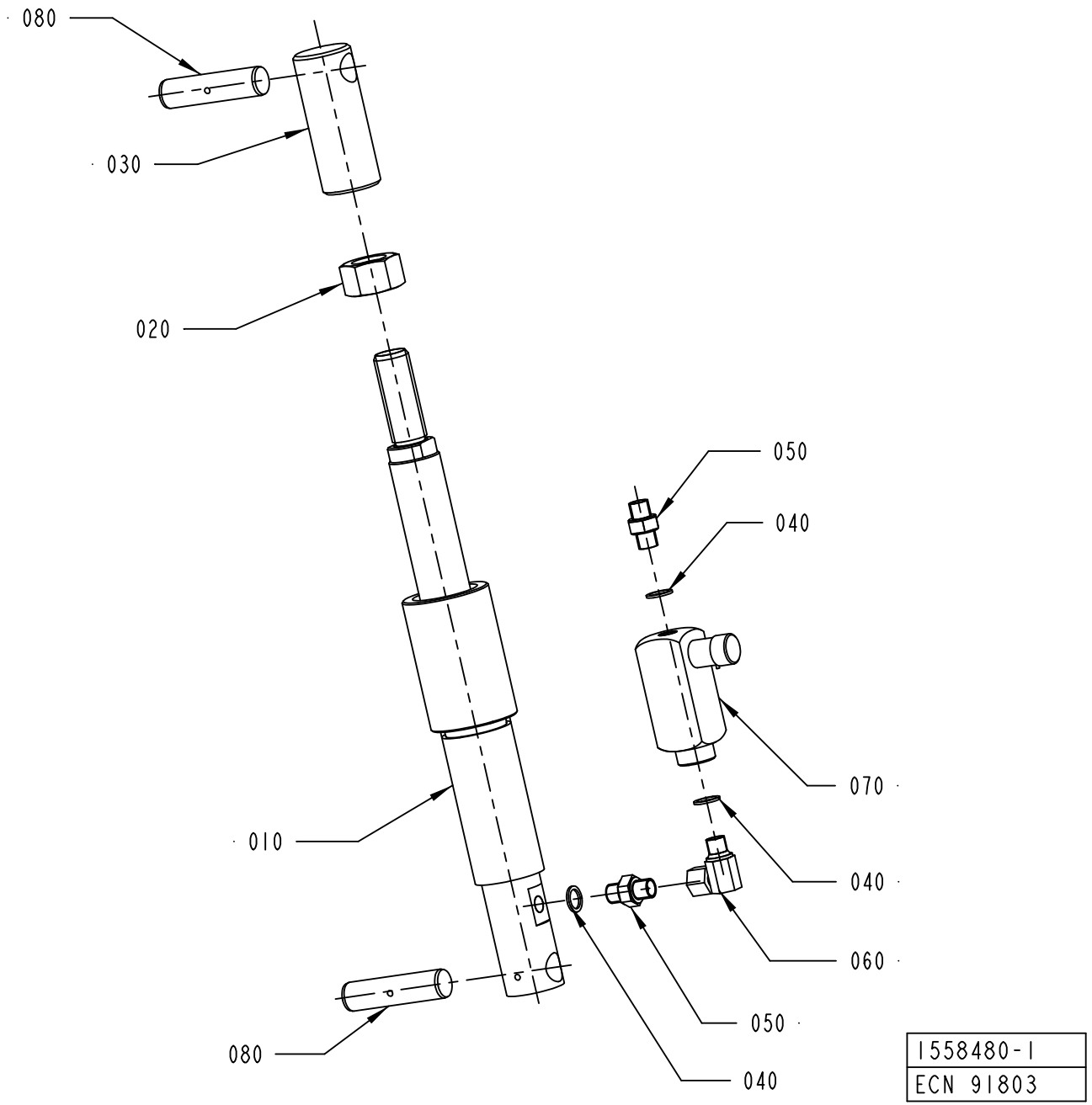

ECM: 91831 - 20010504
Group number: 1558480-0100
Assembly Drawing: 1558480-1_1_AA

Pos	Part No	UN	Qty	Description	Page No
-					
020	312605-0328		1	HEXAGON NUT, M6M M24 A280	
040	315234-0110		3	WASHER,PL.RND.CU.13,5/18 H=1,5	
050	90055-0042		2	NIPPLES, EXT. THREAD, HEXAGON, NO. 6835-	
060	90055-0145		1	ELBOW ADAPTOR-R1/4	
070	90201-0098		1	ADJ. FLOW CON. VALVE, NO. 9 PCCM 400SF	

Pos	Part No	UN	Qty	Description	Page No

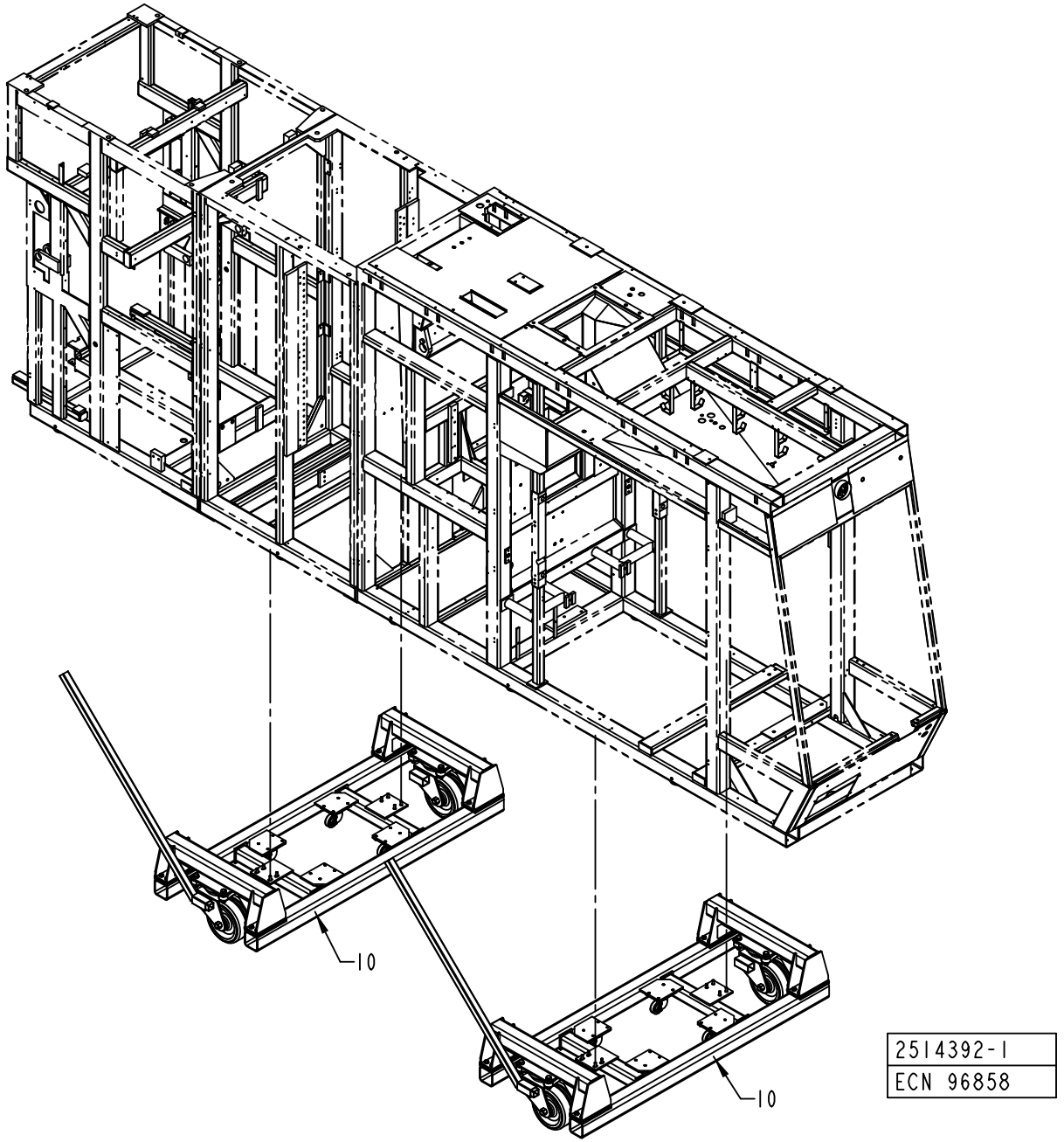
10
10
2514392-1
ECN 96858

ECM: 96863 - 20010830
Group number: 2514392-0100
Assembly Drawing: 2514392-1_1_AA

Pos	Part No	UN	Qty	Description	Page No
-					
0010	582526-0100		2	CARRIAGE	**10-91**

Pos	Part No	UN	Qty	Description	Page No

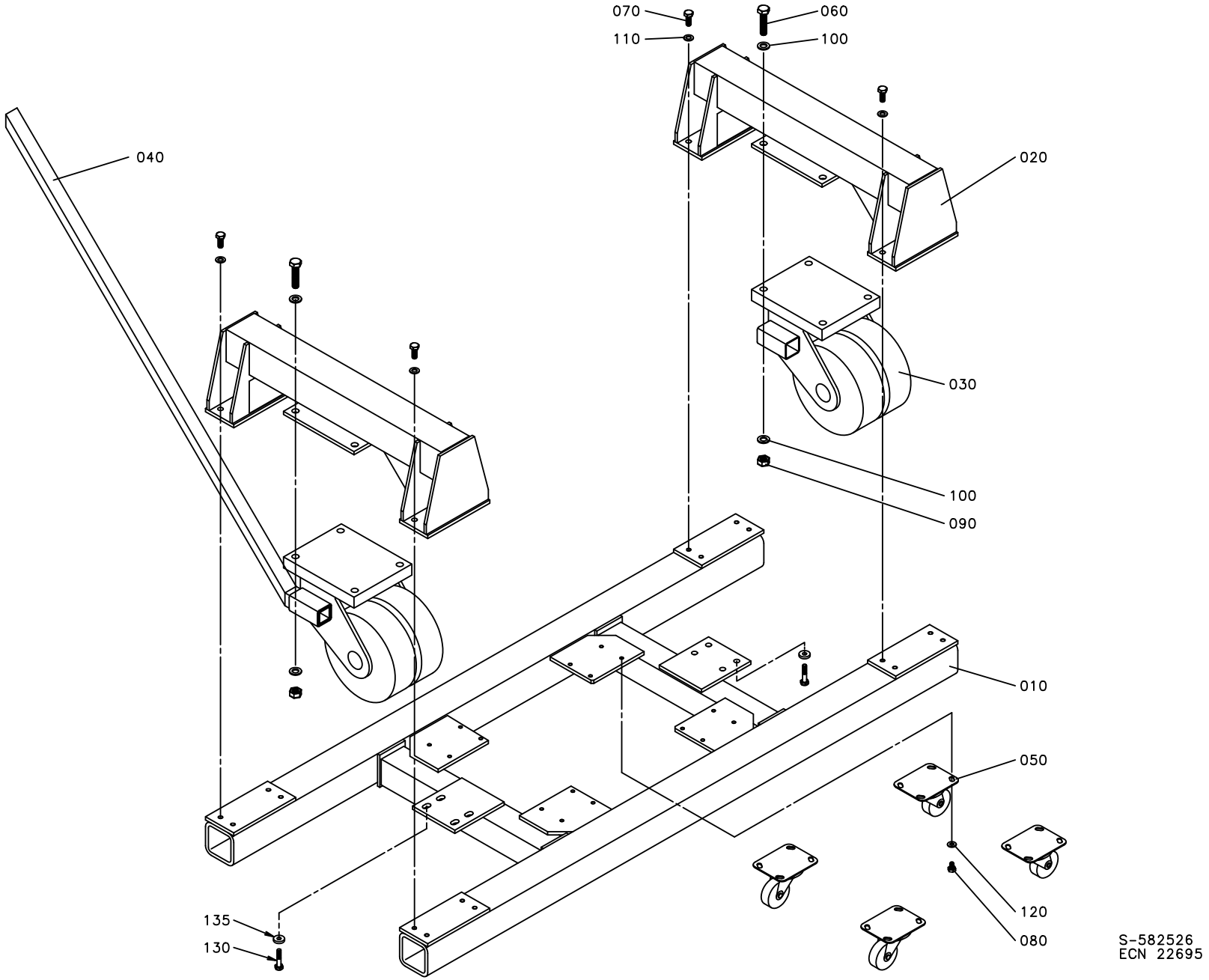
070
110
060
100
040
020
030
100
090
010
050
120
080
135
130
S-582526
ECN 22695

ECM: 96864 - 20010830
Group number: 582526-0100
Assembly Drawing: 582526-1_1_AA

Pos	Part No	UN	Qty	Description	Page No
-					
0010	1140039-0000		1	CONVEYOR FRAME	
0020	1140040-0000		2	BRACKET	
0030	1140840-0000		2	WHEEL	
0040	582527-0000		1	ROD	
0050	90191-0077		4	WHEEL	
0060	312105-0634		8	SCREW M6S ISO 4014 M16X70 A480	
0070	312105-0538		16	SCREW M6S ISO 4017 M12X35 A480	
0080	312105-0489		16	SCREW M6S ISO 4017 M10X16 A480	
0090	312605-0324		8	HEXAGON NUT, M6M M16 A280	
0100	315105-0186		16	WASHER BRB17X30RFR	
0110	315105-0178		16	WASHER BRB13X24RFR	
0120	315105-0173		16	WASHER BRB10,5X22RFR	
0130	312109-0499		8	SCREW M6S ISO 4017 M10X40 A480	
0135	315125-0173		8	WASHER TBRSB 10,5X28X6 A4	

Pos	Part No	UN	Qty	Description	Page No

Tetra Pak

SPC
Spare Parts Catalogue

Part No	Description	Page No
2033-0011	WASHER	1-29, 1-31, 1-33, 1-35, 1-37, 1-39, 1-53, 1-55, 1-59, 1-61, 1-63, 1-75, 1-77, 1-79, 1-81, 1-83, 1-91, 1-93, 1-95, 1-97, 1-99
6278-0000	WASHER	7-33, 7-35
7309-0000	HANDLE	1-395, 1-397
12242-0003	GASKET 48X38X5,5	1-169, 1-171
14600-0000	HOOD	1-213, 1-215, 1-217
14729-0000	NUT	4-205, 4-207, 4-215, 4-217
19972-0000	WASHER 4-7, 4-9, 4-11, 4-17, 4-19, 4-21, 4-51, 4-53, 4-55, 4-57, 4-61, 4-63, 4-65, 4-67, 4-73, 4-79	
20494-0000	COMPRESSION SPRING	4-199, 4-209
22462-0000	SHAFT	4-123, 4-125, 4-159, 4-161
22463-0000	ROLL	4-123, 4-125, 4-159, 4-161
23765-0001	INSULATING PIPE	5-203, 5-205, 5-207, 5-209, 5-211, 5-213
23765-0002	INSULATING PIPE	5-203, 5-205, 5-207, 5-209, 5-211, 5-213
23765-0003	INSULATING PIPE	5-203, 5-205, 5-207, 5-209, 5-211, 5-213
23765-0004	INSULATING PIPE	5-203, 5-205, 5-207, 5-209, 5-211, 5-213
23765-0005	INSULATING PIPE	5-203, 5-205, 5-207, 5-209, 5-211, 5-213
24928-0000	LOCKING RUBBER	1-213, 1-215, 1-217
26075-0000	VOLUME BULGE	4-51, 4-53, 4-55, 4-57, 4-61, 4-63, 4-65, 4-67
28509-0000	WASHER	4-93, 4-95, 4-97, 4-103, 4-139, 4-141, 4-143, 9-5
29876-0000	COVER	1-201
29886-0000	LACE	4-199, 4-209
30298-0000	INSULATION	1-201
31838-0000	PLUNGER	4-199, 4-209
32079-0000	WASHER	4-103
32544-0000	INSULATION NUT	4-93, 4-95, 4-97, 4-103, 4-139, 4-141, 4-143, 9-5
32957-0000	SCREW	4-205, 4-207, 4-215, 4-217
36753-0000	RING	4-199, 4-209
47937-0411	PLMS OFF-LINE PROGRAM	8-113
67379-0101	TRANSFORMER	4-103
67379-0105	TRANSFORMER	4-103
67379-0114	TRANSFORMER	4-103
67379-0206	TRANSFORMER	4-103
67379-0249	TRANSFORMER	4-103
67379-0258	TRANSFORMER	4-103
67379-0269	TRANSFORMER	4-103
67379-0404	TRANSFORMER	1-13
67379-0405	TRANSFORMER	1-13
67379-0412	TRANSFORMER	1-13
67379-0414	TRANSFORMER	1-13
67379-0417	TRANSFORMER	1-13
67380-0207	TRANSFORMER	7-13
67380-0214	TRANSFORMER	7-13
67388-0102	RACK FRONTMOUNTED 84TE	8-105
68262-0101	BACKPLANE FRONT RACK 8TE	8-105
68445-0104	FRONT PLATE 8 TE	8-105
68445-0105	FRONT PLATE 10TE	8-105
72846-0101	COMPRESSION SPRING	10-5
72887-0000	COMPRESSION SPRING	10-35
72888-0001	SPRING BRACKET	10-35
72888-0002	SPRING BRACKET	10-35
74305-0100	PULLER	10-5
74363-0000	FASTENING PLATE	10-53
74364-0000	EXTRACTOR BOLT	10-53
74365-0000	SCREW	10-53
74655-0000	SHAFT	10-33
76131-0000	ASSEMBLY CONE	10-37
76132-0000	ASSEMBLY TOOL	10-37
78801-0000	CALIBRATION TOOL	10-37
82197-0103	UM DOCUMENT SERIAL COMUNICATION ONLY EN	8-113
82351-0106	USER MANUAL PLMS OFF-LINE	8-113
90001-0033	WALL SOCKET OUTLET	8-97, 8-99
90002-0004	BLANK-OFF PLUG, PR 22,5 SKINDICHT-BLK16	1-293, 1-351, 1-355, 1-357, 1-367, 1-369, 1-383, 1-385, 1-387, 2-97, 6-67, 7-133, 7-135, 7-137, 7-139, 7-141, 8-25
90002-0009	BLANK-OFF PLUG, PR 18.6 SKINDICHT-BLK11	1-351, 1-355, 1-357, 1-367, 1-369, 2-97, 2-155, 2-157, 5-281, 7-133, 7-135, 7-137, 7-139, 7-141
90002-0010	LANK-OFF PLUG, PR 37 SKINDICHT-BLK29	2-97, 7-45, 7-47, 7-161, 7-163, 7-165
90002-0012	BLANK-OFF PLUG, PR 28,3 SKINDICHT-BLK21	1-367, 1-369, 1-383, 1-385, 1-387, 2-97, 2-149, 2-151, 7-133, 7-135, 7-137, 7-139, 7-141
90002-0013	BLANK-OFF PLUG, PR 15,2 SKINDICHT-BLK9	1-227, 1-351, 1-355, 1-357, 1-367, 1-369, 1-383, 1-385, 1-387, 2-55, 2-157, 6-31, 6-67, 7-133, 7-135, 7-137, 7-139, 7-141
90002-0016	BLANK-OFF PLUG PR 20.4 SKINDICHT-BLK13,5	1-355, 1-357, 1-367, 1-369, 1-383, 1-385, 1-387, 8-25
90005-0002	WASHER 16/6,7X1,5	4-27, 4-29, 4-39, 4-41
90005-0060	WASHER PLAIN, RBS 6,4/M6)/18,H=1,5	1-91, 1-93, 1-175, 1-195, 8-25
90005-0077	WASHER PL.RND.NYL.8,4/7, H=2	2-265, 8-29, 8-37
90005-0082	WASHER PLAIN ROUND 4,3(M4)/12,H=1	4-51, 4-53, 4-55, 4-57, 4-61, 4-63, 4-65, 4-67, 4-73, 4-79, 7-13, 7-19, 7-75, 7-79, 7-83, 8-25, 8-57
90005-0094	GASKET C 19438-EPR	2-243
90005-0095	WASHER PLAIN BLACK PVC, (M)6X14 H=3	5-83, 5-85, 5-87, 5-89, 5-91
90005-0125	WASHER PLAIN ROUND 5,5/22, H=1,5 FZB	5-15
90012-0049	CABLE GLAND, STR13,5, PR20,4/PG13,5	1-367, 1-369
90012-0063	CABLE GLAND PR 15,2	2-41
90012-0125	GLAND FITTING	2-55, 2-97, 2-155, 7-133, 7-135, 7-137, 7-139, 7-141
90012-0126	HOSE GLAND W/O INSERT PG29 NORMAL	1-201

Part No	Description	Page No
90012-0131	HOSE GLAND W/O INSERT PG21 NORMAL	1-281
90012-0137	GLAND, EXTENDED WITH INSERT, PG11	1-155, 1-157
90015-0020	LEAD-IN, TET5-7, E-1458016	2-9, 2-45, 2-47, 2-125, 2-127, 2-129, 2-149, 2-151
90015-0021	LEAD-IN, TET10-14, E-1458023	2-57, 2-59, 2-211, 2-213, 7-75
90015-0022	LEAD-IN, TET14-20, E-1458029	2-9
90015-0023	LEAD-IN, TET7-10, E-1458019	2-9, 2-49, 2-131, 2-133, 2-149, 2-151
90015-0024	LEAD-IN, TET20-26, E-1458035	7-75
90015-0025	LEAD-IN, TET26-35, E-1458041	6-11
90015-0037	RUBBER BUSHING	6-27
90017-0015	HANDLE, NO. 14.4012.02.308	8-29
90017-0016	HANDLE, NO. 14.4012.02.120	2-253, 2-265, 8-37
90017-0017	HANDLE, NO. 547-128	8-97, 8-99
90024-0036	FILTERED TERMINAL BLOCK	6-11
90024-0060	POWER LINE FILTER, 80 A 250/440 VAC	6-11
90028-0020	CONE TUBE 2,5MM	4-7, 4-9, 4-11, 4-17, 4-19, 4-21, 4-51, 4-53, 4-55, 4-57, 4-61, 4-63, 4-65 4-67, 4-73, 4-79, 4-167, 4-169, 4-171, 4-173, 4-199, 4-201, 4-203, 4-205, 4-207, 4-209, 4-211 4-213, 4-215, 4-217, 5-185
90028-0021	CONE TUBE 4 MM	2-89, 4-199, 4-201, 4-203, 4-205, 4-207, 4-209, 4-211, 4-213, 4-215, 4-217
90028-0022	CONE TUBE 6 MM	2-87, 2-89, 4-185
90028-0024	CONE TUBE 4 MM	4-167, 4-169, 4-201, 4-203, 4-211, 4-213
90028-0025	CONE TUBE 6 MM	4-167, 4-169, 4-201, 4-203, 4-211, 4-213, 5-185
90030-0030	CONN. BULKHEAD SV 12-L/SY	1-255
90030-0058	CONN. T-PIPE T-12	1-257
90030-0065	PIPE CONNECTION	4-81, 4-83, 4-85, 4-129, 4-131, 4-133
90030-0067	CONN. BULKHEAD SV 8-L/SY	2-83
90030-0071	CONN. ELBOW WA 8-R1/4	2-37
90030-0076	CONN. T-PIPE T-6	5-201
90030-0088	CONN. STR., 12-R1/4, EXT. THREAD	1-255
90030-0098	ACCESSORIES, FERRULE 8	2-83, 4-233
90030-0106	CONN. PIPE G-12	1-283
90030-0121	CONN. ELBOW ADJ.,INT 10	2-79
90030-0157	CONN. STR. 10-R3/8, EXT. THREAD	2-79
90030-0166	NIPPLE,REDUCING G1/4"-G1/4"	2-197, 2-199
90030-0171	ADJUSTABLE ELBOW CONNECTION,EXT 6-G1/8	2-33, 5-201
90030-0178	CONN. STR., 10-R1/4, EXT. THREAD	2-81
90030-0180	CONN. STR. GE 12-1/2-14 NPTF	1-255, 1-283
90030-0181	CONN. STR. GE 12-3/8-18 NPTF	1-207
90030-0184	CONN. STR. GA-6-G1/8	1-319, 1-355, 1-357, 2-29, 2-65
90030-0185	CONN. STR. GA-8-G1/4	6-41, 6-43
90030-0187	CONN. STR. GA-12-G3/8	1-257, 1-283, 1-319
90030-0188	CONN. STR. GA-15-G1/2	1-207, 1-255, 1-283, 1-285
90030-0193	CONN. STR. GA-28-G1	1-255
90030-0202	CONN. STR., 6-G1/4, EXT. THREAD	1-291, 1-319
90030-0203	ADJUSTABLE ELBOW CONNECTION,EXT 6-G1/4	1-225, 1-319
90030-0219	CONN. ELBOW BULKHEAD WSV 6	2-89
90030-0223	BUSHING, INT/EXT. G-THREAD NO. 2531	10-57, 10-59
90030-0224	NIPPLES, EXT. THREAD, HEXAGON, NO. 2511	10-57, 10-59
90030-0225	BUSHING, INT/EXT. R-THREAD 1/4X3/8	10-57, 10-59
90030-0257	CONN. ELBOW, 8-R1/8, EXT.THREAD	4-105, 4-107, 4-109, 4-111, 4-149, 4-151, 4-153, 4-155
90030-0336	CONN. STRAIGHT, 316L-12M-BVCO-3	1-233, 9-23
90030-0338	NUT, PIPE & CONNECTORS, SS-8-BVCO-4	1-233
90030-0340	NIPPLES, EXT. THREAD, HEXAGON, RA-G1/2A3	2-81
90030-0344	CONN. STR., 8-G1/4	2-23
90030-0465	STRAIGHT CONNECTION, MAD DN 15	6-37
90030-0481	REDUCER M12TURM6-316	1-255
90030-0485	CONN. BULKHEAD SV 8-	1-269, 2-39
90030-0549	CONN. STRAIGHT, BULKHEAD, SS-4-VCO-61	1-249
90030-0567	CONN. STR., 15-R1/2, EXT. THREAD	2-77
90030-0571	CONN. T-PIPE 6	1-249
90031-0051	BASEPLATE, 10-SLOT	8-67, 8-69
90031-0052	BASEPLATE, 5-SLOT	8-65
90031-0053	BASEPLATE,10-SLOT	8-67, 8-69
90031-0057	PLC, DIGITAL INPUT MODULE	8-67, 8-69
90031-0058	PLC, DIGITAL INPUT MODULE	8-67, 8-69
90031-0059	PLC, DIGITAL OUTPUT MODULE	8-67, 8-69
90031-0060	PLC,ANALOG INPUT MODULE 16 PT/VOLTAGE	8-67, 8-69
90031-0061	PLC,ANALOG INPUT MODULE 16 PT/CURRENT	8-67, 8-69
90031-0062	PLC, ANALOG OUTPUT MODULE 8PT/CURR/VOLT	8-67, 8-69
90031-0065	PLC,TEMPERATUR CONTROL,INPUT MODULE 8 PT	8-67, 8-69
90031-0068	PLC, POWER SUPPLY	8-65, 8-67, 8-69
90031-0300	PLC,COMM.CABLE AND ADAPTER	10-67
90031-0305	I/O EXPANSION CABLE	8-67, 8-69
90032-0038	BLOCK 2 WAYS	2-89, 4-199, 4-209
90032-0039	BLOCK 4 WAYS	4-167, 4-169, 4-199, 4-201, 4-203, 4-205, 4-207, 4-209, 4-211, 4-213, 4-215, 4-217
90032-0040	BLOCK 6 WAYS	4-205, 4-207, 4-215, 4-217, 5-185
90032-0043	DISTRIBUTION BLOCK 3 WAYS	2-89, 4-201, 4-203, 4-211, 4-213
90032-0046	DISTRIBUTION BLOCK 6 WAYS	2-89
90036-0057	LIGHT BULB, BA9S 28V	9-5
90036-0068	BULB 6.5W 24V	2-177
90038-0049	DIODE	1-365
90041-0029	FLOPPY DISC UNIT FD-235HF 1,4MB	8-109
90041-0068	DATACABLE MODEM PC	8-113
90041-0091	PC 2,5" HD BAY, 3016-0028-013	8-109
90042-0170	SOLENOID VALVE BÃ¼RKERT	6-9

Part No	Description	Page No
90042-0171	SOLENOID VALVE BURKERT	1-225
90042-0172	SOLENOID VALVE 4023/1005/1032 24VDC	1-207, 1-285
90042-0203	SOLENOID VALVE BüRKERT	1-223, 1-319
90042-0206	SOLENOID VALVE G1/8, 444-111-000-1	2-27
90042-0215	VALVE BODY 5/2 UNISTABLE	1-337, 1-339, 1-341, 1-345, 1-347, 2-51, 2-135, 2-137, 2-139, 6-75, 7-161, 7-163, 7-165
90042-0221	MKC MAGAZINE PNEUMATIC VALVE	7-161, 7-163, 7-165
90042-0230	VALVE BODY 5/3 OPEN CENTRE	2-51, 7-159
90042-0248	SOLENOID VALVE OFFICIENE DI ENSINO	2-201, 2-203, 2-207
90042-0249	SOLENOID VALVE OFFICINE DI ENSINO	6-69, 6-71
90042-0254	SOLENOID VALVE, R1 1/2	6-35
90042-0265	HIGH SPEED VENTING VALVE 583-590-000-1	7-159, 7-161, 7-163, 7-165
90042-0271	VALVE BODY 2X3/2	1-339, 1-341, 1-345, 1-347, 2-51
90042-0392	CONTACT 2 POLE + EARTH	7-61
90042-0487	COIL 24 VDC/15W, 04983 197 18	2-27
90042-0519	BLANK PLATE ISO SIZE 1	1-337, 1-339, 1-341, 1-345, 1-347, 2-51, 2-135, 2-137, 2-139, 6-75, 7-161, 7-163, 7-165
90042-0520	BASE PLATE ISO SIZE 1	1-337, 1-339, 1-341, 1-345, 1-347, 2-51, 2-135, 2-137, 2-139, 7-161, 7-163, 7-165
90042-0522	PORTED END PIECE ISO SIZE 1	1-337, 1-339, 1-341, 1-345, 1-347, 2-51, 2-135, 2-137, 2-139, 6-75, 7-159, 7-161, 7-163, 7-165
90042-0526	PROTECTIVE SLEEVE MECMAN, 04938 294 08	6-75
90042-0528	BLANKING KIT SEALS ISO SIZE 1	1-337, 1-339, 1-341, 1-345, 1-347, 2-51, 2-135, 2-137, 2-139, 6-75, 7-161, 7-163, 7-165
90042-0532	BASE PLATE ISO SIZE 1	1-337, 1-339, 1-341, 1-345, 1-347, 2-51, 2-135, 2-137, 2-139, 6-75, 7-159, 7-161, 7-163, 7-165
90042-0535	TERMINAL BOARD 19 CORDS	1-337, 1-339, 1-341, 1-345, 1-347, 2-51, 2-135, 2-137, 2-139, 6-75, 7-159, 7-161, 7-163, 7-165
90042-0538	PILOT VALVE L=500MM	1-337, 1-339, 1-341, 1-345, 1-347, 2-51, 2-135, 2-137, 2-139, 6-75, 7-161, 7-163, 7-165
90042-0539	PILOT VALVE L=350MM	2-51, 7-159, 7-161, 7-163, 7-165
90042-0545	SUB-BASE SOFT START ISO 1 AND VDMA 01	7-159, 7-161, 7-163, 7-165
90042-0582	COIL NORGREN QM/48/127/21	7-61
90042-0583	CABLE MECMAN 440-827 000-1	6-77
90042-0585	PILOT VALVE L=5M	6-77, 7-161, 7-163, 7-165
90042-0591	PILOT VALVE, 04938-333-08	7-161, 7-163, 7-165
90043-0002	PRESSURE GAUGE, 2040 D=63 MM	1-283
90043-0006	PRESSURE GAUGE, 2041 D=63 MM	6-69, 6-71
90043-0021	PRESSURE GAUGE 0-1 BAR 1/8" D=40	2-49, 10-51, 10-57, 10-59
90043-0043	PRESSURE GAUGE 0-10 BAR 1/8"	6-37, 10-23, 10-57, 10-59
90043-0064	PRESSURE GAUGE, 2048 D=40 MM	2-131, 2-133, 7-161, 7-163, 7-165
90043-0065	MKC NEW FILL PUMP VACUUM PRESSURE GAUGE	1-335, 1-343, 6-75, 7-161, 7-163, 7-165
90043-0082	PRESSURE GAUGE, 2740, D=63 MM	1-255
90043-0090	PRESSURE GAUGE, 2048 D=40 MM	2-49, 2-131, 2-133
90043-0095	PRESSURE GAUGE, 2740, D=63 MM, GLYC.	1-197
90043-0100	PRESSURE GAUGE, 2948 D=63 MM	6-19
90043-0107	PRESSURE GAUGE	6-77
90044-0084	LIMIT SW. 14 CE1-4	1-287, 1-289
90044-0117	PROX.SW. IX 0208	5-69
90044-0165	PROXIMITY SENSOR, SME-8-K5-LED-24	7-31, 7-65
90044-0192	LIMIT SW. SZ2586.000	8-25
90044-0194	PROX.SW. IN5329/IN3002-BPKG(EX90044-104)	1-149, 1-151, 1-153, 1-169, 1-171, 1-231, 1-273, 1-313, 1-315, 5-215, 5-235, 5-237, 5-239, 5-241, 5-243, 5-245, 5-257, 5-261, 5-263, 7-27, 7-75
90044-0195	PROX.SW. IO 9922 IOW2010-ARKG/M/UP/80CM	3-13, 3-29
90044-0204	KEY SAF.SW. NZIVZ-538-E	2-99
90044-0310	KEY FOR SAFETY SWITCH AZ 15/16 B1	1-7, 1-9, 1-109, 1-119, 1-121, 1-177, 1-397, 7-75
90045-0162	MOTOR M42X30/I	2-41
90048-0037	OIL PUMP INCL. CONTAINER 1,5 L	2-87
90051-0035	KNOB, EXTERNAL THREAD. NO. 8308-1135	1-299, 1-301, 1-335, 7-85, 10-27, 10-29
90051-0045	STELLAR KNOB, NO. 8323-257	1-129, 1-131
90051-0049	KNOB, ADJUST.HI.EXT.THREAD, NO 8324-3755	1-307, 1-309
90051-0082	KNOB, CIRCUL, THREADED BUSH, M6 25X21 MM	7-119, 7-127, 7-175
90051-0083	KNOB, EXTERNAL THREAD. NO. 8308-1321	7-107
90051-0087	LOCK KNOB, NO. GN 617 A5	7-101, 7-103, 7-119, 7-127
90051-0088	ADJUSTMENT SCREW	7-75
90051-0106	COCK HANDLE, NO. H6	6-65
90051-0112	LOCK KNOB, NO. GN 617 NIK5	2-49, 2-131, 2-133, 3-19, 3-33
90052-0011	HORN HOOTERT 24:48VDC.PT NO.1YA030221	7-45, 7-47
90053-0029	COUNTER, F524.800FA3C 24VDC	8-97, 8-99
90053-0031	HOUR COUNTER, B 609.10 10-50VDC	8-97, 8-99
90055-0033	HOSE NIPPLE, EXT.THR. R1/2-13 MM	2-271
90055-0042	NIPPLES, EXT. THREAD, HEXAGON, NO. 6835-	6-19, 10-87
90055-0051	HOSE NIPPLE, EXT.THR. R3/8X13 MM	2-19, 2-21, 2-23, 2-39
90055-0053	HOSE NIPPLE, EXT.THR. R1-25 MM	6-49
90055-0097	STRAIGHT COUPLING	6-79
90055-0100	Y-CONNECTION, 6-6	2-125, 2-127, 2-129, 2-131, 2-133
90055-0101	Y-CONNECTION, 8-8	2-49
90055-0118	ELBOW WITH TAILPIECE 8/8 MM	1-343, 2-131, 2-133
90055-0132	HOSE NIPPLE, EXT.THR. R1/4X7,8 MM	2-37
90055-0143	HOSE,ELBOW 90 COUPLING,FPT,6X8MM	1-337, 1-339, 1-341, 1-345, 1-347
90055-0145	ELBOW ADAPTOR-R1/4	10-87
90055-0166	HOSE NIPPLE, EXT.THR. R11/2X38 MM	6-35
90055-0172	ELBOW WITH TAILPIECE 8/8 MM	2-49, 2-51, 2-125, 2-127, 2-129, 2-131, 2-133, 2-135, 2-137

Part No	Description	Page No
		2-139, 7-161, 7-163, 7-165
90055-0173	ELBOW WITH TAILPIECE 8/6 MM	2-51, 7-159, 7-161, 7-163, 7-165
90055-0204	ELBOW WITH TAILPIECE 8/8 MM LONG	5-187, 5-189, 5-191
90055-0217	ELBOW PIPE JOINT	2-51, 7-105, 7-121, 7-131
90055-0227	Y-CONNECTION, 6-8	2-49
90055-0248	ELBOW WITH TAILPIECE 10/10 MM	2-125, 2-127, 2-129
90055-0249	REDUCER 8-10	6-7
90055-0250	ELBOW WITH TAILPIECE 8/8 MM	6-9
90055-0260	NIPPLE-8 MM G1/4"	6-29
90055-0266	STRAIGHT CONNECTION	2-197, 2-199, 6-9
90055-0267	ELBOW PIPE JOINT,EXT.THREAD,D=8 MM G1/4	2-197, 2-199, 6-9, 6-19
90055-0268	ELBOW WITH TAILPIECE 6/6 MM	2-207
90055-0269	ELBOW PIPE JOINT 8X8 MM	2-197, 2-199
90055-0274	STRAIGHT COUPLING, D=8 MM - G1/4"	2-9, 2-197, 2-199, 6-19, 6-27
90055-0276	T-CONNECTION 8 MM	6-7, 6-19, 6-29, 7-105
90055-0277	ELBOW WITH TAILPIECE 12/12 MM	2-211, 2-213
90055-0278	T-COUPLING, ADJ.12-G1/4"	2-49
90060-0080	RELAY, TIME H3DE-S1 24VDC	8-51, 8-53, 8-55
90062-0015	LOCK WASHER SERRAT.EXT.GEAR,6,4/11 H=0,7	5-187, 5-189, 5-191, 6-11, 7-133, 7-135
		7-137, 7-139, 7-141, 8-25, 8-31, 8-33, 8-35, 8-37, 8-77, 8-79
90062-0016	LOCK WASHER SERRAT.EXT.GEAR,8,4/15 H=0,8	7-45, 7-47, 7-133, 7-135, 7-137, 7-139, 7-141
90062-0022	LOCKING WASHER D=6,4/11	8-51, 8-53, 8-55, 8-67, 8-69, 8-97, 8-99
90062-0029	LOCK WASHER 5,1X 8,6, T= 1,5 DIN 7980	1-115, 2-79, 6-17
90062-0030	LOCK WASHER 6,1X9,7; T=1,5 DIN 7980	1-115
90062-0031	"LOCK WASHER 8,2X12,8; T=2 DIN 7980"	1-115
90062-0058	LOCK WASHER SERRAT.EXT.GEAR,3,2/6 H=0,4	8-77, 8-79
90062-0059	LOCK WASKER SERRAT.EXT.GEAR,4,3/8 H=0,5	7-133, 7-135, 7-137, 7-139, 7-141
90062-0061	LOCK WASHER NORD-LOCK,6,5/10,8, T=2,2	4-27, 4-29, 4-39, 4-41, 5-165, 5-167, 5-259, 5-265
90064-0082	PUSH BUTTON, WHITE	2-265, 7-203, 7-219
90064-0084	PUSH BUTTON, YELLOW	1-355, 1-357, 2-265, 7-203
90064-0086	PUSH BUTTON, WHITE	2-265
90064-0093	PUSH BUTTON, GREEN	2-265
90064-0098	PUSH BUTTON, CLEAR	2-265
90067-0301	BRAKE WIRE, 32 82 138 1	10-85
90067-0302	TORSION SPRING	10-83
90067-0317	BRAKE LINING	10-83
90067-0320	COTTER FOR 90067-301	10-85
90067-0336	GUIDE SHAFT UNIT, 32 82 123 3	10-83
90067-0337	BRAKE DRUM	10-83
90067-0338	GUIDE ROLLER 32 44 117 2	10-83
90067-0342	TENSION SPRING	10-83
90067-0349	ROLLER KIT, 34 73 050 7	10-85
90067-0350	AXLE PIN	10-85
90067-0351	SEAL KIT	10-81
90067-0354	PUMP PISTON	10-81
90067-0355	COMPRESSION SPRING	10-81
90067-0356	TOP WASHER	10-81
90067-0357	REPAIR KIT	10-81
90067-0358	SINK HANDLE	10-85
90067-0359	SINK ROD, 34 74 021 7	10-85
90067-0360	MOUNTING KIT, 34 74 022 5	10-85
90067-0361	TIE ROD	10-85
90067-0364	BRAKE HANDLE	10-85
90067-0365	HYDRAULIC HOSE, 32 04 169 1	10-79
90067-0368	YOKE	10-79
90067-0369	VALVE ARM	10-81
90067-0370	WHEEL, 32 04 176 6	10-79
90067-0371	SLEEVE, 32 04 175 8	10-79
90067-0372	SHAFT, 32 04 174 1	10-79
90069-0614	GEARS, WORM MOTOR MC320P2T	7-73
90074-0011	CABLE CLIPS, D=14 MM	8-25, 8-111
90074-0025	CLIPS, CABLE CLIPS DI=8 MM	6-77
90075-0127	CONTACTOR, 4KW 24VDC	7-151, 7-153
90075-0141	CONTACTOR, 4KW 24VDC	8-51, 8-53, 8-55
90077-0079	FEED THROUGH TERMINAL, 02943.6	2-267, 5-281
90077-0113	FEED THROUGH TERMINAL, 10-00102150-1	2-97, 2-155, 2-157, 8-71, 8-75, 8-101
90077-0114	END PLATE, WAP/WDK 2,5	8-101
90077-0328	RAIL TS15/5	2-267, 5-281
90082-0013	OVER VOLT. PROTECT. PU 4C-R 230 VAC	6-11
90083-0052	NEEDLE ROLLER THRUST BEARING, 30X47X2 MM	5-69
90083-0053	SHAFT LOCATING WASHER, 30X47X1MM	5-69
90087-0019	PLUG M10X1 STAINLESS	3-89, 3-17, 4-167, 4-169, 4-199, 4-201, 4-203, 4-209, 4-211, 4-213, 5-185
90087-0036	PLUG, KR 1/4	6-75
90089-0003	REDUCING SLEEVE, PR22,5/PR18,6	1-155, 1-157
90089-0015	REDUCING SLEEVE, PR37M/PR28,3F	1-367, 1-369
90089-0028	REDUCER, SKINDICHT-ME 13.5/21	7-133, 7-135, 7-137, 7-139, 7-141
90089-0029	ENLARGING SLEEVE	1-367, 1-369
90090-0016	BALL, D=15 MM	5-275
90091-0074	6EAR RING 35X40X5,3 MM	4-91
90091-0138	V-RINGS 40X50X9 MM V-45A	4-225, 4-227
90091-0148	RADIAL SEAL 25X47X7 MM DUST LIP	5-73, 5-217, 5-219, 5-221, 5-223, 5-225, 5-227
90091-0237	ROD SEAL, GLIDORING 20X27,5X3 MM	1-235, 1-237, 1-239, 9-23, 9-25
90091-0238	WEAR RING 20X22X10 MM	1-235, 1-237, 1-239, 9-23, 9-25
90091-0266	SEAL RING 10,4X16,3X2,5 MM	1-233, 9-21

Part No	Description	Page No
90091-0297	RADIAL SEAL 35X47X7 MM DUST LIP	5-5, 5-7, 5-185, 5-235, 5-237, 5-239, 5-241, 5-243, 5-245, 5-257, 5-261, 5-263
90091-0298	RADIAL SEAL 45X65X8 MM DUST LIP	5-235, 5-237, 5-239, 5-241, 5-243, 5-245
90091-0299	RADIAL SEAL 30X52X7 MM DUST LIP	5-5, 5-7, 5-73, 5-229, 5-231, 5-233
90091-0304	RADIAL SEAL 45X65X8 MM DUST LIP	9-25
90091-0306	RADIAL SEAL 30X47X7 MM DUST LIP	5-217, 5-219, 5-221, 5-223, 5-225, 5-227
90091-0335	PISTON SEAL GLIDE RING 62,5X70X3 MM	1-237, 9-25
90091-0336	PISTON SEAL GLIDE RING 79X90X4 MM	1-235, 1-239
90091-0358	SCRAPER, ASOB 45X53X7 MM	4-199, 4-209
90091-0359	X-SEAL 36,17X2,62 MM	4-91
90091-0360	BACK-UP RING 37,5X1,4 MM	4-91
90091-0361	SCRAPER, EXCLUDER2 30X34,8X3,7 MM	4-115, 4-117, 4-119, 4-121
90091-0362	SCRAPER, EXCLUDER2 18X22,8X3,7 MM	4-91
90091-0364	ROD SEAL, STEPSEAL 18X25,3X3,2 MM	4-91
90091-0366	WEAR RING 18X23X3,9 MM	4-91
90091-0368	WEAR RING 30X45X5,3 MM	4-91
90091-0377	ASSEMBLY TOOL SLEEVE GLYD RING	10-37
90091-0378	ASSEMBLY TOOL SLEEVE AQ-SEAL	10-37
90091-0380	SCRAPER, EXCLUDER 20X24,8X3,7 MM	5-235, 5-237, 5-239, 5-241, 5-243, 5-245
90091-0387	ASSEMBLY TOOL	10-37
90091-0391	SEAL SLYDRING	4-91
90091-0398	1PISTON SEAL GLIDE RING T 20,5X28X3,2 MM	4-91
90091-0404	RADIAL SEAL 22X40X7 MM DUST LIP	5-73, 5-261, 5-263
90091-0406	RADIAL SEAL 25X40X7 MM DUST LIP	5-261, 5-263
90091-0408	BEARING SEAL 70X78X5 MM	5-235, 5-237, 5-239, 5-241, 5-243, 5-245
90091-0412	SEAL RING	2-33
90091-0416	RADIAL SEAL 70X90X10 MM DUST LIP	5-69
90091-0428	PISTON SEAL GLIDE RING T 27,5X34,5X3,2 M	4-91
90091-0429	VARILIP 15X26X7 MM	1-175
90091-0436	RADIAL SEAL 20X40X7 MM DUST LIP	4-225, 4-227
90091-0440	RADIAL SEAL 22X40X7 MM DUST LIP	5-257
90092-0052	METERING VALVE 10 MM3	4-167, 4-169, 4-199, 4-201, 4-203, 4-205, 4-207, 4-209, 4-211, 4-213, 4-215, 4-217, 5-185
90092-0053	METERING VALVE 30 MM3	2-89, 3-17
90092-0054	METERING VALVE 50 MM3	4-199, 4-205, 4-207, 4-209, 4-215, 4-217, 5-185
90099-0007	HEXAGON NUT, M10X1, E 63 137 10	7-101, 7-103
90099-0027	HEXAGON NUT, M14, DIN936	1-149, 1-151, 1-153
90099-0051	NUT HEX. M10X1,25, FE FZB	1-199
90099-0053	HEXAGON NUT, M14X1,5, SMS2176	1-187
90099-0085	NUT	6-11
90099-0095	NUT HEX. M18X1,5	1-123, 1-125
90099-0096	NUT	6-11
90099-0104	NUT, PR 15,2 (PG9)	1-15, 1-17, 1-193, 1-195, 1-197, 1-201, 1-203, 1-221, 1-231, 1-249, 1-261, 1-281, 1-287, 1-289, 1-313, 1-315, 1-319, 1-367, 1-369, 1-383, 1-385, 1-387, 1-389, 2-39, 2-89, 6-19, 7-7, 7-133, 7-135, 7-137, 7-139, 7-141
90099-0110	NUT, PR 22,5 (PG16)	1-15, 1-17, 1-181, 1-249, 1-367, 1-369, 1-383, 1-385, 1-387, 1-389, 2-149, 2-151, 7-7, 7-133, 7-135, 7-137, 7-139, 7-141, 7-219, 8-25
90099-0117	NUT, PR 18,6 (PG11)	1-277, 1-281, 1-335, 1-343, 1-367, 1-369, 1-389, 6-11, 7-133, 7-135, 7-137, 7-139, 7-141
90099-0118	NUT, PR 20,4 (PG13,5)	1-367, 1-369, 1-383, 1-385, 1-387, 1-389, 5-277, 7-133, 7-135, 7-137, 7-139, 7-141, 8-25
90099-0119	NUT, PR 28,3 (PG21)	1-367, 1-369, 1-383, 1-385, 1-387, 1-389, 7-7, 7-115, 7-133, 7-135, 7-137, 7-139, 7-141
90099-0120	NUT, PR 37 (PG29)	1-299, 1-301, 2-149, 2-151, 7-115, 7-133, 7-135, 7-137, 7-139, 7-141
90099-0131	NUT HEX. M16X2 SS	2-89, 7-75
90100-0041	SERVO DRIVE SAM-DA-400-07B-P4N-F	8-61
90100-0042	SERVO DRIVE SAM-DA-400-014B-P4N-F	8-61, 8-73
90100-0045	CABLE GLAND, MOTOR END 9032 010 806	2-107, 2-109, 2-111
90100-0047	CONNECTOR, DRIVE END SAM 4/7/14,10-14MM	8-61
90100-0048	CONNECTOR, DRIVE END SAM 4/7/14, 9-16MM	8-61, 8-73
90100-0051	CONNECTOR KIT, BRAKE	8-61, 8-73
90100-0052	CONNECTOR KIT, FEEDBACK CABLE DRIVE END	2-107, 2-109, 2-111, 2-149, 2-151
90100-0054	CONNECTOR KIT, SUPPLY (SAM 4-7-14)	8-61, 8-73
90100-0056	CONNECTOR KIT, OPTION	8-61, 8-73
90100-0059	SAM SUPPLY SAM-PA-400-80-E	8-73
90100-0062	EXTERNAL DB RESISTOR FWA 60-500 6,8 OHM	8-77, 8-79
90100-0064	CONNECTOR SAM-P_-30, 4MM2	8-73
90100-0068	EMC FILTER 90A, 258-75-34	8-73
90100-0069	SERVO CONTROLLER PAM F37, 006.758	8-61
90100-0072	EASYBUS SAM 0,3M	8-61, 8-73
90100-0074	EASYBUS SAM 1,0M	8-61
90100-0075	EASYBUS SAM 2,0M	8-73
90100-0303	SAM TO PC TEST MONITORING CABLE	9-3
90110-0028	CONTACT UNIT 4-POLEADAPTER	8-97, 8-99
90110-0052	MALE INSERT HAN 6E 09 33 006 2601	8-49
90110-0055	FEMALE INSERT HAN 6 HSB 09 31 006 2701	8-39, 8-41, 8-43
90110-0057	FEMALE INSERT HAN 24 E 09 33 002 4201	8-49
90110-0095	CONNECTOR 3 POLE + EARTH	2-27, 2-81, 6-69, 6-71
90110-0123	HOUSING, 09 30 006 0301	8-39, 8-41, 8-43, 8-49
90110-0141	CONTACT UNIT, DE09P064TX	2-107, 2-109, 2-111, 2-149, 2-151
90110-0144	COVER D-SUB 9, 8655MH0911LF	1-367, 1-369, 2-107, 2-109, 2-111, 2-149, 2-151
90110-0147	PLUG D-SUB 9 FEMALE, DE09S064TLF	1-367, 1-369
90110-0150	MALE INSERT 121110 0000	1-227, 1-367, 1-369, 2-57, 2-59, 2-107, 2-109, 2-111, 2-149, 2-151, 6-67, 7-133, 7-135, 7-137, 7-139, 7-141

Part No	Description	Page No
90110-0151	FEMALE INSERT 24-POL 121130 0000	2-95, 2-149, 2-151
90110-0152	CABLE HOOD 24-POL 70.352.2428.1	1-227, 1-367, 1-369, 2-57, 2-59, 2-107, 2-109, 2-111, 2-149, 2-151, 7-133, 7-135, 7-137, 7-139, 7-141
90110-0156	MALE INSERT 70.210.0653.0	1-367, 1-369, 2-107, 2-109, 2-111, 6-41, 6-43, 7-133, 7-135, 7-137, 7-139, 7-141
90110-0157	CABLE HOOD 6-POL 70.352.0628.1	1-227, 1-367, 1-369, 2-57, 2-59, 2-107, 2-109, 2-111, 2-149, 2-151, 7-115, 7-133, 7-135, 7-137, 7-139, 7-141, 7-179
90110-0159	MALE INSERT 70.310.0640.0	1-227, 1-367, 1-369, 2-57, 2-59, 2-107, 2-109, 2-111, 2-149, 2-151, 6-17, 6-27, 6-31, 7-115, 7-133, 7-135, 7-137, 7-139, 7-141, 7-179
90110-0160	CABLE HOOD 6-16-POL 70.352.1628.1	1-367, 1-369, 7-133, 7-135, 7-137, 7-139, 7-141
90110-0163	FEMALE INSERT 70 300 0640 0	2-95
90110-0221	CHASSIS HOUSING 310162-33	2-95
90110-0224	CHASSIS HOUSING 310166-33	2-95
90110-0225	CHASSIS HOUSING 310168-33	2-95
90110-0226	CABLE HOOD 6-POL 70.350.0628.0	6-17, 6-27, 6-31
90110-0227	CABLE HOOD 6-16-POL 71.350.1628.0	6-41, 6-43
90110-0228	CABLE HOOD 24-POL 71.350.2428.0	2-149, 2-151, 6-67
90110-0235	CABLE CONTACT, PX0739/P	1-367, 1-369, 2-107, 2-109, 2-111, 4-187, 4-189, 7-115
90110-0236	CHASSIS CONTACT PX0767/S	2-107, 2-109, 2-111, 8-39, 8-41, 8-43
90110-0244	CABLE HOOD 6-POL 70.350.1628.0	2-107, 2-109, 2-111
90110-0247	FEMALE INSERT 70.200.0653.0	2-95
90110-0296	FEMALE INSERT HDC-HA-4BS 149840-B/2	2-107, 2-109, 2-111
90110-0348	CABLE SEALING, 12033/I, ELFA. 44-625-78	2-107, 2-109, 2-111
90110-0349	JD TAMPA DE PLASTICO	2-107, 2-109, 2-111
90110-0370	BASE HOUSING	2-107, 2-109, 2-111
90110-0381	COVER, 310601-33 CYR24.4	1-367, 1-369, 2-107, 2-109, 2-111, 2-149, 2-151
90110-0383	CONTACT COVER 15 PIN, SUB-D SUBCON	8-5
90110-0385	MARKING HOLDER, 4.242.3853.0	1-367, 1-369, 2-57, 2-59, 2-107, 2-109, 2-111, 2-149, 2-151, 7-133, 7-135, 7-137, 7-139, 7-141
90110-0513	CHASSIS HOUSING, CHP 24L S2	2-149, 2-151
90110-0517	MALE INSERT 4+8 POLES 313102-33 CXM4/8	2-107, 2-109, 2-111, 2-149, 2-151
90110-0518	CONNECTOR D-SUB, SUBCON 15/M-SH	8-5
90111-0120	SWITCH, 2 POS.704.510 .0A+704.901.5/A	2-265, 7-199, 7-215
90111-0122	KEY SWITCH, 2 NO CONTACTS	8-97, 8-99
90111-0124	KEY SWITCH, 1NO,1NC CONTACT	8-97, 8-99
90111-0173	MAIN SW.NZM64-100/ZM64-100-760+AS4-NZM64	6-11
90113-0056	REGULATOR, 11-818-998	2-49, 10-51
90113-0059	FILTER REGULATOR 50UM, B08-396-A3MG	10-57, 10-59
90113-0064	PRESSURE REGULATOR	1-255
90113-0072	FILTER REGULATOR 40Âµ, 915-331242	6-77
90113-0098	PRESSURE REGULATOR	6-37
90113-0113	FILTER REGULATOR, B64G-NNK-AD3-RMN	7-61
90113-0140	QUICK CLAMP	1-335, 1-343, 2-131, 2-133
90113-0155	SOFT START VALVE	7-61
90113-0374	SLOW STARTING VALVE	6-77
90113-0375	PRESSURE DISTRIBUTION	6-77
90113-0377	SHUT OFF VALVE G1/2, 915-331053	6-77
90113-0384	BRACKET FOR R11, 5203-06	10-57, 10-59
90113-0407	YOKE SINGLE, Y64A-4GA-N1N	7-61
90113-0413	END CONNECTOR G3/4, 18-026-981	7-61
90113-0423	HIGH SPEED VENTING VALVE G1/2, R40403053	6-77
90113-0427	SHUT OFF VALVE G1/8, T64T-NNS-001	7-61
90113-0469	MANIFOLD REGULATOR 4 BAR	1-335, 1-343, 2-131, 2-133
90113-0470	MANIFOLD REGULATOR 10 BAR	1-335, 6-75, 7-161, 7-163, 7-165
90115-0021	ROD END, ID=8 MM, M8X1,25 LH	5-17
90115-0134	ROD END, ID=10 MM, M10X1,25	2-247, 5-145, 5-147
90115-0137	ROD END, ID=6 MM, M6X1	5-29, 5-31, 5-33, 5-129, 5-131
90115-0139	ROD END, ID=8 MM, M8X1,25	5-11, 5-13
90115-0180	ROD END, ID=8 MM, M8X1,25 LH	5-11, 5-13
90115-0181	ROD END, ID=10 MM M10X1,5	5-5, 5-7
90115-0182	ROD END, ID=10 MM M10X1,5LH	5-5, 5-7
90117-0030	LOCKING HANDLE, M8/F	5-269
90119-0043	OPTO-RELAY, 22DC 60S-3/32VDC	8-81
90119-0056	RELAY, AUXILIARY MK3P5-S 24VDC	8-51, 8-53, 8-55
90119-0063	OPTO-RELAY, DC/DC AMMS-10-1/30VDC	2-157, 8-101
90119-0067	SOLID-STATE RELAY, H12WD4850	8-81
90119-0072	SAFETY RELAY, JSBR4	8-51, 8-53, 8-55
90119-0082	SSR 90119-67 + HEAT SINK	8-83
90119-0089	SAFETY RELAY, JSBT4 24VDC	8-51, 8-53, 8-55
90119-0105	SAFETY RELAY JOKAB JSR 3T	8-51, 8-53, 8-55
90119-0108	RELAY OMRON G2R-2-SNI-24DC	8-51, 8-53, 8-55, 8-63
90121-0114	RESISTANCE FIXED, 0,22 KOHM, 25 W	8-77, 8-79
90121-0127	RESISTANCE FIXED, 1,5 KOHM, 0,25 W	1-365
90121-0132	RESISTANCE FIXED, 0,51 KOHM, 0,25 W	1-367, 1-369
90121-0137	RESISTANCE FIXED, 2,2 OHM, 15 W	8-59
90129-0006	BASE, S3-B	8-51, 8-53, 8-55
90129-0018	BASE OMRON P2RF-08-E	8-51, 8-53, 8-55, 8-63
90132-0021	HOSE CLIP 6-10MM	2-27
90132-0030	SUPORTE MV 87177 KS 580T	1-197, 1-207
90134-0030	SLEEVE FOR PLASTIC TUBE	2-87, 2-89, 4-233, 5-185
90134-0031	SLEEVE FOR PLASTIC TUBE	3-11, 4-199, 4-205, 4-207, 4-209, 4-215, 4-217
90134-0038	BUSHING/NUT INLET/OUTLET 4 MM	4-167, 4-169, 4-199, 4-201, 4-203, 4-205, 4-207, 4-209, 4-211, 4-213, 4-215, 4-217
90134-0039	BUSHING VALVE CONNECTION 2,5 MM	4-167, 4-169, 4-199, 4-201, 4-203, 4-205, 4-207

Part No	Description	Page No
		4-209, 4-211, 4-213, 4-215, 4-217, 5-185
90134-0040	BUSHING VALVE CONNECTION 4 MM	2-89, 4-199, 4-201, 4-203, 4-205, 4-207, 4-209, 4-211 4-213, 4-215, 4-217
90134-0051	SPACING COLLAR DOSING BLOCK	4-199, 4-201, 4-203, 4-205, 4-207, 4-209, 4-211, 4-213 4-215, 4-217
90134-0052	PLUG DOSING BLOCK	4-201, 4-203, 4-205, 4-207, 4-211, 4-213, 4-215, 4-217, 5-185
90134-0054	BLOCK CONNECTION M10X1	2-89
90134-0055	BUSHING/NUT INLET/OUTLET 6 MM	2-89, 4-167, 4-169, 4-185, 4-201, 4-203, 4-211, 4-213, 5-185
90134-0058	CONNECTION	4-105, 4-107, 4-109, 4-111, 4-149, 4-151, 4-153, 4-155, 4-199, 4-201, 4-203 4-205, 4-207, 4-209, 4-211, 4-213, 4-215, 4-217, 4-221, 5-11, 5-13, 5-215, 5-235, 5-237, 5-239 5-241, 5-243, 5-245
90134-0063	BUSHING/NUT M8X1, D=2,5 MM	4-7, 4-9, 4-11, 4-17, 4-19, 4-21, 4-51, 4-53, 4-55, 4-57, 4-61 4-63, 4-65, 4-67, 4-73, 4-79, 4-171, 4-173
90134-0065	CONNECTION M6 TUBE 2,5 MM	4-167, 4-169, 5-19, 5-21
90134-0068	CONNECTION	3-11, 4-105, 4-107, 4-109, 4-111, 4-149, 4-151, 4-153, 4-155, 4-229, 4-231
90135-0026	EARTH TERMINAL, 3802.6	2-267, 5-281
90135-0035	EARTH WIRE, L=250 MM 16 MM2	8-31, 8-33, 8-35, 8-37, 8-97, 8-99
90135-0040	EARTH WIRE, L=150 MM 16 MM2	7-133, 7-135, 7-137, 7-139, 7-141
90140-0011	T-PIPE, INT. THREAD, NO. 2070-1/2-1/2	2-205
90140-0012	ELBOW, 90 INT/EXT, 2020-1/2-1/2	1-283
90140-0013	ELBOW, 90 INT/EXT, 2020-1/4-1/4	2-197, 2-199, 2-207
90140-0015	T-PIPE, INT. THREAD, 2003-1/8	10-57, 10-59
90140-0018	T-PIPE, INT. THREAD, 2003-1/4	2-207, 10-51
90140-0019	ELBOW, 90, INT. THREAD, NO. 2013-1/4	2-207
90140-0020	ELBOW, 90, INT/EXT. THREAD, NO. 2020-3/8	6-69, 6-71, 7-159, 7-161, 7-163, 7-165
90140-0021	ELBOW, 90 INT/EXT, 20201/8-1/8	7-61
90140-0023	T-PIPE, INT. THREAD, NO. 2070-3/8-3/8	6-17, 6-69, 6-71
90140-0079	SLEEVE, INT. THREAD, NO. 501-08	6-79
90141-0015	RETAINING RING FOR SHAFT DIN 471 8 A2	4-91, 7-7, 7-11, 7-77
90141-0016	RETAINING RING FOR SHAFT DIN 471 10 A2	1-149, 1-151, 1-153, 1-169, 1-171, 1-307, 1-309 3-19, 3-33, 4-181, 4-183, 7-11, 7-33, 7-35, 7-79, 7-85, 7-101, 7-103
90141-0017	RETAINING RING FOR SHAFT DIN 471 17 A2	1-249, 7-97
90141-0019	RETAINING RING FOR BORE DIN 472 50 A2	5-71, 5-185, 5-257, 5-261, 5-263
90141-0020	RETAINING RING FOR BORE DIN 472 42 A2	2-41
90141-0022	SNAP RING B 16	1-199, 1-203
90141-0029	CIRCLIP	4-123, 4-125, 4-159, 4-161
90143-0020	STRIP	2-31
90143-0054	STRIP	2-253
90143-0057	STRIP EMKA 1011-05 21X11MM	2-265, 6-11, 8-25
90143-0059	SEAL STRIP 4610069	1-257, 1-335, 1-343, 1-349, 1-367, 1-369, 2-9, 2-39, 2-243, 2-269, 8-25
90143-0060	EDGE STRIP 9,5X6,3MM BLACK PVC	6-11, 6-55, 6-59, 7-71, 8-25
90143-0073	RUBBER STRIP	7-7
90144-0007	TAPE	1-291, 6-35, 6-37, 6-39, 6-45, 6-79
90144-0072	TAPE SCOTCH VHBS 4945 W=12,7MM	7-209
90144-0073	TREBOFLON-TAPE W=13MM	1-197, 1-207, 1-251, 1-281, 1-283, 1-287, 1-289, 2-39
90148-0101	MEASURING HOSE,MINIMESS S110-AC-FA-0063	2-77
90152-0016	HOSE (SPIRAL)	2-141
90152-0017	HOSE (SPIRAL)	2-209
90152-0050	SPIRAL CONDUIT, 20X13, UL 1313	1-119, 1-221, 1-227, 1-281, 1-351, 1-355, 1-357, 1-367 1-369
90152-0051	SPIRAL CONDUIT, 25X18, UL 1816	1-221, 1-227, 1-249, 1-281, 7-219
90152-0058	SPIRAL CONDUIT, 15X9, UL 0909	1-355, 1-357, 1-367, 1-369, 6-19
90152-0059	SPIRAL CONDUIT, 18X12, UL 1211	1-249
90152-0060	SPIRAL CONDUIT, 42X35, UL3529	7-115
90152-0070	METAL HOSE, 32,5X26, UL 2621	1-227, 1-367, 1-369, 2-149, 2-151, 7-115
90153-0015	ADHESIVE,LOCTITE IS 496/CYANOLOT 303	4-115, 4-117, 4-119, 4-121
90153-0020	ADHESIVE, BOSTIK 1782 125ML	1-201
90153-0023	ADHESIVE, SILICON 251470 TUB 90CC	1-15, 1-17, 1-117, 2-31
90153-0049	ADHESIVE, LOCTITE 409 20G	2-217, 2-219, 2-231, 2-233, 2-237, 2-243, 2-249, 2-253, 2-259
90153-0060	ADHESIVE, 3M DP-190 B/A	2-265
90155-0008	HANGER CHAIN, 18	1-249, 1-261
90157-0016	LOCKING FLUID LOCTITE 242 50 ML	2-65, 5-269, 6-69, 6-71, 7-105, 7-119, 7-121, 7-127, 7-131
90157-0021	LOCKING FLUID LOCTITE 270	2-143, 2-145, 4-175, 4-177, 4-179, 4-199, 4-209, 5-119, 5-121
90157-0034	THREAD SEALANT LOCTITE 572 50 ML	2-211, 2-213
90157-0037	THREAD SEALANT LOCTITE 542	1-13, 1-197, 1-207, 1-281, 1-283
90157-0041	SEALING COMPOUND, RHODORSEAL 5651	2-217, 2-219, 2-231, 2-233, 2-237, 2-243, 2-245 2-249, 2-253, 2-259
90161-0001	O-RING MATERIAL 3 MM	2-119
90163-0007	CONNECTION	10-51, 10-71
90163-0014	QUICK COUPLING, (M) LP-006-1-WR013	2-87
90163-0016	QUICK COUPLING, (F) LP 006-0-WR013	10-51
90163-0041	HOSE NIPPLE, EXT.THR. 3/8-12 MM	2-87, 6-69, 6-71
90163-0052	HOSE NIPPLE, EXT.THR. 1/4-12 MM	2-77
90163-0056	QUICK COUPLING, (F) 5054-6/4	10-57, 10-59
90163-0057	QUICK COUPLING, (M) 5150-1/8	1-323, 1-325, 10-57, 10-59
90163-0062	QUICK COUPLING, (F) 5053-1/8	1-323, 1-325
90163-0063	QUICK COUPLING, (M) 5450-6/4	4-185
90163-0064	QUICK COUPLING, (M) LP-006-2-WR517	2-77, 2-87
90163-0076	QUICK COUPLING, (F) LP-006-0-WR021	2-77
90163-0087	QUICK COUPLING, (M) 5150-1/4	10-57, 10-59
90163-0113	QUICK COUPLING, (M) LP-006-1-WR013-22	10-51
90163-0141	QUICK-RELEASE COUPLING SS-QTM2A-B-8M0-K2	2-39
90163-0172	QUICK-RELEASE COUPLING SS-QTM2A-B-8M0-K4	2-39
90163-0304	QUICK COUPLING, LP-006-5-74-KU (DUST CAP	2-77, 2-87

Part No	Description	Page No
90164-0015	LIGHT FIXTURE, DWDCV111B/230V 50HZ	7-45, 7-47
90164-0303	BRACKET SK2202 WALDMANN	7-45, 7-47
90165-0003	PIPE CLIP FOR TUBE D=4 MM	8-67, 8-69, 8-97, 8-99
90165-0007	PIPE CLIP FOR TUBE D=8 MM	8-77, 8-79
90165-0009	PIPE CLIP FOR TUBE D=12 MM	7-45, 7-47
90165-0019	TOOL CLIP, 81/3, OPEN, 20 - 30 MM	2-49, 2-131, 2-133
90165-0022	PIPE CLIP, FOR TUBE D=2,5 MM, B-3570	8-77, 8-79
90165-0024	PIPE CLIP FOR TUBE D=5 MM	8-97, 8-99
90165-0039	PIPE CLAMP D=15 MM, GSK15/12	1-207
90165-0056	PIPE CLIP FOR TUBE D=4 MM	4-81, 4-83, 4-85, 4-105, 4-107, 4-109, 4-111, 4-129, 4-131, 4-133, 4-149, 4-151, 4-153, 4-155, 5-59, 5-61, 5-235, 5-237, 5-239, 5-241, 5-243, 5-245
90165-0057	PIPE CLIP FOR TUBE D=6 MM	4-243, 5-29, 5-31, 5-33, 5-129, 5-131, 5-257, 5-261, 5-263, 8-97, 8-99
90165-0058	PIPE CLIP FOR TUBE D=2,5 MM	4-81, 4-83, 4-85, 4-105, 4-107, 4-109, 4-111, 4-129, 4-131, 4-133, 4-149, 4-151, 4-153, 4-155, 4-167, 4-169
90165-0087	T-CLIP T6 FOR TUBE D=6 - 7 MM	7-105, 7-121, 7-131
90166-0008	HOSE 7/10 PVC TRANSP.	2-37
90166-0013	TUBE 8 MM PA BLUE	1-225, 1-323, 1-325, 1-335, 1-343, 2-49, 2-125, 2-127, 2-129, 2-131, 2-133, 2-141, 2-205, 2-211, 2-213, 5-103, 5-105, 5-107, 5-109, 5-111, 6-79
90166-0045	HOSE PVC TRANSP. 6/12	6-17, 10-71
90166-0049	HOSE PVC 25/33-34	2-205
90166-0060	HOSE 19/26-27 REINF.PVC	2-15
90166-0068	TUBE 12 MM PA BLUE	1-323, 1-325, 1-335, 1-343, 2-49, 6-75, 7-63, 7-159, 7-161, 7-163, 7-165
90166-0081	TUBE 6 MM PA BLUE	1-335, 1-343, 2-9, 2-33, 2-39, 2-45, 2-47, 2-49, 2-125, 2-127, 2-129, 2-131, 2-133, 4-187, 4-189
90166-0087	HOSE 15/23 REINF.PVC TRANSP.	1-283, 1-285, 2-29
90166-0095	TUBE 4 MM PA BLUE (50M)	1-335, 1-343, 2-49, 2-131, 2-133, 6-75, 7-79
90166-0101	HOSE, SILICONE, 60 SHORE, 6/10 MM	2-27
90166-0108	TUBE 6 MM PA,TRANSP.	2-89, 4-167, 4-169, 4-233, 5-185
90166-0109	TUBE 4 MM PA,TRANSP.	4-199, 4-205, 4-207, 4-209, 4-215, 4-217
90166-0110	TUBE 15 MM PA,TRANSP.	2-205
90166-0113	HOSE	2-87, 10-71
90166-0117	HOSE 4/6 PVC BLUE	7-161, 7-163, 7-165
90166-0118	TUBE 8 MM PA BLACK	1-13, 2-37, 2-197, 2-199, 5-35, 5-37, 5-137, 5-139, 6-9, 6-17, 6-19, 6-21, 6-29, 6-69, 6-71
90166-0121	HOSE	1-207, 2-9, 2-77, 2-121, 2-205, 6-13, 6-15, 6-17, 6-19, 6-23, 6-37
90166-0123	HOSE	4-233
90166-0124	TUBE 6 MM PA,TRANSP.	10-57, 10-59
90166-0132	TUBE 6 MM PA,TRANSP.	2-207, 4-185, 5-65, 5-67
90166-0138	HOSE	2-19, 2-21
90166-0141	TUBE 10 MM PA,TRANSP.	2-209
90166-0143	TUBE 2,5 MM PA,TRANSP.	4-167, 4-169, 4-199, 4-201, 4-203, 4-205, 4-207, 4-209, 4-211, 4-213, 4-215, 4-217, 5-185
90166-0151	HOSE	2-19, 2-21, 2-65, 2-119
90166-0158	HOSE	2-29, 2-65
90166-0161	HOSE	2-27
90166-0176	RUBBER HOSE	1-355, 1-357
90166-0188	PLASTIC HOSE	6-7
90166-0193	TUBE 6 MM PUR BLUE	1-255, 1-257, 1-323, 1-325, 7-13, 7-31, 7-53, 7-79, 7-105, 7-107, 7-121, 7-123, 7-129, 7-131
90166-0194	TUBE 8 MM PUR BLUE	6-75, 7-41, 7-43, 7-45, 7-47, 7-53, 7-105, 7-159, 7-161, 7-163, 7-165
90166-0195	TUBE 12 MM PA BLUE	1-255, 1-323, 1-325, 2-211, 2-213
90166-0196	TUBE 14MM PA BLUE	2-211, 2-213, 6-77, 6-79
90166-0198	RUBBER HOSE	2-39
90166-0199	RUBBER HOSE	1-181
90166-0216	TUBE 10 MM PUR BLUE	2-125, 2-127, 2-129
90166-0225	HOSE	2-39
90166-0232	SHRINKABLE HOSE	6-11
90166-0233	HOSE	2-69, 6-47
90166-0236	HOSE, 38/51 REINFORCED RUBBER	2-113, 2-271, 6-35
90166-0260	HOSE	2-205
90166-0266	TUBE, 6 MM PA BLACK	2-201, 2-203
90181-0064	LOCK ZP1 FOR CHANNEL T1	8-51, 8-53, 8-55, 8-67, 8-69, 8-77, 8-79, 8-97, 8-99
90181-0199	FLEXIBLE CHAIN, LINK 15	7-37
90181-0202	FLEXIBLE CHAIN, BRACKET 1015. 1PZ	7-37
90181-0203	FLEXIBLE CHAIN, BRACKET 1015. 2PZ	7-37
90181-0313	RIVET DUCTAFIX R4	7-133, 7-135, 7-137, 7-139, 7-141
90187-0029	BALL VALVE G1/2, NPBR	6-25, 6-69, 6-71
90187-0045	BALL VALVE G1/4 CR PL	6-7, 6-19, 6-27, 10-51, 10-71
90187-0059	BALL VALVE FOR HYDR.PER. G1/2 3MM HOLE	2-19, 2-21, 2-29
90187-0062	BALL VALVE G1/2, NPBR	1-207, 1-283
90187-0088	BALL VALVE G1/4, NPBR	7-63
90187-0089	BALL VALVE G3/8, NPBR	6-69, 6-71
90187-0096	BALL VALVE G1	1-255
90187-0105	PURGING VALVE, G3/8 FOR WATER	1-281
90187-0110	DIAPHRAGM VALVE DN15, NC WELD CONN.	1-257
90187-0130	TEMP. CONTR. VALVE, R3/4 0-30Ã¸C	6-23
90187-0133	SAFETY VALVE, 10 BARS, R1/2, R1/2	6-37
90187-0147	BALL VALVE G11/2	6-35
90187-0148	BALL VALVE G1	6-47
90187-0149	THROTTLE VALVE, G1/4, G1/4, MALE	2-201, 2-203
90187-0158	THROTTLE BALL VALVE G1/4, R1/4	1-281, 2-9, 2-77, 2-197, 2-199
90187-0176	ACTUATOR ECC 008 FOR DIAPHR. VALVE	1-249
90187-0312	DIAPHRAGM #328 FOR SIZE 15 VALVE	1-257
90187-0325	DIAPHRAGM, 214/300 AO08 4-B -20-150§C	1-249

Part No	Description	Page No
90189-0005	BALL BUSHING, 30X47X68 MM	7-95
90189-0011	BALL BUSHING, 16X26X36 MM	2-247, 7-83
90189-0025	BALL BUSHING, 25X37X37 MM	7-183, 7-185
90191-0047	WHEEL, NO. 442-200-113	10-73
90191-0060	CASTOR WHEEL, NO. 1599PRT	10-73
90191-0077	WHEEL	10-91
90194-0016	WARNING SIGN, RISK OF ELECTRIC SHOCK	6-31, 6-65, 6-67, 7-7
90194-0080	SIGN, IDENTIFICATION OF WIRING	8-35
90194-0113	ADHESIVE LABEL, CALIBRATED & DATE	10-21
90194-0118	SIGN, RESIDUAL VOLTAGE, WAIT 5 MIN.	8-59, 8-71, 8-77, 8-79
90194-0133	SIGN "DELIVERED DESIGN"	2-265, 8-35
90194-0143	WARNING SIGN ISO, HOT SURFACE	7-99
90194-0152	SIGN, EARTH	8-25, 8-31, 8-33, 8-35, 8-37, 8-97, 8-99
90195-0020	TERMINAL BLOCK, 1977.2	2-41, 5-187, 5-189, 5-191
90195-0028	TERM.BLOCK 6-POLE STEATIT	1-201
90195-0029	CONN. LINK NO324 FOR -28	1-201
90201-0098	ADJ. FLOW CON. VALVE, NO. 9 PCCM 400SF	10-87
90201-0131	VALVE	2-81
90201-0132	VALVE	2-81
90201-0133	VALVE	2-81
90201-0135	PRESSURE REDUCING VALVE	2-81
90201-0136	DIRECT CHECK VALVE, NO. DGMDC-3-Y-PK-41	2-81
90201-0448	PLUG	2-81
90201-0449	PLUG	2-81
90201-0450	PLUG	2-81
90201-0456	BOLT KIT, NO. BK 464125M	2-81
90206-0030	HEATING ELEMENT 3000W, 220V	5-187, 5-189, 5-191
90206-0070	HEATING ELEMENT 6000W 380/220V	1-281
90206-0326	JUNCTION BOX FOR 90206-56	1-281
90206-0330	SOCKET WRENCH 2"9	10-5
90207-0363	GASKET	1-233, 9-21
90207-0365	GASKET	1-233, 9-21
90208-0087	CLAMPING ELEMENT WITH SLEEVE, 45X59 MM	5-23, 5-25, 5-113, 5-115
90211-0002	WIRE LOCK, 5 MM	7-183, 7-185
90214-0036	BALL BEARING, 10X22X6 MM	3-19, 3-33
90214-0037	BALL BEARING, 5X16X5 MM	1-311
90214-0105	SPHERICAL BALL BEARING, 15X35X14 MM	1-105, 1-107
90214-0112	BALL BEARING, 12X24X6 MM	1-175
90214-0138	BALL BEARING, 5X19X6 MM	1-313, 1-315, 7-9, 7-27
90214-0165	BALL BEARING, 25X47X12 MM	1-155, 1-157
90214-0194	SPHERICAL BALL BEARING, 15X35X1 MM	4-225, 4-227
90214-0219	CYL.ROLLER BEARING, 17X40X12 MM	5-257, 5-261, 5-263
90214-0229	BALL BEARING, 65X85X10 MM	5-235, 5-237, 5-239, 5-241, 5-243, 5-245
90217-0206	UNION NUT, 1 1/2 APV, 07-01-376/17	1-261
90217-0306	GASKET 22,8X50,5X5,5 MM	1-273
90217-0348	GASKET 35,4X46,8X4 MM	1-245, 1-247, 1-261, 9-5
90220-0034	THERMOCABLE TEX/SITW-20F-KX 2X0,5MM2	1-193, 1-221, 1-227, 1-249, 1-281, 1-367, 1-369, 2-57, 2-59, 2-107, 2-109, 2-111, 2-149, 2-151, 6-19, 7-99, 8-39, 8-41, 8-43
90220-0072	SCR. CABLE 4X0,34MM2	1-367, 1-369
90220-0084	MOTOR CABLE 4X2,5+2(2X0.75)+SHIELD	2-149, 2-151, 8-39, 8-41, 8-43
90220-0091	PAIR TWISTED CABLE 2X2X0,25MM2	1-367, 1-369, 2-81, 2-107, 2-109, 2-111, 8-5, 8-113
90220-0092	PAIR TWISTED CABLE 3X2X0,25MM2	7-83
90220-0095	SCR. CABLE 3X0,75MM2	6-11
90220-0104	SCR. CABLE 4X1,5MM2	1-367, 1-369, 2-149, 2-151, 7-73, 7-115, 7-133, 7-135, 7-137, 7-139, 7-141, 7-151, 7-153, 7-179, 8-39, 8-41, 8-43
90220-0105	SCR. CABLE 4X2,5MM2	1-367, 1-369, 7-7, 8-49
90220-0115	SCR. CABLE 12X0,75MM2	7-7
90220-0116	MOTOR CABLE 4X1,0+2(2X0,5)+SHIELD	2-107, 2-109, 2-111, 8-39, 8-41, 8-43
90220-0125	MOTOR CABLE 4X4,0+2X1,0+2X0,75+SHIELD	2-107, 2-109, 2-111, 8-39, 8-41, 8-43
90220-0131	PAIR TWISTED CABLE 3X2X0,25MM2	2-107, 2-109, 2-111, 2-149, 2-151
90220-0165	SCR. CABLE 5X0,34MM2	1-227, 1-351, 1-355, 1-357, 1-367, 1-369, 2-107, 2-109, 2-111
90220-0180	CABLE, ETHERNET RJ 45 CONNECT. 3 M	8-97, 8-99
90220-0183	SCR. CABLE 2X0,34MM2	8-39, 8-41, 8-43, 8-97, 8-99
90220-0201	CABLE OLFLEX 18X0,75 MM2	1-227
90220-0303	CLAMP FOR SCR.CABLE, 10MM, 55-016-22	6-11
90220-0305	CLAMP FOR SCR.CABLE, 16MM,	6-11
90224-0229	REDUCER, ART.NO RMM 1238	7-63
90224-0303	CONN. ELBOW 1020-8-1/4	10-57, 10-59
90224-0308	CONN. BANJO, ART. NO. 2023-1/8-1/8	1-323, 1-325
90224-0329	ELBOW 90 COUPL.,EXT.THREAD 6/4-G1/4"	2-201, 2-203, 2-207
90224-0349	CONN. BULKHEAD. 1250-6	1-255, 1-323, 1-325
90226-0458	MOUNTING SCREW	1-391, 1-395, 1-397, 2-225, 2-227, 2-229, 2-231, 2-233, 2-243, 2-247, 2-261, 6-53, 6-59, 6-63, 7-195, 7-197, 7-201, 7-211, 7-213, 7-223, 8-45
90230-0017	NON-RETURN VALVE RHD 10-L	2-79
90230-0023	NON-RETURN VALVE	2-77
90230-0027	NON-RETURN VALVE QJ 8355-1/4"	2-243, 5-83, 5-85, 5-87, 5-89, 5-91
90230-0028	NON-RETURN VALVE H 151 R 3/8"	2-207, 6-19
90230-0032	NON-RETURN VALVE, 8MM, L=63,25	2-23, 6-7
90230-0040	NON-RETURN VALVE, R3/8, L=55	6-7
90230-0041	OVERPRESSURE VALVE SS-4 CPA2-RTDG-3	6-27
90230-0042	NON-RETURN VALVE 1/2"	2-121, 6-37, 6-45
90230-0044	NON-RETURN VALVE 1"	2-121, 6-39
90230-0045	NON-RETURN VALVE 1 1/2"	1-275
90230-0064	CHECK VALVE, 6 MM HIGH TEMP.	1-221, 2-33

Part No	Description	Page No
90232-0103	PH.CELL E3S-CT61-L-5M	5-97, 5-99, 5-279
90232-0104	PH.CELL E3S-CT61-D-5M	5-97, 5-99, 5-279
90232-0106	PH.CELL E3S-CR11-5M	7-177
90232-0129	PH.CELL E3S-CR61-5M	7-67, 7-177
90232-0333	REFLECTOR E39-R1	7-45, 7-47, 7-177, 7-217, 7-221
90233-0027	TUBE FUSE, 16A	8-91, 8-93, 9-5
90233-0028	TUBE FUSE, 10A	8-91, 8-93, 9-5
90233-0029	TUBE FUSE, 25A	8-91, 8-93, 9-5
90233-0062	TUBE FUSE, 4A 600V	8-91, 8-93
90235-0151	NON-RETURN VALVE, 534 098 110 0	6-45
90235-0206	QUICK EXHAUST VALVE, SEU-1/8	7-105
90235-0250	THROTTLE CHECK VALVE, GR-1/8-B FESTO	7-39
90235-0274	THROTTLE CHECK VALVE, G1/8", SCU-604-1/8	1-323, 1-325
90235-0731	THROTTLE CHECK VALVE, G1/4", SCO-606-1/4	5-29, 5-31, 5-33, 5-129, 5-131
90235-0844	THROTTLE CHECK VALVE, M5, MANUAL, 6MM	1-195
90235-0846	THROTTLE CHECK VALVE G1/8", MANUAL, 61-169, 1-171, 5-201, 7-31, 7-33, 7-35, 7-123, 7-129	
90235-0847	THROTTLE CHECK VALVE, G1/4", MANUAL,6	1-11
90235-0848	THROTTLE CHECK VALVE, G1/8", MANUAL,8	7-41, 7-43
90236-0041	BRACKET	1-225
90237-0070	SNAP-IN BALL LOCK, 69X19 MM	2-253
90237-0079	FAST LOCKING BOLT, FSQ -M8	2-235
90237-0126	TURNING HANDLE "REPBY 90237-175"	6-57, 6-61
90237-0128	LOCK CYLINDER, 1109-U3	2-219, 2-221, 2-237, 2-249, 2-255, 2-257, 2-259, 6-57, 6-61, 7-207, 7-209, 7-217, 8-31
90237-0151	GUIDE, 1001-U11	8-31, 8-33, 8-35, 8-37
90237-0152	GUIDE, 1001-U12	8-31, 8-33, 8-35, 8-37
90237-0153	LOCK HOUSING, 1121-U26-0B	2-219, 2-221, 2-237, 2-249, 2-255, 2-257, 2-259, 6-57, 6-61, 7-207, 7-209, 7-217, 8-31, 8-33, 8-35, 8-37
90237-0155	LOCK ADAPTER, 1121-U40	8-31, 8-33, 8-35, 8-37
90237-0156	LOCK BOLT, 1000-16	8-31, 8-33, 8-35, 8-37
90237-0157	LOCK BOLT, 1000-230	2-265, 6-65, 8-27, 8-29, 8-97, 8-99
90237-0160	ESCUTCHEON WITH SQUARE, 1121-U23/U13	8-33, 8-35, 8-37
90237-0165	LATCH	2-219, 2-237, 2-259, 7-217
90237-0168	ROUND BAR WITH END WHEEL, 1049-U5	8-31, 8-33, 8-35, 8-37
90237-0169	LOCK ADAPTER, 1000-U49	8-31, 8-33, 8-35, 8-37
90237-0175	TURNING HANDLE, 1125-U185-0A	7-207, 7-209, 7-217
90237-0176	TURNING HANDLE, 1125-U190-A	2-219, 2-221, 2-237, 2-249, 2-255, 2-257, 2-259, 8-31
90237-0178	FAST LOCKING SOCKET,4-28599, M8	2-235
90237-0319	LOCK HOUSING, 1000-U134	1-253, 1-395, 1-397, 2-265, 6-65, 8-27, 8-29, 8-97, 8-99
90237-0320	LOCK HOUSING, 1000-U136	2-265, 6-65, 8-27, 8-29, 8-97, 8-99
90237-0322	LOCK GASKET, 1000-U137	6-65
90237-0323	LOCK O-RING, 1000-24	1-253, 1-395, 1-397, 6-65
90237-0324	KEY, 1104-02 FOR SQUARE 8 MM	8-33, 8-35, 8-37
90237-0335	LOCKING CATCH	1-253, 1-395, 1-397
90237-0337	LOCK HANDLE FOR 90237-319	1-253, 1-395, 1-397
90239-0405	ROD END,BALL JOINT EYE M10X1,25	7-33, 7-35, 7-123, 7-129
90239-0487	REAR,CLEVIS,MINI-ISO 20-25	7-123, 7-129
90239-0489	ROD END, CLEVIS WITH AXLE M6X1,25	1-149, 1-151, 1-153, 1-167, 1-169, 1-171
90239-0491	ROD END,BALL JOINT EYE,MINI-ISO M6	7-79
90239-0832	DOUBLE ACTING, MINI-ISO, CYL. 25-125	7-123, 7-129
90239-0841	DOUBLE ACTING, MINI-ISO, CYL. 16-25	1-167
90239-0861	DOUBLE ACTING, MINI-ISO, CYL. 32-125	7-33, 7-35
90240-0119	BEAR. BUSHING WITHOUT FL	3-19, 3-33
90240-0146	FLANGE BUSHING, 15X21X20 MM	1-287, 1-289
90240-0165	FLANGE BUSHING, 12X16X10 MM	4-239, 4-241
90240-0172	FLANGE BUSHING, 8X12X10 MM	1-29, 1-31, 1-33, 1-35, 1-37, 1-39, 1-53, 1-55, 1-59, 1-61, 1-63, 1-75, 1-77, 1-79, 1-81, 1-83, 1-91, 1-93, 1-95, 1-97, 1-99
90240-0180	FLANGE BUSHING 10X14X15MM	4-181, 4-183, 9-11, 9-13, 9-15, 9-17, 9-19
90240-0258	BUSHING, 15X17X15 MM	5-75, 5-77, 5-79
90240-0261	FLANGE BUSHING, 12X14X9 MM	4-239, 4-241, 4-243
90240-0263	FLANGE BUSHING, 15X17X12 MM	5-75, 5-77, 5-79
90240-0289	FLANGE BUSHING, 10X12X6 MM	4-59, 4-69, 4-239, 4-241
90240-0293	FLANGE BUSHING, 25X28X21 MM	1-15, 1-17
90240-0302	BUSHING, 10X12X10 MM	1-273
90240-0315	SPHER. BEARING, 30X47X22 PLASTIC MM	2-273, 2-275
90240-0317	BUSHING, 35X39X30 MM	5-235, 5-237, 5-239, 5-241, 5-243, 5-245
90242-0093	O-RING MATERIAL 1,5 MM	4-115, 4-117, 4-119, 4-121
90242-0222	O-RING 45,36X3,53 MM	2-41
90242-0223	O-RING 47,35X1,78 MM	2-41
90242-0224	O-RING 44,17X1,78 MM	2-41
90242-0270	O-RING 82,27X1,78 MM	1-139, 1-141, 1-143, 1-145, 1-147, 5-235, 5-237, 5-239, 5-241, 5-243, 5-245
90242-0271	O-RING 63,22X1,78 MM	5-235, 5-237, 5-239, 5-241, 5-243, 5-245
90242-0281	O-RING 58X3 MM	5-229, 5-231, 5-233
90243-0061	AIR GUN, CEJN SERIE 204 ED: 90459-0173	2-141
90243-0118	TOOL BOX, NO. ZERO 105X-SI	10-61
90243-0137	PRESSURE GAUGE KIT 0-50 MM WC, 229900	10-57, 10-59
90243-0146	TOOL	10-5
90243-0147	FLOW METER	10-57, 10-59
90243-0203	MEASURING INSTRUMENT	10-5
90243-0245	MEASURING INSTRUMENT	6-37
90243-0328	PAPER ROLL	10-5
90243-0329	CABLE	10-5
90243-0330	CABLE	10-5
90243-0447	LASER EQUIPMENT	10-5

Part No	Description	Page No
90243-0456	FORCE GAUGE	10-9
90243-0461	MEASURE GAUGE,6916-0109	10-39
90248-0047	HINGE, 1150-U50	2-265
90257-0001	FILTER PLUG ART.NO.8145-00-140 TYPE F14	8-111
90258-0031	PIN, STRAIGHT SLOTTED SPRING FRP 3X20	1-129, 1-131, 7-117, 7-125
90259-0309	3 POLE BUSBAR, K&M B3.1/4	8-89
90259-0311	3 POLE BUSBAR K&M B3.1/5	8-89
90259-0313	AUX. CONTACT K&M NHI21-PKZM0	8-89
90261-0016	PLUG, BLIND, PLASTIC GPN300V2	4-7, 4-9, 4-11, 4-17, 4-19, 4-21, 7-45, 7-47
90261-0033	PLUG, BLIND, PLASTIC GPN300F182	2-173, 2-175, 2-179, 2-181, 2-189, 2-191
90261-0049	PLUG, BLIND, PLASTIC, NO. SR1750	7-81
90261-0057	PLUG, BLIND, PLASTIC	2-65
90261-0069	PLUG, BLIND, PLASTIC, NO. 055-0615	6-49
90261-0070	PLASTIC PLUG SS 0082.31	2-9
90264-0064	FAN / FL 12G308	8-109
90264-0350	FILTER / 554141	8-109
90266-0019	PIPE	4-167, 4-169, 4-199, 4-201, 4-203, 4-205, 4-207, 4-209, 4-211, 4-213, 4-215, 4-217
90266-0165	BRASS PIPE	4-105, 4-107, 4-109, 4-111, 4-149, 4-151, 4-153, 4-155, 4-199, 4-201, 4-203, 4-205, 4-207, 4-209, 4-211, 4-213, 4-215, 4-217, 4-229, 4-231
90266-0166	PIPE	5-215
90270-0017	COMPRESSOR NASH/ELMO 112 MB/4-2083	1-181
90270-0349	CONSTANT FLOW VALVE, 1/2"X1/2" 2GPM	1-207
90274-0042	PRESSURE GUARD, 200 KPA	6-69, 6-71
90274-0056	PRESSURE SWITCH, 100 - 1200 KPA	6-27
90274-0074	PRESSURE GUARD, 530 KPA	6-77
90274-0082	FLOW SWITCH, 2 - 3 L/MIN	6-35
90274-0084	PRESSURE GUARD, 1800 KPA	2-87
90274-0103	PRESSURE GUARD PEV-1/4-B (10773	2-49
90274-0108	DUAL PRESSURE GUARD, -20 - 2800 KPA	6-17
90274-0110	PRESSURE SWITCH, 50 - 1000 KPA	1-225
90274-0124	PRESSURE SWITCH	2-81
90277-0039	FILTER HOUSING LF -1/4-S-5M-B	2-49
90277-0045	FILTER / 9900-05-BK	2-49, 2-131, 2-133
90277-0046	FILTER / 9933-05-101	2-49, 2-131, 2-133
90277-0086	AIR FILTER / ART.NO. BK 464125 (70)	2-77
90277-0104	FILTER F64B-2GN-ARO	1-225
90277-0116	FILTER HOUSING / ART.NO FILTER 58P-S5430	1-343, 7-53
90277-0129	EXHAUST FILTER / SK 3322.200	7-7
90277-0323	FILTER HOUSING / ART.NO 95S6-1/4 S 5430	1-225
90277-0324	FILTER CARTRIDGE 050-11-A	1-225
90277-0355	FILTER INSERT / MBS 100 IPH	1-255
90277-0407	FILTER ELEMENT 60µ, SS-4F-K4-60	1-221
90287-0073	SCREW MC6S M5X70 129	6-77
90287-0075	SCREW SLOT. PAN HEAD LKCS M6X12	2-119
90287-0106	SCREW SPRINGLOAD. SLOTTED HEAD M10X21	7-81
90287-0112	SCREW SPRINGLOAD. SLOTTED HEAD M8X16	1-15, 1-17, 4-197, 4-205, 4-207, 4-215, 4-217, 4-239, 4-241, 7-85
90287-0124	SCREW PAN HEAD MSCS M4X12 NYLON	8-39, 8-41, 8-43, 8-51, 8-53, 8-55, 8-67, 8-69, 8-77, 8-79, 8-97, 8-99
90287-0137	SPACER BOLT DSSM60100	8-25
90287-0148	SCREW SPRINGLOAD. SLOTTED HEAD M5X12	4-187, 4-189
90287-0154	SCREW, SOCK.SET DOGPOINT M6X10	7-173, 7-183, 7-185
90287-0157	SCREW M6SF FLAT HEAD M6X10 88	8-25, 8-51, 8-53, 8-55, 8-67, 8-69, 8-77, 8-79
90287-0159	SCREW, SOCK.SET DOGPOINT M6X16	2-33
90287-0199	SCREW M6S ISO 4017 M5X6 A480	5-215
90287-0261	SCREW MC6S M5X55 A270	7-183, 7-185
90287-0264	SCREW	2-73
90287-0295	SCREW HEX.SOCK.COUNT.MF6S M3X8 A280	4-115, 4-117, 4-119, 4-121
90287-0334	SCREW SPRINGLOAD. SLOTTED HEAD M8X16	7-11
90296-0009	SILICONE GREASE DOW CORNING 150 GR.	9-5
90296-0051	PASTE	7-99
90296-0068	SHELL ALVANIA GREASE EP 2	3-17, 9-5
90303-0011	PROTECTIVE GOGGLES	9-27
90303-0012	PROTECTIVE GLOVES	9-27
90303-0013	APRON	9-27
90304-0020	LIQUID CONTAINER	6-29
90304-0307	ATTACHMENT PIPE	1-283
90319-0013	ROPE 4MM BLUE 3700N	7-183, 7-185
90321-0102	PUMP, MG209XTS37	2-41
90321-0116	PUMP GRUNDFOS CHI 2-60	6-27
90321-0117	PUMP LOWARA SV8-14 F75T	6-41, 6-43
90321-0120	PUMP SV8-09 F756T, 380V60HZ	6-41, 6-43
90321-0128	CHEM. PUMP 081778	2-37
90321-0134	CIRC. PUMP TMB 40/2 230V50HZ	1-281
90321-0135	CIRC. PUMP TMB 40/2 230V60HZ	1-281
90321-0574	PUMP BRACKET LSE-201	2-79
90321-0575	SHAFT COUPLING	2-79
90326-0012	PROTECTIVE COVER, T31A4618	1-15, 1-17, 1-193, 1-221, 1-281, 1-287, 1-289, 6-19, 7-99
90326-0020	PLUG, FEMALE YELLOW CR-AL	1-15, 1-17, 1-193, 1-201, 1-221, 1-249, 1-257, 1-281, 1-287, 1-289, 2-57, 2-59, 2-95, 2-107, 2-109, 2-111, 2-149, 2-151, 6-19, 7-99, 8-25
90326-0022	PLUG, MALE YELLOW CR-AL	1-221, 1-227, 1-249, 1-367, 1-369, 2-57, 2-59, 2-107, 2-109, 2-111, 2-149, 2-151, 6-19, 7-99
90326-0051	THERMOCOUPLE, 12826-33	1-201
90326-0053	THERMOCOUPLE, 12826-35	1-221, 1-287, 1-289, 8-25

Part No	Description	Page No
90326-0054	THERMOCOUPLE, CR-AL STD.GR, 12826-36	7-99
90326-0057	THERMOCOUPLE, CR-AL	1-193, 1-281, 6-19
90326-0060	THERMOCOUPLE, CR-AL	1-249
90326-0081	THERMOCOUPLE, ISA TYPE K.	5-187, 5-189, 5-191
90326-0089	THERMOCOUPLE, 5110-089-000	1-257
90326-0308	THERMOCOUPLE CABLE FOR CE-557793/MALE 5M	10-21
90326-0309	THERMOCOUPLE CABLE FOR CE-557793/FEMALE	10-21
90326-0310	THERMOCOUPLE, 5130020-000	10-21
90328-0001	SILENCER, 338/130 B140-00-120	7-61
90328-0003	SILENCER, 338/110	1-249
90328-0007	SILENCER, 338/125 B140-00-380	6-77
90328-0017	SILENCER, D=6 MM	2-51, 2-135, 2-137, 2-139, 6-75, 7-159, 7-161, 7-163, 7-165
90328-0024	SILENCER G3/8"	1-337, 1-339, 1-341, 1-345, 1-347, 2-51, 2-135, 2-137, 2-139, 6-75, 7-159, 7-161, 7-163, 7-165
90328-0025	SILENCER G1/2"	10-71
90328-0026	SILENCER G1/4"	1-251, 1-255, 1-273
90328-0038	SILENCER, D=8 MM	7-161, 7-163, 7-165
90328-0047	SILENCER G1/8"	1-257
90330-0004	NIPPLES,HEXAGON,EXT.R-THREAD R3/4"-R3/4"	6-19, 6-23
90330-0011	SLEEVE, REDUCTION, INT, R-2023/8X1/4	1-255
90330-0014	ELBOW, 90 INT. THREAD, R-222R1	6-39, 6-49
90330-0020	ELBOW, 90 INT. THREAD, R-2221/2	6-79
90330-0021	NIPPLES, EXT. THREAD. R-207R1/2	2-23, 2-29, 6-7, 6-37
90330-0026	PLUG, EXT. G-THREAD, G1/4	1-343, 2-9, 6-27
90330-0028	NIPPLES, EXT. THREAD. R-207R3/8	2-23
90330-0029	PLUG, EXT. G-THREAD, R-236R3/8	10-57, 10-59
90330-0036	BUSHING, INT/EXT. THR. RP1/8-RP1/2	6-37
90330-0042	BUSHING, INT/EXT. THR. R3/8-RP1/4	6-7, 6-17, 6-19
90330-0043	NIPPLES, EXT. THREAD. R-207R1/4	1-281, 6-27, 6-45
90330-0045	NIPPLES, EXT. THREAD. R-209 KR11/2- KR1	6-39
90330-0047	SLEEVE, REDUCTION, INT, R-2021/2X3/8	2-23
90330-0048	BUSHING, INT/EXT. THR. R1/2-RP3/8	1-283, 2-23
90330-0049	T-PIPE, INT. THREAD, R-221R1/2	1-207, 1-285, 2-23, 6-37, 6-77, 6-79
90330-0054	SLEEVE, INT. THREAD, NO. R-201R1/2	2-29
90330-0056	NIPPLES, EXT. THREAD. R-207 KR11/2	6-35
90330-0057	ELBOW, 90 INT. THREAD, R-222R11/2	6-35
90330-0066	PLUG, EXT. G-THREAD, G1/8	1-15, 1-17, 1-257, 1-269, 1-343
90330-0078	BUSHING, INT/EXT. THR. R3/4-RP3/8	1-207
90330-0080	NIPPLES, EXT. THREAD. R3/4-R1/2	6-27, 6-37
90330-0085	BUSHING, INT/EXT. THR. R1/2-RP1/4	2-23, 6-69, 6-71
90330-0093	NUT, HEXAGON, G1/2	2-83, 2-197, 2-199
90330-0102	SLEEVE, INT, THREAD, NO., R-201R1/4	6-19
90330-0172	ELBOW, 90 INT/EXT, SS-6-SE	1-255
90330-0185	NIPPLES,REDUCING,INT THR, RC1/8 - R 1/8	7-61
90332-0020	RECORDER, 6 CHANNELS 85-264VAC/DC	8-97, 8-99
90335-0024	COMP. SPRING 22250, 1,25X13,75X27	4-187, 4-189
90335-0025	COMP. SPRING 22010, 1X11X26	7-69, 7-87, 10-75
90335-0036	COMP. SPRING 22450, 1,6X14,1X24	5-29, 5-31, 5-33, 5-129, 5-131
90335-0089	TENSION SPRING 41490, 0,9X10X23	1-313, 1-315, 7-27
90335-0091	TENSION SPRING 41890, 1,2X13X48,2	7-101, 7-103, 7-175
90335-0178	COMP. SPRING 22060, 1X13,5X36,5	5-195, 5-197, 5-199
90342-0022	BELLOWS	1-199
90342-0024	RUBBER BELLOWS, 100X100 MM	2-143
90344-0073	TOOTHED WHEEL	2-273, 2-275
90344-0078	PULLEY	7-97
90347-0004	VIBRATION DAMPER D=30 TH=M8 H=17 H2=21MM	1-305
90347-0007	VIBRATION DAMPER	2-13
90347-0009	FLOOR PLATE, NO 1256730	2-189, 2-191, 2-193
90347-0034	VIBRATION DAMPER	1-395, 2-65, 10-11
90347-0039	DAMPER	1-109, 1-119, 1-121, 1-177
90347-0054	ROTARY DASHPOT, S-CRD-P277	1-307, 1-309, 7-33, 7-35, 7-41, 7-43
90347-0080	DAMPER TFE 1201	10-7
90347-0144	VIBRATION DAMPER, NO. RA 40EM-A	1-181
90347-0175	MACHINE SHOE BRIK T 125	2-11, 7-57
90347-0182	SHOCK ABSORBER, YSR-16-20-C	7-31, 7-109, 7-111
90358-0091	REDUCING NIPPLE	6-19
90360-0020	STEAM TRAP / MK36/51 3/8 INCH	1-257
90360-0305	FLOAT, ART NO 10739920	1-197
90410-0337	CALIBRATION INSTRUMENT 5100071-001	10-21
90410-0338	PORTABLE INDICATOR, MICROMITE II	10-21
90411-0001	INSULATING MAT	1-221
90411-0005	INSULATOR	1-201
90411-0020	INSULATING TUBE	2-205
90415-0032	FILTER / 3-02-00-1 1/2"	6-35
90415-0033	OIL FILTER REFILLING UC-HP-1229-25	2-87
90415-0052	FILTER ART NO 12565 C-340-6E FOTVENTI EP	2-37, 2-39
90415-0065	FILTER	6-7, 6-19
90418-0045	ADAPTER, INT. CONN. NO. 7272CU/22-G3/4	6-23
90418-0057	ADAPTER, EXT. CONN. NO. 7276CU / 15-G1/2	6-23
90418-0062	T-PIPE, REDUCTION, INT, NO. 7130-22X15X2	6-23
90422-0008	COOLER	2-79
90422-0037	HEAT EXCHANGER	6-23
90424-0054	SPRAY NOZZLE 120 DEG	1-207
90424-0066	ROT.SPRAY NOZZLE, D26984-B3/8"-PVDF/4.5	2-69, 2-121

Part No	Description	Page No
90424-0068	AIR NOZZLE, G1/4, MOD. 216 BSP	5-29, 5-31, 5-33, 5-103, 5-105, 5-107, 5-109, 5-111, 5-129, 5-131, 5-165, 5-167
90424-0071	ROT.SPRAY NOZZLE, D40140-R3/8-PVDF 4.5	2-69
90425-0016	MECMAN TYPE E120 735-120-000	10-71
90426-0003	HAND SHOWER	2-209
90427-0014	INK JET PRINTER A300 STD 3M CONDUIT	10-67
90450-0003	SINGLE ACTING, MINI-ISO, CYL 20-25	7-101, 7-103
90450-0281	DOUBLE ACTING,PROF.CYL 32-80	1-203
90450-0306	DOUBLE ACTING, MINI-ISO, CYL. 12-25	7-79
90450-0504	DOUBLE ACTING, PROFILE, CYL 50-25	5-251, 5-253
90450-0654	BRACKET,REAR,EYE WITH AXLE 32	7-41, 7-43
90450-0655	BRACKET,REAR,CLEVIS FLANGE WITH FOOT 32	7-41, 7-43
90450-0669	SENSOR, BRACKET SERIES 168	1-203
90450-0723	ROD END,BALL JOINT EYE M10X1,25	7-41, 7-43
90450-0725	ROD END, CLEVIS WITH AXLE M6	1-195
90450-0756	BRACKET, REAR EYE 32	1-149, 1-151, 1-153, 1-169, 1-171
90453-0001	MODEM MA-12	8-113
90453-0002	MODEM MD-12 DC	8-97, 8-99
90457-0019	LEVEL PROBE, HMFB-S=45-0=80-0=90-T70	2-77
90457-0035	REDUCING UNIUN	2-77, 2-79
90457-0036	3-PHASE MOTOR,FOOT MOUNT.1,1KW,1410 RPM	2-79
90457-0037	HYDR. PUMP TFP100 3/8-S-C001	2-79
90457-0039	PUMP CONN. ELBOW FLANGE T-26/12-3/8	2-79
90457-0043	BUSHING, INT/EXT. G-THREAD NO. 1/2-1/4	2-79
90457-0046	WASHER PLAIN ROUND 25,4/67,5, H=2	2-79
90457-0047	SENSOR 2750-1-5111-1 W.ADAPTER PNP	1-203
90457-0078	PANEL NUT	1-335, 1-343, 2-49, 2-131, 2-133, 6-75, 7-161, 7-163, 7-165
90457-0092	SAFETY RELAY RT9-24VDC	8-51, 8-53, 8-55
90457-0100	RESERVATORVZS-2	7-63
90457-0134	O-RING	2-81
90457-0144	REGULATOR 0,3-2 BAR	1-343, 2-49, 2-131, 2-133, 7-161, 7-163, 7-165
90457-0177	FLOW-RESTRICTOR, 2,0 MM, M6	2-81
90457-0194	KEY FOR SAF.SW.048850-C2052	2-99, 2-149, 2-151
90457-0195	KEY FOR SAF.SW.TZRE024PG RC1635-057950	2-149, 2-151
90457-0196	KEY SAF.SW. TZ2RE024PG RC1635	2-99, 2-149, 2-151
90457-0920	BUTTON SIGN, ROTATION OF MATERIAL HOLDER	7-219
90457-0921	WORM GEAR MOTOR MC320P2TB5/D	7-73
90458-0058	SCREW M5X60 A280	4-103, 5-195, 5-197, 5-199
90458-0072	SCREW ISO 7380 S M6X12 A2	2-171, 2-173, 2-175, 2-179, 2-181, 2-187, 2-189, 2-191
90458-0073	WASHER 6,4/30, H=1,5	2-171, 2-173, 2-175, 2-179, 2-181, 2-187, 2-189, 2-191
90458-0138	PROX. SWITCH, E2EG-X1R5B1-5M	1-251, 2-39, 2-115, 4-225, 4-227, 7-21, 7-75
90458-0200	PEROX. SAFETY VALVE, NO. 527-430 1/2X3/4	1-283
90458-0201	FLUID AUT. FEEDER, ALINOX 1/2 46.04.00	1-283, 6-7
90458-0256	PROXIMITY SWITCH IIA 3010-BPKG/6M	2-65
90458-0258	TRANSFORMER, 220VAC/6-9-12VAC	7-133, 7-135, 7-137, 7-139, 7-141
90458-0273	COVER STRIP	7-31, 7-65
90458-0274	DISC FOR COUPLING, HUCO 236.50T	2-33
90458-0292	BASE, KT70-1001	2-177
90458-0293	LIGHT ELEMENT, RED, KL70-401R	2-177
90458-0294	LIGHT ELEMENT, YELLOW, KL70-401Y	2-177
90458-0295	LIGHT ELEMENT, BLUE, KL70-401L	2-177
90458-0306	CABLE GLAND, M16X1,5, NO.5311 1010	7-159, 7-161, 7-163, 7-165, 7-199, 7-215
90458-0307	CABLE GLAND, M20X1,5, NO.5311 1020	7-73
90458-0311	CABLE GLAND, M50X1,5, NO.5311 1060	8-39, 8-41, 8-43
90458-0315	CABLE GLAND, M20X1,5, NO.5311 1120	2-149, 2-151, 7-45, 7-47
90458-0322	NUT, M16X1,5	7-159, 7-161, 7-163, 7-165, 7-199, 7-215
90458-0323	NUT, M20X1,5	7-45, 7-47
90458-0341	THERMOCOUPLE, 5130050-001	1-15, 1-17
90458-0429	HOSE GLAND W/O INSERT M20 EXTENDED	1-7, 1-9, 1-109, 1-119, 1-121, 1-177, 1-193, 1-397
90458-0438	GLAND, EXTENDED WITH INSERT, M20X1,5	7-97, 7-179
90458-0441	GLAND, EXTENDED WITH INSERT, M25X1,5	1-115
90458-0506	RETAINING RING FOR BORE DIN 472 26 A2	2-247
90458-0528	DOUBLE ACTING, COMPACT, CYL 32-25	1-149, 1-151, 1-153, 1-169, 1-171
90458-0577	CONNECTION TERMINAL BK 25/3-PKZ 0	8-89
90458-0601	CONTRAST SCANNER, KT15W-P2110S01	4-187, 4-189
90458-0602	CONTRAST SCANNER, KT15W-P2110S01	7-107
90458-0603	CONNECTOR FEMALE 5 PINS	7-107
90458-0638	DISTRIBUTION FRAME, ASB 4/LED 5-4-12/5M	1-15, 1-17
90458-0639	VARILIP 20X30X7 MM	1-105, 1-107, 1-129, 1-131, 1-149, 1-151, 1-153
90458-0640	O-RING 88,62X1,78 MM	1-105, 1-107, 1-123, 1-125
90458-0672	PROXIMITY SENSOR E2E2-X5MB1-5M	1-249, 1-307, 1-309
90458-0676	PROXIMITY SWITCH,E2EG-X5B1-6M	1-261
90458-0677	PROXIMITY SWITCH, E2EG-X5MB1-M1	7-45, 7-47, 7-173, 7-183, 7-185
90458-0751	BUSHING,INT./EXT.G-THREAD G3/4"-G1/2"	1-283
90458-0757	MOTOR END STRAIN RELIEF HPG29 13 20MM	2-107, 2-109, 2-111
90458-0758	CONN.KIT MOTOR END WINDING C38/39/40	2-107, 2-109, 2-111
90458-0759	CONN.KIT MOTOR END FEEDBACK C38/C39/C40	2-107, 2-109, 2-111
90458-0761	SERVO MOTOR EP 165-090-62L3B-X-C33	5-267
90458-0806	FLOW METER, NO. XF DF23-DN32	1-245, 1-247
90458-0921	FILTER SP 122-200	6-69, 6-71
90458-1076	L-SHAPED CONNECTOR CABLE 933 235-042	7-45, 7-47, 7-173, 7-183, 7-185
90458-1092	PROPORTIONAL VALVE 0 - 10V/0-6 BAR	1-335, 1-343
90458-1102	INTOUCH OEM 2000 V.7.0/7.1 HW KEY	8-97, 8-99
90458-1136	TERMINAL BLOCK, 103630	2-97, 7-143, 7-145, 7-147, 7-149

Part No	Description	Page No
90458-1140	FERRITE, RI-26-28-13	8-77, 8-79
90458-1155	ENLARGING SLEEVE, 7216220	7-73
90458-1170	FERRITE, SFC-6	8-67, 8-69
90458-1307	BLIND PLUG CIRCULAR, M16X1,5 514GFK/216	7-161, 7-163, 7-165
90458-1314	I/O EXPANSION CABLE	8-65
90458-1393	PUMP CYLINDER, 34 73 522 5	10-81
90458-1404	FLANGE BUSHING, 12X16X16 MM	4-237
90458-1447	MOUNTING RAIL SUPPORT TST 128660	8-67, 8-69
90458-1467	CAP, 32 44 129 7	10-83
90458-1468	SPLIT PIN, 43 71 234 8	10-81
90458-1469	PUMP HOUSING, 34 73 517 5	10-81
90458-1470	SINK VALVE COMPL, 34 73 094 5	10-81
90458-1473	PUMP, 34 73 521 7	10-79
90458-1474	PAPER TROLLEY, 32 04 192 3	10-77
90458-1477	CONNECTOR 6-1/8 NPT, EXT. TAPERED	2-61
90458-1478	BALL VALVE SS-43T6MM-SH-10147	2-61
90458-1531	ACTUATOR, N.O., PA 38/100	2-115
90458-1535	TRANSDUCER, BTL5-A11-M0850-P-S32	7-83
90458-1537	HOLDER, FOR INDUCTIVE SENSORS	2-115
90458-1541	DIAPHRAGM, NA 38/25 PFTE	2-115
90458-1592	FLOATING MAGNET, BTL5-P-3800-2	7-83
90458-1595	CONNECTION, BKS-S 33M-00	2-19, 2-21, 7-83
90458-1607	PUMP, SVI 8 03/03 N15T 1.5KW	1-269
90458-1614	SCREW M6S ISO 4014 M5X80 A480	6-9
90458-1651	EMERGENCY STOP, ZB4-BS-844 ZB4-BZ-104	1-355, 1-357, 2-223, 2-265, 7-205, 7-219, 8-37
90458-1704	BALL BEARING, 15X35X11 MM	1-129, 1-131, 1-139, 1-141, 1-143, 1-145, 1-147, 1-149, 1-151, 1-153, 1-155, 1-157, 1-159, 1-161, 1-163, 1-165
90458-1849	CONN. STR., 6-R1/8, EXT. THREAD	1-323, 1-325
90458-1963	STRAIGHT COUPLING D=8-G3/8"	6-7, 6-9, 6-19
90458-1977	REFRACTOMETER SET DA15FC15A DFTP A	2-61
90458-2003	ADAPTER 1" MALE NPT X 1" DAIRY CLAMP	1-273
90458-2071	RETAINING RING FOR BORE DIN 472 24 A2	1-175
90458-2138	SCREW M6S M12X120 A280	9-3
90458-2173	PIPE CONNECTION, 552608M	6-9
90458-2174	CONDUCTIVITY TRANSMITTER, 418962Z	6-9
90458-2241	PRESSURE SWITCH 0,5-10 BAR ADJUSTABLE	7-61
90458-2264	PRESSURE REGULATOR ARC-30-1/2"	1-255
90458-2300	V-RING 16X22X3 MM	3-23
90458-2301	SPRING, YELLOW SPRING G40X115	3-23
90458-2302	FREE-WHEEL COUPLING, 16X16 MM	3-23
90458-2303	CLAMPING ELEMENT WITH SLEEVE, 38X50 MM	3-7, 3-9
90458-2305	COMP. SPRING D22280	3-19, 3-33
90458-2306	TIMING BELT ATL10 2020X50 MM	3-17
90458-2307	LINEAR UNIT HSR25	3-15, 3-31
90458-2333	VALVE, M8A-V4LQ-KZ-11AO-SS PNEUM. OPER.	2-39
90458-2358	FLOAT, BTL2-S-4414-4Z	2-19, 2-21
90458-2395	FILTER INSERT SK 3171 100	7-7
90458-2448	ELBOW PIPE JOINT,EXT.THREAD,D=8 MM G1/4	7-105
90458-2466	MOTOR 3GVA071002-CSB	2-33
90458-2490	CONSTANT FLOW VALVE, GX 1"FX1"F 10GPM	1-273
90458-2554	STERILE GRADE MEMBRANE FILTER 0,2µM	1-255
90458-2557	CABLE OLFLEX 25X1 MM2	2-149, 2-151
90458-2580	LEVEL CONTROL RELAY RM4-LA32M	8-51, 8-53, 8-55
90458-2602	BULKHEAD CONNECTOR, 12 MM	2-211, 2-213
90458-2619	FLOW METER, D-6230-HGB-BB-AV-99-0-N2	1-225
90458-2633	HANDLE, 1045-05	2-187
90458-2638	FILTER ELEMENT SINTERED, C3SF	1-271
90458-2664	CONNECTOR 4 POLE COD.600.00.750-1	1-269
90458-2737	SPHERICAL BALL BEARING, 15X35X14 MM	7-23, 7-25
90458-2775	PROXIMITY SENSOR, SMT-8-PS-K5-LED-24-B	1-11
90458-2845	SCREW,HEXAGON HEAD M6S ISO 4017 M10X45	2-171, 2-179, 2-181, 2-187
90458-2850	HOSE CLIP , 51 MM	6-35
90458-2890	CONNECTOR, 21N-50N12N133NE	1-367, 1-369
90458-2892	CONNECTOR, 11 N-50-3-31/133 NE	1-367, 1-369
90458-2893	SLEEVE, 78 Z-0-3-4	1-367, 1-369
90458-2894	PAIR TWISTED CABLE 1X2X0,2MM2	7-7
90458-2895	COAXIAL CABLE RG 400/U BROWN	1-367, 1-369
90458-2950	BALL BEARING, 5X16X5 MM	7-113
90458-2954	ELBOW PIPE JOINT, EXT.THREAD, D=4MM M5	7-79
90458-2955	ELBOW PIPE JOINT, EXT.THREAD,	1-335, 1-343, 2-49, 2-131, 2-133
90458-2956	ELBOW PIPE JOINT, EXT.THREAD, D=6MM-G1/8	1-11, 1-249, 1-251, 1-257, 1-273, 1-319, 2-27, 2-37, 2-39, 2-125, 2-127, 2-129, 2-247, 5-215, 7-161, 7-163, 7-165
90458-2957	ELBOW PIPE JOINT, EXT.THREAD, D=6MM-G1/4	1-273, 1-335, 1-343, 2-49, 2-131, 2-133, 5-251, 5-253, 7-53
90458-2958	ELBOW PIPE JOINT, EXT.THREAD, D=8MM-G1/4	1-335, 1-343, 2-49, 2-131, 2-133, 5-129, 5-131, 5-165, 5-167, 7-53, 7-65
90458-2959	ELBOW PIPE JOINT, EXT.THREAD,D=12MM-G1/4	1-335, 1-343, 7-161, 7-163, 7-165
90458-2960	ELBOW PIPE JOINT, EXT.THREAD,D=12MM-G3/8	1-251, 1-337, 1-339, 1-341, 1-345, 1-347, 2-51, 2-135, 2-137, 2-139, 6-79, 7-59, 7-161, 7-163, 7-165
90458-2963	ELBOW PIPE JOINT, EXT.THREAD,D=14MM-G3/8	6-79
90458-2964	ELBOW PIPE JOINT, EXT.THREAD, D=8MM-G1/8	6-47, 7-105
90459-0094	O-RING 133,07X1,78 MM	1-105, 1-107, 1-123, 1-125
90459-0098	THRUST BALL BEARING, 15X28X9 MM	1-105, 1-107
90459-0180	FLOW SWITCH, 0,1 - 2,5 L/MIN	6-19

Part No	Description	Page No
90459-0181	PIPE SURFACE THERM., PT-100 -50° -+120°C	1-245, 1-247
90459-0183	TRANSMITTER , TRANS T02 PCP	8-97, 8-99
90459-0184	INTERFACE CONNECTOR FOR TPIH 2500 GENER.	7-7
90459-0241	VALVE, SEAT, N.C. SRC-38-NC-21	1-273
90459-0261	ETHERNET NETWORK INTERFACE CARD 50101034	8-107
90459-0262	BACKPLANE CARD AR-MB7P	8-109
90459-0275	PC ENCLOSURE FLEX BOX ISC E100008A	8-107
90459-0283	POWER SUPPLY UNIT UO36422A	8-109
90459-0284	PROCESSOR BOARD CLIPS V, UO36418C	8-107
90459-0285	CD UNIT E100009A	10-67
90459-0287	DISPLAY UNIT 15", UO36419A	2-263
90459-0288	SLIM LINE TOUCH BEZEL 15", 1511	2-265
90459-0291	CABLE CD UNIT 50400002	8-107
90459-0363	COOLING UNIT, KB40A0721.03	8-111
90459-0401	DOUBLE ACTING, MINI-ISO, CYL. 25-320	2-247
90459-0462	CANISTER LY 500-10	2-39
90459-0472	KEY SAF.SW. AZ 16 02ZVRK-M20-2152-2254	1-7, 1-9, 1-109, 1-119, 1-121, 1-177, 1-397, 7-45, 7-47
90459-0503	CYLINDER, ADVC-16-10-I-P	7-121, 7-131
90459-0586	SWIVEL FLANGE 50	1-11
90459-0587	DOUBLE ACTING, PROFILE, CYL 50-50	1-11
90459-0643	DIFF. PRESS. TRANSDUCER 2671-10CLD2EG2HD	1-355, 1-357
90459-0689	PRESSURE TRANSMITTER 0 - 0,6 BAR	1-113
90459-0711	FLOW SENSOR FS-400 SERIES / 26440	1-207
90459-0713	DOUBLE ACTING, MINI-ISO, CYL 12-80	1-195
90459-0729	HEXAGONAL PROTECTIVE CAP GPN 1000	1-213, 1-215, 1-217
90459-0799	SENSOR BRACKET SMBR-12 FOR CYL 12	1-195
90459-0802	RADIAL SEAL 55X75X10 MM	1-115
90459-0803	O-RING 355,19X3,53 MM	1-115
90459-0804	MOTOR B3/B5 CE CODE: 159353	1-115
90459-0805	BUSHING, 10X14X8 MM	1-175
90459-0829	PROXIMITY SENSOR, SMTO-4U-PS-K-LED-24	1-195
90459-0835	THERMO CONTACT PANEL, 16 CONTACTS 2 ROWS	8-39, 8-41, 8-43
90459-0871	SEALING RING 18X30X7 MM	1-15, 1-17
90459-0941	QUICK COUPLING, PLCD 130-M8	2-197, 2-199
90459-0951	TRANSDUCER, BTL5-A11-M0400-B-S32	2-19, 2-21
90459-0952	LINEAR GUIDE UNIT, BORE 25-STROKE 80	5-195, 5-197, 5-199
90459-0953	DOUBLE ACTING, ROUND, CYL 25-80	5-195, 5-197, 5-199
90459-0959	DISTRIBUTOR BLOCK 1492-PD3163	8-77, 8-79
90459-0960	QUICK COUPLING, PLCD 200-M8	2-197, 2-199
90459-0969	COMP. SPRING A D22430, 1,6X11,6X58,5	5-119, 5-121, 5-125
90459-0997	STRAIGHT COUPLING D=8-R1/4"	6-7, 6-9
90459-1000	LIGHT FIXTURE, RL 70CV-136	2-93
90459-1009	RUBBER STRIP, 1025088988	2-9, 2-119
90459-1018	ROD END,BALL JOINT EYE M10X1,25	1-175
90459-1037	CRIMP TOOL FOR COAX. CONN. HTG 58-901200	10-5
90459-1038	PRESSURE TRANSMITTER, 250BAR	2-81
90459-1126	PLASTIC HOSE PVC TRANSPARENT, 8X11MM	7-21
90459-1130	EM. STOP XAL-K178F	1-19
90459-1147	GEARS, WORM MOTOR VF30 F1-10 P63 B14 V6	2-273, 2-275
90459-1148	VARILIP 14X24X7 MM	1-133, 1-135, 1-137
90459-1174	O-RING 75,87X2,62 MM	1-15, 1-17
90459-1175	O-RING 418X3,0 MM	1-15, 1-17
90459-1189	O-RING 56,87X1,78 MM	1-195
90459-1194	KEY SAF.SW. AZ16-03 ZVRK-M16	1-397
90459-1223	PRESSURE GAUGE HYDRAULIC, 1184954.03-11	2-77
90459-1224	FILTER UNIT, MDF-BNHC-30-LB10-C1.0/B6	2-79
90459-1226	GEARS, WORM MOTOR VF 44P-10+BN71B 0.37KW	1-155, 1-157
90459-1227	MANIFOLD BLOCK, A1-17351	2-81
90459-1235	ANGLE SEAT VALVE, N.C. DN13 TYPE 2002	1-255
90459-1241	ANGLE SEAT VALVE, TRI-CLAMP, N.C. DN20	1-273
90459-1254	TUBE FUSE, 4A 500V	8-91, 8-93, 9-5
90459-1297	RESISTANCE FIXED, 120 OHM, 0,25 W	1-367, 1-369, 7-7
90459-1314	O-RING 491X3 MM	1-117
90459-1352	PCI COMMUNICATION INTERFACE PCI-1612B-A	8-107
90459-1359	FILTER, 1 A, 250 VAC	8-97, 8-99
90459-1395	SCREW HEX.SOCK.SET CONEPT.MS6SS M4X4 A2	1-11
90459-1411	O-RING 7,8X1,9 MM	3-15, 3-31
90459-1420	PROPORTIONAL VALVE 0 - 10V/0-6 BAR	1-225
90459-1424	CONN. STR., 6-G1/8, EXT. THREAD	1-223, 1-249, 2-39
90459-1425	CONN. T-PIPE 8	2-39
90459-1427	QUICK-RELEASE COUPLING, SS-QTM2-D-8M0-K2	2-39
90459-1430	QUICK-RELEASE COUPLING, SS-QTM2-D-8M0-K4	2-39
90459-1452	FEMALE INSERT HAN K 09 38 006 2711	8-49
90459-1467	FORCE GAUGE 0-250N, AFG 250N	10-5
90459-1472	FILTER, KW0604NP3	6-9
90459-1501	CABLE SEALING, 12023/I, ELFA. 44-625-78	4-187, 4-189, 7-83
90459-1506	ELBOW WITH TAILPIECE 10/10 MM	5-187, 5-189, 5-191
90459-1509	CYLINDER, ADVC-20-20-I-P	7-105
90459-1535	FLEXIBLE COUPLING DISC, 16 MM	2-33
90459-1536	FLEXIBLE COUPLING DISC, 14 MM	2-33
90459-1544	HANDLE, GR/10	7-31
90459-1545	CARRIAGE, 1653-314-20	7-31
90459-1566	BELLOW COUPLING, 24X24 MM	5-267

Part No	Description	Page No
90459-1617	TERMINAL BOX FL CAT5	2-157
90459-1619	CONNECTOR 9-032-001-0698	8-73
90459-1620	DIODE, 3A 100V	8-71
90459-1621	CABLE, ETHERNET RJ 45 CONNECT. 1 M	8-97, 8-99, 8-101
90459-1623	O-RING 66,40X1,78 MM	1-155, 1-157
90459-1627	O-RING 114,02X1,78 MM	1-129, 1-131, 1-139, 1-141, 1-143, 1-145, 1-147, 1-155, 1-157
90459-1650	VARILIP 30X40X7 MM	1-155, 1-157
90459-1686	O-RING 126,72X1,78 MM	1-129, 1-131
90459-1690	DIRECTIONAL VALVE, DG4V-3-6C-MUH-7-60-EN	2-81
90459-1728	SCREW ISO4029 M6X45 A4	1-149, 1-151, 1-153
90459-1733	BELLOW COUPLING, 15X15 MM	4-229, 4-231
90459-1736	PURGE VALVE, 2RM-PG4L-SS	6-27
90459-1738	MANDATORY ACTION SIGN ISO, READ MAINTENA	8-97, 8-99
90459-1742	FEED THROUGH TERMINAL, 1024100	1-229, 1-295
90459-1812	CABLE, ETHERNET RJ 45 CONNECT. 8 M	2-149, 2-151
90459-1848	TAPE, SAFETY WALK R25MM X 18,3M	7-45, 7-47
90459-1849	DOUBLE ACTING SHUTTLE CYL. 40-550 MM	7-65
90459-1898	LIFTING EYE BOLT, VLBG(1)1.0T M12 TURN.	10-67
90459-1953	DOUBLE ACTING, MINI-ISO, CYL. 25-10	5-145, 5-147
90459-1996	FILTER CULLIGAN REFILL LINE 10 760665	6-9
90459-2004	FILTER CARTRIDGE ION-EXCHANGE, 759807	6-9
90459-2096	GEARS, WORM MOTOR F2 15 P63 B14 B8 PV 75	7-179
90459-2101	CYLINDER, ADVC-80-25-I-P	7-105
90459-2102	CYLINDER, AEVC 100-25-I-P	7-105
90459-2106	CABLE CONNECTOR, C091 31D004 100 2	1-367, 1-369
90459-2122	THERMOCOUPLE, EN-5130060-0001	1-221
90459-2145	BACK-UP RING 43,5X1,4 MM	4-91
90459-2146	X-SEAL 42,52X2,62 MM	4-91
90459-2173	SEAL GLYDRING 32,5X40X3,2 MM	4-91
90459-2181	BELT TENSION METER, TSM 4	10-5
90459-2185	CPU374, ETHERNET COMMUNICATION	8-67, 8-69
90459-2198	TIMING BELT T10X480X16 POLYURETHANE	7-97
90459-2258	SEAL GLYDRING 25,1X30X2,2 MM	4-123, 4-125, 4-159, 4-161
90459-2363	O-RING MATERIAL 1,78 MM	4-115, 4-117, 4-119, 4-121
90459-2366	HOSE CLIP, (32)-35	2-69, 2-205, 6-47
90459-2553	ELBOW PIPE JOINT 16 MM	8-111
90459-2555	T-CONNECTION 16MM	8-111
90459-2557	BLIND PLUG 16 MM	8-111
90459-2560	LIGHT FIXTURE, TMS121 1XTL-D30W/830 IP	8-25
90459-2563	BRACKET FOR RAIL, TYPE FM 4	8-71
90459-2590	ROD END, CLEVIS WITH AXLE M8	7-101, 7-103
90459-2609	BALL VALVE 3/8", 6A-V6LQ-SI-SSP-ALH	1-269, 2-39
90459-2615	HOSE NIPPLE SS-6-HC-A-601	1-269, 2-39
90459-2635	NUT, HEX.LOCK "CONELOCK" M6 DIN 980V	7-99
90459-2647	DOUBLE ACTING, SHUTTLE, CYL. 25-780	7-31
90459-2704	SNAP HOOK STAINLESS 50X5MM	7-183, 7-185
90459-2705	LIFTING EYE BOLT, M6X40MM	7-183, 7-185
90459-2769	ELBOW PIPE JOINT, EXT.THREAD,D=10MM-G1/2	6-7
90459-2826	GEARS, HELICAL MOTOR ME0102210012	7-97
90459-2843	HEATING CARTRIDGE, 800W 240V	7-99
90459-2938	POWER SUPPLY, 6EP1437-3BA00	8-25
90459-2939	POWER SUPPLY UNIT 6EP1961-3BA00	8-47
90459-3080	HOOD HAN-BRID 3A 19 20 003 1443	2-149, 2-151
90459-3081	HOUSING HAN A 19 20 003 1250	2-149, 2-151
90459-3082	MALE INSERT HAN-BRID RJ45 09 12 003 3001	2-149, 2-151
90459-3083	FEMALE INSERT HAN-BRID RJ45 09 120032790	2-149, 2-151
90459-3154	CABLE OLFLONPTFE 1X4,72 MM² YELLOW-GREEN	1-221
90459-3164	TUBE 14MM PA BLACK	2-205
90459-3165	CABLE OLFLON PTFE 1X4,72 MM² BLACK	1-221
90459-3179	GAS SPRING BRACKET, BES/AUG/06/001	7-193
90459-3181	GAS SPRING, G15-150-50N STAINLESS STEEL	7-193
90459-3182	GAS SPRING FITTNG, AU16 STAINLESS STEEL	7-193
90459-3339	GASKET NBR/PTFE 17X24X2 MM 3/4"	6-17, 6-23
90459-3352	FLAT PIN SOCKET, 6,3X0,8	8-97, 8-99
90459-3370	DOUBLE ACTING, PROFILE,CYL 32-140	7-41, 7-43
90459-3449	VARIABLE FREQUENCY DRIVE 22A-A2P3N104	8-77, 8-79
90459-3450	VARIABLE FREQUENCY DRIVE 22A-A4P5N104	8-77, 8-79
90459-3451	VARIABLE FREQUENCY DRIVE 22A-D4P0N104	8-77, 8-79
90459-3460	FOOTPRINT FILTER 22-RF010-AL	8-77, 8-79
90459-3461	FOOTPRINT FILTER 22-RF5P7-AL	8-77, 8-79
90459-3618	HAND OPERATED CHAIN-HOIST, P.H.D. 250KG	10-17, 10-19
90459-3650	DOUBLE ACTING, MINI-ISO, CYL 25-40	1-175
90459-3682	ROTARY POSITION SENSOR RPN1A111	1-175
90459-3709	CONNECTOR 3-POLE AMP 282087-1	1-175
90459-3759	TIMING BELT 5MR-550-25	4-225, 4-227
90459-3799	FUSE HOLDER, MSC 10 1-POLE A250148	8-91, 8-93
90459-3800	FUSE HOLDER, MSC 10 3-POLE D250151	8-91, 8-93
90459-3832	VENTING BOX, P9852	7-45, 7-47
90459-3940	LEVER, GN 612-6-M16X1.5-A-NI	5-235, 5-237, 5-239, 5-241, 5-243, 5-245
90459-4032	HYDR.ACC., SBO-210-1.4E1/112U-210AK	2-81
90459-4077	WIRE SEAL , AMP 281934	1-175
90459-4079	MINI MIC SRS, AMP 183035-1	1-175
90459-4145	ROTARY ACTUATOR DRD-4-F05	1-273
90459-4148	CONN. STR., 1/2"-1/4 ISO 7/1, EXT. THREA	1-223

Part No	Description	Page No
90459-4151	HOSE ASSEMBLY 12,7 X 304,8 MM	1-223
90459-4169	HOSE ASSEMBLY 919-1D-1D-8-8-5C-3800	1-269
90459-4179	GASKET 30,5X42X4 MM FDA	1-245, 1-247
90459-4504	ROD END, ID=6MM, M6X1	4-239, 4-241
90459-4505	ROD END, ID=6MM, M6X1 LH	4-239, 4-241
90459-4511	CONN. ELBOW, 6	1-221
90459-4553	FUSE HOLDER, MSC 10 2-POLE C250150	8-91, 8-93
90459-4576	O-RING 55X3 MM	5-229, 5-231, 5-233
90459-4577	O-RING 64X3 MM	5-217, 5-219, 5-221, 5-223, 5-225, 5-227
90459-4578	O-RING 78X3 MM	5-217, 5-219, 5-221, 5-223, 5-225, 5-227
90459-4579	O-RING 94X3 MM	5-217, 5-219, 5-221, 5-223, 5-225, 5-227
90459-4580	O-RING 165X4 MM	5-217, 5-219, 5-221, 5-223, 5-225, 5-227
90459-4585	RADIAL SEAL 25X52X7 MM DUST LIP	5-217, 5-219, 5-221, 5-223, 5-225, 5-227
90459-4586	RADIAL SEAL 30X55X7 MM DUST LIP	5-229, 5-231, 5-233
90459-4587	RADIAL SEAL 35X52X7 MM DUST LIP	5-217, 5-219, 5-221, 5-223, 5-225, 5-227
90459-4588	RADIAL SEAL 60X85X8 MM DUST LIP	5-217, 5-219, 5-221, 5-223, 5-225, 5-227
90459-4686	NON-RETURN VALVE, M12A-C6L-1-EPR-SS	1-255
90459-4705	LOCKING PLUG, S 103 A 053-130+ AND 90220	2-101
90459-4932	REAR CLEVIS FOOT MOUNTING , CRLBN-20/25	5-145, 5-147
90459-4991	PRESSURE GAUGE, 9063064 D=40 MM	1-343
90459-5015	CONDUCTIVITY SENSOR CLS 52-A1CS1A2	1-277
90459-5076	SET SCREW ISO4026 M4X5 HRC 45	2-207
90459-5177	ANGLE SEAT VALVE W. FLANGES, N.O.8498668	2-25
90459-5178	ANGLE SEAT VALVE W. FLANGES, N.O.8498669	2-25
90459-5181	GREASE LUBRICATION KIT , 400999139	10-5
90459-5187	CONDUCTIVITY TRANSMITTER CLM223-ID7105	8-97, 8-99
90459-5211	SERVO MOTOR AKM51E-HCS2R-02	4-225, 4-227
90459-5323	OVERLOAD PROTECTION, PKZM0-1	8-89
90459-5324	OVERLOAD PROTECTION, PKZM0-1,6	8-89
90459-5325	OVERLOAD PROTECTION, PKZM0-2,5	8-89
90459-5326	OVERLOAD PROTECTION, PKZM0-4	8-89
90459-5328	OVERLOAD PROTECTION, PKZM0-10	8-89
90459-5330	OVERLOAD PROTECTION, PKZM0-16	8-89
90459-5337	LEVEL SENSOR, COD. 90459	1-269
90459-5440	CONTACTOR 4KW 24VDC, DILM9-01	8-89, 8-95
90459-5441	CONTACTOR 7,5KW 24VDC, DILM17-01	8-89, 8-95
90459-5444	CONTACTOR 15KW 24VDC, DILM32-01	8-95
90459-5471	STRAIGHT COUPLING INT, D=6 MM - G1/4	2-207
90459-5472	FLOW CONTROL VALVE, CFM360612E	2-207
90459-5503	FILTER HOUSING / IDL 11 GB 16 C2H	1-255
90459-5581	TENSION SPRING 1,2X23X8,5	1-313, 1-315
90459-5633	GUIDE CONSOLE, 30X13X750	2-73
90459-5635	HYDRAULIC TANK, 12 L, A1-19101+A3-16783	2-77
90459-5687	FUSE 1 A 250 VAC	8-91, 8-93
90459-5691	CAPACITOR , 100000ÂµF 40VDC	8-59
90459-5692	CAPACITOR, 6800ÂµF 400VDC	8-77, 8-79
90459-5693	CAPACITOR BRACKET Ã¸63, 39522101300	8-59
90459-5694	CAPACITOR BRACKET Ã¸76, 39522101500	8-77, 8-79
90459-5811	RESIDUAL CURRENT DEVICE, FI-25/2/003-A	8-97, 8-99
90459-5813	AUXILARY CONTACT, FAZ-XHI11	8-91, 8-93
90459-5968	WEAR RING 19X22X3,2 MM	4-127
90459-6019	PISTON SEAL STEPSEAL 11,5X19X3,2 MM	4-127
90459-6021	PISTON SEAL STEPSEAL 7,2X12X2,2 MM	4-127
90459-6022	PISTON SEAL STEPSEAL 14,5X22X3,2 MM	4-127
90459-6023	PISTON SEAL 13X19X3,2 MM	4-127
90459-6024	PISTON SEAL 16X22X3,2 MM	4-127
90459-6025	PISTON SEAL 6,2X12X3,2 MM	4-127
90459-6026	WEAR RING 16X19X3,2 MM	4-127
90459-6027	WEAR RING 9X12X3,2 MM	4-127
90459-6130	SERVO MOTOR AHR190-J8-520S-F07D01K99C33B	3-7, 3-9
90459-6436	RECORDER 12-CHANNEL, LOGOSCREEN CF	8-97, 8-99
90459-6472	HARD DISC 2,5" , 03589-000	8-107
90459-6473	HARDDISK COPYING TOOL, 03607-000	10-5
90459-6623	FEMALE INSERT HAN K 4/8, 09 38 012 2701	8-39, 8-41, 8-43
90459-6624	FEMALE INSERT HAN E AV, 09 33 006 4735	8-39, 8-41, 8-43, 8-49
90459-6627	FEMALE INSERT HAN E AV, 09 33 024 4735	8-39, 8-41, 8-43
90459-6638	HOUSING 16B BULKHEAD, 09 30 016 0301	8-39, 8-41, 8-43
90459-6639	HOUSING 24B BULKHEAD, 09 30 024 0301	8-39, 8-41, 8-43
90459-6850	CONNECTION, PKZM0-XDM12	8-89
90459-6851	BASE UNIT, PKZM0-XDM32	8-89
90459-6852	AUXILIARY CONTACT, DILA-XHI22	8-89, 8-95
90459-6853	COMMONING BUSBAR, 1-P 1-PH 1X12 MOD 85A	8-85
90459-6854	COMMONING BUSBAR, 3-P 3-PH 6 100A	8-91, 8-93
90459-6855	COMMONING BUSBAR, 3-P 3-PH 12 100A	8-91, 8-93
90459-6856	FEEDER BLOCK, FAZ/FIP-XVS-KL	8-91, 8-93
90459-6857	BUSBAR, 3-P 12 100A	8-91, 8-93
90459-6858	ETHERNET SW, FL SWITCH SF 8TX FROM V 14	8-97, 8-99
90459-6859	HOUS.SIZE 6-24B HAN-SNAP, 09 33 000 9980	8-49
90459-6975	SOLENOID VALVE G1/4, 2401186082702400	1-319
90459-6977	SOLENOID VALVE G1/4, V04B286N-B423A	1-319
90459-7084	FILTER, CPDI000M1	6-21
90459-7280	AIR NOZZLE, 011	2-201, 2-203
90459-7315	PUSH DYNAMOMETER 20 - 200N, DT120	10-5
90600-0657	SCREW UNC 1/4-20 X10	1-193

Part No	Description	Page No
107426-0000 ..	GUIDE SLEEVE	4-91, 9-5
209183-0000 ..	RING	1-249, 1-261
229207-0000 ..	BEARING SLEEVE	5-59, 5-61
230551-0000 ..	GASKET	1-181
232979-0000 ..	PRESSURE ROLLER (PAK OF 10)	1-213, 1-215, 1-217, 9-11, 9-13, 9-15, 9-17, 9-19
239874-0000 ..	WASHER	4-199, 4-209
245039-0000 ..	GUIDE WHEEL	5-59, 5-61
246513-0000 ..	BEARING	4-199, 4-209
247358-0000 ..	SHIFTER HANDLE	1-133, 1-135, 1-137
252766-0001 ..	INSULATING PIPE	5-203, 5-205, 5-207, 5-209, 5-211, 5-213
252766-0002 ..	INSULATING PIPE	5-203, 5-205, 5-207, 5-209, 5-211, 5-213
252766-0004 ..	INSULATING PIPE	5-203, 5-205, 5-207, 5-209, 5-211, 5-213
255978-0000 ..	FORK	1-213, 1-215, 1-217
256628-0000 ..	PIECE	4-205, 4-207, 4-215, 4-217
256629-0001 ..	AXLE PIN	4-205, 4-207, 4-215, 4-217
257330-0000 ..	PRESSURE ROLLER	1-213, 1-215, 1-217, 9-11, 9-13, 9-15, 9-17, 9-19
263311-0000 ..	WASHER	1-13
263655-0006 ..	SHAFT	1-85, 1-87
263655-0007 ..	SHAFT	1-85, 1-87
263655-0009 ..	SHAFT	1-47, 1-49, 1-51, 1-85, 1-87
263655-0015 ..	SHAFT	1-85, 1-87
263655-0018 ..	SHAFT	1-85, 1-87
263673-0000 ..	GASKET	5-203, 5-205, 5-207, 5-209, 5-211, 5-213
266737-0000 ..	WASHER	1-313, 1-315
266739-0000 ..	CABLE GLAND	5-187, 5-189, 5-191
269151-0000 ..	SHAFT	1-41, 1-43
269859-0000 ..	BRACKET	1-181
270927-0000 ..	SCREW	5-187, 5-189, 5-191
271239-0000 ..	SLEEVE	10-75
271241-0000 ..	SCREW	10-75
271860-0000 ..	CLAMP BLOCK	1-7, 1-9, 1-109, 1-119, 1-121, 1-177
272479-0000 ..	PRESSURE ROLLER (10PCS)	1-213, 1-215, 1-217, 9-11, 9-13, 9-15, 9-17, 9-19
272728-0000 ..	BARRIER	7-69
272810-0001 ..	SLEEVE	10-75
272813-0000 ..	PLUNGER	10-75
273429-0000 ..	WASHER	1-201
273450-0000 ..	SIGN, AIR SPRAY	1-335
273452-0000 ..	SIGN, ROLLING MACHINE FOR FABRICS	1-335
273455-0000 ..	SIGN, COLD WATER	6-69, 6-71
273458-0000 ..	SIGN, AIR	6-77, 7-161, 7-163, 7-165
273953-0000 ..	SEAL	1-85, 1-87
273977-0000 ..	NUT	2-35, 10-69
273978-0000 ..	LEVEL GLAS	2-35, 10-69
273980-0000 ..	SPRING	2-35, 10-69
273981-0000 ..	GASKET	2-27
273985-0000 ..	CARRIAGE	10-73
273996-0000 ..	NUT	2-35, 10-69
276398-0000 ..	HEXAGON NIPPLE	2-197, 2-199
279008-0000 ..	BUSHING	1-133, 1-135, 1-137
282635-0000 ..	GUIDE WHEEL	7-11
294464-0000 ..	BASE PLATE	5-187, 5-189, 5-191
295377-0001 ..	HOOD	1-213, 1-215, 1-217
295377-0003 ..	HOOD	1-213, 1-215, 1-217
311103-0232 ..	PARALLEL PIN ISO 2338 3M6X8 A1	4-61, 4-63, 4-65, 4-67
311103-0234 ..	PARALLEL PIN ISO 2338 3M6X12 A1	4-93, 4-95, 4-97, 4-139, 4-141, 4-143
311103-0235 ..	PARALLEL PIN ISO 2338 3M6X14 A1	1-175, 4-51, 4-53, 4-55, 4-57, 10-71
311103-0236 ..	PARALLEL PIN ISO 2338 3M6X16 A1	1-29, 1-31, 1-33, 1-35, 1-37, 1-53, 1-55, 1-59, 1-61, 1-63
311103-0238 ..	PARALLEL PIN ISO 2338 3M6X20 A1	1-41, 1-43
311103-0267 ..	PARALLEL PIN ISO 2338 4M6X10 A1	4-87, 4-89, 4-135, 4-137
311103-0268 ..	PARALLEL PIN ISO 2338 4M6X12 A1	5-123
311103-0270 ..	PARALLEL PIN ISO 2338 4M6X16 A1	1-287, 1-289, 2-33, 7-109, 7-111
311103-0272 ..	PARALLEL PIN ISO 2338 4M6X20 A1	1-273
311103-0274 ..	PARALLEL PIN ISO 2338 4M6X25 A1	7-67, 7-69
311103-0276 ..	PARALLEL PIN ISO 2338 4M6X30 A1	1-41, 1-43
311103-0306 ..	PARALLEL PIN ISO 2338 5M6X12 A1	1-41, 1-43, 4-171, 4-173
311103-0308 ..	PARALLEL PIN ISO 2338 5M6X16 A1	1-11
311103-0310 ..	PARALLEL PIN ISO 2338 5M6X20 A1	4-175, 4-177, 4-179
311103-0351 ..	PARALLEL PIN ISO 2338 6M6X16 A1	1-11, 3-13, 3-29, 4-229, 4-231, 10-47
311103-0353 ..	PARALLEL PIN ISO 2338 6M6X20 A1	1-91, 1-93, 3-13, 3-29
311103-0354 ..	PARALLEL PIN ISO 2338 6M6X22 A1	4-225, 4-227
311103-0355 ..	PARALLEL PIN ISO 2338 6M6X25 A1	7-173
311103-0359 ..	PARALLEL PIN ISO 2338 6M6X35 A1	10-63
311103-0361 ..	PARALLEL PIN ISO 2338 6M6X40 A1	7-107
311103-0399 ..	PARALLEL PIN ISO 2338 8M6X16 A1	4-175, 4-177, 4-179
311103-0400 ..	PARALLEL PIN ISO 2338 8M6X18 A	4-167, 4-169
311103-0401 ..	PARALLEL PIN ISO 2338 8M6X20 A1	1-117
311103-0402 ..	PARALLEL PIN ISO 2338 8M6X22 A1	4-175, 4-177, 4-179
311103-0403 ..	PARALLEL PIN ISO 2338 8M6X25 A1	1-299, 1-301
311103-0407 ..	PARALLEL PIN ISO 2338 8M6X35 A1	5-215, 5-261, 5-263
311103-0409 ..	PARALLEL PIN ISO 2338 8M6X40 A1	3-23
311103-0413 ..	PARALLEL PIN ISO 2338 8M6X50 A1	1-7, 1-9, 1-109, 1-119, 1-121, 1-177
311103-0454 ..	PARALLEL PIN ISO 2338 10M6X20 A1	5-69
311103-0456 ..	PARALLEL PIN ISO 2338 10M6X25 A1	3-15, 3-31
311103-1274 ..	PARALLEL PIN ISO 2338 4M6X24 A1	1-47, 1-49, 1-51, 1-85, 1-87, 7-33, 7-35, 7-41, 7-43

Part No	Description	Page No
311103-1355 ..	PARALLEL PIN ISO 2338 6M6X24 A1	7-117, 7-125
311103-1403 ..	PARALLEL PIN ISO 2338 8M6X24 A1	1-287, 1-289
311103-1456 ..	PARALLEL PIN ISO 2338 10M6X24 A1	2-65
311111-0345 ..	SPRING PIN ISO 8752 6X32-ST	10-85
311112-0205 ..	SPRING PIN, ISO 8752 3X10-C	3-13, 3-29
311112-0251 ..	SPRING PIN, ISO 8752 4X10-C	5-215
311112-0255 ..	SPRING PIN, ISO 8752 4X18-C	4-239, 4-241
311112-0256 ..	SPRING PIN, ISO 8752 4X20-C	1-105, 1-107, 4-239, 4-241, 4-243
311112-0258 ..	SPRING PIN, ISO 8752 4X24-C	4-239, 4-241, 7-101, 7-103, 7-175
311112-0262 ..	SPRING PIN, ISO 8752 4X32-C	1-133, 1-135, 1-137
311112-0263 ..	SPRING PIN, ISO 8752 4X35-C	4-239, 4-241
311112-0350 ..	SPRING PIN, ISO 8752 6X55-C	10-75
311411-0152 ..	SPLIT PIN SP2X16RFR	10-53
311411-0169 ..	SPLIT PIN SP2,5X25RFR	2-33
311520-0320 ..	RIVET, BLANK 2,4X6	8-97, 8-99
311520-0329 ..	RIVET, BLANK 2,4X8	6-65
311521-0142 ..	BLANK RIVET 3,2X6	9-3
312101-0293 ..	SCREW M6S M4X16 FZB	10-17, 10-19
312101-0325 ..	SCREW M6S M5X10 FZB	2-247
312101-0364 ..	SCREW M6S M6X10 FZB	8-51, 8-53, 8-55, 8-81
312101-0381 ..	SCREW M6S M6X55 FZB	10-75
312101-0678 ..	SCREW M6S M20X70 FZB	10-79
312104-0461 ..	SCREW M6S M8X50H FZB	1-305, 2-193
312105-0285 ..	SCREW M6S ISO 4017 M4X6 A470	1-225, 1-269
312105-0287 ..	SCREW M6S ISO 4017 M4X8 A470	1-41, 1-43, 1-115, 1-201, 1-231, 1-251, 1-253, 1-395, 2-201 2-203, 4-27, 4-29, 4-39, 4-41, 4-51, 4-53, 4-55, 4-57, 4-61, 4-63, 4-65, 4-67, 4-73, 4-79, 5-29, 5-31 5-33, 5-97, 5-99, 5-129, 5-131, 5-185, 5-235, 5-237, 5-239, 5-241, 5-243, 5-245, 7-107, 7-109 7-111, 7-117, 7-125, 7-177, 8-25
312105-0289 ..	SCREW M6S ISO 4017 M4X10 A470	1-29, 1-31, 1-33, 1-35, 1-37, 1-53, 1-55, 1-59, 1-61, 1-63 1-113, 1-129, 1-131, 1-169, 1-171, 1-225, 1-231, 1-269, 2-187, 2-201, 2-203, 2-207, 2-247, 5-23 5-25, 6-9, 7-193
312105-0291 ..	SCREW M6S ISO 4017 M4X12 A470	1-169, 1-171, 1-175, 1-335, 2-243, 4-81, 4-83, 4-85, 4-105 4-107, 4-109, 4-111, 4-129, 4-131, 4-133, 4-149, 4-151, 4-153, 4-155, 5-185, 5-271, 5-273, 5-275 7-97, 7-109, 7-111, 7-117, 7-125, 7-177
312105-0292 ..	SCREW M6S ISO 4017 M4X14 A470	1-397
312105-0293 ..	SCREW M6S ISO 4017 M4X16 A470	1-319, 2-273, 2-275, 5-235, 5-237, 5-239, 5-241, 5-243 5-245, 7-83, 7-117, 7-125
312105-0295 ..	SCREW M6S ISO 4017 M4X20 A470	1-313, 1-315, 2-89, 4-103, 4-199, 4-201, 4-203, 4-205 4-207, 4-209, 4-211, 4-213, 4-215, 4-217, 5-201, 5-247, 5-249, 7-27, 7-67
312105-0297 ..	SCREW M6S ISO 4017 M4X25 A470	1-113, 4-239, 4-241, 4-243, 7-21
312105-0299 ..	SCREW M6S ISO 4017 M4X30 A470	7-75, 7-83, 7-177
312105-0301 ..	SCREW M6S ISO 4017 M4X35 A470	1-13, 7-121, 7-131
312105-0303 ..	SCREW M6S ISO 4017 M4X40 A470	1-225, 1-253, 7-39
312105-0323 ..	SCREW M6S ISO 4017 M5X8 A480	1-95, 1-129, 1-131, 1-189, 1-191, 1-273, 3-23, 4-239, 4-241 5-59, 5-61, 5-97, 5-99, 5-279, 7-21, 7-45, 7-47, 7-67, 7-83, 8-25, 10-13
312105-0325 ..	SCREW M6S ISO 4017 M5X10 A480	1-15, 1-17, 1-41, 1-43, 1-105, 1-107, 1-175, 1-225, 1-249 1-269, 2-65, 4-27, 4-29, 4-39, 4-41, 4-59, 4-69, 4-187, 4-189, 5-15, 5-157, 5-159, 10-9, 10-57, 10-59
312105-0327 ..	SCREW M6S ISO 4017 M5X12 A480	1-11, 1-15, 1-17, 1-29, 1-31, 1-33, 1-35, 1-37, 1-39, 1-41 1-43, 1-53, 1-55, 1-59, 1-61, 1-63, 1-75, 1-77, 1-79, 1-105, 1-107, 1-149, 1-151, 1-153, 1-167 1-195, 1-253, 1-257, 1-285, 1-355, 1-357, 1-395, 2-247, 4-7, 4-9, 4-11, 4-17, 4-19, 4-21, 4-27 4-29, 4-39, 4-41, 4-75, 4-201, 4-203, 4-211, 4-213, 5-69, 5-97, 5-99, 5-195, 5-197, 5-199, 5-257 5-261, 5-263, 5-271, 5-273, 6-19, 6-23, 7-27, 7-45, 7-47, 9-33
312105-0328 ..	SCREW M6S ISO 4017 M5X14 A480	1-395, 1-397, 4-7, 4-9, 4-11, 4-17, 4-19, 4-21, 4-27, 4-29 4-39, 4-41, 4-51, 4-53, 4-55, 4-57, 4-61, 4-63, 4-65, 4-67, 7-173
312105-0329 ..	SCREW M6S ISO 4017 M5X16 A480	1-15, 1-17, 1-29, 1-31, 1-33, 1-35, 1-37, 1-53, 1-55, 1-59 1-61, 1-63, 1-75, 1-77, 1-79, 1-91, 1-93, 1-123, 1-125, 1-139, 1-141, 1-143, 1-145, 1-147, 1-167 1-299, 1-301, 1-313, 1-315, 1-395, 2-39, 2-119, 4-175, 4-177, 4-179, 4-201, 4-203, 4-211, 4-213 5-257, 5-261, 5-263, 5-279, 6-23, 7-31, 7-45, 7-47, 7-73
312105-0331 ..	SCREW M6S ISO 4017 M5X20 A480	1-7, 1-9, 1-39, 1-75, 1-77, 1-79, 1-81, 1-83, 1-91, 1-93 1-105, 1-107, 1-109, 1-119, 1-121, 1-177, 1-313, 1-315, 1-395, 4-27, 4-29, 4-39, 4-41, 4-51, 4-53 4-55, 4-57, 4-61, 4-63, 4-65, 4-67, 4-175, 4-177, 4-179, 7-117, 7-125
312105-0333 ..	SCREW M6S ISO 4017 M5X25 A480	1-223, 1-249, 2-143, 2-217, 2-219, 2-237, 2-259, 4-239, 4-241
312105-0335 ..	SCREW M6S ISO 4014 M5X30 A480	4-199, 4-209
312105-0337 ..	SCREW M6S ISO 4014 M5X35 A480	7-9
312105-0339 ..	SCREW M6S ISO 4014 M5X40 A480	6-9
312105-0340 ..	SCREW M6S ISO 4014 M5X45 A480	1-319
312105-0341 ..	SCREW M6S ISO 4014 M5X50 A480	4-27, 4-29, 4-39, 4-41, 6-7, 7-105
312105-0362 ..	SCREW M6S ISO 4017 M6X8 A480	1-13, 1-41, 1-43, 1-129, 1-131, 1-181, 1-245, 1-247, 1-273 1-283, 2-265, 2-269, 4-105, 4-107, 4-109, 4-111, 4-149, 4-151, 4-153, 4-155, 4-199, 4-205, 4-207 4-209, 4-215, 4-217, 5-103, 5-105, 5-107, 5-109, 5-111, 5-171, 5-173, 5-177, 5-179, 5-215, 7-73, 7-75
312105-0364 ..	SCREW M6S ISO 4017 M6X10 A480	1-41, 1-43, 1-175, 1-299, 1-301, 1-367, 1-369, 1-395 2-241, 4-27, 4-29, 4-39, 4-41, 5-45, 5-47, 5-49, 5-103, 5-105, 5-107, 5-109, 5-111, 5-157, 5-159 5-171, 5-173, 5-177, 5-179, 7-7, 7-71, 7-123, 7-129, 7-183, 7-185, 8-25, 8-97, 8-99
312105-0366 ..	SCREW M6S ISO 4017 M6X12 A480	1-11, 1-97, 1-99, 1-123, 1-125, 1-129, 1-131, 1-139, 1-141 1-143, 1-145, 1-147, 1-155, 1-157, 1-159, 1-161, 1-163, 1-165, 1-169, 1-171, 1-175, 1-181, 1-189 1-191, 1-195, 1-201, 1-223, 1-251, 1-261, 1-281, 1-285, 1-293, 1-319, 1-323, 1-325, 1-355, 1-357 1-395, 1-399, 2-49, 2-61, 2-65, 2-69, 2-83, 2-93, 2-95, 2-119, 2-131, 2-133, 2-173, 2-175, 2-201 2-203, 2-207, 2-219, 2-221, 2-237, 2-249, 2-255, 2-257, 2-259, 2-271, 2-273, 2-275, 4-7, 4-9, 4-11 4-17, 4-19, 4-21, 4-27, 4-29, 4-115, 4-117, 4-119, 4-121, 4-167, 4-169, 4-171, 4-173, 4-175, 4-177 4-179, 4-199, 4-209, 4-237, 5-15, 5-29, 5-31, 5-33, 5-35, 5-37, 5-59, 5-61, 5-63, 5-93, 5-95, 5-101 5-103, 5-105, 5-107, 5-109, 5-111, 5-129, 5-131, 5-137, 5-139, 5-145, 5-147, 5-171, 5-173, 5-177 5-179, 5-235, 5-237, 5-239, 5-241, 5-243, 5-245, 5-257, 5-261, 5-263, 6-7, 6-9, 6-19, 6-29, 7-21 7-29, 7-33, 7-35, 7-37, 7-45, 7-47, 7-59, 7-73, 7-75, 7-97, 7-109, 7-111, 7-117, 7-125, 7-133 7-135, 7-137, 7-139, 7-141, 7-155, 7-157, 7-159, 7-179, 7-183, 7-185, 8-97, 8-99, 10-9

Part No	Description	Page No
312105-0367 ..	SCREW M6S ISO 4017 M6X14 A480	1-7, 1-9, 1-109, 1-119, 1-121, 1-177, 1-367, 1-369, 2-39 2-113, 2-121, 4-27, 4-29, 4-39, 4-41, 4-51, 4-53, 4-55, 4-57, 4-61, 4-63, 4-65, 4-67, 4-243, 5-19 ..... 5-21, 5-63, 5-165, 5-167, 5-259, 5-265, 7-21, 7-27, 7-97, 7-101, 7-103, 7-177
312105-0368 ..	SCREW M6S ISO 4017 M6X16 A480	1-11, 1-15, 1-17, 1-41, 1-43, 1-91, 1-93, 1-105, 1-107 1-113, 1-117, 1-123, 1-125, 1-129, 1-131, 1-155, 1-157, 1-167, 1-169, 1-171, 1-181, 1-225, 1-249 1-269, 1-273, 1-283, 1-285, 1-307, 1-309, 1-317, 1-319, 1-335, 1-343, 1-349, 1-395, 1-397, 2-9 2-27, 2-37, 2-39, 2-49, 2-65, 2-87, 2-103, 2-105, 2-113, 2-119, 2-131, 2-133, 2-243, 2-269, 4-7, 4-9 4-11, 4-17, 4-19, 4-21, 4-27, 4-29, 4-39, 4-41, 4-105, 4-107, 4-109, 4-111, 4-149, 4-151, 4-153 4-155, 4-175, 4-177, 4-179, 4-187, 4-189, 5-5, 5-7, 5-23, 5-25, 5-29, 5-31, 5-33, 5-35, 5-37, 5-65 5-67, 5-75, 5-77, 5-79, 5-83, 5-85, 5-87, 5-89, 5-91, 5-93, 5-95, 5-103, 5-105, 5-107, 5-109, 5-111 5-129, 5-131, 5-137, 5-139, 5-145, 5-147, 5-165, 5-167, 5-171, 5-173, 5-177, 5-179, 5-235, 5-237 5-239, 5-241, 5-243, 5-245, 5-259, 5-261, 5-263, 5-265, 5-271, 5-273, 6-7, 6-11, 6-23, 6-49, 6-51 6-55, 6-67, 6-75, 6-77, 7-31, 7-33, 7-35, 7-45, 7-47, 7-53, 7-63, 7-83, 7-87, 7-109, 7-111, 7-117 ..... 7-125, 7-175, 7-183, 7-185, 8-111, 10-9
312105-0370 ..	SCREW M6S ISO 4017 M6X20 A480	1-7, 1-15, 1-17, 1-41, 1-43, 1-91, 1-93, 1-97, 1-99, 1-129 1-131, 1-133, 1-135, 1-137, 1-139, 1-141, 1-143, 1-145, 1-147, 1-149, 1-151, 1-153, 1-155, 1-157 1-159, 1-161, 1-163, 1-165, 1-169, 1-171, 1-195, 1-203, 1-205, 1-251, 1-275, 1-287, 1-289, 1-299 1-301, 1-307, 1-309, 1-335, 1-355, 1-357, 1-367, 1-369, 1-395, 2-33, 2-65, 2-93, 2-179, 2-181 2-189, 2-191, 2-273, 2-275, 3-13, 3-29, 4-73, 4-79, 4-167, 4-169, 4-175, 4-177, 4-179, 4-197, 4-225 4-227, 4-239, 4-241, 4-243, 5-23, 5-25, 5-65, 5-67, 5-83, 5-85, 5-87, 5-89, 5-91, 5-101, 5-103 5-105, 5-107, 5-109, 5-111, 5-113, 5-115, 5-145, 5-147, 5-165, 5-167, 5-171, 5-173, 5-177, 5-179 5-185, 5-187, 5-189, 5-191, 5-195, 5-197, 5-199, 5-215, 5-235, 5-237, 5-239, 5-241, 5-243, 5-245 6-69, 6-71, 7-7, 7-11, 7-13, 7-23, 7-25, 7-27, 7-31, 7-41, 7-43, 7-53, 7-79, 7-85, 7-99, 7-101, 7-103 ..... 7-107, 7-109, 7-111, 7-113, 7-175, 7-179, 10-13, 10-17, 10-19
312105-0371 ..	SCREW M6S ISO 4017 M6X22 A480	..... 1-123, 1-125, 1-175, 1-307, 1-309, 7-15, 7-17
312105-0372 ..	SCREW M6S ISO 4017 M6X25 A480	1-41, 1-43, 1-85, 1-87, 1-105, 1-107, 1-123, 1-125, 1-139 1-141, 1-143, 1-145, 1-147, 1-167, 1-175, 1-285, 2-33, 2-103, 2-105, 4-81, 4-83, 4-85, 4-129, 4-131 4-133, 4-239, 4-241, 4-243, 5-17, 5-59, 5-61, 5-63, 5-83, 5-85, 5-87, 5-89, 5-91, 5-103, 5-105 5-107, 5-109, 5-111, 5-165, 5-167, 5-187, 5-189, 5-191, 5-235, 5-237, 5-239, 5-241, 5-243, 5-245 ..... 5-251, 5-253, 5-259, 5-261, 5-263, 5-265, 7-7, 7-13, 7-67, 7-107, 7-173, 7-175, 10-83
312105-0374 ..	SCREW M6S ISO 4014 M6X30 A480	1-41, 1-43, 2-273, 2-275, 5-83, 5-85, 5-87, 5-89, 5-91 ..... 5-101, 5-185, 7-193, 10-33, 10-71
312105-0376 ..	SCREW M6S ISO 4014 M6X35 A480	5-23, 5-25, 5-103, 5-105, 5-107, 5-109, 5-111, 5-113 ..... 5-115, 5-157, 5-159, 5-261, 5-263, 6-11, 6-75, 7-173, 7-183, 7-185
312105-0378 ..	SCREW M6S ISO 4014 M6X40 A480	4-229, 4-231, 4-233, 5-15, 5-23, 5-25, 5-113, 5-115, 5-259, 5-265
312105-0379 ..	SCREW M6S ISO 4014 M6X45 A480	..... 2-27, 5-101
312105-0380 ..	SCREW M6S ISO 4014 M6X50 A480	..... 1-219, 7-173, 7-187
312105-0381 ..	SCREW M6S ISO 4014 M6X55 A480	1-113, 1-197, 1-207, 1-287, 1-289, 2-69, 4-185, 5-261 ..... 5-263, 7-183, 7-185
312105-0382 ..	SCREW M6S ISO 4014 M6X60 A480	..... 5-101, 5-275, 7-69
312105-0383 ..	SCREW M6S ISO 4014 M6X65 A480	..... 2-273, 2-275, 7-97, 10-57, 10-59
312105-0384 ..	SCREW M6S ISO 4014 M6X70 A480	..... 1-271, 7-173
312105-0388 ..	SCREW M6S ISO 4014 M6X90 A480	 1-351
312105-0447 ..	SCREW M6S ISO 4017 M8X12 A480	1-15, 1-17, 1-123, 1-125, 1-219, 1-281, 2-29, 2-119, 2-189 2-191, 2-265, 2-269, 2-273, 2-275, 3-5, 3-27, 4-113, 4-157, 5-11, 5-13, 5-19, 5-21, 5-257, 5-261, 8-29
312105-0449 ..	SCREW M6S ISO 4017 M8X16 A480	1-15, 1-17, 1-81, 1-83, 1-109, 1-113, 1-119, 1-121, 1-177 1-181, 1-195, 1-199, 1-281, 1-287, 1-289, 2-19, 2-21, 2-25, 2-61, 2-81, 2-193, 2-253, 2-273, 2-275 4-187, 4-189, 4-225, 4-227, 5-19, 5-21, 5-29, 5-31, 5-33, 5-63, 5-65, 5-67, 5-69, 5-83, 5-85, 5-87 5-89, 5-91, 5-129, 5-131, 5-137, 5-139, 5-271, 5-273, 5-275, 6-49, 7-7, 7-27, 7-29, 7-45, 7-47 ..... 7-95, 7-133, 7-135, 7-137, 7-139, 7-141, 8-37, 10-73
312105-0451 ..	SCREW M6S ISO 4017 M8X20 A480	1-7, 1-9, 1-39, 1-41, 1-43, 1-47, 1-49, 1-51, 1-59, 1-61 1-63, 1-75, 1-77, 1-79, 1-81, 1-83, 1-85, 1-87, 1-109, 1-113, 1-119, 1-121, 1-149, 1-151, 1-153 1-177, 1-181, 1-193, 1-201, 1-221, 1-285, 1-287, 1-289, 1-305, 1-351, 2-25, 2-27, 2-29, 2-39 2-121, 2-193, 5-11, 5-13, 5-19, 5-21, 5-29, 5-31, 5-33, 5-45, 5-47, 5-49, 5-65, 5-67, 5-83, 5-85 5-87, 5-89, 5-91, 5-93, 5-129, 5-131, 5-137, 5-139, 5-215, 5-235, 5-237, 5-239, 5-241, 5-243 5-245, 5-257, 5-261, 5-263, 6-29, 6-49, 7-9, 7-31, 7-45, 7-47, 7-59, 7-95, 7-97, 7-99, 7-105, 7-109 ..... 7-111, 8-57, 10-63
312105-0452 ..	SCREW M6S ISO 4017 M8X22 A4 80	1-75, 1-77, 1-79, 1-97, 1-99, 1-123, 1-125, 1-175, 2-103 ..... 2-105, 4-181, 4-183, 5-137, 5-139, 7-21, 7-45, 7-47
312105-0453 ..	SCREW M6S ISO 4017 M8X25 A480	1-75, 1-77, 1-79, 1-129, 1-131, 1-183, 1-185, 1-187, 1-193 1-197, 1-199, 1-201, 1-203, 1-207, 1-219, 1-249, 1-285, 1-299, 1-301, 2-11, 2-19, 2-21, 2-25, 2-69 2-73, 4-197, 4-205, 4-207, 4-215, 4-217, 4-225, 4-227, 5-5, 5-7, 5-23, 5-25, 5-29, 5-31, 5-33, 5-45 5-47, 5-49, 5-65, 5-67, 5-69, 5-113, 5-115, 5-129, 5-131, 5-193, 5-215, 5-257, 5-261, 5-263, 6-9 ..... 6-27, 6-41, 6-43, 7-45, 7-47, 7-57, 7-117, 7-125
312105-0455 ..	SCREW M6S ISO 4017 M8X30 A480	1-15, 1-17, 1-129, 1-131, 1-193, 1-213, 1-215, 1-217 1-281, 1-285, 1-307, 1-309, 2-69, 2-73, 4-167, 4-169, 4-175, 4-177, 4-179, 4-201, 4-203, 4-205 4-207, 4-211, 4-213, 4-215, 4-217, 5-15, 5-45, 5-47, 5-49, 5-137, 5-139, 5-145, 5-147, 5-185 5-195, 5-197, 5-199, 5-203, 5-205, 5-207, 5-209, 5-211, 5-213, 5-235, 5-237, 5-239, 5-241, 5-243 ..... 5-245, 5-251, 5-253, 7-21, 7-55, 10-17, 10-19, 10-71
312105-0457 ..	SCREW M6S ISO 4014 M8X35 A480	2-13, 4-167, 4-169, 4-175, 4-177, 4-179, 5-29, 5-31, 5-33 5-129, 5-131, 5-145, 5-147, 5-203, 5-205, 5-207, 5-209, 5-211, 5-213, 5-235, 5-237, 5-239, 5-241 ..... 5-243, 5-245, 5-251, 5-253
312105-0459 ..	SCREW M6S ISO 4014 M8X40 A480	..... 5-203, 5-205, 5-207, 5-209, 5-211, 5-213, 10-73
312105-0460 ..	SCREW M6S ISO 4014 M8X45 A480	4-81, 4-83, 4-85, 4-105, 4-107, 4-109, 4-111, 4-129, 4-131 ..... 4-133, 4-149, 4-151, 4-153, 4-155
312105-0461 ..	SCREW M6S ISO 4014 M8X50 A480	..... 5-45, 5-47, 5-49
312105-0462 ..	SCREW M6S ISO 4014 M8X55 A480	1-47, 1-49, 1-51, 1-85, 1-87, 1-281, 4-237, 5-45, 5-47 ..... 5-49, 5-145, 5-147
312105-0463 ..	SCREW M6S ISO 4014 M8X60 A480	..... 4-197, 5-45, 5-47, 5-49, 5-137, 5-139
312105-0464 ..	SCREW M6S ISO 4014 M8X65 A480	2-87, 4-175, 4-177, 4-179, 5-15, 5-45, 5-47, 5-49, 5-137 ..... 5-139, 5-203, 5-205, 5-207, 5-209, 5-211, 5-213
312105-0465 ..	SCREW M6S ISO 4014 M8X70 A480	5-35, 5-37, 5-45, 5-47, 5-49, 5-145, 5-147, 5-203, 5-205 ..... 5-207, 5-209, 5-211, 5-213
312105-0466 ..	SCREW M6S ISO 4014 M8X75 A480	2-31, 5-35, 5-37, 5-45, 5-47, 5-49, 5-145, 5-147, 5-203

Part No	Description	Page No
		5-205, 5-207, 5-209, 5-211, 5-213
312105-0467 ..	SCREW M6S ISO 4014 M8X80 A480	2-73, 5-35, 5-37, 5-45, 5-47, 5-49, 5-137, 5-139, 5-145
		5-147, 5-203, 5-205, 5-207, 5-209, 5-211, 5-213
312105-0469 ..	SCREW M6S ISO 4014 M8X90 A480	4-113, 4-157, 5-35, 5-37, 5-45, 5-47, 5-49, 5-75, 5-77, 5-79
		5-137, 5-139, 5-145, 5-147
312105-0471 ..	SCREW M6S ISO 4014 M8X100 A480	5-63, 5-203, 5-205, 5-207, 5-209, 5-211, 5-213
312105-0475 ..	SCREW M6S ISO 4014 M8X120 A480	5-59, 5-61, 5-63, 5-69
312105-0489 ..	SCREW M6S ISO 4017 M10X16 A480	1-15, 1-17, 5-5, 5-7, 10-67, 10-91
312105-0491 ..	SCREW M6S ISO 4017 M10X20 A480	1-181, 1-267, 1-299, 1-301, 2-179, 2-181, 7-41, 7-43, 10-73
312105-0493 ..	SCREW M6S ISO 4017 M10X25 A480	1-29, 1-31, 1-53, 1-55, 1-181, 1-299, 1-301, 5-185, 10-63
312105-0495 ..	SCREW M6S ISO 4017 M10X30 A480	1-47, 1-49, 1-51, 1-85, 1-87, 1-181, 1-201, 1-213, 1-215
		1-217, 2-171, 2-179, 2-181, 2-189, 2-191, 2-193, 5-5, 5-7, 5-15, 5-69, 5-71, 5-75, 5-77, 5-79, 5-145
		5-147, 5-257, 5-261, 5-263, 6-49, 7-31, 10-7
312105-0497 ..	SCREW M6S ISO 4017 M10X35 A480	3-13, 3-29, 7-33, 7-35, 7-123, 7-129
312105-0499 ..	SCREW M6S ISO 4014 M10X40 A480	5-215, 6-41, 6-43, 7-41, 7-43
312105-0503 ..	SCREW M6S ISO 4014 M10X60 A480	9-3
312105-0505 ..	SCREW M6S ISO 4014 M10X70 A480	1-299, 1-301
312105-0506 ..	SCREW M6S ISO 4014 M10X75 A480	2-173, 2-175, 2-179, 2-181
312105-0507 ..	SCREW M6S ISO 4014 M10X80 A480	5-69, 10-67
312105-0511 ..	SCREW M6S ISO 4014 M10X100 A480	5-63
312105-0513 ..	SCREW M6S ISO 4014 M10X110 A480	5-59, 5-61
312105-0517 ..	SCREW M6S ISO 4014 M10X130 A480	1-297, 5-59, 5-61
312105-0534 ..	SCREW M6S ISO 4017 M12X25 A480	8-25, 10-43
312105-0536 ..	SCREW M6S ISO 4017 M12X30 A480	1-15, 1-17, 2-189, 2-191
312105-0538 ..	SCREW M6S ISO 4017 M12X35 A480	1-15, 1-17, 8-25, 10-91
312105-0542 ..	SCREW M6S ISO 4014 M12X50 A480	3-7, 3-9, 6-41, 6-43
312105-0546 ..	SCREW M6S ISO 4014 M12X70 A480	3-7, 3-9
312105-0548 ..	SCREW M6S ISO 4014 M12X80 A480	7-45, 7-47
312105-0550 ..	SCREW M6S ISO 4014 M12X90 A480	4-197
312105-0552 ..	SCREW M6S ISO 4014 M12X100 A480	2-65
312105-0622 ..	SCREW M6S ISO 4017 M16X25 A480	2-189, 2-191
312105-0629 ..	SCREW M6S ISO 4017 M16X45 A480	2-179, 2-181
312105-0631 ..	SCREW M6S ISO 4014 M16X55 A480	2-65, 5-215
312105-0633 ..	SCREW M6S ISO 4014 M16X65 A480	2-179, 2-181
312105-0634 ..	SCREW M6S ISO 4014 M16X70 A480	10-79, 10-91
312105-0638 ..	SCREW M6S ISO 4014 M16X90 A480	2-9, 2-119
312105-0640 ..	SCREW M6S ISO 4014 M16X100 A480	7-45, 7-47
312105-0674 ..	SCREW M6S ISO 4017 M20X50 A480	2-179, 2-181
312109-0335 ..	SCREW M6S ISO 4017 M5X30 A480	4-233
312109-0374 ..	SCREW M6S ISO 4017 M6X30 A480	1-167, 2-19, 2-21, 2-67, 2-273, 2-275, 3-15, 3-31, 5-103
		5-105, 5-107, 5-109, 5-111, 5-165, 5-167, 5-171, 5-173, 5-177, 5-179, 5-261, 5-263, 7-11, 7-87
		7-109, 7-111, 7-121, 7-131, 10-85
312109-0376 ..	SCREW M6S ISO 4017 M6X35 A480	1-245, 1-247, 1-319, 1-335, 1-343, 2-49, 2-131, 2-133
		5-103, 5-105, 5-107, 5-109, 5-111, 5-165, 5-167, 5-185, 7-109, 7-111
312109-0378 ..	SCREW M6S ISO 4017 M6X40 A480	2-171, 2-179, 2-181, 2-273, 2-275, 4-225, 4-227, 5-69, 7-173
312109-0380 ..	SCREW M6S ISO 4017 M6X50 A480	2-33, 6-29
312109-0386 ..	SCREW M6S ISO 4017 M6X80 A480	7-117, 7-125, 10-13
312109-0457 ..	SCREW M6S ISO 4017 M8X35 A480	1-193, 1-221, 5-45, 5-47, 5-49, 5-145, 5-147, 5-203, 5-205
		5-207, 5-209, 5-211, 5-213, 6-49
312109-0459 ..	SCREW M6S ISO 4017 M8X40 A480	1-33, 1-35, 1-37, 1-59, 1-61, 1-63, 1-85, 1-87, 1-129
		1-131, 4-205, 4-207, 4-215, 4-217, 5-203, 5-205, 5-207, 5-209, 5-211, 5-213, 7-9, 10-63
312109-0460 ..	SCREW M6S ISO 4017 M8X45 A480	1-33, 1-35, 1-37, 1-59, 1-61, 1-63, 4-199, 4-209, 5-5, 5-7
		5-145, 5-147, 5-203, 5-205, 5-207, 5-209, 5-211, 5-213, 5-235, 5-237, 5-239, 5-241, 5-243, 5-245
312109-0461 ..	SCREW M6S ISO 4017 M8X50 A480	1-47, 1-49, 1-51, 1-85, 1-87, 5-45, 5-47, 5-49, 5-203
		5-205, 5-207, 5-209, 5-211, 5-213
312109-0463 ..	SCREW M6S ISO 4017 M8X60 A480	5-185, 5-203, 5-205, 5-207, 5-209, 5-211, 5-213, 5-257
		5-261, 5-263
312109-0499 ..	SCREW M6S ISO 4017 M10X40 A480	2-79, 3-15, 3-31, 5-257, 5-261, 5-263, 5-267, 10-91
312109-0500 ..	SCREW M6S ISO 4017 M10X45 A480	5-257
312109-0501 ..	SCREW M6S ISO 4017 M10X50 A480	5-267, 7-109, 7-111
312109-0544 ..	SCREW M6S ISO 4017 M12X60 A480	2-19, 2-21
312111-0297 ..	SCREW HEX.SOCK.HD.MC6S-TT 4X25 88 FZB	8-25
312111-0327 ..	SCREW HEX.SOCK.HD.MC6S-TT 5X12 88 FZB	10-65
312111-0366 ..	SCREW HEX.SOCK.HD.MC6S-TT 6X12 88 FZB	8-59, 8-67, 8-69, 8-77, 8-79, 10-63
312111-0497 ..	SCREW HEX.SOCK.HD.MC6S-TT 10X35 88 FZ	10-63
312111-0501 ..	SCREW HEX.SOCK.HD.MC6S-TT 10X50 88 FZ	10-65
312111-0630 ..	SCREW HEX.SOCK.HD.MC6S-TT 16X50 88 FZ	2-171, 2-173, 2-175, 2-179, 2-181, 2-187
		2-189, 2-191
312115-0222 ..	SCREW ISO4762 M3X8 A4 80	2-107, 2-109, 2-111, 4-239, 4-241, 4-243
312115-0226 ..	SCREW ISO4762 M3X12 A4 80	5-187, 5-189, 5-191
312115-0228 ..	SCREW ISO4762 M3X16 A4 80	1-313, 1-315, 5-257, 5-261, 5-263, 7-27
312115-0230 ..	SCREW ISO4762 M3X20 A4 80	3-23, 5-187, 5-189, 5-191, 5-235, 5-237, 5-239, 5-241, 5-243
		5-245, 10-49
312115-0285 ..	SCREW ISO4762 M4X6 A4 80	4-81, 4-83, 4-85, 4-105, 4-107, 4-109, 4-111, 4-129, 4-131
		4-133, 4-149, 4-151, 4-153, 4-155
312115-0287 ..	SCREW ISO4762 M4X8 A4 80	1-221, 1-251, 4-51, 4-53, 4-55, 4-57, 4-61, 4-63, 4-65, 4-67, 7-85
312115-0289 ..	SCREW ISO4762 M4X10 A4 80	3-13, 3-29, 4-51, 4-53, 4-55, 4-57, 4-61, 4-63, 4-65, 4-67
312115-0291 ..	SCREW ISO4762 M4X12 A4 80	1-207, 1-239, 2-33, 3-19, 3-33, 4-51, 4-53, 4-55, 4-57, 4-61
		4-63, 4-65, 4-67, 4-167, 4-169, 5-119, 5-121, 5-125, 7-55, 7-101, 7-103, 7-107, 7-133, 7-135
		7-137, 7-139, 7-141, 7-181
312115-0293 ..	SCREW ISO4762 M4X16 A4 80	1-15, 1-17, 4-51, 4-53, 4-55, 4-57, 4-61, 4-63, 4-65, 4-67, 4-167
		4-169, 5-281
312115-0295 ..	SCREW ISO4762 M4X20 A4 80	1-249, 7-99
312115-0297 ..	SCREW ISO4762 M4X25 A4 80	1-19, 4-93, 4-95, 4-97, 4-139, 4-141, 4-143, 5-247, 5-249, 9-5

Part No	Description	Page No
312115-0305 ..	SCREW ISO4762 M4X50 A4 80	1-225, 1-335, 1-343, 4-93, 4-95, 4-97, 4-139, 4-141, 4-143
312115-0323 ..	SCREW ISO4762 M5X8 A4 80	1-395, 4-51, 4-53, 4-55, 4-57, 4-61, 4-63, 4-65, 4-67, 7-79, 7-85
312115-0325 ..	SCREW ISO4762 M5X10 A4 80	1-169, 1-171, 4-115, 4-117, 4-119, 4-121
312115-0327 ..	SCREW ISO4762 M5X12 A4 80	1-169, 1-171, 1-335, 1-343, 1-395, 1-397, 2-49, 2-131, 2-133 2-187, 2-193, 2-219, 2-221, 2-235, 2-237, 2-253, 2-255, 2-257, 4-81, 4-83, 4-85, 4-93, 4-95, 4-97 4-115, 4-117, 4-119, 4-121, 4-129, 4-131, 4-133, 4-139, 4-141, 4-143, 5-157, 5-159, 6-49, 6-57 6-61, 6-65, 7-21, 7-117, 7-121, 7-125, 7-131, 7-207, 7-209, 7-217, 7-221, 8-77, 8-79, 10-43
312115-0328 ..	SCREW ISO4762 M5X14 A4	7-105
312115-0329 ..	SCREW ISO4762 M5X16 A4 80	1-287, 1-289, 4-27, 4-29, 4-39, 4-41, 4-93, 4-95, 4-97, 4-115 4-117, 4-119, 4-121, 4-139, 4-141, 4-143, 4-199, 4-209, 5-195, 5-197, 5-199, 7-45, 7-47, 7-117 7-125, 8-31, 8-33, 8-35, 8-37
312115-0331 ..	SCREW ISO4762 M5X20 A4 80	1-7, 1-9, 1-109, 1-115, 1-119, 1-121, 1-169, 1-171, 1-177, 2-33 2-79, 4-115, 4-117, 4-119, 4-121, 7-107, 7-143, 7-145, 7-147, 7-149, 7-151, 7-153
312115-0333 ..	SCREW ISO4762 M5X25 A4 80	5-157, 5-159, 5-195, 5-197, 5-199, 6-23, 7-105
312115-0335 ..	SCREW ISO4762 M5X30 A4 80	7-85
312115-0337 ..	SCREW ISO4762 M5X35 A4 80	2-173, 2-175, 2-179, 2-181
312115-0339 ..	SCREW ISO4762 M5X40 A4 80	2-99
312115-0340 ..	SCREW ISO4762 M5X45 A4 80	2-99, 2-149, 2-151
312115-0362 ..	SCREW ISO4762 M6X8 A4 80	2-255, 2-257
312115-0364 ..	SCREW ISO4762 M6X10 A4 80	2-33, 6-31, 6-67, 7-71
312115-0366 ..	SCREW ISO4762 M6X12 A4 80	1-111, 1-395, 1-397, 4-27, 4-29, 4-39, 4-41, 4-51, 4-53, 4-55 4-57, 4-61, 4-63, 4-65, 4-67, 4-225, 4-227, 5-11, 5-13, 7-7, 7-41, 7-43, 7-83, 7-95, 7-97, 7-109 7-111, 8-31, 8-33, 8-35, 8-37
312115-0367 ..	SCREW ISO4762 M6X14 A4 80	4-7, 4-9, 4-11, 4-17, 4-19, 4-21, 4-27, 4-29, 4-39, 4-41, 7-161 7-163, 7-165
312115-0368 ..	SCREW ISO4762 M6X16 A4 80	1-105, 1-107, 2-65, 3-7, 3-9, 3-13, 3-29, 4-27, 4-29, 4-39, 4-41 4-51, 4-53, 4-55, 4-57, 4-61, 4-63, 4-65, 4-67, 4-225, 4-227, 4-239, 4-241, 5-145, 5-147, 5-195 5-197, 5-199, 6-13, 6-15, 6-17, 7-33, 7-35, 7-75, 7-97, 7-105, 7-115, 7-179
312115-0370 ..	SCREW ISO4762 M6X20 A4 80	1-115, 1-255, 1-287, 1-289, 5-113, 5-115, 5-235, 5-237, 5-239 5-241, 5-243, 5-245, 6-67, 7-21, 7-95, 7-99, 7-101, 7-103, 7-107, 7-121, 7-131, 7-173, 7-175
312115-0372 ..	SCREW ISO4762 M6X25 A4 80	1-293, 1-351, 2-55, 2-79, 2-97, 2-155, 2-157, 4-27, 4-29, 4-39 4-41, 4-91, 4-221, 5-157, 5-159, 5-247, 5-249, 7-105, 7-183, 7-185
312115-0374 ..	SCREW ISO4762 M6X30 A4 80	1-11, 1-307, 1-309, 1-355, 1-357, 5-145, 5-147, 6-31, 7-41, 7-43 7-101, 7-103, 7-173
312115-0376 ..	SCREW ISO4762 M6X35 A4 80	3-15, 3-31, 7-33, 7-35, 7-107, 7-159, 7-161, 7-163, 7-165
312115-0378 ..	SCREW ISO4762 M6X40 A4 80	4-27, 4-29, 4-39, 4-41, 5-195, 5-197, 5-199, 7-37, 7-155, 7-157, 10-65
312115-0379 ..	SCREW ISO4762 M6X45 A4 80	4-115, 4-117, 4-119, 4-121
312115-0380 ..	SCREW ISO4762 M6X50 A4 80	4-91, 7-31
312115-0447 ..	SCREW ISO4762 M8X12 A4 80	2-187, 4-81, 4-83, 4-85, 4-129, 4-131, 4-133
312115-0449 ..	SCREW ISO4762 M8X16 A4 80	5-29, 5-31, 5-33, 5-129, 5-131, 5-145, 5-147, 7-7, 7-77, 7-97 7-117, 7-125, 7-133, 7-135, 7-137, 7-139, 7-141
312115-0451 ..	SCREW ISO4762 M8X20 A4 80	3-19, 3-33, 4-199, 4-209, 4-225, 4-227, 5-63, 7-7, 7-133, 7-135 7-137, 7-139, 7-141
312115-0453 ..	SCREW ISO4762 M8X25 A4 80	1-115, 1-287, 1-289, 6-45, 7-77
312115-0455 ..	SCREW ISO4762 M8X30 A4 80	5-215
312115-0457 ..	SCREW ISO4762 M8X35 A4 80	4-91, 7-9, 7-31
312115-0459 ..	SCREW ISO4762 M8X40 A4 80	4-91
312115-0460 ..	SCREW ISO4762 M8X45 A4 80	7-31
312115-0461 ..	SCREW ISO4762 M8X50 A4 80	4-91
312115-0463 ..	SCREW ISO4762 M8X60 A4 80	7-45, 7-47
312115-0465 ..	SCREW ISO4762 M8X70 A4 80	4-205, 4-207, 4-215, 4-217, 7-105
312115-0467 ..	SCREW ISO4762 M8X80 A4 80	7-105
312115-0489 ..	SCREW ISO4762 M10X16 A4 80	7-183, 7-185
312115-0491 ..	SCREW ISO4762 M10X20 A4 80	2-145
312115-0497 ..	SCREW ISO4762 M10X35 A4 80	1-303, 5-65, 5-67, 5-69
312115-0499 ..	SCREW ISO4762 M10X40 A4 80	2-143
312115-0500 ..	SCREW ISO4762 M10X45 A4 80	5-69
312115-0501 ..	SCREW ISO4762 M10X50 A4 80	2-9, 7-97
312115-0541 ..	SCREW ISO4762 M12X45 A4 80	1-59, 1-61, 1-63
312115-0546 ..	SCREW ISO4762 M12X70 A4 80	2-171, 2-179, 2-181, 2-187
312115-0630 ..	SCREW ISO4762 M16X50 A4 80	1-297
312115-0634 ..	SCREW ISO4762 M16X70 A4 80	2-179, 2-181
312121-0285 ..	SCREW ISO 1207 M4X6 4.8 - 5.8 Z.PL.	7-27, 8-81
312121-0289 ..	SCREW ISO 1207 M4X10 4.8 - 5.8 Z.PL.	8-25, 8-59, 8-61, 8-65, 8-67, 8-69, 8-73, 8-77, 8-79, 8-81
312121-0321 ..	SCREW ISO 1207 M5X6 4.8 - 5.8 Z.PL.	8-47, 8-51, 8-53, 8-55, 8-67, 8-69, 8-71, 8-73, 8-83 8-91, 8-93, 8-95
312121-0323 ..	SCREW ISO 1207 M5X8 4.8 - 5.8 Z.PL.	8-25, 8-77, 8-79
312121-0364 ..	SCREW ISO 1207 M6X10 4.8 - 5.8 Z.PL.	2-55, 2-97, 2-155, 2-157
312121-0366 ..	SCREW ISO 1207 M6X12 4.8 - 5.8 Z.PL.	8-67, 8-69
312125-0220 ..	SCREW ISO 1207 M3X6 A4	2-41, 2-49, 2-131, 2-133, 6-19, 7-45, 7-47
312125-0222 ..	SCREW ISO 1207 M3X8 A4	1-307, 1-309, 2-77, 2-149, 2-151, 7-7, 7-75, 7-177, 7-217, 7-221 8-39, 8-41, 8-43, 8-77, 8-79
312125-0226 ..	SCREW ISO 1207 M3X12 A4	2-107, 2-109, 2-111
312125-0228 ..	SCREW ISO 1207 M3X16 A4	1-149, 1-151, 1-153, 1-169, 1-171, 1-273, 2-149, 2-151, 5-215
312125-0230 ..	SCREW ISO 1207 M3X20 A4	1-231, 2-95, 5-5, 5-7, 7-75
312125-0232 ..	SCREW ISO 1207 M3X25 A4	2-41, 8-59, 8-77, 8-79
312125-0234 ..	SCREW ISO 1207 M3X30 A4	5-5, 5-7
312125-0285 ..	SCREW ISO 1207 M4X6 A4	1-193, 1-197, 1-319, 2-19, 2-21, 2-87, 7-21, 7-45, 7-47, 7-71, 7-73 7-75, 7-109, 7-111, 7-177, 8-97, 8-99, 8-111
312125-0287 ..	SCREW ISO 1207 M4X8 A4	1-219, 1-299, 1-301, 1-307, 1-309, 2-95, 2-149, 2-151, 5-235 5-237, 5-239, 5-241, 5-243, 5-245, 5-257, 5-261, 5-263, 5-281, 6-11, 6-49, 6-77, 7-13, 7-27, 7-31 7-59, 7-75, 7-79, 7-83, 7-95, 7-159, 7-173
312125-0289 ..	SCREW ISO 1207 M4X10 A4	3-13, 3-29, 6-13, 6-15, 8-25, 8-39, 8-41, 8-43, 8-57, 8-77, 8-79 8-97, 8-99

Part No	Description	Page No
312125-0291 ..	SCREW ISO 1207 M4X12 A4	7-79, 7-85
312125-0295 ..	SCREW ISO 1207 M4X20 A4	4-93, 4-95, 4-97, 4-139, 4-141, 4-143, 9-5
312125-0297 ..	SCREW ISO 1207 M4X25 A4	5-279, 7-177
312125-0299 ..	SCREW ISO 1207 M4X30 A4	2-87, 5-275
312125-0303 ..	SCREW ISO 1207 M4X40 A4	1-355, 1-357
312125-0323 ..	SCREW ISO 1207 M5X8 A4	1-201, 1-207, 1-235, 1-237, 1-239
312125-0325 ..	SCREW ISO 1207 M5X10 A4	1-355, 1-357, 8-89, 8-97, 8-99
312125-0327 ..	SCREW ISO 1207 M5X12 A4	2-79, 5-257, 5-261, 5-263, 10-71
312125-0331 ..	SCREW ISO 1207 M5X20 A4	1-201
312125-0335 ..	SCREW ISO 1207 M5X30 A4	8-97, 8-99
312125-0339 ..	SCREW ISO 1207 M5X40 A4	2-49
312125-0341 ..	SCREW ISO 1207 M5X50 A4	2-49
312125-0364 ..	SCREW ISO 1207 M6X10 A4	1-129, 1-131, 1-281, 1-355, 1-357, 2-57, 2-59, 2-107, 2-109, 2-111, 2-197, 2-199, 3-13, 3-29
312125-0366 ..	SCREW ISO 1207 M6X12 A4	1-15, 1-17, 1-227, 1-293, 1-299, 1-301, 1-351, 2-179, 2-181
312125-0370 ..	SCREW ISO 1207 M6X20 A4	2-27
312125-0374 ..	SCREW ISO 1207 M6X30 A4	1-227
312125-0376 ..	SCREW ISO 1207 M6X35 A4	7-75, 8-97, 8-99
312132-0284 ..	SCREW SLOT. PAN HEAD MSCS M4X5	5-187, 5-189, 5-191
312132-0287 ..	SCREW SLOT. PAN HEAD MSCS M4X8	8-97, 8-99
312132-0289 ..	SCREW SLOT. PAN HEAD MSCS M4X10	2-77, 6-17
312141-0222 ..	SCREW ISO 2009 MFS M3X8 4.8 EL.PL	4-51, 4-53, 4-55, 4-57, 4-61, 4-63, 4-65, 4-67
312145-0222 ..	SCREW ISO 2009 MFS M3X8 A4	1-169, 1-171
312145-0224 ..	SCREW ISO 2009 MFS M3X10 A4	1-169, 1-171
312145-0226 ..	SCREW ISO 2009 MFS M3X12 A4	7-105
312145-0228 ..	SCREW ISO 2009 MFS M3X16 A4	1-249
312145-0234 ..	SCREW ISO 2009 MFS M3X30 A4	4-115, 4-117, 4-119, 4-121
312145-0238 ..	SCREW ISO 2009 MFS M3X40 A4	4-115, 4-117, 4-119, 4-121
312145-0285 ..	SCREW ISO 2009 MFS M4X6 A4	8-51, 8-53, 8-55
312145-0287 ..	SCREW ISO 2009 MFS M4X8 A4	4-7, 4-9, 4-11, 4-17, 4-19, 4-21, 4-75, 4-201, 4-203, 4-205, 4-207, 4-211, 4-213, 4-215, 4-217, 7-117, 7-125
312145-0289 ..	SCREW ISO 2009 MFS M4X10 A4	4-7, 4-9, 4-11, 4-17, 4-19, 4-21, 4-51, 4-53, 4-55, 4-57, 4-61, 4-63, 4-65, 4-67, 4-73, 4-75, 4-79, 5-235, 5-237, 5-239, 5-241, 5-243, 5-245
312145-0291 ..	SCREW ISO 2009 MFS M4X12 A4	4-7, 4-9, 4-11, 4-17, 4-19, 4-21
312145-0323 ..	SCREW ISO 2009 MFS M5X8 A4	4-81, 4-83, 4-85, 4-105, 4-107, 4-109, 4-111, 4-129, 4-131, 4-133, 4-149, 4-151, 4-153, 4-155
312145-0327 ..	SCREW ISO 2009 MFS M5X12 A4	7-45, 7-47
312145-0329 ..	SCREW ISO 2009 MFS M5X16 A4	4-51, 4-53, 4-55, 4-57, 4-61, 4-63, 4-65, 4-67
312145-0380 ..	SCREW ISO 2009 MFS M6X50 A4	10-71
312151-0368 ..	SCREW EN 10642 MF6S M6X16 10.9 EL.PL	5-257, 5-261, 5-263
312151-0451 ..	SCREW EN 10642 MF6S M8X20 10.9 EL.PL	5-19
312155-0220 ..	SCREW DIN 7991 MF6S M3X6 A4 70	7-85
312155-0226 ..	SCREW DIN 7991 MF6S M3X12 A4 70	7-85, 7-121, 7-131
312155-0285 ..	SCREW DIN 7991 MF6S M4X6 A4 70	4-115, 4-117, 4-119, 4-121, 10-9
312155-0287 ..	SCREW DIN 7991 MF6S M4X8 A4 70	4-51, 4-53, 4-55, 4-57, 4-61, 4-63, 4-65, 4-67, 4-93, 4-95, 4-97, 4-105, 4-107, 4-109, 4-111, 4-115, 4-117, 4-119, 4-121, 4-139, 4-141, 4-143, 4-149, 4-151, 4-153, 4-155, 5-23, 5-25, 5-113, 5-115, 5-125, 5-247, 5-249, 7-105, 7-117, 7-125
312155-0289 ..	SCREW DIN 7991 MF6S M4X10 A4 70	2-253, 4-7, 4-9, 4-11, 4-17, 4-19, 4-21, 5-23, 5-25, 5-75, 5-77, 5-79, 5-235, 5-237, 5-239, 5-241, 5-243, 5-245, 5-247, 5-249, 7-21, 7-83, 7-105
312155-0291 ..	SCREW DIN 7991 MF6S M4X12 A4 70	2-253, 3-15, 3-31, 7-107
312155-0293 ..	SCREW DIN 7991 MF6S M4X16 A4 70	5-247, 5-249
312155-0295 ..	SCREW DIN 7991 MF6S M4X20 A4 70	4-167, 4-169, 7-19
312155-0297 ..	SCREW DIN 7991 MF6S M4X25 A4 70	5-185, 7-19
312155-0299 ..	SCREW DIN 7991 MF6S M4X30 A4 70	7-19
312155-0323 ..	SCREW DIN 7991 MF6S M5X8 A4 70	2-73, 4-51, 4-53, 4-55, 4-57, 4-61, 4-63, 4-65, 4-67, 4-81, 4-83, 4-85, 4-105, 4-107, 4-109, 4-111, 4-129, 4-131, 4-133, 4-149, 4-151, 4-153, 4-155, 5-165, 5-167, 5-259, 5-265, 7-87, 7-107, 10-13
312155-0325 ..	SCREW DIN 7991 MF6S M5X10 A4 70	1-105, 1-107, 1-175, 1-397, 4-51, 4-53, 4-55, 4-57, 4-61, 4-63, 4-65, 4-67, 4-93, 4-95, 4-97, 4-139, 4-141, 4-143
312155-0327 ..	SCREW DIN 7991 MF6S M5X12 A4 70	4-51, 4-53, 4-55, 4-57, 4-61, 4-63, 4-65, 4-67, 4-73, 4-79 . 4-201, 4-203, 4-211, 4-213, 5-119, 5-121, 5-125, 5-235, 5-237, 5-239, 5-241, 5-243, 5-245, 7-99
312155-0329 ..	SCREW DIN 7991 MF6S M5X16 A4 70	1-7, 1-9, 1-109, 1-119, 1-121, 1-177, 2-65, 5-83, 5-85, 5-87, 5-89, 5-91
312155-0331 ..	SCREW DIN 7991 MF6S M5X20 A4 70	7-65
312155-0339 ..	SCREW DIN 7991 MF6S M5X40 A4 70	4-27, 4-29, 4-39, 4-41
312155-0364 ..	SCREW DIN 7991 MF6S M6X10 A4 70	1-111, 7-119, 7-127
312155-0366 ..	SCREW DIN 7991 MF6S M6X12 A4 70	5-71, 5-145, 5-147, 7-45, 7-47, 7-81, 7-107, 10-63
312155-0368 ..	SCREW DIN 7991 MF6S M6X16 A4 70	2-273, 2-275, 5-59, 5-61, 7-11, 7-187, 10-13
312155-0370 ..	SCREW DIN 7991 MF6S M6X20 A4 70	5-23, 5-25, 5-113, 5-115, 7-21, 7-65
312155-0376 ..	SCREW DIN 7991 MF6S M6X35 A4 70	5-23, 5-25
312155-0378 ..	SCREW DIN 7991 MF6S M6X40 A4 70	2-253, 5-23, 5-25, 5-75, 5-77, 5-79
312155-0379 ..	SCREW DIN 7991 MF6S M6X45 A4 70	5-113, 5-115
312155-0380 ..	SCREW DIN 7991 MF6S M6X50 A4 70	5-23, 5-25
312155-0449 ..	SCREW DIN 7991 MF6S M8X16 A4 70	1-41, 1-43, 5-83, 5-85, 5-87, 5-89, 5-91, 5-137, 5-139, 5-263, 7-11, 7-77
312155-0451 ..	SCREW DIN 7991 MF6S M8X20 A4 70	7-11
312155-0453 ..	SCREW DIN 7991 MF6S M8X25 A4 70	2-73, 5-71, 5-235, 5-237, 5-239, 5-241, 5-243, 5-245
312155-0455 ..	SCREW DIN 7991 MF6S M8X30 A4 70	5-145, 5-147
312155-0459 ..	SCREW DIN 7991 MF6S M8X40 A4 70	5-45, 5-47, 5-49, 5-145, 5-147
312155-0461 ..	SCREW DIN 7991 MF6S M8X50A4 70	5-145, 5-147
312155-0491 ..	SCREW DIN 7991 MF6S M10X20 A4 70	7-31
312155-0493 ..	SCREW DIN 7991 MF6S M10X25 A4 70	7-45, 7-47
312155-0495 ..	SCREW DIN 7991 MF6S M10X30 A4 70	5-185, 5-257, 5-261, 5-263
312155-0499 ..	SCREW DIN 7991 MF6S M10X40 A4 70	5-23, 5-25, 5-113, 5-115

Part No	Description	Page No
312155-0540 ..	SCREW DIN 7991 MF6S M12X40 A4 70	5-185
312156-0370 ..	SCREW EN 10642 MF6S M6X20 A470	1-297
312180-0364 ..	SCREW ISO7379 H6X10	3-15, 3-31
312180-0366 ..	SCREW ISO7379 H6X12	7-15, 7-17, 7-187
312180-0491 ..	SCREW ISO7379 H10X20	7-101, 7-103
312180-0534 ..	SCREW ISO7379 H12X25	1-297
312230-0150 ..	SCREW HEX.HEAD WOOD T6S 10X160 SS	1-399
312306-0546 ..	SCREW ISO4026 M12X70 FZB	10-55
312311-0327 ..	SCREW ISO4028 M5X12 FZB	2-143
312311-0329 ..	SCREW ISO4028 M5X16 FZB	1-299, 1-301
312311-0370 ..	SCREW ISO4028 M6X20 FZB	5-235, 5-237, 5-239, 5-241, 5-243, 5-245
312311-0372 ..	SCREW ISO4028 M6X25 FZB	7-173
312318-0220 ..	SCREW ISO4029 M3X6 A4	5-269, 7-179
312318-0283 ..	SCREW ISO4029 M4X4 A4	7-107, 7-173
312318-0284 ..	SCREW ISO4029 M4X5 A4	7-109, 7-111
312318-0285 ..	SCREW ISO4029 M4X6 A4	2-41, 4-7, 4-9, 4-11, 4-17, 4-19, 4-21, 4-51, 4-53, 4-55, 4-57, 4-59, 4-61, 4-63, 4-65, 4-67, 4-69, 4-73, 4-79, 5-195, 5-197, 5-199, 10-39
312318-0287 ..	SCREW ISO4029 M4X8 A4	1-311, 4-171, 4-173, 7-11, 7-93
312318-0289 ..	SCREW ISO4029 M4X10 A4	1-307, 1-309, 4-205, 4-207, 4-215, 4-217
312318-0320 ..	SCREW ISO4029 M5X5 A4	4-51, 4-53, 4-55, 4-57, 4-61, 4-63, 4-65, 4-67
312318-0321 ..	SCREW ISO4029 M5X6 A4	10-27, 10-29
312318-0323 ..	SCREW ISO4029 M5X8 A4	1-95, 3-19, 3-33, 4-51, 4-53, 4-55, 4-57, 4-61, 4-63, 4-65, 4-67, 4-187, 4-189, 5-15, 5-125
312318-0325 ..	SCREW ISO4029 M5X10 A4	2-247, 4-51, 4-53, 4-55, 4-57, 4-61, 4-63, 4-65, 4-67, 5-119, 5-121
312318-0327 ..	SCREW ISO4029 M5X12 A4	5-119, 5-121
312318-0329 ..	SCREW ISO4029 M5X16 A4	4-73, 4-79, 4-93, 4-95, 4-97, 4-139, 4-141, 4-143, 7-99
312318-0362 ..	SCREW ISO4029 M6X8 A4	1-133, 1-135, 1-137, 4-229, 4-231, 5-5, 5-7, 5-15, 7-21, 7-41, 7-43, 7-55, 7-117, 7-125
312318-0364 ..	SCREW ISO4029 M6X10 A4	2-13
312318-0366 ..	SCREW ISO4029 M6X12 A4	1-307, 1-309, 3-21, 7-23, 7-25, 7-93
312318-0368 ..	SCREW ISO4029 M6X16 A4	5-235, 5-237, 5-239, 5-241, 5-243, 5-245, 7-95, 7-173
312318-0370 ..	SCREW ISO4029 M6X20 A4	7-67, 8-59, 8-77, 8-79
312318-0372 ..	SCREW ISO4029 M6X25 A4	2-145
312318-0376 ..	SCREW ISO4029 M6X35 A4	1-169, 1-171
312318-0443 ..	SCREW ISO4029 M8X8 A4	1-117, 2-273, 2-275
312318-0445 ..	SCREW ISO4029 M8X10 A4	7-69
312318-0449 ..	SCREW ISO4029 M8X16 A4	4-201, 4-203, 4-205, 4-207, 4-211, 4-213, 4-215, 4-217
312318-0453 ..	SCREW ISO4029 M8X25 A4	1-303, 2-171, 2-173, 2-175, 2-179, 2-181, 2-189, 2-191
312318-0455 ..	SCREW ISO4029 M8X30 A4	7-45, 7-47
312502-0120 ..	DRIVE SCREW ROUND HEAD KDS 0X5	1-335, 1-343, 2-49, 2-131, 2-133, 6-69, 6-71, 6-75, 6-77
312502-0171 ..	DRIVE SCREW ROUND HEAD KDS 2X6	8-59
312503-0225 ..	TAPPING SCREW ISO 7049-ST2,9X9,5-C-Z	2-41
312503-0275 ..	TAPPING SCREW ISO 7049-ST3,5X6,5-C-Z	7-71
312601-0316 ..	HEXAGON NUT, DIN 934 M6 8 FZB	8-25
312601-0322 ..	HEXAGON NUT, DIN 934 M12 8 FZB	3-7, 3-9
312602-0312 ..	HEXAGON NUT, EN 24032 M6M M4 NIPLBR	1-269, 10-57, 10-59
312602-0316 ..	NUT, EN 24032 M6M M6 NIPLBR	10-85
312602-0318 ..	HEXAGON NUT, EN 24032 M6M M8 NIPLBR	10-85
312605-0310 ..	HEXAGON NUT, M6M M3 A280	1-231, 6-11, 7-75, 8-59, 8-77, 8-79, 8-97, 8-99
312605-0312 ..	HEXAGON NUT, M6M M4 A280	1-13, 1-41, 1-43, 1-169, 1-171, 1-197, 1-223, 1-287, 1-289, 1-313, 1-315, 1-319, 1-355, 1-357, 2-87, 2-229, 2-253, 2-273, 2-275, 4-103, 4-175, 4-177, 4-179, 4-205, 4-207, 4-215, 4-217, 5-201, 5-271, 5-273, 5-279, 7-19, 7-27, 7-75, 7-109, 7-111, 7-177, 7-201, 8-25, 8-39, 8-41, 8-43, 8-71, 8-97, 8-99, 8-111
312605-0314 ..	HEXAGON NUT, M6M M5 A280	1-13, 1-41, 1-43, 1-115, 1-123, 1-125, 1-129, 1-131, 1-199, 1-207, 1-299, 1-301, 1-313, 1-315, 1-319, 1-367, 1-369, 1-395, 2-253, 5-59, 5-61, 5-83, 5-85, 5-87, 5-89, 5-91, 5-97, 5-99, 5-279, 6-23, 6-75, 7-9, 7-13, 7-15, 7-17, 7-85, 7-117, 7-125, 7-199, 7-203, 7-215, 7-219, 8-97, 8-99, 10-49, 10-57, 10-59
312605-0316 ..	HEXAGON NUT, M6M M6 A280	1-13, 1-15, 1-17, 1-41, 1-43, 1-105, 1-107, 1-123, 1-125, 1-129, 1-131, 1-133, 1-135, 1-137, 1-139, 1-141, 1-143, 1-145, 1-147, 1-149, 1-151, 1-153, 1-155, 1-157, 1-159, 1-161, 1-163, 1-165, 1-167, 1-169, 1-171, 1-175, 1-181, 1-195, 1-205, 1-221, 1-253, 1-285, 1-287, 1-289, 1-335, 1-343, 1-351, 1-355, 1-357, 1-395, 1-399, 2-13, 2-27, 2-29, 2-33, 2-39, 2-49, 2-121, 2-131, 2-133, 2-145, 2-171, 2-187, 2-243, 2-265, 2-271, 2-273, 2-275, 4-105, 4-107, 4-109, 4-111, 4-149, 4-151, 4-153, 4-155, 4-167, 4-169, 4-175, 4-177, 4-179, 4-225, 4-227, 4-239, 4-241, 5-17, 5-29, 5-31, 5-33, 5-83, 5-85, 5-87, 5-89, 5-91, 5-103, 5-105, 5-107, 5-109, 5-111, 5-129, 5-131, 5-165, 5-167, 5-171, 5-173, 5-177, 5-179, 5-235, 5-237, 5-239, 5-241, 5-243, 5-245, 5-271, 5-273, 5-275, 6-11, 6-29, 6-75, 7-13, 7-21, 7-27, 7-53, 7-63, 7-75, 7-79, 7-85, 7-105, 7-107, 7-109, 7-111, 7-117, 7-121, 7-125, 7-131, 7-133, 7-135, 7-137, 7-139, 7-141, 7-155, 7-157, 7-159, 7-161, 7-163, 7-165, 7-173, 7-175, 7-183, 7-185, 7-187, 7-193, 7-217, 7-221, 8-25, 8-31, 8-33, 8-35, 8-37, 8-49, 8-97, 8-99, 10-9, 10-13, 10-57, 10-59
312605-0318 ..	HEXAGON NUT, M6M M8 A280	1-41, 1-43, 1-113, 1-123, 1-125, 1-183, 1-185, 1-187, 1-193, 1-197, 1-199, 1-201, 1-203, 1-207, 1-213, 1-215, 1-217, 1-221, 1-249, 1-269, 1-281, 1-285, 1-305, 1-307, 1-309, 2-25, 2-31, 2-39, 2-69, 2-87, 2-121, 2-193, 2-273, 2-275, 4-27, 4-29, 4-39, 4-41, 4-113, 4-157, 4-181, 4-183, 4-201, 4-203, 4-205, 4-207, 4-211, 4-213, 4-215, 4-217, 4-225, 4-227, 5-11, 5-13, 5-15, 5-17, 5-35, 5-37, 5-45, 5-47, 5-49, 5-65, 5-67, 5-69, 5-71, 5-137, 5-139, 5-145, 5-147, 5-235, 5-237, 5-239, 5-241, 5-243, 5-245, 5-257, 5-261, 5-263, 5-269, 6-41, 6-43, 6-45, 6-49, 7-45, 7-47, 7-59, 7-75, 7-117, 7-119, 7-125, 7-127, 7-133, 7-135, 7-137, 7-139, 7-141, 10-71, 10-73
312605-0320 ..	HEXAGON NUT, M6M M10 A280	1-201, 1-213, 1-215, 1-217, 1-313, 1-315, 2-33, 2-79, 5-5, 5-7, 5-63, 5-185, 5-267, 7-109, 7-111
312605-0322 ..	HEXAGON NUT, M6M M12 A280	1-149, 1-151, 1-153, 1-169, 1-171, 2-19, 2-21, 5-185, 9-3
312605-0324 ..	HEXAGON NUT, M6M M16 A280	2-189, 2-191, 2-193, 10-91
312605-0328 ..	HEXAGON NUT, M6M M24 A280	10-87
312607-0312 ..	HEXAGON NUT, EN 24032 M6M M4 A480	1-221, 7-39, 10-17, 10-19
312607-0314 ..	HEXAGON NUT, EN 24032 M6M M5 A480	2-49, 7-39
312607-0316 ..	HEXAGON NUT, EN 24032 M6M M6 A480	7-173

Part No	Description	Page No
312607-0318 ..	HEXAGON NUT, EN 24032 M6M M8 A480	4-73, 4-79
312625-0316 ..	HEXAGON THIN NUT, EN 24035 ML6M M6 A4	1-149, 1-151, 1-153, 1-169, 1-171, 1-175, 1-311, 4-51, 4-53, 4-55, 4-57, 4-61, 4-63, 4-65, 4-67, 7-87, 7-101, 7-103
312625-0318 ..	HEXAGON THIN NUT, EN 24035 ML6M M8 A4	1-305, 4-51, 4-53, 4-55, 4-57, 4-61, 4-63, 4-65, 4-67, 4-105, 4-107, 4-109, 4-111, 4-149, 4-151, 4-153, 4-155, 4-197, 4-205, 4-207, 4-215, 4-217, 4-239, 4-241, 7-11, 7-85
312625-0320 ..	HEXAGON THIN NUT, EN 24035 ML6M M10 A4	10-17, 10-19
312625-0322 ..	HEXAGON THIN NUT, EN 24035 ML6M M12 A4	2-273, 2-275
312625-0326 ..	HEXAGON THIN NUT, EN 24035 ML6M M20 A4	2-179, 2-181
312635-0320 ..	NUT M6M 10X1 STAINLESS A2 80	4-205, 4-207, 4-215, 4-217
312705-0310 ..	NUT HEX. DOMED CAP MHM-6 M3 A2	1-169, 1-171
312705-0312 ..	NUT HEX. DOMED CAP MHM-6 M4 A280	1-169, 1-171, 2-219, 2-221, 2-237, 2-249, 2-253, 2-255, 2-257, 2-259, 6-57, 6-61, 7-207, 7-209, 7-217
312705-0314 ..	NUT HEX. DOMED CAP MHM-6 M5 A280	1-367, 1-369, 4-7, 4-9, 4-11, 4-17, 4-19, 4-21, 4-51, 4-53, 4-55, 4-57, 4-61, 4-63, 4-65, 4-67, 5-279
312705-0316 ..	NUT HEX. DOMED CAP MHM-6 M6 A280	1-97, 1-99, 1-105, 1-107, 1-367, 1-369, 2-243, 7-93
312705-0318 ..	NUT HEX. DOMED CAP MHM-6 M8 A280	1-97, 1-99, 1-133, 1-135, 1-137
312715-0116 ..	WING NUT DIN 315 A2 MVM-K M6	1-287, 1-289
312805-0107 ..	NUT ROUND WITH SLOTS M35X1,5 FE	5-217, 5-219, 5-221, 5-223, 5-225, 5-227
312805-0110 ..	NUT ROUND WITH SLOTS M50X1,5 FE	5-217, 5-219, 5-221, 5-223, 5-225, 5-227
312810-0310 ..	HEXAGON NUT, NY-LOCK M3 FZB	3-23
312810-0312 ..	HEXAGON NUT, NY-LOCK M4 FZB	2-243
312810-0316 ..	HEXAGON NUT, NY-LOCK M6 FZB	8-25
312811-0318 ..	NUT HEX.LOCK HELI COIL M8 SS	4-205, 4-207, 4-215, 4-217
312812-0312 ..	HEXAGON NUT, NY-LOCK M4 A480	2-217, 2-219, 2-231, 2-233, 2-237, 2-259, 4-239, 4-241, 4-243, 5-103, 5-105, 5-107, 5-109, 5-111, 5-165, 5-167, 8-25
312812-0314 ..	HEXAGON NUT, NY-LOCK M5 A480	1-249, 1-313, 1-315, 2-217, 2-219, 2-237, 2-259
312812-0316 ..	HEXAGON NUT, NY-LOCK M6 A480	1-129, 1-131, 1-175, 1-283, 1-287, 1-289, 2-93, 2-113, 2-179, 2-181, 4-51, 4-53, 4-55, 4-57, 4-61, 4-63, 4-65, 4-67, 5-15, 5-63, 5-259, 5-265, 7-69, 7-75, 7-79, 7-109, 7-111, 7-193, 10-13, 10-71, 10-75, 10-85
312812-0318 ..	HEXAGON NUT, NY-LOCK M8 A480	2-73, 4-201, 4-203, 4-205, 4-207, 4-211, 4-213, 4-215, 4-217, 4-229, 4-231, 5-11, 5-13, 10-13
312812-0320 ..	HEXAGON NUT, NY-LOCK M10 A480	4-225, 4-227, 5-59, 5-61, 7-41, 7-43
312812-0322 ..	HEXAGON NUT, NY-LOCK M12 A480	2-171, 2-179, 2-181, 2-187, 3-25
312812-0324 ..	HEXAGON NUT, NY-LOCK M16 A480	10-79
312902-0316 ..	NUT HEX. LEFT THREAD, M6 A280	4-239, 4-241
312902-0318 ..	NUT HEX. LEFT THREAD, M8 A280	5-11, 5-13, 5-17, 5-235, 5-237, 5-239, 5-241, 5-243, 5-245
312902-0320 ..	NUT HEX. LEFT THREAD, M10 A280	5-5, 5-7
312927-0150 ..	RIVET NUT M8, CLAMP. LENGTH 3,0 - 4,5	7-45, 7-47
315101-0136 ..	WASHER BRB, 4,3/8 H=0,8	8-59, 8-61, 8-65, 8-67, 8-69, 8-73, 8-77, 8-79, 8-81
315101-0146 ..	WASHER PLAIN, BRB, 5,3/10 H=1	8-25, 8-47, 8-51, 8-53, 8-55, 8-67, 8-69, 8-71, 8-77, 8-79, 8-91, 8-93, 8-95
315101-0153 ..	WASHER PLAIN, BRB, 6,4/12 H=1,5	1-193, 2-37, 2-189, 2-191, 5-19, 5-21, 8-25, 8-59, 8-67, 8-69, 8-77, 8-79, 8-81, 10-75
315101-0165 ..	WASHER PLAIN, BRB, 8,4/16 H=1,5	1-305, 2-189, 2-191
315101-0176 ..	WASHER PLAIN, BRB, 12/22 H=2	10-43
315103-0124 ..	WASHER, BRB, 3,2/6,H=0,5 NI PL BR	7-75
315103-0136 ..	WASHER PLAIN, BRB, 4,3/8,H=0,8 NI PL BR	10-57, 10-59
315103-0153 ..	WASHER, BRB, 6,4/12,H=1,5 NIPL BR	1-139, 1-141, 1-143, 1-145, 1-147, 5-23, 5-25, 5-235, 5-237, 5-239, 5-241, 5-243, 5-245, 7-173
315105-0124 ..	WASHER BRB 3,2X6 RFR	1-149, 1-151, 1-153, 1-169, 1-171, 1-231, 1-273, 1-313, 1-315, 2-107, 2-109, 2-111, 5-5, 5-7, 5-235, 5-237, 5-239, 5-241, 5-243, 5-245, 5-257, 5-261, 5-263, 6-11, 7-27, 7-75, 8-39, 8-41, 8-43, 8-59, 8-77, 8-79, 8-97, 8-99
315105-0136 ..	WASHER BRB 4,3X8 RFR	1-113, 1-129, 1-131, 1-169, 1-171, 1-197, 1-221, 1-223, 1-225, 1-231, 1-251, 1-269, 1-287, 1-289, 1-319, 1-355, 1-357, 1-397, 2-19, 2-21, 2-87, 2-89, 2-187, 2-201, 2-203, 2-207, 2-217, 2-219, 2-221, 2-229, 2-231, 2-233, 2-237, 2-243, 2-247, 2-249, 2-253, 2-255, 2-257, 2-259, 3-13, 3-29, 4-201, 4-203, 4-211, 4-213, 5-23, 5-25, 5-29, 5-31, 5-33, 5-97, 5-99, 5-129, 5-131, 5-185, 5-201, 5-235, 5-237, 5-239, 5-241, 5-243, 5-245, 5-247, 5-249, 5-271, 5-273, 5-279, 6-9, 6-77, 7-21, 7-27, 7-39, 7-75, 7-83, 7-101, 7-103, 7-107, 7-109, 7-111, 7-117, 7-121, 7-125, 7-131, 7-133, 7-135, 7-137, 7-139, 7-141, 7-177, 7-193, 7-201, 7-207, 7-209, 7-217, 7-221, 8-25, 8-39, 8-41, 8-43, 8-77, 8-79, 8-97, 8-99, 8-111
315105-0146 ..	WASHER BRB 5,3X10 RFR	1-7, 1-9, 1-13, 1-15, 1-17, 1-105, 1-107, 1-109, 1-119, 1-121, 1-123, 1-125, 1-129, 1-131, 1-169, 1-171, 1-177, 1-189, 1-191, 1-201, 1-207, 1-223, 1-249, 1-253, 1-299, 1-301, 1-313, 1-315, 1-319, 1-355, 1-357, 1-395, 1-397, 2-39, 2-79, 2-119, 2-193, 2-217, 2-219, 2-237, 2-247, 2-253, 2-259, 4-7, 4-9, 4-11, 4-17, 4-19, 4-21, 4-27, 4-29, 4-39, 4-41, 4-51, 4-53, 4-55, 4-57, 4-59, 4-61, 4-63, 4-65, 4-67, 4-69, 4-75, 4-93, 4-95, 4-97, 4-115, 4-117, 4-119, 4-121, 4-139, 4-141, 4-143, 4-201, 4-203, 4-211, 4-213, 4-233, 4-239, 4-241, 5-59, 5-61, 5-83, 5-85, 5-87, 5-89, 5-91, 5-97, 5-99, 5-157, 5-159, 5-195, 5-197, 5-199, 5-215, 5-257, 5-261, 5-263, 5-271, 5-273, 5-279, 6-7, 6-9, 6-49, 6-57, 6-61, 6-65, 6-75, 7-9, 7-13, 7-21, 7-27, 7-31, 7-39, 7-45, 7-47, 7-67, 7-83, 7-105, 7-117, 7-125, 7-143, 7-145, 7-147, 7-149, 7-151, 7-153, 7-173, 7-199, 7-215, 8-83, 8-89, 8-97, 8-99, 9-33, 10-9, 10-13, 10-49, 10-57, 10-59
315105-0153 ..	WASHER BRB 6,4X12 RFR	1-13, 1-15, 1-17, 1-41, 1-43, 1-97, 1-99, 1-111, 1-117, 1-123, 1-125, 1-133, 1-135, 1-137, 1-169, 1-171, 1-189, 1-191, 1-219, 1-221, 1-225, 1-227, 1-251, 1-253, 1-255, 1-261, 1-269, 1-275, 1-287, 1-289, 1-293, 1-299, 1-301, 1-307, 1-309, 1-317, 1-319, 1-323, 1-325, 1-335, 1-343, 1-349, 1-351, 1-395, 1-397, 2-9, 2-27, 2-33, 2-39, 2-61, 2-65, 2-67, 2-69, 2-83, 2-87, 2-93, 2-95, 2-119, 2-121, 2-179, 2-181, 2-201, 2-203, 2-207, 2-219, 2-221, 2-237, 2-241, 2-243, 2-249, 2-255, 2-257, 2-259, 2-269, 2-273, 2-275, 3-13, 3-15, 3-29, 3-31, 4-7, 4-9, 4-11, 4-17, 4-19, 4-21, 4-27, 4-29, 4-39, 4-41, 4-73, 4-79, 4-81, 4-83, 4-85, 4-129, 4-131, 4-133, 4-167, 4-169, 4-171, 4-173, 4-175, 4-177, 4-179, 4-185, 4-199, 4-205, 4-207, 4-209, 4-215, 4-217, 4-229, 4-231, 4-239, 4-241, 4-243, 5-5, 5-7, 5-15, 5-23, 5-25, 5-29, 5-31, 5-33, 5-35, 5-37, 5-45, 5-47, 5-49, 5-59, 5-61, 5-63, 5-65, 5-67, 5-83, 5-85, 5-87, 5-89, 5-91, 5-95, 5-103, 5-105, 5-107, 5-109, 5-111, 5-113, 5-115, 5-129, 5-131, 5-137, 5-139, 5-145, 5-147, 5-157, 5-159, 5-165, 5-167, 5-171, 5-173, 5-177, 5-179, 5-185, 5-195, 5-197, 5-199, 5-215, 5-235, 5-237, 5-239, 5-241, 5-243, 5-245, 5-251, 5-253, 5-259, 5-261, 5-263, 5-265, 5-271, 5-273, 5-275, 6-7, 6-9, 6-11, 6-19, 6-29, 6-49, 6-51

Part No	Description	Page No
		6-55, 6-67, 6-75, 7-7, 7-11, 7-13, 7-15, 7-17, 7-21, 7-23, 7-25, 7-27, 7-29, 7-31, 7-33, 7-35, 7-37
		7-41, 7-43, 7-45, 7-47, 7-53, 7-59, 7-63, 7-67, 7-69, 7-73, 7-75, 7-79, 7-83, 7-85, 7-97, 7-101
		7-103, 7-105, 7-107, 7-109, 7-111, 7-115, 7-117, 7-125, 7-133, 7-135, 7-137, 7-139, 7-141, 7-155
		7-157, 7-159, 7-161, 7-163, 7-165, 7-173, 7-175, 7-177, 7-179, 7-183, 7-185, 7-187, 7-193, 7-217
		7-221, 8-25, 8-31, 8-33, 8-35, 8-37, 8-49, 8-97, 8-99, 8-111, 10-9, 10-13, 10-17, 10-19, 10-33
		10-57, 10-59, 10-71
315105-0156 ..	WASHER BRB 6,7X14 RFR	1-123, 1-125, 1-311, 2-247, 5-157, 5-159, 7-13, 7-21, 7-87, 7-93
		7-105, 7-107, 7-109, 7-111
315105-0165 ..	WASHER BRB 8,4X16 RFR	1-41, 1-43, 1-59, 1-61, 1-63, 1-75, 1-77, 1-79, 1-113, 1-123, 1-125
		1-133, 1-135, 1-137, 1-219, 1-221, 1-249, 1-269, 1-281, 1-307, 1-309, 1-351, 1-395, 2-11, 2-13
		2-19, 2-21, 2-27, 2-39, 2-61, 2-69, 2-73, 2-81, 2-87, 2-103, 2-105, 2-119, 2-173, 2-175, 2-187
		2-193, 2-253, 2-269, 4-81, 4-83, 4-85, 4-105, 4-107, 4-109, 4-111, 4-113, 4-129, 4-131, 4-133
		4-149, 4-151, 4-153, 4-155, 4-157, 4-167, 4-169, 4-175, 4-177, 4-179, 4-181, 4-183, 4-187, 4-189
		4-197, 4-199, 4-201, 4-203, 4-205, 4-207, 4-209, 4-211, 4-213, 4-215, 4-217, 4-225, 4-227, 4-237
		5-5, 5-7, 5-11, 5-13, 5-15, 5-19, 5-21, 5-23, 5-25, 5-29, 5-31, 5-33, 5-35, 5-37, 5-45, 5-47, 5-49
		5-59, 5-61, 5-63, 5-65, 5-67, 5-69, 5-75, 5-77, 5-79, 5-83, 5-85, 5-87, 5-89, 5-91, 5-93, 5-113
		5-115, 5-119, 5-121, 5-125, 5-129, 5-131, 5-137, 5-139, 5-145, 5-147, 5-185, 5-193, 5-195, 5-197
		5-199, 5-215, 5-235, 5-237, 5-239, 5-241, 5-243, 5-245, 5-251, 5-253, 5-257, 5-261, 5-263, 5-271
		5-273, 6-9, 6-27, 6-49, 7-7, 7-9, 7-11, 7-21, 7-29, 7-31, 7-45, 7-47, 7-55, 7-57, 7-59, 7-75, 7-77
		7-95, 7-97, 7-99, 7-101, 7-103, 7-105, 7-119, 7-127, 7-133, 7-135, 7-137, 7-139, 7-141, 8-37, 8-57, 10-63
315105-0171 ..	WASHER BRB10X18	5-5, 5-7, 5-65, 5-67, 5-145, 5-147
315105-0173 ..	WASHER BRB 10,5X22 RFR	1-175, 1-181, 1-213, 1-215, 1-217, 1-267, 1-313, 1-315, 2-33
		2-145, 2-171, 2-173, 2-175, 2-179, 2-181, 2-187, 2-189, 2-191, 2-193, 3-13, 3-15, 3-29, 3-31, 4-115
		4-117, 4-119, 4-121, 5-5, 5-7, 5-15, 5-29, 5-31, 5-33, 5-59, 5-61, 5-69, 5-129, 5-131, 5-257, 5-261
		.. 5-263, 5-267, 6-41, 6-43, 6-49, 7-11, 7-31, 7-33, 7-35, 7-41, 7-43, 7-177, 9-3, 10-7, 10-31, 10-91
315105-0178 ..	WASHER BRB13X24RFR	2-19, 2-21, 2-39, 2-49, 2-65, 2-189, 2-191, 3-7, 3-9, 3-25, 4-197, 5-185
		7-45, 7-47, 8-25, 9-3, 10-91
315105-0186 ..	WASHER BRB17X30RFR	2-9, 2-65, 2-119, 2-171, 2-173, 2-175, 2-179, 2-181, 2-189, 2-191
		3-23, 4-201, 4-203, 4-211, 4-213, 5-215, 10-91
315105-0192 ..	WASHER BRB21X36RFR	5-215, 10-73
315111-0173 ..	WASHER PLAIN, TBRB 10,5/22 H=4	5-63
315111-0186 ..	WASHER PLAIN, TBRB 17/30 H=6	2-179, 2-181, 2-187, 2-189, 2-191
315115-0153 ..	WASHER PLAIN, TBRB 6,4/12 H=3	1-85, 1-87, 2-273, 2-275, 5-101, 5-113, 5-115, 6-17, 6-23
		7-45, 7-47, 7-87, 7-117, 7-125, 7-175, 7-193
315115-0165 ..	WASHER PLAIN, TBRB 8,4/16 H=3	1-15, 1-17, 1-33, 1-35, 1-37, 1-41, 1-43, 1-47, 1-49, 1-51
		1-59, 1-61, 1-63, 1-85, 1-87, 2-273, 2-275, 4-197, 10-13, 10-53
315115-0173 ..	WASHER PLAIN, TBRB 10,5/22 H=4	1-297, 4-225, 4-227, 6-49, 7-183, 7-185, 10-73
315115-0178 ..	WASHER PLAIN, TBRB 13/24 H=4	1-15, 1-17
315125-0153 ..	WASHER TBRSB 6,4X22X4 A4	1-11, 1-249, 1-285, 1-367, 1-369, 2-39, 2-103, 2-105, 2-171
		2-179, 2-181, 2-187, 2-189, 2-191, 2-269, 2-271, 4-225, 4-227, 4-237, 5-83, 5-85, 5-87, 5-89, 5-91
		..... 5-257, 5-261, 5-263, 6-51, 6-55, 6-69, 6-71, 7-71, 7-73, 7-75, 7-97, 7-117, 7-125, 7-155, 7-157
315125-0165 ..	WASHER TBRSB 8,4X26X5 A4	1-123, 1-125, 1-199, 1-299, 1-301, 2-19, 2-21, 2-73, 3-5, 3-27
		4-187, 4-189, 5-69, 5-187, 5-189, 5-191, 5-257, 5-261, 5-263, 6-29, 7-95, 7-133, 7-135, 7-137
		7-139, 7-141
315125-0173 ..	WASHER TBRSB 10,5X28X6 A4	1-15, 1-17, 1-47, 1-49, 1-51, 1-85, 1-87, 2-171, 2-179, 2-181
		5-257, 5-261, 5-263, 10-91
315202-0101 ..	O-RING 3,1X1,6 MM	4-87, 4-89, 4-135, 4-137, 9-5
315202-0104 ..	O-RING 6,1X1,6 MM	4-115, 4-117, 4-119, 4-121
315202-0105 ..	O-RING 7,1X1,6 MM	4-87, 4-89, 4-91, 4-135, 4-137
315202-0107 ..	O-RING 9,1X1,6 MM	5-11, 5-13, 5-19, 5-21
315202-0110 ..	O-RING 12,1X1,6 MM	4-127
315202-0113 ..	O-RING 15,1X1,6 MM	5-69
315202-0115 ..	O-RING 17,1X1,6 MM	3-17
315202-0116 ..	O-RING 18,1X1,6 MM	4-105, 4-107, 4-109, 4-111, 4-149, 4-151, 4-153, 4-155
315202-0118 ..	O-RING 22,1X1,6 MM	4-127
315202-0119 ..	O-RING 25,1X1,6 MM	1-183, 1-185, 2-223, 4-127, 7-205
315202-0124 ..	O-RING 37,1X1,6 MM	3-7, 3-9
315202-0208 ..	O-RING 9,3X2,4 MM	4-105, 4-107, 4-109, 4-111, 4-149, 4-151, 4-153, 4-155
315202-0211 ..	O-RING 13,3X2,4 MM	2-107, 2-109, 2-111
315202-0214 ..	O-RING 17,3X2,4 MM	9-31
315202-0217 ..	O-RING 24,2X3 MM	5-5, 5-7, 5-73, 5-235, 5-237, 5-239, 5-241, 5-243, 5-245, 9-31
315202-0221 ..	O-RING 34,2X3 MM	5-257, 5-261, 5-263
315202-0225 ..	O-RING 44,2X3 MM	5-23, 5-25, 5-113, 5-115, 5-217, 5-219, 5-221, 5-223, 5-225, 5-227
315202-0233 ..	O-RING 79,2X5,7 MM	9-31
315202-0267 ..	O-RING 16,3X2,4 MM	5-257, 5-261, 5-263
315202-0302 ..	O-RING 54,5X3 MM	2-113, 5-217, 5-219, 5-221, 5-223, 5-225, 5-227, 9-31
315202-0303 ..	O-RING 59,5X3 MM	5-69, 5-235, 5-237, 5-239, 5-241, 5-243, 5-245, 9-31
315202-0304 ..	O-RING 64,5X3 MM	1-237
315202-0305 ..	O-RING 69,5X3 MM	5-185, 5-235, 5-237, 5-239, 5-241, 5-243, 5-245, 9-31
315202-0307 ..	O-RING 79,5X3 MM	2-145, 9-31
315202-0308 ..	O-RING 84,5X3 MM	1-235, 1-239, 9-31
315202-0310 ..	O-RING 94,5X3 MM	9-31
315202-0311 ..	O-RING 99,5X3 MM	5-23, 5-25, 5-69, 5-113, 5-115
315202-0505 ..	O-RING 6,07X1,78 MM	3-11
315202-0701 ..	O-RING 10,82X1,78 MM	2-41
315202-0709 ..	O-RING 23,52X1,78 MM	2-65, 2-119
315202-0739 ..	O-RING 55,25X2,62 MM	1-115
315204-0103 ..	O-RING 5,1X1,6 MM	2-27
315204-0105 ..	O-RING 7,1X1,6 MM	4-115, 4-117, 4-119, 4-121
315204-0122 ..	O-RING 32,1X1,6 MM	1-149, 1-151, 1-153
315204-0123 ..	O-RING 35,1X1,6 MM	1-133, 1-135, 1-137
315204-0206 ..	O-RING 7,3X2,4 MM	1-195
315204-0207 ..	O-RING 8,3X2,4 MM	2-37
315204-0208 ..	O-RING 9,3X2,4 MM	1-249

Part No	Description	Page No
315204-0209 ..	O-RING 10,3X2,4 MM	1-129, 1-131
315204-0213 ..	O-RING 15,2X2,4 MM	1-197
315204-0214 ..	O-RING 17,3X2,4 MM	1-249
315204-0215 ..	O-RING 19,2X3 MM	1-213, 1-215, 1-217, 1-235, 1-237, 1-239, 5-187, 5-189, 5-191, 9-11, 9-13, 9-15, 9-17, 9-19, 9-21, 9-23, 9-25
315204-0219 ..	O-RING 29,2X3 MM	1-213, 1-215, 1-217, 1-255, 9-11, 9-13, 9-15, 9-17, 9-19
315204-0222 ..	O-RING 36,2X3 MM	2-33
315204-0223 ..	O-RING 39,2X3 MM	1-213, 1-215, 1-217, 9-11, 9-13, 9-15, 9-17, 9-19
315204-0301 ..	O-RING 49,5X3 MM	1-237, 9-21
315204-0303 ..	O-RING 59,5X3 MM	5-187, 5-189, 5-191
315204-0307 ..	O-RING 79,5X3 MM	1-205
315204-0308 ..	O-RING 84,5X3 MM	9-23
315204-0317 ..	O-RING 129,5X3 MM	1-197, 1-207
315204-0324 ..	O-RING 164,3X5,7 MM	1-47, 1-49, 1-51, 1-85, 1-87
315205-0505 ..	O-RING 6,07X1,78 MM	1-249
315205-0703 ..	O-RING 14,0X1,78 MM	1-11
315205-0704 ..	O-RING 15,6X1,78 MM	1-123, 1-125, 1-187
315205-0705 ..	O-RING 17,17X1,78 MM	1-123, 1-125
315205-0707 ..	O-RING 20,35X1,78 MM	1-15, 1-17
315205-0709 ..	O-RING 23,52X1,78 MM	1-167
315205-0713 ..	O-RING 29,87X1,78 MM	1-139, 1-141, 1-143, 1-145, 1-147
315205-0714 ..	O-RING 31,47X1,78 MM	1-133, 1-135, 1-137
315205-0715 ..	O-RING 33,05X1,78 MM	1-175
315205-0716 ..	O-RING 34,65X1,78 MM	1-105, 1-107, 1-149, 1-151, 1-153
315205-0801 ..	O-RING 37,82X1,78 MM	1-129, 1-131
315205-0802 ..	O-RING 41,0X1,78 MM	1-123, 1-125, 1-139, 1-141, 1-143, 1-145, 1-147, 1-155, 1-157, 1-159, 1-161, 1-163, 1-165, 1-287, 1-289
315205-0803 ..	O-RING 44,17X1,78 MM	1-105, 1-107
315205-0804 ..	O-RING 47,35X1,78 MM	1-129, 1-131, 1-159, 1-161, 1-163, 1-165, 1-169, 1-171
315205-0805 ..	O-RING 53,7X1,78 MM	1-105, 1-107
315205-0807 ..	O-RING 94,97X1,78 MM	1-105, 1-107, 1-195
315205-0808 ..	O-RING 7,59X2,62 MM	1-189, 1-191
315206-0506 ..	O-RING 7,65X1,78 MM	2-39
315211-0103 ..	BONDED SEAL SS/NBR90 M6	4-105, 4-107, 4-109, 4-111, 4-115, 4-117, 4-119, 4-121, 4-149, 4-151, 4-153, 4-155, 5-69, 9-5
315211-0104 ..	BONDED SEAL SS/NBR90 M8	4-81, 4-83, 4-85, 4-129, 4-131, 4-133, 9-5
315211-0111 ..	BONDED SEAL SS/NBR90 G1/2	1-207, 2-81
315220-0143 ..	V-RINGS 18X26X10,5 MM V-20S	4-239, 4-241
315220-0183 ..	V-RINGS 36X46X13 MM V-40S	2-113
315220-0198 ..	V-RINGS 45X55X13 MM V-50S	2-39, 2-119
315229-0101 ..	GASKETS, 10,4X17,4X3,7 MM 1/2" FDA	1-285
315229-0102 ..	GASKETS, 16,8X23,8X3,7 MM 3/4" FDA	1-113, 6-19
315229-0103 ..	GASKETS, 23,1X30,1X3,7 MM 1" FDA	1-281, 1-285, 2-25, 2-69, 2-121, 6-41, 6-43, 6-47, 9-5
315229-0104 ..	GASKETS, 35,8X42,8X3,7 MM 1"1/2 FD	1-113, 1-123, 1-125, 1-281, 2-25, 9-5
315229-0105 ..	GASKETS, 48,5X55,5X3,7 MM 2" FDA	1-113, 1-285, 2-25, 2-29, 9-5
315229-0106 ..	GASKETS, 61,2X68,2X3,7 MM 2"1/2 FD	1-285
315229-0107 ..	GASKETS, 73,9X80,9X3,7 MM 2"1/2 FD	2-25, 9-5
315229-0203 ..	GASKET 22,1X31,1X3,7 MM 1"	1-183, 1-185, 1-187, 1-193, 1-197
315229-0204 ..	GASKET 34,8X42,8X3,7 MM 1"1/2	1-193, 1-207
315229-0205 ..	GASKET 47,5X55,5X3,7 MM 2 INCH	1-193, 1-199, 1-203, 1-207
315229-0206 ..	GASKET 60,2X68,2X3,7 MM 2"1/2	1-193, 1-199, 1-201, 1-203
315229-0208 ..	GASKET 97,4X105,4X3,7 MM 4"	1-221
315233-0101 ..	WASHER CAPTIVE SEALING M5(NEW315239-101)	1-235, 1-237, 1-239
315233-0109 ..	WASHER CAPTIVE SEALING G1/8	10-57, 10-59
315233-0110 ..	WASHER CAPTIVE SEALING G1/4	2-87, 6-19, 6-77, 10-51, 10-57, 10-59, 10-71
315233-0111 ..	WASHER CAPTIVE SEALING G3/8	2-87, 10-57, 10-59
315233-0113 ..	WASHER CAPTIVE SEALING G1/2	2-121, 2-197, 2-199, 6-25, 6-77, 6-79, 10-57, 10-59, 10-71
315234-0109 ..	WASHER,PL.RND.CU.10,3/13,5 H=1,0	5-187, 5-189, 5-191
315234-0110 ..	WASHER,PL.RND.CU.13,5/18 H=1,5	1-221, 2-77, 10-87
315234-0113 ..	WASHER PL.RND.CU.21,3//26 H=1,5	1-181, 2-77
315237-0109 ..	WASHER,PL.RND.AL.10/14,H=1,5	1-323, 1-325
315237-0110 ..	WASHER,PL.RND.AL.13,5/18,H=1,5	1-15, 1-17, 1-287, 1-289, 2-9, 2-87, 2-197, 2-199
315239-0109 ..	NYLON WASHER G1/8	6-69, 6-71
315239-0111 ..	NYLON WASHER G3/8	6-69, 6-71
315239-0113 ..	NYLON WASHER G1/2	6-69, 6-71
315400-0001 ..	TUBE PUN-H-6X1-BL	5-5, 5-7, 5-165, 5-167
315402-0136 ..	LOCK WASHER FBB 4,1	1-239
315402-0156 ..	LOCK WASHER FBB 6,5	1-155, 1-157, 4-51, 4-53, 4-55, 4-57, 4-61, 4-63, 4-65, 4-67
315402-0165 ..	LOCK WASHER FBB 8,2	4-225, 4-227
315402-0173 ..	LOCK WASHER FBB 10,2	2-143
315701-0165 ..	PARALLEL KEY W. ROUND ENDS 4X4X10 MM	4-225, 4-227
315701-0166 ..	PARALLEL KEY W. ROUND ENDS 4X4X12 MM	7-179
315701-0170 ..	PARALLEL KEY W. ROUND ENDS 4X4X20 MM	7-81, 7-97
315701-0239 ..	PARALLEL KEY W. ROUND ENDS 6X6X40 MM	1-155, 1-157
315705-0164 ..	PARALLEL KEY W. ROUND ENDS 4X4X8 MM	1-41, 1-43, 2-273, 2-275
315705-0196 ..	PARALLEL KEY W.ROUND ENDS 5X5X10	2-33
315705-0201 ..	PARALLEL KEY W. ROUND ENDS 5X5X20 MM	2-273, 2-275, 4-115, 4-117, 4-119, 4-121
315705-0202 ..	PARALLEL KEY W ROUND ENDS 5X5X25MM	5-257, 5-261, 5-263, 7-179
315705-0238 ..	PARALLEL KEY W. ROUND ENDS 6X6X36 MM	2-273, 2-275
315705-0239 ..	PARALLEL KEY W. ROUND ENDS 6X6X40 MM	5-69
315705-0263 ..	PARALLEL KEY W. ROUND ENDS 8X7X20 MM	5-69
315705-0265 ..	PARALLEL KEY W. ROUND ENDS 8X7X25 MM	5-69
315705-0267 ..	PARALLEL KEY W. ROUND ENDS 8X7X30 MM	5-5, 5-7, 5-235, 5-237, 5-239, 5-241, 5-243, 5-245
315705-0270 ..	PARALLEL KEY W. ROUND ENDS 8X7X40 MM	5-5, 5-7

Part No	Description	Page No
315705-0301 ..	PARALLEL KEY W. ROUND ENDS 10X8X40 MM	1-41, 1-43
315705-0305 ..	PARALLEL KEY W. ROUND ENDS 10X8X60 MM	7-55
315705-0334 ..	PARALLEL KEY W. ROUND ENDS 12X8X50 MM	1-115
315741-0102 ..	RETAINING RING DIN 705 A2 6	7-173
315742-0112 ..	RETAINING RING 16 SMS 199 RFR	4-229, 4-231
315742-0116 ..	RETAINING RING 20 SMS 199 RFR	5-15
315742-0122 ..	RETAINING RING 30 SMS 199	2-273, 2-275
315742-0123 ..	RETAINING RING 32 SMS 199 RFR	7-69
315750-0112 ..	RETAINING RING SHAFT DIN 471 ST 15	7-177
315750-0119 ..	RETAINING RING SHAFT DIN 471 ST 25	10-83
315751-0103 ..	RETAINING RING FOR SHAFT DIN 471 6 A2	1-167, 1-195, 7-75, 7-105, 7-107, 7-109, 7-111, 7-173, 7-193
315751-0109 ..	RETAINING RING FOR SHAFT DIN 471 12 A2	1-313, 1-315, 3-23, 4-239, 4-241, 7-27, 7-105, 7-107, 7-119, 7-127
315751-0111 ..	RETAINING RING FOR SHAFT DIN 471 14 A2	7-179
315751-0112 ..	RETAINING RING FOR SHAFT DIN 471 15 A2	1-139, 1-141, 1-143, 1-145, 1-147, 1-155, 1-157, 1-159, 1-161, 1-163, 1-165, 3-21, 4-225, 4-227, 7-23, 7-25, 7-101, 7-103, 7-175, 7-183, 7-185
315751-0113 ..	RETAINING RING FOR SHAFT DIN 471 16 A2	1-15, 1-17, 2-33, 2-143
315751-0119 ..	RETAINING RING FOR SHAFT DIN 471 25 A2	5-271, 5-185, 5-257, 5-261, 5-263, 7-101, 7-103, 7-175
315753-0122 ..	RETAINING RING FOR BORE DIN 472 30 A2	1-311, 5-235, 5-237, 5-239, 5-241, 5-243, 5-245, 7-93
315753-0123 ..	RETAINING RING FOR BORE DIN 472 32 A2	7-179
315753-0124 ..	RETAINING RING FOR BORE DIN 472 35 A2	1-105, 1-107, 4-225, 4-227, 7-23, 7-25, 7-97
315753-0127 ..	RETAINING RING FOR BORE DIN 472 40 A2	7-97
315753-0130 ..	RETAINING RING FOR BORE DIN 472 47 A2	7-95
315753-0132 ..	RETAINING RING FOR BORE DIN 472 52 A2	5-5, 5-7
315753-0135 ..	RETAINING RING FOR BORE DIN 472 60 A2	4-199, 4-209
315754-0113 ..	LOCKING WAE 15	1-235, 1-237, 1-239
315755-0105 ..	RETAINING RING SHAFT DIN 6799 3,2 A2	1-205, 10-15
315755-0106 ..	RETAINING RING SHAFT DIN 6799 4 A2	5-259, 5-265
315755-0107 ..	RETAINING RING SHAFT DIN 6799 5 A2	1-175, 2-273, 2-275
315755-0108 ..	RETAINING RING SHAFT DIN 6799 6 A2	1-307, 1-309, 7-93
315755-0109 ..	RETAINING RING SHAFT DIN 6799 7 A2	7-101, 7-103
315755-0110 ..	RETAINING RING SHAFT DIN 6799 9 A2	2-19, 2-21
315755-0112 ..	RETAINING RING SHAFT DIN 6799 12 A2	7-41, 7-43, 7-67
315755-0113 ..	RETAINING RING SHAFT DIN 6799 15 A2	5-145, 5-147
315755-0801 ..	RETAINING RING SHAFT DIN 6799 8 A2	2-13, 7-21
316810-0106 ..	PIPE CLIP FOR TUBE D=8 MM	1-269, 5-129, 5-131, 5-185
318301-0120 ..	LIFTING EYE BOLT, TYPE, LT, M10	10-17, 10-19
318302-0120 ..	EYE BOLT NUT, TYPE, LH, M10	10-67
318800-0104 ..	HANDLE,SPHERICAL KNOB,INT.THRE.,D.30-M8	1-15, 1-17, 7-21
318850-0113 ..	STELLAR KNOB, INT. THREAD, NO. 8306-0367	10-63
318856-0101 ..	KNOB, EXTERNAL THREAD. NO. 8308-1011	6-21
318856-0109 ..	KNOB, EXTERNAL THREAD. NO. 8308-1658	10-31
318856-0112 ..	KNOB, EXTERNAL THREAD. NO. 8306-0227	6-9
318856-0115 ..	KNOB, EXTERNAL THREAD. NO. 8306-0278	5-15
318860-0106 ..	KNOB, ADJUST.HI.EXT.THREAD, NO 8324-3674	2-143
319030-0125 ..	DISC SPRING, CONICAL 12,5X6,2X0,5 MM	7-99
321101-0162 ..	FLANGE BUSHING, 10X16X8 MM	4-229, 4-231, 7-33, 7-35
321101-0163 ..	FLANGE BUSHING, 10X16X10 MM	4-205, 4-207, 4-215, 4-217
321101-0173 ..	FLANGE BUSHING, 12X18X12 MM	5-19, 5-21
321101-0202 ..	FLANGE BUSHING, 16X22X12 MM	7-41, 7-43
321101-0203 ..	FLANGE BUSHING, 16X22X16 MM	4-229, 4-231
321101-0222 ..	FLANGE BUSHING, 18X25X12	4-219, 10-55
321101-0223 ..	FLANGE BUSHING, 18X25X16	4-219
321105-0164 ..	BEARING BUSH W/O FLANGE, 10X16X16 MM	7-21
321111-0097 ..	FLANGE BUSHING, 8X12X12 MM	7-11
321111-0163 ..	FLANGE BUSHING, 12X18X20 MM	4-239, 4-241
321111-0302 ..	FLANGE BUSHING, 20X26X15 MM	5-15
321116-0234 ..	BEARING BUSH W/O FLANGE, 16X20X12 MM	5-251, 5-253
321120-0108 ..	BEARING BUSH W/O FLANGE, 12X14X8 MM	4-175, 4-177, 4-179
321120-0137 ..	BEARING BUSH W/O FLANGE, 20X23X15 MM	10-85
321130-0200 ..	THRUST WASHER, 14X26X1,5 MM	5-235, 5-237, 5-239, 5-241, 5-243, 5-245
321133-0180 ..	BUSHING, 12X14X12 MM	1-167
321133-0260 ..	BUSHING, 20X23X20 MM	4-243
321136-0140 ..	BUSHING, 10X12X10 MM	4-51, 4-53, 4-55, 4-57, 4-61, 4-63, 4-65, 4-67
321137-0140 ..	BUSHING, 10X14X10 MM	1-41, 1-43
321138-0183 ..	BUSHING, 12X14X15 MM	5-123
321141-0064 ..	BEARING BUSH W/O FLANGE, 6X8X10 MM	7-75
321141-0104 ..	BEARING BUSH W/O FLANGE, 8X10X12 MM	5-17, 7-117, 7-125
321141-0138 ..	BEARING BUSH W/O FLANGE, 10X12X8 MM	1-311, 7-109, 7-111
321141-0178 ..	BEARING BUSH W/O FLANGE, 12X14X10 MM	7-117, 7-125
321141-0183 ..	BEARING BUSH W/O FLANGE, 12X14X15 MM	1-313, 1-315
321141-0216 ..	BEARING BUSH W/O FLANGE, 16X18X12 MM	7-117, 7-125
321141-0260 ..	BEARING BUSH W/O FLANGE, 20X23X20 MM	10-13
321153-0136 ..	FLANGE BUSHING, 10X12X6 MM	5-145, 5-147
321161-0185 ..	FLANGE BUSHING, 12X14X17 MM	7-27
321161-0221 ..	FLANGE BUSHING, 16X18X17 MM	2-143
321308-0202 ..	BALL BEARING, 15X32X9 MM	7-33, 7-35, 7-41, 7-43, 7-179
321308-0205 ..	BALL BEARING, 25X47X12MM	5-5, 5-7, 5-71, 5-185, 5-257, 5-261, 5-263, 7-101, 7-103, 7-175
321313-0100 ..	BALL BEARING, 10X30X9 MM	1-311, 7-93
321313-0102 ..	BALL BEARING, 15X35X11 MM	1-307, 1-309, 2-13, 7-23, 7-25, 7-55, 7-97, 7-117, 7-125, 7-173, 7-177, 7-179, 7-181, 7-183, 7-185
321313-0103 ..	BALL BEARING, 17X40X12MM	2-33, 5-257, 5-261, 5-263, 7-97
321313-0105 ..	BALL BEARING, 25X52X15MM	5-5, 5-7, 5-235, 5-237, 5-239, 5-241, 5-243, 5-245

Part No	Description	Page No
321313-0107 ..	BALL BEARING, 35X72X17MM	5-235, 5-237, 5-239, 5-241, 5-243, 5-245
321316-0205 ..	BALL BEARING, 25X62X17 MM	3-21
321316-0206 ..	BALL BEARING, 30X72X19 MM	5-185
342203-0107 ..	NIPPLES, EXT. THREAD, HEXAGON,Ã¿NO. 209	6-7
342203-0120 ..	NIPPLES, EXT. THREAD, HEXAGON,Ã¿NO. 209	6-39
342206-0109 ..	BUSHING, TAPERED, INT/EXT. THR NO. R211	1-197, 1-207, 1-283
342217-0103 ..	SLEEVE, REDUCTION, INT, R-2021/2X1/4	6-7
342245-0102 ..	T-PIPE, INT. THREAD, R1/4XKR1/4	2-49, 2-207
342700-0110 ..	NIPPLES,HEXAGON,EXT.G-THREAD G1/4"-G1/4"	10-51
342700-0111 ..	NIPPLES,HEXAGON,EXT.G-THREAD G3/8"-G3/8"	6-69, 6-71
342700-0113 ..	NIPPLES,HEXAGON,EXT.G-THREAD G1/2"-G1/2"	1-283, 6-77, 6-79
342700-0116 ..	NIPPLES,HEXAGON,EXT.G-THREAD G1"-G1"	6-49
342700-0201 ..	NIPPLES,HEXAGON,EXT.G-THREAD G1/4"-G1/8"	7-61
342700-0203 ..	NIPPLES,HEXAGON,EXT.G-THREAD G3/8"-G1/4"	2-87, 2-207
342700-0205 ..	NIPPLES,HEXAGON,EXT.G-THREAD G1/2"-G1/4"	6-77, 7-63
342700-0206 ..	NIPPLES,HEXAGON,EXT.G-THREAD G1/2"-G3/8"	6-79
342701-0201 ..	BUSHING,INT./EXT.G-THREAD G1/4"-G1/8"	2-49, 10-51, 10-57, 10-59
342701-0202 ..	BUSHING,INT./EXT.G-THREAD G3/8"-G1/8"	6-17, 6-27, 6-69, 6-71
342701-0203 ..	BUSHING, INT/EXT. G-THREAD NO. 3/8-1/4	1-283
342701-0205 ..	BUSHING,INT./EXT.G-THREAD G1/2"-G1/4"	2-77, 2-209
342701-0206 ..	BUSHING,INT./EXT.G-THREAD G1/2"-G3/8"	6-17
342701-0208 ..	BUSHING, INT/EXT. G-THREAD NO. 3/4-1/4	2-79
342701-0209 ..	BUSHING,INT./EXT.G-THREAD G3/4"-G3/8"	1-283, 7-59
342703-0208 ..	NUT, PIPES & CONNECTORS,NUT M-8 SS	1-189, 1-191, 2-83, 4-233
342706-0130 ..	ACCESSORIES, INSERT SLEEVE 6 MM	1-255, 1-323, 1-325, 2-33, 4-185
342706-0195 ..	ACCESSORIES, INSERT SLEEVE 12 MM	1-255
342708-0109 ..	REINFORCING RING VSH 15X1 MM	6-25, 6-69, 6-71
342713-0209 ..	PLUG (QUANT.MINIMA= 10PC).	2-201, 2-203, 4-105, 4-107, 4-109, 4-111, 4-115, 4-117, 4-119, 4-121, 4-149, 4-151, 4-153, 4-155, 7-61, 7-161, 7-163, 7-165
342713-0210 ..	PLUG,EXT THREAD HEX SOCKET(PAK OF 10 PCS	1-225, 1-335, 2-49, 2-131, 2-133
342713-0211 ..	PLUG, EXT THREAD HEX SOCKET 8638-00-380	1-283, 1-337, 1-339, 1-341, 1-345, 1-347, 2-51, 2-135, 2-137, 2-139, 6-75, 7-159, 7-161, 7-163, 7-165
342713-0213 ..	PLUG, EXT THREAD HEX SOCKET 8638-00-120	1-181, 2-205, 2-271, 6-23, 6-49
342715-0100 ..	BLIND PLUG 4 MM	1-337, 1-339, 1-341, 1-345, 1-347
342715-0102 ..	BLIND PLUG 6 MM	1-337, 1-339, 1-341, 1-345, 1-347, 2-9, 2-51, 2-135, 2-137, 2-139, 6-75, 7-159, 7-161, 7-163, 7-165
342715-0103 ..	BLIND PLUG 8 MM	1-337, 1-339, 1-341, 1-345, 1-347, 2-51, 2-135, 2-137, 2-139, 6-75, 7-161, 7-163, 7-165
342715-0105 ..	BLIND PLUG 12 MM	2-211, 2-213
342715-0106 ..	BLIND PLUG 14 MM	2-9, 2-211, 2-213
342716-0200 ..	REDUCER 4-5	5-165, 5-167
342716-0202 ..	REDUCER 4-6	1-343, 7-53
342716-0203 ..	REDUCER 6-8	1-343, 2-135, 2-137, 2-139, 7-161, 7-163, 7-165
342716-0205 ..	REDUCER 4-8	1-335
342716-0206 ..	REDUCER 8-10	2-131, 2-133
342716-0209 ..	REDUCER 8-12	1-335, 1-343, 2-49, 2-211, 2-213, 7-159, 7-161, 7-163, 7-165
342716-0210 ..	REDUCER 6-12	1-255, 1-323, 1-325, 1-335, 1-343, 2-49
342716-0211 ..	REDUCER 12-14	2-211, 2-213, 6-77
342720-0114 ..	CONN. STR. GA-15-G1/2	6-25, 6-69, 6-71
342720-0119 ..	CONN. STR., GA-22-G3/4	6-23
342722-0197 ..	STRAIGHT COUPLING	1-167, 7-79, 7-105, 7-121, 7-131
342722-0202 ..	PIPE COUPLING 1/8" D=6MM	1-149, 1-151, 1-153, 1-175, 1-199, 1-203, 2-87, 2-115, 5-215, 7-13, 7-31, 7-39, 7-107
342722-0203 ..	STRAIGHT COUPLING	2-25, 2-49, 5-65, 5-67
342722-0204 ..	PIPE COUPLING	5-187, 5-189, 5-191, 7-105
342722-0205 ..	STRAIGHT COUPLING D=8-G1/4"	2-37, 6-45
342722-0206 ..	STRAIGHT COUPLING D=8-G3/8"	6-75, 7-161, 7-163, 7-165
342722-0209 ..	STRAIGHT COUPLING D=12-G1/4"	1-335
342722-0211 ..	STRAIGHT COUPLING D=10-G1/4"	5-187, 5-189, 5-191
342723-0114 ..	CONN. STR. PIPE GI-15-G1/2	2-205
342724-0102 ..	CONN. STR. PIPE GI 6-G1/8	1-323, 1-325
342725-0102 ..	CONN. STR. PIPE GI-6-G1/8	5-201, 7-13
342727-0214 ..	CONN. PIPE G-15-L/SY	2-65
342728-0102 ..	PIPE COUPLING 6 MM	5-165, 5-167, 7-53
342728-0103 ..	PIPE COUPLING 8 MM	5-103, 5-105, 5-107, 5-109, 5-111
342728-0104 ..	PIPE COUPLING 10 MM	2-131, 2-133
342728-0110 ..	PIPE COUPLING 14 MM	2-211, 2-213
342732-0100 ..	ELBOW PIPE JOINT, EXT.THREAD, D=4MM-G1/8	6-75
342732-0104 ..	ELBOW PIPE JOINT, EXT.THREAD, D=8MM-G1/4	5-29, 5-31, 5-33, 5-103, 5-105, 5-107, 5-109, 5-111, 5-165, 5-167, 6-75, 6-77
342732-0109 ..	ELBOW PIPE JOINT, EXT.THREAD, D=1MM-G1/4	6-75
342732-0110 ..	ELBOW PIPE JOINT, EXT.THREAD,D=12MM-G3/8	6-75
342732-0161 ..	ELBOW PIPE JOINT,EXT.THREAD,D=14 MM-G1/2	6-77
342733-0114 ..	CONN. ELBOW WI-15-G1/2	1-207
342735-0102 ..	ELBOW PIPE JOINT	2-201, 2-203, 7-31
342735-0103 ..	ELBOW PIPE JOINT	2-125, 2-127, 2-129, 2-131, 2-133, 6-21, 7-161, 7-163, 7-165
342735-0104 ..	ELBOW PIPE JOINT	2-125, 2-127, 2-129
342735-0109 ..	ELBOW PIPE JOINT	1-255, 1-335, 1-343, 2-211, 2-213, 7-63, 7-161, 7-163, 7-165
342735-0110 ..	ELBOW PIPE	2-211, 2-213
342738-0208 ..	ADJUSTABLE ELBOW CONNECTION,EXT 8-G1/4	2-81, 2-83
342738-0221 ..	ADJUSTABLE ELBOW CONNECTION,EXT 15-G1/2	1-197, 1-283
342741-0209 ..	CONN. T-PIPE TE-12-R3/8	1-283
342742-0103 ..	T-COUPLING,ADJUST,F.PLASTIC TUBE 6-G1/4"	7-53
342742-0110 ..	T-COUPLING,ADJUST,F.PLAST.TUBE 12-G3/8"	7-63

Part No	Description	Page No
342744-0114 ..	CONN. ELBOW ADJ.,INT 15	2-77
342747-0102 ..	CONN. T-PIPE T-6	1-323, 1-325
342748-0102 ..	T-CONNECTION 6MM	1-343, 2-125, 2-127, 2-129, 5-5, 5-7, 7-105, 7-121, 7-131
342748-0103 ..	T-CONNECTION 8MM	1-225, 1-335, 2-49
342748-0109 ..	T-CONNECTION 12MM	1-323, 1-325, 1-335, 1-343, 2-49, 6-75, 7-161, 7-163, 7-165
342748-0110 ..	T-CONNECTION 14MM	2-211, 2-213, 6-77
342751-0215 ..	CONN. L-PIPE, EXT. LE-12-R3/8	1-255
342751-0221 ..	CONN. L-PIPE, EXT. LE-15-R1/2	1-255
342752-0104 ..	CONN. STR. GA-10-G1/4	2-79
342752-0114 ..	CONN. STR. GA-15-G1/2	2-81
342767-0100 ..	CONN. BULKHEAD G1/8	1-355, 1-357
342767-0104 ..	CONN. BULKHEAD G1/4	2-9, 2-141, 2-209
342768-0102 ..	BULKHEAD CONNECTOR, 6 MM	2-9, 2-39
342768-0103 ..	BULKHEAD CONNECTOR, 8 MM	1-343, 2-49, 2-125, 2-127, 2-129, 2-131, 2-133
342768-0104 ..	BULKHEAD CONNECTOR, 10 MM	2-125, 2-127, 2-129
342768-0110 ..	BULKHEAD CONNECTOR, 14 MM	2-9, 2-211, 2-213
342770-0101 ..	STRAIGHT COUPLING INT, D=4 MM - G1/8	1-335, 1-343, 2-49, 2-131, 2-133, 6-75
342770-0105 ..	STRAIGHT COUPLING INT, D=6 MM - G1/8	7-31, 7-161, 7-163, 7-165
342770-0107 ..	STRAIGHT COUPLING INT, D=8 MM - G1/8	7-105
342772-0122 ..	ELBOW FITTING, 8 - G1/4	2-131, 2-133
342796-0108 ..	CONN. BANJO,WH 10-G1/4	2-79
342796-0114 ..	CONN. BANJO,WH 15-G1/2	2-79
342797-0121 ..	CONN. BANJO, RINGPIECE 6-1/8	1-323, 1-325
342797-0122 ..	CONN. BANJO, RINGPIECE 6-1/4	1-255
342840-0103 ..	CLAMPING PIECE	1-249, 1-255, 1-261, 1-263, 1-265, 1-273, 1-275, 1-277, 2-113
342840-0105 ..	CLAMPING PIECE	1-197, 1-207, 1-231, 1-273, 2-271
342840-0107 ..	CLAMPING PIECE	1-231, 2-271
342840-0108 ..	CLAMP, 101,6 MM 3-A PCS+PMCS	1-197
342850-0105 ..	GASKET, FDA, 3-A, 2	1-277
342850-0107 ..	GASKET, FDA, 3-A, 3	2-271
342850-0204 ..	GASKET 35,4X49,1X5,2 MM 1"1/2 FDA 3-A	1-255
342850-0303 ..	GASKET 22,7X49,1X5,2 MM 1" FDA	1-273, 1-275
342850-0304 ..	GASKET 35,4X49,1X5,2 1"1/2 FDA	1-261, 1-263, 1-265, 1-273, 1-275, 1-277, 2-113, 9-5, 9-11, 9-13, 9-15, 9-17, 9-19
342850-0305 ..	GASKET 47,8X62,6X5,2 MM 2" FDA	1-231, 1-263, 1-265, 1-273, 1-277, 2-271
342850-0306 ..	GASKET 60,3X76,1X5,2 MM 2"1/2 FDA	1-263, 1-265, 9-5
342850-0307 ..	GASKET 72,9X89,6X5,2 MM 3" FDA	1-231
342850-0405 ..	GASKET 47,8X62,6X5,2 MM 2" FDA	1-197, 1-207
342850-0408 ..	GASKET 97X117,7X5,2 MM 4" FDA	1-197
342901-0101 ..	HOSE NIPPLE, EXT.THR. R1/8-7 MM	2-27
342901-0102 ..	HOSE NIPPLE, EXT.THR. R1/4-7 MM	6-17, 6-69, 6-71
342901-0105 ..	HOSE NIPPLE, EXT.THR. R1/2-12 MM	1-207, 2-121, 2-205, 6-25, 6-37, 6-69, 6-71
342920-0116 ..	STRAIGHT COUPLING,EXT.THREADED 6/4-R1/2"	2-205
342920-0122 ..	STRAIGHT COUPLING,EXT.THREADED 8/6-R1/4"	1-225, 2-141
342920-0124 ..	STRAIGHT COUPLING,EXT.THREADED 8/6-R1/2"	6-69, 6-71
342920-0132 ..	STRAIGHT COUPL.,EXT.THREADED 10/8-R1/4"	2-209
342920-0151 ..	STRAIGHT COUPL.,EXT.THREAD.15/12,5-R1/2"	1-207, 2-205
342921-0113 ..	STRAIGHT COUPLING,EXT.THREADED 6/4-G1/8"	1-355, 1-357, 2-207, 2-243, 10-57, 10-59
342921-0114 ..	STRAIGHT COUPLING,EXT.THREADED 6/4-G1/4"	2-207, 10-57, 10-59
342921-0115 ..	STRAIGHT COUPLING,EXT.THREADED 6/4-G3/8"	2-207, 6-69, 6-71
342921-0121 ..	STRAIGHT CPLNG,EXT.THREADED 8/6-G1/8INCH	5-45, 5-47, 5-49
342921-0122 ..	STRAIGHT COUPLING,EXT.THREADED 8/6-G1/4"	2-205
342923-0122 ..	STRAIGHT COUPL.,INT.THREADED 8/6-G1/4"	2-37
342930-0122 ..	ELBOW 90 COUPL.,EXT.THREAD 8/6-R1/4"	1-225
342930-0133 ..	ELBOW 90 COUPL.,EXT.THREADED 10/8-R3/8"	6-69, 6-71
342931-0121 ..	ELBOW 90 COUPL.,EXT.THREAD 8/6-G1/8"	1-13, 5-35, 5-37, 5-45, 5-47, 5-49, 5-137, 5-139, 5-157, 5-159, 6-17
342940-0122 ..	T-COUPLING,EXT.THREAD 8/6-R1/4"	1-225
342941-0114 ..	T-COUPLING,EXT.THREAD 6/4-G1/4"	2-201, 2-203
342980-0114 ..	BANJO-CONNECTION,RING 6/4-G1/4"	10-57, 10-59
342980-0121 ..	BANJO-CONNECTION,RING 8/6-G1/8	4-81, 4-83, 4-85, 4-129, 4-131, 4-133
342980-0122 ..	BANJO-CONNECTION,RING 8/6-G1/4 INCH	2-79
342980-0303 ..	BANJO-HOLLOW BOLT COUPL,EXT.THR.01-G1/8	1-323, 1-325, 4-81, 4-83, 4-85, 4-129, 4-131, 4-133
342980-0304 ..	BANJO-HOLLOW BOLT COUPL,EXT.THR.01-G1/4	1-255, 2-79
342980-0314 ..	BANJO-HOLLOW BOLT COUPL,EXT.THR.02-G1/4	10-57, 10-59
342981-0122 ..	BANJO CONNEC,RING,FOR PLAST.TUBE 8-G1/4"	5-29, 5-31, 5-33, 5-129, 5-131
342991-0100 ..	HOSE CLIP,WORM DRIVE TYPE 10-13	1-255, 2-37, 6-17, 6-37, 10-71
342991-0101 ..	HOSE CLIP,WORM DRIVE TYPE (13)-16	1-207, 2-19, 2-21, 2-27, 2-39, 2-87, 2-205, 2-271, 6-13, 6-15, 6-17, 6-19, 6-23, 10-71
342991-0102 ..	HOSE CLIP,WORM DRIVE TYPE (16)-19	2-9, 2-39, 2-77, 2-121, 6-49
342991-0103 ..	HOSE CLIP,WORM DRIVE TYPE (19)-23	1-283, 1-285, 2-29
342991-0104 ..	HOSE CLIP,WORM DRIVE TYPE (23)-27	2-19, 2-21, 2-205
342991-0105 ..	HOSE CLIP,WORM DRIVE TYPE (27)-30	2-15, 2-65, 2-119
342991-0106 ..	HOSE CLIP,WORM DRIVE TYPE (30)-36	2-29, 2-65
342991-0109 ..	HOSE CLIP,WORM DRIVE TYPE (48)-50	1-199, 2-113, 2-271
342991-0110 ..	HOSE CLIP,WORM DRIVE TYPE (54)-63	2-19, 2-21, 2-29
342991-0111 ..	HOSE CLIP,WORM DRIVE TYPE (63)-73	1-181
342991-0114 ..	HOSE CLIP,WORM DRIVE TYPE (93)-110	2-143
344502-0021 ..	GREASE NIPPLE STRAIGHT M6	5-75, 5-77, 5-79
346800-0109 ..	SILENCER FILTER R1/8"	2-87
346800-0110 ..	SILENCER FILTER R1/4"	1-225, 1-319, 1-335, 1-343
350001-0006 ..	PUSH-IN FITTING QS-F-G1/8-6	2-201, 2-203
350002-0006 ..	PUSH-IN L-FITTING QSL-F-G1/8-6	1-223, 5-5, 5-7, 5-145, 5-147, 7-39, 7-101, 7-103

Part No	Description	Page No
350002-0009 ..	PUSH-IN L-FITTING QSL-F-G1/4-8	2-49, 7-161, 7-163, 7-165
350002-0012 ..	PUSH-IN L-FITTING QSL-F-G3/8-8	2-51, 7-159
350004-0003 ..	PUSH-IN L-FITTING QSL-F-8	7-159
350005-0002 ..	PUSH-IN T-FITTING QST-F-6	7-161, 7-163, 7-165
350006-0003 ..	PUSH-IN FITTING QS-F-8H-6	1-335
350006-0007 ..	PUSH-IN FITTING QS-F-12H-6	7-161, 7-163, 7-165
350007-0006 ..	PUSH-IN T-FITTING QST-F-G1/8-6	2-201, 2-203
350013-0005 ..	PLUG QSC-12H	7-161, 7-163, 7-165
350015-0001 ..	Y-FITTING QSY-F-6	5-165, 5-167
351120-0126 ..	CABLE SILFLEX SIHF 2X4 0046025	7-79
351120-0145 ..	CABLE SILFLEX SIHF 3X2,5 0046020	7-85
351120-0164 ..	CABLE SIHF 4X1,5MM2 GREEN/YELLOW	1-193, 1-281
351120-0168 ..	CABLE SIHF 4X10MM2 GREEN/YELLOW	1-367, 1-369
351150-0166 ..	CABLE OLFLEX 4X4 MM2 LIGHT/GREY	2-107, 2-109, 2-111, 6-41, 6-43
351150-0196 ..	CABLE OLFLEX 7X4 MM2 LIGHT/GREY	1-293
351150-0403 ..	CABLE OLFLEX 3X0,75 MM2 LIGHT/GREY	1-227, 1-355, 1-357, 2-57, 2-59, 2-79, 2-81, 2-107, 2-109, 2-111, 2-149, 2-151, 6-35, 6-69, 6-71, 7-199, 7-215
351150-0404 ..	CABLE OLFLEX 4X0,75 MM2 LIGHT/GREY	1-227, 1-351, 1-355, 1-357, 2-57, 2-59, 2-107, 2-109, 2-111
351150-0405 ..	CABLE OLFLEX 5X0,75 MM2 LIGHT/GREY	1-119, 1-351, 1-355, 1-357, 2-57, 2-59, 2-107, 2-109, 2-111, 2-149, 2-151, 5-275, 5-277, 7-45, 7-47, 7-205
351150-0406 ..	CABLE OLFLEX 7X0,75 MM2 LIGHT/GREY	2-57, 2-59, 2-77, 2-107, 2-109, 2-111, 2-149, 2-151, 6-31, 7-45, 7-47
351150-0407 ..	CABLE OLFLEX 12X0,75 MM2 LIGHT/GREY	1-355, 1-357, 7-203, 7-219
351150-0412 ..	CABLE OLFLEX 3X1,5 MM2 LIGHT/GREY	1-281, 2-107, 2-109, 2-111, 2-149, 2-151, 7-45, 7-47, 7-133, 7-135, 7-137, 7-139, 7-141
351150-0413 ..	CABLE OLFLEX 4X1,5 MM2 LIGHT/GREY	2-149, 2-151, 7-133, 7-135, 7-137, 7-139, 7-141
351150-0414 ..	CABLE OLFLEX 5X1,5 MM2 LIGHT/GREY	2-149, 2-151
351150-0415 ..	CABLE OLFLEX 7X1,5 MM2 LIGHT/GREY	7-133, 7-135, 7-137, 7-139, 7-141
351150-0417 ..	CABLE OLFLEX 3X2,5 MM2 LIGHT/GREY	1-227, 2-149, 2-151
351150-0418 ..	CABLE OLFLEX 4X2,5 MM2 LIGHT/GREY	1-367, 1-369, 2-33, 2-57, 2-59, 2-79, 2-107, 2-109, 2-111, 6-17, 6-27
351150-0420 ..	CABLE OLFLEX 7X2,5 MM2 LIGHT/GREY	7-133, 7-135, 7-137, 7-139, 7-141
351150-0425 ..	CABLE OLFLEX 25X0,75 MM2 LIGHT/GREY	1-351, 1-355, 1-357, 2-57, 2-59, 2-107, 2-109, 2-111, 2-149, 2-151, 6-67, 7-133, 7-135, 7-137, 7-139, 7-141
351150-0430 ..	CABLE OLFLEX 5X35 MM2 LIGHT/GREY	2-149, 2-151
351150-0431 ..	CABLE OLFLEX 2X0,75 MM2 LIGHT/GREY	6-17, 6-27, 7-45, 7-47
351160-0102 ..	CABLE (1UNIT = 100M)	1-355, 1-357, 8-23
351160-0104 ..	CABLE AWM 1X1,5 MM2 DARKBLUE	8-23
351160-0105 ..	CABLE AWM 1X2,5 MM2 DARKBLUE	8-23
351160-0106 ..	CABLE AWM 1X4 MM2 DARKBLUE	8-23
351161-0102 ..	CABLE (1UNIT = 100M)	8-23
351161-0104 ..	CABLE AWM LIGHTBLUE 1,5MM2	8-23
351161-0105 ..	CABLE AWM 1X2,5 MM2 LIGHTBLUE	8-23
351161-0110 ..	CABLE AWM 1X25 MM2 LIGHTBLUE	6-11
351161-0111 ..	CABLE AWM 1X35 MM2 LIGHTBLUE	6-11, 8-23
351162-0102 ..	CABLE AWM 1X0,75 MM2 YELLOW-GREEN	8-23
351162-0104 ..	CABLE AWM 1X1,5 MM2 YELLOW-GREEN	8-23
351162-0105 ..	CABLE AWM 1X2,5 MM2 YELLOW-GREEN	8-23
351162-0106 ..	CABLE AWM 1X4 MM2 YELLOW-GREEN	8-23
351162-0107 ..	CABLE AWM 1X6 MM2 YELLOW-GREEN	8-23
351162-0109 ..	CABLE AWM 1X16 MM2 YELLOW-GREEN	6-11, 8-23
351164-0102 ..	CABLE AWM 1X0,75 MM2 BLACK	8-23
351164-0104 ..	CABLE AWM 1X1,5 MM2 BLACK	8-23
351164-0105 ..	CABLE (1UNIT = 100M)	8-23
351164-0106 ..	CABLE AWM 1X4 MM2 BLACK	8-23
351164-0107 ..	CABLE AWM 1X6 MM2 BLACK	8-23
351164-0111 ..	8ABLE AWM 1X35 MM2 BLACK	6-11, 8-23
351172-0102 ..	CABLE AWM 1X 0,75 MM2 DARKBLUE	6-67
351175-0102 ..	CABLE AWM 1X 075 MM2 YELLOW-GREEN	2-41
351416-0010 ..	MINIATURE CIRC. BREAK., FAZ -D1 1-POLE	8-91, 8-93
351416-0020 ..	MINIATURE CIRC. BREAK., FAZ -D2 1-POLE	8-91, 8-93
351416-0060 ..	MINIATURE CIRC. BREAK., FAZ -D6 1-POLE	8-91, 8-93
351416-0100 ..	MINIATURE CIRC. BREAK., FAZ -D10 1-POLE	8-91, 8-93
351416-0160 ..	MINIATURE CIRC. BREAK., FAZ -D16 1-POLE	8-91, 8-93
351418-0060 ..	MINIATURE CIRC. BREAK., FAZ-D6/3 3-POLE	8-91, 8-93
351418-0100 ..	MINIATURE CIRC. BREAK., FAZ-D10/3 3-POLE	8-91, 8-93
351418-0250 ..	MINIATURE CIRC. BREAK.,FAZ-D25/3 3-POLE	8-91, 8-93
351418-0400 ..	MINIATURE CIRC. BREAK.,FAZ-D40/3 3-POLE	8-91, 8-93
352103-0100 ..	CABLE GLAND, STR 9, PR15,2/PG9	1-367, 1-369, 2-39, 2-55, 2-155, 2-157, 6-67
352103-0101 ..	CABLE GLAND, ST 9, PR15,2/PG9	1-197, 1-207, 1-225, 1-227, 1-231, 1-261, 1-287, 1-289, 1-293, 1-319, 1-351, 1-355, 1-357, 1-367, 1-369, 2-27, 2-39, 2-81, 2-87, 2-89, 2-207, 6-31, 6-35, 6-67, 6-69, 6-71, 6-77, 7-7, 7-133, 7-135, 7-137, 7-139, 7-141
352103-0106 ..	CABLE GLAND, ST 11, PR18,6/PG11	1-225, 1-255, 1-367, 1-369, 2-55, 2-79, 2-97, 2-107, 2-109, 2-111, 2-155, 2-157, 5-187, 5-189, 5-191, 6-9, 6-11, 7-133, 7-135, 7-137, 7-139, 7-141
352103-0108 ..	CABLE GLAND, ST 13,5 , PR20,4/PG13,5	1-227, 1-367, 1-369, 2-55, 2-57, 2-59, 2-97, 2-99, 2-107, 2-109, 2-111, 2-149, 2-151, 2-155, 2-157, 5-275, 5-277, 6-17, 6-27, 6-31, 7-115, 7-133, 7-135, 7-137, 7-139, 7-141, 7-179, 8-25
352103-0110 ..	CABLE GLAND, STR 16, PR22,5/PG16	1-351, 2-33, 2-97, 2-107, 2-109, 2-111, 2-149, 2-151, 2-155, 2-223, 6-27, 6-31, 6-67, 7-205
352103-0111 ..	CABLE GLAND, ST 16, PR22,5/PG16	1-181, 1-355, 1-357, 1-367, 1-369, 2-79, 2-95, 6-41, 6-43, 7-7, 7-133, 7-135, 7-137, 7-139, 7-141, 7-203
352103-0115 ..	CABLE GLAND, STR 21, PR28,3/PG21	1-293, 2-145, 2-149, 2-151, 6-41, 6-43, 7-7, 7-133, 7-135, 7-137, 7-139, 7-141
352103-0116 ..	CABLE GLAND, ST 21, PR28,3/PG21	1-351, 1-355, 1-357, 1-367, 1-369, 2-95, 6-67, 7-133

Part No	Description	Page No
		7-135, 7-137, 7-139, 7-141
352103-0120 ..	CABLE GLAND, STR 29, PR37,0/PG29	1-367, 1-369, 2-57, 2-59, 2-107, 2-109, 2-111, 2-149, 2-151, 6-67
352103-0121 ..	CABLE GLAND, ST 29, PR37,0/PG29	1-367, 1-369, 2-55, 2-57, 2-59, 2-97, 2-107, 2-109, 2-111, 2-149, 2-151, 2-155, 2-157, 7-133, 7-135, 7-137, 7-139, 7-141
352103-0123 ..	CABLE GLAND, ST 42, PR54,0/PG42	6-11
352113-0101 ..	CABLE TIE, BLACK 92X2,5 MM	1-219, 2-87, 4-105, 4-107, 4-109, 4-111, 4-149, 4-151, 4-153, 4-155, 4-233, 5-185, 5-235, 5-237, 5-239, 5-241, 5-243, 5-245
352113-0102 ..	CLIP-STRIP, BLACK 188X4,8 MM	3-13, 3-29, 5-35, 5-37, 5-137, 5-139, 5-185, 5-235, 5-237, 5-239, 5-241, 5-243, 5-245, 7-21, 7-59, 7-71, 10-71
352113-0103 ..	CLIP STRIP, 290X7,6 MM	3-13, 3-29
352113-0104 ..	CLIP STRIP, 300X4,8 MM	2-205
352113-0203 ..	ANCHOR PLATES FOR STRIPS, TYPE TM3S8-M0	1-219, 6-13, 6-15, 7-75, 8-25
352113-0204 ..	ANCHOR PLATES FOR STRIPS, TYPE TM3S25-M	1-15, 1-17, 1-129, 1-131, 1-281, 1-299, 1-301, 2-57, 2-59, 2-107, 2-109, 2-111, 2-179, 2-181, 2-197, 2-199, 3-13, 3-29
352113-0205 ..	ANCHOR PLATES FOR STRIPS, TYPE TM2S8-C10	1-307, 1-309, 2-87, 3-13, 3-29, 6-49, 7-21, 7-27, 7-31, 7-45, 7-47, 7-59, 7-71, 7-73, 7-75, 7-79, 7-95, 7-109, 7-111, 7-159, 7-173, 7-177, 8-25, 8-39, 8-41, 8-43, 8-97, 8-99
353001-0103 ..	END SLEEVE 0,75 MM2	5-275
353001-0116 ..	END SLEEVE H0.5/14 ORANGE	1-367, 1-369
353021-0120 ..	FEED THROUGH TERMINAL, 10215.8	8-75, 8-103
353021-0122 ..	TERMINAL DISCONNECTBLE, WTR 2,5 D	8-71
353021-0127 ..	TERMINAL DISCONNECTABLE, WTR 2,5+WSD 2,5	1-365
353021-0212 ..	FEED THROUGH TERMINAL, 10200.0	2-97, 2-155, 8-71, 8-85
353021-0213 ..	FEED THROUGH TERMINAL, 10201.0	1-229, 1-295, 7-151, 7-153
353021-0214 ..	FEED THROUGH TERMINAL, 10202.0	8-71
353021-0216 ..	FEED THROUGH TERMINAL, 10200.8	6-31, 6-67, 8-71
353021-0226 ..	BY-PASS TERMINAL WDU 35	8-77, 8-79
353021-0301 ..	TERMINALS,TRIPLE-LEVEL, DLI 2,5/35 PA	2-55, 2-97, 2-155, 2-157, 7-143, 7-145, 7-147, 7-149
353021-0302 ..	TERMINALS,TRIPLE-LEVEL, DLD 2,5/35 PA	1-229, 1-353, 1-363, 1-365, 7-143, 7-145, 7-147, 7-149
353022-0002 ..	NEUTRAL TERMINAL, 10107.8	8-85
353022-0004 ..	NEUTRAL TERMINAL, 10109.8	8-85
353024-0204 ..	EARTH TERMINAL WPE 2,5	1-295, 2-55, 2-155, 2-157, 6-67, 8-85, 8-87
353024-0205 ..	EARTH TERMINAL, 1010.1	1-229, 1-353, 1-363, 1-365, 6-31, 6-67, 7-147, 7-149, 7-151, 7-153, 8-71, 8-103
353024-0206 ..	EARTH TERMINAL, 1010.2	8-87
353024-0207 ..	EARTH TERMINAL, 1010.3	8-71, 8-87
353024-0209 ..	EARTH TERMINAL, 1010.5	6-11, 8-77, 8-79, 8-87
353031-0201 ..	END BRACKET EW35	6-67
353031-0203 ..	END SUPPORT, WEW 35/2	2-55, 2-97, 2-155, 2-157, 6-31, 7-143, 7-145, 7-151, 7-153, 8-71, 8-75, 8-85, 8-87, 8-101
353032-0004 ..	END PLATE WAP 2,5-10 BEIGE	1-295, 1-365, 2-97, 2-155, 8-71, 8-85
353032-0009 ..	END PLATE, WAP FOR WDK	2-97, 2-155, 2-157, 7-143, 7-145, 7-147, 7-149, 8-71, 8-75
353032-0010 ..	END PLATE WAP	8-75, 8-103
353032-0013 ..	END PLATE, 13818.6	7-143, 7-145, 7-147, 7-149
353032-0301 ..	END PLATE WAP, 13132.6	2-55, 2-97, 2-155, 2-157, 7-143, 7-145, 7-147, 7-149
353032-0302 ..	END PLATE WAP, 13176.6	1-229, 1-353, 1-363, 1-365, 7-147, 7-149
353033-0104 ..	END PLATE, 10502.8	8-85
353034-0018 ..	BRIDGE CONNECTOR WQV 6/2	8-71
353034-0030 ..	BRIDGE CONNECTOR WQV 2,5/10, 10544.6	1-295, 2-97, 2-155, 2-157, 6-31, 6-67, 8-71, 8-75, 8-85, 8-103
353034-0031 ..	BRIDGE CONNECTOR, WQV 4/10, 10520.6	7-151, 7-153
353034-0404 ..	BRIDGE CONNECTOR Q10, 13131.0	1-229, 1-353, 1-363, 1-365, 2-55, 2-97, 2-155, 2-157, 7-143, 7-145, 7-147, 7-149
353041-0001 ..	BUS BAR RAIL 10X3MM SSCH	8-85
353041-0106 ..	HOLDER ZB35 K 5026.8	8-85
353042-0005 ..	RAIL TS 35/7.5	6-11
353101-0118 ..	CABLE SHOE 0,5-1,5MM2 M3 RED	2-41
353101-0130 ..	CABLE SHOE 1,5-2,5MM2 M4 BLUE	2-273, 2-275
353101-0132 ..	CABLE SHOE 1,5-2,5MM2 M5 BLUE	7-85
353101-0153 ..	CABLE SHOE 4,0-6,0MM2 M6 YELLOW	2-149, 2-151
353104-0130 ..	CABLE SHOE, RING UNINS., YAV 025 M 4	7-85
353104-0140 ..	CABLE SHOE, RING UNINS., YAV 06 M 4	7-79
353104-0168 ..	CABLE SHOE, RING UNINS., YAV 16 M 6	6-11
353105-0117 ..	PIN CABLE SHOE 0,75-1,5MM2 RED A1519SR	2-41
353105-0200 ..	PIN CABLE SHOE A4630SR	6-11
353240-0002 ..	GLAND W/O INSERT PG11 NORMAL	2-273, 2-275, 5-281
353240-0005 ..	GLAND W/O INSERT PG21 NORMAL	1-367, 1-369, 2-55, 2-97, 2-155, 7-133, 7-135, 7-137, 7-139, 7-141
353240-0006 ..	GLAND W/O INSERT PG29 NORMAL	1-227, 1-299, 1-301, 1-367, 1-369, 2-149, 2-151
353241-0002 ..	GLAND W/O INSERT PG11 EXTENDED	5-281
353241-0003 ..	GLAND W/O INSERT PG21 EXTENDED	2-149, 2-151
353242-0005 ..	HOSE GLAND W/O INSERT PG9 NORMAL	6-19, 6-67
353243-0001 ..	HOSE GLAND W/O INSERT PG9 EXTENDED	1-15, 1-17, 1-113, 1-193, 1-195, 1-201, 1-203, 1-207, 1-221, 1-227, 1-249, 1-281, 1-285, 1-313, 1-315, 1-351, 1-355, 1-357, 1-367, 1-369, 1-389
353243-0003 ..	HOSE GLAND W/O INSERT PG11 EXTENDED	1-277, 1-281, 1-335, 1-343, 1-351, 1-355, 1-357, 1-367, 1-369, 1-389
353243-0004 ..	HOSE GLAND W/O INSERT PG13,5 EXTENDED	1-367, 1-369, 1-389
353243-0005 ..	HOSE GLAND W/O INSERT PG16 EXTENDED	1-15, 1-17, 1-227, 1-249, 1-367, 1-369, 1-389, 2-149, 2-151, 7-219
353243-0007 ..	HOSE GLAND W/O INSERT PG21 EXTENDED	1-227, 1-367, 1-369, 1-389, 7-115
353243-0008 ..	HOSE GLAND W/O INSERT PG29 EXTENDED	2-149, 2-151, 7-115
353243-0009 ..	HOSE GLAND W/O INSERT PG13,5 EXTENDED	1-19, 1-119, 1-355, 1-357, 1-367, 1-369
353244-0003 ..	HOSE GLAND W/O INSERT PG13,5 EXTENDED	1-221, 1-227

Part No	Description	Page No
353245-0006 ..	GLAND, EXTENDED WITH INSERT, PG21/PR28,3	2-149, 2-151
353247-0005 ..	HOSE GLAND EMC PG21 EXTENDED	2-149, 2-151, 5-187, 5-189, 5-191
353249-0003 ..	INSERT, SINGEL HOLE, E151/11	5-281
353249-0008 ..	INSERT, SINGEL HOLE, EK 152/7	1-15, 1-17, 1-193, 1-201, 1-203, 1-221, 1-227, 1-281, 1-313, 1-315, 1-355, 1-357, 1-367, 1-369, 1-389
353249-0009 ..	INSERT, SINGEL HOLE, EK 152/9	1-113, 1-249, 1-285, 1-351, 1-355, 1-357, 1-367, 1-369
353249-0011 ..	INSERT, SINGEL HOLE, EK 153/11	1-7, 1-9, 1-19, 1-109, 1-119, 1-121, 1-177, 1-193, 1-277, 1-281, 1-335, 1-343, 1-351, 1-355, 1-357, 1-367, 1-369, 1-389, 1-397
353249-0013 ..	INSERT, SINGEL HOLE, EK 154/13	1-227, 1-281, 1-389
353249-0014 ..	INSERT, SINGEL HOLE, EK 154/16	1-15, 1-17, 1-367, 1-369, 7-219
353249-0036 ..	INSERT, MULTI HOLE, EK152 M 2X4	1-195, 1-355, 1-357, 1-367, 1-369, 5-281
353249-0049 ..	INSERT, SOLID, EK155G	2-149, 2-151
353249-0051 ..	INSERT, MULTI HOLE, E154M4X6	1-367, 1-369, 7-133, 7-135, 7-137, 7-139, 7-141
353249-0054 ..	INSERT, SINGEL HOLE, EK 156/25	7-183, 7-185
353249-0060 ..	INSERT, MULTI HOLE, E155M2X13	1-367, 1-369
353249-0061 ..	INSERT, SINGEL HOLE, EK 155/20	1-367, 1-369
353249-0067 ..	INSERT, SINGEL HOLE, E150/7	6-19, 6-67
353249-0079 ..	INSERT, MULTI HOLE, E155M8X5,5	1-299, 1-301
353249-0301 ..	SEALING PIN, 4X20	5-281
353249-0303 ..	SEALING PIN, 5,3X25	2-55
353250-0050 ..	GLAND, LOCK NUT M50X1,5	8-39, 8-41, 8-43
353300-0001 ..	SHRINKABLE HOSE	1-367, 1-369
353300-0006 ..	SHRINKABLE HOSE	1-367, 1-369
353300-0008 ..	SHRINKABLE HOSE	1-367, 1-369
353300-0010 ..	SHRINKABLE HOSE	1-367, 1-369
354000-0005 ..	MINIATURE CIRCUIT BREAKER, FAZ-C0,5/1	8-91, 8-93
354000-0040 ..	MINIATURE CIRCUIT BREAKER, FAZ-C4/1	8-85
354000-0060 ..	MINIATURE CIRCUIT BREAKER, FAZ-C6/1	8-85
354000-0100 ..	MINIATURE CIRCUIT BREAKER, FAZ-C10/1	8-85, 8-91, 8-93
354000-0160 ..	MINIATURE CIRCUIT BREAKER, FAZ-C16/1	8-85
359000-0025 ..	WIRE MARKING, YELLOW, PA3/6"-"	2-211, 2-213
359000-0101 ..	WIRE MARKING, YELLOW, PY01/3"1"	2-41
359000-0102 ..	WIRE MARKING, YELLOW, PY01/3"2"	2-41
359000-0400 ..	WIRE MARKING, YELLOW, PA2/4"0"	1-323, 1-325
359000-0401 ..	WIRE MARKING, YELLOW, PA2/4"1"	1-323, 1-325
359000-0402 ..	WIRE MARKING, YELLOW, PA2/4"2"	1-323, 1-325
359000-0403 ..	WIRE MARKING, YELLOW, PA2/4"3"	1-323, 1-325
359000-0404 ..	WIRE MARKING, YELLOW, PA2/4"4"	1-323, 1-325
359000-0405 ..	WIRE MARKING, YELLOW, PA2/4"5"	1-323, 1-325
359000-0406 ..	WIRE MARKING, YELLOW, PA2/4"6"	1-323, 1-325
359000-0407 ..	WIRE MARKING, YELLOW, PA2/4"7"	1-323, 1-325
359000-0408 ..	WIRE MARKING, YELLOW, PA2/4"8"	1-323, 1-325
359000-0409 ..	WIRE MARKING, YELLOW, PA2/4"9"	1-323, 1-325
359000-0500 ..	WIRE MARKING, YELLOW, PA3/6"0"	2-211, 2-213
359000-0501 ..	WIRE MARKING, YELLOW, PA3/6"1"	2-211, 2-213
359000-0502 ..	WIRE MARKING, YELLOW, PA3/6"2"	2-211, 2-213
359000-0503 ..	WIRE MARKING, YELLOW, PA3/6"3"	2-211, 2-213
359000-0504 ..	WIRE MARKING, YELLOW, PA3/6"4"	2-211, 2-213
359000-0505 ..	WIRE MARKING, YELLOW, PA3/6"5"	2-211, 2-213
359000-0506 ..	WIRE MARKING, YELLOW, PA3/6"6"	2-211, 2-213
359000-0507 ..	WIRE MARKING, YELLOW, PA3/6"7"	2-211, 2-213
359000-0800 ..	WIRE MARKING, YELLOW, PA3/6"A"	2-211, 2-213
359000-0802 ..	WIRE MARKING, YELLOW, PA3/6"C"	2-211, 2-213
359000-0803 ..	WIRE MARKING, YELLOW, PA3/6"D"	2-211, 2-213
359000-0808 ..	WIRE MARKING, YELLOW, PA3/6"I"	2-211, 2-213
359000-0812 ..	WIRE MARKING, YELLOW, PA3/6"M"	2-211, 2-213
359000-0815 ..	WIRE MARKING, YELLOW, PA3/6"P"	2-211, 2-213
359000-0818 ..	WIRE MARKING, YELLOW, PA3/6"S"	2-211, 2-213
359000-0819 ..	WIRE MARKING, YELLOW, PA3/6"T"	2-211, 2-213
359000-0820 ..	WIRE MARKING, YELLOW, PA3/6"U"	2-211, 2-213
359005-0010 ..	MARKING LABEL KIT 0 - 9, 04.841.2150.0	2-57, 2-59, 2-107, 2-109, 2-111, 2-149, 2-151, 6-17, 6-27, 6-31, 6-41, 6-43, 6-67, 7-133, 7-135, 7-137, 7-139, 7-141
359005-0050 ..	MARKING LABEL KIT X, 04.841.4550.0	2-57, 2-59, 2-107, 2-109, 2-111, 2-149, 2-151, 6-17, 6-27, 6-31, 6-41, 6-43, 6-67, 7-133, 7-135, 7-137, 7-139, 7-141
359011-0807 ..	MARKING PLATES 5-FW 1-50	2-97, 8-71, 8-85, 8-87, 8-101, 8-103
359011-0808 ..	MARKING PLATES 5-FW 51-100	8-75, 8-87
359011-0809 ..	MARKING PLATES 5-FW 101-150	6-31, 6-67, 8-75, 8-87
359011-0810 ..	MARKING PLATES 5-FW 151-200	8-75
359011-0811 ..	MARKING PLATES 5-FW 201-2	2-97, 8-75
359011-0817 ..	SYMBOL 5-GW (+) 50PC	2-55, 2-97, 2-155
359011-0818 ..	SYMBOL 5-GW (-) 50PC	2-55, 2-97, 2-155
359011-0819 ..	MARKING PLATES 5-GW (EARTH)	2-267, 5-281, 8-77, 8-79, 8-85
359011-0821 ..	SET OF SIGNS 6-FW 1-50	1-295, 2-155, 2-267, 5-281, 7-151, 7-153, 8-77, 8-79, 8-85, 8-87
359011-0822 ..	SET OF SIGNS 6-FW 51-100	8-85, 8-87
359011-0823 ..	SET OF SIGNS 6-FW 101-150	1-229, 1-295, 1-353, 1-363, 1-365, 7-147, 7-149, 8-85
359011-0824 ..	SET OF SIGNS 6-FW 151-200	1-353, 1-363, 2-97, 2-155, 7-143, 7-145, 7-147, 7-149
359011-0825 ..	SET OF SIGNS 6-FW 201-250	1-363, 7-143, 7-145
359011-0832 ..	SET OF SIGNS 6-GW (+)	1-229, 1-295, 1-353, 1-363, 1-365, 7-143, 7-145, 7-147, 7-149, 8-71
359011-0833 ..	SET OF SIGNS 6-GW (-)	1-229, 1-295, 1-353, 1-363, 1-365, 7-143, 7-145, 7-147, 7-149, 8-71
359011-0834 ..	SET OF SIGNS 6-GW(EARTH)	1-229, 1-295, 1-353, 1-363, 1-365, 2-55, 2-97, 2-155, 2-157, 7-143, 7-145, 7-147, 7-149, 7-151, 7-153, 8-71, 8-103
359012-0800 ..	TERMINAL MARKING LAB. KIT, BSFW, 101-15	2-55, 2-97, 2-155, 2-157
359240-0100 ..	SIGN HOLDER FOR 359240-0001	6-65, 8-97, 8-99
359241-0122 ..	SIGN: " CLEANING STEAM BARRIER SPACE"	8-97, 8-99

Part No	Description	Page No
359241-0133	SIGN: " SERVICE SWITCH"	8-97, 8-99
359241-0201	SIGN: " HOUR METER"	8-97, 8-99
359241-0431	SIGN: " MAIN SWITCH"	6-65
359241-0482	SIGN "PACKAGE COUNTER"	8-97, 8-99
359243-0917	SIGN"400V, 50HZ, 100A"	6-65
359243-0918	SIGN"400V, 60HZ, 100A"	6-65
359301-0001	BUTTON SIGN, UP	2-265
359301-0005	BUTTON SIGN, DOWN	2-265
359301-0050	BUTTON SIGN, DROP CHUTE BRIK	2-265
359301-0090	BUTTON SIGN, INCHING	2-265
359301-0091	BUTTON SIGN, INCHING FINAL FOLDER	2-265
359301-0100	BUTTON SIGN, SPLICING	7-219
359301-0101	BUTTON SIGN, STRIP SPLICING ON	7-203
359301-0110	BUTTON SIGN, SHORT STOP	1-355, 1-357, 2-265, 7-203
359301-0130	BUTTON SIGN, LAMP TEST	2-265
359301-0160	BUTTON SIGN, DRAINAGE OF PRODUCT TUBE	2-265
359301-0170	BUTTON SIGN, SPOOLING OF FINAL FOLDER	2-265
359301-0488	BUTTON SIGN, MATERIAL LOCKING	7-219
359301-0519	SIGN "TPOP RESET"	2-265
359605-0002	MANDATORY SIGN ISO, EYE PROTECTION	2-39
359705-0003	WARNING SIGN ISO, DANGEROUS CHEMICALS	2-39
359705-0004	WARNING SIGN ISO, DANGEROUS CHEMICALS	1-287, 1-289, 2-19, 2-21, 2-39
359705-0005	WARNING SIGN ISO, MOVING PART	7-45, 7-47, 7-67
359705-0007	WARNING SIGN ISO, HOT SURFACE	1-7, 1-9, 1-109, 1-119, 1-121, 1-177, 1-193, 1-221, 1-281, 1-285, 7-73
359705-0015	WARNING SIGN ISO, RISK OF ELECTRIC SHOCK	1-201, 1-227, 1-281, 1-293, 1-351, 1-355, 1-357, 2-55, 2-97, 2-155, 2-157, 2-265, 5-187, 5-189, 5-191, 5-281, 8-27, 8-29, 8-31, 8-33, 8-35, 8-37, 8-45, 8-77, 8-79
359710-0001	WARNING SIGN ISO, HOT SURFACE	5-203, 5-205, 5-207, 5-209, 5-211, 5-213
400828-0000	SPRING	7-79
400833-0000	PLUNGER	7-79
434320-0000	AXLE PIN	4-7, 4-9, 4-11, 4-17, 4-19, 4-21, 4-73, 4-79
434321-0000	CURVE ROLLER	4-7, 4-9, 4-11, 4-17, 4-19, 4-21, 4-51, 4-53, 4-55, 4-57, 4-61, 4-63, 4-65, 4-67, 4-73, 4-79
434665-0000	HOOD	1-213, 1-215, 1-217
436556-0000	CURVE ROLLER	4-7, 4-9, 4-11, 4-17, 4-19, 4-21
436781-0000	GASKET	1-285
440259-0000	RETAINING RING	10-75
440650-0000	WASHER	1-239
440655-0000	RING	1-235
440659-0000	CYLINDRICAL PIN	1-239
440660-0000	COMPRESSION SPRING	1-239
440661-0000	COMPRESSION SPRING	1-239
440662-0000	COMPRESSION SPRING	1-237
440663-0000	COMPRESSION SPRING	1-235, 1-239
441706-0000	WASHER	4-205, 4-207, 4-215, 4-217
441737-0000	WASHER	1-7, 1-9, 1-109, 1-119, 1-121, 1-123, 1-125, 1-177
441739-0000	WASHER	1-7, 1-9, 1-109, 1-119, 1-121, 1-177
441871-0000	PENDULUM SUSPENSION	1-199, 1-203
442237-0000	PORCA	1-183, 1-185
445848-0000	ELASTIC COUPLING	2-273, 2-275
449190-0000	SHAFT	5-251, 5-253
449939-0001	HEATING ELEMENT 15KW	1-201
449969-0100	TOOL DISMOUNTING	10-5
449970-0000	HOLDER	10-55
449971-0000	SPINDLE	10-55
450457-0000	FLANGE	2-65
450833-0000	FILTER	1-223, 1-319
451430-0000	CONNECTION HOUS.(MINOR)	1-201
456123-0000	SUPPORT	1-201
456796-0000	ROLLER	1-85, 1-87
457696-0001	JOINT PIECE	5-59, 5-61
464368-0000	CRAMP	4-233
466042-0000	SEAL	1-47, 1-49, 1-51, 1-85, 1-87
466046-0000	ROLLER	1-47, 1-49, 1-51, 1-85, 1-87
466074-0002	SLIDER	5-59, 5-61
466089-0000	SEAL	1-85, 1-87
466092-0000	ROLL	1-85, 1-87
476185-0000	VALVE CONE	1-237
476220-0000	SPACER	5-59, 5-61
476975-0000	WHEEL	5-59, 5-61
479261-0000	NIPPLE	1-207, 6-69, 6-71
479964-0000	SIGN	2-131, 2-133
484701-0000	SHUTTER	5-83, 5-85, 5-87, 5-89, 5-91
486826-0001	SIGN "EMERGENCY STOP"	1-19, 1-355, 1-357, 2-223, 7-205, 7-219, 8-37
490901-0000	SEAL	1-85, 1-87
490998-0000	THROTTLE SCREW	1-183, 1-185
491305-0000	CONN.DIAGRAM AIR SUPERH.	1-201
491929-0000	IMPELLER WHEEL	2-33
493735-0000	NIPPLE	10-57, 10-59
495118-0014	DISTANCE PIPE L=14 MM	7-143, 7-145, 7-147, 7-149, 7-151, 7-153
495377-0000	BUSH	8-97, 8-99
495495-0000	COOLING ELEMENT SSR	8-81
497748-0000	PIN	1-241, 1-243

Part No	Description	Page No
499011-0000 ..	SHAFT	1-213, 1-215, 1-217
499387-0000 ..	PRESSURE ROLLER	1-213, 1-215, 1-217, 9-11, 9-13, 9-15, 9-17, 9-19
522308-0000 ..	SIGN	10-77
527898-0100 ..	MKS CONTAINER H2O2	2-17, 10-67
527912-0000 ..	NON-RETURN VALVE	2-27
529345-0100 ..	FILLING STATION H2O2	10-67
530551-0000 ..	WASHER	2-27
530587-0000 ..	WASHER	1-237
530588-0000 ..	SEAL RING	1-237, 9-21
530589-0000 ..	SEAL RING	1-199, 1-203, 1-235, 1-239, 9-21
530590-0000 ..	VALVE CONE	1-199, 1-203, 1-235, 1-239
530591-0000 ..	HOLDER	1-239
530592-0000 ..	SEAL RING HOLDER	1-235
530595-0000 ..	SEAL RING HOLDER	1-235
530597-0000 ..	WASHER	1-239
530598-0000 ..	WASHER	1-239
530599-0000 ..	RING	1-199, 1-203, 1-239
531345-0200 ..	PERSONAL PROTECT. EQ H2O2	9-3
531616-0000 ..	HOLDER	2-243
531731-0000 ..	GASKET	1-201
532117-0000 ..	CLAMP RING	1-241
532118-0000 ..	CLAMP RING	1-243
532208-0000 ..	SHAFT	10-73
532209-0000 ..	SHEET	10-73
532210-0100 ..	PEROXIDE CONTAINER TROLLEY	10-67
532211-0000 ..	DOWEL	10-73
532349-0000 ..	PLAIN BEARING	1-199, 1-203
532413-0000 ..	REDUCING NIPPLE	2-207, 2-243
532655-0000 ..	CAUTION SIGN	2-35, 10-69
532676-0000 ..	SHEET	10-57, 10-59
532677-0000 ..	PIPE	10-57, 10-59
532678-0000 ..	DOWEL	10-57, 10-59
532679-0000 ..	PLATE	10-57, 10-59
533014-0100 ..	LEAK FINDING EQUIPMENT (SUPERSTRUCTURE)	10-5
533015-0000 ..	WIRING DIAGRAM	10-57, 10-59
533169-0000 ..	DIAPHRAGM	1-235, 9-21
533374-0000 ..	FITMENT BOTTOM	10-61
533905-0100 ..	PONCH	10-57, 10-59
533906-0000 ..	FITMENT COVER	10-61
534310-0001 ..	NOZZLE	2-243, 5-83, 5-85, 5-87, 5-89, 5-91
534634-0000 ..	PIPE	10-71
534635-0000 ..	VALVE	10-71
534636-0000 ..	LEVEL GLAS	10-71
534637-0000 ..	ATTACHMENT	10-71
534691-0000 ..	DIAPHRAGM	10-71
534692-0000 ..	FRAME SECTION	10-71
534693-0000 ..	PLATE	10-71
534694-0000 ..	SUCTIONPIPE	10-71
534695-0000 ..	WEIGHT	10-71
534696-0000 ..	VALVE	10-71
534697-0000 ..	VALVE HOUSING	10-71
534698-0000 ..	NIPPLE	10-71
536704-0000 ..	WASHER	4-201, 4-203, 4-205, 4-207, 4-211, 4-213, 4-215, 4-217
536916-0000 ..	AXLE PIN	7-75
539212-0000 ..	GASKET	1-233, 9-21
540718-0000 ..	ELBOW PIPE JOINT	2-83
541163-0200 ..	CLAMP RING	1-233
541164-0200 ..	CLAMP RING	1-233
541165-0000 ..	WASHER	1-241, 1-243
541166-0000 ..	WASHER	1-235
544725-0000 ..	AXLE PIN	7-75
544894-0000 ..	SPRING	1-213, 1-215, 1-217
546929-0000 ..	FILTER	1-197, 1-207
549267-0000 ..	LID	1-319
553607-0000 ..	SLEEVE	1-235, 1-237, 1-239
554141-0000 ..	FILTER	1-223, 1-319
554142-0000 ..	FILTER HOUSING	1-223, 1-319
554162-0000 ..	SCREW	1-241, 1-243
554585-0000 ..	STUD SCREW	1-319
555458-0000 ..	SEALING WASHER	1-239
556133-0000 ..	SEALING WASHER	1-237
559810-0101 ..	TMCC2 CONTROLLER	8-105
560122-0000 ..	SUPPORT ROLLER	4-181, 4-183
560931-0000 ..	BRACKET	1-197
561427-0000 ..	CONTAINER	2-35, 10-69
563285-0000 ..	BLIND PLUG	2-27
565250-0000 ..	WASHER	2-35, 10-69
565251-0000 ..	VALVE	2-35, 10-69
566171-0000 ..	CUP SPRING	2-31
566194-0000 ..	WEIGHT	2-31
566195-0000 ..	LID	2-31
566196-0100 ..	LID WITH WEIGHT	2-29
567018-0000 ..	STEAM HOUSE	1-233
567070-0012 ..	ELECTRODE	1-287, 1-289

Part No	Description	Page No
567372-0000 ..	INSTRUCTION FOR USE	10-51
567743-0000 ..	SEAL	1-47, 1-49, 1-51, 1-85, 1-87
567746-0001 ..	ROLLER (STANDARD SIZE)	1-29, 1-31, 1-53, 1-55
569058-0000 ..	SUPPORT ROLLER	4-181, 4-183
569942-0000 ..	SLEEVE	10-75
569943-0000 ..	SLEEVE	10-75
573504-0000 ..	ROLLER	1-47, 1-49, 1-51, 1-85, 1-87
574051-0000 ..	RETAINING RING	10-75
574336-0000 ..	SEAL	1-85, 1-87
574455-0000 ..	TEMPLATE	10-25
574658-0000 ..	LOGOTYPE TP	10-77
575002-0000 ..	PLUNGER	7-69
575034-0000 ..	ROUND NUT	1-7, 1-9, 1-109, 1-119, 1-121, 1-177
576436-0100 ..	A-CYLINDER	1-233
576437-0100 ..	C-CYLINDER	1-233
576438-0100 ..	B-CYLINDER	1-233
576439-0000 ..	CYLINDER HOUSING	1-235, 1-239
576440-0000 ..	END SECTION	1-235, 1-239
576441-0000 ..	PISTON	1-235, 1-239
576442-0000 ..	PISTON ROD	1-239
576443-0000 ..	CYLINDER HOUSING	1-237
576444-0000 ..	END SECTION	1-237
576445-0000 ..	PISTON	1-237
576446-0000 ..	PISTON ROD	1-235
576447-0000 ..	PISTON ROD	1-237
576448-0000 ..	SPACER	1-235
576449-0000 ..	SPACER	1-235
576450-0000 ..	SPACER	1-239
576451-0000 ..	SPACER	1-237
578640-0000 ..	CLAMPING RING	1-303
578684-0000 ..	SPRING BRACKET	7-101, 7-103, 7-175
579318-0000 ..	SEAL	1-85, 1-87
582526-0100 ..	CARRIAGE	10-89
582527-0000 ..	ROD	10-91
583727-0000 ..	SHAFT	7-93
583986-0000 ..	ROLL	7-75
591341-0000 ..	PIN	2-9
596678-0000 ..	KNIFE	7-117, 7-125
598101-0000 ..	BEARING HOUSING	5-185
598549-0000 ..	SCREW	5-215
598713-0000 ..	PLATFORM	2-173, 2-175
598878-0000 ..	MACHINE SIGN 2 ADR. EEA	9-3
735041-0000 ..	CONNECTION CLAMP	1-351
751009-0000 ..	INSULATION	1-201
751395-0000 ..	FLANGE	2-33
751485-0000 ..	SCREW	1-303
751491-0000 ..	ROLL	1-75, 1-77, 1-79
751492-0000 ..	ROLL	1-75, 1-77, 1-79
751502-0000 ..	ROLLER	1-53, 1-55
751604-0000 ..	SPRING	1-213, 1-215, 1-217
752126-0000 ..	FORMING ROLLER	1-75, 1-77, 1-79
752127-0000 ..	FORMING ROLLER	1-75, 1-77, 1-79
752128-0000 ..	FORMING ROLLER	1-75, 1-77, 1-79
752156-0000 ..	FLANGE BUSHING	1-59, 1-61, 1-63, 1-75, 1-77, 1-79
752186-0002 ..	SHAFT	1-75, 1-77, 1-79
752186-0004 ..	SHAFT	1-53, 1-55
752186-0005 ..	SHAFT	1-39, 1-53, 1-55, 1-75, 1-77, 1-79
752186-0006 ..	SHAFT	1-59, 1-61, 1-63, 1-75, 1-77, 1-79
752186-0007 ..	SHAFT	1-33, 1-35, 1-37, 1-59, 1-61, 1-63
752186-0008 ..	SHAFT	1-75, 1-77, 1-79
752186-0009 ..	SHAFT	1-75, 1-77, 1-79
752186-0012 ..	SHAFT	1-75, 1-77, 1-79
752186-0013 ..	SHAFT	1-75, 1-77, 1-79
752186-0014 ..	SHAFT	1-29, 1-31, 1-53, 1-55
752186-0015 ..	SHAFT	1-33, 1-35, 1-37, 1-53, 1-55, 1-59, 1-61, 1-63
752186-0016 ..	SHAFT	1-29, 1-31, 1-53, 1-55, 1-91, 1-93
752186-0019 ..	SHAFT	1-39, 1-75, 1-77, 1-79
752288-0000 ..	SLEEVE	4-127
777170-0107 ..	HOOK SPANNER	10-45
777200-0101 ..	PIPE WRENCH	10-5
797090-0401 ..	JUMBO REEL TRUCK	10-77
905373-0000 ..	SCREW - LEG	10-7
906254-0000 ..	ROLLER	7-101, 7-103, 7-175
925998-0000 ..	DIAPHRAGM	1-251, 9-5
926907-0000 ..	SCREW	1-251
926934-0000 ..	SUPPORT	1-251
927203-0000 ..	COVER	1-251
927244-0100 ..	PUMP	2-39
927252-0000 ..	COMPRESSION SPRING	9-11, 9-13, 9-15, 9-17, 9-19
927262-0000 ..	PIPE	2-39
927339-0000 ..	ADAPTER	2-41
927340-0000 ..	DISC	2-41
927341-0000 ..	HOLDER	2-41
927342-0000 ..	CYLINDER	2-41

Part No	Description	Page No
927354-0000 ..	SCREW	1-253, 1-395
927362-0000 ..	MAGNET	2-41
927363-0000 ..	PLUG	2-41
927420-0001 ..	O-RING 5.1X1.6 SILICONE	1-223, 1-319
927421-0002 ..	O-RING 12.3X2.4 SILICONE	1-319
927421-0003 ..	O-RING 13.3X2.4 SILICONE	1-223, 1-285
927421-0004 ..	O-RING 15.3X2.4 SILICONE	1-223, 1-287, 1-289, 1-319
927421-0005 ..	O-RING 7.3X2.4 SILICONE	10-71
927422-0001 ..	O-RING 19.2X3 SILICONE	1-223, 1-319, 10-71
927422-0003 ..	O.RING 24.2X3 SILICONE	2-35, 10-69
927422-0005 ..	O-RING 36.2X3 SILICONE	2-33
927422-0006 ..	O-RING 42.2X3 SILICONE	1-223, 2-33
927422-0007 ..	O-RING 44.2X3 SILICONE	1-223, 1-319
927422-0009 ..	O-RING 54.5X3 SILICONE	1-319
927422-0016 ..	O-RING 79.5X3 SILICONE	2-19, 2-21
927454-0000 ..	GASKET	1-201
927859-0000 ..	TOOTHED PULLY	5-261, 5-263
928025-0000 ..	PLUG	2-39
929284-0000 ..	ROLLER	1-85, 1-87
929286-0000 ..	SEAL	1-85, 1-87
929355-0000 ..	ROLLER TPA 330	4-181, 4-183
929372-0000 ..	PISTON	4-91
950351-0000 ..	SHAFT	4-91
970215-0000 ..	STOP BLOCK	8-97, 8-99
971346-0000 ..	GUIDE PIN	8-97, 8-99
975917-0000 ..	KEY FOR SAFETY SWITCH 90044-103	7-207
977527-0000 ..	BRACKET	6-19
978380-0000 ..	BLIND PLUG	1-249
978381-0000 ..	WASHER 56X2MM	1-249
978440-0000 ..	CRAMP	1-249
978603-0000 ..	SIGN	2-49
978757-0000 ..	ROLLER 180-284ML	4-181, 4-183
978760-0000 ..	ROLLER TBA200SL	4-181, 4-183
979434-0000 ..	FERRULE	1-251
979500-0003 ..	ELECTRODE	1-197
979548-0000 ..	MACHINE PLATE	1-307, 1-309
979813-0000 ..	PLUG	9-11, 9-13, 9-15, 9-17, 9-19
979847-0000 ..	SHAFT COUPLING	7-179
979931-0000 ..	VOLUME BULGE	4-51, 4-53, 4-55, 4-57, 4-61, 4-63, 4-65, 4-67
979951-0000 ..	FLANGE	10-51
985328-0000 ..	CONNECTION	2-171, 2-173, 2-175, 2-179, 2-181, 2-189, 2-191
985756-0000 ..	KEY	7-45, 7-47
988666-0000 ..	GASKET	8-31, 8-33, 8-35, 8-37
988685-0000 ..	PIN	1-335, 1-343, 1-395, 1-397, 2-49, 2-131, 2-133, 2-219, 2-221, 2-235, 2-237, 2-253, 2-255, 2-257, 6-57, 6-61, 6-65, 7-207, 7-209, 7-217, 7-221, 8-31, 8-33, 8-35, 8-37
988690-0000 ..	RIM	7-209
996388-0500 ..	PEROXIDE PUMP	2-17
1010822-0000 .	RAILING	2-173, 2-175, 2-179, 2-181, 2-189, 2-191
1020142-0002 .	RAIL HOLDER, B55 WIDTH 30 MM	5-83, 5-85, 5-87, 5-89, 5-91
1020146-0000 .	LOCKING BLOCK REPL BY 1020290-101	5-83, 5-85, 5-87, 5-89, 5-91
1020637-0000 .	HOLDER	5-97, 5-99, 5-279
1020638-0000 .	HOLDER	5-279
1035201-0100 .	PAPER REEL HOLDER	10-67
1035362-0100 .	MEASURING DEVICE	10-5
1035654-0000 .	CONNECTION	1-303
1035788-0000 .	SHAFT	4-201, 4-203, 4-205, 4-207, 4-211, 4-213, 4-215, 4-217
1035792-0000 .	E-HINGE	1-335, 1-343, 1-395, 1-397, 2-49, 2-131, 2-133, 2-219, 2-221, 2-235, 2-237, 2-253, 2-255, 2-257, 6-57, 6-61, 6-65, 7-207, 7-209, 7-217, 7-221, 8-31, 8-33, 8-35, 8-37
1035794-0000 .	BLOCKING PIECE	6-57, 6-61, 6-65
1035828-0000 .	VOLUME BULGE	4-7, 4-9, 4-11, 4-17, 4-19, 4-21
1035831-0000 .	VOLUME SHIM	4-7, 4-9, 4-11, 4-17, 4-19, 4-21, 9-11, 9-13, 9-15, 9-17, 9-19
1035871-0000 .	SCREW	4-115, 4-117, 4-119, 4-121
1035877-0000 .	ARM LEFT	4-201, 4-203
1035878-0000 .	ARM RIGHT	4-211, 4-213
1035895-0000 .	SHAFT	7-21
1035954-0000 .	BUSHING	4-199, 4-209
1036155-0000 .	TOOTH PART	4-205, 4-207, 4-215, 4-217
1036156-0000 .	TOOTH PART	4-201, 4-203, 4-211, 4-213
1036187-0000 .	T-PIPE	1-199, 1-203
1036188-0000 .	SHAFT	1-199, 1-203
1036189-0000 .	SPINDEL GUIDE	1-199, 1-203
1036191-0000 .	SEAL HOLDER	1-199, 1-203
1036192-0000 .	SPACER ROD	1-199, 1-203
1036193-0000 .	CYLINDER BRACKET	1-203
1036241-0000 .	WASHER	2-187
1036278-0000 .	SLEEVE	4-127
1036293-0000 .	HOLDER	1-15, 1-17, 1-193, 1-203
1036294-0000 .	GASKET	1-193
1036304-0001 .	LOCKING ARM	6-61
1036304-0014 .	LOCKING ARM	6-61
1036314-0000 .	BOTTOM PANEL	1-181
1036318-0000 .	PIPE	1-181
1036319-0000 .	BRACKET	1-181
1036343-0000 .	SCREW	4-81, 4-83, 4-85, 4-129, 4-131, 4-133

Part No	Description	Page No
1036372-0000	.PIPE	1-201
1036373-0000	.HOLDER	1-201
1036389-0000	.LID	4-149, 4-151, 4-153, 4-155
1036475-0000	.PIN	1-129, 1-131
1036483-0000	.SEAL	4-201, 4-203, 4-211, 4-213
1036484-0000	.GASKET	4-201, 4-203, 4-211, 4-213
1036485-0000	.COVERING PLATE	4-201, 4-203, 4-211, 4-213
1036494-0000	.GUIDE BUSHING	4-115, 4-117, 4-119, 4-121
1036495-0000	.BUSHING	4-105, 4-107, 4-109, 4-111, 4-149, 4-151, 4-153, 4-155
1036501-0000	.SPACER	4-201, 4-203, 4-211, 4-213
1036563-0000	.WASHER	7-207, 7-217, 7-221
1036584-0000	.WASHER	4-93, 4-95, 4-97, 4-139, 4-141, 4-143, 9-5
1036585-0000	.EAR	4-105, 4-107, 4-109, 4-111, 4-149, 4-151, 4-153, 4-155
1036610-0000	.BRACKET	1-195, 1-219, 1-313, 1-315
1036615-0000	.SHAFT	4-205, 4-207, 4-215, 4-217
1036616-0000	.WASHER	4-205, 4-207, 4-215, 4-217
1036617-0000	.BRACKET	4-205, 4-207, 4-215, 4-217, 9-37
1036618-0000	.ROLL	4-205, 4-207, 4-215, 4-217
1036620-0000	.SHAFT	4-205, 4-207, 4-215, 4-217
1036622-0000	.GUIDE ROLLER	7-93
1036623-0000	.GUIDE ROLLER	1-311, 7-93
1036664-0000	.LID	4-105, 4-107, 4-109, 4-111
1036673-0000	.WASHER	2-103, 2-105, 4-187, 4-189
1036674-0000	.FASTENING PLATE	4-187, 4-189
1036794-0000	.PIPE	6-39
1036811-0000	.CLAMP	1-197, 1-207
1036826-0000	.PIPE	6-37
1036827-0000	.PIPE	6-37, 6-45
1036828-0000	.TANK	6-41, 6-43
1036911-0000	.CONTAINER	1-207
1036939-0000	.SIDE PIECE	1-305
1036940-0000	.SIDE PIECE	1-305
1036954-0000	.AXLE SUPPORT	1-47, 1-49, 1-51, 1-85, 1-87
1036955-0000	.AXLE SUPPORT	1-47, 1-49, 1-51, 1-85, 1-87
1036963-0000	.HOOK HOLDER	1-305
1036965-0000	.HOOK HOLDER	1-305
1037012-0000	.AXLE PIN	2-13
1037041-0000	.HOLDER	1-207
1037044-0000	.RAILING	1-303
1037069-0000	.SCREW	4-201, 4-203, 4-211, 4-213
1037089-0000	.SPACER	1-177
1037093-0000	.SENSOR BRACKET	1-231
1037102-0000	.SPACER PIPE	2-19, 2-21
1037104-0000	.LOCATING PIECE	4-199, 4-209
1037106-0000	.SLEEVE	4-199, 4-209
1037120-0000	.SHAFT	7-79
1037121-0000	.SHAFT	7-79
1037124-0000	.HOLDER	7-79
1037129-0000	.LID	1-183, 1-185, 6-47
1037130-0000	.CONNECTION BOX	2-223, 7-205
1037184-0000	.SPACER SCREW	6-11
1037254-0000	.SHIM	4-205, 4-207, 4-215, 4-217, 9-11, 9-13, 9-15, 9-17, 9-19
1037267-0000	.PIPE	1-183, 1-185
1037268-0000	.LID	1-183, 1-185
1037391-0000	.CANTILEVER	2-193
1037443-0000	.GASKET	2-69, 2-121
1037531-0000	.SPACER PLATE	6-11
1037539-0000	.BRACKET	2-27
1037562-0000	.SHAFT	2-273, 2-275
1037571-0000	.GUIDE BUSHING	2-171, 2-179, 2-181
1037572-0000	.COVER PLATE	8-39, 8-41, 8-43
1037573-0000	.GASKET	8-39, 8-41, 8-43
1037574-0000	.COVER PLATE	8-39, 8-41, 8-43
1037575-0000	.GASKET	8-39, 8-41, 8-43
1037583-0000	.HOLDER	6-69, 6-71
1037673-0000	.SLEEVE	2-107, 2-109, 2-111
1037696-0000	.CLAMPING PIECE	10-33
1037697-0000	.CLAMPING PIECE	10-33
1037733-0000	.VOLUME BULGE	4-7, 4-9, 4-11, 4-17, 4-19, 4-21
1037734-0000	.WEDGE	4-7, 4-9, 4-11, 4-17, 4-19, 4-21, 4-51, 4-53, 4-55, 4-57, 4-61, 4-63, 4-65, 4-67, 4-75
1037735-0000	.VOLUME SHIM	4-7, 4-9, 4-11, 4-17, 4-19, 4-21, 9-11, 9-13, 9-15, 9-17, 9-19
1037849-0000	.SLEEVE	4-219
1037851-0000	.LINK	4-219
1037852-0000	.SHAFT	4-221
1037853-0000	.SHAFT	4-201, 4-203, 4-205, 4-207, 4-211, 4-213, 4-215, 4-217
1037885-0000	.REAMED BOLT	1-47, 1-49, 1-51, 1-85, 1-87
1038021-0000	.WASHER	4-219
1038240-0000	.SPACER	4-91
1038275-0012	.SPACER	8-77, 8-79
1038275-0021	.SPACER	8-59
1038275-0030	.SPACER	8-77, 8-79
1038355-0000	.FRAME	8-97, 8-99
1038408-0000	.COVERING PLATE	8-25
1038464-0000	.SPROCKET	1-133, 1-135, 1-137

Part No	Description	Page No
1038509-0000	.WASHER	4-199, 4-209
1038576-0000	.AXLE SUPPORT	1-85, 1-87
1038634-0000	.DRAINING	1-197
1038637-0000	.WEDGE	4-7, 4-9, 4-11, 4-17, 4-19, 4-21
1038638-0000	.VOLUME BULGE	4-7, 4-9, 4-11, 4-17, 4-19, 4-21
1038639-0000	.VOLUME SHIM	4-7, 4-9, 4-11, 4-17, 4-19, 4-21
1038688-0000	.HOLDER	1-285
1038699-0000	.BRACKET	8-37
1038714-0000	.CABLE	8-51, 8-53, 8-55, 8-67, 8-69, 8-77, 8-79
1038828-0000	.PIPE	4-233
1038829-0000	.PIPE	4-233
1038865-0000	.SPACER DISC	7-45, 7-47
1038866-0000	.INTERMEDIARY SECTION	1-197
1038867-0000	.BOW CLAMP	4-205, 4-207, 4-215, 4-217
1040753-0000	.VOLUME FLAP	4-7, 4-9, 4-11, 4-17, 4-19, 4-21
1040754-0000	.VOLUME BULGE	4-7, 4-9, 4-11, 4-17, 4-19, 4-21
1040755-0000	.VOLUME SHIM	4-7, 4-9, 4-11, 4-17, 4-19, 4-21, 9-11, 9-13, 9-15, 9-17, 9-19
1040756-0000	.WEDGE	4-7, 4-9, 4-11, 4-17, 4-19, 4-21
1040796-0000	.PIPE	2-33
1040807-0000	.LID	2-29
1040808-0000	.GASKET	2-29
1040840-0000	.FLANGE	2-19, 2-21
1040841-0000	.FLANGE	2-19, 2-21
1040852-0000	.SEALING RING	2-19, 2-21
1040853-0000	.SEALING RING	2-19, 2-21
1040876-0000	.COVER	1-181
1040877-0000	.PLATE	1-181
1040878-0000	.PLATE	1-181
1040970-0000	.BRACKET	1-281, 1-319
1041046-0000	.FLOW METER	6-19
1041603-0000	.BRACKET	2-13
1041609-0000	.NUT	2-265
1041921-0000	.HOLDER	6-77
1041925-0000	.PIPE	6-35
1041926-0000	.PIPE	6-35
1041930-0000	.PIPE	6-25
1041931-0000	.PIPE	6-25
1041932-0000	.PIPE	6-69, 6-71
1041933-0000	.PIPE	6-69, 6-71
1041934-0000	.PIPE	6-45
1041937-0000	.SIGN	1-335
1041938-0000	.SIGN	6-75
1041943-0000	.CONNECTION BOX	6-31
1041946-0000	.PIPE	6-41, 6-43
1041963-0000	.WASTE BOX	6-49
1041967-0000	.COVERING PANEL	6-55
1041970-0000	.DOOR	6-61
1041972-0000	.DOOR	6-65
1041978-0000	.HINGE FLANGE	1-7, 1-9, 1-109, 1-177
1041979-0000	.HINGE FLANGE	1-7, 1-9, 1-109, 1-177
1041984-0000	.ATTACHMENT PIPE	6-19
1041988-0000	.CLAMP	1-245, 1-247
1086888-0000	.COVER	5-279
1086889-0000	.COVER	5-97, 5-99, 5-279
1095597-0100	.TERMINAL	2-265
1095607-0200	.COVERING PANEL	6-3, 6-5
1095608-0100	.WATER PANEL	6-3, 6-5
1095609-0200	.PNEUMATIC UNIT	6-73
1095610-0300	.MAIN SWITCH	6-3, 6-5
1095611-0300	.VALVE PANEL	6-73
1095612-0300	.COOLING WATER SYSTEM	6-3, 6-5
1095627-0300	.FOAM CLEANING UNIT	6-3, 6-5
1095630-0200	.CONNECTION BOX	6-3, 6-5
1095672-0100	.PIPE	6-33
1095673-0100	.SIDE	6-33
1095675-0100	.PIPE	6-33
1095676-0100	.PUMP	6-33
1095677-0100	.BRANCHING PIPE	6-33
1095678-0300	.BALL VALVE	6-33
1095681-0100	.SPRAY GUN	2-195
1095682-0100	.AIR JET GUN	2-123
1095706-0300	.COOLING WATER PUMP	6-13, 6-15
1095709-0200	.CONNECTION BOX	6-13, 6-15
1095710-0300	.COMPRESSOR UNIT	6-13, 6-15
1095714-0300	.SUPPLY SYSTEM	6-3, 6-5
1095715-0100	.ICE WATER	6-23
1095716-0100	.PIPE WORK-AIR	6-73
1095738-0300	.PROTECTIVE COVER	2-239
1095862-0100	.LADDER	1-297
1095863-0200	.PIVOT ARM	2-117
1095883-0200	.GABLE PLATE	6-51
1095884-0100	.ASSEMBLY TOOL	10-5
1095886-0200	.COVERING PANEL	6-51
1095888-0200	.HATCH	6-51

Part No	Description	Page No
1095889-0100	.DOOR	6-51
1095890-0200	.HATCH	6-51
1095891-0200	.DOOR	6-51
1103298-0000	.NON-SKID	2-65
1103300-0000	.NON-SKID	2-65, 2-119
1110083-0002	.DOLLY	4-115, 4-117, 4-119, 4-121, 9-11, 9-13, 9-15, 9-17, 9-19
1110930-0000	.INDUCTOR	4-93, 4-95, 4-97, 4-139, 4-141, 4-143, 9-11, 9-13, 9-15, 9-17, 9-19
1110931-0000	.INDUCTOR	4-93, 4-95, 4-97, 4-139, 4-141, 4-143, 9-11, 9-13, 9-15, 9-17, 9-19
1110932-0000	.INDUCTOR	4-93, 4-95, 4-97, 4-139, 4-141, 4-143, 9-11, 9-13, 9-15, 9-17, 9-19
1110934-0000	.INDUCTOR	4-93, 4-95, 4-97, 4-139, 4-141, 4-143, 9-11, 9-13, 9-15, 9-17, 9-19
1110936-0000	.INDUCTOR	4-93, 4-95, 4-97, 4-139, 4-141, 4-143, 9-11, 9-13, 9-15, 9-17, 9-19
1110937-0000	.INDUCTOR	4-93, 4-95, 4-97, 4-139, 4-141, 4-143, 9-11, 9-13, 9-15, 9-17, 9-19
1110938-0000	.INDUCTOR	4-93, 4-95, 4-97, 4-139, 4-141, 4-143, 9-11, 9-13, 9-15, 9-17, 9-19
1129066-0000	.RETURN PIPE	6-27
1129079-0000	.FLOW METER	6-19
1129086-0000	.BRACKET	1-15, 1-17
1129141-0000	.MACHINE BODY	6-13, 6-15
1129182-0000	.BRACKET	6-67
1129202-0000	.CONNECTION BOX	6-67
1129209-0000	.MOUNTING RAIL	6-67
1129210-0000	.MOUNTING RAIL	6-31
1129253-0000	.FASTENING PLATE	2-273, 2-275
1129274-0000	.GUIDE LUG	2-219, 2-221, 2-237, 2-249, 2-255, 2-257, 2-259, 6-57, 6-61
1129275-0000	.BOX FOR DIAGRAM	2-249
1129276-0000	.GASKET	8-39, 8-41, 8-43
1129318-0000	.BRACKET	8-25
1129324-0000	.WASHER	2-217, 2-231, 2-233
1129325-0000	.SEALING FLANGE	2-217, 2-231, 2-233
1129328-0000	.ATTACHMENT	2-27
1129342-0000	.PROTECTION	8-81
1129370-0000	.SIGN	2-131, 2-133
1129372-0000	.LID	1-367, 1-369
1129387-0000	.CONNECTION TABLE	6-49
1129402-0000	.SPACER SCREW	6-11
1129431-0000	.WASHER	1-47, 1-49, 1-51, 1-85, 1-87
1129432-0000	.LID	2-37
1129480-0000	.CABLE DUCT	1-355, 1-357
1129504-0000	.MOUNTING RAIL	2-155
1129549-0000	.SHEET	8-39, 8-41, 8-43
1129550-0000	.GASKET	8-39, 8-41, 8-43
1129599-0000	.CRAMP	4-233
1129600-0000	.BRAID	2-149, 2-151
1129643-0000	.STAIR	1-305
1129644-0000	.BRACKET	1-305
1129741-0000	.RAILING	1-303
1129767-0000	.SCREW	2-217, 2-219, 2-221, 2-235, 2-237, 2-249, 2-253, 2-255, 2-257, 2-259, 7-207, 7-209, 7-217, 7-221
1129770-0000	.BLOCKING PIECE	1-335, 1-343, 1-395, 1-397, 2-49, 2-131, 2-133, 2-217, 2-219, 2-221, 2-235, 2-237, 2-249, 2-253, 2-255, 2-257, 2-259, 7-207, 7-209, 7-217, 7-221, 8-31, 8-33, 8-35, 8-37
1129801-0000	.PIPE	1-231
1129802-0000	.PIPE	1-231
1129839-0000	.COOLING PLATE	7-13
1129869-0000	.COOLING PLATE	7-13
1140039-0000	.CONVEYOR FRAME	10-91
1140040-0000	.BRACKET	10-91
1140077-0000	.RING	1-13
1140082-0000	.LOCK SHAFT	5-269
1140129-0000	.HOLDER	2-93
1140268-0000	.TEMPLATE	10-25
1140283-0000	.TEMPLATE	10-25
1140320-0000	.TEMPLATE	10-25
1140480-0000	.CLAMP	1-245, 1-247
1140603-0000	.COMPRESSOR UNIT	6-17
1140642-0000	.PIPE	6-41, 6-43
1140670-0000	.BRACKET	6-41, 6-43
1140685-0000	.BEAM	1-399
1140769-0000	.DOOR STOPPER	8-25
1140840-0000	.WHEEL	10-91
1143215-0000	.SPRING	4-27, 4-29, 4-39, 4-41
1143216-0000	.SPRING	4-27, 4-29, 4-39, 4-41
1143530-0000	.SPRING	5-235, 5-237, 5-239, 5-241, 5-243, 5-245
1144264-0000	.HUB	5-23, 5-25, 5-113, 5-115
1144312-0000	.AXLE PIN	5-23, 5-25, 5-113, 5-115
1144324-0300	.FRAMEWORK	5-3
1144329-0300	.PULL-DOWN DEVICE	5-3
1144331-0300	.PRESSURE DEVICE	5-3
1144335-0000	.ROLLER	5-23, 5-25, 5-113, 5-115
1144354-0000	.WASHER	5-23, 5-25, 5-113, 5-115
1144356-0000	.COVER	5-23, 5-25, 5-113, 5-115
1144417-0000	.BUSHING	5-23, 5-25, 5-113, 5-115
1144468-0000	.BEARING HOUSING	5-261, 5-263
1144470-0000	.SHAFT	5-257, 5-261, 5-263
1144472-0000	.LEVER	5-5, 5-7
1144473-0000	.LEVER	5-5, 5-7

Part No	Description	Page No
1144475-0000	.BRACKET	5-5, 5-7
1144476-0000	.BRACKET	5-5, 5-7
1144482-0000	.SUPPORT	5-235, 5-237, 5-239, 5-241, 5-243, 5-245
1144483-0000	.PLATE	5-235, 5-237, 5-239, 5-241, 5-243, 5-245
1144485-0000	.SUPPORT	5-235, 5-237, 5-239, 5-241, 5-243, 5-245
1144486-0000	.CAM	5-235, 5-237, 5-239, 5-241, 5-243, 5-245
1144488-0000	.COLUMN	5-235, 5-237, 5-239, 5-241, 5-243, 5-245
1144489-0000	.FLANGE	5-235, 5-237, 5-239, 5-241, 5-243, 5-245
1144492-0000	.SPRING	5-235, 5-237, 5-239, 5-241, 5-243, 5-245
1144493-0000	.WASHER	5-235, 5-237, 5-239, 5-241, 5-243, 5-245
1144494-0000	.AXLE PIN	5-235, 5-237, 5-239, 5-241, 5-243, 5-245
1144495-0000	.ECCENTRIC	5-235, 5-237, 5-239, 5-241, 5-243, 5-245
1144496-0000	.ECCENTRIC	5-235, 5-237, 5-239, 5-241, 5-243, 5-245
1144498-0000	.FLANGE	5-235, 5-237, 5-239, 5-241, 5-243, 5-245
1144500-0000	.SUPPORT	5-235, 5-237, 5-239, 5-241, 5-243, 5-245
1144501-0000	.SPACER	5-235, 5-237, 5-239, 5-241, 5-243, 5-245
1144502-0000	.WASHER	5-235, 5-237, 5-239, 5-241, 5-243, 5-245
1144503-0000	.FLANGE	5-235, 5-237, 5-239, 5-241, 5-243, 5-245
1144505-0000	.COLUMN	5-235, 5-237, 5-239, 5-241, 5-243, 5-245
1144506-0000	.LEVER	5-235, 5-237, 5-239, 5-241, 5-243, 5-245
1144507-0000	.BUSHING	5-235, 5-237, 5-239, 5-241, 5-243, 5-245
1144508-0000	.AXLE PIN	5-235, 5-237, 5-239, 5-241, 5-243, 5-245
1144511-0000	.SHIM	5-235, 5-237, 5-239, 5-241, 5-243, 5-245
1144514-0000	.BUSHING	5-235, 5-237, 5-239, 5-241, 5-243, 5-245
1144515-0000	.INSERT	5-235, 5-237, 5-239, 5-241, 5-243, 5-245
1144517-0000	.BUSHING	5-235, 5-237, 5-239, 5-241, 5-243, 5-245
1144520-0000	.ROLLER	5-235, 5-237, 5-239, 5-241, 5-243, 5-245
1144521-0000	.CLAMP	5-235, 5-237, 5-239, 5-241, 5-243, 5-245
1144552-0000	.PLATE	5-65, 5-67
1144555-0000	.STUD SCREW	5-35, 5-37, 5-45, 5-47, 5-49, 5-137, 5-139
1144566-0000	.FLANGE	5-5, 5-7
1144577-0000	.BLOCK	5-251, 5-253
1144579-0000	.AXLE	5-251, 5-253
1144581-0000	.ROLLER	5-71, 5-257, 5-261, 5-263
1144593-0000	.PLATE	5-257, 5-261, 5-263
1144595-0000	.ECCENTRIC SHAFT	5-257, 5-261, 5-263
1144596-0000	.PLUG	5-257, 5-261, 5-263
1144597-0000	.SPACER	5-257, 5-261, 5-263
1144598-0000	.SHAFT	5-261, 5-263
1144601-0000	.GUIDE STUD	4-27, 4-29, 4-39, 4-41, 4-51, 4-53, 4-55, 4-57, 4-61, 4-63, 4-65, 4-67
1144606-0000	.SIGN	2-131, 2-133
1144607-0000	.SIGN	2-131, 2-133
1144618-0000	.FLANGE	5-185
1144619-0000	.SHAFT	5-257, 5-261, 5-263
1144620-0000	.WASHER	5-185
1144621-0000	.PLATE	5-103, 5-105, 5-107, 5-109, 5-111, 5-171, 5-173, 5-177, 5-179
1144625-0000	.SPACER	5-257, 5-261, 5-263
1144645-0200	.PROTECTIVE COVER	5-257, 5-261
1144653-0000	.SWITCH	5-275
1144662-0000	.BUSHING	5-75, 5-77, 5-79
1144665-0000	.SEAL RING	5-185
1144667-0000	.HINGE	5-259, 5-265
1144668-0000	.HINGE	5-259, 5-265
1144669-0000	.PIN	5-259, 5-265
1144678-0000	.SHAFT	5-5, 5-7
1144681-0000	.WASHER	5-5, 5-7, 5-69, 5-215
1144683-0000	.AXLE PIN	5-5, 5-7
1144684-0000	.SPACER	5-5, 5-7
1144685-0000	.SCREW	5-5, 5-7
1144686-0000	.TIE ROD	5-5, 5-7
1144687-0000	.TIE ROD	5-5, 5-7
1144688-0000	.SCREW	5-5, 5-7
1144719-0000	.RAIL	5-45, 5-47, 5-49
1144760-0000	.PLATE	5-257, 5-261
1144783-0000	.TIMING BELT	5-103, 5-105, 5-107, 5-109, 5-111, 5-165, 5-167
1144784-0000	.TOOTHED PULLEY	5-257
1144788-0000	.TOOTHED PULLEY	5-257
1144794-0000	.SUPPORT	5-257, 5-261, 5-263
1144797-0000	.SUPPORT	5-185
1144802-0000	.PULLEY	5-69
1144839-0000	.BLOCK	5-185
1144841-0000	.TIMING BELT	5-257, 5-261, 5-263
1144849-0000	.SWITCH	5-215
1144892-0000	.GUIDE RIGHT	5-35, 5-37, 5-137, 5-139
1144893-0000	.GUIDE LEFT	5-35, 5-37, 5-137, 5-139
1144897-0000	.FOLDING BAR	5-45, 5-47, 5-49
1144898-0000	.FOLDING BAR	5-45, 5-47, 5-49
1144899-0000	.SUPPORT	5-65, 5-67
1144900-0000	.SUPPORT	5-185
1144901-0000	.GUIDE	5-29, 5-31, 5-33
1144902-0000	.SUPPORT	5-29, 5-31, 5-33, 5-129, 5-131
1144905-0000	.SUPPORT	5-35, 5-37
1144914-0000	.LEVER	5-235, 5-237, 5-239, 5-241, 5-243, 5-245
1144915-0000	.LEVER	5-235, 5-237, 5-239, 5-241, 5-243, 5-245

Part No	Description	Page No
1144916-0000	.ADJUSTING SCREW	5-235, 5-237, 5-239, 5-241, 5-243, 5-245
1144918-0000	.PLATE	5-103, 5-105, 5-107, 5-109, 5-111, 5-165, 5-167
1144919-0000	.CARRIER	5-103, 5-105, 5-107, 5-109, 5-111, 5-165, 5-167
1144924-0000	.BOTTOM	5-23, 5-25
1144926-0000	.FLAP	5-23, 5-25
1144927-0000	.FLAP	5-23, 5-25
1144928-0000	.PUSHER	5-235, 5-237, 5-239, 5-241, 5-243, 5-245
1144932-0000	.PLATE	5-235, 5-237, 5-239, 5-241, 5-243, 5-245
1144933-0000	.BLOCK	5-5, 5-7
1144941-0000	.COVERING PLATE	5-29, 5-31, 5-33, 5-129, 5-131
1144943-0000	.SPACER	5-59, 5-61
1144974-0000	.ADJUSTING PLATE	5-29, 5-31, 5-33, 5-129, 5-131
1144975-0000	.ATTACHMENT PLATE	5-29, 5-31, 5-33, 5-129, 5-131
1144976-0000	.STOP SCREW	5-29, 5-31, 5-33, 5-129, 5-131
1144978-0000	.CAM	5-235, 5-237, 5-239, 5-241, 5-243, 5-245
1144979-0000	.WASHER	5-29, 5-31, 5-33, 5-129, 5-131
1144990-0000	.FOLDING BAR	5-45, 5-47, 5-49
1145391-0000	.ROLLER	7-173
1147253-0000	.NUT	7-217, 7-221
1190007-0402	.PLMS RECEIVE	8-113
1195360-0000	.YOKE LEFT	4-199
1195361-0000	.YOKE RIGHT	4-209
1195397-0000	.COMPRESSION SPRING	1-251
1195466-0000	.PIPE	6-47
1254025-0000	.STRIP	2-171, 2-187
1254027-0000	.CORNER STRIP	2-187
1254028-0000	.FASTENING PLATE	2-171, 2-187
1254030-0000	.CHECKER PLATE	2-187
1254109-0000	.BRACKET	4-187, 4-189
1254110-0000	.BRACKET	4-187, 4-189
1254111-0000	.BRACKET	4-187, 4-189
1254410-0000	.WASHER	1-303
1254442-0000	.CABLE SERIAL	8-97, 8-99
1254494-0000	.SPACER	2-143
1255117-0000	.PLAIN BEARING	4-229, 4-231
1255222-0000	.FRAME	3-13, 3-29
1255223-0000	.HOLDER	3-15, 3-31
1255228-0000	.WHEEL	3-21
1255233-0000	.BUSHING	3-7, 3-9
1255261-0000	.FLANGE	3-7
1255293-0000	.CROSS BAR	6-49
1255365-0000	.MOUNTING PLATE	6-23
1255389-0000	.BUSHING	4-115, 4-117, 4-119, 4-121
1255390-0000	.BUSHING	4-115, 4-117, 4-119, 4-121
1255457-0000	.CARRIER RULER	4-123, 4-125
1255458-0000	.CARRIER RULER	4-123, 4-125
1255459-0000	.CARRIER RULER	4-123, 4-125
1255460-0000	.CARRIER RULER	4-123, 4-125
1255461-0000	.CARRIER RULER	4-159, 4-161
1255462-0000	.CARRIER RULER	4-159, 4-161
1255463-0000	.CARRIER RULER	4-159, 4-161
1255464-0000	.CARRIER RULER	4-159, 4-161
1255541-0000	.BUSHING	4-7, 4-9, 4-11, 4-17, 4-19, 4-21
1255551-0000	.SEAL CLOTH	1-285
1255557-0000	.GASKET	2-33
1255559-0000	.PEROXIDE TANK	2-19, 2-21
1255633-0000	.HATCH	6-59
1255635-0000	.HATCH	6-63
1255636-0000	.COVERING PANEL	6-51
1255637-0000	.COVER	6-51
1255638-0000	.COVERING PANEL	6-51
1255671-0000	.GABLE PLATE	6-53
1255866-0000	.PROTECTION	6-11
1255916-0000	.BUSHING	4-73, 4-79
1260247-0000	.CLIP	6-23
1260327-0000	.TUBE	6-23
1260328-0000	.SPRING	4-91
1260547-0100	.ICE WATER UNIT	6-13, 6-15
1260659-0000	.SPRING	9-11, 9-13, 9-15, 9-17, 9-19
1260700-0000	.BLOCK	5-5, 5-7
1260701-0000	.PUSHER	5-235, 5-237, 5-239, 5-241, 5-243, 5-245
1260702-0000	.PLATE	5-235, 5-237, 5-239, 5-241, 5-243, 5-245
1260703-0000	.BOTTOM	5-23, 5-25
1260704-0000	.FLAP	5-23, 5-25, 5-113, 5-115
1260705-0000	.FLAP	5-23, 5-25
1260709-0000	.GUIDE UPPER R	5-35, 5-37
1260710-0000	.GUIDE UPPER L	5-35, 5-37
1260712-0000	.CRANK	5-269
1260714-0000	.SPACER	5-101
1260824-0000	.SPACER RING	5-5, 5-7
1260832-0000	.WASHER	5-69
1260851-0000	.AXLE PIN	5-75, 5-77, 5-79
1260852-0000	.WASHER	5-75, 5-77, 5-79
1260853-0000	.RING	5-75, 5-77, 5-79

Part No	Description	Page No
1260883-0200	.CRANK	5-3
1260885-0000	.FLAP	5-23, 5-25
1260886-0000	.FLAP	5-23, 5-25
1260887-0000	.BLOCK	5-5, 5-7
1260888-0000	.BLOCK	5-235, 5-237, 5-239, 5-241, 5-243, 5-245
1260889-0000	.PUSHER	5-235, 5-237, 5-239, 5-241, 5-243, 5-245
1260894-0000	.PROTECTION	5-259
1260895-0000	.SPRING	5-235, 5-237, 5-239, 5-241, 5-243, 5-245
1260931-0000	.SCREW	5-185
1260941-0000	.SLIDE	5-257
1260944-0000	.BUSHING	5-5, 5-7
1279409-0000	.PLATE	5-103, 5-105, 5-107, 5-109, 5-111, 5-171, 5-173, 5-177, 5-179
1279559-0000	.ARM	5-23, 5-25, 5-113, 5-115
1279573-0000	.SLIDE RAIL UPPER	5-59, 5-61
1279582-0000	.RAIL	5-83, 5-85, 5-87, 5-89, 5-91
1279585-0000	.SUPPORT	5-59, 5-61
1279586-0000	.SUPPORT	5-59, 5-61
1279587-0000	.SLIDE RAIL UPPER	5-59, 5-61
1279670-0000	.SPACER	5-101
1279677-0100	.CRANK GUARD	5-3
1279680-0000	.PIPE	5-271, 5-273
1279688-0000	.SUPPORT	5-257, 5-261, 5-263
1279689-0000	.ACTIVATOR	5-261, 5-263
1282287-0000	.CARRIER	5-103, 5-105, 5-107, 5-109, 5-111, 5-165, 5-167
1282290-0000	.GUIDE	5-103, 5-105, 5-107, 5-109, 5-111, 5-165, 5-167
1282291-0000	.GUIDE	5-103, 5-105, 5-107, 5-109, 5-111, 5-165, 5-167
1282294-0000	.FOLDING BAR	5-45, 5-47, 5-49
1282295-0000	.FOLDING BAR	5-45, 5-47, 5-49
1282335-0000	.FLANGE	5-69
1282343-0000	.BLOCK	5-69
1282345-0000	.SPRING	5-69
1282681-0000	.TOOTHED PULLEY	5-261, 5-263
1282705-0000	.SUPPORT	5-35, 5-37, 5-137, 5-139
1282708-0000	.BUSHING	5-11, 5-13, 5-19, 5-21, 5-23, 5-25, 5-113, 5-115
1282844-0000	.SUPPORT	5-185
1282848-0000	.CARRIER	5-103, 5-105, 5-107, 5-109, 5-111, 5-165, 5-167
1282864-0000	.SPRING	5-75, 5-77, 5-79
1282876-0000	.PIPE	2-25
1282879-0000	.CONNECTING PIPE	2-25
1282891-0000	.PIPE	2-19, 2-21
1282892-0000	.TANK	2-29
1282893-0000	.PIPE	2-29
1282894-0100	.PEROXIDE TANK	2-17
1282895-0200	.PEROXIDE PIPE	2-17
1282896-0100	.TANK	2-17
1282898-0000	.HOSE	2-29
1282899-0000	.HOSE	2-19, 2-21
1282901-0000	.PIPE	2-25
1282906-0000	.NIPPLE	2-19, 2-21
1285003-0000	.LINK	4-163
1285005-0000	.NUT	4-163
1285006-0000	.SPACER	4-163
1285009-0000	.HOLDER	5-83, 5-85, 5-87, 5-89, 5-91
1285010-0000	.HOLDER	5-97, 5-99
1285012-0300	.FOLDING PART	5-3
1285014-0000	.DISTRIBUTOR	5-29, 5-31, 5-33, 5-129, 5-131
1285022-0000	.SIDE PLATE	5-251, 5-253, 9-7, 9-9
1285023-0000	.SIDE PLATE	5-251, 5-253, 9-7, 9-9
1285253-0000	.SPACER	5-83, 5-85, 5-87, 5-89, 5-91
1285254-0000	.WASHER	5-75, 5-77, 5-79
1285260-0400	.OUT FEED	5-3
1285265-0000	.PLATE	5-59, 5-61
1285266-0000	.SPACER	5-59, 5-61
1285267-0000	.SUPPORT	5-35, 5-37, 5-137, 5-139
1285291-0000	.PLATE	5-193
1285293-0000	.HEATING PIPE	5-187, 5-189, 5-191
1285299-0000	.BRACKET	5-29, 5-31, 5-33, 5-129, 5-131
1285306-0000	.SPACER	5-59, 5-61
1285307-0000	.SPACER	5-187, 5-189, 5-191
1285308-0000	.GASKET	5-187, 5-189, 5-191
1285310-0000	.EXTENSION	5-203, 5-205, 5-207, 5-209, 5-211, 5-213
1285311-0000	.PLATE	5-187, 5-189, 5-191
1285312-0000	.GASKET	5-187, 5-189, 5-191
1285363-0000	.TUBE	6-23
1285870-0000	.EXTENSION	5-203, 5-205, 5-207, 5-209, 5-211, 5-213
1285874-0000	.SPACER	5-203, 5-205, 5-207, 5-209, 5-211, 5-213
1285875-0200	.BELT TENSIONER	5-69
1285955-0000	.PLATE	5-261, 5-263
1285956-0000	.BLOCK	5-261, 5-263
1296066-0000	.NOZZLE	5-203, 5-205, 5-207, 5-209, 5-211, 5-213
1296067-0000	.NOZZLE	5-203, 5-205, 5-207, 5-209, 5-211, 5-213
1296068-0000	.NOZZLE	5-203, 5-205, 5-207, 5-209, 5-211, 5-213
1296070-0000	.HEATING PIPE	5-187, 5-189, 5-191
1296072-0000	.EXTENSION	5-203, 5-205, 5-207, 5-209, 5-211, 5-213

Part No	Description	Page No
1296079-0000	.RAIL	5-83, 5-85, 5-87, 5-89, 5-91
1296081-0000	.PLATE	5-59, 5-61
1296153-0000	.GUIDE	5-203, 5-205, 5-207, 5-209, 5-211, 5-213
1296176-0000	.SPRING	5-75, 5-77, 5-79
1296180-0000	.FOLDING DEVICE	5-11, 5-13
1296181-0000	.FOLDING DEVICE	5-11, 5-13
1296218-0200	.LID	2-243
1296289-0000	.TUNNEL	2-241
1296290-0000	.GASKET	2-241
1296387-0000	.NOZZLE	5-203, 5-205, 5-207, 5-209, 5-211, 5-213
1296845-0000	.BRACKET	2-273, 2-275
1296877-0100	.SEAL KIT	9-5
1296878-0100	.SEAL KIT	9-5
1296879-0100	.SEAL KIT	9-5
1296969-0000	.SCREW HOLDER	5-23, 5-25, 5-113, 5-115
1296970-0000	.SCREW BUSHING	5-23, 5-25, 5-113, 5-115
1317042-0000	.RAIL	5-45, 5-47, 5-49
1317043-0000	.SUPPORT	5-45, 5-47, 5-49, 5-145, 5-147
1317047-0000	.RAIL	5-45, 5-47, 5-49
1317085-0000	.NUT	5-203, 5-205, 5-207, 5-209, 5-211, 5-213
1317088-0000	.SPACER	5-35, 5-37, 5-45, 5-47, 5-49
1317211-0000	.COVERING PLATE	5-29, 5-31, 5-33, 5-129, 5-131
1317213-0000	.ADJUSTING PLATE	5-29, 5-31, 5-33, 5-129, 5-131
1317216-0000	.FOLDING BAR	5-45, 5-47, 5-49
1317217-0000	.FOLDING BAR	5-45, 5-47, 5-49
1317218-0000	.SPACER	5-83, 5-85, 5-87, 5-89, 5-91, 5-101, 5-161, 5-163
1317226-0000	.WEIGHT	2-27
1317228-0000	.WASHER	2-253
1317362-0000	.SHAFT	5-235, 5-237, 5-239, 5-241, 5-243, 5-245
1317363-0000	.SHAFT	5-235, 5-237, 5-239, 5-241, 5-243, 5-245
1317438-0000	.FORK	1-213, 1-215, 1-217
1317439-0000	.CATCH	4-39, 4-41
1317440-0000	.STOP PIN	4-27, 4-29, 4-39, 4-41
1317475-0000	.BRACKET	2-103, 2-105
1317554-0000	.FLAP	5-23, 5-25
1317555-0000	.FLAP	5-23, 5-25
1317556-0000	.BOTTOM	5-23, 5-25
1317633-0000	.SPRING	5-29, 5-31, 5-33
1317650-0000	.GUIDE	5-103, 5-105, 5-107, 5-109, 5-111, 5-165, 5-167
1317651-0000	.GUIDE	5-103, 5-105, 5-107, 5-109, 5-111, 5-165, 5-167
1317652-0000	.FOLDING BAR	5-45, 5-47, 5-49
1317653-0000	.FOLDING BAR	5-45, 5-47, 5-49
1317654-0000	.PUSHER	5-235, 5-237, 5-239, 5-241, 5-243, 5-245
1317655-0000	.PLATE	5-235, 5-237, 5-239, 5-241, 5-243, 5-245
1317656-0000	.INSERT	5-23, 5-25
1317711-0000	.SHAFT	7-93
1317712-0000	.SHAFT	7-93
1317713-0000	.SHAFT	1-307, 1-309
1317740-0000	.RUBBER SLEEVE	4-27, 4-29, 4-39, 4-41
1317741-0000	.CATCH	4-27, 4-29
1317742-0000	.CANTILEVER	4-27, 4-29, 4-39, 4-41
1317784-0000	.BRACKET	2-27
1317787-0000	.CATCH	5-235, 5-237, 5-239, 5-241, 5-243, 5-245
1317789-0000	.BLOCK	5-5, 5-7
1317801-0000	.NOZZLE	5-203, 5-205, 5-207, 5-209, 5-211, 5-213
1317802-0000	.NOZZLE	5-203, 5-205, 5-207, 5-209, 5-211, 5-213
1317803-0000	.NOZZLE	5-203, 5-205, 5-207, 5-209, 5-211, 5-213
1317804-0000	.SPACER	5-203, 5-205, 5-207, 5-209, 5-211, 5-213
1317805-0000	.BAR	5-103, 5-105, 5-107, 5-109, 5-111, 5-171, 5-173
1317823-0000	.CANTILEVER	4-27, 4-29, 4-39, 4-41
1317824-0000	.CATCH	4-27, 4-29, 4-39, 4-41
1334012-0000	.GUIDE UPPER L	5-35, 5-37
1334013-0000	.GUIDE UPPER R	5-35, 5-37
1334018-0000	.SHIM	5-5, 5-7
1334081-0000	.CURVE	4-175, 4-177, 4-179
1334113-0000	.HOLDER	5-83, 5-85, 5-87, 5-89, 5-91
1334187-0000	.PLATE	7-77
1334188-0000	.AXLE PIN	7-77
1334189-0000	.BLOCK	7-7, 7-77
1334190-0000	.BLOCK	7-7, 7-77
1334271-0000	.BAR	5-103, 5-105, 5-107, 5-109, 5-111, 5-177, 5-179
1334328-0000	.SPACER	5-5, 5-7
1334447-0000	.SPACER	5-35, 5-37, 5-137, 5-139
1334480-0000	.SUPPORT	5-29, 5-31, 5-33, 5-129, 5-131
1334507-0000	.TUBE	1-281
1334523-0000	.SUPPORT	5-35, 5-37, 5-137, 5-139
1334559-0000	.GUIDE UPPER R	5-35, 5-37, 5-137, 5-139
1334560-0000	.GUIDE UPPER L	5-35, 5-37, 5-137, 5-139
1334561-0000	.SLIDE	5-103, 5-105, 5-107, 5-109, 5-111
1334562-0000	.SLIDE	5-103, 5-105, 5-107, 5-109, 5-111
1334632-0000	.SPACER	5-203, 5-205, 5-207, 5-209, 5-211, 5-213
1334633-0200	.VOLUME FLAP CUTTING	4-5
1334634-0200	.VOLUME FLAP PRESSURE	4-5
1334635-0200	.SHOCK ABSORBER	4-5

Part No	Description	Page No
1334636-0200	.SHOCK ABSORBER	4-5
1334651-0100	.LINK	4-195
1334652-0000	.LINK	4-221
1334653-0000	.LINK	3-11
1334654-0000	.CONNECTION CLAMP	3-25, 4-221
1334655-0000	.LINK ROD	3-25
1334659-0000	.SCREW	3-11
1334718-0000	.SPACER	5-45, 5-47, 5-49
1334856-0000	.COUNTER ROLLER	1-29, 1-31, 1-53, 1-55
1334928-0000	.3AM	3-23
1334929-0000	.SHAFT	3-23
1334932-0000	.DISC	3-23
1334939-0000	.PLUG	3-17
1334941-0000	.TORSION SPRING	3-23
1334942-0000	.WEDGE	3-23
1334943-0000	.STOP LUG	3-23
1334999-0000	.PUSHER	5-235, 5-237, 5-239, 5-241, 5-243, 5-245
1338402-0000	.GUIDE	10-9
1338403-0000	.GUIDE	10-9
1338404-0000	.BRACKET	10-9
1338405-0000	.BRACKET	10-9
1338793-0000	.BRACKET	4-205, 4-207, 4-215, 4-217
1346149-0000	.FOLDING BAR	5-45, 5-47, 5-49
1346150-0000	.FOLDING BAR	5-45, 5-47, 5-49
1346153-0000	.STOP PIN	4-27, 4-29, 4-39, 4-41
1346157-0000	.VOLUME BULGE	4-7, 4-9, 4-11, 4-17, 4-19, 4-21
1346158-0000	.VOLUME SHIM	4-7, 4-9, 4-11, 4-17, 4-19, 4-21, 9-11, 9-13, 9-15, 9-17, 9-19
1346307-0000	.HOLDER	5-275
1346312-0000	.SCREW	2-273, 2-275
1346313-0000	.PLATE	2-273, 2-275
1346340-0000	.BRACKET	5-35, 5-37, 5-137, 5-139
1346343-0000	.RAIL	5-45, 5-47, 5-49, 5-145, 5-147
1346344-0000	.RAIL	5-45, 5-47, 5-49, 5-145, 5-147
1346471-0000	.WEDGE	5-103, 5-105, 5-107, 5-109, 5-111, 5-165, 5-167
1346539-0000	.CONNECTING ROD	5-235, 5-237, 5-239, 5-241, 5-243, 5-245
1346568-0000	.HEAT EXCHANGER	1-281
1346580-0000	.NOZZLE	5-203, 5-205, 5-207, 5-209, 5-211, 5-213
1346581-0000	.NOZZLE	5-203, 5-205, 5-207, 5-209, 5-211, 5-213
1346588-0000	.DRIP PLATE	5-65, 5-67
1346641-0000	.SPACER	5-203, 5-205, 5-207, 5-209, 5-211, 5-213
1346642-0000	.SPACER	5-203, 5-205, 5-207, 5-209, 5-211, 5-213
1346643-0000	.NOZZLE	5-203, 5-205, 5-207, 5-209, 5-211, 5-213
1346644-0000	.NOZZLE	5-203, 5-205, 5-207, 5-209, 5-211, 5-213
1346646-0000	.EXTENSION	5-203, 5-205, 5-207, 5-209, 5-211, 5-213
1346656-0000	.ROD	1-199
1346657-0000	.CYLINDER BRACKET	1-199
1346658-0000	.BRACKET	1-199
1346659-0000	.SCREW	1-199
1346677-0000	.CYLINDER	1-199
1346678-0000	.NOZZLE	5-203, 5-205, 5-207, 5-209, 5-211, 5-213
1346679-0000	.NOZZLE	5-203, 5-205, 5-207, 5-209, 5-211, 5-213
1346736-0000	.WEDGE	5-103, 5-105, 5-107, 5-109, 5-111, 5-165, 5-167
1346845-0000	.PLATE	3-17
1346846-0000	.BELT HOLDER	3-17
1346882-0000	.FLANGE	5-267
1346885-0000	.SUPPORT	2-217, 2-219, 2-237, 2-259
1346887-0000	.SPACER	3-7, 3-9
1346890-0000	.SPACER	3-21
1346988-0000	.ROLL	7-21
1347017-0000	.PULLEY	5-215
1347018-0000	.PLUG	5-235, 5-237, 5-239, 5-241, 5-243, 5-245
1347057-0000	.GUIDE	5-29, 5-31, 5-33, 5-129, 5-131
1347108-0000	.PLATE	5-185
1347109-0000	.PLATE	5-185
1347245-0000	.HEAT EXCHANGER	1-201
1347410-0000	.ACTIVATOR	5-257
1347495-0000	.AXLE PIN	5-11, 5-13
1347496-0000	.SCREW	5-11, 5-13, 5-19, 5-21
1347526-0000	.BRACKET	4-27, 4-29, 4-39, 4-41
1347600-0000	.SUPPORT	5-11, 5-13
1347673-0000	.BRACKET	8-81
1347699-0000	.PLATE	5-257
1347704-0000	.THERMOCOUPLE	2-19, 2-21
1347839-0000	.PULLEY	3-7, 3-9
1347878-0000	.RAIL	2-97
1347880-0000	.INSERT	1-227
1348041-0000	.SPACER	5-35, 5-37
1348042-0000	.SPACER	5-45, 5-47, 5-49
1348043-0000	.SPACER	5-203, 5-205, 5-207, 5-209, 5-211, 5-213
1348047-0000	.FORK	1-213, 1-215, 1-217
1348048-0000	.FORK	1-213, 1-215, 1-217
1348049-0000	.FORK	1-213, 1-215, 1-217
1348056-0300	.FOLDING PART	5-5, 5-7
1348072-0000	.DRIP PLATE	5-215

Part No	Description	Page No
1348132-0000	.SLIDE	5-103, 5-105, 5-107, 5-109, 5-111
1348133-0000	.SLIDE	5-103, 5-105, 5-107, 5-109, 5-111, 5-171, 5-173
1348134-0000	.SLIDE	5-103, 5-105, 5-107, 5-109, 5-111
1348135-0000	.SLIDE	5-103, 5-105, 5-107, 5-109, 5-111, 5-171, 5-173
1348136-0000	.SLIDE	5-103, 5-105, 5-107, 5-109, 5-111, 5-171, 5-173
1348138-0000	.SLIDE	5-103, 5-105, 5-107, 5-109, 5-111
1348139-0000	.SLIDE	5-103, 5-105, 5-107, 5-109, 5-111, 5-177, 5-179
1348140-0000	.SLIDE	5-103, 5-105, 5-107, 5-109, 5-111
1348141-0000	.SLIDE	5-103, 5-105, 5-107, 5-109, 5-111, 5-177, 5-179
1348142-0000	.SLIDE	5-103, 5-105, 5-107, 5-109, 5-111, 5-177, 5-179
1348144-0000	.BAR	5-103, 5-105, 5-107, 5-109, 5-111, 5-171, 5-173
1348145-0000	.BAR	5-103, 5-105, 5-107, 5-109, 5-111
1348146-0000	.BAR	5-103, 5-105, 5-107, 5-109, 5-111
1348147-0000	.BAR	5-103, 5-105, 5-107, 5-109, 5-111, 5-171, 5-173
1348148-0000	.BAR	5-103, 5-105, 5-107, 5-109, 5-111, 5-171, 5-173
1348150-0000	.BAR	5-103, 5-105, 5-107, 5-109, 5-111, 5-177, 5-179
1348151-0000	.BAR	5-103, 5-105, 5-107, 5-109, 5-111
1348152-0000	.BAR	5-103, 5-105, 5-107, 5-109, 5-111
1348153-0000	.BAR	5-103, 5-105, 5-107, 5-109, 5-111, 5-177, 5-179
1348154-0000	.BAR	5-103, 5-105, 5-107, 5-109, 5-111, 5-177, 5-179
1348169-0000	.PLATE	5-103, 5-105, 5-107, 5-109, 5-111, 5-171, 5-173, 5-177, 5-179
1348196-0000	.FASTENING PLATE	4-211, 4-213
1348197-0000	.HOLDER	2-131, 2-133
1348263-0000	.FLANGE	10-51
1348303-0000	.STUD SCREW	5-215
1348359-0000	.BRACKET	2-103, 2-105
1348386-0000	.BEARING HOUSING	2-273, 2-275
1348455-0200	.YOKE LEFT	4-195
1348456-0200	.PRESSURE ARM LEFT	4-195
1348457-0200	.CUTTING ARM LEFT	4-195
1348460-0200	.YOKE RIGHT	4-195
1348461-0200	.PRESSURE ARM RIGHT	4-195
1348462-0200	.CUTTING ARM RIGHT	4-195
1348466-0100	.SCISSOR ARM LINK	4-195
1348483-0000	.SPRING RIGHT	4-27, 4-29, 4-39, 4-41, 4-51, 4-53, 4-55, 4-57, 4-61, 4-63, 4-65, 4-67
1348484-0000	.SPRING LEFT	4-27, 4-29, 4-39, 4-41, 4-51, 4-53, 4-55, 4-57, 4-61, 4-63, 4-65, 4-67
1348504-0000	.SLEEVE	4-91
1348529-0000	.STRAINER	2-25
1348530-0000	.LID	2-25
1348537-0000	.TIMING BELT	5-235, 5-237, 5-239, 5-241, 5-243, 5-245
1348538-0000	.LEVER	5-75, 5-77, 5-79
1348540-0000	.PIVOT AXLE	5-75, 5-77, 5-79
1348545-0000	.RAIL	4-93, 4-95, 4-97
1348546-0000	.RAIL	4-139, 4-141, 4-143
1348631-0000	.PLATE	5-75, 5-77, 5-79
1348635-0000	.RUBBER SEAL	5-275
1348663-0000	.PLATE	5-275
1348669-0000	.SCREW	4-205, 4-207, 4-215, 4-217
1348671-0000	.JOINT LEFT	4-205, 4-207
1348672-0000	.JOINT RIGHT	4-215, 4-217
1348808-0000	.CURVE	4-175, 4-177, 4-179
1348809-0000	.CURVE	4-175, 4-177, 4-179
1348854-0000	.PLATE	5-251, 5-253
1348920-0000	.CRADLE	5-251, 5-253
1348921-0000	.TOOTHED PULLEY	5-257
1348922-0000	.TOOTHED PULLEY	5-257
1348955-0000	.KNIFE	4-163, 9-11, 9-13, 9-15, 9-17, 9-19
1348956-0000	.KNIFE	4-163, 9-11, 9-13, 9-15, 9-17, 9-19
1348957-0000	.BRACKET	5-261
1348963-0000	.SLIDE	5-261
1348966-0000	.KNIFE	4-163, 9-11, 9-13, 9-15, 9-17, 9-19
1348990-0000	.SUPPORT	5-275
1349014-0000	.PAD	7-85
1349017-0000	.PLATE	5-251, 5-253
1349020-0000	.GLAND FITTING	5-275
1349087-0000	.DISTRIBUTOR	5-29, 5-31, 5-33, 5-129, 5-131
1349152-0000	.TIMING BELT	5-103, 5-105, 5-107, 5-109, 5-111, 5-165, 5-167
1349160-0000	.SPACER	5-69
1349181-0000	.TOUCH GUARD	7-79
1349187-0000	.SPRING	2-273, 2-275
1349208-0000	.VOLUME SHIM	4-7, 4-9, 4-11, 4-17, 4-19, 4-21, 9-11, 9-13, 9-15, 9-17, 9-19
1349266-0000	.PLATE	3-19, 3-33
1349285-0000	.SUPPORT	3-13, 3-29
1349319-0000	.CANTILEVER	4-27, 4-29, 4-39, 4-41
1349320-0000	.CATCH	4-27, 4-29, 4-39, 4-41
1349398-0000	.NUT	1-199
1349432-0000	.CATCH	7-21
1349516-0000	.SHAFT	5-235, 5-237, 5-239, 5-241, 5-243, 5-245
1349517-0000	.TOOTHED PULLEY	5-235, 5-237, 5-239, 5-241, 5-243, 5-245
1349518-0000	.SUPPORT	5-235, 5-237, 5-239, 5-241, 5-243, 5-245
1349519-0000	.ACTIVATOR	5-235, 5-237, 5-239, 5-241, 5-243, 5-245
1349566-0000	.COVER	5-279
1349568-0000	.CONNECTION BOX	5-281
1349581-0000	.FLAG	7-75

Part No	Description	Page No
1349584-0000	.BUSHING	4-93, 4-95, 4-97, 4-139, 4-141, 4-143
1349595-0000	.SLEEVE	4-91
1349599-0000	.HOLDER	4-93, 4-95, 4-97, 4-139, 4-141, 4-143
1349608-0000	.HOLDER	1-281
1349612-0000	.PISTON	4-91
1349672-0000	.GUIDE	7-21
1349738-0100	.PRESSURE TEST EQUIPMENT	10-5
1349741-0000	.CURVE	4-175, 4-177, 4-179
1349744-0000	.VOLUME CAM	4-175, 4-177, 4-179
1349780-0000	.LID	4-199, 4-209
1349806-0000	.GUIDE	5-83, 5-85, 5-87, 5-89, 5-91
1349851-0000	.ROLL	1-29, 1-31, 1-53, 1-55
1349867-0000	.FASTENING PLATE	4-201, 4-203
1349868-0000	.FASTENING PLATE	4-201, 4-203, 4-211, 4-213
1349914-0100	.TEMPLATE FILLING PIPE	9-29
1349925-0000	.PLATE	4-115, 4-117, 4-119, 4-121
1349972-0000	.SPRING HOUSING	4-199, 4-209
1349980-0000	.SHAFT	4-93, 4-95, 4-97, 4-139, 4-141, 4-143
1349985-0000	.SPRING	5-75, 5-77, 5-79
1349986-0000	.ROLLER	7-75
1349994-0000	.NUT	7-21
1350042-0000	.GASKET	5-229, 5-231, 5-233
1350210-0100	.RUNNER	3-15, 3-31
1350217-0100	.GUIDE	3-13
1350218-0100	.GUIDE	3-29
1350263-0000	.SPRING RIGHT	4-27, 4-29, 4-39, 4-41, 4-51, 4-53, 4-55, 4-57, 4-61, 4-63, 4-65, 4-67
1350264-0000	.SPRING LEFT	4-27, 4-29, 4-39, 4-41, 4-51, 4-53, 4-55, 4-57, 4-61, 4-63, 4-65, 4-67
1350305-0000	.SEALING RING	5-71
1350421-0000	.NOZZLE	5-203, 5-205, 5-207, 5-209, 5-211, 5-213
1350422-0000	.NOZZLE	5-203, 5-205, 5-207, 5-209, 5-211, 5-213
1350423-0000	.FOLDING BAR	5-35, 5-37, 5-137, 5-139
1350424-0000	.GUIDE RIGHT	5-35, 5-37, 5-137, 5-139
1350425-0000	.GUIDE LEFT	5-35, 5-37, 5-137, 5-139
1350440-0000	.LEVER	5-11, 5-13, 5-19, 5-21
1350441-0000	.SUPPORT	5-11, 5-13
1350497-0000	.ASSEMBLY TOOL	10-5
1350498-0000	.ASSEMBLY TOOL	10-5
1350543-0000	.AXLE PIN	5-75, 5-77, 5-79
1350564-0000	.CLAMP HUB	5-69
1350721-0000	.STUD SCREW	5-35, 5-37, 5-45, 5-47, 5-49
1350808-0000	.BLOCK	5-5, 5-7
1350809-0000	.BLOCK	5-235, 5-237, 5-239, 5-241, 5-243, 5-245
1350810-0000	.PUSHER	5-235, 5-237, 5-239, 5-241, 5-243, 5-245
1350824-0000	.AXLE PIN	3-25
1350825-0000	.LOCK	3-15, 3-31
1350826-0000	.LOCK	3-15, 3-31
1359085-0000	.T-HOLDER	5-95
1359565-0000	.NUT	5-93, 5-95
1360149-0000	.SPACER	5-259, 5-265
1360318-0000	.CARRIER RULER	4-123, 4-125
1360319-0000	.CARRIER RULER	4-159, 4-161
1360399-0000	.PIPE HOLDER	10-57, 10-59
1361560-0000	.PLATE	6-17
1361918-0300	.WHEEL	5-3
1361922-0200	.DROP CHUTE VARIANT	5-3
1361923-0200	.INFEED CONVEYOR VARIANT	5-3
1363297-0000	.CABLE LVDS 10M	2-149, 2-151
1366726-0000	.HOLDER	5-95
1366727-0000	.CLAMP	5-93, 5-95
1366777-0101	.ANGLED RAIL HOLDER TPC21	5-83, 5-85, 5-87, 5-89, 5-91
1369439-0102	.PLMS ON-LINE	10-67
1478000-0000	.HOSE	4-201, 4-203, 4-211, 4-213
1478001-0000	.HOSE	4-201, 4-203, 4-211, 4-213
1478127-0000	.DRIP PLATE	5-65, 5-67
1478170-0000	.CONTAINER	1-319
1478189-0000	.SUPPORT	5-235, 5-237, 5-239, 5-241, 5-243, 5-245
1478190-0000	.TEMPLATE	10-25
1478214-0000	.SLIDE	5-103, 5-105, 5-107, 5-109, 5-111
1478215-0000	.SLIDE	5-103, 5-105, 5-107, 5-109, 5-111
1478227-0000	.CARRIER	5-75, 5-77, 5-79
1478228-0000	.CAM	5-75, 5-77, 5-79
1478235-0000	.PLATE	5-83, 5-85, 5-87, 5-89, 5-91
1478302-0000	.AXLE BOLT	5-71
1478303-0000	.TENSION SPRING	7-21
1478358-0000	.VOLUME FLAP	4-7, 4-9, 4-11, 4-17, 4-19, 4-21
1478359-0000	.ROLLER	1-97, 1-99
1478389-0000	.COVERING PLATE	2-245
1478391-0000	.GASKET	2-245
1478393-0000	.CATCH	4-27, 4-29, 4-39, 4-41
1478395-0000	.CATCH	4-27, 4-29, 4-39, 4-41
1478396-0000	.STOP	4-27, 4-29, 4-39, 4-41
1478417-0000	.ROLLER	5-185
1478418-0000	.AXLE BOLT	5-185
1478497-0000	.VOLUME CAM	4-175, 4-177, 4-179

Part No	Description	Page No
1478558-0000	.WASHER	5-75, 5-77, 5-79
1478583-0100	.PRESSURE GAUGE	10-5
1478584-0000	.NIPPLE	10-23
1478585-0000	.NEEDLE	10-23
1478659-0000	.BRACKET	5-279
1478753-0000	.SHAFT	5-69
1478768-0200	.KNIFE	4-5
1478813-0000	.SPACER	1-251
1478814-0000	.SENSOR	1-251
1478905-0000	.FLANGE	5-69
1478908-0000	.SUPPORT	5-69
1478925-0000	.HATCH	5-75, 5-77, 5-79
1478926-0000	.GUIDE RIGHT	5-35, 5-37, 5-137, 5-139
1478927-0000	.GUIDE LEFT	5-35, 5-37, 5-137, 5-139
1478928-0000	.BUSHING	5-251, 5-253
1484002-0000	.PLATE	4-115, 4-117, 4-119, 4-121
1484003-0000	.PLATE	4-115, 4-117, 4-119, 4-121
1484067-0000	.BRACKET	1-299, 1-301
1484080-0000	.SUPPORT	1-201
1484081-0000	.BRACKET	1-283, 6-29
1484093-0000	.INSERT	2-149, 2-151
1484096-0000	.COVER	5-187, 5-189, 5-191
1484196-0100	.PACK COUNTER	5-277
1484197-0100	.CONNECTION BOX	5-277
1484210-0200	.OUT FEED DRIVING SYSTEM	5-57
1484250-0000	.VOLUME CAM	4-175, 4-177, 4-179
1484251-0000	.VOLUME CAM	4-175, 4-177, 4-179
1484289-0000	.HATCH	5-75, 5-77, 5-79
1484320-0000	.ROD	4-205, 4-207, 4-215, 4-217
1484363-0000	.COVER	7-201
1484379-0000	.INSERT	2-149, 2-151
1484405-0000	.PIPE	1-323, 1-325
1484428-0000	.PLASTIC PLUG	1-287, 1-289
1484447-0000	.BALL BEARING	5-69
1484448-0000	.ROLLER BEARING	5-69
1484620-0000	.SHAFT	5-257
1484693-0000	.KNIFE HOLDER	7-105
1484695-0000	.KNIFE	7-105, 9-5
1484697-0000	.RAIL	7-109, 7-111
1484703-0000	.TIE ROD	7-105
1484704-0000	.SHAFT	7-95, 7-173
1484705-0000	.SLIDER	7-107
1484706-0000	.GEAR WHEEL	7-107
1484707-0200	.STRIP MAGAZINE	7-3, 7-5
1484708-0000	.MOUNTING PLATE	7-75
1484711-0000	.BRACKET	7-83
1484718-0000	.AXLE PIN	7-75
1484719-0000	.AXLE PIN	7-83
1484720-0100	.HINGE	7-73
1484724-0000	.HUB	7-81
1484725-0100	.HUB	7-73
1484726-0000	.SHAFT	7-81
1484728-0000	.BRACKET	7-173
1484738-0000	.BRACKET	7-173
1484740-0000	.BRACKET	7-75
1484745-0100	.WEB GUIDE	7-89, 7-91, 7-173
1484750-0000	.BRACKET	7-93
1484752-0000	.SLIDER	7-183, 7-185
1484760-0000	.SLIDER	7-183, 7-185
1484761-0000	.ANGLE BRACKET	7-183, 7-185
1484766-0000	.DANCE ROLLER	7-173, 7-183, 7-185
1484776-0000	.RAIL	7-107
1484777-0000	.SLIDER	7-107
1484778-0000	.PLATE	7-183, 7-185
1484779-0000	.ROD	7-107
1484781-0000	.PIN	7-105
1484782-0000	.CLAMP BLOCK	7-107
1484783-0000	.CLAMPING ELEMENT	7-107
1484784-0000	.LOCATING PIECE	7-107
1484785-0000	.LOCATING PIECE	7-107
1484865-0000	.VOLUME FLAP	4-17, 4-19, 4-21
1484866-0000	.VOLUME FLAP	4-7, 4-9, 4-11
1484867-0000	.VOLUME FLAP	4-7, 4-9, 4-11
1484868-0000	.VOLUME FLAP	4-17, 4-19, 4-21
1484889-0100	.DOOR	6-55
1484890-0000	.DOOR	6-57
1484969-0000	.SLEEVE	1-113
1487023-0000	.PIPE	6-47
1487038-0200	.OUTFEED WHEEL	5-57
1487158-0300	.FLAP HEATER VARIANT	5-3
1487159-0000	.CARRIER	5-75, 5-77, 5-79
1487177-0000	.GUIDE	5-83, 5-85, 5-87, 5-89, 5-91
1487338-0200	.SUPPORT LEVEL DETECTOR	2-101
1487504-0000	.WASHER	4-175, 4-177, 4-179

Part No	Description	Page No
1487505-0001	.WASHER	4-175, 4-177, 4-179
1487505-0002	.WASHER	4-175, 4-177, 4-179
1487510-0000	.RACK GEAR	7-107
1487511-0000	.BRACKET	7-107
1487517-0000	.CATCH	7-105
1487518-0000	.RULER	7-117, 7-125
1487519-0000	.SHAFT	7-183, 7-185
1487521-0000	.SHAFT	7-175
1487528-0100	.CYLINDER	7-125
1487530-0001	.GUIDE ROD	7-183, 7-185
1487536-0000	.GUIDE BRACKET	7-183, 7-185
1487537-0000	.BRACKET	7-183, 7-185
1487538-0000	.BRACKET	7-183, 7-185
1487544-0200	.SIDE FEEDER	7-45, 7-47
1487550-0000	.ANGLE BRACKET	7-183, 7-185
1487551-0000	.PLATE	7-183, 7-185
1487554-0000	.BRACKET	7-107
1487555-0000	.BUSHING	7-107
1487556-0000	.BAR	7-107
1487557-0000	.BAR	7-107
1487558-0000	.FASTENING PLATE	7-107
1487559-0000	.SLIDER	7-107
1487560-0200	.MACHINE BODY	7-3, 7-5
1487618-0000	.CUTTING JAW	4-115, 4-117, 4-119, 4-121
1487619-0000	.PLATE	4-115, 4-117, 4-119, 4-121
1487626-0000	.VOLUME BULGE	4-7, 4-9, 4-11, 4-17, 4-19, 4-21
1487627-0000	.VOLUME SHIM	4-7, 4-9, 4-11, 4-17, 4-19, 4-21, 9-11, 9-13, 9-15, 9-17, 9-19
1487628-0000	.WEDGE	4-7, 4-9, 4-11, 4-17, 4-19, 4-21
1487629-0100	.DAMPER	3-13
1487630-0100	.DAMPER	3-29
1487631-0000	.BRACKET	3-19, 3-33
1487632-0000	.FORK	3-19, 3-33
1487633-0000	.AXLE PIN	3-19, 3-33
1487634-0000	.AXLE PIN	3-19, 3-33
1487635-0000	.WHEEL	3-19, 3-33
1487636-0000	.STOPPER	3-19, 3-33
1487684-0000	.RAIL	5-83, 5-85, 5-87, 5-89, 5-91
1487738-0000	.FLAP	5-23, 5-25
1487739-0000	.FLAP	5-23, 5-25
1487763-0000	.SHAFT	7-101, 7-103
1487765-0000	.SPACER	7-183, 7-185
1487769-0000	.SPACER	7-183, 7-185
1487770-0000	.BRACKET	7-117, 7-125
1487779-0000	.SHAFT	7-117, 7-125
1487781-0000	.BRACKET	7-117, 7-125
1487782-0000	.SHAFT	7-117, 7-125
1487784-0000	.BRACKET	7-177
1487788-0000	.SPACER	7-179
1487795-0000	.PLATE	7-173
1487796-0000	.PLATE	7-173
1487800-0000	.PLATE	7-173
1487802-0000	.SPACER	7-173
1487808-0200	.BRACKET	7-3, 7-5
1487821-0000	.SPACER	5-185
1487922-0000	.FOLDING DEVICE	5-11, 5-13
1487923-0000	.FOLDING DEVICE	5-11, 5-13
1487929-0000	.SPACER	5-101
1487943-0000	.STOPPER	4-51, 4-53, 4-55, 4-57, 4-61, 4-63, 4-65, 4-67
1487945-0000	.STOP	4-51, 4-53, 4-55, 4-57, 4-61, 4-63, 4-65, 4-67
1487946-0000	.SHAFT	4-51, 4-53, 4-55, 4-57, 4-61, 4-63, 4-65, 4-67
1487948-0000	.BUSHING	4-51, 4-53, 4-55, 4-57, 4-61, 4-63, 4-65, 4-67
1487954-0000	.CUTTING JAW	4-115, 4-117, 4-119, 4-121
1487955-0000	.HOLDER	4-93, 4-95, 4-97, 4-139, 4-141, 4-143
1487995-0000	.HATCH	7-195, 7-197
1488000-0000	.DOOR	7-207
1488005-0000	.BEARING BLOCK	7-45, 7-47
1490031-0000	.PLATE	5-235, 5-237, 5-239, 5-241, 5-243, 5-245
1490032-0000	.PUSHER	5-235, 5-237, 5-239, 5-241, 5-243, 5-245
1490033-0000	.SLIDE	5-103, 5-105, 5-107, 5-109, 5-111
1490034-0000	.SLIDE	5-103, 5-105, 5-107, 5-109, 5-111
1490035-0000	.BAR	5-103, 5-105, 5-107, 5-109, 5-111
1490036-0000	.BAR	5-103, 5-105, 5-107, 5-109, 5-111
1490039-0000	.NOZZLE	5-203, 5-205, 5-207, 5-209, 5-211, 5-213
1490046-0000	.PIN	1-299, 1-301, 2-65
1490057-0000	.BENDING ROLLER	1-287, 1-289
1490085-0000	.GEAR BOX	5-69
1490112-0100	.OUTFEED CONVEYOR	5-57
1490183-0000	.BRACKET	7-183, 7-185
1490187-0000	.ROCKER ARM	7-75
1490188-0100	.COVER	7-189, 7-191
1490190-0200	.HATCH	7-189, 7-191
1490191-0100	.DOOR	7-189, 7-191
1490193-0100	.COVER	7-189, 7-191
1490210-0000	.PLATE	7-67

Part No	Description	Page No
1490215-0200	.COVERING PANEL	7-3, 7-5
1490219-0000	.BRACKET	7-67
1490220-0000	.ANGLE BRACKET	7-109, 7-111
1490226-0000	.FILTER	7-207
1490442-0000	.STUD SCREW 8X20	5-69
1490713-0000	.SPRING HOLDER	1-111
1490714-0000	.GUIDE	1-111
1490715-0000	.DOLLY	1-111
1490762-0000	.ROLLER	1-85, 1-87
1490765-0000	.ROLLER	1-53, 1-55
1490804-0000	.HOLDER	7-79
1490806-0200	.HEATING DEVICE	7-73
1490809-0000	.ARM	7-119, 7-127
1490810-0000	.ARM	7-119, 7-127
1490812-0000	.AXLE	7-119, 7-127
1490813-0000	.SCREW	7-119, 7-127
1490814-0000	.PLATE	7-173
1490815-0000	.PLATE	7-173
1490818-0000	.ARM	7-75
1490820-0000	.SHAFT	7-95
1490821-0000	.ANGLE PIECE	7-117, 7-125
1490831-0200	.MAGAZINE	7-3, 7-5
1490935-0000	.BAR	3-15, 3-31
1490950-0000	.SPLASH PLATE	2-27
1490962-0000	.LID	1-201
1490963-0000	.PIPE	1-197
1490994-0100	.LINK	3-5, 3-27
1494664-0000	.AXLE LINK	7-109, 7-111
1498029-0000	.PIN	5-235, 5-237, 5-239, 5-241, 5-243, 5-245
1498047-0000	.SEALING BLOCK	7-79, 9-5
1498064-0000	.BLOCK	5-71
1498066-0000	.SCREW	5-71
1498067-0000	.PLATE	5-71
1498068-0000	.SEAL RING	5-257
1498117-0000	.TEMPLATE	10-25
1498121-0000	.BASE PLATE	1-299, 1-301
1498122-0000	.BRACKET	1-299, 1-301
1498130-0000	.PLATE	1-149, 1-151, 1-153
1498131-0000	.BRACKET	1-149, 1-151, 1-153
1498132-0000	.SHAFT	1-149, 1-151, 1-153, 1-169, 1-171
1498133-0000	.ARM	1-149, 1-151, 1-153
1498134-0000	.PLATE	1-149, 1-151, 1-153
1498135-0000	.ARM	1-149, 1-151, 1-153
1498143-0000	.LOCK RING	1-213, 1-215, 1-217
1498146-0000	.NOZZLE	5-203, 5-205, 5-207, 5-209, 5-211, 5-213
1498147-0000	.NOZZLE	5-203, 5-205, 5-207, 5-209, 5-211, 5-213
1498149-0000	.TEMPLATE	9-31
1498150-0000	.TEMPLATE	9-31
1498151-0000	.TEMPLATE	9-31
1498161-0000	.SUPPORT	5-35, 5-37
1498163-0000	.SPACER	5-203, 5-205, 5-207, 5-209, 5-211, 5-213
1498430-0000	.ROD	7-13
1498445-0000	.COVER	7-73
1498450-0001	.PLATE	7-83
1498451-0001	.SHAFT	7-83
1498453-0200	.DOOR	7-189, 7-191
1498454-0200	.DOOR	7-189, 7-191
1498457-0000	.BRACKET	7-65
1498459-0001	.GLASS PANE	7-217, 7-221
1498459-0002	.GLASS PANE	7-207
1498459-0003	.GLASS PANE	7-195, 7-197, 7-211, 7-213
1498459-0004	.GLASS PANE	7-209
1498460-0000	.HATCH	7-211, 7-213
1498461-0001	.SEALING STRIP	7-217
1498461-0002	.SEALING STRIP	7-195, 7-197, 7-211, 7-213
1498461-0005	.SEALING STRIP	7-207, 7-209
1498526-0000	.REGULATOR BODY	1-251
1498528-0000	.TIMING BELT	5-69
1498529-0000	.TIMING BELT	5-69
1498620-0000	.PULLEY	5-69
1498621-0000	.SPRING	1-213, 1-215, 1-217
1498782-0000	.TANK BRACKET	1-299, 1-301
1498783-0000	.WHEEL	1-129, 1-131
1498784-0000	.BENDING ROLLER	1-123, 1-125
1498787-0000	.BRACKET	1-299, 1-301
1498790-0000	.SHAFT	1-149, 1-151, 1-153
1498791-0000	.FLANGE	1-149, 1-151, 1-153
1498827-0000	.FOLDING BAR	5-45, 5-47, 5-49
1498828-0000	.FOLDING BAR	5-45, 5-47, 5-49
1498849-0000	.BUSBAR	4-93, 4-95, 4-97
1498850-0000	.BUSBAR	4-139, 4-141, 4-143
1498855-0000	.GASKET	2-113
1498856-0000	.FLANGE	2-113
1498857-0000	.CONNECTION	2-113

Part No	Description	Page No
1498858-0000	.FLANGE	2-113
1498929-0000	.SPRING	5-217, 5-219, 5-221, 5-223, 5-225, 5-227
1499043-0000	.BRACKET	5-69
1499059-0000	.TIMING BELT	5-69
1499064-0000	.PULLEY	5-69
1499071-0000	.SPACER	5-35, 5-37, 5-45, 5-47, 5-49
1499072-0000	.SPACER	5-45, 5-47, 5-49
1499094-0000	.SPACER SCREW	5-45, 5-47, 5-49
1499103-0000	.TIE ROD	5-11, 5-13
1499114-0000	.LOCK RING	1-213, 1-215, 1-217
1499135-0000	.GUIDE	5-103, 5-105, 5-107, 5-109, 5-111
1499136-0000	.GUIDE	5-103, 5-105, 5-107, 5-109, 5-111
1499139-0000	.BLOCK	5-5, 5-7
1499140-0000	.SPACER	5-101
1499141-0000	.FLAP	5-23, 5-25
1499142-0000	.FLAP	5-23, 5-25
1499143-0000	.PLATE	5-235, 5-237, 5-239, 5-241, 5-243, 5-245
1499144-0000	.PUSHER	5-235, 5-237, 5-239, 5-241, 5-243, 5-245
1499150-0000	.RAIL	5-45, 5-47, 5-49, 5-145, 5-147
1499151-0000	.RAIL	5-45, 5-47, 5-49, 5-145, 5-147
1499156-0000	.PIPE	1-285
1499157-0000	.HEATING PIPE	1-201
1499158-0100	.AIR SUPER-HEATER	1-179
1499160-0200	.SCRUBBER	1-179
1499162-0000	.TUBE	1-207
1499166-0000	.PIPE	1-283
1499168-0000	.LID	1-129, 1-131
1499169-0000	.GASKET	1-129, 1-131
1499170-0000	.GASKET	1-129, 1-131
1499171-0000	.LID	1-129, 1-131
1499172-0000	.UPPER SECTION	1-207
1499320-0000	.TIE ROD	4-105, 4-107, 4-109, 4-111, 4-149, 4-151, 4-153, 4-155
1499327-0000	.SHAFT	4-51, 4-53, 4-55, 4-57, 4-61, 4-63, 4-65, 4-67
1499328-0000	.STOPPER	4-51, 4-53, 4-55, 4-57, 4-61, 4-63, 4-65, 4-67
1499336-0000	.STOPPER	4-51, 4-53, 4-55, 4-57, 4-61, 4-63, 4-65, 4-67
1499345-0000	.FLAP HOLDER	4-51, 4-53, 4-55, 4-57, 4-61, 4-63, 4-65, 4-67
1499346-0000	.FLAP HOLDER	4-51, 4-53, 4-55, 4-57, 4-61, 4-63, 4-65, 4-67
1499348-0000	.STOP	4-51, 4-53, 4-55, 4-57, 4-61, 4-63, 4-65, 4-67
1499349-0000	.STOPPER	4-51, 4-53, 4-55, 4-57, 4-61, 4-63, 4-65, 4-67
1499350-0000	.CAM	4-51, 4-53, 4-55, 4-57, 4-61, 4-63, 4-65, 4-67
1499351-0200	.ROLLER UNIT	4-167, 4-169
1499355-0000	.ROLLER	4-51, 4-53, 4-55, 4-57, 4-61, 4-63, 4-65, 4-67
1499356-0000	.CAM	4-51, 4-53, 4-55, 4-57, 4-61, 4-63, 4-65, 4-67
1499357-0000	.VOLUME FLAP	4-51, 4-53, 4-55, 4-57, 4-61, 4-63, 4-65, 4-67
1499358-0000	.VOLUME FLAP	4-51, 4-53, 4-55, 4-57, 4-61, 4-63, 4-65, 4-67
1499400-0000	.GUIDE	5-103, 5-105, 5-107, 5-109, 5-111
1499401-0000	.GUIDE	5-103, 5-105, 5-107, 5-109, 5-111
1499402-0000	.SPACER	5-45, 5-47, 5-49
1499411-0000	.COUNTER ROLLER	1-53, 1-55
1499413-0000	.HOLDER	5-83, 5-85, 5-87, 5-89, 5-91
1499417-0000	.BAR	5-103, 5-105, 5-107, 5-109, 5-111
1499418-0000	.SLIDE	5-103, 5-105, 5-107, 5-109, 5-111
1499422-0000	.SLIDE	5-103, 5-105, 5-107, 5-109, 5-111
1499423-0000	.BAR	5-103, 5-105, 5-107, 5-109, 5-111
1499426-0000	.GUIDE	5-103, 5-105, 5-107, 5-109, 5-111
1499427-0000	.GUIDE	5-103, 5-105, 5-107, 5-109, 5-111
1499444-0000	.NOZZLE	5-203, 5-205, 5-207, 5-209, 5-211, 5-213
1499445-0000	.NOZZLE	5-203, 5-205, 5-207, 5-209, 5-211, 5-213
1499446-0000	.NOZZLE	5-203, 5-205, 5-207, 5-209, 5-211, 5-213
1499475-0000	.HOLDER	5-103, 5-105, 5-107, 5-109, 5-111, 5-165, 5-167
1499476-0000	.HOLDER	5-103, 5-105, 5-107, 5-109, 5-111, 5-165, 5-167, 5-259, 5-265
1499562-0003	.LOCKING ARM	7-207, 7-209
1499562-0004	.LOCKING ARM	7-207, 7-209
1499564-0100	.COVER	7-189, 7-191
1499566-0000	.WASHER	7-109, 7-111
1499568-0000	.HATCH	7-223
1499569-0000	.BRACKET	7-75
1499570-0000	.HOLDER	7-45, 7-47
1499571-0100	.PAPER REEL HOLDER	7-45, 7-47
1499573-0000	.PIN	7-67
1499577-0000	.ARM	7-125
1499578-0300	.CABLE CONDUIT	7-89, 7-91
1499579-0000	.SEALING STRIP	7-221
1499582-0000	.AXLE PIN	7-117, 7-125
1499584-0000	.AXLE PIN	7-55, 7-173, 7-181
1499588-0000	.BENDING ROLLER	7-117, 7-125
1499594-0000	.VOLUME CAM	4-175, 4-177, 4-179
1499635-0000	.LEVER	5-5, 5-7
1499636-0000	.ROLLER	1-53, 1-55
1499642-0201	.TPIH GENERATOR	7-7, 8-57
1499675-0000	.VOLUME BULGE	4-7, 4-9, 4-11, 4-17, 4-19, 4-21
1499678-0000	.ROLLER	4-181, 4-183
1499726-0000	.PLASTIC HOSE	1-285
1499735-0000	.RAILING	1-303

Part No	Description	Page No
1499765-0000	.AXLE LINK	5-11, 5-13
1499786-0000	.BRACKET	6-41, 6-43
1499901-0000	.VOLUME FLAP	4-7, 4-9, 4-11
1499902-0000	.VOLUME FLAP	4-17, 4-19, 4-21
1511067-0000	.CARRIER RULER	4-123, 4-125
1511188-0000	.CARRIER RULER	4-159, 4-161
1511192-0000	.ROCKER	3-23
1511193-0000	.SUPPORT PULLEY	3-21
1511194-0000	.AXLE PIN	3-21
1511195-0000	.SHAFT	3-21
1511196-0000	.SHAFT	3-23
1511197-0100	.PULLEY	3-13, 3-29
1511198-0100	.BELT TENSIONER	3-13, 3-29
1511203-0000	.PIPE	2-69
1511209-0000	.BUSHING	3-23
1511225-0000	.CARRIER	5-75, 5-77, 5-79
1511250-0000	.VOLUME FLAP	4-7, 4-9, 4-11
1511251-0000	.VOLUME FLAP	4-17, 4-19, 4-21
1511253-0000	.VOLUME SHIM	4-7, 4-9, 4-11, 4-17, 4-19, 4-21, 9-11, 9-13, 9-15, 9-17, 9-19
1511254-0000	.BUSHING	4-7, 4-9, 4-11, 4-17, 4-19, 4-21
1511335-0000	.VOLUME BULGE	4-51, 4-53, 4-55, 4-57, 4-61, 4-63, 4-65, 4-67
1511336-0000	.VOLUME SHIM	4-51, 4-53, 4-55, 4-57, 4-61, 4-63, 4-65, 4-67, 9-11, 9-13, 9-15, 9-17, 9-19
1511337-0000	.VOLUME SHIM	4-51, 4-53, 4-55, 4-57, 4-61, 4-63, 4-65, 4-67, 9-11, 9-13, 9-15, 9-17, 9-19
1511338-0000	.STOP	4-51, 4-53, 4-55, 4-57, 4-61, 4-63, 4-65, 4-67
1511339-0000	.STOP	4-51, 4-53, 4-55, 4-57, 4-61, 4-63, 4-65, 4-67
1511351-0000	.FOLDING FLAP	4-123, 4-125, 4-159, 4-161
1511352-0000	.FOLDING FLAP	4-123, 4-125, 4-159, 4-161
1511492-0000	.SHAFT	1-97, 1-99
1511497-0000	.CONTAINER	1-283
1511503-0000	.PIPE	1-193
1511504-0000	.SPACER	1-297
1511512-0000	.BEARING BUSHING	1-175
1511556-0000	.SET SCREW	4-27, 4-29, 4-39, 4-41
1511558-0000	.BOTTOM	5-23, 5-25, 5-113, 5-115, 5-119, 5-121
1511564-0000	.BRACKET	7-183, 7-185
1511568-0000	.PIN	7-117, 7-125
1511569-0000	.SPACER	7-123, 7-129
1511575-0000	.ARM	7-117
1511579-0000	.BRACKET	7-183, 7-185
1511585-0200	.STRIP GUIDE	7-73
1511586-0001	.BAR	7-83
1511587-0000	.BUSHING BLOCK	7-83
1511600-0000	.SPACER	1-251
1511615-0000	.BRACKET	6-23
1511616-0000	.BRACKET	6-23
1511680-0000	.TUBE	6-23
1511692-0000	.SPACER	5-203, 5-205, 5-207, 5-209, 5-211, 5-213
1511697-0000	..FOLDING FLAP	4-123, 4-125, 4-159, 4-161
1511698-0000	.FOLDING FLAP	4-123, 4-125, 4-159, 4-161
1511699-0000	.FOLDING FLAP	4-123, 4-125, 4-159, 4-161
1511700-0000	.FOLDING FLAP	4-123, 4-125, 4-159, 4-161
1511740-0000	.CARRIER	1-133, 1-135, 1-137
1511755-0000	.NET	1-193
1511759-0000	.SPRING	1-287, 1-289
1511769-0000	.ROLLER	1-139, 1-141, 1-143, 1-145, 1-147, 1-149, 1-151, 1-153
1512145-0000	.LID	2-269
1512146-0000	.AXLE PIN	4-51, 4-53, 4-55, 4-57, 4-61, 4-63, 4-65, 4-67
1512147-0000	.WASHER	4-51, 4-53, 4-55, 4-57, 4-61, 4-63, 4-65, 4-67
1512265-0000	.SLEEVE	7-69
1512266-0000	.SLEEVE	7-69
1512267-0000	.ECCENTRIC BUSHING	7-101, 7-103, 7-175
1512275-0000	.PROTECTION PLATE	7-67
1512276-0000	.PROTECTION PLATE	7-117, 7-125
1512278-0000	.SEALING STRIP	7-223
1512279-0200	.MACHINE BODY	7-45, 7-47
1512307-0000	.GUIDE	5-103, 5-105, 5-107, 5-109, 5-111
1512308-0000	.GUIDE	5-103, 5-105, 5-107, 5-109, 5-111
1512315-0000	.ARM RIGHT	4-215, 4-217, 9-37
1512316-0000	.ARM LEFT	4-205, 4-207, 9-37
1512322-0000	.COPPER BRAID	8-67, 8-69
1512324-0000	.CURVE	4-175, 4-177, 4-179
1512325-0000	.VOLUME CAM	4-175, 4-177, 4-179
1512339-0100	.PHOTOCELL OUTFEED	5-57
1512363-0000	.BEARING HOUSING	7-33, 7-35
1512405-0000	.NUT	1-291
1512413-0200	.CONTROL PANEL	7-201
1512414-0000	.SEALING STRIP	7-201
1512420-0000	.PLATE	7-45, 7-47
1512421-0000	.CABLE DUCT	7-71
1512423-0000	.CABLE DUCT	7-71
1512425-0000	.CABLE DUCT	7-71
1512426-0000	.CABLE DUCT	7-71
1512428-0200	.MOUNTING SHEET	7-73
1512429-0100	.PRESSURE ROLLER	7-173

Part No	Description	Page No
1512430-0000	.VOLUME SHIM	7-109, 7-111
1512484-0000	.ROLLER	4-181, 4-183
1512526-0000	.STEERING	7-93
1512563-0200	.PRESSURE JAW LEFT	4-5
1512564-0200	.CARRIER CUTTING LEFT	4-5
1512565-0300	.CUTTING JAW LEFT	4-5
1512568-0200	.PRESSURE JAW RIGHT	4-5
1512569-0200	.CARRIER CUTTING RIGHT	4-5
1512570-0300	.CUTTING JAW RIGHT	4-5
1512579-0000	.BRACKET	4-27, 4-29, 4-39, 4-41
1512998-0000	.FOLDING FLAP CAM	4-229, 4-231
1517053-0000	.SPRING	1-213, 1-215, 1-217
1517087-0000	.HINGE	7-75
1517088-0200	.CONTROL PANEL	7-217
1517101-0000	.PIPE	7-45, 7-47
1517105-0000	.PLATE	7-177
1517107-0000	.PROTECTION	7-73
1517113-0000	.RAIL	7-109, 7-111
1517134-0100	.COMPRESSOR UNIT	1-179
1517135-0000	.FRONT PLATE	1-181
1517136-0000	.COVER	1-181
1517137-0000	.COVER	1-181
1517138-0000	.COVER	1-181
1517242-0000	.GUIDE	5-103, 5-105, 5-107, 5-109, 5-111
1517243-0000	.GUIDE	5-103, 5-105, 5-107, 5-109, 5-111
1517295-0000	.SHEET	6-75
1517298-0200	.INFEED CONVEYOR	5-3
1517299-0200	.INFEED CONVEYOR LONG	5-255
1517300-0300	.INFEED CONVEYOR SHORT	5-255
1517302-0000	.SUPPORT PLATE	5-65, 5-67
1517348-0000	.HOSE	4-233
1517350-0000	.BULB	3-23
1517472-0000	.SIDE PLATE	5-251, 5-253
1517473-0000	.SIDE PLATE	5-251, 5-253
1517474-0000	.GUIDE	5-103, 5-105, 5-107, 5-109, 5-111
1517475-0000	.GUIDE	5-103, 5-105, 5-107, 5-109, 5-111
1517476-0000	.WEDGE	5-103, 5-105, 5-107, 5-109, 5-111, 5-165, 5-167
1517477-0000	.PLATE	5-103, 5-105, 5-107, 5-109, 5-111, 5-165, 5-167
1517478-0000	.BAR	5-103, 5-105, 5-107, 5-109, 5-111
1517479-0000	.BAR	5-103, 5-105, 5-107, 5-109, 5-111
1517480-0000	.SLIDE	5-103, 5-105, 5-107, 5-109, 5-111
1517481-0000	.SLIDE	5-103, 5-105, 5-107, 5-109, 5-111
1517482-0000	.TUBE	1-193
1517524-0000	.GUIDE	5-103, 5-105, 5-107, 5-109, 5-111
1517525-0000	.GUIDE	5-103, 5-105, 5-107, 5-109, 5-111
1517526-0000	.GUIDE	5-103, 5-105, 5-107, 5-109, 5-111, 5-171, 5-173
1517527-0000	.GUIDE	5-103, 5-105, 5-107, 5-109, 5-111, 5-177, 5-179
1517563-0000	.BRACKET	5-65, 5-67
1517567-0000	.PLATE	5-65, 5-67
1517707-0000	.BRACKET	1-281
1517751-0000	.SHAFT	7-85
1517987-0000	.TEMPLATE	9-31
1519089-0000	.GUIDE	5-103, 5-105, 5-107, 5-109, 5-111
1519090-0000	.GUIDE	5-103, 5-105, 5-107, 5-109, 5-111
1519093-0000	.GUIDE	5-103, 5-105, 5-107, 5-109, 5-111
1519094-0000	.GUIDE	5-103, 5-105, 5-107, 5-109, 5-111
1519150-0000	.PIN	1-15, 1-17
1519156-0000	.AIR DISTRIBUTOR	1-169, 1-171
1519158-0000	.LID	1-169, 1-171
1519159-0000	.BUSHING	1-169, 1-171
1519160-0000	.SHAFT	1-169, 1-171
1519163-0000	.ARM	1-169, 1-171
1519166-0000	.BUSHING	1-169, 1-171
1519336-0000	.NOZZLE	5-203, 5-205, 5-207, 5-209, 5-211, 5-213
1519338-0000	.TIMING BELT	5-103, 5-105, 5-107, 5-109, 5-111, 5-165, 5-167
1519339-0000	.SPACER	5-203, 5-205, 5-207, 5-209, 5-211, 5-213
1519340-0000	.TIE ROD	5-11, 5-13
1519341-0000	.BLOCK	5-5, 5-7
1519344-0000	.CARRIER	5-103, 5-105, 5-107, 5-109, 5-111, 5-165, 5-167
1519345-0000	.GUIDE	5-103, 5-105, 5-107, 5-109, 5-111, 5-165, 5-167
1519346-0000	.GUIDE	5-103, 5-105, 5-107, 5-109, 5-111, 5-165, 5-167
1519355-0000	.SPACER	5-45, 5-47, 5-49, 5-145, 5-147
1519358-0000	.GUIDE	5-35, 5-37
1519359-0000	.GUIDE	5-35, 5-37
1519486-0000	.FILTER HOUSING	1-223, 1-319
1519578-0000	.MOUNTING BLOCK	7-109, 7-111
1519580-0000	.GUIDE FINGER	7-107
1519581-0000	.ROLLER BAR	7-173, 7-187
1519583-0000	.BRACKET	7-101, 7-103
1519586-0000	.BRACKET	7-173
1519588-0000	.PROTECTION PLATE	7-45, 7-47
1519589-0100	.HANDLE	7-125
1519591-0000	.RAIL PIN	7-109, 7-111
1519592-0000	.BOW	7-173, 7-187

Part No	Description	Page No
1519769-0000	.FOLDING BAR	5-45, 5-47, 5-49
1519770-0000	.FOLDING BAR	5-45, 5-47, 5-49
1519789-0000	.BRACKET	1-355, 1-357
1519790-0000	.PLATE	1-355, 1-357
1519799-0000	.ANGLE BRACKET	1-111
1519942-0000	.PLATE	7-183, 7-185
1519944-0000	.BRACKET	7-109, 7-111
1519955-0000	.WASHER	7-105
1519960-0000	.SPACER	7-173
1519967-0000	.CLAMP	7-105
1520052-0000	.INDUCTOR	4-93, 4-95, 4-97, 4-139, 4-141, 4-143, 9-11, 9-13, 9-15, 9-17, 9-19
1520167-0000	.INDUCTOR	4-93, 4-95, 4-97, 4-139, 4-141, 4-143, 9-11, 9-13, 9-15, 9-17, 9-19
1520455-0000	.CUTTING RAIL	4-115, 4-117, 4-119, 4-121
1520493-0000	.CUTTING RAIL	4-115, 4-117, 4-119, 4-121
1520494-0000	.CUTTING RAIL	4-115, 4-117, 4-119, 4-121
1520633-0002	.DOLLY	4-115, 4-117, 4-119, 4-121, 9-11, 9-13, 9-15, 9-17, 9-19, 10-67
1520633-0005	.DOLLY	4-115, 4-117, 4-119, 4-121, 9-11, 9-13, 9-15, 9-17, 9-19
1523091-0000	.TEMPLATE	10-25
1523146-0000	.FOLDING FLAP	4-123, 4-125, 4-159, 4-161
1523147-0000	.FOLDING FLAP	4-123, 4-125, 4-159, 4-161
1523148-0000	.CARRIER RULER	4-159, 4-161
1523154-0003	.SPRAY NOZZLE	1-249
1523154-0004	.SPRAY NOZZLE	1-249
1523154-0005	.SPRAY NOZZLE	1-249
1523154-0006	.SPRAY NOZZLE	1-249
1523162-0000	.SCREW	4-105, 4-107, 4-109, 4-111, 4-149, 4-151, 4-153, 4-155
1523177-0000	.CARRIER RULER	4-123, 4-125
1523179-0000	.FLANGE	1-167
1523185-0000	.AXLE PIN	1-167
1523190-0000	.SHAFT	1-133, 1-135, 1-137
1523191-0000	.SHAFT	1-133, 1-135, 1-137
1523216-0200	.LEVEL CONTROL DEVICE	2-91
1523467-0000	.VOLUME BULGE	5-23, 5-25, 5-235, 5-237, 5-239, 5-241, 5-243, 5-245, 5-247, 5-249
1523475-0000	.CANTILEVER	4-27, 4-29, 4-39, 4-41
1523483-0000	.ROLLER	7-33, 7-35, 7-41, 7-43
1523486-0000	.SPACER	7-41, 7-43
1523487-0000	.ROLL	7-75, 7-83
1523490-0000	.VOLUME BULGE	4-175, 4-177, 4-179
1523497-0000	.SPACER	5-203, 5-205, 5-207, 5-209, 5-211, 5-213
1523498-0000	.SPACER	5-35, 5-37
1523641-0000	.SPACER	2-201, 2-203
1523645-0000	.AIR NOZZLE	2-201, 2-203
1523664-0001	.ROLLER (STANDARD SIZE)	1-29, 1-31
1523665-0001	.ROLLER (STANDARD SIZE)	1-29, 1-31
1523680-0000	.PIPE	1-113
1523685-0000	.IMPELLER	1-115
1523686-0000	.LID	1-115
1523687-0000	.PUMP BODY	1-115
1523691-0100	.BLOWING DEVICE	1-113
1523696-0000	.GUIDE	1-47, 1-49, 1-51
1523777-0100	.STAIR CASE	2-159, 2-161, 2-163, 2-165, 2-167, 2-169
1523784-0000	.TOE PLATE	2-187
1523793-0000	.TOE PLATE	2-179, 2-181
1523805-0000	.PIN	1-287, 1-289
1523808-0000	.GASKET	1-285
1523818-0000	.BRACKET	1-323, 1-325
1523819-0000	.BRACKET	1-323, 1-325
1523820-0000	.BRACKET	1-323, 1-325
1523826-0000	.PUSHER	5-235, 5-237, 5-239, 5-241, 5-243, 5-245
1523827-0000	.SCREW	4-115, 4-117, 4-119, 4-121
1523884-0000	.FLAP	5-235, 5-237, 5-239, 5-241, 5-243, 5-245
1523885-0000	.PUSHER	5-235, 5-237, 5-239, 5-241, 5-243, 5-245
1523926-0000	.SPACER	5-35, 5-37, 5-45, 5-47, 5-49
1523927-0000	.SPACER SCREW	5-45, 5-47, 5-49
1524035-0000	.VOLUME BULGE	4-7, 4-9, 4-11, 4-17, 4-19, 4-21, 5-23, 5-25
1524147-0000	.ROLLER	1-75, 1-77, 1-79
1524148-0000	.ROLLER	1-75, 1-77, 1-79
1524149-0000	.ROLLER	1-75, 1-77, 1-79
1524150-0000	.ROLLER	1-75, 1-77, 1-79
1524151-0000	.ROLLER	1-59, 1-61, 1-63
1524152-0000	.ROLLER	1-59, 1-61, 1-63
1524156-0000	.ROLLER	1-53, 1-55
1524167-0000	.CORNER STRIP	2-173, 2-175, 2-179, 2-181, 2-189, 2-191
1524168-0000	.CORNER STRIP	2-173, 2-175, 2-179, 2-181
1524171-0000	.FRAME	2-189, 2-191
1524172-0000	.CHECKER PLATE	2-189, 2-191
1524173-0000	.CHECKER PLATE	2-189, 2-191
1524174-0000	.HOOK	2-189, 2-191
1524175-0000	.LEG	2-189, 2-191
1524176-0000	.CLAMP	2-189, 2-191
1524177-0000	.TOE PLATE	2-189, 2-191
1524179-0000	.TOE PLATE	2-189, 2-191
1524180-0000	.TOE PLATE	2-189, 2-191
1524181-0000	.PIN	2-189, 2-191

Part No	Description	Page No
1524182-0000	.RAILING	2-189, 2-191
1524185-0000	.EXTENSION PIECE	2-189, 2-191, 2-193
1524186-0000	.PROFILE	2-193
1524187-0000	.PROFILE	2-193
1524188-0000	.STAIR	2-193
1524190-0000	.BRACKET	2-193
1524191-0000	.RIM	2-193
1524192-0000	.RAILING	2-193
1524193-0000	.RAILING	2-193
1524233-0000	.PIPE	1-323, 1-325
1524234-0000	.PIPE	1-323, 1-325
1524236-0000	.VALVE HOUSING	1-195
1524237-0000	.PIPE	1-323, 1-325
1524239-0000	.PIPE	1-323, 1-325
1524242-0000	.PIPE	1-323, 1-325
1524243-0000	.PIPE	1-323, 1-325
1524310-0000	.VOLUME BULGE	4-51, 4-53, 4-55, 4-57, 4-61, 4-63, 4-65, 4-67
1524394-0100	.CYLINDER	7-117
1524398-0100	.HANDLE	7-117
1524414-0000	.SEAL	1-85, 1-87
1524416-0000	.ROLLER	1-85, 1-87
1524421-0000	.ROLLER	4-181, 4-183
1524477-0200	.CUTTING TABLE	7-73
1524481-0000	.SEALING BLOCK	7-85
1524484-0000	.FLAP	5-23, 5-25
1524731-0300	.BRACKET	7-173
1524732-0200	.DRIVE UNIT	7-173
1524840-0000	.TEMPLATE	9-31
1524841-0000	.TEMPLATE	9-31
1524854-0000	.BEAM	2-179, 2-181
1524864-0000	.RAILING	2-189, 2-191
1524870-0000	.RAILING	2-187
1528552-0000	.PLATFORM	2-171
1528553-0000	.PLATFORM	2-171
1528639-0000	.GASKET	1-287, 1-289
1528727-0000	.PIPE	1-323, 1-325
1528728-0000	.PIPE	1-323, 1-325
1528746-0100	.GUIDE	1-101, 1-103
1528838-0000	.CLAMP	10-15
1528839-0000	.SLEEVE	10-15
1528840-0000	.LEVER	10-15
1528841-0000	.HOLDER	10-15
1528842-0000	.PIN	10-15
1528847-0100	.PLATFORM	2-159, 2-161, 2-163, 2-165, 2-167, 2-169
1528848-0100	.PLATFORM	2-159, 2-161, 2-163, 2-165, 2-167, 2-169
1528849-0000	.RAILING	2-173, 2-175
1528850-0000	.CHECKER PLATE	2-171
1528855-0000	.CHECKER PLATE	2-171
1528856-0000	.TOE PLATE	2-171
1528857-0000	.TOE PLATE	2-173, 2-175
1528858-0000	.RAILING	2-171
1528859-0000	.RAILING	2-173, 2-175
1528866-0000	.CHECKER PLATE	2-171
1528867-0000	.TOE PLATE	2-171
1528868-0000	.CHECKER PLATE	2-173, 2-175
1528870-0000	.CHECKER PLATE	2-173, 2-175
1528871-0000	.TOE PLATE	2-173, 2-175
1528872-0000	.TOE PLATE	2-173, 2-175
1528873-0000	.RAILING	2-173, 2-175
1528874-0000	.RAILING	2-171
1528887-0000	.TORSION SPRING	10-15
1532223-0000	.BLOCK	1-319
1532231-0000	.CONNECTION	1-169, 1-171
1532236-0000	.CONNECTION BOX	1-293
1532237-0000	.RAIL	1-229, 1-295
1532238-0100	.TERMINAL BLOCK	1-293
1532239-0100	.CONNECTION BOX	1-279
1532240-0000	.BRACKET	1-293
1532249-0000	.WHEEL	1-133, 1-135, 1-137
1532250-0100	.HEAT EXCHANGER VALVE	1-179
1532254-0000	.SPACER	5-101
1532256-0000	.CARRIER	5-103, 5-105, 5-107, 5-109, 5-111
1532257-0000	.SLIDE	5-103, 5-105, 5-107, 5-109, 5-111
1532258-0000	.SLIDE	5-103, 5-105, 5-107, 5-109, 5-111
1532261-0000	.GUIDE	5-103, 5-105, 5-107, 5-109, 5-111
1532262-0000	.GUIDE	5-103, 5-105, 5-107, 5-109, 5-111
1532263-0000	.GUIDE	5-103, 5-105, 5-107, 5-109, 5-111
1532264-0000	.GUIDE	5-103, 5-105, 5-107, 5-109, 5-111
1532266-0000	.BLOCK	5-5, 5-7
1532267-0000	.SUPPORT	5-11, 5-13
1532268-0000	.AXLE LINK	5-11, 5-13
1532269-0000	.TIE ROD	5-11, 5-13
1532270-0000	.SUPPORT	5-11, 5-13
1532275-0000	.FOLDING BAR	5-45, 5-47, 5-49

Part No	Description	Page No
1532276-0000	.FOLDING BAR	5-45, 5-47, 5-49
1532280-0000	.RAIL	5-45, 5-47, 5-49
1532281-0000	.RAIL	5-45, 5-47, 5-49
1532284-0000	.NOZZLE	5-203, 5-205, 5-207, 5-209, 5-211, 5-213
1532285-0000	.NOZZLE	5-203, 5-205, 5-207, 5-209, 5-211, 5-213
1532286-0000	.NOZZLE	5-203, 5-205, 5-207, 5-209, 5-211, 5-213
1532287-0000	.VOLUME FLAP	4-7, 4-9, 4-11, 4-17, 4-19, 4-21
1532289-0000	.PUSHER	5-235, 5-237, 5-239, 5-241, 5-243, 5-245
1532290-0000	.PUSHER	5-235, 5-237, 5-239, 5-241, 5-243, 5-245
1532291-0000	.PLATE	5-235, 5-237, 5-239, 5-241, 5-243, 5-245
1532293-0000	.VOLUME SHIM	4-7, 4-9, 4-11, 4-17, 4-19, 4-21
1532297-0000	.FLAP	5-23, 5-25
1532298-0000	.FLAP	5-23, 5-25
1532299-0000	.TEMPLATE	9-31
1532459-0100	.SETTING TOOL	10-45
1532466-0000	.BRACKET	10-47
1532516-0000	.CARRIER	5-75, 5-77, 5-79
1532901-0100	.PLINTH	8-97, 8-99
1532902-0200	.CABINET	8-3
1532904-0100	.DOOR	8-25
1532905-0000	.PLATE	8-45
1532906-0100	.RACK	8-97, 8-99
1532908-0200	.CONTROL BOARD LEFT	8-3
1532909-0000	.PLATE	8-25
1532911-0000	.FASTENING PLATE	8-25
1532912-0000	.FRAME	8-57
1532916-0000	.MOUNTING PLATE	8-51, 8-53, 8-55
1532917-0000	.MOUNTING PLATE	8-67, 8-69
1532920-0100	.DOOR	8-25
1532921-0000	.DOOR	8-31
1532923-0100	.DOOR	8-25
1532924-0000	.DOOR	8-33
1532926-0000	.GASKET	8-25
1532927-0000	.FASTENING PLATE	8-25
1532928-0000	.COVERING PLATE	8-25
1532929-0000	.COVERING PLATE	8-25
1532930-0000	.PROTECTION	8-77, 8-79
1532932-0200	.DOOR	8-25
1532933-0000	.DOOR	8-35
1532935-0100	.DOOR	8-25
1532936-0000	.DOOR	8-37
1532998-0000	.TEMPLATE	10-25
1533046-0000	.INDUCTOR	4-93, 4-95, 4-97, 4-139, 4-141, 4-143, 9-11, 9-13, 9-15, 9-17, 9-19
1533051-0000	.CUTTING RAIL	4-115, 4-117, 4-119, 4-121
1535036-0000	.PLATE	2-179, 2-181
1538049-0000	.PIPE	1-281
1538109-0000	.COMPRESSION SPRING	4-163
1538154-0000	.DRAIN PIPE	1-193
1538157-0000	.PIPE	1-199
1538158-0000	.PIPE	1-199
1538163-0000	.LEVER	1-167
1538166-0100	.AIR VALVE	1-179
1538169-0000	.HOLDER	1-197
1538181-0000	.PIPE	1-193
1538183-0000	.PIPE	1-193
1538186-0000	.BRACKET	5-45, 5-47, 5-49
1538186-0100	.PAPER TROLLEY	10-67
1538192-0000	.BRACKET	7-173
1538194-0000	.FINGER	7-85
1538202-0000	.AXLE PIN	7-75
1538234-0000	.SPACER	10-47
1538256-0000	.CARRIER RULER	4-123, 4-125
1538264-0000	.CURVE	4-175, 4-177, 4-179
1538265-0000	.VOLUME CAM	4-175, 4-177, 4-179
1538348-0000	.CATCH	4-115, 4-117, 4-119, 4-121
1538349-0000	.CATCH	4-91
1538474-0000	.PIPE	1-193
1538487-0000	.PIPE	1-193
1538494-0000	.LID	1-205
1538496-0000	.ROLLER	1-149, 1-151, 1-153
1538502-0000	.PIPE	1-283
1538503-0000	.PIPE	1-281
1538521-0000	.BUSHING	4-27, 4-29, 4-39, 4-41
1538597-0000	.SHAFT	10-75
1538637-0000	.VOLUME SHIM	4-51, 4-53, 4-55, 4-57, 4-61, 4-63, 4-65, 4-67, 9-11, 9-13, 9-15, 9-17, 9-19
1538723-0000	.PIPE	1-281
1538724-0000	.BRACKET	1-281
1538725-0000	.WASHER	1-129, 1-131
1538726-0000	.BUSHING	1-129, 1-131
1538735-0000	.GASKET	1-287, 1-289
1538742-0000	.LID	1-287, 1-289
1538769-0000	.CARRIER RULER	4-159, 4-161
1538770-0000	.BOTTOM	5-23, 5-25
1538868-0000	.BRACKET	2-219, 2-221, 2-237, 2-249, 2-255, 2-257, 2-259, 6-49, 6-75, 7-45, 7-47

Part No	Description	Page No
1538890-0000	.RAIL	5-45, 5-47, 5-49
1538891-0000	.RAIL	5-45, 5-47, 5-49
1538952-0000	.FORK	1-213, 1-215, 1-217
1538953-0000	.SHAFT	1-213, 1-215, 1-217
1538963-0000	.RAIL	5-65, 5-67
1538970-0000	.SLIDE	5-83, 5-85, 5-87, 5-89, 5-91
1539172-0000	.CANTILEVER	4-27, 4-29, 4-39, 4-41
1539174-0000	.BUSHING	1-13
1539175-0000	.PLATE	1-13
1539348-0000	.HOLDER	4-27, 4-29, 4-39, 4-41
1539387-0000	.SCREW	7-75
1539391-0000	.ROUND NUT	7-207, 7-217, 7-221
1539396-0000	.BOW CLAMP	7-173
1539397-0000	.ROLLER	7-187
1539726-0000	.SHAFT	1-287, 1-289
1539727-0000	.WHEEL	1-287, 1-289
1539729-0000	.BRACKET	1-287, 1-289
1539740-0000	.BUSHING	1-195
1539741-0000	.COVER	1-195
1539742-0000	.SHUTTER	1-195
1539743-0000	.SHUTTER	1-195
1539744-0000	.BRACKET	1-195
1539745-0000	.LEVER	1-195
1539746-0200	.DOOR	1-101, 1-103
1539750-0000	.SHAFT	1-195
1539751-0000	.COVER	1-195
1539752-0000	.BRACKET	1-195
1539840-0000	.VOLUME BULGE	4-7, 4-9, 4-11, 4-17, 4-19, 4-21
1539841-0000	.VOLUME BULGE	4-7, 4-9, 4-11, 4-17, 4-19, 4-21
1539842-0000	.VOLUME SHIM	4-7, 4-9, 4-11, 4-17, 4-19, 4-21
1539843-0000	.VOLUME SHIM	4-7, 4-9, 4-11, 4-17, 4-19, 4-21, 9-11, 9-13, 9-15, 9-17, 9-19
1539871-0000	.SPACER	5-35, 5-37, 5-45, 5-47, 5-49, 5-145, 5-147
1539872-0000	.PUSHER	5-235, 5-237, 5-239, 5-241, 5-243, 5-245
1539873-0000	.SPACER	5-45, 5-47, 5-49
1539874-0000	.SLIDE	5-103, 5-105, 5-107, 5-109, 5-111, 5-171, 5-173
1539875-0000	.SLIDE	5-103, 5-105, 5-107, 5-109, 5-111, 5-177, 5-179
1539876-0000	.PLATE	5-103, 5-105, 5-107, 5-109, 5-111, 5-171, 5-173, 5-177, 5-179
1539877-0000	.BAR	5-103, 5-105, 5-107, 5-109, 5-111, 5-171, 5-173
1539878-0000	.BAR	5-103, 5-105, 5-107, 5-109, 5-111, 5-177, 5-179
1539879-0000	.GUIDE	5-103, 5-105, 5-107, 5-109, 5-111
1539880-0000	.GUIDE	5-103, 5-105, 5-107, 5-109, 5-111
1539881-0000	.FOLDING BAR	5-45, 5-47, 5-49
1539882-0000	.FOLDING BAR	5-45, 5-47, 5-49
1539886-0000	.CANTILEVER	4-27, 4-29, 4-39, 4-41
1539887-0000	.CATCH	4-27, 4-29, 4-39, 4-41
1539892-0000	.TEMPLATE	10-25
1539893-0000	.TEMPLATE	10-25
1539894-0000	.GUIDE	5-103, 5-105, 5-107, 5-109, 5-111, 5-171, 5-173
1539895-0000	.GUIDE	5-103, 5-105, 5-107, 5-109, 5-111, 5-177, 5-179
1539898-0000	.SPACER	5-35, 5-37, 5-45, 5-47, 5-49, 5-137, 5-139
1539900-0000	.RIGHT UPPER GUIDE	5-35, 5-37, 5-137, 5-139
1539902-0000	.VOLUME SHIM	4-7, 4-9, 4-11, 4-17, 4-19, 4-21, 9-11, 9-13, 9-15, 9-17, 9-19
1539903-0000	.VOLUME BULGE	4-7, 4-9, 4-11, 4-17, 4-19, 4-21
1539904-0000	.VOLUME FLAP	4-7, 4-9, 4-11
1539983-0000	.GUIDE	5-103, 5-105, 5-107, 5-109, 5-111
1539984-0000	.GUIDE	5-103, 5-105, 5-107, 5-109, 5-111
1548001-0000	.SIGN	1-343
1548002-0000	.CAM	5-215
1548116-0000	.SPACER	8-97, 8-99
1548121-0000	.PROTECTION	8-59
1548123-0100	.CONTROL BOARD RIGHT	8-3
1548124-0100	.PLINTH	8-67, 8-69
1548125-0100	.PLINTH	8-67, 8-69
1548127-0200	.POWER SUPPLY UNIT	8-3
1548129-0100	.RELAY UNIT 2	8-77, 8-79
1548130-0200	.FUSE BOARD 1	8-77, 8-79
1548131-0200	.FUSE BOARD 2	8-77, 8-79
1548132-0200	.FUSE BOARD 3	8-77, 8-79
1548133-0100	.PLINTH	8-77, 8-79
1548134-0200	.PLINTH	8-77, 8-79
1548136-0100	.DOOR	8-3
1548138-0000	.BRACKET	8-77, 8-79
1548139-0000	.COVER PLATE	8-39, 8-41, 8-43
1548195-0000	.ROLL	7-75
1548197-0000	.ROLL	7-75
1548200-0000	.BRACKET	7-45, 7-47
1548210-0100	.LOCKING DEVICE	7-183, 7-185
1548211-0000	.RAILING	2-179, 2-181
1548230-0000	.BODY	1-251
1548348-0000	.GUIDE	5-83, 5-85, 5-87, 5-89, 5-91
1548353-0000	.SLIDE RAIL	5-59, 5-61
1548354-0000	.COVER	5-59, 5-61
1548454-0000	.DISC	3-23, 9-5
1548460-0100	.VOLUME FLAP PRESSURE	4-5

Part No	Description	Page No
1548460-0101	.VOLUME FLAP	9-7, 9-9
1548460-0102	.VOLUME FLAP	9-7, 9-9
1548460-0103	.VOLUME FLAP	9-7, 9-9
1548460-0104	.VOLUME FLAP	9-7, 9-9
1548460-0105	.VOLUME FLAP	9-7, 9-9
1548460-0106	.VOLUME FLAP	9-7, 9-9
1548460-0107	.VOLUME FLAP	9-7, 9-9
1548460-0108	.VOLUME FLAP	9-7, 9-9
1548460-0109	.VOLUME FLAP	9-7, 9-9
1548460-0110	.VOLUME FLAP	9-7, 9-9
1548460-0111	.VOLUME FLAP	9-7, 9-9
1548491-0200	.ELECTRICAL CABINET	7-3, 7-5
1548492-0000	.ELECTRICAL CABINET	7-133, 7-135, 7-137, 7-139, 7-141
1548496-0100	.TERMINAL	7-133, 7-135, 7-137, 7-139, 7-141
1548527-0000	.FOLDING BAR	5-45, 5-47, 5-49
1548528-0000	.FOLDING BAR	5-45, 5-47, 5-49
1548531-0000	.ROLLER	1-59, 1-61, 1-63
1548540-0000	.ROLLER	1-59, 1-61, 1-63
1548541-0000	.ROLLER	1-59, 1-61, 1-63
1548550-0000	.RAIL	5-83, 5-85, 5-87, 5-89, 5-91
1548551-0000	.SPACER	5-83, 5-85, 5-87, 5-89, 5-91
1548587-0000	.APPLIANCE BOX	7-7
1548588-0000	.GRID ELEMENT	7-7
1548592-0000	.LID	7-7
1548612-0000	.COVERING PLATE	5-29, 5-31, 5-33, 5-129, 5-131
1548726-0000	.CONNECTION BOX	1-355, 1-357
1548727-0000	.MOUNTING PLATE	1-355, 1-357
1548728-0100	.TERMINAL BLOCK	1-355, 1-357
1548729-0000	.RAIL	1-363, 1-365
1548730-0000	.SPACER	1-355, 1-357
1548732-0000	.LID	1-123, 1-125
1548733-0100	.CONNECTION BOX	1-3
1548734-0000	.FLANGE	1-129, 1-131
1548735-0000	.LID	1-129, 1-131
1548736-0100	.BENDING ROLLER	1-101, 1-103
1548739-0000	.FLANGE	1-129, 1-131
1548742-0000	.SPACER	1-195
1548743-0000	.WASHER	1-195
1548749-0000	.PIPE	1-355, 1-357
1548751-0000	.BUSHING	1-155, 1-157
1548753-0100	.DRIVE ROLLER	1-101, 1-103
1548869-0000	.SPACER	1-355, 1-357
1548870-0000	.SPACER	1-355, 1-357
1548872-0100	.PILLAR	1-5
1548876-0100	.IH EQUIPMENT	1-5
1548877-0000	.SPACER	1-109
1548882-0000	.FLANGE	1-155, 1-157
1548892-0100	.CALENDER ROLLER	1-101, 1-103
1548940-0000	.SPRING	4-105, 4-107, 4-109, 4-111, 4-149, 4-151, 4-153, 4-155
1549126-0000	.NOZZLE	5-203, 5-205, 5-207, 5-209, 5-211, 5-213
1549127-0000	.NOZZLE	5-203, 5-205, 5-207, 5-209, 5-211, 5-213
1549312-0000	.INSERT	4-81, 4-83, 4-85, 4-105, 4-107, 4-109, 4-111, 4-129, 4-131, 4-133, 4-149, 4-151, 4-153, 4-155
1549324-0000	.BRACKET	7-45, 7-47
1549332-0000	.ROLLER	7-187
1549344-0000	.HOLDER	6-9
1549378-0000	.SPRING	9-11, 9-13, 9-15, 9-17, 9-19
1549388-0000	.SPACER	5-203, 5-205, 5-207, 5-209, 5-211, 5-213
1549389-0000	.SPACER	5-203, 5-205, 5-207, 5-209, 5-211, 5-213
1549390-0000	.NUT	5-203, 5-205, 5-207, 5-209, 5-211, 5-213
1549406-0000	.PACKAGE GUIDE	5-35, 5-37
1549411-0000	.PACKAGE GUIDE	5-35, 5-37
1549508-0000	.SPACER SCREW	5-45, 5-47, 5-49
1549512-0000	.SPACER	5-101
1549513-0000	.SLIDE	5-103, 5-105, 5-107, 5-109, 5-111
1549514-0000	.SLIDE	5-103, 5-105, 5-107, 5-109, 5-111
1549515-0000	.BAR	5-103, 5-105, 5-107, 5-109, 5-111
1549516-0000	.BAR	5-103, 5-105, 5-107, 5-109, 5-111
1549517-0000	.GUIDE	5-103, 5-105, 5-107, 5-109, 5-111
1549518-0000	.GUIDE	5-103, 5-105, 5-107, 5-109, 5-111
1549522-0000	.GUIDE	5-103, 5-105, 5-107, 5-109, 5-111
1549523-0000	.GUIDE	5-103, 5-105, 5-107, 5-109, 5-111
1549526-0000	.CONTAINER	1-193
1549542-0100	.TERMINAL BLOCK	1-355, 1-357
1549545-0000	.FLANGE	1-175
1549548-0000	.FLANGE	1-175
1549568-0000	.CHAIN	1-133, 1-135, 1-137
1549573-0100	.CRANK	1-101, 1-103
1549594-0000	.VOLUME SHIM	4-7, 4-9, 4-11, 4-17, 4-19, 4-21, 4-51, 4-53, 4-55, 4-57, 4-61, 4-63, 4-65, 4-67, 9-11, 9-13, 9-15, 9-17, 9-19
1549614-0000	.LEFT UPPER GUIDE	5-35, 5-37, 5-137, 5-139
1549615-0000	.SPRING	5-75, 5-77, 5-79
1549822-0000	.FOLDING FLAP	4-123, 4-125, 4-159, 4-161
1549823-0000	.FOLDING FLAP	4-123, 4-125, 4-159, 4-161

Machine Type Group Description Page No

Part No	Description	Page No
1549824-0000	.CARRIER RULER	4-123, 4-125
1549825-0000	.CARRIER RULER	4-159, 4-161
1549828-0000	.KNIFE	4-163, 9-11, 9-13, 9-15, 9-17, 9-19
1549829-0000	.VOLUME BULGE	4-7, 4-9, 4-11, 4-17, 4-19, 4-21, 5-125
1549830-0000	.VOLUME SHIM	4-7, 4-9, 4-11, 4-17, 4-19, 4-21, 5-125, 9-11, 9-13, 9-15, 9-17, 9-19
1549831-0000	.WEDGE	4-7, 4-9, 4-11, 4-17, 4-19, 4-21
1549832-0000	.PLUG	4-7, 4-9, 4-11
1549834-0000	.VOLUME BULGE	4-93, 4-95, 4-97, 4-139, 4-141, 4-143
1549836-0000	.VOLUME FLAP	4-7, 4-9, 4-11
1549837-0000	.VOLUME FLAP	4-17, 4-19, 4-21
1549843-0000	.VOLUME CAM	4-175, 4-177, 4-179
1549844-0000	.FLAP	5-23, 5-25
1549846-0000	.BLOCK	5-5, 5-7
1549847-0000	.PUSHER	5-235, 5-237, 5-239, 5-241, 5-243, 5-245
1549848-0000	.PUSHER	5-235, 5-237, 5-239, 5-241, 5-243, 5-245
1549849-0000	.PLATE	5-235, 5-237, 5-239, 5-241, 5-243, 5-245
1549852-0000	.SLIDE	5-103, 5-105, 5-107, 5-109, 5-111, 5-171, 5-173
1549853-0000	.SLIDE	5-103, 5-105, 5-107, 5-109, 5-111, 5-177, 5-179
1549854-0000	.BAR	5-103, 5-105, 5-107, 5-109, 5-111, 5-171, 5-173
1549855-0000	.BAR	5-103, 5-105, 5-107, 5-109, 5-111, 5-177, 5-179
1549856-0000	.GUIDE	5-103, 5-105, 5-107, 5-109, 5-111
1549857-0000	.GUIDE	5-103, 5-105, 5-107, 5-109, 5-111
1549940-0000	.PUSHER	5-235, 5-237, 5-239, 5-241, 5-243, 5-245
1549980-0200	.FRAME	1-297
1549981-0000	.FLANGE	1-133, 1-135, 1-137
1549982-0000	.FLANGE	1-133, 1-135, 1-137
1549992-0000	.HINGE FLANGE	1-119, 1-121
1549993-0000	.HINGE FLANGE	1-119, 1-121
1549994-0000	.SPACER	1-119, 1-121
1550348-0002	.BEARING	5-63
1550595-6600	.SLIDING STRIP	5-63
1550595-6700	.SLIDING STRIP	5-63
1550595-7000	.SLIDING STRIP	5-63
1550595-7110	.SLIDING STRIP	5-63
1550743-0100	.RAIL HOLDER	5-83, 5-85, 5-87, 5-89, 5-91
1550772-0000	.HOLDER	5-93
1550773-0000	.RAIL HOLDER	5-93
1558008-0000	.BLOCK	5-5, 5-7
1558020-0000	.ROD	5-5, 5-7
1558047-0000	.PUSHER	5-235, 5-237, 5-239, 5-241, 5-243, 5-245
1558123-0000	.VOLUME FLAP	4-17, 4-19, 4-21
1558178-0000	.PUSHER	5-235, 5-237, 5-239, 5-241, 5-243, 5-245
1558184-0000	.PLATE	5-235, 5-237, 5-239, 5-241, 5-243, 5-245
1558221-0000	.BRACKET	7-59
1558251-0000	.SHAFT	7-113
1558252-0000	.SCREW	7-113
1558253-0000	.ROLLER	7-113
1558254-0000	.SHAFT	1-311
1558304-0000	.TEMPLATE	9-31
1558327-0000	.LID	2-19, 2-21
1558328-0000	.NOZZLE	5-203, 5-205, 5-207, 5-209, 5-211, 5-213
1558329-0000	.NOZZLE	5-203, 5-205, 5-207, 5-209, 5-211, 5-213
1558352-0000	.FLANGE	1-307, 1-309
1558356-0100	.SPLICE DETECTOR	1-307, 1-309
1558357-0000	.SHAFT	1-175
1558358-0000	.WHEEL	1-175
1558417-0000	.FLANGE	1-205
1558418-0000	.SHAFT	1-205
1558427-0000	.LID	1-285
1558437-0000	.FRAME	1-299, 1-301
1558438-0000	.CHECKER PLATE	1-297
1558439-0000	.CHECKER PLATE	1-297
1558440-0000	.BRACKET	1-299, 1-301
1558441-0000	.BRACKET	1-13
1558447-0000	.SPACER	4-225, 4-227, 5-203, 5-205, 5-207, 5-209, 5-211, 5-213
1558477-0100	.WHEEL	10-79
1558479-0100	.HANDLE	10-79
1558480-0100	.LIFTING CYLINDER	10-79
1558484-0000	.PROTECTION PLATE	7-45, 7-47
1558485-0000	.AXLE PIN	7-7
1558487-0000	.SUPPORT	7-45, 7-47
1558494-0200	.PRODUCT VALVE	1-209, 1-211
1558495-0100	.HEATING UNIT	1-279
1558496-0000	.FRAME	1-281
1558497-0200	.FRAME SECTION,UPPER	1-3
1558510-0000	.PIPE	1-193
1558511-0200	.PIPE WORK-AIR	1-179
1558513-0000	.PILLAR	1-15, 1-17
1558519-0100	.TERMINAL BLOCK	1-351
1558522-0100	.ADJUSTING ROLLER	1-101, 1-103
1558526-0000	.SPACER	5-35, 5-37, 5-137, 5-139
1558527-0000	.SPACER	5-45, 5-47, 5-49
1558700-0000	.CARRIER	5-103, 5-105, 5-107, 5-109, 5-111
1558701-0000	.BUSHING	4-7, 4-9, 4-11, 4-17, 4-19, 4-21

Part No	Description	Page No
1558713-0000	.SPACER SCREW	5-45, 5-47, 5-49
1558733-0000	.VOLUME BULGE	4-115, 4-117, 4-119, 4-121
1558734-0000	.VOLUME BULGE	4-93, 4-95, 4-97, 4-139, 4-141, 4-143
1558735-0000	.SPACER	5-35, 5-37, 5-45, 5-47, 5-49
1558736-0000	.SPACER	5-35, 5-37
1558737-0000	.HUB	5-113, 5-115
1558748-0000	.FLANGE	1-105, 1-107
1558749-0000	.FLANGE	1-105, 1-107
1558750-0000	.FLANGE	1-105, 1-107
1558751-0000	.FLANGE	1-105, 1-107
1558752-0000	.FLANGE	1-105, 1-107
1558754-0000	.LID	1-105, 1-107
1558755-0000	.FLANGE	1-105, 1-107
1558756-0000	.HOUSING	1-105, 1-107
1558757-0000	.NUT	1-105, 1-107
1558758-0000	.SHAFT	1-105, 1-107
1558760-0000	.KNOB	1-105, 1-107
1558761-0000	.SHAFT	1-105, 1-107
1558762-0000	.LID	1-105, 1-107
1558763-0000	.SLIDER	1-105, 1-107
1558764-0000	.FLANGE	1-105, 1-107
1558765-0000	.FLANGE	1-105, 1-107
1558766-0000	.BUSHING	1-105, 1-107
1558768-0000	.WASHER	1-105, 1-107
1558769-0200	.SEPARATOR	1-179
1558795-0000	.RAILING	2-179, 2-181
1558798-0000	.BRACKET	7-45, 7-47
1558801-0000	.SHOULDER SCREW	7-105
1558817-0000	.VOLUME BULGE	4-7, 4-9, 4-11, 4-17, 4-19, 4-21
1558819-0000	.RAIL	4-93, 4-95, 4-97
1558820-0000	.RAIL	4-139, 4-141, 4-143
1558821-0000	.VOLUME BULGE	5-235, 5-237, 5-239, 5-241, 5-243, 5-245
1558830-0000	.COOLING PLATE	1-13
1558831-0000	.COOLING PLATE	1-13
1558832-0000	.RAIL	1-353
1558833-0000	.CONNECTION BOX	1-351
1558834-0200	.CONNECTION BOX	1-3
1558840-0000	.PIPE	1-285
1558841-0000	.PIPE	1-285
1558842-0000	.PIPE	1-285
1558845-0000	.BRACKET	1-399
1558864-0000	.CARRIER	5-103, 5-105, 5-107, 5-109, 5-111
1558889-0000	.SPACER SCREW	5-45, 5-47, 5-49
1558910-0000	.SPACER	5-35, 5-37, 5-137, 5-139
1558911-0000	.PRESSURE ROLLER	7-15, 7-17, 7-173
1558914-0000	.ROLLER BRACKET	7-15, 7-17
1558917-0000	.SPACER DISC	7-19
1558918-0000	.TIGHTENING NUT	7-19
1558932-0100	.TOP SECTION	5-27
1558933-0000	.FRAME	9-3
1558934-0000	.GUIDE	5-29, 5-31, 5-33
1558935-0100	.TOP RAIL	5-27
1558940-0200	.FLAP GUIDE	5-27
1558941-0000	.RAIL	5-65, 5-67
1558945-0000	.PIVOT PIN	2-143
1558946-0000	.PLUG	2-193
1558947-0000	.STRIP	2-173, 2-175, 2-179, 2-181
1558948-0000	.PLATE	2-145
1558949-0000	.PLATE	2-143
1558974-0000	.PIPE BRACKET	2-143
1558975-0000	.BLOCKING PIECE	2-143
1558983-0000	.DOOR	7-209
1558988-0100	.DOOR	7-189, 7-191
1566845-0002	.DOLLY	4-115, 4-117, 4-119, 4-121, 9-11, 9-13, 9-15, 9-17, 9-19
1591270-0001	.PLC CD	8-13
2500071-0000	.O-RING	1-213, 1-215, 1-217
2500078-0000	.BODY	1-251
2500081-0000	.ELBOW PIPE	1-245, 1-247, 9-11, 9-13, 9-15, 9-17, 9-19
2500082-0000	.MOUNTING PLATE	1-213, 1-215, 1-217
2500088-0100	.3-WAY VALVE	2-113
2500089-0000	.PIPE	9-35
2500591-0000	.VOLUME BULGE	4-93, 4-95, 4-97, 4-139, 4-141, 4-143
2501219-0000	.BRACKET	7-83
2501220-0000	.BRACKET	7-83
2501221-0000	.BRACKET	7-83
2501222-0100	.GENERATOR CABINET	7-3, 7-5
2501278-0000	.ECCENTRIC	1-245, 1-247
2501290-0200	.FILLING SYSTEM	1-3
2501292-0000	.VALVE HOUSING	2-115
2501310-0100	.FILLING PIPE	1-209, 1-211
2501311-0000	.FILLING PIPE	1-213, 1-215, 1-217
2501312-0000	.CLEANING CUP	1-263, 1-265
2501378-0000	.PIPE	2-61
2501612-0000	.NOZZLE	5-203, 5-205, 5-207, 5-209, 5-211, 5-213

Part No	Description	Page No
2501851-0000	.CURVE	4-175, 4-177, 4-179
2503436-0000	.SHAFT	1-311
2503438-0000	.LEVER	1-311
2503634-0000	.BEARING FLANGE	1-115
2503635-0000	.SHIELD	1-115
2503636-0000	.1STOP SCREW	1-115
2503637-0000	.FAN	1-115
2503638-0000	.FAN HOUSING	1-115
2503654-0000	.RAIL	7-147, 7-149
2503661-0100	.CABLE CONNECTION	4-195
2503665-0100	.DESIGN CORRECTION DEVICE LEFT	4-223
2503666-0100	.DESIGN CORRECTION DEVICE RIGHT	4-223
2503669-0000	.ECCENTRIC SHAFT	4-229, 4-231
2503688-0000	.VOLUME BULGE	4-93, 4-95, 4-97, 4-139, 4-141, 4-143
2503689-0000	.VOLUME BULGE	4-115, 4-117, 4-119, 4-121
2503692-0000	.TEMPLATE	10-25
2503694-0000	.TEMPLATE	10-25
2503699-0000	.VOLUME BULGE	4-115, 4-117, 4-119, 4-121
2503700-0000	.VOLUME BULGE	4-93, 4-95, 4-97, 4-139, 4-141, 4-143
2503719-0000	.FRAME	10-11
2503720-0100	.OPENING FORCE TESTER	10-5
2503721-0100	.GRIPPING DEVICE	10-9
2503722-0100	.HOLDER	10-9
2503723-0000	.BLOCK	10-13
2503724-0000	.END PLATE	10-13
2503725-0000	.END PLATE	10-13
2503726-0000	.PLATE	10-13
2503727-0000	.PLATE	10-13
2503728-0000	.ARM	10-13
2503729-0000	.MOUNTING PLATE	10-13
2503730-0000	.SPACER	10-13
2503731-0000	.SLEEVE	10-13
2503732-0000	.SHAFT	10-13
2503733-0000	.HANDLE	10-13
2503734-0000	.WASHER	10-13
2503735-0100	.FRAME	10-9
2504435-0000	.MACHINE BODY	2-9
2504437-0000	.FRAME	2-119
2504496-0100	.TRANSPORT EQUIPMENT	1-3
2504497-0000	.CABLE DUCT	1-367, 1-369
2504498-0000	.CABLE DUCT	1-367, 1-369
2504499-0000	.LID	1-367, 1-369
2504502-0100	.CABLE TRENCH	1-3
2504503-0000	.COVER	1-367, 1-369
2504521-0000	.BAR	1-11
2504523-0000	.CENTERING	1-11
2504547-0000	.GASKET	1-269
2504567-0000	.LINING	1-269
2504569-0000	.WASHER	1-271
2504779-0100	.REAR MODULE	2-3
2504780-0100	.MACHINE BODY	2-5, 2-7
2504781-0100	.HYDROGEN PEROXIDE	2-5, 2-7
2504782-0100	.CHEMICALS	2-5, 2-7
2504784-0200	.BENDING ROLLER	2-9
2504785-0200	.CENTRAL MODULE	2-3
2504786-0200	.MACHINE BODY	2-63
2504787-0100	.CLEANING SYSTEM	2-63
2504789-0100	.LUBRICATION UNIT	2-85
2504790-0100	.LIGHT FIXTURE	2-91, 2-147
2504791-0100	.CABLE DUCT	2-3
2504792-0100	.DRAINING	2-63
2504793-0100	.FRONT MODULE	2-3
2504794-0100	.MACHINE BODY	2-117
2504795-0100	.CLEANING SYSTEM	2-117
2504801-0000	.BRACKET	7-11
2504807-0000	.AXLE PIN	7-11
2504808-0000	.BRACKET	7-11
2504812-0000	.BLOCK	7-27
2504917-0100	.PIPE WORK-WATER	2-3
2504918-0100	.PNEUMATIC SYSTEM	2-3
2504920-0100	.DOORS AND COVERS	2-3
2506269-0000	.BUSHING	1-11
2506273-0000	.LEVER	1-11
2506281-0000	.PLUG	1-15, 1-17
2506283-0000	.PIN	1-15, 1-17
2506291-0000	.BUSHING	1-11
2506328-0000	.BRACKET	7-55
2506334-0000	.SUPPORT	4-225, 4-227
2506336-0000	.PROTECTIVE COVER	4-225, 4-227
2506337-0000	.ANGLE BRACKET	4-225, 4-227
2506338-0000	.SHAFT	4-225, 4-227
2506340-0000	.ECCENTRIC SHAFT	4-229, 4-231
2506359-0100	.VALVE PANEL	2-43
2506360-0100	.VALVE RAMP	2-49

Part No	Description	Page No
2506361-0000	.PANEL	2-49
2506362-0100	.VALVE PANEL	2-123
2506363-0100	.VALVE RAMP	2-131, 2-133
2506364-0000	.PLATE	2-131, 2-133
2506392-0000	.SPACER	4-225, 4-227
2506496-0100	.PRESSURE ROLLER	7-13
2506497-0100	.PRESSURE ROLLER	7-13
2506498-0000	.SEALING PLATE	7-19
2506499-0000	.SEALING PLATE	7-19
2506500-0000	.PLATE	7-19
2506501-0000	.PLATE	7-19
2506502-0000	.PLATE	7-19
2506503-0000	.PLATE	7-19
2506504-0000	.PLATE	7-19
2506505-0000	.PLATE	7-19
2506578-0100	.TANK	7-59
2506614-0100	.BOBBIN BRAKE	7-3, 7-5
2506615-0100	.BOBBIN BRAKE	7-3, 7-5
2506636-0000	.PIN	2-9, 2-119
2506637-0100	.AIR PIPE-LINE	2-17
2506647-0000	.LEVER	7-41
2506648-0000	.LEVER	7-43
2506649-0000	.BEARING FLANGE	7-41
2506650-0000	.FRAME	7-41, 7-43
2506651-0000	.BEARING FLANGE	7-43
2506652-0000	.AXLE PIN	7-41, 7-43
2506653-0000	.PIPE	2-69
2506654-0000	.BLOCK	7-21
2506656-0000	.PLATE	7-21
2506657-0000	.SPACER	7-21
2506659-0000	.ROLLER	7-25
2506660-0000	.SPACER	7-9
2506661-0000	.ROLLER	7-23, 7-25
2506663-0000	.SUPPORT	7-23
2506664-0000	.STEERING	7-9
2506666-0000	.AXEL	7-23, 7-25
2506668-0200	.STRIP APPLICATOR	7-3, 7-5
2506776-0200	.CENTRAL LUBRICATION	2-85
2506796-0100	.CABLE CONNECTION	2-91
2506920-0000	.CANTILEVER	2-95
2506921-0000	.SUPPORT	2-119
2506922-0000	.PIPE	2-121
2506923-0000	.PIPE	2-121
2506924-0000	.PIPE	2-121
2506925-0000	.PIPE	2-121
2506933-0000	.PIPE	2-69
2506934-0000	.PIPE	2-69
2507019-0100	.ROLLER	7-9
2507020-0100	.ROLLER	7-9
2507022-0200	.SPLICE DETECTOR	7-9
2507048-0000	.GASKET	1-213, 1-215, 1-217
2507059-0200	.REGULATING VALVE	1-245, 1-247
2507060-0200	.PRODUCT LINES	1-209, 1-211
2507076-0000	.FOLDING FLAP	4-123, 4-125, 4-159, 4-161
2507077-0000	.FOLDING FLAP	4-123, 4-125, 4-159, 4-161
2507085-0000	.FOLDING FLAP	4-123, 4-125, 4-159, 4-161
2507086-0000	.FOLDING FLAP	4-123, 4-125, 4-159, 4-161
2507092-0000	.FOLDING FLAP	4-123, 4-125, 4-159, 4-161
2507093-0000	.FOLDING FLAP	4-123, 4-125, 4-159, 4-161
2507096-0000	.FOLDING FLAP	4-123, 4-125, 4-159, 4-161
2507097-0000	.FOLDING FLAP	4-123, 4-125, 4-159, 4-161
2507103-0000	.BEARING FLANGE	7-41, 7-43
2508129-0100	.DOOR	2-215
2508130-0000	.DOOR	2-217
2508131-0000	.GLASS PANE	2-217, 2-219
2508132-0000	.RUBBER SEAL	2-217
2508133-0000	.LOCKING ARM	2-219, 2-221, 2-237, 2-249, 2-257, 2-259
2508134-0000	.LOCKING ARM	2-219, 2-237, 2-259
2508135-0100	.DOOR	2-215
2508136-0000	.DOOR	2-219
2508137-0000	.RUBBER SEAL	2-219
2508138-0100	.DOOR	2-215
2508139-0000	.DOOR	2-249
2508140-0000	.LOCKING ARM	2-221, 2-249, 2-257
2508141-0100	.DOOR	2-215
2508142-0000	.DOOR	2-221
2508147-0000	.LOCKING ARM	2-255
2508149-0200	.DOOR	2-215
2508150-0000	.DOOR	2-255
2508151-0000	.RUBBER SEAL	2-255
2508152-0000	.LOCKING ARM	2-255
2508159-0100	.COVER	2-215
2508160-0000	.COVER	2-225
2508161-0000	.RUBBER SEAL	2-225, 2-261

Part No	Description	Page No
2508165-0100	.COVER	2-215
2508166-0000	.COVER	2-227
2508167-0000	.RUBBER SEAL	2-227
2508168-0100	.COVER	2-215
2508169-0000	.COVER	2-229
2508171-0000	.RUBBER SEAL	2-229
2508173-0100	.DIAGRAM	2-249
2508175-0100	.DOOR	2-215
2508176-0000	.DOOR	2-259
2508177-0100	.DOOR	2-215
2508178-0000	.DOOR	2-231
2508179-0000	.RUBBER SEAL	2-231
2508180-0001	.GLASS PANE	2-231
2508180-0002	.GLASS PANE	2-233
2508181-0100	.DOOR	2-215
2508182-0000	.DOOR	2-233
2508183-0000	.RUBBER SEAL	2-233
2508186-0000	.RUBBER SEAL	2-221, 2-249
2508187-0100	.EMERGENCY STOP	7-201
2508192-0000	.GUARD PLATE	2-273, 2-275
2508196-0000	.DRIVE SHAFT	2-273, 2-275
2508200-0000	.SHAFT	2-273, 2-275
2508201-0000	.CONVEYOR CHAIN	2-273, 2-275
2508203-0000	.HOLDER	2-273, 2-275
2508205-0001	.BRACKET	7-181
2508205-0002	.BRACKET	7-181
2508205-0003	.BRACKET	7-181
2508205-0005	.BRACKET	7-181
2508205-0006	.BRACKET	7-181
2508205-0007	.BRACKET	7-181
2508205-0008	.BRACKET	7-181
2508205-0009	.BRACKET	7-181
2508205-0010	.BRACKET	7-181
2508205-0012	.BRACKET	7-181
2508206-0000	.BENDING ROLLER	7-181
2508279-0100	.DOOR	1-5
2508280-0000	.FRAME	1-9
2508281-0000	.GASKET	1-9
2508282-0000	.GLASS PANE	1-9
2508283-0200	.DOOR	1-5
2508285-0000	.GASKET	1-7
2508292-0000	.BUSHING	1-41, 1-43
2508297-0000	.WASHER	1-41, 1-43
2508309-0000	.PLATE	1-41, 1-43
2508311-0000	.PLATE	1-41, 1-43
2508315-0000	.SCREW	1-287, 1-289
2508369-0200	.PLATFORM	2-159, 2-161, 2-163, 2-165, 2-167, 2-169
2508370-0000	.PLATFORM	2-187
2508371-0000	.PLATFORM	2-187
2508374-0000	.CHECKER PLATE	2-187
2508375-0000	.CHECKER PLATE	2-187
2508379-0000	.CHECKER PLATE	2-187
2508380-0000	.CHECKER PLATE	2-187
2508381-0000	.CHECKER PLATE	2-187
2508384-0000	.CHECKER PLATE	2-187
2508385-0000	.CHECKER PLATE	2-187
2508390-0000	.FASTENING PLATE	2-273, 2-275
2508406-0000	.STRUT	4-229, 4-231
2508424-0000	.PIPE	2-69
2508425-0000	.PIPE	2-121
2508426-0000	.BRACKET	2-121
2508427-0000	.BRACKET	2-69
2508428-0000	.PIPE	2-69
2509544-0000	.PIPE	2-113
2509545-0000	.PIPE	2-113
2509546-0000	.CONNECTION	2-113
2509547-0000	.PIPE	2-113
2509552-0000	.DRAINING	2-65, 2-119
2509613-0000	.BUSHING	7-19
2509614-0000	.BUSHING	7-19
2509617-0100	.INDUCTOR	7-13
2509646-0000	.CABLE DUCT	1-367, 1-369
2509647-0000	.CABLE DUCT	1-367, 1-369
2509648-0000	.CABLE DUCT	1-367, 1-369
2509649-0000	.COVER	1-367, 1-369
2509650-0000	.COVER	1-367, 1-369
2509651-0000	.COVER	1-367, 1-369
2509652-0000	.COVER	1-367, 1-369
2509654-0000	.PIPE	1-285
2509655-0000	.PIPE	1-285
2509656-0000	.PIPE	1-285
2509658-0000	.BRACKET	1-395
2509659-0000	.PLATE	1-395
2509674-0000	.BRACKET	1-169, 1-171

Part No	Description	Page No
2509681-0000	.RAIL	1-169, 1-171
2509935-0000	.SPACER	5-45, 5-47, 5-49
2509936-0000	.SPACER SCREW	5-45, 5-47, 5-49
2509937-0000	.SPACER	5-45, 5-47, 5-49
2509938-0000	.BOTTOM	5-23, 5-25
2509941-0000	.SUPPORT	2-119
2510347-0100	.FRONT GUARD	2-215
2510348-0000	.COVER	2-247
2510349-0000	.SEALING STRIP	2-247
2510350-0000	.SUPPORT	2-247
2510351-0000	.SHAFT	2-247
2510352-0000	.DOOR	2-247
2510353-0000	.GUIDE	2-247
2510354-0000	.PIN	2-247
2510355-0000	.SHAFT	2-247
2510359-0000	.FASTENING BRACKET	7-21
2510360-0000	.SHAFT	7-21
2510361-0000	.CONNECTING ROD	7-21
2510362-0000	.SHAFT	7-21
2510363-0000	.SHAFT	7-21
2510364-0000	.SHAFT	7-21
2510365-0000	.ROLLER	7-13
2510366-0000	.SHAFT	7-13
2510372-0000	.BUSHING	2-33
2510393-0000	.BRACKET	7-7
2510399-0000	.BRACKET	7-87
2510400-0000	.HOLDER	7-87
2510401-0100	.HOLDER	7-73
2510404-0000	.SUPPORT	7-23, 7-25
2510405-0000	.SUPPORT	7-23, 7-25
2510755-0000	.BRACKET	6-9
2510785-0000	.COVER PLATE	2-119
2510787-0000	.HOSE	4-233
2510833-0000	.PIPE	2-69
2510901-0000	.BRACKET	2-65
2510904-0000	.HOLDER	2-65
2511330-0000	.SPACER	1-225, 1-335
2512737-0000	.ROLLER	1-33, 1-35, 1-37, 1-59, 1-61, 1-63
2512738-0000	.ROLLER	1-33, 1-35, 1-37, 1-59, 1-61, 1-63
2512740-0000	.ROLLER	1-59, 1-61, 1-63
2512741-0000	.ROLLER	1-33, 1-35, 1-37, 1-59, 1-61, 1-63
2512742-0000	.ROLLER	1-33, 1-35, 1-37, 1-59, 1-61, 1-63
2512746-0000	.ROLLER	1-39, 1-75, 1-77, 1-79
2512748-0000	.ROLLER	1-39, 1-75, 1-77, 1-79
2512749-0000	.ROLLER	1-39, 1-75, 1-77, 1-79
2512768-0000	.SHAFT	1-15, 1-17
2512769-0000	.SHAFT	1-15, 1-17
2512774-0000	.SHIM	1-15, 1-17
2512779-0000	.RING	1-85, 1-87
2512780-0100	.SEAL	1-21, 1-23, 1-25, 1-27
2512821-0000	.EXTERNAL CLEANING DIAGRAM	2-251, 6-33
2512825-0000	.DIAGRAM	2-251
2512826-0000	.DIAGRAM	2-251
2512829-0000	.PNEUMATIC DIAGRAM	2-131, 2-133, 2-251
2512830-0100	.FRONT COVER	2-215
2512910-0200	.CLEANING SYSTEM	1-3
2512930-0200	.SUPPORT RAIL	1-5
2512936-0100	.CLEANING CUP	1-259
2512939-0000	.DISTRIBUTOR BLOCK	1-223
2513013-0000	.SHAFT	4-93, 4-95, 4-97, 4-115, 4-117, 4-119, 4-121, 4-139, 4-141, 4-143
2513014-0000	.CUTTING JAW	4-115, 4-117, 4-119, 4-121
2513015-0000	.HOLDER	4-93, 4-95, 4-97, 4-139, 4-141, 4-143
2514045-0000	.CARRIER	4-81, 4-83, 4-85
2514047-0000	.CARRIER	4-129, 4-131, 4-133
2514048-0200	.CARRIER PRESSURE LEFT	4-5
2514049-0000	.CARRIER	4-81, 4-83, 4-85
2514050-0200	.CARRIER PRESSURE RIGHT	4-5
2514051-0000	.CARRIER	4-129, 4-131, 4-133
2514077-0100	.EXPANSION VESSEL	6-13, 6-15
2514083-0000	.REDUCTION NIPPLE	6-29
2514087-0000	.PLATE	6-29
2514149-0000	.HEATING ELEMENT	5-187, 5-189, 5-191
2514204-0100	.DRAINING	2-9
2514205-0100	.PIPE WORK-WATER	2-195
2514254-0100	.TUBE FLUSHING	2-195
2514255-0100	.PIPE WORK-WATER	2-195
2514392-0100	.MACHINE CARRIAGE	10-67
2514514-0000	.INDUCTOR	1-41, 1-43
2514521-0000	.ROLLER	1-75, 1-77, 1-79
2514522-0000	.INDUCTOR	1-41, 1-43
2514804-0000	.PIN	2-65
2514830-0000	.FRONT COVER	2-243
2514831-0000	.SEALING STRIP	2-243
2514832-0000	.GLASS PANE	2-243

Part No	Description	Page No
2515289-0000	.BRACKET	7-75
2515291-0000	.BRACKET	10-63
2515292-0000	.BRACKET	10-63
2515323-0100	.VALVE RAMP	1-343
2515324-0100	.VALVE RAMP	1-335
2515325-0100	.VALVE RAMP	1-335
2517062-0100	.FRONT COVER	2-239
2518035-0000	.FLAP	5-113, 5-115
2518098-0000	.COUNTER ROLLER	1-29, 1-31, 1-53, 1-55
2518119-0000	.PLATE	7-53
2518129-0000	.GUIDE	5-171, 5-173
2518130-0000	.GUIDE	5-177, 5-179
2518145-0101	.FLEXBOX TETRA BRIK	8-97, 8-99
2518146-0100	.TPOP PANEL 15"	2-3
2518147-0101	.PANEL UNIT 15"	2-263
2518148-0000	.PANEL	2-265
2518149-0000	.FOIL	2-265
2518157-0000	.DOOR	2-265
2519430-0000	.BRACKET	2-121
2519437-0000	.TUBE	1-207
2519439-0000	.TUBE	1-207
2519440-0000	.TUBE	1-207
2519441-0000	.TUBE	1-285
2519442-0000	.TUBE	1-285
2519443-0000	.TUBE	1-285
2519444-0000	.TUBE	1-285
2519554-0000	.PIPE	2-25
2519555-0000	.PIPE	2-25
2519556-0000	.BRACKET	2-61
2519570-0100	.DRAINING	2-3
2519571-0000	.PIPE	2-271
2519572-0000	.PIPE	2-271
2519574-0100	.HYDROGEN PEROXIDE CONCENTRATION METER	2-53
2520160-0000	.CLAMP	5-165, 5-167
2520163-0000	.PLATE	5-195, 5-197, 5-199
2520165-0000	.GUIDE PLATE	5-195, 5-197, 5-199
2520168-0000	.SLIDE	5-119, 5-121
2520170-0000	.FLAP	5-119, 5-121
2520172-0000	.FOLDING PART	5-145, 5-147
2520175-0000	.FOLDING PART	5-145, 5-147
2520178-0000	.GUIDE	5-137, 5-139
2520179-0000	.GUIDE	5-137, 5-139
2520180-0000	.CABLE DUCT	2-269
2520181-0000	.LID	2-269
2520430-0000	.HOLDER	2-119
2520431-0000	.SUPPORT	2-119
2520470-0000	.CARRIER RULER	4-123, 4-125
2520471-0000	.CARRIER RULER	4-159, 4-161
2520472-0000	.VOLUME FLAP	4-17, 4-19, 4-21
2520473-0000	.VOLUME BULGE	4-7, 4-9, 4-11, 4-17, 4-19, 4-21
2520474-0000	.VOLUME SHIM	4-7, 4-9, 4-11, 4-17, 4-19, 4-21
2520484-0100	.PIPE WORK-HYDRAULIC	2-71
2522128-0100	.MOTOR UNIT	5-3
2522129-0100	.INFEED CONVEYOR VARIANT	5-3
2522148-0000	.PIPE	6-47
2522166-0000	.GUIDE	5-171, 5-173
2522167-0000	.GUIDE	5-177, 5-179
2522184-0000	.PIPE	6-47
2522195-0000	.CONNECTION	1-255
2522196-0000	.SPACER	5-203, 5-205, 5-207, 5-209, 5-211, 5-213
2522197-0000	.PLATE	5-235, 5-237, 5-239, 5-241, 5-243, 5-245
2522199-0000	.BLOCK	5-5, 5-7
2522201-0000	.FLAP	5-113, 5-115
2522202-0000	.SPACER	5-101, 5-161, 5-163
2522213-0004	.SHAFT	1-39, 1-59, 1-61, 1-63, 1-75, 1-77, 1-79
2522213-0005	.SHAFT	1-39, 1-75, 1-77, 1-79
2522213-0006	.SHAFT	1-53, 1-55, 1-75, 1-77, 1-79, 1-81, 1-83
2522213-0007	.SHAFT	1-59, 1-61, 1-63, 1-81, 1-83
2522213-0008	.SHAFT	1-75, 1-77, 1-79
2522213-0009	.SHAFT	1-75, 1-77, 1-79
2522213-0010	.SHAFT	1-75, 1-77, 1-79
2522213-0015	.SHAFT	1-59, 1-61, 1-63, 1-91, 1-93, 1-95
2522213-0016	.SHAFT	1-91, 1-93
2522213-0017	.SHAFT	1-91, 1-93
2522213-0019	.SHAFT	1-75, 1-77, 1-79
2522213-0020	.SHAFT	1-75, 1-77, 1-79
2522233-0000	.BUSHING	1-11
2522235-0000	.COMPRESSION SPRING	1-11
2522258-0000	.FLANGE	1-167
2523265-0000	.HOOK	10-63
2523266-0000	.PUMP SHAFT	2-33
2523268-0000	.SHAFT	1-213, 1-215, 1-217, 9-11, 9-13, 9-15, 9-17, 9-19
2523480-0000	.SLIDE	5-83, 5-85, 5-87, 5-89, 5-91
2523482-0000	.PUSH BUTTON BOX	7-219

Part No	Description	Page No
2523483-0000	.PUSH BUTTON BOX	7-219
2523497-0000	.BENDING ROLLER	7-179
2523499-0000	.SHAFT	7-179
2523500-0000	.AXLE PIN	7-179
2523597-0000	.SLIDER	7-85
2523598-0000	.84LICING TABLE	7-85
2523600-0000	.PIN	7-85
2523601-0000	.PAD	7-85
2523765-0000	.BENDING ROLLER	7-55
2523766-0001	.BRACKET	7-55
2523766-0002	.BRACKET	7-55
2523766-0003	.BRACKET	7-55
2523766-0005	.BRACKET	7-55
2523766-0006	.BRACKET	7-55
2523766-0007	.BRACKET	7-55
2523766-0008	.BRACKET	7-55
2523766-0009	.BRACKET	7-55
2523766-0010	.BRACKET	7-55
2523766-0012	.BRACKET	7-55
2523811-0100	.WHEEL	5-3
2523812-0100	.FLAP	5-113, 5-115
2524339-0000	.NOZZLE	5-203, 5-205, 5-207, 5-209, 5-211, 5-213
2524363-0000	.HANGER	6-49
2524388-0000	.VOLUME FLAP	4-7, 4-9, 4-11
2524504-0000	.BRACKET	2-65
2524509-0100	.FLAP HEATER BODY	5-3
2524512-0000	.PUSHER	5-235, 5-237, 5-239, 5-241, 5-243, 5-245
2524515-0000	.CABINET	6-11
2524600-0100	.PRESSURE ROLLER	7-89, 7-91
2524601-0000	.AXLE PIN	7-101, 7-103
2524602-0000	.HANDLE	7-101, 7-103
2524603-0000	.HOLDER	7-101, 7-103
2524604-0000	.ROCKER ARM	7-101, 7-103
2524606-0000	.CABLE DUCT	7-71
2524607-0000	.CABLE DUCT	7-71
2525338-0000	.PLUG	1-261
2525339-0000	.BRACKET	7-75
2525570-0000	.COVER	3-23
2526563-0000	.HANDLE	5-119, 5-121, 5-125
2526567-0000	.CYLINDER	5-119, 5-121, 5-125
2526575-0000	.FOLDING BAR	5-137, 5-139
2526578-0000	.GUIDE	5-171, 5-173
2526579-0000	.GUIDE	5-177, 5-179
2526810-0000	.HOLDER	4-115, 4-117, 4-119, 4-121
2526811-0000	.310.54HOLDER	4-93, 4-95, 4-97, 4-139, 4-141, 4-143
2526812-0000	.SHAFT	4-93, 4-95, 4-97, 4-115, 4-117, 4-119, 4-121, 4-139, 4-141, 4-143
2526820-0000	.LINK	1-167
2526825-0000	.WASHER	1-29, 1-31, 1-33, 1-35, 1-37, 1-53, 1-55, 1-59, 1-61, 1-63
2526826-0000	.BUSHING	1-29, 1-31, 1-33, 1-35, 1-37, 1-53, 1-55, 1-59, 1-61, 1-63
2526827-0000	.SHAFT	1-29, 1-31, 1-33, 1-35, 1-37, 1-53, 1-55, 1-59, 1-61, 1-63
2526841-0000	.SHAFT	1-11
2526842-0000	.LINK	1-167
2526849-0000	.PLATE	1-167
2526850-0000	.SHAFT	1-167
2526851-0000	.SHUTTER	1-167
2526853-0300	.VALVE PANEL	1-321
2526854-0200	.VALVE PANEL	1-321
2526858-0000	.DOWEL	1-15, 1-17, 1-45
2526859-0000	.CAM	1-15, 1-17
2527252-0100	.CONNECTION BOX	2-91
2527253-0100	.CONNECTION BOX	2-53
2527295-0100	.CABLE HARNESS	2-147
2527297-0100	.CONNECTION BOX	2-147
2527299-0100	.CONNECTION BOX	2-147
2527300-0100	.ELECTRIC EQUIPMENT	2-117
2527368-0000	.PNEUMATIC DIAGRAM	2-49, 2-131, 2-133, 2-251, 6-77
2527371-0000	.INSERT	2-149, 2-151
2527509-0000	.PNEUMATIC DIAGRAM	2-49, 2-251
2527525-0000	.BRACKET	2-83
2527529-0000	.GUIDE UPPER L	5-35, 5-37
2527530-0000	.GUIDE UPPER R	5-35, 5-37
2527531-0000	.TIE ROD	5-11, 5-13
2527639-0000	.RUBBER SEAL	2-237, 2-259
2527640-0000	.GLASS PANE	2-237, 2-259
2527703-0100	.GUIDE	5-165, 5-167
2527703-0101	.GUIDE	9-7, 9-9
2527703-0102	.GUIDE	9-7, 9-9
2527703-0103	.GUIDE	9-7, 9-9
2527703-0104	.GUIDE	9-7, 9-9
2527703-0105	.GUIDE	9-7, 9-9
2527703-0108	.GUIDE	9-7, 9-9
2527703-0109	.GUIDE	9-7, 9-9
2527703-0110	.GUIDE	9-7, 9-9
2527703-0111	.GUIDE	9-7, 9-9

Part No	Description	Page No
2527703-0120	.GUIDE	9-7, 9-9
2527703-0121	.GUIDE	9-7, 9-9
2527703-0125	.GUIDE	9-7, 9-9
2527703-0126	.GUIDE	9-7, 9-9
2527703-0127	.GUIDE	9-7, 9-9
2527703-0128	.GUIDE	9-7, 9-9
2527704-0100	.GUIDE	5-165, 5-167
2527704-0101	.GUIDE	9-7, 9-9
2527704-0102	.GUIDE	9-7, 9-9
2527704-0103	.GUIDE	9-7, 9-9
2527704-0104	.GUIDE	9-7, 9-9
2527704-0105	.GUIDE	9-7, 9-9
2527704-0108	.GUIDE	9-7, 9-9
2527704-0109	.GUIDE	9-7, 9-9
2527704-0110	.GUIDE	9-7, 9-9
2527704-0111	.GUIDE	9-7, 9-9
2527704-0120	.GUIDE	9-7, 9-9
2527704-0121	.GUIDE	9-7, 9-9
2527704-0125	.GUIDE	9-7, 9-9
2527704-0126	.GUIDE	9-7, 9-9
2527704-0127	.GUIDE	9-7, 9-9
2527704-0128	.GUIDE	9-7, 9-9
2527725-0000	.CATCH	4-27, 4-29, 4-39, 4-41
2527792-0000	.SUPPORT	5-165, 5-167, 5-259, 5-265
2527793-0000	.SHAFT	5-165, 5-167, 5-259, 5-265
2528044-0100	.PNEUMATIC SYSTEM	2-117
2528046-0100	.HOSE INSTALLATION	2-123
2528056-0000	.RESISTANCE	1-287, 1-289
2528057-0000	.RESISTANCE	1-287, 1-289
2528058-0000	.COVER	1-287, 1-289
2528059-0000	.BRACKET	1-287, 1-289
2528061-0000	.SCREW	1-195
2528062-0000	.SCREW	1-195
2528068-0000	.CAM	1-15, 1-17
2528070-0000	.LOCKING LEVER	1-15, 1-17
2528073-0000	.LID	1-105, 1-107
2528076-0100	.STERILE AIR SYSTEM	1-3
2528079-0200	.PNEUMATIC SYSTEM	1-3
2528080-0200	.HOSE INSTALLATION	1-321
2528081-0200	.HOSE HOLDER	1-321
2528082-0000	.PIPE	1-349
2528083-0000	.TUBE	1-349
2528087-0100	.EMERGENCY STOP	1-5
2528088-0000	.HOLDER	1-15, 1-17
2528096-0000	.RING	1-85, 1-87
2528097-0000	.PLATE	1-85, 1-87
2528101-0100	.BLOWING SYSTEM	1-101, 1-103
2528102-0000	.LOCKING LEVER	1-15, 1-17
2528104-0000	.PIPE	1-213, 1-215, 1-217
2528105-0000	.PLATE	1-313, 1-315
2528106-0000	.FLANGE	1-15, 1-17
2528107-0000	.SHIM	1-15, 1-17
2528110-0000	.HOUSING	1-307, 1-309
2528111-0000	.PLATE	1-15, 1-17
2528112-0000	.BRACKET	1-97, 1-99
2528113-0000	.BRACKET	1-97, 1-99
2528114-0000	.COVER PLATE	1-97, 1-99
2528118-0001	.LOCK PLATE	1-33, 1-35, 1-37, 1-59, 1-61, 1-63
2528118-0002	.LOCK PLATE	1-59, 1-61, 1-63
2528118-0003	.LOCK PLATE	1-53, 1-55, 1-59, 1-61, 1-63
2528118-0004	.LOCK PLATE	1-29, 1-31, 1-53, 1-55, 1-59, 1-61, 1-63
2528118-0005	.LOCK PLATE	1-33, 1-35, 1-37, 1-53, 1-55, 1-59, 1-61, 1-63
2528119-0001	.LOCK PLATE	1-33, 1-35, 1-37, 1-59, 1-61, 1-63
2528119-0002	.LOCK PLATE	1-59, 1-61, 1-63
2528119-0003	.LOCK PLATE	1-53, 1-55, 1-59, 1-61, 1-63
2528119-0004	.LOCK PLATE	1-29, 1-31, 1-53, 1-55, 1-59, 1-61, 1-63
2528119-0005	.LOCK PLATE	1-29, 1-31, 1-33, 1-35, 1-37, 1-53, 1-55, 1-59, 1-61, 1-63
2528123-0001	.LOCK PLATE	1-33, 1-35, 1-37, 1-39, 1-59, 1-61, 1-63, 1-75, 1-77, 1-79
2528123-0002	.LOCK PLATE	1-39, 1-53, 1-55, 1-59, 1-61, 1-63, 1-75, 1-77, 1-79
2528123-0003	.LOCK PLATE	1-53, 1-55, 1-59, 1-61, 1-63
2528123-0004	.LOCK PLATE	1-29, 1-31, 1-33, 1-35, 1-37, 1-53, 1-55, 1-59, 1-61, 1-63
2528123-0005	.LOCK PLATE	1-59, 1-61, 1-63
2528123-0006	.LOCK PLATE	1-91, 1-93
2528123-0007	.LOCK PLATE	1-39, 1-75, 1-77, 1-79
2528123-0008	.LOCK PLATE	1-33, 1-35, 1-37, 1-39, 1-59, 1-61, 1-63, 1-75, 1-77, 1-79
2528123-0009	.LOCK PLATE	1-91, 1-93
2528127-0000	.BRACKET	1-313, 1-315
2528128-0000	.SHAFT	1-313, 1-315
2528129-0200	.FRAME HOUSING	1-123, 1-125
2528133-0000	.WASHER	1-129, 1-131
2528134-0000	.GASKET	1-129, 1-131
2528135-0000	.SHAFT	1-313, 1-315
2528136-0000	.SQUEE-GEE ROLLER	1-139, 1-141, 1-143, 1-145, 1-147, 1-149, 1-151, 1-153
2528144-0000	.FRAME	1-121

Part No	Description	Page No
2528145-0100	.DOOR	1-101, 1-103
2528146-0100	.DOOR	1-101, 1-103
2528455-0100	.ELECTRIC EQUIPMENT	2-5, 2-7
2528457-0100	.PNEUMATIC SYSTEM	2-5, 2-7
2529069-0000	.PIPE	2-69
2529072-0000	.PIPE	1-285
2529073-0000	.PIPE	1-285
2529110-0000	.BRACKET	2-69
2529111-0000	.BRACKET	2-69
2529115-0000	.RAIL	5-83, 5-85, 5-87, 5-89, 5-91
2529116-0100	.ELECTRIC EQUIPMENT	2-63
2529117-0100	.DOOR SAFETY SWITCH	2-91
2529167-0200	.LUBRICATING SYSTEM	2-63
2529169-0000	.HOLDER	2-119
2529178-0000	.HYDRAULIC PIPE	2-83
2529179-0000	.HYDRAULIC PIPE	2-83
2529182-0000	.HYDRAULIC PIPE	2-83
2529183-0000	.HYDRAULIC PIPE	2-83
2529187-0000	.SPACER	3-11
2529341-0000	.GASKET	2-65
2529342-0000	.GASKET	2-65
2529410-0100	.CABLE HARNESS	2-91
2529412-0000	.PUMP HOUSING	2-33
2529413-0000	.EXTENSION PIPE	2-33
2529416-0000	.SHAFT	1-213, 1-215, 1-217, 9-11, 9-13, 9-15, 9-17, 9-19
2529417-0000	.SHAFT	1-213, 1-215, 1-217, 9-11, 9-13, 9-15, 9-17, 9-19
2529418-0000	.SHAFT	1-213, 1-215, 1-217, 9-11, 9-13, 9-15, 9-17, 9-19
2529419-0000	.SHAFT	1-213, 1-215, 1-217, 9-11, 9-13, 9-15, 9-17, 9-19
2529420-0000	.SHAFT	1-213, 1-215, 1-217, 9-11, 9-13, 9-15, 9-17, 9-19
2529484-0100	.PEROXIDE PIPE	1-279
2529485-0200	.SPRAY SYSTEM	1-297
2529498-0000	.GASKET	2-107, 2-109, 2-111
2529499-0100	.CABLE HARNESS	2-53
2529544-0000	.CABLE DUCT	7-71
2529546-0000	.SUPPORT	7-113
2529547-0100	.PAPER GUIDE	7-89, 7-91, 7-173
2529549-0000	.PLATE	7-101, 7-103, 7-175
2529550-0000	.SUPPORT	7-21
2529551-0000	.PROTECTION PLATE	7-45, 7-47
2529569-0100	.INDUCTOR	7-9
2529571-0100	.PRESSURE ROLLER	7-9
2529572-0000	.BRACKET	7-17
2529573-0000	.BRACKET	7-15
2529578-0000	.BUSHING	7-19
2529579-0000	.COVER	2-273, 2-275
2529597-0200	.DOOR	2-215
2529598-0000	.DOOR	2-257
2529599-0000	.RUBBER SEAL	2-257
2529603-0000	.GUIDE	5-103, 5-105, 5-107, 5-109, 5-111
2529604-0000	.GUIDE	5-103, 5-105, 5-107, 5-109, 5-111
2529605-0000	.SLIDE	5-103, 5-105, 5-107, 5-109, 5-111, 5-171, 5-173
2529606-0000	.SLIDE	5-103, 5-105, 5-107, 5-109, 5-111, 5-177, 5-179
2529607-0000	.BAR	5-103, 5-105, 5-107, 5-109, 5-111, 5-177, 5-179
2529608-0000	.BAR	5-103, 5-105, 5-107, 5-109, 5-111, 5-171, 5-173
2529609-0000	.GUIDE	5-103, 5-105, 5-107, 5-109, 5-111
2529610-0000	.GUIDE	5-103, 5-105, 5-107, 5-109, 5-111
2529664-0000	.CARRIER	5-75, 5-77, 5-79
2529670-0000	.WASHER	2-273, 2-275
2529671-0000	.FOLDING DEVICE	5-11, 5-13, 5-19
2529672-0000	.FOLDING DEVICE	5-11, 5-13, 5-21
2529673-0000	.SUPPORT	5-11, 5-13
2529674-0000	.SUPPORT	5-11, 5-13
2529675-0000	.LEVER	5-11, 5-13
2529676-0000	.LEVER	5-11, 5-13
2529742-0000	.CLAMP	1-351
2529750-0000	.COVERING PANEL	1-245, 1-247, 9-11, 9-13, 9-15, 9-17, 9-19
2529760-0200	.COVERING PANEL	1-393
2529785-0000	.KNOB	5-165, 5-167
2529786-0000	.KNOB	5-165, 5-167
2529909-0000	.FOLDING BAR	5-45, 5-47, 5-49
2529910-0000	.FOLDING BAR	5-45, 5-47, 5-49
2529925-0000	.STEP	1-317
2529926-0000	.RAILING	1-303
2529930-0000	.AIR NOZZLE	7-13
2529990-0000	.FRAME	7-71
2529991-0100	.RAILING	1-297
2530080-0100	.DOOR	2-215
2530082-0000	.GLASS PANE	2-235
2530087-0000	.DOOR	2-237
2530096-0000	.RAILING	1-303
2530124-0000	.ROLLER	4-181, 4-183
2530188-0100	.STEP	1-297
2530201-0000	.SPACER SCREW	5-45, 5-47, 5-49
2530256-0000	.VOLUME FLAP	4-7, 4-9, 4-11

Part No	Description	Page No
2530257-0000	.VOLUME FLAP	4-17, 4-19, 4-21
2530284-0000	.GASKET	8-97, 8-99
2530285-0000	.GASKET	8-97, 8-99
2530286-0000	.RAIL	8-25
2530287-0000	.PLATE	8-25
2530288-0000	.GLASS PANE	8-31
2530292-0000	.BRACKET	4-81, 4-83, 4-85, 4-129, 4-131, 4-133
2530293-0000	.BRACKET	4-81, 4-83, 4-85, 4-129, 4-131, 4-133
2530296-0000	.ROLLER	4-81, 4-83, 4-85, 4-129, 4-131, 4-133
2530300-0000	.PIPE	2-119
2530301-0000	.PIPE	2-119
2530302-0000	.PIPE	2-119
2530303-0000	.PIPE	2-119
2530313-0000	.BUSHING	4-7, 4-9, 4-11, 4-17, 4-19, 4-21, 4-51, 4-53, 4-55, 4-57, 4-61, 4-63, 4-65, 4-67
2530399-0000	.HANGER	7-11
2530405-0000	.BRACKET	7-11
2530408-0000	.LEVER	7-11
2530410-0200	.STRIP GUIDE	7-9
2530418-0000	.SPRING	5-165, 5-167, 5-259, 5-265
2530508-0000	.TIE ROD	4-105, 4-107, 4-109, 4-111, 4-149, 4-151, 4-153, 4-155
2530875-0000	.BRACKET	1-269
2531037-0000	.FRAME	1-109
2531038-0000	.FRAME	1-119
2531039-0100	.DOOR	1-101, 1-103
2531040-0000	.GASKET	1-119, 1-121
2531041-0000	.GLASS PANE	1-119, 1-121
2531043-0100	.HOUSING	1-101, 1-103
2531044-0000	.BOX FRAME	1-117
2531045-0000	.GASKET	1-109
2531046-0000	.GLASS PANE	1-109
2531047-0200	.HOUSING	1-101, 1-103
2531048-0000	.BENDING ROLLER	1-123, 1-125
2531052-0100	.PRESSURE UNIT	1-279
2531053-0000	.PLUG	1-123, 1-125
2531054-0000	.PLUG	1-123, 1-125
2531055-0000	.PLUG	1-123, 1-125
2531060-0000	.BRACKET	1-41, 1-43
2531076-0200	.INTEGRATED CLEANING UNIT	1-259
2531077-0200	.CLEANING TANK	1-267
2531078-0200	.VALVE PIPE	1-267
2531079-0000	.PIPE	1-273
2531082-0000	.CLAMP	1-275
2531083-0000	.SLEEVE	1-275
2531114-0000	.CARRIER	4-105, 4-107, 4-109, 4-111
2531233-0000	.HYDRAULIC PIPE	2-83
2531234-0000	.HYDRAULIC PIPE	2-83
2531235-0000	.HYDRAULIC PIPE	2-83
2531236-0000	.HYDRAULIC PIPE	2-83
2531237-0000	.HYDRAULIC PIPE	2-83
2531238-0000	.HYDRAULIC PIPE	2-83
2531245-0000	.HOSE NIPPLE	6-17, 6-19, 6-23
2531274-0100	.ELECTRICAL CONNECTION	5-3
2531276-0000	.BRACKET	5-271, 5-273
2531423-0000	.NUT	6-17, 6-19, 6-23
2531435-0000	.PLUG	1-273
2531493-0000	.BRACKET	7-85
2531500-0000	.PIPE	2-61
2531501-0000	.PIPE	2-61
2531703-0000	.BUSHING	4-93, 4-95, 4-97, 4-115, 4-117, 4-119, 4-121, 4-139, 4-141, 4-143
2532531-0000	.ROLLER	4-81, 4-83, 4-85, 4-129, 4-131, 4-133
2532535-0000	.HATCH	7-201
2532561-0000	.SPACER	7-179
2532574-0000	.COVER	6-17, 6-23
2532580-0000	.HATCH	5-75, 5-77, 5-79
2532619-0000	.COVER	2-221, 2-249
2532620-0000	.GLASS PANE	2-249
2532806-0000	.ATTACHMENT PIPE	6-27
2532837-0000	.TUBE FLUSHING DEVICE	4-185
2532838-0000	.TUBE FLUSHING DEVICE	4-185
2532864-0000	.BRACKET	5-83, 5-85, 5-87, 5-89, 5-91
2532895-0001	.LOCK PLATE	1-75, 1-77, 1-79
2532895-0002	.LOCK PLATE	1-75, 1-77, 1-79
2532895-0003	.LOCK PLATE	1-39, 1-75, 1-77, 1-79, 1-81, 1-83
2532895-0004	.LOCK PLATE	1-39, 1-75, 1-77, 1-79, 1-91, 1-93
2532895-0005	.LOCK PLATE	1-81, 1-83
2532895-0006	.LOCK PLATE	1-75, 1-77, 1-79
2532895-0008	.LOCK PLATE	1-75, 1-77, 1-79, 1-91, 1-93
2532895-0009	.LOCK PLATE	1-81, 1-83
2532896-0000	.COVER	1-123, 1-125
2532897-0000	.GASKET	1-123, 1-125
2532898-0000	.BRACKET	1-41, 1-43
2532899-0000	.BRACKET	1-41, 1-43
2532908-0000	.ROLLER	1-307, 1-309
2532909-0200	.COVERING PANEL	1-3

Part No	Description	Page No
2532911-0000	.ROLLER	1-307, 1-309
2532912-0001	.LOCK PLATE	1-75, 1-77, 1-79
2532912-0002	.LOCK PLATE	1-75, 1-77, 1-79
2532914-0000	.SPACER	1-33, 1-35, 1-37, 1-59, 1-61, 1-63
2532915-0000	.WASHER	1-169, 1-171
2532916-0000	.AIR GUIDE	1-169, 1-171
2532918-0000	.HOLDER	1-169, 1-171
2532919-0000	.PLATE	1-169, 1-171
2532922-0000	.PLATE	1-169, 1-171
2532925-0000	.INDUCTOR	1-41, 1-43
2532931-0000	.FLANGE	1-155, 1-157
2532934-0100	.AIR KNIFE	1-101, 1-103
2532938-0000	.INDUCTOR	1-41, 1-43
2532956-0000	.BENDING ROLLER	1-159, 1-161, 1-163, 1-165
2532963-0000	.DEFLECTOR	1-117
2532964-0000	.DEFLECTOR	1-117
2532965-0000	.ROLLER	1-59, 1-61, 1-63
2532968-0000	.BUSHING	1-199
2532969-0000	.SHAFT	1-149, 1-151, 1-153
2532974-0000	.SETTING TOOL	10-5
2532977-0000	.BRACKET	1-15, 1-17
2532978-0000	.PLATE	1-15, 1-17
2532979-0000	.SPACER	1-13
2532983-0000	.FLANGE	1-139, 1-141, 1-143, 1-145, 1-147
2532984-0000	.FLANGE	1-139, 1-141, 1-143, 1-145, 1-147
2533627-0000	.SUPPORT BLOCK	1-15, 1-17
2533628-0000	.SUPPORT BLOCK	1-15, 1-17
2533638-0000	.AXLE PIN	3-5, 3-27
2533651-0100	.IH EQUIPMENT	8-51, 8-53, 8-55
2533670-0000	.SUPPORT	1-311
2533671-0000	.SCREW	1-311
2533672-0000	.SHAFT	1-311
2533673-0000	.ROLLER	1-311
2533736-0000	.SLEEVE	4-175, 4-177, 4-179
2533737-0000	.RAIL BRACKET	4-175, 4-177, 4-179
2533740-0000	.RAIL BRACKET	4-175, 4-177, 4-179
2533741-0000	.RAIL BRACKET	4-175, 4-177, 4-179
2533742-0000	.RAIL BRACKET	4-175, 4-177, 4-179
2533744-0000	.RAIL BRACKET	4-175, 4-177, 4-179
2533745-0000	.RAIL BRACKET	4-175, 4-177, 4-179
2533747-0000	.RAIL BRACKET	4-175, 4-177, 4-179
2533763-0000	.COVERING PANEL	1-391
2533766-0100	.COVERING PANEL	1-3
2533768-0000	.COVERING PLATE	1-391
2534851-0000	.BAR	4-229, 4-231
2535441-0000	.LEVER	4-239, 4-241
2535442-0000	.PIVOT PIN	4-239, 4-241
2535443-0000	.PIVOT PIN	4-175, 4-177, 4-179
2535455-0000	.LINK	4-239, 4-241, 4-243
2535457-0000	.WOODRUFF KEY	4-239, 4-241, 4-243
2535458-0000	.SHAFT	4-239, 4-241, 4-243
2535461-0000	.CONNECTING ROD	4-239, 4-241
2535538-0100	.FRAME	5-187, 5-189, 5-191
2535540-0100	.PNEUMATIC CIRCUIT	5-195, 5-197, 5-199
2535757-0000	.PIPE	5-201
2535758-0000	.PIPE	5-201
2535759-0000	.BRACKET	5-201
2535932-0000	.CAM	7-21
2535937-0000	.PIPE	5-201
2536026-0000	.CARRIER	4-149, 4-151, 4-153, 4-155
2536047-0000	.ARM	4-215, 4-217
2536048-0000	.ARM	4-205, 4-207
2537111-0000	.CONNECTION BOX	2-97
2537112-0000	.BOX	2-55
2537113-0000	.CONNECTION BOX	2-155
2537114-0000	.CONNECTION BOX	2-157
2537120-0000	.BRACKET	2-65
2537128-0100	.DROP CHUTE VARIANT	5-3
2537129-0000	.SPACER	5-161, 5-163
2537848-0000	.HOUSE	1-271
2537849-0100	.DIFFUSOR	1-269
2538064-0000	.REFLECTOR	7-125
2538065-0000	.REFLECTOR	7-117
2538072-0100	.AUTOMATIC REEL LOADING	7-3, 7-5
2538073-0001	.SHIMS	7-45, 7-47
2538073-0002	.SHIMS	7-45, 7-47
2538075-0000	.BRACKET	7-45, 7-47
2538076-0000	.BRACKET	7-45, 7-47
2538110-0000	.RAIL	5-83, 5-85, 5-87, 5-89, 5-91
2539277-0000	.SHIM	5-113, 5-115
2539440-0100	.ASEPTIC CHAMBER	1-3
2539442-0200	.CLEANING PIPE	1-259
2539445-0200	.PENDULUM ROLLER	1-101, 1-103
2539448-0200	.CLEANING PIPE	1-259

Part No	Description	Page No
2539450-0200	.DRYING CHAMBER	1-3
2539452-0200	.FLOW SWITCH	1-259
2539453-0000	.SPRING	1-213, 1-215, 1-217
2539455-0100	.VALVE	1-101, 1-103
2539457-0000	.LID	9-35
2539458-0100	.SPRAY TANK	1-219
2539459-0000	.HOLDER	9-35
2539471-0000	.COVERING PLATE	1-391
2539532-0000	.GASKET	8-39, 8-41, 8-43
2540593-0000	.CAM	5-75, 5-77, 5-79
2540594-0000	.CAM	5-75, 5-77, 5-79
2540595-0001	.COAXIAL CABLE	7-7
2540596-0001	.2COAXIAL CABLE	7-7
2540596-0002	.COAXIAL CABLE	8-39, 8-41, 8-43
2540596-0003	.COAXIAL CABLE	2-107, 2-109, 2-111
2540609-0000	.KNOB	5-161, 5-163
2540612-0000	.PLATE	5-165, 5-167, 5-259, 5-265
2540615-0000	.CLEANING CUP	1-263, 1-265
2540716-0100	.SIGNAL LAMP	2-173, 2-175, 2-179, 2-181, 2-187
2540767-0000	.PIPE	2-177
2540813-0000	.CHUTE	2-273, 2-275
2540814-0000	.SPLASH PLATE	2-273, 2-275
2540816-0000	.BRACKET	2-273, 2-275
2540817-0000	.CHUTE	2-273, 2-275
2540818-0000	.BRACKET	2-273, 2-275
2540823-0000	.BRACKET	5-251, 5-253
2541083-0100	.BENDING ROLLER	7-45, 7-47
2541125-0000	.SCREW	5-35, 5-37, 5-137, 5-139
2541633-0000	.FLANGE	1-139, 1-141, 1-143, 1-145, 1-147
2541634-0100	.EDGE ROLLER	1-21, 1-23, 1-25, 1-27
2541635-0100	.SQUEE-GEE ROLLER	1-101, 1-103
2541637-0000	.SHAFT	1-139, 1-141, 1-143, 1-145, 1-147
2541639-0000	.LID	1-139, 1-141, 1-143, 1-145, 1-147, 1-155, 1-157, 1-159, 1-161, 1-163, 1-165
2541640-0000	.FLANGE	1-139, 1-141, 1-143, 1-145, 1-147
2541641-0000	.FLANGE	1-139, 1-141, 1-143, 1-145, 1-147
2541643-0000	.FLANGE	1-149, 1-151, 1-153
2541645-0000	.SHIM	1-15, 1-17
2541646-0000	.SHIM	1-15, 1-17
2541647-0000	.LID	1-139, 1-141, 1-143, 1-145, 1-147
2541648-0000	.LID	1-139, 1-141, 1-143, 1-145, 1-147
2541650-0000	.LID	1-149, 1-151, 1-153
2541651-0000	.PLATE	1-7, 1-9, 1-109, 1-119, 1-121, 1-177
2541656-0000	.BEAM	1-399
2541657-0000	.BEAM	1-399
2541658-0000	.SCREW	1-11
2541661-0000	.LID	1-167
2541664-0000	.COVER	1-13
2541673-0000	.WASHER	1-297
2541680-0100	.HYDROGEN PEROXIDE	1-3
2541681-0000	.WASHER	1-149, 1-151, 1-153
2541682-0000	.BUSHING	1-149, 1-151, 1-153
2541714-0100	.DROP CHUTE CRADLE	5-3
2541877-0000	.NAIL	5-235, 5-237, 5-239, 5-241, 5-243, 5-245
2541878-0000	.WASHER	5-235, 5-237, 5-239, 5-241, 5-243, 5-245
2541890-0100	.BRACKET	7-45, 7-47
2541891-0100	.FILTER	7-45, 7-47
2541942-0000	.BRACKET	7-177
2541943-0000	.BRACKET	7-217, 7-221
2542325-0100	.WASTE CONVEYOR	2-3
2542340-0000	.COLUMN	2-65
2542341-0000	.DRAINING	2-65
2542488-0000	.NUT	4-197
2542489-0200	.GUIDE	4-195
2542490-0000	.LID	2-67
2542491-0100	.HOLDER	2-65
2542492-0000	.LID	2-67
2542493-0000	.BLOCK	2-65
2542494-0000	.BLOCK	2-65
2542496-0000	.BRACKET	7-177
2543231-0000	.CARRIER	5-75, 5-77, 5-79
2543234-0000	.BRACKET	5-83, 5-85, 5-87, 5-89, 5-91
2543240-0000	.SPACER	5-203, 5-205, 5-207, 5-209, 5-211, 5-213
2543242-0000	.ANGLE BLOCK	5-103, 5-105, 5-107, 5-109, 5-111, 5-171, 5-173, 5-177, 5-179
2543349-0000	.DRAINING	2-65
2543473-0000	.PLUG	5-267
2543474-0000	.PLUG	5-267
2543480-0100	.FOLDING PART	5-3
2543481-0100	.TOP SECTION	5-127
2543482-0100	.TOP RAIL	5-127
2544199-0200	.STEAM PIPE	1-253
2544213-0000	.BRACKET	2-69
2544214-0000	.PIPE	2-69
2544303-0000	.GASKET	2-67
2544305-0000	.PROTECTION	2-253

Part No	Description	Page No
2544306-0000	.DOOR	2-253
2544307-0000	.RUBBER SEAL	2-253
2544308-0000	.GLASS PANE	2-253
2544310-0100	.PROTECTIVE COVER	2-215
2544311-0000	.BOX	2-39
2544312-0000	.FLOAT	2-39
2544313-0000	.PIPE	2-39
2544314-0000	.PIPE	2-39
2544316-0000	.PIPE	2-39
2544318-0000	.PIPE	2-39
2544319-0000	.COVER	2-39
2544321-0000	.COVER	2-39
2544324-0000	.PIPE	2-39
2544325-0000	.GASKET	2-39
2544326-0100	.INTEGRATED CLEANING UNIT	2-5, 2-7
2544330-0000	.PLUG	2-39
2544331-0000	.COVER	2-261
2544332-0000	.PROTECTION	2-261
2544333-0100	.DOOR	2-215
2544339-0100	.FRAME	5-187, 5-189, 5-191
2544342-0000	.BRACKET	5-145, 5-147
2544850-0100	.FORMING SECTION	1-3
2544865-0000	.BUSHING	1-15, 1-17
2544866-0000	.WASHER	1-15, 1-17
2544873-0100	.CONNECTION PIPE	9-3
2544880-0000	.PROTECTION	1-281
2544881-0000	.ROLLER	1-75, 1-77, 1-79
2544882-0000	.COUNTER ROLLER	1-53, 1-55
2544883-0000	.PLATE	1-149, 1-151, 1-153
2544884-0000	.PLATE	1-149, 1-151, 1-153
2544885-0000	.ARM	1-149, 1-151, 1-153
2544886-0000	.ARM	1-149, 1-151, 1-153
2544891-0000	.INSULATING PLATE	1-41, 1-43
2544892-0000	.INSULATING PLATE	1-41, 1-43
2544893-0000	.INSULATING PLATE	1-41, 1-43
2544894-0000	.INSULATING PLATE	1-41, 1-43
2544897-0000	.BRACKET	1-41, 1-43
2544898-0000	.SHAFT	1-41, 1-43
2544902-0000	.BRACKET	5-215
2544990-0000	.VOLUME FLAP	4-7, 4-9, 4-11
2544991-0000	.VOLUME FLAP	4-17, 4-19, 4-21
2544992-0000	.VOLUME BULGE	4-7, 4-9, 4-11, 4-17, 4-19, 4-21
2544993-0000	.VOLUME SHIM	4-7, 4-9, 4-11, 4-17, 4-19, 4-21
2544995-0000	.GUIDE	5-103, 5-105, 5-107, 5-109, 5-111
2544996-0000	.GUIDE	5-103, 5-105, 5-107, 5-109, 5-111
2544997-0000	.SLIDE	5-103, 5-105, 5-107, 5-109, 5-111, 5-171, 5-173
2544998-0000	.SLIDE	5-103, 5-105, 5-107, 5-109, 5-111, 5-177, 5-179
2544999-0000	.BAR	5-103, 5-105, 5-107, 5-109, 5-111, 5-177, 5-179
2545000-0000	.BAR	5-103, 5-105, 5-107, 5-109, 5-111, 5-171, 5-173
2545006-0000	.SPACER	5-203, 5-205, 5-207, 5-209, 5-211, 5-213
2545017-0000	.PARALLEL KEYS WITH ROUND ENDS	3-7, 3-9
2545065-0001	.TPOP BASIC PROGRAM	8-9
2545135-0000	.SPACER	5-203, 5-205, 5-207, 5-209, 5-211, 5-213
2545236-0000	.NOZZLE	5-203, 5-205, 5-207, 5-209, 5-211, 5-213
2545245-0000	.BUSHING	5-75, 5-77, 5-79
2545352-0000	.TEMPLATE	9-31
2545382-0000	.CARRIER	5-75, 5-77, 5-79
2545433-0000	.SPACER	5-203, 5-205, 5-207, 5-209, 5-211, 5-213
2545537-0000	.SPACER	5-203, 5-205, 5-207, 5-209, 5-211, 5-213
2545545-0000	.INSERT	5-103, 5-105, 5-107, 5-109, 5-111
2545639-0200	.COVERING PANEL	1-393
2545651-0200	.STEAM SYSTEM	1-209, 1-211
2545658-0000	.PLATE	1-299, 1-301
2546229-0100	.ADAPTION TRANSFORMER	4-87, 4-89, 4-135, 4-137
2546319-0000	.HOLDER	2-49
2546463-0000	.PRESSURE RAIL	7-105
2546474-0000	.INDUCTOR	4-93, 4-95, 4-97, 4-139, 4-141, 4-143, 9-11, 9-13, 9-15, 9-17, 9-19
2546475-0000	.RAIL	4-93, 4-95, 4-97
2546476-0000	.RAIL	4-139, 4-141, 4-143
2546496-0000	.RAIL	2-55, 2-157
2546499-0200	.GUIDE	2-71
2546500-0100	.HYDRAULIC SYSTEM	2-63
2546501-0000	.FOLDING FLAP	4-123, 4-125, 4-159, 4-161
2547010-0000	.BRACKET	4-7, 4-9, 4-11, 4-17, 4-19, 4-21
2547011-0000	.VOLUME FLAP	4-7, 4-9, 4-11
2547012-0000	.VOLUME FLAP	4-17, 4-19, 4-21
2547015-0000	.TOOTHED PULLEY	5-261, 5-263
2547017-0000	.TOOTHED PULLEY	5-261, 5-263
2547061-0000	.HOLDER	6-69, 6-71
2547125-0001	.WINDOWS OEM W2000 PROGRAM	8-9
2547187-0000	.PLATE	5-261
2547205-0200	.PRESSURE REGULATOR	1-179
2547211-0000	.FLANGE	1-207
2547213-0000	.FLOW SENSOR	1-207

Part No	Description	Page No
2547376-0100	.KNOB	1-41, 1-43
2547377-0000	.WASHER	1-41, 1-43
2547386-0000	.SHAFT	1-15, 1-17
2547387-0000	.ROD END	1-11
2547388-0000	.AXLE PIN	1-41, 1-43
2547391-0100	.NOZZLE	1-279
2547398-0000	.LID	1-123, 1-125
2547399-0000	.LID	1-123, 1-125
2547401-0000	.SUPPORT PLATE	1-11
2547402-0000	.BRACKET	1-11
2547403-0000	.WHEEL	1-11
2547404-0000	.BRACKET	1-41, 1-43
2547405-0000	.BRACKET	1-41, 1-43
2547406-0000	.ROLLER	1-139, 1-141, 1-143, 1-145, 1-147, 1-149, 1-151, 1-153
2547407-0000	.PIPE	1-193
2547408-0000	.BODY	1-233
2547410-0100	.RODUCT VALVE	1-231
2547419-0000	.SHIM	1-11
2547420-0100	.EDGE ROLLER	1-21, 1-23, 1-25, 1-27
2547421-0100	.FORMING RING	1-21, 1-23, 1-25, 1-27
2547422-0200	.UPPER FORMING RING	1-21, 1-23, 1-25, 1-27
2547425-0000	.BRACKET	1-307, 1-309
2547474-0000	.SIGN LANGUAGE INDEPENDENT	6-19
2547565-0000	.HOLDER	1-307, 1-309
2547566-0000	.ROD	1-307, 1-309
2547568-0000	.PLATE	1-307, 1-309
2547588-0000	.SPRING	4-81, 4-83, 4-85, 4-129, 4-131, 4-133
2547589-0000	.SPRING	4-81, 4-83, 4-85, 4-129, 4-131, 4-133
2547666-0000	.DOOR	7-217
2547667-0000	.DOOR	7-221
2549829-0000	.SPACER	7-105
2550125-0100	.COOLING UNIT	8-3
2550126-0000	.RAIL	8-51, 8-53, 8-55
2550127-0000	.CABLE DUCT	8-51, 8-53, 8-55
2550128-0000	.CABLE DUCT	8-51, 8-53, 8-55
2550129-0000	.CABLE DUCT	8-51, 8-53, 8-55
2550130-0000	.CABLE DUCT	8-51, 8-53, 8-55
2550131-0000	.CABLE DUCT	8-51, 8-53, 8-55
2550132-0000	.DIVIDER	8-51, 8-53, 8-55
2550133-0000	.DIVIDER	8-51, 8-53, 8-55
2550134-0000	.DIVIDER	8-51, 8-53, 8-55
2550135-0000	.DIVIDER	8-51, 8-53, 8-55
2550138-0100	.PLATFORM	2-159, 2-161, 2-163, 2-165, 2-167, 2-169
2550139-0100	.PLATFORM	2-3
2550140-0000	.CHECKER PLATE	2-179, 2-181
2550141-0000	.CHECKER PLATE	2-179, 2-181
2550142-0000	.PLATFORM	2-179, 2-181
2550143-0000	.PLATFORM	2-179, 2-181
2550144-0000	.PLATFORM	2-179, 2-181
2550145-0000	.RAILING	2-179, 2-181
2550146-0000	.RAILING	2-179, 2-181
2550147-0000	.RAILING	2-179, 2-181
2550189-0000	.RAILING	2-179, 2-181
2550191-0000	.TOE PLATE	2-179, 2-181
2550192-0000	.TOE PLATE	2-179, 2-181
2550193-0000	.TOE PLATE	2-179, 2-181
2550211-0000	.VOLUME BULGE	5-23, 5-25
2550269-0001	.LOCKING ARM	7-217
2550269-0002	.LOCKING ARM	7-217
2550333-0000	.GUIDE LUG	7-207, 7-209, 7-217
2550890-0100	.VALVE	1-179
2550891-0000	.BENDING ROLLER	1-105, 1-107
2550893-0000	.BENDING ROLLER	1-105, 1-107
2550895-0100	.CHANGE OVER VALVE	1-193
2550896-0000	.RAIL	7-173
2550944-0000	.WATER DIAGRAM	2-251, 6-69, 6-71
2550945-0000	.WATER DIAGRAM	2-251, 6-69, 6-71
2550979-0000	.TRANSPORT EQUIPMENT	9-3
2551075-0000	.ROLLER	1-307, 1-309
2551119-0000	.PNEUMATIC DIAGRAM	2-251, 6-75
2551120-0000	.CARRIER	5-103, 5-105, 5-107, 5-109, 5-111
2551951-0000	.RAILING	2-173, 2-175, 2-179, 2-181
2551988-0000	.CABLE DUCT	8-39, 8-41, 8-43
2551989-0000	.CABLE DUCT	8-39, 8-41, 8-43
2552001-0000	.HYDRAULIC DIAGRAM	2-71, 2-251
2552002-0200	.BASE UNIT	4-3
2552003-0100	.FORMING UNIT	4-3
2552005-0100	.PRESSURE JAW	4-87, 4-89, 4-135, 4-137
2552006-0100	.INDUCTOR LEFT	4-87, 4-89
2552007-0100	.INDUCTOR RIGHT	4-135, 4-137
2552008-0200	.CUTTING JAW	4-113, 4-157
2552009-0100	.FOLDING FLAP LEFT	4-113
2552010-0200	.PISTON	4-113, 4-157
2552011-0100	.FOLDING FLAP RIGHT	4-157

Part No	Description	Page No
2552018-0000	.CARRIER	5-75, 5-77, 5-79
2552022-0000	.GUIDE	5-29, 5-31, 5-33, 5-129, 5-131
2552077-0200	.DRIVE UNIT	3-3
2552078-0200	.DRIVE UNIT	3-3
2552079-0100	.MOTOR UNIT	3-5, 3-27
2552080-0100	.LINK	3-5, 3-27
2552110-0100	.SUPPORT	3-5
2552111-0100	.SUPPORT	3-27
2552113-0100	.FLOW METER	6-13, 6-15
2552121-0000	.BRACKET	1-11
2552124-0000	.BRACKET	1-307, 1-309
2552125-0100	.BENDING ROLLER	1-297
2552127-0000	.FLANGE	1-159, 1-161, 1-163, 1-165
2552133-0000	.BENDING ROLLER	1-159, 1-161, 1-163, 1-165
2552135-0000	.BENDING ROLLER	1-155, 1-157
2552136-0000	.FLANGE	1-155, 1-157
2552138-0000	.LID	1-15, 1-17
2552139-0000	.BENDING ROLLER	1-155, 1-157
2552140-0000	.BRACKET	1-91, 1-93
2552141-0000	.BRACKET	1-91, 1-93
2552142-0000	.BRACKET	1-91, 1-93
2552143-0000	.BRACKET	1-91, 1-93
2552144-0000	.ROLL	1-91, 1-93
2552151-0000	.BRACKET	10-5
2552152-0000	.BRACKET	10-5
2552153-0000	.BRACKET	10-5
2552154-0000	.BRACKET	10-5
2552155-0000	.ROLL	1-91, 1-93
2552158-0000	.SCREW	1-91, 1-93
2552160-0000	.SUPPORT RING	1-39, 1-75, 1-77, 1-79
2552161-0000	.SUPPORT RING	1-39, 1-75, 1-77, 1-79
2552176-0001	.LOCK PLATE	1-39, 1-75, 1-77, 1-79
2552176-0003	.LOCK PLATE	1-39, 1-75, 1-77, 1-79
2552177-0001	.LOCK PLATE	1-39, 1-75, 1-77, 1-79
2552177-0003	.LOCK PLATE	1-39, 1-75, 1-77, 1-79
2552187-0000	.ROLLER	1-75, 1-77, 1-79
2552188-0000	.ROLLER	1-39, 1-75, 1-77, 1-79
2552201-0000	.LOCKING DEVICE	1-245, 1-247
2552205-0000	.ROLLER	1-39, 1-75, 1-77, 1-79
2552206-0000	.ROLLER	1-39, 1-75, 1-77, 1-79
2552215-0200	.STEAM TRAP	1-253
2552445-0000	.SUPPORT	5-257
2552655-0000	.ROLLER	1-85, 1-87
2552656-0000	.ROLLER	1-85, 1-87
2552776-0000	.ADAPTER	1-255
2552777-0000	.ADAPTER	1-255
2552794-0000	.PULLEY	5-215
2552798-0000	.COMPRESSION ROD	7-105
2552802-0000	.SLIDE PLATE	7-105
2552821-0000	.BRACKET	7-45, 7-47
2552931-0100	.HOSE INSTALLATION	2-43
2553072-0000	.KEY FOR SAFETY SWITCH	7-217, 7-221
2553092-0000	.PLATE	1-113
2553093-0000	.PLATE	1-113
2553094-0000	.PIPE	1-113
2553095-0000	.PIPE	1-113
2553107-0000	.HOLDER	7-45, 7-47
2553108-0000	.HOLDER	7-45, 7-47
2553109-0000	.HOLDER	7-45, 7-47
2553115-0000	.PLATFORM	2-179, 2-181
2553116-0000	.CHECKER PLATE	2-179, 2-181
2553117-0000	.LEG	10-7
2553118-0000	.TOE PLATE	2-179, 2-181
2553119-0000	.RAILING	2-179, 2-181
2553120-0000	.RAILING	2-179, 2-181
2553122-0000	.PLATE	2-173, 2-175, 2-179, 2-181
2553124-0000	.PIN	2-179, 2-181
2553125-0000	.CHECKER PLATE	2-179, 2-181
2553167-0000	.LID	1-223
2553272-0000	.SUPPORT BLOCK	7-121, 7-131
2553273-0000	.AXLE PIN	7-121, 7-131
2553275-0000	.SLIDE PLATE	7-117, 7-125
2553284-0000	.BLOCK	5-29, 5-31, 5-33, 5-129, 5-131
2553343-0000	.SUPPORT	5-11, 5-13
2553344-0000	.SUPPORT	5-11, 5-13
2553345-0000	.TIE ROD	5-11, 5-13
2553346-0000	.AXLE LINK	5-11, 5-13
2553347-0000	.FOLDING BAR	5-45, 5-47, 5-49
2553348-0000	.FOLDING BAR	5-45, 5-47, 5-49
2553615-0000	.FLAP	5-119, 5-121
2553617-0000	.SLIDE	5-119, 5-121
2553799-0000	.WASHER	7-121, 7-131
2554263-0000	.BRACKET	5-83, 5-85, 5-87, 5-89, 5-91
2555082-0000	.SPACER SCREW	5-137, 5-139, 5-145, 5-147

Part No	Description	Page No
2555393-0100	.START-UP KIT	9-3
2555394-0100	.START-UP KIT	9-5
2555404-0000	.FLAP	5-23, 5-25
2555613-0000	.BUSHING	1-105, 1-107
2555614-0000	.BRACKET	1-41, 1-43
2555615-0000	.BRACKET	1-41, 1-43
2555616-0000	.ROLLER	1-41, 1-43
2555617-0000	.PIN	1-41, 1-43
2555618-0000	.SHAFT	1-41, 1-43
2555619-0000	.BRACKET	1-41, 1-43
2555620-0000	.COVER	1-41, 1-43
2555621-0000	.ROLLER	1-33, 1-35, 1-37
2555622-0000	.ROLLER	1-33, 1-35, 1-37
2555623-0000	.COVER	1-41, 1-43
2555625-0000	.ROLL	1-41, 1-43
2555627-0100	.PRESSURE ROLLER	1-21, 1-23, 1-25, 1-27
2555637-0000	.GUIDE	5-29, 5-31, 5-33, 5-129, 5-131
2556260-0200	.TOOLS AND TEMPLATES	10-3
2556261-0100	.ACCESSORIES	10-3
2556496-0000	.CARRIAGE	7-31
2556497-0000	.CARRIAGE	7-31
2556499-0000	.BRACKET	7-31
2556503-0100	.PAPER BRAKE	7-31
2556504-0000	.BRACKET	7-33, 7-35
2556505-0002	.PIN	7-33, 7-35
2556505-0003	.PIN	7-33, 7-35
2556506-0000	.LINK	7-33, 7-35
2556507-0000	.LEVER	7-33, 7-35
2556508-0000	.BRACKET	7-33, 7-35
2556509-0000	.SHAFT	7-33, 7-35
2556510-0000	.BRACKET	7-33, 7-35
2556512-0000	.BRACKET	7-31
2556525-0000	.LEVER	5-75, 5-77, 5-79
2556526-0000	.LEVER	5-75, 5-77, 5-79
2556615-0000	.PIPE CONNECTION	4-185
2556893-0100	.TUBE FLUSHING	4-165
2556894-0000	.TUBE FLUSHING DEVICE	4-185
2556895-0000	.TUBE FLUSHING DEVICE	4-185
2557587-0000	.CABLE DUCT	8-67, 8-69
2557588-0000	.CABLE DUCT	8-67, 8-69
2557589-0000	.CABLE DUCT	8-67, 8-69
2557590-0000	.CABLE DUCT	8-67, 8-69
2557591-0000	.DIVIDER	8-51, 8-53, 8-55, 8-67, 8-69
2557592-0000	.DIVIDER	8-67, 8-69
2557593-0000	.DIVIDER	8-67, 8-69
2557594-0000	.RAIL	8-75
2557612-0000	.SPRING	4-27, 4-29, 4-39, 4-41
2557613-0000	.SPRING	4-27, 4-29, 4-39, 4-41
2558127-0000	.SPACER	5-145, 5-147
2558144-0000	.BOTTOM	5-23, 5-25
2558145-0000	.FLAP	5-23, 5-25
2558148-0000	.SLIDING STRIP	7-105
2558703-0000	.GUIDE UPPER L	5-137, 5-139
2558704-0000	.GUIDE UPPER R	5-137, 5-139
2558754-0000	.RAIL	5-83, 5-85, 5-87, 5-89, 5-91
2558760-0000	.CABLE DUCT	8-77, 8-79
2558761-0000	.CABLE DUCT	8-77, 8-79
2558762-0000	.CABLE DUCT	8-77, 8-79
2558763-0000	.CABLE DUCT	8-77, 8-79
2558764-0000	.CABLE DUCT	8-77, 8-79
2558765-0000	.CABLE DUCT	8-77, 8-79
2558766-0000	.CABLE DUCT	8-77, 8-79
2558768-0000	.CABLE DUCT	8-77, 8-79
2558769-0000	.DIVIDER	8-77, 8-79
2558770-0000	.DIVIDER	8-77, 8-79
2558771-0000	.DIVIDER	8-77, 8-79
2558772-0000	.DIVIDER	8-77, 8-79
2558773-0000	.DIVIDER	8-77, 8-79
2558826-0000	.PIPE	2-39
2558845-0200	.TANK	2-75
2558878-0000	.SIGN	7-73
2558879-0000	.SIGN	7-73
2558920-0000	.STOP	4-39, 4-41
2558921-0000	.STOP	4-27, 4-29
2558922-0000	.STOP	4-39, 4-41
2558923-0000	.STOP	4-27, 4-29
2558929-0000	.BAR	4-27, 4-29, 4-39, 4-41
2558930-0100	.PUMP	2-75
2558932-0000	.RAIL	8-83
2558933-0000	.RAIL	8-85
2558934-0000	.RAIL	8-87
2558937-0000	.RAIL	8-103
2558938-0000	.CABLE DUCT	8-97, 8-99
2558939-0000	.CABLE DUCT	8-97, 8-99

Part No	Description	Page No
2558940-0000	.DIVIDER	8-97, 8-99
2558941-0000	.DIVIDER	8-97, 8-99
2558947-0200	.HYDRAULIC UNIT	2-71
2559008-0000	.VOLUME BULGE	5-235, 5-237, 5-239, 5-241, 5-243, 5-245
2559045-0003	.ELECTRODE	1-319
2559045-0004	.ELECTRODE	1-319
2559051-0000	.INSERT	1-249
2559061-0200	.UPPER FORMING RING	1-21, 1-23, 1-25, 1-27
2559062-0200	.LOWER FORMING RING	1-21, 1-23, 1-25, 1-27
2559063-0200	.LOWER FORMING RING	1-21, 1-23, 1-25, 1-27
2559064-0100	.SEAL	1-21, 1-23, 1-25, 1-27
2559066-0000	.STUD SCREW	1-13
2559095-0000	.BRACKET	1-231
2559102-0000	.RING	1-85, 1-87
2559103-0000	.PLATE	1-85, 1-87
2559104-0000	.PLATE	1-85, 1-87
2559105-0000	.SUPPORT RING	1-75, 1-77, 1-79
2559111-0200	.HYDRAULIC VALVE	2-75
2559112-0100	.CALIBRATION EQUIPMENT	10-5
2559310-0000	.HYDRAULIC PIPE	2-83
2559311-0000	.HYDRAULIC PIPE	2-83
2559424-0000	.CUTTING JAW	4-115, 4-117, 4-119, 4-121
2559425-0000	.CLAMP HOLDER	4-93, 4-95, 4-97, 4-139, 4-141, 4-143
2559439-0000	.COUPLING BOLT	7-105
2559461-0000	.SPACER	2-39
2559976-0000	.BRACKET	2-39
2559977-0000	.HOSE	2-39
2559978-0000	.PIPE	2-39
2559986-0000	.SEALING PLATE	7-99
2559987-0000	.SEALING PLATE	7-99
2562307-0000	.PIPE	1-221
2562315-0000	.PLUG	1-221
2562551-0000	.SLIDE PLANE	7-95
2562552-0000	.SLIDE PLANE	7-95
2562664-0000	.ROLL	1-91, 1-93
2562667-0002	.LOCK PLATE	1-91, 1-93
2562667-0008	.LOCK PLATE	1-75, 1-77, 1-79
2562667-0009	.LOCK PLATE	1-75, 1-77, 1-79
2562677-0000	.WASHER	1-15, 1-17
2562684-0000	.ROLL	1-91, 1-93
2562685-0000	.ROLLER	1-59, 1-61, 1-63
2562686-0000	.ROLLER	1-59, 1-61, 1-63
2562687-0000	.PLATE	1-47, 1-49, 1-51
2562688-0000	.RING	1-47, 1-49, 1-51
2562692-0000	.BRACKET	1-91, 1-93
2562693-0000	.BRACKET	1-91, 1-93
2562694-0000	.ROLLER	1-91, 1-93
2562695-0000	.ROLLER	1-91, 1-93
2562696-0000	.BRACKET	1-91, 1-93
2562697-0000	.BRACKET	1-91, 1-93
2562704-0000	.BODY	1-251
2562709-0000	.ROLLER	1-85, 1-87
2562710-0000	.RING	1-85, 1-87
2562711-0000	.PLATE	1-85, 1-87
2562736-0001	.COAXIAL CABLE	4-233
2562881-0000	.TRANSITION PIPE	1-249
2562882-0000	.ELBOW PIPE	1-249
2562883-0000	.PIPE	1-249
2562893-0100	.PNEUMATIC PANEL	1-219
2563166-0200	.CONNECTOR	8-25
2563167-0100	.MOTOR DRIVE CONTROL	8-51, 8-53, 8-55
2563168-0100	.MOTOR DRIVE CONTROL	8-51, 8-53, 8-55
2563169-0100	.MOTOR DRIVE CONTROL	8-67, 8-69
2563170-0100	.RELAY UNIT 1	8-77, 8-79
2563171-0000	.RAIL	8-71
2563173-0000	.PROFILE	8-97, 8-99
2563174-0000	.PROFILE	8-97, 8-99
2563175-0000	.BRACKET	8-71
2563183-0000	.GUIDE RAIL	7-109, 7-111
2563274-0000	.CARRIER	5-75, 5-77, 5-79
2563276-0000	.PNEUMATIC DIAGRAM	1-321, 2-251
2563279-0000	.PIPE	1-285
2563281-0000	.PIPE	1-285
2563289-0000	.LOWER FILLING PIPE	1-213, 1-215, 1-217
2563290-0000	.PRESSURE FLANGE	1-213, 1-215, 1-217
2563292-0000	.STOP PIN	1-213, 1-215, 1-217
2563293-0000	.LOWER FILLING PIPE	1-213, 1-215, 1-217
2563294-0000	.PRESSURE FLANGE	1-213, 1-215, 1-217
2563295-0000	.STOP PIN	1-213, 1-215, 1-217
2563296-0000	.LOWER FILLING PIPE	1-213, 1-215, 1-217
2563666-0000	.CANTILEVER	4-27, 4-29, 4-39, 4-41
2563667-0000	.SHAFT	4-27, 4-29, 4-39, 4-41
2563671-0000	.SHAFT	4-27, 4-29, 4-39, 4-41
2563759-0000	.SPRAY SYSTEM	1-291

Part No	Description	Page No
2563760-0000	.EXTENSION	1-291
2563761-0000	.NUT	1-291
2563762-0000	.SPACER	1-291
2563766-0000	.BODY	1-251
2564054-0100	.AIR INLET	7-59
2564074-0100	.TOOLS AND TEMPLATES	10-5
2564105-0000	.CONNECTION BOX	1-227
2564106-0100	.CONNECTION BOX	1-219
2564107-0000	.LID	1-285
2564225-0000	.BUSHING	2-33
2564232-0100	.LEG STAND	10-5
2564342-0000	.SPACER	2-33
2564347-0000	.FLAP	5-23, 5-25
2564504-0000	.SUPPORT	7-21
2564545-0000	.PLATE	2-189, 2-191
2564546-0100	.PLATFORM	2-159, 2-161, 2-163, 2-165, 2-167, 2-169
2564561-0000	.PIPE	2-33
2564562-0000	.ROLLER	7-105, 7-107, 7-109, 7-111
2564565-0000	.TOE PLATE	2-187
2564566-0000	.TOE PLATE	2-187
2564596-0000	.FLOAT	1-213, 1-215, 1-217
2564597-0000	.FLOAT	1-213, 1-215, 1-217
2564598-0000	.FLOAT	1-213, 1-215, 1-217
2564599-0000	.FLOAT	1-213, 1-215, 1-217
2564600-0000	.FLOAT	1-213, 1-215, 1-217
2564601-0000	.FLOAT	1-213, 1-215, 1-217
2564602-0000	.FLOAT	1-213, 1-215, 1-217
2564606-0000	.SUPPORT PLATE	1-225
2564607-0000	.PLATE	1-225
2564623-0000	.HANDLE	7-31
2564630-0100	.CABLE DRAG CHAIN	7-31
2564632-0100	.VALVE PANEL	7-155, 7-157
2564633-0100	.VALVE PANEL	7-3, 7-5
2564634-0000	.BEARING BLOCK	7-155, 7-157
2564683-0000	.CURVE	4-175, 4-177, 4-179
2564978-0000	.PIPE	2-33
2565424-0000	.ROLLER	1-53, 1-55
2565425-0000	.COUNTER ROLLER	1-53, 1-55
2565430-0000	.SUPPORT RING	1-75, 1-77, 1-79
2565431-0000	.SUPPORT RING	1-75, 1-77, 1-79
2565432-0100	.TERMINAL BLOCK	1-227
2565436-0000	.FILLING PIPE	1-213, 1-215, 1-217
2565437-0000	.CLEANING CUP	1-263, 1-265
2565440-0000	.INDUCTOR	1-41, 1-43
2565441-0000	.INSULATING PLATE	1-41, 1-43
2565467-0000	.FLANGE	1-193
2565482-0000	.BOX	1-113
2565483-0000	.NOZZLE	1-113
2565492-0000	.PNEUMATIC DIAGRAM	1-321
2565493-0000	.PNEUMATIC DIAGRAM	1-321, 2-251
2565494-0000	.PNEUMATIC DIAGRAM	1-321
2565513-0000	.ROLLER	1-53, 1-55
2565526-0000	.PIPE	2-65
2565624-0300	.SOFTWARE	8-3
2566117-0000	.CUTTING TABLE	7-117, 7-125
2566118-0000	.BRACKET	7-117, 7-125
2566123-0000	.SLIDE PLANE	7-105
2566124-0000	.SLIDE PLANE	7-105
2566125-0000	.SLIDE PLATE	7-105
2566127-0000	.SPACER	7-99
2566128-0000	.HOUSING	7-99
2566129-0000	.ADJUSTMENT ANGLE	7-99
2566130-0000	.PLATE	7-99
2566209-0000	.PLATE	2-39
2566210-0000	.PLATE	2-39
2566211-0000	.LABEL	2-39
2566212-0000	.LABEL	2-39
2566258-0000	.TOE PLATE	2-179, 2-181
2566317-0000	.CARRIER RULER	4-159, 4-161
2566318-0000	.CARRIER RULER	4-123, 4-125
2566319-0000	.FOLDING FLAP	4-123, 4-125, 4-159, 4-161
2566320-0000	.FOLDING FLAP	4-123, 4-125, 4-159, 4-161
2566321-0000	.FLAP	5-113, 5-115
2566323-0000	.FLAP	5-113, 5-115
2566327-0000	.CARRIER	4-149, 4-151, 4-153, 4-155
2566328-0000	.PLATE	4-105, 4-107, 4-109, 4-111, 4-149, 4-151, 4-153, 4-155
2566329-0000	.CARRIER	4-105, 4-107, 4-109, 4-111
2566330-0000	.SLEEVE	4-127
2566332-0000	.SHAFT	4-51, 4-53, 4-55, 4-57, 4-61, 4-63, 4-65, 4-67, 4-73, 4-79
2566333-0000	.HOLDER (STAFFA)	4-51, 4-53, 4-55, 4-57, 4-61, 4-63, 4-65, 4-67, 4-73, 4-79
2566336-0000	.BEARING HOUSING	4-91
2566338-0000	.CATCH	4-91
2566339-0000	.CATCH	4-115, 4-117, 4-119, 4-121
2566340-0000	.CARRIER	4-81, 4-83, 4-85

Part No	Description	Page No
2566341-0000	.CARRIER	4-129, 4-131, 4-133
2569034-0000	.PIPE	2-81
2569035-0000	.PIPE	2-79
2569036-0000	.PIPE	2-77
2569037-0000	.PIPE	2-77
2569038-0000	.PIPE	2-79
2569039-0000	.PIPE	2-79
2569908-0000	.HOUSING	4-91
2569982-0100	.SETTING TOOL	10-5
2570004-0001	.CABLE	2-149, 2-151
2570015-0000	.PRESSURE FLANGE	1-213, 1-215, 1-217
2570017-0000	.PRESSURE FLANGE	1-213, 1-215, 1-217
2570301-0000	.CUTTING JAW	4-115, 4-117, 4-119, 4-121
2570302-0000	.CLAMP HOLDER	4-93, 4-95, 4-97, 4-139, 4-141, 4-143
2570616-0100	.FASTENING PLATE	2-143
2570678-0000	.HANDLE	1-355, 1-357
2570741-0000	.HOLDER	10-63
2570743-0000	.BRACKET	10-63
2570744-0000	.HOLDER	10-65
2570746-0000	.BRACKET	10-63
2570747-0000	.PLATE	10-63
2570821-0000	.SHEET	7-161, 7-163, 7-165
2570834-0000	.PROTECTIVE CASING	7-155, 7-157
2570836-0000	.PROTECTION PLATE	7-155, 7-157
2570848-0000	.HOLDER	4-93, 4-95, 4-97, 4-139, 4-141, 4-143
2570849-0000	.BUSHING	4-93, 4-95, 4-97, 4-115, 4-117, 4-119, 4-121, 4-139, 4-141, 4-143
2570850-0000	.CUTTING JAW	4-115, 4-117, 4-119, 4-121
2571843-0000	.CARRIER	4-105, 4-107, 4-109, 4-111
2572071-0000	.HOOD	1-213, 1-215, 1-217
2572248-0000	.CARRIER	4-149, 4-151, 4-153, 4-155
2572563-0000	.SUPPORT	5-261
2574401-0000	.FRAME	7-95
2574402-0000	.PRESSURE JAW	7-105
2574421-0000	.PIPE	2-29
2574483-0200	.TOOLS AND TEMPLATES	9-3
2575631-0000	.RAIL BRACKET	4-175, 4-177, 4-179
2576244-0000	.BRACKET	7-187
2576245-0000	.ARM	7-187
2576334-0100	.TPOP DATA COLLECTION	8-3
2576335-0100	.TPOP LINE SUPERVISION	8-3
2576379-0000	.ROCKER ARM	7-175
2576396-0000	.PLATE	7-99
2578455-0000	.LIFTING HANDLE	7-175
2578486-0000	.BRACKET	1-319
2578785-0000	.PUSH BUTTON BOX	7-203
2579687-0100	.SETTING TOOL	10-5
2579688-0000	.HOLDER	10-65
2579745-0000	.INSERT	1-221, 1-227
2579838-0000	.TOUCH GUARD	7-85
2579861-0003	.PIVOT BRACKET	6-19
2579988-0000	.CUTTING JAW	4-115, 4-117, 4-119, 4-121
2579989-0000	.HOLDER	4-93, 4-95, 4-97, 4-139, 4-141, 4-143
2579990-0000	.SHAFT	4-93, 4-95, 4-97, 4-115, 4-117, 4-119, 4-121, 4-139, 4-141, 4-143
2579991-0000	.HOLDER	4-93, 4-95, 4-97, 4-139, 4-141, 4-143
2579995-0100	.LAST POINT DE	5-3
2579996-0000	.PLATE	7-29
2581994-0000	.VOLUME BULGE	4-7, 4-9, 4-11, 4-17, 4-19, 4-21, 4-51, 4-53, 4-55, 4-57, 4-61, 4-63, 4-65, 4-67
2582002-0000	.VOLUME FLAP	4-17, 4-19, 4-21
2582003-0100	.GUIDE RAIL	7-89, 7-91
2582020-0000	.RAIL BRACKET	4-175, 4-177, 4-179
2582558-0000	.BASE PLATE	7-121, 7-131
2582559-0000	.RAIL	7-121, 7-131
2582574-0000	.BODY	1-45
2582575-0000	.KNOB	1-45
2582576-0000	.STOP SCREW	1-195
2582590-0000	.PIPE	1-255
2582613-0000	.BRACKET	10-5
2582616-0000	.PLATE	1-85, 1-87
2582623-0000	.SEAL	1-85, 1-87
2582629-0000	.RING	1-85, 1-87
2582630-0000	.ROLLER	1-85, 1-87
2582651-0000	.AIR GUIDE	1-169, 1-171
2582652-0000	.AIR GUIDE	1-169, 1-171
2582654-0000	.PLATE	1-169, 1-171
2582655-0000	.HOLDER	1-169, 1-171
2582668-0000	.PLATE	7-109, 7-111
2587235-0000	.VOLUME FLAP	4-17, 4-19, 4-21
2587236-0000	.VOLUME FLAP	4-7, 4-9, 4-11
2587250-0000	.ARM	7-117, 7-125
2587251-0000	.ANGLE PIECE	7-117, 7-125
2587286-0000	.HOLDER	10-17, 10-19
2587289-0000	.CHECKER PLATE	2-187
2587290-0000	.CHECKER PLATE	2-187
2587291-0000	.CHECKER PLATE	2-187

Part No	Description	Page No
2587292-0000	.CHECKER PLATE	2-187
2587326-0000	.BRACKET	10-67
2587464-0000	.CANTILEVER	4-237
2587466-0000	.INDUCTOR	4-93, 4-95, 4-97, 9-11, 9-13, 9-15, 9-17, 9-19
2587467-0000	.INDUCTOR	4-139, 4-141, 4-143, 9-11, 9-13, 9-15, 9-17, 9-19
2588044-0000	.BRACKET	7-107
2588045-0000	.BRACKET	7-107
2588046-0000	.SHAFT	7-105, 7-107
2588067-0000	.SHAFT	7-179
2588127-0000	.AXLE PIN	5-15
2588130-0100	.FOLDING FIN DEVICE	5-5, 5-7
2588134-0000	.YOKE	5-15
2588290-0000	.BRACKET	7-105
2588291-0000	.TIE ROD	4-105, 4-107, 4-109, 4-111, 4-149, 4-151, 4-153, 4-155
2588292-0000	.PLATE	4-115, 4-117, 4-119, 4-121
2588293-0000	.HOLDER	4-93, 4-95, 4-97, 4-139, 4-141, 4-143
2588294-0000	.LID	4-91
2588295-0000	.SLEEVE	4-91
2588296-0000	.PISTON	4-91
2588297-0000	.SHAFT	4-91
2588299-0000	.BUSHING	4-115, 4-117, 4-119, 4-121
2588300-0000	.RAIL BRACKET	4-175, 4-177, 4-179
2588301-0000	.CURVE	4-175, 4-177, 4-179
2588302-0000	.VOLUME CAM	4-175, 4-177, 4-179
2588303-0000	.SCREW	4-115, 4-117, 4-119, 4-121
2588304-0000	.VOLUME FLAP	4-73
2588305-0000	.VOLUME FLAP	4-79
2588306-0000	.VOLUME FLAP	4-75
2588307-0000	.VOLUME FLAP	4-75
2588327-0000	.INSERT	5-113, 5-115
2588328-0000	.PULLEY	5-69
2588329-0000	.PULLEY	5-69
2588379-0100	.MATERIAL HOLDER	7-125
2588383-0100	.MATERIAL HOLDER	7-117
2588422-0100	.MATERIAL HOLDER L1	7-3, 7-5
2588423-0100	.MATERIAL HOLDER L2	7-3, 7-5
2588425-0000	.PLATE	10-43
2588426-0100	.ALIGNMENT TEMPLATE	10-5
2588946-0100	.SPLICING DEVICE	7-3, 7-5
2588947-0000	.SHIMS	7-99
2588948-0000	.SHIMS	7-99
2589104-0100	.FRAME	7-89, 7-91
2589105-0100	.DRIVE UNIT	7-89, 7-91
2589106-0100	.HEATING UNIT	7-89, 7-91
2589108-0000	.BENDING ROLLER	7-97
2589109-0000	.TOOTHED PULLEY	7-97
2589110-0000	.SHAFT	7-97
2589111-0000	.FLANGE	7-97
2589112-0000	.FLANGE	7-97
2589113-0000	.SHAFT	7-97
2589114-0000	.SHAFT	7-97
2589115-0000	.COVER	7-97
2589119-0000	.NUT	7-95
2589391-0001	.TPOP BASIC START PROGRAM	8-9
2589786-0000	.BRACKET	7-193
2589787-0000	.FITTING	7-193
2589791-0000	.KNIFE HOLDER	7-117, 7-125
2591680-0100	.HOLDER	7-189, 7-191
2591782-0000	.SPRING	1-311
2591790-0000	.BLOCK	5-5, 5-7
2592525-0000	.FILLING PIPE	1-213, 1-215, 1-217
2592530-0000	.PLATE	1-129, 1-131
2592539-0000	.ROLLER	1-29, 1-31
2592540-0000	.ROLLER	1-29, 1-31
2592544-0000	.FILLING PIPE	1-213, 1-215, 1-217
2592545-0000	.ROLLER	1-39
2592546-0000	.ROLLER	1-47, 1-49, 1-51
2592547-0000	.ROLLER	1-47, 1-49, 1-51
2592548-0000	.ROLLER	1-47, 1-49, 1-51
2592549-0000	.ROLLER	1-47, 1-49, 1-51
2592550-0100	.FORMING RING	1-21, 1-23, 1-25, 1-27
2592567-0100	.PRESSURE JAW	7-89, 7-91
2592568-0100	.BAR CODE READER	7-89, 7-91
2592780-0000	.DOLLY	7-105, 9-5
2593831-0100	.VOLUME KIT	9-5
2593851-0100	.EMERGENCY STOP	2-221, 2-249
2594043-0000	.SHOCK ABSORBER	1-251
2594054-0100	.INDEXING UNIT	5-3
2594058-0000	.GUIDE	5-157, 5-159
2594125-0000	.SLEEVE	1-311
2594126-0000	.GUIDE ROLLER	1-311
2594393-0000	.PNEUMATIC DIAGRAM	2-251, 7-161, 7-163, 7-165
2594512-0100	.VOLUME FLAP CUTTING	4-5
2594512-0101	.VOLUME FLAP	9-7, 9-9

Part No	Description	Page No
2594512-0102	.VOLUME FLAP	9-7, 9-9
2594512-0103	.VOLUME FLAP	9-7, 9-9
2594512-0104	.VOLUME FLAP	9-7, 9-9
2594512-0105	.VOLUME FLAP	9-7, 9-9
2594512-0106	.VOLUME FLAP	9-7, 9-9
2594512-0107	.VOLUME FLAP	9-7, 9-9
2594512-0108	.VOLUME FLAP	9-7, 9-9
2594512-0109	.VOLUME FLAP	9-7, 9-9
2594512-0110	.VOLUME FLAP	9-7, 9-9
2594512-0111	.VOLUME FLAP	9-7, 9-9
2594567-0000	.PIPE	2-271
2594589-0000	.BRACKET	2-271
2594596-0000	.BRACKET	1-95
2594601-0000	.RAIL	1-169, 1-171
2594606-0100	.STERILE AIR PIPE	1-179
2594621-0000	.WASHER	1-175
2594624-0000	.PLUG	1-123, 1-125
2594629-0000	.FILLING PIPE	1-213, 1-215, 1-217
2594636-0000	.BRACKET	1-41, 1-43
2594644-0000	.ROLLER	1-53, 1-55
2594646-0000	.PIPE	2-113
2594647-0000	.PIPE	2-113
2594709-0000	.AXLE PIN	4-59, 4-69
2594886-0000	.PLATE	5-251, 5-253
2594887-0000	.SPACER	4-175, 4-177, 4-179
2594888-0000	.VOLUME BULGE	4-73, 4-79
2594889-0000	.VOLUME BULGE	4-75
2594890-0000	.VOLUME SHIM	4-73, 4-79, 9-11, 9-13, 9-15, 9-17, 9-19
2594891-0000	.VOLUME SHIM	4-75, 9-11, 9-13, 9-15, 9-17, 9-19
2594892-0000	.SPRING	4-91
2594893-0000	.WEDGE	4-73, 4-79
2594896-0000	.SCREW	4-75
2594902-0000	.CATCH	5-235, 5-237, 5-239, 5-241, 5-243, 5-245
2594905-0000	.SLIDE	5-171, 5-173
2594906-0000	.SLIDE	5-177, 5-179
2594910-0000	.LEVER	5-75, 5-77, 5-79
2594911-0000	.HATCH	5-75, 5-77, 5-79
2595704-0000	.FOLDING PART	5-145, 5-147
2595705-0000	.FOLDING PART	5-145, 5-147
2595706-0000	.BRACKET	5-145, 5-147
2595707-0000	.FOLDING PART	5-145, 5-147
2595708-0000	.FOLDING PART	5-145, 5-147
2595709-0000	.FOLDING PART	5-145, 5-147
2597324-0100	.VOLUME FLAP	4-5
2597325-0100	.VOLUME FLAP	4-5
2597329-0100	.CURVE UNIT	4-165
2597330-0100	.CONTROL UNIT	4-235
2597331-0100	.CENTERING UNIT	4-235
2597600-0000	.BUSHING	7-19
2597768-0000	.BRACKET	5-157, 5-159
2597769-0000	.GUIDE	5-157, 5-159
2598008-0000	.STOP PIN	1-213, 1-215, 1-217
2598010-0000	.STOP PIN	1-213, 1-215, 1-217
2598015-0000	.LOWER FILLING PIPE	1-213, 1-215, 1-217
2598017-0000	.PRESSURE FLANGE	1-213, 1-215, 1-217
2598018-0000	.LOWER FILLING PIPE	1-213, 1-215, 1-217
2598025-0000	.SIGN	2-131, 2-133
2598065-0000	.SUPPORT	4-237
2598067-0000	.SHAFT	4-243
2598084-0000	.PLATE	1-221
2598085-0000	.SPACER	1-221
2598485-0000	.CLAMP	5-157, 5-159
2598486-0000	.CLAMP	5-157, 5-159
2598487-0000	.SLIDE	5-171, 5-173
2598488-0000	.SLIDE	5-177, 5-179
2598491-0000	.FOLDING PART	5-145, 5-147
2598492-0000	.FOLDING PART	5-145, 5-147
2598493-0000	.BRACKET	5-145, 5-147
2598494-0000	.FOLDING PART	5-145, 5-147
2598495-0000	.FOLDING PART	5-145, 5-147
2598496-0000	.FOLDING PART	5-145, 5-147
2598497-0000	.FOLDING PART	5-145, 5-147
2598498-0000	.NOZZLE	5-203, 5-205, 5-207, 5-209, 5-211, 5-213
2598499-0000	.NOZZLE	5-203, 5-205, 5-207, 5-209, 5-211, 5-213
2598500-0000	.NOZZLE	5-203, 5-205, 5-207, 5-209, 5-211, 5-213
2598502-0000	.SUPPORT	4-239, 4-241
2598503-0000	.EXTENSION	5-203, 5-205, 5-207, 5-209, 5-211, 5-213
2598505-0000	.SPACER	5-195, 5-197, 5-199
2598508-0100	.INFEED/OUTFEED CONVEYOR	5-57
2598513-0000	.SPACER	5-63
2598514-0000	.COVER	5-63
2598689-0000	.HOSE	2-25
2598706-0000	.BAR	5-5, 5-7
2598805-0000	.FLAP	5-119, 5-121

Part No	Description	Page No
2598807-0000	.SLIDE	5-119, 5-121
2598819-0000	.SPACER	5-161, 5-163
2598820-0000	.SPACER	5-161, 5-163
2598844-0000	.COVER	2-65
2598880-0000	.SETTING SCREW	5-17
2599020-0000	.STOP	5-195, 5-197, 5-199
2599044-0000	.BRACKET	5-157, 5-159
2599738-0000	.ECCENTRIC	4-175, 4-177, 4-179
2599739-0000	.ECCENTRIC	4-175, 4-177, 4-179
2599741-0000	.SUPPORT	4-243
2599742-0000	.SHAFT	4-239, 4-241, 4-243
2599743-0000	.SHAFT	4-243
2599847-0000	.SPACER	5-145, 5-147
2599941-0000	.SPACER	2-173, 2-175, 2-179, 2-181, 7-45, 7-47
2601230-0000	.BRACKET	8-97, 8-99
2601232-0000	.FRAME	8-97, 8-99
2601237-0000	.BENDING ROLLER	1-105, 1-107
2601239-0000	.SPRING	1-213, 1-215, 1-217
2601240-0000	.ROLLER	1-39
2601247-0000	.INDUCTOR	1-41, 1-43
2601248-0000	.INSULATING PLATE	1-41, 1-43
2601249-0000	.BRACKET	1-41, 1-43
2601259-0000	.COUNTER ROLLER	1-53, 1-55
2601269-0000	.ROLLER	1-91, 1-93
2601271-0000	.ROLLER	1-91, 1-93
2601272-0000	.ROLLER	1-91, 1-93
2601273-0000	.ROLLER	1-91, 1-93
2601278-0000	.ROLLER	1-75, 1-77, 1-79
2601279-0000	.ROLLER	1-75, 1-77, 1-79
2601284-0000	.438,66LEVER	1-175
2601285-0000	.ROLLER	1-75, 1-77, 1-79
2601286-0000	.ROLLER	1-75, 1-77, 1-79, 1-97, 1-99
2601289-0000	.INDUCTOR	1-41, 1-43
2601307-0000	.INSULATING PLATE	1-41, 1-43
2601308-0000	.ROLLER	1-53, 1-55
2601309-0000	.ROLLER	1-53, 1-55
2601321-0000	.FILLING PIPE	1-213, 1-215, 1-217
2601327-0000	.ROLLER	1-53, 1-55
2601328-0000	.ROLLER	1-53, 1-55
2601333-0000	.ROLLER	1-59, 1-61, 1-63
2601334-0000	.ROLLER	1-59, 1-61, 1-63
2601445-0000	.FOLDING PART	5-145, 5-147
2601455-0000	.FOLDING PART	5-145, 5-147
2601464-0000	.FOLDING PART	5-145, 5-147
2601465-0000	.FOLDING PART	5-145, 5-147
2601468-0000	.PRESSURE FLANGE	1-213, 1-215, 1-217
2601469-0000	.PRESSURE FLANGE	1-213, 1-215, 1-217
2601470-0000	.PRESSURE FLANGE	1-213, 1-215, 1-217
2601472-0000	.PRESSURE FLANGE	1-213, 1-215, 1-217
2601473-0000	.PRESSURE FLANGE	1-213, 1-215, 1-217
2601474-0000	.PRESSURE FLANGE	1-213, 1-215, 1-217
2601483-0100	.PAPER GUIDE	1-307, 1-309
2601580-0000	.HOSE	8-111
2601581-0000	.HOSE	8-111
2601582-0000	.HOSE	8-111
2602592-0000	.FOLDING PART	5-145, 5-147
2602613-0000	.VOLUME BULGE	5-235, 5-237, 5-239, 5-241, 5-243, 5-245
2602614-0000	.BOTTOM	5-23, 5-25
2602652-0000	.SHAFT	4-239, 4-241, 4-243
2602655-0000	.ROLLER	4-181, 4-183
2602657-0000	.LOCK PLATE	4-239, 4-241
2602658-0000	.SHAFT	4-239, 4-241
2602990-0000	.SHEET	7-9
2602991-0000	.ROD	7-11
2602992-0000	.ROD	7-11
2602993-0000	.LEVER	7-27
2602994-0000	.BRACKET	7-27
2602995-0000	.AXLE	7-27
2603138-0000	.BRACKET	5-157, 5-159
2603140-0000	.GUIDE	5-157, 5-159
2603147-0000	.PLATE	5-145, 5-147
2603148-0000	.CLAMP	5-157, 5-159
2603151-0000	.SHIM	4-105, 4-107, 4-109, 4-111, 4-149, 4-151, 4-153, 4-155
2603374-0000	.ECCENTRIC	4-171, 4-173
2603376-0000	.AXLE PIN	4-171, 4-173
2603378-0000	.ROLLER	4-171, 4-173
2603387-0000	.SPACER	2-39
2603488-0000	.FLAP	5-119, 5-121
2603489-0000	.BOTTOM	5-119, 5-121, 9-7, 9-9
2603490-0000	.SLIDE	5-119, 5-121
2603546-0000	.SLIDE PLATE	1-169, 1-171
2603547-0000	.FOLDING PART	5-145, 5-147
2603548-0000	.FOLDING PART	5-145, 5-147
2603630-0000	.SLIDE PLATE	1-169, 1-171

Part No	Description	Page No
2603659-0000	.FOLDING PART	5-145, 5-147
2603660-0000	.FOLDING PART	5-145, 5-147
2603661-0000	.BRACKET	5-145, 5-147
2603662-0000	.BRACKET	5-145, 5-147
2603663-0000	.SPACER	5-35, 5-37, 5-45, 5-47, 5-49, 5-137, 5-139
2603664-0000	.RAIL	5-145, 5-147
2603823-0000	.BOTTOM PLATE	1-169, 1-171
2603824-0000	.COUNTER PLATE	1-169, 1-171
2603826-0100	.FOLDING PART	5-127
2603827-0100	.FLAP GUIDE	5-127
2604069-0000	.BRACKET	6-7
2604493-0000	.VOLUME FLAP	4-51, 4-53, 4-55, 4-57
2604494-0000	.VOLUME FLAP	4-61, 4-63, 4-65, 4-67
2604495-0000	.VOLUME FLAP	4-51, 4-53, 4-55, 4-57
2604496-0000	.VOLUME FLAP	4-61, 4-63, 4-65, 4-67
2604507-0000	.SPACER	5-195, 5-197, 5-199
2604508-0000	.SPACER	5-195, 5-197, 5-199
2604509-0000	.KNOB	5-195, 5-197, 5-199
2604510-0000	.SHAFT	5-195, 5-197, 5-199
2604539-0000	.PROTRACTOR	5-215
2604564-0000	.CUTTING JAW	4-115, 4-117, 4-119, 4-121
2604565-0000	.HOLDER	4-93, 4-95, 4-97, 4-139, 4-141, 4-143
2605066-0000	.CURVE	4-167, 4-169
2605125-0000	.PUSHER	5-235, 5-237, 5-239, 5-241, 5-243, 5-245
2605148-0000	.STOP PIN	1-213, 1-215, 1-217
2605166-0000	.VOLUME SHIM	4-51, 4-53, 4-55, 4-57, 4-61, 4-63, 4-65, 4-67, 9-11, 9-13, 9-15, 9-17, 9-19
2605191-0000	.VOLUME FLAP	4-51, 4-53, 4-55, 4-57
2605192-0000	.VOLUME FLAP	4-61, 4-63, 4-65, 4-67
2605213-0000	.RAIL	5-145, 5-147
2605226-0200	.ROLLER UNIT	4-167, 4-169
2605228-0100	.BENDING ROLLER	7-173
2605869-0000	.FLAP HOLDER	4-51, 4-53, 4-55, 4-57, 4-61, 4-63, 4-65, 4-67
2605875-0000	.FOLDING FLAP	4-123, 4-125, 4-159, 4-161
2605876-0000	.FOLDING FLAP	4-123, 4-125, 4-159, 4-161
2605877-0000	.BENDING ROLLER	2-13
2605879-0000	.CANTILEVER	2-13
2605880-0000	.SHAFT	2-13
2605993-0000	.SIDE PLATE	5-251, 5-253, 9-7, 9-9
2605994-0000	.SIDE PLATE	5-251, 5-253, 9-7, 9-9
2606102-0000	.FLAP HOLDER	4-51, 4-53, 4-55, 4-57, 4-61, 4-63, 4-65, 4-67
2606215-0000	.BRACKET	8-25
2606216-0000	.BRACKET	8-97, 8-99
2606218-0000	.CAM	4-51, 4-53, 4-55, 4-57, 4-61, 4-63, 4-65, 4-67
2606219-0000	.STOPPER	4-51, 4-53, 4-55, 4-57, 4-61, 4-63, 4-65, 4-67
2606277-0000	.FOLDING DEVICE	5-11, 5-13
2606278-0000	.FOLDING DEVICE	5-11, 5-13
2606289-0000	.BOTTOM	5-23, 5-25
2606305-0000	.VOLUME FLAP	4-7, 4-9, 4-11
2606306-0000	.VOLUME FLAP	4-17, 4-19, 4-21
2606891-0000	.ECCENTRIC	4-175, 4-177, 4-179
2606892-0000	.ECCENTRIC	4-175, 4-177, 4-179
2607082-0100	.HEATER	1-219
2607087-0000	.BOTTOM PLATE	1-169, 1-171
2607089-0000	.PRESSURE ROLLER	1-213, 1-215, 1-217, 9-11, 9-13, 9-15, 9-17, 9-19
2607440-0000	.SLIDE PLATE	1-169, 1-171
2608103-0000	.BRACKET	2-39
2608104-0000	.BRACKET	2-39
2608106-0000	.BRACKET	8-25
2608107-0000	.BRACKET	8-25
2608173-0000	.GASKET	8-39, 8-41, 8-43
2608177-0000	.SIGN	8-25, 8-31, 8-33, 8-35, 8-37, 8-97, 8-99
2608273-0000	.HOLDER	2-201, 2-203
2608274-0000	.PIPE	2-201, 2-203
2609303-0000	.WEIGHT	7-183, 7-185
2609365-0000	.HOLDER	2-201, 2-203
2609368-0000	.TIE ROD	5-11, 5-13
2609369-0000	.FOLDING BAR	5-45, 5-47, 5-49
2609370-0000	.FOLDING BAR	5-45, 5-47, 5-49
2609371-0000	.SPACER	5-45, 5-47, 5-49
2609372-0000	.GUIDE	5-129, 5-131
2609923-0000	.WASHER	4-171, 4-173
2609925-0000	.VOLUME BULGE	4-51, 4-53, 4-55, 4-57, 4-61, 4-63, 4-65, 4-67
2610764-0000	.PLATE	5-263
2610779-0000	.BLOCK	5-5, 5-7
2610793-0000	.BLOCK	4-167, 4-169
2610954-0000	.RAIL	4-93, 4-95, 4-97
2610955-0000	.RAIL	4-139, 4-141, 4-143
2610956-0000	.INDUCTOR	4-93, 4-95, 4-97, 4-139, 4-141, 4-143, 9-11, 9-13, 9-15, 9-17, 9-19
2611000-0000	.CUTTING JAW	4-115, 4-117, 4-119, 4-121
2611001-0000	.CLAMP HOLDER	4-93, 4-95, 4-97, 4-139, 4-141, 4-143
2611009-0000	.SHAFT	1-175
2611012-0000	.ROLLER	1-59, 1-61, 1-63
2611016-0000	.ROLLER	1-59, 1-61, 1-63
2611017-0000	.ROLLER	1-59, 1-61, 1-63

Part No	Description	Page No
2611020-0000	.ROLLER	1-59, 1-61, 1-63
2611024-0000	.SPACER	1-59, 1-61, 1-63
2611025-0000	.ROLLER	1-75, 1-77, 1-79
2611026-0000	.ROLLER	1-75, 1-77, 1-79
2611027-0000	.ROLLER	1-75, 1-77, 1-79
2611028-0000	.SUPPORT ROLLER	1-75, 1-77, 1-79
2611034-0000	.BRACKET	1-273
2611038-0000	.SUPPORT RING	1-75, 1-77, 1-79
2611039-0000	.ROLLER	1-81, 1-83
2611040-0000	.ROLLER	1-81, 1-83
2611041-0000	.SUPPORT ROLLER	1-81, 1-83
2611044-0000	.PLATE	1-85, 1-87
2611045-0000	.RING	1-85, 1-87
2611046-0000	.PLATE	1-85, 1-87
2611047-0000	.RING	1-85, 1-87
2611051-0000	.PIPE	1-283
2611053-0000	.INDUCTOR	1-41, 1-43
2611054-0000	.INSULATING PLATE	1-41, 1-43
2611056-0000	.INSULATING PLATE	1-41, 1-43
2611077-0000	.PIPE	1-255
2611104-0000	.HOLDER	1-113
2611457-0000	.CABLE DUCT	7-133, 7-135, 7-137, 7-139, 7-141
2611458-0000	.CABLE DUCT	7-133, 7-135, 7-137, 7-139, 7-141
2611459-0000	.CABLE DUCT	7-133, 7-135, 7-137, 7-139, 7-141
2611460-0000	.CABLE DUCT	7-133, 7-135, 7-137, 7-139, 7-141
2611461-0000	.CABLE DUCT	7-133, 7-135, 7-137, 7-139, 7-141
2611462-0100	.TERMINAL BLOCK	7-133, 7-135, 7-137, 7-139, 7-141
2611463-0100	.TERMINAL BLOCK	7-133, 7-135, 7-137, 7-139, 7-141
2611464-0000	.RAIL	7-143, 7-145
2611465-0000	.RAIL	7-151, 7-153
2611655-0000	.CLAMP HOLDER	4-93, 4-95, 4-97, 4-139, 4-141, 4-143
2611710-0000	.CUTTING JAW	4-115, 4-117, 4-119, 4-121
2611875-0000	.SHIM	5-235, 5-237, 5-239, 5-241, 5-243, 5-245
2613033-0000	.MACHINE BODY	6-49
2613034-0100	.MACHINE BODY	6-3, 6-5
2613644-0100	.CANTILEVER	4-235
2613645-0100	.CURVE UNIT	4-165
2613646-0100	.VOLUME ADJUSTER	4-195
2613647-0100	.VOLUME CURVE PIECE	4-5
2613648-0100	.SUPPORT ROLLER	4-165
2613749-0100	.COVER	7-3, 7-5
2613763-0000	.SLEEVE	4-167, 4-169
2613764-0000	.SLEEVE	4-167, 4-169, 4-175, 4-177, 4-179
2613809-0000	.SPACER	4-167, 4-169
2614038-0000	.SPACER	4-243
2614039-0000	.CLAMP	4-237
2614371-0000	.ROLLER BRACKET	4-167, 4-169
2614372-0000	.SLEEVE	4-167, 4-169, 4-175, 4-177, 4-179
2614373-0000	.ROLLER BRACKET	4-167, 4-169
2614376-0001	.WASHER	4-167, 4-169, 4-175, 4-177, 4-179
2614376-0002	.WASHER	4-167, 4-169, 4-175, 4-177, 4-179
2615463-0100	.FLUSHING DEVICE	2-195
2616034-0000	.COVER PLATE	7-161, 7-163, 7-165
2616217-0000	.BOTTOM	5-123
2616218-0000	.BOTTOM	5-123, 9-7, 9-9
2616219-0000	.BOTTOM	5-123, 9-7, 9-9
2616221-0000	.BRACKET	4-197
2616224-0200	.PHOTOCELL UNIT	4-5
2616225-0000	.CLAMP	4-197
2616227-0000	.TIMING BELT	5-69
2616229-0000	.BLOCK	5-5, 5-7
2616231-0000	.ROLLER	1-85, 1-87
2616236-0000	.WASHER	1-113
2616237-0000	.CONNECTION	1-113
2616238-0000	.HOLDER	1-113
2616239-0000	.HOLDER	1-113
2616240-0000	.PIPE	1-113
2616298-0000	.BRACKET	1-255
2618259-0000	.SPACER	4-167, 4-169, 4-175, 4-177, 4-179
2618302-0000	.PIVOT PIN	4-167, 4-169, 4-175, 4-177, 4-179
2618329-0000	.PLATE	4-239, 4-241
2618330-0000	.HANDLE	4-239, 4-241
2618332-0000	.SHAFT	4-239, 4-241
2618333-0000	.PLATE	4-239, 4-241
2618377-0000	.ECCENTRIC	4-167, 4-169, 4-175, 4-177, 4-179
2618378-0000	.ECCENTRIC	4-167, 4-169, 4-175, 4-177, 4-179
2618424-0000	.SUPPORT	5-29, 5-31, 5-33
2618425-0000	.GUIDE	5-29, 5-31, 5-33
2618683-0000	.SPACER	5-203, 5-205, 5-207, 5-209, 5-211, 5-213
2619069-0000	.SLIDE	1-129, 1-131
2619170-0000	.PLATE	8-47
2619171-0000	.PLATE	1-129, 1-131
2619198-0000	.SHAFT	4-181, 4-183
2619199-0000	.ROLLER	4-181, 4-183

Part No	Description	Page No
2619200-0000	.PLATE	4-181, 4-183
2619210-0000	.SPACER	5-63
2619211-0000	.SPACER	5-63
2619212-0000	.SPACER	5-63
2619213-0000	.SPACER	5-63
2619319-0000	.SHAFT	4-181, 4-183
2619528-0000	.LOCKING CIRCLIP	5-17
2619529-0000	.SLEEVE	5-17
2619530-0000	.SLEEVE	5-17
2619574-0000	.SPACER	5-161, 5-163
2619584-0100	.STRUT	5-15
2619588-0000	.PIPE	5-15
2619589-0000	.HANDLE	5-15
2619596-0000	.HANDLE	5-17
2619597-0100	.FLAP GUIDE	5-15
2619598-0100	.FLAP GUIDE	5-15
2619607-0000	.COVER	1-395
2619737-0000	.KNOB	5-165, 5-167
2619759-0000	.SLIDE	1-129, 1-131
2623513-0000	.BUSHING	4-243
2623590-0000	.CABLE	8-97, 8-99
2623591-0000	.CABLE	8-97, 8-99
2623623-0000	.CYLINDER BRACKET	5-195, 5-197, 5-199
2623624-0000	.CYLINDER BRACKET	5-195, 5-197, 5-199
2623712-0000	.HANGER	6-9
2623713-0000	.HOLDER	6-9
2623714-0100	.PEROXIDE REDUCER	6-3, 6-5
2623715-0000	.HOLDER	6-7
2623717-0000	.HOLDER	6-7
2623718-0100	.PEROXIDE REDUCER	6-3, 6-5
2623719-0000	.HOLDER	6-9
2623720-0000	.HOLDER	6-9
2623721-0100	.PEROXIDE REDUCER	2-19, 2-21
2623783-0000	.PLATE	4-181, 4-183
2623869-0000	.RUBBER HOLDER	5-195, 5-197, 5-199
2623870-0000	.RUBBER DAMPER	5-195, 5-197, 5-199
2623883-0000	.BRACKET	7-31
2623884-0000	.PLATE	7-31
2624539-0000	.PIPE	2-23
2624543-0000	.SPACER	4-175, 4-177, 4-179
2624544-0000	.PIVOT PIN	4-175, 4-177, 4-179
2624549-0100	.POWER SUPPLY UNIT	8-25
2624550-0000	.RAIL	8-47
2624551-0200	.CONNECTION DEVICE	8-25
2624552-0000	.CABLE	8-105
2624554-0000	.FOLDING FLAP	4-123, 4-125, 4-159, 4-161
2624555-0000	.FOLDING FLAP	4-123, 4-125, 4-159, 4-161
2628598-0000	.SPACER	4-175, 4-177, 4-179
2628989-0000	.BRACKET	7-115
2628990-0000	.BRACKET	7-115
2629156-0000	.BODY	1-233
2629236-0000	.CAM	4-51, 4-53, 4-55, 4-57, 4-61, 4-63, 4-65, 4-67
2629237-0000	.CAM	4-51, 4-53, 4-55, 4-57, 4-61, 4-63, 4-65, 4-67
2629239-0000	.TUBE FLUSHING DEVICE	4-185
2629240-0000	.TUBE FLUSHING DEVICE	4-185
2629303-0000	.COVERING PLATE	5-129, 5-131
2629315-0100	.PAPER BRAKE	7-31
2629321-0000	.COIL	1-221
2629322-0000	.COVER	1-221
2629323-0000	.COVER	1-221
2629324-0000	.BRACKET	1-221
2629325-0000	.PIPE	1-219
2629326-0000	.PIPE	1-219
2629327-0000	.FRAME	1-219
2629336-0000	.BOTTOM	5-119, 5-121
2629338-0000	.GUIDE RAIL	7-31
2629344-0000	.SPACER	5-145, 5-147
2630482-0000	.BRACKET	10-17, 10-19
2632534-0000	.HATCH	7-211, 7-213
2632535-0000	.CONNECTION BOX	7-199, 7-215
2632536-0100	.CONTROL PANEL	7-211, 7-213
2632542-0000	.HATCH	7-195, 7-197
2632543-0100	.CONTROL PANEL	7-195, 7-197
2632578-0000	.PLATE	2-171
2632638-0000	.HOLDER	1-249
2632639-0000	.VALVE BODY	1-249
2632640-0000	.VALVE BODY	1-249
2632641-0000	.PIPE	1-249
2632642-0100	.NOZZLE UNIT	1-245, 1-247
2632817-0000	.PLATE	4-181, 4-183
2632818-0000	.SHAFT	4-181, 4-183
2633186-0200	.SOFTWARE TPOP	8-7
2633187-0200	.SOFTWARE TMCC	8-7
2633188-0200	.SOFTWARE PLC	8-7

Part No	Description	Page No
2633189-0300	.SOFTWARE PAM-SAM	8-7
2633328-0000	.PNEUMATIC DIAGRAM	7-161, 7-163, 7-165
2633438-0000	.SPACER	4-175, 4-177, 4-179
2633439-0000	.PIPE	5-271, 5-273
2633440-0000	.PIPE	5-271, 5-273
2633441-0000	.BRACKET	5-271, 5-273
2634515-0000	.CANTILEVER	4-27, 4-29, 4-39, 4-41
2634523-0000	.LOWER FILLING PIPE	1-213, 1-215, 1-217
2634524-0000	.PRESSURE FLANGE	1-213, 1-215, 1-217
2634536-0000	.SUPPORT	2-243
2634565-0007	.PAM - SAM EASY DOWNLOAD	8-15, 8-17
2634569-0008	.PAM - SAM EASY DOWNLOAD	8-15, 8-17
2634573-0008	.PAM - SAM EASY DOWNLOAD	8-15, 8-17
2634577-0008	.PAM - SAM EASY DOWNLOAD	8-15, 8-17
2634581-0007	.PAM - SAM EASY DOWNLOAD	8-15, 8-17
2634585-0008	.PAM - SAM EASY DOWNLOAD	8-15, 8-17
2634894-0000	.FLANGE	5-215
2634917-0000	.SIGN	1-343
2634926-0000	.SUPPORT ROLLER	1-75, 1-77, 1-79
2634930-0000	.SUPPORT ROLLER	1-91, 1-93
2634931-0000	.BRACKET	1-91, 1-93
2634932-0000	.BRACKET	1-97, 1-99
2634933-0000	.BRACKET	1-97, 1-99
2634934-0000	.SHAFT	1-97, 1-99
2634943-0000	.ROLLER	1-81, 1-83
2634947-0000	.ROLLER	1-59, 1-61, 1-63
2634948-0000	.ROLLER	1-59, 1-61, 1-63
2634949-0000	.ROLLER	1-59, 1-61, 1-63
2634953-0000	.ROLLER	1-59, 1-61, 1-63
2634954-0000	.ROLLER	1-59, 1-61, 1-63
2634955-0000	.ROLLER	1-59, 1-61, 1-63
2634956-0000	.ROLLER	1-59, 1-61, 1-63
2634957-0000	.ROLLER	1-59, 1-61, 1-63
2634958-0000	.ROLLER	1-59, 1-61, 1-63
2634961-0000	.SHIM	1-59, 1-61, 1-63
2634967-0000	.SUPPORT RING	1-75, 1-77, 1-79
2634968-0000	.ROLLER	1-75, 1-77, 1-79
2634969-0000	.ROLLER	1-75, 1-77, 1-79
2634970-0000	.ROLLER	1-75, 1-77, 1-79
2634971-0000	.ROLLER	1-75, 1-77, 1-79
2634972-0000	.SHAFT	1-213, 1-215, 1-217
2634983-0000	.ROLLER	1-59, 1-61, 1-63
2634984-0000	.ROLLER	1-59, 1-61, 1-63
2634985-0000	.ROLLER	1-59, 1-61, 1-63
2634987-0000	.SPACER	1-59, 1-61, 1-63
2634988-0000	.ROLLER	1-59, 1-61, 1-63
2634989-0000	.ROLLER	1-59, 1-61, 1-63
2634990-0000	.ROLLER	1-59, 1-61, 1-63
2634995-0000	.FLOAT	1-213, 1-215, 1-217
2634997-0000	.GASKET	1-15, 1-17
2635131-0100	.CABLE SET	8-3
2635167-0000	.VOLUME BULGE	5-235, 5-237, 5-239, 5-241, 5-243, 5-245
2636399-0000	.FLAP	5-119, 5-121
2636400-0000	.BOTTOM	5-119, 5-121
2636401-0000	.SLIDE	5-119, 5-121
2637599-0100	.ALIGNMENT TOOL	10-5
2637600-0000	.TOOL	10-39
2637602-0100	.DRILLING JIG	10-5
2637603-0000	.TOOL	10-41
2637604-0000	.BUSHING	10-41
2637605-0000	.BUSHING	10-41
2637665-0000	.GUIDE	5-103, 5-105, 5-107, 5-109, 5-111, 5-171, 5-173
2637666-0000	.GUIDE	5-103, 5-105, 5-107, 5-109, 5-111, 5-177, 5-179
2638077-0000	.SHAFT	1-213, 1-215, 1-217
2638180-0000	.INSERT	5-113, 5-115
2639127-0000	.FOLDING BAR	5-45, 5-47, 5-49
2639128-0000	.FOLDING BAR	5-45, 5-47, 5-49
2639393-0000	.SPACER	5-45, 5-47, 5-49
2639498-0200	.SOFTWARE RECORDER	8-7
2639832-0000	.RAIL	5-83, 5-85, 5-87, 5-89, 5-91
2639866-0000	.VOLUME FLAP	4-51, 4-53, 4-55, 4-57
2639867-0000	.VOLUME FLAP	4-61, 4-63, 4-65, 4-67
2640075-0000	.VOLUME BULGE	5-235, 5-237, 5-239, 5-241, 5-243, 5-245
2640076-0000	.RAIL	5-83, 5-85, 5-87, 5-89, 5-91
2640116-0000	.TOOL	10-27, 10-29
2640138-0000	.VOLUME BULGE	4-51, 4-53, 4-55, 4-57, 4-61, 4-63, 4-65, 4-67
2640139-0000	.VOLUME SHIM	4-51, 4-53, 4-55, 4-57, 4-61, 4-63, 4-65, 4-67, 9-11, 9-13, 9-15, 9-17, 9-19
2640186-0000	.TOOL	10-27, 10-29
2640292-0000	.TOOL	10-31
2640353-0000	.BRACKET	1-81, 1-83
2640354-0000	.ROLLER	1-81, 1-83
2640814-0000	.RULER	10-31
2640819-0000	.SCREW	3-17
2640822-0000	.SIGN	1-335

Part No	Description	Page No
2640826-0000	.NUT	3-23
2640831-0000	.GUIDE	4-197
2640991-0000	.SLIDE	1-41, 1-43
2640992-0000	.SLIDE	1-41, 1-43
2640993-0000	.PLATE	1-41, 1-43
2641000-0000	.SHAFT	1-41, 1-43
2641203-0000	.TEMPLATE	10-5
2641204-0000	.TEMPLATE	10-5
2641225-0000	.INSERT	4-81, 4-83, 4-85, 4-105, 4-107, 4-109, 4-111, 4-129, 4-131, 4-133, 4-149, 4-151, 4-153, 4-155
2641261-0000	.SPRING	1-213, 1-215, 1-217
2641282-0000	.COUNTER ROLLER	1-53, 1-55
2641285-0000	.ROLLER	1-59, 1-61, 1-63
2641286-0000	.ROLLER	1-59, 1-61, 1-63
2641287-0000	.ROLLER	1-59, 1-61, 1-63
2641288-0000	.ROLLER	1-59, 1-61, 1-63
2641289-0000	.ROLLER	1-59, 1-61, 1-63
2641290-0000	.ROLLER	1-59, 1-61, 1-63
2641294-0000	.STOP PIN	1-213, 1-215, 1-217
2641296-0000	.PIPE	1-193
2641297-0000	.PRESSURE FLANGE	1-213, 1-215, 1-217
2641298-0000	.PIPE	1-187
2641299-0000	.PIPE	1-193
2641317-0000	.PIPE	1-189, 1-191
2641318-0000	.NOZZLE	1-189, 1-191
2641319-0000	.BRACKET	1-189, 1-191
2641322-0000	.PIPE	1-187
2642097-0000	.PLATE	4-181, 4-183
2642146-0000	.TEMPLATE	10-5
2642177-0000	.GUIDE UPPER	5-137, 5-139
2642178-0000	.GUIDE UPPER	5-137, 5-139
2644177-0000	.CLAMP HUB	5-69
2644178-0000	.BLOCK	5-69
2644202-0100	.SETTING TOOL	10-45
2644203-0000	.PLATE	10-49
2644204-0000	.SPINDLE	10-49
2644205-0000	.SPINDLE	10-49
2644317-0100	.TEMPLATE	10-25
2644318-0100	.TEMPLATE	10-25
2644368-0000	.BRACKET	5-145, 5-147
2644397-0000	.HOLDER	4-93, 4-95, 4-97, 4-139, 4-141, 4-143
2645568-0000	.CUTTING JAW	4-115, 4-117, 4-119, 4-121
2646344-0000	.PLATE	4-181, 4-183
2646345-0000	.SHAFT	4-181, 4-183
2646428-0100	.LIFTING UNIT	10-5
2646470-0000	.RUBBER DAMPER	5-195, 5-197, 5-199
2647082-0000	.GUIDE	5-177, 5-179
2647083-0000	.GUIDE	5-171, 5-173
2647084-0000	.BAR	5-171, 5-173
2647085-0000	.BAR	5-177, 5-179
2647086-0000	.GUIDE	5-177, 5-179
2647087-0000	.GUIDE	5-171, 5-173
2647088-0000	.BAR	5-171, 5-173
2647089-0000	.BAR	5-177, 5-179
2647090-0000	.SLIDE	5-171, 5-173
2647091-0000	.SLIDE	5-177, 5-179
2647092-0000	.ANGLE BLOCK	5-171, 5-173, 5-177, 5-179
2647093-0000	.PUSHER	5-247, 5-249
2647094-0000	.PUSHER	5-247, 5-249
2647095-0000	.PUSHER	5-247, 5-249
2647096-0000	.PUSHER	5-247, 5-249
2647097-0000	.NAIL	5-247, 5-249
2647098-0000	.BLOCK	5-247, 5-249
2647099-0000	.GUIDE	5-235, 5-237, 5-239, 5-241, 5-243, 5-245
2647100-0000	.VOLUME BULGE	5-247, 5-249
2647101-0000	.SUPPORT	5-235, 5-237, 5-239, 5-241, 5-243, 5-245
2647102-0000	.PIPE	5-15
2647103-0000	.SHAFT	5-15
2647104-0000	.LEVER	5-19, 5-21
2647105-0000	.AXLE PIN	5-19, 5-21
2647106-0000	.SLIDER	5-21
2647107-0000	.SLIDER	5-19
2647108-0000	.STRUT	5-17
2647109-0000	.SHAFT	5-17
2647110-0000	.BLOCK	5-5, 5-7
2647111-0000	.SUPPORT	5-129, 5-131
2647112-0000	.GUIDE	5-129, 5-131
2647113-0000	.BUSHING	5-247, 5-249
2647114-0000	.INSERT	4-81, 4-83, 4-85, 4-105, 4-107, 4-109, 4-111, 4-129, 4-131, 4-133, 4-149, 4-151, 4-153, 4-155
2647115-0000	.CARRIER	4-81, 4-83, 4-85
2647116-0000	.CARRIER	4-105, 4-107, 4-109, 4-111
2647117-0000	.CARRIER	4-129, 4-131, 4-133
2647118-0000	.CARRIER	4-149, 4-151, 4-153, 4-155
2647119-0000	.GUIDE	5-137, 5-139
2647120-0000	.GUIDE	5-137, 5-139

Part No	Description	Page No
2647121-0000	.FOLDING PART	5-145, 5-147
2647122-0000	.FOLDING PART	5-145, 5-147
2647126-0000	.BRACKET	5-145, 5-147
2647127-0000	.FOLDING PART	5-145, 5-147
2647128-0000	.FOLDING PART	5-145, 5-147
2647129-0000	.FOLDING PART	5-145, 5-147
2647130-0000	.FOLDING PART	5-145, 5-147
2647131-0000	.GUIDE	5-157, 5-159
2648780-0000	.LEVER	1-175
2648846-0000	.SHAFT	4-181, 4-183
2648847-0000	.PLATE	4-181, 4-183
2649130-0000	.GUIDE RAIL	5-145, 5-147
2649131-0000	.GUIDE RAIL	5-145, 5-147
2649132-0000	.GUIDE RAIL	5-145, 5-147
2649133-0000	.GUIDE RAIL	5-145, 5-147
2649134-0000	.BRACKET	5-145, 5-147
2649139-0000	.SPACER	5-145, 5-147
2649165-0100	.CABLE DUCT	1-383, 1-385, 1-387
2649167-0000	.INSERT	1-227, 1-389
2649169-0000	.FUNCTION DIAGRAM	1-219
2649440-0000	.TEMPLATE	10-25
2649441-0000	.SHAFT	4-181, 4-183
2649442-0000	.PLATE	4-181, 4-183
2649443-0000	.CAM	4-51, 4-53, 4-55, 4-57, 4-61, 4-63, 4-65, 4-67
2650709-0100	.DESIGN CORRECTION	4-195
2650710-0100	.DRIVE UNIT	4-223
2650711-0100	.DRIVE UNIT	4-223
2650713-0000	.PLATE	4-225, 4-227
2650717-0000	.SCREW	4-225, 4-227
2650807-0000	.SIDE PLATE	5-251, 5-253
2650808-0000	.SIDE PLATE	5-251, 5-253
2650812-0000	.SHAFT	4-181, 4-183
2650817-0000	.SPRING	5-123, 9-11, 9-13, 9-15, 9-17, 9-19
2651145-0000	.BLOCK	5-235, 5-237, 5-239, 5-241, 5-243, 5-245
2651146-0000	.FLAP	5-113, 5-115
2651326-0000	.TOUCH GUARD	1-245, 1-247
2651329-0000	.PIPE	1-221
2651695-0000	.COVER PLATE	1-97, 1-99
2651789-0000	.ROLLER	1-91, 1-93
2651790-0000	.ROLLER	1-91, 1-93
2651925-0000	.PLATE	7-177
2652191-0000	.KNOB	5-161, 5-163, 5-165, 5-167
2652199-0007	.PAM - SAM EASY DOWNLOAD	8-15, 8-17
2652206-0000	.GUIDE	5-83, 5-85, 5-87, 5-89, 5-91
2652311-0000	.PLATE	5-63
2652888-0000	.SHAFT	5-123
2652889-0000	.SCREW	5-123
2652890-0000	.TOOTHED PULLEY	4-225, 4-227
2652891-0000	.TOOTHED PULLEY	4-225, 4-227
2652892-0000	.PLATE	4-181, 4-183
2652893-0000	.RAIL	5-83, 5-85, 5-87, 5-89, 5-91
2652896-0000	.SHAFT	4-27, 4-29, 4-39, 4-41, 4-51, 4-53, 4-55, 4-57, 4-61, 4-63, 4-65, 4-67
2653607-0000	.SCREW	1-175
2654290-0000	.VOLUME SHIM	4-51, 4-53, 4-55, 4-57, 4-61, 4-63, 4-65, 4-67, 9-11, 9-13, 9-15, 9-17, 9-19
2655095-0000	.BRACKET	4-187, 4-189
2655096-0000	.SLIDE	4-187, 4-189
2655097-0000	.KNOB	4-187, 4-189
2655098-0000	.SHAFT	4-187, 4-189
2655500-0000	.WASHER	5-83, 5-85, 5-87, 5-89, 5-91
2656299-0000	.SHAFT	7-69
2656672-0000	.SPROCKET	5-63
2656899-0000	.BRACKET	2-103, 2-105
2656905-0100	.OPTIONAL PARTS	1-367, 1-369
2656910-0100	.HEAD SPACE BY INJECTION	1-209, 1-211
2656985-0000	.SPACER	5-195, 5-197, 5-199
2657860-0000	.BRACKET	1-81, 1-83
2657863-0000	.PIPE CONNECTION	1-223
2657864-0000	.PIPE CONNECTION	1-223
2657865-0000	.PIPE CONNECTION	1-223
2657873-0100	.LONGITUDINAL SEALING	1-21, 1-23, 1-25, 1-27
2657886-0000	.COUNTER PLATE	1-169, 1-171
2657887-0000	.HORN	1-193
2657888-0000	.HORN	1-193
2657902-0000	.PRESSURE FLANGE	1-213, 1-215, 1-217
2657903-0000	.FILLING PIPE	1-213, 1-215, 1-217
2657922-0000	.SHUTTER	1-251
2657923-0000	.COUNTER ROLLER	1-53, 1-55
2657925-0000	.ROLLER	1-95
2657932-0000	.BAR	5-171, 5-173
2657933-0000	.BAR	5-177, 5-179
2657934-0000	.SLIDE	5-177, 5-179
2657935-0000	.SLIDE	5-171, 5-173
2657936-0000	.GUIDE	5-177, 5-179
2657937-0000	.GUIDE	5-171, 5-173

Part No	Description	Page No
2658058-0000	.RAIL	7-105
2658077-0000	.SHAFT	1-175
2658237-0100	.FLAP	5-113, 5-115
2658238-0000	.FLAP	5-125
2658239-0000	.BOTTOM	5-125, 9-7, 9-9
2658240-0000	.BOTTOM	5-119, 5-121, 5-125, 9-7, 9-9
2658241-0000	.SLIDE	5-119, 5-121, 5-125
2658242-0000	.FLAP	5-119, 5-121
2658247-0000	.WASHER	5-247, 5-249
2658249-0000	.SHIM	5-235, 5-237, 5-239, 5-241, 5-243, 5-245
2658251-0000	.SPACER	4-175, 4-177, 4-179
2658252-0000	.RAIL BRACKET	4-175, 4-177, 4-179
2658253-0000	.CURVE	4-175, 4-177, 4-179
2658255-0000	.RUBBER DAMPER	5-195, 5-197, 5-199
2658256-0000	.FLAP HOLDER	4-61, 4-63, 4-65, 4-67
2658257-0000	.FLAP HOLDER	4-51, 4-53, 4-55, 4-57
2658258-0000	.SHAFT	4-51, 4-53, 4-55, 4-57, 4-61, 4-63, 4-65, 4-67
2658263-0000	.VOLUME BULGE	5-247, 5-249
2658264-0000	.VOLUME BULGE	5-247, 5-249
2658265-0000	.CUTTING JAW	4-115, 4-117, 4-119, 4-121
2658298-0000	.TUBE FLUSHING DEVICE	4-185
2658299-0000	.TUBE FLUSHING DEVICE	4-185
2658390-0100	.BOTTOM	5-113, 5-115
2658743-0100	.ELECTRICAL CONNECTION	8-97, 8-99
2660222-0000	.CAM	4-167, 4-169
2660379-0000	.VOLUME FLAP	4-51, 4-53, 4-55, 4-57
2660380-0000	.VOLUME FLAP	4-61, 4-63, 4-65, 4-67
2660381-0000	.VOLUME FLAP	4-69
2660382-0000	.VOLUME FLAP	4-69
2660383-0000	.VOLUME FLAP	4-59
2660384-0000	.VOLUME FLAP	4-59
2660390-0000	.VOLUME SHIM	4-59, 4-69, 9-11, 9-13, 9-15, 9-17, 9-19
2660391-0000	.SCREW	4-51, 4-53, 4-55, 4-57, 4-61, 4-63, 4-65, 4-67
2660392-0000	.VOLUME BULGE	4-51, 4-53, 4-55, 4-57, 4-61, 4-63, 4-65, 4-67
2660393-0000	.VOLUME SHIM	4-51, 4-53, 4-55, 4-57, 4-61, 4-63, 4-65, 4-67, 9-11, 9-13, 9-15, 9-17, 9-19
2660395-0000	.VOLUME BULGE	4-59, 4-69
2660397-0000	.WEDGE	4-51, 4-53, 4-55, 4-57, 4-61, 4-63, 4-65, 4-67
2660398-0000	.WEDGE	4-59, 4-69
2660399-0000	.ROLLER	4-59, 4-69
2660400-0000	.STOP	4-51, 4-53, 4-55, 4-57, 4-61, 4-63, 4-65, 4-67, 4-73, 4-79
2660401-0000	.CATCH	4-51, 4-53, 4-55, 4-57, 4-61, 4-63, 4-65, 4-67, 4-73, 4-79
2660404-0000	.HOLDER	4-93, 4-95, 4-97, 4-139, 4-141, 4-143
2660776-0000	.BEARING BLOCK	7-31
2660841-0000	.PUSHER	5-235, 5-237, 5-239, 5-241, 5-243, 5-245
2660843-0000	.TEMPLATE	9-31
2661082-0000	.PLATE	2-119
2661094-0000	.SCREW	10-17, 10-19
2661153-0000	.SPACER	5-161, 5-163
2661429-0000	.PUSHER	5-235, 5-237, 5-239, 5-241, 5-243, 5-245
2661450-0000	.VOLUME FLAP	4-61, 4-63, 4-65, 4-67
2661451-0000	.VOLUME FLAP	4-51, 4-53, 4-55, 4-57
2662012-0000	.NIPPLE	2-89
2662142-0000	.SPRING	5-235, 5-237, 5-239, 5-241, 5-243, 5-245, 9-11, 9-13, 9-15, 9-17, 9-19
2662165-0000	.SPRING	4-27, 4-29, 4-39, 4-41, 9-11, 9-13, 9-15, 9-17, 9-19
2662166-0000	.SPRING	4-27, 4-29, 4-39, 4-41, 9-11, 9-13, 9-15, 9-17, 9-19
2662167-0000	.BUSHING	4-27, 4-29, 4-39, 4-41, 4-51, 4-53, 4-55, 4-57, 4-61, 4-63, 4-65, 4-67
2662168-0000	.VOLUME BULGE	4-51, 4-53, 4-55, 4-57, 4-61, 4-63, 4-65, 4-67
2662169-0000	.VOLUME SHIM	4-51, 4-53, 4-55, 4-57, 4-61, 4-63, 4-65, 4-67, 9-11, 9-13, 9-15, 9-17, 9-19
2662211-0000	.CHAIN	10-17, 10-19
2662431-0000	.CAM	4-51, 4-53, 4-55, 4-57, 4-61, 4-63, 4-65, 4-67
2662432-0000	.COUPLING	1-273
2662433-0000	.BRACKET	1-273
2662434-0000	.BRACKET	1-273
2662639-0000	.ROLLER	1-307, 1-309
2662640-0000	.VOLUME CAM	4-175, 4-177, 4-179
2662641-0000	.VOLUME CAM	4-175, 4-177, 4-179
2663360-0000	.SPRING	4-51, 4-53, 4-55, 4-57, 4-61, 4-63, 4-65, 4-67
2663361-0000	.SPRING	4-51, 4-53, 4-55, 4-57, 4-61, 4-63, 4-65, 4-67
2663367-0000	.NUT	5-15
2663369-0000	.BLOCK	5-15
2663370-0000	.SUPPORT	5-15
2663371-0000	.SCREW	5-15
2663372-0000	.SCREW	4-51, 4-53, 4-55, 4-57, 4-61, 4-63, 4-65, 4-67
2663373-0000	.BOTTOM	5-119, 5-121, 9-7, 9-9
2663375-0000	.WASHER	4-27, 4-29, 4-39, 4-41, 4-51, 4-53, 4-55, 4-57, 4-61, 4-63, 4-65, 4-67
2663376-0000	.WASHER	4-27, 4-29, 4-39, 4-41, 4-51, 4-53, 4-55, 4-57, 4-61, 4-63, 4-65, 4-67
2663377-0000	.INDUCTOR	4-139, 4-141, 4-143, 9-11, 9-13, 9-15, 9-17, 9-19
2663378-0000	.INDUCTOR	4-93, 4-95, 4-97, 9-11, 9-13, 9-15, 9-17, 9-19
2664035-0000	.SPACER SCREW	5-145, 5-147
2664098-0000	.FILLING PIPE	1-213, 1-215, 1-217
2664200-0000	.GUIDE	5-171, 5-173
2664201-0000	.GUIDE	5-177, 5-179
2664280-0000	.HOLDER	4-93, 4-95, 4-97, 4-139, 4-141, 4-143
2664596-0000	.CARRIER	5-75, 5-77, 5-79, 9-11, 9-13, 9-15, 9-17, 9-19

Part No	Description	Page No
2664603-0000	.CAM	4-167, 4-169
2664761-0000	.KNIFE	4-163, 9-11, 9-13, 9-15, 9-17, 9-19
2664762-0000	.CUTTING JAW	4-115, 4-117, 4-119, 4-121
2664779-0000	.PLATE	4-181, 4-183
2664780-0000	.PLATE	4-181, 4-183
2665129-0000	.GABLE PLATE	6-55
2665131-0000	.LOCKING ARM	6-57
2665132-0000	.LOCKING ARM	6-57
2665188-0000	.CUTTING JAW	4-115, 4-117, 4-119, 4-121
2665197-0000	.BRACKET	5-263
2665198-0000	.PROTECTION	5-265
2665199-0000	.SLIDE	5-263
2665200-0000	.GUIDE	5-165, 5-167
2665201-0000	.GUIDE	5-165, 5-167
2665202-0000	.GUIDE	5-171, 5-173
2665203-0000	.GUIDE	5-177, 5-179
2665204-0000	.CRADLE	5-251, 5-253
2665205-0000	.PLATE	5-251, 5-253
2665206-0000	.PLATE	5-251, 5-253
2665624-0000	.BENDING ROLLER	7-97
2665720-0000	.SUPPORT	4-239, 4-241
2665721-0000	.SHAFT	4-239, 4-241
2665722-0000	.SUPPORT	4-239, 4-241
2668220-0000	.BOTTOM	5-119, 5-121
2668221-0000	.FLAP	5-119, 5-121
2668222-0000	.SLIDE	5-119, 5-121
2668223-0000	.FLAP	5-113, 5-115
2668224-0000	.GUIDE	5-171, 5-173
2668225-0000	.GUIDE	5-171, 5-173
2668226-0000	.BAR	5-171, 5-173
2668227-0000	.SLIDE	5-171, 5-173
2668228-0000	.GUIDE	5-177, 5-179
2668229-0000	.GUIDE	5-177, 5-179
2668230-0000	.BAR	5-177, 5-179
2668231-0000	.SLIDE	5-177, 5-179
2668232-0000	.BAR	5-171, 5-173
2668233-0000	.SLIDE	5-171, 5-173
2668234-0000	.BAR	5-177, 5-179
2668235-0000	.SLIDE	5-177, 5-179
2668236-0000	.LEVER	5-17
2668237-0000	.SHAFT	5-17
2668238-0000	.PIPE	5-15
2668239-0000	.BLOCK	5-5, 5-7
2668240-0000	.BLOCK	5-235, 5-237, 5-239, 5-241, 5-243, 5-245
2668242-0000	.BLOCK	5-129, 5-131
2668243-0000	.GUIDE	5-129, 5-131
2668244-0000	.HOLDER	5-165, 5-167
2668245-0000	.SLIDER	5-19
2668246-0000	.SLIDER	5-21
2668247-0000	.GUIDE	5-157, 5-159
2668248-0000	.FOLDING PART	5-145, 5-147
2668249-0000	.GUIDE RAIL	5-145, 5-147
2668250-0000	.GUIDE RAIL	5-145, 5-147
2668251-0000	.FOLDING PART	5-145, 5-147
2668252-0000	.GUIDE RAIL	5-145, 5-147
2668253-0000	.GUIDE RAIL	5-145, 5-147
2668254-0000	.BRACKET	5-145, 5-147
2668312-0000	.FLAP HOLDER	4-51, 4-53, 4-55, 4-57, 4-61, 4-63, 4-65, 4-67
2668313-0000	.FOLDING FLAP	4-123, 4-125, 4-159, 4-161
2668314-0000	.FOLDING FLAP	4-123, 4-125, 4-159, 4-161
2668315-0000	.SHAFT	4-51, 4-53, 4-55, 4-57, 4-61, 4-63, 4-65, 4-67
2668318-0000	.HOLDER	4-93, 4-95, 4-97, 4-139, 4-141, 4-143
2668319-0000	.CUTTING JAW	4-115, 4-117, 4-119, 4-121
2668565-0000	.NOZZLE	1-189, 1-191
2668569-0000	.PLUG	1-189, 1-191
2671730-0100	.AIR NOZZLE	1-187
2672745-0000	.VOLUME SHIM	4-75, 9-11, 9-13, 9-15, 9-17, 9-19
2672746-0000	.VOLUME BULGE	4-75
2672847-0000	.ARM	1-269
2672936-0000	.SHUTTER	1-251
2672937-0000	.SHUTTER	1-251
2672938-0000	.SHUTTER	1-251
2672942-0000	.SYMBOLSIGN	1-343
2672949-0000	.FILLING PIPE	1-213, 1-215, 1-217
2672950-0000	.ROLLER	1-59, 1-61, 1-63
2672951-0000	.ROLLER	1-59, 1-61, 1-63
2672952-0000	.ROLLER	1-59, 1-61, 1-63
2672953-0000	.ROLLER	1-59, 1-61, 1-63
2672954-0000	.ROLLER	1-59, 1-61, 1-63
2672955-0000	.ROLLER	1-59, 1-61, 1-63
2672962-0000	.CONNECTING PIPE	1-245, 1-247
2672963-0000	.CONNECTING PIPE	1-245, 1-247
2672968-0000	.INSULATING PLATE	1-41, 1-43
2672970-0000	.ROLLER	1-75, 1-77, 1-79

Part No	Description	Page No
2672972-0000	.ELECTRODE	1-223
2672973-0000	.ELECTRODE	1-223
2672974-0000	.BUSHING	1-223
2672975-0000	.SPACER	1-221
2672978-0000	.ROLLER	1-59, 1-61, 1-63
2672979-0000	.ROLLER	1-59, 1-61, 1-63
2672980-0000	.ROLLER	1-59, 1-61, 1-63
2672981-0000	.ROLLER	1-59, 1-61, 1-63
2672984-0000	.INDUCTOR	1-41, 1-43
2672985-0000	.ROLLER	1-75, 1-77, 1-79
2672986-0000	.ROLLER	1-75, 1-77, 1-79
2672994-0000	.HOOD	1-213, 1-215, 1-217
2673005-0000	.FILLING PIPE	1-213, 1-215, 1-217
2673015-0000	.FORK	1-213, 1-215, 1-217
2673016-0000	.FORK	1-213, 1-215, 1-217
2673021-0000	.SHAFT	1-213, 1-215, 1-217
2673022-0000	.SHAFT	1-213, 1-215, 1-217
2673023-0000	.LOWER FORMING RING	1-53, 1-55
2674188-0100	.EDGE ROLLER	1-21, 1-23, 1-25, 1-27
2674237-0000	.FLAP	5-125
2674238-0000	.BOTTOM	5-125
2674239-0000	.SLIDE	5-119, 5-121, 5-125
2674240-0000	.FLAP	5-119, 5-121
2674241-0000	.BOTTOM	5-119, 5-121
2674242-0000	.SPACER	5-203, 5-205, 5-207, 5-209, 5-211, 5-213
2674243-0000	.STOP	5-195, 5-197, 5-199
2674244-0000	.GUIDE	5-177, 5-179
2674245-0000	.GUIDE	5-177, 5-179
2674246-0000	.BAR	5-177, 5-179
2674247-0000	.SLIDE	5-177, 5-179
2674248-0000	.PLATE	5-171, 5-173, 5-177, 5-179
2674249-0000	.GUIDE	5-171, 5-173
2674250-0000	.GUIDE	5-171, 5-173
2674251-0000	.BAR	5-171, 5-173
2674252-0000	.SLIDE	5-171, 5-173
2674253-0000	.BLOCK	5-5, 5-7
2674254-0000	.SLIDER	5-21
2674255-0000	.STRUT	5-17
2674256-0000	.SHAFT	5-17
2674257-0000	.PIPE	5-15
2674258-0000	.SLIDER	5-19
2674259-0000	.GUIDE	5-157, 5-159
2674260-0000	.FOLDING PART	5-145, 5-147
2674261-0000	.FOLDING PART	5-145, 5-147
2674262-0000	.FOLDING PART	5-145, 5-147
2674263-0000	.FOLDING PART	5-145, 5-147
2674264-0000	.FOLDING PART	5-145, 5-147
2674265-0000	.FOLDING PART	5-145, 5-147
2674266-0000	.SPACER	5-145, 5-147
2674267-0000	.SPACER	5-145, 5-147
2674268-0000	.SPACER	5-145, 5-147
2674269-0000	.NAIL	5-247, 5-249
2674270-0000	.PUSHER	5-247, 5-249
2674271-0000	.PUSHER	5-247, 5-249
2674272-0000	.PUSHER	5-247, 5-249
2674273-0000	.PUSHER	5-247, 5-249
2674322-0000	.STOPPER	4-51, 4-53, 4-55, 4-57, 4-61, 4-63, 4-65, 4-67
2674323-0000	.PLATE	4-181, 4-183
2674324-0000	.CAM	4-167, 4-169
2674325-0000	.CAM	4-51, 4-53, 4-55, 4-57, 4-61, 4-63, 4-65, 4-67
2674326-0000	.CAM	4-51, 4-53, 4-55, 4-57, 4-61, 4-63, 4-65, 4-67
2674327-0000	.SHAFT	4-51, 4-53, 4-55, 4-57, 4-61, 4-63, 4-65, 4-67
2674328-0000	.VOLUME SHIM	4-51, 4-53, 4-55, 4-57, 4-61, 4-63, 4-65, 4-67, 9-11, 9-13, 9-15, 9-17, 9-19
2674329-0000	.VOLUME BULGE	4-51, 4-53, 4-55, 4-57, 4-61, 4-63, 4-65, 4-67
2674330-0000	.FLAP HOLDER	4-51, 4-53, 4-55, 4-57, 4-61, 4-63, 4-65, 4-67
2674331-0000	.VOLUME FLAP	4-61, 4-63, 4-65, 4-67
2674332-0000	.VOLUME FLAP	4-51, 4-53, 4-55, 4-57
2674333-0000	.VOLUME FLAP	4-61, 4-63, 4-65, 4-67
2674334-0000	.VOLUME FLAP	4-51, 4-53, 4-55, 4-57
2674335-0000	.HOLDER	4-93, 4-95, 4-97, 4-139, 4-141, 4-143
2674336-0000	.CUTTING JAW	4-115, 4-117, 4-119, 4-121
2674566-0008	.PAM - SAM EASY DOWNLOAD	8-15, 8-17
2675238-0000	.ROLL	7-75
2675322-0000	.SLIDE	5-177, 5-179
2675323-0000	.SLIDE	5-171, 5-173
2675434-0000	.SUPPORT	10-17, 10-19
2675516-0000	.BRACKET	8-25
2675518-0100	.PLC	8-51, 8-53, 8-55
2675519-0000	.CABLE DUCT	8-51, 8-53, 8-55
2675520-0000	.RAIL	8-51, 8-53, 8-55
2675521-0000	.RAIL	8-97, 8-99
2675522-0000	.DIVIDER	8-67, 8-69
2676615-0000	.NOZZLE	5-203, 5-205, 5-207, 5-209, 5-211, 5-213
2676616-0000	.NOZZLE	5-203, 5-205, 5-207, 5-209, 5-211, 5-213

Part No	Description	Page No
2676617-0000	.NOZZLE	5-203, 5-205, 5-207, 5-209, 5-211, 5-213
2676619-0000	.STOP	5-195, 5-197, 5-199
2676815-0000	.FOLDING BAR	5-137, 5-139
2676816-0000	.FOLDING BAR	5-137, 5-139
2676933-0000	.BUSHING	4-51, 4-53, 4-55, 4-57, 4-61, 4-63, 4-65, 4-67
2676934-0000	.STOP	4-51, 4-53, 4-55, 4-57, 4-61, 4-63, 4-65, 4-67
2677899-0000	.WASHER	4-187, 4-189
2678414-0000	.RAIL	5-83, 5-85, 5-87, 5-89, 5-91
2678417-0000	.WHEEL	5-59, 5-61
2678621-0000	.GUIDE	5-177, 5-179
2678622-0000	.GUIDE	5-171, 5-173
2678708-0000	.SUPPORT	5-263
2678709-0100	.PROTECTIVE COVER	5-263
2678710-0100	.INFEED CONVEYOR SHORT	5-255
2678713-0000	.CAM	4-51, 4-53, 4-55, 4-57, 4-61, 4-63, 4-65, 4-67
2678714-0000	.CAM	4-51, 4-53, 4-55, 4-57, 4-61, 4-63, 4-65, 4-67
2678717-0000	.VOLUME SHIM	4-51, 4-53, 4-55, 4-57, 4-61, 4-63, 4-65, 4-67, 9-11, 9-13, 9-15, 9-17, 9-19
2678753-0000	.PLATE	5-263
2678838-0000	.VOLUME BULGE	4-51, 4-53, 4-55, 4-57, 4-61, 4-63, 4-65, 4-67
2678839-0000	.VOLUME SHIM	4-51, 4-53, 4-55, 4-57, 4-61, 4-63, 4-65, 4-67, 9-11, 9-13, 9-15, 9-17, 9-19
2678840-0000	.VOLUME BULGE	4-51, 4-53, 4-55, 4-57, 4-61, 4-63, 4-65, 4-67
2679598-0000	.SPLASH PLATE	2-273, 2-275
2679599-0000	.CHUTE	2-273, 2-275
2679735-0000	.SPRING	4-27, 4-29, 4-39, 4-41
2679736-0000	.SPRING	4-27, 4-29, 4-39, 4-41
2679884-0000	.BRACKET	4-187, 4-189
2679885-0000	.SLIDE	4-187, 4-189
2679886-0000	.KNOB	4-187, 4-189
2679889-0000	.SPRING	1-213, 1-215, 1-217
2679952-0000	.VOLUME BULGE	4-115, 4-117, 4-119, 4-121
2679953-0000	.VOLUME BULGE	4-93, 4-95, 4-97, 4-139, 4-141, 4-143
2680193-0000	.ROLLER	1-75, 1-77, 1-79
2680195-0000	.ROLLER	1-59, 1-61, 1-63
2680196-0000	.ROLLER	1-59, 1-61, 1-63
2680197-0000	.ROLLER	1-59, 1-61, 1-63
2680198-0000	.ROLLER	1-59, 1-61, 1-63
2680201-0000	.ROLLER	1-59, 1-61, 1-63
2680390-0000	.INDEXING DEVICE	5-215
2680391-0000	.HEAD	5-217, 5-219, 5-221, 5-223, 5-225, 5-227
2680392-0000	.FILTER	5-229, 5-231, 5-233
2680393-0000	.LEVER	5-229, 5-231, 5-233
2680394-0000	.GASKET	5-229, 5-231, 5-233
2680401-0000	.SPRING	5-217, 5-219, 5-221, 5-223, 5-225, 5-227
2681244-0000	.PLATE	4-181, 4-183
2681259-0000	.RAIL	7-109, 7-111
2681260-0000	.RAIL	7-109, 7-111
2681261-0000	.SHAFT	7-101, 7-103
2681262-0000	.BRACKET	7-101, 7-103
2681263-0000	.BUSHING	7-101, 7-103
2681266-0000	.WASHER	7-101, 7-103
2681267-0000	.PLATE	7-109, 7-111
2681535-0000	.SHAFT	7-109, 7-111
2681617-0000	.GEAR WHEEL	4-239, 4-241, 4-243
2681618-0000	.WORM WHEEL	4-239, 4-241
2681619-0000	.WORM GEAR	4-239, 4-241
2682167-0000	.ROLLER	1-75, 1-77, 1-79
2682168-0000	.ROLLER	1-75, 1-77, 1-79
2682169-0000	.ROLLER	1-75, 1-77, 1-79
2682170-0000	.ROLLER	1-75, 1-77, 1-79
2682198-0000	.ARM	4-215, 4-217
2682199-0000	.ARM	4-205, 4-207
2682222-0000	.CARRIER	5-75, 5-77, 5-79
2683974-0000	.HOLDER	2-9
2683975-0000	.HOLDER	2-9
2683976-0000	.SUPPORT	4-225, 4-227
2685238-0000	.PIPE	1-183, 1-185
2685246-0000	.PIPE	1-197
2685247-0000	.UPPER SECTION	1-197
2685271-0000	.PIPE	1-207
2685277-0000	.FILLING PIPE	1-213, 1-215, 1-217
2685285-0000	.BRACKET	1-213, 1-215, 1-217
2685306-0000	.PRESSURE FLANGE	1-213, 1-215, 1-217
2685310-0000	.BRACKET	10-5
2685311-0000	.CONNECTING PIPE	1-245, 1-247
2685339-0000	.GASKET	1-221
2685342-0000	.HEATING ELEMENT	1-221
2685375-0000	.RETAINING RING	1-197
2685380-0000	.SPACER	1-287, 1-289
2685631-0000	.ROLLER	1-75, 1-77, 1-79
2685632-0000	.ROLLER	1-75, 1-77, 1-79
2685633-0000	.ROLLER	1-75, 1-77, 1-79
2686144-0000	.SHAFT	4-93, 4-95, 4-97, 4-115, 4-117, 4-119, 4-121, 4-139, 4-141, 4-143
2686316-0000	.FLANGE	3-9
2686317-0000	.SUPPORT	2-73

Part No	Description	Page No
2686318-0000	.HOLDER	2-73
2686319-0000	.BRACKET	2-73
2686861-0000	.ROLLER	1-53, 1-55
2686876-0000	.PUSHER	5-235, 5-237, 5-239, 5-241, 5-243, 5-245
2687100-0007	.PAM - SAM EASY DOWNLOAD	8-15, 8-17
2687106-0007	.PAM - SAM EASY DOWNLOAD	8-15, 8-17
2687109-0000	.COUPLING	5-229, 5-231, 5-233
2687110-0000	.LOCK WASHER	5-217, 5-219, 5-221, 5-223, 5-225, 5-227
2687111-0000	.LOCK WASHER	5-217, 5-219, 5-221, 5-223, 5-225, 5-227
2687787-0000	.RAIL	5-83, 5-85, 5-87, 5-89, 5-91
2687960-0000	.FRAME	7-95
2688063-0100	.MOTOR UNIT	3-5, 3-27
2688066-0000	.MOUNTING SHEET	2-87
2688917-0000	.ROLLER	4-181, 4-183
2689138-0000	.MOUNTING BLOCK	7-109, 7-111
2689172-0000	.SPACER	1-59, 1-61, 1-63
2689173-0000	.MOUNTING BLOCK	7-109, 7-111
2690377-0000	.BRACKET	1-313, 1-315
2690494-0100	.PNEUMATIC SYSTEM	7-45, 7-47
2690557-0101	.DOCUMENT FOLDER	10-17, 10-19
2691105-0000	.PNEUMATIC DIAGRAM	7-161, 7-163, 7-165
2691183-0000	.FLANGED SHAFT	1-175
2691184-0000	.SHAFT	1-175
2691185-0000	.SUPPORT	1-175
2691359-0000	.INDUCTOR	1-41, 1-43
2691421-0000	.SHIM	4-239, 4-241
2693153-0100	.FOOT	7-45, 7-47
2693155-0000	.LEG	7-57
2693162-0000	.ROLLER	1-59, 1-61, 1-63
2693197-0000	.INSERT	5-113, 5-115
2693199-0000	.PLATE	7-109, 7-111
2693200-0000	.SCREW	5-113, 5-115
2693322-0000	.PIPE	5-271, 5-273
2693446-0000	.STOPPER	4-51, 4-53, 4-55, 4-57, 4-61, 4-63, 4-65, 4-67
2693457-0000	.RAIL	5-83, 5-85, 5-87, 5-89, 5-91
2693459-0000	.BRACKET	5-83, 5-85, 5-87, 5-89, 5-91
2693460-0000	.BRACKET	5-83, 5-85, 5-87, 5-89, 5-91
2693461-0000	.RAIL	5-83, 5-85, 5-87, 5-89, 5-91
2693462-0000	.RAIL	5-83, 5-85, 5-87, 5-89, 5-91
2693463-0000	.RAIL	5-83, 5-85, 5-87, 5-89, 5-91
2693464-0000	.RAIL	5-83, 5-85, 5-87, 5-89, 5-91
2693622-0000	.SPACER	1-251
2694095-0000	.BRACKET	4-187, 4-189
2694714-0000	.GUIDE	1-41, 1-43
2694715-0000	.SUPPORT	1-41, 1-43
2694716-0000	.PLATE	1-41, 1-43
2695408-0000	.HOLDER	4-173
2695409-0000	.HOLDER	4-171
2695800-0000	.INDUCTOR	1-41, 1-43
2695955-0100	.VOLUME FLAP	4-71, 4-77
2695955-0101	.VOLUME FLAP	9-7, 9-9
2695955-0102	.VOLUME FLAP	9-7, 9-9
2695982-0000	.HOUSING	1-129, 1-131
2695983-0000	.GLASS PANE	1-7
2695984-0000	.FRAME	1-7
2695987-0000	.PIPE	1-255
2695988-0000	.PIPE	1-255
2695989-0000	.PIPE	1-255
2695990-0000	.PIPE	1-255
2695991-0000	.PIPE	1-255
2695992-0000	.PIPE	1-255
2695993-0000	.PIPE	1-255
2695994-0000	.ATTACHMENT PIPE	1-257
2695995-0000	.PIPE	1-257
2695996-0000	.PIPE	1-257
2695997-0000	.PIPE	1-193
2695998-0000	.PIPE	1-193
2695999-0000	.PIPE	1-323, 1-325
2696000-0000	.PIPE	1-323, 1-325
2696001-0000	.PIPE	1-323, 1-325
2696002-0000	.TANK	1-269
2696003-0000	.GASKET	1-269
2696005-0000	.PIPE	1-273
2696006-0000	.PIPE	1-273
2696007-0000	.PIPE	1-273
2696008-0000	.PIPE	1-273
2696010-0000	.PIPE	1-277
2696012-0000	.PIPE	1-275
2696013-0000	.PIPE	1-275
2696025-0000	.PIPE	1-257
2696026-0000	.PIPE	1-275
2696027-0000	.PIPE	1-275
2696028-0000	.PIPE SUPPORT	1-261
2696029-0000	.CONNECTING PIPE	1-261

Part No	Description	Page No
2696031-0000	.FRAME UPPER	1-299, 1-301
2696032-0000	.FRAME	1-299, 1-301
2696033-0000	.PLATE	1-343
2696034-0000	.HOLDER	1-299, 1-301
2696035-0000	.COVER	1-299, 1-301
2696036-0000	.HOLDER	1-299, 1-301
2696037-0000	.PIPE	1-257
2696038-0000	.BRACKET	1-351
2696039-0000	.BRACKET	1-351
2696094-0000	.CHAMBER	1-287, 1-289
2696095-0000	.PEROXIDE CHAMBER	1-287, 1-289
2696097-0000	.PLATE	1-287, 1-289
2696098-0000	.COVER	1-221
2696104-0000	.BRACKET	1-299, 1-301
2696156-0100	.VOLUME FLAP	4-77
2696182-0100	.VOLUME FLAP	4-71
2696379-0000	.BRACKET	1-343
2696411-0000	.SPACER	1-59, 1-61, 1-63
2696412-0000	.SPACER	1-59, 1-61, 1-63
2696806-0000	.ROLLER	4-181, 4-183
2697307-0000	.CURVE	4-175, 4-177, 4-179
2697704-0000	.LEVEL PROBE	2-101
2698011-0000	.BUSBAR	4-93, 4-95, 4-97
2698012-0000	.BUSBAR	4-139, 4-141, 4-143
2698178-0000	.BUSBAR	1-15, 1-17
2698292-0000	.BOTTOM	5-113, 5-115
2698293-0000	.FOLDING DEVICE	5-19
2698294-0000	.FOLDING DEVICE	5-21
2698299-0000	.BRACKET	5-137, 5-139
2698300-0000	.PLATE	5-235, 5-237, 5-239, 5-241, 5-243, 5-245
2698319-0000	.BLOCK	5-247, 5-249
2698383-0000	.SLEEVE	7-57
2698628-0000	.RULER	4-197
2699090-0001	.RECORDER	8-19
2699092-0001	.RECORDER	8-19
2699106-0000	.SIDE PLATE	5-63
2699107-0000	.SIDE PLATE	5-63
2699108-0000	.SHAFT	5-63
2699109-0000	.SPACER	5-63
2699873-0007	.PAM - SAM EASY DOWNLOAD	8-15, 8-17
2699996-0000	.BLOCK	7-117, 7-125
2700019-0000	.ROCKER ARM	7-117
2700030-0000	.ROCKER ARM	7-117
2700034-0000	.ROCKER ARM	7-125
2700035-0000	.ROCKER ARM	7-125
2700151-0000	.LID	4-91
2700546-0000	.FRONT RING	1-29, 1-31, 1-53, 1-55
2701169-0002	.RECORDER	8-19
2701319-0000	.GUIDE PIN	7-173
2701758-0005	.PAM - SAM EASY DOWNLOAD	8-15, 8-17
2701846-0000	.FLANGE	7-181
2701847-0000	.BRACKET	7-181
2701880-0000	.FLANGE	7-55
2701881-0000	.BRACKET	7-55
2703095-0000	.ROCKER ARM	7-101, 7-103
2703096-0000	.SUPPORT	7-101, 7-103
2705812-0100	.VOLUME FLAP	4-61, 4-63, 4-65, 4-67
2705812-0101	.VOLUME FLAP	9-7, 9-9
2705812-0102	.VOLUME FLAP	9-7, 9-9
2705813-0100	.VOLUME FLAP	4-51, 4-53, 4-55, 4-57
2705813-0101	.VOLUME FLAP	9-7, 9-9
2705813-0102	.VOLUME FLAP	9-7, 9-9
2705814-0100	.PUSHER	5-235, 5-237, 5-239, 5-241, 5-243, 5-245
2705814-0101	.PUSHER	9-7, 9-9
2705814-0102	.PUSHER	9-7, 9-9
2705814-0103	.PUSHER	9-7, 9-9
2705814-0104	.PUSHER	9-7, 9-9
2707506-0000	.SHAFT	1-313, 1-315
2708322-0000	.RAIL	5-145, 5-147
2708323-0000	.RAIL	5-145, 5-147
2708584-0000	.'CONNECTION PIPE	1-285
2709210-0000	.FLANGE	1-159, 1-161, 1-163, 1-165
2709212-0000	.LID	1-159, 1-161, 1-163, 1-165
2709213-0000	.FLANGE	1-139, 1-141, 1-143, 1-145, 1-147
2709214-0000	.FLANGE	1-139, 1-141, 1-143, 1-145, 1-147
2709216-0000	.FRAME	1-177
2709217-0000	.GASKET	1-177
2709218-0000	.GLASS PANE	1-177
2709223-0000	.BENDING ROLLER	1-287, 1-289
2709224-0000	.WHEEL	1-287, 1-289
2709225-0000	.SHAFT	1-133, 1-135, 1-137
2709262-0000	.SHAFT	1-11
2709302-0000	.ROLLER	1-75, 1-77, 1-79
2709785-0000	.ROLLER	1-53, 1-55

Part No	Description	Page No
2710505-0000	.STOP	5-195, 5-197, 5-199
2710507-0000	.KNOB	2-207
2710508-0000	.TOOL BOX	10-25
2710558-0000	.COVERING PANEL	1-397
2710559-0000	.GLASS PANE	1-397
2710560-0000	.COVER	1-397
2710561-0000	.COVERING PANEL	1-395
2710562-0000	.GLASS PANE	1-395
2710563-0000	.BRACKET	1-397
2710564-0000	.DOOR	1-395
2711240-0000	.BRACKET	1-397
2711242-0000	.BRACKET	1-397
2711243-0000	.COVERING PANEL	1-395
2711244-0000	.GLASS PANE	1-395
2711245-0000	.COVER	1-253
2711246-0000	.COVERING PANEL	1-395
2711247-0000	.COVER	1-253
2711248-0000	.DOOR	1-395
2711249-0000	.PANEL	1-395
2711250-0000	.FRAME	1-395
2711251-0000	.HINGE	1-253
2711254-0000	.COVER	1-253
2711255-0000	.COVERING PANEL	1-395
2711256-0000	.BRACKET	1-397
2711257-0000	.BRACKET	1-397
2711258-0000	.FRAME	1-397
2711259-0000	.FRAME	1-397
2711260-0000	.BRACKET	1-397
2711261-0000	.BRACKET	1-395
2711262-0000	.BRACKET	1-395
2711263-0000	.BRACKET	1-395
2711266-0000	.BRACKET	1-395
2711267-0000	.BRACKET	1-395
2711269-0000	.DOOR	1-397
2711289-0000	.SUPPORT	4-243
2711991-0000	.SUPPORT	7-39
2711992-0000	.COVER	7-39
2711993-0100	.AIR SUPPLY	7-31
2712128-0000	.PLATE	4-225
2712129-0000	.PLATE	4-227
2712433-0000	.COVERING PANEL	1-395
2712434-0000	.FRAME	1-397
2712435-0000	.BRACKET	1-397
2713376-0000	.BRACKET	7-93
2713377-0000	.SUPPORT	7-113
2715295-0000	.BRACKET	4-187, 4-189
2715296-0000	.BRACKET	4-187, 4-189
2715297-0000	.BOW CLAMP	4-187, 4-189
2715298-0000	.BRACKET	2-103, 2-105
2715299-0000	.BRACKET	2-103, 2-105
2715300-0000	.BRACKET	4-197
2715301-0000	.SUPPORT	4-197
2715302-0000	.BRACKET	4-187, 4-189
2715497-0000	.RAIL	5-83, 5-85, 5-87, 5-89, 5-91
2715498-0000	.RAIL	5-83, 5-85, 5-87, 5-89, 5-91
2715499-0000	.SUPPORTING ARM	5-65, 5-67
2715500-0000	.RAIL	5-83, 5-85, 5-87, 5-89, 5-91
2715502-0000	.SUPPORTING ARM	5-65, 5-67
2715503-0000	.RAIL	5-83, 5-85, 5-87, 5-89, 5-91
2715504-0000	.RAIL	5-83, 5-85, 5-87, 5-89, 5-91
2715553-0000	.BENDING ROLLER	1-123, 1-125
2715556-0100	.BATH	1-279
2715567-0000	.BRACKET	1-95
2715569-0000	.BRACKET	1-213, 1-215, 1-217
2715570-0000	.ROLLER	1-95
2715581-0000	.PLATE	1-335
2715601-0000	.SHAFT	1-11
2715618-0000	.LEVER	1-11
2715649-0004	.SPACER	1-95
2715649-0005	.SPACER	1-95
2715650-0002	.SCREW	1-95
2715650-0006	.SCREW	1-95
2715652-0000	.FORK	1-213, 1-215, 1-217
2716441-0000	.BOTTOM PLATE	1-169, 1-171
2716442-0000	.PLATE	1-169, 1-171
2716443-0000	.ROLLER	1-39
2716444-0000	.SLIDE	1-129, 1-131
2716445-0000	.PLATE	1-129, 1-131
2716449-0006	.PAM - SAM EASY DOWNLOAD	8-15, 8-17
2716539-0000	.ROLLER	1-33, 1-35, 1-37
2716540-0000	.ROLLER	1-33, 1-35, 1-37
2716541-0000	.ROLLER	1-29, 1-31
2716544-0000	.ROLLER	1-29, 1-31
2716547-0000	.ROLLER	1-47, 1-49, 1-51

Part No	Description	Page No
2716548-0000	.ROLLER	1-47, 1-49, 1-51
2718901-0000	.SEAL	1-85, 1-87
2719081-0000	.BRACKET	4-187, 4-189
2719686-0000	.SPRING	1-213, 1-215, 1-217
2719737-0000	.PNEUMATIC DIAGRAM	2-131, 2-133, 2-251
2719738-0000	.PNEUMATIC DIAGRAM	2-49, 2-251
2720207-0000	.SLIDE	1-129, 1-131
2720716-0000	.LIFTING DEVICE	10-67
2720717-0000	.ROLLER	1-59, 1-61, 1-63
2720846-0000	.COUNTER ROLLER	1-53, 1-55
2721151-0000	.CANTILEVER	2-207
2721423-0000	.FORMING RING	1-29, 1-31, 1-53, 1-55
2721434-0000	.SHAFT	1-313, 1-315
2722583-0001	.TMCC CD	8-11
2723460-0000	.FRAME	2-65
2724927-0000	.BRACKET	4-187, 4-189
2724928-0000	.SLIDE	4-187, 4-189
2724929-0000	.KNOB	4-187, 4-189
2724930-0000	.SCREW	4-187, 4-189
2724932-0000	.NUT	4-187, 4-189
2724933-0000	.RAIL	5-83, 5-85, 5-87, 5-89, 5-91
2724934-0000	.BRACKET	5-83, 5-85, 5-87, 5-89, 5-91
2724936-0000	.BRACKET	5-83, 5-85, 5-87, 5-89, 5-91
2724937-0000	.SUPPORTING ARM	5-65, 5-67
2724940-0000	.RAIL	5-83, 5-85, 5-87, 5-89, 5-91
2724941-0000	.RAIL	5-83, 5-85, 5-87, 5-89, 5-91
2724942-0000	.RAIL	5-83, 5-85, 5-87, 5-89, 5-91
2724943-0000	.RAIL	5-83, 5-85, 5-87, 5-89, 5-91
2724944-0000	.RAIL	5-83, 5-85, 5-87, 5-89, 5-91
2724947-0000	.RAIL	5-83, 5-85, 5-87, 5-89, 5-91
2724948-0000	.RAIL	5-83, 5-85, 5-87, 5-89, 5-91
2724949-0000	.RAIL	5-83, 5-85, 5-87, 5-89, 5-91
2724950-0000	.RAIL	5-83, 5-85, 5-87, 5-89, 5-91
2724951-0000	.RAIL	5-83, 5-85, 5-87, 5-89, 5-91
2724952-0000	.SUPPORTING ARM	5-65, 5-67
2725526-0000	.SCREW	1-41, 1-43
2725559-0000	.PLATE	1-257
2725564-0000	.WHEEL	1-129, 1-131
2725826-0000	.CLAMP	5-165, 5-167
2725827-0000	.SPACER	5-165, 5-167
2725981-0100	.SETTING TOOL	10-5
2725982-0100	.TEMPLATE	10-25
2726295-0000	.COVER STRIP	2-257
2726296-0000	.COVER STRIP	2-255
2727659-0000	.PROTECTION PLATE	5-185
2727874-0000	.BOTTOM	5-23, 5-25
2728139-0000	.COVER STRIP	2-257
2728140-0000	.COVER STRIP	2-255
2728241-0000	.BRACKET	5-271, 5-273
2728883-0000	.FOLDING FLAP	4-123, 4-125, 4-159, 4-161
2728884-0000	.FOLDING FLAP	4-123, 4-125, 4-159, 4-161
2731428-0000	.NUT	1-29, 1-31, 1-33, 1-35, 1-37, 1-53, 1-55, 1-59, 1-61, 1-63
2731434-0000	.LEVER	1-11
2731438-0000	.FILLING PIPE	1-213, 1-215, 1-217
2731448-0000	.PIPE	1-249
2731503-0000	.LOWER FORMING RING	1-53, 1-55
2731506-0000	.LOWER FORMING RING	1-53, 1-55
2731880-0001	.SHIM	7-31
2731880-0002	.SHIM	7-31
2732810-0000	.BRACKET	5-83, 5-85, 5-87, 5-89, 5-91
2732811-0000	.RAIL	5-83, 5-85, 5-87, 5-89, 5-91
2732812-0000	.RAIL	5-83, 5-85, 5-87, 5-89, 5-91
2732814-0000	.BRACKET	5-83, 5-85, 5-87, 5-89, 5-91
2732815-0000	.BRACKET	5-83, 5-85, 5-87, 5-89, 5-91
2732819-0000	.RAIL	5-83, 5-85, 5-87, 5-89, 5-91
2732820-0100	.RAIL OUT FEED	5-57
2732821-0000	.RAIL	5-83, 5-85, 5-87, 5-89, 5-91
2732822-0000	.BRACKET	5-83, 5-85, 5-87, 5-89, 5-91
2732824-0000	.RAIL	5-83, 5-85, 5-87, 5-89, 5-91
2732825-0100	.RAIL	5-57
2732826-0000	.RAIL	5-83, 5-85, 5-87, 5-89, 5-91
2732827-0000	.BRACKET	5-83, 5-85, 5-87, 5-89, 5-91
2732828-0000	.RAIL	5-83, 5-85, 5-87, 5-89, 5-91
2734424-0006	.PAM - SAM EASY DOWNLOAD	8-15, 8-17
2735125-0000	.GUIDE UPPER	5-137, 5-139
2735126-0000	.GUIDE UPPER	5-137, 5-139
2735127-0000	.RAIL	5-145, 5-147
2735128-0000	.RAIL	5-145, 5-147
2735473-0000	.BRACKET	4-187, 4-189
2735474-0000	.SLIDE	4-187, 4-189
2736138-0000	.CARRIER RULER	4-123, 4-125
2736139-0000	.CARRIER RULER	4-159, 4-161
2736597-0003	.PAM - SAM EASY DOWNLOAD	8-15, 8-17
2736628-0000	.LOWER FORMING RING	1-53, 1-55

Part No	Description	Page No
2736629-0000	.LOWER FORMING RING	1-53, 1-55
2736630-0000	.LOWER FORMING RING	1-53, 1-55
2736631-0000	.UPPER FORMING RING	1-59, 1-61, 1-63
2736632-0000	.UPPER FORMING RING	1-59, 1-61, 1-63
2736633-0000	.UPPER FORMING RING	1-59, 1-61, 1-63
2736634-0000	.UPPER FORMING RING	1-59, 1-61, 1-63
2736635-0000	.UPPER FORMING RING	1-59, 1-61, 1-63
2736636-0000	.UPPER FORMING RING	1-59, 1-61, 1-63
2736676-0000	.UPPER FORMING RING	1-33, 1-35, 1-37, 1-59, 1-61, 1-63
2736677-0000	.UPPER FORMING RING	1-33, 1-35, 1-37, 1-59, 1-61, 1-63
2736697-0000	.UPPER FORMING RING	1-59, 1-61, 1-63
2736702-0000	.BRACKET	1-335
2736705-0000	.LOWER FORMING RING	1-53, 1-55
2736719-0000	.PLATE	9-33
2737034-0000	.TIE ROD	4-105, 4-107, 4-109, 4-111, 4-149, 4-151, 4-153, 4-155
2737771-0000	.PLUNGER	4-127
2737772-0000	.PLUNGER	4-127
2737773-0000	.PLUNGER	4-127
2737841-0000	.BRACKET	7-177
2737842-0000	.BRACKET	7-177
2739682-0000	.SPACER SCREW	5-15
2740795-0000	.FLANGE BUSHING	1-33, 1-35, 1-37
2742199-0000	.BRACKET	7-159
2742200-0100	.VALVE PANEL	7-155, 7-157
2743319-0000	.SUPPORT	1-395
2743320-0000	.SUPPORT	1-395
2746136-0000	.SPRING	4-51, 4-53, 4-55, 4-57, 4-61, 4-63, 4-65, 4-67
2746137-0000	.SPRING	4-51, 4-53, 4-55, 4-57, 4-61, 4-63, 4-65, 4-67
2746721-0000	.COVER	2-229
2746790-0000	.FOLDING DEVICE	5-19
2746791-0000	.FOLDING DEVICE	5-21
2747138-0000	.VOLUME FLAP	4-51, 4-53, 4-55, 4-57, 4-61, 4-63, 4-65, 4-67
2747139-0000	.CAM	4-167, 4-169
2747142-0000	.VOLUME FLAP	4-51, 4-53, 4-55, 4-57, 4-61, 4-63, 4-65, 4-67
2747630-0000	.BRACKET	8-25
2748115-0000	.CRADLE	5-251, 5-253
2748216-0000	.CLAMP	1-253
2748217-0000	.CLAMP	1-253
2748218-0000	.TOUCH GUARD	1-253
2748219-0000	.TOUCH GUARD	1-253
2748220-0000	.HANGER	1-253
2748697-0000	.BRACKET	7-11
2748698-0000	.ADJUSTING SCREW	7-11
2748699-0000	.KNOB	7-11
2748701-0000	.BRACKET	8-25
2748702-0000	.BRACKET	8-25
2750544-0000	.SPACER	5-137, 5-139
2751466-0000	.SHAFT	1-11
2751478-0000	.ROLLER	1-33, 1-35, 1-37, 1-59, 1-61, 1-63
2751479-0000	.ROLLER	1-33, 1-35, 1-37, 1-59, 1-61, 1-63
2751480-0000	.ROLLER	1-59, 1-61, 1-63
2751481-0000	.ROLLER	1-33, 1-35, 1-37, 1-59, 1-61, 1-63
2751482-0000	.ROLLER	1-33, 1-35, 1-37, 1-59, 1-61, 1-63
2751483-0000	.ROLLER	1-33, 1-35, 1-37, 1-59, 1-61, 1-63
2751518-0000	.TEMPLATE	10-25
2751788-0000	.CRADLE	5-251, 5-253
2752533-0000	.SPACER	5-137, 5-139
2752534-0000	.SPACER	5-145, 5-147
2752647-0000	.GUIDE	5-171, 5-173
2752648-0000	.GUIDE	5-177, 5-179
2752754-0000	.RAIL	5-83, 5-85, 5-87, 5-89, 5-91
2752756-0000	.RAIL	5-83, 5-85, 5-87, 5-89, 5-91
2752757-0000	.RAIL	5-83, 5-85, 5-87, 5-89, 5-91
2752758-0000	.RAIL	5-83, 5-85, 5-87, 5-89, 5-91
2752759-0000	.BRACKET	5-83, 5-85, 5-87, 5-89, 5-91
2752760-0000	.RAIL	5-83, 5-85, 5-87, 5-89, 5-91
2756247-0000	.WASHER	10-67
2757847-0000	.PUSHER	5-235, 5-237, 5-239, 5-241, 5-243, 5-245
2758084-0000	.ROLLER	1-33, 1-35, 1-37
2758085-0000	.ROLLER	1-33, 1-35, 1-37
2759322-0000	.ROLLER	1-59, 1-61, 1-63
2759323-0000	.ROLLER	1-59, 1-61, 1-63
2759331-0000	.SHAFT	4-51, 4-53, 4-55, 4-57, 4-61, 4-63, 4-65, 4-67
2760963-0000	.COVER	2-235
2760964-0000	.RUBBER SEAL	2-235
2761017-0000	.SUPPORT RING	1-75, 1-77, 1-79
2761018-0000	.ROLLER	1-75, 1-77, 1-79
2761019-0000	.ROLLER	1-75, 1-77, 1-79
2761020-0000	.ROLLER	1-75, 1-77, 1-79
2761021-0000	.ROLLER	1-75, 1-77, 1-79
2761022-0000	.LOCK PLATE	1-75, 1-77, 1-79
2761763-0000	.LEG	2-11
2761764-0000	.SLEEVE	2-11
2761765-0000	.SLEEVE	2-11

Part No	Description	Page No
2761766-0100	.FOOT	2-9, 2-65, 2-119
2763953-0000	.PLATE	1-129, 1-131
2763962-0000	.BRACKET	1-319
2763966-0000	.PIPE	1-319
2763967-0000	.PIPE	1-319
2763968-0000	.SPACER	1-319
2763969-0000	.REDUCER	1-319
2764013-0000	.UPPER FORMING RING	1-59, 1-61, 1-63
2764014-0000	.UPPER FORMING RING	1-33, 1-35, 1-37, 1-59, 1-61, 1-63
2764015-0000	.UPPER FORMING RING	1-59, 1-61, 1-63
2764016-0000	.UPPER FORMING RING	1-59, 1-61, 1-63
2764017-0000	.UPPER FORMING RING	1-59, 1-61, 1-63
2764018-0000	.UPPER FORMING RING	1-59, 1-61, 1-63
2764019-0000	.UPPER FORMING RING	1-59, 1-61, 1-63
2764020-0000	.UPPER FORMING RING	1-59, 1-61, 1-63
2764021-0000	.UPPER FORMING RING	1-59, 1-61, 1-63
2764022-0000	.UPPER FORMING RING	1-33, 1-35, 1-37, 1-59, 1-61, 1-63
2764023-0000	.LOWER FORMING RING	1-53, 1-55
2764024-0000	.LOWER FORMING RING	1-53, 1-55
2764025-0000	.LOWER FORMING RING	1-53, 1-55
2764026-0000	.LOWER FORMING RING	1-29, 1-31, 1-53, 1-55
2764027-0000	.LOWER FORMING RING	1-29, 1-31, 1-53, 1-55
2764028-0000	.LOWER FORMING RING	1-53, 1-55
2764029-0000	.LOWER FORMING RING	1-53, 1-55
2764030-0000	.LOWER FORMING RING	1-53, 1-55
2764031-0000	.LOWER FORMING RING	1-53, 1-55
2764032-0000	.SHAFT	1-29, 1-31, 1-53, 1-55
2764033-0000	.SHAFT	1-29, 1-31, 1-53, 1-55
2764034-0000	.SHAFT	1-33, 1-35, 1-37, 1-59, 1-61, 1-63
2764035-0000	.SHAFT	1-33, 1-35, 1-37, 1-59, 1-61, 1-63
2764036-0000	.KNOB	1-29, 1-31, 1-33, 1-35, 1-37, 1-53, 1-55, 1-59, 1-61, 1-63
2764456-0004	.PAM - SAM EASY DOWNLOAD	8-15, 8-17
2764475-0000	.ASSEMBLY TOOL	10-37
2764526-0000	.TOOL	10-5
2764527-0100	.ACCESSORIES	9-3
2764809-0000	.CANTILEVER	2-65
2765460-0001	.WELDED CABINET	8-25
2765461-0000	.SWING FRAME	8-97, 8-99
2765462-0001	.COVERING PANEL	8-25
2765463-0000	.MOUNTING PLATE	8-77, 8-79
2765464-0000	.MOUNTING PLATE	8-77, 8-79
2766751-0000	.RAIL	4-93, 4-95, 4-97
2766752-0000	.RAIL	4-139, 4-141, 4-143
2767105-0000	.PROTECTION PLATE	5-185
2767478-0001	.ROLLER	4-181, 4-183, 9-11, 9-13, 9-15, 9-17, 9-19
2767478-0002	.ROLLER	4-181, 4-183, 9-11, 9-13, 9-15, 9-17, 9-19
2767478-0003	.ROLLER	9-11, 9-13, 9-15, 9-17, 9-19
2767478-0004	.ROLLER	9-11, 9-13, 9-15, 9-17, 9-19
2767760-0000	.INDUCTOR	4-93, 4-95, 4-97, 4-139, 4-141, 4-143, 9-11, 9-13, 9-15, 9-17, 9-19
2770115-0000	.SUPPORT	2-73
2770494-0000	.FILLING PIPE	1-213, 1-215, 1-217
2773929-0000	.STOPPER	4-51, 4-53, 4-55, 4-57, 4-61, 4-63, 4-65, 4-67
2774372-0000	.TEMPLATE	9-31
2774373-0000	.TEMPLATE	9-31
2774374-0000	.TEMPLATE	9-31
2774454-0100	.COVER	2-215
2774493-0000	.COMPRESSION SPRING	4-163
2774547-0000	.BEARING HOUSING	4-115, 4-117, 4-119, 4-121
2774548-0000	.BEARING HOUSING	4-115, 4-117, 4-119, 4-121
2774708-0000	.ROLLER	7-11
2775283-0000	.BEARING HOUSING	4-115, 4-117, 4-119, 4-121
2775284-0000	.BEARING HOUSING	4-115, 4-117, 4-119, 4-121
2775285-0000	.BEARING HOUSING	4-115, 4-117, 4-119, 4-121
2775286-0000	.BEARING HOUSING	4-115, 4-117, 4-119, 4-121
2775287-0000	.BEARING HOUSING	4-115, 4-117, 4-119, 4-121
2775288-0000	.BEARING HOUSING	4-115, 4-117, 4-119, 4-121
2775290-0000	.BEARING HOUSING	4-115, 4-117, 4-119, 4-121
2775292-0000	.BEARING HOUSING	4-115, 4-117, 4-119, 4-121
2775293-0000	.BEARING HOUSING	4-115, 4-117, 4-119, 4-121
2777368-0000	.CABLE DUCT	8-77, 8-79
2777369-0000	.CABLE DUCT	8-77, 8-79
2777370-0000	.RAIL	8-89
2777371-0000	.RAIL	8-91, 8-93, 8-95
2777382-0000	.STOP PIN	1-213, 1-215, 1-217
2778300-0000	.ASSEMBLY TOOL	10-37
2778562-0000	.BOTTOM SECTION	1-287, 1-289
2779660-0000	.BRACKET	2-201, 2-203
2779661-0000	.ANGLE	2-201, 2-203
2779662-0000	.SUPPORT	2-201, 2-203
2779663-0000	.BRACKET	2-201, 2-203
2779664-0000	.SUPPORT	2-201, 2-203
2779738-0000	.GUIDE	5-165, 5-167
2779739-0000	.GUIDE	5-165, 5-167
2780072-0000	.RAIL	8-97, 8-99

Part No	Description	Page No
2788635-0000	.TOUCH GUARD	1-395
2788636-0000	.TOUCH GUARD	1-395
2788637-0000	.COVERING PANEL	1-395
2788638-0000	.BRACKET	1-395
2789106-0000	.RAIL	8-77, 8-79
2789107-0100	.DOOR	8-25
2789108-0000	.DOOR	8-29
2789109-0100	.DOOR	8-25
2789110-0000	.DOOR	8-27
2789125-0000	.FUSE PANEL LABEL	8-35
2789126-0000	.RAIL	8-49
2789127-0100	.RELAY	8-51, 8-53, 8-55
2789128-0000	.PROTECTION	8-77, 8-79
2792118-0000	.SUPPORT	6-21
2792119-0100	.FILTER	6-19
2792120-0000	.SUPPORT	6-21
2793319-0000	.PLATE	9-33
2793320-0100	.TEMPLATE	9-29
2793321-0000	.PLATE	9-33
2793322-0000	.PLATE	9-33
2793323-0000	.PLATE	9-33
2793324-0000	.PLATE	9-33
2793325-0000	.PLATE	9-33
2793326-0000	.PLATE	9-33
2793327-0000	.PLATE	9-33
2793328-0000	.PLATE	9-33
2793329-0000	.PLATE	9-33
2793331-0000	.PLATE	9-33
2793360-0000	.HEATER	1-193
2793907-0000	.FASTENING PLATE	6-21
2793908-0000	.CONNECTOR	6-21
2794725-0000	.PLATE	1-47, 1-49, 1-51
2794726-0000	.RING	1-47, 1-49, 1-51
2795266-0000	.SEAL	1-47, 1-49, 1-51, 9-11, 9-13, 9-15, 9-17, 9-19
2796652-0000	.BOTTOM	5-119, 5-121
2799729-0000	.TEMPLATE	9-31
2800104-0000	.HOSE	8-111
2800116-0000	.HOSE	8-111
2801571-0100	.SOFTWARE TPIH	7-7, 8-7
2801770-0001	.TPIH CD	8-21
2802438-0000	.PEROXIDE CHAMBER	1-287, 1-289
2804288-0000	.BRACKET	5-83, 5-85, 5-87, 5-89, 5-91
2804289-0000	.BRACKET	5-83, 5-85, 5-87, 5-89, 5-91
2804290-0000	.BRACKET	5-83, 5-85, 5-87, 5-89, 5-91
2804291-0000	.BRACKET	5-83, 5-85, 5-87, 5-89, 5-91
2804292-0000	.BRACKET	5-83, 5-85, 5-87, 5-89, 5-91
2804293-0000	.BRACKET	5-83, 5-85, 5-87, 5-89, 5-91
2804294-0000	.BRACKET	5-83, 5-85, 5-87, 5-89, 5-91
2804295-0000	.BRACKET	5-83, 5-85, 5-87, 5-89, 5-91
2804298-0000	.BRACKET	5-83, 5-85, 5-87, 5-89, 5-91
2804299-0000	.BRACKET	5-83, 5-85, 5-87, 5-89, 5-91
2804300-0000	.BRACKET	5-83, 5-85, 5-87, 5-89, 5-91
2804301-0000	.BRACKET	5-83, 5-85, 5-87, 5-89, 5-91
2804302-0000	.BRACKET	5-83, 5-85, 5-87, 5-89, 5-91
2804303-0000	.BRACKET	5-83, 5-85, 5-87, 5-89, 5-91
2804304-0000	.BRACKET	5-83, 5-85, 5-87, 5-89, 5-91
2804305-0000	.BRACKET	5-83, 5-85, 5-87, 5-89, 5-91
2804306-0000	.BRACKET	5-83, 5-85, 5-87, 5-89, 5-91
2804307-0000	.BRACKET	5-83, 5-85, 5-87, 5-89, 5-91
2804308-0000	.BRACKET	5-83, 5-85, 5-87, 5-89, 5-91
2804309-0000	.BRACKET	5-83, 5-85, 5-87, 5-89, 5-91
2804310-0000	.BRACKET	5-83, 5-85, 5-87, 5-89, 5-91
2804311-0000	.BRACKET	5-83, 5-85, 5-87, 5-89, 5-91
2804312-0000	.BRACKET	5-83, 5-85, 5-87, 5-89, 5-91
2804313-0000	.BRACKET	5-83, 5-85, 5-87, 5-89, 5-91
2804314-0000	.BRACKET	5-83, 5-85, 5-87, 5-89, 5-91
2804857-0000	.SPACER SCREW	5-145, 5-147
2811776-0000	.NOZZLE	1-113
2811834-0001	.RECORDER CD	8-19
2812556-0000	.HEAT GUARD	1-319
2814509-0002	.PAM SAM CD	8-15, 8-17
2814681-0002	.TPOP CD	8-9
2829288-0000	.COVERING PLATE	1-193
2895146-0000	.SPRING	5-217, 5-219, 5-221, 5-223, 5-225, 5-227

Part No	Description	Page No	Part No	Description	Page No

Part No	Description	Page No	Part No	Description	Page No

Machine Type	Group Description	Page No

Part No	Description	Page No	Part No	Description	Page No

Part No	Description	Page No	Part No	Description	Page No

Machine Type	Group Description	Page No

Part No	Description	Page No	Part No	Description	Page No

Part No	Description	Page No	Part No	Description	Page No

Machine Type	Group Description	Page No

Part No	Description	Page No	Part No	Description	Page No

Part No	Description	Page No	Part No	Description	Page No

Machine Type	Group Description	Page No

Tetra Pak

SPC
Spare Parts Catalogue

Pos	Part No	Description	Page No
A			
P1ASU3	90166-0195	TUBE 12 MM PA BLUE	2-211
P1ASU1	90166-0195	TUBE 12 MM PA BLUE	2-211
P1ASU2	90166-0195	TUBE 12 MM PA BLUE	2-211
P1ASU3	90166-0195	TUBE 12 MM PA BLUE	2-213
P1ASU1	90166-0195	TUBE 12 MM PA BLUE	2-213
P1ASU2	90166-0195	TUBE 12 MM PA BLUE	2-213
AS010	1484695-0000	KNIFE	9-5
AS010	2564232-0100	LEG STAND	10-5
AS020	2592780-0000	DOLLY	9-5
A102	90031-0062	PLC, ANALOG OUTPUT MODULE 8PT/CURR/VOLT	8-67, 8-69
A103	90031-0062	PLC, ANALOG OUTPUT MODULE 8PT/CURR/VOLT	8-67, 8-69
A104	90031-0061	PLC,ANALOG INPUT MODULE 16 PT/CURRENT	8-67, 8-69
A105	90031-0060	PLC,ANALOG INPUT MODULE 16 PT/VOLTAGE	8-67, 8-69
A106	90031-0065	PLC,TEMPERATUR CONTROL,INPUT MODULE 8 PT	8-67, 8-69
A107	90031-0065	PLC,TEMPERATUR CONTROL,INPUT MODULE 8 PT	8-67, 8-69
A108	90031-0065	PLC,TEMPERATUR CONTROL,INPUT MODULE 8 PT	8-67, 8-69
A109	90031-0058	PLC, DIGITAL INPUT MODULE	8-67, 8-69
A110	90031-0057	PLC, DIGITAL INPUT MODULE	8-67, 8-69
A111	90031-0057	PLC, DIGITAL INPUT MODULE	8-67, 8-69
A112	90031-0057	PLC, DIGITAL INPUT MODULE	8-67, 8-69
A113	90031-0057	PLC, DIGITAL INPUT MODULE	8-67, 8-69
A114	90031-0057	PLC, DIGITAL INPUT MODULE	8-67, 8-69
A115	90031-0057	PLC, DIGITAL INPUT MODULE	8-67, 8-69
A116	90031-0057	PLC, DIGITAL INPUT MODULE	8-67, 8-69
A117	90031-0057	PLC, DIGITAL INPUT MODULE	8-67, 8-69
A118	90031-0057	PLC, DIGITAL INPUT MODULE	8-67, 8-69
A119	90031-0057	PLC, DIGITAL INPUT MODULE	8-67, 8-69
A120	90031-0057	PLC, DIGITAL INPUT MODULE	8-67, 8-69
A121	90031-0057	PLC, DIGITAL INPUT MODULE	8-67, 8-69
A122	90031-0057	PLC, DIGITAL INPUT MODULE	8-67, 8-69
A123	90031-0057	PLC, DIGITAL INPUT MODULE	8-67, 8-69
A124	90031-0057	PLC, DIGITAL INPUT MODULE	8-67, 8-69
A125	90031-0057	PLC, DIGITAL INPUT MODULE	8-67, 8-69
A126	90031-0057	PLC, DIGITAL INPUT MODULE	8-67, 8-69
A127	90031-0057	PLC, DIGITAL INPUT MODULE	8-67, 8-69
A128	90031-0057	PLC, DIGITAL INPUT MODULE	8-67, 8-69
A129	90031-0057	PLC, DIGITAL INPUT MODULE	8-67, 8-69
A130	90031-0059	PLC, DIGITAL OUTPUT MODULE	8-67, 8-69
A131	90031-0059	PLC, DIGITAL OUTPUT MODULE	8-67, 8-69
A132	90031-0059	PLC, DIGITAL OUTPUT MODULE	8-67, 8-69
A133	90031-0059	PLC, DIGITAL OUTPUT MODULE	8-67, 8-69
A134	90031-0059	PLC, DIGITAL OUTPUT MODULE	8-67, 8-69
A135	90031-0059	PLC, DIGITAL OUTPUT MODULE	8-67, 8-69
A136	90031-0059	PLC, DIGITAL OUTPUT MODULE	8-67, 8-69
A137	90031-0059	PLC, DIGITAL OUTPUT MODULE	8-67, 8-69
A138	90031-0059	PLC, DIGITAL OUTPUT MODULE	8-67, 8-69
A139	90031-0059	PLC, DIGITAL OUTPUT MODULE	8-67, 8-69
A140	90031-0059	PLC, DIGITAL OUTPUT MODULE	8-67, 8-69
A141	90031-0059	PLC, DIGITAL OUTPUT MODULE	8-67, 8-69
A142	90031-0059	PLC, DIGITAL OUTPUT MODULE	8-67, 8-69
A143	90031-0059	PLC, DIGITAL OUTPUT MODULE	8-67, 8-69
A144	90031-0059	PLC, DIGITAL OUTPUT MODULE	8-67, 8-69
A145	90031-0059	PLC, DIGITAL OUTPUT MODULE	8-67, 8-69
A146	90031-0059	PLC, DIGITAL OUTPUT MODULE	8-67, 8-69
A147	90031-0059	PLC, DIGITAL OUTPUT MODULE	8-67, 8-69
A149	90031-0059	PLC, DIGITAL OUTPUT MODULE	8-67, 8-69
A160	90031-0051	BASEPLATE, 10-SLOT	8-67, 8-69
A161	90031-0053	BASEPLATE,10-SLOT	8-67, 8-69
A162	90031-0053	BASEPLATE,10-SLOT	8-67, 8-69
A163	90031-0053	BASEPLATE,10-SLOT	8-67, 8-69
A164	90031-0053	BASEPLATE,10-SLOT	8-67, 8-69
A165	90031-0052	BASEPLATE, 5-SLOT	8-65
A300	90458-2580	LEVEL CONTROL RELAY RM4-LA32M	8-51, 8-53, 8-55
A301	90458-2580	LEVEL CONTROL RELAY RM4-LA32M	8-51, 8-53, 8-55
A302	90458-2580	LEVEL CONTROL RELAY RM4-LA32M	8-51, 8-53, 8-55
A303	90458-2580	LEVEL CONTROL RELAY RM4-LA32M	8-51, 8-53, 8-55
A304	90458-2580	LEVEL CONTROL RELAY RM4-LA32M	8-51, 8-53, 8-55
A308	90458-2580	LEVEL CONTROL RELAY RM4-LA32M	8-51, 8-53, 8-55
A400	68262-0101	BACKPLANE FRONT RACK 8TE	8-105
A401	68262-0101	BACKPLANE FRONT RACK 8TE	8-105
A402	68262-0101	BACKPLANE FRONT RACK 8TE	8-105
A403	68262-0101	BACKPLANE FRONT RACK 8TE	8-105
A420	90459-0183	TRANSMITTER , TRANS T02 PCP	8-97, 8-99
A450	90453-0002	MODEM MD-12 DC	8-97, 8-99
A451	2518145-0101	FLEXBOX TETRA BRIK	8-97, 8-99
A452	90459-6858	ETHERNET SW, FL SWITCH SF 8TX FROM V 14	8-97, 8-99
A500	1499642-0201	TPIH GENERATOR	8-57
A501	1499642-0201	TPIH GENERATOR	8-57
A600	90119-0072	SAFETY RELAY, JSBR4	8-51, 8-53, 8-55
A601	90119-0105	SAFETY RELAY JOKAB JSR 3T	8-51, 8-53, 8-55
A602	90119-0072	SAFETY RELAY, JSBR4	8-51, 8-53, 8-55
A603	90119-0105	SAFETY RELAY JOKAB JSR 3T	8-51, 8-53, 8-55

Pos	Part No	Description	Page No
A			
A604	90457-0092	SAFETY RELAY RT9-24VDC	8-51, 8-53, 8-55
A605	90457-0092	SAFETY RELAY RT9-24VDC	8-51, 8-53, 8-55
A606	90119-0089	SAFETY RELAY, JSBT4 24VDC	8-51, 8-53, 8-55
A607	90457-0092	SAFETY RELAY RT9-24VDC	8-51, 8-53, 8-55
A700	90100-0069	SERVO CONTROLLER PAM F37, 006.758	8-61
A701	90100-0059	SAM SUPPLY SAM-PA-400-80-E	8-73
A710	90100-0042	SERVO DRIVE SAM-DA-400-014B-P4N-F	8-73
A711	90100-0042	SERVO DRIVE SAM-DA-400-014B-P4N-F	8-73
A712	90100-0042	SERVO DRIVE SAM-DA-400-014B-P4N-F	8-61
A713	90100-0042	SERVO DRIVE SAM-DA-400-014B-P4N-F	8-61
A714	90100-0041	SERVO DRIVE SAM-DA-400-07B-P4N-F	8-61
A715	90100-0041	SERVO DRIVE SAM-DA-400-07B-P4N-F	8-61
A716	90100-0041	SERVO DRIVE SAM-DA-400-07B-P4N-F	8-61
A7417	1499642-0201	TPIH GENERATOR	7-7
B			
B001	90326-0053	THERMOCOUPLE, 12826-35	8-25
B002	90044-0192	LIMIT SW. SZ2586.000	8-25
B003	90044-0192	LIMIT SW. SZ2586.000	8-25
B004	90044-0192	LIMIT SW. SZ2586.000	8-25
B005	90044-0192	LIMIT SW. SZ2586.000	8-25
B1040	90458-0672	PROXIMITY SENSOR E2E2-X5MB1-5M	1-307, 1-309
B1101	90459-0711	FLOW SENSOR FS-400 SERIES / 26440	1-207
B1102	2547213-0000	FLOW SENSOR	1-207
B1104	979500-0003	ELECTRODE	1-197
B1106	90326-0057	THERMOCOUPLE, CR-AL	1-193
B1109	90458-0341	THERMOCOUPLE, 5130050-001	1-15, 1-17
B1111	90457-0047	SENSOR 2750-1-5111-1 W.ADAPTER PNP	1-203
B1163	90459-0643	DIFF. PRESS. TRANSDUCER 2671-10CLD2EG2HD	1-355, 1-357
B1209	90326-0057	THERMOCOUPLE, CR-AL	1-281
B1210	90459-0951	TRANSDUCER, BTL5-A11-M0400-B-S32	2-19, 2-21
B1240	90458-2775	PROXIMITY SENSOR, SMT-8-PS-K5-LED-24-B	1-11
B1241	90459-0829	PROXIMITY SENSOR, SMTO-4U-PS-K-LED-24	1-195
B1242	90459-0829	PROXIMITY SENSOR, SMTO-4U-PS-K-LED-24	1-195
B1243	90459-0829	PROXIMITY SENSOR, SMTO-4U-PS-K-LED-24	1-195
B1244	90459-0829	PROXIMITY SENSOR, SMTO-4U-PS-K-LED-24	1-195
B1301	90044-0194	PROX.SW. IN5329/IN3002-BPKG(EX90044-104)	1-231
B1302	90044-0194	PROX.SW. IN5329/IN3002-BPKG(EX90044-104)	1-231
B1303	90044-0194	PROX.SW. IN5329/IN3002-BPKG(EX90044-104)	1-231
B1305	90458-0256	PROXIMITY SWITCH IIA 3010-BPKG/6M	2-65
B1306	90458-0676	PROXIMITY SWITCH,E2EG-X5B1-6M	1-261
B1307	90458-0676	PROXIMITY SWITCH,E2EG-X5B1-6M	1-261
B1315	90459-5015	CONDUCTIVITY SENSOR CLS 52-A1CS1A2	1-277
B1316	90458-0806	FLOW METER, NO. XF DF23-DN32	1-245, 1-247
B1321	90458-0138	PROX. SWITCH, E2EG-X1R5B1-5M	1-251
B1322	1478814-0000	SENSOR	1-251
B1403	90044-0194	PROX.SW. IN5329/IN3002-BPKG(EX90044-104)	1-313, 1-315
B1405	90044-0194	PROX.SW. IN5329/IN3002-BPKG(EX90044-104)	1-169, 1-171
B1420	90459-0181	PIPE SURFACE THERM., PT-100 -50° -+120°C	1-245, 1-247
B1502	90044-0194	PROX.SW. IN5329/IN3002-BPKG(EX90044-104)	1-149, 1-151, 1-153
B1503	90326-0057	THERMOCOUPLE, CR-AL	1-193
B1504	90459-0472	KEY SAF.SW. AZ 16 02ZVRK-M20-2152-2254	1-109, 1-121
B1505	90459-0472	KEY SAF.SW. AZ 16 02ZVRK-M20-2152-2254	1-9
B1506	90459-0472	KEY SAF.SW. AZ 16 02ZVRK-M20-2152-2254	1-7
B1508	90459-0472	KEY SAF.SW. AZ 16 02ZVRK-M20-2152-2254	1-177
B1509	90459-0472	KEY SAF.SW. AZ 16 02ZVRK-M20-2152-2254	1-119
B1511	90459-3682	ROTARY POSITION SENSOR RPN1A111	1-175
B1700	90044-0195	PROX.SW. IO 9922 IOW2010-ARKG/M/UP/80CM	3-29
B1701	90044-0195	PROX.SW. IO 9922 IOW2010-ARKG/M/UP/80CM	3-29
B1710	90044-0195	PROX.SW. IO 9922 IOW2010-ARKG/M/UP/80CM	3-29
B1711	90044-0195	PROX.SW. IO 9922 IOW2010-ARKG/M/UP/80CM	3-29
B1720	90044-0195	PROX.SW. IO 9922 IOW2010-ARKG/M/UP/80CM	3-13
B1721	90044-0195	PROX.SW. IO 9922 IOW2010-ARKG/M/UP/80CM	3-13
B1730	90044-0195	PROX.SW. IO 9922 IOW2010-ARKG/M/UP/80CM	3-13
B1731	90044-0195	PROX.SW. IO 9922 IOW2010-ARKG/M/UP/80CM	3-13
B1803	90458-0138	PROX. SWITCH, E2EG-X1R5B1-5M	2-39
B1807	90458-0138	PROX. SWITCH, E2EG-X1R5B1-5M	2-39
B1810	90459-5337	LEVEL SENSOR, COD. 90459	1-269
B1812	90044-0194	PROX.SW. IN5329/IN3002-BPKG(EX90044-104)	1-273
B1816	90458-0138	PROX. SWITCH, E2EG-X1R5B1-5M	2-115
B1823	90459-0472	KEY SAF.SW. AZ 16 02ZVRK-M20-2152-2254	1-397
B 2102	90274-0042	PRESSURE GUARD, 200 KPA	6-69, 6-71
B2110	90459-0180	FLOW SWITCH, 0,1 - 2,5 L/MIN	6-19
B2111	90459-0180	FLOW SWITCH, 0,1 - 2,5 L/MIN	6-19
B2201	90274-0074	PRESSURE GUARD, 530 KPA	6-77
B2310	90459-1224	FILTER UNIT, MDF-BNHC-30-LB10-C1.0/B6	2-79
B2320	90457-0019	LEVEL PROBE, HMFB-S=45-0=80-0=90-T70	2-77
B2401	90274-0084	PRESSURE GUARD, 1800 KPA	2-87
B2403	90459-1038	PRESSURE TRANSMITTER, 250BAR	2-81
B2404	90459-1038	PRESSURE TRANSMITTER, 250BAR	2-81
B 2501	90274-0056	PRESSURE SWITCH, 100 - 1200 KPA	6-27
B2510	90326-0057	THERMOCOUPLE, CR-AL	6-19
B2540	90274-0108	DUAL PRESSURE GUARD, -20 - 2800 KPA	6-17

Pos	Part No	Description	Page No
B			
B2810	90457-0196	KEY SAF.SW. TZ2RE024PG RC1635	2-149, 2-151
B2811	90044-0204	KEY SAF.SW. NZIVZ-538-E	2-99
B2812	90457-0196	KEY SAF.SW. TZ2RE024PG RC1635	2-99
B2830	90457-0196	KEY SAF.SW. TZ2RE024PG RC1635	2-149, 2-151
B2831	90457-0196	KEY SAF.SW. TZ2RE024PG RC1635	2-99
B2832	90044-0204	KEY SAF.SW. NZIVZ-538-E	2-99
B3102	90274-0082	FLOW SWITCH, 2 - 3 L/MIN	6-35
B3105	90243-0245	MEASURING INSTRUMENT	6-37
B4315	90458-0138	PROX. SWITCH, E2EG-X1R5B1-5M	4-225, 4-227
B5103	90044-0194	PROX.SW. IN5329/IN3002-BPKG(EX90044-104)	5-257, 5-261, 5-263
B 5104	1144653-0000	SWITCH	5-275
B5203	90044-0194	PROX.SW. IN5329/IN3002-BPKG(EX90044-104)	5-257, 5-261, 5-263
B5302	90044-0194	PROX.SW. IN5329/IN3002-BPKG(EX90044-104)	5-235, 5-237, 5-239, 5-241, 5-243, 5-245
B5307	90326-0081	THERMOCOUPLE, ISA TYPE K.	5-187, 5-189, 5-191
B5308	90326-0081	THERMOCOUPLE, ISA TYPE K.	5-187, 5-189, 5-191
B5309	90326-0081	THERMOCOUPLE, ISA TYPE K.	5-187, 5-189, 5-191
B5310	90326-0089	THERMOCOUPLE, 5110-089-000	1-257
B5314	90044-0194	PROX.SW. IN5329/IN3002-BPKG(EX90044-104)	5-215
B5402	90232-0104	PH.CELL E3S-CT61-D-5M	5-97, 5-99
B5403	90232-0103	PH.CELL E3S-CT61-L-5M	5-97, 5-99
B5501	90232-0104	PH.CELL E3S-CT61-D-5M	5-97, 5-99
B5502	90232-0103	PH.CELL E3S-CT61-L-5M	5-97, 5-99
B5601	90232-0103	PH.CELL E3S-CT61-L-5M	5-279
B5602	90232-0104	PH.CELL E3S-CT61-D-5M	5-279
B6105	90044-0194	PROX.SW. IN5329/IN3002-BPKG(EX90044-104)	7-27
B6107	90458-0677	PROXIMITY SWITCH, E2EG-X5MB1-M1	7-173
B6201	90044-0194	PROX.SW. IN5329/IN3002-BPKG(EX90044-104)	7-75
B6202	90044-0194	PROX.SW. IN5329/IN3002-BPKG(EX90044-104)	7-75
B6203	90458-0138	PROX. SWITCH	7-21
B6204	90044-0194	PROX.SW. IN5329/IN3002-BPKG(EX90044-104)	7-75
B6205	90458-1535	TRANSDUCER, BTL5-A11-M0850-P-S32	7-83
B6208	90458-0138	PROX. SWITCH	7-75
B6209	90459-0472	KEY SAF.SW. AZ 16 02ZVRK-M20-2152-2254	7-45, 7-47
B7210	90232-0129	PH.CELL E3S-CR61-5M	7-177
B7211	90232-0129	PH.CELL E3S-CR61-5M	7-67
B7304	90326-0054	THERMOCOUPLE, CR-AL STD.GR, 12826-36	7-99
B7401	90232-0106	PH.CELL E3S-CR11-5M	7-177
B7411	90458-0677	PROXIMITY SWITCH, E2EG-X5MB1-M1	7-45, 7-47
B7412	90044-0165	PROXIMITY SENSOR, SME-8-K5-LED-24	7-65
B7414	90458-0677	PROXIMITY SWITCH, E2EG-X5MB1-M1	7-45, 7-47
B7430	90044-0165	PROXIMITY SENSOR, SME-8-K5-LED-24	7-31
B7431	90044-0165	PROXIMITY SENSOR, SME-8-K5-LED-24	7-31
B7432	90044-0165	PROXIMITY SENSOR, SME-8-K5-LED-24	7-31
B7433	90044-0165	PROXIMITY SENSOR, SME-8-K5-LED-24	7-31
B7501	90232-0106	PH.CELL E3S-CR11-5M	7-177
B7512	90044-0165	PROXIMITY SENSOR, SME-8-K5-LED-24	7-65
B7801	90459-0472	KEY SAF.SW. AZ 16 02ZVRK-M20-2152-2254	7-45, 7-47
B7806	90459-0472	KEY SAF.SW. AZ 16 02ZVRK-M20-2152-2254	7-45, 7-47
B7807	90459-0472	KEY SAF.SW. AZ 16 02ZVRK-M20-2152-2254	7-45, 7-47
B8420	90458-2241	PRESSURE SWITCH 0,5-10 BAR ADJUSTABLE	7-61
B9104	90274-0110	PRESSURE SWITCH, 50 - 1000 KPA	1-225
B9106	90326-0060	THERMOCOUPLE, CR-AL	1-249
B9107	90458-0672	PROXIMITY SENSOR E2E2-X5MB1-5M	1-249
B9108	90458-0672	PROXIMITY SENSOR E2E2-X5MB1-5M	1-249
B9109	90458-0672	PROXIMITY SENSOR E2E2-X5MB1-5M	1-249
B9110	90458-0672	PROXIMITY SENSOR E2E2-X5MB1-5M	1-249
B9111	90458-0672	PROXIMITY SENSOR E2E2-X5MB1-5M	1-249
B9113	2672972-0000	ELECTRODE	1-223
B9116	2672973-0000	ELECTRODE	1-223
B9117	90458-2619	FLOW METER, D-6230-HGB-BB-AV-99-0-N2	1-225
B9121	90459-2122	THERMOCOUPLE, EN-5130060-0001	1-221
B9122	90326-0053	THERMOCOUPLE, 12826-35	1-221
B43011	90458-0601	CONTRAST SCANNER, KT15W-P2110S01	4-187, 4-189
B43012	90458-0601	CONTRAST SCANNER, KT15W-P2110S01	4-187, 4-189
B72232	90458-0677	PROXIMITY SWITCH, E2EG-X5MB1-M1	7-183, 7-185
B72234	90458-0677	PROXIMITY SWITCH, E2EG-X5MB1-M1	7-183, 7-185
B74031	90458-0602	CONTRAST SCANNER, KT15W-P2110S01	7-107
B74032	90458-0602	CONTRAST SCANNER, KT15W-P2110S01	7-107
C			
C700	90459-5691	CAPACITOR , 100000ÂµF 40VDC	8-59
C700:1	90459-5693	CAPACITOR BRACKET Ã¸63, 39522101300	8-59
C701	90459-5692	CAPACITOR, 6800ÂµF 400VDC	8-77, 8-79
C701:1	90459-5694	CAPACITOR BRACKET Ã¸76, 39522101500	8-77, 8-79
C702	90459-5692	CAPACITOR, 6800ÂµF 400VDC	8-77, 8-79
C702:1	90459-5694	CAPACITOR BRACKET Ã¸76, 39522101500	8-77, 8-79
C1314	90458-1092	PROPORTIONAL VALVE 0 - 10V/0-6 BAR	1-343
C1315	90458-1092	PROPORTIONAL VALVE 0 - 10V/0-6 BAR	1-335
C1316	90458-1092	PROPORTIONAL VALVE 0 - 10V/0-6 BAR	1-343
C1501	90459-3650	DOUBLE ACTING, MINI-ISO, CYL 25-40	1-175
C7410	90459-2101	CYLINDER, ADVC-80-25-I-P	7-105
C7412	90239-0861	DOUBLE ACTING, MINI-ISO, CYL. 32-125	7-33

Pos	Part No	Description	Page No
C			
C7412	90459-1849	DOUBLE ACTING SHUTTLE CYL. 40-550 MM	7-65
C7414	90239-0832	DOUBLE ACTING, MINI-ISO, CYL. 25-125	7-123
C7415	90239-0832	DOUBLE ACTING, MINI-ISO, CYL. 25-125	7-129
C7420	90239-0861	DOUBLE ACTING, MINI-ISO, CYL. 32-125	7-35
C7420	90459-3370	DOUBLE ACTING, PROFILE,CYL 32-140	7-41
C7421	90459-3370	DOUBLE ACTING, PROFILE,CYL 32-140	7-43
C7430	90459-2647	DOUBLE ACTING, SHUTTLE, CYL. 25-780	7-31
C7432	90459-2647	DOUBLE ACTING, SHUTTLE, CYL. 25-780	7-31
C9115	90459-1420	PROPORTIONAL VALVE 0 - 10V/0-6 BAR	1-225
C73031	90459-0503	CYLINDER, ADVC-16-10-I-P	7-121
C73032	90459-0503	CYLINDER, ADVC-16-10-I-P	7-121
C73151	90459-0503	CYLINDER, ADVC-16-10-I-P	7-131
C73152	90459-0503	CYLINDER, ADVC-16-10-I-P	7-131
C74071	90459-1509	CYLINDER, ADVC-20-20-I-P	7-105
C74072	90459-1509	CYLINDER, ADVC-20-20-I-P	7-105
C74081	90459-2102	CYLINDER, AEVC 100-25-I-P	7-105
C74082	90459-2102	CYLINDER, AEVC 100-25-I-P	7-105
D			
DC010	2641203-0000	TEMPLATE	10-5
DC020	2641204-0000	TEMPLATE	10-5
DC030	2642146-0000	TEMPLATE	10-5
DC040	2503720-0100	OPENING FORCE TESTER	10-5
DS010	90296-0068	SHELL ALVANIA GREASE EP 2	9-5
DS010	90459-2181	BELT TENSION METER, TSM 4	10-5
DS020	1548454-0000	DISC	9-5
DS020	2646428-0100	LIFTING UNIT	10-5
D100	90459-2185	CPU374, ETHERNET COMMUNICATION	8-67, 8-69
E			
E001	90459-2560	LIGHT FIXTURE, TMS121 1XTL-D30W/830 IP	8-25
E002	90459-2560	LIGHT FIXTURE, TMS121 1XTL-D30W/830 IP	8-25
EC010	90233-0028	TUBE FUSE, 10A	9-5
EC010	90243-0203	MEASURING INSTRUMENT	10-5
EC020	90233-0029	TUBE FUSE, 25A	9-5
EC020	2559112-0100	CALIBRATION EQUIPMENT	10-5
EC030	90233-0027	TUBE FUSE, 16A	9-5
EC040	90459-1254	TUBE FUSE, 4A 500V	9-5
E900	90459-6856	FEEDER BLOCK, FAZ/FIP-XVS-KL	8-91, 8-93
E901	90459-6856	FEEDER BLOCK, FAZ/FIP-XVS-KL	8-91, 8-93
E7702	90164-0015	LIGHT FIXTURE, DWDCV111B/230V 50HZ	7-45, 7-47
E7705	90164-0015	LIGHT FIXTURE, DWDCV111B/230V 50HZ	7-45, 7-47

Pos	Part No	Description	Page No
F			
F020	90233-0028	TUBE FUSE, 10A	8-91, 8-93
F021	90233-0028	TUBE FUSE, 10A	8-91, 8-93
F022	90233-0029	TUBE FUSE, 25A	8-91, 8-93
F023	90233-0029	TUBE FUSE, 25A	8-91, 8-93
F024	90233-0028	TUBE FUSE, 10A	8-91, 8-93
F025	90233-0029	TUBE FUSE, 25A	8-91, 8-93
F026	90233-0027	TUBE FUSE, 16A	8-91, 8-93
F027	90233-0027	TUBE FUSE, 16A	8-91, 8-93
F028	90459-1254	TUBE FUSE, 4A 500V	8-91, 8-93
F029	90459-1254	TUBE FUSE, 4A 500V	8-91, 8-93
F030	90459-1254	TUBE FUSE, 4A 500V	8-91, 8-93
F031	351416-0100	MINIATURE CIRC. BREAK., FAZ -D10 1-POLE	8-91, 8-93
F032	351416-0100	MINIATURE CIRC. BREAK., FAZ -D10 1-POLE	8-91, 8-93
F033	351416-0100	MINIATURE CIRC. BREAK., FAZ -D10 1-POLE	8-91, 8-93
F034	351416-0160	MINIATURE CIRC. BREAK., FAZ -D16 1-POLE	8-91, 8-93
F035	351416-0160	MINIATURE CIRC. BREAK., FAZ -D16 1-POLE	8-91, 8-93
F036	90459-5687	FUSE 1 A 250 VAC	8-91, 8-93
F037	90233-0062	TUBE FUSE, 4A 600V	8-91, 8-93
F038	351416-0010	MINIATURE CIRC. BREAK., FAZ -D1 1-POLE	8-91, 8-93
F039	351418-0100	MINIATURE CIRC. BREAK., FAZ-D10/3 3-POLE	8-91, 8-93
F042	90233-0027	TUBE FUSE, 16A	8-91, 8-93
F050	351418-0060	MINIATURE CIRC. BREAK., FAZ-D6/3 3-POLE	8-91, 8-93
F051	351418-0400	MINIATURE CIRC. BREAK.,FAZ-D40/3 3-POLE	8-91, 8-93
F052	351416-0060	MINIATURE CIRC. BREAK., FAZ -D6 1-POLE	8-91, 8-93
F053	354000-0100	MINIATURE CIRCUIT BREAKER, FAZ-C10/1	8-91, 8-93
F054	90459-5811	RESIDUAL CURRENT DEVICE, FI-25/2/003-A	8-97, 8-99
F055	351416-0020	MINIATURE CIRC. BREAK., FAZ -D2 1-POLE	8-91, 8-93
F059	351416-0060	MINIATURE CIRC. BREAK., FAZ -D6 1-POLE	8-91, 8-93
F060	354000-0100	MINIATURE CIRCUIT BREAKER, FAZ-C10/1	8-85
F061	354000-0100	MINIATURE CIRCUIT BREAKER, FAZ-C10/1	8-85
F062	354000-0100	MINIATURE CIRCUIT BREAKER, FAZ-C10/1	8-85
F063	354000-0100	MINIATURE CIRCUIT BREAKER, FAZ-C10/1	8-85
F064	354000-0160	MINIATURE CIRCUIT BREAKER, FAZ-C16/1	8-85
F066	354000-0060	MINIATURE CIRCUIT BREAKER, FAZ-C6/1	8-85
F067	354000-0040	MINIATURE CIRCUIT BREAKER, FAZ-C4/1	8-85
F070	354000-0005	MINIATURE CIRCUIT BREAKER, FAZ-C0,5/1	8-91, 8-93
FF010	1478583-0100	PRESSURE GAUGE	10-5
FF010	2662142-0000	SPRING	9-11, 9-13, 9-15, 9-17, 9-19
FF020	1350497-0000	ASSEMBLY TOOL	10-5
FF020	2650817-0000	SPRING	9-11, 9-13, 9-15, 9-17, 9-19
FF030	1350498-0000	ASSEMBLY TOOL	10-5

Pos	Part No	Description	Page No
F			
FF030	2664596-0000 ..	CARRIER	9-11, 9-13, 9-15, 9-17, 9-19
F150	1523691-0100 ..	BLOWING DEVICE	1-113
F700	351418-0250	MINIATURE CIRC. BREAK.,FAZ-D25/3 3-POLE	8-91, 8-93
F700:1	90459-5813	AUXILARY CONTACT, FAZ-XHI11	8-91, 8-93
G			
G001	90459-2938	POWER SUPPLY, 6EP1437-3BA00	8-25
G002	90459-2939	POWER SUPPLY UNIT 6EP1961-3BA00	8-47
G003	90459-2939	POWER SUPPLY UNIT 6EP1961-3BA00	8-47
G010	90459-3449	VARIABLE FREQUENCY DRIVE 22A-A2P3N104	8-77, 8-79
G011	90459-3449	VARIABLE FREQUENCY DRIVE 22A-A2P3N104	8-77, 8-79
G012	90459-3449	VARIABLE FREQUENCY DRIVE 22A-A2P3N104	8-77, 8-79
G013	90459-3450	VARIABLE FREQUENCY DRIVE 22A-A4P5N104	8-77, 8-79
G014	90459-3450	VARIABLE FREQUENCY DRIVE 22A-A4P5N104	8-77, 8-79
G015	90459-3451	VARIABLE FREQUENCY DRIVE 22A-D4P0N104	8-77, 8-79
G100	90031-0068	PLC, POWER SUPPLY	8-67, 8-69
G101	90031-0068	PLC, POWER SUPPLY	8-67, 8-69
G102	90031-0068	PLC, POWER SUPPLY	8-67, 8-69
G103	90031-0068	PLC, POWER SUPPLY	8-67, 8-69
G104	90031-0068	PLC, POWER SUPPLY	8-67, 8-69
G105	90031-0068	PLC, POWER SUPPLY	8-65
H			
H2801	2540716-0100 ..	SIGNAL LAMP	2-187
H7703	90052-0011	HORN HOOTERT 24:48VDC.PT NO.1YA030221	7-45, 7-47
H7703	2540716-0100 ..	SIGNAL LAMP	2-179, 2-181
J			
JS010	28509-0000	WASHER	9-5
JS010	1110083-0002 ..	DOLLY	9-11, 9-13, 9-15, 9-17, 9-19
JS010	1520633-0002 ..	DOLLY	9-11, 9-13, 9-15, 9-17, 9-19
JS010	1520633-0005 ..	DOLLY	9-11, 9-13, 9-15, 9-17, 9-19
JS010	1566845-0002 ..	DOLLY	9-11, 9-13, 9-15, 9-17, 9-19
JS010	2725981-0100 ..	SETTING TOOL	10-5
JS020	32544-0000	INSULATION NUT	9-5
JS020	1035362-0100 ..	MEASURING DEVICE	10-5
JS020	1110930-0000 ..	INDUCTOR	9-11, 9-13, 9-15, 9-17, 9-19
JS020	1110931-0000 ..	INDUCTOR	9-11, 9-13, 9-15, 9-17, 9-19
JS020	1110932-0000 ..	INDUCTOR	9-11, 9-13, 9-15, 9-17, 9-19
JS020	1110934-0000 ..	INDUCTOR	9-11, 9-13, 9-15, 9-17, 9-19
JS020	1110936-0000 ..	INDUCTOR	9-11, 9-13, 9-15, 9-17, 9-19
JS020	1110937-0000 ..	INDUCTOR	9-11, 9-13, 9-15, 9-17, 9-19
JS020	1110938-0000 ..	INDUCTOR	9-11, 9-13, 9-15, 9-17, 9-19
JS020	1520052-0000 ..	INDUCTOR	9-11, 9-13, 9-15, 9-17, 9-19
JS020	1520167-0000 ..	INDUCTOR	9-11, 9-13, 9-15, 9-17, 9-19
JS020	1533046-0000 ..	INDUCTOR	9-11, 9-13, 9-15, 9-17, 9-19
JS020	2546474-0000 ..	INDUCTOR	9-11, 9-13, 9-15, 9-17, 9-19
JS020	2587466-0000 ..	INDUCTOR	9-11, 9-13, 9-15, 9-17, 9-19
JS020	2587467-0000 ..	INDUCTOR	9-11, 9-13, 9-15, 9-17, 9-19
JS020	2610956-0000 ..	INDUCTOR	9-11, 9-13, 9-15, 9-17, 9-19
JS020	2663377-0000 ..	INDUCTOR	9-11, 9-13, 9-15, 9-17, 9-19
JS020	2663378-0000 ..	INDUCTOR	9-11, 9-13, 9-15, 9-17, 9-19
JS020	2767760-0000 ..	INDUCTOR	9-11, 9-13, 9-15, 9-17, 9-19
JS030	72846-0101	COMPRESSION SPRING	10-5
JS030	107426-0000	GUIDE SLEEVE	9-5
JS030	1035831-0000 ..	VOLUME SHIM	9-11, 9-13, 9-15, 9-17, 9-19
JS030	1037735-0000 ..	VOLUME SHIM	9-11, 9-13, 9-15, 9-17, 9-19
JS030	1040755-0000 ..	VOLUME SHIM	9-11, 9-13, 9-15, 9-17, 9-19
JS030	1346158-0000 ..	VOLUME SHIM	9-11, 9-13, 9-15, 9-17, 9-19
JS030	1349208-0000 ..	VOLUME SHIM	9-11, 9-13, 9-15, 9-17, 9-19
JS030	1487627-0000 ..	VOLUME SHIM	9-11, 9-13, 9-15, 9-17, 9-19
JS030	1511253-0000 ..	VOLUME SHIM	9-11, 9-13, 9-15, 9-17, 9-19
JS030	1511336-0000 ..	VOLUME SHIM	9-11, 9-13, 9-15, 9-17, 9-19
JS030	1511337-0000 ..	VOLUME SHIM	9-11, 9-13, 9-15, 9-17, 9-19
JS030	1538637-0000 ..	VOLUME SHIM	9-11, 9-13, 9-15, 9-17, 9-19
JS030	1539902-0000 ..	VOLUME SHIM	9-11, 9-13, 9-15, 9-17, 9-19
JS030	1549594-0000 ..	VOLUME SHIM	9-11, 9-13, 9-15, 9-17, 9-19
JS030	1549830-0000 ..	VOLUME SHIM	9-11, 9-13, 9-15, 9-17, 9-19
JS030	2594891-0000 ..	VOLUME SHIM	9-11, 9-13, 9-15, 9-17, 9-19
JS030	2605166-0000 ..	VOLUME SHIM	9-11, 9-13, 9-15, 9-17, 9-19
JS030	2640139-0000 ..	VOLUME SHIM	9-11, 9-13, 9-15, 9-17, 9-19
JS030	2654290-0000 ..	VOLUME SHIM	9-11, 9-13, 9-15, 9-17, 9-19
JS030	2660393-0000 ..	VOLUME SHIM	9-11, 9-13, 9-15, 9-17, 9-19
JS030	2662169-0000 ..	VOLUME SHIM	9-11, 9-13, 9-15, 9-17, 9-19
JS030	2674328-0000 ..	VOLUME SHIM	9-11, 9-13, 9-15, 9-17, 9-19
JS030	2678717-0000 ..	VOLUME SHIM	9-11, 9-13, 9-15, 9-17, 9-19
JS030	2678839-0000 ..	VOLUME SHIM	9-11, 9-13, 9-15, 9-17, 9-19
JS035	1539843-0000 ..	VOLUME SHIM	9-11, 9-13, 9-15, 9-17, 9-19
JS035	2594890-0000 ..	VOLUME SHIM	9-11, 9-13, 9-15, 9-17, 9-19
JS035	2660390-0000 ..	VOLUME SHIM	9-11, 9-13, 9-15, 9-17, 9-19
JS035	2672745-0000 ..	VOLUME SHIM	9-11, 9-13, 9-15, 9-17, 9-19
JS040	90243-0146	TOOL	10-5
JS040	1036584-0000 ..	WASHER	9-5
JS040	1348955-0000 ..	KNIFE	9-11, 9-13, 9-15, 9-17, 9-19
JS040	1348956-0000 ..	KNIFE	9-11, 9-13, 9-15, 9-17, 9-19

Pos	Part No	Description	Page No
J			
JS040	1348966-0000	KNIFE	9-11, 9-13, 9-15, 9-17, 9-19
JS040	1549828-0000	KNIFE	9-11, 9-13, 9-15, 9-17, 9-19
JS040	2664761-0000	KNIFE	9-11, 9-13, 9-15, 9-17, 9-19
JS050	90206-0330	SOCKET WRENCH 2"9	10-5
JS050	315211-0104	BONDED SEAL SS/NBR90 M8	9-5
JS050	1037254-0000	SHIM	9-11, 9-13, 9-15, 9-17, 9-19
JS060	312115-0297	SCREW ISO4762 M4X25 A4 80	9-5
JS060	927252-0000	COMPRESSION SPRING	9-11, 9-13, 9-15, 9-17, 9-19
JS060	1095884-0100	ASSEMBLY TOOL	10-5
JS060	1260659-0000	SPRING	9-11, 9-13, 9-15, 9-17, 9-19
JS070	312125-0295	SCREW ISO 1207 M4X20 A4	9-5
JS070	2637599-0100	ALIGNMENT TOOL	10-5
JS070	2662165-0000	SPRING	9-11, 9-13, 9-15, 9-17, 9-19
JS080	315211-0103	BONDED SEAL SS/NBR90 M6	9-5
JS080	2637602-0100	DRILLING JIG	10-5
JS080	2662166-0000	SPRING	9-11, 9-13, 9-15, 9-17, 9-19
JS090	315202-0101	O-RING 3,1X1,6 MM	9-5
JS090	1549378-0000	SPRING	9-11, 9-13, 9-15, 9-17, 9-19
JS100	2767478-0001	ROLLER	9-11, 9-13, 9-15, 9-17, 9-19
JS100	2767478-0002	ROLLER	9-11, 9-13, 9-15, 9-17, 9-19
JS100	2767478-0003	ROLLER	9-11, 9-13, 9-15, 9-17, 9-19
JS100	2767478-0004	ROLLER	9-11, 9-13, 9-15, 9-17, 9-19
K			
K001	90459-5440	CONTACTOR 4KW 24VDC, DILM9-01	8-89
K002	90459-5440	CONTACTOR 4KW 24VDC, DILM9-01	8-89
K003	90459-5440	CONTACTOR 4KW 24VDC, DILM9-01	8-89
K004	90459-5440	CONTACTOR 4KW 24VDC, DILM9-01	8-89
K005	90459-5440	CONTACTOR 4KW 24VDC, DILM9-01	8-89
K005:1	90459-6852	AUXILIARY CONTACT, DILA-XHI22	8-89
K006	90459-5441	CONTACTOR 7,5KW 24VDC, DILM17-01	8-89
K007	90459-5440	CONTACTOR 4KW 24VDC, DILM9-01	8-89
K008	90459-5441	CONTACTOR 7,5KW 24VDC, DILM17-01	8-89
K009	90459-5440	CONTACTOR 4KW 24VDC, DILM9-01	8-89
K009:1	90459-6852	AUXILIARY CONTACT, DILA-XHI22	8-89
K020	90459-5441	CONTACTOR 7,5KW 24VDC, DILM17-01	8-95
K021	90459-5441	CONTACTOR 7,5KW 24VDC, DILM17-01	8-95
K022	90459-5441	CONTACTOR 7,5KW 24VDC, DILM17-01	8-95
K023	90459-5441	CONTACTOR 7,5KW 24VDC, DILM17-01	8-95
K024	90459-5440	CONTACTOR 4KW 24VDC, DILM9-01	8-95
K025	90459-5441	CONTACTOR 7,5KW 24VDC, DILM17-01	8-95
K026	90459-5441	CONTACTOR 7,5KW 24VDC, DILM17-01	8-95
K028	90459-5440	CONTACTOR 4KW 24VDC, DILM9-01	8-95
K029	90459-5440	CONTACTOR 4KW 24VDC, DILM9-01	8-95
K030	90459-5440	CONTACTOR 4KW 24VDC, DILM9-01	8-95
K031	90459-5440	CONTACTOR 4KW 24VDC, DILM9-01	8-95
K031:1	90459-6852	AUXILIARY CONTACT, DILA-XHI22	8-95
K034	90459-5440	CONTACTOR 4KW 24VDC, DILM9-01	8-95
K035	90459-5440	CONTACTOR 4KW 24VDC, DILM9-01	8-95
K036	90459-5440	CONTACTOR 4KW 24VDC, DILM9-01	8-95
K037	90459-5440	CONTACTOR 4KW 24VDC, DILM9-01	8-95
K039	90459-5440	CONTACTOR 4KW 24VDC, DILM9-01	8-95
K042	90459-5440	CONTACTOR 4KW 24VDC, DILM9-01	8-95
K100	90060-0080	RELAY, TIME H3DE-S1 24VDC	8-51, 8-53, 8-55
K103	90119-0056	RELAY, AUXILIARY MK3P5-S 24VDC	8-51, 8-53, 8-55
K104	90119-0108	RELAY OMRON G2R-2-SNI-24DC	8-51, 8-53, 8-55
K105	90119-0108	RELAY OMRON G2R-2-SNI-24DC	8-51, 8-53, 8-55
K106	90075-0141	CONTACTOR, 4KW 24VDC	8-51, 8-53, 8-55
K107	90075-0141	CONTACTOR, 4KW 24VDC	8-51, 8-53, 8-55
K108	90119-0108	RELAY OMRON G2R-2-SNI-24DC	8-51, 8-53, 8-55
K110	90119-0108	RELAY OMRON G2R-2-SNI-24DC	8-51, 8-53, 8-55
K111	90119-0108	RELAY OMRON G2R-2-SNI-24DC	8-51, 8-53, 8-55
K112	90119-0108	RELAY OMRON G2R-2-SNI-24DC	8-51, 8-53, 8-55
K113	90119-0108	RELAY OMRON G2R-2-SNI-24DC	8-51, 8-53, 8-55
K114	90119-0108	RELAY OMRON G2R-2-SNI-24DC	8-51, 8-53, 8-55
K115	90119-0108	RELAY OMRON G2R-2-SNI-24DC	8-51, 8-53, 8-55
K117	90119-0108	RELAY OMRON G2R-2-SNI-24DC	8-51, 8-53, 8-55
K120	90119-0108	RELAY OMRON G2R-2-SNI-24DC	8-51, 8-53, 8-55
K121	90119-0108	RELAY OMRON G2R-2-SNI-24DC	8-51, 8-53, 8-55
K122	90119-0108	RELAY OMRON G2R-2-SNI-24DC	8-51, 8-53, 8-55
K123	90119-0108	RELAY OMRON G2R-2-SNI-24DC	8-51, 8-53, 8-55
K124	90119-0108	RELAY OMRON G2R-2-SNI-24DC	8-51, 8-53, 8-55
K125	90119-0056	RELAY, AUXILIARY MK3P5-S 24VDC	8-51, 8-53, 8-55
K126	90119-0108	RELAY OMRON G2R-2-SNI-24DC	8-51, 8-53, 8-55
K129	90075-0141	CONTACTOR, 4KW 24VDC	8-51, 8-53, 8-55
K131	90075-0141	CONTACTOR, 4KW 24VDC	8-51, 8-53, 8-55
K132	90119-0056	RELAY, AUXILIARY MK3P5-S 24VDC	8-51, 8-53, 8-55
K133	90119-0108	RELAY OMRON G2R-2-SNI-24DC	8-51, 8-53, 8-55
K134	90119-0108	RELAY OMRON G2R-2-SNI-24DC	8-51, 8-53, 8-55
K135	90119-0108	RELAY OMRON G2R-2-SNI-24DC	8-51, 8-53, 8-55
K136	90119-0108	RELAY OMRON G2R-2-SNI-24DC	8-51, 8-53, 8-55
K137	90119-0108	RELAY OMRON G2R-2-SNI-24DC	8-51, 8-53, 8-55
K138	90119-0108	RELAY OMRON G2R-2-SNI-24DC	8-51, 8-53, 8-55

Pos	Part No	Description	Page No
K			
K139	90119-0108	RELAY OMRON G2R-2-SNI-24DC	8-51, 8-53, 8-55
K143	90119-0108	RELAY OMRON G2R-2-SNI-24DC	8-51, 8-53, 8-55
K144	90119-0108	RELAY OMRON G2R-2-SNI-24DC	8-51, 8-53, 8-55
K170	90119-0108	RELAY OMRON G2R-2-SNI-24DC	8-63
K200	90119-0082	SSR 90119-67 + HEAT SINK	8-83
K201	90119-0082	SSR 90119-67 + HEAT SINK	8-83
K202	90119-0082	SSR 90119-67 + HEAT SINK	8-83
K203	90119-0082	SSR 90119-67 + HEAT SINK	8-83
K204	90119-0082	SSR 90119-67 + HEAT SINK	8-83
K205	90119-0082	SSR 90119-67 + HEAT SINK	8-83
K206	90119-0082	SSR 90119-67 + HEAT SINK	8-83
K207	90119-0082	SSR 90119-67 + HEAT SINK	8-83
K208	90119-0082	SSR 90119-67 + HEAT SINK	8-83
K209	90119-0082	SSR 90119-67 + HEAT SINK	8-83
K210	90119-0082	SSR 90119-67 + HEAT SINK	8-83
K211	90119-0082	SSR 90119-67 + HEAT SINK	8-83
K213	90119-0082	SSR 90119-67 + HEAT SINK	8-83
K214	90119-0082	SSR 90119-67 + HEAT SINK	8-83
K215	90119-0067	SOLID-STATE RELAY, H12WD4850	8-81
K220	90119-0043	OPTO-RELAY, 22DC 60S-3/32VDC	8-81
K221	90119-0043	OPTO-RELAY, 22DC 60S-3/32VDC	8-81
K222	90119-0043	OPTO-RELAY, 22DC 60S-3/32VDC	8-81
K223	90119-0043	OPTO-RELAY, 22DC 60S-3/32VDC	8-81
K224	90119-0043	OPTO-RELAY, 22DC 60S-3/32VDC	8-81
K225	90119-0043	OPTO-RELAY, 22DC 60S-3/32VDC	8-81
K300	90119-0063	OPTO-RELAY, DC/DC AMMS-10-1/30VDC	8-101
K301	90119-0063	OPTO-RELAY, DC/DC AMMS-10-1/30VDC	8-101
K700	90459-5444	CONTACTOR 15KW 24VDC, DILM32-01	8-95
K701	90459-5444	CONTACTOR 15KW 24VDC, DILM32-01	8-95
K701:1	90459-6852	AUXILIARY CONTACT, DILA-XHI22	8-95
K7010	90075-0127	CONTACTOR, 4KW 24VDC	7-151, 7-153
K7011	90075-0127	CONTACTOR, 4KW 24VDC	7-151, 7-153
L			
L4309	1110930-0000	INDUCTOR	4-93, 4-95, 4-97, 4-139, 4-141, 4-143
L4309	1110931-0000	INDUCTOR	4-93, 4-95, 4-97, 4-139, 4-141, 4-143
L4309	1110932-0000	INDUCTOR	4-93, 4-95, 4-97, 4-139, 4-141, 4-143
L4309	1110934-0000	INDUCTOR	4-93, 4-95, 4-97, 4-139, 4-141, 4-143
L4309	1110936-0000	INDUCTOR	4-93, 4-95, 4-97, 4-139, 4-141, 4-143
L4309	1110937-0000	INDUCTOR	4-93, 4-95, 4-97, 4-139, 4-141, 4-143
L4309	1110938-0000	INDUCTOR	4-93, 4-95, 4-97, 4-139, 4-141, 4-143
L4309	1520052-0000	INDUCTOR	4-93, 4-95, 4-97, 4-139, 4-141, 4-143
L4309	1520167-0000	INDUCTOR	4-93, 4-95, 4-97, 4-139, 4-141, 4-143
L4309	1533046-0000	INDUCTOR	4-93, 4-95, 4-97, 4-139, 4-141, 4-143
L4309	2546474-0000	INDUCTOR	4-93, 4-95, 4-97, 4-139, 4-141, 4-143
L4309	2587466-0000	INDUCTOR	4-93, 4-95, 4-97
L4309	2587467-0000	INDUCTOR	4-139, 4-141, 4-143
L4309	2610956-0000	INDUCTOR	4-93, 4-95, 4-97, 4-139, 4-141, 4-143
L4309	2663377-0000	INDUCTOR	4-139, 4-141, 4-143
L4309	2663378-0000	INDUCTOR	4-93, 4-95, 4-97
L4309	2767760-0000	INDUCTOR	4-93, 4-95, 4-97, 4-139, 4-141, 4-143
L6101	2509617-0100	INDUCTOR	7-13
M			
MB010	315229-0105	GASKETS, 48,5X55,5X3,7 MM 2" FDA	9-5
MB020	315229-0104	GASKETS, 35,8X42,8X3,7 MM 1"1/2 FD	9-5
MB030	90459-1037	CRIMP TOOL FOR COAX. CONN. HTG 58-901200	10-5
MB030	315229-0103	GASKETS, 23,1X30,1X3,7 MM 1" FDA	9-5
MB040	315229-0107	GASKETS, 73,9X80,9X3,7 MM 2"1/2 FD	9-5
MB040	2588426-0100	ALIGNMENT TEMPLATE	10-5
MB050	90036-0057	LIGHT BULB, BA9S 28V	9-5
M1101	90270-0017	COMPRESSOR NASH/ELMO 112 MB/4-2083	1-181
M1206	90321-0134	CIRC. PUMP TMB 40/2 230V50HZ	1-281
M1206	90321-0135	CIRC. PUMP TMB 40/2 230V60HZ	1-281
M 1213	90458-2466	MOTOR 3GVA071002-CSB	2-33
M1501	90459-1226	GEARS, WORM MOTOR VF 44P-10+BN71B 0.37KW	1-155, 1-157
M1801	90458-1607	PUMP, SVI 8 03/03 N15T 1.5KW	1-269
M2301	90457-0036	3-PHASE MOTOR,FOOT MOUNT.1,1KW,1410 RPM	2-79
M 2501	90321-0116	PUMP GRUNDFOS CHI 2-60	6-27
M2715	90459-5211	SERVO MOTOR AKM51E-HCS2R-02	4-225, 4-227
M2716	90458-0761	SERVO MOTOR EP 165-090-62L3B-X-C33	5-267
M3102	90321-0117	PUMP LOWARA SV8-14 F75T	6-41, 6-43
M3102	90321-0120	PUMP SV8-09 F756T, 380V60HZ	6-41, 6-43
M5503	90459-1147	GEARS, WORM MOTOR VF30 F1-10 P63 B14 V6	2-273, 2-275
M6201	90069-0614	GEARS, WORM MOTOR MC320P2T	7-73
M6202	90457-0921	WORM GEAR MOTOR MC320P2TB5/D	7-73
M7208	90459-2826	GEARS, HELICAL MOTOR ME0102210012	7-97
M7217	90459-2096	GEARS, WORM MOTOR F2 15 P63 B14 B8 PV 75	7-179
O			
O2530	90304-0020	LIQUID CONTAINER	6-29
P			
P1SUP	90166-0195	TUBE 12 MM PA BLUE	2-211
P2SUP	90166-0195	TUBE 12 MM PA BLUE	2-211
P1SUP	90166-0195	TUBE 12 MM PA BLUE	2-213

Pos	Part No	Description	Page No
P			
P2SUP	90166-0195	TUBE 12 MM PA BLUE	2-213
P2PTDIMC	90166-0196	TUBE 14MM PA BLUE	2-211
P2PTDIMC1	90166-0196	TUBE 14MM PA BLUE	2-211
P2PTDIMC	90166-0196	TUBE 14MM PA BLUE	2-213
P2PTDIMC1	90166-0196	TUBE 14MM PA BLUE	2-213
P0FM	90166-0196	TUBE 14MM PA BLUE	6-79
P1	90166-0195	TUBE 12 MM PA BLUE	1-323, 1-325
P001	90459-6436	RECORDER 12-CHANNEL, LOGOSCREEN CF	8-97, 8-99
P1:1	90166-0193	TUBE 6 MM PUR BLUE	1-323, 1-325
P1:3	90166-0195	TUBE 12 MM PA BLUE	1-323, 1-325
P2	90166-0013	TUBE 8 MM PA BLUE	1-323, 1-325
P003	90459-5187	CONDUCTIVITY TRANSMITTER CLM223-ID7105	8-97, 8-99
P004	90053-0031	HOUR COUNTER, B 609.10 10-50VDC	8-97, 8-99
P005	90053-0029	COUNTER, F524.800FA3C 24VDC	8-97, 8-99
PT010	2564074-0100	TOOLS AND TEMPLATES	10-5
PT020	90459-5181	GREASE LUBRICATION KIT , 400999139	10-5
PT030	2764526-0000	TOOL	10-5
P101	90166-0196	TUBE 14MM PA BLUE	2-211, 2-213
P102	90166-0195	TUBE 12 MM PA BLUE	2-211, 2-213
P103	90166-0196	TUBE 14MM PA BLUE	2-211, 2-213
P104	90166-0196	TUBE 14MM PA BLUE	2-211, 2-213
P105	90166-0196	TUBE 14MM PA BLUE	2-211, 2-213
P106	90166-0195	TUBE 12 MM PA BLUE	2-211, 2-213
P201	90166-0196	TUBE 14MM PA BLUE	2-211, 2-213
P202	90166-0013	TUBE 8 MM PA BLUE	2-211, 2-213
P203	90166-0196	TUBE 14MM PA BLUE	2-211, 2-213
P204	90166-0195	TUBE 12 MM PA BLUE	2-211, 2-213
P205	90166-0195	TUBE 12 MM PA BLUE	2-211, 2-213
P206	90166-0195	TUBE 12 MM PA BLUE	2-211, 2-213
P207	90166-0195	TUBE 12 MM PA BLUE	2-211, 2-213
P900	90332-0020	RECORDER, 6 CHANNELS 85-264VAC/DC	8-97, 8-99
P901	90332-0020	RECORDER, 6 CHANNELS 85-264VAC/DC	8-97, 8-99
Q			
Q001	90459-5324	OVERLOAD PROTECTION, PKZM0-1,6	8-89
Q001:1	90259-0313	AUX. CONTACT K&M NHI21-PKZM0	8-89
Q002	90459-5326	OVERLOAD PROTECTION, PKZM0-4	8-89
Q002:1	90259-0313	AUX. CONTACT K&M NHI21-PKZM0	8-89
Q003	90459-5325	OVERLOAD PROTECTION, PKZM0-2,5	8-89
Q003:1	90259-0313	AUX. CONTACT K&M NHI21-PKZM0	8-89
Q004	90459-5325	OVERLOAD PROTECTION, PKZM0-2,5	8-89
Q004:1	90259-0313	AUX. CONTACT K&M NHI21-PKZM0	8-89
Q005	90459-5326	OVERLOAD PROTECTION, PKZM0-4	8-89
Q005:1	90259-0313	AUX. CONTACT K&M NHI21-PKZM0	8-89
Q006	90459-5330	OVERLOAD PROTECTION, PKZM0-16	8-89
Q006:1	90259-0313	AUX. CONTACT K&M NHI21-PKZM0	8-89
Q007	90459-5324	OVERLOAD PROTECTION, PKZM0-1,6	8-89
Q007:1	90259-0313	AUX. CONTACT K&M NHI21-PKZM0	8-89
Q008	90459-5328	OVERLOAD PROTECTION, PKZM0-10	8-89
Q008:1	90259-0313	AUX. CONTACT K&M NHI21-PKZM0	8-89
Q009	90459-5323	OVERLOAD PROTECTION, PKZM0-1	8-89
Q009:1	90259-0313	AUX. CONTACT K&M NHI21-PKZM0	8-89
Q100	90111-0173	MAIN SW.NZM64-100/ZM64-100-760+AS4-NZM64	6-11
R			
R700	90121-0137	RESISTANCE FIXED, 2,2 OHM, 15 W	8-59
R701	90100-0062	EXTERNAL DB RESISTOR FWA 60-500 6,8 OHM	8-77, 8-79
R702	90121-0114	RESISTANCE FIXED, 0,22 KOHM, 25 W	8-77, 8-79
R703	90121-0114	RESISTANCE FIXED, 0,22 KOHM, 25 W	8-77, 8-79
R704	90121-0114	RESISTANCE FIXED, 0,22 KOHM, 25 W	8-77, 8-79
R1105	449939-0001	HEATING ELEMENT 15KW	1-201
R1208	90206-0070	HEATING ELEMENT 6000W 380/220V	1-281
R1209	90206-0070	HEATING ELEMENT 6000W 380/220V	1-281
R1503	2793360-0000	HEATER	1-193
R5307	2514149-0000	HEATING ELEMENT	5-187, 5-189, 5-191
R5308	2514149-0000	HEATING ELEMENT	5-187, 5-189, 5-191
R5309	90206-0030	HEATING ELEMENT 3000W, 220V	5-187, 5-189, 5-191
R6203	1498047-0000	SEALING BLOCK	7-79
R6204	1524481-0000	SEALING BLOCK	7-85
R7304	90459-2843	HEATING CARTRIDGE, 800W 240V	7-99
S			
S001	90458-1651	EMERGENCY STOP, ZB4-BS-844 ZB4-BZ-104	8-37
S003	90111-0122	KEY SWITCH, 2 NO CONTACTS	8-97, 8-99
S003:1	359241-0133	SIGN: " SERVICE SWITCH"	8-97, 8-99
S004	90111-0124	KEY SWITCH, 1NO,1NC CONTACT	8-97, 8-99
S004:1	359241-0122	SIGN: " CLEANING STEAM BARRIER SPACE"	8-97, 8-99
S005	90458-1651	EMERGENCY STOP, ZB4-BS-844 ZB4-BZ-104	8-37
SA010	1498047-0000	SEALING BLOCK	9-5
SU010	90243-0447	LASER EQUIPMENT	10-5
SU010	232979-0000	PRESSURE ROLLER (PAK OF 10)	9-11, 9-13, 9-15, 9-17, 9-19
SU010	257330-0000	PRESSURE ROLLER	9-11, 9-13, 9-15, 9-17, 9-19
SU010	272479-0000	PRESSURE ROLLER	9-11, 9-13, 9-15, 9-17, 9-19
SU010	499387-0000	PRESSURE ROLLER	9-11, 9-13, 9-15, 9-17, 9-19
SU010	1296877-0100	SEAL KIT	9-5

Pos	Part No	Description	Page No
S			
SU010	1349738-0100	PRESSURE TEST EQUIPMENT	10-5
SU010	1349914-0100	TEMPLATE FILLING PIPE	9-29
SU010	2607089-0000	PRESSURE ROLLER	9-11, 9-13, 9-15, 9-17, 9-19
SU020	74305-0100	PULLER	10-5
SU020	1296878-0100	SEAL KIT	9-5
SU020	2523268-0000	SHAFT	9-11, 9-13, 9-15, 9-17, 9-19
SU020	2529416-0000	SHAFT	9-11, 9-13, 9-15, 9-17, 9-19
SU020	2529417-0000	SHAFT	9-11, 9-13, 9-15, 9-17, 9-19
SU020	2529418-0000	SHAFT	9-11, 9-13, 9-15, 9-17, 9-19
SU020	2529419-0000	SHAFT	9-11, 9-13, 9-15, 9-17, 9-19
SU020	2529420-0000	SHAFT	9-11, 9-13, 9-15, 9-17, 9-19
SU020	2793320-0100	TEMPLATE	9-29
SU030	315204-0215	O-RING 19,2X3 MM	9-11, 9-13, 9-15, 9-17, 9-19
SU030	315204-0219	O-RING 29,2X3 MM	9-11, 9-13, 9-15, 9-17, 9-19
SU030	315204-0223	O-RING 39,2X3 MM	9-11, 9-13, 9-15, 9-17, 9-19
SU030	777200-0101	PIPE WRENCH	10-5
SU030	1296879-0100	SEAL KIT	9-5
SU040	90217-0348	GASKET 35,4X46,8X4 MM	9-5
SU040	449969-0100	TOOL DISMOUNTING	10-5
SU040	2500081-0000	ELBOW PIPE	9-11, 9-13, 9-15, 9-17, 9-19
SU050	342850-0304	GASKET 35,4X49,1X5,2 1"1/2 FDA	9-5
SU050	533014-0100	LEAK FINDING EQUIPMENT (SUPERSTRUCTURE)	10-5
SU050	2529750-0000	COVERING PANEL	9-11, 9-13, 9-15, 9-17, 9-19
SU060	90459-1467	FORCE GAUGE 0-250N, AFG 250N	10-5
SU060	925998-0000	DIAPHRAGM	9-5
SU060	979813-0000	PLUG	9-11, 9-13, 9-15, 9-17, 9-19
SU070	342850-0304	GASKET 35,4X49,1X5,2 1"1/2 FDA	9-11, 9-13, 9-15, 9-17, 9-19
SU070	342850-0306	GASKET 60,3X76,1X5,2 MM 2"1/2 FDA	9-5
SU070	2552151-0000	BRACKET	10-5
SU070	2552152-0000	BRACKET	10-5
SU070	2552153-0000	BRACKET	10-5
SU070	2552154-0000	BRACKET	10-5
SU070	2582613-0000	BRACKET	10-5
SU070	2685310-0000	BRACKET	10-5
SU080	342850-0304	GASKET 35,4X49,1X5,2 1"1/2 FDA	9-5
SU080	2532974-0000	SETTING TOOL	10-5
SU080	2795266-0000	SEAL	9-11, 9-13, 9-15, 9-17, 9-19
SU090	90459-7315	PUSH DYNAMOMETER 20 - 200N, DT120	10-5
SU120	2569982-0100	SETTING TOOL	10-5
SU130	90243-0328	PAPER ROLL	10-5
SU140	90243-0329	CABLE	10-5
SU150	90243-0330	CABLE	10-5
SU160	2579687-0100	SETTING TOOL	10-5
S900	90458-1651	EMERGENCY STOP, ZB4-BS-844 ZB4-BZ-104	2-265
S901	90064-0082	PUSH BUTTON, WHITE	2-265
S901:1	359301-0519	SIGN "TPOP RESET"	2-265
S902	90064-0082	PUSH BUTTON, WHITE	2-265
S902:1	359301-0130	BUTTON SIGN, LAMP TEST	2-265
S903	90111-0120	SWITCH, 2 POS.704.510 .0A+704.901.5/A	2-265
S904	90064-0082	PUSH BUTTON, WHITE	2-265
S904:1	359301-0170	BUTTON SIGN, SPOOLING OF FINAL FOLDER	2-265
S905	90064-0098	PUSH BUTTON, CLEAR	2-265
S905:1	359301-0091	BUTTON SIGN, INCHING FINAL FOLDER	2-265
S906	90064-0082	PUSH BUTTON, WHITE	2-265
S906:1	359301-0050	BUTTON SIGN, DROP CHUTE BRIK	2-265
S907	90064-0098	PUSH BUTTON, CLEAR	2-265
S907:1	359301-0090	BUTTON SIGN, INCHING	2-265
S908	90064-0084	PUSH BUTTON, YELLOW	2-265
S908:1	359301-0110	BUTTON SIGN, SHORT STOP	2-265
S909	90064-0086	PUSH BUTTON, WHITE	2-265
S909:1	359301-0160	BUTTON SIGN, DRAINAGE OF PRODUCT TUBE	2-265
S911	90064-0093	PUSH BUTTON, GREEN	2-265
S911:1	359301-0001	BUTTON SIGN, UP	2-265
S912	90064-0082	PUSH BUTTON, WHITE	2-265
S912:1	359301-0005	BUTTON SIGN, DOWN	2-265
S1003	90064-0084	PUSH BUTTON, YELLOW	1-355, 1-357
S1802	90458-1651	EMERGENCY STOP, ZB4-BS-844 ZB4-BZ-104	1-355, 1-357
S2803	90458-1651	EMERGENCY STOP, ZB4-BS-844 ZB4-BZ-104	2-223
S6206	90064-0082	PUSH BUTTON, WHITE	7-203
S7303	90064-0082	PUSH BUTTON, WHITE	7-219
S7402	90064-0082	PUSH BUTTON, WHITE	7-219
S7403	90064-0082	PUSH BUTTON, WHITE	7-219
S7408	90235-0206	QUICK EXHAUST VALVE, SEU-1/8	7-105
S7410	90235-0206	QUICK EXHAUST VALVE, SEU-1/8	7-105
S7430	90111-0120	SWITCH, 2 POS.704.510 .0A+704.901.5/A	7-215
S7431	90111-0120	SWITCH, 2 POS.704.510 .0A+704.901.5/A	7-199
S7701	90064-0084	PUSH BUTTON, YELLOW	7-203
S7812	90458-1651	EMERGENCY STOP, ZB4-BS-844 ZB4-BZ-104	7-205
S7813	90458-1651	EMERGENCY STOP, ZB4-BS-844 ZB4-BZ-104	7-219
T			
T1231	90113-0469	MANIFOLD REGULATOR 4 BAR	1-335
T1316	90457-0144	REGULATOR 0,3-2 BAR	1-343

Pos	Part No	Description	Page No
T			
T1332	90113-0469	MANIFOLD REGULATOR 4 BAR	1-343
T1402	67379-0404	TRANSFORMER	1-13
T1402	67379-0405	TRANSFORMER	1-13
T1402	67379-0412	TRANSFORMER	1-13
T1402	67379-0414	TRANSFORMER	1-13
T1402	67379-0417	TRANSFORMER	1-13
T1502	90113-0470	MANIFOLD REGULATOR 10 BAR	1-335
T4200	90113-0469	MANIFOLD REGULATOR 4 BAR	2-131, 2-133
T4301	90457-0144	REGULATOR 0,3-2 BAR	2-49
T5001	90457-0144	REGULATOR 0,3-2 BAR	2-131, 2-133
T5306	90113-0469	MANIFOLD REGULATOR 4 BAR	2-131, 2-133
T5315	90113-0469	MANIFOLD REGULATOR 4 BAR	2-131, 2-133
T5504	90113-0469	MANIFOLD REGULATOR 4 BAR	2-131, 2-133
T6101	67380-0207	TRANSFORMER	7-13
T6101	67380-0214	TRANSFORMER	7-13
T6203	90458-0258	TRANSFORMER, 220VAC/6-9-12VAC	7-133, 7-135, 7-137, 7-139, 7-141
T9114	90113-0469	MANIFOLD REGULATOR 4 BAR	1-335
U			
U1231	90043-0065	MKC NEW FILL PUMP VACUUM PRESSURE GAUGE	1-335
U1314	90043-0065	MKC NEW FILL PUMP VACUUM PRESSURE GAUGE	1-343
U1315	90043-0065	MKC NEW FILL PUMP VACUUM PRESSURE GAUGE	1-335
U1316	90459-4991	PRESSURE GAUGE, 9063064 D=40 MM	1-343
U1332	90043-0065	MKC NEW FILL PUMP VACUUM PRESSURE GAUGE	1-343
U1502	90043-0065	MKC NEW FILL PUMP VACUUM PRESSURE GAUGE	1-335
U4200	90043-0064	PRESSURE GAUGE, 2048 D=40 MM	2-131, 2-133
U4301	90043-0090	PRESSURE GAUGE, 2048 D=40 MM	2-49
U5001	90043-0090	PRESSURE GAUGE, 2048 D=40 MM	2-131, 2-133
U5215	90043-0064	PRESSURE GAUGE, 2048 D=40 MM	2-131, 2-133
U5306	90043-0064	PRESSURE GAUGE, 2048 D=40 MM	2-131, 2-133
U5315	90043-0064	PRESSURE GAUGE, 2048 D=40 MM	2-131, 2-133
U5504	90043-0064	PRESSURE GAUGE, 2048 D=40 MM	2-131, 2-133
U9114	90043-0065	MKC NEW FILL PUMP VACUUM PRESSURE GAUGE	1-335
V			
V710	90459-1620	DIODE, 3A 100V	8-71
V711	90459-1620	DIODE, 3A 100V	8-71
V712	90459-1620	DIODE, 3A 100V	8-71
V713	90459-1620	DIODE, 3A 100V	8-71
V714	90459-1620	DIODE, 3A 100V	8-71
V715	90459-1620	DIODE, 3A 100V	8-71
W			
W0001	351150-0430	CABLE OLFLEX 5X35 MM2 LIGHT/GREY	2-149, 2-151
W100	90031-0305	I/O EXPANSION CABLE	8-67, 8-69
W101	90031-0305	I/O EXPANSION CABLE	8-67, 8-69
W102	90031-0305	I/O EXPANSION CABLE	8-67, 8-69
W103	90031-0305	I/O EXPANSION CABLE	8-67, 8-69
W104	90458-1314	I/O EXPANSION CABLE	8-65
W106	90220-0183	SCR. CABLE 2X0,34MM2	8-39, 8-41, 8-43
W118	90220-0183	SCR. CABLE 2X0,34MM2	8-39, 8-41, 8-43
W119	90220-0183	SCR. CABLE 2X0,34MM2	8-39, 8-41, 8-43
W120	90220-0183	SCR. CABLE 2X0,34MM2	8-39, 8-41, 8-43
W121	90220-0183	SCR. CABLE 2X0,34MM2	8-39, 8-41, 8-43
W122	90220-0183	SCR. CABLE 2X0,34MM2	8-39, 8-41, 8-43
W123	90220-0183	SCR. CABLE 2X0,34MM2	8-39, 8-41, 8-43
W124	90220-0183	SCR. CABLE 2X0,34MM2	8-39, 8-41, 8-43
W125	90220-0183	SCR. CABLE 2X0,34MM2	8-39, 8-41, 8-43
W126	90220-0183	SCR. CABLE 2X0,34MM2	8-39, 8-41, 8-43
W127	90220-0183	SCR. CABLE 2X0,34MM2	8-39, 8-41, 8-43
W130	90220-0183	SCR. CABLE 2X0,34MM2	8-39, 8-41, 8-43
W133	90220-0183	SCR. CABLE 2X0,34MM2	8-39, 8-41, 8-43
W135	90220-0183	SCR. CABLE 2X0,34MM2	8-39, 8-41, 8-43
W137	90220-0183	SCR. CABLE 2X0,34MM2	8-39, 8-41, 8-43
W138	90220-0183	SCR. CABLE 2X0,34MM2	8-39, 8-41, 8-43
W139	90220-0183	SCR. CABLE 2X0,34MM2	8-39, 8-41, 8-43
W151	90220-0183	SCR. CABLE 2X0,34MM2	8-97, 8-99
W152	90220-0183	SCR. CABLE 2X0,34MM2	8-97, 8-99
W153	90220-0183	SCR. CABLE 2X0,34MM2	8-97, 8-99
W200	90459-1621	CABLE, ETHERNET RJ 45 CONNECT. 1 M	8-101
W210	90220-0104	SCR. CABLE 4X1,5MM2	8-39, 8-41, 8-43
W211	90220-0104	SCR. CABLE 4X1,5MM2	8-39, 8-41, 8-43
W212	90220-0104	SCR. CABLE 4X1,5MM2	8-39, 8-41, 8-43
W213	90220-0104	SCR. CABLE 4X1,5MM2	8-39, 8-41, 8-43
W214	90220-0104	SCR. CABLE 4X1,5MM2	8-39, 8-41, 8-43
W215	90220-0104	SCR. CABLE 4X1,5MM2	8-39, 8-41, 8-43
W300	90220-0034	THERMOCABLE TEX/SITW-20F-KX 2X0,5MM2	8-39, 8-41, 8-43
W301	90220-0034	THERMOCABLE TEX/SITW-20F-KX 2X0,5MM2	8-39, 8-41, 8-43
W302	90220-0034	THERMOCABLE TEX/SITW-20F-KX 2X0,5MM2	8-39, 8-41, 8-43
W303	90220-0034	THERMOCABLE TEX/SITW-20F-KX 2X0,5MM2	8-39, 8-41, 8-43
W304	90220-0034	THERMOCABLE TEX/SITW-20F-KX 2X0,5MM2	8-39, 8-41, 8-43
W305	90220-0034	THERMOCABLE TEX/SITW-20F-KX 2X0,5MM2	8-39, 8-41, 8-43
W306	90220-0034	THERMOCABLE TEX/SITW-20F-KX 2X0,5MM2	8-39, 8-41, 8-43
W307	90220-0034	THERMOCABLE TEX/SITW-20F-KX 2X0,5MM2	8-39, 8-41, 8-43
W308	90220-0034	THERMOCABLE TEX/SITW-20F-KX 2X0,5MM2	8-39, 8-41, 8-43

Machine Type Group Description Page No

W

Pos	Part No	Description	Page No
W309	90220-0034	THERMOCABLE TEX/SITW-20F-KX 2X0,5MM2	8-39, 8-41, 8-43
W310	90220-0034	THERMOCABLE TEX/SITW-20F-KX 2X0,5MM2	8-39, 8-41, 8-43
W312	90220-0034	THERMOCABLE TEX/SITW-20F-KX 2X0,5MM2	8-39, 8-41, 8-43
W313	90220-0034	THERMOCABLE TEX/SITW-20F-KX 2X0,5MM2	8-39, 8-41, 8-43
W314	90220-0034	THERMOCABLE TEX/SITW-20F-KX 2X0,5MM2	8-39, 8-41, 8-43
W315	90220-0034	THERMOCABLE TEX/SITW-20F-KX 2X0,5MM2	8-39, 8-41, 8-43
W316	90220-0034	THERMOCABLE TEX/SITW-20F-KX 2X0,5MM2	8-39, 8-41, 8-43
W317	90220-0034	THERMOCABLE TEX/SITW-20F-KX 2X0,5MM2	8-39, 8-41, 8-43
W318	90220-0034	THERMOCABLE TEX/SITW-20F-KX 2X0,5MM2	8-39, 8-41, 8-43
W319	90220-0034	THERMOCABLE TEX/SITW-20F-KX 2X0,5MM2	8-39, 8-41, 8-43
W320	90220-0034	THERMOCABLE TEX/SITW-20F-KX 2X0,5MM2	8-39, 8-41, 8-43
W321	90220-0034	THERMOCABLE TEX/SITW-20F-KX 2X0,5MM2	8-39, 8-41, 8-43
W322	90220-0034	THERMOCABLE TEX/SITW-20F-KX 2X0,5MM2	8-39, 8-41, 8-43
W323	90220-0034	THERMOCABLE TEX/SITW-20F-KX 2X0,5MM2	8-39, 8-41, 8-43
W331	90220-0034	THERMOCABLE TEX/SITW-20F-KX 2X0,5MM2	8-39, 8-41, 8-43
W332	90220-0034	THERMOCABLE TEX/SITW-20F-KX 2X0,5MM2	8-39, 8-41, 8-43
W333	90220-0034	THERMOCABLE TEX/SITW-20F-KX 2X0,5MM2	8-39, 8-41, 8-43
W382	90220-0034	THERMOCABLE TEX/SITW-20F-KX 2X0,5MM2	8-39, 8-41, 8-43
W450	1254442-0000	CABLE SERIAL	8-97, 8-99
W454	2623591-0000	CABLE	8-97, 8-99
W455	2623590-0000	CABLE	8-97, 8-99
W700	90100-0074	EASYBUS SAM 1,0M	8-61
W701	90100-0072	EASYBUS SAM 0,3M	8-61
W702	90100-0072	EASYBUS SAM 0,3M	8-61
W703	90100-0072	EASYBUS SAM 0,3M	8-61
W704	90100-0072	EASYBUS SAM 0,3M	8-61
W705	90100-0072	EASYBUS SAM 0,3M	8-73
W706	90100-0072	EASYBUS SAM 0,3M	8-73
W707	90100-0075	EASYBUS SAM 2,0M	8-73
W710	90220-0125	MOTOR CABLE 4X4,0+2X1,0+2X0,75+SHIELD	8-39, 8-41, 8-43
W711	90220-0125	MOTOR CABLE 4X4,0+2X1,0+2X0,75+SHIELD	8-39, 8-41, 8-43
W712	90220-0125	MOTOR CABLE 4X4,0+2X1,0+2X0,75+SHIELD	8-39, 8-41, 8-43
W713	90220-0125	MOTOR CABLE 4X4,0+2X1,0+2X0,75+SHIELD	8-39, 8-41, 8-43
W714	90220-0116	MOTOR CABLE 4X1,0+2(2X0,5)+SHIELD	8-39, 8-41, 8-43
W715	90220-0116	MOTOR CABLE 4X1,0+2(2X0,5)+SHIELD	8-39, 8-41, 8-43
W716	90220-0084	MOTOR CABLE 4X2,5+2(2X0.75)+SHIELD	8-39, 8-41, 8-43
W1001	351150-0425	CABLE OLFLEX 25X0,75 MM2 LIGHT/GREY	1-351
W1002	351150-0425	CABLE OLFLEX 25X0,75 MM2 LIGHT/GREY	1-351
W1003	351150-0425	CABLE OLFLEX 25X0,75 MM2 LIGHT/GREY	1-355, 1-357
W1004	351150-0425	CABLE OLFLEX 25X0,75 MM2 LIGHT/GREY	1-355, 1-357
W1005	351150-0418	CABLE OLFLEX 4X2,5 MM2 LIGHT/GREY	2-57, 2-59
W1005	351150-0425	CABLE OLFLEX 25X0,75 MM2 LIGHT/GREY	1-355, 1-357
W1006	351150-0407	CABLE OLFLEX 12X0,75 MM2 LIGHT/GREY	1-355, 1-357
W1011	351150-0405	CABLE OLFLEX 5X0,75 MM2 LIGHT/GREY	1-355, 1-357
W1012	351150-0403	CABLE OLFLEX 3X0,75 MM2 LIGHT/GREY	1-355, 1-357
W1013	351150-0403	CABLE OLFLEX 3X0,75 MM2 LIGHT/GREY	1-355, 1-357
W1015	351150-0403	CABLE OLFLEX 3X0,75 MM2 LIGHT/GREY	1-355, 1-357
W1018	351150-0403	CABLE OLFLEX 3X0,75 MM2 LIGHT/GREY	1-355, 1-357
W1029	351150-0404	CABLE OLFLEX 4X0,75 MM2 LIGHT/GREY	1-355, 1-357
W1030	351150-0403	CABLE OLFLEX 3X0,75 MM2 LIGHT/GREY	1-355, 1-357
W1031	351150-0403	CABLE OLFLEX 3X0,75 MM2 LIGHT/GREY	1-355, 1-357
W1041	351150-0405	CABLE OLFLEX 5X0,75 MM2 LIGHT/GREY	1-355, 1-357
W1044	351150-0405	CABLE OLFLEX 5X0,75 MM2 LIGHT/GREY	1-355, 1-357
W1045	351150-0405	CABLE OLFLEX 5X0,75 MM2 LIGHT/GREY	1-351
W1046	351150-0405	CABLE OLFLEX 5X0,75 MM2 LIGHT/GREY	1-351
W1048	351150-0405	CABLE OLFLEX 5X0,75 MM2 LIGHT/GREY	1-355, 1-357
W1052	90220-0165	SCR. CABLE 5X0,34MM2	1-367, 1-369
W1053	90220-0091	PAIR TWISTED CABLE 2X2X0,25MM2	1-367, 1-369
W1054	90458-2895	COAXIAL CABLE RG 400/U BROWN	1-367, 1-369
W1058	351150-0403	CABLE OLFLEX 3X0,75 MM2 LIGHT/GREY	1-355, 1-357
W1065	351150-0403	CABLE OLFLEX 3X0,75 MM2 LIGHT/GREY	1-355, 1-357
W1066	351150-0403	CABLE OLFLEX 3X0,75 MM2 LIGHT/GREY	1-355, 1-357
W1067	351150-0405	CABLE OLFLEX 5X0,75 MM2 LIGHT/GREY	1-119
W1107	90220-0034	THERMOCABLE TEX/SITW-20F-KX 2X0,5MM2	1-367, 1-369
W1232	351150-0403	CABLE OLFLEX 3X0,75 MM2 LIGHT/GREY	1-355, 1-357
W1233	351150-0403	CABLE OLFLEX 3X0,75 MM2 LIGHT/GREY	1-355, 1-357
W1235	351150-0403	CABLE OLFLEX 3X0,75 MM2 LIGHT/GREY	1-355, 1-357
W1240	90220-0105	SCR. CABLE 4X2,5MM2	1-367, 1-369
W1300	90220-0034	THERMOCABLE TEX/SITW-20F-KX 2X0,5MM2	1-367, 1-369
W1301	90220-0034	THERMOCABLE TEX/SITW-20F-KX 2X0,5MM2	1-193
W1302	90220-0034	THERMOCABLE TEX/SITW-20F-KX 2X0,5MM2	1-367, 1-369
W1303	90220-0034	THERMOCABLE TEX/SITW-20F-KX 2X0,5MM2	1-281
W1304	90220-0034	THERMOCABLE TEX/SITW-20F-KX 2X0,5MM2	2-57, 2-59
W1305	90220-0034	THERMOCABLE TEX/SITW-20F-KX 2X0,5MM2	1-367, 1-369
W1307	90220-0034	THERMOCABLE TEX/SITW-20F-KX 2X0,5MM2	1-367, 1-369
W1315	90220-0165	SCR. CABLE 5X0,34MM2	1-367, 1-369
W1316	90220-0165	SCR. CABLE 5X0,34MM2	1-351
W1320	90220-0034	THERMOCABLE TEX/SITW-20F-KX 2X0,5MM2	1-367, 1-369
W1321	90220-0034	THERMOCABLE TEX/SITW-20F-KX 2X0,5MM2	1-193
W1322	90220-0034	THERMOCABLE TEX/SITW-20F-KX 2X0,5MM2	1-367, 1-369
W1323	90220-0034	THERMOCABLE TEX/SITW-20F-KX 2X0,5MM2	1-367, 1-369
W1420	90220-0072	SCR. CABLE 4X0,34MM2	1-367, 1-369

Pos	Part No	Description	Page No
W			
W1500	351150-0418	CABLE OLFLEX 4X2,5 MM2 LIGHT/GREY	1-367, 1-369
W1501	351120-0168	CABLE SIHF 4X10MM2 GREEN/YELLOW	1-367, 1-369
W1502	351150-0196	CABLE OLFLEX 7X4 MM2 LIGHT/GREY	1-293
W1503	351120-0164	CABLE SIHF 4X1,5MM2 GREEN/YELLOW	1-193
W1511	90220-0165	SCR. CABLE 5X0,34MM2	1-355, 1-357
W1801	351150-0404	CABLE OLFLEX 4X0,75 MM2 LIGHT/GREY	1-351
W1802	351150-0404	CABLE OLFLEX 4X0,75 MM2 LIGHT/GREY	2-57, 2-59
W1804	351150-0403	CABLE OLFLEX 3X0,75 MM2 LIGHT/GREY	2-57, 2-59
W1805	351150-0403	CABLE OLFLEX 3X0,75 MM2 LIGHT/GREY	2-57, 2-59
W1806	351150-0404	CABLE OLFLEX 4X0,75 MM2 LIGHT/GREY	2-57, 2-59
W1810	351150-0404	CABLE OLFLEX 4X0,75 MM2 LIGHT/GREY	1-351
W1820	90220-0034	THERMOCABLE TEX/SITW-20F-KX 2X0,5MM2	1-367, 1-369
W1830	90220-0104	SCR. CABLE 4X1,5MM2	1-367, 1-369
W2001	351150-0425	CABLE OLFLEX 25X0,75 MM2 LIGHT/GREY	2-107, 2-109, 2-111
W 2002	351150-0418	CABLE OLFLEX 4X2,5 MM2 LIGHT/GREY	2-33
W2002	351150-0425	CABLE OLFLEX 25X0,75 MM2 LIGHT/GREY	2-107, 2-109, 2-111
W2003	351150-0166	CABLE OLFLEX 4X4 MM2 LIGHT/GREY	2-107, 2-109, 2-111
W2005	351150-0412	CABLE OLFLEX 3X1,5 MM2 LIGHT/GREY	2-107, 2-109, 2-111
W2007	351150-0418	CABLE OLFLEX 4X2,5 MM2 LIGHT/GREY	2-107, 2-109, 2-111
W2008	351150-0418	CABLE OLFLEX 4X2,5 MM2 LIGHT/GREY	2-107, 2-109, 2-111
W2009	351150-0418	CABLE OLFLEX 4X2,5 MM2 LIGHT/GREY	2-107, 2-109, 2-111
W2010	351150-0425	CABLE OLFLEX 25X0,75 MM2 LIGHT/GREY	2-149, 2-151
W2011	351150-0425	CABLE OLFLEX 25X0,75 MM2 LIGHT/GREY	2-149, 2-151
W2014	351150-0413	CABLE OLFLEX 4X1,5 MM2 LIGHT/GREY	2-149, 2-151
W2015	90220-0104	SCR. CABLE 4X1,5MM2	2-149, 2-151
W2016	351150-0412	CABLE OLFLEX 3X1,5 MM2 LIGHT/GREY	2-149, 2-151
W2017	351150-0412	CABLE OLFLEX 3X1,5 MM2 LIGHT/GREY	2-149, 2-151
W2018	351150-0412	CABLE OLFLEX 3X1,5 MM2 LIGHT/GREY	2-149, 2-151
W2019	351150-0412	CABLE OLFLEX 3X1,5 MM2 LIGHT/GREY	2-149, 2-151
W2021	90220-0034	THERMOCABLE TEX/SITW-20F-KX 2X0,5MM2	2-149, 2-151
W2022	90220-0034	THERMOCABLE TEX/SITW-20F-KX 2X0,5MM2	2-149, 2-151
W2023	90220-0034	THERMOCABLE TEX/SITW-20F-KX 2X0,5MM2	2-149, 2-151
W2027	90220-0095	SCR. CABLE 3X0,75MM2	6-11
W2029	90220-0104	SCR. CABLE 4X1,5MM2	1-367, 1-369
W2030	351150-0425	CABLE OLFLEX 25X0,75 MM2 LIGHT/GREY	2-149, 2-151
W2040	351150-0412	CABLE OLFLEX 3X1,5 MM2 LIGHT/GREY	1-281
W2041	351120-0164	CABLE SIHF 4X1,5MM2 GREEN/YELLOW	1-281
W2042	351120-0164	CABLE SIHF 4X1,5MM2 GREEN/YELLOW	1-281
W2050	351150-0425	CABLE OLFLEX 25X0,75 MM2 LIGHT/GREY	2-107, 2-109, 2-111
W2055	90220-0034	THERMOCABLE TEX/SITW-20F-KX 2X0,5MM2	2-107, 2-109, 2-111
W2060	90220-0201	CABLE OLFLEX 18X0,75 MM2	1-227
W2061	351150-0417	CABLE OLFLEX 3X2,5 MM2 LIGHT/GREY	1-227
W2062	90220-0165	SCR. CABLE 5X0,34MM2	1-227
W2063	90220-0034	THERMOCABLE TEX/SITW-20F-KX 2X0,5MM2	1-249
W2064	90220-0034	THERMOCABLE TEX/SITW-20F-KX 2X0,5MM2	1-227
W2065	90220-0034	THERMOCABLE TEX/SITW-20F-KX 2X0,5MM2	1-221
W2066	90458-2557	CABLE OLFLEX 25X1 MM2	2-149, 2-151
W2067	90458-2557	CABLE OLFLEX 25X1 MM2	2-149, 2-151
W2068	1363297-0000	CABLE LVDS 10M	2-149, 2-151
W2071	351150-0412	CABLE OLFLEX 3X1,5 MM2 LIGHT/GREY	2-107, 2-109, 2-111
W2072	351150-0412	CABLE OLFLEX 3X1,5 MM2 LIGHT/GREY	2-107, 2-109, 2-111
W2090	2540596-0003	COAXIAL CABLE	2-107, 2-109, 2-111
W2091	2540596-0003	COAXIAL CABLE	2-107, 2-109, 2-111
W2201	90042-0583	CABLE MECMAN 440-827 000-1	6-77
W2208	351150-0403	CABLE OLFLEX 3X0,75 MM2 LIGHT/GREY	2-81
W2209	351150-0403	CABLE OLFLEX 3X0,75 MM2 LIGHT/GREY	2-81
W2209	351150-0418	CABLE OLFLEX 4X2,5 MM2 LIGHT/GREY	2-79
W2211	351150-0412	CABLE OLFLEX 3X1,5 MM2 LIGHT/GREY	2-107, 2-109, 2-111
W2212	351150-0405	CABLE OLFLEX 5X0,75 MM2 LIGHT/GREY	2-149, 2-151
W 2213	351150-0418	CABLE OLFLEX 4X2,5 MM2 LIGHT/GREY	6-27
W 2214	351150-0418	CABLE OLFLEX 4X2,5 MM2 LIGHT/GREY	6-17
W 2220	351150-0403	CABLE OLFLEX 3X0,75 MM2 LIGHT/GREY	6-69, 6-71
W2222	351150-0403	CABLE OLFLEX 3X0,75 MM2 LIGHT/GREY	6-35
W2224	351150-0406	CABLE OLFLEX 7X0,75 MM2 LIGHT/GREY	2-149, 2-151
W2225	351150-0405	CABLE OLFLEX 5X0,75 MM2 LIGHT/GREY	2-107, 2-109, 2-111
W2226	351150-0406	CABLE OLFLEX 7X0,75 MM2 LIGHT/GREY	2-107, 2-109, 2-111
W2228	351150-0406	CABLE OLFLEX 7X0,75 MM2 LIGHT/GREY	2-149, 2-151
W2230	351150-0405	CABLE OLFLEX 5X0,75 MM2 LIGHT/GREY	2-107, 2-109, 2-111
W2231	351150-0406	CABLE OLFLEX 7X0,75 MM2 LIGHT/GREY	2-107, 2-109, 2-111
W2232	351150-0406	CABLE OLFLEX 7X0,75 MM2 LIGHT/GREY	2-107, 2-109, 2-111
W2233	351150-0403	CABLE OLFLEX 3X0,75 MM2 LIGHT/GREY	2-79
W2234	351150-0406	CABLE OLFLEX 7X0,75 MM2 LIGHT/GREY	2-77
W2235	351150-0403	CABLE OLFLEX 3X0,75 MM2 LIGHT/GREY	2-107, 2-109, 2-111
W2236	351150-0403	CABLE OLFLEX 3X0,75 MM2 LIGHT/GREY	2-81
W2237	351150-0403	CABLE OLFLEX 3X0,75 MM2 LIGHT/GREY	2-81
W2238	351150-0403	CABLE OLFLEX 3X0,75 MM2 LIGHT/GREY	2-81
W2242	90220-0034	THERMOCABLE TEX/SITW-20F-KX 2X0,5MM2	6-19
W 2243	351150-0403	CABLE OLFLEX 3X0,75 MM2 LIGHT/GREY	6-69, 6-71
W2244	351150-0412	CABLE OLFLEX 3X1,5 MM2 LIGHT/GREY	2-107, 2-109, 2-111
W2248	351150-0403	CABLE OLFLEX 3X0,75 MM2 LIGHT/GREY	2-81
W2249	351150-0403	CABLE OLFLEX 3X0,75 MM2 LIGHT/GREY	2-81
W2250	351150-0406	CABLE OLFLEX 7X0,75 MM2 LIGHT/GREY	6-31

W

Pos	Part No	Description	Page No
W 2251	351150-0431	CABLE OLFLEX 2X0,75 MM2 LIGHT/GREY	6-27
W2252	351150-0431	CABLE OLFLEX 2X0,75 MM2 LIGHT/GREY	6-17
W2254	351150-0405	CABLE OLFLEX 5X0,75 MM2 LIGHT/GREY	2-57, 2-59
W2255	351150-0405	CABLE OLFLEX 5X0,75 MM2 LIGHT/GREY	2-57, 2-59
W2256	351150-0166	CABLE OLFLEX 4X4 MM2 LIGHT/GREY	6-41, 6-43
W2258	351150-0425	CABLE OLFLEX 25X0,75 MM2 LIGHT/GREY	6-67
W2270	90220-0091	PAIR TWISTED CABLE 2X2X0,25MM2	2-81, 2-107, 2-109, 2-111
W2271	90220-0091	PAIR TWISTED CABLE 2X2X0,25MM2	2-81, 2-107, 2-109, 2-111
W2710	90220-0125	MOTOR CABLE 4X4,0+2X1,0+2X0,75+SHIELD	2-107, 2-109, 2-111
W2711	90220-0125	MOTOR CABLE 4X4,0+2X1,0+2X0,75+SHIELD	2-107, 2-109, 2-111
W2712	90220-0125	MOTOR CABLE 4X4,0+2X1,0+2X0,75+SHIELD	2-107, 2-109, 2-111
W2713	90220-0125	MOTOR CABLE 4X4,0+2X1,0+2X0,75+SHIELD	2-107, 2-109, 2-111
W2714	90220-0116	MOTOR CABLE 4X1,0+2(2X0,5)+SHIELD	2-107, 2-109, 2-111
W2715	90220-0116	MOTOR CABLE 4X1,0+2(2X0,5)+SHIELD	2-107, 2-109, 2-111
W2716	90220-0084	MOTOR CABLE 4X2,5+2(2X0.75)+SHIELD	2-149, 2-151
W2720	90220-0131	PAIR TWISTED CABLE 3X2X0,25MM2	2-107, 2-109, 2-111
W2721	90220-0131	PAIR TWISTED CABLE 3X2X0,25MM2	2-107, 2-109, 2-111
W2722	90220-0131	PAIR TWISTED CABLE 3X2X0,25MM2	2-107, 2-109, 2-111
W2723	90220-0131	PAIR TWISTED CABLE 3X2X0,25MM2	2-107, 2-109, 2-111
W2724	90220-0131	PAIR TWISTED CABLE 3X2X0,25MM2	2-107, 2-109, 2-111
W2725	90220-0131	PAIR TWISTED CABLE 3X2X0,25MM2	2-107, 2-109, 2-111
W2726	90220-0131	PAIR TWISTED CABLE 3X2X0,25MM2	2-149, 2-151
W4001	351150-0425	CABLE OLFLEX 25X0,75 MM2 LIGHT/GREY	2-57, 2-59
W4002	351150-0425	CABLE OLFLEX 25X0,75 MM2 LIGHT/GREY	2-57, 2-59
W4005	351150-0414	CABLE OLFLEX 5X1,5 MM2 LIGHT/GREY	2-149, 2-151
W4006	351150-0417	CABLE OLFLEX 3X2,5 MM2 LIGHT/GREY	2-149, 2-151
W4008	2562736-0001	COAXIAL CABLE	4-233
W4009	2562736-0001	COAXIAL CABLE	4-233
W4016	90220-0165	SCR. CABLE 5X0,34MM2	2-107, 2-109, 2-111
W4017	90220-0165	SCR. CABLE 5X0,34MM2	2-107, 2-109, 2-111
W4022	351150-0403	CABLE OLFLEX 3X0,75 MM2 LIGHT/GREY	2-57, 2-59
W4052	351150-0403	CABLE OLFLEX 3X0,75 MM2 LIGHT/GREY	2-107, 2-109, 2-111
W4053	351150-0404	CABLE OLFLEX 4X0,75 MM2 LIGHT/GREY	2-107, 2-109, 2-111
W4054	351150-0406	CABLE OLFLEX 7X0,75 MM2 LIGHT/GREY	2-57, 2-59
W4502	2570004-0001	CABLE	2-149, 2-151
W4503	2570004-0001	CABLE	2-149, 2-151
W4505	90459-1812	CABLE, ETHERNET RJ 45 CONNECT. 8 M	2-149, 2-151
W4506	351150-0425	CABLE OLFLEX 25X0,75 MM2 LIGHT/GREY	2-149, 2-151
W4507	90459-1812	CABLE, ETHERNET RJ 45 CONNECT. 8 M	2-149, 2-151
W5002	351150-0413	CABLE OLFLEX 4X1,5 MM2 LIGHT/GREY	2-149, 2-151
W5003	90220-0104	SCR. CABLE 4X1,5MM2	2-149, 2-151
W5004	351150-0412	CABLE OLFLEX 3X1,5 MM2 LIGHT/GREY	2-149, 2-151
W 5006	351150-0405	CABLE OLFLEX 5X0,75 MM2 LIGHT/GREY	5-275
W5021	90220-0034	THERMOCABLE TEX/SITW-20F-KX 2X0,5MM2	2-149, 2-151
W5022	90220-0034	THERMOCABLE TEX/SITW-20F-KX 2X0,5MM2	2-149, 2-151
W5023	90220-0034	THERMOCABLE TEX/SITW-20F-KX 2X0,5MM2	2-149, 2-151
W5503	351150-0403	CABLE OLFLEX 3X0,75 MM2 LIGHT/GREY	2-57, 2-59
W5510	351150-0405	CABLE OLFLEX 5X0,75 MM2 LIGHT/GREY	5-277
W5603	351150-0405	CABLE OLFLEX 5X0,75 MM2 LIGHT/GREY	5-277
W5700	351150-0403	CABLE OLFLEX 3X0,75 MM2 LIGHT/GREY	2-149, 2-151
W7003	351150-0420	CABLE OLFLEX 7X2,5 MM2 LIGHT/GREY	7-133, 7-135, 7-137, 7-139, 7-141
W7004	351150-0413	CABLE OLFLEX 4X1,5 MM2 LIGHT/GREY	7-133, 7-135, 7-137, 7-139, 7-141
W7005	351150-0412	CABLE OLFLEX 3X1,5 MM2 LIGHT/GREY	7-133, 7-135, 7-137, 7-139, 7-141
W7006	351150-0425	CABLE OLFLEX 25X0,75 MM2 LIGHT/GREY	7-133, 7-135, 7-137, 7-139, 7-141
W7007	351150-0425	CABLE OLFLEX 25X0,75 MM2 LIGHT/GREY	7-133, 7-135, 7-137, 7-139, 7-141
W7008	351150-0425	CABLE OLFLEX 25X0,75 MM2 LIGHT/GREY	7-133, 7-135, 7-137, 7-139, 7-141
W7009	351150-0425	CABLE OLFLEX 25X0,75 MM2 LIGHT/GREY	7-133, 7-135, 7-137, 7-139, 7-141
W7010	90220-0104	SCR. CABLE 4X1,5MM2	7-115
W7011	90220-0104	SCR. CABLE 4X1,5MM2	7-179
W7012	90220-0105	SCR. CABLE 4X2,5MM2	7-7
W7014	351150-0412	CABLE OLFLEX 3X1,5 MM2 LIGHT/GREY	7-45, 7-47
W7015	90458-1076	L-SHAPED CONNECTOR CABLE 933 235-042	7-183, 7-185
W7020	90458-1076	L-SHAPED CONNECTOR CABLE 933 235-042	7-173
W7023	90458-1076	L-SHAPED CONNECTOR CABLE 933 235-042	7-183, 7-185
W7024	90458-1076	L-SHAPED CONNECTOR CABLE 933 235-042	7-45, 7-47
W7025	90458-1076	L-SHAPED CONNECTOR CABLE 933 235-042	7-45, 7-47
W7028	351150-0407	CABLE OLFLEX 12X0,75 MM2 LIGHT/GREY	7-203
W7029	351150-0407	CABLE OLFLEX 12X0,75 MM2 LIGHT/GREY	7-219
W7031	351150-0405	CABLE OLFLEX 5X0,75 MM2 LIGHT/GREY	7-205
W7037	351150-0415	CABLE OLFLEX 7X1,5 MM2 LIGHT/GREY	7-133, 7-135, 7-137, 7-139, 7-141
W7039	90220-0115	SCR. CABLE 12X0,75MM2	7-7
W7042	351150-0405	CABLE OLFLEX 5X0,75 MM2 LIGHT/GREY	7-45, 7-47
W7043	351150-0405	CABLE OLFLEX 5X0,75 MM2 LIGHT/GREY	7-45, 7-47
W7044	351150-0405	CABLE OLFLEX 5X0,75 MM2 LIGHT/GREY	7-45, 7-47
W7045	351150-0431	CABLE OLFLEX 2X0,75 MM2 LIGHT/GREY	7-45, 7-47
W7046	351120-0126	CABLE SILFLEX SIHF 2X4 0046025	7-79
W7047	2540595-0001	COAXIAL CABLE	7-7
W7048	2540596-0001	2COAXIAL CABLE	7-7
W7049	351120-0145	CABLE SILFLEX SIHF 3X2,5 0046020	7-85
W7050	90220-0092	PAIR TWISTED CABLE 3X2X0,25MM2	7-83
W7054	351150-0406	CABLE OLFLEX 7X0,75 MM2 LIGHT/GREY	7-45, 7-47
W7055	351150-0412	CABLE OLFLEX 3X1,5 MM2 LIGHT/GREY	7-45, 7-47

Pos	Part No	Description	Page No
W			
W7072	90220-0104	SCR. CABLE 4X1,5MM2	7-73
W7073	90220-0104	SCR. CABLE 4X1,5MM2	7-73
W7075	90220-0104	SCR. CABLE 4X1,5MM2	7-151, 7-153
W7076	90220-0104	SCR. CABLE 4X1,5MM2	7-133, 7-135, 7-137, 7-139, 7-141
W7077	351150-0405	CABLE OLFLEX 5X0,75 MM2 LIGHT/GREY	7-45, 7-47
W7304	90220-0034	THERMOCABLE TEX/SITW-20F-KX 2X0,5MM2	7-99
W7401	351150-0403	CABLE OLFLEX 3X0,75 MM2 LIGHT/GREY	7-215
W7402	351150-0403	CABLE OLFLEX 3X0,75 MM2 LIGHT/GREY	7-199
W9100:1	90459-3165	CABLE OLFLON PTFE 1X4,72 MM² BLACK	1-221
W9100:2	90459-3165	CABLE OLFLON PTFE 1X4,72 MM² BLACK	1-221
W9100:3	90459-3154	CABLE OLFLONPTFE 1X4,72 MM² YELLOW-GREEN	1-221
W9101	351150-0403	CABLE OLFLEX 3X0,75 MM2 LIGHT/GREY	1-227
W9103	351150-0403	CABLE OLFLEX 3X0,75 MM2 LIGHT/GREY	1-227
W9104	351150-0403	CABLE OLFLEX 3X0,75 MM2 LIGHT/GREY	1-227
W9112	351150-0403	CABLE OLFLEX 3X0,75 MM2 LIGHT/GREY	1-227
W9113	351150-0404	CABLE OLFLEX 4X0,75 MM2 LIGHT/GREY	1-227
W9114	351150-0403	CABLE OLFLEX 3X0,75 MM2 LIGHT/GREY	1-227
W9115	90220-0165	SCR. CABLE 5X0,34MM2	1-227
W9117	90220-0165	SCR. CABLE 5X0,34MM2	1-227
W9121	90220-0034	THERMOCABLE TEX/SITW-20F-KX 2X0,5MM2	1-221
X			
X001	90459-0959	DISTRIBUTOR BLOCK 1492-PD3163	8-77, 8-79
X011	90001-0033	WALL SOCKET OUTLET	8-97, 8-99
X025	90326-0020	PLUG, FEMALE YELLOW CR-AL	8-25
X101	90459-6624	FEMALE INSERT HAN E AV, 09 33 006 4735	8-39, 8-41, 8-43
X102	90459-6624	FEMALE INSERT HAN E AV, 09 33 006 4735	8-39, 8-41, 8-43
X103	90459-6624	FEMALE INSERT HAN E AV, 09 33 006 4735	8-39, 8-41, 8-43
X104	90459-6624	FEMALE INSERT HAN E AV, 09 33 006 4735	8-39, 8-41, 8-43
X105	90459-6624	FEMALE INSERT HAN E AV, 09 33 006 4735	8-39, 8-41, 8-43
X106	90459-6624	FEMALE INSERT HAN E AV, 09 33 006 4735	8-39, 8-41, 8-43
X107	90459-6624	FEMALE INSERT HAN E AV, 09 33 006 4735	8-39, 8-41, 8-43
X109	90459-6624	FEMALE INSERT HAN E AV, 09 33 006 4735	8-39, 8-41, 8-43
X111	90459-6624	FEMALE INSERT HAN E AV, 09 33 006 4735	8-39, 8-41, 8-43
X112	90459-6624	FEMALE INSERT HAN E AV, 09 33 006 4735	8-39, 8-41, 8-43
X113	90459-6624	FEMALE INSERT HAN E AV, 09 33 006 4735	8-39, 8-41, 8-43
X114	90459-6624	FEMALE INSERT HAN E AV, 09 33 006 4735	8-39, 8-41, 8-43
X115	90459-6624	FEMALE INSERT HAN E AV, 09 33 006 4735	8-39, 8-41, 8-43
X116	90459-6624	FEMALE INSERT HAN E AV, 09 33 006 4735	8-39, 8-41, 8-43
X117	90459-6624	FEMALE INSERT HAN E AV, 09 33 006 4735	8-39, 8-41, 8-43
X118	90459-6624	FEMALE INSERT HAN E AV, 09 33 006 4735	8-39, 8-41, 8-43
X119	90459-6624	FEMALE INSERT HAN E AV, 09 33 006 4735	8-49
X126	90110-0159	MALE INSERT 70.310.0640.0	7-115
X126	90459-6624	FEMALE INSERT HAN E AV, 09 33 006 4735	8-39, 8-41, 8-43
X127	90459-6624	FEMALE INSERT HAN E AV, 09 33 006 4735	8-39, 8-41, 8-43
X128	90110-0159	MALE INSERT 70.310.0640.0	7-133, 7-135, 7-137, 7-139, 7-141
X128	90459-6624	FEMALE INSERT HAN E AV, 09 33 006 4735	8-39, 8-41, 8-43
X129	90459-6624	FEMALE INSERT HAN E AV, 09 33 006 4735	8-39, 8-41, 8-43
X130	90459-6624	FEMALE INSERT HAN E AV, 09 33 006 4735	8-39, 8-41, 8-43
X132	90110-0159	MALE INSERT 70.310.0640.0	7-133, 7-135, 7-137, 7-139, 7-141
X132	90459-6624	FEMALE INSERT HAN E AV, 09 33 006 4735	8-39, 8-41, 8-43
X133	90110-0159	MALE INSERT 70.310.0640.0	7-133, 7-135, 7-137, 7-139, 7-141
X133	90459-6624	FEMALE INSERT HAN E AV, 09 33 006 4735	8-39, 8-41, 8-43
X134	90110-0159	MALE INSERT 70.310.0640.0	7-133, 7-135, 7-137, 7-139, 7-141
X134	90459-6624	FEMALE INSERT HAN E AV, 09 33 006 4735	8-39, 8-41, 8-43
X136	90459-6624	FEMALE INSERT HAN E AV, 09 33 006 4735	8-39, 8-41, 8-43
X137	90459-6624	FEMALE INSERT HAN E AV, 09 33 006 4735	8-39, 8-41, 8-43
X138	90459-6624	FEMALE INSERT HAN E AV, 09 33 006 4735	8-39, 8-41, 8-43
X160	2540596-0002	COAXIAL CABLE	8-39, 8-41, 8-43
X161	2540596-0002	COAXIAL CABLE	8-39, 8-41, 8-43
X162	2540596-0002	COAXIAL CABLE	8-39, 8-41, 8-43
X201	90459-6627	FEMALE INSERT HAN E AV, 09 33 024 4735	8-39, 8-41, 8-43
X202	90459-6627	FEMALE INSERT HAN E AV, 09 33 024 4735	8-39, 8-41, 8-43
X203	90459-6627	FEMALE INSERT HAN E AV, 09 33 024 4735	8-39, 8-41, 8-43
X204	90459-6627	FEMALE INSERT HAN E AV, 09 33 024 4735	8-39, 8-41, 8-43
X206	90459-6627	FEMALE INSERT HAN E AV, 09 33 024 4735	8-39, 8-41, 8-43
X207	90459-6627	FEMALE INSERT HAN E AV, 09 33 024 4735	8-39, 8-41, 8-43
X208	90459-6627	FEMALE INSERT HAN E AV, 09 33 024 4735	8-39, 8-41, 8-43
X209	90459-6627	FEMALE INSERT HAN E AV, 09 33 024 4735	8-39, 8-41, 8-43
X210	90459-6627	FEMALE INSERT HAN E AV, 09 33 024 4735	8-39, 8-41, 8-43
X211	90459-6627	FEMALE INSERT HAN E AV, 09 33 024 4735	8-39, 8-41, 8-43
X212	90459-6627	FEMALE INSERT HAN E AV, 09 33 024 4735	8-39, 8-41, 8-43
X213	90110-0150	MALE INSERT 121110 0000	7-133, 7-135, 7-137, 7-139, 7-141
X213	90459-6627	FEMALE INSERT HAN E AV, 09 33 024 4735	8-39, 8-41, 8-43
X214	90110-0150	MALE INSERT 121110 0000	7-133, 7-135, 7-137, 7-139, 7-141
X214	90459-6627	FEMALE INSERT HAN E AV, 09 33 024 4735	8-39, 8-41, 8-43
X215	90459-6627	FEMALE INSERT HAN E AV, 09 33 024 4735	8-39, 8-41, 8-43
X216	90459-6627	FEMALE INSERT HAN E AV, 09 33 024 4735	8-39, 8-41, 8-43
X217	90459-6627	FEMALE INSERT HAN E AV, 09 33 024 4735	8-39, 8-41, 8-43
X218	90459-6627	FEMALE INSERT HAN E AV, 09 33 024 4735	8-39, 8-41, 8-43
X219	90110-0150	MALE INSERT 121110 0000	7-133, 7-135, 7-137, 7-139, 7-141
X219	90459-6627	FEMALE INSERT HAN E AV, 09 33 024 4735	8-39, 8-41, 8-43
X220	90110-0150	MALE INSERT 121110 0000	7-133, 7-135, 7-137, 7-139, 7-141

Pos	Part No	Description	Page No
X			
X220	90459-6627	FEMALE INSERT HAN E AV, 09 33 024 4735	8-39, 8-41, 8-43
X221	90459-6627	FEMALE INSERT HAN E AV, 09 33 024 4735	8-39, 8-41, 8-43
X222	90459-6627	FEMALE INSERT HAN E AV, 09 33 024 4735	8-39, 8-41, 8-43
X223	90459-6627	FEMALE INSERT HAN E AV, 09 33 024 4735	8-39, 8-41, 8-43
X224	90459-6627	FEMALE INSERT HAN E AV, 09 33 024 4735	8-39, 8-41, 8-43
X225	90459-6627	FEMALE INSERT HAN E AV, 09 33 024 4735	8-39, 8-41, 8-43
X226	90459-6627	FEMALE INSERT HAN E AV, 09 33 024 4735	8-39, 8-41, 8-43
X227	90459-6627	FEMALE INSERT HAN E AV, 09 33 024 4735	8-39, 8-41, 8-43
X228	90459-6627	FEMALE INSERT HAN E AV, 09 33 024 4735	8-39, 8-41, 8-43
X300	90459-0835	THERMO CONTACT PANEL, 16 CONTACTS 2 ROWS	8-39, 8-41, 8-43
X308	90326-0022	PLUG, MALE YELLOW CR-AL	1-367, 1-369
X312	90326-0022	PLUG, MALE YELLOW CR-AL	1-367, 1-369
X317	90326-0022	PLUG, MALE YELLOW CR-AL	1-367, 1-369
X318	90326-0022	PLUG, MALE YELLOW CR-AL	1-367, 1-369
X320	90326-0022	PLUG, MALE YELLOW CR-AL	7-99
X401	90110-0235	CABLE CONTACT, PX0739/S	7-115
X401	90110-0236	CHASSIS CONTACT PX0767/S	8-39, 8-41, 8-43
X402	90110-0235	CABLE CONTACT, PX0739/S	7-115
X402	90110-0236	CHASSIS CONTACT PX0767/S	8-39, 8-41, 8-43
X403	90110-0236	CHASSIS CONTACT PX0767/S	8-39, 8-41, 8-43
X404	90110-0236	CHASSIS CONTACT PX0767/S	8-39, 8-41, 8-43
X405	90110-0236	CHASSIS CONTACT PX0767/S	8-39, 8-41, 8-43
X406	90110-0236	CHASSIS CONTACT PX0767/S	8-39, 8-41, 8-43
X451	90110-0028	CONTACT UNIT 4-POLEADAPTER	8-97, 8-99
X501	90110-0055	FEMALE INSERT HAN 6 HSB 09 31 006 2701	8-39, 8-41, 8-43
X502	90110-0055	FEMALE INSERT HAN 6 HSB 09 31 006 2701	8-39, 8-41, 8-43
X503	90110-0055	FEMALE INSERT HAN 6 HSB 09 31 006 2701	8-39, 8-41, 8-43
X504	90110-0055	FEMALE INSERT HAN 6 HSB 09 31 006 2701	8-39, 8-41, 8-43
X504	90110-0156	MALE INSERT 70.210.0653.0	7-133, 7-135, 7-137, 7-139, 7-141
X600	90110-0381	COVER, 310601-33 CYR24.4	1-367, 1-369
X710.1	90459-6623	FEMALE INSERT HAN K 4/8, 09 38 012 2701	8-39, 8-41, 8-43
X711.1	90459-6623	FEMALE INSERT HAN K 4/8, 09 38 012 2701	8-39, 8-41, 8-43
X712.1	90459-6623	FEMALE INSERT HAN K 4/8, 09 38 012 2701	8-39, 8-41, 8-43
X713.1	90459-6623	FEMALE INSERT HAN K 4/8, 09 38 012 2701	8-39, 8-41, 8-43
X714.1	90459-6623	FEMALE INSERT HAN K 4/8, 09 38 012 2701	8-39, 8-41, 8-43
X715.1	90459-6623	FEMALE INSERT HAN K 4/8, 09 38 012 2701	8-39, 8-41, 8-43
X716.1	90459-6623	FEMALE INSERT HAN K 4/8, 09 38 012 2701	8-39, 8-41, 8-43
X840	90110-0052	MALE INSERT HAN 6E 09 33 006 2601	8-49
X871	90459-1452	FEMALE INSERT HAN K 09 38 006 2711	8-49
X872	90110-0057	FEMALE INSERT HAN 24 E 09 33 002 4201	8-49
X901	1095597-0100	TERMINAL	2-265
X1250	90042-0535	TERMINAL BOARD 19 CORDS	1-337
X1251	90042-0535	TERMINAL BOARD 19 CORDS	1-339, 1-341
X1252	90042-0535	TERMINAL BOARD 19 CORDS	1-339, 1-341
X1253	90042-0535	TERMINAL BOARD 19 CORDS	1-345, 1-347
X1307	90326-0020	PLUG, FEMALE YELLOW CR-AL	1-257
X1511	90459-3709	CONNECTOR 3-POLE AMP 282087-1	1-175
X1512	90459-4077	WIRE SEAL , AMP 281934	1-175
X1513	90459-4079	MINI MIC SRS, AMP 183035-1	1-175
X2038	90326-0022	PLUG, MALE YELLOW CR-AL	6-19
X2051	90042-0535	TERMINAL BOARD 19 CORDS	6-75
X7022	90458-1595	CONNECTION, BKS-S 33M-00	7-83
X7049	90042-0535	TERMINAL BOARD 19 CORDS	7-161, 7-163, 7-165
X7050	90042-0535	TERMINAL BOARD 19 CORDS	7-161, 7-163, 7-165
X7051	90042-0535	TERMINAL BOARD 19 CORDS	7-159
X7304	90326-0020	PLUG, FEMALE YELLOW CR-AL	7-99
X9121	90326-0020	PLUG, FEMALE YELLOW CR-AL	1-221
X9122	90326-0020	PLUG, FEMALE YELLOW CR-AL	1-221
X74031	90458-0603	CONNECTOR FEMALE 5 PINS	7-107
X74032	90458-0603	CONNECTOR FEMALE 5 PINS	7-107
Y			
Y1104	90042-0172	SOLENOID VALVE 4023/1005/1032 24VDC	1-207
Y1107	90042-0538	PILOT VALVE L=500MM	1-339, 1-341
Y1108	90042-0538	PILOT VALVE L=500MM	1-339, 1-341
Y1111	90042-0538	PILOT VALVE L=500MM	1-339, 1-341
Y1112	90042-0538	PILOT VALVE L=500MM	1-339, 1-341
Y1210	90042-0206	SOLENOID VALVE G1/8, 444-111-000-1	2-27
Y1220	90042-0538	PILOT VALVE L=500MM	2-51
Y1221	90042-0538	PILOT VALVE L=500MM	2-51
Y1222	90042-0172	SOLENOID VALVE 4023/1005/1032 24VDC	1-285
Y1223	90042-0172	SOLENOID VALVE 4023/1005/1032 24VDC	1-285
Y1230	90042-0203	SOLENOID VALVE BüRKERT	1-319
Y1231	90042-0203	SOLENOID VALVE BüRKERT	1-319
Y1232	90459-6975	SOLENOID VALVE G1/4, 2401186082702400	1-319
Y1233	90459-6977	SOLENOID VALVE G1/4, V04B286N-B423A	1-319
Y1241	90042-0538	PILOT VALVE L=500MM	1-339, 1-341
Y1242	90042-0538	PILOT VALVE L=500MM	1-339, 1-341
Y1303	90042-0538	PILOT VALVE L=500MM	1-337
Y1311	90042-0538	PILOT VALVE L=500MM	1-345, 1-347
Y1312	90042-0538	PILOT VALVE L=500MM	1-337
Y1318	90042-0538	PILOT VALVE L=500MM	1-337
Y1320	90042-0538	PILOT VALVE L=500MM	1-345, 1-347

Pos	Part No	Description	Page No
Y			
Y1323	90042-0538	PILOT VALVE L=500MM	1-337
Y1324	90042-0538	PILOT VALVE L=500MM	1-345, 1-347
Y1325	90042-0538	PILOT VALVE L=500MM	1-345, 1-347
Y1326	90042-0538	PILOT VALVE L=500MM	1-345, 1-347
Y1332	90042-0538	PILOT VALVE L=500MM	1-345, 1-347
Y1333	90042-0538	PILOT VALVE L=500MM	1-345, 1-347
Y1333	90187-0110	DIAPHRAGM VALVE DN15, NC WELD CONN.	1-257
Y1401	90042-0538	PILOT VALVE L=500MM	1-339, 1-341
Y1501	90042-0538	PILOT VALVE L=500MM	1-339, 1-341
Y1502	90042-0538	PILOT VALVE L=500MM	1-337
Y1503	90042-0538	PILOT VALVE L=500MM	1-337
Y1801	90042-0538	PILOT VALVE L=500MM	1-345, 1-347
Y1802	90042-0538	PILOT VALVE L=500MM	1-345, 1-347
Y1803	90042-0538	PILOT VALVE L=500MM	1-345, 1-347
Y1804	90042-0538	PILOT VALVE L=500MM	2-51
Y1805	90042-0538	PILOT VALVE L=500MM	2-51
Y1808	90042-0538	PILOT VALVE L=500MM	2-51
Y1809	90042-0538	PILOT VALVE L=500MM	2-51
Y1810	90042-0538	PILOT VALVE L=500MM	1-337
Y2104	90042-0538	PILOT VALVE L=500MM	2-51
Y2106	90042-0248	SOLENOID VALVE OFFICIENE DI ENSINO	2-207
Y 2108	90042-0249	SOLENOID VALVE OFFICINE DI ENSINO	6-69, 6-71
Y2201	90042-0585	PILOT VALVE L=5M	6-77
Y2401	90042-0538	PILOT VALVE L=500MM	2-51
Y3101	90042-0254	SOLENOID VALVE, R1 1/2	6-35
Y3103	90042-0538	PILOT VALVE L=500MM	6-75
Y3105	90042-0538	PILOT VALVE L=500MM	2-51
Y3109	90042-0538	PILOT VALVE L=500MM	6-75
Y3110	90042-0538	PILOT VALVE L=500MM	6-75
Y3111	90042-0538	PILOT VALVE L=500MM	6-75
Y3112	90042-0538	PILOT VALVE L=500MM	6-75
Y5200	90042-0538	PILOT VALVE L=500MM	2-135, 2-137, 2-139
Y5210	90042-0538	PILOT VALVE L=500MM	2-135, 2-137, 2-139
Y5315	90042-0538	PILOT VALVE L=500MM	2-135, 2-137, 2-139
Y5501	90042-0538	PILOT VALVE L=500MM	2-51
Y5502	90042-0538	PILOT VALVE L=500MM	2-51
Y5503	90042-0539	PILOT VALVE L=350MM	2-51
Y5504	90042-0538	PILOT VALVE L=500MM	2-135, 2-137, 2-139
Y5505	90042-0538	PILOT VALVE L=500MM	2-135, 2-137, 2-139
Y5506	90042-0538	PILOT VALVE L=500MM	2-135, 2-137, 2-139
Y6201	90042-0591	PILOT VALVE, 04938-333-08	7-161, 7-163, 7-165
Y6203	90042-0539	PILOT VALVE L=350MM	7-161, 7-163, 7-165
Y6205	90042-0591	PILOT VALVE, 04938-333-08	7-161, 7-163, 7-165
Y7303	90042-0539	PILOT VALVE L=350MM	7-161, 7-163, 7-165
Y7315	90042-0591	PILOT VALVE, 04938-333-08	7-161, 7-163, 7-165
Y7402	90042-0591	PILOT VALVE, 04938-333-08	7-161, 7-163, 7-165
Y7407	90042-0591	PILOT VALVE, 04938-333-08	7-161, 7-163, 7-165
Y7408	90042-0538	PILOT VALVE L=500MM	7-161, 7-163, 7-165
Y7410	90042-0539	PILOT VALVE L=350MM	7-161, 7-163, 7-165
Y7412	90042-0538	PILOT VALVE L=500MM	7-161, 7-163, 7-165
Y7413	90042-0538	PILOT VALVE L=500MM	7-161, 7-163, 7-165
Y7414	90042-0538	PILOT VALVE L=500MM	7-161, 7-163, 7-165
Y7415	90042-0538	PILOT VALVE L=500MM	7-161, 7-163, 7-165
Y7420	90042-0591	PILOT VALVE, 04938-333-08	7-161, 7-163, 7-165
Y7421	90042-0591	PILOT VALVE, 04938-333-08	7-161, 7-163, 7-165
Y7425	90042-0585	PILOT VALVE L=5M	7-161, 7-163, 7-165
Y7430	90042-0539	PILOT VALVE L=350MM	7-159
Y7431	90042-0539	PILOT VALVE L=350MM	7-159
Y7432	90042-0539	PILOT VALVE L=350MM	7-159
Y7433	90042-0539	PILOT VALVE L=350MM	7-159
Y7435	90042-0539	PILOT VALVE L=350MM	7-159
Y8401	90042-0582	COIL NORGREN QM/48/127/21	7-61
Y9101	90042-0171	SOLENOID VALVE BURKERT	1-225
Y9103	90042-0171	SOLENOID VALVE BURKERT	1-225
Y9105	90042-0538	PILOT VALVE L=500MM	1-339, 1-341
Y9106	90042-0538	PILOT VALVE L=500MM	1-339, 1-341
Y9112	90042-0203	SOLENOID VALVE BüRKERT	1-223
Z			
Z001	90024-0060	POWER LINE FILTER, 80 A 250/440 VAC	6-11
Z002	90082-0013	OVER VOLT. PROTECT. PU 4C-R 230 VAC	6-11
Z004	90024-0036	FILTERED TERMINAL BLOCK	6-11
Z006	90459-1359	FILTER, 1 A, 250 VAC	8-97, 8-99
Z010	90459-3460	FOOTPRINT FILTER 22-RF010-AL	8-77, 8-79
Z011	90459-3460	FOOTPRINT FILTER 22-RF010-AL	8-77, 8-79
Z012	90459-3460	FOOTPRINT FILTER 22-RF010-AL	8-77, 8-79
Z013	90459-3460	FOOTPRINT FILTER 22-RF010-AL	8-77, 8-79
Z014	90459-3460	FOOTPRINT FILTER 22-RF010-AL	8-77, 8-79
Z015	90459-3461	FOOTPRINT FILTER 22-RF5P7-AL	8-77, 8-79
Z100	90458-1140	FERRITE, RI-26-28-13	8-77, 8-79
Z101	90458-1140	FERRITE, RI-26-28-13	8-77, 8-79
Z110	90458-1140	FERRITE, RI-26-28-13	8-77, 8-79
Z111	90458-1140	FERRITE, RI-26-28-13	8-77, 8-79

Pos	Part No	Description	Page No
Z			
Z120	90458-1140	FERRITE, RI-26-28-13	8-77, 8-79
Z121	90458-1140	FERRITE, RI-26-28-13	8-77, 8-79
Z130	90458-1140	FERRITE, RI-26-28-13	8-77, 8-79
Z131	90458-1140	FERRITE, RI-26-28-13	8-77, 8-79
Z140	90458-1140	FERRITE, RI-26-28-13	8-77, 8-79
Z141	90458-1140	FERRITE, RI-26-28-13	8-77, 8-79
Z150	90458-1140	FERRITE, RI-26-28-13	8-77, 8-79
Z151	90458-1140	FERRITE, RI-26-28-13	8-77, 8-79
Z701	90100-0068	EMC FILTER 90A, 258-75-34	8-73
Z91031	90277-0104	FILTER F64B-2GN-ARO	1-225
Z91032	90277-0323	FILTER HOUSING / ART.NO 95S6-1/4 S 5430	1-225

Pos	Part No	Description	Page No

Pos	Part No	Description	Page No	Pos	Part No	Description	Page No

Tetra Pak

SPC binder labels. 40 mm Full width *Note! This page is generated* **automatically.**
using the **variable definitions** *made in the* **front page** *file!!*

Tetra Pak A3/Flex 1(2)
648575-0100
Issue: 2007-03 Doc No: SPC-81806-0146

Tetra Pak A3/Flex 1(2)
648575-0100
Issue: 2007-03 Doc No: SPC-81806-0146

Tetra Pak A3/Flex 2(2)
648575-0100
Issue: 2007-03 Doc No: SPC-81806-0146

Tetra Pak A3/Flex 2(2)
648575-0100
Issue: 2007-03 Doc No: SPC-81806-0146

Tetra Pak A3/Flex 1(2)
648575-0100
Issue: 2007-03 Doc No: SPC-81806-0146

Tetra Pak A3/Flex 1(2)
648575-0100
Issue: 2007-03 Doc No: SPC-81806-0146

Tetra Pak A3/Flex 2(2)
648575-0100
Issue: 2007-03 Doc No: SPC-81806-0146

Tetra Pak A3/Flex 2(2)
648575-0100
Issue: 2007-03 Doc No: SPC-81806-0146

Tetra Pak A3/Flex 1(2)
648575-0100
Issue: 2007-03 Doc No: SPC-81806-0146

Tetra Pak A3/Flex 1(2)
648575-0100
Issue: 2007-03 Doc No: SPC-81806-0146

Tetra Pak A3/Flex 2(2)
648575-0100
Issue: 2007-03 Doc No: SPC-81806-0146

Tetra Pak A3/Flex 2(2)
648575-0100
Issue: 2007-03 Doc No: SPC-81806-0146