SPC
Spare Parts Catalogue

VCK Tetra Pak A3/Flex

648597-0100

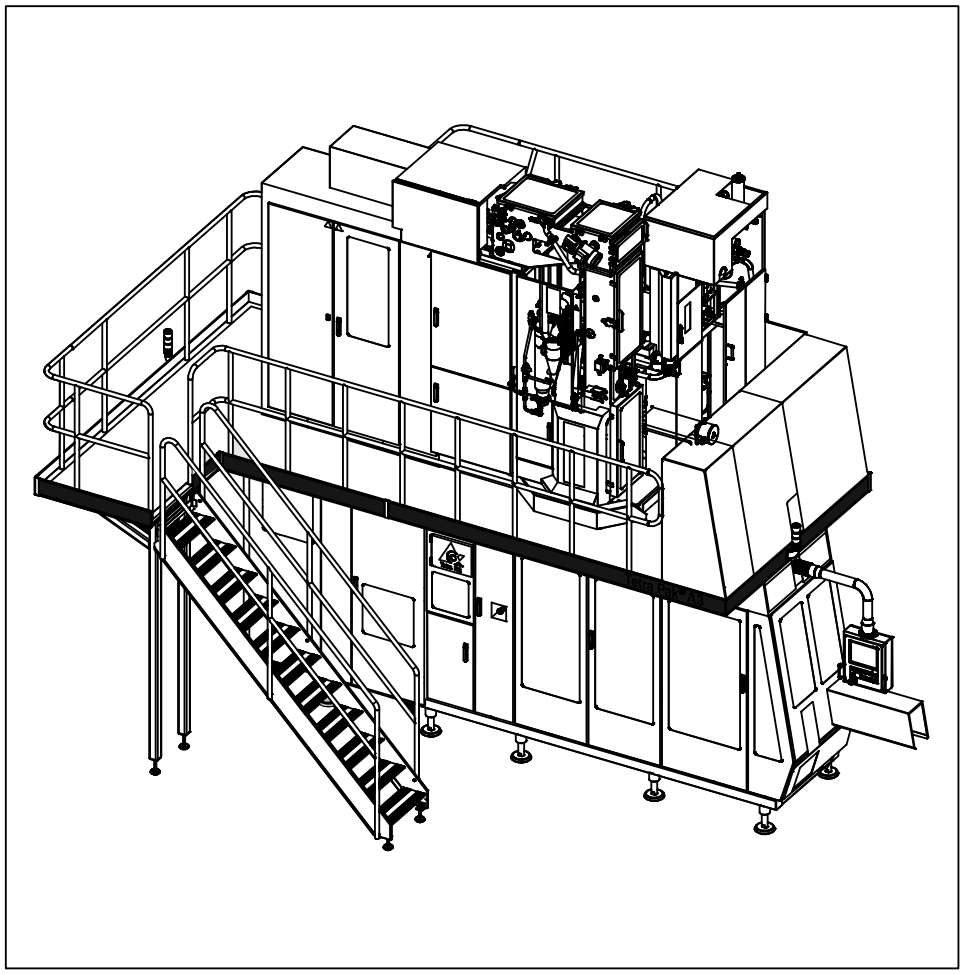

Tetra Pak

Doc. No: SPC-81868-0102

Picture not available yet

The position numbers in the illustration correspond with the chapter numbers listed on the next page.

Copyright © 2004 Tetra Pak Group

All rights reserved. No part of this document may be reproduced or copied in any form or by any means without written permission from Tetra Pak Carton Ambient AB.

Tetra Pak and all Tetra Pak products are trademarks belonging to the Tetra Pak Group.

The content of this manual is in accordance with the design and construction of the machine or equipment at the time of publishing. Tetra Pak reserves the right to introduce design modifications without prior notice.

This document was produced by:

Tetra Pak Carton Ambient S.p.A.
Technical Publications
Via Delfini 1
41100 Modena /Italy

This Tetra Pak equipment was manufactured by:

Tetra Pak Carton Ambient S.p.A.
Via Delfini 1
41100 Modena /Italy

Additional copies can be ordered from Tetra Pak Parts or the nearest Tetra Pak office. When ordering additional copies, always provide the document number. This can be found in the machine specification document. It is also printed on the front cover and in the footer on each page of the manual.

Doc. No. SPC-81868-0102

Issue 2004-04

This document is valid from:

Series No/Machine No Sign.

SPC

Spare Parts Catalogue

Volume Conversion Kit
648597-0100

i Introduction

1 Superstructure Box
B-2634504-0100

2 Jaw System Box
B-2634505-0100

3 Final Folder Box
B-2634506-0100

4 Volume Kit
B-2593831-0100

ii Part Number Index

A list of all optional equipment, optional kits, and rebuilding kits that this catalogue is valid for is found on the next page.

Doc. No: SPC-81868-0102

Issue 2004-04

Tetra Pak

Tetra Pak Carton Ambient S.p.A.

Valid for:

Tetra Pak A3/Flex
648575-0100

Update Log for Doc. No. SPC-81868-0102

This table shows all changes made to this catalogue, such as kits installed and pages added or removed.

Date	Installed Kit	Added Pages (Doc. No.)	Removed Pages	Signature

Date	Installed Kit	Added Pages (Doc. No.)	Removed Pages	Signature

i Introduction

TechPub-2660371-0101

en About the Introduction Chapter
This chapter contains basic information about this catalogue and related Tetra Pak equipment.

da Om indledningen
Kapitlet indeholder grundlæggende oplysninger om dette katalog og tilhørende Tetra Pak-udstyr.

de Zur Einleitung
Dieses Kapitel enthält grundlegende Informationen zu diesem Handbuch und der entsprechenden Tetra Pak Ausrüstung.

el Σχετικά με το Κεφάλαιο 'Εισαγωγή'
Αυτό το κεφάλαιο περιέχει βασικές πληροφορίες για τον παρόντα κατάλογο και τον σχετικό εξοπλισμό της Tetra Pak.

es Sobre el Capítulo de Introducción
Este capítulo contiene información básica sobre este manual y el equipo Tetra Pak relacionado.

fi Tietoja Johdanto-luvusta
Tässä luvussa on perustietoja tästä luettelosta ja Tetra Pak -laitteesta.

fr Concernant le chapitre d'Introduction
Le présent chapitre contient les renseignements de base concernant ce manuel et l'équipement Tetra Pak concerné.

it Informazioni sulla sezione Introduzione
Questa sezione contiene informazioni generali sul presente catalogo e la relativa macchina Tetra Pak.

nl Omtrent het hoofdstuk Inleiding
Dit hoofdstuk bevat basisinformatie betreffende dit handboek en daarmee verband houdende apparatuur van Tetra Pak.

no Om kapitlet Introduksjon
Dette kapitlet inneholder grunnleggende informasjon om denne katalogen og relatert Tetra Pak-ustyr.

po Sobre o capítulo Introdução
Este capítulo contém informações básicas sobre este catálogo e ao equipamento Tetra Pak relacionado.

sv Om inledningskapitlet
Det här kapitlet innehåller grundläggande information om katalogen och Tetra Pak-utrustningen.

TechPub-2660371-0101

Introduction

Illustrations . . . . . i - 5
English Text . . . . . i - 7

Indledning

Illustrationer . . . . . i - 5
Dansk tekst . . . . . i - 11

Einleitung

Abbildungen . . . . . i - 5
Deutscher Text . . . . . i - 15

Εισαγωγή

Εικόνες . . . . . i - 5
Ελληνικό Κείμενο . . . . . i- 19

Introducción

Ilustraciones . . . . . i - 5
Texto español . . . . . i - 23

Johdanto

Kuvat . . . . . i - 5
Suomenkielinen teksti . . . . . i - 27

Introduction

Figures . . . . . i - 5
Texte français . . . . . i - 31

Introduzione

Figure . . . . . i - 5
Testo in italiano . . . . . i - 35

Inleiding

Illustraties . . . . . i - 5
Nederlands tekst . . . . . i - 39

Introduksjon

Illustrasjoner . . . . . i - 5
Norsk tekst . . . . . i - 43

Introdução

Ilustrações . . . . . i - 5
Texto em portugese . . . . . i - 47

TechPub-2660371-0101

Inledning

Bilder . . . . . i - 5
Svensk text . . . . . i - 51

TechPub-2660371-0101

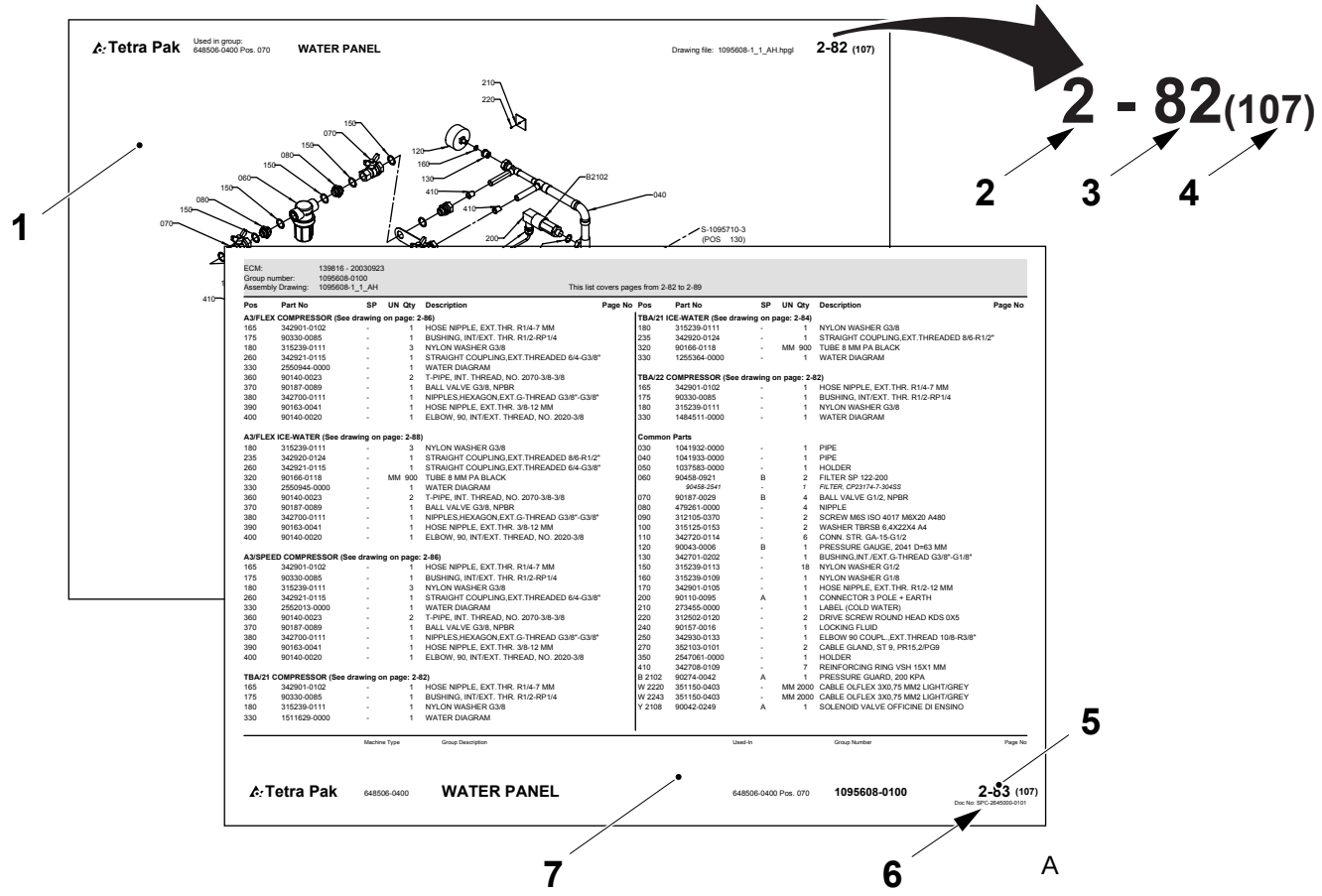

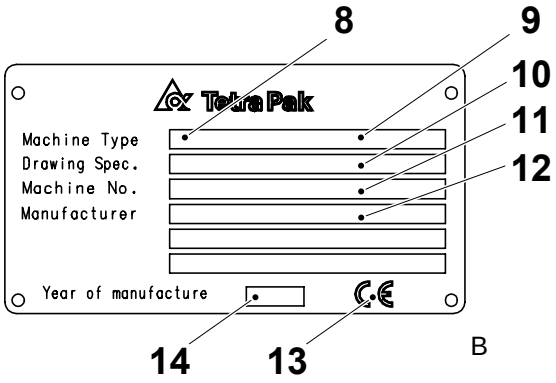

MACHINE SPECIFICATION

Machine Sign Data

Machine Type	: TBA/22 - 200 B
Drawing Spec.	: 648571-0400
Machine No.	: 21070 /83816
Designed by	: Tetra Brik Packaging Systems S.p.A. Via A. Delfini 41100 Modena Italy
Manufacturer	: Tetra Brik Packaging Systems S.p.A. Via A. Delfini 41100 Modena Italy
Year of Manufacture	: 2000

Machine No. : 21070 / 83816

Date of Issue	: 10/23/2000
Machine Type	: **TBA/22 - 200 Baseline**
Issued by	: Tetra Brik
No. of Sheets	: 1/1
No of M. Dev.	: 1

Basic Design

Machine Body	B-648522 0400
Drive Unit	B-648523 - 0500
Jaw System	B-648524 - 0400
Final Folder	B-648525 - 0400
Service Unit	B-648506 - 0300
Strip Applicator	B-648507 - 0400
Regular Accessories	B-648547 - 0100
Superstructure	B-648521 - 0300
Aut. Splicing Unit	B-648513 - 0400
Electrical Cabinet	BE-648538 - 0200

Equipment Included

1282762-0101 Trolley

527898-0101 Container H2O2

Variables

ECN No. EL	71390
Frequency	Hz - 50
Voltage	400/230
Machine Speed	20000/H

Documentation Included

SPC 81511-102 MM 82302-104
MM 82302-604 OM 82346-104
OM 82346-604 IM 82358-103
IM 82358-603 UM 82351-103
UM 82351-603 UM 82197-102
TEM 27080-102 TEM 27085-602
EM 82318-104 EM 82318-604

C

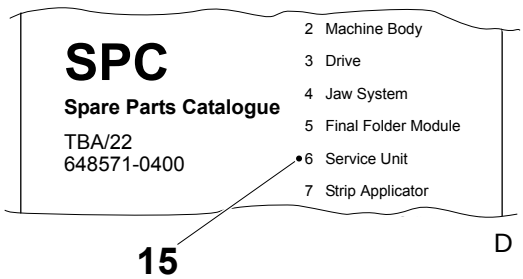

TechPub-2660371-0101

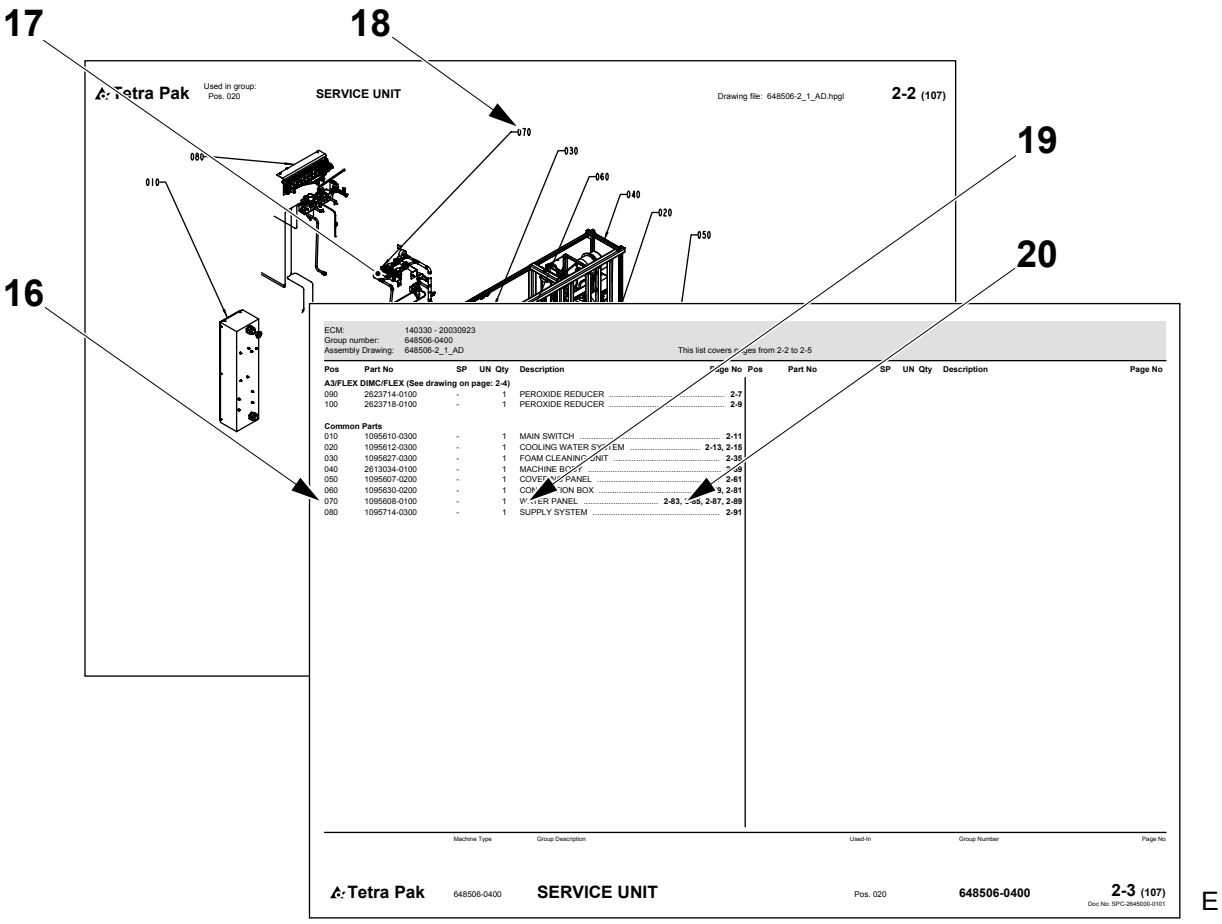

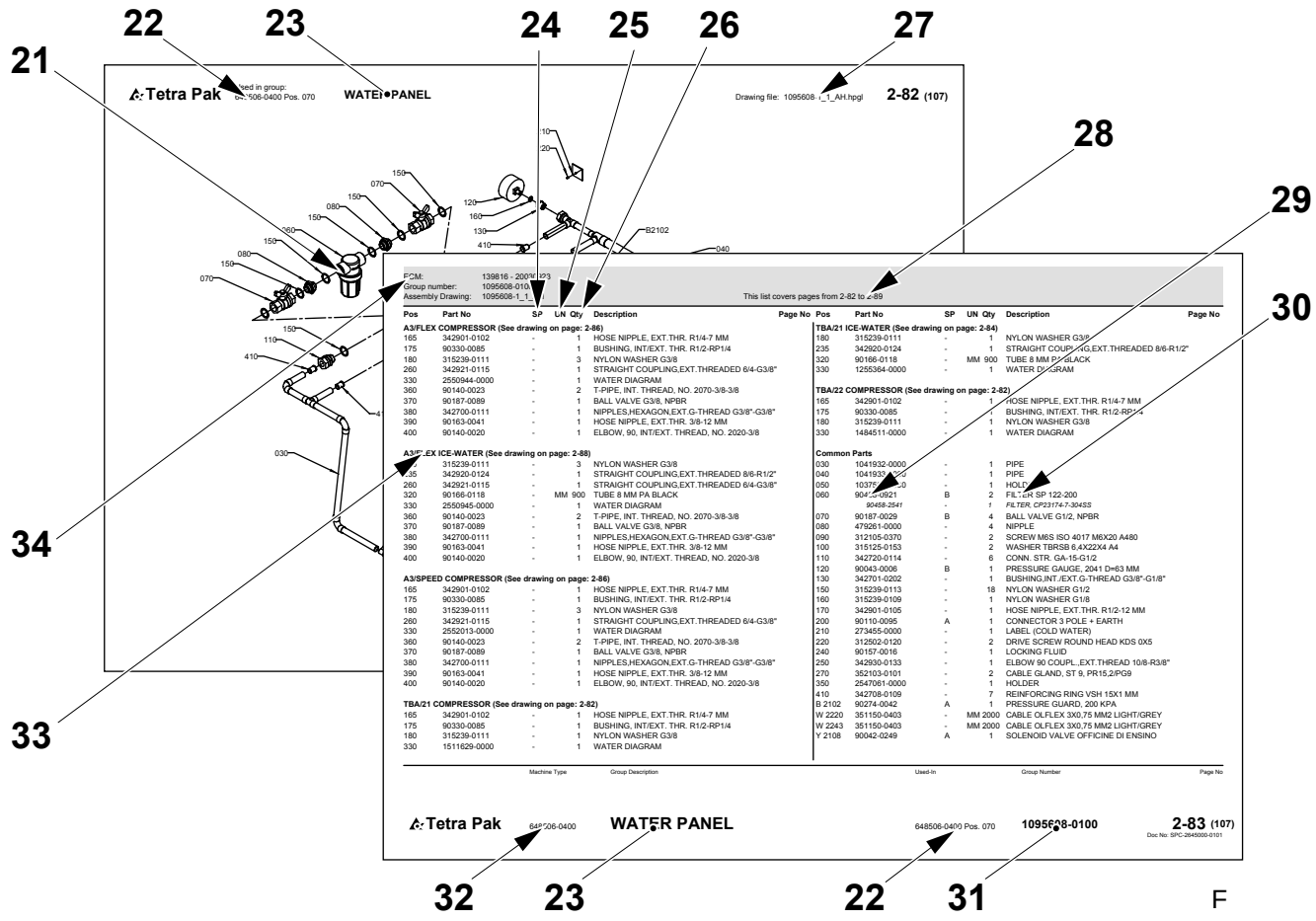

TechPub-2660371-0101

Introduction

Manual Information

Tetra Pak recommends reading all delivered manuals carefully. Make sure that the delivered manuals are available to personnel who operate or maintain the equipment.

It is important to keep this catalogue for the lifetime of the equipment and to pass the catalogue on to any subsequent holder or user.

Tetra Pak will not be held responsible for any damage to the equipment caused by not following the instructions given in the manuals that accompany this equipment.

Delivered Manuals

The manuals delivered with this equipment may include

- Conversion Manual (CM)
  This manual provides technicians with information on converting the equipment between different production modes.
- Electrical Manual (EM)
  This manual provides technicians with information about the equipment's electrical system.
- Installation Manual (IM)
  This manual provides technicians with information required to safely install the equipment.
- Maintenance Manual (MM)
  This manual provides technicians with information on maintaining the equipment.
- Operation Manual (OM)
  This manual provides the operator with information on handling and operating the equipment before, during, and after production.
- Spare Parts Catalogue (SPC)
  This manual provides the information necessary to order spare parts from Tetra Pak
- Technical Manual (TeM)
  - provides technicians with information required to safely install the equipment
  - provides technicians with information on maintaining the equipment
  - provides technicians with information about the equipment's electrical system
  - provides the information necessary to order spare parts from Tetra Pak

TechPub-2660371-0101

Page Layout

Refer to the illustration (A) on page i-5: The main pages in a Spare Parts Catalogue consist of an illustration page (1) and a corresponding list page (7). The page number (5) is shown in the header of an illustration page and in the footer of a list page. The document number (6) is shown in the footer of a list page.

Page Numbering

Refer to the illustration (A) on page i-5: A page number (5) has three parts:

- chapter number (2)
- consecutive page number within the chapter (3)
- total number of pages in the chapter (4)

Machine Introduction

Manufacturer

For the manufacturer’s name and address, see the second page of this catalogue.

Service

To order spare parts for this machine, or to report problems associated with operating this machine, contact the nearest Tetra Pak office.

Contact the Liaison with other inquiries, comments, or suggestions for improvement regarding the equipment and its documentation.

Identification

CE Classification

This equipment complies with the basic health and safety regulations of the European Economic Area (EEA).

TechPub-2660371-0101

Machine Plate

The illustration (B) on page i-5 shows an example of a machine plate. An illustration of the valid machine plate and its location on the equipment is shown in the Introduction chapter of the manuals delivered with this equipment. The machine plate contains the data listed below, needed when contacting Tetra Pak concerning this specific equipment.

- Machine type (8)
- Volume (9)
- Drawing specifications (10)
- Machine serial number (11)
- Manufacturer (12)
- CE mark (13)
- Year of manufacture (14)

The illustration (C) on page i-5 shows an example of a machine specification. Make sure that the equipment data listed in the front pages of this manual corresponds to the machine plate data and the machine specification.

TechPub-2660371-0101

How to Use This Spare Parts Catalogue

Locate a Spare Part Number

a) Refer to the illustration (D) on page i-5: Go to the chapter number (15) indicated beside the main group that contains the part you want to locate.

Items b) and c) refer to the illustration (E) on page i-6.

b) On the main group illustration, look for the machine subgroup (17) that contains the part or subgroup you are looking for. Note the position number (18) and go to the list page that follows the illustration.

c) Look for the position number (16) or the subgroup name (19). Go to the corresponding page number (20) listed in the right-hand column.

Items d) and e) refer to the illustration (F) on page i-6.

d) Locate the part (21) that you are looking for on the subgroup illustration and note the part's position number.

e) The part number (29) and part description (30) are listed beside the position number on the list page.

Information Listed in a Spare Parts Catalogue

The list below refers to the illustration (F) on page i-6. A Spare Parts Catalogue contains the following information about groups, subgroups, and spare parts for the equipment:

- Group structure reference (22). Indicates the next higher group in the equipment list structure.
- Group name (23)
- Spare part code (24). See the Spare Part Codes section.
- Unit of measure (25)
- Quantity (26)
- Assembly drawing number (27)
- List page range (28). Included if there are multiple pages in the group illustration or list.
- Part or subgroup number (29)
- Subgroup name or part description (30)
- Group number (31)
- Equipment number (32)
- Group information heading (33). Indicates if the section below the heading is for a specific machine variant or if it is a list of common parts. If a list has more than one variant and each variant has its own assembly drawing, a page reference to the variant's assembly drawing is shown.
- Internal information (34)

TechPub-2660371-0101

Spare Part Codes

The tables below show the two possible types of Spare Part (SP) Code that may be listed in the SP column of a Spare Parts Catalogue list page.

SP Code	Meaning
A	Critical part
B	Non-critical part

SP Code	Meaning
U	Start-up kit supplied with machine delivery
P	Production kit to be held at production site
S	Service kit to be held at service stations store
C	Central depot kit to be available at the central store

Indledning

Information om manualen

Tetra Pak anbefaler, at alle leverede manualer læses omhyggeligt. Sørg for, at de leverede manualer er tilgængelige for medarbejdere, der betjener eller vedligeholder udstyret.

Det er vigtigt at opbevare dette katalog hele udstyrets levetid og give kataloget videre til eventuelt kommende ejere eller brugere.

Tetra Pak kan ikke holdes ansvarlig for eventuel beskadigelse af udstyr, der opstår, fordi instruktionerne i manualerne til dette udstyr ikke følges.

Leverede manualer

De manualer, der leveres sammen med dette udstyr, kan omfatte:

- Konverteringsmanual (CM)
  Denne manual forsyner teknikere med informationer om konvertering af udstyret mellem forskellige produktionstilstande.
- Elektrisk manual (EM)
  Denne manual forsyner teknikere med informationer om udstyrets elektriske system.
- Installationsmanual (IM)
  Denne manual forsyner teknikere med informationer, der er nødvendige for en sikker installation af udstyret.
- Vedligeholdelsesmanual (MM)
  Denne manual forsyner teknikere med informationer om vedligeholdelse af udstyret.
- Betjeningsmanual (OM)
  Denne manual forsyner operatøren med informationer om håndtering og betjening af udstyret før, under og efter produktion.
- Reservedelskatalog (SPC)
  Denne manual indeholder de informationer, der er nødvendige for at kunne bestille reservedele fra Tetra Pak.
- Teknisk manual (TeM)
  - forsyner teknikere med informationer, der er nødvendige for en sikker installation af udstyret.
  - forsyner teknikere med informationer om vedligeholdelse af udstyret.
  - forsyner teknikere med informationer om udstyrets elektriske system.
  - indeholder de informationer, der er nødvendige for at kunne bestille reservedele fra Tetra Pak.

TechPub-2660371-0101

Sidelayout

Se illustrationen (A) på side i-5: Hovedsiderne i et reservedelskatalog består af en illustrationsside (1) og en tilsvarende listeside (7). Sidenummeret (5) vises i sidehovedet på en illlustrationsside og i sidefoden på en listeside. Dokumentnummeret (6) vises i sidefoden på en listeside.

Sidenummerering

Se illustrationen (A) på side i-5: Et sidenummer (5) har tre dele:

- kapitelnummer (2)
- fortløbende sidenummer i kapitlet (3)
- samlet sideantal i kapitlet (4)

Præsentation af maskinen

Producent

Producentens navn og adresse findes på side to i dette katalog.

Service

Kontakt nærmeste Tetra Pak-kontor for at bestille reservedele eller rapportere problemer i forbindelse med betjening af denne maskine.

Kontakt kontaktpersonen med andre forespørgsler, kommentarer eller forslag til forbedringer af udstyret og dets dokumentation.

Identifikation

CE-klassificering

Dette udstyr overholder de grundlæggende sundheds- og sikkerheds-bestemmelser for Det Europæiske Økonomiske Samarbejdsområde (EØS).

TechPub-2660371-0101

Maskinskilt

Illustrationen (B) på side i-5 viser et eksempel på et maskinskilt. En illustration af et gyldigt maskinskilt og dets placering på udstyret er vist i indledningskapitlet i de manualer, der leveres med dette udstyr. Maskinskiltet indeholder nedennævnte data. Disse er nødvendige ved kontakt med Tetra Pak vedrørende dette specifikke udstyr.

- Maskintype (8)
- Volumen (9)
- Tegningsspecifikationer (10)
- Maskinens serienummer (11)
- Producent (12)
- CE-mærke (13)
- Produktionsår (14)

Illustrationen (C) på side i-5 viser et eksempel på en maskinspecifikation. Kontroller, at de udstyrsdata, der er anført på de første sider i denne manual, svarer til maskinskiltsdataene og maskinspecifikationen.

TechPub-2660371-0101

Sådan bruges dette reservedelskatalog

Find et reservedelsnummer

a) Se illustrationen (D) på side i-5: Gå til kapitelnummeret (15), der er angivet ved siden af hovedgruppen, der indeholder den del, der ønskes fundet.

Punkterne b) og c) refererer til illustrationen (E) på side i-6.

b) I hovedgruppeillustrationen skal man se efter maskinundergruppen (17), som indeholder den del eller undergruppe, der søges. Bemærk placeringsnummeret (18), og gå til listesiden, som følger illustrationen.

c) Se efter placeringsnummeret (16) eller undergruppens navn (19). Gå til det tilsvarende sidenummer (20) angivet i den højre kolonne.

Punkterne d) og e) refererer til illustrationen (F) på side i-6.

d) Find den del (21), du søger i undergruppeillustrationen, og notér delens placeringsnummer.

e) Reservedelsnummeret (29) og -beskrivelsen (30) er angivet ved siden af placeringsnummeret på listesiden.

Informationer der er angivet i et reservedelskatalog

Listen nedenfor refererer til illustrationen (F) på side i-6. Et reservedelskatalog indeholder følgende informationer om grupper, undergrupper og reservedele til udstyret:

- Gruppestrukturreference (22). Angiver næste overordnede gruppe i udstyrslistestrukturen.
- Gruppenavn (23)
- Reservedelskode (24). Se afsnit Reservedelskoder.
- Måleenhed (25)
- Antal (26)
- Samletegningsnummer (27)
- Listens sideområde (28). Er angivet, hvis gruppeillustrationen eller -listen inkluderer mange sider.
- Del- eller undergruppenummer (29)
- Undergruppens navn eller delsbeskrivelse (30)
- Gruppenummer (31)
- Udstyrsnummer (32)
- Overskrift for gruppeinformation (33). Angiver om afsnittet under overskriften er for en specifik maskinvariant, eller om det er en liste over fælles dele. Hvis en liste har mere end én variant, og hver variant har sin egen samletegning, vises en sidereference til variantens samletegning.
- Intern information (34)

Reservedelskoder

Tabellerne nedenfor viser de to mulige typer reservedelskoder (SP), som kan være anført i SP-kolonnen på listesiden i et reservedelskatalog.

SP-kode	Betydning
A	Kritisk del
B	Ikke-kritisk del

SP-kode	Betydning
U	Startsæt der leveres med maskinen
P	Produktionssæt til opbevaring på produktionsstedet
S	Servicesæt til opbevaring på servicestationslager
C	Centraldepotsæt der skal være til rådighed på centrallageret

TechPub-2660371-0101

Einleitung

Handbuch-Informationen

Tetra Pak empfiehlt, alle gelieferten Handbücher sorgfältig zu lesen. Es muss sichergestellt werden, dass die gelieferten Handbücher dem Bediener- oder Wartungspersonal der Ausrüstung verfügbar sind.

Es ist wichtig, dieses Handbuch während der Lebensdauer der Ausrüstung vorzuhalten und es an nachfolgende Halter oder Benutzer weiterzugeben.

Tetra Pak ist nicht verantwortlich für Schäden an der Ausrüstung, die durch die Nichtbefolgung der Anweisungen dieses Handbuchs verursacht werden.

Gelieferte Handbücher

Die mit dieser Ausrüstung gelieferten Handbücher umfassen

- Umbauhandbuch (CM)
  Dieses Handbuch liefert den Technikern Informationen über den Umbau der Ausrüstung zwischen den verschiedenen Produktionsweisen.
- Elektrohandbuch (EM)
  Dieses Handbuch liefert den Technikern Informationen zum Elektrosystem der Ausrüstung.
- Installationshandbuch (IM)
  Dieses Handbuch liefert den Technikern Informationen für die sichere Installation der Ausrüstung.
- Wartungshandbuch (MM)
  Dieses Handbuch liefert den Technikern Informationen über die Wartung der Ausrüstung.
- Betriebshandbuch (OM)
  Dieses Handbuch liefert dem Bediener Informationen über die Handhabung und den Betrieb der Ausrüstung vor, während und nach der Produktion.
- Ersatzteilkatalog (SPC)
  Dieses Handbuch liefert Informationen, wie sie für die Bestellung von Ersatzteilen bei Tetra Pak erforderlich sind.
- Technisches Handbuch (TeM)
  - liefert den Technikern Informationen für die sichere Installation der Ausrüstung
  - liefert den Technikern Informationen über die Wartung der Ausrüstung
  - liefert den Technikern Informationen über das Elektrosystem der Ausrüstung
  - liefert die erforderlichen Informationen für die Bestellung von Ersatzteilen bei Tetra Pak.

TechPub-2660371-0101

Seitenlayout

Bezugnahme Abbildung (A) auf Seite i-5: Die Hauptseiten in einem Ersatzteilkatalog bestehen aus einer Abbildungsseite (1) und einer entsprechenden Listenseite (7). Die Seitennummer (5) ist im Kopf einer Abbilldungsseite und im Fuß einer Listenseite aufgeführt. Die Dokumentennummer (6) ist ist im Fuß einer Listenseite angegeben.

Seitennummerierung

Bezugnahme Abbildung (A) auf Seite i-5: Eine Seitennummer (5) besteht aus drei Teilen:

- Kapitelnummer (2)
- Fortlaufende Seitennummer innerhalb des Kapitels (3)
- Gesamtanzahl der Seiten im Kapitel (4)

Einführung in die Maschine

Hersteller

Für Name und Anschrift des Herstellers, siehe die zweite Seite dieses Kataloges.

Service

Um Ersatzteile für diese Maschine zu bestellen oder um über Probleme beim Betrieb dieser Maschine zu berichten, ist das nächstgelegene Büro von Tetra Pak anzusprechen.

Mit anderen Anfragen. Kommentaren oder Vorschlägen zur Ausrüstung und der Dokumentation ist die Verbindungsstelle anzusprechen.

Identifizierung

CE-Klassifizierung

Diese Ausrüstung entspricht den grundlegenden Gesundheits- und Sicherheitsvorschriften des Europäischen Wirtschaftsraumes (EEA).

TechPub-2660371-0101

Maschinenschild

Die Abbildung (B) auf Seite i-5 zeigt das Beispiel eines Maschinenschildes. Die Abbildung eines gültigen Maschinenschildes und die Lage desselben auf der Ausrüstung befindet sich im Einleitungskapitel der mit der Ausrüstung gelieferten Handbücher. Das Maschinenschild enthält die nachstehend aufgeführten Daten, wie sie erforderlich sind, wenn Tetra Pak wegen dieser spezifischen Ausrüstung anzusprechen ist.

- Maschinentyp (8)
- Volumen (9)
- Zeichnungs-Spezifikationen (10)
- Serien-Nummer der Maschine (11)
- Hersteller (12)
- CE-Markierung (13)
- Baujahr (14)

Die Abbildung (C) auf Seite i-5 zeigt das Beispiel einer Maschinenspezifikation. Es muss sichergestellt sein, dass die in den Frontseiten dieses Handbuchs aufgeführten Ausrüstungsdaten mit den Daten des Maschinenschildes und der Maschinenspezifikation übereinstimmen.

TechPub-2660371-0101

Verwendung dieses Ersatzteilkatalogs

Anordnung einer Ersatzteilnummer

a) Bezugnahme auf Abbildung (D) auf Seite i-5: Weiter zur Kapitelnummer (15), die neben der Hauptgruppe angegeben ist, die das entsprechende Teil enthält.

Die Pos. b) und c) beziehen sich auf die Abbildung (E) auf Seite i-6.

b) Auf der Hauptgruppenabbildung die Maschinen-Untergruppe (17) suchen, die das gesuchte Teil oder die gesuchte Untergruppe enthält. Die Positionsnummer (18) notieren und weiter zur Listenseite gehen, die der Abbildung folgt.

c) Die Positionsnummer (16) oder den Namen der Untergruppe (19) suchen. Dann zur entsprechenden Seitennummer (20) in der rechten Spalte gehen.

Pos. d) und e) beziehen sich auf die Abbildung (F) auf Seite i-6.

d) Suchen Sie Teil (21) auf der Untergruppen-Abbildung und notieren Sie die Positionsnummer des Teils.

e) Die Teilnummer (29) und die Teilebeschreibung (30) finden Sie neben der Positionsnummer auf der Listenseite.

In einem Ersatzteilkatalog enthaltene Information

Die nachstehende Liste bezieht sich auf die Abbildung (F) auf Seite i-6.
Ein Ersatzteilkatalog enthält folgende Informationen über Gruppen, Untergruppen und Ersatzteile für die Ausrüstung:

- Gruppenstrukturreferenz (22). Sie gibt die nächst höhere Gruppe in der Ausrüstungslistenstruktur an
- Gruppenname (23)
- Ersatzteilcode (24). Siehe Kapitel Spare Part Codes
- Maßeinheit (25)
- Menge (26)
- Nummer der Zusammenbauzeichnung (27)
- Listenseite, Bereich (28). Eingeschlossen, wenn Mehrfachseiten in der Gruppenabbildung oder Liste enthalten sind
- Teile- oder Untergruppennummer (29)
- Untergruppenname oder Teilebeschreibung (30)
- Gruppennummer (31)
- Ausrüstungsnummer (32)
- Gruppeninformationsüberschrift (33). Gibt an, ob der Abschnitt unter der Überschrift sich auf eine spezifische Maschinenvariante bezieht oder eine Liste der allgemeinen Teile ist. Wenn eine Liste sich auf mehr als eine Variante bezieht und jede Variante eine eigene Zusammenbauzeichnung hat, wird eine Seitenreferenz zur Zusammenbauzeichnung der Variante vorgestellt.
- Interne Information (34)

TechPub-2660371-0101

Ersatzteilcode

Die nachstehenden Tabellen zeigen die beiden möglichen Typen von Ersatzteilcode (SP), die in der SP-Spalte einer Listenseite des Ersatzteilkatalogs enthalten sein können.

SP Code	Bedeutung
A	Kritisches Teil
B	Unkritisches Teil

SP Code	Bedeutung
U	Mit der Maschine gelieferterAnfahr-Kit
P	Vor Ort vorzuhaltender Produktions-Kit
S	Im Lager der Servicestation vorzuhaltender Service-Kit
C	Im Zentrallager vorzuhaltender Zentraldepot-Kit

Εισαγωγή

Πληροφορίες για τα Εγχειρίδια

Η Tetra Pak σάς συνιστά να διαβάζετε προσεκτικά όλα τα παρεχόμενα εγχειρίδια. Εξασφαλίζετε ότι όλα τα παρεχόμενα εγχειρίδια διατίθενται στο προσωπικό που χειρίζεται ή συντηρεί τον εξοπλισμό.

Είναι σημαντικό να διατηρείτε αυτό τον κατάλογο καθ' όλη τη διάρκεια ζωής του εξοπλισμού καθώς και να παραδίδετε τον κατάλογο στον τυχόν επόμενο ιδιοκτήτη ή χρήστη του εξοπλισμού.

Η Tetra Pak δεν πρόκειται να αναλάβει καμία ευθύνη για οποιαδήποτε ζημιά που μπορεί να προκληθεί στον εξοπλισμό εξαιτίας της μη τήρησης των οδηγιών οι οποίες παρέχονται στα εγχειρίδια που συνοδεύουν αυτό τον εξοπλισμό.

Παρεχόμενα Εγχειρίδια

Στα εγχειρίδια που παρέχονται μαζί μ' αυτό τον εξοπλισμό, μπορεί να περιλαμβάνονται τα εξής:

- Εγχειρίδιο Μετατροπής (CM)
  Αυτό το εγχειρίδιο παρέχει στους τεχνικούς πληροφορίες για τη μετατροπή του εξοπλισμού μεταξύ των διάφορων λειτουργιών παραγωγής.
- Ηλεκτρικό Εγχειρίδιο (EM)
  Αυτό το εγχειρίδιο παρέχει στους τεχνικούς πληροφορίες για το ηλεκτρικό σύστημα του εξοπλισμού.
- Εγχειρίδιο Εγκατάστασης (IM)
  Αυτό το εγχειρίδιο παρέχει στους τεχνικούς τις απαιτούμενες πληροφορίες για την ασφαλή εγκατάσταση του εξοπλισμού.
- Εγχειρίδιο Συντήρησης (MM)
  Αυτό το εγχειρίδιο παρέχει στους τεχνικούς πληροφορίες για τη συντήρηση του εξοπλισμού.
- Εγχειρίδιο Χειρισμού (OM)
  Αυτό το εγχειρίδιο παρέχει στο χειριστή πληροφορίες για το χειρισμό και τη λειτουργία του εξοπλισμού πριν, κατά τη διάρκεια και μετά την παραγωγή.
- Κατάλογος Ανταλλακτικών (SPC)
  Αυτό το εγχειρίδιο παρέχει τις απαραίτητες πληροφορίες για την παραγγελία ανταλλακτικών από την Tetra Pak.
- Τεχνικό Εγχειρίδιο (TeM)
  - παρέχει στους τεχνικούς τις απαιτούμενες πληροφορίες για την ασφαλή εγκατάσταση του εξοπλισμού
  - παρέχει στους τεχνικούς πληροφορίες για τη συντήρηση του εξοπλισμού
  - παρέχει στους τεχνικούς πληροφορίες για το ηλεκτρικό σύστημα του εξοπλισμού
  - παρέχει τις απαραίτητες πληροφορίες για την παραγγελία ανταλλακτικών από την Tetra Pak

TechPub-2660371-0101

ιάταξη Σελίδων

Ανατρέξτε στην εικόνα (A) της σελίδας i-5: Οι κύριες σελίδες ενός Καταλόγου Ανταλλακτικών αποτελούνται από μία εικονογραφημένη σελίδα (1) και από μία αντίστοιχη σελίδα λίστας (7). Ο αριθμός σελίδας (5) εμφανίζεται στην κεφαλίδα μιας εικονογραφημένης σελίδας και στο υποσέλιδο μιας σελίδας λίστας. Ο αριθμός εγγράφου (6) εμφανίζεται στο υποσέλιδο μιας σελίδας λίστας.

Αρίθμηση Σελίδων

Ανατρέξτε στην εικόνα (A) της σελίδας i-5: Ένας αριθμός σελίδας (5) αποτελείται από τα εξής τρία μέρη:

- αριθμός κεφαλαίου (2)
- αύξων αριθμός σελίδας του κεφαλαίου (3)
- συνολικός αριθμός σελίδων του κεφαλαίου (4)

Παρουσίαση Μηχανής

Κατασκευαστής

Για το όνομα και τη διεύθυνση του κατασκευαστή, ανατρέξτε στη δεύτερη σελίδα αυτού του καταλόγου.

Τεχνική εξυπηρέτηση

Για να παραγγείλετε ανταλλακτικά για τη συγκεκριμένη μηχανή ή για να αναφέρετε προβλήματα που σχετίζονται με τη λειτουργία αυτής της μηχανής, επικοινωνήστε με το πλησιέστερο γραφείο της Tetra Pak.

Εάν έχετε άλλου είδους ερωτήσεις, σχόλια ή προτάσεις βελτίωσης σχετικά με τον εξοπλισμό και την έγγραφη τεκμηρίωσή του, επικοινωνήστε με το Τμήμα Σχέσεων.

Στοιχεία ταυτότητας

Σήμανση CE

Αυτός ο εξοπλισμός συμμορφώνεται με τους βασικούς κανονισμούς υγείας και ασφάλειας του Ευρωπαϊκού Οικονομικού Χώρου (ΕΟΧ).

TechPub-2660371-0101

Πινακίδα Αναγνώρισης Μηχανής

Η εικόνα (B) της σελίδας i-5 δείχνει ένα παράδειγμα μιας πινακίδας αναγνώρισης μηχανής. Μια εικόνα που δείχνει την ενδεδειγμένη μορφή και θέση της πινακίδας αναγνώρισης μηχανής στον εξοπλισμό, παρουσιάζεται στο κεφάλαιο 'Εισαγωγή' των εγχειριδίων που παρέχονται μ' αυτόν τον εξοπλισμό. Η πινακίδα αναγνώρισης μηχανής αναγράφει τα δεδομένα που παρατίθενται στη συνέχεια, τα οποία είναι απαραίτητα όταν επικοινωνείτε με την Tetra Pak για θέματα που αφορούν αυτό το συγκεκριμένο εξοπλισμό.

- Τύπος μηχανής (8)
- Χωρητικότητα (9)
- Στοιχεία σχεδίου (10)
- Αριθμός σειράς μηχανής (11)
- Κατασκευαστής (12)
- Σήμανση CE (13)
- Έτος κατασκευής (14)

Η εικόνα (C) της σελίδας i-5 δείχνει ένα παράδειγμα τεχνικών χαρακτηριστικών μηχανής. Βεβαιωθείτε ότι τα δεδομένα εξοπλισμού που παρατίθενται στις πρώτες σελίδες αυτού του εγχειριδίου συμφωνούν με τα δεδομένα της πινακίδας αναγνώρισης μηχανής και των τεχνικών χαρακτηριστικών μηχανής.

TechPub-2660371-0101

Πώς Χρησιμοποιείται Αυτός ο Κατάλογος Ανταλλακτικών

Εύρεση ενός Αριθμού Ανταλλακτικού

a) Ανατρέξτε στην εικόνα (D) της σελίδας i-5: Πηγαίνετε στον αριθμό κεφαλαίου (15) που υποδεικνύεται δίπλα από την κύρια ομάδα της μηχανής η οποία περιλαμβάνει το εξάρτημα που θέλετε να βρείτε.

Τα βήματα b) και c) αναφέρονται στην εικόνα (E) της σελίδας i-6.

b) Στην εικόνα της κύριας ομάδας μηχανής, αναζητήστε την υποομάδα μηχανής (17) η οποία περιλαμβάνει το εξάρτημα ή την υποομάδα που αναζητάτε. Σημειώστε τον αριθμό θέσης (18) και πηγαίνετε στη σελίδα λίστας που ακολουθεί την εικόνα.

c) Αναζητήστε τον αριθμό θέσης (16) ή το όνομα υποομάδας (19). Πηγαίνετε στον αντίστοιχο αριθμό σελίδας (20) που αναγράφεται στη δεξιά στήλη.

Τα βήματα d) και e) αναφέρονται στην εικόνα (F) της σελίδας i-6.

d) Βρείτε το εξάρτημα (21) που αναζητάτε στην εικόνα υποομάδας μηχανής και σημειώστε τον αριθμό θέσης του εξαρτήματος.

e) Ο αριθμός του εξαρτήματος (29) και η περιγραφή του εξαρτήματος (30) παρατίθενται δίπλα στον αριθμό θέσης στη σελίδα λίστας.

Πληροφορίες που Περιέχονται σε έναν Κατάλογο Ανταλλακτικών

Η λίστα που ακολουθεί αναφέρεται στην εικόνα (F) της σελίδας i-6. Ένας Κατάλογος Ανταλλακτικών περιέχει τις παρακάτω πληροφορίες σχετικά με τις ομάδες, τις υποομάδες και τα ανταλλακτικά του εξοπλισμού:

- Αναφορά δομής ομάδας (22). Υποδηλώνει την επόμενη μεγαλύτερη ομάδα στη δομή λίστας του εξοπλισμού.
- Όνομα ομάδας (23)
- Κωδικός ανταλλακτικού (24). είτε την ενότητα Κωδικοί Ανταλλακτικών.
- Μονάδα μέτρησης (25)
- Ποσότητα (26)
- Αριθμός σχεδίου συγκροτήματος (27)
- Περιοχή σελίδων λίστας (28). Περιλαμβάνεται εφόσον η εικόνα ή η λίστα μιας ομάδας εκτίθεται σε περισσότερες από μία σελίδες.
- Αριθμός εξαρτήματος ή υποομάδας (29)
- Αριθμός υποομάδας ή περιγραφή εξαρτήματος (30)
- Αριθμός ομάδας (31)
- Αριθμός εξοπλισμού (32)
- Επικεφαλίδα πληροφοριών ομάδας (33). Υποδεικνύει εάν η ενότητα κάτω από την επικεφαλίδα αφορά μια συγκεκριμένη παραλλαγή μηχανής ή αποτελεί μια λίστα κοινών εξαρτημάτων. Σε περίπτωση που μια λίστα περιέχει περισσότερες από μία παραλλαγές και κάθε παραλλαγή έχει ξεχωριστό σχέδιο συγκροτήματος, εμφανίζεται μια παραπομπή προς τη σελίδα όπου βρίσκεται το σχέδιο συγκροτήματος της παραλλαγής.
- Εσωτερικές πληροφορίες (34)

Κωδικοί Ανταλλακτικών

Οι πίνακες που ακολουθούν δείχνουν τους δύο δυνατούς τύπους Κωδικών Ανταλλακτικών που μπορεί να αναγράφονται στη στήλη Κωδικών Ανταλλακτικών (SP) σε μία σελίδα λίστας ενός Καταλόγου Ανταλλακτικών.

Κωδικός Ανταλλακτικού	**Σημασία**
A	Βασικό εξάρτημα
B	Μη βασικό εξάρτημα

Κωδικός Ανταλλακτικού	**Σημασία**
U	Κιτ εκκίνησης που παραδίδεται μαζί με τη μηχανή
P	Κιτ παραγωγής που διατηρείται στο χώρο παραγωγής
S	Κιτ συντήρησης που διατηρείται στις αποθήκες των κέντρων εξυπηρέτησης
C	Κιτ κεντρικής αποθήκης που διατίθεται στην κεντρική αποθήκη

TechPub-2660371-0101

Introducción

Información del manual

Tetra Pak recomienda que se lean cuidadosamente todos los manuales entregados. Comprobar que todos los manuales entregados estén disponibles para el personal que efectúe la operación o el mantenimiento del equipo.

Es importante conservar este manual durante la vida útil del equipo, así como facilitárselo a cualquier propietario o usuario posterior.

Tetra Pak no se responsabilizará de daños en la máquina o equipo debidos a la inobservancia de las instrucciones dadas en los manuales que acompañan este equipo.

Manuales entregados

Los manuales entregados con este equipo pueden incluir

- Manual de conversión (CM)
  Este manual proporciona a los técnicos información sobre cómo convertir el equipo entre diferentes modos de producción.
- Manual eléctrico (EM)
  Este manual proporciona a los técnicos información acerca del sistema eléctrico del sistema.
- Manual de instalación (IM)
  Este manual proporciona a los técnicos la información necesaria para la instalación segura del equipo.
- Manual de mantenimiento (MM)
  Este manual proporciona a los técnicos la información acerca del mantenimiento del equipo.
- Manual de servicio (OM)
  Este manual proporciona al operador información acerca de la manipulación y operación de la máquina antes, durante y después de la producción.
- Catálogo de piezas de recambio (SPC)
  Este manual proporciona la información necesaria para pedir piezas de recambio a Tetra Pak.
- Manual técnico (TeM)
  - proporciona a los técnicos la información necesaria para la instalación segura del equipo
  - proporciona a los técnicos la información acerca del mantenimiento del equipo
  - proporciona a los técnicos información acerca del sistema eléctrico del sistema
  - proporciona la información necesaria para pedir piezas de recambio a Tetra Pak

TechPub-2660371-0101

Organización de las páginas

Remitirse a la ilustración (A) en la página i-5: Las páginas principales en un Catálogo de piezas de recambio se componen de una página de ilustración (1) y una página de lista correspondiente (7). El número de la página (5) se muestra en el encabezado de una página de ilustración y en el pie de página de una página de lista. El número del documento (6) se muestra en el pie de página de una página de lista.

Numeración de las páginas

Remitirse a la ilustración (A) en la página i-5: Un número de página (5) se compone de tres partes:

- Número de capítulo (2)
- número de página consecutivo (2) dentro del capítulo (3)
- número total de páginas del capítulo (4)

Introducción a la máquina

Fabricante

Para el nombre y la dirección del fabricante, ver la segunda página de este catálogo.

Servicio

Para pedir piezas de recambio para esta máquina o informar problemas asociados con la operación de esta máquina, contactar con la oficina de Tetra Pak más cercana.

Ponerse en contacto con el responsable correspondiente para otras preguntas, comentarios o sugerencias sobre mejoras de la máquina o equipo y su documentación.

Identificación

Clasificación de la CE

Este equipo cumple los requisitos esenciales relativos a la salud y la seguridad del Área Económica Europea (EEA).

TechPub-2660371-0101

Placa de la máquina

La ilustración (B) en la página i-5 muestra un ejemplo de placa de máquina. En la Introducción del capítulo de los manuales entregados con este equipo se muestra una ilustración de la placa de máquina válida y su ubicación en el equipo La placa de máquina contiene los datos listados a continuación requeridos al contactar con Tetra Pak en relaciôn a este equipo específico.

- Tipo de máquina (8)
- Volumen (9)
- Especificaciones de plano (10)
- Número de serie de la máquina (11)
- Fabricante (12)
- Marca de la CE (13)
- Año de fabricación (14)

La ilustración (C) en la página i-5 muestra un ejemplo de especificación máquina. Asegúrese que los datos de equipo listados en las páginas de cubierta de este manual corresponden a los datos de la placa de máquina y la especificación máquinav.

TechPub-2660371-0101

Cómo utilizar este Catálogo de piezas de recambio

Localizar un número de pieza de recambio

a) Remitirse a la ilustración (D) en la página i-5: Ir al número de capítulo (15) indicado detrás el grupo principal que contiene la parte que usted desea localizar.

Los items b) y c) se refieren a la ilustracióni (E) en la página i-6.

b) En la ilustración del grupo principal, buscar el subgrupo máquina (17) que contiene la pieza o subgrupo que usted busca. Anote el número de posición (18) y vaya a la página de lista que sigue la ilustración.

c) Busque el número de posición (16) o el nombre del subgrupo (19). Vaya al número de página correspondiente (20) listado en la columna de la derecha.

Los items d) y e) se refieren a la ilustración (F) en la página i-6.

d) Localizar la pieza (21) que busca en la ilustración del subgrupo y anotar el número de posición de la pieza.

e) El número de pieza (29) y la descripción de pieza (30) están listadas detrás del número de posición en la página de lista.

Información listada en un Catálogo de piezas de recambio

La lista a continuación remite a la ilustración (F) en la página i-6.
Un Catálogo de piezas de recambio contiene la siguiente información sobre grupos, subgrupos y piezas de recambio para el equipo:

- Referencia de estructura de grupo (22). Indica el siguiente grupo más alto en la estructura de lista del equipo.
- Nombre del grupo (23)
- Código de pieza de recambio (24). Consultar la sección Spare Part Codes.
- Unidad de medida (25)
- Cantidad (26)
- Número de plano de conjunto (27)
- Gama de página lista (28). Incluida si hay páginas múltiples en la ilustración o lista de grupo.
- Número de pieza o subgrupo (29)
- Nombre, subgrupo o descripción de pieza (30)
- Número de grupo (31)
- Número de equipo (32)
- Encabezado de información grupo (33). Indica si la sección debajo del encabezado es para una variante máquina específica o si es una lista de piezas comunes. Si la lista tiene más de una variante y cada variante tiene su propio plano de conjunto, se muestra una referencia página para el plano de conjunto de la variante.
- Información interna (34)

TechPub-2660371-0101

Códigos de piezas de recambio

Las tablas a continuación muestran los dos tipos posibles de códigos de Piezas de recambio (PR) que se pueden listar en la columna PR o en una página de lista de Catálogo de piezas de recambio.

Código PR	Significado
A	Pieza crítica
B	Pieza no crítica

Código PR	Significado
U	Kit de inicio suministrado con la entrega de la máquina.
P	Kit de producción debe guardarse en el sitio de producción.
S	Kit de servicio; debe guardarse en el almacén de las estaciones de servicio.
C	Kit de almacén central; debe guardarse en el almacén central.

Johdanto

Tietoja käsikirjasta

Tetra Pak suosittelee kaikkien toimitettavien oppaiden lukemista huolellisesti. Varmista, että toimitetut oppaat ovat laitetta käyttävän tai huoltavan henkilökunnan saatavilla.

Tämä luettelo on säilytettävä laitteen käyttöiän ajan ja toimitettava edelleen mahdolliselle seuraavalle omistajalle tai käyttäjälle.

Tetra Pak ei vastaa laitevaurioista, jotka aiheutuvat laitteen mukana tulevissa oppaissa annettujen ohjeiden noudattamatta jättämisestä.

Toimitettavat ohjeet

Tämän laitteen mukana toimitettaviin ohjeisiin kuuluvat:

- Muutoskirja (CM)
  Tässä oppaassa on teknikoille tarkoitettuja ohjeita laitteiston muuttamisesta eti tuotantotiloihin.
- Sähkökirja (EM)
  Tässä oppaassa on teknikoille tarkoitettuja tietoja laitteen sähköjärjestelmästä.
- Asennuskäsikirja (IM)
  Tässä oppaassa on teknikoille tarkoitettuja tietoja, jotka tarvitaan laitteen turvallista asentamista varten.
- Huoltokäsikirja (MM)
  Tässä oppaassa on teknikoille tarkoitettuja tietoja tämän laitteen huoltamisesta.
- Käyttäjän käsikirja (OM)
  Tässä oppaassa on käyttäjälle tarkoitettuja tietoja laitteiston käsittelystä ja käyttämisestä ennen tuotantoa, tuotannon aikana ja sen jälkeen.
- Varaosakuvasto (SPC)
  Tässä oppaassa on tietoja, joita tarvitaan varaosien tilaamiseen Tetra Pakilta.
- Tekninen käsikirja (TeM)
  - sisältää teknikoille tarkoitettuja tietoja, joita tarvitaan laitteen turvallista asentamista varten
  - sisältää teknikoille tarkoitettuja tietoja laitteen huoltamisesta
  - sisältää teknikoille tarkoitettuja tietoja laitteen sähköjärjestelmästä
  - sisältää tietoja, joita tarvitaan varaosien tilaamiseen Tetra Pakilta.

TechPub-2660371-0101

Sivujen asettelu

Katso kuva (A) sivulla i-5: Varaosaluettelon pääsivut koostuvat kuvasivusta (1) ja sitä vastaavasta luettelosivusta (7). Sivunumero (5) näytetään kuvasivun ylätunnisteessa ja luettelosivun alatunnisteessa. Asiakirjan numero (6) näytetään luettelosivun alatunnisteessa.

Sivunumerointi

Katso kuva (A) sivulla i-5: Sivunumerossa (5) on kolme osaa:

- luvun numero (2)
- perättäinen sivunumero (3) luvun sisällä
- luvun kokonaissivumäärä (4).

Koneen esittely

Valmistaja

Valmistajan nimi ja osoite on ilmoitettu tämän luettelon toisella sivulla.

Huolto

Jos haluat tilata tähän koneeseen varaosia tai jos tämän koneen käytössä ilmenee ongelmia, jotka haluat raportoida, ota yhteyttä lähimpään Tetra Pakin toimistoon.

Jos sinulla on muuta kysyttävää, huomautettavaa tai ehdotuksia laitteistoa ja sen asiakirjoja koskevista parannuksista, ota yhteys yhteyshenkilöön.

Tunnistetiedot

CE-luokitus

Tämä laite vastaa Euroopan talousalueen (EEA) perustason terveys- ja turvallisuusvaatimuksia.

TechPub-2660371-0101

Koneen tyyppikilpi

Kuvassa (B) sivulla i-5 on esimerkki koneen tyyppikilvestä. Voimassa olevan tyyppikilven kuva ja sen sijainti koneessa käy ilmi laitteiston mukana tulleiden ohjeiden Johdanto-luvusta. Tyyppikilvessä on tarvitsemasi Tetra Pakin voimassa olevat yhteystiedot, kun on kyseessä tämä nimenomainen laite.

- Konetyyppi (8)
- Tilavuus (9)
- Piirustuserittelyt (10)
- Koneen sarjanumero (11)
- Valmistaja (12)
- CE-merkki (13)
- Valmistusvuosi (14)

Kuvassa (C) sivulla i-5 on esimerkki koneen erittelystä. Varmista, että tämän ohjeen etusivuilla ilmoitetut laitetiedot vastaavat tyyppikilven ja kone-erittelyn tietoja.

Tämän varaosaluettelon käyttäminen

Etsi varaosan numero

a) Katso kuva (D) sivulla i-5: Siirry lukuun (15), joka on ilmoitettu etsittävän osan pääryhmän vieressä.

Kohdat b) ja c) viittaavat kuvaan (E) sivulla i-6.

b) Etsi pääryhmän kuvasta koneen alaryhmä (17), joka sisältää etsimäsi osan tai alaryhmän. Merkitse muistiin paikkanumero (18) ja siirry luettelosivulle, joka seuraa kuvaa.

c) Etsi paikkanumero (16) tai alaryhmän nimi (19). Siirry vastaavalle sivunumerolle (20), joka on ilmoitettu oikeassa sarakkeessa.

Kohdat d) ja e) viittaavat kuvaan (F) sivulla i-6.

d) Hae etsittävä osa (21) alaryhmän kuvasta ja merkitse osan paikkanumero muistiin.

e) Osanumero (29) ja osan kuvaus (30) on annettu paikkanumeron vieressä luettelosivulla.

TechPub-2660371-0101

Varaosaluettelossa olevat tiedot

Alla oleva luettelo viittaa kuvaan (F) sivulla i-6. Varaosaluettelo sisältää seuraavat tiedot ryhmistä, alaryhmistä ja laitteen varaosista:

- Ryhmärakenneviite (22). Osoittaa seuraavaksi ylemmän ryhmän laiteluettelorakenteessa.
- Ryhmän nimi (23)
- Varaosan koodi (24). Katso osio Varaosakoodit.
- Mittayksikkö (25)
- Määrä (26)
- Kokoonpanopiirustuksen numero (27)
- Luettelosivun väli (28). Tämä on mukana, jos ryhmäkuvassa tai luettelossa on useita sivuja.
- Osan tai alaryhmän numero (29)
- Alaryhmän nimi tai osan kuvaus (30)
- Ryhmän numero (31)
- Laitteen numero (32)
- Ryhmätietojen otsikko (33). Osoittaa, koskeeko alla oleva osio tiettyä koneversiota vai onko kyseessä yleisten osien luettelo. Jos luettelolla on useampi kuin yksi versio ja kullakin versiolla on oma kokoonpanopiirustuksensa, näytetään version kokoonpanopiirustuksen sivuviittaus.
- Sisäiset tiedot (34)

Varaosakoodit

Alla oleva taulukko osoittaa kaksi mahdollista varaosan (SP) koodin tyyppiä, jotka voidaan luetella varaosaluettelon luettelosivun SP-sarakkeessa.

SP-koodi	Merkitys
A	Kriittinen osa
B	Ei-kriittinen osa

SP-koodi	Merkitys
U	Aloituspaketti, joka toimitetaan koneen mukana
P	Tuotantopaketti, joka pidetään tuotantopaikassa
S	Huoltosarja, joka pidetään huoltokorjaamon varastossa
C	Keskusvarastosarja, jonka saa keskusvarastolta

TechPub-2660371-0101

Introduction

Information sur le manuel

Tetra Pak recommande de lire attentivement tous les manuels fournis. S'assurer que les manuels fournis soient accessibles au personnel qui s'occupe du fonctionnement ou de la maintenance de l'équipement.

Il est important de conserver ce manuel pendant toute la durée d'utilisation de la machine et de le transmettre à tout détenteur ou utilisateur ultérieur.

Tetra Pak ne sera pas tenu responsable d’un dommage causé à la machine ou à l’équipement par le fait de ne pas avoir respecté les instructions figurant dans le présent manuel.

Manuels fournis

Les manuels fournis avec cette machine comprennent

- Le Manuel de Conversion (CM)
  Ce manuel fournit aux techniciens les informations nécessaires pour convertir la machine en vue des différents modes de production.
- Manuel Electrique (EM)
  Ce manuel fournit aux techniciens les informations sur le système électrique de la machine.
- Manuel de Mise en Place (IM)
  Ce manuel fournit aux techniciens les informations nécessaires pour l'installation de la machine en toute sécurité.
- Manuel de Maintenance (MM)
  Ce manuel fournit aux techniciens les informations pour la maintenance.
- Manuel d'Opérateur (OM)
  Ce manuel fournit aux opérateurs les informations nécessaires pour la manutention et le fonctionnement de la machine avant, pendant et après la production.
- Catalogue de Pièces de Rechange (SPC)
  Ce manuel fournit l'information nécessaire à la commande de pièces de rechange auprès de Tetra Pak
- Manuel Technique (TeM)
  - fournit aux techniciens les informations nécessaires pour l'installation de la machine en toute sécurité
  - fournit aux techniciens les informations pour la maintenance
  - fournit aux techniciens les informations sur le système électrique de la machine
  - fournit l' information nécessaire à la commande de pièces de rechange auprès de Tetra Pak

TechPub-2660371-0101

Présentation d’une page

Se référer à la figure (A) à la page i-5: Les pages principales du Catalogue des Pièces de Rechange sont composées d'une page de figure (1) et d'une page de liste correspondante (7). Le numéro de page (5) est indiqué dans le titre de la page de figure et dans le bas de page d'une page de liste.
Le numéro de document (6) est indiqué dans le bas de page de la page de liste.

Numérotation de page

Se référer (A) à la page i-5: Un numéro de page (5) possède trois parties:

- Numéro de chapitre (2)
- numéro de page consécutif (2) à l'intérieur du chapitre (3)
- nombre total de pages dans le chapitre (4)

Présentation de la machine

Fabricant

Pour le nom et l'adresse du fabricant, voir la deuxième page de ce catalogue.

Assistance technique

Pour commander les pièces de rechange de cette machine ou pour rapporter les problèmes associés au fonctionnement de celle-ci, prendre contact avec le bureau Tetra Pak le plus proche.

Prendre contact avec le responsable de liaison pour les renseignements, commentaires ou suggestions concernant la machine ou l’équipement et sa documentation.

Identification

Certification CE

Cet équipement est conforme aux réglementations essentielles d'hygiène et de sécurité de la Communauté Economique Européenne (CEE).

TechPub-2660371-0101

Plaque signalétique de machine

La figure (B) à la page i-5 montre un exemple d'une plaque signalétique de machine.
Une représentation de la plaque de machine valable et son emplacement sur l'équipement est indiquée au Chapitre Introduction des manuels fournis avec l'équipement. La plaque de machine contient les caractéristiques figurant dans la liste ci-dessous, nécessaires pour prendre contact avec Tetra Pak au sujet de cet équipement spécifique.

- Type de machine (8)
- Volume (9)
- Spécifications du plan (10)
- Numéro de série de la machine (11)
- Fabricant (12)
- Marquage CE (13)
- Année de fabrication (14)

La figure (C) à la page i-5 montre un exemple d'une spécification de machine. S'assurer que les caractéristiques de l'équipement figurant dans la liste des pages de garde de ce manuel correspondent aux caractéristiques de la plaque signalétique de la machine et à ses spécifications.

TechPub-2660371-0101

Comment utiliser ce Catalogue de Pièces de Rechange

Localiser un numéro de pièce de rechange

a) Se référer à la figure (D) à la page i-5: Aller au numéro de chapitre (15) indiqué à côté du groupe principal qui contient la pièce que vous souhaitez localiser.

Les articles b) et c) se réfèrent à la figure (E) à la page i-6.

b) Sur la figure du groupe principal, chercher la sous-groupe de machine (17) qui contient la pièce ou le sous-groupe que vous recherchez. Noter le numéro de repère (18) et aller à la page de liste qui suit la figure.

c) Rechercher le numéro de repère (16) ou le nom de sous-groupe (19). Aller au numéro de page correspondant (20) figurant dans la liste de la colonne de droite.

Les articles d) et e) se réfèrent à la figure (F) à la page i-6.

d) Localiser la pièce (21) que vous recherchez sur la figure de sous-groupe et noter le numéro de repère de la pièce.

e) Le numéro de pièce (29) et la description de la pièce (30) figurent dans la liste à côté du numéro de repère sur la page de liste.

Informations figurant dans la liste dans un Catalogue de Pièces de Rechange

La liste ci-dessous se réfère à la figure (F) à la page i-6. Un Catalogue de Pièces de Rechange contient les renseignements suivants relatifs aux groupes, sous-groupes et pièces de rechange de l'équipement:

- Référence de structure de groupe (22). Indique le groupe supérieur suivant dans la structure de liste d'équipement.
- Nom du groupe (23).
- Code de pièce de rechange (24). Voir la section Spare Part Codes.
- Unité de mesure (25).
- Quantité (26).
- Numéro de plan de montage (27).
- Gamme de la page de liste (28). Incluse s'il y a des pages multiples dans la figure de groupe ou dans la liste.
- Numéro de pièce ou de sous-groupe (29).
- Nom de sous-groupe ou description de la pièce (30).
- Numéro de groupe (31).
- Numéro de l'équipement (32).
- Titre des informations de groupe (33). Indique si la section sous le titre est pour une variante de machine spécifique ou s'il y a une liste de pièces communes. Si une liste comporte plus d'une variante et que chaque variante possède son propre plan de montage, une référence de page au plan de montage de la variante est alors indiqué.
- Renseignements internes (34).

TechPub-2660371-0101

Codes des pièces de rechange

Les tableaux ci-dessous montrent les deux types possibles de Code de Pièces de rechange (SP) qui peuvent figurer dans la liste dans la colonne de pièces de rechange d'une page de liste de Catalogue de Pièces de Rechange.

Code SP	Signification
A	Pièce critique
B	Pièce non critique

Code SP	Signification
U	Kit de mise en route avec livraison de la machine
P	Kit de production à conserver sur le site de production
S	Kit d'assistance à conserver au magasin des postes d'assistance
C	Kit de dépôt central disponible au magasin central

Introduzione

Informazioni sul manuale

Tetra Pak consiglia di leggere con attenzione tutti i manuali forniti in dotazione. Assicurarsi che tutti i manuali in dotazione siano disponibili per il personale addetto al funzionamento e alla manutenzione della macchina.

È importante conservare il presente catalogo per tutta la durata della macchina e consegnarlo al successivo proprietario o utilizzatore.

Tetra Pak non sarà da ritenersi responsabile per eventuali danni alla macchina causati dal mancato rispetto delle istruzioni fornite nei manuali che accompagnano le macchine.

Manuali in dotazione

I manuali consegnati con la presente macchina possono comprendere:

- Manuale di Conversione (CM)
  Questo manuale fornisce ai tecnici le informazioni necessarie per la conversione della macchina da una modalità di produzione a un'altra.
- Manuale Elettrico (EM)
  Questo manuale fornisce ai tecnici informazioni sull'impianto elettrico della macchina.
- Manuale di Installazione (IM)
  Questo manuale fornisce ai tecnici le informazioni necessarie per installare in sicurezza la macchina.
- Manuale di Manutenzione (MM)
  Questo manuale fornisce ai tecnici le informazioni necessarie per la manutenzione della macchina.
- Manuale Operativo (OM)
  Questo manuale fornisce all'operatore le informazioni sull'utilizzo e il funzionamento della macchina prima, durante e dopo la produzione.
- Catalogo Pezzi di Ricambio (SPC)
  Questo manuale fornisce le informazioni necessarie per ordinare a Tetra Pak i pezzi di ricambio.
- Manuale Tecnico (TeM)
  - fornisce ai tecnici le informazioni necessarie per installare in sicurezza la macchina
  - fornisce ai tecnici le informazioni necessarie per la manutenzione della macchina
  - fornisce ai tecnici informazioni sull'impianto elettrico della macchina
  - fornisce le informazioni necessarie per ordinare a Tetra Pak i pezzi di ricambio.

TechPub-2660371-0101

Schema della pagina

Consultare la figura (A) a pagina i-5. Le pagine principali del Catalogo Pezzi di Ricambio consistono in una pagina con la figura (1) e una pagina elenco corrispondente (7). Il numero di pagina (5) è indicato nell'intestazione delle pagine con le figure e nel piè di pagina delle pagine elenco. Il codice del documento (6) è indicato nel piè di pagina delle pagine elenco.

Numerazione delle pagine

Consultare la figura (A) a pagina i-5. Il numero di pagina (5) è suddiviso in tre parti:

- numero della sezione (2)
- numero progressivo di pagina all'interno della sezione (3)
- numero totale di pagine della sezione (4)

Introduzione alla macchina

Fabbricante

Il nome e l'indirizzo del fabbricante sono riportati sulla seconda pagina del presente catalogo.

Assistenza

Per ordinare i pezzi di ricambio per questa macchina oppure per riferire problemi associati con il funzionamento della macchina, contattare il più vicino ufficio Tetra Pak.

Per tutte le altre richieste, commenti o suggerimenti per eventuali miglioramenti da apportare alla macchina e alla relativa documentazione, contattare il responsabile di collegamento.

Identificazione

Marchio CE

La macchina è conforme alle principali norme sanitarie e di sicurezza dell'Area Economica Europea (EEA).

TechPub-2660371-0101

Targhetta della macchina

La figura (B) a pagina i-5 illustra un esempio di targhetta della macchina. La sezione Introduzione di tutti i manuali consegnati con la presente macchina contiene invece la figura della targhetta della macchina valida e l'illustrazione della sua posizione sulla macchina. La targhetta riporta i dati elencati sotto che sono necessari per contattare Tetra Pak in relazione a questa macchina specifica.

- Tipo di macchina (8)
- Volume (9)
- Specifiche disegno (10)
- Numero di matricola della macchina (11)
- Fabbricante (12)
- Marchio CE (13)
- Anno di fabbricazione (14)

La figura (C) a pagina i-5 mostra un esempio delle specifiche di una macchina. Verificare che i dati relativi alla macchina elencati nelle pagine iniziali del manuale corrispondano ai dati riportati sulla targhetta della macchina e nelle specifiche della macchina.

TechPub-2660371-0101

Come usare questo Catalogo Pezzi di Ricambio

Individuare il numero del pezzo di ricambio

f) Vedere la figura (D) a pagina i-5. Andare al numero della sezione (15) indicato accanto al gruppo principale che contiene il pezzo che si desidera individuare.

I punti b) e c) fanno riferimento alla figura (E) a pagina i-6.

g) Nella figura del gruppo principale, identificare il sottogruppo della macchina (17) che contiene il pezzo o il sottogruppo cercato. Annotare il numero di posizione (18) e andare alla pagina elenco che segue la figura.

h) Identificare il numero di posizione (16) o il nome del sottogruppo (19). Andare al numero di pagina corrispondente (20) indicato nella colonna di destra.

I punti d) e e) fanno riferimento alla figura (F) a pagina i-6.

i) Individuare il pezzo (21) cercato sulla figura del sottogruppo e annotare il numero di posizione del pezzo.

j) Il numero del pezzo (29) e la descrizione del pezzo (30) sono indicati accanto al numero di posizione sulla pagina elenco.

Informazioni contenute nel Catalogo Pezzi di Ricambio

L'elenco seguente fa riferimento alla figura (F) a pagina i-6. Il Catalogo Pezzi di Ricambio contiene le seguenti informazioni sui gruppi, i sottogruppi e i pezzi di ricambio della macchina:

- Riferimento struttura gruppo (22). Indica il gruppo superiore più prossimo nella struttura elenco della macchina.
- Nome gruppo (23)
- Codice pezzo di ricambio (24). Vedere la sezione Codici pezzi di ricambio.
- Unità di misura (25)
- Quantità (26)
- Numero disegno di assemblaggio (27)
- Pagine dell'elenco (28). Questa informazione è presente se la figura o l'elenco relativi al gruppo occupano più di una pagina del manuale.
- Numero pezzo o sottogruppo (29)
- Nome sottogruppo o descrizione pezzo (30)
- Numero gruppo (31)
- Numero macchina (32)
- Titolo informazioni gruppo (33). Indica se la sezione che segue il titolo si riferisce a una variante di macchina specifica oppure se si tratta di un elenco di parti comuni. Se un elenco contiene più di una variante ed esiste un disegno di assemblaggio specifico per ogni variante, viene fornito il riferimento alla pagina in cui è riportato il disegno di assemblaggio relativo alla variante.
- Informazioni interne (34)

Codici pezzi di ricambio

Le tabelle seguenti mostrano le due tipologie di codici dei pezzi di ricambio (SP) che è possibile trovare nella colonna SP di una pagina elenco del Catalogo Pezzi di Ricambio.

Codice SP	Spiegazione
A	Pezzo critico
B	Pezzo non critico

Codice SP	Spiegazione
U	Kit d'avviamento fornito insieme alla macchina
P	Kit di produzione da conservare nei locali di produzione
S	Kit d'assistenza da conservare presso il magazzino del centro di assistenza
C	Kit magazzino centrale che deve essere disponibile presso il magazzino centrale

TechPub-2660371-0101

Inleiding

Informatie betreffende dit handboek

Tetra Pak raadt aan alle geleverde documentatie zorgvuldig te lezen. Ga na of de geleverde documentatie ter beschikking is van het personeel dat de machine moet bedienen of servicewerkzaamheden moet uitvoeren.

Het is belangrijk deze catalogus voor de duur van de machine te bewaren en de catalogus door te geven aan elke volgende eigenaar of gebruiker.

Tetra Pak aanvaardt geen verantwoordelijkheid voor om het even welke soort beschadiging aan de machine als gevolg van het niet opvolgen van de in dit handboek gegeven instructies.

Bijgeleverde handboeken

De met deze apparatuur geleverde handboeken omvatten

- Conversiehandboek (CM)
  Dit handboek geeft technici informatie over het ombouwen van de apparatuur tussen verschillende productiemodi.
- Handboek Elektriciteit (EM)
  Dit handboek geeft elektriciens en servicetechnici informatie betreffende het elektrisch systeem van de apparatuur.
- Installatiehandboek (IM)
  Dit handboek geeft installatiepersoneel informatie om op veilige wijze de apparatuur te installeren.
- Onderhoudshandboek (MM)
  Dit handboek geeft technici informatie over het onderhoud van de apparatuur.
- Bedieningshandboek (OM)
  Dit handboek geeft de operator informatie betreffende het omgaan met en bedienen van de apparatuur, voor, tijdens en na productie.
- Catalogus reservedelen (SPC).
  Dit handboek geeft de nodige informatie om reserveonderdelen bij Tetra Pak te bestellen.
- Technisch Handboek (TeM)
  - Dit handboek geeft technici informatie, nodig om op veilige wijze de apparatuur te installeren
  - Dit handboek geeft technici informatie over het onderhoud van de apparatuur
  - Dit handboek geeft technici informatie betreffende het elektrisch systeem van de apparatuur
  - geeft de nodige informatie, nodig om reserveonderdelen bij Tetra Pak te bestellen

TechPub-2660371-0101

Pagina lay-out

Refereer naar de illustratie (A) op bladzijde i-5: De belangrijkste bladzijden van een Catalogus Reserveonderdelen bestaan uit een bladzijde met een illustratie (1) en een corresponderende bladzijde met een lijst (7).
Het bladzijdenummer (5) is te vinden in de kop van een illustratiebladzijde en in de voetnoot van de lijstbladzijde. Het documentnummer (6) is te vinden in de voetnoot van een lijstbladzijde.

Bladzijdenummering

Refereer naar de illustratie (A) op bladzijde i-5: een bladzijdenummer (5) bestaat uit drie delen:

- hoofdstuknummer (2)
- opeenvolgende bladzijdenummer in het hoofdstuk (3)
- totaal aantal bladzijden in het hoofdstuk (4)

Introductie van de machine

Fabrikant

Voor naam en adres van de fabrikant, zie de tweede bladzijde van deze catalogus.

Service

Voor het bestellen van reserveonderdelen of om bedieningsproblemen van deze machine te melden, contacteer de dichtst bijzijnde vestiging van Tetra Pak.

Neem contact op met de contactpersoon voor andere informatie, opmerkingen of suggesties ter verbetering van de machine en de bijbehorende documentatie.

Identificatie

CE-classificatie

Deze apparatuur voldoet aan de basiseisen voor gezondheid en veiligheid voor het Europese Economische Gebied (EEA).

TechPub-2660371-0101

Machineplaatje

De illustratie (B) op bladzijde i-5 toont een voorbeeld van een machineplaatje.
Een illustratie van het wettige machineplaatje en de plaatsing ervan wordt getoond in het hoofdstuk Introductie van de handboeken, meegeleverd met deze apparatuur. Het machineplaatje bevat onderstaande gegevens die nodig zijn wanneer Tetra Pak moet worden gecontacteerd betreffende deze apparatuur.

- Machinetype (8)
- Volume (9)
- Tekeningspecificaties (10)
- Serienummer machine (11)
- Fabrikant (12)
- CE-markering (13)
- Fabricagejaar (14)

De illustratie (C) op bladzijde i-5 toont een voorbeeld van een machineplaatje. Controleer of de gegevens betreffende de apparatuur in de voorste bladzijden van dit handboek overeenkomen met de gegevens op het machineplaatje en de machinespecificaties.

TechPub-2660371-0101

Hoe dient deze catalogus reserveonderdelen te worden gebruikt

Lokaliseren van een nummer van een reserveonderdeel

a) Refereer naar de illustratie (D) op bladzijde i-5: ga naar het hoofdstuknummer (15), naast de hoofdgroep die het gewenste deel bevat.

Items b) en c) refereer naar de illustratie (E) op bladzijde i-6.

b) Op de illustratie van de hoofdgroep, zoek de machinesub-groep (17) op die het deel van de gewenste sub-groep bevat. Noteer het positienummer (18) en ga naar de lijstbladzijde die op de illustratie volgt.

c) Op de illustratie van de hoofdgroep, zoek de machinesub-groep (17) op die het deel van de gewenste sub-groep bevat. Noteer het positienummer (18) en ga naar de lijstbladzijde die op de illustratie volgt.

Items d) en e) refereren naar de illustratie (F) op bladzijde i-6.

d) Lokaliseer het gewenste onderdeel (21) in de illustratie van de sub-groep en noteer het positienummer van het onderdeel.

e) Het onderdeelnummer (29) en de beschrijving ervan (30) worden naast het positienummer op de lijstbladzijde weergegeven.

Informatie die in een Catalogus reserveonderdelen wordt gegeven

Onderstaande lijst verwijst naar de illustratie (F) op bladzijde i-6.
Een Catalogus reserveonderdelen bevat de volgende informatie betreffende groepen, sub-groepen en reserveonderdelen voor de apparatuur:

- Referentie groepsstructuur (22). Geeft de volgende hoogste groep in de structuur van de apparatuur aan.
- Groepsnaam(23)
- Code reserveonderdeel (24). Zie deel Spare Part Codes.
- Meeteenheid (25)
- Hoeveelheid (26)
- Tekeningnummer montage (27)
- Lijst met bladzijdenreeks (28). Inclusief indien er meerdere bladzijden in de groepsillustratie of lijst voorkomen.
- Onderdeel of sub-groepsnummer (29)
- Naam sub-groep of beschrijving onderdeel (30)
- Groepsnummer (31)
- Apparatuurnummer (32)
- Titel groepsinformatie (33). Geeft aan of het deel onder de titel voor een specifieke machine is, voor een variant of een lijst is met algemene onderdelen. Indien een lijst meer dan één variant bevat en elke variant heeft zijn eigen montagetekening, wordt een bladzijdenreferentie naar de montagetekening van de variant gegeven.
- Interne informatie (34)

Codes reserveonderdelen

Onderstaande tabellen tonen de twee mogelijke codetypes van reserveonderdelen (SP) die vermeld kunnen worden in de SP-kolom van een bladzijde van de Catalogus reserveonderdelen.

SP-code	Omschrijving
A	Essentieel onderdeel
B	Niet essentieel onderdeel

SP-code	Omschrijving
U	Start-up kit, met de machine meegeleverd
P	Productiekit, op te slaan op productielocatie
S	Servicekit, op te slaan op servicelocatie
C	Kit centrale depot, beschikbaar te zijn in centraal magazijn

TechPub-2660371-0101

Introduksjon

Informasjon om håndboken

Tetra Pak anbefaler at du leser nøye gjennom alle leverte håndbøker. Sørg for at håndbøkene er tilgjengelige for alle som betjener eller vedlikeholder utstyret.

Det er viktig at du tar vare på denne katalogen under hele levetiden til utstyret og at du gir den videre til eventuelle nye eiere eller brukere.

Tetra Pak vil ikke være ansvarlig for skader på utstyret som oppstår fordi brukeren ikke følger instruksjonene i håndbøkene som følger med utstyret.

Leverte håndbøker

Håndbøkene som leveres med dette utstyret, kan inkludere

- Konverteringsmanual (CM)
  Denne håndboken gir teknikere informasjon om hvordan de konverterer utstyret mellom ulike produksjonsmodi.
- Electrisk manual (EM)
  Denne håndboken gir teknikere informasjon om utstyrets elektriske system.
- Installasjonsmanual (IM)
  Denne håndboken gir teknikere informasjon som kreves for å kunne installere utstyret på en sikker måte.
- Vedlikeholdsmanual (MM)
  Denne håndboken gir teknikere informasjon om vedlikehold av utstyret.
- Driftsmanual (OM)
  Denne håndboken gir operatøren informasjon om hvordan han håndterer og bruker utstyret før, under og etter produksjon.
- Reservedelskatalog (SPC)
  Denne håndboken inneholder informasjon som du trenger for å bestille reservedeler fra Tetra Pak.
- Teknisk manual (TeM)
  - gir teknikere informasjon om sikker installasjon av utstyret
  - gir teknikere informasjon om vedlikehold av utstyret
  - gir teknikere informasjon om utstyrets elektriske system
  - inneholder informasjon som du trenger for å bestille reservedeler fra Tetra Pak

TechPub-2660371-0101

Sideoppsett

Se illustrasjonen (A) på side i-5: Hovedsidene i reservedelskatalogen består av en illustrasjonsside (1) og en korresponderende listeside (7). Sidenummeret (5) vises i topptekstenpå illustrasjonssiden og i bunnteksten listesiden. Dokumentnummeret (6) vises i bunnteksten på listesiden.

Sidenummerering

Se illustrasjonen (A) på side i-5: Et sidenummer (5) består av tre deler:

- kapittelnummer (2)
- etterfølgende sidenummer i kapitlet (3)
- det totale antall sider i kapitlet (4)

Introduksjon av maskinen

Produsent

Hvis du ønsker produsentens navn og adresse, kan du se side to i denne katalogen.

Service

Når du skal bestille reservedeler til denne maskinen eller rapportere problemer forbundet med driften av denne maskinen, må du kontakte ditt nærmeste Tetra Pak-kontor.

Når det gjelder andre forespørsler, kommentarer eller forslag til forbedringer av utstyret og dets dokumentasjon, kan du ta kontakt med din kontaktperson.

Identifisering

CE-klassifisering

Dette utstyret er i overensstemmelse med de grunnleggende helse- og sikkerhetsforskriftene i Det europeiske økonomiske samarbeidsområdet (EØS).

TechPub-2660371-0101

Maskinplate

Illustrasjonen (B) på side i-5 viser et eksempel på en maskinplate. En illustrasjon av en gyldig maskinplate og hvor denne er plassert på utstyret, er vist i introduksjonskapitlet i håndbøkene som følger med dette utstyret. Maskinplaten inneholder nedenstående data, som du trenger når du skal kontakte Tetra Pak angående dette bestemte utstyret.

- Maskintype (8)
- Volum (9)
- Tegningsspesifikasjoner (10)
- Maskin-serienummer (11)
- Produsent (12)
- CE-merke (13)
- Produksjonsår (14)

Illustrasjonen (C) på side i-5 viser et eksempel på en maskinspesifikasjon. Sørg for at utstyrsdataene som står oppført foran i denne håndboken samsvarer med dataene på maskinplaten og maskinspesifikasjonen.

TechPub-2660371-0101

Hvordan bruke denne reservedelskatalogen

Finn et reservedelsnummer

a) Se illustrasjonen (D) på side i-5: Gå til kapittelnummeret (15) som er angitt ved siden av hovedgruppen som inneholder delen du vil finne.

Punkt b) og c) viser til illustrasjonen (E) på side i-6.

b) På hovedgruppeillustrasjonen ser du etter maskinundergruppen (17) som inneholder delen eller undergruppen du ser etter. Merk deg posisjonsnummeret (18), og gå til listesiden som kommer etter illustrasjonen.

c) Se etter posisjonsnummeret (16) eller undergruppenavnet (19). Gå til det korresponderende sidenummeret (20) som står oppført i høyre kolonne.

Punkt d) og e) viser til illustrasjonen (F) på side i-6.

d) Finn delen (21) du ser etter på undergruppeillustrasjonen, og merk deg delens posisjonsnummer.

e) Delenummeret (29) og delebeskrivelsen (30) finner du ved siden av posisjonsnummeret på listesiden.

Informasjon i en reservedelskatalog

Listen nedenfor viser til illustrasjonen (F) på side i-6. En reservedelskatalog inneholder følgende informasjon om grupper, undergrupper og reservedeler for utstyret:

- Gruppeinndelingsreferanse (22). Angir den neste gruppen opp i inndelingen av utstyrslisten.
- Gruppenavn (23)
- Reservedelskode (24). Se avsnittet Reservedelskoder.
- Målenhet (25)
- Antall (26)
- Tegningsnummer (27)
- Listesideområde (28). Inkludert hvis det er flere sider i gruppeillustrasjonen eller listen.
- Dele- eller undergruppenummer (29)
- Undergruppenavn eller delebeskrivelse (30)
- Gruppenummer (31)
- Utstyrsnummer (32)
- Gruppeinformasjonsoverskrift (33). Angir om avsnittet under overskriften er for en bestemt maskinvariant eller om det er en liste over vanlige deler. Hvis en liste har flere varianter og hver variant har sin egen sammenstillingstegning, vises det en sidereferanse til variantens sammenstillingstegning.
- Intern informasjon (34)

Reservedelskoder

Tabellene nedenfor viser de to mulige typene av reservedelskode (SP) som kan stå oppført i SP-kolonnen på en listeside i en reservedelskatalog.

SP-kode	Betydning
A	Kritisk del
B	Ikke-kritisk del

SP-kode	Betydning
U	Oppstartsett som følger med maskinleveransen
P	Produksjonssett som skal være på produksjonsstedet
S	Servicesett som skal være på servicestasjonen
C	Sentrallagersett som skal være tilgjengelig på sentrallageret

TechPub-2660371-0101

Introdução

Informação do Manual

A Tetra Pak recomenda ler cuidadosamente todos os manuais fornecidos. Verificar se os manuais fornecidos estão ao dispor do pessoal que trabalha com o equipamento ou que faz a manutenção do mesmo.

É importante guardar este catálogo durante o tempo útil de vida da máquina ou do equipamento e de entregar o catálogo a qualquer proprietário ou utilizador subsequente.

A Tetra Pak não toma a responsabilidade por quaisquer danos no equipamento causados devido ao facto de que as instruções dadas nos manuais que acompanham este equipamento não foram seguidas.

Manuais fornecidos

Os manuais fornecidos com este equipamento incluem

- Manual de Conversão (CM)
  Este manual fornece aos técnicos as informações sobre a conversão do equipamento entre os diferentes modos de produção.
- Manual Eléctrico (EM)
  Este manual fornece aos técnicos as informações sobre o sistema eléctrico do equipamento.
- Manual de Instalação (IM)
  Este manual fornece aos técnicos as informações necessárias para instalar seguramente o equipamento.
- Manual de Manutenção (MM)
  Este manual fornece aos técnicos as informações para a manutenção do equipamento.
- Manual de Operação (OM)
  Este manual fornece ao operador as informações que ele necessita para manejar e accionar o equipamento antes, durante e depois da produção.
- Catálogo de Peças Sobressalentes (SPC)
  Este manual fornece as informações necessárias para encomendar peças sobressalentes à Tetra Pak.
- Manual Técnico (TeM)
  - fornece aos técnicos as informações necessárias para instalar seguramente o equipamento
  - fornece aos técnicos as informações para a manutenção do equipamento
  - fornece aos técnicos as informações sobre o sistema eléctrico do equipamento
  - fornece as informações necessárias para encomendar peças sobressalentes à Tetra Pak

TechPub-2660371-0101

Disposição da página

Referência à ilustração (A) na página i-5: As páginas principais num Catálogo de Peças Sobressalentes consistem numa página ilustrada (1) e numa página com a lista correspondente (7). O número da página (5) é mostrado no cabeçalho de uma página ilustrada e no rodapé de uma página com lista. O número do documento (6) é mostrado no rodapé de uma página com lista.

Numeração da página

Referência à ilustração (A) na página i-5: Um número de página (5) tem três partes:

- Número do capítulo (2)
- número consecutivo da página dentro do capítulo (3)
- número total de páginas no capítulo (4)

Introdução da máquina

Fabricante

Para o nome e morada do fabricante, ver a segunda página deste catálogo.

Assistência técnica

Para encomendar peças sobressalentes para esta máquina, ou para relatar problemas associados com a operação desta máquina, contactar a companhia Tetra Pak mais próxima.

Contactar a Liaison se tiver quaisquer questões, comentários ou sugestões para o desenvolvimento relacionado com o equipamento e a sua documentação.

Identificação

Classificação CE

Este equipamento está de acordo com os regulamentos de segurança e saúde da Área Económica Europeia (EEA).

TechPub-2660371-0101

Placa da máquina

A ilustração (B) na página i-5 mostra um exemplo de uma placa da máquina. Uma ilustração da placa da máquina válida e a sua localização no equipamento é mostrada no capítulo Introdução dos manuais fornecidos com este equipamento. A placa da máquina contem os dados alistados em baixo, necessários quando se contactar a Tetra Pak relacionando-se a este equipamento em específico.

- Tipo da máquina (8)
- Volume (9)
- Especificações dos desenhos (10)
- Número de série da máquina (11)
- Fabricante (12)
- Marca CE (13)
- Ano de construção (14)

A ilustração (C) na página i-5 mostra um exemplo de uma especificação da máquina. Verificar se os dados do equipamento alistados nas páginas da frente deste manual correspondem aos dados na placa da máquina e à especificação da máquina.

TechPub-2660371-0101

Como usar este Catálogo de Peças Sobressalentes

Localizar um Número da peça sobressalente

f) Referência à ilustração (D) na página i-5: Para o número do capítulo (15) indicado ao lado do grupo principal que contem a peça que quer localizar.

Pos. b) e c) referem-se à ilustração (E) na página i-6.

g) Na ilustração do grupo principal, procurar o subgrupo da máquina (17) que contem a peça ou subgrupo que está à procura. Anotar o número da posição (18) e passar para a página da lista que segue a ilustração.

h) Procurar o número da posição (16) ou o nome do subgrupo (19). Passar para o número da página correspondente (20) alistado na coluna do lado direito.

Pos. d) e e) referem-se à ilustração (F) na página i-6.

i) Localizar a peça (21) que está à procura na ilustração do subgrupo e anotar o número da posição da peça.

j) O número da peça (29) e a descrição da peça (30) estão alistados ao lado do número da posição na página da lista.

Informações indicadas num Catálogo de Peças Sobressalentes

A lista em baixo refere-se à ilustração (F) na página i-6. Um Catálogo de Peças Sobressalentes contem as seguintes informações sobre grupos, subgrupos e peças sobressalentes para o equipamento:

- Referência da estrutura do grupo (22). Indica o grupo a seguir mais elevado na estrutura da lista do equipamento.
- Nome do grupo (23)
- Código da peça sobressalente (24). Ver o capítulo Spare Part Codes.
- Unidade de medição (25)
- Quantidade (26)
- Número do desenho de montagem (27)
- Gama da página de lista (28). Incluída se houver páginas múltiplas na ilustração do grupo ou lista.
- Número da peça ou do subgrupo (29)
- Nome do subgrupo ou descrição da peça (30)
- Número do grupo (31)
- Número do equipamento (32)
- Título da informação do grupo (33). Indica se a secção abaixo do título é para uma variante de máquina específica ou se é uma lista de peças comuns. Se uma lista tiver mais do que uma variante e cada variante tiver o seu próprio desenho de montagem, é mostrada uma referência para a página do desenho de montagem da variante.
- Informação interna (34)

Códigos de peças sobressalentes

As tabelas em baixo mostram os dois tipos possíveis do código de Peça Sobressalente (SP) que podem estar alistadas na coluna SP de uma página de lista do Catálogo de Peças Sobressalentes.

Código SP	Significado
A	Peça crítica
B	Peça não crítica

Código SP	Significado
U	Kit de colocação ao serviço fornecido com a máquina
P	Kit de produção que deve estar presente no local de produção
S	Conjunto de serviço de assistência para ser mantido no armazém das estações de serviço.
C	Conjunto do depósito geral para estar disponível no armazém central.

TechPub-2660371-0101

Inledning

Information om manualerna

Tetra Pak rekommenderar att alla manualer läses noggrant. Se till att manualerna är tillgängliga för personalen som använder eller underhåller utrustningen.

Det är viktigt att denna katalog behålls under utrustningens livslängd, och att den överlämnas till varje efterföljande innehavare eller användare av utrustningen.

Tetra Pak tar inte ansvar för någon skada på utrustningen som orsakats av att instruktionerna i medföljande manualer inte har följts.

Medföljande manualer

Följande manualer levereras tillsammans med utrustningen:

- Konverteringsmanual (CM)
  Manualen innehåller information för tekniker om hur utrustningen ska konverteras mellan olika produktionslägen.
- Elektrisk manual (EM)
  Manualen innehåller information för tekniker om utrustningens elektriska system.
- Installationsmanual (IM)
  Manualen innehåller information för tekniker om hur utrustningen installeras på ett säkert sätt.
- Underhållsmanual (MM)
  Manualen innehåller information för tekniker om hur utrustningen ska underhållas.
- Driftsmanual (OM)
  Manualen innehåller information för operatören om hur utrustningen ska hanteras före, under och efter produktion.
- Reservdelskatalog (SPC)
  Manualen innehåller information som behövs för beställning av reservdelar från Tetra Pak.
- Teknisk manual (TeM)
  - innehåller information för tekniker om hur utrustningen installeras på ett säkert sätt.
  - innehåller information för tekniker om hur utrustningen ska underhållas.
  - innehåller information för tekniker om utrustningens elektriska system.
  - innehåller information som behövs för beställning av reservdelar från Tetra Pak.

TechPub-2660371-0101

Sidlayout

Se bilden (A) på sidan i-5: Huvudsidorna i reservdelskatalogen består av en bildsida (1) och en motsvarande listsida (7). Sidnumret (5) visas i sidhuvudet på bildsidan och i sidfoten på listsidan. Dokumentnumret (6) visas i sidfoten på listsidan.

Sidnumrering

Se bilden (A) på sidan i-5: Ett sidnummer (5) består av tre delar:

- kapitelnummer (2)
- löpande sidnummer inom kapitlet (3)
- totalt sidantal i kapitlet (4)

Introduktion till maskinen

Tillverkare

Tillverkarens namn och adress finns på sidan 2 i katalogen.

Service

För att beställa reservdelar till denna maskin eller för att rapportera problem som uppstått i samband med driften kontaktar du närmaste Tetra Pak-kontor.

Har du andra frågor, kommentarer eller förslag som gäller förbättring av maskinen eller utrustningen och dokumentationen vänder du dig till din kontaktperson på Tetra Pak.

Identifiering

CE-klassificering

Denna utrustning överensstämmer med de grundläggande hälso- och säkerhetsbestämmelserna inom den europeiska ekonomiska unionen (EEA).

TechPub-2660371-0101

Maskinskylt

Bilden (B) på sidan i-5 visar ett exempel på en maskinskylt. En bild på giltig maskinskylt och dess placering på utrustningen visas i inledningskapitlet som medföljer utrustningen. Skylten innehåller de uppgifter som listas nedan och som behövs vid kontakt med Tetra Pak angående utrustningen.

- Maskintyp (8)
- Volym (9)
- Ritningsspecifikationer (10)
- Maskinnummer (11)
- Tillverkare (12)
- CE-märkning (13)
- Tillverkningsår (14)

Bilden (C) på sidan i-5 visar ett exempel på en maskinspecifikation. Kontrollera att informationen om utrustningen som listas på manualens framsida motsvarar informationen på maskinskylten och i maskinspecifikationen.

Använda reservdelskatalogen

Hitta ett reservdelsnummer

a) Se bilden (D) på sidan i-5: Gå till kapitelnumret (15) som står vid sidan om huvudgruppen som innehåller den del du vill leta reda på.

Punkt b) och c) hänvisar till bilden (E) på sidan i-6.

b) På huvudgruppsbilden letar du efter den maskinundergrupp (17) som innehåller delen eller undergruppen du letar efter. Notera positionsnumret (18) och gå till listsidan som följer efter bilden.

c) Leta efter positionsnumret (16) eller undergruppsnamnet (19). Gå till motsvarande sidnummer (20) som listas i den högra kolumnen.

Punkt d) och e) hänvisar till bilden (F) på sidan i-6.

d) Leta reda på delen (21) i undergruppsbilden och notera delens positionsnummer.

e) Reservdelsnumret (29) och reservdelsbeskrivningen (30) står bredvid positionsnumret på listsidan.

TechPub-2660371-0101

Information i reservdelskatalogen

Listan nedan hänvisar till bilden (F) på sidan i-6. Reservdelskatalogen innehåller följande information om grupper, undergrupper och reservdelar för utrustningen:

- Gruppstrukturreferens (22). Anger nästa högre grupp i utrustningslistans struktur.
- Gruppnamn (23)
- Reservdelskod (24). Se avsnittet Reservdelskoder.
- Måttenhet (25)
- Kvantitet (26)
- Monteringsritningsnummer (27)
- Listsidesintervall (28). Står med om det finns flera sidor i gruppbilden eller listan.
- Reservdels- eller undergruppsnummer (29)
- Undergruppsnamn eller reservdelsbeskrivning (30)
- Gruppnummer (31)
- Utrustningsnummer (32)
- Gruppinformationsrubrik (33). Anger om avsnittet under rubriken gäller en viss maskinvariant eller om det är en lista över allmänna delar. Om en lista har fler än en variant och varje variant har sin egen monteringsritning, visas en sidhänvisning till variantens monteringsritning.
- Intern information (34)

Reservdelskoder

Tabellerna nedan visar de två typerna av reservdelskoder (SP) som kan finnas i SP-kolumnen på en listsida i reservdelskatalogen.

SP-kod	Betydelse
A	Primär reservdel
B	Sekundär reservdel

SP-kod	Betydelse
U	Startsats som ingår i maskinleveransen
P	Produktionssats som bör finnas på produktionsplatsen
S	Servicesats som bör finnas på servicestationen
C	Central lagringssats tillgänglig vid centrallagret

TechPub-2660371-0101

SPC
Spare Parts Catalogue

This page is intentionally left blank.

ECM: 162662 - 20040309
Group number: 2634504-0100
Assembly Drawing:

Pos	Part No	SP	UN	Qty	Description	Page No
TBA 0200S						
090	2674188-0100	-		1	EDGE ROLLER	**1-5**
Common Parts						
010	2501310-0100	-		1	FILLING PIPE	**1-7, 1-9**
020	2507059-0100	-		1	REGULATING VALVE	**1-11**
030	2512936-0100	-		1	CLEANING CUP	**1-13, 1-15**
050	2512780-0100	-		1	SEAL	**1-17, 1-19**
060	2559062-0100	-		1	LOWER FORMING RING	**1-21**
070	2547422-0100	-		1	UPPER FORMING RING	**1-23, 1-25, 1-27, 1-29, 1-31**
080	2547421-0100	-		1	FORMING RING	**1-33, 1-35**
090	2541634-0100	-		1	EDGE ROLLER	**1-37**
100	2634508-0100	-		1	LONGITUDINAL SEALING	**1-39**
110	1487338-0100	-		1	SUPPORT LEVEL DETECTOR	**1-41, 1-43**
120	2575120-0100	-		1	LIFTING UNIT	**1-45**
130	2555394-0100	-		1	START-UP KIT	**1-47, 1-49**
140	2642988-0100	-		1	PLATE	**1-51**
150	2671730-0100	-		1	AIR NOZZLE	**1-53, 1-55**
200	1363779-0000	-		1	BOX	

Pos	Part No	SP	UN	Qty	Description	Page No

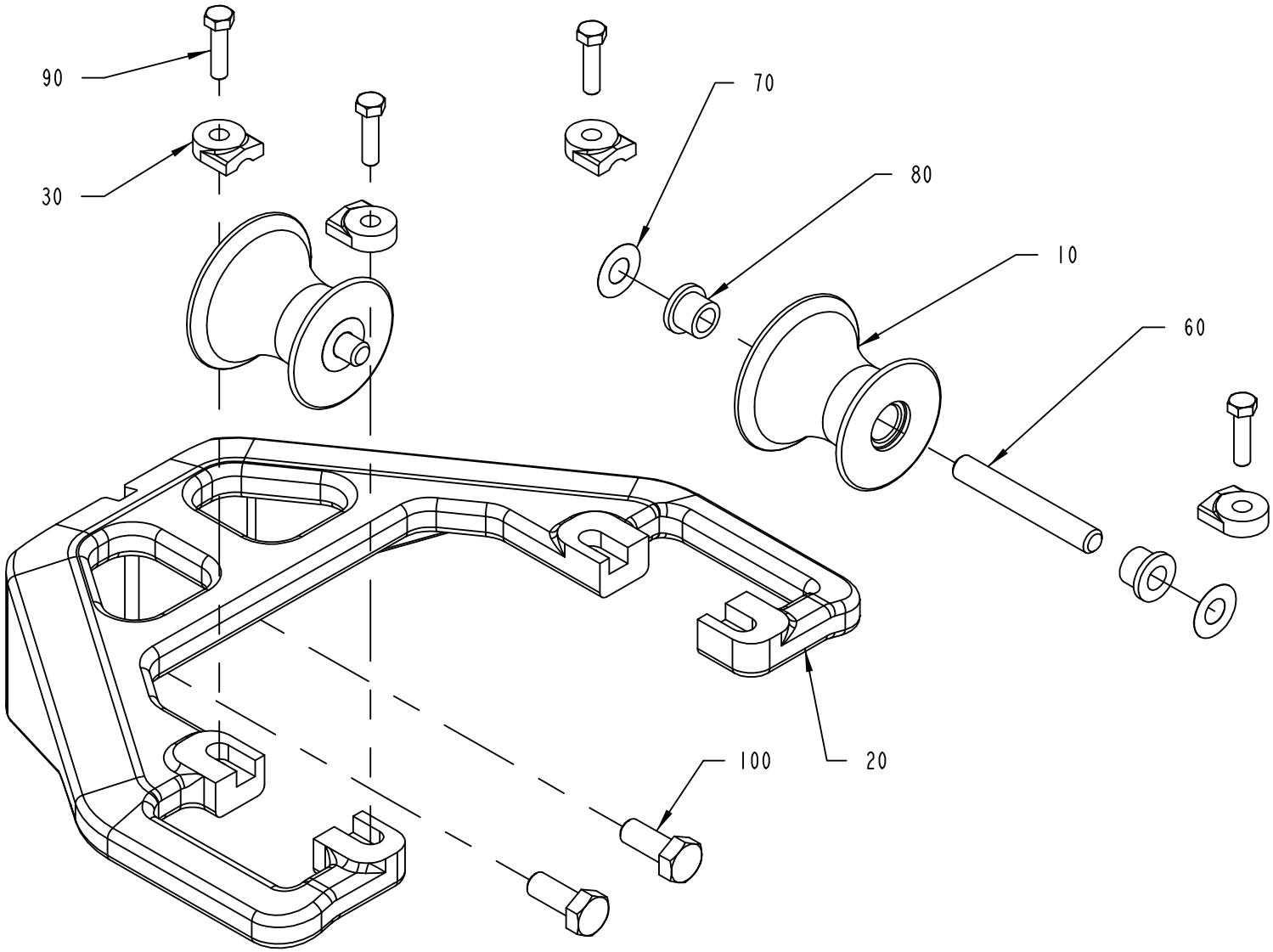

2674188-1
163553

ECM: 163553 - 20040309
Group number: 2674188-0100
Assembly Drawing: 2674188-1_1_AA

Pos	Part No	SP	UN	Qty	Description	Page No
TBA 0200S						
010	2640354-0000	A		2	ROLLER	
020	2640353-0000	-		1	BRACKET	
030	2532895-0009	A		4	LOCK PLATE	
060	2522213-0006	A		2	SHAFT	
090	312105-0331	-		4	SCREW M6S ISO 4017 M5X20 A480	
100	312105-0451	-		2	SCREW M6S ISO 4017 M8X20 A480	
TBA 0330S, TBA 0200B, TBA 0250B						
010	2634943-0000	A		2	ROLLER	
020	2657860-0000	-		1	BRACKET	
030	2532895-0005	A		4	LOCK PLATE	
060	2522213-0007	A		2	SHAFT	
090	312105-0331	-		4	SCREW M6S ISO 4017 M5X20 A480	
100	312105-0449	-		2	SCREW M6S ISO 4017 M8X16 A480	
Common Parts						
070	2033-0011	A		4	WASHER	
080	90240-0172	-		4	FLANGE BUSHING, 8X12X10 MM	

Pos	Part No	SP	UN	Qty	Description	Page No

FILLING PIPE

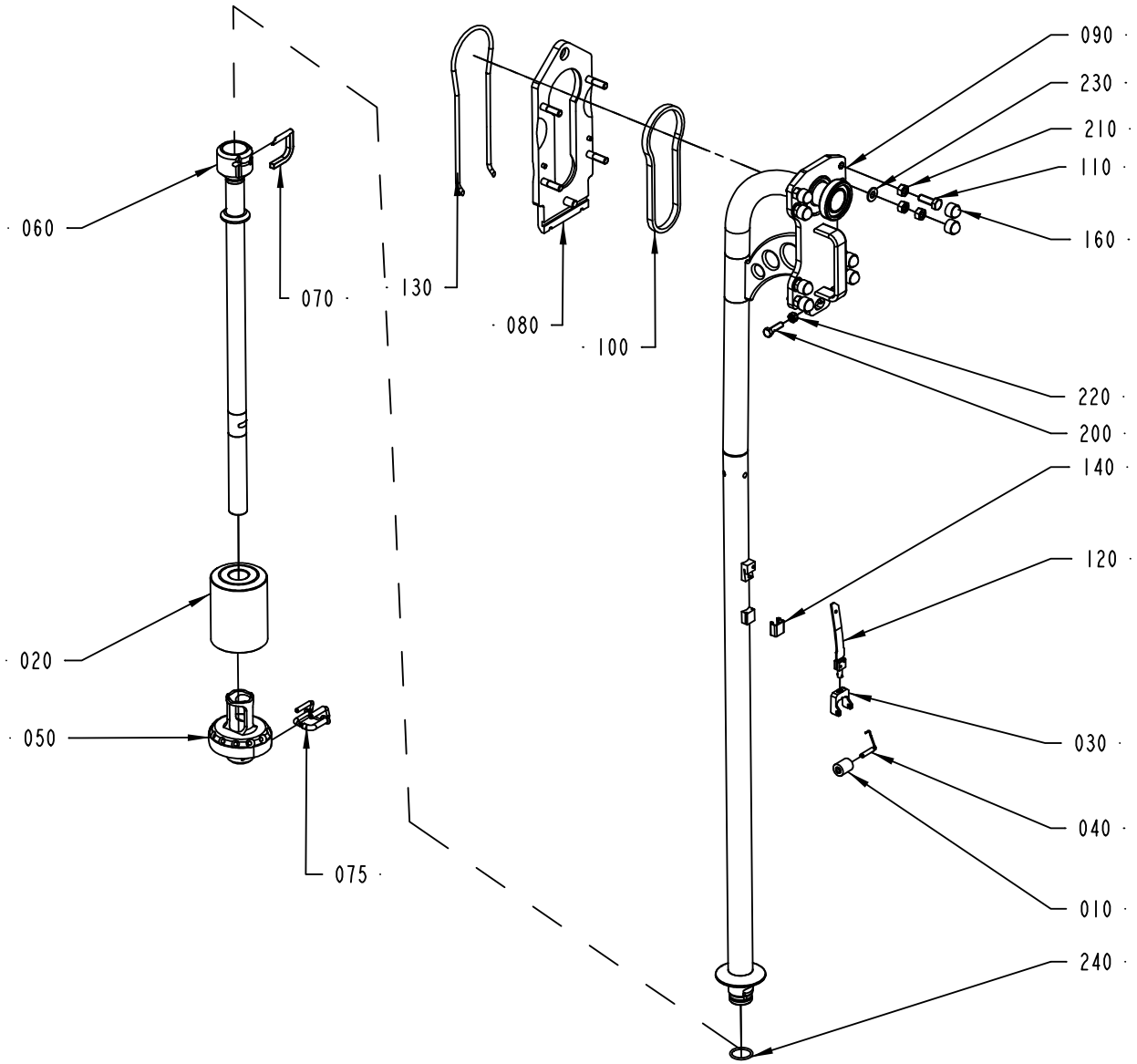

2501310-1
ECM 139126

ECM: 160435 - 20040309
Group number: 2501310-0100
Assembly Drawing: 2501310-1_1_AC

This list covers pages from 1-6 to 1-9

Pos	Part No	SP	UN	Qty	Description	Page No
TBA 0500B NOQC, TBA 1000B NOQC (See drawing on page: 1-6)						
010	232979-0000	A		1	PRESSURE ROLLER	
020	2564596-0000	A		1	FLOAT	
030	1348048-0000	A		1	FORK	
040	2523268-0000	A		1	SHAFT	
050	2563294-0000	A		1	PRESSURE FLANGE	
060	2563293-0000	A		1	LOWER FILLING PIPE	
070	2598008-0000	A		1	STOP PIN	
075	2563295-0000	A		1	STOP PIN	
090	2501311-0000	A		1	FILLING PIPE	
120	1517053-0000	A		1	SPRING	
140	14600-0000	A		1	HOOD	
240	315204-0219	A		1	O-RING 29,2X3 MM	
TBA 0200B NOQC, TBA 0250B NOQC (See drawing on page: 1-8)						
010	257330-0000	A		1	PRESSURE ROLLER	
020	2564600-0000	A		1	FLOAT	
030	1317438-0000	A		1	FORK	
040	2529418-0000	A		1	SHAFT	
050	2601472-0000	A		1	PRESSURE FLANGE	
060	2598015-0000	A		1	LOWER FILLING PIPE	
070	2605148-0000	A		2	STOP PIN	
075	2563292-0000	A		1	STOP PIN	
090	2528104-0000	A		1	FILLING PIPE	
120	1498621-0000	A		1	SPRING	
140	295377-0003	A		1	HOOD	
150	1498143-0000	A		1	LOCKING RING	
240	315204-0215	A		1	O-RING 19,2X3 MM	
TBA 0200B QC, TBA 0330S QC, TBA 0250B QC (See drawing on page: 1-6)						
010	257330-0000	A		1	PRESSURE ROLLER	
020	2564600-0000	A		1	FLOAT	
030	1317438-0000	A		1	FORK	
040	2529418-0000	A		1	SHAFT	
050	2601472-0000	A		1	PRESSURE FLANGE	
060	2664098-0000	-		1	FILLING PIPE	
070	2605148-0000	A		2	STOP PIN	
075	2563292-0000	A		1	STOP PIN	
090	2528104-0000	A		1	FILLING PIPE	
120	1498621-0000	A		1	SPRING	
140	295377-0003	A		1	HOOD	
150	1498143-0000	A		1	LOCKING RING	
240	315204-0215	A		1	O-RING 19,2X3 MM	
TBA 0200S (See drawing on page: 1-8)						
010	272479-0000	A		1	PRESSURE ROLLER	
020	2564601-0000	A		1	FLOAT	
030	255978-0000	A		1	FORK	
040	2529416-0000	A		1	SHAFT	
050	2570015-0000	A		1	PRESSURE FLANGE	
060	2563296-0000	A		1	LOWER FILLING PIPE	
070	2605148-0000	A		2	STOP PIN	
075	2563292-0000	A		1	STOP PIN	
090	2528104-0000	A		1	FILLING PIPE	
120	751604-0000	A		1	SPRING	
140	295377-0001	A		1	HOOD	
150	1499114-0000	A		1	LOCKING RING	
240	315204-0215	A		1	O-RING 19,2X3 MM	
TBA 0500B QC, TBA 1000B QC (See drawing on page: 1-6)						
010	232979-0000	A		1	PRESSURE ROLLER	
020	2564596-0000	A		1	FLOAT	
030	1348048-0000	A		1	FORK	
040	2523268-0000	A		1	SHAFT	
050	2634524-0000	-		1	PRESSURE FLANGE	
060	2634523-0000	-		1	LOWER FILLING PIPE	
070	2598008-0000	A		1	STOP PIN	
075	2563295-0000	A		1	STOP PIN	
090	2501311-0000	A		1	FILLING PIPE	
120	1517053-0000	A		1	SPRING	
140	14600-0000	A		1	HOOD	
240	315204-0219	A		1	O-RING 29,2X3 MM	
TBA 1000S (See drawing on page: 1-6)						
010	499387-0000	A		1	PRESSURE ROLLER	
020	2564596-0000	A		1	FLOAT	
030	1348047-0000	A		1	FORK	
040	2529419-0000	A		1	SHAFT	
050	2563290-0000	A		1	PRESSURE FLANGE	
060	2563289-0000	A		1	LOWER FILLING PIPE	
070	2598008-0000	A		1	STOP PIN	
075	2563295-0000	A		1	STOP PIN	
090	2501311-0000	A		1	FILLING PIPE	
120	2539453-0000	A		1	SPRING	
140	434665-0000	A		1	HOOD	
240	315204-0219	A		1	O-RING 29,2X3 MM	
TBA 1000SQ (See drawing on page: 1-6)						
010	257330-0000	A		1	PRESSURE ROLLER	
020	2564597-0000	A		1	FLOAT	

Machine Type Group Description Used-In Group Number Page No

FILLING PIPE

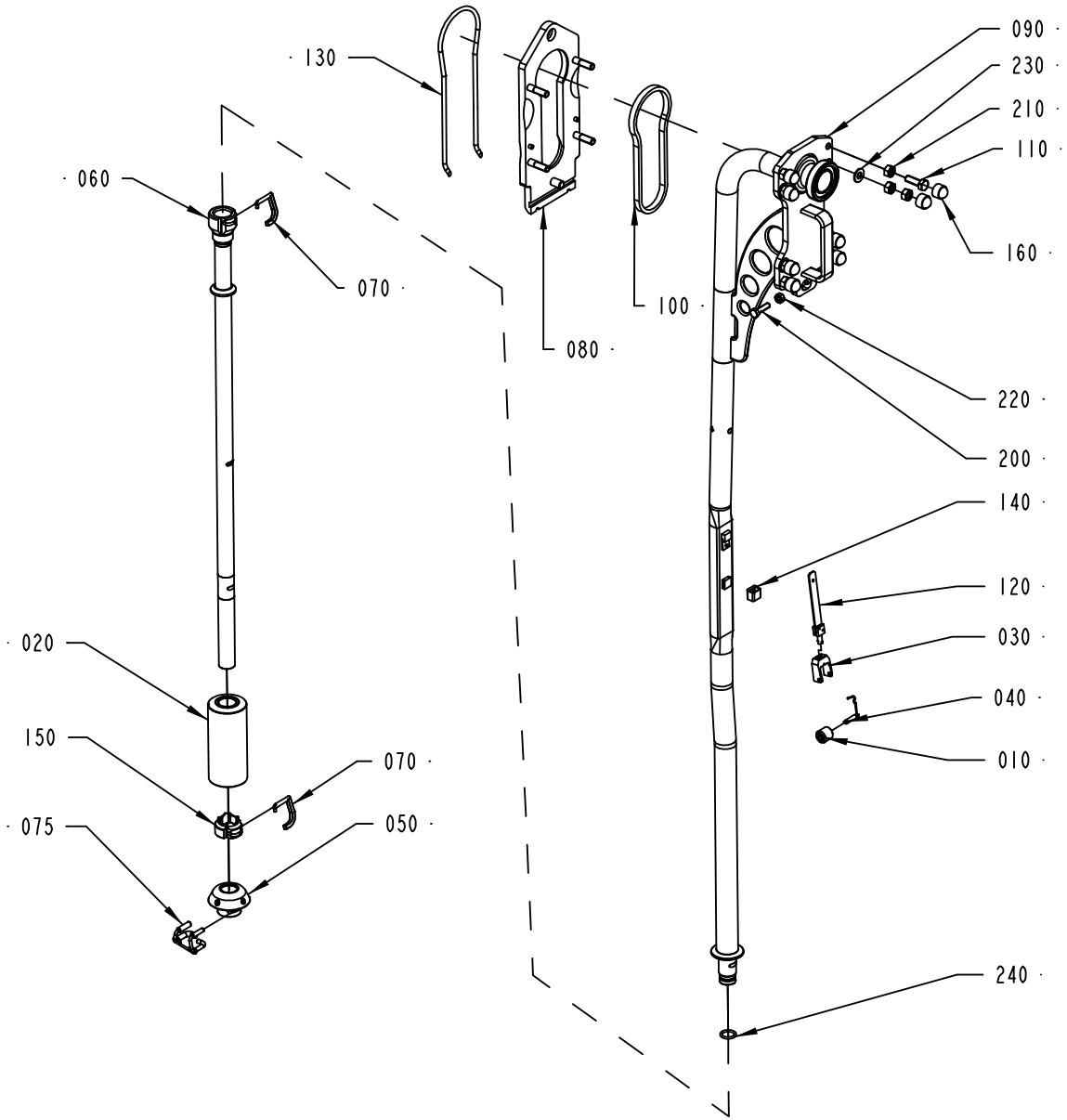

2501310-2
ECM 139126

ECM: 160435 - 20040309
Group number: 2501310-0100
Assembly Drawing: 2501310-2_1_AC

This list covers pages from 1-6 to 1-9

Pos	Part No	SP	UN	Qty	Description	Page No
TBA 1000SQ (Cont'd) (See drawing on page: 1-6)						
030	1348049-0000	A		1	FORK	
040	2529420-0000	A		1	SHAFT	
050	2601469-0000	A		1	PRESSURE FLANGE	
060	2563289-0000	A		1	LOWER FILLING PIPE	
070	2598008-0000	A		1	STOP PIN	
075	2563295-0000	A		1	STOP PIN	
090	2501311-0000	A		1	FILLING PIPE	
120	2539453-0000	A		1	SPRING	
140	434665-0000	A		1	HOOD	
240	315204-0219	A		1	O-RING 29,2X3 MM	
TBA 1500S (See drawing on page: 1-6)						
010	232979-0000	A		1	PRESSURE ROLLER	
020	2564596-0000	A		1	FLOAT	
030	1348048-0000	A		1	FORK	
040	2523268-0000	A		1	SHAFT	
050	2598017-0000	A		1	PRESSURE FLANGE	
060	2592525-0000	A		1	FILLING PIPE	
070	2598008-0000	A		1	STOP PIN	
075	2563295-0000	A		1	STOP PIN	
090	2501311-0000	A		1	FILLING PIPE	
120	1517053-0000	A		1	SPRING	
140	14600-0000	A		1	HOOD	
240	315204-0219	A		1	O-RING 29,2X3 MM	
TPA 1000SQ (See drawing on page: 1-6)						
010	257330-0000	A		1	PRESSURE ROLLER	
020	2564602-0000	A		1	FLOAT	
030	1348049-0000	A		1	FORK	
040	2529420-0000	A		1	SHAFT	
050	2570017-0000	A		1	PRESSURE FLANGE	
060	2565444-0000	A		1	FILLING PIPE	
070	2598008-0000	A		1	STOP PIN	
075	2563295-0000	A		1	STOP PIN	
090	2565436-0000	A		1	FILLING PIPE	
120	1519485-0000	A		1	SPRING	
140	14600-0000	A		1	HOOD	
240	315204-0219	A		1	O-RING 29,2X3 MM	
Common Parts						
080	2500082-0000	A		1	MOUNTING PLATE	
100	2507048-0000	A		1	GASKET	
110	312105-0495	-		4	SCREW M6S ISO 4017 M10X30 A480	
130	2500071-0000	A		1	O-RING	
160	90459-0729	-		8	HEXAGONAL PROTECTIVE CAP GPN 1000	
200	312105-0455	-		2	SCREW M6S ISO 4017 M8X30 A480	
210	312605-0320	-		12	HEXAGON NUT, M6M M10 A280	
220	312605-0318	-		2	HEXAGON NUT, M6M M8 A280	
230	315105-0173	-		4	WASHER BRB10,5X22RFR	

Machine Type | Group Description | Used-In | Group Number | Page No

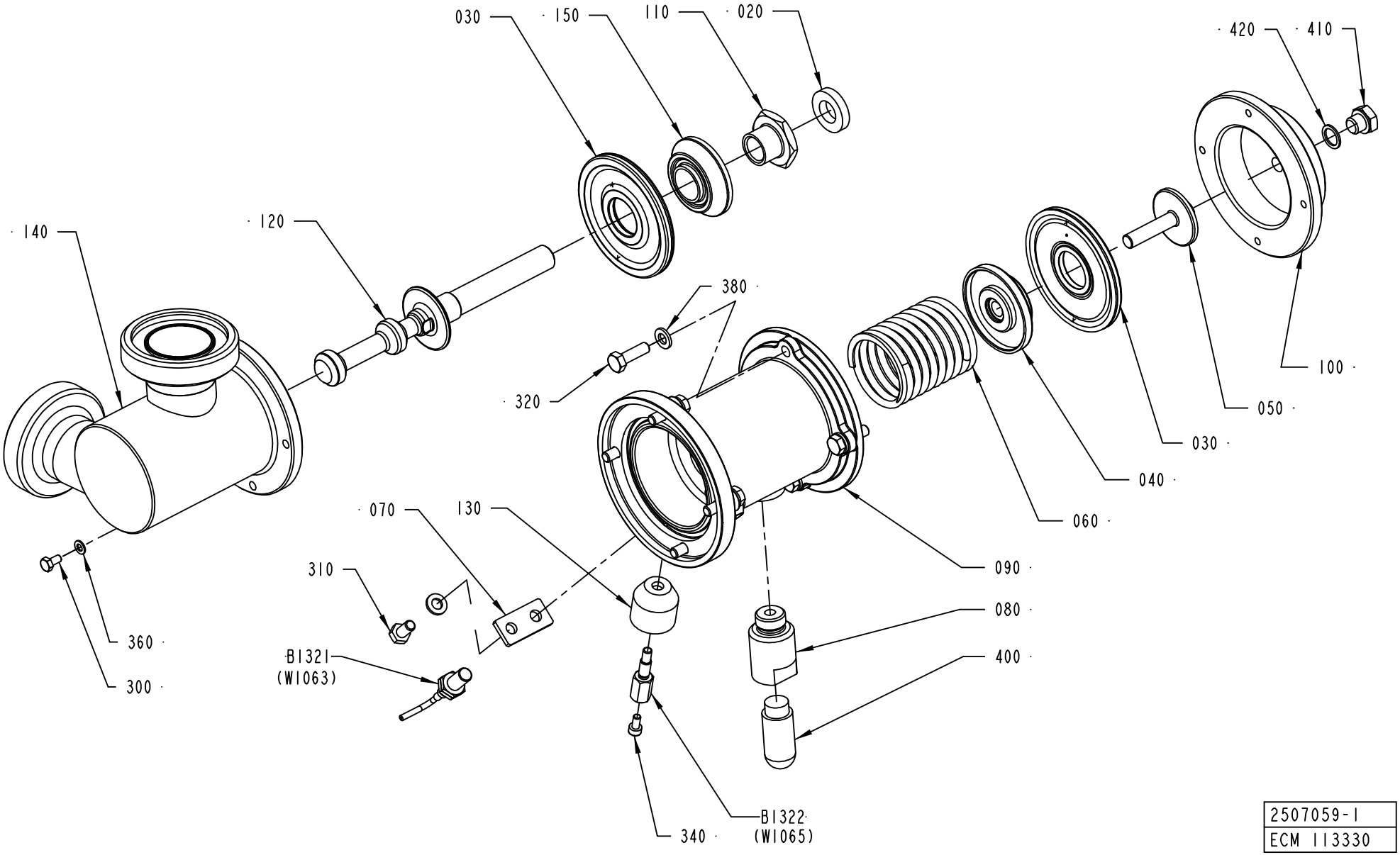

2507059-1
ECM 113330

ECM: 163466 - 20040309
Group number: 2507059-0100
Assembly Drawing: 2507059-1_1_AA

Pos	Part No	SP	UN	Qty	Description	Page No
A3/FLEX TBA 0200S, A3/FLEX TBA 0200B, A3/FLEX TBA 0250B, A3/FLEX TBA 0330S						
040	926906-0000	-		1	SPACER	
060	926909-0000	A		1	COMPRESSION SPRING	
120	927007-0000	A		1	SHUTTER	
140	2562704-0000	-		1	BODY	
A3/FLEX TBA 0500B, A3/FLEX TBA 1000B, A3/FLEX TBA 1000S, A3/FLEX TBA 1000SQ, A3/FLEX TPA 1000SQ						
040	926906-0000	-		1	SPACER	
060	926909-0000	A		1	COMPRESSION SPRING	
120	1511530-0000	A		1	SHUTTER	
140	1548230-0000	-		1	BODY	
A3/FLEX TBA 1500S						
040	926906-0000	-		1	SPACER	
060	926909-0000	A		1	COMPRESSION SPRING	
120	1129321-0000	-		1	SHUTTER	
140	1498526-0000	-		1	REGULATOR BODY	
Common Parts						
020	736514-0000	A		1	SHOCK ABSORBER	
030	925998-0000	A		2	DIAPHRAGM	
050	926907-0000	-		1	SCREW	
070	926934-0000	-		1	SUPPORT	
080	927044-0000	-		1	SPACER	
090	2563280-0000	-		1	BODY	
100	927203-0000	-		1	COVER	
110	979434-0000	-		1	FERRULE	
130	1478813-0000	-		1	SPACER	
150	1511600-0000	-		1	SPACER	
300	312105-0287	-		1	SCREW M6S ISO4017 M4X8 A470	
310	312105-0366	-		1	SCREW M6S ISO 4017 M6X12 A480	
320	312105-0370	-		8	SCREW M6S ISO 4017 M6X20 A480	
340	312115-0287	-		1	SCREW ISO4762 M4X8 A4	
360	315105-0136	-		1	WASHER BRB4,3XRFR	
380	315105-0153	-		9	WASHER BRB6,4X12RFR	
400	90328-0026	A		1	SILENCER G1/4	
410	90330-0066	-		1	PLUG, EXT. G-THREAD, G1/8	
420	315233-0109	-		1	WASHER CAPTIVE SEALING G1/8	
B1321	90458-0138	A		1	PROX.SW. E2EG-X1R5B1-5M	
B1322	1478814-0000	A		1	SENSOR	

Pos	Part No	SP	UN	Qty	Description	Page No

Machine Type | Group Description | Used-In | Group Number | Page No

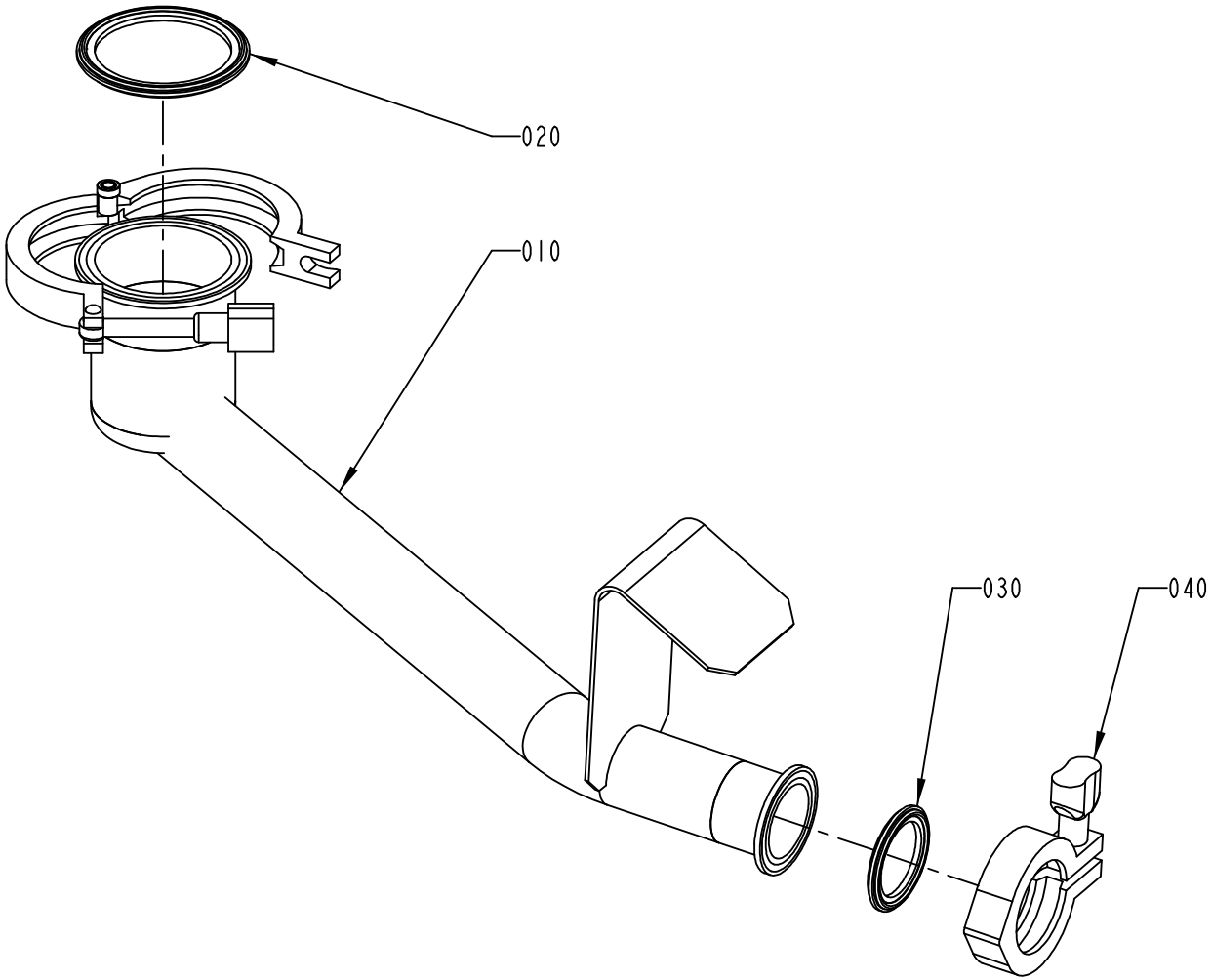

2512936-1
ECM 112508

ECM: 163478 - 20040309
Group number: 2512936-0100
Assembly Drawing: 2512936-1_1_AA

This list covers pages from 1-12 to 1-15

Pos	Part No	SP	UN	Qty	Description	Page No
TBA 0330S, TBA 0200B, TBA 0200S, TBA 0250B (See drawing on page: 1-14)						
010	2540615-0000	-		1	CLEANING CUP	
030	342850-0304	A		2	GASKET 35,4X49,1X5,2 1"1/2 FDA	
TBA 1000S, TBA 1000SQ, TBA 1000B, TBA 1500S (See drawing on page: 1-12)						
010	2501312-0000	-		1	CLEANING CUP	
020	342850-0306	A		1	GASKET 60,3X76,1X5,2 MM 2"1/2 FDA	
030	342850-0304	A		1	GASKET 35,4X49,1X5,2 1"1/2 FDA	
TPA 1000SQ (See drawing on page: 1-12)						
010	2565437-0000	-		1	CLEANING CUP	
020	342850-0305	-		1	GASKET 47,8X62,6X5,2 MM 2" FDA	
030	342850-0304	A		1	GASKET 35,4X49,1X5,2 1"1/2 FDA	
Common Parts						
040	342840-0103	-		1	CLAMPING PIECE	

Pos	Part No	SP	UN	Qty	Description	Page No

Machine Type | Group Description | Used-In | Group Number | Page No

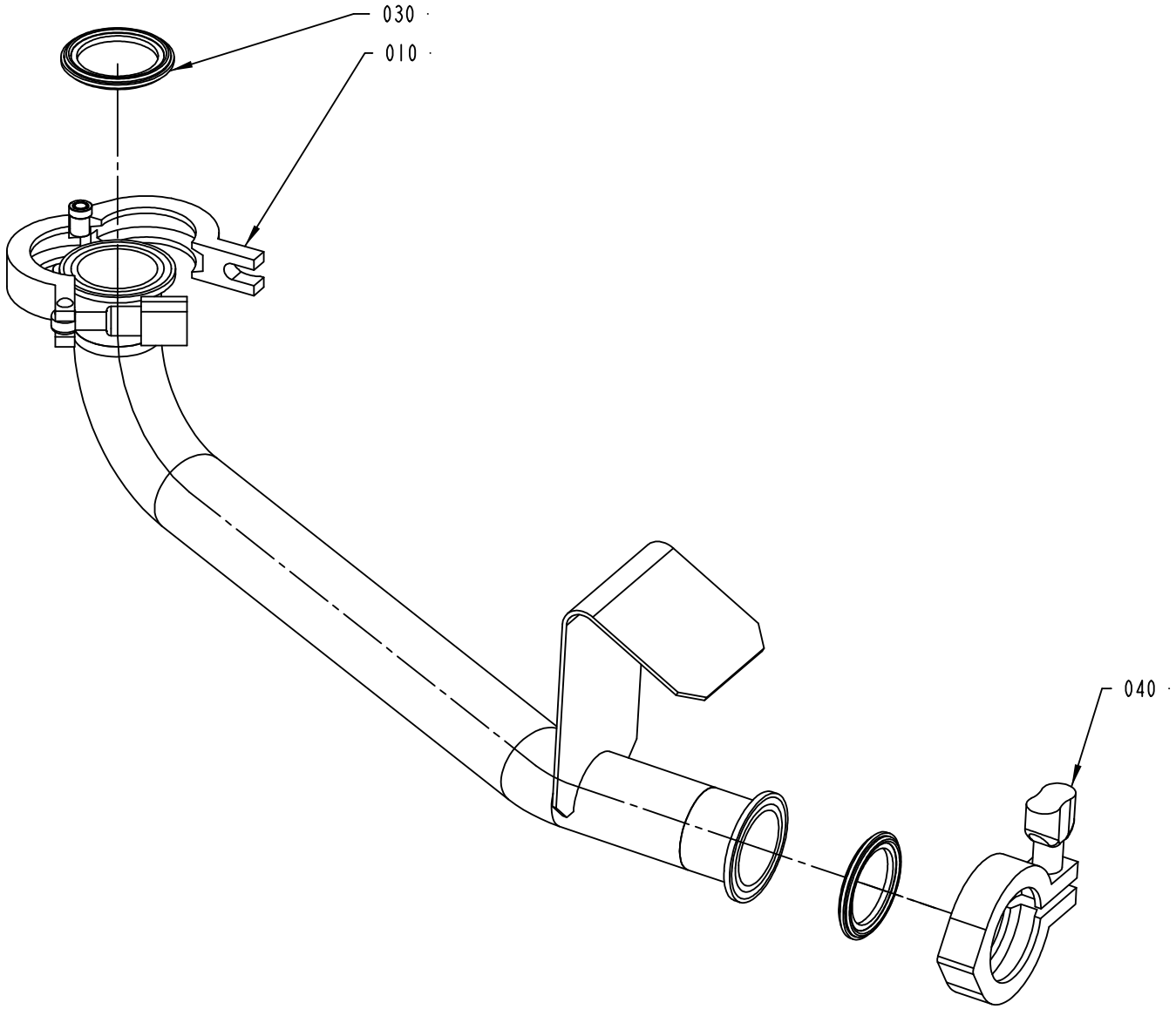

2512936-2
ECM 112508

ECM: 163478 - 20040309
Group number: 2512936-0100
Assembly Drawing: 2512936-2_1_AA

This list covers pages from 1-12 to 1-15

Pos	Part No	SP	UN	Qty	Description	Page No
TBA 0330S, TBA 0200B, TBA 0200S, TBA 0250B (See drawing on page: 1-14)						
010	2540615-0000	-		1	CLEANING CUP	
030	342850-0304	A		2	GASKET 35,4X49,1X5,2 1"1/2 FDA	
TBA 1000S, TBA 1000SQ, TBA 1000B, TBA 1500S (See drawing on page: 1-12)						
010	2501312-0000	-		1	CLEANING CUP	
020	342850-0306	A		1	GASKET 60,3X76,1X5,2 MM 2"1/2 FDA	
030	342850-0304	A		1	GASKET 35,4X49,1X5,2 1"1/2 FDA	
TPA 1000SQ (See drawing on page: 1-12)						
010	2565437-0000	-		1	CLEANING CUP	
020	342850-0305	-		1	GASKET 47,8X62,6X5,2 MM 2" FDA	
030	342850-0304	A		1	GASKET 35,4X49,1X5,2 1"1/2 FDA	
Common Parts						
040	342840-0103	-		1	CLAMPING PIECE	

Pos	Part No	SP	UN	Qty	Description	Page No

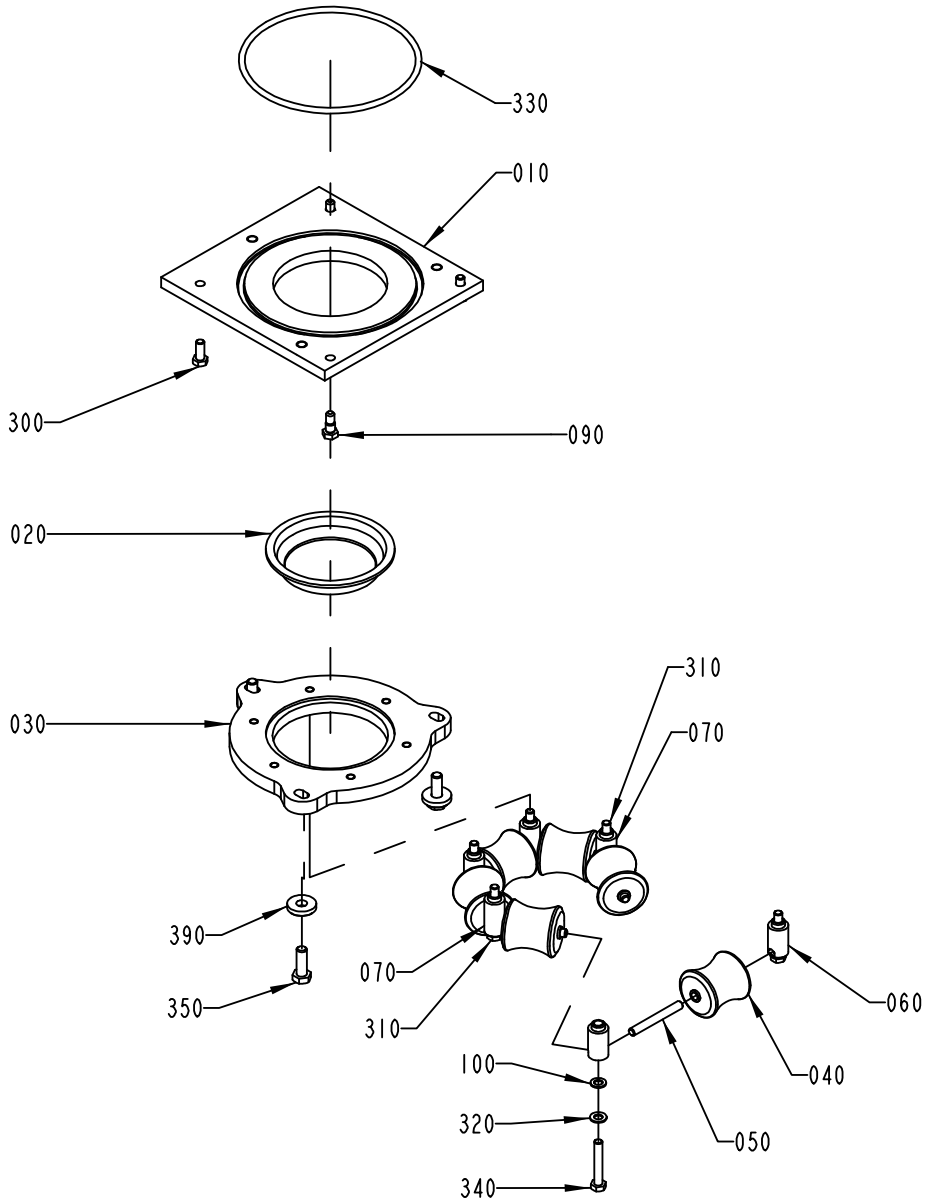

2512780-1
ECM 118518

ECM: 152267 - 20040309
Group number: 2512780-0100
Assembly Drawing: 2512780-1_1_AA

This list covers pages from 1-16 to 1-19

Pos	Part No	SP	UN	Qty	Description	Page No
TBA 0200S (See drawing on page: 1-18)						
010	2562711-0000	-		1	PLATE	
020	490901-0000	A		1	SEAL	
030	2562710-0000	A		1	RING	
040	2562709-0000	A		2	ROLLER	
050	263655-0018	A		2	SHAFT	
060	1038576-0000	-		4	AXLE SUPPORT	
360	315125-0153	-		3	WASHER TBRSB 6,4X22X4 A4	
370	312105-0372	-		3	SCREW M6S ISO 4017 M6X25 A480	
380	312109-0459	-		4	SCREW M6S ISO 4017 M8X40 A480	
TBA 0330S, TBA 0200B, TBA 0250B (See drawing on page: 1-18)						
010	2528097-0000	-		1	PLATE	
020	273953-0000	A		1	SEAL	
030	2528096-0000	A		1	RING	
040	456796-0000	A		2	ROLLER	
050	263655-0006	A		2	SHAFT	
060	1038576-0000	-		4	AXLE SUPPORT	
360	315125-0153	-		3	WASHER TBRSB 6,4X22X4 A4	
370	312105-0372	-		3	SCREW M6S ISO 4017 M6X25 A480	
380	312109-0459	-		4	SCREW M6S ISO 4017 M8X40 A480	
TBA 0500B, TBA 1000B, TBA 1500S (See drawing on page: 1-16)						
010	2559104-0000	-		1	PLATE	
020	466042-0000	A		1	SEAL	
030	2512779-0000	A		1	RING	
040	466046-0000	A		6	ROLLER	
050	263655-0009	A		6	SHAFT	
060	1036954-0000	-		4	AXLE SUPPORT	
070	1036955-0000	A		2	AXLE SUPPORT	
100	1129431-0000	A		4	WASHER	
310	312105-0462	-		2	SCREW M6S ISO 4014 M8X55 A480	
320	315105-0165	-		6	WASHER BRB8,4X16RFR	
340	312109-0461	-		4	SCREW M6S ISO 4017 M8X50 A480	
350	312105-0495	-		3	SCREW M6S ISO 4017 M10X30 A480	
390	315125-0173	-		3	WASHER TBRSB 10,5X28X6 A4	
TBA 1000S (See drawing on page: 1-16)						
010	2559104-0000	-		1	PLATE	
020	567743-0000	A		1	SEAL	
030	2512779-0000	A		1	RING	
040	573504-0000	A		6	ROLLER	
050	263655-0009	A		6	SHAFT	
060	1036954-0000	-		4	AXLE SUPPORT	
070	1036955-0000	A		2	AXLE SUPPORT	
100	1129431-0000	A		4	WASHER	
310	312105-0462	-		2	SCREW M6S ISO 4014 M8X55 A480	
320	315105-0165	-		6	WASHER BRB8,4X16RFR	
340	312109-0461	-		4	SCREW M6S ISO 4017 M8X50 A480	
350	312105-0495	-		3	SCREW M6S ISO 4017 M10X30 A480	
390	315125-0173	-		3	WASHER TBRSB 10,5X28X6 A4	
TBA 1000SQ (See drawing on page: 1-16)						
010	2559104-0000	-		1	PLATE	
020	579318-0000	A		1	SEAL	
030	2512779-0000	A		1	RING	
040	1490762-0000	A		6	ROLLER	
050	263655-0009	A		6	SHAFT	
060	1036954-0000	-		4	AXLE SUPPORT	
070	1036955-0000	A		2	AXLE SUPPORT	
100	1129431-0000	A		4	WASHER	
310	312105-0462	-		2	SCREW M6S ISO 4014 M8X55 A480	
320	315105-0165	-		6	WASHER BRB8,4X16RFR	
340	312109-0461	-		4	SCREW M6S ISO 4017 M8X50 A480	
350	312105-0495	-		3	SCREW M6S ISO 4017 M10X30 A480	
390	315125-0173	-		3	WASHER TBRSB 10,5X28X6 A4	
TPA 1000SQ (See drawing on page: 1-16)						
010	2559103-0000	-		1	PLATE	
020	1524414-0000	A		1	SEAL	
030	2559102-0000	A		1	RING	
040	1524416-0000	A		6	ROLLER	
050	263655-0007	A		6	SHAFT	
060	1036954-0000	-		4	AXLE SUPPORT	
070	1036955-0000	A		2	AXLE SUPPORT	
100	1129431-0000	A		4	WASHER	
310	312105-0462	-		2	SCREW M6S ISO 4014 M8X55 A480	
320	315105-0165	-		6	WASHER BRB8,4X16RFR	
340	312109-0461	-		4	SCREW M6S ISO 4017 M8X50 A480	
350	312105-0495	-		3	SCREW M6S ISO 4017 M10X30 A480	
390	315125-0173	-		3	WASHER TBRSB 10,5X28X6 A4	
Common Parts						
090	1037885-0000	-		2	REAMED BOLT	
300	312105-0451	-		2	SCREW M6S ISO 4017 M8X20 A480	
330	315204-0324	A		1	O-RING 164,3X5,7 MM	

Machine Type | Group Description | Used-In | Group Number | Page No

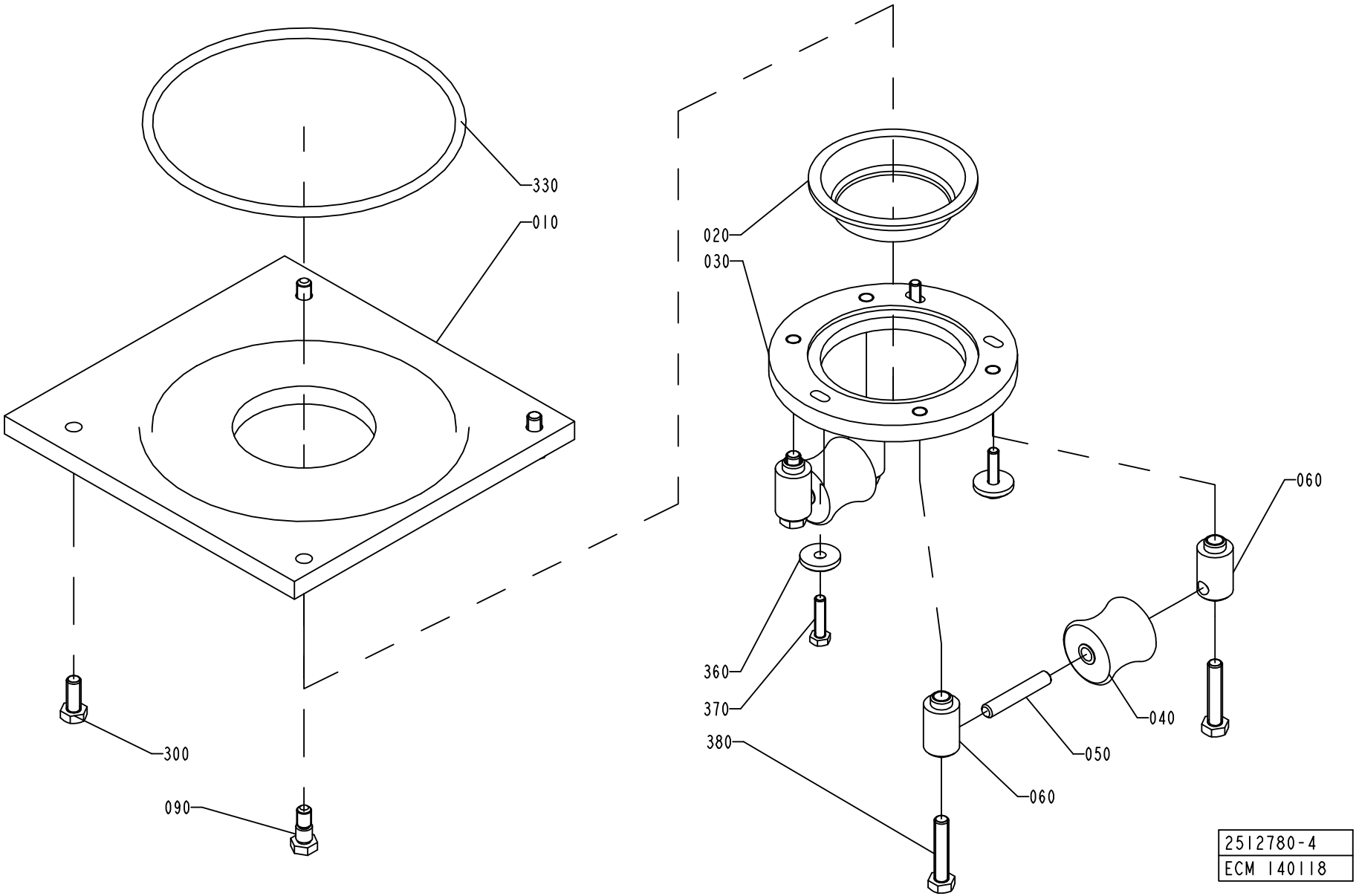
330
010
020
030
060
360
370
380
040
050
060
300
090
2512780-4
ECM 140118

ECM: 152267 - 20040309
Group number: 2512780-0100
Assembly Drawing: 2512780-4_1_AA

This list covers pages from 1-16 to 1-19

Pos	Part No	SP	UN	Qty	Description	Page No
TBA 0200S (See drawing on page: 1-18)						
010	2562711-0000	-		1	PLATE	
020	490901-0000	A		1	SEAL	
030	2562710-0000	A		1	RING	
040	2562709-0000	A		2	ROLLER	
050	263655-0018	A		2	SHAFT	
060	1038576-0000	-		4	AXLE SUPPORT	
360	315125-0153	-		3	WASHER TBRSB 6,4X22X4 A4	
370	312105-0372	-		3	SCREW M6S ISO 4017 M6X25 A480	
380	312109-0459	-		4	SCREW M6S ISO 4017 M8X40 A480	
TBA 0330S, TBA 0200B, TBA 0250B (See drawing on page: 1-18)						
010	2528097-0000	-		1	PLATE	
020	273953-0000	A		1	SEAL	
030	2528096-0000	A		1	RING	
040	456796-0000	A		2	ROLLER	
050	263655-0006	A		2	SHAFT	
060	1038576-0000	-		4	AXLE SUPPORT	
360	315125-0153	-		3	WASHER TBRSB 6,4X22X4 A4	
370	312105-0372	-		3	SCREW M6S ISO 4017 M6X25 A480	
380	312109-0459	-		4	SCREW M6S ISO 4017 M8X40 A480	
TBA 0500B, TBA 1000B, TBA 1500S (See drawing on page: 1-16)						
010	2559104-0000	-		1	PLATE	
020	466042-0000	A		1	SEAL	
030	2512779-0000	A		1	RING	
040	466046-0000	A		6	ROLLER	
050	263655-0009	A		6	SHAFT	
060	1036954-0000	-		4	AXLE SUPPORT	
070	1036955-0000	A		2	AXLE SUPPORT	
100	1129431-0000	A		4	WASHER	
310	312105-0462	-		2	SCREW M6S ISO 4014 M8X55 A480	
320	315105-0165	-		6	WASHER BRB8,4X16RFR	
340	312109-0461	-		4	SCREW M6S ISO 4017 M8X50 A480	
350	312105-0495	-		3	SCREW M6S ISO 4017 M10X30 A480	
390	315125-0173	-		3	WASHER TBRSB 10,5X28X6 A4	
TBA 1000S (See drawing on page: 1-16)						
010	2559104-0000	-		1	PLATE	
020	567743-0000	A		1	SEAL	
030	2512779-0000	A		1	RING	
040	573504-0000	A		6	ROLLER	
050	263655-0009	A		6	SHAFT	
060	1036954-0000	-		4	AXLE SUPPORT	
070	1036955-0000	A		2	AXLE SUPPORT	
100	1129431-0000	A		4	WASHER	
310	312105-0462	-		2	SCREW M6S ISO 4014 M8X55 A480	
320	315105-0165	-		6	WASHER BRB8,4X16RFR	
340	312109-0461	-		4	SCREW M6S ISO 4017 M8X50 A480	
350	312105-0495	-		3	SCREW M6S ISO 4017 M10X30 A480	
390	315125-0173	-		3	WASHER TBRSB 10,5X28X6 A4	
TBA 1000SQ (See drawing on page: 1-16)						
010	2559104-0000	-		1	PLATE	
020	579318-0000	A		1	SEAL	
030	2512779-0000	A		1	RING	
040	1490762-0000	A		6	ROLLER	
050	263655-0009	A		6	SHAFT	
060	1036954-0000	-		4	AXLE SUPPORT	
070	1036955-0000	A		2	AXLE SUPPORT	
100	1129431-0000	A		4	WASHER	
310	312105-0462	-		2	SCREW M6S ISO 4014 M8X55 A480	
320	315105-0165	-		6	WASHER BRB8,4X16RFR	
340	312109-0461	-		4	SCREW M6S ISO 4017 M8X50 A480	
350	312105-0495	-		3	SCREW M6S ISO 4017 M10X30 A480	
390	315125-0173	-		3	WASHER TBRSB 10,5X28X6 A4	
TPA 1000SQ (See drawing on page: 1-16)						
010	2559103-0000	-		1	PLATE	
020	1524414-0000	A		1	SEAL	
030	2559102-0000	A		1	RING	
040	1524416-0000	A		6	ROLLER	
050	263655-0007	A		6	SHAFT	
060	1036954-0000	-		4	AXLE SUPPORT	
070	1036955-0000	A		2	AXLE SUPPORT	
100	1129431-0000	A		4	WASHER	
310	312105-0462	-		2	SCREW M6S ISO 4014 M8X55 A480	
320	315105-0165	-		6	WASHER BRB8,4X16RFR	
340	312109-0461	-		4	SCREW M6S ISO 4017 M8X50 A480	
350	312105-0495	-		3	SCREW M6S ISO 4017 M10X30 A480	
390	315125-0173	-		3	WASHER TBRSB 10,5X28X6 A4	
Common Parts						
090	1037885-0000	-		2	REAMED BOLT	
300	312105-0451	-		2	SCREW M6S ISO 4017 M8X20 A480	
330	315204-0324	A		1	O-RING 164,3X5,7 MM	

Machine Type | Group Description | Used-In | Group Number | Page No

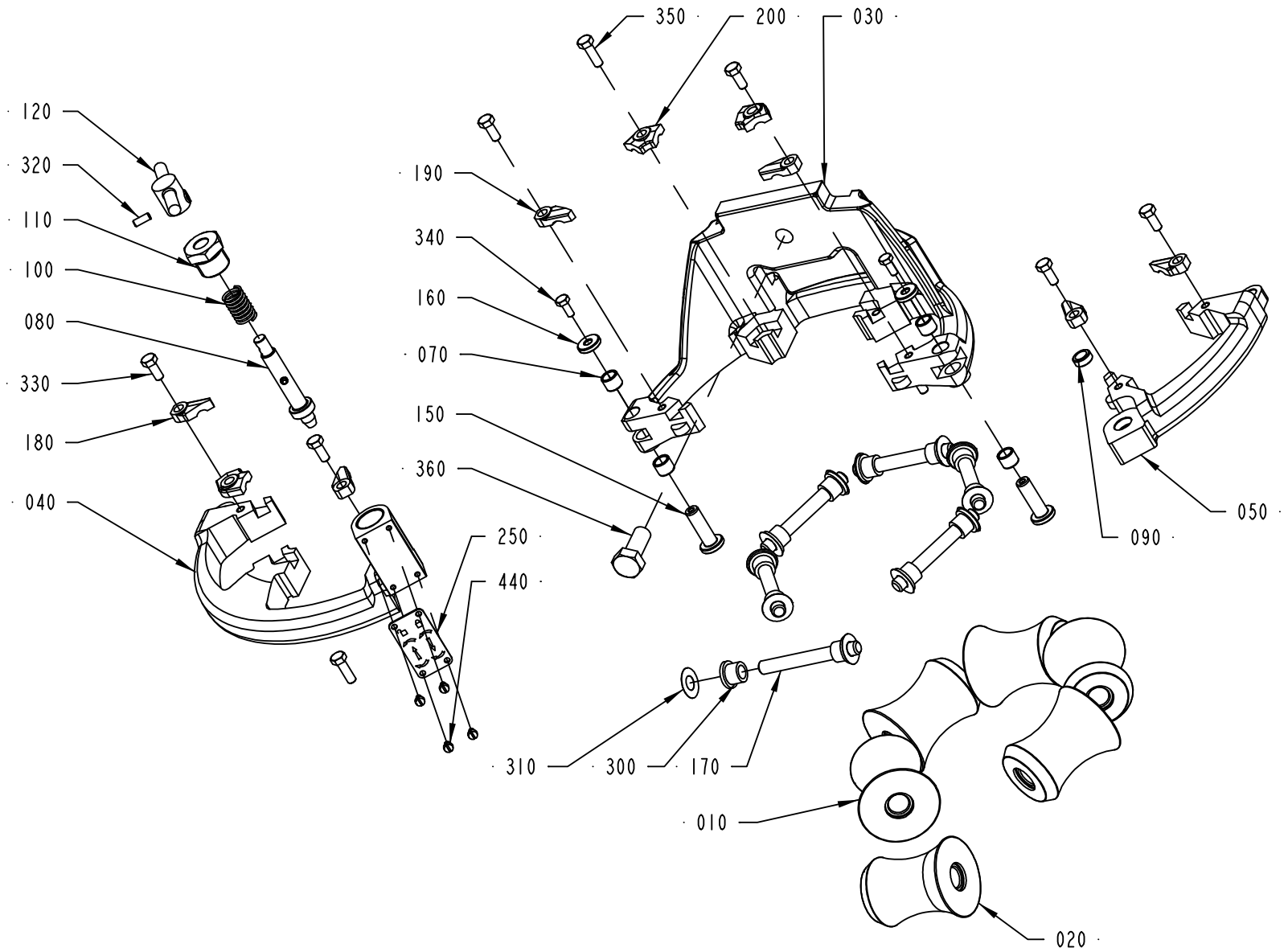

2559062-1
ECM 119736

ECM: 160440 - 20040309
Group number: 2559062-0100
Assembly Drawing: 2559062-1_1_AA

Pos	Part No	SP	UN	Qty	Description	Page No
TBA 0200S						
010	2565424-0000	A		5	ROLLER	
020	2565425-0000	A		1	COUNTER ROLLER	
030	2555606-0000	-		1	LOWER FORMING RING	
040	2555607-0000	-		1	LOWER FORMING RING	
050	2555608-0000	-		1	LOWER FORMING RING	
170	752186-0004	A		6	SHAFT	
180	2528119-0005	A		3	LOCK PLATE	
190	2528118-0005	A		3	LOCK PLATE	
TBA 0330S, TBA 0200B, TBA 0250B						
010	751502-0000	A		5	ROLLER	
020	2544882-0000	A		1	COUNTER ROLLER	
030	2528124-0000	-		1	LOWER FORMING RING	
040	2528125-0000	-		1	LOWER FORMING RING	
050	2528126-0000	-		1	LOWER FORMING RING	
170	752186-0005	A		6	SHAFT	
180	2528119-0005	A		3	LOCK PLATE	
190	2528118-0005	A		3	LOCK PLATE	
200	2528123-0004	A		3	LOCK PLATE	
TBA 0500B, TBA 1000B, TBA 1500S						
010	1349851-0000	A		5	ROLL	
020	2518098-0000	A		1	COUNTER ROLLER	
030	2552189-0000	-		1	LOWER FORMING RING	
040	2552190-0000	-		1	LOWER FORMING RING	
050	2552191-0000	-		1	LOWER FORMING RING	
170	752186-0014	A		6	SHAFT	
180	2528119-0004	A		3	LOCK PLATE	
190	2528118-0004	A		3	LOCK PLATE	
TBA 1000S						
010	567746-0001	A		5	ROLLER, (STD.SIZE)	
020	1334856-0000	A		1	COUNTER ROLLER	
030	2552192-0000	-		1	LOWER FORMING RING	
040	2552193-0000	-		1	LOWER FORMING RING	
050	2552194-0000	-		1	LOWER FORMING RING	
170	752186-0016	A		6	SHAFT	
180	2528119-0005	A		3	LOCK PLATE	
190	2528118-0005	A		3	LOCK PLATE	
TBA 1000SQ						
010	1490765-0000	A		5	ROLLER	
020	1499411-0000	A		1	COUNTER ROLLER	
030	2528120-0000	-		1	LOWER FORMING RING	
040	2528121-0000	-		1	UPPER FORMING RING	
050	2528122-0000	-		1	LOWER FORMING RING	
170	752186-0016	A		6	SHAFT	
180	2528119-0004	A		3	LOCK PLATE	
190	2528118-0004	A		3	LOCK PLATE	
TPA 1000SQ						
010	1524156-0000	A		5	ROLLER	
020	1524547-0000	A		1	COUNTER ROLLER	
030	2532900-0000	-		1	LOWER FORMING RING	
040	2531056-0000	-		1	LOWER FORMING RING	
050	2531057-0000	-		1	LOWER FORMING RING	
170	2522213-0006	A		6	SHAFT	
180	2528119-0005	A		3	LOCK PLATE	
190	2528118-0005	A		3	LOCK PLATE	
Common Parts						
070	2526826-0000	A		4	BUSHING	
080	2526830-0000	A		1	SHAFT	
090	2526836-0000	A		1	BUSHING	
100	2526832-0000	A		1	SPRING	
110	2526833-0000	A		1	NUT	
120	2532973-0000	A		1	KNOB	
150	2526827-0000	A		2	SHAFT	
160	2526825-0000	-		2	WASHER	
250	2555635-0000	-		1	SIGNS	
300	90240-0172	A		12	FLANGE BUSHING, 8X12X10 MM	
310	2033-0011	A		12	WASHER	
320	312318-0289	-		1	SCREW ISO4029 M4X10 A4	
330	312105-0327	-		6	SCREW M6S ISO 4017 M5X12 A480	
340	312105-0289	-		2	SCREW M6S ISO 4017 M4X10 A470	
350	312105-0329	-		3	SCREW M6S ISO 4017 M5X16 A480	
360	312105-0493	-		1	SCREW M6S ISO 4017 M10X25 A480	
440	90459-1228	-		4	SCREW ISO 1207 M3X4 A4	

Machine Type | Group Description | Used-In | Group Number | Page No

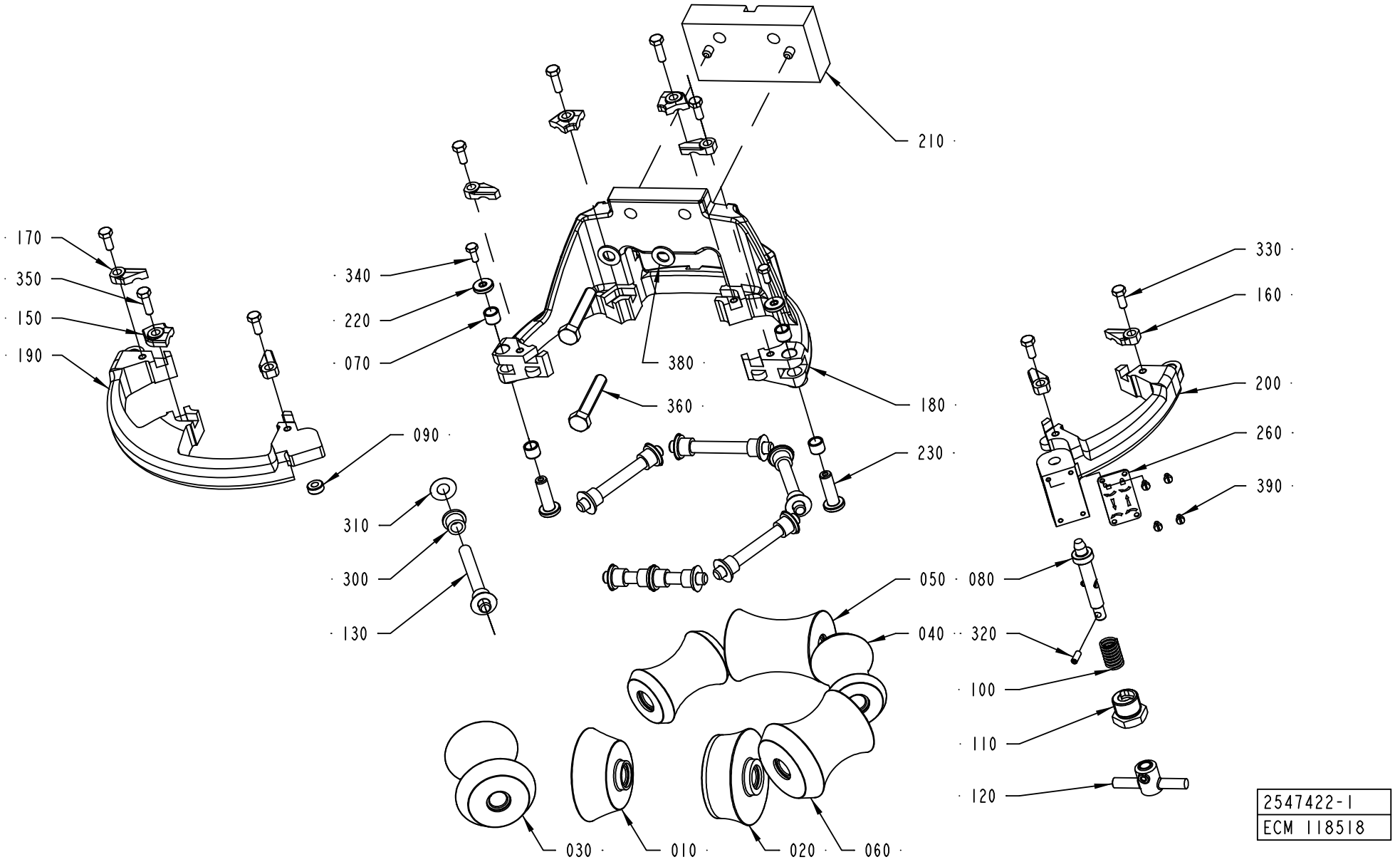
210
170
350
150
190
340
220
070
380
360
180
230
090
310
300
130
330
160
200
260
390
050
040
080
320
100
110
120
030
010
020
060
2547422-1
ECM 118518

ECM: 160439 - 20040309
Group number: 2547422-0100
Assembly Drawing: 2547422-1_1_AA

This list covers pages from 1-22 to 1-31

Pos	Part No	SP	UN	Qty	Description	Page No
TBA 0200S (See drawing on page: 1-26)						
010	2634984-0000	A		1	ROLLER	
020	2634985-0000	A		1	ROLLER	
030	2634949-0000	A		1	ROLLER	
040	2634948-0000	A		2	ROLLER	
050	2634947-0000	A		1	ROLLER	
060	2634983-0000	A		1	ROLLER	
080	2526830-0000	A		1	SHAFT	
100	2526832-0000	A		1	SPRING	
110	2526833-0000	A		1	NUT	
120	2532973-0000	A		1	KNOB	
130	2522213-0004	A		6	SHAFT	
150	2528123-0001	A		3	LOCK PLATE	
160	2528118-0002	A		3	LOCK PLATE	
170	2528119-0002	A		3	LOCK PLATE	
180	2634944-0000	-		1	UPPER FORMING RING	
190	2634945-0000	-		1	UPPER FORMING RING	
200	2634946-0000	-		1	UPPER FORMING RING	
210	2634987-0000	-		1	SPACER	
260	2555590-0000	-		1	SIGN	
300	90240-0172	A		10	FLANGE BUSHING, 8X12X10 MM	
320	312318-0289	-		1	SCREW ISO4029 M4X10 A4	
360	312105-0451	-		2	SCREW M6S ISO 4017 M8X20 A480	
370	752156-0000	-		4	FLANGE BUSHING	
390	90459-1228	-		4	SCREW ISO 1207 M3X4 A4	
400	312115-0451	-		2	SCREW ISO4762 M8X20 A4	
TBA 0330S, TBA 0200B, TBA 0250B (See drawing on page: 1-24)						
010	2641285-0000	A		1	ROLLER	
020	2641286-0000	A		1	ROLLER	
030	2641287-0000	A		1	ROLLER	
040	2641288-0000	A		2	ROLLER	
050	2641289-0000	A		1	ROLLER	
060	2641290-0000	A		1	ROLLER	
080	2526830-0000	A		1	SHAFT	
100	2526832-0000	A		1	SPRING	
110	2526833-0000	A		1	NUT	
120	2532973-0000	A		1	KNOB	
130	2522213-0015	A		6	SHAFT	
150	2528123-0003	A		3	LOCK PLATE	
160	2528118-0003	A		3	LOCK PLATE	
170	2528119-0003	A		3	LOCK PLATE	
180	2657857-0000	-		1	UPPER FORMING RING	
190	2657858-0000	-		1	UPPER FORMING RING	
200	2657859-0000	-		1	UPPER FORMING RING	
210	2634987-0000	-		1	SPACER	
300	90240-0172	A		10	FLANGE BUSHING, 8X12X10 MM	
320	312318-0289	-		1	SCREW ISO4029 M4X10 A4	
360	312105-0451	-		2	SCREW M6S ISO 4017 M8X20 A480	
370	752156-0000	-		4	FLANGE BUSHING	
390	90459-1228	-		4	SCREW ISO 1207 M3X4 A4	
400	312115-0451	-		2	SCREW ISO4762 M8X20 A4	
TBA 0500B, TBA 1000B, TBA 1500S (See drawing on page: 1-26)						
010	2512762-0000	A		1	ROLLER	
020	2514511-0000	A		1	ROLLER	
030	2514510-0000	A		1	ROLLER	
040	2514508-0000	A		2	ROLLER	
050	2514509-0000	A		1	ROLLER	
060	2514507-0000	A		1	ROLLER	
080	2526830-0000	A		1	SHAFT	
100	2526832-0000	A		1	SPRING	
110	2526833-0000	A		1	NUT	
120	2532973-0000	A		1	KNOB	
130	752186-0015	A		6	SHAFT	
150	2528123-0004	A		3	LOCK PLATE	
160	2528118-0005	A		3	LOCK PLATE	
170	2528119-0005	A		3	LOCK PLATE	
180	2552195-0000	-		1	UPPER FORMING RING	
190	2552196-0000	-		1	UPPER FORMING RING	
200	2552197-0000	-		1	UPPER FORMING RING	
210	2532914-0000	-		1	SPACER	
260	2555590-0000	-		1	SIGN	
300	90240-0172	A		14	FLANGE BUSHING, 8X12X10 MM	
320	312318-0289	-		1	SCREW ISO4029 M4X10 A4	
360	312109-0460	-		2	SCREW M6S ISO 4017 M8X45 A480	
380	315105-0165	-		2	WASHER BRB8,4X16RFR	
390	90459-1228	-		4	SCREW ISO 1207 M3X4 A4	
TBA 1000S (See drawing on page: 1-22)						
010	2512737-0000	A		1	ROLLER	
020	2512738-0000	A		1	ROLLER	
030	2512740-0000	A		1	ROLLER	
040	2512741-0000	A		2	ROLLER	
050	2512742-0000	A		2	ROLLER	
080	2526830-0000	A		1	SHAFT	
100	2526832-0000	A		1	SPRING	

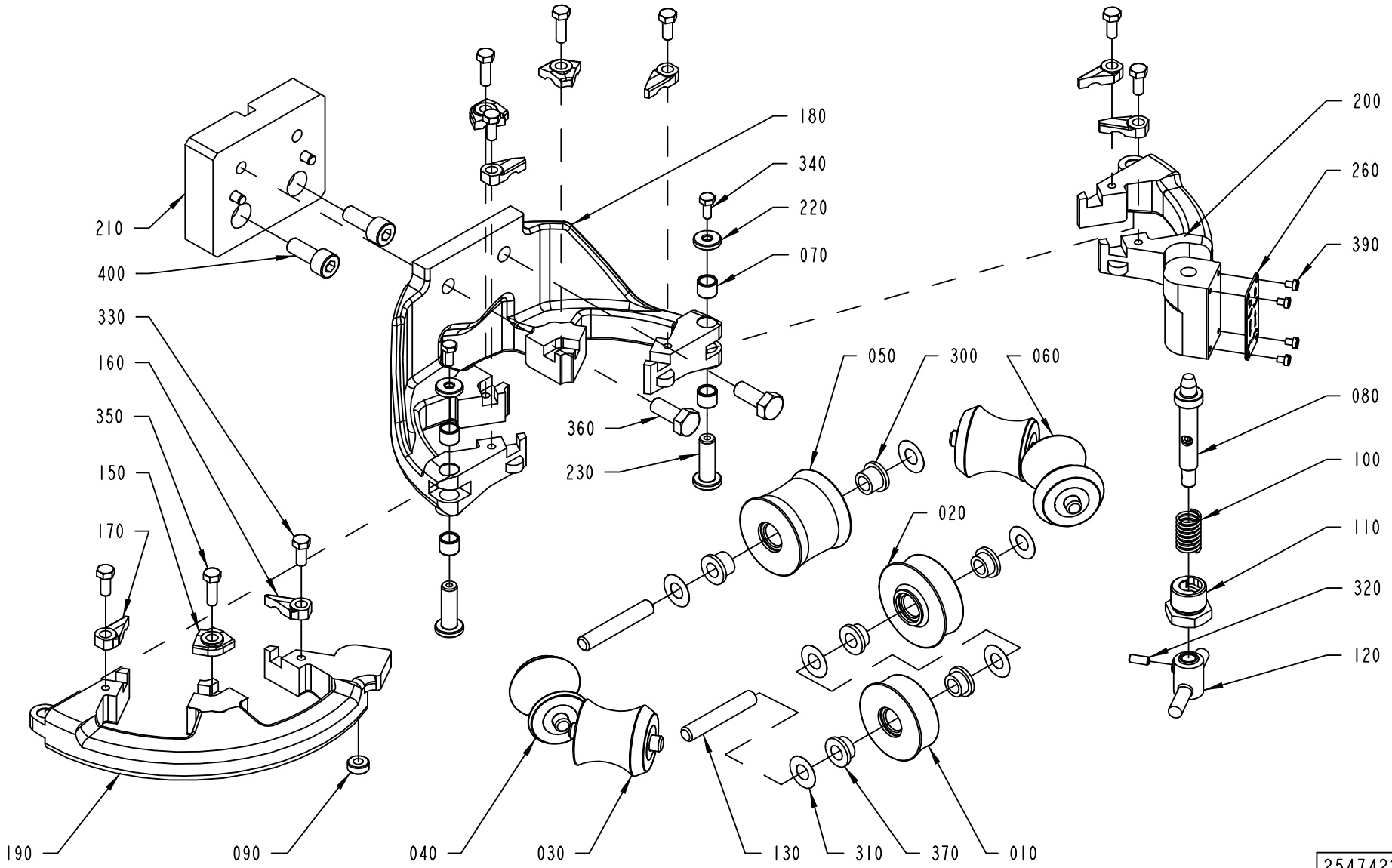

2547422-2
ECM 149525

Pos	Part No	SP	UN	Qty	Description	Page No
TBA 1000S (Cont'd) (See drawing on page: 1-22)						
110	2526833-0000	A		1	NUT	
120	2532973-0000	A		1	KNOB	
130	752186-0007	A		6	SHAFT	
150	2528123-0001	A		3	LOCK PLATE	
160	2528118-0001	A		3	LOCK PLATE	
170	2528119-0001	A		3	LOCK PLATE	
180	2552198-0000	-		1	UPPER FORMING RING	
190	2552199-0000	-		1	UPPER FORMING RING	
200	2552200-0000	-		1	UPPER FORMING RING	
210	2532914-0000	-		1	SPACER	
260	2555590-0000	-		1	SIGN	
300	90240-0172	A		14	FLANGE BUSHING, 8X12X10 MM	
320	312318-0289	-		1	SCREW ISO4029 M4X10 A4	
360	312109-0459	-		2	SCREW M6S ISO 4017 M8X40 A480	
390	90459-1228	-		4	SCREW ISO 1207 M3X4 A4	
TBA 1000SQ (See drawing on page: 1-30)						
010	2532965-0000	A		1	ROLLER	
020	1548541-0000	A		1	ROLLER	
030	1548531-0000	A		4	ROLLER	
060	1548540-0000	A		1	ROLLER	
080	2526830-0000	A		1	SHAFT	
100	2526832-0000	A		1	SPRING	
110	2526833-0000	A		1	NUT	
120	2532973-0000	A		1	KNOB	
130	752186-0007	A		6	SHAFT	
150	2528123-0004	A		3	LOCK PLATE	
160	2528118-0004	A		3	LOCK PLATE	
170	2528119-0004	A		3	LOCK PLATE	
180	2528115-0000	-		1	UPPER FORMING RING	
190	2528116-0000	-		1	UPPER FORMING RING	
200	2528117-0000	-		1	UPPER FORMING RING	
210	2532914-0000	-		1	SPACER	
260	2555590-0000	-		1	SIGN	
300	90240-0172	A		14	FLANGE BUSHING, 8X12X10 MM	
320	312318-0289	-		1	SCREW ISO4029 M4X10 A4	
360	312109-0459	-		2	SCREW M6S ISO 4017 M8X40 A480	
390	90459-1228	-		4	SCREW ISO 1207 M3X4 A4	
TPA 1000SQ (See drawing on page: 1-28)						
010	2562685-0000	A		1	ROLLER	
020	2559101-0000	A		1	ROLLER	
030	1524151-0000	A		2	ROLLER	
040	1524152-0000	A		2	ROLLER	
050	2562686-0000	A		1	ROLLER	
080	2526830-0000	A		1	SHAFT	
100	2526832-0000	A		1	SPRING	
110	2526833-0000	A		1	NUT	
120	2532973-0000	A		1	KNOB	
130	2522213-0007	A		6	SHAFT	
150	2528123-0005	A		3	LOCK PLATE	
160	2528118-0005	A		3	LOCK PLATE	
170	2528119-0005	A		3	LOCK PLATE	
180	2559097-0000	-		1	UPPER FORMING RING	
190	2559098-0000	-		1	UPPER FORMING RING	
200	2559099-0000	-		1	UPPER FORMING RING	
210	2532914-0000	-		1	SPACER	
260	2555590-0000	-		1	SIGN	
300	90240-0172	A		14	FLANGE BUSHING, 8X12X10 MM	
320	312318-0289	-		1	SCREW ISO4029 M4X10 A4	
360	312109-0459	-		2	SCREW M6S ISO 4017 M8X40 A480	
390	90459-1228	-		4	SCREW ISO 1207 M3X4 A4	
Common Parts						
070	2526826-0000	A		4	BUSHING	
090	2526836-0000	A		1	BUSHING	
220	2526825-0000	-		2	WASHER	
230	2526827-0000	A		2	SHAFT	
310	2033-0011	A		14	WASHER	
330	312105-0327	-		6	SCREW M6S ISO 4017 M5X12 A480	
340	312105-0289	-		2	SCREW M6S ISO 4017 M4X10 A470	
350	312105-0329	-		3	SCREW M6S ISO 4017 M5X16 A480	

UPPER FORMING RING

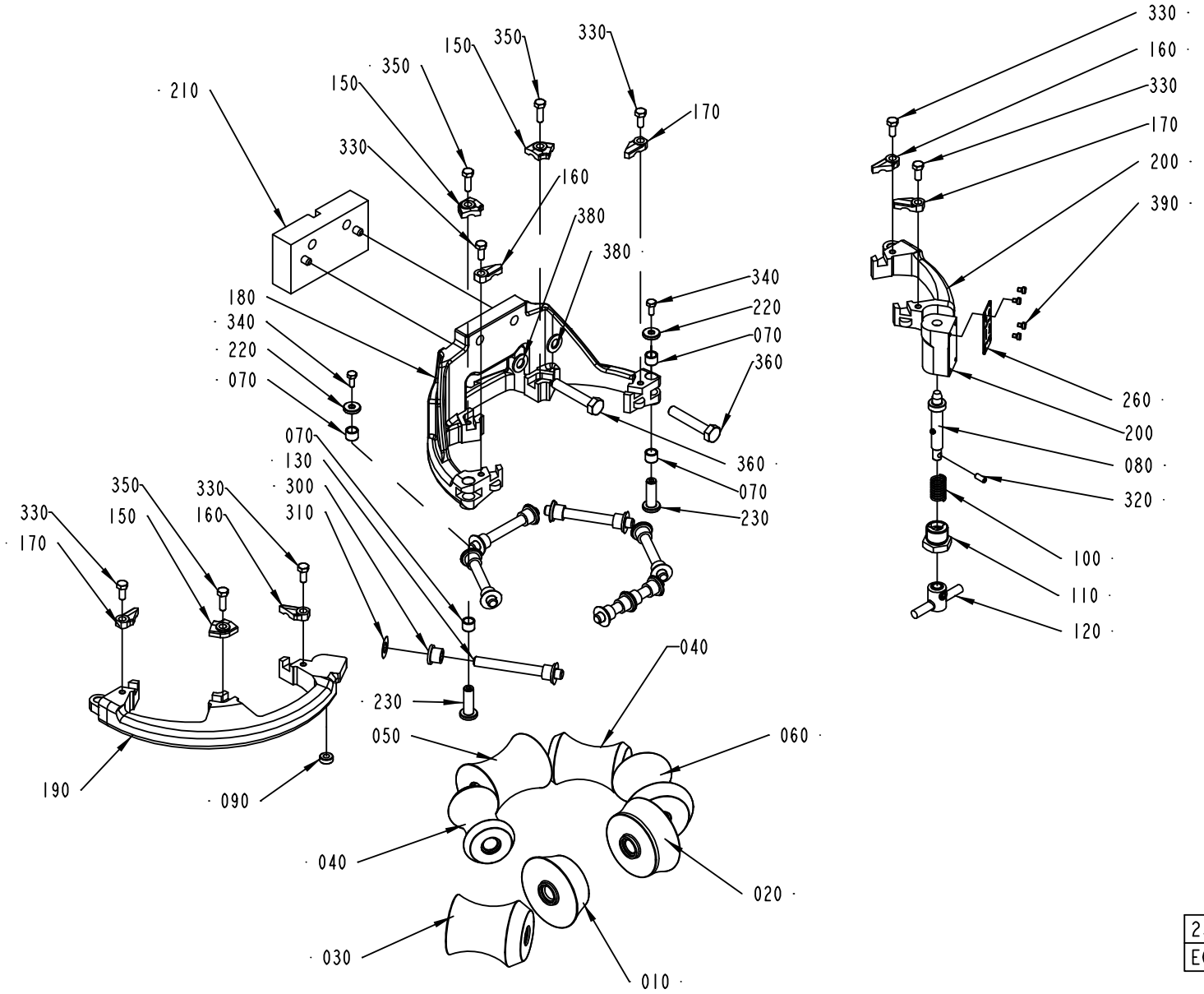

2547422-4
ECM 139126

Pos	Part No	SP	UN	Qty	Description	Page No
SEE PREVIOUS LISTS PAGES: 1-23, 1-25.						

Pos	Part No	SP	UN	Qty	Description	Page No

UPPER FORMING RING

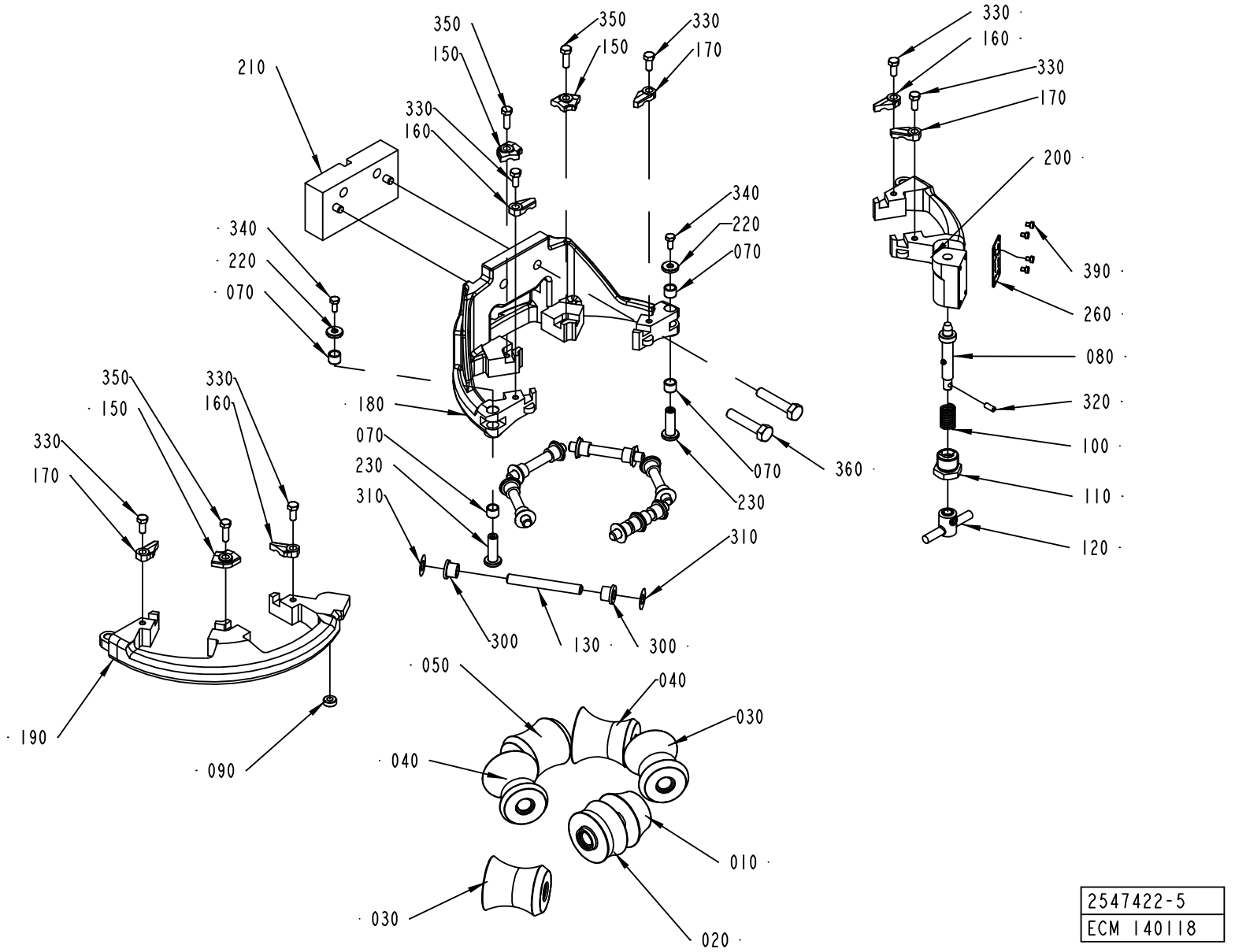

2547422-5
ECM 140118

ECM: 160439 - 20040309
Group number: 2547422-0100
Assembly Drawing: 2547422-5_1_AA

This list covers pages from 1-22 to 1-31

Pos	Part No	SP	UN	Qty	Description	Page No
SEE PREVIOUS LISTS PAGES: 1-23, 1-25.						

Pos	Part No	SP	UN	Qty	Description	Page No

UPPER FORMING RING

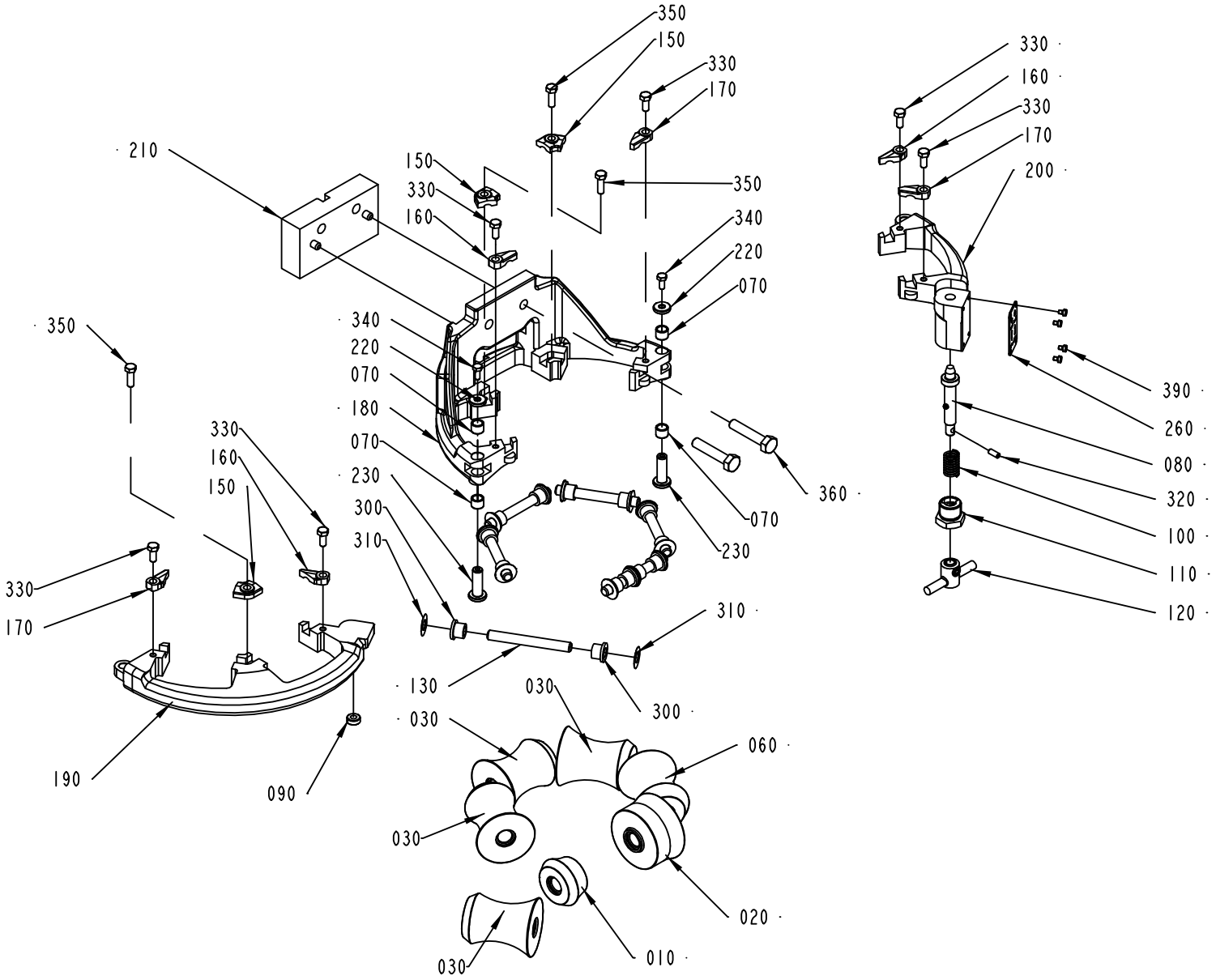

2547422-6
ECM 139126

Pos	Part No	SP	UN	Qty	Description	Page No	Pos	Part No	SP	UN	Qty	Description	Page No

SEE PREVIOUS LISTS PAGES: 1-23, 1-25.

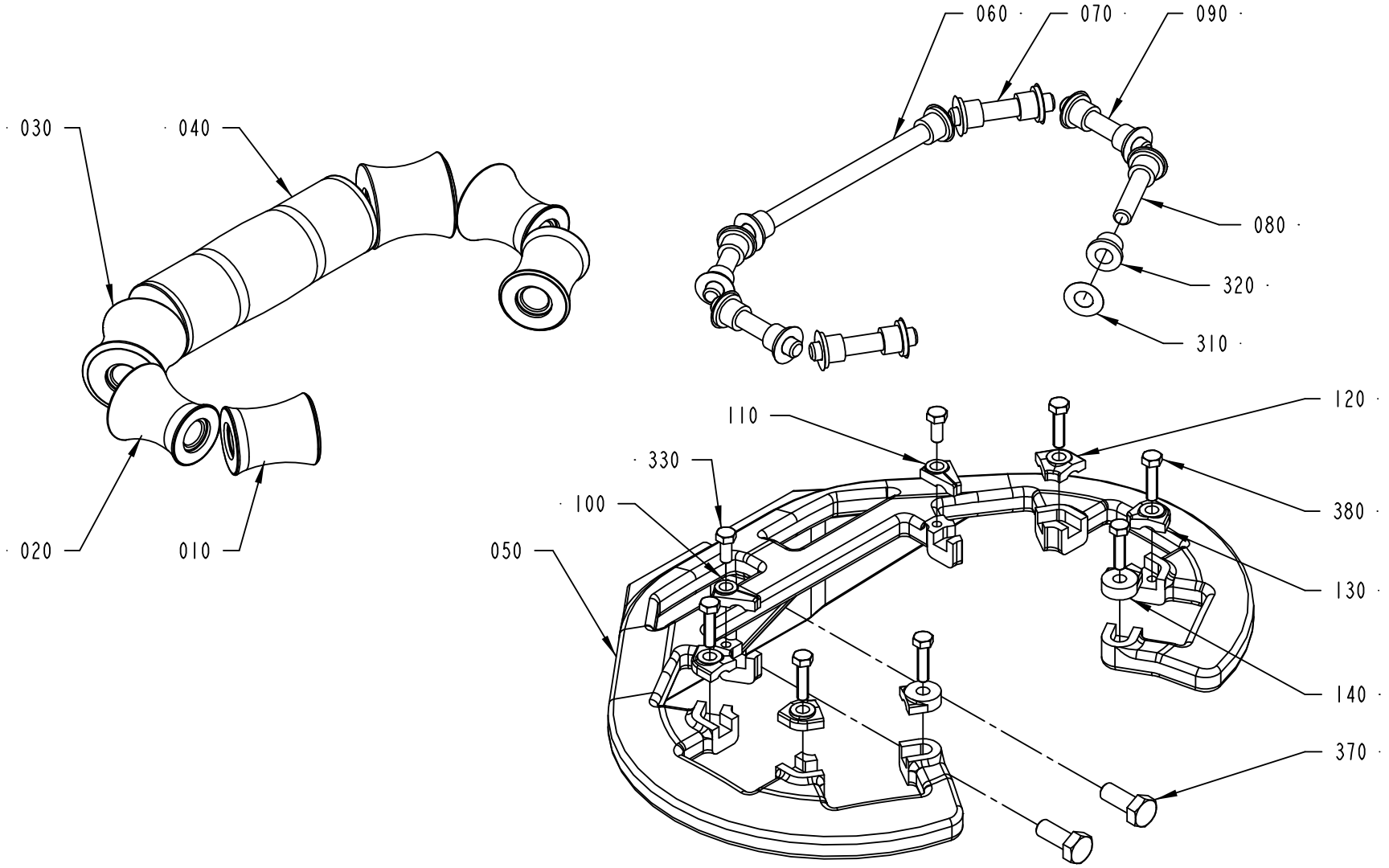

2547421-1
ECM 117070

ECM: 160438 - 20040309
Group number: 2547421-0100
Assembly Drawing: 2547421-1_1_AA

This list covers pages from 1-32 to 1-35

Pos	Part No	SP	UN	Qty	Description	Page No
TBA 0200S (See drawing on page: 1-34)						
010	752128-0000	A		2	FORMING ROLLER	
020	752127-0000	A		2	FORMING ROLLER	
040	752126-0000	A		1	FORMING ROLLER	
050	2565430-0000	-		1	SUPPORT RING	
060	752186-0008	A		1	SHAFT	
070	2522213-0006	A		2	SHAFT	
080	2522213-0010	A		2	SHAFT	
100	2532912-0001	A		4	LOCK PLATE	
110	2532895-0002	A		2	LOCK PLATE	
310	2033-0011	A		10	WASHER	
320	90240-0172	A		6	FLANGE BUSHING, 8X12X10 MM	
340	752156-0000	-		4	FLANGE BUSHING	
350	315105-0165	-		2	WASHER BRB8,4X16RFR	
370	312105-0453	-		2	SCREW M6S ISO 4017 M8X25 A480	
380	312105-0331	-		6	SCREW M6S ISO 4017 M5X20 A480	
TBA 0330S, TBA 0200B, TBA 0250B (See drawing on page: 1-34)						
010	2544881-0000	-		2	ROLLER	
020	751492-0000	-		2	ROLL	
040	751491-0000	-		1	ROLL	
050	2565431-0000	-		1	SUPPORT RING	
060	2522213-0005	A		1	SHAFT	
070	2522213-0006	A		2	SHAFT	
080	2522213-0004	A		2	SHAFT	
100	2532912-0002	-		4	LOCK PLATE	
110	2532895-0003	-		2	LOCK PLATE	
310	2033-0011	A		10	WASHER	
320	90240-0172	-		10	FLANGE BUSHING, 8X12X10 MM	
350	315105-0165	-		2	WASHER BRB8,4X16RFR	
370	312105-0453	-		2	SCREW M6S ISO 4017 M8X25 A480	
380	312105-0331	-		6	SCREW M6S ISO 4017 M5X20 A480	
TBA 0500B, TBA 1000B, TBA 1500S (See drawing on page: 1-32)						
010	2552206-0000	A		2	ROLLER	
020	2552205-0000	A		2	ROLLER	
030	2552188-0000	A		2	ROLLER	
040	2552187-0000	A		1	ROLLER	
050	2552160-0000	-		1	SUPPORT RING	
060	2522213-0005	A		1	SHAFT	
070	752186-0005	A		2	SHAFT	
080	2522213-0004	A		2	SHAFT	
090	752186-0019	A		2	SHAFT	
100	2552176-0001	A		1	LOCK PLATE	
110	2552177-0001	A		1	LOCK PLATE	
120	2528123-0002	A		2	LOCK PLATE	
130	2528123-0008	A		2	LOCK PLATE	
140	2532895-0004	A		2	LOCK PLATE	
310	2033-0011	A		14	WASHER	
320	90240-0172	A		14	FLANGE BUSHING, 8X12X10 MM	
330	312105-0327	-		2	SCREW M6S ISO 4017 M5X12 A480	
370	312105-0451	-		2	SCREW M6S ISO 4017 M8X20 A480	
380	312105-0331	-		6	SCREW M6S ISO 4017 M5X20 A480	
TBA 1000S (See drawing on page: 1-32)						
010	2512748-0000	A		2	ROLLER	
020	2512749-0000	A		2	ROLLER	
030	2512746-0000	A		2	ROLLER	
040	2514521-0000	A		2	ROLLER	
050	2552161-0000	-		1	SUPPORT RING	
060	2522213-0005	A		1	SHAFT	
070	752186-0005	A		2	SHAFT	
080	2522213-0004	A		2	SHAFT	
090	752186-0019	A		2	SHAFT	
100	2552176-0003	A		1	LOCK PLATE	
110	2552177-0003	A		1	LOCK PLATE	
120	2528123-0007	A		2	LOCK PLATE	
130	2528123-0001	A		2	LOCK PLATE	
140	2532895-0003	A		2	LOCK PLATE	
310	2033-0011	A		16	WASHER	
320	90240-0172	A		16	FLANGE BUSHING, 8X12X10 MM	
330	312105-0327	-		2	SCREW M6S ISO 4017 M5X12 A480	
370	312105-0451	-		2	SCREW M6S ISO 4017 M8X20 A480	
380	312105-0331	-		6	SCREW M6S ISO 4017 M5X20 A480	
TBA 1000SQ (See drawing on page: 1-32)						
010	2634971-0000	A		2	ROLLER	
020	2634970-0000	A		2	ROLLER	
030	2634969-0000	A		2	ROLLER	
040	2634968-0000	A		1	ROLLER	
050	2634967-0000	-		1	SUPPORT RING	
060	2522213-0008	A		1	SHAFT	
070	752186-0012	A		2	SHAFT	
080	2522213-0009	A		4	SHAFT	
120	2562667-0009	A		6	LOCK PLATE	
140	2532895-0003	A		2	LOCK PLATE	
310	2033-0011	A		14	WASHER	
320	90240-0172	A		14	FLANGE BUSHING, 8X12X10 MM	

Machine Type | Group Description | Used-In | Group Number | Page No

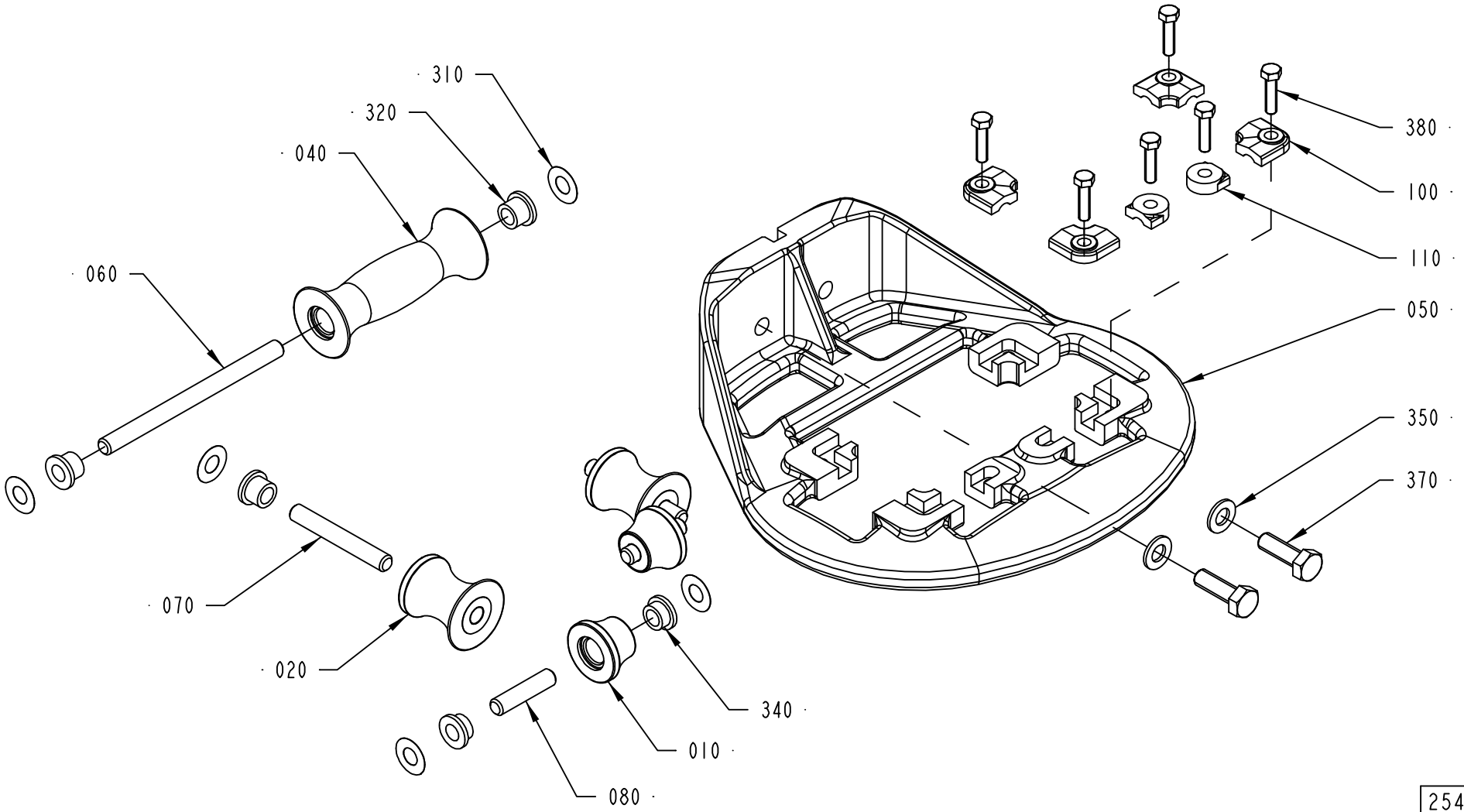

2547421-2
ECM 140118

Pos	Part No	SP	UN	Qty	Description	Page No
TBA 1000SQ (Cont'd) (See drawing on page: 1-32)						
370	312105-0453	-		2	SCREW M6S ISO 4017 M8X25 A480	
380	312105-0331	-		8	SCREW M6S ISO 4017 M5X20 A480	
TPA 1000SQ (See drawing on page: 1-32)						
010	1524150-0000	A		2	ROLLER	
020	1524149-0000	A		2	ROLLER	
030	1524148-0000	A		2	ROLLER	
040	1524147-0000	A		1	ROLLER	
050	2559105-0000	-		1	SUPPORT RING	
060	2522213-0008	A		1	SHAFT	
070	752186-0012	A		2	SHAFT	
080	2522213-0009	A		4	SHAFT	
120	2562667-0008	A		6	LOCK PLATE	
140	2532895-0008	A		2	LOCK PLATE	
310	2033-0011	A		14	WASHER	
320	90240-0172	A		14	FLANGE BUSHING, 8X12X10 MM	
370	312105-0451	-		2	SCREW M6S ISO 4017 M8X20 A480	
380	312105-0331	-		8	SCREW M6S ISO 4017 M5X20 A480	

Pos	Part No	SP	UN	Qty	Description	Page No

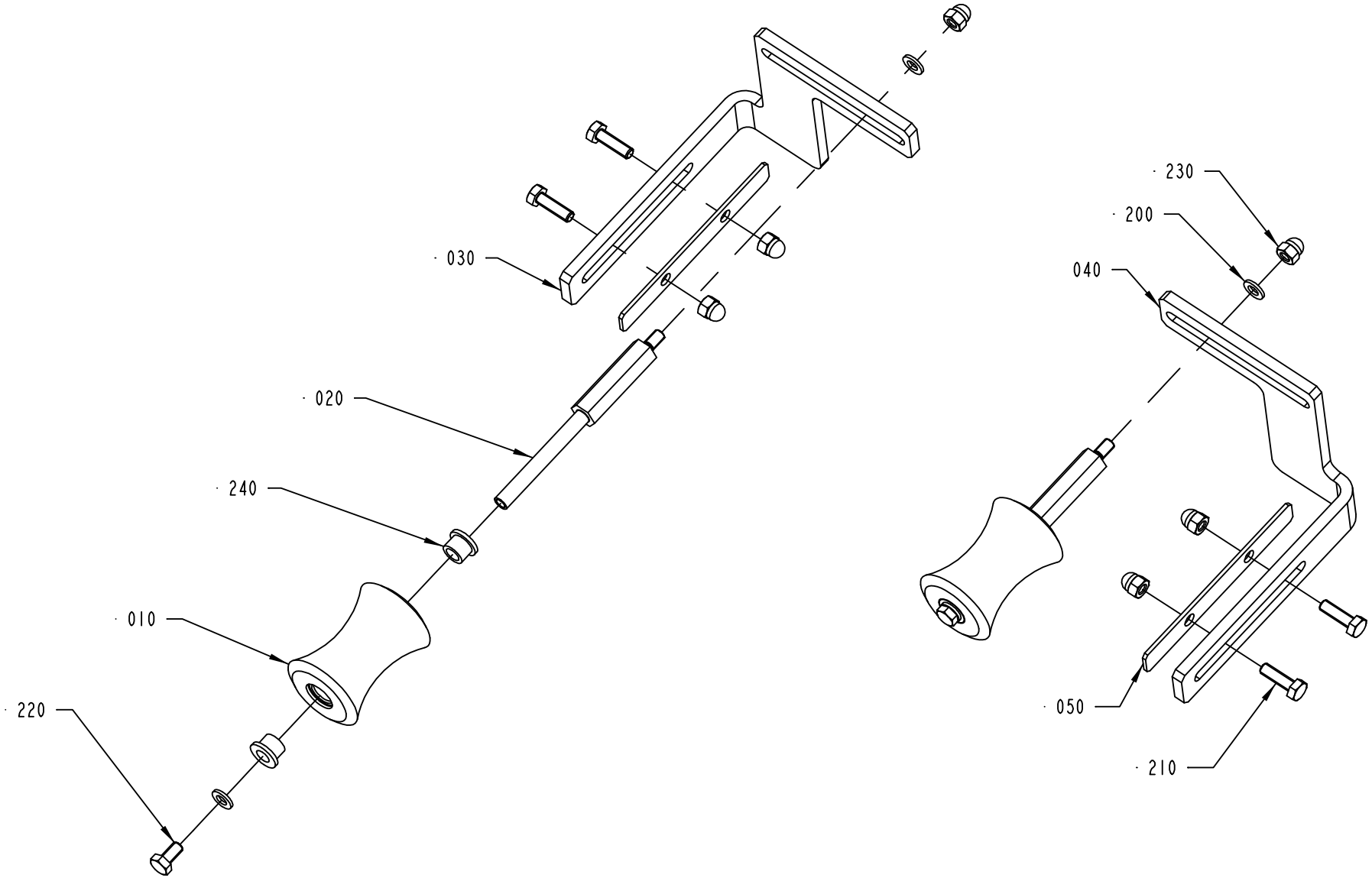

2541634-1
ECM 140118

ECM: 140289 - 20031125
Group number: 2541634-0100
Assembly Drawing: 2541634-1_1_AA

Pos	Part No	SP	UN	Qty	Description	Page No
-						
010	1478359-0000	A		2	ROLLER	
020	1511492-0000	A		2	SHAFT	
030	2528112-0000	-		1	BRACKET	
040	2528113-0000	-		1	BRACKET	
050	2528114-0000	-		2	COVER PLATE	
200	315105-0153	-		4	WASHER BRB6,4X12RFR	
210	312105-0370	-		4	SCREW M6S ISO 4017 M6X20 A480	
220	312105-0366	-		2	SCREW M6S ISO 4017 M6X12 A480	
230	312705-0316	-		6	NUT HEX. DOMED CAP MHM-6 M6 A280	
240	90240-0172	A		4	FLANGE BUSHING, 8X12X10 MM	

Pos	Part No	SP	UN	Qty	Description	Page No

This page is intentionally left blank.

ECM: 163630 - 20040309
Group number: 2634508-0100
Assembly Drawing:

Pos	Part No	SP	UN	Qty	Description	Page No
TBA 0200S						
010	2565440-0000	A		1	INDUCTOR	
020	2565441-0000	A		1	INSULATING PLATE	
030	2555619-0000	-		1	BRACKET	
100	312105-0368	-		6	SCREW M6S ISO 4017 M6X16 A480	
110	312105-0370	-		4	SCREW M6S ISO 4017 M6X20 A480	
120	312105-0372	-		2	SCREW M6S ISO 4017 M6X25 A480	
T1402	67379-0414	A		1	TRANSFORMER	
T1402	67379-0414	A		1	TRANSFORMER	
TBA 0330S, TBA 0200B, TBA 0250B						
010	2532938-0000	-		1	INDUCTOR	
020	2544894-0000	-		1	INSULATING PLATE	
030	2555619-0000	-		1	BRACKET	
100	312105-0368	-		6	SCREW M6S ISO 4017 M6X16 A480	
110	312105-0370	-		4	SCREW M6S ISO 4017 M6X20 A480	
120	312105-0372	-		2	SCREW M6S ISO 4017 M6X25 A480	
T1402	67379-0412	-		1	TRANSFORMER	
T1402	67379-0412	-		1	TRANSFORMER	
TBA 0500B, TBA 1000B						
010	2514514-0000	A		1	INDUCTOR	
020	2544891-0000	A		1	INSULATING PLATE	
030	2555615-0000	-		1	BRACKET	
100	312105-0368	-		6	SCREW M6S ISO 4017 M6X16 A480	
110	312105-0370	-		4	SCREW M6S ISO 4017 M6X20 A480	
120	312105-0372	-		2	SCREW M6S ISO 4017 M6X25 A480	
T1402	67379-0413	A		1	TRANSFORMER	
T1402	67379-0413	A		1	TRANSFORMER	
TBA 1000S						
010	2514522-0000	A		1	INDUCTOR	
020	2544892-0000	A		1	INSULATING PLATE	
030	2555615-0000	-		1	BRACKET	
100	312105-0368	-		2	SCREW M6S ISO 4017 M6X16 A480	
110	312105-0370	-		8	SCREW M6S ISO 4017 M6X20 A480	
120	312105-0374	-		2	SCREW M6S ISO 4014 M6X30 A480	
T1402	67379-0404	A		1	TRANSFORMER	
T1402	67379-0404	A		1	TRANSFORMER	
TBA 1000SQ						
010	2532925-0000	A		1	INDUCTOR	
020	2544893-0000	A		1	INSULATING PLATE	
030	2555615-0000	-		1	BRACKET	
100	312105-0368	-		6	SCREW M6S ISO 4017 M6X16 A480	
110	312105-0370	-		4	SCREW M6S ISO 4017 M6X20 A480	
120	312105-0372	-		2	SCREW M6S ISO 4017 M6X25 A480	
T1402	67379-0413	A		1	TRANSFORMER	
T1402	67379-0413	A		1	TRANSFORMER	
TBA 1500S						
010	2514514-0000	A		1	INDUCTOR	
020	2544891-0000	A		1	INSULATING PLATE	
030	2555615-0000	-		1	BRACKET	
100	312105-0368	-		6	SCREW M6S ISO 4017 M6X16 A480	
110	312105-0370	-		6	SCREW M6S ISO 4017 M6X20 A480	
120	312105-0372	-		6	SCREW M6S ISO 4017 M6X25 A480	
T1402	67379-0417	A		1	TRANSFORMER	
T1402	67379-0417	A		1	TRANSFORMER	
TPA 1000SQ						
010	2601289-0000	A		1	INDUCTOR	
020	2601307-0000	A		1	INSULATING PLATE	
030	2555615-0000	-		1	BRACKET	
100	312105-0368	-		6	SCREW M6S ISO 4017 M6X16 A480	
110	312105-0370	-		4	SCREW M6S ISO 4017 M6X20 A480	
120	312105-0372	-		2	SCREW M6S ISO 4017 M6X25 A480	
T1402	67379-0417	A		1	TRANSFORMER	
T1402	67379-0417	A		1	TRANSFORMER	
Common Parts						
040	2544895-0000	-		2	SHIM	
050	2544896-0000	-		2	SHIM	

Machine Type | Group Description | Used-In | Group Number | Page No

SUPPORT LEVEL DETECTOR

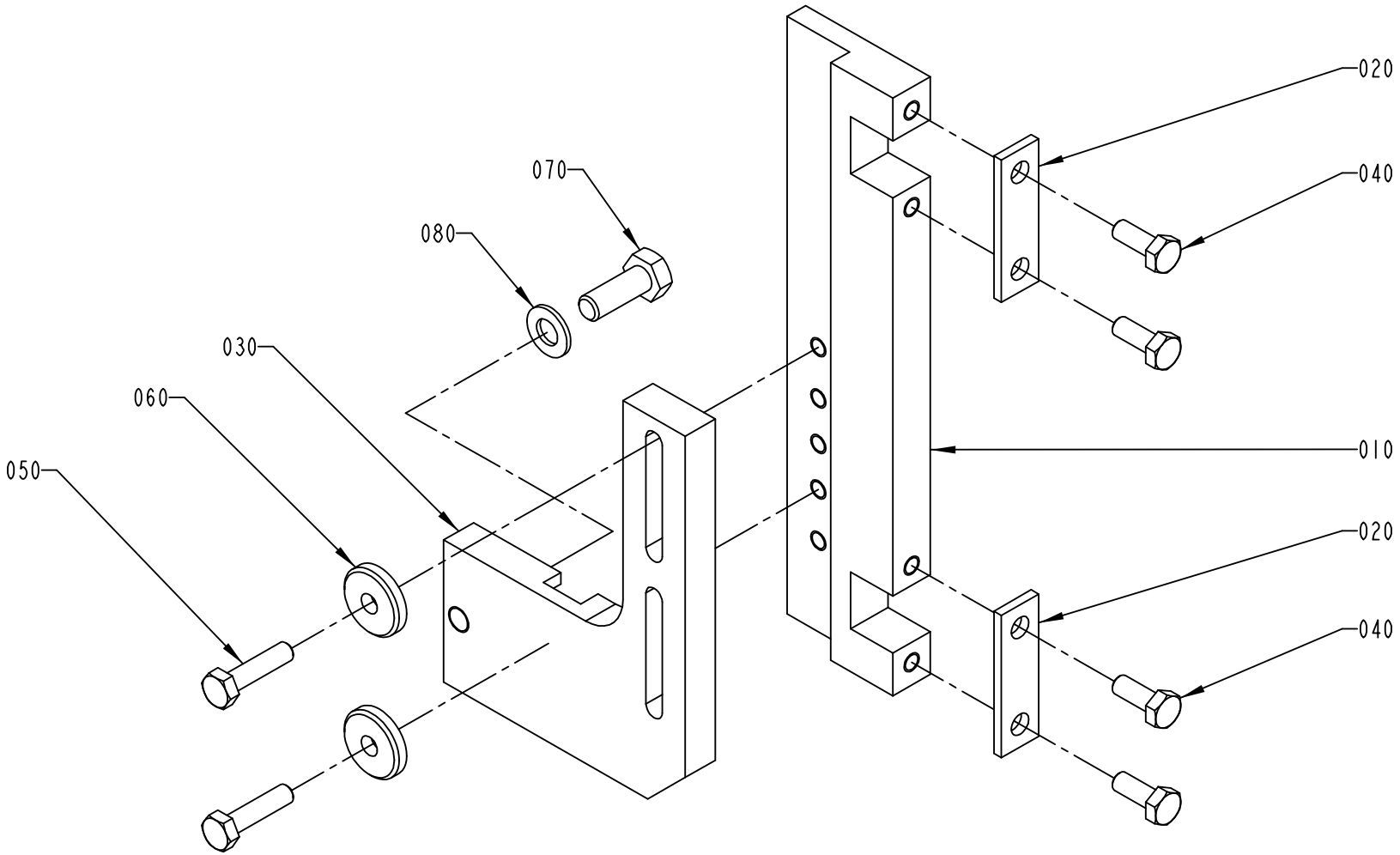

S-1487338-1
ECN 72879

ECM: 145442 - 20031007
Group number: 1487338-0100
Assembly Drawing: 1487338-1_1_AB

This list covers pages from 1-40 to 1-43

Pos	Part No	SP	UN	Qty	Description	Page No
TBA 0330S, TBA 0200B, TBA 0200S, TBA 0250B (See drawing on page: 1-40)						
030	1348359-0000	-		1	BRACKET	
TBA 0500B, TBA 1000S, TBA 1000SQ, TBA 1000B, TBA 1500S, TPA 1000SQ (See drawing on page: 1-42)						
030	1317475-0000	-		1	BRACKET	
Common Parts						
010	1317476-0000	-		1	BRACKET	
020	1036673-0000	-		2	WASHER	
040	312105-0368	-		4	SCREW M6S ISO 4017 M6X16 A480	
050	312105-0372	-		2	SCREW M6S ISO 4017 M6X25 A480	
060	315125-0153	-		2	WASHER TBRSB 6,4X22X4 A4	
070	312105-0452	-		1	SCREW M6S ISO 4017 M8X22 A4 80	
080	315105-0165	-		1	WASHER BRB8,4X16RFR	

Pos	Part No	SP	UN	Qty	Description	Page No

SUPPORT LEVEL DETECTOR

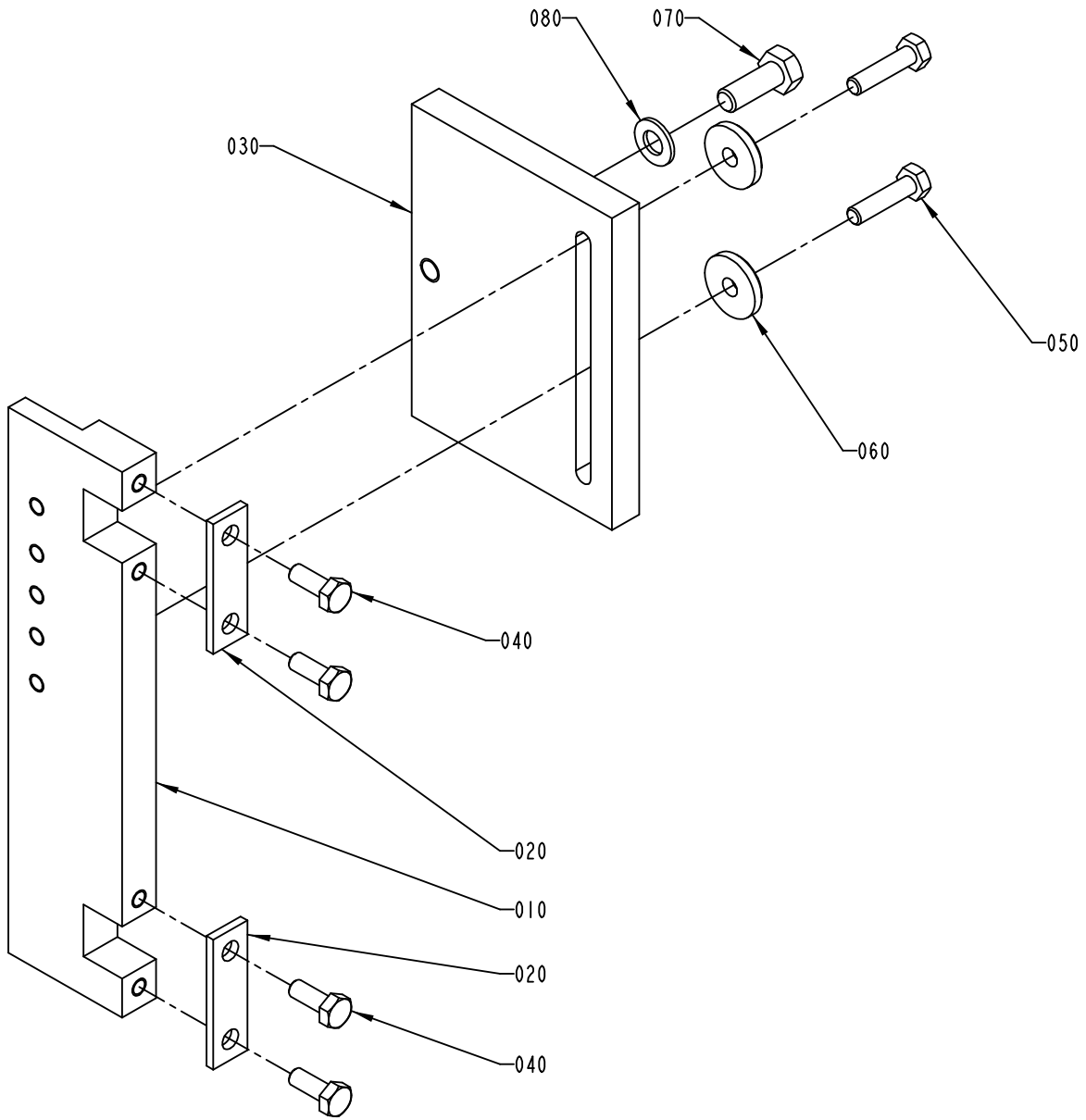

S-1487338-2
ECN 72879

ECM: 145442 - 20031007
Group number: 1487338-0100
Assembly Drawing: 1487338-2_1_AB

This list covers pages from 1-40 to 1-43

Pos	Part No	SP	UN	Qty	Description	Page No
TBA 0330S, TBA 0200B, TBA 0200S, TBA 0250B (See drawing on page: 1-40)						
030	1348359-0000	-		1	BRACKET	
TBA 0500B, TBA 1000S, TBA 1000SQ, TBA 1000B, TBA 1500S, TPA 1000SQ (See drawing on page: 1-42)						
030	1317475-0000	-		1	BRACKET	
Common Parts						
010	1317476-0000	-		1	BRACKET	
020	1036673-0000	-		2	WASHER	
040	312105-0368	-		4	SCREW M6S ISO 4017 M6X16 A480	
050	312105-0372	-		2	SCREW M6S ISO 4017 M6X25 A480	
060	315125-0153	-		2	WASHER TBRSB 6,4X22X4 A4	
070	312105-0452	-		1	SCREW M6S ISO 4017 M8X22 A4 80	
080	315105-0165	-		1	WASHER BRB8,4X16RFR	

Pos	Part No	SP	UN	Qty	Description	Page No

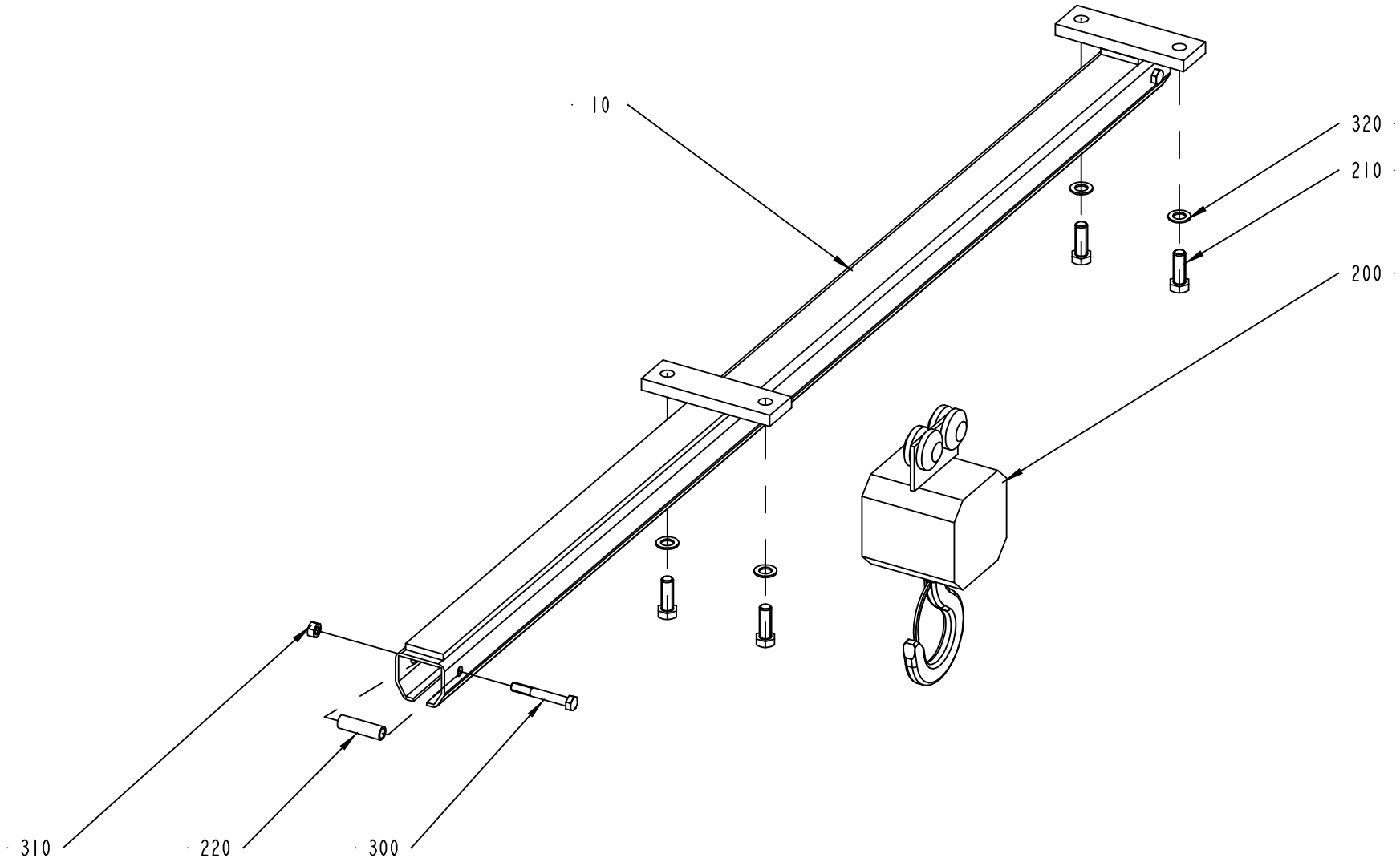

2575120-1
ECM 134821

ECM: 136051 - 20030704
Group number: 2575120-0100
Assembly Drawing: 2575120-1_1_AA

Pos	Part No	SP	UN	Qty	Description	Page No
-						
10	2575119-0000	-		1	GUIDE	
200	90039-0022	-		1	TACKLE BLOCK, NO. BV-225/500	
210	90287-0322	-		4	SCREW M6S M14X40 70	
220	90287-0347	-		2	BOLT	
300	312105-0506	-		2	SCREW M6S ISO 4014 M10X75 A480	
310	312605-0320	-		2	HEXAGON NUT, M6M M10 A280	
320	315101-0182	-		4	WASHER PLAIN, BRB, 15/26 H=2	

Pos	Part No	SP	UN	Qty	Description	Page No

This page is intentionally left blank.

ECM: 166361 - 20040319
Group number: 2555394-0100
Assembly Drawing:

This list covers pages from 1-46 to 1-49

Pos	Part No	SP	UN	Qty	Description	Page No
TBA 0200S						
JS020	1110930-0000	-		2	INDUCTOR	
JS020	1110930-0000	-		2	INDUCTOR	
JS030	1037735-0000	-		8	VOLUME SHIM	
JS040	1348966-0000	-		2	KNIFE	
SU010	272479-0000	-		3	PRESSURE ROLLER	
SU020	2529416-0000	-		1	SHAFT	
SU030	315204-0215	-		2	O-RING 19,2X3 MM	
TBA 0250B						
JS020	1110932-0000	-		2	INDUCTOR	
JS020	1110932-0000	-		2	INDUCTOR	
JS030	2605166-0000	-		8	VOLUME SHIM	
JS030	1346158-0000	-		8	VOLUME SHIM	
JS030	1538637-0000	-		8	VOLUME SHIM	
JS030	2654290-0000	-		8	VOLUME SHIM	
JS040	1348966-0000	-		2	KNIFE	
SU010	257330-0000	-		3	PRESSURE ROLLER	
SU020	2529418-0000	-		1	SHAFT	
SU030	315204-0215	-		2	O-RING 19,2X3 MM	
TBA 0330S, TBA 0200B						
JS020	1110932-0000	-		2	INDUCTOR	
JS020	1110932-0000	-		2	INDUCTOR	
JS030	1538637-0000	-		8	VOLUME SHIM	
JS030	2605166-0000	-		8	VOLUME SHIM	
JS030	2654290-0000	-		8	VOLUME SHIM	
JS040	1348966-0000	-		2	KNIFE	
SU010	257330-0000	-		3	PRESSURE ROLLER	
SU020	2529418-0000	-		1	SHAFT	
SU030	315204-0215	-		2	O-RING 19,2X3 MM	
TBA 0500B NOQC						
JS020	1110938-0000	-		2	INDUCTOR	
JS020	1110938-0000	-		2	INDUCTOR	
JS030	1532293-0000	-		8	VOLUME SHIM	
JS040	1348955-0000	-		2	KNIFE	
SU010	232979-0000	-		3	PRESSURE ROLLER	
SU020	2523268-0000	-		1	SHAFT	
SU030	315204-0219	-		2	O-RING 29,2X3 MM	
TBA 0500B QC, TBA 1000B QC						
JS020	1110938-0000	-		2	INDUCTOR	
JS020	1110938-0000	-		2	INDUCTOR	
JS030	1511337-0000	-		8	VOLUME SHIM	
JS030	1511336-0000	-		8	VOLUME SHIM	
JS040	1348955-0000	-		2	KNIFE	
SU010	232979-0000	-		3	PRESSURE ROLLER	
SU020	2523268-0000	-		1	SHAFT	
SU030	315204-0219	-		2	O-RING 29,2X3 MM	
TBA 1000B NOQC						
JS020	1110938-0000	-		2	INDUCTOR	
JS020	1110938-0000	-		2	INDUCTOR	
JS030	1035831-0000	-		8	VOLUME SHIM	
JS040	1348955-0000	-		2	KNIFE	
SU010	232979-0000	-		3	PRESSURE ROLLER	
SU020	2523268-0000	-		1	SHAFT	
SU030	315204-0219	-		2	O-RING 29,2X3 MM	
TBA 1000S NOMOLDEDCAP						
JS020	1110937-0000	-		2	INDUCTOR	
JS020	1110937-0000	-		2	INDUCTOR	
JS030	1040755-0000	-		8	VOLUME SHIM	
JS040	1348955-0000	-		2	KNIFE	
SU010	499387-0000	-		3	PRESSURE ROLLER	
SU020	2529419-0000	-		1	SHAFT	
SU030	315204-0219	-		2	O-RING 29,2X3 MM	
TBA 1000S STDA7						
JS020	2546474-0000	-		2	INDUCTOR	
JS020	2546474-0000	-		2	INDUCTOR	
JS030	1040755-0000	-		8	VOLUME SHIM	
JS040	1348955-0000	-		2	KNIFE	
SU010	499387-0000	-		3	PRESSURE ROLLER	
SU020	2529419-0000	-		1	SHAFT	
SU030	315204-0219	-		2	O-RING 29,2X3 MM	
TBA 1000SQ						
JS020	1110936-0000	-		2	INDUCTOR	
JS020	1110936-0000	-		2	INDUCTOR	
JS030	1487627-0000	-		8	VOLUME SHIM	
JS040	1348955-0000	-		2	KNIFE	
SU010	257330-0000	-		3	PRESSURE ROLLER	
SU020	2529420-0000	-		1	SHAFT	
SU030	315204-0219	-		2	O-RING 29,2X3 MM	
TBA 1500S						
JS020	1110938-0000	-		2	INDUCTOR	
JS020	1110938-0000	-		2	INDUCTOR	
JS030	1349208-0000	-		8	VOLUME SHIM	
JS040	1348955-0000	-		2	KNIFE	
SU010	232979-0000	-		3	PRESSURE ROLLER	

Machine Type | Group Description | Used-In | Group Number | Page No

This page is intentionally left blank.

ECM: 166361 - 20040319
Group number: 2555394-0100
Assembly Drawing:

This list covers pages from 1-46 to 1-49

Pos	Part No	SP	UN	Qty	Description	Page No
TBA 1500S (Cont'd)						
SU020	2523268-0000	-		1	SHAFT	
SU030	315204-0219	-		2	O-RING 29,2X3 MM	
TPA 1000SQ						
JS020	1520052-0000	-		8	INDUCTOR	
JS020	1520052-0000	-		8	INDUCTOR	
JS035	1539843-0000	-		6	VOLUME SHIM	
JS040	1348956-0000	-		2	KNIFE	
SU010	257330-0000	-		2	PRESSURE ROLLER	
SU020	2529420-0000	-		1	SHAFT	
SU030	315204-0219	-		2	O-RING 29,2X3 MM	
Common Parts						
JS010	1110083-0002	-		12	DOLLY	
JS010	1110083-0002	-		12	DOLLY	
JS050	1037254-0000	-		12	SHIM	
JS060	1260659-0000	-		2	SPRING	

Pos	Part No	SP	UN	Qty	Description	Page No

This page is intentionally left blank.

ECM: 148263 - 20031128
Group number: 2642988-0100
Assembly Drawing:

Pos	Part No	SP	UN	Qty	Description	Page No
-						
010	2619171-0000	-		1	PLATE	
020	2619069-0000	-		1	SLIDE	
030	2619759-0000	-		1	SLIDE	
040	312605-0314	-		4	HEXAGON NUT, M6M M5 A280	
050	315105-0146	-		4	WASHER BRB5,3X10RFR	

Pos	Part No	SP	UN	Qty	Description	Page No

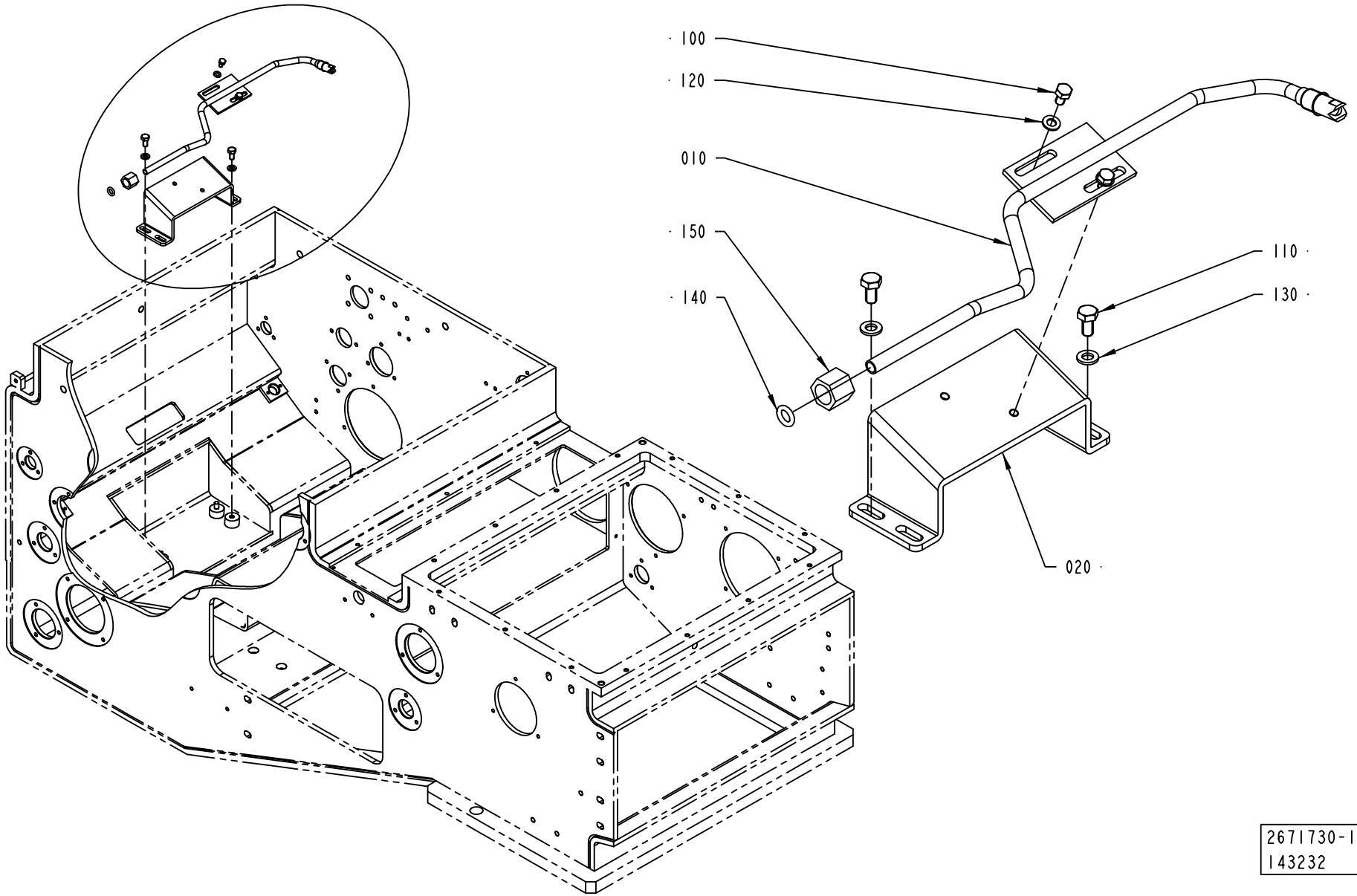
100
120
010
150
140
110
130
020
2671730-1
143232

ECM: 160034 - 20040503
Group number: 2671730-0100
Assembly Drawing: 2671730-1_1_AA

This list covers pages from 1-52 to 1-55

Pos	Part No	SP	UN	Qty	Description	Page No
TBA 1000S, TBA 1000SQ, TBA 1000B, TBA 0200B, TBA 0200S, TBA 0250B (See drawing on page: 1-54)						
010	2668569-0000	A		1	PLUG	
TBA 1500S (See drawing on page: 1-52)						
010	2641318-0000	A		1	NOZZLE	
150	342703-0208	-		1	NUT, PIPES & CONNECTORS,NUT M-8 SS	
TPA 1000SQ (See drawing on page: 1-52)						
010	2668565-0000	A		1	NOZZLE	
150	342703-0208	-		1	NUT, PIPES & CONNECTORS,NUT M-8 SS	
Common Parts						
020	2641319-0000	-		1	BRACKET	
100	312105-0323	-		2	SCREW M6S ISO 4017 M5X8 A480	
110	312105-0366	-		2	SCREW M6S ISO 4017 M6X12 A480	
120	315105-0146	-		2	WASHER BRB5,3X10RFR	
130	315105-0153	-		2	WASHER BRB6,4X12RFR	
140	315205-0808	A		1	O-RING 7,59X2,62 MM	

Pos	Part No	SP	UN	Qty	Description	Page No

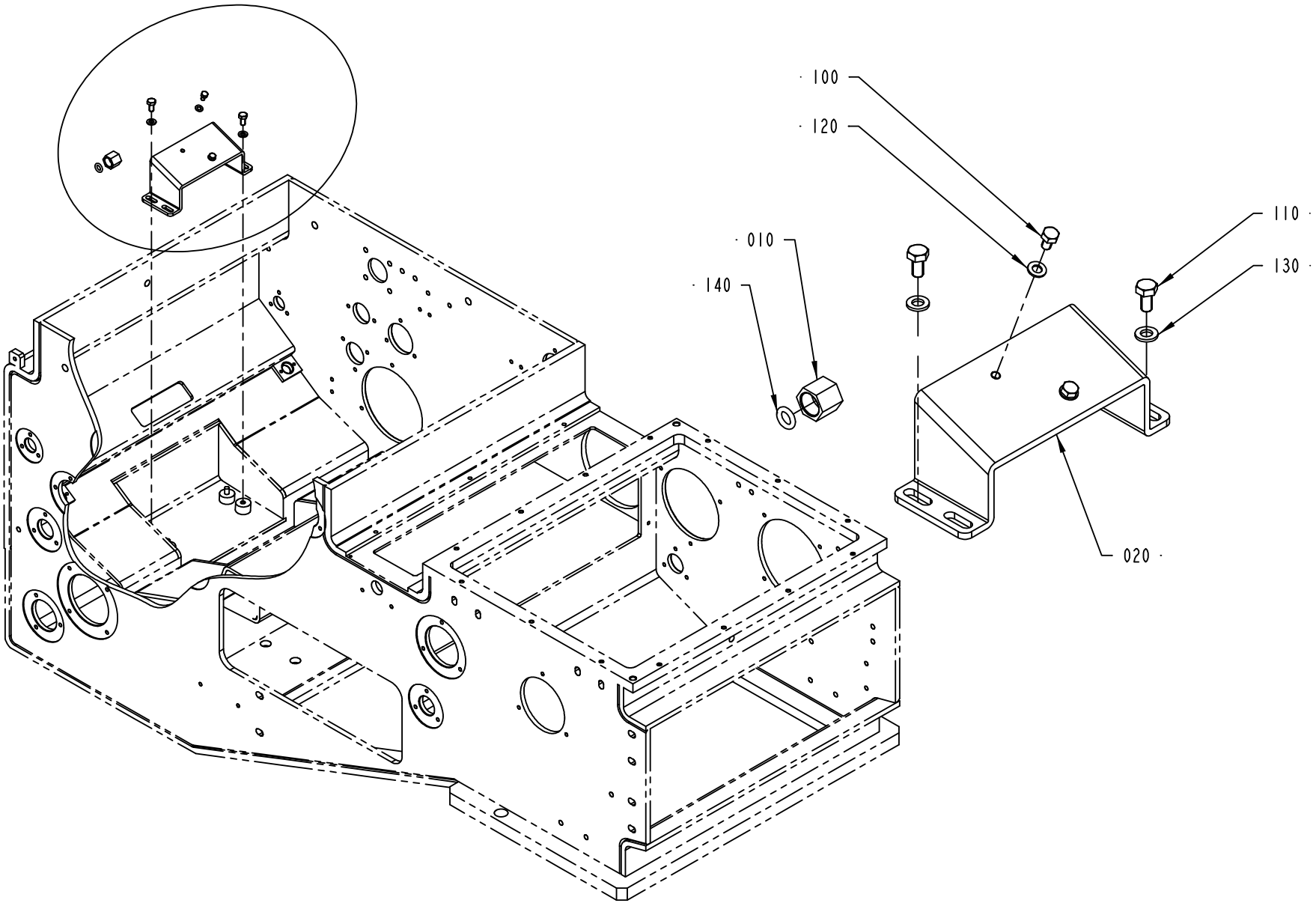

2671730-2
143232

ECM: 160034 - 20040503
Group number: 2671730-0100
Assembly Drawing: 2671730-2_1_AA

This list covers pages from 1-52 to 1-55

Pos	Part No	SP	UN	Qty	Description	Page No
TBA 1000S, TBA 1000SQ, TBA 1000B, TBA 0200B, TBA 0200S, TBA 0250B (See drawing on page: 1-54)						
010	2668569-0000	A		1	PLUG	
TBA 1500S (See drawing on page: 1-52)						
010	2641318-0000	A		1	NOZZLE	
150	342703-0208	-		1	NUT, PIPES & CONNECTORS,NUT M-8 SS	
TPA 1000SQ (See drawing on page: 1-52)						
010	2668565-0000	A		1	NOZZLE	
150	342703-0208	-		1	NUT, PIPES & CONNECTORS,NUT M-8 SS	
Common Parts						
020	2641319-0000	-		1	BRACKET	
100	312105-0323	-		2	SCREW M6S ISO 4017 M5X8 A480	
110	312105-0366	-		2	SCREW M6S ISO 4017 M6X12 A480	
120	315105-0146	-		2	WASHER BRB5,3X10RFR	
130	315105-0153	-		2	WASHER BRB6,4X12RFR	
140	315205-0808	A		1	O-RING 7,59X2,62 MM	

Pos	Part No	SP	UN	Qty	Description	Page No

Tetra Pak

SPC
Spare Parts Catalogue

This page is intentionally left blank.

ECM: 138520 - 20031128
Group number: 2634505-0100
Assembly Drawing:

Pos	Part No	SP	UN	Qty	Description	Page No
-						
010	2552003-0100	-		1	FORMING UNIT	**2-5**
020	2657136-0100	-		1	ELECTRICAL DOCUMENT	**2-119**
030	2660476-0100	-		1	LUBRICATION PIPE FITTING	**2-147**
040	1037254-0000	-		12	SHIM	
050	1036483-0000	-		2	SEAL	
100	1363790-0000	-		1	BOX	

Pos	Part No	SP	UN	Qty	Description	Page No

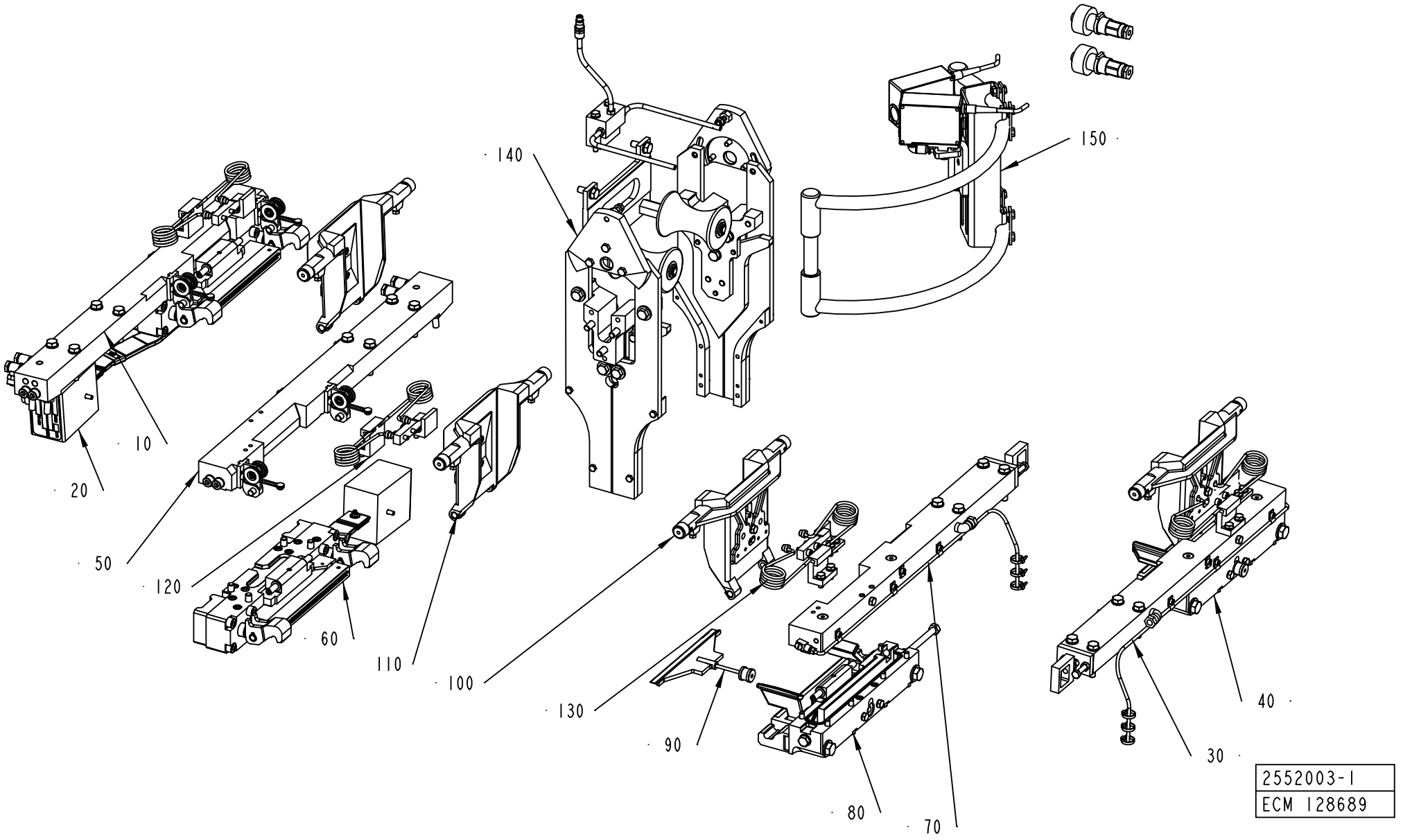
140
150
10
20
50
120
60
110
100
130
90
80
70
40
30
2552003-1
ECM 128689

ECM: 134743 - 20030909
Group number: 2552003-0100
Assembly Drawing: 2552003-1_1_AB

Pos	Part No	SP	UN	Qty	Description	Page No
A3/FLEX NOQC						
100	1334633-0200	-		2	VOLUME FLAP CUTTING	**2-7, 2-9, 2-11**
110	1334634-0200	-		2	VOLUME FLAP PRESSURE	**2-13, 2-15, 2-17**
120	1334635-0200	-		2	SHOCK ABSORBER	**2-19, 2-21, 2-23, 2-25**
130	1334636-0200	-		2	SHOCK ABSORBER	**2-27, 2-29, 2-31, 2-33**
A3/FLEX QC						
100	2594512-0100	-		2	VOLUME FLAP CUTTING	**2-35, 2-37**
110	1548460-0100	-		2	VOLUME FLAP PRESSURE	**2-39, 2-41**
Common Parts						
010	2514048-0200	-		1	CARRIER PRESSURE LEFT	**2-43, 2-45**
020	1512563-0200	-		1	PRESSURE JAW LEFT	**2-47**
030	1512564-0200	-		1	CARRIER CUTTING LEFT	**2-59, 2-61**
040	1512565-0200	-		1	CUTTING JAW LEFT	**2-63**
050	2514050-0200	-		1	CARRIER PRESSURE RIGHT	**2-77, 2-79**
060	1512568-0200	-		1	PRESSURE JAW RIGHT	**2-81**
070	1512569-0200	-		1	CARRIER CUTTING RIGHT	**2-89, 2-91**
080	1512570-0200	-		1	CUTTING JAW RIGHT	**2-93**
090	1478768-0100	-		2	KNIFE	**2-97**
140	2613647-0100	-		1	VOLUME CURVE PIECE	**2-99**
150	2616224-0100	-		1	PHOTOCELL UNIT	**2-115, 2-117**

Pos	Part No	SP	UN	Qty	Description	Page No

Machine Type | Group Description | Used-In | Group Number | Page No

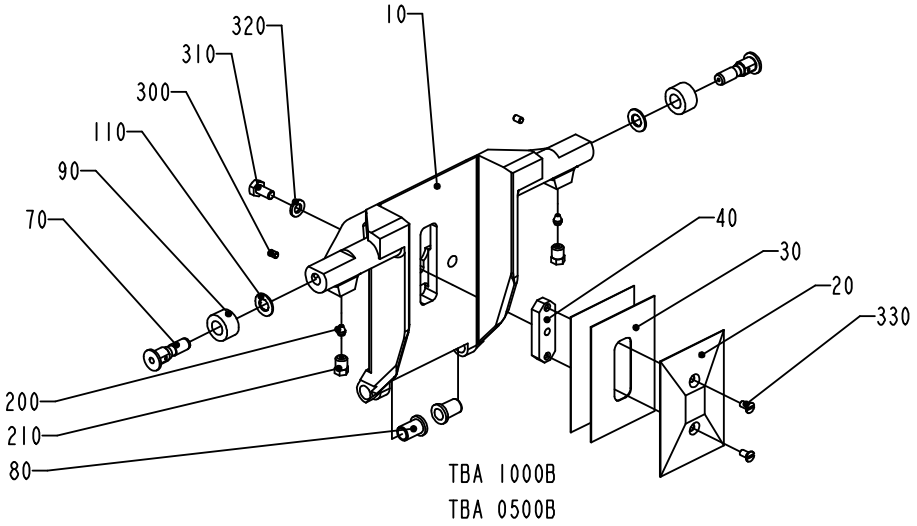
320
10
310
300
110
90
70
40
30
20
330
200
210
80
TBA 1000B
TBA 0500B

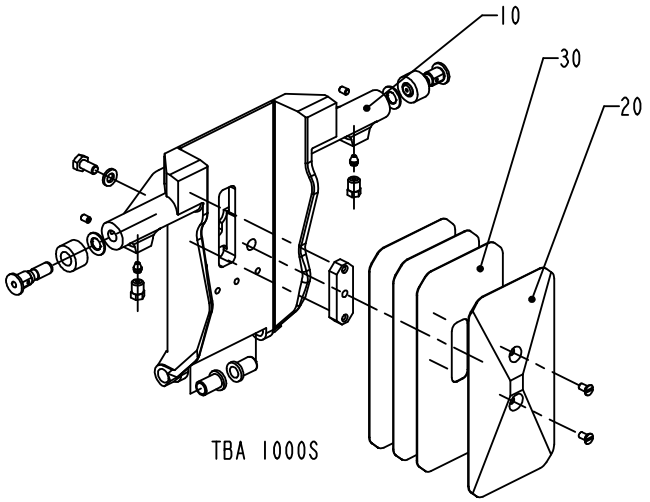
10
30
20
TBA 1000S

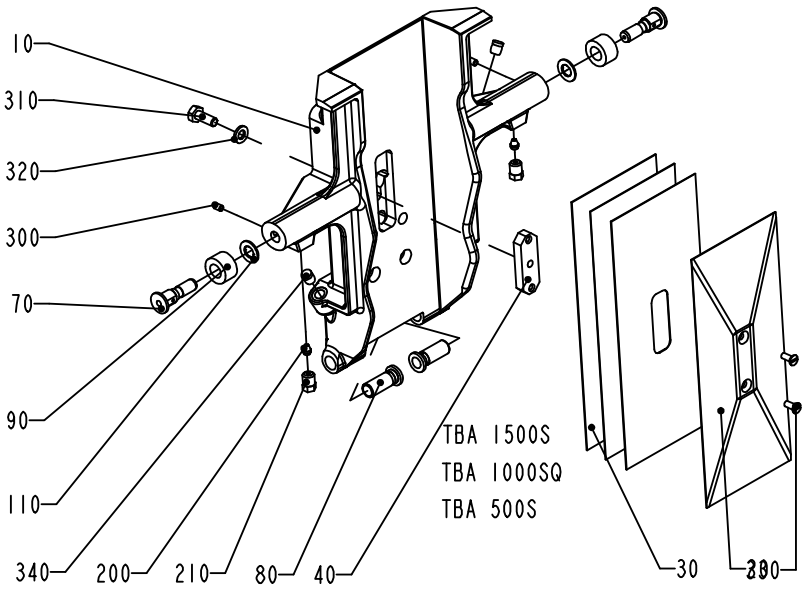
10
310
320
300
70
90
110
340
200
210
80
40
TBA 1500S
TBA 1000SQ
TBA 500S
30
330

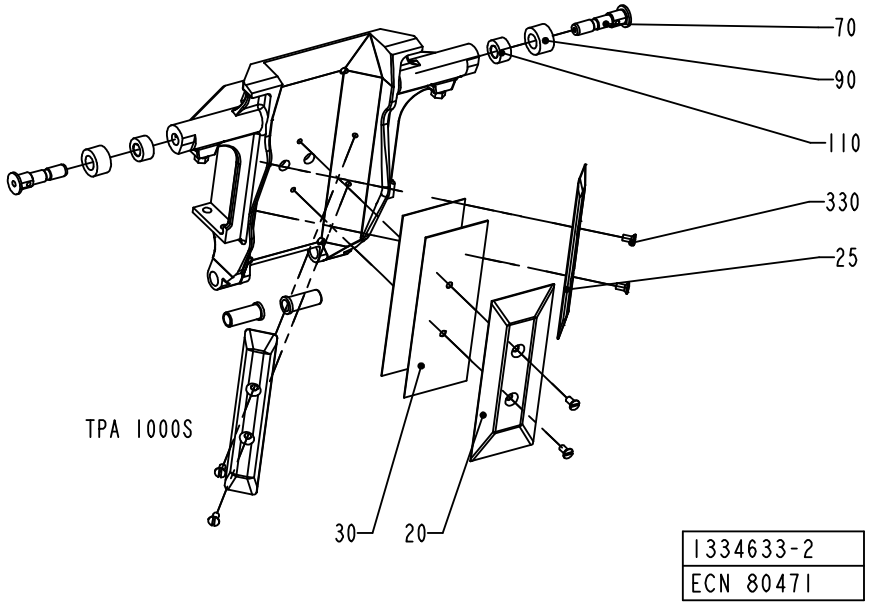
70
90
110
330
25
TPA 1000S
30
20
1334633-2
ECN 80471

ECM: 149723 - 20040224
Group number: 1334633-0200
Assembly Drawing: 1334633-2_1_AD

This list covers pages from 2-6 to 2-11

Pos	Part No	SP	UN	Qty	Description	Page No
TBA 0200B (See drawing on page: 2-8)						
010	1499901-0000	A		1	VOLUME FLAP	
020	1038638-0000	A		1	VOLUME BULGE	
030	1038639-0000	A		2	VOLUME SHIM	
040	1038637-0000	A		1	WEDGE	
070	434320-0000	A		2	AXLE PIN	
080	1255541-0000	A		2	BUSHING	
090	436556-0000	A		2	CURVE ROLLER	
110	19972-0000	A		2	WASHER	
310	312105-0327	-		1	SCREW M6S ISO 4017 M5X12 A480	
320	315105-0146	-		1	WASHER BRB5,3X10RFR	
330	312145-0287	-		2	SCREW ISO 2009 MFS M4X8 A4	
TBA 0200S (See drawing on page: 2-8)						
010	1484866-0000	A		1	VOLUME FLAP	
020	1037733-0000	A		1	VOLUME BULGE	
030	1037735-0000	A		2	VOLUME SHIM	
040	1037734-0000	A		1	WEDGE	
070	434320-0000	A		2	AXLE PIN	
080	1255541-0000	A		2	BUSHING	
090	436556-0000	A		2	CURVE ROLLER	
110	19972-0000	A		2	WASHER	
310	312105-0327	-		1	SCREW M6S ISO 4017 M5X12 A480	
320	315105-0146	-		1	WASHER BRB5,3X10RFR	
330	312145-0287	-		2	SCREW ISO 2009 MFS M4X8 A4	
TBA 0250B (See drawing on page: 2-8)						
010	1484867-0000	A		1	VOLUME FLAP	
020	1346157-0000	A		1	VOLUME BULGE	
030	1346158-0000	A		2	VOLUME SHIM	
040	1037734-0000	A		1	WEDGE	
070	434320-0000	A		2	AXLE PIN	
080	1255541-0000	A		2	BUSHING	
090	436556-0000	A		2	CURVE ROLLER	
110	19972-0000	A		2	WASHER	
310	312105-0327	-		1	SCREW M6S ISO 4017 M5X12 A480	
320	315105-0146	-		1	WASHER BRB5,3X10RFR	
330	312145-0287	-		2	SCREW ISO 2009 MFS M4X8 A4	
TBA 0330S (See drawing on page: 2-8)						
010	2544990-0000	A		1	VOLUME FLAP	
020	2544992-0000	A		1	VOLUME BULGE	
030	2544993-0000	A		3	VOLUME SHIM	
040	1037734-0000	A		1	WEDGE	
070	434320-0000	A		2	AXLE PIN	
080	1255541-0000	A		2	BUSHING	
090	436556-0000	A		2	CURVE ROLLER	
110	19972-0000	A		2	WASHER	
310	312105-0328	-		1	SCREW M6S ISO 4017 M5X14 A480	
320	315105-0146	-		1	WASHER BRB5,3X10RFR	
330	312145-0287	-		2	SCREW ISO 2009 MFS M4X8 A4	
TBA 0500B (See drawing on page: 2-6)						
010	1532287-0000	A		1	VOLUME FLAP	
020	1558817-0000	A		1	VOLUME BULGE	
030	1532293-0000	A		2	VOLUME SHIM	
070	434320-0000	A		2	AXLE PIN	
080	1255541-0000	A		2	BUSHING	
090	436556-0000	A		2	CURVE ROLLER	
110	19972-0000	A		2	WASHER	
310	312105-0327	-		1	SCREW M6S ISO 4017 M5X12 A480	
320	315105-0146	-		1	WASHER BRB5,3X10RFR	
TBA 1000B (See drawing on page: 2-6)						
010	1478358-0000	A		1	VOLUME FLAP	
020	1035828-0000	A		1	VOLUME BULGE	
030	1035831-0000	A		2	VOLUME SHIM	
040	1040756-0000	A		1	WEDGE	
070	434320-0000	A		2	AXLE PIN	
080	1255541-0000	A		2	BUSHING	
090	434321-0000	A		2	CURVE ROLLER	
110	19972-0000	A		2	WASHER	
310	312105-0366	-		1	SCREW M6S ISO 4017 M6X12 A480	
320	315105-0153	-		1	WASHER BRB6,4X12RFR	
330	312145-0287	-		2	SCREW ISO 2009 MFS M4X8 A4	
TBA 1000S (See drawing on page: 2-6)						
010	1040753-0000	A		1	VOLUME FLAP	
020	1040754-0000	A		1	VOLUME BULGE	
030	1040755-0000	A		3	VOLUME SHIM	
040	1040756-0000	A		1	WEDGE	
070	434320-0000	A		2	AXLE PIN	
080	1255541-0000	A		2	BUSHING	
090	434321-0000	A		2	CURVE ROLLER	
110	19972-0000	A		2	WASHER	
310	312105-0366	-		1	SCREW M6S ISO 4017 M6X12 A480	
320	315105-0153	-		1	WASHER BRB6,4X12RFR	
330	312145-0287	-		2	SCREW ISO 2009 MFS M4X8 A4	
TBA 1000SQ (See drawing on page: 2-6)						
010	2606305-0000	A		1	VOLUME FLAP	

Machine Type | Group Description | Used-In | Group Number | Page No

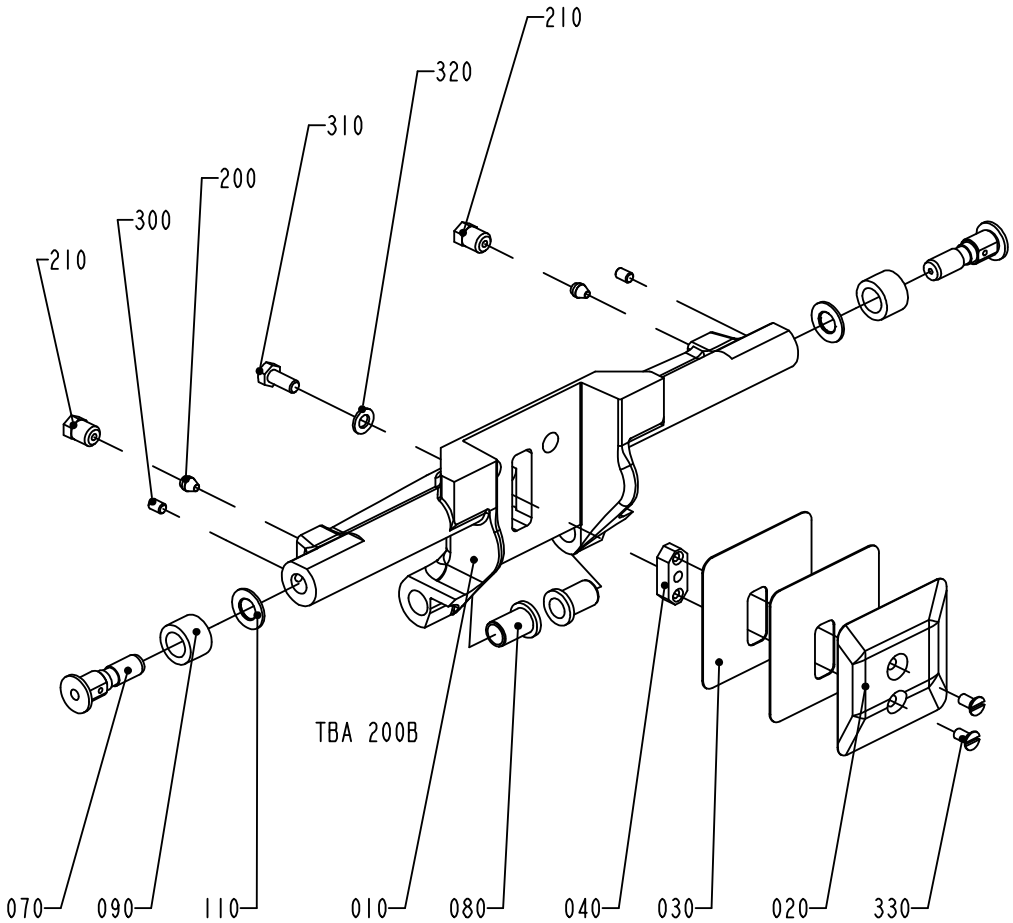

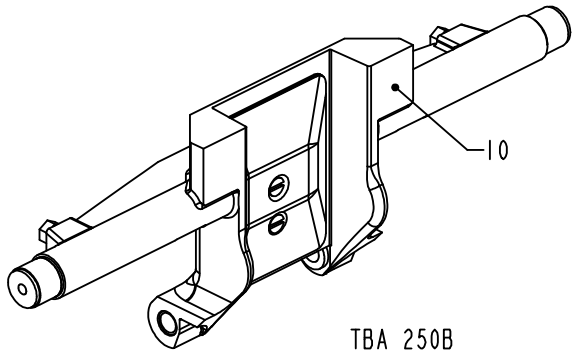

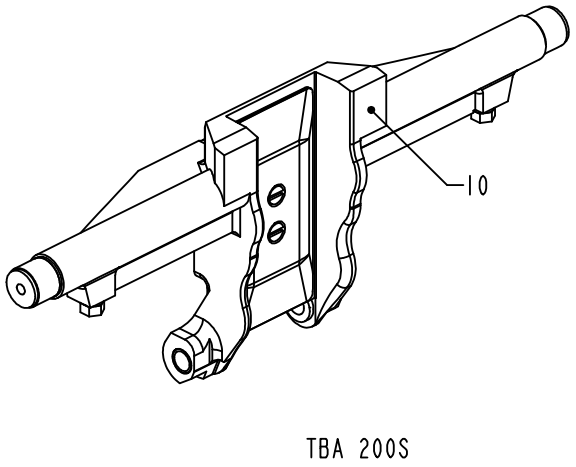

1334633-3
ECN 72770

ECM: 149723 - 20040224
Group number: 1334633-0200
Assembly Drawing: 1334633-3_1_AB

This list covers pages from 2-6 to 2-11

Pos	Part No	SP	UN	Qty	Description	Page No
TBA 1000SQ (Cont'd) (See drawing on page: 2-6)						
020	1487626-0000	A		1	VOLUME BULGE	
030	1487627-0000	A		3	VOLUME SHIM	
040	1040756-0000	A		1	WEDGE	
070	434320-0000	A		2	AXLE PIN	
080	1558701-0000	A		2	BUSHING	
090	434321-0000	A		2	CURVE ROLLER	
110	19972-0000	A		2	WASHER	
310	312115-0367	-		1	SCREW ISO4762 M6X14 A4	
320	315105-0153	-		1	WASHER BRB6,4X12RFR	
330	312145-0291	-		2	SCREW ISO 2009 MFS M4X12 A4	
TBA 1500S (See drawing on page: 2-6)						
010	2587236-0000	A		1	VOLUME FLAP	
020	1499675-0000	A		1	VOLUME BULGE	
030	1349208-0000	A		3	VOLUME SHIM	
040	1040756-0000	A		1	WEDGE	
070	434320-0000	A		2	AXLE PIN	
080	1558701-0000	A		2	BUSHING	
090	434321-0000	A		2	CURVE ROLLER	
110	19972-0000	A		2	WASHER	
310	312105-0368	-		1	SCREW M6S ISO 4017 M6X16 A480	
320	315105-0153	-		1	WASHER BRB6,4X12RFR	
330	312145-0289	-		2	SCREW ISO 2009 MFS M4X10 A4	
340	90261-0016	-		2	PLUG, BLIND, PLASTIC GPN300V2	
TPA 1000SQ (See drawing on page: 2-10)						
010	2547011-0000	A		1	VOLUME FLAP	
025	1539841-0000	A		2	VOLUME BULGE	
035	1539843-0000	A		6	VOLUME SHIM	
040	1040756-0000	A		2	WEDGE	
050	1549125-0000	-		1	PLUG	
060	2547010-0000	-		1	BRACKET	
070	434320-0000	A		2	AXLE PIN	
080	1255541-0000	A		2	BUSHING	
090	434321-0000	A		2	CURVE ROLLER	
110	19972-0000	A		2	WASHER	
320	315105-0153	-		3	WASHER BRB6,4X12RFR	
360	312105-0368	-		3	SCREW M6S ISO 4017 M6X16 A480	
370	312155-0289	-		4	SCREW EN 10642 MF6S M4X10 A480	
Common Parts						
200	90028-0020	-		2	CONE TUBE 2,5MM	
210	90134-0063	-		2	BUSHING/NUT M8X1, D=2,5 MM	
300	312318-0285	-		2	SCREW ISO4029 M4X6 A4	

Pos	Part No	SP	UN	Qty	Description	Page No

Machine Type | Group Description | Used-In | Group Number | Page No

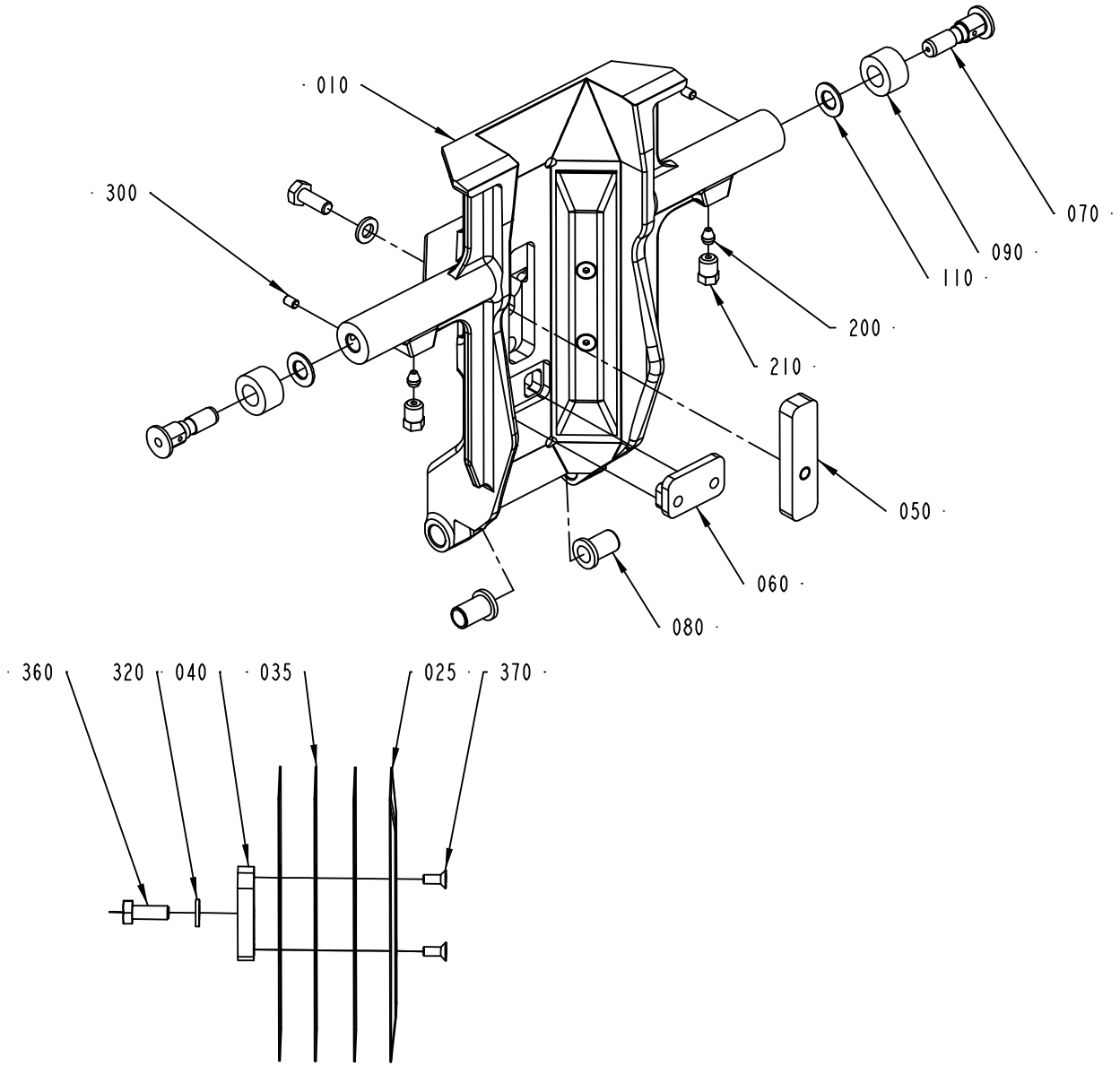

1334633-7
ECM 119888

ECM: 149723 - 20040224
Group number: 1334633-0200
Assembly Drawing: 1334633-7_1_AA

This list covers pages from 2-6 to 2-11

Pos	Part No	SP	UN	Qty	Description	Page No	Pos	Part No	SP	UN	Qty	Description	Page No

SEE PREVIOUS LISTS PAGES: 2-7, 2-9.

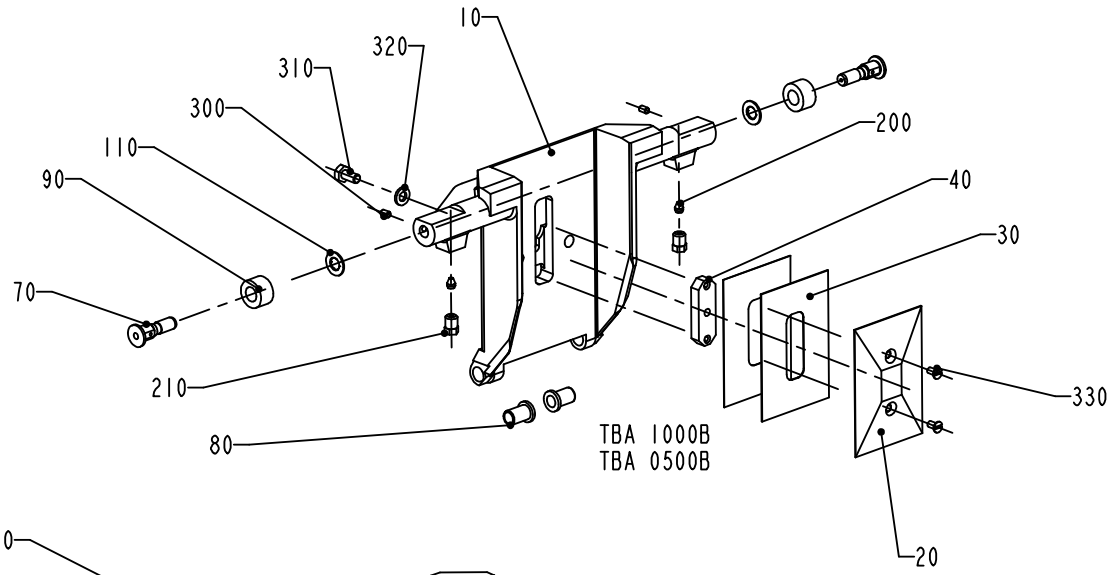

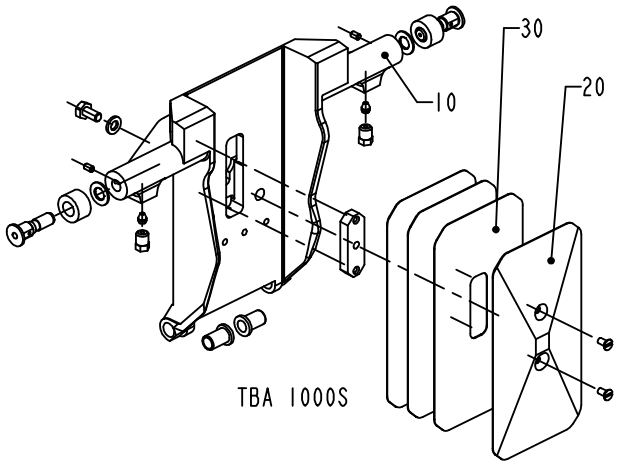

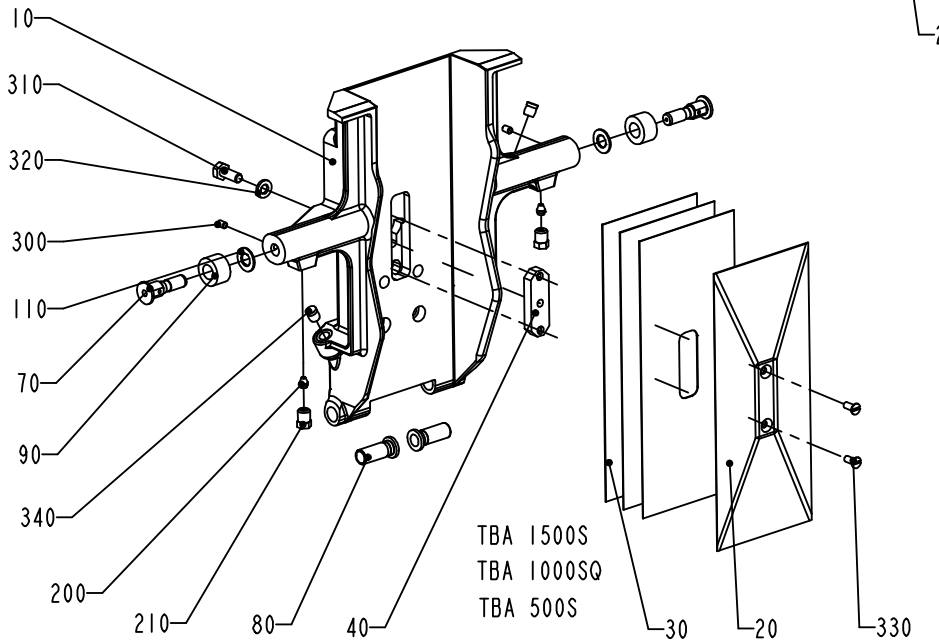

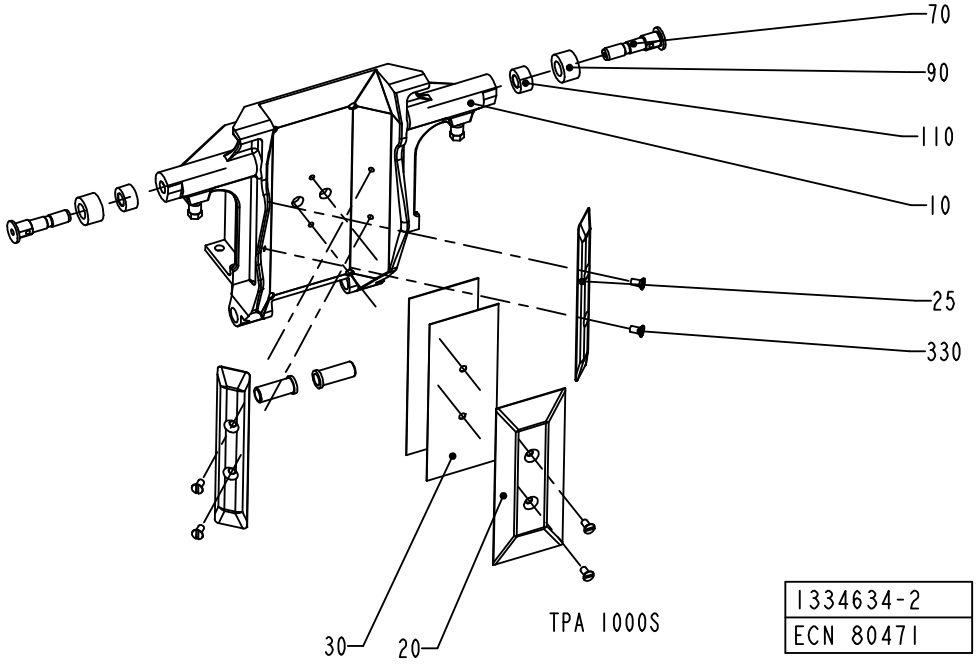

1334634-2
ECN 80471

ECM: 149724 - 20040224
Group number: 1334634-0200
Assembly Drawing: 1334634-2_1_AD

This list covers pages from 2-12 to 2-17

Pos	Part No	SP	UN	Qty	Description	Page No
TPA 1000SQ SMILE (See drawing on page: 2-16)						
010	2582002-0000	A		1	VOLUME FLAP	
020	1539840-0000	A		1	VOLUME BULGE	
025	1539841-0000	A		2	VOLUME BULGE	
030	1539842-0000	A		3	VOLUME SHIM	
035	1539843-0000	A		6	VOLUME SHIM	
040	1040756-0000	A		3	WEDGE	
060	2547010-0000	-		1	BRACKET	
070	434320-0000	A		2	AXLE PIN	
080	1255541-0000	A		2	BUSHING	
090	434321-0000	A		2	CURVE ROLLER	
110	19972-0000	A		2	WASHER	
310	312105-0368	-		3	SCREW M6S ISO 4017 M6X16 A480	
320	315105-0153	-		3	WASHER BRB6,4X12RFR	
370	312155-0289	-		6	SCREW EN 10642 MF6S M4X10 A480	
TBA 0200B (See drawing on page: 2-14)						
010	1499902-0000	A		1	VOLUME FLAP	
020	1038638-0000	A		1	VOLUME BULGE	
030	1038639-0000	A		2	VOLUME SHIM	
040	1038637-0000	A		1	WEDGE	
070	434320-0000	A		2	AXLE PIN	
080	1255541-0000	A		2	BUSHING	
090	436556-0000	A		2	CURVE ROLLER	
110	19972-0000	A		2	WASHER	
310	312105-0327	-		1	SCREW M6S ISO 4017 M5X12 A480	
320	315105-0146	-		1	WASHER BRB5,3X10RFR	
330	312145-0287	-		2	SCREW ISO 2009 MFS M4X8 A4	
TBA 0200S (See drawing on page: 2-14)						
010	1484865-0000	A		1	VOLUME FLAP	
020	1037733-0000	A		1	VOLUME BULGE	
030	1037735-0000	A		2	VOLUME SHIM	
040	1037734-0000	A		1	WEDGE	
070	434320-0000	A		2	AXLE PIN	
080	1255541-0000	A		2	BUSHING	
090	436556-0000	A		2	CURVE ROLLER	
110	19972-0000	A		2	WASHER	
310	312105-0327	-		1	SCREW M6S ISO 4017 M5X12 A480	
320	315105-0146	-		1	WASHER BRB5,3X10RFR	
330	312145-0287	-		2	SCREW ISO 2009 MFS M4X8 A4	
TBA 0250B (See drawing on page: 2-14)						
010	1484868-0000	A		1	VOLUME FLAP	
020	1346157-0000	A		1	VOLUME BULGE	
030	1346158-0000	A		2	VOLUME SHIM	
040	1037734-0000	A		1	WEDGE	
070	434320-0000	A		2	AXLE PIN	
080	1255541-0000	A		2	BUSHING	
090	436556-0000	A		2	CURVE ROLLER	
110	19972-0000	A		2	WASHER	
310	312105-0327	-		1	SCREW M6S ISO 4017 M5X12 A480	
320	315105-0146	-		1	WASHER BRB5,3X10RFR	
330	312145-0287	-		2	SCREW ISO 2009 MFS M4X8 A4	
TBA 0330S (See drawing on page: 2-14)						
010	2544991-0000	A		1	VOLUME FLAP	
020	2544992-0000	A		1	VOLUME BULGE	
030	2544993-0000	A		3	VOLUME SHIM	
040	1037734-0000	A		1	WEDGE	
070	434320-0000	A		2	AXLE PIN	
080	1255541-0000	A		2	BUSHING	
090	436556-0000	A		2	CURVE ROLLER	
110	19972-0000	A		2	WASHER	
310	312105-0328	-		1	SCREW M6S ISO 4017 M5X14 A480	
320	315105-0146	-		1	WASHER BRB5,3X10RFR	
330	312145-0287	-		2	SCREW ISO 2009 MFS M4X8 A4	
TBA 0500B (See drawing on page: 2-12)						
010	1532287-0000	A		1	VOLUME FLAP	
020	1558817-0000	A		1	VOLUME BULGE	
030	1532293-0000	A		2	VOLUME SHIM	
070	434320-0000	A		2	AXLE PIN	
080	1255541-0000	A		2	BUSHING	
090	436556-0000	A		2	CURVE ROLLER	
110	19972-0000	A		2	WASHER	
310	312105-0327	-		1	SCREW M6S ISO 4017 M5X12 A480	
320	315105-0146	-		1	WASHER BRB5,3X10RFR	
TBA 1000B (See drawing on page: 2-12)						
010	1478358-0000	A		1	VOLUME FLAP	
020	1035828-0000	A		1	VOLUME BULGE	
030	1035831-0000	A		3	VOLUME SHIM	
040	1040756-0000	A		1	WEDGE	
070	434320-0000	A		2	AXLE PIN	
080	1255541-0000	A		2	BUSHING	
090	434321-0000	A		2	CURVE ROLLER	
110	19972-0000	A		2	WASHER	
310	312105-0366	-		1	SCREW M6S ISO 4017 M6X12 A480	
320	315105-0153	-		1	WASHER BRB6,4X12RFR	

Machine Type | Group Description | Used-In | Group Number | Page No

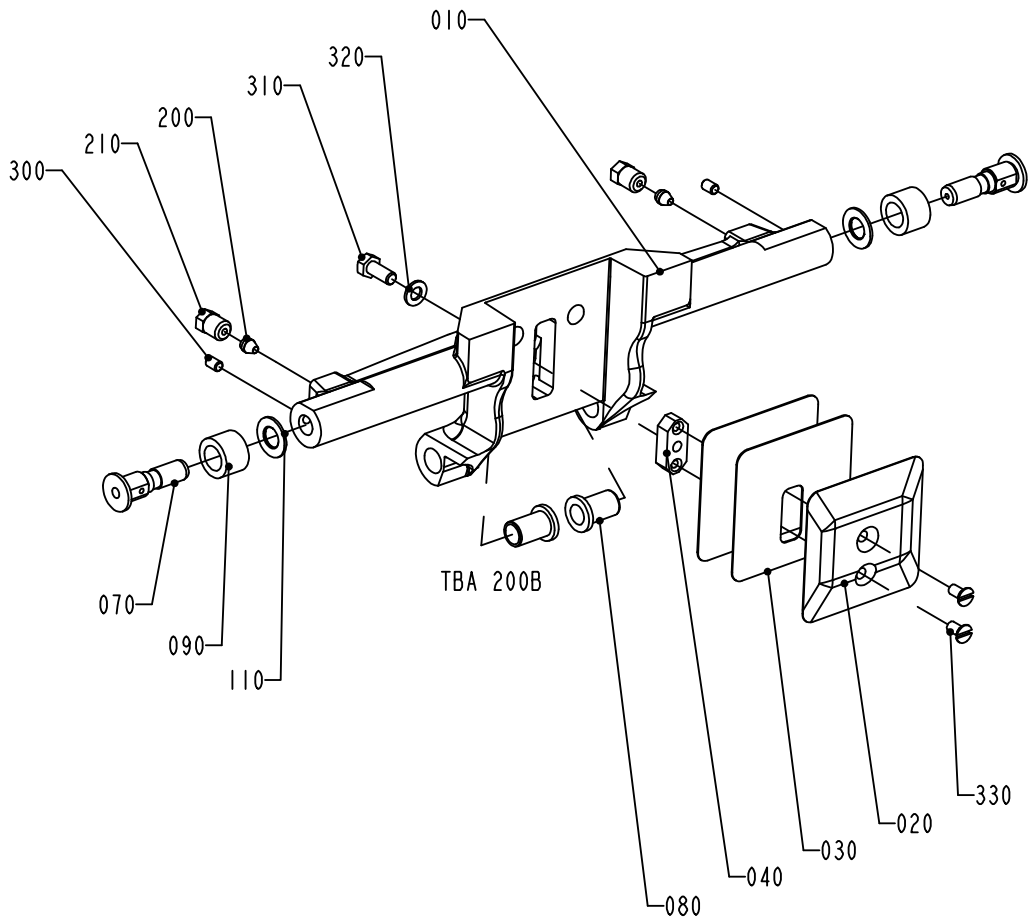

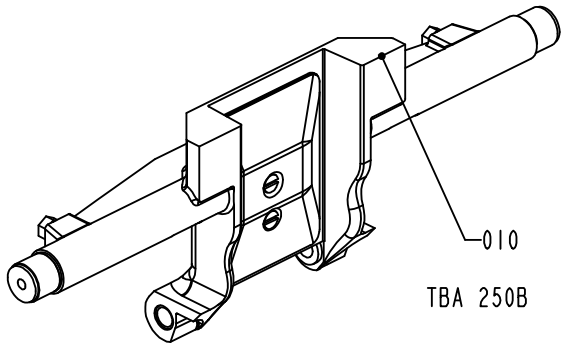

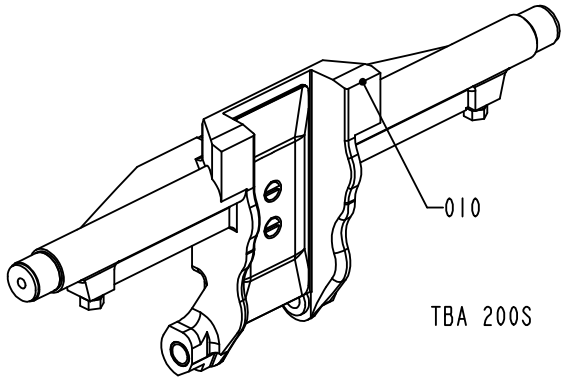

1334634-3
ECN 72770

ECM: 149724 - 20040224
Group number: 1334634-0200
Assembly Drawing: 1334634-3_1_AB

This list covers pages from 2-12 to 2-17

Pos	Part No	SP	UN	Qty	Description	Page No
TBA 1000B (Cont'd) (See drawing on page: 2-12)						
330	312145-0287	-		2	SCREW ISO 2009 MFS M4X8 A4	
TBA 1000S (See drawing on page: 2-12)						
010	1040753-0000	A		1	VOLUME FLAP	
020	1040754-0000	A		1	VOLUME BULGE	
030	1040755-0000	A		3	VOLUME SHIM	
040	1040756-0000	A		1	WEDGE	
070	434320-0000	A		2	AXLE PIN	
080	1255541-0000	A		2	BUSHING	
090	434321-0000	A		2	CURVE ROLLER	
110	19972-0000	A		2	WASHER	
310	312105-0366	-		1	SCREW M6S ISO 4017 M6X12 A480	
320	315105-0153	-		1	WASHER BRB6,4X12RFR	
330	312145-0287	-		2	SCREW ISO 2009 MFS M4X8 A4	
TBA 1000SQ (See drawing on page: 2-12)						
010	2606306-0000	A		1	VOLUME FLAP	
020	1487626-0000	A		1	VOLUME BULGE	
030	1487627-0000	A		3	VOLUME SHIM	
040	1040756-0000	A		1	WEDGE	
070	434320-0000	A		2	AXLE PIN	
080	1558701-0000	A		2	BUSHING	
090	434321-0000	A		2	CURVE ROLLER	
110	19972-0000	A		2	WASHER	
310	312115-0367	-		1	SCREW ISO4762 M6X14 A4	
320	315105-0153	-		1	WASHER BRB6,4X12RFR	
330	312145-0291	-		2	SCREW ISO 2009 MFS M4X12 A4	
TBA 1500S (See drawing on page: 2-12)						
010	2587235-0000	A		1	VOLUME FLAP	
020	1499675-0000	A		1	VOLUME BULGE	
030	1349208-0000	A		3	VOLUME SHIM	
040	1040756-0000	A		1	WEDGE	
070	434320-0000	A		2	AXLE PIN	
080	1558701-0000	A		2	BUSHING	
090	434321-0000	A		2	CURVE ROLLER	
110	19972-0000	A		2	WASHER	
310	312105-0368	-		1	SCREW M6S ISO 4017 M6X16 A480	
320	315105-0153	-		1	WASHER BRB6,4X12RFR	
330	312145-0289	-		2	SCREW ISO 2009 MFS M4X10 A4	
340	90261-0016	-		2	PLUG, BLIND, PLASTIC GPN300V2	
TPA 1000SQ FT (See drawing on page: 2-16)						
010	2547012-0000	A		1	VOLUME FLAP	
020	1539840-0000	A		1	VOLUME BULGE	
025	1539841-0000	A		2	VOLUME BULGE	
030	1539842-0000	A		3	VOLUME SHIM	
035	1539843-0000	A		6	VOLUME SHIM	
040	1040756-0000	A		3	WEDGE	
060	2547010-0000	-		1	BRACKET	
070	434320-0000	A		2	AXLE PIN	
080	1255541-0000	A		2	BUSHING	
090	434321-0000	A		2	CURVE ROLLER	
110	19972-0000	A		2	WASHER	
320	315105-0153	-		3	WASHER BRB6,4X12RFR	
360	312105-0368	-		3	SCREW M6S ISO 4017 M6X16 A480	
370	312155-0289	-		6	SCREW EN 10642 MF6S M4X10 A480	
Common Parts						
200	90028-0020	-		2	CONE TUBE 2,5MM	
210	90134-0063	-		2	BUSHING/NUT M8X1, D=2,5 MM	
300	312318-0285	-		2	SCREW ISO4029 M4X6 A4	

Machine Type | Group Description | Used-In | Group Number | Page No

VOLUME FLAP PRESSURE

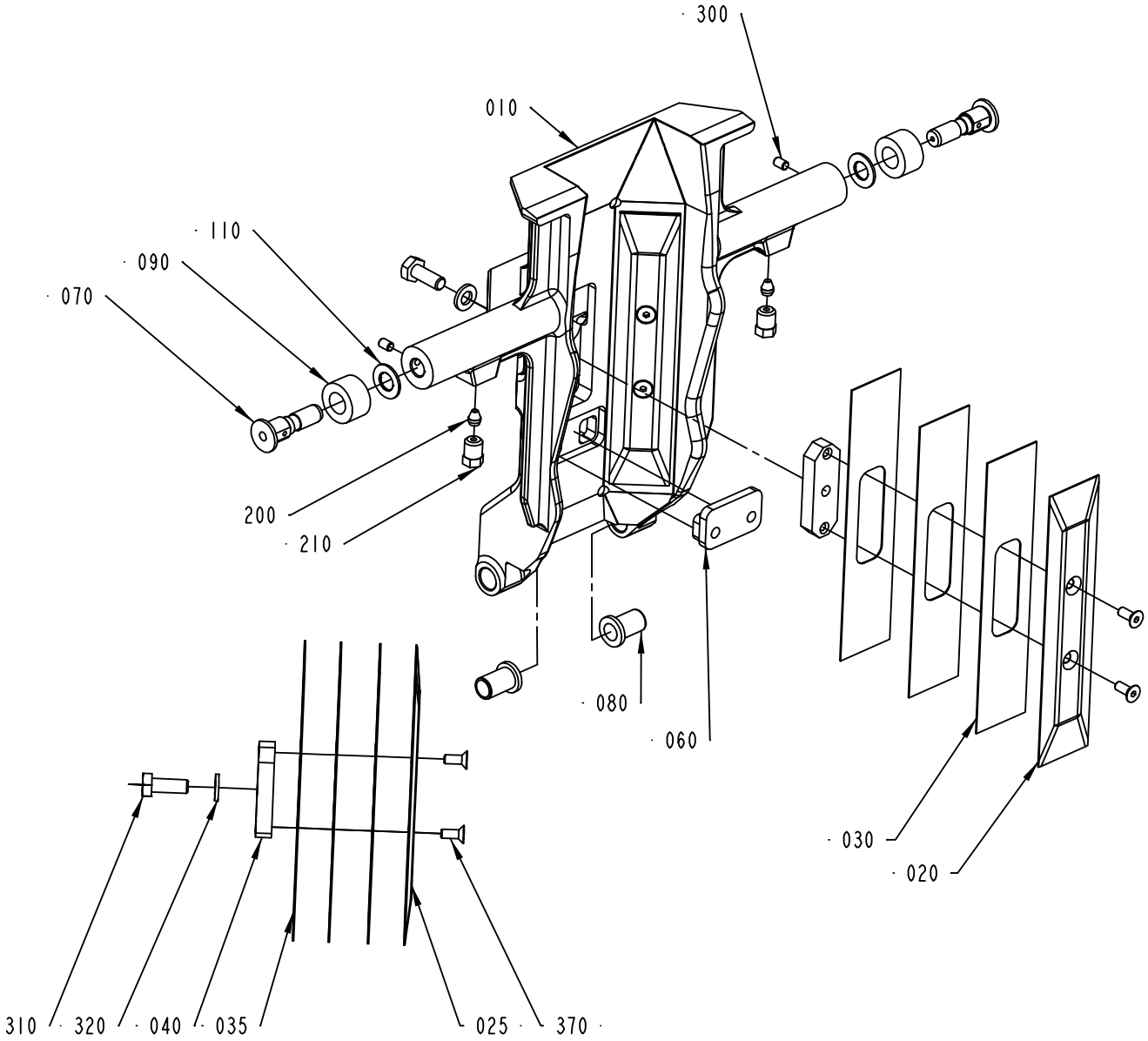

1334634-7
ECM 119888

Pos	Part No	SP	UN	Qty	Description	Page No
SEE PREVIOUS LISTS PAGES: 2-13, 2-15.						

Pos	Part No	SP	UN	Qty	Description	Page No

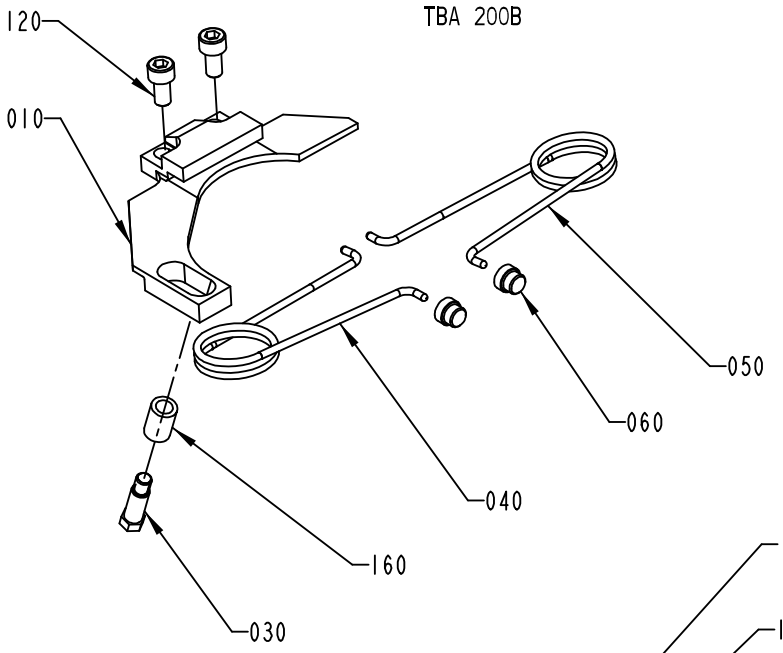

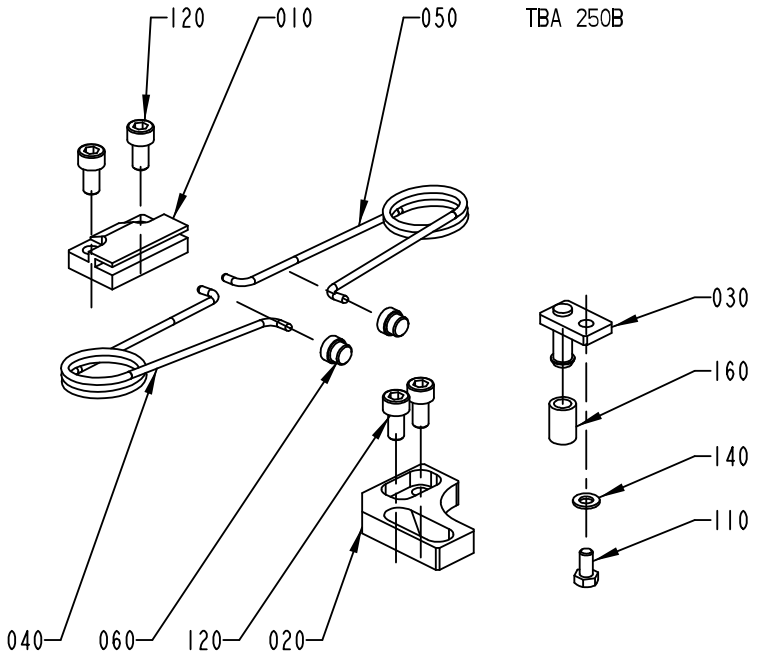

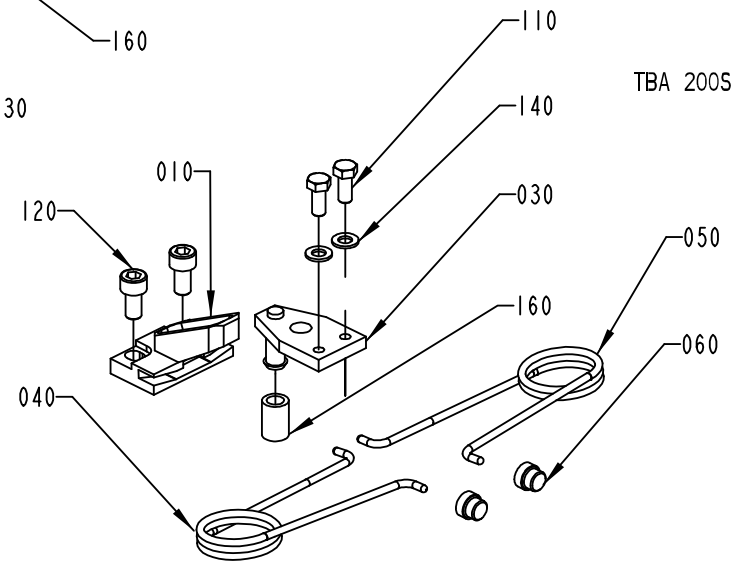

1334635-1
ECN 73647

ECM: 130290 - 20030611
Group number: 1334635-0200
Assembly Drawing: 1334635-1_1_AF

This list covers pages from 2-18 to 2-25

Pos	Part No	SP	UN	Qty	Description	Page No
TBA 0200B (See drawing on page: 2-18)						
010	1512579-0000	A		1	BRACKET	
030	1346153-0000	A		1	STOP PIN	
040	1350263-0000	A		1	SPRING RIGHT	
050	1350264-0000	A		1	SPRING LEFT	
060	1144601-0000	A		2	GUIDE STUD	
120	312115-0366	-		2	SCREW ISO4762 M6X12 A4	
160	1317740-0000	A		1	RUBBER SLEEVE	
TBA 0200S (See drawing on page: 2-18)						
010	1317823-0000	A		1	CANTILEVER	
030	1317824-0000	A		1	CATCH	
040	1350263-0000	A		1	SPRING RIGHT	
050	1350264-0000	A		1	SPRING LEFT	
060	1144601-0000	A		2	GUIDE STUD	
110	312105-0327	-		2	SCREW M6S ISO 4017 M5X12 A480	
120	312115-0366	-		2	SCREW ISO4762 M6X12 A4	
140	315105-0146	-		2	WASHER BRB5,3X10RFR	
160	1317740-0000	A		1	RUBBER SLEEVE	
TBA 0250B (See drawing on page: 2-18)						
010	1317742-0000	A		1	CANTILEVER	
020	1317741-0000	A		1	CATCH	
030	1317440-0000	A		1	STOP PIN	
040	1350263-0000	A		1	SPRING RIGHT	
050	1350264-0000	A		1	SPRING LEFT	
060	1144601-0000	A		2	GUIDE STUD	
110	312105-0325	-		1	SCREW M6S ISO 4017 M5X10 A480	
120	312115-0366	-		4	SCREW ISO4762 M6X12 A4	
140	315105-0146	-		1	WASHER BRB5,3X10RFR	
160	1317740-0000	A		1	RUBBER SLEEVE	
TBA 0330S (See drawing on page: 2-22)						
010	1539172-0000	A		1	CANTILEVER	
030	2527725-0000	A		1	CATCH	
040	1350263-0000	A		1	SPRING RIGHT	
050	1350264-0000	A		1	SPRING LEFT	
060	1144601-0000	A		2	GUIDE STUD	
110	312105-0328	-		2	SCREW M6S ISO 4017 M5X14 A480	
120	312115-0368	-		2	SCREW ISO4762 M6X16 A4	
TBA 0500B (See drawing on page: 2-22)						
010	1539886-0000	A		1	CANTILEVER	
030	1539887-0000	A		1	CATCH	
040	1350263-0000	A		1	SPRING RIGHT	
050	1350264-0000	A		1	SPRING LEFT	
060	1144601-0000	A		2	GUIDE STUD	
110	312105-0327	-		2	SCREW M6S ISO 4017 M5X12 A480	
120	312115-0366	-		2	SCREW ISO4762 M6X12 A4	
TBA 1000B (See drawing on page: 2-20)						
010	1347526-0000	A		1	BRACKET	
020	1478396-0000	A		1	STOP	
030	1478393-0000	A		1	CATCH	
040	1348483-0000	A		1	SPRING RIGHT	
050	1348484-0000	A		1	SPRING LEFT	
060	1144601-0000	A		2	GUIDE STUD	
100	312105-0368	-		4	SCREW M6S ISO 4017 M6X16 A480	
110	312115-0329	-		2	SCREW ISO4762 M5X16 A4	
130	315105-0153	-		4	WASHER BRB6,4X12RFR	
TBA 1000S (See drawing on page: 2-20)						
010	1347526-0000	A		1	BRACKET	
020	1478396-0000	A		1	STOP	
030	1478395-0000	A		1	CATCH	
040	1348483-0000	A		1	SPRING RIGHT	
050	1348484-0000	A		1	SPRING LEFT	
060	1144601-0000	A		2	GUIDE STUD	
100	312105-0368	-		4	SCREW M6S ISO 4017 M6X16 A480	
110	312115-0329	-		2	SCREW ISO4762 M5X16 A4	
130	315105-0153	-		4	WASHER BRB6,4X12RFR	
TBA 1000SQ (See drawing on page: 2-20)						
010	1349319-0000	A		1	CANTILEVER	
030	1349320-0000	A		1	CATCH	
040	1143216-0000	A		1	SPRING	
050	1143215-0000	A		1	SPRING	
060	1144601-0000	A		2	GUIDE STUD	
110	312105-0366	-		2	SCREW M6S ISO 4017 M6X12 A480	
120	312115-0378	-		2	SCREW ISO4762 M6X40 A4 80	
170	1511556-0000	A		1	SET SCREW	
180	312605-0318	-		1	HEXAGON NUT, M6M M8 A280	
TBA 1500S (See drawing on page: 2-20)						
010	1349319-0000	A		1	CANTILEVER	
030	1349320-0000	A		1	CATCH	
040	1143216-0000	A		1	SPRING	
050	1143215-0000	A		1	SPRING	
060	1144601-0000	A		2	GUIDE STUD	
110	312115-0368	-		2	SCREW ISO4762 M6X16 A4	
120	312115-0378	-		2	SCREW ISO4762 M6X40 A4 80	
170	1511556-0000	A		1	SET SCREW	

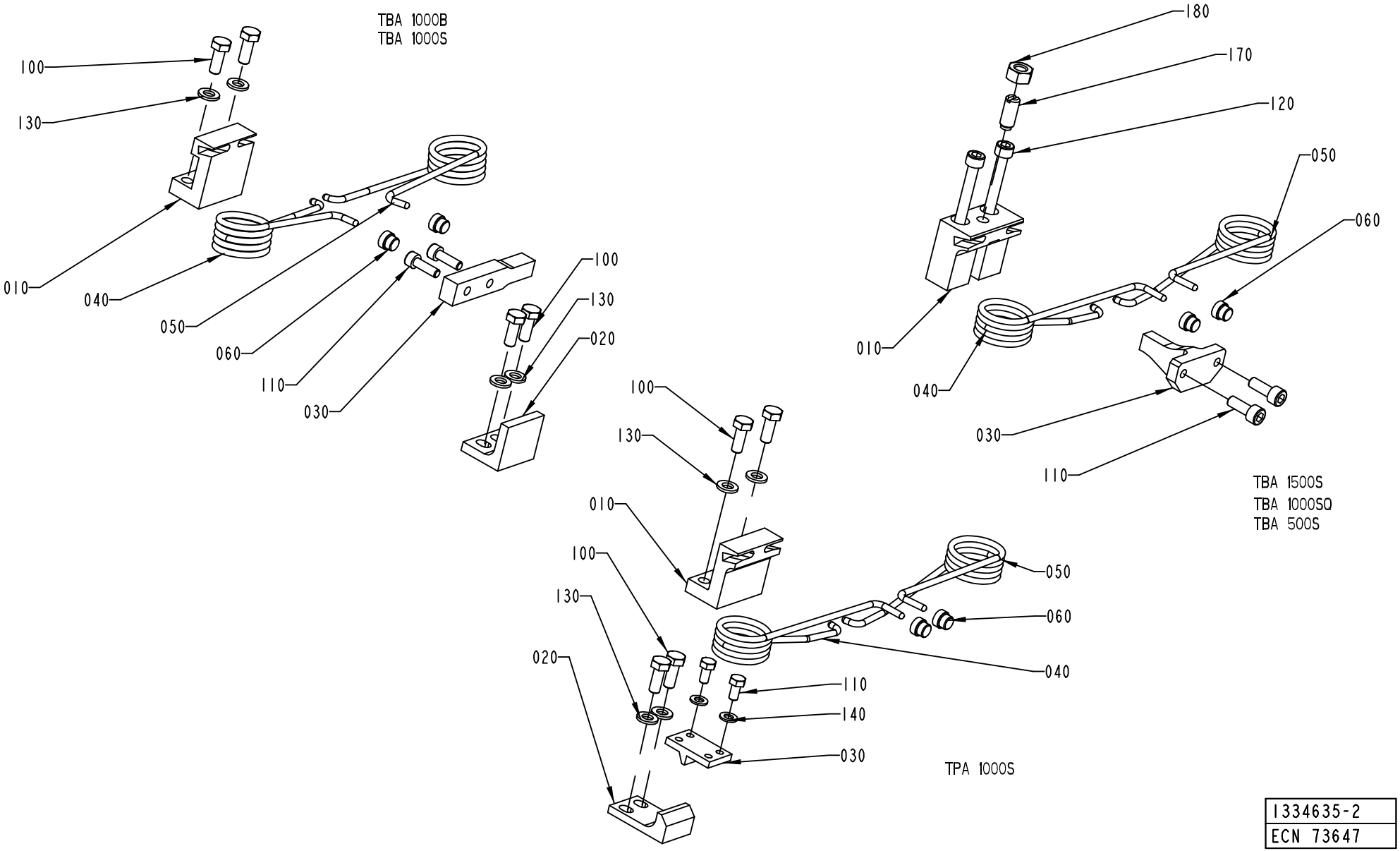

1334635-2
ECN 73647

ECM: 130290 - 20030611
Group number: 1334635-0200
Assembly Drawing: 1334635-2_1_AG

This list covers pages from 2-18 to 2-25

Pos	Part No	SP	UN	Qty	Description	Page No
TBA 1500S (Cont'd) (See drawing on page: 2-20)						
180	312605-0318	-		1	HEXAGON NUT, M6M M8 A280	
TPA 1000SQ (See drawing on page: 2-24)						
010	1523475-0000	A		1	CANTILEVER	
020	2558921-0000	A		1	STOP	
025	2558923-0000	A		1	STOP	
040	2557613-0000	A		1	SPRING	
050	2557612-0000	A		1	SPRING	
060	1144601-0000	A		2	GUIDE STUD	
070	2558929-0000	-		1	BAR	
100	312105-0368	-		10	SCREW M6S ISO 4017 M6X16 A480	
120	312105-0364	-		2	SCREW M6S ISO 4017 M6X10 A480	
130	315105-0153	-		10	WASHER BRB6,4X12RFR	
150	90062-0061	-		2	LOCK WASHER NORD-LOCK,6,5/10,8, H=2,6	

Pos	Part No	SP	UN	Qty	Description	Page No

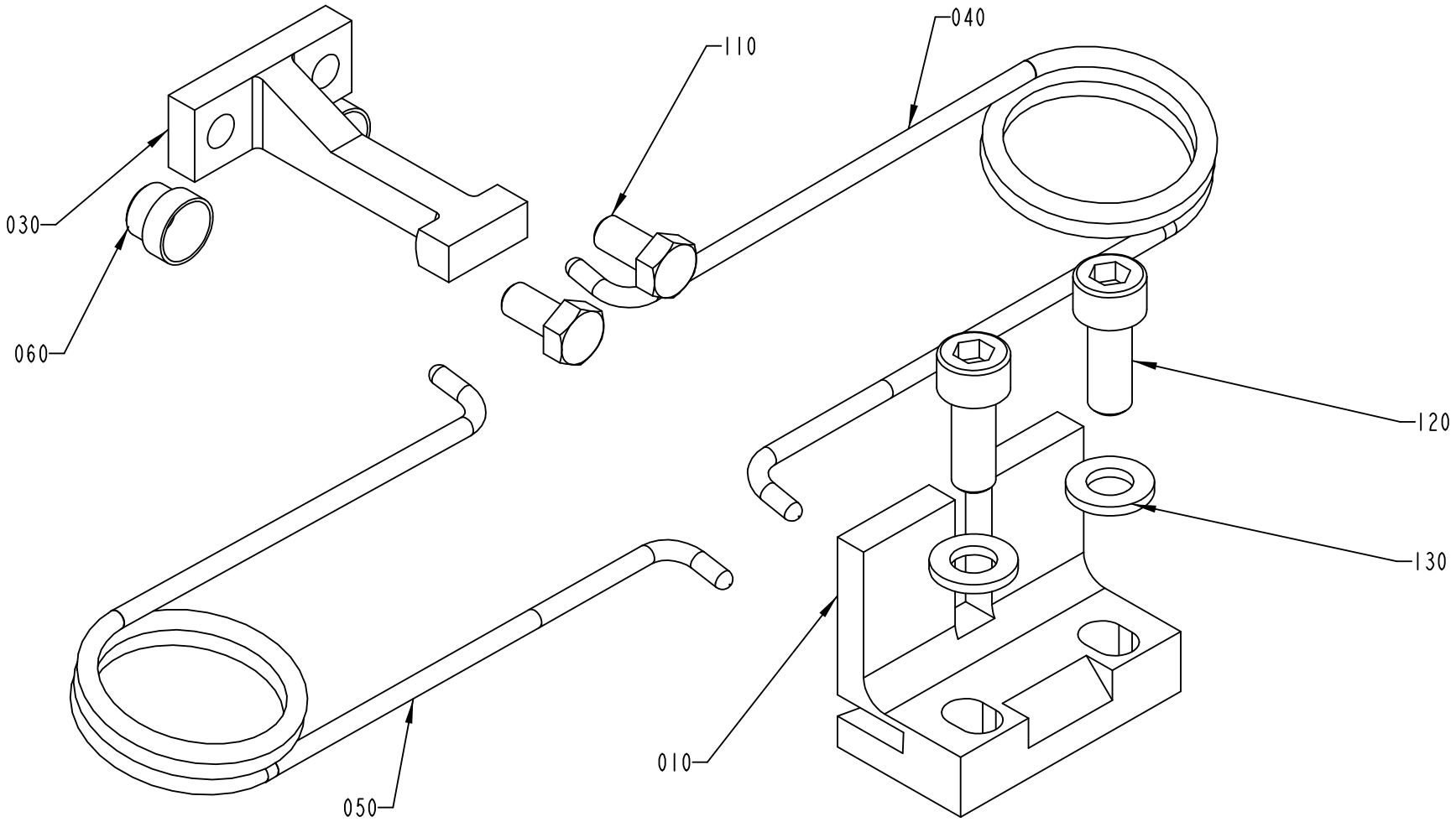

TPA 330SQ
TBA 500B
TPA 250SQ

1334635-3
ECN 80471

Pos	Part No	SP	UN	Qty	Description	Page No
SEE PREVIOUS LISTS PAGES: 2-19, 2-21.						

Pos	Part No	SP	UN	Qty	Description	Page No

SHOCK ABSORBER

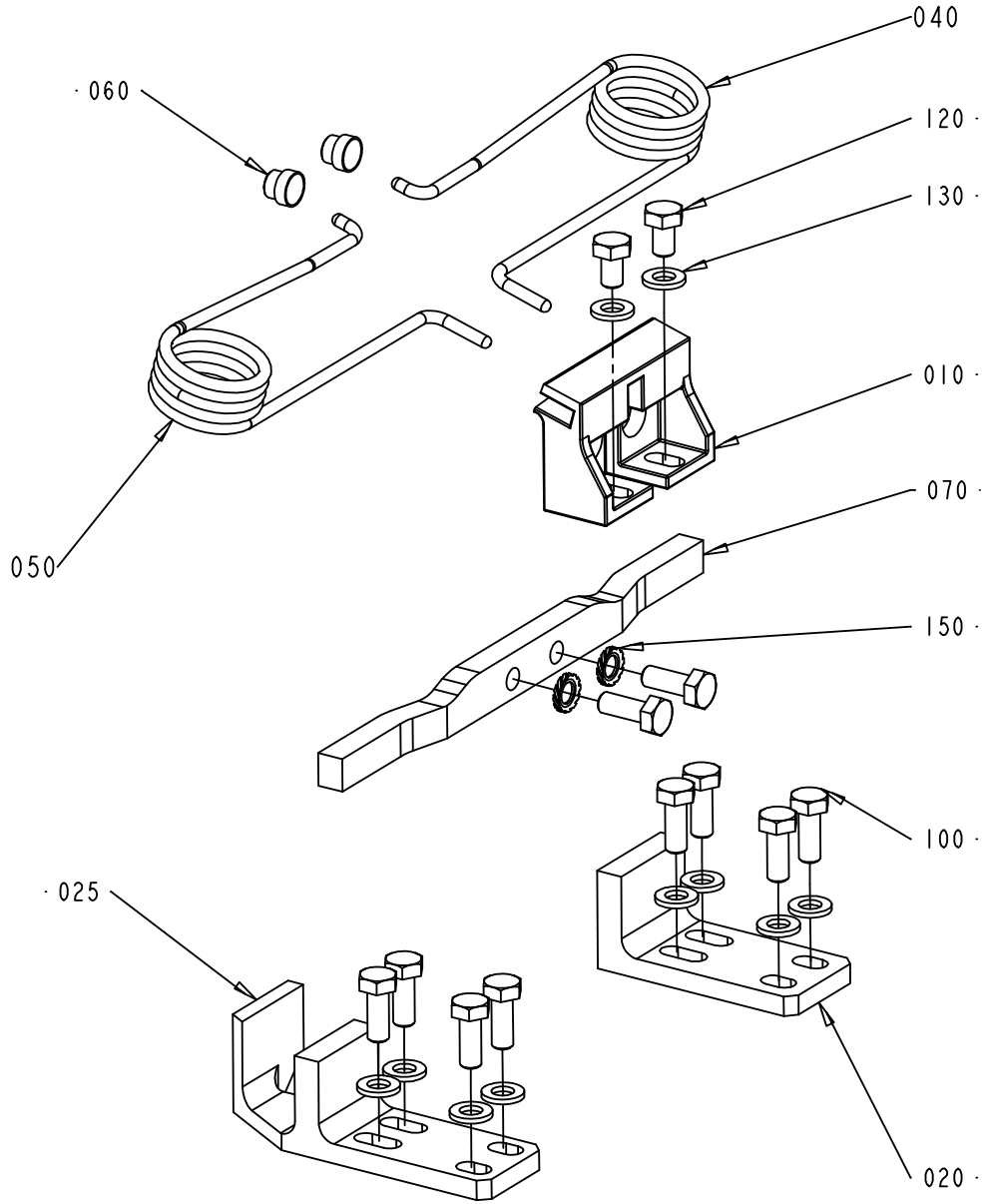

1334635-6
ECM 119888

Pos	Part No	SP	UN	Qty	Description	Page No
SEE PREVIOUS LISTS PAGES: 2-19, 2-21.						

Pos	Part No	SP	UN	Qty	Description	Page No

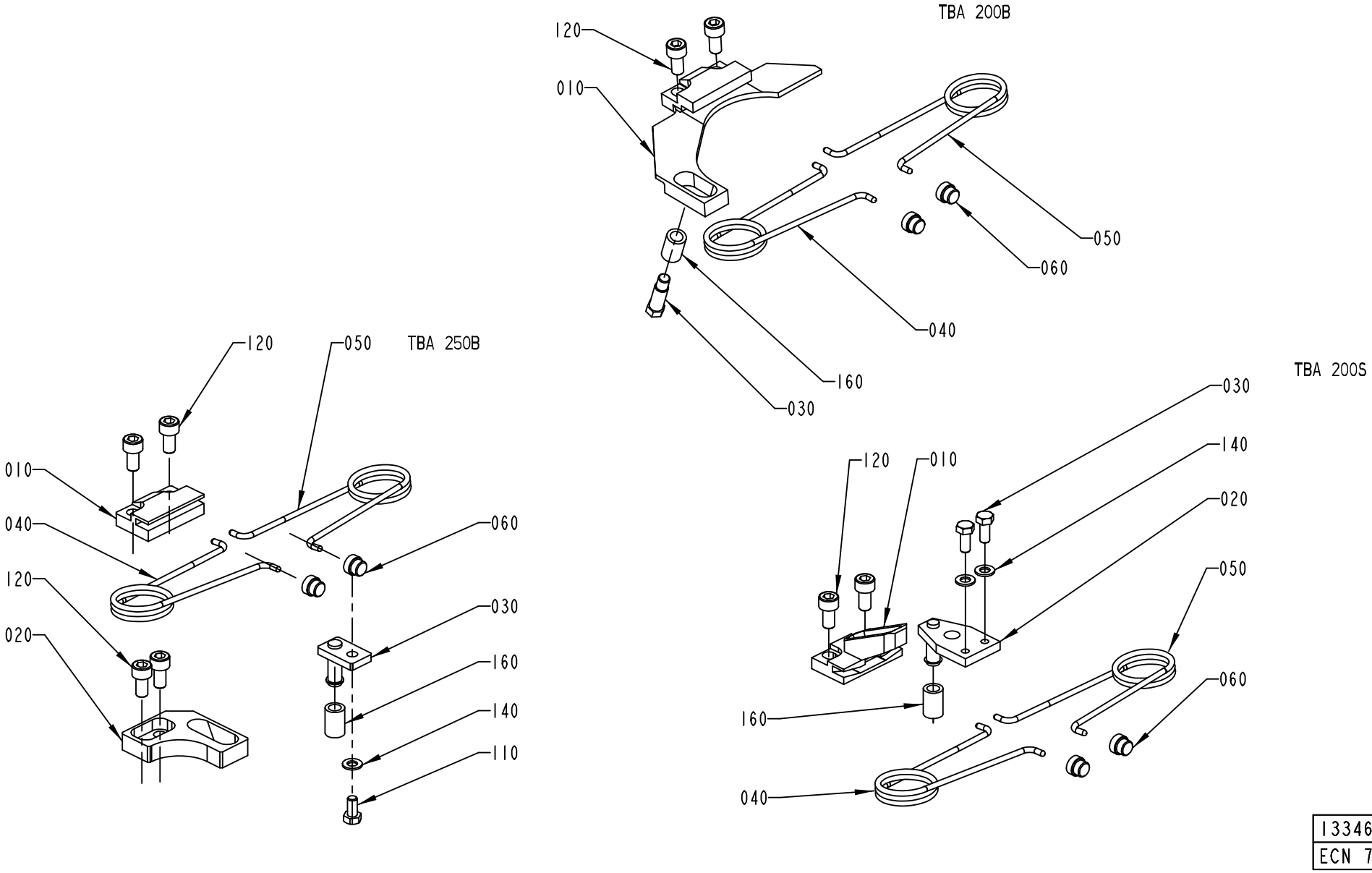

1334636-1
ECN 73647

ECM: 130291 - 20030611
Group number: 1334636-0200
Assembly Drawing: 1334636-1_1_AF

This list covers pages from 2-26 to 2-33

Pos	Part No	SP	UN	Qty	Description	Page No
TBA 0200B (See drawing on page: 2-26)						
010	1512579-0000	A		1	BRACKET	
030	1346153-0000	A		1	STOP PIN	
040	1350263-0000	A		1	SPRING RIGHT	
050	1348484-0000	A		1	SPRING LEFT	
050	1350264-0000	A		1	SPRING LEFT	
060	1144601-0000	A		2	GUIDE STUD	
120	312115-0366	-		2	SCREW ISO4762 M6X12 A4	
160	1317740-0000	A		1	RUBBER SLEEVE	
TBA 0200S (See drawing on page: 2-26)						
010	1317823-0000	A		1	CANTILEVER	
030	1317824-0000	A		1	CATCH	
040	1350263-0000	A		1	SPRING RIGHT	
050	1350264-0000	A		1	SPRING LEFT	
060	1144601-0000	A		2	GUIDE STUD	
110	312105-0327	-		2	SCREW M6S ISO 4017 M5X12 A480	
120	312115-0366	-		2	SCREW ISO4762 M6X12 A4	
140	315105-0146	-		2	WASHER BRB5,3X10RFR	
160	1317740-0000	A		1	RUBBER SLEEVE	
TBA 0250B (See drawing on page: 2-26)						
010	1317742-0000	A		1	CANTILEVER	
020	1317439-0000	A		1	CATCH	
030	1317440-0000	A		1	STOP PIN	
040	1350263-0000	A		1	SPRING RIGHT	
050	1350264-0000	A		1	SPRING LEFT	
060	1144601-0000	A		2	GUIDE STUD	
110	312105-0325	-		1	SCREW M6S ISO 4017 M5X10 A480	
120	312115-0366	-		4	SCREW ISO4762 M6X12 A4	
140	315105-0146	-		1	WASHER BRB5,3X10RFR	
160	1317740-0000	A		1	RUBBER SLEEVE	
TBA 0330S (See drawing on page: 2-30)						
010	1539172-0000	A		1	CANTILEVER	
030	2527725-0000	A		1	CATCH	
040	1350263-0000	A		1	SPRING RIGHT	
050	1350264-0000	A		1	SPRING LEFT	
060	1144601-0000	A		2	GUIDE STUD	
110	312105-0328	-		2	SCREW M6S ISO 4017 M5X14 A480	
120	312115-0368	-		2	SCREW ISO4762 M6X16 A4	
TBA 0500B (See drawing on page: 2-30)						
010	1539886-0000	A		1	CANTILEVER	
030	1539887-0000	A		1	CATCH	
040	1350263-0000	A		1	SPRING RIGHT	
050	1350264-0000	A		1	SPRING LEFT	
060	1144601-0000	A		2	GUIDE STUD	
110	312105-0327	-		2	SCREW M6S ISO 4017 M5X12 A480	
120	312115-0366	-		2	SCREW ISO4762 M6X12 A4	
TBA 1000B (See drawing on page: 2-28)						
010	1347526-0000	A		1	BRACKET	
020	1478396-0000	A		1	STOP	
030	1478393-0000	A		1	CATCH	
040	1348483-0000	A		1	SPRING RIGHT	
050	1348484-0000	A		1	SPRING LEFT	
060	1144601-0000	A		2	GUIDE STUD	
100	312105-0368	-		4	SCREW M6S ISO 4017 M6X16 A480	
110	312115-0329	-		2	SCREW ISO4762 M5X16 A4	
130	315105-0153	-		4	WASHER BRB6,4X12RFR	
TBA 1000S (See drawing on page: 2-28)						
010	1347526-0000	A		1	BRACKET	
020	1478396-0000	A		1	STOP	
030	1478395-0000	A		1	CATCH	
040	1348483-0000	A		1	SPRING RIGHT	
050	1348484-0000	A		1	SPRING LEFT	
060	1144601-0000	A		2	GUIDE STUD	
100	312105-0368	-		4	SCREW M6S ISO 4017 M6X16 A480	
110	312115-0329	-		2	SCREW ISO4762 M5X16 A4	
130	315105-0153	-		4	WASHER BRB6,4X12RFR	
TBA 1000SQ (See drawing on page: 2-28)						
010	1349319-0000	A		1	CANTILEVER	
030	1349320-0000	A		1	CATCH	
040	1143216-0000	A		1	SPRING	
050	1143215-0000	A		1	SPRING	
060	1144601-0000	A		2	GUIDE STUD	
110	312115-0366	-		2	SCREW ISO4762 M6X12 A4	
120	312115-0378	-		2	SCREW ISO4762 M6X40 A4 80	
170	1511556-0000	A		1	SET SCREW	
180	312605-0318	-		1	HEXAGON NUT, M6M M8 A280	
TBA 1500S (See drawing on page: 2-28)						
010	1349319-0000	A		1	CANTILEVER	
030	1349320-0000	A		1	CATCH	
040	1143216-0000	A		1	SPRING	
050	1143215-0000	A		1	SPRING	
060	1144601-0000	A		2	GUIDE STUD	
110	312115-0368	-		2	SCREW ISO4762 M6X16 A4	
120	312115-0378	-		2	SCREW ISO4762 M6X40 A4 80	

TBA 1000B
TBA 1000S

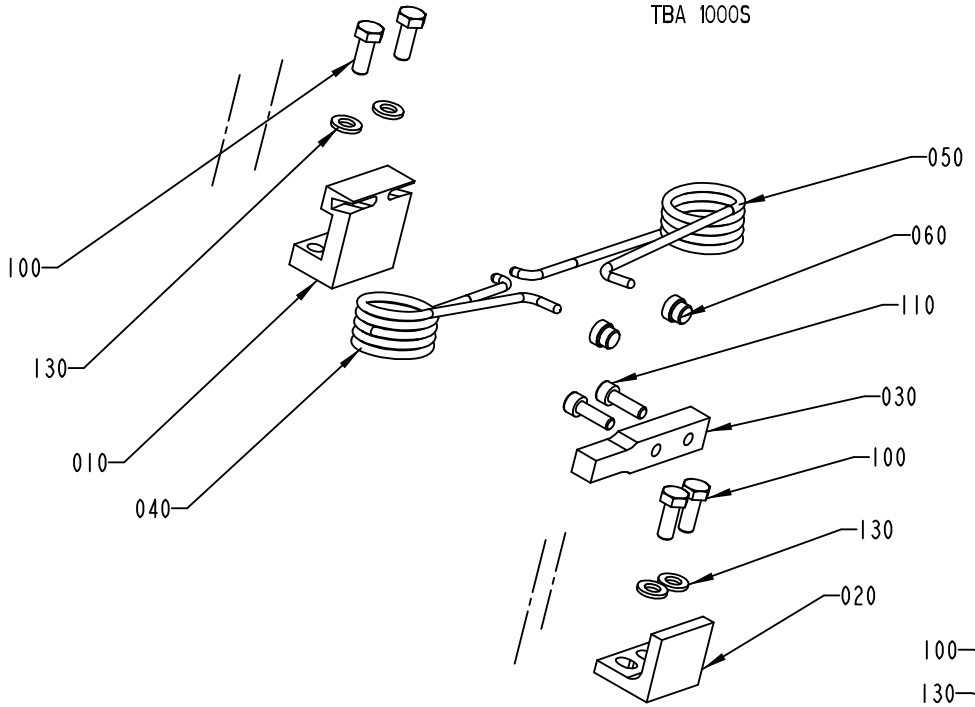

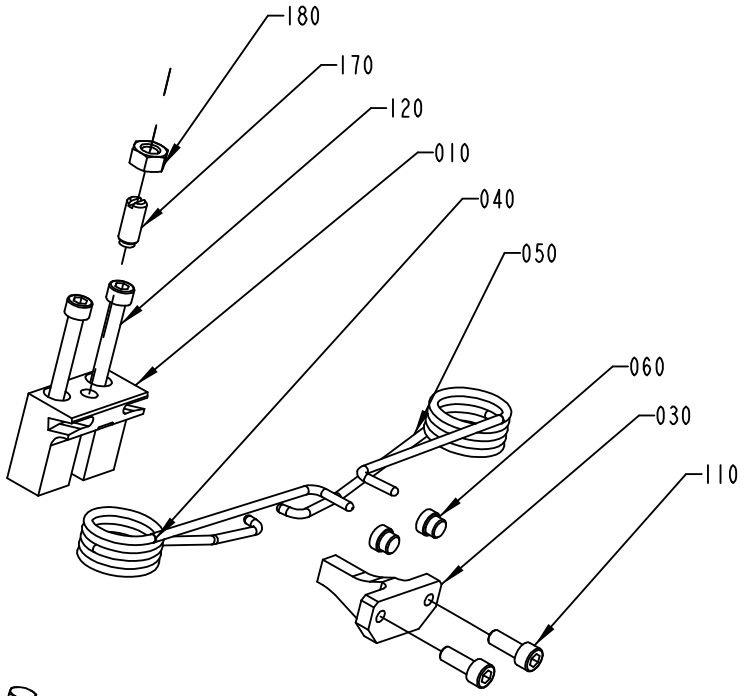

TBA 1500S
TBA 1000SQ
TBA 500S

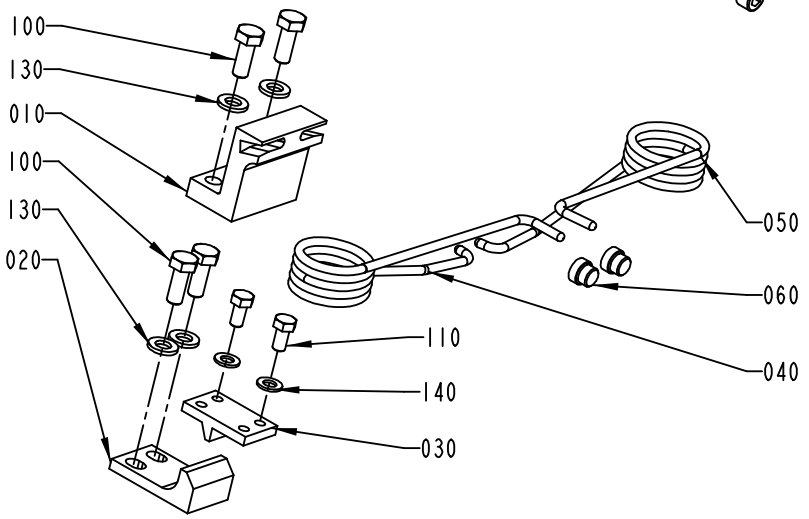

TPA 1000S

1334636-2
ECN 73647

Pos	Part No	SP	UN	Qty	Description	Page No
TBA 1500S (Cont'd) (See drawing on page: 2-28)						
170	1511556-0000	A		1	SET SCREW	
180	312605-0318	-		1	HEXAGON NUT, M6M M8 A280	
TPA 1000SQ (See drawing on page: 2-32)						
010	1523475-0000	A		1	CANTILEVER	
020	2558920-0000	A		1	STOP	
025	2558922-0000	A		1	STOP	
040	2557613-0000	A		1	SPRING	
050	2557612-0000	A		1	SPRING	
060	1144601-0000	A		2	GUIDE STUD	
070	2558929-0000	-		1	BAR	
100	312105-0368	-		10	SCREW M6S ISO 4017 M6X16 A480	
120	312105-0364	-		2	SCREW M6S ISO 4017 M6X10 A480	
130	315105-0153	-		10	WASHER BRB6,4X12RFR	
150	90062-0061	-		2	LOCK WASHER NORD-LOCK,6,5/10,8, H=2,6	

Pos	Part No	SP	UN	Qty	Description	Page No

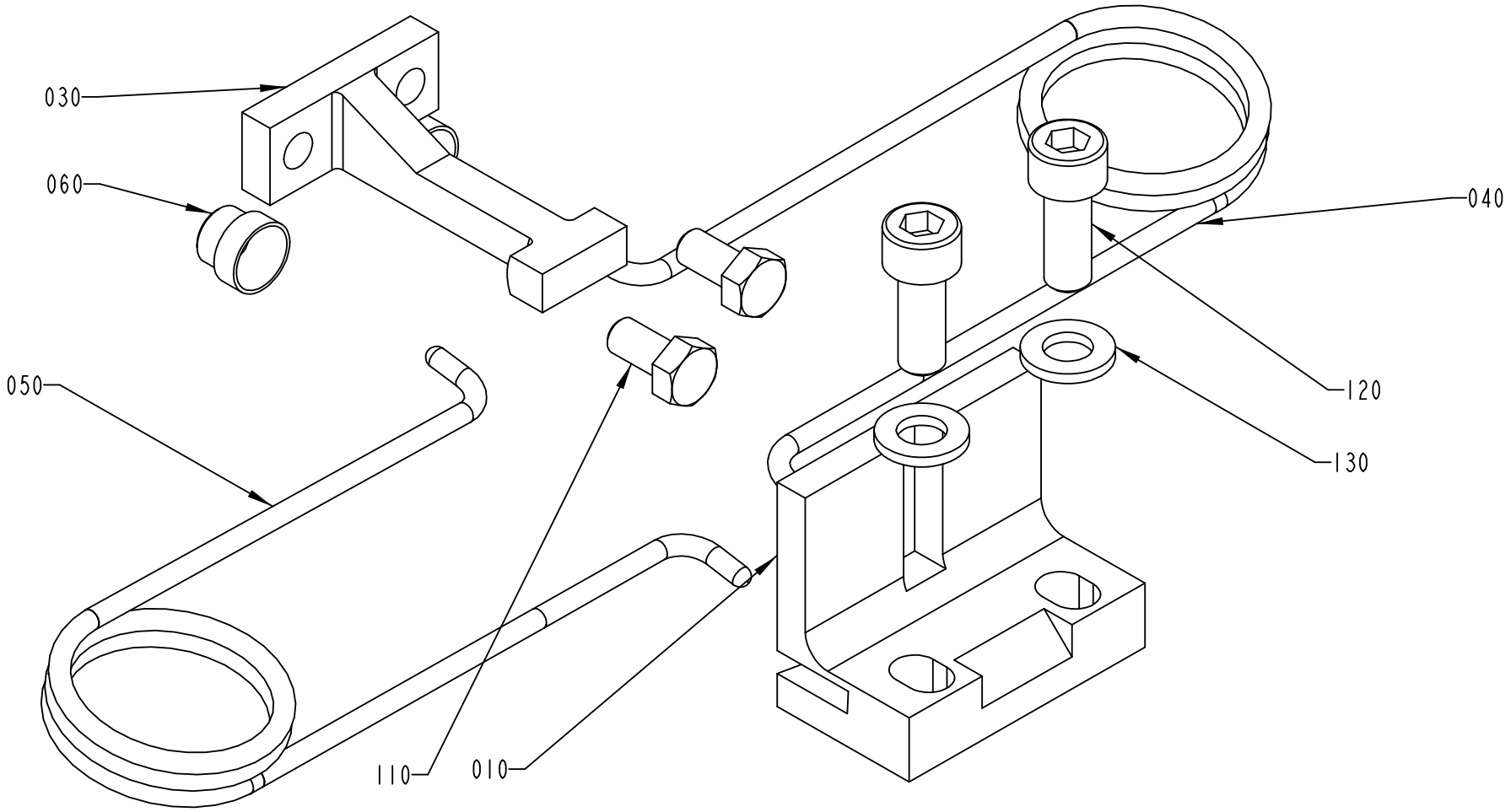

TPA 330SQ
TBA 500B
TPA 250SQ

1334636-3
ECN 80471

Pos	Part No	SP	UN	Qty	Description	Page No
SEE PREVIOUS LISTS PAGES: 2-27, 2-29.						

Pos	Part No	SP	UN	Qty	Description	Page No

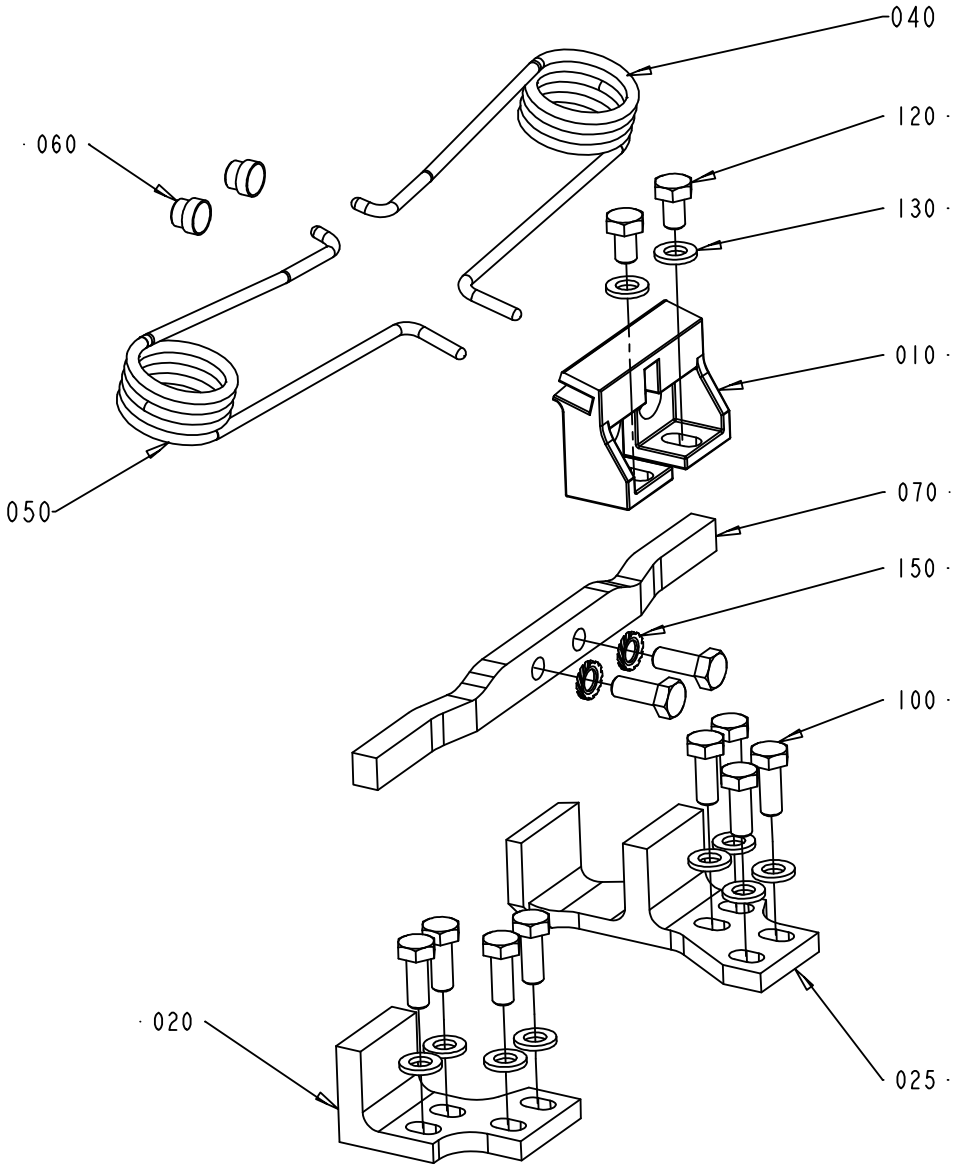

1334636-6
ECM 119888

Pos	Part No	SP	UN	Qty	Description	Page No
SEE PREVIOUS LISTS PAGES: 2-27, 2-29.						

Pos	Part No	SP	UN	Qty	Description	Page No

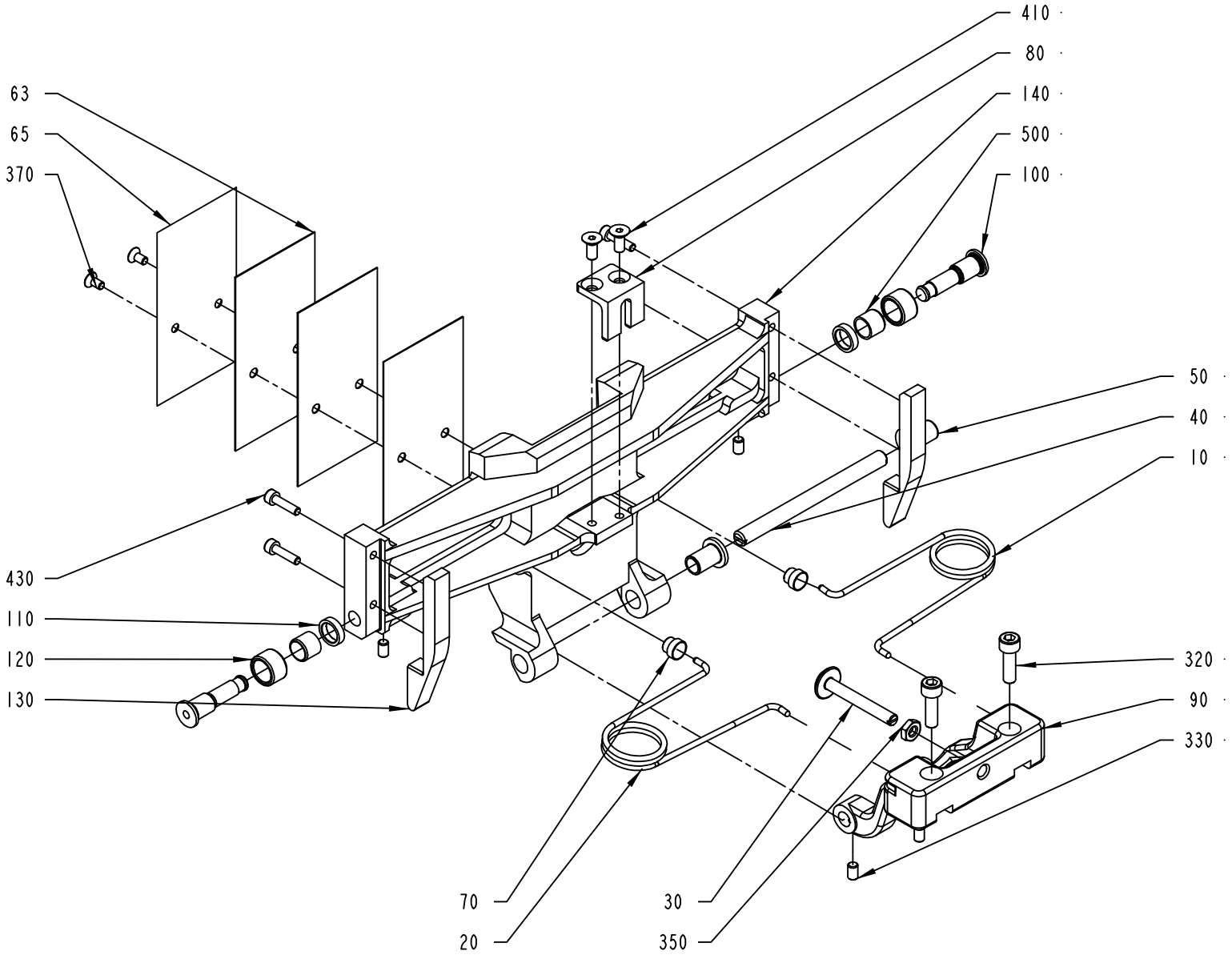
410
80
140
500
100
63
65
370
50
40
10
430
110
120
130
320
90
330
70
20
30
350
2594512-1
ECM 120277

ECM: 160387 - 20040309
Group number: 2594512-0100
Assembly Drawing: 2594512-1_1_AA

This list covers pages from 2-34 to 2-37

Pos	Part No	SP	UN	Qty	Description	Page No
TBA 0200B (See drawing on pages: 2-34, 4-6)						
010	1350263-0000	A		1	SPRING RIGHT	
020	1350264-0000	A		1	SPRING LEFT	
030	1511339-0000	A		1	STOP	
040	1499327-0000	A		1	SHAFT	
050	2530313-0000	A		2	BUSHING	
063	1538637-0000	A		3	VOLUME SHIM	
065	1524310-0000	A		1	VOLUME BULGE	
080	1499328-0000	A		1	STOPPER	
090	2605869-0000	A		1	FLAP HOLDER	
130	2629237-0000	A		2	CAM	
140	2604493-0000	A		1	VOLUME FLAP	
320	312115-0368	-		2	SCREW ISO4762 M6X16 A4	
370	312155-0287	-		2	SCREW EN 10642 MF6S M4X8 A480	
410	312155-0325	-		2	SCREW EN 10642 MF6S M5X10 A480	
430	312115-0291	-		4	SCREW ISO4762 M4X12 A4	
TBA 0250B (See drawing on pages: 2-36, 4-8)						
010	1350263-0000	A		1	SPRING RIGHT	
020	1350264-0000	A		1	SPRING LEFT	
030	1511338-0000	A		1	STOP	
040	1499327-0000	A		1	SHAFT	
050	2530313-0000	A		2	BUSHING	
063	2605166-0000	A		3	VOLUME SHIM	
065	2609925-0000	A		1	VOLUME BULGE	
080	2606219-0000	A		1	STOPPER	
090	2606102-0000	A		1	FLAP HOLDER	
130	2606218-0000	A		2	CAM	
140	2605191-0000	A		1	VOLUME FLAP	
320	312115-0368	-		2	SCREW ISO4762 M6X16 A4	
370	312155-0287	-		2	SCREW EN 10642 MF6S M4X8 A480	
410	312155-0327	-		2	SCREW EN 10642 MF6S M5X12 A480	
430	312115-0291	-		2	SCREW ISO4762 M4X12 A4	
440	312115-0289	-		2	SCREW ISO4762 M4X10 A4	
TBA 0330S (See drawing on pages: 2-34, 4-6)						
010	1350263-0000	A		1	SPRING RIGHT	
020	1350264-0000	A		1	SPRING LEFT	
030	1511338-0000	A		1	STOP	
040	1499327-0000	A		1	SHAFT	
050	2530313-0000	A		2	BUSHING	
063	2654290-0000	A		3	VOLUME SHIM	
065	979931-0000	A		1	VOLUME BULGE	
080	1499336-0000	A		1	STOPPER	
090	2606102-0000	A		1	FLAP HOLDER	
130	2629236-0000	A		2	CAM	
140	2604495-0000	A		1	VOLUME FLAP	
320	312115-0368	-		2	SCREW ISO4762 M6X16 A4	
370	312155-0287	-		2	SCREW EN 10642 MF6S M4X8 A480	
410	312155-0327	-		2	SCREW EN 10642 MF6S M5X12 A480	
430	312115-0293	-		4	SCREW ISO4762 M4X16 A4	
TBA 0500B (See drawing on pages: 2-34, 4-6)						
010	1350263-0000	A		1	SPRING RIGHT	
020	1350264-0000	A		1	SPRING LEFT	
030	1499348-0000	A		1	STOP	
040	1487946-0000	A		1	SHAFT	
050	1487948-0000	A		2	BUSHING	
063	1511336-0000	A		3	VOLUME SHIM	
065	1511335-0000	A		1	VOLUME BULGE	
080	1499349-0000	A		1	STOPPER	
090	1499346-0000	A		1	FLAP HOLDER	
130	1499350-0000	A		2	CAM	
140	1499357-0000	A		1	VOLUME FLAP	
320	312115-0368	-		2	SCREW ISO4762 M6X16 A4	
370	312145-0289	-		2	SCREW ISO 2009 MFS M4X10 A4	
410	312155-0323	-		2	SCREW EN 10642 MF6S M5X8 A480	
430	312115-0291	-		4	SCREW ISO4762 M4X12 A4	
TBA 1000B (See drawing on pages: 2-34, 4-6)						
010	1348483-0000	A		1	SPRING RIGHT	
020	1348484-0000	A		1	SPRING LEFT	
030	1487945-0000	A		1	STOP	
040	1487946-0000	A		1	SHAFT	
050	1487948-0000	A		2	BUSHING	
063	1511337-0000	A		3	VOLUME SHIM	
065	26075-0000	A		1	VOLUME BULGE	
080	1487943-0000	A		1	STOPPER	
090	1499345-0000	A		1	FLAP HOLDER	
130	1499356-0000	A		2	CAM	
140	1499358-0000	A		1	VOLUME FLAP	
320	312115-0368	-		2	SCREW ISO4762 M6X16 A4	
370	312141-0222	-		2	SCREW ISO 2009 MFS M3X8 4.8 EL.PL	
410	312115-0323	-		2	SCREW ISO4762 M5X8 A4	
430	312115-0287	-		4	SCREW ISO4762 M4X8 A4	
Common Parts						
070	1144601-0000	A		2	GUIDE STUD	
100	1512146-0000	A		2	AXLE PIN	

Machine Type | Group Description | Used-In | Group Number | Page No

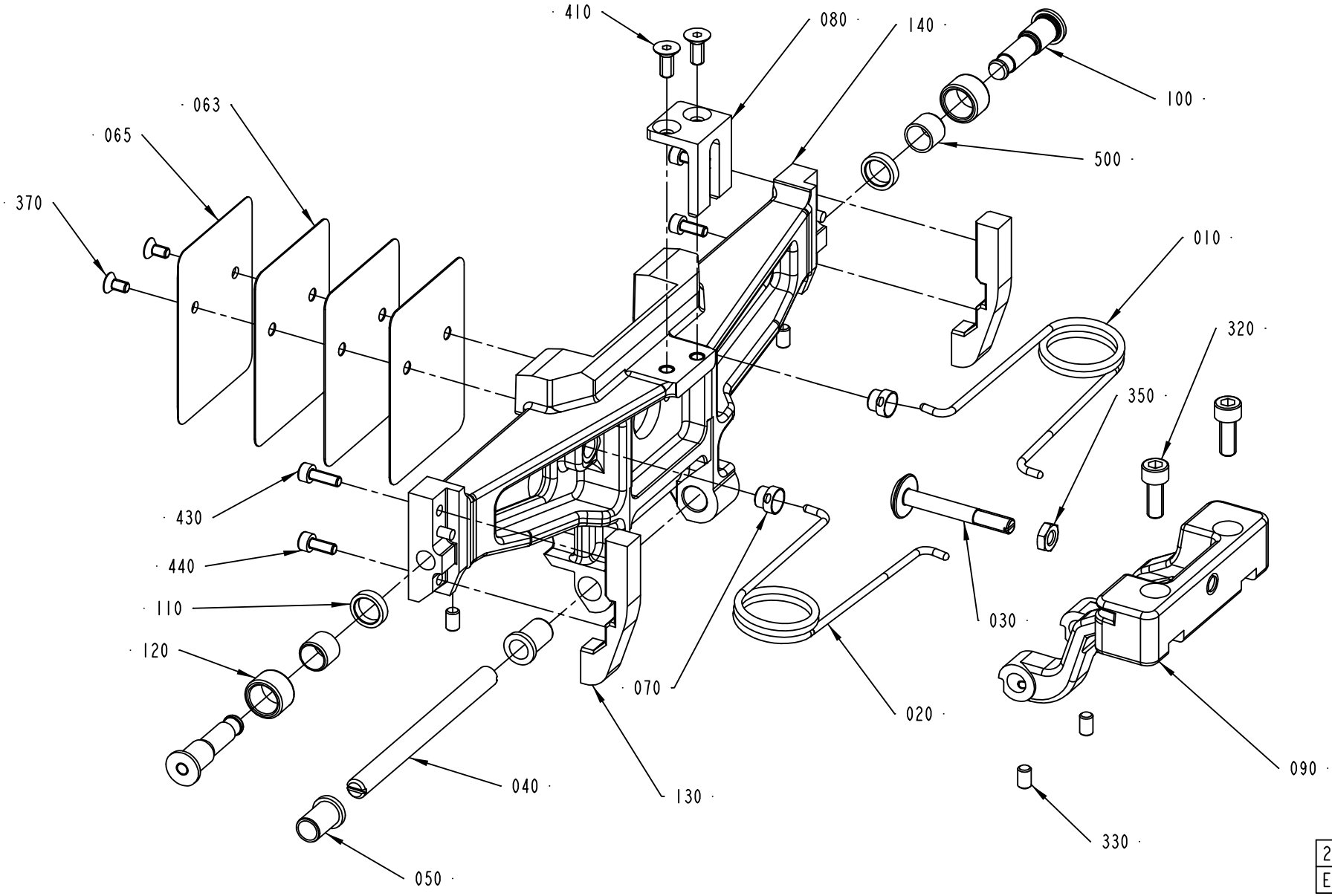

2594512-2
ECM 149527

Pos	Part No	SP	UN	Qty	Description	Page No
Common Parts (Cont'd)						
110	1512147-0000	A		2	WASHER	
120	1499355-0000	A		2	ROLLER	
330	312318-0323	-		4	SCREW ISO4029 M5X8 A4	
350	312625-0316	-		1	HEXAGON THIN NUT, EN 24035 ML6M M6 A4	
500	321136-0140	A		2	BUSHING, 10X12X10 MM	

Pos	Part No	SP	UN	Qty	Description	Page No

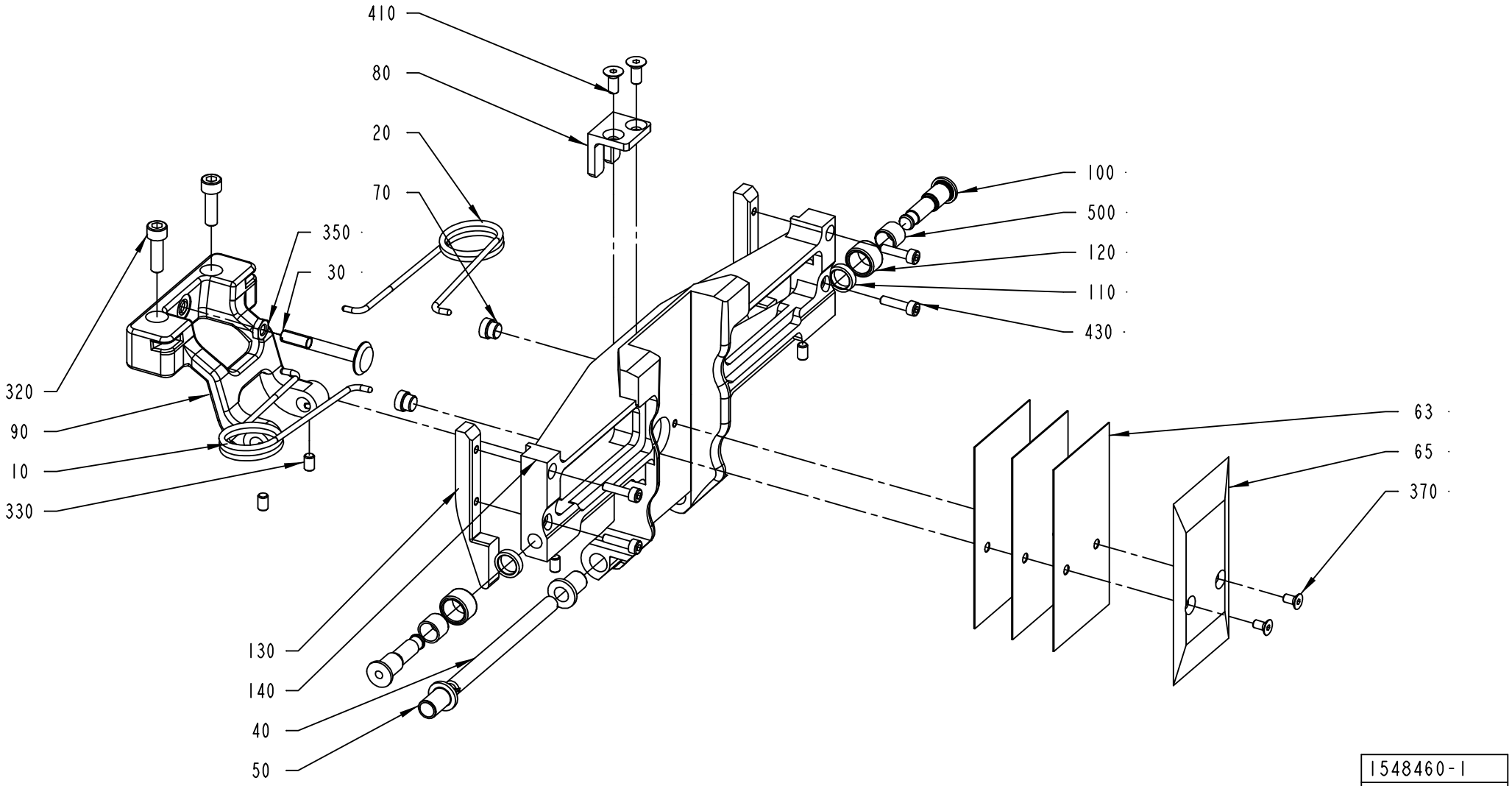
410
80
20
70
350
30
320
90
10
330
130
140
40
50
100
500
120
110
430
63
65
370
1548460-1
ECM 120277

ECM: 157586 - 20040309
Group number: 1548460-0100
Assembly Drawing: 1548460-1_1_AA

This list covers pages from 2-38 to 2-41

Pos	Part No	SP	UN	Qty	Description	Page No
TBA 0200B (See drawing on page: 2-38)						
010	1350263-0000	A		1	SPRING RIGHT	
020	1350264-0000	A		1	SPRING LEFT	
030	1511339-0000	A		1	STOP	
040	1499327-0000	A		1	SHAFT	
050	2530313-0000	A		2	BUSHING	
063	1538637-0000	A		3	VOLUME SHIM	
065	1524310-0000	A		1	VOLUME BULGE	
080	1499328-0000	A		1	STOPPER	
090	2605869-0000	A		1	FLAP HOLDER	
130	2629237-0000	A		2	CAM	
140	2604494-0000	A		1	VOLUME FLAP	
370	312155-0287	-		2	SCREW EN 10642 MF6S M4X8 A480	
410	312155-0325	-		2	SCREW EN 10642 MF6S M5X10 A480	
430	312115-0291	-		4	SCREW ISO4762 M4X12 A4	
TBA 0250B (See drawing on pages: 2-40, 4-10)						
010	1350263-0000	A		1	SPRING RIGHT	
020	1350264-0000	A		1	SPRING LEFT	
030	1511338-0000	A		1	STOP	
040	1499327-0000	A		1	SHAFT	
050	2530313-0000	A		2	BUSHING	
063	2605166-0000	A		3	VOLUME SHIM	
065	2609925-0000	A		1	VOLUME BULGE	
080	2606219-0000	A		1	STOPPER	
090	2606102-0000	A		1	FLAP HOLDER	
130	2606218-0000	A		2	CAM	
140	2605192-0000	A		1	VOLUME FLAP	
370	312155-0287	-		2	SCREW EN 10642 MF6S M4X8 A480	
410	312155-0327	-		2	SCREW EN 10642 MF6S M5X12 A480	
430	312115-0291	-		2	SCREW ISO4762 M4X12 A4	
440	312115-0289	-		2	SCREW ISO4762 M4X10 A4	
TBA 0330S (See drawing on page: 2-38)						
010	1350263-0000	A		1	SPRING RIGHT	
020	1350264-0000	A		1	SPRING LEFT	
030	1511338-0000	A		1	STOP	
040	1499327-0000	A		1	SHAFT	
050	2530313-0000	A		2	BUSHING	
063	2654290-0000	A		3	VOLUME SHIM	
065	979931-0000	A		1	VOLUME BULGE	
080	1499336-0000	A		1	STOPPER	
090	2606102-0000	A		1	FLAP HOLDER	
130	2629236-0000	A		2	CAM	
140	2604496-0000	A		1	VOLUME FLAP	
370	312155-0287	-		2	SCREW EN 10642 MF6S M4X8 A480	
410	312155-0327	-		2	SCREW EN 10642 MF6S M5X12 A480	
430	312115-0293	-		4	SCREW ISO4762 M4X16 A4	
TBA 0500B (See drawing on page: 2-38)						
010	1350263-0000	A		1	SPRING RIGHT	
020	1350264-0000	A		1	SPRING LEFT	
030	1499348-0000	A		1	STOP	
040	1487946-0000	A		1	SHAFT	
050	1487948-0000	A		2	BUSHING	
063	1511336-0000	A		3	VOLUME SHIM	
065	1511335-0000	A		1	VOLUME BULGE	
080	1499349-0000	A		1	STOPPER	
090	1499346-0000	A		1	FLAP HOLDER	
130	1499350-0000	A		2	CAM	
140	1499357-0000	A		1	VOLUME FLAP	
370	312145-0289	-		2	SCREW ISO 2009 MFS M4X10 A4	
410	312155-0323	-		2	SCREW EN 10642 MF6S M5X8 A480	
430	312115-0291	-		4	SCREW ISO4762 M4X12 A4	
TBA 1000B (See drawing on page: 2-38)						
010	1348483-0000	A		1	SPRING RIGHT	
020	1348484-0000	A		1	SPRING LEFT	
030	1487945-0000	A		1	STOP	
040	1487946-0000	A		1	SHAFT	
050	1487948-0000	A		2	BUSHING	
063	1511337-0000	A		3	VOLUME SHIM	
065	26075-0000	A		1	VOLUME BULGE	
080	1487943-0000	A		1	STOPPER	
090	1499345-0000	A		1	FLAP HOLDER	
130	1499356-0000	A		2	CAM	
140	1499358-0000	A		1	VOLUME FLAP	
370	312141-0222	-		2	SCREW ISO 2009 MFS M3X8 4.8 EL.PL	
410	312115-0323	-		2	SCREW ISO4762 M5X8 A4	
430	312115-0287	-		4	SCREW ISO4762 M4X8 A4	
Common Parts						
070	1144601-0000	A		2	GUIDE STUD	
100	1512146-0000	A		2	AXLE PIN	
110	1512147-0000	A		2	WASHER	
120	1499355-0000	A		2	ROLLER	
320	312115-0368	-		2	SCREW ISO4762 M6X16 A4	
330	312318-0323	-		4	SCREW ISO4029 M5X8 A4	
350	312625-0316	-		1	HEXAGON THIN NUT, EN 24035 ML6M M6 A4	

Machine Type Group Description Used-In Group Number Page No

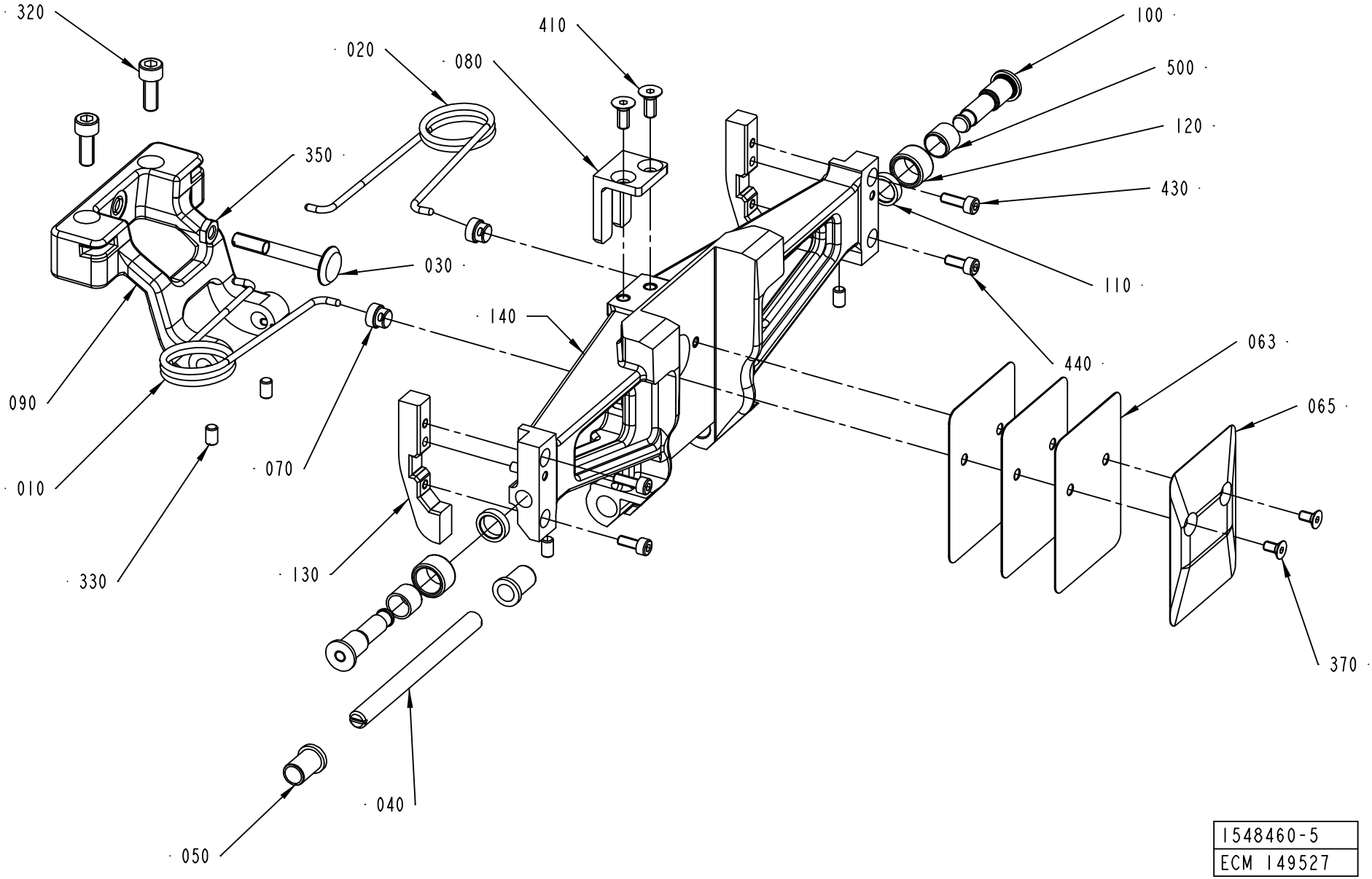
320
020
080
410
100
500
120
430
350
030
110
140
440
063
090
065
010
070
330
130
370
040
050
1548460-5
ECM 149527

Pos	Part No	SP	UN	Qty	Description	Page No
Common Parts (Cont'd)						
500	321136-0140	A		2	BUSHING, 10X12X10 MM	

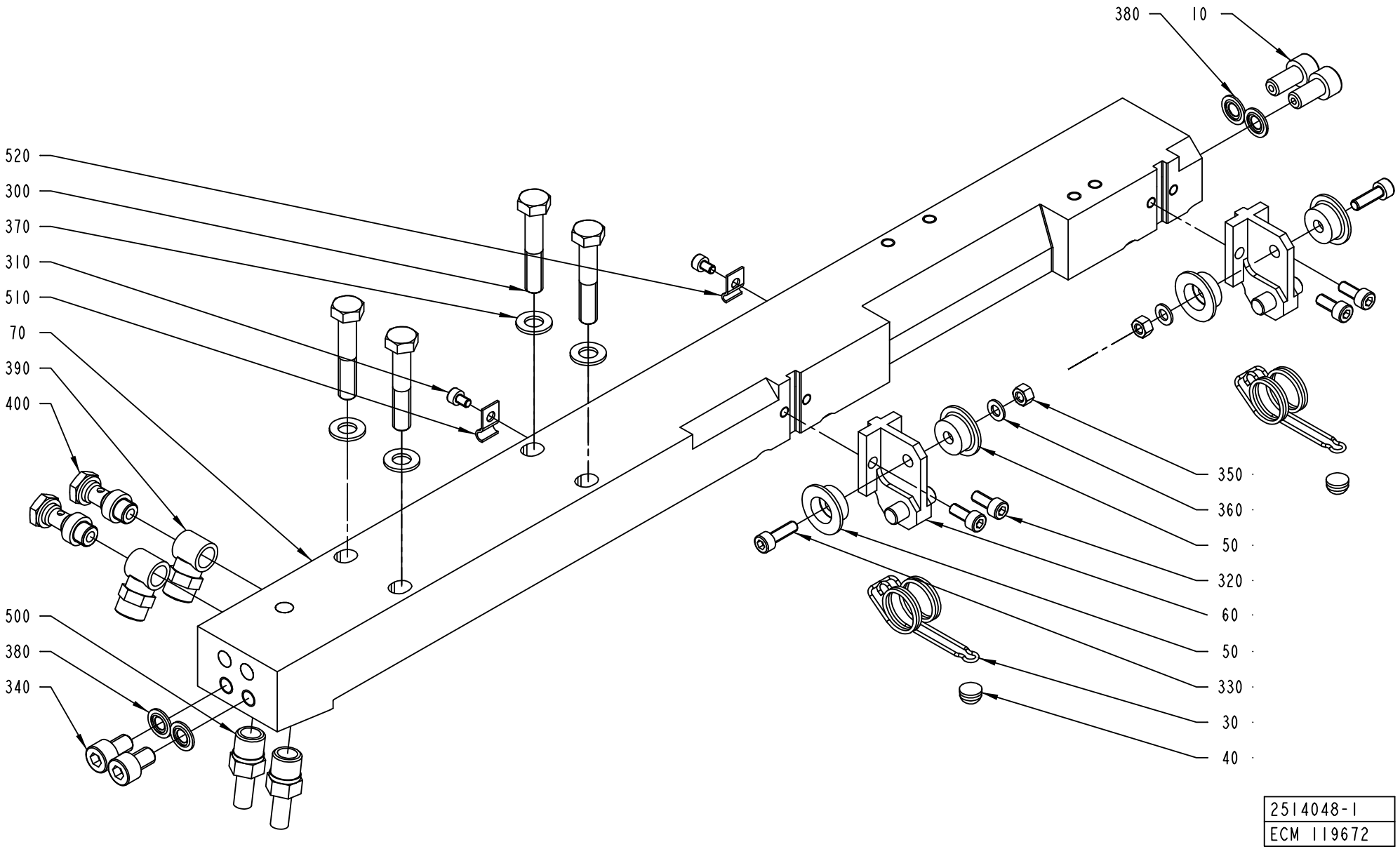
380
10
520
300
370
310
510
70
390
400
500
380
340
350
360
50
320
60
50
330
30
40
2514048-1
ECM 119672

ECM: 120051 - 20030121
Group number: 2514048-0200
Assembly Drawing: 2514048-1_1_AA

This list covers pages from 2-42 to 2-45

Pos	Part No	SP	UN	Qty	Description	Page No
A3/FLEX NOQC (See drawing on page: 2-42)						
070	2514049-0000	A		1	CARRIER	
310	312115-0285	-		2	SCREW ISO4762 M4X6 A4	
510	90165-0056	-		1	PIPE CLIP FOR TUBE D=4 MM	
520	90165-0058	-		1	PIPE CLIP FOR TUBE D=25 MM	
A3/FLEX QC (See drawing on page: 2-44)						
070	2514045-0000	A		1	CARRIER	
080	1549312-0000	A		1	INSERT	
410	312155-0323	-		3	SCREW EN 10642 MF6S M5X8 A480	
Common Parts						
010	1036343-0000	-		2	SCREW	
030	1549378-0000	A		2	SPRING	
040	1129552-0000	A		2	KNOB	
050	1129833-0000	-		4	GUIDE ROLLER	
060	2588013-0000	A		2	BRACKET	
300	312105-0460	-		4	SCREW M6S ISO 4014 M8X45 A480	
320	312115-0327	-		4	SCREW ISO4762 M5X12 A4	
330	312115-0329	-		2	SCREW ISO4762 M5X16 A4	
340	312115-0447	-		2	SCREW ISO4762 M8X12 A4	
350	312605-0314	-		2	HEXAGON NUT, M6M M5 A280	
360	315105-0146	-		2	WASHER BRB5,3X10RFR	
370	315105-0165	-		4	WASHER BRB8,4X16RFR	
380	315211-0104	A		4	BONDED SEAL SS/NBR90 M8	
390	342980-0121	-		2	BANJO-CONNECTION,RING 8/6-G1/8"	
400	342980-0303	-		2	BANJO-HOLLOW BOLT COUPL,EXT.THR.01-G1/8"	
500	90030-0065	-		2	PIPE CONNECTION	

Pos	Part No	SP	UN	Qty	Description	Page No

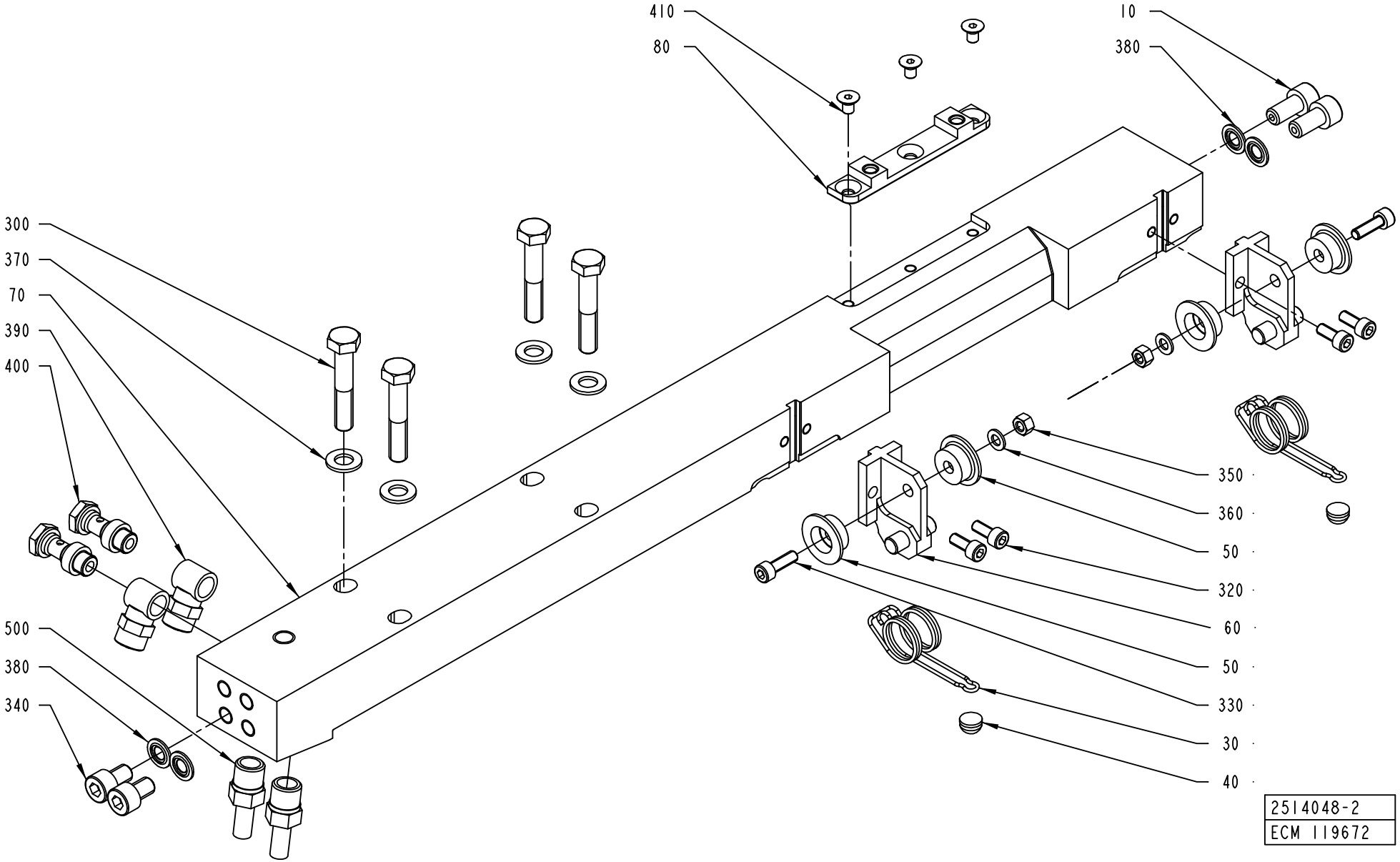
410
80
10
380
300
370
70
390
400
350
360
50
320
60
50
330
30
40
500
380
340
2514048-2
ECM 119672

ECM: 120051 - 20030121
Group number: 2514048-0200
Assembly Drawing: 2514048-2_1_AA

This list covers pages from 2-42 to 2-45

Pos	Part No	SP	UN	Qty	Description	Page No
A3/FLEX NOQC (See drawing on page: 2-42)						
070	2514049-0000	A		1	CARRIER	
310	312115-0285	-		2	SCREW ISO4762 M4X6 A4	
510	90165-0056	-		1	PIPE CLIP FOR TUBE D=4 MM	
520	90165-0058	-		1	PIPE CLIP FOR TUBE D=25 MM	
A3/FLEX QC (See drawing on page: 2-44)						
070	2514045-0000	A		1	CARRIER	
080	1549312-0000	A		1	INSERT	
410	312155-0323	-		3	SCREW EN 10642 MF6S M5X8 A480	
Common Parts						
010	1036343-0000	-		2	SCREW	
030	1549378-0000	A		2	SPRING	
040	1129552-0000	A		2	KNOB	
050	1129833-0000	-		4	GUIDE ROLLER	
060	2588013-0000	A		2	BRACKET	
300	312105-0460	-		4	SCREW M6S ISO 4014 M8X45 A480	
320	312115-0327	-		4	SCREW ISO4762 M5X12 A4	
330	312115-0329	-		2	SCREW ISO4762 M5X16 A4	
340	312115-0447	-		2	SCREW ISO4762 M8X12 A4	
350	312605-0314	-		2	HEXAGON NUT, M6M M5 A280	
360	315105-0146	-		2	WASHER BRB5,3X10RFR	
370	315105-0165	-		4	WASHER BRB8,4X16RFR	
380	315211-0104	A		4	BONDED SEAL SS/NBR90 M8	
390	342980-0121	-		2	BANJO-CONNECTION,RING 8/6-G1/8"	
400	342980-0303	-		2	BANJO-HOLLOW BOLT COUPL,EXT.THR.01-G1/8"	
500	90030-0065	-		2	PIPE CONNECTION	

Pos	Part No	SP	UN	Qty	Description	Page No

Machine Type | Group Description | Used-In | Group Number | Page No

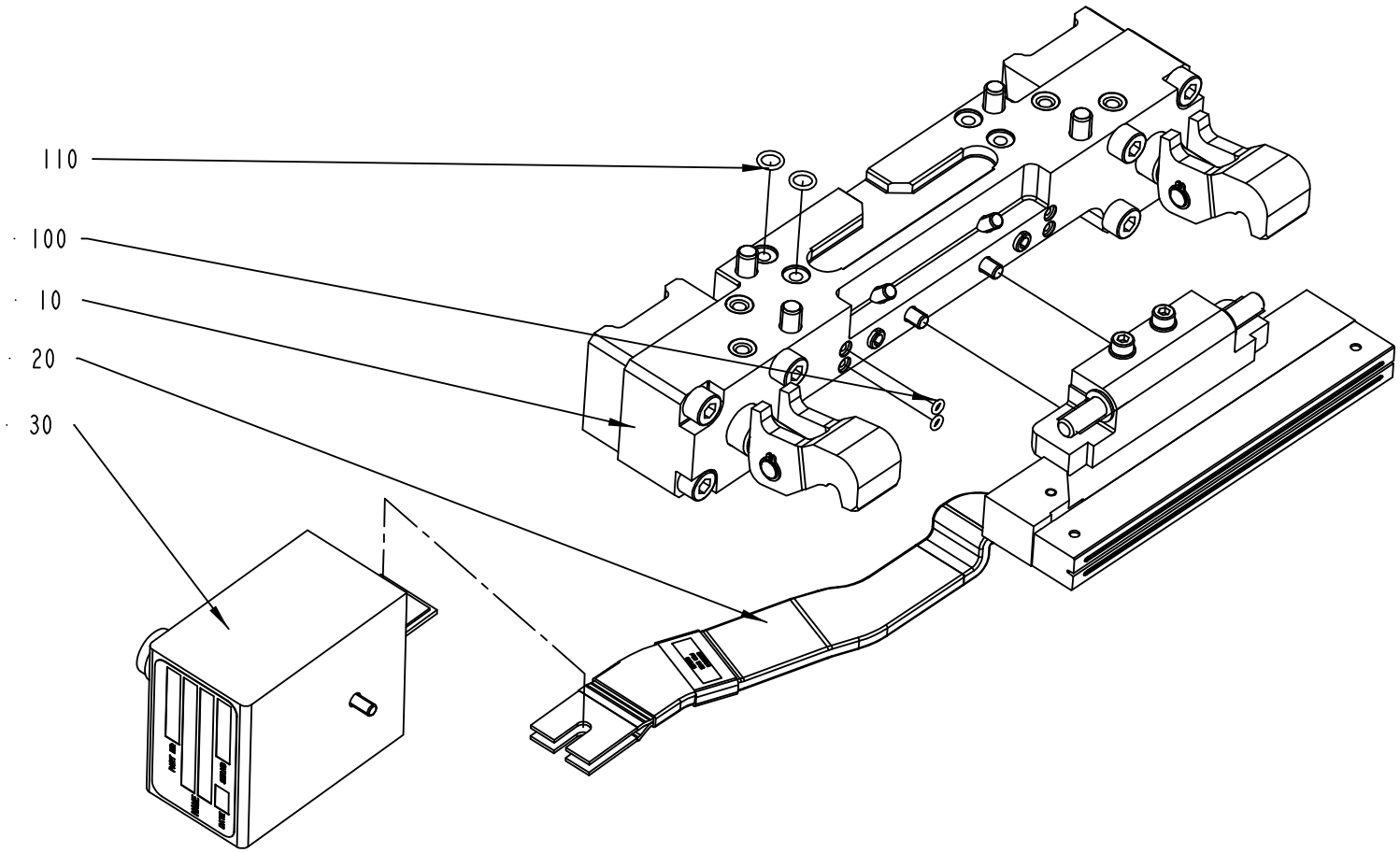

1512563-1
160559

ECM: 165411 - 20040331
Group number: 1512563-0200
Assembly Drawing: 1512563-1_1_AB

Pos	Part No	SP	UN	Qty	Description	Page No
-						
010	2552005-0100	-		1	PRESSURE JAW	**2-49**
020	2552006-0100	-		1	INDUCTOR LEFT	**2-51, 2-53, 2-55**
030	2546229-0100	-		1	ADAPTION TRANSFORMER	**2-57**
100	315202-0101	A		2	O-RING 3,1X1,6 MM	
110	315202-0105	A		2	O-RING 7,1X1,6 MM	

Pos	Part No	SP	UN	Qty	Description	Page No

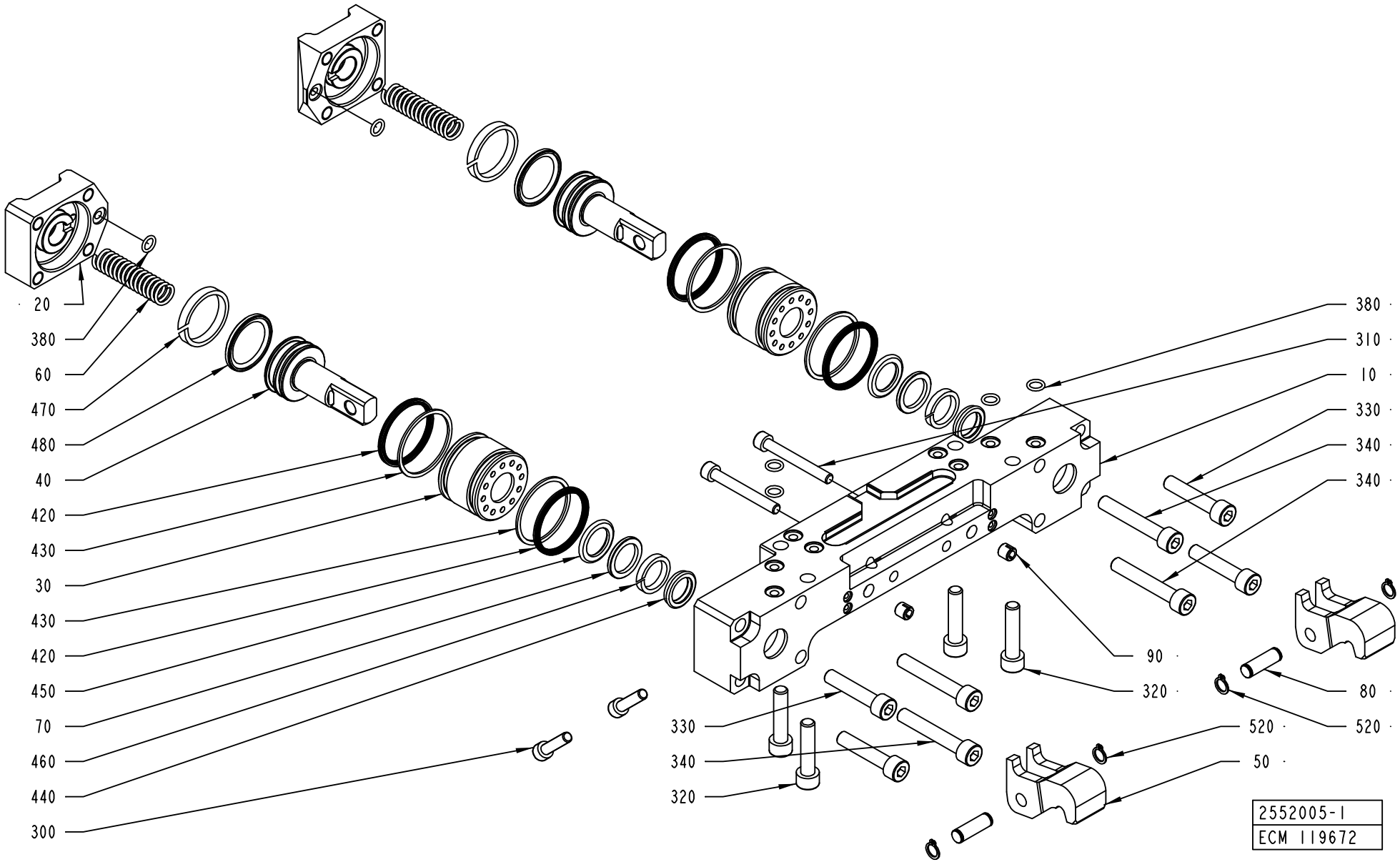
20
380
60
470
480
40
420
430
30
430
420
450
70
460
440
300
380
310
10
330
340
340
90
320
80
520
520
50
330
340
320
2552005-1
ECM 119672

ECM: 165413 - 20040331
Group number: 2552005-0100
Assembly Drawing: 2552005-1_1_AA

Pos	Part No	SP	UN	Qty	Description	Page No
TBA 0330S, TBA 0200B, TBA 0200S, TBA 0250B						
030	1349595-0000	A		2	SLEEVE	
040	929372-0000	A		2	PISTON	
470	90091-0391	A		2	SEAL SLYDRING	
480	90091-0398	A		2	PISTON SEAL, GLID RING T 20,5X28X3,2 MM	
TBA 0500B, TBA 1000S, TBA 1000SQ, TBA 1000B, TBA 1500S, TPA 1000SQ						
030	1348504-0000	A		2	SLEEVE	
040	1349612-0000	A		2	PISTON	
470	90091-0368	A		2	WEAR RING 30X45X5,3 MM	
480	90091-0428	A		2	PISTON SEAL, GLID RING T 27,5X34,5X3,2 M	
Common Parts						
010	2569908-0000	A		1	BEARING HOUSING	
020	1348503-0000	A		2	LID	
050	1538349-0000	A		2	CATCH	
060	1260328-0000	A		2	SPRING	
070	1038240-0000	-		2	SPACER	
080	950351-0000	A		2	SHAFT	
090	107426-0000	A		2	GUIDE SLEEVE	
300	312115-0372	-		2	SCREW ISO4762 M6X25 A4	
310	312115-0380	-		2	SCREW ISO4762 M6X50 A4	
320	312115-0457	-		4	SCREW ISO4762 M8X35 A4	
330	312115-0459	-		4	SCREW ISO4762 M8X40 A4	
340	312115-0461	-		4	SCREW ISO4762 M8X50 A4	
380	315202-0105	A		6	O-RING 7,1X1,6 MM	
420	90091-0359	A		4	X-SEAL 36,17X2,62 MM	
430	90091-0360	A		4	BACK-UP RING 37,5X1,4 MM	
440	90091-0362	A		2	SCRAPER, EXCLUDER2 18X22,8X3,7 MM	
450	90091-0364	A		2	ROD SEAL, STEPSEAL 18X25,3X3,2 MM	
460	90091-0366	A		2	WEAR RING 18X23X3,9 MM	
520	90141-0015	A		4	RETAINING RING FOR SHAFT DIN 471 8 A2	

Pos	Part No	SP	UN	Qty	Description	Page No

Machine Type | Group Description | Used-In | Group Number | Page No

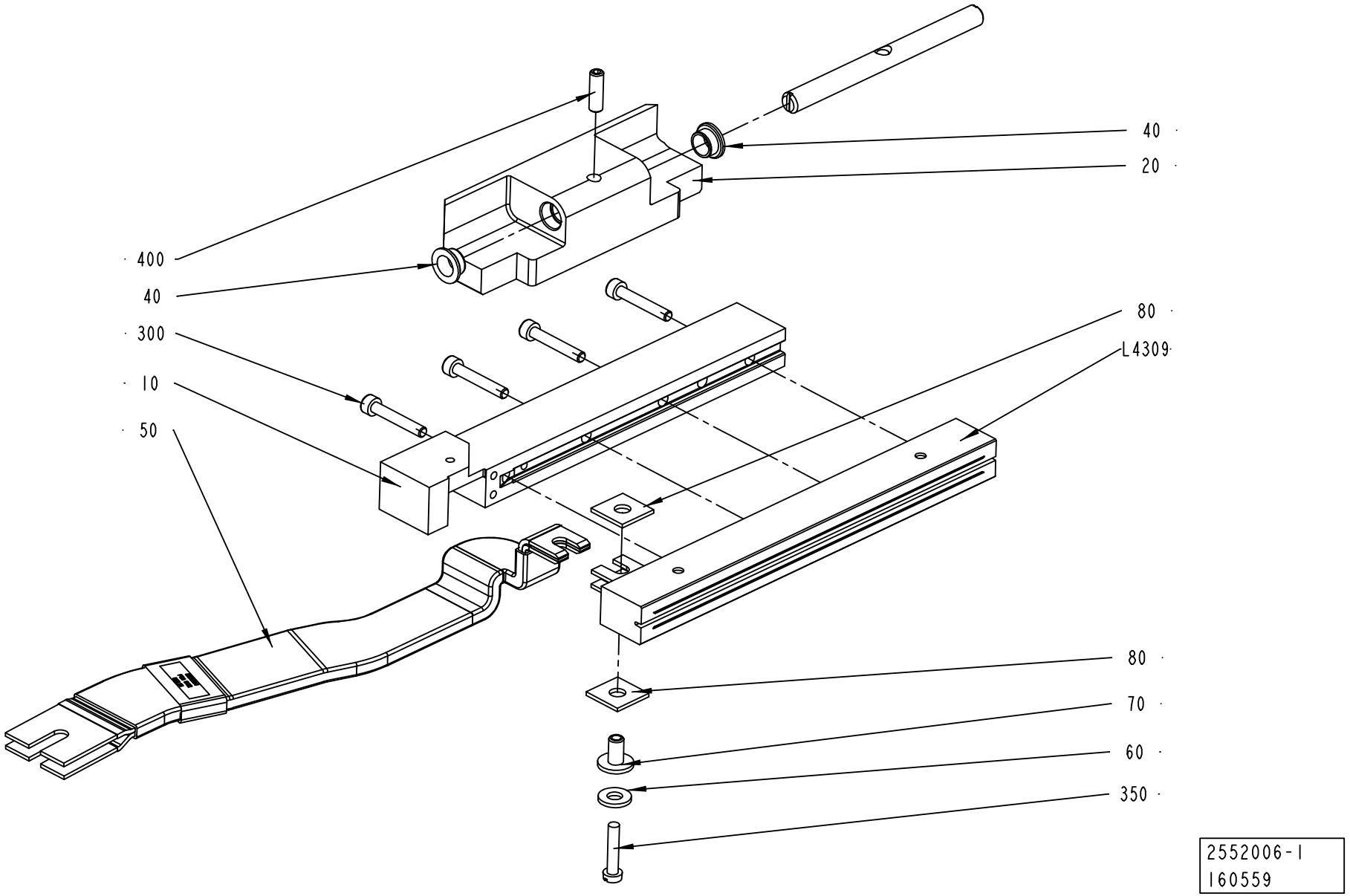
400
40
300
10
50
40
20
80
L4309
80
70
60
350
2552006-1
160559

ECM: 165414 - 20040331
Group number: 2552006-0100
Assembly Drawing: 2552006-1_1_AB

This list covers pages from 2-50 to 2-55

Pos	Part No	SP	UN	Qty	Description	Page No
TBA 0200B NOQC, TBA 0250B NOQC (See drawing on page: 2-50)						
010	1348545-0000	A		1	RAIL	
020	1349599-0000	A		1	HOLDER	
030	1349980-0000	A		1	SHAFT	
040	1349584-0000	A		2	BUSHING	
300	312115-0297	-		3	SCREW ISO4762 M4X25 A4	
400	312318-0329	A		1	SCREW ISO4029 M5X16 A4	
L4309	1110932-0000	A		1	INDUCTOR	
L4309	1110932-0000	A		1	INDUCTOR	
TBA 0200B QC, TBA 0330S QC, TBA 0250B QC (See drawing on page: 2-52)						
010	1348545-0000	A		1	RAIL	
020	2604565-0000	A		1	HOLDER	
300	312115-0297	-		3	SCREW ISO4762 M4X25 A4	
L4309	1110932-0000	A		1	INDUCTOR	
L4309	1110932-0000	A		1	INDUCTOR	
TBA 0200S (See drawing on page: 2-54)						
010	1348545-0000	A		1	RAIL	
020	2513015-0000	A		1	HOLDER	
030	2513013-0000	A		1	SHAFT	
040	2531703-0000	A		2	BUSHING	
300	312115-0297	-		3	SCREW ISO4762 M4X25 A4	
400	312115-0329	A		2	SCREW ISO4762 M5X16 A4	
L4309	1110930-0000	A		1	INDUCTOR	
L4309	1110930-0000	A		1	INDUCTOR	
TBA 0500B QC, TBA 1000B QC (See drawing on page: 2-52)						
010	1558819-0000	A		1	RAIL	
020	1487955-0000	A		1	HOLDER	
090	1558734-0000	A		1	VOLUME BULGE	
300	312115-0297	-		4	SCREW ISO4762 M4X25 A4	
370	312155-0287	-		2	SCREW EN 10642 MF6S M4X8 A480	
L4309	1110938-0000	A		1	INDUCTOR	
L4309	1110938-0000	A		1	INDUCTOR	
TBA 1000B NOQC NOMOLDEDCAP (See drawing on page: 2-54)						
010	1348545-0000	A		1	RAIL	
020	2664280-0000	A		1	HOLDER	
030	2526812-0000	-		1	SHAFT	
040	2531703-0000	A		2	BUSHING	
300	312115-0297	-		4	SCREW ISO4762 M4X25 A4	
410	315105-0146	-		2	WASHER BRB5,3X10RFR	
L4309	1110938-0000	A		1	INDUCTOR	
L4309	1110938-0000	A		1	INDUCTOR	
TBA 1000B NOQC STDA7 (See drawing on page: 2-54)						
010	2610954-0000	A		1	RAIL	
020	2664280-0000	A		1	HOLDER	
030	2526812-0000	-		1	SHAFT	
040	2531703-0000	A		2	BUSHING	
300	312115-0297	-		4	SCREW ISO4762 M4X25 A4	
410	315105-0146	-		2	WASHER BRB5,3X10RFR	
L4309	2610956-0000	A		1	INDUCTOR	
TBA 1000S NOMOLDEDCAP (See drawing on page: 2-54)						
010	1348545-0000	A		1	RAIL	
020	2559425-0000	A		1	CLAMP HOLDER	
030	2526812-0000	-		1	SHAFT	
040	2531703-0000	A		2	BUSHING	
300	312115-0297	-		4	SCREW ISO4762 M4X25 A4	
400	312115-0327	-		2	SCREW ISO4762 M5X12 A4	
L4309	1110937-0000	A		1	INDUCTOR	
L4309	1110937-0000	A		1	INDUCTOR	
TBA 1000S STDA7 (See drawing on page: 2-54)						
010	2546475-0000	A		1	RAIL	
020	2559425-0000	A		1	CLAMP HOLDER	
030	2526812-0000	-		1	SHAFT	
040	2531703-0000	A		2	BUSHING	
300	312115-0297	-		4	SCREW ISO4762 M4X25 A4	
400	312115-0327	-		2	SCREW ISO4762 M5X12 A4	
L4309	2546474-0000	A		1	INDUCTOR	
L4309	2546474-0000	A		1	INDUCTOR	
TBA 1000SQ (See drawing on page: 2-54)						
010	1348545-0000	A		1	RAIL	
020	2526811-0000	A		1	HOLDER	
030	2526812-0000	-		1	SHAFT	
040	2531703-0000	A		2	BUSHING	
300	312115-0297	-		4	SCREW ISO4762 M4X25 A4	
400	312115-0327	-		2	SCREW ISO4762 M5X12 A4	
L4309	1110936-0000	A		1	INDUCTOR	
L4309	1110936-0000	A		1	INDUCTOR	
TBA 1500S (See drawing on page: 2-54)						
010	1348545-0000	A		1	RAIL	
020	2570302-0000	A		1	CLAMP HOLDER	
030	2526812-0000	-		1	SHAFT	
040	2531703-0000	A		2	BUSHING	
300	312115-0297	-		4	SCREW ISO4762 M4X25 A4	
400	312115-0327	-		2	SCREW ISO4762 M5X12 A4	
L4309	1110938-0000	A		1	INDUCTOR	

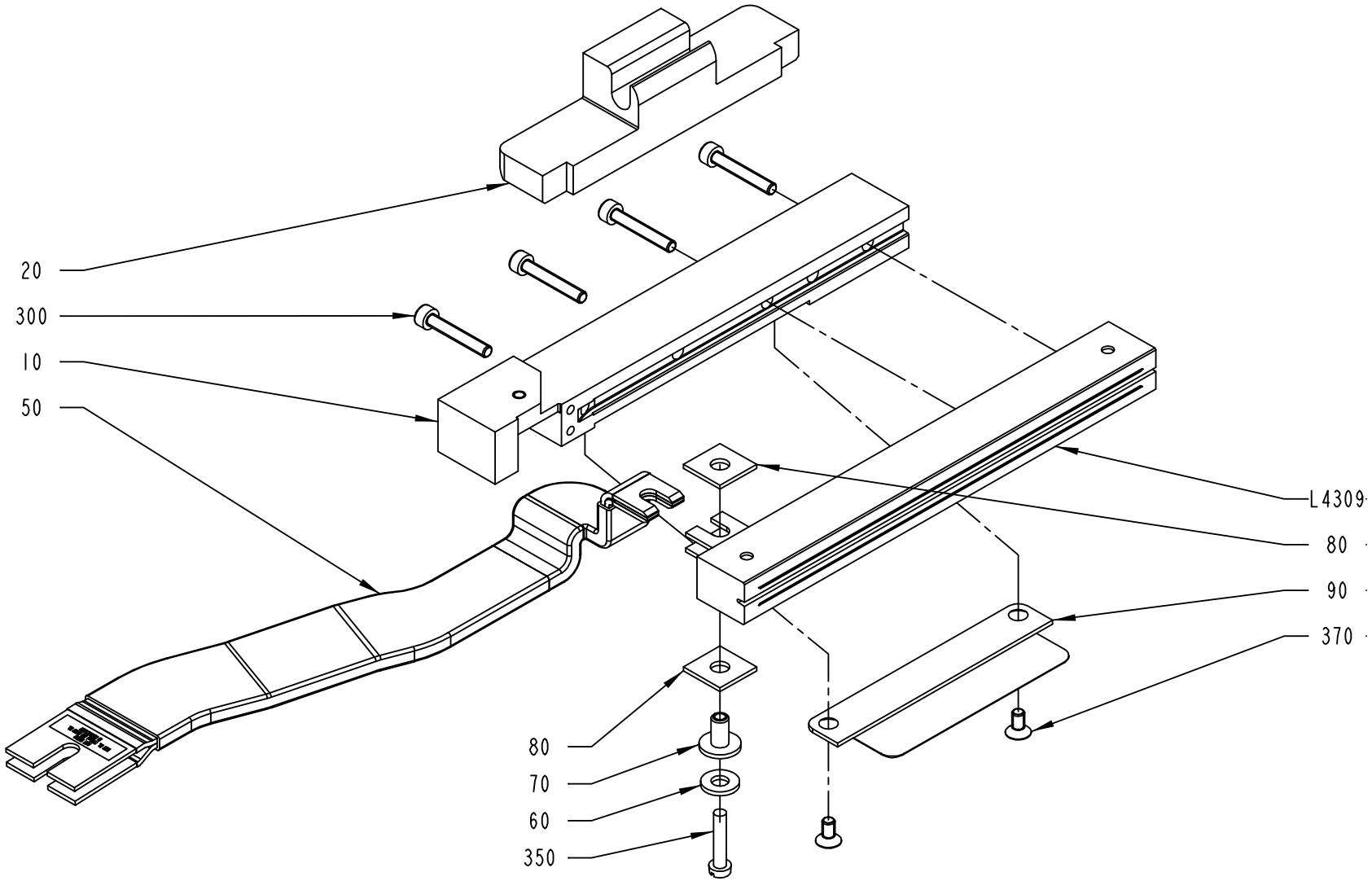

2552006-3
ECM 119672

Pos	Part No	SP	UN	Qty	Description	Page No
TBA 1500S (Cont'd) (See drawing on page: 2-54)						
L4309	1110938-0000	A		1	INDUCTOR	
TPA 1000SQ FT (See drawing on page: 2-54)						
010	1558819-0000	A		1	RAIL	
020	2579989-0000	A		1	HOLDER	
030	2579990-0000	A		1	SHAFT	
040	2531703-0000	A		2	BUSHING	
090	2503700-0000	-		1	VOLUME BULGE	
300	312115-0297	-		4	SCREW ISO4762 M4X25 A4	
370	312155-0287	-		2	SCREW EN 10642 MF6S M4X8 A480	
400	312115-0327	-		2	SCREW ISO4762 M5X12 A4	
L4309	1520052-0000	A		1	INDUCTOR	
L4309	1520052-0000	A		1	INDUCTOR	
TPA 1000SQ SMILE (See drawing on page: 2-54)						
010	1558819-0000	A		1	RAIL	
020	2579991-0000	-		1	HOLDER	
030	2579990-0000	A		1	SHAFT	
040	2531703-0000	A		2	BUSHING	
090	2503700-0000	-		1	VOLUME BULGE	
100	2500591-0000	-		1	VOLUME BULGE	
300	312115-0297	-		4	SCREW ISO4762 M4X25 A4	
370	312155-0287	-		2	SCREW EN 10642 MF6S M4X8 A480	
380	312155-0325	-		2	SCREW EN 10642 MF6S M5X10 A480	
400	312115-0327	-		2	SCREW ISO4762 M5X12 A4	
L4309	1520052-0000	A		1	INDUCTOR	
L4309	1520052-0000	A		1	INDUCTOR	
Common Parts						
050	1498849-0000	A		1	BUSBAR	
060	28509-0000	A		1	WASHER	
070	32544-0000	A		1	INSULATION NUT	
080	1036584-0000	A		2	WASHER	
350	312125-0295	-		1	SCREW ISO 1207 M4X20 A4	

Pos	Part No	SP	UN	Qty	Description	Page No

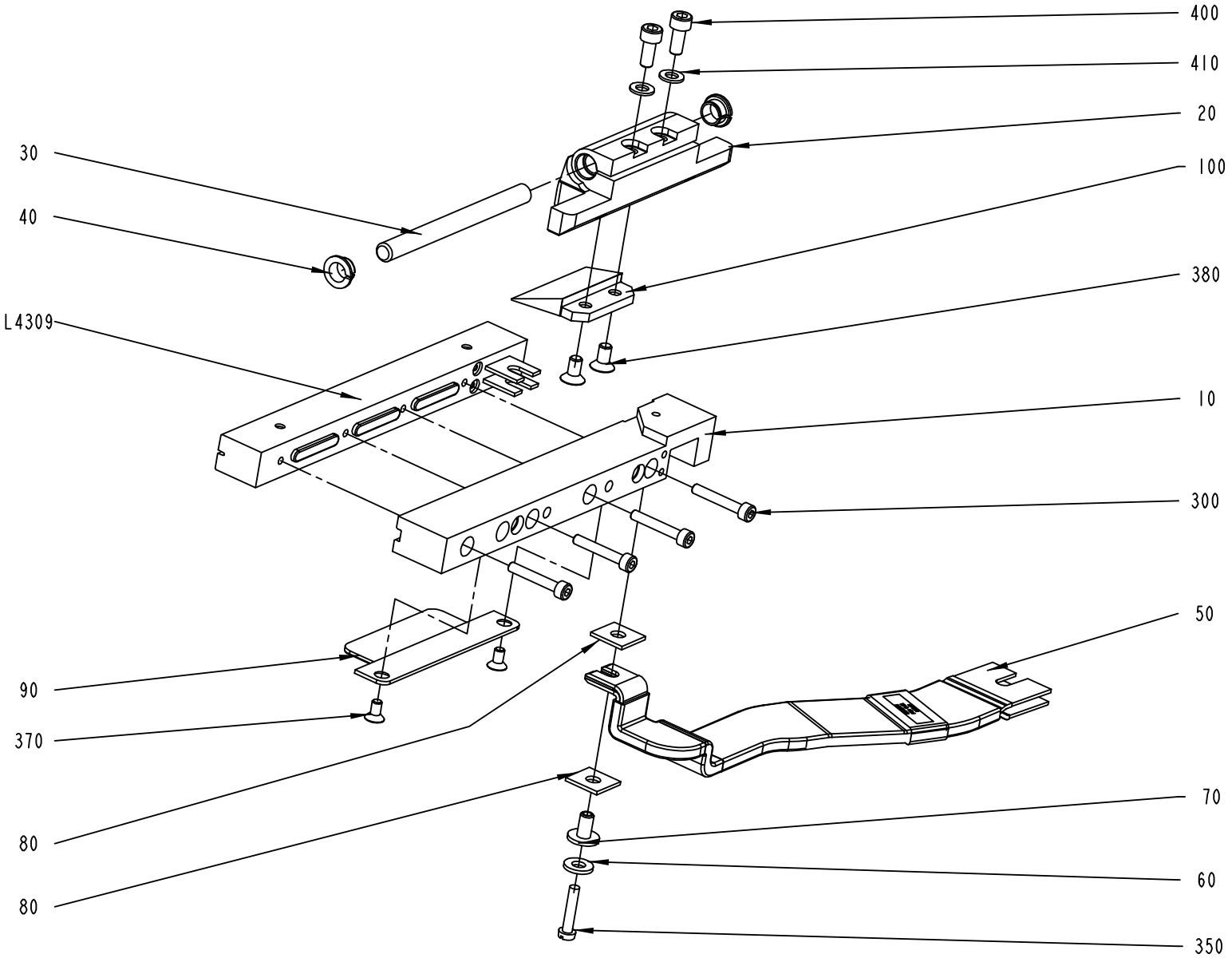
400
410
20
100
380
10
300
50
70
60
350
30
40
L4309
90
370
80
80
2552006-5
160559

Pos	Part No	SP	UN	Qty	Description	Page No
SEE PREVIOUS LISTS PAGES: 2-51, 2-53.						

Pos	Part No	SP	UN	Qty	Description	Page No

ADAPTION TRANSFORMER

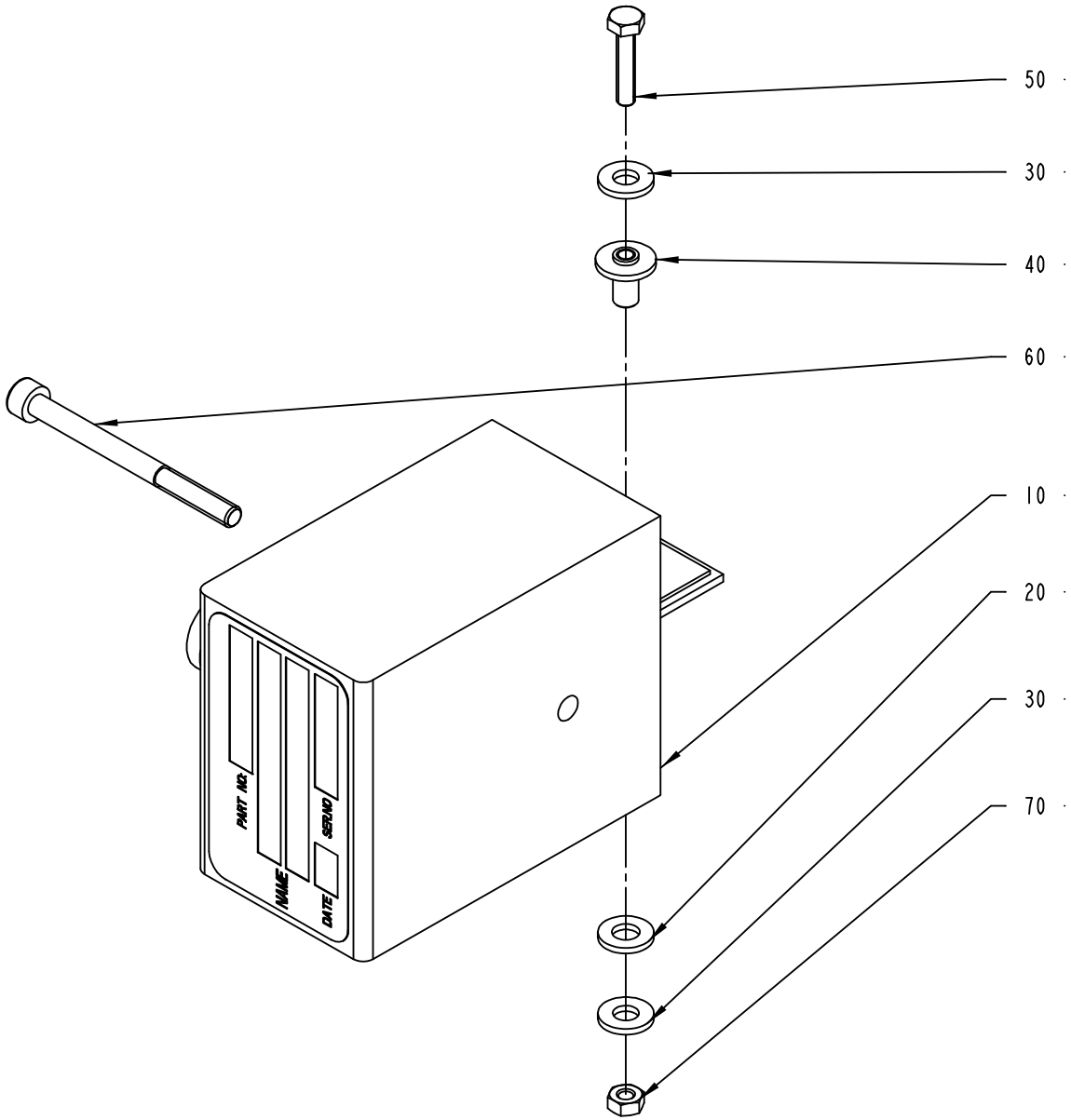

2546229-1
ECM 119672

ECM: 163483 - 20040309
Group number: 2546229-0100
Assembly Drawing: 2546229-1_1_AA

Pos	Part No	SP	UN	Qty	Description	Page No
TBA 0200S						
010	67379-0105	A		1	TRANSFORMER	
010	67379-0105	A		1	TRANSFORMER	
TBA 0330S, TBA 0200B, TBA 0250B						
010	67379-0269	A		1	TRANSFORMER	
010	67379-0269	A		1	TRANSFORMER	
TBA 0500B, TBA 1000S, TBA 1000SQ, TBA 1000B, TBA 1500S						
010	67379-0101	A		1	TRANSFORMER	
010	67379-0101	A		1	TRANSFORMER	
TPA 1000SQ						
010	67379-0249	A		1	TRANSFORMER	
010	67379-0249	A		1	TRANSFORMER	
Common Parts						
020	32079-0000	A		1	WASHER	
030	28509-0000	A		2	WASHER	
040	32544-0000	A		2	INSULATION NUT	
050	312105-0295	-		1	SCREW M6S ISO4017 M4X20 A470	
060	90458-0058	-		1	SCREW M5X60 A280	
070	312605-0312	-		2	HEXAGON NUT, M6M M4 A280	

Pos	Part No	SP	UN	Qty	Description	Page No

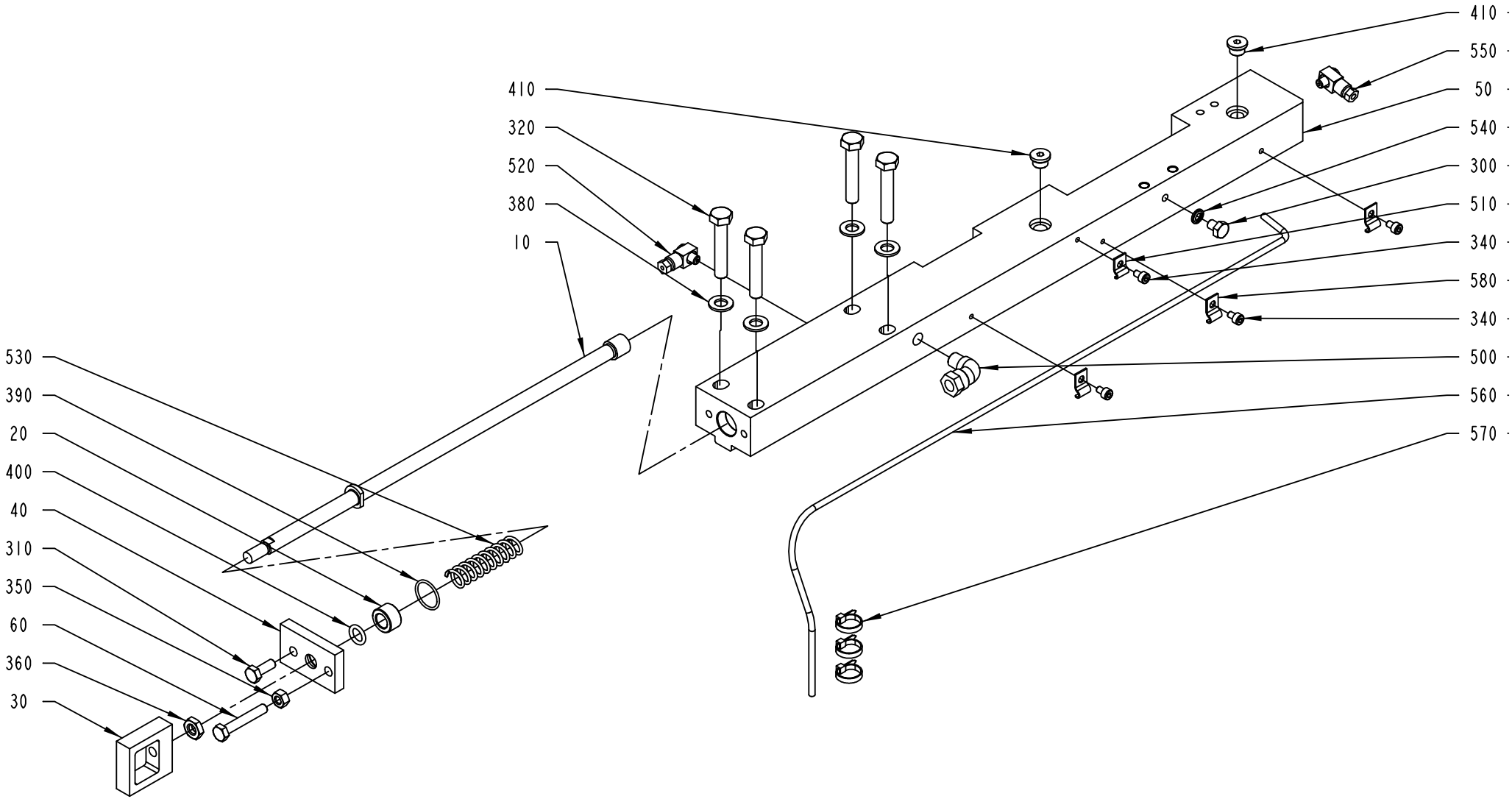

1512564-1
ECM 119672

Pos	Part No	SP	UN	Qty	Description	Page No
TBA 0200B QC, TBA 0330S QC, TBA 0250B QC (See drawing on page: 2-60)						
010	2530508-0000	A		1	TIE ROD	
050	2571843-0000	A		1	CARRIER	
070	1549312-0000	A		1	INSERT	
345	312155-0323	-		3	SCREW EN 10642 MF6S M5X8 A480	
TBA 0500B QC, TBA 1000B QC (See drawing on page: 2-60)						
010	1499320-0000	A		1	TIE ROD	
050	2571843-0000	A		1	CARRIER	
070	1549312-0000	A		1	INSERT	
345	312155-0323	-		3	SCREW EN 10642 MF6S M5X8 A480	
TBA 0200S, TBA 0200B NOQC, TBA 0250B NOQC (See drawing on page: 2-58)						
010	2530508-0000	A		1	TIE ROD	
050	2531114-0000	A		1	CARRIER	
TBA 1000S, TBA 1000SQ, TBA 1500S, TPA 1000SQ, TBA 1000B NOQC (See drawing on page: 2-58)						
010	1499320-0000	A		1	TIE ROD	
050	2531114-0000	A		1	CARRIER	
Common Parts						
020	1036495-0000	A		1	BUSHING	
030	1036585-0000	A		1	EAR	
040	1036664-0000	-		1	LID	
060	1523162-0000	-		1	SCREW	
300	312105-0362	-		1	SCREW M6S ISO 4017 M6X8 A480	
310	312105-0368	-		1	SCREW M6S ISO 4017 M6X16 A480	
320	312105-0460	-		4	SCREW M6S ISO 4014 M8X45 A480	
340	312115-0285	-		4	SCREW ISO4762 M4X6 A4	
350	312605-0316	-		1	HEXAGON NUT, M6M M6 A280	
360	312625-0318	-		1	HEXAGON THIN NUT, EN 24035 ML6M M8 A4	
380	315105-0165	-		4	WASHER BRB8,4X16RFR	
390	315202-0116	A		1	O-RING 18,1X1,6 MM	
400	315202-0208	A		1	O-RING 9,3X2,4 MM	
410	342713-0209	A		2	PLUG, EXT THREAD HEX SOCKET 8638-00-180	
500	90030-0257	-		1	CONN. ELBOW, 8-R1/8, EXT.THREAD	
510	90165-0058	-		1	PIPE CLIP FOR TUBE D=25 MM	
520	90134-0058	-		1	CONNECTION	
530	1548940-0000	A		1	SPRING	
540	315211-0103	A		1	BONDED SEAL SS/NBR90 M6	
550	90134-0068	-		1	CONNECTION	
560	90266-0165	-	MM	800	BRASS PIPE	
570	352113-0101	-		3	CLIP STRIP, 92X2,5 MM	
580	90165-0056	-		3	PIPE CLIP FOR TUBE D=4 MM	

Pos	Part No	SP	UN	Qty	Description	Page No

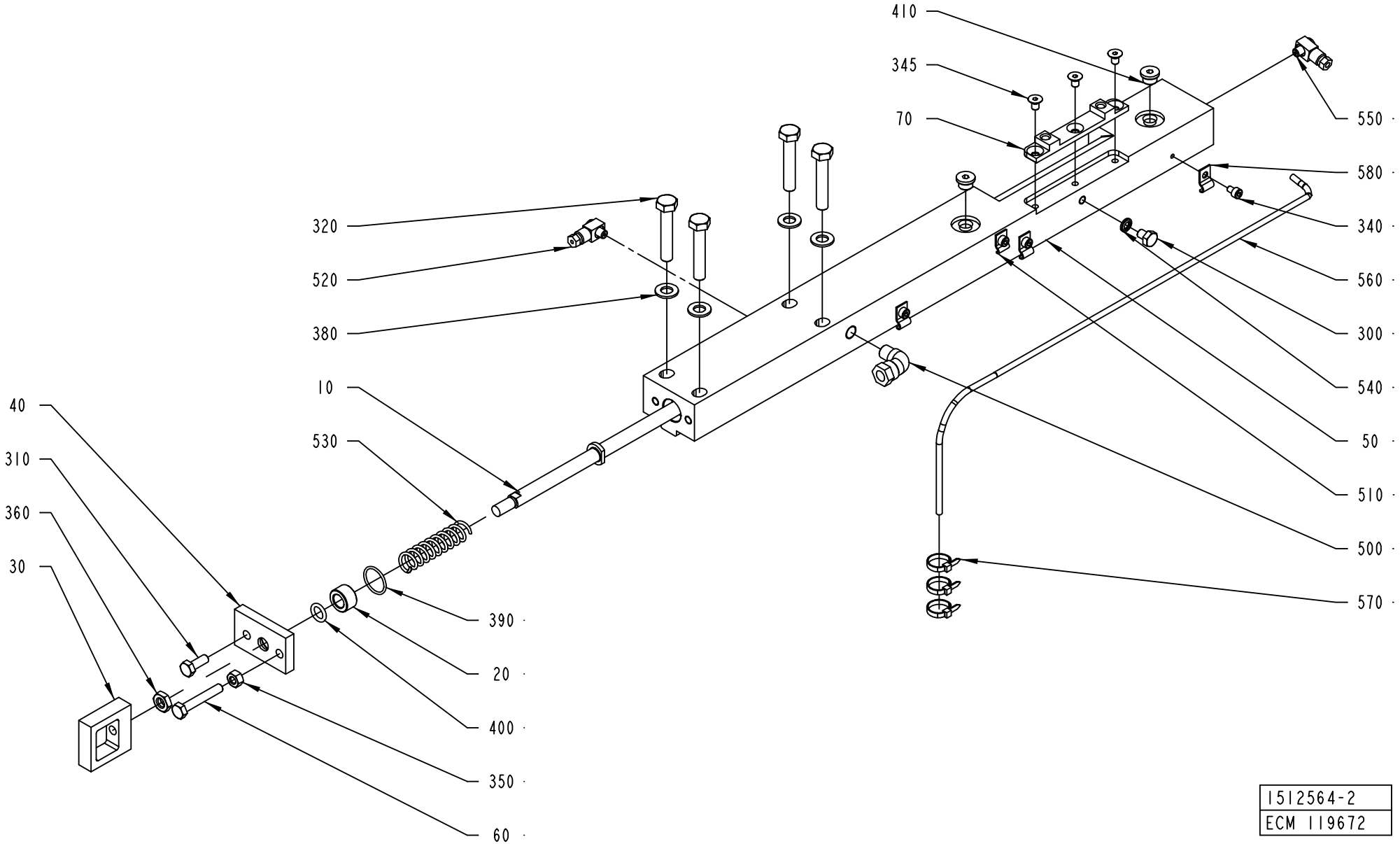
410
345
70
550
580
340
560
300
540
50
510
500
570
320
520
380
10
530
40
310
360
30
390
20
400
350
60
1512564-2
ECM 119672

Pos	Part No	SP	UN	Qty	Description	Page No
TBA 0200B QC, TBA 0330S QC, TBA 0250B QC (See drawing on page: 2-60)						
010	2530508-0000	A		1	TIE ROD	
050	2571843-0000	A		1	CARRIER	
070	1549312-0000	A		1	INSERT	
345	312155-0323	-		3	SCREW EN 10642 MF6S M5X8 A480	
TBA 0500B QC, TBA 1000B QC (See drawing on page: 2-60)						
010	1499320-0000	A		1	TIE ROD	
050	2571843-0000	A		1	CARRIER	
070	1549312-0000	A		1	INSERT	
345	312155-0323	-		3	SCREW EN 10642 MF6S M5X8 A480	
TBA 0200S, TBA 0200B NOQC, TBA 0250B NOQC (See drawing on page: 2-58)						
010	2530508-0000	A		1	TIE ROD	
050	2531114-0000	A		1	CARRIER	
TBA 1000S, TBA 1000SQ, TBA 1500S, TPA 1000SQ, TBA 1000B NOQC (See drawing on page: 2-58)						
010	1499320-0000	A		1	TIE ROD	
050	2531114-0000	A		1	CARRIER	
Common Parts						
020	1036495-0000	A		1	BUSHING	
030	1036585-0000	A		1	EAR	
040	1036664-0000	-		1	LID	
060	1523162-0000	-		1	SCREW	
300	312105-0362	-		1	SCREW M6S ISO 4017 M6X8 A480	
310	312105-0368	-		1	SCREW M6S ISO 4017 M6X16 A480	
320	312105-0460	-		4	SCREW M6S ISO 4014 M8X45 A480	
340	312115-0285	-		4	SCREW ISO4762 M4X6 A4	
350	312605-0316	-		1	HEXAGON NUT, M6M M6 A280	
360	312625-0318	-		1	HEXAGON THIN NUT, EN 24035 ML6M M8 A4	
380	315105-0165	-		4	WASHER BRB8,4X16RFR	
390	315202-0116	A		1	O-RING 18,1X1,6 MM	
400	315202-0208	A		1	O-RING 9,3X2,4 MM	
410	342713-0209	A		2	PLUG, EXT THREAD HEX SOCKET 8638-00-180	
500	90030-0257	-		1	CONN. ELBOW, 8-R1/8, EXT.THREAD	
510	90165-0058	-		1	PIPE CLIP FOR TUBE D=25 MM	
520	90134-0058	-		1	CONNECTION	
530	1548940-0000	A		1	SPRING	
540	315211-0103	A		1	BONDED SEAL SS/NBR90 M6	
550	90134-0068	-		1	CONNECTION	
560	90266-0165	-	MM	800	BRASS PIPE	
570	352113-0101	-		3	CLIP STRIP, 92X2,5 MM	
580	90165-0056	-		3	PIPE CLIP FOR TUBE D=4 MM	

Pos	Part No	SP	UN	Qty	Description	Page No

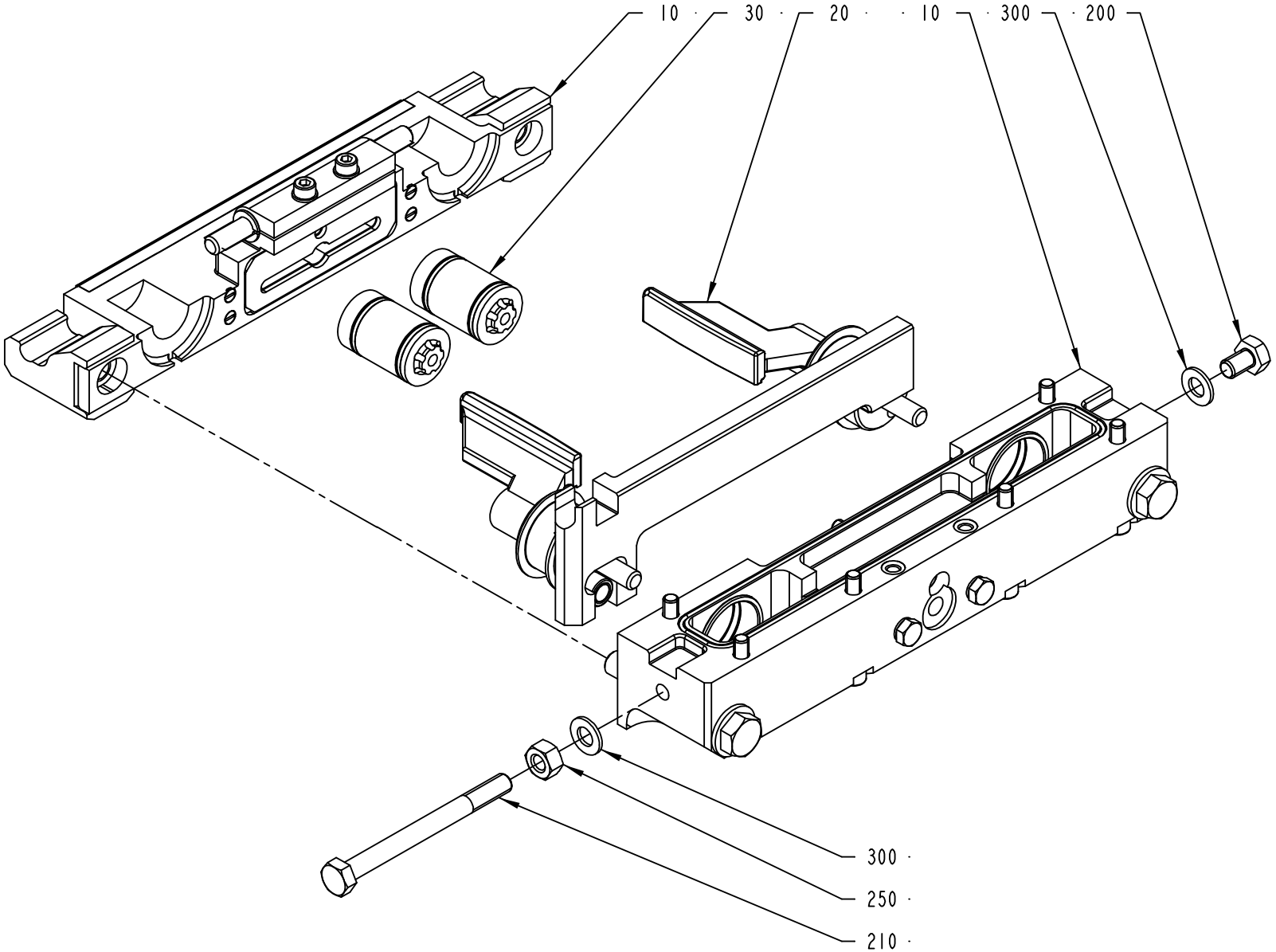

1512565-1
160559

ECM: 165416 - 20040331
Group number: 1512565-0200
Assembly Drawing: 1512565-1_1_AB

Pos	Part No	SP	UN	Qty	Description	Page No
-						
010	2552008-0100	-		1	CUTTING JAW	**2-65, 2-67, 2-69, 2-71**
020	2552009-0100	-		1	FOLDING FLAP LEFT	**2-73**
030	2552010-0100	-		2	PISTON	**2-75**
200	312105-0447	-		1	SCREW M6S ISO 4017 M8X12 A480	
210	312105-0469	-		1	SCREW M6S ISO 4014 M8X90 A480	
250	312605-0318	-		1	HEXAGON NUT, M6M M8 A280	
300	315105-0165	-		2	WASHER BRB8,4X16RFR	

Pos	Part No	SP	UN	Qty	Description	Page No

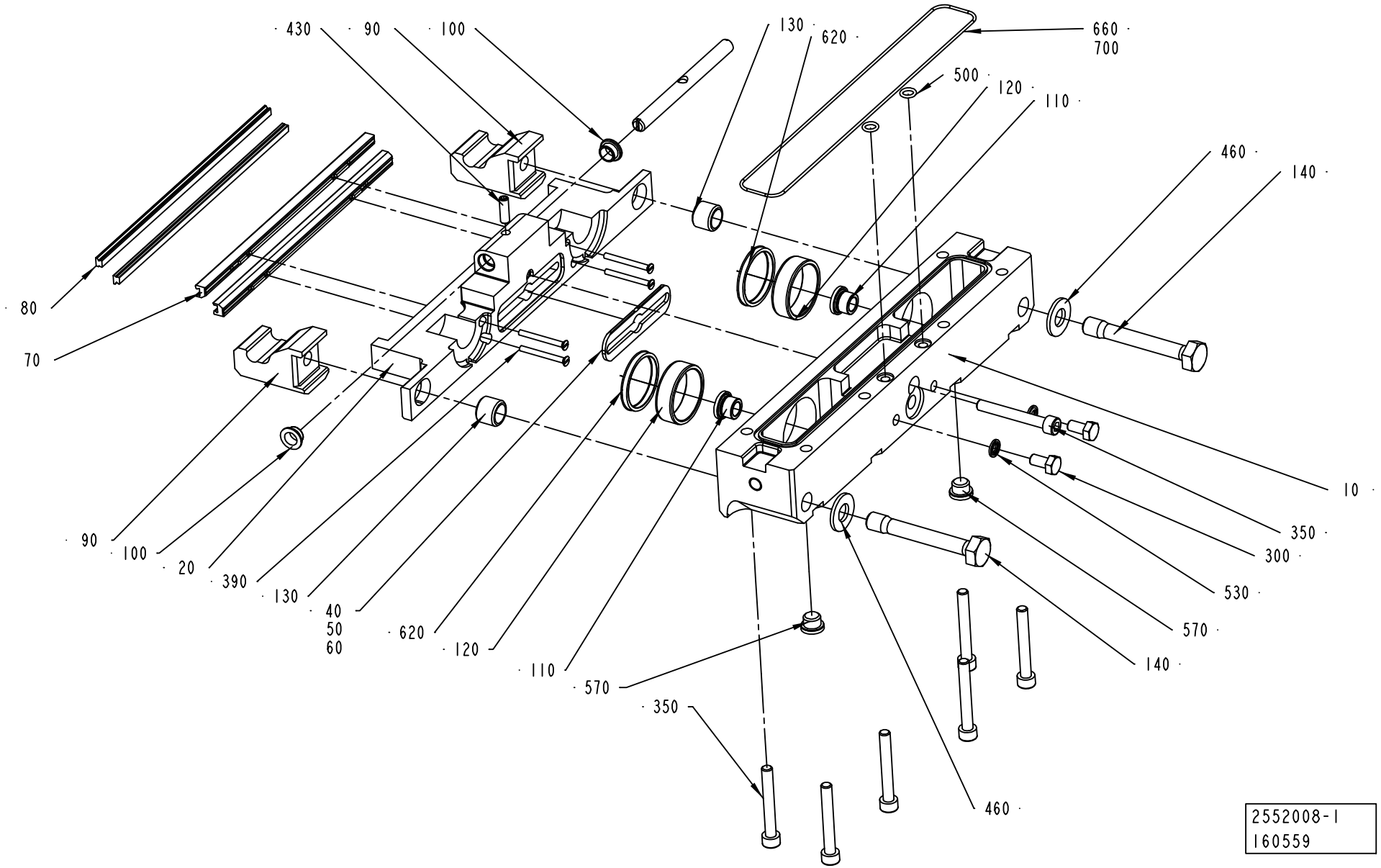
430
90
100
130
620
660
700
500
120
110
460
140
80
70
90
100
20
390
130
40
50
60
620
120
110
570
350
10
350
300
530
570
140
460
2552008-1
160559

ECM: 166003 - 20040331
Group number: 2552008-0100
Assembly Drawing: 2552008-1_1_AB

This list covers pages from 2-64 to 2-71

Pos	Part No	SP	UN	Qty	Description	Page No
TBA 0200B NOQC, TBA 0250B NOQC (See drawing on page: 2-64)						
010	1549806-0000	A		1	BEARING HOUSING	
020	1349596-0000	A		1	CUTTING JAW	
030	1349980-0000	A		1	SHAFT	
050	1484002-0000	A		1	PLATE	
060	1484003-0000	A		1	PLATE	
070	1520493-0000	A		2	CUTTING RAIL	
080	1110083-0002	A		2	DOLLY	
080	1110083-0002	A		2	DOLLY	
100	1349584-0000	A		2	BUSHING	
390	312145-0234	-		4	SCREW ISO 2009 MFS M3X30 A4	
430	312318-0329	A		1	SCREW ISO4029 M5X16 A4	
TBA 0200B QC, TBA 0330S QC, TBA 0250B QC (See drawing on page: 2-68)						
010	2582680-0000	A		1	BEARING HOUSING	
020	2604564-0000	A		1	CUTTING JAW	
050	1484002-0000	A		1	PLATE	
060	1484003-0000	A		1	PLATE	
070	1520493-0000	A		2	CUTTING RAIL	
080	1110083-0002	A		2	DOLLY	
080	1110083-0002	A		2	DOLLY	
390	312145-0234	-		4	SCREW ISO 2009 MFS M3X30 A4	
TBA 0200S (See drawing on page: 2-70)						
010	1549807-0000	A		1	BEARING HOUSING	
020	2513014-0000	A		1	CUTTING JAW	
030	2513013-0000	A		1	SHAFT	
050	1484002-0000	A		1	PLATE	
060	1484003-0000	A		1	PLATE	
070	1520493-0000	A		2	CUTTING RAIL	
080	1110083-0002	A		2	DOLLY	
080	1110083-0002	A		2	DOLLY	
100	2531703-0000	A		2	BUSHING	
390	312145-0234	-		4	SCREW ISO 2009 MFS M3X30 A4	
430	312115-0329	A		2	SCREW ISO4762 M5X16 A4	
TBA 0500B QC, TBA 1000B QC (See drawing on page: 2-68)						
010	1549803-0000	A		1	BEARING HOUSING	
020	1487954-0000	A		1	CUTTING JAW	
040	1349925-0000	A		1	PLATE	
070	1520455-0000	A		2	CUTTING RAIL	
080	1110083-0002	A		2	DOLLY	
080	1110083-0002	A		2	DOLLY	
150	1558733-0000	A		1	VOLUME BULGE	
390	312145-0238	-		4	SCREW COUNTERS.SLOT.HD. MFS M3X40 SS	
410	312155-0285	-		2	SCREW HEX.SOCK.COUNT.MF6S M4X6 A480	
TBA 1000B NOQC (See drawing on page: 2-70)						
010	1549803-0000	A		1	BEARING HOUSING	
020	2665188-0000	A		1	CUTTING JAW	
030	2526812-0000	-		1	SHAFT	
040	1349925-0000	A		1	PLATE	
070	1520455-0000	A		2	CUTTING RAIL	
080	1110083-0002	A		2	DOLLY	
080	1110083-0002	A		2	DOLLY	
100	2531703-0000	A		2	BUSHING	
390	312145-0238	-		4	SCREW COUNTERS.SLOT.HD. MFS M3X40 SS	
430	312115-0329	A		2	SCREW ISO4762 M5X16 A4	
440	315105-0146	-		2	WASHER BRB5,3X10RFR	
TBA 1000S (See drawing on page: 2-70)						
010	1549804-0000	A		1	BEARING HOUSING	
020	2559424-0000	A		1	CUTTING JAW	
030	2526812-0000	-		1	SHAFT	
040	1349925-0000	A		1	PLATE	
070	1520455-0000	A		2	CUTTING RAIL	
080	1110083-0002	A		2	DOLLY	
080	1110083-0002	A		2	DOLLY	
100	2531703-0000	A		2	BUSHING	
390	312145-0238	-		4	SCREW COUNTERS.SLOT.HD. MFS M3X40 SS	
430	312115-0327	A		2	SCREW ISO4762 M5X12 A4	
TBA 1000SQ (See drawing on page: 2-66)						
010	1549808-0000	A		1	BEARING HOUSING	
020	1487618-0000	A		1	CUTTING JAW	
030	2526812-0000	-		1	SHAFT	
040	1487619-0000	A		1	PLATE	
070	1520494-0000	A		2	CUTTING RAIL	
080	1110083-0002	A		2	DOLLY	
080	1110083-0002	A		2	DOLLY	
100	2531703-0000	A		2	BUSHING	
160	2526810-0000	A		1	HOLDER	
340	312115-0331	-		2	SCREW ISO4762 M5X20 A4	
390	312145-0238	-		4	SCREW COUNTERS.SLOT.HD. MFS M3X40 SS	
430	312115-0327	A		2	SCREW ISO4762 M5X12 A4	
550	315705-0201	-		2	PARALLEL KEY W. ROUND ENDS 5X5X20 MM	
TBA 1500S (See drawing on page: 2-70)						
010	1549803-0000	A		1	BEARING HOUSING	
020	2570301-0000	A		1	CUTTING JAW	
030	2526812-0000	-		1	SHAFT	

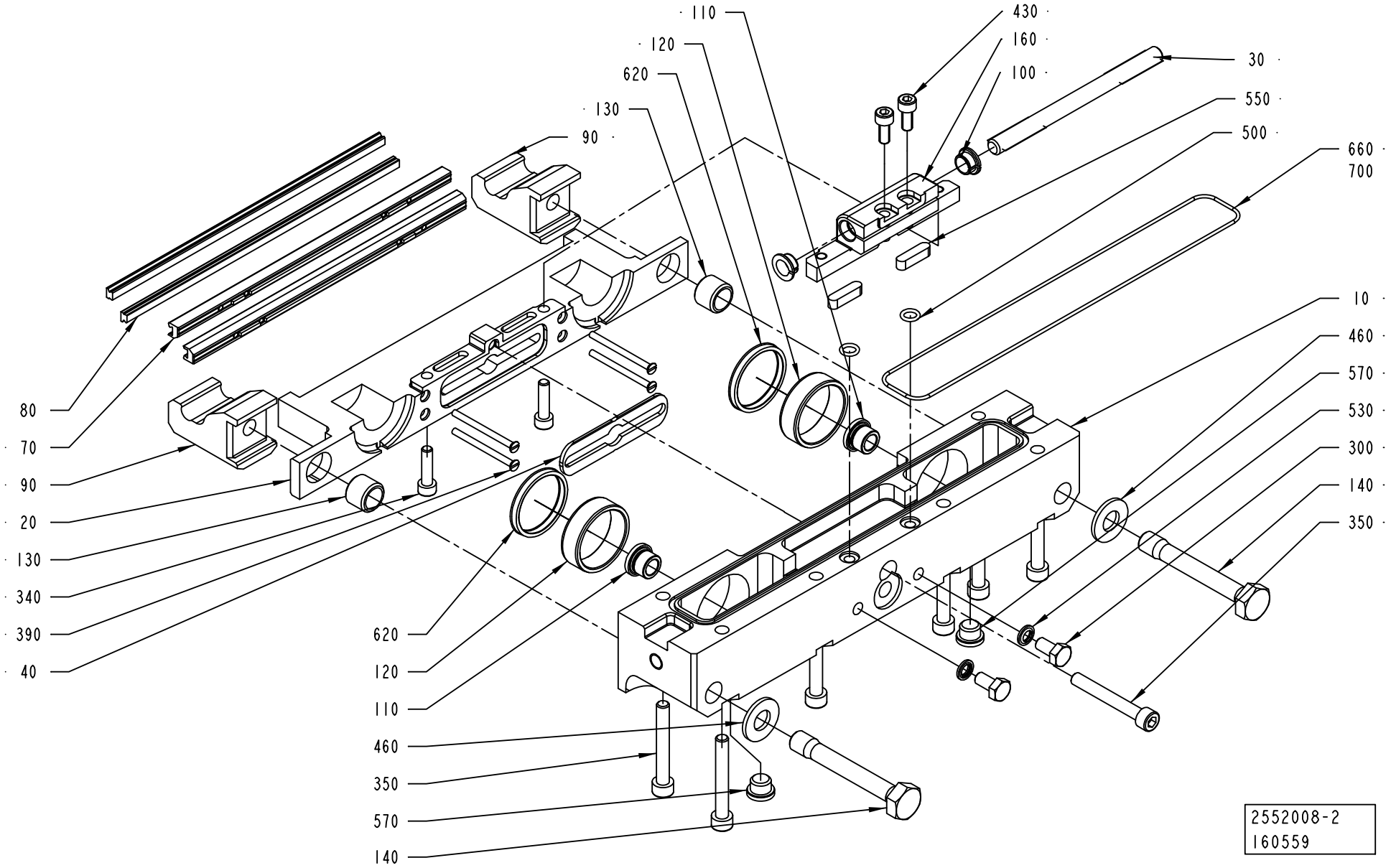
110
120
620
130
90
430
160
100
30
550
500
660
700
10
460
570
530
300
140
350
80
70
90
20
130
340
390
40
620
120
110
460
350
570
140
2552008-2
160559

Pos	Part No	SP	UN	Qty	Description	Page No
TBA 1500S (Cont'd) (See drawing on page: 2-70)						
040	1349925-0000	A		1	PLATE	
070	1520455-0000	A		2	CUTTING RAIL	
080	1110083-0002	A		2	DOLLY	
080	1110083-0002	A		2	DOLLY	
100	2531703-0000	A		2	BUSHING	
390	312145-0238	-		4	SCREW COUNTERS.SLOT.HD. MFS M3X40 SS	
430	312115-0327	A		2	SCREW ISO4762 M5X12 A4	
TPA 1000SQ (See drawing on page: 2-70)						
010	1523145-0000	A		1	BEARING HOUSING	
020	2579988-0000	A		1	CUTTING JAW	
030	2579990-0000	A		1	SHAFT	
040	1487619-0000	A		1	PLATE	
070	1520494-0000	A		2	CUTTING RAIL	
080	1520633-0002	A		2	DOLLY	
080	1520633-0002	A		2	DOLLY	
100	2531703-0000	A		2	BUSHING	
150	2503699-0000	A		1	VOLUME BULGE	
390	312145-0238	-		2	SCREW COUNTERS.SLOT.HD. MFS M3X40 SS	
400	1523827-0000	-		2	SCREW	
410	312155-0287	-		2	SCREW EN 10642 MF6S M4X8 A480	
430	312115-0327	A		2	SCREW ISO4762 M5X12 A4	
Common Parts						
090	1538348-0000	A		2	CATCH	
110	1255390-0000	A		2	BUSHING	
120	1255389-0000	A		2	BUSHING	
130	1036494-0000	A		2	GUIDE BUSHING	
140	1035871-0000	-		2	SCREW	
300	312105-0366	-		2	SCREW M6S ISO 4017 M6X12 A480	
350	312115-0379	-		7	SCREW ISO4762 M6X45 A4	
460	315105-0173	-		2	WASHER BRB10,5X22RFR	
500	315202-0104	A		2	O-RING 6,1X1,6 MM	
530	315211-0103	A		2	BONDED SEAL SS/NBR90 M6	
570	342713-0209	A		2	PLUG, EXT THREAD HEX SOCKET 8638-00-180	
620	90091-0361	A		2	SCRAPER, EXCLUDER2 30X34,8X3,7 MM	
660	90242-0093	A	MM	550	O-RING MATERIAL 1,5 MM	
700	90153-0015	-		1	ADHESIVE,LOCTITE IS 496/CYANOLOT 303	

Pos	Part No	SP	UN	Qty	Description	Page No

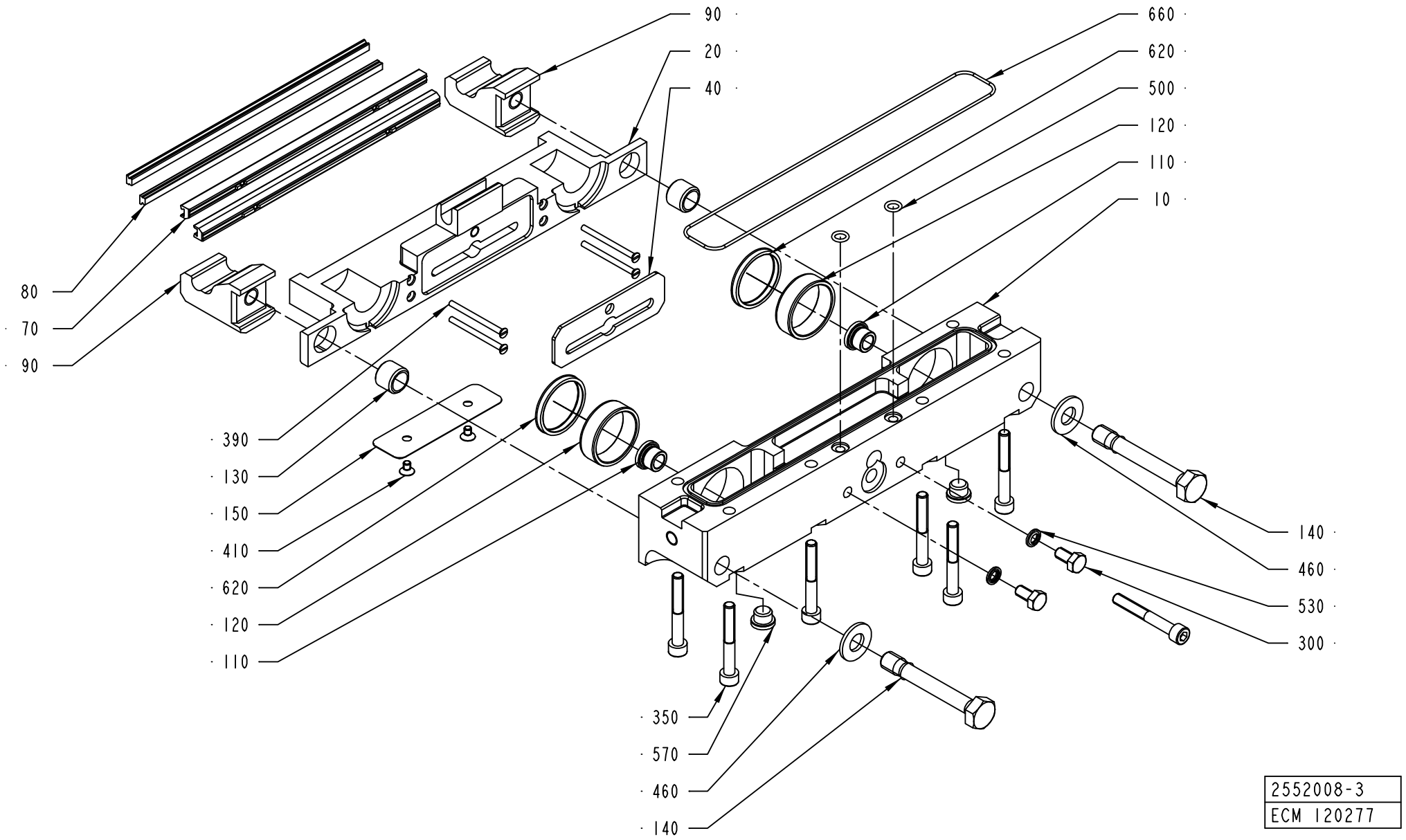
90
20
40
660
620
500
120
110
10
80
70
90
390
130
150
410
620
120
110
140
460
530
300
350
570
460
140
2552008-3
ECM 120277

Pos	Part No	SP	UN	Qty	Description	Page No
SEE PREVIOUS LISTS PAGES: 2-65, 2-67.						

Pos	Part No	SP	UN	Qty	Description	Page No

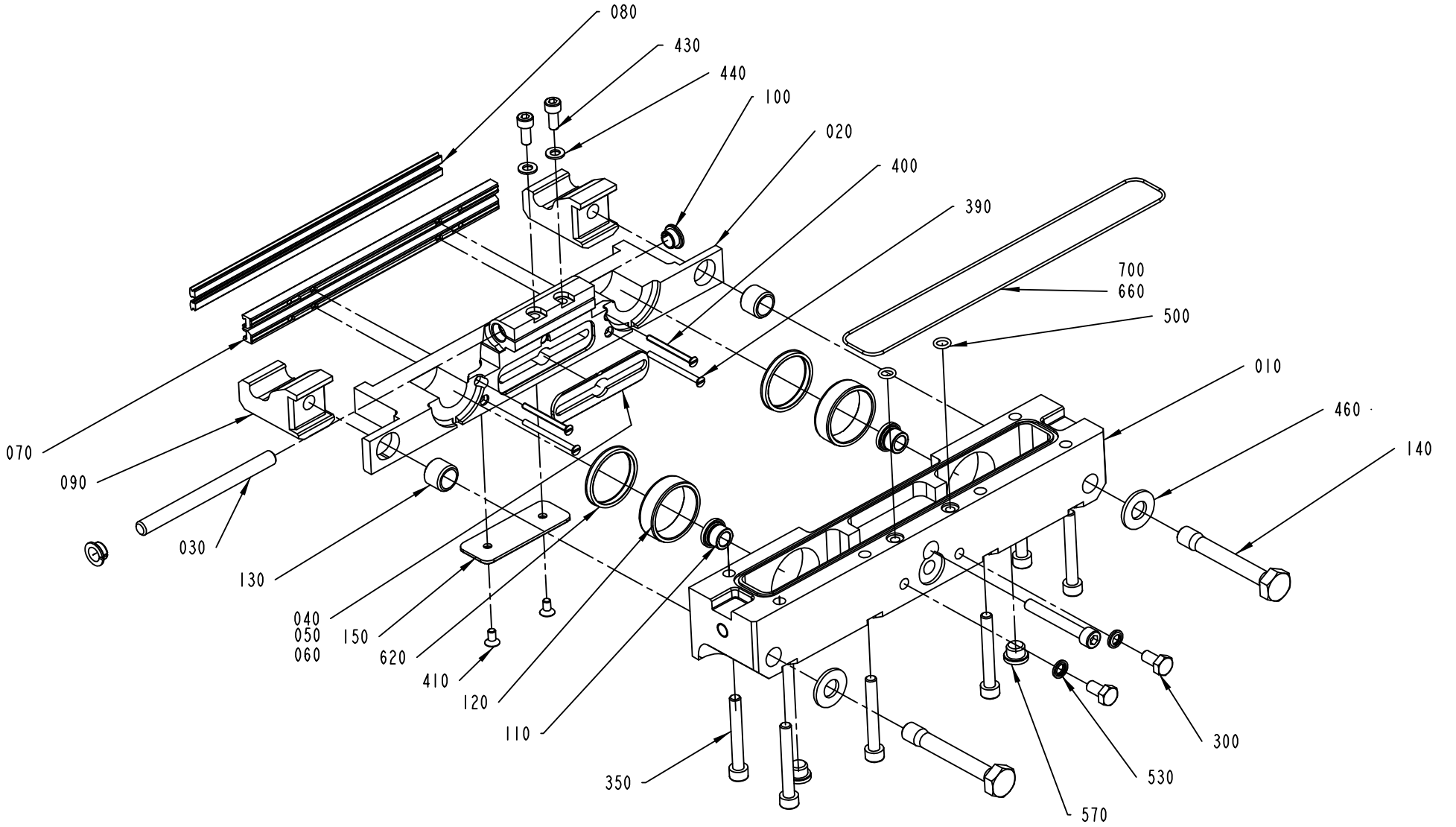
080
430
440
100
020
400
390
700
660
500
010
460
140
070
090
030
130
040
050
060
150
620
410
120
110
350
300
530
570
2552008-4
160559

Pos	Part No	SP	UN	Qty	Description	Page No
SEE PREVIOUS LISTS PAGES: 2-65, 2-67.						

Pos	Part No	SP	UN	Qty	Description	Page No

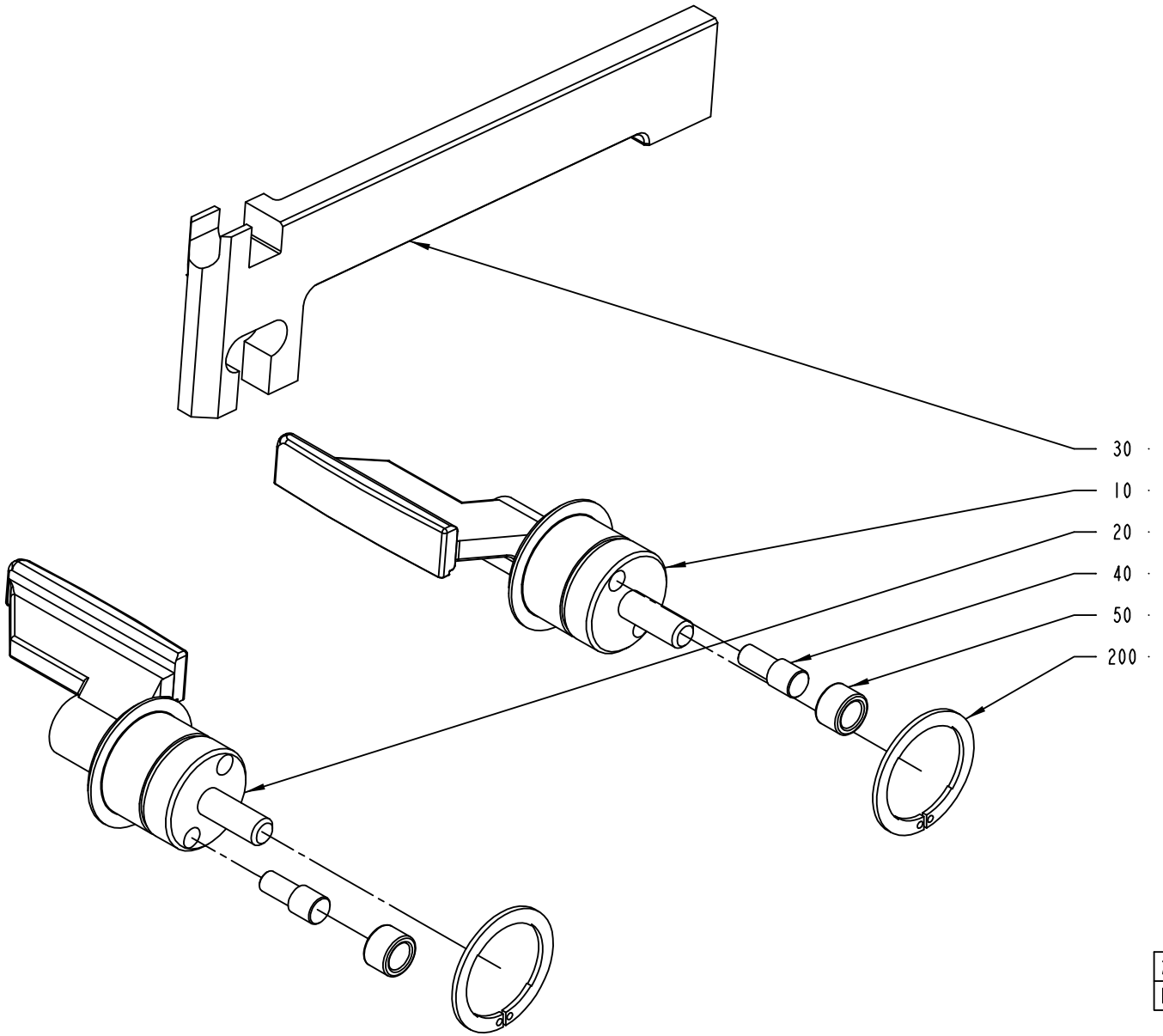
30
10
20
40
50
200
2552009-1
ECM 120277

ECM: 157590 - 20040309
Group number: 2552009-0100
Assembly Drawing: 2552009-1_1_AA

Pos	Part No	SP	UN	Qty	Description	Page No
TBA 0200B QC, TBA 0330S QC, TBA 0250B QC						
010	2605875-0000	A		1	FOLDING FLAP	
020	2605876-0000	A		1	FOLDING FLAP	
030	1255459-0000	A		1	CARRIER RULER	
TBA 0200S						
010	2624554-0000	A		1	FOLDING FLAP	
020	2624555-0000	A		1	FOLDING FLAP	
030	1255458-0000	A		1	CARRIER RULER	
TBA 0500B NOQC, TBA 1000B NOQC NOMOLDEDCAP						
010	1511697-0000	A		1	FOLDING FLAP	
020	1511698-0000	A		1	FOLDING FLAP	
030	1255457-0000	A		1	CARRIER RULER	
TBA 0500B QC, TBA 1000B QC						
010	1511352-0000	A		1	FOLDING FLAP	
020	1511351-0000	A		1	ZFOLDING FLAP	
030	1255457-0000	A		1	CARRIER RULER	
TBA 1000B NOQC STDA7						
010	1511697-0000	A		1	FOLDING FLAP	
020	2610957-0000	A		1	FOLDING FLAP	
030	1255457-0000	A		1	CARRIER RULER	
TBA 1000S NOMOLDEDCAP						
010	1511699-0000	A		1	FOLDING FLAP	
020	1511700-0000	A		1	FOLDING FLAP	
030	1255460-0000	A		1	CARRIER RULER	
TBA 1000S STDA7						
010	1511699-0000	A		1	FOLDING FLAP	
020	2546501-0000	A		1	FOLDING FLAP	
030	1255460-0000	A		1	CARRIER RULER	
TBA 1000SQ						
010	2507076-0000	A		1	FOLDING FLAP	
020	2507077-0000	A		1	FOLDING FLAP	
030	1360318-0000	A		1	CARRIER RULER	
TBA 1500S						
010	2507092-0000	A		1	FOLDING FLAP	
020	2507093-0000	A		1	FOLDING FLAP	
030	1255457-0000	A		1	CARRIER RULER	
TPA 1000SQ						
010	1523146-0000	A		1	FOLDING FLAP	
020	1523147-0000	A		1	FOLDING FLAP	
030	1523177-0000	A		1	CARRIER RULER	
Common Parts						
040	22462-0000	A		2	SHAFT	
050	22463-0000	A		2	ROLL	
200	90141-0029	-		2	CIRCLIP	

Machine Type | Group Description | Used-In | Group Number | Page No

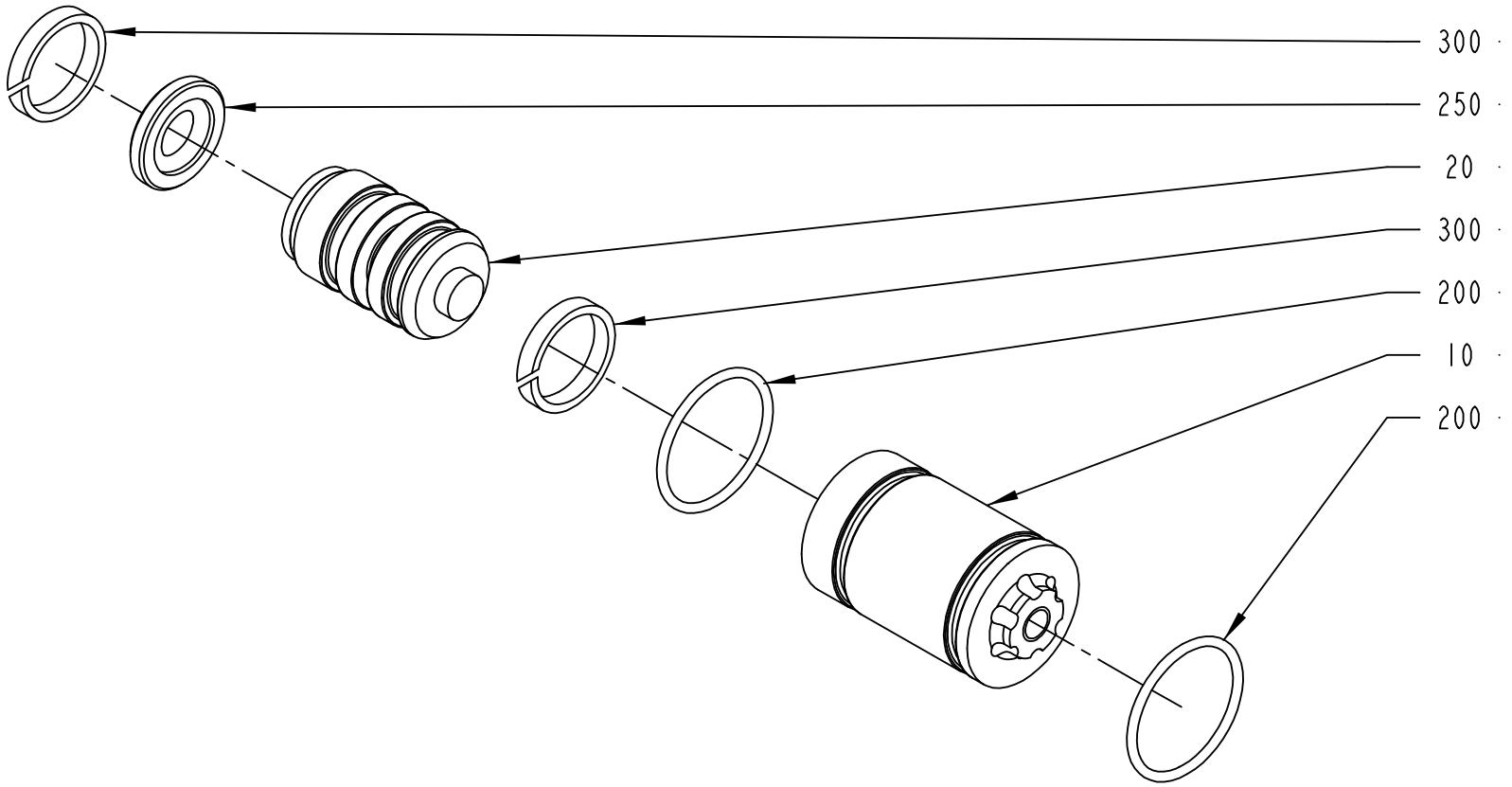

2552010-1
ECM 120277

ECM: 142319 - 20031125
Group number: 2552010-0100
Assembly Drawing: 2552010-1_1_AA

Pos	Part No	SP	UN	Qty	Description	Page No
TBA 0330S, TBA 0200B, TBA 0200S, TBA 0250B						
010	752288-0000	A		1	SLEEVE	
020	752115-0000	A		1	PLUNGER	
200	315202-0110	A		1	O-RING 12,1X1,6 MM	
250	90091-0216	A		1	PISTON SEAL, GLIDORING 7,1X12X2,2 MM	
300	90091-0169	A		2	WEAR RING 12X15X3,2 MM	
TBA 0500B, TBA 1000S, TBA 1000SQ, TBA 1000B, TBA 1500S, TPA 1000SQ						
010	1036278-0000	A		1	SLEEVE	
020	1036279-0000	A		1	PLUNGER	
200	315202-0118	A		2	O-RING 22,1X1,6 MM	
250	90091-0365	A		1	SEAL GLIDORING 11,55X19,05X3,2M	
300	90091-0367	A		2	WEAR RING 16X18X3,1 MM	

Pos	Part No	SP	UN	Qty	Description	Page No

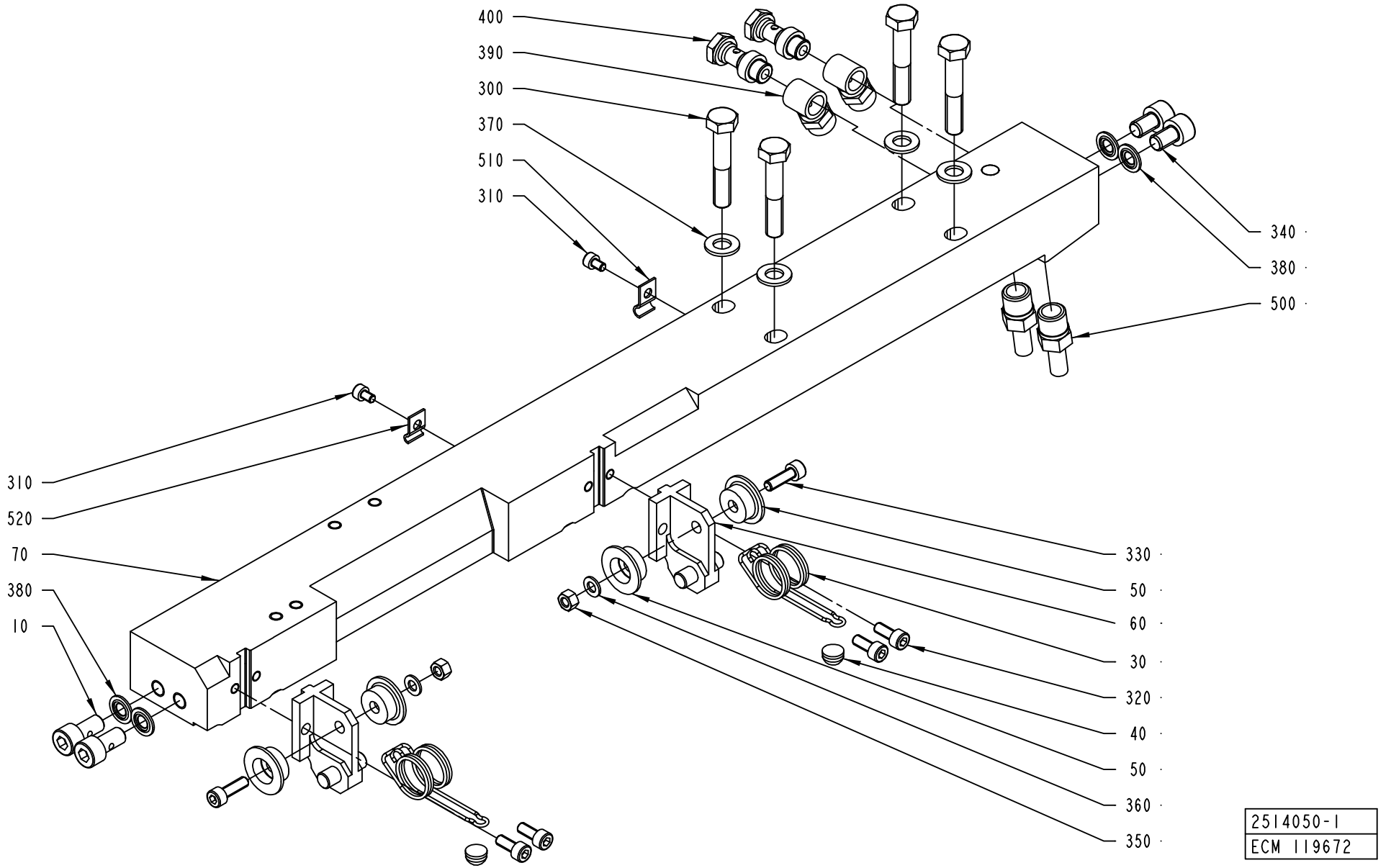
400
390
300
370
510
310
340
380
500
310
520
70
380
10
330
50
60
30
320
40
50
360
350
2514050-1
ECM 119672

ECM: 120056 - 20030121
Group number: 2514050-0200
Assembly Drawing: 2514050-1_1_AA

This list covers pages from 2-76 to 2-79

Pos	Part No	SP	UN	Qty	Description	Page No
A3/FLEX NOQC (See drawing on page: 2-76)						
070	2514051-0000	A		1	CARRIER	
310	312115-0285	-		2	SCREW ISO4762 M4X6 A4	
510	90165-0056	-		1	PIPE CLIP FOR TUBE D=4 MM	
520	90165-0058	-		1	PIPE CLIP FOR TUBE D=25 MM	
A3/FLEX QC (See drawing on page: 2-78)						
070	2514047-0000	A		1	CARRIER	
080	1549312-0000	A		1	INSERT	
410	312155-0323	-		3	SCREW EN 10642 MF6S M5X8 A480	
Common Parts						
010	1036343-0000	-		2	SCREW	
030	1549378-0000	A		2	SPRING	
040	1129552-0000	A		2	KNOB	
050	1129833-0000	-		4	GUIDE ROLLER	
060	2588013-0000	A		2	BRACKET	
300	312105-0460	-		4	SCREW M6S ISO 4014 M8X45 A480	
320	312115-0327	-		4	SCREW ISO4762 M5X12 A4	
330	312115-0329	-		2	SCREW ISO4762 M5X16 A4	
340	312115-0447	-		2	SCREW ISO4762 M8X12 A4	
350	312605-0314	-		2	HEXAGON NUT, M6M M5 A280	
360	315105-0146	-		2	WASHER BRB5,3X10RFR	
370	315105-0165	-		4	WASHER BRB8,4X16RFR	
380	315211-0104	A		4	BONDED SEAL SS/NBR90 M8	
390	342980-0121	-		2	BANJO-CONNECTION,RING 8/6-G1/8"	
400	342980-0303	-		2	BANJO-HOLLOW BOLT COUPL,EXT.THR.01-G1/8"	
500	90030-0065	-		2	PIPE CONNECTION	

Pos	Part No	SP	UN	Qty	Description	Page No

Machine Type | Group Description | Used-In | Group Number | Page No

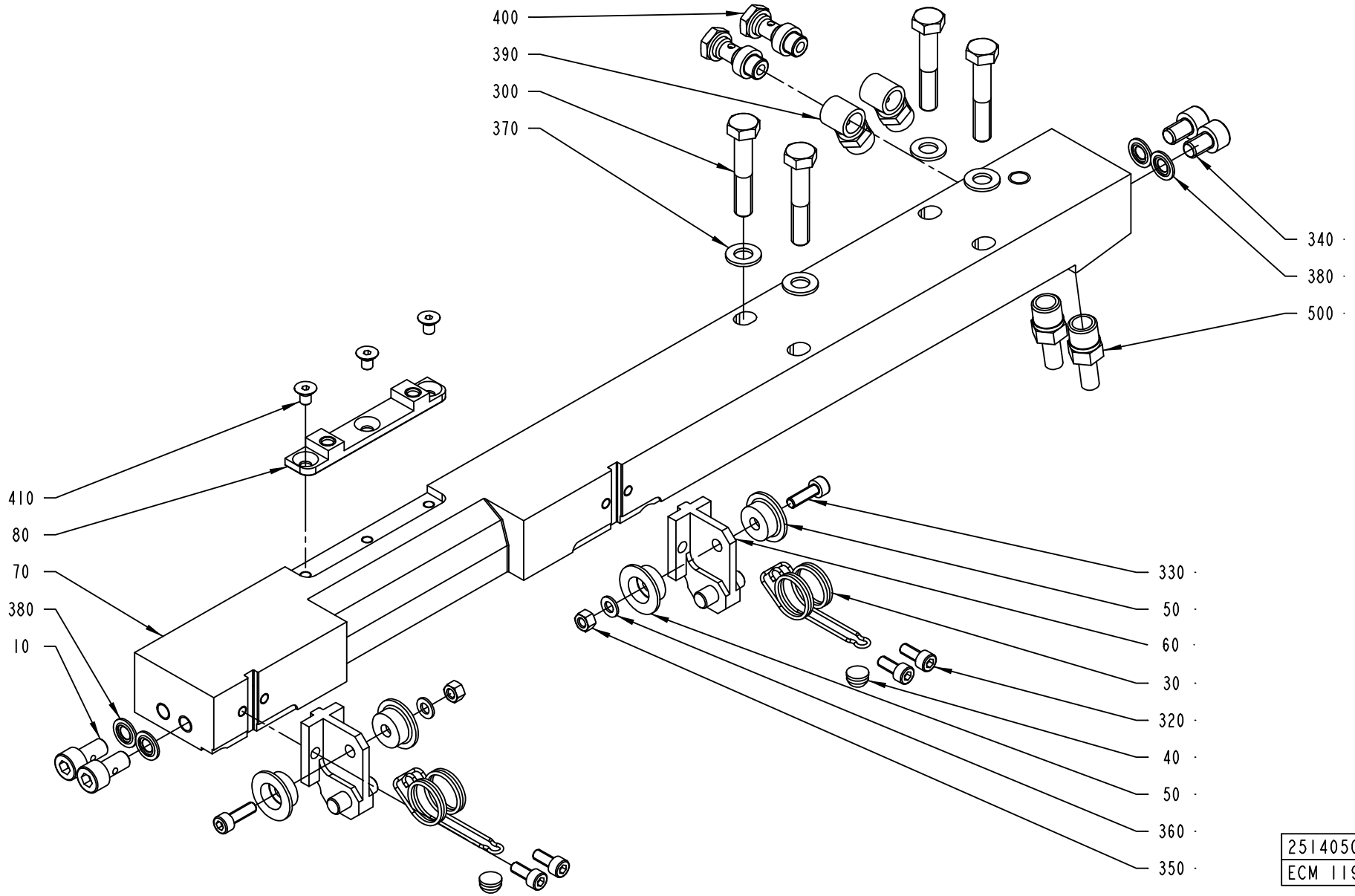
400
390
300
370
340
380
500
410
80
70
380
10
330
50
60
30
320
40
50
360
350
2514050-2
ECM 119672

ECM: 120056 - 20030121
Group number: 2514050-0200
Assembly Drawing: 2514050-2_1_AA

This list covers pages from 2-76 to 2-79

Pos	Part No	SP	UN	Qty	Description	Page No
A3/FLEX NOQC (See drawing on page: 2-76)						
070	2514051-0000	A		1	CARRIER	
310	312115-0285	-		2	SCREW ISO4762 M4X6 A4	
510	90165-0056	-		1	PIPE CLIP FOR TUBE D=4 MM	
520	90165-0058	-		1	PIPE CLIP FOR TUBE D=25 MM	
A3/FLEX QC (See drawing on page: 2-78)						
070	2514047-0000	A		1	CARRIER	
080	1549312-0000	A		1	INSERT	
410	312155-0323	-		3	SCREW EN 10642 MF6S M5X8 A480	
Common Parts						
010	1036343-0000	-		2	SCREW	
030	1549378-0000	A		2	SPRING	
040	1129552-0000	A		2	KNOB	
050	1129833-0000	-		4	GUIDE ROLLER	
060	2588013-0000	A		2	BRACKET	
300	312105-0460	-		4	SCREW M6S ISO 4014 M8X45 A480	
320	312115-0327	-		4	SCREW ISO4762 M5X12 A4	
330	312115-0329	-		2	SCREW ISO4762 M5X16 A4	
340	312115-0447	-		2	SCREW ISO4762 M8X12 A4	
350	312605-0314	-		2	HEXAGON NUT, M6M M5 A280	
360	315105-0146	-		2	WASHER BRB5,3X10RFR	
370	315105-0165	-		4	WASHER BRB8,4X16RFR	
380	315211-0104	A		4	BONDED SEAL SS/NBR90 M8	
390	342980-0121	-		2	BANJO-CONNECTION,RING 8/6-G1/8"	
400	342980-0303	-		2	BANJO-HOLLOW BOLT COUPL,EXT.THR.01-G1/8"	
500	90030-0065	-		2	PIPE CONNECTION	

Pos	Part No	SP	UN	Qty	Description	Page No

Machine Type | Group Description | Used-In | Group Number | Page No

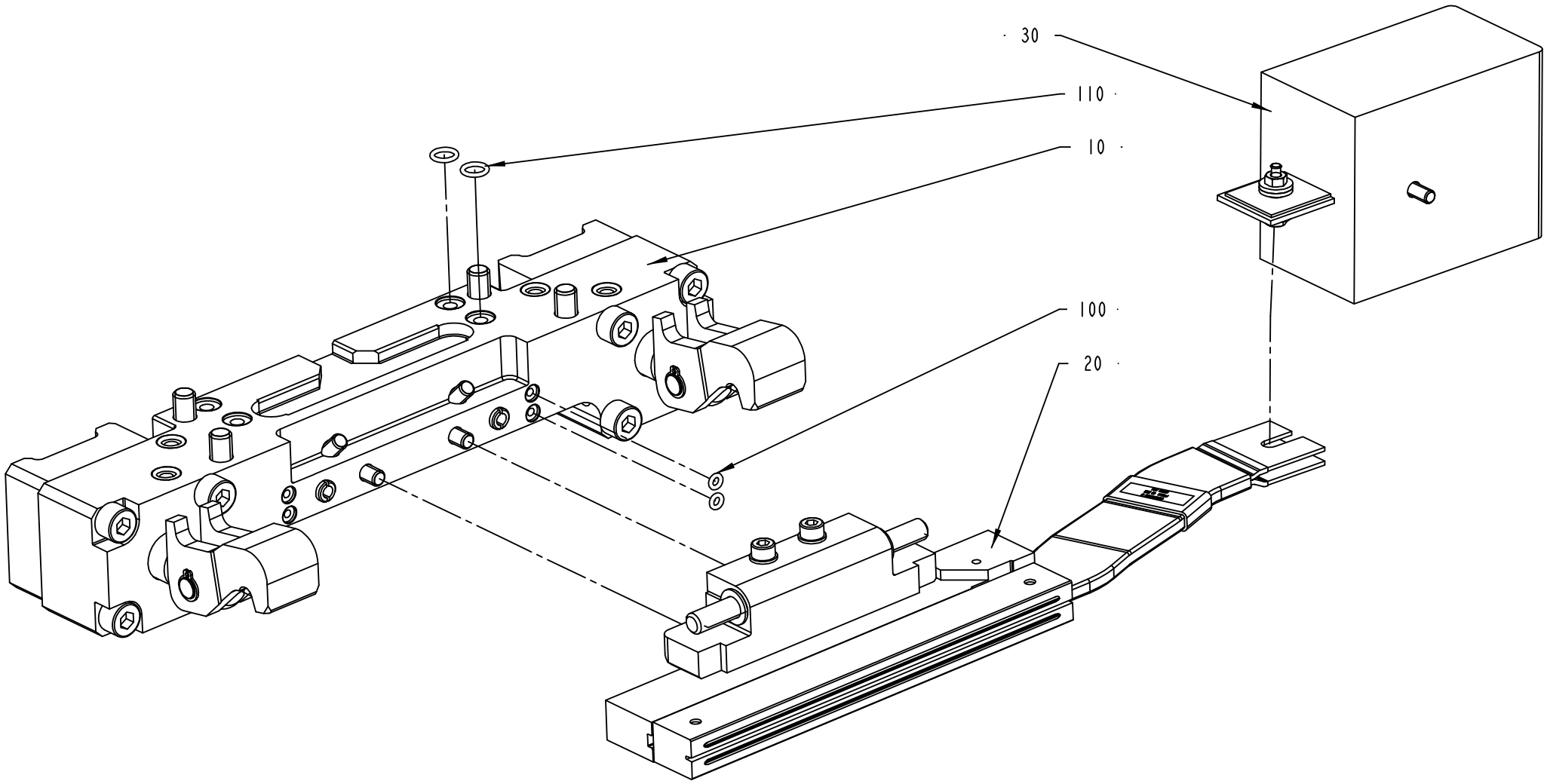

1512568-1
160559

ECM: 165412 - 20040331
Group number: 1512568-0200
Assembly Drawing: 1512568-1_1_AB

Pos	Part No	SP	UN	Qty	Description	Page No
-						
010	2552005-0100	-		1	PRESSURE JAW	**2-49**
020	2552007-0100	-		1	INDUCTOR RIGHT	**2-83, 2-85, 2-87**
030	2546229-0100	-		1	ADAPTION TRANSFORMER	**2-57**
100	315202-0101	A		2	O-RING 3,1X1,6 MM	
110	315202-0105	A		2	O-RING 7,1X1,6 MM	

Pos	Part No	SP	UN	Qty	Description	Page No

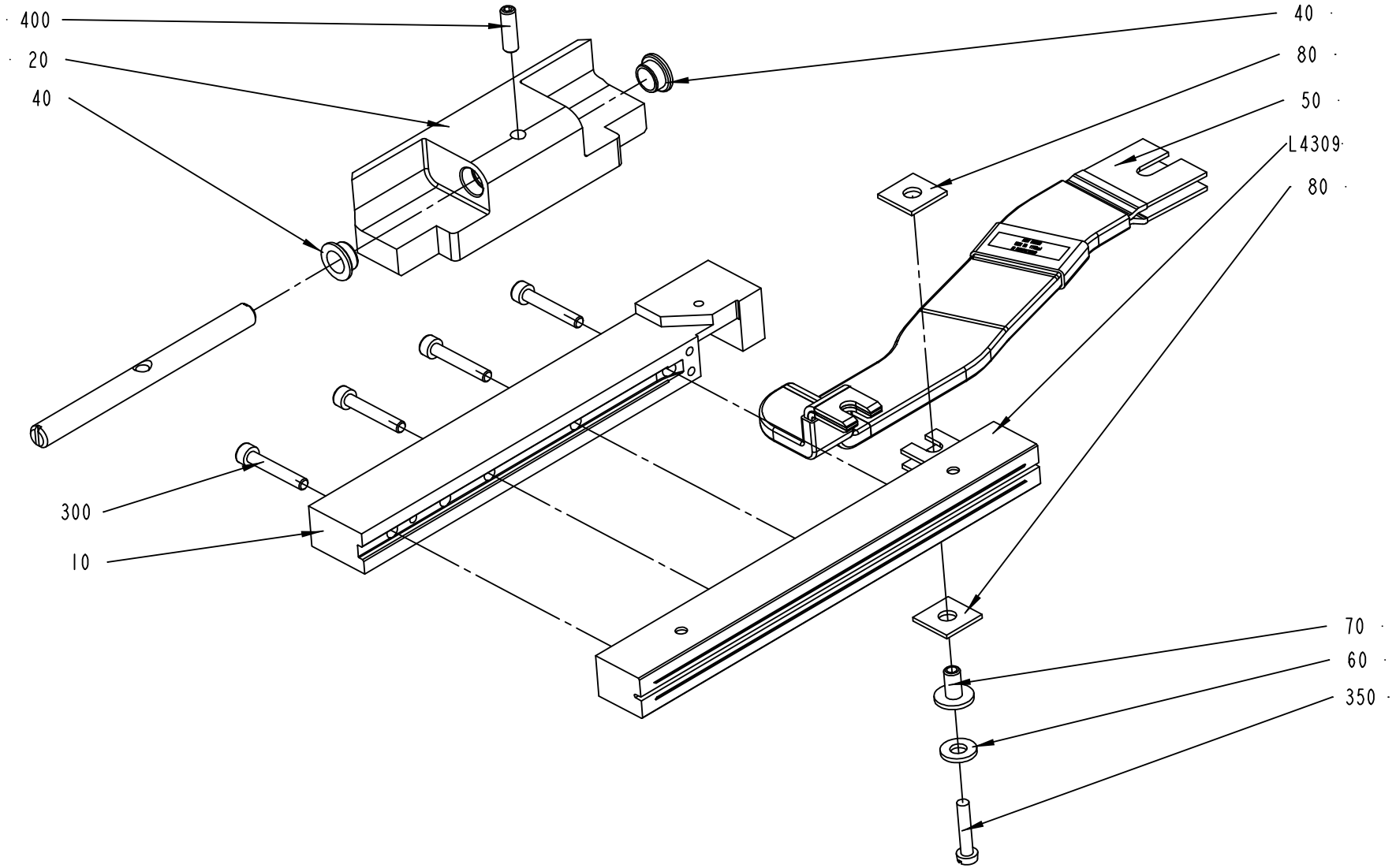
400
20
40
300
10
40
80
50
L4309
80
70
60
350
2552007-1
160559

Pos	Part No	SP	UN	Qty	Description	Page No
TBA 0200B NOQC, TBA 0250B NOQC (See drawing on page: 2-82)						
010	1348546-0000	A		1	RAIL	
020	1349599-0000	A		1	HOLDER	
030	1349980-0000	A		1	SHAFT	
040	1349584-0000	A		2	BUSHING	
300	312115-0297	-		3	SCREW ISO4762 M4X25 A4	
400	312318-0329	A		1	SCREW ISO4029 M5X16 A4	
L4309	1110932-0000	A		1	INDUCTOR	
L4309	1110932-0000	A		1	INDUCTOR	
TBA 0200B QC, TBA 0330S QC, TBA 0250B QC (See drawing on page: 2-84)						
010	1348546-0000	A		1	RAIL	
020	2604565-0000	A		1	HOLDER	
300	312115-0297	-		3	SCREW ISO4762 M4X25 A4	
L4309	1110932-0000	A		1	INDUCTOR	
L4309	1110932-0000	A		1	INDUCTOR	
TBA 0200S (See drawing on page: 2-86)						
010	1348546-0000	A		1	RAIL	
020	2513015-0000	A		1	HOLDER	
030	2513013-0000	A		1	SHAFT	
040	2531703-0000	A		2	BUSHING	
300	312115-0297	-		3	SCREW ISO4762 M4X25 A4	
400	312115-0329	A		2	SCREW ISO4762 M5X16 A4	
L4309	1110930-0000	A		1	INDUCTOR	
L4309	1110930-0000	A		1	INDUCTOR	
TBA 0500B QC, TBA 1000B QC (See drawing on page: 2-84)						
010	1558820-0000	A		1	RAIL	
020	1487955-0000	A		1	HOLDER	
090	1558734-0000	A		1	VOLUME BULGE	
300	312115-0297	-		4	SCREW ISO4762 M4X25 A4	
370	312155-0287	-		2	SCREW EN 10642 MF6S M4X8 A480	
L4309	1110938-0000	A		1	INDUCTOR	
L4309	1110938-0000	A		1	INDUCTOR	
TBA 1000B NOQC NOMOLDEDCAP (See drawing on page: 2-86)						
010	1348546-0000	A		1	RAIL	
020	2664280-0000	A		1	HOLDER	
030	2526812-0000	-		1	SHAFT	
040	2531703-0000	A		2	BUSHING	
300	312115-0297	-		4	SCREW ISO4762 M4X25 A4	
400	312115-0329	A		2	SCREW ISO4762 M5X16 A4	
410	315105-0146	-		2	WASHER BRB5,3X10RFR	
L4309	1110938-0000	A		1	INDUCTOR	
L4309	1110938-0000	A		1	INDUCTOR	

Pos	Part No	SP	UN	Qty	Description	Page No
TBA 1000B NOQC STDA7 (See drawing on page: 2-86)						
010	2610955-0000	A		1	RAIL	
020	2664280-0000	A		1	HOLDER	
030	2526812-0000	-		1	SHAFT	
040	2531703-0000	A		2	BUSHING	
300	312115-0297	-		4	SCREW ISO4762 M4X25 A4	
400	312115-0329	A		2	SCREW ISO4762 M5X16 A4	
410	315105-0146	-		2	WASHER BRB5,3X10RFR	
L4309	2610956-0000	A		1	INDUCTOR	
TBA 1000S NOMOLDEDCAP (See drawing on page: 2-86)						
010	1348546-0000	A		1	RAIL	
020	2559425-0000	A		1	CLAMP HOLDER	
030	2526812-0000	-		1	SHAFT	
040	2531703-0000	A		2	BUSHING	
300	312115-0297	-		4	SCREW ISO4762 M4X25 A4	
400	312115-0327	A		2	SCREW ISO4762 M5X12 A4	
L4309	1110937-0000	A		1	INDUCTOR	
L4309	1110937-0000	A		1	INDUCTOR	
TBA 1000S STDA7 (See drawing on page: 2-86)						
010	2546476-0000	A		1	RAIL	
020	2559425-0000	A		1	CLAMP HOLDER	
030	2526812-0000	-		1	SHAFT	
040	2531703-0000	A		2	BUSHING	
300	312115-0297	-		4	SCREW ISO4762 M4X25 A4	
400	312115-0327	A		2	SCREW ISO4762 M5X12 A4	
L4309	2546474-0000	A		1	INDUCTOR	
L4309	2546474-0000	A		1	INDUCTOR	
TBA 1000SQ (See drawing on page: 2-86)						
010	1348546-0000	A		1	RAIL	
020	2526811-0000	A		1	HOLDER	
030	2526812-0000	-		1	SHAFT	
040	2531703-0000	A		2	BUSHING	
300	312115-0297	-		4	SCREW ISO4762 M4X25 A4	
400	312115-0327	A		2	SCREW ISO4762 M5X12 A4	
L4309	1110936-0000	A		1	INDUCTOR	
L4309	1110936-0000	A		1	INDUCTOR	
TBA 1500S (See drawing on page: 2-86)						
010	1348546-0000	A		1	RAIL	
020	2570302-0000	A		1	CLAMP HOLDER	
030	2526812-0000	-		1	SHAFT	
040	2531703-0000	A		2	BUSHING	
300	312115-0297	-		4	SCREW ISO4762 M4X25 A4	

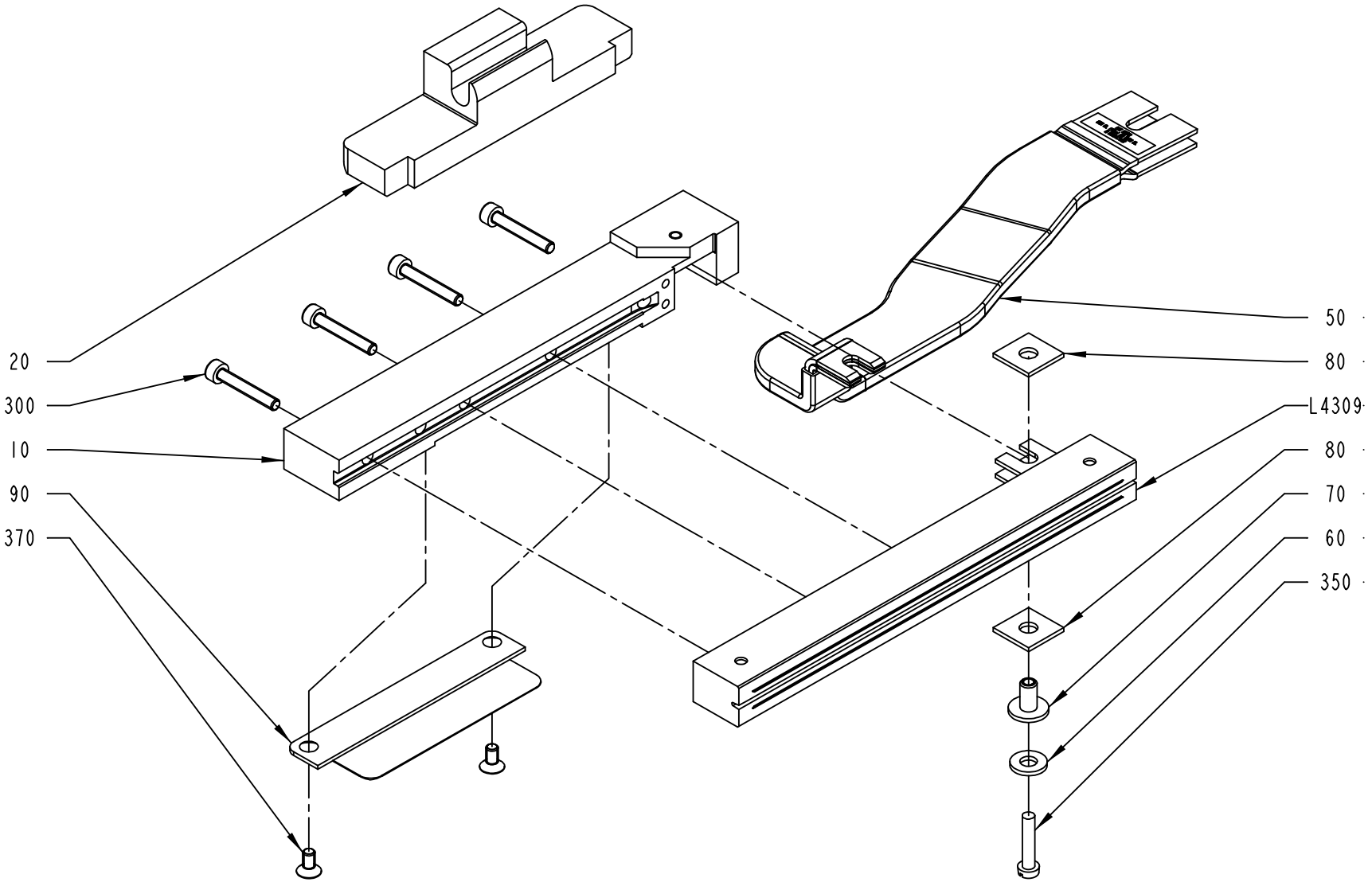

2552007-3
ECM 119672

Pos	Part No	SP	UN	Qty	Description	Page No
TBA 1500S (Cont'd) (See drawing on page: 2-86)						
400	312115-0327	A		2	SCREW ISO4762 M5X12 A4	
L4309	1110938-0000	A		1	INDUCTOR	
L4309	1110938-0000	A		1	INDUCTOR	
TPA 1000SQ FT (See drawing on page: 2-86)						
010	1558820-0000	A		1	RAIL	
020	2579989-0000	A		1	HOLDER	
030	2579990-0000	A		1	SHAFT	
040	2531703-0000	A		2	BUSHING	
090	2503700-0000	-		1	VOLUME BULGE	
300	312115-0297	-		4	SCREW ISO4762 M4X25 A4	
370	312155-0287	-		2	SCREW EN 10642 MF6S M4X8 A480	
400	312115-0327	A		2	SCREW ISO4762 M5X12 A4	
L4309	1520052-0000	A		1	INDUCTOR	
L4309	1520052-0000	A		1	INDUCTOR	
TPA 1000SQ SMILE (See drawing on page: 2-86)						
010	1558820-0000	A		1	RAIL	
020	2579991-0000	-		1	HOLDER	
030	2579990-0000	A		1	SHAFT	
040	2531703-0000	A		2	BUSHING	
090	2503700-0000	-		1	VOLUME BULGE	
100	2500591-0000	-		1	VOLUME BULGE	
300	312115-0297	-		4	SCREW ISO4762 M4X25 A4	
370	312155-0287	-		2	SCREW EN 10642 MF6S M4X8 A480	
380	312155-0325	-		2	SCREW EN 10642 MF6S M5X10 A480	
400	312115-0327	A		2	SCREW ISO4762 M5X12 A4	
L4309	1520052-0000	A		1	INDUCTOR	
L4309	1520052-0000	A		1	INDUCTOR	
Common Parts						
050	1498850-0000	A		1	BUSBAR	
060	28509-0000	A		1	WASHER	
070	32544-0000	A		1	INSULATION NUT	
080	1036584-0000	A		2	WASHER	
350	312125-0295	-		1	SCREW ISO 1207 M4X20 A4	

Pos	Part No	SP	UN	Qty	Description	Page No

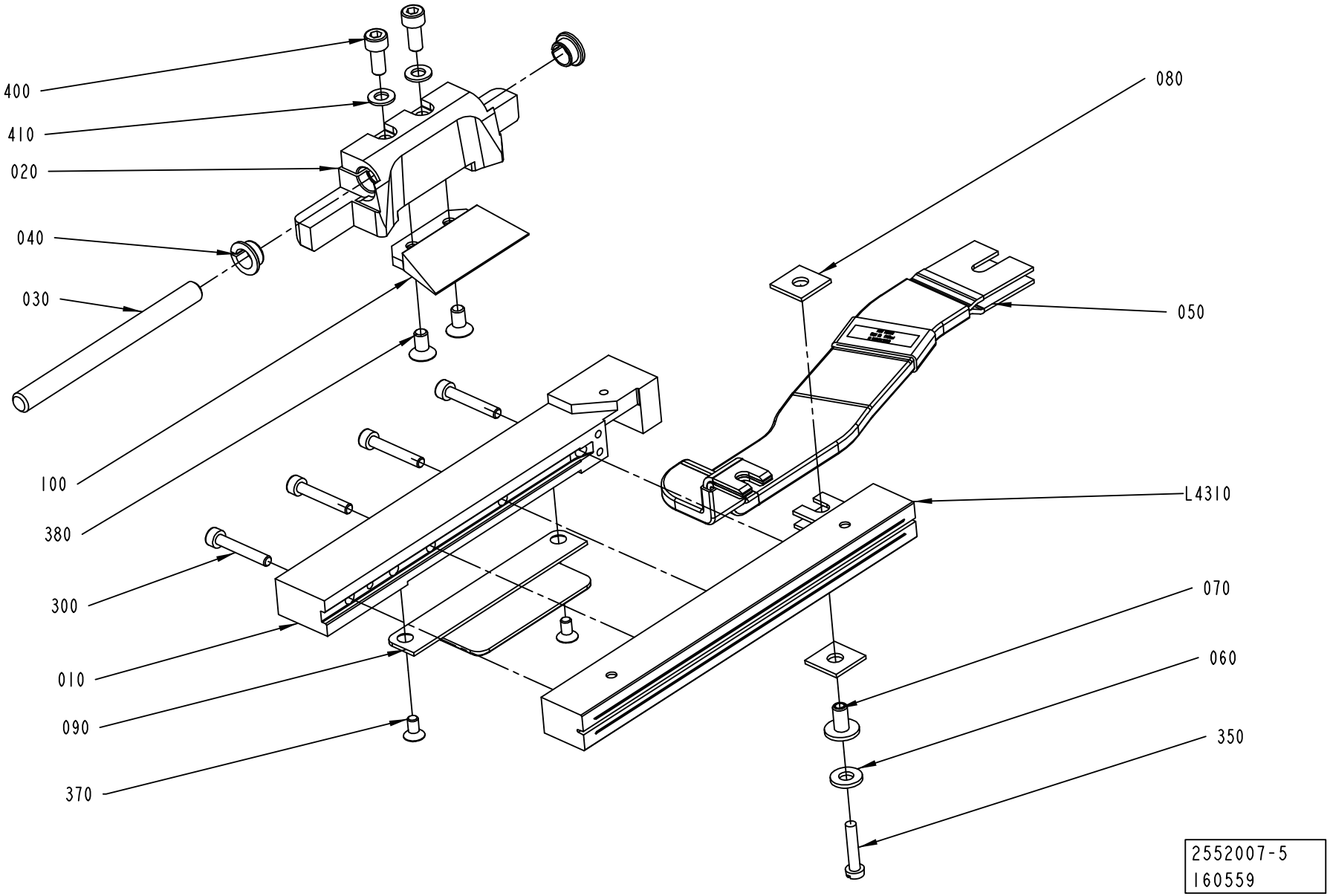
400
410
020
040
030
100
380
300
010
090
370
080
050
L4310
070
060
350
2552007-5
160559

ECM: 165415 - 20040331
Group number: 2552007-0100
Assembly Drawing: 2552007-5_1_AB

This list covers pages from 2-82 to 2-87

Pos	Part No	SP	UN	Qty	Description	Page No
SEE PREVIOUS LISTS PAGES: 2-83, 2-85.						

Pos	Part No	SP	UN	Qty	Description	Page No

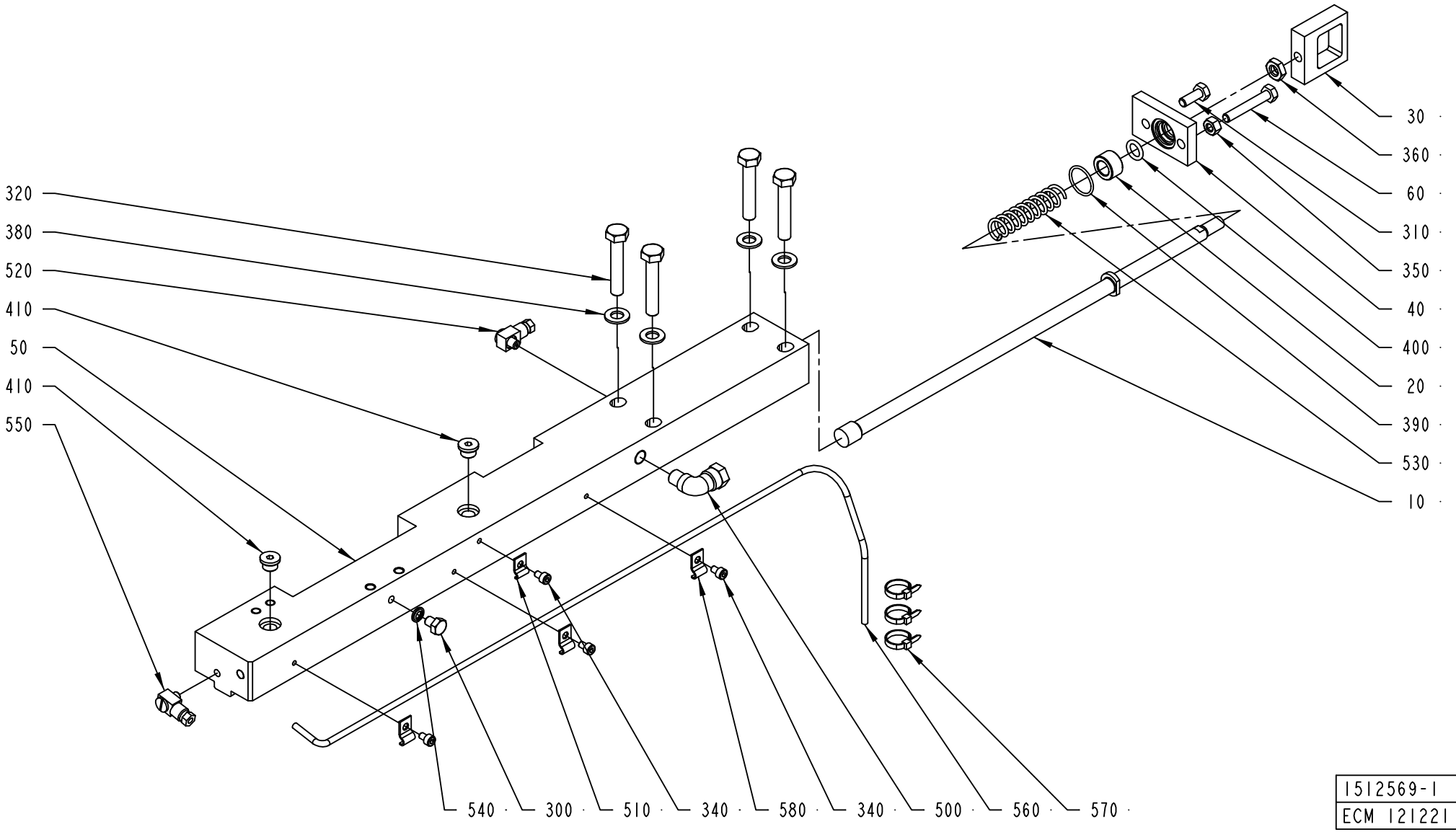

1512569-1
ECM 121221

ECM: 166015 - 20040331
Group number: 1512569-0200
Assembly Drawing: 1512569-1_1_AA

This list covers pages from 2-88 to 2-91

Pos	Part No	SP	UN	Qty	Description	Page No
TBA 0200B QC, TBA 0330S QC, TBA 0250B QC (See drawing on page: 2-90)						
010	2530508-0000	A		1	TIE ROD	
050	2572248-0000	A		1	CARRIER	
070	1549312-0000	A		1	INSERT	
345	312155-0323	-		3	SCREW EN 10642 MF6S M5X8 A480	
TBA 0500B QC, TBA 1000B QC (See drawing on page: 2-90)						
010	1499320-0000	A		1	TIE ROD	
050	2572248-0000	A		1	CARRIER	
070	1549312-0000	A		1	INSERT	
345	312155-0323	-		3	SCREW EN 10642 MF6S M5X8 A480	
TBA 0200S, TBA 0200B NOQC, TBA 0250B NOQC (See drawing on page: 2-88)						
010	2530508-0000	A		1	TIE ROD	
050	2536026-0000	A		1	CARRIER	
TBA 1000S, TBA 1000SQ, TBA 1500S, TPA 1000SQ, TBA 1000B NOQC (See drawing on page: 2-88)						
010	1499320-0000	A		1	TIE ROD	
050	2536026-0000	A		1	CARRIER	
Common Parts						
020	1036495-0000	A		1	BUSHING	
030	1036585-0000	A		1	EAR	
040	1036389-0000	-		1	LID	
060	1523162-0000	-		1	SCREW	
300	312105-0362	-		1	SCREW M6S ISO 4017 M6X8 A480	
310	312105-0368	-		1	SCREW M6S ISO 4017 M6X16 A480	
320	312105-0460	-		4	SCREW M6S ISO 4014 M8X45 A480	
340	312115-0285	-		4	SCREW ISO4762 M4X6 A4	
350	312605-0316	-		1	HEXAGON NUT, M6M M6 A280	
360	312625-0318	-		1	HEXAGON THIN NUT, EN 24035 ML6M M8 A4	
380	315105-0165	-		4	WASHER BRB8,4X16RFR	
390	315202-0116	A		1	O-RING 18,1X1,6 MM	
400	315202-0208	A		1	O-RING 9,3X2,4 MM	
410	342713-0209	A		2	PLUG, EXT THREAD HEX SOCKET 8638-00-180	
500	90030-0257	-		1	CONN. ELBOW, 8-R1/8, EXT.THREAD	
510	90165-0058	-		1	PIPE CLIP FOR TUBE D=25 MM	
520	90134-0058	-		1	CONNECTION	
530	1548940-0000	A		1	SPRING	
540	315211-0103	A		1	BONDED SEAL SS/NBR90 M6	
550	90134-0068	-		1	CONNECTION	
560	90266-0165	-	MM	800	BRASS PIPE	
570	352113-0101	-		3	CLIP STRIP, 92X2,5 MM	
580	90165-0056	-		3	PIPE CLIP FOR TUBE D=4 MM	

Pos	Part No	SP	UN	Qty	Description	Page No

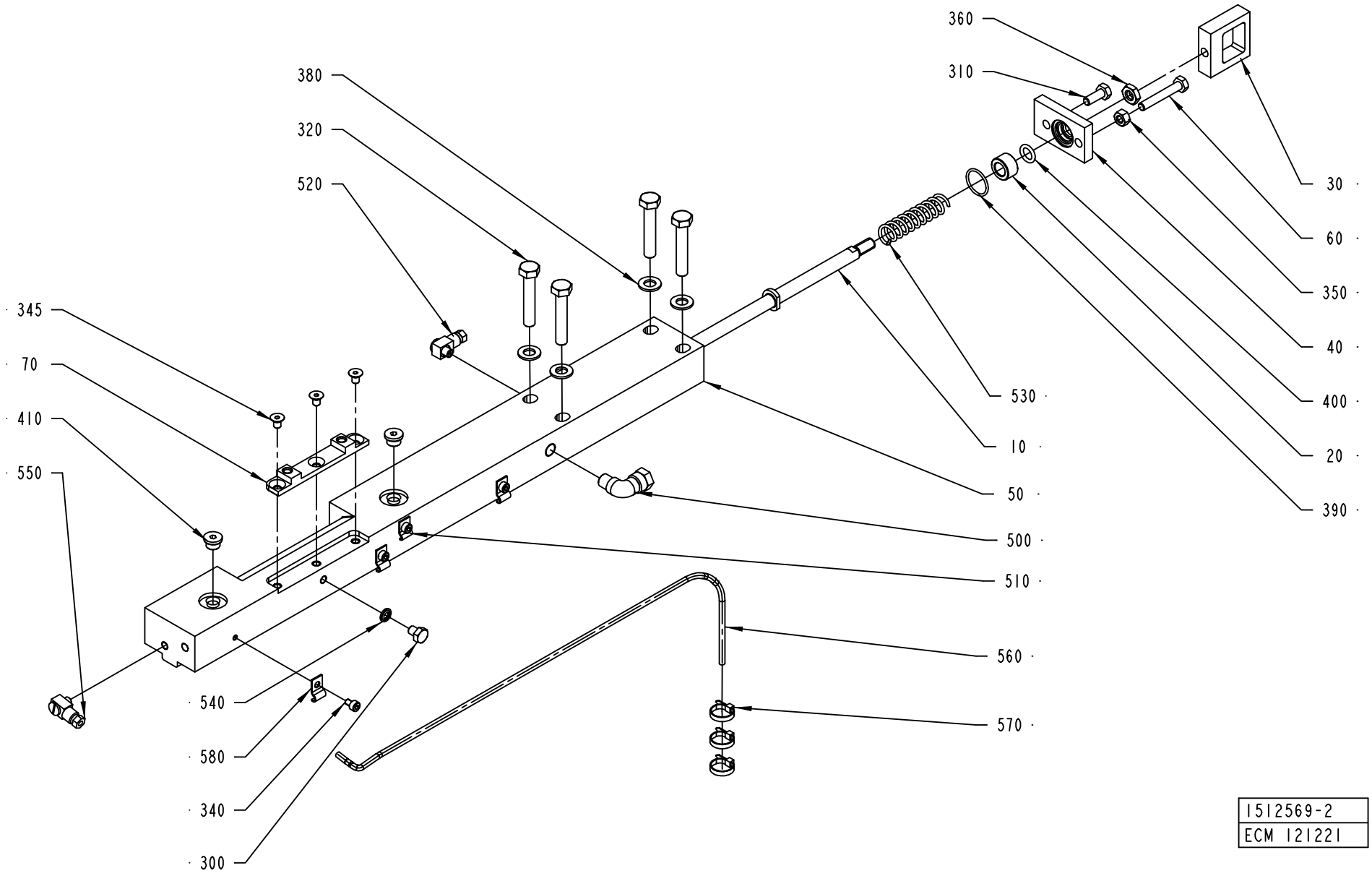
360
310
380
320
520
345
70
410
550
30
60
350
40
400
20
390
530
10
50
500
510
560
570
540
580
340
300
1512569-2
ECM 121221

ECM: 166015 - 20040331
Group number: 1512569-0200
Assembly Drawing: 1512569-2_1_AA

This list covers pages from 2-88 to 2-91

Pos	Part No	SP	UN	Qty	Description	Page No
TBA 0200B QC, TBA 0330S QC, TBA 0250B QC (See drawing on page: 2-90)						
010	2530508-0000	A		1	TIE ROD	
050	2572248-0000	A		1	CARRIER	
070	1549312-0000	A		1	INSERT	
345	312155-0323	-		3	SCREW EN 10642 MF6S M5X8 A480	
TBA 0500B QC, TBA 1000B QC (See drawing on page: 2-90)						
010	1499320-0000	A		1	TIE ROD	
050	2572248-0000	A		1	CARRIER	
070	1549312-0000	A		1	INSERT	
345	312155-0323	-		3	SCREW EN 10642 MF6S M5X8 A480	
TBA 0200S, TBA 0200B NOQC, TBA 0250B NOQC (See drawing on page: 2-88)						
010	2530508-0000	A		1	TIE ROD	
050	2536026-0000	A		1	CARRIER	
TBA 1000S, TBA 1000SQ, TBA 1500S, TPA 1000SQ, TBA 1000B NOQC (See drawing on page: 2-88)						
010	1499320-0000	A		1	TIE ROD	
050	2536026-0000	A		1	CARRIER	
Common Parts						
020	1036495-0000	A		1	BUSHING	
030	1036585-0000	A		1	EAR	
040	1036389-0000	-		1	LID	
060	1523162-0000	-		1	SCREW	
300	312105-0362	-		1	SCREW M6S ISO 4017 M6X8 A480	
310	312105-0368	-		1	SCREW M6S ISO 4017 M6X16 A480	
320	312105-0460	-		4	SCREW M6S ISO 4014 M8X45 A480	
340	312115-0285	-		4	SCREW ISO4762 M4X6 A4	
350	312605-0316	-		1	HEXAGON NUT, M6M M6 A280	
360	312625-0318	-		1	HEXAGON THIN NUT, EN 24035 ML6M M8 A4	
380	315105-0165	-		4	WASHER BRB8,4X16RFR	
390	315202-0116	A		1	O-RING 18,1X1,6 MM	
400	315202-0208	A		1	O-RING 9,3X2,4 MM	
410	342713-0209	A		2	PLUG, EXT THREAD HEX SOCKET 8638-00-180	
500	90030-0257	-		1	CONN. ELBOW, 8-R1/8, EXT.THREAD	
510	90165-0058	-		1	PIPE CLIP FOR TUBE D=25 MM	
520	90134-0058	-		1	CONNECTION	
530	1548940-0000	A		1	SPRING	
540	315211-0103	A		1	BONDED SEAL SS/NBR90 M6	
550	90134-0068	-		1	CONNECTION	
560	90266-0165	-	MM	800	BRASS PIPE	
570	352113-0101	-		3	CLIP STRIP, 92X2,5 MM	
580	90165-0056	-		3	PIPE CLIP FOR TUBE D=4 MM	

Pos	Part No	SP	UN	Qty	Description	Page No

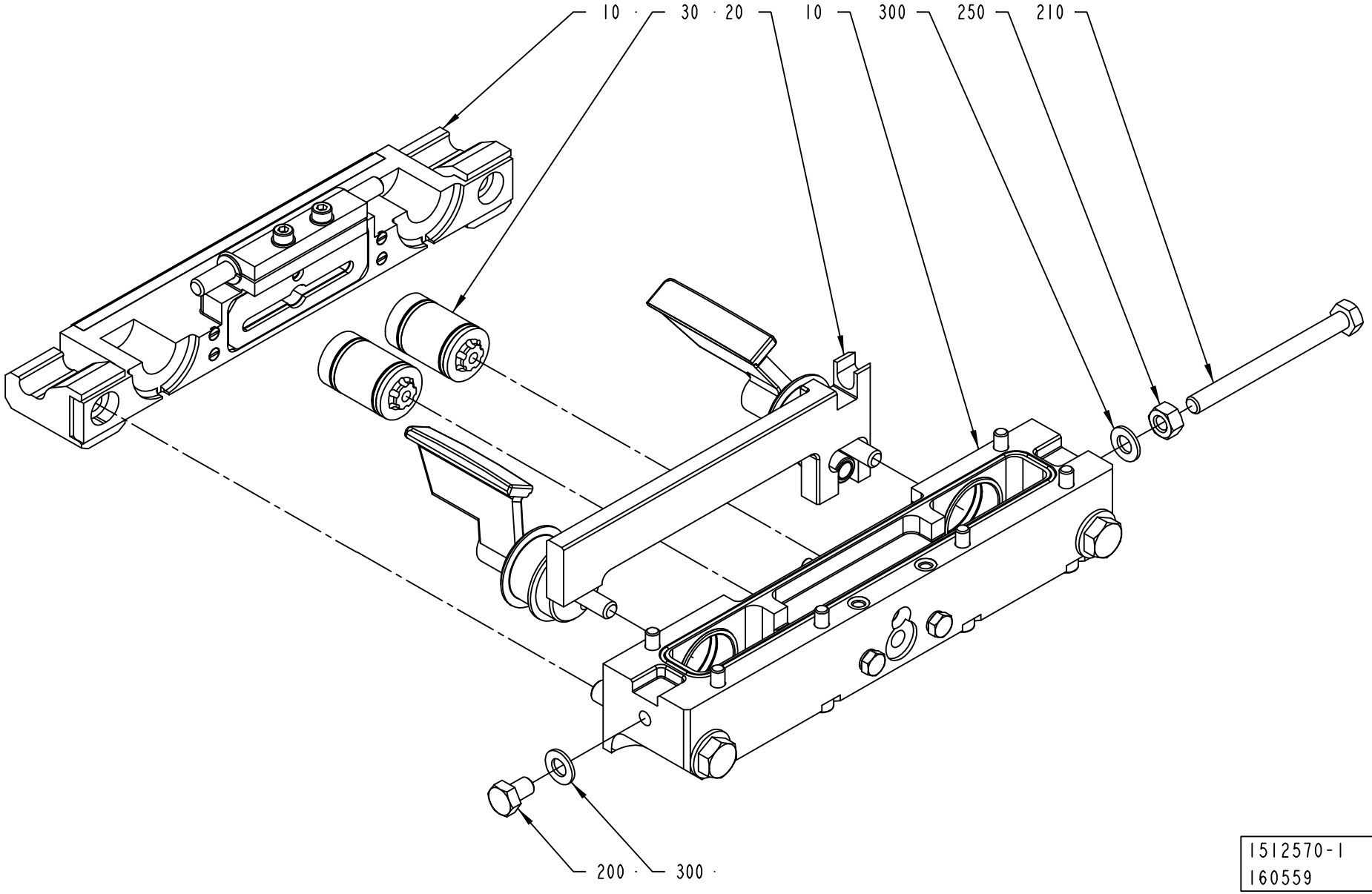
10
30
20
10
300
250
210
200
300
1512570-1
160559

ECM: 166002 - 20040331
Group number: 1512570-0200
Assembly Drawing: 1512570-1_1_AB

Pos	Part No	SP	UN	Qty	Description	Page No
-						
010	2552008-0100	-		1	CUTTING JAW	**2-65, 2-67, 2-69, 2-71**
020	2552011-0100	-		1	FOLDING FLAP RIGHT	**2-95**
030	2552010-0100	-		2	PISTON	**2-75**
200	312105-0447	-		1	SCREW M6S ISO 4017 M8X12 A480	
210	312105-0469	-		1	SCREW M6S ISO 4014 M8X90 A480	
250	312605-0318	-		1	HEXAGON NUT, M6M M8 A280	
300	315105-0165	-		2	WASHER BRB8,4X16RFR	

Pos	Part No	SP	UN	Qty	Description	Page No

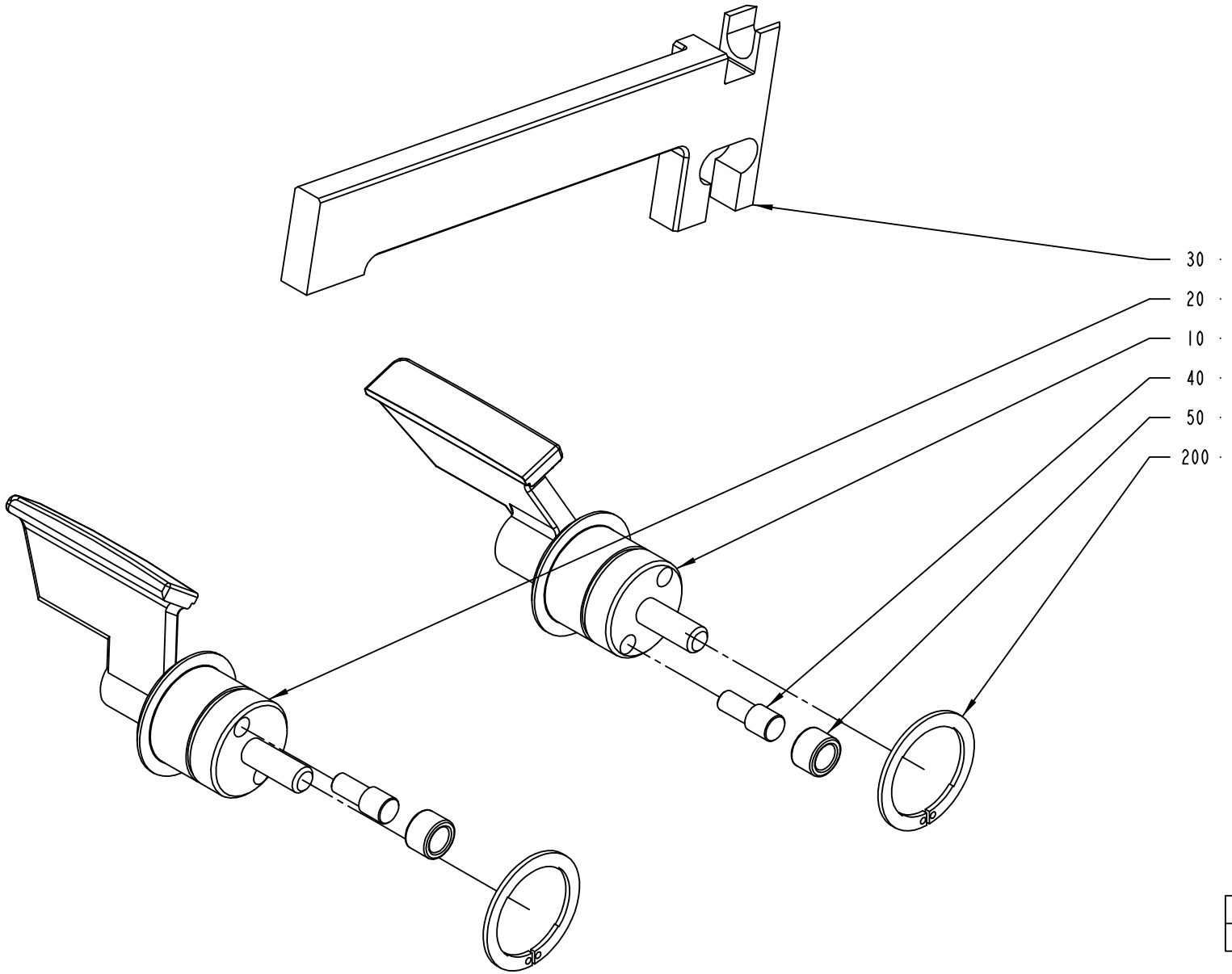

2552011-1
ECM 120277

ECM: 157591 - 20040309
Group number: 2552011-0100
Assembly Drawing: 2552011-1_1_AA

Pos	Part No	SP	UN	Qty	Description	Page No
TBA 0200B QC, TBA 0330S QC, TBA 0250B QC						
010	2605875-0000	A		1	FOLDING FLAP	
020	2605876-0000	A		1	FOLDING FLAP	
030	1255463-0000	A		1	CARRIER RULER	
TBA 0200S						
010	2624554-0000	A		1	FOLDING FLAP	
020	2624555-0000	A		1	FOLDING FLAP	
030	1255462-0000	A		1	CARRIER RULER	
TBA 0500B NOQC, TBA 1000B NOQC NOMOLDEDCAP						
010	1511697-0000	A		1	FOLDING FLAP	
020	1511698-0000	A		1	FOLDING FLAP	
030	1255461-0000	A		1	CARRIER RULER	
TBA 0500B QC, TBA 1000B QC						
010	1511352-0000	A		1	FOLDING FLAP	
020	1511351-0000	A		1	ZFOLDING FLAP	
030	1255461-0000	A		1	CARRIER RULER	
TBA 1000B NOQC STDA7						
010	1511697-0000	A		1	FOLDING FLAP	
020	2610957-0000	A		1	FOLDING FLAP	
030	1255461-0000	A		1	CARRIER RULER	
TBA 1000S NOMOLDEDCAP						
010	1511699-0000	A		1	FOLDING FLAP	
020	1511700-0000	A		1	FOLDING FLAP	
030	1255464-0000	A		1	CARRIER RULER	
TBA 1000S STDA7						
010	1511699-0000	A		1	FOLDING FLAP	
020	2546501-0000	A		1	FOLDING FLAP	
030	1255464-0000	A		1	CARRIER RULER	
TBA 1000SQ						
010	2507076-0000	A		1	FOLDING FLAP	
020	2507077-0000	A		1	FOLDING FLAP	
030	1360319-0000	A		1	CARRIER RULER	
TBA 1500S						
010	2507092-0000	A		1	FOLDING FLAP	
020	2507093-0000	A		1	FOLDING FLAP	
030	1255461-0000	A		1	CARRIER RULER	
TPA 1000SQ						
010	1523146-0000	A		1	FOLDING FLAP	
020	1523147-0000	A		1	FOLDING FLAP	
030	1523148-0000	A		1	CARRIER RULER	
Common Parts						
040	22462-0000	A		2	SHAFT	
050	22463-0000	A		2	ROLL	
200	90141-0029	-		2	CIRCLIP	

Machine Type	Group Description	Used-In	Group Number	Page No

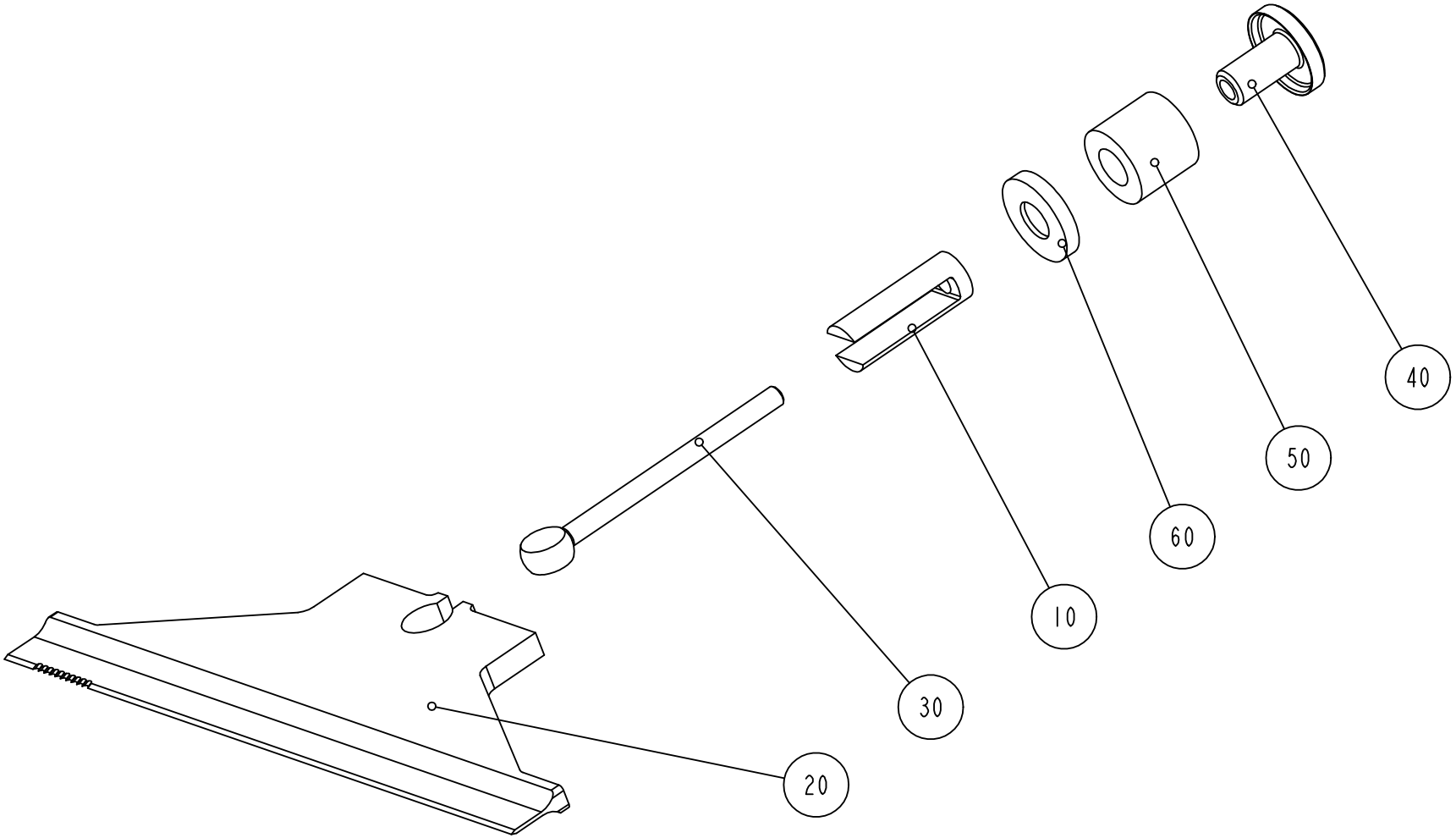

S-1478768-1
ECN 71517

ECM: 125152 - 20031216
Group number: 1478768-0100
Assembly Drawing: 1478768-1_1_AA

Pos	Part No	SP	UN	Qty	Description	Page No
TBA 0330S, TBA 0200B, TBA 0200S, TBA 0250B						
020	1348966-0000	A		1	KNIFE	
030	1478966-0000	A		1	LINK	
060	1484211-0000	A		1	WASHER	
TBA 0500B, TBA 1000S, TBA 1000SQ, TBA 1000B, TBA 1500S						
020	1348955-0000	A		1	KNIFE	
030	1478968-0000	A		1	LINK	
060	1255540-0000	A		1	WASHER	
TPA 1000SQ						
020	1348956-0000	A		1	KNIFE	
030	1478968-0000	A		1	LINK	
060	1255540-0000	A		1	WASHER	
Common Parts						
010	927323-0000	A		1	SPACER	
040	1478967-0000	A		1	WASHER	
050	1260659-0000	A		1	SPRING	

Pos	Part No	SP	UN	Qty	Description	Page No

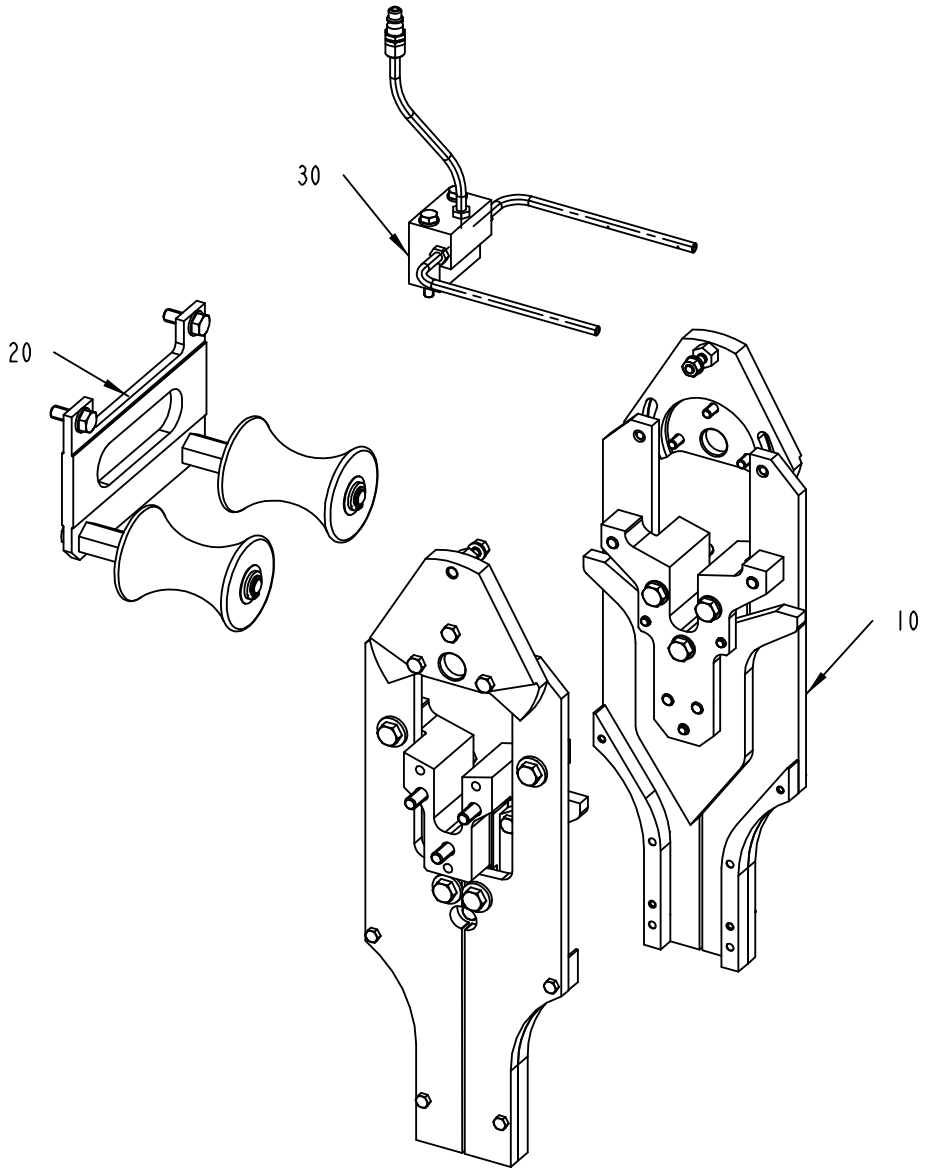

2613647-1
ECM 128689

ECM: 166016 - 20040331
Group number: 2613647-0100
Assembly Drawing: 2613647-1_1_AA

Pos	Part No	SP	UN	Qty	Description	Page No
TBA 0200S						
010	2597329-0100	-		1	CURVE UNIT	**2-101**
TBA 0330S, TBA 0200B, TBA 0250B						
010	2613645-0100	-		1	CURVE UNIT	**2-103**
TBA 0500B QC, TBA 1000B QC						
010	2613645-0100	-		1	CURVE UNIT	**2-103**
TBA 1000B NOQC NOMOLDEDCAP						
010	2597329-0100	-		1	CURVE UNIT	**2-101**
TBA 1000B NOQC STDA7						
010	2597329-0100	-		1	CURVE UNIT	**2-101**
TBA 1000S NOMOLDEDCAP						
010	2597329-0100	-		1	CURVE UNIT	**2-101**
TBA 1000S STDA7						
010	2597329-0100	-		1	CURVE UNIT	**2-101**
TBA 1000SQ						
010	2597329-0100	-		1	CURVE UNIT	**2-101**
TBA 1500S						
010	2597329-0100	-		1	CURVE UNIT	**2-101**
TPA 1000SQ						
010	2597329-0100	-		1	CURVE UNIT	**2-101**
Common Parts						
020	2613648-0100	-		1	SUPPORT ROLLER	**2-109, 2-111**
030	2556893-0100	-		1	TUBE FLUSHING	**2-113**

Pos	Part No	SP	UN	Qty	Description	Page No

Machine Type | Group Description | Used-In | Group Number | Page No

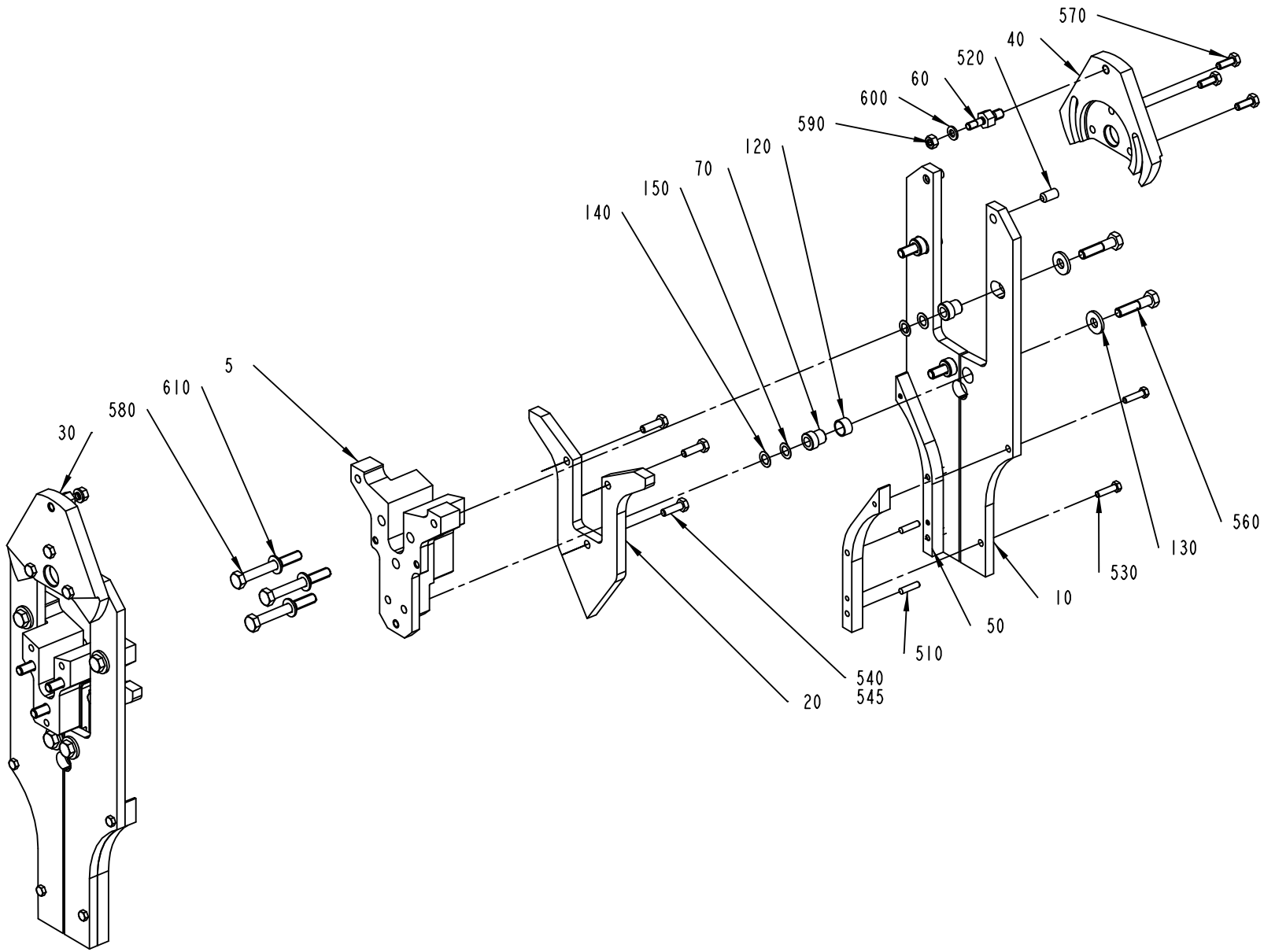

2597329-3
ECM 142194

ECM: 166031 - 20040331
Group number: 2597329-0100
Assembly Drawing: 2597329-3_1_AB

Pos	Part No	SP	UN	Qty	Description	Page No
TBA 0200S						
005	2628598-0000	A		2	SPACER	
010	2533740-0000	A		4	RAIL BRACKET	
020	1334081-0000	A		2	CURVE	
030	2606891-0000	A		1	ECCENTRIC	
040	2606892-0000	A		1	ECCENTRIC	
050	1478497-0000	A		4	VOLUME CAM	
TBA 1000B						
005	2624543-0000	A		2	SPACER	
010	2533741-0000	A		4	RAIL BRACKET	
020	1348808-0000	A		2	CURVE	
030	2618378-0000	A		1	ECCENTRIC	
040	2618377-0000	A		1	ECCENTRIC	
050	1484250-0000	A		4	VOLUME CAM	
TBA 1000S						
005	2624543-0000	A		2	SPACER	
010	2533742-0000	A		4	RAIL BRACKET	
020	1348809-0000	A		2	CURVE	
030	2618378-0000	A		1	ECCENTRIC	
040	2618377-0000	A		1	ECCENTRIC	
050	1484251-0000	A		4	VOLUME CAM	
TBA 1000SQ						
005	2624543-0000	A		2	SPACER	
010	2533744-0000	A		4	RAIL BRACKET	
020	2501851-0000	A		2	CURVE	
030	2618378-0000	A		1	ECCENTRIC	
040	2618377-0000	A		1	ECCENTRIC	
050	1499594-0000	A		4	VOLUME CAM	
TBA 1500S						
005	2633438-0000	A		2	SPACER	
010	2533737-0000	A		4	RAIL BRACKET	
020	1349741-0000	A		2	CURVE	
030	2618378-0000	A		1	ECCENTRIC	
040	2618377-0000	A		1	ECCENTRIC	
050	1349744-0000	A		4	VOLUME CAM	
TPA 1000SQ						
005	2633438-0000	A		2	SPACER	
010	2575631-0000	A		4	RAIL BRACKET	
020	2564683-0000	A		2	CURVE	
030	2618378-0000	A		1	ECCENTRIC	
040	2618377-0000	A		1	ECCENTRIC	
050	1523490-0000	A		4	VOLUME BULGE	

Pos	Part No	SP	UN	Qty	Description	Page No
Common Parts						
060	2624544-0000	-		2	PIVOT PIN	
070	2533736-0000	A		8	SLEEVE	
120	321120-0108	A		4	BEARBUSHING W/O FL 12X14X8	
130	1487504-0000	-		8	WASHER	
140	1487505-0001	-		16	WASHER	
150	1487505-0002	-		16	WASHER	
510	311103-0310	-		8	PARALLEL PIN ISO 2338 5M6X20 A1	
520	311103-0399	-		4	PARALLEL PIN ISO 2338 8M6X16 A1	
530	312105-0331	-		8	SCREW M6S ISO 4017 M5X20 A480	
540	312105-0370	-		6	SCREW M6S ISO 4017 M6X20 A480	
560	312105-0457	-		8	SCREW M6S ISO 4014 M8X35 A480	
570	312105-0368	-		6	SCREW M6S ISO 4017 M6X16 A480	
580	312105-0464	-		6	SCREW M6S ISO 4014 M8X65 A480	
590	312605-0316	-		2	HEXAGON NUT, M6M M6 A280	
600	315105-0153	-		2	WASHER BRB6,4X12RFR	
610	315105-0165	-		6	WASHER BRB8,4X16RFR	

Machine Type | Group Description | Used-In | Group Number | Page No

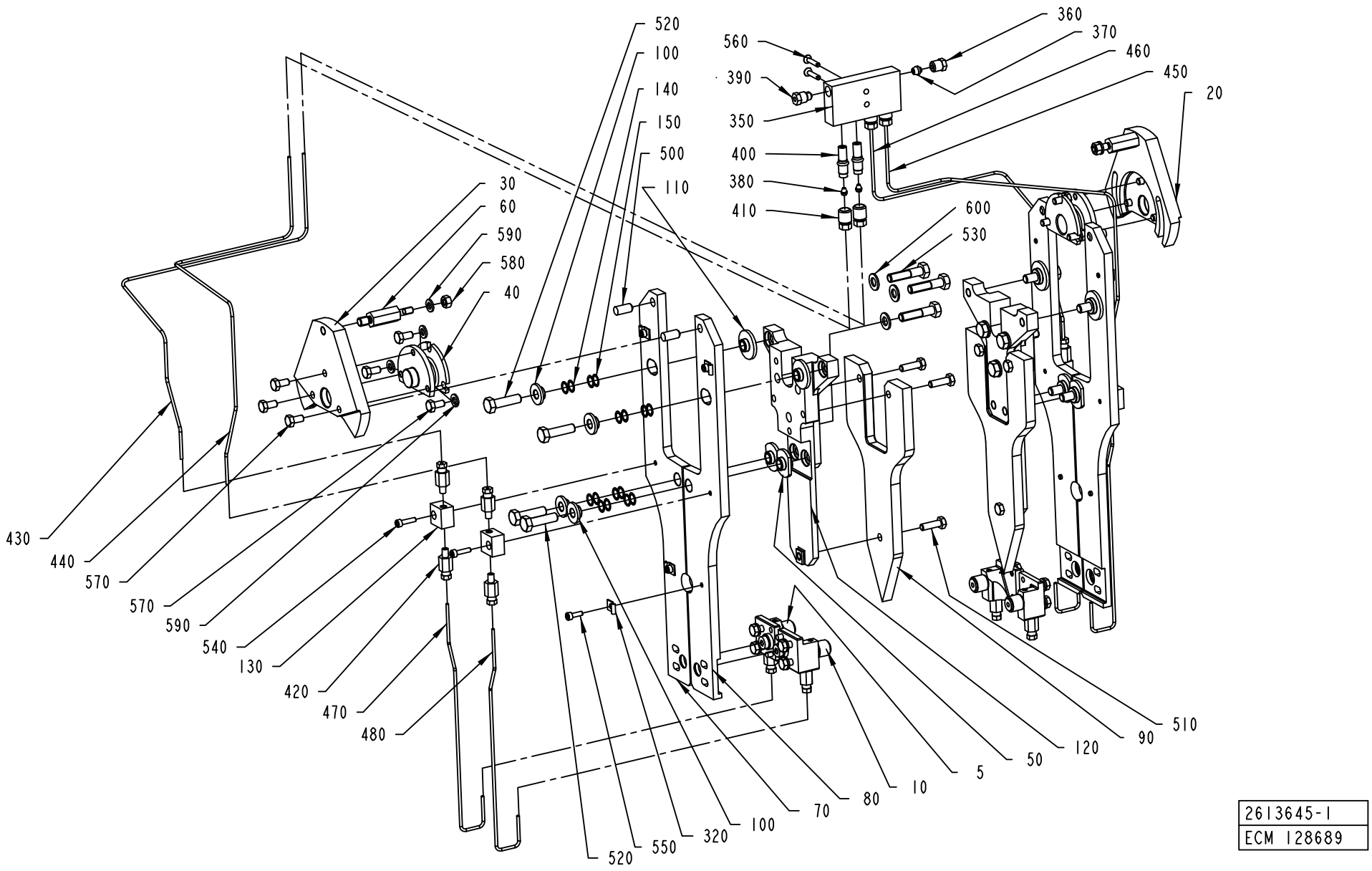

2613645-1
ECM 128689

ECM: 160388 - 20040309
Group number: 2613645-0100
Assembly Drawing: 2613645-1_1_AA

Pos	Part No	SP	UN	Qty	Description	Page No
TBA 0330S, TBA 0200B, TBA 0250B						
090	2664603-0000	A		2	CAM	
TBA 0500B, TBA 1000B						
090	2605066-0000	A		2	CURVE	
Common Parts						
005	2605226-0200	-		2	ROLLER UNIT	**2-105**
010	1499351-0200	-		2	ROLLER UNIT	**2-107**
020	2618377-0000	A		1	ECCENTRIC	
030	2618378-0000	A		1	ECCENTRIC	
040	2618259-0000	-		2	SPACER	
050	2613763-0000	A		4	SLEEVE	
060	2618302-0000	-		2	PIVOT PIN	
070	2614371-0000	A		2	ROLLER BRACKET	
080	2614373-0000	A		2	ROLLER BRACKET	
100	2614372-0000	A		8	SLEEVE	
110	2613764-0000	A		4	SLEEVE	
120	2613809-0000	A		2	SPACER	
130	2610793-0000	-		4	BLOCK	
140	2614376-0001	-		16	WASHER	
150	2614376-0002	-		16	WASHER	
320	90165-0058	-		8	PIPE CLIP FOR TUBE D=25 MM	
350	90032-0039	-		1	BLOCK 4 WAYS	
360	90134-0038	-		1	BUSHING/NUT INLET/OUTLET 4 MM	
370	90028-0024	-		1	CONE TUBE 4 MM	
380	90028-0020	-		4	CONE TUBE 2,5MM	
390	90087-0019	-		1	PLUG M10X1 STAINLESS	
400	90092-0052	-		4	METERING VALVE 10 MM3	
410	90134-0039	-		4	BUSHING VALVE CONNECTION 2,5 MM	
420	90134-0065	-		8	CONNECTION M6 TUBE 2,5 MM	
430	90166-0143	-	MM	550	TUBE 2,5 MM PA,TRANSP.	
440	90166-0143	-	MM	650	TUBE 2,5 MM PA,TRANSP.	
450	90166-0143	-	MM	600	TUBE 2,5 MM PA,TRANSP.	
460	90166-0143	-	MM	500	TUBE 2,5 MM PA,TRANSP.	
470	90266-0019	-	MM	290	PIPE	
480	90266-0019	-	MM	290	PIPE	
500	311103-0400	-		4	PARALLEL PIN ISO 2338 8M6X18 A1	
510	312105-0370	-		6	SCREW M6S ISO 4017 M6X20 A480	
520	312105-0455	-		8	SCREW M6S ISO 4017 M8X30 A480	
530	312105-0457	-		6	SCREW M6S ISO 4014 M8X35 A480	
540	312115-0293	-		4	SCREW ISO4762 M4X16 A4	
550	312115-0291	-		8	SCREW ISO4762 M4X12 A4	
560	312155-0295	-		2	SCREW EN 10642 MF6S M4X20 A480	
570	312105-0366	-		12	SCREW M6S ISO 4017 M6X12 A480	
580	312605-0316	-		2	HEXAGON NUT, M6M M6 A280	
590	315105-0153	-		8	WASHER BRB6,4X12RFR	
600	315105-0165	-		6	WASHER BRB8,4X16RFR	

Machine Type Group Description Used-In Group Number Page No

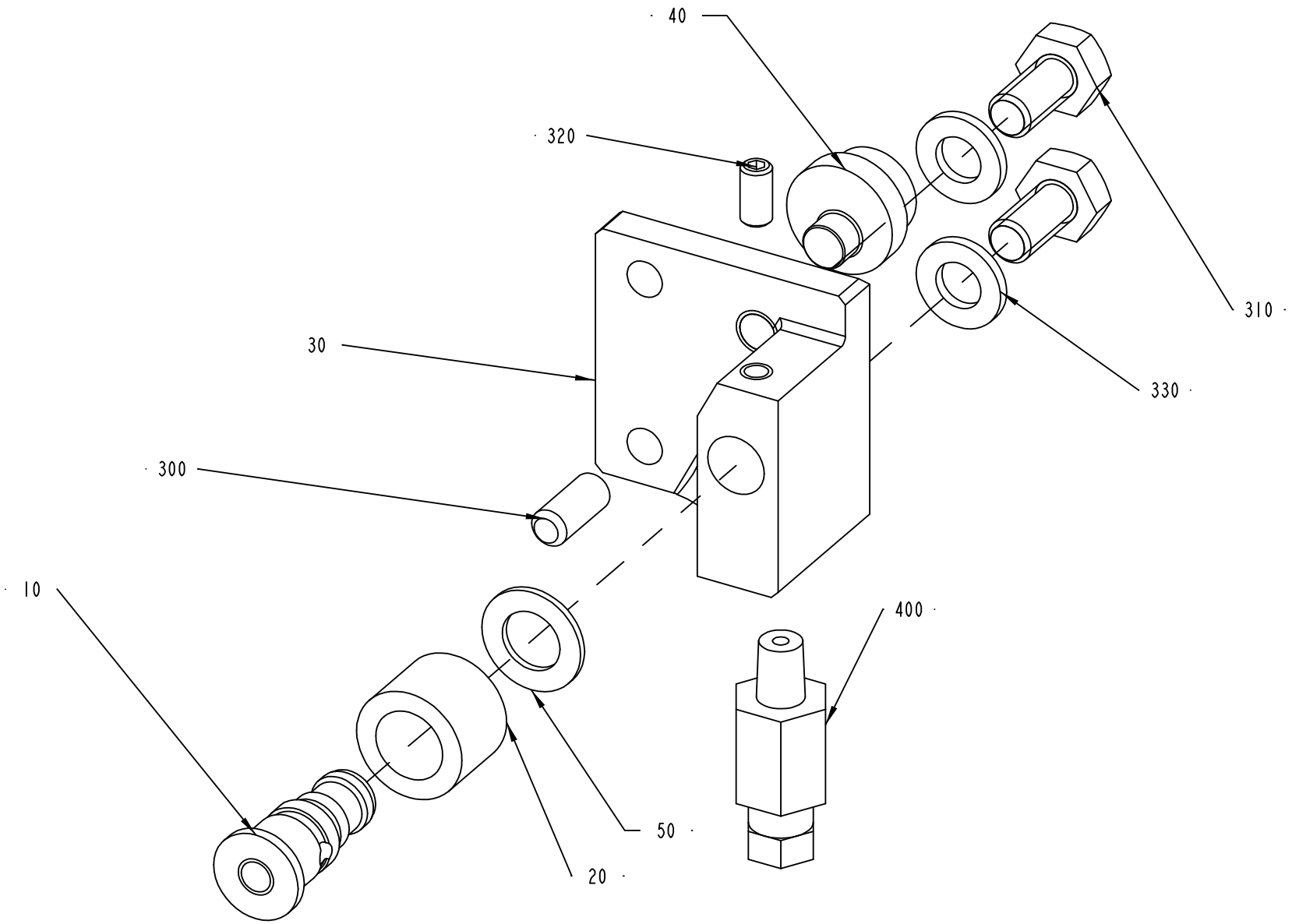

2605226-1
ECM 128689

ECM: 130256 - 20030909
Group number: 2605226-0200
Assembly Drawing: 2605226-1_1_AA

Pos	Part No	SP	UN	Qty	Description	Page No
-						
010	2603376-0000	A		1	AXLE PIN	
020	2603378-0000	A		1	ROLLER	
030	2605227-0000	-		1	HOLDER	
040	2603374-0000	-		1	ECCENTRIC	
050	2609923-0000	-		1	WASHER	
300	311103-0306	-		1	PARALLEL PIN ISO 2338 5M6X12 A1	
310	312105-0366	-		2	SCREW M6S ISO 4017 M6X12 A480	
320	312318-0287	-		1	SCREW ISO4029 M4X8 A4	
330	315105-0153	-		2	WASHER BRB6,4X12RFR	
400	90134-0065	-		1	CONNECTION M6 TUBE 2,5 MM	

Pos	Part No	SP	UN	Qty	Description	Page No

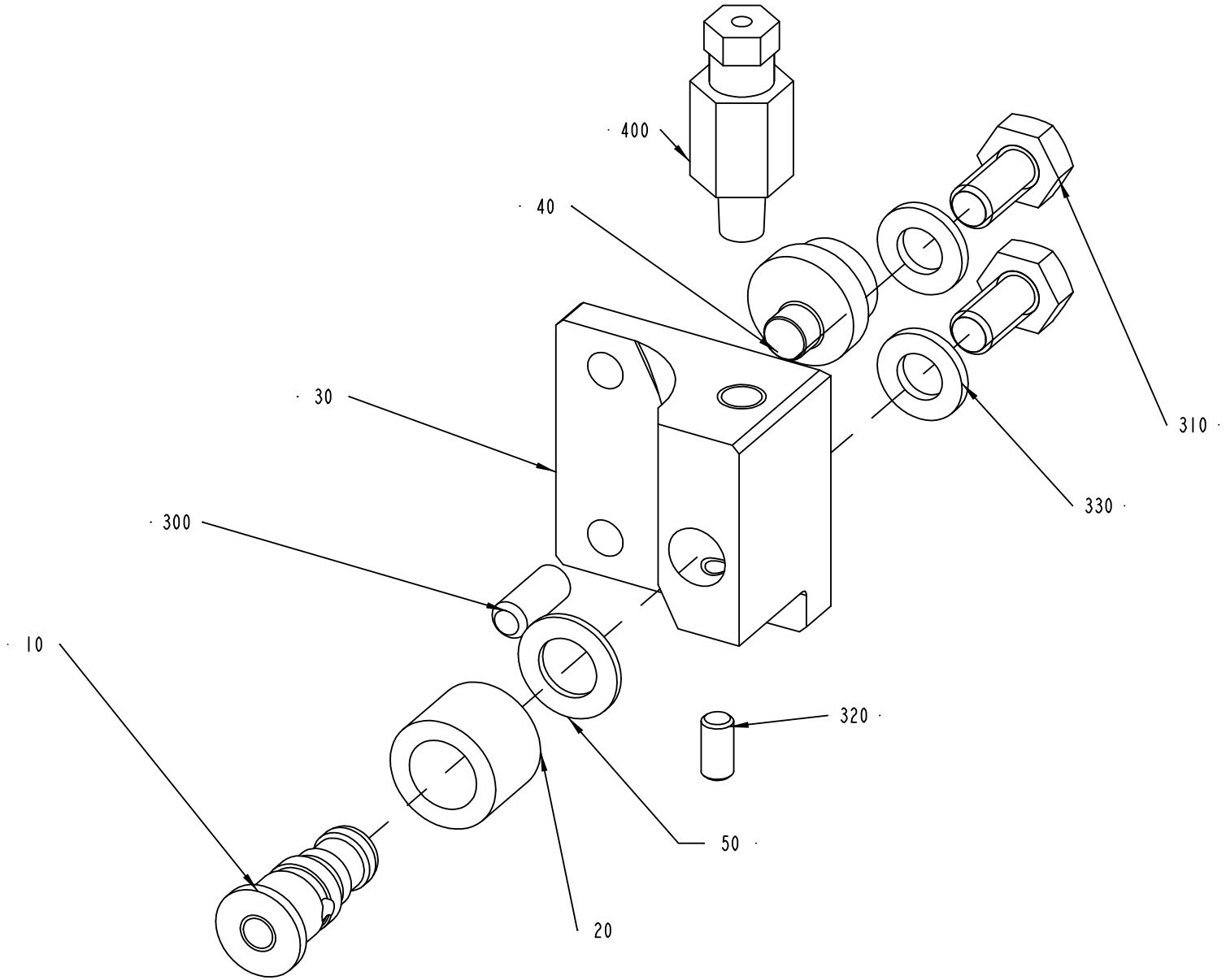

1499351-3
ECM 128689

ECM: 130255 - 20030909
Group number: 1499351-0200
Assembly Drawing: 1499351-3_1_AA

Pos	Part No	SP	UN	Qty	Description	Page No
-						
010	2603376-0000	A		1	AXLE PIN	
020	2603378-0000	A		1	ROLLER	
030	2603373-0000	-		1	HOLDER	
040	2603374-0000	-		1	ECCENTRIC	
050	2609923-0000	-		1	WASHER	
300	311103-0306	-		1	PARALLEL PIN ISO 2338 5M6X12 A1	
310	312105-0366	-		2	SCREW M6S ISO 4017 M6X12 A480	
320	312318-0287	-		1	SCREW ISO4029 M4X8 A4	
330	315105-0153	-		2	WASHER BRB6,4X12RFR	
400	90134-0065	-		1	CONNECTION M6 TUBE 2,5 MM	

Pos	Part No	SP	UN	Qty	Description	Page No

SUPPORT ROLLER

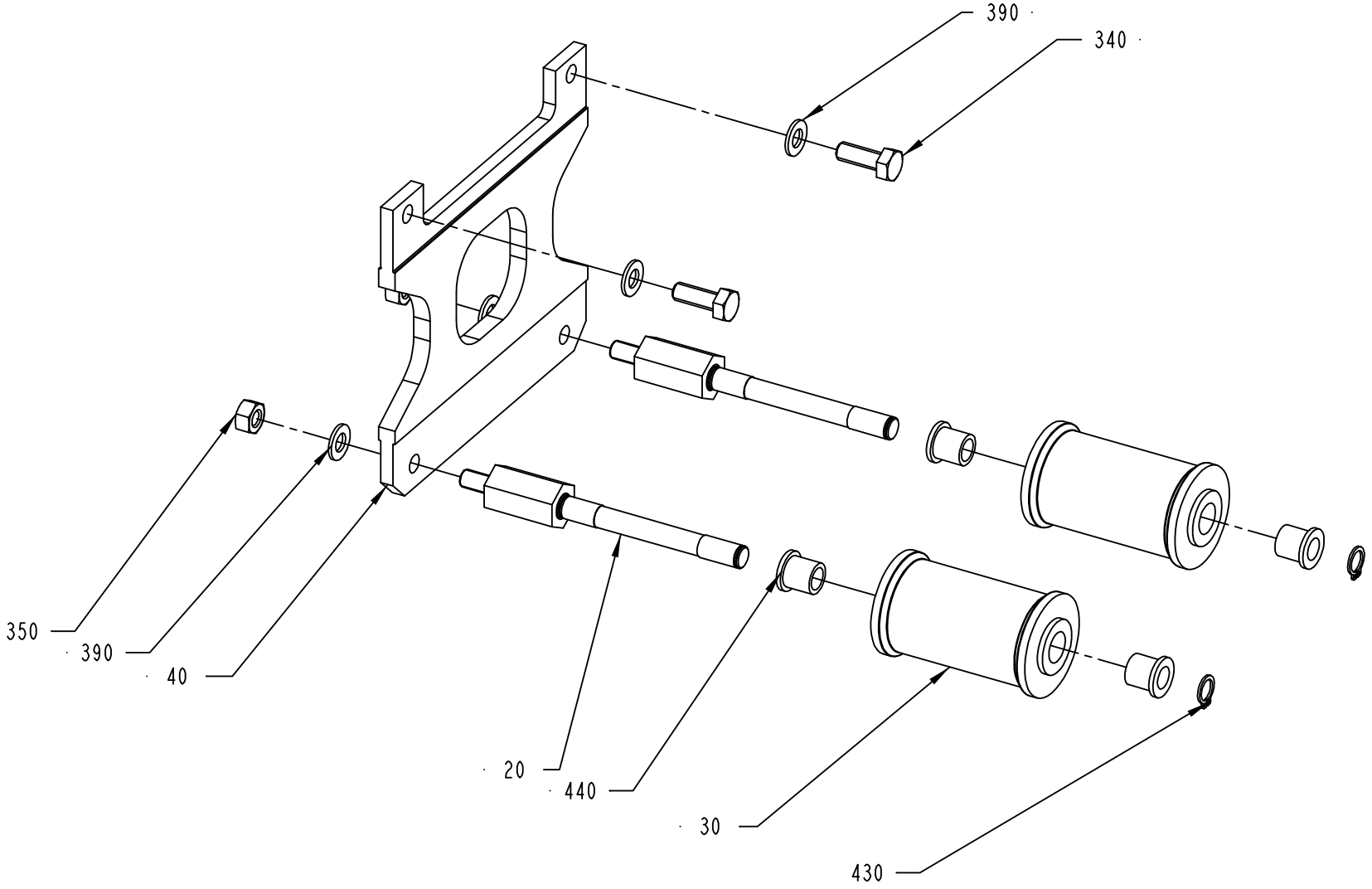

2613648-1
ECM 128689

ECM: 166032 - 20040331
Group number: 2613648-0100
Assembly Drawing: 2613648-1_1_AA

This list covers pages from 2-108 to 2-111

Pos	Part No	SP	UN	Qty	Description	Page No
TBA 1000B NOQC NOMOLDEDCAP (See drawing on page: 2-108)						
020	2619198-0000	A		2	SHAFT	
030	560122-0000	A		2	SUPPORT ROLLER	
040	2623783-0000	-		1	PLATE	
350	312605-0318	-		2	HEXAGON NUT, M6M M8 A280	
390	315105-0165	-		4	WASHER BRB8,4X16RFR	
TBA 0200B QC, TBA 0330S QC, TBA 0250B QC (See drawing on page: 2-108)						
020	2646345-0000	A		2	SHAFT	
030	978757-0000	A		2	ROLLER 180-284ML	
040	2646344-0000	-		1	PLATE	
350	312605-0318	-		2	HEXAGON NUT, M6M M8 A280	
390	315105-0165	-		4	WASHER BRB8,4X16RFR	
TBA 0200S						
020	2632818-0000	A		2	SHAFT	
030	978760-0000	A		2	ROLLER TBA200SL	
040	2632817-0000	-		1	PLATE	
350	312605-0318	-		2	HEXAGON NUT, M6M M8 A280	
390	315105-0165	-		4	WASHER BRB8,4X16RFR	
TBA 0500B QC, TBA 1000B QC (See drawing on page: 2-108)						
020	2619198-0000	A		2	SHAFT	
030	2619199-0000	A		2	ROLLER	
040	2619200-0000	-		1	PLATE	
350	312605-0318	-		2	HEXAGON NUT, M6M M8 A280	
390	315105-0165	-		4	WASHER BRB8,4X16RFR	
TBA 1000B NOQC STDA7 (See drawing on page: 2-110)						
020	2619198-0000	A		2	SHAFT	
025	2610974-0000	A		1	ROLLER	
030	560122-0000	A		1	SUPPORT ROLLER	
040	2623783-0000	-		1	PLATE	
350	312605-0318	-		2	HEXAGON NUT, M6M M8 A280	
390	315105-0165	-		4	WASHER BRB8,4X16RFR	
TBA 1000S NOMOLDEDCAP (See drawing on page: 2-108)						
020	2619198-0000	A		2	SHAFT	
030	569058-0000	A		2	SUPPORT ROLLER	
040	2623783-0000	-		1	PLATE	
350	312605-0318	-		2	HEXAGON NUT, M6M M8 A280	
390	315105-0165	-		4	WASHER BRB8,4X16RFR	
TBA 1000S STDA7 (See drawing on page: 2-110)						
020	2619198-0000	A		2	SHAFT	
025	2608149-0000	A		1	ROLLER	
030	2608150-0000	A		1	ROLLER	
040	2623783-0000	-		1	PLATE	
350	312605-0318	-		2	HEXAGON NUT, M6M M8 A280	
390	315105-0165	-		4	WASHER BRB8,4X16RFR	
TBA 1000SQ (See drawing on page: 2-108)						
020	2619198-0000	A		2	SHAFT	
030	1499678-0000	A		2	ROLLER	
040	2623783-0000	-		1	PLATE	
350	312605-0318	-		2	HEXAGON NUT, M6M M8 A280	
390	315105-0165	-		4	WASHER BRB8,4X16RFR	
TBA 1500S (See drawing on page: 2-108)						
020	2648846-0000	A		2	SHAFT	
030	560122-0000	A		2	SUPPORT ROLLER	
040	2648847-0000	-		1	PLATE	
390	315105-0165	-		2	WASHER BRB8,4X16RFR	
TPA 1000SQ (See drawing on page: 2-108)						
020	2648846-0000	A		2	SHAFT	
030	1524421-0000	A		2	ROLLER	
040	2642097-0000	-		1	PLATE	
390	315105-0165	-		2	WASHER BRB8,4X16RFR	
Common Parts						
340	312105-0452	-		2	SCREW M6S ISO 4017 M8X22 A4 80	
430	90141-0016	-		2	RETAINING RING FOR SHAFT DIN 471 10 A2	
440	90240-0180	A		4	FLANGE BUSHING 10X14X15MM	

Machine Type | Group Description | Used-In | Group Number | Page No

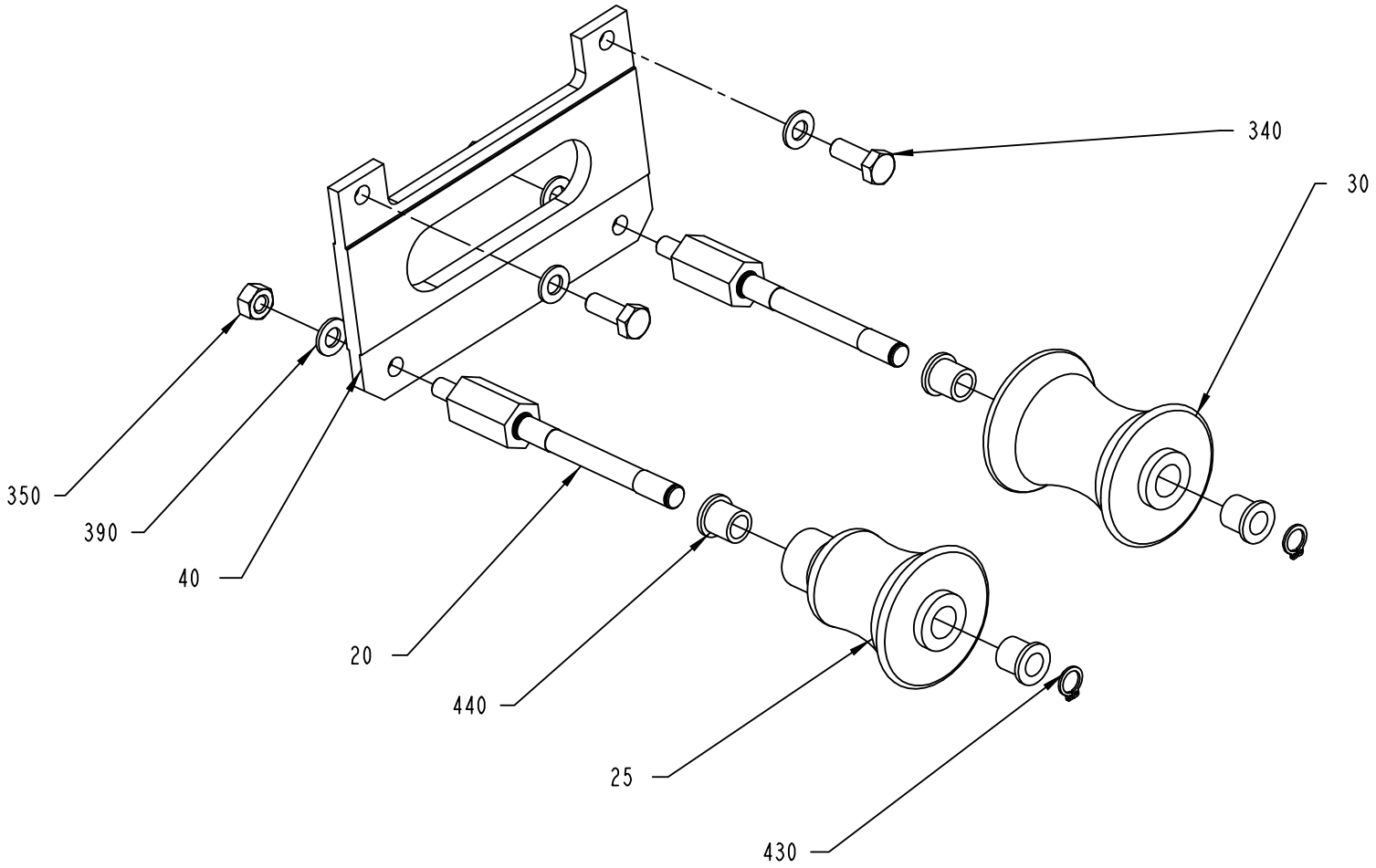

2613648-2
ECM 128689

ECM: 166032 - 20040331
Group number: 2613648-0100
Assembly Drawing: 2613648-2_1_AA

This list covers pages from 2-108 to 2-111

Pos	Part No	SP	UN	Qty	Description	Page No
TBA 1000B NOQC NOMOLDEDCAP (See drawing on page: 2-108)						
020	2619198-0000	A		2	SHAFT	
030	560122-0000	A		2	SUPPORT ROLLER	
040	2623783-0000	-		1	PLATE	
350	312605-0318	-		2	HEXAGON NUT, M6M M8 A280	
390	315105-0165	-		4	WASHER BRB8,4X16RFR	
TBA 0200B QC, TBA 0330S QC, TBA 0250B QC (See drawing on page: 2-108)						
020	2646345-0000	A		2	SHAFT	
030	978757-0000	A		2	ROLLER 180-284ML	
040	2646344-0000	-		1	PLATE	
350	312605-0318	-		2	HEXAGON NUT, M6M M8 A280	
390	315105-0165	-		4	WASHER BRB8,4X16RFR	
TBA 0200S						
020	2632818-0000	A		2	SHAFT	
030	978760-0000	A		2	ROLLER TBA200SL	
040	2632817-0000	-		1	PLATE	
350	312605-0318	-		2	HEXAGON NUT, M6M M8 A280	
390	315105-0165	-		4	WASHER BRB8,4X16RFR	
TBA 0500B QC, TBA 1000B QC (See drawing on page: 2-108)						
020	2619198-0000	A		2	SHAFT	
030	2619199-0000	A		2	ROLLER	
040	2619200-0000	-		1	PLATE	
350	312605-0318	-		2	HEXAGON NUT, M6M M8 A280	
390	315105-0165	-		4	WASHER BRB8,4X16RFR	
TBA 1000B NOQC STDA7 (See drawing on page: 2-110)						
020	2619198-0000	A		2	SHAFT	
025	2610974-0000	A		1	ROLLER	
030	560122-0000	A		1	SUPPORT ROLLER	
040	2623783-0000	-		1	PLATE	
350	312605-0318	-		2	HEXAGON NUT, M6M M8 A280	
390	315105-0165	-		4	WASHER BRB8,4X16RFR	
TBA 1000S NOMOLDEDCAP (See drawing on page: 2-108)						
020	2619198-0000	A		2	SHAFT	
030	569058-0000	A		2	SUPPORT ROLLER	
040	2623783-0000	-		1	PLATE	
350	312605-0318	-		2	HEXAGON NUT, M6M M8 A280	
390	315105-0165	-		4	WASHER BRB8,4X16RFR	
TBA 1000S STDA7 (See drawing on page: 2-110)						
020	2619198-0000	A		2	SHAFT	
025	2608149-0000	A		1	ROLLER	
030	2608150-0000	A		1	ROLLER	
040	2623783-0000	-		1	PLATE	
350	312605-0318	-		2	HEXAGON NUT, M6M M8 A280	
390	315105-0165	-		4	WASHER BRB8,4X16RFR	
TBA 1000SQ (See drawing on page: 2-108)						
020	2619198-0000	A		2	SHAFT	
030	1499678-0000	A		2	ROLLER	
040	2623783-0000	-		1	PLATE	
350	312605-0318	-		2	HEXAGON NUT, M6M M8 A280	
390	315105-0165	-		4	WASHER BRB8,4X16RFR	
TBA 1500S (See drawing on page: 2-108)						
020	2648846-0000	A		2	SHAFT	
030	560122-0000	A		2	SUPPORT ROLLER	
040	2648847-0000	-		1	PLATE	
390	315105-0165	-		2	WASHER BRB8,4X16RFR	
TPA 1000SQ (See drawing on page: 2-108)						
020	2648846-0000	A		2	SHAFT	
030	1524421-0000	A		2	ROLLER	
040	2642097-0000	-		1	PLATE	
390	315105-0165	-		2	WASHER BRB8,4X16RFR	
Common Parts						
340	312105-0452	-		2	SCREW M6S ISO 4017 M8X22 A4 80	
430	90141-0016	-		2	RETAINING RING FOR SHAFT DIN 471 10 A2	
440	90240-0180	A		4	FLANGE BUSHING 10X14X15MM	

Machine Type | Group Description | Used-In | Group Number | Page No

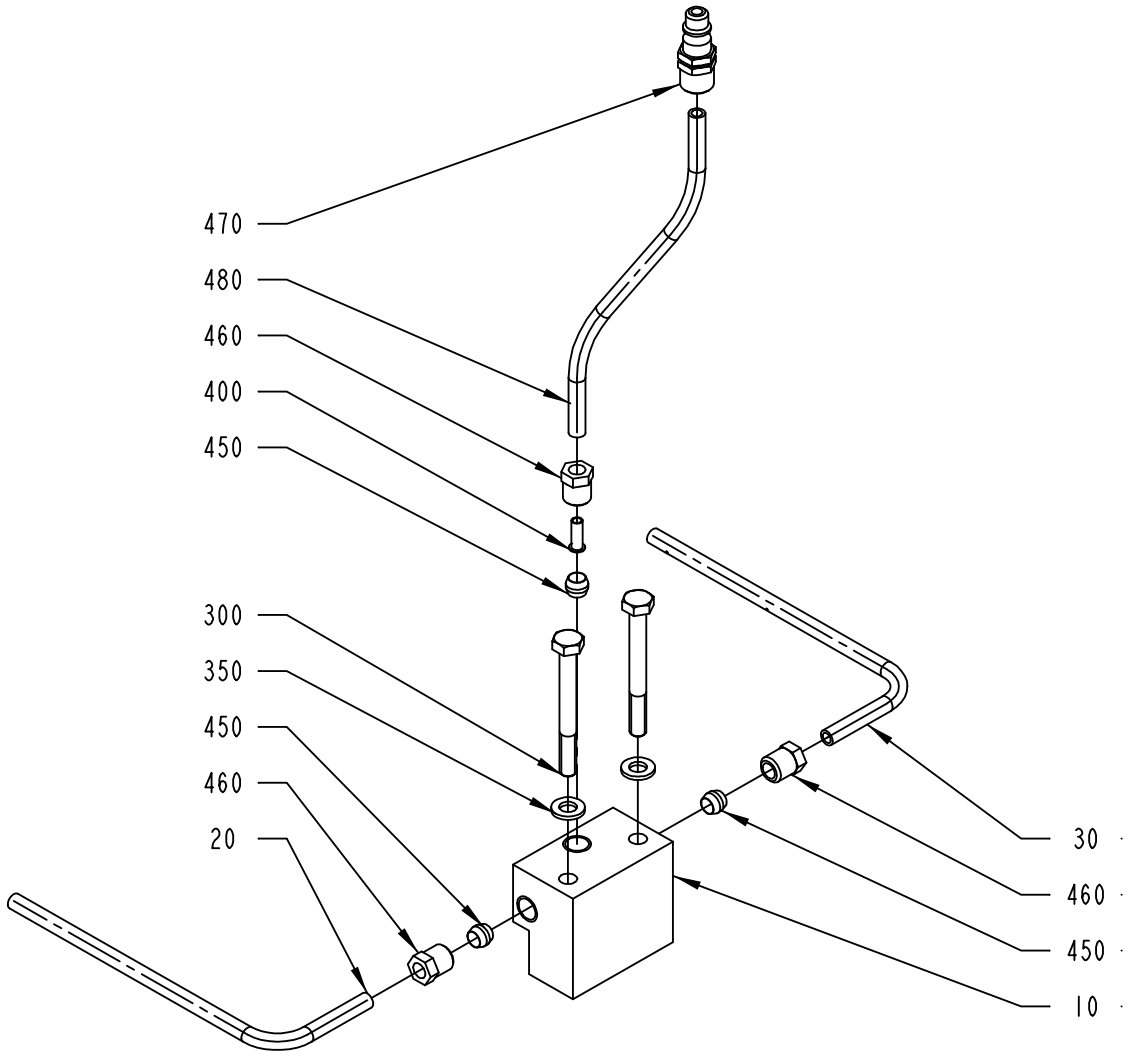

2556893-1
ECM 120277

ECM: 125227 - 20031216
Group number: 2556893-0100
Assembly Drawing: 2556893-1_1_AA

Pos	Part No	SP	UN	Qty	Description	Page No
TBA 0500B, TBA 1000S, TBA 1000SQ, TBA 1000B, TBA 1500S, TPA 1000SQ						
020	2532837-0000	B		1	TUBE FLUSHING DEVICE	
030	2532838-0000	B		1	TUBE FLUSHING DEVICE	
TBA 0330S, TBA 0200B, TBA 0200S, TBA 0250B						
020	2556894-0000	B		1	TUBE FLUSHING DEVICE	
030	2556895-0000	B		1	TUBE FLUSHING DEVICE	
Common Parts						
010	2556615-0000	B		1	PIPE CONNECTION	
300	312105-0381	-		2	SCREW M6S ISO 4014 M6X55 A480	
350	315105-0153	-		2	WASHER BRB6,4X12RFR	
400	342706-0130	-		1	ACCESSORIES, INSERT SLEEVE 6 MM	
450	90028-0022	-		3	CONE TUBE 6 MM	
460	90134-0055	-		3	BUSHING/NUT INLET/OUTLET 6 MM	
470	90163-0063	-		1	QUICK COUPLING, (M) 5450-6/4	
480	90166-0132	-	MM	1500	TUBE 6 MM PA,TRANSP.	

Pos	Part No	SP	UN	Qty	Description	Page No

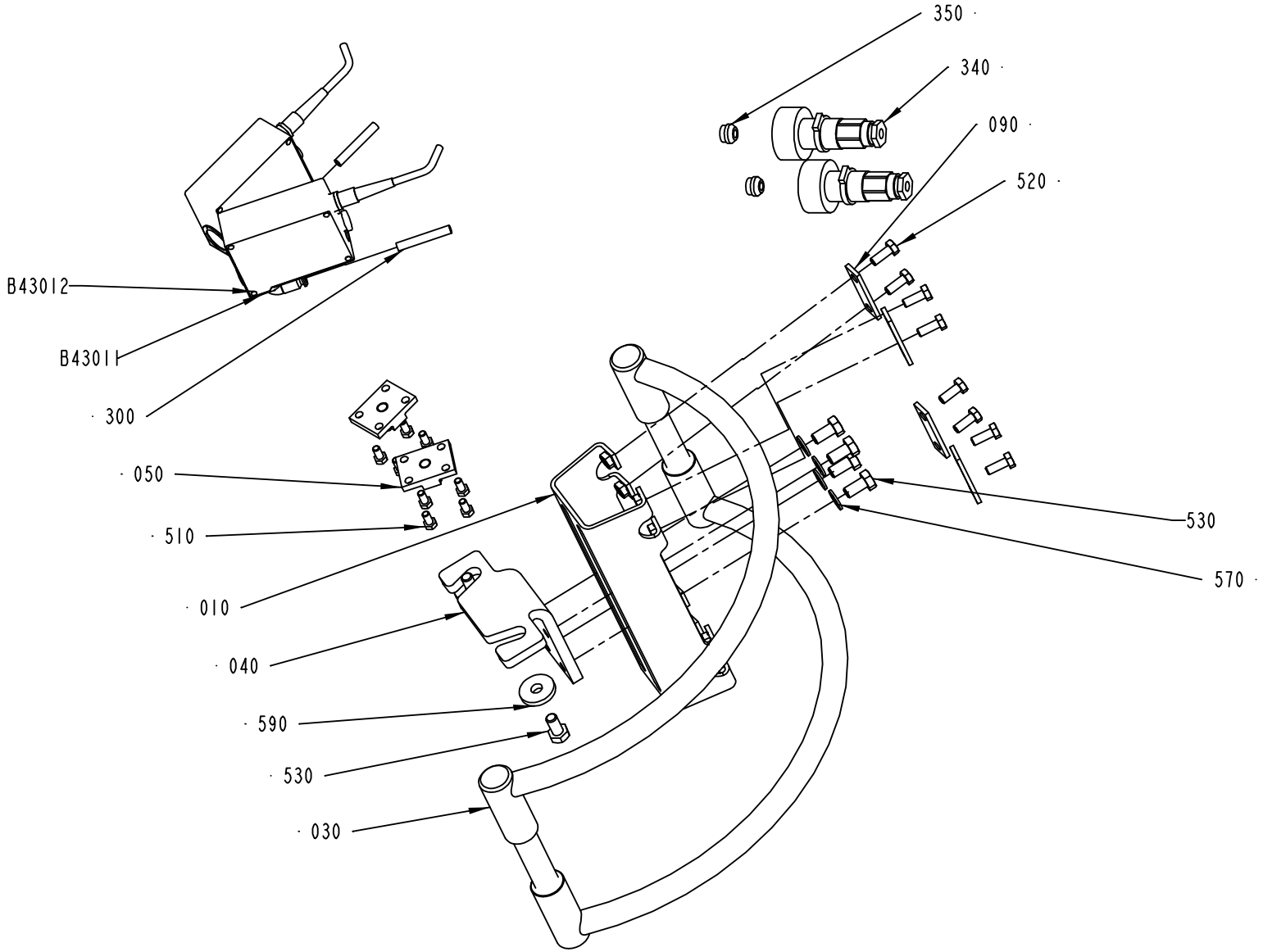

2616224-1
ECM 128689

ECM: 160391 - 20040309
Group number: 2616224-0100
Assembly Drawing: 2616224-1_1_AA

This list covers pages from 2-114 to 2-117

Pos	Part No	SP	UN	Qty	Description	Page No
TBA 0200B QC, TBA 0330S QC, TBA 0250B QC (See drawing on page: 2-116)						
010	2640963-0000	-		1	BRACKET	
020	2655096-0000	-		1	SLIDE	
040	2655095-0000	-		1	BRACKET	
060	2655097-0000	-		1	KNOB	
070	2655098-0000	-		1	SHAFT	
080	90335-0024	-		1	COMP. SPRING 22250, 1,25X13,75X27	
100	90287-0148	-		4	SCREW SPRINGLOAD. SLOTTED HEAD M5X12	
110	312318-0323	-		4	SCREW ISO4029 M5X8 A4	
TBA 0200S (See drawing on page: 2-114)						
010	1036685-0000	-		1	BRACKET	
040	1254110-0000	-		1	BRACKET	
TBA 0500B, TBA 1000S, TBA 1000SQ, TBA 1000B, TBA 1500S (See drawing on page: 2-114)						
010	1036685-0000	-		1	BRACKET	
040	1254109-0000	-		1	BRACKET	
TPA 1000SQ (See drawing on page: 2-114)						
010	1036685-0000	-		1	BRACKET	
040	1334910-0000	-		1	BRACKET	
Common Parts						
030	2616220-0000	-		1	BOW CLAMP	
050	1036674-0000	-		2	FASTENING PLATE	
090	1036673-0000	-		4	WASHER	
300	90166-0081	-	MM	1500	TUBE 6 MM PA BLUE	
340	90110-0235	A		2	CABLE CONTACT, PX0739/S	
350	90459-1501	A		2	CABLE SEALING, 12023/I, ELFA. 44-625-78	
510	312105-0325	-		8	SCREW M6S ISO 4017 M5X10 A480	
520	312105-0368	-		8	SCREW M6S ISO 4017 M6X16 A480	
530	312105-0449	-		6	SCREW M6S ISO 4017 M8X16 A480	
570	315105-0165	-		4	WASHER BRB8,4X16RFR	
590	315125-0165	-		2	WASHER TBRSB 8,4X26X5 A4	
B43011	90458-0601	A		1	PHOTOCELL, SICK PHOTOCELL 1	
	342732-0102	-		*1*	*ELBOW PIPE JOINT, EXT.THREAD, D=6MM-G1/8*	
B43012	90458-0601	A		1	PHOTOCELL, SICK PHOTOCELL 1	
	342732-0102	-		*1*	*ELBOW PIPE JOINT, EXT.THREAD, D=6MM-G1/8*	

Pos	Part No	SP	UN	Qty	Description	Page No

Machine Type | Group Description | Used-In | Group Number | Page No

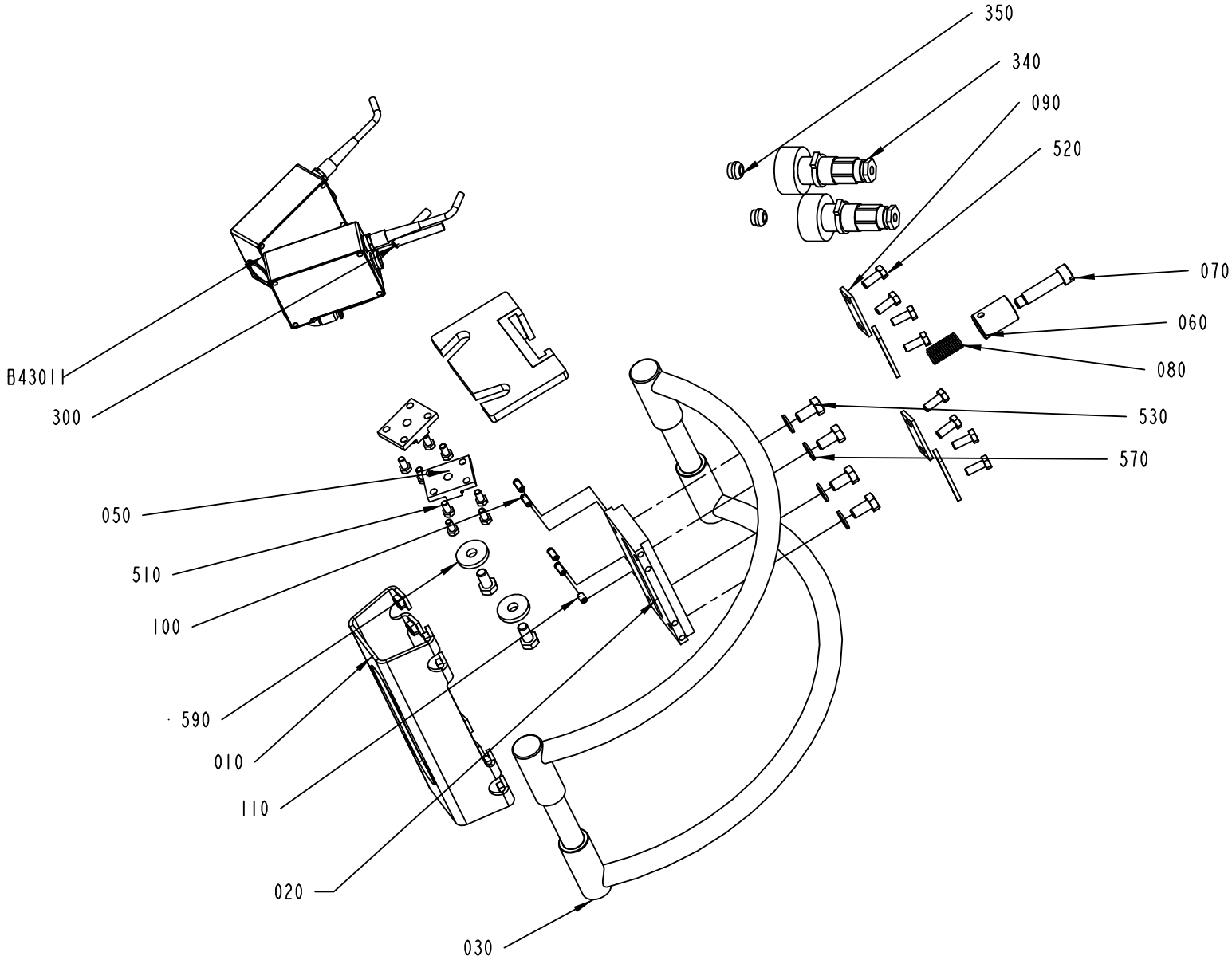

2616224-2
ECM 149527

ECM: 160391 - 20040309
Group number: 2616224-0100
Assembly Drawing: 2616224-2_1_AA

This list covers pages from 2-114 to 2-117

Pos	Part No	SP	UN	Qty	Description	Page No
TBA 0200B QC, TBA 0330S QC, TBA 0250B QC (See drawing on page: 2-116)						
010	2640963-0000	-		1	BRACKET	
020	2655096-0000	-		1	SLIDE	
040	2655095-0000	-		1	BRACKET	
060	2655097-0000	-		1	KNOB	
070	2655098-0000	-		1	SHAFT	
080	90335-0024	-		1	COMP. SPRING 22250, 1,25X13,75X27	
100	90287-0148	-		4	SCREW SPRINGLOAD. SLOTTED HEAD M5X12	
110	312318-0323	-		4	SCREW ISO4029 M5X8 A4	
TBA 0200S (See drawing on page: 2-114)						
010	1036685-0000	-		1	BRACKET	
040	1254110-0000	-		1	BRACKET	
TBA 0500B, TBA 1000S, TBA 1000SQ, TBA 1000B, TBA 1500S (See drawing on page: 2-114)						
010	1036685-0000	-		1	BRACKET	
040	1254109-0000	-		1	BRACKET	
TPA 1000SQ (See drawing on page: 2-114)						
010	1036685-0000	-		1	BRACKET	
040	1334910-0000	-		1	BRACKET	
Common Parts						
030	2616220-0000	-		1	BOW CLAMP	
050	1036674-0000	-		2	FASTENING PLATE	
090	1036673-0000	-		4	WASHER	
300	90166-0081	-	MM	1500	TUBE 6 MM PA BLUE	
340	90110-0235	A		2	CABLE CONTACT, PX0739/S	
350	90459-1501	A		2	CABLE SEALING, 12023/I, ELFA. 44-625-78	
510	312105-0325	-		8	SCREW M6S ISO 4017 M5X10 A480	
520	312105-0368	-		8	SCREW M6S ISO 4017 M6X16 A480	
530	312105-0449	-		6	SCREW M6S ISO 4017 M8X16 A480	
570	315105-0165	-		4	WASHER BRB8,4X16RFR	
590	315125-0165	-		2	WASHER TBRSB 8,4X26X5 A4	
B43011	90458-0601	A		1	PHOTOCELL, SICK PHOTOCELL 1	
	342732-0102	*-*		*1*	*ELBOW PIPE JOINT, EXT.THREAD, D=6MM-G1/8*	
B43012	90458-0601	A		1	PHOTOCELL, SICK PHOTOCELL 1	
	342732-0102	*-*		*1*	*ELBOW PIPE JOINT, EXT.THREAD, D=6MM-G1/8*	

Pos	Part No	SP	UN	Qty	Description	Page No

Machine Type | Group Description | Used-In | Group Number | Page No

This page is intentionally left blank.

ECM: 162658 - 20040309
Group number: 2657136-0100
Assembly Drawing:

Pos	Part No	SP	UN	Qty	Description	Page No
NOPT TBA 0200B, NOPT TBA 0250B, NOPT TBA 0330S						
	2674566-0001	-		1	PAM - SAM EASY DOWNLOAD	
TBA 0200B PT/FLEX, TBA 0250B PT/FLEX, TBA 0330S PT/FLEX						
	2675580-0001	-		1	PAM - SAM EASY DOWNLOAD	
TBA 0200S NOPT						
	2634581-0001	-		2	PAM - SAM EASY DOWNLOAD	**2-121**
TBA 0500B QC NOPT, TBA 1000B QC NOPT						
	2634577-0001	-		2	PAM - SAM EASY DOWNLOAD	**2-123**
TBA 0500B QC PT/FLEX, TBA 1000B QC PT/FLEX						
	2634579-0001	-		2	PAM - SAM EASY DOWNLOAD	**2-125**
TBA 1000B NOPT						
	2634565-0001	-		2	PAM - SAM EASY DOWNLOAD	**2-127**
TBA 1000B PT/FLEX						
	2634567-0001	-		2	PAM - SAM EASY DOWNLOAD	**2-129**
TBA 1000S NOPT						
	2634569-0001	-		2	PAM - SAM EASY DOWNLOAD	**2-131**
TBA 1000S PT/FLEX						
	2634571-0001	-		2	PAM - SAM EASY DOWNLOAD	**2-133**
TBA 1000SQ NOPT						
	2634573-0001	-		2	PAM - SAM EASY DOWNLOAD	**2-135**
TBA 1000SQ PT/FLEX						
	2634575-0001	-		2	PAM - SAM EASY DOWNLOAD	**2-137**
TBA 1500S NOPT						
	2652199-0001	-		2	PAM - SAM EASY DOWNLOAD	**2-139**
TBA 1500S PT/FLEX						
	2652202-0001	-		2	PAM - SAM EASY DOWNLOAD	**2-141**
TPA 1000SQ NOPT						
	2634585-0001	-		2	PAM - SAM EASY DOWNLOAD	**2-143**
TPA 1000SQ PT/FLEX						
	2565561-0001	-		2	PAM - SAM EASY DOWNLOAD	**2-145**
Common Parts						
	90459-0626	-		1	DISCETTE BOX FOR TWO 3,5" FLOPPYDISKS	

Pos	Part No	SP	UN	Qty	Description	Page No

Machine Type	Group Description	Used-In	Group Number	Page No

This page is intentionally left blank.

ECM: 137139 - 20040107
Group number: 2634581-0001
Assembly Drawing:

Pos	Part No	SP	UN	Qty	Description	Page No
-						
0010	2634582-0000	-		1	LABEL DISKETTE	
0020	90458-2027	-		1	FLOPPY DISK, 3,5" 1,44MB FOR PC	
0030	2634581-1001	-		1	PROGRAM OBJECT CODE	
0040	2565559-0000	-		1	MANUFACTURING INSTRUCTION	

Pos	Part No	SP	UN	Qty	Description	Page No

Machine Type | Group Description | Used-In | Group Number | Page No

This page is intentionally left blank.

ECM: 137137 - 20040107
Group number: 2634577-0001
Assembly Drawing:

Pos	Part No	SP	UN	Qty	Description	Page No
-						
0010	2634578-0000	-		1	LABEL DISKETTE	
0020	90458-2027	-		1	FLOPPY DISK, 3,5" 1,44MB FOR PC	
0030	2634577-1001	-		1	PROGRAM OBJECT CODE	
0040	2565559-0000	-		1	MANUFACTURING INSTRUCTION	

Pos	Part No	SP	UN	Qty	Description	Page No

This page is intentionally left blank.

ECM: 137138 - 20040107
Group number: 2634579-0001
Assembly Drawing:

Pos	Part No	SP	UN	Qty	Description	Page No
-						
0010	2634580-0000	-		1	LABEL DISKETTE	
0020	90458-2027	-		1	FLOPPY DISK, 3,5" 1,44MB FOR PC	
0030	2634579-1001	-		1	PROGRAM OBJECT CODE	
0040	2565559-0000	-		1	MANUFACTURING INSTRUCTION	

Pos	Part No	SP	UN	Qty	Description	Page No

This page is intentionally left blank.

ECM: 137131 - 20040107
Group number: 2634565-0001
Assembly Drawing:

Pos	Part No	SP	UN	Qty	Description	Page No
-						
0010	2634566-0000	-		1	LABEL DISKETTE	
0020	90458-2027	-		1	FLOPPY DISK, 3,5" 1,44MB FOR PC	
0030	2634565-1001	-		1	PROGRAM OBJECT CODE	
0040	2565559-0000	-		1	MANUFACTURING INSTRUCTION	

Pos	Part No	SP	UN	Qty	Description	Page No

This page is intentionally left blank.

ECM: 137132 - 20040107
Group number: 2634567-0001
Assembly Drawing:

Pos	Part No	SP	UN	Qty	Description	Page No
-						
0010	2634568-0000	-		1	LABEL DISKETTE	
0020	90458-2027	-		1	FLOPPY DISK, 3,5" 1,44MB FOR PC	
0030	2634567-1001	-		1	PROGRAM OBJECT CODE	
0040	2565559-0000	-		1	MANUFACTURING INSTRUCTION	

Pos	Part No	SP	UN	Qty	Description	Page No

Machine Type | Group Description | Used-In | Group Number | Page No

This page is intentionally left blank.

ECM: 137133 - 20040107
Group number: 2634569-0001
Assembly Drawing:

Pos	Part No	SP	UN	Qty	Description	Page No
-						
0010	2634570-0000	-		1	LABEL DISKETTE	
0020	90458-2027	-		1	FLOPPY DISK, 3,5" 1,44MB FOR PC	
0030	2634569-1001	-		1	PROGRAM OBJECT CODE	
0040	2565559-0000	-		1	MANUFACTURING INSTRUCTION	

Pos	Part No	SP	UN	Qty	Description	Page No

Machine Type | Group Description | Used-In | Group Number | Page No

This page is intentionally left blank.

ECM: 137134 - 20040107
Group number: 2634571-0001
Assembly Drawing:

Pos	Part No	SP	UN	Qty	Description	Page No
-						
0010	2634572-0000	-		1	LABEL DISKETTE	
0020	90458-2027	-		1	FLOPPY DISK, 3,5" 1,44MB FOR PC	
0030	2634571-1001	-		1	PROGRAM OBJECT CODE	
0040	2565559-0000	-		1	MANUFACTURING INSTRUCTION	

Pos	Part No	SP	UN	Qty	Description	Page No

Machine Type | Group Description | Used-In | Group Number | Page No

This page is intentionally left blank.

ECM: 137135 - 20040107
Group number: 2634573-0001
Assembly Drawing:

Pos	Part No	SP	UN	Qty	Description	Page No
-						
0010	2634574-0000	-		1	LABEL DISKETTE	
0020	90458-2027	-		1	FLOPPY DISK, 3,5" 1,44MB FOR PC	
0030	2634573-1001	-		1	PROGRAM OBJECT CODE	
0040	2565559-0000	-		1	MANUFACTURING INSTRUCTION	

Pos	Part No	SP	UN	Qty	Description	Page No

This page is intentionally left blank.

ECM: 137136 - 20040107
Group number: 2634575-0001
Assembly Drawing:

Pos	Part No	SP	UN	Qty	Description	Page No
-						
0010	2634576-0000	-		1	LABEL DISKETTE	
0020	90458-2027	-		1	FLOPPY DISK, 3,5" 1,44MB FOR PC	
0030	2634575-1001	-		1	PROGRAM OBJECT CODE	
0040	2565559-0000	-		1	MANUFACTURING INSTRUCTION	

Pos	Part No	SP	UN	Qty	Description	Page No

This page is intentionally left blank.

ECM: 146619 - 20040107
Group number: 2652199-0001
Assembly Drawing:

Pos	Part No	SP	UN	Qty	Description	Page No
-						
0010	2652200-0000	-		1	LABEL DISKETTE	
0020	90458-2027	-		1	FLOPPY DISK, 3,5" 1,44MB FOR PC	
0030	2652199-1001	-		1	PROGRAM OBJECT CODE	
0040	2565559-0000	-		1	MANUFACTURING INSTRUCTION	

Pos	Part No	SP	UN	Qty	Description	Page No

Machine Type	Group Description	Used-In	Group Number	Page No

This page is intentionally left blank.

ECM: 146620 - 20040107
Group number: 2652202-0001
Assembly Drawing:

Pos	Part No	SP	UN	Qty	Description	Page No
-						
0010	2652203-0000	-		1	LABEL DISKETTE	
0020	90458-2027	-		1	FLOPPY DISK, 3,5" 1,44MB FOR PC	
0030	2652202-1001	-		1	PROGRAM OBJECT CODE	
0040	2565559-0000	-		1	MANUFACTURING INSTRUCTION	

Pos	Part No	SP	UN	Qty	Description	Page No

This page is intentionally left blank.

ECM: 137141 - 20040107
Group number: 2634585-0001
Assembly Drawing:

Pos	Part No	SP	UN	Qty	Description	Page No
-						
0010	2634586-0000	-		1	LABEL DISKETTE	
0020	90458-2027	-		1	FLOPPY DISK, 3,5" 1,44MB FOR PC	
0030	2634585-1001	-		1	PROGRAM OBJECT CODE	
0040	2565559-0000	-		1	MANUFACTURING INSTRUCTION	

Pos	Part No	SP	UN	Qty	Description	Page No

This page is intentionally left blank.

ECM: 137142 - 20040107
Group number: 2565561-0001
Assembly Drawing:

Pos	Part No	SP	UN	Qty	Description	Page No
-						
0010	2565562-0000	-		1	LABEL DISKETTE	
0020	90458-2027	-		1	FLOPPY DISK, 3,5" 1,44MB FOR PC	
0030	2565561-1001	-		1	PROGRAM OBJECT CODE	
0040	2565559-0000	-		1	MANUFACTURING INSTRUCTION	

Pos	Part No	SP	UN	Qty	Description	Page No

This page is intentionally left blank.

ECM: 151865 - 20031128
Group number: 2660476-0100
Assembly Drawing:

Pos	Part No	SP	UN	Qty	Description	Page No
-						
	90166-0143	-	MM	3000	TUBE 2,5 MM PA,TRANSP.	
	90166-0108	-	MM	2500	TUBE 6 MM PA,TRANSP.	
	90134-0055	-		4	BUSHING/NUT INLET/OUTLET 6 MM	
	90134-0052	-		8	PLUG DOSING BLOCK	
	90134-0030	-		5	SLEEVE FOR PLASTIC TUBE	
	90092-0052	-		8	METERING VALVE 10 MM3	
	90087-0019	-		5	PLUG M10X1 STAINLESS	
	90028-0022	-		10	CONE TUBE 6 MM	
	90028-0020	-		8	CONE TUBE 2,5MM	

Pos	Part No	SP	UN	Qty	Description	Page No

Machine Type | Group Description | Used-In | Group Number | Page No

Tetra Pak

SPC
Spare Parts Catalogue

This page is intentionally left blank.

ECM: 162659 - 20040309
Group number: 2634506-0100
Assembly Drawing:

Pos	Part No	SP	UN	Qty	Description	Page No
-						
010	2634509-0100	-		1	VOLUME KIT	**3-5**
050	1361935-0100	-		1	FRAME	**3-215**
060	1361558-0100	-		1	LIFTING KIT-WHEEL	**3-217**
070	599815-0100	-		1	HOLDING FIXTURE	**3-219**
080	1361559-0100	-		1	PULLER	**3-221**
090	2554287-0100	-		1	SUPPORTING PART	**3-223**
100	1499571-0100	-		2	PAPER REEL HOLDER	**3-225**
110	2641396-0100	-		1	BENDING ROLLER	**3-227**
120	2641398-0100	-		1	SQUEE-GEE ROLLER	**3-229**
130	2655614-0100	-		1	TRANSFORMER	**3-231**
150	1363768-0000	-		1	BOX	

Pos	Part No	SP	UN	Qty	Description	Page No

This page is intentionally left blank.

ECM: 162660 - 20040309
Group number: 2634509-0100
Assembly Drawing:

Pos	Part No	SP	UN	Qty	Description	Page No
NOQC						
010	1361922-0200	-		1	DROP CHUTE VARIANT	**3-7**
020	1361923-0200	-		1	INFEED CONVEYOR VARIANT	**3-9, 3-11, 3-13**
050	1285012-0300	-		1	FOLDING PART	**3-15**
060	1361918-0300	-		1	WHEEL	**3-43, 3-45**
QC						
010	2537128-0100	-		1	DROP CHUTE VARIANT	**3-47**
020	2522129-0100	-		1	INFEED CONVEYOR VARIANT	**3-49, 3-51**
050	2543480-0100	-		1	FOLDING PART	**3-57**
060	2523811-0100	-		1	WHEEL	**3-73**
Common Parts						
030	1144324-0300	-		1	FRAMEWORK	**3-77**
040	1144329-0300	-		1	PULL-DOWN DEVICE	**3-79, 3-81**
070	1487158-0300	-		1	FLAP HEATER VARIANT	**3-87, 3-89**
080	1144331-0300	-		1	PRESSURE DEVICE	**3-91, 3-93**
090	1487825-0200	-		1	RAIL	**3-95, 3-97**
100	1361920-0400	-		1	RAIL OUTFEED	**3-99, 3-101, 3-103**
110	1361921-0400	-		1	VOLUME KIT OUT FEED	**3-107**
120	2634511-0100	-		1	MECHANICAL DIFFERENCES	**3-119**
150	1361935-0100	-		1	FRAME	**3-215**

Pos	Part No	SP	UN	Qty	Description	Page No

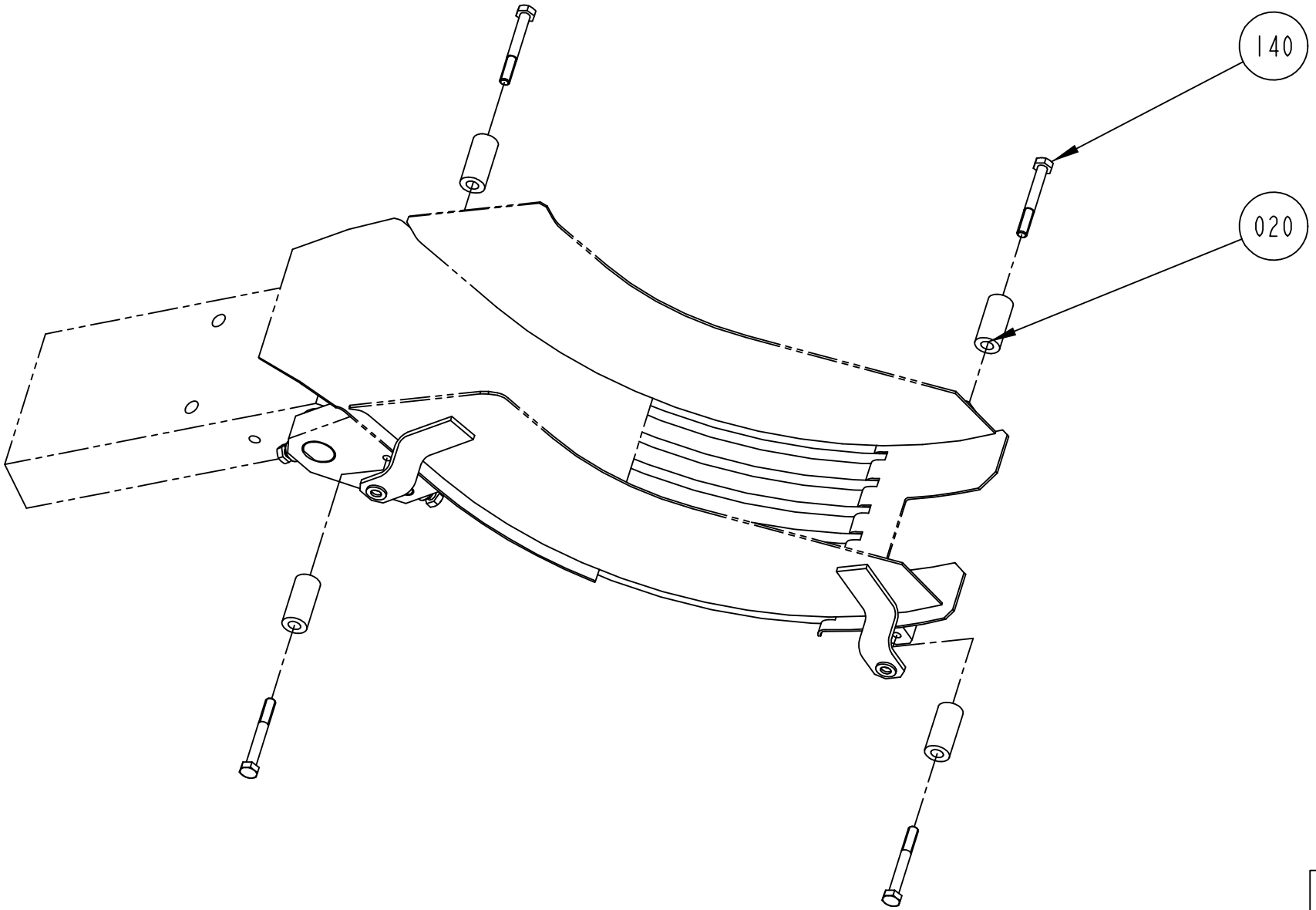

S-1361922-1
ECN 71984

ECM: 118984 - 20021217
Group number: 1361922-0200
Assembly Drawing: 1361922-1_1_AC

Pos	Part No	SP	UN	Qty	Description	Page No
TBA 0200S						
020	315115-0153	-		4	WASHER PLAIN, TBRB 6,4/12 H=3	
140	312105-0370	-		4	SCREW M6S ISO 4017 M6X20 A480	
TBA 0330S, TBA 0200B, TBA 0250B						
020	1317218-0000	-		4	SPACER	
140	312105-0374	-		4	SCREW M6S ISO 4014 M6X30 A480	
TBA 0500B, TBA 1000B						
020	1260714-0000	-		4	SPACER	
140	312105-0382	-		4	SCREW M6S ISO 4014 M6X60 A480	
TBA 1000S						
020	1279670-0000	-		4	SPACER	
140	312105-0382	-		4	SCREW M6S ISO 4014 M6X60 A480	
TBA 1000SQ						
020	1487929-0000	-		4	SPACER	
140	312105-0379	-		4	SCREW M6S ISO 4014 M6X45 A480	
TBA 1500S						
140	312105-0366	-		4	SCREW M6S ISO 4017 M6X12 A480	
TPA 1000SQ						
140	312105-0366	-		4	SCREW M6S ISO 4017 M6X12 A480	

Pos	Part No	SP	UN	Qty	Description	Page No

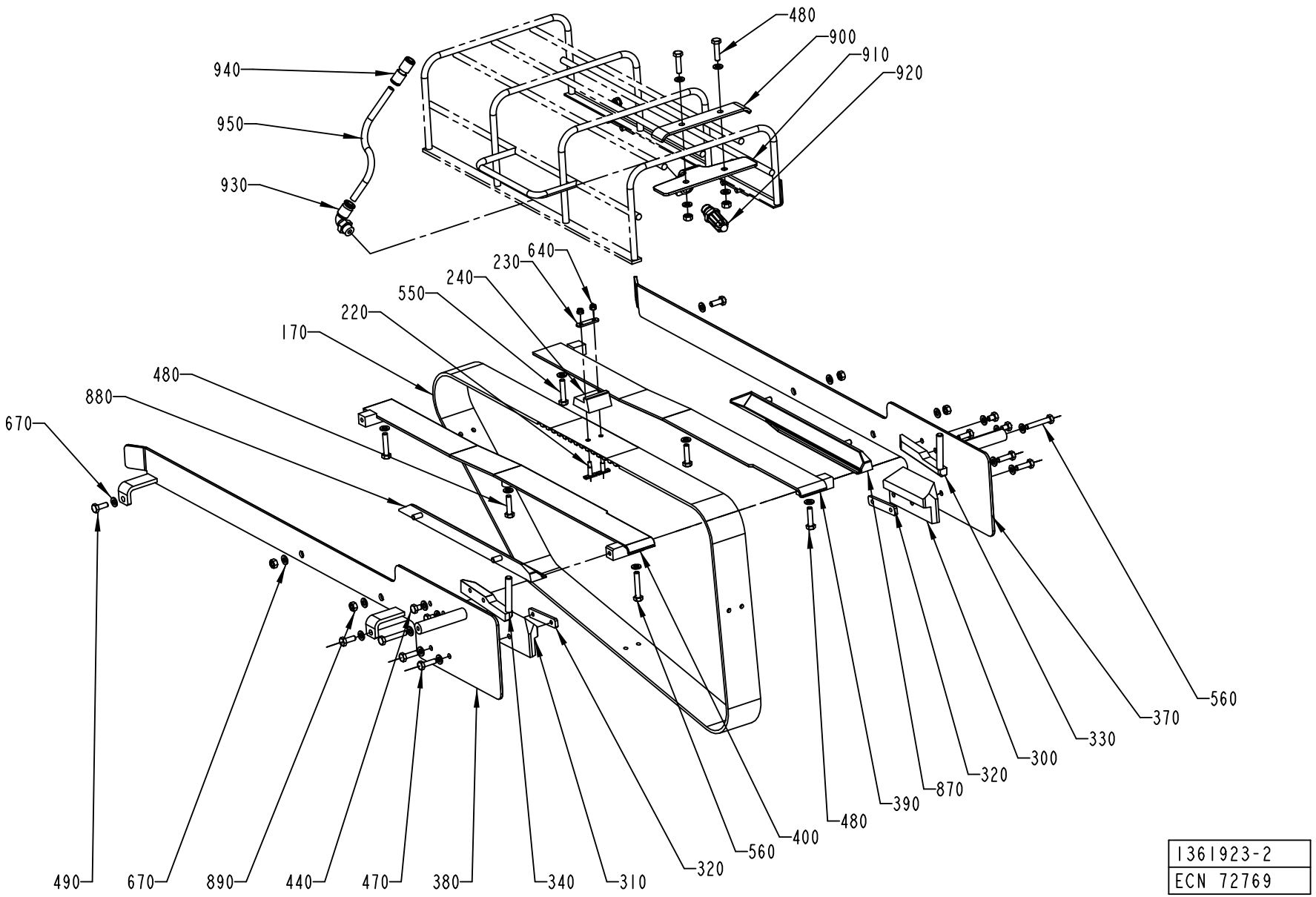

1361923-2
ECN 72769

ECM: 161658 - 20040305
Group number: 1361923-0200
Assembly Drawing: 1361923-2_1_AC

This list covers pages from 3-8 to 3-13

Pos	Part No	SP	UN	Qty	Description	Page No
TPA 1000SQ (See drawing on pages: 3-8, 3-10, 3-12)						
170	1519338-0000	A		1	TIMING BELT	
220	1517476-0000	A		6	WEDGE	
230	1517477-0000	-		3	PLATE	
240	1519344-0000	A		3	CARRIER	
300	1517481-0000	A		1	SLIDE	
310	1517480-0000	A		1	SLIDE	
320	2543242-0000	-		2	ANGLE BLOCK	
330	1517478-0000	-		1	BAR	
340	1517479-0000	-		1	BAR	
370	1517474-0000	-		1	GUIDE	
380	1517475-0000	-		1	GUIDE	
390	1519345-0000	-		1	GUIDE	
400	1519346-0000	-		1	GUIDE	
440	312105-0366	-		4	SCREW M6S ISO 4017 M6X12 A480	
470	312105-0368	-		4	SCREW M6S ISO 4017 M6X16 A480	
500	312105-0364	-		4	SCREW M6S ISO 4017 M6X10 A480	
550	312109-0376	-		2	SCREW M6S ISO 4017 M6X35 A480	
560	312105-0376	-		3	SCREW M6S ISO 4014 M6X35 A480	
640	312812-0312	-		6	HEXAGON NUT, NY-LOCK M4 A480	
870	1539983-0000	-		1	GUIDE	
880	1539984-0000	-		1	GUIDE	
TBA 0200B (See drawing on pages: 3-8, 3-10, 3-12)						
170	1144783-0000	A		1	TIMING BELT	
390	1282290-0000	-		1	GUIDE	
400	1282291-0000	-		1	GUIDE	
440	312105-0362	-		4	SCREW M6S ISO 4017 M6X8 A480	
470	312105-0370	-		4	SCREW M6S ISO 4017 M6X20 A480	
480	312105-0372	-		5	SCREW M6S ISO 4017 M6X25 A480	
550	312109-0374	-		2	SCREW M6S ISO 4017 M6X30 A480	
560	312105-0376	-		3	SCREW M6S ISO 4014 M6X35 A480	
670	315105-0153	-		28	WASHER BRB6,4X12RFR	
890	312605-0316	-		6	HEXAGON NUT, M6M M6 A280	
900	1499476-0000	-		1	HOLDER	
910	1499475-0000	-		1	HOLDER	
920	90424-0068	-		1	AIR NOZZLE, G1/4, MOD. 216 BSP	
930	342732-0104	-		1	ELBOW PIPE JOINT, EXT.THREAD, D=8MM-G1/4	
940	342728-0103	-		1	PIPE COUPLING 8 MM	
950	90166-0013	-	MM	700	TUBE 8 MM PA BLUE	
TBA 0200S (See drawing on pages: 3-8, 3-10, 3-12)						
170	1144783-0000	A		1	TIMING BELT	
370	1499136-0000	-		1	GUIDE	
380	1499135-0000	-		1	GUIDE	
390	1282290-0000	-		1	GUIDE	
400	1282291-0000	-		1	GUIDE	
440	312105-0362	-		4	SCREW M6S ISO 4017 M6X8 A480	
470	312105-0370	-		4	SCREW M6S ISO 4017 M6X20 A480	
480	312105-0372	-		5	SCREW M6S ISO 4017 M6X25 A480	
550	312109-0374	-		2	SCREW M6S ISO 4017 M6X30 A480	
560	312105-0376	-		3	SCREW M6S ISO 4014 M6X35 A480	
670	315105-0153	-		28	WASHER BRB6,4X12RFR	
890	312605-0316	-		6	HEXAGON NUT, M6M M6 A280	
900	1499476-0000	-		1	HOLDER	
910	1499475-0000	-		1	HOLDER	
920	90424-0068	-		1	AIR NOZZLE, G1/4, MOD. 216 BSP	
930	342732-0104	-		1	ELBOW PIPE JOINT, EXT.THREAD, D=8MM-G1/4	
940	342728-0103	-		1	PIPE COUPLING 8 MM	
950	90166-0013	-	MM	700	TUBE 8 MM PA BLUE	
TBA 0250B (See drawing on pages: 3-8, 3-10, 3-12)						
170	1144783-0000	A		1	TIMING BELT	
390	1282290-0000	-		1	GUIDE	
400	1282291-0000	-		1	GUIDE	
440	312105-0362	-		4	SCREW M6S ISO 4017 M6X8 A480	
470	312105-0370	-		4	SCREW M6S ISO 4017 M6X20 A480	
480	312105-0372	-		5	SCREW M6S ISO 4017 M6X25 A480	
550	312109-0374	-		2	SCREW M6S ISO 4017 M6X30 A480	
560	312105-0376	-		3	SCREW M6S ISO 4014 M6X35 A480	
670	315105-0153	-		28	WASHER BRB6,4X12RFR	
890	312605-0316	-		6	HEXAGON NUT, M6M M6 A280	
900	1499476-0000	-		1	HOLDER	
910	1499475-0000	-		1	HOLDER	
920	90424-0068	-		1	AIR NOZZLE, G1/4, MOD. 216 BSP	
930	342732-0104	-		1	ELBOW PIPE JOINT, EXT.THREAD, D=8MM-G1/4	
940	342728-0103	-		1	PIPE COUPLING 8 MM	
950	90166-0013	-	MM	700	TUBE 8 MM PA BLUE	
TBA 0330S (See drawing on pages: 3-8, 3-10, 3-12)						
170	1144783-0000	A		1	TIMING BELT	
300	2544997-0000	A		1	SLIDE	
310	2544998-0000	A		1	SLIDE	
330	2545000-0000	-		1	BAR	
340	2544999-0000	-		1	BAR	
370	2544996-0000	-		1	GUIDE	

Machine Type | Group Description | Used-In | Group Number | Page No

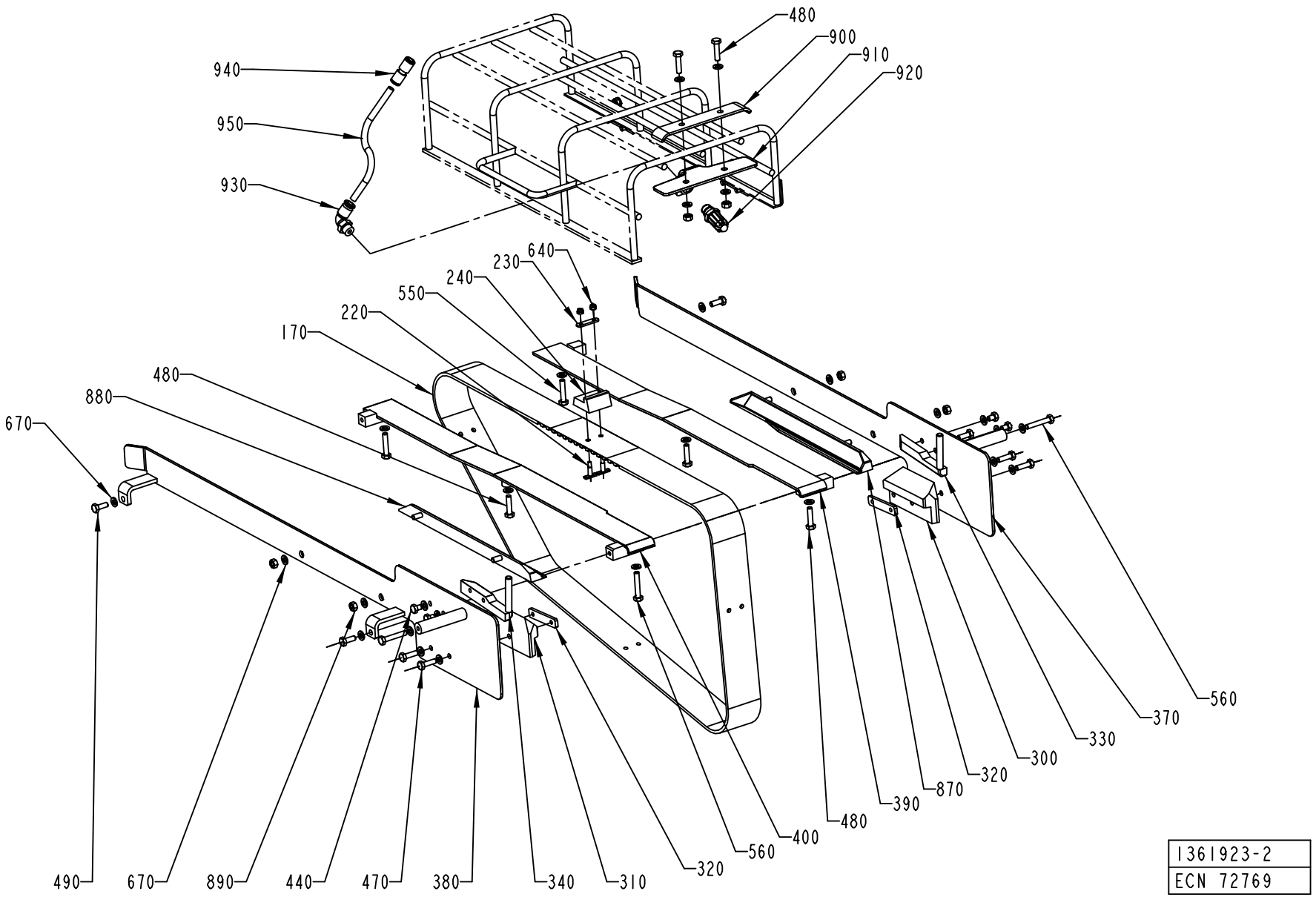

1361923-2
ECN 72769

ECM: 161658 - 20040305
Group number: 1361923-0200
Assembly Drawing: 1361923-2_1_AC

This list covers pages from 3-8 to 3-13

Pos	Part No	SP	UN	Qty	Description	Page No
TBA 0330S (Cont'd) (See drawing on pages: 3-8, 3-10, 3-12)						
380	2544995-0000	-		1	GUIDE	
390	2529610-0000	-		1	GUIDE	
400	2529609-0000	-		1	GUIDE	
440	312105-0362	-		4	SCREW M6S ISO 4017 M6X8 A480	
470	312105-0370	-		4	SCREW M6S ISO 4017 M6X20 A480	
550	312109-0374	-		2	SCREW M6S ISO 4017 M6X30 A480	
560	312105-0376	-		3	SCREW M6S ISO 4014 M6X35 A480	
670	315105-0153	-		16	WASHER BRB6,4X12RFR	
890	312605-0316	-		2	HEXAGON NUT, M6M M6 A280	
TBA 0500B (See drawing on pages: 3-8, 3-10, 3-12)						
170	1144783-0000	A		1	TIMING BELT	
470	312105-0370	-		4	SCREW M6S ISO 4017 M6X20 A480	
550	312109-0374	-		2	SCREW M6S ISO 4017 M6X30 A480	
560	312105-0376	-		3	SCREW M6S ISO 4014 M6X35 A480	
TBA 1000B (See drawing on pages: 3-8, 3-10, 3-12)						
170	1144783-0000	A		1	TIMING BELT	
240	1144919-0000	A		4	CARRIER	
390	1282290-0000	-		1	GUIDE	
400	1282291-0000	-		1	GUIDE	
440	312105-0362	-		4	SCREW M6S ISO 4017 M6X8 A480	
470	312105-0370	-		4	SCREW M6S ISO 4017 M6X20 A480	
550	312109-0374	-		2	SCREW M6S ISO 4017 M6X30 A480	
560	312105-0376	-		3	SCREW M6S ISO 4014 M6X35 A480	
TBA 1000S (See drawing on pages: 3-8, 3-10, 3-12)						
170	1144783-0000	A		1	TIMING BELT	
240	1144919-0000	A		4	CARRIER	
440	312105-0362	-		4	SCREW M6S ISO 4017 M6X8 A480	
470	312105-0370	-		4	SCREW M6S ISO 4017 M6X20 A480	
550	312109-0374	-		2	SCREW M6S ISO 4017 M6X30 A480	
560	312105-0376	-		3	SCREW M6S ISO 4014 M6X35 A480	
TBA 1000SQ (See drawing on pages: 3-8, 3-10, 3-12)						
170	1144783-0000	A		1	TIMING BELT	
320	1144621-0000	-		2	PLATE	
440	312105-0362	-		4	SCREW M6S ISO 4017 M6X8 A480	
470	312105-0370	-		4	SCREW M6S ISO 4017 M6X20 A480	
550	312109-0374	-		2	SCREW M6S ISO 4017 M6X30 A480	
560	312105-0376	-		3	SCREW M6S ISO 4014 M6X35 A480	
TBA 1500S (See drawing on pages: 3-8, 3-10, 3-12)						
220	1346471-0000	A		6	WEDGE	
230	1144918-0000	-		3	PLATE	
300	1334561-0000	A		1	SLIDE	
310	1334562-0000	A		1	SLIDE	
320	1144621-0000	-		2	PLATE	
330	1317805-0000	-		1	BAR	
340	1334271-0000	-		1	BAR	
440	312105-0362	-		4	SCREW M6S ISO 4017 M6X8 A480	
470	312105-0370	-		4	SCREW M6S ISO 4017 M6X20 A480	
550	312109-0374	-		2	SCREW M6S ISO 4017 M6X30 A480	
560	312105-0376	-		3	SCREW M6S ISO 4014 M6X35 A480	
640	312812-0312	-		6	HEXAGON NUT, NY-LOCK M4 A480	
Common Parts						
170	1349152-0000	A		1	TIMING BELT	
220	1346471-0000	A		8	WEDGE	
220	1346736-0000	A		8	WEDGE	
230	1144918-0000	-		4	PLATE	
240	1282848-0000	A		4	CARRIER	
240	1558864-0000	A		4	CARRIER	
240	1558700-0000	A		4	CARRIER	
240	1282287-0000	A		4	CARRIER	
300	1532257-0000	A		1	SLIDE	
300	1490033-0000	A		1	SLIDE	
300	1348137-0000	A		1	SLIDE	
300	1348136-0000	A		1	SLIDE	
300	1348135-0000	A		1	SLIDE	
300	1539874-0000	A		1	SLIDE	
300	1499418-0000	A		1	SLIDE	
300	1348134-0000	A		1	SLIDE	
300	1348133-0000	A		1	SLIDE	
300	1348132-0000	A		1	SLIDE	
310	1532258-0000	A		1	SLIDE	
310	1539875-0000	A		1	SLIDE	
310	1348143-0000	A		1	SLIDE	
310	1490034-0000	A		1	SLIDE	
310	1348142-0000	A		1	SLIDE	
310	1348141-0000	A		1	SLIDE	
310	1348140-0000	A		1	SLIDE	
310	1348139-0000	A		1	SLIDE	
310	1499422-0000	A		1	SLIDE	
310	1348138-0000	A		1	SLIDE	
320	1539876-0000	-		2	PLATE	
320	1279409-0000	-		2	PLATE	
320	1348169-0000	-		2	PLATE	
330	1490035-0000	-		1	BAR	

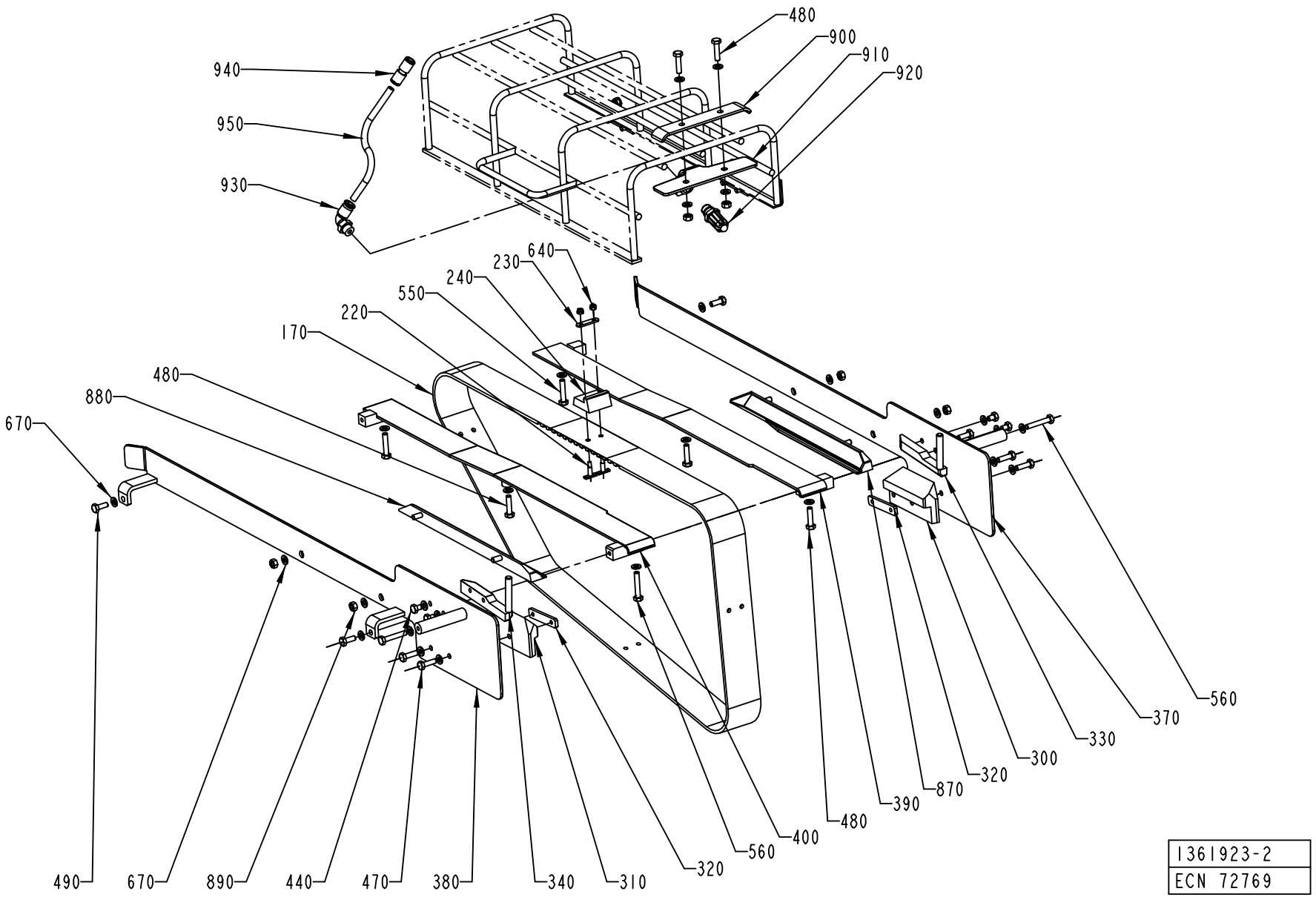

1361923-2
ECN 72769

ECM: 161658 - 20040305
Group number: 1361923-0200
Assembly Drawing: 1361923-2_1_AC

This list covers pages from 3-8 to 3-13

Pos	Part No	SP	UN	Qty	Description	Page No
Common Parts (Cont'd)						
330	1348149-0000	-		1	BAR	
330	1348148-0000	-		1	BAR	
330	1499417-0000	-		1	BAR	
330	1348147-0000	-		1	BAR	
330	1348146-0000	-		1	BAR	
330	1348145-0000	-		1	BAR	
330	1348144-0000	-		1	BAR	
330	1539877-0000	-		1	BAR	
340	1490036-0000	-		1	BAR	
340	1348152-0000	-		1	BAR	
340	1348153-0000	-		1	BAR	
340	1499423-0000	-		1	BAR	
340	1348154-0000	-		1	BAR	
340	1348151-0000	-		1	BAR	
340	1348150-0000	-		1	BAR	
340	1539878-0000	-		1	BAR	
340	1348155-0000	-		1	BAR	
370	1499401-0000	-		1	GUIDE	
370	1499427-0000	-		1	GUIDE	
370	1512308-0000	-		1	GUIDE	
370	1517242-0000	-		1	GUIDE	
370	1517244-0000	-		1	GUIDE	
370	1539879-0000	-		1	GUIDE	
370	1519089-0000	-		1	GUIDE	
370	1532261-0000	-		1	GUIDE	
370	1519093-0000	-		1	GUIDE	
380	1512307-0000	-		1	GUIDE	
380	1517243-0000	-		1	GUIDE	
380	1517245-0000	-		1	GUIDE	
380	1499426-0000	-		1	GUIDE	
380	1499400-0000	-		1	GUIDE	
380	1519090-0000	-		1	GUIDE	
380	1519094-0000	-		1	GUIDE	
380	1532262-0000	-		1	GUIDE	
380	1539880-0000	-		1	GUIDE	
390	1478215-0000	-		1	SLIDE	
390	1317651-0000	-		1	GUIDE	
400	1478214-0000	-		1	SLIDE	
400	1317650-0000	-		1	GUIDE	
480	312105-0372	-		3	SCREW M6S ISO 4017 M6X25 A480	
490	312105-0368	-		4	SCREW M6S ISO 4017 M6X16 A480	
640	312812-0312	-		8	HEXAGON NUT, NY-LOCK M4 A480	
670	315105-0153	-		20	WASHER BRB6,4X12RFR	
870	1517526-0000	-		1	GUIDE	
870	1532263-0000	-		1	GUIDE	
880	1517527-0000	-		1	GUIDE	
880	1532264-0000	-		1	GUIDE	

Machine Type | Group Description | Used-In | Group Number | Page No

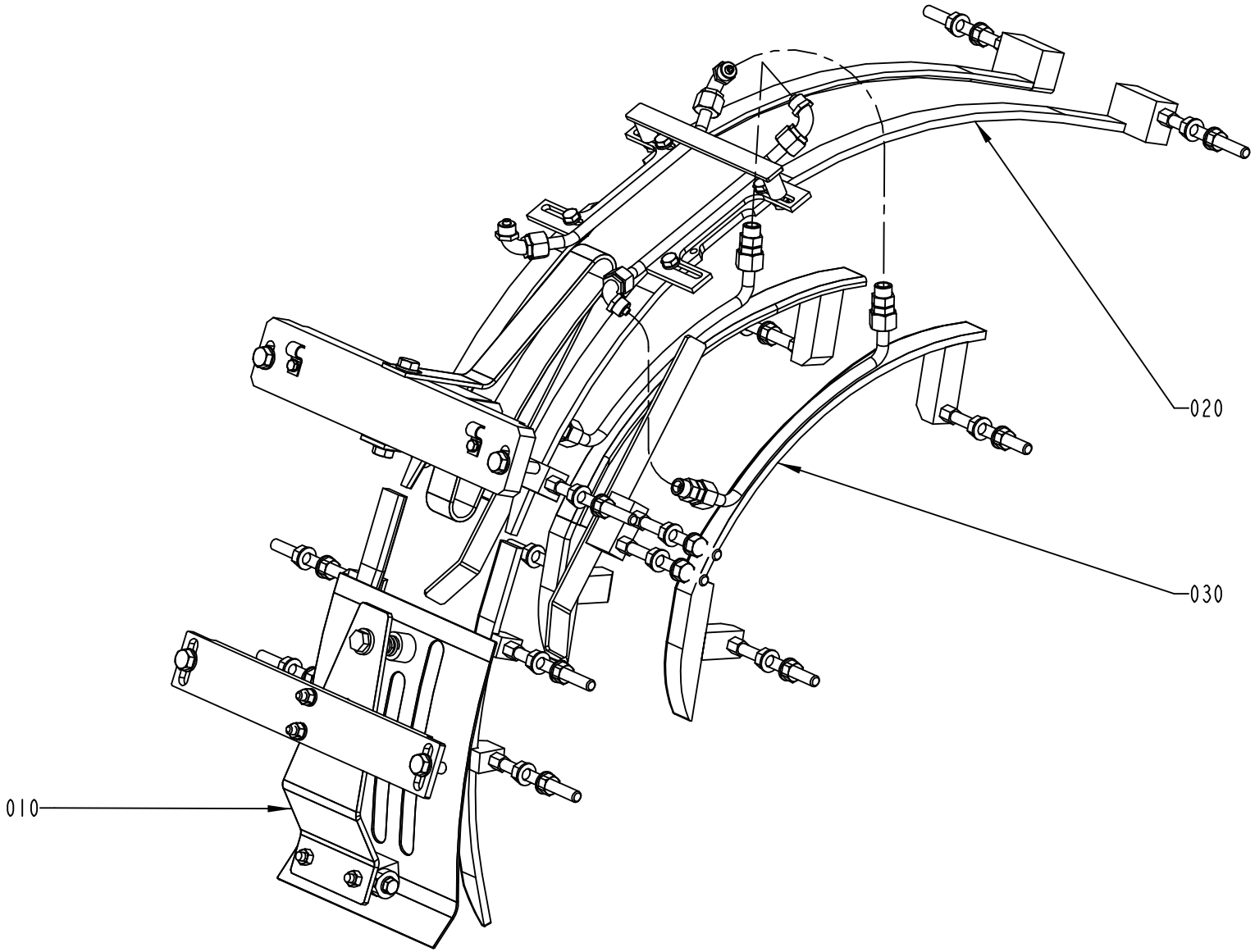

1285012-11
ECN 95038

ECM: 110175 - 20030403
Group number: 1285012-0300
Assembly Drawing: 1285012-11_1_AA

Pos	Part No	SP	UN	Qty	Description	Page No
-						
010	1558932-0100	-		1	TOP SECTION	**3-17, 3-19, 3-21**
020	1558935-0100	-		1	TOP RAIL	**3-23, 3-25, 3-27, 3-29**
030	1558940-0200	-		1	FLAP GUIDE	**3-31, 3-33, 3-35, 3-37, 3-39, 3-41**

Pos	Part No	SP	UN	Qty	Description	Page No

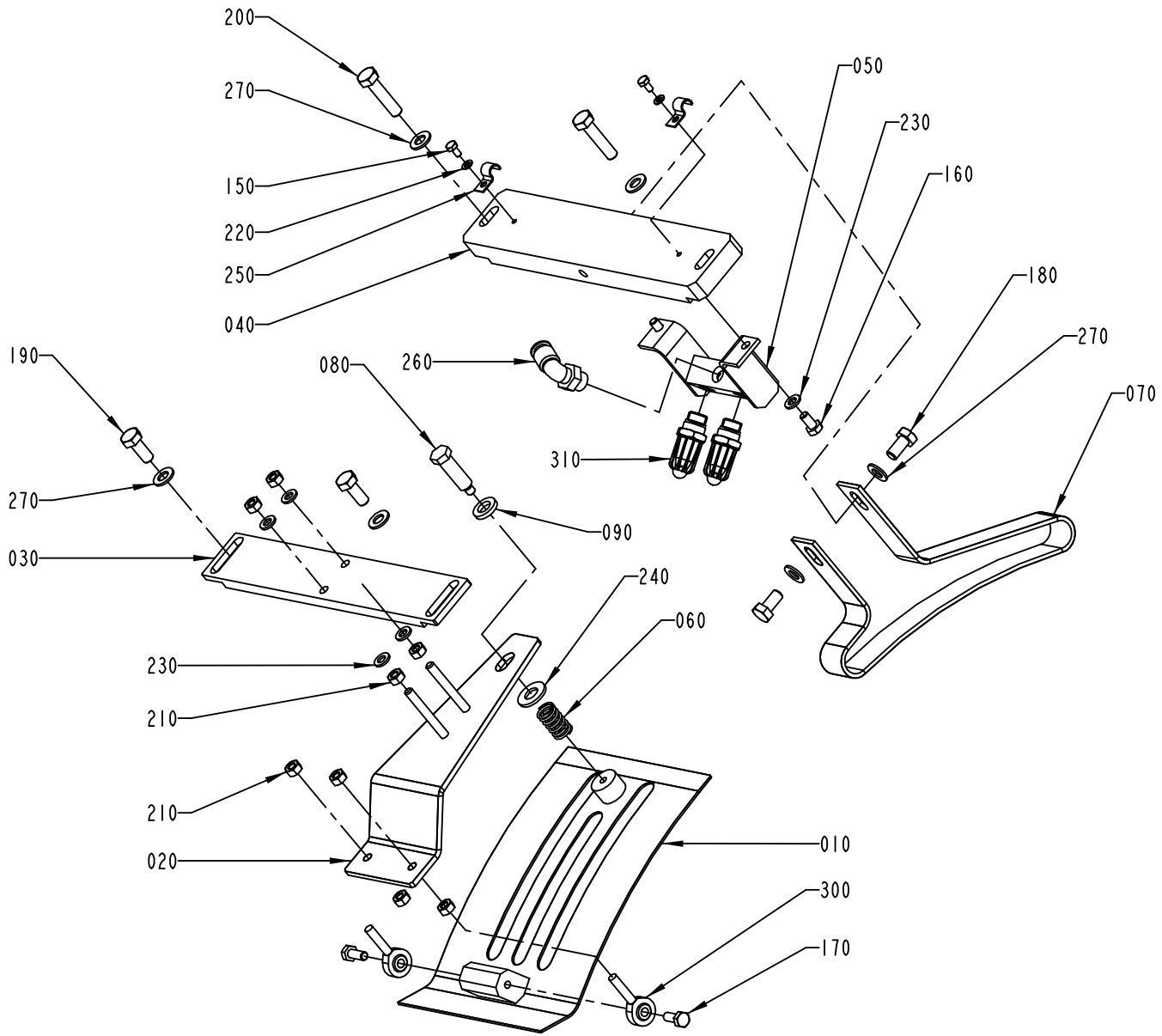

1558932-1
ECN 95038

ECM: 161661 - 20040305
Group number: 1558932-0100
Assembly Drawing: 1558932-1_1_AA

This list covers pages from 3-16 to 3-21

Pos	Part No	SP	UN	Qty	Description	Page No
TBA 0200B, TBA 0250B (See drawing on page: 3-16)						
010	1317211-0000	A		1	COVERING PLATE	
020	1317213-0000	-		1	ADJUSTING PLATE	
030	1144975-0000	-		1	ATTACHMENT PLATE	
040	1144902-0000	-		1	SUPPORT	
060	1317633-0000	A		1	SPRING	
150	312105-0287	-		2	SCREW M6S ISO4017 M4X8 A470	
190	312105-0451	-		2	SCREW M6S ISO 4017 M8X20 A480	
220	315105-0136	-		2	WASHER BRB4,3XRFR	
230	315105-0153	-		4	WASHER BRB6,4X12RFR	
250	90165-0057	-		2	PIPE CLIP FOR TUBE D=6 MM	
270	315105-0165	-		4	WASHER BRB8,4X16RFR	
TBA 0200S (See drawing on page: 3-16)						
010	1317211-0000	A		1	COVERING PLATE	
020	1317213-0000	-		1	ADJUSTING PLATE	
030	1144975-0000	-		1	ATTACHMENT PLATE	
040	1144902-0000	-		1	SUPPORT	
060	1317633-0000	A		1	SPRING	
070	1144901-0000	A		1	GUIDE	
150	312105-0287	-		2	SCREW M6S ISO4017 M4X8 A470	
180	312105-0449	-		2	SCREW M6S ISO 4017 M8X16 A480	
190	312105-0451	-		2	SCREW M6S ISO 4017 M8X20 A480	
220	315105-0136	-		2	WASHER BRB4,3XRFR	
230	315105-0153	-		4	WASHER BRB6,4X12RFR	
250	90165-0057	-		2	PIPE CLIP FOR TUBE D=6 MM	
270	315105-0165	-		6	WASHER BRB8,4X16RFR	
TBA 0330S (See drawing on page: 3-20)						
010	1317211-0000	A		1	COVERING PLATE	
020	1317213-0000	-		1	ADJUSTING PLATE	
030	1144975-0000	-		1	ATTACHMENT PLATE	
040	1144902-0000	-		1	SUPPORT	
050	1349087-0000	-		1	DISTRIBUTOR	
060	90335-0036	A		1	COMP. SPRING 22450, 1,6X14,1X24	
070	2552022-0000	A		1	GUIDE	
150	312105-0287	-		2	SCREW M6S ISO4017 M4X8 A470	
160	312105-0366	-		2	SCREW M6S ISO 4017 M6X12 A480	
180	312105-0451	-		1	SCREW M6S ISO 4017 M8X20 A480	
190	312105-0451	-		2	SCREW M6S ISO 4017 M8X20 A480	
220	315105-0136	-		2	WASHER BRB4,3XRFR	
230	315105-0153	-		6	WASHER BRB6,4X12RFR	
250	90165-0057	-		2	PIPE CLIP FOR TUBE D=6 MM	
260	342732-0104	-		1	ELBOW PIPE JOINT, EXT.THREAD, D=8MM-G1/4	
270	315105-0165	-		6	WASHER BRB8,4X16RFR	
310	90424-0068	A		1	AIR NOZZLE, G1/4, MOD. 216 BSP	
320	2553284-0000	-		1	BLOCK	
TBA 0500B, TBA 1000S, TBA 1000B (See drawing on page: 3-16)						
010	1144941-0000	A		1	COVERING PLATE	
020	1144974-0000	-		1	ADJUSTING PLATE	
030	1144975-0000	-		1	ATTACHMENT PLATE	
040	1144902-0000	-		1	SUPPORT	
050	1285014-0000	-		1	DISTRIBUTOR	
060	90335-0036	A		1	COMP. SPRING 22450, 1,6X14,1X24	
070	1144901-0000	A		1	GUIDE	
150	312105-0287	-		2	SCREW M6S ISO4017 M4X8 A470	
160	312105-0366	-		2	SCREW M6S ISO 4017 M6X12 A480	
180	312105-0449	-		2	SCREW M6S ISO 4017 M8X16 A480	
190	312105-0451	-		2	SCREW M6S ISO 4017 M8X20 A480	
220	315105-0136	-		2	WASHER BRB4,3XRFR	
230	315105-0153	-		6	WASHER BRB6,4X12RFR	
250	90165-0057	-		2	PIPE CLIP FOR TUBE D=6 MM	
260	342732-0104	-		1	ELBOW PIPE JOINT, EXT.THREAD, D=8MM-G1/4	
270	315105-0165	-		6	WASHER BRB8,4X16RFR	
310	90424-0068	A		2	AIR NOZZLE, G1/4, MOD. 216 BSP	
TBA 1000SQ (See drawing on page: 3-16)						
010	1144941-0000	A		1	COVERING PLATE	
020	1144974-0000	-		1	ADJUSTING PLATE	
030	1144975-0000	-		1	ATTACHMENT PLATE	
040	1144902-0000	-		1	SUPPORT	
050	1349087-0000	-		1	DISTRIBUTOR	
060	90335-0036	A		1	COMP. SPRING 22450, 1,6X14,1X24	
150	312105-0287	-		2	SCREW M6S ISO4017 M4X8 A470	
160	312105-0366	-		2	SCREW M6S ISO 4017 M6X12 A480	
190	312105-0451	-		2	SCREW M6S ISO 4017 M8X20 A480	
220	315105-0136	-		2	WASHER BRB4,3XRFR	
230	315105-0153	-		6	WASHER BRB6,4X12RFR	
250	90165-0057	-		2	PIPE CLIP FOR TUBE D=6 MM	
260	342732-0104	-		1	ELBOW PIPE JOINT, EXT.THREAD, D=8MM-G1/4	
270	315105-0165	-		4	WASHER BRB8,4X16RFR	
310	90424-0068	A		1	AIR NOZZLE, G1/4, MOD. 216 BSP	
TPA 1000SQ (See drawing on page: 3-18)						
010	1548612-0000	A		1	COVERING PLATE	
020	1144974-0000	-		1	ADJUSTING PLATE	
030	1285299-0000	-		1	BRACKET	
040	1334480-0000	-		1	SUPPORT	

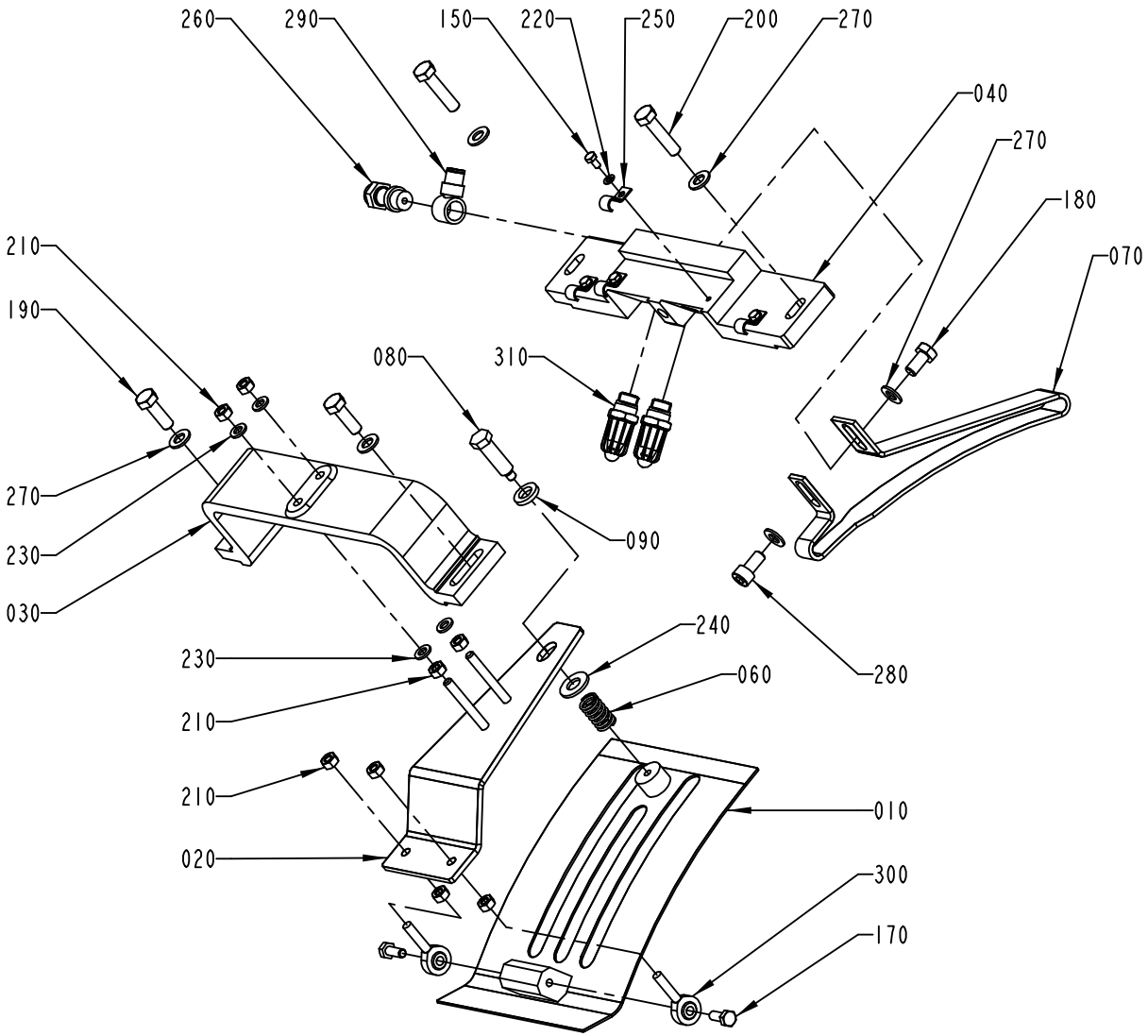

1558932-2
ECN 95038

Pos	Part No	SP	UN	Qty	Description	Page No
TPA 1000SQ (Cont'd) (See drawing on page: 3-18)						
060	90335-0036	A		1	COMP. SPRING 22450, 1,6X14,1X24	
070	1519352-0000	A		1	GUIDE	
150	312105-0287	-		4	SCREW M6S ISO4017 M4X8 A470	
180	312105-0449	-		1	SCREW M6S ISO 4017 M8X16 A480	
190	312105-0453	-		2	SCREW M6S ISO 4017 M8X25 A480	
220	315105-0136	-		4	WASHER BRB4,3XRFR	
230	315105-0153	-		4	WASHER BRB6,4X12RFR	
250	90165-0057	-		4	PIPE CLIP FOR TUBE D=6 MM	
260	90235-0731	-		1	THROTTLE CHECK VALVES,G1/4"	
270	315105-0165	-		6	WASHER BRB8,4X16RFR	
280	312115-0449	-		1	SCREW ISO4762 M8X16 A4	
290	342981-0122	-		1	BANJO CONNEC,RING,FOR PLAST.TUBE 8-G1/4"	
310	90424-0068	A		2	AIR NOZZLE, G1/4, MOD. 216 BSP	
TBA 1500S (See drawing on page: 3-18)						
010	1144941-0000	A		1	COVERING PLATE	
020	1144974-0000	-		1	ADJUSTING PLATE	
030	1285299-0000	-		1	BRACKET	
040	1334480-0000	-		1	SUPPORT	
060	90335-0036	A		1	COMP. SPRING 22450, 1,6X14,1X24	
070	1347057-0000	A		1	GUIDE	
150	312105-0287	-		4	SCREW M6S ISO4017 M4X8 A470	
180	312105-0449	-		1	SCREW M6S ISO 4017 M8X16 A480	
190	312105-0453	-		2	SCREW M6S ISO 4017 M8X25 A480	
220	315105-0136	-		4	WASHER BRB4,3XRFR	
230	315105-0153	-		4	WASHER BRB6,4X12RFR	
250	90165-0057	-		4	PIPE CLIP FOR TUBE D=6 MM	
260	90235-0731	-		1	THROTTLE CHECK VALVES,G1/4"	
270	315105-0165	-		6	WASHER BRB8,4X16RFR	
280	312115-0449	-		1	SCREW ISO4762 M8X16 A4	
290	342981-0122	-		1	BANJO CONNEC,RING,FOR PLAST.TUBE 8-G1/4"	
310	90424-0068	A		2	AIR NOZZLE, G1/4, MOD. 216 BSP	
Common Parts						
080	1144976-0000	-		1	STOP SCREW	
090	1144979-0000	-		1	WASHER	
170	312105-0368	-		2	SCREW M6S ISO 4017 M6X16 A480	
200	312105-0457	-		2	SCREW M6S ISO 4014 M8X35 A480	
210	312605-0316	-		8	HEXAGON NUT, M6M M6 A280	
240	315105-0173	-		1	WASHER BRB10,5X22RFR	
300	90115-0137	A		2	ROD END, ID=6 MM, M6X1	

Pos	Part No	SP	UN	Qty	Description	Page No

Machine Type | Group Description | Used-In | Group Number | Page No

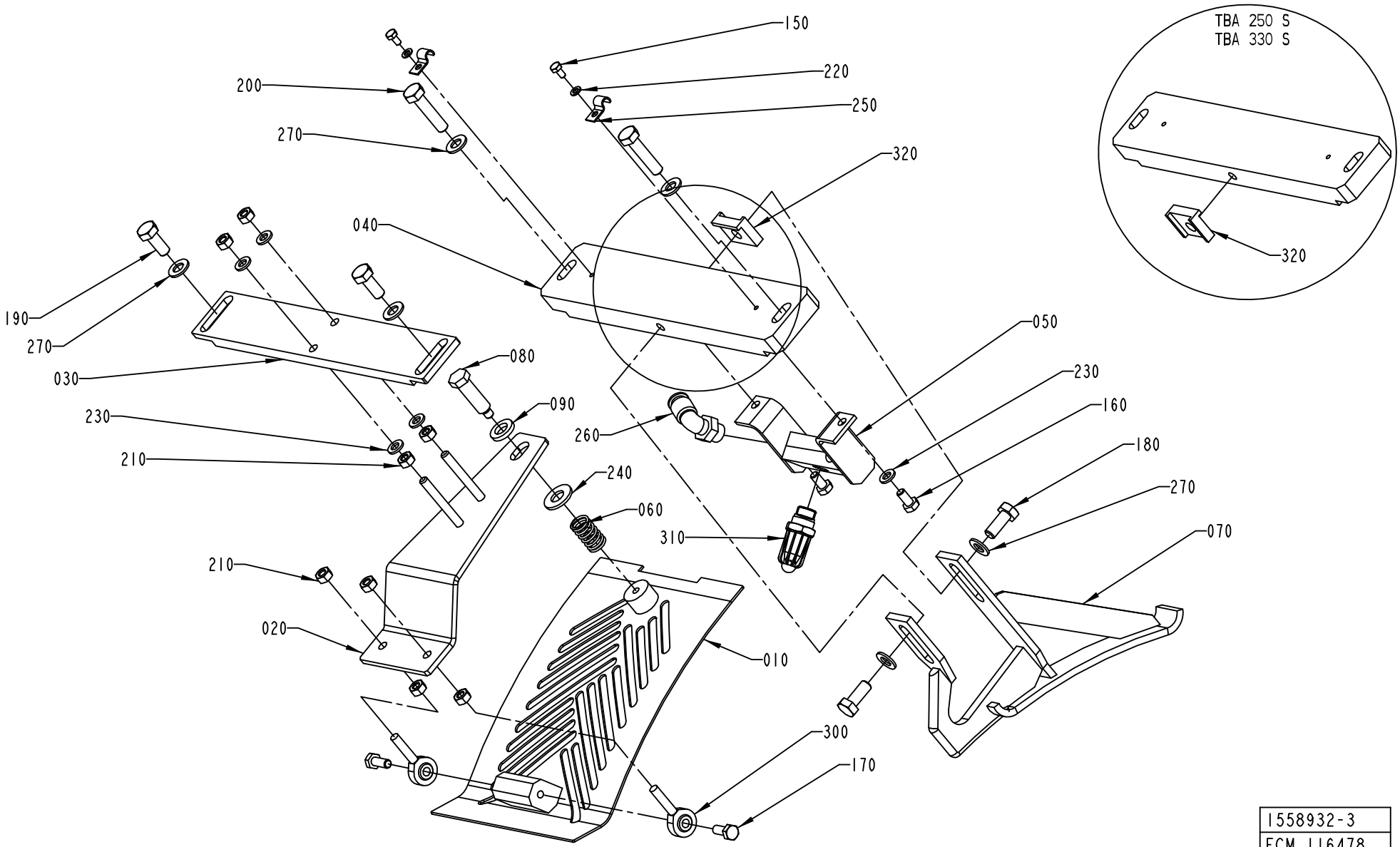

1558932-3
ECM 116478

ECM: 161661 - 20040305
Group number: 1558932-0100
Assembly Drawing: 1558932-3_1_AA

This list covers pages from 3-16 to 3-21

Pos	Part No	SP	UN	Qty	Description	Page No
SEE PREVIOUS LISTS PAGES: 3-17, 3-19.						

Pos	Part No	SP	UN	Qty	Description	Page No

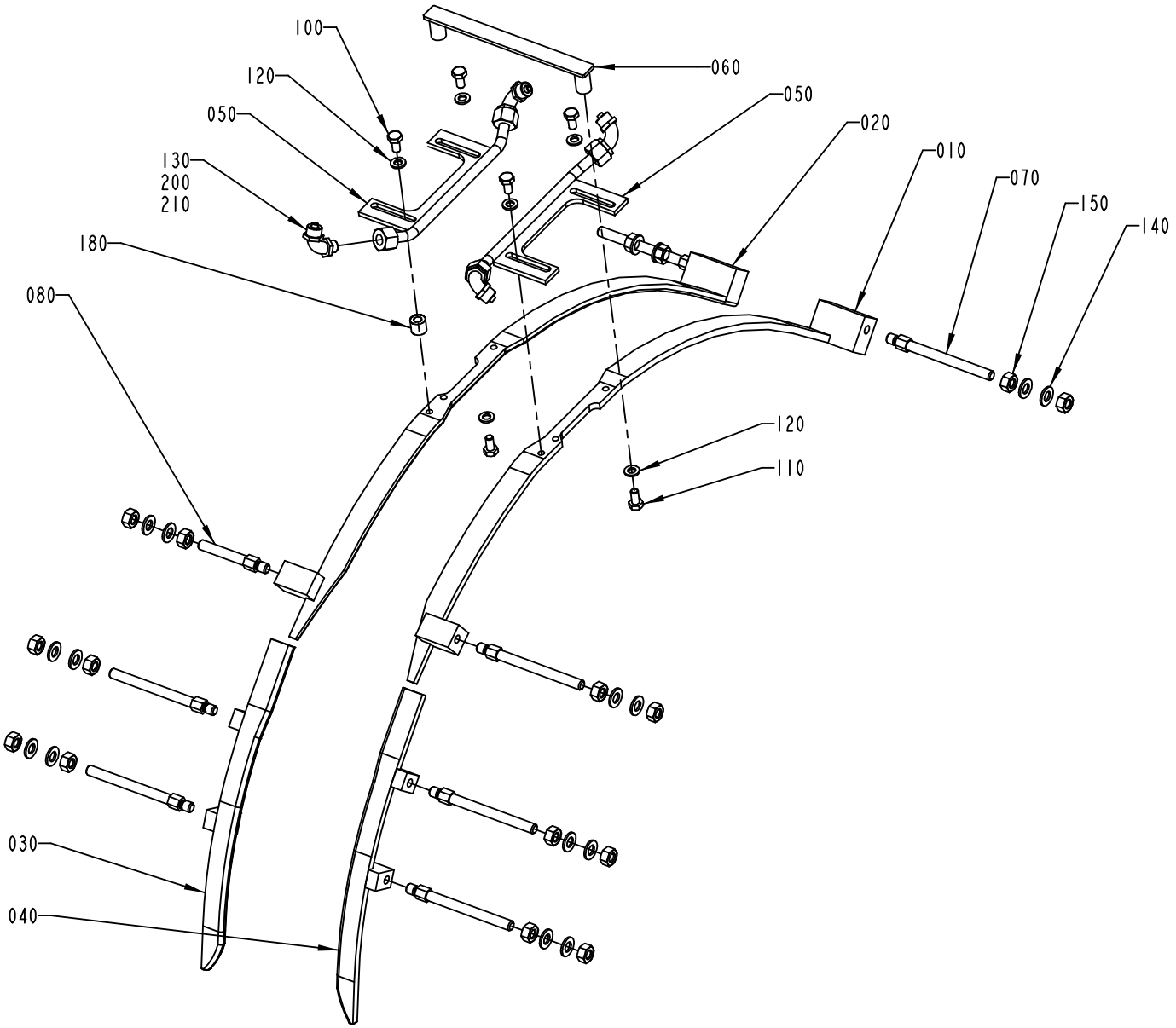

1558935-1
ECN 95038

ECM: 161662 - 20040305
Group number: 1558935-0100
Assembly Drawing: 1558935-1_1_AA

This list covers pages from 3-22 to 3-29

Pos	Part No	SP	UN	Qty	Description	Page No
TPA 1000SQ (See drawing on page: 3-24)						
010	1350424-0000	A		1	GUIDE RIGHT	
020	1350425-0000	A		1	GUIDE LEFT	
030	1519358-0000	A		1	GUIDE	
040	1519359-0000	A		1	GUIDE	
060	1346340-0000	-		1	BRACKET	
090	1523926-0000	-		8	SPACER	
100	312105-0368	-		4	SCREW M6S ISO 4017 M6X16 A480	
140	315105-0165	-		8	WASHER BRB8,4X16RFR	
160	2541125-0000	-		8	SCREW	
180	1282705-0000	-		4	SUPPORT	
TBA 0200B, TBA 0200S, TBA 0250B (See drawing on page: 3-22)						
010	1478926-0000	A		1	GUIDE RIGHT	
020	1478927-0000	A		1	GUIDE LEFT	
030	1334013-0000	A		1	GUIDE UPPER R	
040	1334012-0000	A		1	GUIDE UPPER L	
060	1346340-0000	-		1	BRACKET	
070	1144555-0000	-		7	STUD SCREW	
080	1334523-0000	-		1	SUPPORT	
100	312105-0366	-		4	SCREW M6S ISO 4017 M6X12 A480	
140	315105-0165	-		16	WASHER BRB8,4X16RFR	
150	312605-0318	-		16	HEXAGON NUT, M6M M8 A280	
TBA 0330S (See drawing on page: 3-22)						
010	1144892-0000	A		1	GUIDE RIGHT	
020	1144893-0000	A		1	GUIDE LEFT	
030	1539900-0000	A		1	RIGHT UPPER GUIDE	
040	1549614-0000	A		1	LEFT UPPER GUIDE	
060	1346340-0000	-		1	BRACKET	
070	1144555-0000	-		8	STUD SCREW	
100	312105-0366	-		4	SCREW M6S ISO 4017 M6X12 A480	
140	315105-0165	-		16	WASHER BRB8,4X16RFR	
150	312605-0318	-		16	HEXAGON NUT, M6M M8 A280	
TBA 0500B (See drawing on page: 3-26)						
010	1144892-0000	A		1	GUIDE RIGHT	
020	1144893-0000	A		1	GUIDE LEFT	
030	1539900-0000	A		1	RIGHT UPPER GUIDE	
040	1549614-0000	A		1	LEFT UPPER GUIDE	
060	1144905-0000	-		1	SUPPORT	
090	1539871-0000	-		4	SPACER	
095	1334447-0000	-		4	SPACER	
140	315105-0165	-		8	WASHER BRB8,4X16RFR	
160	312105-0465	-		8	SCREW M6S ISO 4014 M8X70 A480	
TBA 1000B (See drawing on page: 3-24)						
010	1144892-0000	A		1	GUIDE RIGHT	
020	1144893-0000	A		1	GUIDE LEFT	
030	1260709-0000	A		1	GUIDE UPPER R	
040	1260710-0000	A		1	GUIDE UPPER L	
060	1144905-0000	-		1	SUPPORT	
090	2603663-0000	-		8	SPACER	
100	312105-0366	-		4	SCREW M6S ISO 4017 M6X12 A480	
140	315105-0165	-		8	WASHER BRB8,4X16RFR	
160	312105-0465	-		8	SCREW M6S ISO 4014 M8X70 A480	
TBA 1000S (See drawing on page: 3-22)						
010	1144892-0000	A		1	GUIDE RIGHT	
020	1144893-0000	A		1	GUIDE LEFT	
030	1260709-0000	A		1	GUIDE UPPER R	
040	1260710-0000	A		1	GUIDE UPPER L	
060	1144905-0000	-		1	SUPPORT	
070	1144555-0000	-		7	STUD SCREW	
080	1350721-0000	-		1	STUD SCREW	
100	312105-0366	-		4	SCREW M6S ISO 4017 M6X12 A480	
140	315105-0165	-		16	WASHER BRB8,4X16RFR	
150	312605-0318	-		16	HEXAGON NUT, M6M M8 A280	
TBA 1000SQ (See drawing on page: 3-24)						
010	1144892-0000	A		1	GUIDE RIGHT	
020	1144893-0000	A		1	GUIDE LEFT	
030	1549411-0000	A		1	PACKAGE GUIDE	
040	1549406-0000	A		1	PACKAGE GUIDE	
060	1498161-0000	-		1	SUPPORT	
090	1499071-0000	-		8	SPACER	
100	312105-0366	-		4	SCREW M6S ISO 4017 M6X12 A480	
140	315105-0165	-		8	WASHER BRB8,4X16RFR	
160	312105-0466	-		8	SCREW M6S ISO 4014 M8X75 A480	
TBA 1500S (See drawing on page: 3-28)						
010	1350424-0000	A		1	GUIDE RIGHT	
020	1350425-0000	A		1	GUIDE LEFT	
030	1334559-0000	A		1	GUIDE UPPER R	
040	1334560-0000	A		1	GUIDE UPPER L	
060	1285267-0000	-		1	SUPPORT	
090	1317088-0000	-		4	SPACER	
095	1348041-0000	-		2	SPACER	
098	1317088-0000	-		2	SPACER	
100	312105-0368	-		4	SCREW M6S ISO 4017 M6X16 A480	
140	315105-0165	-		8	WASHER BRB8,4X16RFR	

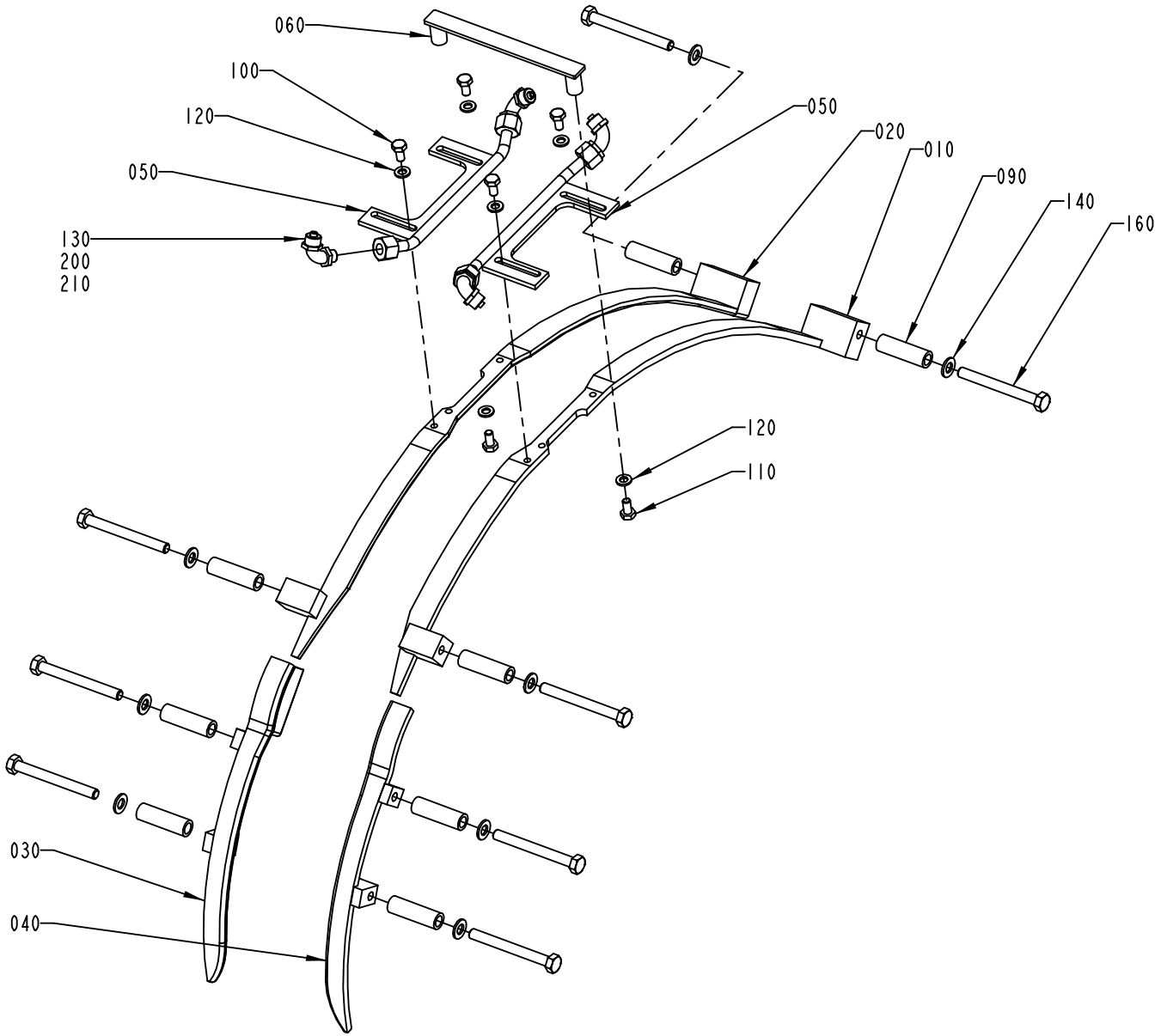

1558935-2
ECN 95038

ECM: 161662 - 20040305
Group number: 1558935-0100
Assembly Drawing: 1558935-2_1_AA

This list covers pages from 3-22 to 3-29

Pos	Part No	SP	UN	Qty	Description	Page No
TBA 1500S (Cont'd) (See drawing on page: 3-28)						
160	312105-0465	-		4	SCREW M6S ISO 4014 M8X70 A480	
165	312105-0465	-		2	SCREW M6S ISO 4014 M8X70 A480	
170	312105-0467	-		2	SCREW M6S ISO 4014 M8X80 A480	
180	1282705-0000	-		4	SUPPORT	
Common Parts						
050	1350423-0000	-		2	FOLDING BAR	
110	312105-0366	-		2	SCREW M6S ISO 4017 M6X12 A480	
120	315105-0153	-		6	WASHER BRB6,4X12RFR	
130	342931-0121	-		4	ELBOW 90 COUPL.,EXT.THREAD 8/6-G1/8"	
200	90166-0118	-	MM	1500	TUBE 8 MM PA BLACK	
210	352113-0102	-		10	CLIP-STRIP, BLACK 188X4,8 MM	

Pos	Part No	SP	UN	Qty	Description	Page No

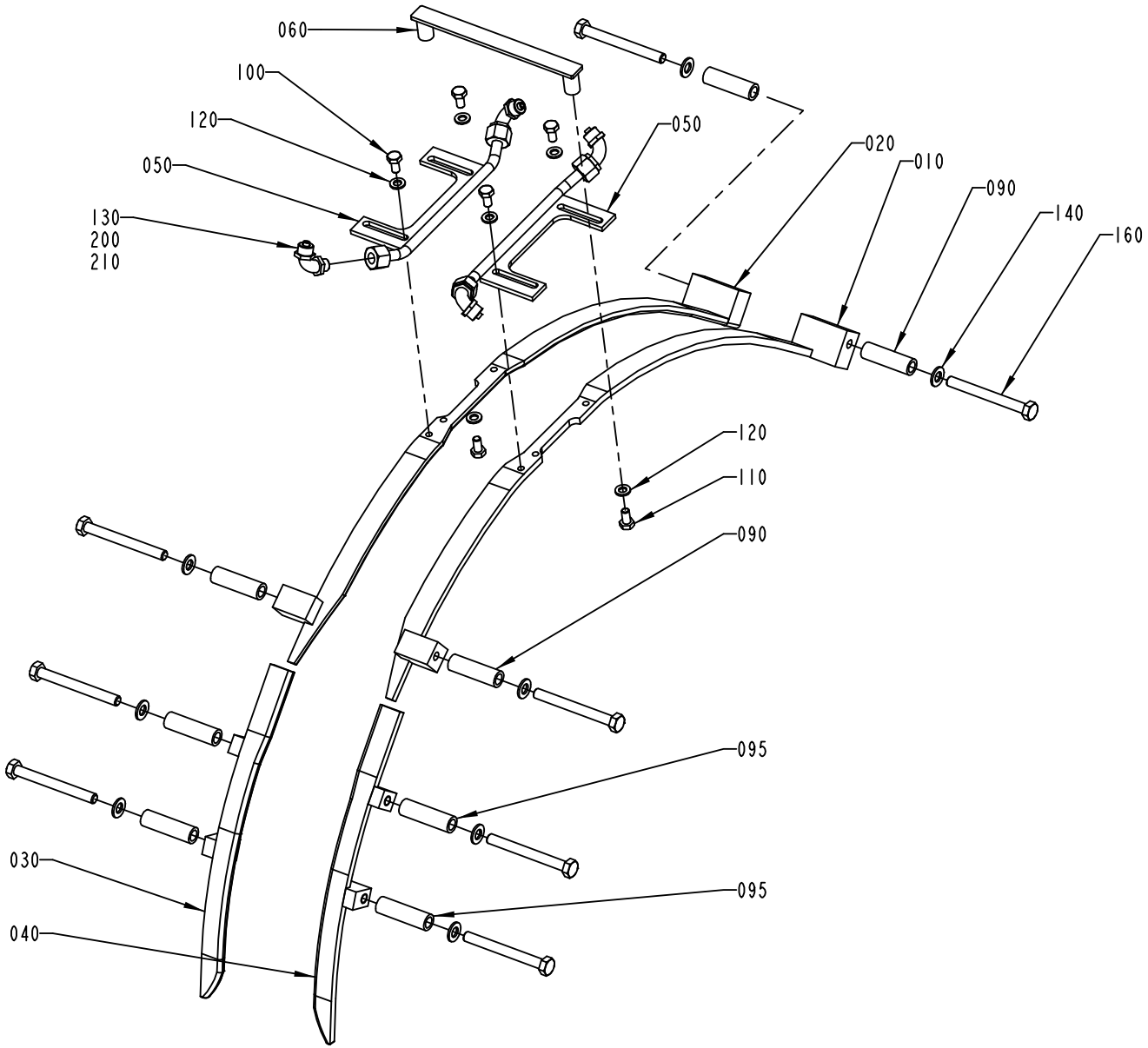

1558935-3
ECN 95038

ECM: 161662 - 20040305
Group number: 1558935-0100
Assembly Drawing: 1558935-3_1_AA

This list covers pages from 3-22 to 3-29

Pos	Part No	SP	UN	Qty	Description	Page No
SEE PREVIOUS LISTS PAGES: 3-23, 3-25.						

Pos	Part No	SP	UN	Qty	Description	Page No

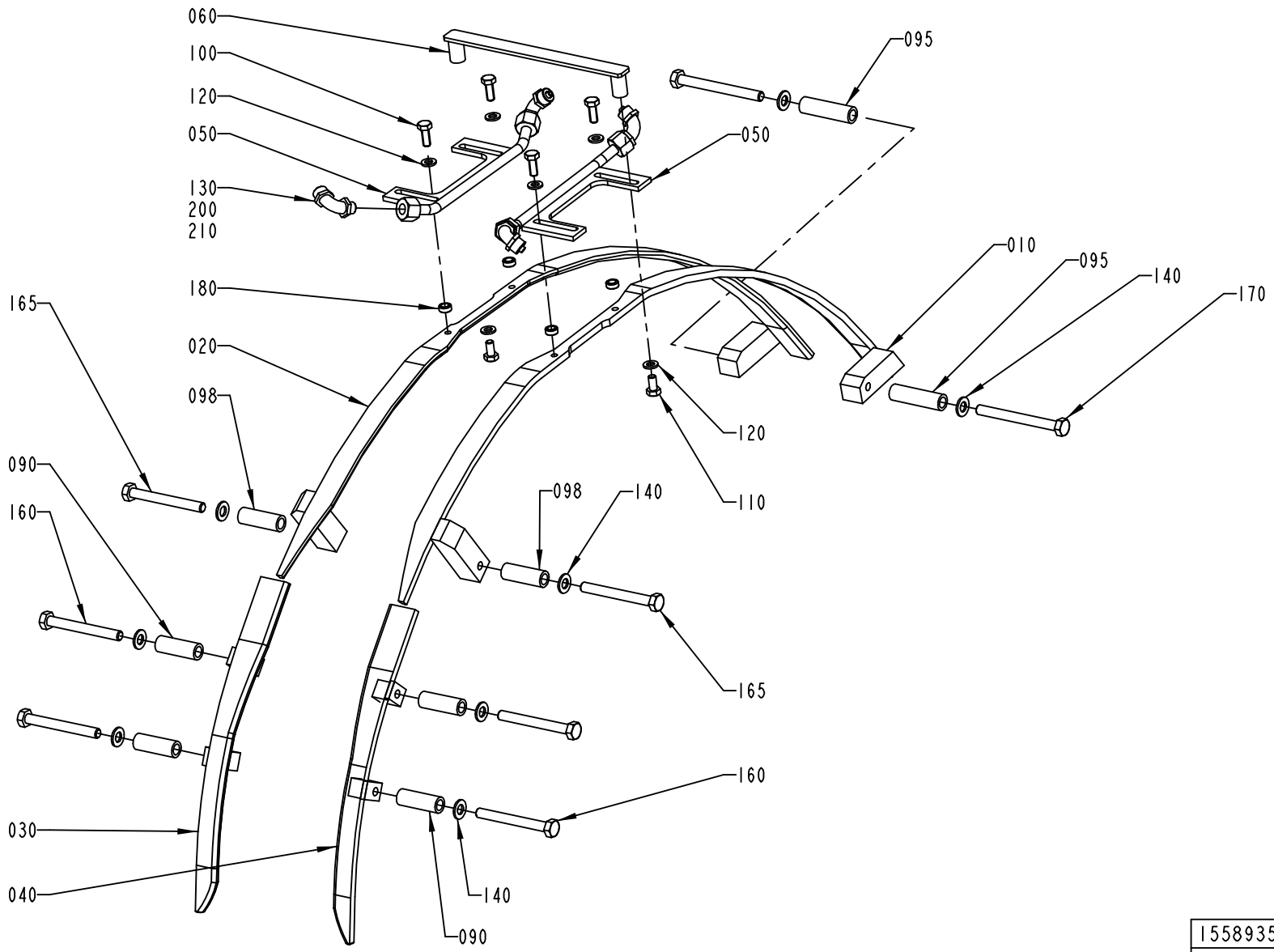

1558935-4
ECN 95038

ECM: 161662 - 20040305
Group number: 1558935-0100
Assembly Drawing: 1558935-4_1_AA

This list covers pages from 3-22 to 3-29

Pos	Part No	SP	UN	Qty	Description	Page No
SEE PREVIOUS LISTS PAGES: 3-23, 3-25.						

Pos	Part No	SP	UN	Qty	Description	Page No

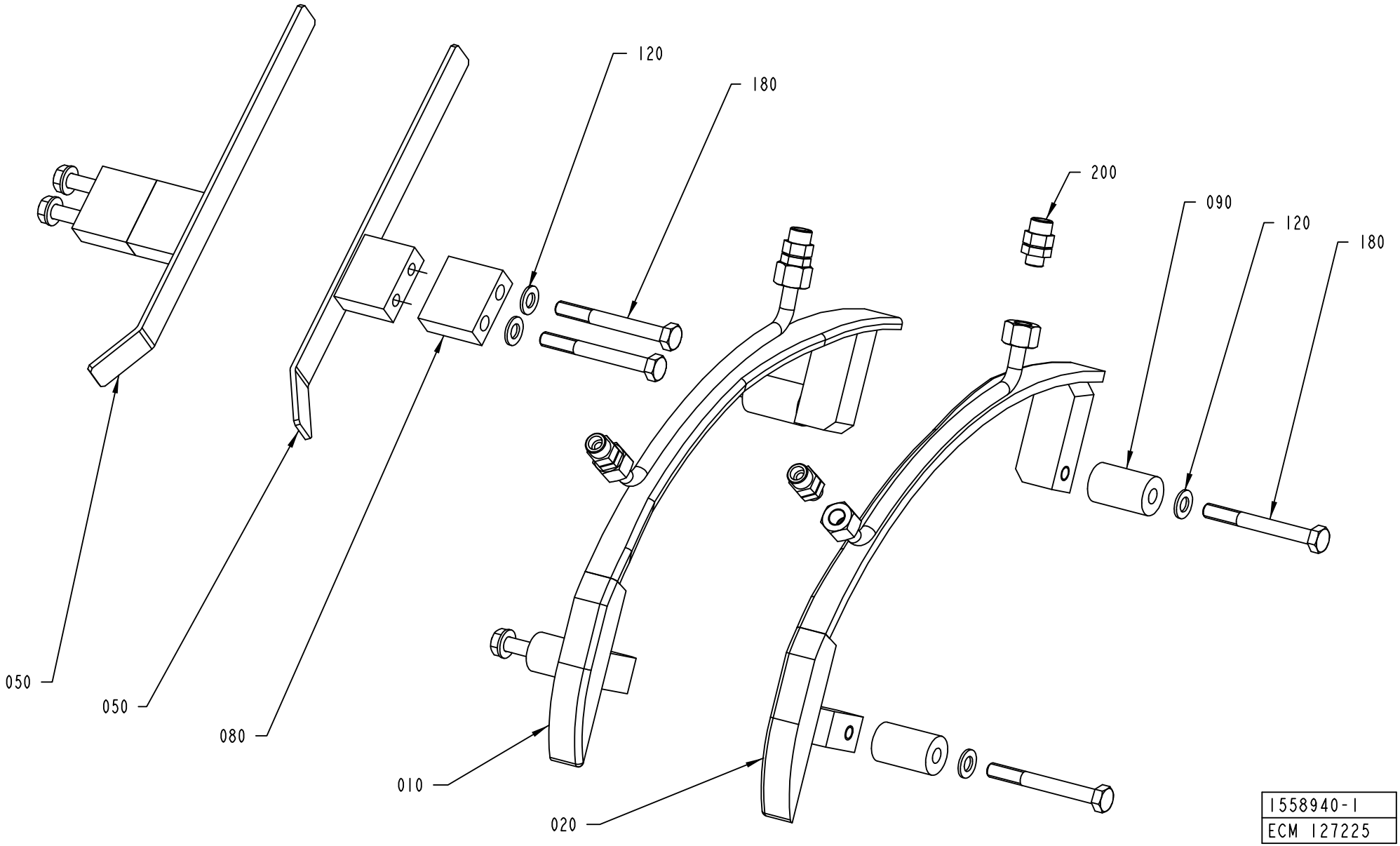
120
180
200
090
120
180
050
050
080
010
020
1558940-1
ECM 127225

ECM: 147160 - 20031125
Group number: 1558940-0200
Assembly Drawing: 1558940-1_1_AB

This list covers pages from 3-30 to 3-41

Pos	Part No	SP	UN	Qty	Description	Page No
TPA 1000SQ (See drawing on page: 3-38)						
010	1548527-0000	A		1	FOLDING BAR	
020	1548528-0000	A		1	FOLDING BAR	
030	1317043-0000	-		2	SUPPORT	
040	1499150-0000	-		1	RAIL	
050	1499151-0000	-		1	RAIL	
060	1523927-0000	-		2	SPACER SCREW	
080	1519355-0000	-		4	SPACER	
090	1523926-0000	-		2	SPACER	
100	312109-0457	-		4	SCREW M6S ISO 4017 M8X35 A480	
110	312105-0462	-		4	SCREW M6S ISO 4014 M8X55 A480	
120	315105-0165	-		20	WASHER BRB8,4X16RFR	
130	312605-0318	-		2	HEXAGON NUT, M6M M8 A280	
160	312155-0459	-		2	SCREW EN 10642 MF6S M8X40 A480	
170	312105-0453	-		2	SCREW M6S ISO 4017 M8X25 A480	
180	312105-0467	-		2	SCREW M6S ISO 4014 M8X80 A480	
200	342921-0121	-		4	STRAIGHT COUPLING,EXT.THREADED 8/6-G1/8"	
210	1538890-0000	-		1	RAIL	
220	1538891-0000	-		1	RAIL	
230	1519355-0000	-		4	SPACER	
240	1538186-0000	-		2	BRACKET	
250	312105-0462	-		4	SCREW M6S ISO 4014 M8X55 A480	
260	312105-0455	-		2	SCREW M6S ISO 4017 M8X30 A480	
TPA 1000SQ SMILE (See drawing on page: 3-38)						
010	2553347-0000	A		1	FOLDING BAR	
020	2553348-0000	A		1	FOLDING BAR	
030	1317043-0000	-		2	SUPPORT	
040	1499150-0000	-		1	RAIL	
050	1499151-0000	-		1	RAIL	
060	1523927-0000	-		2	SPACER SCREW	
080	1519355-0000	-		4	SPACER	
090	1523926-0000	-		2	SPACER	
100	312109-0457	-		4	SCREW M6S ISO 4017 M8X35 A480	
110	312105-0462	-		4	SCREW M6S ISO 4014 M8X55 A480	
120	315105-0165	-		20	WASHER BRB8,4X16RFR	
130	312605-0318	-		2	HEXAGON NUT, M6M M8 A280	
160	312155-0459	-		2	SCREW EN 10642 MF6S M8X40 A480	
170	312105-0453	-		2	SCREW M6S ISO 4017 M8X25 A480	
180	312105-0467	-		2	SCREW M6S ISO 4014 M8X80 A480	
200	342921-0121	-		4	STRAIGHT COUPLING,EXT.THREADED 8/6-G1/8"	
210	1538890-0000	-		1	RAIL	
220	1538891-0000	-		1	RAIL	
230	1519355-0000	-		4	SPACER	
240	1538186-0000	-		2	BRACKET	
250	312105-0462	-		4	SCREW M6S ISO 4014 M8X55 A480	
260	312105-0455	-		2	SCREW M6S ISO 4017 M8X30 A480	
TBA 0200B (See drawing on page: 3-32)						
010	1346149-0000	A		1	FOLDING BAR	
020	1346150-0000	A		1	FOLDING BAR	
040	1346343-0000	-		1	RAIL	
050	1346344-0000	-		1	RAIL	
060	1144555-0000	-		7	STUD SCREW	
065	1350721-0000	-		1	STUD SCREW	
070	1144990-0000	-		2	FOLDING BAR	
120	315105-0165	-		16	WASHER BRB8,4X16RFR	
130	312605-0318	-		16	HEXAGON NUT, M6M M8 A280	
140	315105-0153	-		4	WASHER BRB6,4X12RFR	
150	312105-0364	-		4	SCREW M6S ISO 4017 M6X10 A480	
200	342931-0121	-		4	ELBOW 90 COUPL.,EXT.THREAD 8/6-G1/8"	
TBA 0200S (See drawing on page: 3-32)						
010	1282294-0000	A		1	FOLDING BAR	
020	1282295-0000	A		1	FOLDING BAR	
040	1346343-0000	-		1	RAIL	
050	1346344-0000	-		1	RAIL	
060	1144555-0000	-		7	STUD SCREW	
065	1350721-0000	-		1	STUD SCREW	
070	1144990-0000	-		2	FOLDING BAR	
120	315105-0165	-		16	WASHER BRB8,4X16RFR	
130	312605-0318	-		16	HEXAGON NUT, M6M M8 A280	
140	315105-0153	-		4	WASHER BRB6,4X12RFR	
150	312105-0364	-		4	SCREW M6S ISO 4017 M6X10 A480	
200	342931-0121	-		4	ELBOW 90 COUPL.,EXT.THREAD 8/6-G1/8"	
TBA 0250B (See drawing on page: 3-32)						
010	1317217-0000	A		1	FOLDING BAR	
020	1317216-0000	A		1	FOLDING BAR	
040	1346343-0000	-		1	RAIL	
050	1346344-0000	-		1	RAIL	
060	1144555-0000	-		7	STUD SCREW	
065	1350721-0000	-		1	STUD SCREW	
070	1144990-0000	-		2	FOLDING BAR	
120	315105-0165	-		16	WASHER BRB8,4X16RFR	
130	312605-0318	-		16	HEXAGON NUT, M6M M8 A280	
140	315105-0153	-		4	WASHER BRB6,4X12RFR	
150	312105-0364	-		4	SCREW M6S ISO 4017 M6X10 A480	

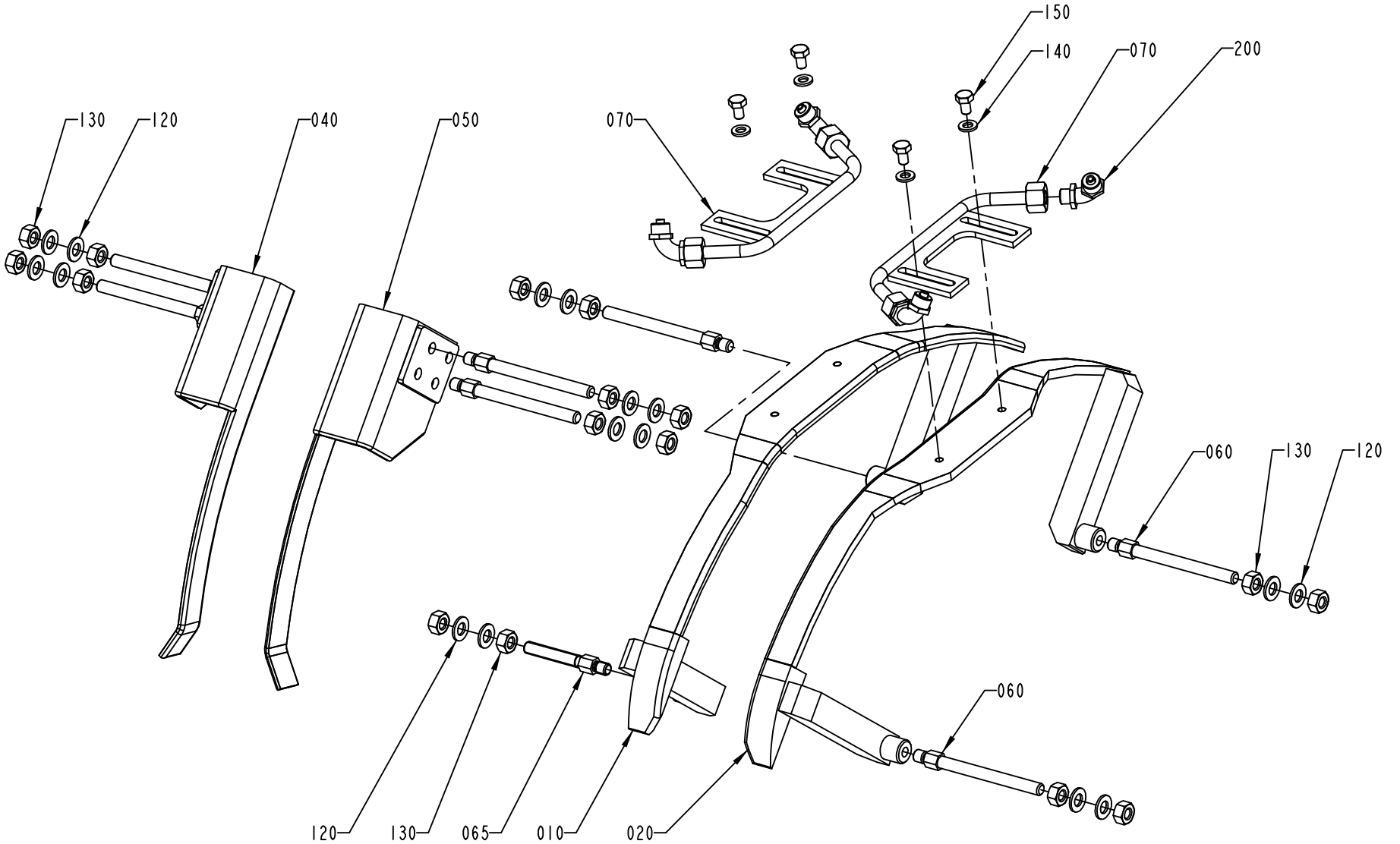

1558940-3
ECN 95038

Pos	Part No	SP	UN	Qty	Description	Page No
TBA 0250B (Cont'd) (See drawing on page: 3-32)						
200	342931-0121	-		4	ELBOW 90 COUPL.,EXT.THREAD 8/6-G1/8"	
TBA 0500B (See drawing on page: 3-36)						
010	1539881-0000	A		1	FOLDING BAR	
020	1539882-0000	A		1	FOLDING BAR	
040	1346343-0000	-		1	RAIL	
050	1346344-0000	-		1	RAIL	
060	1558713-0000	-		2	SPACER SCREW	
080	1539873-0000	-		4	SPACER	
090	1539871-0000	-		2	SPACER	
110	312109-0461	-		4	SCREW M6S ISO 4017 M8X50 A480	
120	315105-0165	-		8	WASHER BRB8,4X16RFR	
130	312605-0318	-		2	HEXAGON NUT, M6M M8 A280	
180	312105-0464	-		2	SCREW M6S ISO 4014 M8X65 A480	
200	342921-0121	-		4	STRAIGHT COUPLING,EXT.THREADED 8/6-G1/8"	
TBA 1000B NOMOLDEDCAP (See drawing on page: 3-30)						
010	2639127-0000	A		1	FOLDING BAR	
020	2639128-0000	A		1	FOLDING BAR	
050	1144719-0000	-		2	RAIL	
080	2639393-0000	-		2	SPACER	
090	2603663-0000	-		4	SPACER	
120	315105-0165	-		8	WASHER BRB8,4X16RFR	
180	312105-0465	-		8	SCREW M6S ISO 4014 M8X70 A480	
200	342921-0121	-		4	STRAIGHT COUPLING,EXT.THREADED 8/6-G1/8"	
TBA 1000B STDA7 (See drawing on page: 3-34)						
010	2609370-0000	A		1	FOLDING BAR	
020	2609369-0000	A		1	FOLDING BAR	
030	1317043-0000	-		2	SUPPORT	
040	1499150-0000	-		1	RAIL	
050	1499151-0000	-		1	RAIL	
060	2509936-0000	-		2	SPACER SCREW	
080	2609371-0000	-		4	SPACER	
090	2603663-0000	-		2	SPACER	
100	312109-0457	-		4	SCREW M6S ISO 4017 M8X35 A480	
120	315105-0165	-		14	WASHER BRB8,4X16RFR	
130	312605-0318	-		2	HEXAGON NUT, M6M M8 A280	
160	312155-0459	-		2	SCREW EN 10642 MF6S M8X40 A480	
170	312105-0453	-		2	SCREW M6S ISO 4017 M8X25 A480	
180	312105-0466	-		2	SCREW M6S ISO 4014 M8X75 A480	
200	342931-0121	-		4	ELBOW 90 COUPL.,EXT.THREAD 8/6-G1/8"	
250	312105-0462	-		4	SCREW M6S ISO 4014 M8X55 A480	
TBA 1000S NOMOLDEDCAP (See drawing on page: 3-40)						
010	1144897-0000	A		1	FOLDING BAR	
020	1144898-0000	A		1	FOLDING BAR	
050	1144719-0000	-		2	RAIL	
060	1144555-0000	-		8	STUD SCREW	
120	315105-0165	-		16	WASHER BRB8,4X16RFR	
130	312605-0318	-		16	HEXAGON NUT, M6M M8 A280	
200	342921-0121	-		4	STRAIGHT COUPLING,EXT.THREADED 8/6-G1/8"	
TBA 1000S STDA7 (See drawing on page: 3-34)						
010	1498827-0000	A		1	FOLDING BAR	
020	1498828-0000	A		1	FOLDING BAR	
030	1317043-0000	-		2	SUPPORT	
050	1317047-0000	-		1	RAIL	
060	2509936-0000	-		2	SPACER SCREW	
080	2509937-0000	-		4	SPACER	
090	2509935-0000	-		2	SPACER	
100	312109-0457	-		4	SCREW M6S ISO 4017 M8X35 A480	
110	312105-0461	-		4	SCREW M6S ISO 4014 M8X50 A480	
120	315105-0165	-		14	WASHER BRB8,4X16RFR	
130	312605-0318	-		2	HEXAGON NUT, M6M M8 A280	
160	312155-0459	-		2	SCREW EN 10642 MF6S M8X40 A480	
170	312105-0451	-		2	SCREW M6S ISO 4017 M8X20 A480	
180	312105-0464	-		2	SCREW M6S ISO 4014 M8X65 A480	
200	342931-0121	-		4	ELBOW 90 COUPL.,EXT.THREAD 8/6-G1/8"	
TBA 1000SQ (See drawing on page: 3-34)						
010	1498827-0000	A		1	FOLDING BAR	
020	1498828-0000	A		1	FOLDING BAR	
030	1317043-0000	-		2	SUPPORT	
040	1317042-0000	-		1	RAIL	
050	1317047-0000	-		1	RAIL	
060	1499094-0000	-		2	SPACER SCREW	
080	1499072-0000	-		4	SPACER	
090	1499071-0000	-		2	SPACER	
100	312109-0457	-		4	SCREW M6S ISO 4017 M8X35 A480	
110	312105-0463	-		4	SCREW M6S ISO 4014 M8X60 A480	
120	315105-0165	-		14	WASHER BRB8,4X16RFR	
130	312605-0318	-		2	HEXAGON NUT, M6M M8 A280	
160	312155-0459	-		2	SCREW EN 10642 MF6S M8X40 A480	
170	312105-0451	-		2	SCREW M6S ISO 4017 M8X20 A480	
180	312105-0466	-		2	SCREW M6S ISO 4014 M8X75 A480	
200	342931-0121	-		4	ELBOW 90 COUPL.,EXT.THREAD 8/6-G1/8"	
TBA 1500S (See drawing on page: 3-34)						
010	1317653-0000	A		1	FOLDING BAR	

FLAP GUIDE

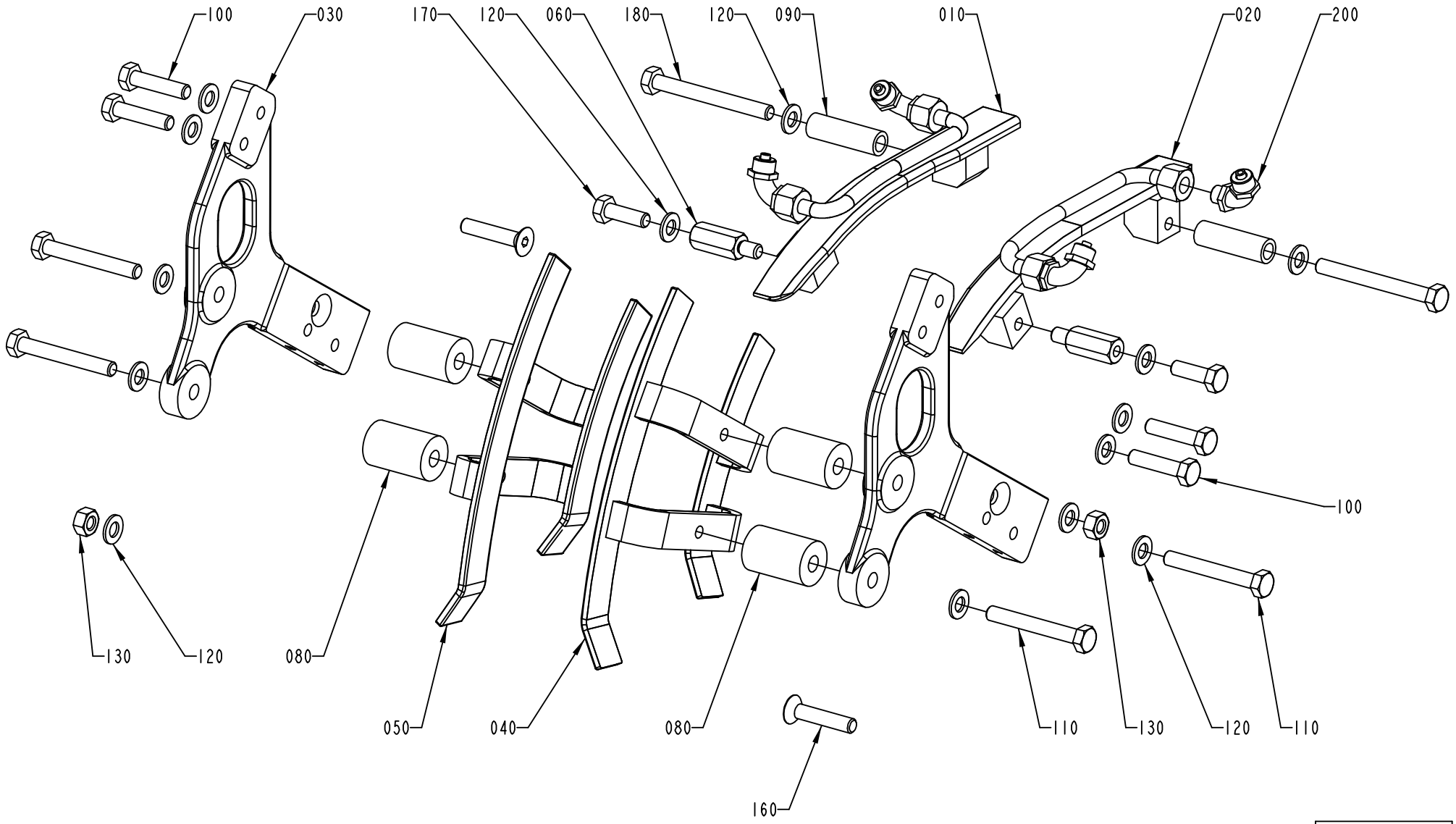

1558940-4
ECN 95038

Pos	Part No	SP	UN	Qty	Description	Page No
TBA 1500S (Cont'd) (See drawing on page: 3-34)						
030	1317043-0000	-		2	SUPPORT	
040	1317042-0000	-		1	RAIL	
050	1317047-0000	-		1	RAIL	
060	1348042-0000	-		2	SPACER	
080	1334718-0000	-		4	SPACER	
090	1317088-0000	-		2	SPACER	
100	312109-0457	-		4	SCREW M6S ISO 4017 M8X35 A480	
110	312109-0461	-		4	SCREW M6S ISO 4017 M8X50 A480	
120	315105-0165	-		12	WASHER BRB8,4X16RFR	
130	312605-0318	-		2	HEXAGON NUT, M6M M8 A280	
180	312105-0465	-		2	SCREW M6S ISO 4014 M8X70 A480	
200	342931-0121	-		4	ELBOW 90 COUPL.,EXT.THREAD 8/6-G1/8"	

Pos	Part No	SP	UN	Qty	Description	Page No

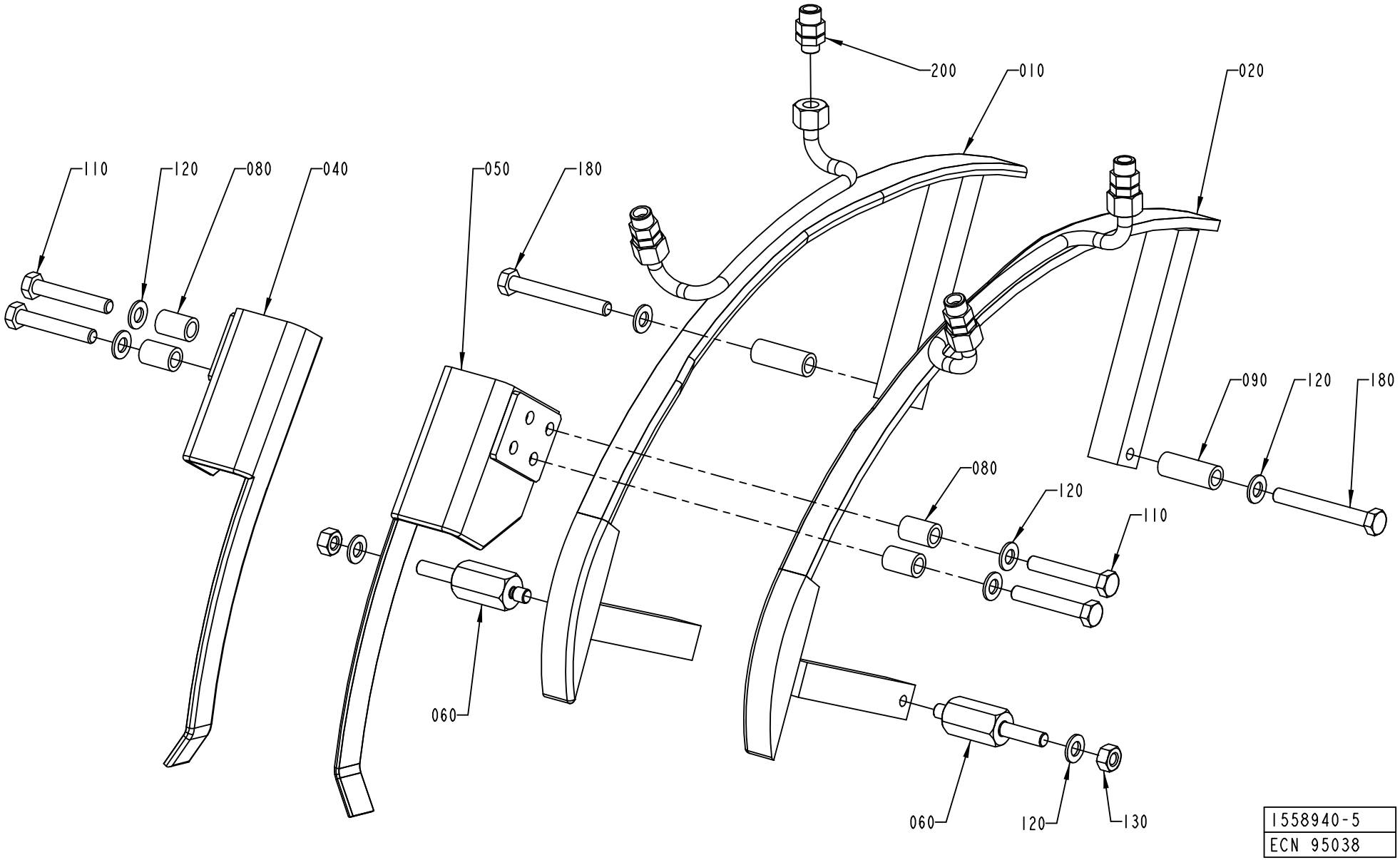

1558940-5
ECN 95038

Pos	Part No	SP	UN	Qty	Description	Page No
SEE PREVIOUS LISTS PAGES: 3-31, 3-33, 3-35.						

Pos	Part No	SP	UN	Qty	Description	Page No

FLAP GUIDE

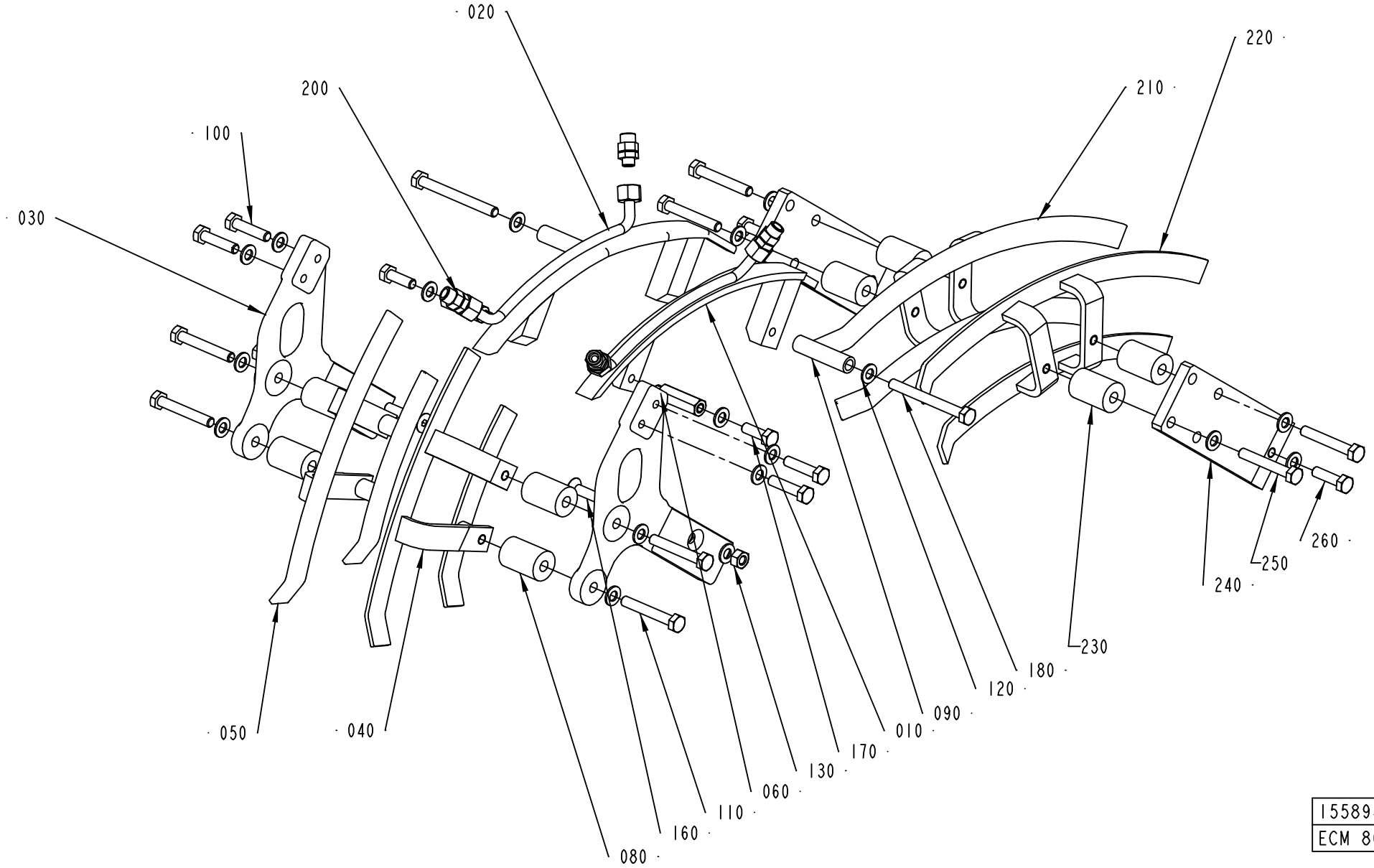

1558940-6
ECM 80646

Pos	Part No	SP	UN	Qty	Description	Page No
SEE PREVIOUS LISTS PAGES: 3-31, 3-33, 3-35.						

Pos	Part No	SP	UN	Qty	Description	Page No

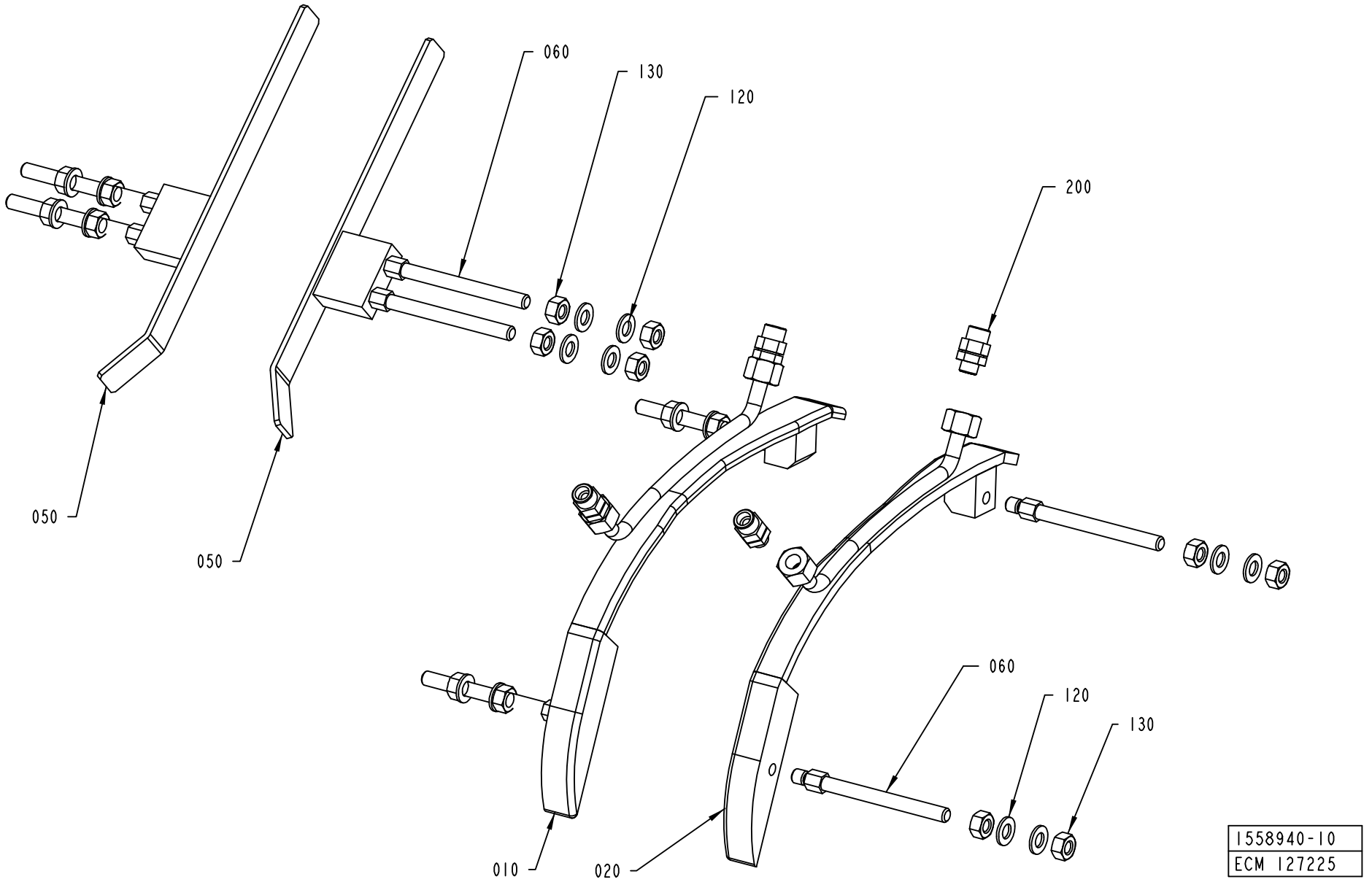
060
130
120
200
050
050
060
120
130
010
020
1558940-10
ECM 127225

Pos	Part No	SP	UN	Qty	Description	Page No
SEE PREVIOUS LISTS PAGES: 3-31, 3-33, 3-35.						

Pos	Part No	SP	UN	Qty	Description	Page No

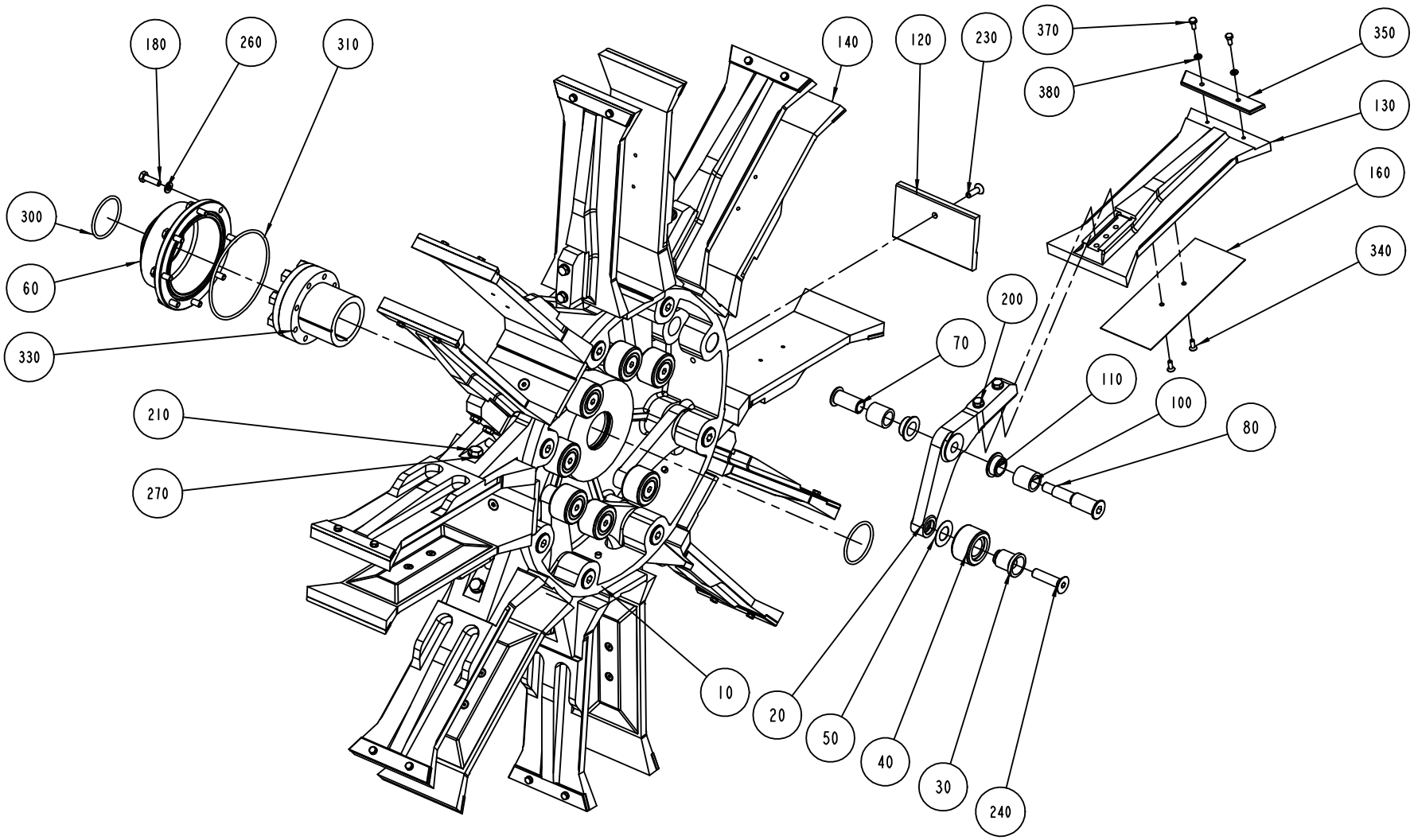

S-1361918-2
ECN 73332

ECM: 142186 - 20031125
Group number: 1361918-0300
Assembly Drawing: 1361918-2_1_AB

This list covers pages from 3-42 to 3-45

Pos	Part No	SP	UN	Qty	Description	Page No
A3/FLEX TPA 1000SQ						
010	1144264-0000	A		1	HUB	
120	1538770-0000	A		8	BOTTOM	
130	2555404-0000	A		8	FLAP	
140	1524484-0000	A		8	FLAP	
160	1523467-0000	A		8	VOLUME BULGE	
200	312105-0378	-		16	SCREW M6S ISO 4014 M6X40 A480	
210	312105-0453	-		8	SCREW M6S ISO 4017 M8X25 A480	
230	312155-0378	-		8	SCREW EN 10642 MF6S M6X40 A480	
340	312155-0289	-		16	SCREW EN 10642 MF6S M4X10 A480	
A3/FLEX TBA 1000B STDA7						
010	1144264-0000	A		1	HUB	
120	2606289-0000	A		8	BOTTOM	
130	1260704-0000	A		8	FLAP	
140	1260705-0000	A		8	FLAP	
200	312105-0376	-		16	SCREW M6S ISO 4014 M6X35 A480	
210	312105-0453	-		8	SCREW M6S ISO 4017 M8X25 A480	
230	312155-0380	-		8	SCREW EN 10642 MF6S M6X50 A480	
A3/FLEX TBA 1000S STDA7						
010	1144264-0000	A		1	HUB	
120	2509938-0000	A		8	BOTTOM	
130	1144926-0000	A		8	FLAP	
140	1144927-0000	A		8	FLAP	
160	2550211-0000	-		8	VOLUME BULGE	
200	312105-0376	-		16	SCREW M6S ISO 4014 M6X35 A480	
210	312105-0453	-		8	SCREW M6S ISO 4017 M8X25 A480	
230	312155-0370	-		8	SCREW EN 10642 MF6S M6X20 A480	
340	312155-0287	-		16	SCREW EN 10642 MF6S M4X8 A480	
A3/FLEX TPA 1000SQ SMILE						
010	1144264-0000	A		1	HUB	
120	2558144-0000	A		8	BOTTOM	
130	2558145-0000	A		8	FLAP	
140	1524484-0000	A		8	FLAP	
160	1523467-0000	A		8	VOLUME BULGE	
210	312105-0453	-		8	SCREW M6S ISO 4017 M8X25 A480	
230	312105-0368	-		8	SCREW M6S ISO 4017 M6X16 A480	
260	315103-0153	-		32	WASHER, BRB, 6,4/12,H=1,5 NIPL BR	
340	312155-0289	-		16	SCREW EN 10642 MF6S M4X10 A480	
A3/FLEX TBA 0200S						
010	1144264-0000	A		1	HUB	
130	1260885-0000	A		8	FLAP	
140	1260886-0000	A		8	FLAP	
200	312105-0376	-		16	SCREW M6S ISO 4014 M6X35 A480	
210	312105-0453	-		8	SCREW M6S ISO 4017 M8X25 A480	
A3/FLEX TBA 1000B NOMOLDEDCAP						
010	1144264-0000	A		1	HUB	
120	1260703-0000	A		8	BOTTOM	
130	1260704-0000	A		8	FLAP	
140	1260705-0000	A		8	FLAP	
200	312105-0376	-		16	SCREW M6S ISO 4014 M6X35 A480	
210	312105-0453	-		8	SCREW M6S ISO 4017 M8X25 A480	
230	312155-0380	-		8	SCREW EN 10642 MF6S M6X50 A480	
A3/FLEX TBA 1000S NOMOLDEDCAP						
010	1144264-0000	A		1	HUB	
120	1144924-0000	A		8	BOTTOM	
130	1144926-0000	A		8	FLAP	
140	1144927-0000	A		8	FLAP	
160	2550211-0000	-		8	VOLUME BULGE	
200	312105-0376	-		16	SCREW M6S ISO 4014 M6X35 A480	
210	312105-0453	-		8	SCREW M6S ISO 4017 M8X25 A480	
230	312155-0370	-		8	SCREW EN 10642 MF6S M6X20 A480	
340	312155-0287	-		16	SCREW EN 10642 MF6S M4X8 A480	
A3/FLEX TBA 1000SQ						
010	1144264-0000	A		1	HUB	
120	1511558-0000	A		8	BOTTOM	
130	1487739-0000	A		8	FLAP	
140	1487738-0000	A		8	FLAP	
200	312105-0376	-		16	SCREW M6S ISO 4014 M6X35 A480	
210	312105-0453	-		8	SCREW M6S ISO 4017 M8X25 A480	
230	312155-0370	-		8	SCREW EN 10642 MF6S M6X20 A480	
A3/FLEX TBA 1500S						
010	1144264-0000	A		1	HUB	
120	1317556-0000	A		8	BOTTOM	
130	1317554-0000	A		8	FLAP	
140	1317555-0000	A		8	FLAP	
200	312105-0376	-		16	SCREW M6S ISO 4014 M6X35 A480	
210	312105-0453	-		8	SCREW M6S ISO 4017 M8X25 A480	
230	312155-0376	-		8	SCREW EN 10642 MF6S M6X35 A480	
350	1317656-0000	A		16	INSERT	
370	312105-0289	-		32	SCREW M6S ISO 4017 M4X10 A470	
380	315105-0136	-		32	WASHER BRB4,3XRFR	
Common Parts						
020	1279559-0000	A		8	ARM	
030	1144312-0000	A		8	AXLE PIN	

Machine Type | Group Description | Used-In | Group Number | Page No

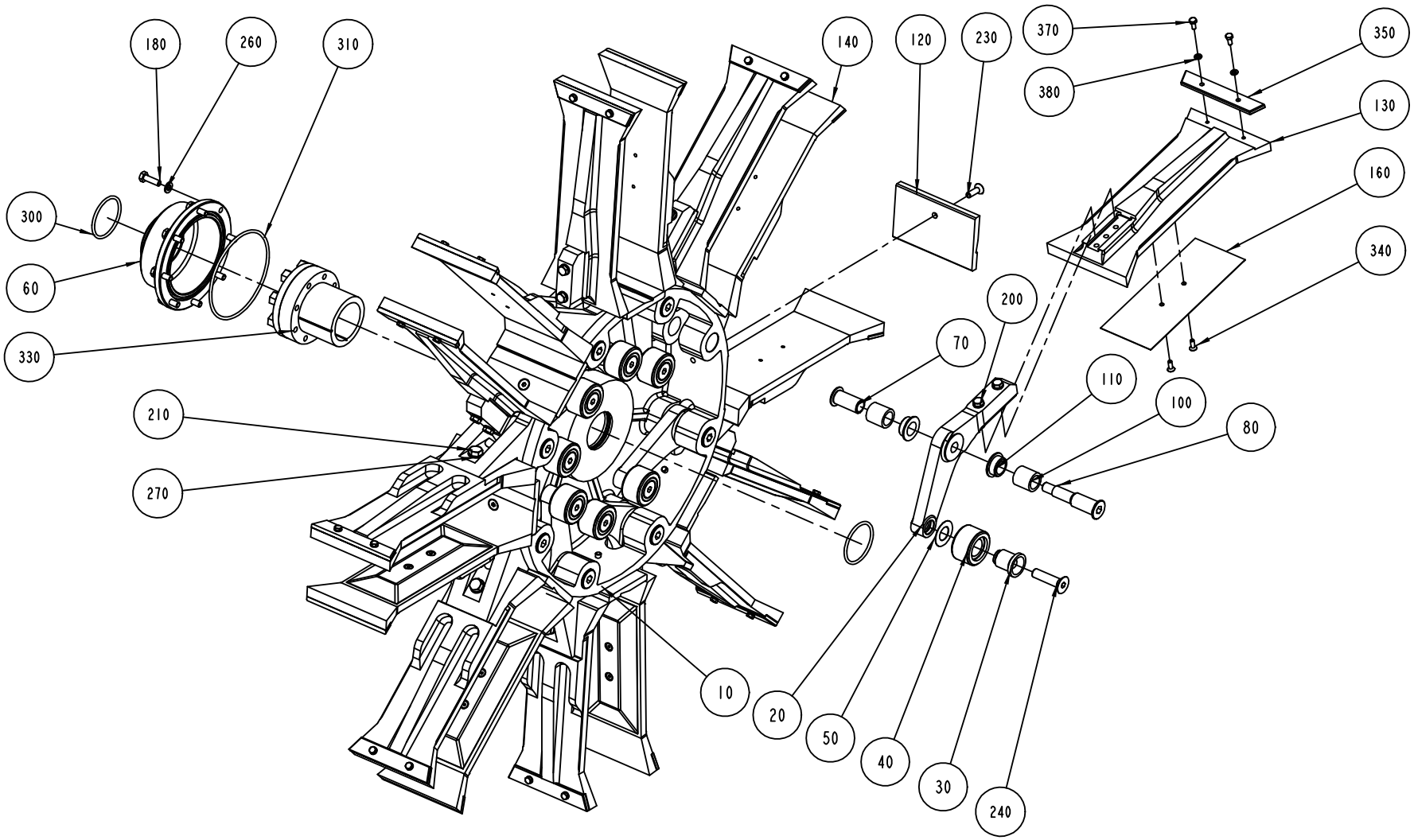

S-1361918-2
ECN 73332

ECM: 142186 - 20031125
Group number: 1361918-0300
Assembly Drawing: 1361918-2_1_AB

This list covers pages from 3-42 to 3-45

Pos	Part No	SP	UN	Qty	Description	Page No
Common Parts (Cont'd)						
040	1144335-0000	A		8	ROLLER	
050	1144354-0000	A		8	WASHER	
060	1144356-0000	-		1	COVER	
070	1296970-0000	A		8	SCREW BUSHING	
080	1296969-0000	A		8	SCREW HOLDER	
100	1144417-0000	A		16	BUSHING	
110	1282708-0000	A		16	BUSHING	
180	312105-0370	-		8	SCREW M6S ISO 4017 M6X20 A480	
240	312155-0499	-		8	SCREW EN 10642 MF6S M10X40 A480	
260	315105-0153	-		24	WASHER BRB6,4X12RFR	
270	315105-0165	-		8	WASHER BRB8,4X16RFR	
300	315202-0225	A		2	O-RING 44,2X3 MM	
310	315202-0311	A		1	O-RING 99,5X3 MM	
330	90208-0087	A		1	CLAMPING ELEMENT WITH SLEEVE, 45X59 MM	

Pos	Part No	SP	UN	Qty	Description	Page No

DROP CHUTE VARIANT

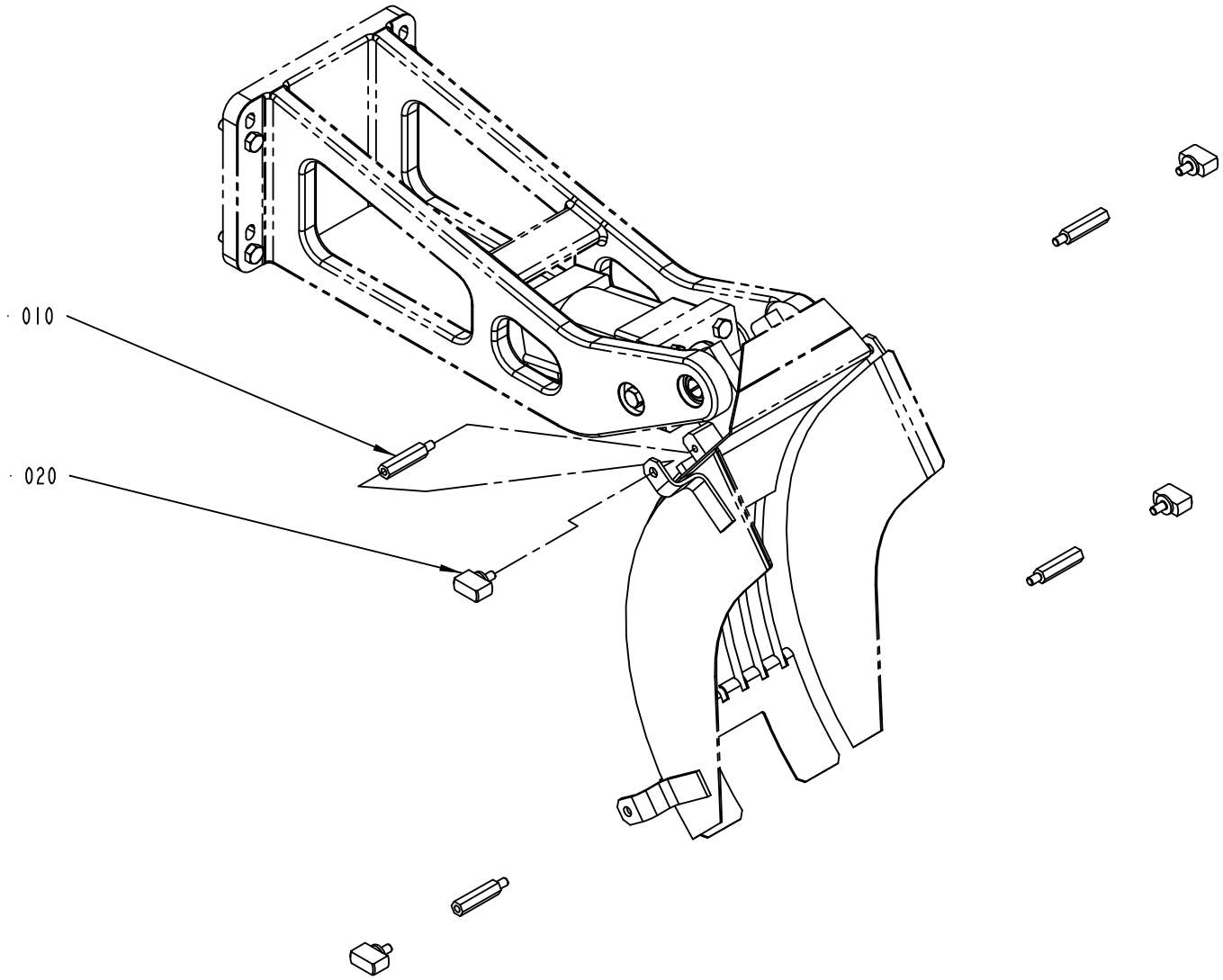

2537128-1
ECM 110157

ECM: 157778 - 20040309
Group number: 2537128-0100
Assembly Drawing: 2537128-1_1_AA

Pos	Part No	SP	UN	Qty	Description	Page No
TBA 0200B QC, TBA 0330S QC, TBA 0250B QC						
010	1317218-0000	-		4	SPACER	
Common Parts						
010	2598820-0000	-		2	SPACER	
020	2540609-0000	-		4	KNOB	

Pos	Part No	SP	UN	Qty	Description	Page No

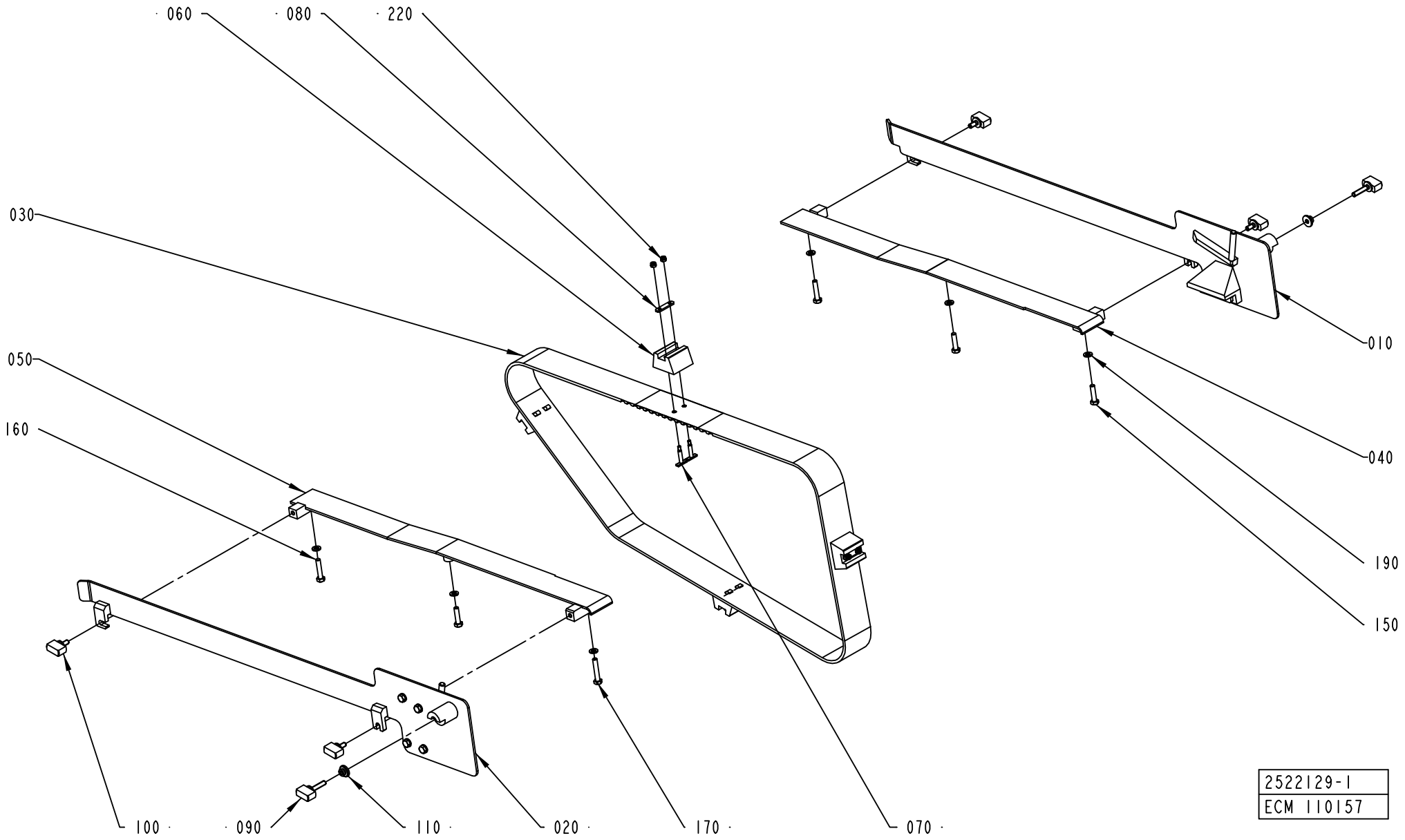
060
080
220
030
050
160
010
040
190
150
100
090
110
020
170
070
2522129-1
ECM 110157

Pos	Part No	SP	UN	Qty	Description	Page No
TBA 0200B QC (See drawing on page: 3-50)						
040	1282290-0000	-		1	GUIDE	
050	1282291-0000	-		1	GUIDE	
060	1282287-0000	-		4	CARRIER	
070	1346736-0000	-		8	WEDGE	
090	2652191-0000	-		2	KNOB	
110	2520160-0000	-		2	CLAMP	
120	1499476-0000	-		1	HOLDER	
130	1499475-0000	-		1	HOLDER	
150	312105-0372	-		5	SCREW M6S ISO 4017 M6X25 A480	
190	315105-0153	-		10	WASHER BRB6,4X12RFR	
230	312605-0316	-		2	HEXAGON NUT, M6M M6 A280	
250	90424-0068	-		1	AIR NOZZLE, G1/4, MOD. 216 BSP	
260	90458-2958	-		1	ELBOW PIPE JOINT, EXT.THREAD, D=8MM-G1/4	
270	342728-0103	-		1	PIPE COUPLING 8 MM	
280	90166-0013	-	MM	700	TUBE 8 MM PA BLUE	
TBA 0250B QC (See drawing on page: 3-50)						
040	1282290-0000	-		1	GUIDE	
050	1282291-0000	-		1	GUIDE	
060	1282287-0000	-		4	CARRIER	
070	1346736-0000	-		8	WEDGE	
090	2652191-0000	-		2	KNOB	
110	2520160-0000	-		2	CLAMP	
120	1499476-0000	-		1	HOLDER	
130	1499475-0000	-		1	HOLDER	
150	312105-0372	-		5	SCREW M6S ISO 4017 M6X25 A480	
190	315105-0153	-		10	WASHER BRB6,4X12RFR	
230	312605-0316	-		2	HEXAGON NUT, M6M M6 A280	
250	90424-0068	-		1	AIR NOZZLE, G1/4, MOD. 216 BSP	
260	90458-2958	-		1	ELBOW PIPE JOINT, EXT.THREAD, D=8MM-G1/4	
270	342728-0103	-		1	PIPE COUPLING 8 MM	
280	90166-0013	-	MM	700	TUBE 8 MM PA BLUE	
TBA 0330S QC (See drawing on page: 3-50)						
040	1282290-0000	-		1	GUIDE	
050	1282291-0000	-		1	GUIDE	
060	1282287-0000	-		4	CARRIER	
070	1346736-0000	-		8	WEDGE	
090	2652191-0000	-		2	KNOB	
110	2520160-0000	-		2	CLAMP	
120	1499476-0000	-		1	HOLDER	
130	1499475-0000	-		1	HOLDER	
150	312105-0372	-		5	SCREW M6S ISO 4017 M6X25 A480	
190	315105-0153	-		10	WASHER BRB6,4X12RFR	
230	312605-0316	-		2	HEXAGON NUT, M6M M6 A280	
250	90424-0068	-		1	AIR NOZZLE, G1/4, MOD. 216 BSP	
260	90458-2958	-		1	ELBOW PIPE JOINT, EXT.THREAD, D=8MM-G1/4	
270	342728-0103	-		1	PIPE COUPLING 8 MM	
280	90166-0013	-	MM	700	TUBE 8 MM PA BLUE	
TBA 0500B (See drawing on page: 3-48)						
060	1144919-0000	A		4	CARRIER	
090	2529785-0000	-		2	KNOB	
110	2520160-0000	-		2	CLAMP	
150	312105-0372	-		3	SCREW M6S ISO 4017 M6X25 A480	
190	315105-0153	-		6	WASHER BRB6,4X12RFR	
TBA 1000B (See drawing on page: 3-48)						
060	1144919-0000	A		4	CARRIER	
090	2529785-0000	-		2	KNOB	
110	2520160-0000	-		2	CLAMP	
150	312105-0372	-		3	SCREW M6S ISO 4017 M6X25 A480	
190	315105-0153	-		6	WASHER BRB6,4X12RFR	
Common Parts						
010	2527704-0100	-		1	GUIDE	**3-53**
020	2527703-0100	-		1	GUIDE	**3-55**
030	1144783-0000	A		1	TIMING BELT	
040	1317651-0000	-		1	GUIDE	
050	1317650-0000	-		1	GUIDE	
070	1346471-0000	A		8	WEDGE	
080	1144918-0000	-		4	PLATE	
100	2529786-0000	-		4	KNOB	
160	312109-0374	-		2	SCREW M6S ISO 4017 M6X30 A480	
170	312109-0376	-		1	SCREW M6S ISO 4017 M6X35 A480	
220	312812-0312	-		8	HEXAGON NUT, NY-LOCK M4 A480	

Machine Type | Group Description | Used-In | Group Number | Page No

INFEED CONVEYOR VARIANT

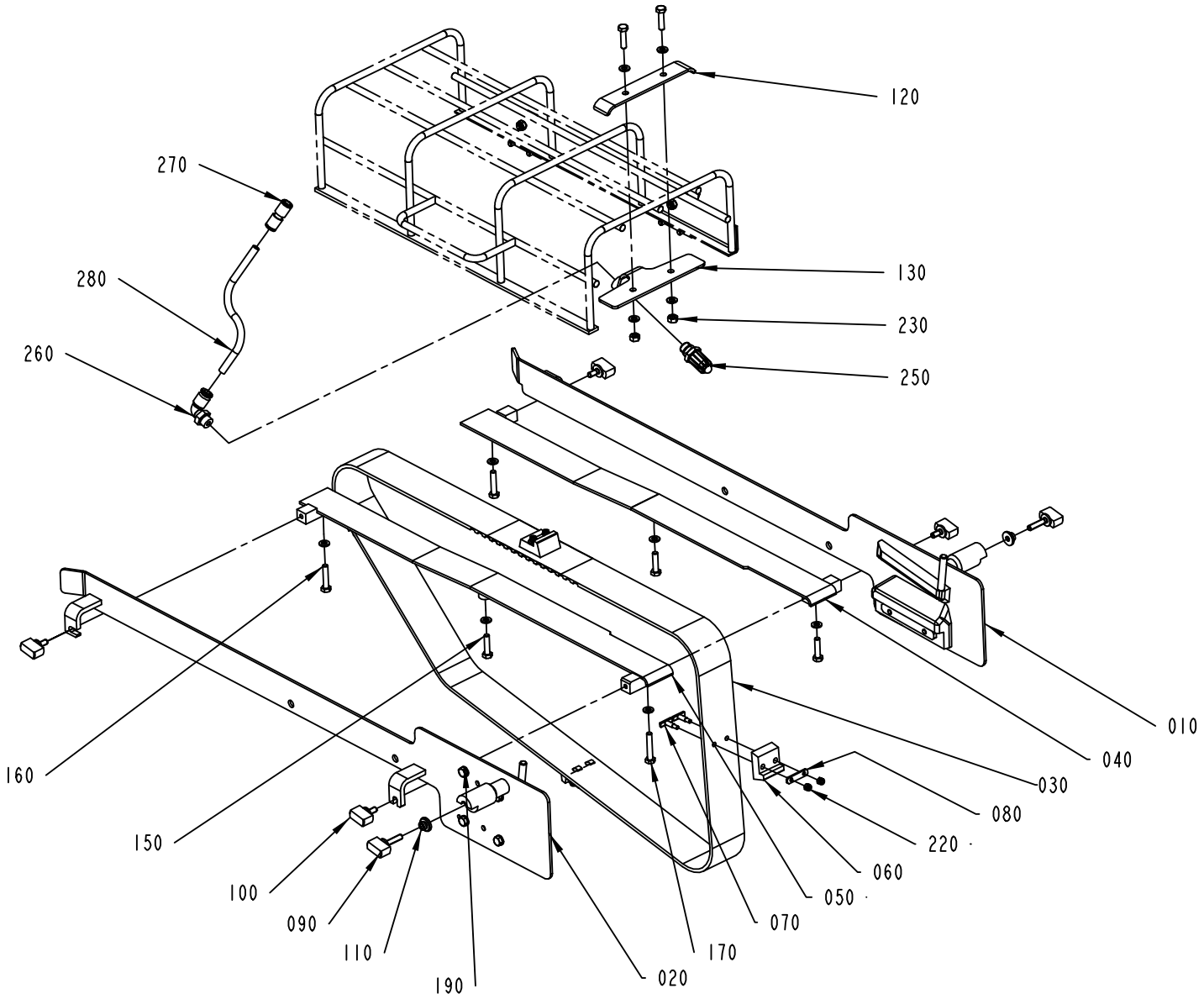

2522129-5
ECM 149528

ECM: 157772 - 20040309
Group number: 2522129-0100
Assembly Drawing: 2522129-5_1_AA

This list covers pages from 3-48 to 3-51

Pos	Part No	SP	UN	Qty	Description	Page No
TBA 0200B QC (See drawing on page: 3-50)						
040	1282290-0000	-		1	GUIDE	
050	1282291-0000	-		1	GUIDE	
060	1282287-0000	-		4	CARRIER	
070	1346736-0000	-		8	WEDGE	
090	2652191-0000	-		2	KNOB	
110	2520160-0000	-		2	CLAMP	
120	1499476-0000	-		1	HOLDER	
130	1499475-0000	-		1	HOLDER	
150	312105-0372	-		5	SCREW M6S ISO 4017 M6X25 A480	
190	315105-0153	-		10	WASHER BRB6,4X12RFR	
230	312605-0316	-		2	HEXAGON NUT, M6M M6 A280	
250	90424-0068	-		1	AIR NOZZLE, G1/4, MOD. 216 BSP	
260	90458-2958	-		1	ELBOW PIPE JOINT, EXT.THREAD, D=8MM-G1/4	
270	342728-0103	-		1	PIPE COUPLING 8 MM	
280	90166-0013	-	MM	700	TUBE 8 MM PA BLUE	
TBA 0250B QC (See drawing on page: 3-50)						
040	1282290-0000	-		1	GUIDE	
050	1282291-0000	-		1	GUIDE	
060	1282287-0000	-		4	CARRIER	
070	1346736-0000	-		8	WEDGE	
090	2652191-0000	-		2	KNOB	
110	2520160-0000	-		2	CLAMP	
120	1499476-0000	-		1	HOLDER	
130	1499475-0000	-		1	HOLDER	
150	312105-0372	-		5	SCREW M6S ISO 4017 M6X25 A480	
190	315105-0153	-		10	WASHER BRB6,4X12RFR	
230	312605-0316	-		2	HEXAGON NUT, M6M M6 A280	
250	90424-0068	-		1	AIR NOZZLE, G1/4, MOD. 216 BSP	
260	90458-2958	-		1	ELBOW PIPE JOINT, EXT.THREAD, D=8MM-G1/4	
270	342728-0103	-		1	PIPE COUPLING 8 MM	
280	90166-0013	-	MM	700	TUBE 8 MM PA BLUE	
TBA 0330S QC (See drawing on page: 3-50)						
040	1282290-0000	-		1	GUIDE	
050	1282291-0000	-		1	GUIDE	
060	1282287-0000	-		4	CARRIER	
070	1346736-0000	-		8	WEDGE	
090	2652191-0000	-		2	KNOB	
110	2520160-0000	-		2	CLAMP	
120	1499476-0000	-		1	HOLDER	
130	1499475-0000	-		1	HOLDER	
150	312105-0372	-		5	SCREW M6S ISO 4017 M6X25 A480	
190	315105-0153	-		10	WASHER BRB6,4X12RFR	
230	312605-0316	-		2	HEXAGON NUT, M6M M6 A280	
250	90424-0068	-		1	AIR NOZZLE, G1/4, MOD. 216 BSP	
260	90458-2958	-		1	ELBOW PIPE JOINT, EXT.THREAD, D=8MM-G1/4	
270	342728-0103	-		1	PIPE COUPLING 8 MM	
280	90166-0013	-	MM	700	TUBE 8 MM PA BLUE	
TBA 0500B (See drawing on page: 3-48)						
060	1144919-0000	A		4	CARRIER	
090	2529785-0000	-		2	KNOB	
110	2520160-0000	-		2	CLAMP	
150	312105-0372	-		3	SCREW M6S ISO 4017 M6X25 A480	
190	315105-0153	-		6	WASHER BRB6,4X12RFR	
TBA 1000B (See drawing on page: 3-48)						
060	1144919-0000	A		4	CARRIER	
090	2529785-0000	-		2	KNOB	
110	2520160-0000	-		2	CLAMP	
150	312105-0372	-		3	SCREW M6S ISO 4017 M6X25 A480	
190	315105-0153	-		6	WASHER BRB6,4X12RFR	
Common Parts						
010	2527704-0100	-		1	GUIDE	**3-53**
020	2527703-0100	-		1	GUIDE	**3-55**
030	1144783-0000	A		1	TIMING BELT	
040	1317651-0000	-		1	GUIDE	
050	1317650-0000	-		1	GUIDE	
070	1346471-0000	A		8	WEDGE	
080	1144918-0000	-		4	PLATE	
100	2529786-0000	-		4	KNOB	
160	312109-0374	-		2	SCREW M6S ISO 4017 M6X30 A480	
170	312109-0376	-		1	SCREW M6S ISO 4017 M6X35 A480	
220	312812-0312	-		8	HEXAGON NUT, NY-LOCK M4 A480	

Machine Type | Group Description | Used-In | Group Number | Page No

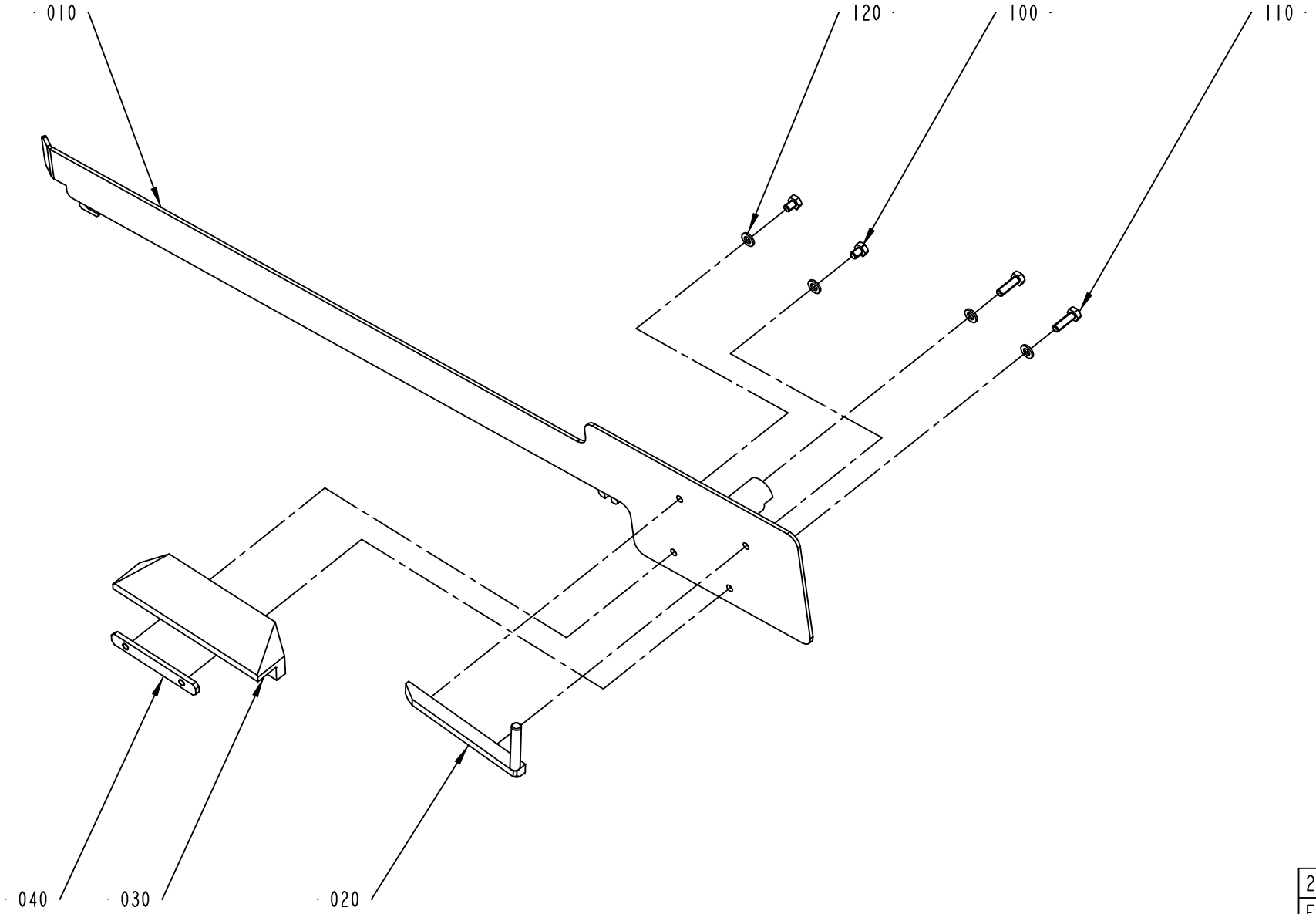

2527704-1
ECM 110157

ECM: 157776 - 20040309
Group number: 2527704-0100
Assembly Drawing: 2527704-1_1_AA

Pos	Part No	SP	UN	Qty	Description	Page No
TBA 0200B QC (See drawing on pages: 3-52, 4-4)						
010	2526578-0000	-		1	GUIDE	
020	1348148-0000	-		1	BAR	
030	1348136-0000	-		1	SLIDE	
040	1348169-0000	-		1	PLATE	
050	2664200-0000	-		1	GUIDE	
130	312605-0316	-		2	HEXAGON NUT, M6M M6 A280	
TBA 0250B QC (See drawing on pages: 3-52, 4-4)						
010	2526578-0000	-		1	GUIDE	
020	1348147-0000	-		1	BAR	
030	1348135-0000	-		1	SLIDE	
040	1348169-0000	-		1	PLATE	
050	2664200-0000	-		1	GUIDE	
130	312605-0316	-		2	HEXAGON NUT, M6M M6 A280	
TBA 0330S QC (See drawing on pages: 3-52, 4-4)						
010	2526578-0000	-		1	GUIDE	
020	2545000-0000	-		1	BAR	
030	2544997-0000	-		1	SLIDE	
040	1279409-0000	-		1	PLATE	
TBA 0500B (See drawing on pages: 3-52, 4-4)						
010	2522166-0000	-		1	GUIDE	
020	1539877-0000	-		1	BAR	
030	1539874-0000	A		1	SLIDE	
040	1539876-0000	-		1	PLATE	
110	312105-0370	-		2	SCREW M6S ISO 4017 M6X20 A480	
120	315105-0153	-		6	WASHER BRB6,4X12RFR	
TBA 1000B (See drawing on pages: 3-52, 4-4)						
010	2518129-0000	-		1	GUIDE	
020	1348144-0000	-		1	BAR	
030	1348133-0000	A		1	SLIDE	
040	1279409-0000	-		1	PLATE	
110	312105-0370	-		2	SCREW M6S ISO 4017 M6X20 A480	
120	315105-0153	-		6	WASHER BRB6,4X12RFR	
Common Parts						
050	2619407-0000	-		1	GUIDE	
100	312105-0362	-		2	SCREW M6S ISO 4017 M6X8 A480	

Pos	Part No	SP	UN	Qty	Description	Page No

Machine Type | Group Description | Used-In | Group Number | Page No

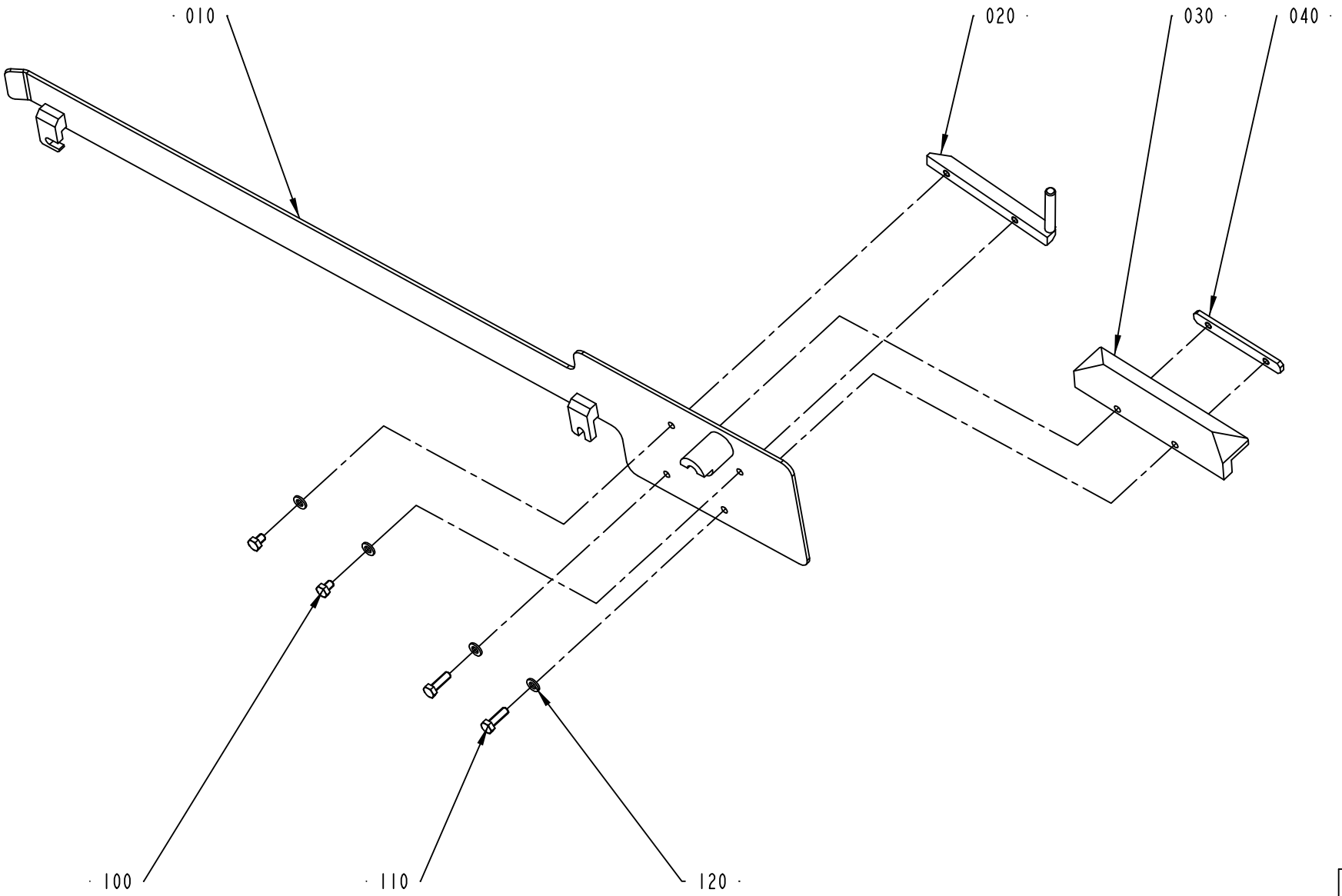

2527703-1
ECM 110157

ECM: 157775 - 20040309
Group number: 2527703-0100
Assembly Drawing: 2527703-1_1_AA

Pos	Part No	SP	UN	Qty	Description	Page No
TBA 0200B (See drawing on pages: 3-54, 4-12)						
010	2526579-0000	-		1	GUIDE	
020	1348154-0000	-		1	BAR	
030	1348142-0000	-		1	SLIDE	
040	1348169-0000	-		1	PLATE	
050	2664201-0000	-		1	GUIDE	
110	312105-0370	-		2	SCREW M6S ISO 4017 M6X20 A480	
120	315105-0153	-		6	WASHER BRB6,4X12RFR	
130	312605-0316	-		2	HEXAGON NUT, M6M M6 A280	
TBA 0250B (See drawing on pages: 3-54, 4-12)						
010	2526579-0000	-		1	GUIDE	
020	1348153-0000	-		1	BAR	
030	1348141-0000	-		1	SLIDE	
040	1348169-0000	-		1	PLATE	
050	2664201-0000	-		1	GUIDE	
110	312105-0370	-		2	SCREW M6S ISO 4017 M6X20 A480	
120	315105-0153	-		6	WASHER BRB6,4X12RFR	
130	312605-0316	-		2	HEXAGON NUT, M6M M6 A280	
TBA 0330S (See drawing on pages: 3-54, 4-12)						
010	2526579-0000	-		1	GUIDE	
020	2544999-0000	-		1	BAR	
030	2544998-0000	-		1	SLIDE	
040	1279409-0000	-		1	PLATE	
110	312105-0370	-		2	SCREW M6S ISO 4017 M6X20 A480	
120	315105-0153	-		6	WASHER BRB6,4X12RFR	
TBA 0500B (See drawing on pages: 3-54, 4-12)						
010	2522167-0000	-		1	GUIDE	
020	1539878-0000	-		1	BAR	
030	1539875-0000	A		1	SLIDE	
040	1539876-0000	-		1	PLATE	
110	312105-0370	-		2	SCREW M6S ISO 4017 M6X20 A480	
120	315105-0153	-		6	WASHER BRB6,4X12RFR	
TBA 1000B (See drawing on pages: 3-54, 4-12)						
010	2518130-0000	-		1	GUIDE	
020	1348150-0000	-		1	BAR	
030	1348139-0000	A		1	SLIDE	
040	1279409-0000	-		1	PLATE	
110	312105-0370	-		2	SCREW M6S ISO 4017 M6X20 A480	
120	315105-0153	-		6	WASHER BRB6,4X12RFR	
Common Parts						
100	312105-0362	-		2	SCREW M6S ISO 4017 M6X8 A480	

Pos	Part No	SP	UN	Qty	Description	Page No

Machine Type | Group Description | Used-In | Group Number | Page No

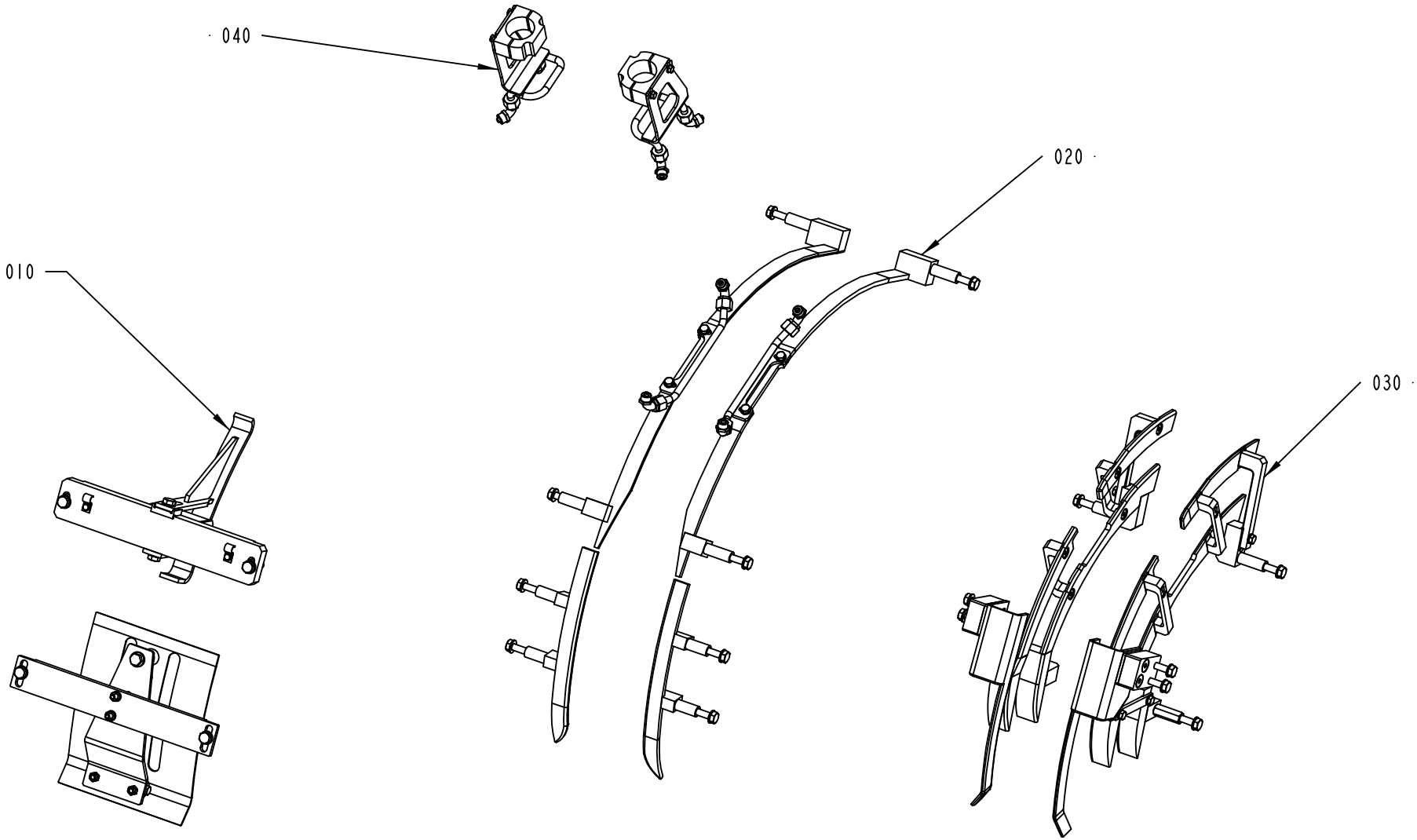

2543480-1
ECM 110156

ECM: 127231 - 20031103
Group number: 2543480-0100
Assembly Drawing: 2543480-1_1_AA

Pos	Part No	SP	UN	Qty	Description	Page No
-						
010	2543481-0100	-		1	TOP SECTION	**3-59, 3-61**
020	2543482-0100	-		1	TOP RAIL	**3-63, 3-65**
030	2603827-0100	-		1	FLAP GUIDE	**3-67, 3-69**
040	2603826-0100	-		1	FOLDING PART	**3-71**

Pos	Part No	SP	UN	Qty	Description	Page No

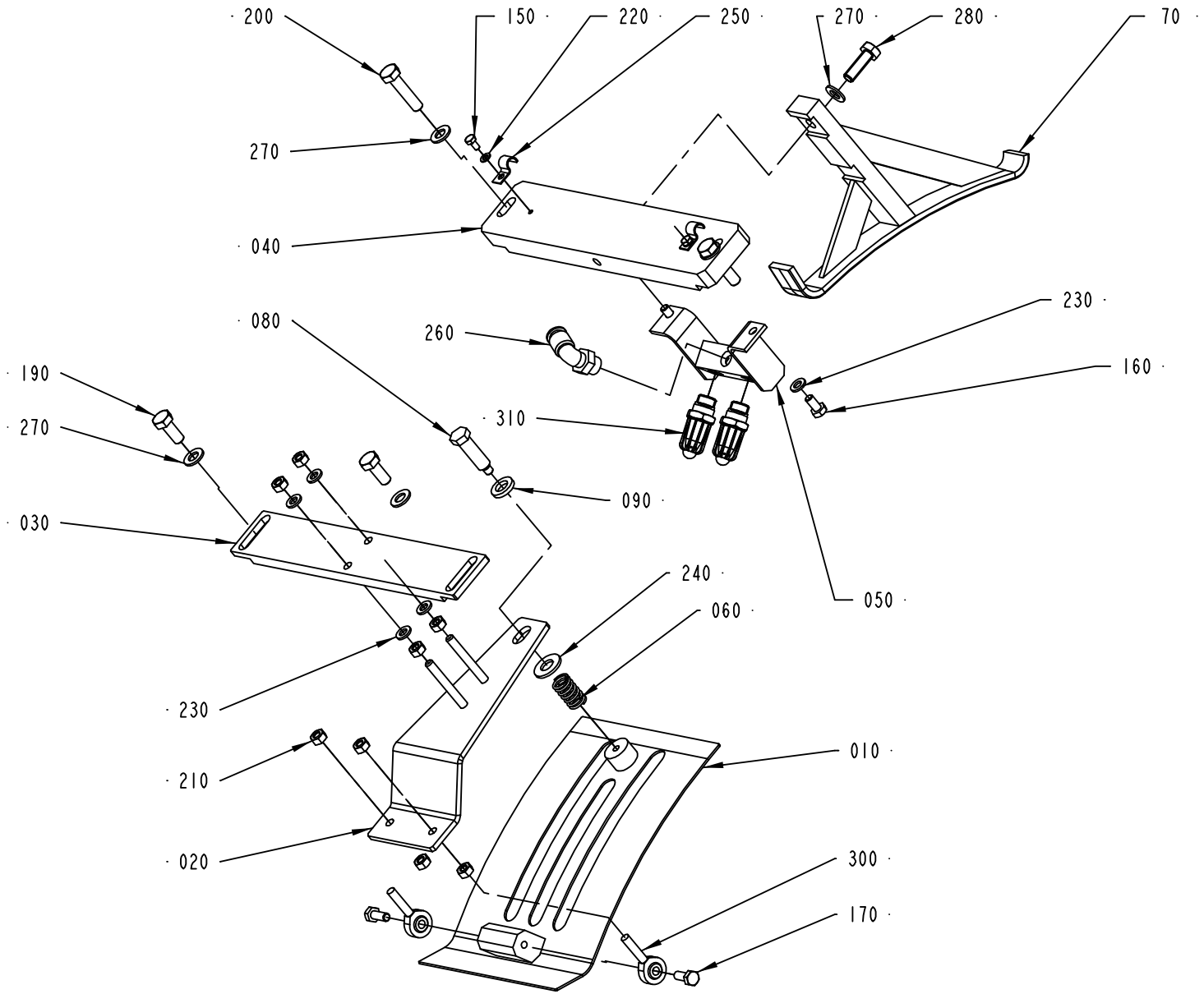

2543481-1
ECM 127225

ECM: 158923 - 20040309
Group number: 2543481-0100
Assembly Drawing: 2543481-1_1_AB

This list covers pages from 3-58 to 3-61

Pos	Part No	SP	UN	Qty	Description	Page No
TBA 0200B QC, TBA 0330S QC, TBA 0250B QC (See drawing on page: 3-60)						
010	1317211-0000	A		1	COVERING PLATE	
020	1317213-0000	-		1	ADJUSTING PLATE	
050	1349087-0000	-		1	DISTRIBUTOR	
070	2552022-0000	-		1	GUIDE	
100	2553284-0000	-		1	BLOCK	
270	315105-0165	-		6	WASHER BRB8,4X16RFR	
280	312105-0451	-		2	SCREW M6S ISO 4017 M8X20 A480	
310	90424-0068	A		1	AIR NOZZLE, G1/4, MOD. 216 BSP	
TBA 0500B QC, TBA 1000B QC (See drawing on page: 3-58)						
010	1144941-0000	A		1	COVERING PLATE	
020	1144974-0000	-		1	ADJUSTING PLATE	
050	1285014-0000	-		1	DISTRIBUTOR	
070	2609372-0000	-		1	GUIDE	
180	312105-0449	-		1	SCREW M6S ISO 4017 M8X16 A480	
270	315105-0165	-		5	WASHER BRB8,4X16RFR	
280	312105-0453	-		1	SCREW M6S ISO 4017 M8X25 A480	
310	90424-0068	A		2	AIR NOZZLE, G1/4, MOD. 216 BSP	
Common Parts						
030	1144975-0000	-		1	ATTACHMENT PLATE	
040	1144902-0000	-		1	SUPPORT	
060	90335-0036	A		1	COMP. SPRING 22450, 1,6X14,1X24	
080	1144976-0000	-		1	STOP SCREW	
090	1144979-0000	-		1	WASHER	
150	312105-0287	-		2	SCREW M6S ISO4017 M4X8 A470	
160	312105-0366	-		2	SCREW M6S ISO 4017 M6X12 A480	
170	312105-0368	-		2	SCREW M6S ISO 4017 M6X16 A480	
190	312105-0451	-		2	SCREW M6S ISO 4017 M8X20 A480	
200	312105-0457	-		2	SCREW M6S ISO 4014 M8X35 A480	
210	312605-0316	-		8	HEXAGON NUT, M6M M6 A280	
220	315105-0136	-		2	WASHER BRB4,3XRFR	
230	315105-0153	-		6	WASHER BRB6,4X12RFR	
240	315105-0173	-		1	WASHER BRB10,5X22RFR	
250	90165-0057	-		2	PIPE CLIP FOR TUBE D=6 MM	
260	90458-2958	-		1	ELBOW PIPE JOINT, EXT.THREAD, D=8MM-G1/4	
300	90115-0137	A		2	ROD END, ID=6 MM, M6X1	

Pos	Part No	SP	UN	Qty	Description	Page No

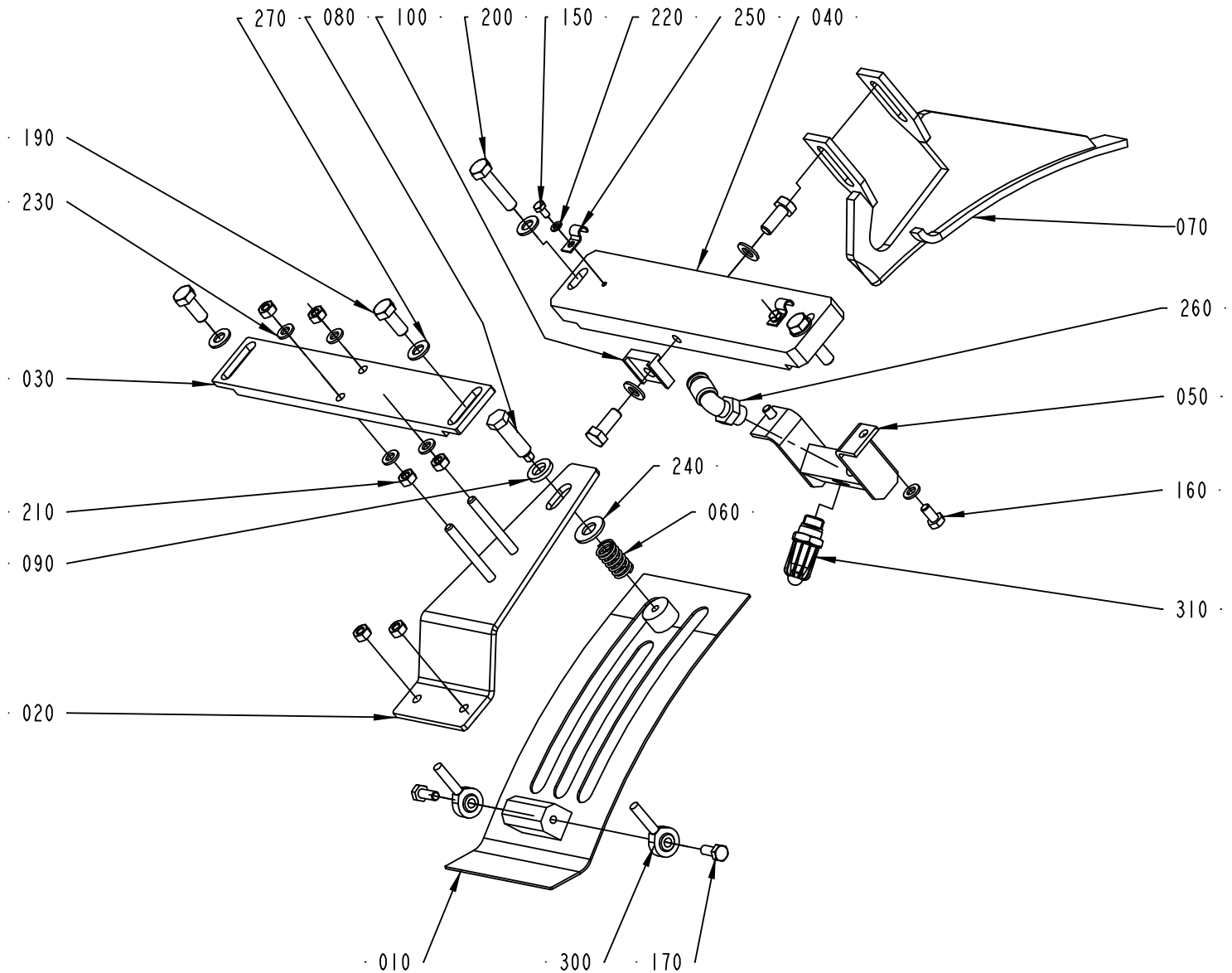

2543481-3
ECM 149528

ECM: 158923 - 20040309
Group number: 2543481-0100
Assembly Drawing: 2543481-3_1_AA

This list covers pages from 3-58 to 3-61

Pos	Part No	SP	UN	Qty	Description	Page No
TBA 0200B QC, TBA 0330S QC, TBA 0250B QC (See drawing on page: 3-60)						
010	1317211-0000	A		1	COVERING PLATE	
020	1317213-0000	-		1	ADJUSTING PLATE	
050	1349087-0000	-		1	DISTRIBUTOR	
070	2552022-0000	-		1	GUIDE	
100	2553284-0000	-		1	BLOCK	
270	315105-0165	-		6	WASHER BRB8,4X16RFR	
280	312105-0451	-		2	SCREW M6S ISO 4017 M8X20 A480	
310	90424-0068	A		1	AIR NOZZLE, G1/4, MOD. 216 BSP	
TBA 0500B QC, TBA 1000B QC (See drawing on page: 3-58)						
010	1144941-0000	A		1	COVERING PLATE	
020	1144974-0000	-		1	ADJUSTING PLATE	
050	1285014-0000	-		1	DISTRIBUTOR	
070	2609372-0000	-		1	GUIDE	
180	312105-0449	-		1	SCREW M6S ISO 4017 M8X16 A480	
270	315105-0165	-		5	WASHER BRB8,4X16RFR	
280	312105-0453	-		1	SCREW M6S ISO 4017 M8X25 A480	
310	90424-0068	A		2	AIR NOZZLE, G1/4, MOD. 216 BSP	
Common Parts						
030	1144975-0000	-		1	ATTACHMENT PLATE	
040	1144902-0000	-		1	SUPPORT	
060	90335-0036	A		1	COMP. SPRING 22450, 1,6X14,1X24	
080	1144976-0000	-		1	STOP SCREW	
090	1144979-0000	-		1	WASHER	
150	312105-0287	-		2	SCREW M6S ISO4017 M4X8 A470	
160	312105-0366	-		2	SCREW M6S ISO 4017 M6X12 A480	
170	312105-0368	-		2	SCREW M6S ISO 4017 M6X16 A480	
190	312105-0451	-		2	SCREW M6S ISO 4017 M8X20 A480	
200	312105-0457	-		2	SCREW M6S ISO 4014 M8X35 A480	
210	312605-0316	-		8	HEXAGON NUT, M6M M6 A280	
220	315105-0136	-		2	WASHER BRB4,3XRFR	
230	315105-0153	-		6	WASHER BRB6,4X12RFR	
240	315105-0173	-		1	WASHER BRB10,5X22RFR	
250	90165-0057	-		2	PIPE CLIP FOR TUBE D=6 MM	
260	90458-2958	-		1	ELBOW PIPE JOINT, EXT.THREAD, D=8MM-G1/4	
300	90115-0137	A		2	ROD END, ID=6 MM, M6X1	

Pos	Part No	SP	UN	Qty	Description	Page No

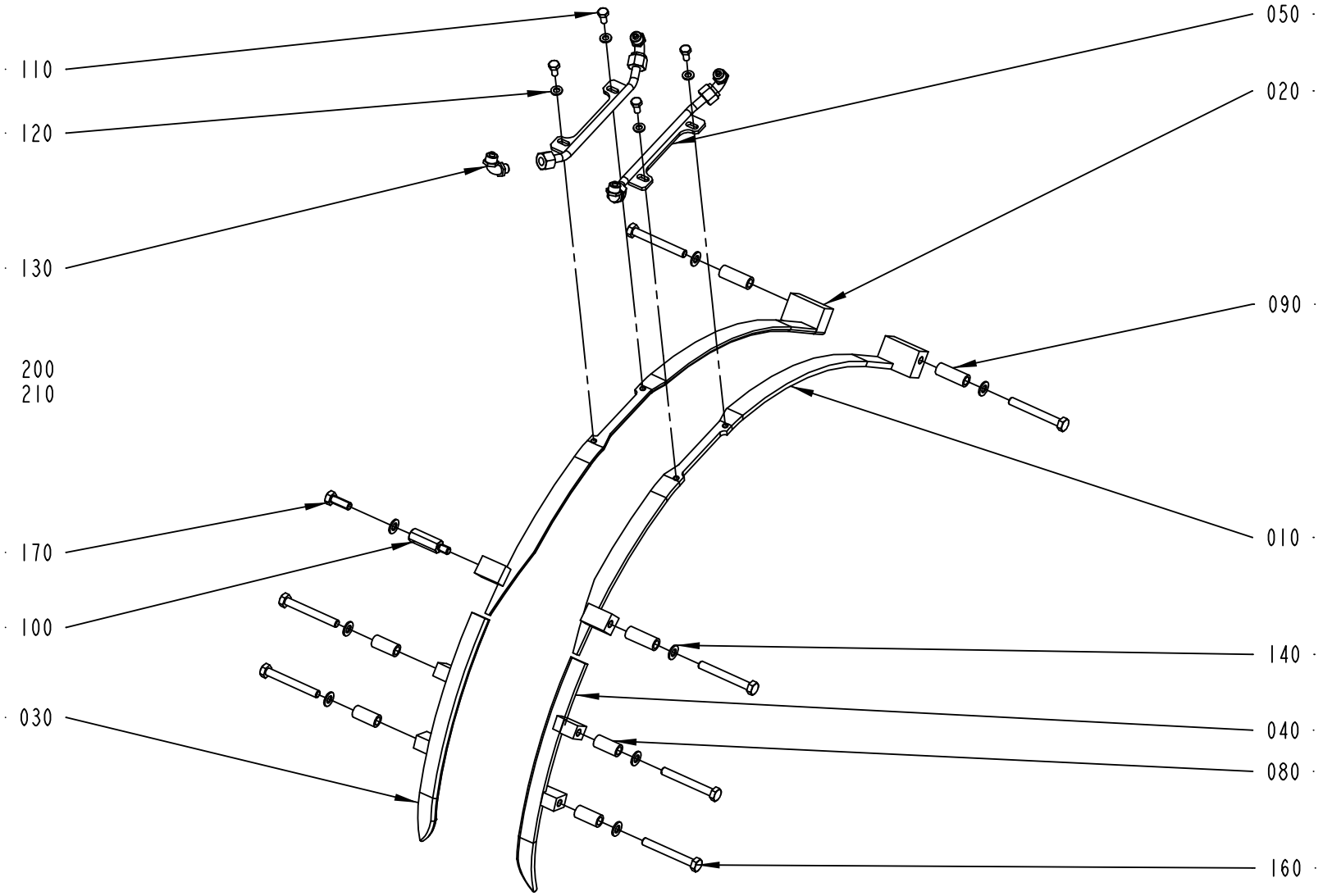

2543482-1
ECM 110156

ECM: 163552 - 20040309
Group number: 2543482-0100
Assembly Drawing: 2543482-1_1_AA

This list covers pages from 3-62 to 3-65

Pos	Part No	SP	UN	Qty	Description	Page No
TBA 0200B QC, TBA 0330S QC, TBA 0250B QC (See drawing on page: 3-64)						
010	1144892-0000	A		1	GUIDE RIGHT	
020	1144893-0000	A		1	GUIDE LEFT	
030	2558704-0000	A		1	GUIDE UPPER R	
040	2558703-0000	-		1	GUIDE UPPER L	
050	2676815-0000	-		1	FOLDING BAR	
055	2676816-0000	-		1	FOLDING BAR	
060	1346340-0000	-		1	BRACKET	
070	1144555-0000	-		8	STUD SCREW	
110	312105-0366	-		6	SCREW M6S ISO 4017 M6X12 A480	
120	315105-0153	-		6	WASHER BRB6,4X12RFR	
140	315105-0165	-		16	WASHER BRB8,4X16RFR	
150	312605-0318	-		16	HEXAGON NUT, M6M M8 A280	
TBA 0500B QC, TBA 1000B QC (See drawing on page: 3-62)						
010	2520178-0000	A		1	GUIDE	
020	2520179-0000	A		1	GUIDE	
030	1539900-0000	A		1	RIGHT UPPER GUIDE	
040	1549614-0000	A		1	LEFT UPPER GUIDE	
050	2526575-0000	-		2	FOLDING BAR	
080	1334447-0000	-		4	SPACER	
090	2603663-0000	-		3	SPACER	
100	2555082-0000	-		1	SPACER SCREW	
110	312105-0366	-		4	SCREW M6S ISO 4017 M6X12 A480	
120	315105-0153	-		4	WASHER BRB6,4X12RFR	
140	315105-0165	-		8	WASHER BRB8,4X16RFR	
160	312105-0464	-		7	SCREW M6S ISO 4014 M8X65 A480	
170	312105-0452	-		1	SCREW M6S ISO 4017 M8X22 A4 80	
Common Parts						
130	342931-0121	-		4	ELBOW 90 COUPL.,EXT.THREAD 8/6-G1/8"	
200	90166-0118	-	MM	1500	TUBE 8 MM PA BLACK	
210	352113-0102	-		10	CLIP-STRIP, BLACK 188X4,8 MM	

Pos	Part No	SP	UN	Qty	Description	Page No

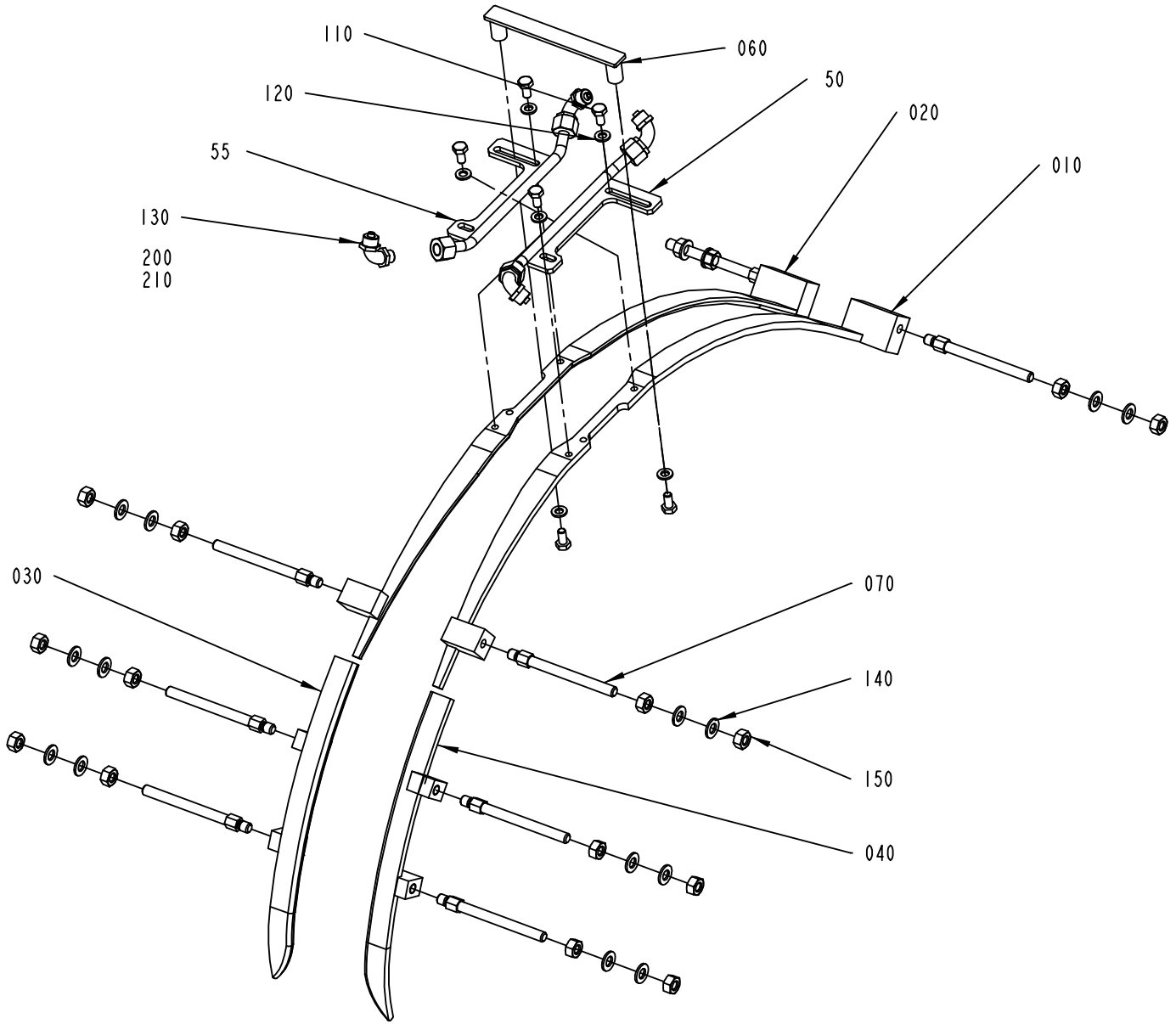

2543482-3
ECM 163552

Pos	Part No	SP	UN	Qty	Description	Page No
TBA 0200B QC, TBA 0330S QC, TBA 0250B QC (See drawing on page: 3-64)						
010	1144892-0000	A		1	GUIDE RIGHT	
020	1144893-0000	A		1	GUIDE LEFT	
030	2558704-0000	A		1	GUIDE UPPER R	
040	2558703-0000	-		1	GUIDE UPPER L	
050	2676815-0000	-		1	FOLDING BAR	
055	2676816-0000	-		1	FOLDING BAR	
060	1346340-0000	-		1	BRACKET	
070	1144555-0000	-		8	STUD SCREW	
110	312105-0366	-		6	SCREW M6S ISO 4017 M6X12 A480	
120	315105-0153	-		6	WASHER BRB6,4X12RFR	
140	315105-0165	-		16	WASHER BRB8,4X16RFR	
150	312605-0318	-		16	HEXAGON NUT, M6M M8 A280	
TBA 0500B QC, TBA 1000B QC (See drawing on page: 3-62)						
010	2520178-0000	A		1	GUIDE	
020	2520179-0000	A		1	GUIDE	
030	1539900-0000	A		1	RIGHT UPPER GUIDE	
040	1549614-0000	A		1	LEFT UPPER GUIDE	
050	2526575-0000	-		2	FOLDING BAR	
080	1334447-0000	-		4	SPACER	
090	2603663-0000	-		3	SPACER	
100	2555082-0000	-		1	SPACER SCREW	
110	312105-0366	-		4	SCREW M6S ISO 4017 M6X12 A480	
120	315105-0153	-		4	WASHER BRB6,4X12RFR	
140	315105-0165	-		8	WASHER BRB8,4X16RFR	
160	312105-0464	-		7	SCREW M6S ISO 4014 M8X65 A480	
170	312105-0452	-		1	SCREW M6S ISO 4017 M8X22 A4 80	
Common Parts						
130	342931-0121	-		4	ELBOW 90 COUPL.,EXT.THREAD 8/6-G1/8"	
200	90166-0118	-	MM	1500	TUBE 8 MM PA BLACK	
210	352113-0102	-		10	CLIP-STRIP, BLACK 188X4,8 MM	

Pos	Part No	SP	UN	Qty	Description	Page No

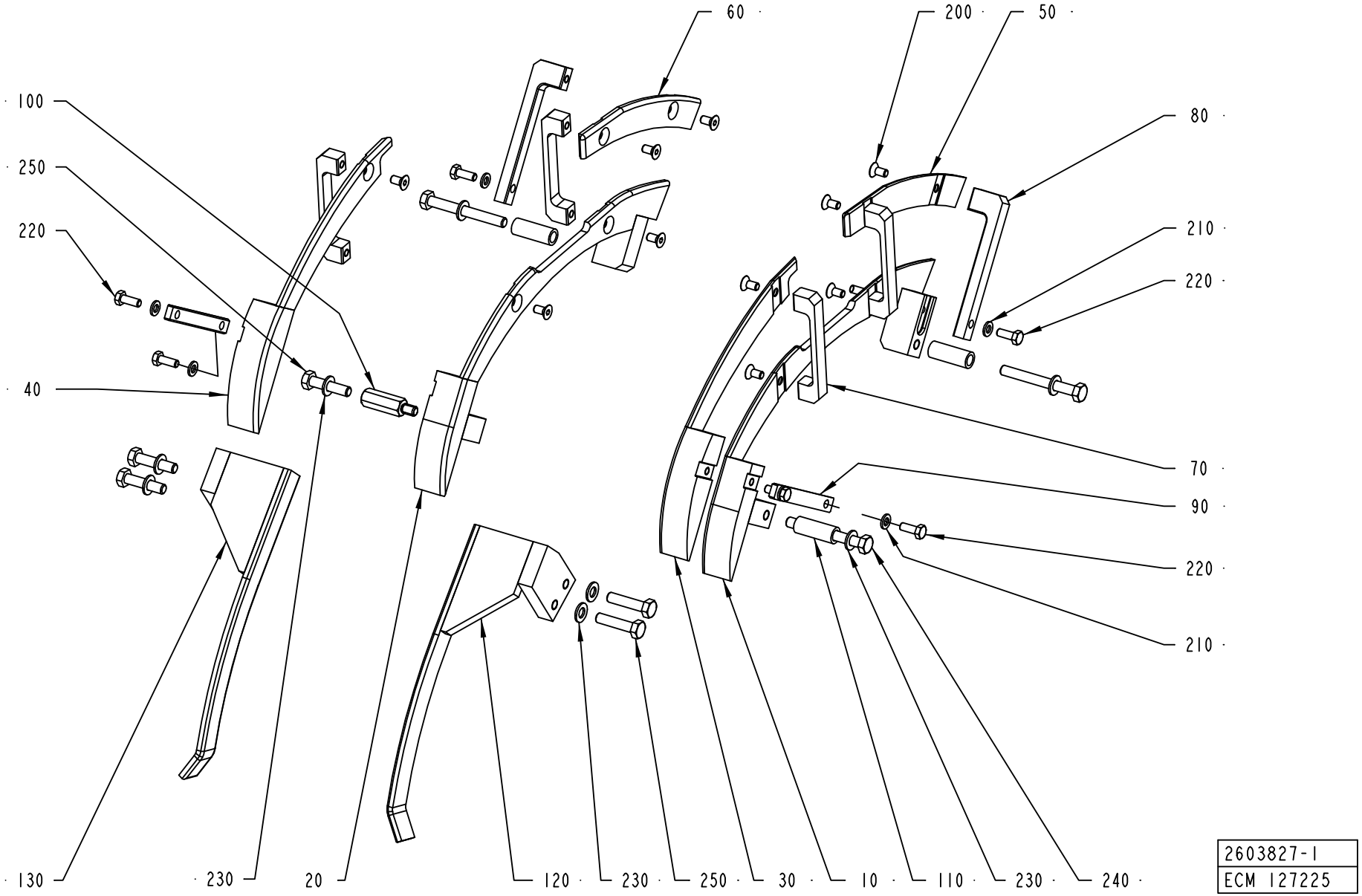
60
200
50
100
80
250
210
220
220
40
70
90
220
210
130
230
20
120
230
250
30
10
110
230
240
2603827-1
ECM 127225

ECM: 158925 - 20040309
Group number: 2603827-0100
Assembly Drawing: 2603827-1_1_AA

This list covers pages from 3-66 to 3-69

Pos	Part No	SP	UN	Qty	Description	Page No
TBA 0200B QC, TBA 0330S QC, TBA 0250B QC (See drawing on page: 3-68)						
010	2595707-0000	-		1	FOLDING PART	
020	2601445-0000	-		1	FOLDING PART	
030	2595704-0000	-		1	FOLDING PART	
040	2601455-0000	-		1	FOLDING PART	
050	2595705-0000	-		1	FOLDING PART	
060	2601465-0000	-		1	FOLDING PART	
070	2595706-0000	-		8	BRACKET	
110	2599847-0000	-		3	SPACER	
120	1346344-0000	-		1	RAIL	
130	1346343-0000	-		1	RAIL	
140	2595708-0000	-		1	FOLDING PART	
150	2602592-0000	-		1	FOLDING PART	
160	2595709-0000	-		1	FOLDING PART	
170	2601464-0000	-		1	FOLDING PART	
180	2558127-0000	-		2	SPACER	
190	2664035-0000	-		1	SPACER SCREW	
210	315105-0153	-		24	WASHER BRB6,4X12RFR	
220	312105-0370	-		24	SCREW M6S ISO 4017 M6X20 A480	
230	315105-0165	-		8	WASHER BRB8,4X16RFR	
240	312105-0467	-		3	SCREW M6S ISO 4014 M8X80 A480	
250	312105-0457	-		4	SCREW M6S ISO 4014 M8X35 A480	
260	312155-0461	-		4	SCREW EN 10642 MF6S M8X50 A480	
270	312105-0455	-		1	SCREW M6S ISO 4017 M8X30 A480	
TBA 0500B QC, TBA 1000B QC (See drawing on page: 3-66)						
080	2603661-0000	-		2	BRACKET	
090	2544342-0000	-		2	BRACKET	
100	2555082-0000	-		1	SPACER SCREW	
200	312155-0366	-		10	SCREW EN 10642 MF6S M6X12 A480	
Common Parts						
010	2520175-0000	-		1	FOLDING PART	
020	2520172-0000	-		1	FOLDING PART	
030	2603659-0000	-		1	FOLDING PART	
040	2603660-0000	-		1	FOLDING PART	
050	2603548-0000	-		1	FOLDING PART	
060	2603547-0000	-		1	FOLDING PART	
070	2603662-0000	-		4	BRACKET	
110	1539871-0000	-		3	SPACER	
120	2603664-0000	-		1	RAIL	
130	2605213-0000	-		1	RAIL	
210	315105-0153	-		6	WASHER BRB6,4X12RFR	
220	312105-0368	-		6	SCREW M6S ISO 4017 M6X16 A480	
230	315105-0165	-		8	WASHER BRB8,4X16RFR	
240	312105-0465	-		3	SCREW M6S ISO 4014 M8X70 A480	
250	312105-0457	-		5	SCREW M6S ISO 4014 M8X35 A480	

Machine Type | Group Description | Used-In | Group Number | Page No

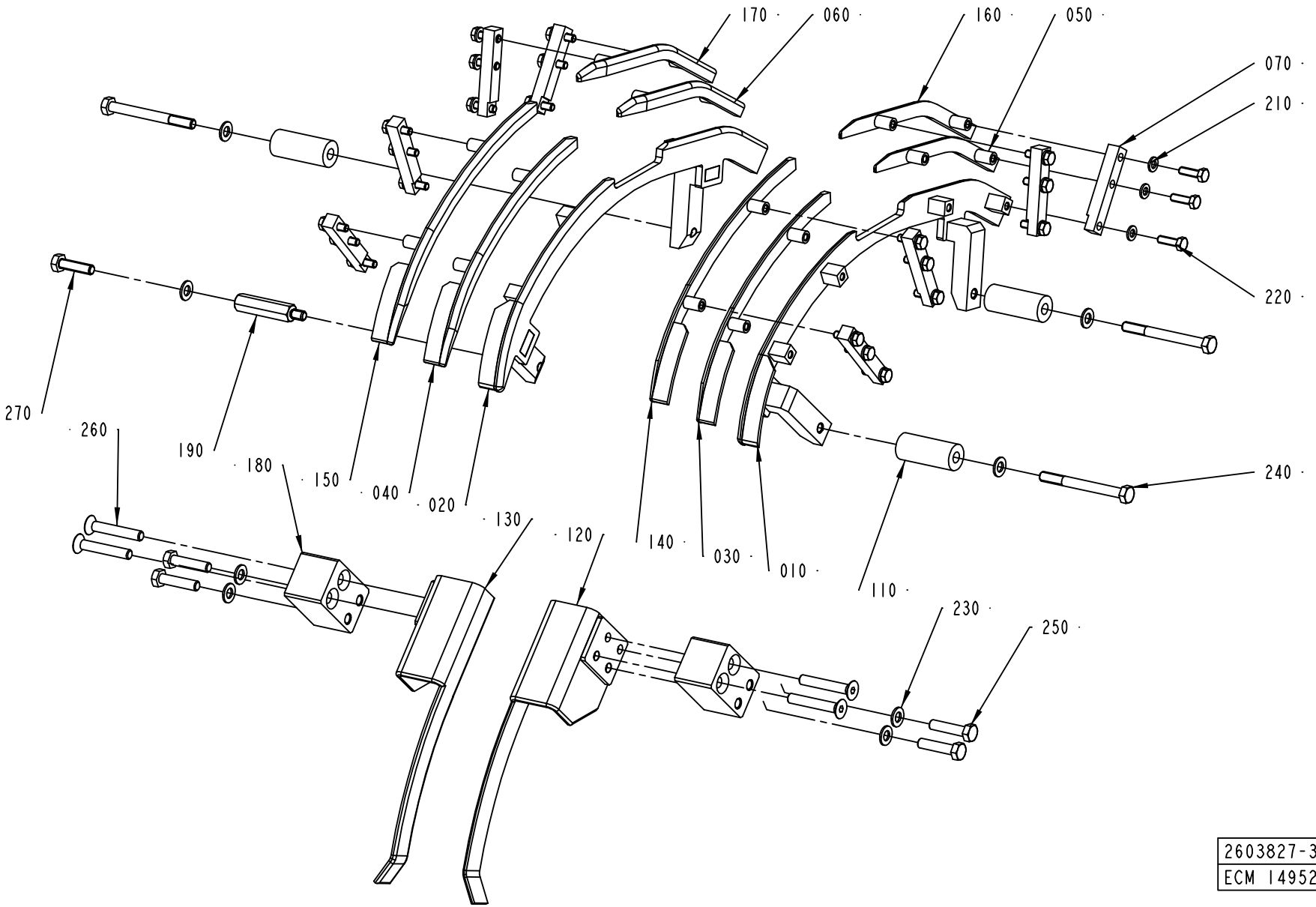

2603827-3
ECM 149528

ECM: 158925 - 20040309
Group number: 2603827-0100
Assembly Drawing: 2603827-3_1_AA

This list covers pages from 3-66 to 3-69

Pos	Part No	SP	UN	Qty	Description	Page No
TBA 0200B QC, TBA 0330S QC, TBA 0250B QC (See drawing on page: 3-68)						
010	2595707-0000	-		1	FOLDING PART	
020	2601445-0000	-		1	FOLDING PART	
030	2595704-0000	-		1	FOLDING PART	
040	2601455-0000	-		1	FOLDING PART	
050	2595705-0000	-		1	FOLDING PART	
060	2601465-0000	-		1	FOLDING PART	
070	2595706-0000	-		8	BRACKET	
110	2599847-0000	-		3	SPACER	
120	1346344-0000	-		1	RAIL	
130	1346343-0000	-		1	RAIL	
140	2595708-0000	-		1	FOLDING PART	
150	2602592-0000	-		1	FOLDING PART	
160	2595709-0000	-		1	FOLDING PART	
170	2601464-0000	-		1	FOLDING PART	
180	2558127-0000	-		2	SPACER	
190	2664035-0000	-		1	SPACER SCREW	
210	315105-0153	-		24	WASHER BRB6,4X12RFR	
220	312105-0370	-		24	SCREW M6S ISO 4017 M6X20 A480	
230	315105-0165	-		8	WASHER BRB8,4X16RFR	
240	312105-0467	-		3	SCREW M6S ISO 4014 M8X80 A480	
250	312105-0457	-		4	SCREW M6S ISO 4014 M8X35 A480	
260	312155-0461	-		4	SCREW EN 10642 MF6S M8X50 A480	
270	312105-0455	-		1	SCREW M6S ISO 4017 M8X30 A480	
TBA 0500B QC, TBA 1000B QC (See drawing on page: 3-66)						
080	2603661-0000	-		2	BRACKET	
090	2544342-0000	-		2	BRACKET	
100	2555082-0000	-		1	SPACER SCREW	
200	312155-0366	-		10	SCREW EN 10642 MF6S M6X12 A480	
Common Parts						
010	2520175-0000	-		1	FOLDING PART	
020	2520172-0000	-		1	FOLDING PART	
030	2603659-0000	-		1	FOLDING PART	
040	2603660-0000	-		1	FOLDING PART	
050	2603548-0000	-		1	FOLDING PART	
060	2603547-0000	-		1	FOLDING PART	
070	2603662-0000	-		4	BRACKET	
110	1539871-0000	-		3	SPACER	
120	2603664-0000	-		1	RAIL	
130	2605213-0000	-		1	RAIL	
210	315105-0153	-		6	WASHER BRB6,4X12RFR	
220	312105-0368	-		6	SCREW M6S ISO 4017 M6X16 A480	

Pos	Part No	SP	UN	Qty	Description	Page No
230	315105-0165	-		8	WASHER BRB8,4X16RFR	
240	312105-0465	-		3	SCREW M6S ISO 4014 M8X70 A480	
250	312105-0457	-		5	SCREW M6S ISO 4014 M8X35 A480	

Machine Type | Group Description | Used-In | Group Number | Page No

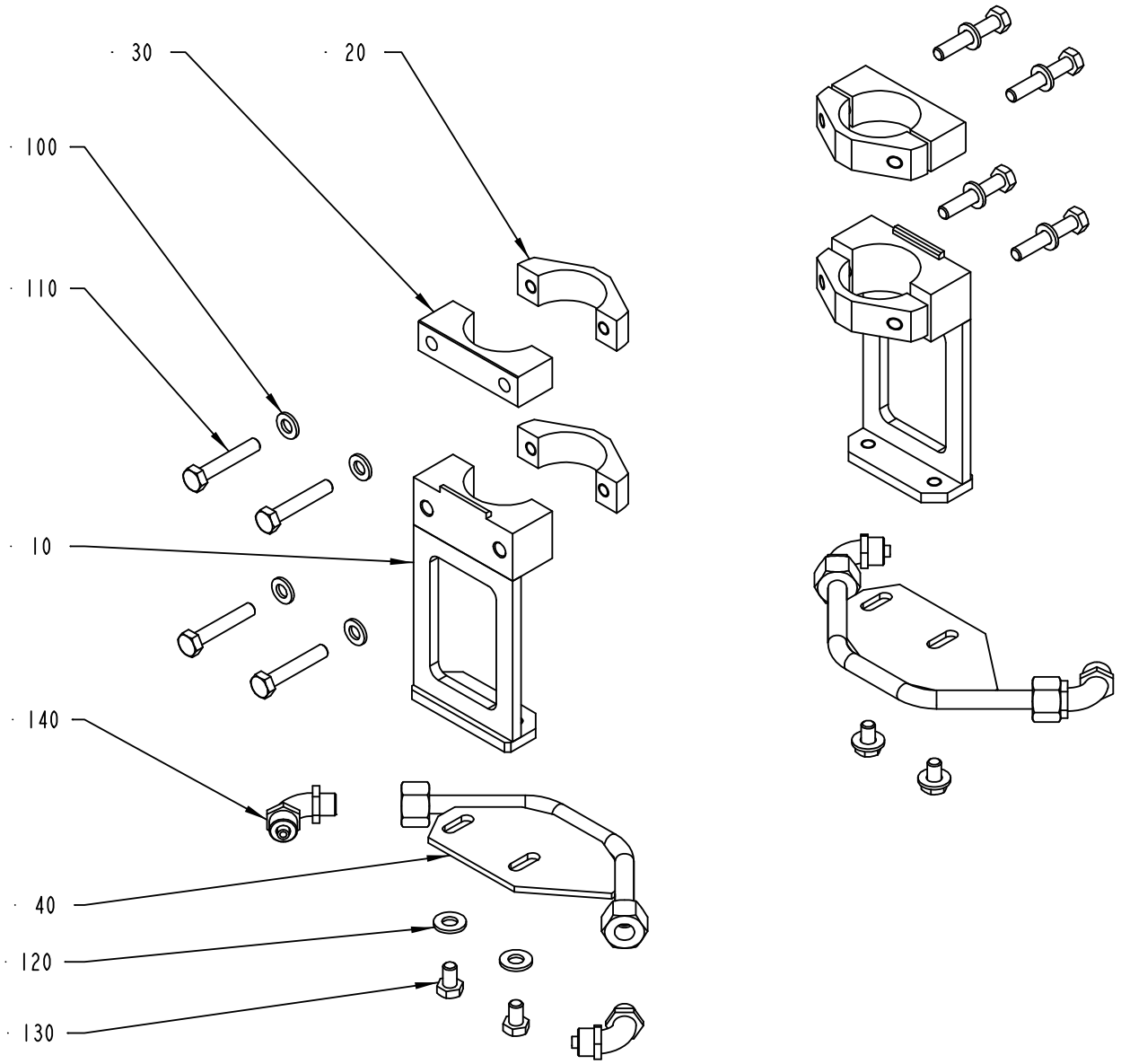

2603826-1
ECM 127225

ECM: 158924 - 20040309
Group number: 2603826-0100
Assembly Drawing: 2603826-1_1_AA

Pos	Part No	SP	UN	Qty	Description	Page No
TBA 0200B QC, TBA 0330S QC, TBA 0250B QC						
010	2599044-0000	-		2	BRACKET	
040	2594058-0000	-		2	GUIDE	
TBA 0500B QC, TBA 1000B QC						
010	2597768-0000	-		2	BRACKET	
040	2597769-0000	-		2	GUIDE	
Common Parts						
020	2598486-0000	-		4	CLAMP	
030	2598485-0000	-		2	CLAMP	
100	315105-0153	-		8	WASHER BRB6,4X12RFR	
110	312105-0376	-		8	SCREW M6S ISO 4014 M6X35 A480	
120	315105-0156	-		4	WASHER BRB 6.7X14 RFR	
130	312105-0364	-		4	SCREW M6S ISO 4017 M6X10 A480	
140	342931-0121	-		4	ELBOW 90 COUPL.,EXT.THREAD 8/6-G1/8"	

Pos	Part No	SP	UN	Qty	Description	Page No

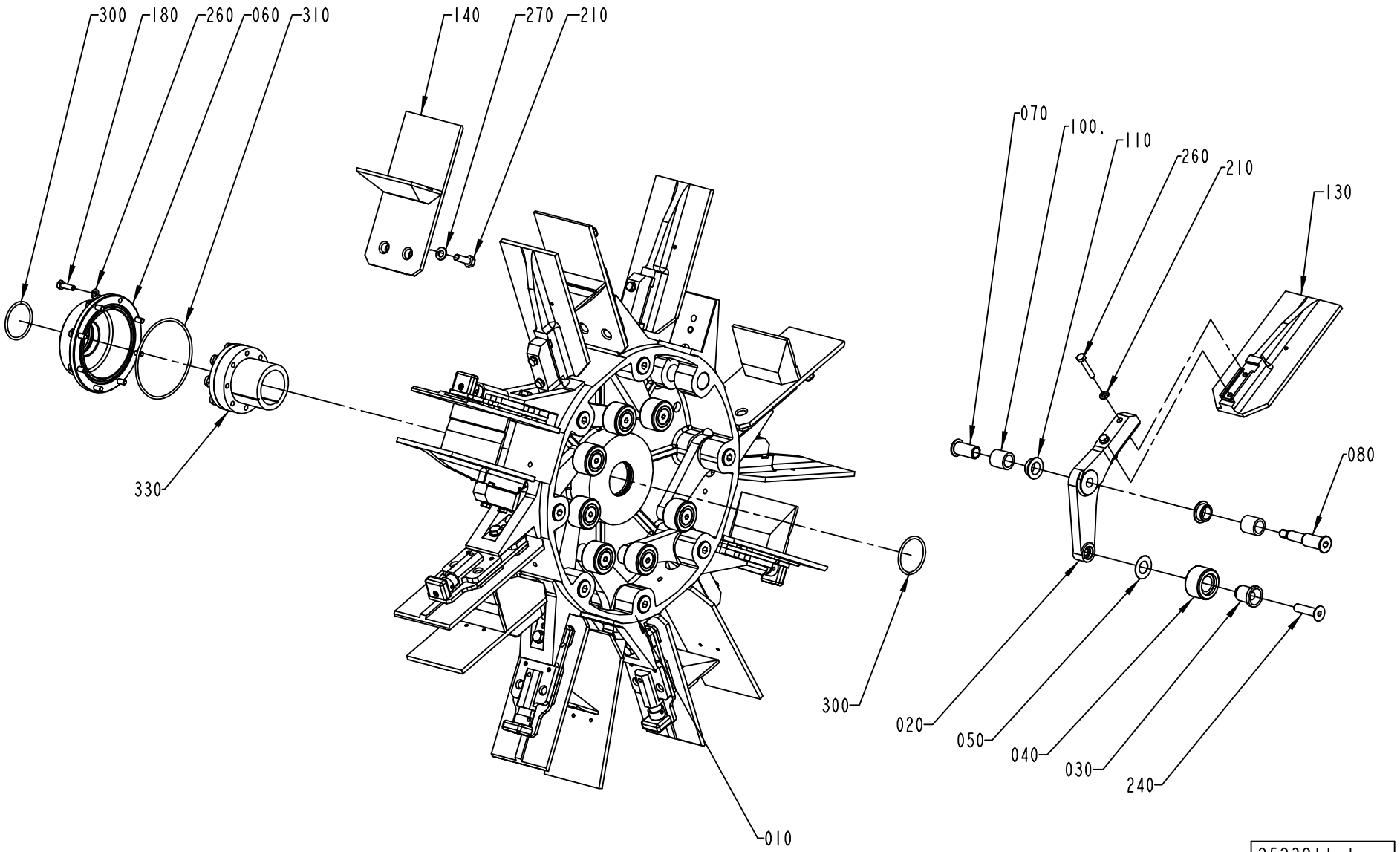
300
180
260
060
310
140
270
210
330
010
070
100.
110
260
210
130
080
300
020
050
040
030
240
2523811-1
ECM 110155

ECM: 157773 - 20040309
Group number: 2523811-0100
Assembly Drawing: 2523811-1_1_AA

Pos	Part No	SP	UN	Qty	Description	Page No
TBA 0200B QC, TBA 0330S QC, TBA 0250B QC						
130	2651146-0000	-		8	FLAP	
Common Parts						
010	1144264-0000	A		1	HUB	
020	1279559-0000	A		8	ARM	
030	1144312-0000	A		8	AXLE PIN	
040	1144335-0000	A		8	ROLLER	
050	1144354-0000	A		8	WASHER	
060	1144356-0000	-		1	COVER	
070	1296970-0000	A		8	SCREW BUSHING	
080	1296969-0000	A		8	SCREW HOLDER	
100	1144417-0000	A		16	BUSHING	
110	1282708-0000	A		16	BUSHING	
140	2523812-0100	-		8	FLAP	**3-75**
180	312105-0370	-		8	SCREW M6S ISO 4017 M6X20 A480	
190	312155-0370	-		8	SCREW EN 10642 MF6S M6X20 A480	
200	312105-0376	-		16	SCREW M6S ISO 4014 M6X35 A480	
210	312105-0453	-		8	SCREW M6S ISO 4017 M8X25 A480	
240	312155-0499	-		8	SCREW EN 10642 MF6S M10X40 A480	
260	315105-0153	-		24	WASHER BRB6,4X12RFR	
270	315105-0165	-		8	WASHER BRB8,4X16RFR	
300	315202-0225	A		2	O-RING 44,2X3 MM	
310	315202-0311	A		1	O-RING 99,5X3 MM	
330	90208-0087	A		1	CLAMPING ELEMENT WITH SLEEVE, 45X59 MM	

Pos	Part No	SP	UN	Qty	Description	Page No

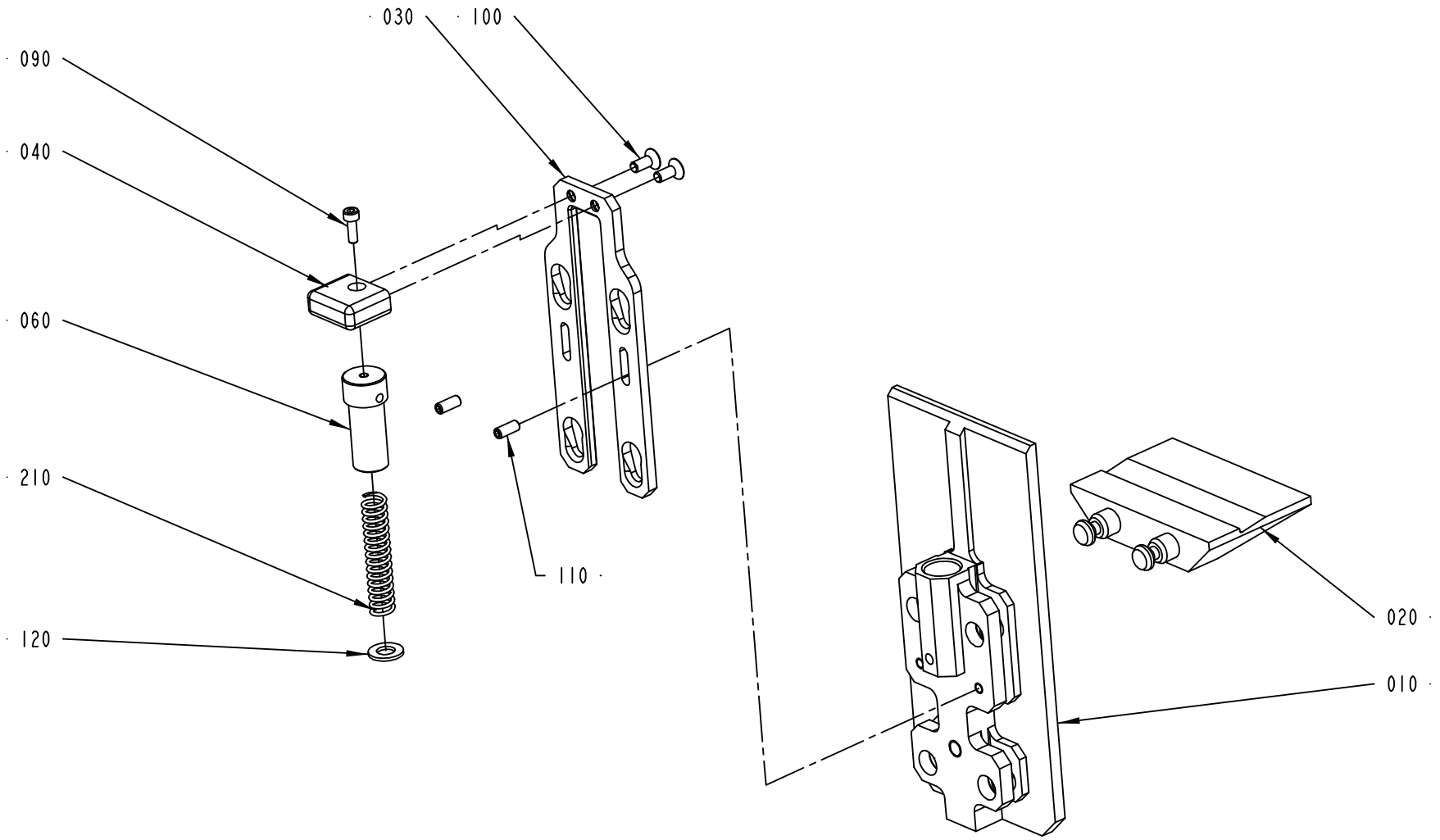

2523812-1
ECM 127225

ECM: 157774 - 20040309
Group number: 2523812-0100
Assembly Drawing: 2523812-1_1_AB

Pos	Part No	SP	UN	Qty	Description	Page No
TBA 0200B QC, TBA 0330S QC, TBA 0250B QC						
010	2603488-0000	-		1	FLAP	
020	2603489-0000	-		1	BOTTOM	
030	2603490-0000	-		1	SLIDE	
100	312155-0327	-		16	SCREW EN 10642 MF6S M5X12 A480	
110	312318-0327	-		16	SCREW ISO4029 M5X12 A4	
120	315105-0165	-		8	WASHER BRB8,4X16RFR	
TBA 0500B, TBA 1000B						
010	2520170-0000	A		1	FLAP	
030	2520168-0000	A		1	SLIDE	
100	312155-0327	-		2	SCREW EN 10642 MF6S M5X12 A480	
110	312318-0327	-		2	SCREW ISO4029 M5X12 A4	
120	315105-0165	-		1	WASHER BRB8,4X16RFR	
Common Parts						
010	2598805-0000	A		1	FLAP	
010	2553615-0000	A		1	FLAP	
020	2619391-0000	A		1	BOTTOM	
020	2629336-0000	A		1	BOTTOM	
030	2598807-0000	A		1	SLIDE	
030	2553617-0000	A		1	SLIDE	
040	2526563-0000	A		1	HANDLE	
060	2526567-0000	A		1	CYLINDER	
090	312115-0291	-		1	SCREW ISO4762 M4X12 A4	
210	90459-0969	A		1	COMP. SPRING A D22430, 1,6X11,6X58,5	

Pos	Part No	SP	UN	Qty	Description	Page No

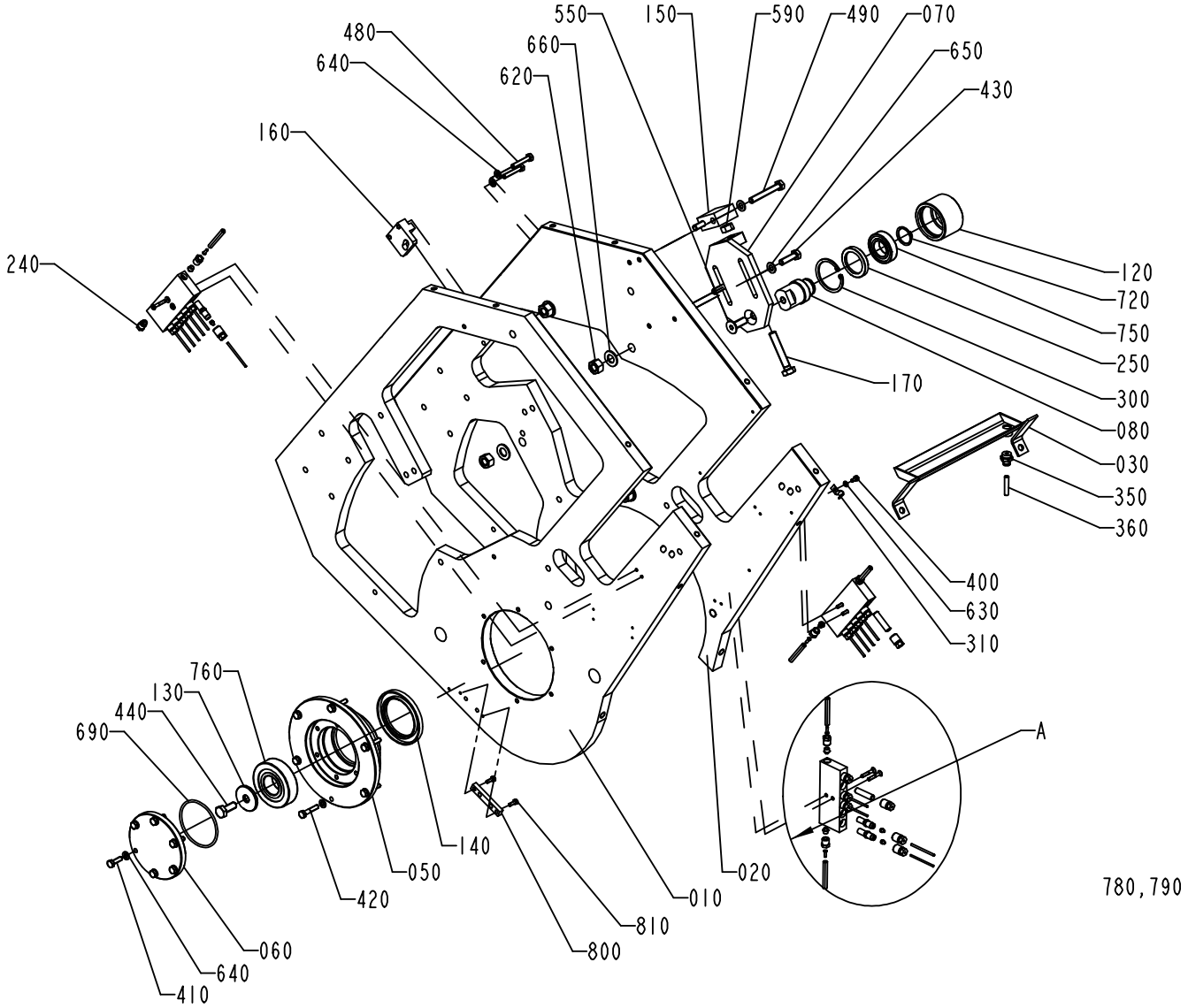

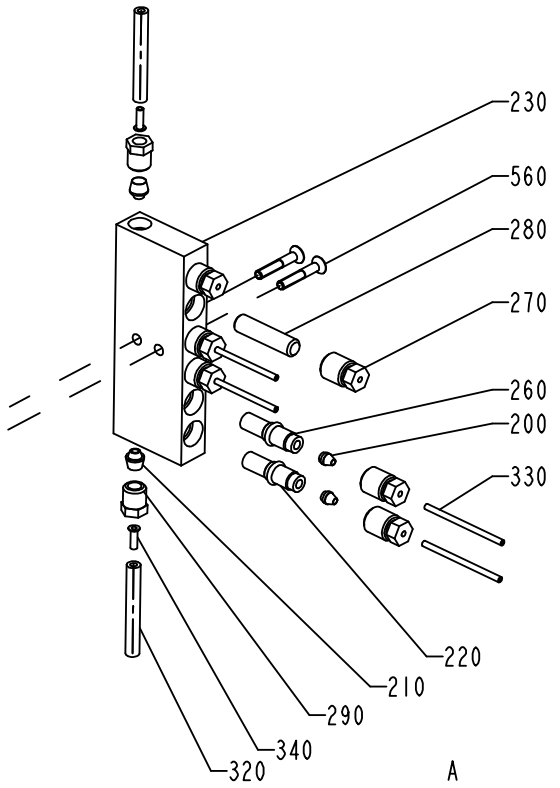

S-1144324-2
ECN 73332

ECM: 157767 - 20040309
Group number: 1144324-0300
Assembly Drawing: 1144324-2_1_AC

Pos	Part No	SP	UN	Qty	Description	Page No
A3/FLEX TBA 1000B, A3/FLEX TBA 1000S, A3/FLEX TBA 0200S, A3/FLEX TBA 1500S, A3/FLEX TBA 0200B QC, A3/FLEX TBA 0250B QC, A3/FLEX TBA 0330S QC						
160	1144900-0000	-		1	SUPPORT	
A3/FLEX TBA 1000SQ, A3/FLEX TPA 1000SQ						
260	90092-0052	-		16	METERING VALVE 10 MM3	
280	90134-0052	-		2	PLUG DOSING BLOCK	
Common Parts						
010	1347109-0000	-		1	PLATE	
020	1347108-0000	-		1	PLATE	
050	598101-0000	A		1	BEARING HOUSING	
060	1144618-0000	-		1	FLANGE	
070	1144797-0000	-		1	SUPPORT	
080	1478418-0000	A		1	AXLE BOLT	
120	1478417-0000	A		1	ROLLER	
130	1144620-0000	A		1	WASHER	
140	1144665-0000	A		1	SEAL RING	
150	1144839-0000	-		1	BLOCK	
160	1282844-0000	-		1	SUPPORT	
170	1260931-0000	-		1	SCREW	
200	90028-0020	-		14	CONE TUBE 2,5MM	
210	90028-0025	-		5	CONE TUBE 6 MM	
220	90092-0054	-		1	METERING VALVE 50 MM3	
230	90032-0040	-		3	BLOCK 6 WAYS	
240	90087-0019	-		1	PLUG M10X1 STAINLESS	
250	90091-0297	A		1	RADIAL SEAL 35X47X7 MM DUST LIP	
260	90092-0052	-		14	METERING VALVE 10 MM3	
270	90134-0039	-		18	BUSHING VALVE CONNECTION 2,5 MM	
280	90134-0052	-		4	PLUG DOSING BLOCK	
290	90134-0055	-		5	BUSHING/NUT INLET/OUTLET 6 MM	
300	90141-0019	A		1	RETAINING RING FOR BORE DIN 472 50 A2	
310	316810-0106	-		5	PIPE CLIP FOR TUBE D=8 MM	
320	90166-0108	-	M	4	TUBE 6 MM PA,TRANSP.	
330	90166-0143	-	M	4	TUBE 2,5 MM PA,TRANSP.	
340	90134-0030	-		5	SLEEVE FOR PLASTIC TUBE	
400	312105-0287	-		5	SCREW M6S ISO4017 M4X8 A470	
410	312105-0370	-		6	SCREW M6S ISO 4017 M6X20 A480	
420	312105-0374	-		6	SCREW M6S ISO 4014 M6X30 A480	
430	312105-0455	-		2	SCREW M6S ISO 4017 M8X30 A480	
440	312105-0493	-		1	SCREW M6S ISO 4017 M10X25 A480	
480	312109-0376	-		2	SCREW M6S ISO 4017 M6X35 A480	
490	312109-0463	-		2	SCREW M6S ISO 4017 M8X60 A480	
550	312155-0495	-		1	SCREW EN 10642 MF6S M10X30 A480	
560	312155-0297	-		6	SCREW EN 10642 MF6S M4X25 A480	
590	312605-0320	-		1	HEXAGON NUT, M6M M10 A280	
620	312605-0322	-		4	HEXAGON NUT, M6M M12 A280	
630	315105-0136	-		5	WASHER BRB4,3XRFR	
640	315105-0153	-		14	WASHER BRB6,4X12RFR	
650	315105-0165	-		4	WASHER BRB8,4X16RFR	
660	315105-0178	-		4	WASHER BRB13X24RFR	
690	315202-0305	A		1	O-RING 69,5X3 MM	
720	315751-0119	A		1	RETAINING RING FOR SHAFT DIN 471 25 A2	
750	321308-0205	A		1	BALL BEARING, 25X47X12MM	
760	321316-0206	A		1	BALL BEARING, 30X72X19 MM	
780	352113-0102	-		3	CLIP-STRIP, BLACK 188X4,8 MM	
790	352113-0101	-		7	CLIP STRIP, 92X2,5 MM	
800	1487821-0000	-		1	SPACER	
810	312105-0291	-		2	SCREW M6S ISO 4017 M4X12 A470	

Machine Type | Group Description | Used-In | Group Number | Page No

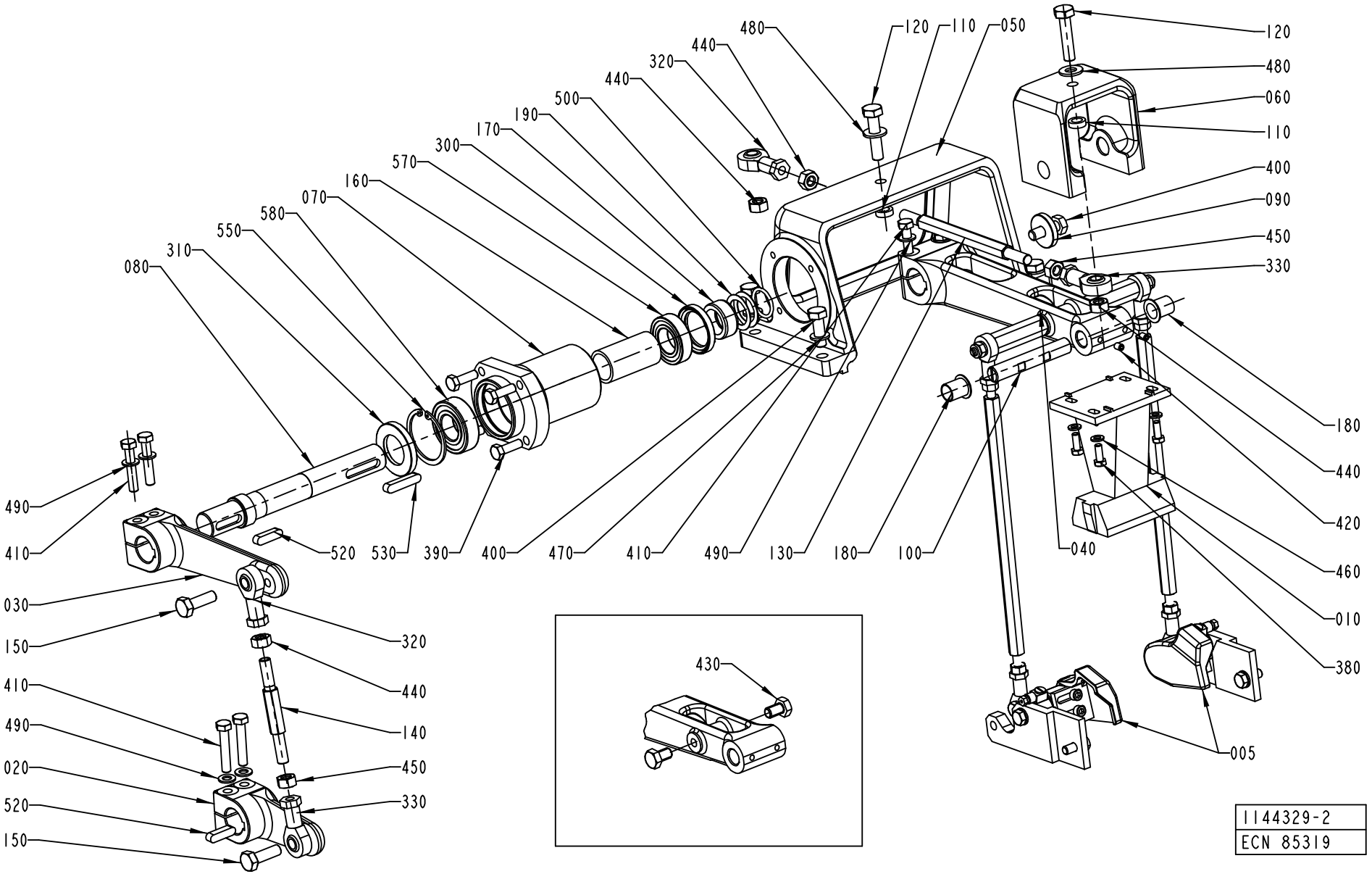
480
120
110
050
440
320
440
500
190
170
300
570
160
070
580
550
310
080
120
480
060
110
400
090
450
330
180
440
420
460
010
380
005
040
100
180
130
490
410
470
400
390
530
520
490
410
030
150
320
440
140
450
330
410
490
020
520
150
430
1144329-2
ECN 85319

ECM: 158926 - 20040309
Group number: 1144329-0300
Assembly Drawing: 1144329-2_1_AB

This list covers pages from 3-78 to 3-81

Pos	Part No	SP	UN	Qty	Description	Page No
TBA 0200B NOQC, TBA 0330S NOQC, TBA 0250B NOQC (See drawing on page: 3-78)						
010	1350808-0000	A		1	BLOCK	
430	312105-0489	-		2	SCREW M6S ISO 4017 M10X16 A480	
TBA 0200B QC, TBA 0330S QC, TBA 0250B QC (See drawing on page: 3-78)						
010	2591790-0000	A		1	BLOCK	
430	312105-0489	-		2	SCREW M6S ISO 4017 M10X16 A480	
TBA 0200S (See drawing on page: 3-78)						
010	1260887-0000	A		1	BLOCK	
430	312105-0489	-		2	SCREW M6S ISO 4017 M10X16 A480	
TBA 0500B, TBA 1000B NOMOLDEDCAP (See drawing on page: 3-78)						
010	1260700-0000	A		1	BLOCK	
430	312105-0489	-		2	SCREW M6S ISO 4017 M10X16 A480	
TBA 1000B STDA7 (See drawing on page: 3-78)						
005	1348056-0300	-		1	FOLDING PART	**3-83, 3-85**
010	1260700-0000	A		1	BLOCK	
TBA 1000S NOMOLDEDCAP (See drawing on page: 3-78)						
010	1144933-0000	A		1	BLOCK	
430	312105-0489	-		2	SCREW M6S ISO 4017 M10X16 A480	
TBA 1000S STDA7 (See drawing on page: 3-80)						
005	1348056-0300	-		1	FOLDING PART	**3-83, 3-85**
010	1144933-0000	A		1	BLOCK	
TBA 1000SQ (See drawing on page: 3-80)						
005	1348056-0300	-		1	FOLDING PART	**3-83, 3-85**
010	1558008-0000	A		1	BLOCK	
200	1558020-0000	A		2	ROD	
590	312125-0234	-		4	SCREW ISO 1207 M3X30 A4	
600	315105-0124	-		4	WASHER BRB3,2X6RFR	
TBA 1500S (See drawing on page: 3-78)						
010	1317789-0000	A		1	BLOCK	
430	312105-0489	-		2	SCREW M6S ISO 4017 M10X16 A480	
TPA 1000SQ (See drawing on page: 3-78)						
005	1348056-0300	-		1	FOLDING PART	**3-83, 3-85**
010	1519341-0000	A		1	BLOCK	
Common Parts						
020	1144472-0000	A		1	LEVER	
030	1144473-0000	A		1	LEVER	
040	1499635-0000	A		1	LEVER	
050	1144475-0000	-		1	BRACKET	
060	1144476-0000	-		1	BRACKET	
070	1144566-0000	-		1	FLANGE	
080	1144678-0000	A		1	SHAFT	
090	1144681-0000	-		1	WASHER	
100	1144683-0000	A		1	AXLE PIN	
110	1144684-0000	-		2	SPACER	
120	1144685-0000	-		2	SCREW	
130	1144686-0000	A		1	TIE ROD	
140	1144687-0000	A		1	TIE ROD	
150	1144688-0000	-		2	SCREW	
160	1260824-0000	-		1	SPACER RING	
170	1334328-0000	-		1	SPACER	
180	1260944-0000	A		2	BUSHING	
190	1334018-0000	A		4	SHIM	
300	90091-0297	A		1	RADIAL SEAL 35X47X7 MM DUST LIP	
310	90091-0299	A		1	RADIAL SEAL 30X52X7 MM DUST LIP	
320	90115-0181	A		2	ROD END, ID=10 MM M10X1,5	
330	90115-0182	A		2	ROD END, ID=10 MM M10X1,5LH	
380	312105-0368	-		4	SCREW M6S ISO 4017 M6X16 A480	
390	312105-0453	-		4	SCREW M6S ISO 4017 M8X25 A480	
400	312105-0495	-		5	SCREW M6S ISO 4017 M10X30 A480	
410	312109-0460	-		6	SCREW M6S ISO 4017 M8X45 A480	
420	312318-0362	-		2	SCREW ISO4029 M6X8 A4	
440	312605-0320	-		4	HEXAGON NUT, M6M M10 A280	
450	312902-0320	-		2	NUT HEX. LEFT THREAD, M10 A280	
460	315105-0153	-		4	WASHER BRB6,4X12RFR	
470	315105-0171	-		4	WASHER BRB10X18	
480	315105-0173	-		2	WASHER BRB10,5X22RFR	
490	315105-0165	-		6	WASHER BRB8,4X16RFR	
500	315202-0217	A		1	O-RING 24,2X3 MM	
520	315705-0267	A		1	PARALLEL KEY W. ROUND ENDS 8X7X30 MM	
530	315705-0270	A		1	PARALLEL KEY W. ROUND ENDS 8X7X40 MM	
550	315753-0132	A		1	RETAINING RING FOR BORE DIN 472 52 A2	
570	321308-0205	A		1	BALL BEARING, 25X47X12MM	
580	321313-0105	A		1	BALL BEARING, 25X52X15MM	

Machine Type | Group Description | Used-In | Group Number | Page No

PULL-DOWN DEVICE

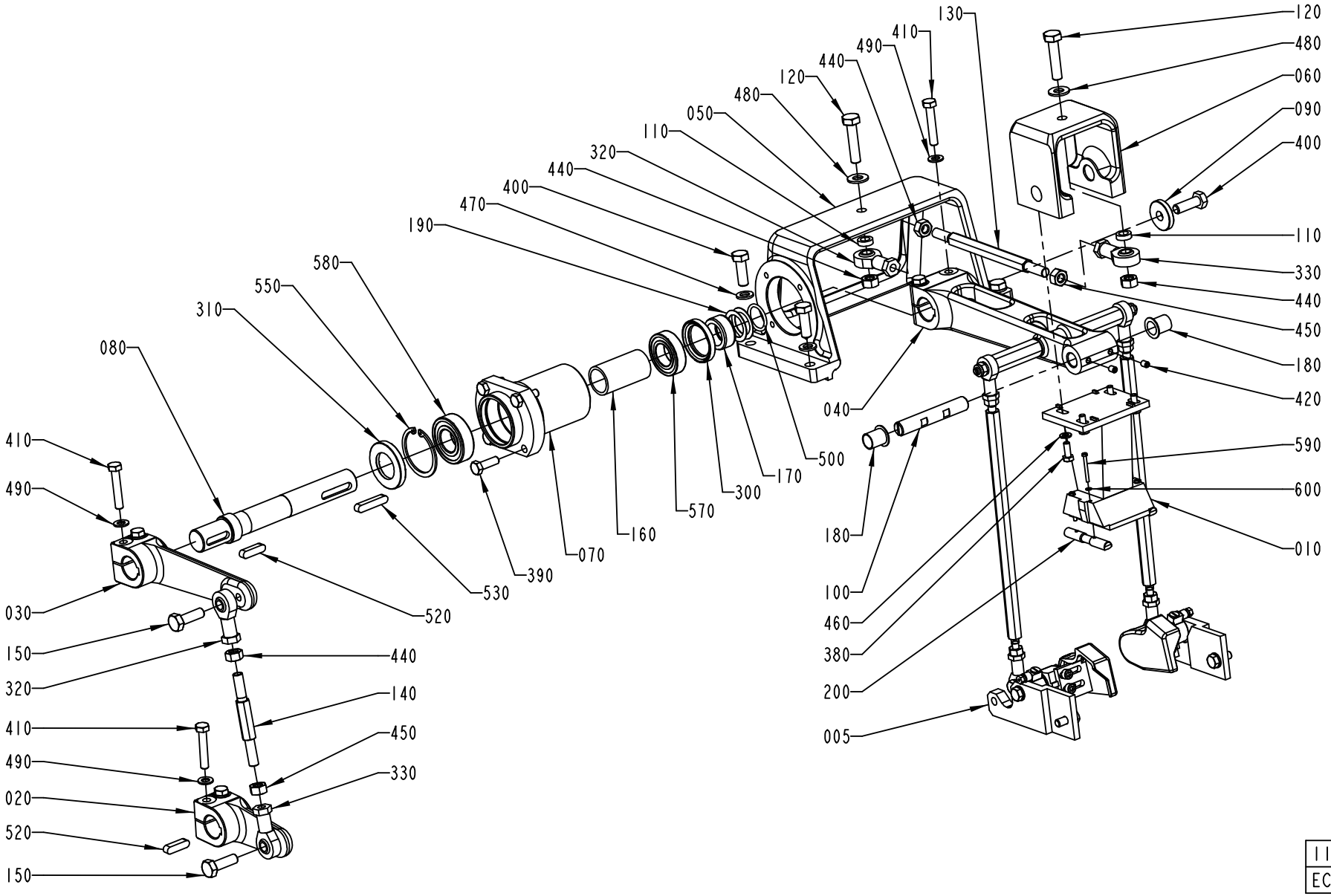

1144329-3
ECN 86559

ECM: 158926 - 20040309
Group number: 1144329-0300
Assembly Drawing: 1144329-3_1_AA

This list covers pages from 3-78 to 3-81

Pos	Part No	SP	UN	Qty	Description	Page No
TBA 0200B NOQC, TBA 0330S NOQC, TBA 0250B NOQC (See drawing on page: 3-78)						
010	1350808-0000	A		1	BLOCK	
430	312105-0489	-		2	SCREW M6S ISO 4017 M10X16 A480	
TBA 0200B QC, TBA 0330S QC, TBA 0250B QC (See drawing on page: 3-78)						
010	2591790-0000	A		1	BLOCK	
430	312105-0489	-		2	SCREW M6S ISO 4017 M10X16 A480	
TBA 0200S (See drawing on page: 3-78)						
010	1260887-0000	A		1	BLOCK	
430	312105-0489	-		2	SCREW M6S ISO 4017 M10X16 A480	
TBA 0500B, TBA 1000B NOMOLDEDCAP (See drawing on page: 3-78)						
010	1260700-0000	A		1	BLOCK	
430	312105-0489	-		2	SCREW M6S ISO 4017 M10X16 A480	
TBA 1000B STDA7 (See drawing on page: 3-78)						
005	1348056-0300	-		1	FOLDING PART	**3-83, 3-85**
010	1260700-0000	A		1	BLOCK	
TBA 1000S NOMOLDEDCAP (See drawing on page: 3-78)						
010	1144933-0000	A		1	BLOCK	
430	312105-0489	-		2	SCREW M6S ISO 4017 M10X16 A480	
TBA 1000S STDA7 (See drawing on page: 3-80)						
005	1348056-0300	-		1	FOLDING PART	**3-83, 3-85**
010	1144933-0000	A		1	BLOCK	
TBA 1000SQ (See drawing on page: 3-80)						
005	1348056-0300	-		1	FOLDING PART	**3-83, 3-85**
010	1558008-0000	A		1	BLOCK	
200	1558020-0000	A		2	ROD	
590	312125-0234	-		4	SCREW ISO 1207 M3X30 A4	
600	315105-0124	-		4	WASHER BRB3,2X6RFR	
TBA 1500S (See drawing on page: 3-78)						
010	1317789-0000	A		1	BLOCK	
430	312105-0489	-		2	SCREW M6S ISO 4017 M10X16 A480	
TPA 1000SQ (See drawing on page: 3-78)						
005	1348056-0300	-		1	FOLDING PART	**3-83, 3-85**
010	1519341-0000	A		1	BLOCK	
Common Parts						
020	1144472-0000	A		1	LEVER	
030	1144473-0000	A		1	LEVER	
040	1499635-0000	A		1	LEVER	
050	1144475-0000	-		1	BRACKET	
060	1144476-0000	-		1	BRACKET	
070	1144566-0000	-		1	FLANGE	
080	1144678-0000	A		1	SHAFT	
090	1144681-0000	-		1	WASHER	
100	1144683-0000	A		1	AXLE PIN	
110	1144684-0000	-		2	SPACER	
120	1144685-0000	-		2	SCREW	
130	1144686-0000	A		1	TIE ROD	
140	1144687-0000	A		1	TIE ROD	
150	1144688-0000	-		2	SCREW	
160	1260824-0000	-		1	SPACER RING	
170	1334328-0000	-		1	SPACER	
180	1260944-0000	A		2	BUSHING	
190	1334018-0000	A		4	SHIM	
300	90091-0297	A		1	RADIAL SEAL 35X47X7 MM DUST LIP	
310	90091-0299	A		1	RADIAL SEAL 30X52X7 MM DUST LIP	
320	90115-0181	A		2	ROD END, ID=10 MM M10X1,5	
330	90115-0182	A		2	ROD END, ID=10 MM M10X1,5LH	
380	312105-0368	-		4	SCREW M6S ISO 4017 M6X16 A480	
390	312105-0453	-		4	SCREW M6S ISO 4017 M8X25 A480	
400	312105-0495	-		5	SCREW M6S ISO 4017 M10X30 A480	
410	312109-0460	-		6	SCREW M6S ISO 4017 M8X45 A480	
420	312318-0362	-		2	SCREW ISO4029 M6X8 A4	
440	312605-0320	-		4	HEXAGON NUT, M6M M10 A280	
450	312902-0320	-		2	NUT HEX. LEFT THREAD, M10 A280	
460	315105-0153	-		4	WASHER BRB6,4X12RFR	
470	315105-0171	-		4	WASHER BRB10X18	
480	315105-0173	-		2	WASHER BRB10,5X22RFR	
490	315105-0165	-		6	WASHER BRB8,4X16RFR	
500	315202-0217	A		1	O-RING 24,2X3 MM	
520	315705-0267	A		1	PARALLEL KEY W. ROUND ENDS 8X7X30 MM	
530	315705-0270	A		1	PARALLEL KEY W. ROUND ENDS 8X7X40 MM	
550	315753-0132	A		1	RETAINING RING FOR BORE DIN 472 52 A2	
570	321308-0205	A		1	BALL BEARING, 25X47X12MM	
580	321313-0105	A		1	BALL BEARING, 25X52X15MM	

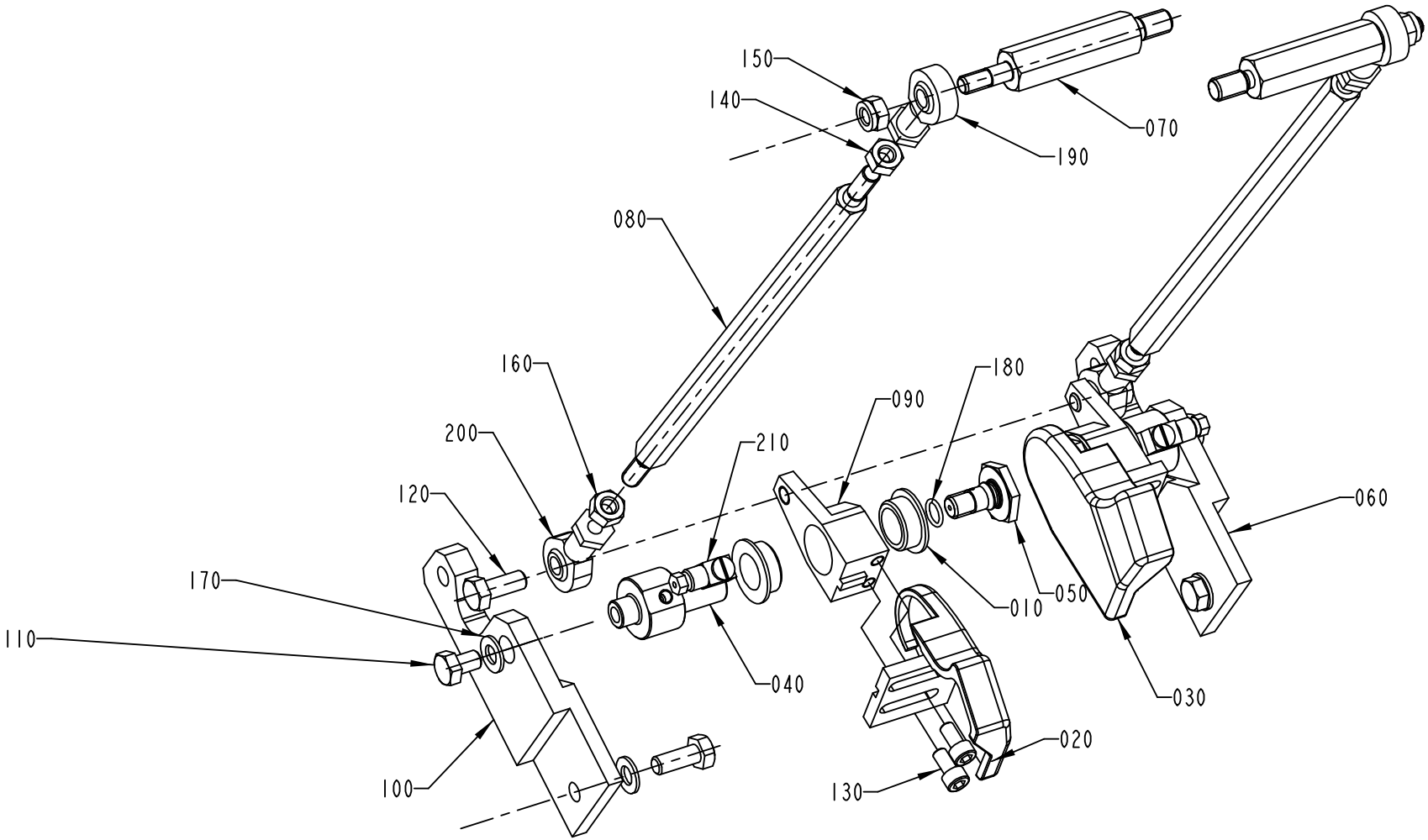

S-1348056-2
ECN 72862

ECM: 147161 - 20031125
Group number: 1348056-0300
Assembly Drawing: 1348056-2_1_AA

This list covers pages from 3-82 to 3-85

Pos	Part No	SP	UN	Qty	Description	Page No
TBA 1000B STDA7 (See drawing on page: 3-82)						
020	1487922-0000	A		1	FOLDING DEVICE	
030	1487923-0000	A		1	FOLDING DEVICE	
060	1347600-0000	-		1	SUPPORT	
070	1499765-0000	A		2	AXLE LINK	
080	2609368-0000	A		2	TIE ROD	
100	1350441-0000	-		1	SUPPORT	
TBA 1000SQ, TBA 1000S STDA7 (See drawing on page: 3-82)						
020	1487922-0000	A		1	FOLDING DEVICE	
030	1487923-0000	A		1	FOLDING DEVICE	
060	1347600-0000	-		1	SUPPORT	
070	1499765-0000	A		2	AXLE LINK	
080	1499103-0000	A		2	TIE ROD	
100	1350441-0000	-		1	SUPPORT	
TPA 1000SQ (See drawing on page: 3-82)						
020	1296180-0000	A		1	FOLDING DEVICE	
030	1296181-0000	A		1	FOLDING DEVICE	
060	1347600-0000	-		1	SUPPORT	
070	1499765-0000	A		2	AXLE LINK	
080	1519340-0000	A		2	TIE ROD	
100	1350441-0000	-		1	SUPPORT	
TPA 1000SQ SMILE (See drawing on page: 3-84)						
020	2529671-0000	A		1	FOLDING DEVICE	
030	2529672-0000	A		1	FOLDING DEVICE	
060	2553343-0000	-		1	SUPPORT	
070	2553346-0000	A		2	AXLE LINK	
080	2553345-0000	A		2	TIE ROD	
090	2529676-0000	-		1	LEVER	
100	2553344-0000	-		1	SUPPORT	
220	2529675-0000	-		1	LEVER	
Common Parts						
010	1282708-0000	A		4	BUSHING	
040	1347495-0000	A		2	AXLE PIN	
050	1347496-0000	A		2	SCREW	
090	1350440-0000	-		2	LEVER	
110	312105-0447	-		2	SCREW M6S ISO 4017 M8X12 A480	
120	312105-0451	-		4	SCREW M6S ISO 4017 M8X20 A480	
130	312115-0366	-		4	SCREW ISO4762 M6X12 A4	
140	312605-0318	-		2	HEXAGON NUT, M6M M8 A280	
150	312812-0318	-		2	HEXAGON NUT, NY-LOCK M8 A480	
160	312902-0318	-		2	NUT HEX. LEFT THREAD, M8 A280	
170	315105-0165	-		4	WASHER BRB8,4X16RFR	
180	315202-0107	A		2	O-RING 9,1X1,6 MM	
190	90115-0139	A		2	ROD END, ID=8 MM, M8X1,25	
200	90115-0180	A		2	ROD END, ID=8 MM, M8X1,25 LH	
210	90134-0058	-		2	CONNECTION	

Machine Type | Group Description | Used-In | Group Number | Page No

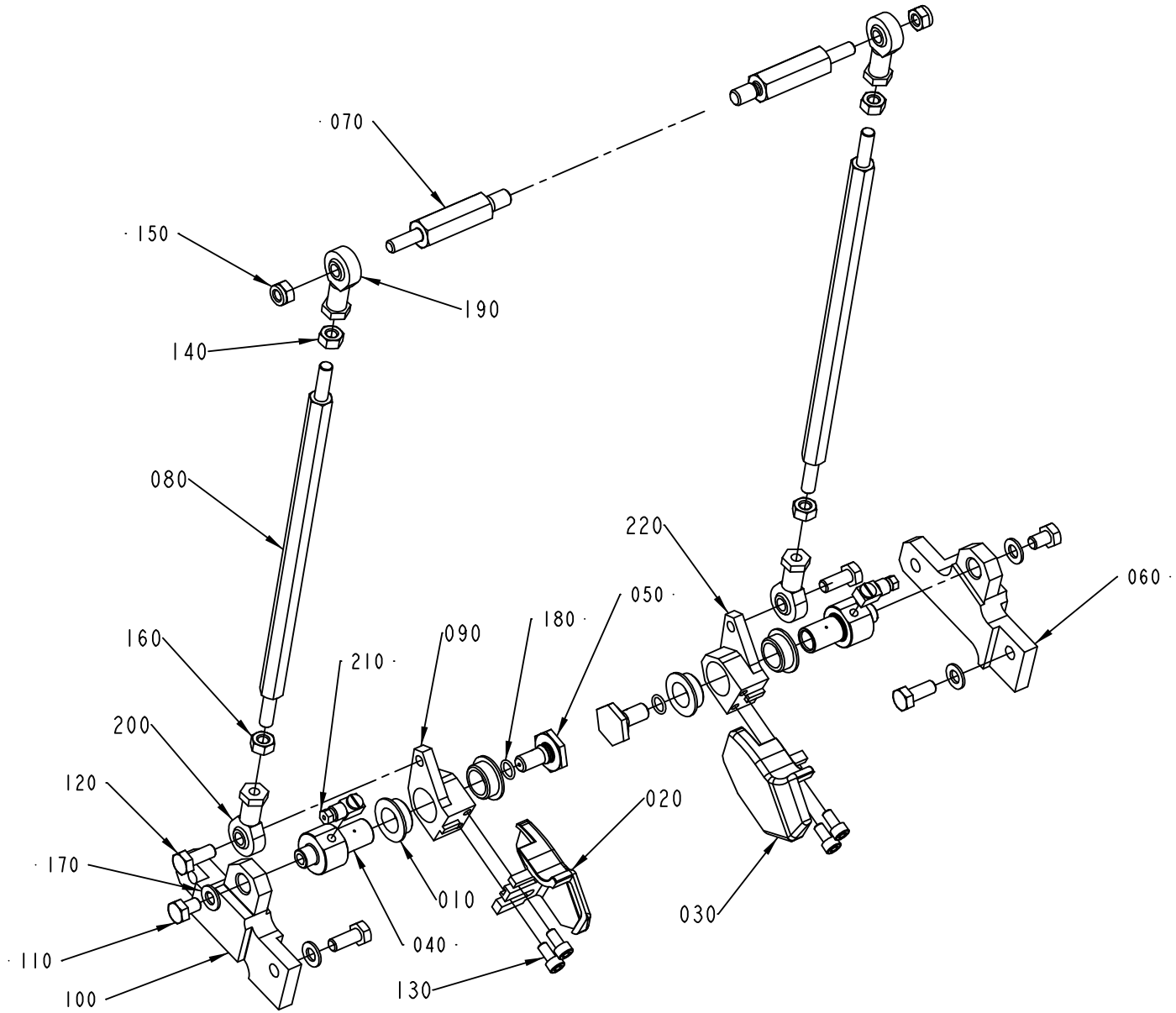

1348056-3
ECM 116478

ECM: 147161 - 20031125
Group number: 1348056-0300
Assembly Drawing: 1348056-3_1_AA

This list covers pages from 3-82 to 3-85

Pos	Part No	SP	UN	Qty	Description	Page No
TBA 1000B STDA7 (See drawing on page: 3-82)						
020	1487922-0000	A		1	FOLDING DEVICE	
030	1487923-0000	A		1	FOLDING DEVICE	
060	1347600-0000	-		1	SUPPORT	
070	1499765-0000	A		2	AXLE LINK	
080	2609368-0000	A		2	TIE ROD	
100	1350441-0000	-		1	SUPPORT	
TBA 1000SQ, TBA 1000S STDA7 (See drawing on page: 3-82)						
020	1487922-0000	A		1	FOLDING DEVICE	
030	1487923-0000	A		1	FOLDING DEVICE	
060	1347600-0000	-		1	SUPPORT	
070	1499765-0000	A		2	AXLE LINK	
080	1499103-0000	A		2	TIE ROD	
100	1350441-0000	-		1	SUPPORT	
TPA 1000SQ (See drawing on page: 3-82)						
020	1296180-0000	A		1	FOLDING DEVICE	
030	1296181-0000	A		1	FOLDING DEVICE	
060	1347600-0000	-		1	SUPPORT	
070	1499765-0000	A		2	AXLE LINK	
080	1519340-0000	A		2	TIE ROD	
100	1350441-0000	-		1	SUPPORT	
TPA 1000SQ SMILE (See drawing on page: 3-84)						
020	2529671-0000	A		1	FOLDING DEVICE	
030	2529672-0000	A		1	FOLDING DEVICE	
060	2553343-0000	-		1	SUPPORT	
070	2553346-0000	A		2	AXLE LINK	
080	2553345-0000	A		2	TIE ROD	
090	2529676-0000	-		1	LEVER	
100	2553344-0000	-		1	SUPPORT	
220	2529675-0000	-		1	LEVER	
Common Parts						
010	1282708-0000	A		4	BUSHING	
040	1347495-0000	A		2	AXLE PIN	
050	1347496-0000	A		2	SCREW	
090	1350440-0000	-		2	LEVER	
110	312105-0447	-		2	SCREW M6S ISO 4017 M8X12 A480	
120	312105-0451	-		4	SCREW M6S ISO 4017 M8X20 A480	
130	312115-0366	-		4	SCREW ISO4762 M6X12 A4	
140	312605-0318	-		2	HEXAGON NUT, M6M M8 A280	
150	312812-0318	-		2	HEXAGON NUT, NY-LOCK M8 A480	
160	312902-0318	-		2	NUT HEX. LEFT THREAD, M8 A280	
170	315105-0165	-		4	WASHER BRB8,4X16RFR	
180	315202-0107	A		2	O-RING 9,1X1,6 MM	
190	90115-0139	A		2	ROD END, ID=8 MM, M8X1,25	
200	90115-0180	A		2	ROD END, ID=8 MM, M8X1,25 LH	
210	90134-0058	-		2	CONNECTION	

Machine Type | Group Description | Used-In | Group Number | Page No

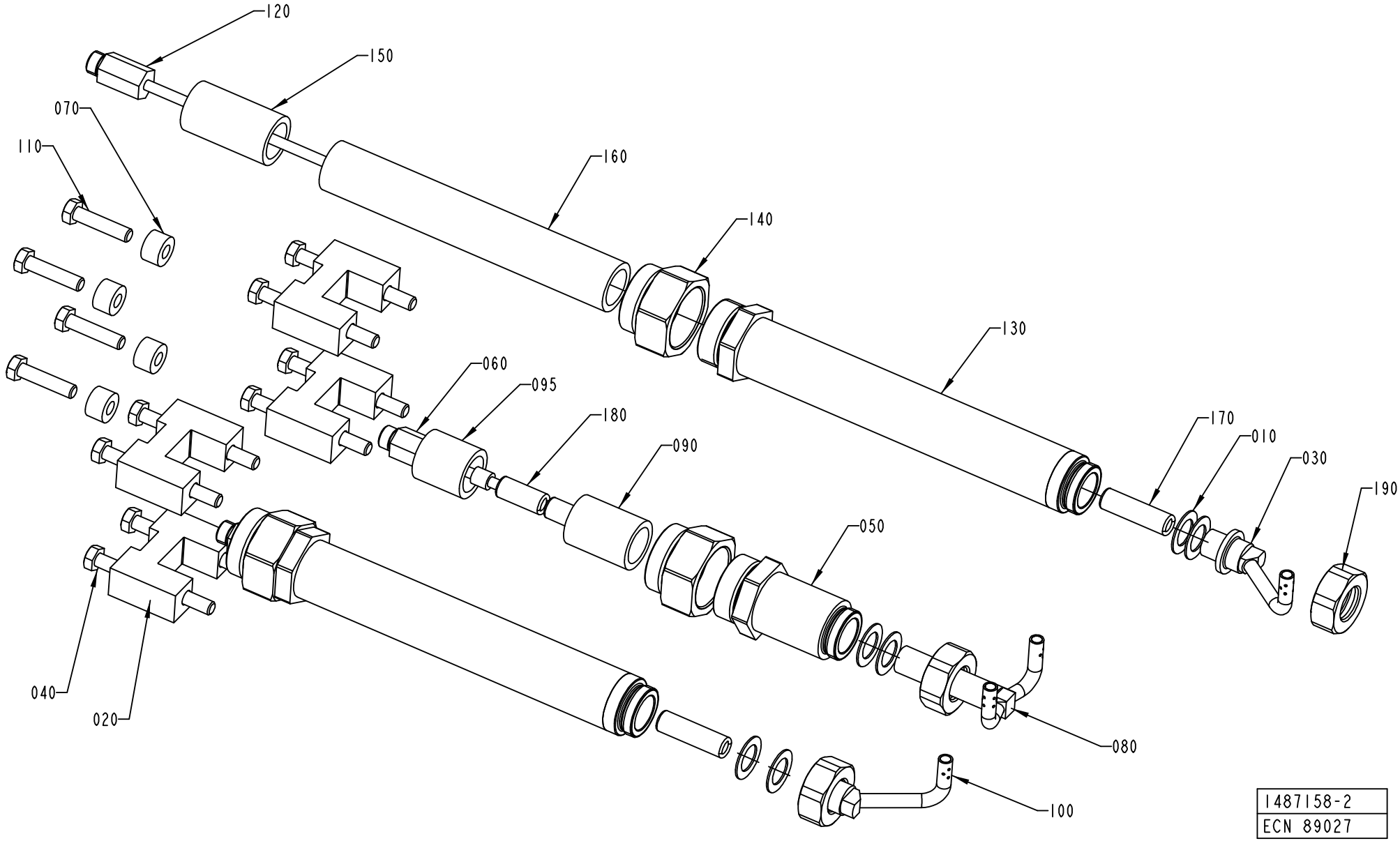
120
150
070
110
160
140
130
060
095
180
090
170
010
030
190
050
040
020
080
100
1487158-2
ECN 89027

ECM: 157770 - 20040309
Group number: 1487158-0300
Assembly Drawing: 1487158-2_1_AA

This list covers pages from 3-86 to 3-89

Pos	Part No	SP	UN	Qty	Description	Page No
TBA 0500B QC, TBA 1000B QC (See drawing on page: 3-88)						
050	1549389-0000	B		1	SPACER	
120	1285310-0000	-		2	EXTENSION	
160	23765-0001	A		2	INSULATING PIPE	
190	1317085-0000	B		2	NUT	
TBA 0200B NOQC (See drawing on page: 3-86)						
050	1549389-0000	B		1	SPACER	
070	1285874-0000	-		4	SPACER	
095	23765-0004	A		1	INSULATING PIPE	
130	1549388-0000	B		2	SPACER	
170	252766-0001	A		2	INSULATING PIPE	
190	1317085-0000	B		2	NUT	
TBA 0200B QC, TBA 0330S QC, TBA 0250B QC (See drawing on page: 3-86)						
020	1285874-0000	-		8	SPACER	
040	312105-0457	-		4	SCREW M6S ISO 4014 M8X35 A480	
050	1549389-0000	B		1	SPACER	
070	1498163-0000	-		4	SPACER	
095	23765-0004	A		1	INSULATING PIPE	
110	312105-0459	-		8	SCREW M6S ISO 4014 M8X40 A480	
120	1285310-0000	-		2	EXTENSION	
160	23765-0001	A		2	INSULATING PIPE	
190	1317085-0000	B		2	NUT	
TBA 0200S (See drawing on page: 3-86)						
020	1285874-0000	-		8	SPACER	
050	1549389-0000	B		1	SPACER	
070	1285874-0000	-		4	SPACER	
095	23765-0004	A		1	INSULATING PIPE	
130	1549388-0000	B		2	SPACER	
170	252766-0001	A		2	INSULATING PIPE	
180	252766-0001	A		1	INSULATING PIPE	
190	1317085-0000	B		2	NUT	
TBA 0250B NOQC (See drawing on page: 3-86)						
050	1549389-0000	B		1	SPACER	
070	1285874-0000	-		4	SPACER	
095	23765-0004	A		1	INSULATING PIPE	
130	1549388-0000	B		2	SPACER	
170	252766-0001	A		2	INSULATING PIPE	
190	1317085-0000	B		2	NUT	
TBA 0500B NOQC (See drawing on page: 3-86)						
050	1549389-0000	B		1	SPACER	
130	1549388-0000	B		2	SPACER	
170	252766-0001	A		2	INSULATING PIPE	
190	1317085-0000	B		2	NUT	
TBA 1000B NOQC (See drawing on page: 3-86)						
050	1549389-0000	B		1	SPACER	
120	1285310-0000	-		2	EXTENSION	
160	23765-0001	A		2	INSULATING PIPE	
190	1317085-0000	B		2	NUT	
TBA 1000S (See drawing on page: 3-86)						
030	1296068-0000	A		1	NOZZLE	
050	1549389-0000	B		1	SPACER	
080	1296066-0000	A		1	NOZZLE	
100	1296067-0000	A		1	NOZZLE	
120	1285310-0000	-		2	EXTENSION	
160	23765-0001	A		2	INSULATING PIPE	
190	1317085-0000	B		2	NUT	
TBA 1000SQ (See drawing on page: 3-86)						
020	1285874-0000	-		8	SPACER	
050	1549389-0000	B		1	SPACER	
070	1285874-0000	-		4	SPACER	
120	1285310-0000	-		2	EXTENSION	
160	23765-0001	A		2	INSULATING PIPE	
190	1317085-0000	B		2	NUT	
TBA 1500S (See drawing on page: 3-86)						
010	263673-0000	-		9	GASKET	
060	1285870-0000	-		1	EXTENSION	
120	1285310-0000	-		2	EXTENSION	
160	23765-0001	A		2	INSULATING PIPE	
190	1317085-0000	B		2	NUT	
TPA 1000SQ (See drawing on page: 3-86)						
010	263673-0000	-		9	GASKET	
020	1519339-0000	-		8	SPACER	
030	1549127-0000	A		1	NOZZLE	
040	312105-0465	-		8	SCREW M6S ISO 4014 M8X70 A480	
060	1285870-0000	-		1	EXTENSION	
080	1519336-0000	A		1	NOZZLE	
100	1549126-0000	A		1	NOZZLE	
120	1285310-0000	-		2	EXTENSION	
160	23765-0001	A		2	INSULATING PIPE	
190	1317085-0000	B		2	NUT	
Common Parts						
010	263673-0000	-		6	GASKET	
020	1348043-0000	-		8	SPACER	
020	1498163-0000	-		8	SPACER	

Machine Type | Group Description | Used-In | Group Number | Page No

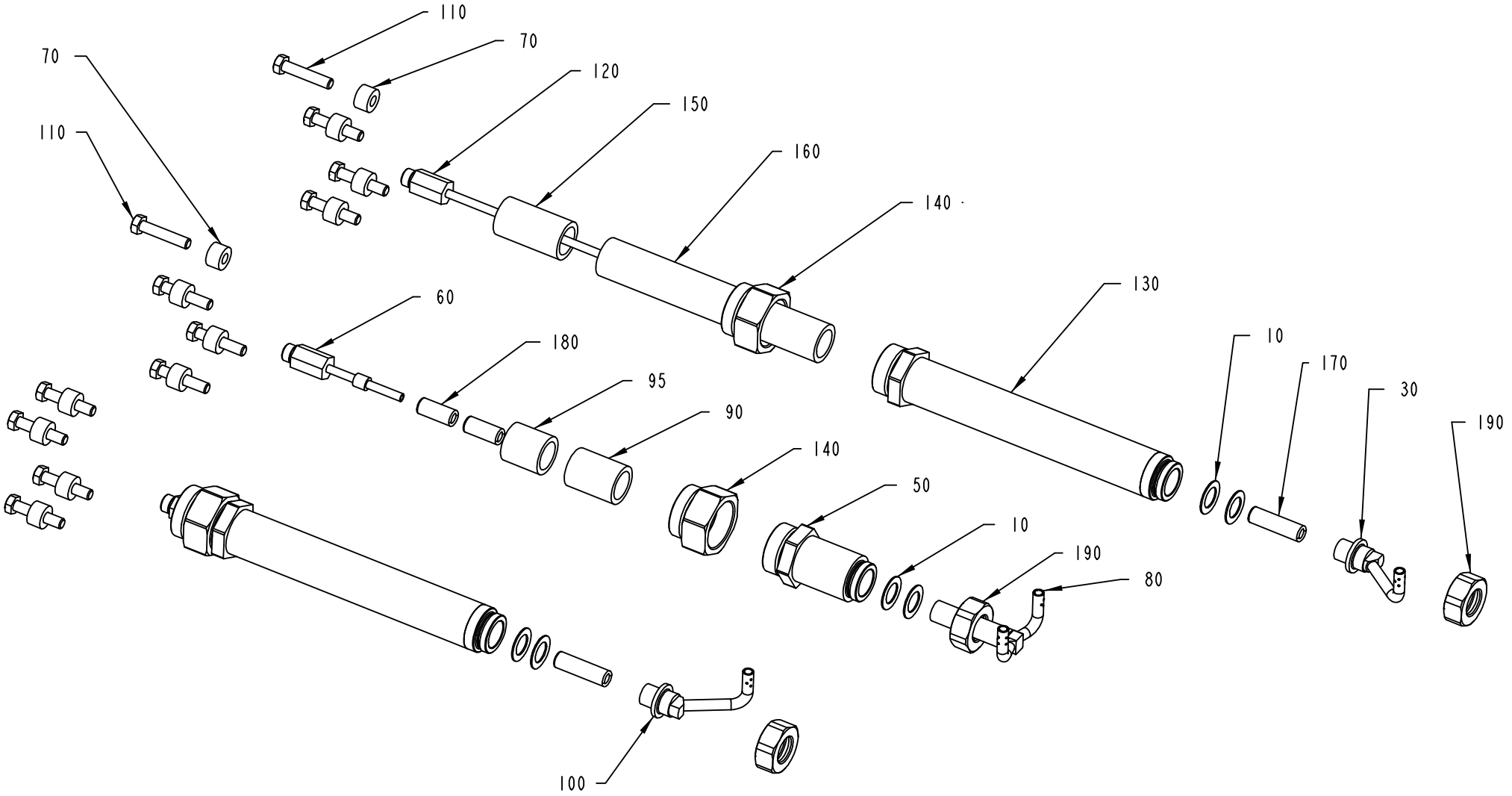

1487158-4
ECM 127225

Pos	Part No	SP	UN	Qty	Description	Page No
Common Parts (Cont'd)						
020	1285874-0000	-		4	SPACER	
020	1346642-0000	-		4	SPACER	
020	1296153-0000	-		4	GUIDE	
020	1317804-0000	-		8	SPACER	
020	1511692-0000	-		8	SPACER	
020	1346641-0000	-		4	SPACER	
030	1346679-0000	A		1	NOZZLE	
030	1346644-0000	A		1	NOZZLE	
030	1350422-0000	A		1	NOZZLE	
030	1317802-0000	A		1	NOZZLE	
030	1532284-0000	A		1	NOZZLE	
030	1498147-0000	A		1	NOZZLE	
030	1499446-0000	A		1	NOZZLE	
040	312109-0460	-		8	SCREW M6S ISO 4017 M8X45 A480	
040	312109-0457	-		8	SCREW M6S ISO 4017 M8X35 A480	
040	312105-0471	-		8	SCREW M6S ISO 4014 M8X100 A480	
040	312105-0466	-		8	SCREW M6S ISO 4014 M8X75 A480	
040	312105-0464	-		8	SCREW M6S ISO 4014 M8X65 A480	
040	312109-0461	-		8	SCREW M6S ISO 4017 M8X50 A480	
050	2545433-0000	B		1	SPACER	
060	1296072-0000	-		1	EXTENSION	
070	1498163-0000	-		12	SPACER	
070	2545537-0000	-		4	SPACER	
070	1334632-0000	-		4	SPACER	
070	1523497-0000	-		4	SPACER	
080	1532285-0000	A		1	NOZZLE	
080	1499445-0000	A		1	NOZZLE	
080	1490039-0000	A		1	NOZZLE	
080	1346581-0000	A		1	NOZZLE	
080	1346580-0000	A		1	NOZZLE	
080	1317801-0000	A		1	NOZZLE	
080	1296387-0000	A		1	NOZZLE	
090	23765-0004	A		1	INSULATING PIPE	
090	23765-0005	A		1	INSULATING PIPE	
095	23765-0005	A		1	INSULATING PIPE	
100	1532286-0000	A		1	NOZZLE	
100	1499444-0000	A		1	NOZZLE	
100	1498146-0000	A		1	NOZZLE	
100	1350421-0000	A		1	NOZZLE	
100	1346678-0000	A		1	NOZZLE	
100	1346643-0000	A		1	NOZZLE	
100	1317803-0000	A		1	NOZZLE	
110	312105-0459	-		12	SCREW M6S ISO 4014 M8X40 A480	
110	312109-0457	-		4	SCREW M6S ISO 4017 M8X35 A480	
110	312109-0461	-		4	SCREW M6S ISO 4017 M8X50 A480	
110	312109-0463	-		4	SCREW M6S ISO 4017 M8X60 A480	
120	1346646-0000	-		2	EXTENSION	
120	2517967-0000	-		2	EXTENSION	
130	2598967-0000	B		2	SPACER	
130	2545135-0000	B		2	SPACER	
140	1549390-0000	B		3	NUT	
150	23765-0003	A		2	INSULATING PIPE	
160	23765-0002	A		2	INSULATING PIPE	
170	252766-0002	A		2	INSULATING PIPE	
180	252766-0001	A		2	INSULATING PIPE	
180	252766-0002	A		1	INSULATING PIPE	
200	359710-0001	-		3	WARNING SIGN ISO, HOT SURFACE	

PRESSURE DEVICE

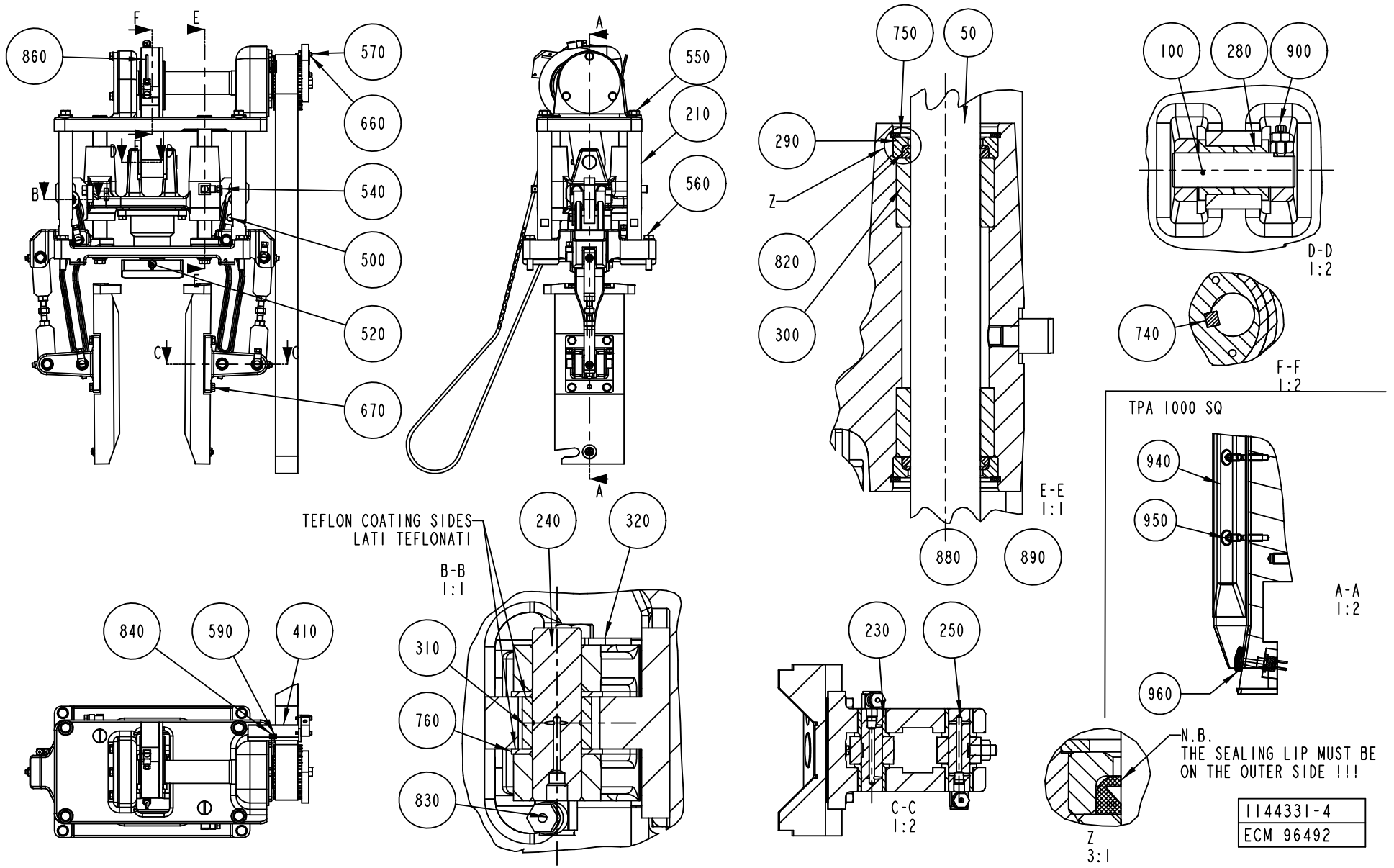

ECM: 158927 - 20040309
Group number: 1144331-0300
Assembly Drawing: 1144331-4_1_AE

This list covers pages from 3-90 to 3-93

Pos	Part No	SP	UN	Qty	Description	Page No
TPA 1000SQ						
045	2541877-0000	A		2	NAIL	
080	1143530-0000	A		1	SPRING	
450	1144486-0000	A		2	CAM	
475	1523885-0000	A		1	PUSHER	
630	312605-0316	-		11	HEXAGON NUT, M6M M6 A280	
940	1523467-0000	-		4	VOLUME BULGE	
950	312155-0289	-		8	SCREW EN 10642 MF6S M4X10 A480	
960	2541878-0000	-		6	WASHER	
TBA 1000B NOQC						
080	1144492-0000	A		1	SPRING	
520	312105-0370	-		11	SCREW M6S ISO 4017 M6X20 A480	
TBA 0200B NOQC						
520	312105-0370	-		11	SCREW M6S ISO 4017 M6X20 A480	
TBA 0200B QC, TBA 0330S QC, TBA 0250B QC						
470	2605125-0000	A		1	PUSHER	
475	2605125-0000	A		1	PUSHER	
480	2651145-0000	A		1	BLOCK	
520	312105-0370	-		11	SCREW M6S ISO 4017 M6X20 A480	
TBA 0200S						
520	312105-0370	-		11	SCREW M6S ISO 4017 M6X20 A480	
TBA 0250B NOQC						
520	312105-0370	-		11	SCREW M6S ISO 4017 M6X20 A480	
TBA 0500B NOQC						
080	1144492-0000	A		1	SPRING	
520	312105-0370	-		11	SCREW M6S ISO 4017 M6X20 A480	
TBA 0500B QC, TBA 1000B QC						
080	1144492-0000	A		1	SPRING	
520	312105-0370	-		11	SCREW M6S ISO 4017 M6X20 A480	
TBA 1000S						
080	1144492-0000	A		1	SPRING	
520	312105-0370	-		11	SCREW M6S ISO 4017 M6X20 A480	
TBA 1000SQ						
080	1144492-0000	A		1	SPRING	
TBA 1500S						
080	1144492-0000	A		1	SPRING	
Common Parts						
010	1144482-0000	-		2	SUPPORT	
020	1144483-0000	-		1	PLATE	
030	1144485-0000	-		1	SUPPORT	
045	1350428-0000	A		2	NAIL	
050	1144488-0000	A		2	COLUMN	
060	1144489-0000	A		1	FLANGE	
070	1478189-0000	A		1	SUPPORT	
080	1260895-0000	A		1	SPRING	
090	1144493-0000	-		1	WASHER	
100	1144494-0000	A		1	AXLE PIN	
110	1144495-0000	A		1	ECCENTRIC	
120	1144496-0000	A		1	ECCENTRIC	
130	1346539-0000	A		1	CONNECTING ROD	
140	1144498-0000	-		1	FLANGE	
150	90091-0408	A		2	BEARING SEAL 70X78X5	
160	1144500-0000	-		1	SUPPORT	
170	1144501-0000	-		1	SPACER	
180	1144502-0000	-		1	WASHER	
190	1144503-0000	-		1	FLANGE	
200	1349516-0000	A		1	SHAFT	
210	1144505-0000	-		4	COLUMN	
220	1144506-0000	A		2	LEVER	
230	1144507-0000	A		16	BUSHING	
240	1144508-0000	A		2	AXLE PIN	
250	1317362-0000	A		6	SHAFT	
260	1144511-0000	A		6	SHIM	
270	1317363-0000	A		2	SHAFT	
280	1144514-0000	A		2	BUSHING	
290	1144515-0000	A		4	INSERT	
300	1144517-0000	A		4	BUSHING	
310	1144520-0000	A		2	ROLLER	
320	1144521-0000	-		2	CLAMP	
330	1347018-0000	-		1	PLUG	
340	1349517-0000	A		1	TOOTHED PULLEY	
350	1349519-0000	-		1	ACTIVATOR	
360	90240-0317	A		1	BUSHING, 35X39X30 MM	
370	90214-0229	A		1	BALL BEARING, 65X85X10 MM	
380	90242-0271	A		1	O-RING 63,22X1,78 MM	
390	90242-0270	A		1	O-RING 82,27X1,78 MM	
410	1349518-0000	-		1	SUPPORT	
420	1144914-0000	A		2	LEVER	
430	1144915-0000	A		2	LEVER	
440	1144916-0000	A		2	ADJUSTING SCREW	
450	1144978-0000	A		2	CAM	
460	1348537-0000	A		1	TIMING BELT	
470	2529289-0000	A		2	PUSHER	
470	2524512-0000	A		1	PUSHER	

Machine Type | Group Description | Used-In | Group Number | Page No

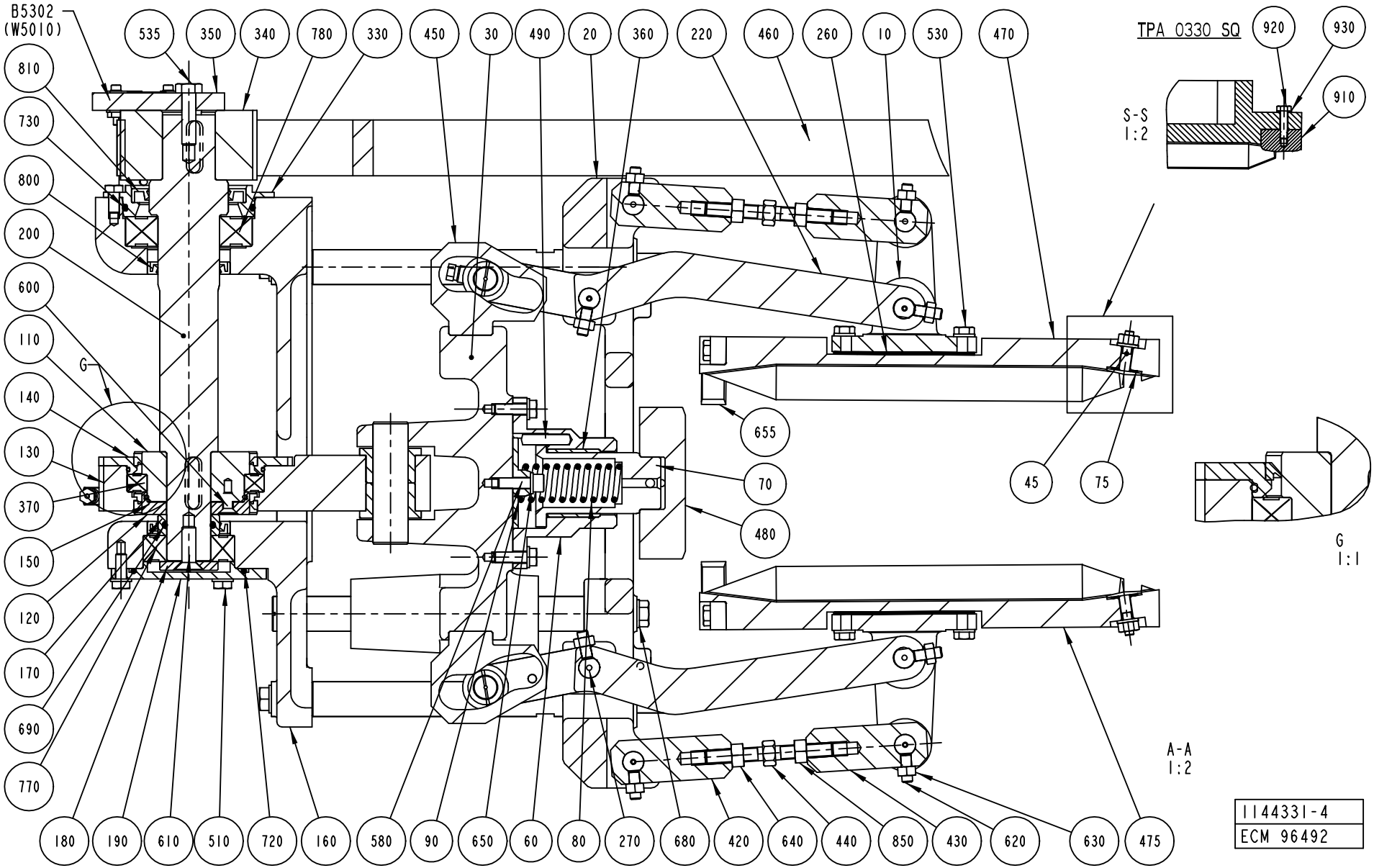
B5302
(W5010)
535
350
340
780
330
450
30
490
20
360
220
460
260
10
530
470
810
730
800
200
600
110
G
140
130
370
150
120
170
690
770
180
190
610
510
720
160
580
90
650
60
80
270
680
420
640
440
850
430
620
630
475
655
70
480
45
75
TPA 0330 SQ
920
930
910
S-S
1:2
G
1:1
A-A
1:2
1144331-4
ECM 96492

ECM: 158927 - 20040309
Group number: 1144331-0300
Assembly Drawing: 1144331-4_2_AE

This list covers pages from 3-90 to 3-93

Pos	Part No	SP	UN	Qty	Description	Page No
Common Parts (Cont'd)						
470	1549847-0000	A		1	PUSHER	
470	1539872-0000	A		1	PUSHER	
470	1334999-0000	A		1	PUSHER	
470	1317654-0000	A		1	PUSHER	
470	1282712-0000	A		1	PUSHER	
470	1260889-0000	A		1	PUSHER	
470	1260701-0000	A		1	PUSHER	
470	1532289-0000	A		1	PUSHER	
470	1350810-0000	A		1	PUSHER	
470	1490032-0000	A		2	PUSHER	
470	1144936-0000	A		1	PUSHER	
470	1499144-0000	A		2	PUSHER	
470	1523884-0000	A		1	FLAP	
470	1144928-0000	A		1	PUSHER	
475	1499144-0000	A		1	PUSHER	
475	1532290-0000	A		1	PUSHER	
475	1282715-0000	A		1	PUSHER	
475	1317654-0000	A		1	PUSHER	
475	1539872-0000	A		1	PUSHER	
475	1549848-0000	A		1	PUSHER	
475	1260889-0000	A		1	PUSHER	
475	1334999-0000	A		1	PUSHER	
475	1490032-0000	A		1	PUSHER	
475	1260701-0000	A		1	PUSHER	
475	2524512-0000	A		1	PUSHER	
475	1144996-0000	A		1	PUSHER	
475	1350810-0000	A		1	PUSHER	
475	1144928-0000	A		1	PUSHER	
480	1499143-0000	A		1	PLATE	
480	1317655-0000	A		1	PLATE	
480	1490031-0000	A		1	PLATE	
480	1350809-0000	A		1	BLOCK	
480	1523826-0000	A		1	PUSHER	
480	1282714-0000	A		1	PLATE	
480	1532291-0000	A		1	PLATE	
480	1549849-0000	A		1	PLATE	
480	1260888-0000	A		1	BLOCK	
480	1260702-0000	A		1	PLATE	
480	1549940-0000	A		1	PUSHER	
480	1144484-0000	A		1	PLATE	
480	1144932-0000	A		1	PLATE	
490	1498029-0000	A		1	PIN	
500	312105-0366	-		8	SCREW M6S ISO 4017 M6X12 A480	
510	312105-0368	-		3	SCREW M6S ISO 4017 M6X16 A480	
520	312105-0370	-		15	SCREW M6S ISO 4017 M6X20 A480	
530	312105-0372	-		8	SCREW M6S ISO 4017 M6X25 A480	
535	312105-0455	-		1	SCREW M6S ISO 4017 M8X30 A480	
540	312105-0451	-		4	SCREW M6S ISO 4017 M8X20 A480	
550	312105-0457	-		6	SCREW M6S ISO 4014 M8X35 A480	
560	312109-0460	-		4	SCREW M6S ISO 4017 M8X45 A480	
570	312115-0230	-		2	SCREW ISO4762 M3X20 A4	
580	312115-0370	-		1	SCREW ISO4762 M6X20 A4	
590	312125-0287	-		1	SCREW ISO 1207 M4X8 A4	
600	312155-0327	-		6	SCREW EN 10642 MF6S M5X12 A480	
610	312155-0453	-		1	SCREW EN 10642 MF6S M8X25 A480	
620	312318-0368	-		9	SCREW ISO4029 M6X16 A4	
630	312605-0316	-		9	HEXAGON NUT, M6M M6 A280	
640	312605-0318	-		2	HEXAGON NUT, M6M M8 A280	
650	315103-0153	-		3	WASHER, BRB, 6,4/12,H=1,5 NIPL BR	
655	1317787-0000	A		2	CATCH	
660	315105-0124	-		2	WASHER BRB3,2X6RFR	
670	315105-0153	-		15	WASHER BRB6,4X12RFR	
680	315105-0165	-		14	WASHER BRB8,4X16RFR	
690	315202-0217	A		1	O-RING 24,2X3 MM	
720	315202-0303	A		1	O-RING 59,5X3 MM	
730	315202-0305	A		1	O-RING 69,5X3 MM	
740	315705-0267	A		2	PARALLEL KEY W. ROUND ENDS 8X7X30 MM	
750	315753-0122	A		4	RETAINING RING FOR BORE DIN 472 30 A2	
760	321130-0200	A		4	THRUST WASHER, 14X26X1,5 MM	
770	321313-0105	A		1	BALL BEARING, 25X52X15MM	
780	321313-0107	A		1	BALL BEARING, 35X72X17MM	
800	90091-0297	A		2	RADIAL SEAL 35X47X7 MM DUST LIP	
810	90091-0298	A		1	RADIAL SEAL 45X65X8 MM DUST LIP	
820	90091-0380	A		4	SCRAPER, EXCLUDER 20X24,8X3,7 MM	
830	90134-0058	-		14	CONNECTION	
840	90165-0056	-		1	PIPE CLIP FOR TUBE D=4 MM	
850	312902-0318	-		2	NUT HEX. LEFT THREAD, M8 A280	
880	352113-0102	-		5	CLIP-STRIP, BLACK 188X4,8 MM	
890	352113-0101	-		8	CLIP STRIP, 92X2,5 MM	
900	312311-0370	-		1	SCREW ISO4028 M6X20 FZB	
B5302	90044-0194	A		1	PROX.SW. IN5329/IN3002-BPKG	

Machine Type | Group Description | Used-In | Group Number | Page No

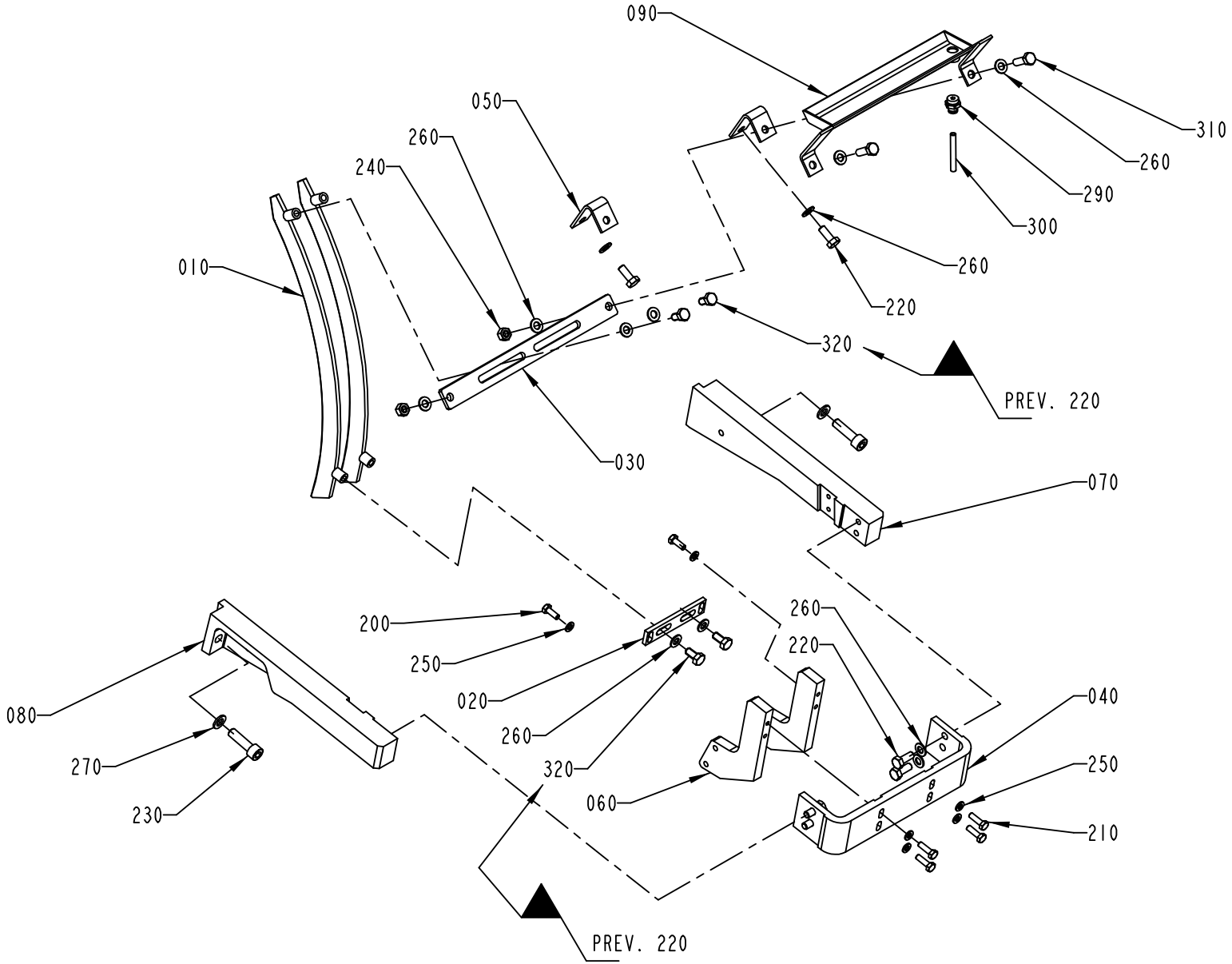

1487825-3
ECM 111612

Pos	Part No	SP	UN	Qty	Description	Page No
TBA 0500B, TBA 0330S, TBA 1000S, TBA 1000SQ, TBA 1000B, TBA 0200B, TBA 0200S, TBA 0250B (See drawing on page: 3-94)						
050	1144899-0000	-		2	SUPPORT	
080	2512834-0000	-		1	SUPPORTING ARM	
090	1478127-0000	-		1	DRIP PLATE	
240	312605-0318	-		2	HEXAGON NUT, M6M M8 A280	
260	315105-0165	-		14	WASHER BRB8,4X16RFR	
310	312105-0453	-		2	SCREW M6S ISO 4017 M8X25 A480	
TBA 1500S, TPA 1000SQ (See drawing on page: 3-96)						
010	1538963-0000	-		2	RAIL	
070	1517564-0000	-		1	SUPPORTING ARM	
080	1517568-0000	-		1	SUPPORTING ARM	
220	312105-0451	-		10	SCREW M6S ISO 4017 M8X20 A480	
240	312605-0318	-		2	HEXAGON NUT, M6M M8 A280	
260	315105-0165	-		14	WASHER BRB8,4X16RFR	
320	312105-0449	-		2	SCREW M6S ISO 4017 M8X16 A480	
Common Parts						
010	1558941-0000	-		2	RAIL	
020	1517567-0000	-		1	PLATE	
030	1144552-0000	-		1	PLATE	
040	1517563-0000	-		1	BRACKET	
050	1346588-0000	-		1	DRIP PLATE	
060	1517302-0000	-		2	SUPPORT PLATE	
070	2512817-0000	-		1	SUPPORTING ARM	
200	312105-0368	-		2	SCREW M6S ISO 4017 M6X16 A480	
210	312105-0370	-		4	SCREW M6S ISO 4017 M6X20 A480	
220	312105-0451	-		6	SCREW M6S ISO 4017 M8X20 A480	
230	312115-0497	-		2	SCREW ISO4762 M10X35 A4	
250	315105-0153	-		6	WASHER BRB6,4X12RFR	
270	315105-0171	-		2	WASHER BRB10X18	
290	342722-0203	-		1	STRAIGHT COUPLING	
300	90166-0132	-	MM	2000	TUBE 6 MM PA,TRANSP.	
320	312105-0449	-		4	SCREW M6S ISO 4017 M8X16 A480	

Pos	Part No	SP	UN	Qty	Description	Page No

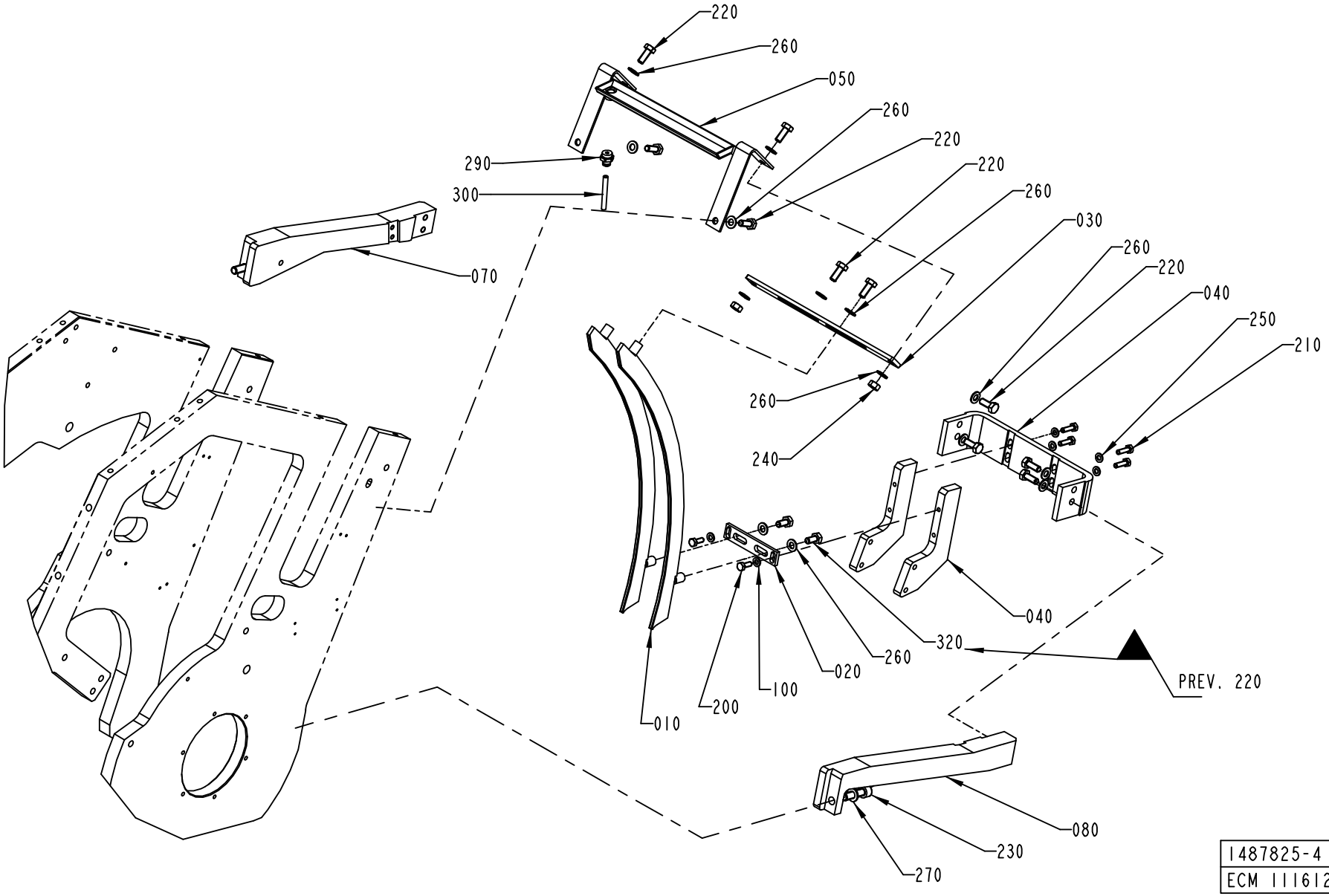
220
260
050
260
220
220
260
030
260
220
040
250
210
290
300
070
260
240
320
PREV. 220
040
020
260
100
200
010
080
230
270
1487825-4
ECM 111612

Pos	Part No	SP	UN	Qty	Description	Page No
TBA 0500B, TBA 0330S, TBA 1000S, TBA 1000SQ, TBA 1000B, TBA 0200B, TBA 0200S, TBA 0250B (See drawing on page: 3-94)						
050	1144899-0000	-		2	SUPPORT	
080	2512834-0000	-		1	SUPPORTING ARM	
090	1478127-0000	-		1	DRIP PLATE	
240	312605-0318	-		2	HEXAGON NUT, M6M M8 A280	
260	315105-0165	-		14	WASHER BRB8,4X16RFR	
310	312105-0453	-		2	SCREW M6S ISO 4017 M8X25 A480	
TBA 1500S, TPA 1000SQ (See drawing on page: 3-96)						
010	1538963-0000	-		2	RAIL	
070	1517564-0000	-		1	SUPPORTING ARM	
080	1517568-0000	-		1	SUPPORTING ARM	
220	312105-0451	-		10	SCREW M6S ISO 4017 M8X20 A480	
240	312605-0318	-		2	HEXAGON NUT, M6M M8 A280	
260	315105-0165	-		14	WASHER BRB8,4X16RFR	
320	312105-0449	-		2	SCREW M6S ISO 4017 M8X16 A480	
Common Parts						
010	1558941-0000	-		2	RAIL	
020	1517567-0000	-		1	PLATE	
030	1144552-0000	-		1	PLATE	
040	1517563-0000	-		1	BRACKET	
050	1346588-0000	-		1	DRIP PLATE	
060	1517302-0000	-		2	SUPPORT PLATE	
070	2512817-0000	-		1	SUPPORTING ARM	
200	312105-0368	-		2	SCREW M6S ISO 4017 M6X16 A480	
210	312105-0370	-		4	SCREW M6S ISO 4017 M6X20 A480	
220	312105-0451	-		6	SCREW M6S ISO 4017 M8X20 A480	
230	312115-0497	-		2	SCREW ISO4762 M10X35 A4	
250	315105-0153	-		6	WASHER BRB6,4X12RFR	
270	315105-0171	-		2	WASHER BRB10X18	
290	342722-0203	-		1	STRAIGHT COUPLING	
300	90166-0132	-	MM	2000	TUBE 6 MM PA,TRANSP.	
320	312105-0449	-		4	SCREW M6S ISO 4017 M8X16 A480	

Pos	Part No	SP	UN	Qty	Description	Page No

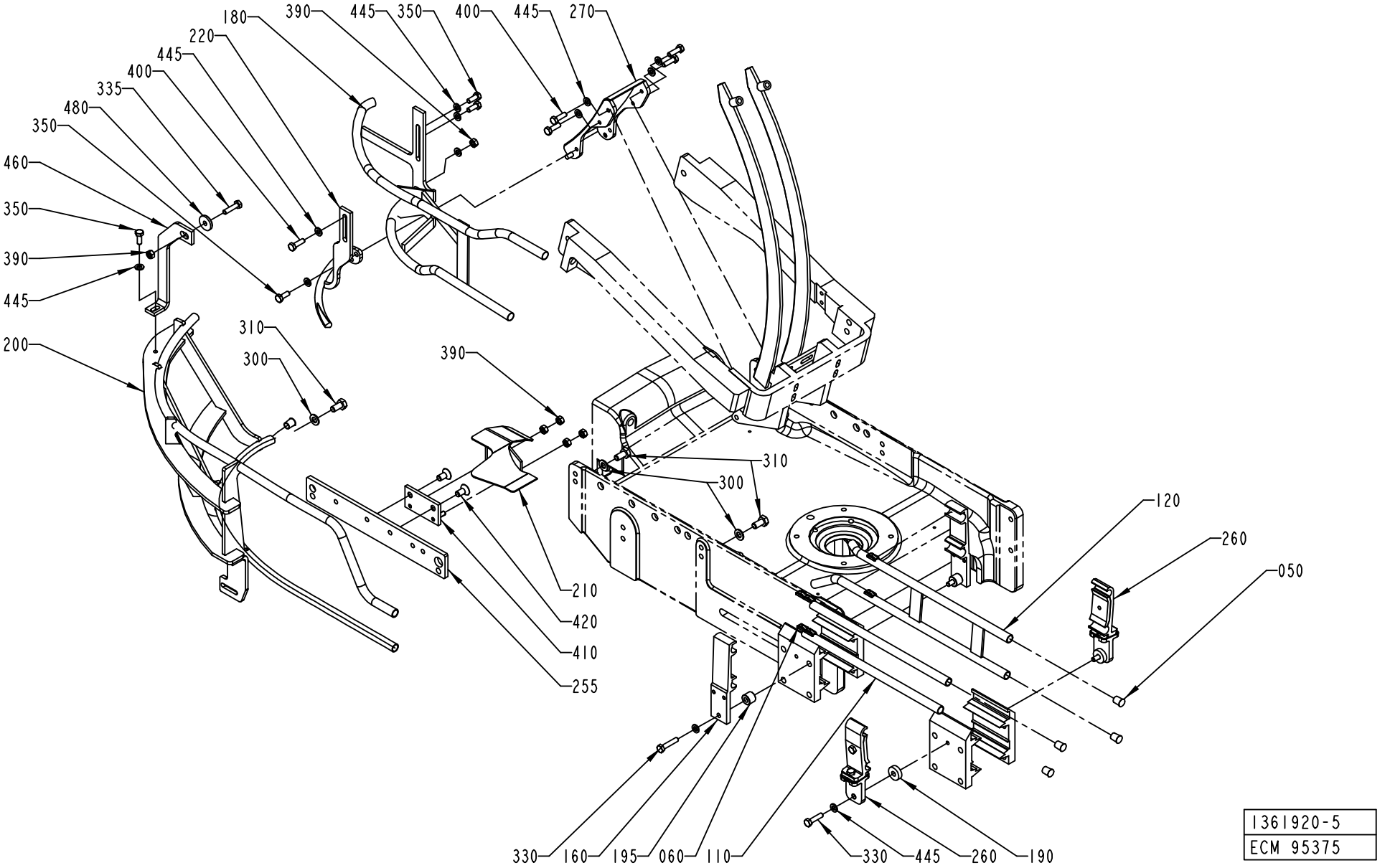
180
390
445
350
400
445
270
220
445
400
335
480
350
460
350
390
445
200
310
300
390
310
300
120
260
050
210
420
410
255
330
160
195
060
110
330
445
260
190
1361920-5
ECM 95375

ECM: 157768 - 20040309
Group number: 1361920-0400
Assembly Drawing: 1361920-5_1_AA

This list covers pages from 3-98 to 3-103

Pos	Part No	SP	UN	Qty	Description	Page No
TBA 0200B NOQC, TBA 0250B NOQC (See drawing on page: 3-100)						
050	484701-0000	-		14	SHUTTER	
160	1285009-0000	-		2	HOLDER	
260	1020142-0002	-		2	RAIL HOLDER, B55 WIDTH 30 MM	
270	1538970-0000	A		1	SLIDE	
300	315105-0165	-		5	WASHER BRB8,4X16RFR	
310	312105-0449	-		5	SCREW M6S ISO 4017 M8X16 A480	
330	312105-0370	-		4	SCREW M6S ISO 4017 M6X20 A480	
390	312605-0316	-		1	HEXAGON NUT, M6M M6 A280	
TBA 0200B QC, TBA 0330S QC, TBA 0250B QC (See drawing on page: 3-100)						
050	484701-0000	-		13	SHUTTER	
120	2558754-0000	-		1	RAIL	
160	1285009-0000	-		2	HOLDER	
180	2537127-0000	A		1	RAIL	
200	2559052-0000	-		1	RAIL	
210	2538110-0000	A		1	RAIL	
260	1020142-0002	-		2	RAIL HOLDER, B55 WIDTH 30 MM	
300	315105-0165	-		5	WASHER BRB8,4X16RFR	
310	312105-0449	-		5	SCREW M6S ISO 4017 M8X16 A480	
330	312105-0370	-		4	SCREW M6S ISO 4017 M6X20 A480	
390	312605-0316	-		1	HEXAGON NUT, M6M M6 A280	
400	312105-0370	-		5	SCREW M6S ISO 4017 M6X20 A480	
TBA 0200S (See drawing on page: 3-100)						
050	484701-0000	-		14	SHUTTER	
160	1285009-0000	-		2	HOLDER	
180	2537127-0000	A		1	RAIL	
200	2537819-0000	A		1	RAIL	
210	2538110-0000	A		1	RAIL	
260	1020142-0002	-		2	RAIL HOLDER, B55 WIDTH 30 MM	
300	315105-0165	-		5	WASHER BRB8,4X16RFR	
310	312105-0449	-		5	SCREW M6S ISO 4017 M8X16 A480	
330	312105-0370	-		4	SCREW M6S ISO 4017 M6X20 A480	
390	312605-0316	-		1	HEXAGON NUT, M6M M6 A280	
400	312105-0370	-		5	SCREW M6S ISO 4017 M6X20 A480	
TBA 0500B QC, TBA 0500B NOQC, TBA 1000B QC (See drawing on page: 3-100)						
050	484701-0000	-		14	SHUTTER	
150	1499413-0000	-		1	HOLDER	
160	1285009-0000	-		2	HOLDER	
260	1020142-0002	-		2	RAIL HOLDER, B55 WIDTH 30 MM	
270	1538970-0000	A		1	SLIDE	
300	315105-0165	-		5	WASHER BRB8,4X16RFR	
310	312105-0449	-		5	SCREW M6S ISO 4017 M8X16 A480	
360	312155-0329	-		1	SCREW EN 10642 MF6S M5X16 A480	
370	315105-0146	-		1	WASHER BRB5,3X10RFR	
380	312605-0314	-		1	HEXAGON NUT, M6M M5 A280	
390	312605-0316	-		1	HEXAGON NUT, M6M M6 A280	
400	312105-0370	-		5	SCREW M6S ISO 4017 M6X20 A480	
445	315105-0153	-		14	WASHER BRB6,4X12RFR	
TBA 1000S, TBA 1000B NOQC (See drawing on page: 3-100)						
050	484701-0000	-		14	SHUTTER	
150	1499413-0000	-		1	HOLDER	
160	1285009-0000	-		2	HOLDER	
200	1285258-0000	A		1	RAIL	
260	1020142-0002	-		2	RAIL HOLDER, B55 WIDTH 30 MM	
270	1538970-0000	A		1	SLIDE	
300	315105-0165	-		5	WASHER BRB8,4X16RFR	
310	312105-0449	-		5	SCREW M6S ISO 4017 M8X16 A480	
360	312155-0329	-		1	SCREW EN 10642 MF6S M5X16 A480	
370	315105-0146	-		1	WASHER BRB5,3X10RFR	
380	312605-0314	-		1	HEXAGON NUT, M6M M5 A280	
390	312605-0316	-		1	HEXAGON NUT, M6M M6 A280	
400	312105-0370	-		5	SCREW M6S ISO 4017 M6X20 A480	
445	315105-0153	-		14	WASHER BRB6,4X12RFR	
TBA 1000SQ (See drawing on page: 3-102)						
050	484701-0000	-		14	SHUTTER	
160	1285009-0000	-		2	HOLDER	
210	1349806-0000	A		1	GUIDE	
260	1020142-0002	-		2	RAIL HOLDER, B55 WIDTH 30 MM	
270	1538970-0000	A		1	SLIDE	
300	315105-0165	-		5	WASHER BRB8,4X16RFR	
310	312105-0449	-		5	SCREW M6S ISO 4017 M8X16 A480	
390	312605-0316	-		1	HEXAGON NUT, M6M M6 A280	
400	312105-0370	-		5	SCREW M6S ISO 4017 M6X20 A480	
TBA 1500S (See drawing on page: 3-100)						
150	1499413-0000	-		1	HOLDER	
160	1285009-0000	-		2	HOLDER	
180	2504412-0000	A		1	RAIL	
200	1285258-0000	A		1	RAIL	
260	1020142-0002	-		2	RAIL HOLDER, B55 WIDTH 30 MM	
270	1538970-0000	A		1	SLIDE	
300	315105-0165	-		5	WASHER BRB8,4X16RFR	
310	312105-0449	-		5	SCREW M6S ISO 4017 M8X16 A480	
360	312155-0329	-		1	SCREW EN 10642 MF6S M5X16 A480	
370	315105-0146	-		1	WASHER BRB5,3X10RFR	

Machine Type | Group Description | Used-In | Group Number | Page No

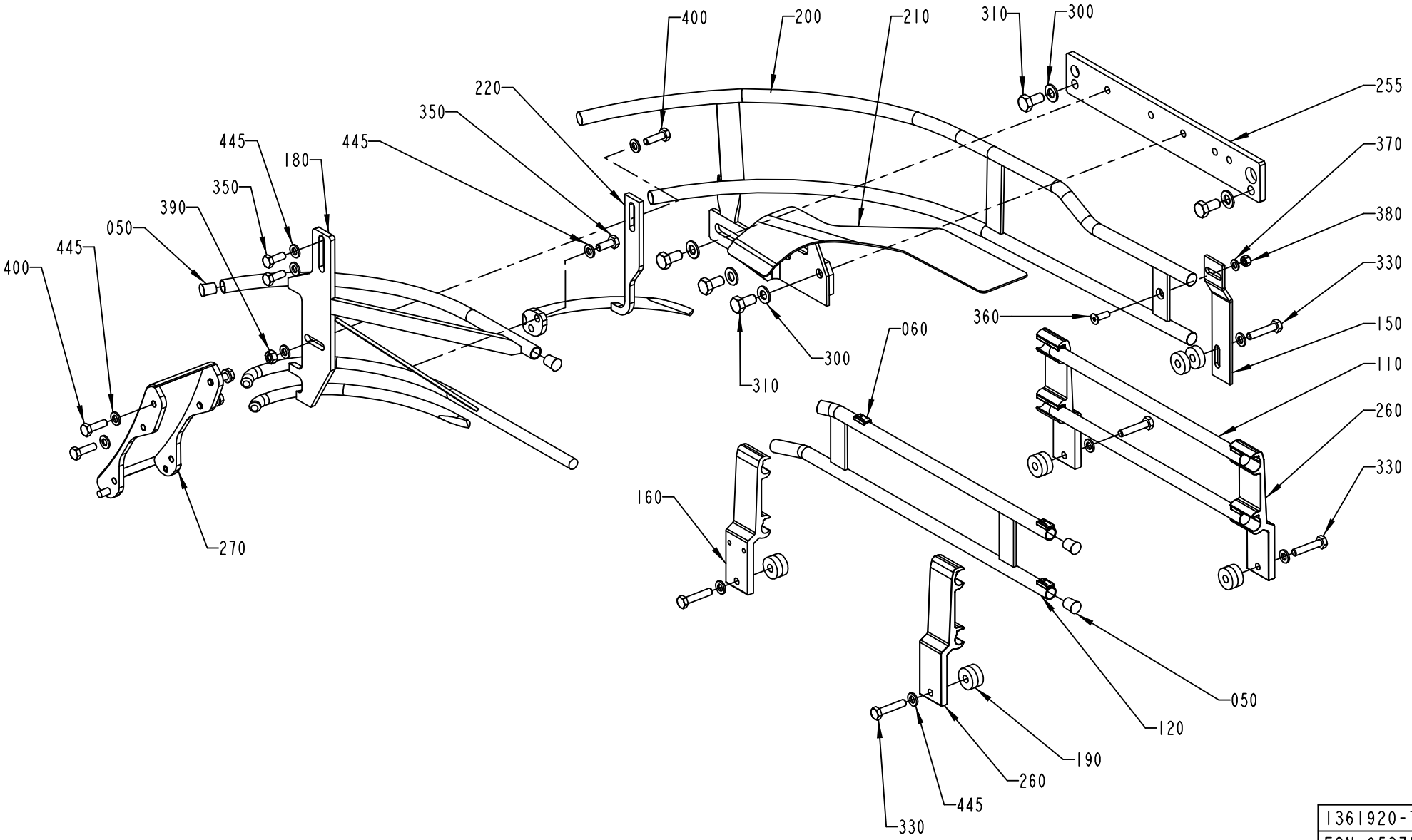

1361920-7
ECN 95375

Pos	Part No	SP	UN	Qty	Description	Page No
TBA 1500S (Cont'd) (See drawing on page: 3-100)						
380	312605-0314	-		1	HEXAGON NUT, M6M M5 A280	
390	312605-0316	-		1	HEXAGON NUT, M6M M6 A280	
400	312105-0370	-		5	SCREW M6S ISO 4017 M6X20 A480	
445	315105-0153	-		14	WASHER BRB6,4X12RFR	
TPA 1000SQ (See drawing on page: 3-98)						
060	1020146-0000	-		6	LOCKING BLOCK REPL BY 1020290-101	
180	1548114-0000	A		1	RAIL	
190	1285253-0000	-		2	SPACER	
195	1317218-0000	-		2	SPACER	
200	2527766-0000	A		1	RAIL	
210	1548348-0000	A		1	GUIDE	
220	1548349-0000	A		1	RAIL	
270	1538970-0000	A		1	SLIDE	
310	312105-0449	-		3	SCREW M6S ISO 4017 M8X16 A480	
400	312105-0370	-		5	SCREW M6S ISO 4017 M6X20 A480	
410	1548551-0000	-		1	SPACER	
420	312155-0449	-		2	SCREW EN 10642 MF6S M8X16 A480	
445	315105-0153	-		14	WASHER BRB6,4X12RFR	
460	2532864-0000	-		1	BRACKET	
480	315125-0153	-		1	WASHER TBRSB 6,4X22X4 A4	
Common Parts						
050	484701-0000	-		10	SHUTTER	
060	1020146-0000	-		10	LOCKING BLOCK REPL BY 1020290-101	
110	1279582-0000	A		2	RAIL	
120	1548550-0000	A		1	RAIL	
120	1487684-0000	A		1	RAIL	
120	1296079-0000	A		1	RAIL	
160	1334113-0000	-		2	HOLDER	
180	2598925-0000	A		1	RAIL	
180	2523573-0000	-		1	PLATE	
180	2522145-0000	A		1	RAIL	
180	2520346-0000	A		1	RAIL	
180	2520183-0000	A		1	RAIL	
180	2517495-0000	A		1	RAIL	
190	1317218-0000	-		5	SPACER	
190	1285253-0000	-		9	SPACER	
200	1346739-0000	A		1	GUIDE	
200	1519540-0000	A		1	RAIL	
200	1524349-0000	A		1	GUIDE	
200	2517965-0000	A		1	GUIDE	
200	1532294-0000	A		1	RAIL	
200	1539869-0000	A		1	RAIL	
210	1487177-0000	A		1	GUIDE	
220	2545232-0000	A		1	RAIL	
220	2619602-0000	-		1	RAIL	
220	2531558-0000	A		1	RAIL	
220	2518100-0000	A		1	RAIL	
220	2523501-0000	A		1	RAIL	
220	2504414-0000	A		1	RAIL	
220	2522181-0000	A		1	RAIL	
255	1478235-0000	-		1	PLATE	
260	1366777-0101	-		2	ANGLED RAIL HOLDER TPC21	**3-105**
260	1020816-0002	-		2	RAIL HOLDER, B68/R68 WIDTH 30 MM	
270	2523480-0000	A		1	SLIDE	
300	315105-0165	-		3	WASHER BRB8,4X16RFR	
330	312105-0374	-		5	SCREW M6S ISO 4014 M6X30 A480	
335	312105-0372	-		3	SCREW M6S ISO 4017 M6X25 A480	
350	312105-0368	-		4	SCREW M6S ISO 4017 M6X16 A480	
390	312605-0316	-		6	HEXAGON NUT, M6M M6 A280	
400	312105-0370	-		9	SCREW M6S ISO 4017 M6X20 A480	
445	315105-0153	-		13	WASHER BRB6,4X12RFR	
460	2543234-0000	-		1	BRACKET	

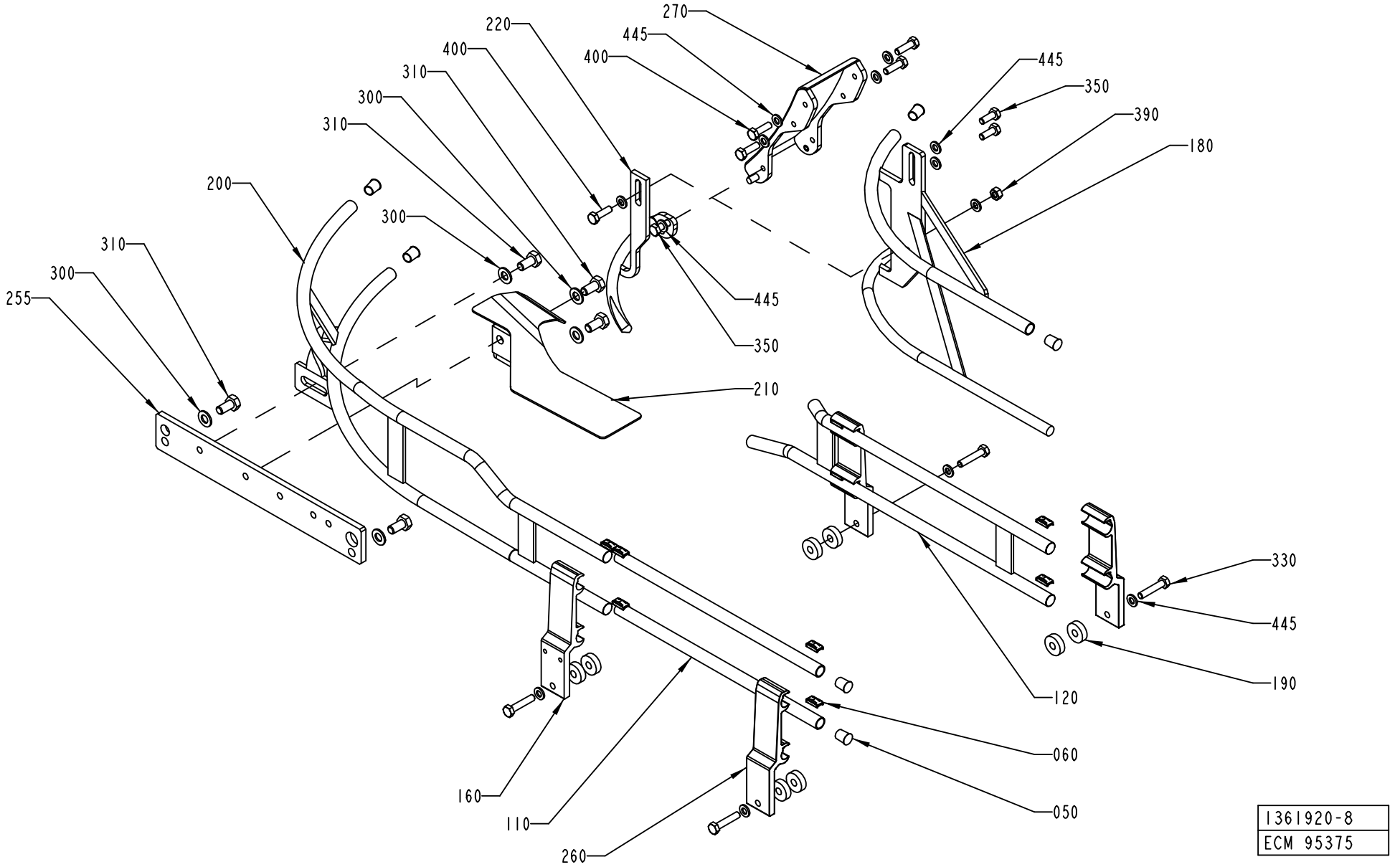
270
220
445
400
400
310
300
310
445
350
390
180
200
300
310
300
255
445
350
210
330
445
190
120
060
050
160
110
260
1361920-8
ECM 95375

ECM: 157768 - 20040309
Group number: 1361920-0400
Assembly Drawing: 1361920-8_1_AA

This list covers pages from 3-98 to 3-103

Pos	Part No	SP	UN	Qty	Description	Page No
SEE PREVIOUS LISTS PAGES: 3-99, 3-101.						

Pos	Part No	SP	UN	Qty	Description	Page No

ANGLED RAIL HOLDER TPC21

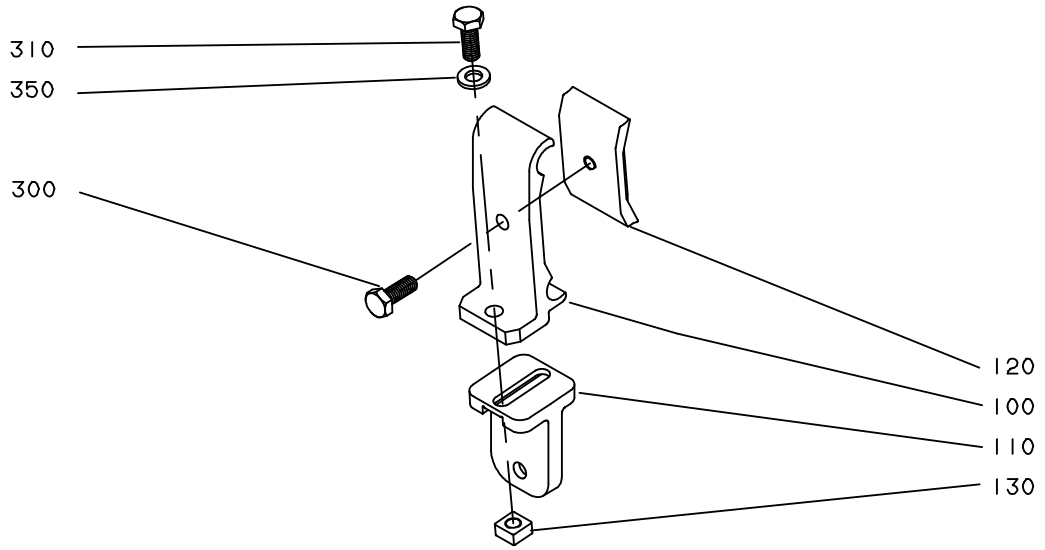

S-1366777-1
ECN 81455

ECM: 81687 - 20001204
Group number: 1366777-0101
Assembly Drawing: 1366777-1_1_AA

Pos	Part No	SP	UN	Qty	Description	Page No
-						
100	1366726-0000	-		1	HOLDER	
110	1359085-0000	-		1	T-HOLDER	
120	1366727-0000	-		1	CLAMP	
130	1359565-0000	-		1	NUT	
300	312105-0366	-		1	SCREW M6S ISO 4017 M6X12 A480	
310	312105-0368	-		1	SCREW M6S ISO 4017 M6X16 A480	
350	315105-0153	-		1	WASHER BRB6,4X12RFR	

Pos	Part No	SP	UN	Qty	Description	Page No

This page is intentionally left blank.

ECM: 111628 - 20021128
Group number: 1361921-0400
Assembly Drawing:

Pos	Part No	SP	UN	Qty	Description	Page No
-						
010	1487038-0200	-		1	OUTFEED WHEEL	**3-109, 3-111, 3-113, 3-115**
020	1538644-0100	-		1	OUTFEED BELT	**3-117**

Pos	Part No	SP	UN	Qty	Description	Page No

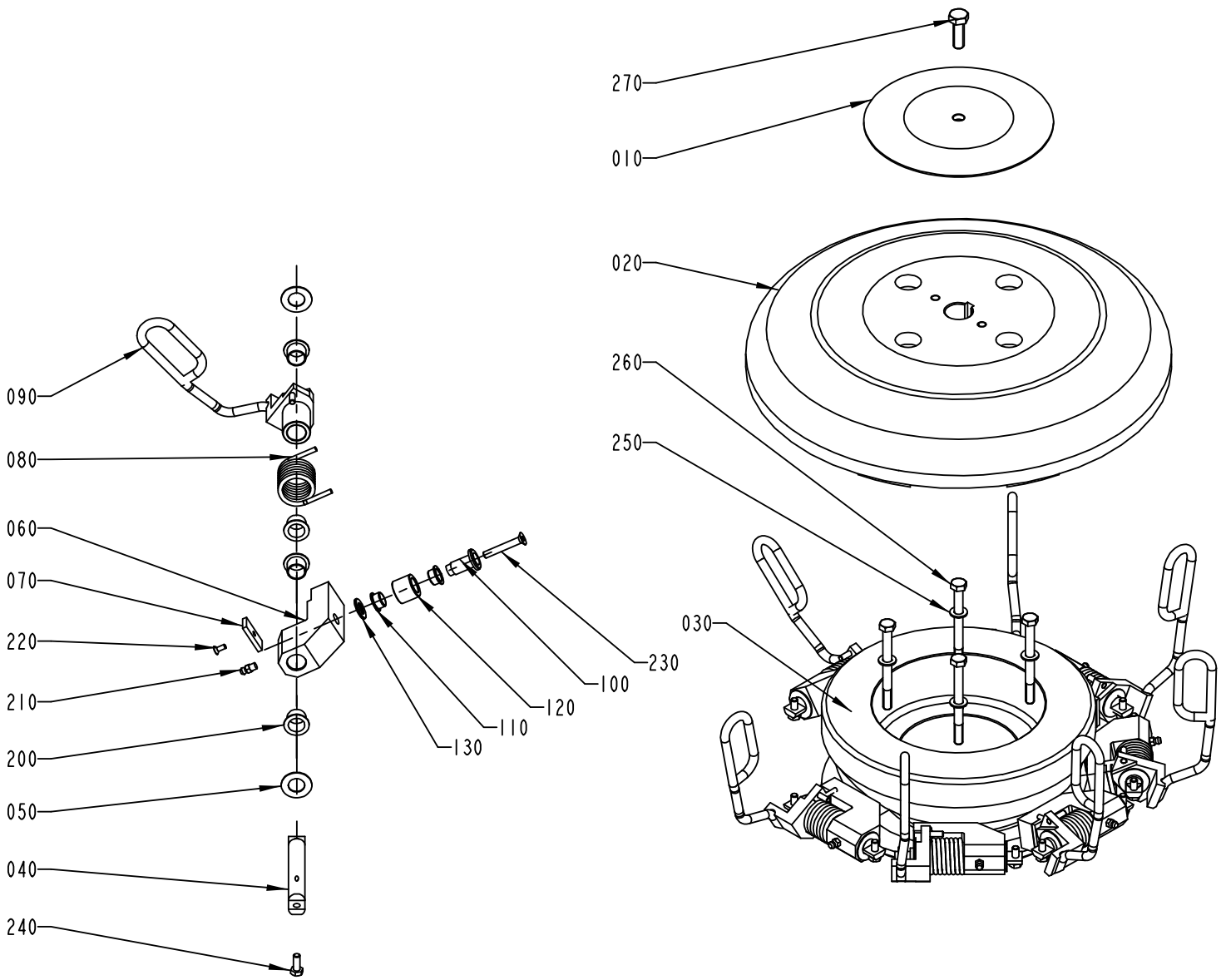

1487038-1
ECM 95375

ECM: 157769 - 20040309
Group number: 1487038-0200
Assembly Drawing: 1487038-1_1_AB

This list covers pages from 3-108 to 3-115

Pos	Part No	SP	UN	Qty	Description	Page No
TBA 0200B NOQC, TBA 0250B NOQC (See drawing on page: 3-110)						
030	1478228-0000	A		1	CAM	
040	1348540-0000	A		8	PIVOT AXLE	
060	1348538-0000	A		8	LEVER	
070	1348631-0000	-		8	PLATE	
080	1282864-0000	A		8	SPRING	
130	1285254-0000	A		8	WASHER	
220	312155-0289	-		8	SCREW EN 10642 MF6S M4X10 A480	
230	312155-0378	-		8	SCREW EN 10642 MF6S M6X40 A480	
TBA 0200B QC, TBA 0330S QC, TBA 0330S NOQC, TBA 0250B QC (See drawing on page: 3-114)						
130	1285254-0000	A		8	WASHER	
230	312155-0378	-		8	SCREW EN 10642 MF6S M6X40 A480	
TBA 0200S (See drawing on page: 3-112)						
020	1478925-0000	-		1	HATCH	
050	1260852-0000	A		24	WASHER	
100	1260851-0000	A		12	AXLE PIN	
110	1144662-0000	A		24	BUSHING	
120	1260853-0000	A		12	RING	
200	90240-0263	A		24	FLANGE BUSHING, 15X17X12 MM	
210	344502-0021	-		12	GREASE NIPPLE STRAIGHT M6	
240	312105-0368	-		12	SCREW M6S ISO 4017 M6X16 A480	
280	2545245-0000	A		12	BUSHING	
290	90240-0258	A		12	BUSHING, 15X17X15 MM	
TBA 0500B, TBA 1000S, TBA 1000B (See drawing on page: 3-110)						
030	1478228-0000	A		1	CAM	
040	1348540-0000	A		8	PIVOT AXLE	
060	1348538-0000	A		8	LEVER	
070	1348631-0000	-		8	PLATE	
080	1282864-0000	A		8	SPRING	
130	1285254-0000	A		8	WASHER	
220	312155-0289	-		8	SCREW EN 10642 MF6S M4X10 A480	
230	312155-0378	-		8	SCREW EN 10642 MF6S M6X40 A480	
TBA 1000SQ (See drawing on page: 3-108)						
030	1478228-0000	A		1	CAM	
040	1348540-0000	A		8	PIVOT AXLE	
060	1348538-0000	A		8	LEVER	
070	1348631-0000	-		8	PLATE	
130	1285254-0000	A		8	WASHER	
220	312155-0289	-		8	SCREW EN 10642 MF6S M4X10 A480	
230	312155-0378	-		8	SCREW EN 10642 MF6S M6X40 A480	
TBA 1500S (See drawing on page: 3-110)						
030	1478228-0000	A		1	CAM	
040	1348540-0000	A		8	PIVOT AXLE	
060	1348538-0000	A		8	LEVER	
070	1348631-0000	-		8	PLATE	
080	1282864-0000	A		8	SPRING	
130	1285254-0000	A		8	WASHER	
220	312155-0289	-		8	SCREW EN 10642 MF6S M4X10 A480	
230	312155-0378	-		8	SCREW EN 10642 MF6S M6X40 A480	
TPA 1000SQ (See drawing on page: 3-114)						
130	1285254-0000	A		8	WASHER	
230	312155-0378	-		8	SCREW EN 10642 MF6S M6X40 A480	
Common Parts						
010	1478558-0000	-		1	WASHER	
020	2532580-0000	-		1	HATCH	
020	1484289-0000	-		1	HATCH	
030	2540594-0000	A		1	CAM	
030	2540593-0000	A		1	CAM	
040	1350543-0000	A		12	AXLE PIN	
050	1260852-0000	A		16	WASHER	
060	2556526-0000	A		8	LEVER	
060	2556525-0000	A		12	LEVER	
080	1349985-0000	A		8	SPRING	
080	1296176-0000	A		8	SPRING	
080	1549615-0000	A		8	SPRING	
090	2563274-0000	A		12	CARRIER	
090	2552018-0000	A		12	CARRIER	
090	2545382-0000	A		12	CARRIER	
090	2543231-0000	A		8	CARRIER	
090	2529664-0000	A		8	CARRIER	
090	1532516-0000	A		8	CARRIER	
090	1511225-0000	A		8	CARRIER	
090	1487159-0000	A		8	CARRIER	
090	1478227-0000	A		8	CARRIER	
100	1260851-0000	A		8	AXLE PIN	
110	1144662-0000	A		16	BUSHING	
120	1260853-0000	A		8	RING	
130	1285254-0000	A		12	WASHER	
200	90240-0263	A		32	FLANGE BUSHING, 15X17X12 MM	
210	344502-0021	-		8	GREASE NIPPLE STRAIGHT M6	
230	312155-0378	-		12	SCREW EN 10642 MF6S M6X40 A480	
240	312105-0368	-		16	SCREW M6S ISO 4017 M6X16 A480	
250	315105-0165	-		4	WASHER BRB8,4X16RFR	
260	312105-0469	-		4	SCREW M6S ISO 4014 M8X90 A480	

Machine Type | Group Description | Used-In | Group Number | Page No

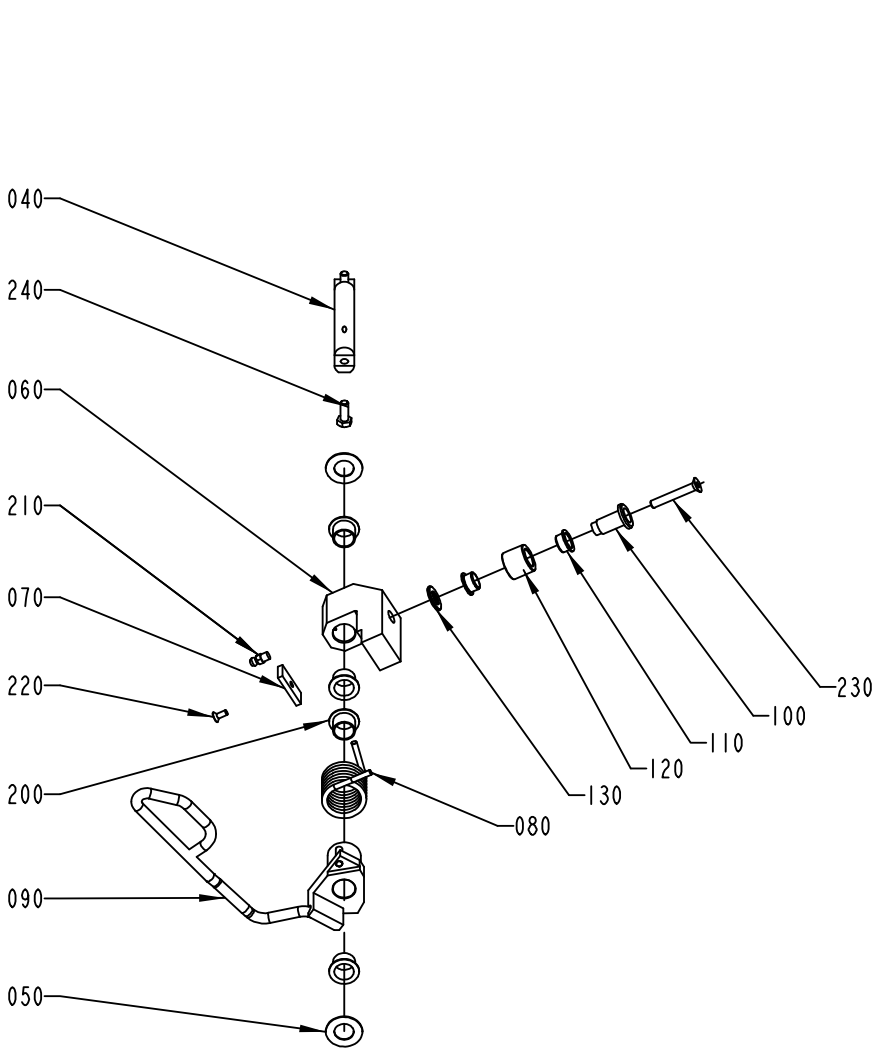

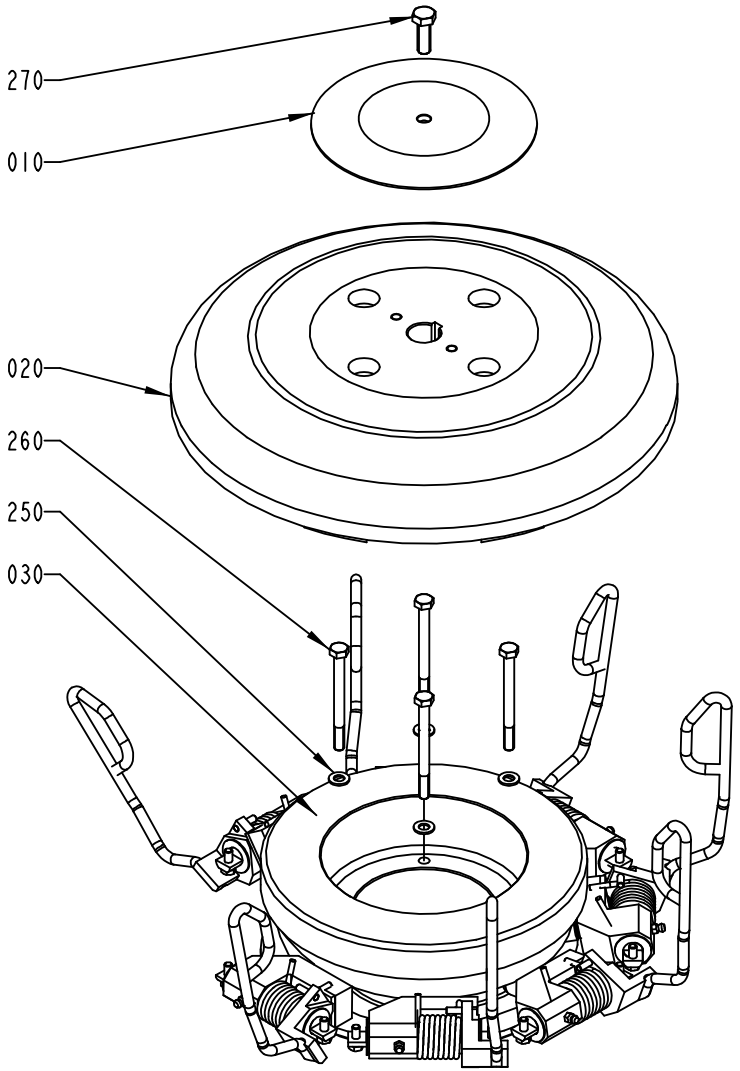

1487038-2
ECM 95375

Pos	Part No	SP	UN	Qty	Description	Page No
Common Parts (Cont'd)						
270	312105-0495	-		1	SCREW M6S ISO 4017 M10X30 A480	
280	2545245-0000	A		8	BUSHING	
290	90240-0258	A		8	BUSHING, 15X17X15 MM	

Pos	Part No	SP	UN	Qty	Description	Page No

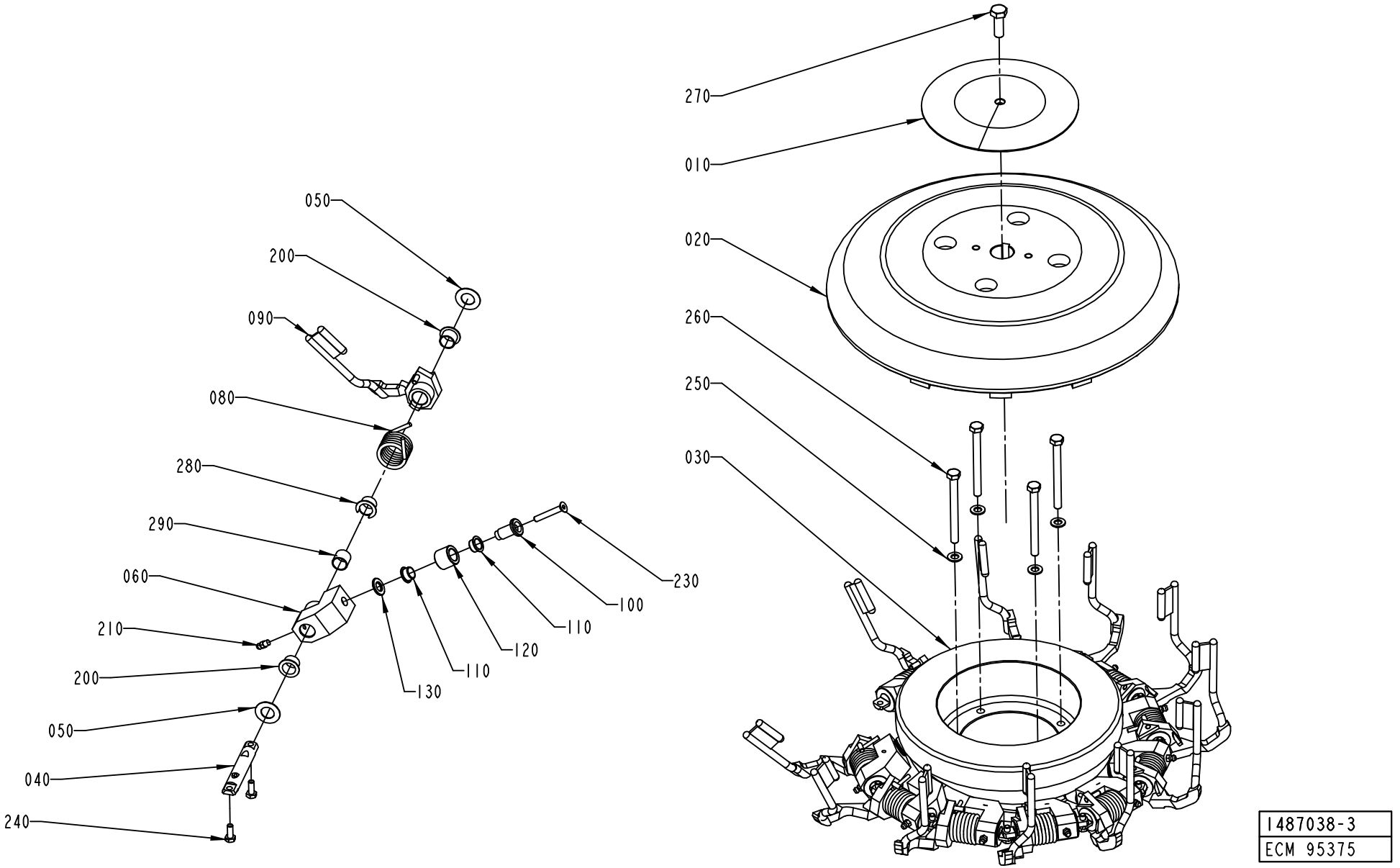
270
010
020
260
250
030
050
200
090
080
280
290
060
210
200
050
040
240
230
100
110
120
110
130
1487038-3
ECM 95375

ECM: 157769 - 20040309
Group number: 1487038-0200
Assembly Drawing: 1487038-3_1_AB

This list covers pages from 3-108 to 3-115

Pos	Part No	SP	UN	Qty	Description	Page No
SEE PREVIOUS LISTS PAGES: 3-109, 3-111.						

Pos	Part No	SP	UN	Qty	Description	Page No

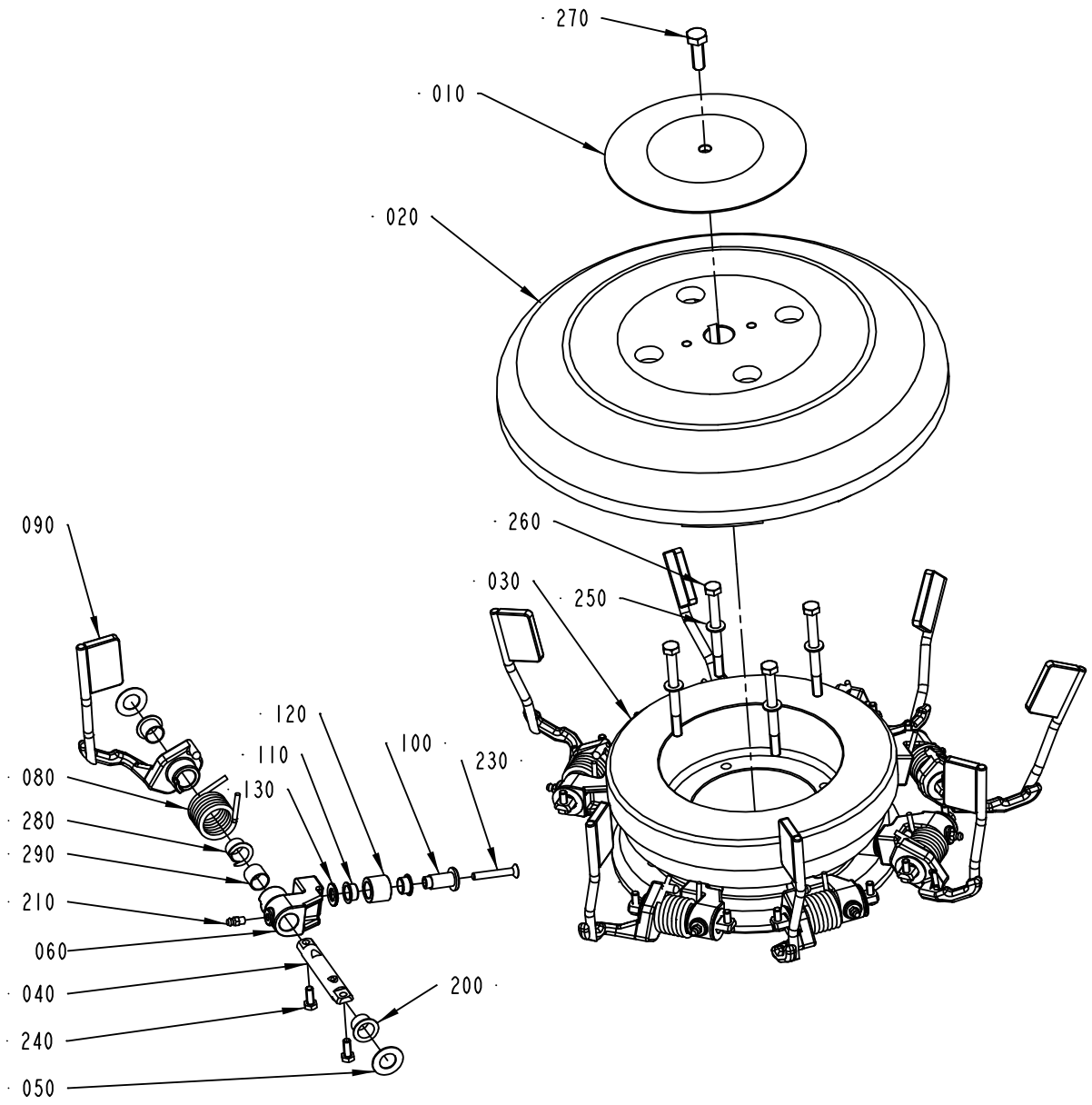

1487038-4
ECM 116448

ECM: 157769 - 20040309
Group number: 1487038-0200
Assembly Drawing: 1487038-4_1_AA

This list covers pages from 3-108 to 3-115

Pos	Part No	SP	UN	Qty	Description	Page No
SEE PREVIOUS LISTS PAGES: 3-109, 3-111.						

Pos	Part No	SP	UN	Qty	Description	Page No

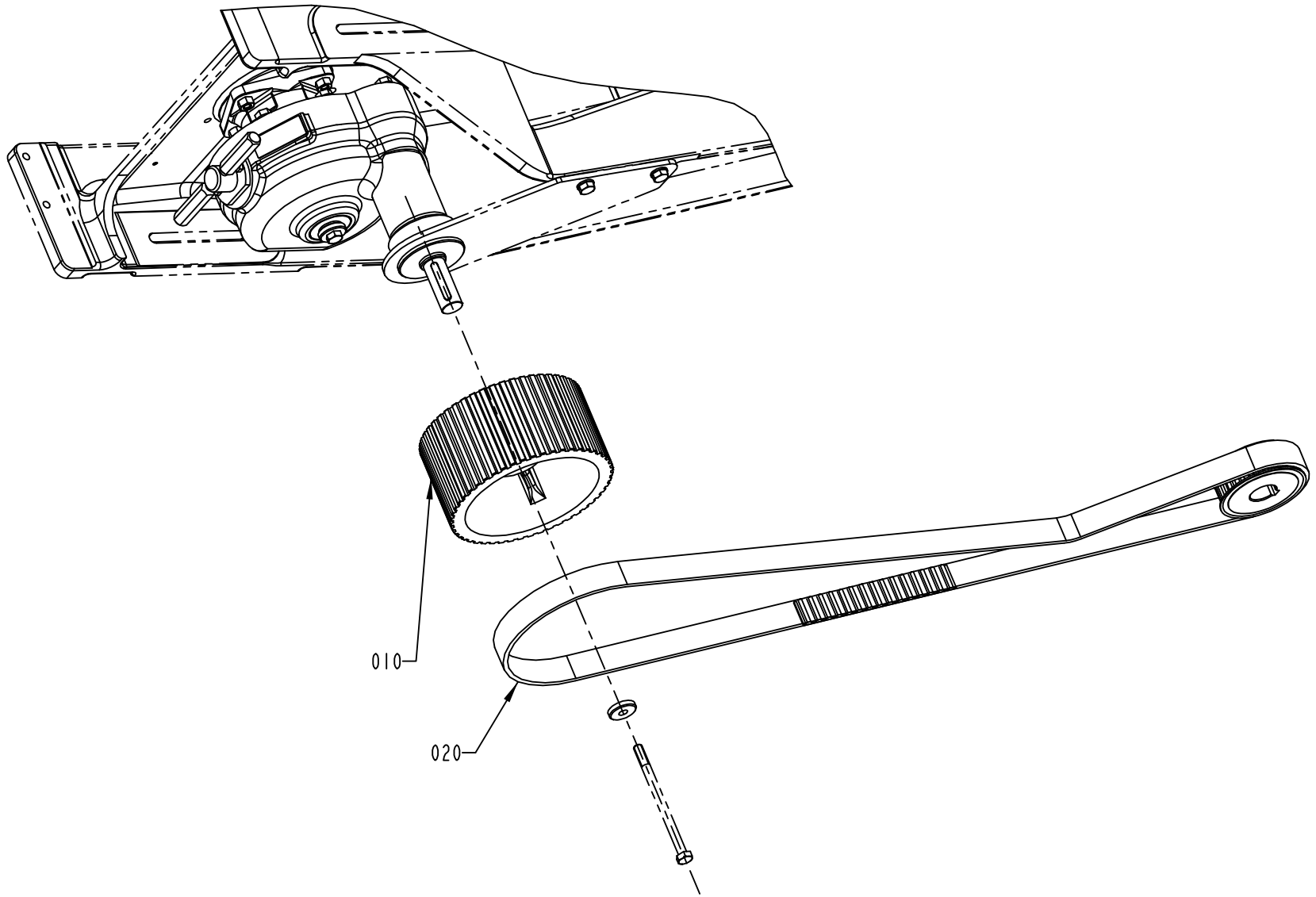

1538644-1
ECN 80431

ECM: 118993 - 20021217
Group number: 1538644-0100
Assembly Drawing: 1538644-1_1_AA

Pos	Part No	SP	UN	Qty	Description	Page No
TBA 0200S						
010	1499064-0000	A		1	PULLEY	
020	1499059-0000	A		1	TIMING BELT	
TBA 0500B, TBA 0330S, TBA 1000S, TBA 1000SQ, TBA 1000B, TBA 0200B, TBA 0250B						
010	1498620-0000	A		1	PULLEY	
020	1498529-0000	A		1	TIMING BELT	
TBA 1500S						
010	1498620-0000	A		1	PULLEY	
020	1498528-0000	A		1	TIMING BELT	
TPA 1000SQ						
010	1498620-0000	A		1	PULLEY	
020	1498528-0000	A		1	TIMING BELT	

Pos	Part No	SP	UN	Qty	Description	Page No

This page is intentionally left blank.

ECM: 166479 - 20040319
Group number: 2634511-0100
Assembly Drawing:

Pos	Part No	SP	UN	Qty	Description	Page No
DIFFFIN DIFFWHEEL						
010	1517322-0100	-		1	FIN TYPE	**3-121**
020	1517298-0200	-		1	INFEED CONVEYOR	**3-129**
030	1524370-0100	-		1	WHEEL DIFFERENCE	**3-137**
040	2541714-0100	-		1	DROP CHUTE CRADLE	**3-139**
050	2635475-0100	-		1	PT MECHANICAL DIFFERENCES	**3-141**
DIFFFIN SAMEWHEEL						
010	1517322-0100	-		1	FIN TYPE	**3-121**
050	2635475-0100	-		1	PT MECHANICAL DIFFERENCES	**3-141**
SAMEFIN DIFFWHEEL						
020	1517298-0200	-		1	INFEED CONVEYOR	**3-129**
030	1524370-0100	-		1	WHEEL DIFFERENCE	**3-137**
040	2541714-0100	-		1	DROP CHUTE CRADLE	**3-139**
Common Parts						
060	2678844-0100	-		1	PT FLEX HOLES	**3-155**
070	2636081-0100	-		1	FLAP HEATER	**3-199**

Pos	Part No	SP	UN	Qty	Description	Page No

Machine Type | Group Description | Used-In | Group Number | Page No

This page is intentionally left blank.

ECM: 118992 - 20021217
Group number: 1517322-0100
Assembly Drawing:

Pos	Part No	SP	UN	Qty	Description	Page No
TBA 1000SQ, TPA 1000SQ						
030	1512339-0100	-		1	PHOTOCELL OUTFEED	**3-123**
Common Parts						
010	1490112-0100	-		1	OUTFEED CONVEYOR	**3-125, 3-127**

Pos	Part No	SP	UN	Qty	Description	Page No

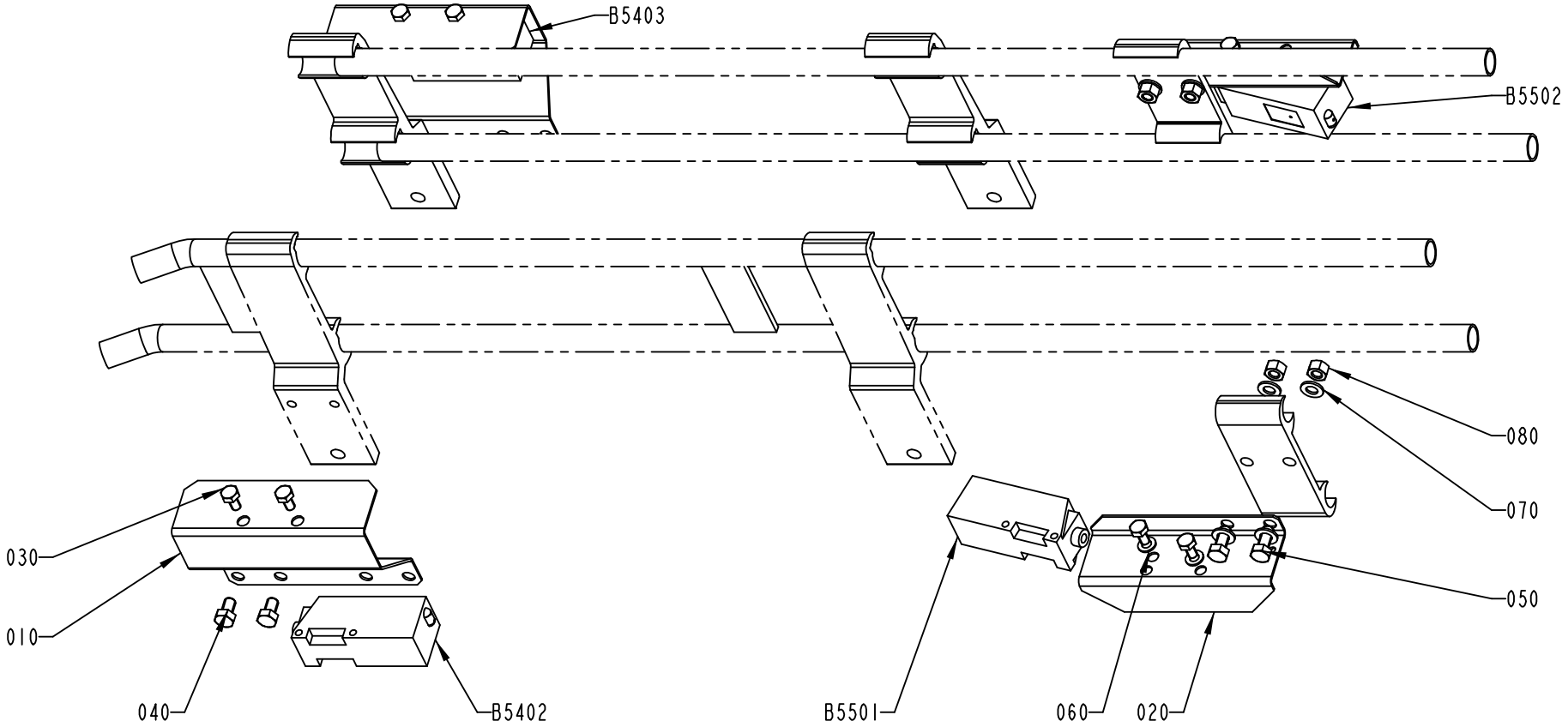

S-1512339-1
ECN 72862

ECM: 72862 - 20000310
Group number: 1512339-0100
Assembly Drawing: 1512339-1_1_AA

Pos	Part No	SP	UN	Qty	Description	Page No
-						
010	1285010-0000	-		2	HOLDER	
020	1086889-0000	-		2	COVER	
025	1020637-0000	-		2	HOLDER	
030	312105-0287	-		8	SCREW M6S ISO4017 M4X8 A470	
040	312105-0323	-		4	SCREW M6S ISO 4017 M5X8 A480	
050	312105-0327	-		4	SCREW M6S ISO 4017 M5X12 A480	
060	315105-0136	-		4	WASHER BRB4,3XRFR	
070	315105-0146	-		8	WASHER BRB5,3X10RFR	
080	312605-0314	-		4	HEXAGON NUT, M6M M5 A280	
B5402	90232-0104	-		1	PH.CELL E3S-CT61-D-5M	
B5403	90232-0103	-		1	PH.CELL E3S-CT61-L-5M	
B5501	90232-0104	-		1	PH.CELL E3S-CT61-D-5M	
B5502	90232-0103	-		1	PH.CELL E3S-CT61-L-5M	

Pos	Part No	SP	UN	Qty	Description	Page No

OUTFEED CONVEYOR

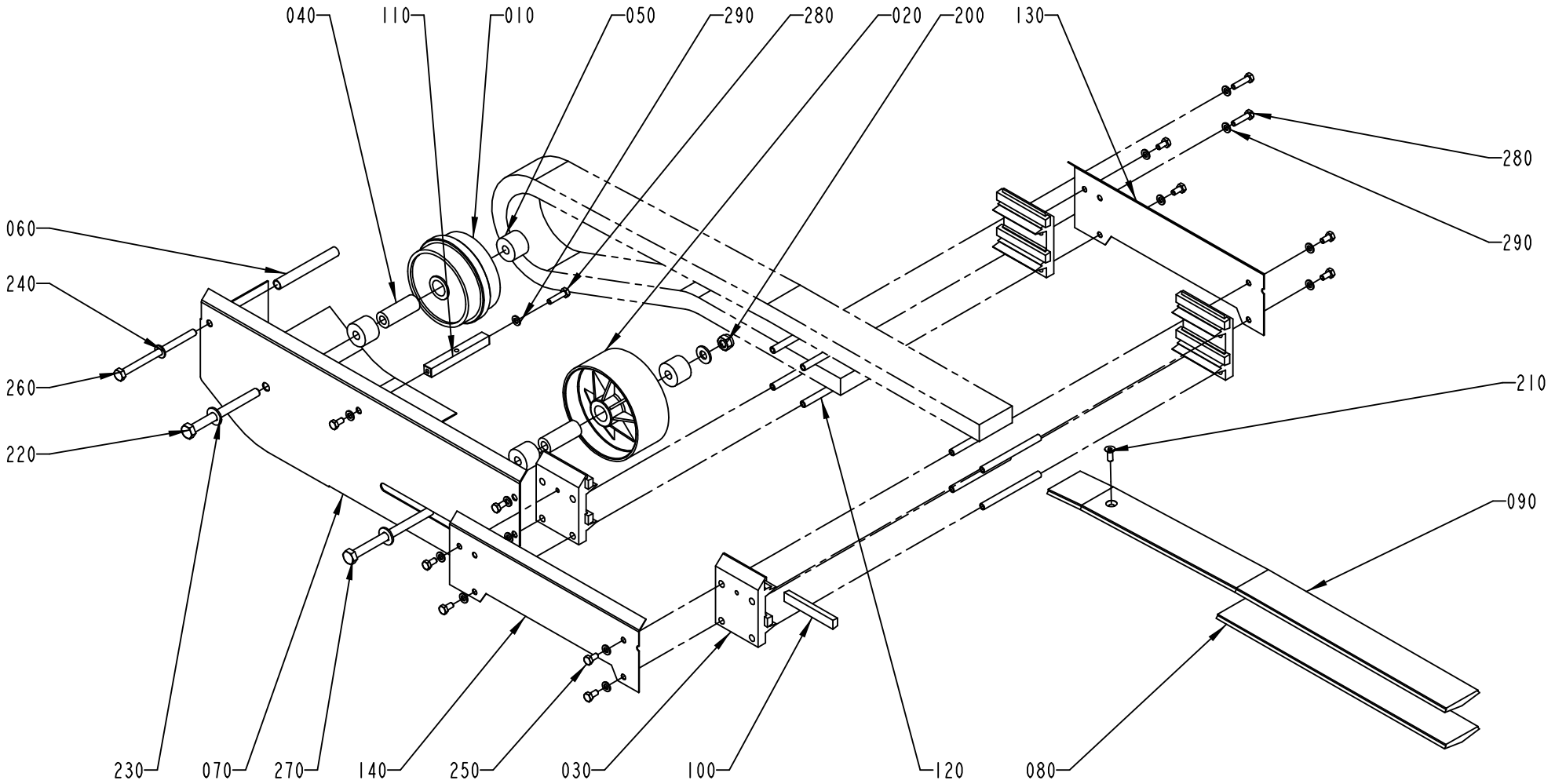

S-1490112-1
ECN 72862

Pos	Part No	SP	UN	Qty	Description	Page No
TBA 0500B, TBA 0330S, TBA 1000S, TBA 1000B, TBA 0200B, TBA 0200S, TBA 0250B, TBA 1500S (See drawing on page: 3-126)						
010	245039-0000	-		1	GUIDE WHEEL	
070	1285265-0000	-		1	PLATE	
090	1279573-0000	-		1	SLIDE RAIL U	
TBA 1000SQ (See drawing on page: 3-124)						
090	1279573-0000	-		1	SLIDE RAIL U	
Common Parts						
010	1348118-0000	A		1	WHEEL	
020	476975-0000	A		1	WHEEL	
030	457696-0001	-		4	JOINT PIECE	
040	229207-0000	A		2	BEARING SLEEVE	
050	1144943-0000	-		4	SPACER	
060	1285306-0000	-		1	SPACER	
070	1296081-0000	-		1	PLATE	
070	1548354-0000	-		1	COVER	
080	1279587-0000	-		1	SLIDE RAIL U	
090	1548353-0000	-		1	SLIDE RAIL	
100	466074-0002	-		8	SLIDER	
110	1285266-0000	-		1	SPACER	
120	476220-0000	-		8	SPACER	
130	1279585-0000	-		1	SUPPORT	
140	1279586-0000	-		1	SUPPORT	
150	90165-0056	-		3	PIPE CLIP FOR TUBE D=4 MM	
200	312812-0320	-		1	HEXAGON NUT, NY-LOCK M10 A480	
210	312155-0368	-		1	SCREW EN 10642 MF6S M6X16 A480	
220	312105-0513	-		1	SCREW M6S ISO 4014 M10X110 A480	
230	315105-0173	-		3	WASHER BRB10,5X22RFR	
240	315105-0165	-		1	WASHER BRB8,4X16RFR	
250	312105-0366	-		11	SCREW M6S ISO 4017 M6X12 A480	
260	312105-0475	-		1	SCREW M6S ISO 4014 M8X120 A480	
270	312105-0517	-		1	SCREW M6S ISO 4014 M10X130 A480	
280	312105-0372	-		3	SCREW M6S ISO 4017 M6X25 A480	
285	312105-0323	-		3	SCREW M6S ISO 4017 M5X8 A480	
290	315105-0153	-		14	WASHER BRB6,4X12RFR	
300	315105-0146	-		3	WASHER BRB5,3X10RFR	
310	312605-0314	-		3	HEXAGON NUT, M6M M5 A280	

Pos	Part No	SP	UN	Qty	Description	Page No

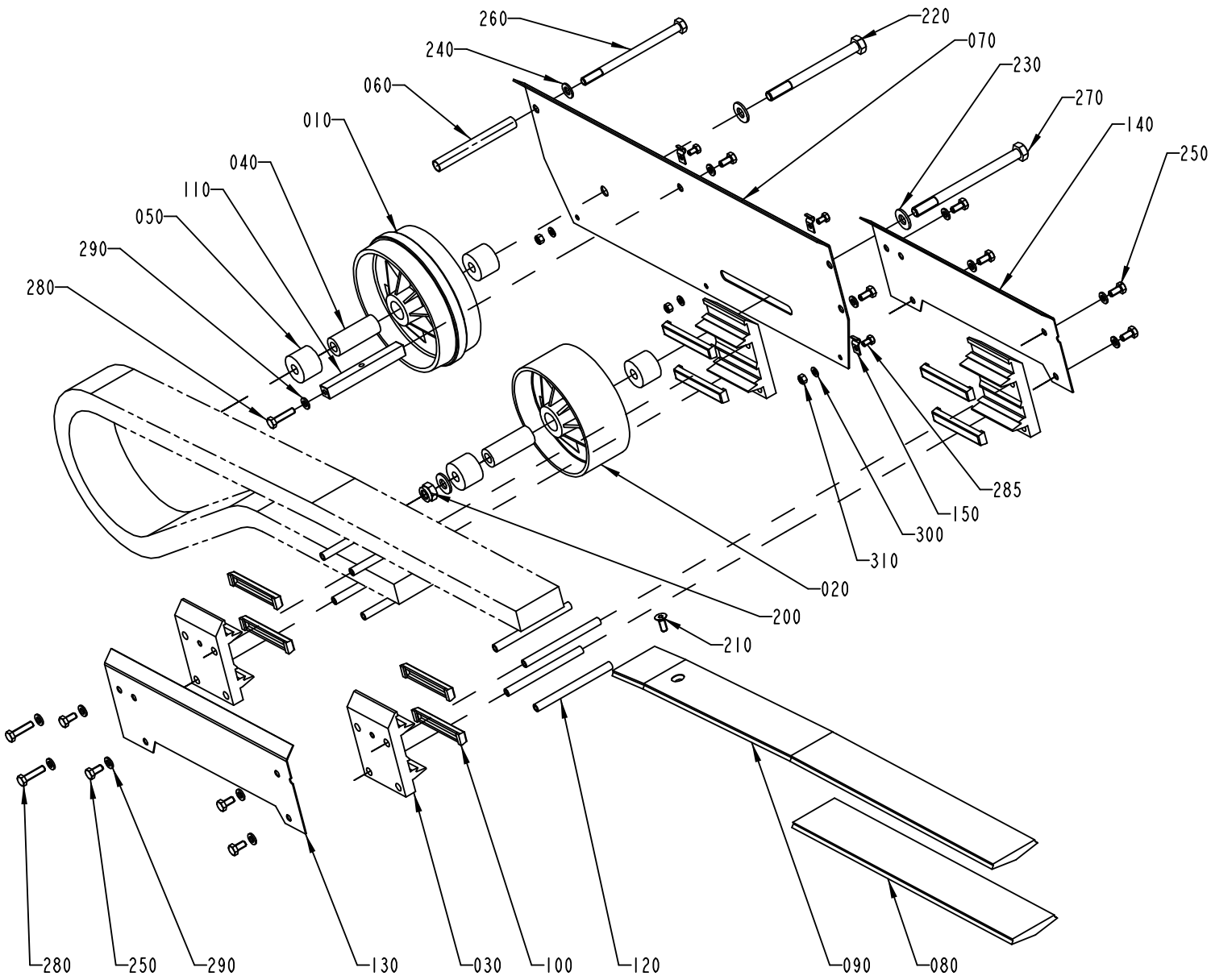

1490112-2
ECN 85319

Pos	Part No	SP	UN	Qty	Description	Page No
TBA 0500B, TBA 0330S, TBA 1000S, TBA 1000B, TBA 0200B, TBA 0200S, TBA 0250B, TBA 1500S (See drawing on page: 3-126)						
010	245039-0000	-		1	GUIDE WHEEL	
070	1285265-0000	-		1	PLATE	
090	1279573-0000	-		1	SLIDE RAIL U	
TBA 1000SQ (See drawing on page: 3-124)						
090	1279573-0000	-		1	SLIDE RAIL U	
Common Parts						
010	1348118-0000	A		1	WHEEL	
020	476975-0000	A		1	WHEEL	
030	457696-0001	-		4	JOINT PIECE	
040	229207-0000	A		2	BEARING SLEEVE	
050	1144943-0000	-		4	SPACER	
060	1285306-0000	-		1	SPACER	
070	1296081-0000	-		1	PLATE	
070	1548354-0000	-		1	COVER	
080	1279587-0000	-		1	SLIDE RAIL U	
090	1548353-0000	-		1	SLIDE RAIL	
100	466074-0002	-		8	SLIDER	
110	1285266-0000	-		1	SPACER	
120	476220-0000	-		8	SPACER	
130	1279585-0000	-		1	SUPPORT	
140	1279586-0000	-		1	SUPPORT	
150	90165-0056	-		3	PIPE CLIP FOR TUBE D=4 MM	
200	312812-0320	-		1	HEXAGON NUT, NY-LOCK M10 A480	
210	312155-0368	-		1	SCREW EN 10642 MF6S M6X16 A480	
220	312105-0513	-		1	SCREW M6S ISO 4014 M10X110 A480	
230	315105-0173	-		3	WASHER BRB10,5X22RFR	
240	315105-0165	-		1	WASHER BRB8,4X16RFR	
250	312105-0366	-		11	SCREW M6S ISO 4017 M6X12 A480	
260	312105-0475	-		1	SCREW M6S ISO 4014 M8X120 A480	
270	312105-0517	-		1	SCREW M6S ISO 4014 M10X130 A480	
280	312105-0372	-		3	SCREW M6S ISO 4017 M6X25 A480	
285	312105-0323	-		3	SCREW M6S ISO 4017 M5X8 A480	
290	315105-0153	-		14	WASHER BRB6,4X12RFR	
300	315105-0146	-		3	WASHER BRB5,3X10RFR	
310	312605-0314	-		3	HEXAGON NUT, M6M M5 A280	

Pos	Part No	SP	UN	Qty	Description	Page No

Machine Type | Group Description | Used-In | Group Number | Page No

This page is intentionally left blank.

ECM: 157771 - 20040309
Group number: 1517298-0200
Assembly Drawing:

Pos	Part No	SP	UN	Qty	Description	Page No
TBA 0500B, TBA 0300S, TBA 1000S, TBA 1000SQ, TBA 1000B, TBA 0200B, TBA 0200S, TBA 0250B						
010	1517299-0200	-		1	INFEED CONVEYOR LONG	**3-131**
TBA 1500S, TPA 1000SQ						
020	1517300-0300	-		1	INFEED CONVEYOR SHORT	**3-135**

Pos	Part No	SP	UN	Qty	Description	Page No

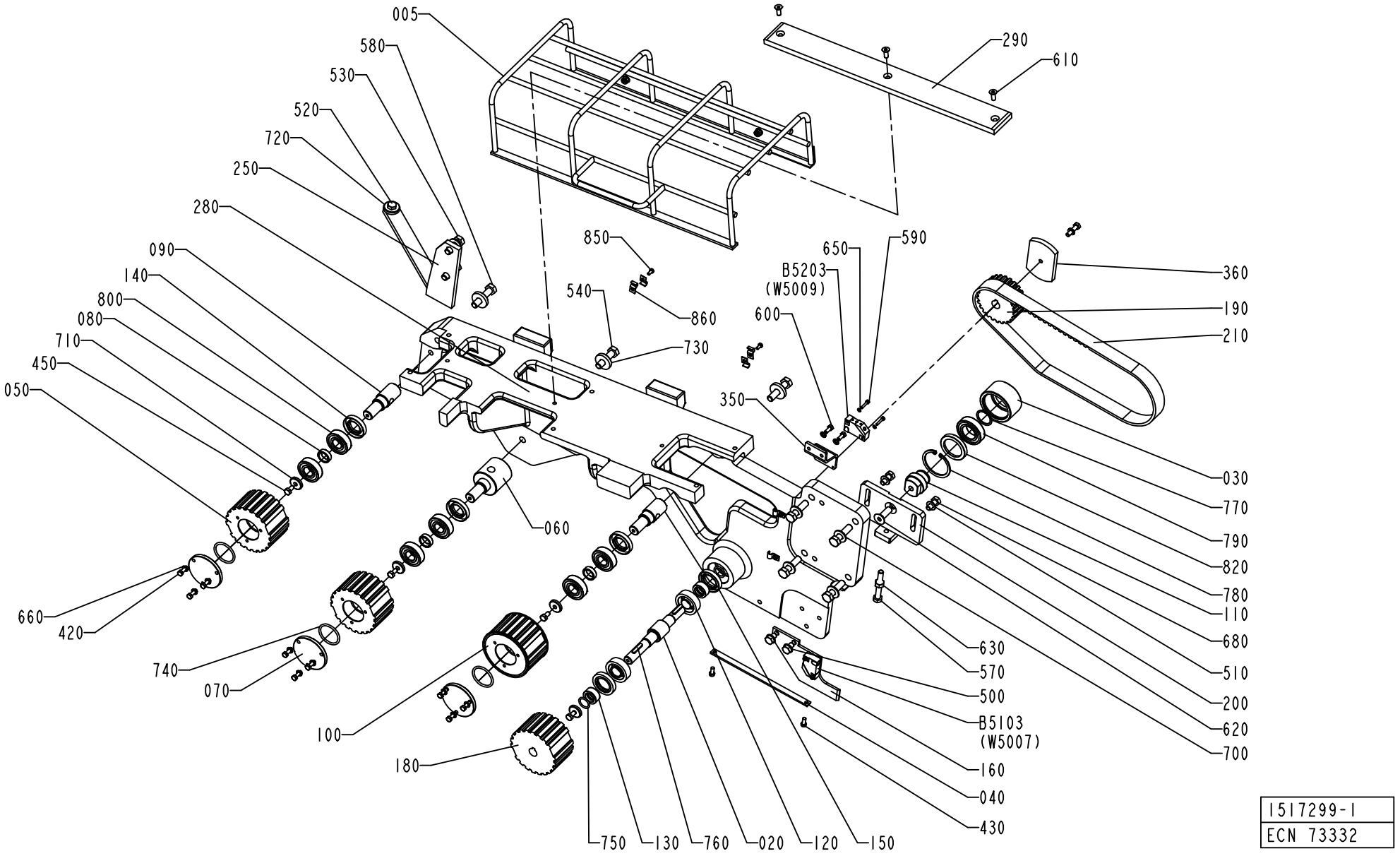
005
580
530
520
720
250
280
090
140
800
080
710
450
050
660
420
740
070
100
180
060
850
540
860
730
350
650
B5203
(W5009)
590
600
290
610
360
190
210
030
770
790
820
780
110
680
510
200
620
700
630
570
500
B5103
(W5007)
160
040
430
750
130
760
020
120
150
1517299-1
ECN 73332

ECM: 141269 - 20031022
Group number: 1517299-0200
Assembly Drawing: 1517299-1_1_AA

Pos	Part No	SP	UN	Qty	Description	Page No
-						
005	1144645-0200	-		1	PROTECTIVE COVER	**3-133**
020	1144470-0000	C		1	SHAFT	
030	1144581-0000	-		1	ROLLER	
040	1144593-0000	-		1	PLATE	
050	1348921-0000	D		2	TOOTHED PULLEY	
060	1144595-0000	C		1	ECCENTRIC SHAFT	
070	1144596-0000	-		3	PLUG	
080	1144597-0000	-		3	SPACER	
090	1484620-0000	C		2	SHAFT	
100	1348922-0000	D		1	TOOTHED PULLEY	
110	1144619-0000	C		1	SHAFT	
120	90214-0219	C		2	CYL.ROLLER BEARING, 17X40X12 MM	
130	1144625-0000	C		2	SPACER	
140	90091-0440	C		3	RADIAL SEAL 22X40X7 MM DUST LIP	
150	1498068-0000	C		2	SEAL RING	
160	1144760-0000	-		1	PLATE	
180	1144784-0000	D		1	TOOTHED PULLEY	
190	1144788-0000	D		1	TOOTHED PULLEY	
200	1144794-0000	-		1	SUPPORT	
210	1144841-0000	C		1	TIMING BELT	
250	2552445-0000	-		1	SUPPORT	
280	1347699-0000	-		1	PLATE	
290	1260941-0000	D		1	SLIDE	
350	1279688-0000	-		1	SUPPORT	
360	1347410-0000	-		1	ACTIVATOR	
420	312105-0329	-		9	SCREW M6S ISO 4017 M5X16 A480	
430	312105-0327	-		2	SCREW M6S ISO 4017 M5X12 A480	
450	312105-0366	-		4	SCREW M6S ISO 4017 M6X12 A480	
500	312105-0447	-		2	SCREW M6S ISO 4017 M8X12 A480	
510	312105-0451	-		2	SCREW M6S ISO 4017 M8X20 A480	
520	312105-0453	-		1	SCREW M6S ISO 4017 M8X25 A480	
530	312105-0495	-		2	SCREW M6S ISO 4017 M10X30 A480	
540	312109-0499	-		5	SCREW M6S ISO 4017 M10X40 A480	
570	312109-0463	-		1	SCREW M6S ISO 4017 M8X60 A480	
580	312109-0500	-		2	SCREW M6S ISO 4017 M10X45 A480	
590	312115-0228	-		4	SCREW ISO4762 M3X16 A4	
600	312125-0327	-		2	SCREW ISO 1207 M5X12 A4	
610	312151-0368	-		3	SCREW EN 10642 MF6S M6X16 10.9 EL.PL	
620	312155-0495	-		1	SCREW EN 10642 MF6S M10X30 A480	
630	312605-0318	-		1	HEXAGON NUT, M6M M8 A280	
650	315105-0124	-		4	WASHER BRB3,2X6RFR	
660	315105-0146	-		11	WASHER BRB5,3X10RFR	
680	315105-0165	-		4	WASHER BRB8,4X16RFR	
700	315105-0173	-		6	WASHER BRB10,5X22RFR	
710	315125-0153	-		4	WASHER TBRSB 6,4X22X4 A4	
720	315125-0165	-		1	WASHER TBRSB 8,4X26X5 A4	
730	315125-0173	-		3	WASHER TBRSB 10,5X28X6 A4	
740	315202-0221	C		3	O-RING 34,2X3 MM	
750	315202-0267	C		2	O-RING 16,3X2,4 MM	
760	315705-0202	-		2	PARALLEL KEY W ROUND ENDS 5X5X25MM	
770	315751-0119	-		1	RETAINING RING FOR SHAFT DIN 471 25 A2	
780	90141-0019	-		1	RETAINING RING FOR BORE DIN 472 50 A2	
790	321308-0205	C		1	BALL BEARING, 25X47X12MM	
800	321313-0103	C		6	BALL BEARING, 17X40X12MM	
820	90091-0297	C		1	RADIAL SEAL 35X47X7 MM DUST LIP	
850	312125-0287	-		4	SCREW ISO 1207 M4X8 A4	
860	90165-0057	-		6	PIPE CLIP FOR TUBE D=6 MM	
B5103	90044-0194	C		1	PROX.SW. IN5329/IN3002-BPKG	
B5203	90044-0194	C		1	PROX.SW. IN5329/IN3002-BPKG	

Machine Type	Group Description	Used-In	Group Number	Page No

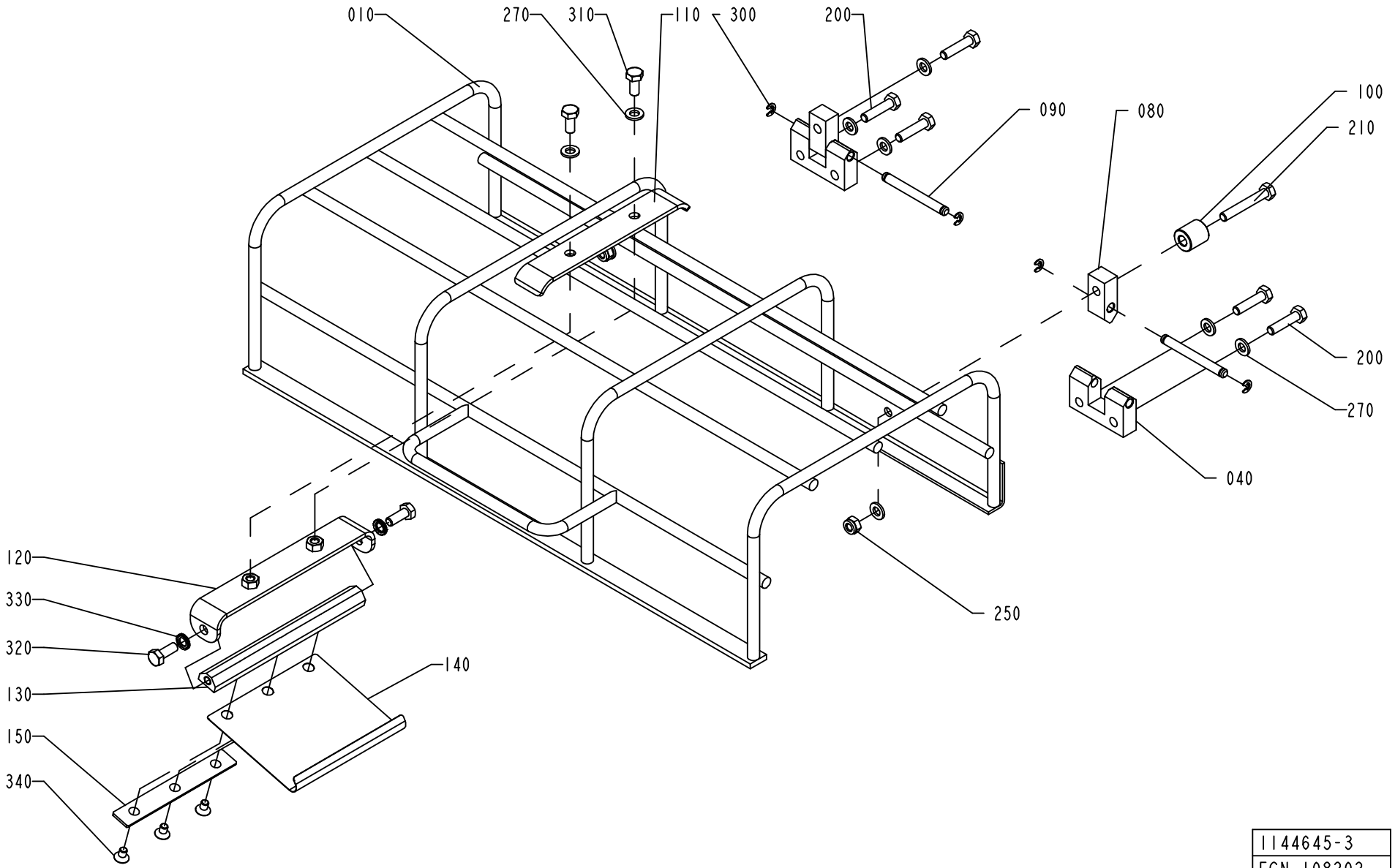

1144645-3
ECN 108202

ECM: 108864 - 20021110
Group number: 1144645-0200
Assembly Drawing: 1144645-3_1_AC

Pos	Part No	SP	UN	Qty	Description	Page No
-						
010	1260894-0000	-		1	PROTECTION	
040	1144667-0000	-		2	HINGE	
080	1144668-0000	-		2	HINGE	
090	1144669-0000	-		2	PIN	
100	1360149-0000	-		1	SPACER	
110	1499476-0000	-		1	HOLDER	
120	2527792-0000	-		1	SUPPORT	
130	2527793-0000	-		1	SHAFT	
140	2530418-0000	-		1	SPRING	
150	2540612-0000	-		1	PLATE	
200	312105-0372	-		5	SCREW M6S ISO 4017 M6X25 A480	
210	312105-0378	-		1	SCREW M6S ISO 4014 M6X40 A480	
250	312812-0316	-		2	HEXAGON NUT, NY-LOCK M6 A480	
270	315105-0153	-		9	WASHER BRB6,4X12RFR	
300	315755-0106	-		4	RETAINING RING SHAFT DIN 6799 4 A2	
310	312105-0367	-		2	SCREW M6S ISO 4017 M6X14 A480	
320	312105-0368	-		2	SCREW M6S ISO 4017 M6X16 A480	
330	90062-0061	-		2	LOCK WASHER NORD-LOCK,6,5/10,8, H=2,6	
340	312155-0323	-		3	SCREW EN 10642 MF6S M5X8 A480	

Pos	Part No	SP	UN	Qty	Description	Page No

INFEED CONVEYOR SHORT

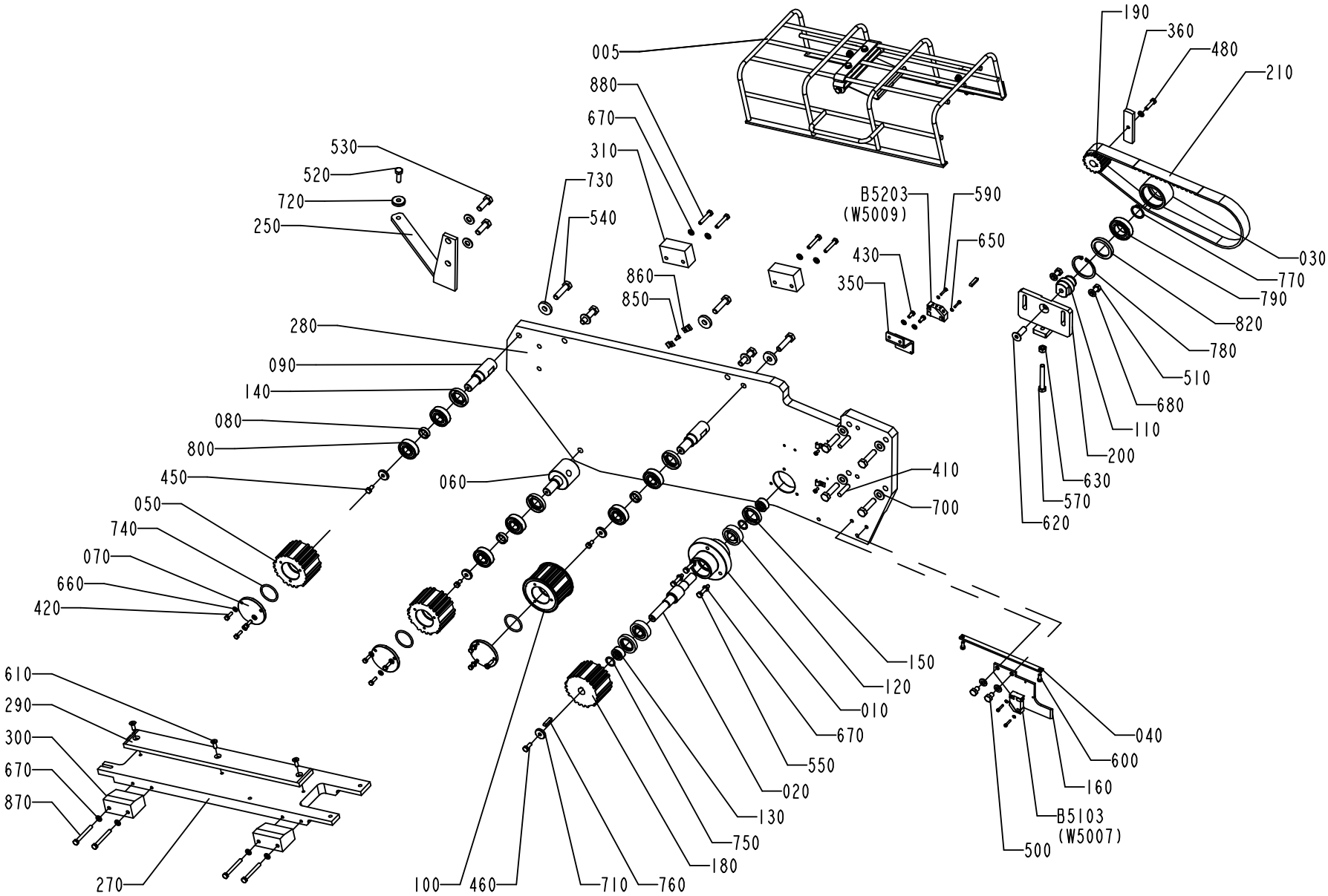

1517300-2
ECN 108202

ECM: 141270 - 20031022
Group number: 1517300-0300
Assembly Drawing: 1517300-2_1_AA

Pos	Part No	SP	UN	Qty	Description	Page No
-						
005	1144645-0200	-		1	PROTECTIVE COVER	**3-133**
010	1144468-0000	A		1	BEARING HOUSING	
020	1144470-0000	A		1	SHAFT	
030	1144581-0000	A		1	ROLLER	
040	1144593-0000	A		1	PLATE	
050	2547015-0000	A		2	TOOTHED PULLEY	
060	1144595-0000	A		1	ECCENTRIC SHAFT	
070	1144596-0000	-		3	PLUG	
080	1144597-0000	-		3	SPACER	
090	1144598-0000	A		2	SHAFT	
100	2547017-0000	A		1	TOOTHED PULLEY	
110	1144619-0000	A		1	SHAFT	
120	90214-0219	A		2	CYL.ROLLER BEARING, 17X40X12 MM	
130	1144625-0000	-		2	SPACER	
140	90091-0404	A		3	RADIAL SEAL 22X40X7 MM DUST LIP	
150	90091-0406	A		2	RADIAL SEAL 25X40X7 MM DUST LIP	
160	1144760-0000	A		1	PLATE	
180	927859-0000	A		1	TOOTHED PULLY	
190	1282681-0000	A		1	TOOTHED PULLEY	
200	1144794-0000	-		1	SUPPORT	
210	1144841-0000	A		1	TIMING BELT	
250	2572563-0000	-		1	SUPPORT	
270	1348957-0000	-		1	BRACKET	
280	2547187-0000	-		1	PLATE	
290	1348963-0000	A		1	SLIDE	
300	1285956-0000	-		2	BLOCK	
310	1285955-0000	-		2	PLATE	
350	1279688-0000	-		1	SUPPORT	
360	1279689-0000	-		1	ACTIVATOR	
410	311103-0407	-		2	PARALLEL PIN ISO 2338 8M6X35 A1	
420	312105-0329	-		9	SCREW M6S ISO 4017 M5X16 A480	
430	312105-0327	-		2	SCREW M6S ISO 4017 M5X12 A480	
450	312105-0366	-		3	SCREW M6S ISO 4017 M6X12 A480	
460	312105-0368	-		1	SCREW M6S ISO 4017 M6X16 A480	
480	312105-0372	-		1	SCREW M6S ISO 4017 M6X25 A480	
500	312105-0447	-		2	SCREW M6S ISO 4017 M8X12 A480	
510	312105-0451	-		2	SCREW M6S ISO 4017 M8X20 A480	
520	312105-0453	-		1	SCREW M6S ISO 4017 M8X25 A480	
530	312105-0495	-		2	SCREW M6S ISO 4017 M10X30 A480	
540	312109-0499	-		9	SCREW M6S ISO 4017 M10X40 A480	
550	312109-0374	-		3	SCREW M6S ISO 4017 M6X30 A480	
570	312109-0463	-		1	SCREW M6S ISO 4017 M8X60 A480	
590	312115-0228	-		4	SCREW ISO4762 M3X16 A4	
600	312125-0327	-		2	SCREW ISO 1207 M5X12 A4	
610	312151-0368	-		3	SCREW EN 10642 MF6S M6X16 10.9 EL.PL	
620	312155-0495	-		1	SCREW EN 10642 MF6S M10X30 A480	
630	312605-0318	-		1	HEXAGON NUT, M6M M8 A280	
650	315105-0124	-		4	WASHER BRB3,2X6RFR	
660	315105-0146	-		11	WASHER BRB5,3X10RFR	
670	315105-0153	-		12	WASHER BRB6,4X12RFR	
680	315105-0165	-		4	WASHER BRB8,4X16RFR	
700	315105-0173	-		8	WASHER BRB10,5X22RFR	
710	315125-0153	-		4	WASHER TBRSB 6,4X22X4 A4	
720	315125-0165	-		1	WASHER TBRSB 8,4X26X5 A4	
730	315125-0173	-		3	WASHER TBRSB 10,5X28X6 A4	
740	315202-0221	A		3	O-RING 34,2X3 MM	
750	315202-0267	A		2	O-RING 16,3X2,4 MM	
760	315705-0202	A		2	PARALLEL KEY W ROUND ENDS 5X5X25MM	
770	315751-0119	A		1	RETAINING RING FOR SHAFT DIN 471 25 A2	
780	90141-0019	A		1	RETAINING RING FOR BORE DIN 472 50 A2	
790	321308-0205	A		1	BALL BEARING, 25X47X12MM	
800	321313-0103	A		6	BALL BEARING, 17X40X12MM	
820	90091-0297	A		1	RADIAL SEAL 35X47X7 MM DUST LIP	
850	312125-0287	-		4	SCREW ISO 1207 M4X8 A4	
860	90165-0057	-		6	PIPE CLIP FOR TUBE D=6 MM	
870	312105-0381	-		4	SCREW M6S ISO 4014 M6X55 A480	
880	312105-0376	-		4	SCREW M6S ISO 4014 M6X35 A480	
B5103	90044-0194	A		1	PROX.SW. IN5329/IN3002-BPKG	
B5203	90044-0194	A		1	PROX.SW. IN5329/IN3002-BPKG	

Machine Type | Group Description | Used-In | Group Number | Page No

This page is intentionally left blank.

ECM: 73332 - 20000411
Group number: 1524370-0100
Assembly Drawing:

Pos	Part No	SP	UN	Qty	Description	Page No
-						
010	1349160-0000	-		1	SPACER	
020	312115-0500	-		4	SCREW ISO4762 M10X45 A4	
030	312105-0507	-		2	SCREW M6S ISO 4014 M10X80 A480	
040	312115-0497	-		2	SCREW ISO4762 M10X35 A4	
050	315105-0173	-		4	WASHER BRB10,5X22RFR	

Pos	Part No	SP	UN	Qty	Description	Page No

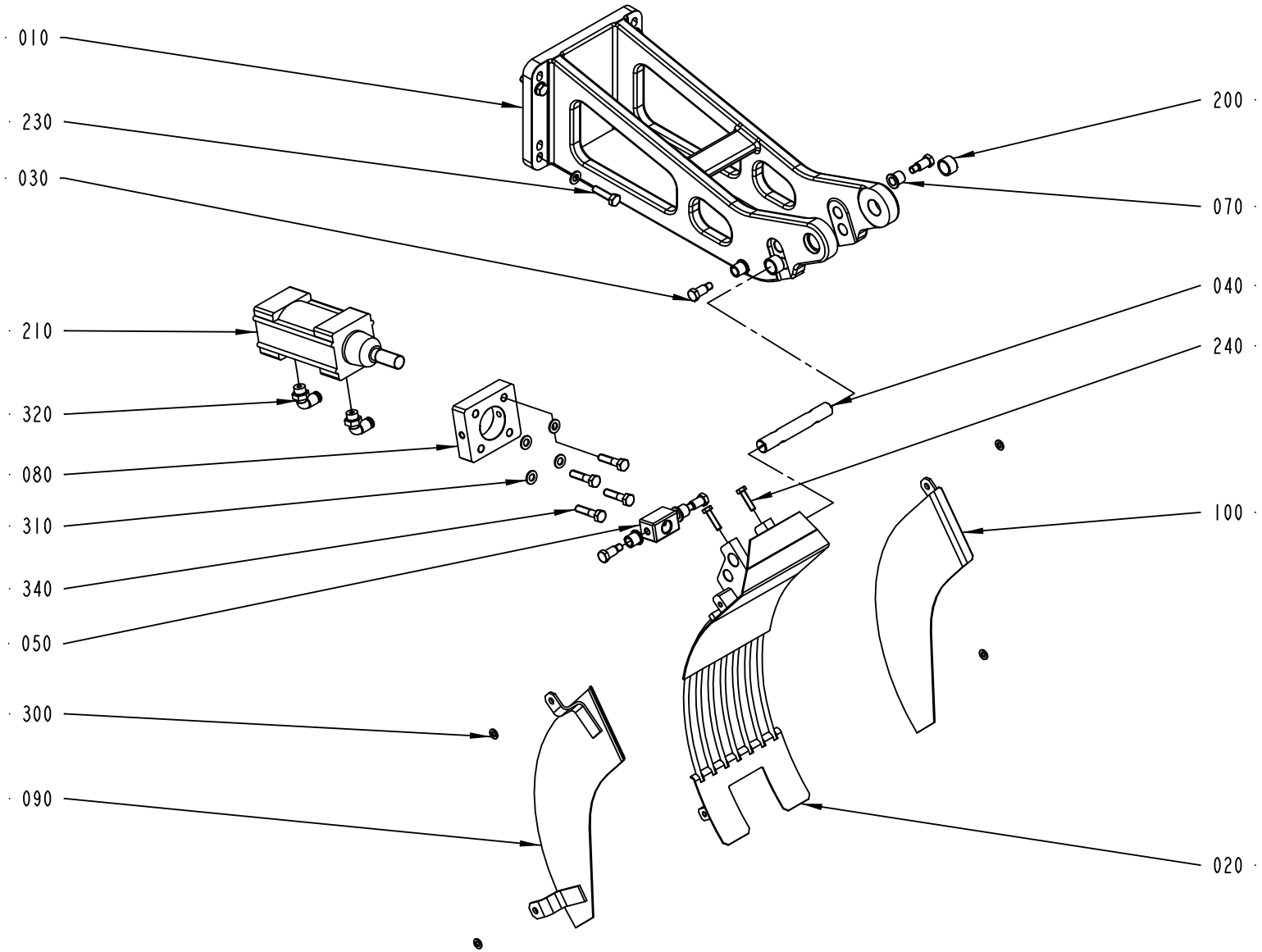

2541714-1
ECM 110157

ECM: 158928 - 20040309
Group number: 2541714-0100
Assembly Drawing: 2541714-1_1_AA

Pos	Part No	SP	UN	Qty	Description	Page No
TBA 1000B QC						
090	1285023-0000	-		1	SIDE PLATE	
100	1285022-0000	-		1	SIDE PLATE	
TBA 0200B QC, TBA 0330S QC, TBA 0250B QC						
090	2650807-0000	-		1	SIDE PLATE	
100	2650808-0000	-		1	SIDE PLATE	
300	315105-0153	-		4	WASHER BRB6,4X12RFR	
TBA 1000S, TBA 1000SQ, TBA 0200S, TBA 0500B NOQC, TBA 1000B NOQC, TBA 0200B NOQC, TBA 0330S NOQC, TBA 0250B NOQC						
090	1285023-0000	-		1	SIDE PLATE	
100	1285022-0000	-		1	SIDE PLATE	
300	315105-0153	-		4	WASHER BRB6,4X12RFR	
TBA 1500S						
020	1348920-0000	B		1	CRADLE	
300	315105-0153	-		4	WASHER BRB6,4X12RFR	
TPA 1000SQ						
020	1348920-0000	B		1	CRADLE	
300	315105-0153	-		4	WASHER BRB6,4X12RFR	
Common Parts						
010	2540823-0000	-		1	BRACKET	
020	1484258-0000	B		1	CRADLE	
030	449190-0000	A		4	SHAFT	
040	1144579-0000	A		1	AXLE	
050	1144577-0000	-		1	BLOCK	
070	1478928-0000	A		4	BUSHING	
080	1144535-0000	-		1	PLATE	
090	1517472-0000	-		1	SIDE PLATE	
090	2605993-0000	-		1	SIDE PLATE	
090	1348854-0000	-		1	PLATE	
100	1517473-0000	-		1	SIDE PLATE	
100	2605994-0000	-		1	SIDE PLATE	
100	1349017-0000	-		1	PLATE	
200	321116-0234	A		2	BEAR. BUSH. WITHOUT FL, 16X20X12 MM	
210	90450-0504	A		1	PNEUMATIC CYLINDER	
230	312105-0455	-		4	SCREW M6S ISO 4017 M8X30 A480	
240	312105-0372	-		2	SCREW M6S ISO 4017 M6X25 A480	
310	315105-0165	-		8	WASHER BRB8,4X16RFR	
320	90458-2957	-		2	ELBOW PIPE JOINT, EXT.THREAD, D=6MM-G1/4	
340	312105-0457	-		4	SCREW M6S ISO 4014 M8X35 A480	

Pos	Part No	SP	UN	Qty	Description	Page No

This page is intentionally left blank.

ECM: 138791 - 20031128
Group number: 2635475-0100
Assembly Drawing:

Pos	Part No	SP	UN	Qty	Description	Page No
PT/FLEX						
010	2652084-0100	-		1	TAB FOLDING	**3-143**

Pos	Part No	SP	UN	Qty	Description	Page No

Machine Type | Group Description | Used-In | Group Number | Page No

This page is intentionally left blank.

ECM: 162630 - 20040315
Group number: 2652084-0100
Assembly Drawing:

Pos	Part No	SP	UN	Qty	Description	Page No
TBA 1000B HOLE95, TBA 1000S HOLE95, TBA 1500S HOLE95						
010	1538248-0100	-		1	FOLDING DEVICE	**3-145**
TBA 1000SQ HOLE95						
010	2511311-0200	-		1	FOLDING DEVICE	**3-151**

Pos	Part No	SP	UN	Qty	Description	Page No

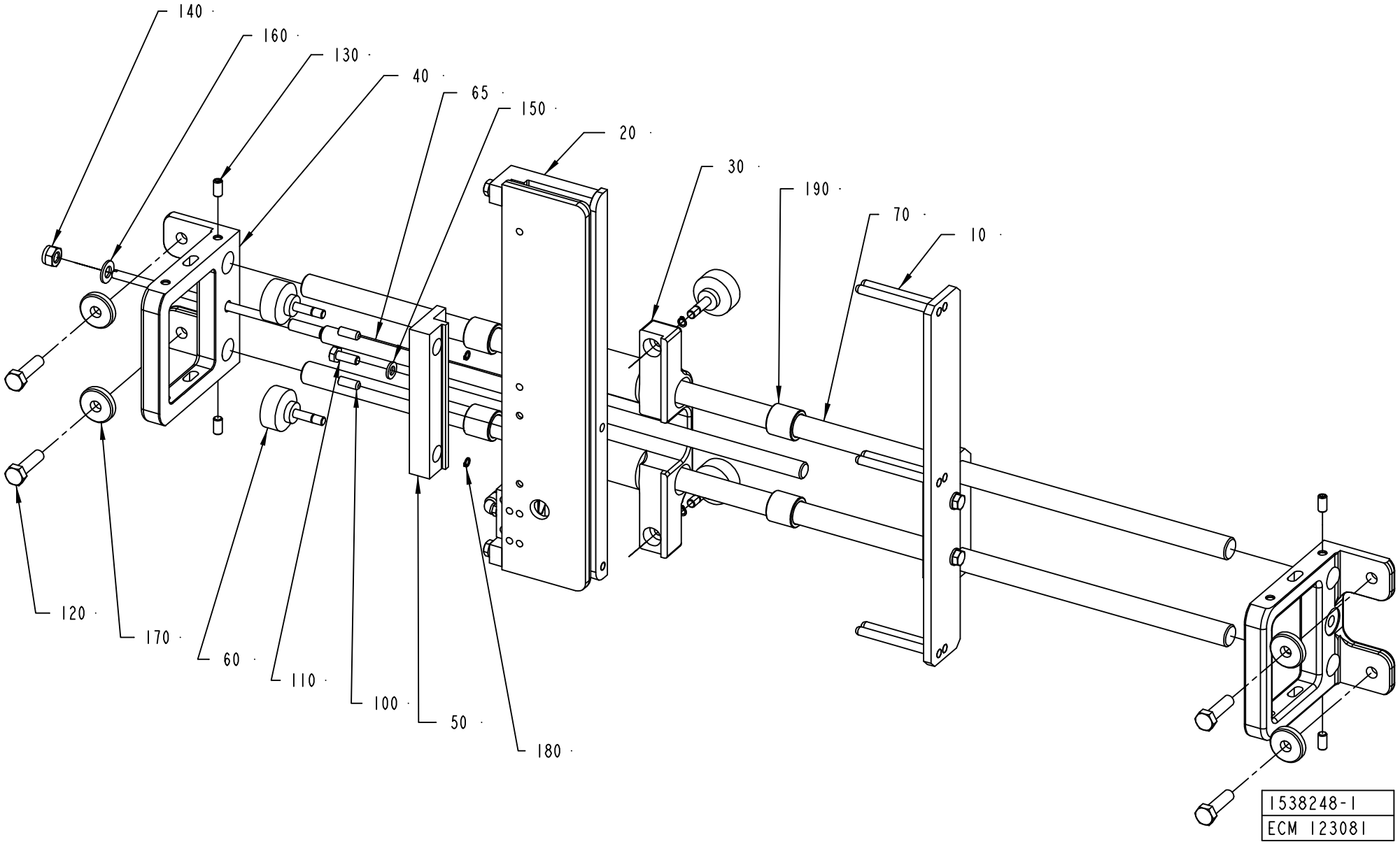
140
160
130
40
65
150
20
30
190
70
10
120
170
60
110
100
50
180
1538248-1
ECM 123081

ECM: 123904 - 20030110
Group number: 1538248-0100
Assembly Drawing: 1538248-1_1_AC

Pos	Part No	SP	UN	Qty	Description	Page No
-						
010	1499219-0100	-		1	PAPER GUIDE	**3-147**
020	2565387-0100	-		1	FOLDING UNIT	**3-149**
030	1523302-0000	-		1	HOUSING	
040	1499216-0000	-		2	PLATE	
050	1523303-0000	-		1	BRACKET	
060	1532447-0000	-		4	HANDLE	
065	1538668-0000	-		1	GUIDE ROD	
070	1538247-0000	-		2	AXLE PIN	
100	311103-0351	-		2	PARALLEL PIN ISO 2338 6M6X16 A1	
110	312105-0368	-		1	SCREW M6S ISO 4017 M6X16 A480	
120	312105-0455	-		4	SCREW M6S ISO 4017 M8X30 A480	
130	312318-0366	-		4	SCREW ISO4029 M6X12 A4	
140	312812-0318	-		1	HEXAGON NUT, NY-LOCK M8 A480	
150	315105-0153	-		1	WASHER BRB6,4X12RFR	
160	315105-0165	-		1	WASHER BRB8,4X16RFR	
170	315125-0165	-		4	WASHER TBRSB 8,4X26X5 A4	
180	315750-0102	-		4	RETAINING RING SHAFT DIN 471 ST 5	
190	321105-0204	B		4	BEAR. BUSH. WITHOUT FL, 16X22X20 MM	

Pos	Part No	SP	UN	Qty	Description	Page No

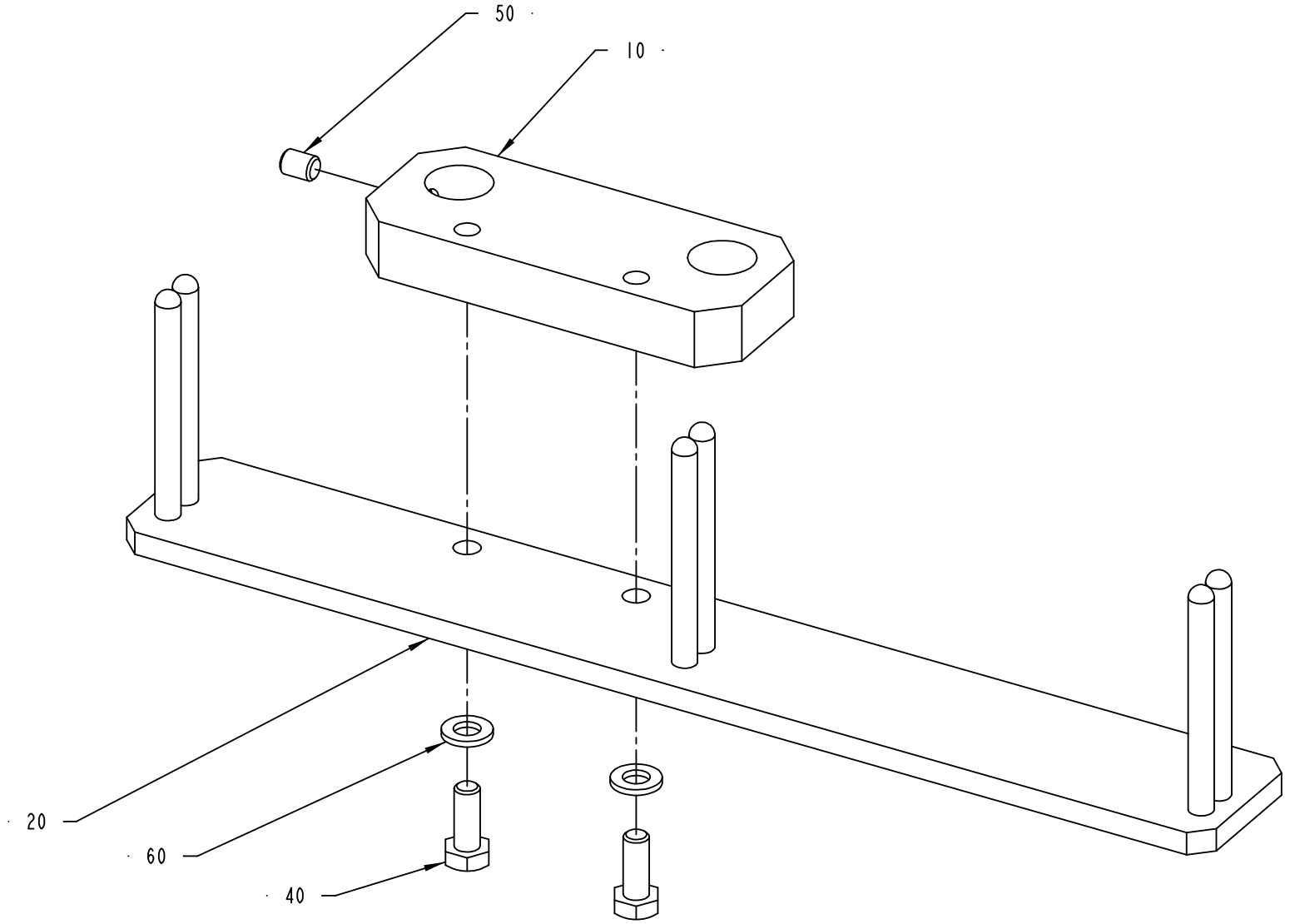

1499219-1
ECN 81002

ECM: 81217 - 20020212
Group number: 1499219-0100
Assembly Drawing: 1499219-1_1_AA

Pos	Part No	SP	UN	Qty	Description	Page No
-						
010	1499217-0000	-		1	BRACKET	
020	1499218-0000	-		1	PAPER GUIDE	
040	312105-0368	-		2	SCREW M6S ISO 4017 M6X16 A480	
050	312318-0362	-		1	SCREW ISO4029 M6X8 A4	
060	315105-0153	-		2	WASHER BRB6,4X12RFR	

Pos	Part No	SP	UN	Qty	Description	Page No

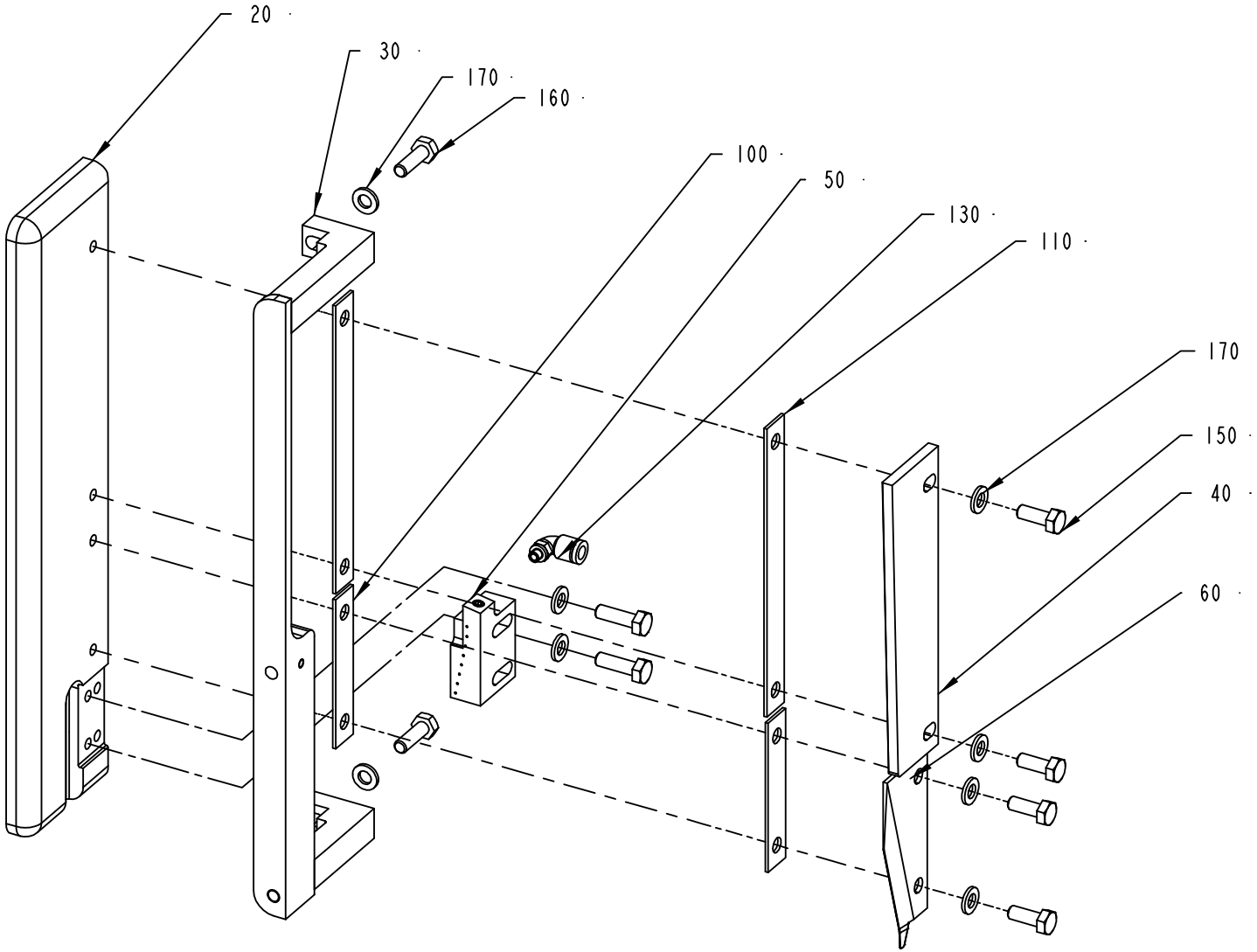

2565387-1
ECM 117428

ECM: 118287 - 20021216
Group number: 2565387-0100
Assembly Drawing: 2565387-1_1_AA

Pos	Part No	SP	UN	Qty	Description	Page No
-						
020	1499233-0000	-		1	PLATE	
030	1499210-0000	-		1	RAIL	
040	908171-0000	B		1	GUIDE PLATE	
050	2556285-0000	-		1	AIR NOZZLE	
060	2556284-0000	-		1	GUIDE	
100	908174-0001	B		2	SHIM	
110	908174-0002	B		2	SHIM	
130	90457-0922	-		1	ELBOW PIPE JOINT, EXT.THREAD, D=6MM M5	
150	312105-0368	-		4	SCREW M6S ISO 4017 M6X16 A480	
160	312105-0370	-		4	SCREW M6S ISO 4017 M6X20 A480	
170	315105-0153	-		8	WASHER BRB6,4X12RFR	

Pos	Part No	SP	UN	Qty	Description	Page No

FOLDING DEVICE

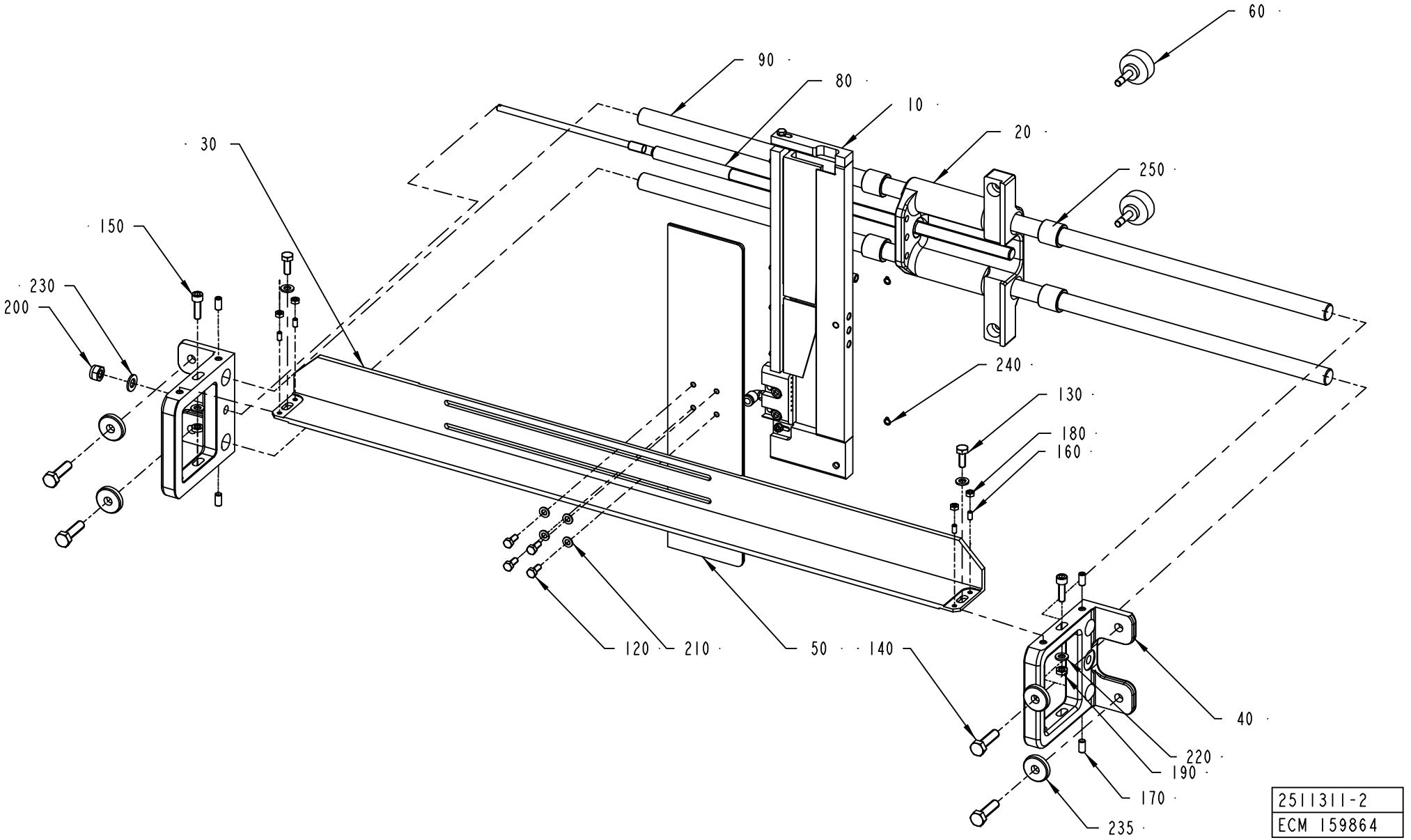

ECM: 161262 - 20040209
Group number: 2511311-0200
Assembly Drawing: 2511311-2_1_AA

Pos	Part No	SP	UN	Qty	Description	Page No
-						
010	1499225-0200	-		1	FOLDING PART	**3-153**
020	1523302-0000	-		1	HOUSING	
030	2511312-0000	-		1	ANGLE BRACKET	
040	1499216-0000	-		2	PLATE	
050	1532446-0000	-		1	PLATE	
060	1532447-0000	-		2	HANDLE	
080	1538668-0000	-		1	GUIDE ROD	
090	1538247-0000	-		2	AXLE PIN	
120	312105-0327	-		4	SCREW M6S ISO 4017 M5X12 A480	
130	312105-0368	-		2	SCREW M6S ISO 4017 M6X16 A480	
140	312105-0455	-		4	SCREW M6S ISO 4017 M8X30 A480	
150	312115-0370	-		2	SCREW ISO4762 M6X20 A4	
160	312318-0287	-		4	SCREW ISO4029 M4X8 A4	
170	312318-0366	-		4	SCREW ISO4029 M6X12 A4	
180	312605-0312	-		4	HEXAGON NUT, M6M M4 A280	
190	312625-0316	-		2	HEXAGON THIN NUT, EN 24035 ML6M M6 A4	
200	312812-0318	-		1	HEXAGON NUT, NY-LOCK M8 A480	
210	315105-0146	-		4	WASHER BRB5,3X10RFR	
220	315105-0153	-		4	WASHER BRB6,4X12RFR	
230	315105-0165	-		1	WASHER BRB8,4X16RFR	
235	315125-0165	-		4	WASHER TBRSB 8,4X26X5 A4	
240	315750-0102	-		2	RETAINING RING SHAFT DIN 471 ST 5	
250	321105-0204	B		4	BEAR. BUSH. WITHOUT FL, 16X22X20 MM	

Pos	Part No	SP	UN	Qty	Description	Page No

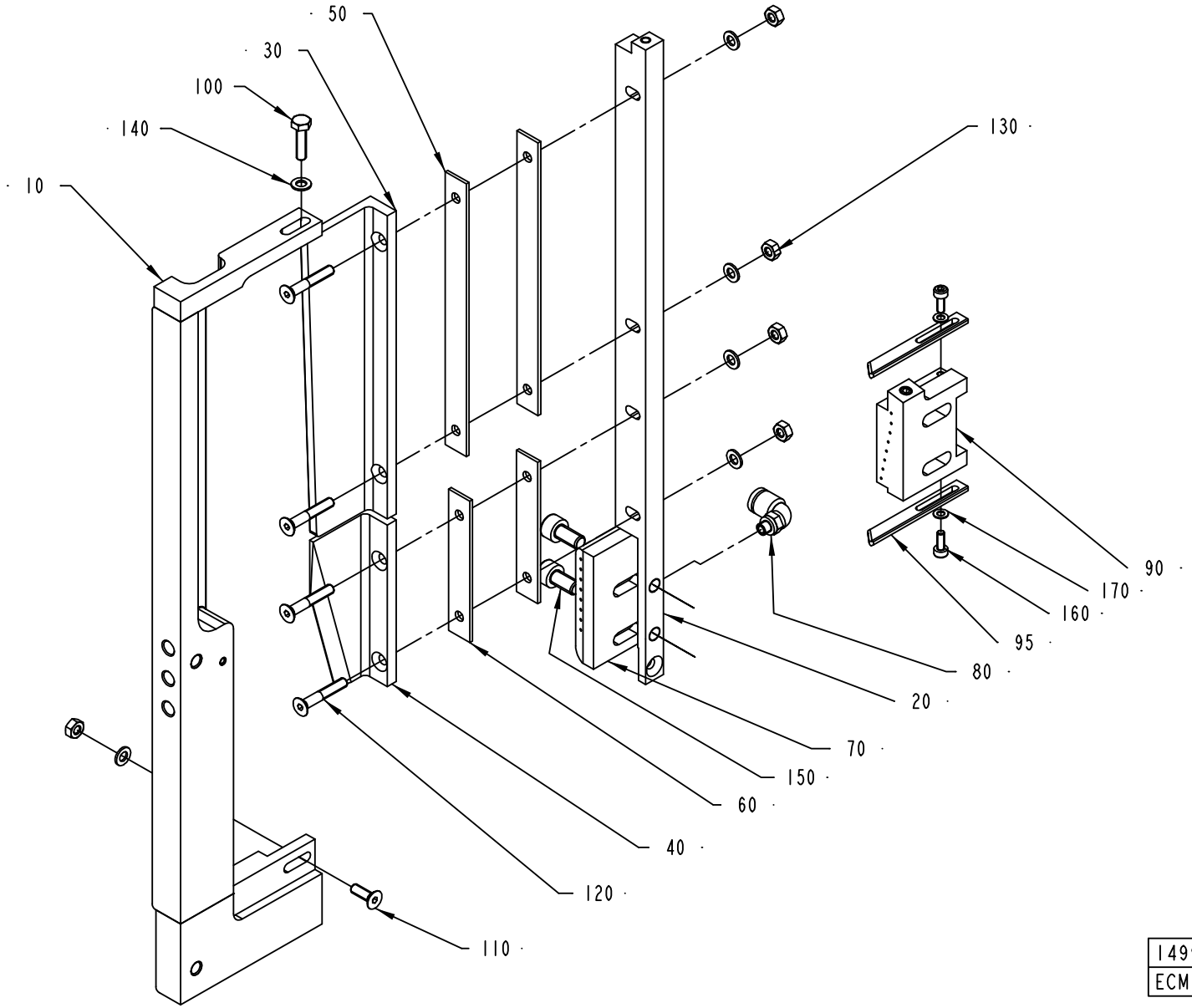

1499225-2
ECM 159864

ECM: 161836 - 20040209
Group number: 1499225-0200
Assembly Drawing: 1499225-2_1_AA

Pos	Part No	SP	UN	Qty	Description	Page No
-						
010	1499229-0000	-		1	RAIL	
020	2658050-0000	-		1	PLATE	
030	929823-0000	B		1	PAPER GUIDE	
040	929825-0000	B		1	PAPER GUIDE	
050	1499227-0000	B		2	SHIM	
060	1499228-0000	B		2	SHIM	
070	2658051-0000	-		1	AIR NOZZLE	
080	90457-0922	-		1	ELBOW PIPE JOINT, EXT.THREAD, D=6MM M5	
090	2658049-0000	-		1	AIR NOZZLE	
095	2674511-0000	-		2	CAM	
100	312105-0293	-		1	SCREW M6S ISO 4017 M4X16 A470	
110	312155-0291	-		1	SCREW EN 10642 MF6S M4X12 A480	
120	312155-0297	-		4	SCREW EN 10642 MF6S M4X25 A480	
130	312605-0312	-		5	HEXAGON NUT, M6M M4 A280	
140	315105-0136	-		6	WASHER BRB4,3XRFR	
150	312115-0366	-		2	SCREW ISO4762 M6X12 A4	
160	312115-0222	-		2	SCREW ISO4762 M3X8 A4	
170	315105-0124	-		2	WASHER BRB3,2X6RFR	

Pos	Part No	SP	UN	Qty	Description	Page No

This page is intentionally left blank.

ECM: 166480 - 20040319
Group number: 2678844-0100
Assembly Drawing:

Pos	Part No	SP	UN	Qty	Description	Page No
PT/FLEX						
	2642049-0100	-		1	PT FLEX HOLES	**3-157**

Pos	Part No	SP	UN	Qty	Description	Page No

Machine Type | Group Description | Used-In | Group Number | Page No

This page is intentionally left blank.

ECM: 167349 - 20040405
Group number: 2642049-0100
Assembly Drawing:

Pos	Part No	SP	UN	Qty	Description	Page No
-						
010	2564075-0100	-		1	OPENING SPECIFICATION	**3-159**
020	2564056-0100	-		1	MAGAZINE	**3-161**
030	2533681-0100	-		1	BOBBIN HOLDER	**3-163**
040	2533685-0100	-		1	SPLICING TABLE	**3-165**
050	2564057-0100	-		1	TAB MAGAZINE	**3-167**
060	2546271-0100	-		1	TAB C'JAW	**3-169**
070	2546275-0100	-		1	TAB FEEDER	**3-171**
080	2564059-0100	-		1	TAB FEEDER	**3-173**
090	2546285-0100	-		1	PATCH C'JAW	**3-175**
100	2511291-0100	-		1	PATCH FEEDER	**3-177**
110	2564060-0100	-		1	PATCH FEEDER	**3-179**
200	2546278-0100	-		1	PUNCH UNIT	**3-181**
210	2564058-0100	-		1	TURNING DEVICE	**3-183**
220	2564050-0100	-		1	MAGAZINE	**3-185**
230	2533684-0100	-		1	SPLICING TABLE	**3-189**
240	2564051-0100	-		1	PATCH MAGAZINE	**3-191**
250	2533682-0100	-		1	BOBBIN HOLDER	**3-193**
260	2564076-0100	-		1	START-UP KIT	**3-195**
270	2587337-0100	-		1	SETTING TEMPLATE	**3-197**

Pos	Part No	SP	UN	Qty	Description	Page No

This page is intentionally left blank.

ECM: 165112 - 20040315
Group number: 2564075-0100
Assembly Drawing:

Pos	Part No	SP	UN	Qty	Description	Page No
TBA 0250B HOLE21						
010	2661999-0000	-		1	OPENING SPECIFICATION	
TBA 1000B HOLE95						
010	2658047-0000	-		1	OPENING SPECIFICATION	
TBA 1000S HOLE90						
010	2579887-0000	-		1	OPENING SPECIFICATION	
TBA 1000S HOLE95						
010	2658048-0000	-		1	OPENING SPECIFICATION	
TBA 1000SQ HOLE95						
010	2658046-0000	-		1	OPENING SPECIFICATION	
TBA 1500S HOLE95						
010	2658045-0000	-		1	OPENING SPECIFICATION	

Pos	Part No	SP	UN	Qty	Description	Page No

Machine Type | Group Description | Used-In | Group Number | Page No

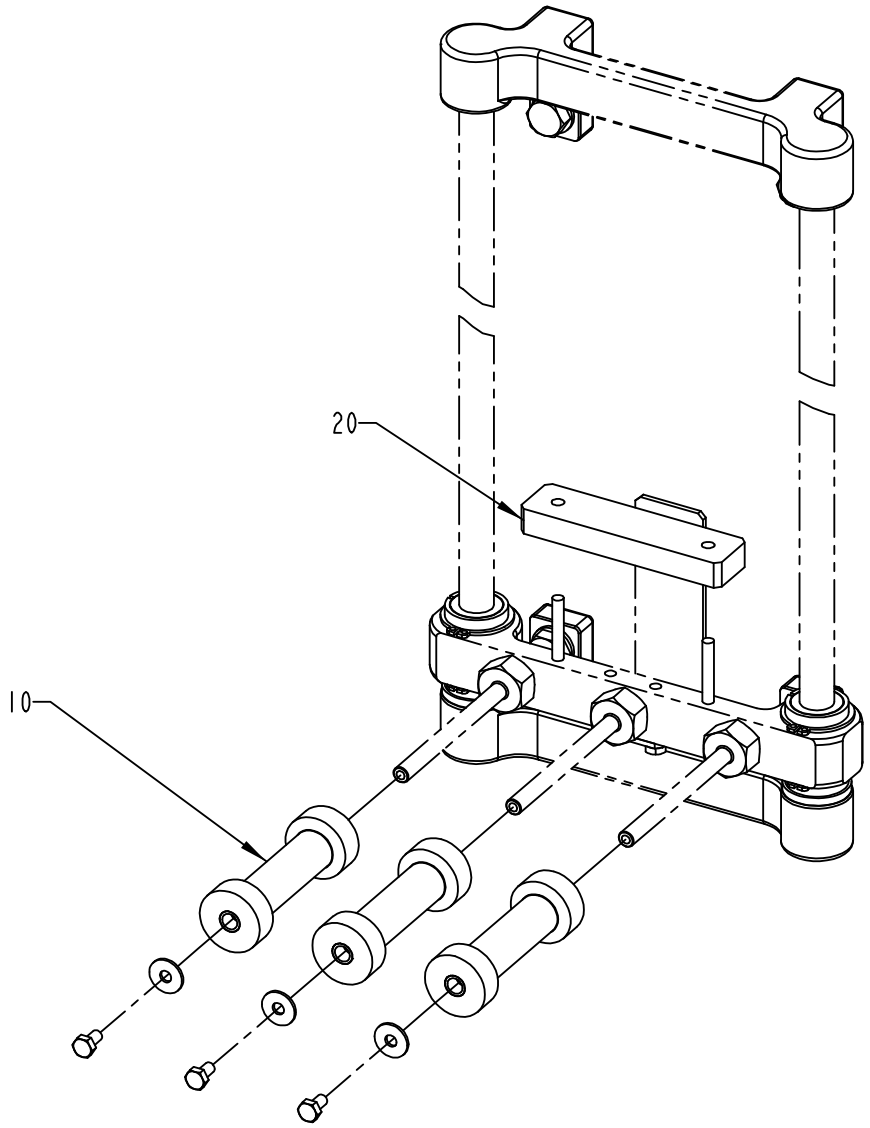

2564056-1
ECM 123507

ECM: 165108 - 20040315
Group number: 2564056-0100
Assembly Drawing: 2564056-1_1_AB

Pos	Part No	SP	UN	Qty	Description	Page No
TBA 0250B HOLE21						
010	2564043-0008	A		3	ROLLER	
020	2608240-0003	-		3	WEIGHT	
TBA 1000B HOLE95, TBA 1000S HOLE95, TBA 1000SQ HOLE95, TBA 1500S HOLE95						
010	2564043-0009	A		3	ROLLER	
020	2608240-0003	-		3	WEIGHT	
TBA 1000S HOLE90						
010	2564043-0006	A		3	ROLLER	
020	2608240-0003	-		3	WEIGHT	

Pos	Part No	SP	UN	Qty	Description	Page No

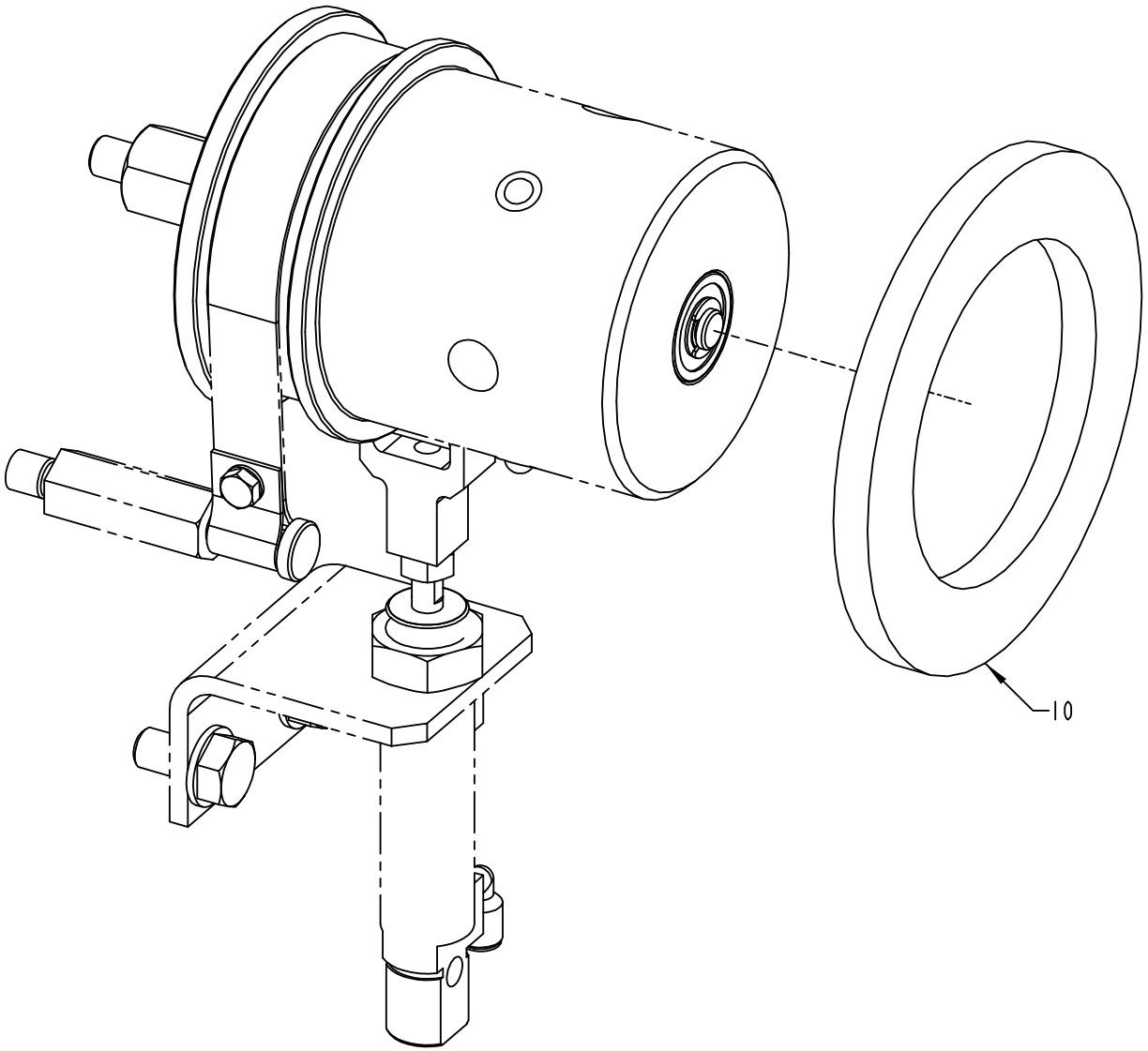

2533681-1
ECM 123507

ECM: 165094 - 20040315
Group number: 2533681-0100
Assembly Drawing: 2533681-1_1_AB

Pos	Part No	SP	UN	Qty	Description	Page No
TBA 0250B HOLE21						
010	1347952-0010	B		1	SPACER	
TBA 1000B HOLE95, TBA 1000S HOLE95, TBA 1000SQ HOLE95, TBA 1500S HOLE95						
010	1347952-0011	B		1	SPACER	
TBA 1000S HOLE90						
010	1347952-0008	B		1	SPACER	

Pos	Part No	SP	UN	Qty	Description	Page No

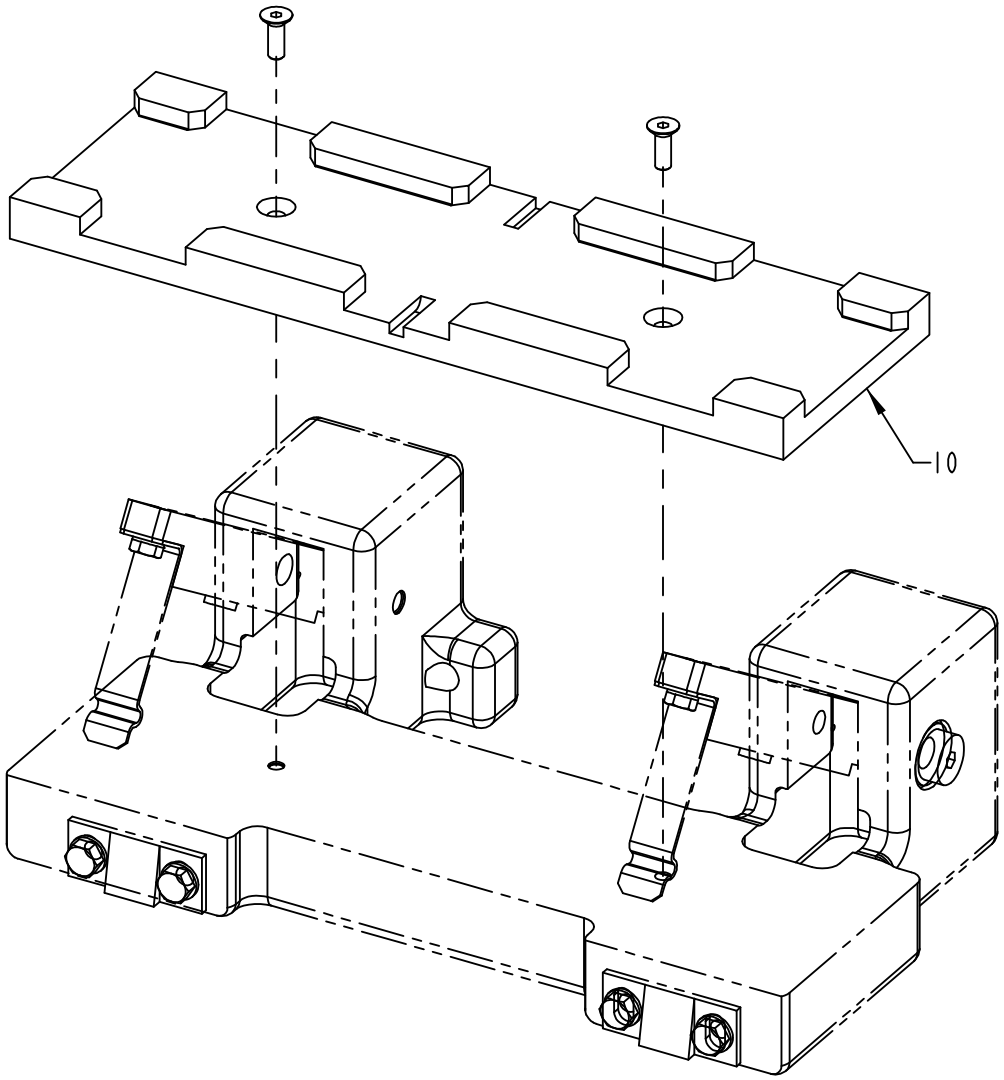

2533685-1
ECM 123507

ECM: 165095 - 20040315
Group number: 2533685-0100
Assembly Drawing: 2533685-1_1_AB

Pos	Part No	SP	UN	Qty	Description	Page No
TBA 0250B HOLE21						
010	1499296-0007	B		1	GUIDE	
TBA 1000B HOLE95, TBA 1000S HOLE95, TBA 1000SQ HOLE95, TBA 1500S HOLE95						
010	1499296-0008	B		1	GUIDE	
TBA 1000S HOLE90						
010	1499296-0015	B		1	GUIDE	

Pos	Part No	SP	UN	Qty	Description	Page No

TAB MAGAZINE

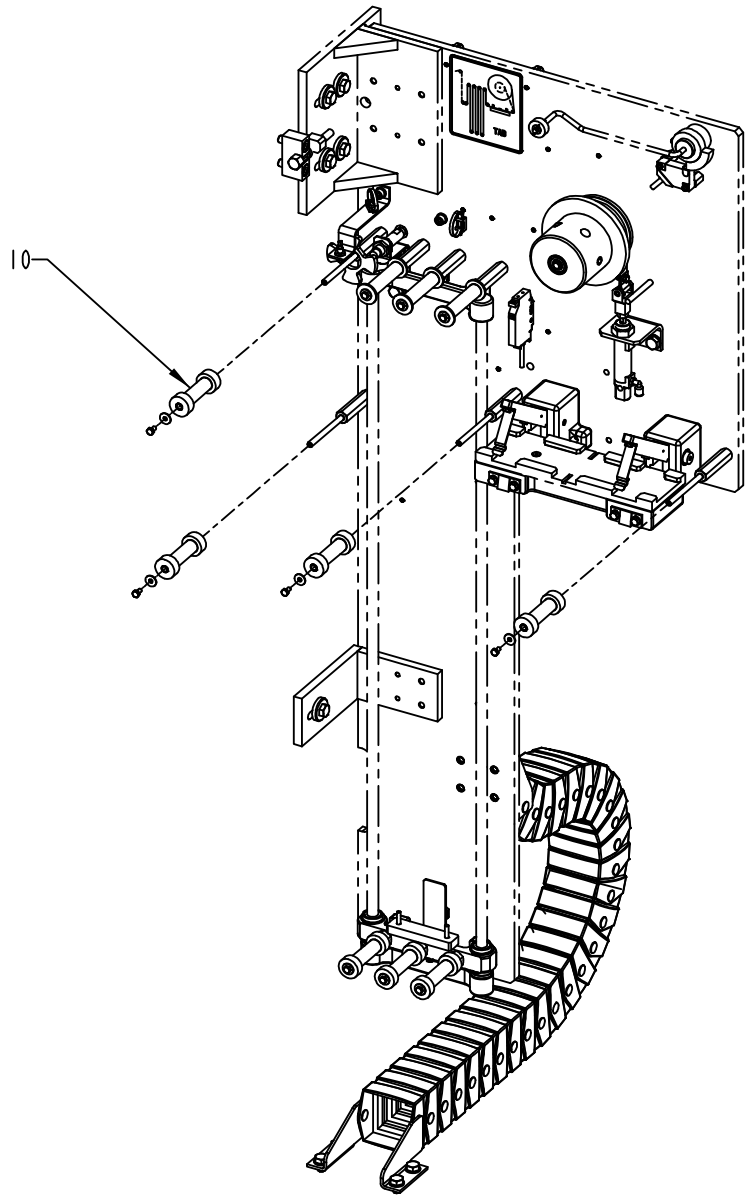

2564057-1
ECM 123507

ECM: 165109 - 20040315
Group number: 2564057-0100
Assembly Drawing: 2564057-1_1_AB

Pos	Part No	SP	UN	Qty	Description	Page No
TBA 0250B HOLE21						
010	2564044-0011	A		4	ROLLER	
TBA 1000B HOLE95, TBA 1000S HOLE95, TBA 1000SQ HOLE95, TBA 1500S HOLE95						
010	2564044-0012	A		4	ROLLER	
TBA 1000S HOLE90						
010	2564044-0008	A		4	ROLLER	

Pos	Part No	SP	UN	Qty	Description	Page No

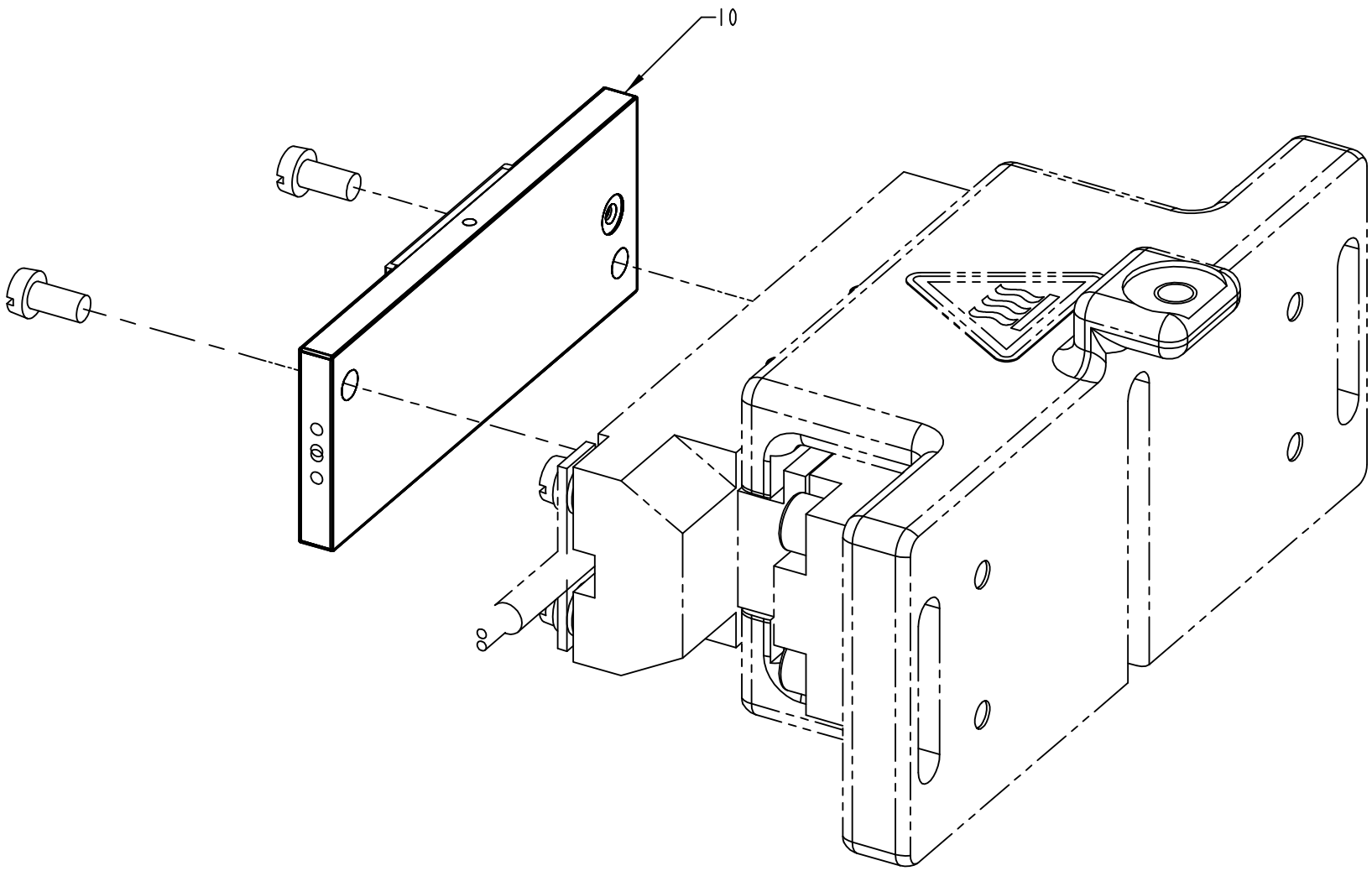

2546271-1
ECM 123507

ECM: 165097 - 20040315
Group number: 2546271-0100
Assembly Drawing: 2546271-1_1_AB

Pos	Part No	SP	UN	Qty	Description	Page No
TBA 0250B HOLE21						
010	2526537-0000	A		1	SEALING PLATE	
TBA 1000B HOLE95, TBA 1000S HOLE95, TBA 1000SQ HOLE95, TBA 1500S HOLE95						
010	2563974-0000	-		1	SEALING PLATE	
TBA 1000S HOLE90						
010	2579886-0000	A		1	SEALING PLATE	

Pos	Part No	SP	UN	Qty	Description	Page No

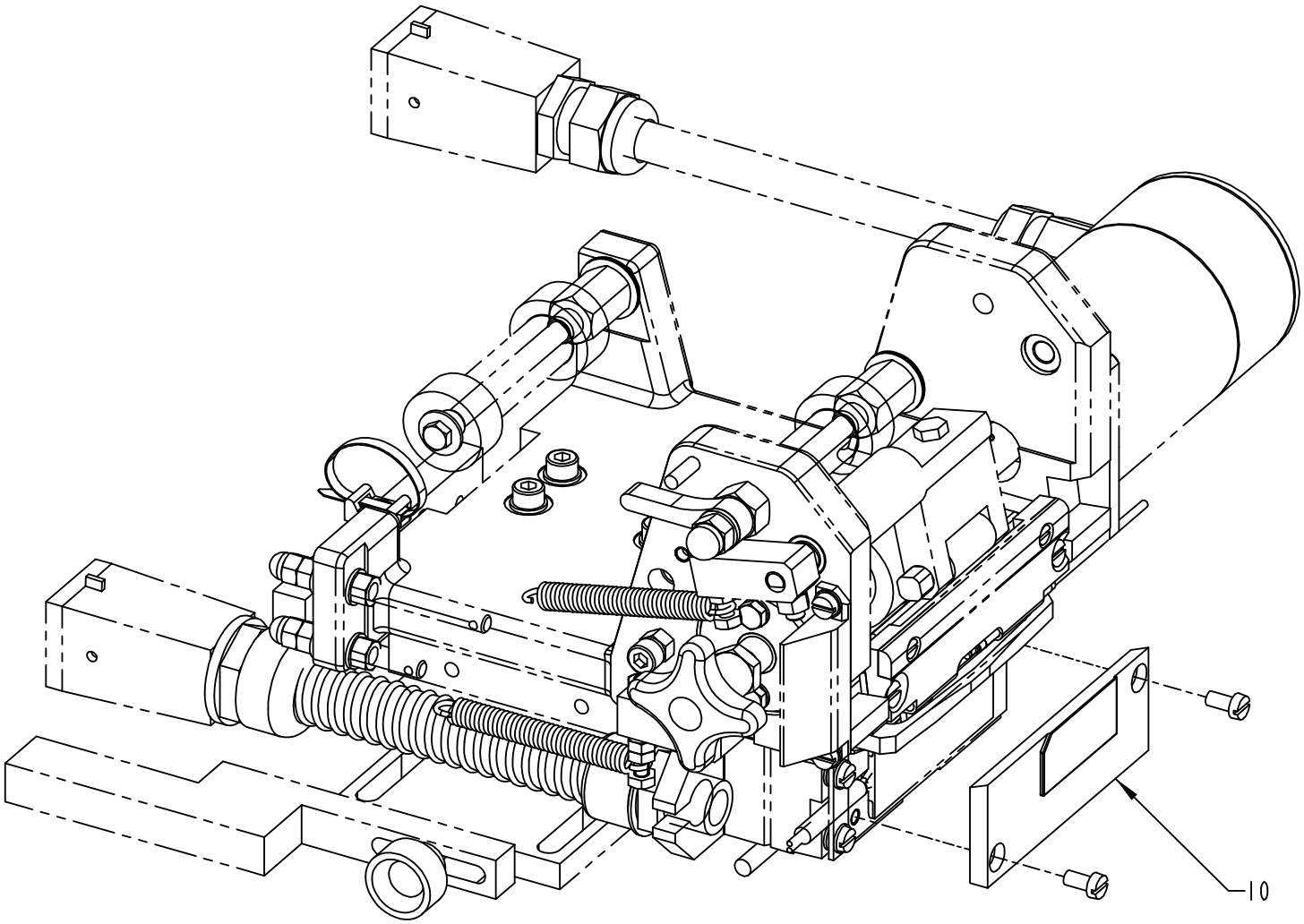

2546275-1
ECM 123507

ECM: 165100 - 20040315
Group number: 2546275-0100
Assembly Drawing: 2546275-1_1_AB

Pos	Part No	SP	UN	Qty	Description	Page No
TBA 0250B HOLE21						
010	2526551-0000	A		1	SEALING PLATE	
TBA 1000B HOLE95, TBA 1000S HOLE95, TBA 1000SQ HOLE95, TBA 1500S HOLE95						
010	2563983-0000	A		1	SEALING PLATE	
TBA 1000S HOLE90						
010	2603681-0000	A		1	SEALING PLATE	

Pos	Part No	SP	UN	Qty	Description	Page No

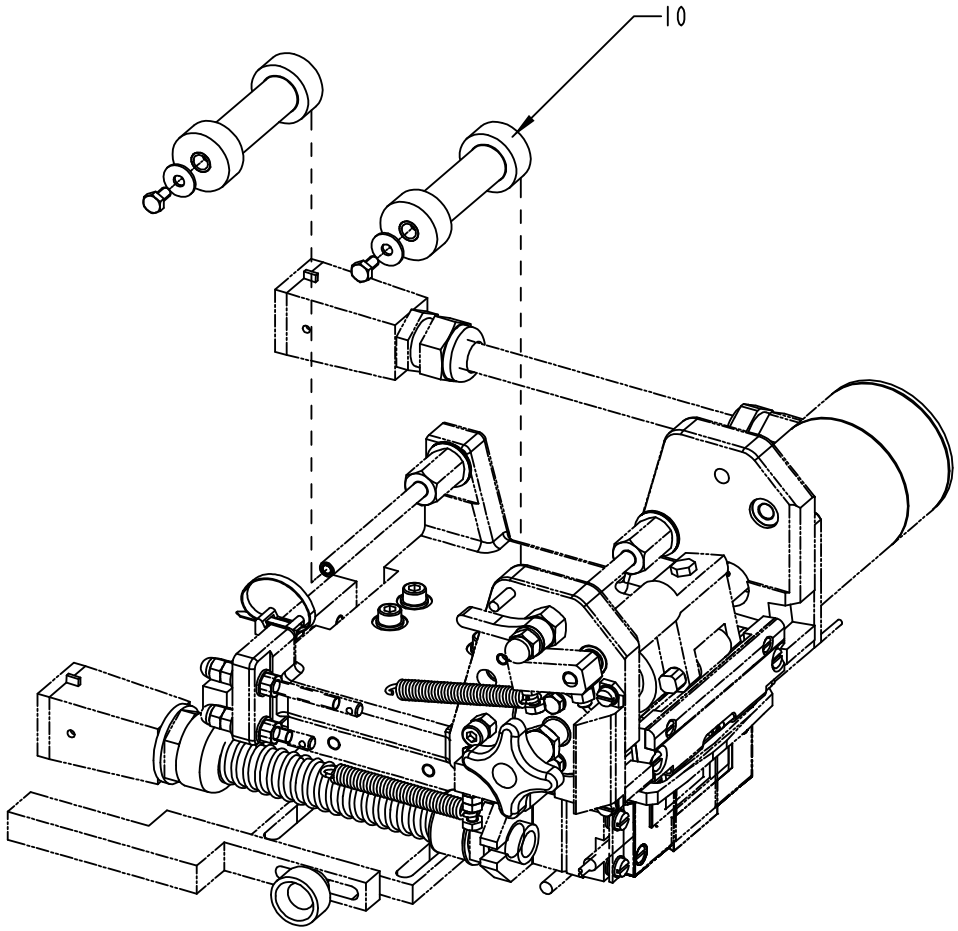

2564059-1
ECM 123507

ECM: 165110 - 20040315
Group number: 2564059-0100
Assembly Drawing: 2564059-1_1_AB

Pos	Part No	SP	UN	Qty	Description	Page No
TBA 0250B HOLE21						
010	2564044-0011	A		2	ROLLER	
TBA 1000B HOLE95, TBA 1000S HOLE95, TBA 1000SQ HOLE95, TBA 1500S HOLE95						
010	2564044-0012	A		2	ROLLER	
TBA 1000S HOLE90						
010	2564044-0008	A		2	ROLLER	

Pos	Part No	SP	UN	Qty	Description	Page No

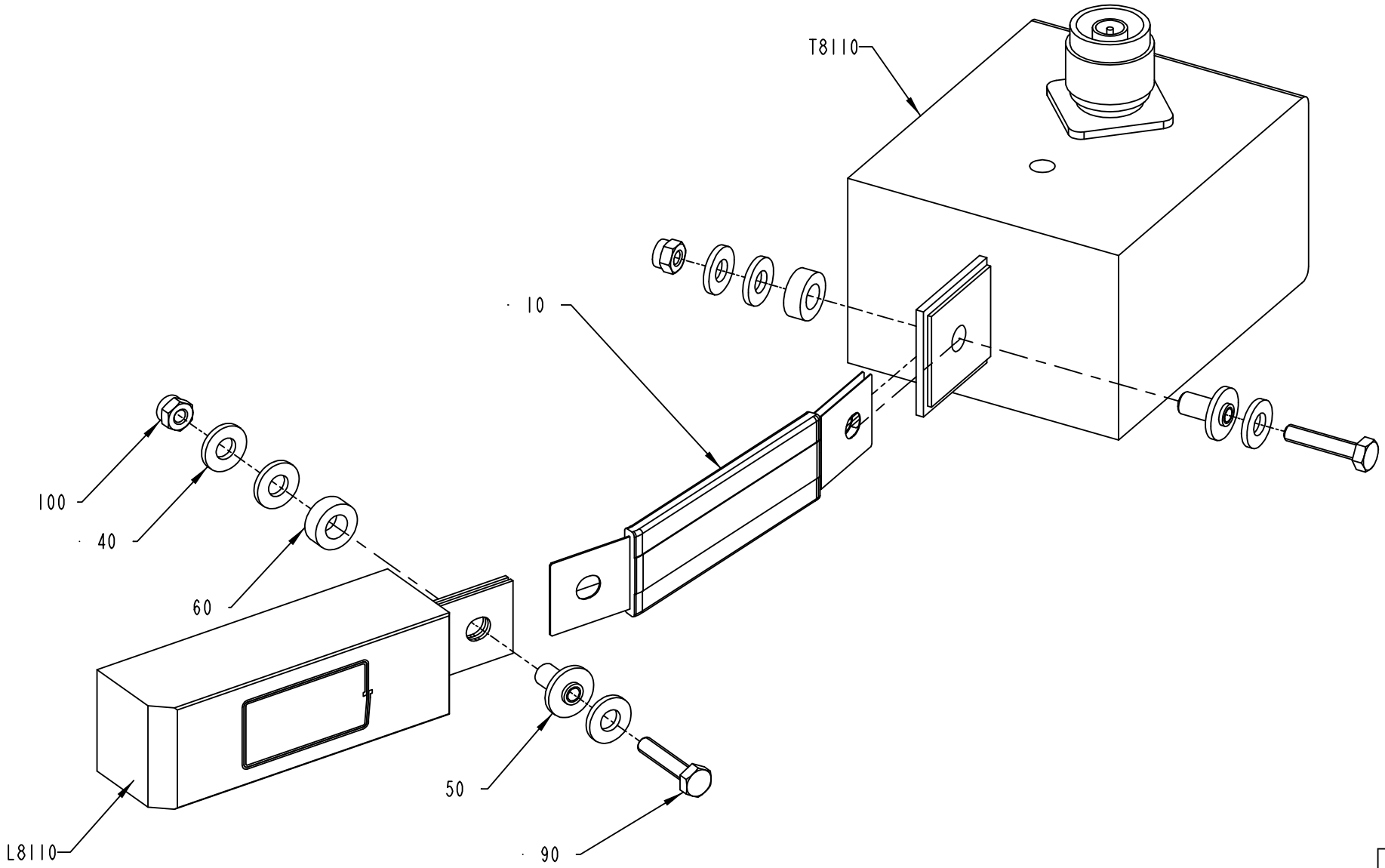

2546285-1
ECM 139868

ECM: 165111 - 20040315
Group number: 2546285-0100
Assembly Drawing: 2546285-1_1_AC

Pos	Part No	SP	UN	Qty	Description	Page No
HOLE21, HOLE95						
L8110	1533360-0000	A		1	INDUCTOR	
L8110	1533360-0000	A		1	INDUCTOR	
T8110	67379-0216	A		1	TRANSFORMER	
T8110	67379-0216	A		1	TRANSFORMER	
HOLE60						
L8110	1533363-0000	A		1	INDUCTOR	
L8110	1533363-0000	A		1	INDUCTOR	
T8110	67379-0216	A		1	TRANSFORMER	
T8110	67379-0216	A		1	TRANSFORMER	
HOLE72						
L8110	1566708-0000	A		1	INDUCTOR	
L8110	1566708-0000	A		1	INDUCTOR	
T8110	67379-0215	A		1	TRANSFORMER	
T8110	67379-0215	A		1	TRANSFORMER	
HOLE90						
L8110	1533364-0000	A		1	INDUCTOR	
L8110	1533364-0000	A		1	INDUCTOR	
T8110	67379-0215	A		1	TRANSFORMER	
T8110	67379-0215	A		1	TRANSFORMER	
Common Parts						
010	1140889-0000	A		1	BUSBAR	
040	28509-0000	-		6	WASHER	
050	32544-0000	-		2	INSULATION NUT	
060	32644-0000	-		2	WASHER	
090	312105-0295	-		2	SCREW M6S ISO4017 M4X20 A470	
100	312812-0312	-		2	HEXAGON NUT, NY-LOCK M4 A480	
T8110	67379-0224	A		1	TRANSFORMER	
T8110	67379-0224	A		1	TRANSFORMER	

Pos	Part No	SP	UN	Qty	Description	Page No

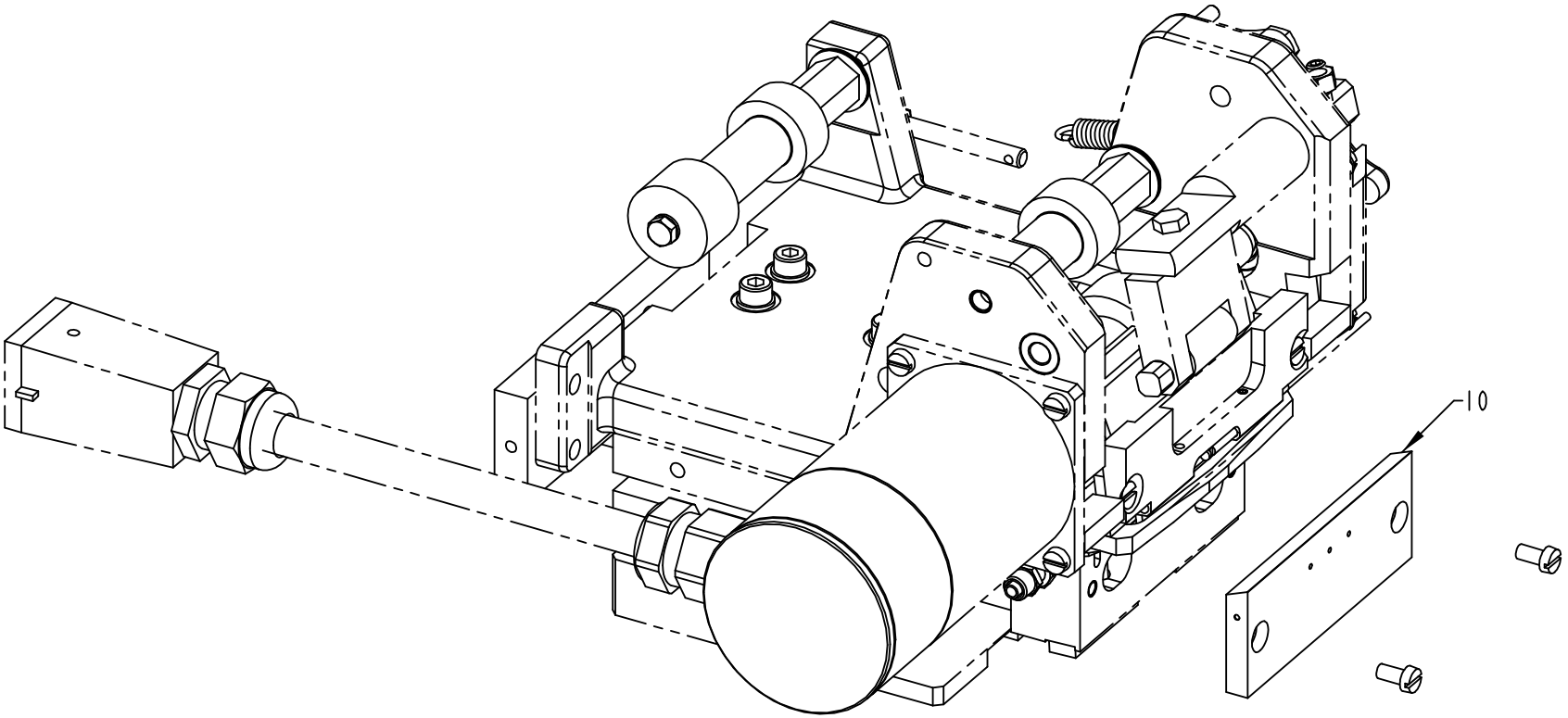

2511291-1
ECM 111416

ECM: 159872 - 20040209
Group number: 2511291-0100
Assembly Drawing: 2511291-1_1_AA

Pos	Part No	SP	UN	Qty	Description	Page No
HOLE21, HOLE60, HOLE90, HOLE95						
010	2533715-0000	A		1	SEALING PLATE	
HOLE72						
020	2546293-0000	A		1	SEALING PLATE	

Pos	Part No	SP	UN	Qty	Description	Page No

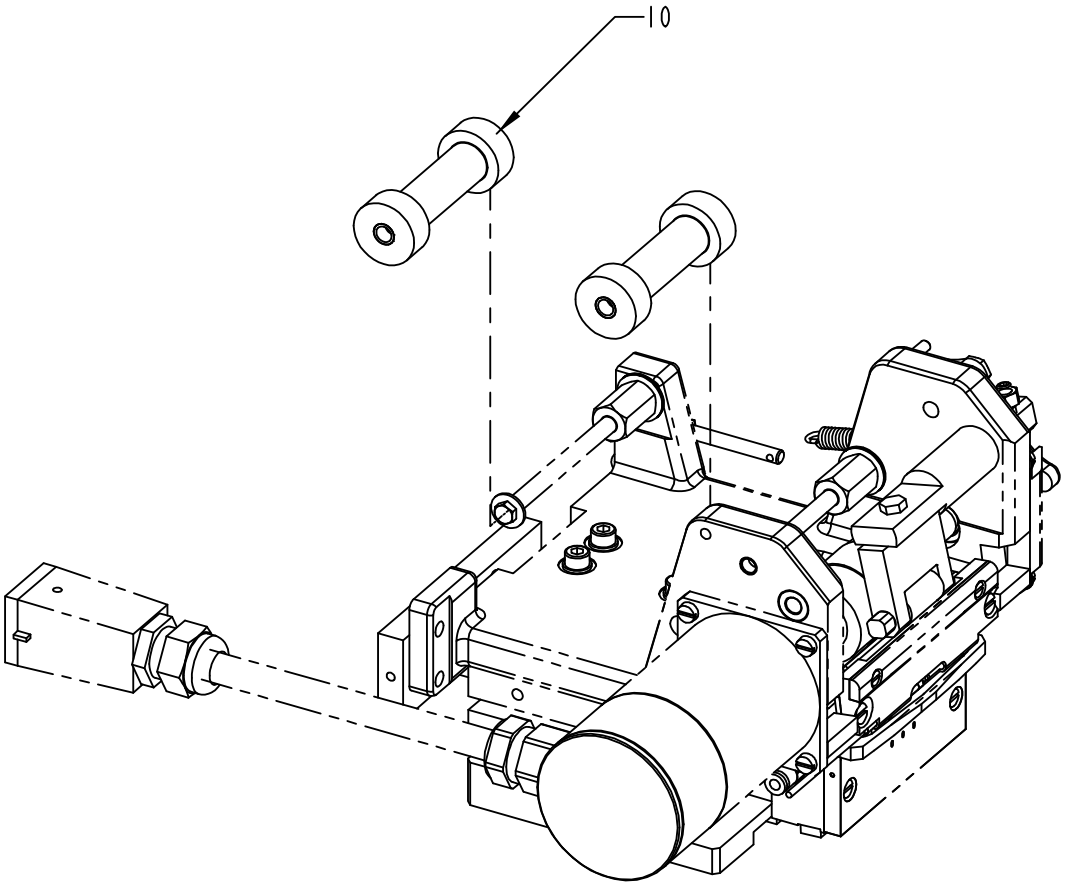

2564060-1
ECM 117180

ECM: 159984 - 20040209
Group number: 2564060-0100
Assembly Drawing: 2564060-1_1_AA

Pos	Part No	SP	UN	Qty	Description	Page No
HOLE21, HOLE95						
010	2564044-0006	A		2	ROLLER	
HOLE60						
010	2564044-0009	A		2	ROLLER	
HOLE72						
010	2564044-0002	A		2	ROLLER	
HOLE90						
010	2564044-0005	A		2	ROLLER	

Pos	Part No	SP	UN	Qty	Description	Page No

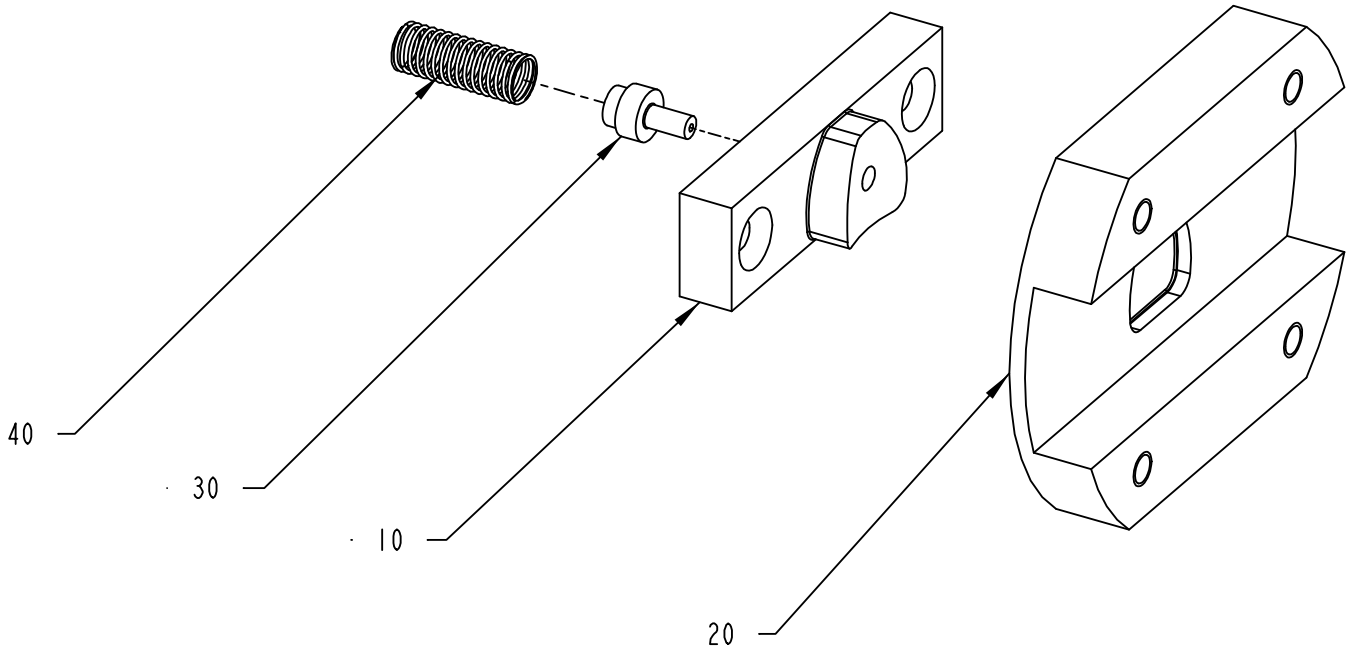

2546278-1
ECM 117180

ECM: 159885 - 20040209
Group number: 2546278-0100
Assembly Drawing: 2546278-1_1_AB

Pos	Part No	SP	UN	Qty	Description	Page No
HOLE21						
010	2526527-0000	A		1	PUNCH	
020	2526528-0000	A		1	DIE	
HOLE60						
010	1484230-0000	A		1	PUNCH	
020	1484231-0000	A		1	DIE	
HOLE72						
010	2511644-0000	A		1	PUNCH	
020	2511639-0000	A		1	DIE	
030	2501815-0000	A		1	PIN	
040	90335-0005	A		1	SPRING	
HOLE90						
010	2603683-0000	A		1	PUNCH	
020	2603682-0000	A		1	DIE	
HOLE95						
010	2657828-0000	A		1	PUNCH	
020	2657829-0000	A		1	DIE	

Pos	Part No	SP	UN	Qty	Description	Page No

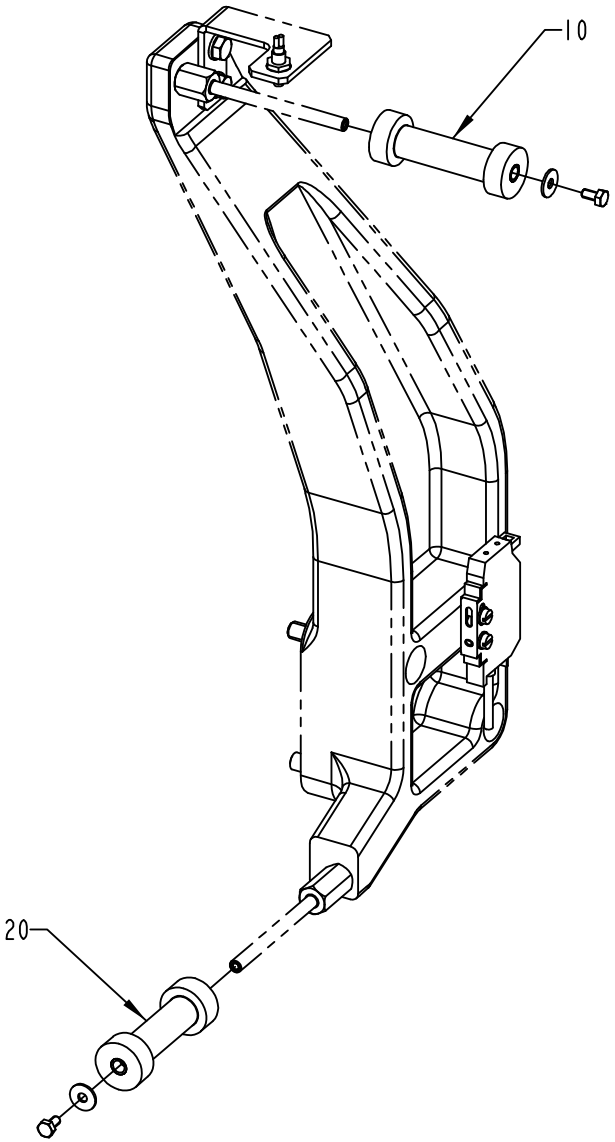

2564058-1
ECM 117432

ECM: 159982 - 20040209
Group number: 2564058-0100
Assembly Drawing: 2564058-1_1_AA

Pos	Part No	SP	UN	Qty	Description	Page No
HOLE21, HOLE95						
010	2564043-0005	A		1	ROLLER	
020	2564044-0006	A		1	ROLLER	
HOLE60						
010	2564043-0007	A		1	ROLLER	
020	2564044-0009	A		1	ROLLER	
HOLE72						
010	2564043-0002	A		1	ROLLER	
020	2564044-0002	A		1	ROLLER	
HOLE90						
010	2564043-0004	A		1	ROLLER	
020	2564044-0005	A		1	ROLLER	

Pos	Part No	SP	UN	Qty	Description	Page No

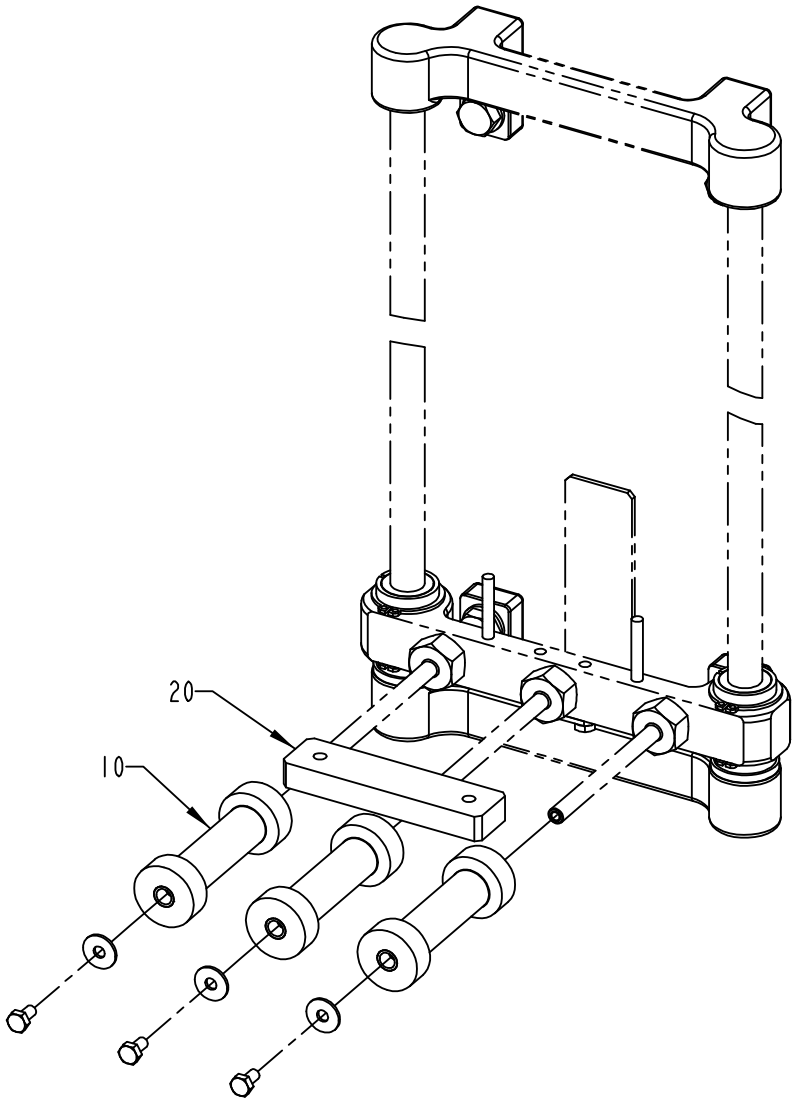

2564050-1
ECM 117431

ECM: 159894 - 20040209
Group number: 2564050-0100
Assembly Drawing: 2564050-1_1_AA

Pos	Part No	SP	UN	Qty	Description	Page No
HOLE21, HOLE95						
010	2564043-0005	A		3	ROLLER	
020	2608240-0001	-		1	WEIGHT	
HOLE60						
010	2564043-0007	A		3	ROLLER	
020	2608240-0001	-		1	WEIGHT	
HOLE72						
010	2645650-0000	A		3	ROLLER	**3-187**
HOLE90						
010	2564043-0004	A		3	ROLLER	
020	2608240-0001	-		1	WEIGHT	

Pos	Part No	SP	UN	Qty	Description	Page No

This page is intentionally left blank.

ECM: 143041 - 20030930
Group number: 2645650-0000
Assembly Drawing:

Pos	Part No	SP	UN	Qty	Description	Page No
-						
010	321138-0060	-		2	BUSHING, 6X8X6 MM	

Pos	Part No	SP	UN	Qty	Description	Page No

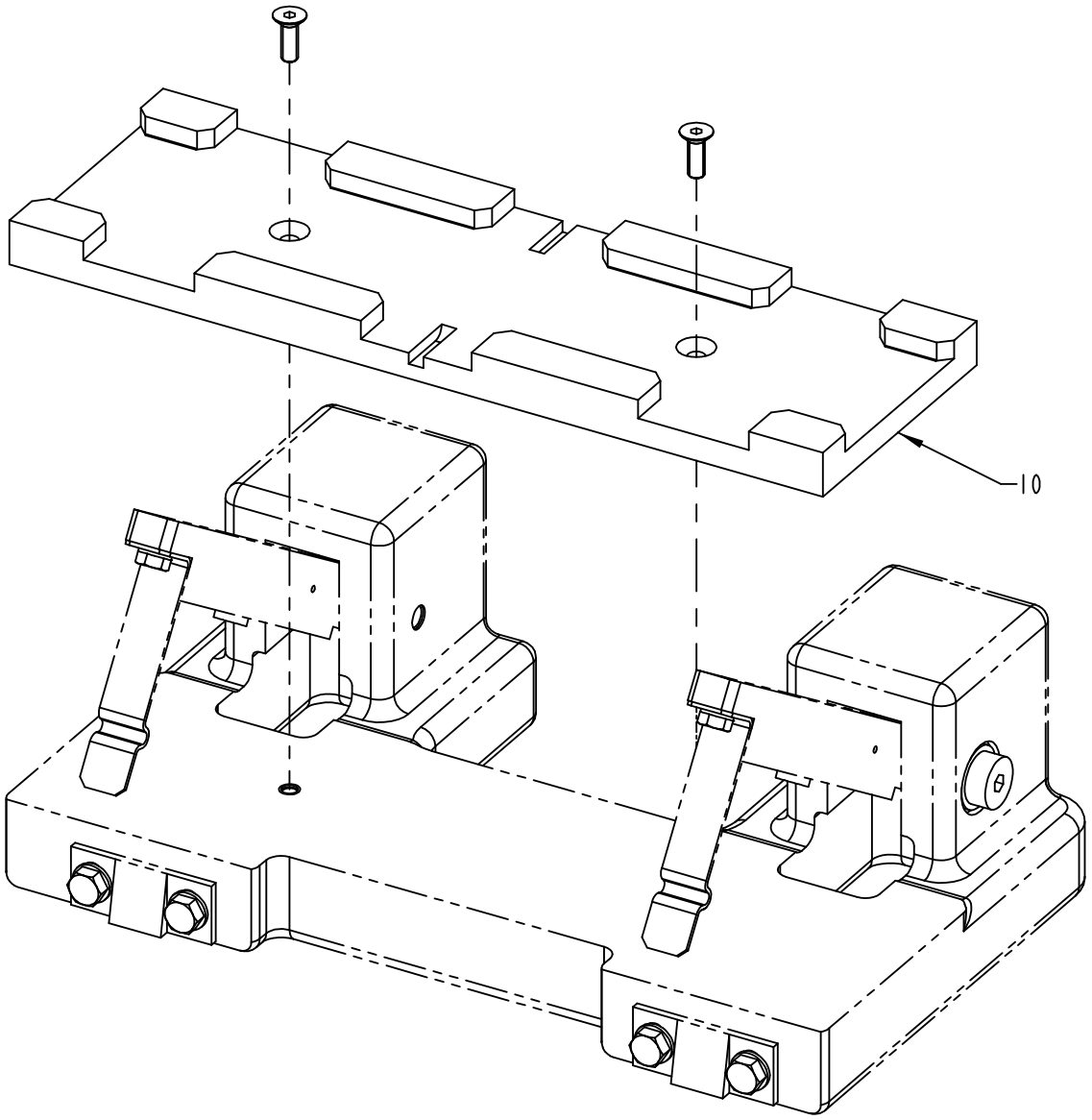

2533684-1
ECM 110732

ECM: 159877 - 20040209
Group number: 2533684-0100
Assembly Drawing: 2533684-1_1_AA

Pos	Part No	SP	UN	Qty	Description	Page No
HOLE21, HOLE95						
010	1499296-0004	B		1	GUIDE	
HOLE60						
010	1499296-0014	B		1	GUIDE	
HOLE72						
010	1499296-0001	B		1	GUIDE	
HOLE90						
010	1499296-0003	B		1	GUIDE	

Pos	Part No	SP	UN	Qty	Description	Page No

PATCH MAGAZINE

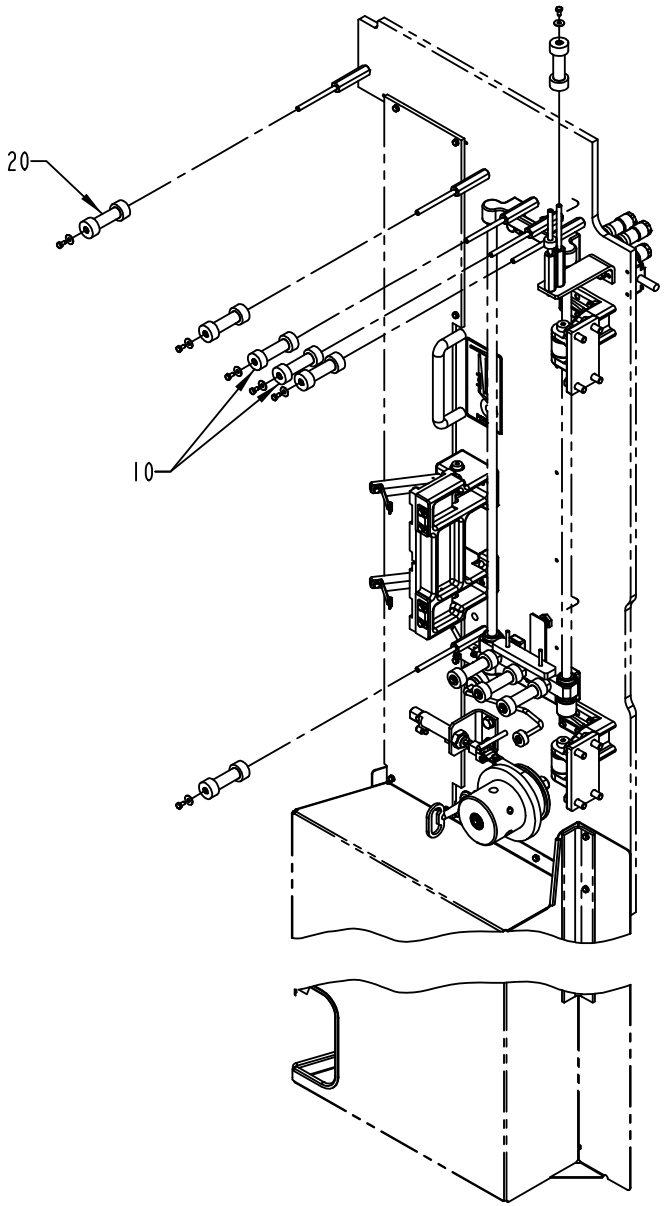

2564051-1
ECM 139868

ECM: 159895 - 20040209
Group number: 2564051-0100
Assembly Drawing: 2564051-1_1_AB

Pos	Part No	SP	UN	Qty	Description	Page No
HOLE21, HOLE95						
010	2564043-0005	A		2	ROLLER	
020	2564044-0006	A		5	ROLLER	
HOLE60						
010	2564043-0007	A		2	ROLLER	
020	2564044-0009	A		5	ROLLER	
HOLE72						
010	2645650-0000	A		2	ROLLER	**3-187**
020	2564044-0002	A		5	ROLLER	
HOLE90						
010	2564043-0004	A		2	ROLLER	
020	2564044-0005	A		5	ROLLER	

Pos	Part No	SP	UN	Qty	Description	Page No

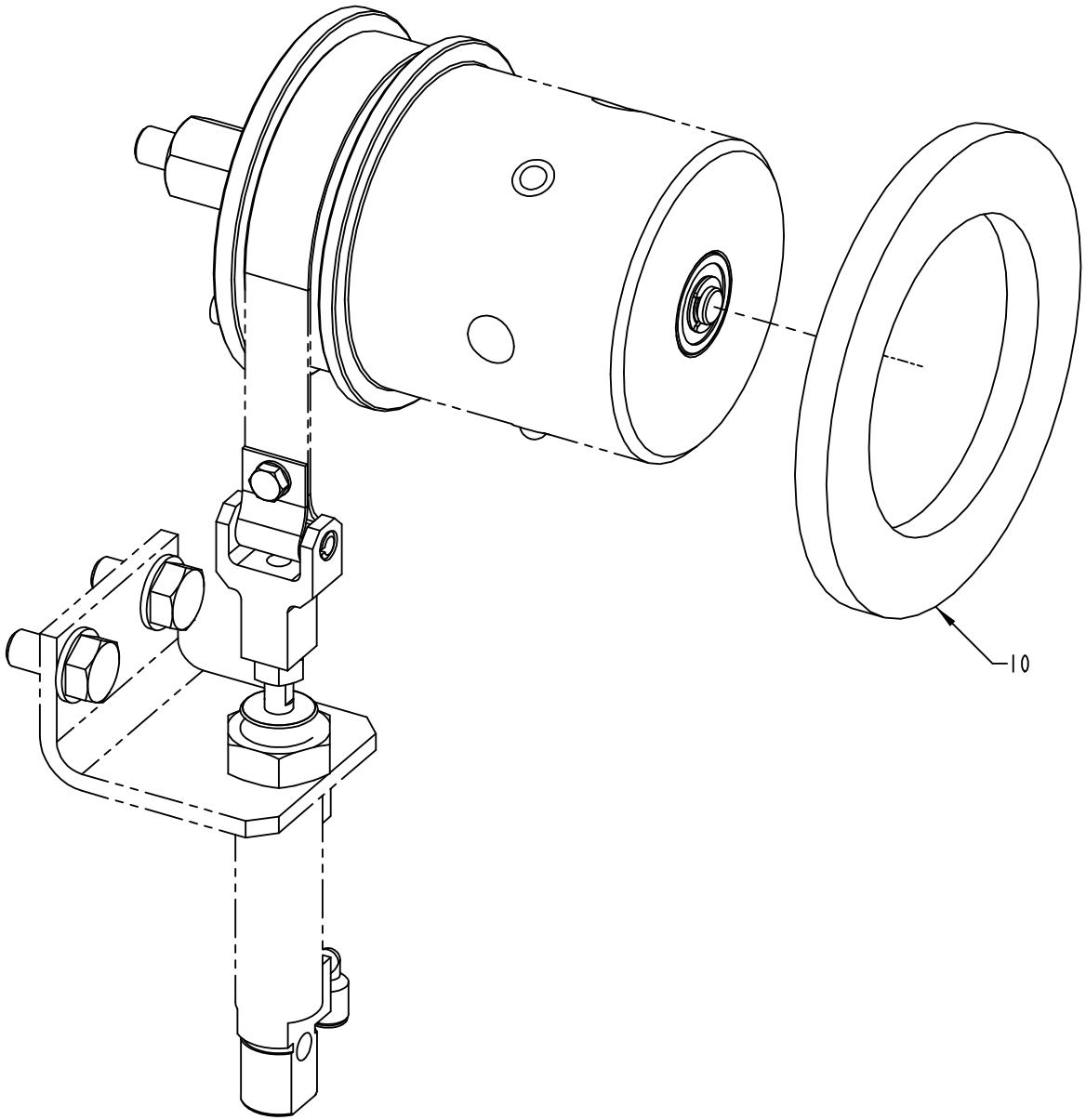

2533682-1
ECM 110732

ECM: 159876 - 20040209
Group number: 2533682-0100
Assembly Drawing: 2533682-1_1_AA

Pos	Part No	SP	UN	Qty	Description	Page No
HOLE21, HOLE95						
010	1347952-0006	-		1	SPACER	
HOLE60						
010	1347952-0017	-		1	SPACER	
HOLE72						
010	1347952-0002	-		1	SPACER	
HOLE90						
010	1347952-0004	-		1	SPACER	

Pos	Part No	SP	UN	Qty	Description	Page No

This page is intentionally left blank.

ECM: 165114 - 20040315
Group number: 2564076-0100
Assembly Drawing:

Pos	Part No	SP	UN	Qty	Description	Page No
HOLE21						
010	1533360-0000	-		1	INDUCTOR	
010	1533360-0000	-		1	INDUCTOR	
020	2526551-0000	-		1	SEALING PLATE	
030	2526537-0000	-		1	SEALING PLATE	
100	90144-0071	-		1	TAPE, AL 30µM 16MM BLACK	
HOLE60						
010	1533363-0000	-		1	INDUCTOR	
010	1533363-0000	-		1	INDUCTOR	
020	2526531-0000	-		1	SEALING PLATE	
030	2563986-0000	-		1	SEALING PLATE	
130	90144-0070	-		1	TAPE, AL 30µM 19MM BLACK	
HOLE72						
010	1566708-0000	-		1	INDUCTOR	
010	1566708-0000	-		1	INDUCTOR	
020	2525292-0000	-		1	SEALING PLATE	
030	2511640-0000	-		1	SEALING PLATE	
040	2504616-0000	-		1	SEALING PLATE	
120	90144-0069	-		1	PE TAPE,BLACK ON ALUMINUM 24X24 MM	
HOLE90						
010	1533364-0000	-		1	INDUCTOR	
010	1533364-0000	-		1	INDUCTOR	
020	2603681-0000	-		1	SEALING PLATE	
030	2579886-0000	-		1	SEALING PLATE	
100	90144-0071	-		1	TAPE, AL 30µM 16MM BLACK	
HOLE95						
010	1533360-0000	-		1	INDUCTOR	
010	1533360-0000	-		1	INDUCTOR	
020	2563974-0000	-		1	SEALING PLATE	
030	2563983-0000	-		1	SEALING PLATE	
100	90144-0071	-		1	TAPE, AL 30µM 16MM BLACK	
Common Parts						
130	2660847-0000	-		1	TAPE	
200	2608237-0000	-		1	SPOGNE	

Pos	Part No	SP	UN	Qty	Description	Page No

This page is intentionally left blank.

ECM: 165113 - 20040315
Group number: 2587337-0100
Assembly Drawing:

Pos	Part No	SP	UN	Qty	Description	Page No
TBA 1000B HOLE95						
010	2672800-0000	-		1	TEMPLATE	
TBA 1000S HOLE90						
010	2651573-0000	-		1	TEMPLATE	
TBA 1000S HOLE95						
010	2672799-0000	-		1	TEMPLATE	
TBA 1000SQ HOLE95						
010	2672798-0000	-		1	TEMPLATE	
TBA 1500S HOLE95						
010	2672797-0000	-		1	TEMPLATE	

Pos	Part No	SP	UN	Qty	Description	Page No

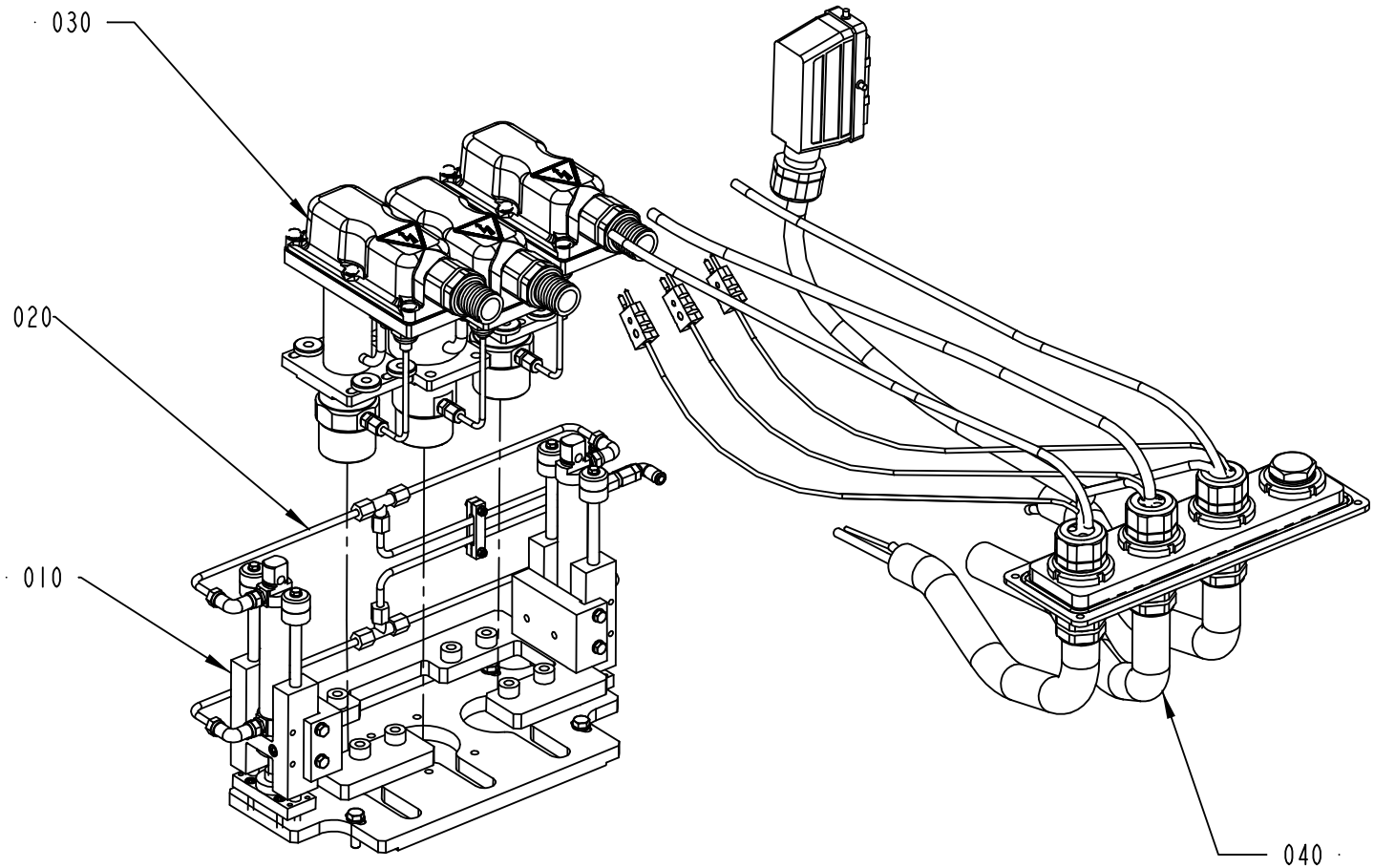

2636081-1
ECM 148268

ECM: 166101 - 20040319
Group number: 2636081-0100
Assembly Drawing: 2636081-1_1_AA

Pos	Part No	SP	UN	Qty	Description	Page No
TBA 1000B QC START FM NOQC, TBA 0500B START FM NOQC, TBA 0200B START FM NOQC, TBA 0250B START FM NOQC, TBA 0330S START FM NOQC						
010	2535538-0100	-		1	FRAME	**3-201, 3-203**
020	2636082-0100	-		1	FLAP HEATER	**3-207**
030	2641480-0100	-		1	HEATING PART	**3-209**
040	2660376-0100	-		1	CABLE HARNESS	**3-211**
TBA 1000S START FM QC, TBA 1000Sq START FM QC, TBA 1500S START FM QC, TBA 1000B NOQC START FM QC, TBA 0200S START FM QC, TPA 1000Sq START FM QC						
010	2544339-0100	-		1	FRAME	**3-213**
030	2641480-0100	-		1	HEATING PART	**3-209**
040	2660376-0100	-		1	CABLE HARNESS	**3-211**

Pos	Part No	SP	UN	Qty	Description	Page No

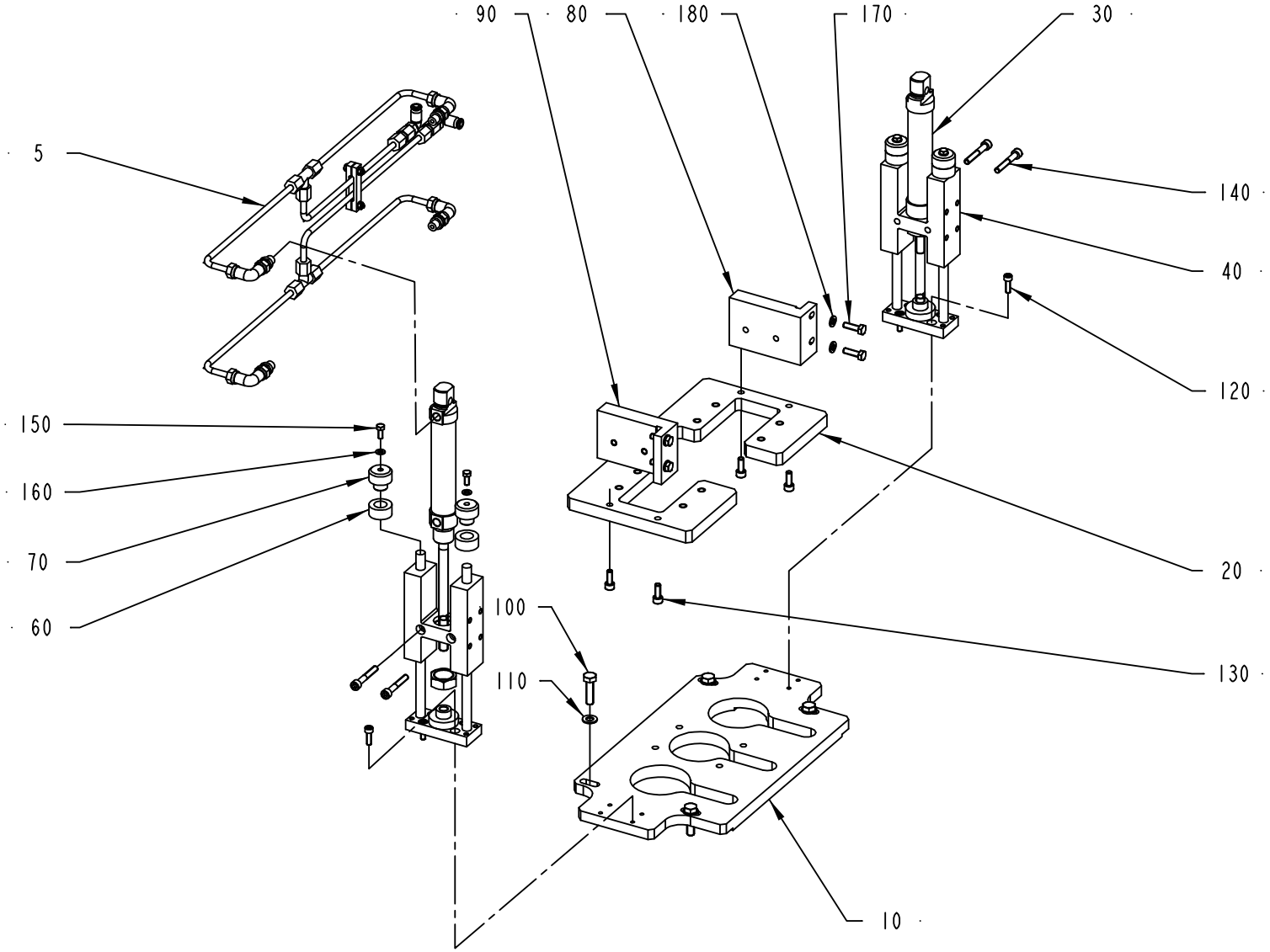

2535538-1
ECM 127225

ECM: 157777 - 20040309
Group number: 2535538-0100
Assembly Drawing: 2535538-1_1_AB

This list covers pages from 3-200 to 3-203

Pos	Part No	SP	UN	Qty	Description	Page No
A3/FLEX TBA 0200B QC, A3/FLEX TBA 0250B QC, A3/FLEX TBA 0330S QC (See drawing on page: 3-202)						
030	90459-0953	-		2	DOUBLE ACTING, ROUND, CYL 25-80	
040	90459-0952	-		2	LINEAR GUIDE UNIT, BORE 25-STROKE 80	
060	2599020-0000	-		4	STOP	
065	2604507-0000	-		2	SPACER	
075	2604508-0000	-		2	SPACER	
120	90458-0058	-		8	SCREW M5X60 A280	
190	90335-0178	-		2	COMP. SPRING 22060, 1X13,5X36,5	
200	2604509-0000	-		2	KNOB	
210	2604510-0000	-		2	SHAFT	
A3/FLEX TBA 0500B QC, A3/FLEX TBA 1000B QC (See drawing on page: 3-200)						
030	90459-0953	A		2	DOUBLE ACTING, ROUND, CYL 25-80	
040	90459-0952	A		2	LINEAR GUIDE UNIT, BORE 25-STROKE 80	
060	2623870-0000	-		4	RUBBER DAMPER	
120	312115-0329	-		8	SCREW ISO4762 M5X16 A4	
Common Parts						
005	2535540-0100	-		1	PNEUMATIC CIRCUIT	**3-205**
010	2520163-0000	-		1	PLATE	
020	2520165-0000	-		1	GUIDE PLATE	
030	90459-3119	A		2	DOUBLE ACTING, MINI-ISO, CYL. 25-100	
040	90459-3118	A		2	LINEAR GUIDE UNIT, BORE 25-STROKE 100	
070	2623869-0000	-		4	RUBBER HOLDER	
080	2623623-0000	-		1	CYLINDER BRACKET	
090	2623624-0000	-		1	CYLINDER BRACKET	
100	312105-0327	-		4	SCREW M6S ISO 4017 M5X12 A480	
110	312105-0455	-		4	SCREW M6S ISO 4017 M8X30 A480	
130	312115-0368	-		4	SCREW ISO4762 M6X16 A4	
140	312115-0378	-		4	SCREW ISO4762 M6X40 A4 80	
150	315105-0146	-		4	WASHER BRB5,3X10RFR	
160	315105-0165	-		4	WASHER BRB8,4X16RFR	
170	312105-0370	-		4	SCREW M6S ISO 4017 M6X20 A480	
180	315105-0153	-		4	WASHER BRB6,4X12RFR	

Pos	Part No	SP	UN	Qty	Description	Page No

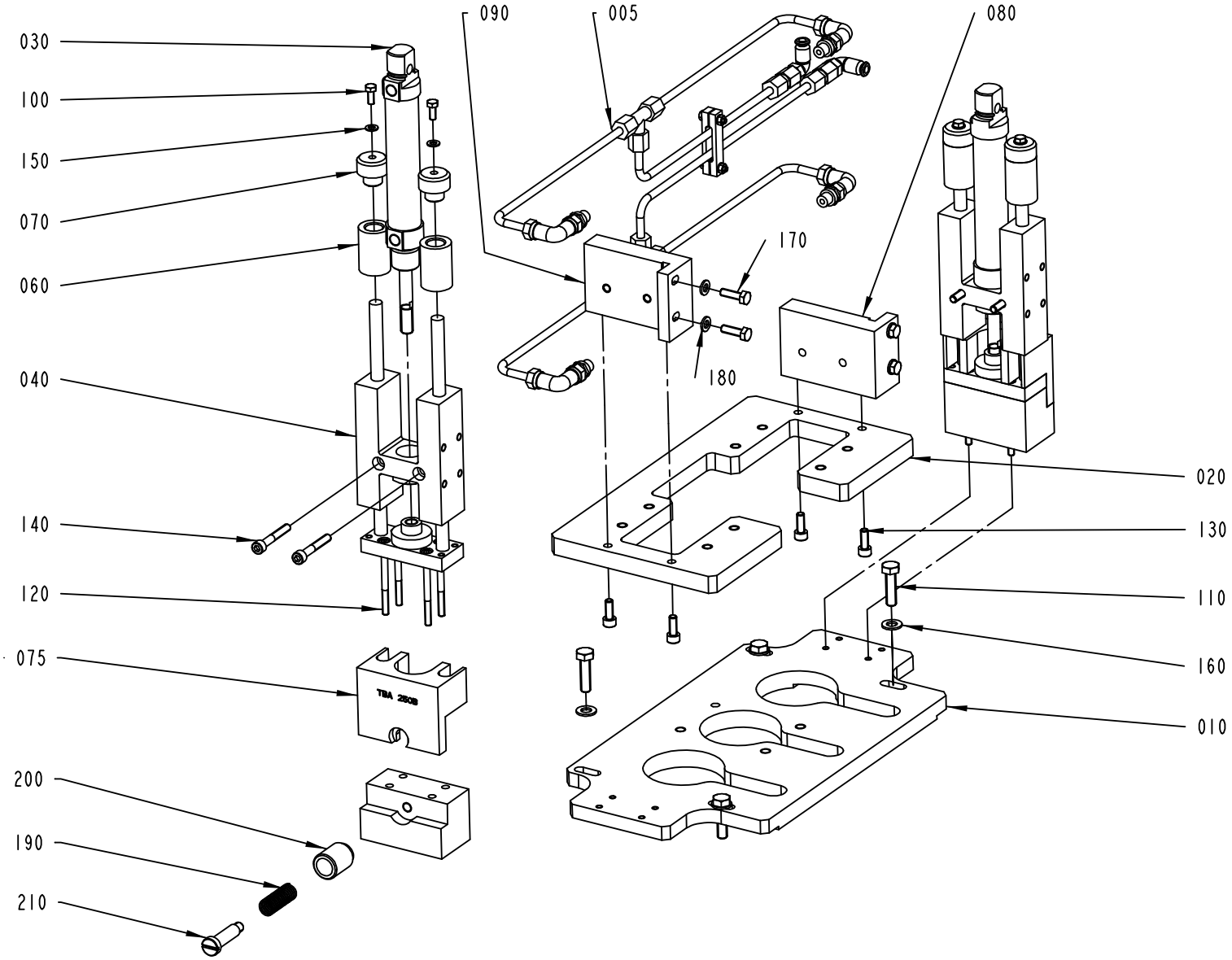

2535538-2
ECM 149528

ECM: 157777 - 20040309
Group number: 2535538-0100
Assembly Drawing: 2535538-2_1_AA

This list covers pages from 3-200 to 3-203

Pos	Part No	SP	UN	Qty	Description	Page No
A3/FLEX TBA 0200B QC, A3/FLEX TBA 0250B QC, A3/FLEX TBA 0330S QC (See drawing on page: 3-202)						
030	90459-0953	-		2	DOUBLE ACTING, ROUND, CYL 25-80	
040	90459-0952	-		2	LINEAR GUIDE UNIT, BORE 25-STROKE 80	
060	2599020-0000	-		4	STOP	
065	2604507-0000	-		2	SPACER	
075	2604508-0000	-		2	SPACER	
120	90458-0058	-		8	SCREW M5X60 A280	
190	90335-0178	-		2	COMP. SPRING 22060, 1X13,5X36,5	
200	2604509-0000	-		2	KNOB	
210	2604510-0000	-		2	SHAFT	
A3/FLEX TBA 0500B QC, A3/FLEX TBA 1000B QC (See drawing on page: 3-200)						
030	90459-0953	A		2	DOUBLE ACTING, ROUND, CYL 25-80	
040	90459-0952	A		2	LINEAR GUIDE UNIT, BORE 25-STROKE 80	
060	2623870-0000	-		4	RUBBER DAMPER	
120	312115-0329	-		8	SCREW ISO4762 M5X16 A4	
Common Parts						
005	2535540-0100	-		1	PNEUMATIC CIRCUIT	**3-205**
010	2520163-0000	-		1	PLATE	
020	2520165-0000	-		1	GUIDE PLATE	
030	90459-3119	A		2	DOUBLE ACTING, MINI-ISO, CYL. 25-100	
040	90459-3118	A		2	LINEAR GUIDE UNIT, BORE 25-STROKE 100	
070	2623869-0000	-		4	RUBBER HOLDER	
080	2623623-0000	-		1	CYLINDER BRACKET	
090	2623624-0000	-		1	CYLINDER BRACKET	
100	312105-0327	-		4	SCREW M6S ISO 4017 M5X12 A480	
110	312105-0455	-		4	SCREW M6S ISO 4017 M8X30 A480	
130	312115-0368	-		4	SCREW ISO4762 M6X16 A4	
140	312115-0378	-		4	SCREW ISO4762 M6X40 A4 80	
150	315105-0146	-		4	WASHER BRB5,3X10RFR	
160	315105-0165	-		4	WASHER BRB8,4X16RFR	
170	312105-0370	-		4	SCREW M6S ISO 4017 M6X20 A480	
180	315105-0153	-		4	WASHER BRB6,4X12RFR	

Pos	Part No	SP	UN	Qty	Description	Page No

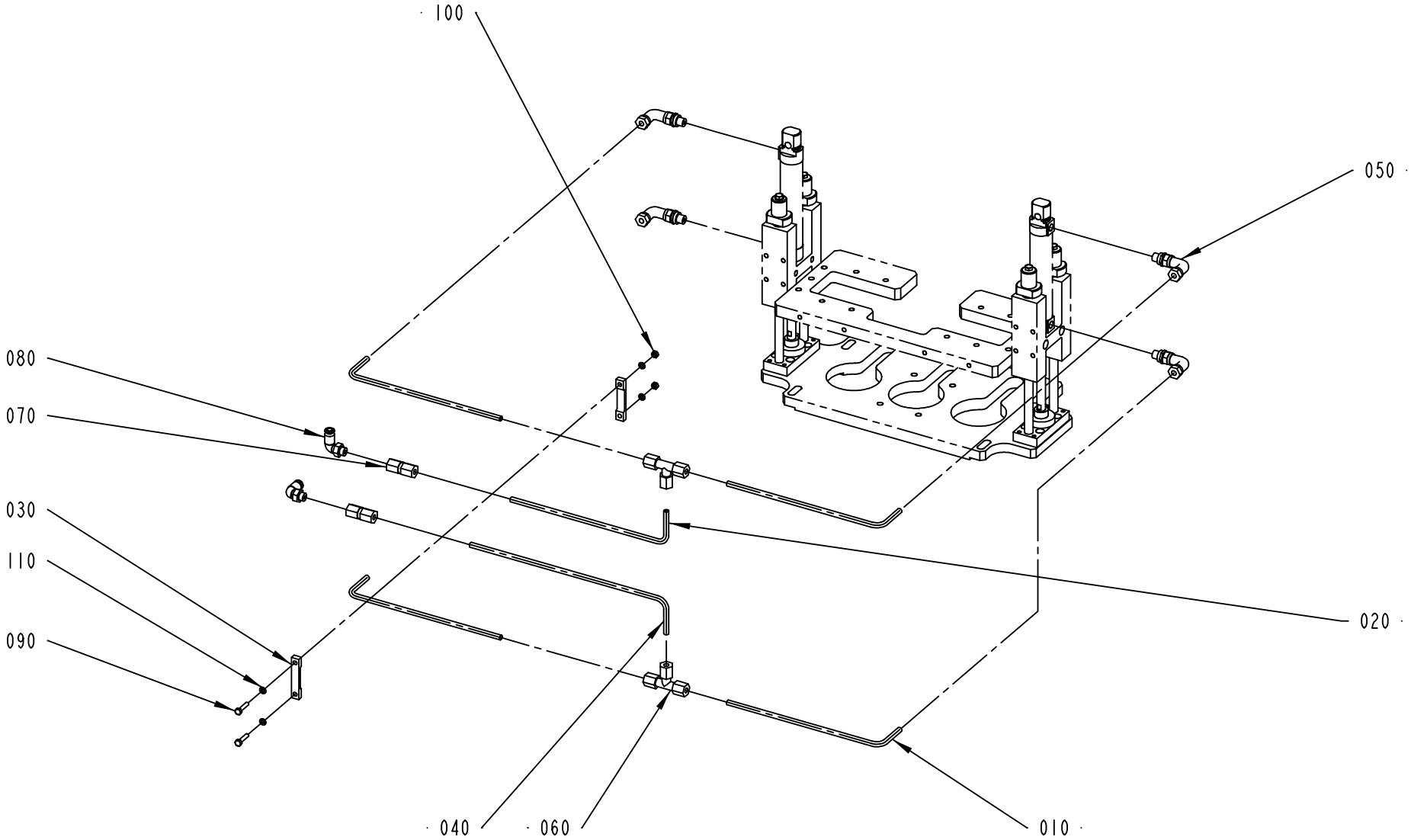

2535540-1
ECM 110155

ECM: 141344 - 20031022
Group number: 2535540-0100
Assembly Drawing: 2535540-1_1_AA

Pos	Part No	SP	UN	Qty	Description	Page No
A3/FLEX						
020	2535758-0000	-		1	PIPE	
Common Parts						
010	2535757-0000	-		4	PIPE	
020	2598941-0000	-		1	PIPE	
030	2535759-0000	-		2	BRACKET	
040	2535937-0000	-		1	PIPE	
050	90030-0171	-		4	ADJUSTABLE ELBOW CONNECTION,EXT 6-G1/8	
060	90030-0076	-		2	CONN. T-PIPE T-6	
070	342725-0102	-		2	CONN. STR. PIPE GI-6-G1/8	
080	90458-2956	-		2	ELBOW PIPE JOINT, EXT.THREAD, D=6MM-G1/8	
090	312105-0295	-		2	SCREW M6S ISO4017 M4X20 A470	
100	312605-0312	-		2	HEXAGON NUT, M6M M4 A280	
110	315105-0136	-		4	WASHER BRB4,3XRFR	

Pos	Part No	SP	UN	Qty	Description	Page No

This page is intentionally left blank.

ECM: 138558 - 20031128
Group number: 2636082-0100
Assembly Drawing:

Pos	Part No	SP	UN	Qty	Description	Page No
-						
010	90042-0215	-		1	VALVE BODY 5/2 UNISTABLE	
020	90042-0538	-		1	PILOT VALVE L=500MM	
030	342716-0203	-		2	REDUCER 6-8	
040	90055-0175	-		2	HOSE NIPPLE, EXT.THR. R3/4X19,1 MM	
050	90166-0013	-	MM	4000	TUBE 8 MM PA BLUE	
060	2512829-0000	-		1	PNEUMATIC DIAGRAM	
110	90235-0846	-		1	THROTTLE CHECK VALVE G1/8", MANUAL, 6	
120	90235-0846	-		1	THROTTLE CHECK VALVE G1/8", MANUAL, 6	

Pos	Part No	SP	UN	Qty	Description	Page No

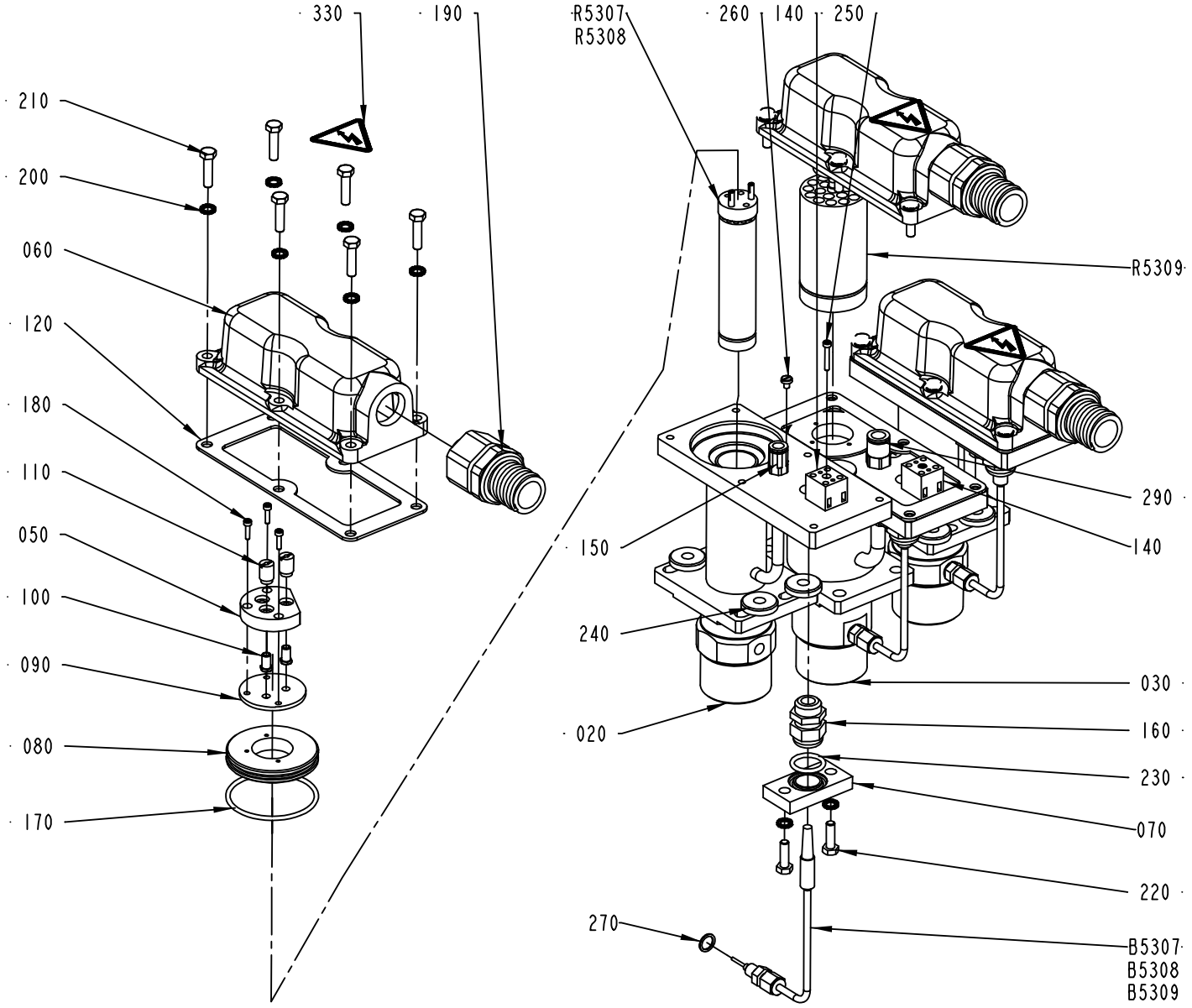

2641480-1
ECM 148268

ECM: 148862 - 20031128
Group number: 2641480-0100
Assembly Drawing: 2641480-1_1_AA

Pos	Part No	SP	UN	Qty	Description	Page No
-						
020	1296070-0000	-		2	HEATING PIPE	
030	1285293-0000	-		1	HEATING PIPE	
050	294464-0000	A		3	BASE PLATE	
060	1484096-0000	-		3	COVER	
070	1285311-0000	-		3	PLATE	
080	1285307-0000	-		3	SPACER	
090	1285308-0000	A		3	GASKET	
100	270927-0000	A		6	SCREW	
110	266739-0000	A		6	CABLE GLAND	
120	1285312-0000	A		3	GASKET	
140	90195-0020	-		3	TERMINAL BLOCK, 1977.2	
150	342722-0204	-		2	PIPE COUPLING	
160	352103-0106	A		3	CABLE GLAND, ST 11, PR18,6/PG11	
170	315204-0303	A		3	O-RING 59,5X3 MM	
180	312115-0226	-		9	SCREW ISO4762 M3X12 A4	
190	353247-0005	-		3	GLAND, PG21, 15455P21S10UL21	
200	90062-0015	-		24	LOCK WASHER SERRAT.EXT.GEAR,6,4/11 H=0,7	
210	312105-0372	-		18	SCREW M6S ISO 4017 M6X25 A480	
220	312105-0370	-		6	SCREW M6S ISO 4017 M6X20 A480	
230	315204-0215	A		3	O-RING 19,2X3 MM	
240	315125-0165	-		8	WASHER TBRSB 8,4X26X5 A4	
250	312115-0230	-		3	SCREW ISO4762 M3X20 A4	
260	312132-0284	-		3	SCREW SLOT. PAN HEAD MSCS M4X5	
270	315234-0109	-		3	WASHER,PL.RND.CU.10,3/13,5 H=1,0	
290	342722-0211	-		1	STRAIGHT COUPLING D=10-G1/4"	
330	359705-0015	-		3	WARNING SIGN ISO, RISK OF ELECTRIC SHOCK	
B5307	90326-0081	A		1	THERMOCOUPLE, ISA TYPE K.	
B5308	90326-0081	A		1	THERMOCOUPLE, ISA TYPE K.	
B5309	90326-0081	A		1	THERMOCOUPLE, ISA TYPE K.	
R5307	90459-0707	-		1	HEATING ELEMENT, 1500W/220V	
R5308	90459-0707	-		1	HEATING ELEMENT, 1500W/220V	
R5309	90206-0030	A		1	HEATING ELEMENT, 3000W, 220V	

Pos	Part No	SP	UN	Qty	Description	Page No

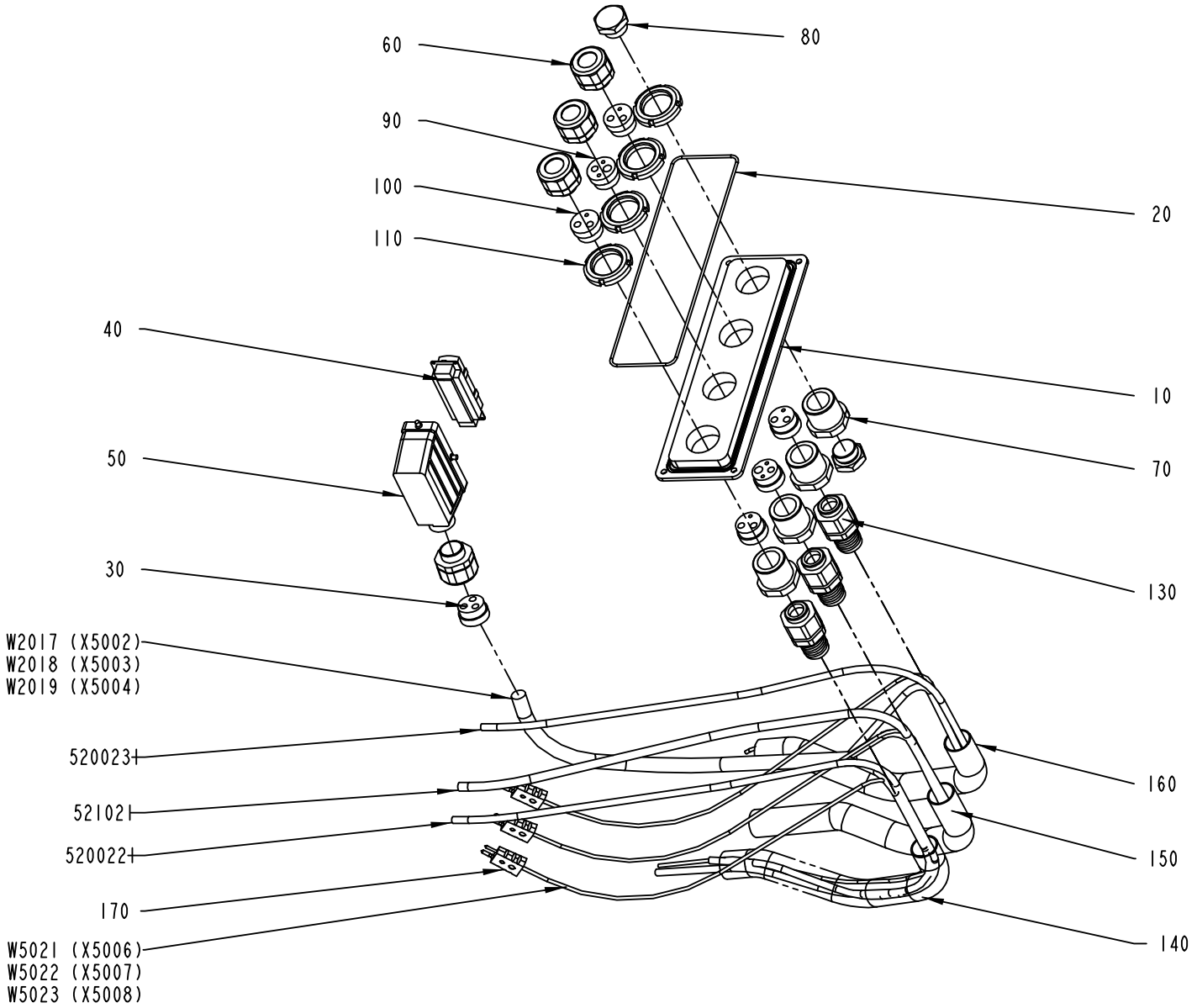

2660376-1
ECM 148268

ECM: 151747 - 20031128
Group number: 2660376-0100
Assembly Drawing: 2660376-1_1_AA

Pos	Part No	SP	UN	Qty	Description	Page No
-						
010	2514370-0000	-		1	PLATE	
020	90161-0001	-	MM	800	O-RING MATERIAL 3 MM	
030	2527371-0000	-		1	INSERT	
040	90110-0150	-		1	MALE INSERT 121110 0000	
050	90110-0228	-		1	CABLE HOOD 24-POL 71.350.2428.0	
060	353241-0003	-		4	EXTENDED WITHOUT INSERT, PG 21	
070	2514372-0000	-		4	BUSHING	
080	2514371-0000	-		2	PLUG	
090	1484093-0000	-		2	INSERT	
100	1484379-0000	-		4	INSERT	
110	312805-0108	-		4	NUT ROUND WITH SLOTS M40X1,5 FE	
130	353247-0005	-		3	GLAND, PG21, 15455P21S10UL21	
140	90152-0070	-	MM	490	METAL HOSE, 32,5X26, UL 2621	
150	90152-0070	-	MM	360	METAL HOSE, 32,5X26, UL 2621	
160	90152-0070	-	MM	510	METAL HOSE, 32,5X26, UL 2621	
170	90326-0022	-		3	PLUG, MALE YELLOW CR-AL	
5200221	90166-0013	-	MM	1200	TUBE 8 MM PA BLUE	
5200231	90166-0013	-	MM	1200	TUBE 8 MM PA BLUE	
521021	90166-0216	-	MM	1150	TUBE 10 MM PUR BLUE	
W2017	351150-0412	-	MM	2000	CABLE OLFLEX 3X1,5 MM2 LIGHT/GREY	
W2018	351150-0412	-	MM	2000	CABLE OLFLEX 3X1,5 MM2 LIGHT/GREY	
W2019	351150-0412	-	MM	2000	CABLE OLFLEX 3X1,5 MM2 LIGHT/GREY	
W5021	90220-0034	-	MM	7500	THERMOCABLE TEX/SITW-20F-KX 2X0,5MM2	
W5022	90220-0034	-	MM	7500	THERMOCABLE TEX/SITW-20F-KX 2X0,5MM2	
W5023	90220-0034	-	MM	7500	THERMOCABLE TEX/SITW-20F-KX 2X0,5MM2	

Pos	Part No	SP	UN	Qty	Description	Page No

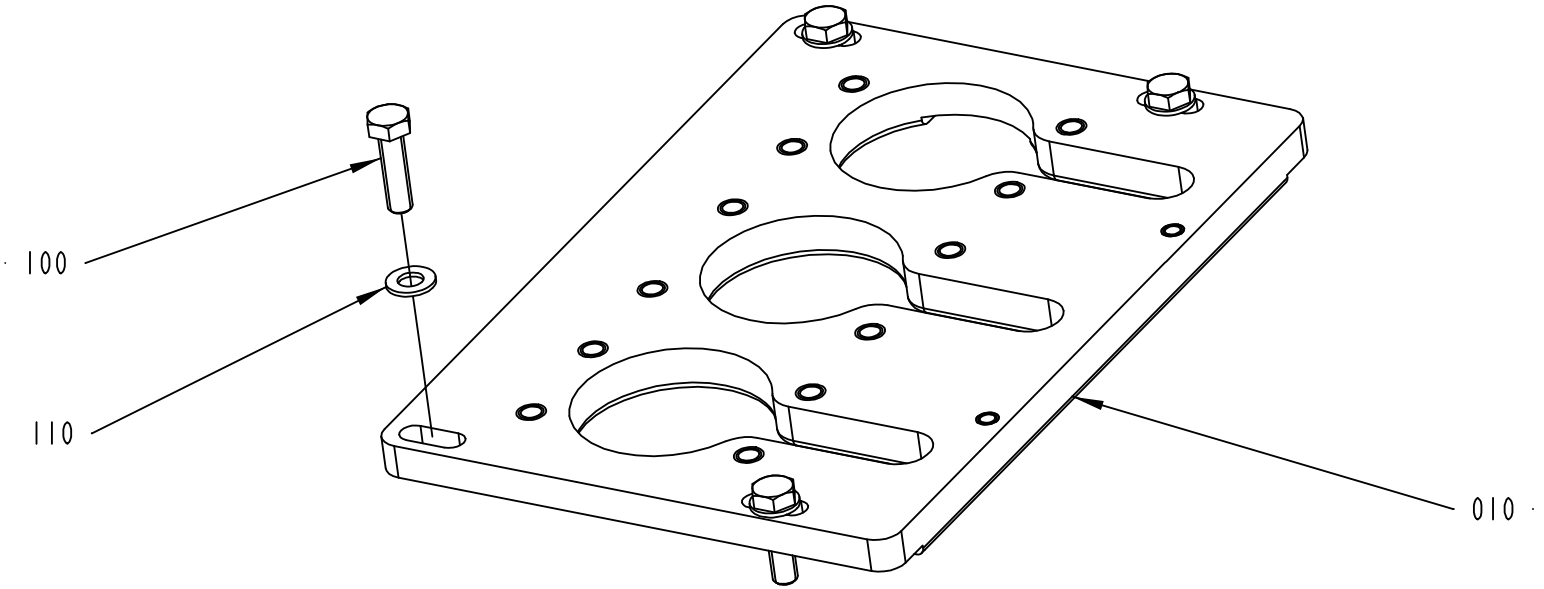

2544339-1
ECM 116811

ECM: 116811 - 20030403
Group number: 2544339-0100
Assembly Drawing: 2544339-1_1_AA

Pos	Part No	SP	UN	Qty	Description	Page No
-						
010	1285291-0000	-		1	PLATE	
100	315105-0165	-		4	WASHER BRB8,4X16RFR	
110	312105-0453	-		4	SCREW M6S ISO 4017 M8X25 A480	

Pos	Part No	SP	UN	Qty	Description	Page No

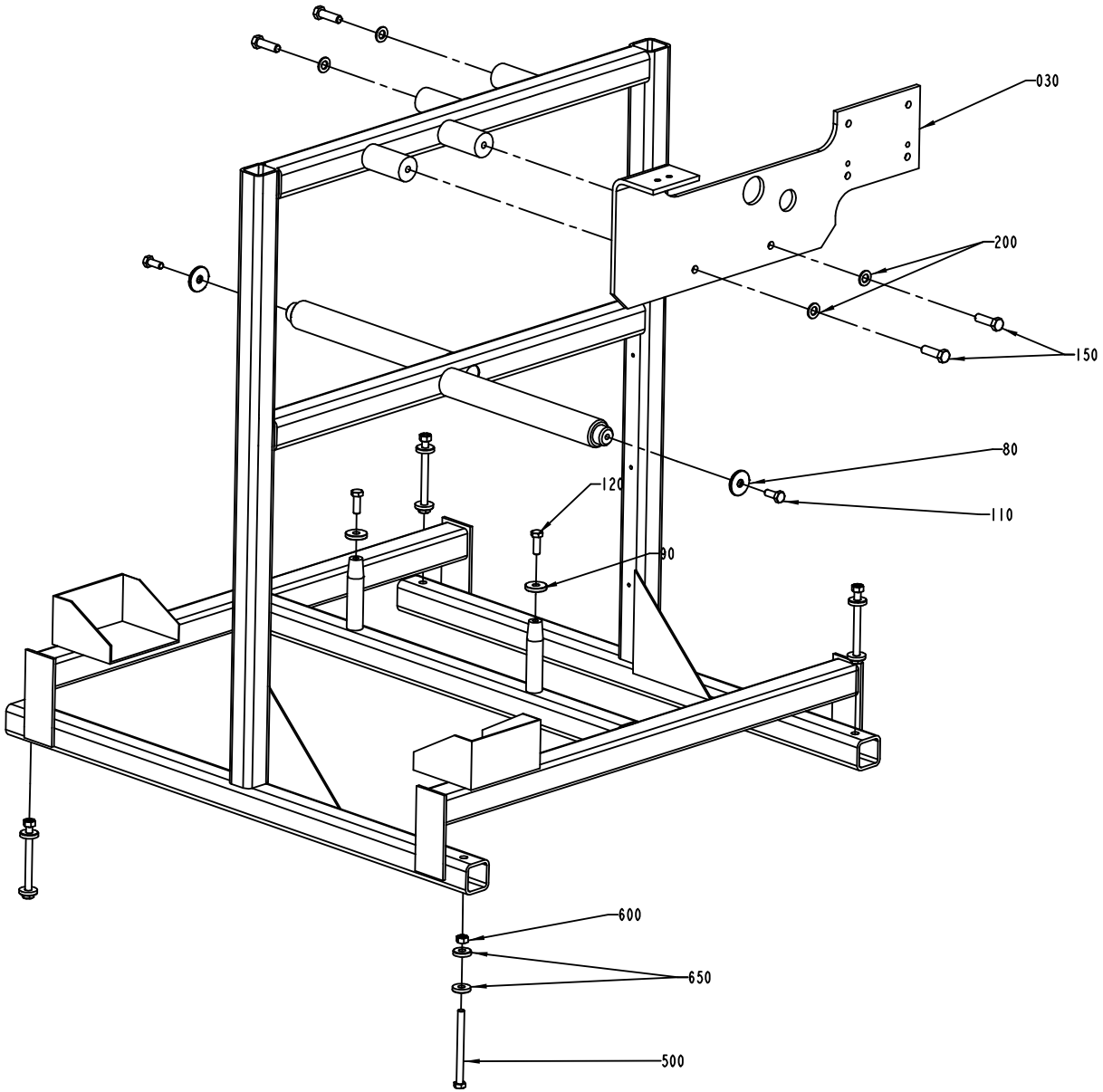

S-1361935-1
ECN 73332

ECM: 73332 - 20000411
Group number: 1361935-0100
Assembly Drawing: 1361935-1_1_AB

Pos	Part No	SP	UN	Qty	Description	Page No
-						
020	1361934-0000	-		1	FRAME	
030	1363780-0000	-		1	CARRIER	
080	1144620-0000	-		2	WASHER	
090	1144681-0000	-		2	WASHER	
110	312105-0493	-		2	SCREW M6S ISO 4017 M10X25 A480	
120	312105-0495	-		2	SCREW M6S ISO 4017 M10X30 A480	
150	312105-0540	-		4	SCREW M6S ISO 4017 M12X40 A480	
200	315105-0178	-		4	WASHER BRB13X24RFR	
500	312101-0515	-		4	SCREW M6S M10X120 FZB	
600	312601-0320	-		4	NUT M6M 10-8 FZB	
650	315121-0173	-		8	WASHER PLAIN, TBRSB 10,5/28 H=6	

Pos	Part No	SP	UN	Qty	Description	Page No

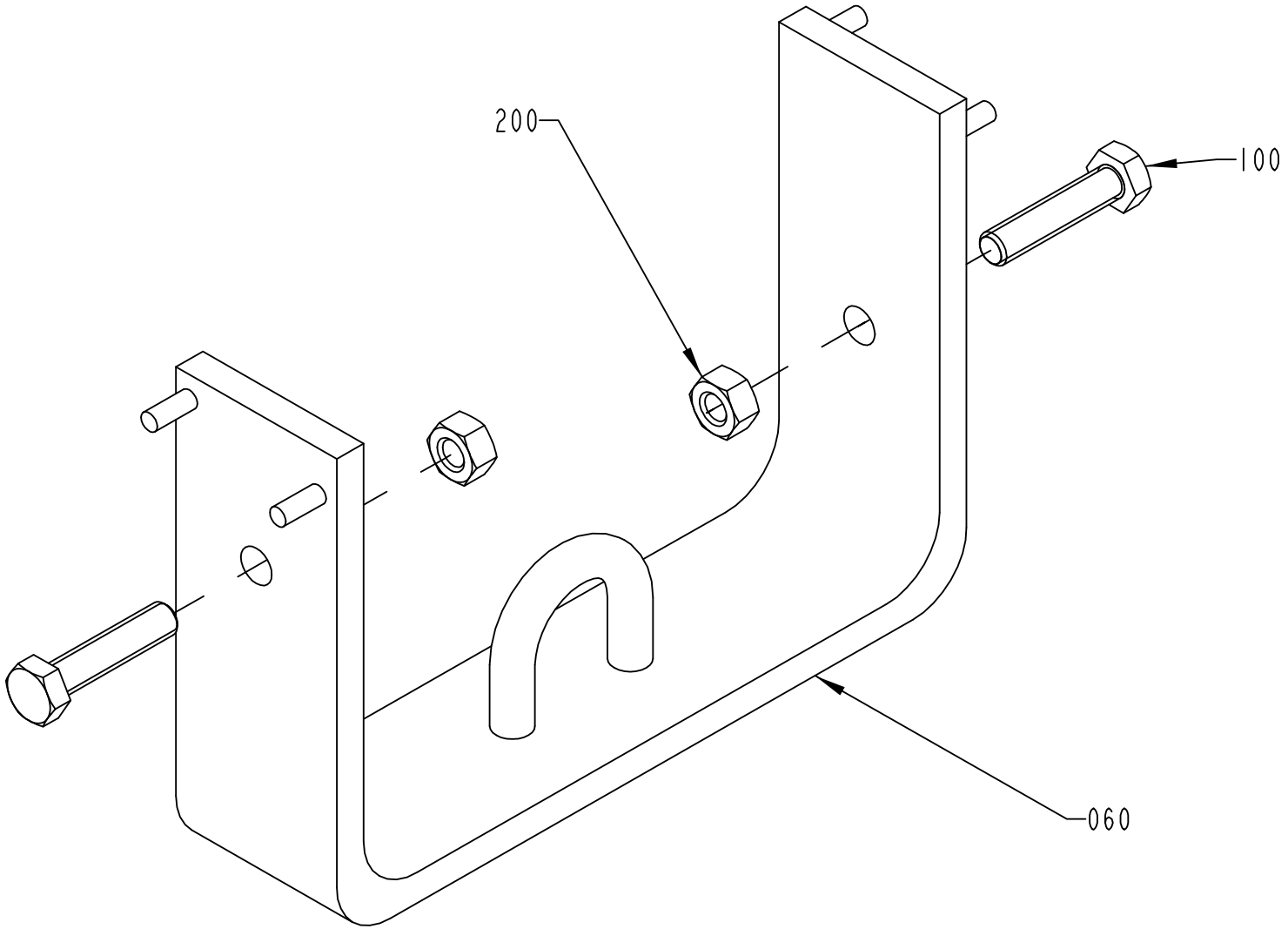

S-1361558-1
ECN 70383

ECM: 73332 - 20000411
Group number: 1361558-0100
Assembly Drawing: 1361558-1_1_AA

Pos	Part No	SP	UN	Qty	Description	Page No
-						
020	1363791-0000	-		1	BRACKET	
100	312109-0500	-		2	SCREW M6S ISO 4017 M10X45 A480	
200	312605-0320	-		2	HEXAGON NUT, M6M M10 A280	

Pos	Part No	SP	UN	Qty	Description	Page No

HOLDING FIXTURE

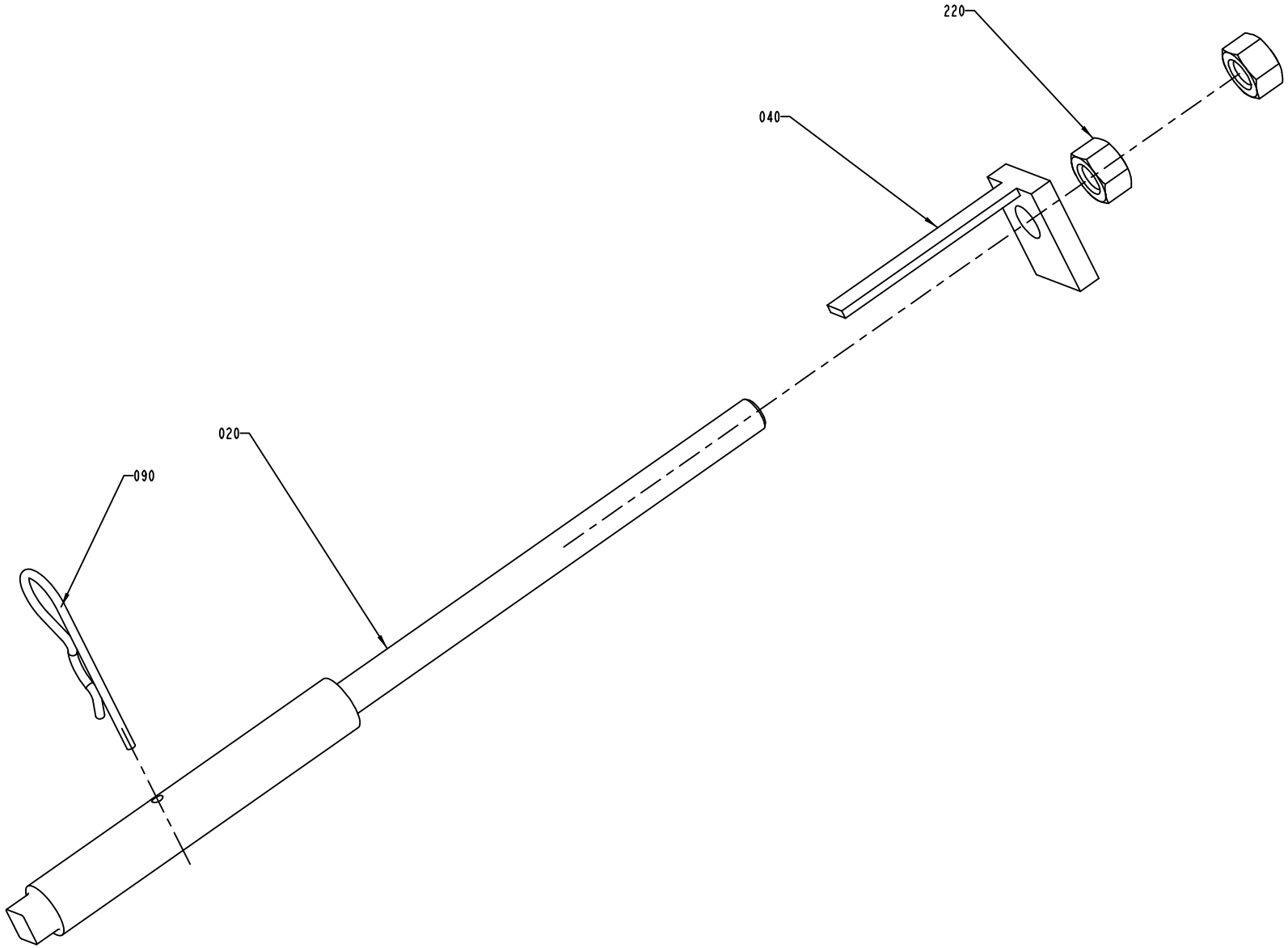

S-599815-I
ECN 70383

ECM: 118983 - 20021217
Group number: 599815-0100
Assembly Drawing: 599815-1_1_AA

Pos	Part No	SP	UN	Qty	Description	Page No
-						
020	598095-0000	-		2	SCREW	
040	598096-0000	-		2	WASHER	
090	90258-0060	-		2	COTTER	
220	312605-0322	-		4	HEXAGON NUT, M6M M12 A280	

Pos	Part No	SP	UN	Qty	Description	Page No

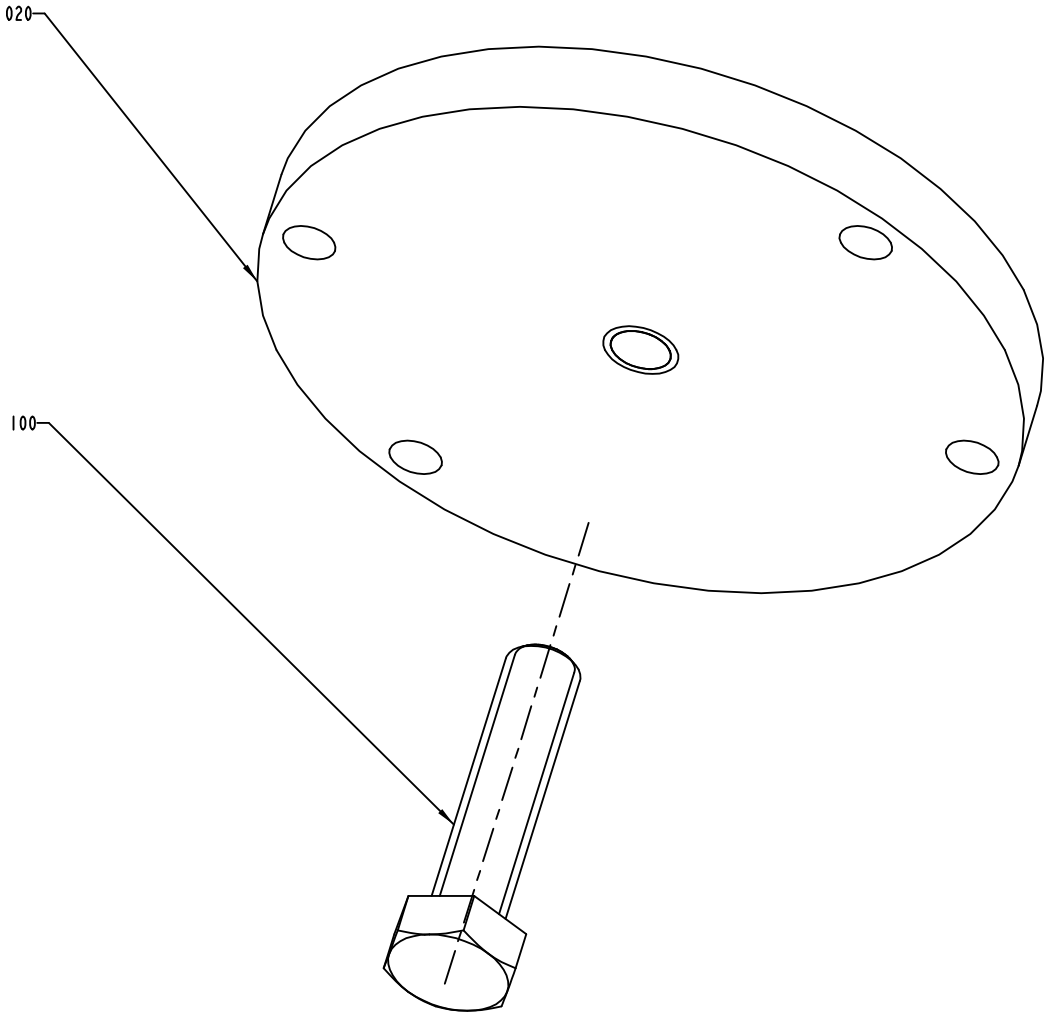

S-1361559-1
ECN 70383

ECM: 70383 - 19990301
Group number: 1361559-0100
Assembly Drawing: 1361559-1_1_AA

Pos	Part No	SP	UN	Qty	Description	Page No
-						
020	1361547-0000	-		1	PULLER	
100	312109-0500	-		1	SCREW M6S ISO 4017 M10X45 A480	

Pos	Part No	SP	UN	Qty	Description	Page No

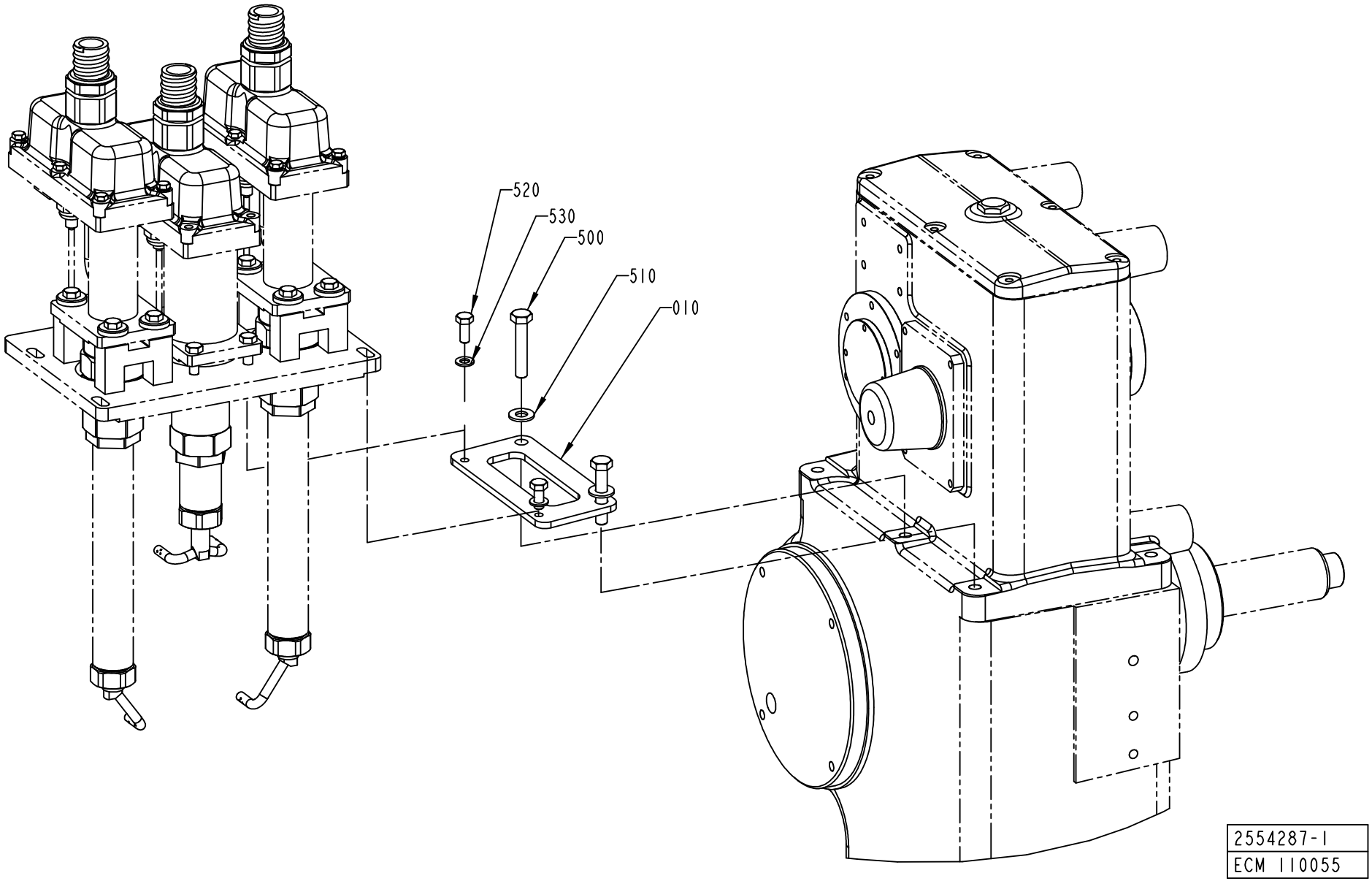
520
530
500
510
010
2554287-1
ECM 110055

ECM: 111096 - 20021013
Group number: 2554287-0100
Assembly Drawing: 2554287-1_1_AA

Pos	Part No	SP	UN	Qty	Description	Page No
-						
010	2554242-0000	-		1	PLATE	
500	312105-0502	-		2	SCREW M6S ISO 4014 M10X55 A480	
510	315105-0173	-		2	WASHER BRB10,5X22RFR	
520	312105-0451	-		2	SCREW M6S ISO 4017 M8X20 A480	
530	315105-0165	-		2	WASHER BRB8,4X16RFR	

Pos	Part No	SP	UN	Qty	Description	Page No

PAPER REEL HOLDER

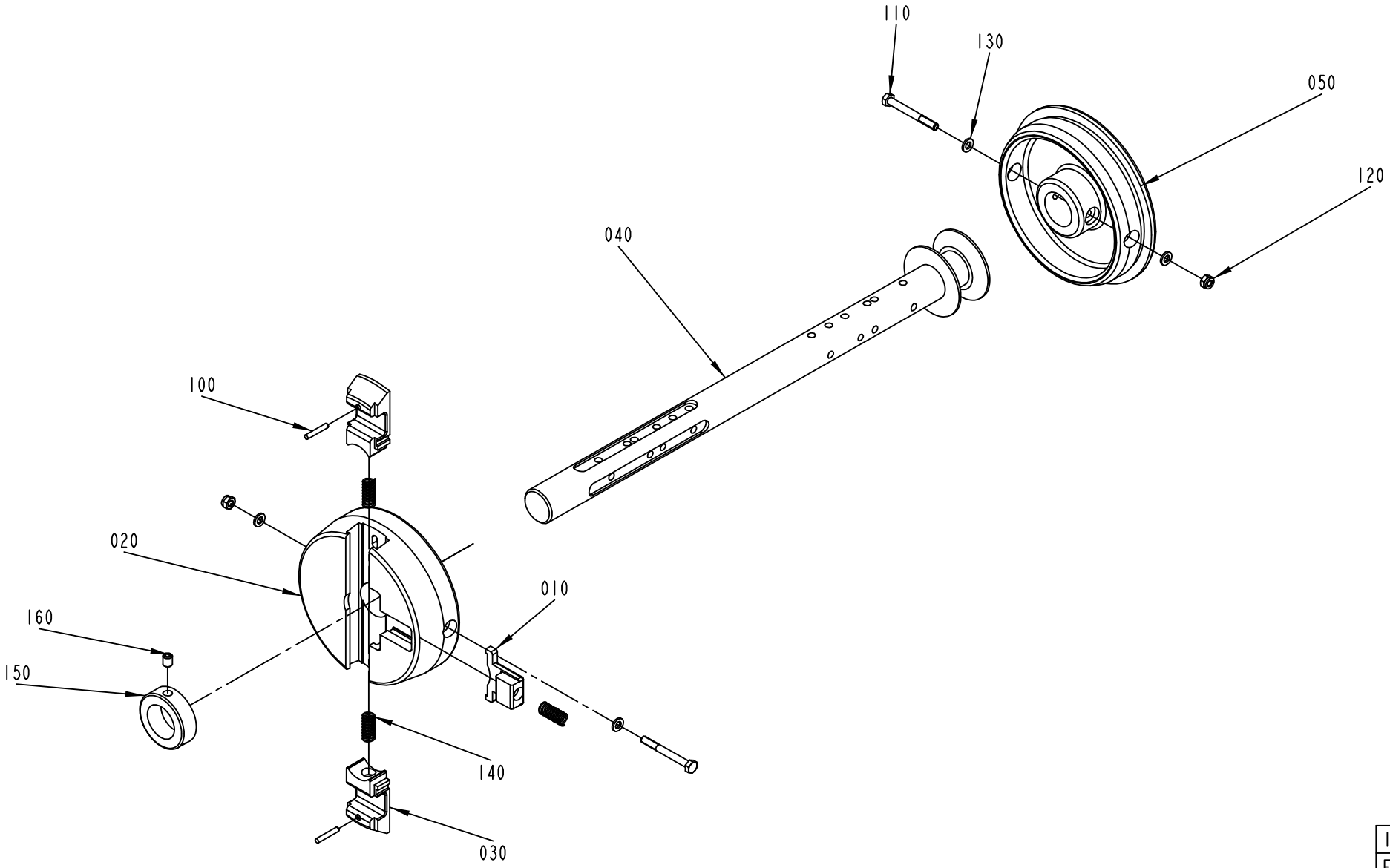

1499571-2
ECM 149839

ECM: 151708 - 20040112
Group number: 1499571-0100
Assembly Drawing: 1499571-2_1_AE

Pos	Part No	SP	UN	Qty	Description	Page No
A3/FLEX						
040	2656299-0000	-		1	SHAFT	
150	315742-0123	-		1	RETAINING RING 32 SMS 199	
160	312318-0445	-		1	SCREW ISO4029 M8X10 A4	
Common Parts						
010	272728-0000	A		1	BARRIER	
020	1512265-0000	A		1	SLEEVE	
030	575002-0000	A		2	PLUNGER	
050	1512266-0000	A		1	SLEEVE	
100	311103-0274	-		2	PARALLELL PIN, M6, 4X25 MM	
110	312105-0381	-		2	SCREW M6S ISO 4014 M6X55 A480	
120	312812-0316	-		2	HEXAGON NUT, NY-LOCK M6 A480	
130	315105-0153	-		4	WASHER BRB6,4X12RFR	
140	90335-0025	A		3	COMP. SPRING 22010, 1X11X26	

Pos	Part No	SP	UN	Qty	Description	Page No

This page is intentionally left blank.

ECM: 163629 - 20040309
Group number: 2641396-0100
Assembly Drawing:

Pos	Part No	SP	UN	Qty	Description	Page No
TBA 0200S						
010	2523766-0010	-		4	BRACKET	
020	2508205-0010	-		8	BRACKET	
TBA 0330S, TBA 0200B, TBA 0250B						
010	2523766-0007	-		4	BRACKET	
020	2508205-0007	-		8	BRACKET	
TBA 0500B, TBA 1000B, TBA 1500S						
010	2523766-0001	-		4	BRACKET	
020	2508205-0001	-		8	BRACKET	
TBA 1000S						
010	2523766-0002	-		4	BRACKET	
020	2508205-0002	-		8	BRACKET	
TBA 1000SQ						
010	2523766-0003	-		4	BRACKET	
020	2508205-0003	-		8	BRACKET	

Pos	Part No	SP	UN	Qty	Description	Page No

This page is intentionally left blank.

ECM: 162656 - 20040309
Group number: 2641398-0100
Assembly Drawing:

Pos	Part No	SP	UN	Qty	Description	Page No
TBA 0330S, TBA 1000SQ, TBA 0200B, TBA 0250B, TBA 1500S						
010	1511769-0000	A		1	ROLLER	
TBA 0500B, TBA 1000S, TBA 1000B, TBA 0200S						
010	1538496-0000	A		1	ROLLER	

Pos	Part No	SP	UN	Qty	Description	Page No

This page is intentionally left blank.

ECM: 162655 - 20040309
Group number: 2655614-0100
Assembly Drawing:

Pos	Part No	SP	UN	Qty	Description	Page No
TBA 0200B QC, TBA 0330S QC, TBA 0250B QC						
010	67380-0214	A		1	TRANSFORMER	
TBA 0200S, TBA 1500S, TPA 1000SQ						
010	67380-0213	A		1	TRANSFORMER	
010	67380-0213	A		1	TRANSFORMER	
TBA 0500B, TBA 1000S, TBA 1000SQ, TBA 1000B						
010	67380-0207	A		1	TRANSFORMER	
010	67380-0207	A		1	TRANSFORMER	

Pos	Part No	SP	UN	Qty	Description	Page No

Tetra Pak

SPC
Spare Parts Catalogue

This page is intentionally left blank.

ECM: 166102 - 20040319
Group number: 2593831-0100
Assembly Drawing:

Pos	Part No	SP	UN	Qty	Description	Page No
TBA 0200B						
010	2594512-0103	-		2	VOLUME FLAP	
010	2594512-0105	-		2	VOLUME FLAP	
020	1548460-0103	-		2	VOLUME FLAP	
020	1548460-0105	-		2	VOLUME FLAP	
030	2527703-0103	-		1	GUIDE	
030	2527703-0104	-		1	GUIDE	
040	2527704-0103	-		1	GUIDE	
040	2527704-0104	-		1	GUIDE	
090	2604508-0000	-		2	SPACER	
TBA 0250B						
010	2594512-0103	-		2	VOLUME FLAP	
010	2594512-0104	-		2	VOLUME FLAP	
020	1548460-0103	-		2	VOLUME FLAP	
020	1548460-0104	-		2	VOLUME FLAP	
030	2527703-0103	-		1	GUIDE	
030	2527703-0105	-		1	GUIDE	
040	2527704-0103	-		1	GUIDE	
040	2527704-0105	-		1	GUIDE	**4-5**
TBA 0330S						
010	2594512-0104	-		2	VOLUME FLAP	
010	2594512-0105	-		2	VOLUME FLAP	
020	1548460-0104	-		2	VOLUME FLAP	
020	1548460-0105	-		2	VOLUME FLAP	
030	2527703-0104	-		1	GUIDE	
030	2527703-0105	-		1	GUIDE	
040	2527704-0104	-		1	GUIDE	
040	2527704-0105	-		1	GUIDE	**4-5**
080	2603489-0000	-		8	BOTTOM	
090	2604508-0000	-		2	SPACER	
TBA 0500B						
010	2594512-0101	-		2	VOLUME FLAP	**4-7, 4-9**
020	1548460-0101	-		2	VOLUME FLAP	**4-11**
030	2527703-0101	-		1	GUIDE	**4-13**
040	2527704-0101	-		1	GUIDE	
050	1285023-0000	-		1	SIDE PLATE	
060	1285022-0000	-		1	SIDE PLATE	
TBA 1000B						
010	2594512-0102	-		2	VOLUME FLAP	
020	1548460-0102	-		2	VOLUME FLAP	
030	2527703-0102	-		1	GUIDE	
040	2527704-0102	-		1	GUIDE	
050	2605993-0000	-		1	SIDE PLATE	
060	2605994-0000	-		1	SIDE PLATE	
Common Parts						
100	1363770-0000	-		1	BOX	

Machine Type | Group Description | Used-In | Group Number | Page No

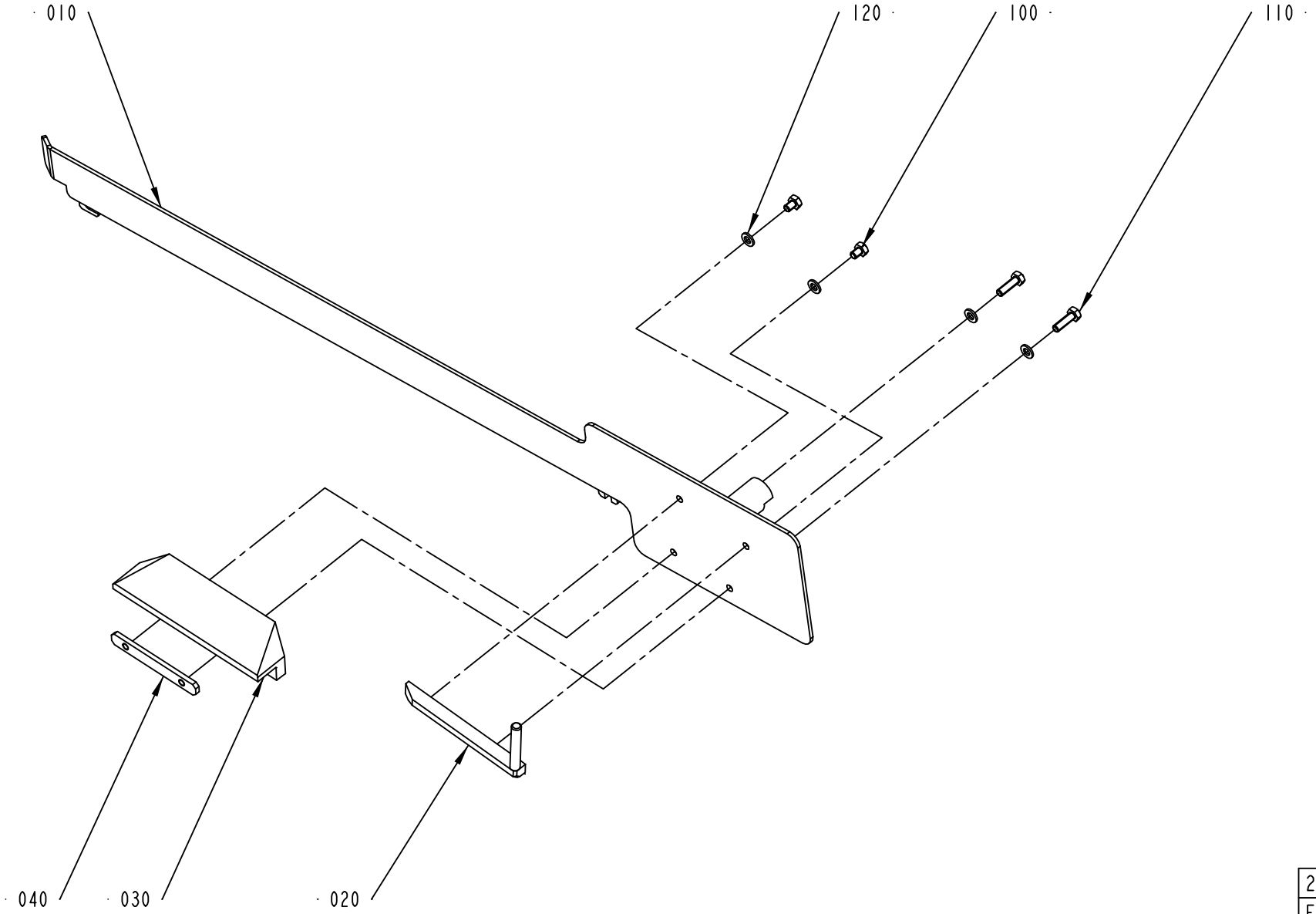

2527704-1
ECM 110157

ECM: 110157 -
Group number: 2527704-0105
Assembly Drawing: 2527704-1_1_AA

Pos	Part No	SP	UN	Qty	Description	Page No
TBA 0200B QC (See drawing on pages: 3-52, 4-4)						
010	2526578-0000	-		1	GUIDE	
020	1348148-0000	-		1	BAR	
030	1348136-0000	-		1	SLIDE	
040	1348169-0000	-		1	PLATE	
050	2664200-0000	-		1	GUIDE	
130	312605-0316	-		2	HEXAGON NUT, M6M M6 A280	
TBA 0250B QC (See drawing on pages: 3-52, 4-4)						
010	2526578-0000	-		1	GUIDE	
040	1348169-0000	-		1	PLATE	
050	2664200-0000	-		1	GUIDE	
130	312605-0316	-		2	HEXAGON NUT, M6M M6 A280	
TBA 0330S QC (See drawing on pages: 3-52, 4-4)						
010	2526578-0000	-		1	GUIDE	
Common Parts						
100	312105-0362	-		2	SCREW M6S ISO 4017 M6X8 A480	

Pos	Part No	SP	UN	Qty	Description	Page No

Machine Type | Group Description | Used-In | Group Number | Page No

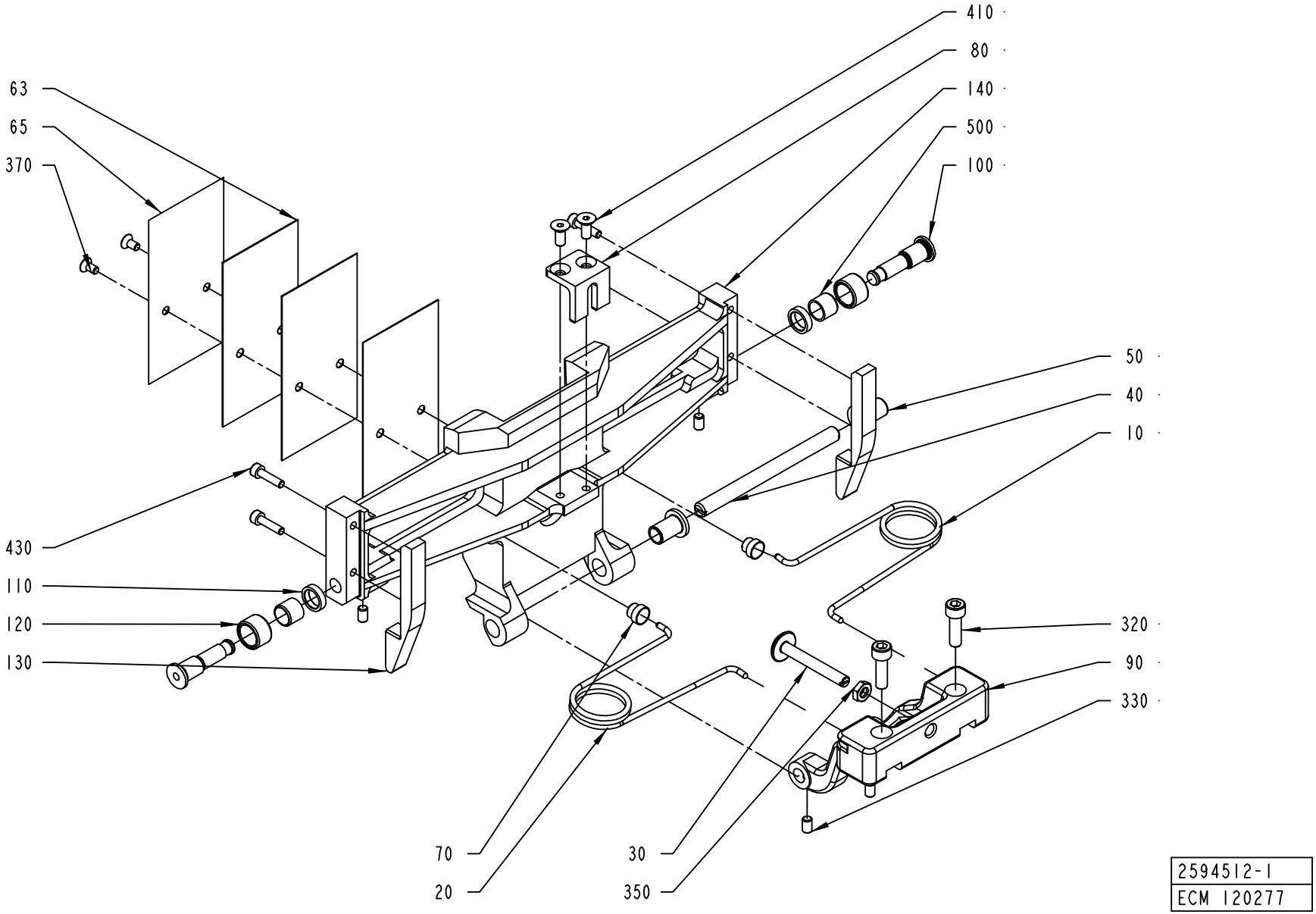
410
80
140
500
100
63
65
370
50
40
10
430
110
120
130
320
90
330
70
20
30
350
2594512-1
ECM 120277

ECM: 149527 -
Group number: 2594512-0101
Assembly Drawing: 2594512-1_1_AA

This list covers pages from 4-6 to 4-9

Pos	Part No	SP	UN	Qty	Description	Page No
TBA 0250B (See drawing on pages: 2-36, 4-8)						
010	1350263-0000	A		1	SPRING RIGHT	
020	1350264-0000	A		1	SPRING LEFT	
030	1511338-0000	A		1	STOP	
040	1499327-0000	A		1	SHAFT	
050	2530313-0000	A		2	BUSHING	
063	2605166-0000	A		3	VOLUME SHIM	
065	2609925-0000	A		1	VOLUME BULGE	
080	2606219-0000	A		1	STOPPER	
090	2606102-0000	A		1	FLAP HOLDER	
130	2606218-0000	A		2	CAM	
140	2605191-0000	A		1	VOLUME FLAP	
320	312115-0368	-		2	SCREW ISO4762 M6X16 A4	
370	312155-0287	-		2	SCREW EN 10642 MF6S M4X8 A480	
410	312155-0327	-		2	SCREW EN 10642 MF6S M5X12 A480	
430	312115-0291	-		2	SCREW ISO4762 M4X12 A4	
440	312115-0289	-		2	SCREW ISO4762 M4X10 A4	
TBA 0330S, TBA 0200B (See drawing on pages: 2-34, 4-6)						
010	1350263-0000	A		1	SPRING RIGHT	
020	1350264-0000	A		1	SPRING LEFT	
040	1499327-0000	A		1	SHAFT	
050	2530313-0000	A		2	BUSHING	
320	312115-0368	-		2	SCREW ISO4762 M6X16 A4	
370	312155-0287	-		2	SCREW EN 10642 MF6S M4X8 A480	
TBA 0500B (See drawing on pages: 2-34, 4-6)						
010	1350263-0000	A		1	SPRING RIGHT	
020	1350264-0000	A		1	SPRING LEFT	
030	1499348-0000	A		1	STOP	
040	1487946-0000	A		1	SHAFT	
050	1487948-0000	A		2	BUSHING	
063	1511336-0000	A		3	VOLUME SHIM	
065	1511335-0000	A		1	VOLUME BULGE	
080	1499349-0000	A		1	STOPPER	
090	1499346-0000	A		1	FLAP HOLDER	
130	1499350-0000	A		2	CAM	
140	1499357-0000	A		1	VOLUME FLAP	
320	312115-0368	-		2	SCREW ISO4762 M6X16 A4	
370	312145-0289	-		2	SCREW ISO 2009 MFS M4X10 A4	
410	312155-0323	-		2	SCREW EN 10642 MF6S M5X8 A480	
430	312115-0291	-		4	SCREW ISO4762 M4X12 A4	
TBA 1000B (See drawing on pages: 2-34, 4-6)						
010	1348483-0000	A		1	SPRING RIGHT	
020	1348484-0000	A		1	SPRING LEFT	
030	1487945-0000	A		1	STOP	
040	1487946-0000	A		1	SHAFT	
050	1487948-0000	A		2	BUSHING	
063	1511337-0000	A		3	VOLUME SHIM	
065	26075-0000	A		1	VOLUME BULGE	
080	1487943-0000	A		1	STOPPER	
090	1499345-0000	A		1	FLAP HOLDER	
130	1499356-0000	A		2	CAM	
140	1499358-0000	A		1	VOLUME FLAP	
320	312115-0368	-		2	SCREW ISO4762 M6X16 A4	
370	312141-0222	-		2	SCREW ISO 2009 MFS M3X8 4.8 EL.PL	
410	312115-0323	-		2	SCREW ISO4762 M5X8 A4	
430	312115-0287	-		4	SCREW ISO4762 M4X8 A4	
Common Parts						
030	1511339-0000	A		1	STOP	
063	2654290-0000	A		3	VOLUME SHIM	
063	1538637-0000	A		3	VOLUME SHIM	
065	1524310-0000	A		1	VOLUME BULGE	
065	979931-0000	A		1	VOLUME BULGE	
070	1144601-0000	A		2	GUIDE STUD	
080	1499328-0000	A		1	STOPPER	
080	1499336-0000	A		1	STOPPER	
090	2605869-0000	A		1	FLAP HOLDER	
100	1512146-0000	A		2	AXLE PIN	
110	1512147-0000	A		2	WASHER	
120	1499355-0000	A		2	ROLLER	
130	2629236-0000	A		2	CAM	
130	2629237-0000	A		2	CAM	
140	2604495-0000	A		1	VOLUME FLAP	
140	2604493-0000	A		1	VOLUME FLAP	
330	312318-0323	-		4	SCREW ISO4029 M5X8 A4	
350	312625-0316	-		1	HEXAGON THIN NUT, EN 24035 ML6M M6 A4	
410	312155-0325	-		2	SCREW EN 10642 MF6S M5X10 A480	
430	312115-0293	-		4	SCREW ISO4762 M4X16 A4	
500	321136-0140	A		2	BUSHING, 10X12X10 MM	

Machine Type | Group Description | Used-In | Group Number | Page No

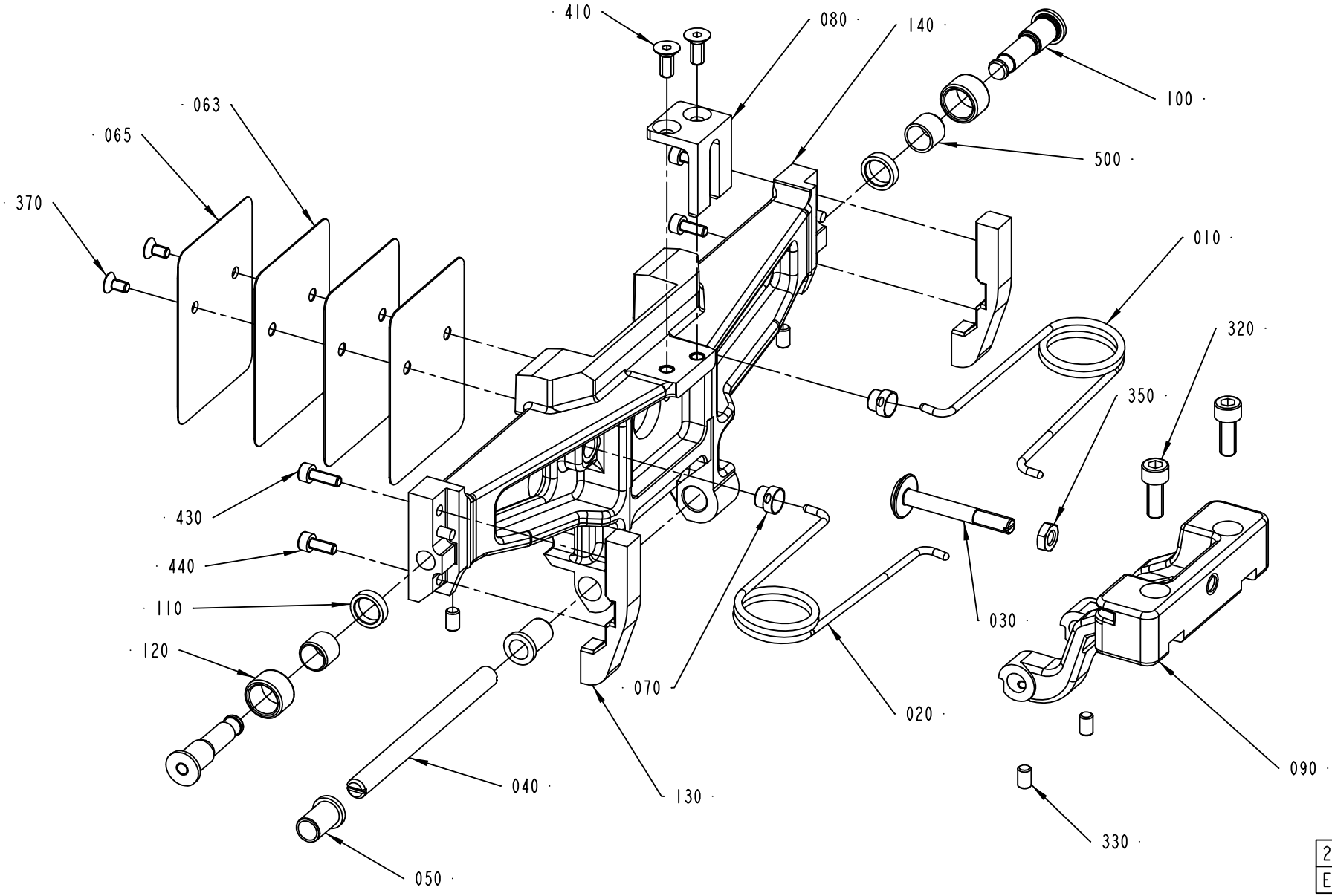
410
080
140
100
063
065
500
370
010
320
350
430
440
110
120
030
070
020
090
040
130
330
050
2594512-2
ECM 149527

ECM: 149527 -
Group number: 2594512-0101
Assembly Drawing: 2594512-2_1_AA

This list covers pages from 4-6 to 4-9

Pos	Part No	SP	UN	Qty	Description	Page No
TBA 0250B (See drawing on pages: 2-36, 4-8)						
010	1350263-0000	A		1	SPRING RIGHT	
020	1350264-0000	A		1	SPRING LEFT	
030	1511338-0000	A		1	STOP	
040	1499327-0000	A		1	SHAFT	
050	2530313-0000	A		2	BUSHING	
063	2605166-0000	A		3	VOLUME SHIM	
065	2609925-0000	A		1	VOLUME BULGE	
080	2606219-0000	A		1	STOPPER	
090	2606102-0000	A		1	FLAP HOLDER	
130	2606218-0000	A		2	CAM	
140	2605191-0000	A		1	VOLUME FLAP	
320	312115-0368	-		2	SCREW ISO4762 M6X16 A4	
370	312155-0287	-		2	SCREW EN 10642 MF6S M4X8 A480	
410	312155-0327	-		2	SCREW EN 10642 MF6S M5X12 A480	
430	312115-0291	-		2	SCREW ISO4762 M4X12 A4	
440	312115-0289	-		2	SCREW ISO4762 M4X10 A4	
TBA 0330S, TBA 0200B (See drawing on pages: 2-34, 4-6)						
010	1350263-0000	A		1	SPRING RIGHT	
020	1350264-0000	A		1	SPRING LEFT	
040	1499327-0000	A		1	SHAFT	
050	2530313-0000	A		2	BUSHING	
320	312115-0368	-		2	SCREW ISO4762 M6X16 A4	
370	312155-0287	-		2	SCREW EN 10642 MF6S M4X8 A480	
TBA 0500B (See drawing on pages: 2-34, 4-6)						
010	1350263-0000	A		1	SPRING RIGHT	
020	1350264-0000	A		1	SPRING LEFT	
030	1499348-0000	A		1	STOP	
040	1487946-0000	A		1	SHAFT	
050	1487948-0000	A		2	BUSHING	
063	1511336-0000	A		3	VOLUME SHIM	
065	1511335-0000	A		1	VOLUME BULGE	
080	1499349-0000	A		1	STOPPER	
090	1499346-0000	A		1	FLAP HOLDER	
130	1499350-0000	A		2	CAM	
140	1499357-0000	A		1	VOLUME FLAP	
320	312115-0368	-		2	SCREW ISO4762 M6X16 A4	
370	312145-0289	-		2	SCREW ISO 2009 MFS M4X10 A4	
410	312155-0323	-		2	SCREW EN 10642 MF6S M5X8 A480	
430	312115-0291	-		4	SCREW ISO4762 M4X12 A4	
TBA 1000B (See drawing on pages: 2-34, 4-6)						
010	1348483-0000	A		1	SPRING RIGHT	
020	1348484-0000	A		1	SPRING LEFT	
030	1487945-0000	A		1	STOP	
040	1487946-0000	A		1	SHAFT	
050	1487948-0000	A		2	BUSHING	
063	1511337-0000	A		3	VOLUME SHIM	
065	26075-0000	A		1	VOLUME BULGE	
080	1487943-0000	A		1	STOPPER	
090	1499345-0000	A		1	FLAP HOLDER	
130	1499356-0000	A		2	CAM	
140	1499358-0000	A		1	VOLUME FLAP	
320	312115-0368	-		2	SCREW ISO4762 M6X16 A4	
370	312141-0222	-		2	SCREW ISO 2009 MFS M3X8 4.8 EL.PL	
410	312115-0323	-		2	SCREW ISO4762 M5X8 A4	
430	312115-0287	-		4	SCREW ISO4762 M4X8 A4	
Common Parts						
030	1511339-0000	A		1	STOP	
063	2654290-0000	A		3	VOLUME SHIM	
063	1538637-0000	A		3	VOLUME SHIM	
065	1524310-0000	A		1	VOLUME BULGE	
065	979931-0000	A		1	VOLUME BULGE	
070	1144601-0000	A		2	GUIDE STUD	
080	1499328-0000	A		1	STOPPER	
080	1499336-0000	A		1	STOPPER	
090	2605869-0000	A		1	FLAP HOLDER	
100	1512146-0000	A		2	AXLE PIN	
110	1512147-0000	A		2	WASHER	
120	1499355-0000	A		2	ROLLER	
130	2629236-0000	A		2	CAM	
130	2629237-0000	A		2	CAM	
140	2604495-0000	A		1	VOLUME FLAP	
140	2604493-0000	A		1	VOLUME FLAP	
330	312318-0323	-		4	SCREW ISO4029 M5X8 A4	
350	312625-0316	-		1	HEXAGON THIN NUT, EN 24035 ML6M M6 A4	
410	312155-0325	-		2	SCREW EN 10642 MF6S M5X10 A480	
430	312115-0293	-		4	SCREW ISO4762 M4X16 A4	
500	321136-0140	A		2	BUSHING, 10X12X10 MM	

Machine Type | Group Description | Used-In | Group Number | Page No

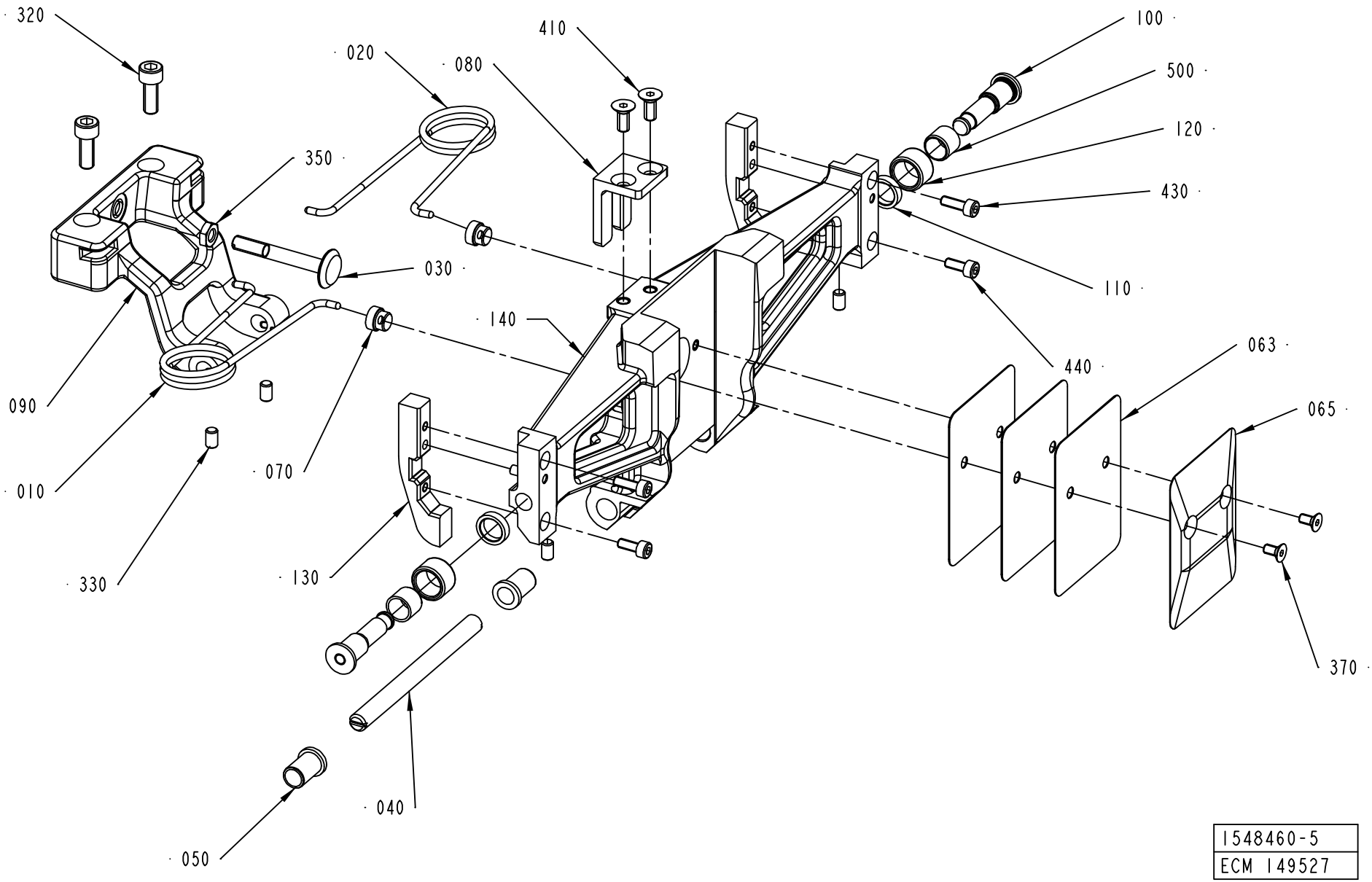
320
020
080
410
100
500
120
430
350
030
110
140
440
063
090
065
010
070
330
130
370
040
050
1548460-5
ECM 149527

ECM: 149527 -
Group number: 1548460-0101
Assembly Drawing: 1548460-5_1_AA

Pos	Part No	SP	UN	Qty	Description	Page No
-						
010	1350263-0000	A		1	SPRING RIGHT	
020	1350264-0000	A		1	SPRING LEFT	
030	1511338-0000	A		1	STOP	
040	1499327-0000	A		1	SHAFT	
050	2530313-0000	A		2	BUSHING	
063	2605166-0000	A		3	VOLUME SHIM	
065	2609925-0000	A		1	VOLUME BULGE	
070	1144601-0000	A		2	GUIDE STUD	
080	2606219-0000	A		1	STOPPER	
090	2606102-0000	A		1	FLAP HOLDER	
100	1512146-0000	A		2	AXLE PIN	
110	1512147-0000	A		2	WASHER	
120	1499355-0000	A		2	ROLLER	
130	2606218-0000	A		2	CAM	
140	2605192-0000	A		1	VOLUME FLAP	
320	312115-0368	-		2	SCREW ISO4762 M6X16 A4	
330	312318-0323	-		4	SCREW ISO4029 M5X8 A4	
350	312625-0316	-		1	HEXAGON THIN NUT, EN 24035 ML6M M6 A4	
370	312155-0287	-		2	SCREW EN 10642 MF6S M4X8 A480	
410	312155-0327	-		2	SCREW EN 10642 MF6S M5X12 A480	
430	312115-0291	-		2	SCREW ISO4762 M4X12 A4	
440	312115-0289	-		2	SCREW ISO4762 M4X10 A4	
500	321136-0140	A		2	BUSHING, 10X12X10 MM	

Pos	Part No	SP	UN	Qty	Description	Page No

Machine Type | Group Description | Used-In | Group Number | Page No

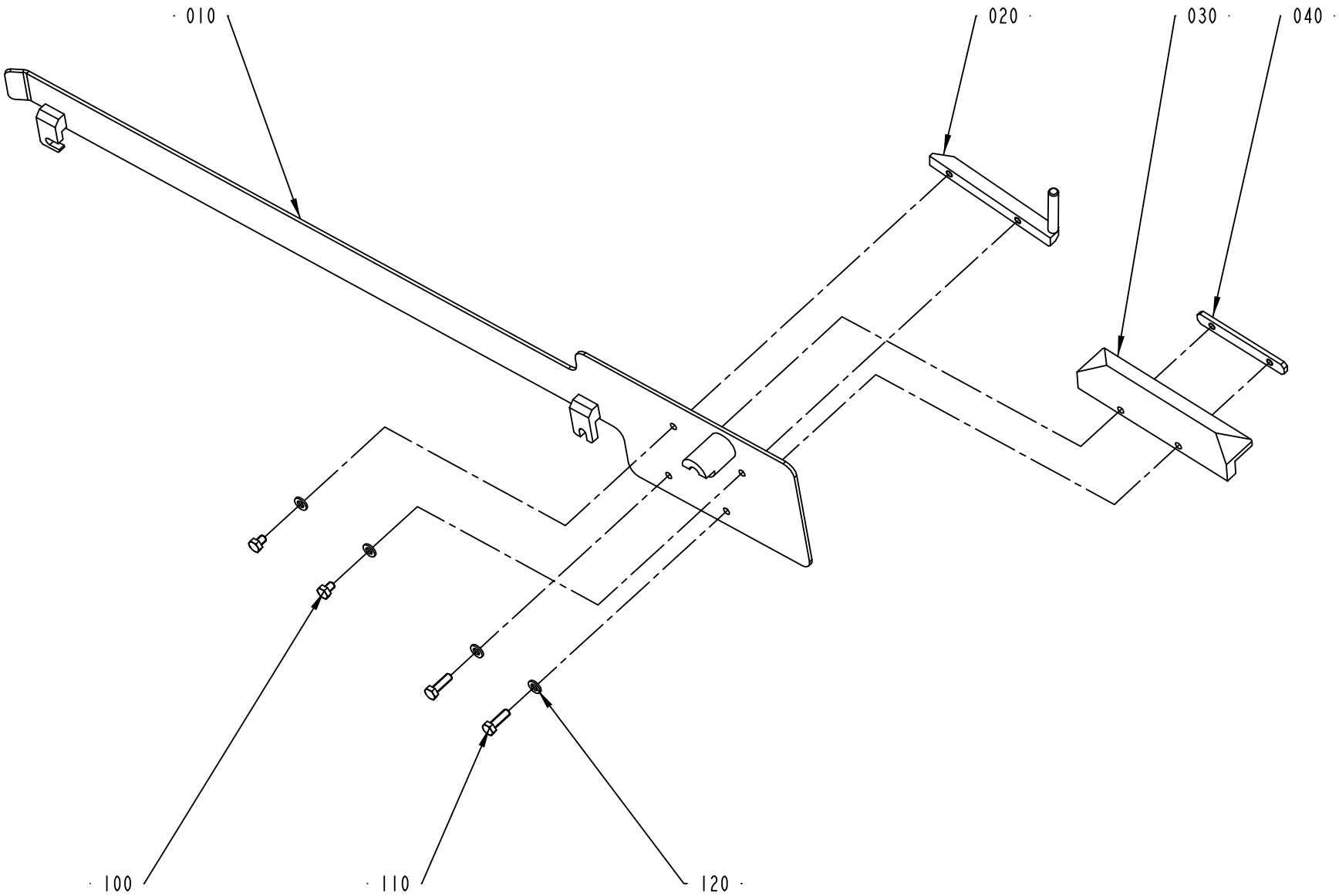

2527703-1
ECM 110157

ECM: 110157 -
Group number: 2527703-0101
Assembly Drawing: 2527703-1_1_AA

Pos	Part No	SP	UN	Qty	Description	Page No
-						
010	2526579-0000	-		1	GUIDE	
020	1348154-0000	-		1	BAR	
030	1348142-0000	-		1	SLIDE	
040	1348169-0000	-		1	PLATE	
050	2664201-0000	-		1	GUIDE	
100	312105-0362	-		2	SCREW M6S ISO 4017 M6X8 A480	
110	312105-0370	-		2	SCREW M6S ISO 4017 M6X20 A480	
120	315105-0153	-		6	WASHER BRB6,4X12RFR	
130	312605-0316	-		2	HEXAGON NUT, M6M M6 A280	

Pos	Part No	SP	UN	Qty	Description	Page No

Tetra Pak

SPC
Spare Parts Catalogue

Part No	Description	Page No
2033-0011	WASHER	1-5, 1-21, 1-23, 1-25, 1-33, 1-35
14600-0000	HOOD	1-7, 1-9
19972-0000	WASHER	2-7, 2-9, 2-13, 2-15
22462-0000	SHAFT	2-73, 2-95
22463-0000	ROLL	2-73, 2-95
23765-0001	INSULATING PIPE	3-87, 3-89
23765-0002	INSULATING PIPE	3-87, 3-89
23765-0003	INSULATING PIPE	3-87, 3-89
23765-0004	INSULATING PIPE	3-87, 3-89
23765-0005	INSULATING PIPE	3-87, 3-89
26075-0000	VOLUME BULGE	2-35, 2-37, 2-39, 2-41, 4-7, 4-9
28509-0000	WASHER	2-51, 2-53, 2-57, 2-83, 2-85, 3-175
32079-0000	WASHER	2-57
32544-0000	INSULATION NUT	2-51, 2-53, 2-57, 2-83, 2-85, 3-175
32644-0000	WASHER	3-175
67379-0101	TRANSFORMER	2-57
67379-0105	TRANSFORMER	2-57
67379-0215	TRANSFORMER	3-175
67379-0216	TRANSFORMER	3-175
67379-0224	TRANSFORMER	3-175
67379-0249	TRANSFORMER	2-57
67379-0269	TRANSFORMER	2-57
67379-0404	TRANSFORMER	1-39
67379-0412	TRANSFORMER	1-39
67379-0413	TRANSFORMER	1-39
67379-0414	TRANSFORMER	1-39
67379-0417	TRANSFORMER	1-39
67380-0207	TRANSFORMER	3-231
67380-0213	TRANSFORMER	3-231
67380-0214	TRANSFORMER	3-231
90028-0020	CONE TUBE 2,5MM	2-7, 2-9, 2-13, 2-15, 2-103, 2-147, 3-77
90028-0022	CONE TUBE 6 MM	2-113, 2-147
90028-0024	CONE TUBE 4 MM	2-103
90028-0025	CONE TUBE 6 MM	3-77
90030-0065	PIPE CONNECTION	2-43, 2-45, 2-77, 2-79
90030-0076	CONN. T-PIPE T-6	3-205
90030-0171	ADJUSTABLE ELBOW CONNECTION,EXT 6-G1/8	3-205
90030-0257	CONN. ELBOW, 8-R1/8, EXT.THREAD	2-59, 2-61, 2-89, 2-91
90032-0039	BLOCK 4 WAYS	2-103
90032-0040	BLOCK 6 WAYS	3-77
90039-0022	TACKLE BLOCK, NO. BV-225/500	1-45
90042-0215	VALVE BODY 5/2 UNISTABLE	3-207
90042-0538	PILOT VALVE L=500MM	3-207
90044-0194	PROX.SW. IN5329/IN3002-BPKG	3-91, 3-93, 3-131, 3-135
90055-0175	HOSE NIPPLE, EXT.THR. R3/4X19,1 MM	3-207
90062-0015	LOCK WASHER SERRAT.EXT.GEAR,6,4/11 H=0,7	3-209
90062-0061	LOCK WASHER NORD-LOCK,6,5/10,8, H=2,6	2-19, 2-21, 2-27, 2-29, 3-133
90087-0019	PLUG M10X1 STAINLESS	2-103, 2-147, 3-77
90091-0169	WEAR RING 12X15X3,2 MM	2-75
90091-0216	PISTON SEAL, GLIDORING 7,1X12X2,2 MM	2-75
90091-0297	RADIAL SEAL 35X47X7 MM DUST LIP	3-77, 3-79, 3-81, 3-91, 3-93, 3-131, 3-135
90091-0298	RADIAL SEAL 45X65X8 MM DUST LIP	3-91, 3-93
90091-0299	RADIAL SEAL 30X52X7 MM DUST LIP	3-79, 3-81
90091-0359	X-SEAL 36,17X2,62 MM	2-49
90091-0360	BACK-UP RING 37,5X1,4 MM	2-49
90091-0361	SCRAPER, EXCLUDER2 30X34,8X3,7 MM	2-65, 2-67
90091-0362	SCRAPER, EXCLUDER2 18X22,8X3,7 MM	2-49
90091-0364	ROD SEAL, STEPSEAL 18X25,3X3,2 MM	2-49
90091-0365	SEAL GLIDORING 11,55X19,05X3,2M	2-75
90091-0366	WEAR RING 18X23X3,9 MM	2-49
90091-0367	WEAR RING 16X18X3,1 MM	2-75
90091-0368	WEAR RING 30X45X5,3 MM	2-49
90091-0380	SCRAPER, EXCLUDER 20X24,8X3,7 MM	3-91, 3-93
90091-0391	SEAL SLYDRING	2-49
90091-0398	PISTON SEAL, GLID RING T 20,5X28X3,2 MM	2-49
90091-0404	RADIAL SEAL 22X40X7 MM DUST LIP	3-135
90091-0406	RADIAL SEAL 25X40X7 MM DUST LIP	3-135
90091-0408	BEARING SEAL 70X78X5	3-91, 3-93
90091-0428	PISTON SEAL, GLID RING T 27,5X34,5X3,2 M	2-49
90091-0440	RADIAL SEAL 22X40X7 MM DUST LIP	3-131
90092-0052	METERING VALVE 10 MM3	2-103, 2-147, 3-77
90092-0054	METERING VALVE 50 MM3	3-77
90110-0150	MALE INSERT 121110 0000	3-211
90110-0228	CABLE HOOD 24-POL 71.350.2428.0	3-211
90110-0235	CABLE CONTACT, PX0739/S	2-115, 2-117
90115-0137	ROD END, ID=6 MM, M6X1	3-17, 3-19, 3-59, 3-61
90115-0139	ROD END, ID=8 MM, M8X1,25	3-83, 3-85
90115-0180	ROD END, ID=8 MM, M8X1,25 LH	3-83, 3-85
90115-0181	ROD END, ID=10 MM M10X1,5	3-79, 3-81
90115-0182	ROD END, ID=10 MM M10X1,5LH	3-79, 3-81
90134-0030	SLEEVE FOR PLASTIC TUBE	2-147, 3-77
90134-0038	BUSHING/NUT INLET/OUTLET 4 MM	2-103
90134-0039	BUSHING VALVE CONNECTION 2,5 MM	2-103, 3-77
90134-0052	PLUG DOSING BLOCK	2-147, 3-77

Part No	Description	Page No
90134-0055	BUSHING/NUT INLET/OUTLET 6 MM	2-113, 2-147, 3-77
90134-0058	CONNECTION	2-59, 2-61, 2-89, 2-91, 3-83, 3-85, 3-91, 3-93
90134-0063	BUSHING/NUT M8X1, D=2,5 MM	2-7, 2-9, 2-13, 2-15
90134-0065	CONNECTION M6 TUBE 2,5 MM	2-103, 2-105, 2-107
90134-0068	CONNECTION	2-59, 2-61, 2-89, 2-91
90141-0015	RETAINING RING FOR SHAFT DIN 471 8 A2	2-49
90141-0016	RETAINING RING FOR SHAFT DIN 471 10 A2	2-109, 2-111
90141-0019	RETAINING RING FOR BORE DIN 472 50 A2	3-77, 3-131, 3-135
90141-0029	CIRCLIP	2-73, 2-95
90144-0069	PE TAPE,BLACK ON ALUMINUM 24X24 MM	3-195
90144-0070	TAPE, AL 30µM 19MM BLACK	3-195
90144-0071	TAPE, AL 30µM 16MM BLACK	3-195
90152-0070	METAL HOSE, 32,5X26, UL 2621	3-211
90153-0015	ADHESIVE,LOCTITE IS 496/CYANOLOT 303	2-65, 2-67
90161-0001	O-RING MATERIAL 3 MM	3-211
90163-0063	QUICK COUPLING, (M) 5450-6/4	2-113
90165-0056	PIPE CLIP FOR TUBE D=4 MM	2-43, 2-45, 2-59, 2-61, 2-77, 2-79, 2-89, 2-91, 3-91, 3-93, 3-125, 3-127
90165-0057	PIPE CLIP FOR TUBE D=6 MM	3-17, 3-19, 3-59, 3-61, 3-131, 3-135
90165-0058	PIPE CLIP FOR TUBE D=25 MM	2-43, 2-45, 2-59, 2-61, 2-77, 2-79, 2-89, 2-91, 2-103
90166-0013	TUBE 8 MM PA BLUE	3-9, 3-11, 3-13, 3-49, 3-51, 3-207, 3-211
90166-0081	TUBE 6 MM PA BLUE	2-115, 2-117
90166-0108	TUBE 6 MM PA,TRANSP.	2-147, 3-77
90166-0118	TUBE 8 MM PA BLACK	3-23, 3-25, 3-63, 3-65
90166-0132	TUBE 6 MM PA,TRANSP.	2-113, 3-95, 3-97
90166-0143	TUBE 2,5 MM PA,TRANSP.	2-103, 2-147, 3-77
90166-0216	TUBE 10 MM PUR BLUE	3-211
90195-0020	TERMINAL BLOCK, 1977.2	3-209
90206-0030	HEATING ELEMENT, 3000W, 220V	3-209
90208-0087	CLAMPING ELEMENT WITH SLEEVE, 45X59 MM	3-43, 3-45, 3-73
90214-0219	CYL.ROLLER BEARING, 17X40X12 MM	3-131, 3-135
90214-0229	BALL BEARING, 65X85X10 MM	3-91, 3-93
90220-0034	THERMOCABLE TEX/SITW-20F-KX 2X0,5MM2	3-211
90232-0103	PH.CELL E3S-CT61-L-5M	3-123
90232-0104	PH.CELL E3S-CT61-D-5M	3-123
90235-0731	THROTTLE CHECK VALVES,G1/4"	3-17, 3-19
90235-0846	THROTTLE CHECK VALVE G1/8", MANUAL, 6	3-207
90240-0172	FLANGE BUSHING, 8X12X10 MM	1-5, 1-21, 1-23, 1-25, 1-33, 1-35, 1-37
90240-0180	FLANGE BUSHING 10X14X15MM	2-109, 2-111
90240-0258	BUSHING, 15X17X15 MM	3-109, 3-111
90240-0263	FLANGE BUSHING, 15X17X12 MM	3-109, 3-111
90240-0317	BUSHING, 35X39X30 MM	3-91, 3-93
90242-0093	O-RING MATERIAL 1,5 MM	2-65, 2-67
90242-0270	O-RING 82,27X1,78 MM	3-91, 3-93
90242-0271	O-RING 63,22X1,78 MM	3-91, 3-93
90258-0060	COTTER	3-219
90261-0016	PLUG, BLIND, PLASTIC GPN300V2	2-7, 2-9, 2-13, 2-15
90266-0019	PIPE	2-103
90266-0165	BRASS PIPE	2-59, 2-61, 2-89, 2-91
90287-0148	SCREW SPRINGLOAD. SLOTTED HEAD M5X12	2-115, 2-117
90287-0322	SCREW M6S M14X40 70	1-45
90287-0347	BOLT	1-45
90326-0022	PLUG, MALE YELLOW CR-AL	3-211
90326-0081	THERMOCOUPLE, ISA TYPE K.	3-209
90328-0026	SILENCER G1/4	1-11
90330-0066	PLUG, EXT. G-THREAD, G1/8	1-11
90335-0005	SPRING	3-181
90335-0024	COMP. SPRING 22250, 1,25X13,75X27	2-115, 2-117
90335-0025	COMP. SPRING 22010, 1X11X26	3-225
90335-0036	COMP. SPRING 22450, 1,6X14,1X24	3-17, 3-19, 3-59, 3-61
90335-0178	COMP. SPRING 22060, 1X13,5X36,5	3-201, 3-203
90424-0068	AIR NOZZLE, G1/4, MOD. 216 BSP	3-9, 3-11, 3-13, 3-17, 3-19, 3-49, 3-51, 3-59, 3-61
90450-0504	PNEUMATIC CYLINDER	3-139
90457-0922	ELBOW PIPE JOINT, EXT.THREAD, D=6MM M5	3-149, 3-153
90458-0058	SCREW M5X60 A280	2-57, 3-201, 3-203
90458-0138	PROX.SW. E2EG-X1R5B1-5M	1-11
90458-0601	PHOTOCELL, SICK PHOTOCELL 1	2-115, 2-117
90458-2027	FLOPPY DISK, 3,5" 1,44MB FOR PC	2-121, 2-123, 2-125, 2-127, 2-129, 2-131, 2-133, 2-135, 2-137, 2-139, 2-141, 2-143, 2-145
90458-2956	ELBOW PIPE JOINT, EXT.THREAD, D=6MM-G1/8	3-205
90458-2957	ELBOW PIPE JOINT, EXT.THREAD, D=6MM-G1/4	3-139
90458-2958	ELBOW PIPE JOINT, EXT.THREAD, D=8MM-G1/4	3-49, 3-51, 3-59, 3-61
90459-0626	DISCETTE BOX FOR TWO 3,5" FLOPPYDISKS	2-119
90459-0707	HEATING ELEMENT, 1500W/220V	3-209
90459-0729	HEXAGONAL PROTECTIVE CAP GPN 1000	1-7, 1-9
90459-0952	LINEAR GUIDE UNIT, BORE 25-STROKE 80	3-201, 3-203
90459-0953	DOUBLE ACTING, ROUND, CYL 25-80	3-201, 3-203
90459-0969	COMP. SPRING A D22430, 1,6X11,6X58,5	3-75
90459-1228	SCREW ISO 1207 M3X4 A4	1-21, 1-23, 1-25
90459-1501	CABLE SEALING, 12023/I, ELFA. 44-625-78	2-115, 2-117
90459-3118	LINEAR GUIDE UNIT, BORE 25-STROKE 100	3-201, 3-203
90459-3119	DOUBLE ACTING, MINI-ISO, CYL. 25-100	3-201, 3-203
107426-0000	GUIDE SLEEVE	2-49
229207-0000	BEARING SLEEVE	3-125, 3-127
232979-0000	PRESSURE ROLLER	1-7, 1-9, 1-47, 1-49

Part No	Description	Page No
245039-0000 ..	GUIDE WHEEL	3-125, 3-127
252766-0001 ..	INSULATING PIPE	3-87, 3-89
252766-0002 ..	INSULATING PIPE	3-87, 3-89
255978-0000 ..	FORK	1-7, 1-9
257330-0000 ..	PRESSURE ROLLER	1-7, 1-9, 1-47, 1-49
263655-0006 ..	SHAFT	1-17, 1-19
263655-0007 ..	SHAFT	1-17, 1-19
263655-0009 ..	SHAFT	1-17, 1-19
263655-0018 ..	SHAFT	1-17, 1-19
263673-0000 ..	GASKET	3-87, 3-89
266739-0000 ..	CABLE GLAND	3-209
270927-0000 ..	SCREW	3-209
272479-0000 ..	PRESSURE ROLLER	1-7, 1-9, 1-47, 1-49
272728-0000 ..	BARRIER	3-225
273953-0000 ..	SEAL	1-17, 1-19
294464-0000 ..	BASE PLATE	3-209
295377-0001 ..	HOOD	1-7, 1-9
295377-0003 ..	HOOD	1-7, 1-9
311103-0274 ..	PARALLELL PIN, M6, 4X25 MM	3-225
311103-0306 ..	PARALLEL PIN ISO 2338 5M6X12 A1	2-105, 2-107
311103-0310 ..	PARALLEL PIN ISO 2338 5M6X20 A1	2-101
311103-0351 ..	PARALLEL PIN ISO 2338 6M6X16 A1	3-145
311103-0399 ..	PARALLEL PIN ISO 2338 8M6X16 A1	2-101
311103-0400 ..	PARALLEL PIN ISO 2338 8M6X18 A1	2-103
311103-0407 ..	PARALLEL PIN ISO 2338 8M6X35 A1	3-135
312101-0515 ..	SCREW M6S M10X120 FZB	3-215
312105-0287 ..	SCREW M6S ISO4017 M4X8 A470	1-11, 3-17, 3-19, 3-59, 3-61, 3-77, 3-123
312105-0289 ..	SCREW M6S ISO 4017 M4X10 A470	1-21, 1-23, 1-25, 3-43, 3-45
312105-0291 ..	SCREW M6S ISO 4017 M4X12 A470	3-77
312105-0293 ..	SCREW M6S ISO 4017 M4X16 A470	3-153
312105-0295 ..	SCREW M6S ISO4017 M4X20 A470	2-57, 3-175, 3-205
312105-0323 ..	SCREW M6S ISO 4017 M5X8 A480	1-53, 1-55, 3-123, 3-125, 3-127
312105-0325 ..	SCREW M6S ISO 4017 M5X10 A480	2-19, 2-21, 2-27, 2-29, 2-115, 2-117
312105-0327 ..	SCREW M6S ISO 4017 M5X12 A480	1-21, 1-23, 1-25, 1-33, 1-35, 2-7, 2-9, 2-13, 2-15, 2-19, 2-21, 2-27, 2-29, 3-123, 3-131, 3-135, 3-151, 3-201, 3-203
312105-0328 ..	SCREW M6S ISO 4017 M5X14 A480	2-7, 2-9, 2-13, 2-15, 2-19, 2-21, 2-27, 2-29
312105-0329 ..	SCREW M6S ISO 4017 M5X16 A480	1-21, 1-23, 1-25, 3-131, 3-135
312105-0331 ..	SCREW M6S ISO 4017 M5X20 A480	1-5, 1-33, 1-35, 2-101
312105-0362 ..	SCREW M6S ISO 4017 M6X8 A480	2-59, 2-61, 2-89, 2-91, 3-9, 3-11, 3-13, 3-53, 3-55, 4-5, 4-13
312105-0364 ..	SCREW M6S ISO 4017 M6X10 A480	2-19, 2-21, 2-27, 2-29, 3-9, 3-11, 3-13, 3-31, 3-33, 3-35, 3-71
312105-0366 ..	SCREW M6S ISO 4017 M6X12 A480	1-11, 1-37, 1-53, 1-55, 2-7, 2-9, 2-13, 2-15, 2-19, 2-21, 2-65, 2-67, 2-103, 2-105, 2-107, 3-7, 3-9, 3-11, 3-13, 3-17, 3-19, 3-23, 3-25, 3-59, 3-61, 3-63, 3-65, 3-91, 3-93, 3-105, 3-125, 3-127, 3-131, 3-135
312105-0367 ..	SCREW M6S ISO 4017 M6X14 A480	3-133
312105-0368 ..	SCREW M6S ISO 4017 M6X16 A480	1-39, 1-41, 1-43, 2-7, 2-9, 2-13, 2-15, 2-19, 2-21, 2-27, 2-29, 2-59, 2-61, 2-89, 2-91, 2-101, 2-115, 2-117, 3-9, 3-11, 3-13, 3-17, 3-19, 3-23, 3-25, 3-43, 3-45, 3-59, 3-61, 3-67, 3-69, 3-79, 3-81, 3-91, 3-93, 3-95, 3-97, 3-99, 3-101, 3-105, 3-109, 3-111, 3-133, 3-135, 3-145, 3-147, 3-149, 3-151
312105-0370 ..	SCREW M6S ISO 4017 M6X20 A480	1-11, 1-37, 1-39, 2-101, 2-103, 3-7, 3-9, 3-11, 3-13, 3-43, 3-45, 3-53, 3-55, 3-67, 3-69, 3-73, 3-77, 3-91, 3-93, 3-95, 3-97, 3-99, 3-101, 3-149, 3-201, 3-203, 3-209, 4-13
312105-0372 ..	SCREW M6S ISO 4017 M6X25 A480	1-17, 1-19, 1-39, 1-41, 1-43, 3-9, 3-11, 3-13, 3-49, 3-51, 3-91, 3-93, 3-99, 3-101, 3-125, 3-127, 3-133, 3-135, 3-139, 3-209
312105-0374 ..	SCREW M6S ISO 4014 M6X30 A480	1-39, 3-7, 3-77, 3-99, 3-101
312105-0376 ..	SCREW M6S ISO 4014 M6X35 A480	3-9, 3-11, 3-13, 3-43, 3-45, 3-71, 3-73, 3-135
312105-0378 ..	SCREW M6S ISO 4014 M6X40 A480	3-43, 3-45, 3-133
312105-0379 ..	SCREW M6S ISO 4014 M6X45 A480	3-7
312105-0381 ..	SCREW M6S ISO 4014 M6X55 A480	2-113, 3-135, 3-225
312105-0382 ..	SCREW M6S ISO 4014 M6X60 A480	3-7
312105-0447 ..	SCREW M6S ISO 4017 M8X12 A480	2-63, 2-93, 3-83, 3-85, 3-131, 3-135
312105-0449 ..	SCREW M6S ISO 4017 M8X16 A480	1-5, 2-115, 2-117, 3-17, 3-19, 3-59, 3-61, 3-95, 3-97, 3-99, 3-101
312105-0451 ..	SCREW M6S ISO 4017 M8X20 A480	1-5, 1-17, 1-19, 1-23, 1-25, 1-33, 1-35, 3-17, 3-19, 3-31, 3-33, 3-35, 3-59, 3-61, 3-83, 3-85, 3-91, 3-93, 3-95, 3-97, 3-131, 3-135, 3-223
312105-0452 ..	SCREW M6S ISO 4017 M8X22 A4 80	1-41, 1-43, 2-109, 2-111, 3-63, 3-65
312105-0453 ..	SCREW M6S ISO 4017 M8X25 A480	1-33, 1-35, 3-17, 3-19, 3-31, 3-33, 3-35, 3-43, 3-45, 3-59, 3-61, 3-73, 3-79, 3-81, 3-95, 3-97, 3-131, 3-135, 3-213
312105-0455 ..	SCREW M6S ISO 4017 M8X30 A480	1-7, 1-9, 2-103, 3-31, 3-33, 3-35, 3-67, 3-69, 3-77, 3-91, 3-93, 3-139, 3-145, 3-151, 3-201, 3-203
312105-0457 ..	SCREW M6S ISO 4014 M8X35 A480	2-101, 2-103, 3-17, 3-19, 3-59, 3-61, 3-67, 3-69, 3-87, 3-89, 3-91, 3-93, 3-139
312105-0459 ..	SCREW M6S ISO 4014 M8X40 A480	3-87, 3-89
312105-0460 ..	SCREW M6S ISO 4014 M8X45 A480	2-43, 2-45, 2-59, 2-61, 2-77, 2-79, 2-89, 2-91
312105-0461 ..	SCREW M6S ISO 4014 M8X50 A480	3-31, 3-33, 3-35
312105-0462 ..	SCREW M6S ISO 4014 M8X55 A480	1-17, 1-19, 3-31, 3-33, 3-35
312105-0463 ..	SCREW M6S ISO 4014 M8X60 A480	3-31, 3-33, 3-35
312105-0464 ..	SCREW M6S ISO 4014 M8X65 A480	2-101, 3-31, 3-33, 3-35, 3-63, 3-65, 3-87, 3-89
312105-0465 ..	SCREW M6S ISO 4014 M8X70 A480	3-23, 3-25, 3-31, 3-33, 3-35, 3-67, 3-69, 3-87, 3-89
312105-0466 ..	SCREW M6S ISO 4014 M8X75 A480	3-23, 3-25, 3-31, 3-33, 3-35, 3-87, 3-89
312105-0467 ..	SCREW M6S ISO 4014 M8X80 A480	3-23, 3-25, 3-31, 3-33, 3-35, 3-67, 3-69
312105-0469 ..	SCREW M6S ISO 4014 M8X90 A480	2-63, 2-93, 3-109, 3-111
312105-0471 ..	SCREW M6S ISO 4014 M8X100 A480	3-87, 3-89
312105-0475 ..	SCREW M6S ISO 4014 M8X120 A480	3-125, 3-127
312105-0489 ..	SCREW M6S ISO 4017 M10X16 A480	3-79, 3-81

Part No	Description	Page No
312105-0493 ..	SCREW M6S ISO 4017 M10X25 A480	1-21, 3-77, 3-215
312105-0495 ..	SCREW M6S ISO 4017 M10X30 A480	1-7, 1-9, 1-17, 1-19, 3-79, 3-81, 3-109, 3-111, 3-131, 3-135, 3-215
312105-0502 ..	SCREW M6S ISO 4014 M10X55 A480	3-223
312105-0506 ..	SCREW M6S ISO 4014 M10X75 A480	1-45
312105-0507 ..	SCREW M6S ISO 4014 M10X80 A480	3-137
312105-0513 ..	SCREW M6S ISO 4014 M10X110 A480	3-125, 3-127
312105-0517 ..	SCREW M6S ISO 4014 M10X130 A480	3-125, 3-127
312105-0540 ..	SCREW M6S ISO 4017 M12X40 A480	3-215
312109-0374 ..	SCREW M6S ISO 4017 M6X30 A480	3-9, 3-11, 3-13, 3-49, 3-51, 3-135
312109-0376 ..	SCREW M6S ISO 4017 M6X35 A480	3-9, 3-11, 3-13, 3-49, 3-51, 3-77
312109-0457 ..	SCREW M6S ISO 4017 M8X35 A480	3-31, 3-33, 3-35, 3-87, 3-89
312109-0459 ..	SCREW M6S ISO 4017 M8X40 A480	1-17, 1-19, 1-23, 1-25
312109-0460 ..	SCREW M6S ISO 4017 M8X45 A480	1-23, 1-25, 3-79, 3-81, 3-87, 3-89, 3-91, 3-93
312109-0461 ..	SCREW M6S ISO 4017 M8X50 A480	1-17, 1-19, 3-31, 3-33, 3-35, 3-87, 3-89
312109-0463 ..	SCREW M6S ISO 4017 M8X60 A480	3-77, 3-87, 3-89, 3-131, 3-135
312109-0499 ..	SCREW M6S ISO 4017 M10X40 A480	3-131, 3-135
312109-0500 ..	SCREW M6S ISO 4017 M10X45 A480	3-131, 3-217, 3-221
312115-0222 ..	SCREW ISO4762 M3X8 A4	3-153
312115-0226 ..	SCREW ISO4762 M3X12 A4	3-209
312115-0228 ..	SCREW ISO4762 M3X16 A4	3-131, 3-135
312115-0230 ..	SCREW ISO4762 M3X20 A4	3-91, 3-93, 3-209
312115-0285 ..	SCREW ISO4762 M4X6 A4	2-43, 2-45, 2-59, 2-61, 2-77, 2-79, 2-89, 2-91
312115-0287 ..	SCREW ISO4762 M4X8 A4	1-11, 2-35, 2-37, 2-39, 2-41, 4-7, 4-9
312115-0289 ..	SCREW ISO4762 M4X10 A4	2-35, 2-37, 2-39, 2-41, 4-7, 4-9, 4-11
312115-0291 ..	SCREW ISO4762 M4X12 A4	2-35, 2-37, 2-39, 2-41, 2-103, 3-75, 4-7, 4-9, 4-11
312115-0293 ..	SCREW ISO4762 M4X16 A4	2-35, 2-37, 2-39, 2-41, 2-103, 4-7, 4-9
312115-0297 ..	SCREW ISO4762 M4X25 A4	2-51, 2-53, 2-83, 2-85
312115-0323 ..	SCREW ISO4762 M5X8 A4	2-35, 2-37, 2-39, 2-41, 4-7, 4-9
312115-0327 ..	SCREW ISO4762 M5X12 A4	2-43, 2-45, 2-51, 2-53, 2-65, 2-67, 2-77, 2-79, 2-83, 2-85
312115-0329 ..	SCREW ISO4762 M5X16 A4	2-19, 2-21, 2-27, 2-29, 2-43, 2-45, 2-51, 2-53, 2-65, 2-67, 2-77, 2-79, 2-83, 2-85, 3-201, 3-203
312115-0331 ..	SCREW ISO4762 M5X20 A4	2-65, 2-67
312115-0366 ..	SCREW ISO4762 M6X12 A4	2-19, 2-21, 2-27, 2-29, 3-83, 3-85, 3-153
312115-0367 ..	SCREW ISO4762 M6X14 A4	2-7, 2-9, 2-13, 2-15
312115-0368 ..	SCREW ISO4762 M6X16 A4	2-19, 2-21, 2-27, 2-29, 2-35, 2-37, 2-39, 2-41, 3-201, 3-203, 4-7, 4-9, 4-11
312115-0370 ..	SCREW ISO4762 M6X20 A4	3-91, 3-93, 3-151
312115-0372 ..	SCREW ISO4762 M6X25 A4	2-49
312115-0378 ..	SCREW ISO4762 M6X40 A4 80	2-19, 2-21, 2-27, 2-29, 3-201, 3-203
312115-0379 ..	SCREW ISO4762 M6X45 A4	2-65, 2-67
312115-0380 ..	SCREW ISO4762 M6X50 A4	2-49
312115-0447 ..	SCREW ISO4762 M8X12 A4	2-43, 2-45, 2-77, 2-79
312115-0449 ..	SCREW ISO4762 M8X16 A4	3-17, 3-19
312115-0451 ..	SCREW ISO4762 M8X20 A4	1-23, 1-25
312115-0457 ..	SCREW ISO4762 M8X35 A4	2-49
312115-0459 ..	SCREW ISO4762 M8X40 A4	2-49
312115-0461 ..	SCREW ISO4762 M8X50 A4	2-49
312115-0497 ..	SCREW ISO4762 M10X35 A4	3-95, 3-97, 3-137
312115-0500 ..	SCREW ISO4762 M10X45 A4	3-137
312125-0234 ..	SCREW ISO 1207 M3X30 A4	3-79, 3-81
312125-0287 ..	SCREW ISO 1207 M4X8 A4	3-91, 3-93, 3-131, 3-135
312125-0295 ..	SCREW ISO 1207 M4X20 A4	2-51, 2-53, 2-83, 2-85
312125-0327 ..	SCREW ISO 1207 M5X12 A4	3-131, 3-135
312132-0284 ..	SCREW SLOT. PAN HEAD MSCS M4X5	3-209
312141-0222 ..	SCREW ISO 2009 MFS M3X8 4.8 EL.PL	2-35, 2-37, 2-39, 2-41, 4-7, 4-9
312145-0234 ..	SCREW ISO 2009 MFS M3X30 A4	2-65, 2-67
312145-0238 ..	SCREW COUNTERS.SLOT.HD. MFS M3X40 SS	2-65, 2-67
312145-0287 ..	SCREW ISO 2009 MFS M4X8 A4	2-7, 2-9, 2-13, 2-15
312145-0289 ..	SCREW ISO 2009 MFS M4X10 A4	2-7, 2-9, 2-13, 2-15, 2-35, 2-37, 2-39, 2-41, 4-7, 4-9
312145-0291 ..	SCREW ISO 2009 MFS M4X12 A4	2-7, 2-9, 2-13, 2-15
312151-0368 ..	SCREW EN 10642 MF6S M6X16 10.9 EL.PL	3-131, 3-135
312155-0285 ..	SCREW HEX.SOCK.COUNT.MF6S M4X6 A480	2-65, 2-67
312155-0287 ..	SCREW EN 10642 MF6S M4X8 A480	2-35, 2-37, 2-39, 2-41, 2-51, 2-53, 2-65, 2-67, 2-83, 2-85, 3-43, 3-45, 4-7, 4-9, 4-11
312155-0289 ..	SCREW EN 10642 MF6S M4X10 A480	2-7, 2-9, 2-13, 2-15, 3-43, 3-45, 3-91, 3-93, 3-109, 3-111
312155-0291 ..	SCREW EN 10642 MF6S M4X12 A480	3-153
312155-0295 ..	SCREW EN 10642 MF6S M4X20 A480	2-103
312155-0297 ..	SCREW EN 10642 MF6S M4X25 A480	3-77, 3-153
312155-0323 ..	SCREW EN 10642 MF6S M5X8 A480	2-35, 2-37, 2-39, 2-41, 2-43, 2-45, 2-59, 2-61, 2-77, 2-79, 2-89, 2-91, 3-133, 4-7, 4-9
312155-0325 ..	SCREW EN 10642 MF6S M5X10 A480	2-35, 2-37, 2-39, 2-41, 2-51, 2-53, 2-83, 2-85, 4-7, 4-9
312155-0327 ..	SCREW EN 10642 MF6S M5X12 A480	2-35, 2-37, 2-39, 2-41, 3-75, 3-91, 3-93, 4-7, 4-9, 4-11
312155-0329 ..	SCREW EN 10642 MF6S M5X16 A480	3-99, 3-101
312155-0366 ..	SCREW EN 10642 MF6S M6X12 A480	3-67, 3-69
312155-0368 ..	SCREW EN 10642 MF6S M6X16 A480	3-125, 3-127
312155-0370 ..	SCREW EN 10642 MF6S M6X20 A480	3-43, 3-45, 3-73
312155-0376 ..	SCREW EN 10642 MF6S M6X35 A480	3-43, 3-45
312155-0378 ..	SCREW EN 10642 MF6S M6X40 A480	3-43, 3-45, 3-109, 3-111
312155-0380 ..	SCREW EN 10642 MF6S M6X50 A480	3-43, 3-45
312155-0449 ..	SCREW EN 10642 MF6S M8X16 A480	3-99, 3-101
312155-0453 ..	SCREW EN 10642 MF6S M8X25 A480	3-91, 3-93
312155-0459 ..	SCREW EN 10642 MF6S M8X40 A480	3-31, 3-33, 3-35
312155-0461 ..	SCREW EN 10642 MF6S M8X50 A480	3-67, 3-69

Part No	Description	Page No
312155-0495 ..	SCREW EN 10642 MF6S M10X30 A480	3-77, 3-131, 3-135
312155-0499 ..	SCREW EN 10642 MF6S M10X40 A480	3-43, 3-45, 3-73
312311-0370 ..	SCREW ISO4028 M6X20 FZB	3-91, 3-93
312318-0285 ..	SCREW ISO4029 M4X6 A4	2-7, 2-9, 2-13, 2-15
312318-0287 ..	SCREW ISO4029 M4X8 A4	2-105, 2-107, 3-151
312318-0289 ..	SCREW ISO4029 M4X10 A4	1-21, 1-23, 1-25
312318-0323 ..	SCREW ISO4029 M5X8 A4	2-35, 2-37, 2-39, 2-41, 2-115, 2-117, 4-7, 4-9, 4-11
312318-0327 ..	SCREW ISO4029 M5X12 A4	3-75
312318-0329 ..	SCREW ISO4029 M5X16 A4	2-51, 2-53, 2-65, 2-67, 2-83, 2-85
312318-0362 ..	SCREW ISO4029 M6X8 A4	3-79, 3-81, 3-147
312318-0366 ..	SCREW ISO4029 M6X12 A4	3-145, 3-151
312318-0368 ..	SCREW ISO4029 M6X16 A4	3-91, 3-93
312318-0445 ..	SCREW ISO4029 M8X10 A4	3-225
312601-0320 ..	NUT M6M 10-8 FZB	3-215
312605-0312 ..	HEXAGON NUT, M6M M4 A280	2-57, 3-151, 3-153, 3-205
312605-0314 ..	HEXAGON NUT, M6M M5 A280	1-51, 2-43, 2-45, 2-77, 2-79, 3-99, 3-101, 3-123, 3-125, 3-127
312605-0316 ..	HEXAGON NUT, M6M M6 A280	2-59, 2-61, 2-89, 2-91, 2-101, 2-103, 3-9, 3-11, 3-13, 3-17, 3-19, 3-49, 3-51, 3-53, 3-55, 3-59, 3-61, 3-91, 3-93, 3-99, 3-101, 4-5, 4-13
312605-0318 ..	HEXAGON NUT, M6M M8 A280	1-7, 1-9, 2-19, 2-21, 2-27, 2-29, 2-63, 2-93, 2-109, 2-111, 3-23, 3-25, 3-31, 3-33, 3-35, 3-63, 3-65, 3-83, 3-85, 3-91, 3-93, 3-95, 3-97, 3-131, 3-135
312605-0320 ..	HEXAGON NUT, M6M M10 A280	1-7, 1-9, 1-45, 3-77, 3-79, 3-81, 3-217
312605-0322 ..	HEXAGON NUT, M6M M12 A280	3-77, 3-219
312625-0316 ..	HEXAGON THIN NUT, EN 24035 ML6M M6 A4	2-35, 2-37, 2-39, 2-41, 3-151, 4-7, 4-9, 4-11
312625-0318 ..	HEXAGON THIN NUT, EN 24035 ML6M M8 A4	2-59, 2-61, 2-89, 2-91
312705-0316 ..	NUT HEX. DOMED CAP MHM-6 M6 A280	1-37
312805-0108 ..	NUT ROUND WITH SLOTS M40X1,5 FE	3-211
312812-0312 ..	HEXAGON NUT, NY-LOCK M4 A480	3-9, 3-11, 3-13, 3-49, 3-51, 3-175
312812-0316 ..	HEXAGON NUT, NY-LOCK M6 A480	3-133, 3-225
312812-0318 ..	HEXAGON NUT, NY-LOCK M8 A480	3-83, 3-85, 3-145, 3-151
312812-0320 ..	HEXAGON NUT, NY-LOCK M10 A480	3-125, 3-127
312902-0318 ..	NUT HEX. LEFT THREAD, M8 A280	3-83, 3-85, 3-91, 3-93
312902-0320 ..	NUT HEX. LEFT THREAD, M10 A280	3-79, 3-81
315101-0182 ..	WASHER PLAIN, BRB, 15/26 H=2	1-45
315103-0153 ..	WASHER, BRB, 6,4/12,H=1,5 NIPL BR	3-43, 3-45, 3-91, 3-93
315105-0124 ..	WASHER BRB3,2X6RFR	3-79, 3-81, 3-91, 3-93, 3-131, 3-135, 3-153
315105-0136 ..	WASHER BRB4,3XRFR	1-11, 3-17, 3-19, 3-43, 3-45, 3-59, 3-61, 3-77, 3-123, 3-153, 3-205
315105-0146 ..	WASHER BRB5,3X10RFR	1-51, 1-53, 1-55, 2-7, 2-9, 2-13, 2-15, 2-19, 2-21, 2-27, 2-29, 2-43, 2-45, 2-51, 2-53, 2-65, 2-67, 2-77, 2-79, 2-83, 2-85, 3-99, 3-101, 3-123, 3-125, 3-127, 3-131, 3-135, 3-151, 3-201, 3-203
315105-0153 ..	WASHER BRB6,4X12RFR	1-11, 1-37, 1-53, 1-55, 2-7, 2-9, 2-13, 2-15, 2-19, 2-21, 2-27, 2-29, 2-101, 2-103, 2-105, 2-107, 2-113, 3-9, 3-11, 3-13, 3-17, 3-19, 3-23, 3-25, 3-31, 3-33, 3-35, 3-43, 3-45, 3-49, 3-51, 3-53, 3-55, 3-59, 3-61, 3-63, 3-65, 3-67, 3-69, 3-71, 3-73, 3-77, 3-79, 3-81, 3-91, 3-93, 3-95, 3-97, 3-99, 3-101, 3-105, 3-125, 3-127, 3-133, 3-135, 3-139, 3-145, 3-147, 3-149, 3-151, 3-201, 3-203, 3-225, 4-13
315105-0156 ..	WASHER BRB 6.7X14 RFR	3-71
315105-0165 ..	WASHER BRB8,4X16RFR	1-17, 1-19, 1-23, 1-25, 1-33, 1-35, 1-41, 1-43, 2-43, 2-45, 2-59, 2-61, 2-63, 2-77, 2-79, 2-89, 2-91, 2-93, 2-101, 2-103, 2-109, 2-111, 2-115, 2-117, 3-17, 3-19, 3-23, 3-25, 3-31, 3-33, 3-35, 3-43, 3-45, 3-59, 3-61, 3-63, 3-65, 3-67, 3-69, 3-73, 3-75, 3-77, 3-79, 3-81, 3-83, 3-85, 3-91, 3-93, 3-95, 3-97, 3-99, 3-101, 3-109, 3-111, 3-125, 3-127, 3-131, 3-135, 3-139, 3-145, 3-151, 3-201, 3-203, 3-213, 3-223
315105-0171 ..	WASHER BRB10X18	3-79, 3-81, 3-95, 3-97
315105-0173 ..	WASHER BRB10,5X22RFR	1-7, 1-9, 2-65, 2-67, 3-17, 3-19, 3-59, 3-61, 3-79, 3-81, 3-125, 3-127, 3-131, 3-135, 3-137, 3-223
315105-0178 ..	WASHER BRB13X24RFR	3-77, 3-215
315115-0153 ..	WASHER PLAIN, TBRB 6,4/12 H=3	3-7
315121-0173 ..	WASHER PLAIN, TBRSB 10,5/28 H=6	3-215
315125-0153 ..	WASHER TBRSB 6,4X22X4 A4	1-17, 1-19, 1-41, 1-43, 3-99, 3-101, 3-131, 3-135
315125-0165 ..	WASHER TBRSB 8,4X26X5 A4	2-115, 2-117, 3-131, 3-135, 3-145, 3-151, 3-209
315125-0173 ..	WASHER TBRSB 10,5X28X6 A4	1-17, 1-19, 3-131, 3-135
315202-0101 ..	O-RING 3,1X1,6 MM	2-47, 2-81
315202-0104 ..	O-RING 6,1X1,6 MM	2-65, 2-67
315202-0105 ..	O-RING 7,1X1,6 MM	2-47, 2-49, 2-81
315202-0107 ..	O-RING 9,1X1,6 MM	3-83, 3-85
315202-0110 ..	O-RING 12,1X1,6 MM	2-75
315202-0116 ..	O-RING 18,1X1,6 MM	2-59, 2-61, 2-89, 2-91
315202-0118 ..	O-RING 22,1X1,6 MM	2-75
315202-0208 ..	O-RING 9,3X2,4 MM	2-59, 2-61, 2-89, 2-91
315202-0217 ..	O-RING 24,2X3 MM	3-79, 3-81, 3-91, 3-93
315202-0221 ..	O-RING 34,2X3 MM	3-131, 3-135
315202-0225 ..	O-RING 44,2X3 MM	3-43, 3-45, 3-73
315202-0267 ..	O-RING 16,3X2,4 MM	3-131, 3-135
315202-0303 ..	O-RING 59,5X3 MM	3-91, 3-93
315202-0305 ..	O-RING 69,5X3 MM	3-77, 3-91, 3-93
315202-0311 ..	O-RING 99,5X3 MM	3-43, 3-45, 3-73
315204-0215 ..	O-RING 19,2X3 MM	1-7, 1-9, 1-47, 1-49, 3-209
315204-0219 ..	O-RING 29,2X3 MM	1-7, 1-9, 1-47, 1-49
315204-0303 ..	O-RING 59,5X3 MM	3-209
315204-0324 ..	O-RING 164,3X5,7 MM	1-17, 1-19
315205-0808 ..	O-RING 7,59X2,62 MM	1-53, 1-55
315211-0103 ..	BONDED SEAL SS/NBR90 M6	2-59, 2-61, 2-65, 2-67, 2-89, 2-91
315211-0104 ..	BONDED SEAL SS/NBR90 M8	2-43, 2-45, 2-77, 2-79
315233-0109 ..	WASHER CAPTIVE SEALING G1/8	1-11
315234-0109 ..	WASHER,PL.RND.CU.10,3/13,5 H=1,0	3-209
315705-0201 ..	PARALLEL KEY W. ROUND ENDS 5X5X20 MM	2-65, 2-67

Part No	Description	Page No
315705-0202	PARALLEL KEY W ROUND ENDS 5X5X25MM	3-131, 3-135
315705-0267	PARALLEL KEY W. ROUND ENDS 8X7X30 MM	3-79, 3-81, 3-91, 3-93
315705-0270	PARALLEL KEY W. ROUND ENDS 8X7X40 MM	3-79, 3-81
315742-0123	RETAINING RING 32 SMS 199	3-225
315750-0102	RETAINING RING SHAFT DIN 471 ST 5	3-145, 3-151
315751-0119	RETAINING RING FOR SHAFT DIN 471 25 A2	3-77, 3-131, 3-135
315753-0122	RETAINING RING FOR BORE DIN 472 30 A2	3-91, 3-93
315753-0132	RETAINING RING FOR BORE DIN 472 52 A2	3-79, 3-81
315755-0106	RETAINING RING SHAFT DIN 6799 4 A2	3-133
316810-0106	PIPE CLIP FOR TUBE D=8 MM	3-77
321105-0204	BEAR. BUSH. WITHOUT FL, 16X22X20 MM	3-145, 3-151
321116-0234	BEAR. BUSH. WITHOUT FL, 16X20X12 MM	3-139
321120-0108	BEARBUSHING W/O FL 12X14X8	2-101
321130-0200	THRUST WASHER, 14X26X1,5 MM	3-91, 3-93
321136-0140	BUSHING, 10X12X10 MM	2-35, 2-37, 2-39, 2-41, 4-7, 4-9, 4-11
321138-0060	BUSHING, 6X8X6 MM	3-187
321308-0205	BALL BEARING, 25X47X12MM	3-77, 3-79, 3-81, 3-131, 3-135
321313-0103	BALL BEARING, 17X40X12MM	3-131, 3-135
321313-0105	BALL BEARING, 25X52X15MM	3-79, 3-81, 3-91, 3-93
321313-0107	BALL BEARING, 35X72X17MM	3-91, 3-93
321316-0206	BALL BEARING, 30X72X19 MM	3-77
342703-0208	NUT, PIPES & CONNECTORS,NUT M-8 SS	1-53, 1-55
342706-0130	ACCESSORIES, INSERT SLEEVE 6 MM	2-113
342713-0209	PLUG, EXT THREAD HEX SOCKET 8638-00-180	2-59, 2-61, 2-65, 2-67, 2-89, 2-91
342716-0203	REDUCER 6-8	3-207
342722-0203	STRAIGHT COUPLING	3-95, 3-97
342722-0204	PIPE COUPLING	3-209
342722-0211	STRAIGHT COUPLING D=10-G1/4"	3-209
342725-0102	CONN. STR. PIPE GI-6-G1/8	3-205
342728-0103	PIPE COUPLING 8 MM	3-9, 3-11, 3-13, 3-49, 3-51
342732-0104	ELBOW PIPE JOINT, EXT.THREAD, D=8MM-G1/4	3-9, 3-11, 3-13, 3-17, 3-19
342840-0103	CLAMPING PIECE	1-13, 1-15
342850-0304	GASKET 35,4X49,1X5,2 1"1/2 FDA	1-13, 1-15
342850-0305	GASKET 47,8X62,6X5,2 MM 2" FDA	1-13, 1-15
342850-0306	GASKET 60,3X76,1X5,2 MM 2"1/2 FDA	1-13, 1-15
342921-0121	STRAIGHT COUPLING,EXT.THREADED 8/6-G1/8"	3-31, 3-33, 3-35
342931-0121	ELBOW 90 COUPL.,EXT.THREAD 8/6-G1/8"	3-23, 3-25, 3-31, 3-33, 3-35, 3-63, 3-65, 3-71
342980-0121	BANJO-CONNECTION,RING 8/6-G1/8"	2-43, 2-45, 2-77, 2-79
342980-0303	BANJO-HOLLOW BOLT COUPL,EXT.THR.01-G1/8"	2-43, 2-45, 2-77, 2-79
342981-0122	BANJO CONNEC,RING,FOR PLAST.TUBE 8-G1/4"	3-17, 3-19
344502-0021	GREASE NIPPLE STRAIGHT M6	3-109, 3-111
351150-0412	CABLE OLFLEX 3X1,5 MM2 LIGHT/GREY	3-211
352103-0106	CABLE GLAND, ST 11, PR18,6/PG11	3-209
352113-0101	CLIP STRIP, 92X2,5 MM	2-59, 2-61, 2-89, 2-91, 3-77, 3-91, 3-93
352113-0102	CLIP-STRIP, BLACK 188X4,8 MM	3-23, 3-25, 3-63, 3-65, 3-77, 3-91, 3-93
353241-0003	EXTENDED WITHOUT INSERT, PG 21	3-211
353247-0005	GLAND, PG21, 15455P21S10UL21	3-209, 3-211
359705-0015	WARNING SIGN ISO, RISK OF ELECTRIC SHOCK	3-209
359710-0001	WARNING SIGN ISO, HOT SURFACE	3-87, 3-89
434320-0000	AXLE PIN	2-7, 2-9, 2-13, 2-15
434321-0000	CURVE ROLLER	2-7, 2-9, 2-13, 2-15
434665-0000	HOOD	1-7, 1-9
436556-0000	CURVE ROLLER	2-7, 2-9, 2-13, 2-15
449190-0000	SHAFT	3-139
456796-0000	ROLLER	1-17, 1-19
457696-0001	JOINT PIECE	3-125, 3-127
466042-0000	SEAL	1-17, 1-19
466046-0000	ROLLER	1-17, 1-19
466074-0002	SLIDER	3-125, 3-127
476220-0000	SPACER	3-125, 3-127
476975-0000	WHEEL	3-125, 3-127
484701-0000	SHUTTER	3-99, 3-101
490901-0000	SEAL	1-17, 1-19
499387-0000	PRESSURE ROLLER	1-7, 1-9, 1-47, 1-49
560122-0000	SUPPORT ROLLER	2-109, 2-111
567743-0000	SEAL	1-17, 1-19
567746-0001	ROLLER, (STD.SIZE)	1-21
569058-0000	SUPPORT ROLLER	2-109, 2-111
573504-0000	ROLLER	1-17, 1-19
575002-0000	PLUNGER	3-225
579318-0000	SEAL	1-17, 1-19
598095-0000	SCREW	3-219
598096-0000	WASHER	3-219
598101-0000	BEARING HOUSING	3-77
599815-0100	HOLDING FIXTURE	3-3
736514-0000	SHOCK ABSORBER	1-11
751491-0000	ROLL	1-33, 1-35
751492-0000	ROLL	1-33, 1-35
751502-0000	ROLLER	1-21
751604-0000	SPRING	1-7, 1-9
752115-0000	PLUNGER	2-75
752126-0000	FORMING ROLLER	1-33, 1-35
752127-0000	FORMING ROLLER	1-33, 1-35
752128-0000	FORMING ROLLER	1-33, 1-35

Part No	Description	Page No
752156-0000 ..	FLANGE BUSHING	1-23, 1-25, 1-33, 1-35
752186-0004 ..	SHAFT	1-21
752186-0005 ..	SHAFT	1-21, 1-33, 1-35
752186-0007 ..	SHAFT	1-23, 1-25
752186-0008 ..	SHAFT	1-33, 1-35
752186-0012 ..	SHAFT	1-33, 1-35
752186-0014 ..	SHAFT	1-21
752186-0015 ..	SHAFT	1-23, 1-25
752186-0016 ..	SHAFT	1-21
752186-0019 ..	SHAFT	1-33, 1-35
752288-0000 ..	SLEEVE	2-75
908171-0000 ..	GUIDE PLATE	3-149
908174-0001 ..	SHIM	3-149
908174-0002 ..	SHIM	3-149
925998-0000 ..	DIAPHRAGM	1-11
926906-0000 ..	SPACER	1-11
926907-0000 ..	SCREW	1-11
926909-0000 ..	COMPRESSION SPRING	1-11
926934-0000 ..	SUPPORT	1-11
927007-0000 ..	SHUTTER	1-11
927044-0000 ..	SPACER	1-11
927203-0000 ..	COVER	1-11
927323-0000 ..	SPACER	2-97
927859-0000 ..	TOOTHED PULLY	3-135
929372-0000 ..	PISTON	2-49
929823-0000 ..	PAPER GUIDE	3-153
929825-0000 ..	PAPER GUIDE	3-153
950351-0000 ..	SHAFT	2-49
978757-0000 ..	ROLLER 180-284ML	2-109, 2-111
978760-0000 ..	ROLLER TBA200SL	2-109, 2-111
979434-0000 ..	FERRULE	1-11
979931-0000 ..	VOLUME BULGE	2-35, 2-37, 2-39, 2-41, 4-7, 4-9
1020142-0002 .	RAIL HOLDER, B55 WIDTH 30 MM	3-99, 3-101
1020146-0000 .	LOCKING BLOCK REPL BY 1020290-101	3-99, 3-101
1020637-0000 .	HOLDER	3-123
1020816-0002 .	RAIL HOLDER, B68/R68 WIDTH 30 MM	3-99, 3-101
1035828-0000 .	VOLUME BULGE	2-7, 2-9, 2-13, 2-15
1035831-0000 .	VOLUME SHIM	1-47, 1-49, 2-7, 2-9, 2-13, 2-15
1035871-0000 .	SCREW	2-65, 2-67
1036278-0000 .	SLEEVE	2-75
1036279-0000 .	PLUNGER	2-75
1036343-0000 .	SCREW	2-43, 2-45, 2-77, 2-79
1036389-0000 .	LID	2-89, 2-91
1036483-0000 .	SEAL	2-3
1036494-0000 .	GUIDE BUSHING	2-65, 2-67
1036495-0000 .	BUSHING	2-59, 2-61, 2-89, 2-91
1036584-0000 .	WASHER	2-51, 2-53, 2-83, 2-85
1036585-0000 .	EAR	2-59, 2-61, 2-89, 2-91
1036664-0000 .	LID	2-59, 2-61
1036673-0000 .	WASHER	1-41, 1-43, 2-115, 2-117
1036674-0000 .	FASTENING PLATE	2-115, 2-117
1036685-0000 .	BRACKET	2-115, 2-117
1036954-0000 .	AXLE SUPPORT	1-17, 1-19
1036955-0000 .	AXLE SUPPORT	1-17, 1-19
1037254-0000 .	SHIM	1-47, 1-49, 2-3
1037733-0000 .	VOLUME BULGE	2-7, 2-9, 2-13, 2-15
1037734-0000 .	WEDGE	2-7, 2-9, 2-13, 2-15
1037735-0000 .	VOLUME SHIM	1-47, 1-49, 2-7, 2-9, 2-13, 2-15
1037885-0000 .	REAMED BOLT	1-17, 1-19
1038240-0000 .	SPACER	2-49
1038576-0000 .	AXLE SUPPORT	1-17, 1-19
1038637-0000 .	WEDGE	2-7, 2-9, 2-13, 2-15
1038638-0000 .	VOLUME BULGE	2-7, 2-9, 2-13, 2-15
1038639-0000 .	VOLUME SHIM	2-7, 2-9, 2-13, 2-15
1040753-0000 .	VOLUME FLAP	2-7, 2-9, 2-13, 2-15
1040754-0000 .	VOLUME BULGE	2-7, 2-9, 2-13, 2-15
1040755-0000 .	VOLUME SHIM	1-47, 1-49, 2-7, 2-9, 2-13, 2-15
1040756-0000 .	WEDGE	2-7, 2-9, 2-13, 2-15
1086889-0000 .	COVER	3-123
1110083-0002 .	DOLLY	1-47, 1-49, 2-65, 2-67
1110930-0000 .	INDUCTOR	1-47, 1-49, 2-51, 2-53, 2-83, 2-85
1110932-0000 .	INDUCTOR	1-47, 1-49, 2-51, 2-53, 2-83, 2-85
1110936-0000 .	INDUCTOR	1-47, 1-49, 2-51, 2-53, 2-83, 2-85
1110937-0000 .	INDUCTOR	1-47, 1-49, 2-51, 2-53, 2-83, 2-85
1110938-0000 .	INDUCTOR	1-47, 1-49, 2-51, 2-53, 2-83, 2-85
1129321-0000 .	SHUTTER	1-11
1129431-0000 .	WASHER	1-17, 1-19
1129552-0000 .	KNOB	2-43, 2-45, 2-77, 2-79
1129833-0000 .	GUIDE ROLLER	2-43, 2-45, 2-77, 2-79
1140889-0000 .	BUSBAR	3-175
1143215-0000 .	SPRING	2-19, 2-21, 2-27, 2-29
1143216-0000 .	SPRING	2-19, 2-21, 2-27, 2-29
1143530-0000 .	SPRING	3-91, 3-93
1144264-0000 .	HUB	3-43, 3-45, 3-73

Part No	Description	Page No
1144312-0000	.AXLE PIN	3-43, 3-45, 3-73
1144324-0300	.FRAMEWORK	3-5
1144329-0300	.PULL-DOWN DEVICE	3-5
1144331-0300	.PRESSURE DEVICE	3-5
1144335-0000	.ROLLER	3-43, 3-45, 3-73
1144354-0000	.WASHER	3-43, 3-45, 3-73
1144356-0000	.COVER	3-43, 3-45, 3-73
1144417-0000	.BUSHING	3-43, 3-45, 3-73
1144468-0000	.BEARING HOUSING	3-135
1144470-0000	.SHAFT	3-131, 3-135
1144472-0000	.LEVER	3-79, 3-81
1144473-0000	.LEVER	3-79, 3-81
1144475-0000	.BRACKET	3-79, 3-81
1144476-0000	.BRACKET	3-79, 3-81
1144482-0000	.SUPPORT	3-91, 3-93
1144483-0000	.PLATE	3-91, 3-93
1144484-0000	.PLATE	3-91, 3-93
1144485-0000	.SUPPORT	3-91, 3-93
1144486-0000	.CAM	3-91, 3-93
1144488-0000	.COLUMN	3-91, 3-93
1144489-0000	.FLANGE	3-91, 3-93
1144492-0000	.SPRING	3-91, 3-93
1144493-0000	.WASHER	3-91, 3-93
1144494-0000	.AXLE PIN	3-91, 3-93
1144495-0000	.ECCENTRIC	3-91, 3-93
1144496-0000	.ECCENTRIC	3-91, 3-93
1144498-0000	.FLANGE	3-91, 3-93
1144500-0000	.SUPPORT	3-91, 3-93
1144501-0000	.SPACER	3-91, 3-93
1144502-0000	.WASHER	3-91, 3-93
1144503-0000	.FLANGE	3-91, 3-93
1144505-0000	.COLUMN	3-91, 3-93
1144506-0000	.LEVER	3-91, 3-93
1144507-0000	.BUSHING	3-91, 3-93
1144508-0000	.AXLE PIN	3-91, 3-93
1144511-0000	.SHIM	3-91, 3-93
1144514-0000	.BUSHING	3-91, 3-93
1144515-0000	.INSERT	3-91, 3-93
1144517-0000	.BUSHING	3-91, 3-93
1144520-0000	.ROLLER	3-91, 3-93
1144521-0000	.CLAMP	3-91, 3-93
1144535-0000	.PLATE	3-139
1144552-0000	.PLATE	3-95, 3-97
1144555-0000	.STUD SCREW	3-23, 3-25, 3-31, 3-33, 3-35, 3-63, 3-65
1144566-0000	.FLANGE	3-79, 3-81
1144577-0000	.BLOCK	3-139
1144579-0000	.AXLE	3-139
1144581-0000	.ROLLER	3-131, 3-135
1144593-0000	.PLATE	3-131, 3-135
1144595-0000	.ECCENTRIC SHAFT	3-131, 3-135
1144596-0000	.PLUG	3-131, 3-135
1144597-0000	.SPACER	3-131, 3-135
1144598-0000	.SHAFT	3-135
1144601-0000	.GUIDE STUD	2-19, 2-21, 2-27, 2-29, 2-35, 2-37, 2-39, 2-41, 4-7, 4-9, 4-11
1144618-0000	.FLANGE	3-77
1144619-0000	.SHAFT	3-131, 3-135
1144620-0000	.WASHER	3-77, 3-215
1144621-0000	.PLATE	3-9, 3-11, 3-13
1144625-0000	.SPACER	3-131, 3-135
1144645-0200	.PROTECTIVE COVER	3-131, 3-135
1144662-0000	.BUSHING	3-109, 3-111
1144665-0000	.SEAL RING	3-77
1144667-0000	.HINGE	3-133
1144668-0000	.HINGE	3-133
1144669-0000	.PIN	3-133
1144678-0000	.SHAFT	3-79, 3-81
1144681-0000	.WASHER	3-79, 3-81, 3-215
1144683-0000	.AXLE PIN	3-79, 3-81
1144684-0000	.SPACER	3-79, 3-81
1144685-0000	.SCREW	3-79, 3-81
1144686-0000	.TIE ROD	3-79, 3-81
1144687-0000	.TIE ROD	3-79, 3-81
1144688-0000	.SCREW	3-79, 3-81
1144719-0000	.RAIL	3-31, 3-33, 3-35
1144760-0000	.PLATE	3-131, 3-135
1144783-0000	.TIMING BELT	3-9, 3-11, 3-13, 3-49, 3-51
1144784-0000	.TOOTHED PULLEY	3-131
1144788-0000	.TOOTHED PULLEY	3-131
1144794-0000	.SUPPORT	3-131, 3-135
1144797-0000	.SUPPORT	3-77
1144839-0000	.BLOCK	3-77
1144841-0000	.TIMING BELT	3-131, 3-135
1144892-0000	.GUIDE RIGHT	3-23, 3-25, 3-63, 3-65
1144893-0000	.GUIDE LEFT	3-23, 3-25, 3-63, 3-65

Part No	Description	Page No
1144897-0000	.FOLDING BAR	3-31, 3-33, 3-35
1144898-0000	.FOLDING BAR	3-31, 3-33, 3-35
1144899-0000	.SUPPORT	3-95, 3-97
1144900-0000	.SUPPORT	3-77
1144901-0000	.GUIDE	3-17, 3-19
1144902-0000	.SUPPORT	3-17, 3-19, 3-59, 3-61
1144905-0000	.SUPPORT	3-23, 3-25
1144914-0000	.LEVER	3-91, 3-93
1144915-0000	.LEVER	3-91, 3-93
1144916-0000	.ADJUSTING SCREW	3-91, 3-93
1144918-0000	.PLATE	3-9, 3-11, 3-13, 3-49, 3-51
1144919-0000	.CARRIER	3-9, 3-11, 3-13, 3-49, 3-51
1144924-0000	.BOTTOM	3-43, 3-45
1144926-0000	.FLAP	3-43, 3-45
1144927-0000	.FLAP	3-43, 3-45
1144928-0000	.PUSHER	3-91, 3-93
1144932-0000	.PLATE	3-91, 3-93
1144933-0000	.BLOCK	3-79, 3-81
1144936-0000	.PUSHER	3-91, 3-93
1144941-0000	.COVERING PLATE	3-17, 3-19, 3-59, 3-61
1144943-0000	.SPACER	3-125, 3-127
1144974-0000	.ADJUSTING PLATE	3-17, 3-19, 3-59, 3-61
1144975-0000	.ATTACHMENT PLATE	3-17, 3-19, 3-59, 3-61
1144976-0000	.STOP SCREW	3-17, 3-19, 3-59, 3-61
1144978-0000	.CAM	3-91, 3-93
1144979-0000	.WASHER	3-17, 3-19, 3-59, 3-61
1144990-0000	.FOLDING BAR	3-31, 3-33, 3-35
1144996-0000	.PUSHER	3-91, 3-93
1254109-0000	.BRACKET	2-115, 2-117
1254110-0000	.BRACKET	2-115, 2-117
1255389-0000	.BUSHING	2-65, 2-67
1255390-0000	.BUSHING	2-65, 2-67
1255457-0000	.CARRIER RULER	2-73
1255458-0000	.CARRIER RULER	2-73
1255459-0000	.CARRIER RULER	2-73
1255460-0000	.CARRIER RULER	2-73
1255461-0000	.CARRIER RULER	2-95
1255462-0000	.CARRIER RULER	2-95
1255463-0000	.CARRIER RULER	2-95
1255464-0000	.CARRIER RULER	2-95
1255540-0000	.WASHER	2-97
1255541-0000	.BUSHING	2-7, 2-9, 2-13, 2-15
1260328-0000	.SPRING	2-49
1260659-0000	.SPRING	1-47, 1-49, 2-97
1260700-0000	.BLOCK	3-79, 3-81
1260701-0000	.PUSHER	3-91, 3-93
1260702-0000	.PLATE	3-91, 3-93
1260703-0000	.BOTTOM	3-43, 3-45
1260704-0000	.FLAP	3-43, 3-45
1260705-0000	.FLAP	3-43, 3-45
1260709-0000	.GUIDE UPPER R	3-23, 3-25
1260710-0000	.GUIDE UPPER L	3-23, 3-25
1260714-0000	.SPACER	3-7
1260824-0000	.SPACER RING	3-79, 3-81
1260851-0000	.AXLE PIN	3-109, 3-111
1260852-0000	.WASHER	3-109, 3-111
1260853-0000	.RING	3-109, 3-111
1260885-0000	.FLAP	3-43, 3-45
1260886-0000	.FLAP	3-43, 3-45
1260887-0000	.BLOCK	3-79, 3-81
1260888-0000	.BLOCK	3-91, 3-93
1260889-0000	.PUSHER	3-91, 3-93
1260894-0000	.PROTECTION	3-133
1260895-0000	.SPRING	3-91, 3-93
1260931-0000	.SCREW	3-77
1260941-0000	.SLIDE	3-131
1260944-0000	.BUSHING	3-79, 3-81
1279409-0000	.PLATE	3-9, 3-11, 3-13, 3-53, 3-55
1279559-0000	.ARM	3-43, 3-45, 3-73
1279573-0000	.SLIDE RAIL U	3-125, 3-127
1279582-0000	.RAIL	3-99, 3-101
1279585-0000	.SUPPORT	3-125, 3-127
1279586-0000	.SUPPORT	3-125, 3-127
1279587-0000	.SLIDE RAIL U	3-125, 3-127
1279670-0000	.SPACER	3-7
1279688-0000	.SUPPORT	3-131, 3-135
1279689-0000	.ACTIVATOR	3-135
1282287-0000	.CARRIER	3-9, 3-11, 3-13, 3-49, 3-51
1282290-0000	.GUIDE	3-9, 3-11, 3-13, 3-49, 3-51
1282291-0000	.GUIDE	3-9, 3-11, 3-13, 3-49, 3-51
1282294-0000	.FOLDING BAR	3-31, 3-33, 3-35
1282295-0000	.FOLDING BAR	3-31, 3-33, 3-35
1282681-0000	.TOOTHED PULLEY	3-135
1282705-0000	.SUPPORT	3-23, 3-25

Part No	Description	Page No
1282708-0000	.BUSHING	3-43, 3-45, 3-73, 3-83, 3-85
1282712-0000	.PUSHER	3-91, 3-93
1282714-0000	.PLATE	3-91, 3-93
1282715-0000	.PUSHER	3-91, 3-93
1282844-0000	.SUPPORT	3-77
1282848-0000	.CARRIER	3-9, 3-11, 3-13
1282864-0000	.SPRING	3-109, 3-111
1285009-0000	.HOLDER	3-99, 3-101
1285010-0000	.HOLDER	3-123
1285012-0300	.FOLDING PART	3-5
1285014-0000	.DISTRIBUTOR	3-17, 3-19, 3-59, 3-61
1285022-0000	.SIDE PLATE	3-139, 4-3
1285023-0000	.SIDE PLATE	3-139, 4-3
1285253-0000	.SPACER	3-99, 3-101
1285254-0000	.WASHER	3-109, 3-111
1285258-0000	.RAIL	3-99, 3-101
1285265-0000	.PLATE	3-125, 3-127
1285266-0000	.SPACER	3-125, 3-127
1285267-0000	.SUPPORT	3-23, 3-25
1285291-0000	.PLATE	3-213
1285293-0000	.HEATING PIPE	3-209
1285299-0000	.BRACKET	3-17, 3-19
1285306-0000	.SPACER	3-125, 3-127
1285307-0000	.SPACER	3-209
1285308-0000	.GASKET	3-209
1285310-0000	.EXTENSION	3-87, 3-89
1285311-0000	.PLATE	3-209
1285312-0000	.GASKET	3-209
1285870-0000	.EXTENSION	3-87, 3-89
1285874-0000	.SPACER	3-87, 3-89
1285955-0000	.PLATE	3-135
1285956-0000	.BLOCK	3-135
1296066-0000	.NOZZLE	3-87, 3-89
1296067-0000	.NOZZLE	3-87, 3-89
1296068-0000	.NOZZLE	3-87, 3-89
1296070-0000	.HEATING PIPE	3-209
1296072-0000	.EXTENSION	3-87, 3-89
1296079-0000	.RAIL	3-99, 3-101
1296081-0000	.PLATE	3-125, 3-127
1296153-0000	.GUIDE	3-87, 3-89
1296176-0000	.SPRING	3-109, 3-111
1296180-0000	.FOLDING DEVICE	3-83, 3-85
1296181-0000	.FOLDING DEVICE	3-83, 3-85
1296387-0000	.NOZZLE	3-87, 3-89
1296969-0000	.SCREW HOLDER	3-43, 3-45, 3-73
1296970-0000	.SCREW BUSHING	3-43, 3-45, 3-73
1317042-0000	.RAIL	3-31, 3-33, 3-35
1317043-0000	.SUPPORT	3-31, 3-33, 3-35
1317047-0000	.RAIL	3-31, 3-33, 3-35
1317085-0000	.NUT	3-87, 3-89
1317088-0000	.SPACER	3-23, 3-25, 3-31, 3-33, 3-35
1317211-0000	.COVERING PLATE	3-17, 3-19, 3-59, 3-61
1317213-0000	.ADJUSTING PLATE	3-17, 3-19, 3-59, 3-61
1317216-0000	.FOLDING BAR	3-31, 3-33, 3-35
1317217-0000	.FOLDING BAR	3-31, 3-33, 3-35
1317218-0000	.SPACER	3-7, 3-47, 3-99, 3-101
1317362-0000	.SHAFT	3-91, 3-93
1317363-0000	.SHAFT	3-91, 3-93
1317438-0000	.FORK	1-7, 1-9
1317439-0000	.CATCH	2-27, 2-29
1317440-0000	.STOP PIN	2-19, 2-21, 2-27, 2-29
1317475-0000	.BRACKET	1-41, 1-43
1317476-0000	.BRACKET	1-41, 1-43
1317554-0000	.FLAP	3-43, 3-45
1317555-0000	.FLAP	3-43, 3-45
1317556-0000	.BOTTOM	3-43, 3-45
1317633-0000	.SPRING	3-17, 3-19
1317650-0000	.GUIDE	3-9, 3-11, 3-13, 3-49, 3-51
1317651-0000	.GUIDE	3-9, 3-11, 3-13, 3-49, 3-51
1317652-0000	.FOLDING BAR	3-31, 3-33, 3-35
1317653-0000	.FOLDING BAR	3-31, 3-33, 3-35
1317654-0000	.PUSHER	3-91, 3-93
1317655-0000	.PLATE	3-91, 3-93
1317656-0000	.INSERT	3-43, 3-45
1317740-0000	.RUBBER SLEEVE	2-19, 2-21, 2-27, 2-29
1317741-0000	.CATCH	2-19, 2-21
1317742-0000	.CANTILEVER	2-19, 2-21, 2-27, 2-29
1317787-0000	.CATCH	3-91, 3-93
1317789-0000	.BLOCK	3-79, 3-81
1317801-0000	.NOZZLE	3-87, 3-89
1317802-0000	.NOZZLE	3-87, 3-89
1317803-0000	.NOZZLE	3-87, 3-89
1317804-0000	.SPACER	3-87, 3-89
1317805-0000	.BAR	3-9, 3-11, 3-13

Part No	Description	Page No
1317823-0000	.CANTILEVER	2-19, 2-21, 2-27, 2-29
1317824-0000	.CATCH	2-19, 2-21, 2-27, 2-29
1334012-0000	.GUIDE UPPER L	3-23, 3-25
1334013-0000	.GUIDE UPPER R	3-23, 3-25
1334018-0000	.SHIM	3-79, 3-81
1334081-0000	.CURVE	2-101
1334113-0000	.HOLDER	3-99, 3-101
1334271-0000	.BAR	3-9, 3-11, 3-13
1334328-0000	.SPACER	3-79, 3-81
1334447-0000	.SPACER	3-23, 3-25, 3-63, 3-65
1334480-0000	.SUPPORT	3-17, 3-19
1334523-0000	.SUPPORT	3-23, 3-25
1334559-0000	.GUIDE UPPER R	3-23, 3-25
1334560-0000	.GUIDE UPPER L	3-23, 3-25
1334561-0000	.SLIDE	3-9, 3-11, 3-13
1334562-0000	.SLIDE	3-9, 3-11, 3-13
1334632-0000	.SPACER	3-87, 3-89
1334633-0200	.VOLUME FLAP CUTTING	2-5
1334634-0200	.VOLUME FLAP PRESSURE	2-5
1334635-0200	.SHOCK ABSORBER	2-5
1334636-0200	.SHOCK ABSORBER	2-5
1334718-0000	.SPACER	3-31, 3-33, 3-35
1334856-0000	.COUNTER ROLLER	1-21
1334910-0000	.BRACKET	2-115, 2-117
1334999-0000	.PUSHER	3-91, 3-93
1346149-0000	.FOLDING BAR	3-31, 3-33, 3-35
1346150-0000	.FOLDING BAR	3-31, 3-33, 3-35
1346153-0000	.STOP PIN	2-19, 2-21, 2-27, 2-29
1346157-0000	.VOLUME BULGE	2-7, 2-9, 2-13, 2-15
1346158-0000	.VOLUME SHIM	1-47, 1-49, 2-7, 2-9, 2-13, 2-15
1346340-0000	.BRACKET	3-23, 3-25, 3-63, 3-65
1346343-0000	.RAIL	3-31, 3-33, 3-35, 3-67, 3-69
1346344-0000	.RAIL	3-31, 3-33, 3-35, 3-67, 3-69
1346471-0000	.WEDGE	3-9, 3-11, 3-13, 3-49, 3-51
1346539-0000	.CONNECTING ROD	3-91, 3-93
1346580-0000	.NOZZLE	3-87, 3-89
1346581-0000	.NOZZLE	3-87, 3-89
1346588-0000	.DRIP PLATE	3-95, 3-97
1346641-0000	.SPACER	3-87, 3-89
1346642-0000	.SPACER	3-87, 3-89
1346643-0000	.NOZZLE	3-87, 3-89
1346644-0000	.NOZZLE	3-87, 3-89
1346646-0000	.EXTENSION	3-87, 3-89
1346678-0000	.NOZZLE	3-87, 3-89
1346679-0000	.NOZZLE	3-87, 3-89
1346736-0000	.WEDGE	3-9, 3-11, 3-13, 3-49, 3-51
1346739-0000	.GUIDE	3-99, 3-101
1347018-0000	.PLUG	3-91, 3-93
1347057-0000	.GUIDE	3-17, 3-19
1347108-0000	.PLATE	3-77
1347109-0000	.PLATE	3-77
1347410-0000	.ACTIVATOR	3-131
1347495-0000	.AXLE PIN	3-83, 3-85
1347496-0000	.SCREW	3-83, 3-85
1347526-0000	.BRACKET	2-19, 2-21, 2-27, 2-29
1347600-0000	.SUPPORT	3-83, 3-85
1347699-0000	.PLATE	3-131
1347952-0002	.SPACER	3-193
1347952-0004	.SPACER	3-193
1347952-0006	.SPACER	3-193
1347952-0008	.SPACER	3-163
1347952-0010	.SPACER	3-163
1347952-0011	.SPACER	3-163
1347952-0017	.SPACER	3-193
1348041-0000	.SPACER	3-23, 3-25
1348042-0000	.SPACER	3-31, 3-33, 3-35
1348043-0000	.SPACER	3-87, 3-89
1348047-0000	.FORK	1-7, 1-9
1348048-0000	.FORK	1-7, 1-9
1348049-0000	.FORK	1-7, 1-9
1348056-0300	.FOLDING PART	3-79, 3-81
1348118-0000	.WHEEL	3-125, 3-127
1348132-0000	.SLIDE	3-9, 3-11, 3-13
1348133-0000	.SLIDE	3-9, 3-11, 3-13, 3-53
1348134-0000	.SLIDE	3-9, 3-11, 3-13
1348135-0000	.SLIDE	3-9, 3-11, 3-13, 3-53
1348136-0000	.SLIDE	3-9, 3-11, 3-13, 3-53, 4-5
1348137-0000	.SLIDE	3-9, 3-11, 3-13
1348138-0000	.SLIDE	3-9, 3-11, 3-13
1348139-0000	.SLIDE	3-9, 3-11, 3-13, 3-55
1348140-0000	.SLIDE	3-9, 3-11, 3-13
1348141-0000	.SLIDE	3-9, 3-11, 3-13, 3-55
1348142-0000	.SLIDE	3-9, 3-11, 3-13, 3-55, 4-13
1348143-0000	.SLIDE	3-9, 3-11, 3-13

Part No	Description	Page No
1348144-0000	.BAR	3-9, 3-11, 3-13, 3-53
1348145-0000	.BAR	3-9, 3-11, 3-13
1348146-0000	.BAR	3-9, 3-11, 3-13
1348147-0000	.BAR	3-9, 3-11, 3-13, 3-53
1348148-0000	.BAR	3-9, 3-11, 3-13, 3-53, 4-5
1348149-0000	.BAR	3-9, 3-11, 3-13
1348150-0000	.BAR	3-9, 3-11, 3-13, 3-55
1348151-0000	.BAR	3-9, 3-11, 3-13
1348152-0000	.BAR	3-9, 3-11, 3-13
1348153-0000	.BAR	3-9, 3-11, 3-13, 3-55
1348154-0000	.BAR	3-9, 3-11, 3-13, 3-55, 4-13
1348155-0000	.BAR	3-9, 3-11, 3-13
1348169-0000	.PLATE	3-9, 3-11, 3-13, 3-53, 3-55, 4-5, 4-13
1348359-0000	.BRACKET	1-41, 1-43
1348483-0000	.SPRING RIGHT	2-19, 2-21, 2-27, 2-29, 2-35, 2-37, 2-39, 2-41, 4-7, 4-9
1348484-0000	.SPRING LEFT	2-19, 2-21, 2-27, 2-29, 2-35, 2-37, 2-39, 2-41, 4-7, 4-9
1348503-0000	.LID	2-49
1348504-0000	.SLEEVE	2-49
1348537-0000	.TIMING BELT	3-91, 3-93
1348538-0000	.LEVER	3-109, 3-111
1348540-0000	.PIVOT AXLE	3-109, 3-111
1348545-0000	.RAIL	2-51, 2-53
1348546-0000	.RAIL	2-83, 2-85
1348631-0000	.PLATE	3-109, 3-111
1348808-0000	.CURVE	2-101
1348809-0000	.CURVE	2-101
1348854-0000	.PLATE	3-139
1348920-0000	.CRADLE	3-139
1348921-0000	.TOOTHED PULLEY	3-131
1348922-0000	.TOOTHED PULLEY	3-131
1348955-0000	.KNIFE	1-47, 1-49, 2-97
1348956-0000	.KNIFE	1-47, 1-49, 2-97
1348957-0000	.BRACKET	3-135
1348963-0000	.SLIDE	3-135
1348966-0000	.KNIFE	1-47, 1-49, 2-97
1349017-0000	.PLATE	3-139
1349087-0000	.DISTRIBUTOR	3-17, 3-19, 3-59, 3-61
1349152-0000	.TIMING BELT	3-9, 3-11, 3-13
1349160-0000	.SPACER	3-137
1349208-0000	.VOLUME SHIM	1-47, 1-49, 2-7, 2-9, 2-13, 2-15
1349319-0000	.CANTILEVER	2-19, 2-21, 2-27, 2-29
1349320-0000	.CATCH	2-19, 2-21, 2-27, 2-29
1349516-0000	.SHAFT	3-91, 3-93
1349517-0000	.TOOTHED PULLEY	3-91, 3-93
1349518-0000	.SUPPORT	3-91, 3-93
1349519-0000	.ACTIVATOR	3-91, 3-93
1349584-0000	.BUSHING	2-51, 2-53, 2-65, 2-67, 2-83, 2-85
1349595-0000	.SLEEVE	2-49
1349596-0000	.CUTTING JAW	2-65, 2-67
1349599-0000	.HOLDER	2-51, 2-53, 2-83, 2-85
1349612-0000	.PISTON	2-49
1349741-0000	.CURVE	2-101
1349744-0000	.VOLUME CAM	2-101
1349806-0000	.GUIDE	3-99, 3-101
1349851-0000	.ROLL	1-21
1349925-0000	.PLATE	2-65, 2-67
1349980-0000	.SHAFT	2-51, 2-53, 2-65, 2-67, 2-83, 2-85
1349985-0000	.SPRING	3-109, 3-111
1350263-0000	.SPRING RIGHT	2-19, 2-21, 2-27, 2-29, 2-35, 2-37, 2-39, 2-41, 4-7, 4-9, 4-11
1350264-0000	.SPRING LEFT	2-19, 2-21, 2-27, 2-29, 2-35, 2-37, 2-39, 2-41, 4-7, 4-9, 4-11
1350421-0000	.NOZZLE	3-87, 3-89
1350422-0000	.NOZZLE	3-87, 3-89
1350423-0000	.FOLDING BAR	3-23, 3-25
1350424-0000	.GUIDE RIGHT	3-23, 3-25
1350425-0000	.GUIDE LEFT	3-23, 3-25
1350428-0000	.NAIL	3-91, 3-93
1350440-0000	.LEVER	3-83, 3-85
1350441-0000	.SUPPORT	3-83, 3-85
1350543-0000	.AXLE PIN	3-109, 3-111
1350721-0000	.STUD SCREW	3-23, 3-25, 3-31, 3-33, 3-35
1350808-0000	.BLOCK	3-79, 3-81
1350809-0000	.BLOCK	3-91, 3-93
1350810-0000	.PUSHER	3-91, 3-93
1359085-0000	.T-HOLDER	3-105
1359565-0000	.NUT	3-105
1360149-0000	.SPACER	3-133
1360318-0000	.CARRIER RULER	2-73
1360319-0000	.CARRIER RULER	2-95
1361547-0000	.PULLER	3-221
1361558-0100	.LIFTING KIT-WHEEL	3-3
1361559-0100	.PULLER	3-3
1361918-0300	.WHEEL	3-5
1361920-0400	.RAIL OUTFEED	3-5
1361921-0400	.VOLUME KIT OUT FEED	3-5

Part No	Description	Page No
1361922-0200	.DROP CHUTE VARIANT	3-5
1361923-0200	.INFEED CONVEYOR VARIANT	3-5
1361934-0000	.FRAME	3-215
1361935-0100	.FRAME	3-3, 3-5
1363768-0000	.BOX	3-3
1363770-0000	.BOX	4-3
1363779-0000	.BOX	1-3
1363780-0000	.CARRIER	3-215
1363790-0000	.BOX	2-3
1363791-0000	.BRACKET	3-217
1366726-0000	.HOLDER	3-105
1366727-0000	.CLAMP	3-105
1366777-0101	.ANGLED RAIL HOLDER TPC21	3-99, 3-101
1478127-0000	.DRIP PLATE	3-95, 3-97
1478189-0000	.SUPPORT	3-91, 3-93
1478214-0000	.SLIDE	3-9, 3-11, 3-13
1478215-0000	.SLIDE	3-9, 3-11, 3-13
1478227-0000	.CARRIER	3-109, 3-111
1478228-0000	.CAM	3-109, 3-111
1478235-0000	.PLATE	3-99, 3-101
1478358-0000	.VOLUME FLAP	2-7, 2-9, 2-13, 2-15
1478359-0000	.ROLLER	1-37
1478393-0000	.CATCH	2-19, 2-21, 2-27, 2-29
1478395-0000	.CATCH	2-19, 2-21, 2-27, 2-29
1478396-0000	.STOP	2-19, 2-21, 2-27, 2-29
1478417-0000	.ROLLER	3-77
1478418-0000	.AXLE BOLT	3-77
1478497-0000	.VOLUME CAM	2-101
1478558-0000	.WASHER	3-109, 3-111
1478768-0100	.KNIFE	2-5
1478813-0000	.SPACER	1-11
1478814-0000	.SENSOR	1-11
1478925-0000	.HATCH	3-109, 3-111
1478926-0000	.GUIDE RIGHT	3-23, 3-25
1478927-0000	.GUIDE LEFT	3-23, 3-25
1478928-0000	.BUSHING	3-139
1478966-0000	.LINK	2-97
1478967-0000	.WASHER	2-97
1478968-0000	.LINK	2-97
1484002-0000	.PLATE	2-65, 2-67
1484003-0000	.PLATE	2-65, 2-67
1484093-0000	.INSERT	3-211
1484096-0000	.COVER	3-209
1484211-0000	.WASHER	2-97
1484230-0000	.PUNCH	3-181
1484231-0000	.DIE	3-181
1484250-0000	.VOLUME CAM	2-101
1484251-0000	.VOLUME CAM	2-101
1484258-0000	.CRADLE	3-139
1484289-0000	.HATCH	3-109, 3-111
1484379-0000	.INSERT	3-211
1484620-0000	.SHAFT	3-131
1484865-0000	.VOLUME FLAP	2-13, 2-15
1484866-0000	.VOLUME FLAP	2-7, 2-9
1484867-0000	.VOLUME FLAP	2-7, 2-9
1484868-0000	.VOLUME FLAP	2-13, 2-15
1487038-0200	.OUTFEED WHEEL	3-107
1487158-0300	.FLAP HEATER VARIANT	3-5
1487159-0000	.CARRIER	3-109, 3-111
1487177-0000	.GUIDE	3-99, 3-101
1487338-0100	.SUPPORT LEVEL DETECTOR	1-3
1487504-0000	.WASHER	2-101
1487505-0001	.WASHER	2-101
1487505-0002	.WASHER	2-101
1487618-0000	.CUTTING JAW	2-65, 2-67
1487619-0000	.PLATE	2-65, 2-67
1487626-0000	.VOLUME BULGE	2-7, 2-9, 2-13, 2-15
1487627-0000	.VOLUME SHIM	1-47, 1-49, 2-7, 2-9, 2-13, 2-15
1487684-0000	.RAIL	3-99, 3-101
1487738-0000	.FLAP	3-43, 3-45
1487739-0000	.FLAP	3-43, 3-45
1487821-0000	.SPACER	3-77
1487825-0200	.RAIL	3-5
1487922-0000	.FOLDING DEVICE	3-83, 3-85
1487923-0000	.FOLDING DEVICE	3-83, 3-85
1487929-0000	.SPACER	3-7
1487943-0000	.STOPPER	2-35, 2-37, 2-39, 2-41, 4-7, 4-9
1487945-0000	.STOP	2-35, 2-37, 2-39, 2-41, 4-7, 4-9
1487946-0000	.SHAFT	2-35, 2-37, 2-39, 2-41, 4-7, 4-9
1487948-0000	.BUSHING	2-35, 2-37, 2-39, 2-41, 4-7, 4-9
1487954-0000	.CUTTING JAW	2-65, 2-67
1487955-0000	.HOLDER	2-51, 2-53, 2-83, 2-85
1490031-0000	.PLATE	3-91, 3-93
1490032-0000	.PUSHER	3-91, 3-93

Part No	Description	Page No
1490033-0000	.SLIDE	3-9, 3-11, 3-13
1490034-0000	.SLIDE	3-9, 3-11, 3-13
1490035-0000	.BAR	3-9, 3-11, 3-13
1490036-0000	.BAR	3-9, 3-11, 3-13
1490039-0000	.NOZZLE	3-87, 3-89
1490112-0100	.OUTFEED CONVEYOR	3-121
1490762-0000	.ROLLER	1-17, 1-19
1490765-0000	.ROLLER	1-21
1498029-0000	.PIN	3-91, 3-93
1498068-0000	.SEAL RING	3-131
1498143-0000	.LOCKING RING	1-7, 1-9
1498146-0000	.NOZZLE	3-87, 3-89
1498147-0000	.NOZZLE	3-87, 3-89
1498161-0000	.SUPPORT	3-23, 3-25
1498163-0000	.SPACER	3-87, 3-89
1498526-0000	.REGULATOR BODY	1-11
1498528-0000	.TIMING BELT	3-117
1498529-0000	.TIMING BELT	3-117
1498620-0000	.PULLEY	3-117
1498621-0000	.SPRING	1-7, 1-9
1498827-0000	.FOLDING BAR	3-31, 3-33, 3-35
1498828-0000	.FOLDING BAR	3-31, 3-33, 3-35
1498849-0000	.BUSBAR	2-51, 2-53
1498850-0000	.BUSBAR	2-83, 2-85
1499059-0000	.TIMING BELT	3-117
1499064-0000	.PULLEY	3-117
1499071-0000	.SPACER	3-23, 3-25, 3-31, 3-33, 3-35
1499072-0000	.SPACER	3-31, 3-33, 3-35
1499094-0000	.SPACER SCREW	3-31, 3-33, 3-35
1499103-0000	.TIE ROD	3-83, 3-85
1499114-0000	.LOCKING RING	1-7, 1-9
1499135-0000	.GUIDE	3-9, 3-11, 3-13
1499136-0000	.GUIDE	3-9, 3-11, 3-13
1499143-0000	.PLATE	3-91, 3-93
1499144-0000	.PUSHER	3-91, 3-93
1499150-0000	.RAIL	3-31, 3-33, 3-35
1499151-0000	.RAIL	3-31, 3-33, 3-35
1499210-0000	.RAIL	3-149
1499216-0000	.PLATE	3-145, 3-151
1499217-0000	.BRACKET	3-147
1499218-0000	.PAPER GUIDE	3-147
1499219-0100	.PAPER GUIDE	3-145
1499225-0200	.FOLDING PART	3-151
1499227-0000	.SHIM	3-153
1499228-0000	.SHIM	3-153
1499229-0000	.RAIL	3-153
1499233-0000	.PLATE	3-149
1499296-0001	.GUIDE	3-189
1499296-0003	.GUIDE	3-189
1499296-0004	.GUIDE	3-189
1499296-0007	.GUIDE	3-165
1499296-0008	.GUIDE	3-165
1499296-0014	.GUIDE	3-189
1499296-0015	.GUIDE	3-165
1499320-0000	.TIE ROD	2-59, 2-61, 2-89, 2-91
1499327-0000	.SHAFT	2-35, 2-37, 2-39, 2-41, 4-7, 4-9, 4-11
1499328-0000	.STOPPER	2-35, 2-37, 2-39, 2-41, 4-7, 4-9
1499336-0000	.STOPPER	2-35, 2-37, 2-39, 2-41, 4-7, 4-9
1499345-0000	.FLAP HOLDER	2-35, 2-37, 2-39, 2-41, 4-7, 4-9
1499346-0000	.FLAP HOLDER	2-35, 2-37, 2-39, 2-41, 4-7, 4-9
1499348-0000	.STOP	2-35, 2-37, 2-39, 2-41, 4-7, 4-9
1499349-0000	.STOPPER	2-35, 2-37, 2-39, 2-41, 4-7, 4-9
1499350-0000	.CAM	2-35, 2-37, 2-39, 2-41, 4-7, 4-9
1499351-0200	.ROLLER UNIT	2-103
1499355-0000	.ROLLER	2-35, 2-37, 2-39, 2-41, 4-7, 4-9, 4-11
1499356-0000	.CAM	2-35, 2-37, 2-39, 2-41, 4-7, 4-9
1499357-0000	.VOLUME FLAP	2-35, 2-37, 2-39, 2-41, 4-7, 4-9
1499358-0000	.VOLUME FLAP	2-35, 2-37, 2-39, 2-41, 4-7, 4-9
1499400-0000	.GUIDE	3-9, 3-11, 3-13
1499401-0000	.GUIDE	3-9, 3-11, 3-13
1499411-0000	.COUNTER ROLLER	1-21
1499413-0000	.HOLDER	3-99, 3-101
1499417-0000	.BAR	3-9, 3-11, 3-13
1499418-0000	.SLIDE	3-9, 3-11, 3-13
1499422-0000	.SLIDE	3-9, 3-11, 3-13
1499423-0000	.BAR	3-9, 3-11, 3-13
1499426-0000	.GUIDE	3-9, 3-11, 3-13
1499427-0000	.GUIDE	3-9, 3-11, 3-13
1499444-0000	.NOZZLE	3-87, 3-89
1499445-0000	.NOZZLE	3-87, 3-89
1499446-0000	.NOZZLE	3-87, 3-89
1499475-0000	.HOLDER	3-9, 3-11, 3-13, 3-49, 3-51
1499476-0000	.HOLDER	3-9, 3-11, 3-13, 3-49, 3-51, 3-133
1499571-0100	.PAPER REEL HOLDER	3-3

Machine Type Group Description Page No

Part No	Description	Page No
1499594-0000	.VOLUME CAM	2-101
1499635-0000	.LEVER	3-79, 3-81
1499675-0000	.VOLUME BULGE	2-7, 2-9, 2-13, 2-15
1499678-0000	.ROLLER	2-109, 2-111
1499765-0000	.AXLE LINK	3-83, 3-85
1499901-0000	.VOLUME FLAP	2-7, 2-9
1499902-0000	.VOLUME FLAP	2-13, 2-15
1511225-0000	.CARRIER	3-109, 3-111
1511335-0000	.VOLUME BULGE	2-35, 2-37, 2-39, 2-41, 4-7, 4-9
1511336-0000	.VOLUME SHIM	1-47, 1-49, 2-35, 2-37, 2-39, 2-41, 4-7, 4-9
1511337-0000	.VOLUME SHIM	1-47, 1-49, 2-35, 2-37, 2-39, 2-41, 4-7, 4-9
1511338-0000	.STOP	2-35, 2-37, 2-39, 2-41, 4-7, 4-9, 4-11
1511339-0000	.STOP	2-35, 2-37, 2-39, 2-41, 4-7, 4-9
1511351-0000	.ZFOLDING FLAP	2-73, 2-95
1511352-0000	.FOLDING FLAP	2-73, 2-95
1511492-0000	.SHAFT	1-37
1511530-0000	.SHUTTER	1-11
1511556-0000	.SET SCREW	2-19, 2-21, 2-27, 2-29
1511558-0000	.BOTTOM	3-43, 3-45
1511600-0000	.SPACER	1-11
1511692-0000	.SPACER	3-87, 3-89
1511697-0000	.FOLDING FLAP	2-73, 2-95
1511698-0000	.FOLDING FLAP	2-73, 2-95
1511699-0000	.FOLDING FLAP	2-73, 2-95
1511700-0000	.FOLDING FLAP	2-73, 2-95
1511769-0000	.ROLLER	3-229
1512146-0000	.AXLE PIN	2-35, 2-37, 2-39, 2-41, 4-7, 4-9, 4-11
1512147-0000	.WASHER	2-35, 2-37, 2-39, 2-41, 4-7, 4-9, 4-11
1512265-0000	.SLEEVE	3-225
1512266-0000	.SLEEVE	3-225
1512307-0000	.GUIDE	3-9, 3-11, 3-13
1512308-0000	.GUIDE	3-9, 3-11, 3-13
1512339-0100	.PHOTOCELL OUTFEED	3-121
1512563-0200	.PRESSURE JAW LEFT	2-5
1512564-0200	.CARRIER CUTTING LEFT	2-5
1512565-0200	.CUTTING JAW LEFT	2-5
1512568-0200	.PRESSURE JAW RIGHT	2-5
1512569-0200	.CARRIER CUTTING RIGHT	2-5
1512570-0200	.CUTTING JAW RIGHT	2-5
1512579-0000	.BRACKET	2-19, 2-21, 2-27, 2-29
1517053-0000	.SPRING	1-7, 1-9
1517242-0000	.GUIDE	3-9, 3-11, 3-13
1517243-0000	.GUIDE	3-9, 3-11, 3-13
1517244-0000	.GUIDE	3-9, 3-11, 3-13
1517245-0000	.GUIDE	3-9, 3-11, 3-13
1517298-0200	.INFEED CONVEYOR	3-119
1517299-0200	.INFEED CONVEYOR LONG	3-129
1517300-0300	.INFEED CONVEYOR SHORT	3-129
1517302-0000	.SUPPORT PLATE	3-95, 3-97
1517322-0100	.FIN TYPE	3-119
1517472-0000	.SIDE PLATE	3-139
1517473-0000	.SIDE PLATE	3-139
1517474-0000	.GUIDE	3-9, 3-11, 3-13
1517475-0000	.GUIDE	3-9, 3-11, 3-13
1517476-0000	.WEDGE	3-9, 3-11, 3-13
1517477-0000	.PLATE	3-9, 3-11, 3-13
1517478-0000	.BAR	3-9, 3-11, 3-13
1517479-0000	.BAR	3-9, 3-11, 3-13
1517480-0000	.SLIDE	3-9, 3-11, 3-13
1517481-0000	.SLIDE	3-9, 3-11, 3-13
1517524-0000	.GUIDE	3-9, 3-11, 3-13
1517525-0000	.GUIDE	3-9, 3-11, 3-13
1517526-0000	.GUIDE	3-9, 3-11, 3-13
1517527-0000	.GUIDE	3-9, 3-11, 3-13
1517563-0000	.BRACKET	3-95, 3-97
1517564-0000	.SUPPORTING ARM	3-95, 3-97
1517567-0000	.PLATE	3-95, 3-97
1517568-0000	.SUPPORTING ARM	3-95, 3-97
1519089-0000	.GUIDE	3-9, 3-11, 3-13
1519090-0000	.GUIDE	3-9, 3-11, 3-13
1519093-0000	.GUIDE	3-9, 3-11, 3-13
1519094-0000	.GUIDE	3-9, 3-11, 3-13
1519336-0000	.NOZZLE	3-87, 3-89
1519338-0000	.TIMING BELT	3-9, 3-11, 3-13
1519339-0000	.SPACER	3-87, 3-89
1519340-0000	.TIE ROD	3-83, 3-85
1519341-0000	.BLOCK	3-79, 3-81
1519344-0000	.CARRIER	3-9, 3-11, 3-13
1519345-0000	.GUIDE	3-9, 3-11, 3-13
1519346-0000	.GUIDE	3-9, 3-11, 3-13
1519352-0000	.GUIDE	3-17, 3-19
1519355-0000	.SPACER	3-31, 3-33, 3-35
1519358-0000	.GUIDE	3-23, 3-25
1519359-0000	.GUIDE	3-23, 3-25

Part No	Description	Page No
1519485-0000	.SPRING	1-7, 1-9
1519540-0000	.RAIL	3-99, 3-101
1520052-0000	.INDUCTOR	1-47, 1-49, 2-51, 2-53, 2-83, 2-85
1520455-0000	.CUTTING RAIL	2-65, 2-67
1520493-0000	.CUTTING RAIL	2-65, 2-67
1520494-0000	.CUTTING RAIL	2-65, 2-67
1520633-0002	.DOLLY	2-65, 2-67
1523145-0000	.BEARING HOUSING	2-65, 2-67
1523146-0000	.FOLDING FLAP	2-73, 2-95
1523147-0000	.FOLDING FLAP	2-73, 2-95
1523148-0000	.CARRIER RULER	2-95
1523162-0000	.SCREW	2-59, 2-61, 2-89, 2-91
1523177-0000	.CARRIER RULER	2-73
1523302-0000	.HOUSING	3-145, 3-151
1523303-0000	.BRACKET	3-145
1523467-0000	.VOLUME BULGE	3-43, 3-45, 3-91, 3-93
1523475-0000	.CANTILEVER	2-19, 2-21, 2-27, 2-29
1523490-0000	.VOLUME BULGE	2-101
1523497-0000	.SPACER	3-87, 3-89
1523826-0000	.PUSHER	3-91, 3-93
1523827-0000	.SCREW	2-65, 2-67
1523884-0000	.FLAP	3-91, 3-93
1523885-0000	.PUSHER	3-91, 3-93
1523926-0000	.SPACER	3-23, 3-25, 3-31, 3-33, 3-35
1523927-0000	.SPACER SCREW	3-31, 3-33, 3-35
1524147-0000	.ROLLER	1-33, 1-35
1524148-0000	.ROLLER	1-33, 1-35
1524149-0000	.ROLLER	1-33, 1-35
1524150-0000	.ROLLER	1-33, 1-35
1524151-0000	.ROLLER	1-23, 1-25
1524152-0000	.ROLLER	1-23, 1-25
1524156-0000	.ROLLER	1-21
1524310-0000	.VOLUME BULGE	2-35, 2-37, 2-39, 2-41, 4-7, 4-9
1524349-0000	.GUIDE	3-99, 3-101
1524370-0100	.WHEEL DIFFERENCE	3-119
1524414-0000	.SEAL	1-17, 1-19
1524416-0000	.ROLLER	1-17, 1-19
1524421-0000	.ROLLER	2-109, 2-111
1524484-0000	.FLAP	3-43, 3-45
1524547-0000	.COUNTER ROLLER	1-21
1532257-0000	.SLIDE	3-9, 3-11, 3-13
1532258-0000	.SLIDE	3-9, 3-11, 3-13
1532261-0000	.GUIDE	3-9, 3-11, 3-13
1532262-0000	.GUIDE	3-9, 3-11, 3-13
1532263-0000	.GUIDE	3-9, 3-11, 3-13
1532264-0000	.GUIDE	3-9, 3-11, 3-13
1532284-0000	.NOZZLE	3-87, 3-89
1532285-0000	.NOZZLE	3-87, 3-89
1532286-0000	.NOZZLE	3-87, 3-89
1532287-0000	.VOLUME FLAP	2-7, 2-9, 2-13, 2-15
1532289-0000	.PUSHER	3-91, 3-93
1532290-0000	.PUSHER	3-91, 3-93
1532291-0000	.PLATE	3-91, 3-93
1532293-0000	.VOLUME SHIM	1-47, 1-49, 2-7, 2-9, 2-13, 2-15
1532294-0000	.RAIL	3-99, 3-101
1532446-0000	.PLATE	3-151
1532447-0000	.HANDLE	3-145, 3-151
1532516-0000	.CARRIER	3-109, 3-111
1533360-0000	.INDUCTOR	3-175, 3-195
1533363-0000	.INDUCTOR	3-175, 3-195
1533364-0000	.INDUCTOR	3-175, 3-195
1538186-0000	.BRACKET	3-31, 3-33, 3-35
1538247-0000	.AXLE PIN	3-145, 3-151
1538248-0100	.FOLDING DEVICE	3-143
1538348-0000	.CATCH	2-65, 2-67
1538349-0000	.CATCH	2-49
1538496-0000	.ROLLER	3-229
1538637-0000	.VOLUME SHIM	1-47, 1-49, 2-35, 2-37, 2-39, 2-41, 4-7, 4-9
1538644-0100	.OUTFEED BELT	3-107
1538668-0000	.GUIDE ROD	3-145, 3-151
1538770-0000	.BOTTOM	3-43, 3-45
1538890-0000	.RAIL	3-31, 3-33, 3-35
1538891-0000	.RAIL	3-31, 3-33, 3-35
1538963-0000	.RAIL	3-95, 3-97
1538970-0000	.SLIDE	3-99, 3-101
1539172-0000	.CANTILEVER	2-19, 2-21, 2-27, 2-29
1539840-0000	.VOLUME BULGE	2-13, 2-15
1539841-0000	.VOLUME BULGE	2-7, 2-9, 2-13, 2-15
1539842-0000	.VOLUME SHIM	2-13, 2-15
1539843-0000	.VOLUME SHIM	1-47, 1-49, 2-7, 2-9, 2-13, 2-15
1539869-0000	.RAIL	3-99, 3-101
1539871-0000	.SPACER	3-23, 3-25, 3-31, 3-33, 3-35, 3-67, 3-69
1539872-0000	.PUSHER	3-91, 3-93
1539873-0000	.SPACER	3-31, 3-33, 3-35

Part No	Description	Page No
1539874-0000	.SLIDE	3-9, 3-11, 3-13, 3-53
1539875-0000	.SLIDE	3-9, 3-11, 3-13, 3-55
1539876-0000	.PLATE	3-9, 3-11, 3-13, 3-53, 3-55
1539877-0000	.BAR	3-9, 3-11, 3-13, 3-53
1539878-0000	.BAR	3-9, 3-11, 3-13, 3-55
1539879-0000	.GUIDE	3-9, 3-11, 3-13
1539880-0000	.GUIDE	3-9, 3-11, 3-13
1539881-0000	.FOLDING BAR	3-31, 3-33, 3-35
1539882-0000	.FOLDING BAR	3-31, 3-33, 3-35
1539886-0000	.CANTILEVER	2-19, 2-21, 2-27, 2-29
1539887-0000	.CATCH	2-19, 2-21, 2-27, 2-29
1539900-0000	.RIGHT UPPER GUIDE	3-23, 3-25, 3-63, 3-65
1539983-0000	.GUIDE	3-9, 3-11, 3-13
1539984-0000	.GUIDE	3-9, 3-11, 3-13
1548114-0000	.RAIL	3-99, 3-101
1548230-0000	.BODY	1-11
1548348-0000	.GUIDE	3-99, 3-101
1548349-0000	.RAIL	3-99, 3-101
1548353-0000	.SLIDE RAIL	3-125, 3-127
1548354-0000	.COVER	3-125, 3-127
1548460-0100	.VOLUME FLAP PRESSURE	2-5
1548460-0101	.VOLUME FLAP	4-3
1548460-0102	.VOLUME FLAP	4-3
1548460-0103	.VOLUME FLAP	4-3
1548460-0104	.VOLUME FLAP	4-3
1548460-0105	.VOLUME FLAP	4-3
1548527-0000	.FOLDING BAR	3-31, 3-33, 3-35
1548528-0000	.FOLDING BAR	3-31, 3-33, 3-35
1548531-0000	.ROLLER	1-23, 1-25
1548540-0000	.ROLLER	1-23, 1-25
1548541-0000	.ROLLER	1-23, 1-25
1548550-0000	.RAIL	3-99, 3-101
1548551-0000	.SPACER	3-99, 3-101
1548612-0000	.COVERING PLATE	3-17, 3-19
1548940-0000	.SPRING	2-59, 2-61, 2-89, 2-91
1549125-0000	.PLUG	2-7, 2-9
1549126-0000	.NOZZLE	3-87, 3-89
1549127-0000	.NOZZLE	3-87, 3-89
1549312-0000	.INSERT	2-43, 2-45, 2-59, 2-61, 2-77, 2-79, 2-89, 2-91
1549378-0000	.SPRING	2-43, 2-45, 2-77, 2-79
1549388-0000	.SPACER	3-87, 3-89
1549389-0000	.SPACER	3-87, 3-89
1549390-0000	.NUT	3-87, 3-89
1549406-0000	.PACKAGE GUIDE	3-23, 3-25
1549411-0000	.PACKAGE GUIDE	3-23, 3-25
1549614-0000	.LEFT UPPER GUIDE	3-23, 3-25, 3-63, 3-65
1549615-0000	.SPRING	3-109, 3-111
1549803-0000	.BEARING HOUSING	2-65, 2-67
1549804-0000	.BEARING HOUSING	2-65, 2-67
1549806-0000	.BEARING HOUSING	2-65, 2-67
1549807-0000	.BEARING HOUSING	2-65, 2-67
1549808-0000	.BEARING HOUSING	2-65, 2-67
1549847-0000	.PUSHER	3-91, 3-93
1549848-0000	.PUSHER	3-91, 3-93
1549849-0000	.PLATE	3-91, 3-93
1549940-0000	.PUSHER	3-91, 3-93
1558008-0000	.BLOCK	3-79, 3-81
1558020-0000	.ROD	3-79, 3-81
1558700-0000	.CARRIER	3-9, 3-11, 3-13
1558701-0000	.BUSHING	2-7, 2-9, 2-13, 2-15
1558713-0000	.SPACER SCREW	3-31, 3-33, 3-35
1558733-0000	.VOLUME BULGE	2-65, 2-67
1558734-0000	.VOLUME BULGE	2-51, 2-53, 2-83, 2-85
1558817-0000	.VOLUME BULGE	2-7, 2-9, 2-13, 2-15
1558819-0000	.RAIL	2-51, 2-53
1558820-0000	.RAIL	2-83, 2-85
1558864-0000	.CARRIER	3-9, 3-11, 3-13
1558932-0100	.TOP SECTION	3-15
1558935-0100	.TOP RAIL	3-15
1558940-0200	.FLAP GUIDE	3-15
1558941-0000	.RAIL	3-95, 3-97
1566708-0000	.INDUCTOR	3-175, 3-195
2500071-0000	.O-RING	1-7, 1-9
2500082-0000	.MOUNTING PLATE	1-7, 1-9
2500591-0000	.VOLUME BULGE	2-51, 2-53, 2-83, 2-85
2501310-0100	.FILLING PIPE	1-3
2501311-0000	.FILLING PIPE	1-7, 1-9
2501312-0000	.CLEANING CUP	1-13, 1-15
2501815-0000	.PIN	3-181
2501851-0000	.CURVE	2-101
2503699-0000	.VOLUME BULGE	2-65, 2-67
2503700-0000	.VOLUME BULGE	2-51, 2-53, 2-83, 2-85
2504412-0000	.RAIL	3-99, 3-101
2504414-0000	.RAIL	3-99, 3-101

Part No	Description	Page No
2504616-0000	.SEALING PLATE	3-195
2507048-0000	.GASKET	1-7, 1-9
2507059-0100	.REGULATING VALVE	1-3
2507076-0000	.FOLDING FLAP	2-73, 2-95
2507077-0000	.FOLDING FLAP	2-73, 2-95
2507092-0000	.FOLDING FLAP	2-73, 2-95
2507093-0000	.FOLDING FLAP	2-73, 2-95
2508205-0001	.BRACKET	3-227
2508205-0002	.BRACKET	3-227
2508205-0003	.BRACKET	3-227
2508205-0007	.BRACKET	3-227
2508205-0010	.BRACKET	3-227
2509935-0000	.SPACER	3-31, 3-33, 3-35
2509936-0000	.SPACER SCREW	3-31, 3-33, 3-35
2509937-0000	.SPACER	3-31, 3-33, 3-35
2509938-0000	.BOTTOM	3-43, 3-45
2511291-0100	.PATCH FEEDER	3-157
2511311-0200	.FOLDING DEVICE	3-143
2511312-0000	.ANGLE BRACKET	3-151
2511639-0000	.DIE	3-181
2511640-0000	.SEALING PLATE	3-195
2511644-0000	.PUNCH	3-181
2512737-0000	.ROLLER	1-23, 1-25
2512738-0000	.ROLLER	1-23, 1-25
2512740-0000	.ROLLER	1-23, 1-25
2512741-0000	.ROLLER	1-23, 1-25
2512742-0000	.ROLLER	1-23, 1-25
2512746-0000	.ROLLER	1-33, 1-35
2512748-0000	.ROLLER	1-33, 1-35
2512749-0000	.ROLLER	1-33, 1-35
2512762-0000	.ROLLER	1-23, 1-25
2512779-0000	.RING	1-17, 1-19
2512780-0100	.SEAL	1-3
2512817-0000	.SUPPORTING ARM	3-95, 3-97
2512829-0000	.PNEUMATIC DIAGRAM	3-207
2512834-0000	.SUPPORTING ARM	3-95, 3-97
2512936-0100	.CLEANING CUP	1-3
2513013-0000	.SHAFT	2-51, 2-53, 2-65, 2-67, 2-83, 2-85
2513014-0000	.CUTTING JAW	2-65, 2-67
2513015-0000	.HOLDER	2-51, 2-53, 2-83, 2-85
2514045-0000	.CARRIER	2-43, 2-45
2514047-0000	.CARRIER	2-77, 2-79
2514048-0200	.CARRIER PRESSURE LEFT	2-5
2514049-0000	.CARRIER	2-43, 2-45
2514050-0200	.CARRIER PRESSURE RIGHT	2-5
2514051-0000	.CARRIER	2-77, 2-79
2514370-0000	.PLATE	3-211
2514371-0000	.PLUG	3-211
2514372-0000	.BUSHING	3-211
2514507-0000	.ROLLER	1-23, 1-25
2514508-0000	.ROLLER	1-23, 1-25
2514509-0000	.ROLLER	1-23, 1-25
2514510-0000	.ROLLER	1-23, 1-25
2514511-0000	.ROLLER	1-23, 1-25
2514514-0000	.INDUCTOR	1-39
2514521-0000	.ROLLER	1-33, 1-35
2514522-0000	.INDUCTOR	1-39
2517495-0000	.RAIL	3-99, 3-101
2517965-0000	.GUIDE	3-99, 3-101
2517967-0000	.EXTENSION	3-87, 3-89
2518098-0000	.COUNTER ROLLER	1-21
2518100-0000	.RAIL	3-99, 3-101
2518129-0000	.GUIDE	3-53
2518130-0000	.GUIDE	3-55
2520160-0000	.CLAMP	3-49, 3-51
2520163-0000	.PLATE	3-201, 3-203
2520165-0000	.GUIDE PLATE	3-201, 3-203
2520168-0000	.SLIDE	3-75
2520170-0000	.FLAP	3-75
2520172-0000	.FOLDING PART	3-67, 3-69
2520175-0000	.FOLDING PART	3-67, 3-69
2520178-0000	.GUIDE	3-63, 3-65
2520179-0000	.GUIDE	3-63, 3-65
2520183-0000	.RAIL	3-99, 3-101
2520346-0000	.RAIL	3-99, 3-101
2522129-0100	.INFEED CONVEYOR VARIANT	3-5
2522145-0000	.RAIL	3-99, 3-101
2522166-0000	.GUIDE	3-53
2522167-0000	.GUIDE	3-55
2522181-0000	.RAIL	3-99, 3-101
2522213-0004	.SHAFT	1-23, 1-25, 1-33, 1-35
2522213-0005	.SHAFT	1-33, 1-35
2522213-0006	.SHAFT	1-5, 1-21, 1-33, 1-35
2522213-0007	.SHAFT	1-5, 1-23, 1-25

Part No	Description	Page No
2522213-0008	.SHAFT	1-33, 1-35
2522213-0009	.SHAFT	1-33, 1-35
2522213-0010	.SHAFT	1-33, 1-35
2522213-0015	.SHAFT	1-23, 1-25
2523268-0000	.SHAFT	1-7, 1-9, 1-47, 1-49
2523480-0000	.SLIDE	3-99, 3-101
2523501-0000	.RAIL	3-99, 3-101
2523573-0000	.PLATE	3-99, 3-101
2523766-0001	.BRACKET	3-227
2523766-0002	.BRACKET	3-227
2523766-0003	.BRACKET	3-227
2523766-0007	.BRACKET	3-227
2523766-0010	.BRACKET	3-227
2523811-0100	.WHEEL	3-5
2523812-0100	.FLAP	3-73
2524512-0000	.PUSHER	3-91, 3-93
2525292-0000	.SEALING PLATE	3-195
2526527-0000	.PUNCH	3-181
2526528-0000	.DIE	3-181
2526531-0000	.SEALING PLATE	3-195
2526537-0000	.SEALING PLATE	3-169, 3-195
2526551-0000	.SEALING PLATE	3-171, 3-195
2526563-0000	.HANDLE	3-75
2526567-0000	.CYLINDER	3-75
2526575-0000	.FOLDING BAR	3-63, 3-65
2526578-0000	.GUIDE	3-53, 4-5
2526579-0000	.GUIDE	3-55, 4-13
2526810-0000	.HOLDER	2-65, 2-67
2526811-0000	.HOLDER	2-51, 2-53, 2-83, 2-85
2526812-0000	.SHAFT	2-51, 2-53, 2-65, 2-67, 2-83, 2-85
2526825-0000	.WASHER	1-21, 1-23, 1-25
2526826-0000	.BUSHING	1-21, 1-23, 1-25
2526827-0000	.SHAFT	1-21, 1-23, 1-25
2526830-0000	.SHAFT	1-21, 1-23, 1-25
2526832-0000	.SPRING	1-21, 1-23, 1-25
2526833-0000	.NUT	1-21, 1-23, 1-25
2526836-0000	.BUSHING	1-21, 1-23, 1-25
2527371-0000	.INSERT	3-211
2527703-0100	.GUIDE	3-49, 3-51
2527703-0101	.GUIDE	4-3
2527703-0102	.GUIDE	4-3
2527703-0103	.GUIDE	4-3
2527703-0104	.GUIDE	4-3
2527703-0105	.GUIDE	4-3
2527704-0100	.GUIDE	3-49, 3-51
2527704-0101	.GUIDE	4-3
2527704-0102	.GUIDE	4-3
2527704-0103	.GUIDE	4-3
2527704-0104	.GUIDE	4-3
2527704-0105	.GUIDE	4-3
2527725-0000	.CATCH	2-19, 2-21, 2-27, 2-29
2527766-0000	.RAIL	3-99, 3-101
2527792-0000	.SUPPORT	3-133
2527793-0000	.SHAFT	3-133
2528096-0000	.RING	1-17, 1-19
2528097-0000	.PLATE	1-17, 1-19
2528104-0000	.FILLING PIPE	1-7, 1-9
2528112-0000	.BRACKET	1-37
2528113-0000	.BRACKET	1-37
2528114-0000	.COVER PLATE	1-37
2528115-0000	.UPPER FORMING RING	1-23, 1-25
2528116-0000	.UPPER FORMING RING	1-23, 1-25
2528117-0000	.UPPER FORMING RING	1-23, 1-25
2528118-0001	.LOCK PLATE	1-23, 1-25
2528118-0002	.LOCK PLATE	1-23, 1-25
2528118-0003	.LOCK PLATE	1-23, 1-25
2528118-0004	.LOCK PLATE	1-21, 1-23, 1-25
2528118-0005	.LOCK PLATE	1-21, 1-23, 1-25
2528119-0001	.LOCK PLATE	1-23, 1-25
2528119-0002	.LOCK PLATE	1-23, 1-25
2528119-0003	.LOCK PLATE	1-23, 1-25
2528119-0004	.LOCK PLATE	1-21, 1-23, 1-25
2528119-0005	.LOCK PLATE	1-21, 1-23, 1-25
2528120-0000	.LOWER FORMING RING	1-21
2528121-0000	.UPPER FORMING RING	1-21
2528122-0000	.LOWER FORMING RING	1-21
2528123-0001	.LOCK PLATE	1-23, 1-25, 1-33, 1-35
2528123-0002	.LOCK PLATE	1-33, 1-35
2528123-0003	.LOCK PLATE	1-23, 1-25
2528123-0004	.LOCK PLATE	1-21, 1-23, 1-25
2528123-0005	.LOCK PLATE	1-23, 1-25
2528123-0007	.LOCK PLATE	1-33, 1-35
2528123-0008	.LOCK PLATE	1-33, 1-35
2528124-0000	.LOWER FORMING RING	1-21

Part No	Description	Page No
2528125-0000	.LOWER FORMING RING	1-21
2528126-0000	.LOWER FORMING RING	1-21
2529289-0000	.PUSHER	3-91, 3-93
2529416-0000	.SHAFT	1-7, 1-9, 1-47, 1-49
2529418-0000	.SHAFT	1-7, 1-9, 1-47, 1-49
2529419-0000	.SHAFT	1-7, 1-9, 1-47, 1-49
2529420-0000	.SHAFT	1-7, 1-9, 1-47, 1-49
2529609-0000	.GUIDE	3-9, 3-11, 3-13
2529610-0000	.GUIDE	3-9, 3-11, 3-13
2529664-0000	.CARRIER	3-109, 3-111
2529671-0000	.FOLDING DEVICE	3-83, 3-85
2529672-0000	.FOLDING DEVICE	3-83, 3-85
2529675-0000	.LEVER	3-83, 3-85
2529676-0000	.LEVER	3-83, 3-85
2529785-0000	.KNOB	3-49, 3-51
2529786-0000	.KNOB	3-49, 3-51
2530313-0000	.BUSHING	2-35, 2-37, 2-39, 2-41, 4-7, 4-9, 4-11
2530418-0000	.SPRING	3-133
2530508-0000	.TIE ROD	2-59, 2-61, 2-89, 2-91
2531056-0000	.LOWER FORMING RING	1-21
2531057-0000	.LOWER FORMING RING	1-21
2531114-0000	.CARRIER	2-59, 2-61
2531558-0000	.RAIL	3-99, 3-101
2531703-0000	.BUSHING	2-51, 2-53, 2-65, 2-67, 2-83, 2-85
2532580-0000	.HATCH	3-109, 3-111
2532837-0000	.TUBE FLUSHING DEVICE	2-113
2532838-0000	.TUBE FLUSHING DEVICE	2-113
2532864-0000	.BRACKET	3-99, 3-101
2532895-0002	.LOCK PLATE	1-33, 1-35
2532895-0003	.LOCK PLATE	1-33, 1-35
2532895-0004	.LOCK PLATE	1-33, 1-35
2532895-0005	.LOCK PLATE	1-5
2532895-0008	.LOCK PLATE	1-33, 1-35
2532895-0009	.LOCK PLATE	1-5
2532900-0000	.LOWER FORMING RING	1-21
2532912-0001	.LOCK PLATE	1-33, 1-35
2532912-0002	.LOCK PLATE	1-33, 1-35
2532914-0000	.SPACER	1-23, 1-25
2532925-0000	.INDUCTOR	1-39
2532938-0000	.INDUCTOR	1-39
2532965-0000	.ROLLER	1-23, 1-25
2532973-0000	.KNOB	1-21, 1-23, 1-25
2533681-0100	.BOBBIN HOLDER	3-157
2533682-0100	.BOBBIN HOLDER	3-157
2533684-0100	.SPLICING TABLE	3-157
2533685-0100	.SPLICING TABLE	3-157
2533715-0000	.SEALING PLATE	3-177
2533736-0000	.SLEEVE	2-101
2533737-0000	.RAIL BRACKET	2-101
2533740-0000	.RAIL BRACKET	2-101
2533741-0000	.RAIL BRACKET	2-101
2533742-0000	.RAIL BRACKET	2-101
2533744-0000	.RAIL BRACKET	2-101
2535538-0100	.FRAME	3-199
2535540-0100	.PNEUMATIC CIRCUIT	3-201, 3-203
2535757-0000	.PIPE	3-205
2535758-0000	.PIPE	3-205
2535759-0000	.BRACKET	3-205
2535937-0000	.PIPE	3-205
2536026-0000	.CARRIER	2-89, 2-91
2537127-0000	.RAIL	3-99, 3-101
2537128-0100	.DROP CHUTE VARIANT	3-5
2537819-0000	.RAIL	3-99, 3-101
2538110-0000	.RAIL	3-99, 3-101
2539453-0000	.SPRING	1-7, 1-9
2540593-0000	.CAM	3-109, 3-111
2540594-0000	.CAM	3-109, 3-111
2540609-0000	.KNOB	3-47
2540612-0000	.PLATE	3-133
2540615-0000	.CLEANING CUP	1-13, 1-15
2540823-0000	.BRACKET	3-139
2541125-0000	.SCREW	3-23, 3-25
2541634-0100	.EDGE ROLLER	1-3
2541714-0100	.DROP CHUTE CRADLE	3-119
2541877-0000	.NAIL	3-91, 3-93
2541878-0000	.WASHER	3-91, 3-93
2543231-0000	.CARRIER	3-109, 3-111
2543234-0000	.BRACKET	3-99, 3-101
2543242-0000	.ANGLE BLOCK	3-9, 3-11, 3-13
2543480-0100	.FOLDING PART	3-5
2543481-0100	.TOP SECTION	3-57
2543482-0100	.TOP RAIL	3-57
2544339-0100	.FRAME	3-199
2544342-0000	.BRACKET	3-67, 3-69

Part No	Description	Page No
2544881-0000	.ROLLER	1-33, 1-35
2544882-0000	.COUNTER ROLLER	1-21
2544891-0000	.INSULATING PLATE	1-39
2544892-0000	.INSULATING PLATE	1-39
2544893-0000	.INSULATING PLATE	1-39
2544894-0000	.INSULATING PLATE	1-39
2544895-0000	.SHIM	1-39
2544896-0000	.SHIM	1-39
2544990-0000	.VOLUME FLAP	2-7, 2-9
2544991-0000	.VOLUME FLAP	2-13, 2-15
2544992-0000	.VOLUME BULGE	2-7, 2-9, 2-13, 2-15
2544993-0000	.VOLUME SHIM	2-7, 2-9, 2-13, 2-15
2544995-0000	.GUIDE	3-9, 3-11, 3-13
2544996-0000	.GUIDE	3-9, 3-11, 3-13
2544997-0000	.SLIDE	3-9, 3-11, 3-13, 3-53
2544998-0000	.SLIDE	3-9, 3-11, 3-13, 3-55
2544999-0000	.BAR	3-9, 3-11, 3-13, 3-55
2545000-0000	.BAR	3-9, 3-11, 3-13, 3-53
2545135-0000	.SPACER	3-87, 3-89
2545232-0000	.RAIL	3-99, 3-101
2545245-0000	.BUSHING	3-109, 3-111
2545382-0000	.CARRIER	3-109, 3-111
2545433-0000	.SPACER	3-87, 3-89
2545537-0000	.SPACER	3-87, 3-89
2546229-0100	.ADAPTION TRANSFORMER	2-47, 2-81
2546271-0100	.TAB C'JAW	3-157
2546275-0100	.TAB FEEDER	3-157
2546278-0100	.PUNCH UNIT	3-157
2546285-0100	.PATCH C'JAW	3-157
2546293-0000	.SEALING PLATE	3-177
2546474-0000	.INDUCTOR	1-47, 1-49, 2-51, 2-53, 2-83, 2-85
2546475-0000	.RAIL	2-51, 2-53
2546476-0000	.RAIL	2-83, 2-85
2546501-0000	.FOLDING FLAP	2-73, 2-95
2547010-0000	.BRACKET	2-7, 2-9, 2-13, 2-15
2547011-0000	.VOLUME FLAP	2-7, 2-9
2547012-0000	.VOLUME FLAP	2-13, 2-15
2547015-0000	.TOOTHED PULLEY	3-135
2547017-0000	.TOOTHED PULLEY	3-135
2547187-0000	.PLATE	3-135
2547421-0100	.FORMING RING	1-3
2547422-0100	.UPPER FORMING RING	1-3
2550211-0000	.VOLUME BULGE	3-43, 3-45
2552003-0100	.FORMING UNIT	2-3
2552005-0100	.PRESSURE JAW	2-47, 2-81
2552006-0100	.INDUCTOR LEFT	2-47
2552007-0100	.INDUCTOR RIGHT	2-81
2552008-0100	.CUTTING JAW	2-63, 2-93
2552009-0100	.FOLDING FLAP LEFT	2-63
2552010-0100	.PISTON	2-63, 2-93
2552011-0100	.FOLDING FLAP RIGHT	2-93
2552018-0000	.CARRIER	3-109, 3-111
2552022-0000	.GUIDE	3-17, 3-19, 3-59, 3-61
2552160-0000	.SUPPORT RING	1-33, 1-35
2552161-0000	.SUPPORT RING	1-33, 1-35
2552176-0001	.LOCK PLATE	1-33, 1-35
2552176-0003	.LOCK PLATE	1-33, 1-35
2552177-0001	.LOCK PLATE	1-33, 1-35
2552177-0003	.LOCK PLATE	1-33, 1-35
2552187-0000	.ROLLER	1-33, 1-35
2552188-0000	.ROLLER	1-33, 1-35
2552189-0000	.LOWER FORMING RING	1-21
2552190-0000	.LOWER FORMING RING	1-21
2552191-0000	.LOWER FORMING RING	1-21
2552192-0000	.LOWER FORMING RING	1-21
2552193-0000	.LOWER FORMING RING	1-21
2552194-0000	.LOWER FORMING RING	1-21
2552195-0000	.UPPER FORMING RING	1-23, 1-25
2552196-0000	.UPPER FORMING RING	1-23, 1-25
2552197-0000	.UPPER FORMING RING	1-23, 1-25
2552198-0000	.UPPER FORMING RING	1-23, 1-25
2552199-0000	.UPPER FORMING RING	1-23, 1-25
2552200-0000	.UPPER FORMING RING	1-23, 1-25
2552205-0000	.ROLLER	1-33, 1-35
2552206-0000	.ROLLER	1-33, 1-35
2552445-0000	.SUPPORT	3-131
2553284-0000	.BLOCK	3-17, 3-19, 3-59, 3-61
2553343-0000	.SUPPORT	3-83, 3-85
2553344-0000	.SUPPORT	3-83, 3-85
2553345-0000	.TIE ROD	3-83, 3-85
2553346-0000	.AXLE LINK	3-83, 3-85
2553347-0000	.FOLDING BAR	3-31, 3-33, 3-35
2553348-0000	.FOLDING BAR	3-31, 3-33, 3-35
2553615-0000	.FLAP	3-75

Part No	Description	Page No
2553617-0000	.SLIDE	3-75
2554242-0000	.PLATE	3-223
2554287-0100	.SUPPORTING PART	3-3
2555082-0000	.SPACER SCREW	3-63, 3-65, 3-67, 3-69
2555394-0100	.START-UP KIT	1-3
2555404-0000	.FLAP	3-43, 3-45
2555590-0000	.SIGN	1-23, 1-25
2555606-0000	.LOWER FORMING RING	1-21
2555607-0000	.LOWER FORMING RING	1-21
2555608-0000	.LOWER FORMING RING	1-21
2555615-0000	.BRACKET	1-39
2555619-0000	.BRACKET	1-39
2555635-0000	.SIGNS	1-21
2556284-0000	.GUIDE	3-149
2556285-0000	.AIR NOZZLE	3-149
2556525-0000	.LEVER	3-109, 3-111
2556526-0000	.LEVER	3-109, 3-111
2556615-0000	.PIPE CONNECTION	2-113
2556893-0100	.TUBE FLUSHING	2-99
2556894-0000	.TUBE FLUSHING DEVICE	2-113
2556895-0000	.TUBE FLUSHING DEVICE	2-113
2557612-0000	.SPRING	2-19, 2-21, 2-27, 2-29
2557613-0000	.SPRING	2-19, 2-21, 2-27, 2-29
2558127-0000	.SPACER	3-67, 3-69
2558144-0000	.BOTTOM	3-43, 3-45
2558145-0000	.FLAP	3-43, 3-45
2558703-0000	.GUIDE UPPER L	3-63, 3-65
2558704-0000	.GUIDE UPPER R	3-63, 3-65
2558754-0000	.RAIL	3-99, 3-101
2558920-0000	.STOP	2-27, 2-29
2558921-0000	.STOP	2-19, 2-21
2558922-0000	.STOP	2-27, 2-29
2558923-0000	.STOP	2-19, 2-21
2558929-0000	.BAR	2-19, 2-21, 2-27, 2-29
2559052-0000	.RAIL	3-99, 3-101
2559062-0100	.LOWER FORMING RING	1-3
2559097-0000	.UPPER FORMING RING	1-23, 1-25
2559098-0000	.UPPER FORMING RING	1-23, 1-25
2559099-0000	.UPPER FORMING RING	1-23, 1-25
2559101-0000	.ROLLER	1-23, 1-25
2559102-0000	.RING	1-17, 1-19
2559103-0000	.PLATE	1-17, 1-19
2559104-0000	.PLATE	1-17, 1-19
2559105-0000	.SUPPORT RING	1-33, 1-35
2559424-0000	.CUTTING JAW	2-65, 2-67
2559425-0000	.CLAMP HOLDER	2-51, 2-53, 2-83, 2-85
2562667-0008	.LOCK PLATE	1-33, 1-35
2562667-0009	.LOCK PLATE	1-33, 1-35
2562685-0000	.ROLLER	1-23, 1-25
2562686-0000	.ROLLER	1-23, 1-25
2562704-0000	.BODY	1-11
2562709-0000	.ROLLER	1-17, 1-19
2562710-0000	.RING	1-17, 1-19
2562711-0000	.PLATE	1-17, 1-19
2563274-0000	.CARRIER	3-109, 3-111
2563280-0000	.BODY	1-11
2563289-0000	.LOWER FILLING PIPE	1-7, 1-9
2563290-0000	.PRESSURE FLANGE	1-7, 1-9
2563292-0000	.STOP PIN	1-7, 1-9
2563293-0000	.LOWER FILLING PIPE	1-7, 1-9
2563294-0000	.PRESSURE FLANGE	1-7, 1-9
2563295-0000	.STOP PIN	1-7, 1-9
2563296-0000	.LOWER FILLING PIPE	1-7, 1-9
2563974-0000	.SEALING PLATE	3-169, 3-195
2563983-0000	.SEALING PLATE	3-171, 3-195
2563986-0000	.SEALING PLATE	3-195
2564043-0002	.ROLLER	3-183
2564043-0004	.ROLLER	3-183, 3-185, 3-191
2564043-0005	.ROLLER	3-183, 3-185, 3-191
2564043-0006	.ROLLER	3-161
2564043-0007	.ROLLER	3-183, 3-185, 3-191
2564043-0008	.ROLLER	3-161
2564043-0009	.ROLLER	3-161
2564044-0002	.ROLLER	3-179, 3-183, 3-191
2564044-0005	.ROLLER	3-179, 3-183, 3-191
2564044-0006	.ROLLER	3-179, 3-183, 3-191
2564044-0008	.ROLLER	3-167, 3-173
2564044-0009	.ROLLER	3-179, 3-183, 3-191
2564044-0011	.ROLLER	3-167, 3-173
2564044-0012	.ROLLER	3-167, 3-173
2564050-0100	.MAGAZINE	3-157
2564051-0100	.PATCH MAGAZINE	3-157
2564056-0100	.MAGAZINE	3-157
2564057-0100	.TAB MAGAZINE	3-157

Part No	Description	Page No
2564058-0100	.TURNING DEVICE	3-157
2564059-0100	.TAB FEEDER	3-157
2564060-0100	.PATCH FEEDER	3-157
2564075-0100	.OPENING SPECIFICATION	3-157
2564076-0100	.START-UP KIT	3-157
2564596-0000	.FLOAT	1-7, 1-9
2564597-0000	.FLOAT	1-7, 1-9
2564600-0000	.FLOAT	1-7, 1-9
2564601-0000	.FLOAT	1-7, 1-9
2564602-0000	.FLOAT	1-7, 1-9
2564683-0000	.CURVE	2-101
2565387-0100	.FOLDING UNIT	3-145
2565424-0000	.ROLLER	1-21
2565425-0000	.COUNTER ROLLER	1-21
2565430-0000	.SUPPORT RING	1-33, 1-35
2565431-0000	.SUPPORT RING	1-33, 1-35
2565436-0000	.FILLING PIPE	1-7, 1-9
2565437-0000	.CLEANING CUP	1-13, 1-15
2565440-0000	.INDUCTOR	1-39
2565441-0000	.INSULATING PLATE	1-39
2565444-0000	.FILLING PIPE	1-7, 1-9
2565559-0000	.MANUFACTURING INSTRUCTION	2-121, 2-123, 2-125, 2-127, 2-129, 2-131, 2-133, 2-135, 2-137, 2-139, 2-141, 2-143, 2-145
2565561-0001	.PAM - SAM EASY DOWNLOAD	2-119
2565561-1001	.PROGRAM OBJECT CODE	2-145
2565562-0000	.LABEL DISKETTE	2-145
2569908-0000	.BEARING HOUSING	2-49
2570015-0000	.PRESSURE FLANGE	1-7, 1-9
2570017-0000	.PRESSURE FLANGE	1-7, 1-9
2570301-0000	.CUTTING JAW	2-65, 2-67
2570302-0000	.CLAMP HOLDER	2-51, 2-53, 2-83, 2-85
2571843-0000	.CARRIER	2-59, 2-61
2572248-0000	.CARRIER	2-89, 2-91
2572563-0000	.SUPPORT	3-135
2575119-0000	.GUIDE	1-45
2575120-0100	.LIFTING UNIT	1-3
2575631-0000	.RAIL BRACKET	2-101
2579886-0000	.SEALING PLATE	3-169, 3-195
2579887-0000	.OPENING SPECIFICATION	3-159
2579988-0000	.CUTTING JAW	2-65, 2-67
2579989-0000	.HOLDER	2-51, 2-53, 2-83, 2-85
2579990-0000	.SHAFT	2-51, 2-53, 2-65, 2-67, 2-83, 2-85
2579991-0000	.HOLDER	2-51, 2-53, 2-83, 2-85
2582002-0000	.VOLUME FLAP	2-13, 2-15
2582680-0000	.BEARING HOUSING	2-65, 2-67
2587235-0000	.VOLUME FLAP	2-13, 2-15
2587236-0000	.VOLUME FLAP	2-7, 2-9
2587337-0100	.SETTING TEMPLATE	3-157
2588013-0000	.BRACKET	2-43, 2-45, 2-77, 2-79
2591790-0000	.BLOCK	3-79, 3-81
2592525-0000	.FILLING PIPE	1-7, 1-9
2594058-0000	.GUIDE	3-71
2594512-0100	.VOLUME FLAP CUTTING	2-5
2594512-0101	.VOLUME FLAP	4-3
2594512-0102	.VOLUME FLAP	4-3
2594512-0103	.VOLUME FLAP	4-3
2594512-0104	.VOLUME FLAP	4-3
2594512-0105	.VOLUME FLAP	4-3
2595704-0000	.FOLDING PART	3-67, 3-69
2595705-0000	.FOLDING PART	3-67, 3-69
2595706-0000	.BRACKET	3-67, 3-69
2595707-0000	.FOLDING PART	3-67, 3-69
2595708-0000	.FOLDING PART	3-67, 3-69
2595709-0000	.FOLDING PART	3-67, 3-69
2597329-0100	.CURVE UNIT	2-99
2597768-0000	.BRACKET	3-71
2597769-0000	.GUIDE	3-71
2598008-0000	.STOP PIN	1-7, 1-9
2598015-0000	.LOWER FILLING PIPE	1-7, 1-9
2598017-0000	.PRESSURE FLANGE	1-7, 1-9
2598485-0000	.CLAMP	3-71
2598486-0000	.CLAMP	3-71
2598805-0000	.FLAP	3-75
2598807-0000	.SLIDE	3-75
2598820-0000	.SPACER	3-47
2598925-0000	.RAIL	3-99, 3-101
2598941-0000	.PIPE	3-205
2598967-0000	.SPACER	3-87, 3-89
2599020-0000	.STOP	3-201, 3-203
2599044-0000	.BRACKET	3-71
2599847-0000	.SPACER	3-67, 3-69
2601289-0000	.INDUCTOR	1-39
2601307-0000	.INSULATING PLATE	1-39
2601445-0000	.FOLDING PART	3-67, 3-69

Part No	Description	Page No
2601455-0000	.FOLDING PART	3-67, 3-69
2601464-0000	.FOLDING PART	3-67, 3-69
2601465-0000	.FOLDING PART	3-67, 3-69
2601469-0000	.PRESSURE FLANGE	1-7, 1-9
2601472-0000	.PRESSURE FLANGE	1-7, 1-9
2602592-0000	.FOLDING PART	3-67, 3-69
2603373-0000	.HOLDER	2-107
2603374-0000	.ECCENTRIC	2-105, 2-107
2603376-0000	.AXLE PIN	2-105, 2-107
2603378-0000	.ROLLER	2-105, 2-107
2603488-0000	.FLAP	3-75
2603489-0000	.BOTTOM	3-75, 4-3
2603490-0000	.SLIDE	3-75
2603547-0000	.FOLDING PART	3-67, 3-69
2603548-0000	.FOLDING PART	3-67, 3-69
2603659-0000	.FOLDING PART	3-67, 3-69
2603660-0000	.FOLDING PART	3-67, 3-69
2603661-0000	.BRACKET	3-67, 3-69
2603662-0000	.BRACKET	3-67, 3-69
2603663-0000	.SPACER	3-23, 3-25, 3-31, 3-33, 3-35, 3-63, 3-65
2603664-0000	.RAIL	3-67, 3-69
2603681-0000	.SEALING PLATE	3-171, 3-195
2603682-0000	.DIE	3-181
2603683-0000	.PUNCH	3-181
2603826-0100	.FOLDING PART	3-57
2603827-0100	.FLAP GUIDE	3-57
2604493-0000	.VOLUME FLAP	2-35, 2-37, 4-7, 4-9
2604494-0000	.VOLUME FLAP	2-39, 2-41
2604495-0000	.VOLUME FLAP	2-35, 2-37, 4-7, 4-9
2604496-0000	.VOLUME FLAP	2-39, 2-41
2604507-0000	.SPACER	3-201, 3-203
2604508-0000	.SPACER	3-201, 3-203, 4-3
2604509-0000	.KNOB	3-201, 3-203
2604510-0000	.SHAFT	3-201, 3-203
2604564-0000	.CUTTING JAW	2-65, 2-67
2604565-0000	.HOLDER	2-51, 2-53, 2-83, 2-85
2605066-0000	.CURVE	2-103
2605125-0000	.PUSHER	3-91, 3-93
2605148-0000	.STOP PIN	1-7, 1-9
2605166-0000	.VOLUME SHIM	1-47, 1-49, 2-35, 2-37, 2-39, 2-41, 4-7, 4-9, 4-11
2605191-0000	.VOLUME FLAP	2-35, 2-37, 4-7, 4-9
2605192-0000	.VOLUME FLAP	2-39, 2-41, 4-11
2605213-0000	.RAIL	3-67, 3-69
2605226-0200	.ROLLER UNIT	2-103
2605227-0000	.HOLDER	2-105
2605869-0000	.FLAP HOLDER	2-35, 2-37, 2-39, 2-41, 4-7, 4-9
2605875-0000	.FOLDING FLAP	2-73, 2-95
2605876-0000	.FOLDING FLAP	2-73, 2-95
2605993-0000	.SIDE PLATE	3-139, 4-3
2605994-0000	.SIDE PLATE	3-139, 4-3
2606102-0000	.FLAP HOLDER	2-35, 2-37, 2-39, 2-41, 4-7, 4-9, 4-11
2606218-0000	.CAM	2-35, 2-37, 2-39, 2-41, 4-7, 4-9, 4-11
2606219-0000	.STOPPER	2-35, 2-37, 2-39, 2-41, 4-7, 4-9, 4-11
2606289-0000	.BOTTOM	3-43, 3-45
2606305-0000	.VOLUME FLAP	2-7, 2-9
2606306-0000	.VOLUME FLAP	2-13, 2-15
2606891-0000	.ECCENTRIC	2-101
2606892-0000	.ECCENTRIC	2-101
2608149-0000	.ROLLER	2-109, 2-111
2608150-0000	.ROLLER	2-109, 2-111
2608237-0000	.SPOGNE	3-195
2608240-0001	.WEIGHT	3-185
2608240-0003	.WEIGHT	3-161
2609368-0000	.TIE ROD	3-83, 3-85
2609369-0000	.FOLDING BAR	3-31, 3-33, 3-35
2609370-0000	.FOLDING BAR	3-31, 3-33, 3-35
2609371-0000	.SPACER	3-31, 3-33, 3-35
2609372-0000	.GUIDE	3-59, 3-61
2609923-0000	.WASHER	2-105, 2-107
2609925-0000	.VOLUME BULGE	2-35, 2-37, 2-39, 2-41, 4-7, 4-9, 4-11
2610793-0000	.BLOCK	2-103
2610954-0000	.RAIL	2-51, 2-53
2610955-0000	.RAIL	2-83, 2-85
2610956-0000	.INDUCTOR	2-51, 2-53, 2-83, 2-85
2610957-0000	.FOLDING FLAP	2-73, 2-95
2610974-0000	.ROLLER	2-109, 2-111
2613645-0100	.CURVE UNIT	2-99
2613647-0100	.VOLUME CURVE PIECE	2-5
2613648-0100	.SUPPORT ROLLER	2-99
2613763-0000	.SLEEVE	2-103
2613764-0000	.SLEEVE	2-103
2613809-0000	.SPACER	2-103
2614371-0000	.ROLLER BRACKET	2-103
2614372-0000	.SLEEVE	2-103

Part No	Description	Page No
2614373-0000	.ROLLER BRACKET	2-103
2614376-0001	.WASHER	2-103
2614376-0002	.WASHER	2-103
2616220-0000	.BOW CLAMP	2-115, 2-117
2616224-0100	.PHOTOCELL UNIT	2-5
2618259-0000	.SPACER	2-103
2618302-0000	.PIVOT PIN	2-103
2618377-0000	.ECCENTRIC	2-101, 2-103
2618378-0000	.ECCENTRIC	2-101, 2-103
2619069-0000	.SLIDE	1-51
2619171-0000	.PLATE	1-51
2619198-0000	.SHAFT	2-109, 2-111
2619199-0000	.ROLLER	2-109, 2-111
2619200-0000	.PLATE	2-109, 2-111
2619391-0000	.BOTTOM	3-75
2619407-0000	.GUIDE	3-53
2619602-0000	.RAIL	3-99, 3-101
2619759-0000	.SLIDE	1-51
2623623-0000	.CYLINDER BRACKET	3-201, 3-203
2623624-0000	.CYLINDER BRACKET	3-201, 3-203
2623783-0000	.PLATE	2-109, 2-111
2623869-0000	.RUBBER HOLDER	3-201, 3-203
2623870-0000	.RUBBER DAMPER	3-201, 3-203
2624543-0000	.SPACER	2-101
2624544-0000	.PIVOT PIN	2-101
2624554-0000	.FOLDING FLAP	2-73, 2-95
2624555-0000	.FOLDING FLAP	2-73, 2-95
2628598-0000	.SPACER	2-101
2629236-0000	.CAM	2-35, 2-37, 2-39, 2-41, 4-7, 4-9
2629237-0000	.CAM	2-35, 2-37, 2-39, 2-41, 4-7, 4-9
2629336-0000	.BOTTOM	3-75
2632817-0000	.PLATE	2-109, 2-111
2632818-0000	.SHAFT	2-109, 2-111
2633438-0000	.SPACER	2-101
2634508-0100	.LONGITUDINAL SEALING	1-3
2634509-0100	.VOLUME KIT	3-3
2634511-0100	.MECHANICAL DIFFERENCES	3-5
2634523-0000	.LOWER FILLING PIPE	1-7, 1-9
2634524-0000	.PRESSURE FLANGE	1-7, 1-9
2634565-0001	.PAM - SAM EASY DOWNLOAD	2-119
2634565-1001	.PROGRAM OBJECT CODE	2-127
2634566-0000	.LABEL DISKETTE	2-127
2634567-0001	.PAM - SAM EASY DOWNLOAD	2-119
2634567-1001	.PROGRAM OBJECT CODE	2-129
2634568-0000	.LABEL DISKETTE	2-129
2634569-0001	.PAM - SAM EASY DOWNLOAD	2-119
2634569-1001	.PROGRAM OBJECT CODE	2-131
2634570-0000	.LABEL DISKETTE	2-131
2634571-0001	.PAM - SAM EASY DOWNLOAD	2-119
2634571-1001	.PROGRAM OBJECT CODE	2-133
2634572-0000	.LABEL DISKETTE	2-133
2634573-0001	.PAM - SAM EASY DOWNLOAD	2-119
2634573-1001	.PROGRAM OBJECT CODE	2-135
2634574-0000	.LABEL DISKETTE	2-135
2634575-0001	.PAM - SAM EASY DOWNLOAD	2-119
2634575-1001	.PROGRAM OBJECT CODE	2-137
2634576-0000	.LABEL DISKETTE	2-137
2634577-0001	.PAM - SAM EASY DOWNLOAD	2-119
2634577-1001	.PROGRAM OBJECT CODE	2-123
2634578-0000	.LABEL DISKETTE	2-123
2634579-0001	.PAM - SAM EASY DOWNLOAD	2-119
2634579-1001	.PROGRAM OBJECT CODE	2-125
2634580-0000	.LABEL DISKETTE	2-125
2634581-0001	.PAM - SAM EASY DOWNLOAD	2-119
2634581-1001	.PROGRAM OBJECT CODE	2-121
2634582-0000	.LABEL DISKETTE	2-121
2634585-0001	.PAM - SAM EASY DOWNLOAD	2-119
2634585-1001	.PROGRAM OBJECT CODE	2-143
2634586-0000	.LABEL DISKETTE	2-143
2634943-0000	.ROLLER	1-5
2634944-0000	.UPPER FORMING RING	1-23, 1-25
2634945-0000	.UPPER FORMING RING	1-23, 1-25
2634946-0000	.UPPER FORMING RING	1-23, 1-25
2634947-0000	.ROLLER	1-23, 1-25
2634948-0000	.ROLLER	1-23, 1-25
2634949-0000	.ROLLER	1-23, 1-25
2634967-0000	.SUPPORT RING	1-33, 1-35
2634968-0000	.ROLLER	1-33, 1-35
2634969-0000	.ROLLER	1-33, 1-35
2634970-0000	.ROLLER	1-33, 1-35
2634971-0000	.ROLLER	1-33, 1-35
2634983-0000	.ROLLER	1-23, 1-25
2634984-0000	.ROLLER	1-23, 1-25
2634985-0000	.ROLLER	1-23, 1-25

Part No	Description	Page No
2634987-0000	.SPACER	1-23, 1-25
2635475-0100	.PT MECHANICAL DIFFERENCES	3-119
2636081-0100	.FLAP HEATER	3-119
2636082-0100	.FLAP HEATER	3-199
2639127-0000	.FOLDING BAR	3-31, 3-33, 3-35
2639128-0000	.FOLDING BAR	3-31, 3-33, 3-35
2639393-0000	.SPACER	3-31, 3-33, 3-35
2640353-0000	.BRACKET	1-5
2640354-0000	.ROLLER	1-5
2640963-0000	.BRACKET	2-115, 2-117
2641285-0000	.ROLLER	1-23, 1-25
2641286-0000	.ROLLER	1-23, 1-25
2641287-0000	.ROLLER	1-23, 1-25
2641288-0000	.ROLLER	1-23, 1-25
2641289-0000	.ROLLER	1-23, 1-25
2641290-0000	.ROLLER	1-23, 1-25
2641318-0000	.NOZZLE	1-53, 1-55
2641319-0000	.BRACKET	1-53, 1-55
2641396-0100	.BENDING ROLLER	3-3
2641398-0100	.SQUEE-GEE ROLLER	3-3
2641480-0100	.HEATING PART	3-199
2642049-0100	.PT FLEX HOLES	3-155
2642097-0000	.PLATE	2-109, 2-111
2642988-0100	.PLATE	1-3
2645650-0000	.ROLLER	3-185, 3-191
2646344-0000	.PLATE	2-109, 2-111
2646345-0000	.SHAFT	2-109, 2-111
2648846-0000	.SHAFT	2-109, 2-111
2648847-0000	.PLATE	2-109, 2-111
2650807-0000	.SIDE PLATE	3-139
2650808-0000	.SIDE PLATE	3-139
2651145-0000	.BLOCK	3-91, 3-93
2651146-0000	.FLAP	3-73
2651573-0000	.TEMPLATE	3-197
2652084-0100	.TAB FOLDING	3-141
2652191-0000	.KNOB	3-49, 3-51
2652199-0001	.PAM - SAM EASY DOWNLOAD	2-119
2652199-1001	.PROGRAM OBJECT CODE	2-139
2652200-0000	.LABEL DISKETTE	2-139
2652202-0001	.PAM - SAM EASY DOWNLOAD	2-119
2652202-1001	.PROGRAM OBJECT CODE	2-141
2652203-0000	.LABEL DISKETTE	2-141
2654290-0000	.VOLUME SHIM	1-47, 1-49, 2-35, 2-37, 2-39, 2-41, 4-7, 4-9
2655095-0000	.BRACKET	2-115, 2-117
2655096-0000	.SLIDE	2-115, 2-117
2655097-0000	.KNOB	2-115, 2-117
2655098-0000	.SHAFT	2-115, 2-117
2655614-0100	.TRANSFORMER	3-3
2656299-0000	.SHAFT	3-225
2657136-0100	.ELECTRICAL DOCUMENT	2-3
2657828-0000	.PUNCH	3-181
2657829-0000	.DIE	3-181
2657857-0000	.UPPER FORMING RING	1-23, 1-25
2657858-0000	.UPPER FORMING RING	1-23, 1-25
2657859-0000	.UPPER FORMING RING	1-23, 1-25
2657860-0000	.BRACKET	1-5
2658045-0000	.OPENING SPECIFICATION	3-159
2658046-0000	.OPENING SPECIFICATION	3-159
2658047-0000	.OPENING SPECIFICATION	3-159
2658048-0000	.OPENING SPECIFICATION	3-159
2658049-0000	.AIR NOZZLE	3-153
2658050-0000	.PLATE	3-153
2658051-0000	.AIR NOZZLE	3-153
2660376-0100	.CABLE HARNESS	3-199
2660476-0100	.LUBRICATION PIPE FITTING	2-3
2660847-0000	.TAPE	3-195
2661999-0000	.OPENING SPECIFICATION	3-159
2664035-0000	.SPACER SCREW	3-67, 3-69
2664098-0000	.FILLING PIPE	1-7, 1-9
2664200-0000	.GUIDE	3-53, 4-5
2664201-0000	.GUIDE	3-55, 4-13
2664280-0000	.HOLDER	2-51, 2-53, 2-83, 2-85
2664603-0000	.CAM	2-103
2665188-0000	.CUTTING JAW	2-65, 2-67
2668565-0000	.NOZZLE	1-53, 1-55
2668569-0000	.PLUG	1-53, 1-55
2671730-0100	.AIR NOZZLE	1-3
2672797-0000	.TEMPLATE	3-197
2672798-0000	.TEMPLATE	3-197
2672799-0000	.TEMPLATE	3-197
2672800-0000	.TEMPLATE	3-197
2674188-0100	.EDGE ROLLER	1-3
2674511-0000	.CAM	3-153
2674566-0001	.PAM - SAM EASY DOWNLOAD	2-119

Tetra Pak

SPC binder labels. 40 mm Full width *Note! This page is generated* **automatically.**
using the **variable definitions** *made in the* **front page** *file!!*

VCK Tetra Pak A3/Flex
648597-0100
Issue: 2004-04 Doc No: SPC-81868-0102

VCK Tetra Pak A3/Flex
648597-0100
Issue: 2004-04 Doc No: SPC-81868-0102

VCK Tetra Pak A3/Flex
648597-0100
Issue: 2004-04 Doc No: SPC-81868-0102

VCK Tetra Pak A3/Flex
648597-0100
Issue: 2004-04 Doc No: SPC-81868-0102

VCK Tetra Pak A3/Flex
648597-0100
Issue: 2004-04 Doc No: SPC-81868-0102

VCK Tetra Pak A3/Flex
648597-0100
Issue: 2004-04 Doc No: SPC-81868-0102

VCK Tetra Pak A3/Flex
648597-0100
Issue: 2004-04 Doc No: SPC-81868-0102

VCK Tetra Pak A3/Flex
648597-0100
Issue: 2004-04 Doc No: SPC-81868-0102

VCK Tetra Pak A3/Flex
648597-0100
Issue: 2004-04 Doc No: SPC-81868-0102

VCK Tetra Pak A3/Flex
648597-0100
Issue: 2004-04 Doc No: SPC-81868-0102

VCK Tetra Pak A3/Flex
648597-0100
Issue: 2004-04 Doc No: SPC-81868-0102

SPC binder labels. 30 mm Half width *Note! This page is generated* **automatically.**
using the **variable definitions** *made in the* **front page** *file!!*

VCK Tetra Pak A3/Flex
648597-0100
Issue: 2004-04 Doc No: SPC-81868-0102

VCK Tetra Pak A3/Flex
648597-0100
Issue: 2004-04 Doc No: SPC-81868-0102

VCK Tetra Pak A3/Flex
648597-0100
Issue: 2004-04 Doc No: SPC-81868-0102

VCK Tetra Pak A3/Flex
648597-0100
Issue: 2004-04 Doc No: SPC-81868-0102

VCK Tetra Pak A3/Flex
648597-0100
Issue: 2004-04 Doc No: SPC-81868-0102

VCK Tetra Pak A3/Flex
648597-0100
Issue: 2004-04 Doc No: SPC-81868-0102

VCK Tetra Pak A3/Flex
648597-0100
Issue: 2004-04 Doc No: SPC-81868-0102

VCK Tetra Pak A3/Flex
648597-0100
Issue: 2004-04 Doc No: SPC-81868-0102

VCK Tetra Pak A3/Flex
648597-0100
Issue: 2004-04 Doc No: SPC-81868-0102

VCK Tetra Pak A3/Flex
648597-0100
Issue: 2004-04 Doc No: SPC-81868-0102

VCK Tetra Pak A3/Flex
648597-0100
Issue: 2004-04 Doc No: SPC-81868-0102

VCK Tetra Pak A3/Flex
648597-0100
Issue: 2004-04 Doc No: SPC-81868-0102

VCK Tetra Pak A3/Flex
648597-0100
Issue: 2004-04 Doc No: SPC-81868-0102