SPC
Spare Parts Catalogue

VCK Tetra Pak A3/Flex

648597-0100

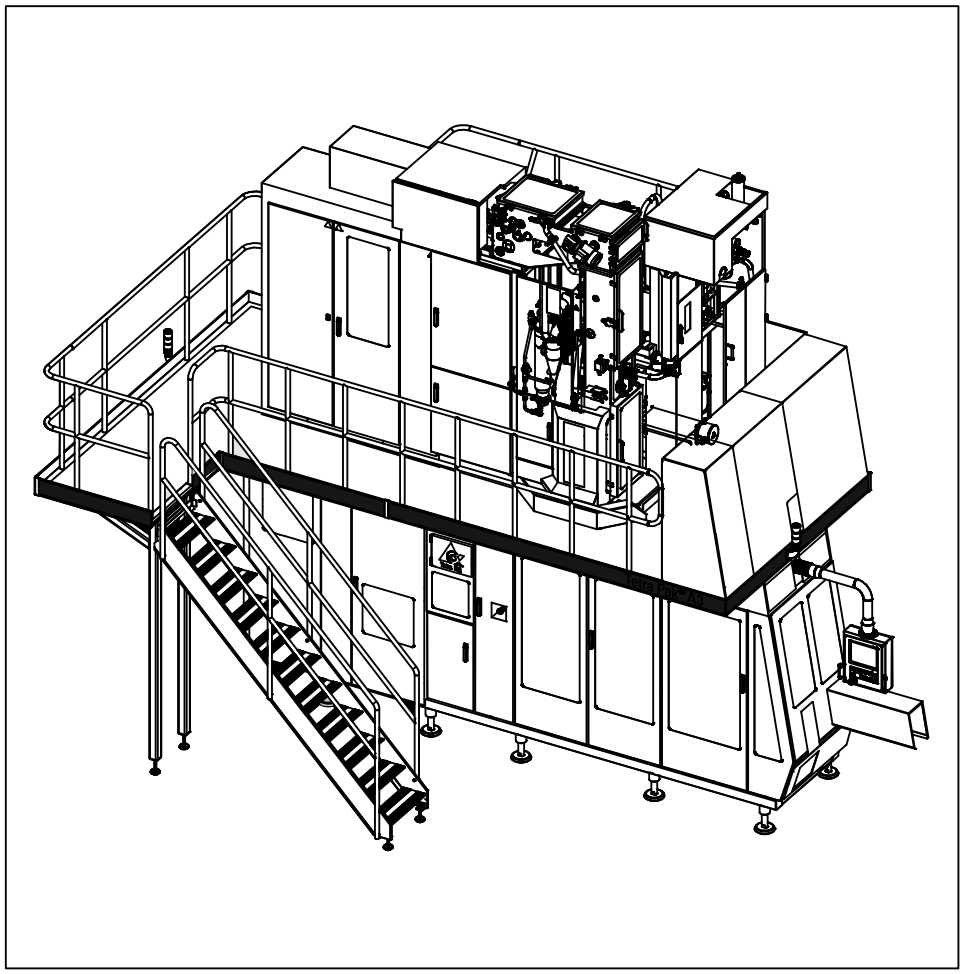

Tetra Pak

Doc. No: SPC-81868-0104

Picture not available yet

The position numbers in the illustration correspond with the chapter numbers listed on the next page.

Copyright © 2005 Tetra Pak Group

All rights reserved. No part of this document may be reproduced or copied in any form or by any means without written permission from Tetra Pak Carton Ambient S.p.A..

Tetra Pak and all Tetra Pak products are trademarks belonging to the Tetra Pak Group.

The content of this manual is in accordance with the design and construction of the machine or equipment at the time of publishing. Tetra Pak reserves the right to introduce design modifications without prior notice.

This document was produced by:

Tetra Pak Carton Ambient S.p.A.
Technical Publications
Via Delfini 1
41100 Modena /Italy

This Tetra Pak equipment was manufactured by:

Tetra Pak Carton Ambient S.p.A.
Via Delfini 1
41100 Modena /Italy

Additional copies can be ordered from Tetra Pak Parts or the nearest Tetra Pak office. When ordering additional copies, always provide the document number. This can be found in the machine specification document. It is also printed on the front cover and in the footer on each page of the manual.

Doc. No. SPC-81868-0104

Issue 2005-01

This document is valid from:

Series No/Machine No Sign.

SPC

Spare Parts Catalogue

Tetra Pak A3/Flex
Volum Conversion Kit
648597-0100

i Introduction

1 Box 2 - Superstructure
B-2634504-0100

2 Box 3 - Jaw System
B-2634505-0100

3 Box 4 - Final Folder
B-2634506-0100

4 Box6 - Volume Kit
B-2698249-0100

ii Part Number Index

iii Electrical Parts Index

A list of all optional equipment, optional kits, and rebuilding kits that this catalogue is valid for is found on the next page.

Doc. No: SPC-81868-0104

Issue 2005-01

Tetra Pak

Tetra Pak Carton Ambient S.p.A.

Valid for:

Tetra Pak A3/Flex
648575-0100

Update Log for Doc. No. SPC-81868-0104

This table shows all changes made to this catalogue, such as kits installed and pages added or removed.

Date	Installed Kit	Added Pages (Doc. No.)	Removed Pages	Signature

Date	Installed Kit	Added Pages (Doc. No.)	Removed Pages	Signature

i Introduction

en About the Introduction Chapter
This chapter contains basic information about this catalogue and related Tetra Pak equipment.

cs Seznámení s úvodní kapitolou
Tato kapitola obsahuje základní informace o tomto katalogu a o příslušném zařízení Tetra Pak.

da Om indledningen
Kapitlet indeholder grundlæggende oplysninger om dette katalog og tilhørende Tetra Pak-udstyr.

de Zur Einleitung
Dieses Kapitel enthält grundlegende Informationen zu diesem Handbuch und der entsprechenden Tetra Pak Ausrüstung.

el Σχετικά με το Κεφάλαιο 'Εισαγωγή'
Αυτό το κεφάλαιο περιέχει βασικές πληροφορίες για τον παρόντα κατάλογο και τον σχετικό εξοπλισμό της Tetra Pak.

es Sobre el Capítulo de Introducción
Este capítulo contiene información básica sobre este manual y el equipo Tetra Pak relacionado.

et Sissejuhatava peatüki kohta
Sellest peatükist leiate põhiinfo kataloogi ja Tetra Pak seadmete kohta.

fi Tietoja Johdanto-luvusta
Tässä luvussa on perustietoja tästä luettelosta ja Tetra Pak -laitteesta.

fr Concernant le chapitre d'Introduction
Le présent chapitre contient les renseignements de base concernant ce manuel et l'équipement Tetra Pak concerné.

hu A Bevezetés fejezetről
Ezen fejezet alapvető információt tartalmaz jelen kézikönyvről és a kapcsolódó Tetra Pak berendezésről.

it Informazioni sulla sezione Introduzione
Questa sezione contiene informazioni generali sul presente catalogo e la relativa macchina Tetra Pak.

lt Apie pristatymo skyrių
Šiame skyriuje yra pagrindinė informacija apie šį katalogą ir su juo susijusią Tetra Pak įrangą.

lv Par Ievada nodaļu
Šī nodaļa satur galveno informāciju par katalogu un par Tetra Pak iekārtām, uz kurām tas attiecas.

mt Dwar il-Kapitlu ta' l-Introduzzjoni
Dan il-kapitlu fih informazzjoni bażika dwar dan il-katalgu u tagħmir relatat ta' Tetra Pak.

nl Omtrent het hoofdstuk Inleiding
Dit hoofdstuk bevat basisinformatie betreffende dit handboek en daarmee verband houdende apparatuur van Tetra Pak.

no Om kapitlet Introduksjon
Dette kapitlet inneholder grunnleggende informasjon om denne katalogen og relatert Tetra Pak-ustyr.

pl Informacje na temat Rozdziału Wprowadzającego
Rozdział ten zawiera podstawowe informacje na temat niniejszego katalogu i związanego z nim wyposażenia Tetra Pak.

pt Sobre o capítulo Introdução
Este capítulo contém informações básicas sobre este catálogo e ao equipamento Tetra Pak relacionado.

sk O úvodnej kapitole
Táto kapitola obsahuje základné informácie o tomto katalógu a príslušnom zariadení Tetra Pak.

sl Informacija o uvodnem poglavju
Poglavje vsebuje osnovne informacije o tem katalogu in opremi Tetra Pak.

sv Om inledningskapitlet
Det här kapitlet innehåller grundläggande information om katalogen och Tetra Pak-utrustningen.

Introduction

Illustrations . . . . . i - 5
English Text . . . . . i - 7

Úvod

Obrázky . . . . . i - 5
Český text . . . . . i - 11

Indledning

Illustrationer . . . . . i - 5
Dansk tekst . . . . . i - 15

Einleitung

Abbildungen . . . . . i - 5
Deutscher Text . . . . . i - 19

Εισαγωγή

Εικόνες . . . . . i - 5
Ελληνικό Κείμενο . . . . . i - 23

Introducción

Ilustraciones . . . . . i - 5
Texto español . . . . . i - 27

Sissejuhatus

Illustratsioonid . . . . . i - 5
Eestikeelne tekst . . . . . i - 31

Johdanto

Kuvat . . . . . i - 5
Suomenkielinen teksti . . . . . i - 35

Introduction

Figures . . . . . i - 5
Texte français . . . . . i - 39

Bevezetés

Ábrák . . . . . i - 5
Magyar szöveg . . . . . i - 43

Introduzione

Figure . . . . . i - 5
Testo in italiano . . . . . i - 47

Įvadas

Iliustracijos . . . . . i - 5
Lietuviškas tekstas . . . . . i - 51

Ievads

Ilustrācijas . . . . . i - 5
Latviešu teksts . . . . . i - 55

Introduzzjoni

Stampi . . . . . i - 5
Test bil-Malti . . . . . i - 59

Inleiding

Illustraties . . . . . i - 5
Nederlands tekst . . . . . i - 63

Introduksjon

Illustrasjoner . . . . . i - 5
Norsk tekst . . . . . i - 67

Wprowadzenie

Ilustracje . . . . . i - 5
Tekst po polsku . . . . . i - 71

Introdução

Ilustrações . . . . . i - 5
Texto em portugese . . . . . i - 75

Úvod

Zobrazenie . . . . . i - 5
Slovenský text . . . . . i - 79

Uvod

Risbe . . . . . i - 5
Slovensko besedilo . . . . . i - 83

Inledning

Bilder . . . . . i - 5
Svensk text . . . . . i - 87

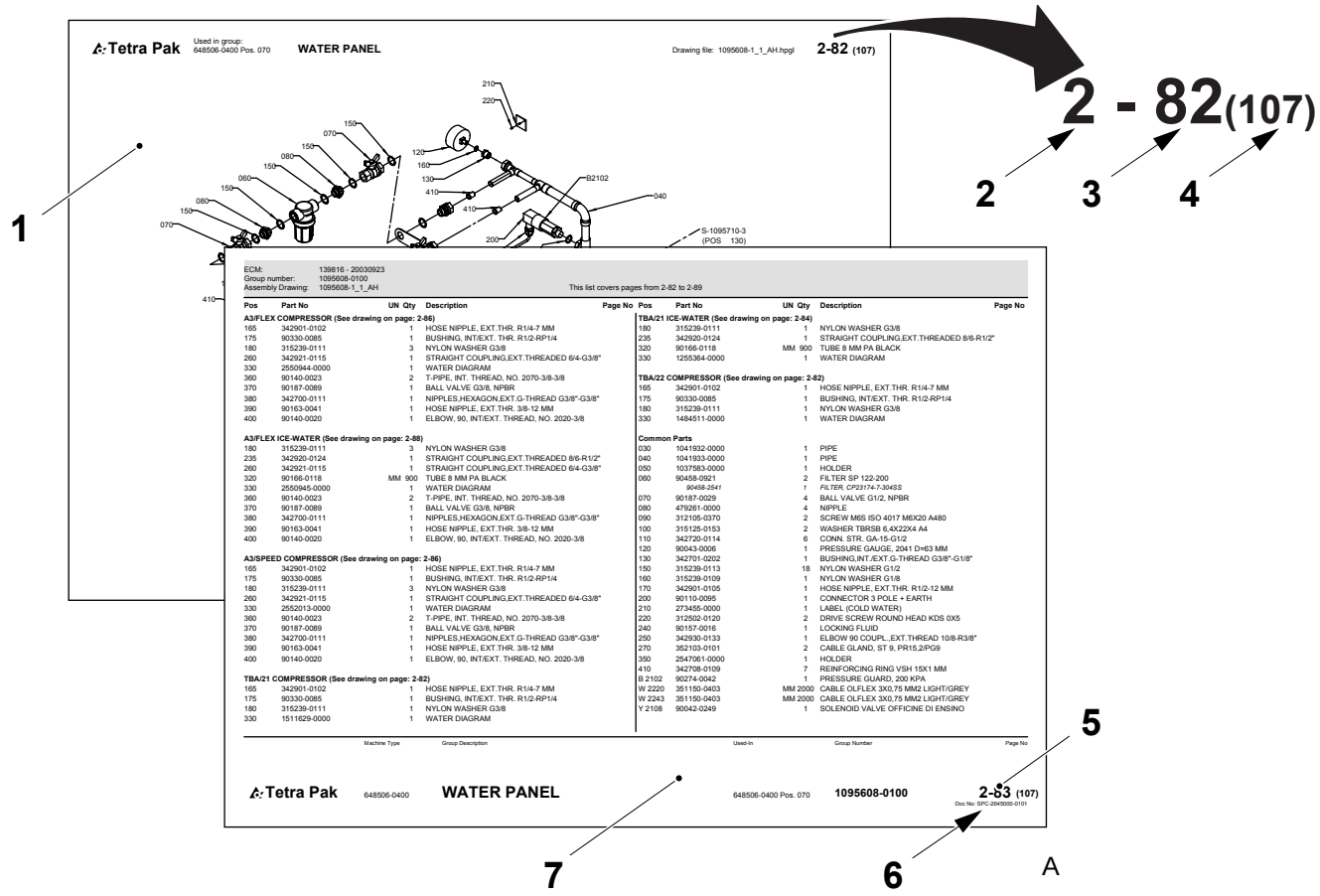
Tetra Pak
Used in group: 648506-0400 Pos. 070
WATER PANEL
Drawing file: 1095608-1_1_AH.hpgl
2-82 (107)
2 - 82(107)
1
2
3
4
5
6
7
A
ECM: 139816 - 20030923
Group number: 1095608-0100
Assembly Drawing: 1095608-1_1_AH
This list covers pages from 2-82 to 2-89
Tetra Pak 648506-0400 WATER PANEL 648506-0400 Pos. 070 1095608-0100 2-83 (107)

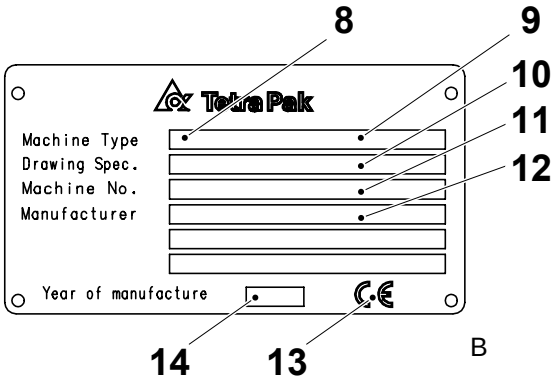
8
9
10
11
12
Tetra Pak
Machine Type
Drawing Spec.
Machine No.
Manufacturer
Year of manufacture
14
13
B

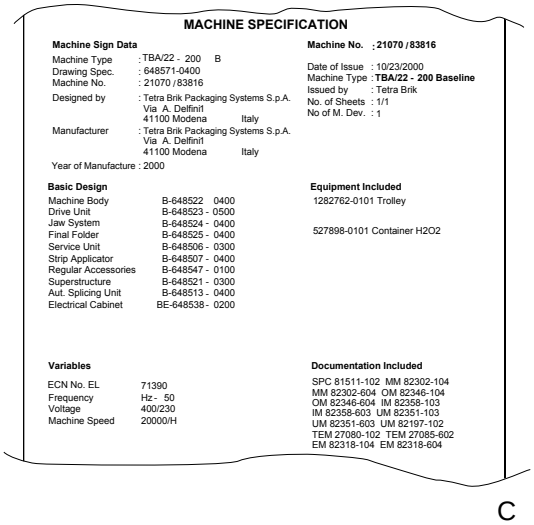
MACHINE SPECIFICATION
Machine Sign Data
Machine Type : TBA/22 - 200 B
Drawing Spec. : 648571-0400
Machine No. : 21070 / 83816
Designed by : Tetra Brik Packaging Systems S.p.A. Via A. Delfini 41100 Modena Italy
Manufacturer : Tetra Brik Packaging Systems S.p.A. Via A. Delfini 41100 Modena Italy
Year of Manufacture : 2000
Machine No. : 21070 / 83816
Date of Issue : 10/23/2000
Machine Type : TBA/22 - 200 Baseline
Issued by : Tetra Brik
No. of Sheets : 1/1
No of M. Dev. : 1
Basic Design
Machine Body B-648522 0400
Drive Unit B-648523 - 0500
Jaw System B-648524 - 0400
Final Folder B-648525 - 0400
Service Unit B-648506 - 0300
Strip Applicator B-648507 - 0400
Regular Accessories B-648547 - 0100
Superstructure B-648521 - 0300
Aut. Splicing Unit B-648513 - 0400
Electrical Cabinet BE-648538 - 0200
Equipment Included
1282762-0101 Trolley
527898-0101 Container H2O2
Variables
ECN No. EL 71390
Frequency Hz - 50
Voltage 400/230
Machine Speed 20000/H
Documentation Included
SPC 81511-102 MM 82302-104
MM 82302-604 OM 82346-104
OM 82346-604 IM 82358-103
IM 82358-603 UM 82351-103
UM 82351-603 UM 82197-102
TEM 27080-102 TEM 27085-602
EM 82318-104 EM 82318-604
C

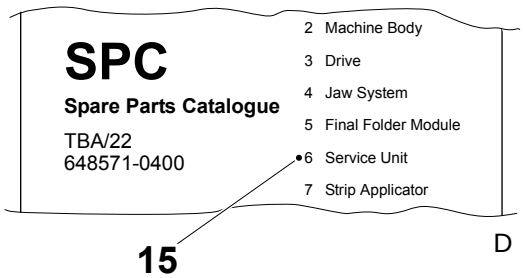
SPC
Spare Parts Catalogue
TBA/22
648571-0400
2 Machine Body
3 Drive
4 Jaw System
5 Final Folder Module
6 Service Unit
7 Strip Applicator
15
D

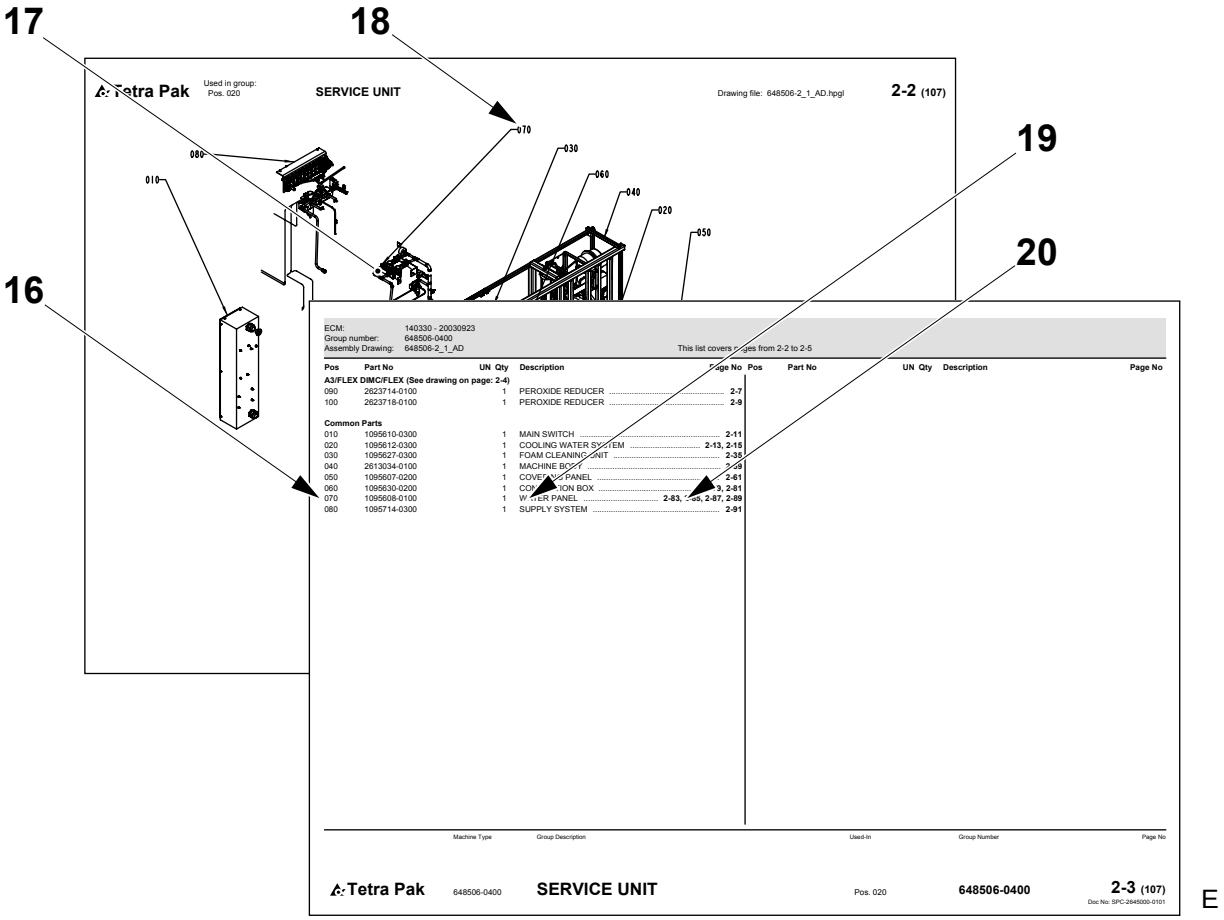
17
18
19
20
16
Tetra Pak
SERVICE UNIT
Drawing file: 648506-2_1_AD.hpgl
2-2 (107)
070
030
080
060
010
040
020
050
ECM: 140330 - 20030923
Group number: 648506-0400
Assembly Drawing: 648506-2_1_AD
This list covers pages from 2-2 to 2-5
Pos Part No UN Qty Description Page No
A3/FLEX DIMC/FLEX (See drawing on page: 2-4)
090 2623714-0100 1 PEROXIDE REDUCER 2-7
100 2623718-0100 1 PEROXIDE REDUCER 2-9
Common Parts
010 1095610-0300 1 MAIN SWITCH 2-11
020 1095612-0300 1 COOLING WATER SYSTEM 2-13, 2-15
030 1095627-0300 1 FOAM CLEANING UNIT 2-35
040 2613034-0100 1 MACHINE BODY
050 1095607-0200 1 COVERING PANEL 2-61
060 1095630-0200 1 CONTROL BOX 2-3, 2-81
070 1095608-0100 1 WATER PANEL 2-83, 2-87, 2-89
080 1095714-0300 1 SUPPLY SYSTEM 2-91
Machine Type
Group Description
Used-In
Group Number
Page No
Tetra Pak
648506-0400
SERVICE UNIT
Pos. 020
648506-0400
2-3 (107)
Doc No: SPC-2645000-0101

E

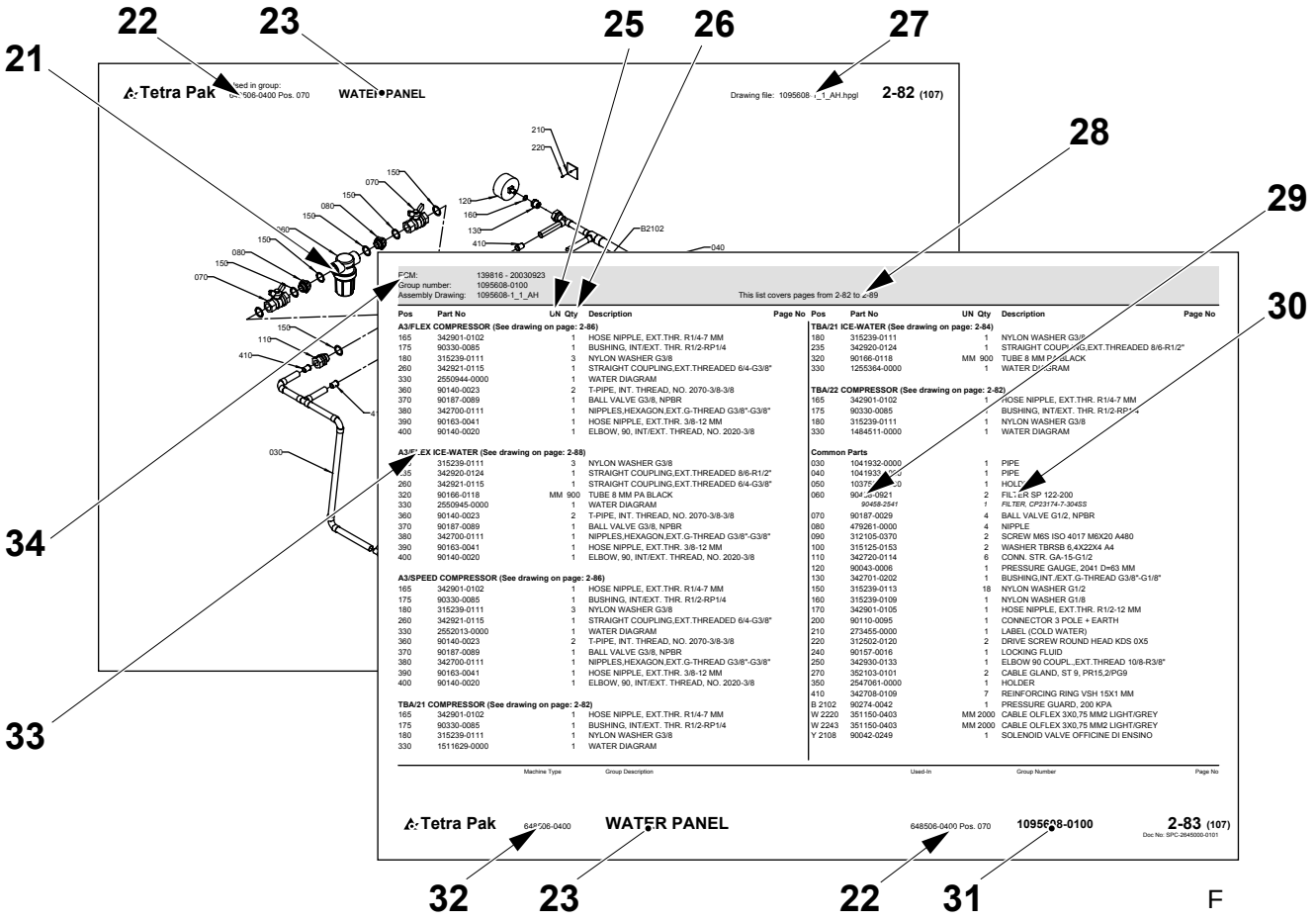
22
23
25
26
27
21
28
29
30
34
33
Tetra Pak
WATER PANEL
Drawing file: 1095608-1_1_AH.hpgl
2-82 (107)
210
220
150
070
080
120
160
130
410
B2102
040
030
110
ECM: 139816 - 20030923
Group number: 1095608-0100
Assembly Drawing: 1095608-1_1_AH
This list covers pages from 2-82 to 2-89
Pos Part No UN Qty Description Page No
A3/FLEX COMPRESSOR (See drawing on page: 2-86)
165 342901-0102 1 HOSE NIPPLE, EXT.THR. R1/4-7 MM
175 90330-0085 1 BUSHING, INT/EXT. THR. R1/2-RP1/4
180 315239-0111 3 NYLON WASHER G3/8
260 342921-0115 1 STRAIGHT COUPLING,EXT.THREADED 6/4-G3/8"
330 2550944-0000 1 WATER DIAGRAM
360 90140-0023 2 T-PIPE, INT. THREAD, NO. 2070-3/8-3/8
370 90187-0089 1 BALL VALVE G3/8, NPBR
380 342700-0111 1 NIPPLES,HEXAGON,EXT.G-THREAD G3/8"-G3/8"
390 90163-0041 1 HOSE NIPPLE, EXT.THR. 3/8-12 MM
400 90140-0020 1 ELBOW, 90, INT/EXT. THREAD, NO. 2020-3/8
A3/FLEX ICE-WATER (See drawing on page: 2-88)
155 315239-0111 3 NYLON WASHER G3/8
165 342920-0124 1 STRAIGHT COUPLING,EXT.THREADED 8/6-R1/2"
260 342921-0115 1 STRAIGHT COUPLING,EXT.THREADED 6/4-G3/8"
320 90166-0118 MM 900 TUBE 8 MM PA BLACK
330 2550945-0000 1 WATER DIAGRAM
360 90140-0023 2 T-PIPE, INT. THREAD, NO. 2070-3/8-3/8
370 90187-0089 1 BALL VALVE G3/8, NPBR
380 342700-0111 1 NIPPLES,HEXAGON,EXT.G-THREAD G3/8"-G3/8"
390 90163-0041 1 HOSE NIPPLE, EXT.THR. 3/8-12 MM
400 90140-0020 1 ELBOW, 90, INT/EXT. THREAD, NO. 2020-3/8
A3/SPEED COMPRESSOR (See drawing on page: 2-86)
165 342901-0102 1 HOSE NIPPLE, EXT.THR. R1/4-7 MM
175 90330-0085 1 BUSHING, INT/EXT. THR. R1/2-RP1/4
180 315239-0111 3 NYLON WASHER G3/8
260 342921-0115 1 STRAIGHT COUPLING,EXT.THREADED 6/4-G3/8"
330 2552013-0000 1 WATER DIAGRAM
360 90140-0023 2 T-PIPE, INT. THREAD, NO. 2070-3/8-3/8
370 90187-0089 1 BALL VALVE G3/8, NPBR
380 342700-0111 1 NIPPLES,HEXAGON,EXT.G-THREAD G3/8"-G3/8"
390 90163-0041 1 HOSE NIPPLE, EXT.THR. 3/8-12 MM
400 90140-0020 1 ELBOW, 90, INT/EXT. THREAD, NO. 2020-3/8
TBA/21 COMPRESSOR (See drawing on page: 2-82)
165 342901-0102 1 HOSE NIPPLE, EXT.THR. R1/4-7 MM
175 90330-0085 1 BUSHING, INT/EXT. THR. R1/2-RP1/4
180 315239-0111 1 NYLON WASHER G3/8
330 1511629-0000 1 WATER DIAGRAM
TBA/21 ICE-WATER (See drawing on page: 2-84)
180 315239-0111 1 NYLON WASHER G3/8
235 342920-0124 1 STRAIGHT COUPLING,EXT.THREADED 8/6-R1/2"
320 90166-0118 MM 900 TUBE 8 MM PA BLACK
330 1255364-0000 1 WATER DIAGRAM
TBA/22 COMPRESSOR (See drawing on page: 2-82)
165 342901-0102 1 HOSE NIPPLE, EXT.THR. R1/4-7 MM
175 90330-0085 1 BUSHING, INT/EXT. THR. R1/2-RP1/4
180 315239-0111 1 NYLON WASHER G3/8
330 1484511-0000 1 WATER DIAGRAM
Common Parts
030 1041932-0000 1 PIPE
040 1041933-0000 1 PIPE
050 1037[illegible] 1 HOLDER
060 9045[illegible]-0921 2 FILTER SP 122-200
90458-2541 1 FILTER, CP23174-7-30455
070 90187-0029 4 BALL VALVE G1/2, NPBR
080 479261-0000 4 NIPPLE
090 312105-0370 2 SCREW M6S ISO 4017 M6X20 A480
100 315125-0153 2 WASHER TBRSB 6,4X22X4 A4
110 342720-0114 6 CONN. STR. GA-15-G1/2
120 90043-0006 1 PRESSURE GAUGE, 2041 D=63 MM
130 342701-0202 1 BUSHING,INT./EXT.G-THREAD G3/8"-G1/8"
150 315239-0113 18 NYLON WASHER G1/2
160 315239-0109 1 NYLON WASHER G1/8
170 342901-0105 1 HOSE NIPPLE, EXT.THR. R1/2-12 MM
200 90110-0095 1 CONNECTOR 3 POLE + EARTH
210 273455-0000 1 LABEL (COLD WATER)
220 312502-0120 2 DRIVE SCREW ROUND HEAD KDS 0X5
240 90157-0016 1 LOCKING FLUID
250 342930-0133 1 ELBOW 90 COUPL.,EXT.THREAD 10/8-R3/8"
270 352103-0101 2 CABLE GLAND, ST 9, PR15,2/PG9
350 2547061-0000 1 HOLDER
410 342708-0109 7 REINFORCING RING VSH 15X1 MM
B 2102 90274-0042 1 PRESSURE GUARD, 200 KPA
W 2220 351150-0403 MM 2000 CABLE OLFLEX 3X0,75 MM2 LIGHT/GREY
W 2243 351150-0403 MM 2000 CABLE OLFLEX 3X0,75 MM2 LIGHT/GREY
Y 2108 90042-0249 1 SOLENOID VALVE OFFICINE DI ENSINO
Machine Type
Group Description
Used-In
Group Number
Page No
Tetra Pak
648506-0400
WATER PANEL
648506-0400 Pos. 070
1095608-0100
2-83 (107)
Doc No: SPC-2648000-0101
32
23
22
31

F

Introduction

Manual Information

Tetra Pak recommends reading all delivered manuals carefully. Make sure that the delivered manuals are available to personnel who operate or maintain the equipment.

It is important to keep this catalogue for the lifetime of the equipment and to pass the catalogue on to any subsequent holder or user.

Tetra Pak will not be held responsible for any damage to the equipment caused by not following the instructions given in the manuals that accompany this equipment.

Delivered Manuals

The manuals delivered with this equipment may include

- Conversion Manual (CM)
  This manual provides technicians with information on converting the equipment between different production modes.
- Electrical Manual (EM)
  This manual provides technicians with information about the equipment's electrical system.
- Installation Manual (IM)
  This manual provides technicians with information required to safely install the equipment.
- Maintenance Manual (MM)
  This manual provides technicians with information on maintaining the equipment.
- Operation Manual (OM)
  This manual provides the operator with information on handling and operating the equipment before, during, and after production.
- Spare Parts Catalogue (SPC)
  This manual provides the information necessary to order spare parts from Tetra Pak.
- Technical Manual (TeM)
  - provides technicians with information required to safely install the equipment
  - provides technicians with information on maintaining the equipment
  - provides technicians with information about the equipment's electrical system
  - provides the information necessary to order spare parts from Tetra Pak

Page Layout

Refer to the illustration (A) on page i-5: The main pages in a Spare Parts Catalogue consist of an illustration page (1) and a corresponding list page (7). The page number (5) is shown in the header of an illustration page and in the footer of a list page. The document number (6) is shown in the footer of a list page.

Page Numbering

Refer to the illustration (A) on page i-5: A page number (5) has three parts:

- chapter number (2)
- consecutive page number within the chapter (3)
- total number of pages in the chapter (4)

Machine Introduction

Manufacturer

For the manufacturer's name and address, see the second page of this catalogue.

Service

To order spare parts for this machine, or to report problems associated with operating this machine, contact the nearest Tetra Pak office.

Contact the Liaison with other inquiries, comments, or suggestions for improvement regarding the equipment and its documentation.

Identification

CE Classification

This equipment complies with the basic health and safety regulations of the European Economic Area (EEA).

Machine Plate

The illustration (B) on page i-5 shows an example of a machine plate. An illustration of the valid machine plate and its location on the equipment is shown in the Introduction chapter of the manuals delivered with this equipment. The machine plate contains the data listed below, needed when contacting Tetra Pak concerning this specific equipment.

- Machine type (8)
- Volume (9)
- Drawing specifications (10)
- Machine serial number (11)
- Manufacturer (12)
- CE mark (13)
- Year of manufacture (14)

The illustration (C) on page i-5 shows an example of a machine specification. Make sure that the equipment data listed in the front pages of this manual corresponds to the machine plate data and the machine specification.

How to Use This Spare Parts Catalogue

Locate a Spare Part Number

a) Refer to the illustration (D) on page i-5: Go to the chapter number (15) indicated beside the main group that contains the part you want to locate.

Items b) and c) refer to the illustration (E) on page i-6.

b) On the main group illustration, look for the machine subgroup (17) that contains the part or subgroup you are looking for. Note the position number (18) and go to the list page that follows the illustration.

c) Look for the position number (16) or the subgroup name (19). Go to the corresponding page number (20) listed in the right-hand column.

Items d) and e) refer to the illustration (F) on page i-6.

d) Locate the part (21) that you are looking for on the subgroup illustration and note the part's position number.

e) The part number (29) and part description (30) are listed beside the position number on the list page.

Information Listed in a Spare Parts Catalogue

The list below refers to the illustration (F) on page i-6. A Spare Parts Catalogue contains the following information about groups, subgroups, and spare parts for the equipment:

- Group structure reference (22). Indicates the next higher group in the equipment list structure.
- Group name (23)
- Unit of measure (25)
- Quantity (26)
- Assembly drawing number (27)
- List page range (28). Included if there are multiple pages in the group illustration or list.
- Part or subgroup number (29)
- Subgroup name or part description (30)
- Group number (31)
- Equipment number (32)
- Group information heading (33). Indicates if the section below the heading is for a specific machine variant or if it is a list of common parts. If a list has more than one variant and each variant has its own assembly drawing, a page reference to the variant's assembly drawing is shown.
- Internal information (34)

Úvod

Informace o příručce

Společnost Tetra Pak doporučuje, abyste se důkladně seznámili se všemi dodanými příručkami. Dodané příručky musí být k dispozici pracovníkům, kteří provádějí obsluhu nebo údržbu zařízení.

Tento katalog je třeba uchovávat po celou dobu životnosti zařízení a předat jej každému dalšímu vlastníkovi nebo uživateli.

Společnost Tetra Pak nezodpovídá za škody na zařízení způsobené nedodržováním pokynů uvedených v příručkách dodaných se zařízením.

Dodané příručky

Mezi příručky dodané se zařízením patří:

- Příručka pro konverzi (CM)
  Tato příručka obsahuje informace pro techniky o konverzi zařízení mezi jednotlivými výrobními režimy.
- Příručka pro elektroinstalaci (EM)
  Tato příručka obsahuje informace pro techniky o elektroinstalaci zařízení.
- Příručka pro instalaci (IM)
  Tato příručka obsahuje informace pro techniky týkající se bezpečné instalace zařízení.
- Příručka pro obsluhu (MM)
  Tato příručka obsahuje informace pro techniky o údržbě zařízení.
- Provozní příručka (OM)
  Tato příručka obsahuje informace pro obsluhu o manipulaci a provozu zařízení před, během a po výrobě.
- Katalog náhradních dílů (SPC)
  Tato příručka obsahuje informace nezbytné pro objednávání náhradních dílů od společnosti Tetra Pak.
- Technická příručka (TeM)
  - obsahuje informace pro techniky týkající se bezpečné instalace zařízení
  - obsahuje informace pro techniky o údržbě zařízení
  - obsahuje informace pro techniky o elektroinstalaci zařízení
  - obsahuje informace nezbytné pro objednávání náhradních dílů od společnosti Tetra Pak

Vzhled stránky

Viz obrázek (A) na stránce i-5: hlavní stránky v katalogu náhradních dílů se skládají ze stránky s obrázkem (1) a z odpovídající katalogové stránky (7). Číslo stránky (5) je uvedeno v záhlaví stránky s obrázkem a v zapatí katalogové stránky. Číslo dokumentu (6) je uvedeno v záhlaví katalogové stránky.

Číslování stránek

Viz obrázek (A) na stránce i-5: číslo stránky (5) se skládá ze tří částí:

- číslo kapitoly (2)
- číslo další stránky (3) v rámci kapitoly
- celkový počet stránek (4) v kapitole

Seznámení se zařízením

Výrobce

Název a adresa výrobce jsou uvedeny na druhé stránce tohoto katalogu.

Servis

Chcete-li objednat náhradní díly pro toto zařízení nebo chcete-li ohlásit potíže spojené s provozem zařízení, obrat’te se na nejbližší pobočku společnosti Tetra Pak.

S ostatními stížnostmi, připomínkami nebo zlepšovacími návrhy v souvislosti se zařízením a dokumentací se obrat’te na zastoupení společnosti.

Označení

Klasifikace CE

Toto zařízení vyhovuje základním zdravotním a bezpečnostním směrnicím EEA (European Economic Area).

Typový štítek

Na obrázku (B) na stránce i-5 je uveden příklad typového štítku zařízení. Příslušné typové štítky a jejich umístění na zařízení jsou uvedeny v kapitole Úvod v příručkách dodaných se zařízením. Typový štítek obsahuje níže uvedené údaje, které je třeba uvést při kontaktování společnosti Tetra Pak ohledně tohoto zařízení.

- typ zařízení (8)
- množství (9)
- označení schémat (10)
- sériové číslo zařízení (11)
- výrobce (12)
- symbol CE (13)
- rok výroby (14)

Na obrázku (C) na stránce i-5 je uveden příklad specifikace zařízení. Údaje o zařízení uvedené na předních stránkách této příručky musí souhlasit s údaji na typovém štítku a se specifikacemi zařízení.

Jak používat tento katalog náhradních dílů

Vyhledání čísla náhradního dílů

a) Viz obrázek (D) na stránce i-5: přejdete na číslo kapitoly (15) uvedené vedle hlavní skupiny, která obsahuje hledaný díl.

Položky b) a c) odkazují na obrázek (E) na stránce i-6.

b) Na obrázku hlavní skupiny vyhledejte podskupinu zařízení (17) která obsahuje hledaný díl nebo podskupinu. Zapamatujte si číslo umístění (18) a přejděte na katalogovou stránku, která následuje obrázek.

c) Vyhledejte číslo umístění (16) nebo název podskupiny (19). Přejděte na příslušné číslo stránky (20) uvedené v pravém sloupci.

Položky d) a e) odkazují na obrázek (F) na stránce i-6.

d) Na obrázku podskupiny vyhledejte požadovaný díl (21) a poznamenejte si číslo jeho umístění.

e) Na katalogové stránce je vedle čísla umístění uvedeno číslo dílu (29) a popis (30).

Informace uvedené v katalogu náhradních dílů

Následující seznam odkazuje na obrázek (F) na stránce i-6. Katalog náhradních dílů obsahuje následující informace o skupinách, podskupinách a náhradních dílech pro toto zařízení:

- Označení struktury skupiny (22). Označuje další vyšší skupinu ve struktuře katalogu zařízení.
- Název skupiny (23)
- Měrné jednotky (25)
- Množství (26)
- Číslo schématu součásti (27)
- Rozsah katalogových stránek (28). Je uvedeno, pokud obrázek skupiny nebo katalog obsahují více stránek.
- Číslo dílu nebo podskupiny (29)
- Název podskupiny nebo popis dílu (30)
- Číslo skupiny (31)
- Číslo zařízení (32)
- Nadpis informací o skupině (33). Označuje, zda se oddíl pod nadpisem vztahuje na konkrétní variantu zařízení nebo představuje katalog běžných dílů. Pokud některý katalog obsahuje více, než jednu variantu, a pokud má každá varianta vlastní schéma součásti, zobrazí se odkaz na stránku se schématem součásti dané varianty.
- Vnitřní informace (34)

Indledning

Information om manualen

Tetra Pak anbefaler, at alle leverede manualer læses omhyggeligt. Sørg for, at de leverede manualer er tilgængelige for medarbejdere, der betjener eller vedligeholder udstyret.

Det er vigtigt at opbevare dette katalog hele udstyrets levetid og give kataloget videre til eventuelt kommende ejere eller brugere.

Tetra Pak kan ikke holdes ansvarlig for eventuel beskadigelse af udstyr, der opstår, fordi instruktionerne i manualerne til dette udstyr ikke følges.

Leverede manualer

De manualer, der leveres sammen med dette udstyr, kan omfatte:

- Konverteringsmanual (CM)
  Denne manual forsyner teknikere med informationer om konvertering af udstyret mellem forskellige produktionstilstande.
- Elektrisk manual (EM)
  Denne manual forsyner teknikere med informationer om udstyrets elektriske system.
- Installationsmanual (IM)
  Denne manual forsyner teknikere med informationer, der er nødvendige for en sikker installation af udstyret.
- Vedligeholdelsesmanual (MM)
  Denne manual forsyner teknikere med informationer om vedligeholdelse af udstyret.
- Betjeningsmanual (OM)
  Denne manual forsyner operatøren med informationer om håndtering og betjening af udstyret før, under og efter produktion.
- Reservedelskatalog (SPC)
  Denne manual indeholder de informationer, der er nødvendige for at kunne bestille reservedele fra Tetra Pak.
- Teknisk manual (TeM)
  - forsyner teknikere med informationer, der er nødvendige for en sikker installation af udstyret.
  - forsyner teknikere med informationer om vedligeholdelse af udstyret.
  - forsyner teknikere med informationer om udstyrets elektriske system.
  - indeholder de informationer, der er nødvendige for at kunne bestille reservedele fra Tetra Pak.

Sidelayout

Se illustrationen (A) på side i-5: Hovedsiderne i et reservedelskatalog består af en illustrationsside (1) og en tilsvarende listeside (7). Sidenummeret (5) vises i sidehovedet på en illlustrationsside og i sidefoden på en listeside. Dokumentnummeret (6) vises i sidefoden på en listeside.

Sidenummerering

Se illustrationen (A) på side i-5: Et sidenummer (5) har tre dele:

- kapitelnummer (2)
- fortløbende sidenummer i kapitlet (3)
- samlet sideantal i kapitlet (4)

Præsentation af maskinen

Producent

Producentens navn og adresse findes på side to i dette katalog.

Service

Kontakt nærmeste Tetra Pak-kontor for at bestille reservedele eller rapportere problemer i forbindelse med betjening af denne maskine.

Kontakt kontaktpersonen med andre forespørgsler, kommentarer eller forslag til forbedringer af udstyret og dets dokumentation.

Identifikation

CE-klassificering

Dette udstyr overholder de grundlæggende sundheds- og sikkerheds-bestemmelser for Det Europæiske Økonomiske Samarbejdsområde (EØS).

Maskinskilt

Illustrationen (B) på side i-5 viser et eksempel på et maskinskilt. En illustration af et gyldigt maskinskilt og dets placering på udstyret er vist i indledningskapitlet i de manualer, der leveres med dette udstyr. Maskinskiltet indeholder nedennævnte data. Disse er nødvendige ved kontakt med Tetra Pak vedrørende dette specifikke udstyr.

- Maskintype (8)
- Volumen (9)
- Tegningsspecifikationer (10)
- Maskinens serienummer (11)
- Producent (12)
- CE-mærke (13)
- Produktionsår (14)

Illustrationen (C) på side i-5 viser et eksempel på en maskinspecifikation. Kontroller, at de udstyrsdata, der er anført på de første sider i denne manual, svarer til maskinskiltsdataene og maskinspecifikationen.

Sådan bruges dette reservedelskatalog

Find et reservedelsnummer

a) Se illustrationen (D) på side i-5: Gå til kapitelnummeret (15), der er angivet ved siden af hovedgruppen, der indeholder den del, der ønskes fundet.

Punkterne b) og c) refererer til illustrationen (E) på side i-6.

b) I hovedgruppeillustrationen skal man se efter maskinundergruppen (17), som indeholder den del eller undergruppe, der søges. Bemærk placeringsnummeret (18), og gå til listesiden, som følger illustrationen.

c) Se efter placeringsnummeret (16) eller undergruppens navn (19). Gå til det tilsvarende sidenummer (20) angivet i den højre kolonne.

Punkterne d) og e) refererer til illustrationen (F) på side i-6.

d) Find den del (21), du søger i undergruppeillustrationen, og notér delens placeringsnummer.

e) Reservedelsnummeret (29) og -beskrivelsen (30) er angivet ved siden af placeringsnummeret på listesiden.

Informationer der er angivet i et reservedelskatalog

Listen nedenfor refererer til illustrationen (F) på side i-6. Et reservedelskatalog indeholder følgende informationer om grupper, undergrupper og reservedele til udstyret:

- Gruppestrukturreference (22). Angiver næste overordnede gruppe i udstyrslistestrukturen.
- Gruppenavn (23)
- Måleenhed (25)
- Antal (26)
- Samletegningsnummer (27)
- Listens sideområde (28). Er angivet, hvis gruppeillustrationen eller -listen inkluderer mange sider.
- Del- eller undergruppenummer (29)
- Undergruppens navn eller delsbeskrivelse (30)
- Gruppenummer (31)
- Udstyrsnummer (32)
- Overskrift for gruppeinformation (33). Angiver om afsnittet under overskriften er for en specifik maskinvariant, eller om det er en liste over fælles dele. Hvis en liste har mere end én variant, og hver variant har sin egen samletegning, vises en sidereference til variantens samletegning.
- Intern information (34)

Einleitung

Handbuch-Informationen

Tetra Pak empfiehlt, alle gelieferten Handbücher sorgfältig zu lesen. Es muss sichergestellt werden, dass die gelieferten Handbücher dem Bediener- oder Wartungspersonal der Ausrüstung verfügbar sind.

Es ist wichtig, dieses Handbuch während der Lebensdauer der Ausrüstung vorzuhalten und es an nachfolgende Halter oder Benutzer weiterzugeben.

Tetra Pak ist nicht verantwortlich für Schäden an der Ausrüstung, die durch die Nichtbefolgung der Anweisungen dieses Handbuchs verursacht werden.

Gelieferte Handbücher

Die mit dieser Ausrüstung gelieferten Handbücher umfassen

- Umbauhandbuch (CM)
  Dieses Handbuch liefert den Technikern Informationen über den Umbau der Ausrüstung zwischen den verschiedenen Produktionsweisen.
- Elektrohandbuch (EM)
  Dieses Handbuch liefert den Technikern Informationen zum Elektrosystem der Ausrüstung.
- Installationshandbuch (IM)
  Dieses Handbuch liefert den Technikern Informationen für die sichere Installation der Ausrüstung.
- Wartungshandbuch (MM)
  Dieses Handbuch liefert den Technikern Informationen über die Wartung der Ausrüstung.
- Betriebshandbuch (OM)
  Dieses Handbuch liefert dem Bediener Informationen über die Handhabung und den Betrieb der Ausrüstung vor, während und nach der Produktion.
- Ersatzteilkatalog (SPC)
  Dieses Handbuch liefert Informationen, wie sie für die Bestellung von Ersatzteilen bei Tetra Pak erforderlich sind.
- Technisches Handbuch (TeM)
  - liefert den Technikern Informationen für die sichere Installation der Ausrüstung
  - liefert den Technikern Informationen über die Wartung der Ausrüstung
  - liefert den Technikern Informationen über das Elektrosystem der Ausrüstung
  - liefert die erforderlichen Informationen für die Bestellung von Ersatzteilen bei Tetra Pak.

Seitenlayout

Bezugnahme Abbildung (A) auf Seite i-5: Die Hauptseiten in einem Ersatzteilkatalog bestehen aus einer Abbildungsseite (1) und einer entsprechenden Listenseite (7). Die Seitennummer (5) ist im Kopf einer Abbilldungsseite und im Fuß einer Listenseite aufgeführt. Die Dokumentennummer (6) ist ist im Fuß einer Listenseite angegeben.

Seitennummerierung

Bezugnahme Abbildung (A) auf Seite i-5: Eine Seitennummer (5) besteht aus drei Teilen:

- Kapitelnummer (2)
- Fortlaufende Seitennummer innerhalb des Kapitels (3)
- Gesamtanzahl der Seiten im Kapitel (4)

Einführung in die Maschine

Hersteller

Für Name und Anschrift des Herstellers, siehe die zweite Seite dieses Kataloges.

Service

Um Ersatzteile für diese Maschine zu bestellen oder um über Probleme beim Betrieb dieser Maschine zu berichten, ist das nächstgelegene Büro von Tetra Pak anzusprechen.

Mit anderen Anfragen. Kommentaren oder Vorschlägen zur Ausrüstung und der Dokumentation ist die Verbindungsstelle anzusprechen.

Identifizierung

CE-Klassifizierung

Diese Ausrüstung entspricht den grundlegenden Gesundheits- und Sicherheitsvorschriften des Europäischen Wirtschaftsraumes (EEA).

Maschinenschild

Die Abbildung (B) auf Seite i-5 zeigt das Beispiel eines Maschinenschildes. Die Abbildung eines gültigen Maschinenschildes und die Lage desselben auf der Ausrüstung befindet sich im Einleitungskapitel der mit der Ausrüstung gelieferten Handbücher. Das Maschinenschild enthält die nachstehend aufgeführten Daten, wie sie erforderlich sind, wenn Tetra Pak wegen dieser spezifischen Ausrüstung anzusprechen ist.

- Maschinentyp (8)
- Volumen (9)
- Zeichnungs-Spezifikationen (10)
- Serien-Nummer der Maschine (11)
- Hersteller (12)
- CE-Markierung (13)
- Baujahr (14)

Die Abbildung (C) auf Seite i-5 zeigt das Beispiel einer Maschinenspezifikation. Es muss sichergestellt sein, dass die in den Frontseiten dieses Handbuchs aufgeführten Ausrüstungsdaten mit den Daten des Maschinenschildes und der Maschinenspezifikation übereinstimmen.

Verwendung dieses Ersatzteilkatalogs

Anordnung einer Ersatzteilnummer

a) Bezugnahme auf Abbildung (D) auf Seite i-5: Weiter zur Kapitelnummer (15), die neben der Hauptgruppe angegeben ist, die das entsprechende Teil enthält.

Die Pos. b) und c) beziehen sich auf die Abbildung (E) auf Seite i-6.

b) Auf der Hauptgruppenabbildung die Maschinen-Untergruppe (17) suchen, die das gesuchte Teil oder die gesuchte Untergruppe enthält. Die Positionsnummer (18) notieren und weiter zur Listenseite gehen, die der Abbildung folgt.

c) Die Positionsnummer (16) oder den Namen der Untergruppe (19) suchen. Dann zur entsprechenden Seitennummer (20) in der rechten Spalte gehen.

Pos. d) und e) beziehen sich auf die Abbildung (F) auf Seite i-6.

d) Suchen Sie Teil (21) auf der Untergruppen-Abbildung und notieren Sie die Positionsnummer des Teils.

e) Die Teilnummer (29) und die Teilebeschreibung (30) finden Sie neben der Positionsnummer auf der Listenseite.

In einem Ersatzteilkatalog enthaltene Information

Die nachstehende Liste bezieht sich auf die Abbildung (F) auf Seite i-6.
Ein Ersatzteilkatalog enthält folgende Informationen über Gruppen, Untergruppen und Ersatzteile für die Ausrüstung:

- Gruppenstrukturreferenz (22). Sie gibt die nächst höhere Gruppe in der Ausrüstungslistenstruktur an
- Gruppenname (23)
- Maßeinheit (25)
- Menge (26)
- Nummer der Zusammenbauzeichnung (27)
- Listenseite, Bereich (28). Eingeschlossen, wenn Mehrfachseiten in der Gruppenabbildung oder Liste enthalten sind
- Teile- oder Untergruppennummer (29)
- Untergruppenname oder Teilebeschreibung (30)
- Gruppennummer (31)
- Ausrüstungsnummer (32)
- Gruppeninformationsüberschrift (33). Gibt an, ob der Abschnitt unter der Überschrift sich auf eine spezifische Maschinenvariante bezieht oder eine Liste der allgemeinen Teile ist. Wenn eine Liste sich auf mehr als eine Variante bezieht und jede Variante eine eigene Zusammenbauzeichnung hat, wird eine Seitenreferenz zur Zusammenbauzeichnung der Variante vorgestellt.
- Interne Information (34)

Εισαγωγή

Πληροφορίες για το Εγχειρίδιο

Η Tetra Pak σας συνιστά να διαβάζετε προσεκτικά όλα τα χορηγούμενα εγχειρίδια. Βεβαιωθείτε ότι είναι διαθέσιμα όλα τα χορηγούμενα εγχειρίδια για το προσωπικό που χειρίζεται ή συντηρεί τον εξοπλισμό.

Είναι σημαντικό να διατηρείτε αυτό τον κατάλογο καθ' όλη τη διάρκεια ζωής του εξοπλισμού καθώς και να παραδίδετε τον κατάλογο στον τυχόν επόμενο ιδιοκτήτη ή χρήστη του εξοπλισμού.

Η Tetra Pak δεν πρόκειται να αναλάβει καμία ευθύνη για οποιαδήποτε ζημιά που προκαλείται στον εξοπλισμό λόγω της παράβλεψης των οδηγιών που δίνονται στα εγχειρίδια που συνοδεύουν αυτό τον εξοπλισμό.

Χορηγούμενα Εγχειρίδια

Τα εγχειρίδια που χορηγούνται μ' αυτόν τον εξοπλισμό, μπορεί να περιλαμβάνουν

- Εγχειρίδιο Μετατροπής (CM)
  Αυτό το εγχειρίδιο χορηγεί στους τεχνικούς πληροφορίες για τη μετατροπή του εξοπλισμού στους διαφορετικούς τρόπους παραγωγής.
- Εγχειρίδιο Ηλεκτρικού (EM)
  Αυτό το εγχειρίδιο χορηγεί στους τεχνικούς πληροφορίες για το ηλεκτρικό σύστημα του εξοπλισμού.
- Εγχειρίδιο Εγκατάστασης (IM)
  Αυτό το εγχειρίδιο χορηγεί στους τεχνικούς τις απαιτούμενες πληροφορίες για την ασφαλή εγκατάσταση του εξοπλισμού.
- Εγχειρίδιο Συντήρησης (MM)
  Αυτό το εγχειρίδιο χορηγεί στους τεχνικούς πληροφορίες για τη συντήρηση του εξοπλισμού.
- Εγχειρίδιο Χρήσης (OM)
  Αυτό το εγχειρίδιο χορηγεί στο χειριστή πληροφορίες για τη διακίνηση και το χειρισμό του εξοπλισμού πριν, κατά τη διάρκεια και μετά την παραγωγή.
- Κατάλογος Ανταλλακτικών (SPC)
  Αυτό το εγχειρίδιο χορηγεί τις απαραίτητες πληροφορίες για την παραγγελία ανταλλακτικών από την Tetra Pak.
- Τεχνικό Εγχειρίδιο (TeM)
  - χορηγεί στους τεχνικούς τις απαιτούμενες πληροφορίες για την ασφαλή εγκατάσταση του εξοπλισμού
  - χορηγεί στους τεχνικούς πληροφορίες για τη συντήρηση του εξοπλισμού
  - χορηγεί στους τεχνικούς πληροφορίες για το ηλεκτρικό σύστημα του εξοπλισμού
  - χορηγεί τις απαραίτητες πληροφορίες για την παραγγελία ανταλλακτικών από την Tetra Pak

Σχεδίαση Σελίδας

Ανατρέξτε στην εικόνα (A) της σελίδας i-5: Οι κύριες σελίδες ενός Καταλόγου Ανταλλακτικών αποτελούνται από μία εικονογραφημένη σελίδα (1) και από μία αντίστοιχη σελίδα καταλόγου (7). Ο αριθμός σελίδας (5) φαίνεται στην κεφαλίδα μιας εικονογραφημένης σελίδας και στο υποσέλιδο μιας σελίδας καταλόγου. Ο αριθμός εγγράφου (6) φαίνεται στο υποσέλιδο μιας σελίδας λίστας.

Αρίθμηση Σελίδων

Ανατρέξτε στην εικόνα (A) της σελίδας i-5: Ένας αριθμός σελίδας (5) αποτελείται από τρία μέρη:

- αριθμός κεφαλαίου (2)
- αύξων αριθμός σελίδας του κεφαλαίου (3)
- συνολικός αριθμός σελίδων του κεφαλαίου (4)

Εισαγωγή στη Μηχανή

Κατασκευαστής

Για την επωνυμία και τη διεύθυνση του κατασκευαστή, βλέπετε στη δεύτερη σελίδα αυτού του καταλόγου.

Σέρβις

Για να παραγγείλετε ανταλλακτικά για τη συγκεκριμένη μηχανή, ή για να αναφέρετε προβλήματα που σχετίζονται με το χειρισμό αυτής της μηχανής, επικοινωνήστε με το πλησιέστερο γραφείο της Tetra Pak.

Εάν έχετε άλλου είδους ερωτήσεις, σχόλια ή προτάσεις βελτίωσης όσον αφορά τον εξοπλισμό και την έγγραφη τεκμηρίωσή του, επικοινωνήστε με το Τμήμα Σχέσεων.

Αναγνώριση

Κατάταξη ΕΚ

Αυτός ο εξοπλισμός συμμορφώνεται με τους βασικούς κανονισμούς υγείας και ασφάλειας του Ευρωπαϊκού Οικονομικού Χώρου (ΕΟΧ).

Πινακίδα Μηχανής

Η εικόνα (B) της σελίδας i-5 δείχνει ένα παράδειγμα μιας πινακίδας μηχανής. Μια εικόνα της ενδεδειγμένης μορφής και θέσης της πινακίδας μηχανής στον εξοπλισμό, υποδεικνύεται στο κεφάλαιο 'Εισαγωγή' των εγχειριδίων που χορηγούνται μ' αυτόν τον εξοπλισμό. Η πινακίδα μηχανής περιέχει τα στοιχεία που παρατίθενται παρακάτω, τα οποία χρειάζονται όταν επικοινωνείτε με την Tetra Pak για όσον αφορά αυτό το συγκεκριμένο εξοπλισμό.

- Τύπος μηχανής (8)
- Όγκος (9)
- Προδιαγραφές σχεδίου (10)
- Αριθμός σειράς μηχανής (11)
- Κατασκευαστής (12)
- Σήμα ΕΚ (13)
- Έτος κατασκευής (14)

Η εικόνα (C) της σελίδας i-5 δείχνει ένα παράδειγμα τεχνικών χαρακτηριστικών μηχανής. Βεβαιωθείτε ότι τα στοιχεία εξοπλισμού που παρατίθενται στις πρώτες σελίδες αυτού του εγχειριδίου αντιστοιχούν με τα στοιχεία της πινακίδας μηχανής και τα τεχνικά χαρακτηριστικά μηχανής.

Πώς Χρησιμοποιείται Αυτός ο Κατάλογος Ανταλλακτικών

Εντοπισμός ενός Αριθμού Ανταλλακτικού

a) Ανατρέξτε στην εικόνα (D) της σελίδας i-5: Πηγαίνετε στον αριθμό κεφαλαίου (15) που υποδεικνύεται δίπλα από το κύριο συγκρότημα το οποίο περιλαμβάνει το εξάρτημα που θέλετε να εντοπίσετε.

Τα βήματα b) και c) αναφέρονται στην εικόνα (E) της σελίδας i-6.

b) Στην εικόνα της κύριου συγκροτήματος, αναζητήστε το υποσυγκρότημα μηχανής (17) που περιλαμβάνει το εξάρτημα ή το υποσυγκρότημα που αναζητάτε. Σημειώστε τον αριθμό θέσης (18) και πηγαίνετε στη σελίδα καταλόγου που ακολουθεί την εικόνα.

c) Αναζητήστε τον αριθμό θέσης (16) ή το όνομα υποσυγκροτήματος (19). Πηγαίνετε στον αντίστοιχο αριθμό σελίδας (20) που αναγράφεται στη δεξιά στήλη.

Τα βήματα d) και e) αναφέρονται στην εικόνα (F) της σελίδας i-6.

d) Εντοπίστε το εξάρτημα (21) που αναζητάτε στην εικόνα υποσυγκροτήματος και σημειώστε τον αριθμό θέσης του εξαρτήματος.

e) Ο αριθμός του εξαρτήματος (29) και η περιγραφή του εξαρτήματος (30) παρατίθενται δίπλα στον αριθμό θέσης στη σελίδα καταλόγου.

Πληροφορίες που Περιέχονται σε έναν Κατάλογο Ανταλλακτικών

Ο παρακάτω κατάλογος αναφέρεται στην εικόνα (F) της σελίδας i-6. Ένας Κατάλογος Ανταλλακτικών περιέχει τις ακόλουθες πληροφορίες σχετικά με συγκροτήματα, υποσυγκροτήματα και ανταλλακτικά του εξοπλισμού:

- Αναφορά συγκροτήματος κατασκευής (22). Υποδεικνύει το επόμενο μεγαλύτερο συγκρότημα στον πίνακα εξοπλισμού κατασκευής.
- Όνομα συγκροτήματος (23)
- Μονάδα μέτρησης (25)
- Ποσότητα (26)
- Αριθμός σχεδίου συναρμολόγησης (27)
- Σειρά σελίδων καταλόγου (28). Περιλαμβάνεται εάν υπάρχουν πολλαπλές σελίδες στην εικόνα ή στον κατάλογο συγκροτήματος.
- Αριθμός εξαρτήματος ή υποσυγκροτήματος (29)
- Όνομα υποσυγκροτήματος ή περιγραφή εξαρτήματος (30)
- Αριθμός συγκροτήματος (31)
- Αριθμός εξοπλισμού (32)
- Επικεφαλίδα πληροφοριών συγκροτήματος (33). Υποδεικνύει εάν η ενότητα κάτω από την επικεφαλίδα αφορά μια ειδική παραλλαγή μηχανής ή είναι ένας κατάλογος κοινών εξαρτημάτων. Εάν ένας κατάλογος περιέχει περισσότερες από μία παραλλαγές και κάθε παραλλαγή έχει το δικό της σχέδιο συναρμολόγησης, υποδεικνύεται μια παραπομπή στη σελίδα σχεδίου συναρμολόγησης της παραλλαγής.
- Εσωτερικές πληροφορίες (34)

Introducción

Información del manual

Tetra Pak recomienda que se lean cuidadosamente todos los manuales entregados. Comprobar que todos los manuales entregados estén disponibles para el personal que efectúe la operación o el mantenimiento del equipo.

Es importante conservar este manual durante la vida útil del equipo, así como facilitárselo a cualquier propietario o usuario posterior.

Tetra Pak no se responsabilizará de daños en la máquina o equipo debidos a la inobservancia de las instrucciones dadas en los manuales que acompañan este equipo.

Manuales entregados

Los manuales entregados con este equipo pueden incluir

- Manual de conversión (CM)
  Este manual proporciona a los técnicos información sobre cómo convertir el equipo entre diferentes modos de producción.
- Manual eléctrico (EM)
  Este manual proporciona a los técnicos información acerca del sistema eléctrico del sistema.
- Manual de instalación (IM)
  Este manual proporciona a los técnicos la información necesaria para la instalación segura del equipo.
- Manual de mantenimiento (MM)
  Este manual proporciona a los técnicos la información acerca del mantenimiento del equipo.
- Manual de servicio (OM)
  Este manual proporciona al operador información acerca de la manipulación y operación de la máquina antes, durante y después de la producción.
- Catálogo de piezas de recambio (SPC)
  Este manual proporciona la información necesaria para pedir piezas de recambio a Tetra Pak.
- Manual técnico (TeM)
  - proporciona a los técnicos la información necesaria para la instalación segura del equipo
  - proporciona a los técnicos la información acerca del mantenimiento del equipo
  - proporciona a los técnicos información acerca del sistema eléctrico del sistema
  - proporciona la información necesaria para pedir piezas de recambio a Tetra Pak

Organización de las páginas

Remitirse a la ilustración (A) en la página i-5: Las páginas principales en un Catálogo de piezas de recambio se componen de una página de ilustración (1) y una página de lista correspondiente (7). El número de la página (5) se muestra en el encabezado de una página de ilustración y en el pie de página de una página de lista. El número del documento (6) se muestra en el pie de página de una página de lista.

Numeración de las páginas

Remitirse a la ilustración (A) en la página i-5: Un número de página (5) se compone de tres partes:

- Número de capítulo (2)
- número de página consecutivo (2) dentro del capítulo (3)
- número total de páginas del capítulo (4)

Introducción a la máquina

Fabricante

Para el nombre y la dirección del fabricante, ver la segunda página de este catálogo.

Servicio

Para pedir piezas de recambio para esta máquina o informar problemas asociados con la operación de esta máquina, contactar con la oficina de Tetra Pak más cercana.

Ponerse en contacto con el responsable correspondiente para otras preguntas, comentarios o sugerencias sobre mejoras de la máquina o equipo y su documentación.

Identificación

Clasificación de la CE

Este equipo cumple los requisitos esenciales relativos a la salud y la seguridad del Área Económica Europea (EEA).

Placa de la máquina

La ilustración (B) en la página i-5 muestra un ejemplo de placa de máquina. En la Introducción del capítulo de los manuales entregados con este equipo se muestra una ilustración de la placa de máquina válida y su ubicación en el equipo La placa de máquina contiene los datos listados a continuación requeridos al contactar con Tetra Pak en relaciôn a este equipo específico.

- Tipo de máquina (8)
- Volumen (9)
- Especificaciones de plano (10)
- Número de serie de la máquina (11)
- Fabricante (12)
- Marca de la CE (13)
- Año de fabricación (14)

La ilustración (C) en la página i-5 muestra un ejemplo de especificación máquina. Asegúrese que los datos de equipo listados en las páginas de cubierta de este manual corresponden a los datos de la placa de máquina y la especificación máquinav.

Cómo utilizar este Catálogo de piezas de recambio

Localizar un número de pieza de recambio

a) Remitirse a la ilustración (D) en la página i-5: Ir al número de capítulo (15) indicado detrás el grupo principal que contiene la parte que usted desea localizar.

Los items b) y c) se refieren a la ilustracióni (E) en la página i-6.

b) En la ilustración del grupo principal, buscar el subgrupo máquina (17) que contiene la pieza o subgrupo que usted busca. Anote el número de posición (18) y vaya a la página de lista que sigue la ilustración.

c) Busque el número de posición (16) o el nombre del subgrupo (19). Vaya al número de página correspondiente (20) listado en la columna de la derecha.

Los items d) y e) se refieren a la ilustración (F) en la página i-6.

d) Localizar la pieza (21) que busca en la ilustración del subgrupo y anotar el número de posición de la pieza.

e) El número de pieza (29) y la descripción de pieza (30) están listadas detrás del número de posición en la página de lista.

Información listada en un Catálogo de piezas de recambio

La lista a continuación remite a la ilustración (F) en la página i-6.
Un Catálogo de piezas de recambio contiene la siguiente información sobre grupos, subgrupos y piezas de recambio para el equipo:

- Referencia de estructura de grupo (22). Indica el siguiente grupo más alto en la estructura de lista del equipo.
- Nombre del grupo (23)
- Unidad de medida (25)
- Cantidad (26)
- Número de plano de conjunto (27)
- Gama de página lista (28). Incluida si hay páginas múltiples en la ilustración o lista de grupo.
- Número de pieza o subgrupo (29)
- Nombre, subgrupo o descripción de pieza (30)
- Número de grupo (31)
- Número de equipo (32)
- Encabezado de información grupo (33). Indica si la sección debajo del encabezado es para una variante máquina específica o si es una lista de piezas comunes. Si la lista tiene más de una variante y cada variante tiene su propio plano de conjunto, se muestra una referencia página para el plano de conjunto de la variante.
- Información interna (34)

Sissejuhatus

Kasutusjuhendi teave

Tetra Pak soovitab lugeda hoolega kõiki kaasasolevaid juhendeid. Veenduge, et juhendid on seadmega töötavatele ja neid hooldavatele töötajatele kättesaadavad.

Oluline on hoida kataloog alles kogu seadme eluea jooksul ja anda kataloog kaasa ka järgmisele omanikule või kasutajale.

Tetra Pak ei vastuta seadme kahjustuste eest, mille põhjuseks on seadmega kaasasolevas juhendis toodud juhiste mittejärgimine.

Kaasasolevad juhendid

Seadmega kaasasolevad juhendid võivad sisaldada järgmist:

- Konverteerimisjuhend (ÜJ)
  Juhend annab tehnikutele teavet seadme konverteerimise kohta eri tootmisrežiimide korral.
- Elektrijuhend (EJ)
  Juhend annab tehnikutele teavet seadme elektrisüsteemi kohta.
- Paigaldusjuhend (PJ)
  Juhend annab tehnikutele teavet seadme ohutu paigaldamise kohta.
- Hooldusjuhend (HJ)
  Juhend annab tehnikutele teavet seadme hoolduse kohta.
- Kasutusjuhend (KJ)
  Juhend annab operaatorile teavet seadme käitlemise ja töö kohta enne tootmist, selle ajal ja pärast seda.
- Varuosade kataloog (VOK)
  Juhend annab Tetra Pakilt varuosade tellimiseks vajalikku teavet.
- Tehniline juhend (TJ)
  - annab tehnikutele seadme ohutuks paigaldamiseks vajalikku teavet
  - annab tehnikutele teavet seadme hoolduse kohta
  - annab tehnikutele teavet seadme elektrisüsteemi kohta
  - annab Tetra Pakilt varuosade tellimiseks vajalikku teavet

Küljend

Vt illustratsiooni (A) lk i-5: Varuosade kataloogi põhilehtedeks on illustratsioonilehed (1) ja vastavad loetelulehed (7). Lehekülje number (5) on toodud illustratsioonilehe päises ja loetelulehe jaluses. Dokumendi number (6) on toodud loetelulehe jaluses.

Leheküljenummerdus

Vt illustratsiooni (A) lk i-5: Lehekülje number (5) koosneb kolmest osast:

- peatüki number (2)
- lehekülgede järjestikused numbrid peatüki sees (3)
- lehekülgede koguarv peatükis (4)

Sissejuhatus masina kohta

Tootja

Tootja nimi ja aadress on toodud kataloogi teisel lehel.

Teenindus

Varuosade tellimiseks masinale või selle tööga seotud probleemidest teatamiseks võtke ühendust lähima Tetra Pak kontoriga.

Kui teil on muid küsimusi, märkusi või soovitusi seadmete ja dokumentatsiooni täiustamise kohta, võtke ühendust Tetra Paki kontaktisikuga.

Identifitseerimine

CE-klassifikatsioon

Seade vastab Euroopa Majanduspiirkonna (EMP) põhilistele tervisekaitse ja ohutuse alastele määrustele.

Masina andmeplaat

Illustratsioon (B) leheküljel i-5 kujutab masina andmeplaati.
Masina andmeplaadi pilt ja selle asukoht seadmel on toodud seadmega kaasasolevate juhendite sissejuhatavas peatükis. Masina andmeplaadil on allpool nimetatud andmed, mida vajate antud konkreetse seadmega seoses Tetra Paki poole pöördudes.

- Masina tüüp (8)
- Maht (9)
- Joonisspetsifikatsioonid (10)
- Masina seerianumber (11)
- Tootja (12)
- CE-tähis (13)
- Tootmisaasta (14)

Illustratsioon (C) leheküljel i-5 kujutab masina spetsifikatsiooni. Veenduge, et käesoleva juhendi esimestel lehekülgedel toodud andmed seadme kohta vastavad masina andmesildil olevatele andmetele ja masina spetsifikatsioonile.

Kuidas varuosade kataloogi kasutada

Leidke varuosa number

a) Vt illustratsiooni (D) lk i-5: Leidke peatükk, mille number (15) on toodud selle põhirühma juures, mis sisaldab teie poolt otsitavat varuosa.

Punktid b) ja c) käivad illustratsiooni (E) kohta lk i-6.

b) Põhirühma illustratsioonil leidke masina alarühm (17), mis sisaldab osa või alarühma, mida otsite. Leidke positsiooni number (18) ja avage siis illustratsioonile järgnev loeteluleht.

c) Leidke positsiooni number (16) või alarühma nimetus (19). Leidke vastav leheküljenumber (20) parempoolsest veerust.

Punktid d) ja e) käivad illustratsiooni (F) kohta lk i-6.

d) Leidke otsitav osa (21) alarühma illustratsioonilt ja siis osa positsiooninumber.

e) Osa number (29) ja osa kirjeldus (30) on toodud positsiooninumbri kõrval loetelulehel.

Varuosade kataloogis toodud teave

Allpool toodud loetelu käib illustratsiooni (F) kohta lk i-6. Varuosade kataloogis on järgmine teave seadme rühmade, alarühmade ja varuosade kohta:

- Rühmastruktuuri viide (22). Esitab järgmise kõrgema rühma seadmete loetelu struktuuris.
- Rühma nimetus (23)
- Mõõtühik (25)
- Kogus (26)
- Koostejoonise number (27)
- Loetelu lehekülgede vahemik (28). Märgitud, kui rühma illustratsioonid või loetelu on mitmel lehel.
- Osa või alarühma number (29)
- Alarühma nimetus või osa kirjeldus (30)
- Rühma number (31)
- Seadme number (32)
- Rühma teabe rubriik (33). Näitab, kas rubriigi all toodud jaotis on konkreetse masinavariandi kohta või on tegemist tavaliste varuosade loeteluga. Kui loetelus on üle ühe variandi ja iga variandi jaoks on oma koostejoonis, esitatakse viide selle variandi koostejoonise leheküljele.
- Siseteave (34)

Johdanto

Tietoja käsikirjasta

Tetra Pak suosittelee kaikkien toimitettavien oppaiden lukemista huolellisesti. Varmista, että toimitetut oppaat ovat laitetta käyttävän tai huoltavan henkilökunnan saatavilla.

Tämä luettelo on säilytettävä laitteen käyttöiän ajan ja toimitettava edelleen mahdolliselle seuraavalle omistajalle tai käyttäjälle.

Tetra Pak ei vastaa laitevaurioista, jotka aiheutuvat laitteen mukana tulevissa oppaissa annettujen ohjeiden noudattamatta jättämisestä.

Toimitettavat ohjeet

Tämän laitteen mukana toimitettaviin ohjeisiin kuuluvat:

- Muutoskirja (CM)
  Tässä oppaassa on teknikoille tarkoitettuja ohjeita laitteiston muuttamisesta eti tuotantotiloihin.
- Sähkökirja (EM)
  Tässä oppaassa on teknikoille tarkoitettuja tietoja laitteen sähköjärjestelmästä.
- Asennuskäsikirja (IM)
  Tässä oppaassa on teknikoille tarkoitettuja tietoja, jotka tarvitaan laitteen turvallista asentamista varten.
- Huoltokäsikirja (MM)
  Tässä oppaassa on teknikoille tarkoitettuja tietoja tämän laitteen huoltamisesta.
- Käyttäjän käsikirja (OM)
  Tässä oppaassa on käyttäjälle tarkoitettuja tietoja laitteiston käsittelystä ja käyttämisestä ennen tuotantoa, tuotannon aikana ja sen jälkeen.
- Varaosakuvasto (SPC)
  Tässä oppaassa on tietoja, joita tarvitaan varaosien tilaamiseen Tetra Pakilta.
- Tekninen käsikirja (TeM)
  - sisältää teknikoille tarkoitettuja tietoja, joita tarvitaan laitteen turvallista asentamista varten
  - sisältää teknikoille tarkoitettuja tietoja laitteen huoltamisesta
  - sisältää teknikoille tarkoitettuja tietoja laitteen sähköjärjestelmästä
  - sisältää tietoja, joita tarvitaan varaosien tilaamiseen Tetra Pakilta.

Sivujen asettelu

Katso kuva (A) sivulla i-5: Varaosaluettelon pääsivut koostuvat kuvasivusta (1) ja sitä vastaavasta luettelosivusta (7). Sivunumero (5) näytetään kuvasivun ylätunnisteessa ja luettelosivun alatunnisteessa. Asiakirjan numero (6) näytetään luettelosivun alatunnisteessa.

Sivunumerointi

Katso kuva (A) sivulla i-5: Sivunumerossa (5) on kolme osaa:

- luvun numero (2)
- perättäinen sivunumero (3) luvun sisällä
- luvun kokonaissivumäärä (4).

Koneen esittely

Valmistaja

Valmistajan nimi ja osoite on ilmoitettu tämän luettelon toisella sivulla.

Huolto

Jos haluat tilata tähän koneeseen varaosia tai jos tämän koneen käytössä ilmenee ongelmia, jotka haluat raportoida, ota yhteyttä lähimpään Tetra Pakin toimistoon.

Jos sinulla on muuta kysyttävää, huomautettavaa tai ehdotuksia laitteistoa ja sen asiakirjoja koskevista parannuksista, ota yhteys yhteyshenkilöön.

Tunnistetiedot

CE-luokitus

Tämä laite vastaa Euroopan talousalueen (EEA) perustason terveys- ja turvallisuusvaatimuksia.

Koneen tyyppikilpi

Kuvassa (B) sivulla i-5 on esimerkki koneen tyyppikilvestä. Voimassa olevan tyyppikilven kuva ja sen sijainti koneessa käy ilmi laitteiston mukana tulleiden ohjeiden Johdanto-luvusta. Tyyppikilvessä on tarvitsemasi Tetra Pakin voimassa olevat yhteystiedot, kun on kyseessä tämä nimenomainen laite.

- Konetyyppi (8)
- Tilavuus (9)
- Piirustuserittelyt (10)
- Koneen sarjanumero (11)
- Valmistaja (12)
- CE-merkki (13)
- Valmistusvuosi (14)

Kuvassa (C) sivulla i-5 on esimerkki koneen erittelystä. Varmista, että tämän ohjeen etusivuilla ilmoitetut laitetiedot vastaavat tyyppikilven ja kone-erittelyn tietoja.

Tämän varaosaluettelon käyttäminen

Etsi varaosan numero

a) Katso kuva (D) sivulla i-5: Siirry lukuun (15), joka on ilmoitettu etsittävän osan pääryhmän vieressä.

Kohdat b) ja c) viittaavat kuvaan (E) sivulla i-6.

b) Etsi pääryhmän kuvasta koneen alaryhmä (17), joka sisältää etsimäsi osan tai alaryhmän. Merkitse muistiin paikkanumero (18) ja siirry luettelosivulle, joka seuraa kuvaa.

c) Etsi paikkanumero (16) tai alaryhmän nimi (19). Siirry vastaavalle sivunumerolle (20), joka on ilmoitettu oikeassa sarakkeessa.

Kohdat d) ja e) viittaavat kuvaan (F) sivulla i-6.

d) Hae etsittävä osa (21) alaryhmän kuvasta ja merkitse osan paikkanumero muistiin.

e) Osanumero (29) ja osan kuvaus (30) on annettu paikkanumeron vieressä luettelosivulla.

Varaosaluettelossa olevat tiedot

Alla oleva luettelo viittaa kuvaan (F) sivulla i-6. Varaosaluettelo sisältää seuraavat tiedot ryhmistä, alaryhmistä ja laitteen varaosista:

- Ryhmärakenneviite (22). Osoittaa seuraavaksi ylemmän ryhmän laiteluettelorakenteessa.
- Ryhmän nimi (23)
- Mittayksikkö (25)
- Määrä (26)
- Kokoonpanopiirustuksen numero (27)
- Luettelosivun väli (28). Tämä on mukana, jos ryhmäkuvassa tai luettelossa on useita sivuja.
- Osan tai alaryhmän numero (29)
- Alaryhmän nimi tai osan kuvaus (30)
- Ryhmän numero (31)
- Laitteen numero (32)
- Ryhmätietojen otsikko (33). Osoittaa, koskeeko alla oleva osio tiettyä koneversiota vai onko kyseessä yleisten osien luettelo. Jos luettelolla on useampi kuin yksi versio ja kullakin versiolla on oma kokoonpanopiirustuksensa, näytetään version kokoonpanopiirustuksen sivuviittaus.
- Sisäiset tiedot (34)

Introduction

Information sur le manuel

Tetra Pak recommande de lire attentivement tous les manuels fournis. S'assurer que les manuels fournis soient accessibles au personnel qui s'occupe du fonctionnement ou de la maintenance de l'équipement.

Il est important de conserver ce manuel pendant toute la durée d'utilisation de la machine et de le transmettre à tout détenteur ou utilisateur ultérieur.

Tetra Pak ne sera pas tenu responsable d'un dommage causé à la machine ou à l'équipement par le fait de ne pas avoir respecté les instructions figurant dans le présent manuel.

Manuels fournis

Les manuels fournis avec cette machine comprennent

- Le Manuel de Conversion (CM)
  Ce manuel fournit aux techniciens les informations nécessaires pour convertir la machine en vue des différents modes de production.
- Manuel Electrique (EM)
  Ce manuel fournit aux techniciens les informations sur le système électrique de la machine.
- Manuel de Mise en Place (IM)
  Ce manuel fournit aux techniciens les informations nécessaires pour l'installation de la machine en toute sécurité.
- Manuel de Maintenance (MM)
  Ce manuel fournit aux techniciens les informations pour la maintenance.
- Manuel d'Opérateur (OM)
  Ce manuel fournit aux opérateurs les informations nécessaires pour la manutention et le fonctionnement de la machine avant, pendant et après la production.
- Catalogue de Pièces de Rechange (SPC)
  Ce manuel fournit l'information nécessaire à la commande de pièces de rechange auprès de Tetra Pak
- Manuel Technique (TeM)
  - fournit aux techniciens les informations nécessaires pour l'installation de la machine en toute sécurité
  - fournit aux techniciens les informations pour la maintenance
  - fournit aux techniciens les informations sur le système électrique de la machine
  - fournit l' information nécessaire à la commande de pièces de rechange auprès de Tetra Pak

Présentation d’une page

Se référer à la figure (A) à la page i-5: Les pages principales du Catalogue des Pièces de Rechange sont composées d'une page de figure (1) et d'une page de liste correspondante (7). Le numéro de page (5) est indiqué dans le titre de la page de figure et dans le bas de page d'une page de liste.
Le numéro de document (6) est indiqué dans le bas de page de la page de liste.

Numérotation de page

Se référer (A) à la page i-5: Un numéro de page (5) possède trois parties:

- Numéro de chapitre (2)
- numéro de page consécutif (2) à l'intérieur du chapitre (3)
- nombre total de pages dans le chapitre (4)

Présentation de la machine

Fabricant

Pour le nom et l'adresse du fabricant, voir la deuxième page de ce catalogue.

Assistance technique

Pour commander les pièces de rechange de cette machine ou pour rapporter les problèmes associés au fonctionnement de celle-ci, prendre contact avec le bureau Tetra Pak le plus proche.

Prendre contact avec le responsable de liaison pour les renseignements, commentaires ou suggestions concernant la machine ou l’équipement et sa documentation.

Identification

Certification CE

Cet équipement est conforme aux réglementations essentielles d'hygiène et de sécurité de la Communauté Economique Européenne (CEE).

Plaque signalétique de machine

La figure (B) à la page i-5 montre un exemple d'une plaque signalétique de machine.
Une représentation de la plaque de machine valable et son emplacement sur l'équipement est indiquée au Chapitre Introduction des manuels fournis avec l'équipement. La plaque de machine contient les caractéristiques figurant dans la liste ci-dessous, nécessaires pour prendre contact avec Tetra Pak au sujet de cet équipement spécifique.

- Type de machine (8)
- Volume (9)
- Spécifications du plan (10)
- Numéro de série de la machine (11)
- Fabricant (12)
- Marquage CE (13)
- Année de fabrication (14)

La figure (C) à la page i-5 montre un exemple d'une spécification de machine. S'assurer que les caractéristiques de l'équipement figurant dans la liste des pages de garde de ce manuel correspondent aux caractéristiques de la plaque signalétique de la machine et à ses spécifications.

Comment utiliser ce Catalogue de Pièces de Rechange

Localiser un numéro de pièce de rechange

a) Se référer à la figure (D) à la page i-5: Aller au numéro de chapitre (15) indiqué à côté du groupe principal qui contient la pièce que vous souhaitez localiser.

Les articles b) et c) se réfèrent à la figure (E) à la page i-6.

b) Sur la figure du groupe principal, chercher la sous-groupe de machine (17) qui contient la pièce ou le sous-groupe que vous recherchez. Noter le numéro de repère (18) et aller à la page de liste qui suit la figure.

c) Rechercher le numéro de repère (16) ou le nom de sous-groupe (19). Aller au numéro de page correspondant (20) figurant dans la liste de la colonne de droite.

Les articles d) et e) se réfèrent à la figure (F) à la page i-6.

d) Localiser la pièce (21) que vous recherchez sur la figure de sous-groupe et noter le numéro de repère de la pièce.

e) Le numéro de pièce (29) et la description de la pièce (30) figurent dans la liste à côté du numéro de repère sur la page de liste.

Informations figurant dans la liste dans un Catalogue de Pièces de Rechange

La liste ci-dessous se réfère à la figure (F) à la page i-6. Un Catalogue de Pièces de Rechange contient les renseignements suivants relatifs aux groupes, sous-groupes et pièces de rechange de l'équipement:

- Référence de structure de groupe (22). Indique le groupe supérieur suivant dans la structure de liste d'équipement.
- Nom du groupe (23).
- Unité de mesure (25).
- Quantité (26).
- Numéro de plan de montage (27).
- Gamme de la page de liste (28). Incluse s'il y a des pages multiples dans la figure de groupe ou dans la liste.
- Numéro de pièce ou de sous-groupe (29).
- Nom de sous-groupe ou description de la pièce (30).
- Numéro de groupe (31).
- Numéro de l'équipement (32).
- Titre des informations de groupe (33). Indique si la section sous le titre est pour une variante de machine spécifique ou s'il y a une liste de pièces communes. Si une liste comporte plus d'une variante et que chaque variante possède son propre plan de montage, une référence de page au plan de montage de la variante est alors indiqué.
- Renseignements internes (34).

Bevezetés

Kézikönyv információ

A Tetra Pak az összes rendelkezésre bocsátott kézikönyv figyelmes elolvasását ajánlja. Győződjön meg arról, hogy a rendelkezésre bocsátott kézikönyveket hozzáférhetővé tették a berendezést kezelő és karbantartó személyzet számára.

Föltétlenül őrizzék meg ezen kézikönyvet a berendezés teljes élethossza alatt, és adják át a következő tulajdonosnak vagy felhasználónak.

A Tetra Pak nem vonható felelősségre a berendezést ért olyan károkért, amelyek a kézikönyvben meghatározott utasítások be nem tartásából erednek.

Rendelkezésre bocsátott kézikönyvek

A géppel vagy berendezéssel együtt a következő dokumentumokat szállítjuk

- Karbantartási kézikönyv (CM)
  Ezen kézikönyv a technikusok számára szolgáltat adatokat a berendezés átkapcsolásáról egyik üzemmódból a másikba.
- Elektromos kézikönyv (EM)
  Ezen kézikönyv a villamosmérnökök és szervizelő technikusok számára szolgáltat adatokat a berendezés elektromos hálózatáról.
- Beszerelési kézikönyv (IM)
  Ezen kézikönyv a berendezés biztonságos beszerelésével kapcsolatos adatokat szolgáltat a technikusoknak.
- Karbantartási kézikönyv (MM)
  Ezen kézikönyv a technikusok számára szolgáltat adatokat a berendezés karbantartásáról.
- Kezelési kézikönyv (OM)
  Ezen kézikönyv a berendezés kezelésével és vezérlésével kapcsolatos adatokat szolgáltat a kezelőknek termelés előtt, közben és után.
- Cserealkatrész katalógus (SPC)
  Ezen kézikönyv a cserealkatrészek Tetra Pak cégtől való megrendeléséhez szükséges adatokat tartalmaz.
- Műszaki kézikönyv (TeM)
  - a berendezés biztonságos beszerelésével kapcsolatos adatokat szolgáltat a technikusoknak
  - a technikusok számára szolgáltat adatokat a berendezés karbantartásáról
  - a villamosmérnökök és szervizelő technikusok számára szolgáltat adatokat a berendezés elektromos hálózatáról
  - a cserealkatrészek Tetra Pak cégtől való megrendeléséhez szükséges adatokat tartalmaz

Lap elrendezése

Tekintse meg a i-5 oldalon levő ábrát (A): A Cserealkatrészek katalógusának főoldalai egy rajzoldalból (1) és egy hozzá tartozó listaoldalból (7) állnak. Az oldalszám (5) a rajzoldal fejlécében és a listaoldal láblécében jelenik meg. A dokumentumszám (6) a listaoldal láblécében jelenik meg.

Oldalszámozás

Tekintse meg a i-5 oldalon levő ábrát (A): Az oldalszám (5) három részből áll:

- fejezetszám (2)
- folytonos oldalszám (3) a fejezeten belül
- fejezet oldalszáma (4)

A gép bemutatása

Gyártó

A gyártó neve és címe ezen katalógus, második oldalán található.

Szervizelés

Ezen gép valamely cserealkatrészének megrendelése vagy a gép működésével kapcsolatos üzemzavarok bejelentése végett, forduljon a legközelebbi Tetra Pak képviselethez.

Bármilyen más, a berendezés, illetve dokumentációjának feljavítására irányuló kérdéseivel, megjegyzéseivel vagy javaslataival forduljon kapcsolattartóhoz.

Azonosítás

CE besorolás

Ezen berendezés megfelel az Európai Gazdasági Régió (EEA) alapvető egészségügyi és biztonsági előírásainak.

A gép adattáblája

A i-5 oldalon található ábra (B) a gép adattáblájának egyik példája.
A megfelelő gép-adattábla ábrája és helye a berendezésen a berendezéssel szállított kézikönyvek Bevezetés fejezetében található. A gép adattáblája az alább felsorolt adatokat tartalmazza, amelyek ezen berendezésre vonatkoznak, és a Tetra Pak céggel való kapcsolat felvételekor szükségesek.

- Géptípus (8)
- Térfogat (9)
- Tervrajz (10)
- A gép sorozatszáma (11)
- Gyártó (12)
- CE jelzés (13)
- Gyártás éve (14)

A i-5 oldalon található ábra (C) példa a gép műszaki leírására. Győződjön meg arról, hogy ezen kézikönyv előlapjain közölt berendezésadatok megegyeznek a gép adattábláján és a gép műszaki leírásában megjelenő információval.

A Cserealkatrészek katalógus használata

Keresse meg a cserealkatrész számát

a) Tekintse meg a i-5 oldalon levő ábrát (D): Lapozzon a keresett alkatrészt tartalmazó főcsoport mellett feltüntetett számú (15) fejezetre.

A b) és c) elemek a i-6 oldalon levő ábrára vonatkoznak.

b) A főcsoport-ábrán keresse meg azt az alcsoportot (17), amelyik a keresett alkatrészt vagy alcsoportot tartalmazza. Jegyezze le a helyszámot (18), majd lapozzon az ábrát követő listaoldalra.

c) Keresse meg a lejegyzett helyszámot (16) vagy a keresett alcsoport nevét (19). Lapozzon a jobb oldali oszlopban feltüntetett számú (20) oldalra.

A d) és e) elemek a i-6 oldalon levő ábrára (F) vonatkoznak.

d) Az alcsoport ábrán keresse meg a keresett alkatrészt (21), és jegyezze le az alkatrész helyszámát.

e) Az alkatrészek száma (29) és leírása (30) a listaoldalon, a helyszám mellett láthatóak.

A Cserelkatrész katalógusban közölt adatok

Az alábbi lista a i-6 oldalon található ábrára (F) vonatkozik. A Cserealkatrészek katalógus a következő, csoportokra, alcsoportokra és cserealkatrészkere vonatkozó, adatokat tartalmazza:

- Csoportstruktúra hivatkozás (22). A berendezés listás struktúrájában közvetlenül az aktuális csoport fölött álló csoportot jelöli.
- Csoportnév (23)
- Mértékegység (25)
- Menniség (26)
- Szerelvény tervrajza (27)
- Lista oldaltartománya (28). Abban az esetben jelenik meg, ha a csoport ábrája vagy listája többboldalas.
- Alkatrész vagy alcsoport száma (29)
- Alcsoport neve vagy alkatrész leírása (30)
- Csoportszám (31)
- Berendezésszám (32)
- Csoportinformáció fejléc (33). Azt mutatja, hogy a fejléc után következő rész egy bizonyos gépváltozatra vonatkozik vagy az általános cserealkatrészek listája. Ha a listának több változata van, és mindegyikhez más szerelvény-tervrajz tartozik, az illető szerelvény-tervrajz oldalhivatkozása is megjelenik.
- Belső információ (34)

Introduzione

Informazioni sul manuale

Tetra Pak consiglia di leggere con attenzione tutti i manuali forniti in dotazione. Assicurarsi che tutti i manuali in dotazione siano disponibili per il personale addetto al funzionamento e alla manutenzione della macchina.

È importante conservare il presente catalogo per tutta la durata della macchina e consegnarlo al successivo proprietario o utilizzatore.

Tetra Pak non sarà da ritenersi responsabile per eventuali danni alla macchina causati dal mancato rispetto delle istruzioni fornite nei manuali che accompagnano le macchine.

Manuali in dotazione

I manuali consegnati con la presente macchina possono comprendere:

- Manuale di Conversione (CM)
  Questo manuale fornisce ai tecnici le informazioni necessarie per la conversione della macchina da una modalità di produzione a un'altra.
- Manuale Elettrico (EM)
  Questo manuale fornisce ai tecnici informazioni sull'impianto elettrico della macchina.
- Manuale di Installazione (IM)
  Questo manuale fornisce ai tecnici le informazioni necessarie per installare in sicurezza la macchina.
- Manuale di Manutenzione (MM)
  Questo manuale fornisce ai tecnici le informazioni necessarie per la manutenzione della macchina.
- Manuale Operativo (OM)
  Questo manuale fornisce all'operatore le informazioni sull'utilizzo e il funzionamento della macchina prima, durante e dopo la produzione.
- Catalogo Pezzi di Ricambio (SPC)
  Questo manuale fornisce le informazioni necessarie per ordinare a Tetra Pak i pezzi di ricambio.
- Manuale Tecnico (TeM)
  - fornisce ai tecnici le informazioni necessarie per installare in sicurezza la macchina
  - fornisce ai tecnici le informazioni necessarie per la manutenzione della macchina
  - fornisce ai tecnici informazioni sull'impianto elettrico della macchina
  - fornisce le informazioni necessarie per ordinare a Tetra Pak i pezzi di ricambio.

Schema della pagina

Consultare la figura (A) a pagina i-5. Le pagine principali del Catalogo Pezzi di Ricambio consistono in una pagina con la figura (1) e una pagina elenco corrispondente (7). Il numero di pagina (5) è indicato nell'intestazione delle pagine con le figure e nel piè di pagina delle pagine elenco. Il codice del documento (6) è indicato nel piè di pagina delle pagine elenco.

Numerazione delle pagine

Consultare la figura (A) a pagina i-5. Il numero di pagina (5) è suddiviso in tre parti:

- numero della sezione (2)
- numero progressivo di pagina all'interno della sezione (3)
- numero totale di pagine della sezione (4)

Introduzione alla macchina

Fabbricante

Il nome e l'indirizzo del fabbricante sono riportati sulla seconda pagina del presente catalogo.

Assistenza

Per ordinare i pezzi di ricambio per questa macchina oppure per riferire problemi associati con il funzionamento della macchina, contattare il più vicino ufficio Tetra Pak.

Per tutte le altre richieste, commenti o suggerimenti per eventuali miglioramenti da apportare alla macchina e alla relativa documentazione, contattare il responsabile di collegamento.

Identificazione

Marchio CE

La macchina è conforme alle principali norme sanitarie e di sicurezza dell'Area Economica Europea (EEA).

Targhetta della macchina

La figura (B) a pagina i-5 illustra un esempio di targhetta della macchina. La sezione Introduzione di tutti i manuali consegnati con la presente macchina contiene invece la figura della targhetta della macchina valida e l'illustrazione della sua posizione sulla macchina. La targhetta riporta i dati elencati sotto che sono necessari per contattare Tetra Pak in relazione a questa macchina specifica.

- Tipo di macchina (8)
- Volume (9)
- Specifiche disegno (10)
- Numero di matricola della macchina (11)
- Fabbricante (12)
- Marchio CE (13)
- Anno di fabbricazione (14)

La figura (C) a pagina i-5 mostra un esempio delle specifiche di una macchina. Verificare che i dati relativi alla macchina elencati nelle pagine iniziali del manuale corrispondano ai dati riportati sulla targhetta della macchina e nelle specifiche della macchina.

Come usare questo Catalogo Pezzi di Ricambio

Individuare il numero del pezzo di ricambio

f) Vedere la figura (D) a pagina i-5. Andare al numero della sezione (15) indicato accanto al gruppo principale che contiene il pezzo che si desidera individuare.

I punti b) e c) fanno riferimento alla figura (E) a pagina i-6.

g) Nella figura del gruppo principale, identificare il sottogruppo della macchina (17) che contiene il pezzo o il sottogruppo cercato. Annotare il numero di posizione (18) e andare alla pagina elenco che segue la figura.

h) Identificare il numero di posizione (16) o il nome del sottogruppo (19). Andare al numero di pagina corrispondente (20) indicato nella colonna di destra.

I punti d) e e) fanno riferimento alla figura (F) a pagina i-6.

i) Individuare il pezzo (21) cercato sulla figura del sottogruppo e annotare il numero di posizione del pezzo.

j) Il numero del pezzo (29) e la descrizione del pezzo (30) sono indicati accanto al numero di posizione sulla pagina elenco.

Informazioni contenute nel Catalogo Pezzi di Ricambio

L'elenco seguente fa riferimento alla figura (F) a pagina i-6. Il Catalogo Pezzi di Ricambio contiene le seguenti informazioni sui gruppi, i sottogruppi e i pezzi di ricambio della macchina:

- Riferimento struttura gruppo (22). Indica il gruppo superiore più prossimo nella struttura elenco della macchina.
- Nome gruppo (23)
- Unità di misura (25)
- Quantità (26)
- Numero disegno di assemblaggio (27)
- Pagine dell'elenco (28). Questa informazione è presente se la figura o l'elenco relativi al gruppo occupano più di una pagina del manuale.
- Numero pezzo o sottogruppo (29)
- Nome sottogruppo o descrizione pezzo (30)
- Numero gruppo (31)
- Numero macchina (32)
- Titolo informazioni gruppo (33). Indica se la sezione che segue il titolo si riferisce a una variante di macchina specifica oppure se si tratta di un elenco di parti comuni. Se un elenco contiene più di una variante ed esiste un disegno di assemblaggio specifico per ogni variante, viene fornito il riferimento alla pagina in cui è riportato il disegno di assemblaggio relativo alla variante.
- Informazioni interne (34)

Įvadas

Žinyno informacija

Tetra Pak rekomenduoja atidžiai perskaityti visus pateikiamus žinynus. Užtikrinkite, kad pateikti žinynai būtų prieinami darbuotojams, kurie naudoja ar aptarnauja įrangą.

Svarbu išsaugoti šį katalogą visą įrangos naudojimo laiką ir perduoti jį vėlesniems savininkams ar naudotojams.

Tetra Pak neprisiima atsakomybės už bet kokius pažeidimus įrangai, kuriuos sukels nurodymų, pateikiamų žinynuose kartu su įranga, nesilaikymas.

Pateikiami žinynai

Žinynuose, pateikiamuose su šia įranga, gali būti:

- Konversijos žinynas (KŽ)
  Šiame žinyne technikams pateikiama informacija apie įrangos perjungimą skirtingais gamybiniais režimais.
- Elektros žinynas (EŽ)
  Šiame žinyne technikams pateikiama informacija apie įrangos elektros sistemą.
- Montavimo žinynas (MŽ)
  Šiame žinyne technikams pateikiama informacija, reikalinga saugiam įrangos sumontavimui.
- Aptarnavimo žinynas (AŽ)
  Šiame žinyne technikams pateikiama informacija apie įrangos aptarnavimą.
- Naudotojo žinynas (NŽ)
  Šiame žinyne operatoriui pateikiama informacija apie įrangos priežiūrą ir naudojimą prieš gamybos procesą, jo metu ir po jo.
- Atsarginių detalių katalogas (ADK)
  Šiame žinyne pateikiama informacija, reikalinga norint užsakyti atsargines detales iš Tetra Pak.
- Techninis žinynas (TeŽ)
  - pateikia technikams informaciją, reikalingą saugiam įrangos sumontavimui
  - pateikia technikams informaciją, reikalingą įrangos aptarnavimui
  - pateikiama technikams informacija apie įrangos elektros sistemą
  - pateikiama informacija, kaip užsakyti atsargines detales iš Tetra Pak

Puslapio išdėstymas

Remkitės iliustracija (A) puslapyje i-5: Pagrindiniai atsarginių detalių katalogo puslapiai yra sudaryti iš iliustracijos puslapio (1) ir jį atitinkančio sąrašo puslapio (7). Puslapio numeris (5) parodytas iliustracijos puslapio viršutinėje paraštėje ir sąrašo puslapio apatinėje paraštėje. Dokumento numeris (6) yra parodytas apatinėje sąrašo puslapio paraštėje.

Puslapių numeravimas

Vadovaukitės iliustracija (A) puslapyje i-5: A puslapio numeris (5) turi tris dalis:

- skyriaus numerį (2)
- puslapio eilės numerį skyriuje (3)
- bendrą puslapių skaičių skyriuje (4)

Mašinos pristatymas

Gamintojas

Gamintojo pavadinimą ir adresą galite rasti šio katalogo antrajame puslapyje.

Aptarnavimas

Norėdami užsakyti atsargines detales šiai mašinai arba pranešti apie nesklandumus, susijusius su šios mašinos naudojimu, susisiekite su artimiausiu Tetra Pak biuru.

Susisiekite su Liaison dėl kitų komentarų, klausimų ar pasiūlymų, kaip patobulinti įrangą ar jos dokumentaciją.

Identifikacija

CE Klasifikacija

Ši įranga atitinka Europos ekonominės erdvės (EEE) pirminius sveikatos ir saugumo normatyvus.

Mašinos plokštelė

Iliustracijoje (B) puslapyje i-5 parodytas mašinos plokštelės pavyzdys. Mašinos specifikacijos plokštelės iliustracija ir jos vieta prie įrangos parodyta įžanginiame žinynų, pateikiamų su šia įranga, skyriuje. Mašinos plokštelėje yra žemiau išvardinti duomenys, reikalingi kreipiantis į Tetra Pak su šia konkrečia įranga susijusiais klausimais:

- mašinos tipas (8)
- tomas (9)
- brėžinių specifikacijos (10)
- mašinos serijos numeris (11)
- gamintojas (12)
- CE ženklas (13)
- pagaminimo metai (14)

Iliustracija (C) puslapyje i-5 vaizduoja mašinos specifikacijos pavyzdį. Įsitikinkite, kad įrangos duomenys, išdėstyti šio žinyno pirmuosiuose puslapiuose, atitinka duomenis mašinos plokštelėje ir mašinos specifikaciją.

Kaip naudotis šiuo atsarginių detalių katalogu?

Atsarginės detalės numerio nustatymas

a) Remkitės iliustracija (D) puslapyje i-5: eikite į skyrių Nr. (15), nurodytą šalia pagrindinės grupės, kurioje yra jūsų ieškoma detalė.

Elementai b) ir c) nurodo iliustraciją (E) puslapyje i-6.

b) Pagrindinės grupės iliustracijoje suraskite mašinos pogrupį (17), kuriame yra jūsų ieškoma detalė. Įsidėmėkite pozicijos numerį ir pereikite į sąrašo puslapį, kuris atitinka iliustraciją.

c) Ieškokite pozicijos numerio (16) arba pogrupio pavadinimo (19). Pereikite į atitinkamo numerio puslapį (20), kuris nurodytas dešiniajame stulpelyje.

Elementai d) ir e) nurodo iliustraciją (F) puslapyje i-6.

d) Raskite ieškomą detalę (21) pogrupio iliustracijoje ir įsidėmėkite detalės pozicijos numerį.

e) Detalės numeris (29) ir detalės aprašymas (30) pateikiami šalia pozicijos numerio sąrašo puslapyje.

Informacija, pateikiama atsarginių detalių kataloge

Žemiau pateikiamas sąrašas nurodo iliustraciją (F) puslapyje i-6. Atsarginių detalių kataloge yra tokia informacija apie grupes, pogrupius ir atsargines detales įrangai:

- Grupės struktūros nuorodos (22). Nurodo tolimesnę aukštesnę grupę įrangos sąrašo struktūroje.
- Grupės pavadinimas (23)
- Mato vienetas (25)
- Kiekis (26)
- Surinkimo brėžinio numeris (27)
- Sąrašo puslapio diapazonas (28). Įtrauktas, jei egzistuoja daug puslapių grupės iliustracijoje arba sąraše.
- Detalės arba pogrupio numeris (29)
- Pogrupio pavadinimas ar detalės aprašymas (30)
- Grupės numeris (31)
- Įrangos numeris (32)
- Grupės informacinė antraštė (33). Nurodo, ar žemiau antraštės esantis skyrius yra skirtas specifiniam mašinos variantui, ar tai yra įprastinių detalių sąrašas. Jei sąrašas turi daugiau nei vieną variantą ir kiekvienas variantas iliustruojamas surinkimo brėžiniu, pateikiama nuoroda į surinkimo brėžinio puslapį.
- Vidinė informacija (34)

Ievads

Informācija par rokasgrāmatu

Tetra Pak iesaka rūpīgi izlasīt visas piegādātās rokasgrāmatas. Piegādātajām rokasgrāmatām ir jābūt pieejamām personālam, kas apkalpo iekārtas vai veic to apkopi.

Nepieciešams saglabāt šo katalogu visu laiku, kamēr iekārtas tiek izmantotas, un nodot katalogu nākamajam īpašniekam vai lietotājam.

Tetra Pak neatbild par iekārtas bojājumiem, kuri rodas līdz ar iekārtu piegādāto instrukciju neievērošanas rezultātā.

Piegādātās rokasgrāmatas

Līdz ar iekārtu var tikt piegādātas šādas rokasgrāmatas

- Pārslēgšanas rokasgrāmata (CM)
  Šī rokasgrāmata sniedz tehniķiem informāciju par iekārtas pārslēgšanu dažādos atšķirīgos ražošanas režīmos.
- Elektriskās instalācijas rokasgrāmata (EM)
  Šī rokasgrāmata sniedz tehniķiem informāciju par iekārtas elektriskās instalācijas sistēmu.
- Uzstādīšanas rokasgrāmata (IM)
  Šī rokasgrāmata sniedz tehniķiem informāciju, kas nepieciešama drošai iekārtas uzstādīšanai.
- Apkopes rokasgrāmata (MM)
  Šī rokasgrāmata sniedz tehniķiem informāciju par iekārtas apkopi.
- Ekspluatācijas rokasgrāmata (OM)
  Šī rokasgrāmata sniedz apkalpojošajam personālam informāciju par iekārtas apkalpošanu un ekspluatēšanu pirms darba sākuma, darba laikā un pēc darba beigām.
- Rezerves daļu katalogs (SPC)
  Šī rokasgrāmata sniedz informāciju, kas nepieciešama, lai pasūtītu rezerves daļas no Tetra Pak.
- Tehniskā rokasgrāmata (TeM)
  - sniedz tehniķiem informāciju, kas nepieciešama drošai iekārtas uzstādīšanai
  - sniedz tehniķiem informāciju par iekārtas apkopi
  - sniedz tehniķiem informāciju par iekārtas elektrisko instalāciju
  - sniedz informāciju, kas nepieciešama, lai pasūtītu rezerves daļas no Tetra Pak

Lappuses izkārtojums

Skatīt ilustrāciju (A) i-5 lappusē: Galvenās lappuses Rezerves daļu katalogā sastāv no ilustrāciju lapas (1) un atbilstīgās saraksta lapas (7). Lappuses numurs (5) ir norādīts ilustrācijas lapas galvenē un saraksta lapas kājenē. Dokumenta numurs (6) ir norādīts saraksta lapas kājenē.

Lappušu numerācija

Skatīt ilustrāciju (A) lappusē i-5: Lappuses numurs (5) sastāv no trim daļām:

- nodaļas numura (2)
- secīga lappuses numura nodaļas ietvaros (3)
- kopējā lappušu skaita nodaļā (4)

Iepazīstināšana ar iekārtu

Ražotājs

Ražotāja nosaukumu un adresi skatīt šī kataloga otrajā lappusē.

Serviss

Ja nepieciešams pasūtīt rezerves daļas šai mašīnai vai ziņot par problēmām, kas saistītas ar mašīnas ekspluatāciju, tad, lūdzu, sazinieties ar tuvāko Tetra Pak pārstāvniecību.

Ja Jums ir citi jautājumi, piezīmes vai ieteikumi par iekārtas un tās dokumentācijas uzlabošanu, tad lūdzam sazināties ar Sakaru biroju.

Identifikācija

CE klasifikācija

Šī iekārta atbilst galvenajām Eiropas Ekonomiskās Zonas (EEA) regulām, kuras attiecas uz veselību un drošību.

Mašīnas tipa plāksnīte

Ilustrācijā (B) i-5lappusē redzams mašīnas tipa plāksnītes paraugs. Aktuālās mašīnas tipa plāksnīte un tās atrašanās vieta uz iekārtas ir parādīta līdz ar šo iekārtu piegādāto rokasgrāmatu Ievada nodaļā. Mašīnas tipa plāksnīte satur tālāk uzskaitīto informāciju, kura ir nepieciešama, sazinoties ar Tetra Pak par šo iekārtu.

- Mašīnas tips (8)
- Daudzums (9)
- Rasējuma specifikācijas (10)
- Mašīnas sērijas numurs (11)
- Ražotājs (12)
- CE apzīmējums (13)
- Izgatavošanas gads (14)

Ilustrācijā (C) i-5lappusē ir parādīts mašīnas specifikācijas paraugs. Pārliecinieties, ka šīs rokasgrāmatas titullapās minētā informācija par iekārtu atbilst tai, kas norādīta uz mašīnas tipa plāksnītes un mašīnas specifikācijā.

Rezerves daļu kataloga lietošana

Vajadzīgās rezerves daļas numura atrašana

a) Skatiet ilustrāciju (D) i-5lappusē: atrodiet nodaļas numuru (15), kas norādīts līdzās galvenajai grupai, kurā ietilpst Jūsu meklētā rezerves daļa.

Pozīcijas b) un c) skatiet ilustrāciju (E) i-6lappusē.

b) Galvenās grupas ilustrācijā atrodiet mašīnas apakšgrupu (17), kurā ietilpst Jūsu meklētā detaļa vai apakšgrupa. Atzīmējiet pozīcijas numuru (18) un pievērsieties saraksta lappusei, kura seko šai ilustrācijai.

c) Sameklējiet atbilstīgo pozīcijas numuru (16) vai apakšgrupas nosaukumu (19). Pievērsieties atbilstīgajam lappuses numuram (20), kas norādīts ailē pa labi.

Pozīcijas d) un e) skatiet ilustrāciju (E) i-6lappusē.

d) Atrodiet vajadzīgo rezerves daļu (21) apakšgrupas ilustrācijā un atzīmējiet šīs detaļas pozīcijas numuru.

e) Šīs daļas numurs (29) un apraksts (30) atrodas saraksta lapā līdzās pozīcijas numuram.

Rezerves daļu katalogā sniegtā informācija

Šis saraksts attiecas uz ilustrāciju (F) i-6lappusē. Rezerves daļu katalogs satur šādu informāciju par grupām, apakšgrupām un iekārtas rezerves daļām:

- Norādes par grupu struktūru (22). Norāde uz tuvāko augstāko grupu iekārtas saraksta struktūrā.
- Grupas nosaukums (23)
- Mērvienība (25)
- Skaits (26)
- Montāžas rasējuma numurs (27)
- Saraksta lappuses zona (28). Tiek izmantota tad, ja grupas ilustrācija vai saraksts ir uz vairākām lappusēm.
- Daļas vai apakšgrupas numurs (29)
- Apakšgrupas nosaukums vai daļas apraksts (30)
- Grupas numurs (31)
- Iekārtas numurs (32)
- Grupas informācijas iedaļas apzīmējums (33). Norāda, vai iedaļa zem šī apzīmējuma attiecas uz noteiktu mašīnas variantu, vai arī tas ir kopējo rezerves daļu saraksts. Ja sarakstam ir vairāk par vienu variantu un katram variantam ir savs montāžas rasējums, tad tiek dota atsauce uz lappusi, kur atrodams katra varianta montāžas rasējums.
- Iekšējā informācija (34)

Introduzzjoni

Informazzjoni tal-Manwal

Tetra Pak tirrakkomanda li jinqraw bl-attenzjoni l-manwali kkunsinnati kollha. Aċċerta ruħek li l-manwali kkunsinnati kollha huma disponibbli għall-personàl li jħaddem jew li jagħmel manutezjoni fuq it-tagħmir.

Huwa importanti li żżomm dan il-katalgu sakemm idum jaħdem it-tagħmir, u li tgħaddi l-katalgu lil xi sid jew lil xi persuna oħra li tuża dan it-tagħmir fil-futur.

Tetra Pak ma tistax tinżamm responsabbli ta' xi ħsara lit-tagħmir ikkawżata minn nuqqas ta' osservanza ta' l-istruzzjonijiet li jingħataw f'dan il-manwal.

Manwali Kkunsinnati

Il-manwali kkunsinnati ma' dan it-tagħmir jinkludu

- Manwal tal-Konverżjoni (CM)
  Dan il-manwal jipprovdi informazzjoni lit-tekniċi dwar il-konverżjoni tat-tagħmir bejn modi differenti tal-produzzjoni.
- Manwal Elettriku (EM)
  Dan il-manwal jipprovdi informazzjoni lit-tekniċi dwar is-sistema ta' l-elettriku tat-tagħmir.
- Manwal ta' l-Installazzjoni (IM)
  Dan il-manwal jipprovdi lit-tekniċi b'informazzjoni meħtieġa biex jinstallaw it-tagħmir mingħajr periklu.
- Manwal tal-Manutenzjoni (MM)
  Dan il-manwal jipprovdi lit-tekniċi b'informazzjoni fuq kif jagħmlu manutenzjoni fuq it-tagħmir.
- Manwal ta' l-Operazzjoni (OM)
  Dan il-manwal jipprovdi informazzjoni lill-operatur fuq kif jimmaniġġja u jħaddem it-tagħmir, qabel, waqt, u wara l-produzzjoni.
- Katalgu tal-Partijiet Għat-Tibdil (SPC)
  Dan il-manwal jipprovdi l-informazzjoni neċessarja biex jiġu ordnati partijiet għat-tibdil mingħand Tetra Pak.
- Manwal Tekniku (TeM)
  - jipprovdi lit-tekniċi b'informazzjoni meħtieġa biex jinstallaw it-tagħmir mingħajr periklu
  - jipprovdi lit-tekniċi b'informazzjoni fuq kif jagħmlu manutenzjoni fuq it-tagħmir
  - jipprovdi informazzjoni lit-tekniċi dwar is-sistema ta' l-elettriku tat-tagħmir.
  - jipprovdi l-informazzjoni neċessarja biex jiġu ordnati partijiet għat-tibdil mingħand Tetra Pak

Taqsim tal-Paġna

Irreferi għal stampa (A) f'paġna i-5: Il-paġni ewlenin fil-Katalgu tal-Partijiet Għat-Tibdil jikkonsistu f'paġna bl-istampi (1) u paġna b'lista li tikkorrispondi (7). In-numru tal-paġna (5) jintwera fil-header ta' paġna bl-istampi u fil-footer ta' paġna b'lista. In-numru tad-dokument (6) jintwera fil-footer ta' paġna b'lista.

Numru tal-paġna

Irreferi għal stampa (A) f'paġna i-5: In-numru tal-paġna (5) fih tliet partijiet:

- numru tal-kapitlu (2)
- in-numru konsekuttiv tal-paġna fil-kapitlu (3)
- in-numru totali ta' paġni fil-kapitlu (4)

Introduzzjoni tal-Magna

Manifattur

Għall-isem u l-indirizz tal-manifattur, ara t-tieni paġna ta' dan il-katalgu.

Servizz

Biex tordna partijiet għat-tibdil għal din il-magna, jew biex tirrapporta problemi assoċjati mat-tħaddim ta' din il-magna, ikkuntattja l-eqreb uffiċċju ta' Tetra Pak.

Ikkuntattja lill-persuna responsabbli mill-komunikazzjoni jekk ikollok xi mistoqsijiet, kummenti, jew suġġerimenti oħrajn biex ittejjeb it-tagħmir u d-dokumentazzjoni tiegħu.

Identifikazzjoni

Klassifikazzjoni CE

Dan it-tagħmir huwa konformi mar-regolamenti bażiċi tas-saħħa u s-sigurtà tal- European Economic Area (EEA).

Pjanċa tal-Magna

L-istampa (B) fuq paġna i-5 turi eżempju ta' pjanċa tal-magna.
Stampa tal-pjanċa valida tal-magna u l-lok tagħha fuq it-tagħmir hi murija fil-kapitlu ta' l-Introduzzjoni tal-manwali kkunsinnati ma' dan it-tagħmir.
Il-pjanċa tat-tagħmir fiha l-informazzjoni elenkata hawn taħt, meħtieġa meta tikkuntattja lil Tetra Pak dwar dan it-tagħmir partikulari.

- Tip ta' magna (8)
- Volum (9)
- Speċifikazzjonijiet tad-Disinn (10)
- Numru tas-serje tal-magna (11)
- Manifattur (12)
- Marka CE (13)
- Sena tal-manifattura (14)

L-istampa (Ċ) fuq paġna i-5 turi eżempju ta' speċifikazzjoni tal-magna.
Aċċerta ruħek li l-informazzjoni tat-tagħmir elenkata fuq il-paġni ta' quddiem ta' dan il-manwal tikkorrispondi għall-informazzjoni tal-pjanċa tal-magna u l-ispeċifikazzjoni tal-magna.

Kif Tuża Dan il-Katalgu tal-Partijiet Għat-Tibdil

Sib Numru ta' Parti Għat-Tibdil

a) Irreferi għal stampa (D) f'paġna i-5: Mur fin-numru tal-kapitlu (15) indikat ħdejn il-grupp prinċipali li fih il-parti li trid issib.

Oġġetti b) u c) irreferi għal stampa (E) f'paġna i-6.

b) Fl-istampa tal-grupp prinċipali, fittex għas-sottogrupp tal-magna (17) li fih il-parti jew sottogrupp li tkun qed tfittex. Innota n-numru tal-pożizzjoni (18) u mur fil-paġna bil-lista li ssegwi l-istampa.

c) Fittex in-numru tal-pożizzjoni (16) jew l-isem tas-sottogrupp (19). Mur fin-numru tal-paġna li jikkorrispondi (20) elenkat fil-kolonna tan-naħa tal-lemin.

Oġġetti d) u e) irreferi għal stampa (F) f'paġna i-6.

d) Sib il-parti (21) li qed tfittex fl-istampa tas-sottogrupp u nnota n-numru tal-pożizzjoni tal-parti.

e) In-numru tal-parti (29) u d-deskrizzjoni tal-parti (30) huma elenkati ħdejn n-numru tal-pożizzjoni fuq il-paġna bil-lista.

Informazzjoni Elenkata fil-Katalgu tal-Partijiet Għat-Tibdil

Il-lista t'hawn taħt tirreferi għal stampa (F) fuq paġna i-6. Il-Katalgu tal-Partijiet Għat-Tibdil fih din l-informazzjoni li ġejja dwar gruppi, sottogruppi, u partijiet għat-tibdil għat-tagħmir:

- Referenza ta' l-istruttura tal-grupp (22). Tindika l-ogħla grupp li jmiss fl-istruttura tal-lista tat-tagħmir.
- Isem tal-grụpp (23)
- Unit tal-kejl (25)
- Kwantità (26)
- Numru tad-disinn ta' l-immuntar (27)
- Medda tal-paġni tal-lista (28). Inklużi jekk hemm paġni multipli fil-lista jew fl-istampa tal-grupp.
- Numru tal-parti jew sottogrupp (29)
- Deskrizzjoni ta' l-isem tas-sottogrupp jew parti (30)
- Numru tal-grupp (31)
- Numru tat-tagħmir (32)
- Heading ta' l-informazzjoni tal-grupp (33). Tindika jekk is-sezzjoni ta' taħt il-heading hix għal xi varjant speċifiku tal-magna jew jekk hix lista ta' partijiet komuni. Jekk lista jkun fiha aktar minn varjant wieħed u jekk kull varjant ikollu d-disinn ta' l-immuntar tiegħu, tintwera referenza ta' paġna għad-disinn ta' l-immuntar tal-varjant.
- Informazzjoni interna (34)

Inleiding

Informatie betreffende dit handboek

Tetra Pak raadt aan alle geleverde documentatie zorgvuldig te lezen. Ga na of de geleverde documentatie ter beschikking is van het personeel dat de machine moet bedienen of servicewerkzaamheden moet uitvoeren.

Het is belangrijk deze catalogus voor de duur van de machine te bewaren en de catalogus door te geven aan elke volgende eigenaar of gebruiker.

Tetra Pak aanvaardt geen verantwoordelijkheid voor om het even welke soort beschadiging aan de machine als gevolg van het niet opvolgen van de in dit handboek gegeven instructies.

Bijgeleverde handboeken

De met deze apparatuur geleverde handboeken omvatten

- Conversiehandboek (CM)
  Dit handboek geeft technici informatie over het ombouwen van de apparatuur tussen verschillende productiemodi.
- Handboek Elektriciteit (EM)
  Dit handboek geeft elektriciens en servicetechnici informatie betreffende het elektrisch systeem van de apparatuur.
- Installatiehandboek (IM)
  Dit handboek geeft installatiepersoneel informatie om op veilige wijze de apparatuur te installeren.
- Onderhoudshandboek (MM)
  Dit handboek geeft technici informatie over het onderhoud van de apparatuur.
- Bedieningshandboek (OM)
  Dit handboek geeft de operator informatie betreffende het omgaan met en bedienen van de apparatuur, voor, tijdens en na productie.
- Catalogus reservedelen (SPC).
  Dit handboek geeft de nodige informatie om reserveonderdelen bij Tetra Pak te bestellen.
- Technisch Handboek (TeM)
  - Dit handboek geeft technici informatie, nodig om op veilige wijze de apparatuur te installeren
  - Dit handboek geeft technici informatie over het onderhoud van de apparatuur
  - Dit handboek geeft technici informatie betreffende het elektrisch systeem van de apparatuur
  - geeft de nodige informatie, nodig om reserveonderdelen bij Tetra Pak te bestellen

Pagina lay-out

Refereer naar de illustratie (A) op bladzijde i-5: De belangrijkste bladzijden van een Catalogus Reserveonderdelen bestaan uit een bladzijde met een illustratie (1) en een corresponderende bladzijde met een lijst (7).
Het bladzijdenummer (5) is te vinden in de kop van een illustratiebladzijde en in de voetnoot van de lijstbladzijde. Het documentnummer (6) is te vinden in de voetnoot van een lijstbladzijde.

Bladzijdenummering

Refereer naar de illustratie (A) op bladzijde i-5: een bladzijdenummer (5) bestaat uit drie delen:

- hoofdstuknummer (2)
- opeenvolgende bladzijdenummer in het hoofdstuk (3)
- totaal aantal bladzijden in het hoofdstuk (4)

Introductie van de machine

Fabrikant

Voor naam en adres van de fabrikant, zie de tweede bladzijde van deze catalogus.

Service

Voor het bestellen van reserveonderdelen of om bedieningsproblemen van deze machine te melden, contacteer de dichtst bijzijnde vestiging van Tetra Pak.

Neem contact op met de contactpersoon voor andere informatie, opmerkingen of suggesties ter verbetering van de machine en de bijbehorende documentatie.

Identificatie

CE-classificatie

Deze apparatuur voldoet aan de basiseisen voor gezondheid en veiligheid voor het Europese Economische Gebied (EEA).

Machineplaatje

De illustratie (B) op bladzijde i-5 toont een voorbeeld van een machineplaatje.
Een illustratie van het wettige machineplaatje en de plaatsing ervan wordt getoond in het hoofdstuk Introductie van de handboeken, meegeleverd met deze apparatuur. Het machineplaatje bevat onderstaande gegevens die nodig zijn wanneer Tetra Pak moet worden gecontacteerd betreffende deze apparatuur.

- Machinetype (8)
- Volume (9)
- Tekeningspecificaties (10)
- Serienummer machine (11)
- Fabrikant (12)
- CE-markering (13)
- Fabricagejaar (14)

De illustratie (C) op bladzijde i-5 toont een voorbeeld van een machineplaatje. Controleer of de gegevens betreffende de apparatuur in de voorste bladzijden van dit handboek overeenkomen met de gegevens op het machineplaatje en de machinespecificaties.

Hoe dient deze catalogus reserveonderdelen te worden gebruikt

Lokaliseren van een nummer van een reserveonderdeel

a) Refereer naar de illustratie (D) op bladzijde i-5: ga naar het hoofdstuknummer (15), naast de hoofdgroep die het gewenste deel bevat.

Items b) en c) refereer naar de illustratie (E) op bladzijde i-6.

b) Op de illustratie van de hoofdgroep, zoek de machinesub-groep (17) op die het deel van de gewenste sub-groep bevat. Noteer het positienummer (18) en ga naar de lijstbladzijde die op de illustratie volgt.

c) Op de illustratie van de hoofdgroep, zoek de machinesub-groep (17) op die het deel van de gewenste sub-groep bevat. Noteer het positienummer (18) en ga naar de lijstbladzijde die op de illustratie volgt.

Items d) en e) refereren naar de illustratie (F) op bladzijde i-6.

d) Lokaliseer het gewenste onderdeel (21) in de illustratie van de sub-groep en noteer het positienummer van het onderdeel.

e) Het onderdeelnummer (29) en de beschrijving ervan (30) worden naast het positienummer op de lijstbladzijde weergegeven.

Informatie die in een Catalogus reserveonderdelen wordt gegeven

Onderstaande lijst verwijst naar de illustratie (F) op bladzijde i-6.
Een Catalogus reserveonderdelen bevat de volgende informatie betreffende groepen, sub-groepen en reserveonderdelen voor de apparatuur:

- Referentie groepsstructuur (22). Geeft de volgende hoogste groep in de structuur van de apparatuur aan.
- Groepsnaam(23)
- Meeteenheid (25)
- Hoeveelheid (26)
- Tekeningnummer montage (27)
- Lijst met bladzijdenreeks (28). Inclusief indien er meerdere bladzijden in de groepsillustratie of lijst voorkomen.
- Onderdeel of sub-groepsnummer (29)
- Naam sub-groep of beschrijving onderdeel (30)
- Groepsnummer (31)
- Apparatuurnummer (32)
- Titel groepsinformatie (33). Geeft aan of het deel onder de titel voor een specifieke machine is, voor een variant of een lijst is met algemene onderdelen. Indien een lijst meer dan één variant bevat en elke variant heeft zijn eigen montagetekening, wordt een bladzijdenreferentie naar de montagetekening van de variant gegeven.
- Interne informatie (34)

Introduksjon

Informasjon om håndboken

Tetra Pak anbefaler at du leser nøye gjennom alle leverte håndbøker. Sørg for at håndbøkene er tilgjengelige for alle som betjener eller vedlikeholder utstyret.

Det er viktig at du tar vare på denne katalogen under hele levetiden til utstyret og at du gir den videre til eventuelle nye eiere eller brukere.

Tetra Pak vil ikke være ansvarlig for skader på utstyret som oppstår fordi brukeren ikke følger instruksjonene i håndbøkene som følger med utstyret.

Leverte håndbøker

Håndbøkene som leveres med dette utstyret, kan inkludere

- Konverteringsmanual (CM)
  Denne håndboken gir teknikere informasjon om hvordan de konverterer utstyret mellom ulike produksjonsmodi.
- Electrisk manual (EM)
  Denne håndboken gir teknikere informasjon om utstyrets elektriske system.
- Installasjonsmanual (IM)
  Denne håndboken gir teknikere informasjon som kreves for å kunne installere utstyret på en sikker måte.
- Vedlikeholdsmanual (MM)
  Denne håndboken gir teknikere informasjon om vedlikehold av utstyret.
- Driftsmanual (OM)
  Denne håndboken gir operatøren informasjon om hvordan han håndterer og bruker utstyret før, under og etter produksjon.
- Reservedelskatalog (SPC)
  Denne håndboken inneholder informasjon som du trenger for å bestille reservedeler fra Tetra Pak.
- Teknisk manual (TeM)
  - gir teknikere informasjon om sikker installasjon av utstyret
  - gir teknikere informasjon om vedlikehold av utstyret
  - gir teknikere informasjon om utstyrets elektriske system
  - inneholder informasjon som du trenger for å bestille reservedeler fra Tetra Pak

Sideoppsett

Se illustrasjonen (A) på side i-5: Hovedsidene i reservedelskatalogen består av en illustrasjonsside (1) og en korresponderende listeside (7). Sidenummeret (5) vises i topptekster på illustrasjonssiden og i bunnteksten listesiden. Dokumentnummeret (6) vises i bunnteksten på listesiden.

Sidenummerering

Se illustrasjonen (A) på side i-5: Et sidenummer (5) består av tre deler:

- kapittelnummer (2)
- etterfølgende sidenummer i kapitlet (3)
- det totale antall sider i kapitlet (4)

Introduksjon av maskinen

Produsent

Hvis du ønsker produsentens navn og adresse, kan du se side to i denne katalogen.

Service

Når du skal bestille reservedeler til denne maskinen eller rapportere problemer forbundet med driften av denne maskinen, må du kontakte ditt nærmeste Tetra Pak-kontor.

Når det gjelder andre forespørsler, kommentarer eller forslag til forbedringer av utstyret og dets dokumentasjon, kan du ta kontakt med din kontaktperson.

Identifisering

CE-klassifisering

Dette utstyret er i overensstemmelse med de grunnleggende helse- og sikkerhetsforskriftene i Det europeiske økonomiske samarbeidsområdet (EØS).

Maskinplate

Illustrasjonen (B) på side i-5 viser et eksempel på en maskinplate. En illustrasjon av en gyldig maskinplate og hvor denne er plassert på utstyret, er vist i introduksjonskapitlet i håndbøkene som følger med dette utstyret. Maskinplaten inneholder nedenstående data, som du trenger når du skal kontakte Tetra Pak angående dette bestemte utstyret.

- Maskintype (8)
- Volum (9)
- Tegningsspesifikasjoner (10)
- Maskin-serienummer (11)
- Produsent (12)
- CE-merke (13)
- Produksjonsår (14)

Illustrasjonen (C) på side i-5 viser et eksempel på en maskinspesifikasjon. Sørg for at utstyrsdataene som står oppført foran i denne håndboken samsvarer med dataene på maskinplaten og maskinspesifikasjonen.

Hvordan bruke denne reservedelskatalogen

Finn et reservedelsnummer

a) Se illustrasjonen (D) på side i-5: Gå til kapittelnummeret (15) som er angitt ved siden av hovedgruppen som inneholder delen du vil finne.

Punkt b) og c) viser til illustrasjonen (E) på side i-6.

b) På hovedgruppeillustrasjonen ser du etter maskinundergruppen (17) som inneholder delen eller undergruppen du ser etter. Merk deg posisjonsnummeret (18), og gå til listesiden som kommer etter illustrasjonen.

c) Se etter posisjonsnummeret (16) eller undergruppenavnet (19). Gå til det korresponderende sidenummeret (20) som står oppført i høyre kolonne.

Punkt d) og e) viser til illustrasjonen (F) på side i-6.

d) Finn delen (21) du ser etter på undergruppeillustrasjonen, og merk deg delens posisjonsnummer.

e) Delenummeret (29) og delebeskrivelsen (30) finner du ved siden av posisjonsnummeret på listesiden.

Informasjon i en reservedelskatalog

Listen nedenfor viser til illustrasjonen (F) på side i-6. En reservedelskatalog inneholder følgende informasjon om grupper, undergrupper og reservedeler for utstyret:

- Gruppeinndelingsreferanse (22). Angir den neste gruppen opp i inndelingen av utstyrslisten.
- Gruppenavn (23)
- Målenhet (25)
- Antall (26)
- Tegningsnummer (27)
- Listesideområde (28). Inkludert hvis det er flere sider i gruppeillustrasjonen eller listen.
- Dele- eller undergruppenummer (29)
- Undergruppenavn eller delebeskrivelse (30)
- Gruppenummer (31)
- Utstyrsnummer (32)
- Gruppeinformasjonsoverskrift (33). Angir om avsnittet under overskriften er for en bestemt maskinvariant eller om det er en liste over vanlige deler. Hvis en liste har flere varianter og hver variant har sin egen sammenstillingstegning, vises det en sidereferanse til variantens sammenstillingstegning.
- Intern informasjon (34)

Wprowadzenie

Informacje o Instrukcji

Tetra Pak zaleca dokładne zapoznanie się ze wszystkimi dostarczonymi instrukcjami obsługi. Upewnij się, że dostarczone instrukcje obsługi są dostępne dla personelu obsługującego lub konserwującego wyposażenie.

Ważne jest, aby niniejszy katalog zachować na cały okres eksploatacji urządzenia i przekazać go każdemu kolejnemu użytkownikowi/ właścicielowi.

Tetra Pak nie ponosi odpowiedzialności za żadne uszkodzenia urządzenia spowodowane nieprzestrzeganiem zaleceń zawartych instrukcjach dołączonych do tego urządzenia.

Dostarczone Instrukcje

Instrukcje dostarczone z tym urządzeniem zawierają

- Instrukcję Konwersji (CM)
  Instrukcja ta dostarcza technikom informacje o sposobie konwersji urządzenia pomiędzy różnymi trybami produkcji.
- Instrukcję Elektryki (EM)
  Instrukcja ta dostarcza technikom informacje o układzie elektrycznym urządzenia.
- Instrukcję Instalacyjną (IM)
  Instrukcja ta dostarcza technikom informacje niezbędne do bezpiecznego zainstalowania urządzenia.
- Instrukcję Konserwacji (MM)
  Instrukcja ta dostarcza technikom informacje o sposobie konserwacji urządzenia.
- Instrukcję Operacyjną (OM)
  Instrukcja ta dostarcza operatorowi informacje o sposobie manipulacji i obsługi urządzenia przed, podczas i po produkcji.
- Katalog Części Zamiennych (SPC)
  Instrukcja ta dostarcza informacje niezbędne do zamawiania części zamiennych z firmy Tetra Pak.
- Instrukcję Techniczną (TeM)
  - dostarcza technikom informacje niezbędne do bezpiecznego zainstalowania urządzenia
  - dostarcza technikom informacje o konserwacji urządzenia
  - dostarcza technikom informacje o układzie elektrycznym urządzenia
  - dostarcza informacje niezbędne do zamawiania części zamiennych z firmy Tetra Pak

Układ Strony

Patrz ilustracja (A) na stronie i-5: Kartki główne Katalogu Części Zamiennych składają się z ze strony z ilustracją (1) oraz odpowiadającej jej strony z listą (7). W nagłówku strony z ilustracją oraz w stopce strony z listą pokazany jest numer strony (5). Numer dokumentu (6)umieszczony jest w stopce strony z listą.

Numeracja stron

Patrz ilustracja (A) na stronie i-5:Numer strony (5) zawiera trzy części:

- numer rozdziału (2)
- kolejny numer strony (3) w ramach rozdziału
- łączna ilość stron (4) w rozdziale

Wprowadzenie do Maszyny

Producent

Nazwę i adres producenta można znaleźć na drugiej stronie niniejszego katalogu.

Serwis

Aby zamówić części zapasowe do tej maszyny lub zgłosić problemy związane z jej pracą należy skontaktować się z najbliższym biurem Tetra Pak.

Prosimy o nawiązanie kontaktu w przypadku jakichkolwiek zapytań, komentarzy, lub sugestii zmierzających do usprawnienia wyposażenia oraz dokumentacji z nimi związanych.

Identyfikacja

Klasyfikacja CE

Urządzenie spełnia wymagania podstawowych przepisów BHP Europejskiego Obszaru Ekonomicznego (EEA).

Płyta znamionowa maszyny

Ilustracja (B) przedstawiona na stronie i-5 pokazuje przykład płyty znamionowej maszyny.
Ilustracja prawidłowej płyty znamionowej oraz jej położenie na urządzeniu pokazana jest w rozdziale Wprowadzenie zawartym w instrukcjach dostarczonych z tym urządzeniem. Płyta znamionowa maszyny zawiera niżej przedstawione dane, potrzebne podczas kontaktowania się z firmą Tetra Pak w sprawach dotyczących tego konkretnego urządzenia.

- Typ maszyny (8)
- Objętość (9)
- Specyfikacje rysunkowe (10)
- Numer seryjny urządzenia (11)
- Producent (12)
- Oznaczenie symbolemCE (13)
- Rok produkcji (14)

Ilustracja (C) zawarta na stronie i-5 pokazuje przykład specyfikacji maszyny. Należy sprawdzić, czy dane wyposażenia przedstawione na pierwszej stronie tej instrukcji odpowiadają danym zawartym na płycie znamionowej maszyny oraz specyfikacji maszyny.

Jak Korzystać z niniejszego Katalogu Części Zamiennych

Należy znaleźć Numer części zamiennej

a) Patrz ilustracja (D) zawarta na stronie i-5: Przejdź do numeru rozdziału (15) pokazanego obok głównej grupy zawierającej część, którą chcesz odszukać.

Pozycje b) i c) odnoszą się do ilustracji (E) zawartej na stronie i-6.

b) Na ilustracji grupy głównej odszukaj podgrupę maszyny (17), która zawiera odpowiednią część lub podgrupę, której szukasz. Zanotuj numer pozycji (18) i przejdź na stronę z listą, umieszczoną za ilustracją.

c) Odszukaj numer pozycji (16) lub nazwę podgrupy (19). Przejdź do odpowiedniego numeru strony (20) pokazanego w kolumnie umieszczonej po prawej stronie.

Pozycje d) i e) odnoszą się do ilustracji (F) zawartej na stronie i-6.

d) Znajdź na ilustracji podgrupy część (21), której szukasz i zanotuj numer pozycji części.

e) Numer części (29) oraz opis części (30) są umieszczone na stronie z listą obok numeru pozycji.

Informacje zawarte w Katalogu Części Zamiennych

Poniższa lista odnosi się do ilustracji (F) zawartej na stronie i-6. Katalog Części Zamiennych zawiera następujące informacje o grupach, podgrupach oraz częściach zamiennych dla urządzenia:

- Struktura referencji grup (22). Wskazuje następną wyższą grupę zawartą w strukturze listy wyposażenia.
- Nazwa grupy (23)
- Jednostka miary(25)
- Ilość (26)
- Numer rysunku montażowego (27)
- Zakres strony z listą (28). Zawarty w przypadku występowania wielu stron dla ilustracji lub listy grupy.
- Numer części lub podgrupy (29)
- Nazwa podgrupy lub opis części (30)
- Numer grupy (31)
- Numer urządzenia (32)
- Nagłówek informacyjny grupy (33). Wskazuje, czy sekcja umieszczona pod nagłówkiem dotyczy określonego wariantu maszyny, czy też jest to lista wspólna dla wszystkich wariantów. Jeśli lista występuje w wielu wariantach i dla każdego z nich dostępny jest własny rysunek montażowy, pokazany jest numer strony odniesienia rysunku montażowego dla danego wariantu.
- Informacje wewnętrzne (34)

Introdução

Informação do Manual

A Tetra Pak recomenda ler cuidadosamente todos os manuais fornecidos. Verificar se os manuais fornecidos estão ao dispor do pessoal que trabalha com o equipamento ou que faz a manutenção do mesmo.

É importante guardar este catálogo durante o tempo útil de vida da máquina ou do equipamento e de entregar o catálogo a qualquer proprietário ou utilizador subsequente.

A Tetra Pak não toma a responsabilidade por quaisquer danos no equipamento causados devido ao facto de que as instruções dadas nos manuais que acompanham este equipamento não foram seguidas.

Manuais fornecidos

Os manuais fornecidos com este equipamento incluem

- Manual de Conversão (CM)
  Este manual fornece aos técnicos as informações sobre a conversão do equipamento entre os diferentes modos de produção.
- Manual Eléctrico (EM)
  Este manual fornece aos técnicos as informações sobre o sistema eléctrico do equipamento.
- Manual de Instalação (IM)
  Este manual fornece aos técnicos as informações necessárias para instalar seguramente o equipamento.
- Manual de Manutenção (MM)
  Este manual fornece aos técnicos as informações para a manutenção do equipamento.
- Manual de Operação (OM)
  Este manual fornece ao operador as informações que ele necessita para manejar e accionar o equipamento antes, durante e depois da produção.
- Catálogo de Peças Sobressalentes (SPC)
  Este manual fornece as informações necessárias para encomendar peças sobressalentes à Tetra Pak.
- Manual Técnico (TeM)
  - fornece aos técnicos as informações necessárias para instalar seguramente o equipamento
  - fornece aos técnicos as informações para a manutenção do equipamento
  - fornece aos técnicos as informações sobre o sistema eléctrico do equipamento
  - fornece as informações necessárias para encomendar peças sobressalentes à Tetra Pak

Disposição da página

Referência à ilustração (A) na página i-5: As páginas principais num Catálogo de Peças Sobressalentes consistem numa página ilustrada (1) e numa página com a lista correspondente (7). O número da página (5) é mostrado no cabeçalho de uma página ilustrada e no rodapé de uma página com lista. O número do documento (6) é mostrado no rodapé de uma página com lista.

Numeração da página

Referência à ilustração (A) na página i-5: Um número de página (5) tem três partes:

- Número do capítulo (2)
- número consecutivo da página dentro do capítulo (3)
- número total de páginas no capítulo (4)

Introdução da máquina

Fabricante

Para o nome e morada do fabricante, ver a segunda página deste catálogo.

Assistência técnica

Para encomendar peças sobressalentes para esta máquina, ou para relatar problemas associados com a operação desta máquina, contactar a companhia Tetra Pak mais próxima.

Contactar a Liaison se tiver quaisquer questões, comentários ou sugestões para o desenvolvimento relacionado com o equipamento e a sua documentação.

Identificação

Classificação CE

Este equipamento está de acordo com os regulamentos de segurança e saúde da Área Económica Europeia (EEA).

Placa da máquina

A ilustração (B) na página i-5 mostra um exemplo de uma placa da máquina. Uma ilustração da placa da máquina válida e a sua localização no equipamento é mostrada no capítulo Introdução dos manuais fornecidos com este equipamento. A placa da máquina contem os dados alistados em baixo, necessários quando se contactar a Tetra Pak relacionando-se a este equipamento em específico.

- Tipo da máquina (8)
- Volume (9)
- Especificações dos desenhos (10)
- Número de série da máquina (11)
- Fabricante (12)
- Marca CE (13)
- Ano de construção (14)

A ilustração (C) na página i-5 mostra um exemplo de uma especificação da máquina. Verificar se os dados do equipamento alistados nas páginas da frente deste manual correspondem aos dados na placa da máquina e à especificação da máquina.

Como usar este Catálogo de Peças Sobressalentes

Localizar um Número da peça sobressalente

f) Referência à ilustração (D) na página i-5: Para o número do capítulo (15) indicado ao lado do grupo principal que contem a peça que quer localizar.

Pos. b) e c) referem-se à ilustração (E) na página i-6.

g) Na ilustração do grupo principal, procurar o subgrupo da máquina (17) que contem a peça ou subgrupo que está à procura. Anotar o número da posição (18) e passar para a página da lista que segue a ilustração.

h) Procurar o número da posição (16) ou o nome do subgrupo (19). Passar para o número da página correspondente (20) alistado na coluna do lado direito.

Pos. d) e e) referem-se à ilustração (F) na página i-6.

i) Localizar a peça (21) que está à procura na ilustração do subgrupo e anotar o número da posição da peça.

j) O número da peça (29) e a descrição da peça (30) estão alistados ao lado do número da posição na página da lista.

Informações indicadas num Catálogo de Peças Sobressalentes

A lista em baixo refere-se à ilustração (F) na página i-6. Um Catálogo de Peças Sobressalentes contem as seguintes informações sobre grupos, subgrupos e peças sobressalentes para o equipamento:

- Referência da estrutura do grupo (22). Indica o grupo a seguir mais elevado na estrutura da lista do equipamento.
- Nome do grupo (23)
- Unidade de medição (25)
- Quantidade (26)
- Número do desenho de montagem (27)
- Gama da página de lista (28). Incluída se houver páginas múltiplas na ilustração do grupo ou lista.
- Número da peça ou do subgrupo (29)
- Nome do subgrupo ou descrição da peça (30)
- Número do grupo (31)
- Número do equipamento (32)
- Título da informação do grupo (33). Indica se a secção abaixo do título é para uma variante de máquina específica ou se é uma lista de peças comuns. Se uma lista tiver mais do que uma variante e cada variante tiver o seu próprio desenho de montagem, é mostrada uma referência para a página do desenho de montagem da variante.
- Informação interna (34)

Úvod

Informácie o príručke

Tetra Pak doporučuje čítať pozorne všetky dodané príručky. Presvedčte sa, že dodané príručky sú k dispozícii personálu, ktorý vykonáva obsluhu alebo údržbu zariadenia.

Je dôležité ponechať si tento katalóg počas životnosti zariadenia a odovzdať katalóg inému majiteľovi alebo užívateľovi.

Tetra Pak nebude zodpovedať za nijaké zničenie zariadenia spôsobené nedodržaním pokynov uvedených v príručke vzhľadom na toto zariadenie.

Dodané príručky

Príručky dodané s týmto zariadením majú obsahovať

- Konverznú príručku (CM)
  Táto príručka poskytuje technikom informácie o konvertovaní zariadenia medzi rozličnými režimami výroby.
- Príručku elektriky (EM)
  Táto príručka poskytujetechnikom informácie o zariadeniach elektrickej inštalácie.
- Inštalačnú príručku (IM)
  Táto príručka poskytuje technikom informácie, požadované pre bezpečnú inštaláciu zariadenia.
- Údržbársku príručku (MM)
  Táto príručka poskytujetechnikom informáciu o údržbe zariadenia.
- Návod k použitiu (OM)
  Táto príručka poskytuje obsluhe informáciu o zaobchádzaní a obsluhe zariadenia pred, počas a po výrobe.
- Katalóg náhradných dielov (SPC)
  Táto príručka poskytuje informácie potrebné pre objednávku náhradných dielov Tetra Pak.
- Technická príručka (TeM)
  - poskytuje technikom informácie potrebné pre bezpečnú inštaláciu zariadenia
  - poskytuje technikom informácie o údržbe zariadenia
  - poskytujetechnikom informácie o zariadení elektrickej inštalácie
  - poskytuje informácie potrebné pre objednávku náhradných dielov z Tetra Pak

Formát stránky

Odvoláva sa na zobrazenie (A) na stranei-5: Hlavné stránky v katalógu náhradných dielov pozostávajú zo stránky zobrazenia (1) a stránky príslušného zoznamu (7). Stránka číslo (5) ukazuje v hlavičke stránky zobrazenie a v zápätí stránky zoznam. Číslo dokumentu (6) je zobrazené v zápätí stránky zoznamu.

Číslo stránky

Odvoláva sa na zobrazenie (A) na stranei-5: Číslo stránky (5) má tri časti:

- číslo kapitoly (2)
- nasledujúce číslo stránky v rámci kapitoly (3)
- celkový počet strán v kapitole (4)

Úvod o stroji

Výrobca

Pre názov a adresu výrobcu, viď druhá strana tohoto katalógu.

Servis

Pre objednávku náhradných dielov pre tento stroj, alebo pre hlásenie problémov spojených s obsluhou tohoto stroja, kontaktujte najbližšiu pobočku spoločnosti Tetra Pak.

Kontaktujte styčnú osobu s inými žiadosťami, poznámkami, alebo zlepšovacími návrhmi týkajúcimi sa zariadenia a jeho dokumentácie.

Označenie

CE klasifikácia

Zariadenie spĺňa základné zdravotné a bezpečnostné predpisy Európskeho hospodárskeho priestoru (EEA).

Prístrojová doska

Zobrazenie (B) na strane i-5 ukazuje príklad prístrojovej dosky. Zobrazenie správnej prístrojovej dosky a jej umiestnenie na zariadení je uvedené v kapitole Úvod príručky dodanej s týmto zariadením. Prístrojová doska obsahuje dole zoznam údajov, potrebných ak kontaktujete spoločnosť Tetra Pak ohľadom tohoto špeciálneho zariadenia.

- Typ stroja (8)
- Kapacita (9)
- Výkres špecifikácie (10)
- Sériové číslo stroja (11)
- Výrobca (12)
- značka CE (13)
- Rok výroby (14)

Zobrazenie (C) na strane i-5 ukazuje príklad špecifikácie stroja. Presvedčte sa, či údaje zariadenia uvedené na prednej strane tejto príručky zodpovedajú údajom prístrojovej dosky a špecifikácii stroja.

Ako používať tento katalóg náhradných dielov

Vyhľadajte číslo náhradného dielu

a) Odvoláva sa na zobrazenie (D) na strane i-5: Chodťe na kapitolu číslo (15) označenú při halvnej skupine, ktorá obsahuje diel, ktorý chcete vyhľadať.

Položky b) a c) sa odvolávajú na zobrazenie (E) na strane i-6

b) Na zobrazení hlavnej skupiny, hľadajte pre stroj podskupinu (17) ktorá obsahuje diel alebo podskupinu, ktoré hľadáte. Zaznamenajte pozíciu číslo (18) a choďte na stránku zoznamu, ktorá sleduje zobrazenie.

c) Hľadajte číslo položky (16) alebo názov podskupiny (19). Choďte na zodpovedajúcu stránku číslo (20)uvedenú v stĺpci po pravej ruke.

Položky d) a e) sa odvolávajú na zobrazenie (F) na stranei-6

d) Vyhľadajte diel (21), ktorý hľadáte podľa zobrazenia podskupiny a poznámky čísla položky dielu.

e) Číslo dielu (29) a popis dielu (30) sú uvedené pri čísle položky na zozname stránok.

Informácie uvedené v katalógu náhradných dielov

Zoznam dole sa odvoláva na zobrazenie (F) na strane i-6 Katalóg náhradných dielov obsahuje informácie o skupinách, podskupinách a náhradných dieloch pre zariadenie:

- Odkaz na usporiadanie skupiny (22) Označuje nasledujúcu vyššiu skupinu v štruktúre zoznamu zariadenia.
- Názov skupiny (23)
- Jednotka merania(25)
- Množstvo (26)
- Číslo výkresu montáže (27)
- Zoznam rozsahu stránok (28). Zahrnutý, ak sú to mnohonásobné stránky v zobrazení skupiny alebo zoznam.
- Diel alebo číslo podskupiny (29)
- Názov podskupiny alebo popis dielu (30)
- Číslo skupiny (31)
- Ćíslo zariadenia (32)
- Základné informácie o skupine (33). Označuje, ak sekcia pod hlavičkou je pre špeciálnu variantu stroja alebo ak je to zoznam všeobecných dielov. Ak zoznam má viac ako jednu variantu a každá varianta má svoj vlastný montážny výkres, tak je zobrazená strana, ktorá odkazuje na varianty montážneho výkresu.
- Interné informácie (34)

Uvod

Informacija o priročnikih

Podjetje Tetra Pak priporoča, da natančno preberete vse priložene priročnike. Osebje, ki upravlja in vzdržuje opremo, mora imeti dostop do priloženih priročnikov.

Katalog hranite v celotnem času uporabe opreme. V primeru, ko opremo pridobi drug uporabnik, mu obenem izročite tudi katalog.

Podjetje Tetra Pak ne prevzema odgovornosti za poškodbe na opremi, ki nastanejo zaradi neupoštevanja navodil iz priročnikov, ki so priloženi opremi.

Priloženi priročniki

Priročniki, ki so priloženi opremi, vključujejo

- Priročnik za zamenjavo (CM)
  V tem priročniku so podatki, ki tehnikom omogočajo izvesti zamenjavo opreme med različnimi načini proizvodnje.
- Električni priročnik (EM)
  Priročnik vsebuje informacije za tehnike o električnem sistemu opreme.
- Priročnik za namestitev (IM)
  Priročnik vsebuje ustrezne tehnične informacije za varno namestitev opreme.
- Priročnik za vzdrževanje (MM)
  Priročnik vsebuje informacije za tehnike o vzdrževanju opreme.
- Priročnik za obratovanje (OM)
  Priročnik je namenjen informiranju za pravilno rokovanje in upravljanje s strojem pred, med in po proizvodnem postopku.
- Katalog rezervnih delov (SPC)
  Priročnik vsebuje potrebne informacije za naročanje rezervnih delov v podjetju Tetra Pak.
- Tehnični priročnik (TeM) vsebuje:
  - ustrezne tehnične informacije za tehnike za varno namestitev opreme
  - informacije za tehnike o vzdrževanju opreme
  - informacije za tehnike o električnem sistemu opreme
  - potrebne informacije za naročanje rezervnih delov v podjetju Tetra Pak

Zgradba strani

Oglejte si risbo (A) na strani i-5: Glavne strani v Katalogu rezervnih delov sestavljata stran z risbo (1) ter ustrezna stran s seznamom (7). Številka strani (5) je v glavi na strani z risbo ter v nogi na strani s seznamom. Številka dokumenta (6) je v nogi na strani s seznamom.

Številčenje strani

Oglejte si risbo (A) na strani i-5: Številko strani (5) sestavljajo trije deli:

- številka poglavja (2)
- zaporedna številka strani v poglavju (3)
- skupno število strani poglavja (4)

Predstavitev stroja

Proizvajalec

Ime in naslov proizvajalca poiščite na drugi strani tega kataloga.

Servis

Za naročanje rezervnih delov za stroj ter za sporočanje motenj pri delovanju stroja se obrnite na najbližjo servisno službo podjetja Tetra Pak.

V primeru drugih zahtev, komentarjev, predlogov za izboljšavo opreme ali dokumentacije se obrnite na odgovorno osebo.

Identifikacijska oznaka

CE klasifikacija

Oprema je izdelana v skladu z osnovnimi zdravstvenimi in varnostnimi predpisi Evropskega gospodarskega prostora (EGP).

Ploščica s podatki

Risba (B) na strani i-5 prikazuje primer ploščice s podatki.
Risba veljavne ploščice s podatki ter mesto njene namestitve na opremi je v uvodnem poglavju posameznih priročnikov, ki so priloženi opremi.
Na ploščici s podatki so zapisani spodaj našteti podatki, ki jih potrebujete pri posvetovanju s podjetjem Tetra Pak.

- Tip stroja (8)
- Prostornina (9)
- Specifikacija risbe (10)
- Serijska številka stroja (11)
- Proizvajalec (12)
- CE oznaka (13)
- Leto izdelave (14)

Risba (C) na strani i-5 prikazuje primer specifikacije strojne opreme.
Prepričajte se, da podatki o opremi, ki so zapisani na prvih straneh priročnika, ustrezajo podatkom na ploščici s podatki in specifikaciji strojne opreme.

Uporaba Kataloga rezervnih delov

Določitev številke rezervnega dela

a) Oglejte si risbo (D) na strani i-5: Zatem si oglejte poglavje številka (15), ki je označeno poleg glavne skupine, ki vsebuje želeni del.

Točki b) in c) se nanašata na risbo (E) na strani i-6.

b) Na risbi glavne skupine poiščite podskupino stroja (17), ki vključuje del ali podskupino, ki ga (jo) iščete. Zapomnite si pozicijsko številko (18) in pojdite na stran s seznamom, ki sledi risbi.

c) Poiščite pozicijsko številko (16) ali ime podskupine (19). Pojdite na ustrezno številko strani (20), ki je označena v desnem stolpcu.

Točki d) in e) se nanašata na risbo (F) na strani i-6.

d) Na risbi podskupine poiščite sestavni del (21) in si zapišite njegovo pozicijsko številko.

e) Številka sestavnega dela (29) in opis sestavnega dela (30) se nahajata poleg pozicijske številke na strani s seznamom.

Informacije v Katalogu rezervnih delov

Spodnji seznam se nanaša na risbo (F) na strani i-6. V Katalogu rezervnih delov so naslednje informacije o skupinah, podskupinah in rezervnih delih za opremo:

- Referenca strukture skupine (22). Označuje naslednjo višjo skupino v strukturi seznama opreme.
- Ime skupine (23)
- Merska enota (25)
- Količina (26)
- Številka sestavne risbe (27)
- Število strani seznama (28). Vključeno, kadar risba ali seznam skupine vsebuje več strani.
- Številka dela ali podskupine (29)
- Ime podskupine ali opis dela (30)
- Številka skupine (31)
- Številka opreme (32)
- Naslov skupine informacij (33). Označuje, če se odsek pod naslovom nanaša na specifično izvedbo stroja, ali je seznam skupnih delov. Če ima seznam več izvedb ter ima vsaka izvedba svojo sestavno risbo, je prikazana referenčna stran sestavne risbe za to izvedbo.
- Interna informacija (34)

Inledning

Information om manualerna

Tetra Pak rekommenderar att alla manualer läses noggrant. Se till att manualerna är tillgängliga för personalen som använder eller underhåller utrustningen.

Det är viktigt att denna katalog behålls under utrustningens livslängd, och att den överlämnas till varje efterföljande innehavare eller användare av utrustningen.

Tetra Pak tar inte ansvar för någon skada på utrustningen som orsakats av att instruktionerna i medföljande manualer inte har följts.

Medföljande manualer

Följande manualer levereras tillsammans med utrustningen:

- Konverteringsmanual (CM)
  Manualen innehåller information för tekniker om hur utrustningen ska konverteras mellan olika produktionslägen.
- Elektrisk manual (EM)
  Manualen innehåller information för tekniker om utrustningens elektriska system.
- Installationsmanual (IM)
  Manualen innehåller information för tekniker om hur utrustningen installeras på ett säkert sätt.
- Underhållsmanual (MM)
  Manualen innehåller information för tekniker om hur utrustningen ska underhållas.
- Driftsmanual (OM)
  Manualen innehåller information för operatören om hur utrustningen ska hanteras före, under och efter produktion.
- Reservdelskatalog (SPC)
  Manualen innehåller information som behövs för beställning av reservdelar från Tetra Pak.
- Teknisk manual (TeM)
  - innehåller information för tekniker om hur utrustningen installeras på ett säkert sätt.
  - innehåller information för tekniker om hur utrustningen ska underhållas.
  - innehåller information för tekniker om utrustningens elektriska system.
  - innehåller information som behövs för beställning av reservdelar från Tetra Pak.

Sidlayout

Se bilden (A) på sidan i-5: Huvudsidorna i reservdelskatalogen består av en bildsida (1) och en motsvarande listsida (7). Sidnumret (5) visas i sidhuvudet på bildsidan och i sidfoten på listsidan. Dokumentnumret (6) visas i sidfoten på listsidan.

Sidnumrering

Se bilden (A) på sidan i-5: Ett sidnummer (5) består av tre delar:

- kapitelnummer (2)
- löpande sidnummer inom kapitlet (3)
- totalt sidantal i kapitlet (4)

Introduktion till maskinen

Tillverkare

Tillverkarens namn och adress finns på sidan 2 i katalogen.

Service

För att beställa reservdelar till denna maskin eller för att rapportera problem som uppstått i samband med driften kontaktar du närmaste Tetra Pak-kontor.

Har du andra frågor, kommentarer eller förslag som gäller förbättring av maskinen eller utrustningen och dokumentationen vänder du dig till din kontaktperson på Tetra Pak.

Identifiering

CE-klassificering

Denna utrustning överensstämmer med de grundläggande hälso- och säkerhetsbestämmelserna inom den europeiska ekonomiska unionen (EEA).

Maskinskylt

Bilden (B) på sidan i-5 visar ett exempel på en maskinskylt. En bild på giltig maskinskylt och dess placering på utrustningen visas i inledningskapitlet som medföljer utrustningen. Skylten innehåller de uppgifter som listas nedan och som behövs vid kontakt med Tetra Pak angående utrustningen.

- Maskintyp (8)
- Volym (9)
- Ritningsspecifikationer (10)
- Maskinnummer (11)
- Tillverkare (12)
- CE-märkning (13)
- Tillverkningsår (14)

Bilden (C) på sidan i-5 visar ett exempel på en maskinspecifikation. Kontrollera att informationen om utrustningen som listas på manualens framsida motsvarar informationen på maskinskylten och i maskinspecifikationen.

Använda reservdelskatalogen

Hitta ett reservdelsnummer

a) Se bilden (D) på sidan i-5: Gå till kapitelnumret (15) som står vid sidan om huvudgruppen som innehåller den del du vill leta reda på.

Punkt b) och c) hänvisar till bilden (E) på sidan i-6.

b) På huvudgruppsbilden letar du efter den maskinundergrupp (17) som innehåller delen eller undergruppen du letar efter. Notera positionsnumret (18) och gå till listsidan som följer efter bilden.

c) Leta efter positionsnumret (16) eller undergruppsnamnet (19). Gå till motsvarande sidnummer (20) som listas i den högra kolumnen.

Punkt d) och e) hänvisar till bilden (F) på sidan i-6.

d) Leta reda på delen (21) i undergruppsbilden och notera delens positionsnummer.

e) Reservdelsnumret (29) och reservdelsbeskrivningen (30) står bredvid positionsnumret på listsidan.

Information i reservdelskatalogen

Listan nedan hänvisar till bilden (F) på sidan i-6. Reservdelskatalogen innehåller följande information om grupper, undergrupper och reservdelar för utrustningen:

- Gruppstrukturreferens (22). Anger nästa högre grupp i utrustningslistans struktur.
- Gruppnamn (23)
- Måttenhet (25)
- Kvantitet (26)
- Monteringsritningsnummer (27)
- Listsidesintervall (28). Står med om det finns flera sidor i gruppbilden eller listan.
- Reservdels- eller undergruppsnummer (29)
- Undergruppsnamn eller reservdelsbeskrivning (30)
- Gruppnummer (31)
- Utrustningsnummer (32)
- Gruppinformationsrubrik (33). Anger om avsnittet under rubriken gäller en viss maskinvariant eller om det är en lista över allmänna delar. Om en lista har fler än en variant och varje variant har sin egen monteringsritning, visas en sidhänvisning till variantens monteringsritning.
- Intern information (34)

SPC
Spare Parts Catalogue

This page is intentionally left blank.

ECM: 195810 - 20041213
Group number: 2634504-0100
Assembly Drawing:

Pos	Part No	UN	Qty	Description	Page No
TBA 0330S, TBA 0200B, TBA 0250S, TBA 0200S, TBA 0200M, TBA 0250B					
090	2674188-0100		1	EDGE ROLLER	**1-5, 1-7**
TBA 1890S, TBA 2000S					
040	2555627-0100		1	PRESSURE ROLLER	**1-9**
090	2547420-0100		1	EDGE ROLLER	**1-11, 1-13, 1-15**
Common Parts					
010	2501310-0100		1	FILLING PIPE	**1-17, 1-19, 1-21**
020	2507059-0200		1	REGULATING VALVE	**1-23**
030	2512936-0100		1	CLEANING CUP	**1-25, 1-27**
050	2512780-0100		1	SEAL	**1-29, 1-31, 1-33**
060	2559062-0100		1	LOWER FORMING RING	**1-35, 1-37, 1-39**
070	2547422-0100		1	UPPER FORMING RING	**1-41, 1-43, 1-45, 1-47, 1-49, 1-51, 1-53**
080	2547421-0100		1	FORMING RING	**1-55, 1-57, 1-59**
100	2657873-0100		1	LONGITUDINAL SEALING	**1-61, 1-63**
110	1487338-0100		1	SUPPORT LEVEL DETECTOR	**1-67, 1-69**
120	2575120-0100		1	LIFTING UNIT	**1-71**
130	2555394-0100		1	START-UP KIT	**1-73, 1-75, 1-77, 1-79, 1-81, 1-83**
140	2642988-0100		1	PLATE	**1-85**
150	2671730-0100		1	AIR NOZZLE	**1-87, 1-89**
160	1548876-0100		1	IH EQUIPMENT	**1-91**
170	2721433-0100		1	SUPPORT RAIL	**1-93**
180	2691695-0100		1	BOX 5 - SUPERSTRUCTURE	**1-95**
190	2541634-0100		1	EDGE ROLLER	**1-151, 1-153**
200	1363779-0000		1	BOX	

Pos	Part No	UN	Qty	Description	Page No

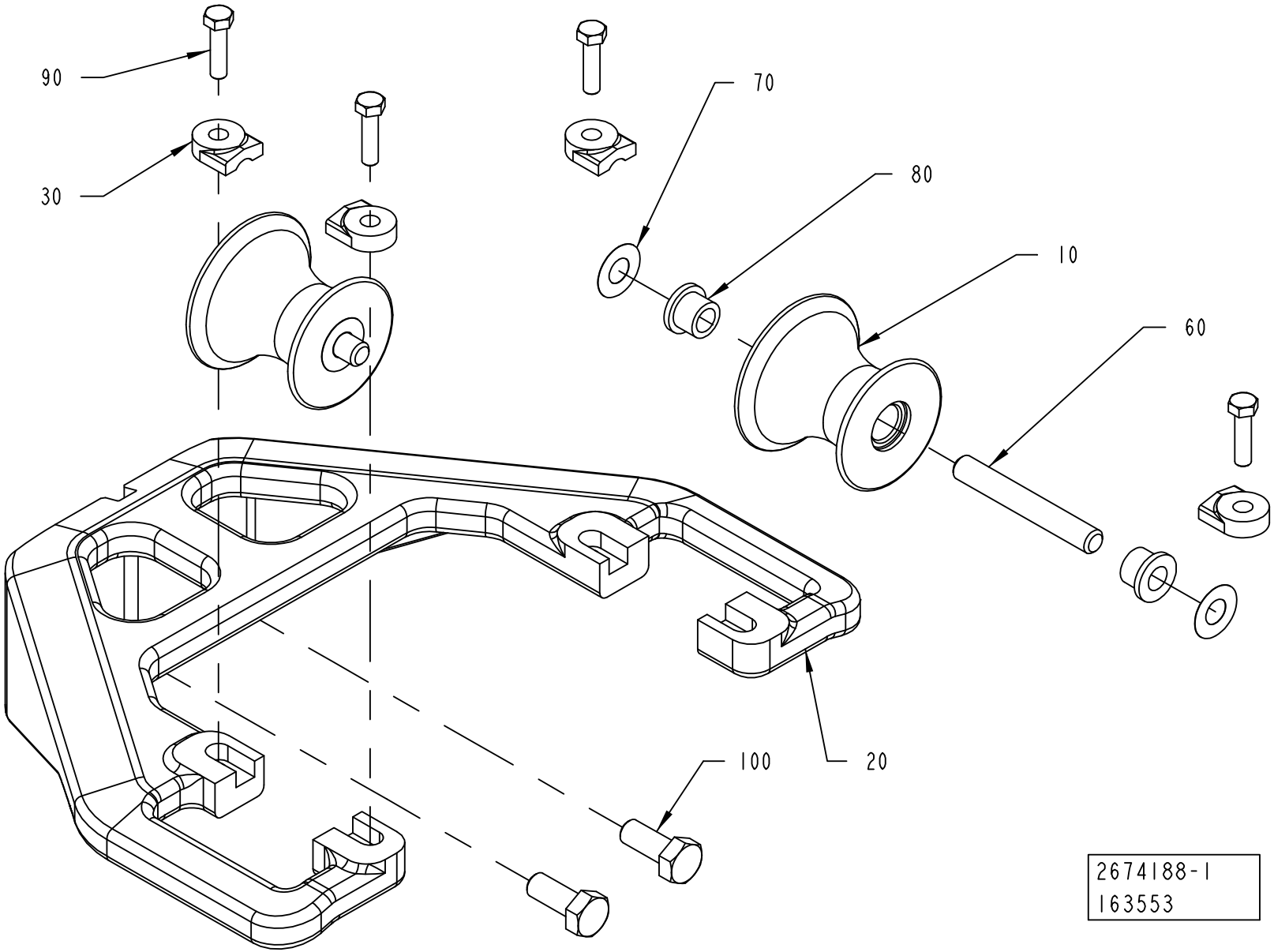
90
30
70
80
10
60
100
20
2674188-1
163553

ECM: 193506 - 20041213
Group number: 2674188-0100
Assembly Drawing: 2674188-1_1_AA

This list covers pages from 1-4 to 1-7

Pos	Part No	UN	Qty	Description	Page No
TBA 0200S (See drawing on page: 1-4)					
010	2640354-0000		2	ROLLER	
020	2640353-0000		1	BRACKET	
030	2532895-0009		4	LOCK PLATE	
060	2522213-0006		2	SHAFT	
070	2033-0011		4	WASHER	
080	90240-0172		4	FLANGE BUSHING, 8X12X10 MM	
090	312105-0331		4	SCREW M6S ISO 4017 M5X20 A480	
100	312105-0451		2	SCREW M6S ISO 4017 M8X20 A480	
TBA 0250S, TBA 0200M (See drawing on page: 1-6)					
005	2611039-0000		1	ROLLER	
010	2611040-0000		2	ROLLER	
020	2611041-0000		1	SUPPORT ROLLER	
030	2532895-0009		4	LOCK PLATE	
040	2532895-0003		2	LOCK PLATE	
060	2522213-0006		3	SHAFT	
070	2033-0011		6	WASHER	
080	90240-0172		6	FLANGE BUSHING, 8X12X10 MM	
090	312105-0331		6	SCREW M6S ISO 4017 M5X20 A480	
100	312105-0451		2	SCREW M6S ISO 4017 M8X20 A480	
TBA 0330S, TBA 0200B, TBA 0250B (See drawing on page: 1-4)					
010	2634943-0000		2	ROLLER	
020	2657860-0000		1	BRACKET	
030	2532895-0005		4	LOCK PLATE	
060	2522213-0007		2	SHAFT	
070	2033-0011		4	WASHER	
080	90240-0172		4	FLANGE BUSHING, 8X12X10 MM	
090	312105-0331		4	SCREW M6S ISO 4017 M5X20 A480	
100	312105-0449		2	SCREW M6S ISO 4017 M8X16 A480	

Pos	Part No	UN	Qty	Description	Page No

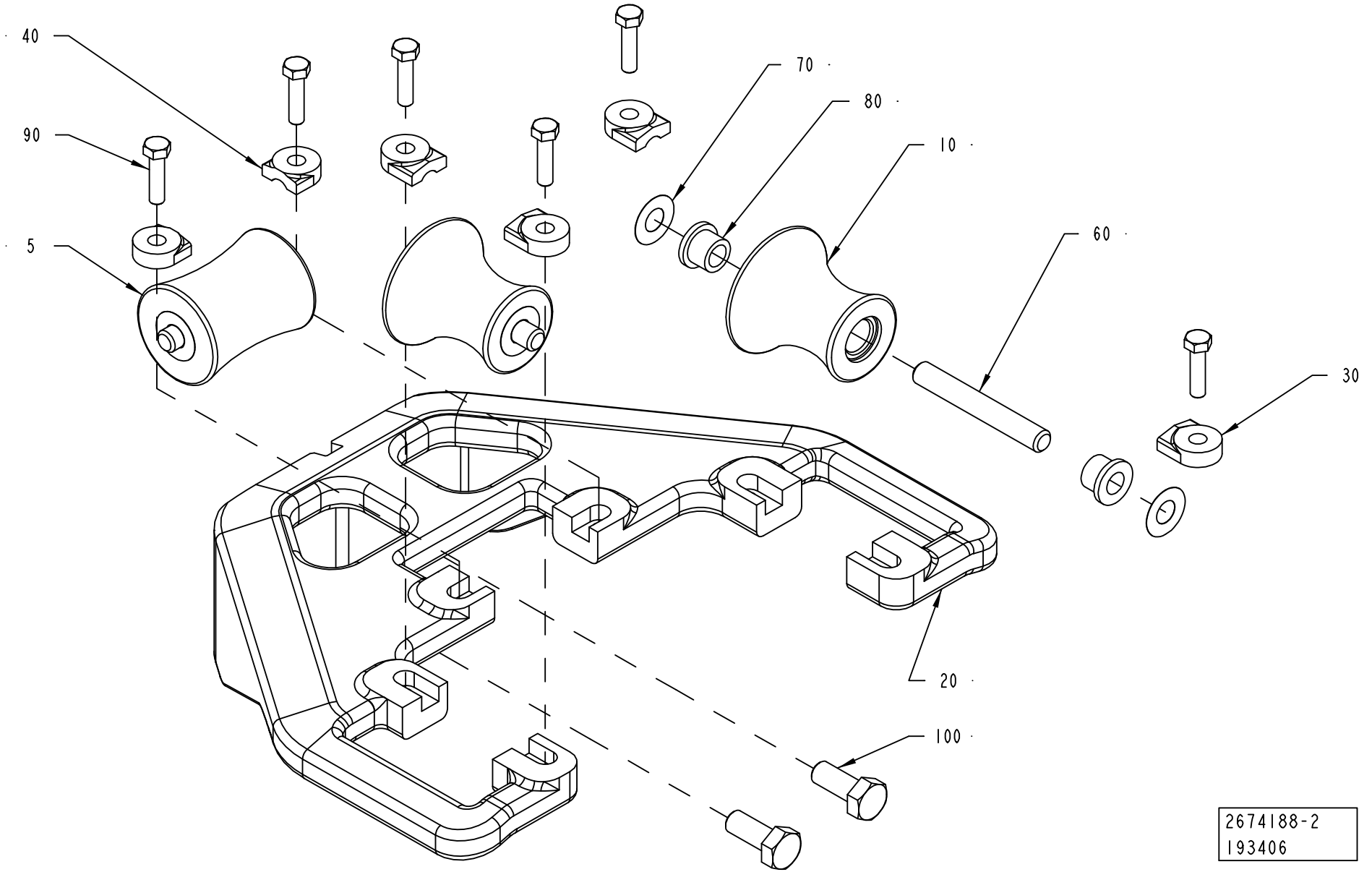
40
90
5
70
80
10
60
30
20
100
2674188-2
193406

ECM: 193506 - 20041213
Group number: 2674188-0100
Assembly Drawing: 2674188-2_1_AA

This list covers pages from 1-4 to 1-7

Pos	Part No	UN	Qty	Description	Page No
TBA 0200S (See drawing on page: 1-4)					
010	2640354-0000		2	ROLLER	
020	2640353-0000		1	BRACKET	
030	2532895-0009		4	LOCK PLATE	
060	2522213-0006		2	SHAFT	
070	2033-0011		4	WASHER	
080	90240-0172		4	FLANGE BUSHING, 8X12X10 MM	
090	312105-0331		4	SCREW M6S ISO 4017 M5X20 A480	
100	312105-0451		2	SCREW M6S ISO 4017 M8X20 A480	
TBA 0250S, TBA 0200M (See drawing on page: 1-6)					
005	2611039-0000		1	ROLLER	
010	2611040-0000		2	ROLLER	
020	2611041-0000		1	SUPPORT ROLLER	
030	2532895-0009		4	LOCK PLATE	
040	2532895-0003		2	LOCK PLATE	
060	2522213-0006		3	SHAFT	
070	2033-0011		6	WASHER	
080	90240-0172		6	FLANGE BUSHING, 8X12X10 MM	
090	312105-0331		6	SCREW M6S ISO 4017 M5X20 A480	
100	312105-0451		2	SCREW M6S ISO 4017 M8X20 A480	
TBA 0330S, TBA 0200B, TBA 0250B (See drawing on page: 1-4)					
010	2634943-0000		2	ROLLER	
020	2657860-0000		1	BRACKET	
030	2532895-0005		4	LOCK PLATE	
060	2522213-0007		2	SHAFT	
070	2033-0011		4	WASHER	
080	90240-0172		4	FLANGE BUSHING, 8X12X10 MM	
090	312105-0331		4	SCREW M6S ISO 4017 M5X20 A480	
100	312105-0449		2	SCREW M6S ISO 4017 M8X16 A480	

Pos	Part No	UN	Qty	Description	Page No

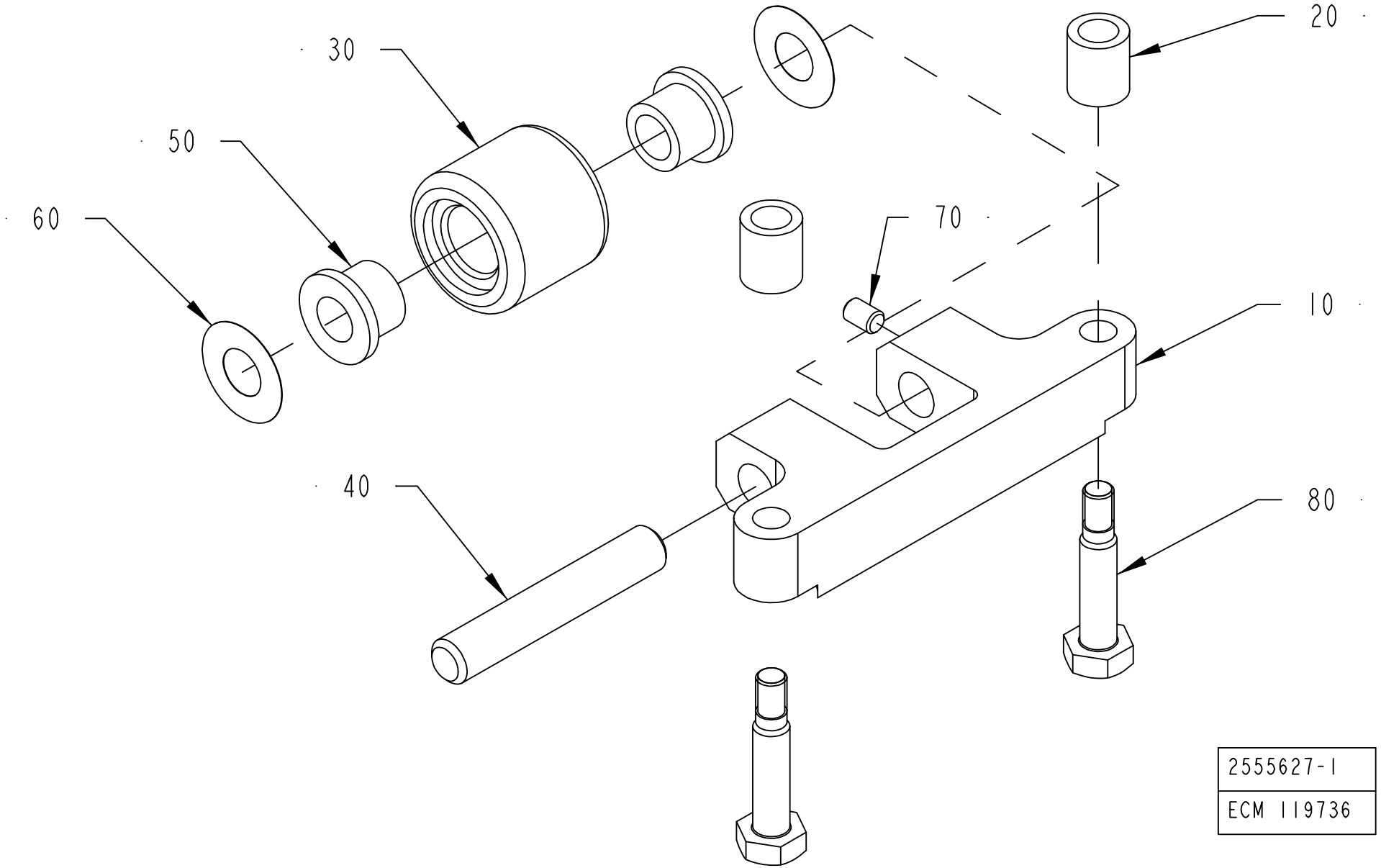
20
30
50
60
70
10
40
80
2555627-1
ECM 119736

ECM: 173006 - 20040924
Group number: 2555627-0100
Assembly Drawing: 2555627-1_1_AA

Pos	Part No	UN	Qty	Description	Page No
A3/FLEX TBA 1890S, A3/FLEX TBA 2000S					
010	2594596-0000		1	BRACKET	
030	2657925-0000		1	ROLLER	
080	2611072-0000		2	SCREW	
Common Parts					
040	752186-0005		1	SHAFT	
050	90240-0172		2	FLANGE BUSHING, 8X12X10 MM	
060	2033-0011		2	WASHER	
070	312318-0285		1	SCREW ISO4029 M4X6 A4	

Pos	Part No	UN	Qty	Description	Page No

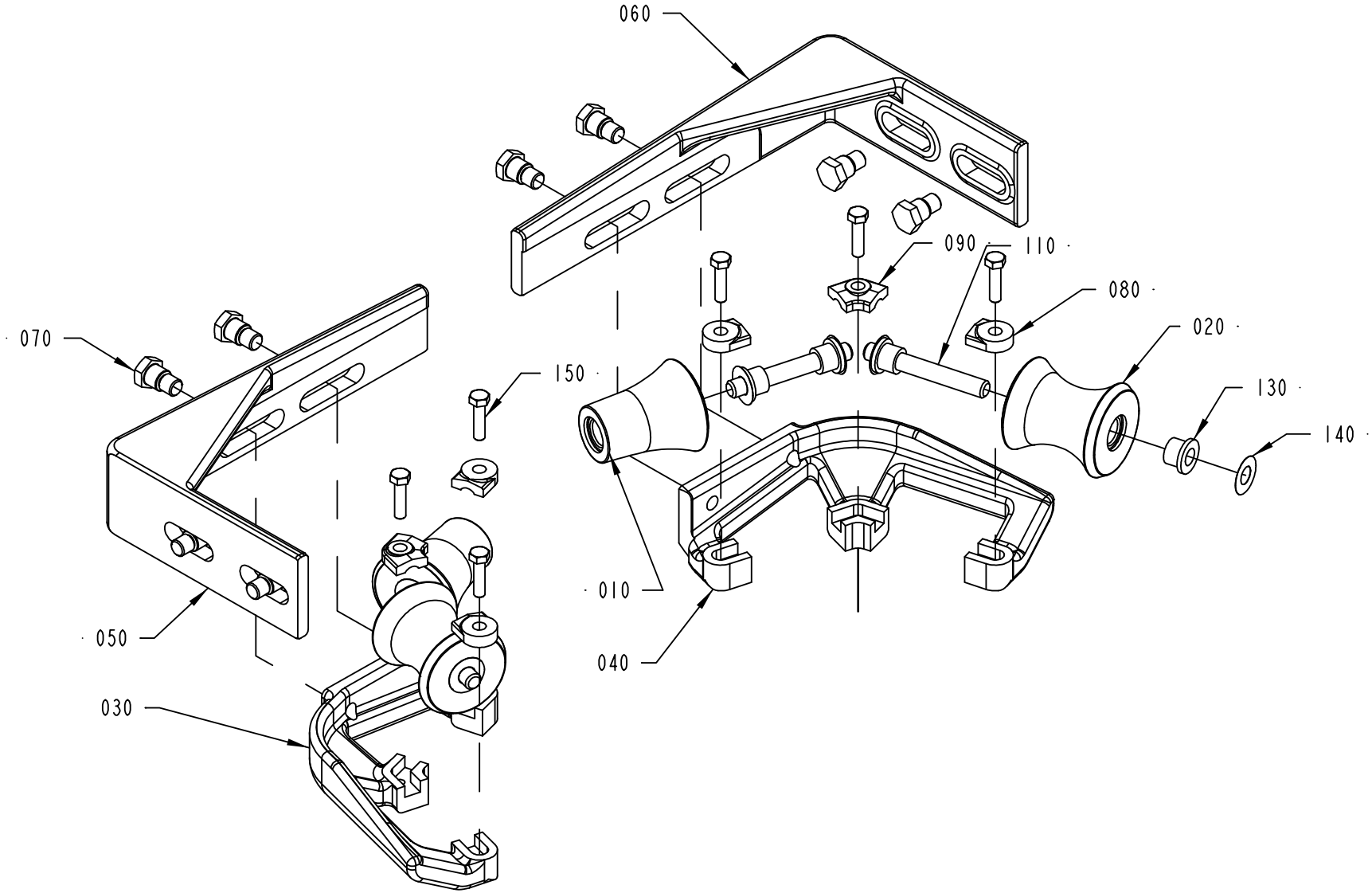

2547420-1
ECM 117070

ECM: 190575 - 20041125
Group number: 2547420-0100
Assembly Drawing: 2547420-1_1_AA

This list covers pages from 1-10 to 1-15

Pos	Part No	UN	Qty	Description	Page No
TBA 0250S, TBA 0200M (See drawing on page: 1-14)					
010	2611039-0000		1	ROLLER	
020	2611040-0000		2	ROLLER	
030	2611041-0000		1	SUPPORT ROLLER	
080	2532895-0009		4	LOCK PLATE	
090	2532895-0003		2	LOCK PLATE	
110	2522213-0006		2	SHAFT	
130	90240-0172		6	FLANGE BUSHING, 8X12X10 MM	
140	2033-0011		6	WASHER	
150	312105-0331		6	SCREW M6S ISO 4017 M5X20 A480	
160	312105-0451		2	SCREW M6S ISO 4017 M8X20 A480	
TBA 0500B, TBA 1000B (See drawing on page: 1-10)					
010	2651790-0000		2	ROLLER	
020	2651789-0000		2	ROLLER	
030	2552140-0000		1	BRACKET	
040	2552141-0000		1	BRACKET	
050	2552142-0000		1	BRACKET	
060	2552143-0000		1	BRACKET	
070	2552158-0000		8	SCREW	
080	2532895-0008		4	LOCK PLATE	
090	2528123-0006		2	LOCK PLATE	
110	752186-0016		4	SHAFT	
130	90240-0172		8	FLANGE BUSHING, 8X12X10 MM	
140	2033-0011		8	WASHER	
150	312105-0331		6	SCREW M6S ISO 4017 M5X20 A480	
TBA 1000S, TBA 1500S (See drawing on page: 1-10)					
010	2552144-0000		2	ROLL	
020	2562664-0000		2	ROLL	
030	2552140-0000		1	BRACKET	
040	2552141-0000		1	BRACKET	
050	2552142-0000		1	BRACKET	
060	2552143-0000		1	BRACKET	
070	2552158-0000		8	SCREW	
080	2532895-0008		4	LOCK PLATE	
090	2528123-0006		2	LOCK PLATE	
110	752186-0016		4	SHAFT	
130	90240-0172		8	FLANGE BUSHING, 8X12X10 MM	
140	2033-0011		8	WASHER	
150	312105-0331		6	SCREW M6S ISO 4017 M5X20 A480	
TBA 1000SQ (See drawing on page: 1-10)					
010	2552155-0000		2	ROLL	
020	2562684-0000		2	ROLL	
030	2552140-0000		1	BRACKET	
040	2552141-0000		1	BRACKET	
050	2552142-0000		1	BRACKET	
060	2552143-0000		1	BRACKET	
070	2552158-0000		8	SCREW	
080	2532895-0008		4	LOCK PLATE	
090	2528123-0006		2	LOCK PLATE	
110	752186-0016		4	SHAFT	
130	90240-0172		8	FLANGE BUSHING, 8X12X10 MM	
140	2033-0011		8	WASHER	
150	312105-0331		6	SCREW M6S ISO 4017 M5X20 A480	
TBA 1890S, TBA 2000S (See drawing on page: 1-12)					
010	2601269-0000		1	ROLLER	
015	2601272-0000		2	ROLLER	
020	2601271-0000		2	ROLLER	
025	2601273-0000		2	ROLLER	
050	2634930-0000		1	SUPPORT ROLLER	
060	2634931-0000		2	BRACKET	
080	2532895-0004		2	LOCK PLATE	
090	2562667-0002		6	LOCK PLATE	
100	2522213-0016		1	SHAFT	
110	2522213-0015		4	SHAFT	
120	2522213-0017		2	SHAFT	
130	90240-0172		14	FLANGE BUSHING, 8X12X10 MM	
140	2033-0011		14	WASHER	
150	312105-0329		8	SCREW M6S ISO 4017 M5X16 A480	
160	312105-0368		4	SCREW M6S ISO 4017 M6X16 A480	
170	312105-0370		4	SCREW M6S ISO 4017 M6X20 A480	
180	90005-0060		4	WASHER PLAIN, RBS 6,4/M6)/18,H=1,5	
190	311103-0353		2	PARALLEL PIN ISO 2338 6M6X20 A1	
TPA 1000SQ (See drawing on page: 1-10)					
010	2562694-0000		2	ROLLER	
020	2562695-0000		2	ROLLER	
030	2562696-0000		1	BRACKET	
040	2562697-0000		1	BRACKET	
050	2562692-0000		1	BRACKET	
060	2562693-0000		1	BRACKET	
070	2552158-0000		8	SCREW	
080	2532895-0008		4	LOCK PLATE	
090	2528123-0009		2	LOCK PLATE	
110	752186-0016		4	SHAFT	
130	90240-0172		8	FLANGE BUSHING, 8X12X10 MM	

Machine Type | Group Description | Used-In | Group Number | Page No

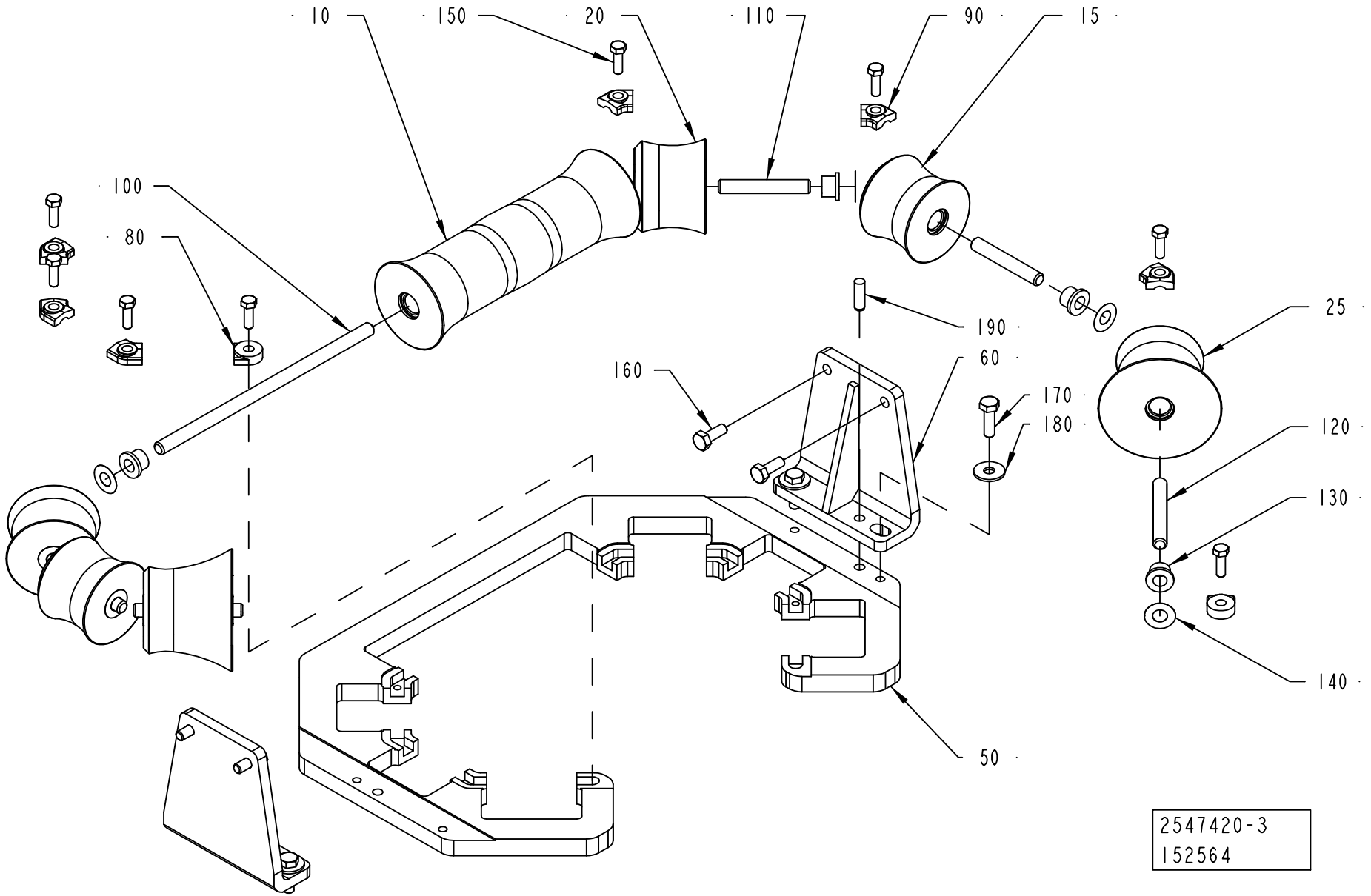
10
150
20
110
90
15
100
80
190
60
160
170
180
25
120
130
140
50
2547420-3
152564

Pos	Part No	UN	Qty	Description	Page No
TPA 1000SQ (Cont'd) (See drawing on page: 1-10)					
140	2033-0011		8	WASHER	
150	312105-0331		6	SCREW M6S ISO 4017 M5X20 A480	

Pos	Part No	UN	Qty	Description	Page No

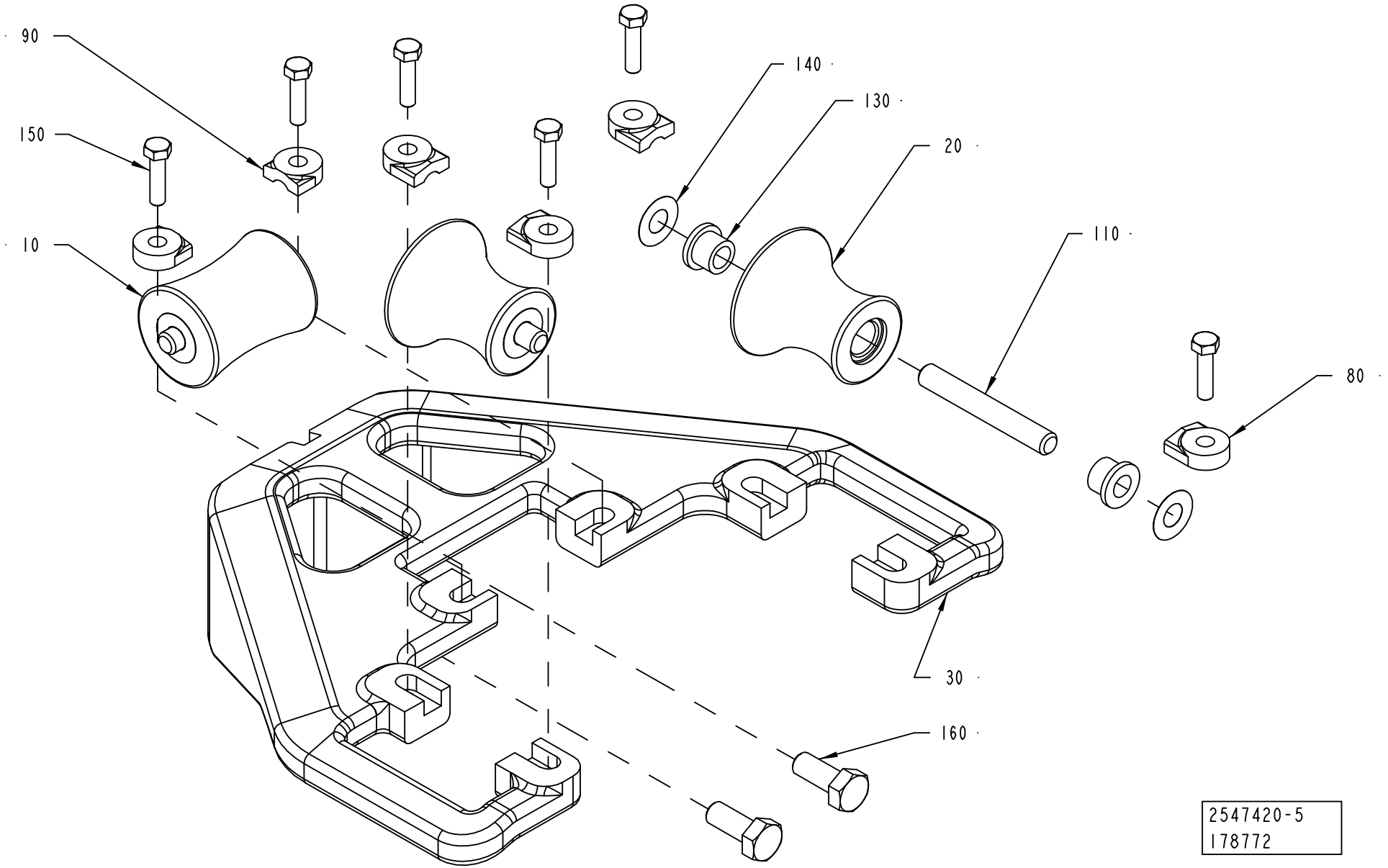
90
150
10
140
130
20
110
80
30
160
2547420-5
178772

Pos	Part No	UN	Qty	Description	Page No	Pos	Part No	UN	Qty	Description	Page No

SEE PREVIOUS LISTS PAGES: 1-11, 1-13.

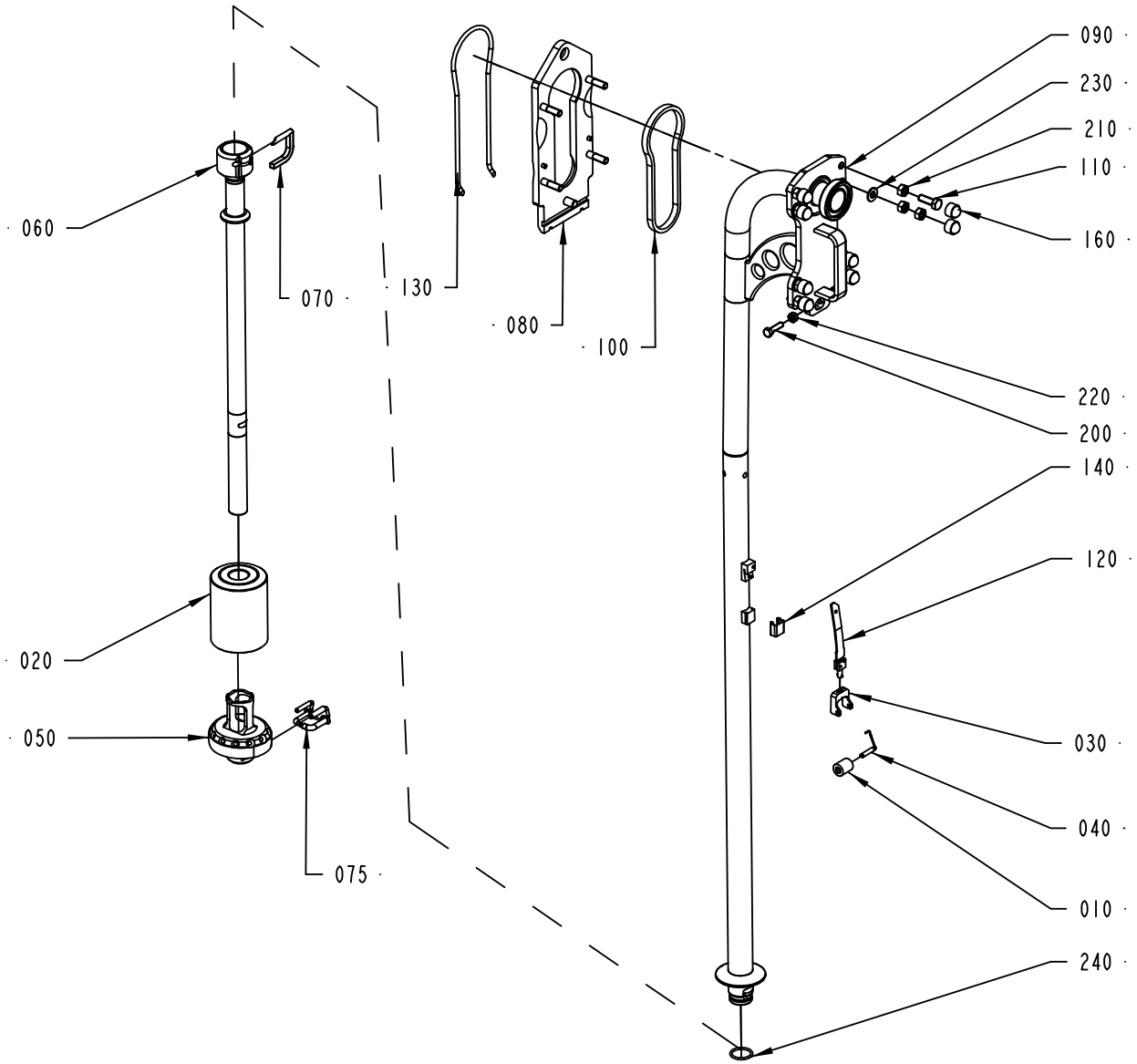

2501310-1
ECM 139126

ECM: 190140 - 20041125
Group number: 2501310-0100
Assembly Drawing: 2501310-1_1_AC

This list covers pages from 1-16 to 1-21

Pos	Part No	UN	Qty	Description	Page No
TBA 0500B NOQC, TBA 1000B NOQC (See drawing on page: 1-16)					
010	232979-0000		1	PRESSURE ROLLER	
020	2564596-0000		1	FLOAT	
030	1348048-0000		1	FORK	
040	2523268-0000		1	SHAFT	
050	2563294-0000		1	PRESSURE FLANGE	
060	2563293-0000		1	LOWER FILLING PIPE	
070	2598008-0000		1	STOP PIN	
075	2563295-0000		1	STOP PIN	
090	2501311-0000		1	FILLING PIPE	
120	1517053-0000		1	SPRING	
140	14600-0000		1	HOOD	
240	315204-0219		1	O-RING 29,2X3 MM	
TBA 0200B NOQC, TBA 0250B NOQC (See drawing on page: 1-18)					
010	257330-0000		1	PRESSURE ROLLER	
020	2564600-0000		1	FLOAT	
030	1317438-0000		1	FORK	
040	2529418-0000		1	SHAFT	
050	2601472-0000		1	PRESSURE FLANGE	
060	2598015-0000		1	LOWER FILLING PIPE	
070	2605148-0000		2	STOP PIN	
075	2563292-0000		1	STOP PIN	
090	2528104-0000		1	PIPE	
120	1498621-0000		1	SPRING	
140	295377-0003		1	HOOD	
150	1498143-0000		1	LOCKING RING	
240	315204-0215		1	O-RING 19,2X3 MM	
TBA 0200B QC, TBA 0330S QC, TBA 0250B QC (See drawing on page: 1-16)					
010	257330-0000		1	PRESSURE ROLLER	
020	2564600-0000		1	FLOAT	
030	1317438-0000		1	FORK	
040	2529418-0000		1	SHAFT	
050	2601472-0000		1	PRESSURE FLANGE	
060	2664098-0000		1	FILLING PIPE	
070	2605148-0000		2	STOP PIN	
075	2563292-0000		1	STOP PIN	
090	2528104-0000		1	PIPE	
120	1498621-0000		1	SPRING	
140	295377-0003		1	HOOD	
150	1498143-0000		1	LOCKING RING	
240	315204-0215		1	O-RING 19,2X3 MM	
TBA 0200S (See drawing on page: 1-18)					
010	272479-0000		1	PRESSURE ROLLER	
020	2564601-0000		1	FLOAT	
030	255978-0000		1	FORK	
040	2529416-0000		1	SHAFT	
050	2570015-0000		1	PRESSURE FLANGE	
060	2563296-0000		1	LOWER FILLING PIPE	
070	2605148-0000		2	STOP PIN	
075	2563292-0000		1	STOP PIN	
090	2528104-0000		1	PIPE	
120	751604-0000		1	SPRING	
140	295377-0001		1	HOOD	
150	1499114-0000		1	LOCKING RING	
240	315204-0215		1	O-RING 19,2X3 MM	
TBA 0250S, TBA 0200M (See drawing on page: 1-18)					
010	272479-0000		1	PRESSURE ROLLER	
020	2564601-0000		1	FLOAT	
030	255978-0000		1	FORK	
040	2529416-0000		1	SHAFT	
050	2685306-0000		1	PRESSURE FLANGE	
060	2601321-0000		1	FILLING PIPE	
070	2605148-0000		2	STOP PIN	
075	2563292-0000		1	STOP PIN	
090	2528104-0000		1	PIPE	
120	751604-0000		1	SPRING	
140	295377-0001		1	HOOD	
150	1499114-0000		1	LOCKING RING	
240	315204-0215		1	O-RING 19,2X3 MM	
TBA 0500B QC, TBA 1000B QC (See drawing on page: 1-16)					
010	232979-0000		1	PRESSURE ROLLER	
020	2564596-0000		1	FLOAT	
030	1348048-0000		1	FORK	
040	2523268-0000		1	SHAFT	
050	2634524-0000		1	PRESSURE FLANGE	
060	2634523-0000		1	LOWER FILLING PIPE	
070	2598008-0000		1	STOP PIN	
075	2563295-0000		1	STOP PIN	
090	2501311-0000		1	FILLING PIPE	
120	1517053-0000		1	SPRING	
140	14600-0000		1	HOOD	
240	315204-0219		1	O-RING 29,2X3 MM	
TBA 0500S (See drawing on page: 1-16)					
010	257330-0000		1	PRESSURE ROLLER	

Machine Type | Group Description | Used-In | Group Number | Page No

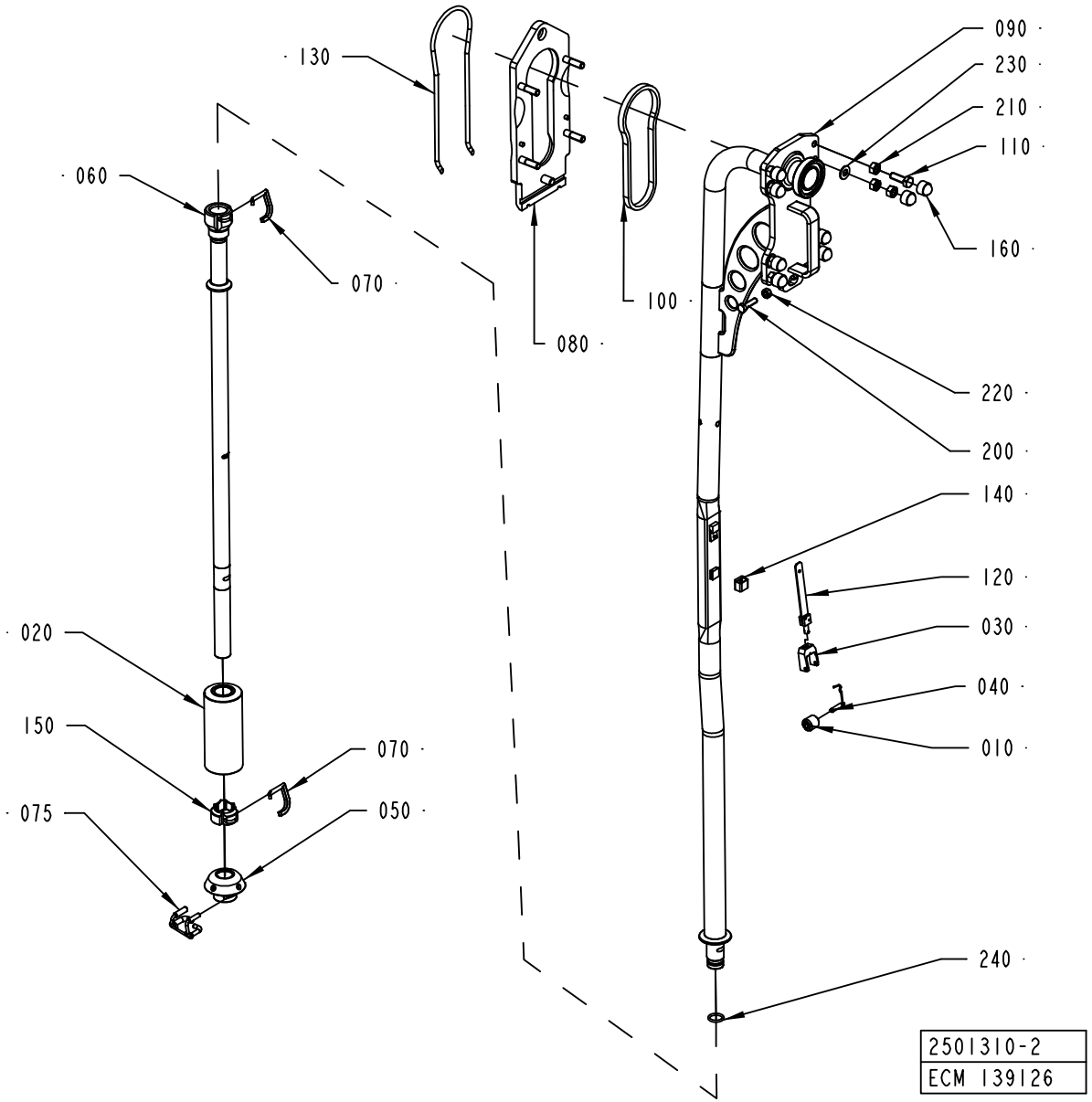
130
060
070
080
100
090
230
210
110
160
220
200
140
120
030
040
010
020
150
070
075
050
240
2501310-2
ECM 139126

Pos	Part No	UN	Qty	Description	Page No
TBA 0500S (Cont'd) (See drawing on page: 1-16)					
020	2564598-0000		1	FLOAT	
030	2673016-0000		1	FORK	
040	2673022-0000		1	SHAFT	
050	2601468-0000		1	PRESSURE FLANGE	
060	2685277-0000		1	FILLING PIPE	
070	2598008-0000		1	STOP PIN	
075	2563295-0000		1	STOP PIN	
090	2673005-0000		1	FILLING PIPE	
120	1517053-0000		1	SPRING	
140	14600-0000		1	HOOD	
240	315204-0219		1	O-RING 29,2X3 MM	
TBA 1000S (See drawing on page: 1-16)					
010	499387-0000		1	PRESSURE ROLLER	
020	2564596-0000		1	FLOAT	
030	1348047-0000		1	FORK	
040	2529419-0000		1	SHAFT	
050	2563290-0000		1	PRESSURE FLANGE	
060	2563289-0000		1	LOWER FILLING PIPE	
070	2598008-0000		1	STOP PIN	
075	2563295-0000		1	STOP PIN	
090	2501311-0000		1	FILLING PIPE	
120	2539453-0000		1	SPRING	
140	434665-0000		1	HOOD	
240	315204-0219		1	O-RING 29,2X3 MM	
TBA 1000SQ (See drawing on page: 1-16)					
010	257330-0000		1	PRESSURE ROLLER	
020	2564597-0000		1	FLOAT	
030	1348049-0000		1	FORK	
040	2529420-0000		1	SHAFT	
050	2601469-0000		1	PRESSURE FLANGE	
060	2563289-0000		1	LOWER FILLING PIPE	
070	2598008-0000		1	STOP PIN	
075	2563295-0000		1	STOP PIN	
090	2501311-0000		1	FILLING PIPE	
120	2539453-0000		1	SPRING	
140	434665-0000		1	HOOD	
240	315204-0219		1	O-RING 29,2X3 MM	
TBA 1500S (See drawing on page: 1-16)					
010	232979-0000		1	PRESSURE ROLLER	
020	2564596-0000		1	FLOAT	
030	1348048-0000		1	FORK	
040	2523268-0000		1	SHAFT	
050	2598017-0000		1	PRESSURE FLANGE	
060	2592525-0000		1	FILLING PIPE	
070	2598008-0000		1	STOP PIN	
075	2563295-0000		1	STOP PIN	
090	2501311-0000		1	FILLING PIPE	
120	1517053-0000		1	SPRING	
140	14600-0000		1	HOOD	
240	315204-0219		1	O-RING 29,2X3 MM	
TBA 1890S QC, TBA 2000S QC (See drawing on page: 1-20)					
010	232979-0000		2	PRESSURE ROLLER	
020	2634995-0000		1	FLOAT	
030	1538952-0000		1	FORK	
040	1538953-0000		1	SHAFT	
050	2641297-0000		1	PRESSURE FLANGE	
060	2594629-0000		1	FILLING PIPE	
070	2594617-0000		1	STOP PIN	
075	2641294-0000		1	STOP PIN	
090	2592544-0000		1	FILLING PIPE	
120	2601239-0000		1	SPRING	
140	2672994-0000		1	HOOD	
170	24928-0000		3	LOCKING RUBBER	
185	267728-0000		2	SHAFT	
190	2685285-0000		1	BRACKET	
240	315204-0223		1	O-RING 39,2X3 MM	
TPA 0330SQ (See drawing on page: 1-18)					
010	257330-0000		1	PRESSURE ROLLER	
020	2564599-0000		1	FLOAT	
030	1348047-0000		1	FORK	
040	2529417-0000		1	SHAFT	
050	2601470-0000		1	PRESSURE FLANGE	
060	2598018-0000		1	LOWER FILLING PIPE	
070	2605148-0000		2	STOP PIN	
075	2563292-0000		1	STOP PIN	
090	2528104-0000		1	PIPE	
120	544894-0000		1	SPRING	
140	295377-0003		1	HOOD	
150	1498143-0000		1	LOCKING RING	
240	315204-0215		1	O-RING 19,2X3 MM	
TPA 0500SQ (See drawing on page: 1-16)					
010	257330-0000		1	PRESSURE ROLLER	
020	2564600-0000		1	FLOAT	

Machine Type | Group Description | Used-In | Group Number | Page No

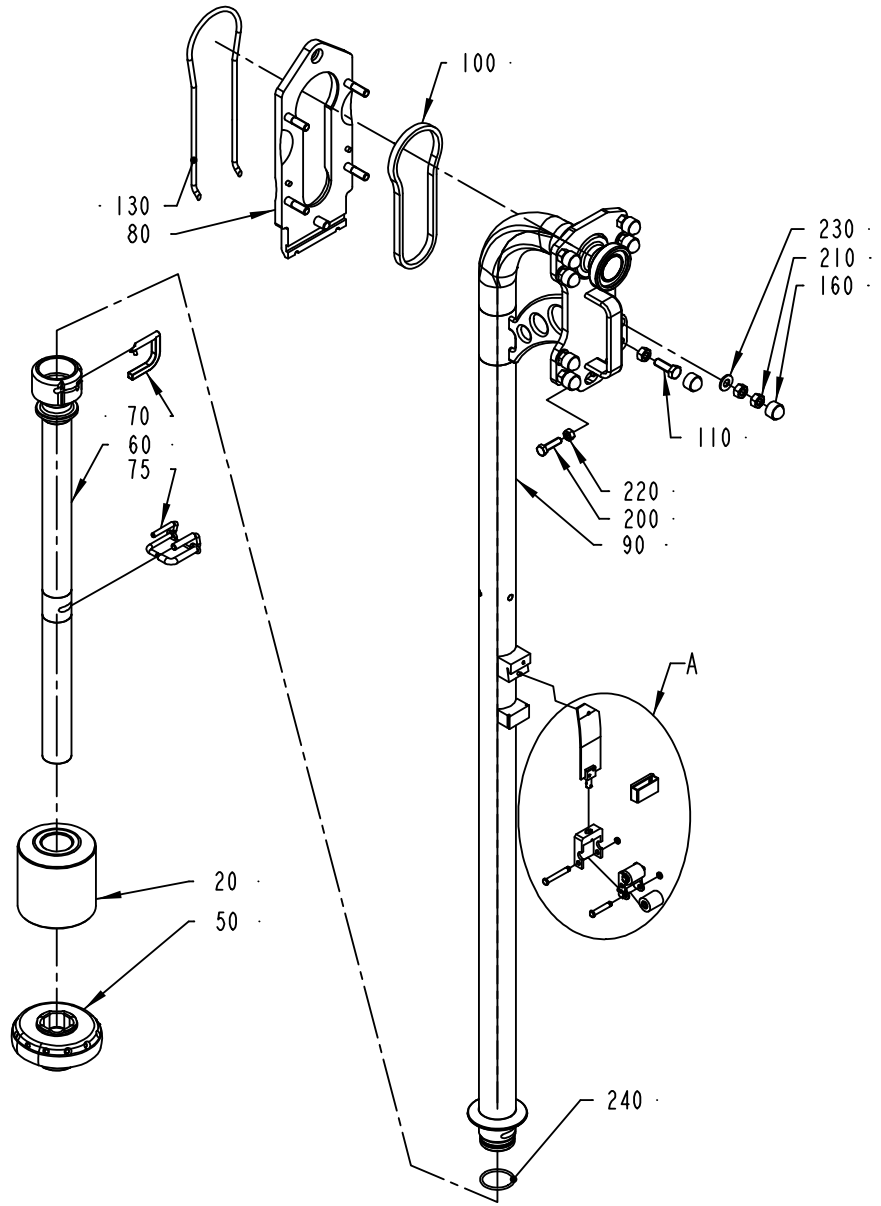

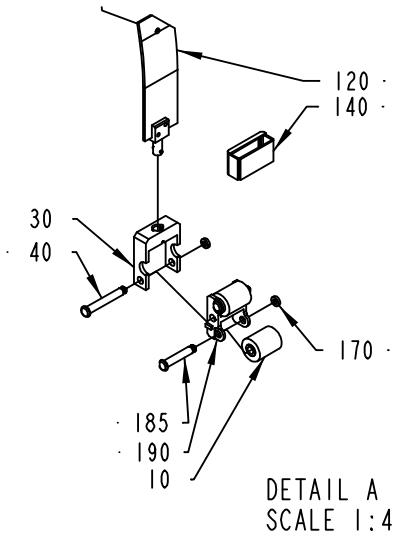

DETAIL A
SCALE 1:4

2501310-3
ECM 151418

Pos	Part No	UN	Qty	Description	Page No
TPA 0500SQ (Cont'd) (See drawing on page: 1-16)					
030	2673015-0000		1	FORK	
040	2673021-0000		1	SHAFT	
050	2601474-0000		1	PRESSURE FLANGE	
060	2672949-0000		1	FILLING PIPE	
070	2598010-0000		1	STOP PIN	
075	2563295-0000		1	STOP PIN	
090	2673005-0000		1	FILLING PIPE	
120	2679889-0000		1	SPRING	
140	14600-0000		1	HOOD	
240	315204-0219		1	O-RING 29,2X3 MM	
TPA 1000SQ (See drawing on page: 1-16)					
010	257330-0000		1	PRESSURE ROLLER	
020	2564602-0000		1	FLOAT	
030	1348049-0000		1	FORK	
040	2529420-0000		1	SHAFT	
050	2570017-0000		1	PRESSURE FLANGE	
060	2565444-0000		1	FILLING PIPE	
070	2598008-0000		1	STOP PIN	
075	2563295-0000		1	STOP PIN	
090	2565436-0000		1	FILLING PIPE	
120	1519485-0000		1	SPRING	
140	14600-0000		1	HOOD	
240	315204-0219		1	O-RING 29,2X3 MM	
Common Parts					
080	2500082-0000		1	MOUNTING PLATE	
100	2507048-0000		1	GASKET	
110	312105-0495		4	SCREW M6S ISO 4017 M10X30 A480	
130	2500071-0000		1	O-RING	
160	90459-0729		8	HEXAGONAL PROTECTIVE CAP GPN 1000	
200	312105-0455		2	SCREW M6S ISO 4017 M8X30 A480	
210	312605-0320		12	HEXAGON NUT, M6M M10 A280	
220	312605-0318		2	HEXAGON NUT, M6M M8 A280	
230	315105-0173		4	WASHER BRB10,5X22RFR	

Pos	Part No	UN	Qty	Description	Page No

REGULATING VALVE

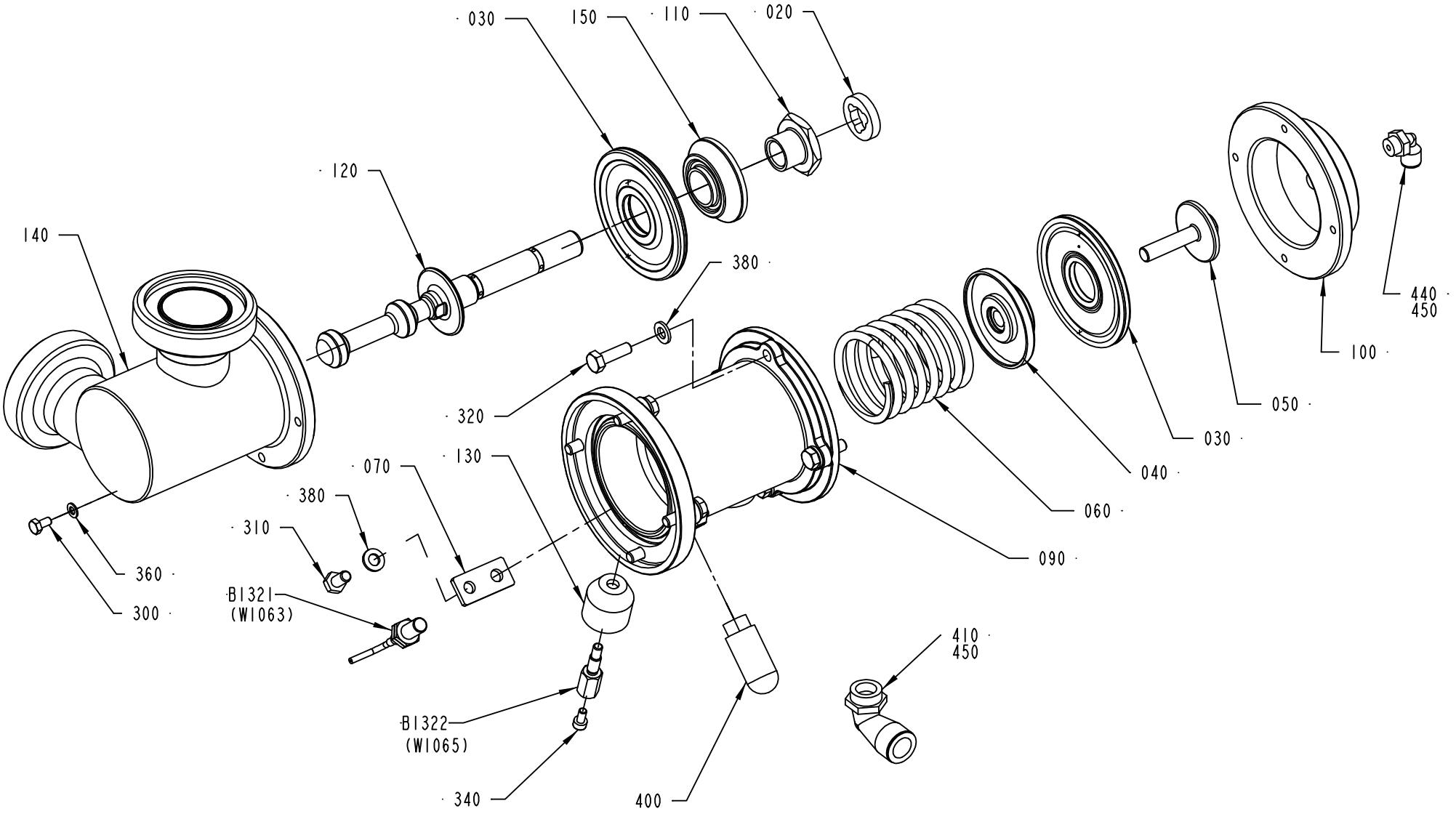

2507059-4
ECM 158797

ECM: 190410 - 20041125
Group number: 2507059-0200
Assembly Drawing: 2507059-4_1_AA

Pos	Part No	UN	Qty	Description	Page No
A3/FLEX TBA 0200S, A3/FLEX TBA 0200B, A3/FLEX TBA 0250B, A3/FLEX TBA 0330S, A3/FLEX TPA 0330SQ, A3/FLEX TBA 0200M, A3/FLEX TBA 0250S					
120	2672938-0000		1	SHUTTER	
140	2562704-0000		1	BODY	
A3/FLEX TBA 0500B, A3/FLEX TBA 1000B, A3/FLEX TBA 1000S, A3/FLEX TBA 1000SQ, A3/FLEX TPA 1000SQ, A3/FLEX TPA 0500SQ, A3/FLEX TBA 0500S					
120	2672936-0000		1	SHUTTER	
140	1548230-0000		1	BODY	
A3/FLEX TBA 1500S					
120	2672937-0000		1	SHUTTER	
140	1498526-0000		1	REGULATOR BODY	
A3/FLEX TBA 1890S, A3/FLEX TBA 2000S					
120	2657922-0000		1	SHUTTER	
140	2500078-0000		1	BODY	
Common Parts					
020	2594043-0000		1	SHOCK ABSORBER	
030	925998-0000		2	DIAPHRAGM	
040	2693622-0000		1	SPACER	
050	926907-0000		1	SCREW	
060	1195397-0000		1	COMPRESSION SPRING	
070	926934-0000		1	SUPPORT	
080	927044-0000		1	SPACER	
090	2563766-0000		1	BODY	
100	927203-0000		1	COVER	
110	979434-0000		1	FERRULE	
130	1478813-0000		1	SPACER	
150	1511600-0000		1	SPACER	
300	312105-0287		1	SCREW M6S ISO4017 M4X8 A470	
310	312105-0366		1	SCREW M6S ISO 4017 M6X12 A480	
320	312105-0370		8	SCREW M6S ISO 4017 M6X20 A480	
340	312115-0287		1	SCREW ISO4762 M4X8 A4	
360	315105-0136		1	WASHER BRB4,3XRFR	
380	315105-0153		9	WASHER BRB6,4X12RFR	
400	90328-0026		1	SILENCER G1/4	
410	90458-2960		1	ELBOW PIPE JOINT, EXT.THREAD,D=12MM-G3/8	
440	90458-2956		2	ELBOW PIPE JOINT, EXT.THREAD, D=6MM-G1/8	
450	90144-0073		1	TREBOFLON-TAPE W=13MM	
B1321	90458-0138		1	PROX.SW. E2EG-X1R5B1-5M	
B1322	1478814-0000		1	SENSOR	

Pos	Part No	UN	Qty	Description	Page No

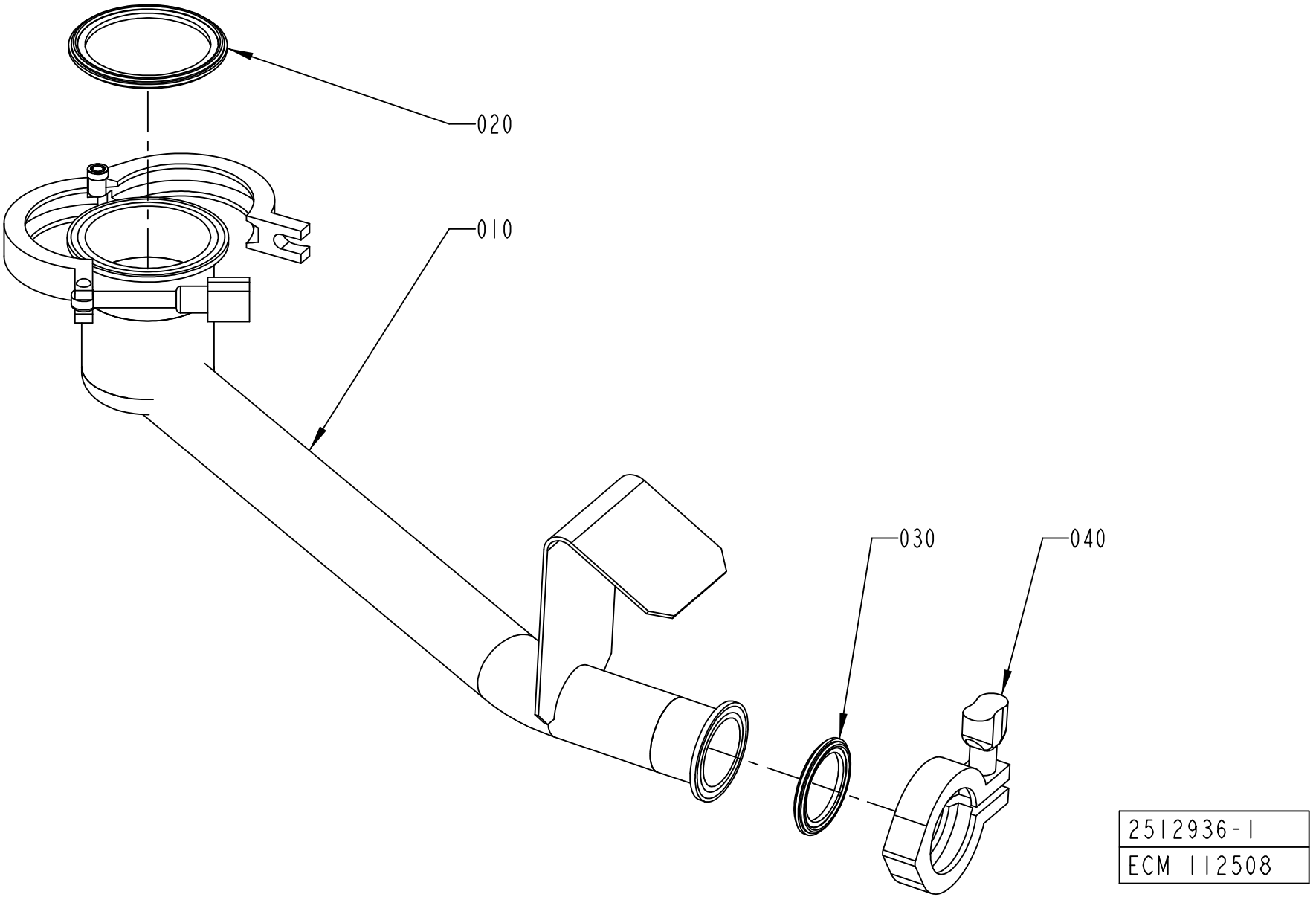
020
010
030
040
2512936-1
ECM 112508

Pos	Part No	UN	Qty	Description	Page No
TBA 0330S, TBA 0200B, TBA 0250S, TBA 0200S, TBA 0200M, TBA 0250B, TPA 0330SQ (See drawing on page: 1-26)					
010	2540615-0000		1	CLEANING CUP	
030	342850-0304		2	GASKET 35,4X49,1X5,2 1"1/2 FDA	
TBA 0500S, TPA 1000SQ, TPA 0500SQ (See drawing on page: 1-24)					
010	2565437-0000		1	CLEANING CUP	
020	342850-0305		1	GASKET 47,8X62,6X5,2 MM 2" FDA	
030	342850-0304		1	GASKET 35,4X49,1X5,2 1"1/2 FDA	
TBA 1000S, TBA 1000SQ, TBA 1000B, TBA 1500S, TBA 1890S, TBA 2000S (See drawing on page: 1-24)					
010	2501312-0000		1	CLEANING CUP	
020	342850-0306		1	GASKET 60,3X76,1X5,2 MM 2"1/2 FDA	
030	342850-0304		1	GASKET 35,4X49,1X5,2 1"1/2 FDA	
Common Parts					
040	342840-0103		1	CLAMPING PIECE	

Pos	Part No	UN	Qty	Description	Page No

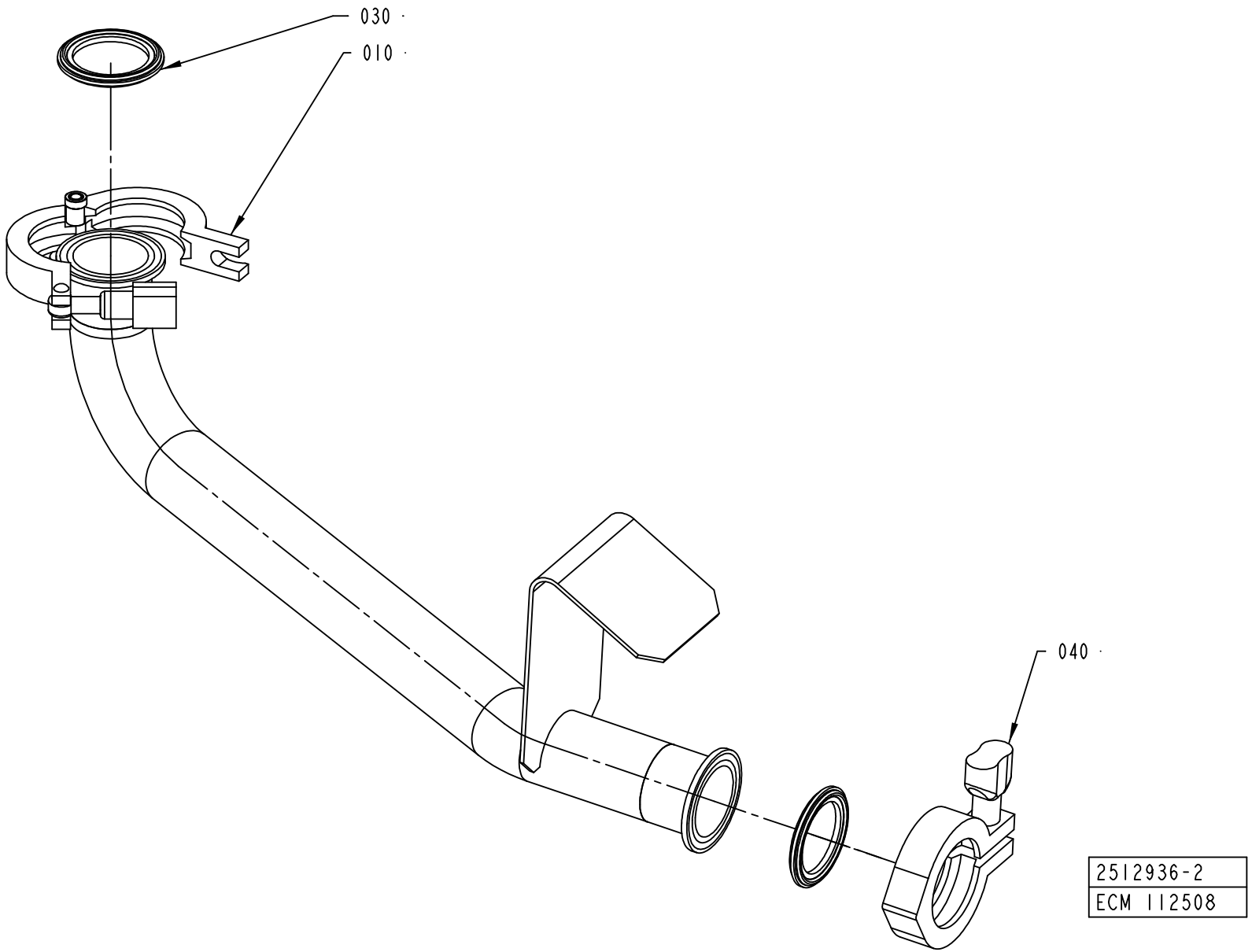
030
010
040
2512936-2
ECM 112508

ECM: 190414 - 20041125
Group number: 2512936-0100
Assembly Drawing: 2512936-2_1_AA

This list covers pages from 1-24 to 1-27

Pos	Part No	UN	Qty	Description	Page No
TBA 0330S, TBA 0200B, TBA 0250S, TBA 0200S, TBA 0200M, TBA 0250B, TPA 0330SQ (See drawing on page: 1-26)					
010	2540615-0000		1	CLEANING CUP	
030	342850-0304		2	GASKET 35,4X49,1X5,2 1"1/2 FDA	
TBA 0500S, TPA 1000SQ, TPA 0500SQ (See drawing on page: 1-24)					
010	2565437-0000		1	CLEANING CUP	
020	342850-0305		1	GASKET 47,8X62,6X5,2 MM 2" FDA	
030	342850-0304		1	GASKET 35,4X49,1X5,2 1"1/2 FDA	
TBA 1000S, TBA 1000SQ, TBA 1000B, TBA 1500S, TBA 1890S, TBA 2000S (See drawing on page: 1-24)					
010	2501312-0000		1	CLEANING CUP	
020	342850-0306		1	GASKET 60,3X76,1X5,2 MM 2"1/2 FDA	
030	342850-0304		1	GASKET 35,4X49,1X5,2 1"1/2 FDA	
Common Parts					
040	342840-0103		1	CLAMPING PIECE	

Pos	Part No	UN	Qty	Description	Page No

Machine Type | Group Description | Used-In | Group Number | Page No

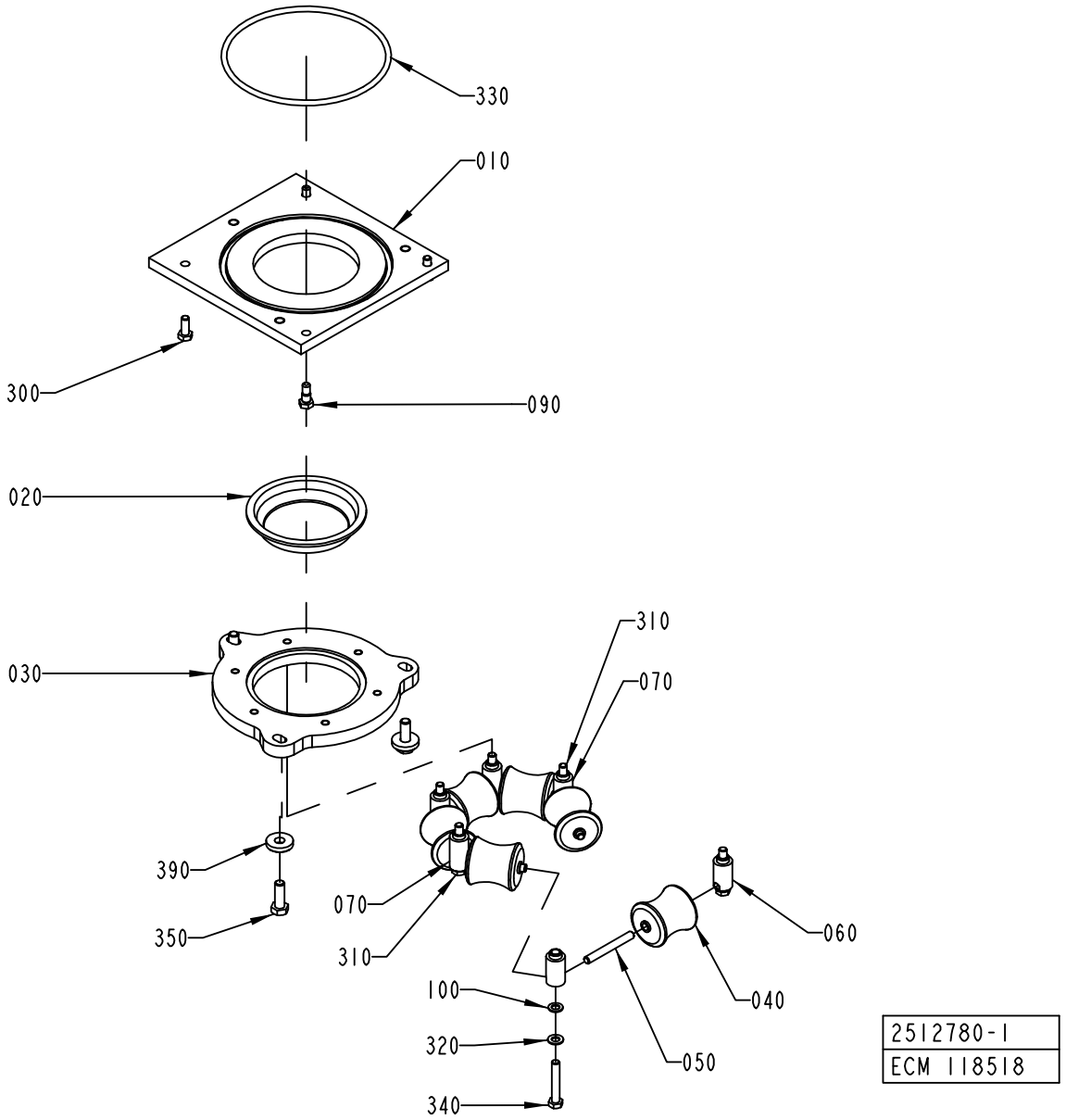
330
010
300
090
020
030
310
070
390
070
350
310
060
040
100
320
050
340
2512780-1
ECM 118518

ECM: 193901 - 20041213
Group number: 2512780-0100
Assembly Drawing: 2512780-1_1_AA

This list covers pages from 1-28 to 1-33

Pos	Part No	UN	Qty	Description	Page No
TBA 0200S (See drawing on page: 1-30)					
010	2562711-0000		1	PLATE	
020	490901-0000		1	SEAL	
030	2562710-0000		1	RING	
040	2562709-0000		2	ROLLER	
050	263655-0018		2	SHAFT	
060	1038576-0000		4	AXLE SUPPORT	
360	315125-0153		3	WASHER TBRSB 6,4X22X4 A4	
370	312105-0372		3	SCREW M6S ISO 4017 M6X25 A480	
380	312109-0459		4	SCREW M6S ISO 4017 M8X40 A480	
TBA 0250S, TBA 0200M (See drawing on page: 1-30)					
010	2611044-0000		1	PLATE	
020	574336-0000		1	SEAL	
030	2611045-0000		1	RING	
050	263655-0018		2	SHAFT	
060	1038576-0000		4	AXLE SUPPORT	
360	315125-0153		3	WASHER TBRSB 6,4X22X4 A4	
370	312105-0372		3	SCREW M6S ISO 4017 M6X25 A480	
380	312109-0459		4	SCREW M6S ISO 4017 M8X40 A480	
TBA 0330S, TBA 0200B, TBA 0250B (See drawing on page: 1-30)					
010	2528097-0000		1	PLATE	
020	273953-0000		1	SEAL	
030	2528096-0000		1	RING	
040	456796-0000		2	ROLLER	
050	263655-0006		2	SHAFT	
060	1038576-0000		4	AXLE SUPPORT	
360	315125-0153		3	WASHER TBRSB 6,4X22X4 A4	
370	312105-0372		3	SCREW M6S ISO 4017 M6X25 A480	
380	312109-0459		4	SCREW M6S ISO 4017 M8X40 A480	
TBA 0500B, TBA 1000B, TBA 1500S (See drawing on page: 1-28)					
010	2559104-0000		1	PLATE	
020	466042-0000		1	SEAL	
030	2512779-0000		1	RING	
040	466046-0000		6	ROLLER	
050	263655-0009		6	SHAFT	
060	1036954-0000		4	AXLE SUPPORT	
070	1036955-0000		2	AXLE SUPPORT	
100	1129431-0000		4	WASHER	
310	312105-0462		2	SCREW M6S ISO 4014 M8X55 A480	
320	315105-0165		6	WASHER BRB8,4X16RFR	
340	312109-0461		4	SCREW M6S ISO 4017 M8X50 A480	
350	312105-0495		3	SCREW M6S ISO 4017 M10X30 A480	
390	315125-0173		3	WASHER TBRSB 10,5X28X6 A4	
TBA 0500S (See drawing on page: 1-32)					
010	2559103-0000		1	PLATE	
020	466089-0000		1	SEAL	
030	2559102-0000		1	RING	
040	466092-0000		5	ROLL	
045	466092-0000		1	ROLL	
050	263655-0007		6	SHAFT	
060	1036954-0000		4	AXLE SUPPORT	
070	1036955-0000		2	AXLE SUPPORT	
100	1129431-0000		4	WASHER	
310	312105-0462		2	SCREW M6S ISO 4014 M8X55 A480	
320	315105-0165		6	WASHER BRB8,4X16RFR	
340	312109-0461		4	SCREW M6S ISO 4017 M8X50 A480	
350	312105-0495		3	SCREW M6S ISO 4017 M10X30 A480	
390	315125-0173		3	WASHER TBRSB 10,5X28X6 A4	
410	311103-1274		2	PARALLEL PIN ISO 2338 4M6X24 A1	
TBA 1000S (See drawing on page: 1-28)					
010	2559104-0000		1	PLATE	
020	567743-0000		1	SEAL	
030	2512779-0000		1	RING	
040	573504-0000		6	ROLLER	
050	263655-0009		6	SHAFT	
060	1036954-0000		4	AXLE SUPPORT	
070	1036955-0000		2	AXLE SUPPORT	
100	1129431-0000		4	WASHER	
310	312105-0462		2	SCREW M6S ISO 4014 M8X55 A480	
320	315105-0165		6	WASHER BRB8,4X16RFR	
340	312109-0461		4	SCREW M6S ISO 4017 M8X50 A480	
350	312105-0495		3	SCREW M6S ISO 4017 M10X30 A480	
390	315125-0173		3	WASHER TBRSB 10,5X28X6 A4	
TBA 1000SQ (See drawing on page: 1-28)					
010	2559104-0000		1	PLATE	
020	579318-0000		1	SEAL	
030	2512779-0000		1	RING	
040	1490762-0000		6	ROLLER	
050	263655-0009		6	SHAFT	
060	1036954-0000		4	AXLE SUPPORT	
070	1036955-0000		2	AXLE SUPPORT	
100	1129431-0000		4	WASHER	
310	312105-0462		2	SCREW M6S ISO 4014 M8X55 A480	
320	315105-0165		6	WASHER BRB8,4X16RFR	

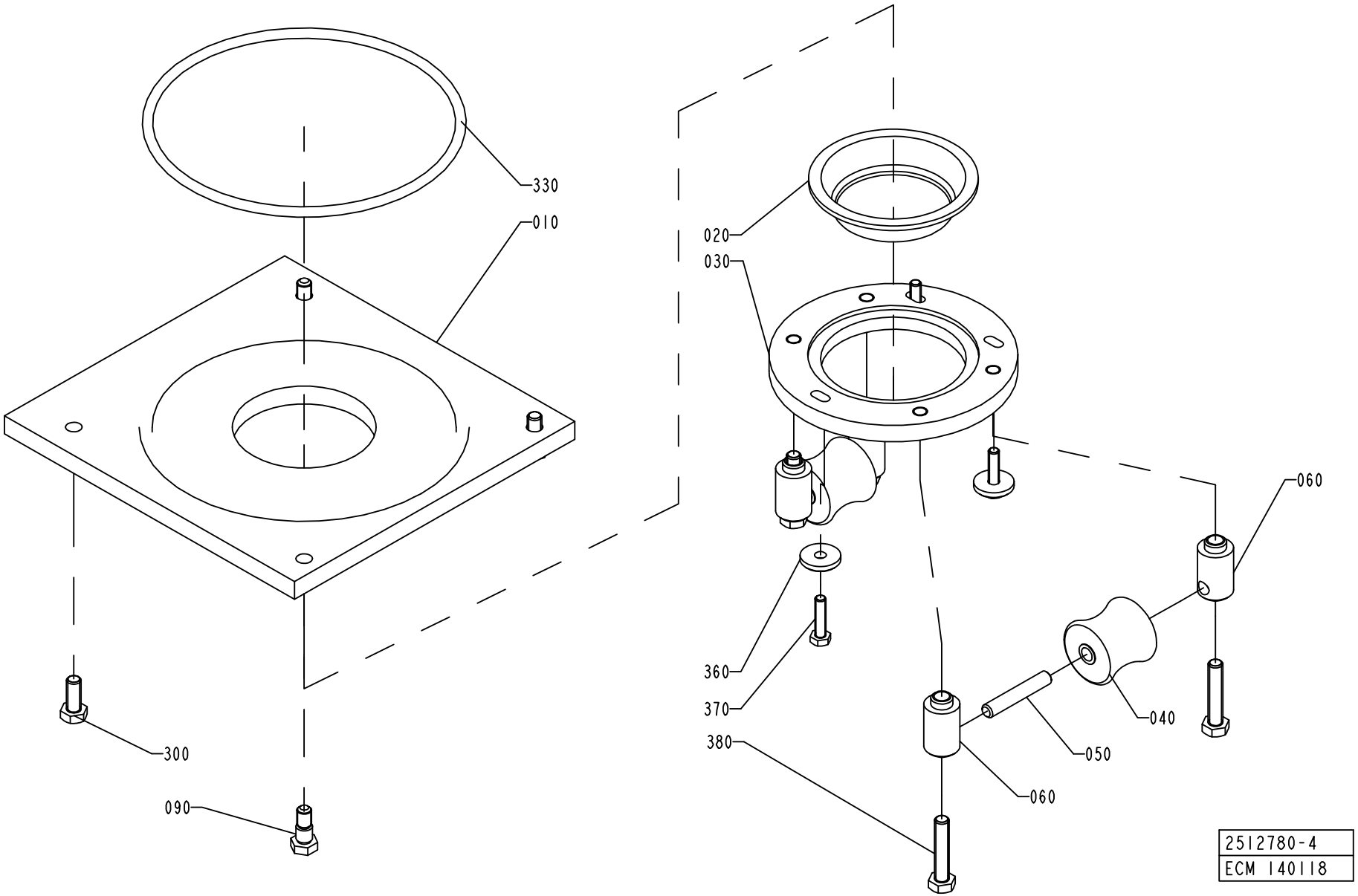
330
010
020
030
060
360
370
380
040
050
060
300
090
2512780-4
ECM 140118

ECM: 193901 - 20041213
Group number: 2512780-0100
Assembly Drawing: 2512780-4_1_AA

This list covers pages from 1-28 to 1-33

Pos	Part No	UN	Qty	Description	Page No
TBA 1000SQ (Cont'd) (See drawing on page: 1-28)					
340	312109-0461		4	SCREW M6S ISO 4017 M8X50 A480	
350	312105-0495		3	SCREW M6S ISO 4017 M10X30 A480	
390	315125-0173		3	WASHER TBRSB 10,5X28X6 A4	
TBA 1890S, TBA 2000S (See drawing on page: 1-28)					
010	2582616-0000		1	PLATE	
020	2582623-0000		1	SEAL	
030	2582629-0000		1	RING	
040	2582630-0000		6	ROLLER	
050	263655-0015		6	SHAFT	
060	1036954-0000		4	AXLE SUPPORT	
070	1036955-0000		2	AXLE SUPPORT	
100	1129431-0000		4	WASHER	
310	312105-0462		2	SCREW M6S ISO 4014 M8X55 A480	
320	315105-0165		6	WASHER BRB8,4X16RFR	
340	312109-0461		4	SCREW M6S ISO 4017 M8X50 A480	
350	312105-0495		3	SCREW M6S ISO 4017 M10X30 A480	
390	315125-0173		3	WASHER TBRSB 10,5X28X6 A4	
TPA 0330SQ (See drawing on page: 1-30)					
010	2528097-0000		1	PLATE	
020	929286-0000		1	SEAL	
030	2528096-0000		1	RING	
040	929284-0000		2	ROLLER	
050	263655-0006		2	SHAFT	
060	1038576-0000		4	AXLE SUPPORT	
360	315125-0153		3	WASHER TBRSB 6,4X22X4 A4	
370	312105-0372		3	SCREW M6S ISO 4017 M6X25 A480	
380	312109-0459		4	SCREW M6S ISO 4017 M8X40 A480	
TPA 0500SQ (See drawing on page: 1-32)					
010	2611046-0000		1	PLATE	
020	2718901-0000		1	SEAL	
030	2611047-0000		1	RING	
040	2552655-0000		5	ROLLER	
045	2552656-0000		1	ROLLER	
050	263655-0007		6	SHAFT	
060	1036954-0000		4	AXLE SUPPORT	
070	1036955-0000		2	AXLE SUPPORT	
100	1129431-0000		4	WASHER	
310	312105-0462		2	SCREW M6S ISO 4014 M8X55 A480	
320	315105-0165		6	WASHER BRB8,4X16RFR	
340	312109-0461		4	SCREW M6S ISO 4017 M8X50 A480	
350	312105-0495		3	SCREW M6S ISO 4017 M10X30 A480	
390	315125-0173		3	WASHER TBRSB 10,5X28X6 A4	
400	311103-0232		1	PARALLEL PIN ISO 2338 3M6X8 A1	
410	311103-1274		2	PARALLEL PIN ISO 2338 4M6X24 A1	
TPA 1000SQ (See drawing on page: 1-28)					
010	2559103-0000		1	PLATE	
020	1524414-0000		1	SEAL	
030	2559102-0000		1	RING	
040	1524416-0000		6	ROLLER	
050	263655-0007		6	SHAFT	
060	1036954-0000		4	AXLE SUPPORT	
070	1036955-0000		2	AXLE SUPPORT	
100	1129431-0000		4	WASHER	
310	312105-0462		2	SCREW M6S ISO 4014 M8X55 A480	
320	315105-0165		6	WASHER BRB8,4X16RFR	
340	312109-0461		4	SCREW M6S ISO 4017 M8X50 A480	
350	312105-0495		3	SCREW M6S ISO 4017 M10X30 A480	
390	315125-0173		3	WASHER TBRSB 10,5X28X6 A4	
Common Parts					
040	2616231-0000		2	ROLLER	
090	1037885-0000		2	REAMED BOLT	
300	312105-0451		2	SCREW M6S ISO 4017 M8X20 A480	
330	315204-0324		1	O-RING 164,3X5,7 MM	

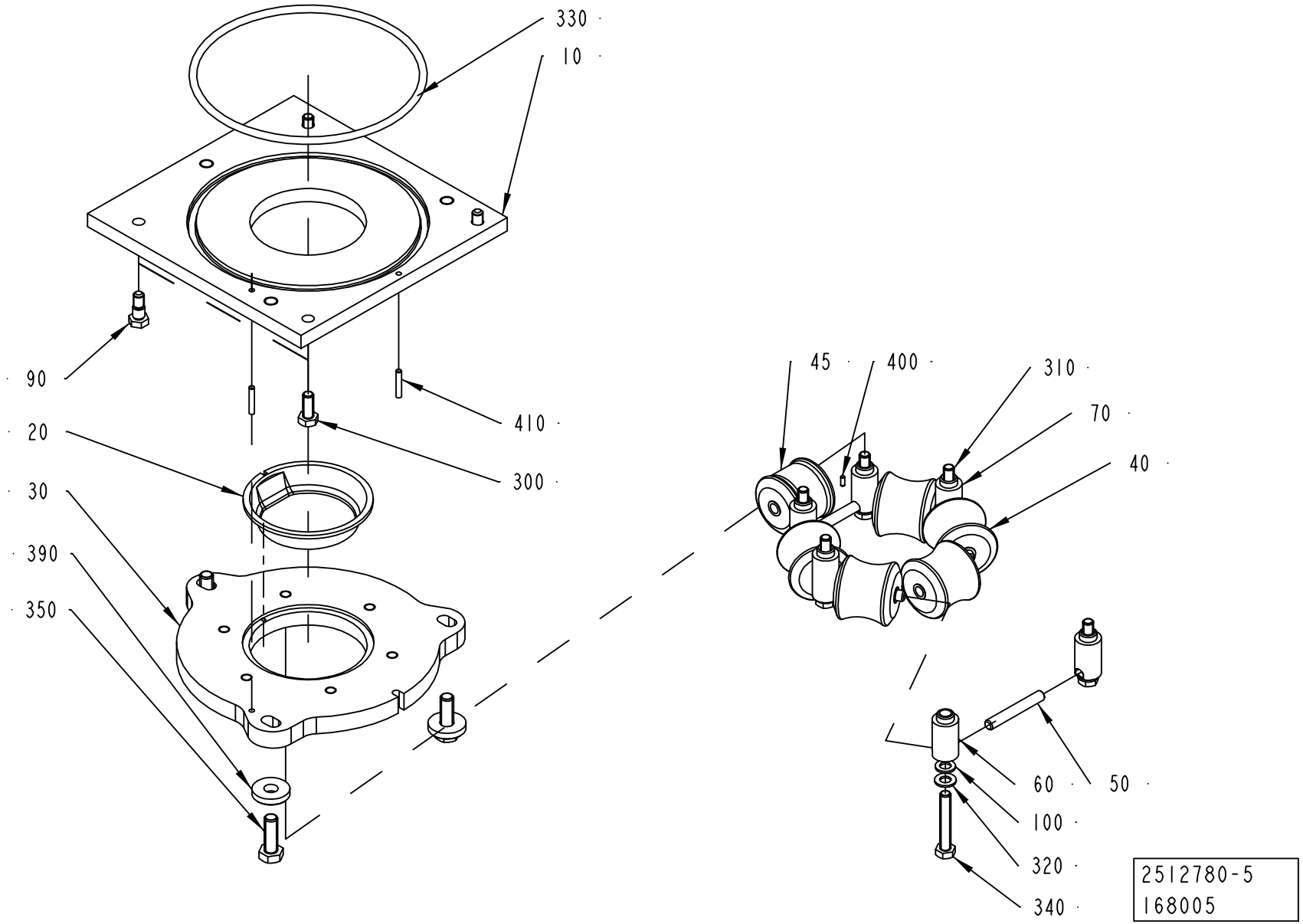
330
10
90
20
30
390
350
410
300
45
400
310
70
40
60
50
100
320
340
2512780-5
168005

Pos	Part No	UN	Qty	Description	Page No	Pos	Part No	UN	Qty	Description	Page No

SEE PREVIOUS LISTS PAGES: 1-29, 1-31.

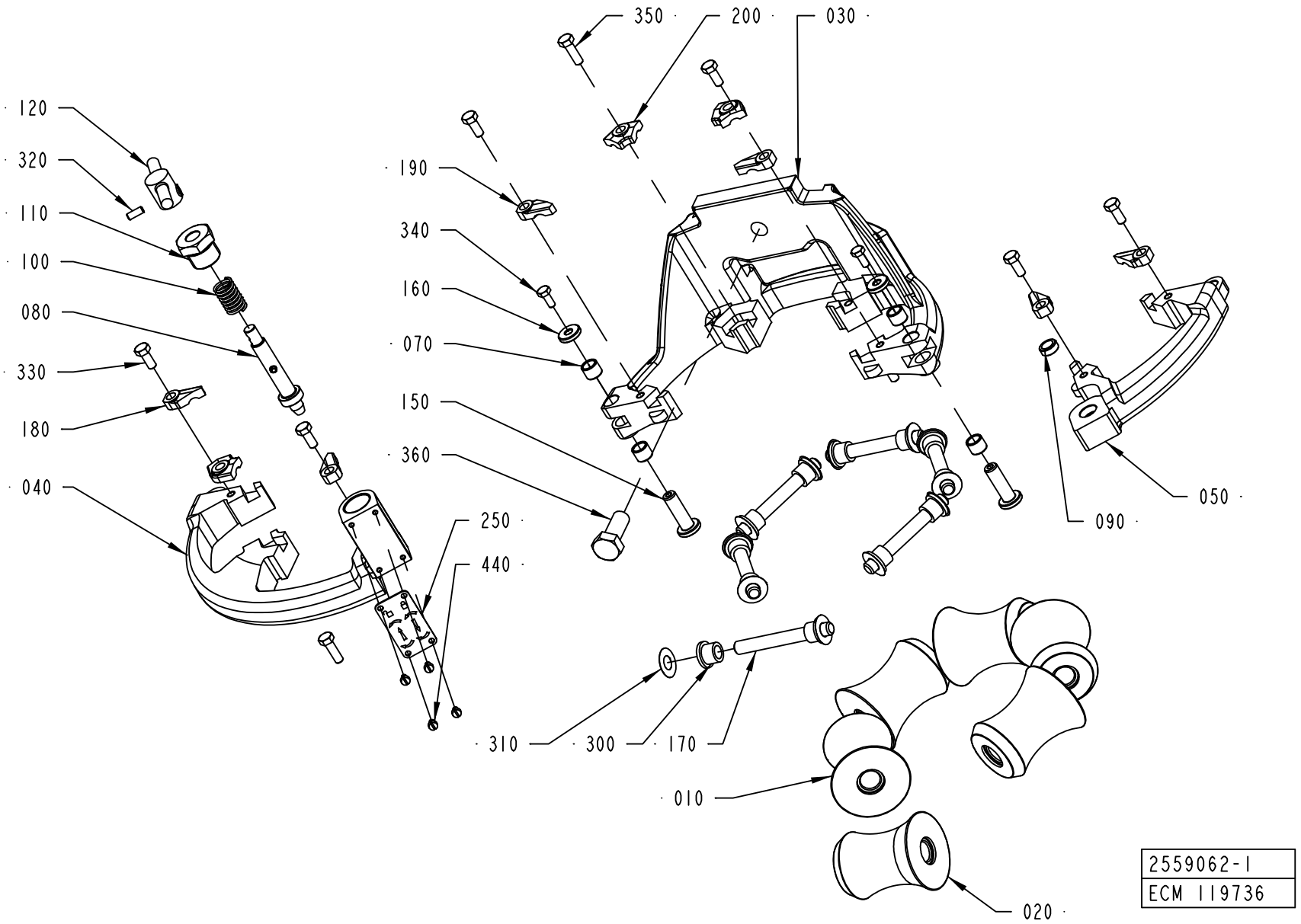
350
200
030
120
320
110
100
080
330
180
040
190
340
160
070
150
360
250
440
310
300
170
010
020
090
050
2559062-1
ECM 119736

ECM: 190452 - 20041125
Group number: 2559062-0100
Assembly Drawing: 2559062-1_1_AA

This list covers pages from 1-34 to 1-39

Pos	Part No	UN	Qty	Description	Page No
TBA 0200S (See drawing on page: 1-34)					
010	2565424-0000		5	ROLLER	
020	2565425-0000		1	COUNTER ROLLER	
030	2555606-0000		1	LOWER FORMING RING	
040	2555607-0000		1	LOWER FORMING RING	
050	2555608-0000		1	LOWER FORMING RING	
070	2526826-0000		4	BUSHING	
150	2526827-0000		2	SHAFT	
160	2526825-0000		2	WASHER	
170	752186-0004		6	SHAFT	
180	2528119-0005		3	LOCK PLATE	
190	2528118-0005		3	LOCK PLATE	
330	312105-0327		6	SCREW M6S ISO 4017 M5X12 A480	
340	312105-0289		2	SCREW M6S ISO 4017 M4X10 A470	
350	312105-0329		3	SCREW M6S ISO 4017 M5X16 A480	
TBA 0250S, TBA 0200M (See drawing on page: 1-34)					
010	2601308-0000		5	ROLLER	
020	2601309-0000		1	ROLLER	
030	2601324-0000		1	LOWER FORMING RING	
040	2601325-0000		1	LOWER FORMING RING	
050	2601326-0000		1	LOWER FORMING RING	
070	2526826-0000		4	BUSHING	
150	2526827-0000		2	SHAFT	
160	2526825-0000		2	WASHER	
170	752186-0004		6	SHAFT	
180	2528119-0003		3	LOCK PLATE	
190	2528118-0003		3	LOCK PLATE	
200	2528123-0002		3	LOCK PLATE	
330	312105-0327		6	SCREW M6S ISO 4017 M5X12 A480	
340	312105-0289		2	SCREW M6S ISO 4017 M4X10 A470	
350	312105-0329		3	SCREW M6S ISO 4017 M5X16 A480	
TBA 0330S, TBA 0200B, TBA 0250B (See drawing on page: 1-34)					
010	751502-0000		5	ROLLER	
020	2544882-0000		1	COUNTER ROLLER	
030	2528124-0000		1	LOWER FORMING RING	
040	2528125-0000		1	LOWER FORMING RING	
050	2528126-0000		1	LOWER FORMING RING	
070	2526826-0000		4	BUSHING	
150	2526827-0000		2	SHAFT	
160	2526825-0000		2	WASHER	
170	752186-0005		6	SHAFT	
180	2528119-0005		3	LOCK PLATE	
190	2528118-0005		3	LOCK PLATE	
330	312105-0327		6	SCREW M6S ISO 4017 M5X12 A480	
340	312105-0289		2	SCREW M6S ISO 4017 M4X10 A470	
350	312105-0329		3	SCREW M6S ISO 4017 M5X16 A480	
TBA 0500B, TBA 1000B, TBA 1500S (See drawing on page: 1-34)					
010	1349851-0000		5	ROLL	
020	2518098-0000		1	COUNTER ROLLER	
030	2552189-0000		1	LOWER FORMING RING	
040	2552190-0000		1	LOWER FORMING RING	
050	2552191-0000		1	LOWER FORMING RING	
070	2526826-0000		4	BUSHING	
150	2526827-0000		2	SHAFT	
160	2526825-0000		2	WASHER	
170	752186-0014		6	SHAFT	
180	2528119-0004		3	LOCK PLATE	
190	2528118-0004		3	LOCK PLATE	
330	312105-0327		6	SCREW M6S ISO 4017 M5X12 A480	
340	312105-0289		2	SCREW M6S ISO 4017 M4X10 A470	
350	312105-0329		3	SCREW M6S ISO 4017 M5X16 A480	
TBA 0500S (See drawing on page: 1-34)					
010	1499636-0000		5	ROLLER	
020	2709785-0000		1	ROLLER	
030	2532900-0000		1	LOWER FORMING RING	
040	2531056-0000		1	LOWER FORMING RING	
050	2531057-0000		1	LOWER FORMING RING	
070	2526826-0000		4	BUSHING	
150	2526827-0000		2	SHAFT	
160	2526825-0000		2	WASHER	
170	2522213-0006		6	SHAFT	
180	2528119-0005		3	LOCK PLATE	
190	2528118-0005		3	LOCK PLATE	
330	312105-0327		6	SCREW M6S ISO 4017 M5X12 A480	
350	312105-0329		3	SCREW M6S ISO 4017 M5X16 A480	
TBA 1000S (See drawing on page: 1-34)					
010	567746-0001		5	ROLLER, (STD.SIZE)	
020	1334856-0000		1	COUNTER ROLLER	
030	2552192-0000		1	LOWER FORMING RING	
040	2552193-0000		1	LOWER FORMING RING	
050	2552194-0000		1	LOWER FORMING RING	
070	2526826-0000		4	BUSHING	
150	2526827-0000		2	SHAFT	
160	2526825-0000		2	WASHER	

LOWER FORMING RING

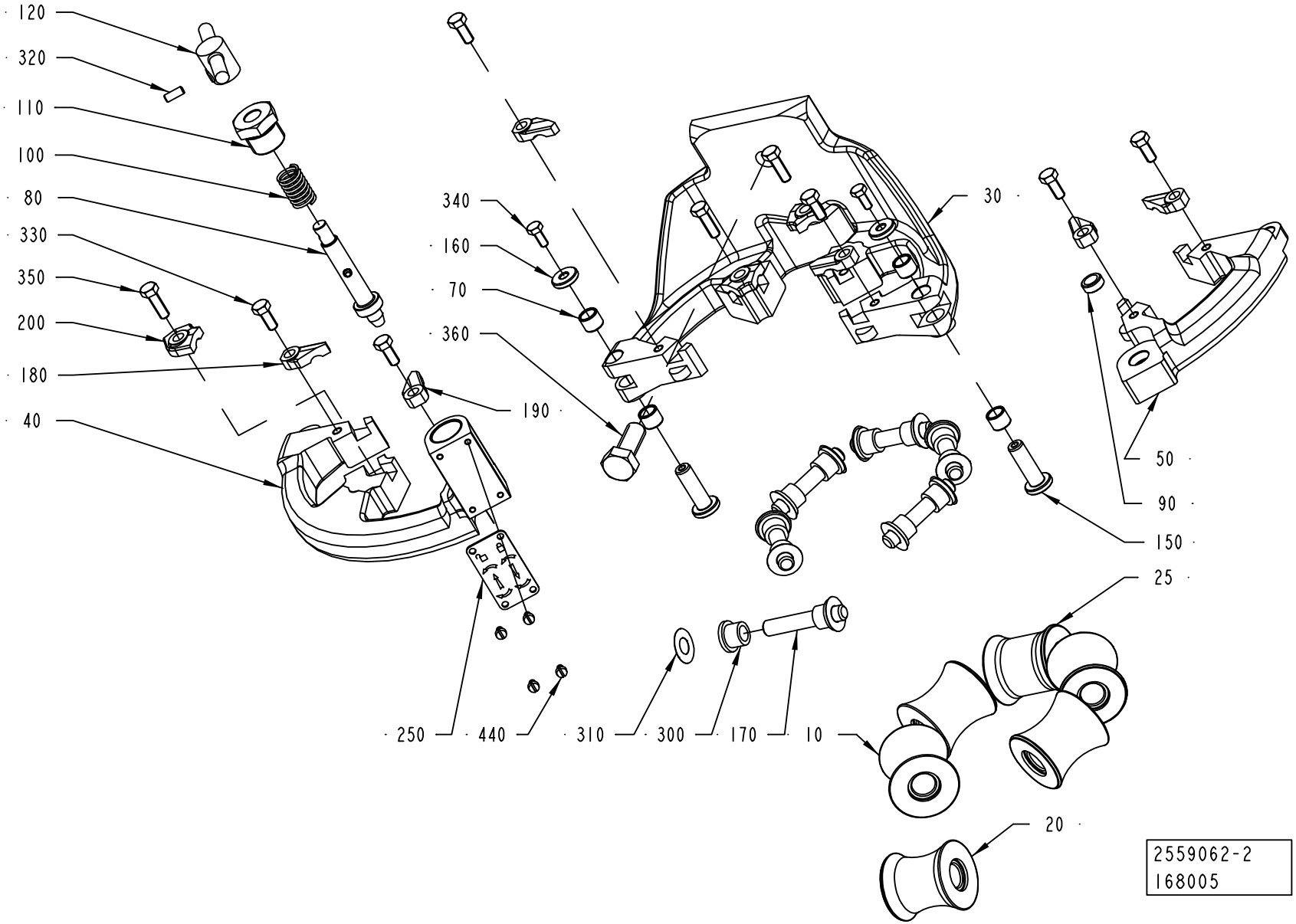

ECM: 190452 - 20041125
Group number: 2559062-0100
Assembly Drawing: 2559062-2_1_AA

This list covers pages from 1-34 to 1-39

Pos	Part No	UN	Qty	Description	Page No
TBA 1000S (Cont'd) (See drawing on page: 1-34)					
170	752186-0016		6	SHAFT	
180	2528119-0005		3	LOCK PLATE	
190	2528118-0005		3	LOCK PLATE	
330	312105-0327		6	SCREW M6S ISO 4017 M5X12 A480	
340	312105-0289		2	SCREW M6S ISO 4017 M4X10 A470	
350	312105-0329		3	SCREW M6S ISO 4017 M5X16 A480	
TBA 1000SQ (See drawing on page: 1-34)					
010	1490765-0000		5	ROLLER	
020	1499411-0000		1	COUNTER ROLLER	
030	2528120-0000		1	LOWER FORMING RING	
040	2528121-0000		1	UPPER FORMING RING	
050	2528122-0000		1	LOWER FORMING RING	
070	2526826-0000		4	BUSHING	
150	2526827-0000		2	SHAFT	
160	2526825-0000		2	WASHER	
170	752186-0016		6	SHAFT	
180	2528119-0004		3	LOCK PLATE	
190	2528118-0004		3	LOCK PLATE	
330	312105-0327		6	SCREW M6S ISO 4017 M5X12 A480	
340	312105-0289		2	SCREW M6S ISO 4017 M4X10 A470	
350	312105-0329		3	SCREW M6S ISO 4017 M5X16 A480	
TBA 1890S, TBA 2000S (See drawing on page: 1-38)					
010	2565513-0000		5	ROLLER	
020	2657923-0000		1	COUNTER ROLLER	
030	2592554-0000		1	LOWER FORMING RING	
040	2673023-0000		1	LOWER FORMING RING	
070	2526826-0000		3	BUSHING	
150	2526827-0000		1	SHAFT	
160	2526825-0000		1	WASHER	
170	752186-0015		6	SHAFT	
180	2528119-0004		2	LOCK PLATE	
190	2528118-0004		2	LOCK PLATE	
200	2528123-0004		4	LOCK PLATE	
260	2632565-0000		1	SHAFT	
330	312105-0327		4	SCREW M6S ISO 4017 M5X12 A480	
340	312105-0289		1	SCREW M6S ISO 4017 M4X10 A470	
350	312105-0329		4	SCREW M6S ISO 4017 M5X16 A480	
TPA 0330SQ (See drawing on page: 1-34)					
010	2594644-0000		5	ROLLER	
020	2641282-0000		1	COUNTER ROLLER	
030	2528124-0000		1	LOWER FORMING RING	
040	2528125-0000		1	LOWER FORMING RING	
050	2528126-0000		1	LOWER FORMING RING	
070	2526826-0000		4	BUSHING	
150	2526827-0000		2	SHAFT	
160	2526825-0000		2	WASHER	
170	752186-0005		6	SHAFT	
180	2528119-0005		3	LOCK PLATE	
190	2528118-0005		3	LOCK PLATE	
330	312105-0327		6	SCREW M6S ISO 4017 M5X12 A480	
340	312105-0289		2	SCREW M6S ISO 4017 M4X10 A470	
350	312105-0329		3	SCREW M6S ISO 4017 M5X16 A480	
TPA 0500SQ (See drawing on page: 1-36)					
010	2601328-0000		4	ROLLER	
020	2686861-0000		1	ROLLER	
025	2601327-0000		1	ROLLER	
030	2601330-0000		1	LOWER FORMING RING	
040	2601331-0000		1	LOWER FORMING RING	
050	2601332-0000		1	LOWER FORMING RING	
070	2526826-0000		4	BUSHING	
150	2526827-0000		2	SHAFT	
160	2526825-0000		2	WASHER	
170	752186-0005		6	SHAFT	
180	2528119-0004		3	LOCK PLATE	
190	2528118-0004		3	LOCK PLATE	
200	2528123-0003		3	LOCK PLATE	
330	312105-0327		6	SCREW M6S ISO 4017 M5X12 A480	
340	312105-0289		2	SCREW M6S ISO 4017 M4X10 A470	
350	312105-0329		3	SCREW M6S ISO 4017 M5X16 A480	
TPA 1000SQ (See drawing on page: 1-34)					
010	1524156-0000		5	ROLLER	
020	1524547-0000		1	COUNTER ROLLER	
030	2532900-0000		1	LOWER FORMING RING	
040	2531056-0000		1	LOWER FORMING RING	
050	2531057-0000		1	LOWER FORMING RING	
070	2526826-0000		4	BUSHING	
150	2526827-0000		2	SHAFT	
160	2526825-0000		2	WASHER	
170	2522213-0006		6	SHAFT	
180	2528119-0005		3	LOCK PLATE	
190	2528118-0005		3	LOCK PLATE	
330	312105-0327		6	SCREW M6S ISO 4017 M5X12 A480	
340	312105-0289		2	SCREW M6S ISO 4017 M4X10 A470	

Machine Type | Group Description | Used-In | Group Number | Page No

LOWER FORMING RING

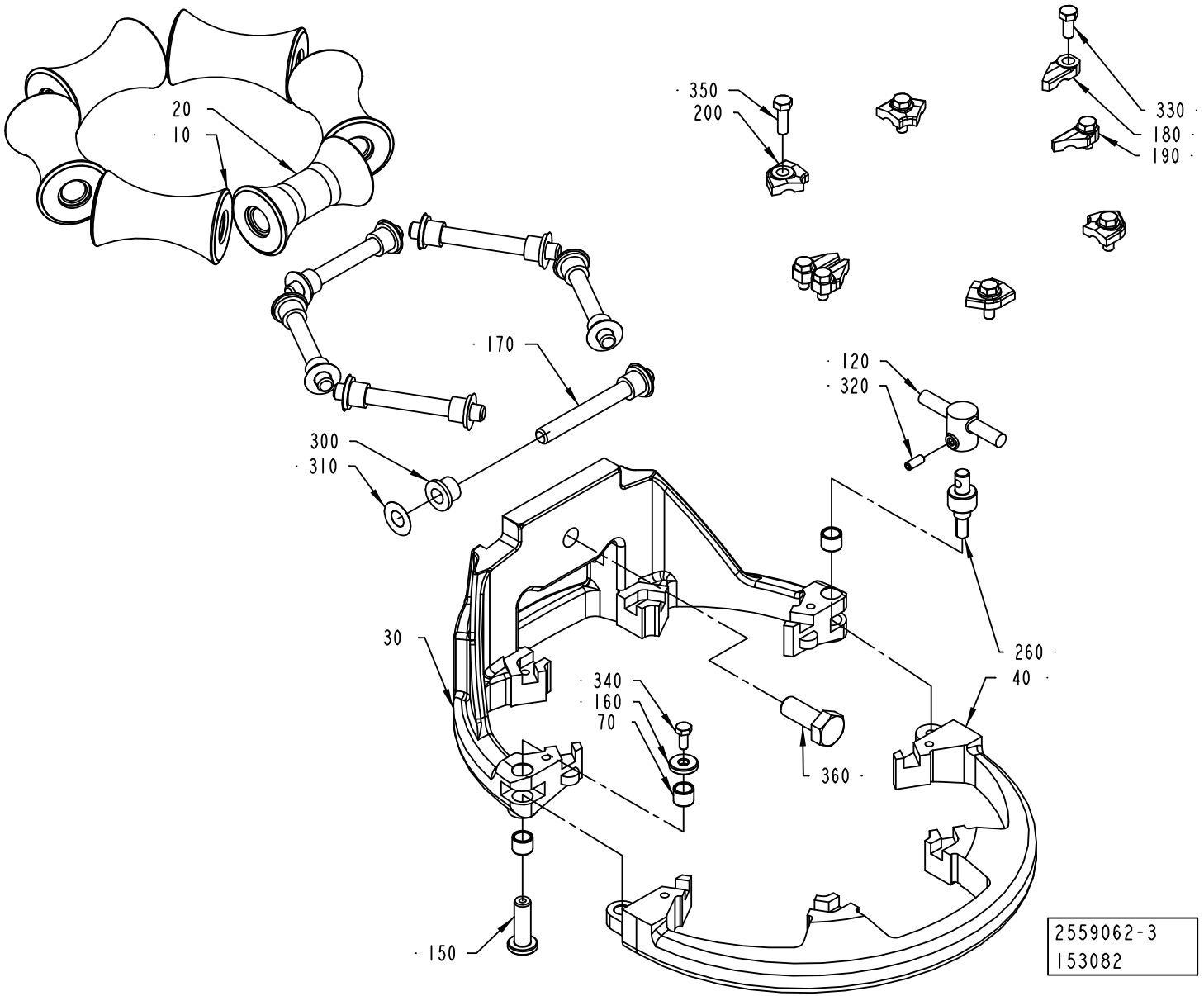

ECM: 190452 - 20041125
Group number: 2559062-0100
Assembly Drawing: 2559062-3_1_AA

This list covers pages from 1-34 to 1-39

Pos	Part No	UN	Qty	Description	Page No
TPA 1000SQ (Cont'd) (See drawing on page: 1-34)					
350	312105-0329		3	SCREW M6S ISO 4017 M5X16 A480	
Common Parts					
080	2526830-0000		1	SHAFT	
090	2526836-0000		1	BUSHING	
100	2526832-0000		1	SPRING	
110	2526833-0000		1	NUT	
120	2532973-0000		1	KNOB	
200	2528123-0004		3	LOCK PLATE	
250	2555635-0000		1	SIGNS	
300	90240-0172		12	FLANGE BUSHING, 8X12X10 MM	
310	2033-0011		12	WASHER	
320	312318-0289		1	SCREW ISO4029 M4X10 A4	
360	312105-0493		1	SCREW M6S ISO 4017 M10X25 A480	
440	90459-1228		4	SCREW ISO 1207 M3X4 A4	

Pos	Part No	UN	Qty	Description	Page No

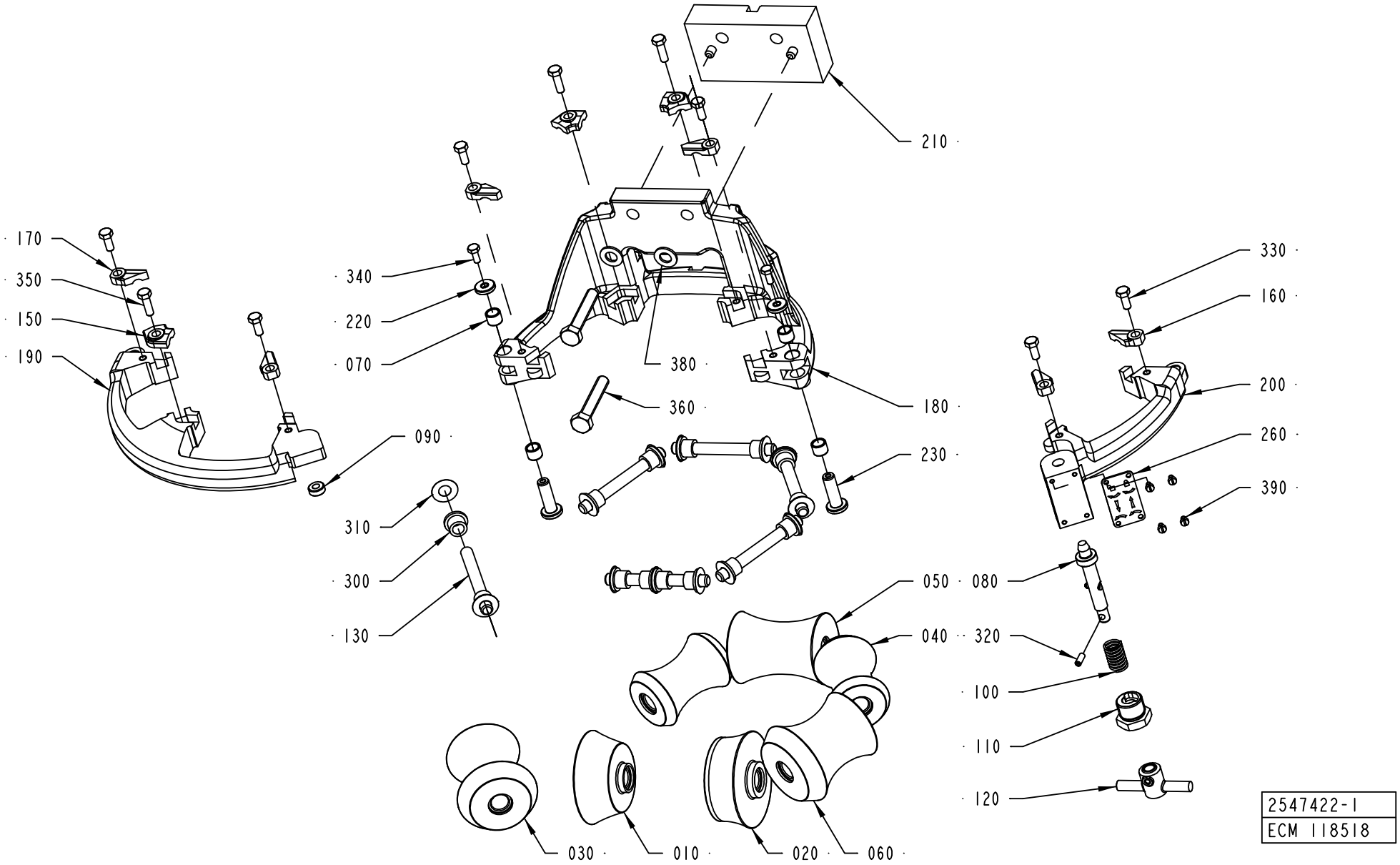
210
170
350
150
190
340
220
070
380
360
180
230
090
310
300
130
330
160
200
260
390
050
040
080
320
100
110
120
030
010
020
060
2547422-1
ECM 118518

ECM: 190417 - 20041125
Group number: 2547422-0100
Assembly Drawing: 2547422-1_1_AA

This list covers pages from 1-40 to 1-53

Pos	Part No	UN	Qty	Description	Page No
TBA 0200S (See drawing on page: 1-46)					
010	2634984-0000		1	ROLLER	
020	2634985-0000		1	ROLLER	
030	2634949-0000		1	ROLLER	
040	2634948-0000		2	ROLLER	
050	2634947-0000		1	ROLLER	
060	2634983-0000		1	ROLLER	
080	2526830-0000		1	SHAFT	
100	2526832-0000		1	SPRING	
110	2526833-0000		1	NUT	
120	2532973-0000		1	KNOB	
130	2522213-0004		6	SHAFT	
150	2528123-0001		3	LOCK PLATE	
160	2528118-0002		3	LOCK PLATE	
170	2528119-0002		3	LOCK PLATE	
180	2634944-0000		1	UPPER FORMING RING	
190	2634945-0000		1	UPPER FORMING RING	
200	2634946-0000		1	UPPER FORMING RING	
210	2634987-0000		1	SPACER	
260	2555590-0000		1	SIGN	
300	90240-0172		10	FLANGE BUSHING, 8X12X10 MM	
320	312318-0289		1	SCREW ISO4029 M4X10 A4	
360	312105-0451		2	SCREW M6S ISO 4017 M8X20 A480	
370	752156-0000		4	FLANGE BUSHING	
390	90459-1228		4	SCREW ISO 1207 M3X4 A4	
400	312115-0451		2	SCREW ISO4762 M8X20 A4	
TBA 0250S, TBA 0200M (See drawing on page: 1-42)					
010	2634988-0000		1	ROLLER	
020	2634989-0000		1	ROLLER	
030	2611012-0000		1	ROLLER	
040	2601334-0000		2	ROLLER	
050	2601333-0000		1	ROLLER	
060	2634990-0000		1	ROLLER	
080	2526830-0000		1	SHAFT	
100	2526832-0000		1	SPRING	
110	2526833-0000		1	NUT	
120	2532973-0000		1	KNOB	
130	2522213-0004		6	SHAFT	
150	2528123-0001		3	LOCK PLATE	
160	2528118-0002		3	LOCK PLATE	
170	2528119-0002		3	LOCK PLATE	
180	2611013-0000		1	UPPER FORMING RING	
190	2634991-0000		1	UPPER FORMING RING	
200	2634992-0000		1	UPPER FORMING RING	
210	2634987-0000		1	SPACER	
260	2555590-0000		1	SIGN	
300	90240-0172		10	FLANGE BUSHING, 8X12X10 MM	
320	312318-0289		1	SCREW ISO4029 M4X10 A4	
360	312105-0451		2	SCREW M6S ISO 4017 M8X20 A480	
370	752156-0000		4	FLANGE BUSHING	
390	90459-1228		4	SCREW ISO 1207 M3X4 A4	
400	312115-0451		2	SCREW ISO4762 M8X20 A4	
TBA 0330S, TBA 0200B, TBA 0250B (See drawing on page: 1-42)					
010	2641285-0000		1	ROLLER	
020	2641286-0000		1	ROLLER	
030	2641287-0000		1	ROLLER	
040	2641288-0000		2	ROLLER	
050	2641289-0000		1	ROLLER	
060	2641290-0000		1	ROLLER	
080	2526830-0000		1	SHAFT	
100	2526832-0000		1	SPRING	
110	2526833-0000		1	NUT	
120	2532973-0000		1	KNOB	
130	2522213-0015		6	SHAFT	
150	2528123-0003		3	LOCK PLATE	
160	2528118-0003		3	LOCK PLATE	
170	2528119-0003		3	LOCK PLATE	
180	2657857-0000		1	UPPER FORMING RING	
190	2657858-0000		1	UPPER FORMING RING	
200	2657859-0000		1	UPPER FORMING RING	
210	2634987-0000		1	SPACER	
300	90240-0172		10	FLANGE BUSHING, 8X12X10 MM	
320	312318-0289		1	SCREW ISO4029 M4X10 A4	
360	312105-0451		2	SCREW M6S ISO 4017 M8X20 A480	
370	752156-0000		4	FLANGE BUSHING	
390	90459-1228		4	SCREW ISO 1207 M3X4 A4	
400	312115-0451		2	SCREW ISO4762 M8X20 A4	
TBA 0500B, TBA 1000B, TBA 1500S (See drawing on page: 1-46)					
010	2512762-0000		1	ROLLER	
020	2514511-0000		1	ROLLER	
030	2514510-0000		1	ROLLER	
040	2514508-0000		2	ROLLER	
050	2514509-0000		1	ROLLER	
060	2514507-0000		1	ROLLER	

Machine Type | Group Description | Used-In | Group Number | Page No

UPPER FORMING RING

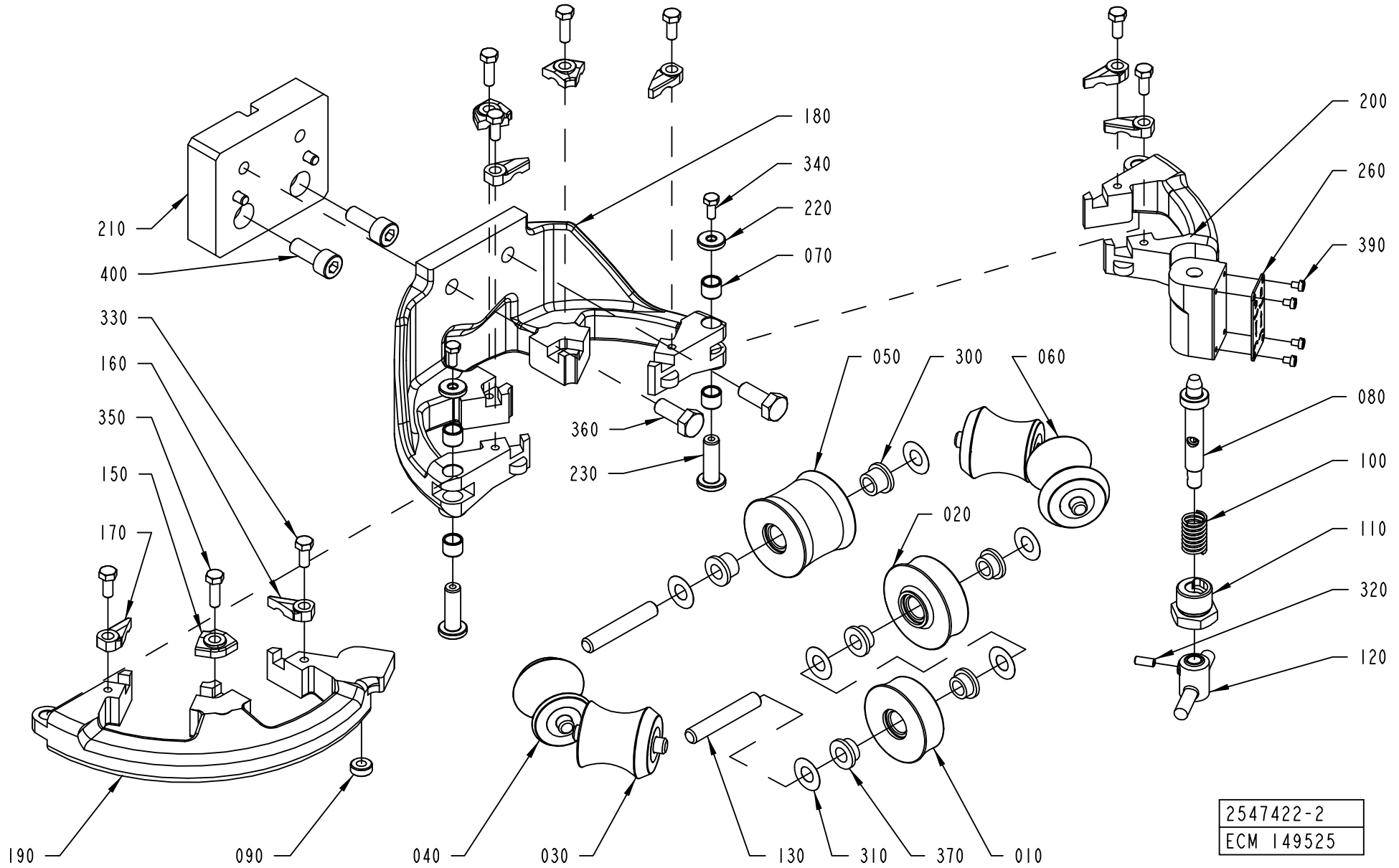

ECM: 190417 - 20041125
Group number: 2547422-0100
Assembly Drawing: 2547422-2_1_AA

This list covers pages from 1-40 to 1-53

Pos	Part No	UN	Qty	Description	Page No
TBA 0500B, TBA 1000B, TBA 1500S (Cont'd) (See drawing on page: 1-46)					
080	2526830-0000		1	SHAFT	
100	2526832-0000		1	SPRING	
110	2526833-0000		1	NUT	
120	2532973-0000		1	KNOB	
130	752186-0015		6	SHAFT	
150	2528123-0004		3	LOCK PLATE	
160	2528118-0005		3	LOCK PLATE	
170	2528119-0005		3	LOCK PLATE	
180	2552195-0000		1	UPPER FORMING RING	
190	2552196-0000		1	UPPER FORMING RING	
200	2552197-0000		1	UPPER FORMING RING	
210	2532914-0000		1	SPACER	
260	2555590-0000		1	SIGN	
300	90240-0172		14	FLANGE BUSHING, 8X12X10 MM	
320	312318-0289		1	SCREW ISO4029 M4X10 A4	
360	312109-0460		2	SCREW M6S ISO 4017 M8X45 A480	
380	315105-0165		2	WASHER BRB8,4X16RFR	
390	90459-1228		4	SCREW ISO 1207 M3X4 A4	
TBA 0500S (See drawing on page: 1-46)					
010	2611020-0000		1	ROLLER	
020	2720717-0000		1	ROLLER	
030	2672980-0000		1	ROLLER	
040	2672979-0000		2	ROLLER	
050	2672978-0000		1	ROLLER	
060	2672981-0000		1	ROLLER	
080	2526830-0000		1	SHAFT	
100	2526832-0000		1	SPRING	
110	2526833-0000		1	NUT	
120	2532973-0000		1	KNOB	
130	752186-0007		6	SHAFT	
150	2528123-0005		3	LOCK PLATE	
160	2528118-0005		3	LOCK PLATE	
170	2528119-0005		3	LOCK PLATE	
180	2720718-0000		1	UPPER FORMING RING	
190	2559098-0000		1	UPPER FORMING RING	
200	2559099-0000		1	UPPER FORMING RING	
210	2532914-0000		1	SPACER	
260	2555590-0000		1	SIGN	
300	90240-0172		14	FLANGE BUSHING, 8X12X10 MM	
320	312318-0289		1	SCREW ISO4029 M4X10 A4	
360	312109-0459		2	SCREW M6S ISO 4017 M8X40 A480	
390	90459-1228		4	SCREW ISO 1207 M3X4 A4	
TBA 1000S (See drawing on page: 1-40)					
010	2512737-0000		1	ROLLER	
020	2512738-0000		1	ROLLER	
030	2512740-0000		1	ROLLER	
040	2512741-0000		2	ROLLER	
050	2512742-0000		2	ROLLER	
080	2526830-0000		1	SHAFT	
100	2526832-0000		1	SPRING	
110	2526833-0000		1	NUT	
120	2532973-0000		1	KNOB	
130	752186-0007		6	SHAFT	
150	2528123-0001		3	LOCK PLATE	
160	2528118-0001		3	LOCK PLATE	
170	2528119-0001		3	LOCK PLATE	
180	2552198-0000		1	UPPER FORMING RING	
190	2552199-0000		1	UPPER FORMING RING	
200	2552200-0000		1	UPPER FORMING RING	
210	2532914-0000		1	SPACER	
260	2555590-0000		1	SIGN	
300	90240-0172		14	FLANGE BUSHING, 8X12X10 MM	
320	312318-0289		1	SCREW ISO4029 M4X10 A4	
360	312109-0459		2	SCREW M6S ISO 4017 M8X40 A480	
390	90459-1228		4	SCREW ISO 1207 M3X4 A4	
TBA 1000SQ (See drawing on page: 1-50)					
010	2532965-0000		1	ROLLER	
020	1548541-0000		1	OLLER	
030	1548531-0000		4	ROLLER	
060	1548540-0000		1	ROLLER	
080	2526830-0000		1	SHAFT	
100	2526832-0000		1	SPRING	
110	2526833-0000		1	NUT	
120	2532973-0000		1	KNOB	
130	752186-0007		6	SHAFT	
150	2528123-0004		3	LOCK PLATE	
160	2528118-0004		3	LOCK PLATE	
170	2528119-0004		3	LOCK PLATE	
180	2528115-0000		1	UPPER FORMING RING	
190	2528116-0000		1	UPPER FORMING RING	
200	2528117-0000		1	UPPER FORMING RING	
210	2532914-0000		1	SPACER	
260	2555590-0000		1	SIGN	

Machine Type | Group Description | Used-In | Group Number | Page No

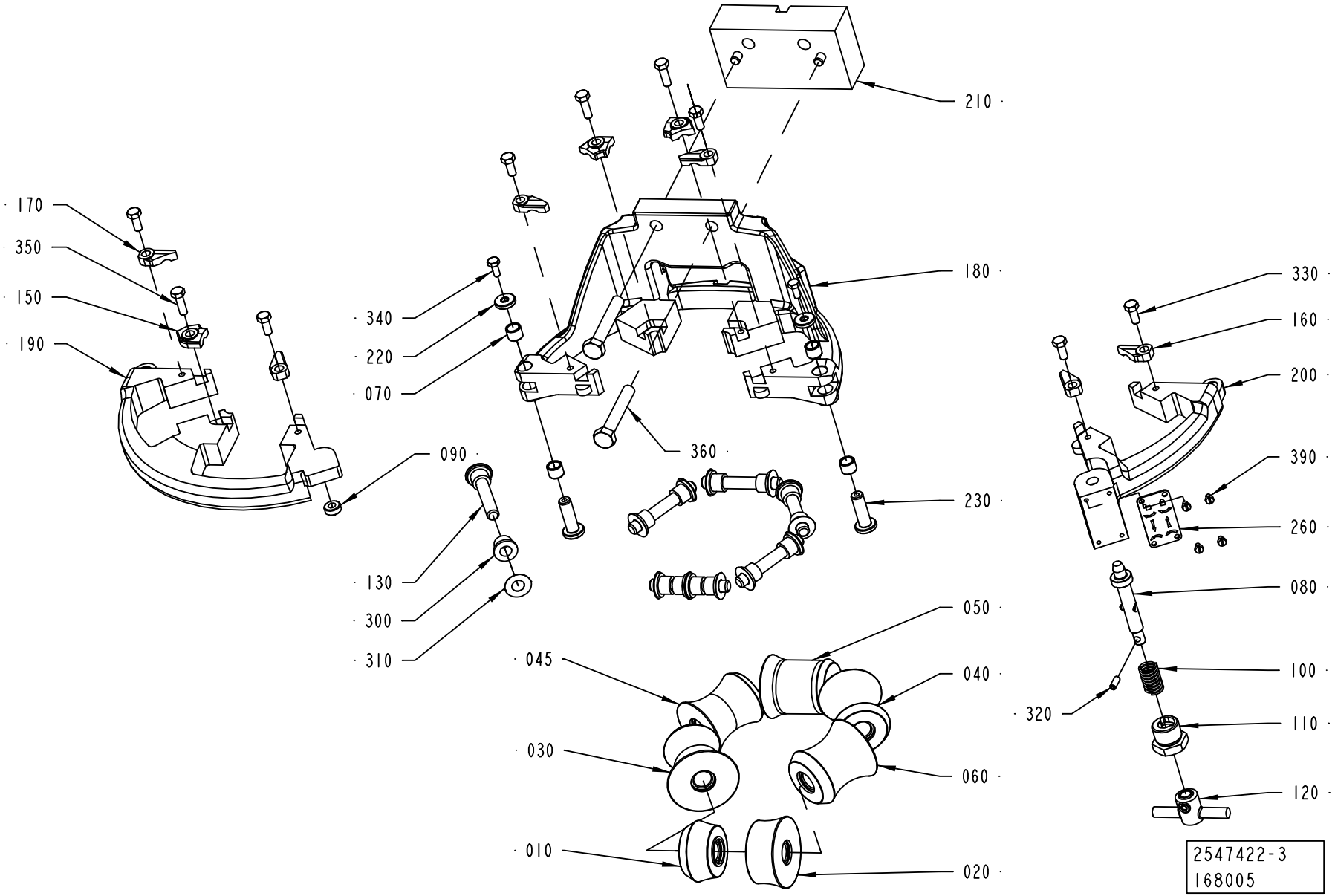
210
170
350
150
190
340
220
070
180
330
160
200
390
260
080
100
110
120
090
360
230
130
300
310
050
045
040
030
060
010
020
320
2547422-3
168005

Pos	Part No	UN	Qty	Description	Page No
TBA 1000SQ (Cont'd) (See drawing on page: 1-50)					
300	90240-0172		14	FLANGE BUSHING, 8X12X10 MM	
320	312318-0289		1	SCREW ISO4029 M4X10 A4	
360	312109-0459		2	SCREW M6S ISO 4017 M8X40 A480	
390	90459-1228		4	SCREW ISO 1207 M3X4 A4	
TBA 1890S, TBA 2000S (See drawing on page: 1-52)					
010	2634958-0000		1	ROLLER	
020	2634957-0000		1	ROLLER	
030	2634956-0000		1	ROLLER	
040	2634954-0000		2	ROLLER	
050	2634953-0000		1	ROLLER	
060	2634955-0000		1	ROLLER	
080	2526830-0000		1	SHAFT	
100	2526832-0000		1	SPRING	
110	2526833-0000		1	NUT	
120	2532973-0000		1	KNOB	
130	752186-0015		6	SHAFT	
150	2528123-0002		3	LOCK PLATE	
160	2528118-0003		3	LOCK PLATE	
170	2528119-0003		3	LOCK PLATE	
180	2634950-0000		1	UPPER FORMING RING	
190	2634951-0000		1	UPPER FORMING RING	
200	2634952-0000		1	UPPER FORMING RING	
210	2532914-0000		1	SPACER	
215	2634961-0000		1	SHIM	
260	2555590-0000		1	SIGN	
300	90240-0172		14	FLANGE BUSHING, 8X12X10 MM	
320	312318-0289		1	SCREW ISO4029 M4X10 A4	
360	312109-0459		2	SCREW M6S ISO 4017 M8X40 A480	
380	315105-0165		2	WASHER BRB8,4X16RFR	
390	90459-1228		4	SCREW ISO 1207 M3X4 A4	
TPA 0330SQ (See drawing on page: 1-42)					
010	2672950-0000		1	ROLLER	
020	2672951-0000		1	ROLLER	
030	2672955-0000		1	ROLLER	
040	2672953-0000		2	ROLLER	
050	2672954-0000		1	ROLLER	
060	2672952-0000		1	ROLLER	
080	2526830-0000		1	SHAFT	
100	2526832-0000		1	SPRING	
110	2526833-0000		1	NUT	
120	2532973-0000		1	KNOB	
130	2522213-0015		6	SHAFT	
150	2528123-0003		3	LOCK PLATE	
160	2528118-0003		3	LOCK PLATE	
170	2528119-0003		3	LOCK PLATE	
180	2657857-0000		1	UPPER FORMING RING	
190	2657858-0000		1	UPPER FORMING RING	
200	2657859-0000		1	UPPER FORMING RING	
210	2689172-0000		1	SPACER	
260	2555590-0000		1	SIGN	
300	90240-0172		10	FLANGE BUSHING, 8X12X10 MM	
320	312318-0289		1	SCREW ISO4029 M4X10 A4	
360	312105-0451		2	SCREW M6S ISO 4017 M8X20 A480	
370	752156-0000		4	FLANGE BUSHING	
390	90459-1228		4	SCREW ISO 1207 M3X4 A4	
400	312115-0451		2	SCREW ISO4762 M8X20 A4	
TPA 0500SQ (See drawing on page: 1-44)					
010	2680198-0000		1	ROLLER	
020	2680201-0000		1	ROLLER	
030	2680197-0000		1	ROLLER	
040	2611016-0000		1	ROLLER	
045	2680196-0000		1	ROLLER	
050	2680195-0000		1	ROLLER	
060	2611017-0000		1	ROLLER	
080	2526830-0000		1	SHAFT	
100	2526832-0000		1	SPRING	
110	2526833-0000		1	NUT	
120	2532973-0000		1	KNOB	
130	752186-0006		6	SHAFT	
150	2528123-0003		3	LOCK PLATE	
160	2528118-0004		3	LOCK PLATE	
170	2528119-0004		3	LOCK PLATE	
180	2611021-0000		1	UPPER FORMING RING	
190	2611022-0000		1	UPPER FORMING RING	
200	2611023-0000		1	UPPER FORMING RING	
210	2611024-0000		1	SPACER	
260	2555590-0000		1	SIGN	
300	90240-0172		14	FLANGE BUSHING, 8X12X10 MM	
320	312318-0289		1	SCREW ISO4029 M4X10 A4	
360	312109-0461		2	SCREW M6S ISO 4017 M8X50 A480	
390	90459-1228		4	SCREW ISO 1207 M3X4 A4	
TPA 1000SQ (See drawing on page: 1-48)					
010	2562685-0000		1	ROLLER	

UPPER FORMING RING

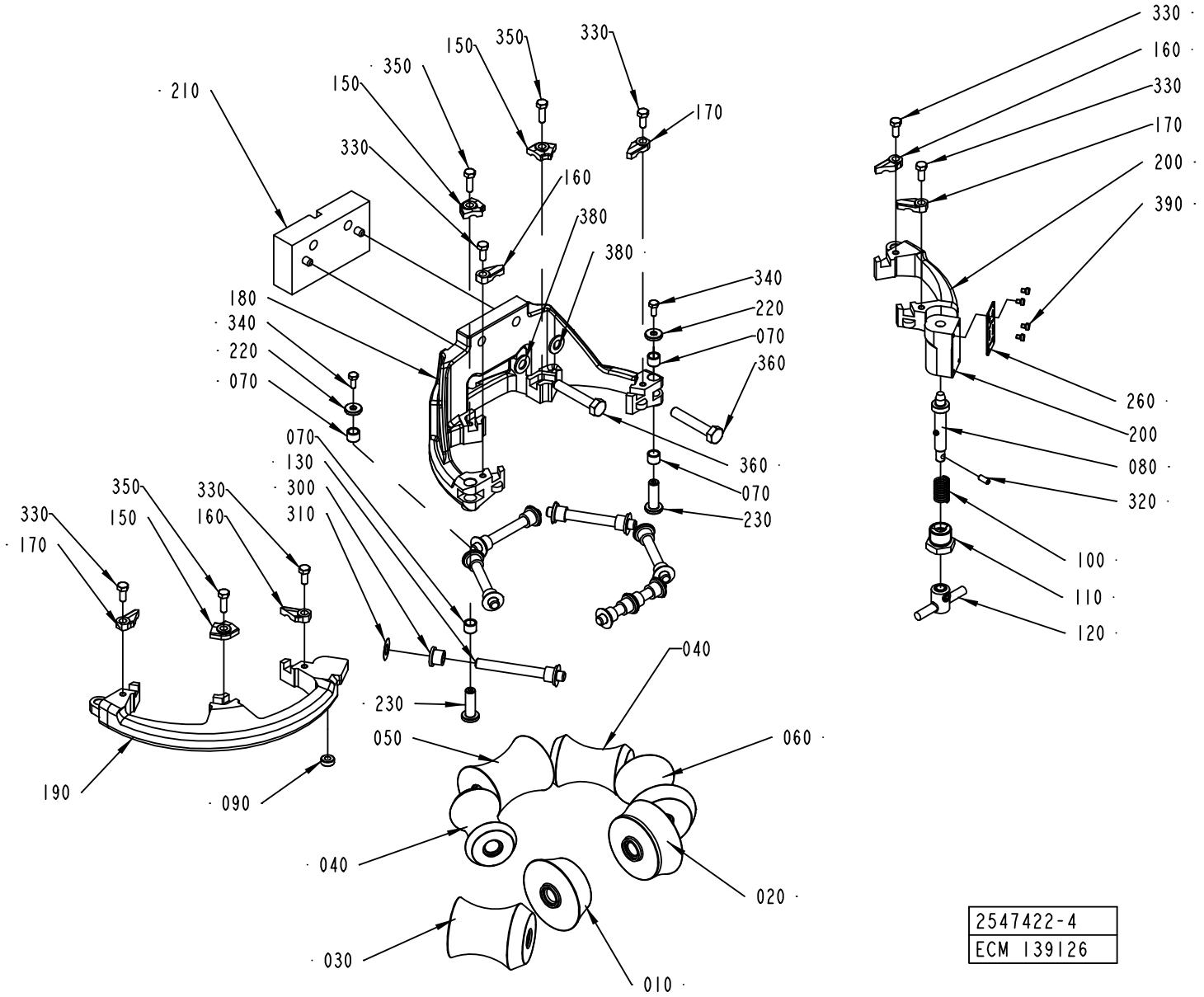

2547422-4
ECM 139126

Pos	Part No	UN	Qty	Description	Page No
TPA 1000SQ (Cont'd) (See drawing on page: 1-48)					
020	2559101-0000		1	ROLLER	
030	1524151-0000		2	ROLLER	
040	1524152-0000		2	ROLLER	
050	2562686-0000		1	ROLLER	
080	2526830-0000		1	SHAFT	
100	2526832-0000		1	SPRING	
110	2526833-0000		1	NUT	
120	2532973-0000		1	KNOB	
130	2522213-0007		6	SHAFT	
150	2528123-0005		3	LOCK PLATE	
160	2528118-0005		3	LOCK PLATE	
170	2528119-0005		3	LOCK PLATE	
180	2559097-0000		1	UPPER FORMING RING	
190	2559098-0000		1	UPPER FORMING RING	
200	2559099-0000		1	UPPER FORMING RING	
210	2532914-0000		1	SPACER	
260	2555590-0000		1	SIGN	
300	90240-0172		14	FLANGE BUSHING, 8X12X10 MM	
320	312318-0289		1	SCREW ISO4029 M4X10 A4	
360	312109-0459		2	SCREW M6S ISO 4017 M8X40 A480	
390	90459-1228		4	SCREW ISO 1207 M3X4 A4	
Common Parts					
070	2526826-0000		4	BUSHING	
090	2526836-0000		1	BUSHING	
220	2526825-0000		2	WASHER	
230	2526827-0000		2	SHAFT	
310	2033-0011		14	WASHER	
330	312105-0327		6	SCREW M6S ISO 4017 M5X12 A480	
340	312105-0289		2	SCREW M6S ISO 4017 M4X10 A470	
350	312105-0329		3	SCREW M6S ISO 4017 M5X16 A480	

Pos	Part No	UN	Qty	Description	Page No

UPPER FORMING RING

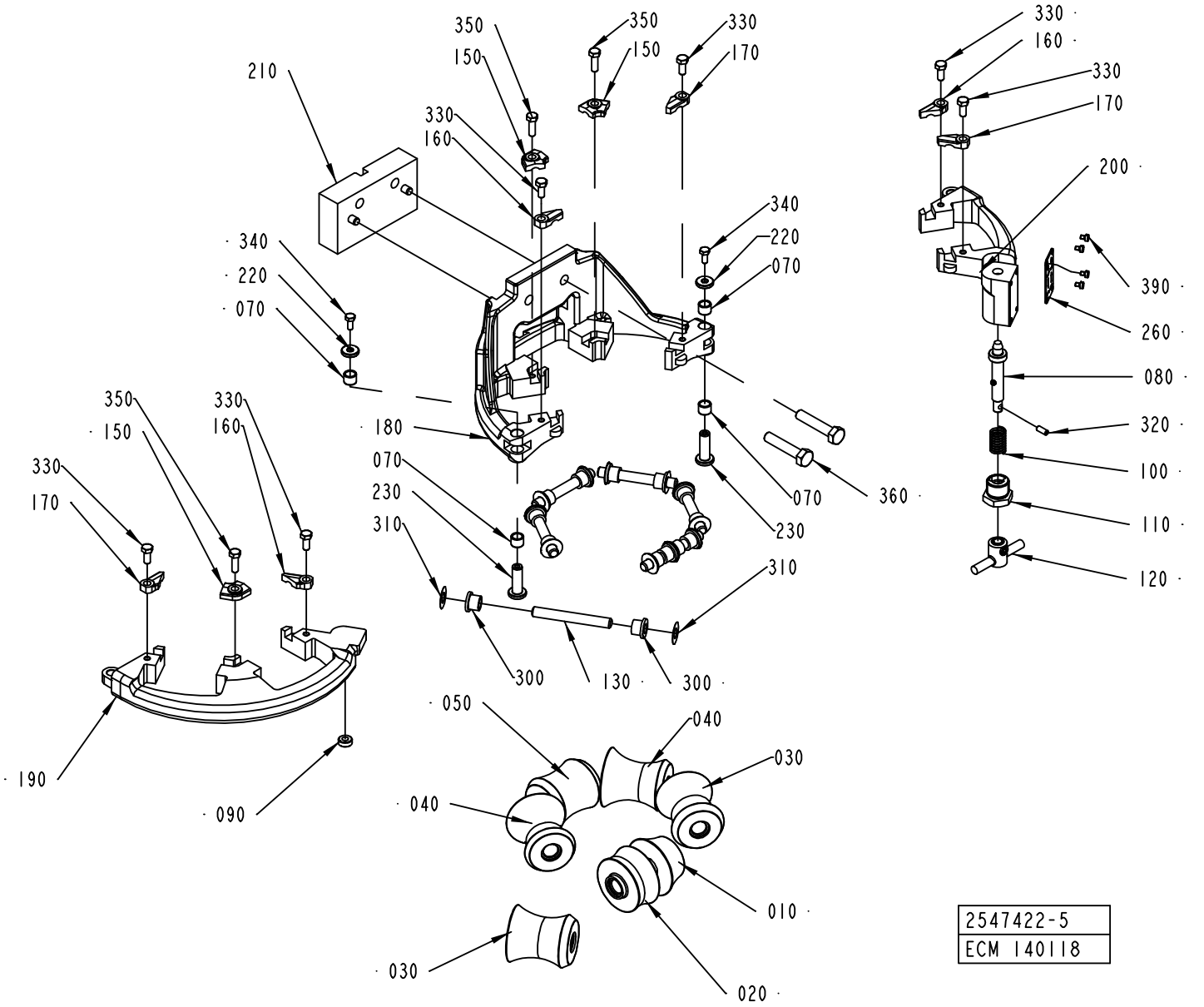

Pos	Part No	UN	Qty	Description	Page No	Pos	Part No	UN	Qty	Description	Page No

SEE PREVIOUS LISTS PAGES: 1-41, 1-43, 1-45, 1-47.

UPPER FORMING RING

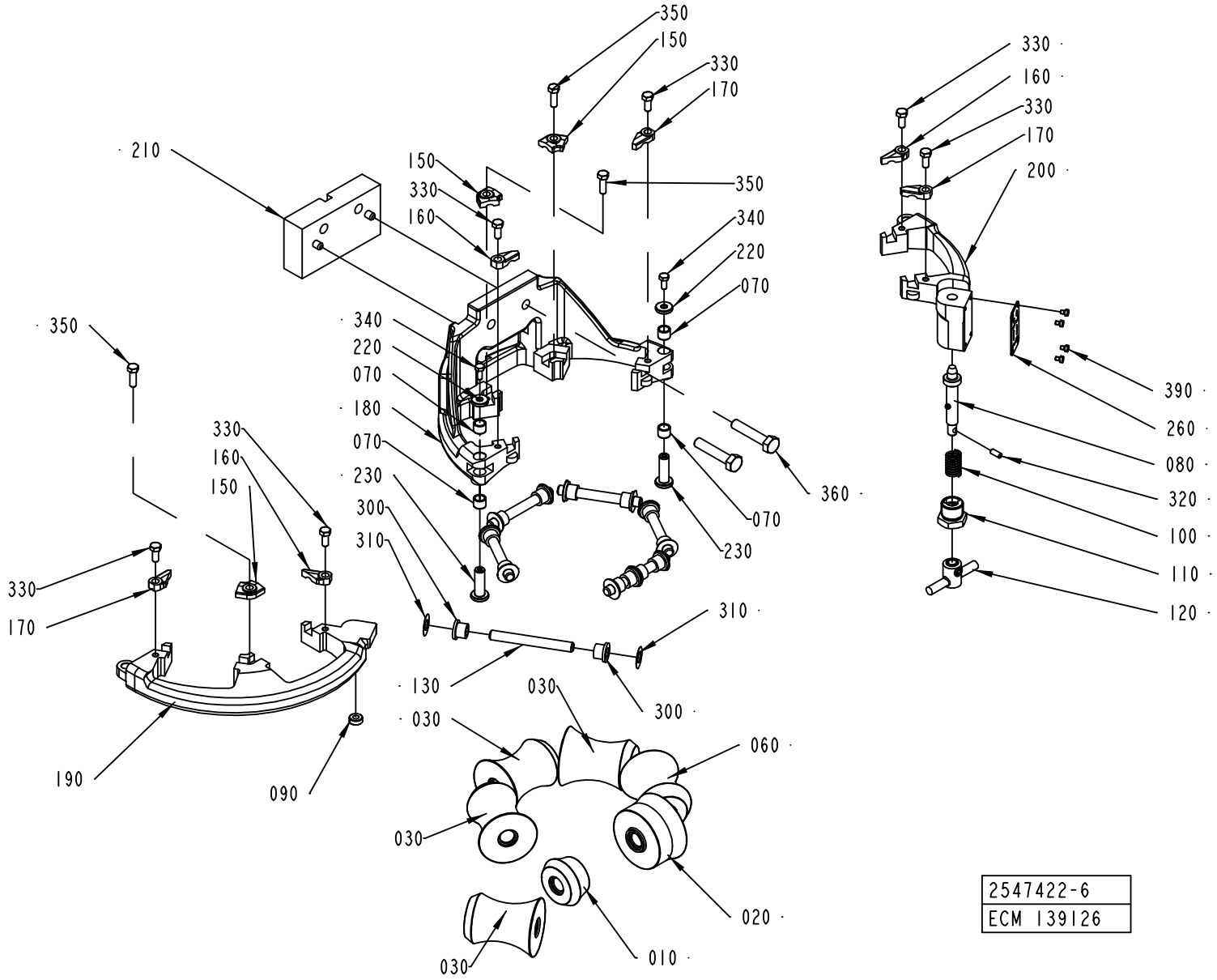

2547422-6
ECM 139126

Pos	Part No	UN	Qty	Description	Page No	Pos	Part No	UN	Qty	Description	Page No

SEE PREVIOUS LISTS PAGES: 1-41, 1-43, 1-45, 1-47.

UPPER FORMING RING

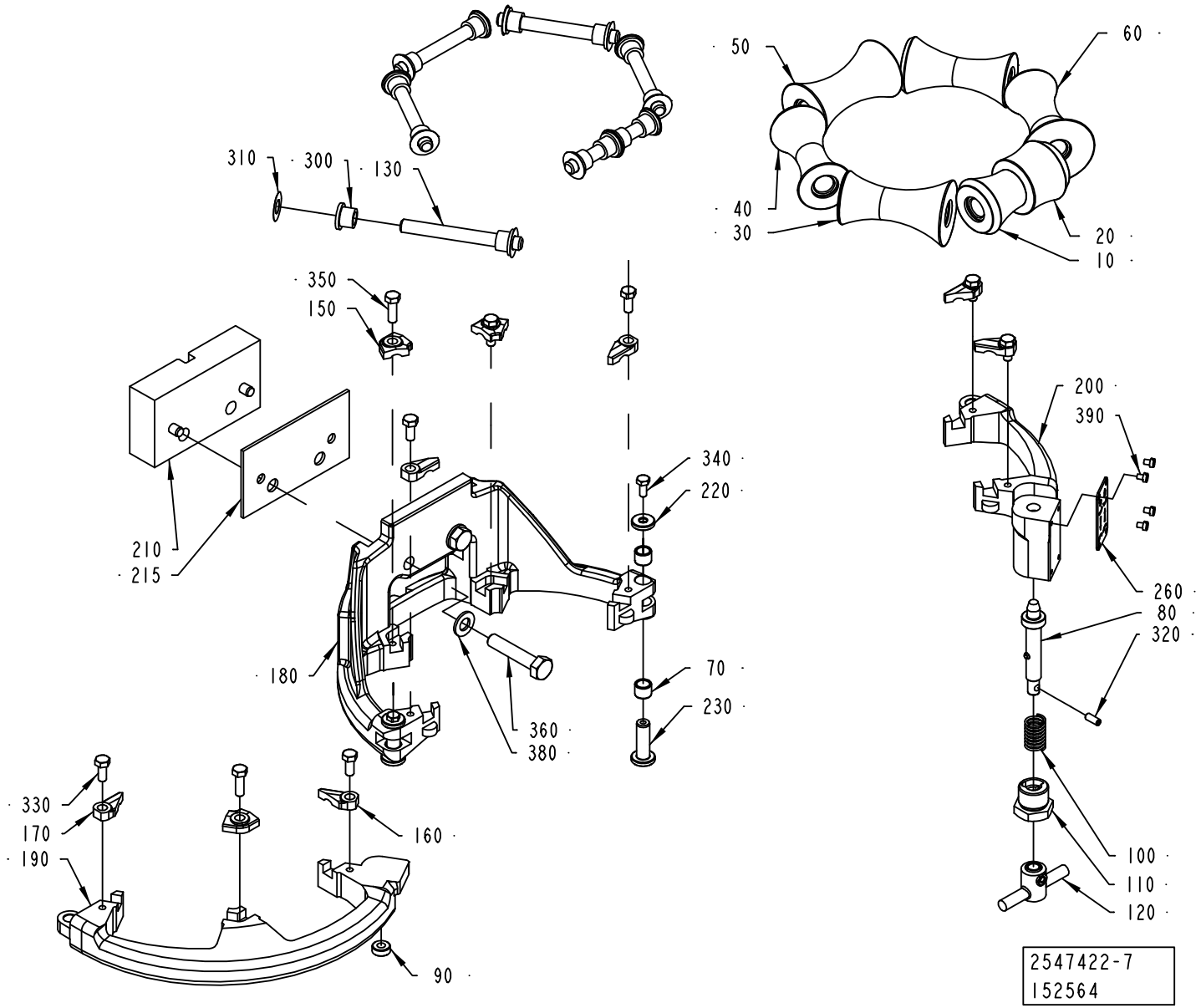

Pos	Part No	UN	Qty	Description	Page No	Pos	Part No	UN	Qty	Description	Page No

SEE PREVIOUS LISTS PAGES: 1-41, 1-43, 1-45, 1-47.

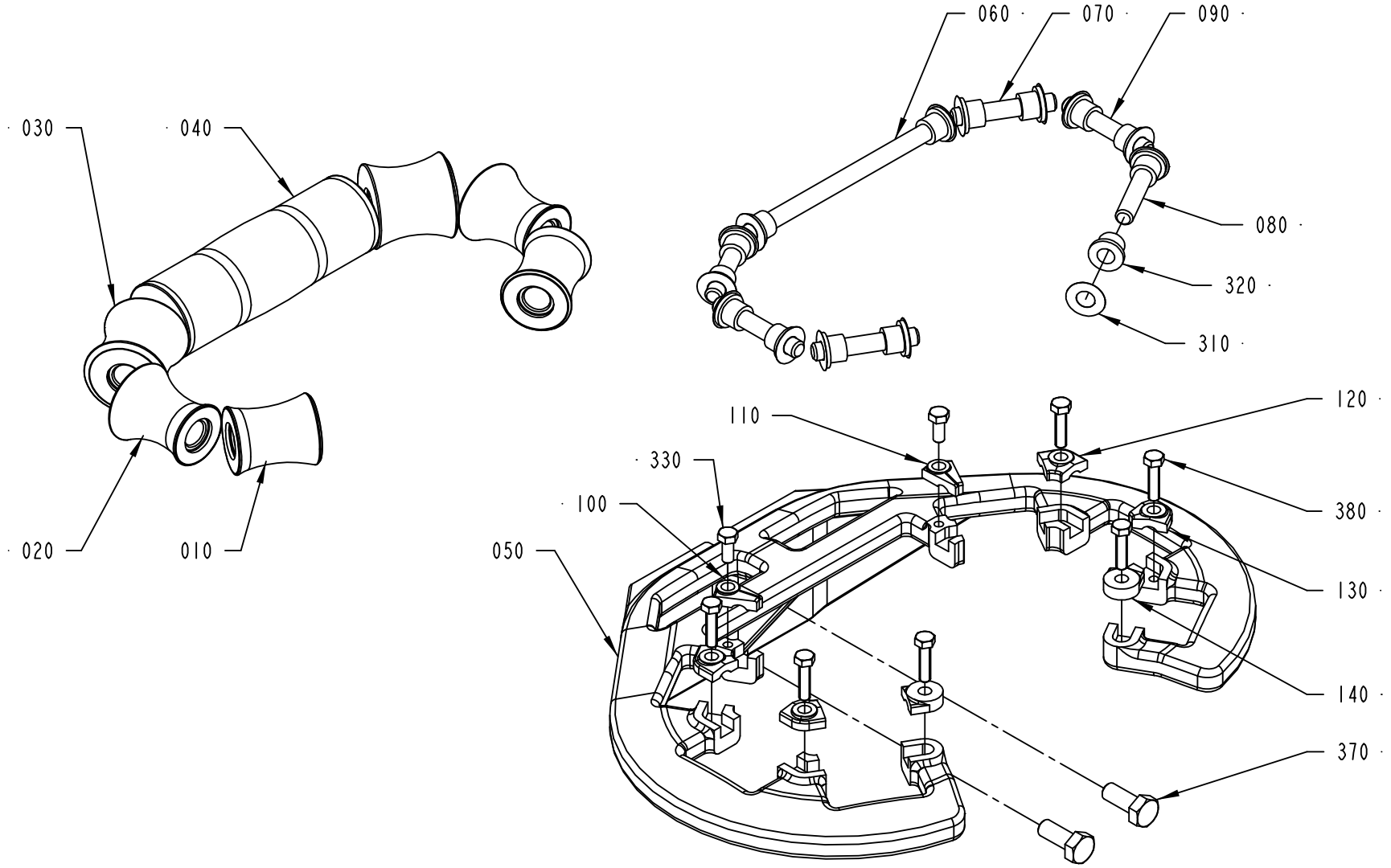

2547421-1
ECM 117070

ECM: 193677 - 20041213
Group number: 2547421-0100
Assembly Drawing: 2547421-1_1_AA

This list covers pages from 1-54 to 1-59

Pos	Part No	UN	Qty	Description	Page No
TBA 0200S (See drawing on page: 1-56)					
010	752128-0000		2	FORMING ROLLER	
020	752127-0000		2	FORMING ROLLER	
040	752126-0000		1	FORMING ROLLER	
050	2565430-0000		1	SUPPORT RING	
060	752186-0008		1	SHAFT	
070	2522213-0006		2	SHAFT	
080	2522213-0010		2	SHAFT	
100	2532912-0001		4	LOCK PLATE	
110	2532895-0002		2	LOCK PLATE	
310	2033-0011		10	WASHER	
320	90240-0172		6	FLANGE BUSHING, 8X12X10 MM	
340	752156-0000		4	FLANGE BUSHING	
350	315105-0165		2	WASHER BRB8,4X16RFR	
370	312105-0453		2	SCREW M6S ISO 4017 M8X25 A480	
380	312105-0331		6	SCREW M6S ISO 4017 M5X20 A480	
TBA 0250S, TBA 0200M (See drawing on page: 1-56)					
010	2611027-0000		2	ROLLER	
020	2611026-0000		2	ROLLER	
040	2611025-0000		1	ROLLER	
050	2611028-0000		1	SUPPORT ROLLER	
060	752186-0008		1	SHAFT	
070	2522213-0006		2	SHAFT	
080	752186-0013		1	SHAFT	
100	2532912-0002		4	LOCK PLATE	
110	2532895-0006		2	LOCK PLATE	
310	2033-0011		10	WASHER	
320	90240-0172		6	FLANGE BUSHING, 8X12X10 MM	
340	752156-0000		4	FLANGE BUSHING	
350	315105-0165		2	WASHER BRB8,4X16RFR	
370	312105-0453		2	SCREW M6S ISO 4017 M8X25 A480	
380	312105-0331		6	SCREW M6S ISO 4017 M5X20 A480	
TBA 0330S, TBA 0200B, TBA 0250B (See drawing on page: 1-56)					
010	2544881-0000		2	ROLLER	
020	751492-0000		2	ROLL	
040	751491-0000		1	ROLL	
050	2565431-0000		1	SUPPORT RING	
060	2522213-0005		1	SHAFT	
070	2522213-0006		2	SHAFT	
080	2522213-0004		2	SHAFT	
100	2532912-0002		4	LOCK PLATE	
110	2532895-0003		2	LOCK PLATE	
310	2033-0011		10	WASHER	
320	90240-0172		10	FLANGE BUSHING, 8X12X10 MM	
350	315105-0165		2	WASHER BRB8,4X16RFR	
370	312105-0453		2	SCREW M6S ISO 4017 M8X25 A480	
380	312105-0331		6	SCREW M6S ISO 4017 M5X20 A480	
TBA 0500B, TBA 1000B, TBA 1500S (See drawing on page: 1-54)					
010	2552206-0000		2	ROLLER	
020	2552205-0000		2	ROLLER	
030	2552188-0000		2	ROLLER	
040	2552187-0000		1	ROLLER	
050	2552160-0000		1	SUPPORT RING	
060	2522213-0005		1	SHAFT	
070	752186-0005		2	SHAFT	
080	2522213-0004		2	SHAFT	
090	752186-0019		2	SHAFT	
100	2552176-0001		1	LOCK PLATE	
110	2552177-0001		1	LOCK PLATE	
120	2528123-0002		2	LOCK PLATE	
130	2528123-0008		2	LOCK PLATE	
140	2532895-0004		2	LOCK PLATE	
310	2033-0011		14	WASHER	
320	90240-0172		14	FLANGE BUSHING, 8X12X10 MM	
330	312105-0327		2	SCREW M6S ISO 4017 M5X12 A480	
370	312105-0451		2	SCREW M6S ISO 4017 M8X20 A480	
380	312105-0331		6	SCREW M6S ISO 4017 M5X20 A480	
TBA 0500S (See drawing on page: 1-54)					
010	2672986-0000		2	ROLLER	
020	2672985-0000		2	ROLLER	
030	2672970-0000		2	ROLLER	
040	2709302-0000		1	ROLLER	
050	2611038-0000		1	SUPPORT RING	
060	752186-0009		1	SHAFT	
070	752186-0012		2	SHAFT	
080	752186-0012		2	SHAFT	
090	752186-0002		2	SHAFT	
120	2562667-0008		6	LOCK PLATE	
140	2532895-0001		2	LOCK PLATE	
310	2033-0011		14	WASHER	
320	90240-0172		14	FLANGE BUSHING, 8X12X10 MM	
370	312105-0451		2	SCREW M6S ISO 4017 M8X20 A480	
380	312105-0331		8	SCREW M6S ISO 4017 M5X20 A480	
TBA 1000S (See drawing on page: 1-54)					

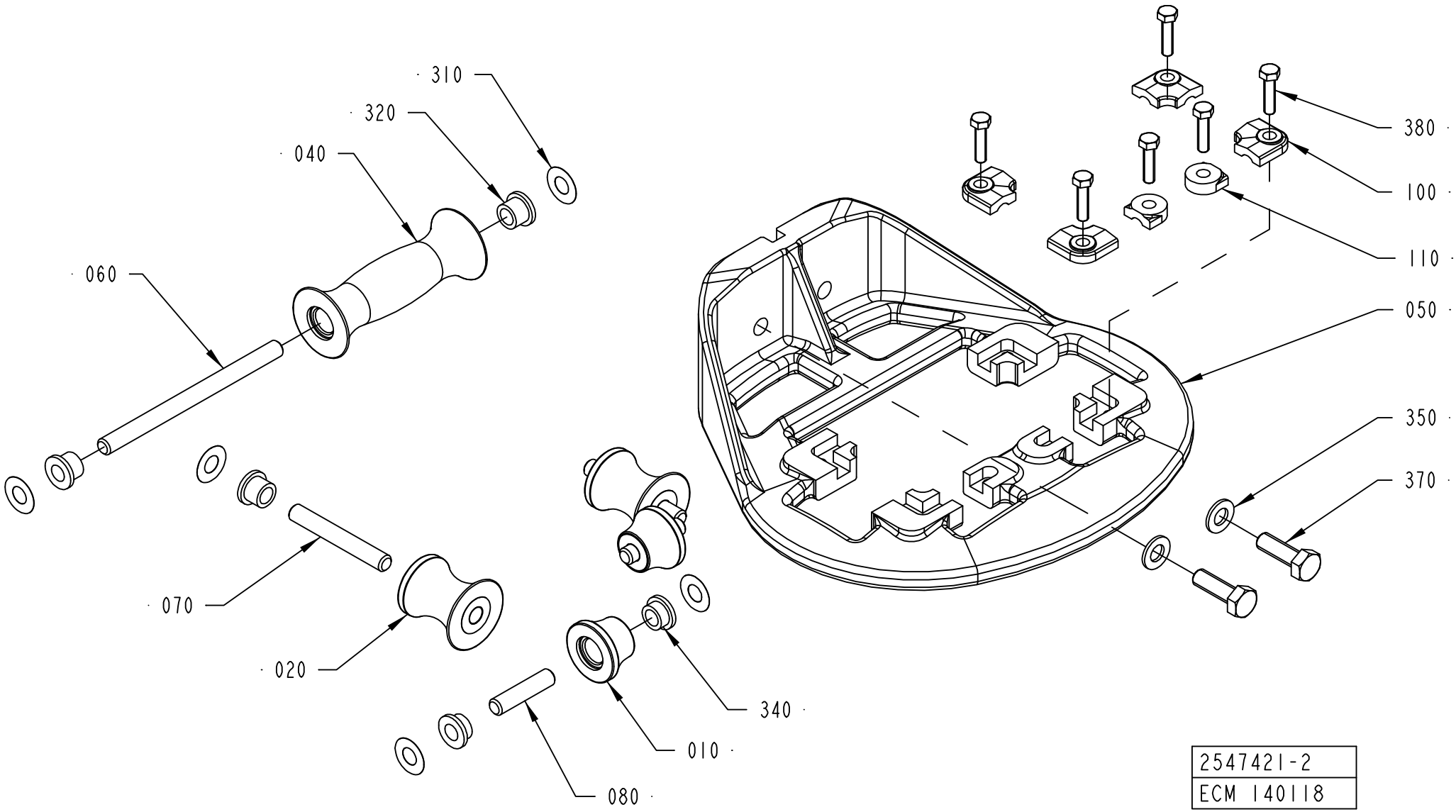
310
320
040
060
070
020
080
010
340
380
100
110
050
350
370
2547421-2
ECM 140118

ECM: 193677 - 20041213
Group number: 2547421-0100
Assembly Drawing: 2547421-2_1_AA

This list covers pages from 1-54 to 1-59

Pos	Part No	UN	Qty	Description	Page No
TBA 1000S (Cont'd) (See drawing on page: 1-54)					
010	2512748-0000		2	ROLLER	
020	2512749-0000		2	ROLLER	
030	2512746-0000		2	ROLLER	
040	2514521-0000		2	ROLLER	
050	2552161-0000		1	SUPPORT RING	
060	2522213-0005		1	SHAFT	
070	752186-0005		2	SHAFT	
080	2522213-0004		2	SHAFT	
090	752186-0019		2	SHAFT	
100	2552176-0003		1	LOCK PLATE	
110	2552177-0003		1	LOCK PLATE	
120	2528123-0007		2	LOCK PLATE	
130	2528123-0001		2	LOCK PLATE	
140	2532895-0003		2	LOCK PLATE	
310	2033-0011		16	WASHER	
320	90240-0172		16	FLANGE BUSHING, 8X12X10 MM	
330	312105-0327		2	SCREW M6S ISO 4017 M5X12 A480	
370	312105-0451		2	SCREW M6S ISO 4017 M8X20 A480	
380	312105-0331		6	SCREW M6S ISO 4017 M5X20 A480	
TBA 1000SQ (See drawing on page: 1-54)					
010	2634971-0000		2	ROLLER	
020	2634970-0000		2	ROLLER	
030	2634969-0000		2	ROLLER	
040	2634968-0000		1	ROLLER	
050	2634967-0000		1	SUPPORT RING	
060	2522213-0008		1	SHAFT	
070	752186-0012		2	SHAFT	
080	2522213-0009		4	SHAFT	
120	2562667-0009		6	LOCK PLATE	
140	2532895-0003		2	LOCK PLATE	
310	2033-0011		14	WASHER	
320	90240-0172		14	FLANGE BUSHING, 8X12X10 MM	
370	312105-0453		2	SCREW M6S ISO 4017 M8X25 A480	
380	312105-0331		8	SCREW M6S ISO 4017 M5X20 A480	
TBA 1890S, TBA 2000S (See drawing on page: 1-58)					
010	2601286-0000		2	ROLLER	
020	2601285-0000		2	ROLLER	
030	2601279-0000		2	ROLLER	
040	2601278-0000		1	ROLLER	
050	2634926-0000		1	SUPPORT ROLLER	
060	2522213-0019		1	SHAFT	
070	752186-0006		2	SHAFT	
080	2522213-0020		2	SHAFT	
090	752186-0019		2	SHAFT	
120	2562667-0008		4	LOCK PLATE	
130	2528123-0007		2	LOCK PLATE	
140	2532895-0002		2	LOCK PLATE	
310	2033-0011		14	WASHER	
320	90240-0172		14	FLANGE BUSHING, 8X12X10 MM	
350	315105-0165		2	WASHER BRB8,4X16RFR	
370	312105-0452		2	SCREW M6S ISO 4017 M8X22 A4 80	
380	312105-0329		8	SCREW M6S ISO 4017 M5X16 A480	
TPA 0330SQ (See drawing on page: 1-54)					
010	2682169-0000		2	ROLLER	
020	2682168-0000		2	ROLLER	
030	2682167-0000		2	ROLLER	
040	2682170-0000		1	ROLLER	
050	2611038-0000		1	SUPPORT RING	
060	752186-0009		1	SHAFT	
070	752186-0012		2	SHAFT	
080	752186-0012		2	SHAFT	
090	752186-0002		2	SHAFT	
120	2562667-0008		6	LOCK PLATE	
140	2532895-0001		2	LOCK PLATE	
310	2033-0011		14	WASHER	
320	90240-0172		14	FLANGE BUSHING, 8X12X10 MM	
370	312105-0453		2	SCREW M6S ISO 4017 M8X25 A480	
380	312105-0331		8	SCREW M6S ISO 4017 M5X20 A480	
TPA 0500SQ (See drawing on page: 1-54)					
010	2680193-0000		2	ROLLER	
020	2685633-0000		2	ROLLER	
030	2685632-0000		2	ROLLER	
040	2685631-0000		1	ROLLER	
050	2611038-0000		1	SUPPORT RING	
060	752186-0009		1	SHAFT	
070	752186-0012		2	SHAFT	
080	752186-0012		2	SHAFT	
090	752186-0002		2	SHAFT	
120	2562667-0008		6	LOCK PLATE	
140	2532895-0001		2	LOCK PLATE	
310	2033-0011		14	WASHER	
320	90240-0172		14	FLANGE BUSHING, 8X12X10 MM	
370	312105-0453		2	SCREW M6S ISO 4017 M8X25 A480	

Machine Type | Group Description | Used-In | Group Number | Page No

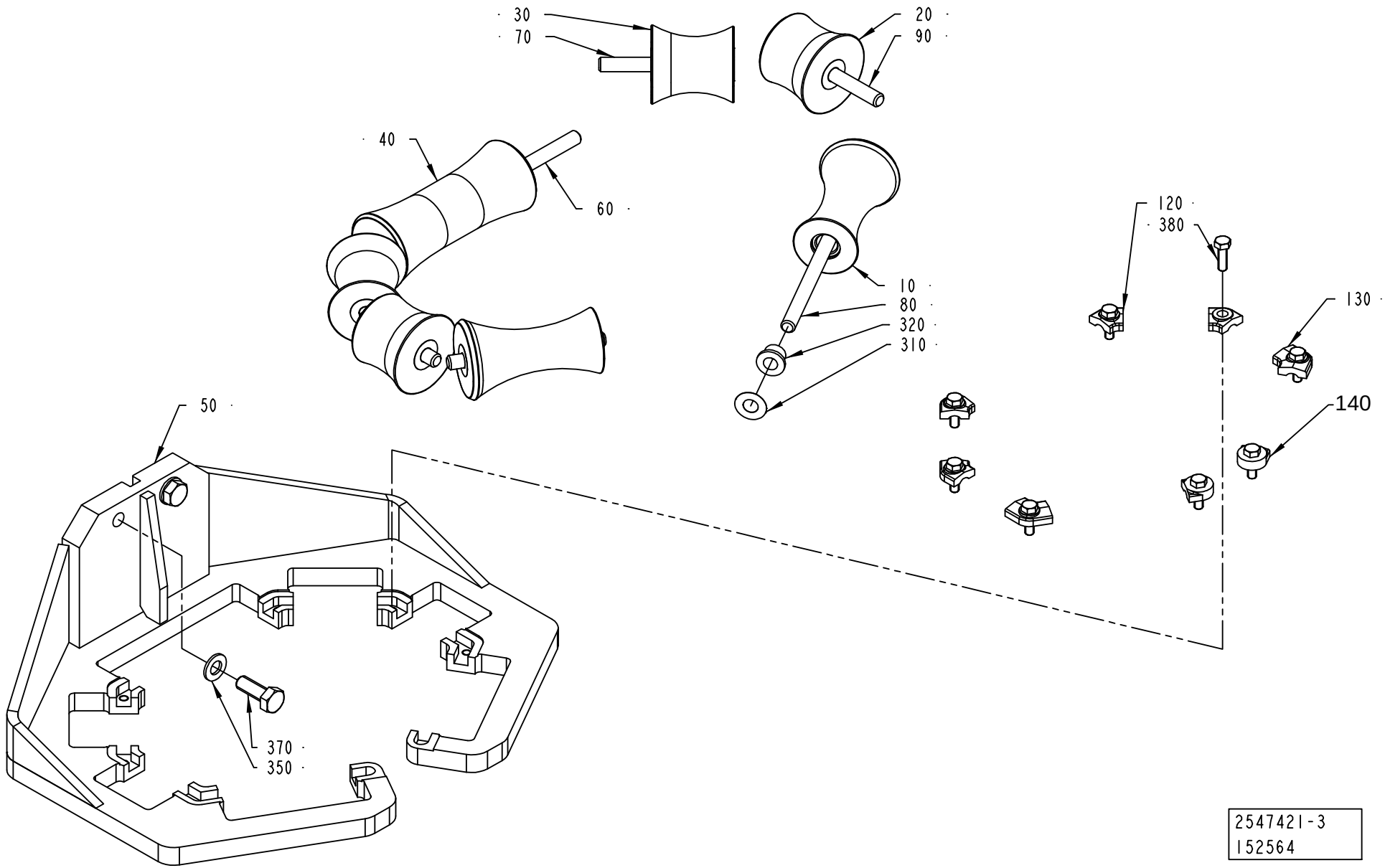
30
70
20
90
40
60
10
80
320
310
120
380
130
140
50
370
350
2547421-3
152564

Pos	Part No	UN	Qty	Description	Page No
TPA 0500SQ (Cont'd) (See drawing on page: 1-54)					
380	312105-0331		8	SCREW M6S ISO 4017 M5X20 A480	
TPA 1000SQ (See drawing on page: 1-54)					
010	1524150-0000		2	ROLLER	
020	1524149-0000		2	ROLLER	
030	1524148-0000		2	ROLLER	
040	1524147-0000		1	ROLLER	
050	2559105-0000		1	SUPPORT RING	
060	2522213-0008		1	SHAFT	
070	752186-0012		2	SHAFT	
080	2522213-0009		4	SHAFT	
120	2562667-0008		6	LOCK PLATE	
140	2532895-0008		2	LOCK PLATE	
310	2033-0011		14	WASHER	
320	90240-0172		14	FLANGE BUSHING, 8X12X10 MM	
370	312105-0451		2	SCREW M6S ISO 4017 M8X20 A480	
380	312105-0331		8	SCREW M6S ISO 4017 M5X20 A480	

Pos	Part No	UN	Qty	Description	Page No

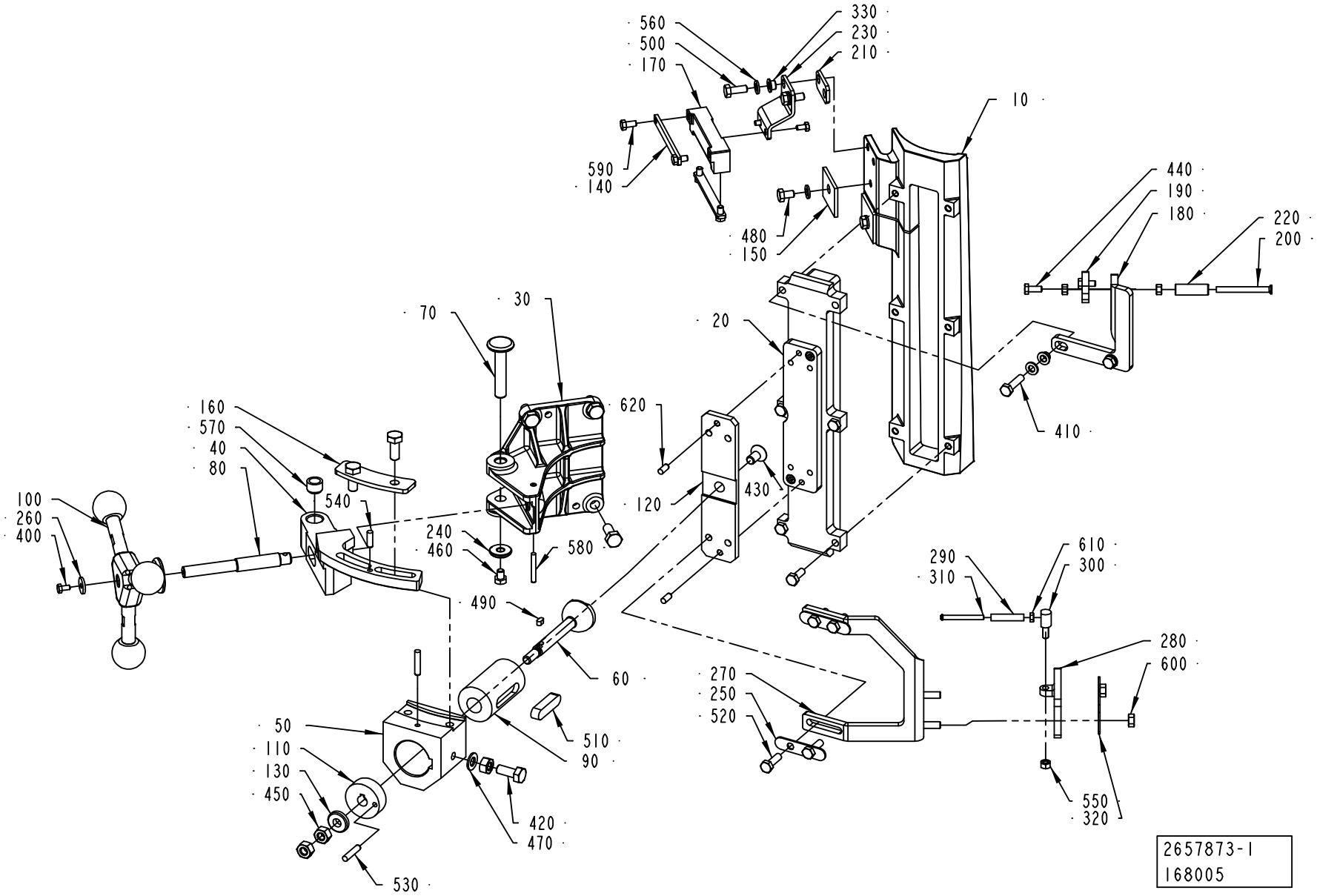
560
500
170
330
230
210
10
590
140
480
150
440
190
180
220
200
70
30
20
620
160
570
40
80
540
120
430
410
100
260
400
240
460
580
490
60
290
310
610
300
280
600
270
250
520
50
110
130
450
510
90
420
470
530
550
320
2657873-1
168005

ECM: 190453 - 20041125
Group number: 2657873-0100
Assembly Drawing: 2657873-1_1_AA

This list covers pages from 1-60 to 1-63

Pos	Part No	UN	Qty	Description	Page No
TBA 0200S					
010	2565440-0000		1	INDUCTOR	
020	2565441-0000		1	INSULATING PLATE	
180	2547404-0000		1	BRACKET	
270	2555614-0000		1	BRACKET	
280	2555619-0000		1	BRACKET	
TBA 0250S, TBA 0200M					
010	2611053-0000		1	INDUCTOR	
020	2611054-0000		1	INSULATING PLATE	
180	2547404-0000		1	BRACKET	
270	2555614-0000		1	BRACKET	
280	2555619-0000		1	BRACKET	
TBA 0330S, TBA 0200B, TBA 0250B					
010	2532938-0000		1	INDUCTOR	
020	2544894-0000		1	INSULATING PLATE	
180	2547404-0000		1	BRACKET	
270	2555614-0000		1	BRACKET	
280	2555619-0000		1	BRACKET	
TBA 0500B, TBA 1000B, TBA 1500S					
010	2514514-0000		1	INDUCTOR	
020	2544891-0000		1	INSULATING PLATE	
180	2547404-0000		1	BRACKET	
270	2555614-0000		1	BRACKET	
280	2555615-0000		1	BRACKET	
TBA 0500S					
010	2672984-0000		1	INDUCTOR	
020	2672968-0000		1	INSULATING PLATE	
180	2547404-0000		1	BRACKET	
270	2555614-0000		1	BRACKET	
280	2555615-0000		1	BRACKET	
TBA 1000S					
010	2514522-0000		1	INDUCTOR	
020	2544892-0000		1	INSULATING PLATE	
180	2547404-0000		1	BRACKET	
270	2555614-0000		1	BRACKET	
280	2555615-0000		1	BRACKET	
TBA 1000SQ					
010	2532925-0000		1	INDUCTOR	
020	2544893-0000		1	INSULATING PLATE	
180	2547404-0000		1	BRACKET	
270	2555614-0000		1	BRACKET	
280	2555615-0000		1	BRACKET	
TBA 1890S, TBA 2000S					
010	2601247-0000		1	INDUCTOR	
020	2601248-0000		1	INSULATING PLATE	
180	2601249-0000		1	BRACKET	
270	2594636-0000		1	BRACKET	
280	2555615-0000		1	BRACKET	
TPA 0330SQ					
010	2695800-0000		1	INDUCTOR	
020	2544894-0000		1	INSULATING PLATE	
180	2547404-0000		1	BRACKET	
270	2555614-0000		1	BRACKET	
280	2555619-0000		1	BRACKET	
TPA 0500SQ					
010	2691359-0000		1	INDUCTOR	
020	2611056-0000		1	INSULATING PLATE	
180	2547404-0000		1	BRACKET	
270	2555614-0000		1	BRACKET	
280	2555619-0000		1	BRACKET	
TPA 1000SQ					
010	2601289-0000		1	INDUCTOR	
020	2601307-0000		1	INSULATING PLATE	
180	2547404-0000		1	BRACKET	
270	2555614-0000		1	BRACKET	
280	2555615-0000		1	BRACKET	
Common Parts					
030	2544897-0000		1	BRACKET	
040	2694714-0000		1	GUIDE	
050	2694715-0000		1	SUPPORT	
060	2641000-0000		1	SHAFT	
070	2547388-0000		1	AXLE PIN	
080	2544898-0000		1	SHAFT	
090	2640991-0000		1	SLIDE	
100	2547376-0100		1	KNOB	**1-65**
110	2640992-0000		1	SLIDE	
120	2640993-0000		1	PLATE	
130	2641923-0000		1	WASHER	
140	2508309-0000		2	PLATE	
150	2508311-0000		2	PLATE	
160	2694716-0000		1	PLATE	
170	2531060-0000		1	BRACKET	
190	2547405-0000		1	BRACKET	
200	269151-0000		1	SHAFT	

Machine Type | Group Description | Used-In | Group Number | Page No

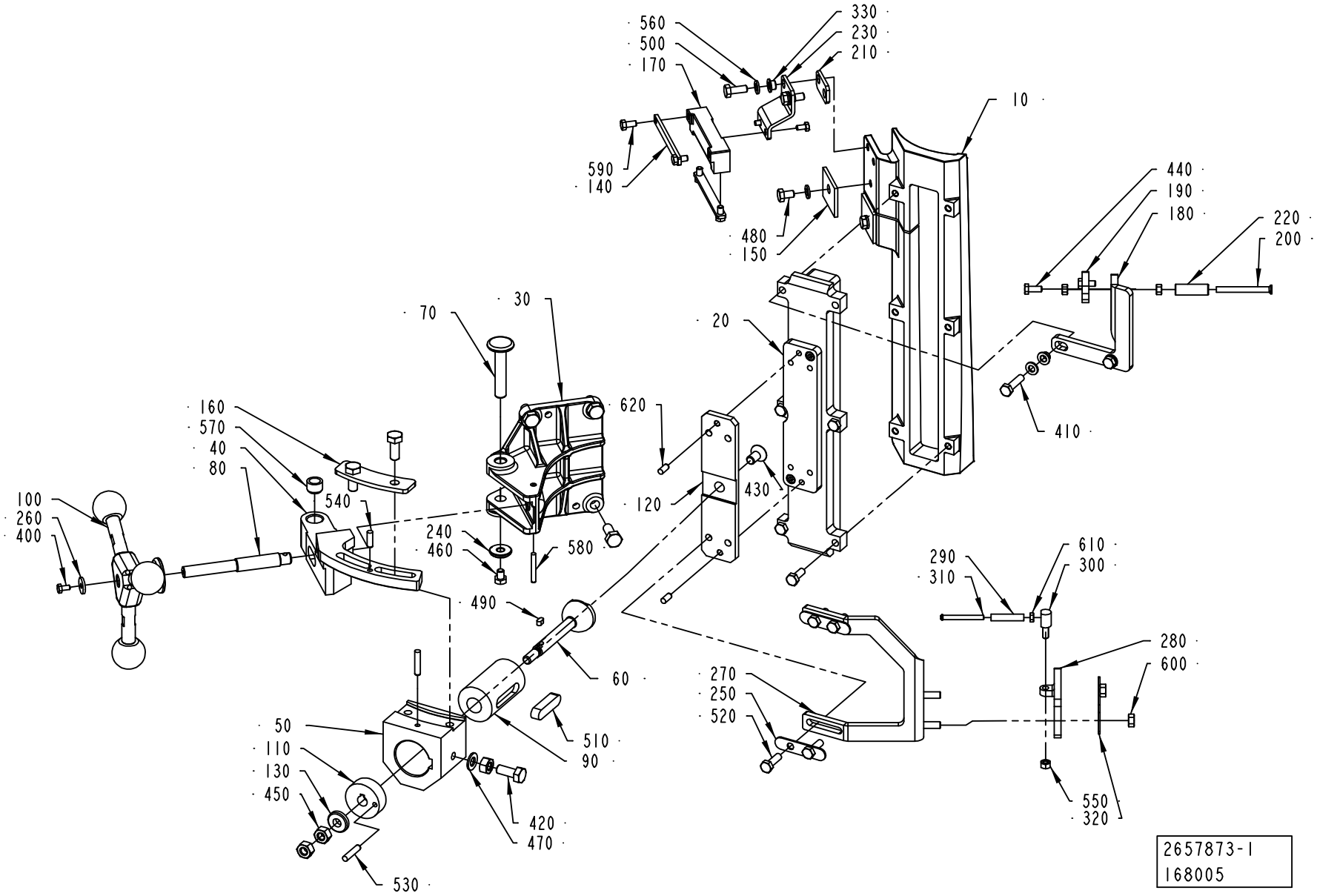
560
500
170
330
230
210
10
590
140
480
150
440
190
180
220
200
70
30
20
620
160
570
40
80
540
100
260
400
240
460
580
120
430
410
490
60
290
310
610
300
280
600
270
250
520
50
110
130
450
510
90
420
470
530
550
320
2657873-1
168005

Pos	Part No	UN	Qty	Description	Page No
Common Parts (Cont'd)					
210	2532898-0000		1	BRACKET	
220	2555625-0000		1	ROLL	
230	2532899-0000		1	BRACKET	
240	2508297-0000		1	WASHER	
250	2555623-0000		2	COVER	
260	2547377-0000		1	WASHER	
290	2555616-0000		1	ROLLER	
300	2555617-0000		1	PIN	
310	2555618-0000		1	SHAFT	
320	2555620-0000		1	COVER	
330	2508292-0000		4	BUSHING	
400	312105-0287		3	SCREW M6S ISO4017 M4X8 A470	
410	312105-0372		2	SCREW M6S ISO 4017 M6X25 A480	
420	312105-0451		7	SCREW M6S ISO 4017 M8X20 A480	
430	312155-0449		1	SCREW DIN 7991 MF6S M8X16 A480	
440	312105-0327		2	SCREW M6S ISO 4017 M5X12 A480	
450	312605-0318		3	HEXAGON NUT, M6M M8 A280	
460	312105-0362		1	SCREW M6S ISO 4017 M6X8 A480	
470	315105-0165		6	WASHER BRB8,4X16RFR	
480	312105-0364		2	SCREW M6S ISO 4017 M6X10 A480	
490	315705-0164		1	PARALLEL KEY W. ROUND ENDS 4X4X8 MM	
500	312105-0368		6	SCREW M6S ISO 4017 M6X16 A480	
510	315705-0301		1	PARALLEL KEY W. ROUND ENDS 10X8X40 MM	
520	312105-0370		4	SCREW M6S ISO 4017 M6X20 A480	
530	311103-0312		2	PARALLELL PIN, M6, 5X25 MM	
540	311103-0308		1	PARALLEL PIN ISO 2338 5M6X16 A1	
550	312605-0314		3	HEXAGON NUT, M6M M5 A280	
560	315105-0153		6	WASHER BRB6,4X12RFR	
570	321137-0140		2	BUSHING, 10X14X10 MM	
580	311103-0276		1	PARALLEL PIN ISO 2338 4M6X30 A1	
590	312105-0325		4	SCREW M6S ISO 4017 M5X10 A480	
600	312605-0316		2	HEXAGON NUT, M6M M6 A280	
610	312605-0312		1	HEXAGON NUT, M6M M4 A280	
620	311103-0306		2	PARALLEL PIN ISO 2338 5M6X12 A1	

Pos	Part No	UN	Qty	Description	Page No

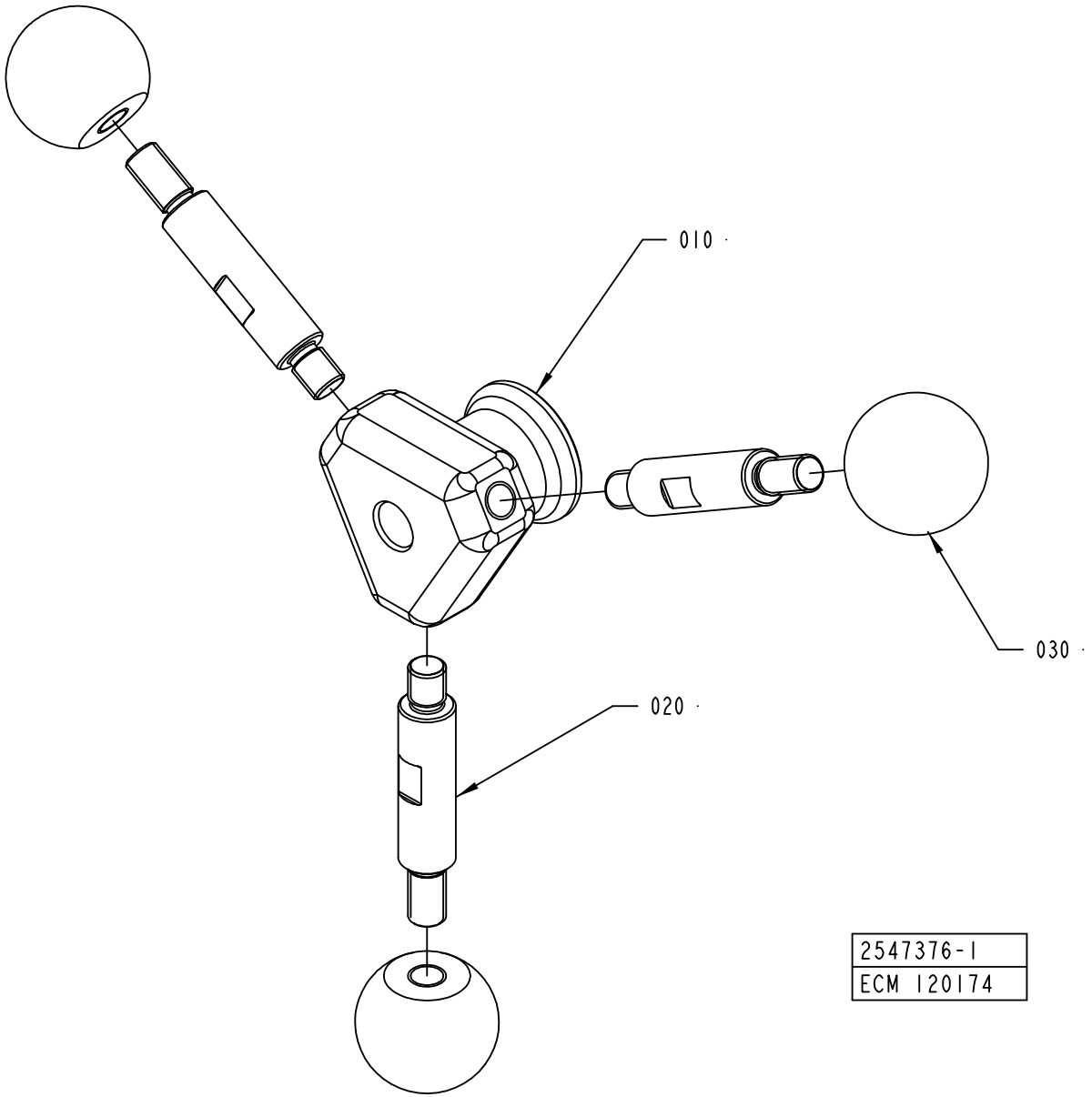
010
020
030
2547376-1
ECM 120174

ECM: 121123 - 20030123
Group number: 2547376-0100
Assembly Drawing: 2547376-1_1_AA

Pos	Part No	UN	Qty	Description	Page No
-					
010	2582574-0000		1	BODY	
020	2526858-0000		3	DOWEL	
030	2582575-0000		3	KNOB	

Pos	Part No	UN	Qty	Description	Page No

SUPPORT LEVEL DETECTOR

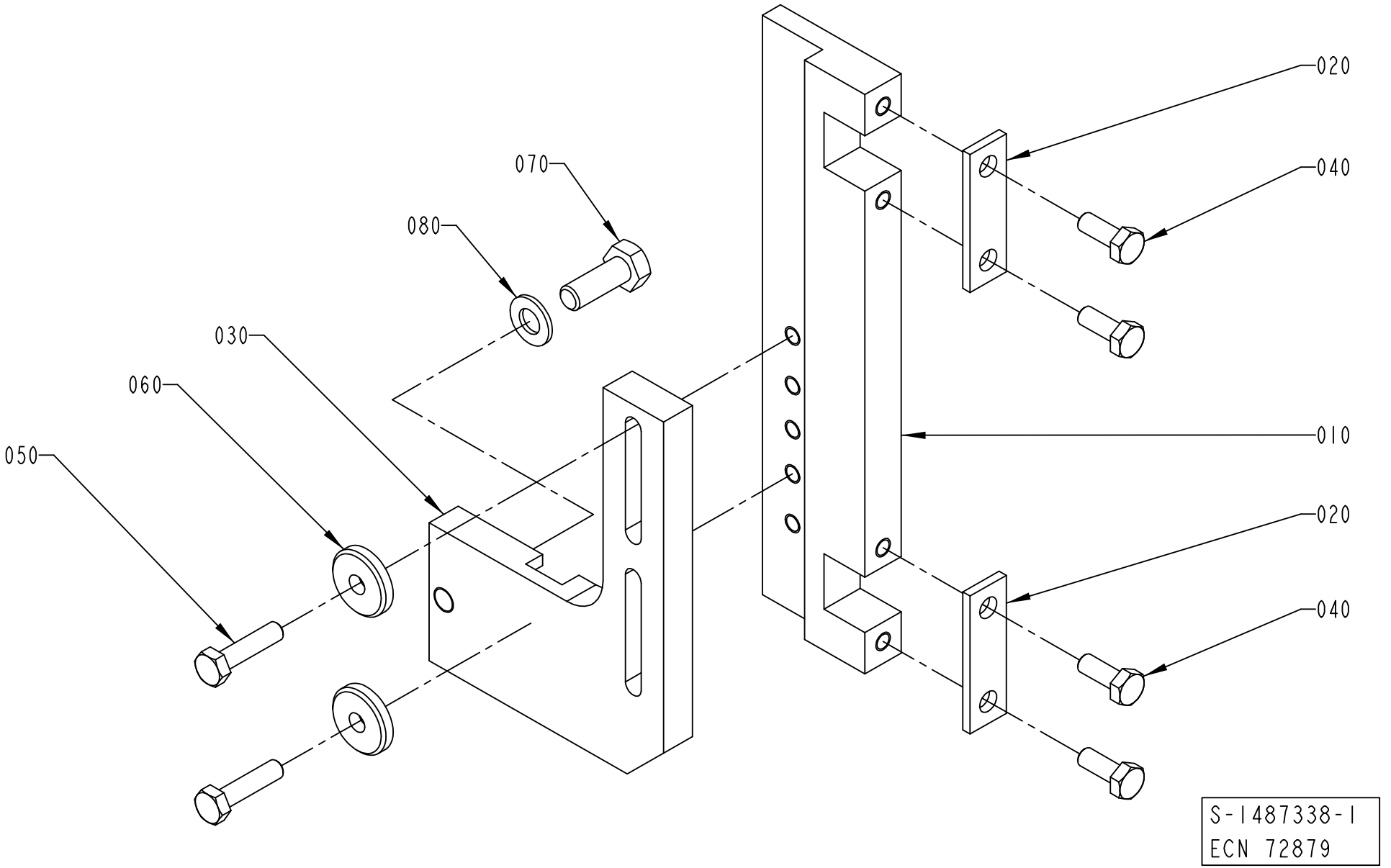

Pos	Part No	UN	Qty	Description	Page No
TBA 0330S, TBA 0200B, TBA 0250S, TBA 0200S, TBA 0200M, TBA 0250B, TPA 0330SQ, TPA 0500SQ (See drawing on page: 1-66)					
010	1317476-0000		1	BRACKET	
030	1348359-0000		1	BRACKET	
TBA 0500S, TBA 0500B, TBA 1000S, TBA 1000SQ, TBA 1000B, TBA 1500S, TPA 1000SQ (See drawing on page: 1-68)					
010	1317476-0000		1	BRACKET	
030	1317475-0000		1	BRACKET	
TBA 1890S, TBA 2000S (See drawing on page: 1-68)					
010	2650813-0000		1	BRACKET	
030	2656899-0000		1	BRACKET	
Common Parts					
020	1036673-0000		2	WASHER	
040	312105-0368		4	SCREW M6S ISO 4017 M6X16 A480	
050	312105-0372		2	SCREW M6S ISO 4017 M6X25 A480	
060	315125-0153		2	WASHER TBRSB 6,4X22X4 A4	
070	312105-0452		1	SCREW M6S ISO 4017 M8X22 A4 80	
080	315105-0165		1	WASHER BRB8,4X16RFR	

Pos	Part No	UN	Qty	Description	Page No

SUPPORT LEVEL DETECTOR

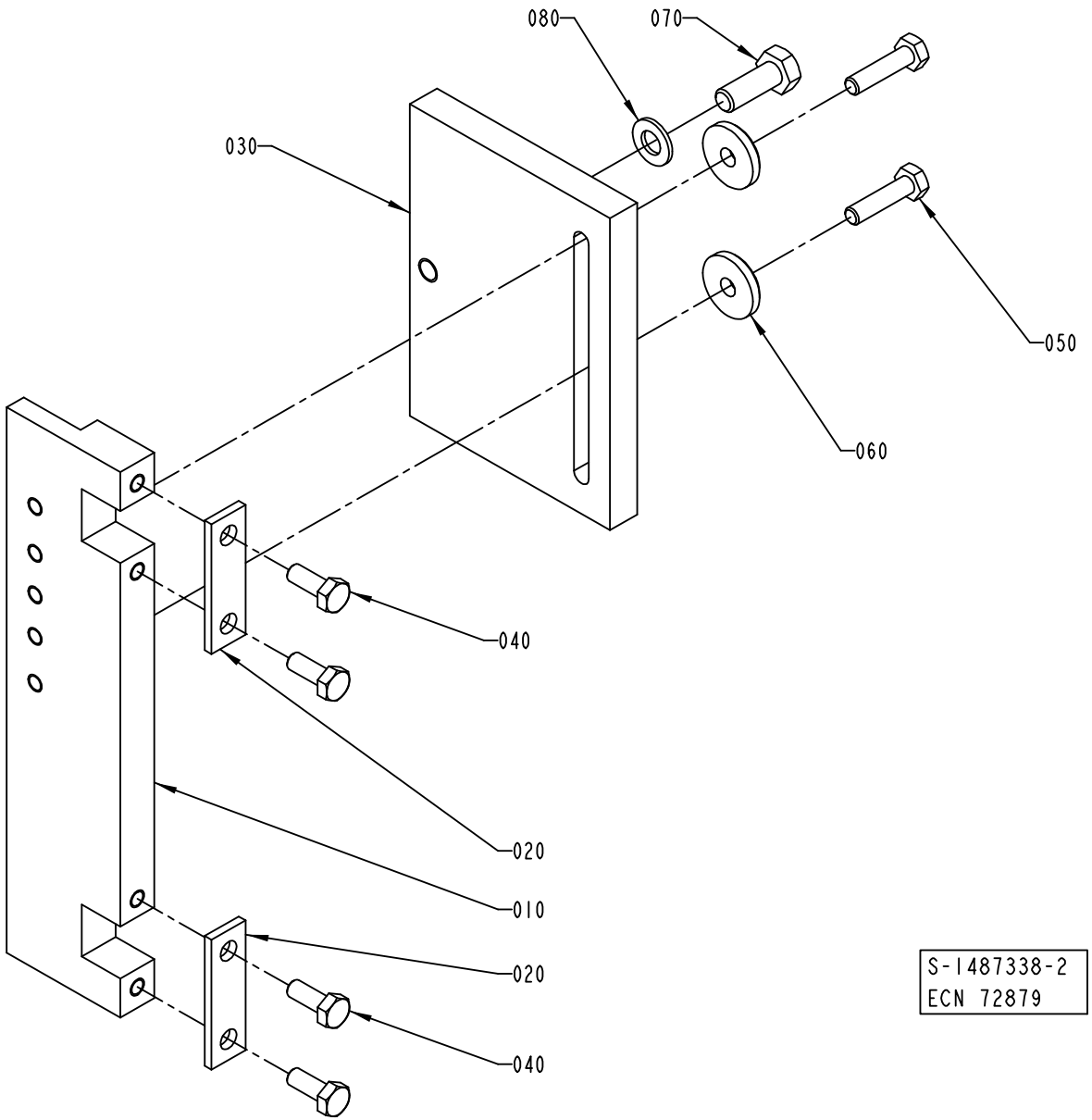

Pos	Part No	UN	Qty	Description	Page No
TBA 0330S, TBA 0200B, TBA 0250S, TBA 0200S, TBA 0200M, TBA 0250B, TPA 0330SQ, TPA 0500SQ (See drawing on page: 1-66)					
010	1317476-0000		1	BRACKET	
030	1348359-0000		1	BRACKET	
TBA 0500S, TBA 0500B, TBA 1000S, TBA 1000SQ, TBA 1000B, TBA 1500S, TPA 1000SQ (See drawing on page: 1-68)					
010	1317476-0000		1	BRACKET	
030	1317475-0000		1	BRACKET	
TBA 1890S, TBA 2000S (See drawing on page: 1-68)					
010	2650813-0000		1	BRACKET	
030	2656899-0000		1	BRACKET	
Common Parts					
020	1036673-0000		2	WASHER	
040	312105-0368		4	SCREW M6S ISO 4017 M6X16 A480	
050	312105-0372		2	SCREW M6S ISO 4017 M6X25 A480	
060	315125-0153		2	WASHER TBRSB 6,4X22X4 A4	
070	312105-0452		1	SCREW M6S ISO 4017 M8X22 A4 80	
080	315105-0165		1	WASHER BRB8,4X16RFR	

Pos	Part No	UN	Qty	Description	Page No

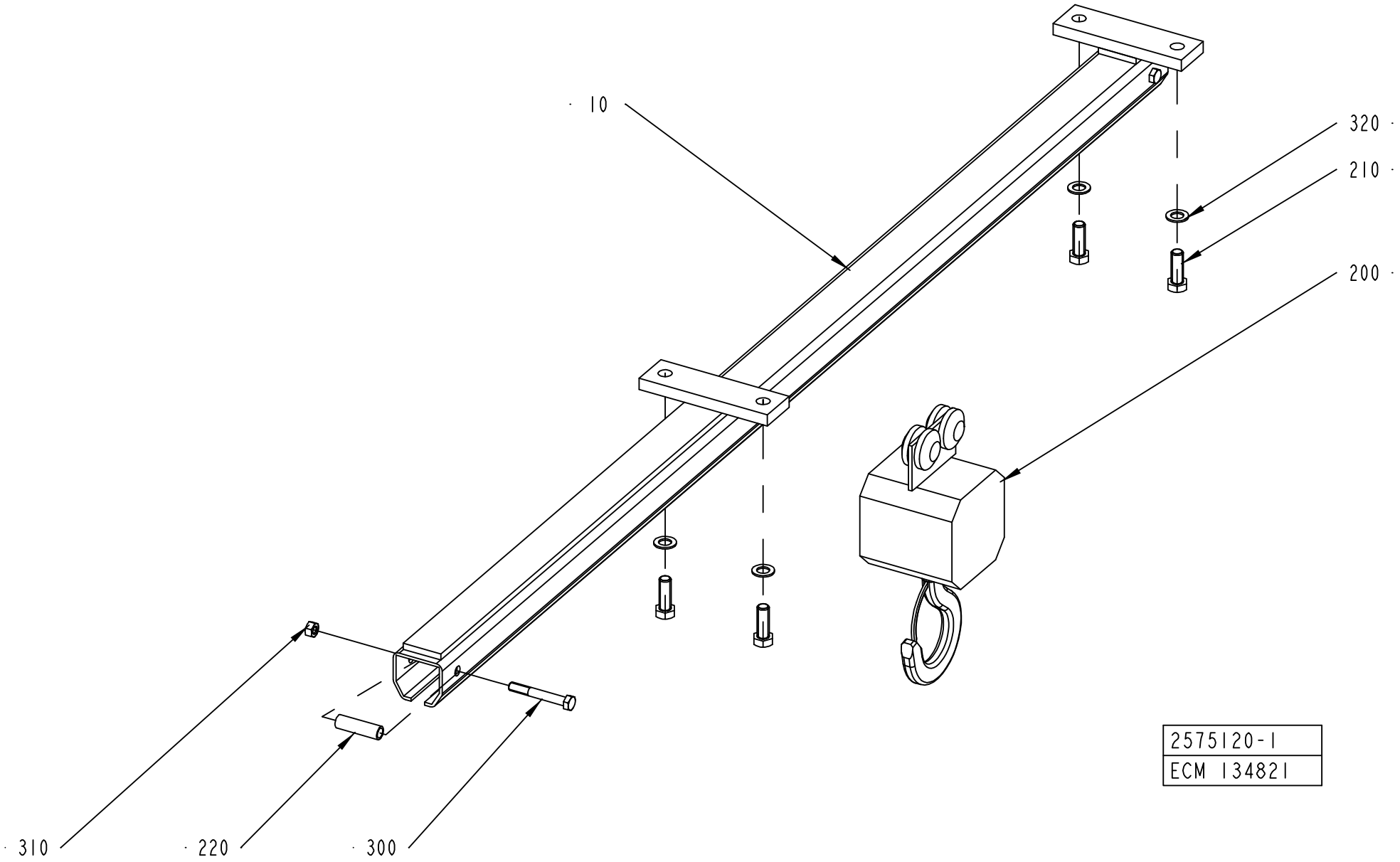
10
320
210
200
310
220
300
2575120-1
ECM 134821

ECM: 136051 - 20030704
Group number: 2575120-0100
Assembly Drawing: 2575120-1_1_AA

Pos	Part No	UN	Qty	Description	Page No
-					
10	2575119-0000		1	GUIDE	
200	90039-0022		1	TACKLE BLOCK, NO. BV-225/500	
210	90287-0322		4	SCREW M6S M14X40 70	
220	90287-0347		2	BOLT	
300	312105-0506		2	SCREW M6S ISO 4014 M10X75 A480	
310	312605-0320		2	HEXAGON NUT, M6M M10 A280	
320	315101-0182		4	WASHER PLAIN, BRB, 15/26 H=2	

Pos	Part No	UN	Qty	Description	Page No

This page is intentionally left blank.

ECM: 194879 - 20041203
Group number: 2555394-0100
Assembly Drawing:

This list covers pages from 1-72 to 1-83

Pos	Part No	UN	Qty	Description	Page No
TPA 1000SQ HI					
JS010	1520633-0005		12	DOLLY	
JS010	1520633-0005		12	DOLLY	
JS020	1520052-0000		8	INDUCTOR	
JS020	1520052-0000		8	INDUCTOR	
JS035	1539843-0000		6	VOLUME SHIM	
JS040	1348956-0000		2	KNIFE	
JS060	1260659-0000		2	SPRING	
SU010	257330-0000		2	PRESSURE ROLLER	
SU020	2529420-0000		1	SHAFT	
SU030	315204-0219		2	O-RING 29,2X3 MM	
SU040	2500081-0000		1	ELBOW PIPE	
SU050	2529750-0000		1	COVERING PANEL	
SU060	979813-0000		1	PLUG	
SU070	342850-0304		1	GASKET 35,4X49,1X5,2 1"1/2 FDA	
TBA 1000B NOQC HI					
JS010	1110083-0002		12	DOLLY	
JS010	1110083-0002		12	DOLLY	
JS020	1110938-0000		2	INDUCTOR	
JS020	1110938-0000		2	INDUCTOR	
JS030	1035831-0000		8	VOLUME SHIM	
JS040	1348955-0000		2	KNIFE	
JS060	1260659-0000		2	SPRING	
SU010	232979-0000		3	PRESSURE ROLLER	
SU020	2523268-0000		1	SHAFT	
SU030	315204-0219		2	O-RING 29,2X3 MM	
SU040	2500081-0000		1	ELBOW PIPE	
SU050	2529750-0000		1	COVERING PANEL	
SU060	979813-0000		1	PLUG	
SU070	342850-0304		1	GASKET 35,4X49,1X5,2 1"1/2 FDA	
TBA 1000B NOQC NOHI					
JS010	1110083-0002		12	DOLLY	
JS010	1110083-0002		12	DOLLY	
JS020	1110938-0000		2	INDUCTOR	
JS020	1110938-0000		2	INDUCTOR	
JS030	1035831-0000		8	VOLUME SHIM	
JS040	1348955-0000		2	KNIFE	
JS060	1260659-0000		2	SPRING	
SU010	232979-0000		3	PRESSURE ROLLER	
SU020	2523268-0000		1	SHAFT	
SU030	315204-0219		2	O-RING 29,2X3 MM	
TBA 1000S NOMOLDEDCAP HI					
JS010	1110083-0002		12	DOLLY	
JS010	1110083-0002		12	DOLLY	
JS020	1110937-0000		2	INDUCTOR	
JS020	1110937-0000		2	INDUCTOR	
JS030	1040755-0000		8	VOLUME SHIM	
JS040	1348955-0000		2	KNIFE	
JS060	1260659-0000		2	SPRING	
SU010	499387-0000		3	PRESSURE ROLLER	
SU020	2529419-0000		1	SHAFT	
SU030	315204-0219		2	O-RING 29,2X3 MM	
SU040	2500081-0000		1	ELBOW PIPE	
SU050	2529750-0000		1	COVERING PANEL	
SU060	979813-0000		1	PLUG	
SU070	342850-0304		1	GASKET 35,4X49,1X5,2 1"1/2 FDA	
TBA 1000S NOMOLDEDCAP NOHI					
JS010	1110083-0002		12	DOLLY	
JS010	1110083-0002		12	DOLLY	
JS020	1110937-0000		2	INDUCTOR	
JS020	1110937-0000		2	INDUCTOR	
JS030	1040755-0000		8	VOLUME SHIM	
JS040	1348955-0000		2	KNIFE	
JS060	1260659-0000		2	SPRING	
SU010	499387-0000		3	PRESSURE ROLLER	
SU020	2529419-0000		1	SHAFT	
SU030	315204-0219		2	O-RING 29,2X3 MM	
TBA 1000S STDA7 HI					
JS010	1110083-0002		12	DOLLY	
JS010	1110083-0002		12	DOLLY	
JS020	2546474-0000		2	INDUCTOR	
JS020	2546474-0000		2	INDUCTOR	
JS030	1040755-0000		8	VOLUME SHIM	
JS040	1348955-0000		2	KNIFE	
JS060	1260659-0000		2	SPRING	
SU010	499387-0000		3	PRESSURE ROLLER	
SU020	2529419-0000		1	SHAFT	
SU030	315204-0219		2	O-RING 29,2X3 MM	
SU040	2500081-0000		1	ELBOW PIPE	
SU050	2529750-0000		1	COVERING PANEL	
SU060	979813-0000		1	PLUG	
SU070	342850-0304		1	GASKET 35,4X49,1X5,2 1"1/2 FDA	
TBA 1000S STDA7 NOHI					
JS010	1110083-0002		12	DOLLY	

Machine Type | Group Description | Used-In | Group Number | Page No

This page is intentionally left blank.

Pos	Part No	UN	Qty	Description	Page No
TBA 1000S STDA7 NOHI (Cont'd)					
JS010	1110083-0002		12	DOLLY	
JS020	2546474-0000		2	INDUCTOR	
JS020	2546474-0000		2	INDUCTOR	
JS030	1040755-0000		8	VOLUME SHIM	
JS040	1348955-0000		2	KNIFE	
JS060	1260659-0000		2	SPRING	
SU010	499387-0000		3	PRESSURE ROLLER	
SU020	2529419-0000		1	SHAFT	
SU030	315204-0219		2	O-RING 29,2X3 MM	
TBA 1000SQ HI					
JS010	1110083-0002		12	DOLLY	
JS010	1110083-0002		12	DOLLY	
JS020	1110936-0000		2	INDUCTOR	
JS020	1110936-0000		2	INDUCTOR	
JS030	1487627-0000		8	VOLUME SHIM	
JS040	1348955-0000		2	KNIFE	
JS060	1260659-0000		2	SPRING	
SU010	257330-0000		3	PRESSURE ROLLER	
SU020	2529420-0000		1	SHAFT	
SU030	315204-0219		2	O-RING 29,2X3 MM	
SU040	2500081-0000		1	ELBOW PIPE	
SU050	2529750-0000		1	COVERING PANEL	
SU060	979813-0000		1	PLUG	
SU070	342850-0304		1	GASKET 35,4X49,1X5,2 1"1/2 FDA	
TBA 1000SQ NOHI					
JS010	1110083-0002		12	DOLLY	
JS010	1110083-0002		12	DOLLY	
JS020	1110936-0000		2	INDUCTOR	
JS020	1110936-0000		2	INDUCTOR	
JS030	1487627-0000		8	VOLUME SHIM	
JS040	1348955-0000		2	KNIFE	
JS060	1260659-0000		2	SPRING	
SU010	257330-0000		3	PRESSURE ROLLER	
SU020	2529420-0000		1	SHAFT	
SU030	315204-0219		2	O-RING 29,2X3 MM	
TBA 1500S HI					
JS010	1110083-0002		12	DOLLY	
JS010	1110083-0002		12	DOLLY	
JS020	1110938-0000		2	INDUCTOR	
JS020	1110938-0000		2	INDUCTOR	
JS030	1349208-0000		8	VOLUME SHIM	
JS040	1348955-0000		2	KNIFE	
JS060	1260659-0000		2	SPRING	
SU010	232979-0000		3	PRESSURE ROLLER	
SU020	2523268-0000		1	SHAFT	
SU030	315204-0219		2	O-RING 29,2X3 MM	
SU040	2500081-0000		1	ELBOW PIPE	
SU050	2529750-0000		1	COVERING PANEL	
SU060	979813-0000		1	PLUG	
SU070	342850-0304		1	GASKET 35,4X49,1X5,2 1"1/2 FDA	
TBA 1500S NOHI					
JS010	1110083-0002		12	DOLLY	
JS010	1110083-0002		12	DOLLY	
JS020	1110938-0000		2	INDUCTOR	
JS020	1110938-0000		2	INDUCTOR	
JS030	1349208-0000		8	VOLUME SHIM	
JS040	1348955-0000		2	KNIFE	
JS060	1260659-0000		2	SPRING	
SU010	232979-0000		3	PRESSURE ROLLER	
SU020	2523268-0000		1	SHAFT	
SU030	315204-0219		2	O-RING 29,2X3 MM	
TBA 1890S HI, TBA 2000S HI					
FF010	2662142-0000		1	SPRING	
FF020	2650817-0000		4	SPRING	
FF030	2664596-0000		2	CARRIER	
JS010	1520633-0005		12	DOLLY	
JS010	1520633-0005		12	DOLLY	
JS020	1533046-0000		2	INDUCTOR	
JS020	1533046-0000		2	INDUCTOR	
JS030	2594891-0000		8	VOLUME SHIM	
JS035	2594890-0000		8	VOLUME SHIM	
JS035	2672745-0000		8	VOLUME SHIM	
JS040	2664761-0000		2	KNIFE	
JS060	927252-0000		2	COMPRESSION SPRING	
JS070	2662165-0000		2	SPRING	
JS080	2662166-0000		2	SPRING	
JS090	1549378-0000		2	SPRING	
SU010	232979-0000		6	PRESSURE ROLLER	
SU030	315204-0223		2	O-RING 39,2X3 MM	
SU040	2500081-0000		1	ELBOW PIPE	
SU050	2529750-0000		1	COVERING PANEL	
SU060	979813-0000		1	PLUG	
SU070	342850-0304		1	GASKET 35,4X49,1X5,2 1"1/2 FDA	

This page is intentionally left blank.

Pos	Part No	UN	Qty	Description	Page No
TBA 1890S NOHI, TBA 2000S NOHI (Cont'd)					
JS010	1520633-0005		12	DOLLY	
JS010	1520633-0005		12	DOLLY	
TPA 0330SQ HI					
JS010	1110083-0002		12	DOLLY	
JS010	1110083-0002		12	DOLLY	
JS020	1520167-0000		2	INDUCTOR	
JS020	1520167-0000		2	INDUCTOR	
JS030	1539902-0000		8	VOLUME SHIM	
JS040	1348966-0000		2	KNIFE	
JS060	1260659-0000		2	SPRING	
SU010	257330-0000		3	PRESSURE ROLLER	
SU020	2529417-0000		1	SHAFT	
SU030	315204-0215		2	O-RING 19,2X3 MM	
SU040	2500081-0000		1	ELBOW PIPE	
SU050	2529750-0000		1	COVERING PANEL	
SU060	979813-0000		1	PLUG	
SU070	342850-0304		1	GASKET 35,4X49,1X5,2 1"1/2 FDA	
TPA 0500SQ HI					
JS010	1110083-0002		12	DOLLY	
JS010	1110083-0002		12	DOLLY	
JS020	2587466-0000		1	INDUCTOR	
JS020	2587467-0000		1	INDUCTOR	
JS020	2587466-0000		1	INDUCTOR	
JS020	2587467-0000		1	INDUCTOR	
JS030	1549830-0000		24	VOLUME SHIM	
JS040	1549828-0000		2	KNIFE	
JS060	1260659-0000		2	SPRING	
SU010	257330-0000		3	PRESSURE ROLLER	
SU020	2529420-0000		1	SHAFT	
SU030	315204-0219		2	O-RING 29,2X3 MM	
SU040	2500081-0000		1	ELBOW PIPE	
SU050	2529750-0000		1	COVERING PANEL	
SU060	979813-0000		1	PLUG	
SU070	342850-0304		1	GASKET 35,4X49,1X5,2 1"1/2 FDA	
TPA 0500SQ NOHI					
JS010	1110083-0002		12	DOLLY	
JS010	1110083-0002		12	DOLLY	
JS020	2587466-0000		1	INDUCTOR	
JS020	2587467-0000		1	INDUCTOR	
JS020	2587467-0000		1	INDUCTOR	
JS020	2587466-0000		1	INDUCTOR	
JS030	1549830-0000		24	VOLUME SHIM	
JS040	1549828-0000		2	KNIFE	
JS060	1260659-0000		2	SPRING	
SU010	257330-0000		3	PRESSURE ROLLER	
SU020	2529420-0000		1	SHAFT	
SU030	315204-0219		2	O-RING 29,2X3 MM	
TBA 0200B HI, TBA 0330S HI					
JS010	1110083-0002		12	DOLLY	
JS010	1110083-0002		12	DOLLY	
JS020	1110932-0000		2	INDUCTOR	
JS020	1110932-0000		2	INDUCTOR	
JS030	2605166-0000		8	VOLUME SHIM	
JS030	1538637-0000		8	VOLUME SHIM	
JS030	2654290-0000		8	VOLUME SHIM	
JS040	1348966-0000		2	KNIFE	
JS060	1260659-0000		2	SPRING	
SU010	257330-0000		3	PRESSURE ROLLER	
SU020	2529418-0000		1	SHAFT	
SU030	315204-0215		2	O-RING 19,2X3 MM	
SU040	2500081-0000		1	ELBOW PIPE	
SU050	2529750-0000		1	COVERING PANEL	
SU060	979813-0000		1	PLUG	
SU070	342850-0304		1	GASKET 35,4X49,1X5,2 1"1/2 FDA	
TBA 0200B NOHI, TBA 0330S NOHI					
JS010	1110083-0002		12	DOLLY	
JS010	1110083-0002		12	DOLLY	
JS020	1110932-0000		2	INDUCTOR	
JS020	1110932-0000		2	INDUCTOR	
JS030	2654290-0000		8	VOLUME SHIM	
JS030	1538637-0000		8	VOLUME SHIM	
JS030	2605166-0000		8	VOLUME SHIM	
JS040	1348966-0000		2	KNIFE	
JS060	1260659-0000		2	SPRING	
SU010	257330-0000		3	PRESSURE ROLLER	
SU020	2529418-0000		1	SHAFT	
SU030	315204-0215		2	O-RING 19,2X3 MM	
TBA 0200M HI					
JS010	1110083-0002		12	DOLLY	
JS010	1110083-0002		12	DOLLY	
JS020	1110931-0000		2	INDUCTOR	
JS020	1110931-0000		2	INDUCTOR	
JS030	2640139-0000		8	VOLUME SHIM	

This page is intentionally left blank.

ECM: 194879 - 20041203
Group number: 2555394-0100
Assembly Drawing:

This list covers pages from 1-72 to 1-83

Pos	Part No	UN	Qty	Description	Page No
TBA 0200M HI (Cont'd)					
JS040	1348966-0000		2	KNIFE	
SU010	272479-0000		3	PRESSURE ROLLER	
SU020	2529416-0000		1	SHAFT	
SU040	2500081-0000		1	ELBOW PIPE	
SU050	2529750-0000		1	COVERING PANEL	
SU060	979813-0000		1	PLUG	
SU070	342850-0304		1	GASKET 35,4X49,1X5,2 1"1/2 FDA	
TBA 0200M NOHI					
JS010	1110083-0002		12	DOLLY	
JS010	1110083-0002		12	DOLLY	
JS020	1110931-0000		2	INDUCTOR	
JS020	1110931-0000		2	INDUCTOR	
JS030	2640139-0000		8	VOLUME SHIM	
JS040	1348966-0000		2	KNIFE	
SU010	272479-0000		3	PRESSURE ROLLER	
SU020	2529416-0000		1	SHAFT	
TBA 0200S HI					
JS010	1110083-0002		12	DOLLY	
JS010	1110083-0002		12	DOLLY	
JS020	1110930-0000		2	INDUCTOR	
JS020	1110930-0000		2	INDUCTOR	
JS030	1037735-0000		8	VOLUME SHIM	
JS040	1348966-0000		2	KNIFE	
JS060	1260659-0000		2	SPRING	
SU010	272479-0000		3	PRESSURE ROLLER	
SU020	2529416-0000		1	SHAFT	
SU030	315204-0215		2	O-RING 19,2X3 MM	
SU040	2500081-0000		1	ELBOW PIPE	
SU050	2529750-0000		1	COVERING PANEL	
SU060	979813-0000		1	PLUG	
SU070	342850-0304		1	GASKET 35,4X49,1X5,2 1"1/2 FDA	
TBA 0200S NOHI					
JS010	1110083-0002		12	DOLLY	
JS010	1110083-0002		12	DOLLY	
JS020	1110930-0000		2	INDUCTOR	
JS020	1110930-0000		2	INDUCTOR	
JS030	1037735-0000		8	VOLUME SHIM	
JS040	1348966-0000		2	KNIFE	
JS060	1260659-0000		2	SPRING	
SU010	272479-0000		3	PRESSURE ROLLER	
SU020	2529416-0000		1	SHAFT	
SU030	315204-0215		2	O-RING 19,2X3 MM	
TBA 0250B HI					
JS010	1110083-0002		12	DOLLY	
JS010	1110083-0002		12	DOLLY	
JS020	1110932-0000		2	INDUCTOR	
JS020	1110932-0000		2	INDUCTOR	
JS030	1346158-0000		8	VOLUME SHIM	
JS030	2654290-0000		8	VOLUME SHIM	
JS030	2605166-0000		8	VOLUME SHIM	
JS030	1538637-0000		8	VOLUME SHIM	
JS040	1348966-0000		2	KNIFE	
JS060	1260659-0000		2	SPRING	
SU010	257330-0000		3	PRESSURE ROLLER	
SU020	2529418-0000		1	SHAFT	
SU030	315204-0215		2	O-RING 19,2X3 MM	
SU040	2500081-0000		1	ELBOW PIPE	
SU050	2529750-0000		1	COVERING PANEL	
SU060	979813-0000		1	PLUG	
SU070	342850-0304		1	GASKET 35,4X49,1X5,2 1"1/2 FDA	
TBA 0250B NOHI					
JS010	1110083-0002		12	DOLLY	
JS010	1110083-0002		12	DOLLY	
JS020	1110932-0000		2	INDUCTOR	
JS020	1110932-0000		2	INDUCTOR	
JS030	1538637-0000		8	VOLUME SHIM	
JS030	2605166-0000		8	VOLUME SHIM	
JS030	2654290-0000		8	VOLUME SHIM	
JS030	1346158-0000		8	VOLUME SHIM	
JS040	1348966-0000		2	KNIFE	
JS060	1260659-0000		2	SPRING	
SU010	257330-0000		3	PRESSURE ROLLER	
SU020	2529418-0000		1	SHAFT	
SU030	315204-0215		2	O-RING 19,2X3 MM	
TBA 0250S HI					
JS010	1110083-0002		12	DOLLY	
JS010	1110083-0002		12	DOLLY	
JS020	1110931-0000		2	INDUCTOR	
JS020	1110931-0000		2	INDUCTOR	
JS030	2662169-0000		8	VOLUME SHIM	
JS040	1348966-0000		2	KNIFE	
SU010	272479-0000		3	PRESSURE ROLLER	
SU020	2529416-0000		1	SHAFT	

This page is intentionally left blank.

ECM: 194879 - 20041203
Group number: 2555394-0100
Assembly Drawing:

This list covers pages from 1-72 to 1-83

Pos	Part No	UN	Qty	Description	Page No
TBA 0250S HI (Cont'd)					
SU040	2500081-0000		1	ELBOW PIPE	
SU050	2529750-0000		1	COVERING PANEL	
SU060	979813-0000		1	PLUG	
SU070	342850-0304		1	GASKET 35,4X49,1X5,2 1"1/2 FDA	
TBA 0250S NOHI					
JS010	1110083-0002		12	DOLLY	
JS010	1110083-0002		12	DOLLY	
JS020	1110931-0000		2	INDUCTOR	
JS020	1110931-0000		2	INDUCTOR	
JS030	2662169-0000		8	VOLUME SHIM	
JS040	1348966-0000		2	KNIFE	
SU010	272479-0000		3	PRESSURE ROLLER	
SU020	2529416-0000		1	SHAFT	
TBA 0500B NOQC HI					
JS010	1110083-0002		12	DOLLY	
JS010	1110083-0002		12	DOLLY	
JS020	1110938-0000		2	INDUCTOR	
JS020	1110938-0000		2	INDUCTOR	
JS030	1532293-0000		8	VOLUME SHIM	
JS040	1348955-0000		2	KNIFE	
JS060	1260659-0000		2	SPRING	
SU010	232979-0000		3	PRESSURE ROLLER	
SU020	2523268-0000		1	SHAFT	
SU030	315204-0219		2	O-RING 29,2X3 MM	
SU040	2500081-0000		1	ELBOW PIPE	
SU050	2529750-0000		1	COVERING PANEL	
SU060	979813-0000		1	PLUG	
SU070	342850-0304		1	GASKET 35,4X49,1X5,2 1"1/2 FDA	
TBA 0500B NOQC NOHI					
JS010	1110083-0002		12	DOLLY	
JS010	1110083-0002		12	DOLLY	
JS020	1110938-0000		2	INDUCTOR	
JS020	1110938-0000		2	INDUCTOR	
JS030	1532293-0000		8	VOLUME SHIM	
JS040	1348955-0000		2	KNIFE	
JS060	1260659-0000		2	SPRING	
SU010	232979-0000		3	PRESSURE ROLLER	
SU020	2523268-0000		1	SHAFT	
SU030	315204-0219		2	O-RING 29,2X3 MM	
TBA 0500B QC HI, TBA 1000B QC HI					
JS010	1110083-0002		12	DOLLY	
JS010	1110083-0002		12	DOLLY	
JS020	1110938-0000		2	INDUCTOR	
JS020	1110938-0000		2	INDUCTOR	
JS030	1511336-0000		8	VOLUME SHIM	
JS030	1511337-0000		8	VOLUME SHIM	
JS040	1348955-0000		2	KNIFE	
JS060	1260659-0000		2	SPRING	
SU010	232979-0000		3	PRESSURE ROLLER	
SU020	2523268-0000		1	SHAFT	
SU030	315204-0219		2	O-RING 29,2X3 MM	
SU040	2500081-0000		1	ELBOW PIPE	
SU050	2529750-0000		1	COVERING PANEL	
SU060	979813-0000		1	PLUG	
SU070	342850-0304		1	GASKET 35,4X49,1X5,2 1"1/2 FDA	
TBA 0500B QC NOHI, TBA 1000B QC NOHI					
JS010	1110083-0002		12	DOLLY	
JS010	1110083-0002		12	DOLLY	
JS020	1110938-0000		2	INDUCTOR	
JS020	1110938-0000		2	INDUCTOR	
JS030	1511337-0000		8	VOLUME SHIM	
JS030	1511336-0000		8	VOLUME SHIM	
JS040	1348955-0000		2	KNIFE	
JS060	1260659-0000		2	SPRING	
SU010	232979-0000		3	PRESSURE ROLLER	
SU020	2523268-0000		1	SHAFT	
SU030	315204-0219		2	O-RING 29,2X3 MM	
TBA 0500S HI					
JS010	1110083-0002		12	DOLLY	
JS010	1110083-0002		12	DOLLY	
JS020	1110934-0000		2	INDUCTOR	
JS020	1110934-0000		2	INDUCTOR	
JS030	1511253-0000		8	VOLUME SHIM	
JS040	1348956-0000		2	KNIFE	
JS060	1260659-0000		2	SPRING	
SU010	499387-0000		3	PRESSURE ROLLER	
SU020	2529420-0000		1	SHAFT	
SU030	315204-0219		2	O-RING 29,2X3 MM	
SU040	2500081-0000		1	ELBOW PIPE	
SU050	2529750-0000		1	COVERING PANEL	
SU060	979813-0000		1	PLUG	
SU070	342850-0304		1	GASKET 35,4X49,1X5,2 1"1/2 FDA	
TBA 0500S NOHI					

Machine Type | Group Description | Used-In | Group Number | Page No

This page is intentionally left blank.

Pos	Part No	UN	Qty	Description	Page No
TBA 0500S NOHI (Cont'd)					
JS010	1110083-0002		12	DOLLY	
JS010	1110083-0002		12	DOLLY	
JS020	1110934-0000		2	INDUCTOR	
JS020	1110934-0000		2	INDUCTOR	
JS030	1511253-0000		8	VOLUME SHIM	
JS040	1348956-0000		2	KNIFE	
JS060	1260659-0000		2	SPRING	
SU010	499387-0000		3	PRESSURE ROLLER	
SU020	2529420-0000		1	SHAFT	
SU030	315204-0219		2	O-RING 29,2X3 MM	
Common Parts					
JS010	1520633-0005		12	DOLLY	
JS010	1520633-0005		12	DOLLY	
JS050	1037254-0000		12	SHIM	

Pos	Part No	UN	Qty	Description	Page No

This page is intentionally left blank.

ECM: 190479 - 20041102
Group number: 2642988-0100
Assembly Drawing:

Pos	Part No	UN	Qty	Description	Page No
TBA 0330S, TBA 0200B, TBA 0250S, TBA 0200S, TBA 0200M, TBA 0250B, TPA 0330SQ					
010	2619171-0000		1	PLATE	
020	2619759-0000		1	SLIDE	
040	312605-0314		4	HEXAGON NUT, M6M M5 A280	
050	315105-0146		4	WASHER BRB5,3X10RFR	
TBA 0500B, TBA 1000S, TBA 1000SQ, TBA 1000B, TBA 1500S, TPA 1000SQ					
010	2619171-0000		1	PLATE	
020	2619069-0000		1	SLIDE	
040	312605-0314		4	HEXAGON NUT, M6M M5 A280	
050	315105-0146		4	WASHER BRB5,3X10RFR	
TBA 0500S, TPA 0500SQ					
010	2619171-0000		1	PLATE	
020	2720207-0000		1	SLIDE	
040	312605-0314		4	HEXAGON NUT, M6M M5 A280	
050	315105-0146		4	WASHER BRB5,3X10RFR	
TBA 1890S, TBA 2000S					
010	2592530-0000		1	PLATE	

Pos	Part No	UN	Qty	Description	Page No

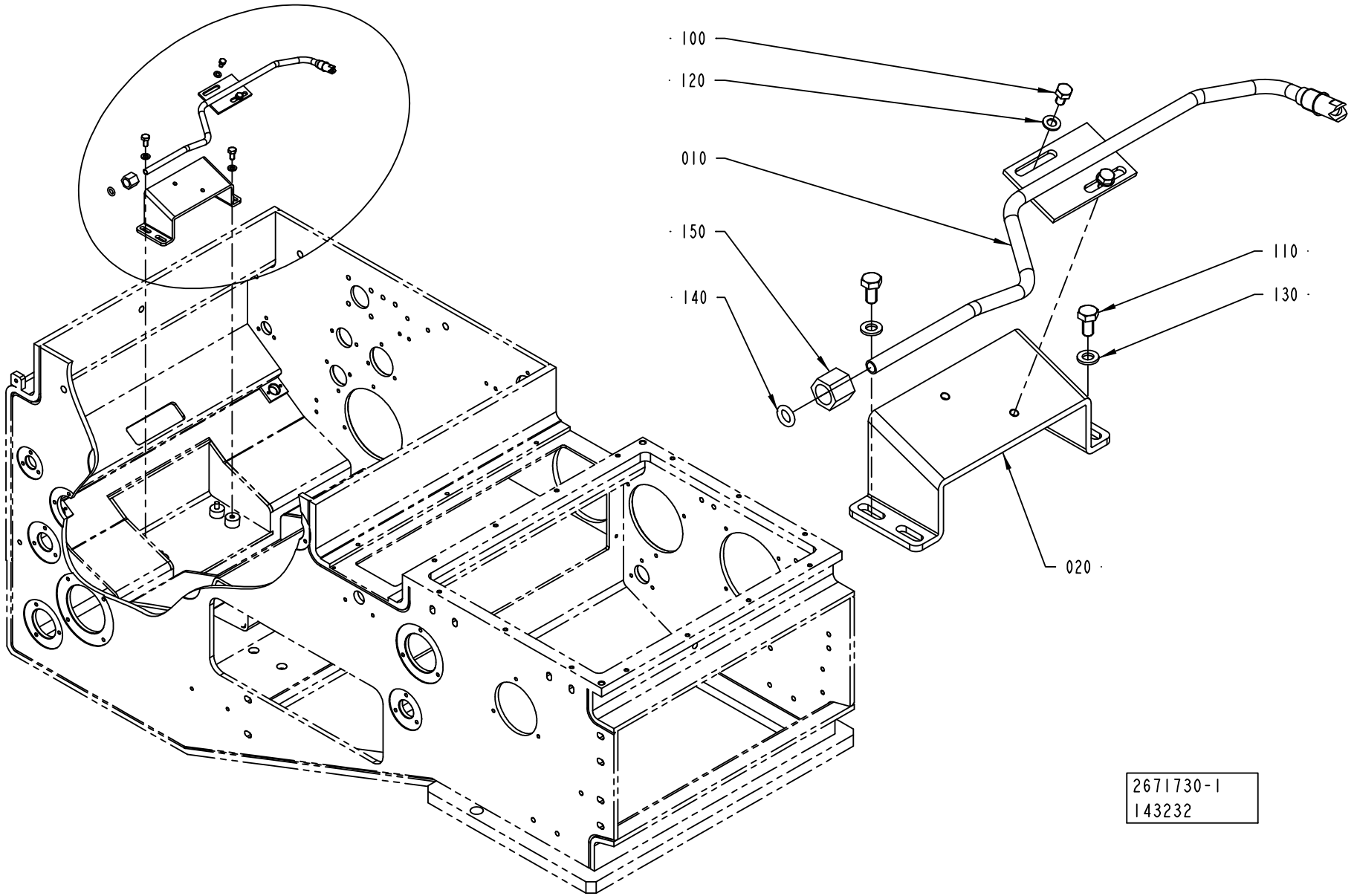
100
120
010
150
140
110
130
020
2671730-1
143232

Pos	Part No	UN	Qty	Description	Page No
TBA 0500S, TBA 0500B, TBA 1000S, TBA 1000SQ, TBA 1000B, TBA 0200B, TBA 0250S, TBA 0200S, TBA 0200M, TBA 0250B (See drawing on page: 1-88)					
010	2668569-0000		1	PLUG	
TBA 1500S (See drawing on page: 1-86)					
010	2641318-0000		1	NOZZLE	
150	342703-0208		1	NUT, PIPES & CONNECTORS,NUT M-8 SS	
TBA 1890S, TBA 2000S (See drawing on page: 1-86)					
010	2641317-0000		1	PIPE	
150	342703-0208		1	NUT, PIPES & CONNECTORS,NUT M-8 SS	
TPA 0330SQ, TPA 1000SQ, TPA 0500SQ (See drawing on page: 1-86)					
010	2668565-0000		1	NOZZLE	
150	342703-0208		1	NUT, PIPES & CONNECTORS,NUT M-8 SS	
Common Parts					
020	2641319-0000		1	BRACKET	
100	312105-0323		2	SCREW M6S ISO 4017 M5X8 A480	
110	312105-0366		2	SCREW M6S ISO 4017 M6X12 A480	
120	315105-0146		2	WASHER BRB5,3X10RFR	
130	315105-0153		2	WASHER BRB6,4X12RFR	
140	315205-0808		1	O-RING 7,59X2,62 MM	

Pos	Part No	UN	Qty	Description	Page No

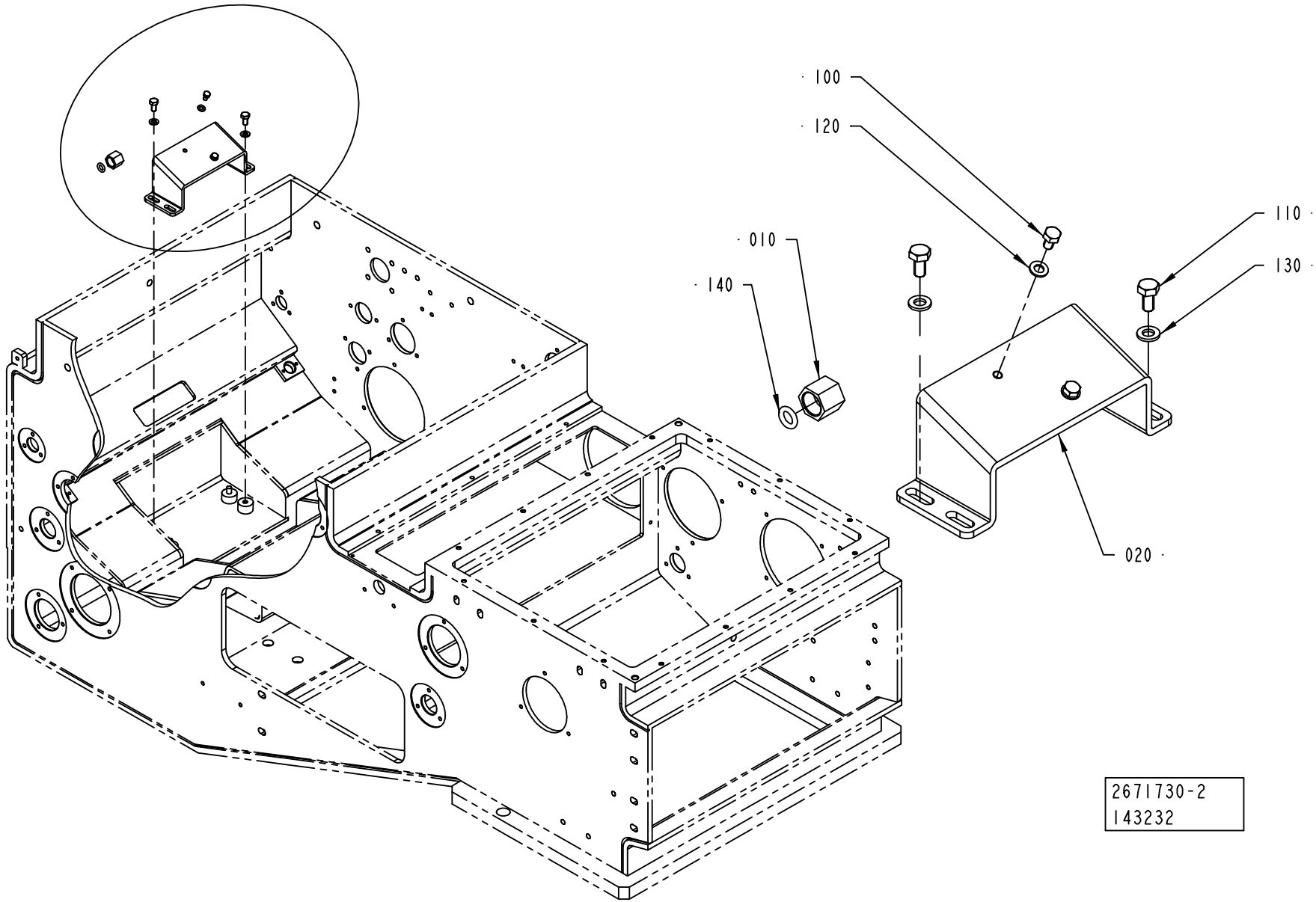
100
120
110
010
130
140
020
2671730-2
143232

Pos	Part No	UN	Qty	Description	Page No
TBA 0500S, TBA 0500B, TBA 1000S, TBA 1000SQ, TBA 1000B, TBA 0200B, TBA 0250S, TBA 0200S, TBA 0200M, TBA 0250B (See drawing on page: 1-88)					
010	2668569-0000		1	PLUG	
TBA 1500S (See drawing on page: 1-86)					
010	2641318-0000		1	NOZZLE	
150	342703-0208		1	NUT, PIPES & CONNECTORS,NUT M-8 SS	
TBA 1890S, TBA 2000S (See drawing on page: 1-86)					
010	2641317-0000		1	PIPE	
150	342703-0208		1	NUT, PIPES & CONNECTORS,NUT M-8 SS	
TPA 0330SQ, TPA 1000SQ, TPA 0500SQ (See drawing on page: 1-86)					
010	2668565-0000		1	NOZZLE	
150	342703-0208		1	NUT, PIPES & CONNECTORS,NUT M-8 SS	
Common Parts					
020	2641319-0000		1	BRACKET	
100	312105-0323		2	SCREW M6S ISO 4017 M5X8 A480	
110	312105-0366		2	SCREW M6S ISO 4017 M6X12 A480	
120	315105-0146		2	WASHER BRB5,3X10RFR	
130	315105-0153		2	WASHER BRB6,4X12RFR	
140	315205-0808		1	O-RING 7,59X2,62 MM	

Pos	Part No	UN	Qty	Description	Page No

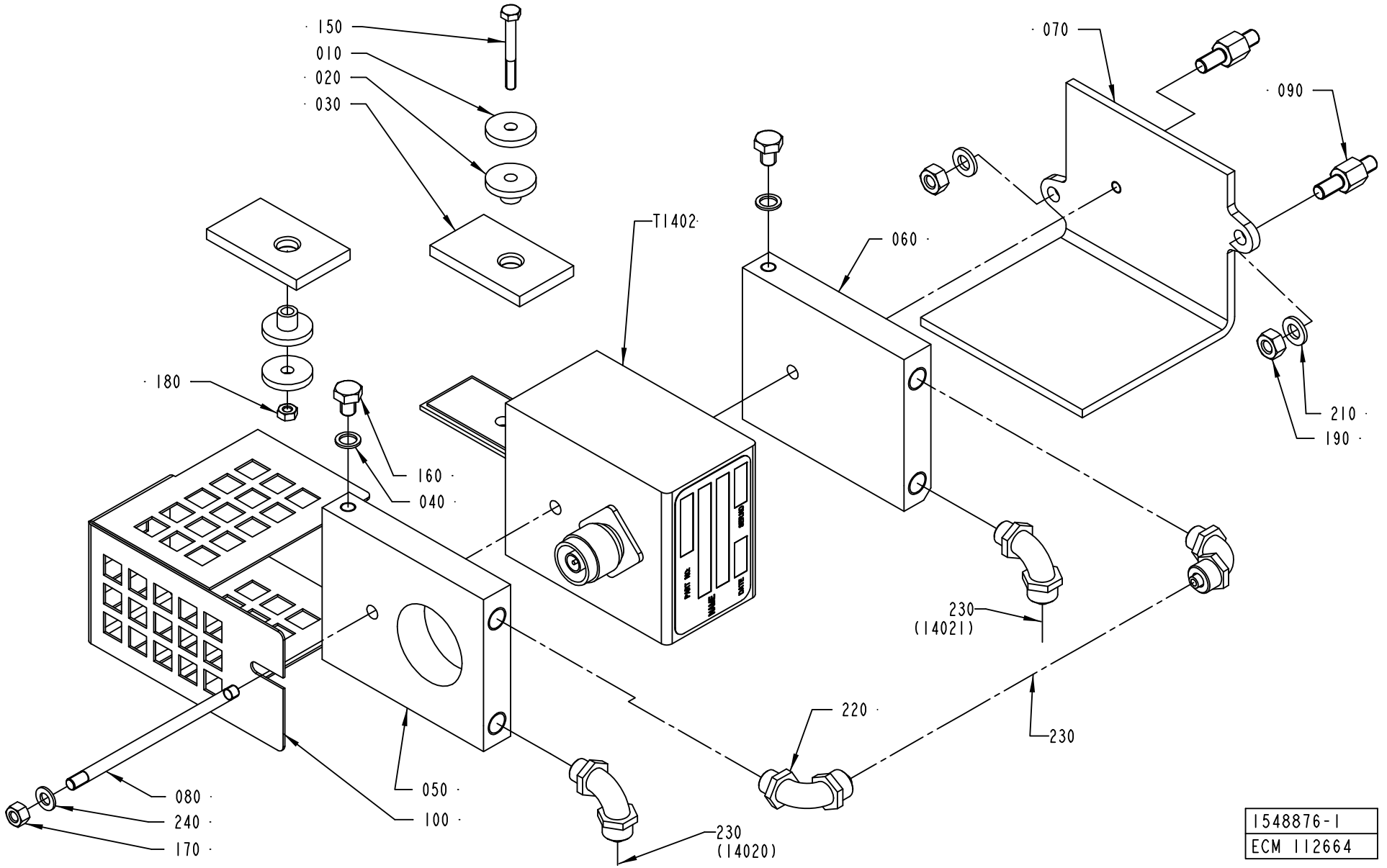
150
010
020
030
070
090
T1402
060
180
210
190
160
040
230
(14021)
220
230
080
240
170
050
100
230
(14020)
1548876-1
ECM 112664

ECM: 193504 - 20041213
Group number: 1548876-0100
Assembly Drawing: 1548876-1_1_AA

Pos	Part No	UN	Qty	Description	Page No
A3/FLEX TBA 0200B, A3/FLEX TBA 0250B, A3/FLEX TBA 0330S, A3/FLEX TPA 0330SQ, A3/FLEX TPA 0500SQ, A3/FLEX TBA 0500S					
T1402	67379-0412		1	TRANSFORMER	
T1402	67379-0412		1	TRANSFORMER	
A3/FLEX TBA 0200S, A3/FLEX TBA 1890S, A3/FLEX TBA 2000S, A3/FLEX TBA 0200M, A3/FLEX TBA 0250S					
T1402	67379-0414		1	TRANSFORMER	
T1402	67379-0414		1	TRANSFORMER	
A3/FLEX TBA 0500B, A3/FLEX TBA 1000B, A3/FLEX TPA 1000SQ, A3/FLEX TBA 1500S					
T1402	67379-0417		1	TRANSFORMER	
T1402	67379-0417		1	TRANSFORMER	
A3/FLEX TBA 1000S NODIMC					
T1402	67379-0404		1	TRANSFORMER	
T1402	67379-0404		1	TRANSFORMER	
A3/FLEX TBA 1000SQ, A3/FLEX TBA 1000S DIMC/FLEX					
T1402	67379-0405		1	TRANSFORMER	
T1402	67379-0405		1	TRANSFORMER	
Common Parts					
010	263311-0000		2	WASHER	
020	1539174-0000		2	BUSHING	
030	1539175-0000		2	PLATE	
040	1140077-0000		2	RING	
050	1558830-0000		1	COOLING PLATE	
060	1558831-0000		1	COOLING PLATE	
070	1558441-0000		1	BRACKET	
080	2559066-0000		1	STUD SCREW	
090	2532979-0000		2	SPACER	
100	2541664-0000		1	COVER	
150	312105-0301		1	SCREW M6S ISO 4017 M4X35 A470	
160	312105-0362		2	SCREW M6S ISO 4017 M6X8 A480	
170	312605-0314		1	HEXAGON NUT, M6M M5 A280	
180	312605-0312		1	HEXAGON NUT, M6M M4 A280	
190	312605-0316		2	HEXAGON NUT, M6M M6 A280	
210	315105-0153		2	WASHER BRB6,4X12RFR	
220	342931-0121		4	ELBOW 90 COUPL.,EXT.THREAD 8/6-G1/8"	
230	90166-0118	MM	6000	TUBE 8 MM PA BLACK	
240	315105-0146		1	WASHER BRB5,3X10RFR	
250	90157-0037		1	THREAD SEALANT LOCTITE 542	

Pos	Part No	UN	Qty	Description	Page No

Machine Type | Group Description | Used-In | Group Number | Page No

This page is intentionally left blank.

ECM: 193088 - 20041203
Group number: 2721433-0100
Assembly Drawing:

Pos	Part No	UN	Qty	Description	Page No
TBA 0500B, TBA 0330S, TBA 1000S, TBA 1000SQ, TBA 1000B, TBA 0200B, TBA 0200S, TBA 0250B, TBA 1500S, TPA 1000SQ					
010	2506273-0000		1	LEVER	
040	2506269-0000		1	BUSHING	
TBA 0500S, TBA 0250S, TBA 0200M, TPA 0330SQ, TPA 0500SQ					
020	2677636-0000		1	LEVER	
030	2685417-0000		1	BUSHING	

Pos	Part No	UN	Qty	Description	Page No

This page is intentionally left blank.

ECM: 193488 - 20041203
Group number: 2691695-0100
Assembly Drawing:

Pos	Part No	UN	Qty	Description	Page No
START FM TBA 1890S, START FM TBA 2000S					
010	1548892-0100		1	CALENDER ROLLER	**1-97, 1-99**
030	2532934-0100		1	AIR KNIFE	**1-101, 1-103, 1-105**
040	2541635-0100		1	SQUEE-GEE ROLLER	**1-107, 1-109, 1-111**
090	1558522-0100		1	ADJUSTING ROLLER	**1-113**
110	2547407-0000		2	PIPE	
120	2672962-0000		1	CONNECTING PIPE	
130	2532911-0000		1	ROLLER	
170	2702068-0000		1	BOX	
190	90335-0089		1	TENSION SPRING 41490, 0,9X10X23	
200	2528135-0000		1	SHAFT	
210	1144802-0000		1	PULLEY	
220	1533493-0000		1	BUSBAR	
260	2721432-0100		1	SUPPORT RAIL	**1-115**
270	2731260-0100		1	KIT	**1-117**
TBA 1890S, TBA 2000S					
010	1548892-0100		1	CALENDER ROLLER	**1-97, 1-99**
020	2531042-0100		1	UPPER SECTION	**1-131**
030	2532934-0100		1	AIR KNIFE	**1-101, 1-103, 1-105**
040	2541635-0100		1	SQUEE-GEE ROLLER	**1-107, 1-109, 1-111**
050	2690494-0100		1	PNEUMATIC SYSTEM	**1-139**
060	2701978-0100		1	LID ADAPTER	**1-145**
100	2657888-0000		1	HORN	
110	2657887-0000		1	HORN	
120	2685311-0000		1	CONNECTING PIPE	
130	2662639-0000		1	ROLLER	
140	2609303-0000		2	WEIGHT	
150	2679599-0000		1	CHUTE	
160	2679598-0000		1	SPLASH PLATE	
170	2702068-0000		1	BOX	
180	90214-0138		1	BALL BEARING, 5X19X6 MM	
200	2721434-0000		1	SHAFT	
210	2588328-0000		1	PULLEY	
220	2698178-0000		1	BUSBAR	
250	90287-0261		4	SCREW MC6S M5X55 A270	
260	2721431-0100		1	SUPPORT RAIL	**1-147**
270	2728205-0100		1	KIT	**1-149**

Pos	Part No	UN	Qty	Description	Page No

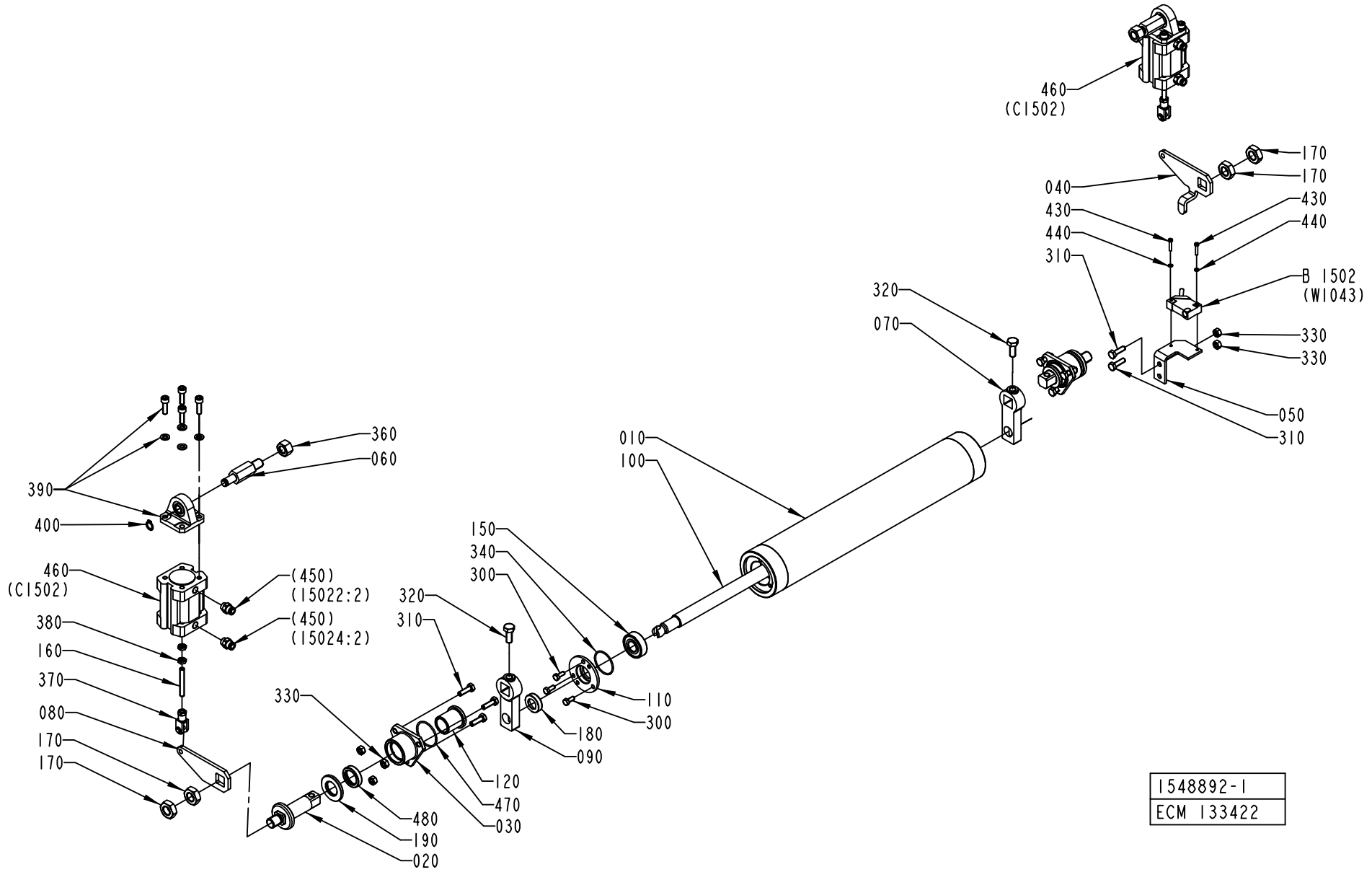
460
(C1502)
170
170
040
430
430
440
440
310
B 1502
(W1043)
320
070
330
330
050
310
010
100
360
060
390
400
460
(C1502)
(450)
(15022:2)
(450)
(15024:2)
380
160
370
080
170
170
150
340
300
320
310
330
110
300
180
090
120
470
030
480
190
020
1548892-1
ECM 133422

ECM: 195298 - 20041203
Group number: 1548892-0100
Assembly Drawing: 1548892-1_1_AB

This list covers pages from 1-96 to 1-99

Pos	Part No	UN	Qty	Description	Page No
A3/FLEX DIMC/FLEX (See drawing on page: 1-96)					
010	2528136-0000		1	SQUEE-GEE ROLLER	
040	1498130-0000		1	PLATE	
070	1498133-0000		1	ARM	
080	1498134-0000		1	PLATE	
090	1498135-0000		1	ARM	
A3/FLEX TBA 1000B NODIMC, A3/FLEX TBA 0500B NODIMC, A3/FLEX TBA 1000S NODIMC, A3/FLEX TBA 1000SQ NODIMC, A3/FLEX TBA 0200S NODIMC, A3/FLEX TBA 0200M NODIMC, A3/FLEX TBA 0250S NODIMC, A3/FLEX TBA 0500S NODIMC (See drawing on page: 1-96)					
010	1538496-0000		1	ROLLER	
040	1498130-0000		1	PLATE	
070	1498133-0000		1	ARM	
080	1498134-0000		1	PLATE	
090	1498135-0000		1	ARM	
A3/FLEX TBA 2000S NODIMC, A3/FLEX TBA 1890S NODIMC (See drawing on page: 1-98)					
010	2547406-0000		1	ROLLER	
040	2544883-0000		1	PLATE	
070	2544885-0000		1	ARM	
080	2544884-0000		1	PLATE	
090	2544886-0000		1	ARM	
A3/FLEX TPA 1000SQ NODIMC, A3/FLEX TBA 1500S NODIMC, A3/FLEX TBA 0200B NODIMC, A3/FLEX TBA 0250B NODIMC, A3/FLEX TBA 0330S NODIMC, A3/FLEX TPA 0330SQ NODIMC, A3/FLEX TPA 0500SQ NODIMC (See drawing on page: 1-96)					
010	1511769-0000		1	ROLLER	
040	1498130-0000		1	PLATE	
070	1498133-0000		1	ARM	
080	1498134-0000		1	PLATE	
090	1498135-0000		1	ARM	
Common Parts					
020	2532969-0000		2	SHAFT	
030	2541643-0000		2	FLANGE	
050	1498131-0000		1	BRACKET	
060	1498132-0000		2	SHAFT	
100	1498790-0000		1	SHAFT	
110	1498791-0000		2	FLANGE	
120	2541682-0000		2	BUSHING	
150	90458-1704		2	BALL BEARING, 15X35X11 MM	
160	90459-1728		2	SCREW ISO4029 M6X45 A4	
170	90099-0027		4	HEXAGON NUT, M14, DIN936	
180	2541650-0000		2	LID	
190	2541681-0000		2	WASHER	
300	312105-0327		6	SCREW M6S ISO 4017 M5X12 A480	
310	312105-0370		8	SCREW M6S ISO 4017 M6X20 A480	
320	312105-0451		2	SCREW M6S ISO 4017 M8X20 A480	
330	312605-0316		8	HEXAGON NUT, M6M M6 A280	
340	315204-0122		2	O-RING 32,1X1,6 MM	
360	312605-0322		2	HEXAGON NUT, M6M M12 A280	
370	90239-0489		2	ROD END, CLEVIS WITH AXLE M6X1,25	
380	312625-0316		4	HEXAGON THIN NUT, EN 24035 ML6M M6 A4	
390	90450-0756		2	BRACKET, REAR EYE 32	
400	90141-0016		2	RETAINING RING FOR SHAFT DIN 471 10 A2	
430	312125-0228		2	SCREW ISO 1207 M3X16 A4	
440	315105-0124		2	WASHER BRB3,2X6RFR	
450	342722-0202		4	PIPE COUPLING 1/8" D=6MM	
460	90458-0528		2	DOUBLE ACTING, COMPACT, CYL 32-25	
470	315205-0716		2	O-RING 34,65X1,78 MM	
480	90458-0639		2	VARILIP 20X30X7 MM	
B1502	90044-0194		1	PROX.SW. IN5329/IN3002-BPKG	

Machine Type | Group Description | Used-In | Group Number | Page No

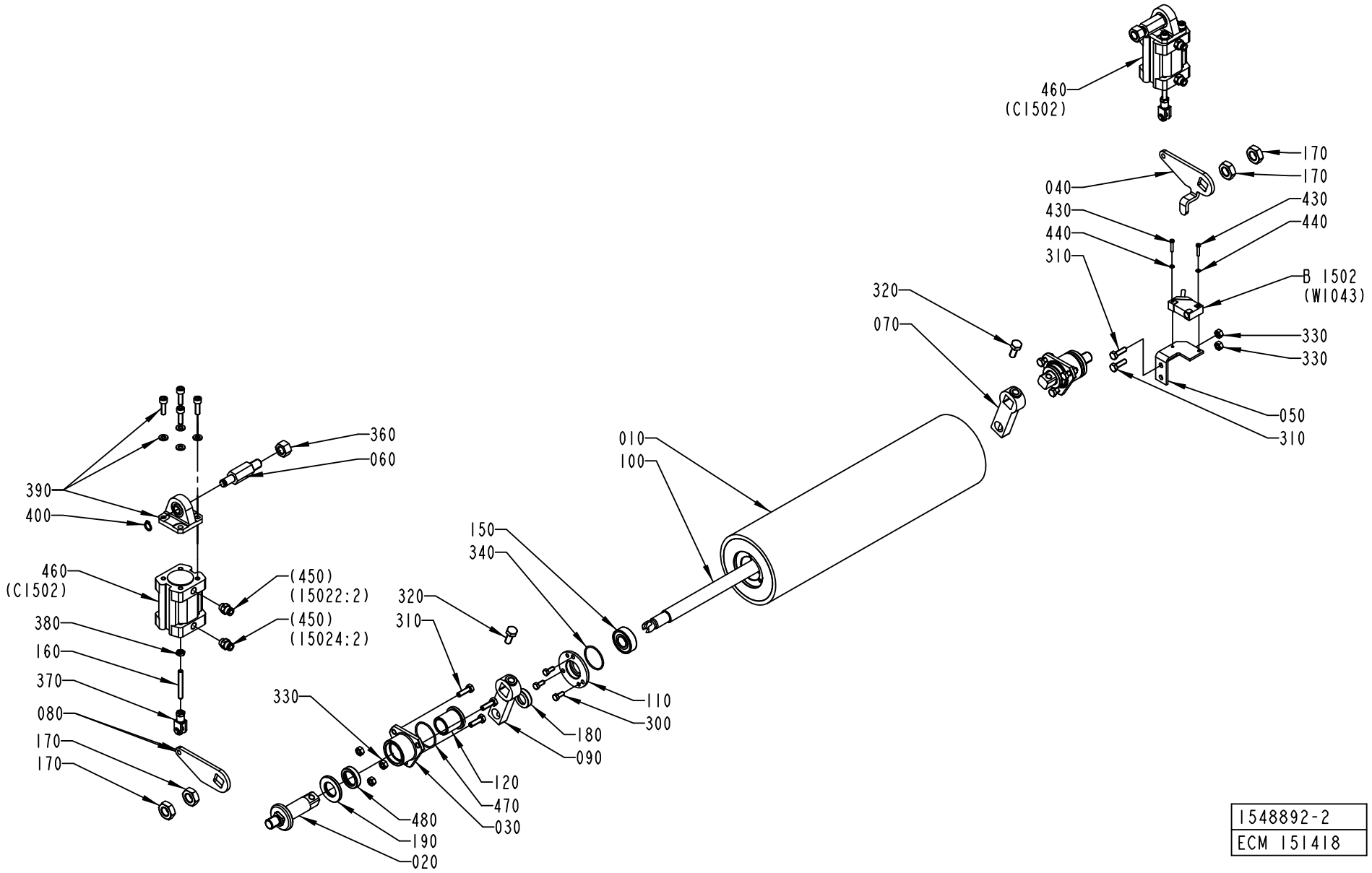
460
(C1502)
170
170
040
430
440
310
430
440
B 1502
(W1043)
320
070
330
330
050
310
010
100
360
060
390
400
460
(C1502)
(450)
(15022:2)
(450)
(15024:2)
380
160
370
080
170
170
150
340
320
310
330
110
300
180
090
120
470
030
480
190
020
1548892-2
ECM 151418

ECM: 195298 - 20041203
Group number: 1548892-0100
Assembly Drawing: 1548892-2_1_AA

This list covers pages from 1-96 to 1-99

Pos	Part No	UN	Qty	Description	Page No
A3/FLEX DIMC/FLEX (See drawing on page: 1-96)					
010	2528136-0000		1	SQUEE-GEE ROLLER	
040	1498130-0000		1	PLATE	
070	1498133-0000		1	ARM	
080	1498134-0000		1	PLATE	
090	1498135-0000		1	ARM	
A3/FLEX TBA 1000B NODIMC, A3/FLEX TBA 0500B NODIMC, A3/FLEX TBA 1000S NODIMC, A3/FLEX TBA 1000SQ NODIMC, A3/FLEX TBA 0200S NODIMC, A3/FLEX TBA 0200M NODIMC, A3/FLEX TBA 0250S NODIMC, A3/FLEX TBA 0500S NODIMC (See drawing on page: 1-96)					
010	1538496-0000		1	ROLLER	
040	1498130-0000		1	PLATE	
070	1498133-0000		1	ARM	
080	1498134-0000		1	PLATE	
090	1498135-0000		1	ARM	
A3/FLEX TBA 2000S NODIMC, A3/FLEX TBA 1890S NODIMC (See drawing on page: 1-98)					
010	2547406-0000		1	ROLLER	
040	2544883-0000		1	PLATE	
070	2544885-0000		1	ARM	
080	2544884-0000		1	PLATE	
090	2544886-0000		1	ARM	
A3/FLEX TPA 1000SQ NODIMC, A3/FLEX TBA 1500S NODIMC, A3/FLEX TBA 0200B NODIMC, A3/FLEX TBA 0250B NODIMC, A3/FLEX TBA 0330S NODIMC, A3/FLEX TPA 0330SQ NODIMC, A3/FLEX TPA 0500SQ NODIMC (See drawing on page: 1-96)					
010	1511769-0000		1	ROLLER	
040	1498130-0000		1	PLATE	
070	1498133-0000		1	ARM	
080	1498134-0000		1	PLATE	
090	1498135-0000		1	ARM	
Common Parts					
020	2532969-0000		2	SHAFT	
030	2541643-0000		2	FLANGE	
050	1498131-0000		1	BRACKET	
060	1498132-0000		2	SHAFT	
100	1498790-0000		1	SHAFT	
110	1498791-0000		2	FLANGE	
120	2541682-0000		2	BUSHING	
150	90458-1704		2	BALL BEARING, 15X35X11 MM	
160	90459-1728		2	SCREW ISO4029 M6X45 A4	
170	90099-0027		4	HEXAGON NUT, M14, DIN936	
180	2541650-0000		2	LID	
190	2541681-0000		2	WASHER	
300	312105-0327		6	SCREW M6S ISO 4017 M5X12 A480	
310	312105-0370		8	SCREW M6S ISO 4017 M6X20 A480	
320	312105-0451		2	SCREW M6S ISO 4017 M8X20 A480	
330	312605-0316		8	HEXAGON NUT, M6M M6 A280	
340	315204-0122		2	O-RING 32,1X1,6 MM	
360	312605-0322		2	HEXAGON NUT, M6M M12 A280	
370	90239-0489		2	ROD END, CLEVIS WITH AXLE M6X1,25	
380	312625-0316		4	HEXAGON THIN NUT, EN 24035 ML6M M6 A4	
390	90450-0756		2	BRACKET, REAR EYE 32	
400	90141-0016		2	RETAINING RING FOR SHAFT DIN 471 10 A2	
430	312125-0228		2	SCREW ISO 1207 M3X16 A4	
440	315105-0124		2	WASHER BRB3,2X6RFR	
450	342722-0202		4	PIPE COUPLING 1/8" D=6MM	
460	90458-0528		2	DOUBLE ACTING, COMPACT, CYL 32-25	
470	315205-0716		2	O-RING 34,65X1,78 MM	
480	90458-0639		2	VARILIP 20X30X7 MM	
B1502	90044-0194		1	PROX.SW. IN5329/IN3002-BPKG	

Machine Type | Group Description | Used-In | Group Number | Page No

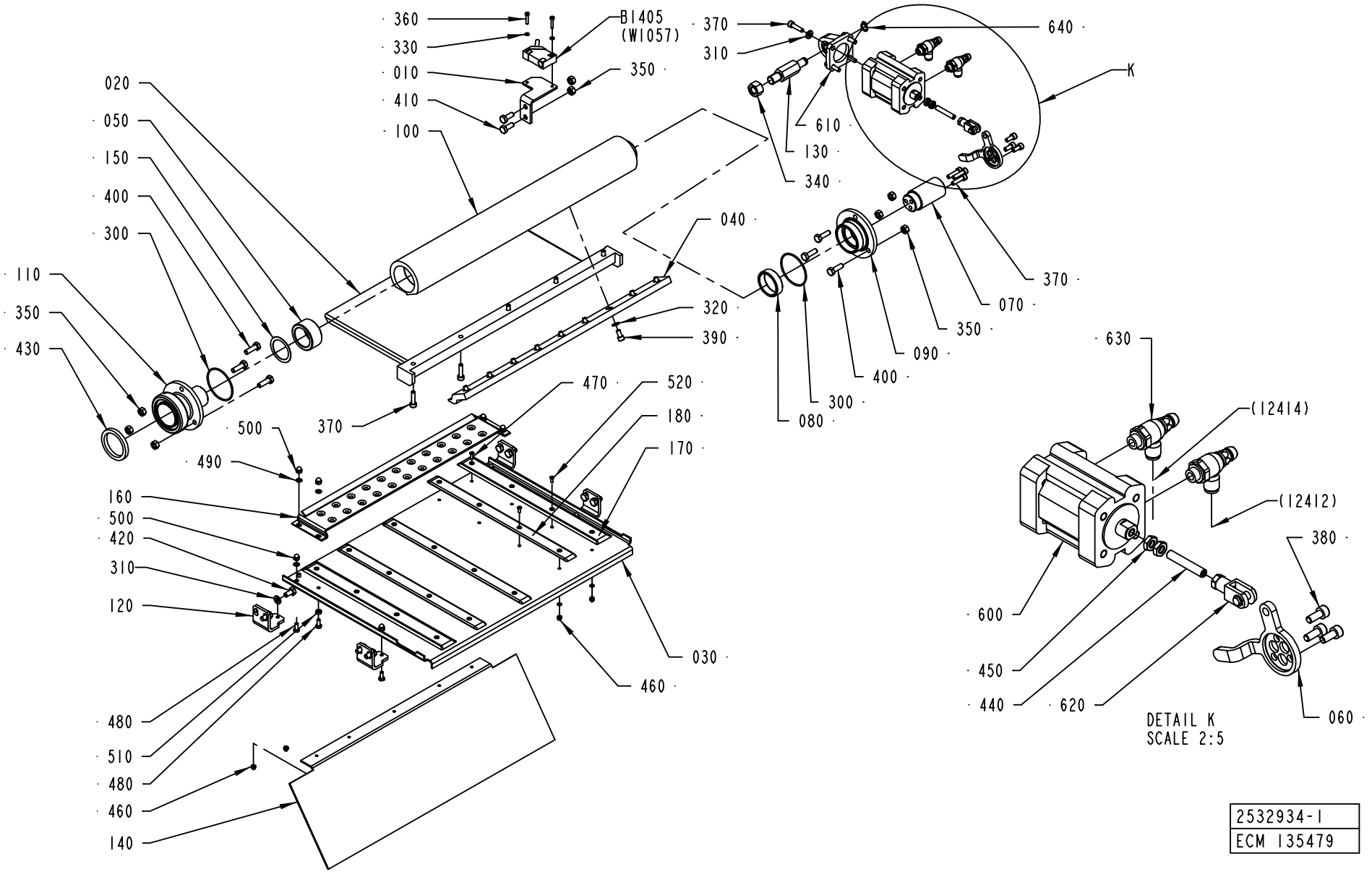

2532934-1
ECM 135479

ECM: 190569 - 20041104
Group number: 2532934-0100
Assembly Drawing: 2532934-1_1_AC

This list covers pages from 1-100 to 1-105

Pos	Part No	UN	Qty	Description	Page No
A3/FLEX DIMC/FLEX (See drawing on page: 1-102)					
030	2607087-0000		1	BOTTOM PLATE	
140	2532922-0000		1	PLATE	
180	2603630-0000		2	SLIDE PLATE	
190	2607440-0000		1	SLIDE PLATE	
330	315105-0124		14	WASHER BRB3,2X6RFR	
460	312705-0310		12	NUT HEX. DOMED CAP MHM-6 M3 A2	
470	312145-0224		2	SCREW ISO 2009 MFS M3X10 A4	
520	312145-0222		10	SCREW ISO 2009 MFS M3X8 A4	
A3/FLEX TBA 2000S NODIMC, A3/FLEX TBA 1890S NODIMC (See drawing on page: 1-104)					
010	2582651-0000		1	AIR GUIDE	
030	2582652-0000		1	AIR GUIDE	
040	2594601-0000		1	RAIL	
120	2582655-0000		4	HOLDER	
140	2582654-0000		1	PLATE	
160	2657886-0000		1	COUNTER PLATE	
170	2603546-0000		2	SLIDE PLATE	
180	2603630-0000		3	SLIDE PLATE	
330	315105-0124		22	WASHER BRB3,2X6RFR	
460	312705-0310		20	NUT HEX. DOMED CAP MHM-6 M3 A2	
470	312145-0224		5	SCREW ISO 2009 MFS M3X10 A4	
520	312145-0222		15	SCREW ISO 2009 MFS M3X8 A4	
650	312105-0291		2	SCREW M6S ISO 4017 M4X12 A470	
A3/FLEX TBA 1000B NODIMC, A3/FLEX TBA 0500B NODIMC, A3/FLEX TBA 1000S NODIMC, A3/FLEX TBA 1000SQ NODIMC, A3/FLEX TBA 0200S NODIMC, A3/FLEX TPA 1000SQ NODIMC, A3/FLEX TBA 1500S NODIMC, A3/FLEX TBA 0200B NODIMC, A3/FLEX TBA 0250B NODIMC, A3/FLEX TBA 0330S NODIMC, A3/FLEX TPA 0330SQ NODIMC, A3/FLEX TPA 0500SQ NODIMC, A3/FLEX TBA 0200M NODIMC, A3/FLEX TBA 0250S NODIMC, A3/FLEX TBA 0500S NODIMC (See drawing on page: 1-100)					
030	2603823-0000		1	BOTTOM PLATE	
140	2532919-0000		1	PLATE	
170	2603546-0000		2	SLIDE PLATE	
180	2603630-0000		3	SLIDE PLATE	
330	315105-0124		22	WASHER BRB3,2X6RFR	
460	312705-0310		20	NUT HEX. DOMED CAP MHM-6 M3 A2	
470	312145-0224		5	SCREW ISO 2009 MFS M3X10 A4	
520	312145-0222		15	SCREW ISO 2009 MFS M3X8 A4	
Common Parts					
010	2509674-0000		1	BRACKET	
020	2532916-0000		1	AIR GUIDE	
040	2509681-0000		1	RAIL	
050	1519166-0000		1	BUSHING	
060	1519163-0000		1	ARM	
070	1519160-0000		1	SHAFT	
080	1519159-0000		1	BUSHING	
090	1519158-0000		1	LID	
100	1519156-0000		1	AIR DISTRIBUTOR	
110	1532231-0000		1	CONNECTION	
120	2532918-0000		4	HOLDER	
130	1498132-0000		1	SHAFT	
150	2532915-0000		1	WASHER	
160	2603824-0000		1	COUNTER PLATE	
300	315205-0804		2	O-RING 47,35X1,78 MM	
310	315105-0153		12	WASHER BRB6,4X12RFR	
320	315105-0146		9	WASHER BRB5,3X10RFR	
340	312605-0322		1	HEXAGON NUT, M6M M12 A280	
350	312605-0316		8	HEXAGON NUT, M6M M6 A280	
360	312125-0228		2	SCREW ISO 1207 M3X16 A4	
370	312115-0331		12	SCREW ISO4762 M5X20 A4	
380	312115-0327		3	SCREW ISO4762 M5X12 A4	
390	312115-0325		9	SCREW ISO4762 M5X10 A4	
400	312105-0370		6	SCREW M6S ISO 4017 M6X20 A480	
410	312105-0368		2	SCREW M6S ISO 4017 M6X16 A480	
420	312105-0366		8	SCREW M6S ISO 4017 M6X12 A480	
430	12242-0003		1	GASKET 48X38X5,5	
440	312318-0376		1	SCREW ISO4029 M6X35 A4	
450	312625-0316		2	HEXAGON THIN NUT, EN 24035 ML6M M6 A4	
480	312105-0289		8	SCREW M6S ISO 4017 M4X10 A470	
490	315105-0136		8	WASHER BRB4,3XRFR	
500	312705-0312		8	NUT HEX. DOMED CAP MHM-6 M4 A280	
510	312605-0312		4	HEXAGON NUT, M6M M4 A280	
600	90458-0528		1	DOUBLE ACTING, COMPACT, CYL 32-25	
610	90450-0756		1	BRACKET, REAR EYE 32	
620	90239-0489		1	ROD END, CLEVIS WITH AXLE M6X1,25	
630	90235-0846		2	THROTTLE CHECK VALVE G1/8", MANUAL, 6	
640	90141-0016		1	RETAINING RING FOR SHAFT DIN 471 10 A2	
B1405	90044-0194		1	PROX.SW. IN5329/IN3002-BPKG	

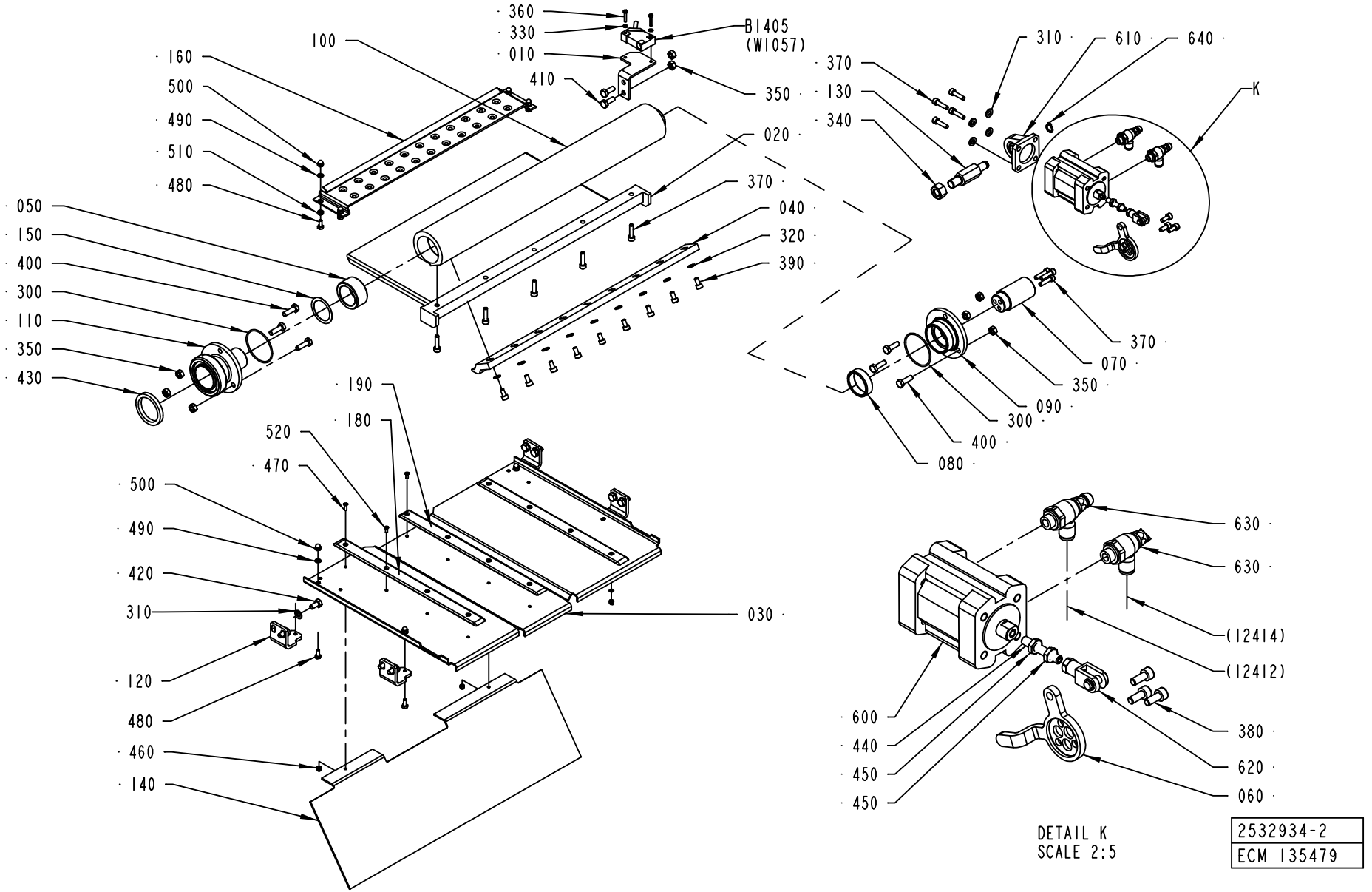
360
330
010
410
B1405
(W1057)
350
100
160
500
490
510
480
020
370
040
320
390
050
150
400
300
110
350
430
310
610
640
370
130
340
K
370
070
350
090
300
400
080
190
180
520
470
500
490
420
310
120
480
460
140
030
630
630
(12414)
(12412)
380
620
060
600
440
450
450
DETAIL K
SCALE 2:5
2532934-2
ECM 135479

ECM: 190569 - 20041104
Group number: 2532934-0100
Assembly Drawing: 2532934-2_1_AC

This list covers pages from 1-100 to 1-105

Pos	Part No	UN	Qty	Description	Page No
A3/FLEX DIMC/FLEX (See drawing on page: 1-102)					
030	2607087-0000		1	BOTTOM PLATE	
140	2532922-0000		1	PLATE	
180	2603630-0000		2	SLIDE PLATE	
190	2607440-0000		1	SLIDE PLATE	
330	315105-0124		14	WASHER BRB3,2X6RFR	
460	312705-0310		12	NUT HEX. DOMED CAP MHM-6 M3 A2	
470	312145-0224		2	SCREW ISO 2009 MFS M3X10 A4	
520	312145-0222		10	SCREW ISO 2009 MFS M3X8 A4	
A3/FLEX TBA 2000S NODIMC, A3/FLEX TBA 1890S NODIMC (See drawing on page: 1-104)					
010	2582651-0000		1	AIR GUIDE	
030	2582652-0000		1	AIR GUIDE	
040	2594601-0000		1	RAIL	
120	2582655-0000		4	HOLDER	
140	2582654-0000		1	PLATE	
160	2657886-0000		1	COUNTER PLATE	
170	2603546-0000		2	SLIDE PLATE	
180	2603630-0000		3	SLIDE PLATE	
330	315105-0124		22	WASHER BRB3,2X6RFR	
460	312705-0310		20	NUT HEX. DOMED CAP MHM-6 M3 A2	
470	312145-0224		5	SCREW ISO 2009 MFS M3X10 A4	
520	312145-0222		15	SCREW ISO 2009 MFS M3X8 A4	
650	312105-0291		2	SCREW M6S ISO 4017 M4X12 A470	
A3/FLEX TBA 1000B NODIMC, A3/FLEX TBA 0500B NODIMC, A3/FLEX TBA 1000S NODIMC, A3/FLEX TBA 1000SQ NODIMC, A3/FLEX TBA 0200S NODIMC, A3/FLEX TPA 1000SQ NODIMC, A3/FLEX TBA 1500S NODIMC, A3/FLEX TBA 0200B NODIMC, A3/FLEX TBA 0250B NODIMC, A3/FLEX TBA 0330S NODIMC, A3/FLEX TPA 0330SQ NODIMC, A3/FLEX TPA 0500SQ NODIMC, A3/FLEX TBA 0200M NODIMC, A3/FLEX TBA 0250S NODIMC, A3/FLEX TBA 0500S NODIMC (See drawing on page: 1-100)					
030	2603823-0000		1	BOTTOM PLATE	
140	2532919-0000		1	PLATE	
170	2603546-0000		2	SLIDE PLATE	
180	2603630-0000		3	SLIDE PLATE	
330	315105-0124		22	WASHER BRB3,2X6RFR	
460	312705-0310		20	NUT HEX. DOMED CAP MHM-6 M3 A2	
470	312145-0224		5	SCREW ISO 2009 MFS M3X10 A4	
520	312145-0222		15	SCREW ISO 2009 MFS M3X8 A4	
Common Parts					
010	2509674-0000		1	BRACKET	
020	2532916-0000		1	AIR GUIDE	
040	2509681-0000		1	RAIL	
050	1519166-0000		1	BUSHING	
060	1519163-0000		1	ARM	
070	1519160-0000		1	SHAFT	
080	1519159-0000		1	BUSHING	
090	1519158-0000		1	LID	
100	1519156-0000		1	AIR DISTRIBUTOR	
110	1532231-0000		1	CONNECTION	
120	2532918-0000		4	HOLDER	
130	1498132-0000		1	SHAFT	
150	2532915-0000		1	WASHER	
160	2603824-0000		1	COUNTER PLATE	
300	315205-0804		2	O-RING 47,35X1,78 MM	
310	315105-0153		12	WASHER BRB6,4X12RFR	
320	315105-0146		9	WASHER BRB5,3X10RFR	
340	312605-0322		1	HEXAGON NUT, M6M M12 A280	
350	312605-0316		8	HEXAGON NUT, M6M M6 A280	
360	312125-0228		2	SCREW ISO 1207 M3X16 A4	
370	312115-0331		12	SCREW ISO4762 M5X20 A4	
380	312115-0327		3	SCREW ISO4762 M5X12 A4	
390	312115-0325		9	SCREW ISO4762 M5X10 A4	
400	312105-0370		6	SCREW M6S ISO 4017 M6X20 A480	
410	312105-0368		2	SCREW M6S ISO 4017 M6X16 A480	
420	312105-0366		8	SCREW M6S ISO 4017 M6X12 A480	
430	12242-0003		1	GASKET 48X38X5,5	
440	312318-0376		1	SCREW ISO4029 M6X35 A4	
450	312625-0316		2	HEXAGON THIN NUT, EN 24035 ML6M M6 A4	
480	312105-0289		8	SCREW M6S ISO 4017 M4X10 A470	
490	315105-0136		8	WASHER BRB4,3XRFR	
500	312705-0312		8	NUT HEX. DOMED CAP MHM-6 M4 A280	
510	312605-0312		4	HEXAGON NUT, M6M M4 A280	
600	90458-0528		1	DOUBLE ACTING, COMPACT, CYL 32-25	
610	90450-0756		1	BRACKET, REAR EYE 32	
620	90239-0489		1	ROD END, CLEVIS WITH AXLE M6X1,25	
630	90235-0846		2	THROTTLE CHECK VALVE G1/8", MANUAL, 6	
640	90141-0016		1	RETAINING RING FOR SHAFT DIN 471 10 A2	
B1405	90044-0194		1	PROX.SW. IN5329/IN3002-BPKG	

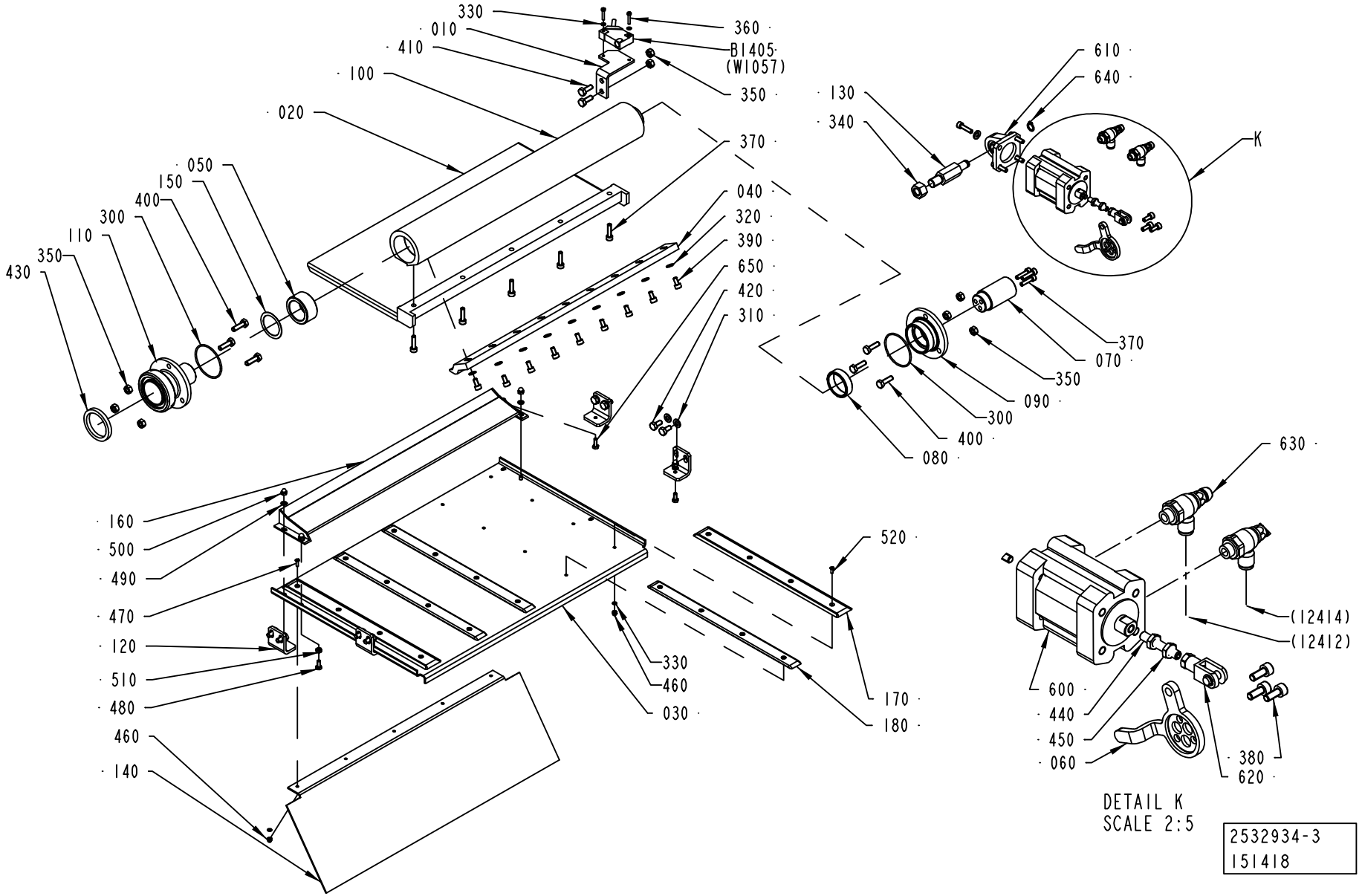
330
010
410
100
020
050
150
400
300
110
350
430
360
B1405
(W1057)
350
370
040
320
390
650
420
310
130
340
610
640
K
370
070
350
090
300
400
080
160
500
490
470
120
510
480
460
140
520
330
460
030
170
180
630
(12414)
(12412)
600
440
450
060
380
620
DETAIL K
SCALE 2:5
2532934-3
151418

ECM: 190569 - 20041104
Group number: 2532934-0100
Assembly Drawing: 2532934-3_1_AA

This list covers pages from 1-100 to 1-105

Pos	Part No	UN	Qty	Description	Page No
A3/FLEX DIMC/FLEX (See drawing on page: 1-102)					
030	2607087-0000		1	BOTTOM PLATE	
140	2532922-0000		1	PLATE	
180	2603630-0000		2	SLIDE PLATE	
190	2607440-0000		1	SLIDE PLATE	
330	315105-0124		14	WASHER BRB3,2X6RFR	
460	312705-0310		12	NUT HEX. DOMED CAP MHM-6 M3 A2	
470	312145-0224		2	SCREW ISO 2009 MFS M3X10 A4	
520	312145-0222		10	SCREW ISO 2009 MFS M3X8 A4	
A3/FLEX TBA 2000S NODIMC, A3/FLEX TBA 1890S NODIMC (See drawing on page: 1-104)					
010	2582651-0000		1	AIR GUIDE	
030	2582652-0000		1	AIR GUIDE	
040	2594601-0000		1	RAIL	
120	2582655-0000		4	HOLDER	
140	2582654-0000		1	PLATE	
160	2657886-0000		1	COUNTER PLATE	
170	2603546-0000		2	SLIDE PLATE	
180	2603630-0000		3	SLIDE PLATE	
330	315105-0124		22	WASHER BRB3,2X6RFR	
460	312705-0310		20	NUT HEX. DOMED CAP MHM-6 M3 A2	
470	312145-0224		5	SCREW ISO 2009 MFS M3X10 A4	
520	312145-0222		15	SCREW ISO 2009 MFS M3X8 A4	
650	312105-0291		2	SCREW M6S ISO 4017 M4X12 A470	
A3/FLEX TBA 1000B NODIMC, A3/FLEX TBA 0500B NODIMC, A3/FLEX TBA 1000S NODIMC, A3/FLEX TBA 1000SQ NODIMC, A3/FLEX TBA 0200S NODIMC, A3/FLEX TPA 1000SQ NODIMC, A3/FLEX TBA 1500S NODIMC, A3/FLEX TBA 0200B NODIMC, A3/FLEX TBA 0250B NODIMC, A3/FLEX TBA 0330S NODIMC, A3/FLEX TPA 0330SQ NODIMC, A3/FLEX TPA 0500SQ NODIMC, A3/FLEX TBA 0200M NODIMC, A3/FLEX TBA 0250S NODIMC, A3/FLEX TBA 0500S NODIMC (See drawing on page: 1-100)					
030	2603823-0000		1	BOTTOM PLATE	
140	2532919-0000		1	PLATE	
170	2603546-0000		2	SLIDE PLATE	
180	2603630-0000		3	SLIDE PLATE	
330	315105-0124		22	WASHER BRB3,2X6RFR	
460	312705-0310		20	NUT HEX. DOMED CAP MHM-6 M3 A2	
470	312145-0224		5	SCREW ISO 2009 MFS M3X10 A4	
520	312145-0222		15	SCREW ISO 2009 MFS M3X8 A4	
Common Parts					
010	2509674-0000		1	BRACKET	
020	2532916-0000		1	AIR GUIDE	
040	2509681-0000		1	RAIL	
050	1519166-0000		1	BUSHING	
060	1519163-0000		1	ARM	
070	1519160-0000		1	SHAFT	
080	1519159-0000		1	BUSHING	
090	1519158-0000		1	LID	
100	1519156-0000		1	AIR DISTRIBUTOR	
110	1532231-0000		1	CONNECTION	
120	2532918-0000		4	HOLDER	
130	1498132-0000		1	SHAFT	
150	2532915-0000		1	WASHER	
160	2603824-0000		1	COUNTER PLATE	
300	315205-0804		2	O-RING 47,35X1,78 MM	
310	315105-0153		12	WASHER BRB6,4X12RFR	
320	315105-0146		9	WASHER BRB5,3X10RFR	
340	312605-0322		1	HEXAGON NUT, M6M M12 A280	
350	312605-0316		8	HEXAGON NUT, M6M M6 A280	
360	312125-0228		2	SCREW ISO 1207 M3X16 A4	
370	312115-0331		12	SCREW ISO4762 M5X20 A4	
380	312115-0327		3	SCREW ISO4762 M5X12 A4	
390	312115-0325		9	SCREW ISO4762 M5X10 A4	
400	312105-0370		6	SCREW M6S ISO 4017 M6X20 A480	
410	312105-0368		2	SCREW M6S ISO 4017 M6X16 A480	
420	312105-0366		8	SCREW M6S ISO 4017 M6X12 A480	
430	12242-0003		1	GASKET 48X38X5,5	
440	312318-0376		1	SCREW ISO4029 M6X35 A4	
450	312625-0316		2	HEXAGON THIN NUT, EN 24035 ML6M M6 A4	
480	312105-0289		8	SCREW M6S ISO 4017 M4X10 A470	
490	315105-0136		8	WASHER BRB4,3XRFR	
500	312705-0312		8	NUT HEX. DOMED CAP MHM-6 M4 A280	
510	312605-0312		4	HEXAGON NUT, M6M M4 A280	
600	90458-0528		1	DOUBLE ACTING, COMPACT, CYL 32-25	
610	90450-0756		1	BRACKET, REAR EYE 32	
620	90239-0489		1	ROD END, CLEVIS WITH AXLE M6X1,25	
630	90235-0846		2	THROTTLE CHECK VALVE G1/8", MANUAL, 6	
640	90141-0016		1	RETAINING RING FOR SHAFT DIN 471 10 A2	
B1405	90044-0194		1	PROX.SW. IN5329/IN3002-BPKG	

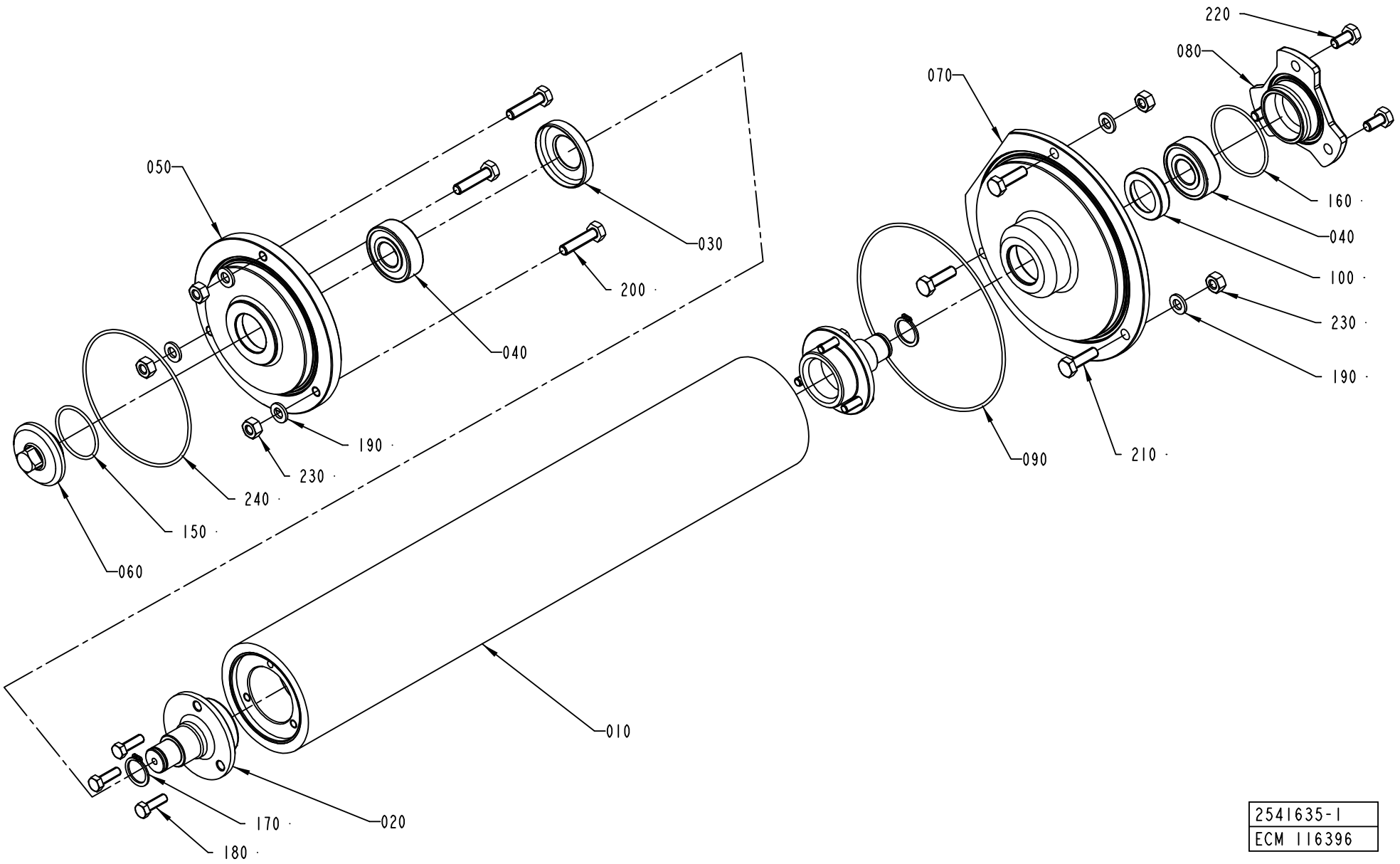

2541635-1
ECM 116396

ECM: 190573 - 20041104
Group number: 2541635-0100
Assembly Drawing: 2541635-1_1_AA

This list covers pages from 1-106 to 1-111

Pos	Part No	UN	Qty	Description	Page No
A3/FLEX DIMC/FLEX (See drawing on page: 1-108)					
010	2528136-0000		1	SQUEE-GEE ROLLER	
070	2532984-0000		1	FLANGE	
A3/FLEX TBA 2000S NODIMC, A3/FLEX TBA 1890S NODIMC (See drawing on page: 1-110)					
010	2547406-0000		1	ROLLER	
050	2541641-0000		1	FLANGE	
070	2541640-0000		1	FLANGE	
A3/FLEX TBA 1000B NODIMC, A3/FLEX TBA 0500B NODIMC, A3/FLEX TBA 1000S NODIMC, A3/FLEX TBA 1000SQ NODIMC, A3/FLEX TPA 1000SQ NODIMC, A3/FLEX TBA 1500S NODIMC, A3/FLEX TBA 0200B NODIMC, A3/FLEX TBA 0250B NODIMC, A3/FLEX TBA 0330S NODIMC, A3/FLEX TPA 0330SQ NODIMC, A3/FLEX TPA 0500SQ NODIMC, A3/FLEX TBA 0200M NODIMC, A3/FLEX TBA 0250S NODIMC, A3/FLEX TBA 0500S NODIMC (See drawing on page: 1-106)					
010	1511769-0000		1	ROLLER	
070	2532984-0000		1	FLANGE	
Common Parts					
020	2541637-0000		2	SHAFT	
030	2541647-0000		1	LID	
040	90458-1704		2	BALL BEARING, 15X35X11 MM	
050	2541633-0000		1	FLANGE	
060	2532983-0000		1	FLANGE	
080	2541639-0000		1	LID	
090	90459-1627		1	O-RING 114,02X1,78 MM	
100	2541648-0000		1	LID	
150	315205-0713		1	O-RING 29,87X1,78 MM	
160	315205-0802		1	O-RING 41,0X1,78 MM	
170	315751-0112		2	RETAINING RING FOR SHAFT DIN 471 15 A2	
180	312105-0329		6	SCREW M6S ISO 4017 M5X16 A480	
190	315103-0153		6	WASHER, BRB, 6,4/12,H=1,5 NIPL BR	
200	312105-0372		3	SCREW M6S ISO 4017 M6X25 A480	
210	312105-0370		3	SCREW M6S ISO 4017 M6X20 A480	
220	312105-0366		3	SCREW M6S ISO 4017 M6X12 A480	
230	312605-0316		6	HEXAGON NUT, M6M M6 A280	
240	90242-0270		1	O-RING 82,27X1,78 MM	

Pos	Part No	UN	Qty	Description	Page No

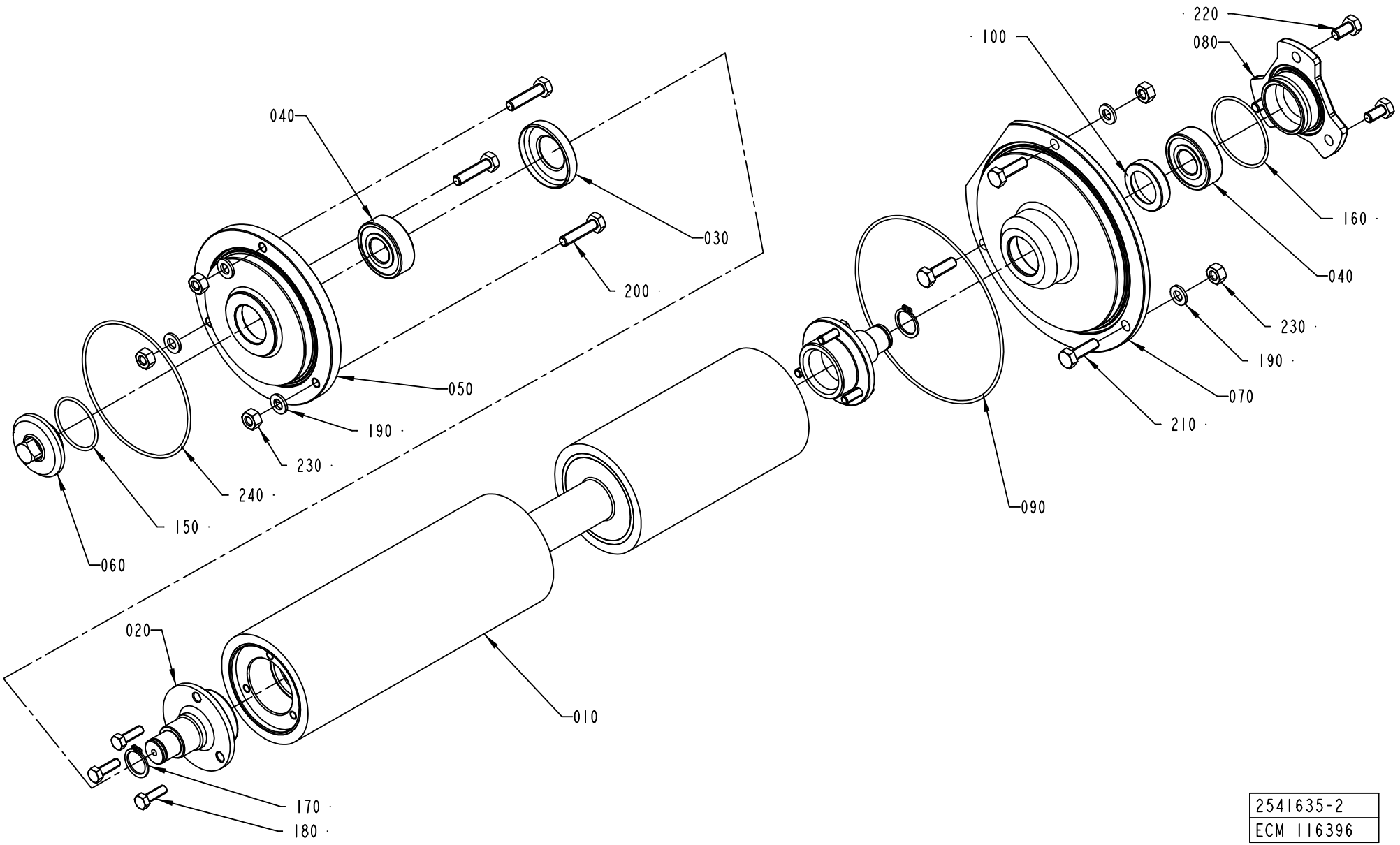

2541635-2
ECM 116396

ECM: 190573 - 20041104
Group number: 2541635-0100
Assembly Drawing: 2541635-2_1_AA

This list covers pages from 1-106 to 1-111

Pos	Part No	UN	Qty	Description	Page No
A3/FLEX DIMC/FLEX (See drawing on page: 1-108)					
010	2528136-0000		1	SQUEE-GEE ROLLER	
070	2532984-0000		1	FLANGE	
A3/FLEX TBA 2000S NODIMC, A3/FLEX TBA 1890S NODIMC (See drawing on page: 1-110)					
010	2547406-0000		1	ROLLER	
050	2541641-0000		1	FLANGE	
070	2541640-0000		1	FLANGE	
A3/FLEX TBA 1000B NODIMC, A3/FLEX TBA 0500B NODIMC, A3/FLEX TBA 1000S NODIMC, A3/FLEX TBA 1000SQ NODIMC, A3/FLEX TPA 1000SQ NODIMC, A3/FLEX TBA 1500S NODIMC, A3/FLEX TBA 0200B NODIMC, A3/FLEX TBA 0250B NODIMC, A3/FLEX TBA 0330S NODIMC, A3/FLEX TPA 0330SQ NODIMC, A3/FLEX TPA 0500SQ NODIMC, A3/FLEX TBA 0200M NODIMC, A3/FLEX TBA 0250S NODIMC, A3/FLEX TBA 0500S NODIMC (See drawing on page: 1-106)					
010	1511769-0000		1	ROLLER	
070	2532984-0000		1	FLANGE	
Common Parts					
020	2541637-0000		2	SHAFT	
030	2541647-0000		1	LID	
040	90458-1704		2	BALL BEARING, 15X35X11 MM	
050	2541633-0000		1	FLANGE	
060	2532983-0000		1	FLANGE	
080	2541639-0000		1	LID	
090	90459-1627		1	O-RING 114,02X1,78 MM	
100	2541648-0000		1	LID	
150	315205-0713		1	O-RING 29,87X1,78 MM	
160	315205-0802		1	O-RING 41,0X1,78 MM	
170	315751-0112		2	RETAINING RING FOR SHAFT DIN 471 15 A2	
180	312105-0329		6	SCREW M6S ISO 4017 M5X16 A480	
190	315103-0153		6	WASHER, BRB, 6,4/12,H=1,5 NIPL BR	
200	312105-0372		3	SCREW M6S ISO 4017 M6X25 A480	
210	312105-0370		3	SCREW M6S ISO 4017 M6X20 A480	
220	312105-0366		3	SCREW M6S ISO 4017 M6X12 A480	
230	312605-0316		6	HEXAGON NUT, M6M M6 A280	
240	90242-0270		1	O-RING 82,27X1,78 MM	

Pos	Part No	UN	Qty	Description	Page No

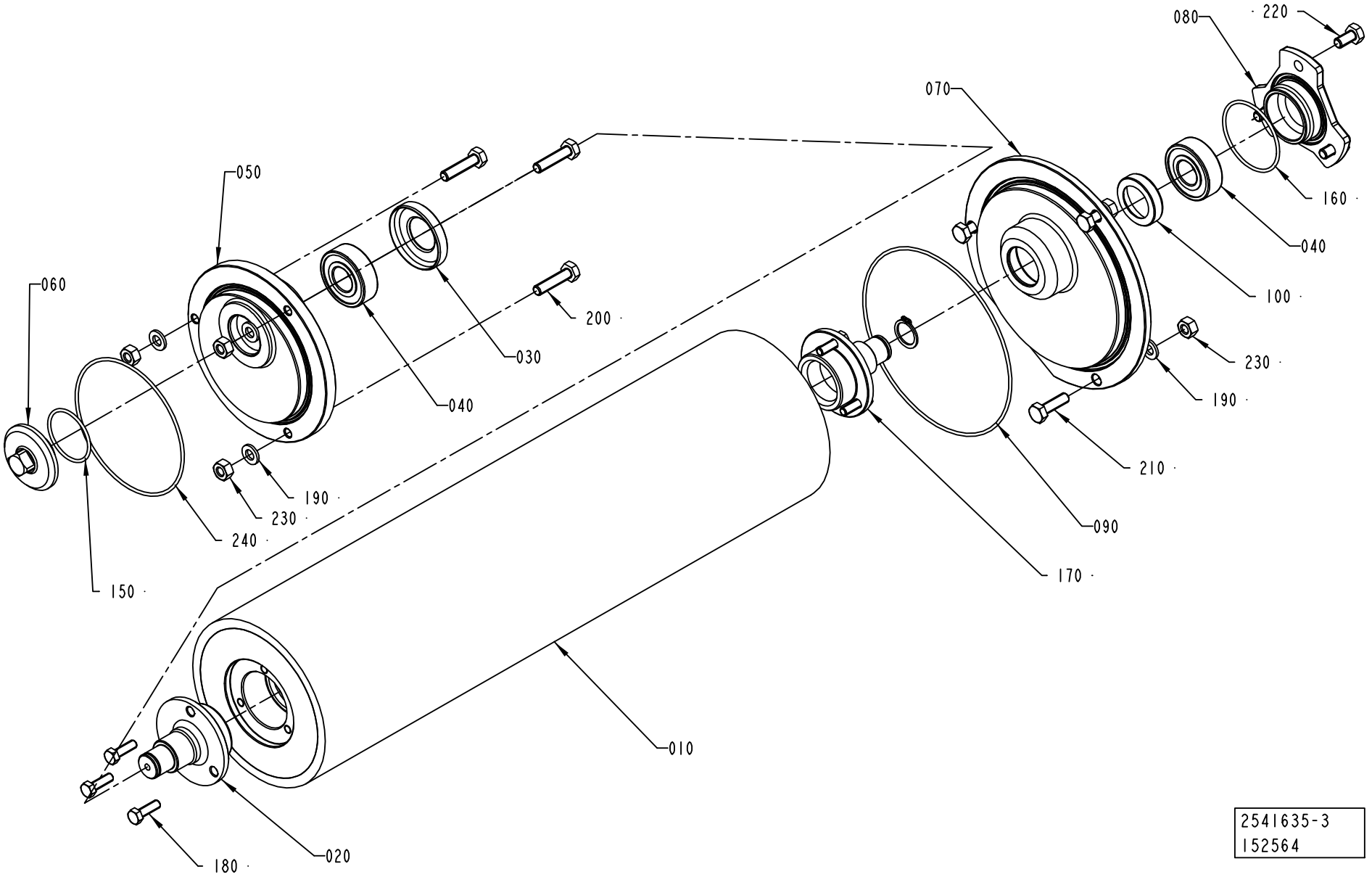
080
220
070
050
160
040
060
200
030
100
230
040
190
210
190
230
240
090
150
170
010
180
020
2541635-3
152564

ECM: 190573 - 20041104
Group number: 2541635-0100
Assembly Drawing: 2541635-3_1_AA

This list covers pages from 1-106 to 1-111

Pos	Part No	UN	Qty	Description	Page No
A3/FLEX DIMC/FLEX (See drawing on page: 1-108)					
010	2528136-0000		1	SQUEE-GEE ROLLER	
070	2532984-0000		1	FLANGE	
A3/FLEX TBA 2000S NODIMC, A3/FLEX TBA 1890S NODIMC (See drawing on page: 1-110)					
010	2547406-0000		1	ROLLER	
050	2541641-0000		1	FLANGE	
070	2541640-0000		1	FLANGE	
A3/FLEX TBA 1000B NODIMC, A3/FLEX TBA 0500B NODIMC, A3/FLEX TBA 1000S NODIMC, A3/FLEX TBA 1000SQ NODIMC, A3/FLEX TPA 1000SQ NODIMC, A3/FLEX TBA 1500S NODIMC, A3/FLEX TBA 0200B NODIMC, A3/FLEX TBA 0250B NODIMC, A3/FLEX TBA 0330S NODIMC, A3/FLEX TPA 0330SQ NODIMC, A3/FLEX TPA 0500SQ NODIMC, A3/FLEX TBA 0200M NODIMC, A3/FLEX TBA 0250S NODIMC, A3/FLEX TBA 0500S NODIMC (See drawing on page: 1-106)					
010	1511769-0000		1	ROLLER	
070	2532984-0000		1	FLANGE	
Common Parts					
020	2541637-0000		2	SHAFT	
030	2541647-0000		1	LID	
040	90458-1704		2	BALL BEARING, 15X35X11 MM	
050	2541633-0000		1	FLANGE	
060	2532983-0000		1	FLANGE	
080	2541639-0000		1	LID	
090	90459-1627		1	O-RING 114,02X1,78 MM	
100	2541648-0000		1	LID	
150	315205-0713		1	O-RING 29,87X1,78 MM	
160	315205-0802		1	O-RING 41,0X1,78 MM	
170	315751-0112		2	RETAINING RING FOR SHAFT DIN 471 15 A2	
180	312105-0329		6	SCREW M6S ISO 4017 M5X16 A480	
190	315103-0153		6	WASHER, BRB, 6,4/12,H=1,5 NIPL BR	
200	312105-0372		3	SCREW M6S ISO 4017 M6X25 A480	
210	312105-0370		3	SCREW M6S ISO 4017 M6X20 A480	
220	312105-0366		3	SCREW M6S ISO 4017 M6X12 A480	
230	312605-0316		6	HEXAGON NUT, M6M M6 A280	
240	90242-0270		1	O-RING 82,27X1,78 MM	

Pos	Part No	UN	Qty	Description	Page No

ADJUSTING ROLLER

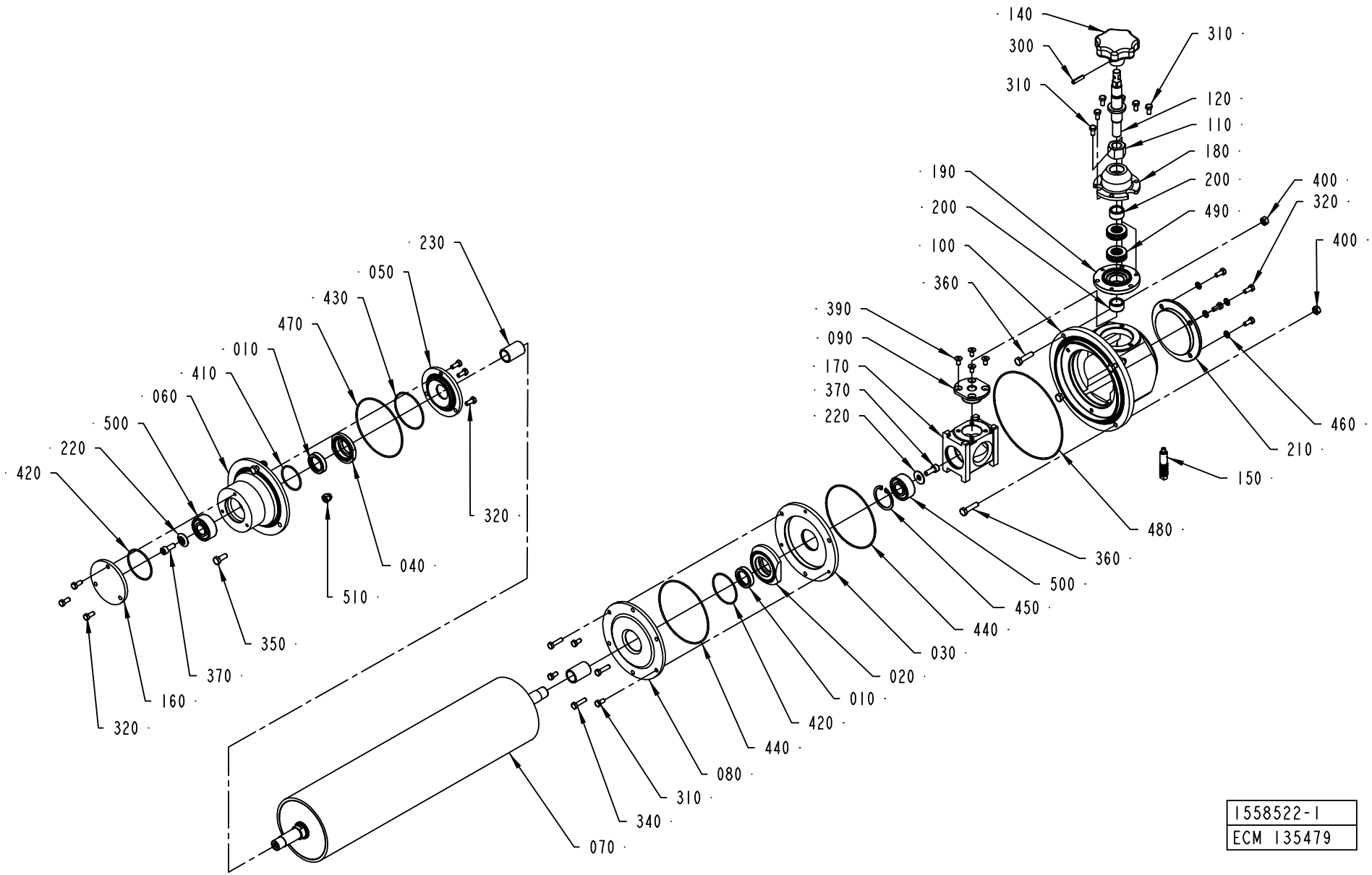

1558522-1
ECM 135479

ECM: 174639 - 20040924
Group number: 1558522-0100
Assembly Drawing: 1558522-1_1_AB

Pos	Part No	UN	Qty	Description	Page No
A3/FLEX DIMC/FLEX, C3/FLEX DIMC/FLEX					
070	2550893-0000		1	BENDING ROLLER	
A3/FLEX TBA 2000S NODIMC, A3/FLEX TBA 1890S NODIMC					
070	2601237-0000		1	BENDING ROLLER	
A3/FLEX TBA 1000B NODIMC, A3/FLEX TBA 0500B NODIMC, A3/FLEX TBA 1000S NODIMC, A3/FLEX TBA 1000SQ NODIMC, A3/FLEX TBA 0200S NODIMC, A3/FLEX TPA 1000SQ NODIMC, A3/FLEX TBA 1500S NODIMC, A3/FLEX TBA 0200B NODIMC, A3/FLEX TBA 0250B NODIMC, A3/FLEX TBA 0330S NODIMC, A3/FLEX TPA 0330SQ NODIMC, A3/FLEX TPA 0500SQ NODIMC, A3/FLEX TBA 0200M NODIMC, A3/FLEX TBA 0250S NODIMC, A3/FLEX TBA 0500S NODIMC					
070	2550891-0000		1	BENDING ROLLER	
Common Parts					
010	90458-0639		2	VARILIP 20X30X7 MM	
020	1558748-0000		1	FLANGE	
030	1558749-0000		1	FLANGE	
040	1558750-0000		1	FLANGE	
050	1558751-0000		1	FLANGE	
060	1558752-0000		1	FLANGE	
080	1558754-0000		1	LID	
090	1558755-0000		1	FLANGE	
100	1558756-0000		1	HOUSING	
110	1558757-0000		1	NUT	
120	1558758-0000		1	SHAFT	
140	1558760-0000		1	KNOB	
150	1558761-0000		1	SHAFT	
160	1558762-0000		1	LID	
170	1558763-0000		1	SLIDER	
180	1558764-0000		1	FLANGE	
190	1558765-0000		1	FLANGE	
200	1558766-0000		2	BUSHING	
210	2528073-0000		1	LID	
220	1558768-0000		2	WASHER	
230	2555613-0000		2	BUSHING	
300	311112-0256		1	SPRING PIN, ISO 8752 4X20-C	
310	312105-0325		9	SCREW M6S ISO 4017 M5X10 A480	
320	312105-0327		10	SCREW M6S ISO 4017 M5X12 A480	
340	312105-0331		3	SCREW M6S ISO 4017 M5X20 A480	
350	312105-0368		3	SCREW M6S ISO 4017 M6X16 A480	
360	312105-0372		4	SCREW M6S ISO 4017 M6X25 A480	
370	312115-0368		2	SCREW ISO4762 M6X16 A4	
390	312155-0325		4	SCREW DIN 7991 MF6S M5X10 A480	
400	312605-0316		4	HEXAGON NUT, M6M M6 A280	
410	315205-0716		1	O-RING 34,65X1,78 MM	
420	315205-0803		2	O-RING 44,17X1,78 MM	
430	315205-0805		1	O-RING 53,7X1,78 MM	
440	315205-0807		2	O-RING 94,97X1,78 MM	
450	315753-0124		1	RETAINING RING FOR BORE DIN 472 35 A2	
460	315105-0146		4	WASHER BRB5,3X10RFR	
470	90458-0640		1	O-RING 88,62X1,78 MM	
480	90459-0094		1	O-RING 133,07X1,78 MM	
490	90459-0098		2	THRUST BALL BEARING, 15X28X9 MM	
500	90214-0105		2	SPHERICAL BALL BEARING, 15X35X14 MM	
510	312705-0316		3	NUT HEX. DOMED CAP MHM-6 M6 A280	

This page is intentionally left blank.

ECM: 193087 - 20041203
Group number: 2721432-0100
Assembly Drawing:

Pos	Part No	UN	Qty	Description	Page No
TBA 0500B, TBA 0330S, TBA 1000S, TBA 1000SQ, TBA 1000B, TBA 0200B, TBA 0200S, TBA 0250B, TBA 1500S, TPA 1000SQ					
010	2522234-0000		1	LEVER	
TBA 0500S, TBA 0250S, TBA 0200M, TPA 0330SQ, TPA 0500SQ					
010	2522234-0000		1	LEVER	
020	2677636-0000		1	LEVER	
030	2685417-0000		1	BUSHING	

Pos	Part No	UN	Qty	Description	Page No

This page is intentionally left blank.

ECM: 195184 - 20041203
Group number: 2731260-0100
Assembly Drawing:

Pos	Part No	UN	Qty	Description	Page No
-					
010	2524600-0100		1	PRESSURE ROLLER	**1-119, 1-121**
020	2582003-0100		1	GUIDE RAIL	**1-123, 1-125**
030	2589108-0000		1	BENDING ROLLER	
040	1484745-0100		1	WEB GUIDE	**1-127**
050	2529547-0100		1	PAPER GUIDE	**1-129**

Pos	Part No	UN	Qty	Description	Page No

PRESSURE ROLLER

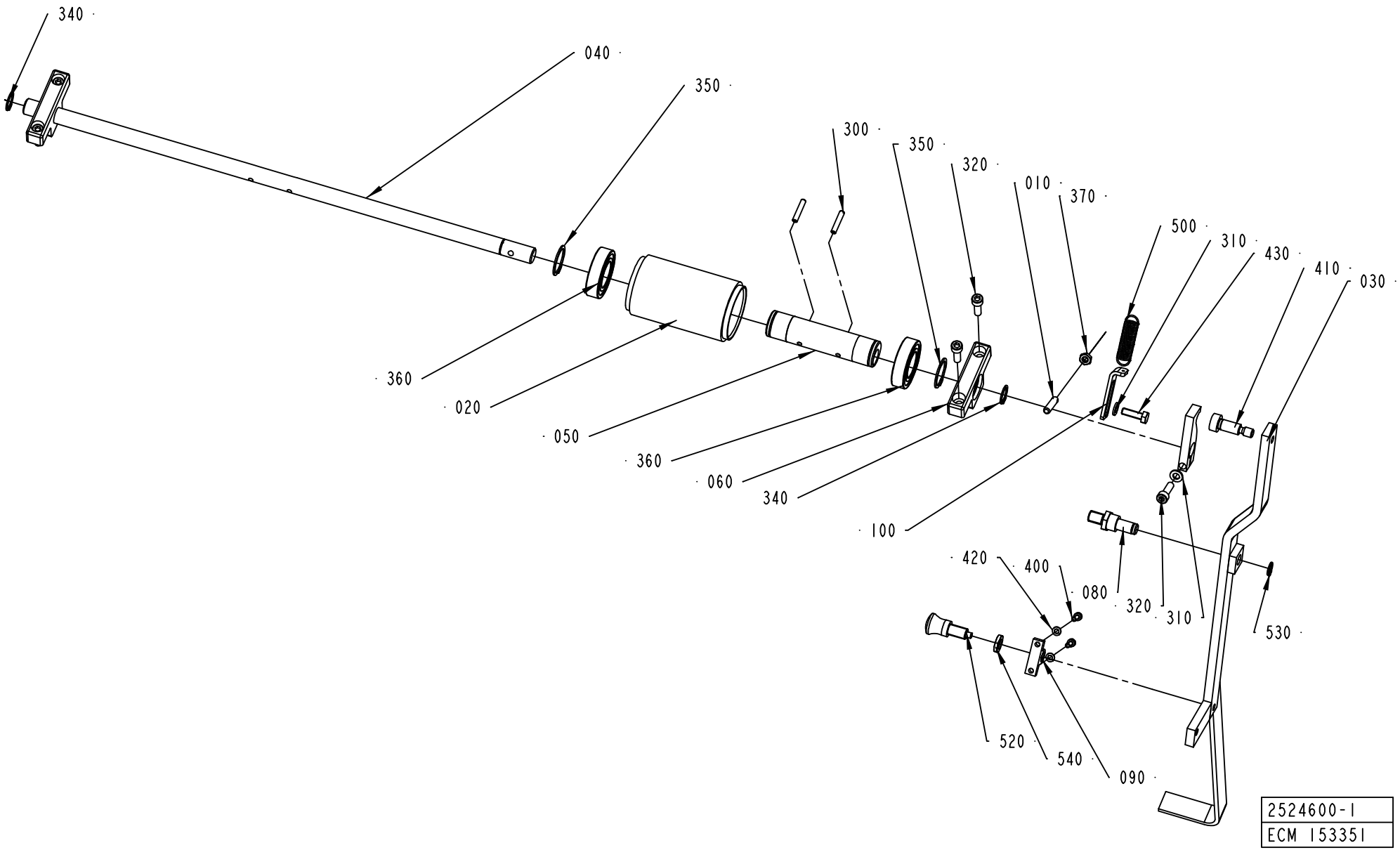

ECM: 195230 - 20041203
Group number: 2524600-0100
Assembly Drawing: 2524600-1_1_AB

This list covers pages from 1-118 to 1-121

Pos	Part No	UN	Qty	Description	Page No
A3/FLEX TBA 1890S, A3/FLEX TBA 2000S (See drawing on page: 1-120)					
020	906254-0000		2	ROLLER	
030	90450-0003		1	SINGLE ACTING, MINI-ISO, CYL 20-25	
040	2681261-0000		1	SHAFT	
050	1512267-0000		2	ECCENTRIC BUSHING	
060	2681262-0000		2	BRACKET	
070	2703095-0000		1	ROCKER ARM	
080	2703096-0000		1	SUPPORT	
090	2681263-0000		2	BUSHING	
100	2681266-0000		1	WASHER	
300	311112-0258		4	SPRING PIN, ISO 8752 4X24-C	
310	315755-0109		1	RETAINING RING SHAFT DIN 6799 7 A2	
320	312115-0374		2	SCREW ISO4762 M6X30 A4	
350	315751-0119		4	RETAINING RING FOR SHAFT DIN 471 25 A2	
360	321308-0205		4	BALL BEARING, 25X47X12MM	
370	315105-0165		1	WASHER BRB8,4X16RFR	
400	312105-0367		1	SCREW M6S ISO 4017 M6X14 A480	
410	90459-2590		1	ROD END, CLEVIS WITH AXLE M8	
420	312115-0370		4	SCREW ISO4762 M6X20 A4	
A3/FLEX TBA 0500B, A3/FLEX TBA 1000B, A3/FLEX TBA 1000S, A3/FLEX TBA 1000SQ, A3/FLEX TPA 1000SQ, A3/FLEX TBA 0200S, A3/FLEX TBA 1500S, A3/FLEX TBA 0200B, A3/FLEX TBA 0250B, A3/FLEX TBA 0330S, A3/FLEX TPA 0330SQ, A3/FLEX TPA 0500SQ, A3/FLEX TBA 0200M, A3/FLEX TBA 0250S, A3/FLEX TBA 0500S (See drawing on page: 1-118)					
010	578684-0000		1	SPRING BRACKET	
020	906254-0000		1	ROLLER	
030	2524602-0000		1	HANDLE	
040	1487763-0000		1	SHAFT	
050	1512267-0000		1	ECCENTRIC BUSHING	
060	1519583-0000		2	BRACKET	
070	2524604-0000		1	ROCKER ARM	
080	2524601-0000		1	AXLE PIN	
090	2524603-0000		1	HOLDER	
100	2529549-0000		1	PLATE	
300	311112-0258		2	SPRING PIN, ISO 8752 4X24-C	
310	315105-0153		2	WASHER BRB6,4X12RFR	
320	312115-0370		5	SCREW ISO4762 M6X20 A4	
350	315751-0119		2	RETAINING RING FOR SHAFT DIN 471 25 A2	
360	321308-0205		2	BALL BEARING, 25X47X12MM	
370	312625-0316		1	HEXAGON THIN NUT, EN 24035 ML6M M6 A4	
400	312115-0291		2	SCREW ISO4762 M4X12 A4	
410	312180-0491		1	SCREW ISO7379 H10X20	
420	315105-0136		2	WASHER BRB4,3XRFR	
430	312105-0370		1	SCREW M6S ISO 4017 M6X20 A480	
500	90335-0091		1	TENSION SPRING 41890, 1,2X13X48,2	
520	90051-0087		1	LOCK KNOB, NO. GN 617 A5	
530	90141-0016		1	RETAINING RING FOR SHAFT DIN 471 10 A2	
540	90099-0007		1	HEXAGON NUT, M10X1, E 63 137 10	
Common Parts					
340	315751-0112		2	RETAINING RING FOR SHAFT DIN 471 15 A2	

Machine Type | Group Description | Used-In | Group Number | Page No

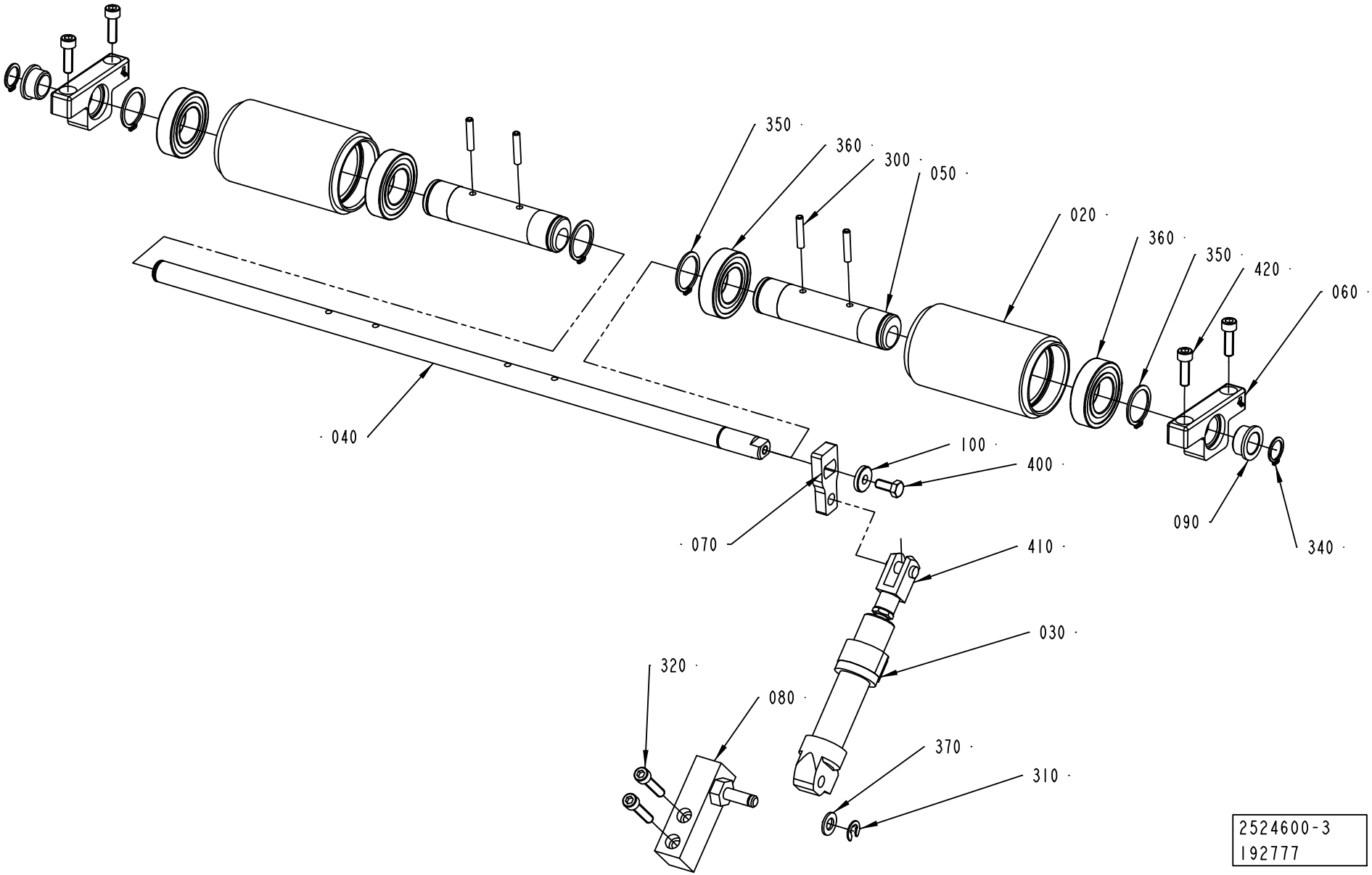
350
360
300
050
020
360
350
420
060
040
100
400
070
090
340
410
030
320
080
370
310
2524600-3
192777

ECM: 195230 - 20041203
Group number: 2524600-0100
Assembly Drawing: 2524600-3_1_AB

This list covers pages from 1-118 to 1-121

Pos	Part No	UN	Qty	Description	Page No
A3/FLEX TBA 1890S, A3/FLEX TBA 2000S (See drawing on page: 1-120)					
020	906254-0000		2	ROLLER	
030	90450-0003		1	SINGLE ACTING, MINI-ISO, CYL 20-25	
040	2681261-0000		1	SHAFT	
050	1512267-0000		2	ECCENTRIC BUSHING	
060	2681262-0000		2	BRACKET	
070	2703095-0000		1	ROCKER ARM	
080	2703096-0000		1	SUPPORT	
090	2681263-0000		2	BUSHING	
100	2681266-0000		1	WASHER	
300	311112-0258		4	SPRING PIN, ISO 8752 4X24-C	
310	315755-0109		1	RETAINING RING SHAFT DIN 6799 7 A2	
320	312115-0374		2	SCREW ISO4762 M6X30 A4	
350	315751-0119		4	RETAINING RING FOR SHAFT DIN 471 25 A2	
360	321308-0205		4	BALL BEARING, 25X47X12MM	
370	315105-0165		1	WASHER BRB8,4X16RFR	
400	312105-0367		1	SCREW M6S ISO 4017 M6X14 A480	
410	90459-2590		1	ROD END, CLEVIS WITH AXLE M8	
420	312115-0370		4	SCREW ISO4762 M6X20 A4	
A3/FLEX TBA 0500B, A3/FLEX TBA 1000B, A3/FLEX TBA 1000S, A3/FLEX TBA 1000SQ, A3/FLEX TPA 1000SQ, A3/FLEX TBA 0200S, A3/FLEX TBA 1500S, A3/FLEX TBA 0200B, A3/FLEX TBA 0250B, A3/FLEX TBA 0330S, A3/FLEX TPA 0330SQ, A3/FLEX TPA 0500SQ, A3/FLEX TBA 0200M, A3/FLEX TBA 0250S, A3/FLEX TBA 0500S (See drawing on page: 1-118)					
010	578684-0000		1	SPRING BRACKET	
020	906254-0000		1	ROLLER	
030	2524602-0000		1	HANDLE	
040	1487763-0000		1	SHAFT	
050	1512267-0000		1	ECCENTRIC BUSHING	
060	1519583-0000		2	BRACKET	
070	2524604-0000		1	ROCKER ARM	
080	2524601-0000		1	AXLE PIN	
090	2524603-0000		1	HOLDER	
100	2529549-0000		1	PLATE	
300	311112-0258		2	SPRING PIN, ISO 8752 4X24-C	
310	315105-0153		2	WASHER BRB6,4X12RFR	
320	312115-0370		5	SCREW ISO4762 M6X20 A4	
350	315751-0119		2	RETAINING RING FOR SHAFT DIN 471 25 A2	
360	321308-0205		2	BALL BEARING, 25X47X12MM	
370	312625-0316		1	HEXAGON THIN NUT, EN 24035 ML6M M6 A4	
400	312115-0291		2	SCREW ISO4762 M4X12 A4	
410	312180-0491		1	SCREW ISO7379 H10X20	
420	315105-0136		2	WASHER BRB4,3XRFR	
430	312105-0370		1	SCREW M6S ISO 4017 M6X20 A480	
500	90335-0091		1	TENSION SPRING 41890, 1,2X13X48,2	
520	90051-0087		1	LOCK KNOB, NO. GN 617 A5	
530	90141-0016		1	RETAINING RING FOR SHAFT DIN 471 10 A2	
540	90099-0007		1	HEXAGON NUT, M10X1, E 63 137 10	
Common Parts					
340	315751-0112		2	RETAINING RING FOR SHAFT DIN 471 15 A2	

Machine Type | Group Description | Used-In | Group Number | Page No

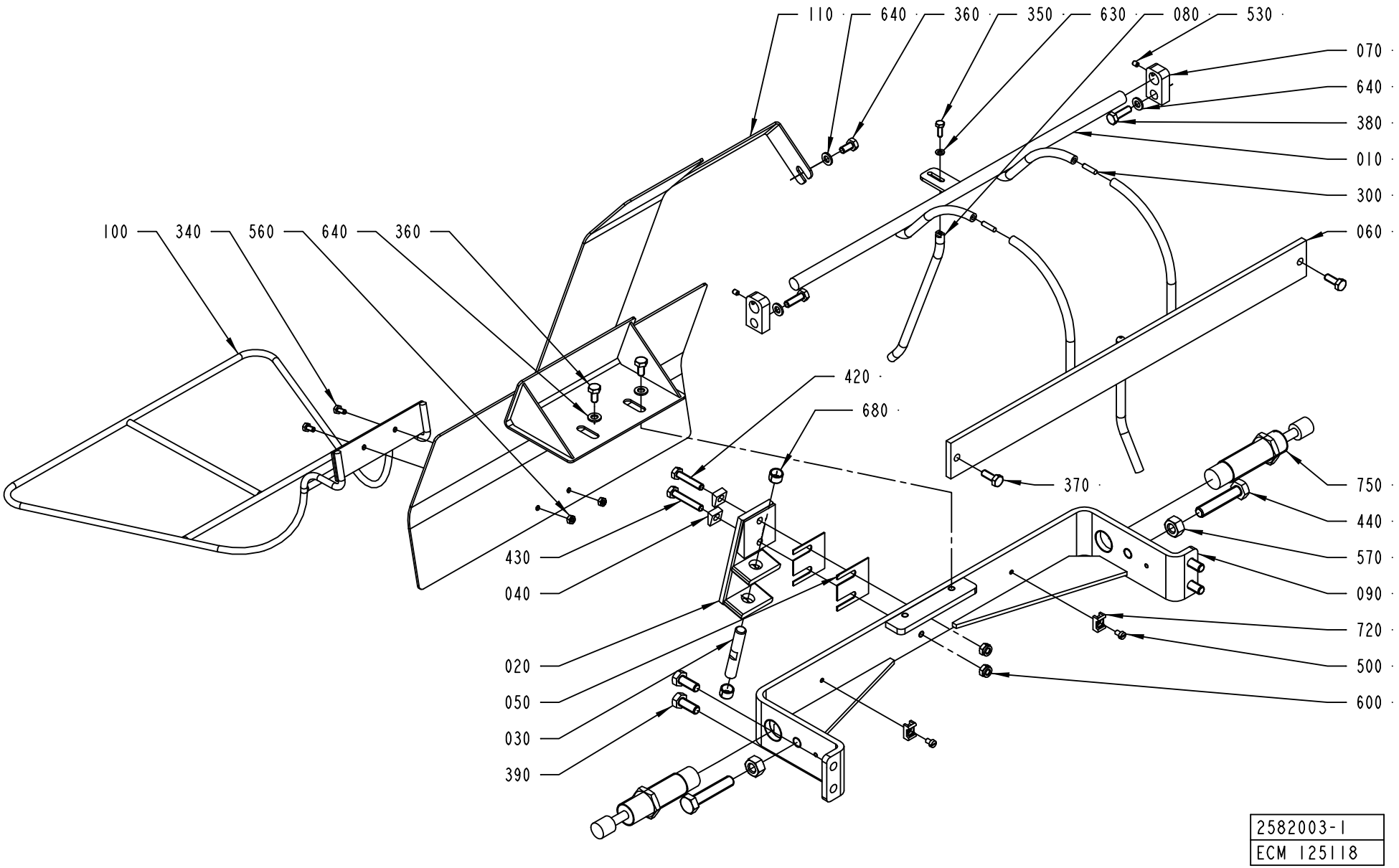
110
640
360
350
630
080
530
070
640
380
010
300
060
100
340
560
640
360
420
680
370
750
440
570
090
720
500
600
430
040
020
050
030
390
2582003-1
ECM 125118

ECM: 190959 - 20041104
Group number: 2582003-0100
Assembly Drawing: 2582003-1_1_AB

This list covers pages from 1-122 to 1-125

Pos	Part No	UN	Qty	Description	Page No
A3/FLEX TBA 1890S, A3/FLEX TBA 2000S (See drawing on page: 1-124)					
010	2681260-0000		1	RAIL	
060	2681259-0000		1	RAIL	
070	2689138-0000		1	MOUNTING BLOCK	
080	2689173-0000		1	MOUNTING BLOCK	
110	2681267-0000		1	PLATE	
130	2564562-0000		3	ROLLER	
170	2693199-0000		2	PLATE	
180	2681535-0000		1	SHAFT	
300	311103-0270		3	PARALLEL PIN ISO 2338 4M6X16 A1	
310	315105-0156		6	WASHER BRB 6.7X14 RFR	
330	315751-0103		4	RETAINING RING FOR SHAFT DIN 471 6 A2	
350	312605-0316		4	HEXAGON NUT, M6M M6 A280	
360	312115-0366		4	SCREW ISO4762 M6X12 A4	
390	312105-0451		4	SCREW M6S ISO 4017 M8X20 A480	
400	312105-0366		2	SCREW M6S ISO 4017 M6X12 A480	
640	315105-0153		18	WASHER BRB6,4X12RFR	
A3/FLEX TBA 0500B, A3/FLEX TBA 1000B, A3/FLEX TBA 1000S, A3/FLEX TBA 1000SQ, A3/FLEX TPA 1000SQ, A3/FLEX TBA 0200S, A3/FLEX TBA 1500S, A3/FLEX TBA 0200B, A3/FLEX TBA 0250B, A3/FLEX TBA 0330S, A3/FLEX TPA 0330SQ, A3/FLEX TPA 0500SQ, A3/FLEX TBA 0200M, A3/FLEX TBA 0250S, A3/FLEX TBA 0500S (See drawing on page: 1-122)					
010	1484697-0000		1	RAIL	
060	1517113-0000		1	RAIL	
070	1519578-0000		2	MOUNTING BLOCK	
080	1519591-0000		1	RAIL PIN	
110	2582668-0000		1	PLATE	
300	311103-0270		2	PARALLEL PIN ISO 2338 4M6X16 A1	
350	312105-0291		1	SCREW M6S ISO 4017 M4X12 A470	
360	312105-0366		3	SCREW M6S ISO 4017 M6X12 A480	
390	312105-0451		4	SCREW M6S ISO 4017 M8X20 A480	
630	315105-0136		1	WASHER BRB4,3XRFR	
640	315105-0153		5	WASHER BRB6,4X12RFR	
Common Parts					
020	1490220-0000		1	ANGLE BRACKET	
030	1494664-0000		1	AXLE LINK	
040	1499566-0000		2	WASHER	
050	1512430-0000		2	VOLUME SHIM	
090	1519944-0000		1	BRACKET	
100	2563183-0000		1	GUIDE RAIL	
340	312105-0287		2	SCREW M6S ISO4017 M4X8 A470	
370	312105-0368		2	SCREW M6S ISO 4017 M6X16 A480	
380	312105-0370		2	SCREW M6S ISO 4017 M6X20 A480	
420	312109-0374		1	SCREW M6S ISO 4017 M6X30 A480	
430	312109-0376		1	SCREW M6S ISO 4017 M6X35 A480	
440	312109-0501		2	SCREW M6S ISO 4017 M10X50 A480	
500	312125-0285		2	SCREW ISO 1207 M4X6 A4	
530	312318-0284		2	SCREW ISO4029 M4X5 A4	
560	312605-0312		2	HEXAGON NUT, M6M M4 A280	
570	312605-0320		2	HEXAGON NUT, M6M M10 A280	
600	312812-0316		2	HEXAGON NUT, NY-LOCK M6 A480	
680	321141-0138		2	BEARING BUSHING W/O FL, 10X12X8 MM	
720	352113-0205		2	ANCHOR PLATES FOR STRIPS, TYPE TM2S8-C10	
750	90347-0182		2	SHOCK ABSORBER, YSR-16-20-C	

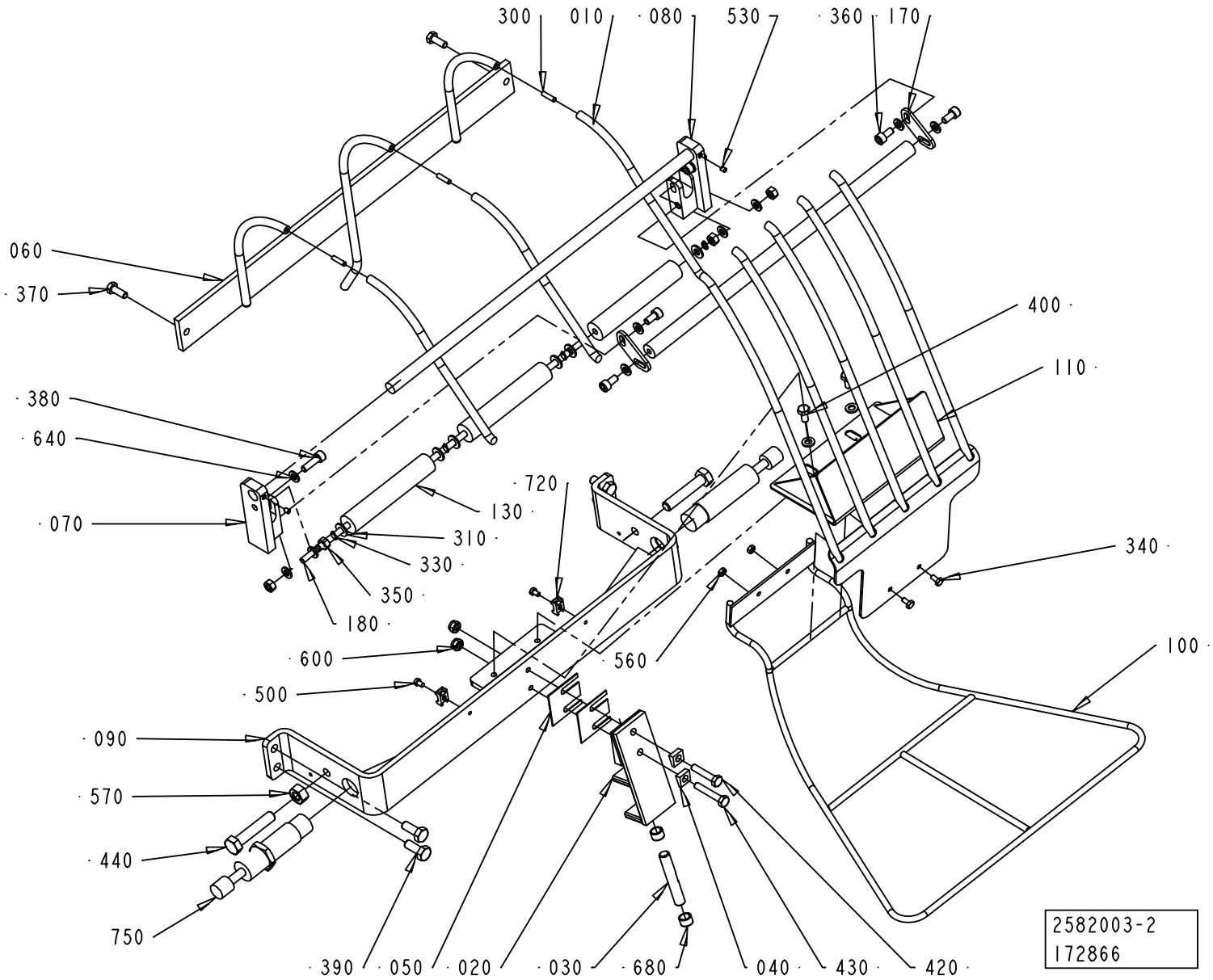
300
010
080
530
360
170
060
370
400
110
380
640
720
130
070
310
330
340
350
180
600
560
100
500
090
570
440
750
390
050
020
030
680
040
430
420
2582003-2
172866

ECM: 190959 - 20041104
Group number: 2582003-0100
Assembly Drawing: 2582003-2_1_AA

This list covers pages from 1-122 to 1-125

Pos	Part No	UN	Qty	Description	Page No
A3/FLEX TBA 1890S, A3/FLEX TBA 2000S (See drawing on page: 1-124)					
010	2681260-0000		1	RAIL	
060	2681259-0000		1	RAIL	
070	2689138-0000		1	MOUNTING BLOCK	
080	2689173-0000		1	MOUNTING BLOCK	
110	2681267-0000		1	PLATE	
130	2564562-0000		3	ROLLER	
170	2693199-0000		2	PLATE	
180	2681535-0000		1	SHAFT	
300	311103-0270		3	PARALLEL PIN ISO 2338 4M6X16 A1	
310	315105-0156		6	WASHER BRB 6.7X14 RFR	
330	315751-0103		4	RETAINING RING FOR SHAFT DIN 471 6 A2	
350	312605-0316		4	HEXAGON NUT, M6M M6 A280	
360	312115-0366		4	SCREW ISO4762 M6X12 A4	
390	312105-0451		4	SCREW M6S ISO 4017 M8X20 A480	
400	312105-0366		2	SCREW M6S ISO 4017 M6X12 A480	
640	315105-0153		18	WASHER BRB6,4X12RFR	
A3/FLEX TBA 0500B, A3/FLEX TBA 1000B, A3/FLEX TBA 1000S, A3/FLEX TBA 1000SQ, A3/FLEX TPA 1000SQ, A3/FLEX TBA 0200S, A3/FLEX TBA 1500S, A3/FLEX TBA 0200B, A3/FLEX TBA 0250B, A3/FLEX TBA 0330S, A3/FLEX TPA 0330SQ, A3/FLEX TPA 0500SQ, A3/FLEX TBA 0200M, A3/FLEX TBA 0250S, A3/FLEX TBA 0500S (See drawing on page: 1-122)					
010	1484697-0000		1	RAIL	
060	1517113-0000		1	RAIL	
070	1519578-0000		2	MOUNTING BLOCK	
080	1519591-0000		1	RAIL PIN	
110	2582668-0000		1	PLATE	
300	311103-0270		2	PARALLEL PIN ISO 2338 4M6X16 A1	
350	312105-0291		1	SCREW M6S ISO 4017 M4X12 A470	
360	312105-0366		3	SCREW M6S ISO 4017 M6X12 A480	
390	312105-0451		4	SCREW M6S ISO 4017 M8X20 A480	
630	315105-0136		1	WASHER BRB4,3XRFR	
640	315105-0153		5	WASHER BRB6,4X12RFR	
Common Parts					
020	1490220-0000		1	ANGLE BRACKET	
030	1494664-0000		1	AXLE LINK	
040	1499566-0000		2	WASHER	
050	1512430-0000		2	VOLUME SHIM	
090	1519944-0000		1	BRACKET	
100	2563183-0000		1	GUIDE RAIL	
340	312105-0287		2	SCREW M6S ISO4017 M4X8 A470	
370	312105-0368		2	SCREW M6S ISO 4017 M6X16 A480	
380	312105-0370		2	SCREW M6S ISO 4017 M6X20 A480	
420	312109-0374		1	SCREW M6S ISO 4017 M6X30 A480	
430	312109-0376		1	SCREW M6S ISO 4017 M6X35 A480	
440	312109-0501		2	SCREW M6S ISO 4017 M10X50 A480	
500	312125-0285		2	SCREW ISO 1207 M4X6 A4	
530	312318-0284		2	SCREW ISO4029 M4X5 A4	
560	312605-0312		2	HEXAGON NUT, M6M M4 A280	
570	312605-0320		2	HEXAGON NUT, M6M M10 A280	
600	312812-0316		2	HEXAGON NUT, NY-LOCK M6 A480	
680	321141-0138		2	BEARING BUSHING W/O FL, 10X12X8 MM	
720	352113-0205		2	ANCHOR PLATES FOR STRIPS, TYPE TM2S8-C10	
750	90347-0182		2	SHOCK ABSORBER, YSR-16-20-C	

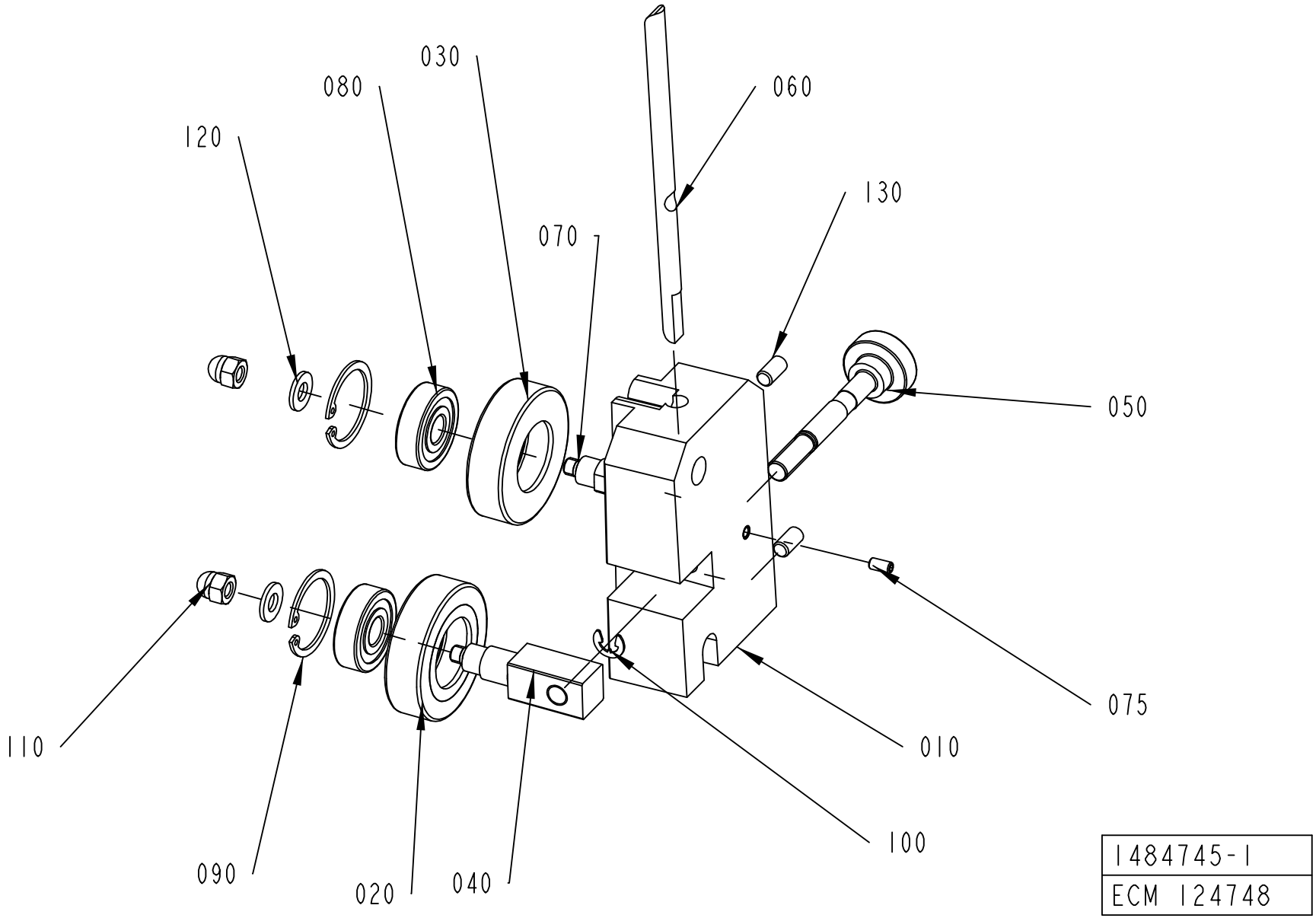

1484745-1
ECM 124748

ECM: 195227 - 20041203
Group number: 1484745-0100
Assembly Drawing: 1484745-1_1_AD

Pos	Part No	UN	Qty	Description	Page No
A3/FLEX TBA 1890S, A3/FLEX TBA 2000S					
010	2713376-0000		1	BRACKET	
A3/FLEX TBA 0500B, A3/FLEX TBA 1000B, A3/FLEX TBA 1000S, A3/FLEX TBA 1000SQ, A3/FLEX TPA 1000SQ, A3/FLEX TBA 0200S, A3/FLEX TBA 1500S, A3/FLEX TBA 0200B, A3/FLEX TBA 0250B, A3/FLEX TBA 0330S, A3/FLEX TPA 0330SQ, A3/FLEX TPA 0500SQ, A3/FLEX TBA 0200M, A3/FLEX TBA 0250S, A3/FLEX TBA 0500S					
010	1484750-0000		1	BRACKET	
Common Parts					
020	1036623-0000		1	GUIDE ROLLER	
030	1036622-0000		1	GUIDE ROLLER	
040	1317711-0000		1	SHAFT	
050	1317712-0000		1	SHAFT	
060	1512526-0000		1	STEERING	
070	583727-0000		1	SHAFT	
075	312318-0287		1	SCREW ISO4029 M4X8 A4	
080	321313-0100		2	BALL BEARING, 10X30X9 MM	
090	315753-0122		2	RETAINING RING FOR BORE DIN 472 30 A2	
100	315755-0108		1	RETAINING RING SHAFT DIN 6799 6 A2	
110	312705-0316		2	NUT HEX. DOMED CAP MHM-6 M6 A280	
120	315105-0156		2	WASHER BRB 6.7X14 RFR	
130	312318-0366		2	SCREW ISO4029 M6X12 A4	

Pos	Part No	UN	Qty	Description	Page No

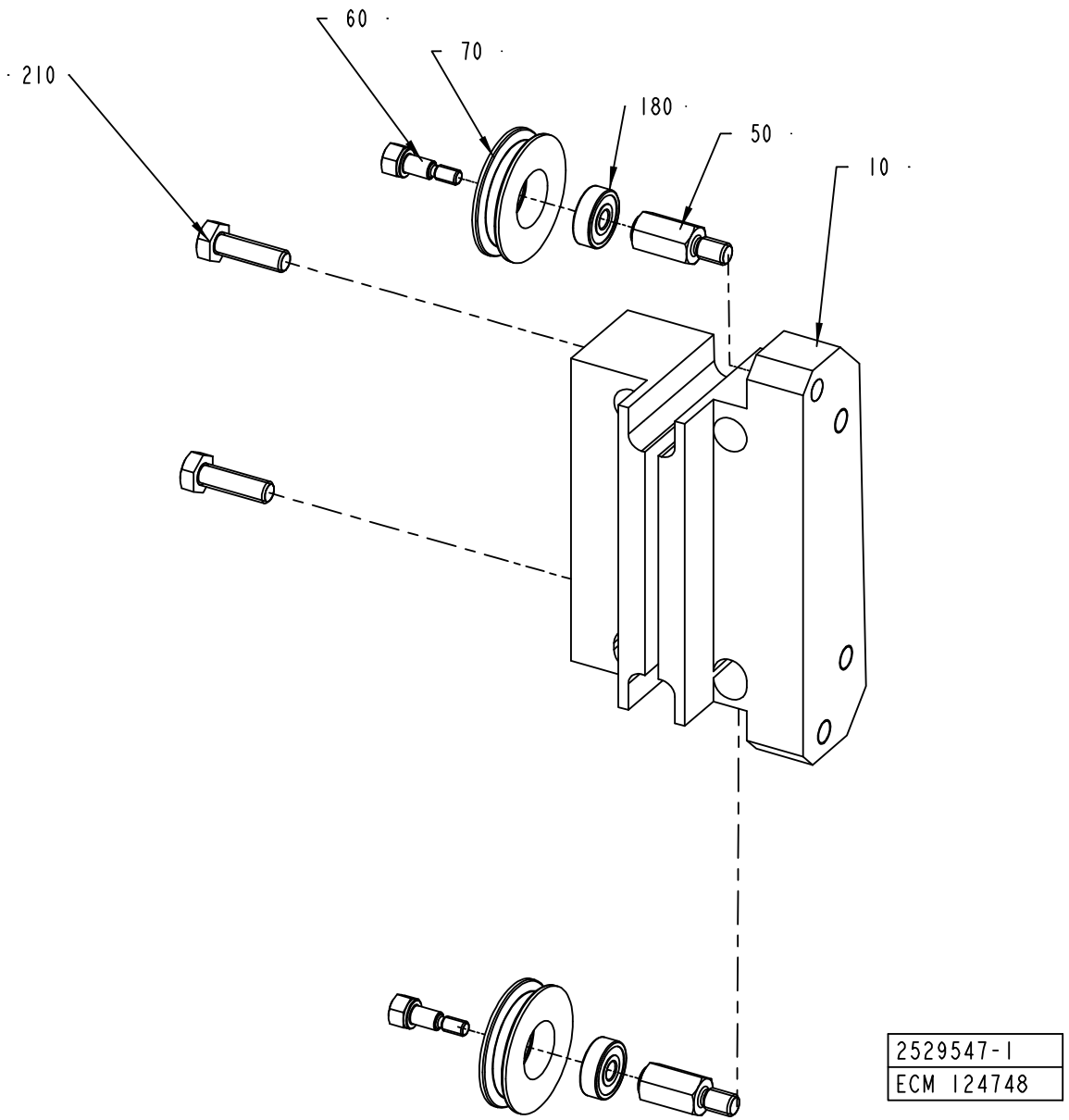
60
70
180
50
10
210
2529547-1
ECM 124748

ECM: 195231 - 20041203
Group number: 2529547-0100
Assembly Drawing: 2529547-1_1_AB

Pos	Part No	UN	Qty	Description	Page No
A3/FLEX TBA 1890S, A3/FLEX TBA 2000S					
010	2713377-0000		1	SUPPORT	
A3/FLEX TBA 0500B, A3/FLEX TBA 1000B, A3/FLEX TBA 1000S, A3/FLEX TBA 1000SQ, A3/FLEX TPA 1000SQ, A3/FLEX TBA 0200S, A3/FLEX TBA 1500S, A3/FLEX TBA 0200B, A3/FLEX TBA 0250B, A3/FLEX TPA 0330SQ, A3/FLEX TPA 0500SQ, A3/FLEX TBA 0200M, A3/FLEX TBA 0250S, A3/FLEX TBA 0500S					
010	2529546-0000		1	SUPPORT	
Common Parts					
050	1558251-0000		2	SHAFT	
060	1558252-0000		2	SCREW	
070	1558253-0000		2	ROLLER	
180	90458-2950		2	BALL BEARING, 5X16X5 MM	
210	312105-0370		2	SCREW M6S ISO 4017 M6X20 A480	

Pos	Part No	UN	Qty	Description	Page No

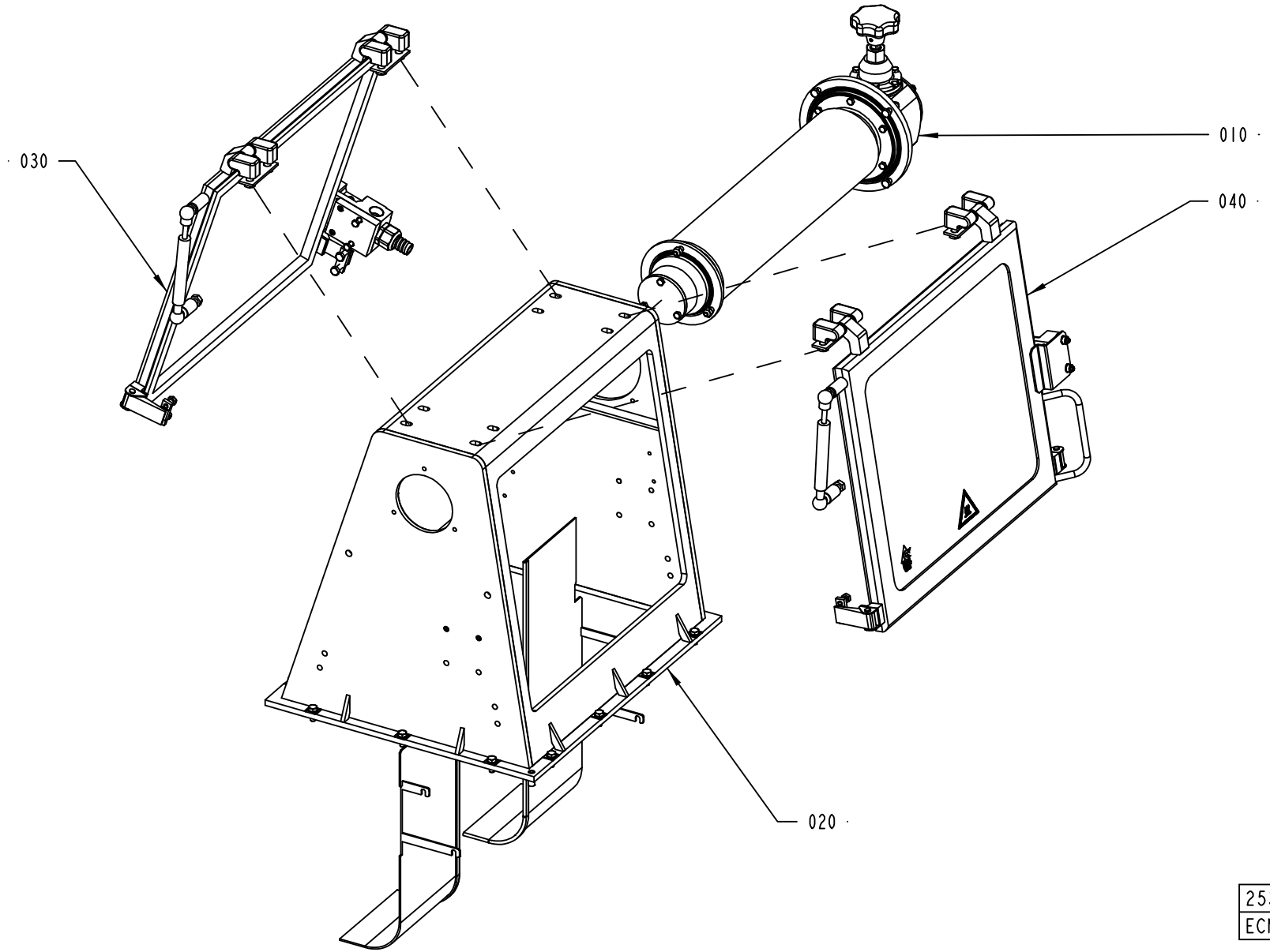

2531042-1
ECM 113788

ECM: 113788 - 20030123
Group number: 2531042-0100
Assembly Drawing: 2531042-1_1_AA

Pos	Part No	UN	Qty	Description	Page No
-					
010	1558522-0100		1	ADJUSTING ROLLER	**1-113**
020	2531043-0100		1	HOUSING	**1-133**
030	2531039-0100		1	DOOR	**1-135**
040	2528145-0100		1	DOOR	**1-137**

Pos	Part No	UN	Qty	Description	Page No

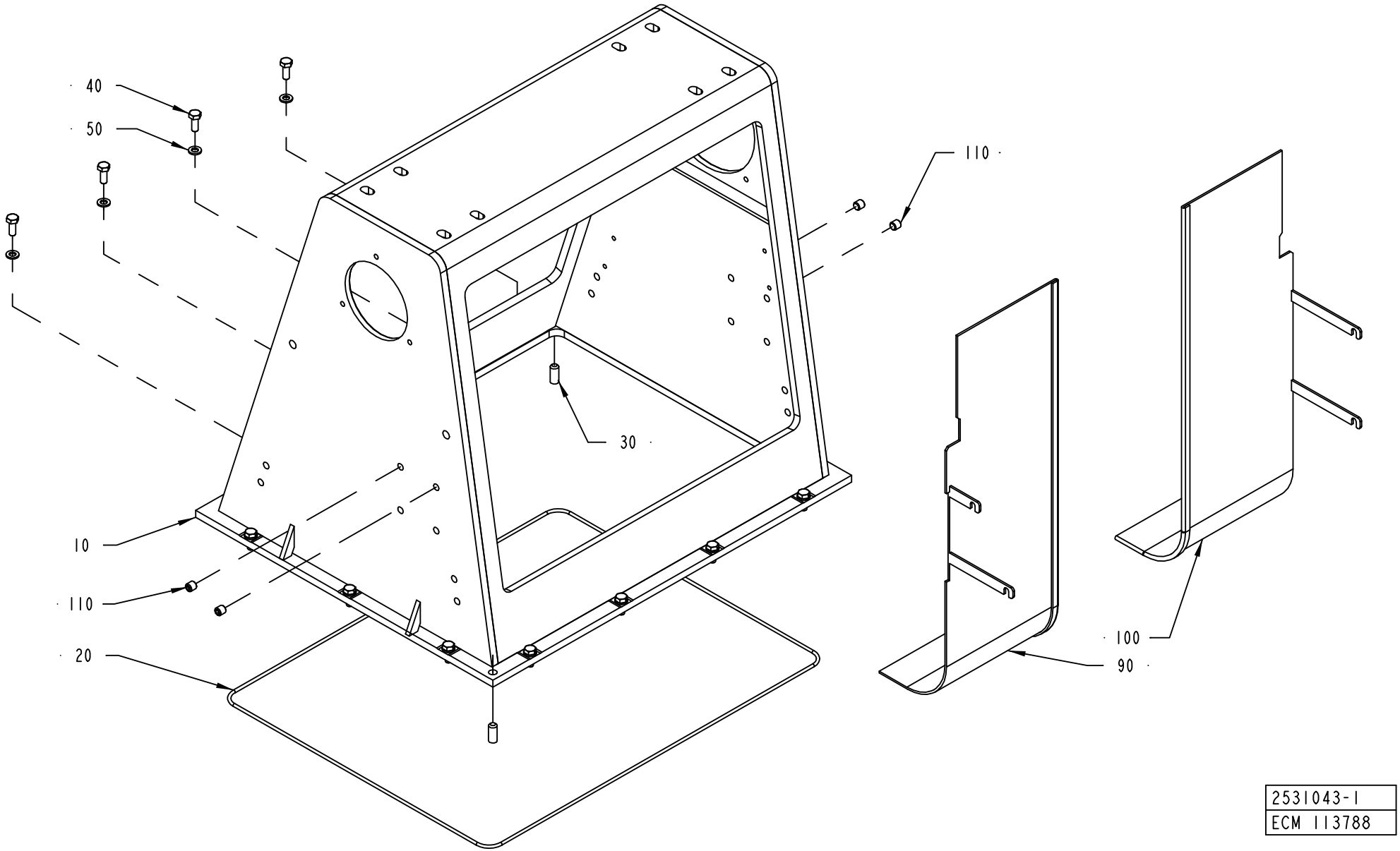

2531043-1
ECM 113788

ECM: 189728 - 20041104
Group number: 2531043-0100
Assembly Drawing: 2531043-1_1_AA

Pos	Part No	UN	Qty	Description	Page No
-					
010	2531044-0000		1	BOX FRAME	
020	90459-1314		1	O-RING 491X3 MM	
030	311103-0401		2	PARALLEL PIN ISO 2338 8M6X20 A1	
040	312105-0368		14	SCREW M6S ISO 4017 M6X16 A480	
050	315105-0153		14	WASHER BRB6,4X12RFR	
060	90153-0023		1	ADHESIVE, SILICON 251470 TUB 90CC	
090	2532963-0000		1	DEFLECTOR	
100	2532964-0000		1	DEFLECTOR	
110	312318-0443		4	SCREW ISO4029 M8X8 A4	

Pos	Part No	UN	Qty	Description	Page No

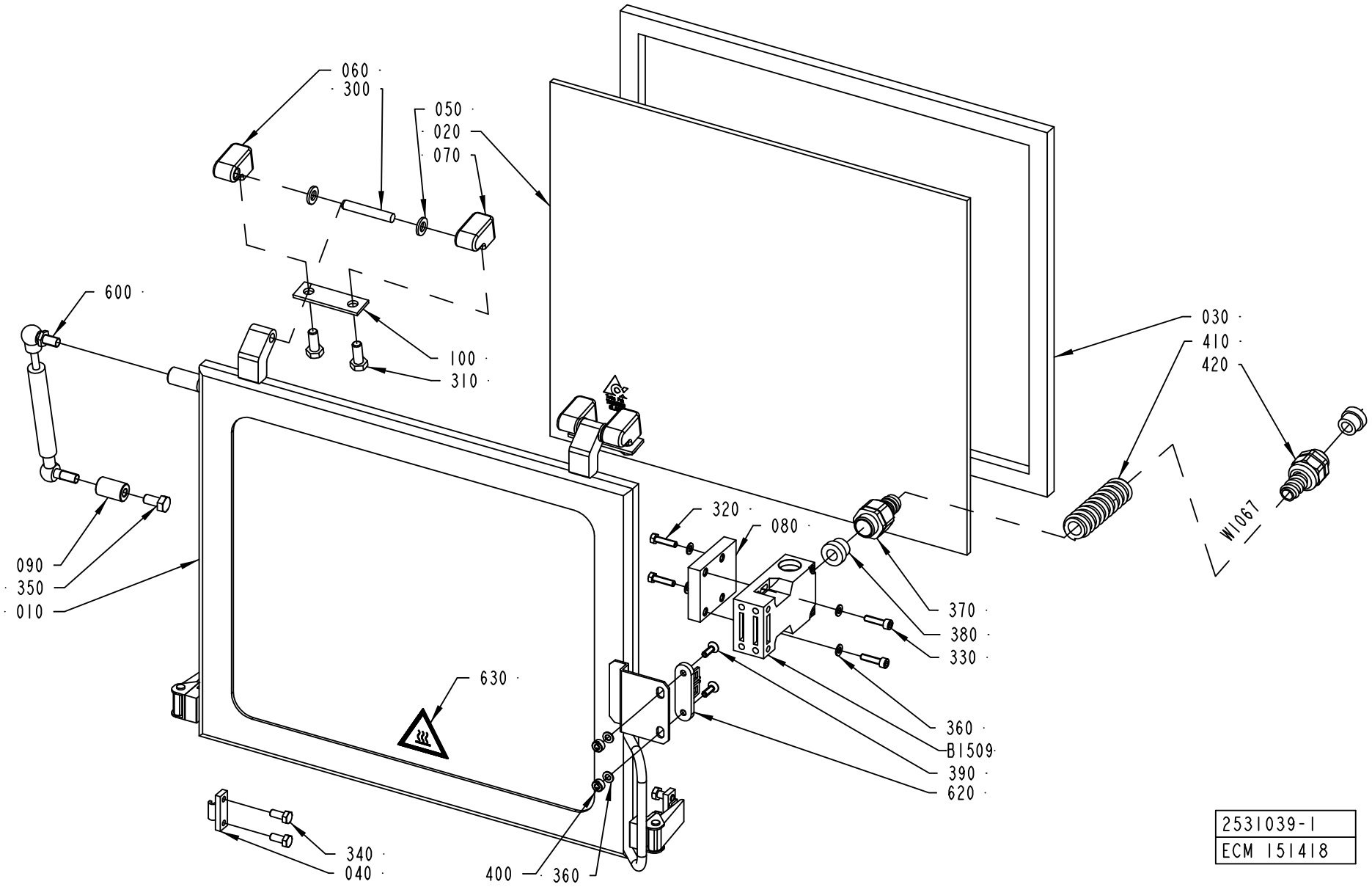
060
300
050
020
070
600
100
310
030
410
420
W1067
320
080
090
350
010
370
380
330
630
360
B1509
390
620
340
040
400
360
2531039-1
ECM 151418

ECM: 190567 - 20041104
Group number: 2531039-0100
Assembly Drawing: 2531039-1_1_AC

Pos	Part No	UN	Qty	Description	Page No
-					
010	2531038-0000		1	FRAME	
020	2531041-0000		1	GLASS PANE	
030	2531040-0000		1	GASKET	
040	271860-0000		2	CLAMP BLOCK	
050	441739-0000		4	WASHER	
060	1549992-0000		2	HINGE FLANGE	
070	1549993-0000		2	HINGE FLANGE	
080	2541651-0000		1	PLATE	
090	1549994-0000		1	SPACER	
100	441737-0000		2	WASHER	
300	311103-0413		2	PARALLEL PIN ISO 2338 8M6X50 A1	
310	312105-0451		4	SCREW M6S ISO 4017 M8X20 A480	
320	312105-0331		2	SCREW M6S ISO 4017 M5X20 A480	
330	312115-0331		2	SCREW ISO4762 M5X20 A4	
340	312105-0367		4	SCREW M6S ISO 4017 M6X14 A480	
350	312105-0449		1	SCREW M6S ISO 4017 M8X16 A480	
360	315105-0146		6	WASHER BRB5,3X10RFR	
370	90458-0429		1	HOSE GLAND W/O INSERT M20 EXTENDED	
380	353249-0011		2	INSERT, SINGEL HOLE, EK 153/11	
390	312155-0329		2	SCREW DIN 7991 MF6S M5X16 A480	
400	575034-0000		2	ROUND NUT	
410	90152-0050	M	1	SPIRAL CONDUIT, 20X13, UL 1313	
420	353243-0009		1	HOSE GLAND W/O INSERT PG13,5 EXTENDED	
600	90347-0039		1	DAMPER	
620	90044-0310		1	KEY FOR SAFETY SWITCH, AZ 15/16 B1	
630	359705-0007		1	WARNING SIGN ISO, HOT SURFACE	
B1509	90459-0472		1	KEY SAF.SW. AZ 16 02ZVRK-M20-2152-2254	
W1067	351150-0405	M	1	CABLE OLFLEX 5X0,75 MM2 LIGHT/GREY	

Pos	Part No	UN	Qty	Description	Page No

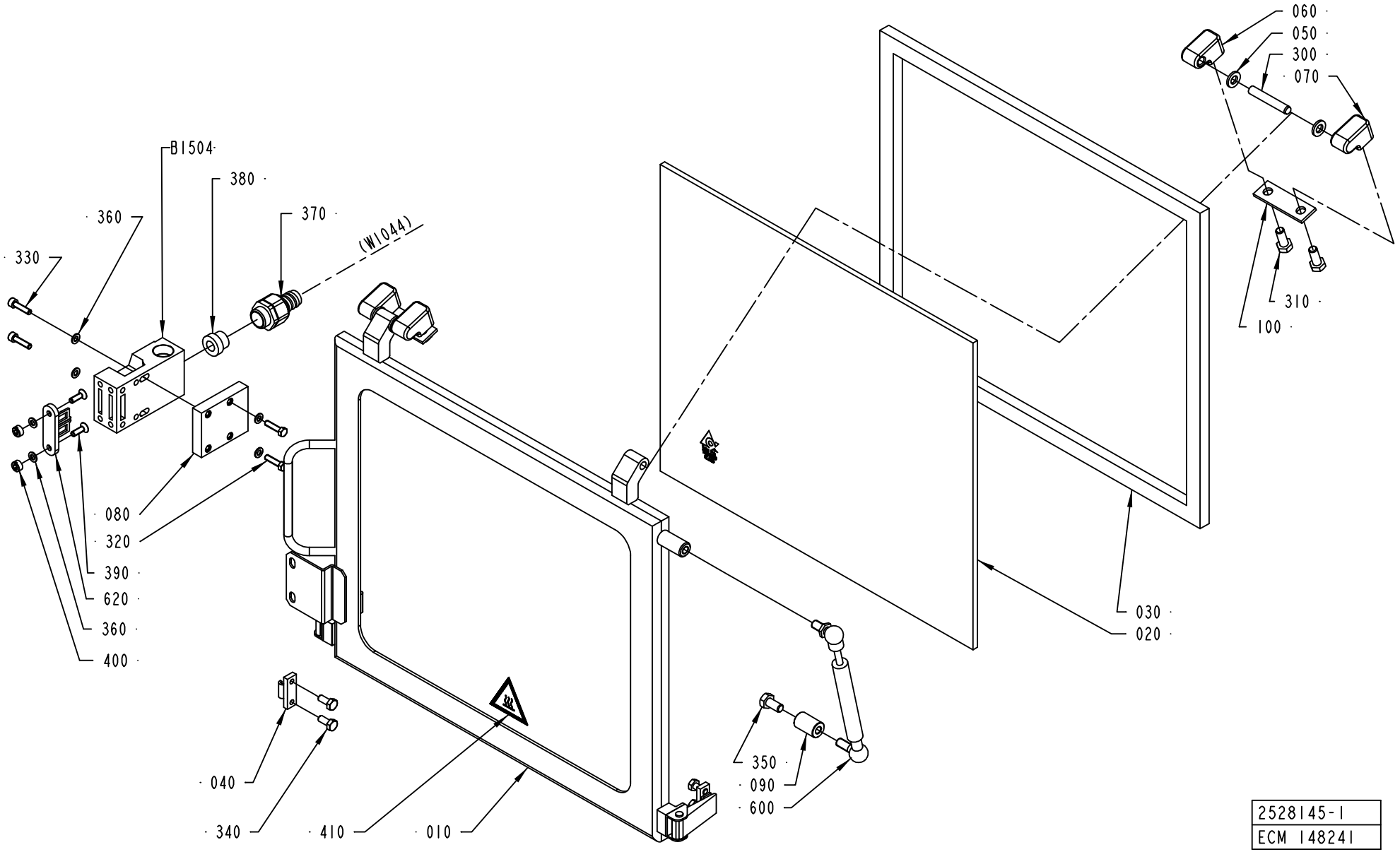

2528145-1
ECM 148241

ECM: 189731 - 20041104
Group number: 2528145-0100
Assembly Drawing: 2528145-1_1_AB

Pos	Part No	UN	Qty	Description	Page No
-					
010	2528144-0000		1	FRAME	
020	2531041-0000		1	GLASS PANE	
030	2531040-0000		1	GASKET	
040	271860-0000		2	CLAMP BLOCK	
050	441739-0000		4	WASHER	
060	1549992-0000		2	HINGE FLANGE	
070	1549993-0000		2	HINGE FLANGE	
080	2541651-0000		1	PLATE	
090	1549994-0000		1	SPACER	
100	441737-0000		2	WASHER	
300	311103-0413		2	PARALLEL PIN ISO 2338 8M6X50 A1	
310	312105-0451		4	SCREW M6S ISO 4017 M8X20 A480	
320	312105-0331		2	SCREW M6S ISO 4017 M5X20 A480	
330	312115-0331		2	SCREW ISO4762 M5X20 A4	
340	312105-0367		4	SCREW M6S ISO 4017 M6X14 A480	
350	312105-0449		1	SCREW M6S ISO 4017 M8X16 A480	
360	315105-0146		6	WASHER BRB5,3X10RFR	
370	90458-0429		1	HOSE GLAND W/O INSERT M20 EXTENDED	
380	353249-0011		1	INSERT, SINGEL HOLE, EK 153/11	
390	312155-0329		2	SCREW DIN 7991 MF6S M5X16 A480	
400	575034-0000		2	ROUND NUT	
410	359705-0007		1	WARNING SIGN ISO, HOT SURFACE	
600	90347-0039		1	DAMPER	
620	90044-0310		1	KEY FOR SAFETY SWITCH, AZ 15/16 B1	
B1504	90459-0472		1	KEY SAF.SW. AZ 16 02ZVRK-M20-2152-2254	

Pos	Part No	UN	Qty	Description	Page No

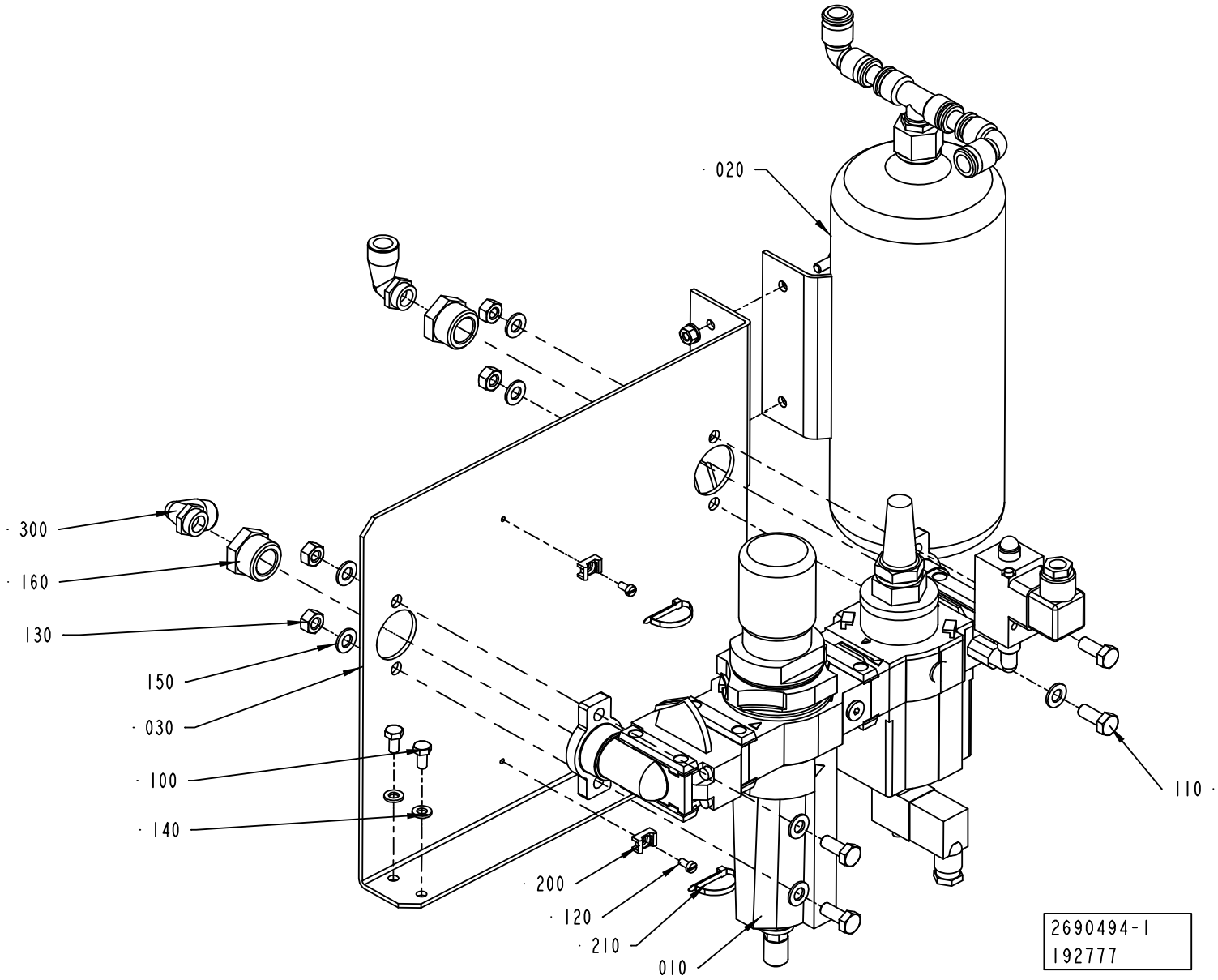
020
300
160
130
150
030
100
140
200
120
210
010
110
2690494-1
192777

ECM: 195289 - 20041203
Group number: 2690494-0100
Assembly Drawing: 2690494-1_1_AB

Pos	Part No	UN	Qty	Description	Page No
TBA 1890S, TBA 2000S					
010	2564054-0100		1	AIR INLET	**1-141**
020	2506578-0100		1	TANK	**1-143**
030	1558221-0000		1	BRACKET	
100	312105-0366		4	SCREW M6S ISO 4017 M6X12 A480	
110	312105-0451		4	SCREW M6S ISO 4017 M8X20 A480	
120	312125-0287		2	SCREW ISO 1207 M4X8 A4	
130	312605-0318		4	HEXAGON NUT, M6M M8 A280	
140	315105-0153		4	WASHER BRB6,4X12RFR	
150	315105-0165		8	WASHER BRB8,4X16RFR	
160	342701-0209		2	BUSHING,INT./EXT.G-THREAD G3/4"-G3/8"	
200	352113-0205		2	ANCHOR PLATES FOR STRIPS, TYPE TM2S8-C10	
210	352113-0102		2	CLIP-STRIP, BLACK 188X4,8 MM	
300	90458-2960		2	ELBOW PIPE JOINT, EXT.THREAD,D=12MM-G3/8	

Pos	Part No	UN	Qty	Description	Page No

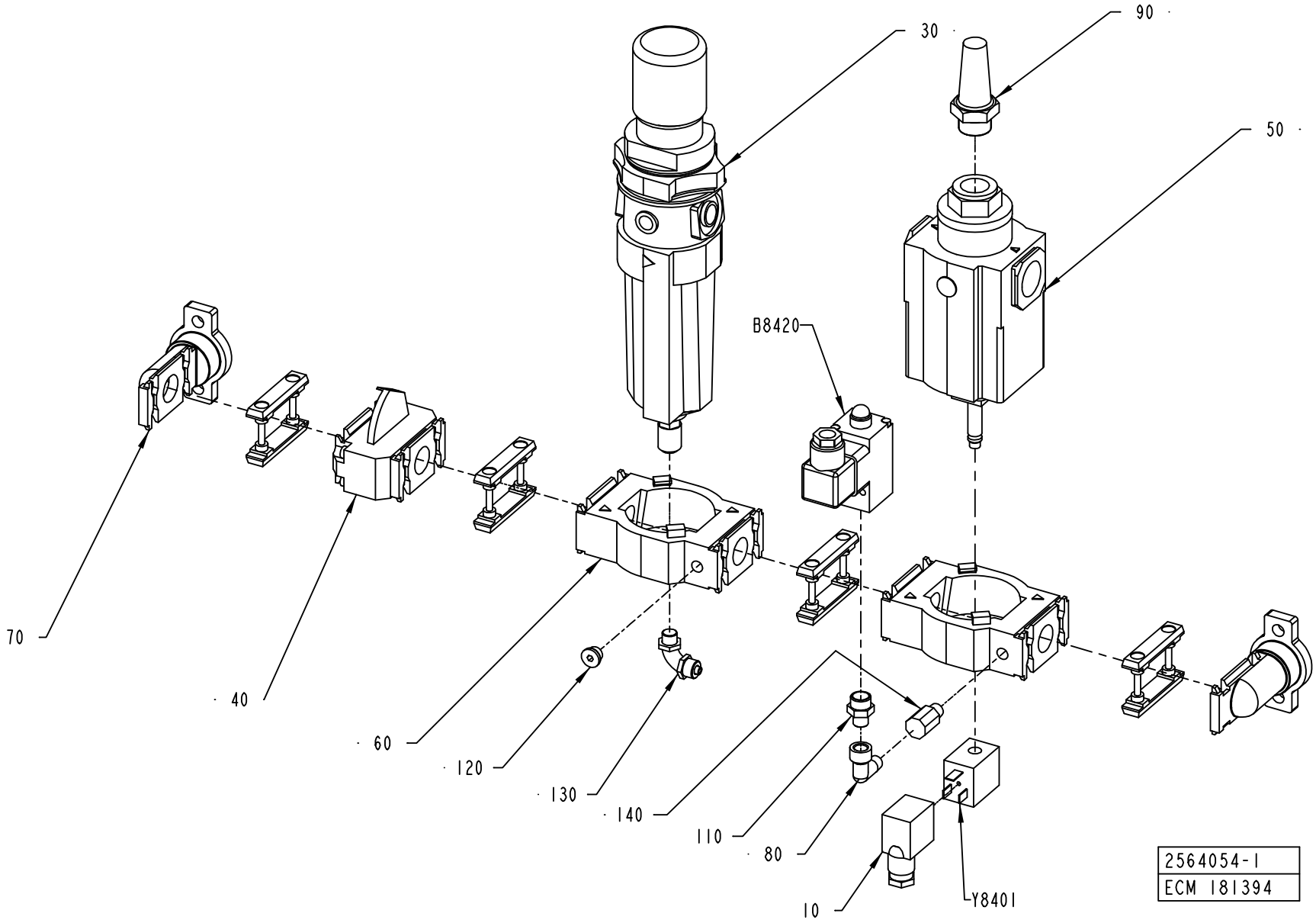
30
90
50
B8420
70
40
60
120
130
140
110
80
10
Y8401
2564054-1
ECM 181394

ECM: 181400 - 20040823
Group number: 2564054-0100
Assembly Drawing: 2564054-1_1_AC

Pos	Part No	UN	Qty	Description	Page No
-					
010	90042-0392		1	CONTACT 2 POLE + EARTH	
030	90113-0113		1	FILTER REGULATOR, B64G-NNK-AD3-RMN	
040	90113-0427		1	SHUT OFF VALVE G1/8, T64T-NNS-001	
050	90113-0155		1	SOFT START VALVE	
060	90113-0407		2	YOKE SINGLE, Y64A-4GA-N1N	
070	90113-0413		2	END CONNECTOR G3/4, 18-026-981	
080	90140-0021		1	ELBOW, 90 INT/EXT, 20201/8-1/8	
090	90328-0001		1	SILENCER, 338/130 B140-00-120	
110	342700-0201		1	NIPPLES,HEXAGON,EXT.G-THREAD G1/4"-G1/8"	
120	342713-0209		1	PLUG (1UNIT = 10PC)	
130	342931-0121		1	ELBOW 90 COUPL.,EXT.THREAD 8/6-G1/8"	
140	90330-0185		1	NIPPLES,REDUCING,INT THR, RC1/8 - R 1/8	
B8420	90458-2241		1	PRESSURE SWITCH 0,5-10 BAR ADJUSTABLE	
Y8401	90042-0582		1	COIL NORGREN QM/48/127/21	

Pos	Part No	UN	Qty	Description	Page No

ALL PT

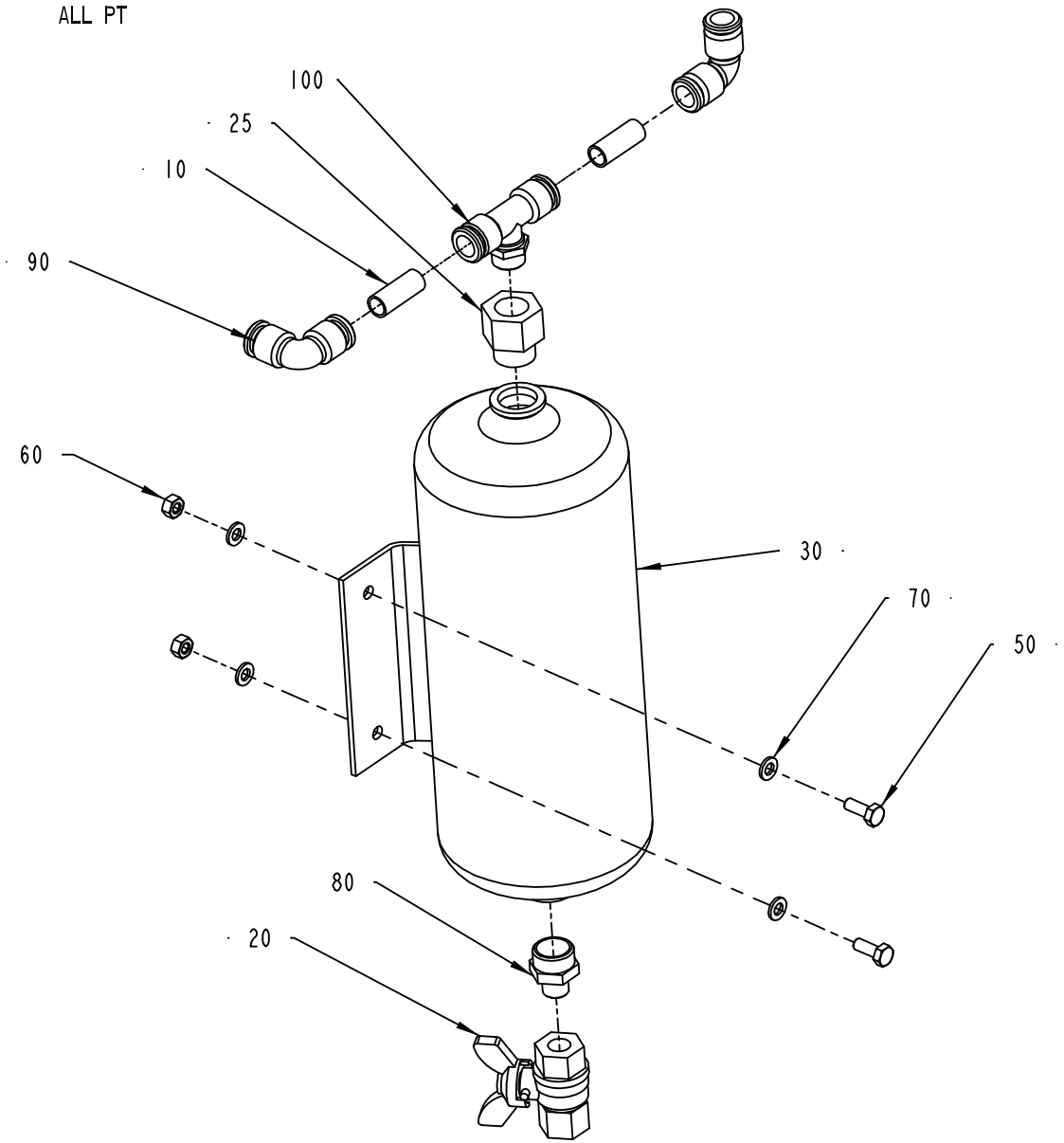

VALID ONLY FOR ASU A3 FLEX TBA2000S/TBA1890S

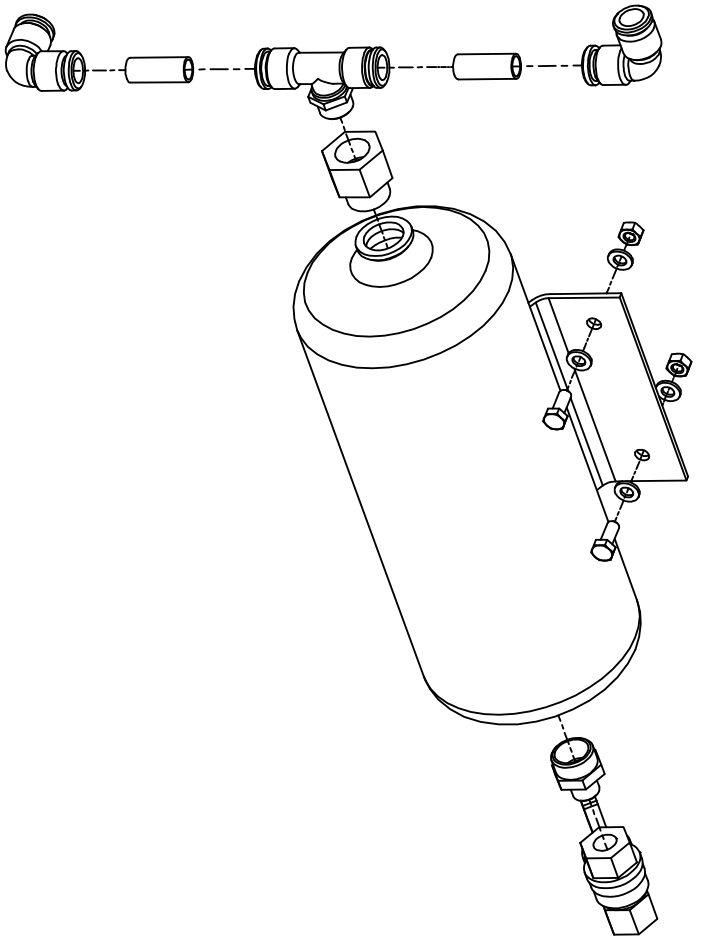

2506578-1
192777

ECM: 195228 - 20041203
Group number: 2506578-0100
Assembly Drawing: 2506578-1_1_AB

Pos	Part No	UN	Qty	Description	Page No
-					
010	90166-0068	MM	150	TUBE 12 MM PA BLUE	
020	90187-0088		1	BALL VALVE G1/4, NPBR	
025	90224-0229		1	REDUCER, ART.NO RMM 1238	
030	90457-0100		1	RESERVATORVZS-2	
050	312105-0368		2	SCREW M6S ISO 4017 M6X16 A480	
060	312605-0316		2	HEXAGON NUT, M6M M6 A280	
070	315105-0153		4	WASHER BRB6,4X12RFR	
080	342700-0205		1	NIPPLES,HEXAGON,EXT.G-THREAD G1/2"-G1/4"	
090	342735-0109		2	ELBOW PIPE JOINT	
100	342742-0110		1	T-COUPLING,ADJUST,F.PLAST.TUBE 12-G3/8"	

Pos	Part No	UN	Qty	Description	Page No

This page is intentionally left blank.

ECM: 193085 - 20041203
Group number: 2701978-0100
Assembly Drawing:

Pos	Part No	UN	Qty	Description	Page No	Pos	Part No	UN	Qty	Description	Page No
-											
010	2547398-0000		1	LID							
020	2547399-0000		1	LID							
100	312105-0371		7	SCREW M6S ISO 4017 M6X22 A480							
110	312105-0452		5	SCREW M6S ISO 4017 M8X22 A4 80							
120	312605-0316		9	HEXAGON NUT, M6M M6 A280							
130	312605-0318		6	HEXAGON NUT, M6M M8 A280							
140	315105-0165		5	WASHER BRB8,4X16RFR							
150	312105-0447		2	SCREW M6S ISO 4017 M8X12 A480							
160	312105-0329		2	SCREW M6S ISO 4017 M5X16 A480							
170	315105-0146		2	WASHER BRB5,3X10RFR							
180	312605-0314		2	HEXAGON NUT, M6M M5 A280							
190	312105-0368		2	SCREW M6S ISO 4017 M6X16 A480							
195	315105-0153		2	WASHER BRB6,4X12RFR							
200	90458-0640		1	O-RING 88,62X1,78 MM							
210	90459-0094		1	O-RING 133,07X1,78 MM							

This page is intentionally left blank.

ECM: 193086 - 20041203
Group number: 2721431-0100
Assembly Drawing:

Pos	Part No	UN	Qty	Description	Page No
START FM TBA 0200B, START FM TBA 0200S, START FM TBA 0250B, START FM TBA 0330S, START FM TBA 0500B, START FM TBA 1000B, START FM TBA 1000S, START FM TBA 1500S, START FM TPA 1000SQ, START FM TBA 1000SQ					
010	2698520-0000		1	LEVER	
START FM TBA 0200M, START FM TBA 0250S, START FM TPA 0330SQ, START FM TPA 0500SQ, START FM TBA 0500S					
010	2698520-0000		1	LEVER	
020	2506273-0000		1	LEVER	
030	2506269-0000		1	BUSHING	

Pos	Part No	UN	Qty	Description	Page No

This page is intentionally left blank.

ECM: 194885 - 20041203
Group number: 2728205-0100
Assembly Drawing:

Pos	Part No	UN	Qty	Description	Page No
-					
010	2524600-0100		1	PRESSURE ROLLER	**1-119, 1-121**
020	2582003-0100		1	GUIDE RAIL	**1-123, 1-125**
030	2665624-0000		1	BENDING ROLLER	
040	1484745-0100		1	WEB GUIDE	**1-127**
050	2529547-0100		1	PAPER GUIDE	**1-129**

Pos	Part No	UN	Qty	Description	Page No

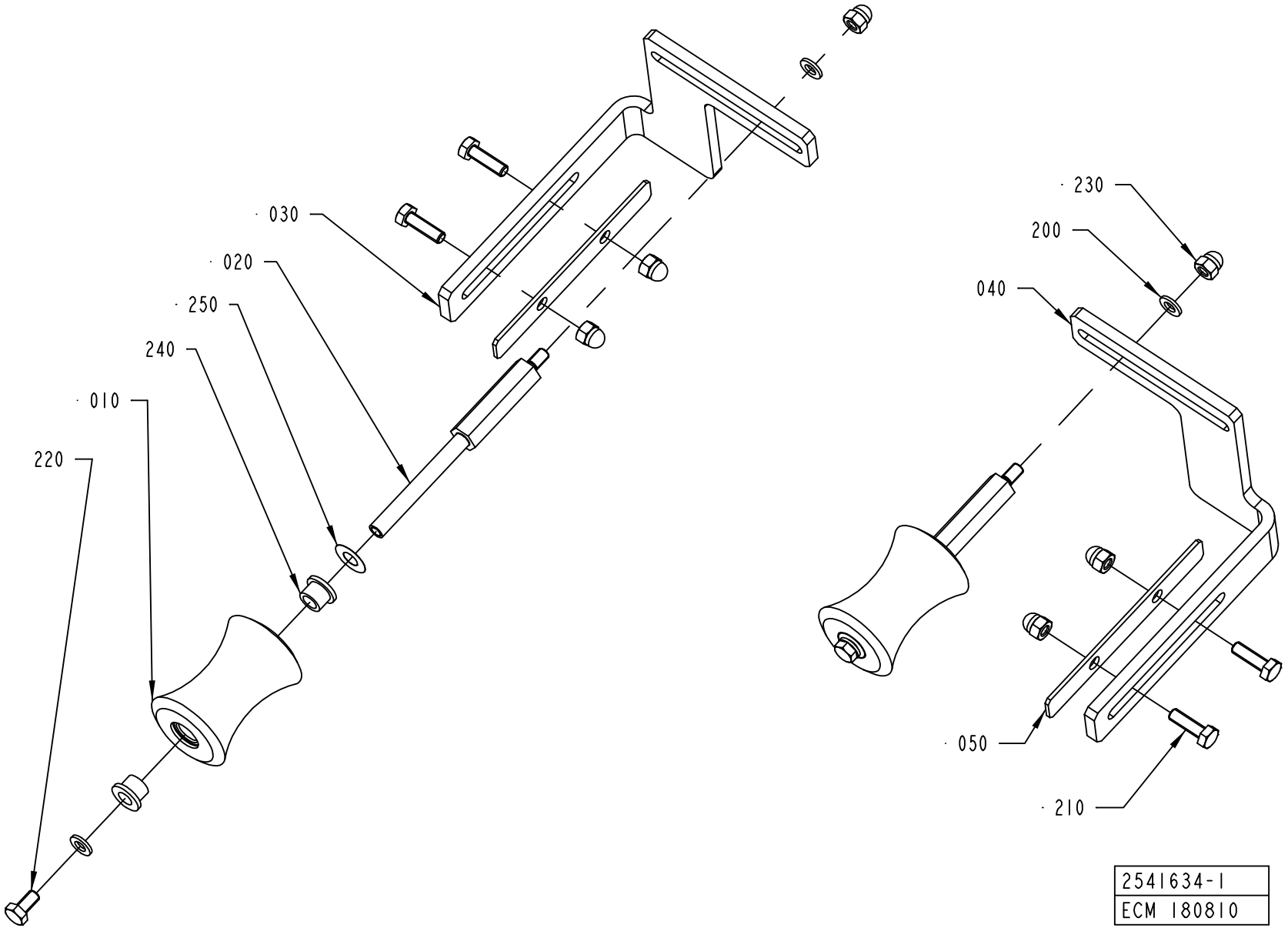
030
020
250
240
010
220
230
200
040
050
210
2541634-1
ECM 180810

Pos	Part No	UN	Qty	Description	Page No
A3/FLEX TBA 0500B, A3/FLEX TBA 1000B, A3/FLEX TBA 1000S, A3/FLEX TBA 1000SQ, A3/FLEX TPA 1000SQ, A3/FLEX TBA 0200S, A3/FLEX TBA 1500S, A3/FLEX TBA 0200B, A3/FLEX TBA 0250B, A3/FLEX TBA 0330S, A3/FLEX TPA 0330SQ, A3/FLEX TPA 0500SQ, A3/FLEX TBA 0200M, A3/FLEX TBA 0250S, A3/FLEX TBA 0500S (See drawing on page: 1-150)					
010	1478359-0000		2	ROLLER	
020	1511492-0000		2	SHAFT	
030	2528112-0000		1	BRACKET	
040	2528113-0000		1	BRACKET	
050	2528114-0000		2	COVER PLATE	
210	312105-0370		4	SCREW M6S ISO 4017 M6X20 A480	
220	312105-0366		2	SCREW M6S ISO 4017 M6X12 A480	
230	312705-0316		6	NUT HEX. DOMED CAP MHM-6 M6 A280	
A3/FLEX TBA 1890S, A3/FLEX TBA 2000S (See drawing on page: 1-152)					
010	2601286-0000		2	ROLLER	
020	2634934-0000		2	SHAFT	
030	2634932-0000		1	BRACKET	
040	2634933-0000		1	BRACKET	
050	2651695-0000		2	COVER PLATE	
210	312105-0452		4	SCREW M6S ISO 4017 M8X22 A4 80	
220	312105-0366		2	SCREW M6S ISO 4017 M6X12 A480	
230	312705-0316		2	NUT HEX. DOMED CAP MHM-6 M6 A280	
260	312705-0318		4	NUT HEX. DOMED CAP MHM-6 M8 A280	
Common Parts					
200	315105-0153		4	WASHER BRB6,4X12RFR	
240	90240-0172		4	FLANGE BUSHING, 8X12X10 MM	
250	2033-0011		2	WASHER	

Pos	Part No	UN	Qty	Description	Page No

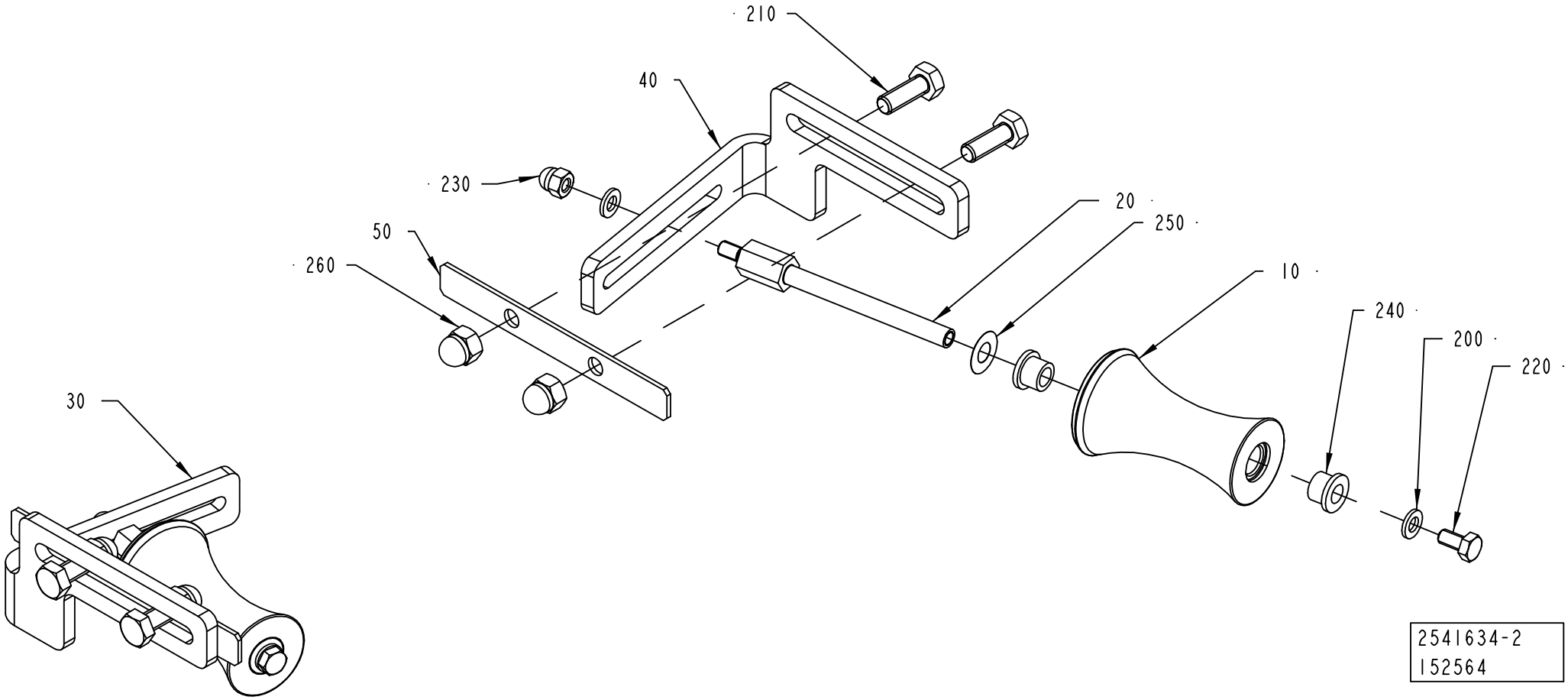
210
40
230
20
250
50
260
10
240
200
220
30
2541634-2
152564

Pos	Part No	UN	Qty	Description	Page No
A3/FLEX TBA 0500B, A3/FLEX TBA 1000B, A3/FLEX TBA 1000S, A3/FLEX TBA 1000SQ, A3/FLEX TPA 1000SQ, A3/FLEX TBA 0200S, A3/FLEX TBA 1500S, A3/FLEX TBA 0200B, A3/FLEX TBA 0250B, A3/FLEX TBA 0330S, A3/FLEX TPA 0330SQ, A3/FLEX TPA 0500SQ, A3/FLEX TBA 0200M, A3/FLEX TBA 0250S, A3/FLEX TBA 0500S (See drawing on page: 1-150)					
010	1478359-0000		2	ROLLER	
020	1511492-0000		2	SHAFT	
030	2528112-0000		1	BRACKET	
040	2528113-0000		1	BRACKET	
050	2528114-0000		2	COVER PLATE	
210	312105-0370		4	SCREW M6S ISO 4017 M6X20 A480	
220	312105-0366		2	SCREW M6S ISO 4017 M6X12 A480	
230	312705-0316		6	NUT HEX. DOMED CAP MHM-6 M6 A280	
A3/FLEX TBA 1890S, A3/FLEX TBA 2000S (See drawing on page: 1-152)					
010	2601286-0000		2	ROLLER	
020	2634934-0000		2	SHAFT	
030	2634932-0000		1	BRACKET	
040	2634933-0000		1	BRACKET	
050	2651695-0000		2	COVER PLATE	
210	312105-0452		4	SCREW M6S ISO 4017 M8X22 A4 80	
220	312105-0366		2	SCREW M6S ISO 4017 M6X12 A480	
230	312705-0316		2	NUT HEX. DOMED CAP MHM-6 M6 A280	
260	312705-0318		4	NUT HEX. DOMED CAP MHM-6 M8 A280	
Common Parts					
200	315105-0153		4	WASHER BRB6,4X12RFR	
240	90240-0172		4	FLANGE BUSHING, 8X12X10 MM	
250	2033-0011		2	WASHER	

Pos	Part No	UN	Qty	Description	Page No

Tetra Pak

SPC
Spare Parts Catalogue

This page is intentionally left blank.

ECM: 138520 - 20031128
Group number: 2634505-0100
Assembly Drawing:

Pos	Part No	UN	Qty	Description	Page No
-					
010	2552003-0100		1	FORMING UNIT	**2-5**
020	2657136-0100		1	ELECTRICAL DOCUMENT	**2-167**
030	2660476-0100		1	LUBRICATION PIPE FITTING	**2-169**
040	1037254-0000		12	SHIM	
050	1036483-0000		2	SEAL	
100	1363790-0000		1	BOX	

Pos	Part No	UN	Qty	Description	Page No

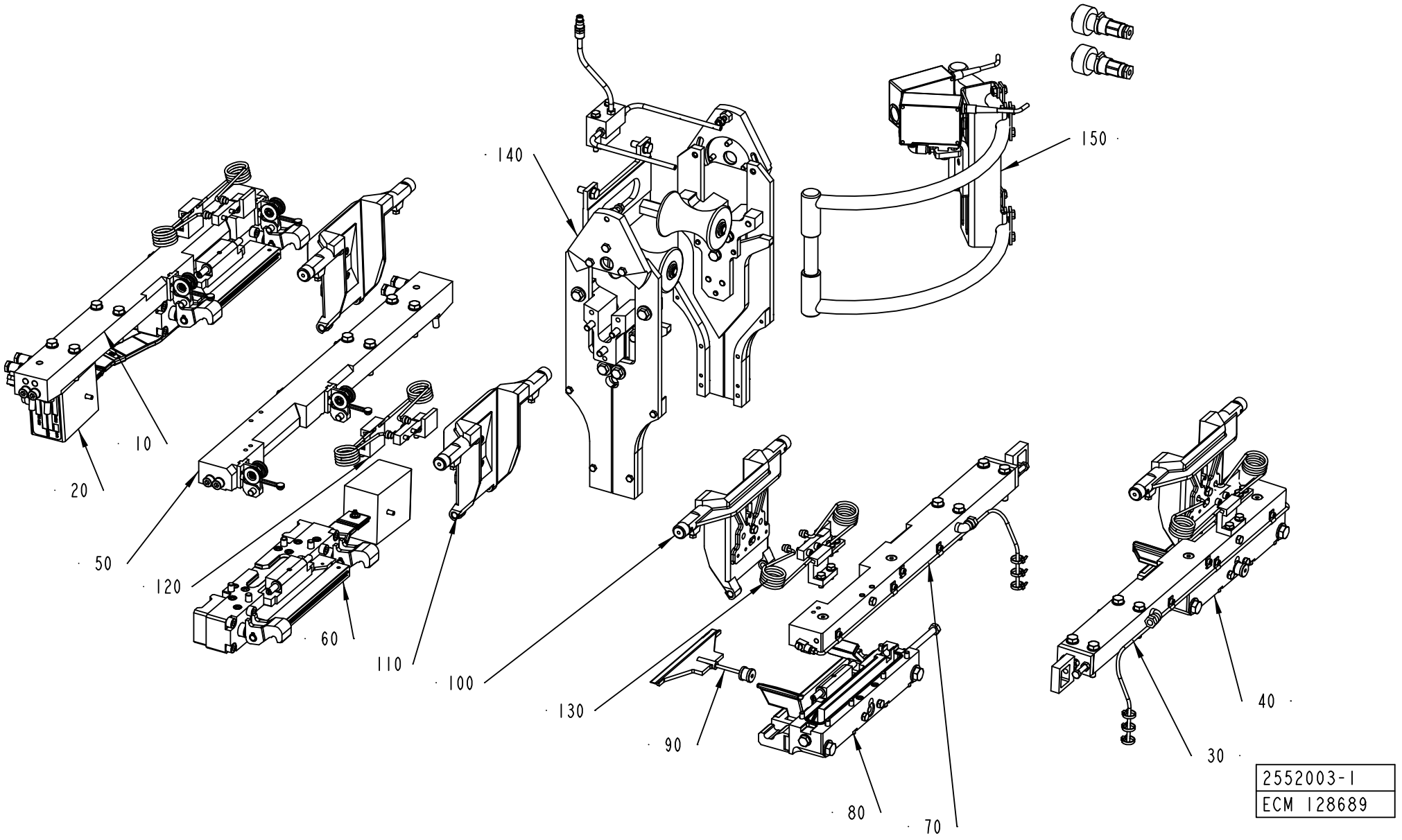
140
150
10
20
50
120
60
110
100
130
90
80
70
40
30
2552003-1
ECM 128689

ECM: 194874 - 20041203
Group number: 2552003-0100
Assembly Drawing: 2552003-1_1_AB

Pos	Part No	UN	Qty	Description	Page No
A3/FLEX NOQC					
100	1334633-0200		2	VOLUME FLAP CUTTING	**2-7, 2-9, 2-11, 2-13**
110	1334634-0200		2	VOLUME FLAP PRESSURE	**2-15, 2-17, 2-19, 2-21**
120	1334635-0200		2	SHOCK ABSORBER	**2-23, 2-25, 2-27, 2-29, 2-31, 2-33**
130	1334636-0200		2	SHOCK ABSORBER	**2-35, 2-37, 2-39, 2-41, 2-43, 2-45**
A3/FLEX TBA 0500B QC, A3/FLEX TBA 1000B QC, A3/FLEX TBA 0200B QC, A3/FLEX TBA 0250B QC, A3/FLEX TBA 0330S QC, A3/FLEX TBA 0250S QC, A3/FLEX TBA 0200M QC					
100	2594512-0100		2	VOLUME FLAP CUTTING	**2-47, 2-49**
110	1548460-0100		2	VOLUME FLAP PRESSURE	**2-51, 2-53**
A3/FLEX TBA 1890S QC, A3/FLEX TBA 2000S QC					
100	2597325-0100		2	VOLUME FLAP	**2-55**
110	2597324-0100		2	VOLUME FLAP	**2-61**
120	1334635-0200		2	SHOCK ABSORBER	**2-23, 2-25, 2-27, 2-29, 2-31, 2-33**
130	1334636-0200		2	SHOCK ABSORBER	**2-35, 2-37, 2-39, 2-41, 2-43, 2-45**
Common Parts					
010	2514048-0200		1	CARRIER PRESSURE LEFT	**2-65, 2-67**
020	1512563-0200		1	PRESSURE JAW LEFT	**2-69, 2-71**
030	1512564-0200		1	CARRIER CUTTING LEFT	**2-85, 2-87, 2-89**
040	1512565-0200		1	CUTTING JAW LEFT	**2-91**
050	2514050-0200		1	CARRIER PRESSURE RIGHT	**2-109, 2-111**
060	1512568-0200		1	PRESSURE JAW RIGHT	**2-113, 2-115**
070	1512569-0200		1	CARRIER CUTTING RIGHT	**2-125, 2-127, 2-129**
080	1512570-0200		1	CUTTING JAW RIGHT	**2-131**
090	1478768-0100		2	KNIFE	**2-137**
140	2613647-0100		1	VOLUME CURVE PIECE	**2-139**
150	2616224-0100		1	PHOTOCELL UNIT	**2-161, 2-163, 2-165**

Pos	Part No	UN	Qty	Description	Page No

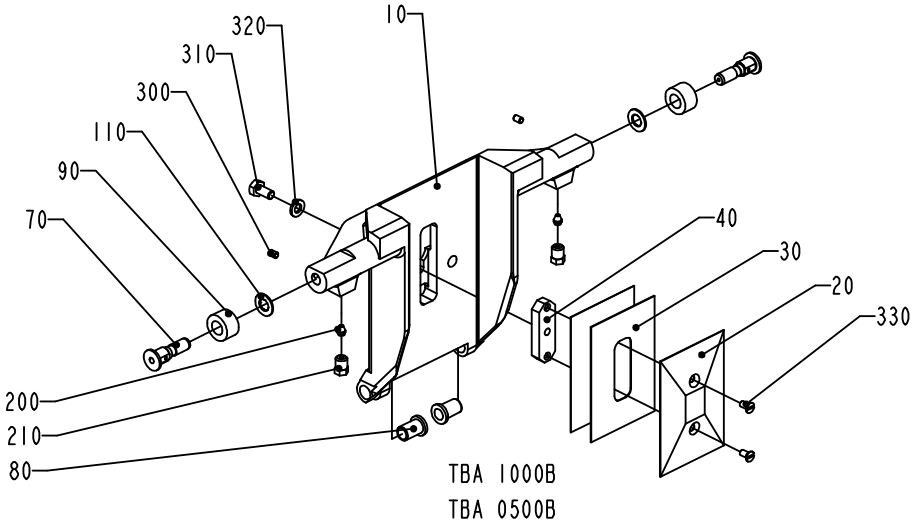

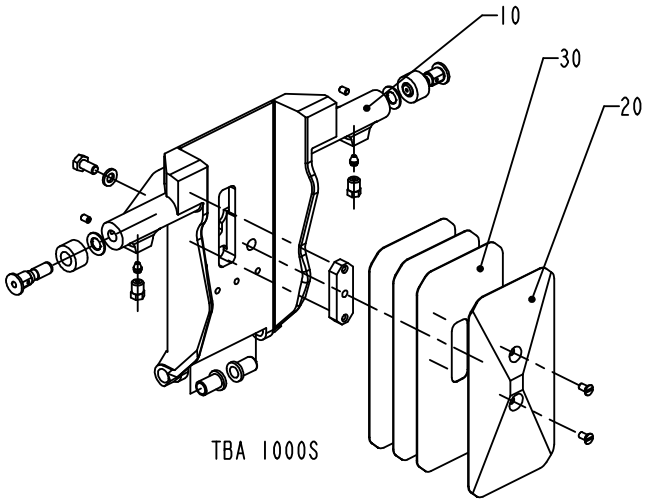

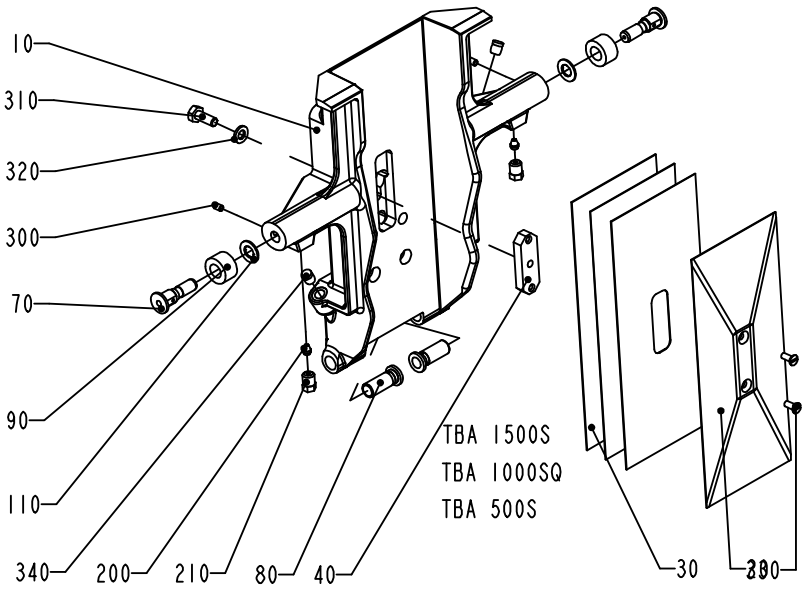

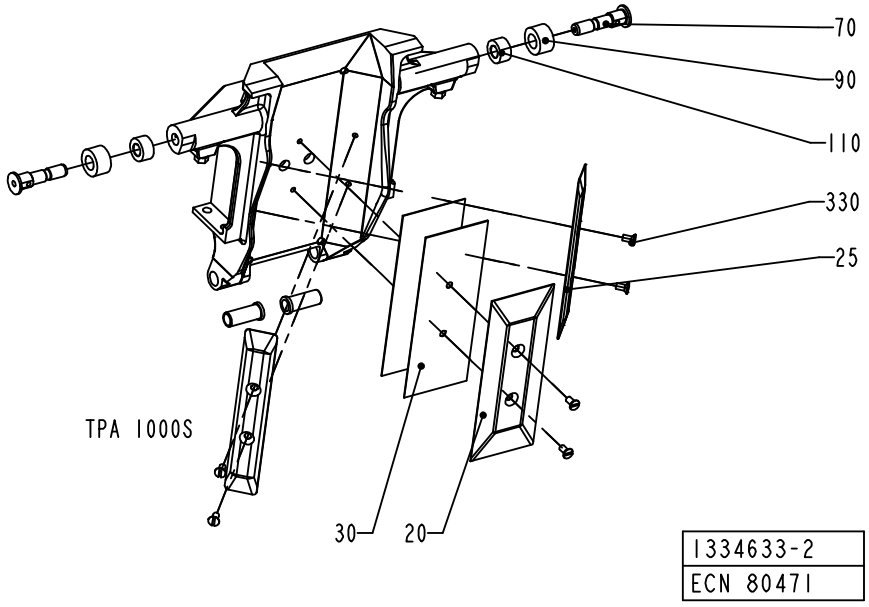

1334633-2
ECN 80471

ECM: 149723 - 20040224
Group number: 1334633-0200
Assembly Drawing: 1334633-2_1_AD

This list covers pages from 2-6 to 2-13

Pos	Part No	UN	Qty	Description	Page No
TBA 0200B (See drawing on page: 2-8)					
010	1499901-0000		1	VOLUME FLAP	
020	1038638-0000		1	VOLUME BULGE	
030	1038639-0000		2	VOLUME SHIM	
040	1038637-0000		1	WEDGE	
070	434320-0000		2	AXLE PIN	
080	1255541-0000		2	BUSHING	
090	436556-0000		2	CURVE ROLLER	
110	19972-0000		2	WASHER	
310	312105-0327		1	SCREW M6S ISO 4017 M5X12 A480	
320	315105-0146		1	WASHER BRB5,3X10RFR	
330	312145-0287		2	SCREW ISO 2009 MFS M4X8 A4	
TBA 0200S (See drawing on page: 2-8)					
010	1484866-0000		1	VOLUME FLAP	
020	1037733-0000		1	VOLUME BULGE	
030	1037735-0000		2	VOLUME SHIM	
040	1037734-0000		1	WEDGE	
070	434320-0000		2	AXLE PIN	
080	1255541-0000		2	BUSHING	
090	436556-0000		2	CURVE ROLLER	
110	19972-0000		2	WASHER	
310	312105-0327		1	SCREW M6S ISO 4017 M5X12 A480	
320	315105-0146		1	WASHER BRB5,3X10RFR	
330	312145-0287		2	SCREW ISO 2009 MFS M4X8 A4	
TBA 0250B (See drawing on page: 2-8)					
010	1484867-0000		1	VOLUME FLAP	
020	1346157-0000		1	VOLUME BULGE	
030	1346158-0000		2	VOLUME SHIM	
040	1037734-0000		1	WEDGE	
070	434320-0000		2	AXLE PIN	
080	1255541-0000		2	BUSHING	
090	436556-0000		2	CURVE ROLLER	
110	19972-0000		2	WASHER	
310	312105-0327		1	SCREW M6S ISO 4017 M5X12 A480	
320	315105-0146		1	WASHER BRB5,3X10RFR	
330	312145-0287		2	SCREW ISO 2009 MFS M4X8 A4	
TBA 0250S (See drawing on page: 2-8)					
010	2524388-0000		1	VOLUME FLAP	
020	2520473-0000		1	VOLUME BULGE	
030	2520474-0000		3	VOLUME SHIM	
040	1037734-0000		1	WEDGE	
070	434320-0000		2	AXLE PIN	
080	1255541-0000		2	BUSHING	
090	436556-0000		2	CURVE ROLLER	
110	19972-0000		2	WASHER	
310	312105-0328		1	SCREW M6S ISO 4017 M5X14 A480	
320	315105-0146		1	WASHER BRB5,3X10RFR	
330	312145-0287		2	SCREW ISO 2009 MFS M4X8 A4	
TBA 0330S (See drawing on page: 2-8)					
010	2544990-0000		1	VOLUME FLAP	
020	2544992-0000		1	VOLUME BULGE	
030	2544993-0000		3	VOLUME SHIM	
040	1037734-0000		1	WEDGE	
070	434320-0000		2	AXLE PIN	
080	1255541-0000		2	BUSHING	
090	436556-0000		2	CURVE ROLLER	
110	19972-0000		2	WASHER	
310	312105-0328		1	SCREW M6S ISO 4017 M5X14 A480	
320	315105-0146		1	WASHER BRB5,3X10RFR	
330	312145-0287		2	SCREW ISO 2009 MFS M4X8 A4	
TBA 0500B (See drawing on page: 2-6)					
010	1532287-0000		1	VOLUME FLAP	
020	1558817-0000		1	VOLUME BULGE	
030	1532293-0000		2	VOLUME SHIM	
070	434320-0000		2	AXLE PIN	
080	1255541-0000		2	BUSHING	
090	436556-0000		2	CURVE ROLLER	
110	19972-0000		2	WASHER	
310	312105-0327		1	SCREW M6S ISO 4017 M5X12 A480	
320	315105-0146		1	WASHER BRB5,3X10RFR	
TBA 0500S (See drawing on page: 2-6)					
010	1511250-0000		1	VOLUME FLAP	
020	1524035-0000		1	VOLUME BULGE	
030	1511253-0000		3	VOLUME SHIM	
040	1487628-0000		1	WEDGE	
070	434320-0000		2	AXLE PIN	
080	1511254-0000		2	BUSHING	
090	434321-0000		2	CURVE ROLLER	
110	19972-0000		2	WASHER	
310	312105-0368		1	SCREW M6S ISO 4017 M6X16 A480	
320	315105-0153		1	WASHER BRB6,4X12RFR	
330	312145-0289		2	SCREW ISO 2009 MFS M4X10 A4	
340	90261-0016		2	PLUG, BLIND, PLASTIC GPN300V2	
TBA 1000B (See drawing on page: 2-6)					

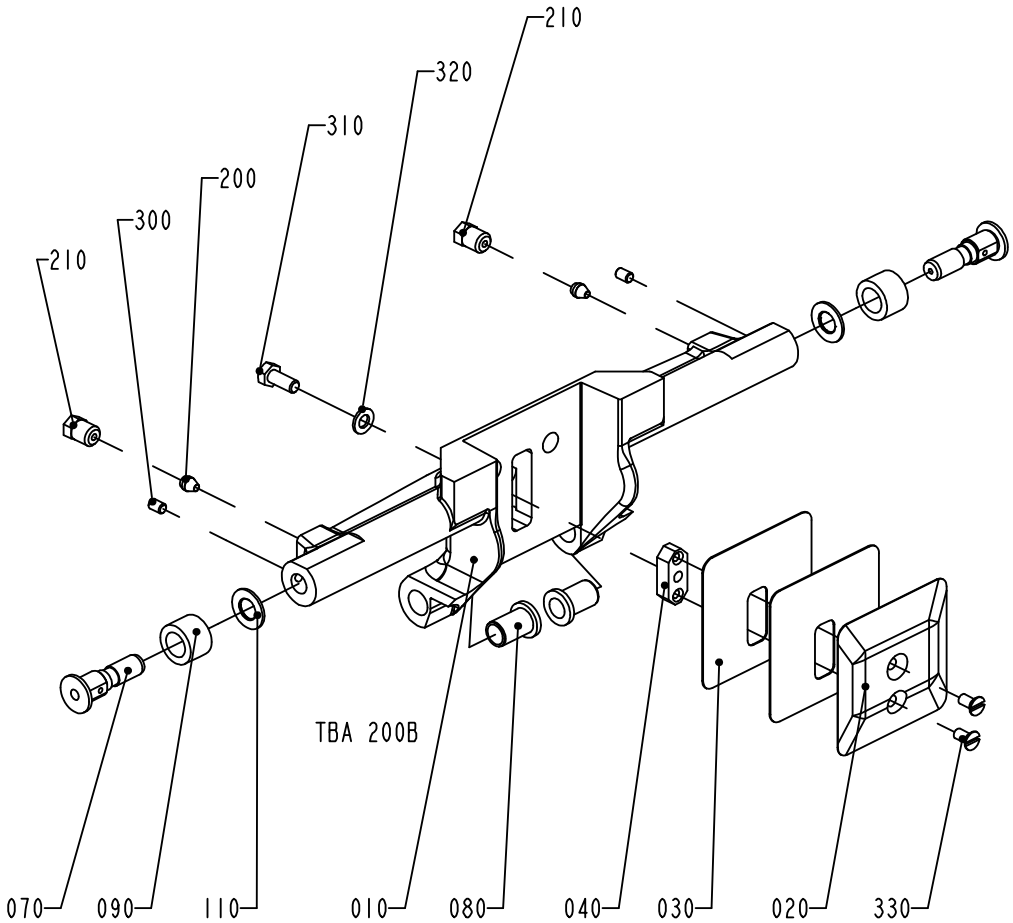

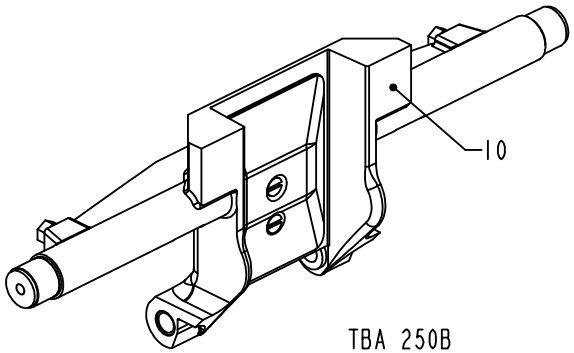

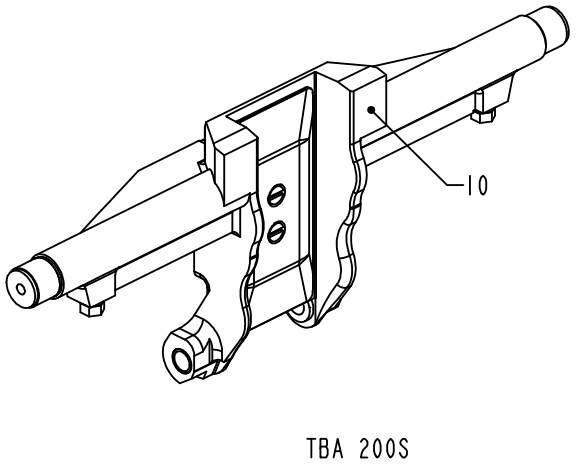

1334633-3
ECN 72770

ECM: 149723 - 20040224
Group number: 1334633-0200
Assembly Drawing: 1334633-3_1_AB

This list covers pages from 2-6 to 2-13

Pos	Part No	UN	Qty	Description	Page No
TBA 1000B (Cont'd) (See drawing on page: 2-6)					
010	1478358-0000		1	VOLUME FLAP	
020	1035828-0000		1	VOLUME BULGE	
030	1035831-0000		2	VOLUME SHIM	
040	1040756-0000		1	WEDGE	
070	434320-0000		2	AXLE PIN	
080	1255541-0000		2	BUSHING	
090	434321-0000		2	CURVE ROLLER	
110	19972-0000		2	WASHER	
310	312105-0366		1	SCREW M6S ISO 4017 M6X12 A480	
320	315105-0153		1	WASHER BRB6,4X12RFR	
330	312145-0287		2	SCREW ISO 2009 MFS M4X8 A4	
TBA 1000S (See drawing on page: 2-6)					
010	1040753-0000		1	VOLUME FLAP	
020	1040754-0000		1	VOLUME BULGE	
030	1040755-0000		3	VOLUME SHIM	
040	1040756-0000		1	WEDGE	
070	434320-0000		2	AXLE PIN	
080	1255541-0000		2	BUSHING	
090	434321-0000		2	CURVE ROLLER	
110	19972-0000		2	WASHER	
310	312105-0366		1	SCREW M6S ISO 4017 M6X12 A480	
320	315105-0153		1	WASHER BRB6,4X12RFR	
330	312145-0287		2	SCREW ISO 2009 MFS M4X8 A4	
TBA 1000SQ (See drawing on page: 2-6)					
010	2606305-0000		1	VOLUME FLAP	
020	1487626-0000		1	VOLUME BULGE	
030	1487627-0000		3	VOLUME SHIM	
040	1040756-0000		1	WEDGE	
070	434320-0000		2	AXLE PIN	
080	1558701-0000		2	BUSHING	
090	434321-0000		2	CURVE ROLLER	
110	19972-0000		2	WASHER	
310	312115-0367		1	SCREW ISO4762 M6X14 A4	
320	315105-0153		1	WASHER BRB6,4X12RFR	
330	312145-0291		2	SCREW ISO 2009 MFS M4X12 A4	
TBA 1500S (See drawing on page: 2-6)					
010	2587236-0000		1	VOLUME FLAP	
020	1499675-0000		1	VOLUME BULGE	
030	1349208-0000		3	VOLUME SHIM	
040	1040756-0000		1	WEDGE	
070	434320-0000		2	AXLE PIN	
080	1558701-0000		2	BUSHING	
090	434321-0000		2	CURVE ROLLER	
110	19972-0000		2	WASHER	
310	312105-0368		1	SCREW M6S ISO 4017 M6X16 A480	
320	315105-0153		1	WASHER BRB6,4X12RFR	
330	312145-0289		2	SCREW ISO 2009 MFS M4X10 A4	
340	90261-0016		2	PLUG, BLIND, PLASTIC GPN300V2	
TPA 0330SQ (See drawing on page: 2-10)					
010	1539904-0000		1	VOLUME FLAP	
020	1539903-0000		2	VOLUME BULGE	
030	1539902-0000		6	VOLUME SHIM	
070	434320-0000		2	AXLE PIN	
080	1255541-0000		2	BUSHING	
090	436556-0000		2	CURVE ROLLER	
110	19972-0000		2	WASHER	
320	315105-0146		2	WASHER BRB5,3X10RFR	
325	312105-0327		2	SCREW M6S ISO 4017 M5X12 A480	
TPA 0500SQ (See drawing on page: 2-12)					
010	1549836-0000		1	VOLUME FLAP	
025	1549829-0000		2	VOLUME BULGE	
035	1549830-0000		6	VOLUME SHIM	
040	1549831-0000		2	WEDGE	
050	1549832-0000		1	PLUG	
070	434320-0000		2	AXLE PIN	
080	2530313-0000		2	BUSHING	
090	434321-0000		2	CURVE ROLLER	
110	19972-0000		2	WASHER	
310	312105-0327		3	SCREW M6S ISO 4017 M5X12 A480	
320	315105-0146		3	WASHER BRB5,3X10RFR	
370	312155-0289		4	SCREW DIN 7991 MF6S M4X10 A480	
TPA 1000SQ (See drawing on page: 2-12)					
010	2547011-0000		1	VOLUME FLAP	
025	1539841-0000		2	VOLUME BULGE	
035	1539843-0000		6	VOLUME SHIM	
040	1040756-0000		2	WEDGE	
050	1549125-0000		1	PLUG	
060	2547010-0000		1	BRACKET	
070	434320-0000		2	AXLE PIN	
080	1255541-0000		2	BUSHING	
090	434321-0000		2	CURVE ROLLER	
110	19972-0000		2	WASHER	
320	315105-0153		3	WASHER BRB6,4X12RFR	

Machine Type | Group Description | Used-In | Group Number | Page No

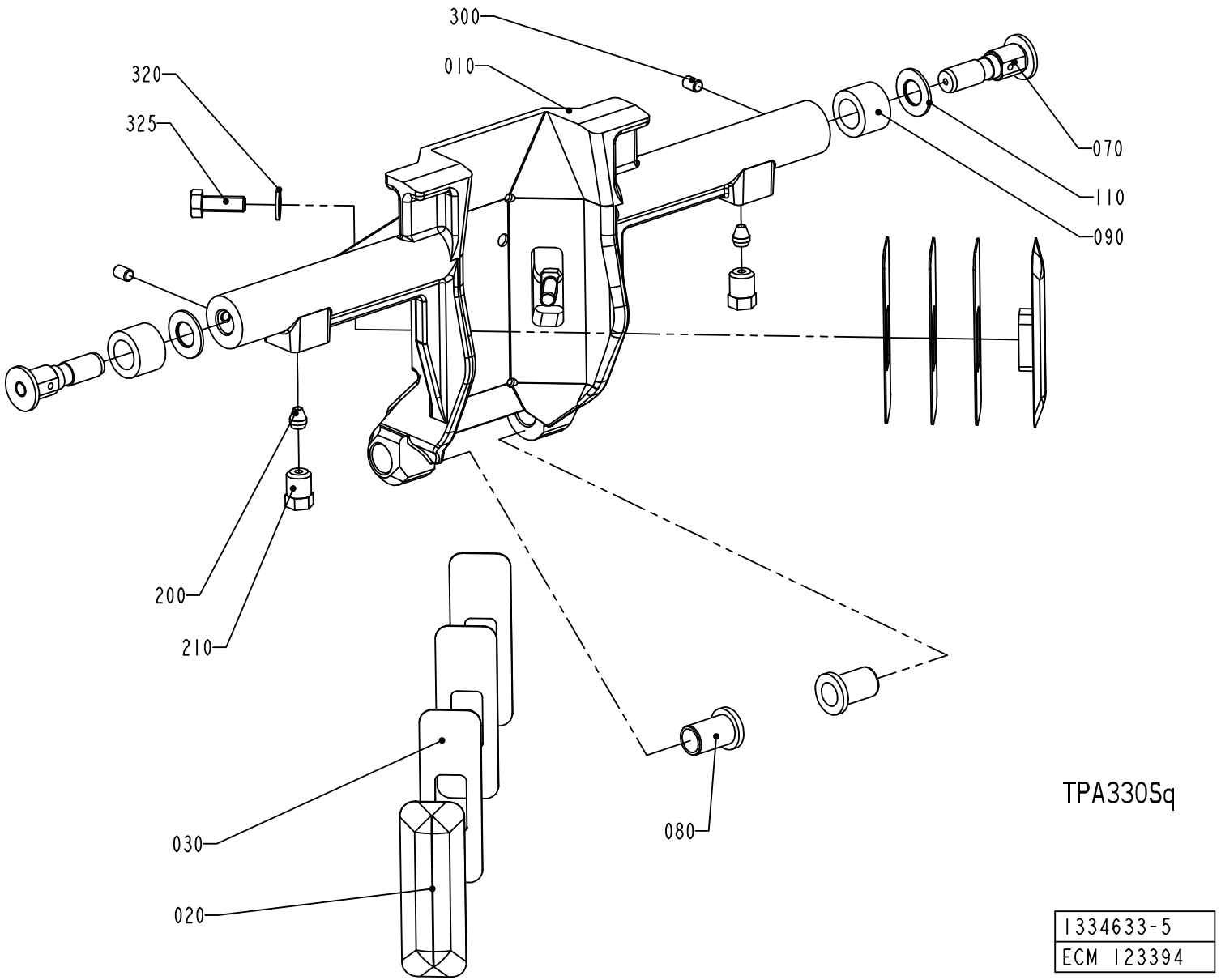
300
010
320
325
070
110
090
200
210
030
020
080
TPA330Sq
1334633-5
ECM 123394

Pos	Part No	UN	Qty	Description	Page No
TPA 1000SQ (Cont'd) (See drawing on page: 2-12)					
360	312105-0368		3	SCREW M6S ISO 4017 M6X16 A480	
370	312155-0289		4	SCREW DIN 7991 MF6S M4X10 A480	
Common Parts					
200	90028-0020		2	CONE TUBE 2,5MM	
210	90134-0063		2	BUSHING/NUT M8X1, D=2,5 MM	
300	312318-0285		2	SCREW ISO4029 M4X6 A4	

Pos	Part No	UN	Qty	Description	Page No

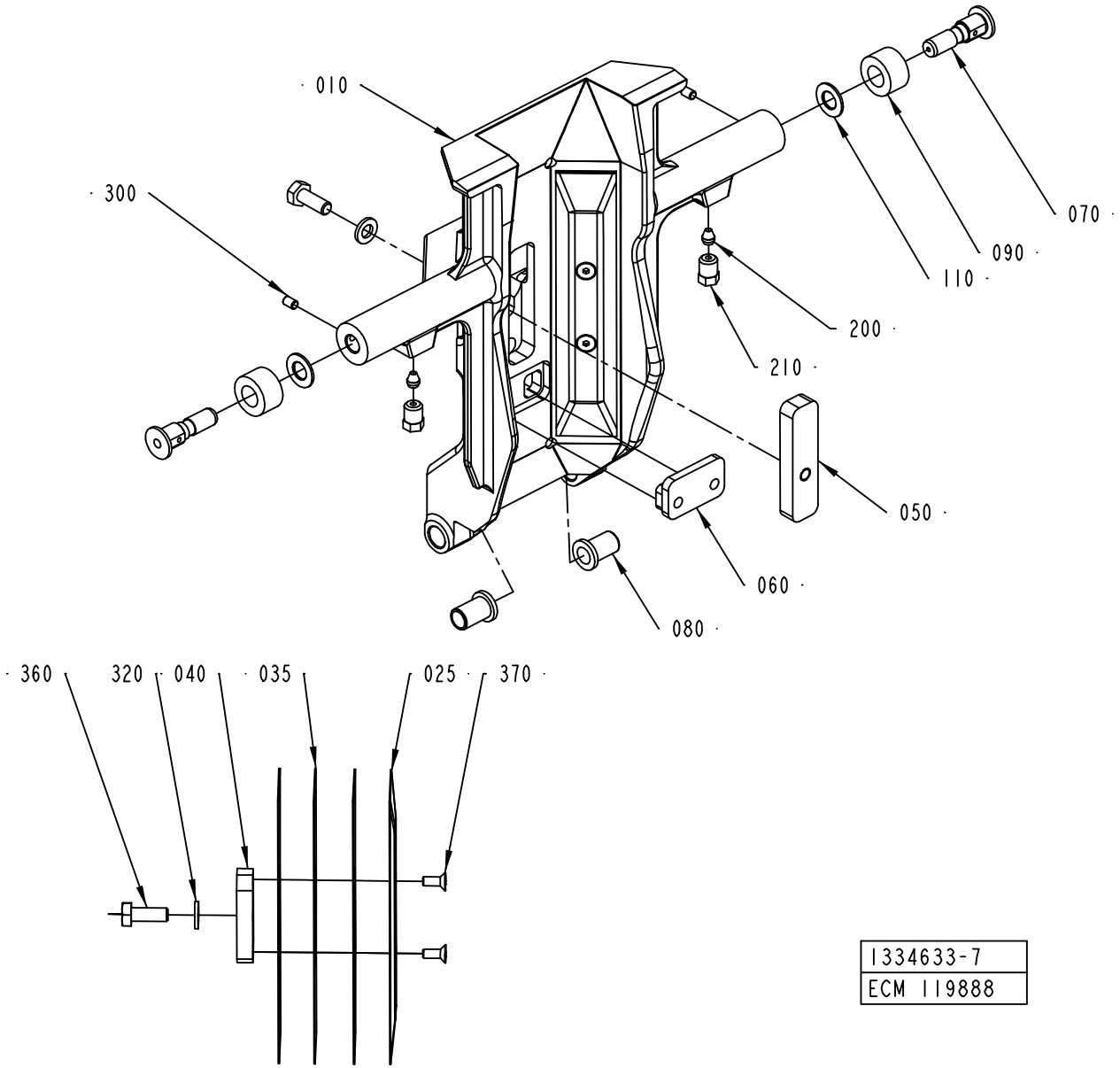
010
300
070
090
110
200
210
050
060
080
360
320
040
035
025
370
1334633-7
ECM 119888

ECM: 149723 - 20040224
Group number: 1334633-0200
Assembly Drawing: 1334633-7_1_AA

This list covers pages from 2-6 to 2-13

Pos	Part No	UN	Qty	Description	Page No	Pos	Part No	UN	Qty	Description	Page No
SEE PREVIOUS LISTS PAGES: 2-7, 2-9, 2-11.											

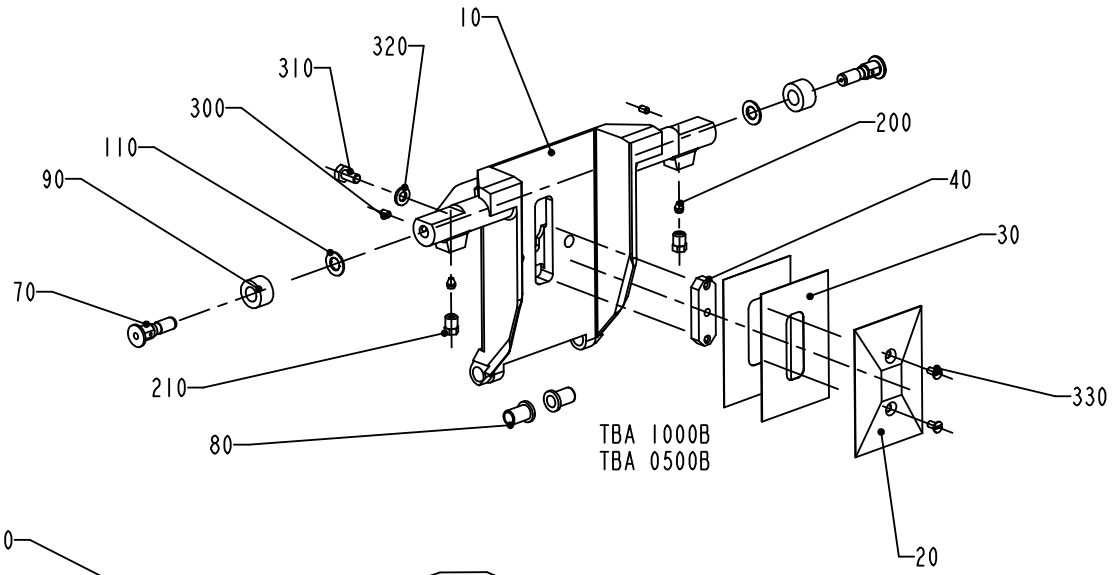

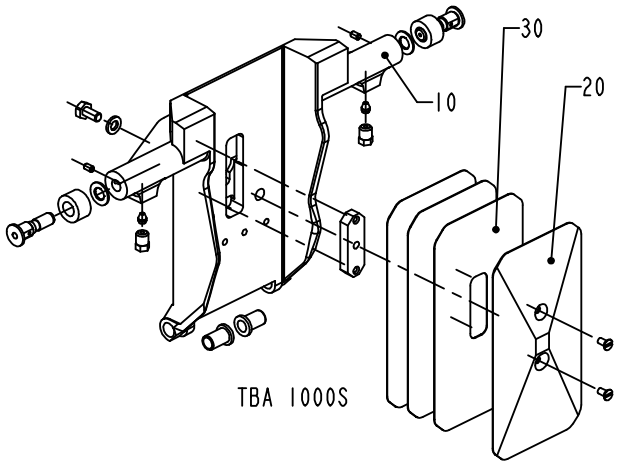

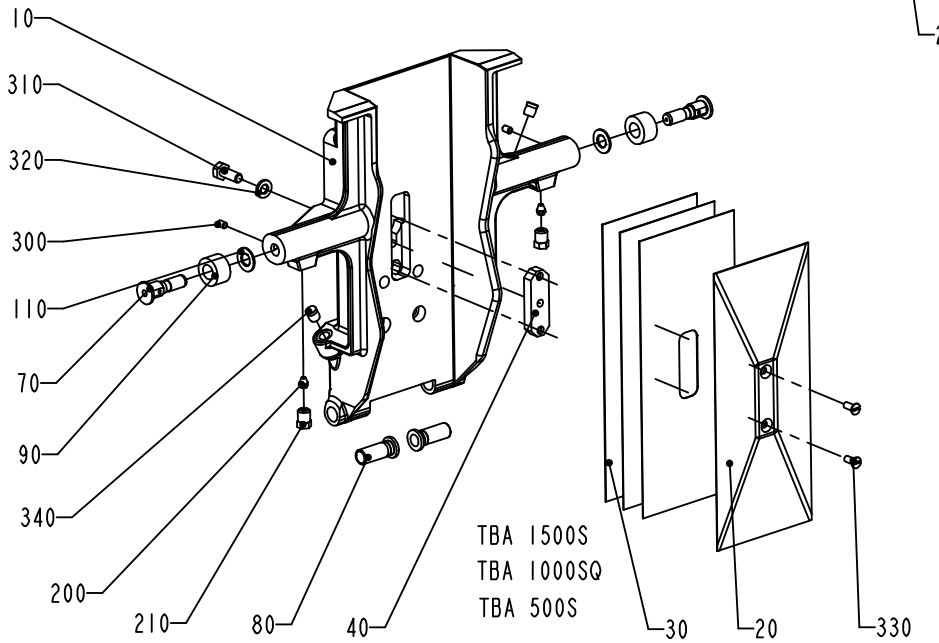

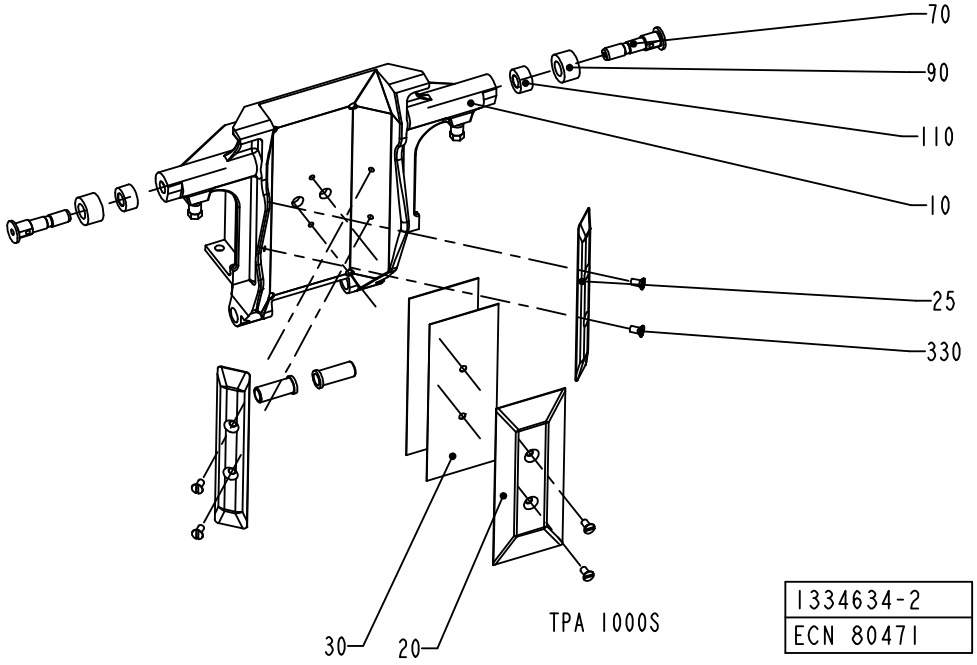

1334634-2
ECN 80471

ECM: 149724 - 20040224
Group number: 1334634-0200
Assembly Drawing: 1334634-2_1_AD

This list covers pages from 2-14 to 2-21

Pos	Part No	UN	Qty	Description	Page No
TPA 1000SQ SMILE (See drawing on page: 2-20)					
010	2582002-0000		1	VOLUME FLAP	
020	1539840-0000		1	VOLUME BULGE	
025	1539841-0000		2	VOLUME BULGE	
030	1539842-0000		3	VOLUME SHIM	
035	1539843-0000		6	VOLUME SHIM	
040	1040756-0000		3	WEDGE	
060	2547010-0000		1	BRACKET	
070	434320-0000		2	AXLE PIN	
080	1255541-0000		2	BUSHING	
090	434321-0000		2	CURVE ROLLER	
110	19972-0000		2	WASHER	
310	312105-0368		3	SCREW M6S ISO 4017 M6X16 A480	
320	315105-0153		3	WASHER BRB6,4X12RFR	
370	312155-0289		6	SCREW DIN 7991 MF6S M4X10 A480	
TBA 0200B (See drawing on page: 2-16)					
010	1499902-0000		1	VOLUME FLAP	
020	1038638-0000		1	VOLUME BULGE	
030	1038639-0000		2	VOLUME SHIM	
040	1038637-0000		1	WEDGE	
070	434320-0000		2	AXLE PIN	
080	1255541-0000		2	BUSHING	
090	436556-0000		2	CURVE ROLLER	
110	19972-0000		2	WASHER	
310	312105-0327		1	SCREW M6S ISO 4017 M5X12 A480	
320	315105-0146		1	WASHER BRB5,3X10RFR	
330	312145-0287		2	SCREW ISO 2009 MFS M4X8 A4	
TBA 0200S (See drawing on page: 2-16)					
010	1484865-0000		1	VOLUME FLAP	
020	1037733-0000		1	VOLUME BULGE	
030	1037735-0000		2	VOLUME SHIM	
040	1037734-0000		1	WEDGE	
070	434320-0000		2	AXLE PIN	
080	1255541-0000		2	BUSHING	
090	436556-0000		2	CURVE ROLLER	
110	19972-0000		2	WASHER	
310	312105-0327		1	SCREW M6S ISO 4017 M5X12 A480	
320	315105-0146		1	WASHER BRB5,3X10RFR	
330	312145-0287		2	SCREW ISO 2009 MFS M4X8 A4	
TBA 0250B (See drawing on page: 2-16)					
010	1484868-0000		1	VOLUME FLAP	
020	1346157-0000		1	VOLUME BULGE	
030	1346158-0000		2	VOLUME SHIM	
040	1037734-0000		1	WEDGE	
070	434320-0000		2	AXLE PIN	
080	1255541-0000		2	BUSHING	
090	436556-0000		2	CURVE ROLLER	
110	19972-0000		2	WASHER	
310	312105-0327		1	SCREW M6S ISO 4017 M5X12 A480	
320	315105-0146		1	WASHER BRB5,3X10RFR	
330	312145-0287		2	SCREW ISO 2009 MFS M4X8 A4	
TBA 0250S (See drawing on page: 2-16)					
010	2520472-0000		1	VOLUME FLAP	
020	2520473-0000		1	VOLUME BULGE	
030	2520474-0000		3	VOLUME SHIM	
040	1037734-0000		1	WEDGE	
070	434320-0000		2	AXLE PIN	
080	1255541-0000		2	BUSHING	
090	436556-0000		2	CURVE ROLLER	
110	19972-0000		2	WASHER	
310	312105-0328		1	SCREW M6S ISO 4017 M5X14 A480	
320	315105-0146		1	WASHER BRB5,3X10RFR	
330	312145-0287		2	SCREW ISO 2009 MFS M4X8 A4	
TBA 0330S (See drawing on page: 2-16)					
010	2544991-0000		1	VOLUME FLAP	
020	2544992-0000		1	VOLUME BULGE	
030	2544993-0000		3	VOLUME SHIM	
040	1037734-0000		1	WEDGE	
070	434320-0000		2	AXLE PIN	
080	1255541-0000		2	BUSHING	
090	436556-0000		2	CURVE ROLLER	
110	19972-0000		2	WASHER	
310	312105-0328		1	SCREW M6S ISO 4017 M5X14 A480	
320	315105-0146		1	WASHER BRB5,3X10RFR	
330	312145-0287		2	SCREW ISO 2009 MFS M4X8 A4	
TBA 0500B (See drawing on page: 2-14)					
010	1532287-0000		1	VOLUME FLAP	
020	1558817-0000		1	VOLUME BULGE	
030	1532293-0000		2	VOLUME SHIM	
070	434320-0000		2	AXLE PIN	
080	1255541-0000		2	BUSHING	
090	436556-0000		2	CURVE ROLLER	
110	19972-0000		2	WASHER	
310	312105-0327		1	SCREW M6S ISO 4017 M5X12 A480	

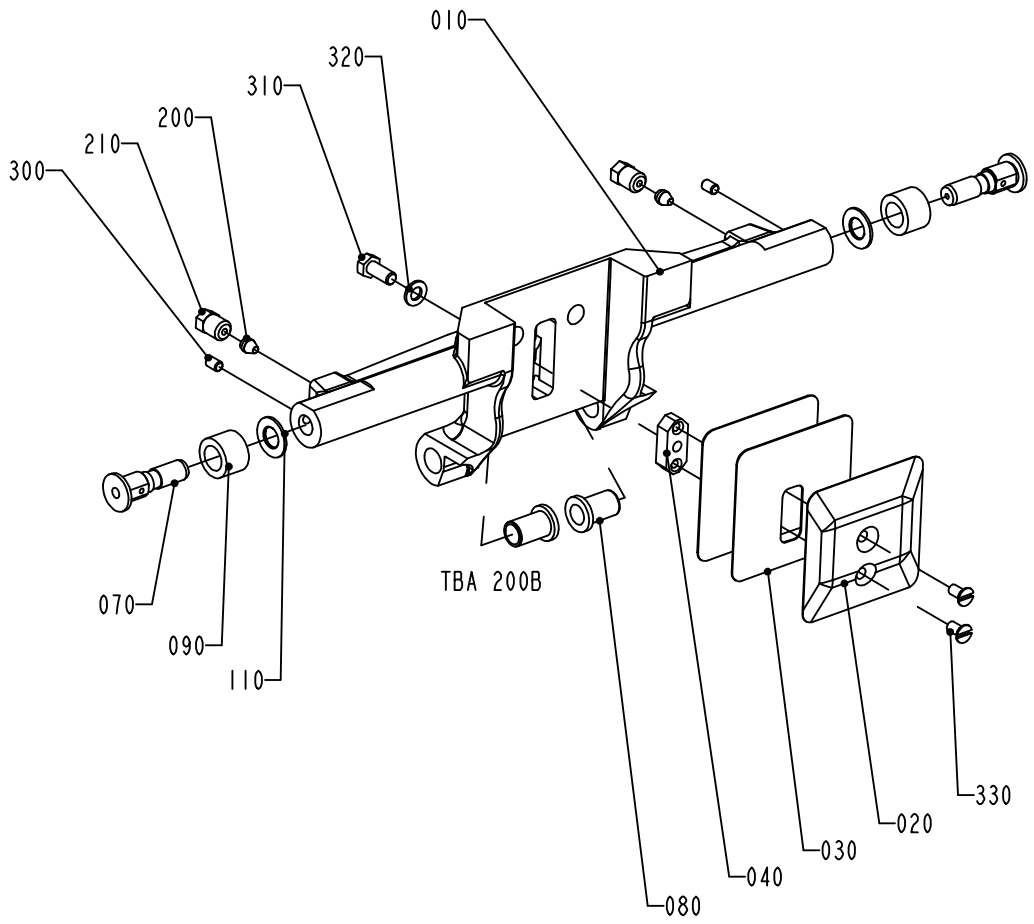

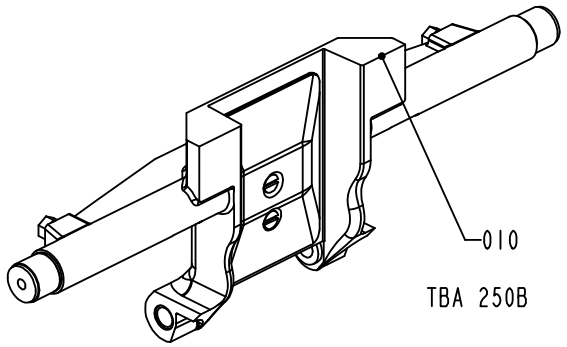

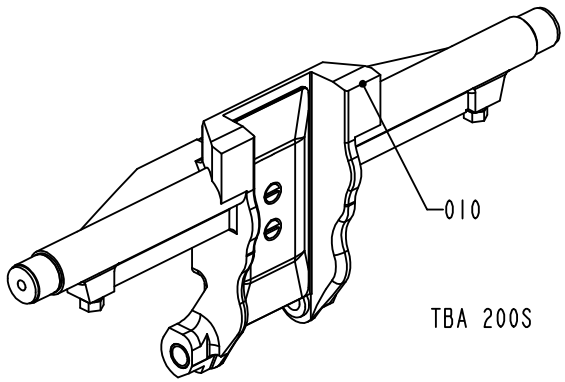

1334634-3
ECN 72770

ECM: 149724 - 20040224
Group number: 1334634-0200
Assembly Drawing: 1334634-3_1_AB

This list covers pages from 2-14 to 2-21

Pos	Part No	UN	Qty	Description	Page No
TBA 0500B (Cont'd) (See drawing on page: 2-14)					
320	315105-0146		1	WASHER BRB5,3X10RFR	
TBA 0500S (See drawing on page: 2-14)					
010	1511251-0000		1	VOLUME FLAP	
020	1524035-0000		1	VOLUME BULGE	
030	1511253-0000		3	VOLUME SHIM	
040	1487628-0000		1	WEDGE	
070	434320-0000		2	AXLE PIN	
080	1511254-0000		2	BUSHING	
090	434321-0000		2	CURVE ROLLER	
110	19972-0000		2	WASHER	
310	312105-0368		1	SCREW M6S ISO 4017 M6X16 A480	
320	315105-0153		1	WASHER BRB6,4X12RFR	
330	312145-0291		2	SCREW ISO 2009 MFS M4X12 A4	
340	90261-0016		2	PLUG, BLIND, PLASTIC GPN300V2	
TBA 1000B (See drawing on page: 2-14)					
010	1478358-0000		1	VOLUME FLAP	
020	1035828-0000		1	VOLUME BULGE	
030	1035831-0000		3	VOLUME SHIM	
040	1040756-0000		1	WEDGE	
070	434320-0000		2	AXLE PIN	
080	1255541-0000		2	BUSHING	
090	434321-0000		2	CURVE ROLLER	
110	19972-0000		2	WASHER	
310	312105-0366		1	SCREW M6S ISO 4017 M6X12 A480	
320	315105-0153		1	WASHER BRB6,4X12RFR	
330	312145-0287		2	SCREW ISO 2009 MFS M4X8 A4	
TBA 1000S (See drawing on page: 2-14)					
010	1040753-0000		1	VOLUME FLAP	
020	1040754-0000		1	VOLUME BULGE	
030	1040755-0000		3	VOLUME SHIM	
040	1040756-0000		1	WEDGE	
070	434320-0000		2	AXLE PIN	
080	1255541-0000		2	BUSHING	
090	434321-0000		2	CURVE ROLLER	
110	19972-0000		2	WASHER	
310	312105-0366		1	SCREW M6S ISO 4017 M6X12 A480	
320	315105-0153		1	WASHER BRB6,4X12RFR	
330	312145-0287		2	SCREW ISO 2009 MFS M4X8 A4	
TBA 1000SQ (See drawing on page: 2-14)					
010	2606306-0000		1	VOLUME FLAP	
020	1487626-0000		1	VOLUME BULGE	
030	1487627-0000		3	VOLUME SHIM	
040	1040756-0000		1	WEDGE	
070	434320-0000		2	AXLE PIN	
080	1558701-0000		2	BUSHING	
090	434321-0000		2	CURVE ROLLER	
110	19972-0000		2	WASHER	
310	312115-0367		1	SCREW ISO4762 M6X14 A4	
320	315105-0153		1	WASHER BRB6,4X12RFR	
330	312145-0291		2	SCREW ISO 2009 MFS M4X12 A4	
TBA 1500S (See drawing on page: 2-14)					
010	2587235-0000		1	VOLUME FLAP	
020	1499675-0000		1	VOLUME BULGE	
030	1349208-0000		3	VOLUME SHIM	
040	1040756-0000		1	WEDGE	
070	434320-0000		2	AXLE PIN	
080	1558701-0000		2	BUSHING	
090	434321-0000		2	CURVE ROLLER	
110	19972-0000		2	WASHER	
310	312105-0368		1	SCREW M6S ISO 4017 M6X16 A480	
320	315105-0153		1	WASHER BRB6,4X12RFR	
330	312145-0289		2	SCREW ISO 2009 MFS M4X10 A4	
340	90261-0016		2	PLUG, BLIND, PLASTIC GPN300V2	
TPA 0330SQ (See drawing on page: 2-18)					
010	1558123-0000		1	VOLUME FLAP	
020	1539903-0000		2	VOLUME BULGE	
030	1539902-0000		6	VOLUME SHIM	
070	434320-0000		2	AXLE PIN	
080	1255541-0000		2	BUSHING	
090	436556-0000		2	CURVE ROLLER	
110	19972-0000		2	WASHER	
320	315105-0146		2	WASHER BRB5,3X10RFR	
325	312105-0327		2	SCREW M6S ISO 4017 M5X12 A480	
TPA 0500SQ SMILE (See drawing on page: 2-20)					
010	1549837-0000		1	VOLUME FLAP	
020	1549829-0000		1	VOLUME BULGE	
025	1549829-0000		2	VOLUME BULGE	
030	1549830-0000		3	VOLUME SHIM	
035	1549830-0000		6	VOLUME SHIM	
040	1549831-0000		3	WEDGE	
070	434320-0000		2	AXLE PIN	
080	2530313-0000		2	BUSHING	
090	434321-0000		2	CURVE ROLLER	

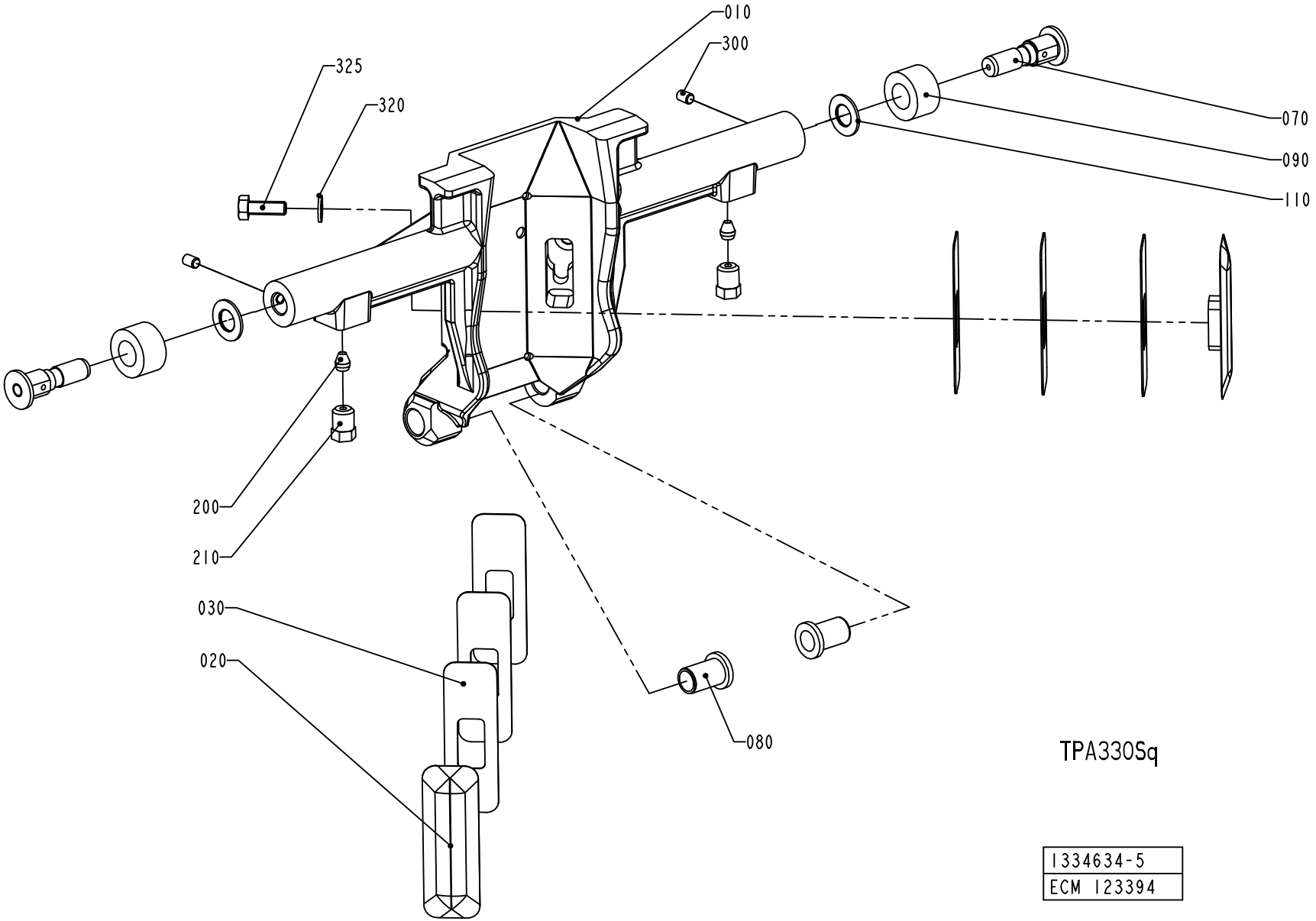
010
300
325
320
070
090
110
200
210
030
020
080
TPA330Sq
1334634-5
ECM 123394

Pos	Part No	UN	Qty	Description	Page No
TPA 0500SQ SMILE (Cont'd) (See drawing on page: 2-20)					
310	312105-0327		3	SCREW M6S ISO 4017 M5X12 A480	
320	315105-0146		3	WASHER BRB5,3X10RFR	
370	312155-0289		6	SCREW DIN 7991 MF6S M4X10 A480	
TPA 1000SQ FT (See drawing on page: 2-20)					
010	2547012-0000		1	VOLUME FLAP	
020	1539840-0000		1	VOLUME BULGE	
025	1539841-0000		2	VOLUME BULGE	
030	1539842-0000		3	VOLUME SHIM	
035	1539843-0000		6	VOLUME SHIM	
040	1040756-0000		3	WEDGE	
060	2547010-0000		1	BRACKET	
070	434320-0000		2	AXLE PIN	
080	1255541-0000		2	BUSHING	
090	434321-0000		2	CURVE ROLLER	
110	19972-0000		2	WASHER	
320	315105-0153		3	WASHER BRB6,4X12RFR	
360	312105-0368		3	SCREW M6S ISO 4017 M6X16 A480	
370	312155-0289		6	SCREW DIN 7991 MF6S M4X10 A480	
Common Parts					
200	90028-0020		2	CONE TUBE 2,5MM	
210	90134-0063		2	BUSHING/NUT M8X1, D=2,5 MM	
300	312318-0285		2	SCREW ISO4029 M4X6 A4	

Pos	Part No	UN	Qty	Description	Page No

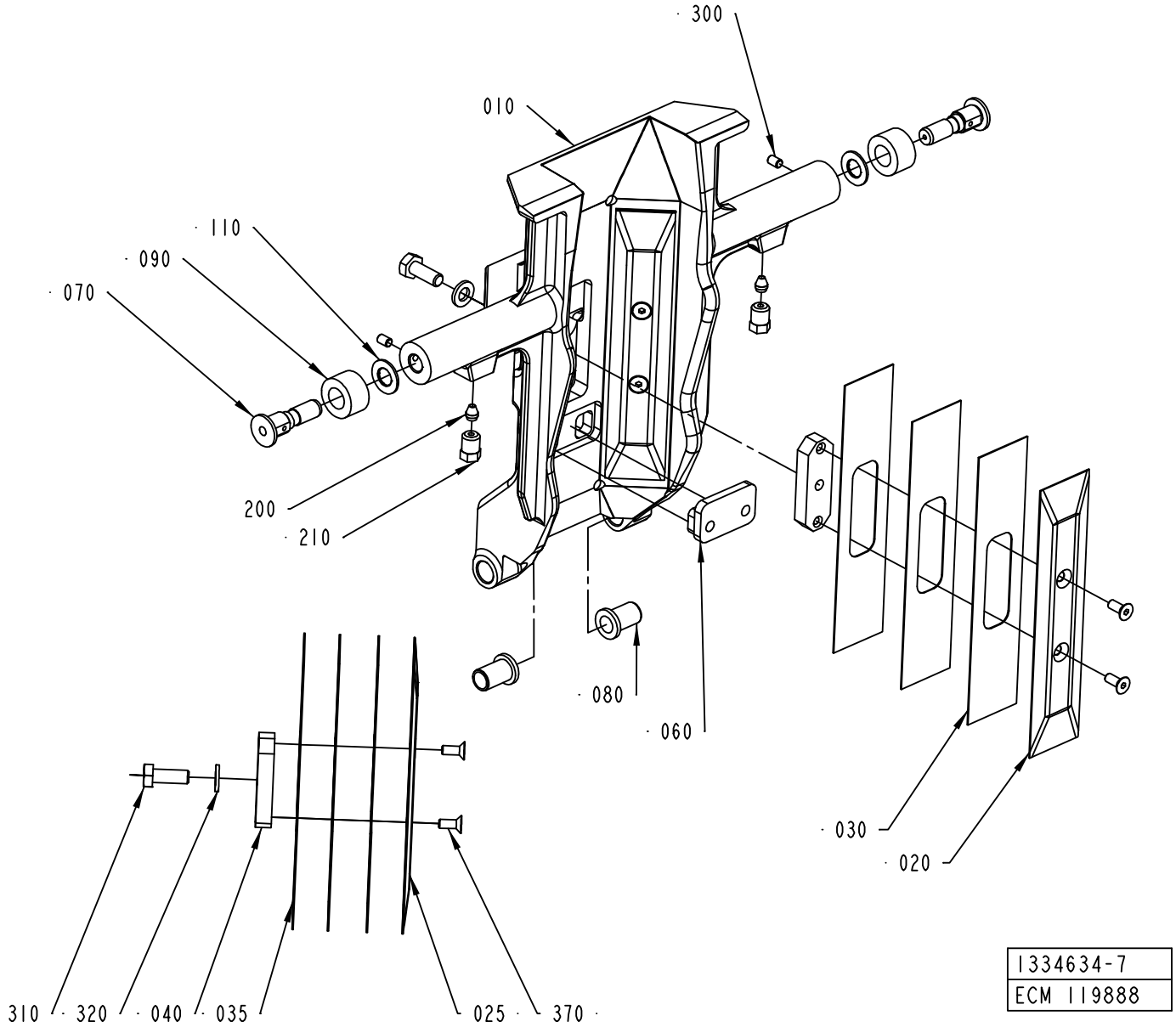
300
010
110
090
070
200
210
080
060
030
020
310
320
040
035
025
370
1334634-7
ECM 119888

Pos	Part No	UN	Qty	Description	Page No	Pos	Part No	UN	Qty	Description	Page No

SEE PREVIOUS LISTS PAGES: 2-15, 2-17, 2-19.

Machine Type	Group Description	Used-In	Group Number	Page No

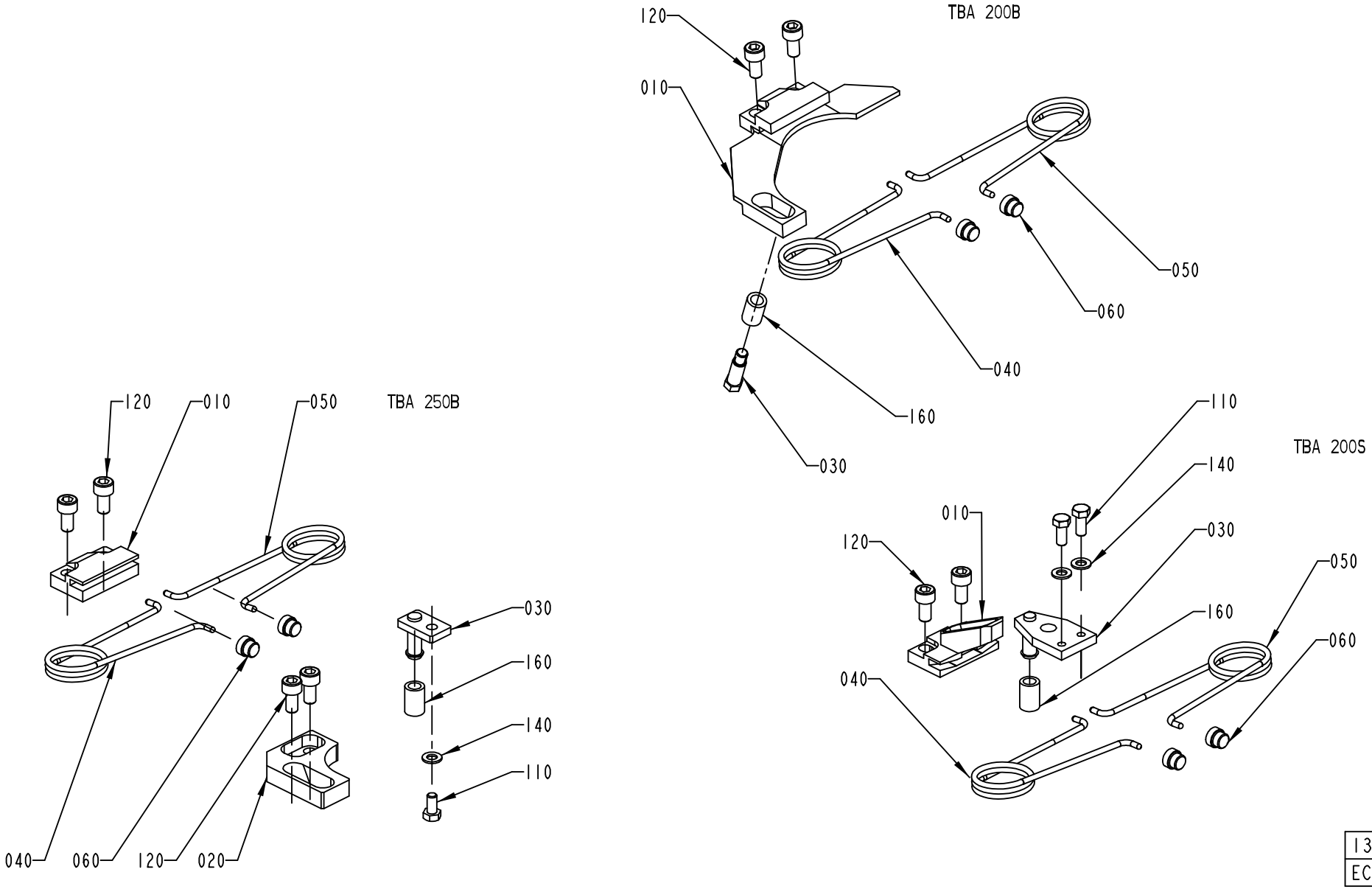

1334635-1
ECN 73647

ECM: 194871 - 20041203
Group number: 1334635-0200
Assembly Drawing: 1334635-1_1_AF

This list covers pages from 2-22 to 2-33

Pos	Part No	UN	Qty	Description	Page No
TBA 0200B (See drawing on page: 2-22)					
010	1512579-0000		1	BRACKET	
030	1346153-0000		1	STOP PIN	
040	1350263-0000		1	SPRING RIGHT	
050	1350264-0000		1	SPRING LEFT	
060	1144601-0000		2	GUIDE STUD	
120	312115-0366		2	SCREW ISO4762 M6X12 A4	
160	1317740-0000		1	RUBBER SLEEVE	
TBA 0200S (See drawing on page: 2-22)					
010	1317823-0000		1	CANTILEVER	
030	1317824-0000		1	CATCH	
040	1350263-0000		1	SPRING RIGHT	
050	1350264-0000		1	SPRING LEFT	
060	1144601-0000		2	GUIDE STUD	
110	312105-0327		2	SCREW M6S ISO 4017 M5X12 A480	
120	312115-0366		2	SCREW ISO4762 M6X12 A4	
140	315105-0146		2	WASHER BRB5,3X10RFR	
160	1317740-0000		1	RUBBER SLEEVE	
TBA 0250B (See drawing on page: 2-22)					
010	1317742-0000		1	CANTILEVER	
020	1317741-0000		1	CATCH	
030	1317440-0000		1	STOP PIN	
040	1350263-0000		1	SPRING RIGHT	
050	1350264-0000		1	SPRING LEFT	
060	1144601-0000		2	GUIDE STUD	
110	312105-0325		1	SCREW M6S ISO 4017 M5X10 A480	
120	312115-0366		4	SCREW ISO4762 M6X12 A4	
140	315105-0146		1	WASHER BRB5,3X10RFR	
160	1317740-0000		1	RUBBER SLEEVE	
TBA 0330S, TBA 0250S (See drawing on page: 2-26)					
010	1539172-0000		1	CANTILEVER	
030	2527725-0000		1	CATCH	
040	1350263-0000		1	SPRING RIGHT	
050	1350264-0000		1	SPRING LEFT	
060	1144601-0000		2	GUIDE STUD	
110	312105-0328		2	SCREW M6S ISO 4017 M5X14 A480	
120	312115-0368		2	SCREW ISO4762 M6X16 A4	
TBA 0500B (See drawing on page: 2-26)					
010	1539886-0000		1	CANTILEVER	
030	1539887-0000		1	CATCH	
040	1350263-0000		1	SPRING RIGHT	
050	1350264-0000		1	SPRING LEFT	
060	1144601-0000		2	GUIDE STUD	
110	312105-0327		2	SCREW M6S ISO 4017 M5X12 A480	
120	312115-0366		2	SCREW ISO4762 M6X12 A4	
TBA 0500S (See drawing on page: 2-24)					
010	1349319-0000		1	CANTILEVER	
030	1349320-0000		1	CATCH	
040	1143216-0000		1	SPRING	
050	1143215-0000		1	SPRING	
060	1144601-0000		2	GUIDE STUD	
110	312115-0372		2	SCREW ISO4762 M6X25 A4	
120	312115-0378		2	SCREW ISO4762 M6X40 A4 80	
170	1511556-0000		1	SET SCREW	
180	312605-0318		1	HEXAGON NUT, M6M M8 A280	
TBA 1000B (See drawing on page: 2-24)					
010	1347526-0000		1	BRACKET	
020	1478396-0000		1	STOP	
030	1478393-0000		1	CATCH	
040	1348483-0000		1	SPRING RIGHT	
050	1348484-0000		1	SPRING LEFT	
060	1144601-0000		2	GUIDE STUD	
100	312105-0368		4	SCREW M6S ISO 4017 M6X16 A480	
110	312115-0329		2	SCREW ISO4762 M5X16 A4	
130	315105-0153		4	WASHER BRB6,4X12RFR	
TBA 1000S (See drawing on page: 2-24)					
010	1347526-0000		1	BRACKET	
020	1478396-0000		1	STOP	
030	1478395-0000		1	CATCH	
040	1348483-0000		1	SPRING RIGHT	
050	1348484-0000		1	SPRING LEFT	
060	1144601-0000		2	GUIDE STUD	
100	312105-0368		4	SCREW M6S ISO 4017 M6X16 A480	
110	312115-0329		2	SCREW ISO4762 M5X16 A4	
130	315105-0153		4	WASHER BRB6,4X12RFR	
TBA 1000SQ (See drawing on page: 2-24)					
010	1349319-0000		1	CANTILEVER	
030	1349320-0000		1	CATCH	
040	1143216-0000		1	SPRING	
050	1143215-0000		1	SPRING	
060	1144601-0000		2	GUIDE STUD	
110	312105-0366		2	SCREW M6S ISO 4017 M6X12 A480	
120	312115-0378		2	SCREW ISO4762 M6X40 A4 80	
170	1511556-0000		1	SET SCREW	

Machine Type | Group Description | Used-In | Group Number | Page No

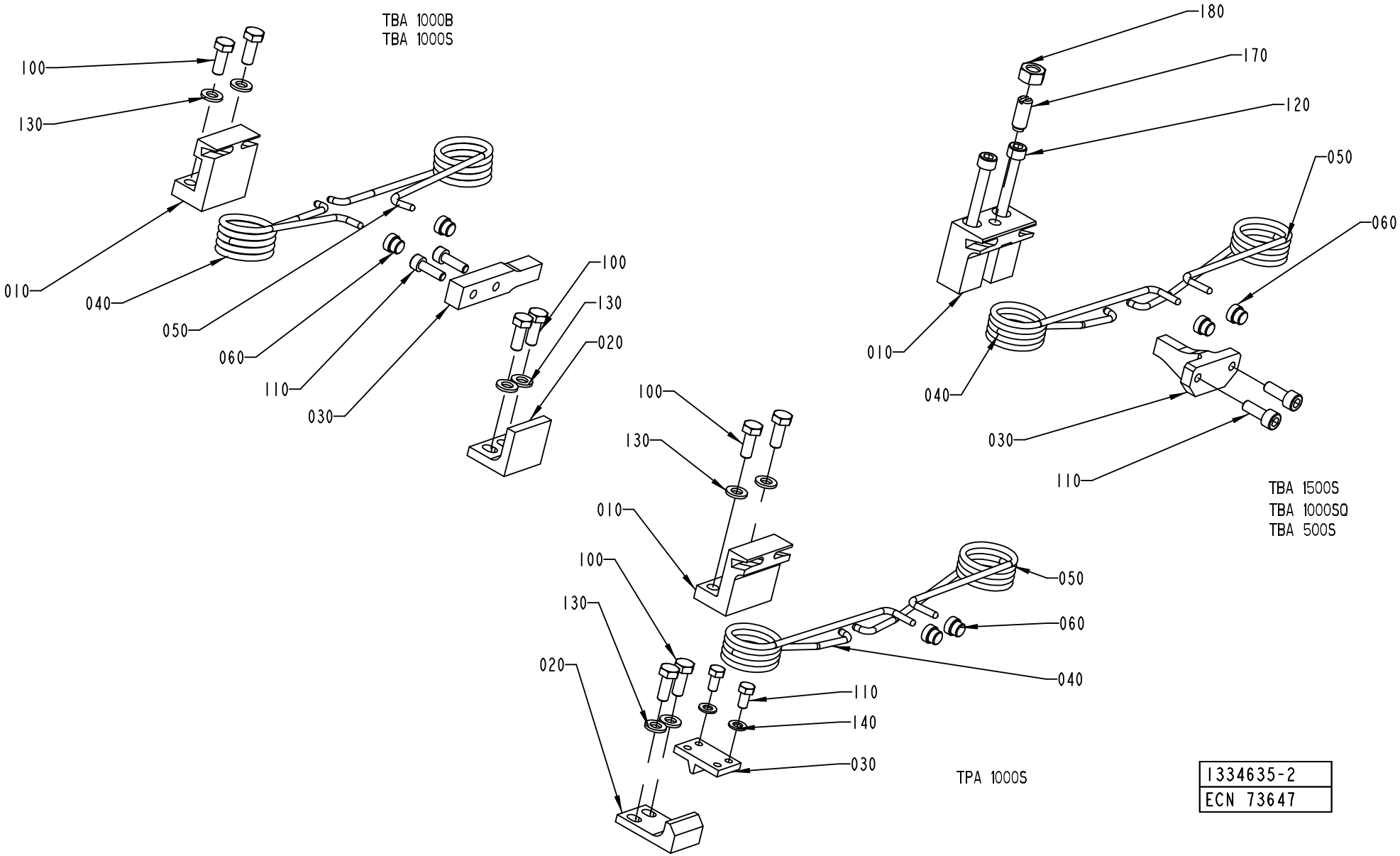
TBA 1000B
TBA 1000S
100
130
010
040
050
060
110
030
100
130
020
180
170
120
050
060
010
040
030
110
TBA 1500S
TBA 1000SQ
TBA 500S
100
130
010
100
130
020
050
060
040
110
140
030
TPA 1000S
1334635-2
ECN 73647

Pos	Part No	UN	Qty	Description	Page No
TBA 1000SQ (Cont'd) (See drawing on page: 2-24)					
180	312605-0318		1	HEXAGON NUT, M6M M8 A280	
TBA 1500S (See drawing on page: 2-24)					
010	1349319-0000		1	CANTILEVER	
030	1349320-0000		1	CATCH	
040	1143216-0000		1	SPRING	
050	1143215-0000		1	SPRING	
060	1144601-0000		2	GUIDE STUD	
110	312115-0368		2	SCREW ISO4762 M6X16 A4	
120	312115-0378		2	SCREW ISO4762 M6X40 A4 80	
170	1511556-0000		1	SET SCREW	
180	312605-0318		1	HEXAGON NUT, M6M M8 A280	
TBA 1890S, TBA 2000S (See drawing on page: 2-32)					
010	2634515-0000		1	CANTILEVER	
040	2662165-0000		1	SPRING	
050	2662166-0000		1	SPRING	
075	2652896-0000		2	SHAFT	
080	2662167-0000		1	BUSHING	
090	2663376-0000		2	WASHER	
095	2663375-0000		2	WASHER	
095	90458-0073		2	WASHER 6,4/30, H=1,5	
100	312115-0367		2	SCREW ISO4762 M6X14 A4	
100	312115-0368		2	SCREW ISO4762 M6X16 A4	
120	312105-0331		1	SCREW M6S ISO 4017 M5X20 A480	
125	312105-0341		2	SCREW M6S ISO 4014 M5X50 A480	
130	315105-0146		3	WASHER BRB5,3X10RFR	
190	312105-0367		2	SCREW M6S ISO 4017 M6X14 A480	
190	312105-0366		2	SCREW M6S ISO 4017 M6X12 A480	
TPA 0330SQ (See drawing on page: 2-26)					
010	1539172-0000		1	CANTILEVER	
030	1539887-0000		1	CATCH	
040	1350263-0000		1	SPRING RIGHT	
050	1350264-0000		1	SPRING LEFT	
060	1144601-0000		2	GUIDE STUD	
110	312105-0325		2	SCREW M6S ISO 4017 M5X10 A480	
120	312115-0368		2	SCREW ISO4762 M6X16 A4	
TPA 0500SQ (See drawing on page: 2-28)					
010	2563666-0000		1	CANTILEVER	
030	2527725-0000		1	CATCH	
040	2563670-0000		1	SPRING	
050	2563669-0000		1	SPRING	
070	2563671-0000		1	SHAFT	
075	2563667-0000		2	SHAFT	
080	1538521-0000		2	BUSHING	
085	2563672-0000		2	HOLDER	
110	312105-0327		2	SCREW M6S ISO 4017 M5X12 A480	
120	312115-0366		2	SCREW ISO4762 M6X12 A4	
130	315105-0153		2	WASHER BRB6,4X12RFR	
190	312155-0339		2	SCREW DIN 7991 MF6S M5X40 A480	
200	312115-0367		2	SCREW ISO4762 M6X14 A4	
210	90005-0002		2	WASHER 16/6,7X1,5	
220	312105-0287		2	SCREW M6S ISO4017 M4X8 A470	
TPA 1000SQ (See drawing on page: 2-30)					
010	1523475-0000		1	CANTILEVER	
020	2558921-0000		1	STOP	
025	2558923-0000		1	STOP	
040	2557613-0000		1	SPRING	
050	2557612-0000		1	SPRING	
060	1144601-0000		2	GUIDE STUD	
070	2558929-0000		1	BAR	
100	312105-0368		10	SCREW M6S ISO 4017 M6X16 A480	
120	312105-0364		2	SCREW M6S ISO 4017 M6X10 A480	
130	315105-0153		10	WASHER BRB6,4X12RFR	
150	90062-0061		2	LOCK WASHER NORD-LOCK,6,5/10,8, T=2,2	

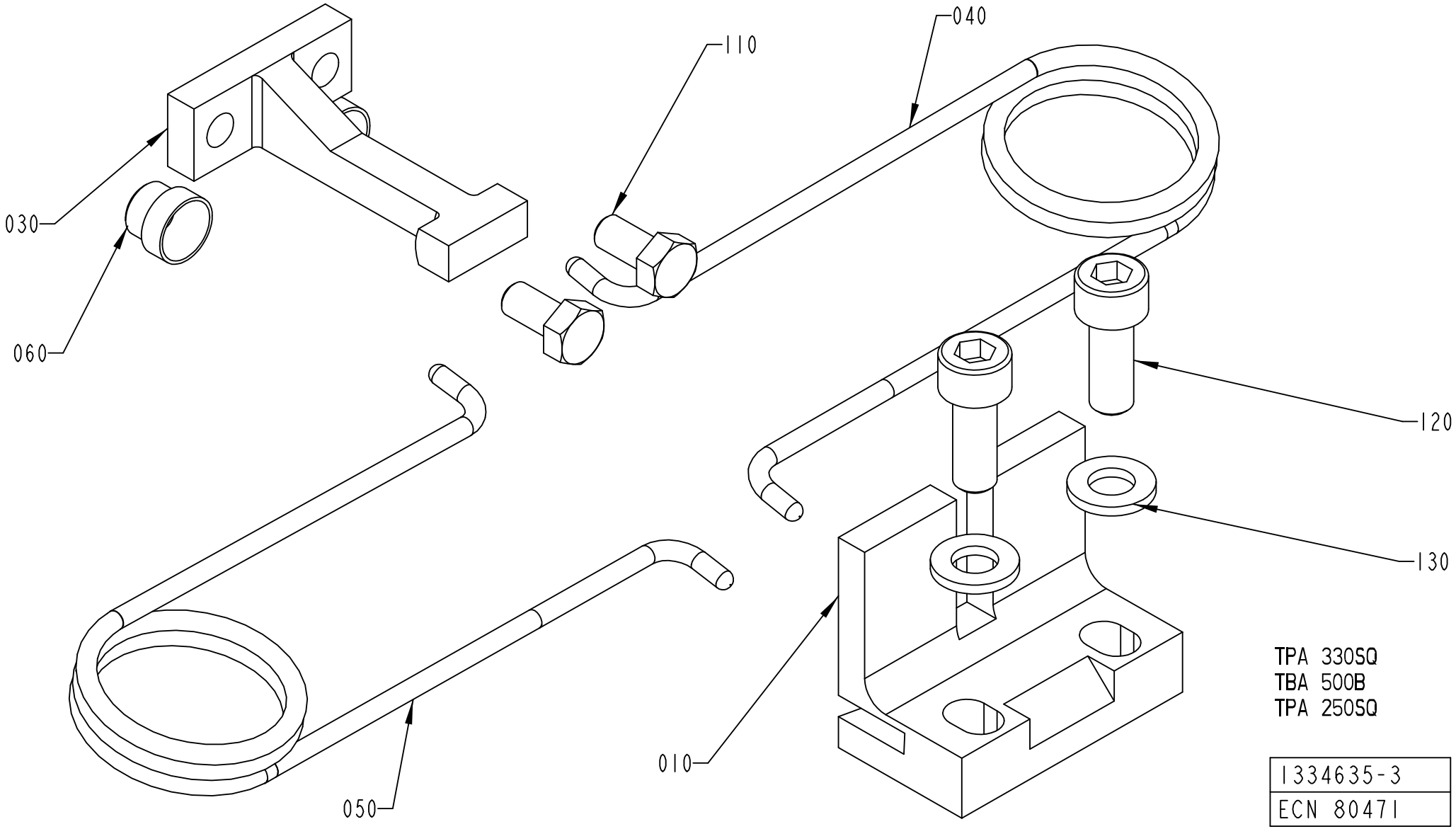
040
110
030
060
120
130
010
050
TPA 330SQ
TBA 500B
TPA 250SQ
1334635-3
ECN 80471

Pos	Part No	UN	Qty	Description	Page No	Pos	Part No	UN	Qty	Description	Page No

SEE PREVIOUS LISTS PAGES: 2-23, 2-25.

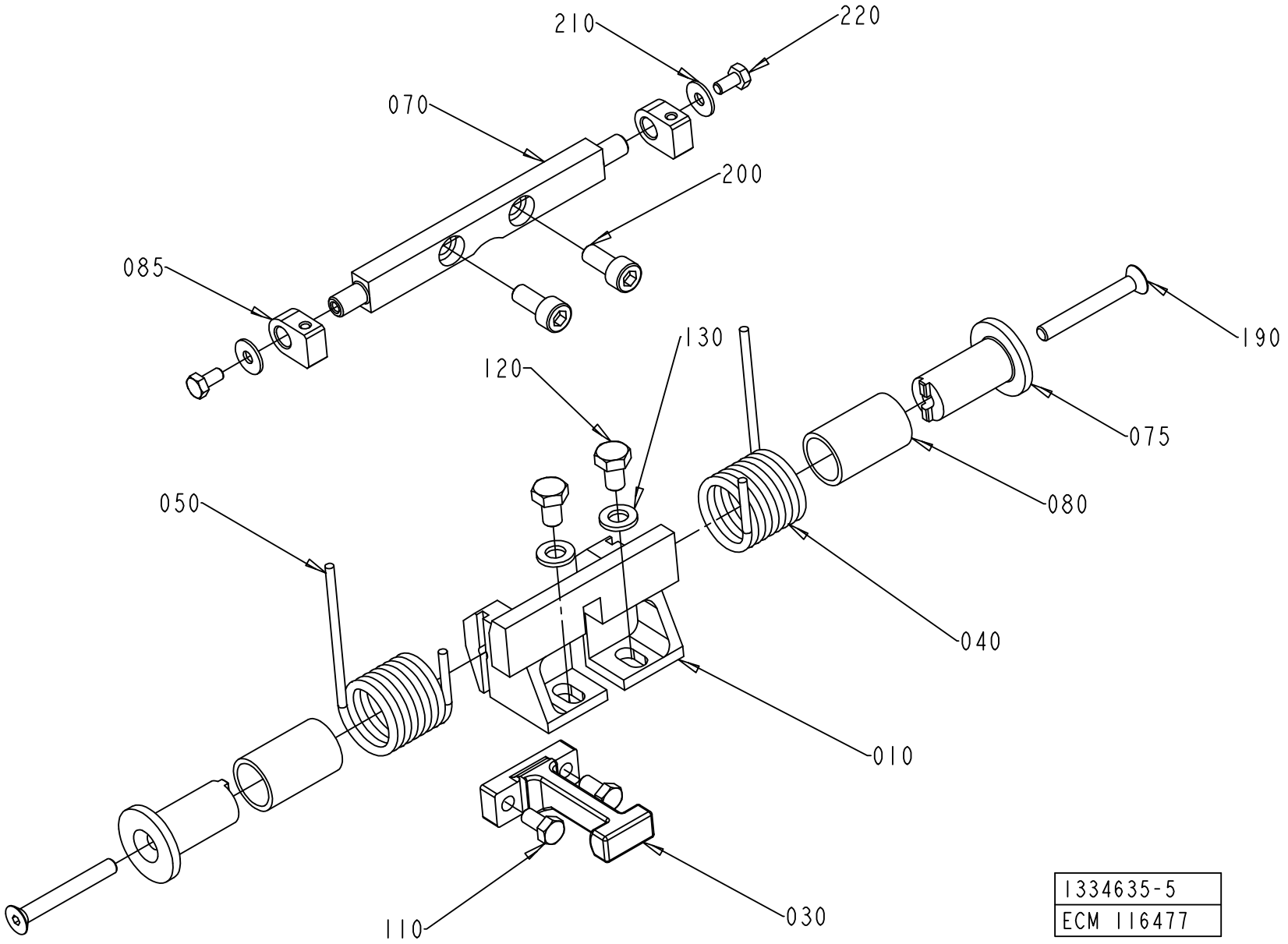

1334635-5
ECM 116477

Pos	Part No	UN	Qty	Description	Page No	Pos	Part No	UN	Qty	Description	Page No

SEE PREVIOUS LISTS PAGES: 2-23, 2-25.

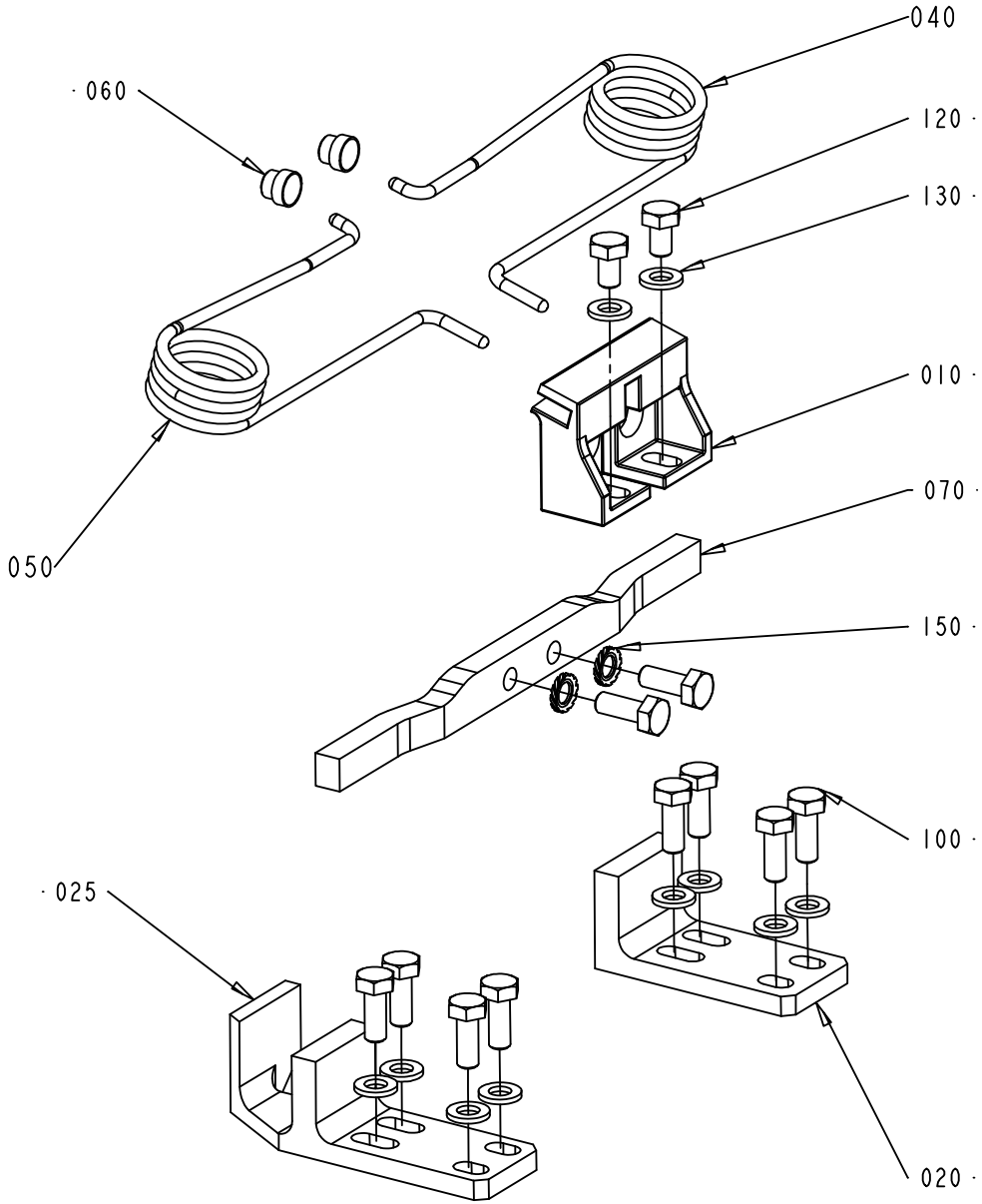

1334635-6
ECM 119888

Pos	Part No	UN	Qty	Description	Page No	Pos	Part No	UN	Qty	Description	Page No

SEE PREVIOUS LISTS PAGES: 2-23, 2-25.

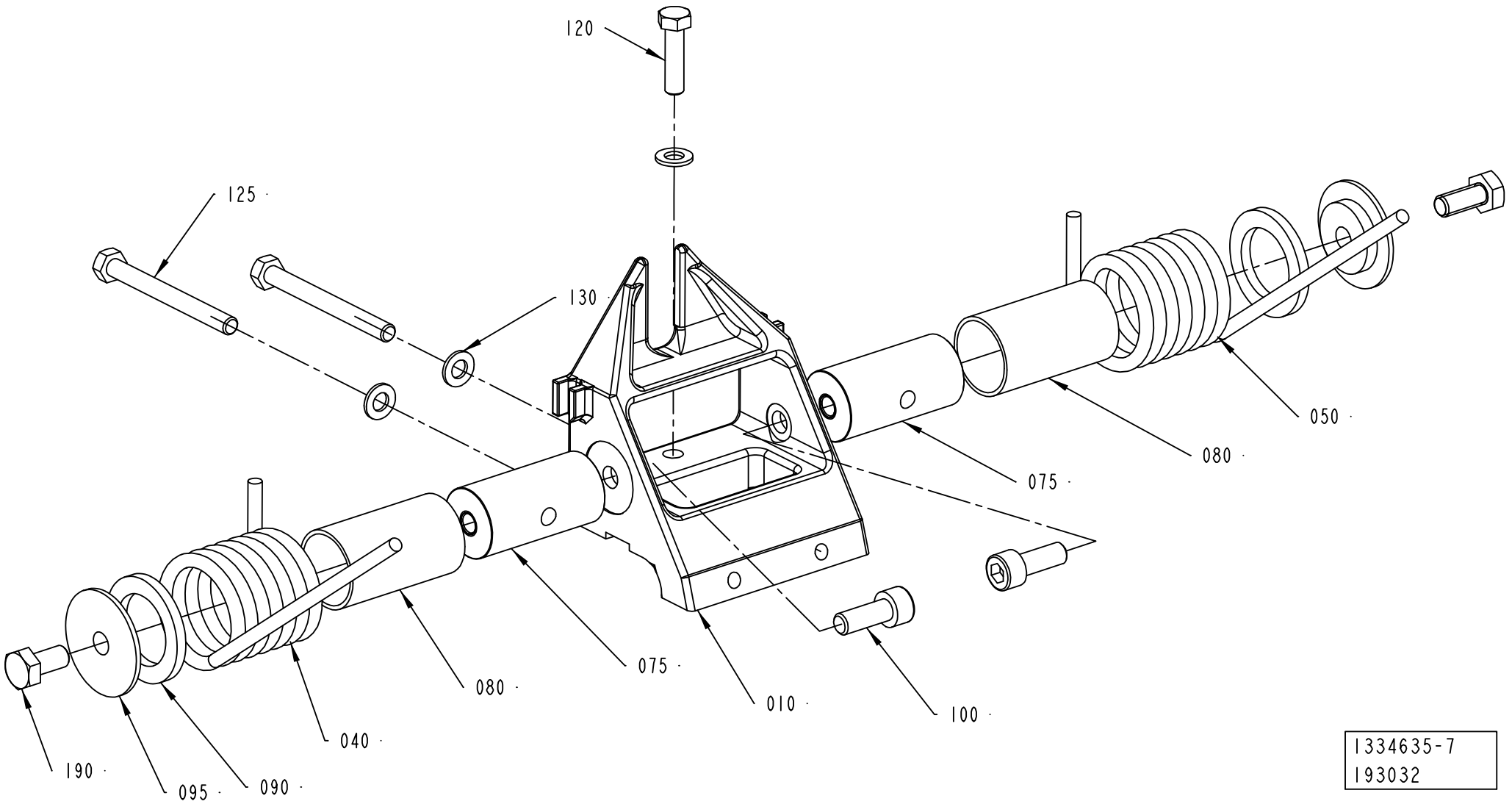
120
125
130
050
080
075
080
075
010
100
040
190
095
090
1334635-7
193032

Pos	Part No	UN	Qty	Description	Page No	Pos	Part No	UN	Qty	Description	Page No

SEE PREVIOUS LISTS PAGES: 2-23, 2-25.

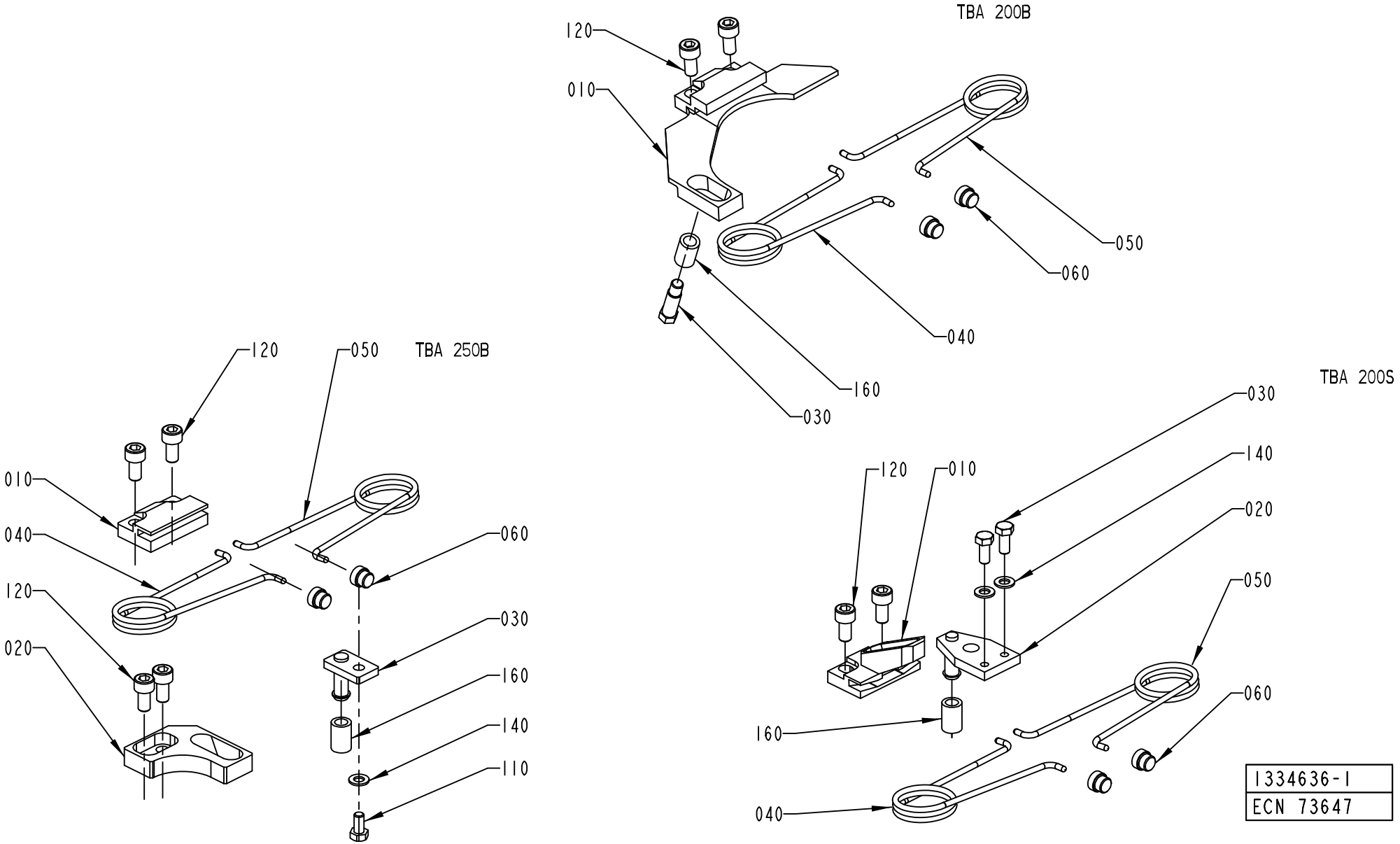
TBA 200B
120
010
050
060
040
160
030
TBA 250B
120
050
010
040
060
120
030
020
160
140
110
TBA 200S
030
140
120
010
020
050
160
060
040
1334636-1
ECN 73647

ECM: 194872 - 20041203
Group number: 1334636-0200
Assembly Drawing: 1334636-1_1_AF

This list covers pages from 2-34 to 2-45

Pos	Part No	UN	Qty	Description	Page No
TBA 0200B (See drawing on page: 2-34)					
010	1512579-0000		1	BRACKET	
030	1346153-0000		1	STOP PIN	
040	1350263-0000		1	SPRING RIGHT	
050	1350264-0000		1	SPRING LEFT	
050	1348484-0000		1	SPRING LEFT	
060	1144601-0000		2	GUIDE STUD	
120	312115-0366		2	SCREW ISO4762 M6X12 A4	
160	1317740-0000		1	RUBBER SLEEVE	
TBA 0200S (See drawing on page: 2-34)					
010	1317823-0000		1	CANTILEVER	
030	1317824-0000		1	CATCH	
040	1350263-0000		1	SPRING RIGHT	
050	1350264-0000		1	SPRING LEFT	
060	1144601-0000		2	GUIDE STUD	
110	312105-0327		2	SCREW M6S ISO 4017 M5X12 A480	
120	312115-0366		2	SCREW ISO4762 M6X12 A4	
140	315105-0146		2	WASHER BRB5,3X10RFR	
160	1317740-0000		1	RUBBER SLEEVE	
TBA 0250B (See drawing on page: 2-34)					
010	1317742-0000		1	CANTILEVER	
020	1317439-0000		1	CATCH	
030	1317440-0000		1	STOP PIN	
040	1350263-0000		1	SPRING RIGHT	
050	1350264-0000		1	SPRING LEFT	
060	1144601-0000		2	GUIDE STUD	
110	312105-0325		1	SCREW M6S ISO 4017 M5X10 A480	
120	312115-0366		4	SCREW ISO4762 M6X12 A4	
140	315105-0146		1	WASHER BRB5,3X10RFR	
160	1317740-0000		1	RUBBER SLEEVE	
TBA 0330S, TBA 0250S (See drawing on page: 2-38)					
010	1539172-0000		1	CANTILEVER	
030	2527725-0000		1	CATCH	
040	1350263-0000		1	SPRING RIGHT	
050	1350264-0000		1	SPRING LEFT	
060	1144601-0000		2	GUIDE STUD	
110	312105-0328		2	SCREW M6S ISO 4017 M5X14 A480	
120	312115-0368		2	SCREW ISO4762 M6X16 A4	
TBA 0500B (See drawing on page: 2-38)					
010	1539886-0000		1	CANTILEVER	
030	1539887-0000		1	CATCH	
040	1350263-0000		1	SPRING RIGHT	
050	1350264-0000		1	SPRING LEFT	
060	1144601-0000		2	GUIDE STUD	
110	312105-0327		2	SCREW M6S ISO 4017 M5X12 A480	
120	312115-0366		2	SCREW ISO4762 M6X12 A4	
TBA 0500S (See drawing on page: 2-36)					
010	1349319-0000		1	CANTILEVER	
030	1349320-0000		1	CATCH	
040	1143216-0000		1	SPRING	
050	1143215-0000		1	SPRING	
060	1144601-0000		2	GUIDE STUD	
110	312115-0372		2	SCREW ISO4762 M6X25 A4	
120	312115-0378		2	SCREW ISO4762 M6X40 A4 80	
170	1511556-0000		1	SET SCREW	
180	312605-0318		1	HEXAGON NUT, M6M M8 A280	
TBA 1000B (See drawing on page: 2-36)					
010	1347526-0000		1	BRACKET	
020	1478396-0000		1	STOP	
030	1478393-0000		1	CATCH	
040	1348483-0000		1	SPRING RIGHT	
050	1348484-0000		1	SPRING LEFT	
060	1144601-0000		2	GUIDE STUD	
100	312105-0368		4	SCREW M6S ISO 4017 M6X16 A480	
110	312115-0329		2	SCREW ISO4762 M5X16 A4	
130	315105-0153		4	WASHER BRB6,4X12RFR	
TBA 1000S (See drawing on page: 2-36)					
010	1347526-0000		1	BRACKET	
020	1478396-0000		1	STOP	
030	1478395-0000		1	CATCH	
040	1348483-0000		1	SPRING RIGHT	
050	1348484-0000		1	SPRING LEFT	
060	1144601-0000		2	GUIDE STUD	
100	312105-0368		4	SCREW M6S ISO 4017 M6X16 A480	
110	312115-0329		2	SCREW ISO4762 M5X16 A4	
130	315105-0153		4	WASHER BRB6,4X12RFR	
TBA 1000SQ (See drawing on page: 2-36)					
010	1349319-0000		1	CANTILEVER	
030	1349320-0000		1	CATCH	
040	1143216-0000		1	SPRING	
050	1143215-0000		1	SPRING	
060	1144601-0000		2	GUIDE STUD	
110	312115-0366		2	SCREW ISO4762 M6X12 A4	
120	312115-0378		2	SCREW ISO4762 M6X40 A4 80	

Machine Type | Group Description | Used-In | Group Number | Page No

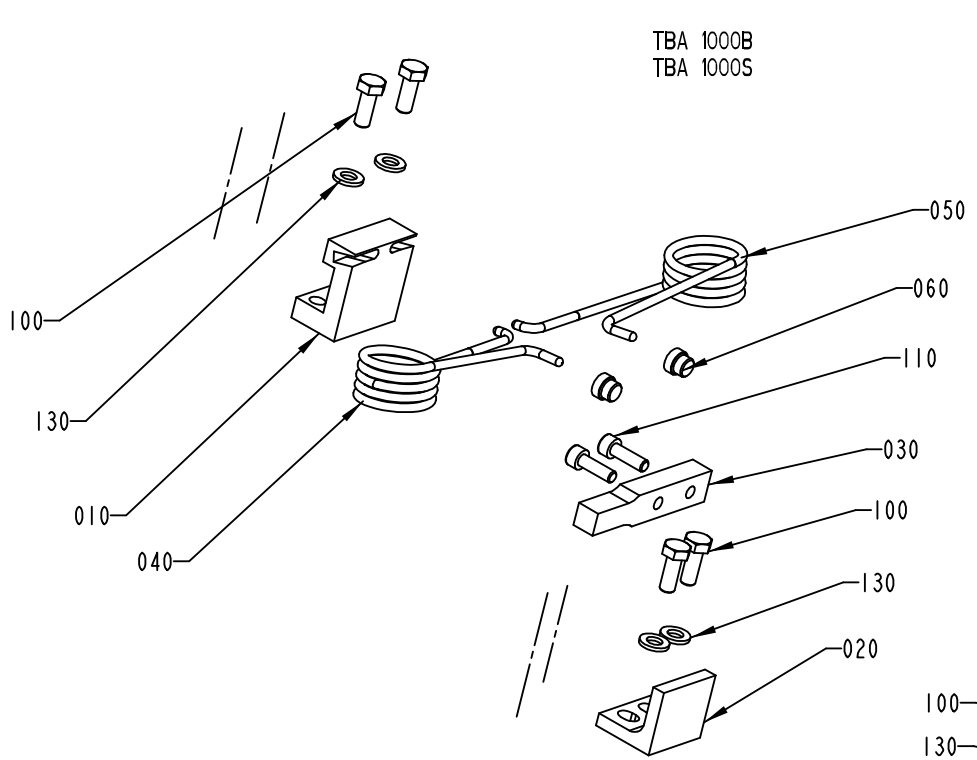

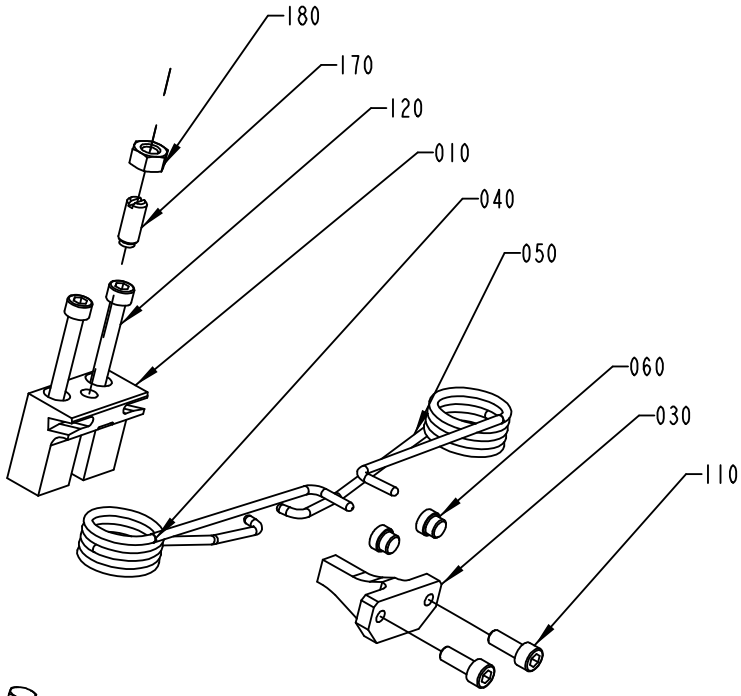

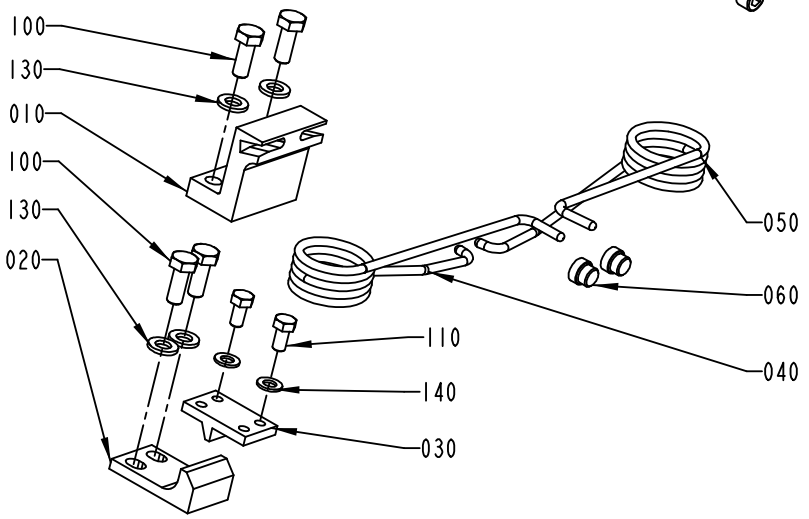

TBA 1500S
TBA 1000SQ
TBA 500S

TPA 1000S

1334636-2
ECN 73647

Pos	Part No	UN	Qty	Description	Page No
TBA 1000SQ (Cont'd) (See drawing on page: 2-36)					
170	1511556-0000		1	SET SCREW	
180	312605-0318		1	HEXAGON NUT, M6M M8 A280	
TBA 1500S (See drawing on page: 2-36)					
010	1349319-0000		1	CANTILEVER	
030	1349320-0000		1	CATCH	
040	1143216-0000		1	SPRING	
050	1143215-0000		1	SPRING	
060	1144601-0000		2	GUIDE STUD	
110	312115-0368		2	SCREW ISO4762 M6X16 A4	
120	312115-0378		2	SCREW ISO4762 M6X40 A4 80	
170	1511556-0000		1	SET SCREW	
180	312605-0318		1	HEXAGON NUT, M6M M8 A280	
TBA 1890S, TBA 2000S (See drawing on page: 2-44)					
010	2634515-0000		1	CANTILEVER	
040	2662165-0000		1	SPRING	
050	2662166-0000		1	SPRING	
075	2652896-0000		2	SHAFT	
080	2662167-0000		2	BUSHING	
090	2663376-0000		2	WASHER	
095	90458-0073		2	WASHER 6,4/30, H=1,5	
095	2663375-0000		2	WASHER	
100	312115-0368		2	SCREW ISO4762 M6X16 A4	
100	312115-0367		2	SCREW ISO4762 M6X14 A4	
120	312105-0331		1	SCREW M6S ISO 4017 M5X20 A480	
125	312105-0341		2	SCREW M6S ISO 4014 M5X50 A480	
130	315105-0146		3	WASHER BRB5,3X10RFR	
190	312105-0367		2	SCREW M6S ISO 4017 M6X14 A480	
190	312105-0366		2	SCREW M6S ISO 4017 M6X12 A480	
TPA 0330SQ (See drawing on page: 2-38)					
010	1539172-0000		1	CANTILEVER	
030	1539887-0000		1	CATCH	
040	1350263-0000		1	SPRING RIGHT	
050	1350264-0000		1	SPRING LEFT	
060	1144601-0000		2	GUIDE STUD	
110	312105-0325		2	SCREW M6S ISO 4017 M5X10 A480	
120	312115-0368		2	SCREW ISO4762 M6X16 A4	
TPA 0500SQ (See drawing on page: 2-40)					
010	2563666-0000		1	CANTILEVER	
030	2527725-0000		1	CATCH	
040	2563670-0000		1	SPRING	
050	2563669-0000		1	SPRING	
070	2563671-0000		1	SHAFT	
075	2563667-0000		2	SHAFT	
080	1538521-0000		2	BUSHING	
085	2563672-0000		2	HOLDER	
110	312105-0327		2	SCREW M6S ISO 4017 M5X12 A480	
120	312115-0366		2	SCREW ISO4762 M6X12 A4	
130	315105-0153		2	WASHER BRB6,4X12RFR	
190	312155-0339		2	SCREW DIN 7991 MF6S M5X40 A480	
200	312115-0367		2	SCREW ISO4762 M6X14 A4	
210	90005-0002		2	WASHER 16/6,7X1,5	
220	312105-0287		2	SCREW M6S ISO4017 M4X8 A470	
TPA 1000SQ (See drawing on page: 2-42)					
010	1523475-0000		1	CANTILEVER	
020	2558920-0000		1	STOP	
025	2558922-0000		1	STOP	
040	2557613-0000		1	SPRING	
050	2557612-0000		1	SPRING	
060	1144601-0000		2	GUIDE STUD	
070	2558929-0000		1	BAR	
100	312105-0368		10	SCREW M6S ISO 4017 M6X16 A480	
120	312105-0364		2	SCREW M6S ISO 4017 M6X10 A480	
130	315105-0153		10	WASHER BRB6,4X12RFR	
150	90062-0061		2	LOCK WASHER NORD-LOCK,6,5/10,8, T=2,2	

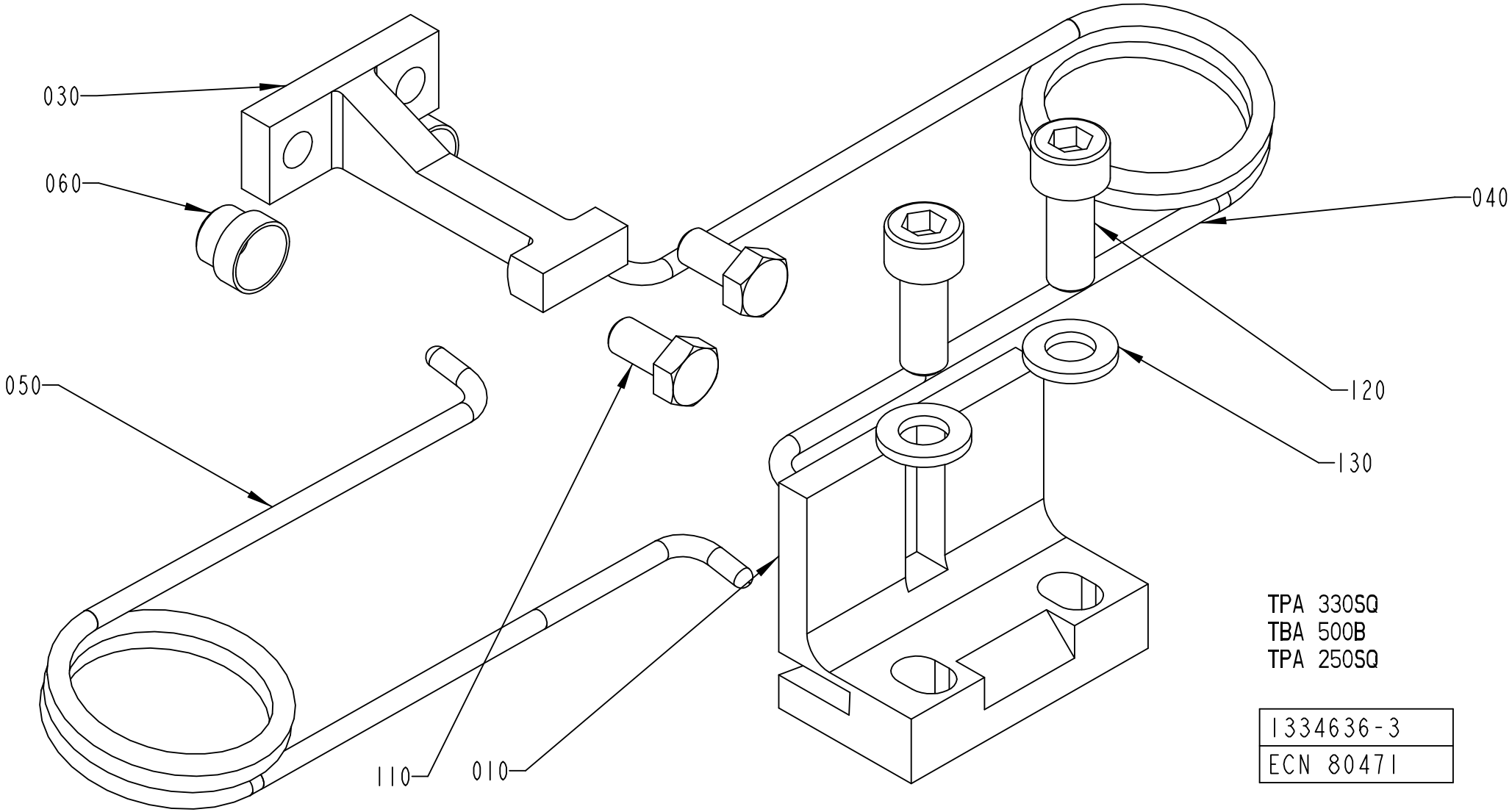
030
060
040
050
120
130
110
010
TPA 330SQ
TBA 500B
TPA 250SQ
1334636-3
ECN 80471

Pos	Part No	UN	Qty	Description	Page No	Pos	Part No	UN	Qty	Description	Page No

SEE PREVIOUS LISTS PAGES: 2-35, 2-37.

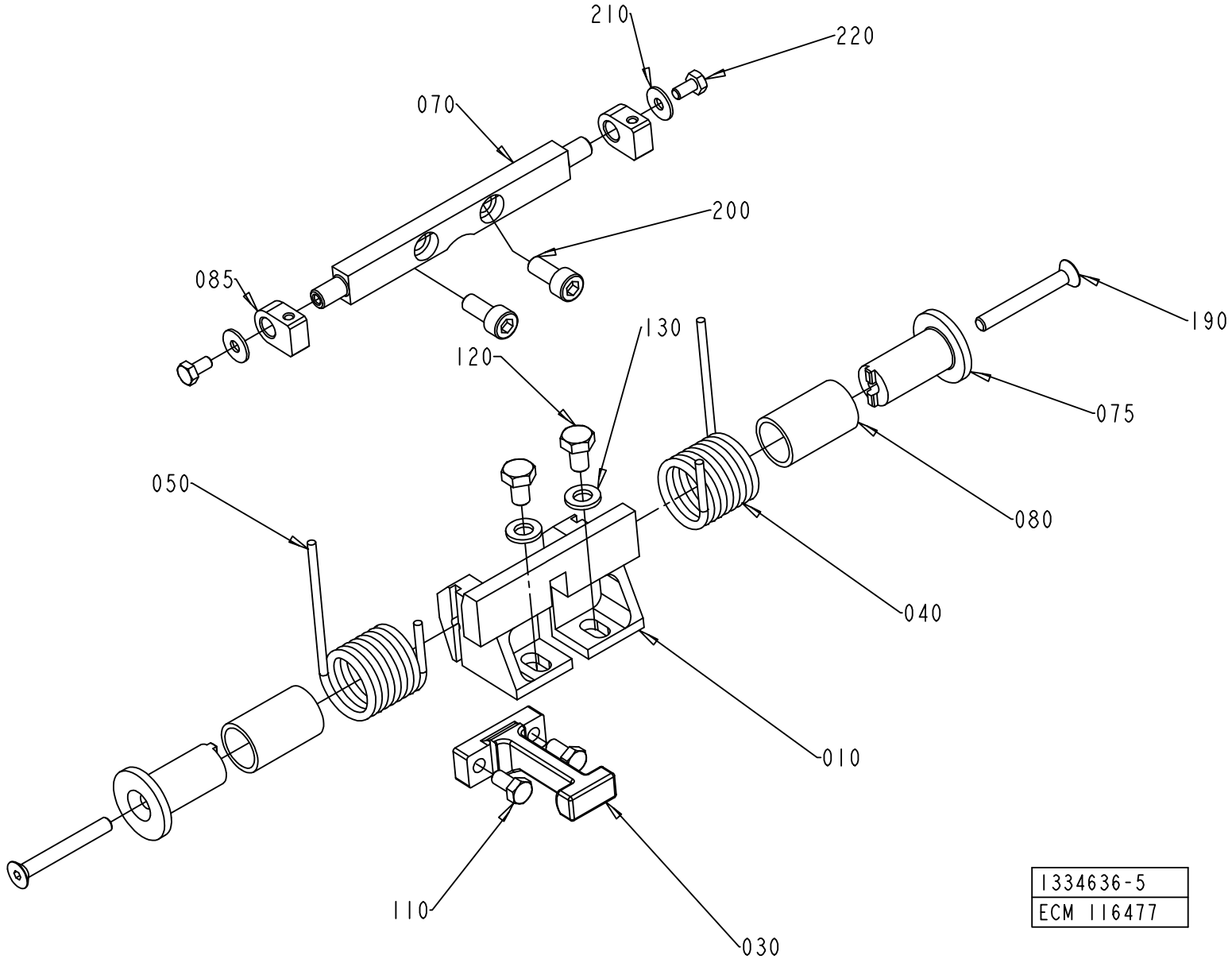
210
220
070
200
085
190
130
120
075
050
080
040
010
110
030
1334636-5
ECM 116477

Pos	Part No	UN	Qty	Description	Page No	Pos	Part No	UN	Qty	Description	Page No

SEE PREVIOUS LISTS PAGES: 2-35, 2-37.

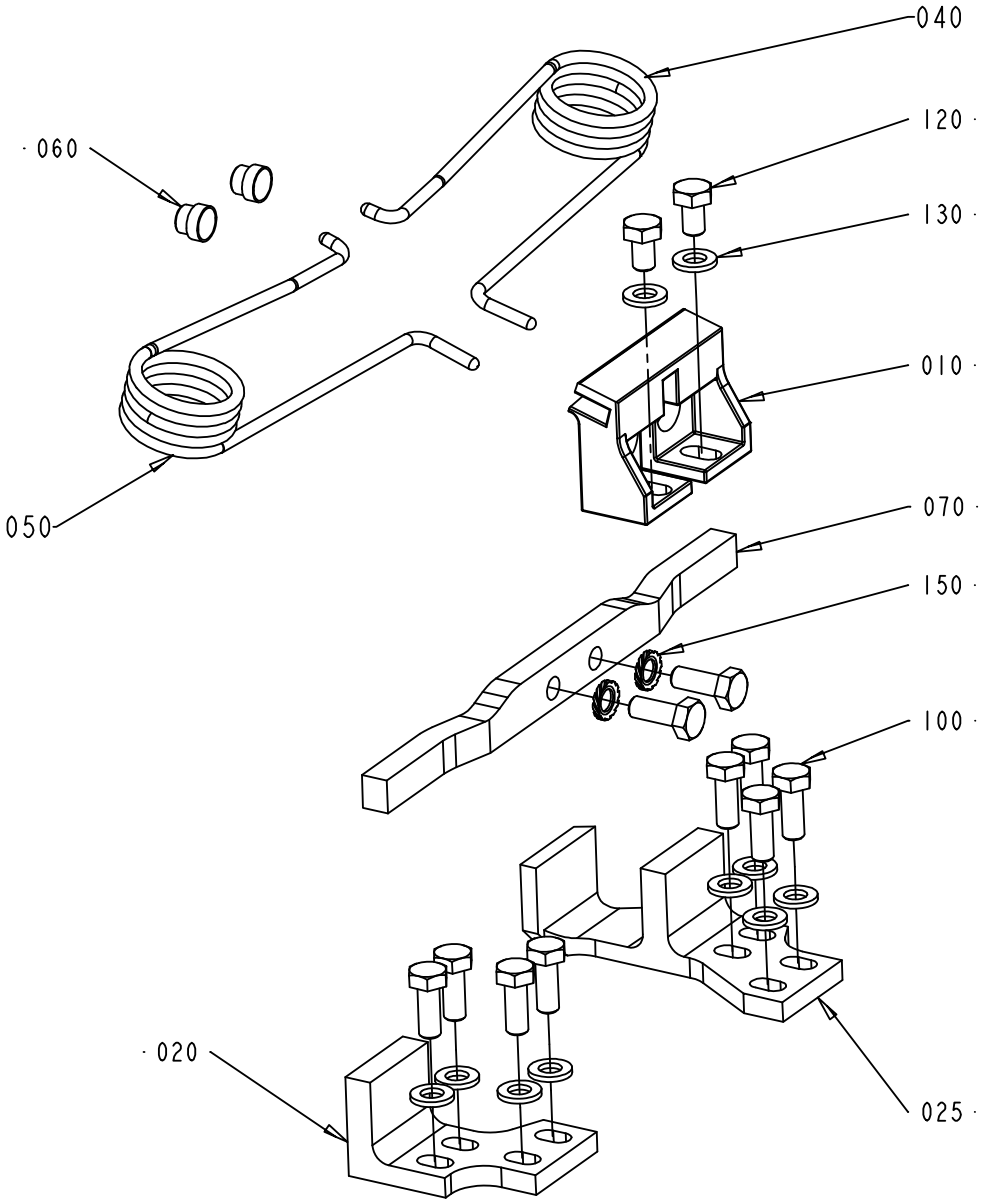

1334636-6
ECM 119888

Pos	Part No	UN	Qty	Description	Page No	Pos	Part No	UN	Qty	Description	Page No

SEE PREVIOUS LISTS PAGES: 2-35, 2-37.

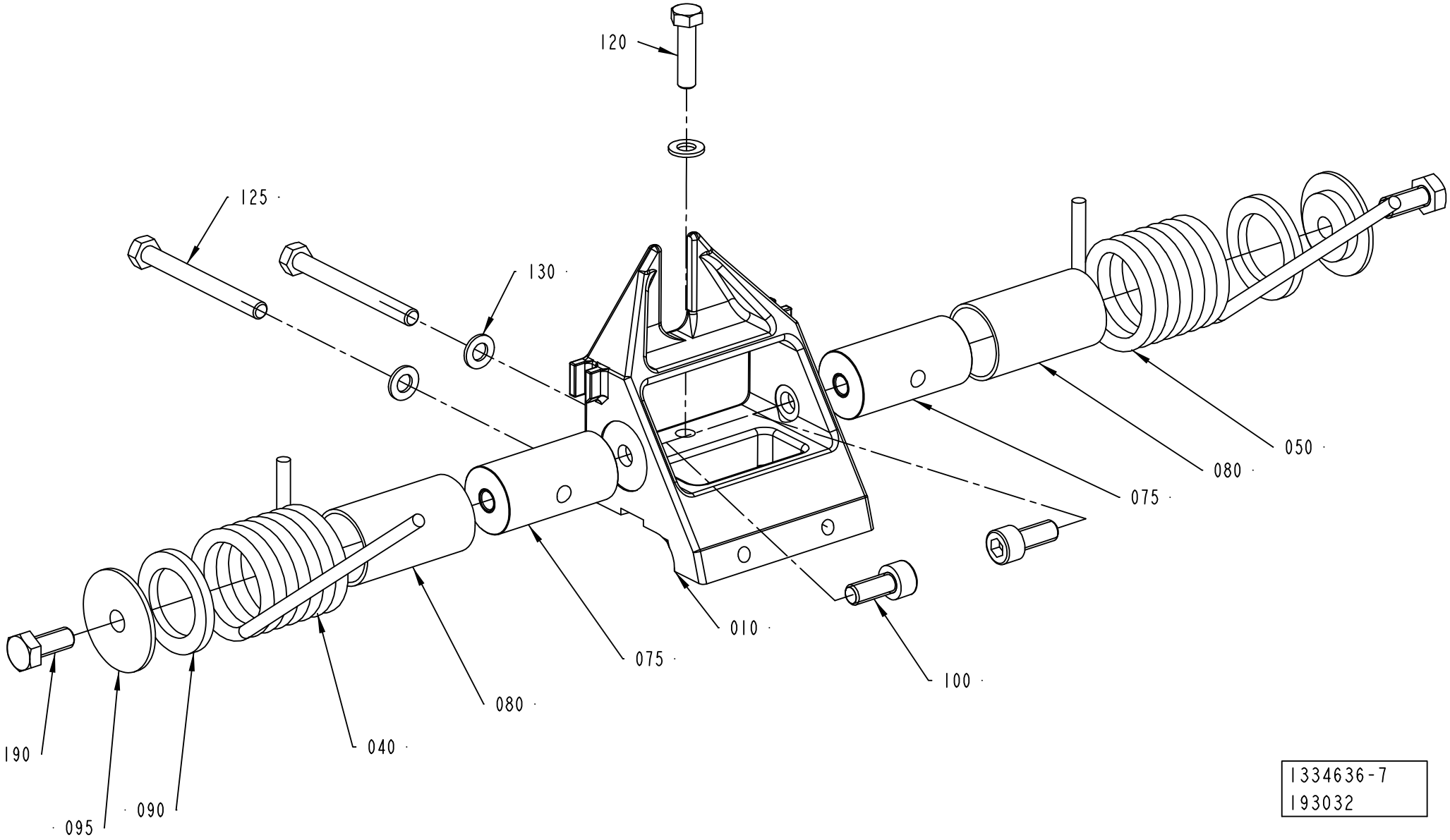

1334636-7
193032

Pos	Part No	UN	Qty	Description	Page No	Pos	Part No	UN	Qty	Description	Page No

SEE PREVIOUS LISTS PAGES: 2-35, 2-37.

VOLUME FLAP CUTTING

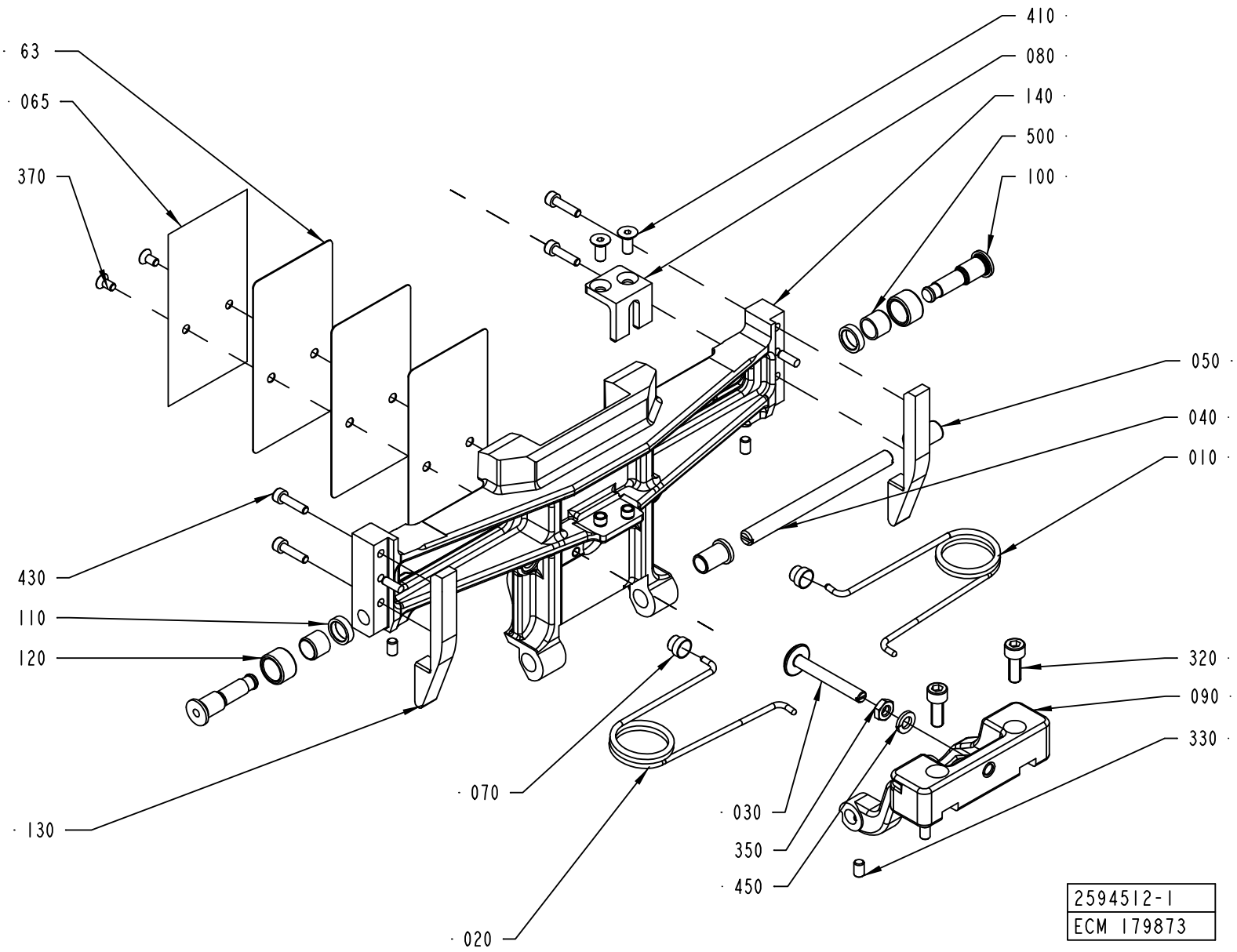

ECM: 193596 - 20041213
Group number: 2594512-0100
Assembly Drawing: 2594512-1_1_AB

This list covers pages from 2-46 to 2-49

Pos	Part No	UN	Qty	Description	Page No
TBA 0200B (See drawing on pages: 2-46, 4-34)					
010	1350263-0000		1	SPRING RIGHT	
020	1350264-0000		1	SPRING LEFT	
030	1511339-0000		1	STOP	
040	1499327-0000		1	SHAFT	
050	2530313-0000		2	BUSHING	
063	1538637-0000		3	VOLUME SHIM	
065	1524310-0000		1	VOLUME BULGE	
080	1499328-0000		1	STOPPER	
090	2605869-0000		1	FLAP HOLDER	
130	2629237-0000		2	CAM	
140	2604493-0000		1	VOLUME FLAP	
320	312115-0368		2	SCREW ISO4762 M6X16 A4	
370	312155-0287		2	SCREW DIN 7991 MF6S M4X8 A480	
410	312155-0325		2	SCREW DIN 7991 MF6S M5X10 A480	
430	312115-0289		4	SCREW ISO4762 M4X10 A4	
450	315402-0156		1	LOCK WASHER FBB 6,5	
TBA 0200M (See drawing on pages: 2-46, 4-34)					
010	1350263-0000		1	SPRING RIGHT	
020	1350264-0000		1	SPRING LEFT	
030	1511338-0000		1	STOP	
040	1499327-0000		1	SHAFT	
050	2530313-0000		2	BUSHING	
063	2640139-0000		3	VOLUME SHIM	
065	2640138-0000		1	VOLUME BULGE	
080	2606219-0000		1	STOPPER	
090	2606102-0000		1	FLAP HOLDER	
130	2649443-0000		2	CAM	
140	2639866-0000		1	VOLUME FLAP	
320	312115-0368		2	SCREW ISO4762 M6X16 A4	
370	312155-0287		2	SCREW DIN 7991 MF6S M4X8 A480	
410	312155-0325		2	SCREW DIN 7991 MF6S M5X10 A480	
430	312115-0291		4	SCREW ISO4762 M4X12 A4	
450	315402-0156		1	LOCK WASHER FBB 6,5	
TBA 0250B (See drawing on pages: 2-48, 4-36)					
010	1350263-0000		1	SPRING RIGHT	
020	1350264-0000		1	SPRING LEFT	
030	1511338-0000		1	STOP	
040	1499327-0000		1	SHAFT	
050	2530313-0000		2	BUSHING	
063	2605166-0000		4	VOLUME SHIM	
065	2609925-0000		1	VOLUME BULGE	
080	2693446-0000		1	STOPPER	
090	2606102-0000		1	FLAP HOLDER	
130	2606218-0000		2	CAM	
140	2605191-0000		1	VOLUME FLAP	
320	312115-0368		2	SCREW ISO4762 M6X16 A4	
370	312155-0287		2	SCREW DIN 7991 MF6S M4X8 A480	
410	312155-0327		2	SCREW DIN 7991 MF6S M5X12 A480	
440	312115-0289		4	SCREW ISO4762 M4X10 A4	
450	315402-0156		1	LOCK WASHER FBB 6,5	
TBA 0250S (See drawing on pages: 2-46, 4-34)					
010	1350263-0000		1	SPRING RIGHT	
020	1350264-0000		1	SPRING LEFT	
030	1511338-0000		1	STOP	
040	1499327-0000		1	SHAFT	
050	2530313-0000		2	BUSHING	
063	2662169-0000		3	VOLUME SHIM	
065	2662168-0000		1	VOLUME BULGE	
080	1499336-0000		1	STOPPER	
090	2606102-0000		1	FLAP HOLDER	
130	2662431-0000		2	CAM	
140	2661451-0000		1	VOLUME FLAP	
320	312115-0368		2	SCREW ISO4762 M6X16 A4	
370	312155-0287		2	SCREW DIN 7991 MF6S M4X8 A480	
410	312155-0327		2	SCREW DIN 7991 MF6S M5X12 A480	
430	312115-0293		4	SCREW ISO4762 M4X16 A4	
450	315402-0156		1	LOCK WASHER FBB 6,5	
TBA 0330S (See drawing on pages: 2-46, 4-34)					
010	1350263-0000		1	SPRING RIGHT	
020	1350264-0000		1	SPRING LEFT	
030	1511338-0000		1	STOP	
040	1499327-0000		1	SHAFT	
050	2530313-0000		2	BUSHING	
063	2654290-0000		3	VOLUME SHIM	
065	979931-0000		1	VOLUME BULGE	
080	1499336-0000		1	STOPPER	
090	2606102-0000		1	FLAP HOLDER	
130	2629236-0000		2	CAM	
140	2604495-0000		1	VOLUME FLAP	
320	312115-0368		2	SCREW ISO4762 M6X16 A4	
370	312155-0287		2	SCREW DIN 7991 MF6S M4X8 A480	
410	312155-0327		2	SCREW DIN 7991 MF6S M5X12 A480	
430	312115-0293		4	SCREW ISO4762 M4X16 A4	

Machine Type | Group Description | Used-In | Group Number | Page No

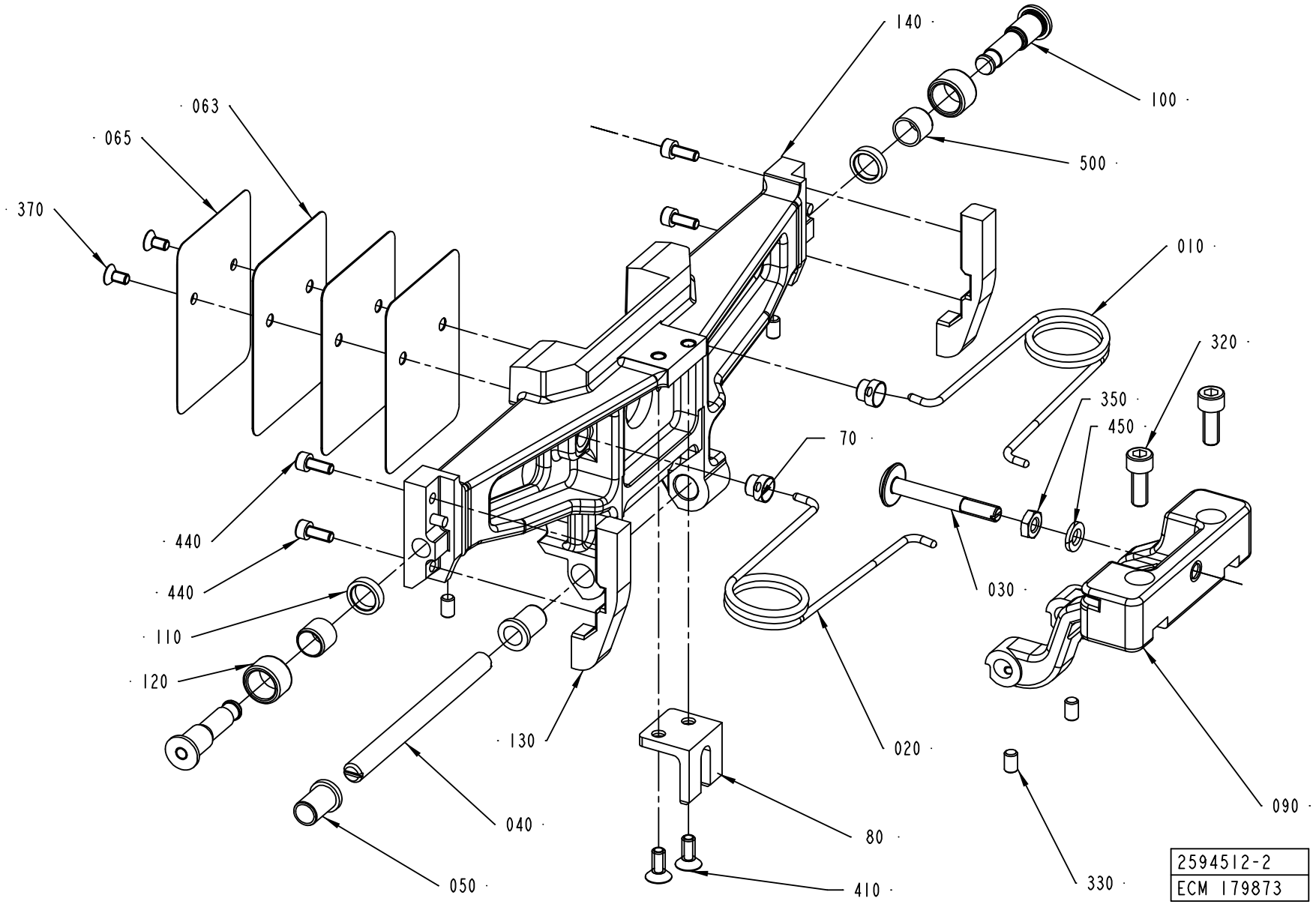
140
100
063
065
500
370
010
320
350
450
70
440
440
030
110
120
130
020
090
040
80
050
410
330
2594512-2
ECM 179873

Pos	Part No	UN	Qty	Description	Page No
TBA 0330S (Cont'd) (See drawing on pages: 2-46, 4-34)					
450	315402-0156		1	LOCK WASHER FBB 6,5	
TBA 0500B (See drawing on pages: 2-46, 4-34)					
010	1350263-0000		1	SPRING RIGHT	
020	1350264-0000		1	SPRING LEFT	
030	1499348-0000		1	STOP	
040	1487946-0000		1	SHAFT	
050	1487948-0000		2	BUSHING	
063	1511336-0000		3	VOLUME SHIM	
065	1511335-0000		1	VOLUME BULGE	
080	1499349-0000		1	STOPPER	
090	1499346-0000		1	FLAP HOLDER	
130	1499350-0000		2	CAM	
140	1499357-0000		1	VOLUME FLAP	
320	312115-0368		2	SCREW ISO4762 M6X16 A4	
370	312145-0289		2	SCREW ISO 2009 MFS M4X10 A4	
410	312155-0323		2	SCREW DIN 7991 MF6S M5X8 A480	
430	312115-0291		4	SCREW ISO4762 M4X12 A4	
TBA 1000B (See drawing on pages: 2-46, 4-34)					
010	1348483-0000		1	SPRING RIGHT	
020	1348484-0000		1	SPRING LEFT	
030	1487945-0000		1	STOP	
040	1487946-0000		1	SHAFT	
050	1487948-0000		2	BUSHING	
063	1511337-0000		3	VOLUME SHIM	
065	26075-0000		1	VOLUME BULGE	
080	1487943-0000		1	STOPPER	
090	1499345-0000		1	FLAP HOLDER	
130	1499356-0000		2	CAM	
140	1499358-0000		1	VOLUME FLAP	
320	312115-0368		2	SCREW ISO4762 M6X16 A4	
370	312141-0222		2	SCREW ISO 2009 MFS M3X8 4.8 EL.PL	
410	312115-0323		2	SCREW ISO4762 M5X8 A4	
430	312115-0287		4	SCREW ISO4762 M4X8 A4	
Common Parts					
070	1144601-0000		2	GUIDE STUD	
100	1512146-0000		2	AXLE PIN	
110	1512147-0000		2	WASHER	
120	1499355-0000		2	ROLLER	
330	312318-0323		4	SCREW ISO4029 M5X8 A4	
350	312625-0316		1	HEXAGON THIN NUT, EN 24035 ML6M M6 A4	
500	321136-0140		2	BUSHING, 10X12X10 MM	

Pos	Part No	UN	Qty	Description	Page No

Machine Type | Group Description | Used-In | Group Number | Page No

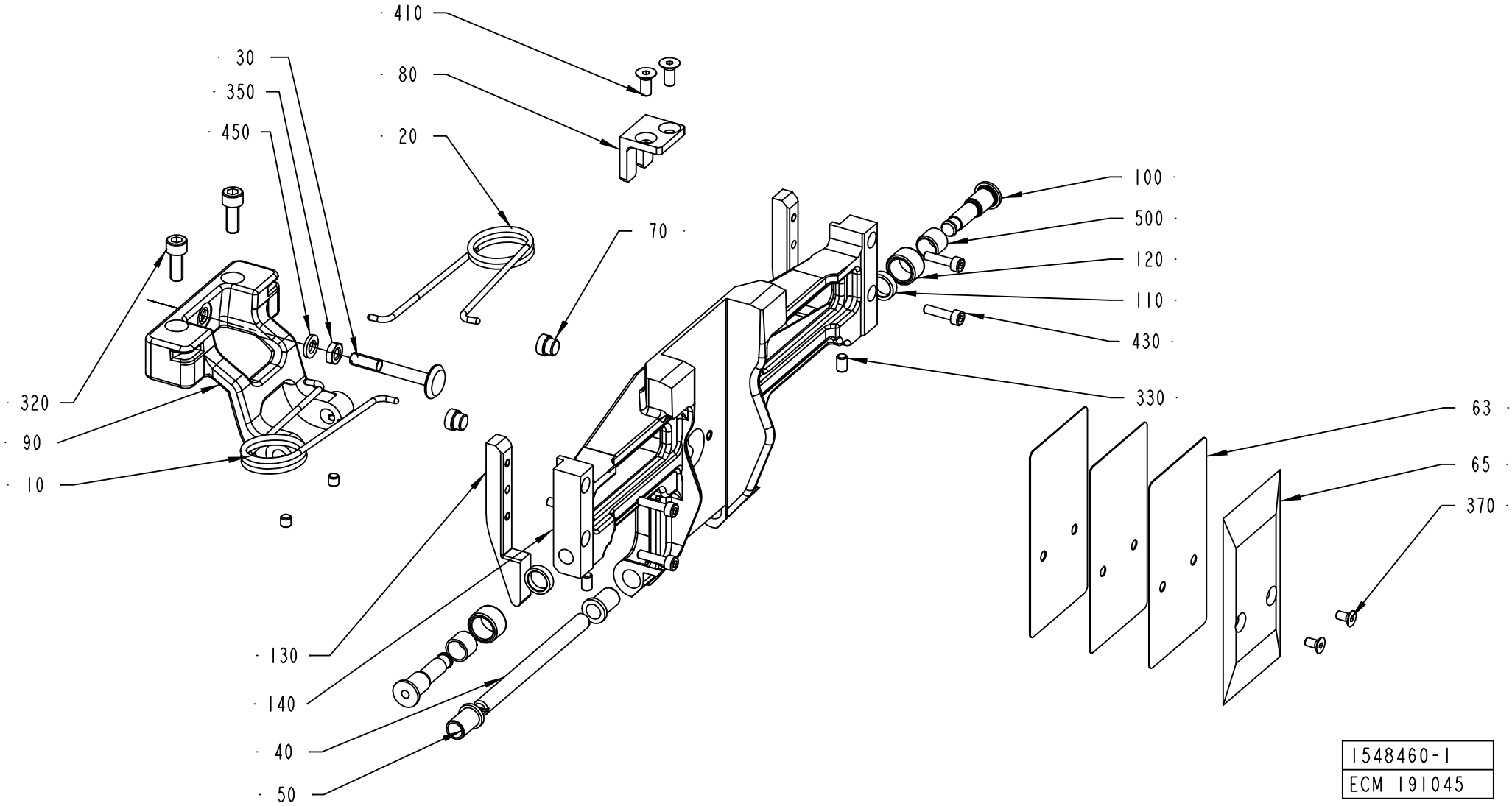
410
30
80
350
20
450
100
500
70
120
110
430
320
330
63
90
65
10
370
130
140
40
50
1548460-1
ECM 191045

ECM: 193595 - 20041213
Group number: 1548460-0100
Assembly Drawing: 1548460-1_1_AC

This list covers pages from 2-50 to 2-53

Pos	Part No	UN	Qty	Description	Page No
TBA 0200B (See drawing on pages: 2-50, 4-38)					
010	1350263-0000		1	SPRING RIGHT	
020	1350264-0000		1	SPRING LEFT	
030	1511339-0000		1	STOP	
040	1499327-0000		1	SHAFT	
050	2530313-0000		2	BUSHING	
063	1538637-0000		3	VOLUME SHIM	
065	1524310-0000		1	VOLUME BULGE	
080	1499328-0000		1	STOPPER	
090	2605869-0000		1	FLAP HOLDER	
130	2629237-0000		2	CAM	
140	2604494-0000		1	1OLUME FLAP	
370	312155-0287		2	SCREW DIN 7991 MF6S M4X8 A480	
410	312155-0325		2	SCREW DIN 7991 MF6S M5X10 A480	
430	312115-0289		4	SCREW ISO4762 M4X10 A4	
450	315402-0156		1	LOCK WASHER FBB 6,5	
TBA 0200M (See drawing on pages: 2-50, 4-38)					
010	1350263-0000		1	SPRING RIGHT	
020	1350264-0000		1	SPRING LEFT	
030	1511338-0000		1	STOP	
040	1499327-0000		1	SHAFT	
050	2530313-0000		2	BUSHING	
063	2640139-0000		3	VOLUME SHIM	
065	2640138-0000		1	VOLUME BULGE	
080	2606219-0000		1	STOPPER	
090	2606102-0000		1	FLAP HOLDER	
130	2649443-0000		2	CAM	
140	2639867-0000		1	VOLUME FLAP	
370	312155-0287		2	SCREW DIN 7991 MF6S M4X8 A480	
410	312155-0325		2	SCREW DIN 7991 MF6S M5X10 A480	
410	312155-0327		2	SCREW DIN 7991 MF6S M5X12 A480	
430	312115-0291		4	SCREW ISO4762 M4X12 A4	
450	315402-0156		1	LOCK WASHER FBB 6,5	
TBA 0250B (See drawing on pages: 2-52, 4-40)					
010	1350263-0000		1	SPRING RIGHT	
020	1350264-0000		1	SPRING LEFT	
030	1511338-0000		1	STOP	
040	1499327-0000		1	SHAFT	
050	2530313-0000		2	BUSHING	
063	2605166-0000		4	VOLUME SHIM	
065	2609925-0000		1	VOLUME BULGE	
080	2693446-0000		1	STOPPER	
090	2606102-0000		1	FLAP HOLDER	
130	2606218-0000		2	CAM	
140	2605192-0000		1	VOLUME FLAP	
370	312155-0287		2	SCREW DIN 7991 MF6S M4X8 A480	
410	312155-0327		2	SCREW DIN 7991 MF6S M5X12 A480	
440	312115-0289		4	SCREW ISO4762 M4X10 A4	
450	315402-0156		1	LOCK WASHER FBB 6,5	
TBA 0250S (See drawing on pages: 2-50, 4-38)					
010	1350263-0000		1	SPRING RIGHT	
020	1350264-0000		1	SPRING LEFT	
030	1511338-0000		1	STOP	
040	1499327-0000		1	SHAFT	
050	2530313-0000		2	BUSHING	
063	2662169-0000		3	VOLUME SHIM	
065	2662168-0000		1	VOLUME BULGE	
080	1499336-0000		1	STOPPER	
090	2606102-0000		1	FLAP HOLDER	
130	2662431-0000		2	CAM	
140	2661450-0000		1	VOLUME FLAP	
370	312155-0287		2	SCREW DIN 7991 MF6S M4X8 A480	
430	312115-0293		4	SCREW ISO4762 M4X16 A4	
450	315402-0156		1	LOCK WASHER FBB 6,5	
TBA 0330S (See drawing on pages: 2-50, 4-38)					
010	1350263-0000		1	SPRING RIGHT	
020	1350264-0000		1	SPRING LEFT	
030	1511338-0000		1	STOP	
040	1499327-0000		1	SHAFT	
050	2530313-0000		2	BUSHING	
063	2654290-0000		3	VOLUME SHIM	
065	979931-0000		1	VOLUME BULGE	
080	1499336-0000		1	STOPPER	
090	2606102-0000		1	FLAP HOLDER	
130	2629236-0000		2	CAM	
140	2604496-0000		1	VOLUME FLAP	
370	312155-0287		2	SCREW DIN 7991 MF6S M4X8 A480	
410	312155-0327		2	SCREW DIN 7991 MF6S M5X12 A480	
430	312115-0293		4	SCREW ISO4762 M4X16 A4	
450	315402-0156		1	LOCK WASHER FBB 6,5	
TBA 0500B (See drawing on pages: 2-50, 4-38)					
010	1350263-0000		1	SPRING RIGHT	
020	1350264-0000		1	SPRING LEFT	
030	1499348-0000		1	STOP	

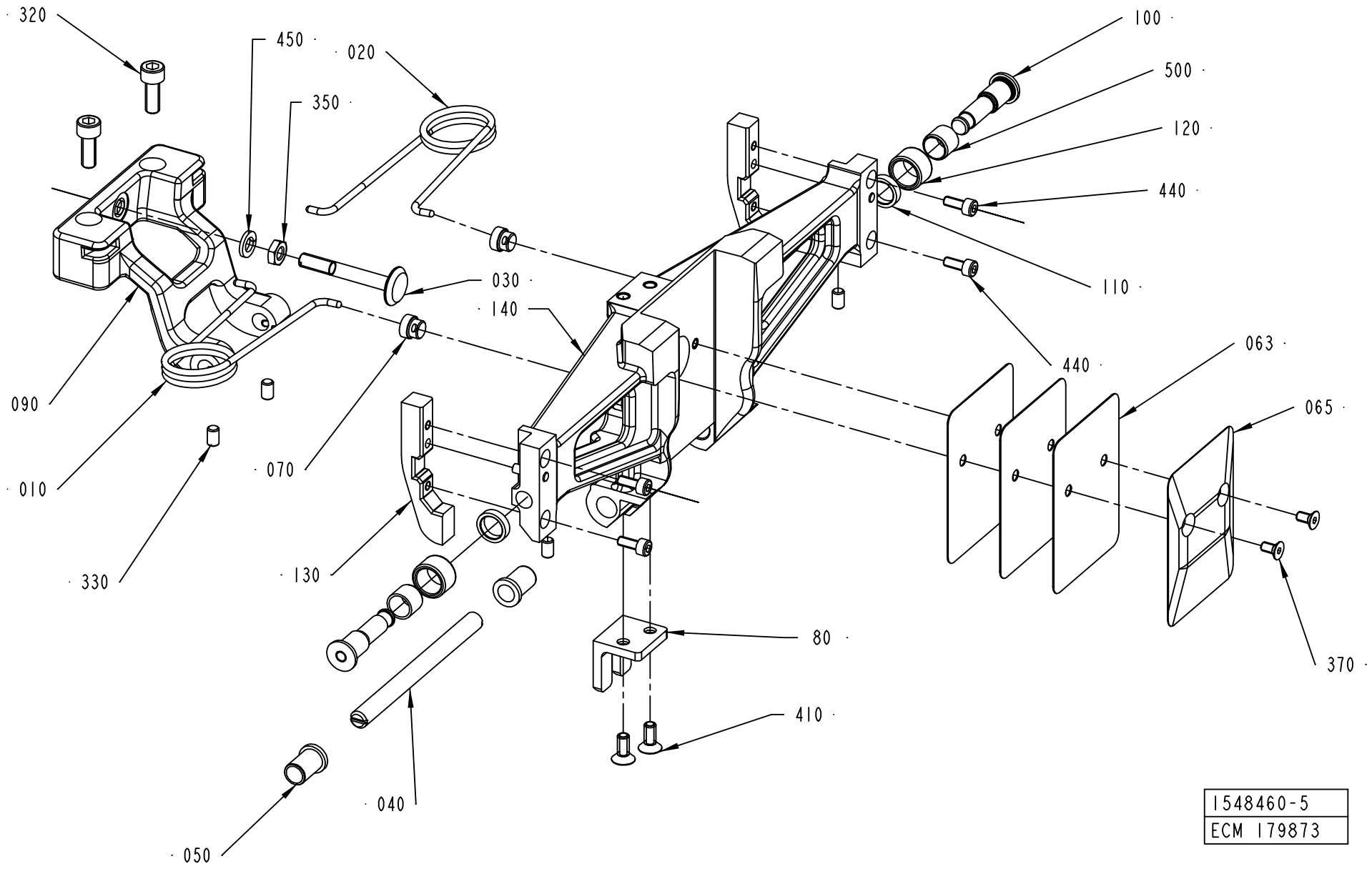
320
450
020
350
100
500
120
440
030
140
110
440
063
065
090
010
070
330
130
80
370
410
040
050
1548460-5
ECM 179873

ECM: 193595 - 20041213
Group number: 1548460-0100
Assembly Drawing: 1548460-5_1_AB

This list covers pages from 2-50 to 2-53

Pos	Part No	UN	Qty	Description	Page No
TBA 0500B (Cont'd) (See drawing on pages: 2-50, 4-38)					
040	1487946-0000		1	SHAFT	
050	1487948-0000		2	BUSHING	
063	1511336-0000		3	VOLUME SHIM	
065	1511335-0000		1	VOLUME BULGE	
080	1499349-0000		1	STOPPER	
090	1499346-0000		1	FLAP HOLDER	
130	1499350-0000		2	CAM	
140	1499357-0000		1	VOLUME FLAP	
370	312145-0289		2	SCREW ISO 2009 MFS M4X10 A4	
410	312155-0323		2	SCREW DIN 7991 MF6S M5X8 A480	
430	312115-0291		4	SCREW ISO4762 M4X12 A4	
TBA 1000B (See drawing on pages: 2-50, 4-38)					
010	1348483-0000		1	SPRING RIGHT	
020	1348484-0000		1	SPRING LEFT	
030	1487945-0000		1	STOP	
040	1487946-0000		1	SHAFT	
050	1487948-0000		2	BUSHING	
063	1511337-0000		3	VOLUME SHIM	
065	26075-0000		1	VOLUME BULGE	
080	1487943-0000		1	STOPPER	
090	1499345-0000		1	FLAP HOLDER	
130	1499356-0000		2	CAM	
140	1499358-0000		1	VOLUME FLAP	
370	312141-0222		2	SCREW ISO 2009 MFS M3X8 4.8 EL.PL	
410	312115-0323		2	SCREW ISO4762 M5X8 A4	
430	312115-0287		4	SCREW ISO4762 M4X8 A4	
Common Parts					
070	1144601-0000		2	GUIDE STUD	
100	1512146-0000		2	AXLE PIN	
110	1512147-0000		2	WASHER	
120	1499355-0000		2	ROLLER	
320	312115-0368		2	SCREW ISO4762 M6X16 A4	
330	312318-0323		4	SCREW ISO4029 M5X8 A4	
350	312625-0316		1	HEXAGON THIN NUT, EN 24035 ML6M M6 A4	
500	321136-0140		2	BUSHING, 10X12X10 MM	

Pos	Part No	UN	Qty	Description	Page No

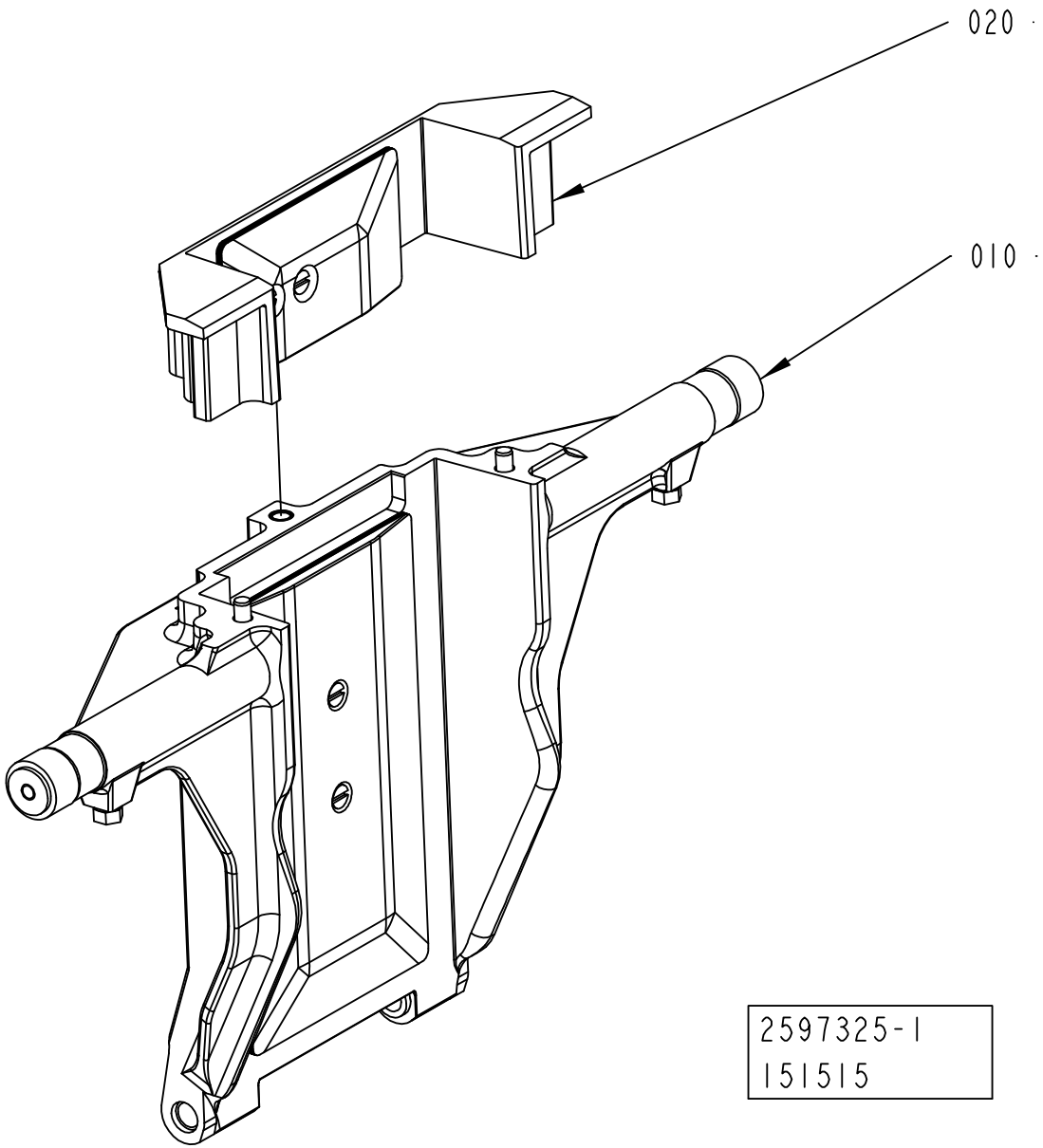
020
010
2597325-1
151515

ECM: 175826 - 20040923
Group number: 2597325-0100
Assembly Drawing: 2597325-1_1_AA

Pos	Part No	UN	Qty	Description	Page No
-					
010	2696182-0100		1	VOLUME FLAP	**2-57**
020	2695955-0100		1	VOLUME FLAP	**2-59**

Pos	Part No	UN	Qty	Description	Page No

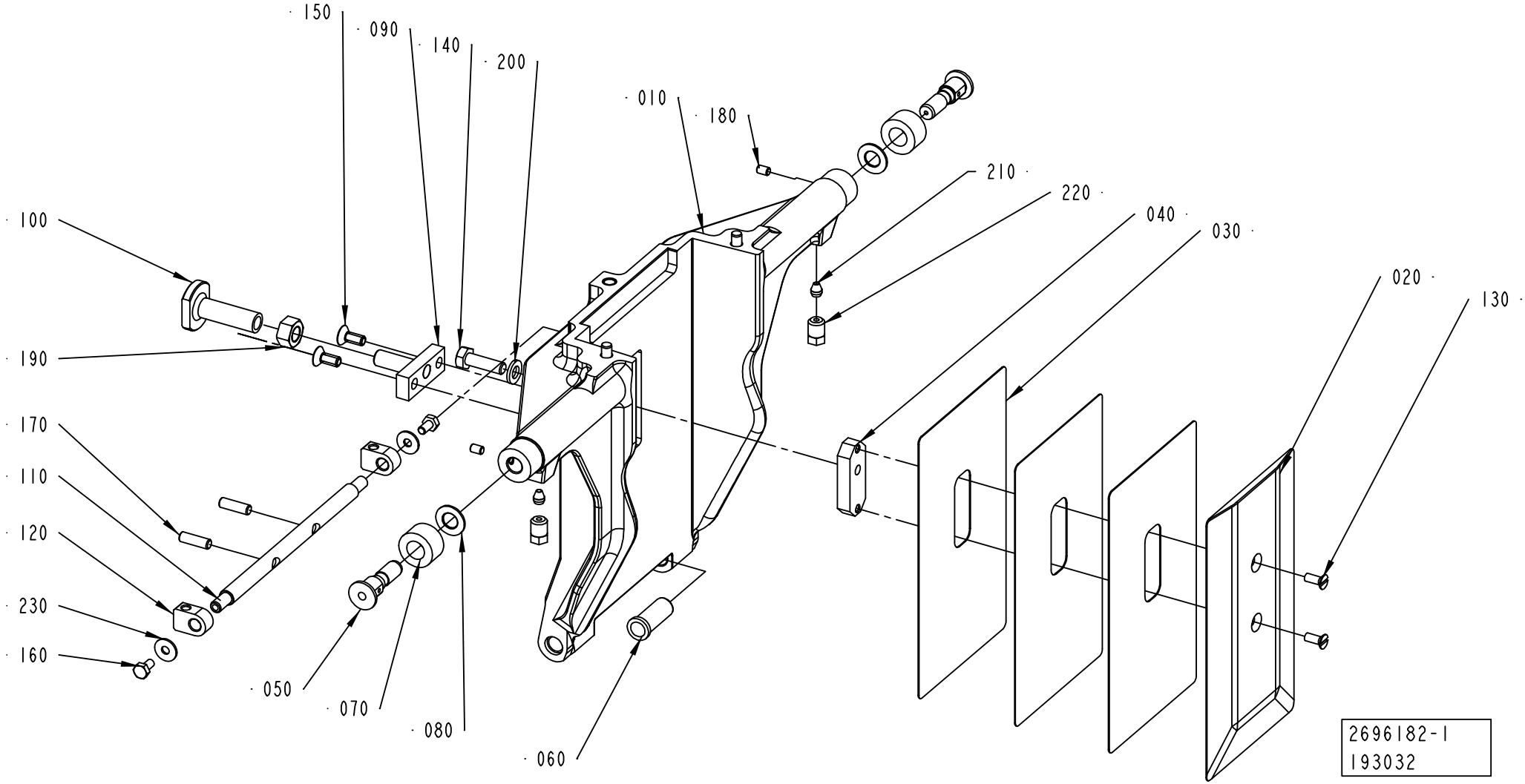
150
090
140
200
010
180
210
220
040
030
020
130
100
190
170
110
120
230
160
050
070
080
060
2696182-1
193032

ECM: 194878 - 20041203
Group number: 2696182-0100
Assembly Drawing: 2696182-1_1_AB

Pos	Part No	UN	Qty	Description	Page No
-					
010	2588304-0000		1	VOLUME FLAP	
020	2594888-0000		1	VOLUME BULGE	
030	2594890-0000		3	VOLUME SHIM	
040	2594893-0000		1	WEDGE	
050	434320-0000		2	AXLE PIN	
060	1255916-0000		2	BUSHING	
070	434321-0000		2	CURVE ROLLER	
080	19972-0000		2	WASHER	
090	2660401-0000		1	CATCH	
100	2660400-0000		1	STOP	
110	2566332-0000		1	SHAFT	
120	2566333-0000		2	HOLDER	
130	312145-0289		2	SCREW ISO 2009 MFS M4X10 A4	
140	312105-0370		1	SCREW M6S ISO 4017 M6X20 A480	
150	312155-0327		2	SCREW DIN 7991 MF6S M5X12 A480	
160	312105-0287		2	SCREW M6S ISO4017 M4X8 A470	
170	312318-0329		2	SCREW ISO4029 M5X16 A4	
180	312318-0285		2	SCREW ISO4029 M4X6 A4	
190	312607-0318		1	HEXAGON NUT, EN 24032 M6M M8 A480	
200	315105-0153		1	WASHER BRB6,4X12RFR	
210	90028-0020		2	CONE TUBE 2,5MM	
220	90134-0063		2	BUSHING/NUT M8X1, D=2,5 MM	
230	90005-0082		2	WASHER PLAIN ROUND 4,3(M4)/12,H=1	

Pos	Part No	UN	Qty	Description	Page No

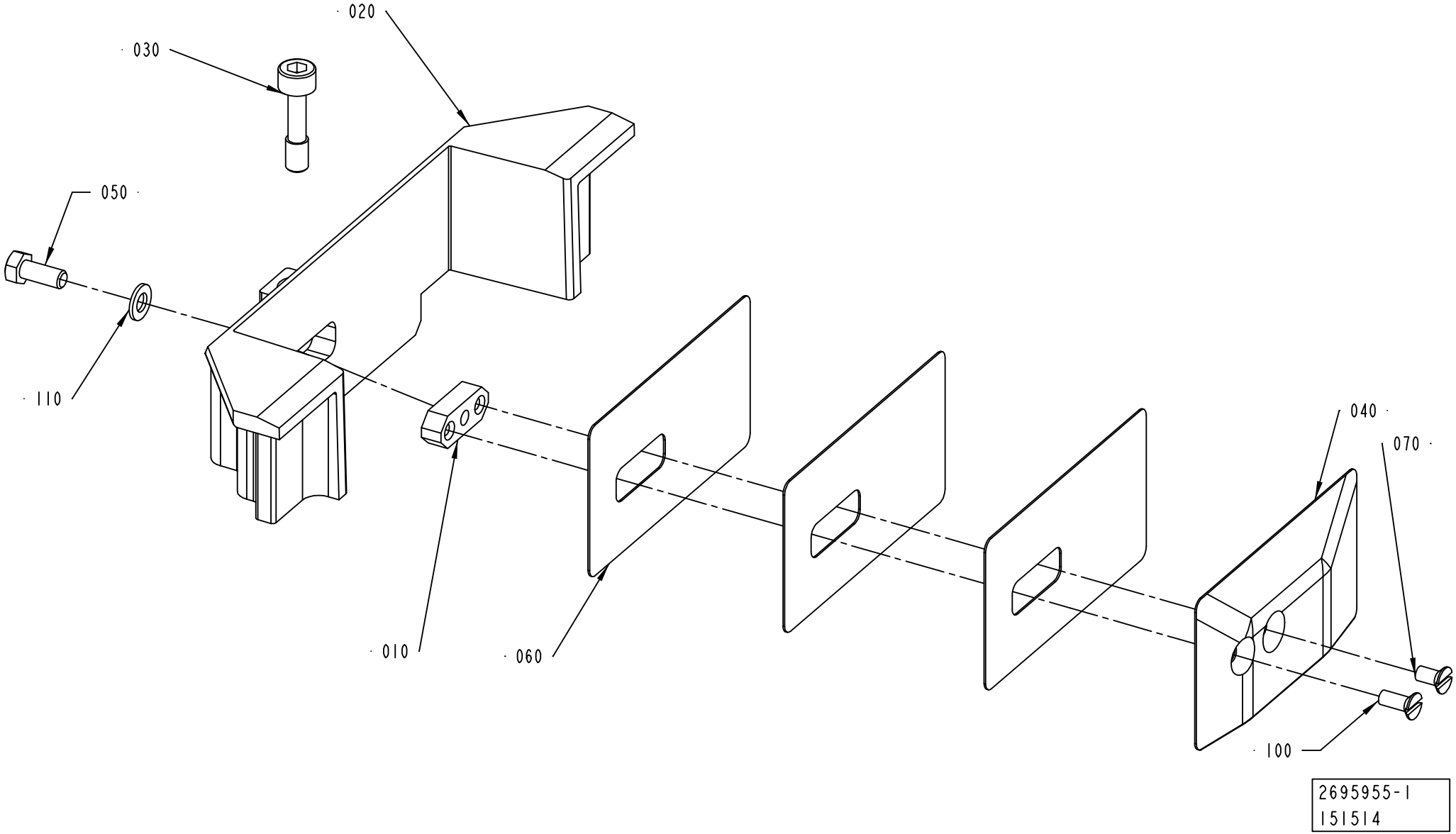
020
030
050
110
010
060
040
070
100
2695955-1
151514

ECM: 191301 - 20041104
Group number: 2695955-0100
Assembly Drawing: 2695955-1_1_AA

Pos	Part No	UN	Qty	Description	Page No
TBA 1890S					
020	2588306-0000		1	VOLUME FLAP	
040	2594889-0000		1	VOLUME BULGE	
060	2594891-0000		3	VOLUME SHIM	
TBA 2000S					
020	2588307-0000		1	VOLUME FLAP	
040	2672746-0000		1	VOLUME BULGE	
060	2672745-0000		3	VOLUME SHIM	
Common Parts					
010	1037734-0000		1	WEDGE	
030	2594896-0000		2	SCREW	
050	312105-0327		1	SCREW M6S ISO 4017 M5X12 A480	
070	312145-0287		1	SCREW ISO 2009 MFS M4X8 A4	
100	312145-0289		1	SCREW ISO 2009 MFS M4X10 A4	
110	315105-0146		1	WASHER BRB5,3X10RFR	

Pos	Part No	UN	Qty	Description	Page No

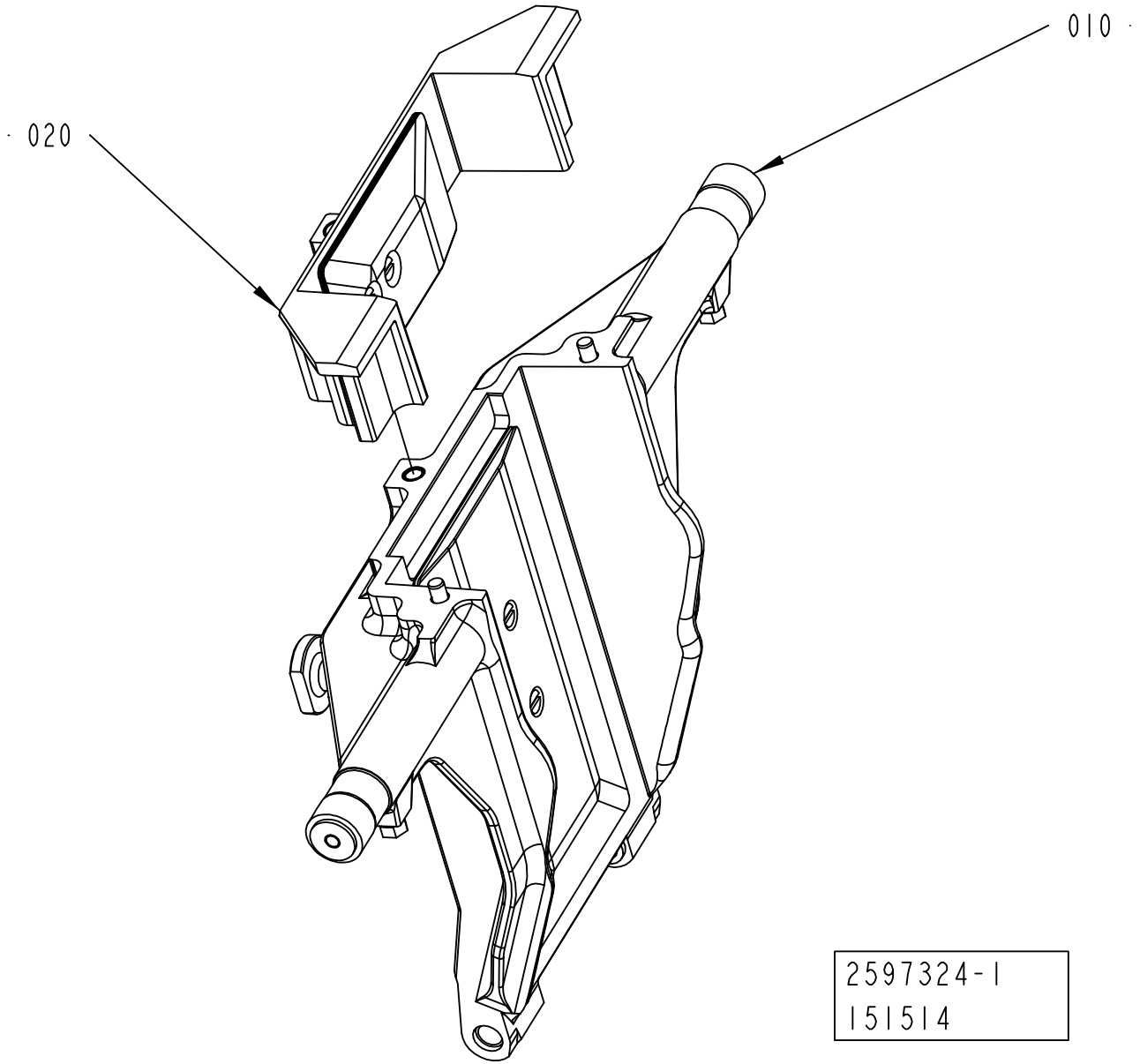
010
020
2597324-1
151514

ECM: 175825 - 20040923
Group number: 2597324-0100
Assembly Drawing: 2597324-1_1_AA

Pos	Part No	UN	Qty	Description	Page No
-					
010	2696156-0100		1	VOLUME FLAP	**2-63**
020	2695955-0100		1	VOLUME FLAP	**2-59**

Pos	Part No	UN	Qty	Description	Page No

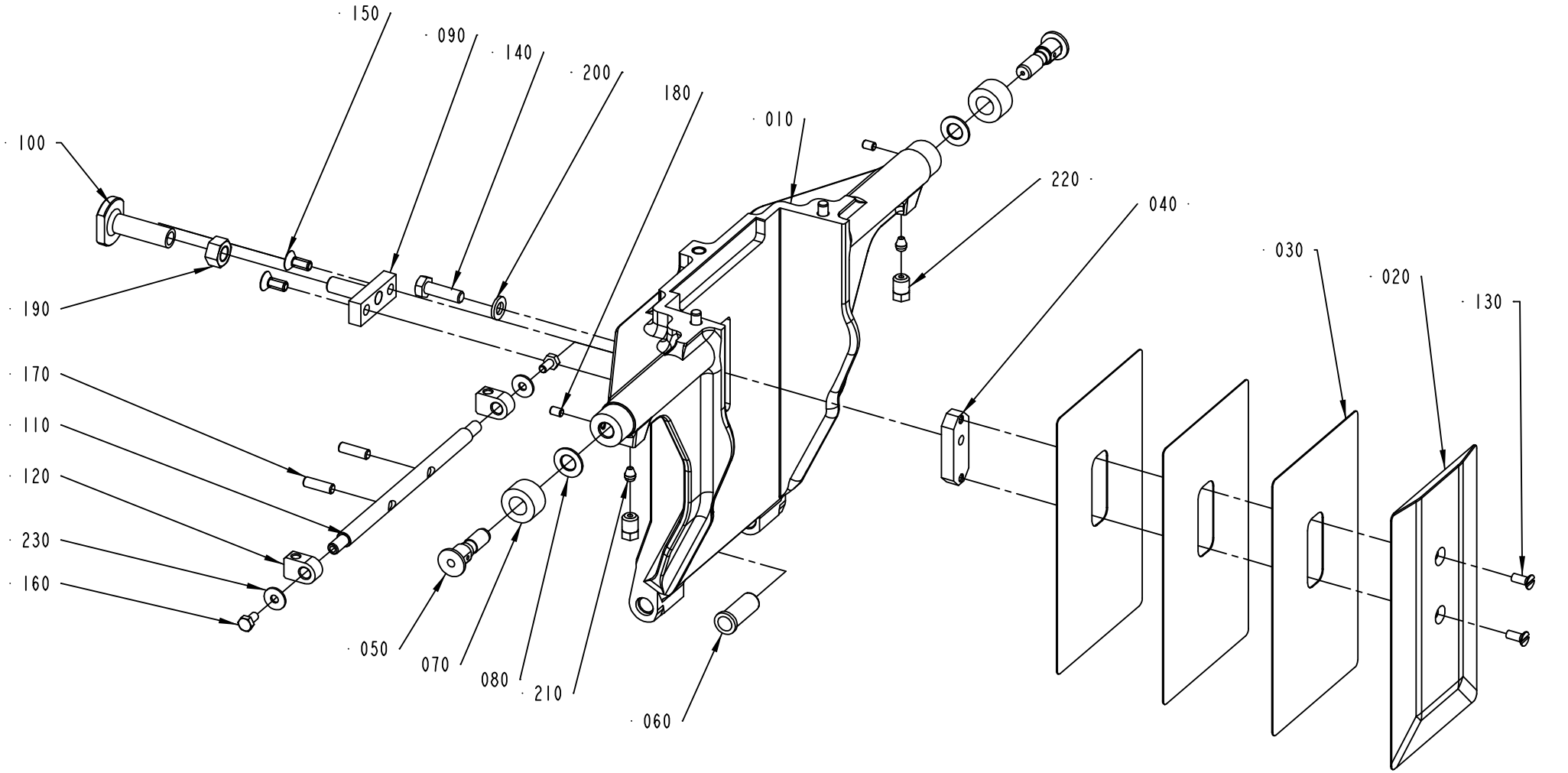
150
090
140
200
180
010
100
220
040
030
020
130
190
170
110
120
230
160
050
070
080
210
060
2696156-1
193032

ECM: 194877 - 20041203
Group number: 2696156-0100
Assembly Drawing: 2696156-1_1_AB

Pos	Part No	UN	Qty	Description	Page No
-					
010	2588305-0000		1	VOLUME FLAP	
020	2594888-0000		1	VOLUME BULGE	
030	2594890-0000		3	VOLUME SHIM	
040	2594893-0000		1	WEDGE	
050	434320-0000		2	AXLE PIN	
060	1255916-0000		2	BUSHING	
070	434321-0000		2	CURVE ROLLER	
080	19972-0000		2	WASHER	
090	2660401-0000		1	CATCH	
100	2660400-0000		1	STOP	
110	2566332-0000		1	SHAFT	
120	2566333-0000		2	HOLDER	
130	312145-0289		2	SCREW ISO 2009 MFS M4X10 A4	
140	312105-0370		1	SCREW M6S ISO 4017 M6X20 A480	
150	312155-0327		2	SCREW DIN 7991 MF6S M5X12 A480	
160	312105-0287		2	SCREW M6S ISO4017 M4X8 A470	
170	312318-0329		2	SCREW ISO4029 M5X16 A4	
180	312318-0285		2	SCREW ISO4029 M4X6 A4	
190	312607-0318		1	HEXAGON NUT, EN 24032 M6M M8 A480	
200	315105-0153		1	WASHER BRB6,4X12RFR	
210	90028-0020		2	CONE TUBE 2,5MM	
220	90134-0063		2	BUSHING/NUT M8X1, D=2,5 MM	
230	90005-0082		2	WASHER PLAIN ROUND 4,3(M4)/12,H=1	

Pos	Part No	UN	Qty	Description	Page No

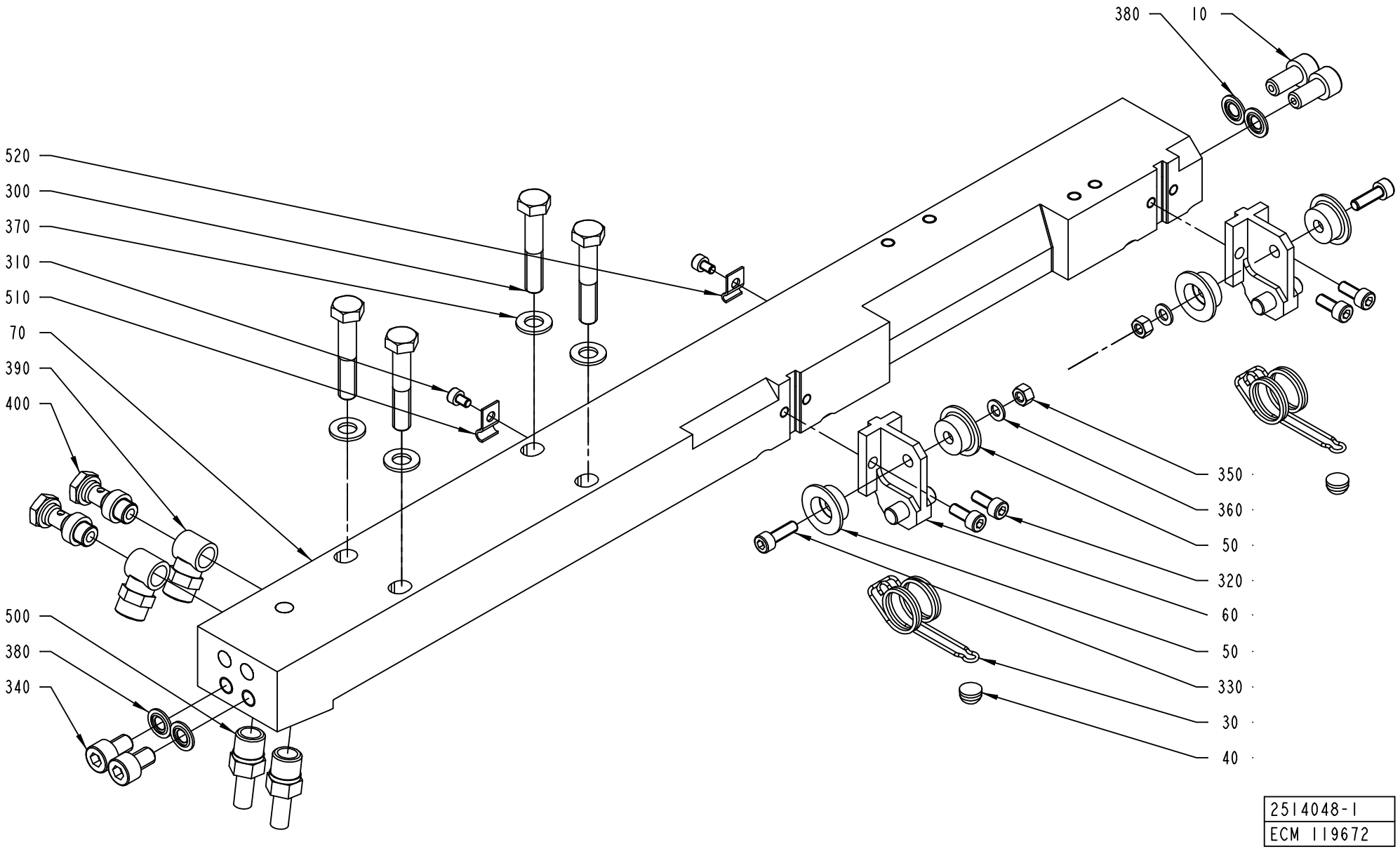
380
10
520
300
370
310
510
70
390
400
500
380
340
350
360
50
320
60
50
330
30
40
2514048-1
ECM 119672

ECM: 181188 - 20041013
Group number: 2514048-0200
Assembly Drawing: 2514048-1_1_AA

This list covers pages from 2-64 to 2-67

Pos	Part No	UN	Qty	Description	Page No
A3/FLEX NOQC (See drawing on page: 2-64)					
070	2514049-0000		1	CARRIER	
310	312115-0285		2	SCREW ISO4762 M4X6 A4	
510	90165-0056		1	PIPE CLIP FOR TUBE D=4 MM	
520	90165-0058		1	PIPE CLIP FOR TUBE D=25 MM	
TBA 0250S, TBA 0200M (See drawing on page: 2-66)					
070	2514045-0000		1	CARRIER	
080	2641225-0000		1	INSERT	
410	312155-0323		3	SCREW DIN 7991 MF6S M5X8 A480	
TBA 0500B QC, TBA 1000B QC, TBA 0200B QC, TBA 0330S QC, TBA 0250B QC (See drawing on page: 2-66)					
070	2514045-0000		1	CARRIER	
080	1549312-0000		1	INSERT	
410	312155-0323		3	SCREW DIN 7991 MF6S M5X8 A480	
TBA 1890S QC, TBA 2000S QC (See drawing on page: 2-64)					
070	2566340-0000		1	CARRIER	
310	312115-0285		2	SCREW ISO4762 M4X6 A4	
510	90165-0056		1	PIPE CLIP FOR TUBE D=4 MM	
520	90165-0058		1	PIPE CLIP FOR TUBE D=25 MM	
Common Parts					
010	1036343-0000		2	SCREW	
030	1549378-0000		2	SPRING	
040	1129552-0000		2	KNOB	
050	1129833-0000		4	GUIDE ROLLER	
060	2588013-0000		2	BRACKET	
300	312105-0460		4	SCREW M6S ISO 4014 M8X45 A480	
320	312115-0327		4	SCREW ISO4762 M5X12 A4	
330	312115-0329		2	SCREW ISO4762 M5X16 A4	
340	312115-0447		2	SCREW ISO4762 M8X12 A4	
350	312605-0314		2	HEXAGON NUT, M6M M5 A280	
360	315105-0146		2	WASHER BRB5,3X10RFR	
370	315105-0165		4	WASHER BRB8,4X16RFR	
380	315211-0104		4	BONDED SEAL SS/NBR90 M8	
390	342980-0121		2	BANJO-CONNECTION,RING 8/6-G1/8"	
400	342980-0303		2	BANJO-HOLLOW BOLT COUPL,EXT.THR.01-G1/8"	
500	90030-0065		2	PIPE CONNECTION	

Pos	Part No	UN	Qty	Description	Page No

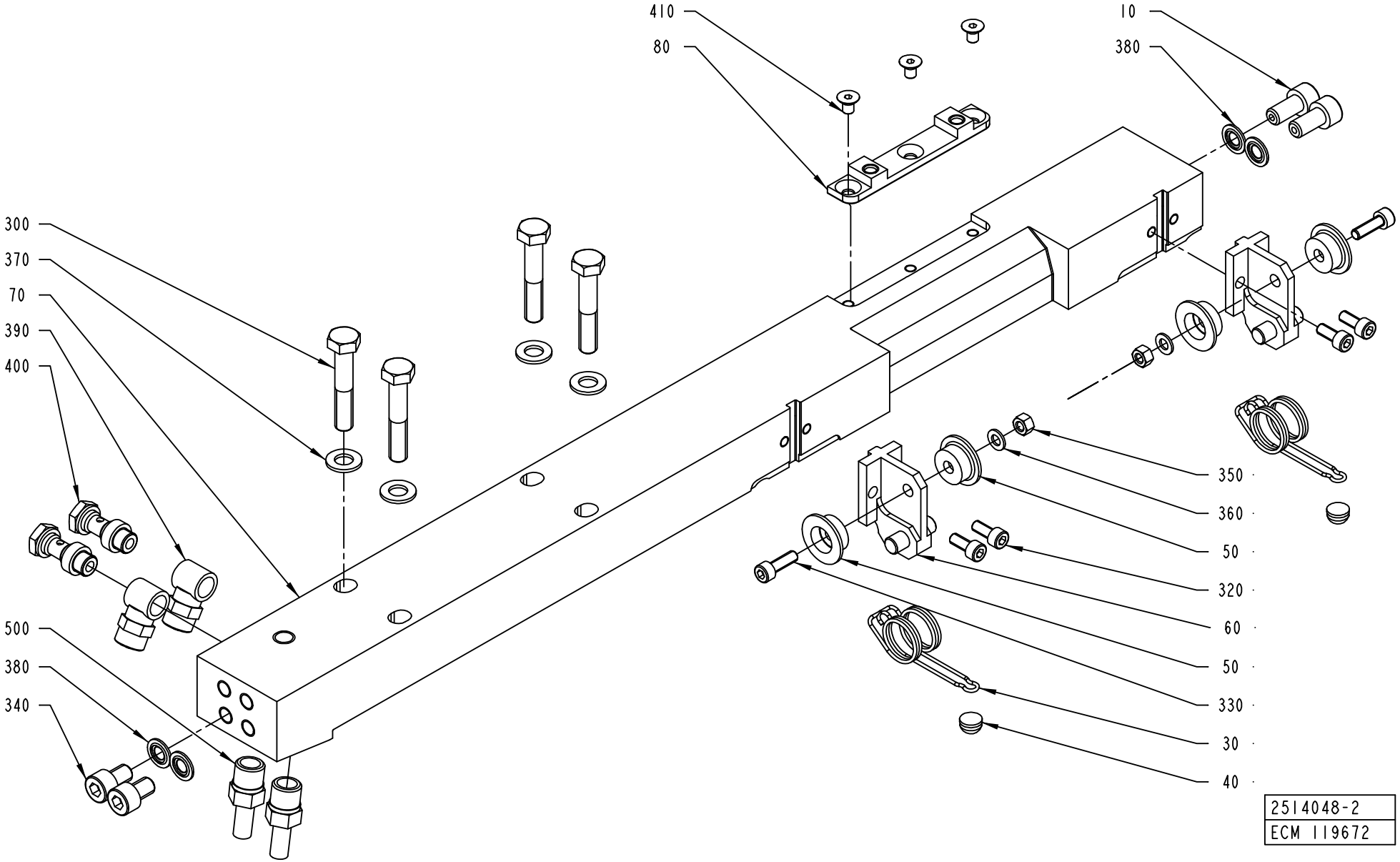
410
80
10
380
300
370
70
390
400
350
360
50
320
60
50
330
30
40
500
380
340
2514048-2
ECM 119672

ECM: 181188 - 20041013
Group number: 2514048-0200
Assembly Drawing: 2514048-2_1_AA

This list covers pages from 2-64 to 2-67

Pos	Part No	UN	Qty	Description	Page No
A3/FLEX NOQC (See drawing on page: 2-64)					
070	2514049-0000		1	CARRIER	
310	312115-0285		2	SCREW ISO4762 M4X6 A4	
510	90165-0056		1	PIPE CLIP FOR TUBE D=4 MM	
520	90165-0058		1	PIPE CLIP FOR TUBE D=25 MM	
TBA 0250S, TBA 0200M (See drawing on page: 2-66)					
070	2514045-0000		1	CARRIER	
080	2641225-0000		1	INSERT	
410	312155-0323		3	SCREW DIN 7991 MF6S M5X8 A480	
TBA 0500B QC, TBA 1000B QC, TBA 0200B QC, TBA 0330S QC, TBA 0250B QC (See drawing on page: 2-66)					
070	2514045-0000		1	CARRIER	
080	1549312-0000		1	INSERT	
410	312155-0323		3	SCREW DIN 7991 MF6S M5X8 A480	
TBA 1890S QC, TBA 2000S QC (See drawing on page: 2-64)					
070	2566340-0000		1	CARRIER	
310	312115-0285		2	SCREW ISO4762 M4X6 A4	
510	90165-0056		1	PIPE CLIP FOR TUBE D=4 MM	
520	90165-0058		1	PIPE CLIP FOR TUBE D=25 MM	
Common Parts					
010	1036343-0000		2	SCREW	
030	1549378-0000		2	SPRING	
040	1129552-0000		2	KNOB	
050	1129833-0000		4	GUIDE ROLLER	
060	2588013-0000		2	BRACKET	
300	312105-0460		4	SCREW M6S ISO 4014 M8X45 A480	
320	312115-0327		4	SCREW ISO4762 M5X12 A4	
330	312115-0329		2	SCREW ISO4762 M5X16 A4	
340	312115-0447		2	SCREW ISO4762 M8X12 A4	
350	312605-0314		2	HEXAGON NUT, M6M M5 A280	
360	315105-0146		2	WASHER BRB5,3X10RFR	
370	315105-0165		4	WASHER BRB8,4X16RFR	
380	315211-0104		4	BONDED SEAL SS/NBR90 M8	
390	342980-0121		2	BANJO-CONNECTION,RING 8/6-G1/8"	
400	342980-0303		2	BANJO-HOLLOW BOLT COUPL,EXT.THR.01-G1/8"	
500	90030-0065		2	PIPE CONNECTION	

Pos	Part No	UN	Qty	Description	Page No

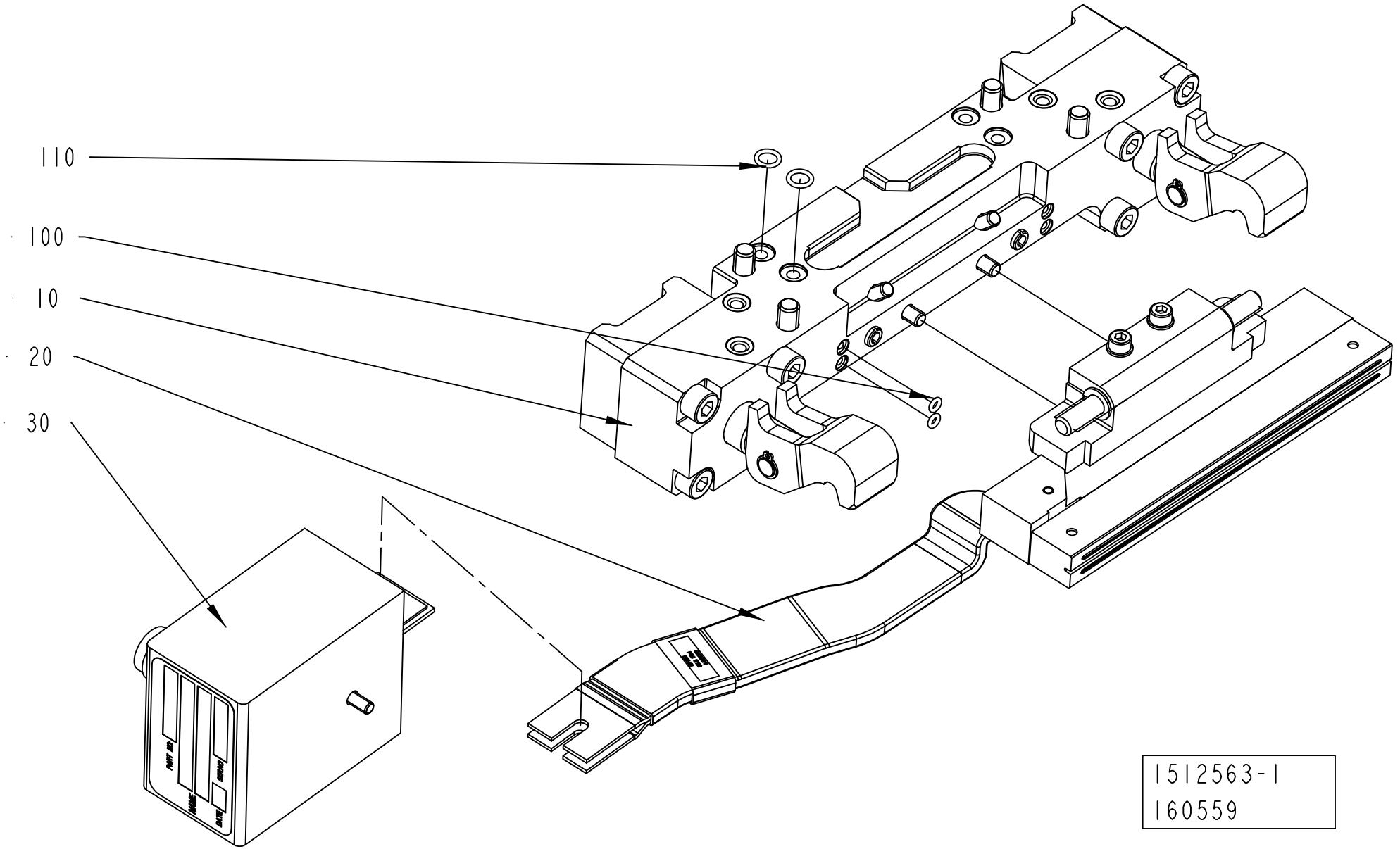
110
100
10
20
30
1512563-1
160559

ECM: 191288 - 20041104
Group number: 1512563-0200
Assembly Drawing: 1512563-1_1_AB

This list covers pages from 2-68 to 2-71

Pos	Part No	UN	Qty	Description	Page No
TBA 1890S QC, TBA 2000S QC (See drawing on pages: 2-68, 2-70)					
120	311103-0267		1	PARALLEL PIN ISO 2338 4M6X10 A1	
Common Parts					
010	2552005-0100		1	PRESSURE JAW	**2-73**
020	2552006-0100		1	INDUCTOR LEFT	**2-75, 2-77, 2-79, 2-81**
030	2546229-0100		1	ADAPTION TRANSFORMER	**2-83**
100	315202-0101		2	O-RING 3,1X1,6 MM	
110	315202-0105		2	O-RING 7,1X1,6 MM	

Pos	Part No	UN	Qty	Description	Page No

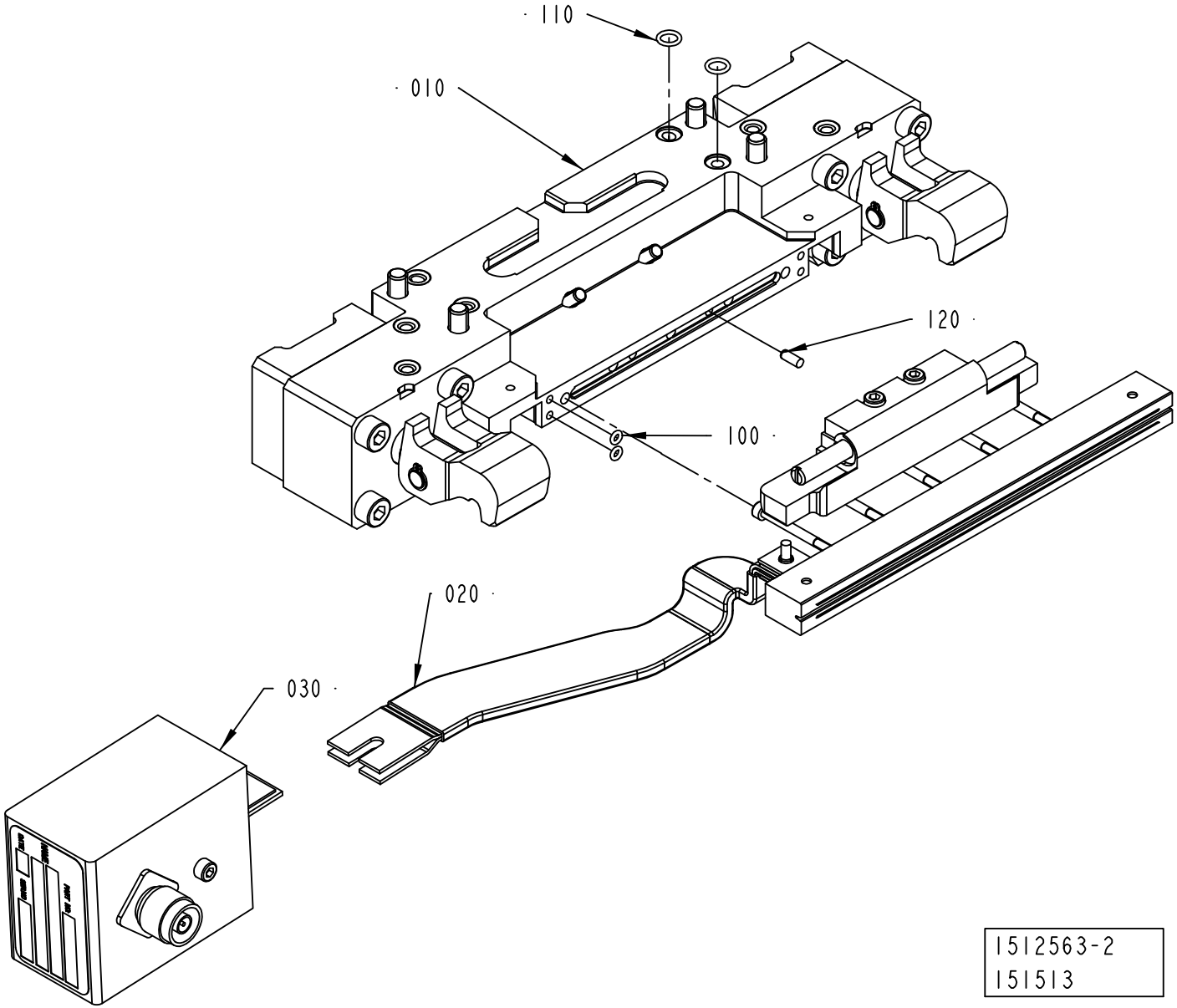

1512563-2
151513

ECM: 191288 - 20041104
Group number: 1512563-0200
Assembly Drawing: 1512563-2_1_AA

This list covers pages from 2-68 to 2-71

Pos	Part No	UN	Qty	Description	Page No
TBA 1890S QC, TBA 2000S QC (See drawing on pages: 2-68, 2-70)					
120	311103-0267		1	PARALLEL PIN ISO 2338 4M6X10 A1	
Common Parts					
010	2552005-0100		1	PRESSURE JAW	**2-73**
020	2552006-0100		1	INDUCTOR LEFT	**2-75, 2-77, 2-79, 2-81**
030	2546229-0100		1	ADAPTION TRANSFORMER	**2-83**
100	315202-0101		2	O-RING 3,1X1,6 MM	
110	315202-0105		2	O-RING 7,1X1,6 MM	

Pos	Part No	UN	Qty	Description	Page No

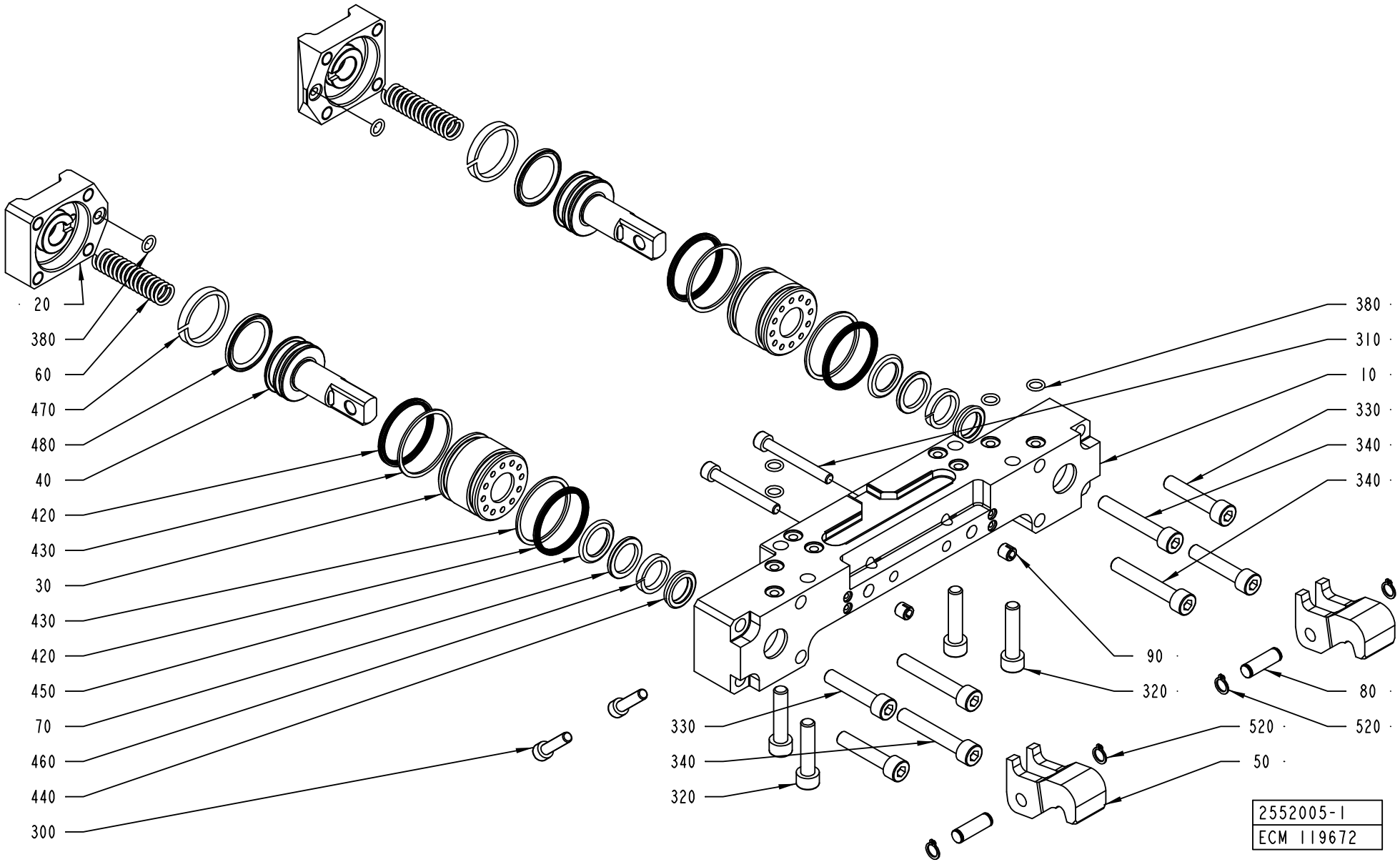
20
380
60
470
480
40
420
430
30
430
420
450
70
460
440
300
380
310
10
330
340
340
90
320
80
520
520
50
330
340
320
2552005-1
ECM 119672

ECM: 191292 - 20041104
Group number: 2552005-0100
Assembly Drawing: 2552005-1_1_AA

Pos	Part No	UN	Qty	Description	Page No
TBA 0330S, TBA 0200B, TBA 0250S, TBA 0200S, TBA 0200M, TBA 0250B, TPA 0330SQ					
010	2569908-0000		1	HOUSING	
020	2700151-0000		2	LID	
030	1349595-0000		2	SLEEVE	
040	929372-0000		2	PISTON	
050	1538349-0000		2	CATCH	
060	1260328-0000		2	SPRING	
080	950351-0000		2	SHAFT	
090	107426-0000		2	GUIDE SLEEVE	
310	312115-0380		2	SCREW ISO4762 M6X50 A4	
330	312115-0459		4	SCREW ISO4762 M8X40 A4	
420	90091-0359		4	X-SEAL 36,17X2,62 MM	
430	90091-0360		4	BACK-UP RING 37,5X1,4 MM	
470	90091-0391		2	SEAL SLYDRING	
480	90091-0398		2	PISTON SEAL, GLID RING T 20,5X28X3,2 MM	
TBA 0500S, TBA 0500B, TBA 1000S, TBA 1000SQ, TBA 1000B, TBA 1500S, TPA 1000SQ, TPA 0500SQ					
010	2569908-0000		1	HOUSING	
020	2700151-0000		2	LID	
030	1348504-0000		2	SLEEVE	
040	1349612-0000		2	PISTON	
050	1538349-0000		2	CATCH	
060	1260328-0000		2	SPRING	
080	950351-0000		2	SHAFT	
090	107426-0000		2	GUIDE SLEEVE	
310	312115-0380		2	SCREW ISO4762 M6X50 A4	
330	312115-0459		4	SCREW ISO4762 M8X40 A4	
420	90091-0359		4	X-SEAL 36,17X2,62 MM	
430	90091-0360		4	BACK-UP RING 37,5X1,4 MM	
470	90091-0368		2	WEAR RING 30X45X5,3 MM	
480	90091-0428		2	PISTON SEAL, GLID RING T 27,5X34,5X3,2 M	
TBA 1890S, TBA 2000S					
010	2566336-0000		1	BEARING HOUSING	
020	2588294-0000		2	LID	
030	2588295-0000		2	SLEEVE	
040	2588296-0000		2	PISTON	
050	2566338-0000		2	CATCH	
060	2594892-0000		2	SPRING	
080	2588297-0000		2	SHAFT	
420	90459-2146		4	X-SEAL 42,52X2,62 MM	
430	90459-2145		4	BACK-UP RING 43,5X1,4 MM	
470	90091-0074		2	WEAR RING 35X40X5,3 MM	
480	90459-2173		2	SEAL GLYDRING 32,5X40X3,2 MM	

Pos	Part No	UN	Qty	Description	Page No
Common Parts					
070	1038240-0000		2	SPACER	
300	312115-0372		2	SCREW ISO4762 M6X25 A4	
320	312115-0457		4	SCREW ISO4762 M8X35 A4	
340	312115-0461		4	SCREW ISO4762 M8X50 A4	
380	315202-0105		6	O-RING 7,1X1,6 MM	
440	90091-0362		2	SCRAPER, EXCLUDER2 18X22,8X3,7 MM	
450	90091-0364		2	ROD SEAL, STEPSEAL 18X25,3X3,2 MM	
460	90091-0366		2	WEAR RING 18X23X3,9 MM	
520	90141-0015		4	RETAINING RING FOR SHAFT DIN 471 8 A2	

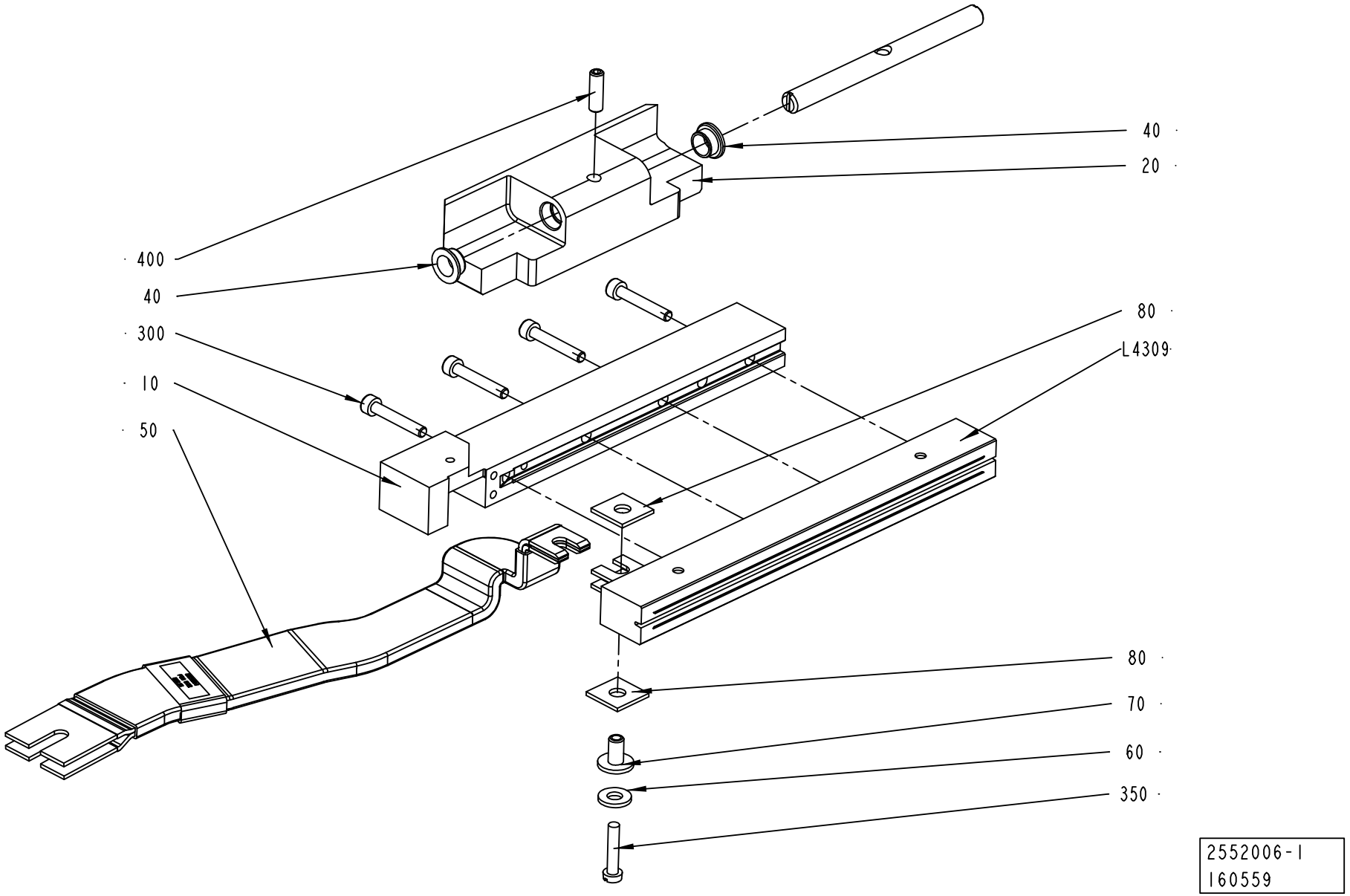
400
40
300
10
50
40
20
80
L4309
80
70
60
350
2552006-1
160559

ECM: 193954 - 20041213
Group number: 2552006-0100
Assembly Drawing: 2552006-1_1_AB

This list covers pages from 2-74 to 2-81

Pos	Part No	UN	Qty	Description	Page No
TPA 1000SQ SMILE (See drawing on page: 2-80)					
010	1558819-0000		1	RAIL	
020	2579991-0000		1	HOLDER	
030	2579990-0000		1	SHAFT	
040	2531703-0000		2	BUSHING	
050	1498849-0000		1	BUSBAR	
090	2503700-0000		1	VOLUME BULGE	
100	2500591-0000		1	VOLUME BULGE	
300	312115-0297		4	SCREW ISO4762 M4X25 A4	
370	312155-0287		2	SCREW DIN 7991 MF6S M4X8 A480	
380	312155-0325		2	SCREW DIN 7991 MF6S M5X10 A480	
400	312115-0327		2	SCREW ISO4762 M5X12 A4	
L4309	1520052-0000		1	INDUCTOR	
L4309	1520052-0000		1	INDUCTOR	
TBA 0200B NOQC, TBA 0250B NOQC (See drawing on page: 2-74)					
010	1348545-0000		1	RAIL	
020	1349599-0000		1	HOLDER	
030	1349980-0000		1	SHAFT	
040	1349584-0000		2	BUSHING	
050	1498849-0000		1	BUSBAR	
300	312115-0297		3	SCREW ISO4762 M4X25 A4	
400	312318-0329		1	SCREW ISO4029 M5X16 A4	
L4309	1110932-0000		1	INDUCTOR	
L4309	1110932-0000		1	INDUCTOR	
TBA 0200B QC, TBA 0330S QC, TBA 0250B QC (See drawing on page: 2-76)					
010	1348545-0000		1	RAIL	
020	2604565-0000		1	HOLDER	
050	1498849-0000		1	BUSBAR	
300	312115-0297		3	SCREW ISO4762 M4X25 A4	
L4309	1110932-0000		1	INDUCTOR	
L4309	1110932-0000		1	INDUCTOR	
TBA 0200S (See drawing on page: 2-80)					
010	1348545-0000		1	RAIL	
020	2513015-0000		1	HOLDER	
030	2513013-0000		1	SHAFT	
040	2531703-0000		2	BUSHING	
050	1498849-0000		1	BUSBAR	
300	312115-0297		3	SCREW ISO4762 M4X25 A4	
400	312115-0329		2	SCREW ISO4762 M5X16 A4	
L4309	1110930-0000		1	INDUCTOR	
L4309	1110930-0000		1	INDUCTOR	
TBA 0250S QC, TBA 0200M QC (See drawing on page: 2-78)					
010	1348545-0000		1	RAIL	
020	2644397-0000		1	HOLDER	
050	1498849-0000		1	BUSBAR	
300	312115-0297		3	SCREW ISO4762 M4X25 A4	
L4309	1110931-0000		1	INDUCTOR	
L4309	1110931-0000		1	INDUCTOR	
TBA 0500B QC, TBA 1000B QC (See drawing on page: 2-76)					
010	1558819-0000		1	RAIL	
020	1487955-0000		1	HOLDER	
050	1498849-0000		1	BUSBAR	
090	1558734-0000		1	VOLUME BULGE	
300	312115-0297		4	SCREW ISO4762 M4X25 A4	
370	312155-0287		2	SCREW DIN 7991 MF6S M4X8 A480	
L4309	1110938-0000		1	INDUCTOR	
L4309	1110938-0000		1	INDUCTOR	
TBA 0500S (See drawing on page: 2-80)					
010	1348545-0000		1	RAIL	
020	2611001-0000		1	CLAMP HOLDER	
030	2579990-0000		1	SHAFT	
040	2531703-0000		2	BUSHING	
050	1498849-0000		1	BUSBAR	
300	312115-0297		4	SCREW ISO4762 M4X25 A4	
400	312115-0327		2	SCREW ISO4762 M5X12 A4	
L4309	1110934-0000		1	INDUCTOR	
L4309	1110934-0000		1	INDUCTOR	
TBA 1000B NOQC NOMOLDEDCAP (See drawing on page: 2-80)					
010	1348545-0000		1	RAIL	
020	2664280-0000		1	HOLDER	
030	2526812-0000		1	SHAFT	
040	2531703-0000		2	BUSHING	
050	1498849-0000		1	BUSBAR	
300	312115-0297		4	SCREW ISO4762 M4X25 A4	
410	315105-0146		2	WASHER BRB5,3X10RFR	
L4309	1110938-0000		1	INDUCTOR	
L4309	1110938-0000		1	INDUCTOR	
TBA 1000B NOQC STDA7 (See drawing on page: 2-80)					
010	2610954-0000		1	RAIL	
020	2664280-0000		1	HOLDER	
030	2526812-0000		1	SHAFT	
040	2531703-0000		2	BUSHING	
050	1498849-0000		1	BUSBAR	
300	312115-0297		4	SCREW ISO4762 M4X25 A4	

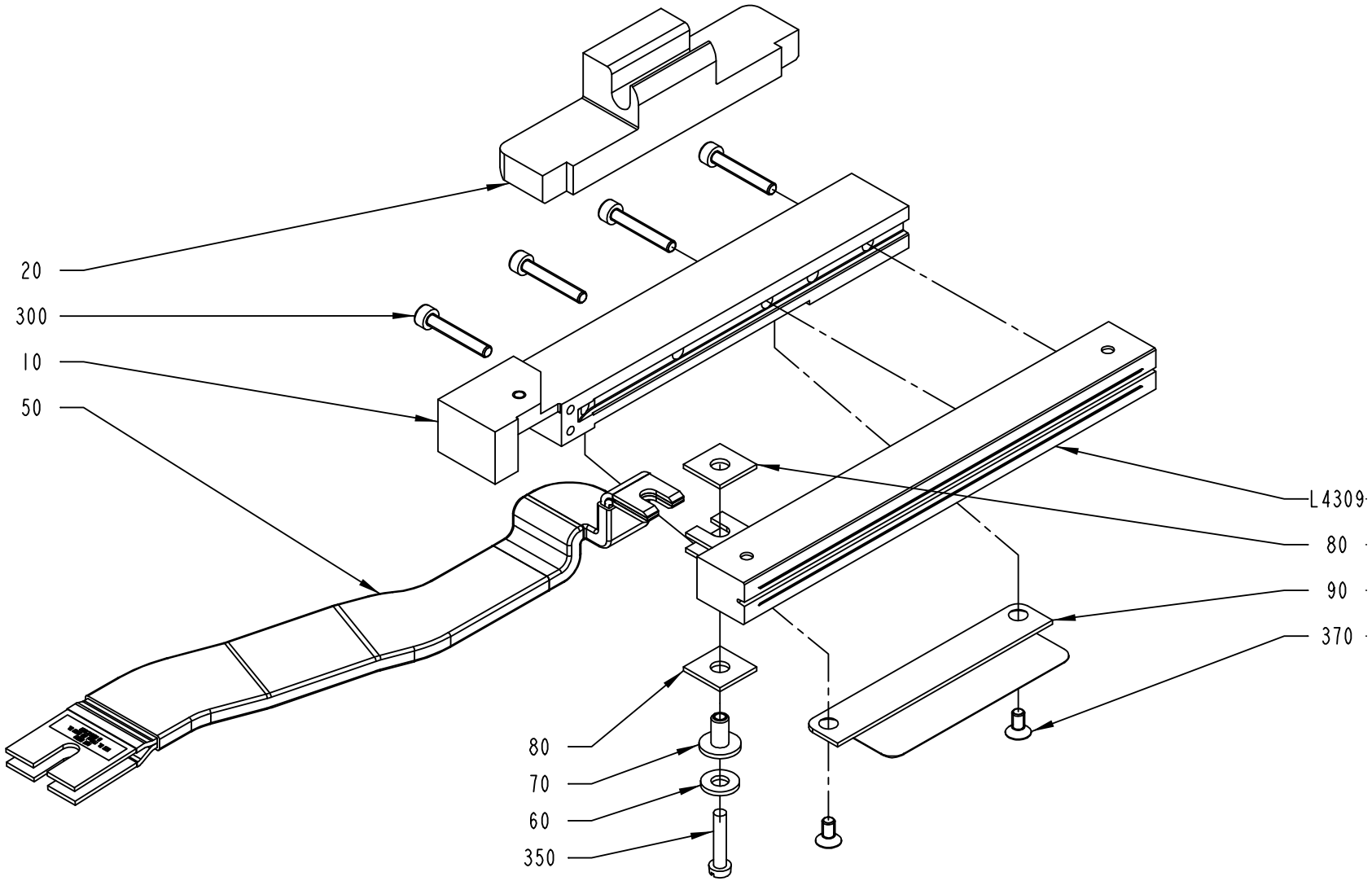

2552006-3
ECM 119672

Pos	Part No	UN	Qty	Description	Page No
TBA 1000B NOQC STDA7 (Cont'd) (See drawing on page: 2-80)					
410	315105-0146		2	WASHER BRB5,3X10RFR	
L4309	2610956-0000		1	INDUCTOR	
L4309	2610956-0000		1	INDUCTOR	
TBA 1000S NOMOLDEDCAP (See drawing on page: 2-80)					
010	1348545-0000		1	RAIL	
020	2559425-0000		1	CLAMP HOLDER	
030	2526812-0000		1	SHAFT	
040	2531703-0000		2	BUSHING	
050	1498849-0000		1	BUSBAR	
300	312115-0297		4	SCREW ISO4762 M4X25 A4	
400	312115-0327		2	SCREW ISO4762 M5X12 A4	
L4309	1110937-0000		1	INDUCTOR	
L4309	1110937-0000		1	INDUCTOR	
TBA 1000S STDA7 (See drawing on page: 2-80)					
010	2546475-0000		1	RAIL	
020	2559425-0000		1	CLAMP HOLDER	
030	2526812-0000		1	SHAFT	
040	2531703-0000		2	BUSHING	
050	1498849-0000		1	BUSBAR	
300	312115-0297		4	SCREW ISO4762 M4X25 A4	
400	312115-0327		2	SCREW ISO4762 M5X12 A4	
L4309	2546474-0000		1	INDUCTOR	
L4309	2546474-0000		1	INDUCTOR	
TBA 1000SQ (See drawing on page: 2-80)					
010	1348545-0000		1	RAIL	
020	2526811-0000		1	HOLDER	
030	2526812-0000		1	SHAFT	
040	2531703-0000		2	BUSHING	
050	1498849-0000		1	BUSBAR	
300	312115-0297		4	SCREW ISO4762 M4X25 A4	
400	312115-0327		2	SCREW ISO4762 M5X12 A4	
L4309	1110936-0000		1	INDUCTOR	
L4309	1110936-0000		1	INDUCTOR	
TBA 1500S (See drawing on page: 2-80)					
010	1348545-0000		1	RAIL	
020	2570302-0000		1	CLAMP HOLDER	
030	2526812-0000		1	SHAFT	
040	2531703-0000		2	BUSHING	
050	1498849-0000		1	BUSBAR	
300	312115-0297		4	SCREW ISO4762 M4X25 A4	
400	312115-0327		2	SCREW ISO4762 M5X12 A4	
L4309	1110938-0000		1	INDUCTOR	
L4309	1110938-0000		1	INDUCTOR	
TBA 1890S QC, TBA 2000S QC (See drawing on page: 2-80)					
020	2588293-0000		1	HOLDER	
030	2686144-0000		1	SHAFT	
040	2531703-0000		2	BUSHING	
050	2698011-0000		1	BUSBAR	
300	312115-0305		5	SCREW ISO4762 M4X50 A4	
400	312115-0327		2	SCREW ISO4762 M5X12 A4	
L4309	1533046-0000		1	INDUCTOR	
L4309	1533046-0000		1	INDUCTOR	
TPA 0330SQ (See drawing on page: 2-80)					
010	1348545-0000		1	RAIL	
020	2611655-0000		1	CLAMP HOLDER	
030	2513013-0000		1	SHAFT	
040	2531703-0000		2	BUSHING	
050	1498849-0000		1	BUSBAR	
300	312115-0297		3	SCREW ISO4762 M4X25 A4	
400	312115-0327		2	SCREW ISO4762 M5X12 A4	
L4309	1520167-0000		1	INDUCTOR	
L4309	1520167-0000		1	INDUCTOR	
TPA 0500SQ SMILE (See drawing on page: 2-80)					
010	1558819-0000		1	RAIL	
020	2570848-0000		1	HOLDER	
030	2513013-0000		1	SHAFT	
040	2570849-0000		2	BUSHING	
050	1498849-0000		1	BUSBAR	
090	2503688-0000		1	VOLUME BULGE	
100	1549834-0000		1	VOLUME BULGE	
300	312115-0297		4	SCREW ISO4762 M4X25 A4	
370	312155-0287		2	SCREW DIN 7991 MF6S M4X8 A480	
380	312155-0325		2	SCREW DIN 7991 MF6S M5X10 A480	
400	312115-0329		2	SCREW ISO4762 M5X16 A4	
L4309	2587466-0000		1	INDUCTOR	
L4309	2587466-0000		1	INDUCTOR	
TPA 1000SQ FT (See drawing on page: 2-80)					
010	1558819-0000		1	RAIL	
020	2579989-0000		1	HOLDER	
030	2579990-0000		1	SHAFT	
040	2531703-0000		2	BUSHING	
050	1498849-0000		1	BUSBAR	
090	2503700-0000		1	VOLUME BULGE	

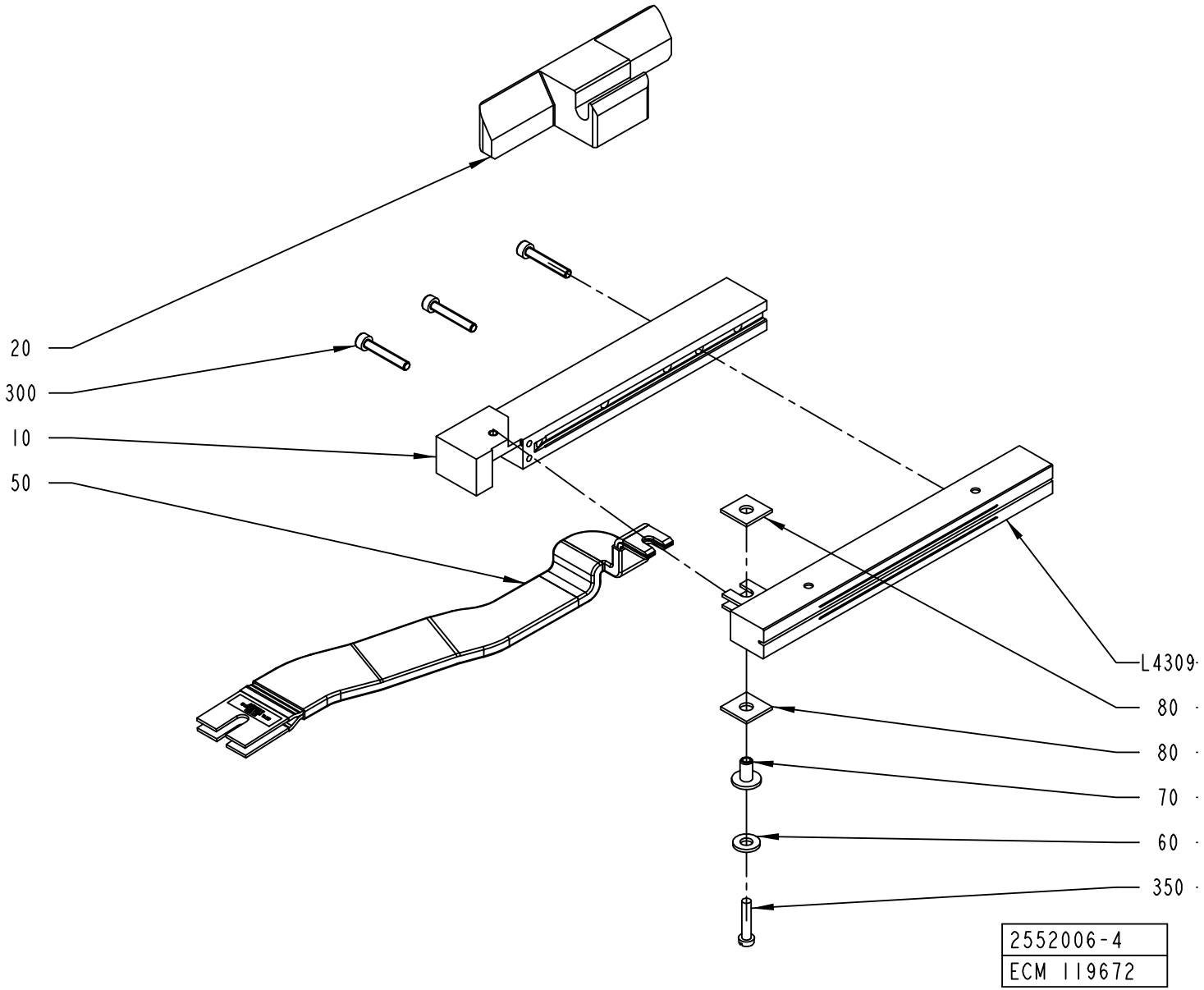
20
300
10
50
L4309
80
80
70
60
350
2552006-4
ECM 119672

Pos	Part No	UN	Qty	Description	Page No
TPA 1000SQ FT (Cont'd) (See drawing on page: 2-80)					
300	312115-0297		4	SCREW ISO4762 M4X25 A4	
370	312155-0287		2	SCREW DIN 7991 MF6S M4X8 A480	
400	312115-0327		2	SCREW ISO4762 M5X12 A4	
L4309	1520052-0000		1	INDUCTOR	
L4309	1520052-0000		1	INDUCTOR	
Common Parts					
060	28509-0000		1	WASHER	
070	32544-0000		1	INSULATION NUT	
080	1036584-0000		2	WASHER	
350	312125-0295		1	SCREW ISO 1207 M4X20 A4	

Pos	Part No	UN	Qty	Description	Page No

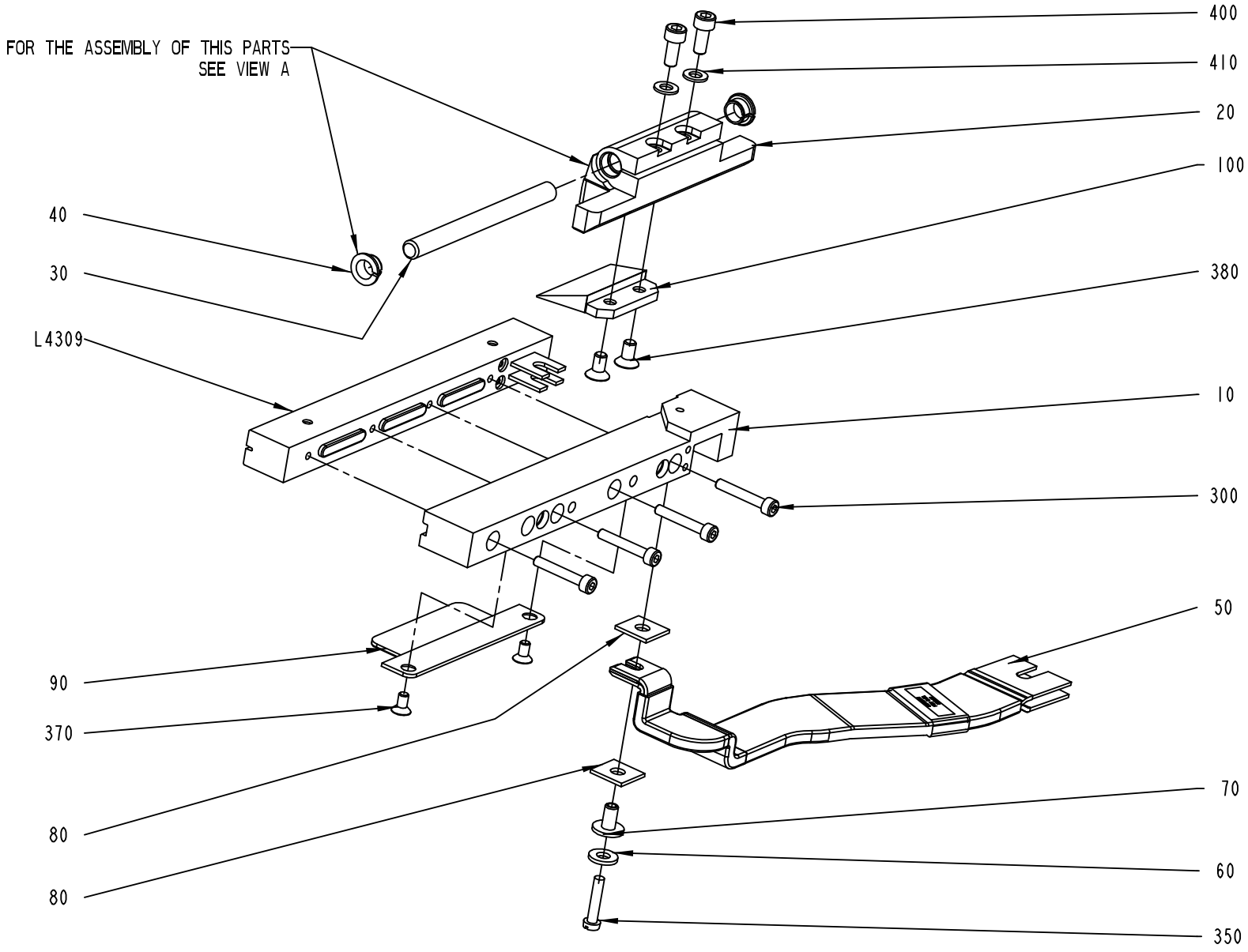

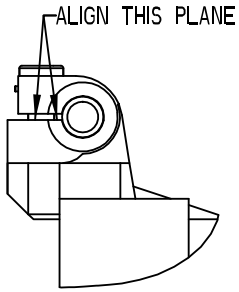

2552006-5
151513

ECM: 193954 - 20041213
Group number: 2552006-0100
Assembly Drawing: 2552006-5_1_AC

This list covers pages from 2-74 to 2-81

Pos	Part No	UN	Qty	Description	Page No	Pos	Part No	UN	Qty	Description	Page No

SEE PREVIOUS LISTS PAGES: 2-75, 2-77, 2-79.

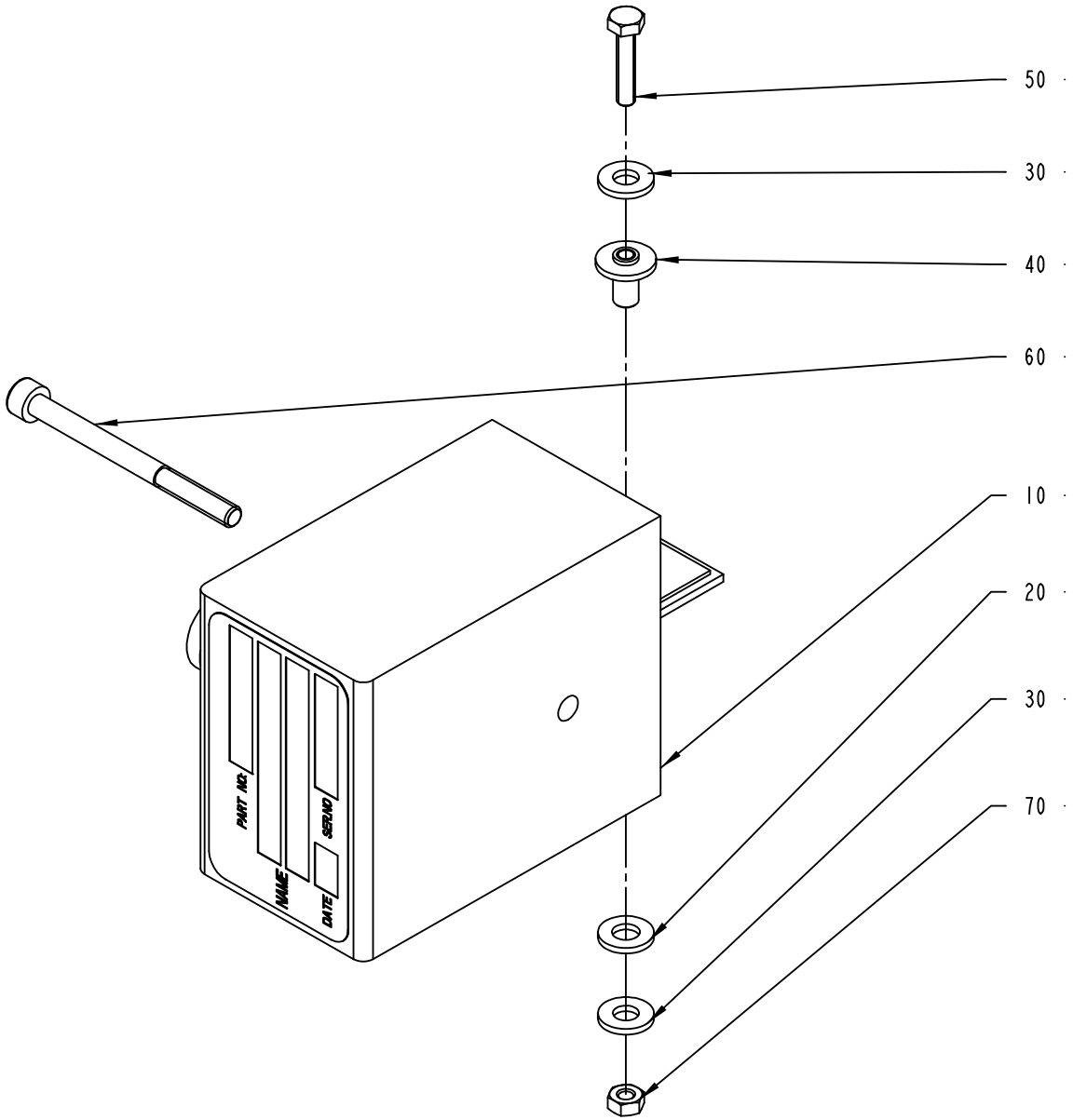

2546229-1
ECM 119672

ECM: 191360 - 20041028
Group number: 2546229-0100
Assembly Drawing: 2546229-1_1_AA

Pos	Part No	UN	Qty	Description	Page No
TBA 0200S					
010	67379-0105		1	TRANSFORMER	
010	67379-0105		1	TRANSFORMER	
TBA 0250S, TBA 0200M, TPA 0500SQ					
010	67379-0206		1	TRANSFORMER	
010	67379-0206		1	TRANSFORMER	
TBA 0330S, TBA 0200B, TBA 0250B					
010	67379-0269		1	TRANSFORMER	
010	67379-0269		1	TRANSFORMER	
TBA 0500B, TBA 1000S, TBA 1000SQ, TBA 1000B, TBA 1500S					
010	67379-0101		1	TRANSFORMER	
010	67379-0101		1	TRANSFORMER	
TBA 0500S					
010	67379-0258		1	TRANSFORMER	
010	67379-0258		1	TRANSFORMER	
TPA 0330SQ					
010	67379-0269		1	TRANSFORMER	
010	67379-0269		1	TRANSFORMER	
TPA 1000SQ, TBA 1890S, TBA 2000S					
010	67379-0249		1	TRANSFORMER	
010	67379-0249		1	TRANSFORMER	
Common Parts					
020	32079-0000		1	WASHER	
030	28509-0000		2	WASHER	
040	32544-0000		2	INSULATION NUT	
050	312105-0295		1	SCREW M6S ISO4017 M4X20 A470	
060	90458-0058		1	SCREW M5X60 A280	
070	312605-0312		2	HEXAGON NUT, M6M M4 A280	

Pos	Part No	UN	Qty	Description	Page No

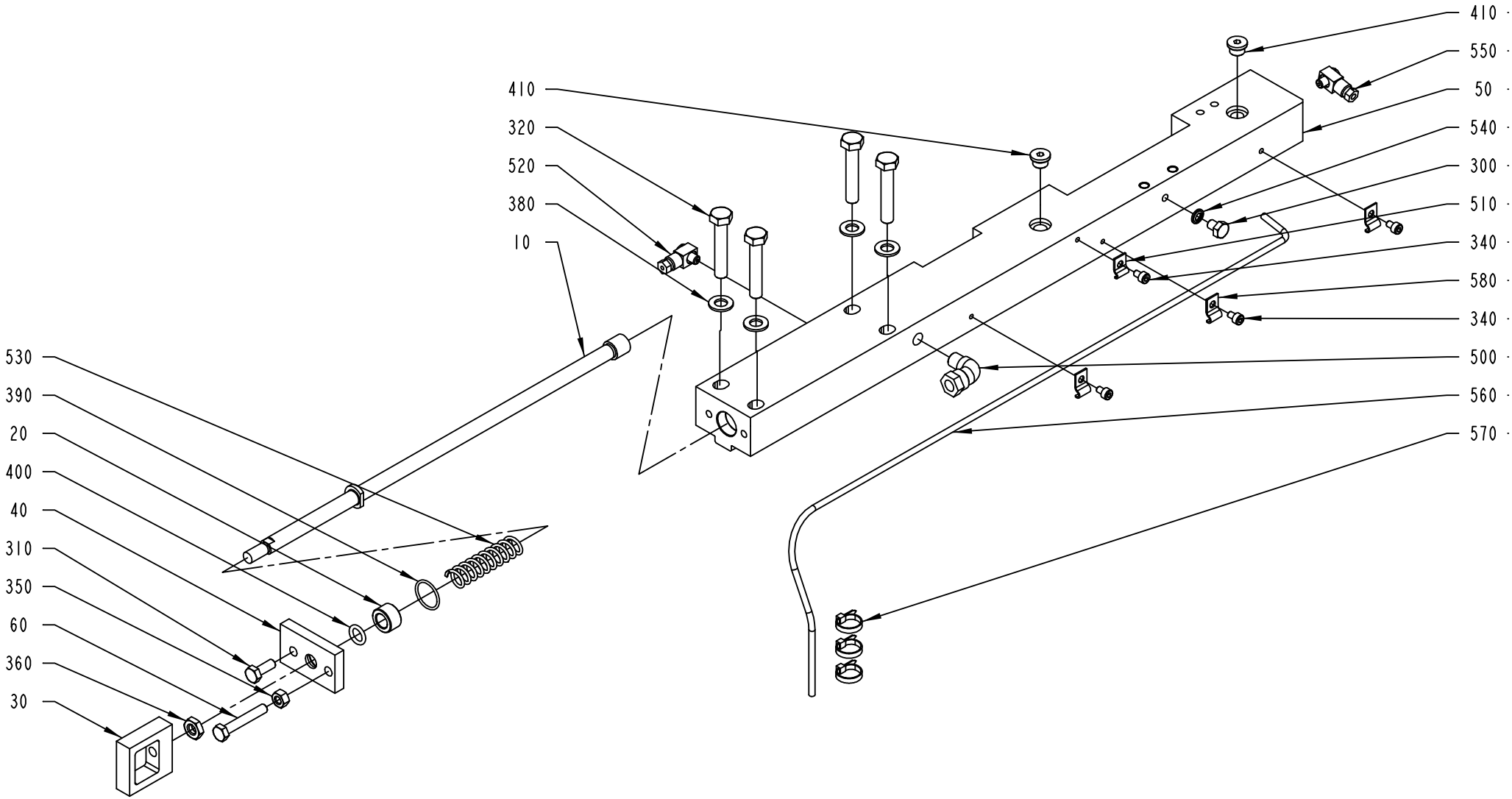

1512564-1
ECM 119672

ECM: 181186 - 20041013
Group number: 1512564-0200
Assembly Drawing: 1512564-1_1_AA

This list covers pages from 2-84 to 2-89

Pos	Part No	UN	Qty	Description	Page No
TBA 0200B QC, TBA 0330S QC, TBA 0250B QC (See drawing on page: 2-86)					
010	2530508-0000		1	TIE ROD	
050	2571843-0000		1	CARRIER	
070	1549312-0000		1	INSERT	
345	312155-0323		3	SCREW DIN 7991 MF6S M5X8 A480	
TBA 0250S, TBA 0200M (See drawing on page: 2-86)					
010	2530508-0000		1	TIE ROD	
050	2571843-0000		1	CARRIER	
070	2641225-0000		1	INSERT	
345	312155-0323		3	SCREW DIN 7991 MF6S M5X8 A480	
TBA 0500B QC, TBA 1000B QC (See drawing on page: 2-86)					
010	1499320-0000		1	TIE ROD	
050	2571843-0000		1	CARRIER	
070	1549312-0000		1	INSERT	
345	312155-0323		3	SCREW DIN 7991 MF6S M5X8 A480	
TBA 0500S, TBA 0200S, TPA 0330SQ, TPA 0500SQ, TBA 0200B NOQC, TBA 0250B NOQC (See drawing on page: 2-84)					
010	2530508-0000		1	TIE ROD	
050	2531114-0000		1	CARRIER	
TBA 1000S, TBA 1000SQ, TBA 1500S, TPA 1000SQ, TBA 1000B NOQC (See drawing on page: 2-84)					
010	1499320-0000		1	TIE ROD	
050	2531114-0000		1	CARRIER	
TBA 1890S QC, TBA 2000S QC (See drawing on page: 2-88)					
010	2588291-0000		1	TIE ROD	
050	2566329-0000		1	CARRIER	
070	2566328-0000		1	PLATE	
590	312155-0287		3	SCREW DIN 7991 MF6S M4X8 A480	
600	2603151-0000		1	SHIM	
Common Parts					
020	1036495-0000		1	BUSHING	
030	1036585-0000		1	EAR	
040	1036664-0000		1	LID	
060	1523162-0000		1	SCREW	
300	312105-0362		1	SCREW M6S ISO 4017 M6X8 A480	
310	312105-0368		1	SCREW M6S ISO 4017 M6X16 A480	
320	312105-0460		4	SCREW M6S ISO 4014 M8X45 A480	
340	312115-0285		4	SCREW ISO4762 M4X6 A4	
350	312605-0316		1	HEXAGON NUT, M6M M6 A280	
360	312625-0318		1	HEXAGON THIN NUT, EN 24035 ML6M M8 A4	
380	315105-0165		4	WASHER BRB8,4X16RFR	
390	315202-0116		1	O-RING 18,1X1,6 MM	
400	315202-0208		1	O-RING 9,3X2,4 MM	
410	342713-0209		2	PLUG (1UNIT = 10PC)	
500	90030-0257		1	CONN. ELBOW, 8-R1/8, EXT.THREAD	
510	90165-0058		1	PIPE CLIP FOR TUBE D=25 MM	
520	90134-0058		1	CONNECTION	
530	1548940-0000		1	SPRING	
540	315211-0103		1	BONDED SEAL SS/NBR90 M6	
550	90134-0068		1	CONNECTION	
560	90266-0165	MM	800	BRASS PIPE	
570	352113-0101		3	CLIP STRIP, 92X2,5 MM	
580	90165-0056		3	PIPE CLIP FOR TUBE D=4 MM	

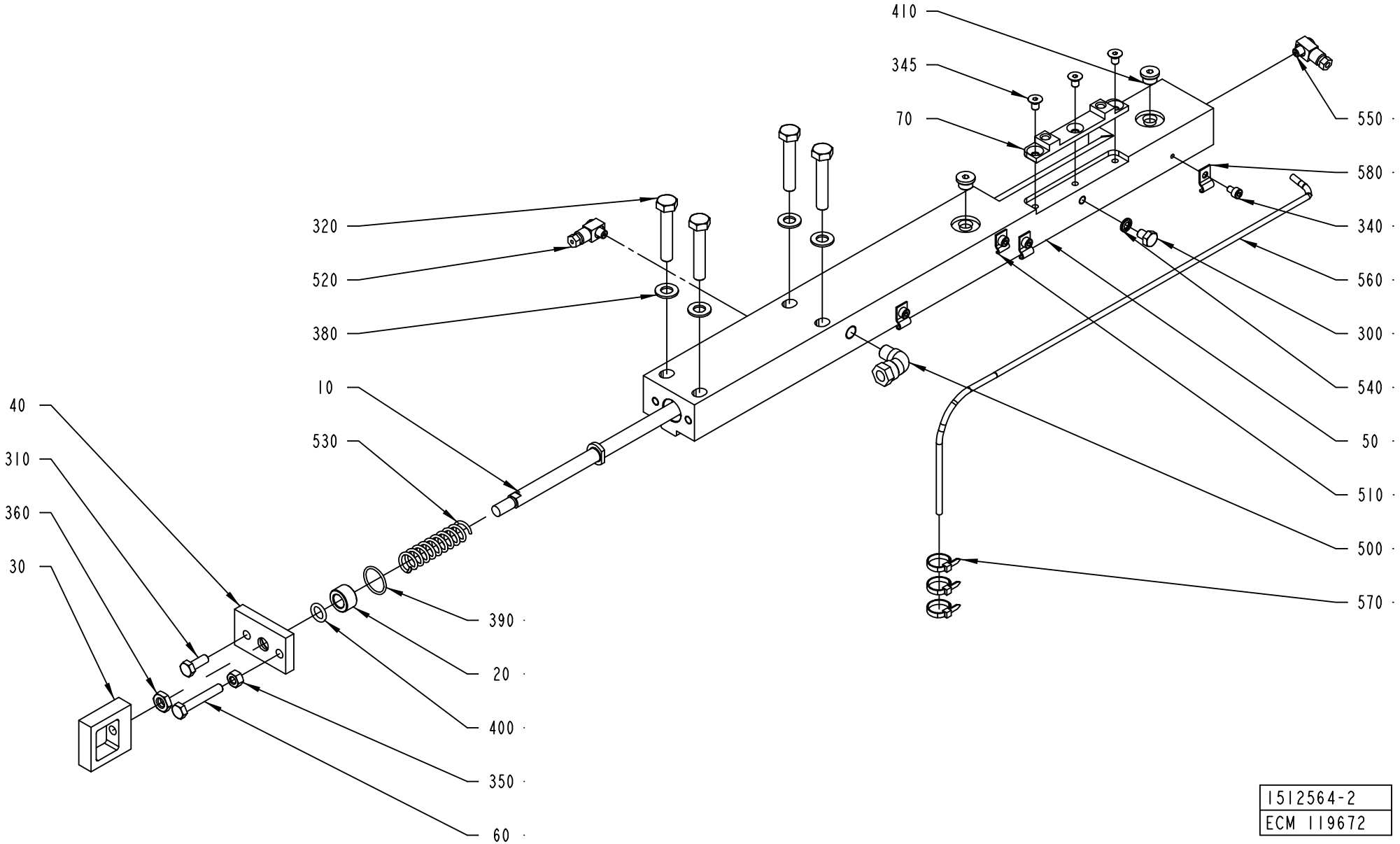
410
345
70
550
580
340
560
300
540
50
510
500
570
320
520
380
10
530
40
310
360
30
390
20
400
350
60
1512564-2
ECM 119672

ECM: 181186 - 20041013
Group number: 1512564-0200
Assembly Drawing: 1512564-2_1_AA

This list covers pages from 2-84 to 2-89

Pos	Part No	UN	Qty	Description	Page No
TBA 0200B QC, TBA 0330S QC, TBA 0250B QC (See drawing on page: 2-86)					
010	2530508-0000		1	TIE ROD	
050	2571843-0000		1	CARRIER	
070	1549312-0000		1	INSERT	
345	312155-0323		3	SCREW DIN 7991 MF6S M5X8 A480	
TBA 0250S, TBA 0200M (See drawing on page: 2-86)					
010	2530508-0000		1	TIE ROD	
050	2571843-0000		1	CARRIER	
070	2641225-0000		1	INSERT	
345	312155-0323		3	SCREW DIN 7991 MF6S M5X8 A480	
TBA 0500B QC, TBA 1000B QC (See drawing on page: 2-86)					
010	1499320-0000		1	TIE ROD	
050	2571843-0000		1	CARRIER	
070	1549312-0000		1	INSERT	
345	312155-0323		3	SCREW DIN 7991 MF6S M5X8 A480	
TBA 0500S, TBA 0200S, TPA 0330SQ, TPA 0500SQ, TBA 0200B NOQC, TBA 0250B NOQC (See drawing on page: 2-84)					
010	2530508-0000		1	TIE ROD	
050	2531114-0000		1	CARRIER	
TBA 1000S, TBA 1000SQ, TBA 1500S, TPA 1000SQ, TBA 1000B NOQC (See drawing on page: 2-84)					
010	1499320-0000		1	TIE ROD	
050	2531114-0000		1	CARRIER	
TBA 1890S QC, TBA 2000S QC (See drawing on page: 2-88)					
010	2588291-0000		1	TIE ROD	
050	2566329-0000		1	CARRIER	
070	2566328-0000		1	PLATE	
590	312155-0287		3	SCREW DIN 7991 MF6S M4X8 A480	
600	2603151-0000		1	SHIM	
Common Parts					
020	1036495-0000		1	BUSHING	
030	1036585-0000		1	EAR	
040	1036664-0000		1	LID	
060	1523162-0000		1	SCREW	
300	312105-0362		1	SCREW M6S ISO 4017 M6X8 A480	
310	312105-0368		1	SCREW M6S ISO 4017 M6X16 A480	
320	312105-0460		4	SCREW M6S ISO 4014 M8X45 A480	
340	312115-0285		4	SCREW ISO4762 M4X6 A4	
350	312605-0316		1	HEXAGON NUT, M6M M6 A280	
360	312625-0318		1	HEXAGON THIN NUT, EN 24035 ML6M M8 A4	
380	315105-0165		4	WASHER BRB8,4X16RFR	
390	315202-0116		1	O-RING 18,1X1,6 MM	
400	315202-0208		1	O-RING 9,3X2,4 MM	
410	342713-0209		2	PLUG (1UNIT = 10PC)	
500	90030-0257		1	CONN. ELBOW, 8-R1/8, EXT.THREAD	
510	90165-0058		1	PIPE CLIP FOR TUBE D=25 MM	
520	90134-0058		1	CONNECTION	
530	1548940-0000		1	SPRING	
540	315211-0103		1	BONDED SEAL SS/NBR90 M6	
550	90134-0068		1	CONNECTION	
560	90266-0165	MM	800	BRASS PIPE	
570	352113-0101		3	CLIP STRIP, 92X2,5 MM	
580	90165-0056		3	PIPE CLIP FOR TUBE D=4 MM	

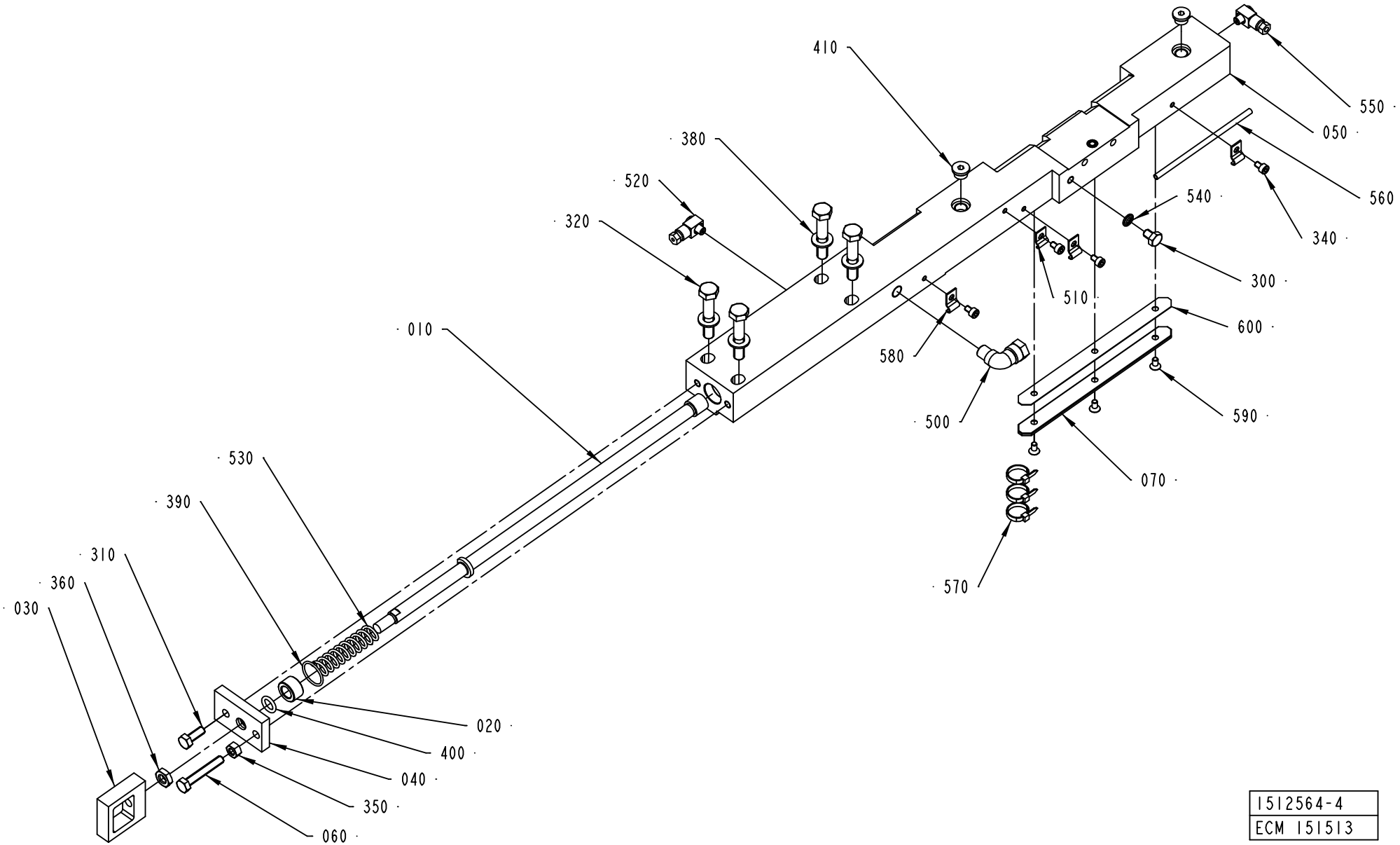

1512564-4
ECM 151513

ECM: 181186 - 20041013
Group number: 1512564-0200
Assembly Drawing: 1512564-4_1_AA

This list covers pages from 2-84 to 2-89

Pos	Part No	UN	Qty	Description	Page No
TBA 0200B QC, TBA 0330S QC, TBA 0250B QC (See drawing on page: 2-86)					
010	2530508-0000		1	TIE ROD	
050	2571843-0000		1	CARRIER	
070	1549312-0000		1	INSERT	
345	312155-0323		3	SCREW DIN 7991 MF6S M5X8 A480	
TBA 0250S, TBA 0200M (See drawing on page: 2-86)					
010	2530508-0000		1	TIE ROD	
050	2571843-0000		1	CARRIER	
070	2641225-0000		1	INSERT	
345	312155-0323		3	SCREW DIN 7991 MF6S M5X8 A480	
TBA 0500B QC, TBA 1000B QC (See drawing on page: 2-86)					
010	1499320-0000		1	TIE ROD	
050	2571843-0000		1	CARRIER	
070	1549312-0000		1	INSERT	
345	312155-0323		3	SCREW DIN 7991 MF6S M5X8 A480	
TBA 0500S, TBA 0200S, TPA 0330SQ, TPA 0500SQ, TBA 0200B NOQC, TBA 0250B NOQC (See drawing on page: 2-84)					
010	2530508-0000		1	TIE ROD	
050	2531114-0000		1	CARRIER	
TBA 1000S, TBA 1000SQ, TBA 1500S, TPA 1000SQ, TBA 1000B NOQC (See drawing on page: 2-84)					
010	1499320-0000		1	TIE ROD	
050	2531114-0000		1	CARRIER	
TBA 1890S QC, TBA 2000S QC (See drawing on page: 2-88)					
010	2588291-0000		1	TIE ROD	
050	2566329-0000		1	CARRIER	
070	2566328-0000		1	PLATE	
590	312155-0287		3	SCREW DIN 7991 MF6S M4X8 A480	
600	2603151-0000		1	SHIM	
Common Parts					
020	1036495-0000		1	BUSHING	
030	1036585-0000		1	EAR	
040	1036664-0000		1	LID	
060	1523162-0000		1	SCREW	
300	312105-0362		1	SCREW M6S ISO 4017 M6X8 A480	
310	312105-0368		1	SCREW M6S ISO 4017 M6X16 A480	
320	312105-0460		4	SCREW M6S ISO 4014 M8X45 A480	
340	312115-0285		4	SCREW ISO4762 M4X6 A4	
350	312605-0316		1	HEXAGON NUT, M6M M6 A280	
360	312625-0318		1	HEXAGON THIN NUT, EN 24035 ML6M M8 A4	
380	315105-0165		4	WASHER BRB8,4X16RFR	
390	315202-0116		1	O-RING 18,1X1,6 MM	
400	315202-0208		1	O-RING 9,3X2,4 MM	
410	342713-0209		2	PLUG (1UNIT = 10PC)	
500	90030-0257		1	CONN. ELBOW, 8-R1/8, EXT.THREAD	
510	90165-0058		1	PIPE CLIP FOR TUBE D=25 MM	
520	90134-0058		1	CONNECTION	
530	1548940-0000		1	SPRING	
540	315211-0103		1	BONDED SEAL SS/NBR90 M6	
550	90134-0068		1	CONNECTION	
560	90266-0165	MM	800	BRASS PIPE	
570	352113-0101		3	CLIP STRIP, 92X2,5 MM	
580	90165-0056		3	PIPE CLIP FOR TUBE D=4 MM	

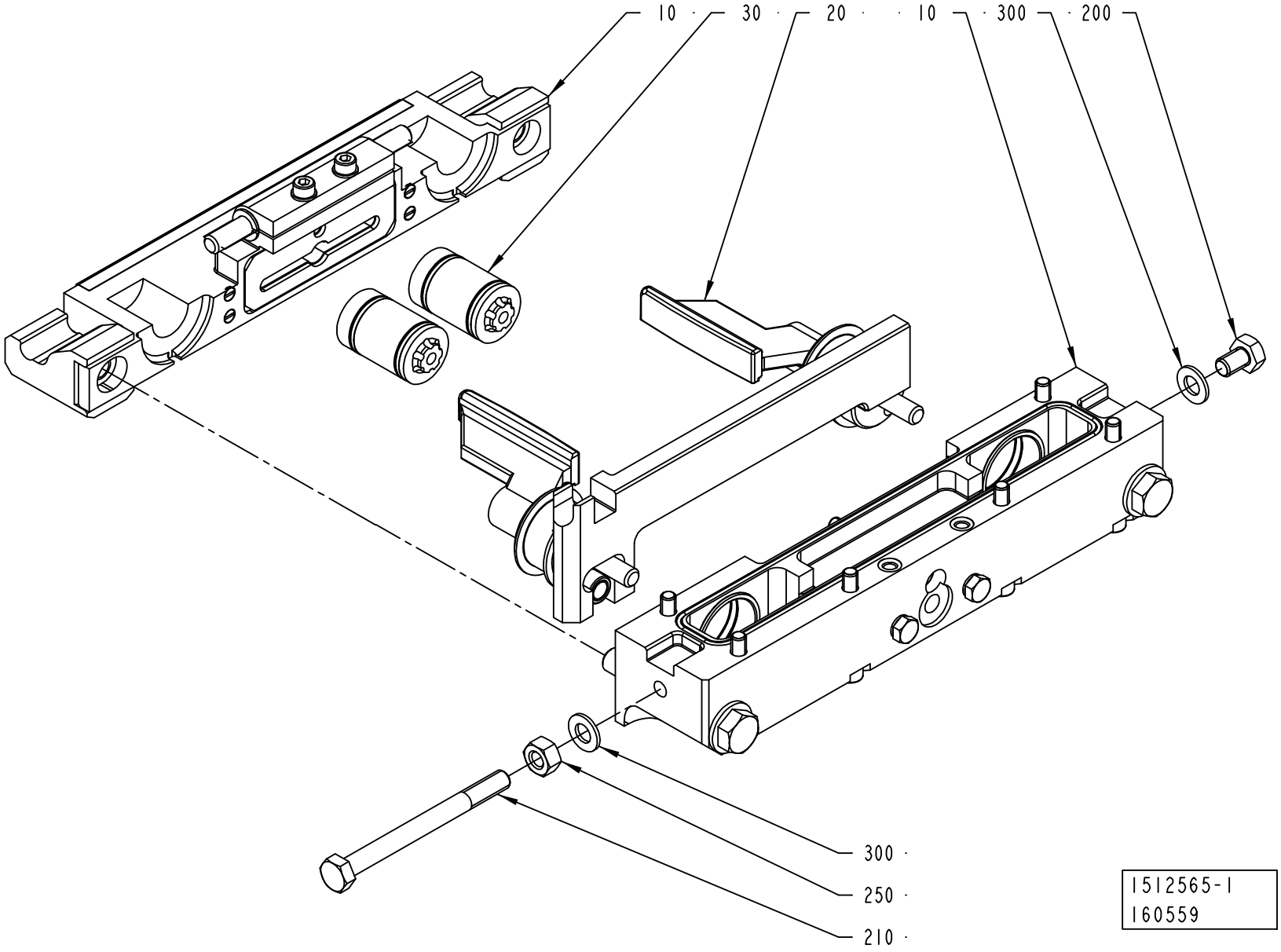
10
30
20
10
300
200
300
250
210
1512565-1
160559

ECM: 181549 - 20041013
Group number: 1512565-0200
Assembly Drawing: 1512565-1_1_AB

Pos	Part No	UN	Qty	Description	Page No
-					
010	2552008-0100		1	CUTTING JAW	**2-93, 2-95, 2-97, 2-99, 2-101**
020	2552009-0100		1	FOLDING FLAP LEFT	**2-103, 2-105**
030	2552010-0100		2	PISTON	**2-107**
200	312105-0447		1	SCREW M6S ISO 4017 M8X12 A480	
210	312105-0469		1	SCREW M6S ISO 4014 M8X90 A480	
250	312605-0318		1	HEXAGON NUT, M6M M8 A280	
300	315105-0165		2	WASHER BRB8,4X16RFR	

Pos	Part No	UN	Qty	Description	Page No

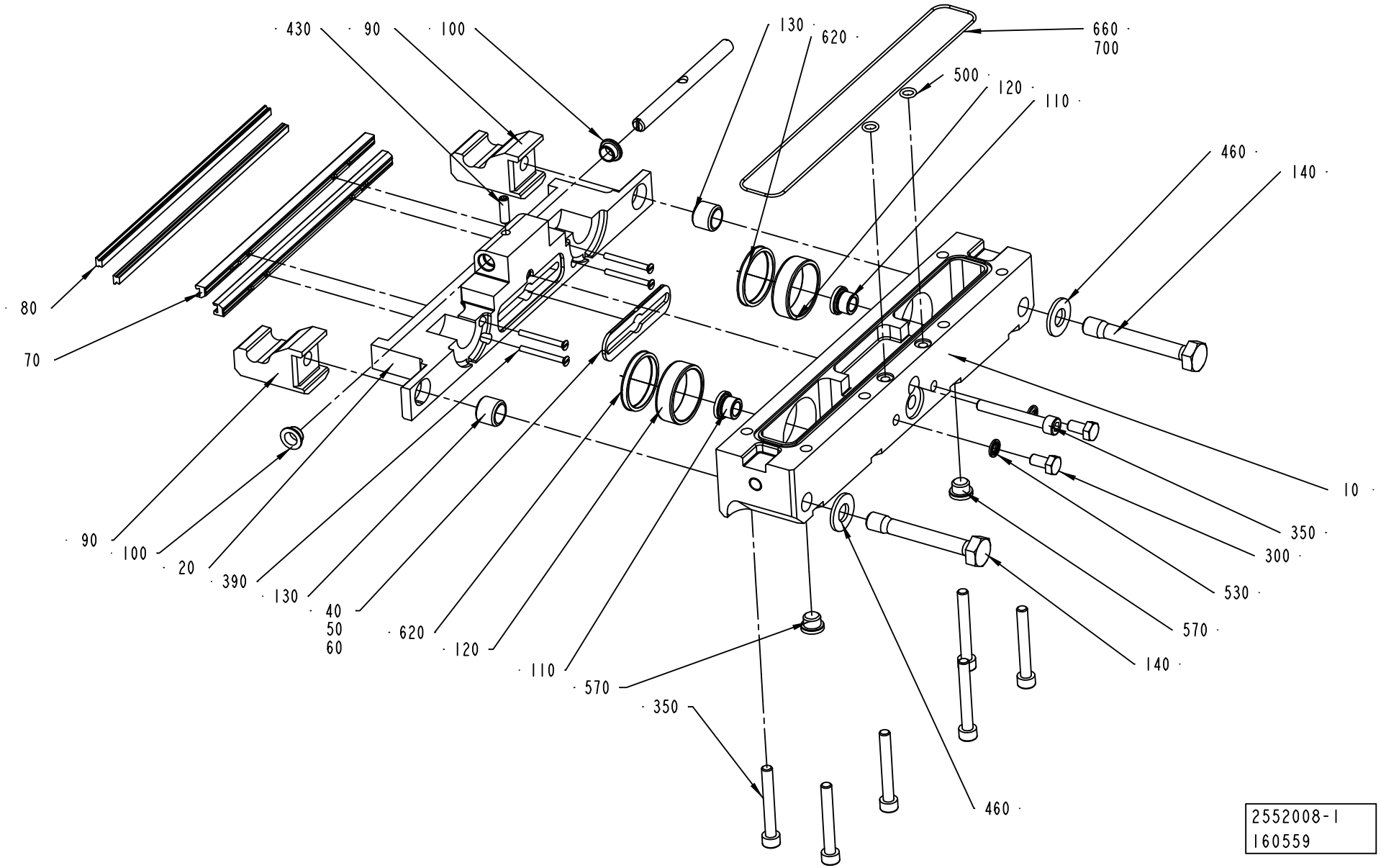
430
90
100
130
620
660
700
500
120
110
460
140
80
70
90
100
20
390
130
40
50
60
620
120
110
570
350
10
350
300
530
570
140
460
2552008-1
160559

ECM: 194875 - 20041203
Group number: 2552008-0100
Assembly Drawing: 2552008-1_1_AB

This list covers pages from 2-92 to 2-101

Pos	Part No	UN	Qty	Description	Page No
TBA 0200B NOQC, TBA 0250B NOQC (See drawing on page: 2-92)					
010	1549806-0000		1	BEARING HOUSING	
020	1349596-0000		1	CUTTING JAW	
030	1349980-0000		1	SHAFT	
050	1484002-0000		1	PLATE	
060	1484003-0000		1	PLATE	
070	1520493-0000		2	CUTTING RAIL	
080	1110083-0002		2	DOLLY	
080	1110083-0002		2	DOLLY	
090	1538348-0000		2	CATCH	
100	1349584-0000		2	BUSHING	
120	1255389-0000		2	BUSHING	
140	1035871-0000		2	SCREW	
390	312145-0234		4	SCREW ISO 2009 MFS M3X30 A4	
430	312318-0329		1	SCREW ISO4029 M5X16 A4	
500	315202-0104		2	O-RING 6,1X1,6 MM	
620	90091-0361		2	SCRAPER, EXCLUDER2 30X34,8X3,7 MM	
660	90242-0093	MM	550	O-RING MATERIAL 1,5 MM	
TBA 0200B QC, TBA 0330S QC, TBA 0250B QC (See drawing on page: 2-96)					
010	2582680-0000		1	BEARING HOUSING	
020	2604564-0000		1	CUTTING JAW	
050	1484002-0000		1	PLATE	
060	1484003-0000		1	PLATE	
070	1520493-0000		2	CUTTING RAIL	
080	1110083-0002		2	DOLLY	
080	1110083-0002		2	DOLLY	
090	1538348-0000		2	CATCH	
120	1255389-0000		2	BUSHING	
140	1035871-0000		2	SCREW	
390	312145-0234		4	SCREW ISO 2009 MFS M3X30 A4	
500	315202-0104		2	O-RING 6,1X1,6 MM	
620	90091-0361		2	SCRAPER, EXCLUDER2 30X34,8X3,7 MM	
660	90242-0093	MM	550	O-RING MATERIAL 1,5 MM	
TBA 0200S (See drawing on page: 2-98)					
010	1549807-0000		1	BEARING HOUSING	
020	2513014-0000		1	CUTTING JAW	
030	2513013-0000		1	SHAFT	
050	1484002-0000		1	PLATE	
060	1484003-0000		1	PLATE	
070	1520493-0000		2	CUTTING RAIL	
080	1110083-0002		2	DOLLY	
080	1110083-0002		2	DOLLY	
090	1538348-0000		2	CATCH	
100	2531703-0000		2	BUSHING	
120	1255389-0000		2	BUSHING	
140	1035871-0000		2	SCREW	
390	312145-0234		4	SCREW ISO 2009 MFS M3X30 A4	
430	312115-0329		2	SCREW ISO4762 M5X16 A4	
500	315202-0104		2	O-RING 6,1X1,6 MM	
620	90091-0361		2	SCRAPER, EXCLUDER2 30X34,8X3,7 MM	
660	90242-0093	MM	550	O-RING MATERIAL 1,5 MM	
TBA 0250S QC, TBA 0200M QC (See drawing on page: 2-100)					
010	2642943-0000		1	BEARING HOUSING	
020	2645568-0000		1	CUTTING JAW	
050	1484002-0000		1	PLATE	
060	1484003-0000		1	PLATE	
070	1520493-0000		2	CUTTING RAIL	
080	1110083-0002		2	DOLLY	
080	1110083-0002		2	DOLLY	
390	312145-0234		4	SCREW ISO 2009 MFS M3X30 A4	
TBA 0500B QC, TBA 1000B QC (See drawing on page: 2-96)					
010	1549803-0000		1	BEARING HOUSING	
020	1487954-0000		1	CUTTING JAW	
040	1349925-0000		1	PLATE	
070	1520455-0000		2	CUTTING RAIL	
080	1110083-0002		2	DOLLY	
080	1110083-0002		2	DOLLY	
090	1538348-0000		2	CATCH	
120	1255389-0000		2	BUSHING	
140	1035871-0000		2	SCREW	
150	1558733-0000		1	VOLUME BULGE	
390	312145-0238		4	SCREW COUNTERS.SLOT.HD. MFS M3X40 SS	
410	312155-0285		2	SCREW HEX.SOCK.COUNT.MF6S M4X6 A480	
500	315202-0104		2	O-RING 6,1X1,6 MM	
620	90091-0361		2	SCRAPER, EXCLUDER2 30X34,8X3,7 MM	
660	90242-0093	MM	550	O-RING MATERIAL 1,5 MM	
TBA 0500S (See drawing on page: 2-98)					
010	1549809-0000		1	BEARING HOUSING	
020	2611000-0000		1	CUTTING JAW	
030	2579990-0000		1	SHAFT	
040	1487619-0000		1	PLATE	
070	1520494-0000		2	CUTTING RAIL	
080	1110083-0002		2	DOLLY	
080	1110083-0002		2	DOLLY	

Machine Type Group Description Used-In Group Number Page No

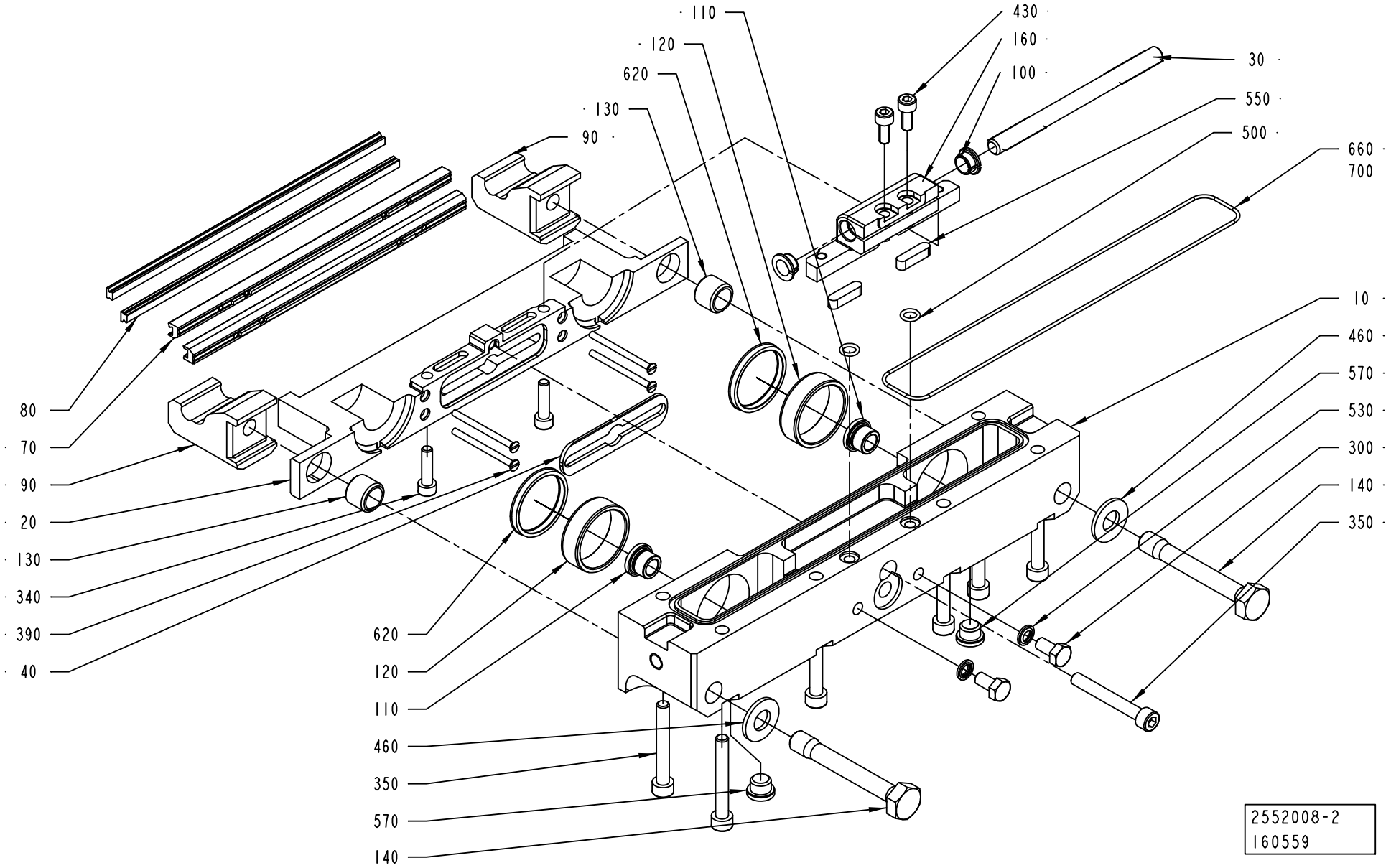
110
120
620
130
90
430
160
100
30
550
500
660
700
10
460
570
530
300
140
350
80
70
90
20
130
340
390
40
620
120
110
460
350
570
140
2552008-2
160559

Pos	Part No	UN	Qty	Description	Page No
TBA 0500S (Cont'd) (See drawing on page: 2-98)					
090	1538348-0000		2	CATCH	
100	2531703-0000		2	BUSHING	
120	1255389-0000		2	BUSHING	
140	1035871-0000		2	SCREW	
390	312145-0234		4	SCREW ISO 2009 MFS M3X30 A4	
430	312115-0327		2	SCREW ISO4762 M5X12 A4	
500	315202-0104		2	O-RING 6,1X1,6 MM	
620	90091-0361		2	SCRAPER, EXCLUDER2 30X34,8X3,7 MM	
660	90242-0093	MM	550	O-RING MATERIAL 1,5 MM	
TBA 1000B NOQC (See drawing on page: 2-98)					
010	1549803-0000		1	BEARING HOUSING	
020	2665188-0000		1	CUTTING JAW	
030	2526812-0000		1	SHAFT	
040	1349925-0000		1	PLATE	
070	1520455-0000		2	CUTTING RAIL	
080	1110083-0002		2	DOLLY	
080	1110083-0002		2	DOLLY	
090	1538348-0000		2	CATCH	
100	2531703-0000		2	BUSHING	
120	1255389-0000		2	BUSHING	
140	1035871-0000		2	SCREW	
390	312145-0238		4	SCREW COUNTERS.SLOT.HD. MFS M3X40 SS	
430	312115-0329		2	SCREW ISO4762 M5X16 A4	
440	315105-0146		2	WASHER BRB5,3X10RFR	
500	315202-0104		2	O-RING 6,1X1,6 MM	
620	90091-0361		2	SCRAPER, EXCLUDER2 30X34,8X3,7 MM	
660	90242-0093	MM	550	O-RING MATERIAL 1,5 MM	
TBA 1000S (See drawing on page: 2-98)					
010	1549804-0000		1	BEARING HOUSING	
020	2559424-0000		1	CUTTING JAW	
030	2526812-0000		1	SHAFT	
040	1349925-0000		1	PLATE	
070	1520455-0000		2	CUTTING RAIL	
080	1110083-0002		2	DOLLY	
080	1110083-0002		2	DOLLY	
090	1538348-0000		2	CATCH	
100	2531703-0000		2	BUSHING	
120	1255389-0000		2	BUSHING	
140	1035871-0000		2	SCREW	
390	312145-0238		4	SCREW COUNTERS.SLOT.HD. MFS M3X40 SS	
430	312115-0327		2	SCREW ISO4762 M5X12 A4	
500	315202-0104		2	O-RING 6,1X1,6 MM	
620	90091-0361		2	SCRAPER, EXCLUDER2 30X34,8X3,7 MM	
660	90242-0093	MM	550	O-RING MATERIAL 1,5 MM	
TBA 1000SQ (See drawing on page: 2-94)					
010	1549808-0000		1	BEARING HOUSING	
020	1487618-0000		1	CUTTING JAW	
030	2526812-0000		1	SHAFT	
040	1487619-0000		1	PLATE	
070	1520494-0000		2	CUTTING RAIL	
080	1110083-0002		2	DOLLY	
080	1110083-0002		2	DOLLY	
090	1538348-0000		2	CATCH	
100	2531703-0000		2	BUSHING	
120	1255389-0000		2	BUSHING	
140	1035871-0000		2	SCREW	
160	2526810-0000		1	HOLDER	
340	312115-0331		2	SCREW ISO4762 M5X20 A4	
390	312145-0238		4	SCREW COUNTERS.SLOT.HD. MFS M3X40 SS	
430	312115-0327		2	SCREW ISO4762 M5X12 A4	
500	315202-0104		2	O-RING 6,1X1,6 MM	
550	315705-0201		2	PARALLEL KEY W. ROUND ENDS 5X5X20 MM	
620	90091-0361		2	SCRAPER, EXCLUDER2 30X34,8X3,7 MM	
660	90242-0093	MM	550	O-RING MATERIAL 1,5 MM	
TBA 1500S (See drawing on page: 2-98)					
010	1549803-0000		1	BEARING HOUSING	
020	2570301-0000		1	CUTTING JAW	
030	2526812-0000		1	SHAFT	
040	1349925-0000		1	PLATE	
070	1520455-0000		2	CUTTING RAIL	
080	1110083-0002		2	DOLLY	
080	1110083-0002		2	DOLLY	
090	1538348-0000		2	CATCH	
100	2531703-0000		2	BUSHING	
120	1255389-0000		2	BUSHING	
140	1035871-0000		2	SCREW	
390	312145-0238		4	SCREW COUNTERS.SLOT.HD. MFS M3X40 SS	
430	312115-0327		2	SCREW ISO4762 M5X12 A4	
500	315202-0104		2	O-RING 6,1X1,6 MM	
620	90091-0361		2	SCRAPER, EXCLUDER2 30X34,8X3,7 MM	
660	90242-0093	MM	550	O-RING MATERIAL 1,5 MM	
TBA 1890S QC, TBA 2000S QC (See drawing on page: 2-98)					
010	2566325-0000		1	BEARING HOUSING	

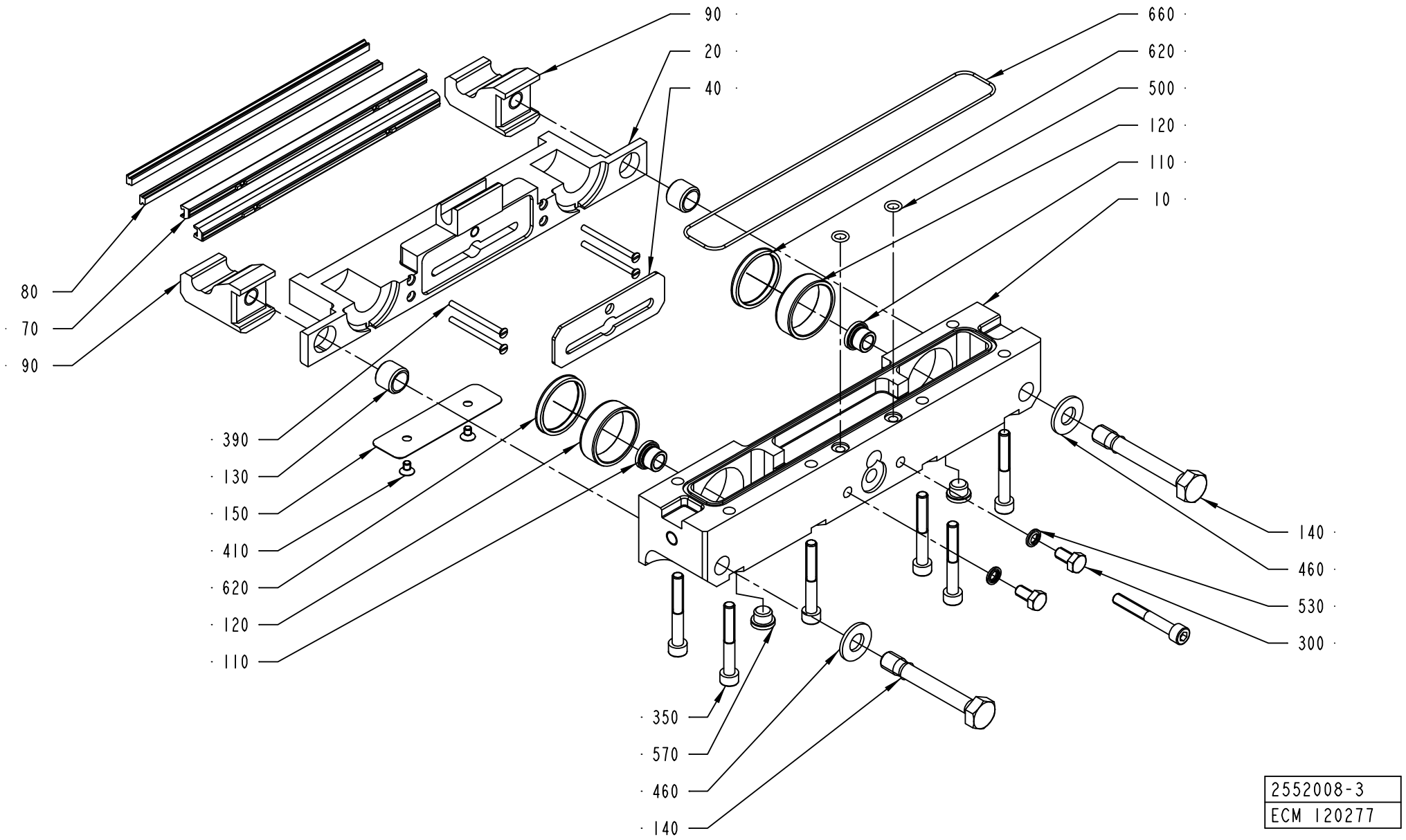

2552008-3
ECM 120277

ECM: 194875 - 20041203
Group number: 2552008-0100
Assembly Drawing: 2552008-3_1_AA

This list covers pages from 2-92 to 2-101

Pos	Part No	UN	Qty	Description	Page No
TBA 1890S QC, TBA 2000S QC (Cont'd) (See drawing on page: 2-98)					
020	2664762-0000		1	CUTTING JAW	
030	2686144-0000		1	SHAFT	
040	2588292-0000		1	PLATE	
070	1533051-0000		2	CUTTING RAIL	
080	1520633-0005		2	DOLLY	
080	1520633-0005		2	DOLLY	
090	2566339-0000		2	CATCH	
100	2531703-0000		2	BUSHING	
120	2588299-0000		2	BUSHING	
140	2588303-0000		2	SCREW	
390	312145-0238		8	SCREW COUNTERS.SLOT.HD. MFS M3X40 SS	
430	312115-0325		2	SCREW ISO4762 M5X10 A4	
500	315204-0105		2	O-RING 7,1X1,6 MM	
620	90091-0361		2	SCRAPER, EXCLUDER2 30X34,8X3,7 MM	
660	90459-2363		1	O-RING MATERIAL 1,78 MM	
TPA 0330SQ (See drawing on page: 2-98)					
010	2505277-0000		1	BEARING HOUSING	
020	2611710-0000		1	CUTTING JAW	
030	2513013-0000		1	SHAFT	
050	1484002-0000		1	PLATE	
060	1484003-0000		1	PLATE	
070	1520493-0000		2	CUTTING RAIL	
080	1110083-0002		2	DOLLY	
080	1110083-0002		2	DOLLY	
090	1538348-0000		2	CATCH	
100	2531703-0000		2	BUSHING	
120	1255389-0000		2	BUSHING	
140	1035871-0000		2	SCREW	
390	312145-0234		4	SCREW ISO 2009 MFS M3X30 A4	
430	312115-0327		2	SCREW ISO4762 M5X12 A4	
500	315202-0104		2	O-RING 6,1X1,6 MM	
620	90091-0361		2	SCRAPER, EXCLUDER2 30X34,8X3,7 MM	
660	90242-0093	MM	550	O-RING MATERIAL 1,5 MM	
TPA 0500SQ (See drawing on page: 2-98)					
010	1549826-0000		1	BEARING HOUSING	
020	2570850-0000		1	CUTTING JAW	
030	2513013-0000		1	SHAFT	
050	1484002-0000		1	PLATE	
060	1484003-0000		1	PLATE	
070	1520493-0000		2	CUTTING RAIL	
080	1110083-0002		2	DOLLY	
080	1110083-0002		2	DOLLY	
090	1538348-0000		2	CATCH	
100	2570849-0000		2	BUSHING	
120	1255389-0000		2	BUSHING	
140	1035871-0000		2	SCREW	
150	2503689-0000		1	VOLUME BULGE	
390	312145-0238		4	SCREW COUNTERS.SLOT.HD. MFS M3X40 SS	
410	312155-0287		2	SCREW DIN 7991 MF6S M4X8 A480	
430	312115-0327		2	SCREW ISO4762 M5X12 A4	
500	315202-0104		2	O-RING 6,1X1,6 MM	
620	90091-0361		2	SCRAPER, EXCLUDER2 30X34,8X3,7 MM	
660	90242-0093	MM	550	O-RING MATERIAL 1,5 MM	
TPA 1000SQ (See drawing on page: 2-98)					
010	1523145-0000		1	BEARING HOUSING	
020	2579988-0000		1	CUTTING JAW	
030	2579990-0000		1	SHAFT	
040	1487619-0000		1	PLATE	
070	1520494-0000		2	CUTTING RAIL	
080	1520633-0002		2	DOLLY	
080	1520633-0002		2	DOLLY	
090	1538348-0000		2	CATCH	
100	2531703-0000		2	BUSHING	
120	1255389-0000		2	BUSHING	
140	1035871-0000		2	SCREW	
150	2503699-0000		1	VOLUME BULGE	
390	312145-0238		2	SCREW COUNTERS.SLOT.HD. MFS M3X40 SS	
400	1523827-0000		2	SCREW	
410	312155-0287		2	SCREW DIN 7991 MF6S M4X8 A480	
430	312115-0327		2	SCREW ISO4762 M5X12 A4	
500	315202-0104		2	O-RING 6,1X1,6 MM	
620	90091-0361		2	SCRAPER, EXCLUDER2 30X34,8X3,7 MM	
660	90242-0093	MM	550	O-RING MATERIAL 1,5 MM	
Common Parts					
110	1255390-0000		2	BUSHING	
130	1036494-0000		2	GUIDE BUSHING	
300	312105-0366		2	SCREW M6S ISO 4017 M6X12 A480	
350	312115-0379		7	SCREW ISO4762 M6X45 A4	
460	315105-0173		2	WASHER BRB10,5X22RFR	
530	315211-0103		2	BONDED SEAL SS/NBR90 M6	
570	342713-0209		2	PLUG (1UNIT = 10PC)	
700	90153-0015		1	ADHESIVE,LOCTITE IS 496/CYANOLOT 303	

Machine Type | Group Description | Used-In | Group Number | Page No

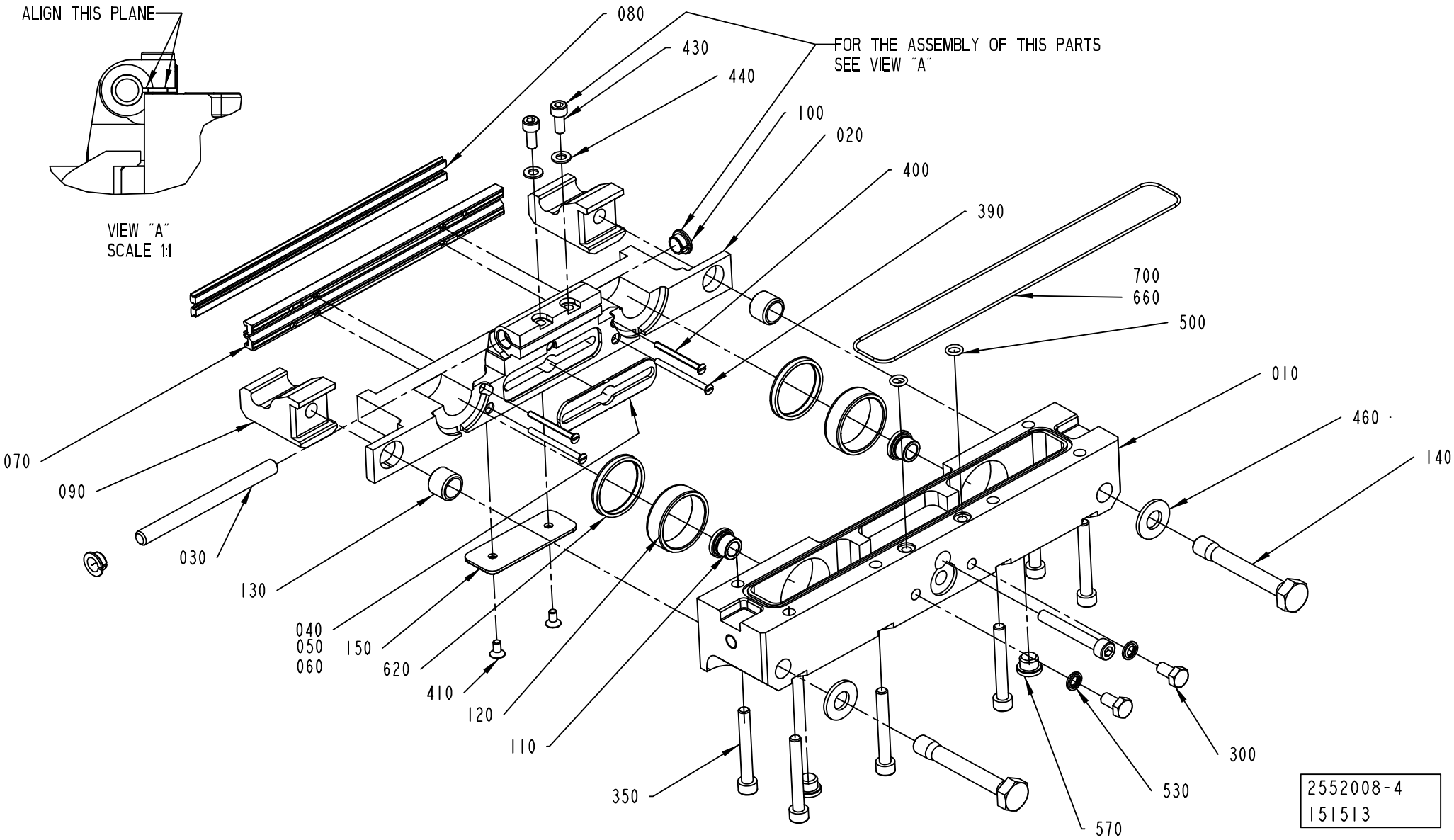
ALIGN THIS PLANE
VIEW "A"
SCALE 1:1
080
430
440
100
020
400
390
FOR THE ASSEMBLY OF THIS PARTS
SEE VIEW "A"
700
660
500
010
460
140
070
090
030
130
040
050
060
150
620
410
120
110
350
300
530
570
2552008-4
151513

Pos	Part No	UN	Qty	Description	Page No	Pos	Part No	UN	Qty	Description	Page No

SEE PREVIOUS LISTS PAGES: 2-93, 2-95, 2-97.

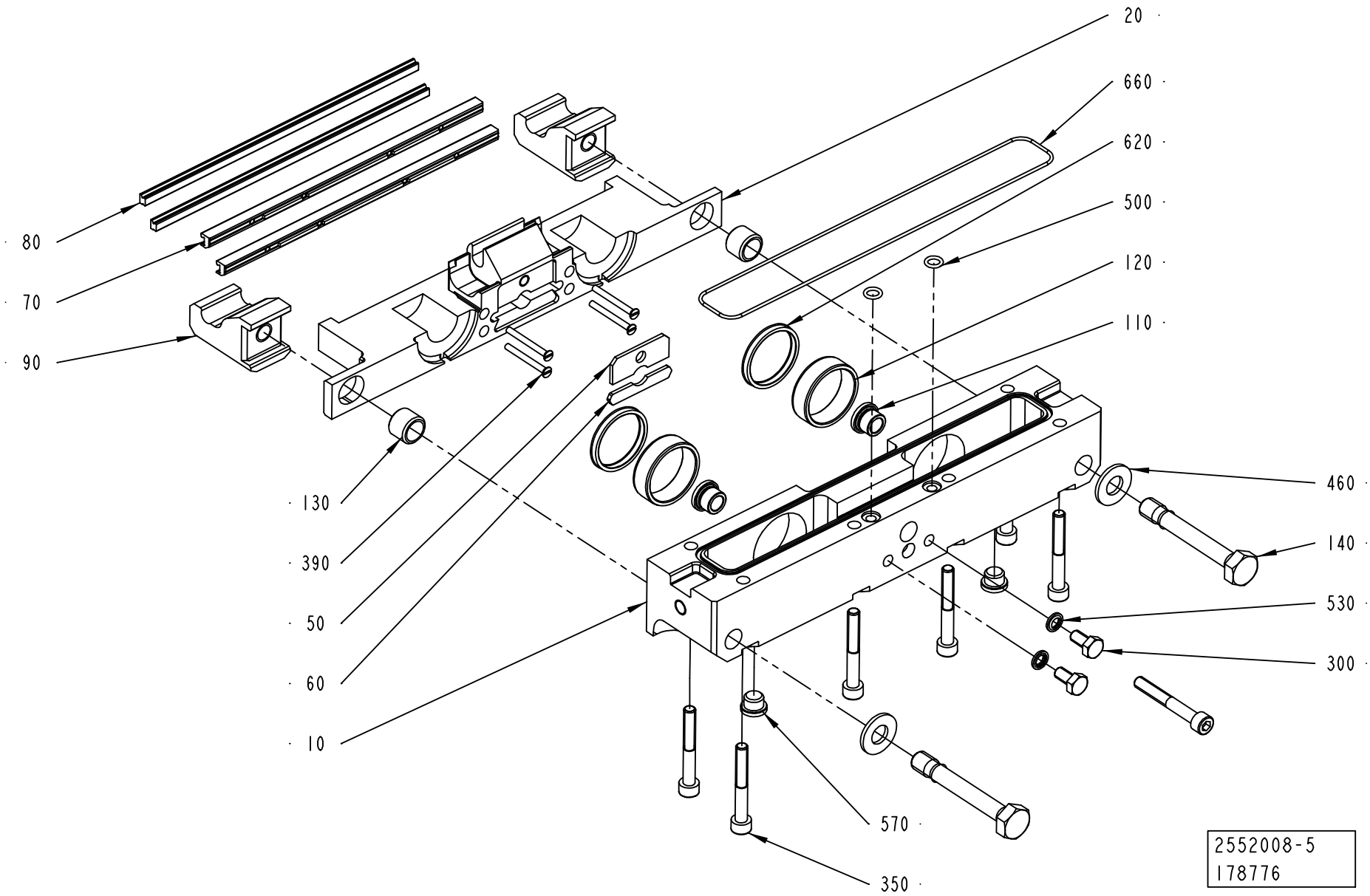
20
660
620
500
120
110
80
70
90
130
390
50
60
10
460
140
530
300
570
350
2552008-5
178776

ECM: 194875 - 20041203
Group number: 2552008-0100
Assembly Drawing: 2552008-5_1_AA

This list covers pages from 2-92 to 2-101

Pos	Part No	UN	Qty	Description	Page No	Pos	Part No	UN	Qty	Description	Page No
SEE PREVIOUS LISTS PAGES: 2-93, 2-95, 2-97.											

FOLDING FLAP LEFT

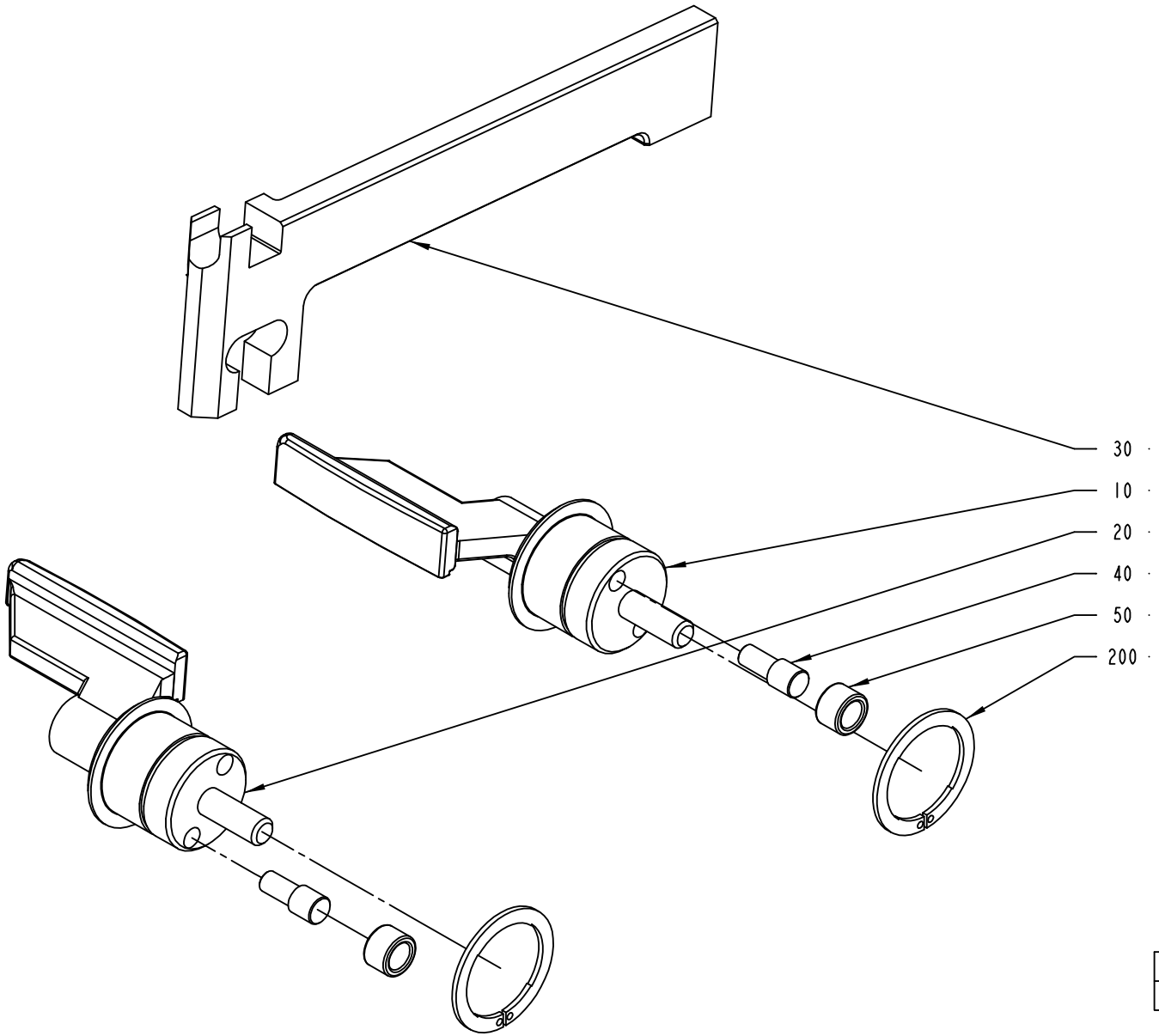

2552009-1
ECM 120277

ECM: 191295 - 20041104
Group number: 2552009-0100
Assembly Drawing: 2552009-1_1_AA

This list covers pages from 2-102 to 2-105

Pos	Part No	UN	Qty	Description	Page No
TPA 1000SQ (See drawing on page: 2-102)					
010	1523146-0000		1	FOLDING FLAP	
020	1523147-0000		1	FOLDING FLAP	
030	1523177-0000		1	CARRIER RULER	
TBA 0200B QC, TBA 0330S QC (See drawing on page: 2-102)					
010	2605875-0000		1	FOLDING FLAP	
020	2605876-0000		1	FOLDING FLAP	
030	1255459-0000		1	CARRIER RULER	
TBA 0200S (See drawing on page: 2-102)					
010	2624554-0000		1	FOLDING FLAP	
020	2624555-0000		1	FOLDING FLAP	
030	1255458-0000		1	CARRIER RULER	
TBA 0250B QC					
010	2605875-0000		1	FOLDING FLAP	
020	2605876-0000		1	FOLDING FLAP	
030	1255459-0000		1	CARRIER RULER	
TBA 0250S QC, TBA 0200M QC					
010	2624554-0000		1	FOLDING FLAP	
020	2624555-0000		1	FOLDING FLAP	
030	2520470-0000		1	CARRIER RULER	
TBA 0500B NOQC, TBA 1000B NOQC NOMOLDEDCAP (See drawing on page: 2-102)					
010	1511697-0000		1	.FOLDING FLAP	
020	1511698-0000		1	FOLDING FLAP	
030	1255457-0000		1	CARRIER RULER	
TBA 0500B QC, TBA 1000B QC (See drawing on page: 2-102)					
010	1511352-0000		1	FOLDING FLAP	
020	1511351-0000		1	FOLDING FLAP	
030	1255457-0000		1	CARRIER RULER	
TBA 0500S (See drawing on page: 2-102)					
010	2507085-0000		1	FOLDING FLAP	
020	2507086-0000		1	FOLDING FLAP	
030	1511067-0000		1	CARRIER RULER	
TBA 1000B NOQC STDA7 (See drawing on page: 2-102)					
010	1511697-0000		1	.FOLDING FLAP	
020	2610957-0000		1	FOLDING FLAP	
030	1255457-0000		1	CARRIER RULER	
TBA 1000S NOMOLDEDCAP (See drawing on page: 2-102)					
010	1511699-0000		1	FOLDING FLAP	
020	1511700-0000		1	FOLDING FLAP	
030	1255460-0000		1	CARRIER RULER	
TBA 1000S STDA7 (See drawing on page: 2-102)					
010	1511699-0000		1	FOLDING FLAP	
020	2546501-0000		1	FOLDING FLAP	
030	1255460-0000		1	CARRIER RULER	
TBA 1000SQ (See drawing on page: 2-102)					
010	2507076-0000		1	FOLDING FLAP	
020	2507077-0000		1	FOLDING FLAP	
030	1360318-0000		1	CARRIER RULER	
TBA 1500S (See drawing on page: 2-102)					
010	2507092-0000		1	FOLDING FLAP	
020	2507093-0000		1	FOLDING FLAP	
030	1255457-0000		1	CARRIER RULER	
TBA 1890S QC, TBA 2000S QC (See drawing on page: 2-104)					
010	2566319-0000		1	FOLDING FLAP	
020	2566320-0000		1	FOLDING FLAP	
030	2566318-0000		1	CARRIER RULER	
210	90459-2258		2	SEAL GLYDRING 25,1X30X2,2 MM	
TPA 0330SQ (See drawing on page: 2-102)					
010	2507096-0000		1	FOLDING FLAP	
020	2507097-0000		1	FOLDING FLAP	
030	1538256-0000		1	CARRIER RULER	
TPA 0500SQ (See drawing on page: 2-102)					
010	1549822-0000		1	FOLDING FLAP	
020	1549823-0000		1	FOLDING FLAP	
030	1549824-0000		1	CARRIER RULER	
Common Parts					
040	22462-0000		2	SHAFT	
050	22463-0000		2	ROLL	
200	90141-0029		2	CIRCLIP	

Machine Type | Group Description | Used-In | Group Number | Page No

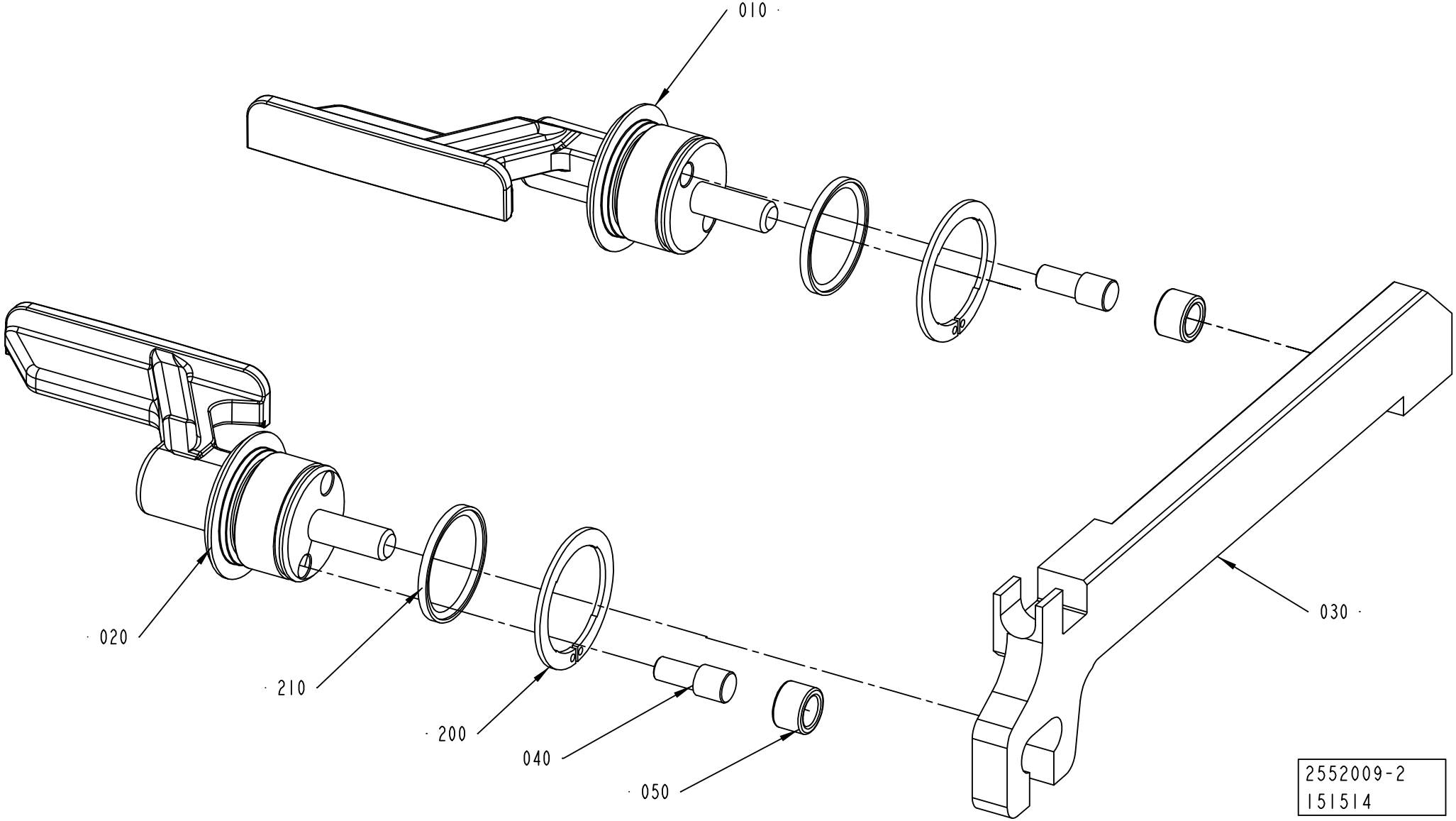
010
020
210
200
040
050
030
2552009-2
151514

ECM: 191295 - 20041104
Group number: 2552009-0100
Assembly Drawing: 2552009-2_1_AA

This list covers pages from 2-102 to 2-105

Pos	Part No	UN	Qty	Description	Page No
TPA 1000SQ (See drawing on page: 2-102)					
010	1523146-0000		1	FOLDING FLAP	
020	1523147-0000		1	FOLDING FLAP	
030	1523177-0000		1	CARRIER RULER	
TBA 0200B QC, TBA 0330S QC (See drawing on page: 2-102)					
010	2605875-0000		1	FOLDING FLAP	
020	2605876-0000		1	FOLDING FLAP	
030	1255459-0000		1	CARRIER RULER	
TBA 0200S (See drawing on page: 2-102)					
010	2624554-0000		1	FOLDING FLAP	
020	2624555-0000		1	FOLDING FLAP	
030	1255458-0000		1	CARRIER RULER	
TBA 0250B QC					
010	2605875-0000		1	FOLDING FLAP	
020	2605876-0000		1	FOLDING FLAP	
030	1255459-0000		1	CARRIER RULER	
TBA 0250S QC, TBA 0200M QC					
010	2624554-0000		1	FOLDING FLAP	
020	2624555-0000		1	FOLDING FLAP	
030	2520470-0000		1	CARRIER RULER	
TBA 0500B NOQC, TBA 1000B NOQC NOMOLDEDCAP (See drawing on page: 2-102)					
010	1511697-0000		1	.FOLDING FLAP	
020	1511698-0000		1	FOLDING FLAP	
030	1255457-0000		1	CARRIER RULER	
TBA 0500B QC, TBA 1000B QC (See drawing on page: 2-102)					
010	1511352-0000		1	FOLDING FLAP	
020	1511351-0000		1	FOLDING FLAP	
030	1255457-0000		1	CARRIER RULER	
TBA 0500S (See drawing on page: 2-102)					
010	2507085-0000		1	FOLDING FLAP	
020	2507086-0000		1	FOLDING FLAP	
030	1511067-0000		1	CARRIER RULER	
TBA 1000B NOQC STDA7 (See drawing on page: 2-102)					
010	1511697-0000		1	.FOLDING FLAP	
020	2610957-0000		1	FOLDING FLAP	
030	1255457-0000		1	CARRIER RULER	
TBA 1000S NOMOLDEDCAP (See drawing on page: 2-102)					
010	1511699-0000		1	FOLDING FLAP	
020	1511700-0000		1	FOLDING FLAP	
030	1255460-0000		1	CARRIER RULER	
TBA 1000S STDA7 (See drawing on page: 2-102)					
010	1511699-0000		1	FOLDING FLAP	
020	2546501-0000		1	FOLDING FLAP	
030	1255460-0000		1	CARRIER RULER	
TBA 1000SQ (See drawing on page: 2-102)					
010	2507076-0000		1	FOLDING FLAP	
020	2507077-0000		1	FOLDING FLAP	
030	1360318-0000		1	CARRIER RULER	
TBA 1500S (See drawing on page: 2-102)					
010	2507092-0000		1	FOLDING FLAP	
020	2507093-0000		1	FOLDING FLAP	
030	1255457-0000		1	CARRIER RULER	
TBA 1890S QC, TBA 2000S QC (See drawing on page: 2-104)					
010	2566319-0000		1	FOLDING FLAP	
020	2566320-0000		1	FOLDING FLAP	
030	2566318-0000		1	CARRIER RULER	
210	90459-2258		2	SEAL GLYDRING 25,1X30X2,2 MM	
TPA 0330SQ (See drawing on page: 2-102)					
010	2507096-0000		1	FOLDING FLAP	
020	2507097-0000		1	FOLDING FLAP	
030	1538256-0000		1	CARRIER RULER	
TPA 0500SQ (See drawing on page: 2-102)					
010	1549822-0000		1	FOLDING FLAP	
020	1549823-0000		1	FOLDING FLAP	
030	1549824-0000		1	CARRIER RULER	
Common Parts					
040	22462-0000		2	SHAFT	
050	22463-0000		2	ROLL	
200	90141-0029		2	CIRCLIP	

Machine Type | Group Description | Used-In | Group Number | Page No

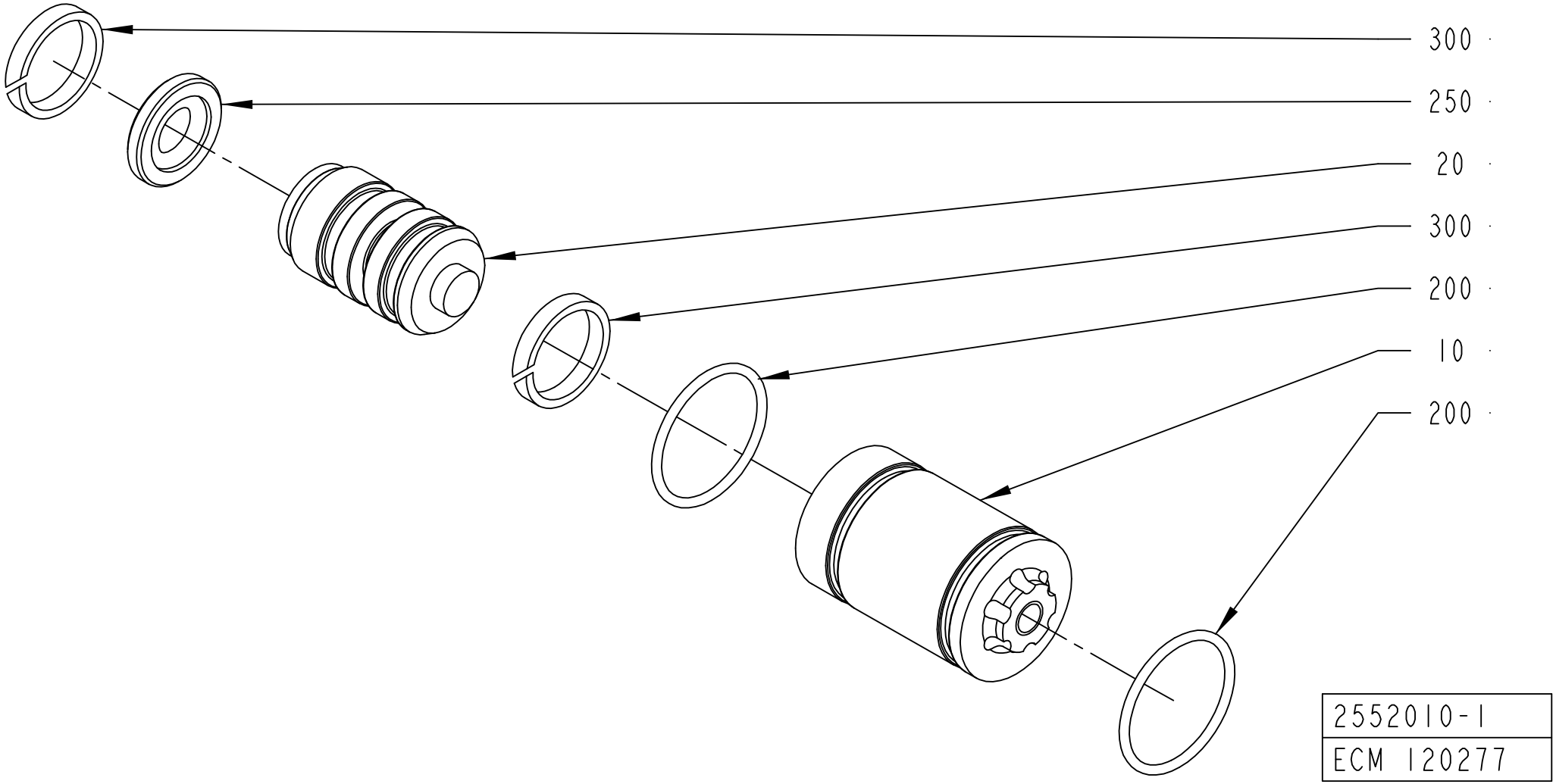
300
250
20
300
200
10
200
2552010-1
ECM 120277

ECM: 191296 - 20041104
Group number: 2552010-0100
Assembly Drawing: 2552010-1_1_AA

Pos	Part No	UN	Qty	Description	Page No
TBA 0330S, TBA 0200B, TBA 0250S, TBA 0200S, TBA 0200M, TBA 0250B, TPA 0330SQ					
010	752288-0000		1	SLEEVE	
020	752115-0000		1	PLUNGER	
200	315202-0110		1	O-RING 12,1X1,6 MM	
250	90091-0216		1	PISTON SEAL, GLIDORING 7,1X12X2,2 MM	
300	90091-0169		2	WEAR RING 12X15X3,2 MM	
TBA 0500S, TBA 0500B, TBA 1000S, TBA 1000SQ, TBA 1000B, TBA 1500S, TPA 1000SQ, TPA 0500SQ					
010	1036278-0000		1	SLEEVE	
020	1036279-0000		1	PLUNGER	
200	315202-0118		2	O-RING 22,1X1,6 MM	
250	90091-0365		1	SEAL GLIDORING 11,55X19,05X3,2M	
300	90091-0367		2	WEAR RING 16X18X3,1 MM	
TBA 1890S, TBA 2000S					
010	2566330-0000		1	SLEEVE	
020	2566331-0000		1	PLUNGER	
200	315202-0118		2	O-RING 22,1X1,6 MM	
250	90459-2172		1	SEAL GLYDRING 14,55X22X3,2 MM	
300	90459-2132		2	WEAR RING 17X22X5,6 MM	

Pos	Part No	UN	Qty	Description	Page No

CARRIER PRESSURE RIGHT

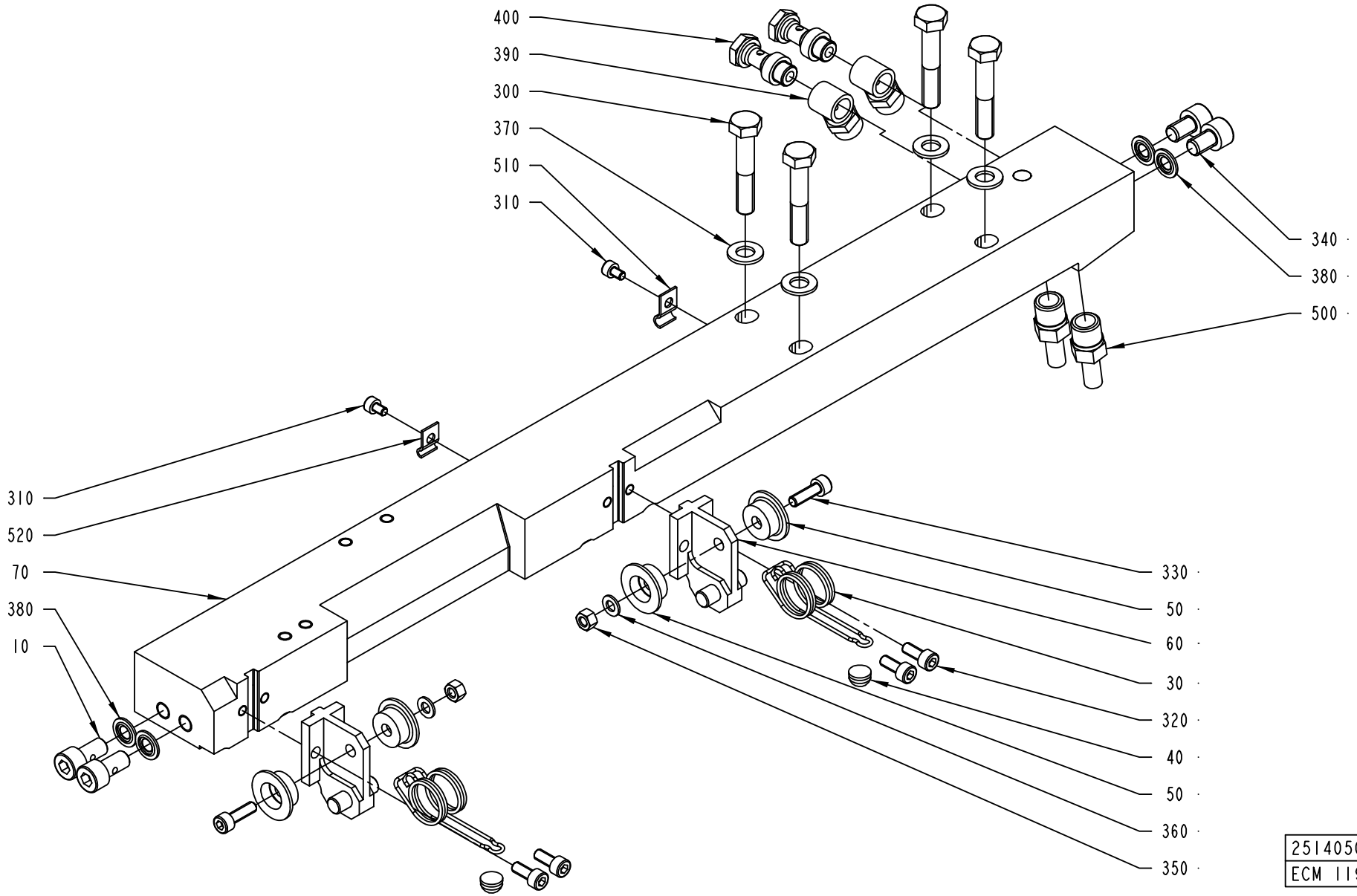

ECM: 181189 - 20041013
Group number: 2514050-0200
Assembly Drawing: 2514050-1_1_AA

This list covers pages from 2-108 to 2-111

Pos	Part No	UN	Qty	Description	Page No
A3/FLEX NOQC (See drawing on page: 2-108)					
070	2514051-0000		1	CARRIER	
310	312115-0285		2	SCREW ISO4762 M4X6 A4	
510	90165-0056		1	PIPE CLIP FOR TUBE D=4 MM	
520	90165-0058		1	PIPE CLIP FOR TUBE D=25 MM	
A3/FLEX TBA 0250S QC, A3/FLEX TBA 0200M QC (See drawing on page: 2-110)					
070	2514047-0000		1	CARRIER	
080	2641225-0000		1	INSERT	
410	312155-0323		3	SCREW DIN 7991 MF6S M5X8 A480	
A3/FLEX TBA 0500B QC, A3/FLEX TBA 1000B QC, A3/FLEX TBA 0200B QC, A3/FLEX TBA 0250B QC, A3/FLEX TBA 0330S QC (See drawing on page: 2-110)					
070	2514047-0000		1	CARRIER	
080	1549312-0000		1	INSERT	
410	312155-0323		3	SCREW DIN 7991 MF6S M5X8 A480	
A3/FLEX TBA 1890S QC, A3/FLEX TBA 2000S QC (See drawing on page: 2-108)					
070	2566341-0000		1	CARRIER	
310	312115-0285		2	SCREW ISO4762 M4X6 A4	
510	90165-0056		1	PIPE CLIP FOR TUBE D=4 MM	
520	90165-0058		1	PIPE CLIP FOR TUBE D=25 MM	
Common Parts					
010	1036343-0000		2	SCREW	
030	1549378-0000		2	SPRING	
040	1129552-0000		2	KNOB	
050	1129833-0000		4	GUIDE ROLLER	
060	2588013-0000		2	BRACKET	
300	312105-0460		4	SCREW M6S ISO 4014 M8X45 A480	
320	312115-0327		4	SCREW ISO4762 M5X12 A4	
330	312115-0329		2	SCREW ISO4762 M5X16 A4	
340	312115-0447		2	SCREW ISO4762 M8X12 A4	
350	312605-0314		2	HEXAGON NUT, M6M M5 A280	
360	315105-0146		2	WASHER BRB5,3X10RFR	
370	315105-0165		4	WASHER BRB8,4X16RFR	
380	315211-0104		4	BONDED SEAL SS/NBR90 M8	
390	342980-0121		2	BANJO-CONNECTION,RING 8/6-G1/8"	
400	342980-0303		2	BANJO-HOLLOW BOLT COUPL,EXT.THR.01-G1/8"	
500	90030-0065		2	PIPE CONNECTION	

Pos	Part No	UN	Qty	Description	Page No

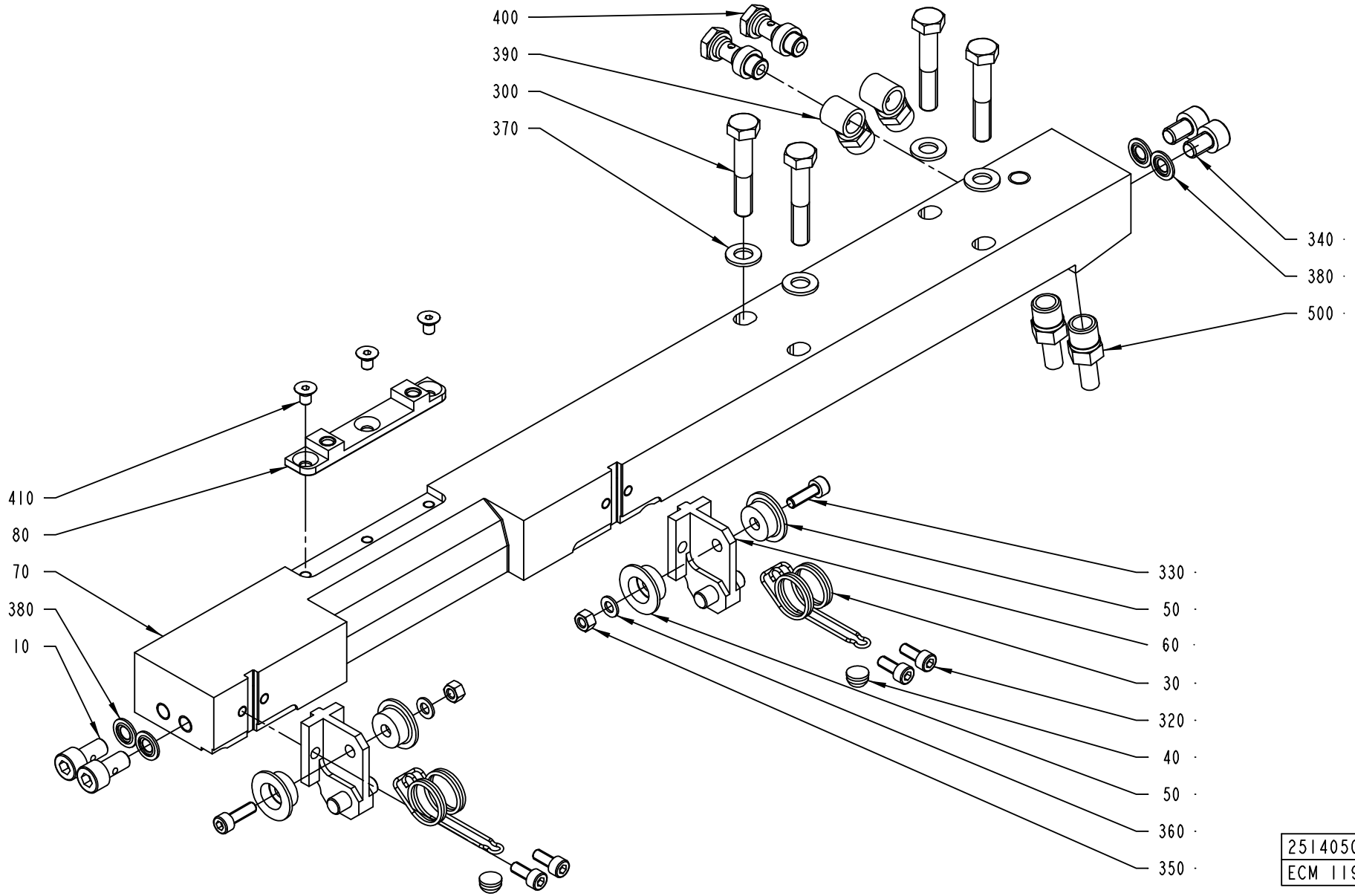
400
390
300
370
340
380
500
410
80
70
380
10
330
50
60
30
320
40
50
360
350
2514050-2
ECM 119672

ECM: 181189 - 20041013
Group number: 2514050-0200
Assembly Drawing: 2514050-2_1_AA

This list covers pages from 2-108 to 2-111

Pos	Part No	UN	Qty	Description	Page No
A3/FLEX NOQC (See drawing on page: 2-108)					
070	2514051-0000		1	CARRIER	
310	312115-0285		2	SCREW ISO4762 M4X6 A4	
510	90165-0056		1	PIPE CLIP FOR TUBE D=4 MM	
520	90165-0058		1	PIPE CLIP FOR TUBE D=25 MM	
A3/FLEX TBA 0250S QC, A3/FLEX TBA 0200M QC (See drawing on page: 2-110)					
070	2514047-0000		1	CARRIER	
080	2641225-0000		1	INSERT	
410	312155-0323		3	SCREW DIN 7991 MF6S M5X8 A480	
A3/FLEX TBA 0500B QC, A3/FLEX TBA 1000B QC, A3/FLEX TBA 0200B QC, A3/FLEX TBA 0250B QC, A3/FLEX TBA 0330S QC (See drawing on page: 2-110)					
070	2514047-0000		1	CARRIER	
080	1549312-0000		1	INSERT	
410	312155-0323		3	SCREW DIN 7991 MF6S M5X8 A480	
A3/FLEX TBA 1890S QC, A3/FLEX TBA 2000S QC (See drawing on page: 2-108)					
070	2566341-0000		1	CARRIER	
310	312115-0285		2	SCREW ISO4762 M4X6 A4	
510	90165-0056		1	PIPE CLIP FOR TUBE D=4 MM	
520	90165-0058		1	PIPE CLIP FOR TUBE D=25 MM	
Common Parts					
010	1036343-0000		2	SCREW	
030	1549378-0000		2	SPRING	
040	1129552-0000		2	KNOB	
050	1129833-0000		4	GUIDE ROLLER	
060	2588013-0000		2	BRACKET	
300	312105-0460		4	SCREW M6S ISO 4014 M8X45 A480	
320	312115-0327		4	SCREW ISO4762 M5X12 A4	
330	312115-0329		2	SCREW ISO4762 M5X16 A4	
340	312115-0447		2	SCREW ISO4762 M8X12 A4	
350	312605-0314		2	HEXAGON NUT, M6M M5 A280	
360	315105-0146		2	WASHER BRB5,3X10RFR	
370	315105-0165		4	WASHER BRB8,4X16RFR	
380	315211-0104		4	BONDED SEAL SS/NBR90 M8	
390	342980-0121		2	BANJO-CONNECTION,RING 8/6-G1/8"	
400	342980-0303		2	BANJO-HOLLOW BOLT COUPL,EXT.THR.01-G1/8"	
500	90030-0065		2	PIPE CONNECTION	

Pos	Part No	UN	Qty	Description	Page No

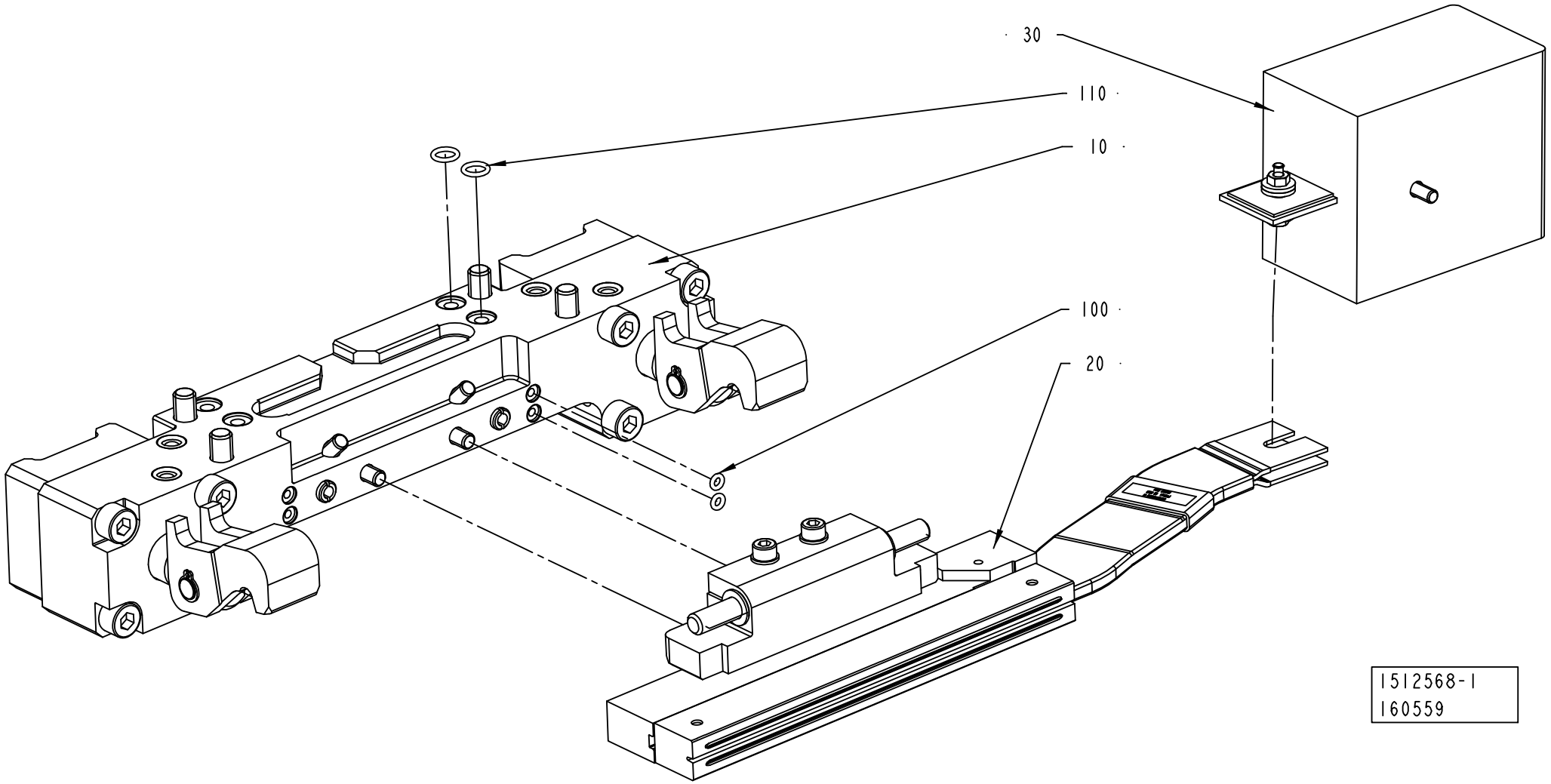
30
110
10
100
20
1512568-1
160559

Pos	Part No	UN	Qty	Description	Page No
TBA 1890S QC, TBA 2000S QC (See drawing on pages: 2-112, 2-114)					
120	311103-0267		1	PARALLEL PIN ISO 2338 4M6X10 A1	
Common Parts					
010	2552005-0100		1	PRESSURE JAW	**2-73**
020	2552007-0100		1	INDUCTOR RIGHT	**2-117, 2-119, 2-121, 2-123**
030	2546229-0100		1	ADAPTION TRANSFORMER	**2-83**
100	315202-0101		2	O-RING 3,1X1,6 MM	
110	315202-0105		2	O-RING 7,1X1,6 MM	

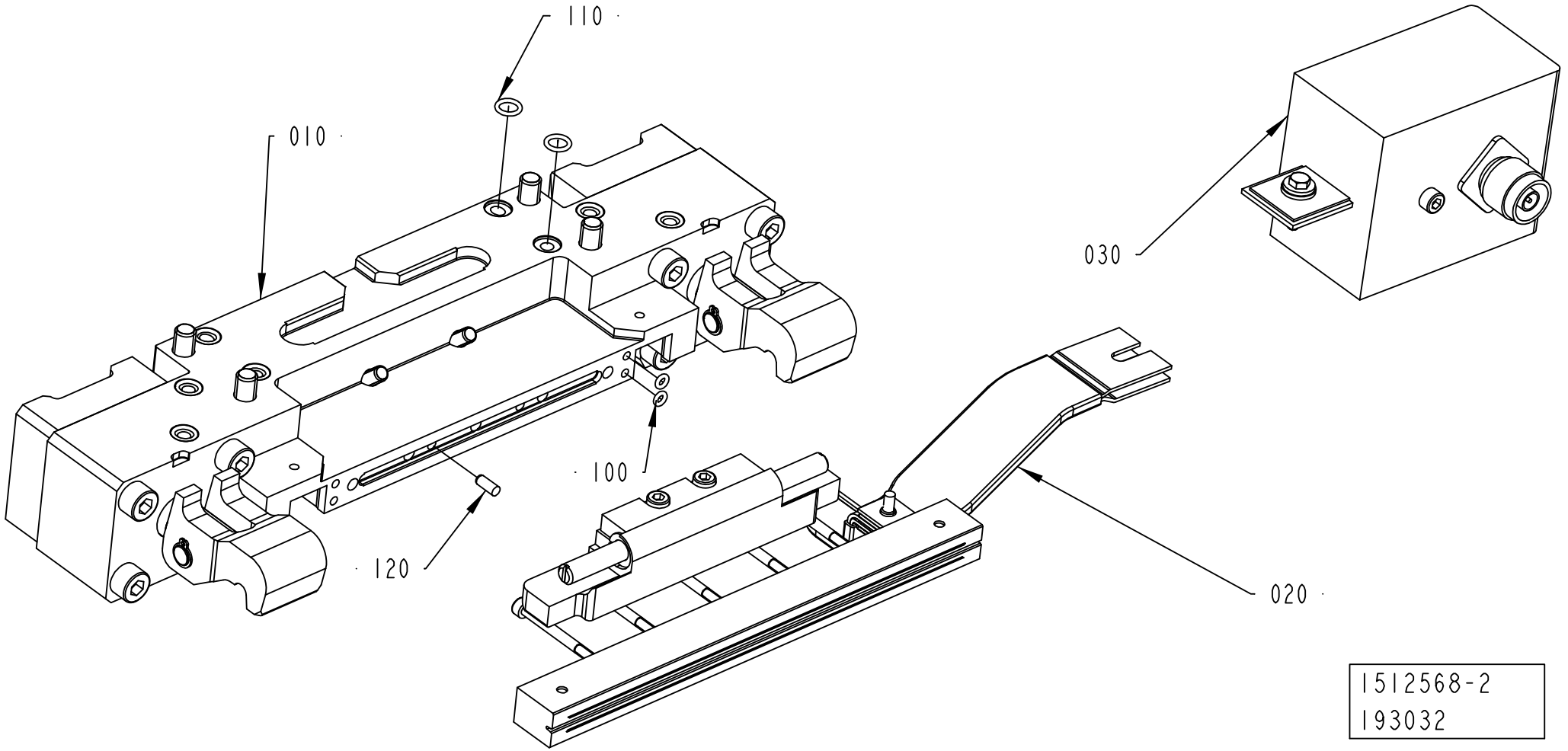
110
010
030
100
120
020
1512568-2
193032

ECM: 194873 - 20041203
Group number: 1512568-0200
Assembly Drawing: 1512568-2_1_AB

This list covers pages from 2-112 to 2-115

Pos	Part No	UN	Qty	Description	Page No
TBA 1890S QC, TBA 2000S QC (See drawing on pages: 2-112, 2-114)					
120	311103-0267		1	PARALLEL PIN ISO 2338 4M6X10 A1	
Common Parts					
010	2552005-0100		1	PRESSURE JAW	**2-73**
020	2552007-0100		1	INDUCTOR RIGHT	**2-117, 2-119, 2-121, 2-123**
030	2546229-0100		1	ADAPTION TRANSFORMER	**2-83**
100	315202-0101		2	O-RING 3,1X1,6 MM	
110	315202-0105		2	O-RING 7,1X1,6 MM	

Pos	Part No	UN	Qty	Description	Page No

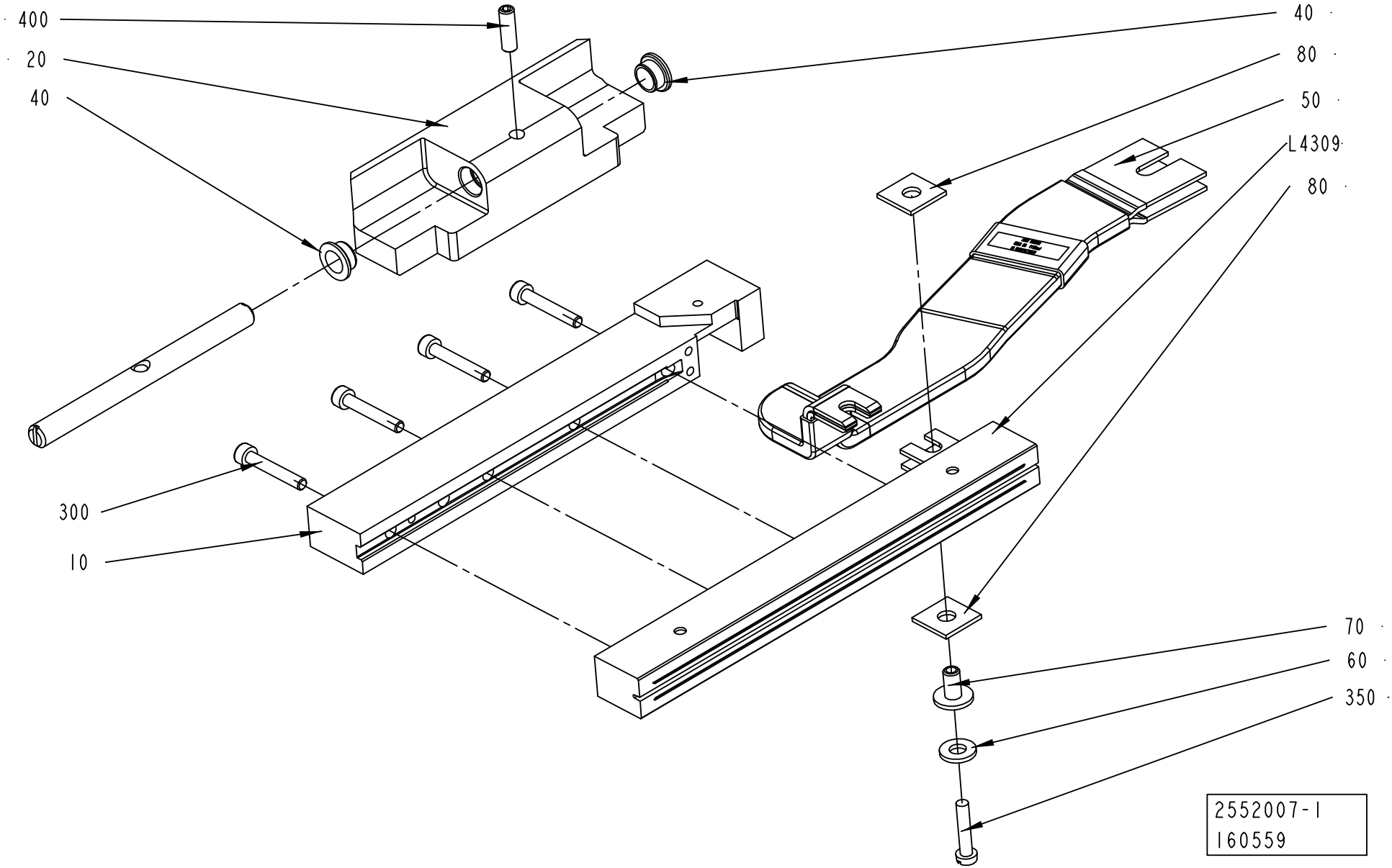
400
20
40
300
10
40
80
50
L4309
80
70
60
350
2552007-1
160559

ECM: 193597 - 20041213
Group number: 2552007-0100
Assembly Drawing: 2552007-1_1_AB

This list covers pages from 2-116 to 2-123

Pos	Part No	UN	Qty	Description	Page No
TPA 1000SQ SMILE (See drawing on page: 2-122)					
010	1558820-0000		1	RAIL	
020	2579991-0000		1	HOLDER	
030	2579990-0000		1	SHAFT	
040	2531703-0000		2	BUSHING	
050	1498850-0000		1	BUSBAR	
090	2503700-0000		1	VOLUME BULGE	
100	2500591-0000		1	VOLUME BULGE	
300	312115-0297		4	SCREW ISO4762 M4X25 A4	
370	312155-0287		2	SCREW DIN 7991 MF6S M4X8 A480	
380	312155-0325		2	SCREW DIN 7991 MF6S M5X10 A480	
400	312115-0327		2	SCREW ISO4762 M5X12 A4	
L4309	1520052-0000		1	INDUCTOR	
L4309	1520052-0000		1	INDUCTOR	
TBA 0200B NOQC, TBA 0250B NOQC (See drawing on page: 2-116)					
010	1348546-0000		1	RAIL	
020	1349599-0000		1	HOLDER	
030	1349980-0000		1	SHAFT	
040	1349584-0000		2	BUSHING	
050	1498850-0000		1	BUSBAR	
300	312115-0297		3	SCREW ISO4762 M4X25 A4	
400	312318-0329		1	SCREW ISO4029 M5X16 A4	
L4309	1110932-0000		1	INDUCTOR	
L4309	1110932-0000		1	INDUCTOR	
TBA 0200B QC, TBA 0330S QC, TBA 0250B QC (See drawing on page: 2-118)					
010	1348546-0000		1	RAIL	
020	2604565-0000		1	HOLDER	
050	1498850-0000		1	BUSBAR	
300	312115-0297		3	SCREW ISO4762 M4X25 A4	
L4309	1110932-0000		1	INDUCTOR	
L4309	1110932-0000		1	INDUCTOR	
TBA 0200S (See drawing on page: 2-122)					
010	1348546-0000		1	RAIL	
020	2513015-0000		1	HOLDER	
030	2513013-0000		1	SHAFT	
040	2531703-0000		2	BUSHING	
050	1498850-0000		1	BUSBAR	
300	312115-0297		3	SCREW ISO4762 M4X25 A4	
400	312115-0329		2	SCREW ISO4762 M5X16 A4	
L4309	1110930-0000		1	INDUCTOR	
L4309	1110930-0000		1	INDUCTOR	
TBA 0250S QC, TBA 0200M QC (See drawing on page: 2-120)					
010	1348546-0000		1	RAIL	
020	2644397-0000		1	HOLDER	
050	1498850-0000		1	BUSBAR	
300	312115-0297		3	SCREW ISO4762 M4X25 A4	
L4309	1110931-0000		1	INDUCTOR	
L4309	1110931-0000		1	INDUCTOR	
TBA 0500B QC, TBA 1000B QC (See drawing on page: 2-118)					
010	1558820-0000		1	RAIL	
020	1487955-0000		1	HOLDER	
050	1498850-0000		1	BUSBAR	
090	1558734-0000		1	VOLUME BULGE	
300	312115-0297		4	SCREW ISO4762 M4X25 A4	
370	312155-0287		2	SCREW DIN 7991 MF6S M4X8 A480	
L4309	1110938-0000		1	INDUCTOR	
L4309	1110938-0000		1	INDUCTOR	
TBA 0500S (See drawing on page: 2-122)					
010	1348546-0000		1	RAIL	
020	2611001-0000		1	CLAMP HOLDER	
030	2579990-0000		1	SHAFT	
040	2531703-0000		2	BUSHING	
050	1498850-0000		1	BUSBAR	
300	312115-0297		4	SCREW ISO4762 M4X25 A4	
400	312115-0327		2	SCREW ISO4762 M5X12 A4	
L4309	1110934-0000		1	INDUCTOR	
L4309	1110934-0000		1	INDUCTOR	
TBA 1000B NOQC NOMOLDEDCAP (See drawing on page: 2-122)					
010	1348546-0000		1	RAIL	
020	2664280-0000		1	HOLDER	
030	2526812-0000		1	SHAFT	
040	2531703-0000		2	BUSHING	
050	1498850-0000		1	BUSBAR	
300	312115-0297		4	SCREW ISO4762 M4X25 A4	
400	312115-0329		2	SCREW ISO4762 M5X16 A4	
410	315105-0146		2	WASHER BRB5,3X10RFR	
L4309	1110938-0000		1	INDUCTOR	
L4309	1110938-0000		1	INDUCTOR	
TBA 1000B NOQC STDA7 (See drawing on page: 2-122)					
010	2610955-0000		1	RAIL	
020	2664280-0000		1	HOLDER	
030	2526812-0000		1	SHAFT	
040	2531703-0000		2	BUSHING	
050	1498850-0000		1	BUSBAR	

Machine Type | Group Description | Used-In | Group Number | Page No

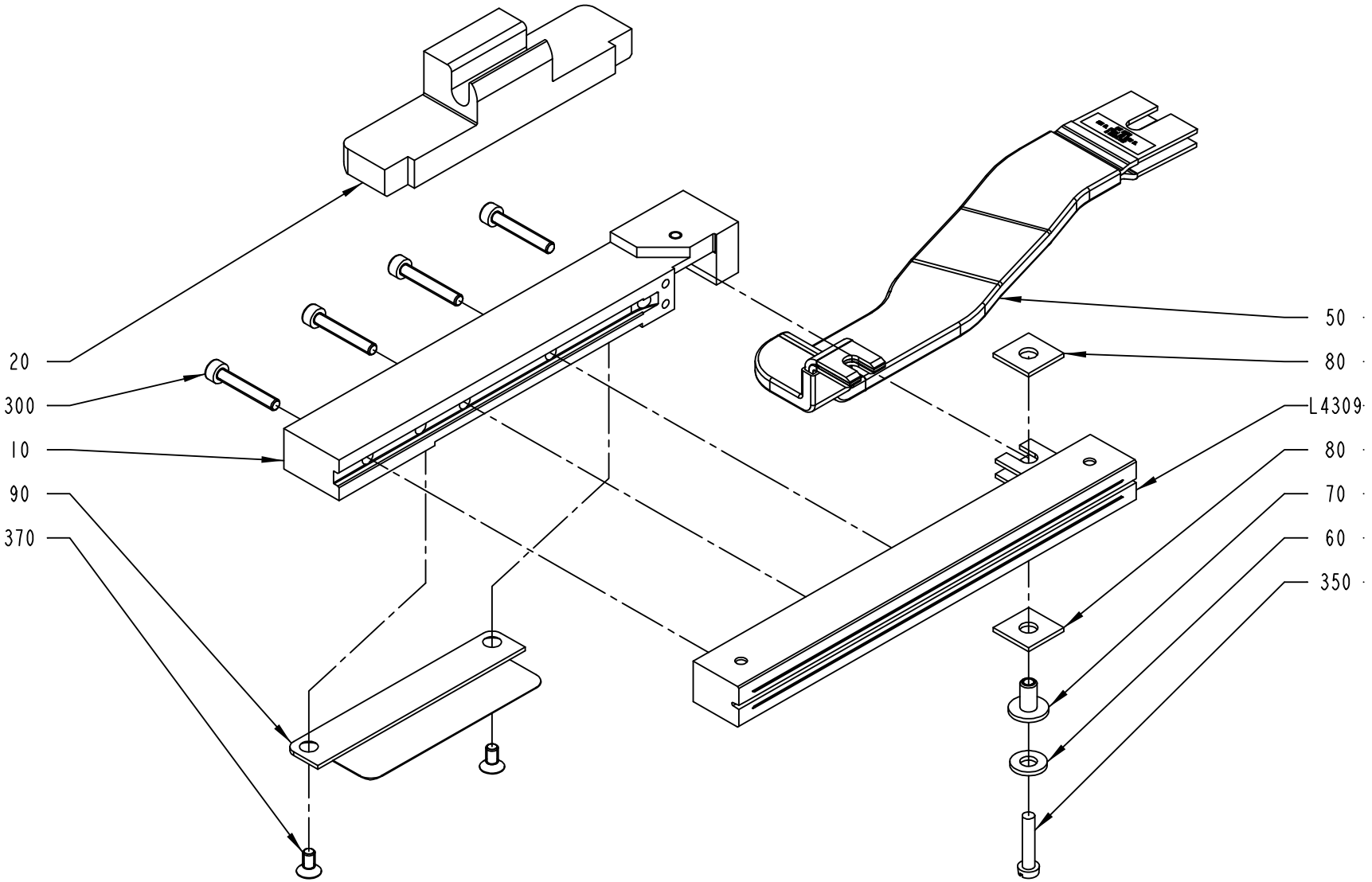

2552007-3
ECM 119672

Pos	Part No	UN	Qty	Description	Page No
TBA 1000B NOQC STDA7 (Cont'd) (See drawing on page: 2-122)					
300	312115-0297		4	SCREW ISO4762 M4X25 A4	
400	312115-0329		2	SCREW ISO4762 M5X16 A4	
410	315105-0146		2	WASHER BRB5,3X10RFR	
L4309	2610956-0000		1	INDUCTOR	
L4309	2610956-0000		1	INDUCTOR	
TBA 1000S NOMOLDEDCAP (See drawing on page: 2-122)					
010	1348546-0000		1	RAIL	
020	2559425-0000		1	CLAMP HOLDER	
030	2526812-0000		1	SHAFT	
040	2531703-0000		2	BUSHING	
050	1498850-0000		1	BUSBAR	
300	312115-0297		4	SCREW ISO4762 M4X25 A4	
400	312115-0327		2	SCREW ISO4762 M5X12 A4	
L4309	1110937-0000		1	INDUCTOR	
L4309	1110937-0000		1	INDUCTOR	
TBA 1000S STDA7 (See drawing on page: 2-122)					
010	2546476-0000		1	RAIL	
020	2559425-0000		1	CLAMP HOLDER	
030	2526812-0000		1	SHAFT	
040	2531703-0000		2	BUSHING	
050	1498850-0000		1	BUSBAR	
300	312115-0297		4	SCREW ISO4762 M4X25 A4	
400	312115-0327		2	SCREW ISO4762 M5X12 A4	
L4309	2546474-0000		1	INDUCTOR	
L4309	2546474-0000		1	INDUCTOR	
TBA 1000SQ (See drawing on page: 2-122)					
010	1348546-0000		1	RAIL	
020	2526811-0000		1	HOLDER	
030	2526812-0000		1	SHAFT	
040	2531703-0000		2	BUSHING	
050	1498850-0000		1	BUSBAR	
300	312115-0297		4	SCREW ISO4762 M4X25 A4	
400	312115-0327		2	SCREW ISO4762 M5X12 A4	
L4309	1110936-0000		1	INDUCTOR	
L4309	1110936-0000		1	INDUCTOR	
TBA 1500S (See drawing on page: 2-122)					
010	1348546-0000		1	RAIL	
020	2570302-0000		1	CLAMP HOLDER	
030	2526812-0000		1	SHAFT	
040	2531703-0000		2	BUSHING	
050	1498850-0000		1	BUSBAR	
300	312115-0297		4	SCREW ISO4762 M4X25 A4	
400	312115-0327		2	SCREW ISO4762 M5X12 A4	
L4309	1110938-0000		1	INDUCTOR	
L4309	1110938-0000		1	INDUCTOR	
TBA 1890S QC, TBA 2000S QC (See drawing on page: 2-122)					
020	2588293-0000		1	HOLDER	
030	2686144-0000		1	SHAFT	
040	2531703-0000		2	BUSHING	
050	2698012-0000		1	BUSBAR	
300	312115-0305		5	SCREW ISO4762 M4X50 A4	
400	312115-0327		2	SCREW ISO4762 M5X12 A4	
L4309	1533046-0000		1	INDUCTOR	
L4309	1533046-0000		1	INDUCTOR	
TPA 0330SQ (See drawing on page: 2-122)					
010	1348546-0000		1	RAIL	
020	2611655-0000		1	CLAMP HOLDER	
030	2513013-0000		1	SHAFT	
040	2531703-0000		2	BUSHING	
050	1498850-0000		1	BUSBAR	
300	312115-0297		3	SCREW ISO4762 M4X25 A4	
400	312115-0327		2	SCREW ISO4762 M5X12 A4	
L4309	1520167-0000		1	INDUCTOR	
L4309	1520167-0000		1	INDUCTOR	
TPA 0500SQ SMILE (See drawing on page: 2-122)					
010	1558820-0000		1	RAIL	
020	2570848-0000		1	HOLDER	
030	2513013-0000		1	SHAFT	
040	2570849-0000		1	BUSHING	
050	1498850-0000		1	BUSBAR	
090	2503688-0000		1	VOLUME BULGE	
100	1549834-0000		1	VOLUME BULGE	
300	312115-0297		4	SCREW ISO4762 M4X25 A4	
370	312155-0287		2	SCREW DIN 7991 MF6S M4X8 A480	
380	312155-0325		2	SCREW DIN 7991 MF6S M5X10 A480	
400	312115-0329		2	SCREW ISO4762 M5X16 A4	
L4309	2587467-0000		1	INDUCTOR	
L4309	2587467-0000		1	INDUCTOR	
TPA 1000SQ FT (See drawing on page: 2-122)					
010	1558820-0000		1	RAIL	
020	2579989-0000		1	HOLDER	
030	2579990-0000		1	SHAFT	
040	2531703-0000		2	BUSHING	

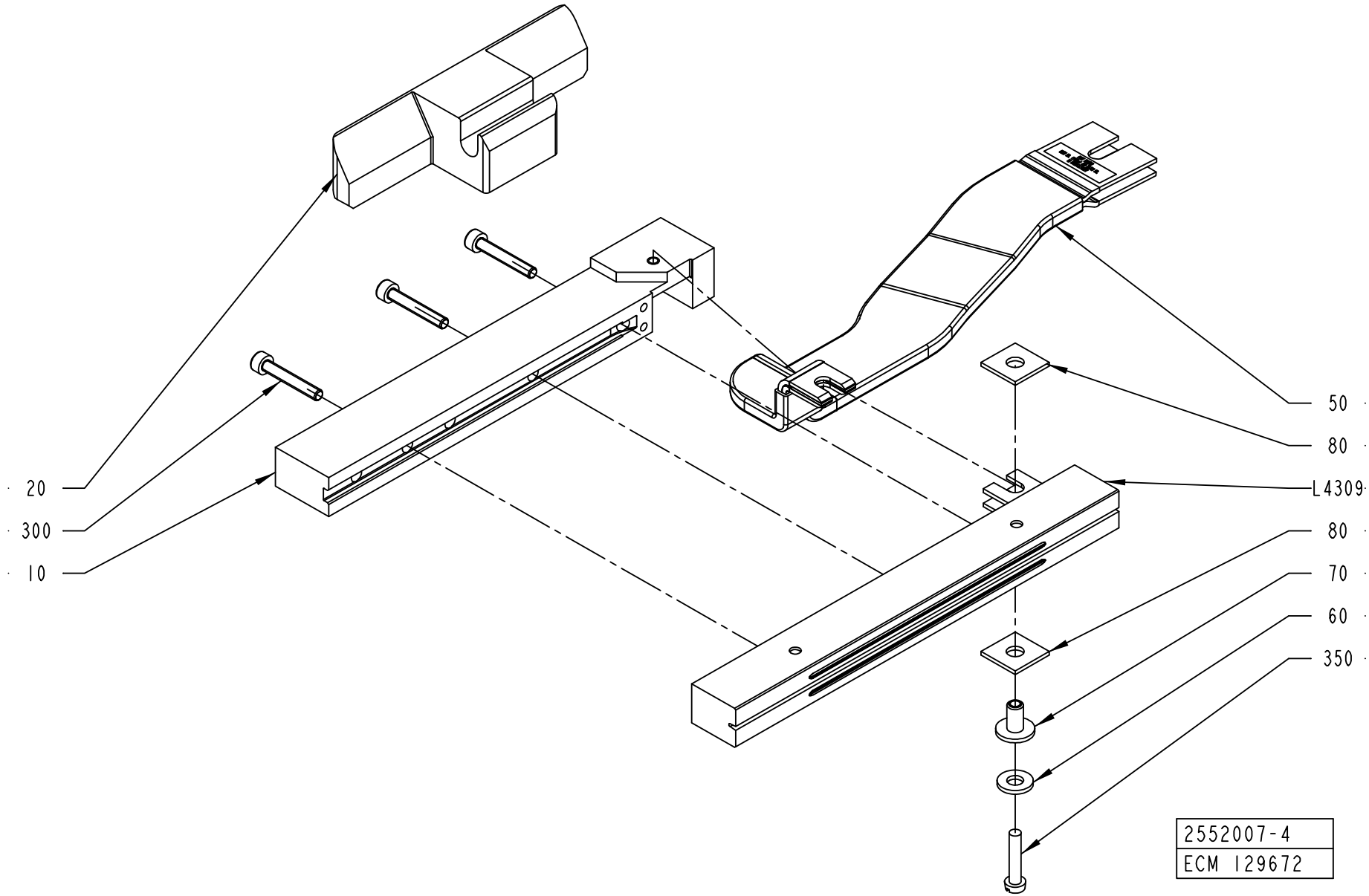
20
300
10
50
80
L4309
80
70
60
350
2552007-4
ECM 129672

Pos	Part No	UN	Qty	Description	Page No
TPA 1000SQ FT (Cont'd) (See drawing on page: 2-122)					
050	1498850-0000		1	BUSBAR	
090	2503700-0000		1	VOLUME BULGE	
300	312115-0297		4	SCREW ISO4762 M4X25 A4	
370	312155-0287		2	SCREW DIN 7991 MF6S M4X8 A480	
400	312115-0327		2	SCREW ISO4762 M5X12 A4	
L4309	1520052-0000		1	INDUCTOR	
L4309	1520052-0000		1	INDUCTOR	
Common Parts					
060	28509-0000		1	WASHER	
070	32544-0000		1	INSULATION NUT	
080	1036584-0000		2	WASHER	
350	312125-0295		1	SCREW ISO 1207 M4X20 A4	

Pos	Part No	UN	Qty	Description	Page No

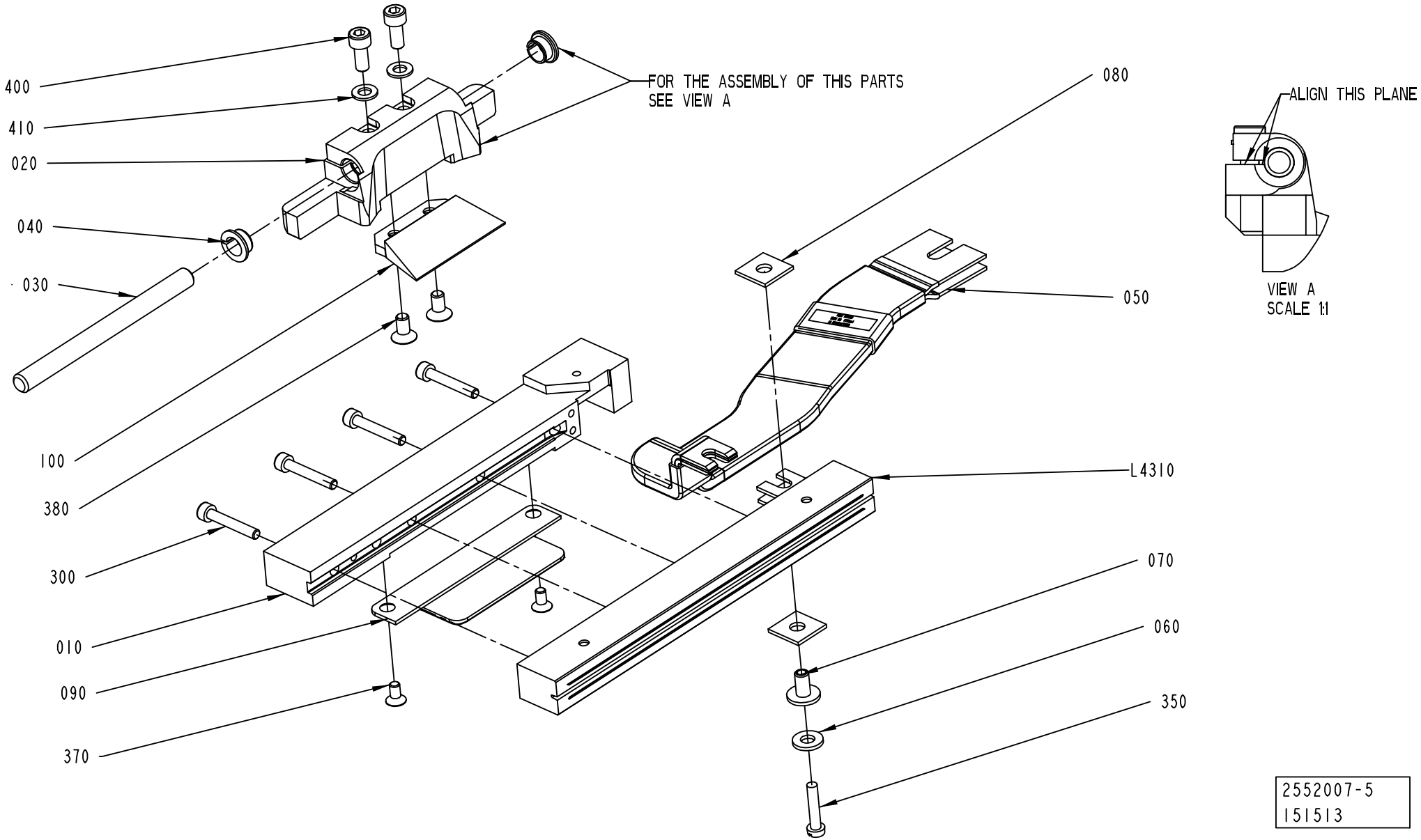
400
410
020
040
030
100
380
300
010
090
370
FOR THE ASSEMBLY OF THIS PARTS
SEE VIEW A
080
050
L4310
070
060
350
ALIGN THIS PLANE
VIEW A
SCALE 1:1
2552007-5
151513

Pos	Part No	UN	Qty	Description	Page No
SEE PREVIOUS LISTS PAGES: 2-117, 2-119, 2-121.					

Pos	Part No	UN	Qty	Description	Page No

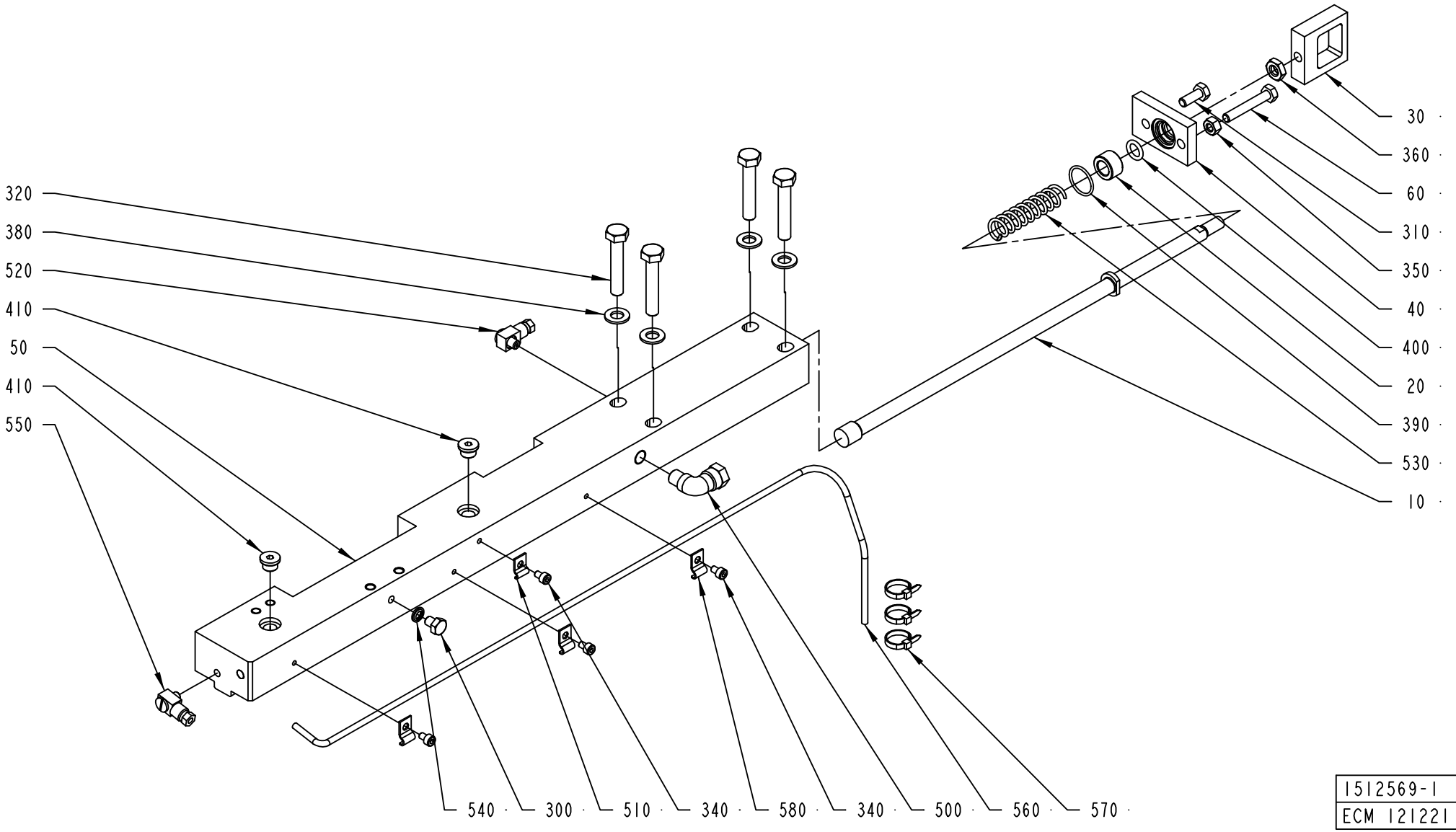

1512569-1
ECM 121221

ECM: 181547 - 20041013
Group number: 1512569-0200
Assembly Drawing: 1512569-1_1_AA

This list covers pages from 2-124 to 2-129

Pos	Part No	UN	Qty	Description	Page No
TBA 0200B QC, TBA 0330S QC, TBA 0250B QC (See drawing on page: 2-126)					
010	2530508-0000		1	TIE ROD	
050	2572248-0000		1	CARRIER	
070	1549312-0000		1	INSERT	
345	312155-0323		3	SCREW DIN 7991 MF6S M5X8 A480	
TBA 0250S QC, TBA 0200M QC (See drawing on page: 2-126)					
010	2530508-0000		1	TIE ROD	
050	2572248-0000		1	CARRIER	
070	2641225-0000		1	INSERT	
345	312155-0323		3	SCREW DIN 7991 MF6S M5X8 A480	
TBA 0500B QC, TBA 1000B QC (See drawing on page: 2-126)					
010	1499320-0000		1	TIE ROD	
050	2572248-0000		1	CARRIER	
070	1549312-0000		1	INSERT	
345	312155-0323		3	SCREW DIN 7991 MF6S M5X8 A480	
TBA 0500S, TBA 0200S, TPA 0330SQ, TPA 0500SQ, TBA 0200B NOQC, TBA 0250B NOQC (See drawing on page: 2-124)					
010	2530508-0000		1	TIE ROD	
050	2536026-0000		1	CARRIER	
TBA 1000S, TBA 1000SQ, TBA 1500S, TPA 1000SQ, TBA 1000B NOQC (See drawing on page: 2-124)					
010	1499320-0000		1	TIE ROD	
050	2536026-0000		1	CARRIER	
TBA 1890S QC, TBA 2000S QC (See drawing on page: 2-128)					
010	2588291-0000		1	TIE ROD	
050	2566327-0000		1	CARRIER	
070	2566328-0000		1	PLATE	
590	312155-0287		3	SCREW DIN 7991 MF6S M4X8 A480	
600	2603151-0000		1	SHIM	
Common Parts					
020	1036495-0000		1	BUSHING	
030	1036585-0000		1	EAR	
040	1036389-0000		1	LID	
060	1523162-0000		1	SCREW	
300	312105-0362		1	SCREW M6S ISO 4017 M6X8 A480	
310	312105-0368		1	SCREW M6S ISO 4017 M6X16 A480	
320	312105-0460		4	SCREW M6S ISO 4014 M8X45 A480	
340	312115-0285		4	SCREW ISO4762 M4X6 A4	
350	312605-0316		1	HEXAGON NUT, M6M M6 A280	
360	312625-0318		1	HEXAGON THIN NUT, EN 24035 ML6M M8 A4	
380	315105-0165		4	WASHER BRB8,4X16RFR	
390	315202-0116		1	O-RING 18,1X1,6 MM	
400	315202-0208		1	O-RING 9,3X2,4 MM	
410	342713-0209		2	PLUG (1UNIT = 10PC)	
500	90030-0257		1	CONN. ELBOW, 8-R1/8, EXT.THREAD	
510	90165-0058		1	PIPE CLIP FOR TUBE D=25 MM	
520	90134-0058		1	CONNECTION	
530	1548940-0000		1	SPRING	
540	315211-0103		1	BONDED SEAL SS/NBR90 M6	
550	90134-0068		1	CONNECTION	
560	90266-0165	MM	800	BRASS PIPE	
570	352113-0101		3	CLIP STRIP, 92X2,5 MM	
580	90165-0056		3	PIPE CLIP FOR TUBE D=4 MM	

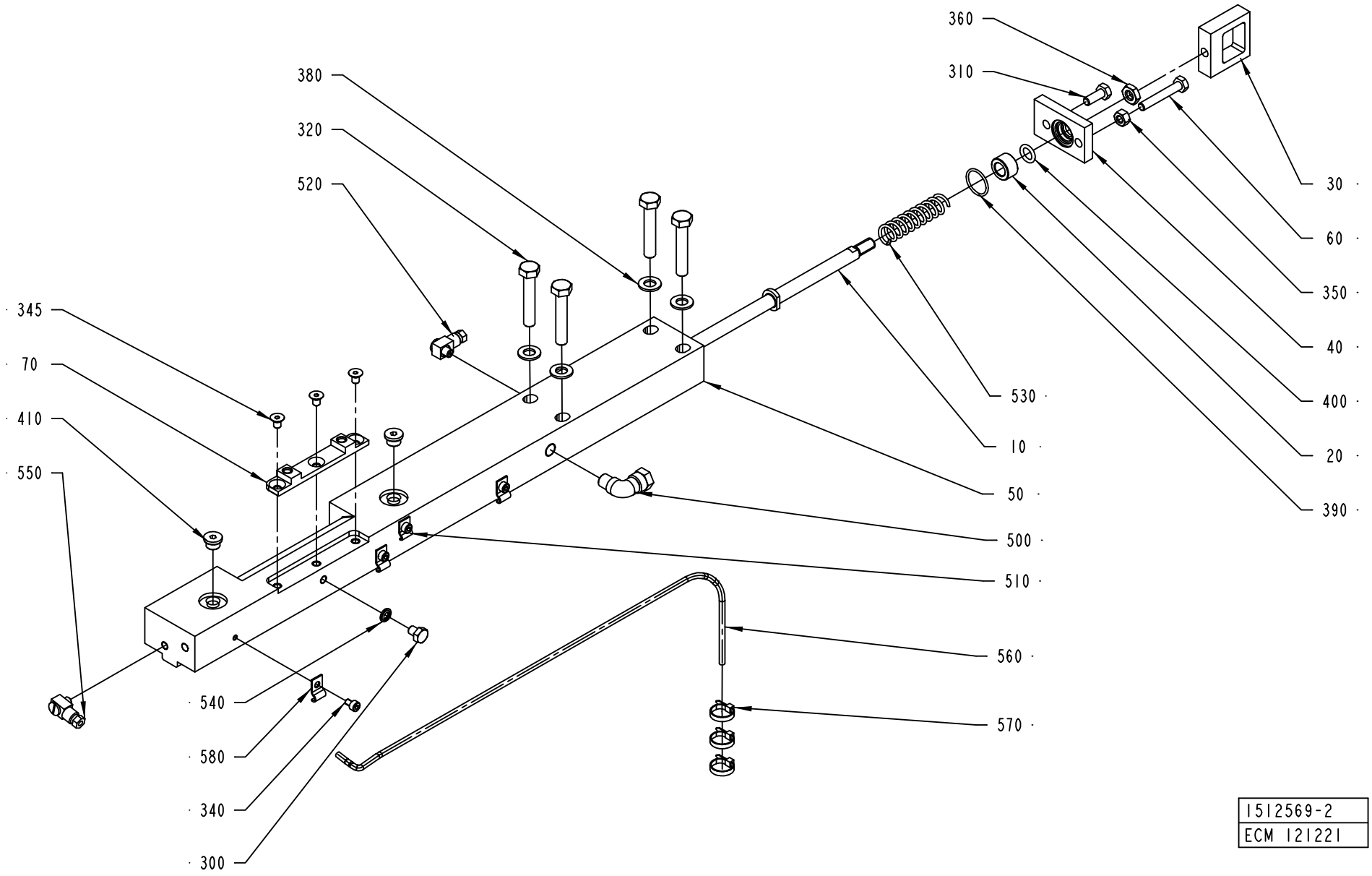
360
310
380
320
520
345
70
410
550
30
60
350
40
400
20
390
530
10
50
500
510
560
570
540
580
340
300
1512569-2
ECM 121221

ECM: 181547 - 20041013
Group number: 1512569-0200
Assembly Drawing: 1512569-2_1_AA

This list covers pages from 2-124 to 2-129

Pos	Part No	UN	Qty	Description	Page No
TBA 0200B QC, TBA 0330S QC, TBA 0250B QC (See drawing on page: 2-126)					
010	2530508-0000		1	TIE ROD	
050	2572248-0000		1	CARRIER	
070	1549312-0000		1	INSERT	
345	312155-0323		3	SCREW DIN 7991 MF6S M5X8 A480	
TBA 0250S QC, TBA 0200M QC (See drawing on page: 2-126)					
010	2530508-0000		1	TIE ROD	
050	2572248-0000		1	CARRIER	
070	2641225-0000		1	INSERT	
345	312155-0323		3	SCREW DIN 7991 MF6S M5X8 A480	
TBA 0500B QC, TBA 1000B QC (See drawing on page: 2-126)					
010	1499320-0000		1	TIE ROD	
050	2572248-0000		1	CARRIER	
070	1549312-0000		1	INSERT	
345	312155-0323		3	SCREW DIN 7991 MF6S M5X8 A480	
TBA 0500S, TBA 0200S, TPA 0330SQ, TPA 0500SQ, TBA 0200B NOQC, TBA 0250B NOQC (See drawing on page: 2-124)					
010	2530508-0000		1	TIE ROD	
050	2536026-0000		1	CARRIER	
TBA 1000S, TBA 1000SQ, TBA 1500S, TPA 1000SQ, TBA 1000B NOQC (See drawing on page: 2-124)					
010	1499320-0000		1	TIE ROD	
050	2536026-0000		1	CARRIER	
TBA 1890S QC, TBA 2000S QC (See drawing on page: 2-128)					
010	2588291-0000		1	TIE ROD	
050	2566327-0000		1	CARRIER	
070	2566328-0000		1	PLATE	
590	312155-0287		3	SCREW DIN 7991 MF6S M4X8 A480	
600	2603151-0000		1	SHIM	
Common Parts					
020	1036495-0000		1	BUSHING	
030	1036585-0000		1	EAR	
040	1036389-0000		1	LID	
060	1523162-0000		1	SCREW	
300	312105-0362		1	SCREW M6S ISO 4017 M6X8 A480	
310	312105-0368		1	SCREW M6S ISO 4017 M6X16 A480	
320	312105-0460		4	SCREW M6S ISO 4014 M8X45 A480	
340	312115-0285		4	SCREW ISO4762 M4X6 A4	
350	312605-0316		1	HEXAGON NUT, M6M M6 A280	
360	312625-0318		1	HEXAGON THIN NUT, EN 24035 ML6M M8 A4	
380	315105-0165		4	WASHER BRB8,4X16RFR	
390	315202-0116		1	O-RING 18,1X1,6 MM	
400	315202-0208		1	O-RING 9,3X2,4 MM	
410	342713-0209		2	PLUG (1UNIT = 10PC)	
500	90030-0257		1	CONN. ELBOW, 8-R1/8, EXT.THREAD	
510	90165-0058		1	PIPE CLIP FOR TUBE D=25 MM	
520	90134-0058		1	CONNECTION	
530	1548940-0000		1	SPRING	
540	315211-0103		1	BONDED SEAL SS/NBR90 M6	
550	90134-0068		1	CONNECTION	
560	90266-0165	MM	800	BRASS PIPE	
570	352113-0101		3	CLIP STRIP, 92X2,5 MM	
580	90165-0056		3	PIPE CLIP FOR TUBE D=4 MM	

Machine Type | Group Description | Used-In | Group Number | Page No

CARRIER CUTTING RIGHT

Drawing file: 1512569-4_1_AA.hpgl

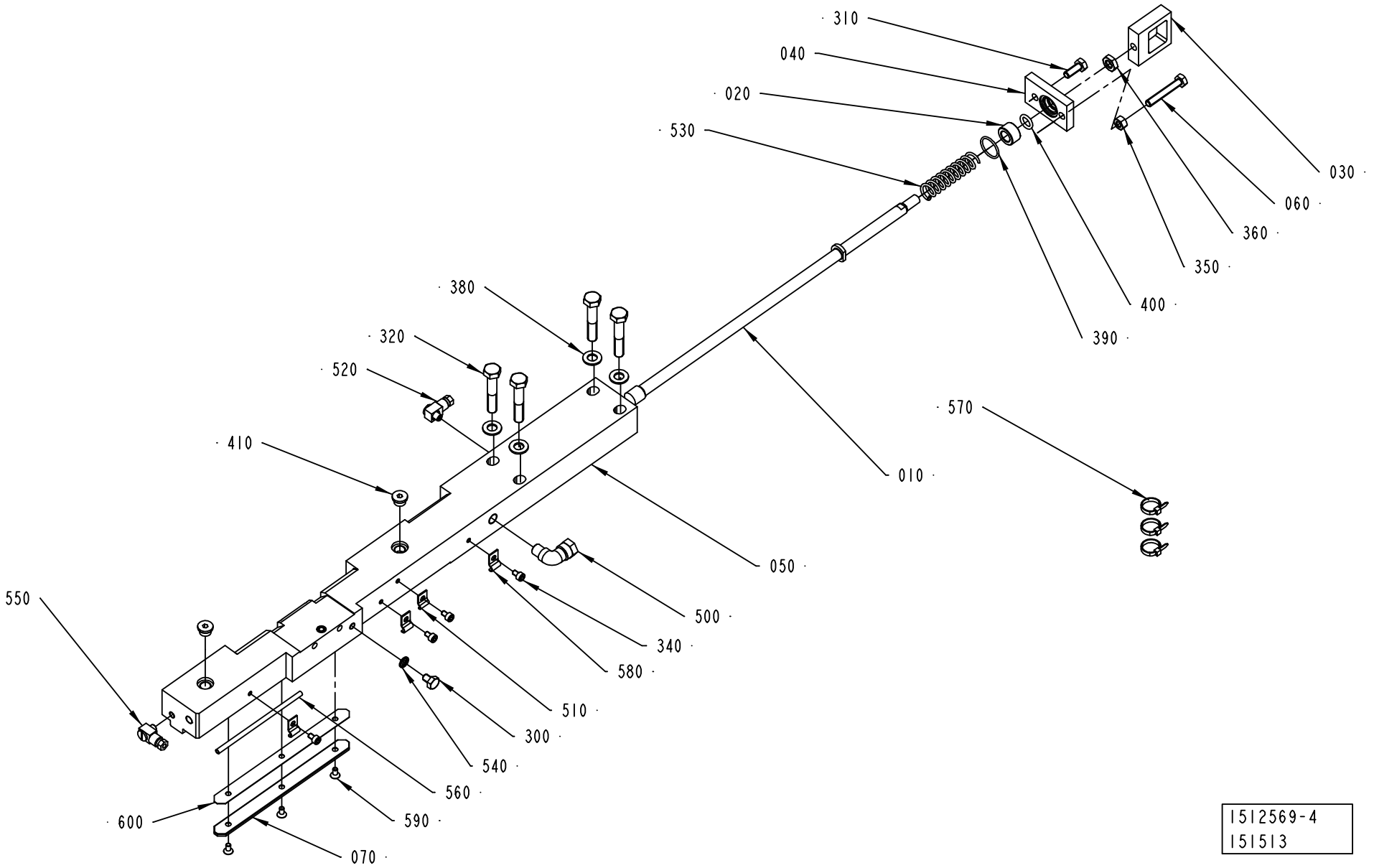

1512569-4
151513

ECM: 181547 - 20041013
Group number: 1512569-0200
Assembly Drawing: 1512569-4_1_AA

This list covers pages from 2-124 to 2-129

Pos	Part No	UN	Qty	Description	Page No
TBA 0200B QC, TBA 0330S QC, TBA 0250B QC (See drawing on page: 2-126)					
010	2530508-0000		1	TIE ROD	
050	2572248-0000		1	CARRIER	
070	1549312-0000		1	INSERT	
345	312155-0323		3	SCREW DIN 7991 MF6S M5X8 A480	
TBA 0250S QC, TBA 0200M QC (See drawing on page: 2-126)					
010	2530508-0000		1	TIE ROD	
050	2572248-0000		1	CARRIER	
070	2641225-0000		1	INSERT	
345	312155-0323		3	SCREW DIN 7991 MF6S M5X8 A480	
TBA 0500B QC, TBA 1000B QC (See drawing on page: 2-126)					
010	1499320-0000		1	TIE ROD	
050	2572248-0000		1	CARRIER	
070	1549312-0000		1	INSERT	
345	312155-0323		3	SCREW DIN 7991 MF6S M5X8 A480	
TBA 0500S, TBA 0200S, TPA 0330SQ, TPA 0500SQ, TBA 0200B NOQC, TBA 0250B NOQC (See drawing on page: 2-124)					
010	2530508-0000		1	TIE ROD	
050	2536026-0000		1	CARRIER	
TBA 1000S, TBA 1000SQ, TBA 1500S, TPA 1000SQ, TBA 1000B NOQC (See drawing on page: 2-124)					
010	1499320-0000		1	TIE ROD	
050	2536026-0000		1	CARRIER	
TBA 1890S QC, TBA 2000S QC (See drawing on page: 2-128)					
010	2588291-0000		1	TIE ROD	
050	2566327-0000		1	CARRIER	
070	2566328-0000		1	PLATE	
590	312155-0287		3	SCREW DIN 7991 MF6S M4X8 A480	
600	2603151-0000		1	SHIM	
Common Parts					
020	1036495-0000		1	BUSHING	
030	1036585-0000		1	EAR	
040	1036389-0000		1	LID	
060	1523162-0000		1	SCREW	
300	312105-0362		1	SCREW M6S ISO 4017 M6X8 A480	
310	312105-0368		1	SCREW M6S ISO 4017 M6X16 A480	
320	312105-0460		4	SCREW M6S ISO 4014 M8X45 A480	
340	312115-0285		4	SCREW ISO4762 M4X6 A4	
350	312605-0316		1	HEXAGON NUT, M6M M6 A280	
360	312625-0318		1	HEXAGON THIN NUT, EN 24035 ML6M M8 A4	
380	315105-0165		4	WASHER BRB8,4X16RFR	
390	315202-0116		1	O-RING 18,1X1,6 MM	
400	315202-0208		1	O-RING 9,3X2,4 MM	
410	342713-0209		2	PLUG (1UNIT = 10PC)	
500	90030-0257		1	CONN. ELBOW, 8-R1/8, EXT.THREAD	
510	90165-0058		1	PIPE CLIP FOR TUBE D=25 MM	
520	90134-0058		1	CONNECTION	
530	1548940-0000		1	SPRING	
540	315211-0103		1	BONDED SEAL SS/NBR90 M6	
550	90134-0068		1	CONNECTION	
560	90266-0165	MM	800	BRASS PIPE	
570	352113-0101		3	CLIP STRIP, 92X2,5 MM	
580	90165-0056		3	PIPE CLIP FOR TUBE D=4 MM	

Machine Type | Group Description | Used-In | Group Number | Page No

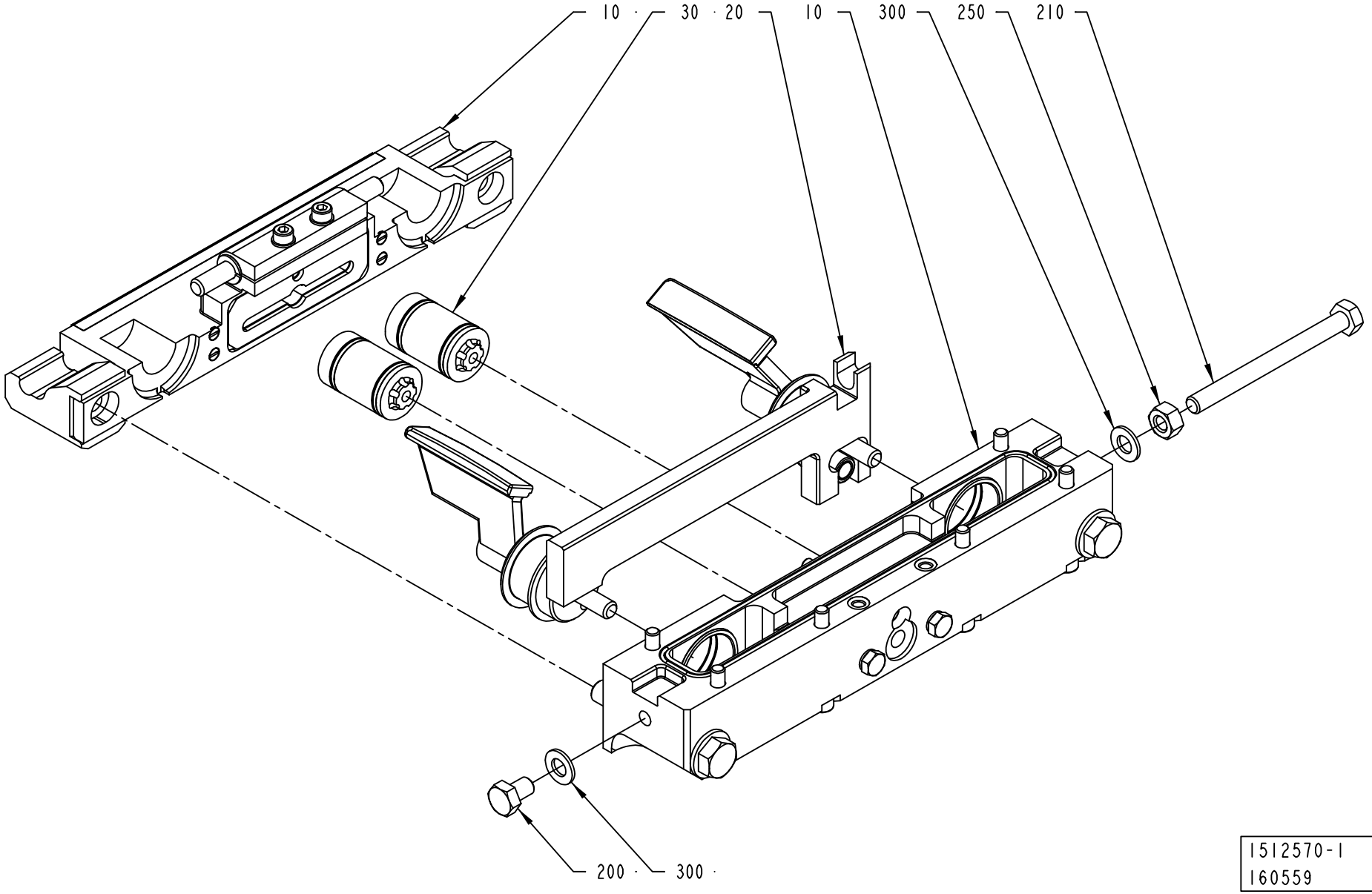
10
30
20
10
300
250
210
200
300
1512570-1
160559

ECM: 181187 - 20041013
Group number: 1512570-0200
Assembly Drawing: 1512570-1_1_AB

Pos	Part No	UN	Qty	Description	Page No
-					
010	2552008-0100		1	CUTTING JAW	**2-93, 2-95, 2-97, 2-99, 2-101**
020	2552011-0100		1	FOLDING FLAP RIGHT	**2-133, 2-135**
030	2552010-0100		2	PISTON	**2-107**
200	312105-0447		1	SCREW M6S ISO 4017 M8X12 A480	
210	312105-0469		1	SCREW M6S ISO 4014 M8X90 A480	
250	312605-0318		1	HEXAGON NUT, M6M M8 A280	
300	315105-0165		2	WASHER BRB8,4X16RFR	

Pos	Part No	UN	Qty	Description	Page No

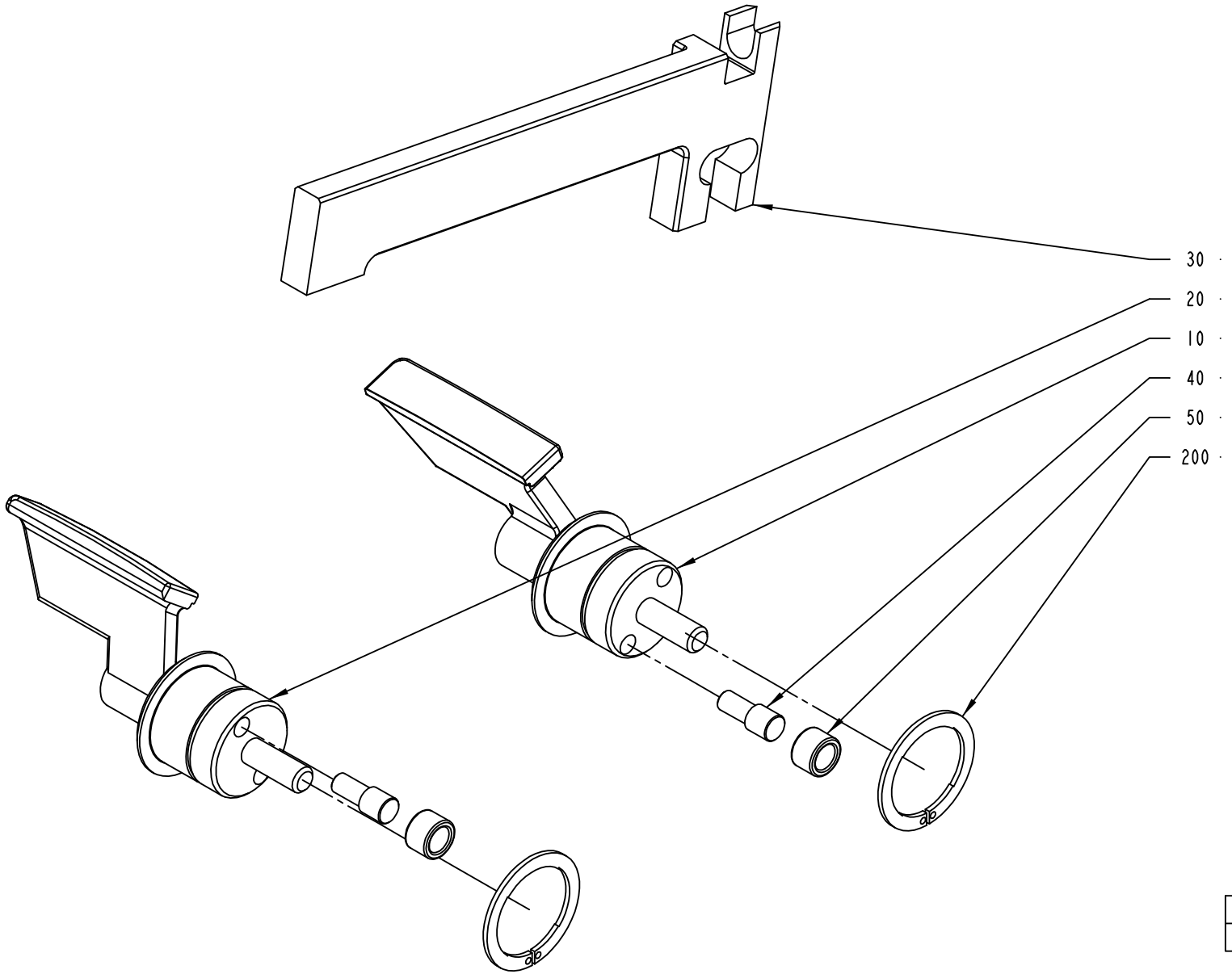
30
20
10
40
50
200
2552011-1
ECM 120277

ECM: 191297 - 20041104
Group number: 2552011-0100
Assembly Drawing: 2552011-1_1_AA

This list covers pages from 2-132 to 2-135

Pos	Part No	UN	Qty	Description	Page No
TBA 0200B QC, TBA 0330S QC, TBA 0250B QC (See drawing on page: 2-132)					
010	2605875-0000		1	FOLDING FLAP	
020	2605876-0000		1	FOLDING FLAP	
030	1255463-0000		1	CARRIER RULER	
TBA 0200S (See drawing on page: 2-132)					
010	2624554-0000		1	FOLDING FLAP	
020	2624555-0000		1	FOLDING FLAP	
030	1255462-0000		1	CARRIER RULER	
TBA 0250S QC, TBA 0200M QC					
010	2624554-0000		1	FOLDING FLAP	
020	2624555-0000		1	FOLDING FLAP	
030	2520471-0000		1	CARRIER RULER	
TBA 0500B NOQC, TBA 1000B NOQC NOMOLDEDCAP (See drawing on page: 2-132)					
010	1511697-0000		1	.FOLDING FLAP	
020	1511698-0000		1	FOLDING FLAP	
030	1255461-0000		1	CARRIER RULER	
TBA 0500B QC, TBA 1000B QC (See drawing on page: 2-132)					
010	1511352-0000		1	FOLDING FLAP	
020	1511351-0000		1	FOLDING FLAP	
030	1255461-0000		1	CARRIER RULER	
TBA 0500S (See drawing on page: 2-132)					
010	2507085-0000		1	FOLDING FLAP	
020	2507086-0000		1	FOLDING FLAP	
030	1511188-0000		1	CARRIER RULER	
TBA 1000B NOQC STDA7 (See drawing on page: 2-132)					
010	1511697-0000		1	.FOLDING FLAP	
020	2610957-0000		1	FOLDING FLAP	
030	1255461-0000		1	CARRIER RULER	
TBA 1000S NOMOLDEDCAP (See drawing on page: 2-132)					
010	1511699-0000		1	FOLDING FLAP	
020	1511700-0000		1	FOLDING FLAP	
030	1255464-0000		1	CARRIER RULER	
TBA 1000S STDA7 (See drawing on page: 2-132)					
010	1511699-0000		1	FOLDING FLAP	
020	2546501-0000		1	FOLDING FLAP	
030	1255464-0000		1	CARRIER RULER	
TBA 1000SQ (See drawing on page: 2-132)					
010	2507076-0000		1	FOLDING FLAP	
020	2507077-0000		1	FOLDING FLAP	
030	1360319-0000		1	CARRIER RULER	
TBA 1500S (See drawing on page: 2-132)					
010	2507092-0000		1	FOLDING FLAP	
020	2507093-0000		1	FOLDING FLAP	
030	1255461-0000		1	CARRIER RULER	
TBA 1890S QC, TBA 2000S QC (See drawing on page: 2-134)					
010	2566319-0000		1	FOLDING FLAP	
020	2566320-0000		1	FOLDING FLAP	
030	2566317-0000		1	CARRIER RULER	
210	90459-2258		2	SEAL GLYDRING 25,1X30X2,2 MM	
TPA 0330SQ (See drawing on page: 2-132)					
010	2507096-0000		1	FOLDING FLAP	
020	2507097-0000		1	FOLDING FLAP	
030	1538769-0000		1	CARRIER RULER	
TPA 0500SQ (See drawing on page: 2-132)					
010	1549822-0000		1	FOLDING FLAP	
020	1549823-0000		1	FOLDING FLAP	
030	1549825-0000		1	CARRIER RULER	
TPA 1000SQ (See drawing on page: 2-132)					
010	1523146-0000		1	FOLDING FLAP	
020	1523147-0000		1	FOLDING FLAP	
030	1523148-0000		1	CARRIER RULER	
Common Parts					
040	22462-0000		2	SHAFT	
050	22463-0000		2	ROLL	
200	90141-0029		2	CIRCLIP	

Machine Type | Group Description | Used-In | Group Number | Page No

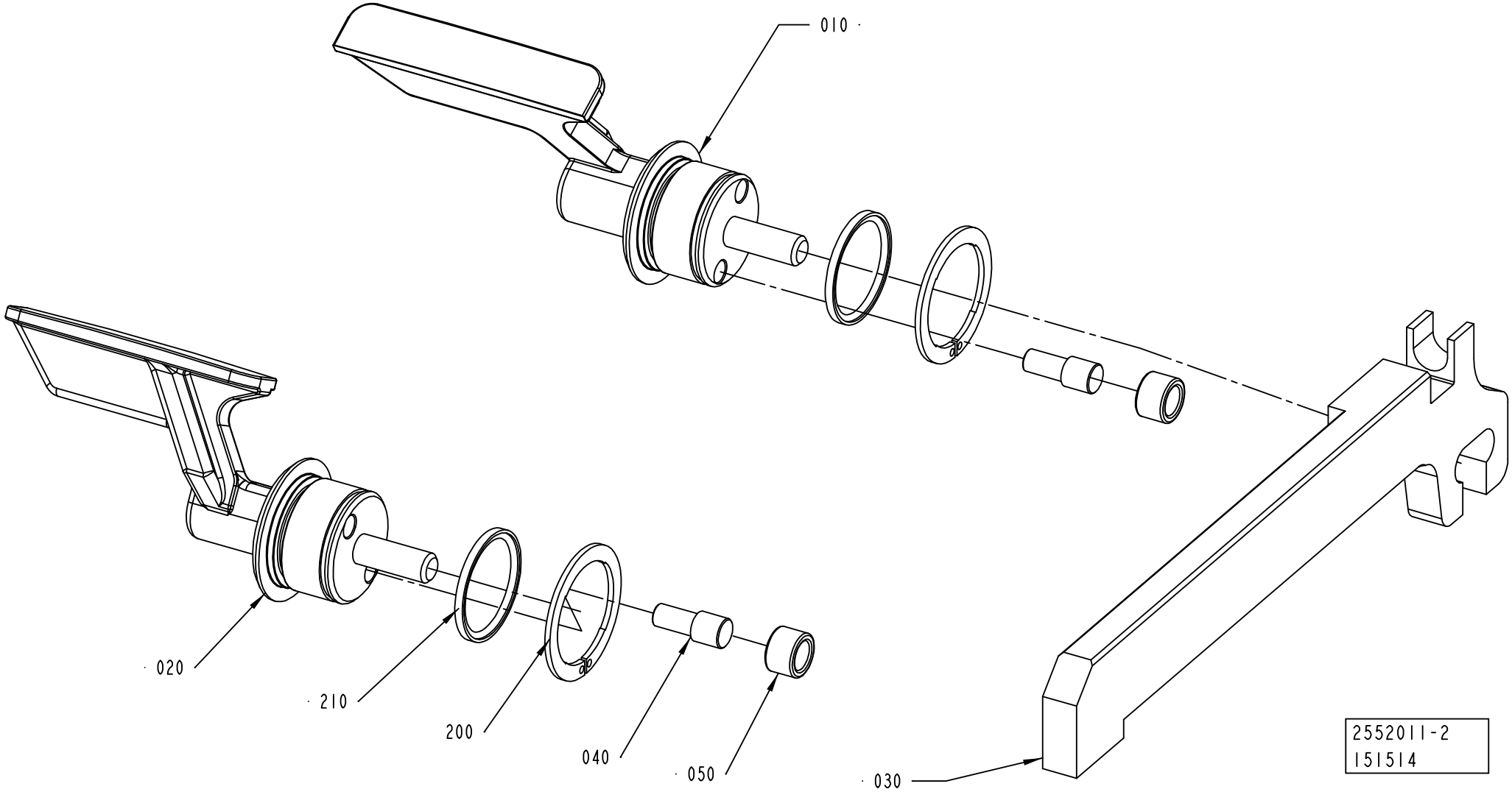
010
020
210
200
040
050
030
2552011-2
151514

ECM: 191297 - 20041104
Group number: 2552011-0100
Assembly Drawing: 2552011-2_1_AA

This list covers pages from 2-132 to 2-135

Pos	Part No	UN	Qty	Description	Page No
TBA 0200B QC, TBA 0330S QC, TBA 0250B QC (See drawing on page: 2-132)					
010	2605875-0000		1	FOLDING FLAP	
020	2605876-0000		1	FOLDING FLAP	
030	1255463-0000		1	CARRIER RULER	
TBA 0200S (See drawing on page: 2-132)					
010	2624554-0000		1	FOLDING FLAP	
020	2624555-0000		1	FOLDING FLAP	
030	1255462-0000		1	CARRIER RULER	
TBA 0250S QC, TBA 0200M QC					
010	2624554-0000		1	FOLDING FLAP	
020	2624555-0000		1	FOLDING FLAP	
030	2520471-0000		1	CARRIER RULER	
TBA 0500B NOQC, TBA 1000B NOQC NOMOLDEDCAP (See drawing on page: 2-132)					
010	1511697-0000		1	.FOLDING FLAP	
020	1511698-0000		1	FOLDING FLAP	
030	1255461-0000		1	CARRIER RULER	
TBA 0500B QC, TBA 1000B QC (See drawing on page: 2-132)					
010	1511352-0000		1	FOLDING FLAP	
020	1511351-0000		1	FOLDING FLAP	
030	1255461-0000		1	CARRIER RULER	
TBA 0500S (See drawing on page: 2-132)					
010	2507085-0000		1	FOLDING FLAP	
020	2507086-0000		1	FOLDING FLAP	
030	1511188-0000		1	CARRIER RULER	
TBA 1000B NOQC STDA7 (See drawing on page: 2-132)					
010	1511697-0000		1	.FOLDING FLAP	
020	2610957-0000		1	FOLDING FLAP	
030	1255461-0000		1	CARRIER RULER	
TBA 1000S NOMOLDEDCAP (See drawing on page: 2-132)					
010	1511699-0000		1	FOLDING FLAP	
020	1511700-0000		1	FOLDING FLAP	
030	1255464-0000		1	CARRIER RULER	
TBA 1000S STDA7 (See drawing on page: 2-132)					
010	1511699-0000		1	FOLDING FLAP	
020	2546501-0000		1	FOLDING FLAP	
030	1255464-0000		1	CARRIER RULER	
TBA 1000SQ (See drawing on page: 2-132)					
010	2507076-0000		1	FOLDING FLAP	
020	2507077-0000		1	FOLDING FLAP	
030	1360319-0000		1	CARRIER RULER	
TBA 1500S (See drawing on page: 2-132)					
010	2507092-0000		1	FOLDING FLAP	
020	2507093-0000		1	FOLDING FLAP	
030	1255461-0000		1	CARRIER RULER	
TBA 1890S QC, TBA 2000S QC (See drawing on page: 2-134)					
010	2566319-0000		1	FOLDING FLAP	
020	2566320-0000		1	FOLDING FLAP	
030	2566317-0000		1	CARRIER RULER	
210	90459-2258		2	SEAL GLYDRING 25,1X30X2,2 MM	
TPA 0330SQ (See drawing on page: 2-132)					
010	2507096-0000		1	FOLDING FLAP	
020	2507097-0000		1	FOLDING FLAP	
030	1538769-0000		1	CARRIER RULER	
TPA 0500SQ (See drawing on page: 2-132)					
010	1549822-0000		1	FOLDING FLAP	
020	1549823-0000		1	FOLDING FLAP	
030	1549825-0000		1	CARRIER RULER	
TPA 1000SQ (See drawing on page: 2-132)					
010	1523146-0000		1	FOLDING FLAP	
020	1523147-0000		1	FOLDING FLAP	
030	1523148-0000		1	CARRIER RULER	
Common Parts					
040	22462-0000		2	SHAFT	
050	22463-0000		2	ROLL	
200	90141-0029		2	CIRCLIP	

Machine Type | Group Description | Used-In | Group Number | Page No

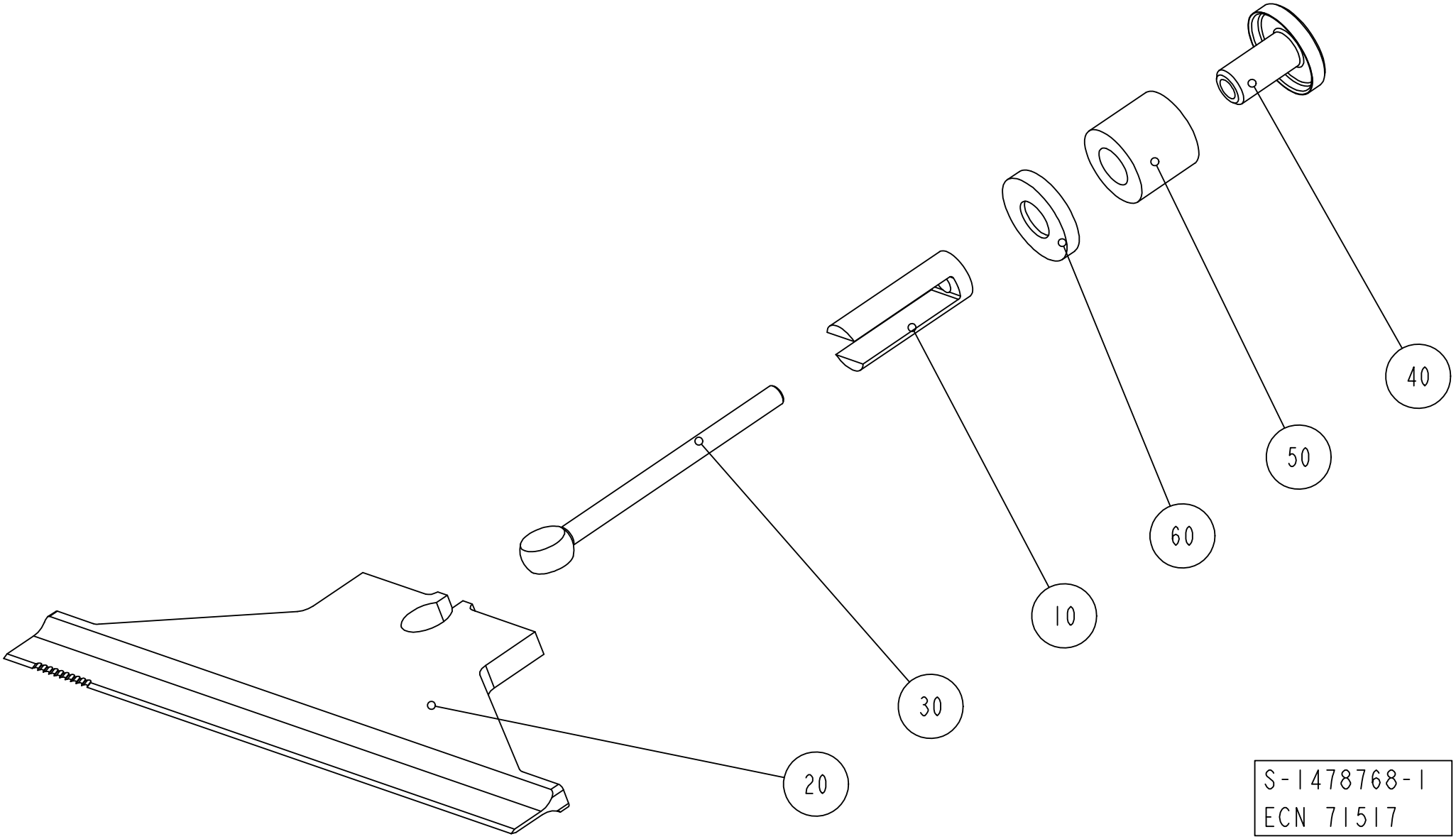
40
50
60
10
30
20
S-1478768-1
ECN 71517

ECM: 181184 - 20041013
Group number: 1478768-0100
Assembly Drawing: 1478768-1_1_AA

Pos	Part No	UN	Qty	Description	Page No
TBA 0330S, TBA 0200B, TBA 0250S, TBA 0200S, TBA 0200M, TBA 0250B, TPA 0330SQ					
020	1348966-0000		1	KNIFE	
030	1478966-0000		1	LINK	
040	1478967-0000		1	WASHER	
050	1260659-0000		1	SPRING	
060	1484211-0000		1	WASHER	
TBA 0500B, TBA 1000S, TBA 1000SQ, TBA 1000B, TBA 1500S					
020	1348955-0000		1	KNIFE	
030	1478968-0000		1	LINK	
040	1478967-0000		1	WASHER	
050	1260659-0000		1	SPRING	
060	1255540-0000		1	WASHER	
TBA 0500S, TPA 1000SQ					
020	1348956-0000		1	KNIFE	
030	1478968-0000		1	LINK	
040	1478967-0000		1	WASHER	
050	1260659-0000		1	SPRING	
060	1255540-0000		1	WASHER	
TBA 1890S, TBA 2000S					
020	2664761-0000		1	KNIFE	
030	927440-0000		1	LINK	
040	927441-0000		1	NUT	
050	927252-0000		1	COMPRESSION SPRING	
TPA 0500SQ					
020	1549828-0000		1	KNIFE	
030	1478968-0000		1	LINK	
040	1478967-0000		1	WASHER	
050	1260659-0000		1	SPRING	
060	1255540-0000		1	WASHER	
Common Parts					
010	927323-0000		1	SPACER	

Pos	Part No	UN	Qty	Description	Page No

VOLUME CURVE PIECE

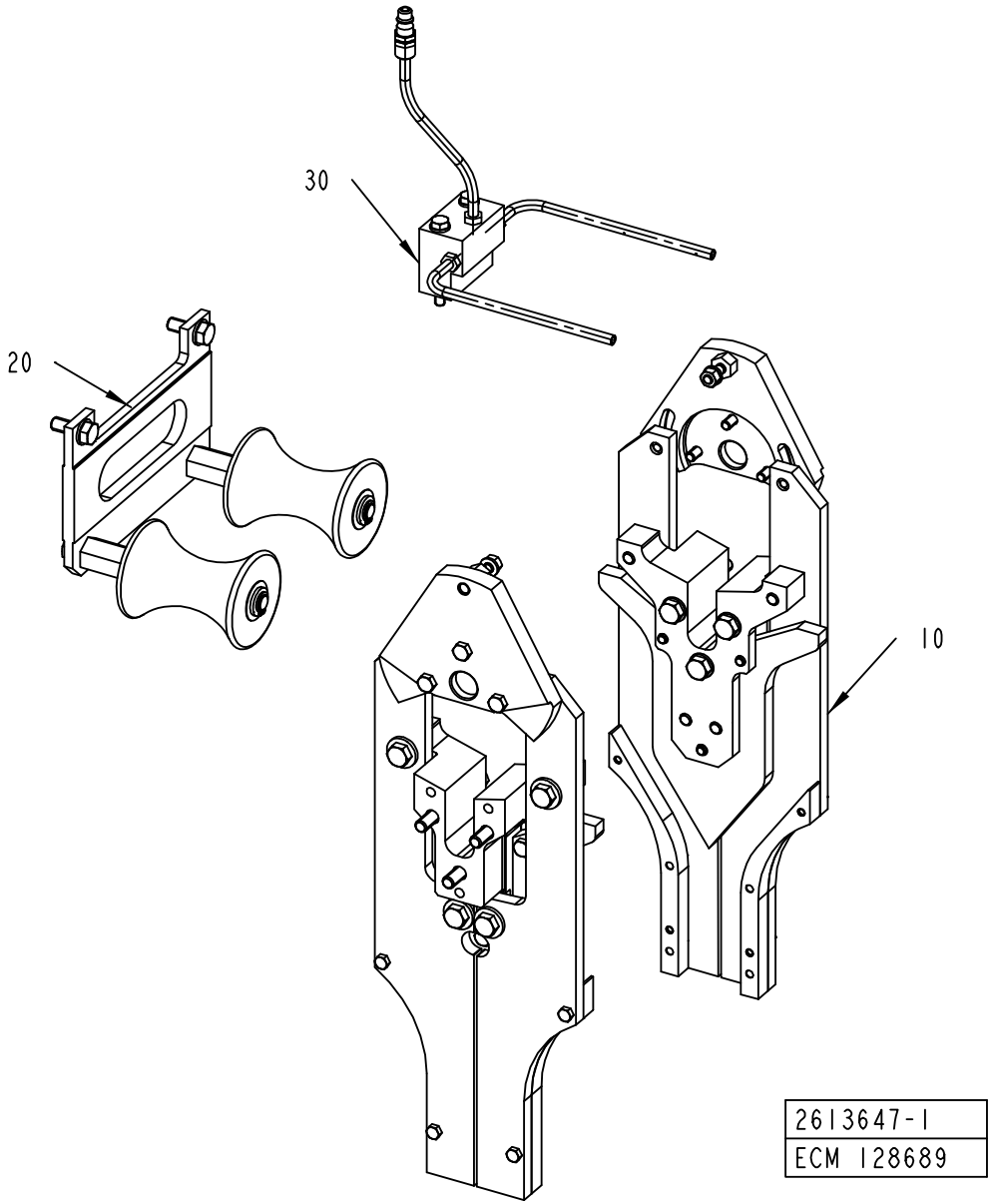

ECM: 190137 - 20041028
Group number: 2613647-0100
Assembly Drawing: 2613647-1_1_AA

Pos	Part No	UN	Qty	Description	Page No
TBA 1890S QC, TBA 2000S QC					
010	2597329-0100		1	CURVE UNIT	**2-141, 2-143, 2-145**
TPA 0330SQ					
010	2597329-0100		1	CURVE UNIT	**2-141, 2-143, 2-145**
TPA 0500SQ					
010	2597329-0100		1	CURVE UNIT	**2-141, 2-143, 2-145**
TPA 1000SQ					
010	2597329-0100		1	CURVE UNIT	**2-141, 2-143, 2-145**
TBA 0200S					
010	2597329-0100		1	CURVE UNIT	**2-141, 2-143, 2-145**
TBA 0250S QC, TBA 0200M QC					
010	2613645-0100		1	CURVE UNIT	**2-147, 2-149**
TBA 0330S, TBA 0200B, TBA 0250B					
010	2613645-0100		1	CURVE UNIT	**2-147, 2-149**
TBA 0500B QC, TBA 1000B QC					
010	2613645-0100		1	CURVE UNIT	**2-147, 2-149**
TBA 0500S					
010	2597329-0100		1	CURVE UNIT	**2-141, 2-143, 2-145**
TBA 1000B NOQC NOMOLDEDCAP					
010	2597329-0100		1	CURVE UNIT	**2-141, 2-143, 2-145**
TBA 1000B NOQC STDA7					
010	2597329-0100		1	CURVE UNIT	**2-141, 2-143, 2-145**
TBA 1000S NOMOLDEDCAP					
010	2597329-0100		1	CURVE UNIT	**2-141, 2-143, 2-145**
TBA 1000S STDA7					
010	2597329-0100		1	CURVE UNIT	**2-141, 2-143, 2-145**
TBA 1000SQ					
010	2597329-0100		1	CURVE UNIT	**2-141, 2-143, 2-145**
TBA 1500S					
010	2597329-0100		1	CURVE UNIT	**2-141, 2-143, 2-145**
Common Parts					
020	2613648-0100		1	SUPPORT ROLLER	**2-155, 2-157**
030	2556893-0100		1	TUBE FLUSHING	**2-159**

Pos	Part No	UN	Qty	Description	Page No

Machine Type | Group Description | Used-In | Group Number | Page No

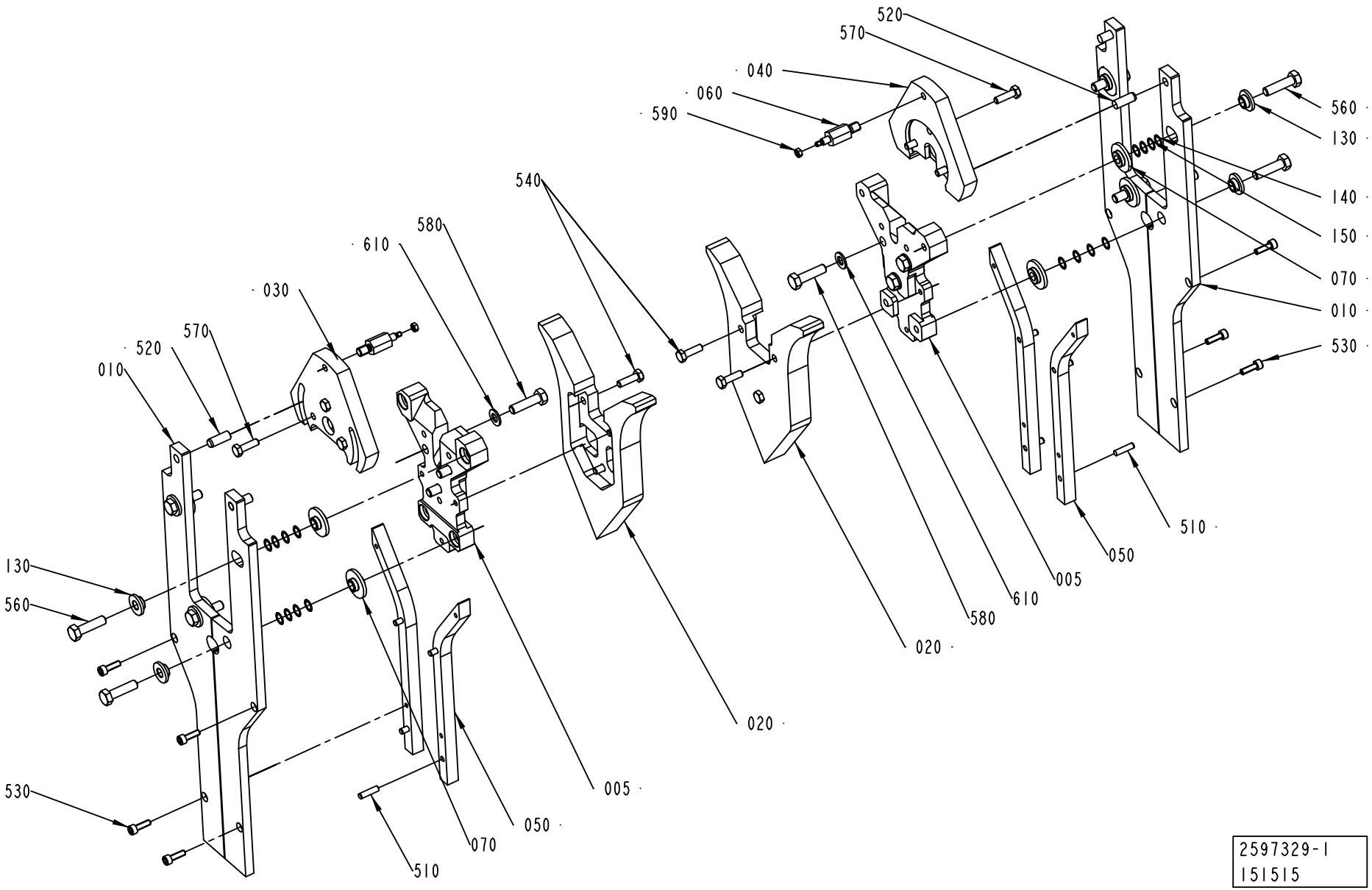
520
570
040
060
590
560
130
140
150
070
010
530
540
580
610
030
570
520
010
130
560
530
005
050
070
510
020
580
610
005
050
510
020
2597329-1
151515

ECM: 193598 - 20041213
Group number: 2597329-0100
Assembly Drawing: 2597329-1_1_AA

This list covers pages from 2-140 to 2-145

Pos	Part No	UN	Qty	Description	Page No
TBA 0200S (See drawing on page: 2-142)					
005	2628598-0000		2	SPACER	
010	2533740-0000		4	RAIL BRACKET	
020	1334081-0000		2	CURVE	
030	2606891-0000		1	ECCENTRIC	
040	2606892-0000		1	ECCENTRIC	
050	1478497-0000		4	VOLUME CAM	
060	2624544-0000		2	PIVOT PIN	
070	2533736-0000		8	SLEEVE	
120	321120-0108		4	BEARBUSHING W/O FL 12X14X8	
130	1487504-0000		8	WASHER	
140	1487505-0001		16	WASHER	
150	1487505-0002		16	WASHER	
520	311103-0399		4	PARALLEL PIN ISO 2338 8M6X16 A1	
530	312105-0331		8	SCREW M6S ISO 4017 M5X20 A480	
560	312105-0457		8	SCREW M6S ISO 4014 M8X35 A480	
570	312105-0368		6	SCREW M6S ISO 4017 M6X16 A480	
580	312105-0464		6	SCREW M6S ISO 4014 M8X65 A480	
590	312605-0316		2	HEXAGON NUT, M6M M6 A280	
600	315105-0153		2	WASHER BRB6,4X12RFR	
TBA 0500S (See drawing on page: 2-142)					
005	2624543-0000		2	SPACER	
010	2533745-0000		4	RAIL BRACKET	
020	1512324-0000		2	CURVE	
030	2618378-0000		1	ECCENTRIC	
040	2618377-0000		1	ECCENTRIC	
050	1512325-0000		4	VOLUME CAM	
060	2624544-0000		2	PIVOT PIN	
070	2533736-0000		8	SLEEVE	
120	321120-0108		4	BEARBUSHING W/O FL 12X14X8	
130	1487504-0000		8	WASHER	
140	1487505-0001		16	WASHER	
150	1487505-0002		16	WASHER	
520	311103-0399		4	PARALLEL PIN ISO 2338 8M6X16 A1	
530	312105-0331		8	SCREW M6S ISO 4017 M5X20 A480	
560	312105-0457		8	SCREW M6S ISO 4014 M8X35 A480	
570	312105-0368		6	SCREW M6S ISO 4017 M6X16 A480	
580	312105-0464		6	SCREW M6S ISO 4014 M8X65 A480	
590	312605-0316		2	HEXAGON NUT, M6M M6 A280	
600	315105-0153		2	WASHER BRB6,4X12RFR	
TBA 1000B (See drawing on page: 2-142)					
005	2624543-0000		2	SPACER	
010	2533741-0000		4	RAIL BRACKET	
020	1348808-0000		2	CURVE	
030	2618378-0000		1	ECCENTRIC	
040	2618377-0000		1	ECCENTRIC	
050	1484250-0000		4	VOLUME CAM	
060	2624544-0000		2	PIVOT PIN	
070	2533736-0000		8	SLEEVE	
120	321120-0108		4	BEARBUSHING W/O FL 12X14X8	
130	1487504-0000		8	WASHER	
140	1487505-0001		16	WASHER	
150	1487505-0002		16	WASHER	
520	311103-0399		4	PARALLEL PIN ISO 2338 8M6X16 A1	
530	312105-0331		8	SCREW M6S ISO 4017 M5X20 A480	
560	312105-0457		8	SCREW M6S ISO 4014 M8X35 A480	
570	312105-0368		6	SCREW M6S ISO 4017 M6X16 A480	
580	312105-0464		6	SCREW M6S ISO 4014 M8X65 A480	
590	312605-0316		2	HEXAGON NUT, M6M M6 A280	
600	315105-0153		2	WASHER BRB6,4X12RFR	
TBA 1000S (See drawing on page: 2-142)					
005	2624543-0000		2	SPACER	
010	2533742-0000		4	RAIL BRACKET	
020	1348809-0000		2	CURVE	
030	2618378-0000		1	ECCENTRIC	
040	2618377-0000		1	ECCENTRIC	
050	1484251-0000		4	VOLUME CAM	
060	2624544-0000		2	PIVOT PIN	
070	2533736-0000		8	SLEEVE	
120	321120-0108		4	BEARBUSHING W/O FL 12X14X8	
130	1487504-0000		8	WASHER	
140	1487505-0001		16	WASHER	
150	1487505-0002		16	WASHER	
520	311103-0399		4	PARALLEL PIN ISO 2338 8M6X16 A1	
530	312105-0331		8	SCREW M6S ISO 4017 M5X20 A480	
560	312105-0457		8	SCREW M6S ISO 4014 M8X35 A480	
570	312105-0368		6	SCREW M6S ISO 4017 M6X16 A480	
580	312105-0464		6	SCREW M6S ISO 4014 M8X65 A480	
590	312605-0316		2	HEXAGON NUT, M6M M6 A280	
600	315105-0153		2	WASHER BRB6,4X12RFR	
TBA 1000SQ (See drawing on page: 2-142)					
005	2624543-0000		2	SPACER	
010	2533744-0000		4	RAIL BRACKET	
020	2501851-0000		2	CURVE	

Machine Type | Group Description | Used-In | Group Number | Page No

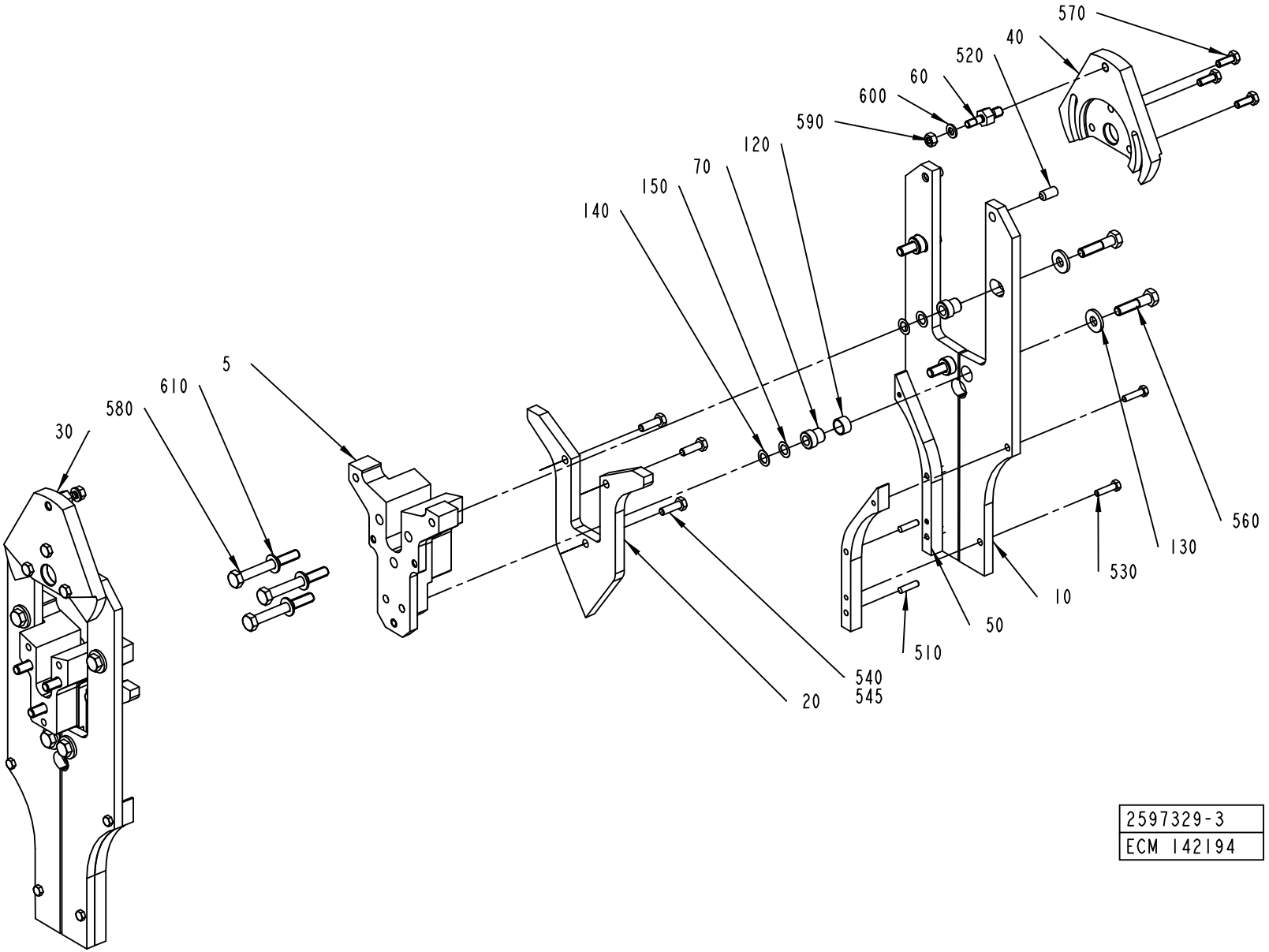

2597329-3
ECM 142194

ECM: 193598 - 20041213
Group number: 2597329-0100
Assembly Drawing: 2597329-3_1_AB

This list covers pages from 2-140 to 2-145

Pos	Part No	UN	Qty	Description	Page No
TBA 1000SQ (Cont'd) (See drawing on page: 2-142)					
030	2618378-0000		1	ECCENTRIC	
040	2618377-0000		1	ECCENTRIC	
050	1499594-0000		4	VOLUME CAM	
060	2624544-0000		2	PIVOT PIN	
070	2533736-0000		8	SLEEVE	
120	321120-0108		4	BEARBUSHING W/O FL 12X14X8	
130	1487504-0000		8	WASHER	
140	1487505-0001		16	WASHER	
150	1487505-0002		16	WASHER	
520	311103-0399		4	PARALLEL PIN ISO 2338 8M6X16 A1	
530	312105-0331		8	SCREW M6S ISO 4017 M5X20 A480	
560	312105-0457		8	SCREW M6S ISO 4014 M8X35 A480	
570	312105-0368		6	SCREW M6S ISO 4017 M6X16 A480	
580	312105-0464		6	SCREW M6S ISO 4014 M8X65 A480	
590	312605-0316		2	HEXAGON NUT, M6M M6 A280	
600	315105-0153		2	WASHER BRB6,4X12RFR	
TBA 1500S (See drawing on page: 2-142)					
005	2633438-0000		2	SPACER	
010	2533737-0000		4	RAIL BRACKET	
020	1349741-0000		2	CURVE	
030	2618378-0000		1	ECCENTRIC	
040	2618377-0000		1	ECCENTRIC	
050	1349744-0000		4	VOLUME CAM	
060	2624544-0000		2	PIVOT PIN	
070	2533736-0000		8	SLEEVE	
120	321120-0108		4	BEARBUSHING W/O FL 12X14X8	
130	1487504-0000		8	WASHER	
140	1487505-0001		16	WASHER	
150	1487505-0002		16	WASHER	
520	311103-0399		4	PARALLEL PIN ISO 2338 8M6X16 A1	
530	312105-0331		8	SCREW M6S ISO 4017 M5X20 A480	
560	312105-0457		8	SCREW M6S ISO 4014 M8X35 A480	
570	312105-0368		6	SCREW M6S ISO 4017 M6X16 A480	
580	312105-0464		6	SCREW M6S ISO 4014 M8X65 A480	
590	312605-0316		2	HEXAGON NUT, M6M M6 A280	
600	315105-0153		2	WASHER BRB6,4X12RFR	
TBA 1890S QC, TBA 2000S QC (See drawing on page: 2-140)					
005	2594887-0000		2	SPACER	
010	2588300-0000		4	RAIL BRACKET	
020	2588301-0000		2	CURVE	
030	2599739-0000		1	ECCENTRIC	
040	2599738-0000		1	ECCENTRIC	
050	2588302-0000		4	VOLUME CAM	
060	2535443-0000		2	PIVOT PIN	
070	2613764-0000		8	SLEEVE	
130	2614372-0000		8	SLEEVE	
140	2614376-0001		32	WASHER	
150	2614376-0002		32	WASHER	
520	311103-0402		4	PARALLEL PIN ISO 2338 8M6X22 A1	
530	312105-0329		8	SCREW M6S ISO 4017 M5X16 A480	
545	90157-0021		1	LOCKING FLUID LOCTITE 270	
560	312105-0455		8	SCREW M6S ISO 4017 M8X30 A480	
570	312105-0370		6	SCREW M6S ISO 4017 M6X20 A480	
580	312105-0455		6	SCREW M6S ISO 4017 M8X30 A480	
590	312605-0312		2	HEXAGON NUT, M6M M4 A280	
TPA 0330SQ (See drawing on page: 2-142)					
005	2628598-0000		2	SPACER	
010	2533747-0000		4	RAIL BRACKET	
020	1538264-0000		2	CURVE	
030	2606891-0000		1	ECCENTRIC	
040	2606892-0000		1	ECCENTRIC	
050	1538265-0000		4	VOLUME CAM	
060	2624544-0000		2	PIVOT PIN	
070	2533736-0000		8	SLEEVE	
120	321120-0108		4	BEARBUSHING W/O FL 12X14X8	
130	1487504-0000		8	WASHER	
140	1487505-0001		16	WASHER	
150	1487505-0002		16	WASHER	
520	311103-0399		4	PARALLEL PIN ISO 2338 8M6X16 A1	
530	312105-0331		8	SCREW M6S ISO 4017 M5X20 A480	
560	312105-0457		8	SCREW M6S ISO 4014 M8X35 A480	
570	312105-0368		6	SCREW M6S ISO 4017 M6X16 A480	
580	312105-0464		6	SCREW M6S ISO 4014 M8X65 A480	
590	312605-0316		2	HEXAGON NUT, M6M M6 A280	
600	315105-0153		2	WASHER BRB6,4X12RFR	
TPA 0500SQ (See drawing on page: 2-142)					
005	2624543-0000		2	SPACER	
010	2582020-0000		4	RAIL BRACKET	
020	2697307-0000		2	CURVE	
030	2618378-0000		1	ECCENTRIC	
040	2618377-0000		1	ECCENTRIC	
050	1549843-0000		4	VOLUME CAM	
060	2624544-0000		2	PIVOT PIN	

Machine Type | Group Description | Used-In | Group Number | Page No

See previous drawings pages: 2-140, 2-142.

Pos	Part No	UN	Qty	Description	Page No
TPA 0500SQ (Cont'd) (See drawing on page: 2-142)					
070	2533736-0000		8	SLEEVE	
120	321120-0108		4	BEARBUSHING W/O FL 12X14X8	
130	1487504-0000		8	WASHER	
140	1487505-0001		16	WASHER	
150	1487505-0002		16	WASHER	
520	311103-0399		4	PARALLEL PIN ISO 2338 8M6X16 A1	
530	312105-0331		8	SCREW M6S ISO 4017 M5X20 A480	
560	312105-0457		8	SCREW M6S ISO 4014 M8X35 A480	
570	312105-0368		6	SCREW M6S ISO 4017 M6X16 A480	
580	312105-0464		6	SCREW M6S ISO 4014 M8X65 A480	
590	312605-0316		2	HEXAGON NUT, M6M M6 A280	
600	315105-0153		2	WASHER BRB6,4X12RFR	
TPA 1000SQ (See drawing on page: 2-142)					
005	2633438-0000		2	SPACER	
010	2575631-0000		4	RAIL BRACKET	
020	2564683-0000		2	CURVE	
030	2618378-0000		1	ECCENTRIC	
040	2618377-0000		1	ECCENTRIC	
050	1523490-0000		4	VOLUME BULGE	
060	2624544-0000		2	PIVOT PIN	
070	2533736-0000		8	SLEEVE	
120	321120-0108		4	BEARBUSHING W/O FL 12X14X8	
130	1487504-0000		8	WASHER	
140	1487505-0001		16	WASHER	
150	1487505-0002		16	WASHER	
520	311103-0399		4	PARALLEL PIN ISO 2338 8M6X16 A1	
530	312105-0331		8	SCREW M6S ISO 4017 M5X20 A480	
560	312105-0457		8	SCREW M6S ISO 4014 M8X35 A480	
570	312105-0368		6	SCREW M6S ISO 4017 M6X16 A480	
580	312105-0464		6	SCREW M6S ISO 4014 M8X65 A480	
590	312605-0316		2	HEXAGON NUT, M6M M6 A280	
600	315105-0153		2	WASHER BRB6,4X12RFR	
Common Parts					
510	311103-0310		8	PARALLEL PIN ISO 2338 5M6X20 A1	
540	312105-0370		6	SCREW M6S ISO 4017 M6X20 A480	
610	315105-0165		6	WASHER BRB8,4X16RFR	

Pos	Part No	UN	Qty	Description	Page No

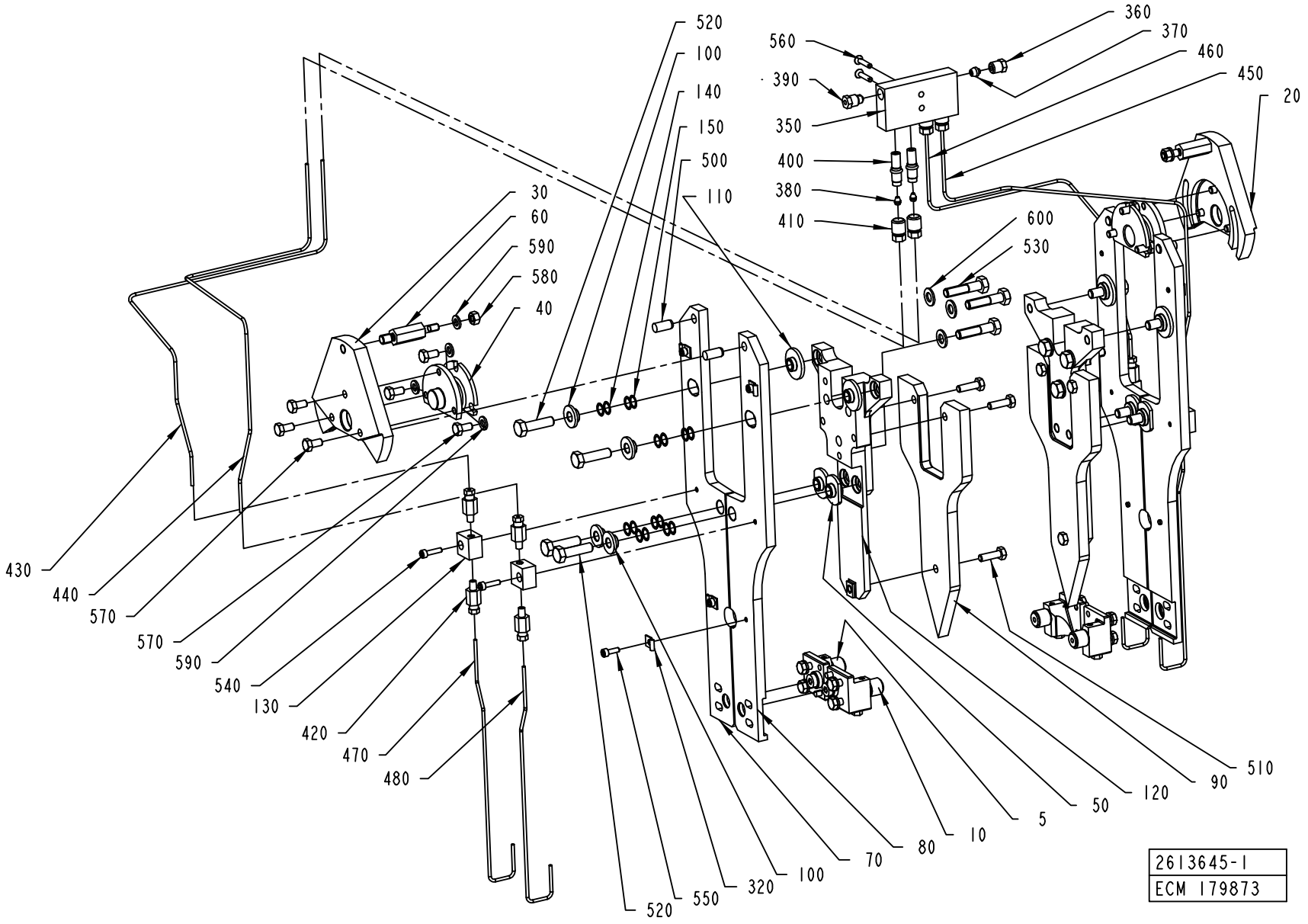
520
100
140
150
500
110
30
60
590
580
40
560
390
350
400
380
410
360
370
460
450
20
600
530
430
440
570
570
590
540
130
420
470
480
520
550
320
100
70
80
10
5
50
120
90
510
2613645-1
ECM 179873

ECM: 179873 - 20041014
Group number: 2613645-0100
Assembly Drawing: 2613645-1_1_AB

This list covers pages from 2-146 to 2-149

Pos	Part No	UN	Qty	Description	Page No
TBA 0250S, TBA 0200M (See drawing on pages: 2-146, 2-148)					
005	2605226-0200		2	ROLLER UNIT	**2-151**
010	1499351-0200		2	ROLLER UNIT	**2-153**
020	2618377-0000		1	ECCENTRIC	
030	2618378-0000		1	ECCENTRIC	
060	2618302-0000		2	PIVOT PIN	
090	2660222-0000		2	CAM	
130	2610793-0000		4	BLOCK	
320	90165-0058		8	PIPE CLIP FOR TUBE D=25 MM	
350	90032-0039		1	BLOCK 4 WAYS	
360	90134-0038		1	BUSHING/NUT INLET/OUTLET 4 MM	
370	90028-0024		1	CONE TUBE 4 MM	
380	90028-0020		4	CONE TUBE 2,5MM	
390	90087-0019		1	PLUG M10X1 STAINLESS	
400	90092-0052		4	METERING VALVE 10 MM3	
410	90134-0039		4	BUSHING VALVE CONNECTION 2,5 MM	
420	90134-0065		8	CONNECTION M6 TUBE 2,5 MM	
430	90166-0143	MM	550	TUBE 2,5 MM PA,TRANSP.	
440	90166-0143	MM	650	TUBE 2,5 MM PA,TRANSP.	
450	90166-0143	MM	600	TUBE 2,5 MM PA,TRANSP.	
460	90166-0143	MM	500	TUBE 2,5 MM PA,TRANSP.	
470	90266-0019	MM	260	PIPE	
480	90266-0019	MM	260	PIPE	
540	312115-0293		4	SCREW ISO4762 M4X16 A4	
550	312115-0291		8	SCREW ISO4762 M4X12 A4	
560	312155-0295		2	SCREW DIN 7991 MF6S M4X20 A480	
570	312105-0366		12	SCREW M6S ISO 4017 M6X12 A480	
590	315105-0153		8	WASHER BRB6,4X12RFR	
TBA 0330S, TBA 0200B, TBA 0250B (See drawing on pages: 2-146, 2-148)					
005	2605226-0200		2	ROLLER UNIT	**2-151**
010	1499351-0200		2	ROLLER UNIT	**2-153**
020	2618377-0000		1	ECCENTRIC	
030	2618378-0000		1	ECCENTRIC	
060	2618302-0000		2	PIVOT PIN	
090	2664603-0000		2	CAM	
130	2610793-0000		4	BLOCK	
320	90165-0058		8	PIPE CLIP FOR TUBE D=25 MM	
350	90032-0039		1	BLOCK 4 WAYS	
360	90134-0038		1	BUSHING/NUT INLET/OUTLET 4 MM	
370	90028-0024		1	CONE TUBE 4 MM	
380	90028-0020		4	CONE TUBE 2,5MM	
390	90087-0019		1	PLUG M10X1 STAINLESS	
400	90092-0052		4	METERING VALVE 10 MM3	
410	90134-0039		4	BUSHING VALVE CONNECTION 2,5 MM	
420	90134-0065		8	CONNECTION M6 TUBE 2,5 MM	
430	90166-0143	MM	550	TUBE 2,5 MM PA,TRANSP.	
440	90166-0143	MM	650	TUBE 2,5 MM PA,TRANSP.	
450	90166-0143	MM	600	TUBE 2,5 MM PA,TRANSP.	
460	90166-0143	MM	500	TUBE 2,5 MM PA,TRANSP.	
470	90266-0019	MM	260	PIPE	
480	90266-0019	MM	260	PIPE	
540	312115-0293		4	SCREW ISO4762 M4X16 A4	
550	312115-0291		8	SCREW ISO4762 M4X12 A4	
560	312155-0295		2	SCREW DIN 7991 MF6S M4X20 A480	
570	312105-0366		12	SCREW M6S ISO 4017 M6X12 A480	
590	315105-0153		8	WASHER BRB6,4X12RFR	
TBA 0500B, TBA 1000B (See drawing on pages: 2-146, 2-148)					
005	2605226-0200		2	ROLLER UNIT	**2-151**
010	1499351-0200		2	ROLLER UNIT	**2-153**
020	2618377-0000		1	ECCENTRIC	
030	2618378-0000		1	ECCENTRIC	
060	2618302-0000		2	PIVOT PIN	
090	2605066-0000		2	CURVE	
130	2610793-0000		4	BLOCK	
320	90165-0058		8	PIPE CLIP FOR TUBE D=25 MM	
350	90032-0039		1	BLOCK 4 WAYS	
360	90134-0038		1	BUSHING/NUT INLET/OUTLET 4 MM	
370	90028-0024		1	CONE TUBE 4 MM	
380	90028-0020		4	CONE TUBE 2,5MM	
390	90087-0019		1	PLUG M10X1 STAINLESS	
400	90092-0052		4	METERING VALVE 10 MM3	
410	90134-0039		4	BUSHING VALVE CONNECTION 2,5 MM	
420	90134-0065		8	CONNECTION M6 TUBE 2,5 MM	
430	90166-0143	MM	550	TUBE 2,5 MM PA,TRANSP.	
440	90166-0143	MM	650	TUBE 2,5 MM PA,TRANSP.	
450	90166-0143	MM	600	TUBE 2,5 MM PA,TRANSP.	
460	90166-0143	MM	500	TUBE 2,5 MM PA,TRANSP.	
470	90266-0019	MM	260	PIPE	
480	90266-0019	MM	260	PIPE	
540	312115-0293		4	SCREW ISO4762 M4X16 A4	
550	312115-0291		8	SCREW ISO4762 M4X12 A4	
560	312155-0295		2	SCREW DIN 7991 MF6S M4X20 A480	
570	312105-0366		12	SCREW M6S ISO 4017 M6X12 A480	
590	315105-0153		8	WASHER BRB6,4X12RFR	

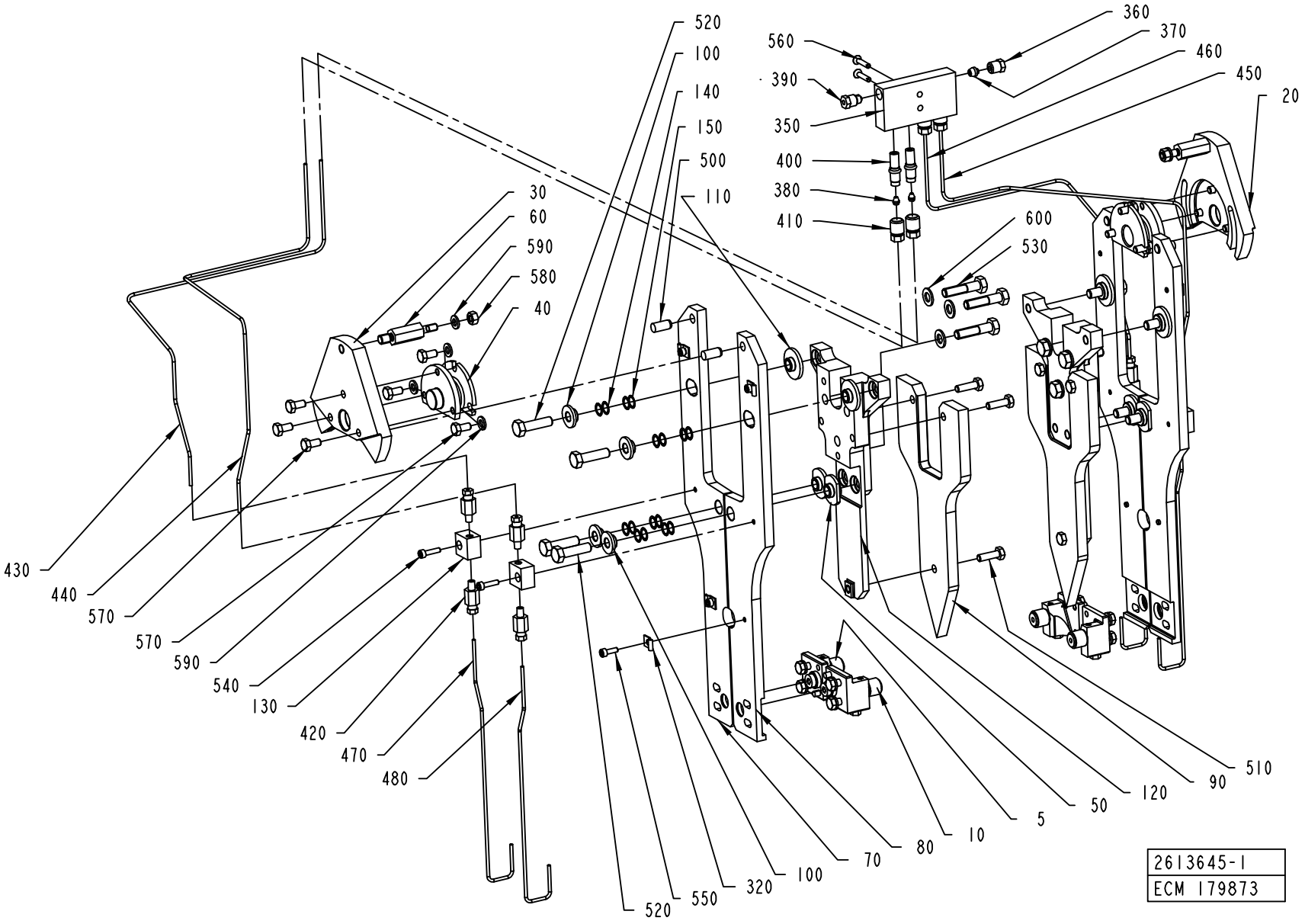
520
100
140
150
500
110
30
60
590
580
40
560
390
350
400
380
410
360
370
460
450
20
600
530
430
440
570
570
590
540
130
420
470
480
520
550
320
100
70
80
10
5
50
120
90
510
2613645-1
ECM 179873

ECM: 179873 - 20041014
Group number: 2613645-0100
Assembly Drawing: 2613645-1_1_AB

This list covers pages from 2-146 to 2-149

Pos	Part No	UN	Qty	Description	Page No
Common Parts (Cont'd)					
040	2618259-0000		2	SPACER	
050	2613763-0000		4	SLEEVE	
070	2614371-0000		2	ROLLER BRACKET	
080	2614373-0000		2	ROLLER BRACKET	
100	2614372-0000		8	SLEEVE	
110	2613764-0000		4	SLEEVE	
120	2613809-0000		2	SPACER	
140	2614376-0001		16	WASHER	
150	2614376-0002		16	WASHER	
500	311103-0400		4	PARALLEL PIN ISO 2338 8M6X18 A1	
510	312105-0370		6	SCREW M6S ISO 4017 M6X20 A480	
520	312105-0455		8	SCREW M6S ISO 4017 M8X30 A480	
530	312105-0457		6	SCREW M6S ISO 4014 M8X35 A480	
580	312605-0316		2	HEXAGON NUT, M6M M6 A280	
600	315105-0165		6	WASHER BRB8,4X16RFR	

Pos	Part No	UN	Qty	Description	Page No

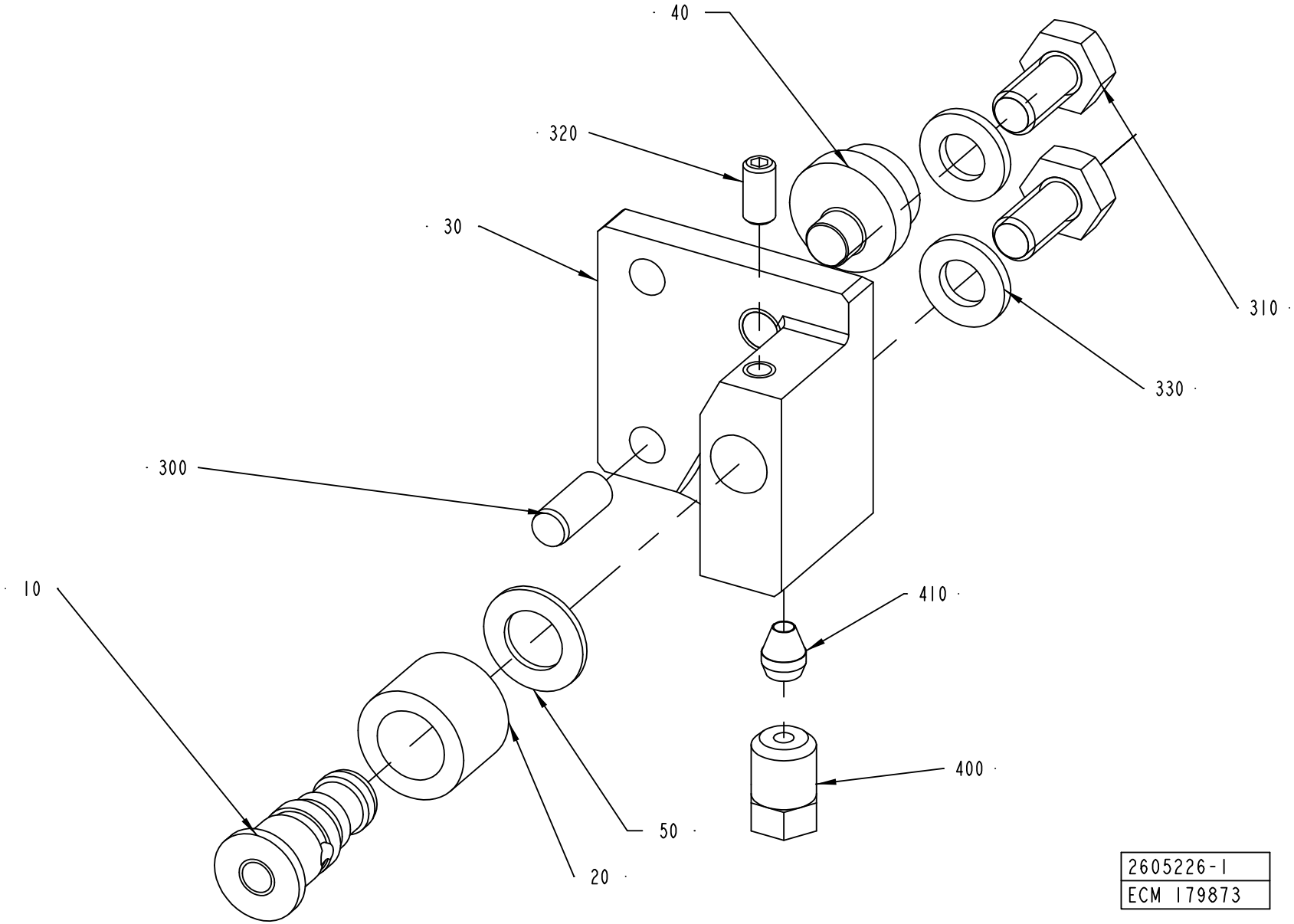
40
320
30
310
330
300
10
410
400
50
20
2605226-1
ECM 179873

ECM: 180537 - 20041013
Group number: 2605226-0200
Assembly Drawing: 2605226-1_1_AB

Pos	Part No	UN	Qty	Description	Page No
-					
010	2603376-0000		1	AXLE PIN	
020	2603378-0000		1	ROLLER	
030	2695409-0000		1	HOLDER	
040	2603374-0000		1	ECCENTRIC	
050	2609923-0000		1	WASHER	
300	311103-0306		1	PARALLEL PIN ISO 2338 5M6X12 A1	
310	312105-0366		2	SCREW M6S ISO 4017 M6X12 A480	
320	312318-0287		1	SCREW ISO4029 M4X8 A4	
330	315105-0153		2	WASHER BRB6,4X12RFR	
400	90134-0063		1	BUSHING/NUT M8X1, D=2,5 MM	
410	90028-0020		1	CONE TUBE 2,5MM	

Pos	Part No	UN	Qty	Description	Page No

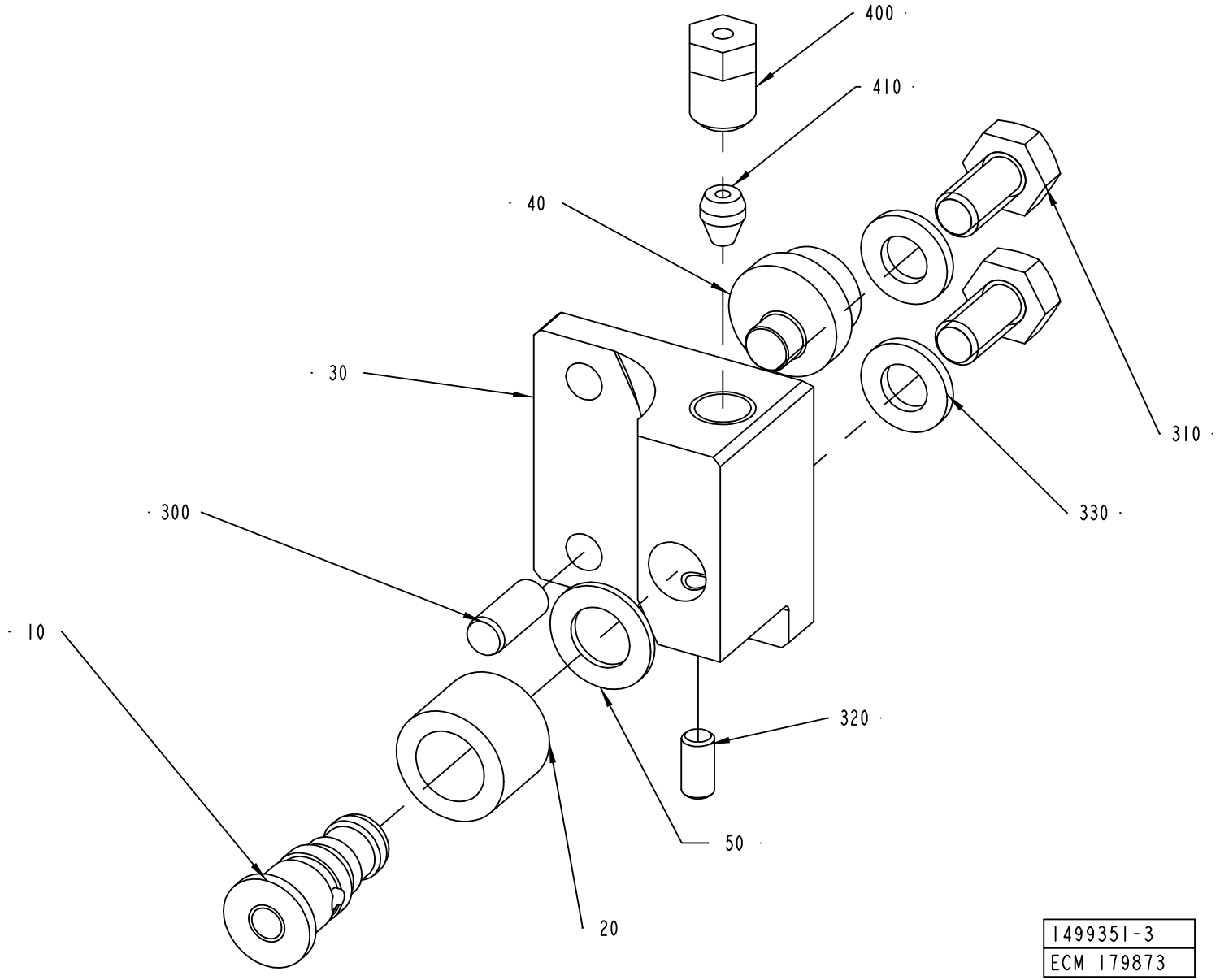

1499351-3
ECM 179873

ECM: 180538 - 20041013
Group number: 1499351-0200
Assembly Drawing: 1499351-3_1_AB

Pos	Part No	UN	Qty	Description	Page No
-					
010	2603376-0000		1	AXLE PIN	
020	2603378-0000		1	ROLLER	
030	2695408-0000		1	HOLDER	
040	2603374-0000		1	ECCENTRIC	
050	2609923-0000		1	WASHER	
300	311103-0306		1	PARALLEL PIN ISO 2338 5M6X12 A1	
310	312105-0366		2	SCREW M6S ISO 4017 M6X12 A480	
320	312318-0287		1	SCREW ISO4029 M4X8 A4	
330	315105-0153		2	WASHER BRB6,4X12RFR	
400	90134-0063		1	BUSHING/NUT M8X1, D=2,5 MM	
410	90028-0020		1	CONE TUBE 2,5MM	

Pos	Part No	UN	Qty	Description	Page No

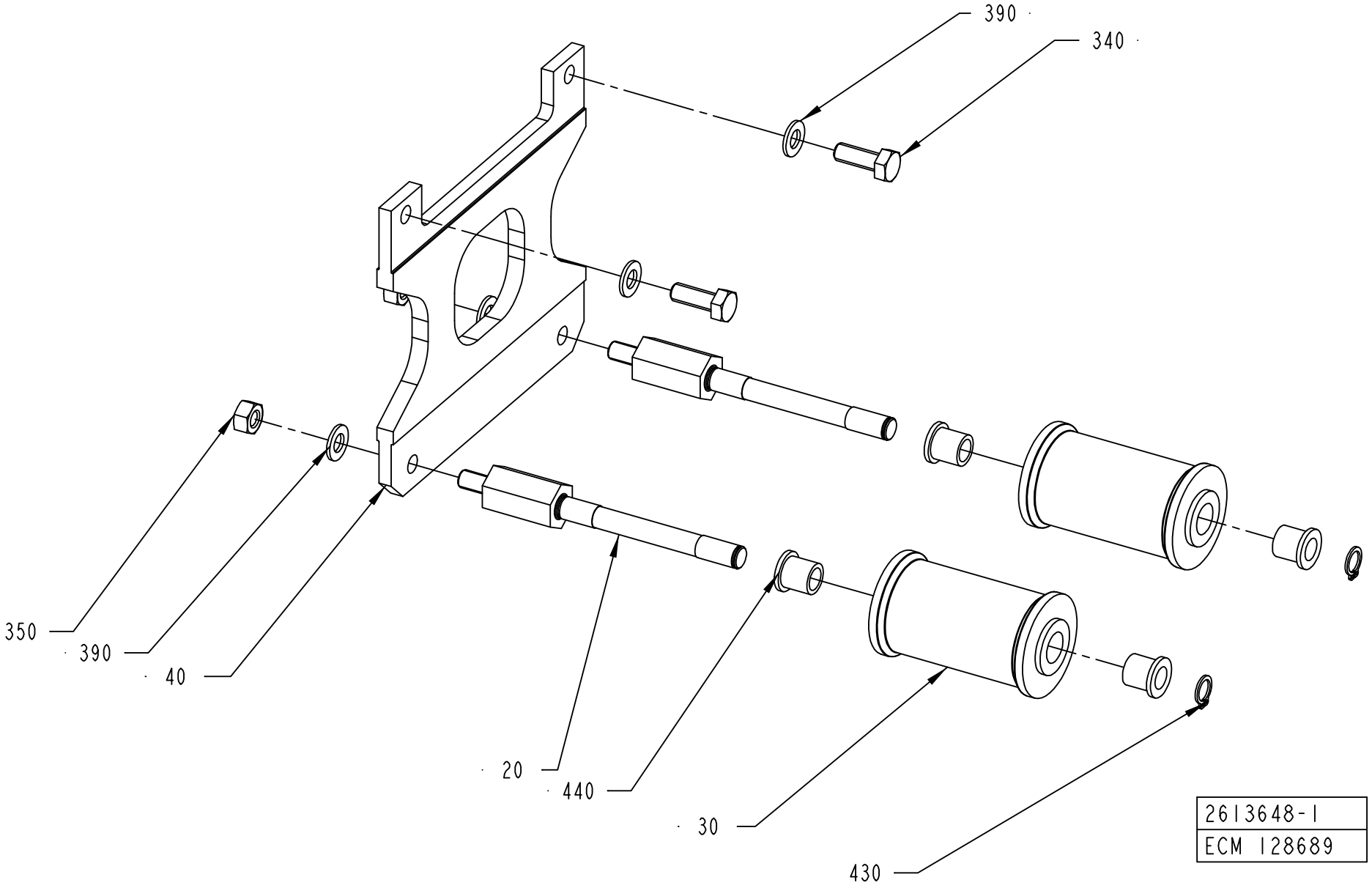
390
340
350
390
40
20
440
30
430
2613648-1
ECM 128689

ECM: 190138 - 20041028
Group number: 2613648-0100
Assembly Drawing: 2613648-1_1_AA

This list covers pages from 2-154 to 2-157

Pos	Part No	UN	Qty	Description	Page No
TPA 0500SQ (See drawing on page: 2-154)					
020	2619198-0000		2	SHAFT	
030	2688917-0000		2	ROLLER	
040	2664780-0000		1	PLATE	
350	312605-0318		2	HEXAGON NUT, M6M M8 A280	
390	315105-0165		4	WASHER BRB8,4X16RFR	
430	90141-0016		2	RETAINING RING FOR SHAFT DIN 471 10 A2	
440	90240-0180		4	FLANGE BUSHING 10X14X15MM	
TPA 1000SQ (See drawing on page: 2-154)					
020	2648846-0000		2	SHAFT	
030	1524421-0000		2	ROLLER	
040	2642097-0000		1	PLATE	
390	315105-0165		2	WASHER BRB8,4X16RFR	
430	90141-0016		2	RETAINING RING FOR SHAFT DIN 471 10 A2	
440	90240-0180		4	FLANGE BUSHING 10X14X15MM	
TBA 1000B NOQC NOMOLDEDCAP (See drawing on page: 2-154)					
020	2619198-0000		2	SHAFT	
030	560122-0000		2	SUPPORT ROLLER	
040	2623783-0000		1	PLATE	
350	312605-0318		2	HEXAGON NUT, M6M M8 A280	
390	315105-0165		4	WASHER BRB8,4X16RFR	
430	90141-0016		2	RETAINING RING FOR SHAFT DIN 471 10 A2	
440	90240-0180		4	FLANGE BUSHING 10X14X15MM	
TBA 0200B QC, TBA 0330S QC, TBA 0250B QC (See drawing on page: 2-154)					
020	2646345-0000		2	SHAFT	
030	978757-0000		2	ROLLER 180-284ML	
040	2646344-0000		1	PLATE	
350	312605-0318		2	HEXAGON NUT, M6M M8 A280	
390	315105-0165		4	WASHER BRB8,4X16RFR	
430	90141-0016		2	RETAINING RING FOR SHAFT DIN 471 10 A2	
440	90240-0180		4	FLANGE BUSHING 10X14X15MM	
TBA 0200S					
020	2632818-0000		2	SHAFT	
030	978760-0000		2	ROLLER TBA200SL	
040	2632817-0000		1	PLATE	
350	312605-0318		2	HEXAGON NUT, M6M M8 A280	
390	315105-0165		4	WASHER BRB8,4X16RFR	
430	90141-0016		2	RETAINING RING FOR SHAFT DIN 471 10 A2	
440	90240-0180		4	FLANGE BUSHING 10X14X15MM	
TBA 0250S QC, TBA 0200M QC (See drawing on page: 2-154)					
020	2649441-0000		2	SHAFT	
030	2530124-0000		2	ROLLER	
040	2649442-0000		1	PLATE	
350	312605-0318		2	HEXAGON NUT, M6M M8 A280	
390	315105-0165		4	WASHER BRB8,4X16RFR	
430	90141-0016		2	RETAINING RING FOR SHAFT DIN 471 10 A2	
440	90240-0180		4	FLANGE BUSHING 10X14X15MM	
TBA 0500B QC, TBA 1000B QC (See drawing on page: 2-154)					
020	2619198-0000		2	SHAFT	
030	2619199-0000		2	ROLLER	
040	2619200-0000		1	PLATE	
350	312605-0318		2	HEXAGON NUT, M6M M8 A280	
390	315105-0165		4	WASHER BRB8,4X16RFR	
430	90141-0016		2	RETAINING RING FOR SHAFT DIN 471 10 A2	
440	90240-0180		4	FLANGE BUSHING 10X14X15MM	
TBA 0500S (See drawing on page: 2-154)					
020	2619198-0000		2	SHAFT	
030	1512484-0000		2	ROLLER	
040	2664780-0000		1	PLATE	
350	312605-0318		2	HEXAGON NUT, M6M M8 A280	
390	315105-0165		6	WASHER BRB8,4X16RFR	
430	90141-0016		2	RETAINING RING FOR SHAFT DIN 471 10 A2	
440	90240-0180		4	FLANGE BUSHING 10X14X15MM	
TBA 1000B NOQC STDA7 (See drawing on page: 2-156)					
020	2619198-0000		2	SHAFT	
025	2610974-0000		1	ROLLER	
030	560122-0000		1	SUPPORT ROLLER	
040	2623783-0000		1	PLATE	
350	312605-0318		2	HEXAGON NUT, M6M M8 A280	
390	315105-0165		4	WASHER BRB8,4X16RFR	
430	90141-0016		2	RETAINING RING FOR SHAFT DIN 471 10 A2	
440	90240-0180		4	FLANGE BUSHING 10X14X15MM	
TBA 1000S NOMOLDEDCAP (See drawing on page: 2-154)					
020	2619198-0000		2	SHAFT	
030	569058-0000		2	SUPPORT ROLLER	
040	2623783-0000		1	PLATE	
350	312605-0318		2	HEXAGON NUT, M6M M8 A280	
390	315105-0165		4	WASHER BRB8,4X16RFR	
430	90141-0016		2	RETAINING RING FOR SHAFT DIN 471 10 A2	
440	90240-0180		4	FLANGE BUSHING 10X14X15MM	
TBA 1000S STDA7 (See drawing on page: 2-156)					
020	2619198-0000		2	SHAFT	
025	2608149-0000		1	ROLLER	
030	2608150-0000		1	ROLLER	

SUPPORT ROLLER

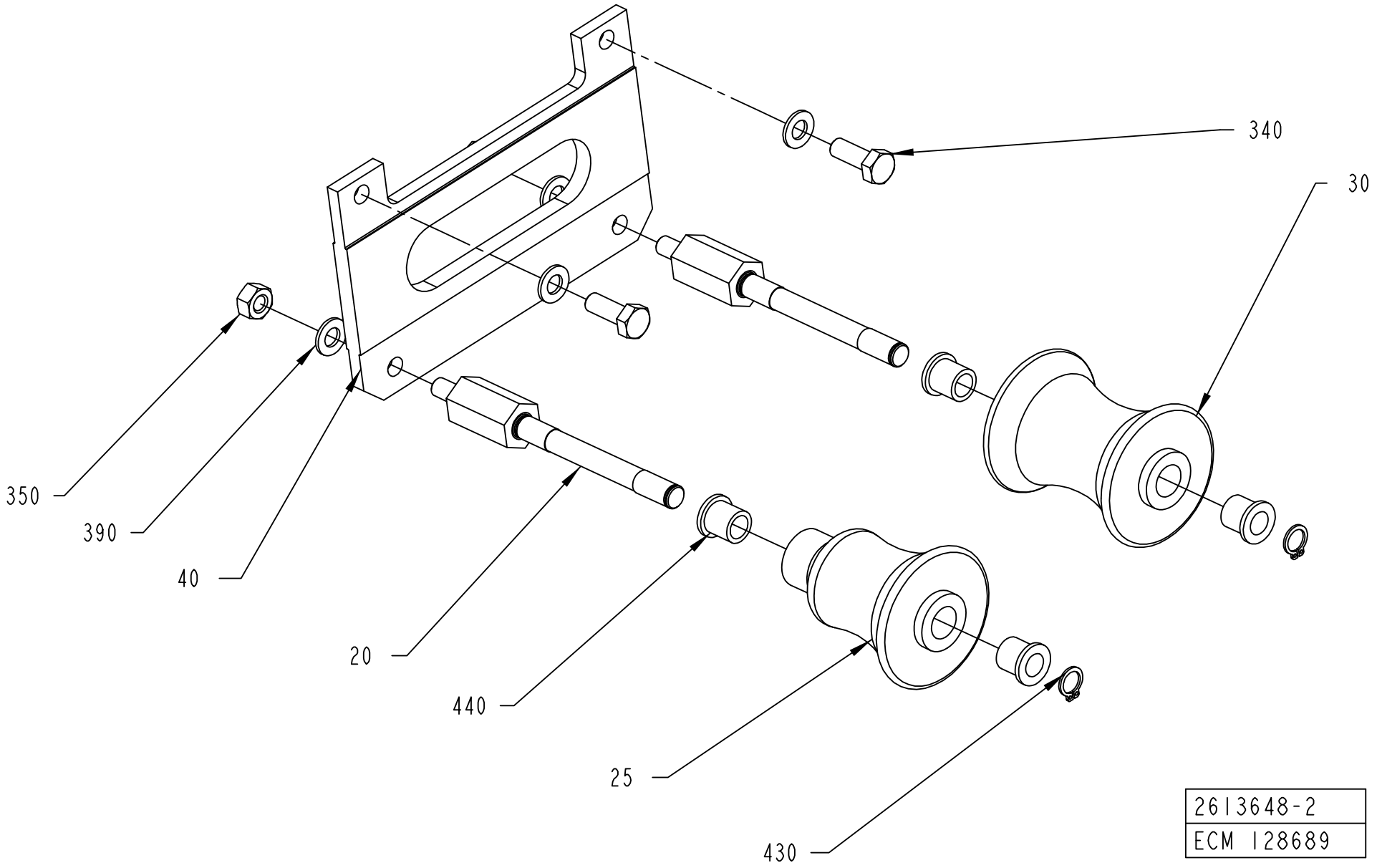

Pos	Part No	UN	Qty	Description	Page No
TBA 1000S STDA7 (Cont'd) (See drawing on page: 2-156)					
040	2623783-0000		1	PLATE	
350	312605-0318		2	HEXAGON NUT, M6M M8 A280	
390	315105-0165		4	WASHER BRB8,4X16RFR	
430	90141-0016		2	RETAINING RING FOR SHAFT DIN 471 10 A2	
440	90240-0180		4	FLANGE BUSHING 10X14X15MM	
TBA 1000SQ (See drawing on page: 2-154)					
020	2619198-0000		2	SHAFT	
030	1499678-0000		2	ROLLER	
040	2623783-0000		1	PLATE	
350	312605-0318		2	HEXAGON NUT, M6M M8 A280	
390	315105-0165		4	WASHER BRB8,4X16RFR	
430	90141-0016		2	RETAINING RING FOR SHAFT DIN 471 10 A2	
440	90240-0180		4	FLANGE BUSHING 10X14X15MM	
TBA 1500S (See drawing on page: 2-154)					
020	2648846-0000		2	SHAFT	
030	560122-0000		2	SUPPORT ROLLER	
040	2648847-0000		1	PLATE	
390	315105-0165		2	WASHER BRB8,4X16RFR	
430	90141-0016		2	RETAINING RING FOR SHAFT DIN 471 10 A2	
440	90240-0180		4	FLANGE BUSHING 10X14X15MM	
TBA 1890S QC, TBA 2000S QC (See drawing on page: 2-154)					
020	2650812-0000		2	SHAFT	
030	2602655-0000		2	ROLLER	
040	2652892-0000		1	PLATE	
350	312605-0318		2	HEXAGON NUT, M6M M8 A280	
390	315105-0165		4	WASHER BRB8,4X16RFR	
430	90141-0016		2	RETAINING RING FOR SHAFT DIN 471 10 A2	
440	90240-0180		4	FLANGE BUSHING 10X14X15MM	
TPA 0330SQ (See drawing on page: 2-154)					
020	2619319-0000		2	SHAFT	
030	929355-0000		2	ROLLER TPA 330	
040	2664779-0000		1	PLATE	
350	312605-0318		2	HEXAGON NUT, M6M M8 A280	
390	315105-0165		4	WASHER BRB8,4X16RFR	
430	90141-0016		2	RETAINING RING FOR SHAFT DIN 471 10 A2	
440	90240-0180		4	FLANGE BUSHING 10X14X15MM	
Common Parts					
340	312105-0452		2	SCREW M6S ISO 4017 M8X22 A4 80	

Pos	Part No	UN	Qty	Description	Page No

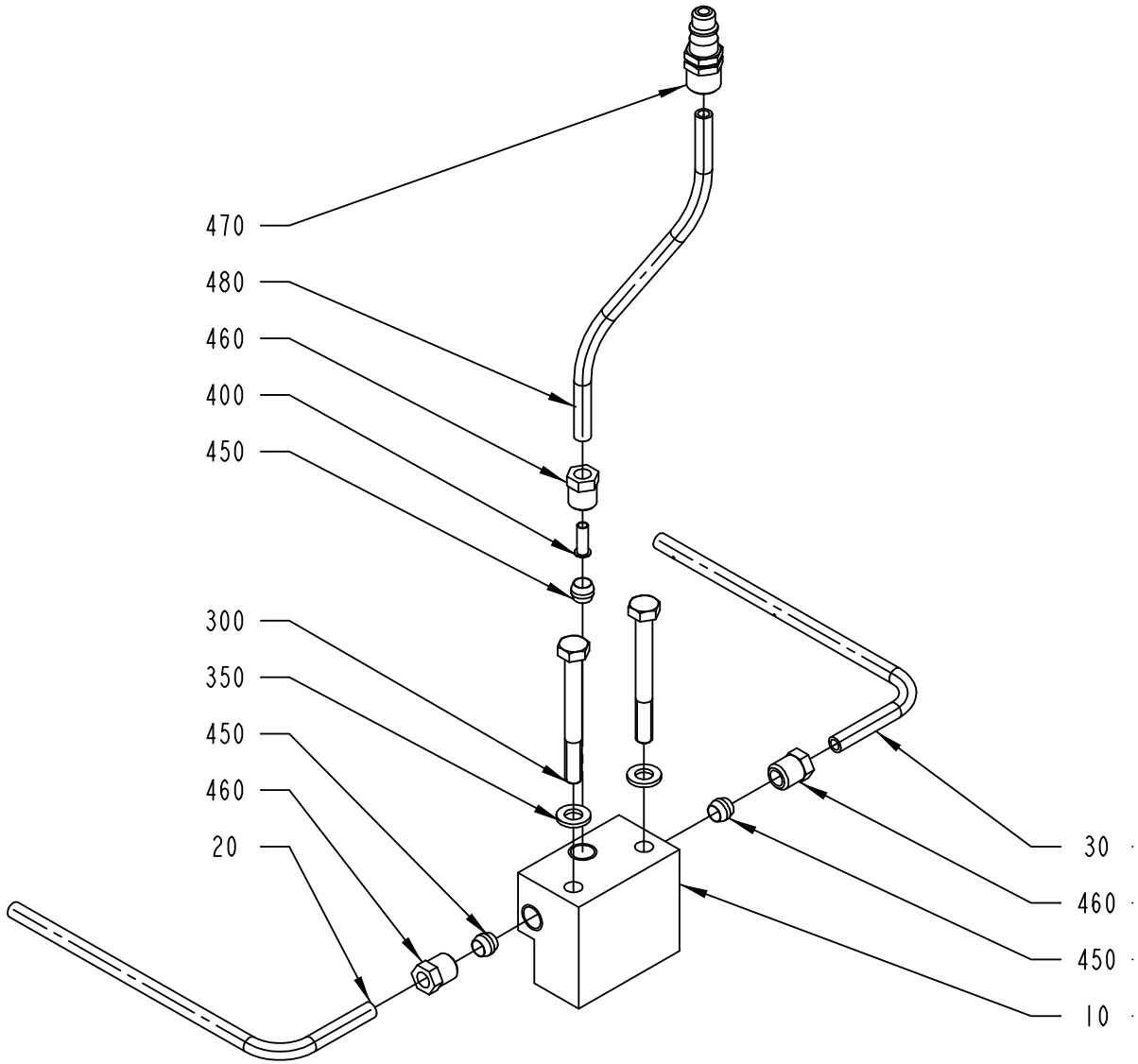

2556893-1
ECM 120277

ECM: 181443 - 20041013
Group number: 2556893-0100
Assembly Drawing: 2556893-1_1_AA

Pos	Part No	UN	Qty	Description	Page No
TBA 0500B, TBA 1000S, TBA 1000SQ, TBA 1000B, TBA 1500S, TPA 1000SQ					
020	2532837-0000		1	TUBE FLUSHING DEVICE	
030	2532838-0000		1	TUBE FLUSHING DEVICE	
TBA 0500S, TBA 0330S, TBA 0200B, TBA 0250S, TBA 0200S, TBA 0200M, TBA 0250B, TPA 0330SQ, TPA 0500SQ					
020	2556894-0000		1	TUBE FLUSHING DEVICE	
030	2556895-0000		1	TUBE FLUSHING DEVICE	
TBA 1890S, TBA 2000S					
020	2629240-0000		1	TUBE FLUSHING DEVICE	
030	2629239-0000		1	TUBE FLUSHING DEVICE	
Common Parts					
010	2556615-0000		1	PIPE CONNECTION	
300	312105-0381		2	SCREW M6S ISO 4014 M6X55 A480	
350	315105-0153		2	WASHER BRB6,4X12RFR	
400	342706-0130		1	ACCESSORIES, INSERT SLEEVE 6 MM	
450	90028-0022		3	CONE TUBE 6 MM	
460	90134-0055		3	BUSHING/NUT INLET/OUTLET 6 MM	
470	90163-0063		1	QUICK COUPLING, (M) 5450-6/4	
480	90166-0132	MM	1500	TUBE 6 MM PA,TRANSP.	

Pos	Part No	UN	Qty	Description	Page No

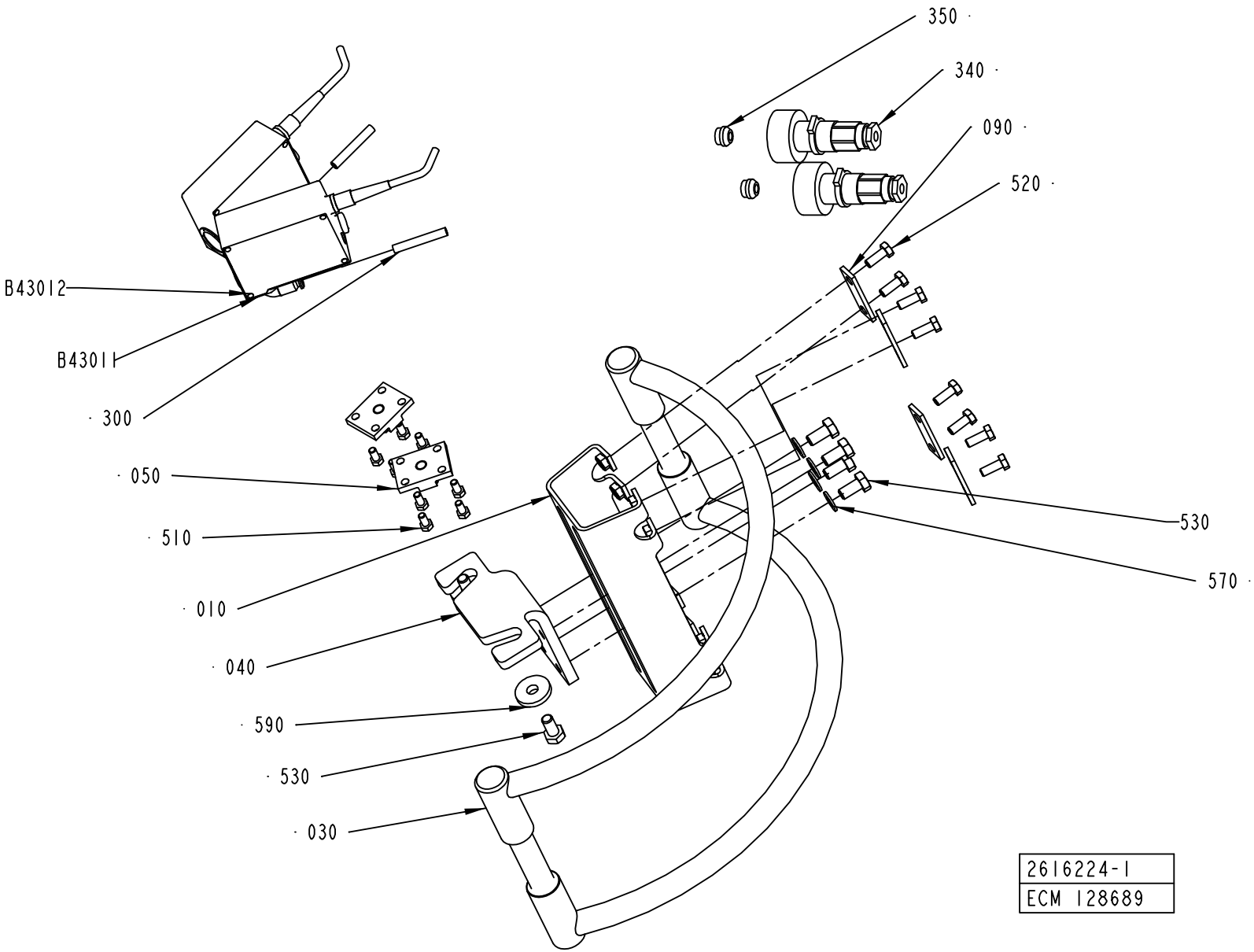
350
340
090
520
B43012
B43011
300
050
510
010
040
590
530
030
530
570
2616224-1
ECM 128689

ECM: 193594 - 20041213
Group number: 2616224-0100
Assembly Drawing: 2616224-1_1_AA

This list covers pages from 2-160 to 2-165

Pos	Part No	UN	Qty	Description	Page No
TBA 0200S (See drawing on page: 2-160)					
010	1036685-0000		1	BRACKET	
030	2616220-0000		1	BOW CLAMP	
040	1254110-0000		1	BRACKET	
590	315125-0165		2	WASHER TBRSB 8,4X26X5 A4	
TBA 0250S, TBA 0200M (See drawing on page: 2-162)					
010	2640963-0000		1	BRACKET	
020	2679885-0000		1	SLIDE	
030	2616220-0000		1	BOW CLAMP	
040	2679884-0000		1	BRACKET	
060	2679886-0000		1	KNOB	
070	2655098-0000		1	SHAFT	
080	90335-0024		1	COMP. SPRING 22250, 1,25X13,75X27	
100	90287-0148		4	SCREW SPRINGLOAD. SLOTTED HEAD M5X12	
110	312318-0323		4	SCREW ISO4029 M5X8 A4	
TBA 0330S, TBA 0200B, TBA 0250B (See drawing on page: 2-162)					
010	2640963-0000		1	BRACKET	
020	2655096-0000		1	SLIDE	
030	2616220-0000		1	BOW CLAMP	
040	2655095-0000		1	BRACKET	
060	2655097-0000		1	KNOB	
070	2655098-0000		1	SHAFT	
080	90335-0024		1	COMP. SPRING 22250, 1,25X13,75X27	
100	90287-0148		4	SCREW SPRINGLOAD. SLOTTED HEAD M5X12	
110	312318-0323		4	SCREW ISO4029 M5X8 A4	
590	315125-0165		2	WASHER TBRSB 8,4X26X5 A4	
TBA 0500B, TBA 1000S, TBA 1000SQ, TBA 1000B, TBA 1500S (See drawing on page: 2-160)					
010	1036685-0000		1	BRACKET	
030	2616220-0000		1	BOW CLAMP	
040	1254109-0000		1	BRACKET	
590	315125-0165		2	WASHER TBRSB 8,4X26X5 A4	
TBA 0500S, TPA 1000SQ (See drawing on page: 2-160)					
010	1036685-0000		1	BRACKET	
030	2616220-0000		1	BOW CLAMP	
040	1334910-0000		1	BRACKET	
590	315125-0165		2	WASHER TBRSB 8,4X26X5 A4	
TBA 1890S, TBA 2000S (See drawing on page: 2-160)					
010	2650815-0000		1	BRACKET	
030	2650814-0000		1	BOW CLAMP	
040	2611408-0000		1	BRACKET	
590	2677899-0000		2	WASHER	
TPA 0330SQ (See drawing on page: 2-160)					
010	1036685-0000		1	BRACKET	
030	2616220-0000		1	BOW CLAMP	
040	1254111-0000		1	BRACKET	
590	315125-0165		2	WASHER TBRSB 8,4X26X5 A4	
TPA 0500SQ (See drawing on page: 2-164)					
010	1036685-0000		1	BRACKET	
030	2616220-0000		1	BOW CLAMP	
040	1254111-0000		1	BRACKET	
590	315125-0165		2	WASHER TBRSB 8,4X26X5 A4	
Common Parts					
050	1036674-0000		2	FASTENING PLATE	
090	1036673-0000		4	WASHER	
300	90166-0081	MM	1500	TUBE 6 MM PA BLUE	
340	90110-0235		2	CABLE CONTACT, PX0739/S	
350	90459-1501		2	CABLE SEALING, 12023/I, ELFA. 44-625-78	
510	312105-0325		8	SCREW M6S ISO 4017 M5X10 A480	
520	312105-0368		8	SCREW M6S ISO 4017 M6X16 A480	
530	312105-0449		6	SCREW M6S ISO 4017 M8X16 A480	
570	315105-0165		4	WASHER BRB8,4X16RFR	
B43011	90458-0601		1	CONTRAST SCANNER, KT15W-P2110S01	
	342732-0102		*1*	*ELBOW PIPE JOINT, EXT.THREAD, D=6MM-G1/8*	
B43012	90458-0601		1	CONTRAST SCANNER, KT15W-P2110S01	
	342732-0102		*1*	*ELBOW PIPE JOINT, EXT.THREAD, D=6MM-G1/8*	

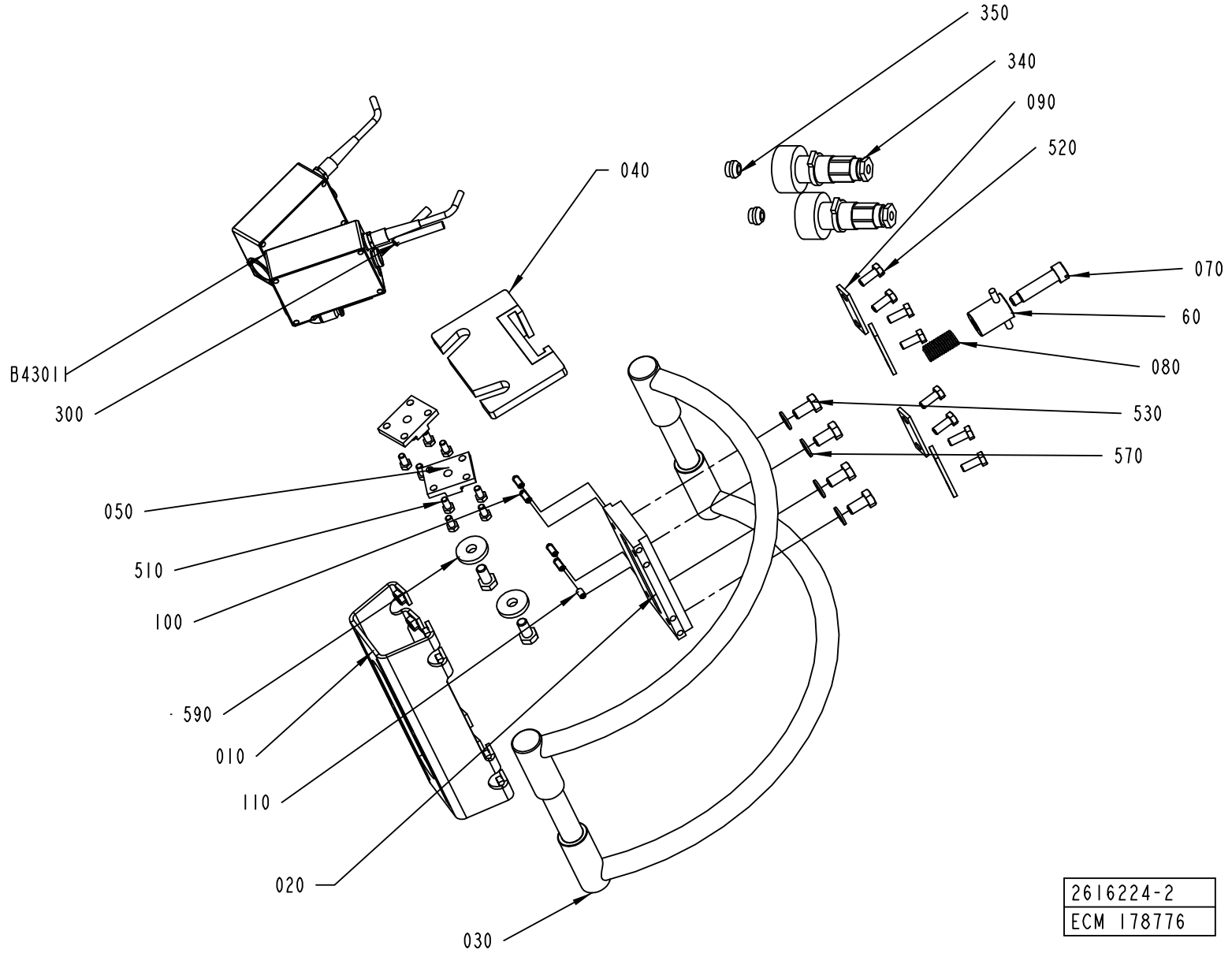
350
340
090
520
040
070
60
080
B43011
300
530
570
050
510
100
590
010
110
020
030
2616224-2
ECM 178776

ECM: 193594 - 20041213
Group number: 2616224-0100
Assembly Drawing: 2616224-2_1_AB

This list covers pages from 2-160 to 2-165

Pos	Part No	UN	Qty	Description	Page No
TBA 0200S (See drawing on page: 2-160)					
010	1036685-0000		1	BRACKET	
030	2616220-0000		1	BOW CLAMP	
040	1254110-0000		1	BRACKET	
590	315125-0165		2	WASHER TBRSB 8,4X26X5 A4	
TBA 0250S, TBA 0200M (See drawing on page: 2-162)					
010	2640963-0000		1	BRACKET	
020	2679885-0000		1	SLIDE	
030	2616220-0000		1	BOW CLAMP	
040	2679884-0000		1	BRACKET	
060	2679886-0000		1	KNOB	
070	2655098-0000		1	SHAFT	
080	90335-0024		1	COMP. SPRING 22250, 1,25X13,75X27	
100	90287-0148		4	SCREW SPRINGLOAD. SLOTTED HEAD M5X12	
110	312318-0323		4	SCREW ISO4029 M5X8 A4	
TBA 0330S, TBA 0200B, TBA 0250B (See drawing on page: 2-162)					
010	2640963-0000		1	BRACKET	
020	2655096-0000		1	SLIDE	
030	2616220-0000		1	BOW CLAMP	
040	2655095-0000		1	BRACKET	
060	2655097-0000		1	KNOB	
070	2655098-0000		1	SHAFT	
080	90335-0024		1	COMP. SPRING 22250, 1,25X13,75X27	
100	90287-0148		4	SCREW SPRINGLOAD. SLOTTED HEAD M5X12	
110	312318-0323		4	SCREW ISO4029 M5X8 A4	
590	315125-0165		2	WASHER TBRSB 8,4X26X5 A4	
TBA 0500B, TBA 1000S, TBA 1000SQ, TBA 1000B, TBA 1500S (See drawing on page: 2-160)					
010	1036685-0000		1	BRACKET	
030	2616220-0000		1	BOW CLAMP	
040	1254109-0000		1	BRACKET	
590	315125-0165		2	WASHER TBRSB 8,4X26X5 A4	
TBA 0500S, TPA 1000SQ (See drawing on page: 2-160)					
010	1036685-0000		1	BRACKET	
030	2616220-0000		1	BOW CLAMP	
040	1334910-0000		1	BRACKET	
590	315125-0165		2	WASHER TBRSB 8,4X26X5 A4	
TBA 1890S, TBA 2000S (See drawing on page: 2-160)					
010	2650815-0000		1	BRACKET	
030	2650814-0000		1	BOW CLAMP	
040	2611408-0000		1	BRACKET	
590	2677899-0000		2	WASHER	
TPA 0330SQ (See drawing on page: 2-160)					
010	1036685-0000		1	BRACKET	
030	2616220-0000		1	BOW CLAMP	
040	1254111-0000		1	BRACKET	
590	315125-0165		2	WASHER TBRSB 8,4X26X5 A4	
TPA 0500SQ (See drawing on page: 2-164)					
010	1036685-0000		1	BRACKET	
030	2616220-0000		1	BOW CLAMP	
040	1254111-0000		1	BRACKET	
590	315125-0165		2	WASHER TBRSB 8,4X26X5 A4	
Common Parts					
050	1036674-0000		2	FASTENING PLATE	
090	1036673-0000		4	WASHER	
300	90166-0081	MM	1500	TUBE 6 MM PA BLUE	
340	90110-0235		2	CABLE CONTACT, PX0739/S	
350	90459-1501		2	CABLE SEALING, 12023/I, ELFA. 44-625-78	
510	312105-0325		8	SCREW M6S ISO 4017 M5X10 A480	
520	312105-0368		8	SCREW M6S ISO 4017 M6X16 A480	
530	312105-0449		6	SCREW M6S ISO 4017 M8X16 A480	
570	315105-0165		4	WASHER BRB8,4X16RFR	
B43011	90458-0601		1	CONTRAST SCANNER, KT15W-P2110S01	
	342732-0102		*1*	*ELBOW PIPE JOINT, EXT.THREAD, D=6MM-G1/8*	
B43012	90458-0601		1	CONTRAST SCANNER, KT15W-P2110S01	
	342732-0102		*1*	*ELBOW PIPE JOINT, EXT.THREAD, D=6MM-G1/8*	

Machine Type | Group Description | Used-In | Group Number | Page No

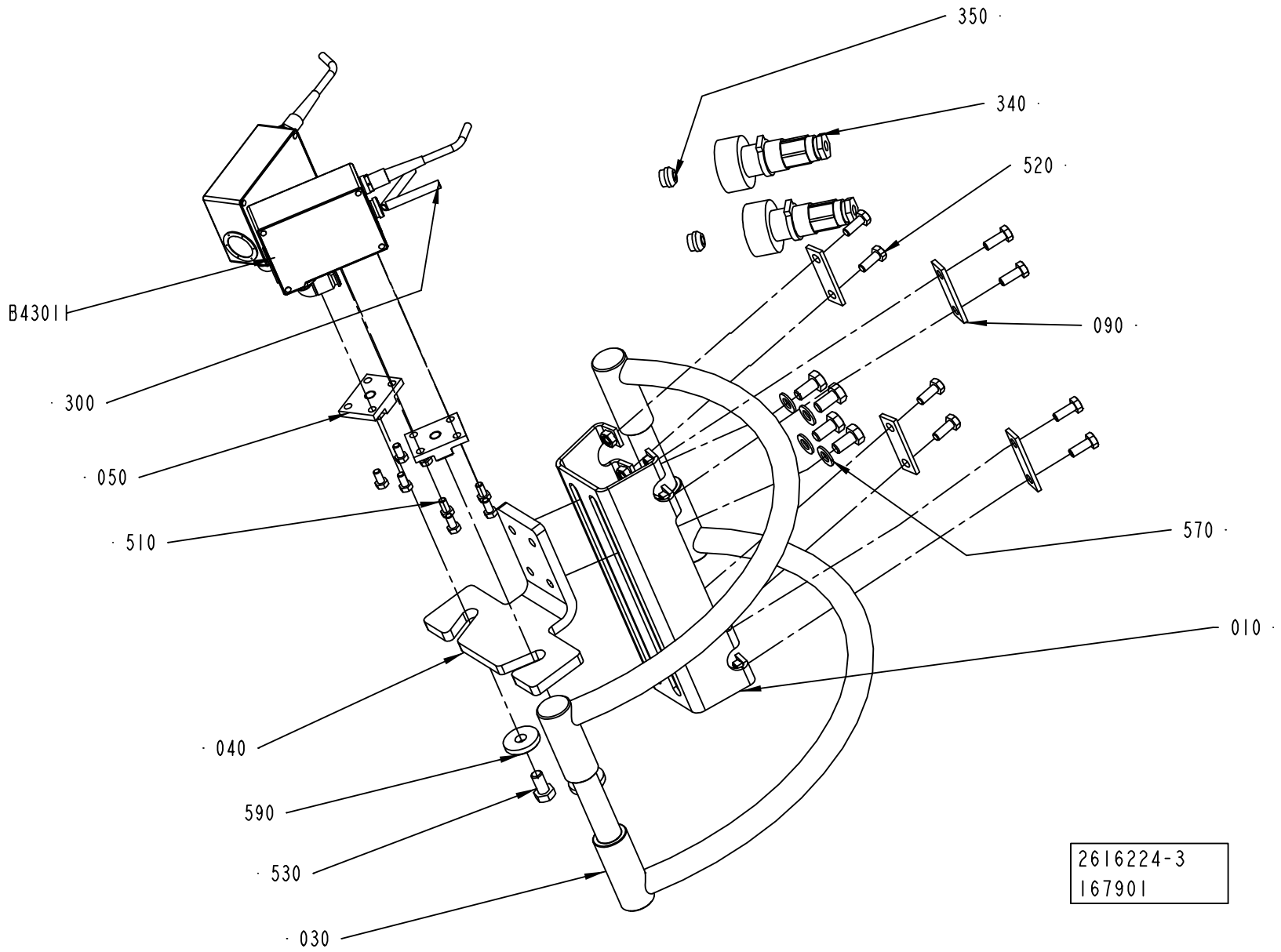
350
340
520
090
570
010
B43011
300
050
510
040
590
530
030
2616224-3
167901

ECM: 193594 - 20041213
Group number: 2616224-0100
Assembly Drawing: 2616224-3_1_AA

This list covers pages from 2-160 to 2-165

Pos	Part No	UN	Qty	Description	Page No
TBA 0200S (See drawing on page: 2-160)					
010	1036685-0000		1	BRACKET	
030	2616220-0000		1	BOW CLAMP	
040	1254110-0000		1	BRACKET	
590	315125-0165		2	WASHER TBRSB 8,4X26X5 A4	
TBA 0250S, TBA 0200M (See drawing on page: 2-162)					
010	2640963-0000		1	BRACKET	
020	2679885-0000		1	SLIDE	
030	2616220-0000		1	BOW CLAMP	
040	2679884-0000		1	BRACKET	
060	2679886-0000		1	KNOB	
070	2655098-0000		1	SHAFT	
080	90335-0024		1	COMP. SPRING 22250, 1,25X13,75X27	
100	90287-0148		4	SCREW SPRINGLOAD. SLOTTED HEAD M5X12	
110	312318-0323		4	SCREW ISO4029 M5X8 A4	
TBA 0330S, TBA 0200B, TBA 0250B (See drawing on page: 2-162)					
010	2640963-0000		1	BRACKET	
020	2655096-0000		1	SLIDE	
030	2616220-0000		1	BOW CLAMP	
040	2655095-0000		1	BRACKET	
060	2655097-0000		1	KNOB	
070	2655098-0000		1	SHAFT	
080	90335-0024		1	COMP. SPRING 22250, 1,25X13,75X27	
100	90287-0148		4	SCREW SPRINGLOAD. SLOTTED HEAD M5X12	
110	312318-0323		4	SCREW ISO4029 M5X8 A4	
590	315125-0165		2	WASHER TBRSB 8,4X26X5 A4	
TBA 0500B, TBA 1000S, TBA 1000SQ, TBA 1000B, TBA 1500S (See drawing on page: 2-160)					
010	1036685-0000		1	BRACKET	
030	2616220-0000		1	BOW CLAMP	
040	1254109-0000		1	BRACKET	
590	315125-0165		2	WASHER TBRSB 8,4X26X5 A4	
TBA 0500S, TPA 1000SQ (See drawing on page: 2-160)					
010	1036685-0000		1	BRACKET	
030	2616220-0000		1	BOW CLAMP	
040	1334910-0000		1	BRACKET	
590	315125-0165		2	WASHER TBRSB 8,4X26X5 A4	
TBA 1890S, TBA 2000S (See drawing on page: 2-160)					
010	2650815-0000		1	BRACKET	
030	2650814-0000		1	BOW CLAMP	
040	2611408-0000		1	BRACKET	
590	2677899-0000		2	WASHER	
TPA 0330SQ (See drawing on page: 2-160)					
010	1036685-0000		1	BRACKET	
030	2616220-0000		1	BOW CLAMP	
040	1254111-0000		1	BRACKET	
590	315125-0165		2	WASHER TBRSB 8,4X26X5 A4	
TPA 0500SQ (See drawing on page: 2-164)					
010	1036685-0000		1	BRACKET	
030	2616220-0000		1	BOW CLAMP	
040	1254111-0000		1	BRACKET	
590	315125-0165		2	WASHER TBRSB 8,4X26X5 A4	
Common Parts					
050	1036674-0000		2	FASTENING PLATE	
090	1036673-0000		4	WASHER	
300	90166-0081	MM	1500	TUBE 6 MM PA BLUE	
340	90110-0235		2	CABLE CONTACT, PX0739/S	
350	90459-1501		2	CABLE SEALING, 12023/I, ELFA. 44-625-78	
510	312105-0325		8	SCREW M6S ISO 4017 M5X10 A480	
520	312105-0368		8	SCREW M6S ISO 4017 M6X16 A480	
530	312105-0449		6	SCREW M6S ISO 4017 M8X16 A480	
570	315105-0165		4	WASHER BRB8,4X16RFR	
B43011	90458-0601		1	CONTRAST SCANNER, KT15W-P2110S01	
	342732-0102		*1*	*ELBOW PIPE JOINT, EXT.THREAD, D=6MM-G1/8*	
B43012	90458-0601		1	CONTRAST SCANNER, KT15W-P2110S01	
	342732-0102		*1*	*ELBOW PIPE JOINT, EXT.THREAD, D=6MM-G1/8*	

This page is intentionally left blank.

ECM: 194884 - 20041203
Group number: 2657136-0100
Assembly Drawing:

Pos	Part No	UN	Qty	Description	Page No
TBA 1500S NOPT					
	2652199-0001		2	PAM - SAM EASY DOWNLOAD	
TBA 1500S PT/FLEX					
	2652202-0001		2	PAM - SAM EASY DOWNLOAD	
TBA 1890S QC NOPT, TBA 2000S QC NOPT					
	2701758-0001		2	PAM - SAM EASY DOWNLOAD	
TBA 1890S QC PT/FLEX, TBA 2000S QC PT/FLEX					
	2701755-0001		2	PAM - SAM EASY DOWNLOAD	
TPA 0330SQ NOPT					
	2687100-0001		2	PAM - SAM EASY DOWNLOAD	
TPA 0330SQ PT/FLEX					
	2687097-0001		2	PAM - SAM EASY DOWNLOAD	
TPA 0500SQ NOPT					
	2687106-0001		2	PAM - SAM EASY DOWNLOAD	
	2634569-0001		2	PAM - SAM EASY DOWNLOAD	
TPA 0500SQ PT/FLEX					
	2687103-0001		2	PAM - SAM EASY DOWNLOAD	
TPA 1000SQ NOPT					
	2634585-0001		2	PAM - SAM EASY DOWNLOAD	
TPA 1000SQ PT/FLEX					
	2565561-0001		2	PAM - SAM EASY DOWNLOAD	
NOPT TBA 0200B, NOPT TBA 0250B, NOPT TBA 0330S					
	2674566-0001		1	PAM - SAM EASY DOWNLOAD	
NOPT TBA 0200M, NOPT TBA 0250S					
	2699873-0001		2	PAM - SAM EASY DOWNLOAD	
TBA 0200B PT/FLEX, TBA 0250B PT/FLEX, TBA 0330S PT/FLEX					
	2675580-0001		1	PAM - SAM EASY DOWNLOAD	
TBA 0200M PT/FLEX, TBA 0250S PT/FLEX					
	2699870-0001		2	PAM - SAM EASY DOWNLOAD	
TBA 0200S NOPT					
	2634581-0001		2	PAM - SAM EASY DOWNLOAD	
TBA 0200S PT/FLEX					
	2634583-0001		2	PAM - SAM EASY DOWNLOAD	
TBA 0500B QC NOPT, TBA 1000B QC NOPT					
	2634577-0001		2	PAM - SAM EASY DOWNLOAD	
TBA 0500B QC PT/FLEX, TBA 1000B QC PT/FLEX					
	2634579-0001		2	PAM - SAM EASY DOWNLOAD	
TBA 0500S NOPT					
	2716449-0001		2	PAM - SAM EASY DOWNLOAD	
TBA 0500S PT/FLEX					
	2716447-0001		2	PAM - SAM EASY DOWNLOAD	
TBA 1000B NOPT					
	2634565-0001		2	PAM - SAM EASY DOWNLOAD	
TBA 1000B PT/FLEX					
	2634567-0001		2	PAM - SAM EASY DOWNLOAD	
TBA 1000S NOPT					
	2634569-0001		2	PAM - SAM EASY DOWNLOAD	
TBA 1000S PT/FLEX					
	2634571-0001		2	PAM - SAM EASY DOWNLOAD	
TBA 1000SQ NOPT					
	2634573-0001		2	PAM - SAM EASY DOWNLOAD	
TBA 1000SQ PT/FLEX					
	2634575-0001		2	PAM - SAM EASY DOWNLOAD	
Common Parts					
	90459-0626		1	DISCETTE BOX FOR TWO 3,5" FLOPPYDISKS	

Machine Type | Group Description | Used-In | Group Number | Page No

This page is intentionally left blank.

ECM: 151865 - 20031128
Group number: 2660476-0100
Assembly Drawing:

Pos	Part No	UN	Qty	Description	Page No
-					
	90166-0143	MM	3000	TUBE 2,5 MM PA,TRANSP.	
	90166-0108	MM	2500	TUBE 6 MM PA,TRANSP.	
	90134-0055		4	BUSHING/NUT INLET/OUTLET 6 MM	
	90134-0052		8	PLUG DOSING BLOCK	
	90134-0030		5	SLEEVE FOR PLASTIC TUBE	
	90092-0052		8	METERING VALVE 10 MM3	
	90087-0019		5	PLUG M10X1 STAINLESS	
	90028-0022		10	CONE TUBE 6 MM	
	90028-0020		8	CONE TUBE 2,5MM	

Pos	Part No	UN	Qty	Description	Page No

Tetra Pak

SPC
Spare Parts Catalogue

This page is intentionally left blank.

ECM: 182042 - 20041013
Group number: 2634506-0100
Assembly Drawing:

Pos	Part No	UN	Qty	Description	Page No
-					
010	2634509-0100		1	VOLUME KIT	**3-5**
050	1361935-0100		1	FRAME	**3-303**
060	1361558-0100		1	LIFTING KIT-WHEEL	**3-305**
070	599815-0100		2	HOLDING FIXTURE	**3-307**
080	1361559-0100		1	PULLER	**3-309**
100	1499571-0100		2	PAPER REEL HOLDER	**3-311**
110	2641396-0100		1	BENDING ROLLER	**3-313**
120	2641398-0100		1	SQUEE-GEE ROLLER	**3-315**
130	2655614-0100		1	TRANSFORMER	**3-317**
150	1363768-0000		1	BOX	

Pos	Part No	UN	Qty	Description	Page No

This page is intentionally left blank.

ECM: 196579 - 20041213
Group number: 2634509-0100
Assembly Drawing:

Pos	Part No	UN	Qty	Description	Page No
NOQC					
010	1361922-0200		1	DROP CHUTE VARIANT	**3-7**
020	1361923-0200		1	INFEED CONVEYOR VARIANT	**3-9, 3-11, 3-13, 3-15, 3-17**
050	1285012-0300		1	FOLDING PART	**3-19**
060	1361918-0300		1	WHEEL	**3-49, 3-51**
QC					
010	2537128-0100		1	DROP CHUTE VARIANT	**3-53, 3-55**
020	2522129-0100		1	INFEED CONVEYOR VARIANT	**3-57, 3-59, 3-61**
050	2543480-0100		1	FOLDING PART	**3-73**
060	2523811-0100		1	WHEEL	**3-99, 3-101, 3-103**
Common Parts					
030	1144324-0300		1	FRAMEWORK	**3-109**
040	1144329-0300		1	PULL-DOWN DEVICE	**3-111, 3-113**
070	1487158-0300		1	FLAP HEATER VARIANT	**3-119, 3-121, 3-123, 3-125, 3-127**
080	1144331-0300		1	PRESSURE DEVICE	**3-129, 3-131, 3-133, 3-135**
090	1487825-0200		1	RAIL	**3-137, 3-139**
100	1361920-0400		1	RAIL OUTFEED	**3-141, 3-143, 3-145, 3-147**
110	1361921-0400		1	VOLUME KIT OUT FEED	**3-153**
120	2634511-0100		1	MECHANICAL DIFFERENCES	**3-167**

Pos	Part No	UN	Qty	Description	Page No

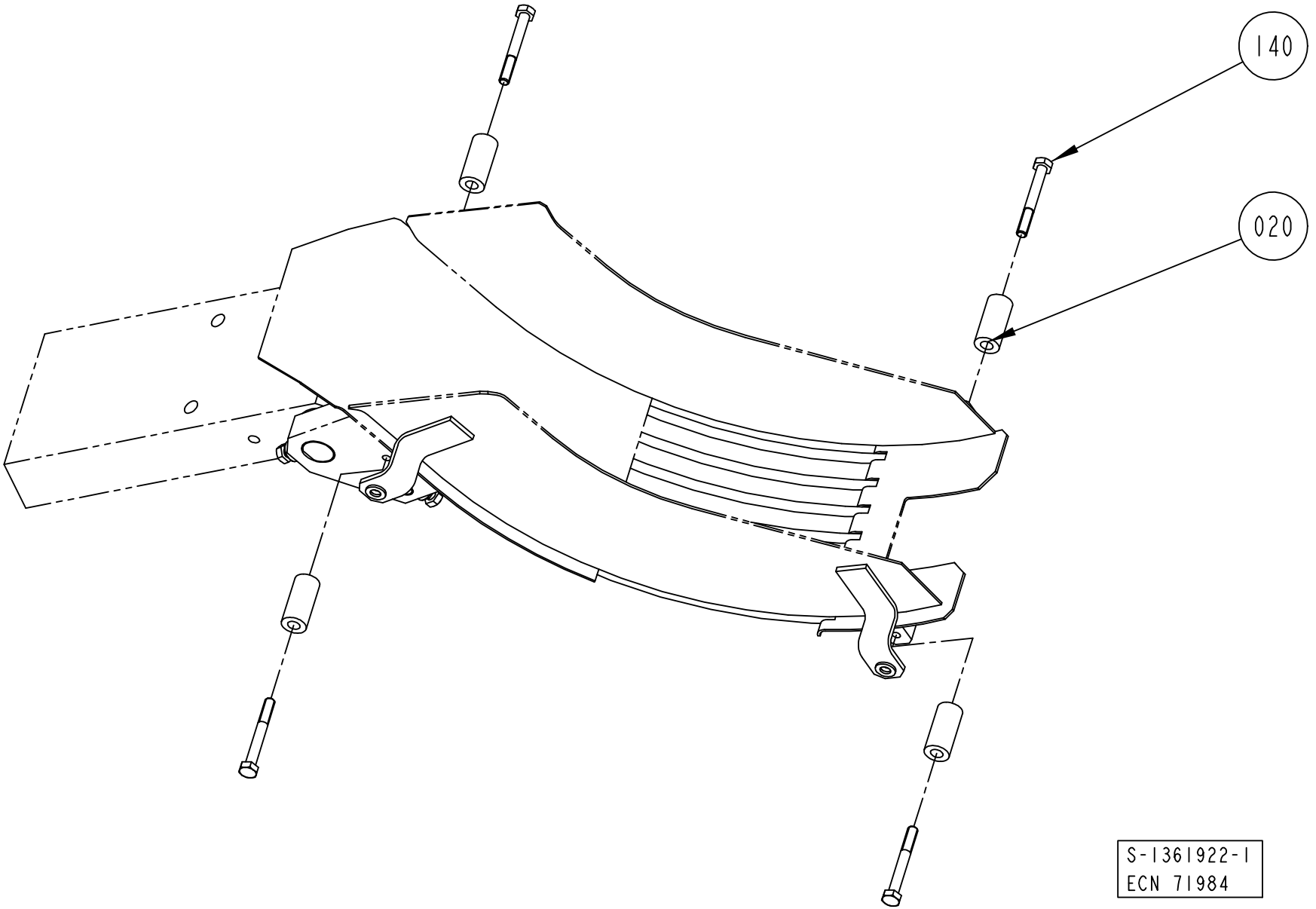
140
020
S-1361922-1
ECN 71984

ECM: 189517 - 20041104
Group number: 1361922-0200
Assembly Drawing: 1361922-1_1_AC

Pos	Part No	UN	Qty	Description	Page No
TBA 0200S					
020	315115-0153		4	WASHER PLAIN, TBRB 6,4/12 H=3	
140	312105-0370		4	SCREW M6S ISO 4017 M6X20 A480	
TBA 0250S					
020	2522202-0000		4	SPACER	
140	312105-0374		4	SCREW M6S ISO 4014 M6X30 A480	
TBA 0330S, TBA 0200B, TBA 0250B					
020	1317218-0000		4	SPACER	
140	312105-0374		4	SCREW M6S ISO 4014 M6X30 A480	
TBA 0500B, TBA 1000B					
020	1260714-0000		4	SPACER	
140	312105-0382		4	SCREW M6S ISO 4014 M6X60 A480	
TBA 0500S					
020	1499140-0000		4	SPACER	
140	312105-0379		4	SCREW M6S ISO 4014 M6X45 A480	
TBA 1000S					
020	1279670-0000		4	SPACER	
140	312105-0382		4	SCREW M6S ISO 4014 M6X60 A480	
TBA 1000SQ					
020	1487929-0000		4	SPACER	
140	312105-0379		4	SCREW M6S ISO 4014 M6X45 A480	
TBA 1500S					
140	312105-0366		4	SCREW M6S ISO 4017 M6X12 A480	
TPA 0330SQ					
020	1532254-0000		4	SPACER	
140	312105-0374		4	SCREW M6S ISO 4014 M6X30 A480	
TPA 0500SQ					
020	1549512-0000		4	SPACER	
140	312105-0374		4	SCREW M6S ISO 4014 M6X30 A480	
TPA 1000SQ					
140	312105-0366		4	SCREW M6S ISO 4017 M6X12 A480	

Pos	Part No	UN	Qty	Description	Page No

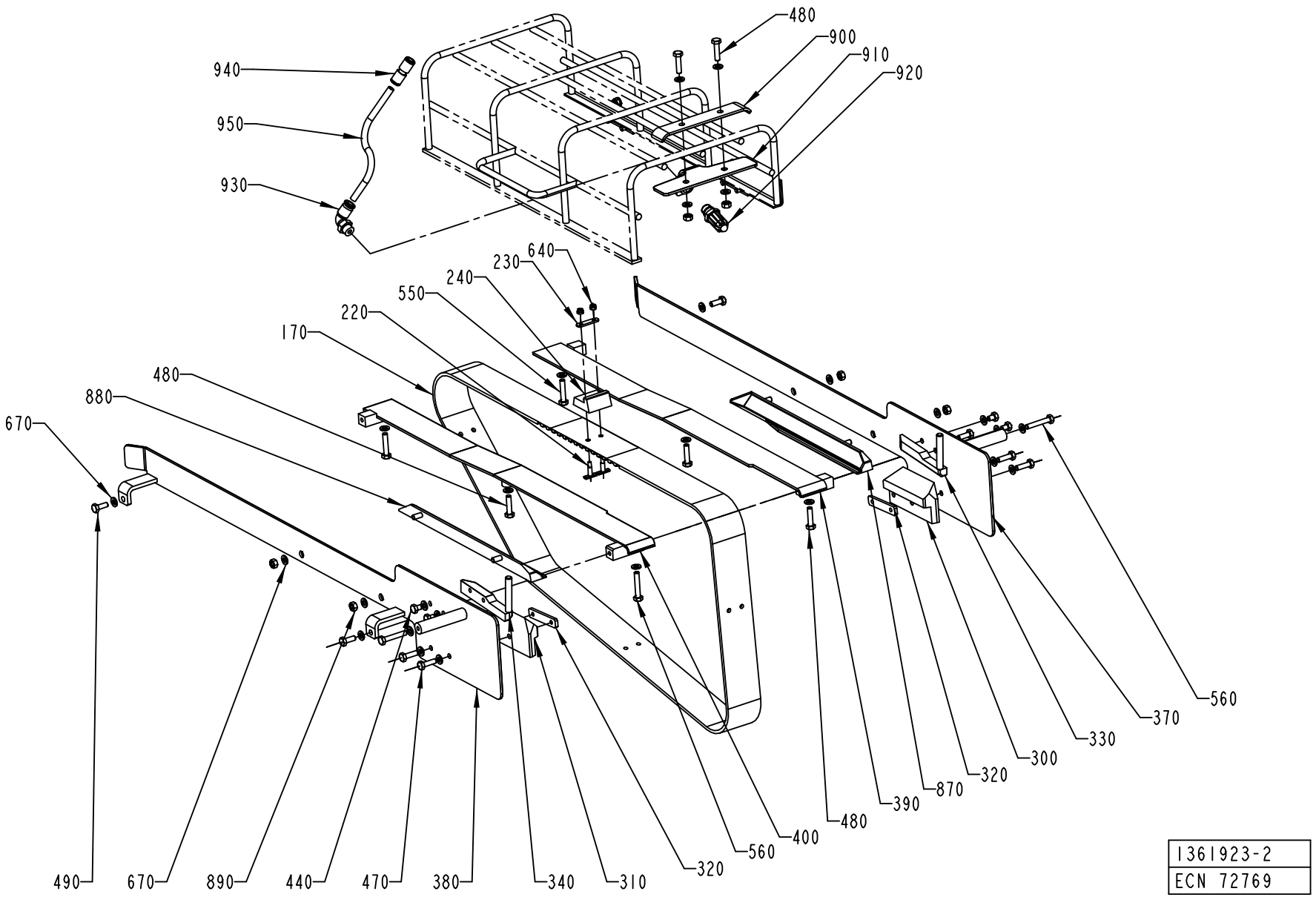

1361923-2
ECN 72769

ECM: 189520 - 20041104
Group number: 1361923-0200
Assembly Drawing: 1361923-2_1_AC

This list covers pages from 3-8 to 3-17

Pos	Part No	UN	Qty	Description	Page No
TPA 1000SQ (See drawing on page: 3-8)					
170	1519338-0000		1	TIMING BELT	
220	1517476-0000		6	WEDGE	
230	1517477-0000		3	PLATE	
240	1519344-0000		3	CARRIER	
300	1517481-0000		1	SLIDE	
310	1517480-0000		1	SLIDE	
320	2543242-0000		2	ANGLE BLOCK	
330	1517478-0000		1	BAR	
340	1517479-0000		1	BAR	
370	1517474-0000		1	GUIDE	
380	1517475-0000		1	GUIDE	
390	1519345-0000		1	GUIDE	
400	1519346-0000		1	GUIDE	
440	312105-0366		4	SCREW M6S ISO 4017 M6X12 A480	
470	312105-0368		4	SCREW M6S ISO 4017 M6X16 A480	
480	312105-0372		3	SCREW M6S ISO 4017 M6X25 A480	
500	312105-0364		4	SCREW M6S ISO 4017 M6X10 A480	
550	312109-0376		2	SCREW M6S ISO 4017 M6X35 A480	
560	312105-0376		3	SCREW M6S ISO 4014 M6X35 A480	
640	312812-0312		6	HEXAGON NUT, NY-LOCK M4 A480	
670	315105-0153		20	WASHER BRB6,4X12RFR	
870	1539983-0000		1	GUIDE	
880	1539984-0000		1	GUIDE	
TBA 0200B (See drawing on page: 3-8)					
170	1144783-0000		1	TIMING BELT	
220	1346736-0000		8	WEDGE	
230	1144918-0000		4	PLATE	
240	1282287-0000		4	CARRIER	
300	1348136-0000		1	SLIDE	
310	1348142-0000		1	SLIDE	
320	1348169-0000		2	PLATE	
330	1348148-0000		1	BAR	
340	1348154-0000		1	BAR	
370	1499427-0000		1	GUIDE	
380	1499426-0000		1	GUIDE	
390	1282290-0000		1	GUIDE	
400	1282291-0000		1	GUIDE	
440	312105-0362		4	SCREW M6S ISO 4017 M6X8 A480	
470	312105-0370		4	SCREW M6S ISO 4017 M6X20 A480	
480	312105-0372		5	SCREW M6S ISO 4017 M6X25 A480	
550	312109-0374		2	SCREW M6S ISO 4017 M6X30 A480	
560	312105-0376		3	SCREW M6S ISO 4014 M6X35 A480	
640	312812-0312		8	HEXAGON NUT, NY-LOCK M4 A480	
670	315105-0153		28	WASHER BRB6,4X12RFR	
870	1517526-0000		1	GUIDE	
880	1517527-0000		1	GUIDE	
890	312605-0316		6	HEXAGON NUT, M6M M6 A280	
900	1499476-0000		1	HOLDER	
910	1499475-0000		1	HOLDER	
920	90424-0068		1	AIR NOZZLE, G1/4, MOD. 216 BSP	
930	342732-0104		1	ELBOW PIPE JOINT, EXT.THREAD, D=8MM-G1/4	
940	342728-0103		1	PIPE COUPLING 8 MM	
950	90166-0013	MM	700	TUBE 8 MM PA BLUE	
TBA 0200S (See drawing on page: 3-8)					
170	1144783-0000		1	TIMING BELT	
220	1346736-0000		8	WEDGE	
230	1144918-0000		4	PLATE	
240	1282287-0000		4	CARRIER	
300	1348134-0000		1	SLIDE	
310	1348140-0000		1	SLIDE	
320	1348169-0000		2	PLATE	
330	1348146-0000		1	BAR	
340	1348152-0000		1	BAR	
370	1499136-0000		1	GUIDE	
380	1499135-0000		1	GUIDE	
390	1282290-0000		1	GUIDE	
400	1282291-0000		1	GUIDE	
440	312105-0362		4	SCREW M6S ISO 4017 M6X8 A480	
470	312105-0370		4	SCREW M6S ISO 4017 M6X20 A480	
480	312105-0372		5	SCREW M6S ISO 4017 M6X25 A480	
550	312109-0374		2	SCREW M6S ISO 4017 M6X30 A480	
560	312105-0376		3	SCREW M6S ISO 4014 M6X35 A480	
640	312812-0312		8	HEXAGON NUT, NY-LOCK M4 A480	
670	315105-0153		28	WASHER BRB6,4X12RFR	
870	1517524-0000		1	GUIDE	
880	1517525-0000		1	GUIDE	
890	312605-0316		6	HEXAGON NUT, M6M M6 A280	
900	1499476-0000		1	HOLDER	
910	1499475-0000		1	HOLDER	
920	90424-0068		1	AIR NOZZLE, G1/4, MOD. 216 BSP	
930	342732-0104		1	ELBOW PIPE JOINT, EXT.THREAD, D=8MM-G1/4	
940	342728-0103		1	PIPE COUPLING 8 MM	
950	90166-0013	MM	700	TUBE 8 MM PA BLUE	

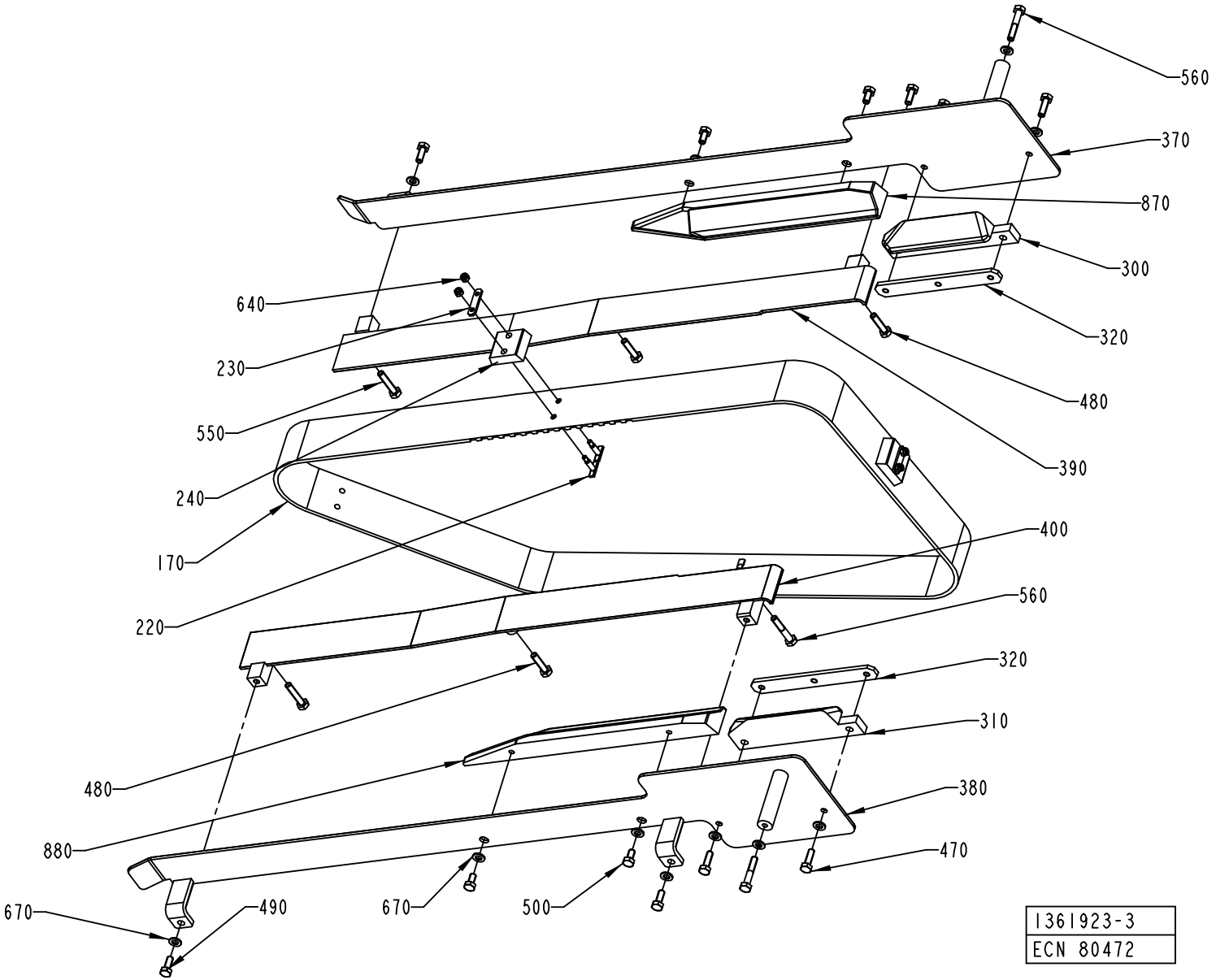
560
370
870
300
320
480
390
400
560
320
310
380
470
640
230
550
240
170
220
480
880
670
490
670
500
1361923-3
ECN 80472

Pos	Part No	UN	Qty	Description	Page No
TBA 0250B (Cont'd) (See drawing on page: 3-8)					
170	1144783-0000		1	TIMING BELT	
220	1346736-0000		8	WEDGE	
230	1144918-0000		4	PLATE	
240	1282287-0000		4	CARRIER	
300	1348135-0000		1	SLIDE	
310	1348141-0000		1	SLIDE	
320	1348169-0000		2	PLATE	
330	1348147-0000		1	BAR	
340	1348153-0000		1	BAR	
370	1499427-0000		1	GUIDE	
380	1499426-0000		1	GUIDE	
390	1282290-0000		1	GUIDE	
400	1282291-0000		1	GUIDE	
440	312105-0362		4	SCREW M6S ISO 4017 M6X8 A480	
470	312105-0370		4	SCREW M6S ISO 4017 M6X20 A480	
480	312105-0372		5	SCREW M6S ISO 4017 M6X25 A480	
550	312109-0374		2	SCREW M6S ISO 4017 M6X30 A480	
560	312105-0376		3	SCREW M6S ISO 4014 M6X35 A480	
640	312812-0312		8	HEXAGON NUT, NY-LOCK M4 A480	
670	315105-0153		28	WASHER BRB6,4X12RFR	
870	1517526-0000		1	GUIDE	
880	1517527-0000		1	GUIDE	
890	312605-0316		6	HEXAGON NUT, M6M M6 A280	
900	1499476-0000		1	HOLDER	
910	1499475-0000		1	HOLDER	
920	90424-0068		1	AIR NOZZLE, G1/4, MOD. 216 BSP	
930	342732-0104		1	ELBOW PIPE JOINT, EXT.THREAD, D=8MM-G1/4	
940	342728-0103		1	PIPE COUPLING 8 MM	
950	90166-0013	MM	700	TUBE 8 MM PA BLUE	
TBA 0250S (See drawing on page: 3-8)					
170	1144783-0000		1	TIMING BELT	
220	1346736-0000		8	WEDGE	
230	1144918-0000		4	PLATE	
240	2551120-0000		4	CARRIER	
300	2529605-0000		1	SLIDE	
310	2529606-0000		1	SLIDE	
320	1279409-0000		2	PLATE	
330	2529608-0000		1	BAR	
340	2529607-0000		1	BAR	
370	2529603-0000		1	GUIDE	
380	2529604-0000		1	GUIDE	
390	1282290-0000		1	GUIDE	
400	1282291-0000		1	GUIDE	
440	312105-0362		4	SCREW M6S ISO 4017 M6X8 A480	
470	312105-0370		4	SCREW M6S ISO 4017 M6X20 A480	
480	312105-0372		5	SCREW M6S ISO 4017 M6X25 A480	
550	312109-0374		2	SCREW M6S ISO 4017 M6X30 A480	
560	312105-0376		3	SCREW M6S ISO 4014 M6X35 A480	
640	312812-0312		8	HEXAGON NUT, NY-LOCK M4 A480	
670	315105-0153		28	WASHER BRB6,4X12RFR	
870	1517524-0000		1	GUIDE	
880	1517525-0000		1	GUIDE	
890	312605-0316		6	HEXAGON NUT, M6M M6 A280	
900	1499476-0000		1	HOLDER	
910	1499475-0000		1	HOLDER	
920	90424-0068		1	AIR NOZZLE, G1/4, MOD. 216 BSP	
930	342732-0104		1	ELBOW PIPE JOINT, EXT.THREAD, D=8MM-G1/4	
940	342728-0103		1	PIPE COUPLING 8 MM	
950	90166-0013	MM	700	TUBE 8 MM PA BLUE	
TBA 0330S (See drawing on page: 3-8)					
170	1144783-0000		1	TIMING BELT	
230	1144918-0000		4	PLATE	
240	1282287-0000		4	CARRIER	
300	2544997-0000		1	SLIDE	
310	2544998-0000		1	SLIDE	
320	1279409-0000		2	PLATE	
330	2545000-0000		1	BAR	
340	2544999-0000		1	BAR	
370	2544996-0000		1	GUIDE	
380	2544995-0000		1	GUIDE	
390	2529610-0000		1	GUIDE	
400	2529609-0000		1	GUIDE	
440	312105-0362		4	SCREW M6S ISO 4017 M6X8 A480	
470	312105-0370		4	SCREW M6S ISO 4017 M6X20 A480	
480	312105-0372		3	SCREW M6S ISO 4017 M6X25 A480	
550	312109-0374		2	SCREW M6S ISO 4017 M6X30 A480	
560	312105-0376		3	SCREW M6S ISO 4014 M6X35 A480	
640	312812-0312		8	HEXAGON NUT, NY-LOCK M4 A480	
670	315105-0153		16	WASHER BRB6,4X12RFR	
890	312605-0316		2	HEXAGON NUT, M6M M6 A280	
TBA 0500B (See drawing on page: 3-8)					
170	1144783-0000		1	TIMING BELT	
220	1346471-0000		8	WEDGE	
230	1144918-0000		4	PLATE	
240	1558700-0000		4	CARRIER	
300	1539874-0000		1	SLIDE	

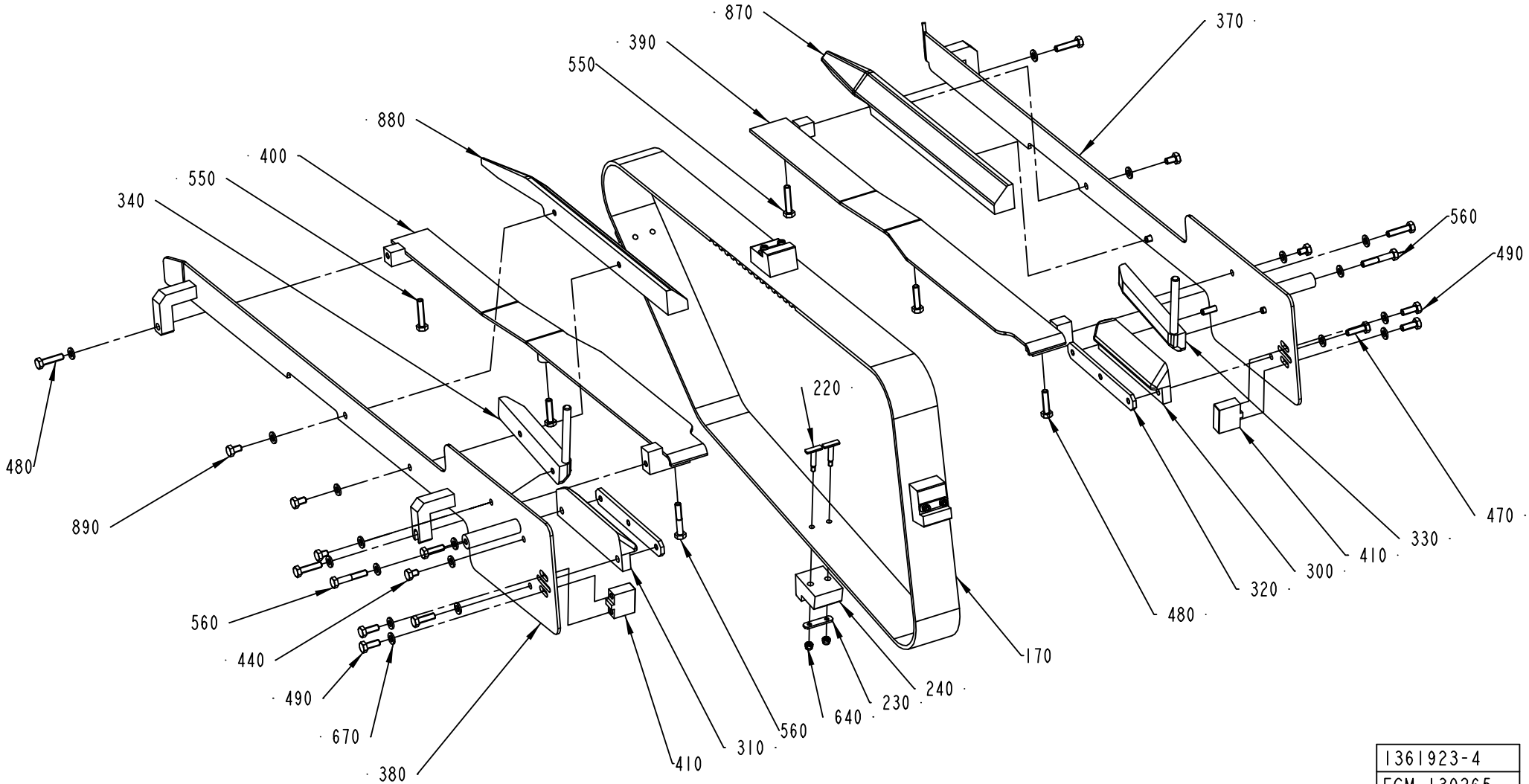

1361923-4
ECM 130265

ECM: 189520 - 20041104
Group number: 1361923-0200
Assembly Drawing: 1361923-4_1_AB

This list covers pages from 3-8 to 3-17

Pos	Part No	UN	Qty	Description	Page No
TBA 0500B (Cont'd) (See drawing on page: 3-8)					
310	1539875-0000		1	SLIDE	
320	1539876-0000		2	PLATE	
330	1539877-0000		1	BAR	
340	1539878-0000		1	BAR	
370	1539879-0000		1	GUIDE	
380	1539880-0000		1	GUIDE	
390	1317651-0000		1	GUIDE	
400	1317650-0000		1	GUIDE	
470	312105-0370		4	SCREW M6S ISO 4017 M6X20 A480	
480	312105-0372		3	SCREW M6S ISO 4017 M6X25 A480	
550	312109-0374		2	SCREW M6S ISO 4017 M6X30 A480	
560	312105-0376		3	SCREW M6S ISO 4014 M6X35 A480	
640	312812-0312		8	HEXAGON NUT, NY-LOCK M4 A480	
670	315105-0153		20	WASHER BRB6,4X12RFR	
TBA 0500S (See drawing on page: 3-8)					
170	1144783-0000		1	TIMING BELT	
220	1346736-0000		8	WEDGE	
230	1144918-0000		4	PLATE	
240	1282287-0000		4	CARRIER	
300	1499418-0000		1	SLIDE	
310	1499422-0000		1	SLIDE	
320	1144621-0000		2	PLATE	
330	1499417-0000		1	BAR	
340	1499423-0000		1	BAR	
370	1499401-0000		1	GUIDE	
380	1499400-0000		1	GUIDE	
390	1317651-0000		1	GUIDE	
400	1317650-0000		1	GUIDE	
440	312105-0362		4	SCREW M6S ISO 4017 M6X8 A480	
470	312105-0370		4	SCREW M6S ISO 4017 M6X20 A480	
480	312105-0372		3	SCREW M6S ISO 4017 M6X25 A480	
550	312109-0374		2	SCREW M6S ISO 4017 M6X30 A480	
560	312105-0376		3	SCREW M6S ISO 4014 M6X35 A480	
640	312812-0312		8	HEXAGON NUT, NY-LOCK M4 A480	
670	315105-0153		20	WASHER BRB6,4X12RFR	
TBA 1000B (See drawing on page: 3-8)					
170	1144783-0000		1	TIMING BELT	
220	1346471-0000		8	WEDGE	
230	1144918-0000		4	PLATE	
240	1144919-0000		4	CARRIER	
300	1348133-0000		1	SLIDE	
310	1348139-0000		1	SLIDE	
320	1279409-0000		2	PLATE	
330	1348144-0000		1	BAR	
340	1348150-0000		1	BAR	
370	1519089-0000		1	GUIDE	
380	1519090-0000		1	GUIDE	
390	1282290-0000		1	GUIDE	
400	1282291-0000		1	GUIDE	
440	312105-0362		4	SCREW M6S ISO 4017 M6X8 A480	
470	312105-0370		4	SCREW M6S ISO 4017 M6X20 A480	
480	312105-0372		3	SCREW M6S ISO 4017 M6X25 A480	
550	312109-0374		2	SCREW M6S ISO 4017 M6X30 A480	
560	312105-0376		3	SCREW M6S ISO 4014 M6X35 A480	
640	312812-0312		8	HEXAGON NUT, NY-LOCK M4 A480	
670	315105-0153		20	WASHER BRB6,4X12RFR	
TBA 1000S (See drawing on page: 3-8)					
170	1144783-0000		1	TIMING BELT	
220	1346471-0000		8	WEDGE	
230	1144918-0000		4	PLATE	
240	1144919-0000		4	CARRIER	
300	1348132-0000		1	SLIDE	
310	1348138-0000		1	SLIDE	
320	1279409-0000		2	PLATE	
330	1348145-0000		1	BAR	
340	1348151-0000		1	BAR	
370	1517242-0000		1	GUIDE	
380	1517243-0000		1	GUIDE	
390	1317651-0000		1	GUIDE	
400	1317650-0000		1	GUIDE	
440	312105-0362		4	SCREW M6S ISO 4017 M6X8 A480	
470	312105-0370		4	SCREW M6S ISO 4017 M6X20 A480	
480	312105-0372		3	SCREW M6S ISO 4017 M6X25 A480	
550	312109-0374		2	SCREW M6S ISO 4017 M6X30 A480	
560	312105-0376		3	SCREW M6S ISO 4014 M6X35 A480	
640	312812-0312		8	HEXAGON NUT, NY-LOCK M4 A480	
670	315105-0153		20	WASHER BRB6,4X12RFR	
TBA 1000SQ (See drawing on page: 3-8)					
170	1144783-0000		1	TIMING BELT	
220	1346471-0000		8	WEDGE	
230	1144918-0000		4	PLATE	
240	1282848-0000		4	CARRIER	
300	1490033-0000		1	SLIDE	

See previous drawings pages: 3-8, 3-10, 3-12.

ECM: 189520 - 20041104
Group number: 1361923-0200
Assembly Drawing: 1361923-4_1_AB

This list covers pages from 3-8 to 3-17

Pos	Part No	UN	Qty	Description	Page No
TBA 1000SQ (Cont'd) (See drawing on page: 3-8)					
310	1490034-0000		1	SLIDE	
320	1144621-0000		2	PLATE	
330	1490035-0000		1	BAR	
340	1490036-0000		1	BAR	
370	1512308-0000		1	GUIDE	
380	1512307-0000		1	GUIDE	
390	1317651-0000		1	GUIDE	
400	1317650-0000		1	GUIDE	
440	312105-0362		4	SCREW M6S ISO 4017 M6X8 A480	
470	312105-0370		4	SCREW M6S ISO 4017 M6X20 A480	
480	312105-0372		3	SCREW M6S ISO 4017 M6X25 A480	
550	312109-0374		2	SCREW M6S ISO 4017 M6X30 A480	
560	312105-0376		3	SCREW M6S ISO 4014 M6X35 A480	
640	312812-0312		8	HEXAGON NUT, NY-LOCK M4 A480	
670	315105-0153		20	WASHER BRB6,4X12RFR	
TBA 1500S (See drawing on page: 3-8)					
170	1349152-0000		1	TIMING BELT	
220	1346471-0000		6	WEDGE	
230	1144918-0000		3	PLATE	
240	1282848-0000		3	CARRIER	
300	1334561-0000		1	SLIDE	
310	1334562-0000		1	SLIDE	
320	1144621-0000		2	PLATE	
330	1317805-0000		1	BAR	
340	1334271-0000		1	BAR	
370	1519093-0000		1	GUIDE	
380	1519094-0000		1	GUIDE	
390	1478215-0000		1	SLIDE	
400	1478214-0000		1	SLIDE	
440	312105-0362		4	SCREW M6S ISO 4017 M6X8 A480	
470	312105-0370		4	SCREW M6S ISO 4017 M6X20 A480	
480	312105-0372		3	SCREW M6S ISO 4017 M6X25 A480	
550	312109-0374		2	SCREW M6S ISO 4017 M6X30 A480	
560	312105-0376		3	SCREW M6S ISO 4014 M6X35 A480	
640	312812-0312		6	HEXAGON NUT, NY-LOCK M4 A480	
670	315105-0153		20	WASHER BRB6,4X12RFR	
TPA 0330SQ (See drawing on page: 3-10)					
170	1144783-0000		1	TIMING BELT	
220	1346736-0000		8	WEDGE	
230	1144918-0000		4	PLATE	
240	1558864-0000		4	CARRIER	
300	1532257-0000		1	SLIDE	
310	1532258-0000		1	SLIDE	
320	1144621-0000		2	PLATE	
370	1532261-0000		1	GUIDE	
380	1532262-0000		1	GUIDE	
390	1317651-0000		1	GUIDE	
400	1317650-0000		1	GUIDE	
470	312105-0370		4	SCREW M6S ISO 4017 M6X20 A480	
480	312105-0372		3	SCREW M6S ISO 4017 M6X25 A480	
500	312105-0366		4	SCREW M6S ISO 4017 M6X12 A480	
550	312109-0374		2	SCREW M6S ISO 4017 M6X30 A480	
560	312105-0376		3	SCREW M6S ISO 4014 M6X35 A480	
640	312812-0312		8	HEXAGON NUT, NY-LOCK M4 A480	
670	315105-0153		20	WASHER BRB6,4X12RFR	
870	1532263-0000		1	GUIDE	
880	1532264-0000		1	GUIDE	
TPA 0500SQ (See drawing on page: 3-12)					
170	1144783-0000		1	TIMING BELT	
220	1346471-0000		8	WEDGE	
230	1144918-0000		4	PLATE	
240	1532256-0000		4	CARRIER	
300	1549513-0000		1	SLIDE	
310	1549514-0000		1	SLIDE	
320	1144621-0000		2	PLATE	
330	1549515-0000		1	BAR	
340	1549516-0000		1	BAR	
370	1549517-0000		1	GUIDE	
380	1549518-0000		1	GUIDE	
390	1549523-0000		1	GUIDE	
400	1549522-0000		1	GUIDE	
410	2545545-0000		2	INSERT	
440	312105-0362		4	SCREW M6S ISO 4017 M6X8 A480	
470	312105-0370		4	SCREW M6S ISO 4017 M6X20 A480	
480	312105-0372		7	SCREW M6S ISO 4017 M6X25 A480	
550	312109-0374		2	SCREW M6S ISO 4017 M6X30 A480	
560	312105-0376		3	SCREW M6S ISO 4014 M6X35 A480	
640	312812-0312		8	HEXAGON NUT, NY-LOCK M4 A480	
670	315105-0153		28	WASHER BRB6,4X12RFR	
870	1539983-0000		1	GUIDE	
880	1539984-0000		1	GUIDE	
890	312105-0364		4	SCREW M6S ISO 4017 M6X10 A480	
Common Parts					

Machine Type	Group Description	Used-In	Group Number	Page No

See previous drawings pages: 3-8, 3-10, 3-12.

Pos	Part No	UN	Qty	Description	Page No	Pos	Part No	UN	Qty	Description	Page No
Common Parts (Cont'd)											
490	312105-0368		4	SCREW M6S ISO 4017 M6X16 A480							

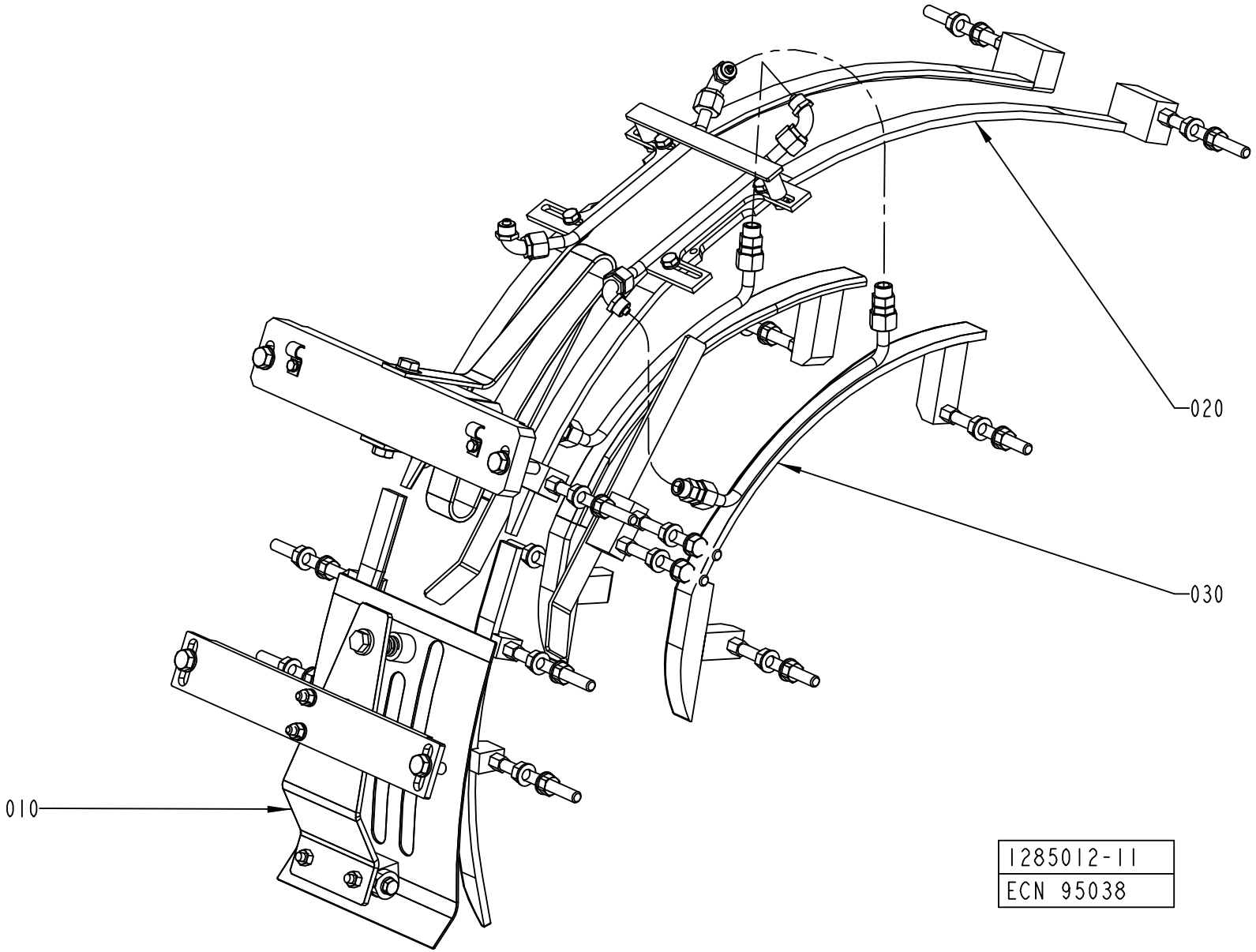
020
030
010
1285012-11
ECN 95038

ECM: 110175 - 20030403
Group number: 1285012-0300
Assembly Drawing: 1285012-11_1_AA

Pos	Part No	UN	Qty	Description	Page No
-					
010	1558932-0100		1	TOP SECTION	**3-21, 3-23, 3-25**
020	1558935-0100		1	TOP RAIL	**3-27, 3-29, 3-31, 3-33, 3-35**
030	1558940-0200		1	FLAP GUIDE	**3-37, 3-39, 3-41, 3-43, 3-45, 3-47**

Pos	Part No	UN	Qty	Description	Page No

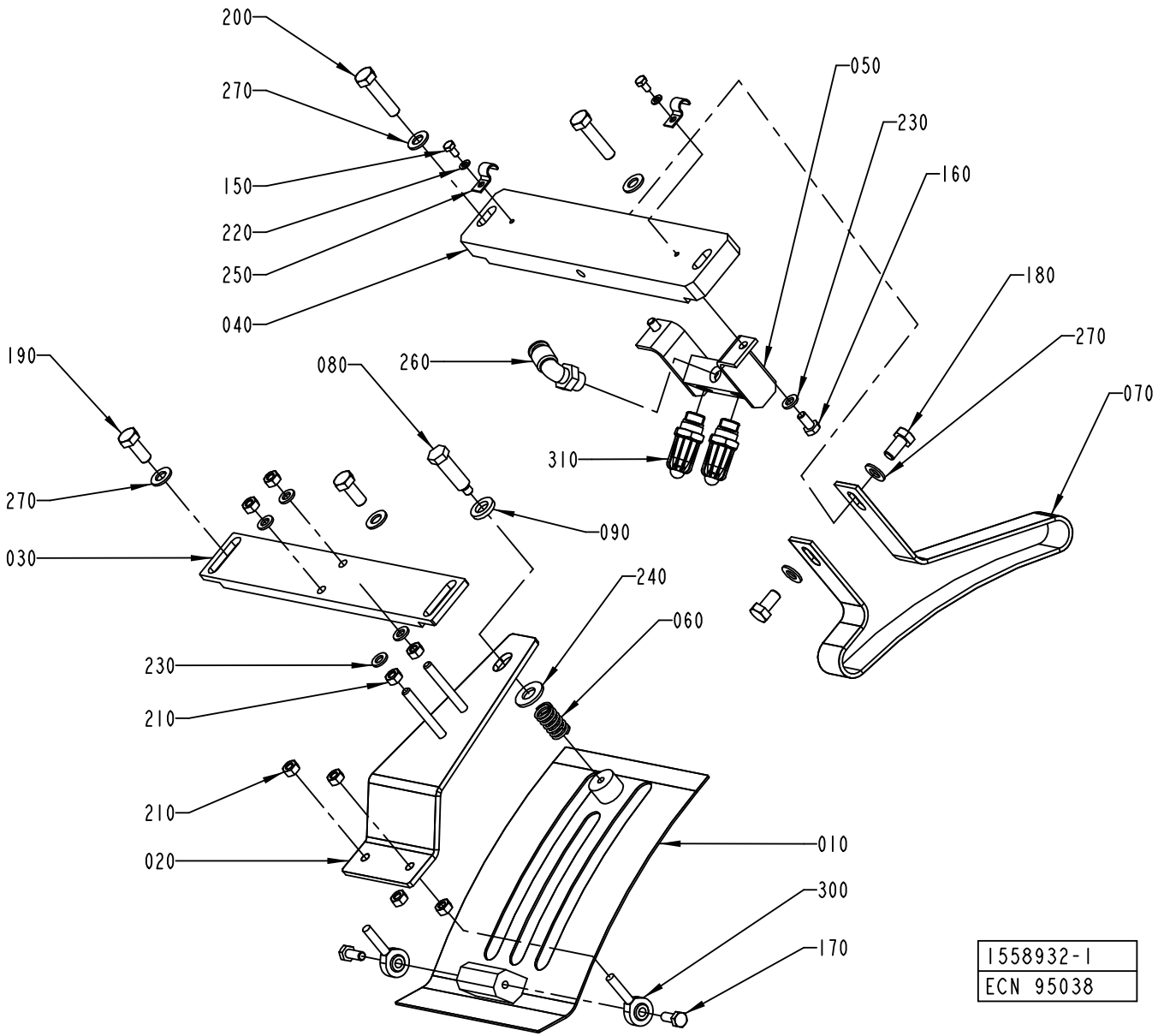
200
270
150
220
250
040
050
230
160
180
270
070
190
080
260
310
270
030
090
240
060
230
210
210
020
010
300
170
1558932-1
ECN 95038

ECM: 189493 - 20041104
Group number: 1558932-0100
Assembly Drawing: 1558932-1_1_AA

This list covers pages from 3-20 to 3-25

Pos	Part No	UN	Qty	Description	Page No
TBA 0200B, TBA 0250B (See drawing on page: 3-20)					
010	1317211-0000		1	COVERING PLATE	
020	1317213-0000		1	ADJUSTING PLATE	
030	1144975-0000		1	ATTACHMENT PLATE	
040	1144902-0000		1	SUPPORT	
060	1317633-0000		1	SPRING	
150	312105-0287		2	SCREW M6S ISO4017 M4X8 A470	
190	312105-0451		2	SCREW M6S ISO 4017 M8X20 A480	
220	315105-0136		2	WASHER BRB4,3XRFR	
230	315105-0153		4	WASHER BRB6,4X12RFR	
250	90165-0057		2	PIPE CLIP FOR TUBE D=6 MM	
270	315105-0165		4	WASHER BRB8,4X16RFR	
TBA 0200S (See drawing on page: 3-20)					
010	1317211-0000		1	COVERING PLATE	
020	1317213-0000		1	ADJUSTING PLATE	
030	1144975-0000		1	ATTACHMENT PLATE	
040	1144902-0000		1	SUPPORT	
060	1317633-0000		1	SPRING	
070	1144901-0000		1	GUIDE	
150	312105-0287		2	SCREW M6S ISO4017 M4X8 A470	
180	312105-0449		2	SCREW M6S ISO 4017 M8X16 A480	
190	312105-0451		2	SCREW M6S ISO 4017 M8X20 A480	
220	315105-0136		2	WASHER BRB4,3XRFR	
230	315105-0153		4	WASHER BRB6,4X12RFR	
250	90165-0057		2	PIPE CLIP FOR TUBE D=6 MM	
270	315105-0165		6	WASHER BRB8,4X16RFR	
TBA 0250S (See drawing on page: 3-24)					
010	1317211-0000		1	COVERING PLATE	
020	1317213-0000		1	ADJUSTING PLATE	
030	1144975-0000		1	ATTACHMENT PLATE	
040	1144902-0000		1	SUPPORT	
060	90335-0036		1	COMP. SPRING 22450, 1,6X14,1X24	
070	2555637-0000		1	GUIDE	
150	312105-0287		2	SCREW M6S ISO4017 M4X8 A470	
180	312105-0451		1	SCREW M6S ISO 4017 M8X20 A480	
190	312105-0451		2	SCREW M6S ISO 4017 M8X20 A480	
220	315105-0136		2	WASHER BRB4,3XRFR	
230	315105-0153		4	WASHER BRB6,4X12RFR	
250	90165-0057		2	PIPE CLIP FOR TUBE D=6 MM	
270	315105-0165		6	WASHER BRB8,4X16RFR	
TBA 0330S (See drawing on page: 3-24)					
010	1317211-0000		1	COVERING PLATE	
020	1317213-0000		1	ADJUSTING PLATE	
030	1144975-0000		1	ATTACHMENT PLATE	
040	1144902-0000		1	SUPPORT	
050	1349087-0000		1	DISTRIBUTOR	
060	90335-0036		1	COMP. SPRING 22450, 1,6X14,1X24	
070	2552022-0000		1	GUIDE	
150	312105-0287		2	SCREW M6S ISO4017 M4X8 A470	
160	312105-0366		2	SCREW M6S ISO 4017 M6X12 A480	
180	312105-0451		1	SCREW M6S ISO 4017 M8X20 A480	
190	312105-0451		2	SCREW M6S ISO 4017 M8X20 A480	
220	315105-0136		2	WASHER BRB4,3XRFR	
230	315105-0153		6	WASHER BRB6,4X12RFR	
250	90165-0057		2	PIPE CLIP FOR TUBE D=6 MM	
260	342732-0104		1	ELBOW PIPE JOINT, EXT.THREAD, D=8MM-G1/4	
270	315105-0165		6	WASHER BRB8,4X16RFR	
310	90424-0068		1	AIR NOZZLE, G1/4, MOD. 216 BSP	
320	2553284-0000		1	BLOCK	
TBA 0500S, TBA 0500B, TBA 1000S, TBA 1000B (See drawing on page: 3-20)					
010	1144941-0000		1	COVERING PLATE	
020	1144974-0000		1	ADJUSTING PLATE	
030	1144975-0000		1	ATTACHMENT PLATE	
040	1144902-0000		1	SUPPORT	
050	1285014-0000		1	DISTRIBUTOR	
060	90335-0036		1	COMP. SPRING 22450, 1,6X14,1X24	
070	1144901-0000		1	GUIDE	
150	312105-0287		2	SCREW M6S ISO4017 M4X8 A470	
160	312105-0366		2	SCREW M6S ISO 4017 M6X12 A480	
180	312105-0449		2	SCREW M6S ISO 4017 M8X16 A480	
190	312105-0451		2	SCREW M6S ISO 4017 M8X20 A480	
220	315105-0136		2	WASHER BRB4,3XRFR	
230	315105-0153		6	WASHER BRB6,4X12RFR	
250	90165-0057		2	PIPE CLIP FOR TUBE D=6 MM	
260	342732-0104		1	ELBOW PIPE JOINT, EXT.THREAD, D=8MM-G1/4	
270	315105-0165		6	WASHER BRB8,4X16RFR	
310	90424-0068		2	AIR NOZZLE, G1/4, MOD. 216 BSP	
TBA 1000SQ (See drawing on page: 3-20)					
010	1144941-0000		1	COVERING PLATE	
020	1144974-0000		1	ADJUSTING PLATE	
030	1144975-0000		1	ATTACHMENT PLATE	
040	1144902-0000		1	SUPPORT	
050	1349087-0000		1	DISTRIBUTOR	
060	90335-0036		1	COMP. SPRING 22450, 1,6X14,1X24	

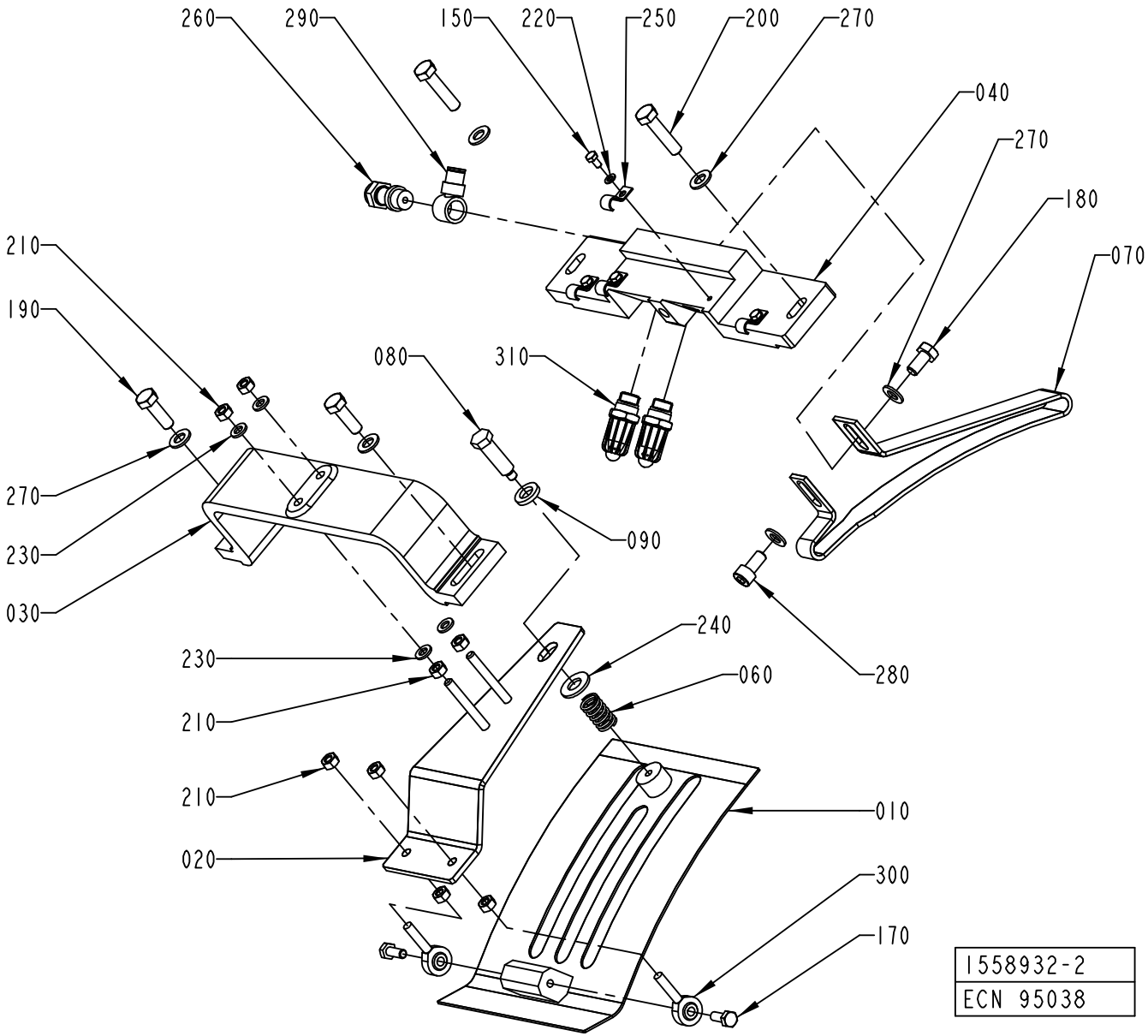
260
290
150
220
250
200
270
040
270
180
070
210
190
080
310
270
230
030
090
240
230
060
280
210
210
010
020
300
170
1558932-2
ECN 95038

Pos	Part No	UN	Qty	Description	Page No
TBA 1000SQ (Cont'd) (See drawing on page: 3-20)					
150	312105-0287		2	SCREW M6S ISO4017 M4X8 A470	
160	312105-0366		2	SCREW M6S ISO 4017 M6X12 A480	
190	312105-0451		2	SCREW M6S ISO 4017 M8X20 A480	
220	315105-0136		2	WASHER BRB4,3XRFR	
230	315105-0153		6	WASHER BRB6,4X12RFR	
250	90165-0057		2	PIPE CLIP FOR TUBE D=6 MM	
260	342732-0104		1	ELBOW PIPE JOINT, EXT.THREAD, D=8MM-G1/4	
270	315105-0165		4	WASHER BRB8,4X16RFR	
310	90424-0068		1	AIR NOZZLE, G1/4, MOD. 216 BSP	
TPA 0330SQ (See drawing on page: 3-20)					
010	1317211-0000		1	COVERING PLATE	
020	1317213-0000		1	ADJUSTING PLATE	
030	1144975-0000		1	ATTACHMENT PLATE	
040	1144902-0000		1	SUPPORT	
050	1349087-0000		1	DISTRIBUTOR	
060	90335-0036		1	COMP. SPRING 22450, 1,6X14,1X24	
070	1558934-0000		1	GUIDE	
150	312105-0287		2	SCREW M6S ISO4017 M4X8 A470	
160	312105-0366		2	SCREW M6S ISO 4017 M6X12 A480	
180	312105-0449		1	SCREW M6S ISO 4017 M8X16 A480	
190	312105-0451		2	SCREW M6S ISO 4017 M8X20 A480	
220	315105-0136		2	WASHER BRB4,3XRFR	
230	315105-0153		6	WASHER BRB6,4X12RFR	
250	90165-0057		2	PIPE CLIP FOR TUBE D=6 MM	
260	342732-0104		1	ELBOW PIPE JOINT, EXT.THREAD, D=8MM-G1/4	
270	315105-0165		5	WASHER BRB8,4X16RFR	
310	90424-0068		1	AIR NOZZLE, G1/4, MOD. 216 BSP	
TPA 0500SQ (See drawing on page: 3-24)					
010	1548612-0000		1	COVERING PLATE	
020	1144974-0000		1	ADJUSTING PLATE	
030	1144975-0000		1	ATTACHMENT PLATE	
040	1144902-0000		1	SUPPORT	
050	1349087-0000		1	DISTRIBUTOR	
060	90335-0036		1	COMP. SPRING 22450, 1,6X14,1X24	
070	2552022-0000		1	GUIDE	
150	312105-0287		2	SCREW M6S ISO4017 M4X8 A470	
160	312105-0366		2	SCREW M6S ISO 4017 M6X12 A480	
180	312105-0451		1	SCREW M6S ISO 4017 M8X20 A480	
190	312105-0451		2	SCREW M6S ISO 4017 M8X20 A480	
220	315105-0136		2	WASHER BRB4,3XRFR	
230	315105-0153		6	WASHER BRB6,4X12RFR	
250	90165-0057		2	PIPE CLIP FOR TUBE D=6 MM	
260	342732-0104		1	ELBOW PIPE JOINT, EXT.THREAD, D=8MM-G1/4	
270	315105-0165		6	WASHER BRB8,4X16RFR	
310	90424-0068		1	AIR NOZZLE, G1/4, MOD. 216 BSP	
320	2553284-0000		1	BLOCK	
TPA 1000SQ (See drawing on page: 3-22)					
010	1548612-0000		1	COVERING PLATE	
020	1144974-0000		1	ADJUSTING PLATE	
030	1285299-0000		1	BRACKET	
040	1334480-0000		1	SUPPORT	
060	90335-0036		1	COMP. SPRING 22450, 1,6X14,1X24	
070	1519352-0000		1	GUIDE	
150	312105-0287		4	SCREW M6S ISO4017 M4X8 A470	
180	312105-0449		1	SCREW M6S ISO 4017 M8X16 A480	
190	312105-0453		2	SCREW M6S ISO 4017 M8X25 A480	
220	315105-0136		4	WASHER BRB4,3XRFR	
230	315105-0153		4	WASHER BRB6,4X12RFR	
250	90165-0057		4	PIPE CLIP FOR TUBE D=6 MM	
260	90235-0731		1	THROTTLE CHECK VALVE, G1/4", SCO-606-1/4	
270	315105-0165		6	WASHER BRB8,4X16RFR	
280	312115-0449		1	SCREW ISO4762 M8X16 A4	
290	342981-0122		1	BANJO CONNEC,RING,FOR PLAST.TUBE 8-G1/4"	
310	90424-0068		2	AIR NOZZLE, G1/4, MOD. 216 BSP	
TBA 1500S (See drawing on page: 3-22)					
010	1144941-0000		1	COVERING PLATE	
020	1144974-0000		1	ADJUSTING PLATE	
030	1285299-0000		1	BRACKET	
040	1334480-0000		1	SUPPORT	
060	90335-0036		1	COMP. SPRING 22450, 1,6X14,1X24	
070	1347057-0000		1	GUIDE	
150	312105-0287		4	SCREW M6S ISO4017 M4X8 A470	
180	312105-0449		1	SCREW M6S ISO 4017 M8X16 A480	
190	312105-0453		2	SCREW M6S ISO 4017 M8X25 A480	
220	315105-0136		4	WASHER BRB4,3XRFR	
230	315105-0153		4	WASHER BRB6,4X12RFR	
250	90165-0057		4	PIPE CLIP FOR TUBE D=6 MM	
260	90235-0731		1	THROTTLE CHECK VALVE, G1/4", SCO-606-1/4	
270	315105-0165		6	WASHER BRB8,4X16RFR	
280	312115-0449		1	SCREW ISO4762 M8X16 A4	
290	342981-0122		1	BANJO CONNEC,RING,FOR PLAST.TUBE 8-G1/4"	
310	90424-0068		2	AIR NOZZLE, G1/4, MOD. 216 BSP	
Common Parts					

Machine Type | Group Description | Used-In | Group Number | Page No

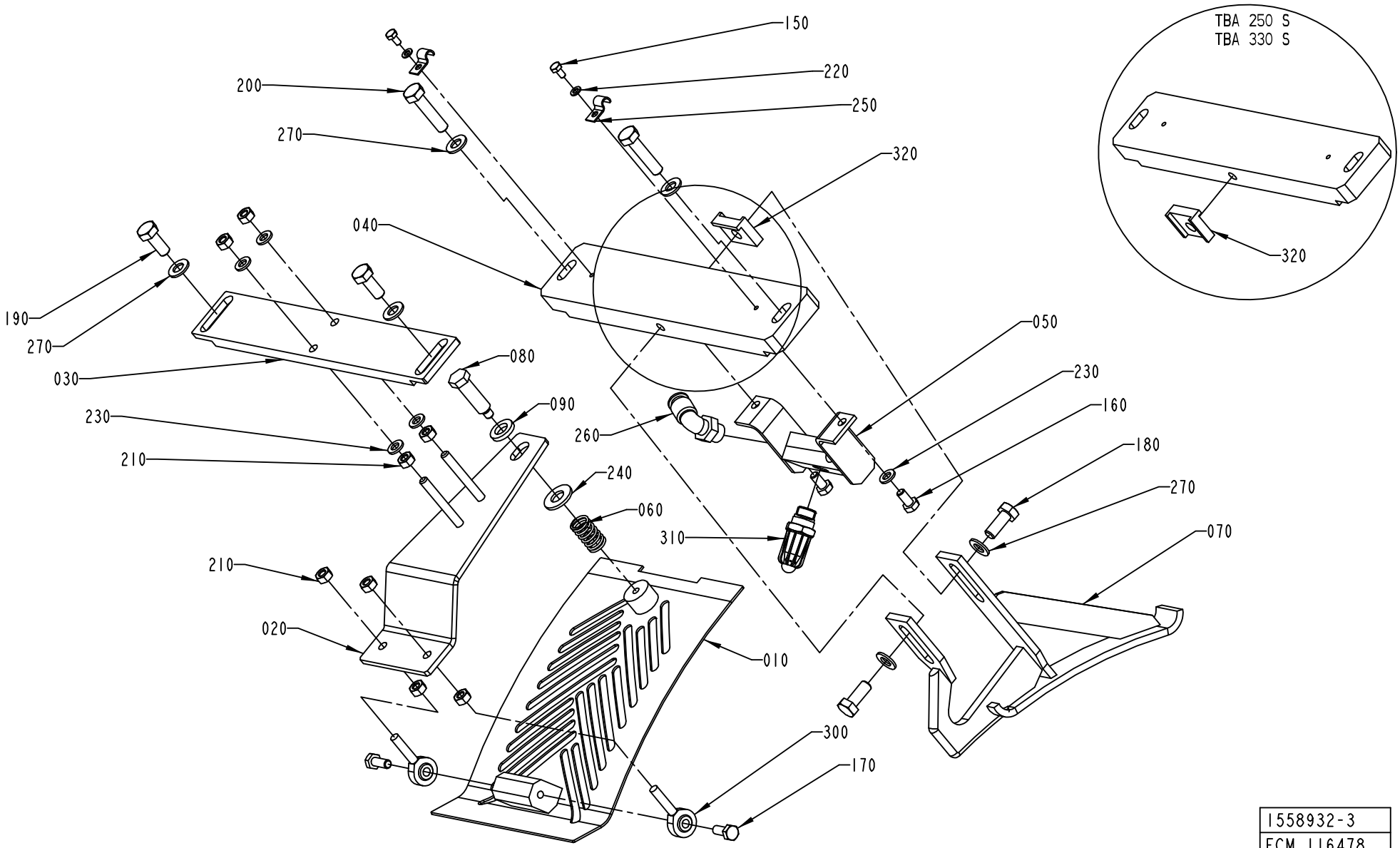

1558932-3
ECM 116478

Pos	Part No	UN	Qty	Description	Page No
Common Parts (Cont'd)					
080	1144976-0000		1	STOP SCREW	
090	1144979-0000		1	WASHER	
170	312105-0368		2	SCREW M6S ISO 4017 M6X16 A480	
200	312105-0457		2	SCREW M6S ISO 4014 M8X35 A480	
210	312605-0316		8	HEXAGON NUT, M6M M6 A280	
240	315105-0173		1	WASHER BRB10,5X22RFR	
300	90115-0137		2	ROD END, ID=6 MM, M6X1	

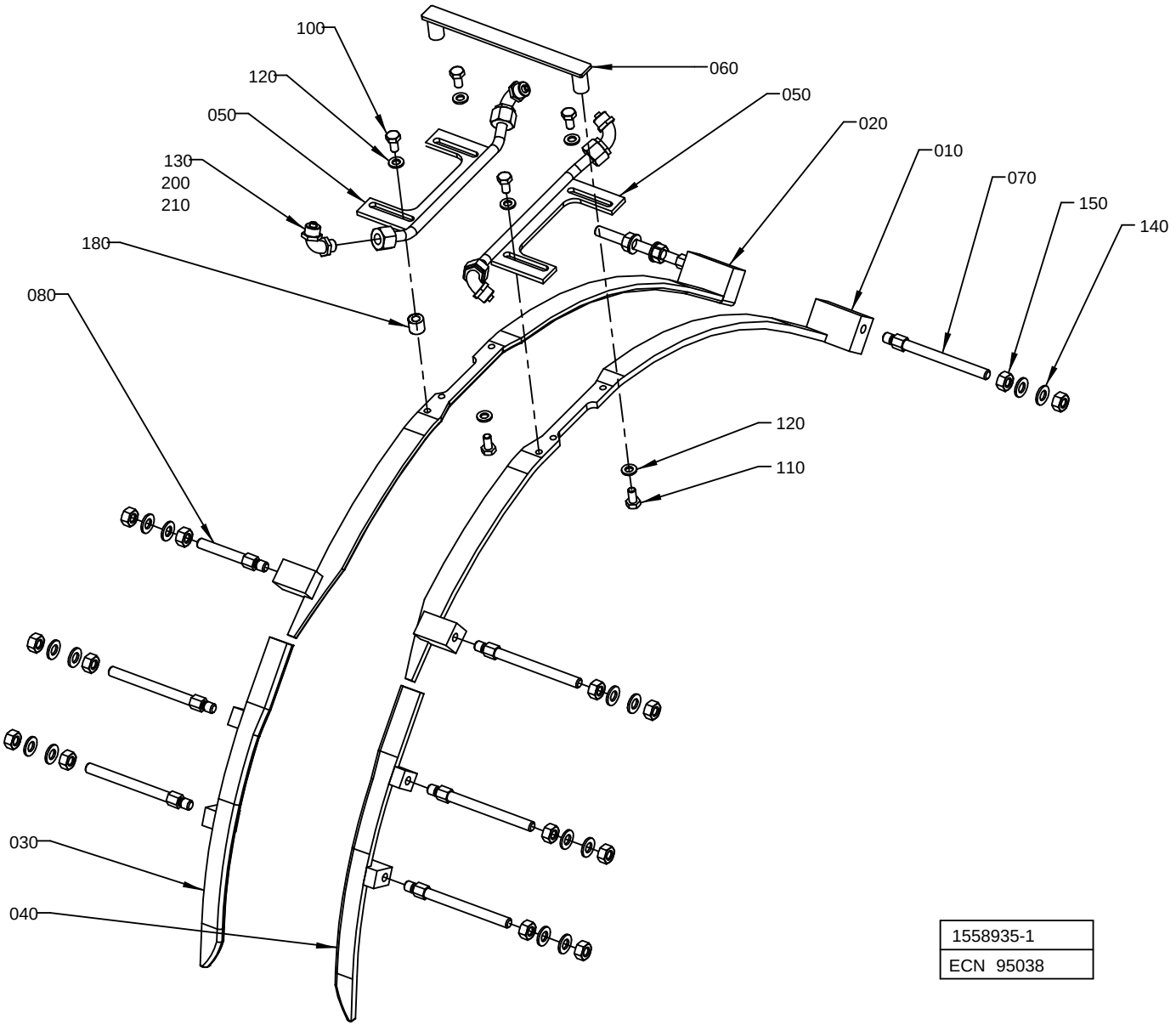
100
120
050
130
200
210
180
080
060
050
020
010
070
150
140
120
110
030
040
1558935-1
ECN 95038

ECM: 189494 - 20041104
Group number: 1558935-0100
Assembly Drawing: 1558935-1_1_AA

This list covers pages from 3-26 to 3-35

Pos	Part No	UN	Qty	Description	Page No
TPA 1000SQ (See drawing on page: 3-28)					
010	1350424-0000		1	GUIDE RIGHT	
020	1350425-0000		1	GUIDE LEFT	
030	1519358-0000		1	GUIDE	
040	1519359-0000		1	GUIDE	
060	1346340-0000		1	BRACKET	
090	1523926-0000		8	SPACER	
100	312105-0368		4	SCREW M6S ISO 4017 M6X16 A480	
140	315105-0165		8	WASHER BRB8,4X16RFR	
160	2541125-0000		8	SCREW	
180	1282705-0000		4	SUPPORT	
TBA 0200B, TBA 0200S, TBA 0250B (See drawing on page: 3-26)					
010	1478926-0000		1	GUIDE RIGHT	
020	1478927-0000		1	GUIDE LEFT	
030	1334013-0000		1	GUIDE UPPER R	
040	1334012-0000		1	GUIDE UPPER L	
060	1346340-0000		1	BRACKET	
070	1144555-0000		7	STUD SCREW	
080	1334523-0000		1	SUPPORT	
100	312105-0366		4	SCREW M6S ISO 4017 M6X12 A480	
140	315105-0165		16	WASHER BRB8,4X16RFR	
150	312605-0318		16	HEXAGON NUT, M6M M8 A280	
TBA 0250S (See drawing on page: 3-26)					
010	1478926-0000		1	GUIDE RIGHT	
020	1478927-0000		1	GUIDE LEFT	
030	1539900-0000		1	RIGHT UPPER GUIDE	
040	1549614-0000		1	LEFT UPPER GUIDE	
060	1346340-0000		1	BRACKET	
070	1144555-0000		7	STUD SCREW	
080	1334523-0000		1	SUPPORT	
100	312105-0366		4	SCREW M6S ISO 4017 M6X12 A480	
140	315105-0165		16	WASHER BRB8,4X16RFR	
150	312605-0318		16	HEXAGON NUT, M6M M8 A280	
TBA 0330S (See drawing on page: 3-26)					
010	1144892-0000		1	GUIDE RIGHT	
020	1144893-0000		1	GUIDE LEFT	
030	1539900-0000		1	RIGHT UPPER GUIDE	
040	1549614-0000		1	LEFT UPPER GUIDE	
060	1346340-0000		1	BRACKET	
070	1144555-0000		8	STUD SCREW	
100	312105-0366		4	SCREW M6S ISO 4017 M6X12 A480	
140	315105-0165		16	WASHER BRB8,4X16RFR	
150	312605-0318		16	HEXAGON NUT, M6M M8 A280	
TBA 0500B (See drawing on page: 3-30)					
010	1144892-0000		1	GUIDE RIGHT	
020	1144893-0000		1	GUIDE LEFT	
030	1539900-0000		1	RIGHT UPPER GUIDE	
040	1549614-0000		1	LEFT UPPER GUIDE	
060	1144905-0000		1	SUPPORT	
090	1539871-0000		4	SPACER	
095	1334447-0000		4	SPACER	
140	315105-0165		8	WASHER BRB8,4X16RFR	
160	312105-0465		8	SCREW M6S ISO 4014 M8X70 A480	
TBA 0500S (See drawing on page: 3-30)					
010	1144892-0000		1	GUIDE RIGHT	
020	1144893-0000		1	GUIDE LEFT	
030	1260709-0000		1	GUIDE UPPER R	
040	1260710-0000		1	GUIDE UPPER L	
060	1144905-0000		1	SUPPORT	
090	1499071-0000		4	SPACER	
095	1523498-0000		4	SPACER	
100	312105-0366		4	SCREW M6S ISO 4017 M6X12 A480	
140	315105-0165		8	WASHER BRB8,4X16RFR	
160	312105-0466		8	SCREW M6S ISO 4014 M8X75 A480	
TBA 1000B (See drawing on page: 3-28)					
010	1144892-0000		1	GUIDE RIGHT	
020	1144893-0000		1	GUIDE LEFT	
030	1260709-0000		1	GUIDE UPPER R	
040	1260710-0000		1	GUIDE UPPER L	
060	1144905-0000		1	SUPPORT	
090	2603663-0000		8	SPACER	
100	312105-0366		4	SCREW M6S ISO 4017 M6X12 A480	
140	315105-0165		8	WASHER BRB8,4X16RFR	
160	312105-0465		8	SCREW M6S ISO 4014 M8X70 A480	
TBA 1000S (See drawing on page: 3-26)					
010	1144892-0000		1	GUIDE RIGHT	
020	1144893-0000		1	GUIDE LEFT	
030	1260709-0000		1	GUIDE UPPER R	
040	1260710-0000		1	GUIDE UPPER L	
060	1144905-0000		1	SUPPORT	
070	1144555-0000		7	STUD SCREW	
080	1350721-0000		1	STUD SCREW	
100	312105-0366		4	SCREW M6S ISO 4017 M6X12 A480	
140	315105-0165		16	WASHER BRB8,4X16RFR	

Machine Type | Group Description | Used-In | Group Number | Page No

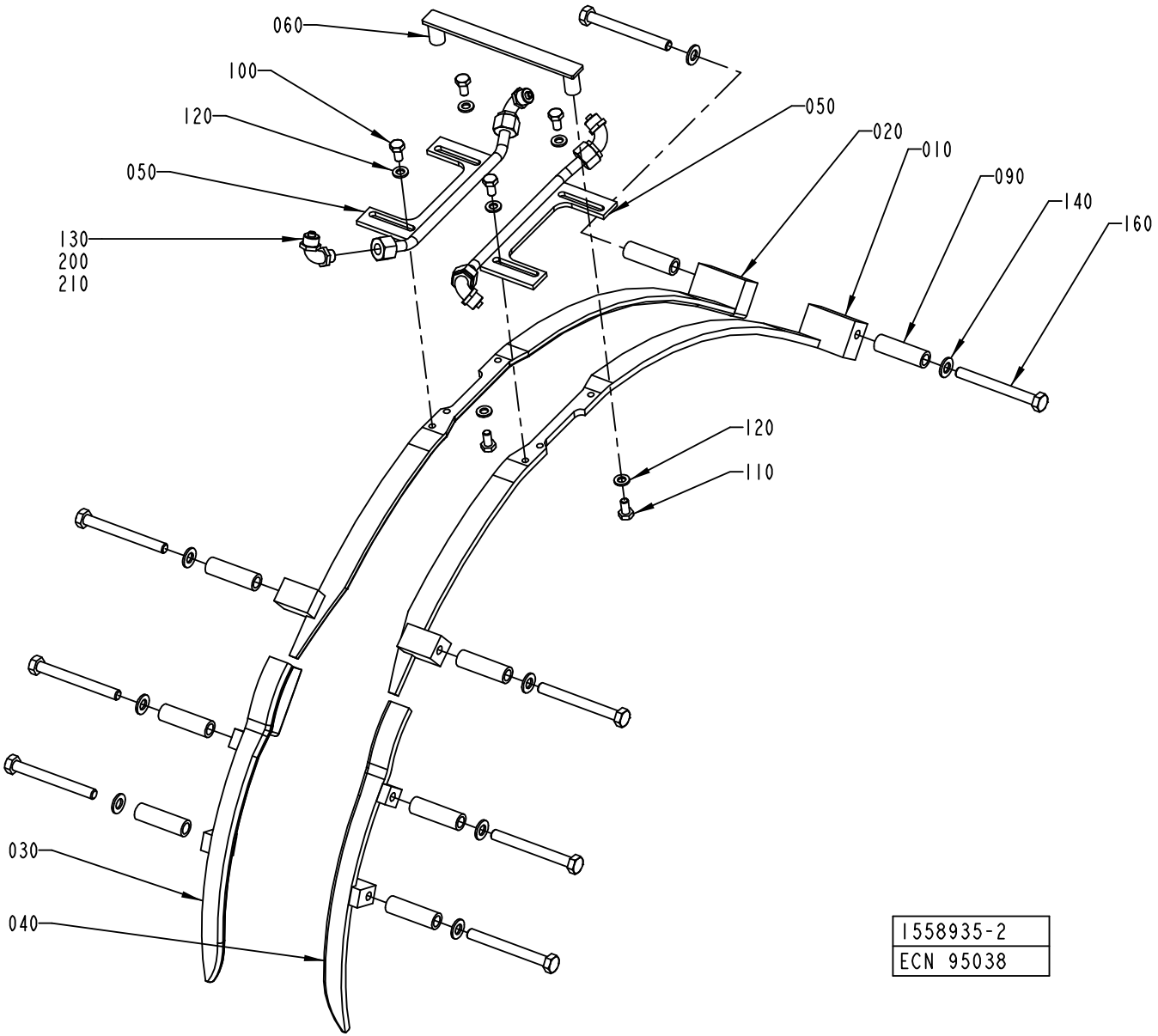
060
100
120
050
130
200
210
050
020
010
090
140
160
120
110
030
040
1558935-2
ECN 95038

Pos	Part No	UN	Qty	Description	Page No
TBA 1000S (Cont'd) (See drawing on page: 3-26)					
150	312605-0318		16	HEXAGON NUT, M6M M8 A280	
TBA 1000SQ (See drawing on page: 3-28)					
010	1144892-0000		1	GUIDE RIGHT	
020	1144893-0000		1	GUIDE LEFT	
030	1549411-0000		1	PACKAGE GUIDE	
040	1549406-0000		1	PACKAGE GUIDE	
060	1498161-0000		1	SUPPORT	
090	1499071-0000		8	SPACER	
100	312105-0366		4	SCREW M6S ISO 4017 M6X12 A480	
140	315105-0165		8	WASHER BRB8,4X16RFR	
160	312105-0466		8	SCREW M6S ISO 4014 M8X75 A480	
TBA 1500S (See drawing on page: 3-32)					
010	1350424-0000		1	GUIDE RIGHT	
020	1350425-0000		1	GUIDE LEFT	
030	1334559-0000		1	GUIDE UPPER R	
040	1334560-0000		1	GUIDE UPPER L	
060	1285267-0000		1	SUPPORT	
090	1317088-0000		4	SPACER	
095	1348041-0000		2	SPACER	
098	1317088-0000		2	SPACER	
100	312105-0368		4	SCREW M6S ISO 4017 M6X16 A480	
140	315105-0165		8	WASHER BRB8,4X16RFR	
160	312105-0465		4	SCREW M6S ISO 4014 M8X70 A480	
165	312105-0465		2	SCREW M6S ISO 4014 M8X70 A480	
170	312105-0467		2	SCREW M6S ISO 4014 M8X80 A480	
180	1282705-0000		4	SUPPORT	
TPA 0330SQ (See drawing on page: 3-32)					
010	1144892-0000		1	GUIDE RIGHT	
020	1144893-0000		1	GUIDE LEFT	
030	1539900-0000		1	RIGHT UPPER GUIDE	
040	1549614-0000		1	LEFT UPPER GUIDE	
060	1346340-0000		1	BRACKET	
090	1558735-0000		4	SPACER	
095	1558736-0000		2	SPACER	
098	1558910-0000		2	SPACER	
100	312105-0366		4	SCREW M6S ISO 4017 M6X12 A480	
140	315105-0165		8	WASHER BRB8,4X16RFR	
160	312105-0469		4	SCREW M6S ISO 4014 M8X90 A480	
165	312105-0467		2	SCREW M6S ISO 4014 M8X80 A480	
170	312105-0469		2	SCREW M6S ISO 4014 M8X90 A480	
TPA 0500SQ (See drawing on page: 3-34)					
010	1144892-0000		1	GUIDE RIGHT	
020	1144893-0000		1	GUIDE LEFT	
030	2527530-0000		1	GUIDE UPPER R	
040	2527529-0000		1	GUIDE UPPER L	
060	1346340-0000		1	BRACKET	
070	1144555-0000		3	STUD SCREW	
080	1334523-0000		1	SUPPORT	
090	1558910-0000		4	SPACER	
100	312105-0366		4	SCREW M6S ISO 4017 M6X12 A480	
140	315105-0165		12	WASHER BRB8,4X16RFR	
150	312605-0318		8	HEXAGON NUT, M6M M8 A280	
160	312105-0467		4	SCREW M6S ISO 4014 M8X80 A480	
Common Parts					
050	1350423-0000		2	FOLDING BAR	
110	312105-0366		2	SCREW M6S ISO 4017 M6X12 A480	
120	315105-0153		6	WASHER BRB6,4X12RFR	
130	342931-0121		4	ELBOW 90 COUPL.,EXT.THREAD 8/6-G1/8"	
200	90166-0118	MM	1500	TUBE 8 MM PA BLACK	
210	352113-0102		10	CLIP-STRIP, BLACK 188X4,8 MM	

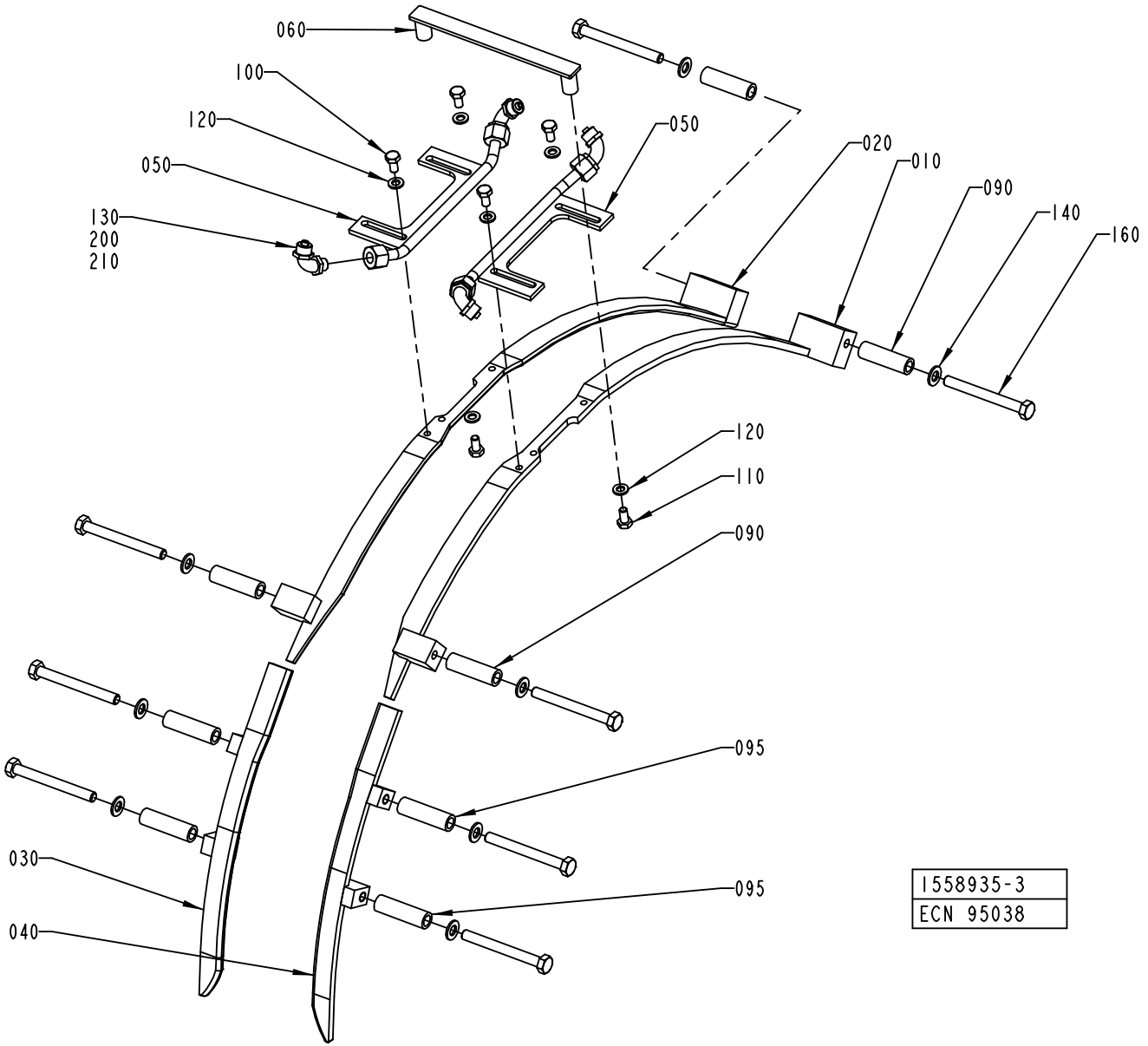
060
100
120
050
130
200
210
050
020
010
090
140
160
120
110
090
095
095
030
040
1558935-3
ECN 95038

Pos	Part No	UN	Qty	Description	Page No	Pos	Part No	UN	Qty	Description	Page No

SEE PREVIOUS LISTS PAGES: 3-27, 3-29.

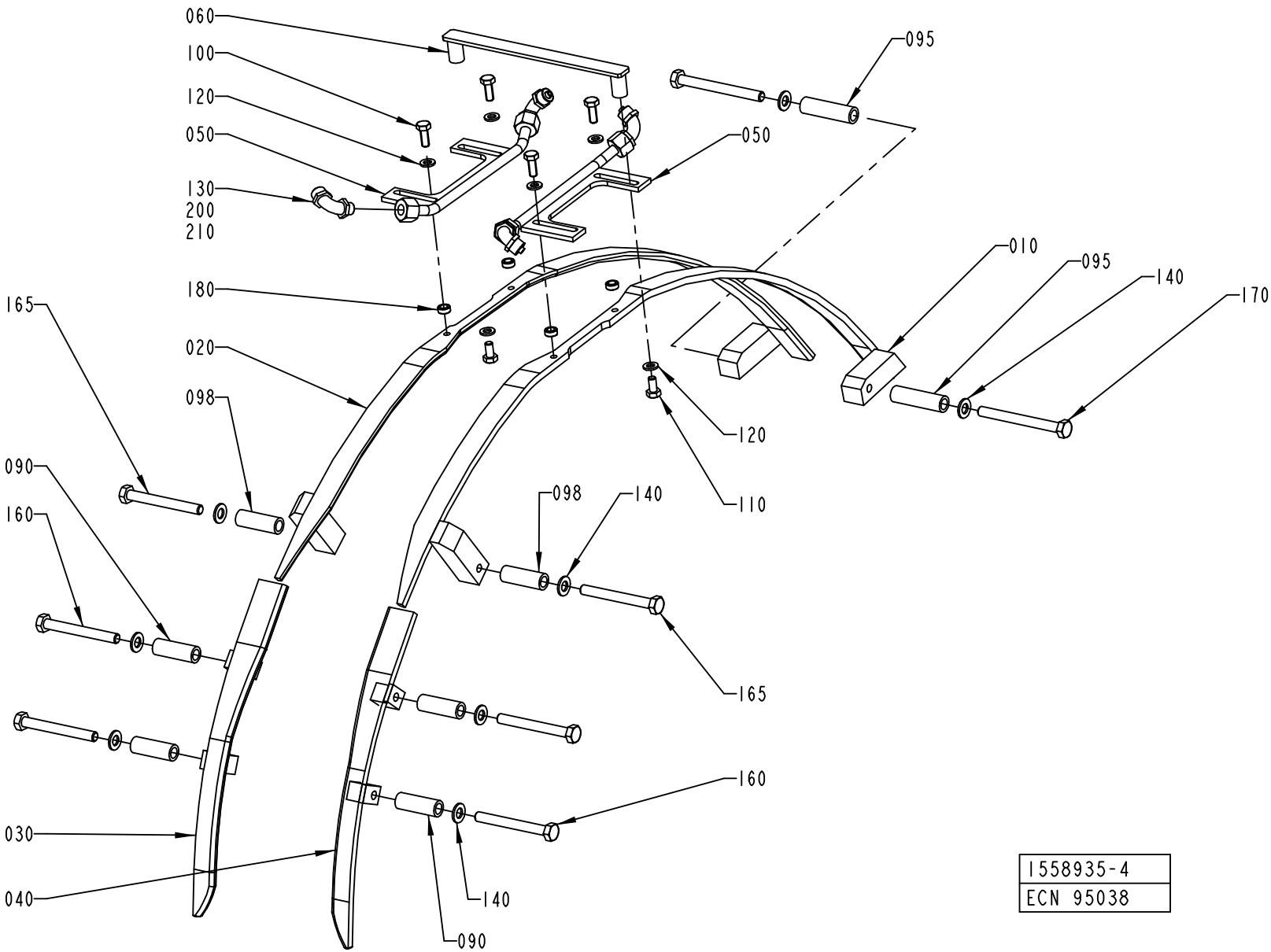
060
100
120
050
130
200
210
180
165
020
098
090
160
030
040
095
050
010
095
140
170
120
110
098
140
165
160
140
090
1558935-4
ECN 95038

Pos	Part No	UN	Qty	Description	Page No	Pos	Part No	UN	Qty	Description	Page No

SEE PREVIOUS LISTS PAGES: 3-27, 3-29.

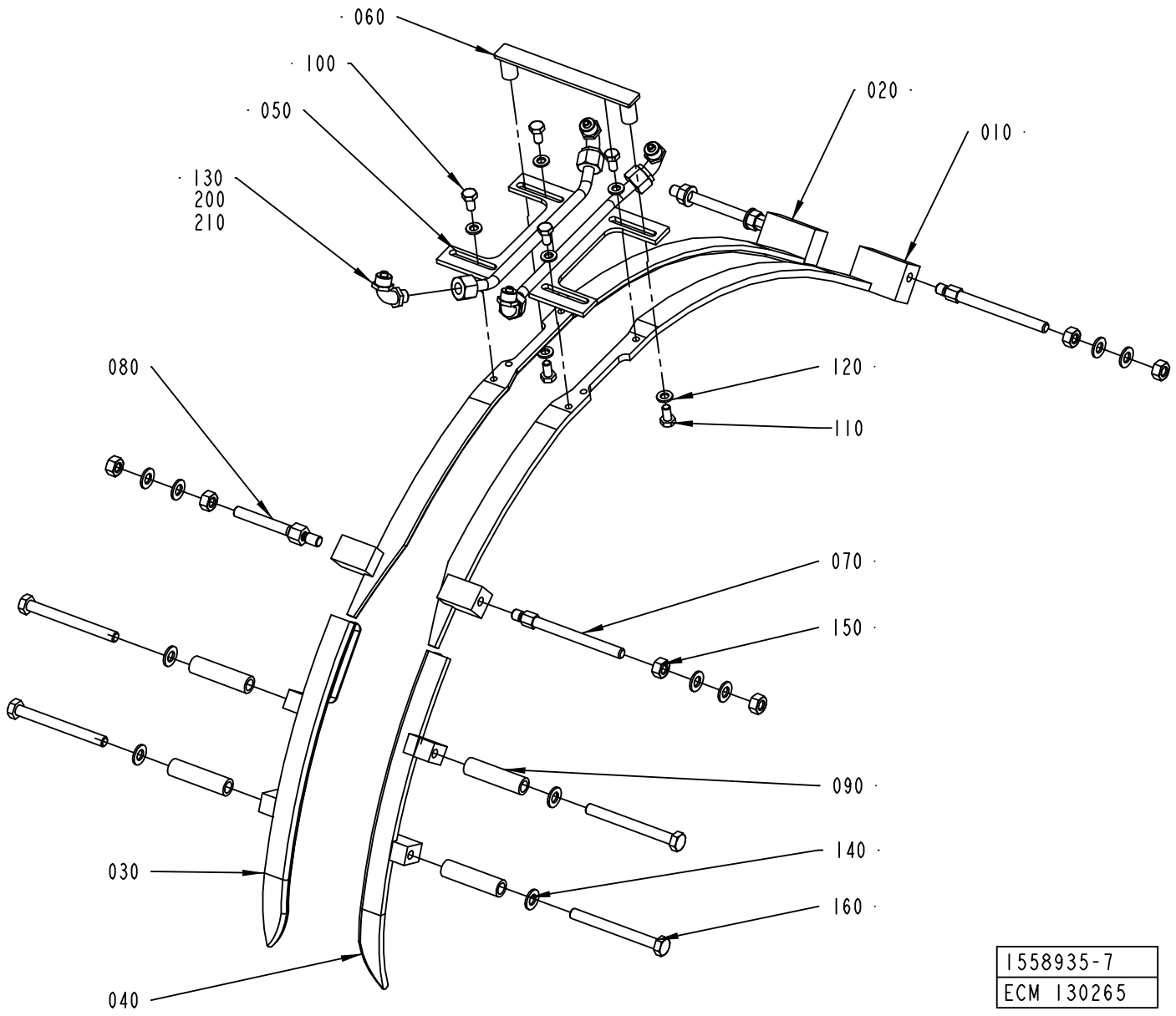
060
100
050
130
200
210
020
010
080
120
110
070
150
090
140
160
030
040
1558935-7
ECM 130265

ECM: 189494 - 20041104
Group number: 1558935-0100
Assembly Drawing: 1558935-7_1_AA

This list covers pages from 3-26 to 3-35

Pos	Part No	UN	Qty	Description	Page No
SEE PREVIOUS LISTS PAGES: 3-27, 3-29.					

Pos	Part No	UN	Qty	Description	Page No

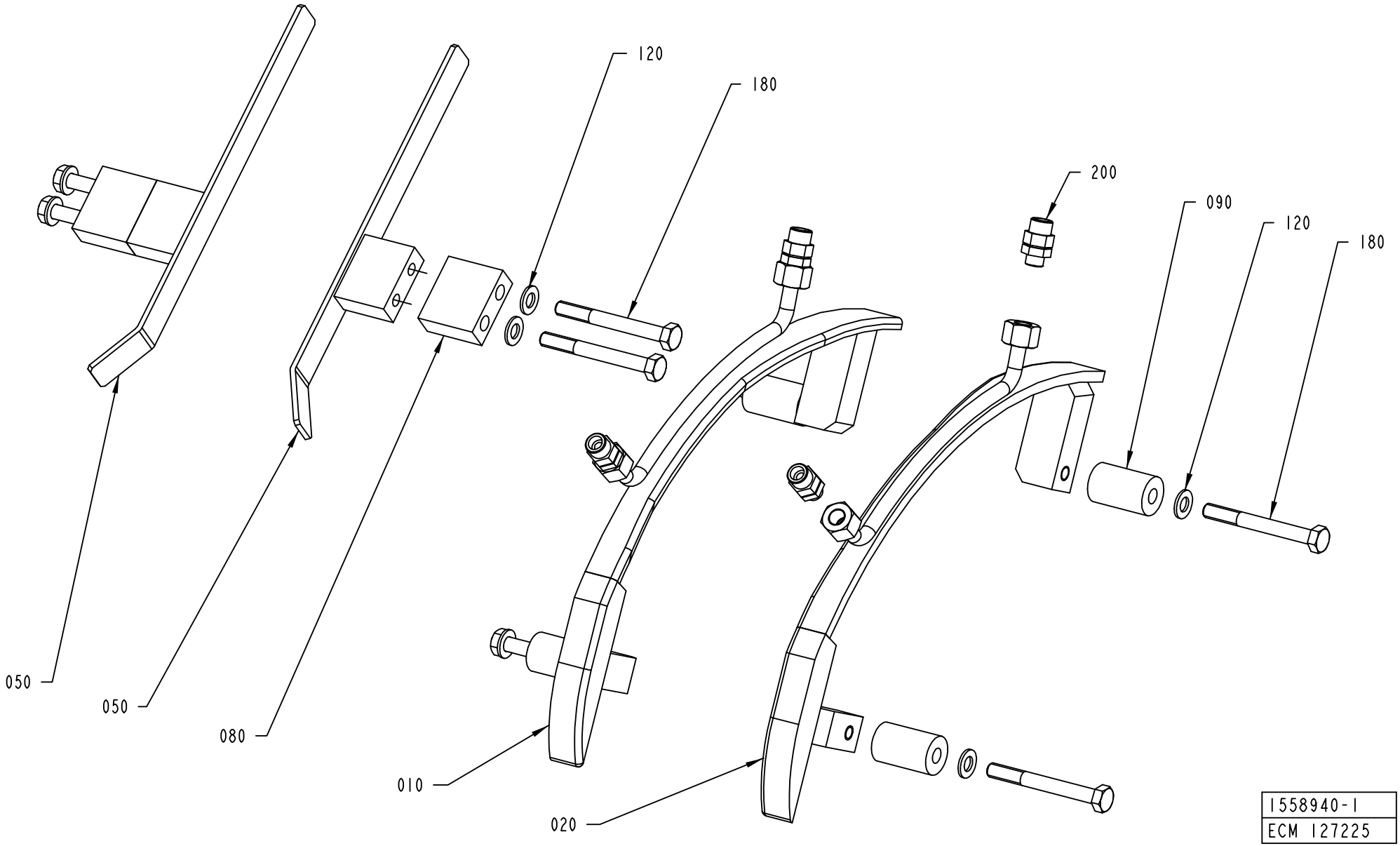
120
180
200
090
120
180
050
050
080
010
020
1558940-1
ECM 127225

ECM: 189495 - 20041104
Group number: 1558940-0200
Assembly Drawing: 1558940-1_1_AB

This list covers pages from 3-36 to 3-47

Pos	Part No	UN	Qty	Description	Page No
TPA 1000SQ (See drawing on page: 3-44)					
010	1548527-0000		1	FOLDING BAR	
020	1548528-0000		1	FOLDING BAR	
030	1317043-0000		2	SUPPORT	
040	1499150-0000		1	RAIL	
050	1499151-0000		1	RAIL	
060	1523927-0000		2	SPACER SCREW	
080	1519355-0000		4	SPACER	
090	1523926-0000		2	SPACER	
100	312109-0457		4	SCREW M6S ISO 4017 M8X35 A480	
110	312105-0462		4	SCREW M6S ISO 4014 M8X55 A480	
120	315105-0165		20	WASHER BRB8,4X16RFR	
130	312605-0318		2	HEXAGON NUT, M6M M8 A280	
160	312155-0459		2	SCREW DIN 7991 MF6S M8X40 A480	
170	312105-0453		2	SCREW M6S ISO 4017 M8X25 A480	
180	312105-0467		2	SCREW M6S ISO 4014 M8X80 A480	
200	342921-0121		4	STRAIGHT COUPLING,EXT.THREADED 8/6-G1/8"	
210	1538890-0000		1	RAIL	
220	1538891-0000		1	RAIL	
230	1519355-0000		4	SPACER	
240	1538186-0000		2	BRACKET	
250	312105-0462		4	SCREW M6S ISO 4014 M8X55 A480	
260	312105-0455		2	SCREW M6S ISO 4017 M8X30 A480	
TPA 1000SQ SMILE (See drawing on page: 3-44)					
010	2553347-0000		1	FOLDING BAR	
020	2553348-0000		1	FOLDING BAR	
030	1317043-0000		2	SUPPORT	
040	1499150-0000		1	RAIL	
050	1499151-0000		1	RAIL	
060	1523927-0000		2	SPACER SCREW	
080	1519355-0000		4	SPACER	
090	1523926-0000		2	SPACER	
100	312109-0457		4	SCREW M6S ISO 4017 M8X35 A480	
110	312105-0462		4	SCREW M6S ISO 4014 M8X55 A480	
120	315105-0165		20	WASHER BRB8,4X16RFR	
130	312605-0318		2	HEXAGON NUT, M6M M8 A280	
160	312155-0459		2	SCREW DIN 7991 MF6S M8X40 A480	
170	312105-0453		2	SCREW M6S ISO 4017 M8X25 A480	
180	312105-0467		2	SCREW M6S ISO 4014 M8X80 A480	
200	342921-0121		4	STRAIGHT COUPLING,EXT.THREADED 8/6-G1/8"	
210	1538890-0000		1	RAIL	
220	1538891-0000		1	RAIL	
230	1519355-0000		4	SPACER	
240	1538186-0000		2	BRACKET	
250	312105-0462		4	SCREW M6S ISO 4014 M8X55 A480	
260	312105-0455		2	SCREW M6S ISO 4017 M8X30 A480	
TBA 0200B (See drawing on page: 3-38)					
010	1346149-0000		1	FOLDING BAR	
020	1346150-0000		1	FOLDING BAR	
040	1346343-0000		1	RAIL	
050	1346344-0000		1	RAIL	
060	1144555-0000		7	STUD SCREW	
065	1350721-0000		1	STUD SCREW	
070	1144990-0000		2	FOLDING BAR	
120	315105-0165		16	WASHER BRB8,4X16RFR	
130	312605-0318		16	HEXAGON NUT, M6M M8 A280	
140	315105-0153		4	WASHER BRB6,4X12RFR	
150	312105-0364		4	SCREW M6S ISO 4017 M6X10 A480	
200	342931-0121		4	ELBOW 90 COUPL.,EXT.THREAD 8/6-G1/8"	
TBA 0200S (See drawing on page: 3-38)					
010	1282294-0000		1	FOLDING BAR	
020	1282295-0000		1	FOLDING BAR	
040	1346343-0000		1	RAIL	
050	1346344-0000		1	RAIL	
060	1144555-0000		7	STUD SCREW	
065	1350721-0000		1	STUD SCREW	
070	1144990-0000		2	FOLDING BAR	
120	315105-0165		16	WASHER BRB8,4X16RFR	
130	312605-0318		16	HEXAGON NUT, M6M M8 A280	
140	315105-0153		4	WASHER BRB6,4X12RFR	
150	312105-0364		4	SCREW M6S ISO 4017 M6X10 A480	
200	342931-0121		4	ELBOW 90 COUPL.,EXT.THREAD 8/6-G1/8"	
TBA 0250B (See drawing on page: 3-38)					
010	1317217-0000		1	FOLDING BAR	
020	1317216-0000		1	FOLDING BAR	
040	1346343-0000		1	RAIL	
050	1346344-0000		1	RAIL	
060	1144555-0000		7	STUD SCREW	
065	1350721-0000		1	STUD SCREW	
070	1144990-0000		2	FOLDING BAR	
120	315105-0165		16	WASHER BRB8,4X16RFR	
130	312605-0318		16	HEXAGON NUT, M6M M8 A280	
140	315105-0153		4	WASHER BRB6,4X12RFR	
150	312105-0364		4	SCREW M6S ISO 4017 M6X10 A480	

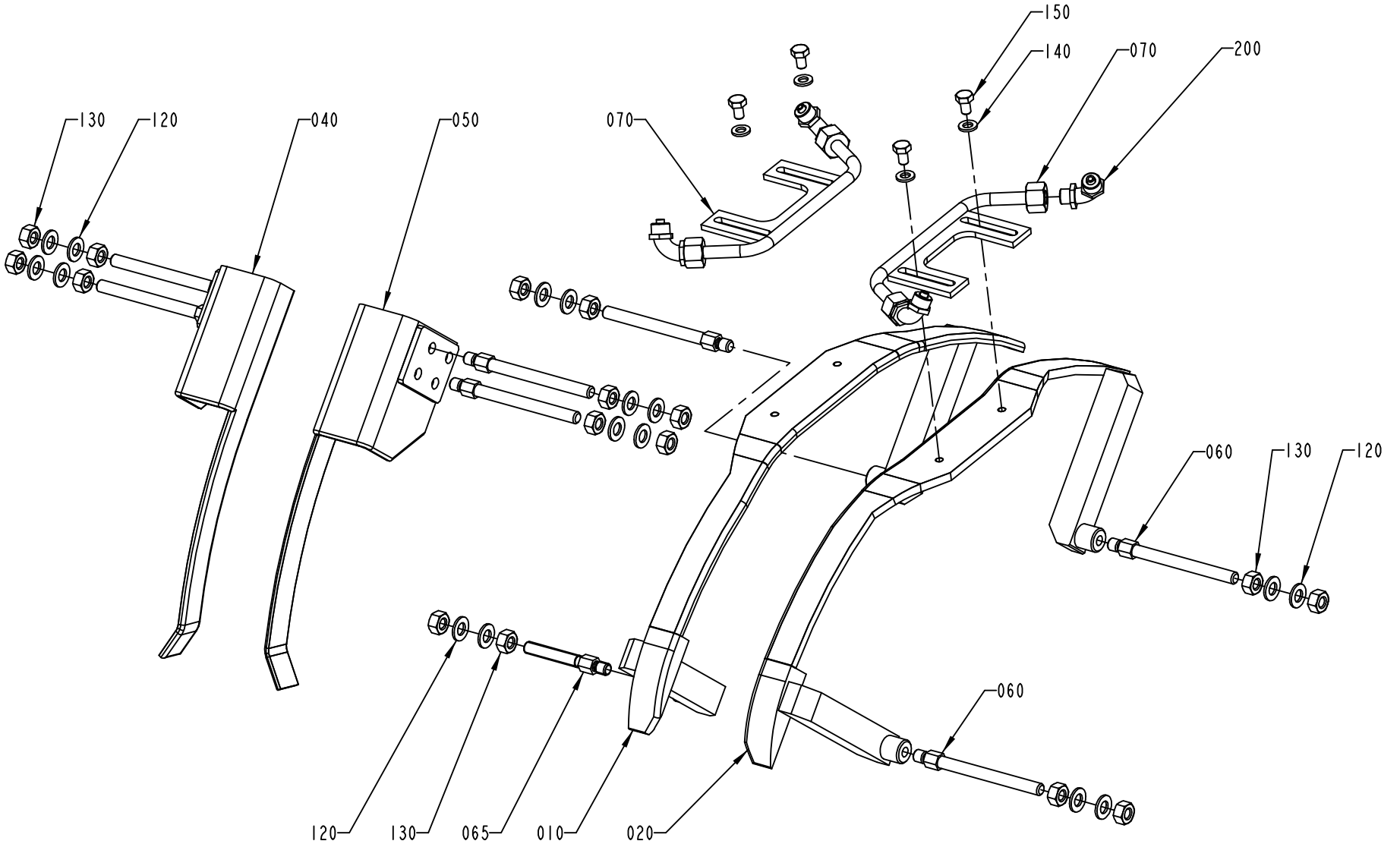

1558940-3
ECN 95038

ECM: 189495 - 20041104
Group number: 1558940-0200
Assembly Drawing: 1558940-3_1_AA

This list covers pages from 3-36 to 3-47

Pos	Part No	UN	Qty	Description	Page No
TBA 0250B (Cont'd) (See drawing on page: 3-38)					
200	342931-0121		4	ELBOW 90 COUPL.,EXT.THREAD 8/6-G1/8"	
TBA 0500B (See drawing on page: 3-42)					
010	1539881-0000		1	FOLDING BAR	
020	1539882-0000		1	FOLDING BAR	
040	1346343-0000		1	RAIL	
050	1346344-0000		1	RAIL	
060	1558713-0000		2	SPACER SCREW	
080	1539873-0000		4	SPACER	
090	1539871-0000		2	SPACER	
110	312109-0461		4	SCREW M6S ISO 4017 M8X50 A480	
120	315105-0165		8	WASHER BRB8,4X16RFR	
130	312605-0318		2	HEXAGON NUT, M6M M8 A280	
180	312105-0464		2	SCREW M6S ISO 4014 M8X65 A480	
200	342921-0121		4	STRAIGHT COUPLING,EXT.THREADED 8/6-G1/8"	
TBA 0500S (See drawing on page: 3-40)					
010	1519770-0000		1	FOLDING BAR	
020	1519769-0000		1	FOLDING BAR	
030	1317043-0000		2	SUPPORT	
040	1499150-0000		1	RAIL	
050	1499151-0000		1	RAIL	
060	1499402-0000		2	SPACER	
080	1499072-0000		4	SPACER	
090	1499071-0000		2	SPACER	
100	312109-0457		4	SCREW M6S ISO 4017 M8X35 A480	
110	312105-0463		4	SCREW M6S ISO 4014 M8X60 A480	
120	315105-0165		12	WASHER BRB8,4X16RFR	
130	312605-0318		2	HEXAGON NUT, M6M M8 A280	
180	312105-0466		2	SCREW M6S ISO 4014 M8X75 A480	
200	342921-0121		4	STRAIGHT COUPLING,EXT.THREADED 8/6-G1/8"	
TBA 1000B NOMOLDEDCAP (See drawing on page: 3-36)					
010	2639127-0000		1	FOLDING BAR	
020	2639128-0000		1	FOLDING BAR	
050	1144719-0000		2	RAIL	
080	2639393-0000		2	SPACER	
090	2603663-0000		4	SPACER	
120	315105-0165		8	WASHER BRB8,4X16RFR	
180	312105-0465		8	SCREW M6S ISO 4014 M8X70 A480	
200	342921-0121		4	STRAIGHT COUPLING,EXT.THREADED 8/6-G1/8"	
TBA 1000B STDA7 (See drawing on page: 3-40)					
010	2609370-0000		1	FOLDING BAR	
020	2609369-0000		1	FOLDING BAR	
030	1317043-0000		2	SUPPORT	
040	1499150-0000		1	RAIL	
050	1499151-0000		1	RAIL	
060	2509936-0000		2	SPACER SCREW	
080	2609371-0000		4	SPACER	
090	2603663-0000		2	SPACER	
100	312109-0457		4	SCREW M6S ISO 4017 M8X35 A480	
120	315105-0165		14	WASHER BRB8,4X16RFR	
130	312605-0318		2	HEXAGON NUT, M6M M8 A280	
160	312155-0459		2	SCREW DIN 7991 MF6S M8X40 A480	
170	312105-0453		2	SCREW M6S ISO 4017 M8X25 A480	
180	312105-0466		2	SCREW M6S ISO 4014 M8X75 A480	
200	342931-0121		4	ELBOW 90 COUPL.,EXT.THREAD 8/6-G1/8"	
250	312105-0462		4	SCREW M6S ISO 4014 M8X55 A480	
TBA 1000S NOMOLDEDCAP (See drawing on page: 3-46)					
010	1144897-0000		1	FOLDING BAR	
020	1144898-0000		1	FOLDING BAR	
050	1144719-0000		2	RAIL	
060	1144555-0000		8	STUD SCREW	
120	315105-0165		16	WASHER BRB8,4X16RFR	
130	312605-0318		16	HEXAGON NUT, M6M M8 A280	
200	342921-0121		4	STRAIGHT COUPLING,EXT.THREADED 8/6-G1/8"	
TBA 1000S STDA7 (See drawing on page: 3-40)					
010	1498827-0000		1	FOLDING BAR	
020	1498828-0000		1	FOLDING BAR	
030	1317043-0000		2	SUPPORT	
050	1317047-0000		1	RAIL	
060	2509936-0000		2	SPACER SCREW	
080	2509937-0000		4	SPACER	
090	2509935-0000		2	SPACER	
100	312109-0457		4	SCREW M6S ISO 4017 M8X35 A480	
110	312105-0461		4	SCREW M6S ISO 4014 M8X50 A480	
120	315105-0165		14	WASHER BRB8,4X16RFR	
130	312605-0318		2	HEXAGON NUT, M6M M8 A280	
160	312155-0459		2	SCREW DIN 7991 MF6S M8X40 A480	
170	312105-0451		2	SCREW M6S ISO 4017 M8X20 A480	
180	312105-0464		2	SCREW M6S ISO 4014 M8X65 A480	
200	342931-0121		4	ELBOW 90 COUPL.,EXT.THREAD 8/6-G1/8"	
TBA 1000SQ (See drawing on page: 3-40)					
010	1498827-0000		1	FOLDING BAR	
020	1498828-0000		1	FOLDING BAR	
030	1317043-0000		2	SUPPORT	

Machine Type | Group Description | Used-In | Group Number | Page No

FLAP GUIDE

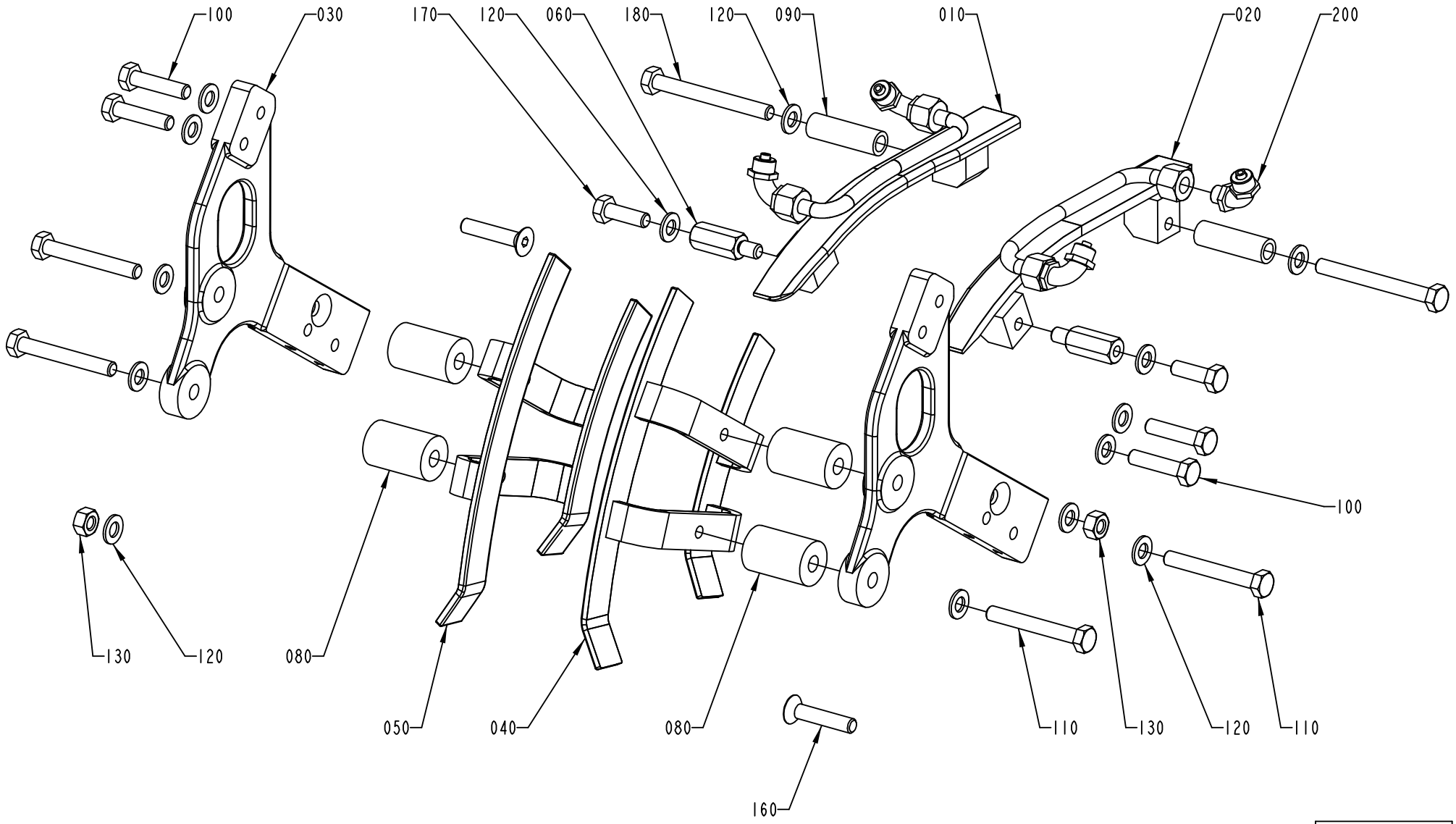

1558940-4
ECN 95038

ECM: 189495 - 20041104
Group number: 1558940-0200
Assembly Drawing: 1558940-4_1_AA

This list covers pages from 3-36 to 3-47

Pos	Part No	UN	Qty	Description	Page No
TBA 1000SQ (Cont'd) (See drawing on page: 3-40)					
050	1317047-0000		1	RAIL	
060	1499094-0000		2	SPACER SCREW	
080	1499072-0000		4	SPACER	
090	1499071-0000		2	SPACER	
100	312109-0457		4	SCREW M6S ISO 4017 M8X35 A480	
110	312105-0463		4	SCREW M6S ISO 4014 M8X60 A480	
120	315105-0165		14	WASHER BRB8,4X16RFR	
130	312605-0318		2	HEXAGON NUT, M6M M8 A280	
160	312155-0459		2	SCREW DIN 7991 MF6S M8X40 A480	
170	312105-0451		2	SCREW M6S ISO 4017 M8X20 A480	
180	312105-0466		2	SCREW M6S ISO 4014 M8X75 A480	
200	342931-0121		4	ELBOW 90 COUPL.,EXT.THREAD 8/6-G1/8"	
TBA 1500S (See drawing on page: 3-40)					
010	1317653-0000		1	FOLDING BAR	
020	1317652-0000		1	FOLDING BAR	
030	1317043-0000		2	SUPPORT	
040	1317042-0000		1	RAIL	
050	1317047-0000		1	RAIL	
060	1348042-0000		2	SPACER	
080	1334718-0000		4	SPACER	
090	1317088-0000		2	SPACER	
100	312109-0457		4	SCREW M6S ISO 4017 M8X35 A480	
110	312109-0461		4	SCREW M6S ISO 4017 M8X50 A480	
120	315105-0165		12	WASHER BRB8,4X16RFR	
130	312605-0318		2	HEXAGON NUT, M6M M8 A280	
180	312105-0465		2	SCREW M6S ISO 4014 M8X70 A480	
200	342931-0121		4	ELBOW 90 COUPL.,EXT.THREAD 8/6-G1/8"	
TPA 0330SQ (See drawing on page: 3-40)					
010	1532275-0000		1	FOLDING BAR	
020	1532276-0000		1	FOLDING BAR	
030	1317043-0000		2	SUPPORT	
040	1532281-0000		1	RAIL	
050	1532280-0000		1	RAIL	
060	1499094-0000		2	SPACER SCREW	
080	1499072-0000		4	SPACER	
090	1558735-0000		2	SPACER	
100	312109-0457		4	SCREW M6S ISO 4017 M8X35 A480	
110	312105-0463		4	SCREW M6S ISO 4014 M8X60 A480	
120	315105-0165		14	WASHER BRB8,4X16RFR	
130	312605-0318		2	HEXAGON NUT, M6M M8 A280	
160	312155-0459		2	SCREW DIN 7991 MF6S M8X40 A480	
170	312105-0453		2	SCREW M6S ISO 4017 M8X25 A480	
180	312105-0469		2	SCREW M6S ISO 4014 M8X90 A480	
200	342921-0121		4	STRAIGHT COUPLING,EXT.THREADED 8/6-G1/8"	
TPA 0500SQ SMILE (See drawing on page: 3-40)					
010	2529910-0000		1	FOLDING BAR	
020	2529909-0000		1	FOLDING BAR	
030	1317043-0000		2	SUPPORT	
040	1499150-0000		1	RAIL	
050	1499151-0000		1	RAIL	
060	2530201-0000		2	SPACER SCREW	
080	1549508-0000		4	SPACER SCREW	
100	312109-0457		4	SCREW M6S ISO 4017 M8X35 A480	
110	312105-0451		4	SCREW M6S ISO 4017 M8X20 A480	
120	315105-0165		14	WASHER BRB8,4X16RFR	
130	312605-0318		2	HEXAGON NUT, M6M M8 A280	
160	312155-0459		2	SCREW DIN 7991 MF6S M8X40 A480	
170	312105-0453		2	SCREW M6S ISO 4017 M8X25 A480	
180	312105-0467		2	SCREW M6S ISO 4014 M8X80 A480	
200	342921-0121		4	STRAIGHT COUPLING,EXT.THREADED 8/6-G1/8"	

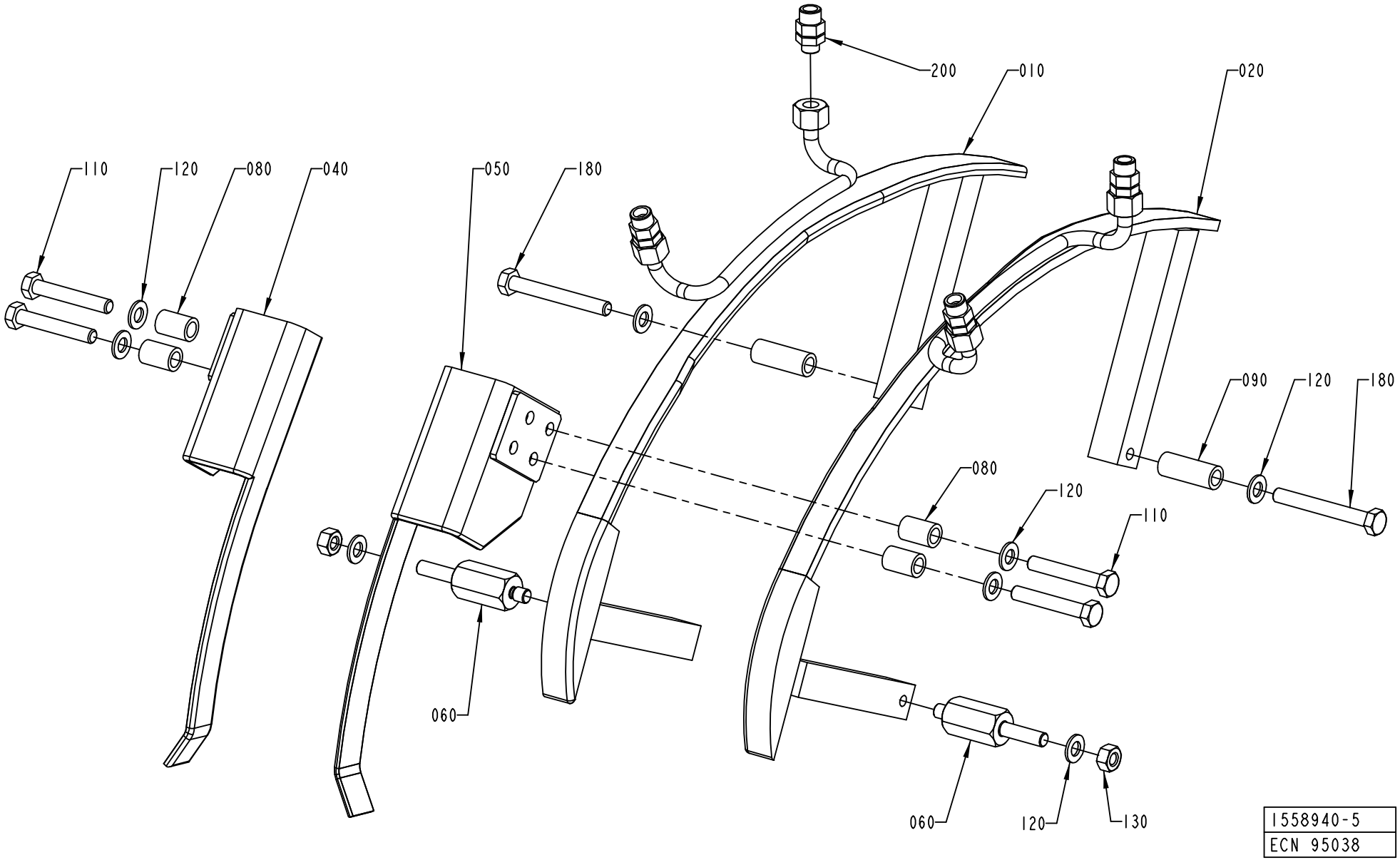
200
010
020
110
120
080
040
050
180
090
120
180
080
120
110
060
060
120
130
1558940-5
ECN 95038

Pos	Part No	UN	Qty	Description	Page No	Pos	Part No	UN	Qty	Description	Page No

SEE PREVIOUS LISTS PAGES: 3-37, 3-39, 3-41.

FLAP GUIDE

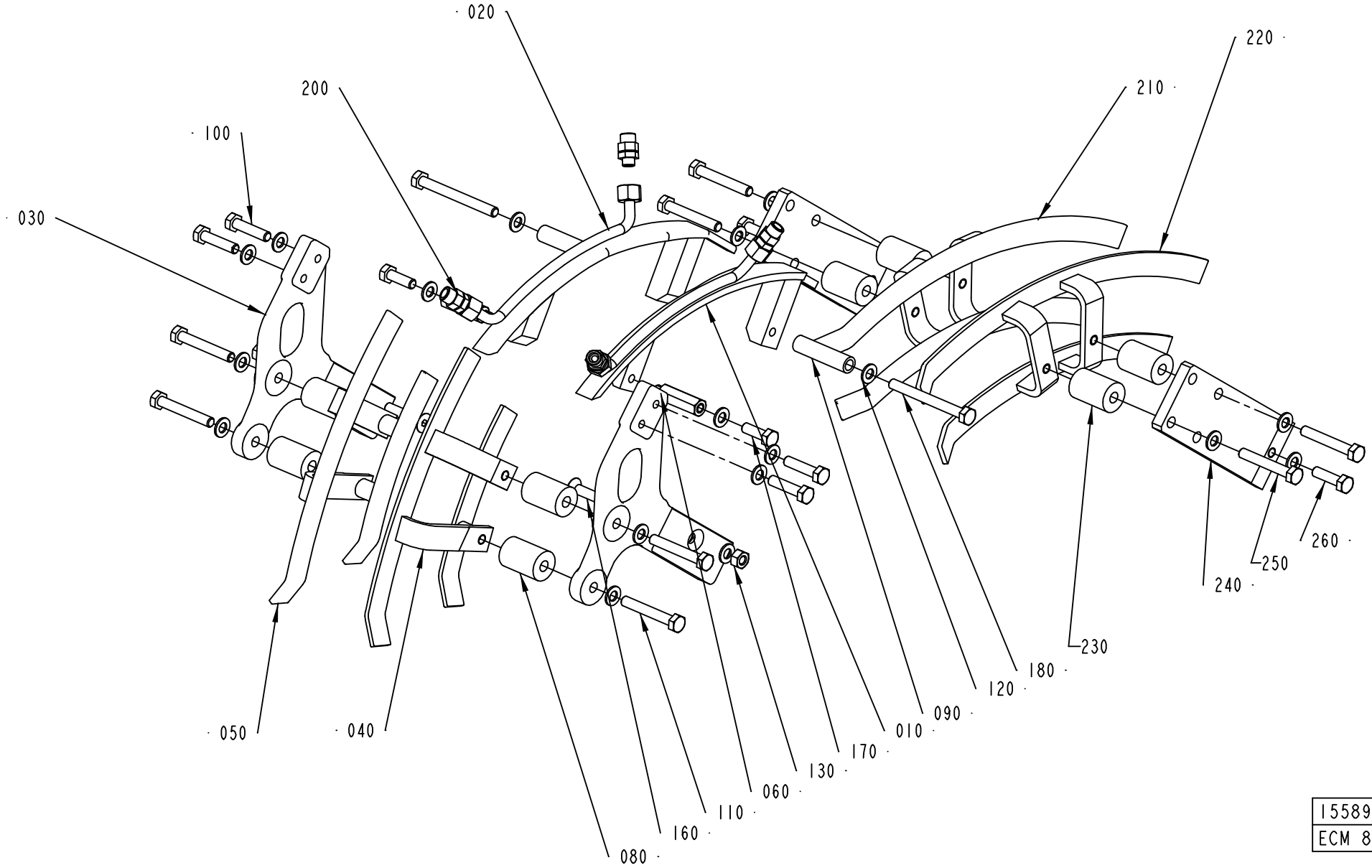

1558940-6
ECM 80646

Pos	Part No	UN	Qty	Description	Page No	Pos	Part No	UN	Qty	Description	Page No

SEE PREVIOUS LISTS PAGES: 3-37, 3-39, 3-41.

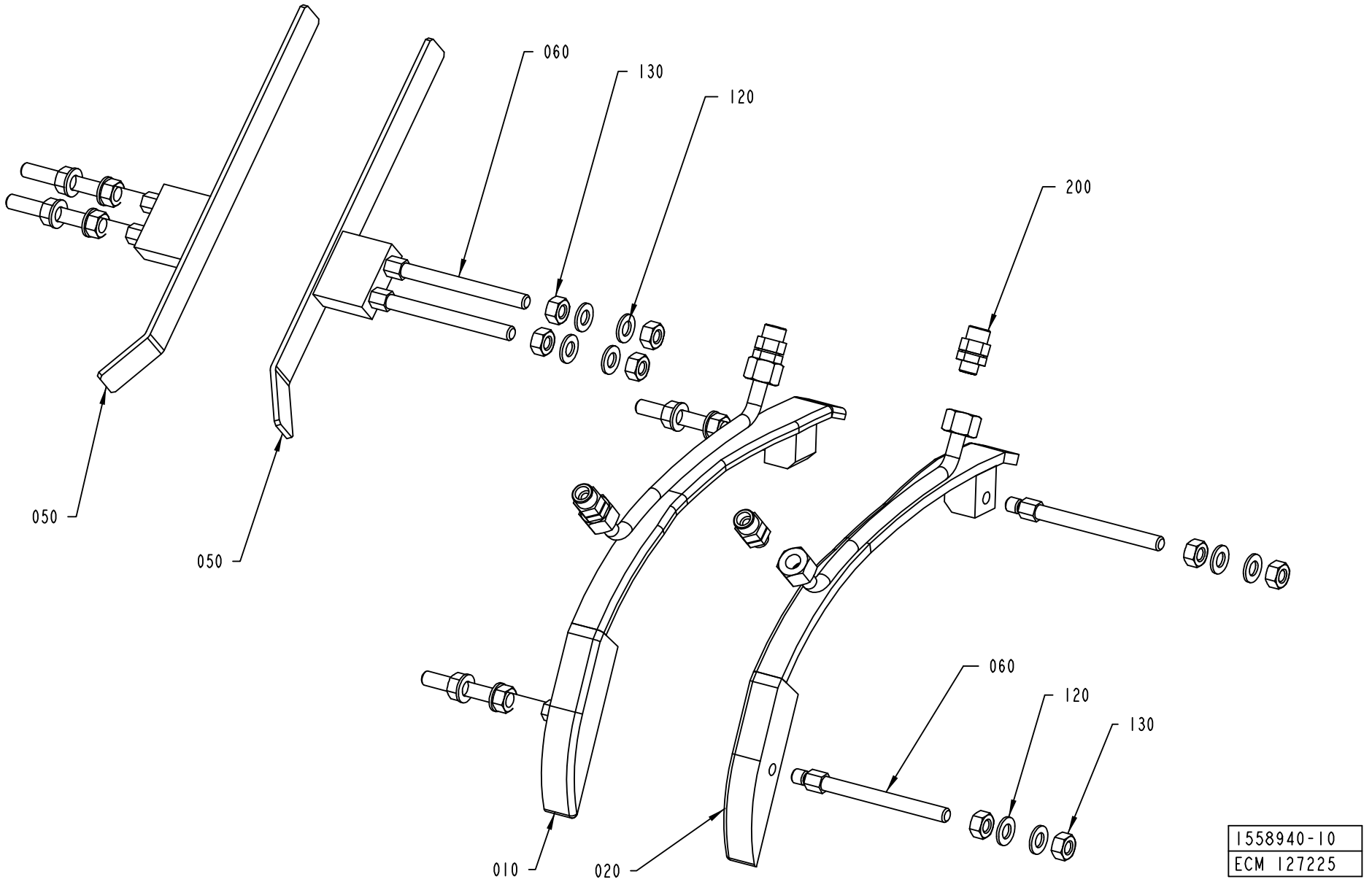
060
130
120
200
050
050
060
120
130
010
020
1558940-10
ECM 127225

Pos	Part No	UN	Qty	Description	Page No	Pos	Part No	UN	Qty	Description	Page No

SEE PREVIOUS LISTS PAGES: 3-37, 3-39, 3-41.

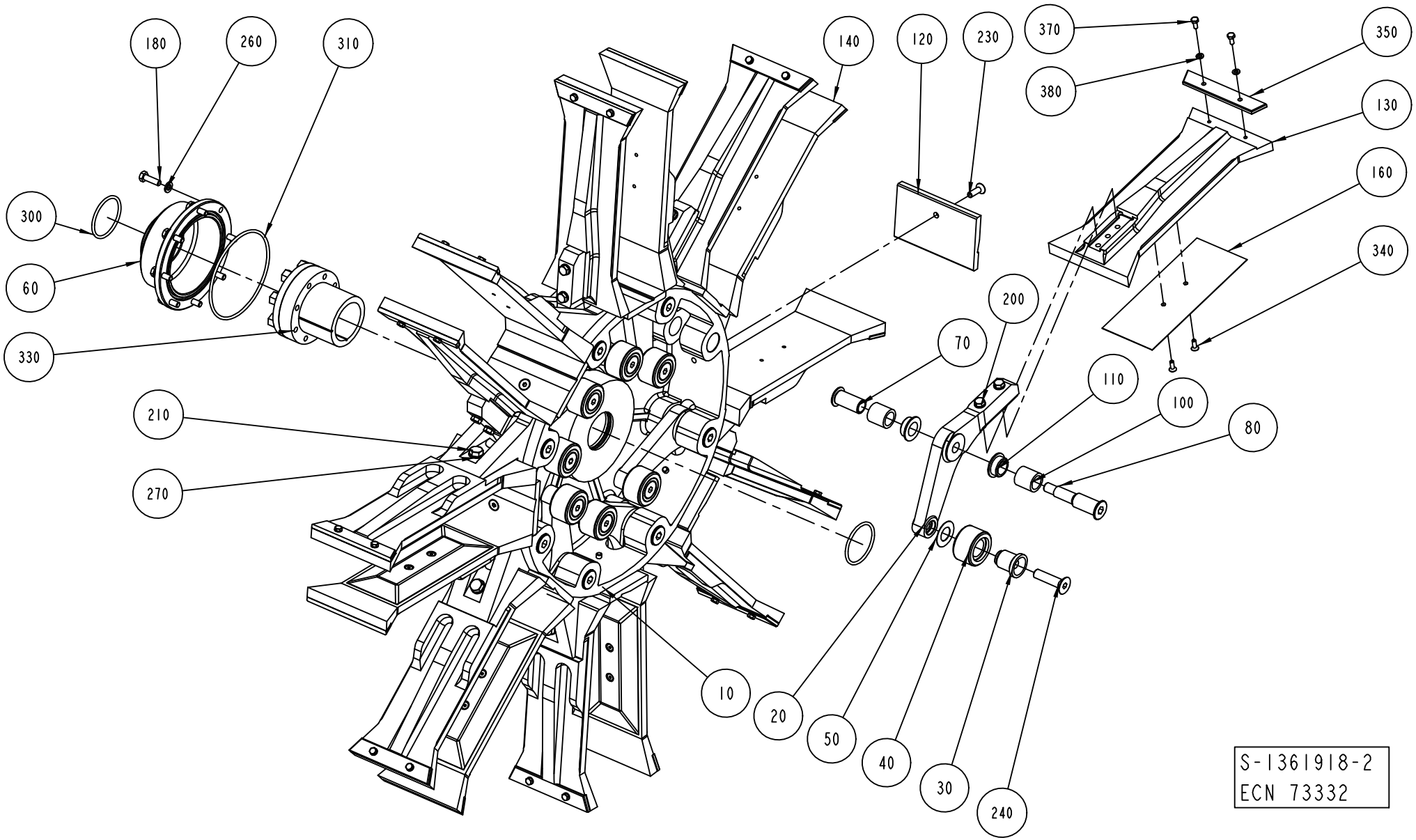
180
260
310
140
120
230
370
350
380
130
160
300
340
60
200
330
70
110
210
100
80
270
10
20
50
40
30
240
S-1361918-2
ECN 73332

ECM: 189492 - 20041029
Group number: 1361918-0300
Assembly Drawing: 1361918-2_1_AB

This list covers pages from 3-48 to 3-51

Pos	Part No	UN	Qty	Description	Page No
A3/FLEX TPA 1000SQ					
010	1144264-0000		1	HUB	
120	1538770-0000		8	BOTTOM	
130	2555404-0000		8	FLAP	
140	1524484-0000		8	FLAP	
160	1523467-0000		8	VOLUME BULGE	
200	312105-0378		16	SCREW M6S ISO 4014 M6X40 A480	
210	312105-0453		8	SCREW M6S ISO 4017 M8X25 A480	
230	312155-0378		8	SCREW DIN 7991 MF6S M6X40 A480	
260	315105-0153		24	WASHER BRB6,4X12RFR	
340	312155-0289		16	SCREW DIN 7991 MF6S M4X10 A480	
A3/FLEX TBA 1000B STDA7					
010	1144264-0000		1	HUB	
120	2606289-0000		8	BOTTOM	
130	1260704-0000		8	FLAP	
140	1260705-0000		8	FLAP	
200	312105-0376		16	SCREW M6S ISO 4014 M6X35 A480	
210	312105-0453		8	SCREW M6S ISO 4017 M8X25 A480	
230	312155-0380		8	SCREW DIN 7991 MF6S M6X50 A480	
260	315105-0153		24	WASHER BRB6,4X12RFR	
A3/FLEX TBA 1000S STDA7					
010	1144264-0000		1	HUB	
120	2509938-0000		8	BOTTOM	
130	1144926-0000		8	FLAP	
140	1144927-0000		8	FLAP	
160	2550211-0000		8	VOLUME BULGE	
200	312105-0376		16	SCREW M6S ISO 4014 M6X35 A480	
210	312105-0453		8	SCREW M6S ISO 4017 M8X25 A480	
230	312155-0370		8	SCREW DIN 7991 MF6S M6X20 A480	
260	315105-0153		24	WASHER BRB6,4X12RFR	
340	312155-0287		16	SCREW DIN 7991 MF6S M4X8 A480	
A3/FLEX TPA 0500SQ SMILE					
010	1144264-0000		1	HUB	
120	2602614-0000		8	BOTTOM	
130	1549844-0000		8	FLAP	
140	2564347-0000		8	FLAP	
200	312105-0376		16	SCREW M6S ISO 4014 M6X35 A480	
210	312105-0453		8	SCREW M6S ISO 4017 M8X25 A480	
230	312105-0368		8	SCREW M6S ISO 4017 M6X16 A480	
260	315103-0153		32	WASHER, BRB, 6,4/12,H=1,5 NIPL BR	
A3/FLEX TPA 1000SQ SMILE					
010	1144264-0000		1	HUB	
120	2558144-0000		8	BOTTOM	
130	2558145-0000		8	FLAP	
140	1524484-0000		8	FLAP	
160	1523467-0000		8	VOLUME BULGE	
210	312105-0453		8	SCREW M6S ISO 4017 M8X25 A480	
230	312105-0368		8	SCREW M6S ISO 4017 M6X16 A480	
260	315103-0153		32	WASHER, BRB, 6,4/12,H=1,5 NIPL BR	
340	312155-0289		16	SCREW DIN 7991 MF6S M4X10 A480	
A3/FLEX TBA 0200S					
010	1144264-0000		1	HUB	
130	1260885-0000		8	FLAP	
140	1260886-0000		8	FLAP	
200	312105-0376		16	SCREW M6S ISO 4014 M6X35 A480	
210	312105-0453		8	SCREW M6S ISO 4017 M8X25 A480	
260	315105-0153		24	WASHER BRB6,4X12RFR	
A3/FLEX TBA 0500S					
010	1144264-0000		1	HUB	
130	1499141-0000		8	FLAP	
140	1499142-0000		8	FLAP	
160	1524035-0000		8	VOLUME BULGE	
200	312105-0376		16	SCREW M6S ISO 4014 M6X35 A480	
210	312105-0453		8	SCREW M6S ISO 4017 M8X25 A480	
260	315105-0153		24	WASHER BRB6,4X12RFR	
340	312155-0289		16	SCREW DIN 7991 MF6S M4X10 A480	
A3/FLEX TBA 1000B NOMOLDEDCAP					
010	1144264-0000		1	HUB	
120	1260703-0000		8	BOTTOM	
130	1260704-0000		8	FLAP	
140	1260705-0000		8	FLAP	
200	312105-0376		16	SCREW M6S ISO 4014 M6X35 A480	
210	312105-0453		8	SCREW M6S ISO 4017 M8X25 A480	
230	312155-0380		8	SCREW DIN 7991 MF6S M6X50 A480	
260	315105-0153		24	WASHER BRB6,4X12RFR	
A3/FLEX TBA 1000S NOMOLDEDCAP					
010	1144264-0000		1	HUB	
120	1144924-0000		8	BOTTOM	
130	1144926-0000		8	FLAP	
140	1144927-0000		8	FLAP	
160	2550211-0000		8	VOLUME BULGE	
200	312105-0376		16	SCREW M6S ISO 4014 M6X35 A480	
210	312105-0453		8	SCREW M6S ISO 4017 M8X25 A480	
230	312155-0370		8	SCREW DIN 7991 MF6S M6X20 A480	

Machine Type | Group Description | Used-In | Group Number | Page No

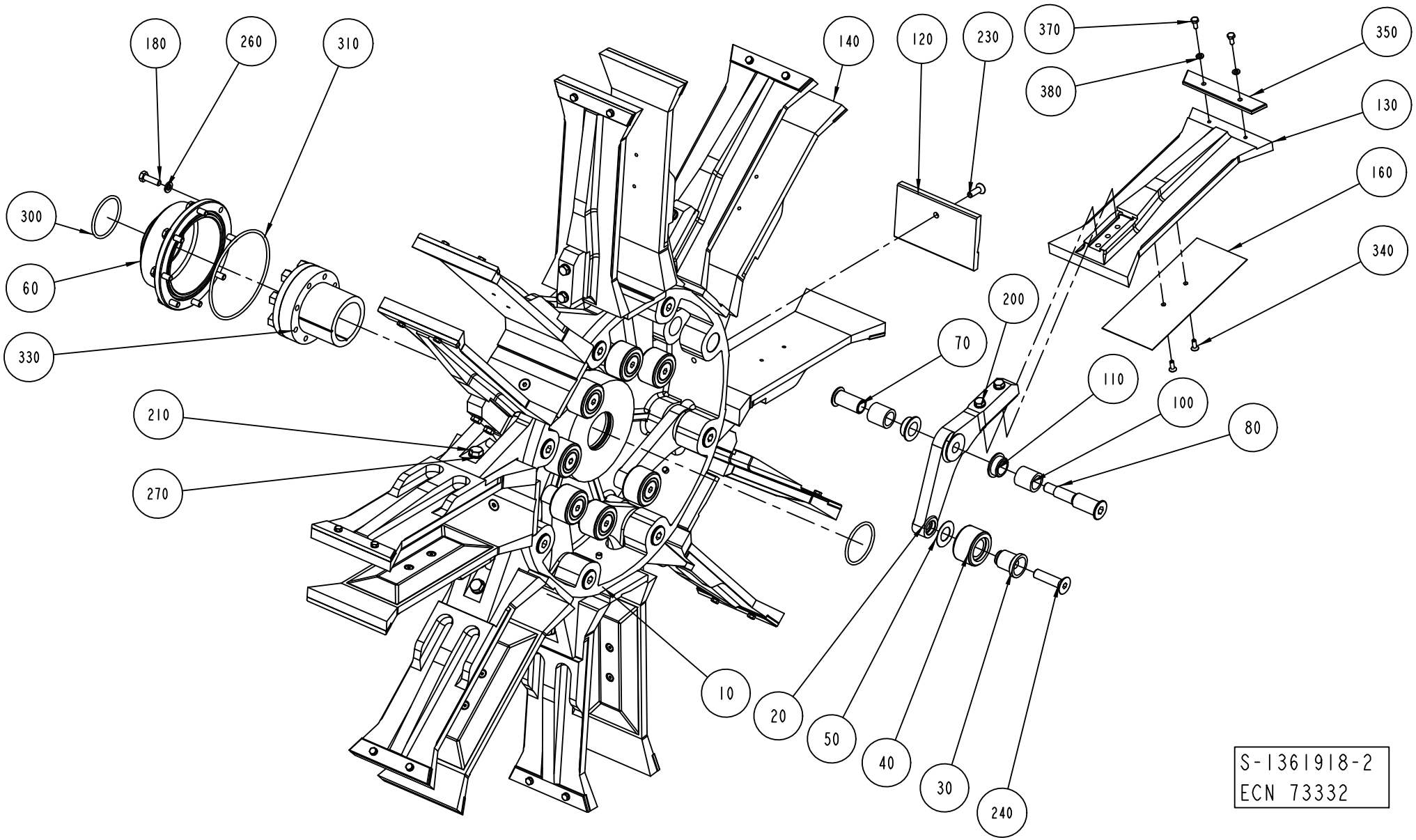
180
260
310
140
120
230
370
350
380
130
160
300
340
60
200
330
70
110
210
100
80
270
10
20
50
40
30
240
S-1361918-2
ECN 73332

ECM: 189492 - 20041029
Group number: 1361918-0300
Assembly Drawing: 1361918-2_1_AB

This list covers pages from 3-48 to 3-51

Pos	Part No	UN	Qty	Description	Page No
A3/FLEX TBA 1000S NOMOLDEDCAP (Cont'd)					
260	315105-0153		24	WASHER BRB6,4X12RFR	
340	312155-0287		16	SCREW DIN 7991 MF6S M4X8 A480	
A3/FLEX TBA 1000SQ					
010	1144264-0000		1	HUB	
120	1511558-0000		8	BOTTOM	
130	1487739-0000		8	FLAP	
140	1487738-0000		8	FLAP	
200	312105-0376		16	SCREW M6S ISO 4014 M6X35 A480	
210	312105-0453		8	SCREW M6S ISO 4017 M8X25 A480	
230	312155-0370		8	SCREW DIN 7991 MF6S M6X20 A480	
260	315105-0153		24	WASHER BRB6,4X12RFR	
A3/FLEX TBA 1500S					
010	1144264-0000		1	HUB	
120	1317556-0000		8	BOTTOM	
130	1317554-0000		8	FLAP	
140	1317555-0000		8	FLAP	
200	312105-0376		16	SCREW M6S ISO 4014 M6X35 A480	
210	312105-0453		8	SCREW M6S ISO 4017 M8X25 A480	
230	312155-0376		8	SCREW DIN 7991 MF6S M6X35 A480	
260	315105-0153		24	WASHER BRB6,4X12RFR	
350	1317656-0000		16	INSERT	
370	312105-0289		32	SCREW M6S ISO 4017 M4X10 A470	
380	315105-0136		32	WASHER BRB4,3XRFR	
A3/FLEX TPA 0330SQ					
010	1144264-0000		1	HUB	
130	1532297-0000		8	FLAP	
140	1532298-0000		8	FLAP	
200	312105-0376		16	SCREW M6S ISO 4014 M6X35 A480	
210	312105-0453		8	SCREW M6S ISO 4017 M8X25 A480	
260	315105-0153		24	WASHER BRB6,4X12RFR	
Common Parts					
020	1279559-0000		8	ARM	
030	1144312-0000		8	AXLE PIN	
040	1144335-0000		8	ROLLER	
050	1144354-0000		8	WASHER	
060	1144356-0000		1	COVER	
070	1296970-0000		8	SCREW BUSHING	
080	1296969-0000		8	SCREW HOLDER	
100	1144417-0000		16	BUSHING	
110	1282708-0000		16	BUSHING	
180	312105-0370		8	SCREW M6S ISO 4017 M6X20 A480	
240	312155-0499		8	SCREW DIN 7991 MF6S M10X40 A480	
270	315105-0165		8	WASHER BRB8,4X16RFR	
300	315202-0225		2	O-RING 44,2X3 MM	
310	315202-0311		1	O-RING 99,5X3 MM	
330	90208-0087		1	CLAMPING ELEMENT WITH SLEEVE, 45X59 MM	

Machine Type | Group Description | Used-In | Group Number | Page No

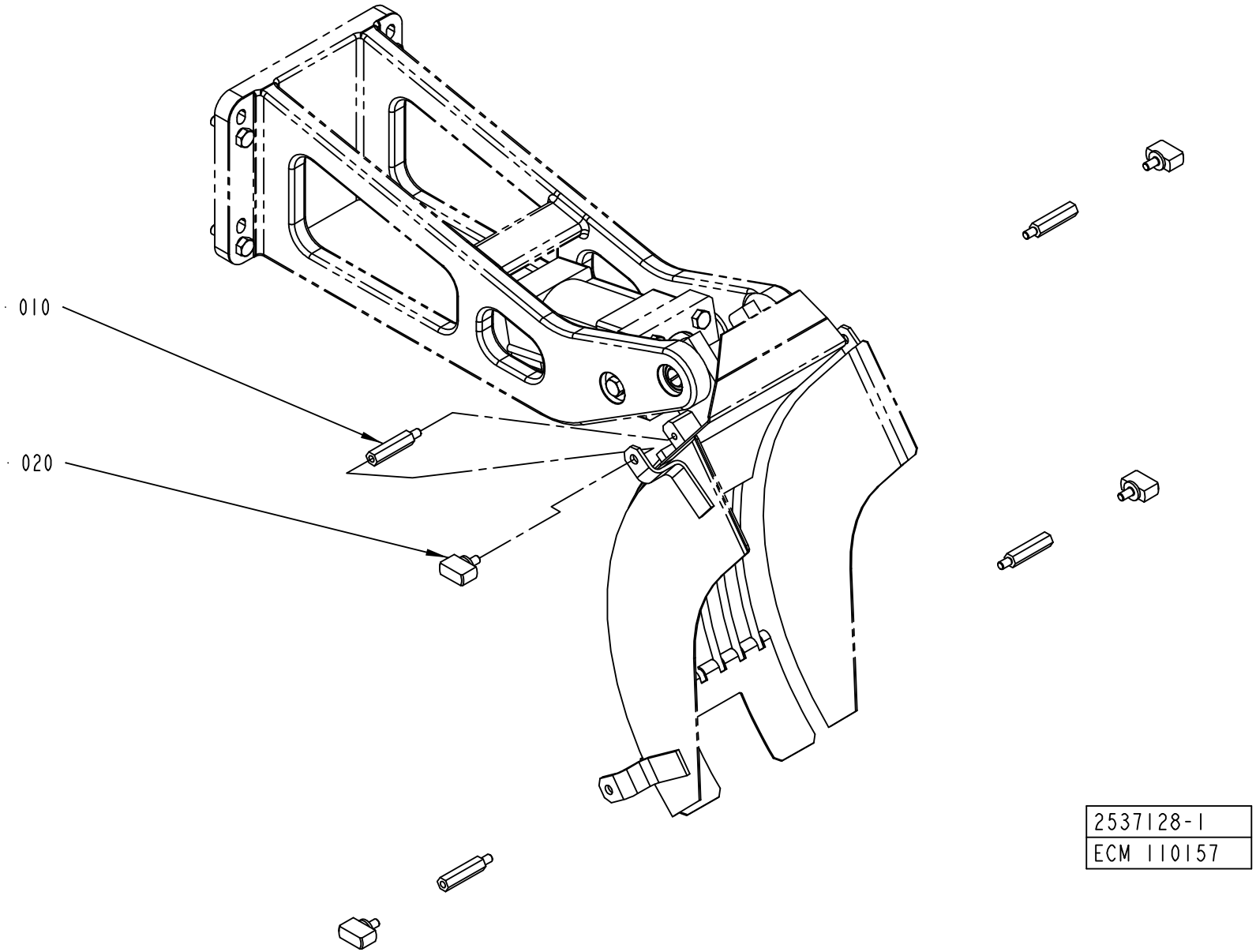
010
020
2537128-1
ECM 110157

Pos	Part No	UN	Qty	Description	Page No
0500B, 1000B (See drawing on page: 3-52)					
010	2537129-0000		4	SPACER	
1000SQ, 0500SQ (See drawing on page: 3-54)					
010	2598820-0000		2	SPACER	
030	2619574-0000		2	SPACER	
TBA 0250S, TBA 0200M					
010	2522202-0000		4	SPACER	
020	2652191-0000		4	KNOB	
TBA 0330S, TBA 0200B, TBA 0250B (See drawing on page: 3-52)					
010	1317218-0000		4	SPACER	
TBA 1890S, TBA 2000S (See drawing on page: 3-52)					
010	2661153-0000		4	SPACER	
Common Parts					
020	2540609-0000		4	KNOB	

Pos	Part No	UN	Qty	Description	Page No

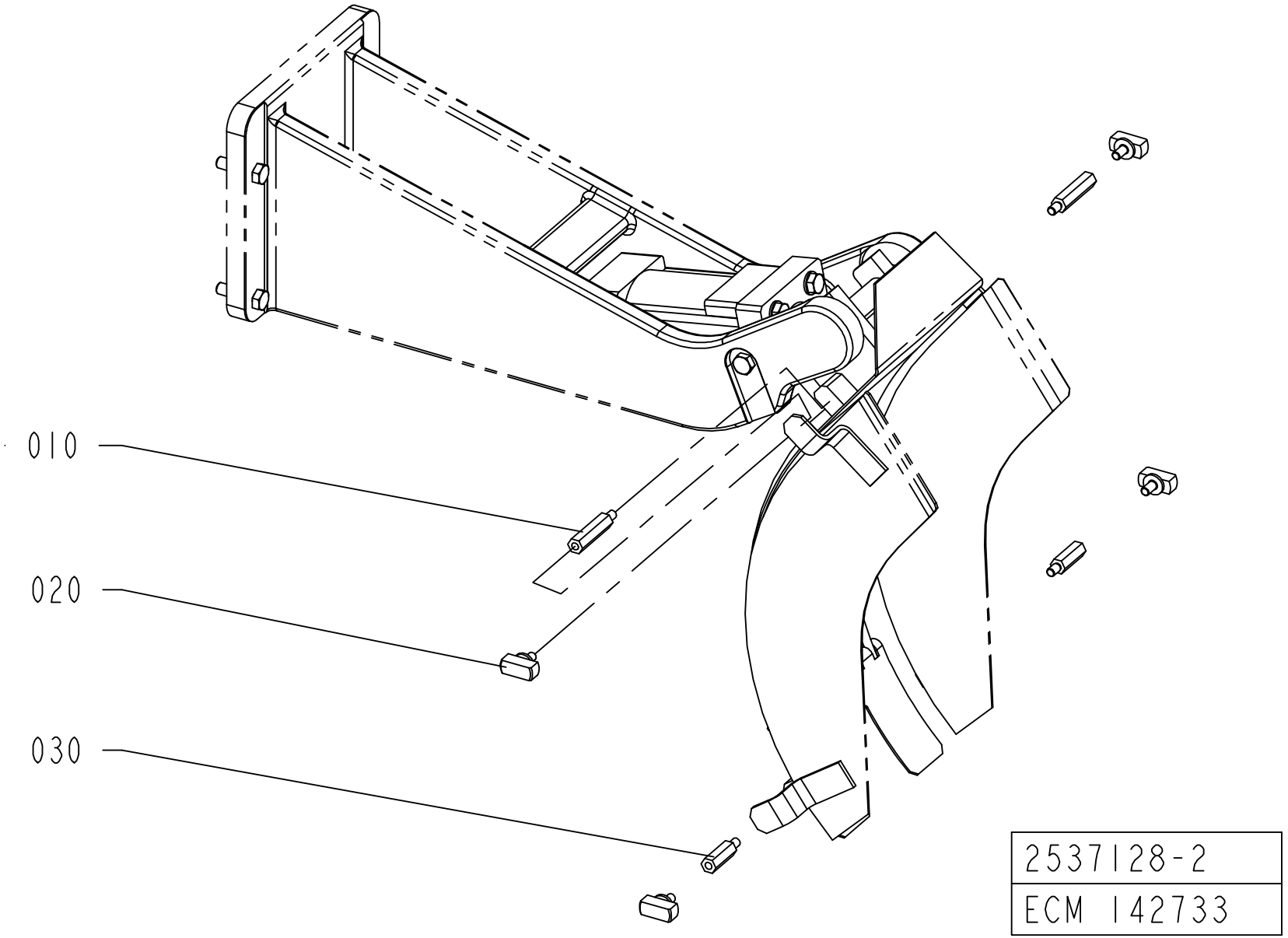
010
020
030
2537128-2
ECM 142733

Pos	Part No	UN	Qty	Description	Page No
0500B, 1000B (See drawing on page: 3-52)					
010	2537129-0000		4	SPACER	
1000SQ, 0500SQ (See drawing on page: 3-54)					
010	2598820-0000		2	SPACER	
030	2619574-0000		2	SPACER	
TBA 0250S, TBA 0200M					
010	2522202-0000		4	SPACER	
020	2652191-0000		4	KNOB	
TBA 0330S, TBA 0200B, TBA 0250B (See drawing on page: 3-52)					
010	1317218-0000		4	SPACER	
TBA 1890S, TBA 2000S (See drawing on page: 3-52)					
010	2661153-0000		4	SPACER	
Common Parts					
020	2540609-0000		4	KNOB	

Pos	Part No	UN	Qty	Description	Page No

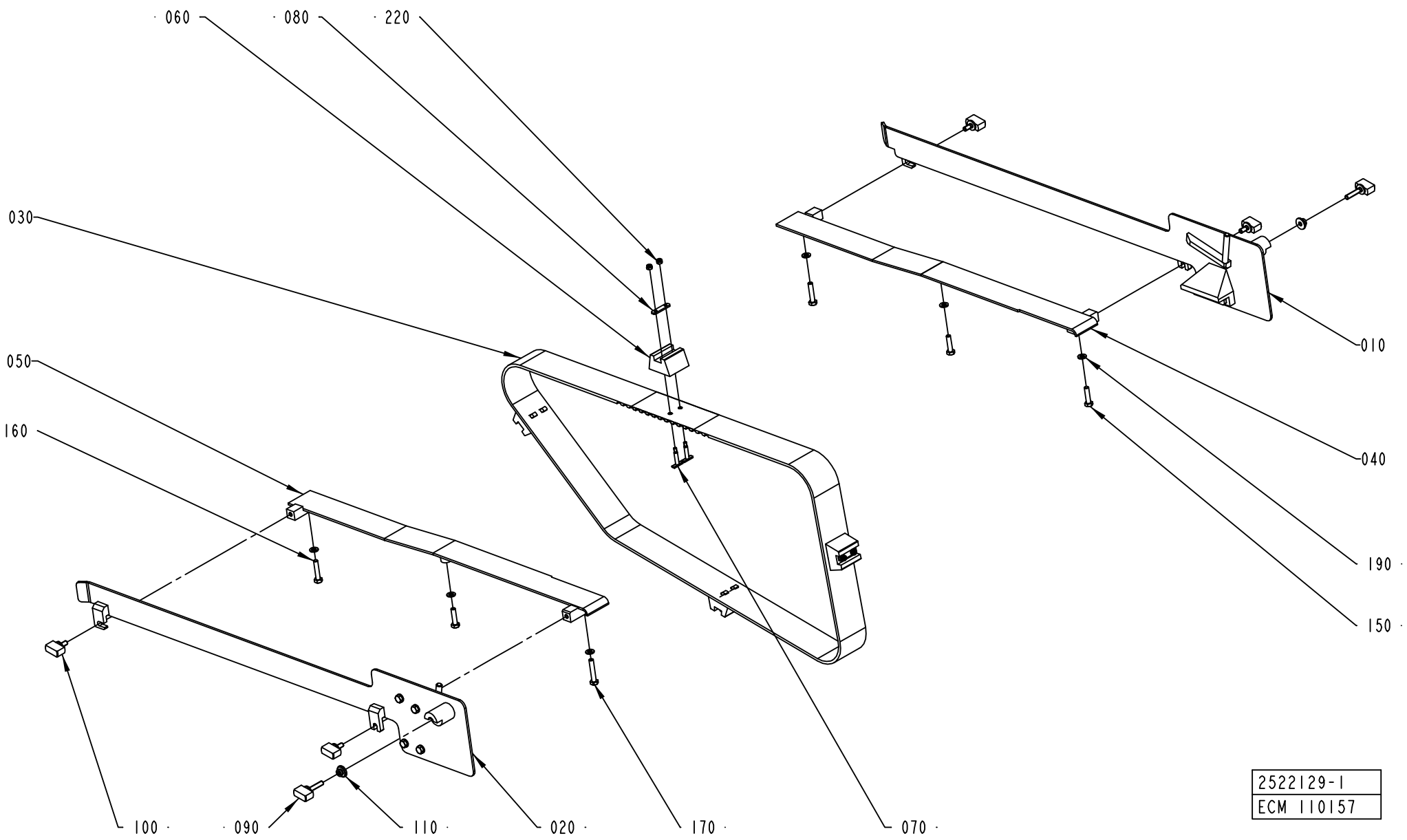
060
080
220
030
050
160
010
040
190
150
100
090
110
020
170
070
2522129-1
ECM 110157

ECM: 190869 - 20041119
Group number: 2522129-0100
Assembly Drawing: 2522129-1_1_AA

This list covers pages from 3-56 to 3-61

Pos	Part No	UN	Qty	Description	Page No
TBA 1890S (See drawing on page: 3-58)					
030	1349152-0000		1	TIMING BELT	
040	2665201-0000		1	GUIDE	
050	2665200-0000		1	GUIDE	
060	1282848-0000		3	CARRIER	
070	1346471-0000		6	WEDGE	
080	1144918-0000		3	PLATE	
090	2529785-0000		2	KNOB	
100	2529786-0000		4	KNOB	
110	2520160-0000		2	CLAMP	
150	312105-0370		4	SCREW M6S ISO 4017 M6X20 A480	
190	315105-0153		6	WASHER BRB6,4X12RFR	
220	312812-0312		6	HEXAGON NUT, NY-LOCK M4 A480	
TBA 2000S (See drawing on page: 3-58)					
030	1349152-0000		1	TIMING BELT	
040	2665201-0000		1	GUIDE	
050	2665200-0000		1	GUIDE	
060	1282848-0000		3	CARRIER	
070	1346471-0000		6	WEDGE	
080	1144918-0000		3	PLATE	
090	2529785-0000		2	KNOB	
100	2529786-0000		4	KNOB	
110	2520160-0000		2	CLAMP	
150	312105-0370		4	SCREW M6S ISO 4017 M6X20 A480	
190	315105-0153		6	WASHER BRB6,4X12RFR	
220	312812-0312		6	HEXAGON NUT, NY-LOCK M4 A480	
TBA 0200B (See drawing on page: 3-60)					
030	1144783-0000		1	TIMING BELT	
040	1282290-0000		1	GUIDE	
050	1282291-0000		1	GUIDE	
060	1282287-0000		4	CARRIER	
070	1346736-0000		8	WEDGE	
080	1144918-0000		4	PLATE	
090	2652191-0000		2	KNOB	
110	2520160-0000		2	CLAMP	
120	1499476-0000		1	HOLDER	
130	1499475-0000		1	HOLDER	
150	312105-0372		5	SCREW M6S ISO 4017 M6X25 A480	
160	312109-0374		2	SCREW M6S ISO 4017 M6X30 A480	
190	315105-0153		10	WASHER BRB6,4X12RFR	
220	312812-0312		8	HEXAGON NUT, NY-LOCK M4 A480	
230	312605-0316		2	HEXAGON NUT, M6M M6 A280	
250	90424-0068		1	AIR NOZZLE, G1/4, MOD. 216 BSP	
260	90458-2958		1	ELBOW PIPE JOINT, EXT.THREAD, D=8MM-G1/4	
270	342728-0103		1	PIPE COUPLING 8 MM	
280	90166-0013	MM	700	TUBE 8 MM PA BLUE	
TBA 0200M (See drawing on page: 3-60)					
030	1144783-0000		1	TIMING BELT	
040	1282290-0000		1	GUIDE	
050	1282291-0000		1	GUIDE	
060	1282287-0000		4	CARRIER	
070	1346736-0000		8	WEDGE	
080	1144918-0000		4	PLATE	
090	2652191-0000		2	KNOB	
100	2529786-0000		4	KNOB	
110	2520160-0000		2	CLAMP	
120	1499476-0000		1	HOLDER	
130	1499475-0000		1	HOLDER	
150	312105-0372		5	SCREW M6S ISO 4017 M6X25 A480	
160	312109-0374		2	SCREW M6S ISO 4017 M6X30 A480	
190	315105-0153		10	WASHER BRB6,4X12RFR	
220	312812-0312		8	HEXAGON NUT, NY-LOCK M4 A480	
230	312605-0316		2	HEXAGON NUT, M6M M6 A280	
250	90424-0068		1	AIR NOZZLE, G1/4, MOD. 216 BSP	
260	90458-2958		1	ELBOW PIPE JOINT, EXT.THREAD, D=8MM-G1/4	
270	342728-0103		1	PIPE COUPLING 8 MM	
280	90166-0013	MM	700	TUBE 8 MM PA BLUE	
TBA 0250B (See drawing on page: 3-60)					
030	1144783-0000		1	TIMING BELT	
040	1282290-0000		1	GUIDE	
050	1282291-0000		1	GUIDE	
060	1282287-0000		4	CARRIER	
070	1346736-0000		8	WEDGE	
080	1144918-0000		4	PLATE	
090	2652191-0000		2	KNOB	
110	2520160-0000		2	CLAMP	
120	1499476-0000		1	HOLDER	
130	1499475-0000		1	HOLDER	
150	312105-0372		5	SCREW M6S ISO 4017 M6X25 A480	
160	312109-0374		2	SCREW M6S ISO 4017 M6X30 A480	
190	315105-0153		10	WASHER BRB6,4X12RFR	
220	312812-0312		8	HEXAGON NUT, NY-LOCK M4 A480	
230	312605-0316		2	HEXAGON NUT, M6M M6 A280	
250	90424-0068		1	AIR NOZZLE, G1/4, MOD. 216 BSP	

Machine Type | Group Description | Used-In | Group Number | Page No

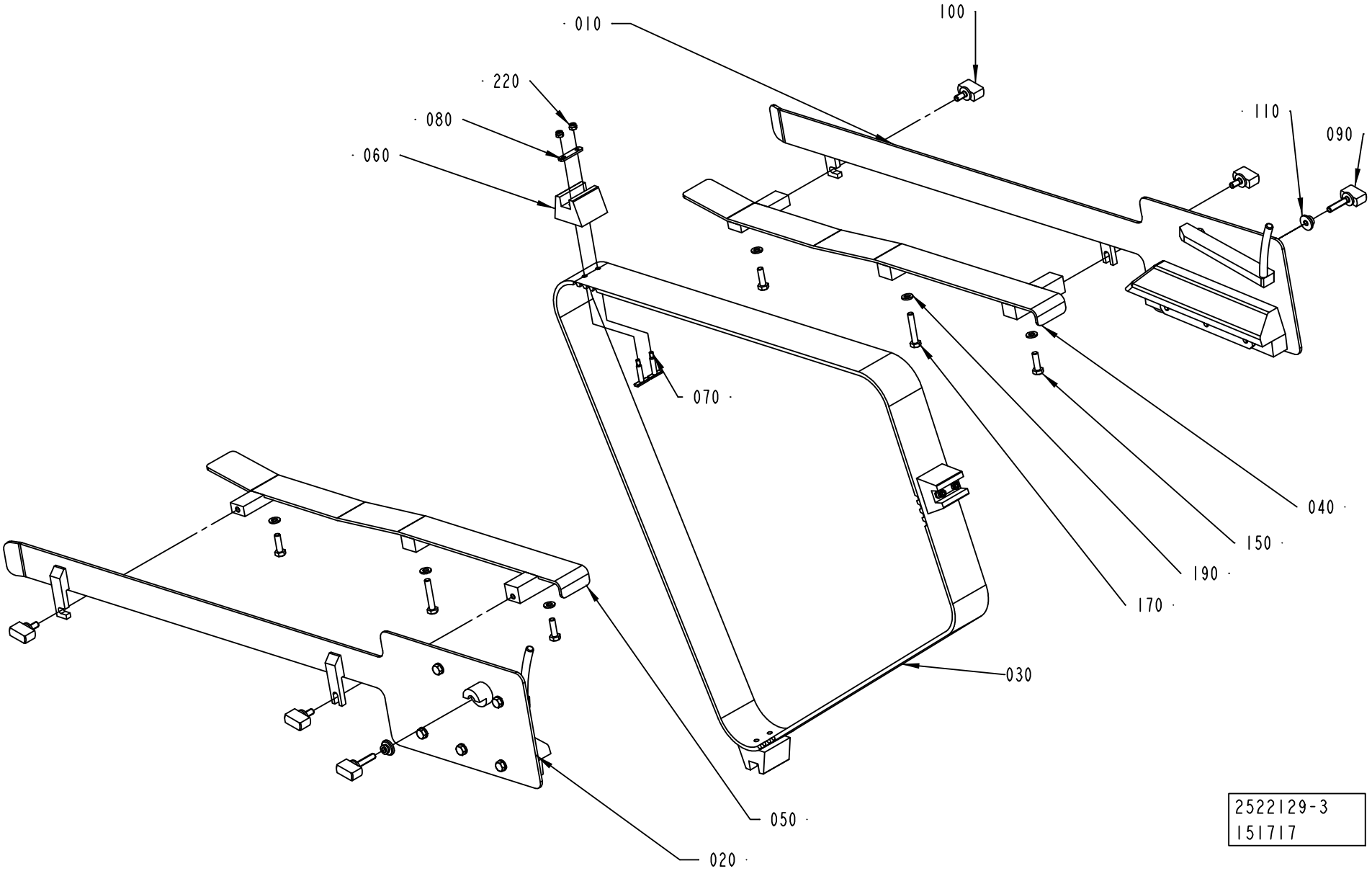
010
100
220
080
060
110
090
070
040
150
190
170
030
050
020
2522129-3
151717

Pos	Part No	UN	Qty	Description	Page No
TBA 0250B (Cont'd) (See drawing on page: 3-60)					
260	90458-2958		1	ELBOW PIPE JOINT, EXT.THREAD, D=8MM-G1/4	
270	342728-0103		1	PIPE COUPLING 8 MM	
280	90166-0013	MM	700	TUBE 8 MM PA BLUE	
TBA 0250S (See drawing on page: 3-60)					
030	1144783-0000		1	TIMING BELT	
040	1282290-0000		1	GUIDE	
050	1282291-0000		1	GUIDE	
060	1282287-0000		4	CARRIER	
070	1346736-0000		8	WEDGE	
080	1144918-0000		4	PLATE	
090	2652191-0000		2	KNOB	
100	2529786-0000		4	KNOB	
110	2520160-0000		2	CLAMP	
120	1499476-0000		1	HOLDER	
130	1499475-0000		1	HOLDER	
150	312105-0372		5	SCREW M6S ISO 4017 M6X25 A480	
160	312109-0374		2	SCREW M6S ISO 4017 M6X30 A480	
190	315105-0153		10	WASHER BRB6,4X12RFR	
220	312812-0312		8	HEXAGON NUT, NY-LOCK M4 A480	
230	312605-0316		2	HEXAGON NUT, M6M M6 A280	
250	90424-0068		1	AIR NOZZLE, G1/4, MOD. 216 BSP	
260	90458-2958		1	ELBOW PIPE JOINT, EXT.THREAD, D=8MM-G1/4	
270	342728-0103		1	PIPE COUPLING 8 MM	
280	90166-0013	MM	700	TUBE 8 MM PA BLUE	
TBA 0330S (See drawing on page: 3-60)					
030	1144783-0000		1	TIMING BELT	
040	1282290-0000		1	GUIDE	
050	1282291-0000		1	GUIDE	
060	1282287-0000		4	CARRIER	
070	1346736-0000		8	WEDGE	
080	1144918-0000		4	PLATE	
090	2652191-0000		2	KNOB	
110	2520160-0000		2	CLAMP	
120	1499476-0000		1	HOLDER	
130	1499475-0000		1	HOLDER	
150	312105-0372		5	SCREW M6S ISO 4017 M6X25 A480	
160	312109-0374		2	SCREW M6S ISO 4017 M6X30 A480	
190	315105-0153		10	WASHER BRB6,4X12RFR	
220	312812-0312		8	HEXAGON NUT, NY-LOCK M4 A480	
230	312605-0316		2	HEXAGON NUT, M6M M6 A280	
250	90424-0068		1	AIR NOZZLE, G1/4, MOD. 216 BSP	
260	90458-2958		1	ELBOW PIPE JOINT, EXT.THREAD, D=8MM-G1/4	
270	342728-0103		1	PIPE COUPLING 8 MM	
280	90166-0013	MM	700	TUBE 8 MM PA BLUE	
TBA 0500B (See drawing on page: 3-56)					
030	1144783-0000		1	TIMING BELT	
060	1144919-0000		4	CARRIER	
080	1144918-0000		4	PLATE	
090	2529785-0000		2	KNOB	
110	2520160-0000		2	CLAMP	
150	312105-0372		3	SCREW M6S ISO 4017 M6X25 A480	
160	312109-0374		2	SCREW M6S ISO 4017 M6X30 A480	
190	315105-0153		6	WASHER BRB6,4X12RFR	
220	312812-0312		8	HEXAGON NUT, NY-LOCK M4 A480	
TBA 1000B (See drawing on page: 3-56)					
030	1144783-0000		1	TIMING BELT	
060	1144919-0000		4	CARRIER	
080	1144918-0000		4	PLATE	
090	2529785-0000		2	KNOB	
110	2520160-0000		2	CLAMP	
150	312105-0372		3	SCREW M6S ISO 4017 M6X25 A480	
160	312109-0374		2	SCREW M6S ISO 4017 M6X30 A480	
190	315105-0153		6	WASHER BRB6,4X12RFR	
220	312812-0312		8	HEXAGON NUT, NY-LOCK M4 A480	
Common Parts					
010	2527704-0100		1	GUIDE	**3-63, 3-65**
020	2527703-0100		1	GUIDE	**3-67, 3-69, 3-71**
170	312109-0376		1	SCREW M6S ISO 4017 M6X35 A480	

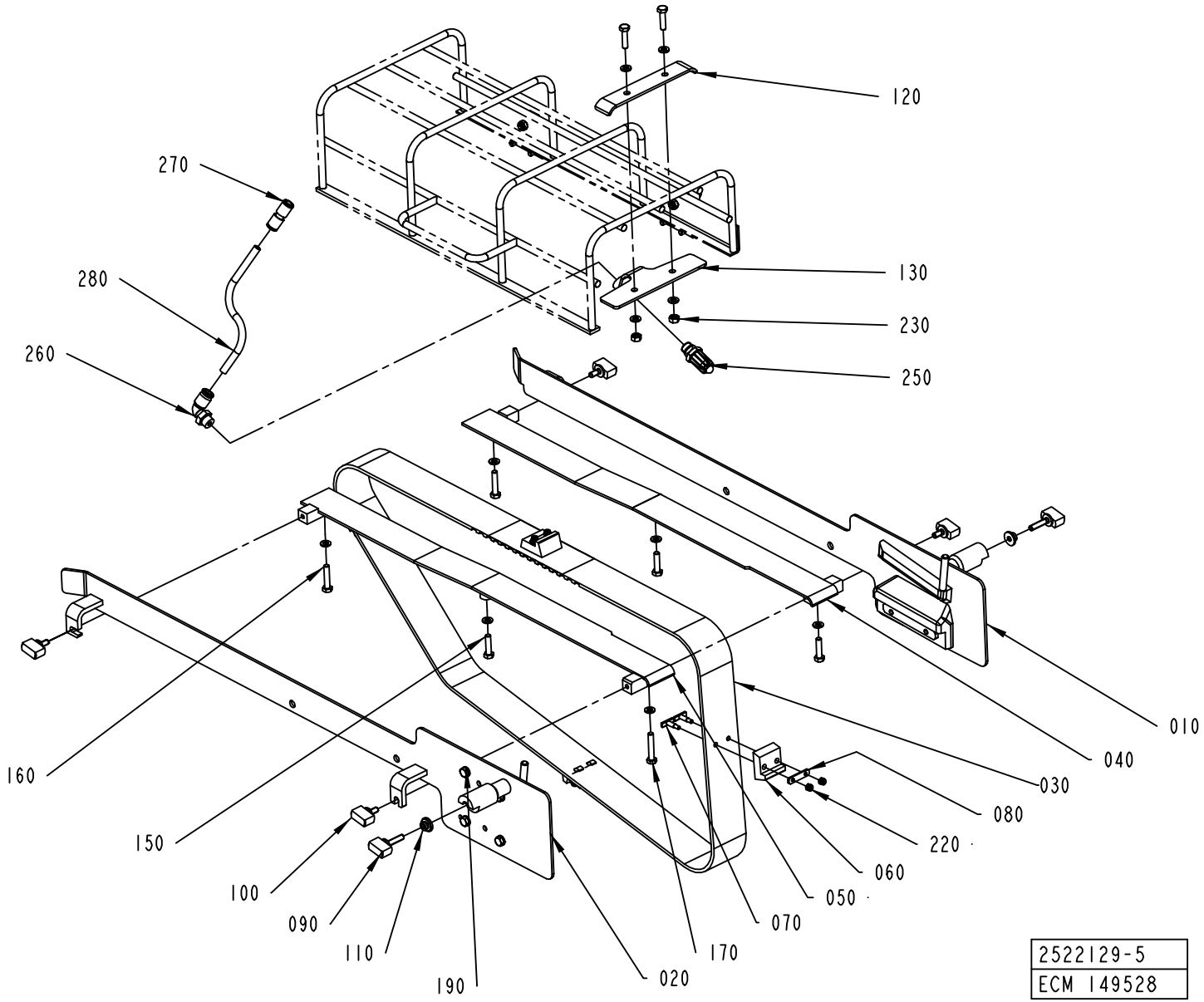
120
270
280
260
130
230
250
010
040
030
080
220
060
050
070
170
020
190
110
090
100
150
160
2522129-5
ECM 149528

Pos	Part No	UN	Qty	Description	Page No	Pos	Part No	UN	Qty	Description	Page No

SEE PREVIOUS LISTS PAGES: 3-57, 3-59.

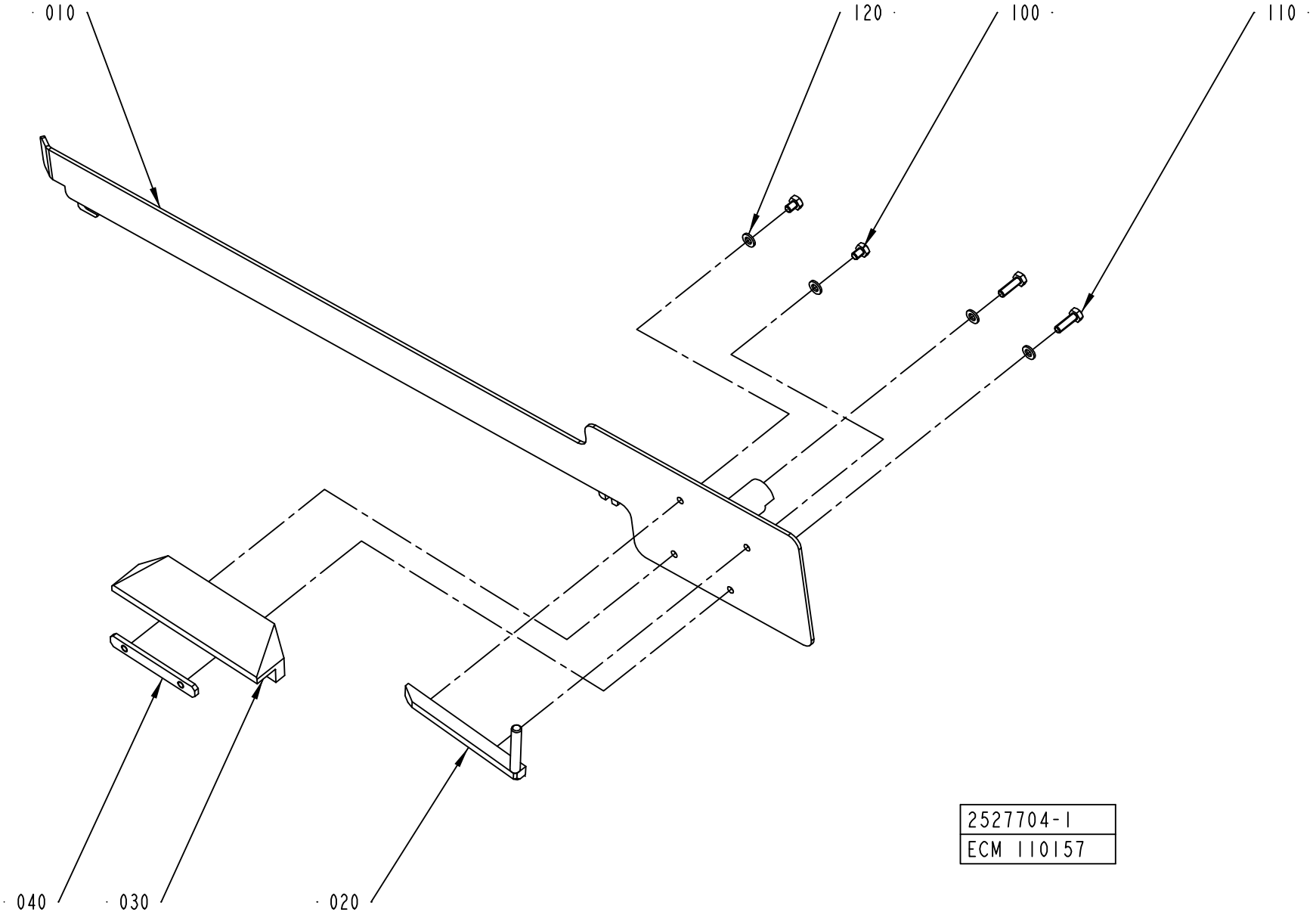
010
120
100
110
040
030
020
2527704-1
ECM 110157

ECM: 190924 - 20041104
Group number: 2527704-0100
Assembly Drawing: 2527704-1_1_AA

This list covers pages from 3-62 to 3-65

Pos	Part No	UN	Qty	Description	Page No
TBA 0200B (See drawing on pages: 3-64, 4-32)					
010	2526578-0000		1	GUIDE	
020	1348148-0000		1	BAR	
030	1348136-0000		1	SLIDE	
040	1348169-0000		1	PLATE	
050	2664200-0000		1	GUIDE	
120	315105-0153		6	WASHER BRB6,4X12RFR	
130	312605-0316		2	HEXAGON NUT, M6M M6 A280	
TBA 0200M (See drawing on pages: 3-64, 4-32)					
010	2657937-0000		1	GUIDE	
020	2657932-0000		1	BAR	
030	2657935-0000		1	SLIDE	
040	1348169-0000		1	PLATE	
050	1517526-0000		1	GUIDE	
110	312105-0370		2	SCREW M6S ISO 4017 M6X20 A480	
120	315105-0153		6	WASHER BRB6,4X12RFR	
130	312605-0316		2	HEXAGON NUT, M6M M6 A280	
TBA 0250B (See drawing on pages: 3-64, 4-32)					
010	2526578-0000		1	GUIDE	
020	1348147-0000		1	BAR	
030	1348135-0000		1	SLIDE	
040	1348169-0000		1	PLATE	
050	2664200-0000		1	GUIDE	
120	315105-0153		6	WASHER BRB6,4X12RFR	
130	312605-0316		2	HEXAGON NUT, M6M M6 A280	
TBA 0250S (See drawing on pages: 3-64, 4-32)					
010	2657937-0000		1	GUIDE	
020	2529608-0000		1	BAR	
030	2529605-0000		1	SLIDE	
040	1279409-0000		1	PLATE	
050	1517526-0000		1	GUIDE	
110	312105-0370		2	SCREW M6S ISO 4017 M6X20 A480	
120	315105-0153		6	WASHER BRB6,4X12RFR	
130	312605-0316		2	HEXAGON NUT, M6M M6 A280	
TBA 0330S (See drawing on pages: 3-64, 4-32)					
010	2526578-0000		1	GUIDE	
020	2545000-0000		1	BAR	
030	2544997-0000		1	SLIDE	
040	1279409-0000		1	PLATE	
050	2664200-0000		1	GUIDE	
120	315105-0153		6	WASHER BRB6,4X12RFR	
130	312605-0316		2	HEXAGON NUT, M6M M6 A280	

Pos	Part No	UN	Qty	Description	Page No
TBA 0500B (See drawing on pages: 3-62, 4-30)					
010	2522166-0000		1	GUIDE	
020	1539877-0000		1	BAR	
030	1539874-0000		1	SLIDE	
040	1539876-0000		1	PLATE	
110	312105-0370		2	SCREW M6S ISO 4017 M6X20 A480	
120	315105-0153		6	WASHER BRB6,4X12RFR	
TBA 1000B (See drawing on pages: 3-62, 4-30)					
010	2518129-0000		1	GUIDE	
020	1348144-0000		1	BAR	
030	1348133-0000		1	SLIDE	
040	1279409-0000		1	PLATE	
110	312105-0370		2	SCREW M6S ISO 4017 M6X20 A480	
120	315105-0153		6	WASHER BRB6,4X12RFR	
TBA 1890S (See drawing on pages: 3-62, 4-30)					
010	2665202-0000		1	GUIDE	
020	1317805-0000		1	BAR	
030	2594905-0000		1	SLIDE	
040	1144621-0000		1	PLATE	
110	312109-0374		3	SCREW M6S ISO 4017 M6X30 A480	
120	315105-0153		5	WASHER BRB6,4X12RFR	
TBA 2000S (See drawing on pages: 3-62, 4-30)					
010	2678622-0000		1	GUIDE	
020	1317805-0000		1	BAR	
030	2598487-0000		1	SLIDE	
040	1144621-0000		1	PLATE	
110	312109-0374		3	SCREW M6S ISO 4017 M6X30 A480	
120	315105-0153		5	WASHER BRB6,4X12RFR	
Common Parts					
100	312105-0362		2	SCREW M6S ISO 4017 M6X8 A480	

Machine Type	Group Description	Used-In	Group Number	Page No

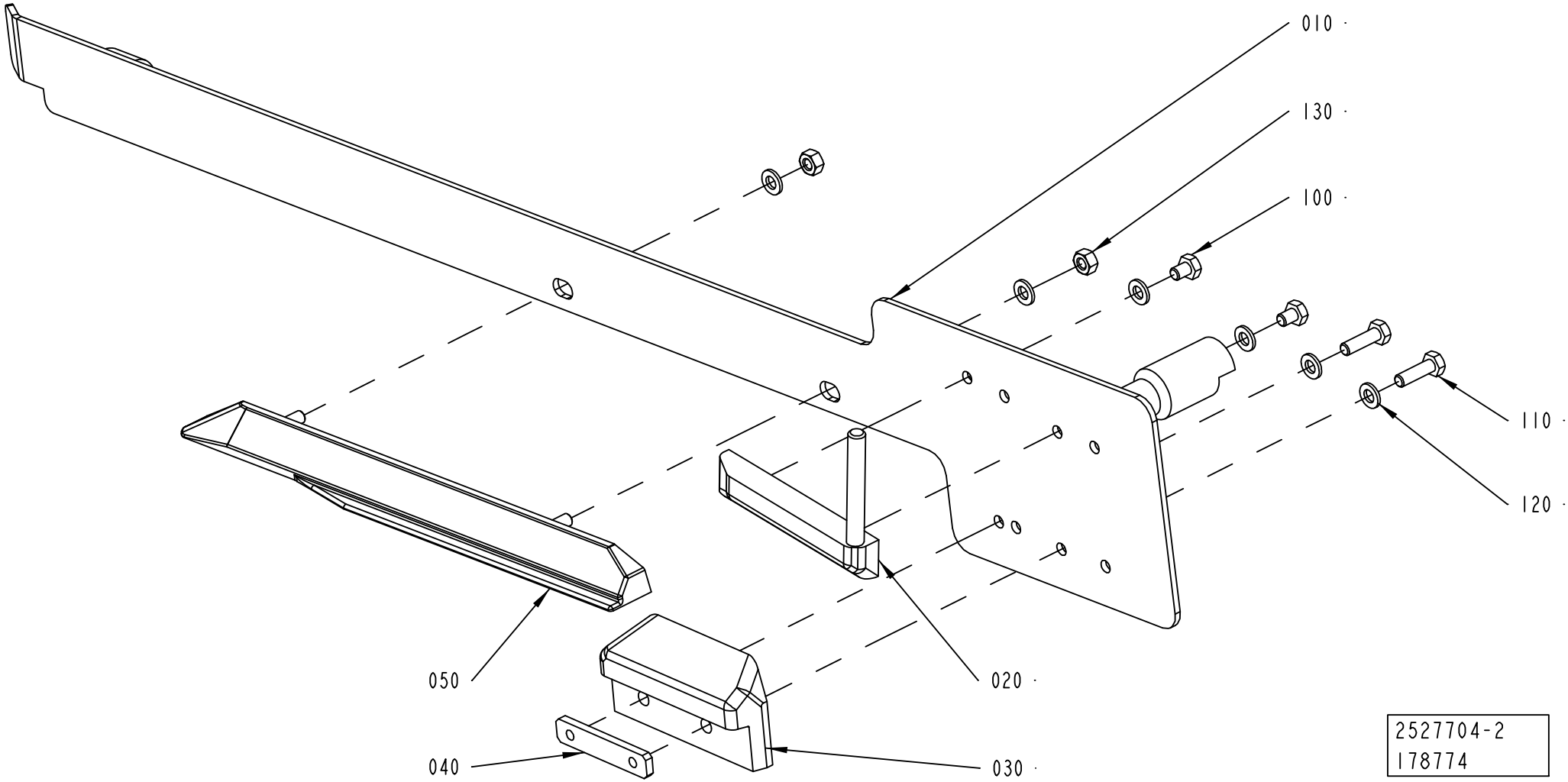
010
130
100
110
120
050
020
040
030
2527704-2
178774

ECM: 190924 - 20041104
Group number: 2527704-0100
Assembly Drawing: 2527704-2_1_AA

This list covers pages from 3-62 to 3-65

Pos	Part No	UN	Qty	Description	Page No
TBA 0200B (See drawing on pages: 3-64, 4-32)					
010	2526578-0000		1	GUIDE	
020	1348148-0000		1	BAR	
030	1348136-0000		1	SLIDE	
040	1348169-0000		1	PLATE	
050	2664200-0000		1	GUIDE	
120	315105-0153		6	WASHER BRB6,4X12RFR	
130	312605-0316		2	HEXAGON NUT, M6M M6 A280	
TBA 0200M (See drawing on pages: 3-64, 4-32)					
010	2657937-0000		1	GUIDE	
020	2657932-0000		1	BAR	
030	2657935-0000		1	SLIDE	
040	1348169-0000		1	PLATE	
050	1517526-0000		1	GUIDE	
110	312105-0370		2	SCREW M6S ISO 4017 M6X20 A480	
120	315105-0153		6	WASHER BRB6,4X12RFR	
130	312605-0316		2	HEXAGON NUT, M6M M6 A280	
TBA 0250B (See drawing on pages: 3-64, 4-32)					
010	2526578-0000		1	GUIDE	
020	1348147-0000		1	BAR	
030	1348135-0000		1	SLIDE	
040	1348169-0000		1	PLATE	
050	2664200-0000		1	GUIDE	
120	315105-0153		6	WASHER BRB6,4X12RFR	
130	312605-0316		2	HEXAGON NUT, M6M M6 A280	
TBA 0250S (See drawing on pages: 3-64, 4-32)					
010	2657937-0000		1	GUIDE	
020	2529608-0000		1	BAR	
030	2529605-0000		1	SLIDE	
040	1279409-0000		1	PLATE	
050	1517526-0000		1	GUIDE	
110	312105-0370		2	SCREW M6S ISO 4017 M6X20 A480	
120	315105-0153		6	WASHER BRB6,4X12RFR	
130	312605-0316		2	HEXAGON NUT, M6M M6 A280	
TBA 0330S (See drawing on pages: 3-64, 4-32)					
010	2526578-0000		1	GUIDE	
020	2545000-0000		1	BAR	
030	2544997-0000		1	SLIDE	
040	1279409-0000		1	PLATE	
050	2664200-0000		1	GUIDE	
120	315105-0153		6	WASHER BRB6,4X12RFR	
130	312605-0316		2	HEXAGON NUT, M6M M6 A280	

Pos	Part No	UN	Qty	Description	Page No
TBA 0500B (See drawing on pages: 3-62, 4-30)					
010	2522166-0000		1	GUIDE	
020	1539877-0000		1	BAR	
030	1539874-0000		1	SLIDE	
040	1539876-0000		1	PLATE	
110	312105-0370		2	SCREW M6S ISO 4017 M6X20 A480	
120	315105-0153		6	WASHER BRB6,4X12RFR	
TBA 1000B (See drawing on pages: 3-62, 4-30)					
010	2518129-0000		1	GUIDE	
020	1348144-0000		1	BAR	
030	1348133-0000		1	SLIDE	
040	1279409-0000		1	PLATE	
110	312105-0370		2	SCREW M6S ISO 4017 M6X20 A480	
120	315105-0153		6	WASHER BRB6,4X12RFR	
TBA 1890S (See drawing on pages: 3-62, 4-30)					
010	2665202-0000		1	GUIDE	
020	1317805-0000		1	BAR	
030	2594905-0000		1	SLIDE	
040	1144621-0000		1	PLATE	
110	312109-0374		3	SCREW M6S ISO 4017 M6X30 A480	
120	315105-0153		5	WASHER BRB6,4X12RFR	
TBA 2000S (See drawing on pages: 3-62, 4-30)					
010	2678622-0000		1	GUIDE	
020	1317805-0000		1	BAR	
030	2598487-0000		1	SLIDE	
040	1144621-0000		1	PLATE	
110	312109-0374		3	SCREW M6S ISO 4017 M6X30 A480	
120	315105-0153		5	WASHER BRB6,4X12RFR	
Common Parts					
100	312105-0362		2	SCREW M6S ISO 4017 M6X8 A480	

Machine Type | Group Description | Used-In | Group Number | Page No

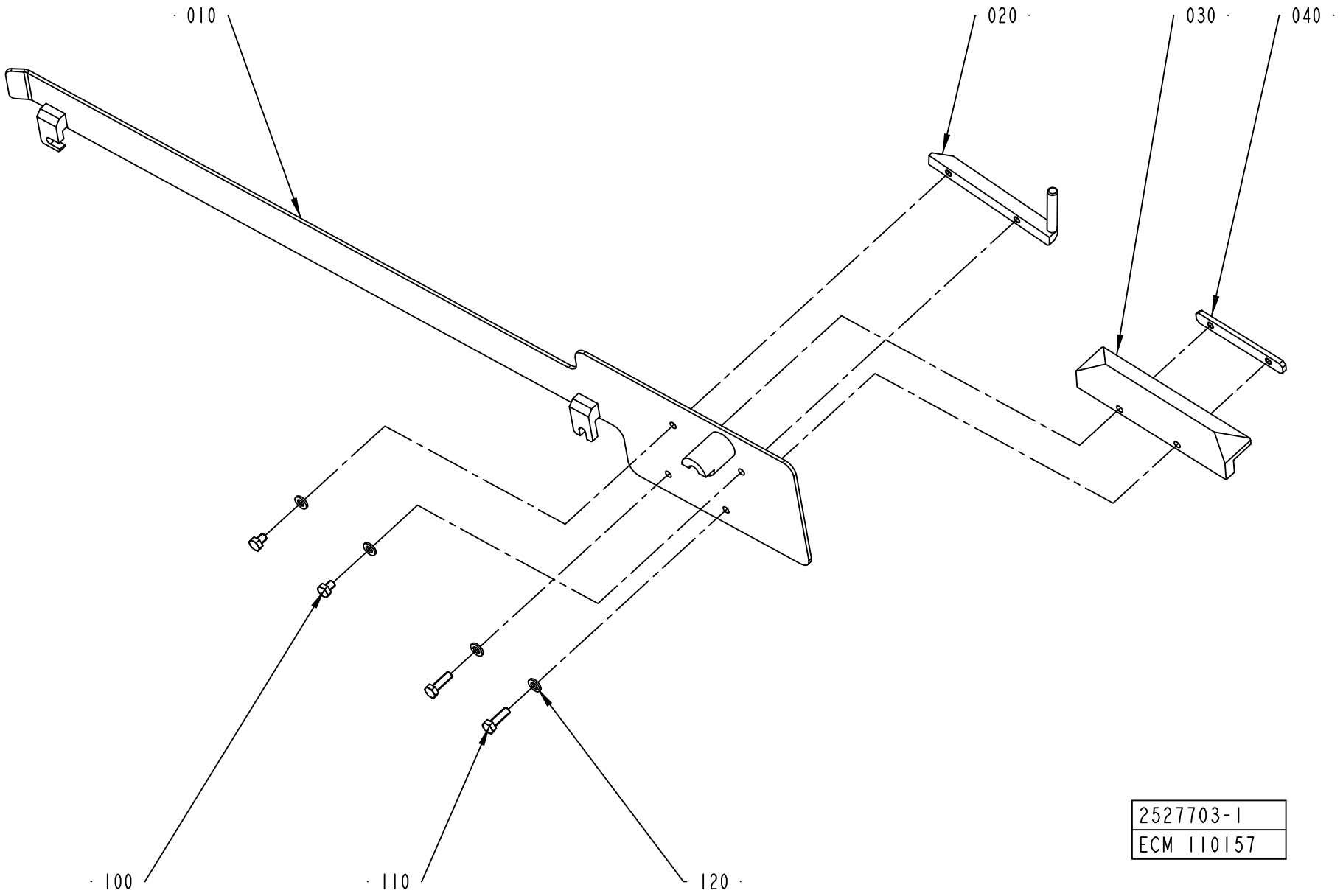
010
020
030
040
100
110
120
2527703-1
ECM 110157

ECM: 193610 - 20041201
Group number: 2527703-0100
Assembly Drawing: 2527703-1_1_AA

This list covers pages from 3-66 to 3-71

Pos	Part No	UN	Qty	Description	Page No
TBA 1000SQ					
120	315105-0153		7	WASHER BRB6,4X12RFR	
TBA 1890S (See drawing on pages: 3-66, 4-26)					
010	2665203-0000		1	GUIDE	
020	1334271-0000		1	BAR	
030	2594906-0000		1	SLIDE	
040	1144621-0000		1	PLATE	
110	312109-0374		3	SCREW M6S ISO 4017 M6X30 A480	
120	315105-0153		5	WASHER BRB6,4X12RFR	
TBA 2000S (See drawing on pages: 3-66, 4-26)					
010	2678621-0000		1	GUIDE	
020	1334271-0000		1	BAR	
030	2598488-0000		1	SLIDE	
040	1144621-0000		1	PLATE	
110	312109-0374		3	SCREW M6S ISO 4017 M6X30 A480	
120	315105-0153		5	WASHER BRB6,4X12RFR	
TBA 0200B (See drawing on pages: 3-68, 4-28)					
010	2526579-0000		1	GUIDE	
020	1348154-0000		1	BAR	
030	1348142-0000		1	SLIDE	
040	1348169-0000		1	PLATE	
050	2664201-0000		1	GUIDE	
110	312105-0370		2	SCREW M6S ISO 4017 M6X20 A480	
120	315105-0153		6	WASHER BRB6,4X12RFR	
130	312605-0316		2	HEXAGON NUT, M6M M6 A280	
TBA 0200M (See drawing on pages: 3-68, 4-28)					
010	2657936-0000		1	GUIDE	
020	2657933-0000		1	BAR	
030	2657934-0000		1	SLIDE	
040	1348169-0000		1	PLATE	
050	1517527-0000		1	GUIDE	
110	312105-0370		2	SCREW M6S ISO 4017 M6X20 A480	
120	315105-0153		6	WASHER BRB6,4X12RFR	
130	312605-0316		2	HEXAGON NUT, M6M M6 A280	
TBA 0250B (See drawing on pages: 3-68, 4-28)					
010	2526579-0000		1	GUIDE	
020	1348153-0000		1	BAR	
030	1348141-0000		1	SLIDE	
040	1348169-0000		1	PLATE	
050	2664201-0000		1	GUIDE	
110	312105-0370		2	SCREW M6S ISO 4017 M6X20 A480	
120	315105-0153		6	WASHER BRB6,4X12RFR	
130	312605-0316		2	HEXAGON NUT, M6M M6 A280	
TBA 0250S (See drawing on pages: 3-68, 4-28)					
010	2657936-0000		1	GUIDE	
020	2529607-0000		1	BAR	
030	2529606-0000		1	SLIDE	
040	1279409-0000		1	PLATE	
050	1517527-0000		1	GUIDE	
110	312105-0370		2	SCREW M6S ISO 4017 M6X20 A480	
120	315105-0153		6	WASHER BRB6,4X12RFR	
130	312605-0316		2	HEXAGON NUT, M6M M6 A280	
TBA 0330S (See drawing on pages: 3-68, 4-28)					
010	2526579-0000		1	GUIDE	
020	2544999-0000		1	BAR	
030	2544998-0000		1	SLIDE	
040	1279409-0000		1	PLATE	
050	2664201-0000		1	GUIDE	
110	312105-0370		2	SCREW M6S ISO 4017 M6X20 A480	
120	315105-0153		6	WASHER BRB6,4X12RFR	
130	312605-0316		2	HEXAGON NUT, M6M M6 A280	
TBA 0500B (See drawing on pages: 3-66, 4-26)					
010	2522167-0000		1	GUIDE	
020	1539878-0000		1	BAR	
030	1539875-0000		1	SLIDE	
040	1539876-0000		1	PLATE	
110	312105-0370		2	SCREW M6S ISO 4017 M6X20 A480	
120	315105-0153		6	WASHER BRB6,4X12RFR	
TBA 1000B (See drawing on pages: 3-66, 3-70, 4-26)					
010	2518130-0000		1	GUIDE	
020	1348150-0000		1	BAR	
030	1348139-0000		1	SLIDE	
040	1279409-0000		1	PLATE	
110	312105-0370		2	SCREW M6S ISO 4017 M6X20 A480	
120	315105-0153		6	WASHER BRB6,4X12RFR	
Common Parts					
100	312105-0362		2	SCREW M6S ISO 4017 M6X8 A480	

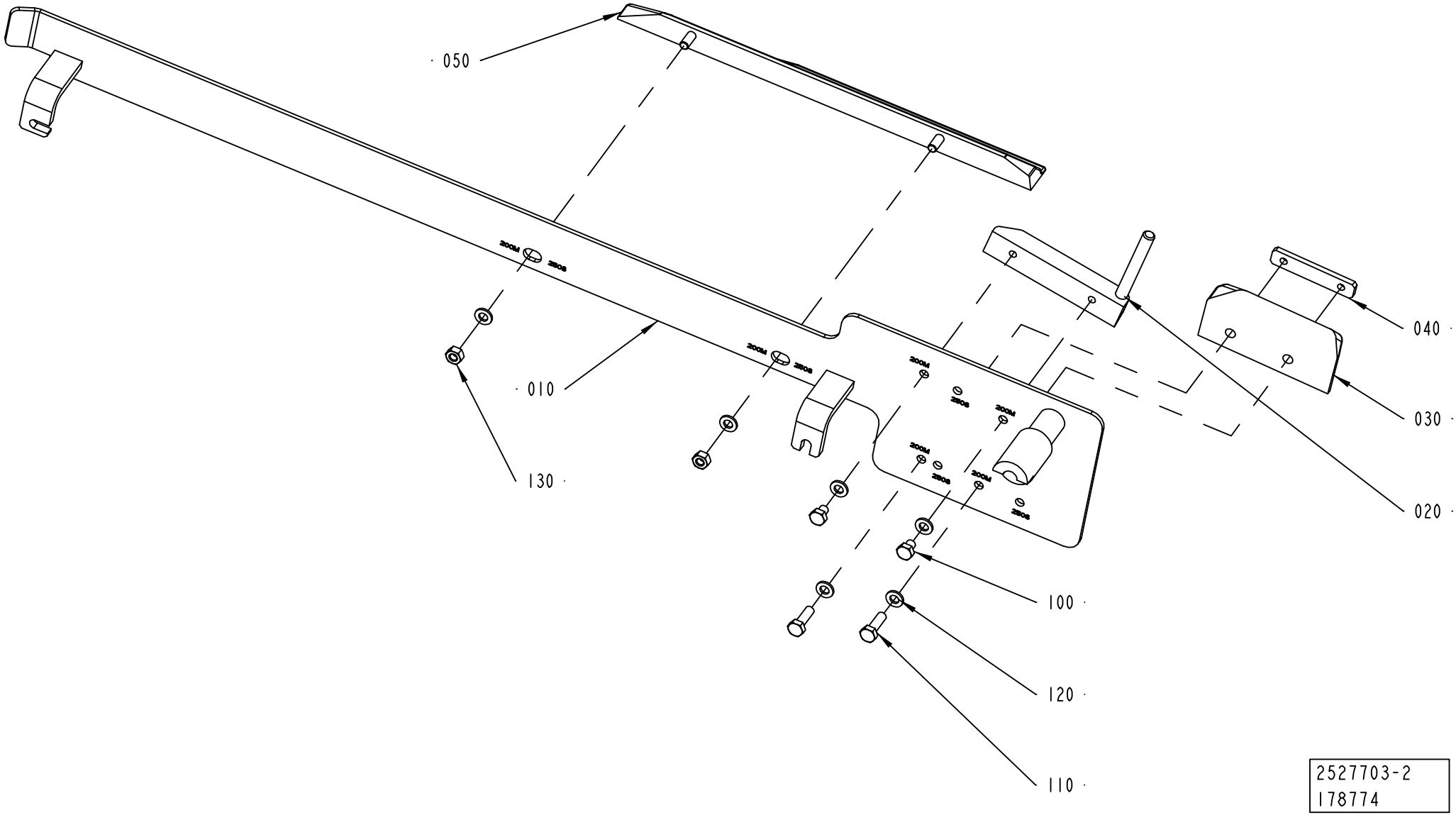
050
010
130
040
030
020
100
120
110
2527703-2
178774

Pos	Part No	UN	Qty	Description	Page No
TBA 1000SQ					
120	315105-0153		7	WASHER BRB6,4X12RFR	
TBA 1890S (See drawing on pages: 3-66, 4-26)					
010	2665203-0000		1	GUIDE	
020	1334271-0000		1	BAR	
030	2594906-0000		1	SLIDE	
040	1144621-0000		1	PLATE	
110	312109-0374		3	SCREW M6S ISO 4017 M6X30 A480	
120	315105-0153		5	WASHER BRB6,4X12RFR	
TBA 2000S (See drawing on pages: 3-66, 4-26)					
010	2678621-0000		1	GUIDE	
020	1334271-0000		1	BAR	
030	2598488-0000		1	SLIDE	
040	1144621-0000		1	PLATE	
110	312109-0374		3	SCREW M6S ISO 4017 M6X30 A480	
120	315105-0153		5	WASHER BRB6,4X12RFR	
TBA 0200B (See drawing on pages: 3-68, 4-28)					
010	2526579-0000		1	GUIDE	
020	1348154-0000		1	BAR	
030	1348142-0000		1	SLIDE	
040	1348169-0000		1	PLATE	
050	2664201-0000		1	GUIDE	
110	312105-0370		2	SCREW M6S ISO 4017 M6X20 A480	
120	315105-0153		6	WASHER BRB6,4X12RFR	
130	312605-0316		2	HEXAGON NUT, M6M M6 A280	
TBA 0200M (See drawing on pages: 3-68, 4-28)					
010	2657936-0000		1	GUIDE	
020	2657933-0000		1	BAR	
030	2657934-0000		1	SLIDE	
040	1348169-0000		1	PLATE	
050	1517527-0000		1	GUIDE	
110	312105-0370		2	SCREW M6S ISO 4017 M6X20 A480	
120	315105-0153		6	WASHER BRB6,4X12RFR	
130	312605-0316		2	HEXAGON NUT, M6M M6 A280	
TBA 0250B (See drawing on pages: 3-68, 4-28)					
010	2526579-0000		1	GUIDE	
020	1348153-0000		1	BAR	
030	1348141-0000		1	SLIDE	
040	1348169-0000		1	PLATE	
050	2664201-0000		1	GUIDE	
110	312105-0370		2	SCREW M6S ISO 4017 M6X20 A480	
120	315105-0153		6	WASHER BRB6,4X12RFR	
130	312605-0316		2	HEXAGON NUT, M6M M6 A280	
TBA 0250S (See drawing on pages: 3-68, 4-28)					
010	2657936-0000		1	GUIDE	
020	2529607-0000		1	BAR	
030	2529606-0000		1	SLIDE	
040	1279409-0000		1	PLATE	
050	1517527-0000		1	GUIDE	
110	312105-0370		2	SCREW M6S ISO 4017 M6X20 A480	
120	315105-0153		6	WASHER BRB6,4X12RFR	
130	312605-0316		2	HEXAGON NUT, M6M M6 A280	
TBA 0330S (See drawing on pages: 3-68, 4-28)					
010	2526579-0000		1	GUIDE	
020	2544999-0000		1	BAR	
030	2544998-0000		1	SLIDE	
040	1279409-0000		1	PLATE	
050	2664201-0000		1	GUIDE	
110	312105-0370		2	SCREW M6S ISO 4017 M6X20 A480	
120	315105-0153		6	WASHER BRB6,4X12RFR	
130	312605-0316		2	HEXAGON NUT, M6M M6 A280	
TBA 0500B (See drawing on pages: 3-66, 4-26)					
010	2522167-0000		1	GUIDE	
020	1539878-0000		1	BAR	
030	1539875-0000		1	SLIDE	
040	1539876-0000		1	PLATE	
110	312105-0370		2	SCREW M6S ISO 4017 M6X20 A480	
120	315105-0153		6	WASHER BRB6,4X12RFR	
TBA 1000B (See drawing on pages: 3-66, 3-70, 4-26)					
010	2518130-0000		1	GUIDE	
020	1348150-0000		1	BAR	
030	1348139-0000		1	SLIDE	
040	1279409-0000		1	PLATE	
110	312105-0370		2	SCREW M6S ISO 4017 M6X20 A480	
120	315105-0153		6	WASHER BRB6,4X12RFR	
Common Parts					
100	312105-0362		2	SCREW M6S ISO 4017 M6X8 A480	

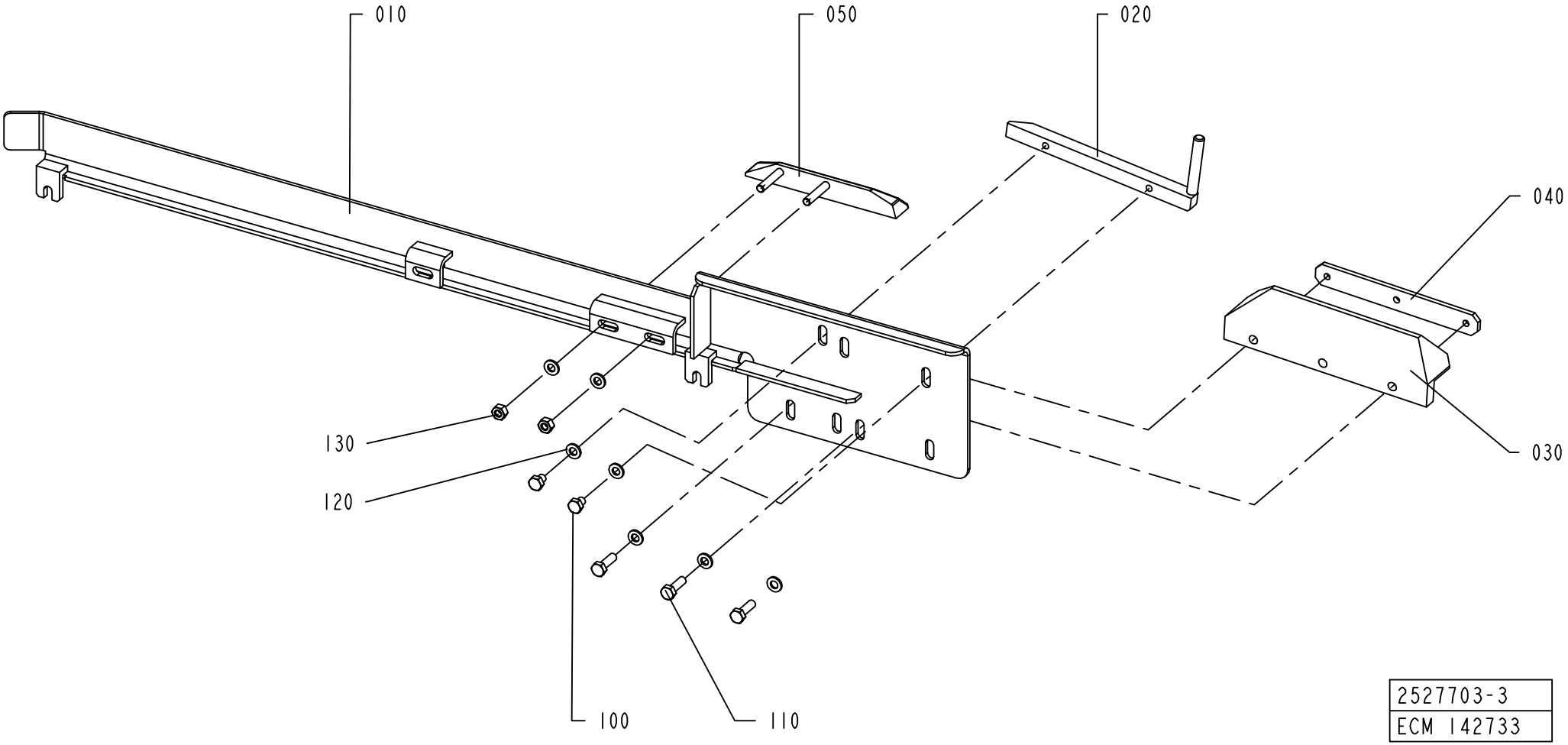
010
050
020
040
030
130
120
100
110
2527703-3
ECM 142733

ECM: 193610 - 20041201
Group number: 2527703-0100
Assembly Drawing: 2527703-3_1_AA

This list covers pages from 3-66 to 3-71

Pos	Part No	UN	Qty	Description	Page No
TBA 1000SQ					
120	315105-0153		7	WASHER BRB6,4X12RFR	
TBA 1890S (See drawing on pages: 3-66, 4-26)					
010	2665203-0000		1	GUIDE	
020	1334271-0000		1	BAR	
030	2594906-0000		1	SLIDE	
040	1144621-0000		1	PLATE	
110	312109-0374		3	SCREW M6S ISO 4017 M6X30 A480	
120	315105-0153		5	WASHER BRB6,4X12RFR	
TBA 2000S (See drawing on pages: 3-66, 4-26)					
010	2678621-0000		1	GUIDE	
020	1334271-0000		1	BAR	
030	2598488-0000		1	SLIDE	
040	1144621-0000		1	PLATE	
110	312109-0374		3	SCREW M6S ISO 4017 M6X30 A480	
120	315105-0153		5	WASHER BRB6,4X12RFR	
TBA 0200B (See drawing on pages: 3-68, 4-28)					
010	2526579-0000		1	GUIDE	
020	1348154-0000		1	BAR	
030	1348142-0000		1	SLIDE	
040	1348169-0000		1	PLATE	
050	2664201-0000		1	GUIDE	
110	312105-0370		2	SCREW M6S ISO 4017 M6X20 A480	
120	315105-0153		6	WASHER BRB6,4X12RFR	
130	312605-0316		2	HEXAGON NUT, M6M M6 A280	
TBA 0200M (See drawing on pages: 3-68, 4-28)					
010	2657936-0000		1	GUIDE	
020	2657933-0000		1	BAR	
030	2657934-0000		1	SLIDE	
040	1348169-0000		1	PLATE	
050	1517527-0000		1	GUIDE	
110	312105-0370		2	SCREW M6S ISO 4017 M6X20 A480	
120	315105-0153		6	WASHER BRB6,4X12RFR	
130	312605-0316		2	HEXAGON NUT, M6M M6 A280	
TBA 0250B (See drawing on pages: 3-68, 4-28)					
010	2526579-0000		1	GUIDE	
020	1348153-0000		1	BAR	
030	1348141-0000		1	SLIDE	
040	1348169-0000		1	PLATE	
050	2664201-0000		1	GUIDE	
110	312105-0370		2	SCREW M6S ISO 4017 M6X20 A480	
120	315105-0153		6	WASHER BRB6,4X12RFR	
130	312605-0316		2	HEXAGON NUT, M6M M6 A280	
TBA 0250S (See drawing on pages: 3-68, 4-28)					
010	2657936-0000		1	GUIDE	
020	2529607-0000		1	BAR	
030	2529606-0000		1	SLIDE	
040	1279409-0000		1	PLATE	
050	1517527-0000		1	GUIDE	
110	312105-0370		2	SCREW M6S ISO 4017 M6X20 A480	
120	315105-0153		6	WASHER BRB6,4X12RFR	
130	312605-0316		2	HEXAGON NUT, M6M M6 A280	
TBA 0330S (See drawing on pages: 3-68, 4-28)					
010	2526579-0000		1	GUIDE	
020	2544999-0000		1	BAR	
030	2544998-0000		1	SLIDE	
040	1279409-0000		1	PLATE	
050	2664201-0000		1	GUIDE	
110	312105-0370		2	SCREW M6S ISO 4017 M6X20 A480	
120	315105-0153		6	WASHER BRB6,4X12RFR	
130	312605-0316		2	HEXAGON NUT, M6M M6 A280	
TBA 0500B (See drawing on pages: 3-66, 4-26)					
010	2522167-0000		1	GUIDE	
020	1539878-0000		1	BAR	
030	1539875-0000		1	SLIDE	
040	1539876-0000		1	PLATE	
110	312105-0370		2	SCREW M6S ISO 4017 M6X20 A480	
120	315105-0153		6	WASHER BRB6,4X12RFR	
TBA 1000B (See drawing on pages: 3-66, 3-70, 4-26)					
010	2518130-0000		1	GUIDE	
020	1348150-0000		1	BAR	
030	1348139-0000		1	SLIDE	
040	1279409-0000		1	PLATE	
110	312105-0370		2	SCREW M6S ISO 4017 M6X20 A480	
120	315105-0153		6	WASHER BRB6,4X12RFR	
Common Parts					
100	312105-0362		2	SCREW M6S ISO 4017 M6X8 A480	

Machine Type | Group Description | Used-In | Group Number | Page No

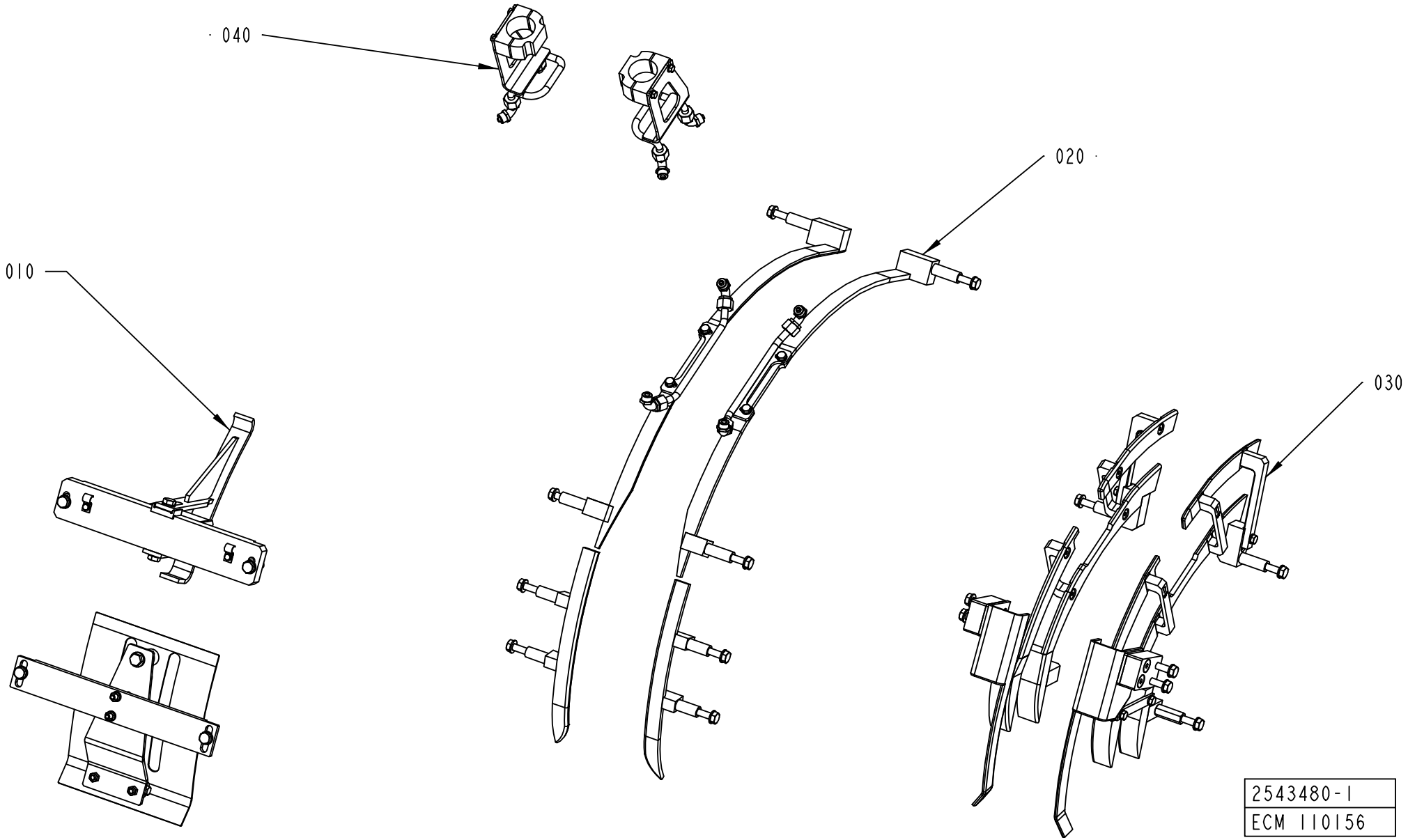
040
020
010
030
2543480-1
ECM 110156

ECM: 127231 - 20031103
Group number: 2543480-0100
Assembly Drawing: 2543480-1_1_AA

Pos	Part No	UN	Qty	Description	Page No
-					
010	2543481-0100		1	TOP SECTION	**3-75, 3-77, 3-79, 3-81**
020	2543482-0100		1	TOP RAIL	**3-83, 3-85, 3-87**
030	2603827-0100		1	FLAP GUIDE	**3-89, 3-91, 3-93, 3-95**
040	2603826-0100		1	FOLDING PART	**3-97**

Pos	Part No	UN	Qty	Description	Page No

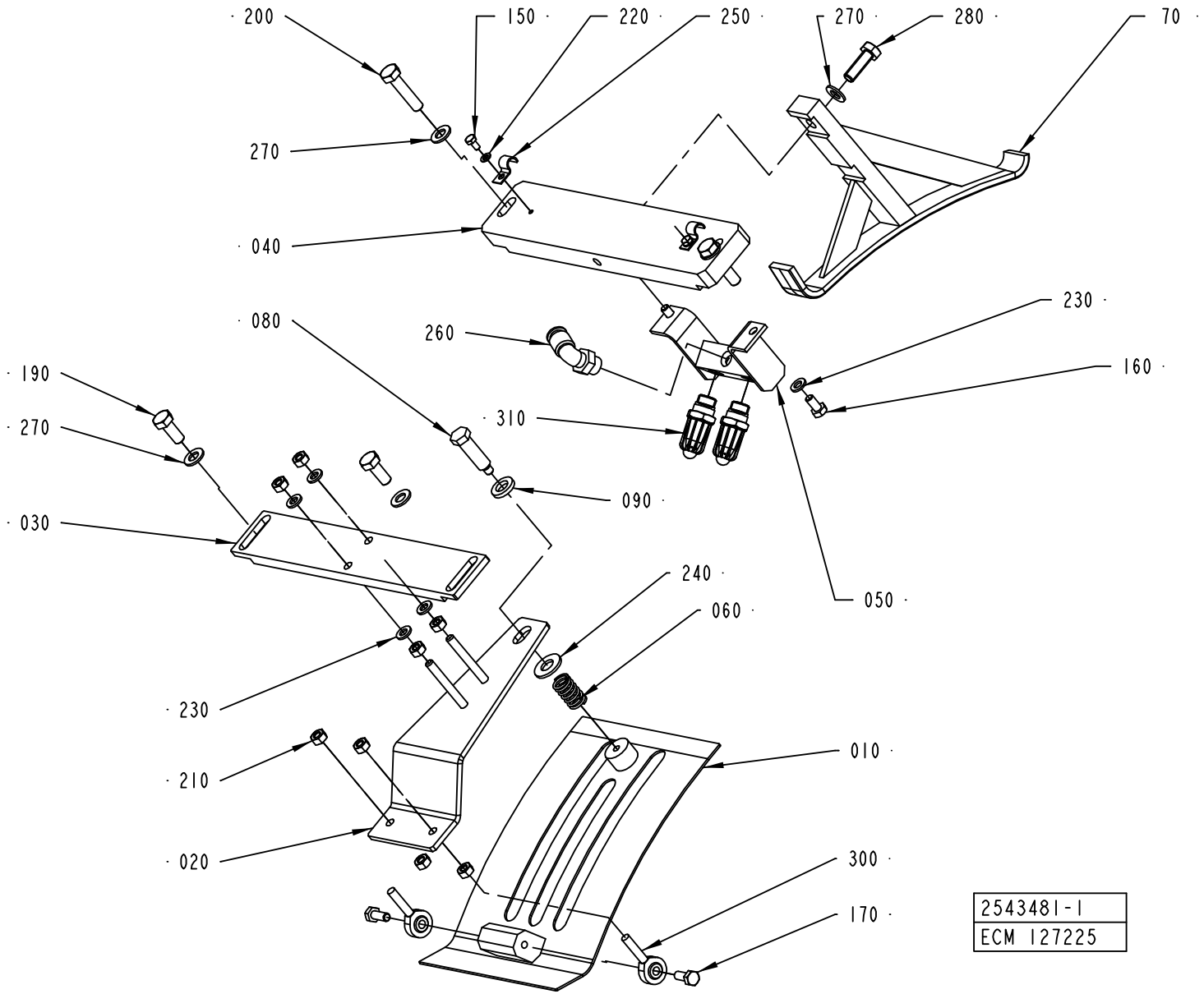
200
150
220
250
270
280
70
270
040
080
260
230
160
190
270
310
090
030
240
060
050
230
210
010
020
300
170
2543481-1
ECM 127225

Pos	Part No	UN	Qty	Description	Page No
TBA 0250S, TBA 0200M (See drawing on page: 3-80)					
010	1317211-0000		1	COVERING PLATE	
020	1317213-0000		1	ADJUSTING PLATE	
030	1144975-0000		1	ATTACHMENT PLATE	
040	1144902-0000		1	SUPPORT	
070	2555637-0000		1	GUIDE	
150	312105-0287		2	SCREW M6S ISO4017 M4X8 A470	
190	312105-0451		4	SCREW M6S ISO 4017 M8X20 A480	
220	315105-0136		2	WASHER BRB4,3XRFR	
230	315105-0153		4	WASHER BRB6,4X12RFR	
250	90165-0057		2	PIPE CLIP FOR TUBE D=6 MM	
270	315105-0165		6	WASHER BRB8,4X16RFR	
TBA 0330S, TBA 0200B, TBA 0250B (See drawing on page: 3-78)					
010	1317211-0000		1	COVERING PLATE	
020	1317213-0000		1	ADJUSTING PLATE	
030	1144975-0000		1	ATTACHMENT PLATE	
040	1144902-0000		1	SUPPORT	
050	1349087-0000		1	DISTRIBUTOR	
070	2552022-0000		1	GUIDE	
100	2553284-0000		1	BLOCK	
150	312105-0287		2	SCREW M6S ISO4017 M4X8 A470	
160	312105-0366		2	SCREW M6S ISO 4017 M6X12 A480	
190	312105-0451		2	SCREW M6S ISO 4017 M8X20 A480	
220	315105-0136		2	WASHER BRB4,3XRFR	
230	315105-0153		6	WASHER BRB6,4X12RFR	
250	90165-0057		2	PIPE CLIP FOR TUBE D=6 MM	
260	90458-2958		1	ELBOW PIPE JOINT, EXT.THREAD, D=8MM-G1/4	
270	315105-0165		6	WASHER BRB8,4X16RFR	
280	312105-0451		2	SCREW M6S ISO 4017 M8X20 A480	
310	90424-0068		1	AIR NOZZLE, G1/4, MOD. 216 BSP	
TBA 0500B, TBA 1000B (See drawing on page: 3-74)					
010	1144941-0000		1	COVERING PLATE	
020	1144974-0000		1	ADJUSTING PLATE	
030	1144975-0000		1	ATTACHMENT PLATE	
040	1144902-0000		1	SUPPORT	
050	1285014-0000		1	DISTRIBUTOR	
070	2609372-0000		1	GUIDE	
150	312105-0287		2	SCREW M6S ISO4017 M4X8 A470	
160	312105-0366		2	SCREW M6S ISO 4017 M6X12 A480	
180	312105-0449		1	SCREW M6S ISO 4017 M8X16 A480	
190	312105-0451		2	SCREW M6S ISO 4017 M8X20 A480	
220	315105-0136		2	WASHER BRB4,3XRFR	
230	315105-0153		6	WASHER BRB6,4X12RFR	
250	90165-0057		2	PIPE CLIP FOR TUBE D=6 MM	
260	90458-2958		1	ELBOW PIPE JOINT, EXT.THREAD, D=8MM-G1/4	
270	315105-0165		5	WASHER BRB8,4X16RFR	
280	312105-0453		1	SCREW M6S ISO 4017 M8X25 A480	
310	90424-0068		2	AIR NOZZLE, G1/4, MOD. 216 BSP	
TBA 1890S, TBA 2000S (See drawing on page: 3-76)					
010	1548612-0000		1	COVERING PLATE	
020	1144974-0000		1	ADJUSTING PLATE	
030	1285299-0000		1	BRACKET	
040	1334480-0000		1	SUPPORT	
070	1347057-0000		1	GUIDE	
150	312105-0287		4	SCREW M6S ISO4017 M4X8 A470	
180	312105-0449		1	SCREW M6S ISO 4017 M8X16 A480	
190	312105-0453		2	SCREW M6S ISO 4017 M8X25 A480	
220	315105-0136		4	WASHER BRB4,3XRFR	
230	315105-0153		4	WASHER BRB6,4X12RFR	
250	316810-0106		4	PIPE CLIP FOR TUBE D=8 MM	
270	315105-0165		6	WASHER BRB8,4X16RFR	
280	312115-0449		1	SCREW ISO4762 M8X16 A4	
310	90424-0068		2	AIR NOZZLE, G1/4, MOD. 216 BSP	
320	342981-0122		1	BANJO CONNEC,RING,FOR PLAST.TUBE 8-G1/4"	
330	90235-0731		1	THROTTLE CHECK VALVE, G1/4", SCO-606-1/4	
Common Parts					
060	90335-0036		1	COMP. SPRING 22450, 1,6X14,1X24	
080	1144976-0000		1	STOP SCREW	
090	1144979-0000		1	WASHER	
170	312105-0368		2	SCREW M6S ISO 4017 M6X16 A480	
200	312105-0457		2	SCREW M6S ISO 4014 M8X35 A480	
210	312605-0316		8	HEXAGON NUT, M6M M6 A280	
240	315105-0173		1	WASHER BRB10,5X22RFR	
300	90115-0137		2	ROD END, ID=6 MM, M6X1	

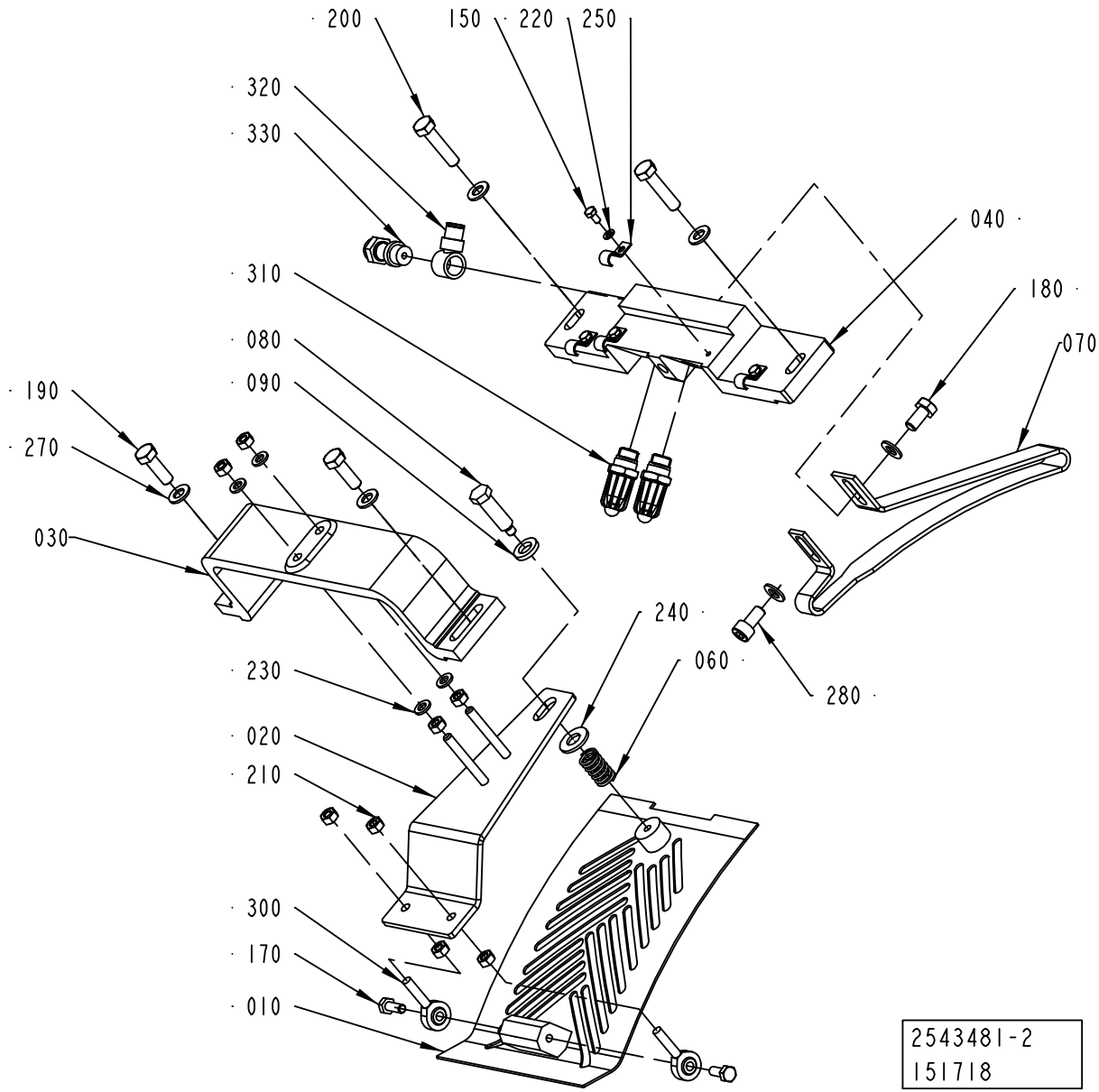
200
150
220
250
320
330
040
310
180
080
070
090
190
270
030
240
060
280
230
020
210
300
170
010
2543481-2
151718

Pos	Part No	UN	Qty	Description	Page No
TBA 0250S, TBA 0200M (See drawing on page: 3-80)					
010	1317211-0000		1	COVERING PLATE	
020	1317213-0000		1	ADJUSTING PLATE	
030	1144975-0000		1	ATTACHMENT PLATE	
040	1144902-0000		1	SUPPORT	
070	2555637-0000		1	GUIDE	
150	312105-0287		2	SCREW M6S ISO4017 M4X8 A470	
190	312105-0451		4	SCREW M6S ISO 4017 M8X20 A480	
220	315105-0136		2	WASHER BRB4,3XRFR	
230	315105-0153		4	WASHER BRB6,4X12RFR	
250	90165-0057		2	PIPE CLIP FOR TUBE D=6 MM	
270	315105-0165		6	WASHER BRB8,4X16RFR	
TBA 0330S, TBA 0200B, TBA 0250B (See drawing on page: 3-78)					
010	1317211-0000		1	COVERING PLATE	
020	1317213-0000		1	ADJUSTING PLATE	
030	1144975-0000		1	ATTACHMENT PLATE	
040	1144902-0000		1	SUPPORT	
050	1349087-0000		1	DISTRIBUTOR	
070	2552022-0000		1	GUIDE	
100	2553284-0000		1	BLOCK	
150	312105-0287		2	SCREW M6S ISO4017 M4X8 A470	
160	312105-0366		2	SCREW M6S ISO 4017 M6X12 A480	
190	312105-0451		2	SCREW M6S ISO 4017 M8X20 A480	
220	315105-0136		2	WASHER BRB4,3XRFR	
230	315105-0153		6	WASHER BRB6,4X12RFR	
250	90165-0057		2	PIPE CLIP FOR TUBE D=6 MM	
260	90458-2958		1	ELBOW PIPE JOINT, EXT.THREAD, D=8MM-G1/4	
270	315105-0165		6	WASHER BRB8,4X16RFR	
280	312105-0451		2	SCREW M6S ISO 4017 M8X20 A480	
310	90424-0068		1	AIR NOZZLE, G1/4, MOD. 216 BSP	
TBA 0500B, TBA 1000B (See drawing on page: 3-74)					
010	1144941-0000		1	COVERING PLATE	
020	1144974-0000		1	ADJUSTING PLATE	
030	1144975-0000		1	ATTACHMENT PLATE	
040	1144902-0000		1	SUPPORT	
050	1285014-0000		1	DISTRIBUTOR	
070	2609372-0000		1	GUIDE	
150	312105-0287		2	SCREW M6S ISO4017 M4X8 A470	
160	312105-0366		2	SCREW M6S ISO 4017 M6X12 A480	
180	312105-0449		1	SCREW M6S ISO 4017 M8X16 A480	
190	312105-0451		2	SCREW M6S ISO 4017 M8X20 A480	
220	315105-0136		2	WASHER BRB4,3XRFR	
230	315105-0153		6	WASHER BRB6,4X12RFR	
250	90165-0057		2	PIPE CLIP FOR TUBE D=6 MM	
260	90458-2958		1	ELBOW PIPE JOINT, EXT.THREAD, D=8MM-G1/4	
270	315105-0165		5	WASHER BRB8,4X16RFR	
280	312105-0453		1	SCREW M6S ISO 4017 M8X25 A480	
310	90424-0068		2	AIR NOZZLE, G1/4, MOD. 216 BSP	
TBA 1890S, TBA 2000S (See drawing on page: 3-76)					
010	1548612-0000		1	COVERING PLATE	
020	1144974-0000		1	ADJUSTING PLATE	
030	1285299-0000		1	BRACKET	
040	1334480-0000		1	SUPPORT	
070	1347057-0000		1	GUIDE	
150	312105-0287		4	SCREW M6S ISO4017 M4X8 A470	
180	312105-0449		1	SCREW M6S ISO 4017 M8X16 A480	
190	312105-0453		2	SCREW M6S ISO 4017 M8X25 A480	
220	315105-0136		4	WASHER BRB4,3XRFR	
230	315105-0153		4	WASHER BRB6,4X12RFR	
250	316810-0106		4	PIPE CLIP FOR TUBE D=8 MM	
270	315105-0165		6	WASHER BRB8,4X16RFR	
280	312115-0449		1	SCREW ISO4762 M8X16 A4	
310	90424-0068		2	AIR NOZZLE, G1/4, MOD. 216 BSP	
320	342981-0122		1	BANJO CONNEC,RING,FOR PLAST.TUBE 8-G1/4"	
330	90235-0731		1	THROTTLE CHECK VALVE, G1/4", SCO-606-1/4	
Common Parts					
060	90335-0036		1	COMP. SPRING 22450, 1,6X14,1X24	
080	1144976-0000		1	STOP SCREW	
090	1144979-0000		1	WASHER	
170	312105-0368		2	SCREW M6S ISO 4017 M6X16 A480	
200	312105-0457		2	SCREW M6S ISO 4014 M8X35 A480	
210	312605-0316		8	HEXAGON NUT, M6M M6 A280	
240	315105-0173		1	WASHER BRB10,5X22RFR	
300	90115-0137		2	ROD END, ID=6 MM, M6X1	

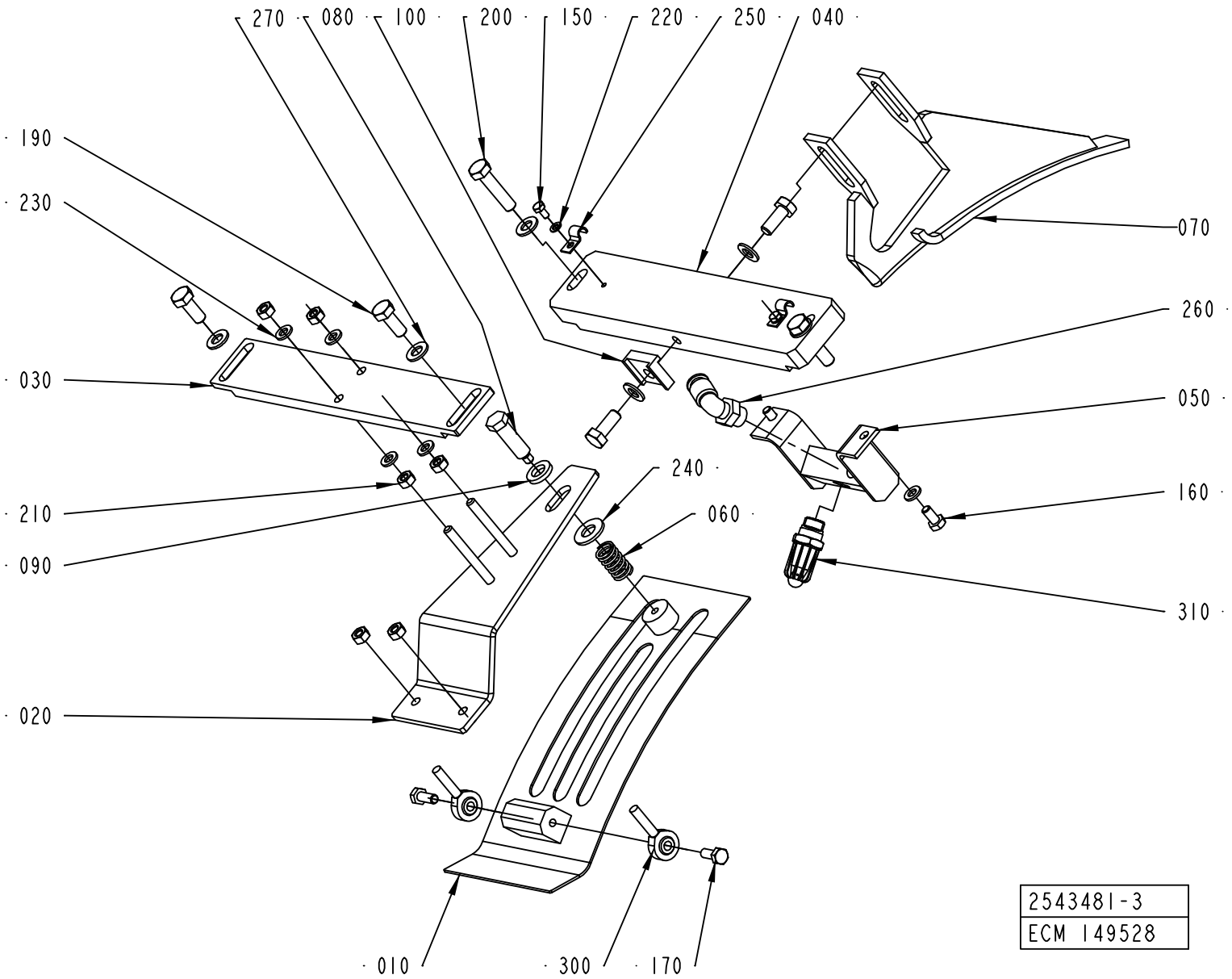
270
080
100
200
150
220
250
040
190
230
070
260
030
050
240
160
060
210
090
310
020
010
300
170
2543481-3
ECM 149528

Pos	Part No	UN	Qty	Description	Page No
TBA 0250S, TBA 0200M (See drawing on page: 3-80)					
010	1317211-0000		1	COVERING PLATE	
020	1317213-0000		1	ADJUSTING PLATE	
030	1144975-0000		1	ATTACHMENT PLATE	
040	1144902-0000		1	SUPPORT	
070	2555637-0000		1	GUIDE	
150	312105-0287		2	SCREW M6S ISO4017 M4X8 A470	
190	312105-0451		4	SCREW M6S ISO 4017 M8X20 A480	
220	315105-0136		2	WASHER BRB4,3XRFR	
230	315105-0153		4	WASHER BRB6,4X12RFR	
250	90165-0057		2	PIPE CLIP FOR TUBE D=6 MM	
270	315105-0165		6	WASHER BRB8,4X16RFR	
TBA 0330S, TBA 0200B, TBA 0250B (See drawing on page: 3-78)					
010	1317211-0000		1	COVERING PLATE	
020	1317213-0000		1	ADJUSTING PLATE	
030	1144975-0000		1	ATTACHMENT PLATE	
040	1144902-0000		1	SUPPORT	
050	1349087-0000		1	DISTRIBUTOR	
070	2552022-0000		1	GUIDE	
100	2553284-0000		1	BLOCK	
150	312105-0287		2	SCREW M6S ISO4017 M4X8 A470	
160	312105-0366		2	SCREW M6S ISO 4017 M6X12 A480	
190	312105-0451		2	SCREW M6S ISO 4017 M8X20 A480	
220	315105-0136		2	WASHER BRB4,3XRFR	
230	315105-0153		6	WASHER BRB6,4X12RFR	
250	90165-0057		2	PIPE CLIP FOR TUBE D=6 MM	
260	90458-2958		1	ELBOW PIPE JOINT, EXT.THREAD, D=8MM-G1/4	
270	315105-0165		6	WASHER BRB8,4X16RFR	
280	312105-0451		2	SCREW M6S ISO 4017 M8X20 A480	
310	90424-0068		1	AIR NOZZLE, G1/4, MOD. 216 BSP	
TBA 0500B, TBA 1000B (See drawing on page: 3-74)					
010	1144941-0000		1	COVERING PLATE	
020	1144974-0000		1	ADJUSTING PLATE	
030	1144975-0000		1	ATTACHMENT PLATE	
040	1144902-0000		1	SUPPORT	
050	1285014-0000		1	DISTRIBUTOR	
070	2609372-0000		1	GUIDE	
150	312105-0287		2	SCREW M6S ISO4017 M4X8 A470	
160	312105-0366		2	SCREW M6S ISO 4017 M6X12 A480	
180	312105-0449		1	SCREW M6S ISO 4017 M8X16 A480	
190	312105-0451		2	SCREW M6S ISO 4017 M8X20 A480	
220	315105-0136		2	WASHER BRB4,3XRFR	
230	315105-0153		6	WASHER BRB6,4X12RFR	
250	90165-0057		2	PIPE CLIP FOR TUBE D=6 MM	
260	90458-2958		1	ELBOW PIPE JOINT, EXT.THREAD, D=8MM-G1/4	
270	315105-0165		5	WASHER BRB8,4X16RFR	
280	312105-0453		1	SCREW M6S ISO 4017 M8X25 A480	
310	90424-0068		2	AIR NOZZLE, G1/4, MOD. 216 BSP	
TBA 1890S, TBA 2000S (See drawing on page: 3-76)					
010	1548612-0000		1	COVERING PLATE	
020	1144974-0000		1	ADJUSTING PLATE	
030	1285299-0000		1	BRACKET	
040	1334480-0000		1	SUPPORT	
070	1347057-0000		1	GUIDE	
150	312105-0287		4	SCREW M6S ISO4017 M4X8 A470	
180	312105-0449		1	SCREW M6S ISO 4017 M8X16 A480	
190	312105-0453		2	SCREW M6S ISO 4017 M8X25 A480	
220	315105-0136		4	WASHER BRB4,3XRFR	
230	315105-0153		4	WASHER BRB6,4X12RFR	
250	316810-0106		4	PIPE CLIP FOR TUBE D=8 MM	
270	315105-0165		6	WASHER BRB8,4X16RFR	
280	312115-0449		1	SCREW ISO4762 M8X16 A4	
310	90424-0068		2	AIR NOZZLE, G1/4, MOD. 216 BSP	
320	342981-0122		1	BANJO CONNEC,RING,FOR PLAST.TUBE 8-G1/4"	
330	90235-0731		1	THROTTLE CHECK VALVE, G1/4", SCO-606-1/4	
Common Parts					
060	90335-0036		1	COMP. SPRING 22450, 1,6X14,1X24	
080	1144976-0000		1	STOP SCREW	
090	1144979-0000		1	WASHER	
170	312105-0368		2	SCREW M6S ISO 4017 M6X16 A480	
200	312105-0457		2	SCREW M6S ISO 4014 M8X35 A480	
210	312605-0316		8	HEXAGON NUT, M6M M6 A280	
240	315105-0173		1	WASHER BRB10,5X22RFR	
300	90115-0137		2	ROD END, ID=6 MM, M6X1	

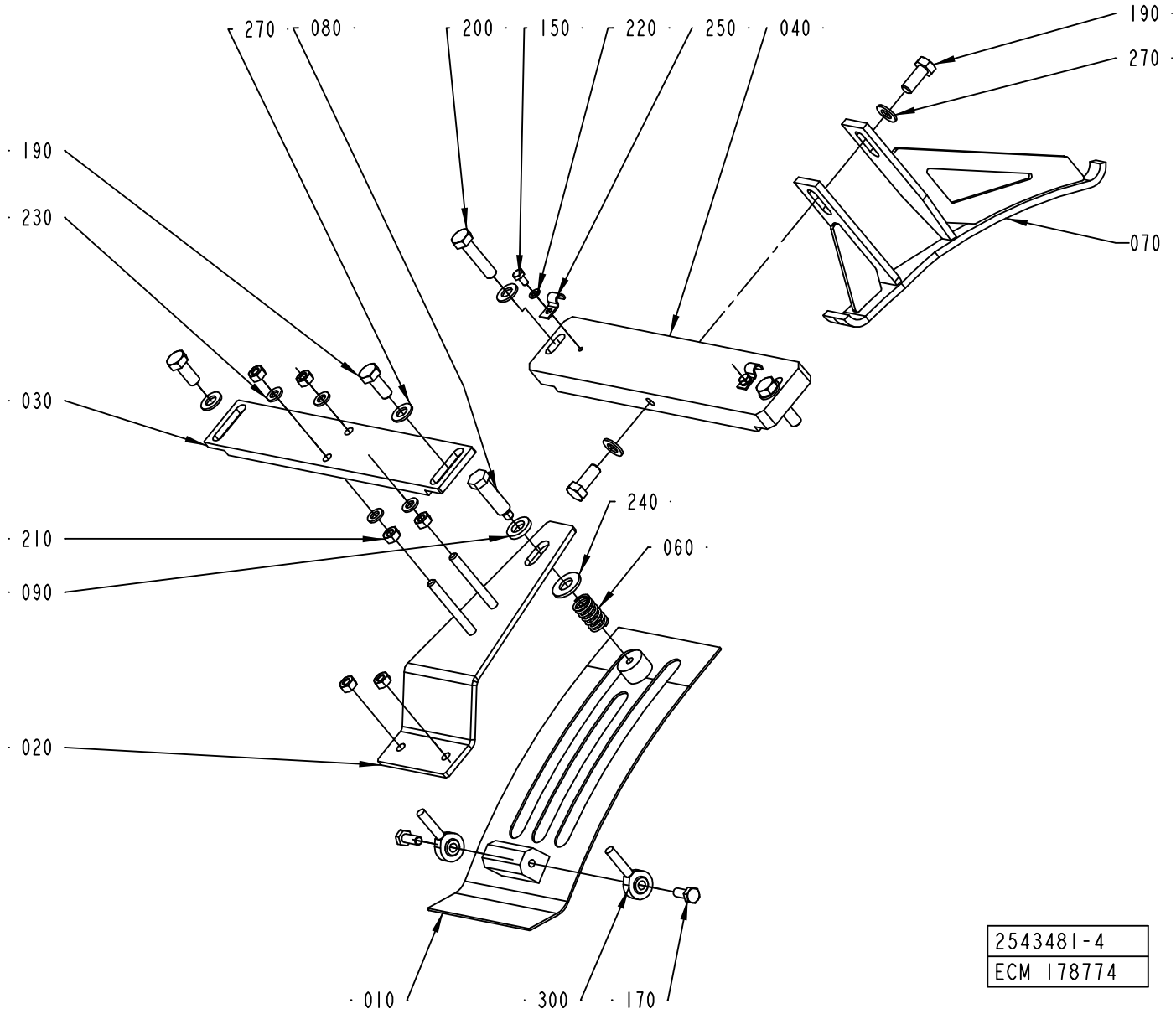
270
080
200
150
220
250
040
190
270
190
230
070
030
240
210
060
090
020
010
300
170
2543481-4
ECM 178774

ECM: 190925 - 20041104
Group number: 2543481-0100
Assembly Drawing: 2543481-4_1_AA

This list covers pages from 3-74 to 3-81

Pos	Part No	UN	Qty	Description	Page No
TBA 0250S, TBA 0200M (See drawing on page: 3-80)					
010	1317211-0000		1	COVERING PLATE	
020	1317213-0000		1	ADJUSTING PLATE	
030	1144975-0000		1	ATTACHMENT PLATE	
040	1144902-0000		1	SUPPORT	
070	2555637-0000		1	GUIDE	
150	312105-0287		2	SCREW M6S ISO4017 M4X8 A470	
190	312105-0451		4	SCREW M6S ISO 4017 M8X20 A480	
220	315105-0136		2	WASHER BRB4,3XRFR	
230	315105-0153		4	WASHER BRB6,4X12RFR	
250	90165-0057		2	PIPE CLIP FOR TUBE D=6 MM	
270	315105-0165		6	WASHER BRB8,4X16RFR	
TBA 0330S, TBA 0200B, TBA 0250B (See drawing on page: 3-78)					
010	1317211-0000		1	COVERING PLATE	
020	1317213-0000		1	ADJUSTING PLATE	
030	1144975-0000		1	ATTACHMENT PLATE	
040	1144902-0000		1	SUPPORT	
050	1349087-0000		1	DISTRIBUTOR	
070	2552022-0000		1	GUIDE	
100	2553284-0000		1	BLOCK	
150	312105-0287		2	SCREW M6S ISO4017 M4X8 A470	
160	312105-0366		2	SCREW M6S ISO 4017 M6X12 A480	
190	312105-0451		2	SCREW M6S ISO 4017 M8X20 A480	
220	315105-0136		2	WASHER BRB4,3XRFR	
230	315105-0153		6	WASHER BRB6,4X12RFR	
250	90165-0057		2	PIPE CLIP FOR TUBE D=6 MM	
260	90458-2958		1	ELBOW PIPE JOINT, EXT.THREAD, D=8MM-G1/4	
270	315105-0165		6	WASHER BRB8,4X16RFR	
280	312105-0451		2	SCREW M6S ISO 4017 M8X20 A480	
310	90424-0068		1	AIR NOZZLE, G1/4, MOD. 216 BSP	
TBA 0500B, TBA 1000B (See drawing on page: 3-74)					
010	1144941-0000		1	COVERING PLATE	
020	1144974-0000		1	ADJUSTING PLATE	
030	1144975-0000		1	ATTACHMENT PLATE	
040	1144902-0000		1	SUPPORT	
050	1285014-0000		1	DISTRIBUTOR	
070	2609372-0000		1	GUIDE	
150	312105-0287		2	SCREW M6S ISO4017 M4X8 A470	
160	312105-0366		2	SCREW M6S ISO 4017 M6X12 A480	
180	312105-0449		1	SCREW M6S ISO 4017 M8X16 A480	
190	312105-0451		2	SCREW M6S ISO 4017 M8X20 A480	
220	315105-0136		2	WASHER BRB4,3XRFR	
230	315105-0153		6	WASHER BRB6,4X12RFR	
250	90165-0057		2	PIPE CLIP FOR TUBE D=6 MM	
260	90458-2958		1	ELBOW PIPE JOINT, EXT.THREAD, D=8MM-G1/4	
270	315105-0165		5	WASHER BRB8,4X16RFR	
280	312105-0453		1	SCREW M6S ISO 4017 M8X25 A480	
310	90424-0068		2	AIR NOZZLE, G1/4, MOD. 216 BSP	
TBA 1890S, TBA 2000S (See drawing on page: 3-76)					
010	1548612-0000		1	COVERING PLATE	
020	1144974-0000		1	ADJUSTING PLATE	
030	1285299-0000		1	BRACKET	
040	1334480-0000		1	SUPPORT	
070	1347057-0000		1	GUIDE	
150	312105-0287		4	SCREW M6S ISO4017 M4X8 A470	
180	312105-0449		1	SCREW M6S ISO 4017 M8X16 A480	
190	312105-0453		2	SCREW M6S ISO 4017 M8X25 A480	
220	315105-0136		4	WASHER BRB4,3XRFR	
230	315105-0153		4	WASHER BRB6,4X12RFR	
250	316810-0106		4	PIPE CLIP FOR TUBE D=8 MM	
270	315105-0165		6	WASHER BRB8,4X16RFR	
280	312115-0449		1	SCREW ISO4762 M8X16 A4	
310	90424-0068		2	AIR NOZZLE, G1/4, MOD. 216 BSP	
320	342981-0122		1	BANJO CONNEC,RING,FOR PLAST.TUBE 8-G1/4"	
330	90235-0731		1	THROTTLE CHECK VALVE, G1/4", SCO-606-1/4	
Common Parts					
060	90335-0036		1	COMP. SPRING 22450, 1,6X14,1X24	
080	1144976-0000		1	STOP SCREW	
090	1144979-0000		1	WASHER	
170	312105-0368		2	SCREW M6S ISO 4017 M6X16 A480	
200	312105-0457		2	SCREW M6S ISO 4014 M8X35 A480	
210	312605-0316		8	HEXAGON NUT, M6M M6 A280	
240	315105-0173		1	WASHER BRB10,5X22RFR	
300	90115-0137		2	ROD END, ID=6 MM, M6X1	

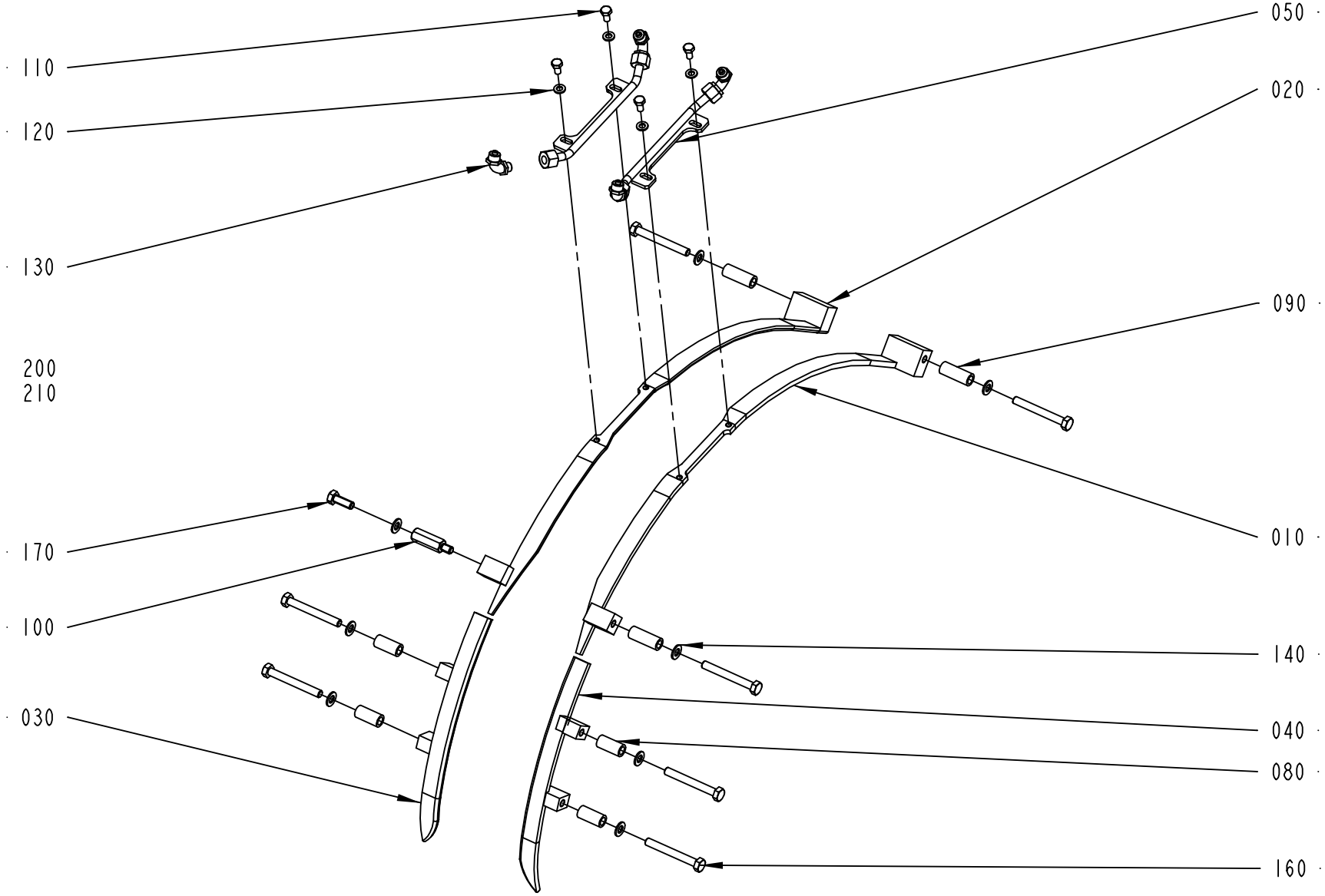

2543482-1
ECM 110156

ECM: 190926 - 20041104
Group number: 2543482-0100
Assembly Drawing: 2543482-1_1_AA

This list covers pages from 3-82 to 3-87

Pos	Part No	UN	Qty	Description	Page No
TBA 0250S, TBA 0200M (See drawing on page: 3-86)					
010	1478926-0000		1	GUIDE RIGHT	
020	1478927-0000		1	GUIDE LEFT	
030	1539900-0000		1	RIGHT UPPER GUIDE	
040	1549614-0000		1	LEFT UPPER GUIDE	
050	2676815-0000		1	FOLDING BAR	
055	2676816-0000		1	FOLDING BAR	
060	1346340-0000		1	BRACKET	
070	1144555-0000		8	STUD SCREW	
110	312105-0366		6	SCREW M6S ISO 4017 M6X12 A480	
120	315105-0153		6	WASHER BRB6,4X12RFR	
140	315105-0165		16	WASHER BRB8,4X16RFR	
150	312605-0318		16	HEXAGON NUT, M6M M8 A280	
TBA 0330S, TBA 0200B, TBA 0250B (See drawing on page: 3-86)					
010	1144892-0000		1	GUIDE RIGHT	
020	1144893-0000		1	GUIDE LEFT	
030	2558704-0000		1	GUIDE UPPER R	
040	2558703-0000		1	GUIDE UPPER L	
050	2676815-0000		1	FOLDING BAR	
055	2676816-0000		1	FOLDING BAR	
060	1346340-0000		1	BRACKET	
070	1144555-0000		8	STUD SCREW	
110	312105-0366		6	SCREW M6S ISO 4017 M6X12 A480	
120	315105-0153		6	WASHER BRB6,4X12RFR	
140	315105-0165		16	WASHER BRB8,4X16RFR	
150	312605-0318		16	HEXAGON NUT, M6M M8 A280	
TBA 0500B, TBA 1000B (See drawing on page: 3-82)					
010	2520178-0000		1	GUIDE	
020	2520179-0000		1	GUIDE	
030	1539900-0000		1	RIGHT UPPER GUIDE	
040	1549614-0000		1	LEFT UPPER GUIDE	
050	2526575-0000		2	FOLDING BAR	
080	1334447-0000		4	SPACER	
090	2603663-0000		3	SPACER	
100	2555082-0000		1	SPACER SCREW	
110	312105-0366		4	SCREW M6S ISO 4017 M6X12 A480	
120	315105-0153		4	WASHER BRB6,4X12RFR	
140	315105-0165		8	WASHER BRB8,4X16RFR	
160	312105-0464		7	SCREW M6S ISO 4014 M8X65 A480	
170	312105-0452		1	SCREW M6S ISO 4017 M8X22 A4 80	
TBA 1890S, TBA 2000S (See drawing on page: 3-84)					
010	1350424-0000		1	GUIDE RIGHT	
020	1350425-0000		1	GUIDE LEFT	
030	1334559-0000		1	GUIDE UPPER R	
040	1334560-0000		1	GUIDE UPPER L	
050	1350423-0000		2	FOLDING BAR	
080	1334447-0000		4	SPACER	
090	1334447-0000		4	SPACER	
110	312105-0368		4	SCREW M6S ISO 4017 M6X16 A480	
120	315105-0153		6	WASHER BRB6,4X12RFR	
140	315105-0165		8	WASHER BRB8,4X16RFR	
160	312105-0463		8	SCREW M6S ISO 4014 M8X60 A480	
220	1282705-0000		4	SUPPORT	
230	1285267-0000		1	SUPPORT	
240	312105-0366		2	SCREW M6S ISO 4017 M6X12 A480	
Common Parts					
130	342931-0121		4	ELBOW 90 COUPL.,EXT.THREAD 8/6-G1/8"	
200	90166-0118	MM	1500	TUBE 8 MM PA BLACK	
210	352113-0102		10	CLIP-STRIP, BLACK 188X4,8 MM	

Machine Type | Group Description | Used-In | Group Number | Page No

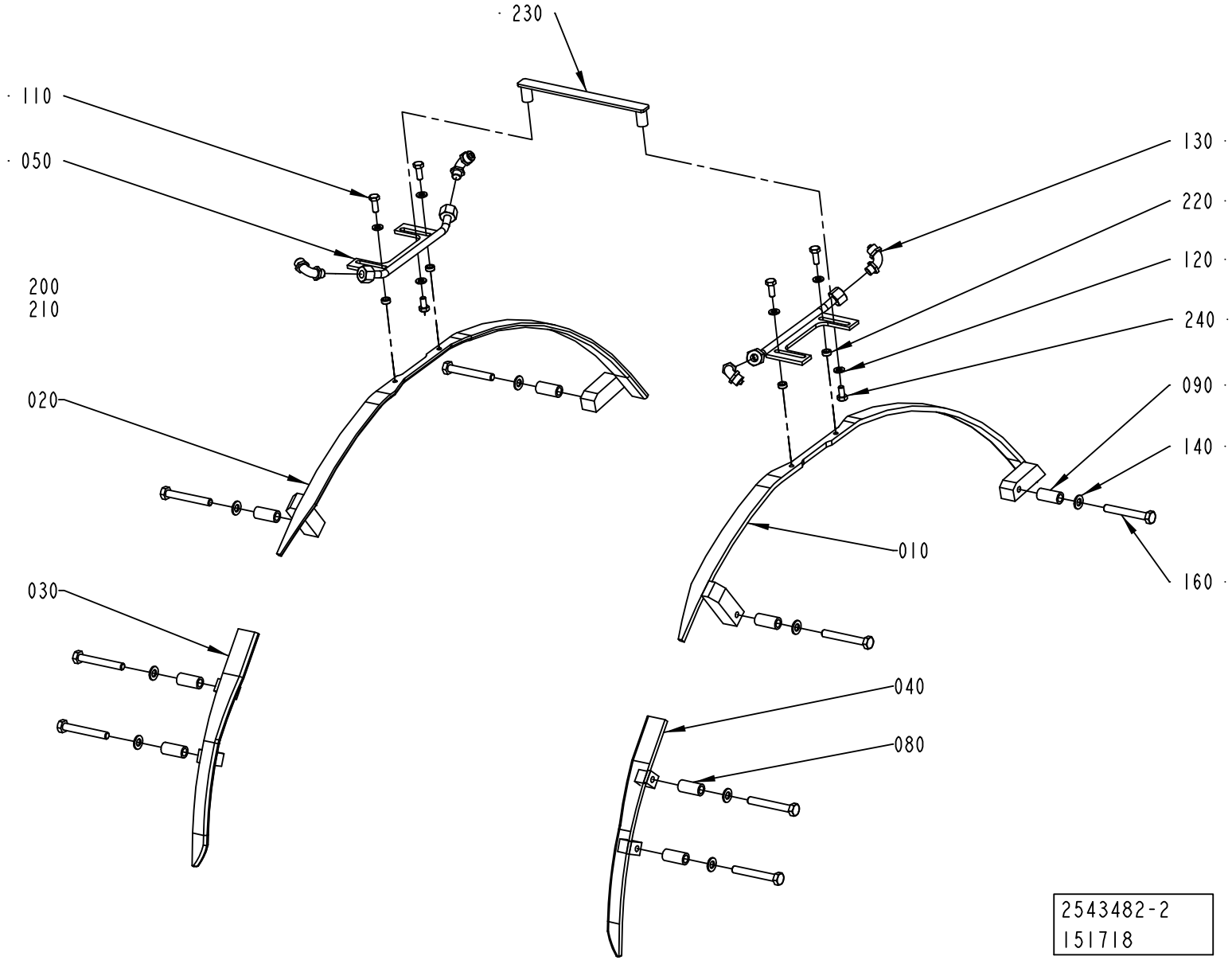
230
110
050
200
210
020
030
130
220
120
240
090
140
010
160
040
080
2543482-2
151718

ECM: 190926 - 20041104
Group number: 2543482-0100
Assembly Drawing: 2543482-2_1_AA

This list covers pages from 3-82 to 3-87

Pos	Part No	UN	Qty	Description	Page No
TBA 0250S, TBA 0200M (See drawing on page: 3-86)					
010	1478926-0000		1	GUIDE RIGHT	
020	1478927-0000		1	GUIDE LEFT	
030	1539900-0000		1	RIGHT UPPER GUIDE	
040	1549614-0000		1	LEFT UPPER GUIDE	
050	2676815-0000		1	FOLDING BAR	
055	2676816-0000		1	FOLDING BAR	
060	1346340-0000		1	BRACKET	
070	1144555-0000		8	STUD SCREW	
110	312105-0366		6	SCREW M6S ISO 4017 M6X12 A480	
120	315105-0153		6	WASHER BRB6,4X12RFR	
140	315105-0165		16	WASHER BRB8,4X16RFR	
150	312605-0318		16	HEXAGON NUT, M6M M8 A280	
TBA 0330S, TBA 0200B, TBA 0250B (See drawing on page: 3-86)					
010	1144892-0000		1	GUIDE RIGHT	
020	1144893-0000		1	GUIDE LEFT	
030	2558704-0000		1	GUIDE UPPER R	
040	2558703-0000		1	GUIDE UPPER L	
050	2676815-0000		1	FOLDING BAR	
055	2676816-0000		1	FOLDING BAR	
060	1346340-0000		1	BRACKET	
070	1144555-0000		8	STUD SCREW	
110	312105-0366		6	SCREW M6S ISO 4017 M6X12 A480	
120	315105-0153		6	WASHER BRB6,4X12RFR	
140	315105-0165		16	WASHER BRB8,4X16RFR	
150	312605-0318		16	HEXAGON NUT, M6M M8 A280	
TBA 0500B, TBA 1000B (See drawing on page: 3-82)					
010	2520178-0000		1	GUIDE	
020	2520179-0000		1	GUIDE	
030	1539900-0000		1	RIGHT UPPER GUIDE	
040	1549614-0000		1	LEFT UPPER GUIDE	
050	2526575-0000		2	FOLDING BAR	
080	1334447-0000		4	SPACER	
090	2603663-0000		3	SPACER	
100	2555082-0000		1	SPACER SCREW	
110	312105-0366		4	SCREW M6S ISO 4017 M6X12 A480	
120	315105-0153		4	WASHER BRB6,4X12RFR	
140	315105-0165		8	WASHER BRB8,4X16RFR	
160	312105-0464		7	SCREW M6S ISO 4014 M8X65 A480	
170	312105-0452		1	SCREW M6S ISO 4017 M8X22 A4 80	
TBA 1890S, TBA 2000S (See drawing on page: 3-84)					
010	1350424-0000		1	GUIDE RIGHT	
020	1350425-0000		1	GUIDE LEFT	
030	1334559-0000		1	GUIDE UPPER R	
040	1334560-0000		1	GUIDE UPPER L	
050	1350423-0000		2	FOLDING BAR	
080	1334447-0000		4	SPACER	
090	1334447-0000		4	SPACER	
110	312105-0368		4	SCREW M6S ISO 4017 M6X16 A480	
120	315105-0153		6	WASHER BRB6,4X12RFR	
140	315105-0165		8	WASHER BRB8,4X16RFR	
160	312105-0463		8	SCREW M6S ISO 4014 M8X60 A480	
220	1282705-0000		4	SUPPORT	
230	1285267-0000		1	SUPPORT	
240	312105-0366		2	SCREW M6S ISO 4017 M6X12 A480	
Common Parts					
130	342931-0121		4	ELBOW 90 COUPL.,EXT.THREAD 8/6-G1/8"	
200	90166-0118	MM	1500	TUBE 8 MM PA BLACK	
210	352113-0102		10	CLIP-STRIP, BLACK 188X4,8 MM	

Machine Type | Group Description | Used-In | Group Number | Page No

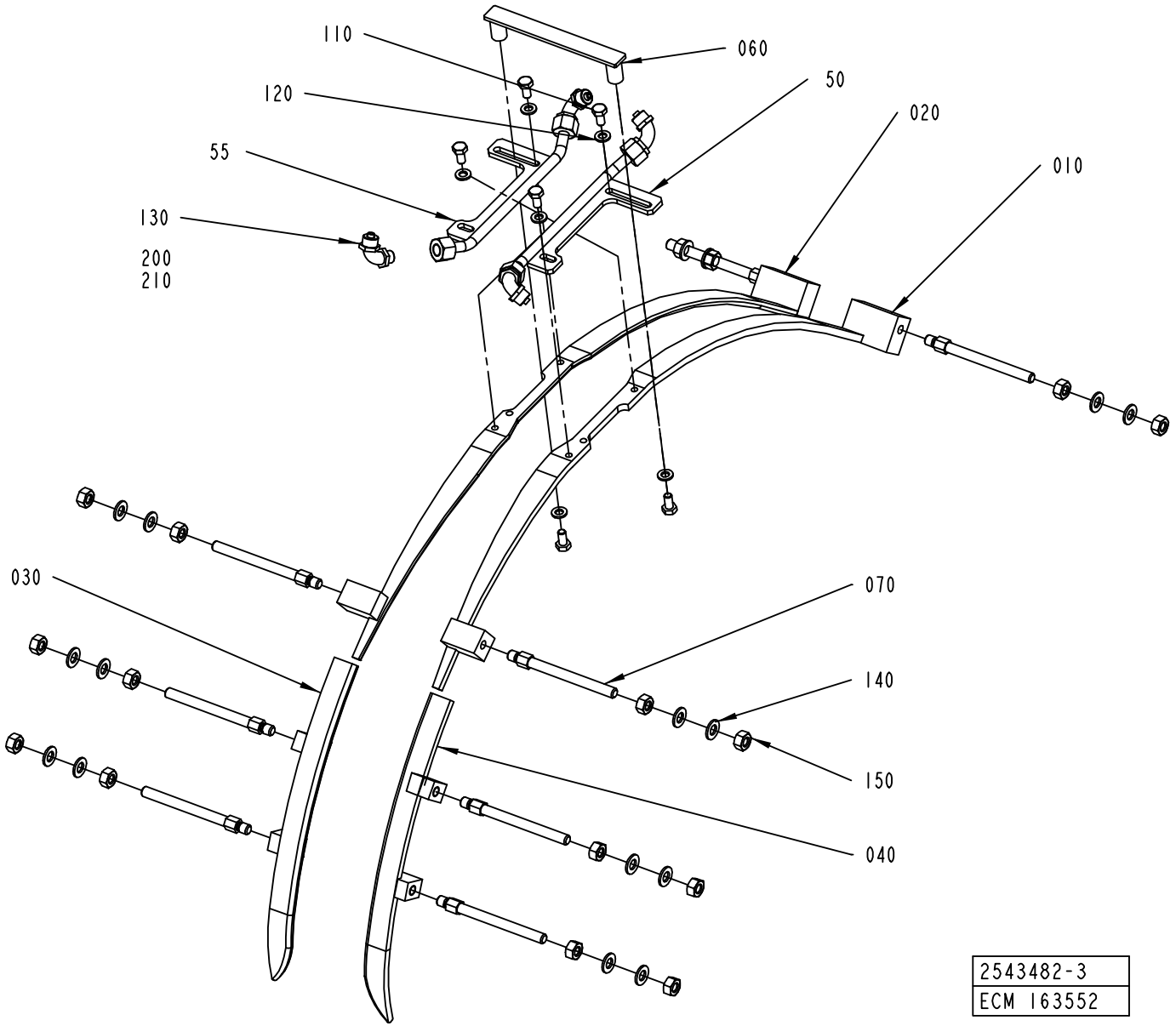

2543482-3
ECM 163552

ECM: 190926 - 20041104
Group number: 2543482-0100
Assembly Drawing: 2543482-3_1_AB

This list covers pages from 3-82 to 3-87

Pos	Part No	UN	Qty	Description	Page No
TBA 0250S, TBA 0200M (See drawing on page: 3-86)					
010	1478926-0000		1	GUIDE RIGHT	
020	1478927-0000		1	GUIDE LEFT	
030	1539900-0000		1	RIGHT UPPER GUIDE	
040	1549614-0000		1	LEFT UPPER GUIDE	
050	2676815-0000		1	FOLDING BAR	
055	2676816-0000		1	FOLDING BAR	
060	1346340-0000		1	BRACKET	
070	1144555-0000		8	STUD SCREW	
110	312105-0366		6	SCREW M6S ISO 4017 M6X12 A480	
120	315105-0153		6	WASHER BRB6,4X12RFR	
140	315105-0165		16	WASHER BRB8,4X16RFR	
150	312605-0318		16	HEXAGON NUT, M6M M8 A280	
TBA 0330S, TBA 0200B, TBA 0250B (See drawing on page: 3-86)					
010	1144892-0000		1	GUIDE RIGHT	
020	1144893-0000		1	GUIDE LEFT	
030	2558704-0000		1	GUIDE UPPER R	
040	2558703-0000		1	GUIDE UPPER L	
050	2676815-0000		1	FOLDING BAR	
055	2676816-0000		1	FOLDING BAR	
060	1346340-0000		1	BRACKET	
070	1144555-0000		8	STUD SCREW	
110	312105-0366		6	SCREW M6S ISO 4017 M6X12 A480	
120	315105-0153		6	WASHER BRB6,4X12RFR	
140	315105-0165		16	WASHER BRB8,4X16RFR	
150	312605-0318		16	HEXAGON NUT, M6M M8 A280	
TBA 0500B, TBA 1000B (See drawing on page: 3-82)					
010	2520178-0000		1	GUIDE	
020	2520179-0000		1	GUIDE	
030	1539900-0000		1	RIGHT UPPER GUIDE	
040	1549614-0000		1	LEFT UPPER GUIDE	
050	2526575-0000		2	FOLDING BAR	
080	1334447-0000		4	SPACER	
090	2603663-0000		3	SPACER	
100	2555082-0000		1	SPACER SCREW	
110	312105-0366		4	SCREW M6S ISO 4017 M6X12 A480	
120	315105-0153		4	WASHER BRB6,4X12RFR	
140	315105-0165		8	WASHER BRB8,4X16RFR	
160	312105-0464		7	SCREW M6S ISO 4014 M8X65 A480	
170	312105-0452		1	SCREW M6S ISO 4017 M8X22 A4 80	
TBA 1890S, TBA 2000S (See drawing on page: 3-84)					
010	1350424-0000		1	GUIDE RIGHT	
020	1350425-0000		1	GUIDE LEFT	
030	1334559-0000		1	GUIDE UPPER R	
040	1334560-0000		1	GUIDE UPPER L	
050	1350423-0000		2	FOLDING BAR	
080	1334447-0000		4	SPACER	
090	1334447-0000		4	SPACER	
110	312105-0368		4	SCREW M6S ISO 4017 M6X16 A480	
120	315105-0153		6	WASHER BRB6,4X12RFR	
140	315105-0165		8	WASHER BRB8,4X16RFR	
160	312105-0463		8	SCREW M6S ISO 4014 M8X60 A480	
220	1282705-0000		4	SUPPORT	
230	1285267-0000		1	SUPPORT	
240	312105-0366		2	SCREW M6S ISO 4017 M6X12 A480	
Common Parts					
130	342931-0121		4	ELBOW 90 COUPL.,EXT.THREAD 8/6-G1/8"	
200	90166-0118	MM	1500	TUBE 8 MM PA BLACK	
210	352113-0102		10	CLIP-STRIP, BLACK 188X4,8 MM	

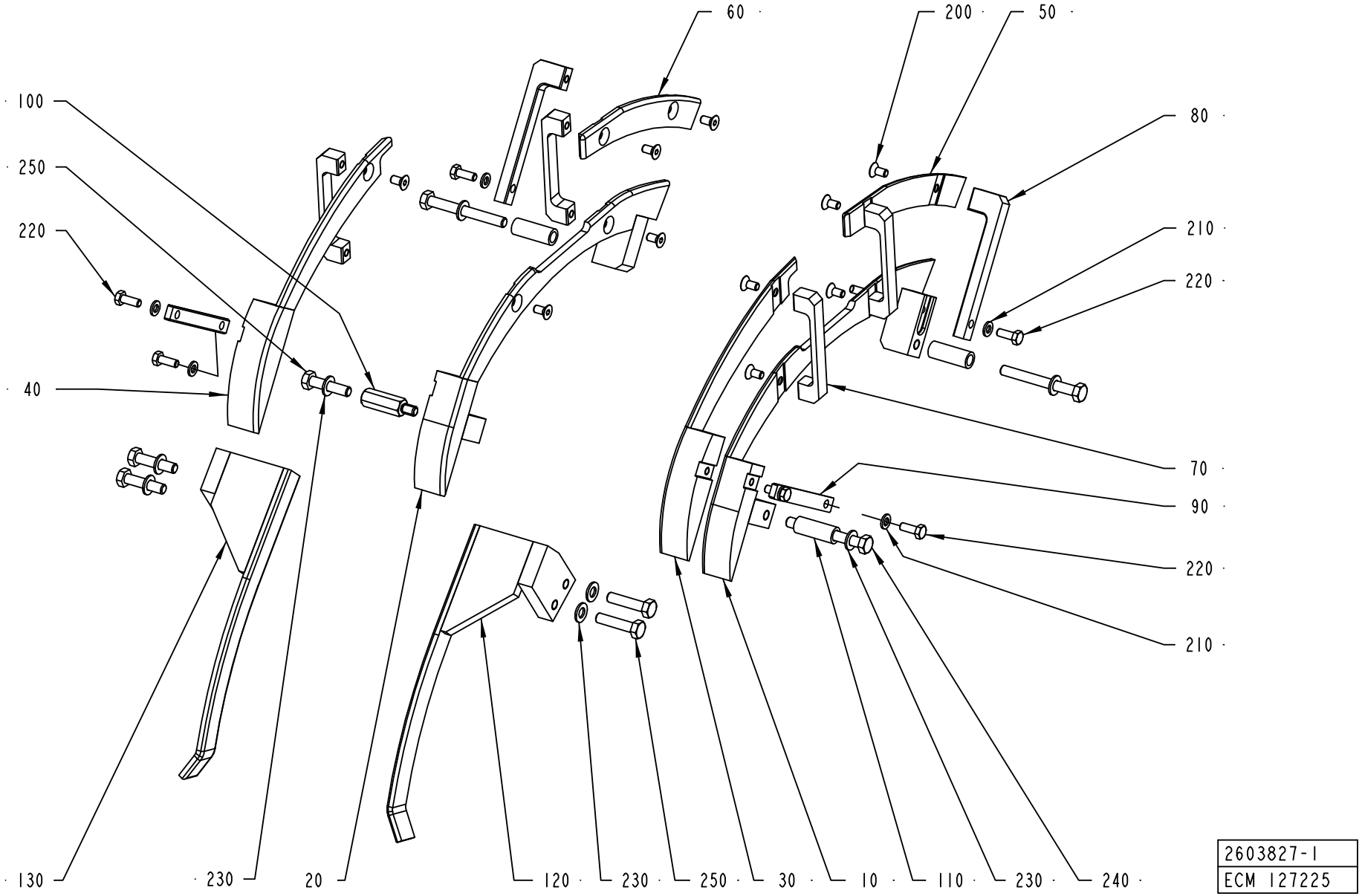
60
200
50
100
80
250
210
220
220
40
70
90
220
210
130
230
20
120
230
250
30
10
110
230
240
2603827-1
ECM 127225

ECM: 190928 - 20041104
Group number: 2603827-0100
Assembly Drawing: 2603827-1_1_AA

This list covers pages from 3-88 to 3-95

Pos	Part No	UN	Qty	Description	Page No
TBA 0250S, TBA 0200M (See drawing on page: 3-94)					
010	2595707-0000		1	FOLDING PART	
020	2601445-0000		1	FOLDING PART	
030	2649130-0000		1	GUIDE RAIL	
040	2649132-0000		1	GUIDE RAIL	
050	2649131-0000		1	GUIDE RAIL	
060	2649133-0000		1	GUIDE RAIL	
070	2649134-0000		1	BRACKET	
110	2649135-0000		4	SPACER	
120	1346344-0000		1	RAIL	
130	1346343-0000		1	RAIL	
180	2649139-0000		2	SPACER	
210	315105-0153		16	WASHER BRB6,4X12RFR	
220	312105-0370		16	SCREW M6S ISO 4017 M6X20 A480	
230	315105-0165		8	WASHER BRB8,4X16RFR	
240	312105-0467		4	SCREW M6S ISO 4014 M8X80 A480	
250	312105-0457		4	SCREW M6S ISO 4014 M8X35 A480	
260	312155-0461		4	SCREW DIN 7991 MF6S M8X50 A480	
TBA 0330S, TBA 0200B, TBA 0250B (See drawing on page: 3-92)					
010	2595707-0000		1	FOLDING PART	
020	2601445-0000		1	FOLDING PART	
030	2595704-0000		1	FOLDING PART	
040	2601455-0000		1	FOLDING PART	
050	2595705-0000		1	FOLDING PART	
060	2601465-0000		1	FOLDING PART	
070	2595706-0000		8	BRACKET	
110	2599847-0000		3	SPACER	
120	1346344-0000		1	RAIL	
130	1346343-0000		1	RAIL	
140	2595708-0000		1	FOLDING PART	
150	2602592-0000		1	FOLDING PART	
160	2595709-0000		1	FOLDING PART	
170	2601464-0000		1	FOLDING PART	
180	2558127-0000		2	SPACER	
190	2664035-0000		1	SPACER SCREW	
210	315105-0153		24	WASHER BRB6,4X12RFR	
220	312105-0370		24	SCREW M6S ISO 4017 M6X20 A480	
230	315105-0165		8	WASHER BRB8,4X16RFR	
240	312105-0467		3	SCREW M6S ISO 4014 M8X80 A480	
250	312105-0457		4	SCREW M6S ISO 4014 M8X35 A480	
260	312155-0461		4	SCREW DIN 7991 MF6S M8X50 A480	
270	312105-0455		1	SCREW M6S ISO 4017 M8X30 A480	
TBA 0500B, TBA 1000B (See drawing on page: 3-88)					
010	2520175-0000		1	FOLDING PART	
020	2520172-0000		1	FOLDING PART	
030	2603659-0000		1	FOLDING PART	
040	2603660-0000		1	FOLDING PART	
050	2603548-0000		1	FOLDING PART	
060	2603547-0000		1	FOLDING PART	
070	2603662-0000		4	BRACKET	
080	2603661-0000		2	BRACKET	
090	2544342-0000		2	BRACKET	
100	2555082-0000		1	SPACER SCREW	
110	1539871-0000		3	SPACER	
120	2603664-0000		1	RAIL	
130	2605213-0000		1	RAIL	
200	312155-0366		10	SCREW DIN 7991 MF6S M6X12 A480	
210	315105-0153		6	WASHER BRB6,4X12RFR	
220	312105-0368		6	SCREW M6S ISO 4017 M6X16 A480	
230	315105-0165		8	WASHER BRB8,4X16RFR	
240	312105-0465		3	SCREW M6S ISO 4014 M8X70 A480	
250	312105-0457		5	SCREW M6S ISO 4014 M8X35 A480	
TBA 1890S, TBA 2000S (See drawing on page: 3-90)					
010	2598497-0000		1	FOLDING PART	
020	2598496-0000		1	FOLDING PART	
030	2598495-0000		1	FOLDING PART	
040	2598494-0000		1	FOLDING PART	
050	1499151-0000		1	RAIL	
060	1499150-0000		1	RAIL	
110	2629344-0000		4	SPACER	
120	2598492-0000		1	FOLDING PART	
130	2598491-0000		1	FOLDING PART	
230	315105-0165		12	WASHER BRB8,4X16RFR	
240	312109-0460		4	SCREW M6S ISO 4017 M8X45 A480	
250	312109-0457		6	SCREW M6S ISO 4017 M8X35 A480	
280	1317043-0000		2	SUPPORT	
290	2603147-0000		2	PLATE	
300	2598493-0000		2	BRACKET	
310	315105-0153		14	WASHER BRB6,4X12RFR	
320	312115-0368		4	SCREW ISO4762 M6X16 A4	
340	312105-0366		2	SCREW M6S ISO 4017 M6X12 A480	
350	312115-0449		2	SCREW ISO4762 M8X16 A4	
360	312105-0368		4	SCREW M6S ISO 4017 M6X16 A480	
370	315755-0113		2	RETAINING RING SHAFT DIN 6799 15 A2	

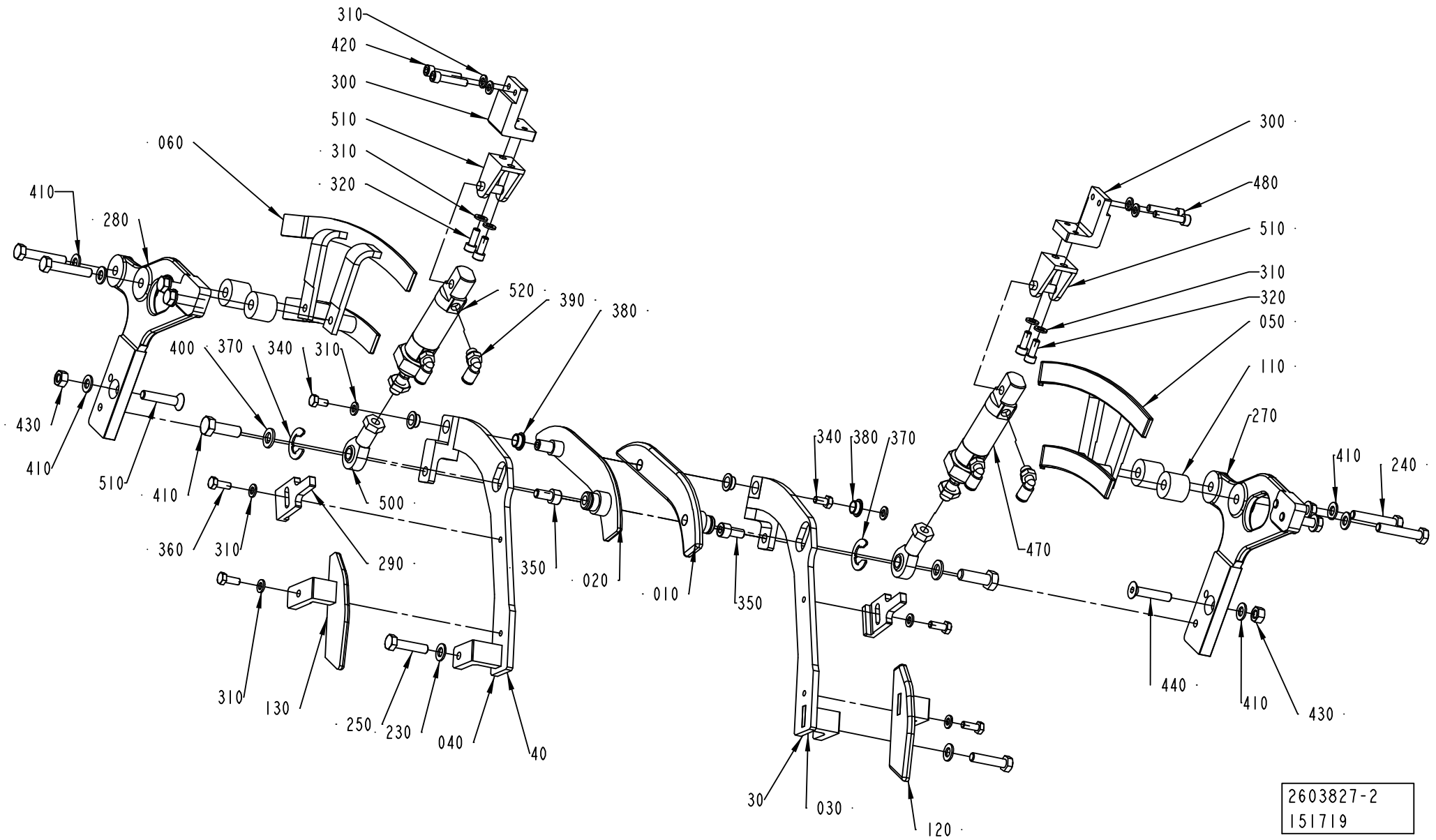
310
420
300
510
310
320
060
410
280
520
390
380
400
370
340
310
430
410
510
410
500
360
310
290
350
020
010
350
340
380
370
470
300
480
510
310
320
050
110
270
410
240
440
410
430
310
130
250
230
040
40
30
030
120
2603827-2
151719

Pos	Part No	UN	Qty	Description	Page No
TBA 1890S, TBA 2000S (Cont'd) (See drawing on page: 3-90)					
380	321153-0136		4	FLANGE BUSHING, 10X12X6 MM	
390	350002-0006		4	PUSH-IN L-FITTING QSL-F-G1/8-6	
400	315105-0171		2	WASHER BRB10X18	
410	312105-0495		2	SCREW M6S ISO 4017 M10X30 A480	
420	312115-0374		4	SCREW ISO4762 M6X30 A4	
430	312605-0318		2	HEXAGON NUT, M6M M8 A280	
440	312155-0459		2	SCREW DIN 7991 MF6S M8X40 A480	
500	90115-0134		2	ROD END, ID=10 MM, M10X1,25	
510	90459-4932		2	REAR CLEVIS FOOT MOUNTING , CRLBN-20/25	
520	90459-1953		2	DOUBLE ACTING, MINI-ISO, CYL. 25-10	

Pos	Part No	UN	Qty	Description	Page No

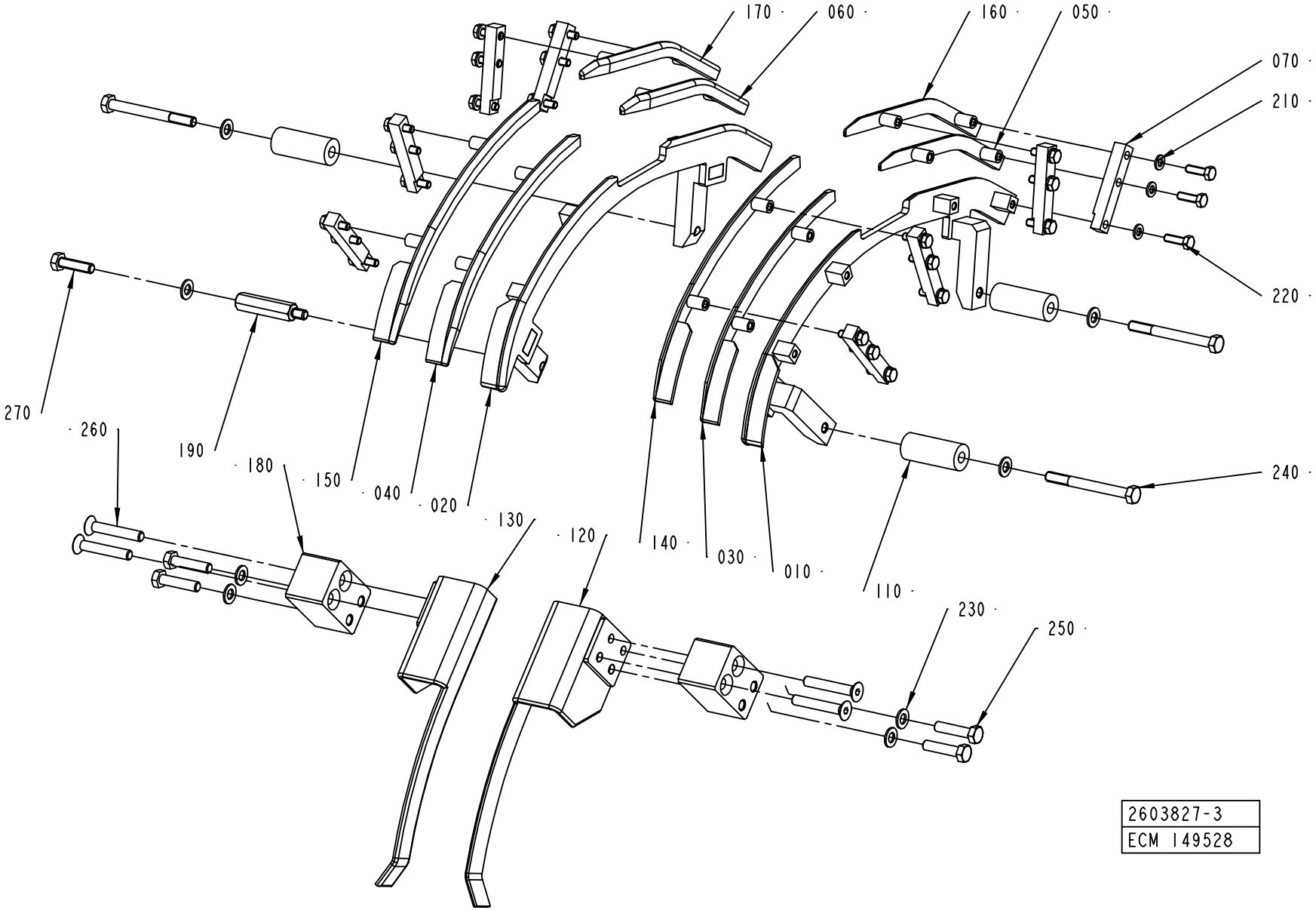
170
060
160
050
070
210
220
240
270
260
190
180
150
040
020
130
120
140
030
010
110
230
250
2603827-3
ECM 149528

Pos	Part No	UN	Qty	Description	Page No	Pos	Part No	UN	Qty	Description	Page No

SEE PREVIOUS LISTS PAGES: 3-89, 3-91.

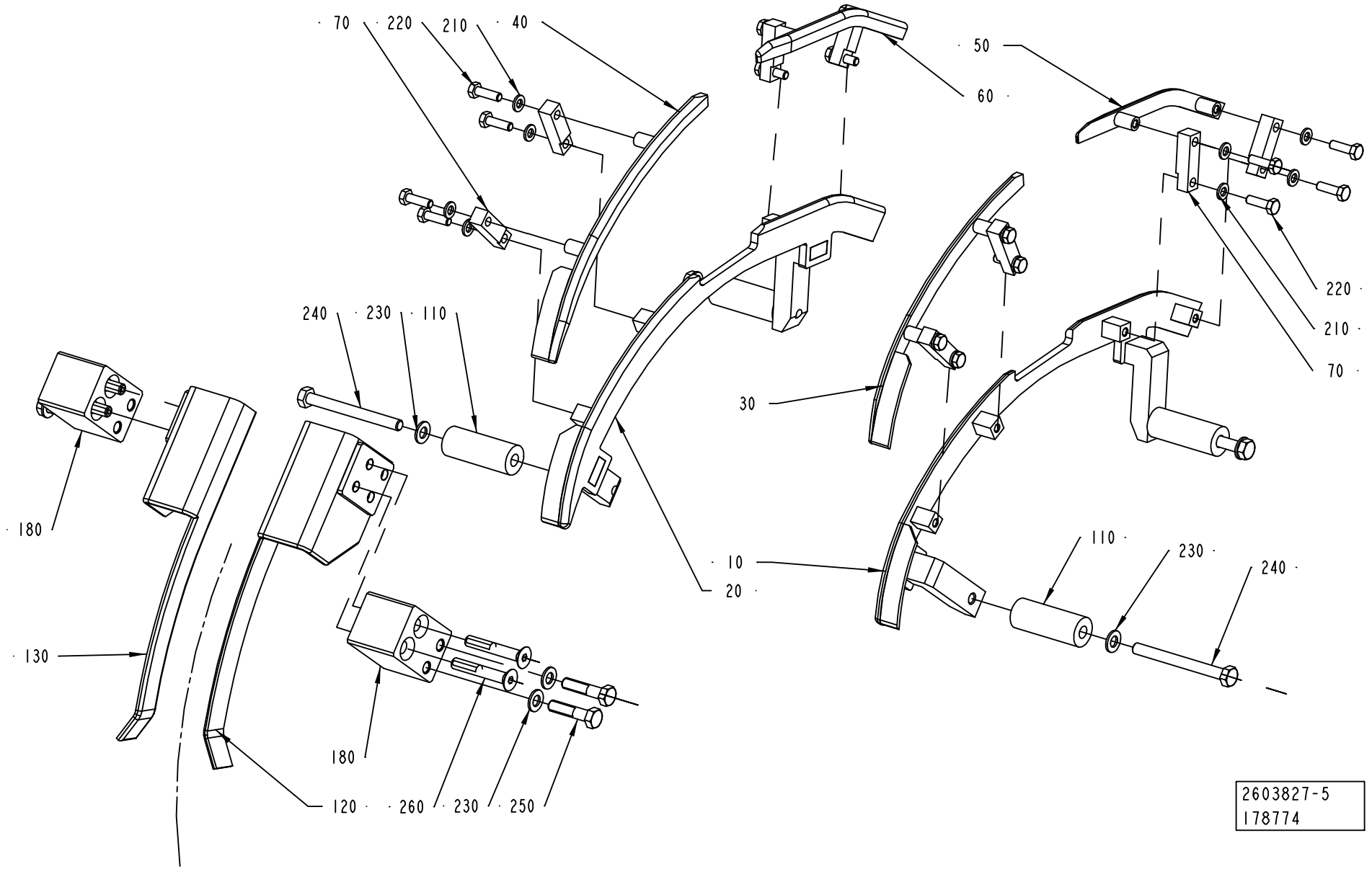
70
220
210
40
50
60
240
230
110
30
180
10
20
130
180
120
260
230
250
220
210
70
110
230
240
2603827-5
178774

Pos	Part No	UN	Qty	Description	Page No
SEE PREVIOUS LISTS PAGES: 3-89, 3-91.					

Pos	Part No	UN	Qty	Description	Page No

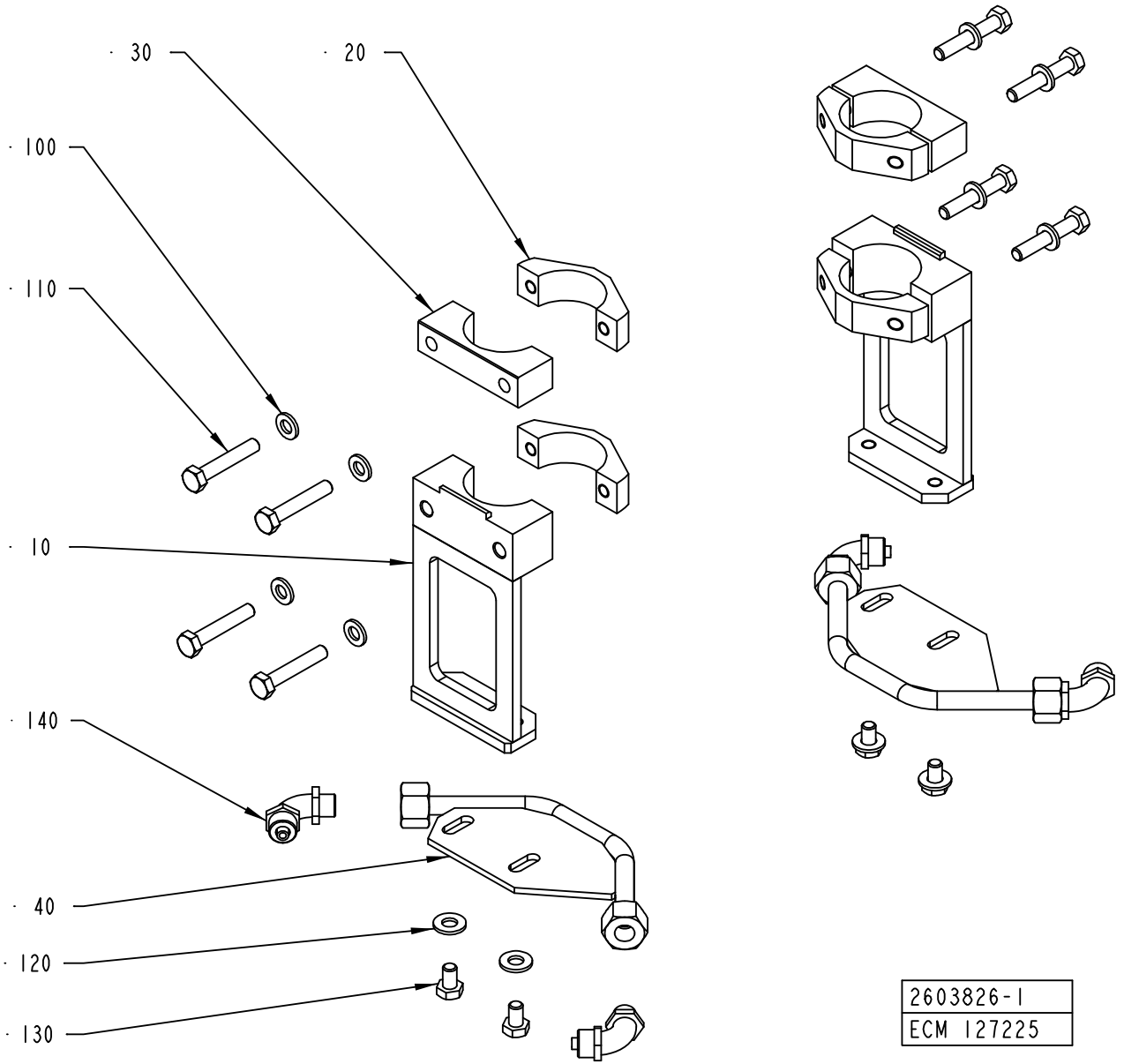

2603826-1
ECM 127225

ECM: 194239 - 20041013
Group number: 2603826-0100
Assembly Drawing: 2603826-1_1_AA

Pos	Part No	UN	Qty	Description	Page No
TBA 0330S, TBA 0200B, TBA 0250S, TBA 0200M, TBA 0250B (See drawing on page: 3-96)					
010	2599044-0000		2	BRACKET	
020	2598486-0000		4	CLAMP	
030	2598485-0000		2	CLAMP	
040	2594058-0000		2	GUIDE	
100	315105-0153		8	WASHER BRB6,4X12RFR	
110	312105-0376		8	SCREW M6S ISO 4014 M6X35 A480	
120	315105-0156		4	WASHER BRB 6.7X14 RFR	
130	312105-0364		4	SCREW M6S ISO 4017 M6X10 A480	
TBA 0500B, TBA 1000B (See drawing on page: 3-96)					
010	2597768-0000		2	BRACKET	
020	2598486-0000		4	CLAMP	
030	2598485-0000		2	CLAMP	
040	2597769-0000		2	GUIDE	
100	315105-0153		8	WASHER BRB6,4X12RFR	
110	312105-0376		8	SCREW M6S ISO 4014 M6X35 A480	
120	315105-0156		4	WASHER BRB 6.7X14 RFR	
130	312105-0364		4	SCREW M6S ISO 4017 M6X10 A480	
TBA 1890S, TBA 2000S (See drawing on page: 3-96)					
010	2603138-0000		2	BRACKET	
020	2603148-0000		2	CLAMP	
040	2603140-0000		2	GUIDE	
110	312115-0333		4	SCREW ISO4762 M5X25 A4	
120	315105-0146		4	WASHER BRB5,3X10RFR	
130	312115-0327		4	SCREW ISO4762 M5X12 A4	
Common Parts					
140	342931-0121		4	ELBOW 90 COUPL.,EXT.THREAD 8/6-G1/8"	

Pos	Part No	UN	Qty	Description	Page No

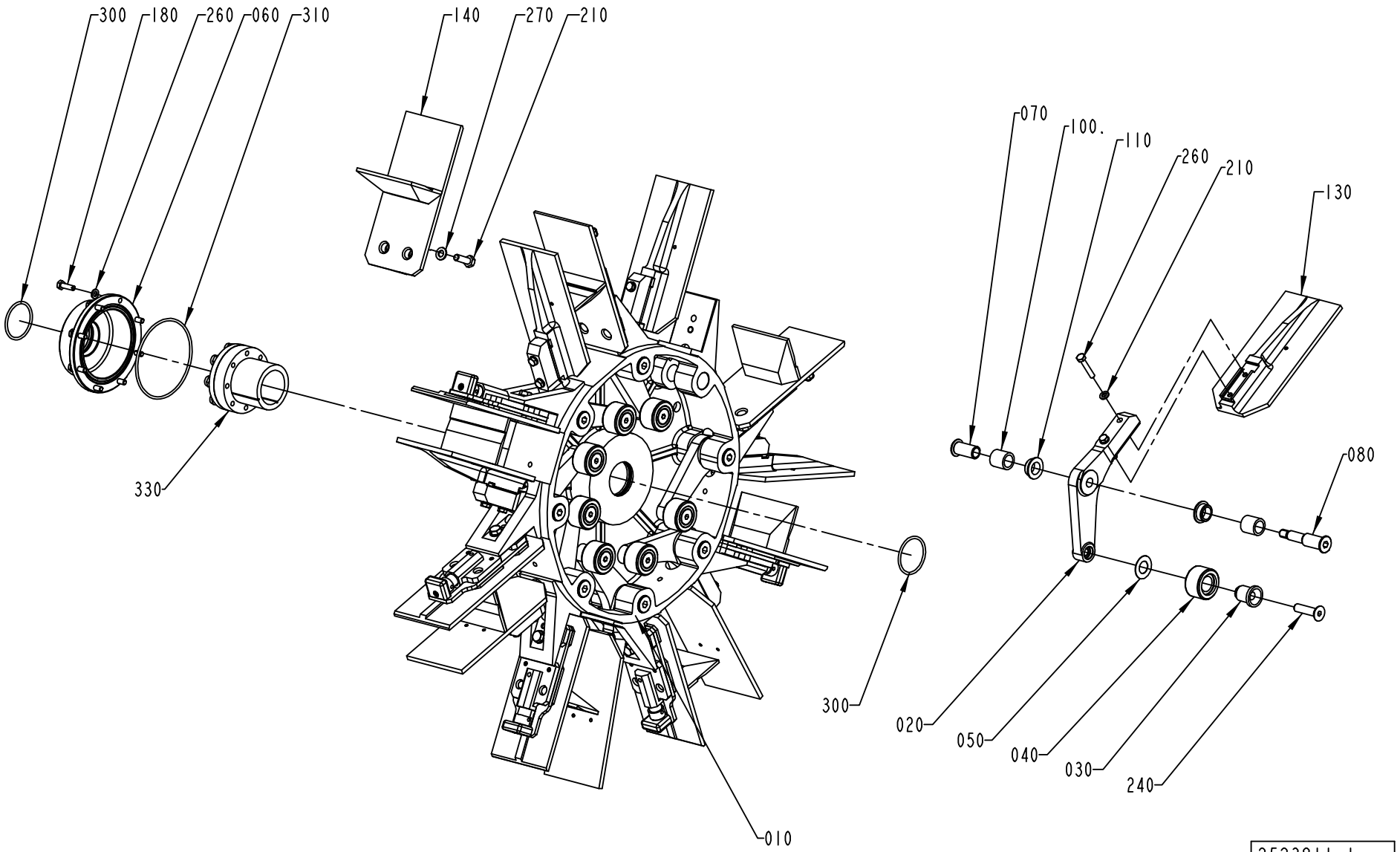
300
180
260
060
310
140
270
210
330
010
070
100.
110
260
210
130
080
300
020
050
040
030
240
2523811-1
ECM 110155

ECM: 193054 - 20041119
Group number: 2523811-0100
Assembly Drawing: 2523811-1_1_AA

This list covers pages from 3-98 to 3-103

Pos	Part No	UN	Qty	Description	Page No
0500B, 1000B (See drawing on page: 3-98)					
130	1260704-0000		8	FLAP	
190	312155-0370		8	SCREW DIN 7991 MF6S M6X20 A480	
200	312105-0376		16	SCREW M6S ISO 4014 M6X35 A480	
260	315105-0153		24	WASHER BRB6,4X12RFR	
1000SQ, 0500SQ (See drawing on page: 3-100)					
130	2518035-0000		8	FLAP	
160	1338941-0000		8	BOTTOM	
190	312155-0370		8	SCREW DIN 7991 MF6S M6X20 A480	
200	312105-0376		16	SCREW M6S ISO 4014 M6X35 A480	
260	315105-0153		24	WASHER BRB6,4X12RFR	
TBA 0250S, TBA 0200M (See drawing on page: 3-98)					
130	2522201-0000		8	FLAP	
TBA 0330S, TBA 0200B, TBA 0250B (See drawing on page: 3-98)					
130	2651146-0000		8	FLAP	
190	312155-0370		8	SCREW DIN 7991 MF6S M6X20 A480	
200	312105-0376		16	SCREW M6S ISO 4014 M6X35 A480	
260	315105-0153		24	WASHER BRB6,4X12RFR	
TBA 1890S (See drawing on page: 3-102)					
090	2693197-0000		32	INSERT	
130	2566321-0000		8	FLAP	
140	2566323-0000		8	FLAP	
150	2638180-0000		16	INSERT	
160	2658390-0100		8	BOTTOM	**3-105**
170	2588327-0000		8	INSERT	
190	312115-0370		8	SCREW ISO4762 M6X20 A4	
200	2693200-0000		16	SCREW	
205	315115-0153		16	WASHER PLAIN, TBRB 6,4/12 H=3	
250	312155-0287		32	SCREW DIN 7991 MF6S M4X8 A480	
260	315105-0153		8	WASHER BRB6,4X12RFR	
TBA 2000S (See drawing on page: 3-102)					
090	2693197-0000		32	INSERT	
130	2566321-0000		8	FLAP	
140	2566323-0000		8	FLAP	
150	2638180-0000		16	INSERT	
160	2658390-0100		8	BOTTOM	**3-105**
170	2588327-0000		8	INSERT	
190	312115-0370		8	SCREW ISO4762 M6X20 A4	
200	2693200-0000		16	SCREW	
205	315115-0153		16	WASHER PLAIN, TBRB 6,4/12 H=3	
250	312155-0287		32	SCREW DIN 7991 MF6S M4X8 A480	
260	315105-0153		8	WASHER BRB6,4X12RFR	

Pos	Part No	UN	Qty	Description	Page No
Common Parts					
010	1144264-0000		1	HUB	
020	1279559-0000		8	ARM	
030	1144312-0000		8	AXLE PIN	
040	1144335-0000		8	ROLLER	
050	1144354-0000		8	WASHER	
060	1144356-0000		1	COVER	
070	1296970-0000		8	SCREW BUSHING	
080	1296969-0000		8	SCREW HOLDER	
100	1144417-0000		16	BUSHING	
110	1282708-0000		16	BUSHING	
140	2523812-0100		8	FLAP	**3-107**
180	312105-0370		8	SCREW M6S ISO 4017 M6X20 A480	
190	312155-0370		8	SCREW DIN 7991 MF6S M6X20 A480	
210	312105-0453		8	SCREW M6S ISO 4017 M8X25 A480	
240	312155-0499		8	SCREW DIN 7991 MF6S M10X40 A480	
270	315105-0165		8	WASHER BRB8,4X16RFR	
300	315202-0225		2	O-RING 44,2X3 MM	
310	315202-0311		1	O-RING 99,5X3 MM	
330	90208-0087		1	CLAMPING ELEMENT WITH SLEEVE, 45X59 MM	

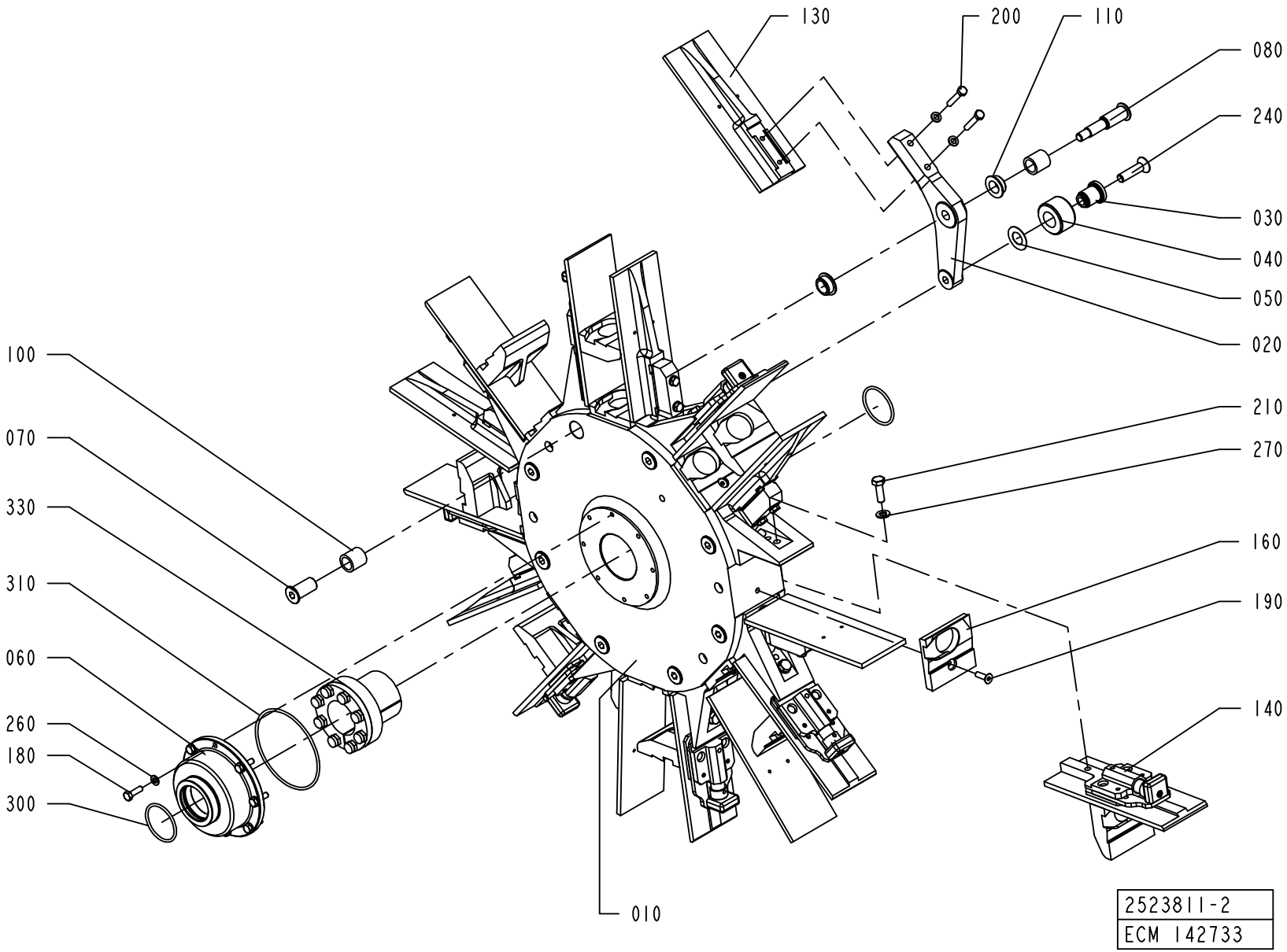
130
200
110
080
240
030
040
050
020
100
070
330
310
060
260
180
300
210
270
160
190
140
010
2523811-2
ECM 142733

ECM: 193054 - 20041119
Group number: 2523811-0100
Assembly Drawing: 2523811-2_1_AA

This list covers pages from 3-98 to 3-103

Pos	Part No	UN	Qty	Description	Page No
0500B, 1000B (See drawing on page: 3-98)					
130	1260704-0000		8	FLAP	
190	312155-0370		8	SCREW DIN 7991 MF6S M6X20 A480	
200	312105-0376		16	SCREW M6S ISO 4014 M6X35 A480	
260	315105-0153		24	WASHER BRB6,4X12RFR	
1000SQ, 0500SQ (See drawing on page: 3-100)					
130	2518035-0000		8	FLAP	
160	1338941-0000		8	BOTTOM	
190	312155-0370		8	SCREW DIN 7991 MF6S M6X20 A480	
200	312105-0376		16	SCREW M6S ISO 4014 M6X35 A480	
260	315105-0153		24	WASHER BRB6,4X12RFR	
TBA 0250S, TBA 0200M (See drawing on page: 3-98)					
130	2522201-0000		8	FLAP	
TBA 0330S, TBA 0200B, TBA 0250B (See drawing on page: 3-98)					
130	2651146-0000		8	FLAP	
190	312155-0370		8	SCREW DIN 7991 MF6S M6X20 A480	
200	312105-0376		16	SCREW M6S ISO 4014 M6X35 A480	
260	315105-0153		24	WASHER BRB6,4X12RFR	
TBA 1890S (See drawing on page: 3-102)					
090	2693197-0000		32	INSERT	
130	2566321-0000		8	FLAP	
140	2566323-0000		8	FLAP	
150	2638180-0000		16	INSERT	
160	2658390-0100		8	BOTTOM	**3-105**
170	2588327-0000		8	INSERT	
190	312115-0370		8	SCREW ISO4762 M6X20 A4	
200	2693200-0000		16	SCREW	
205	315115-0153		16	WASHER PLAIN, TBRB 6,4/12 H=3	
250	312155-0287		32	SCREW DIN 7991 MF6S M4X8 A480	
260	315105-0153		8	WASHER BRB6,4X12RFR	
TBA 2000S (See drawing on page: 3-102)					
090	2693197-0000		32	INSERT	
130	2566321-0000		8	FLAP	
140	2566323-0000		8	FLAP	
150	2638180-0000		16	INSERT	
160	2658390-0100		8	BOTTOM	**3-105**
170	2588327-0000		8	INSERT	
190	312115-0370		8	SCREW ISO4762 M6X20 A4	
200	2693200-0000		16	SCREW	
205	315115-0153		16	WASHER PLAIN, TBRB 6,4/12 H=3	
250	312155-0287		32	SCREW DIN 7991 MF6S M4X8 A480	
260	315105-0153		8	WASHER BRB6,4X12RFR	

Pos	Part No	UN	Qty	Description	Page No
Common Parts					
010	1144264-0000		1	HUB	
020	1279559-0000		8	ARM	
030	1144312-0000		8	AXLE PIN	
040	1144335-0000		8	ROLLER	
050	1144354-0000		8	WASHER	
060	1144356-0000		1	COVER	
070	1296970-0000		8	SCREW BUSHING	
080	1296969-0000		8	SCREW HOLDER	
100	1144417-0000		16	BUSHING	
110	1282708-0000		16	BUSHING	
140	2523812-0100		8	FLAP	**3-107**
180	312105-0370		8	SCREW M6S ISO 4017 M6X20 A480	
190	312155-0370		8	SCREW DIN 7991 MF6S M6X20 A480	
210	312105-0453		8	SCREW M6S ISO 4017 M8X25 A480	
240	312155-0499		8	SCREW DIN 7991 MF6S M10X40 A480	
270	315105-0165		8	WASHER BRB8,4X16RFR	
300	315202-0225		2	O-RING 44,2X3 MM	
310	315202-0311		1	O-RING 99,5X3 MM	
330	90208-0087		1	CLAMPING ELEMENT WITH SLEEVE, 45X59 MM	

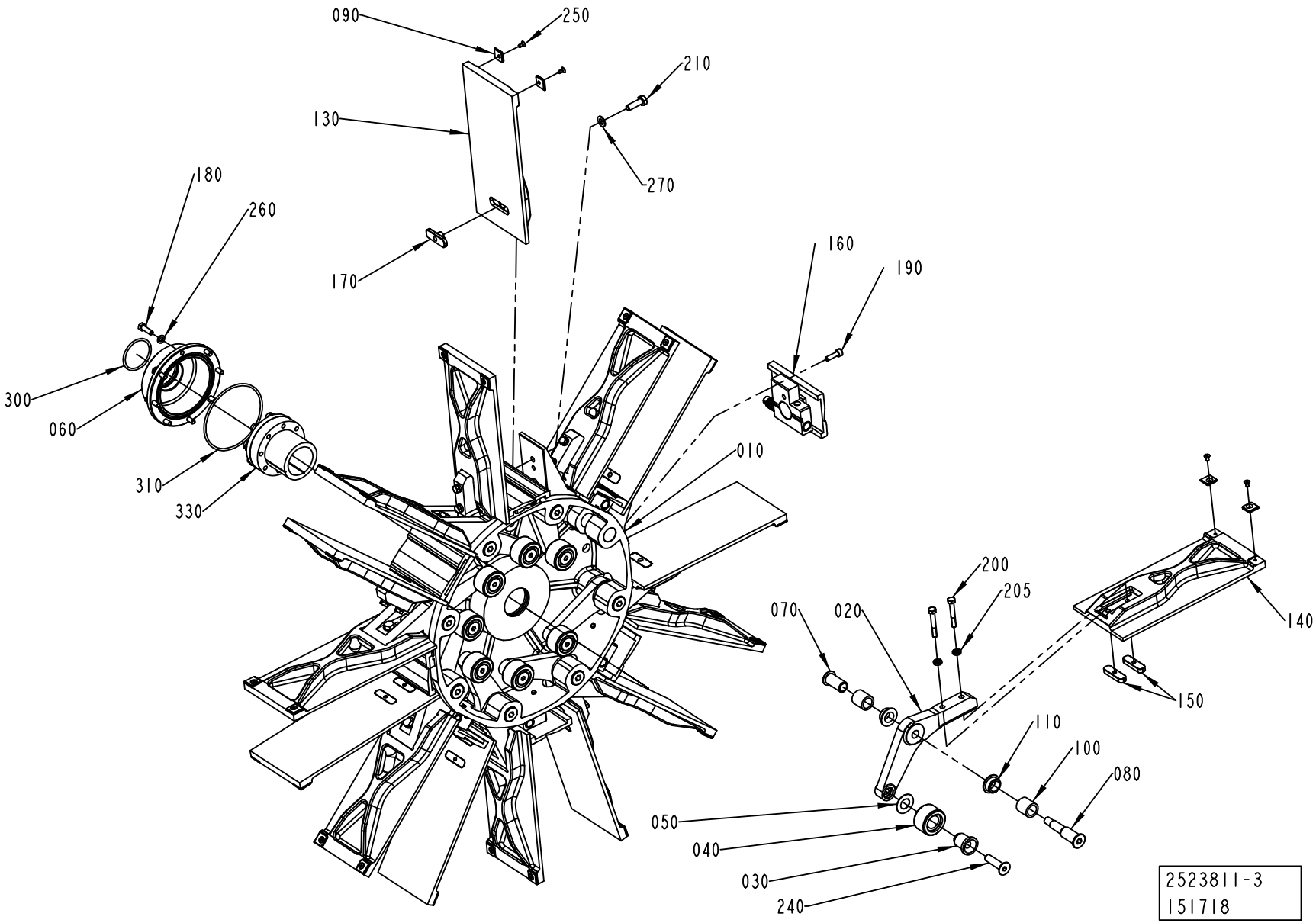
090
250
210
130
270
180
260
170
160
190
300
060
310
330
010
200
205
070
020
140
150
110
100
080
050
040
030
240
2523811-3
151718

ECM: 193054 - 20041119
Group number: 2523811-0100
Assembly Drawing: 2523811-3_1_AA

This list covers pages from 3-98 to 3-103

Pos	Part No	UN	Qty	Description	Page No
0500B, 1000B (See drawing on page: 3-98)					
130	1260704-0000		8	FLAP	
190	312155-0370		8	SCREW DIN 7991 MF6S M6X20 A480	
200	312105-0376		16	SCREW M6S ISO 4014 M6X35 A480	
260	315105-0153		24	WASHER BRB6,4X12RFR	
1000SQ, 0500SQ (See drawing on page: 3-100)					
130	2518035-0000		8	FLAP	
160	1338941-0000		8	BOTTOM	
190	312155-0370		8	SCREW DIN 7991 MF6S M6X20 A480	
200	312105-0376		16	SCREW M6S ISO 4014 M6X35 A480	
260	315105-0153		24	WASHER BRB6,4X12RFR	
TBA 0250S, TBA 0200M (See drawing on page: 3-98)					
130	2522201-0000		8	FLAP	
TBA 0330S, TBA 0200B, TBA 0250B (See drawing on page: 3-98)					
130	2651146-0000		8	FLAP	
190	312155-0370		8	SCREW DIN 7991 MF6S M6X20 A480	
200	312105-0376		16	SCREW M6S ISO 4014 M6X35 A480	
260	315105-0153		24	WASHER BRB6,4X12RFR	
TBA 1890S (See drawing on page: 3-102)					
090	2693197-0000		32	INSERT	
130	2566321-0000		8	FLAP	
140	2566323-0000		8	FLAP	
150	2638180-0000		16	INSERT	
160	2658390-0100		8	BOTTOM	**3-105**
170	2588327-0000		8	INSERT	
190	312115-0370		8	SCREW ISO4762 M6X20 A4	
200	2693200-0000		16	SCREW	
205	315115-0153		16	WASHER PLAIN, TBRB 6,4/12 H=3	
250	312155-0287		32	SCREW DIN 7991 MF6S M4X8 A480	
260	315105-0153		8	WASHER BRB6,4X12RFR	
TBA 2000S (See drawing on page: 3-102)					
090	2693197-0000		32	INSERT	
130	2566321-0000		8	FLAP	
140	2566323-0000		8	FLAP	
150	2638180-0000		16	INSERT	
160	2658390-0100		8	BOTTOM	**3-105**
170	2588327-0000		8	INSERT	
190	312115-0370		8	SCREW ISO4762 M6X20 A4	
200	2693200-0000		16	SCREW	
205	315115-0153		16	WASHER PLAIN, TBRB 6,4/12 H=3	
250	312155-0287		32	SCREW DIN 7991 MF6S M4X8 A480	
260	315105-0153		8	WASHER BRB6,4X12RFR	

Pos	Part No	UN	Qty	Description	Page No
Common Parts					
010	1144264-0000		1	HUB	
020	1279559-0000		8	ARM	
030	1144312-0000		8	AXLE PIN	
040	1144335-0000		8	ROLLER	
050	1144354-0000		8	WASHER	
060	1144356-0000		1	COVER	
070	1296970-0000		8	SCREW BUSHING	
080	1296969-0000		8	SCREW HOLDER	
100	1144417-0000		16	BUSHING	
110	1282708-0000		16	BUSHING	
140	2523812-0100		8	FLAP	**3-107**
180	312105-0370		8	SCREW M6S ISO 4017 M6X20 A480	
190	312155-0370		8	SCREW DIN 7991 MF6S M6X20 A480	
210	312105-0453		8	SCREW M6S ISO 4017 M8X25 A480	
240	312155-0499		8	SCREW DIN 7991 MF6S M10X40 A480	
270	315105-0165		8	WASHER BRB8,4X16RFR	
300	315202-0225		2	O-RING 44,2X3 MM	
310	315202-0311		1	O-RING 99,5X3 MM	
330	90208-0087		1	CLAMPING ELEMENT WITH SLEEVE, 45X59 MM	

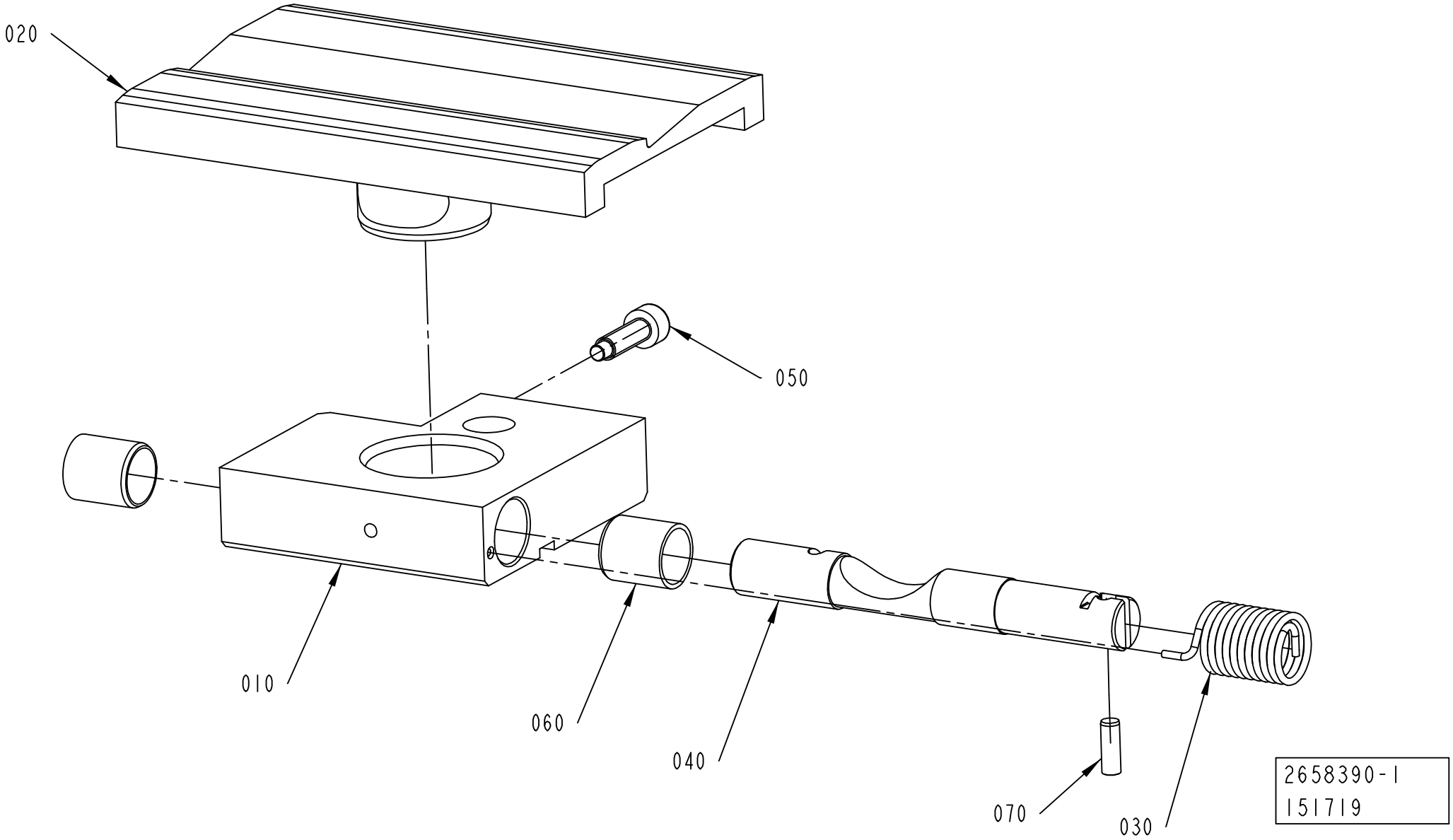
020
050
010
060
040
070
030
2658390-1
151719

ECM: 190929 - 20041104
Group number: 2658390-0100
Assembly Drawing: 2658390-1_1_AA

Pos	Part No	UN	Qty	Description	Page No
TBA 1890S					
020	2616218-0000		1	BOTTOM	
TBA 2000S					
020	2616219-0000		1	BOTTOM	
Common Parts					
010	2616217-0000		1	BOTTOM	
030	2650817-0000		1	SPRING	
040	2652888-0000		1	SHAFT	
050	2652889-0000		1	SCREW	
060	321138-0183		2	BUSHING, 12X14X15 MM	
070	311103-0268		1	PARALLEL PIN ISO 2338 4M6X12 A1	

Pos	Part No	UN	Qty	Description	Page No

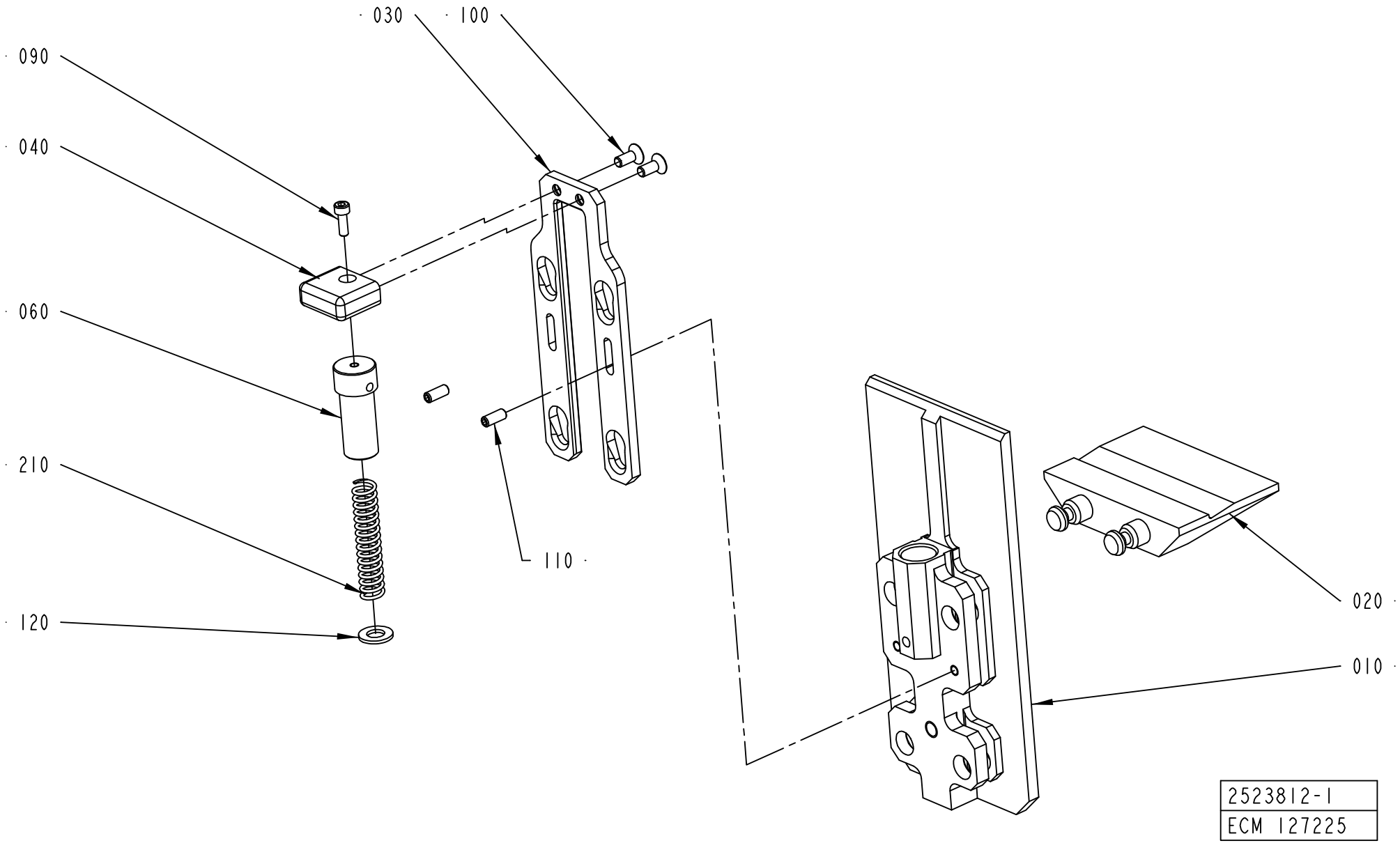
030
100
090
040
060
210
120
110
020
010
2523812-1
ECM 127225

ECM: 181063 - 20041013
Group number: 2523812-0100
Assembly Drawing: 2523812-1_1_AB

Pos	Part No	UN	Qty	Description	Page No
TBA 0200B QC, TBA 0330S QC, TBA 0250B QC					
010	2603488-0000		1	FLAP	
020	2603489-0000		1	BOTTOM	
030	2603490-0000		1	SLIDE	
100	312155-0327		16	SCREW DIN 7991 MF6S M5X12 A480	
110	312318-0327		16	SCREW ISO4029 M5X12 A4	
120	315105-0165		8	WASHER BRB8,4X16RFR	
TBA 0250S, TBA 0200M					
010	2636399-0000		1	FLAP	
020	2636400-0000		1	BOTTOM	
030	2636401-0000		1	SLIDE	
100	312155-0327		2	SCREW DIN 7991 MF6S M5X12 A480	
110	312318-0327		2	SCREW ISO4029 M5X12 A4	
120	315105-0165		1	WASHER BRB8,4X16RFR	
TBA 0500B, TBA 1000B					
010	2520170-0000		1	FLAP	
020	2629336-0000		1	BOTTOM	
030	2520168-0000		1	SLIDE	
100	312155-0327		2	SCREW DIN 7991 MF6S M5X12 A480	
110	312318-0327		2	SCREW ISO4029 M5X12 A4	
120	315105-0165		1	WASHER BRB8,4X16RFR	
Common Parts					
040	2526563-0000		1	HANDLE	
060	2526567-0000		1	CYLINDER	
090	312115-0291		1	SCREW ISO4762 M4X12 A4	
210	90459-0969		1	COMP. SPRING A D22430, 1,6X11,6X58,5	

Pos	Part No	UN	Qty	Description	Page No

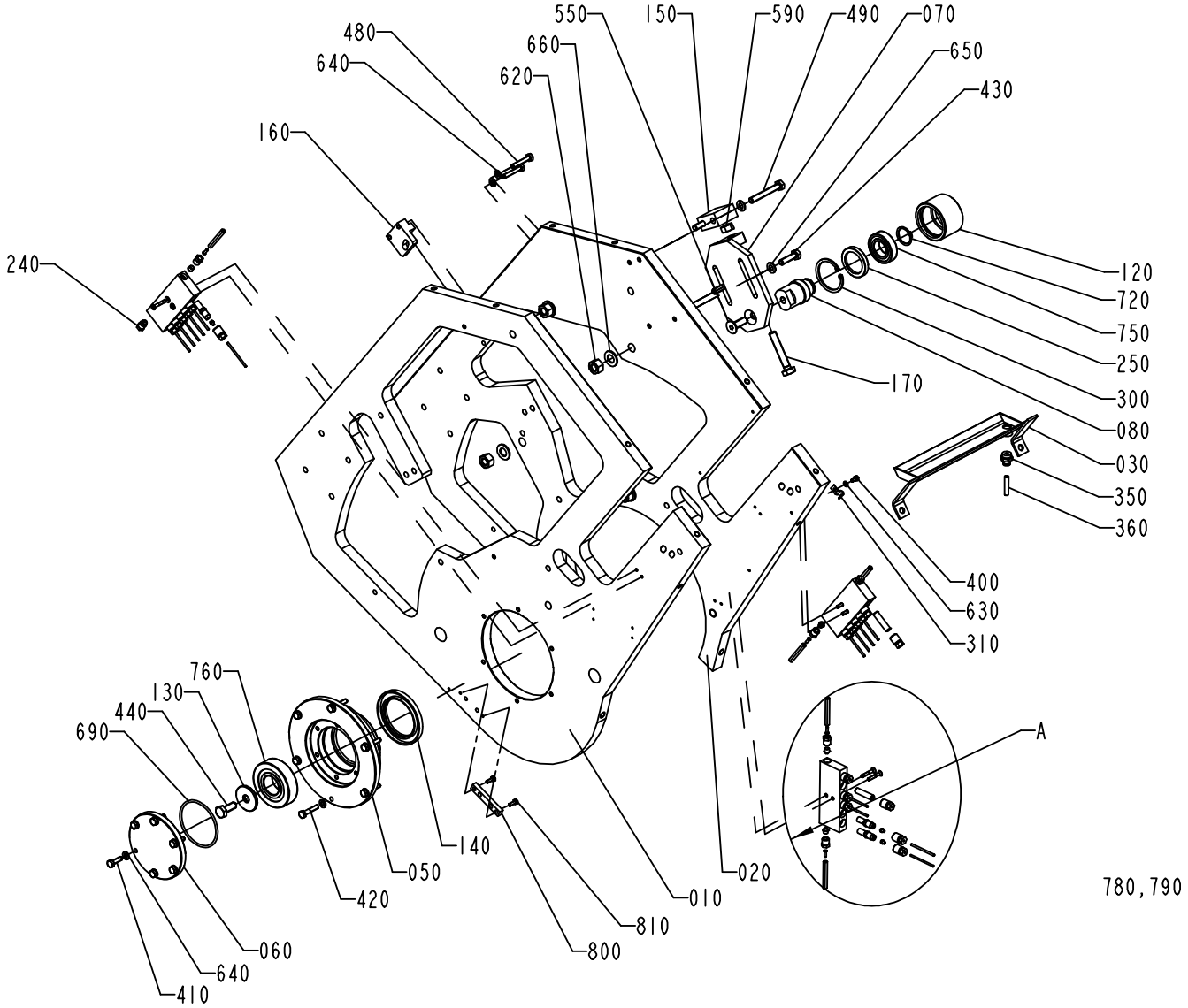

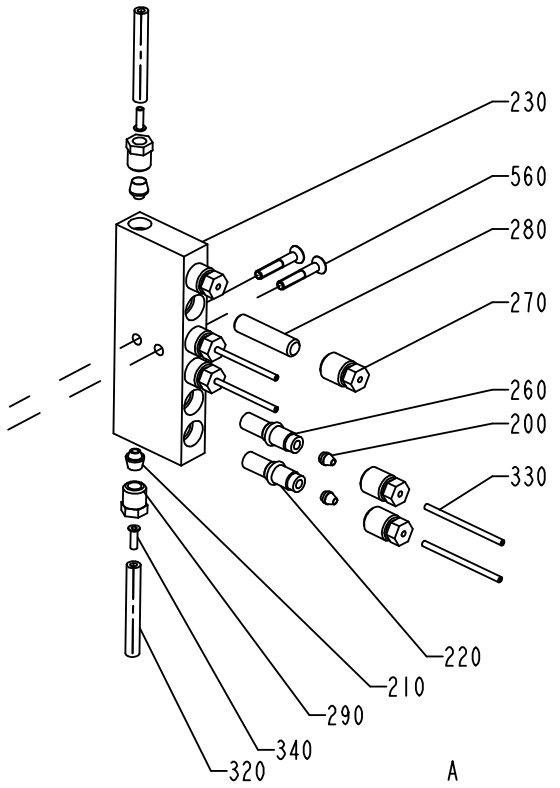

S-1144324-2
ECN 73332

ECM: 190870 - 20041119
Group number: 1144324-0300
Assembly Drawing: 1144324-2_1_AC

Pos	Part No	UN	Qty	Description	Page No
A3/FLEX TBA 1890S QC, A3/FLEX TBA 2000S QC (See drawing on page: 3-108)					
160	1282844-0000		1	SUPPORT	
260	90092-0052		13	METERING VALVE 10 MM3	
280	90134-0052		4	PLUG DOSING BLOCK	
A3/FLEX TBA 1000B, A3/FLEX TBA 1000S, A3/FLEX TBA 0200S, A3/FLEX TBA 1500S, A3/FLEX TBA 0200B QC, A3/FLEX TBA 0250B QC, A3/FLEX TBA 0330S QC, A3/FLEX TBA 0250S QC, A3/FLEX TBA 0200M QC (See drawing on page: 3-108)					
160	1144900-0000		1	SUPPORT	
260	90092-0052		14	METERING VALVE 10 MM3	
280	90134-0052		4	PLUG DOSING BLOCK	
A3/FLEX TBA 1000SQ, A3/FLEX TPA 1000SQ, A3/FLEX TPA 0330SQ, A3/FLEX TPA 0500SQ (See drawing on page: 3-108)					
160	1282844-0000		1	SUPPORT	
260	90092-0052		16	METERING VALVE 10 MM3	
280	90134-0052		2	PLUG DOSING BLOCK	
A3/FLEX TBA 0500B QC, A3/FLEX TBA 1000B QC, A3/FLEX TBA 0500S (See drawing on page: 3-108)					
160	1282844-0000		1	SUPPORT	
260	90092-0052		14	METERING VALVE 10 MM3	
280	90134-0052		4	PLUG DOSING BLOCK	
Common Parts					
010	1347109-0000		1	PLATE	
020	1347108-0000		1	PLATE	
050	598101-0000		1	BEARING HOUSING	
060	1144618-0000		1	FLANGE	
070	1144797-0000		1	SUPPORT	
080	1478418-0000		1	AXLE BOLT	
120	1478417-0000		1	ROLLER	
130	1144620-0000		1	WASHER	
140	1144665-0000		1	SEAL RING	
150	1144839-0000		1	BLOCK	
170	1260931-0000		1	SCREW	
200	90028-0020		14	CONE TUBE 2,5MM	
210	90028-0025		5	CONE TUBE 6 MM	
220	90092-0054		1	METERING VALVE 50 MM3	
230	90032-0040		3	BLOCK 6 WAYS	
240	90087-0019		1	PLUG M10X1 STAINLESS	
250	90091-0297		1	RADIAL SEAL 35X47X7 MM DUST LIP	
270	90134-0039		18	BUSHING VALVE CONNECTION 2,5 MM	
290	90134-0055		5	BUSHING/NUT INLET/OUTLET 6 MM	
300	90141-0019		1	RETAINING RING FOR BORE DIN 472 50 A2	
310	316810-0106		5	PIPE CLIP FOR TUBE D=8 MM	
320	90166-0108	M	4	TUBE 6 MM PA,TRANSP.	
330	90166-0143	M	4	TUBE 2,5 MM PA,TRANSP.	
340	90134-0030		5	SLEEVE FOR PLASTIC TUBE	
400	312105-0287		5	SCREW M6S ISO4017 M4X8 A470	
410	312105-0370		6	SCREW M6S ISO 4017 M6X20 A480	
420	312105-0374		6	SCREW M6S ISO 4014 M6X30 A480	
430	312105-0455		2	SCREW M6S ISO 4017 M8X30 A480	
440	312105-0493		1	SCREW M6S ISO 4017 M10X25 A480	
480	312109-0376		2	SCREW M6S ISO 4017 M6X35 A480	
490	312109-0463		2	SCREW M6S ISO 4017 M8X60 A480	
550	312155-0495		1	SCREW DIN 7991 MF6S M10X30 A480	
560	312155-0297		6	SCREW DIN 7991 MF6S M4X25 A480	
590	312605-0320		1	HEXAGON NUT, M6M M10 A280	
620	312605-0322		4	HEXAGON NUT, M6M M12 A280	
630	315105-0136		5	WASHER BRB4,3XRFR	
640	315105-0153		14	WASHER BRB6,4X12RFR	
650	315105-0165		4	WASHER BRB8,4X16RFR	
660	315105-0178		4	WASHER BRB13X24RFR	
690	315202-0305		1	O-RING 69,5X3 MM	
720	315751-0119		1	RETAINING RING FOR SHAFT DIN 471 25 A2	
750	321308-0205		1	BALL BEARING, 25X47X12MM	
760	321316-0206		1	BALL BEARING, 30X72X19 MM	
780	352113-0102		3	CLIP-STRIP, BLACK 188X4,8 MM	
790	352113-0101		7	CLIP STRIP, 92X2,5 MM	
800	1487821-0000		1	SPACER	
810	312105-0291		2	SCREW M6S ISO 4017 M4X12 A470	

Machine Type | Group Description | Used-In | Group Number | Page No

PULL-DOWN DEVICE

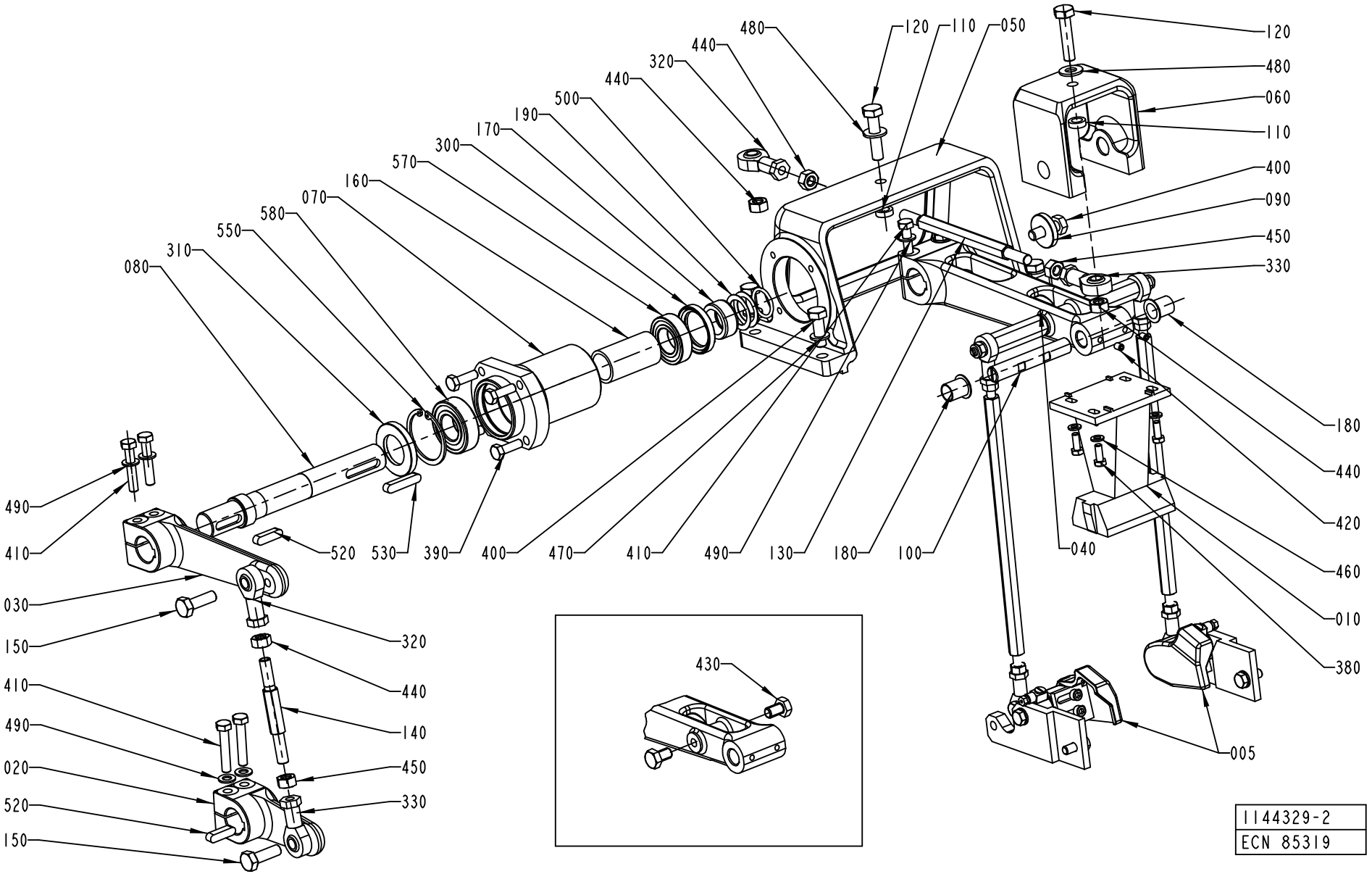

ECM: 180378 - 20041013
Group number: 1144329-0300
Assembly Drawing: 1144329-2_1_AB

This list covers pages from 3-110 to 3-113

Pos	Part No	UN	Qty	Description	Page No
TPA 1000SQ (See drawing on page: 3-110)					
005	1348056-0300		1	FOLDING PART	**3-115, 3-117**
010	1519341-0000		1	BLOCK	
TBA 0200B NOQC, TBA 0330S NOQC, TBA 0250B NOQC (See drawing on page: 3-110)					
010	1350808-0000		1	BLOCK	
430	312105-0489		2	SCREW M6S ISO 4017 M10X16 A480	
TBA 0200B QC, TBA 0330S QC, TBA 0250B QC (See drawing on page: 3-110)					
010	2591790-0000		1	BLOCK	
430	312105-0489		2	SCREW M6S ISO 4017 M10X16 A480	
TBA 0200S (See drawing on page: 3-110)					
010	1260887-0000		1	BLOCK	
430	312105-0489		2	SCREW M6S ISO 4017 M10X16 A480	
TBA 0250S, TBA 0200M (See drawing on page: 3-110)					
010	2522199-0000		1	BLOCK	
430	312105-0489		2	SCREW M6S ISO 4017 M10X16 A480	
TBA 0500B, TBA 1000B NOMOLDEDCAP (See drawing on page: 3-110)					
010	1260700-0000		1	BLOCK	
430	312105-0489		2	SCREW M6S ISO 4017 M10X16 A480	
TBA 0500S (See drawing on page: 3-110)					
010	1499139-0000		1	BLOCK	
430	312105-0489		2	SCREW M6S ISO 4017 M10X16 A480	
TBA 1000B STDA7 (See drawing on page: 3-110)					
005	1348056-0300		1	FOLDING PART	**3-115, 3-117**
010	1260700-0000		1	BLOCK	
TBA 1000S NOMOLDEDCAP (See drawing on page: 3-110)					
010	1144933-0000		1	BLOCK	
430	312105-0489		2	SCREW M6S ISO 4017 M10X16 A480	
TBA 1000S STDA7 (See drawing on page: 3-112)					
005	1348056-0300		1	FOLDING PART	**3-115, 3-117**
010	1144933-0000		1	BLOCK	
TBA 1000SQ (See drawing on page: 3-112)					
005	1348056-0300		1	FOLDING PART	**3-115, 3-117**
010	1558008-0000		1	BLOCK	
200	1558020-0000		2	ROD	
590	312125-0234		4	SCREW ISO 1207 M3X30 A4	
600	315105-0124		4	WASHER BRB3,2X6RFR	
TBA 1500S (See drawing on page: 3-110)					
010	1317789-0000		1	BLOCK	
430	312105-0489		2	SCREW M6S ISO 4017 M10X16 A480	
TBA 1890S QC, TBA 2000S QC (See drawing on page: 3-112)					
010	2616229-0000		1	BLOCK	
430	312105-0489		2	SCREW M6S ISO 4017 M10X16 A480	
590	312125-0234		4	SCREW ISO 1207 M3X30 A4	
600	315105-0124		4	WASHER BRB3,2X6RFR	
TPA 0330SQ (See drawing on page: 3-110)					
005	1348056-0300		1	FOLDING PART	**3-115, 3-117**
010	1532266-0000		1	BLOCK	
TPA 0500SQ (See drawing on page: 3-112)					
005	1348056-0300		1	FOLDING PART	**3-115, 3-117**
010	2610779-0000		1	BLOCK	
200	2598706-0000		2	BAR	
430	312105-0489		2	SCREW M6S ISO 4017 M10X16 A480	
590	312125-0230		4	SCREW ISO 1207 M3X20 A4	
600	315105-0124		4	WASHER BRB3,2X6RFR	
Common Parts					
020	1144472-0000		1	LEVER	
030	1144473-0000		1	LEVER	
040	1499635-0000		1	LEVER	
050	1144475-0000		1	BRACKET	
060	1144476-0000		1	BRACKET	
070	1144566-0000		1	FLANGE	
080	1144678-0000		1	SHAFT	
090	1144681-0000		1	WASHER	
100	1144683-0000		1	AXLE PIN	
110	1144684-0000		2	SPACER	
120	1144685-0000		2	SCREW	
130	1144686-0000		1	TIE ROD	
140	1144687-0000		1	TIE ROD	
150	1144688-0000		2	SCREW	
160	1260824-0000		1	SPACER RING	
170	1334328-0000		1	SPACER	
180	1260944-0000		2	BUSHING	
190	1334018-0000		4	SHIM	
300	90091-0297		1	RADIAL SEAL 35X47X7 MM DUST LIP	
310	90091-0299		1	RADIAL SEAL 30X52X7 MM DUST LIP	
320	90115-0181		2	ROD END, ID=10 MM M10X1,5	
330	90115-0182		2	ROD END, ID=10 MM M10X1,5LH	
380	312105-0368		4	SCREW M6S ISO 4017 M6X16 A480	
390	312105-0453		4	SCREW M6S ISO 4017 M8X25 A480	
400	312105-0495		5	SCREW M6S ISO 4017 M10X30 A480	
410	312109-0460		6	SCREW M6S ISO 4017 M8X45 A480	
420	312318-0362		2	SCREW ISO4029 M6X8 A4	
440	312605-0320		4	HEXAGON NUT, M6M M10 A280	
450	312902-0320		2	NUT HEX. LEFT THREAD, M10 A280	

Machine Type | Group Description | Used-In | Group Number | Page No

PULL-DOWN DEVICE

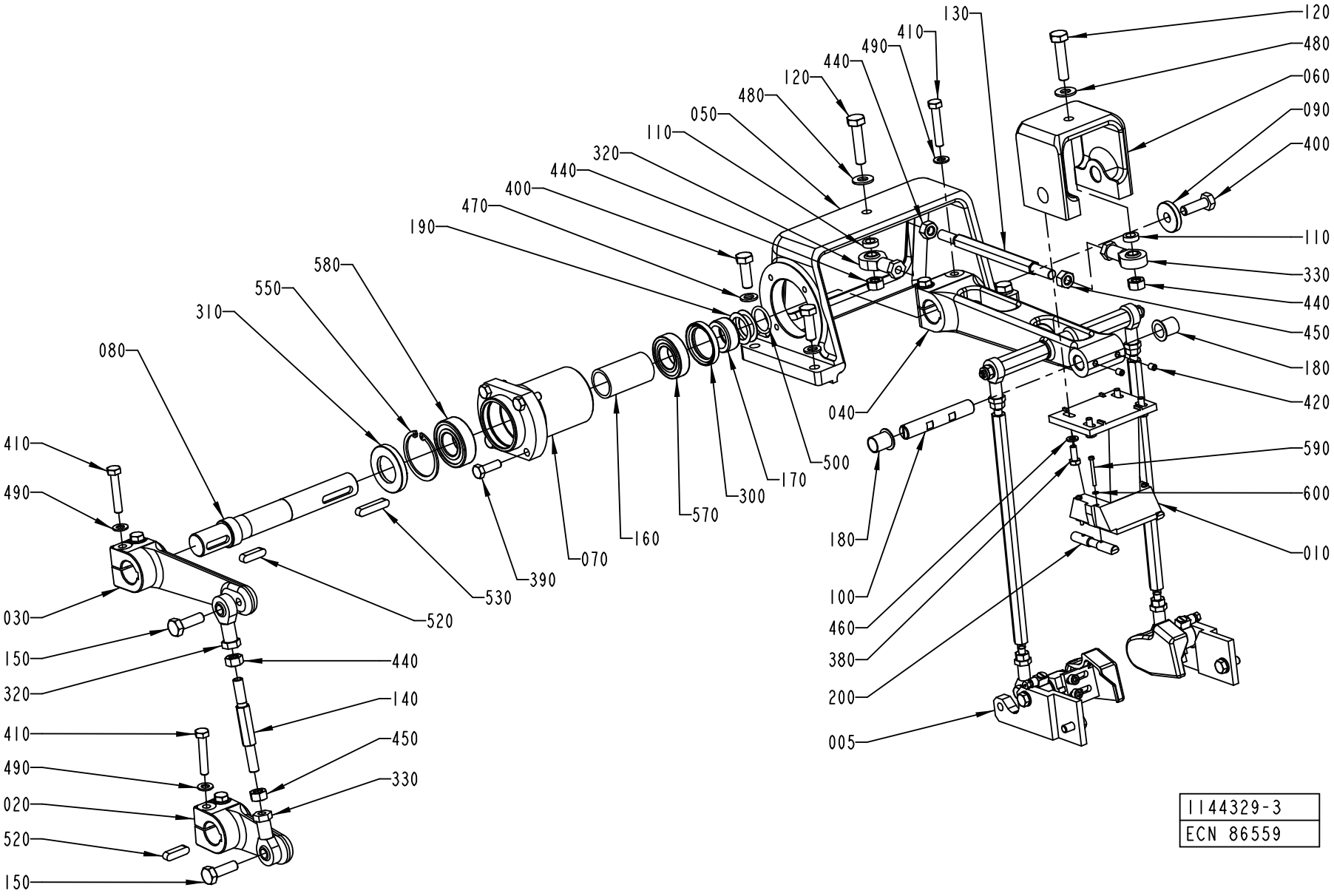

Pos	Part No	UN	Qty	Description	Page No
Common Parts (Cont'd)					
460	315105-0153		4	WASHER BRB6,4X12RFR	
470	315105-0171		4	WASHER BRB10X18	
480	315105-0173		2	WASHER BRB10,5X22RFR	
490	315105-0165		6	WASHER BRB8,4X16RFR	
500	315202-0217		1	O-RING 24,2X3 MM	
520	315705-0267		1	PARALLEL KEY W. ROUND ENDS 8X7X30 MM	
530	315705-0270		1	PARALLEL KEY W. ROUND ENDS 8X7X40 MM	
550	315753-0132		1	RETAINING RING FOR BORE DIN 472 52 A2	
570	321308-0205		1	BALL BEARING, 25X47X12MM	
580	321313-0105		1	BALL BEARING, 25X52X15MM	

Pos	Part No	UN	Qty	Description	Page No

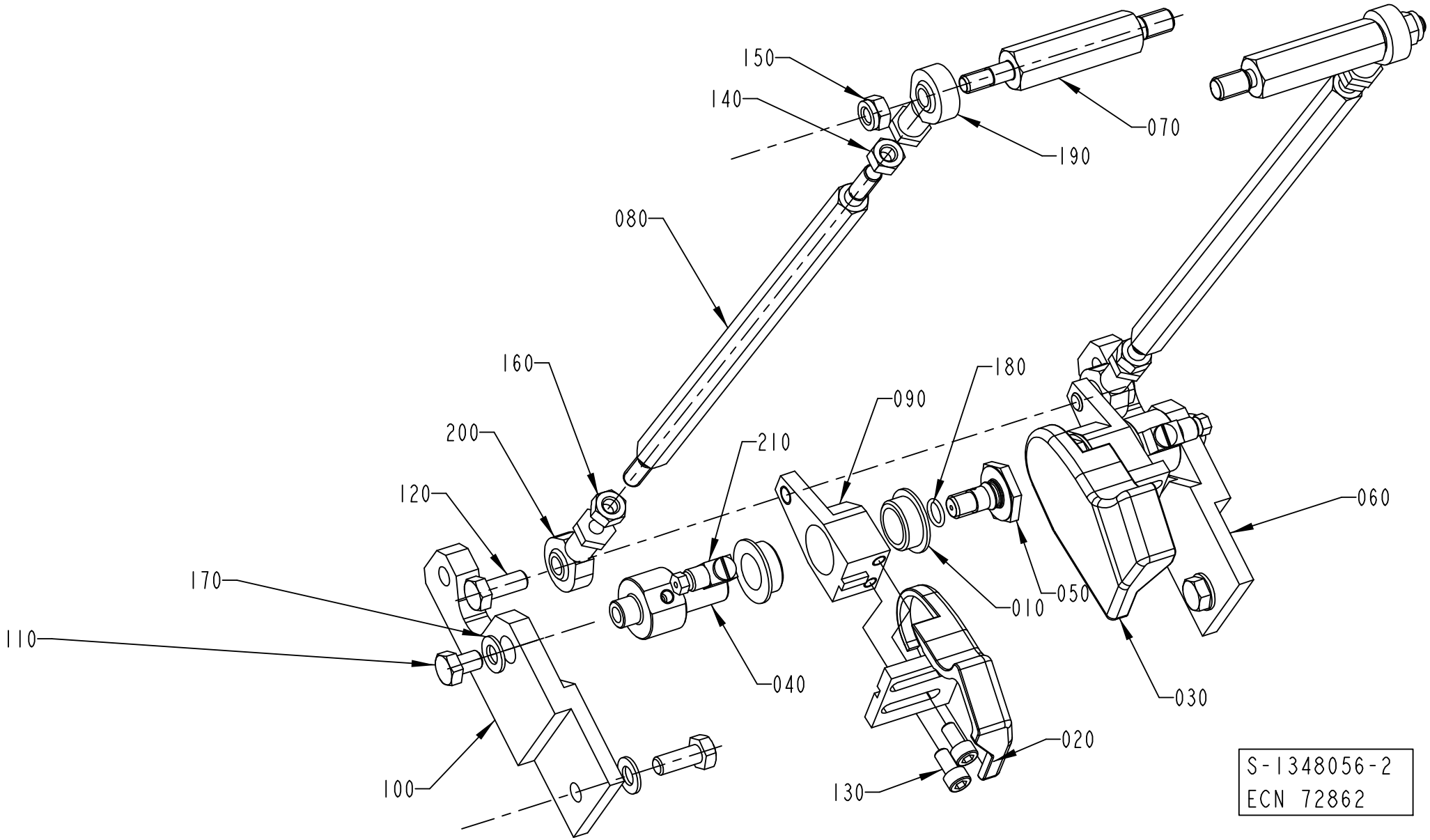
150
140
070
190
080
160
180
090
200
210
120
060
170
010
050
110
040
030
020
100
130
S-1348056-2
ECN 72862

ECM: 189489 - 20041104
Group number: 1348056-0300
Assembly Drawing: 1348056-2_1_AA

This list covers pages from 3-114 to 3-117

Pos	Part No	UN	Qty	Description	Page No
TBA 1000B STDA7 (See drawing on page: 3-114)					
020	1487922-0000		1	FOLDING DEVICE	
030	1487923-0000		1	FOLDING DEVICE	
060	1347600-0000		1	SUPPORT	
070	1499765-0000		2	AXLE LINK	
080	2609368-0000		2	TIE ROD	
090	1350440-0000		2	LEVER	
100	1350441-0000		1	SUPPORT	
TBA 1000SQ, TBA 1000S STDA7 (See drawing on page: 3-114)					
020	1487922-0000		1	FOLDING DEVICE	
030	1487923-0000		1	FOLDING DEVICE	
060	1347600-0000		1	SUPPORT	
070	1499765-0000		2	AXLE LINK	
080	1499103-0000		2	TIE ROD	
090	1350440-0000		2	LEVER	
100	1350441-0000		1	SUPPORT	
TPA 0330SQ (See drawing on page: 3-114)					
020	1296180-0000		1	FOLDING DEVICE	
030	1296181-0000		1	FOLDING DEVICE	
060	1532267-0000		1	SUPPORT	
070	1532268-0000		2	AXLE LINK	
080	1532269-0000		2	TIE ROD	
090	1350440-0000		2	LEVER	
100	1532270-0000		1	SUPPORT	
TPA 0500SQ SMILE (See drawing on page: 3-116)					
020	2606277-0000		1	FOLDING DEVICE	
030	2606278-0000		1	FOLDING DEVICE	
060	2529673-0000		1	SUPPORT	
070	1532268-0000		2	AXLE LINK	
080	2527531-0000		2	TIE ROD	
090	2529676-0000		1	LEVER	
100	2529674-0000		1	SUPPORT	
220	2529675-0000		1	LEVER	
TPA 1000SQ (See drawing on page: 3-114)					
020	1296180-0000		1	FOLDING DEVICE	
030	1296181-0000		1	FOLDING DEVICE	
060	1347600-0000		1	SUPPORT	
070	1499765-0000		2	AXLE LINK	
080	1519340-0000		2	TIE ROD	
090	1350440-0000		2	LEVER	
100	1350441-0000		1	SUPPORT	
TPA 1000SQ SMILE (See drawing on page: 3-116)					
020	2529671-0000		1	FOLDING DEVICE	
030	2529672-0000		1	FOLDING DEVICE	
060	2553343-0000		1	SUPPORT	
070	2553346-0000		2	AXLE LINK	
080	2553345-0000		2	TIE ROD	
090	2529676-0000		1	LEVER	
100	2553344-0000		1	SUPPORT	
220	2529675-0000		1	LEVER	
Common Parts					
010	1282708-0000		4	BUSHING	
040	1347495-0000		2	AXLE PIN	
050	1347496-0000		2	SCREW	
110	312105-0447		2	SCREW M6S ISO 4017 M8X12 A480	
120	312105-0451		4	SCREW M6S ISO 4017 M8X20 A480	
130	312115-0366		4	SCREW ISO4762 M6X12 A4	
140	312605-0318		2	HEXAGON NUT, M6M M8 A280	
150	312812-0318		2	HEXAGON NUT, NY-LOCK M8 A480	
160	312902-0318		2	NUT HEX. LEFT THREAD, M8 A280	
170	315105-0165		4	WASHER BRB8,4X16RFR	
180	315202-0107		2	O-RING 9,1X1,6 MM	
190	90115-0139		2	ROD END, ID=8 MM, M8X1,25	
200	90115-0180		2	ROD END, ID=8 MM, M8X1,25 LH	
210	90134-0058		2	CONNECTION	

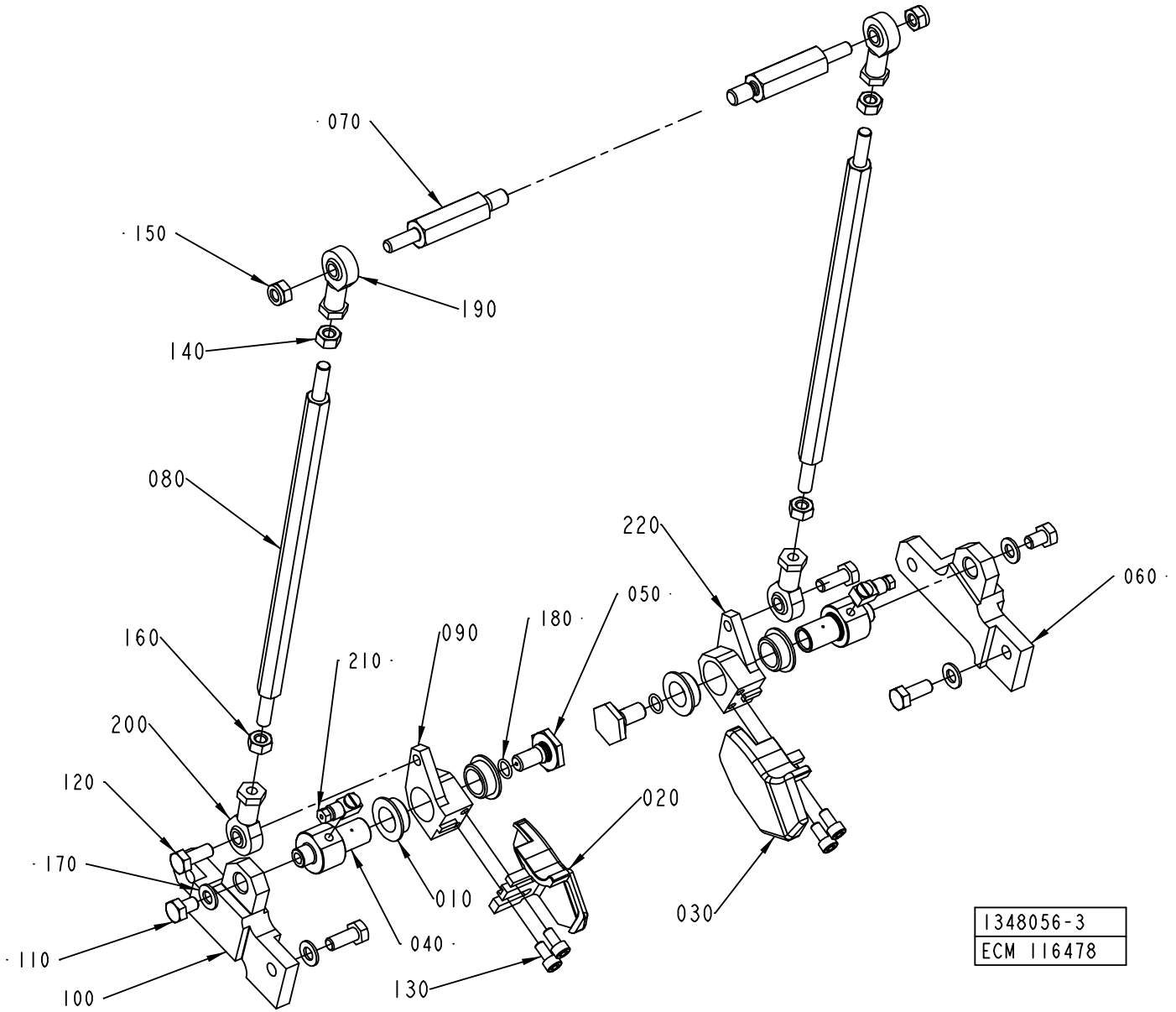
070
150
190
140
080
160
200
120
170
110
100
210
090
180
050
220
060
020
030
010
040
130
1348056-3
ECM 116478

ECM: 189489 - 20041104
Group number: 1348056-0300
Assembly Drawing: 1348056-3_1_AA

This list covers pages from 3-114 to 3-117

Pos	Part No	UN	Qty	Description	Page No
TBA 1000B STDA7 (See drawing on page: 3-114)					
020	1487922-0000		1	FOLDING DEVICE	
030	1487923-0000		1	FOLDING DEVICE	
060	1347600-0000		1	SUPPORT	
070	1499765-0000		2	AXLE LINK	
080	2609368-0000		2	TIE ROD	
090	1350440-0000		2	LEVER	
100	1350441-0000		1	SUPPORT	
TBA 1000SQ, TBA 1000S STDA7 (See drawing on page: 3-114)					
020	1487922-0000		1	FOLDING DEVICE	
030	1487923-0000		1	FOLDING DEVICE	
060	1347600-0000		1	SUPPORT	
070	1499765-0000		2	AXLE LINK	
080	1499103-0000		2	TIE ROD	
090	1350440-0000		2	LEVER	
100	1350441-0000		1	SUPPORT	
TPA 0330SQ (See drawing on page: 3-114)					
020	1296180-0000		1	FOLDING DEVICE	
030	1296181-0000		1	FOLDING DEVICE	
060	1532267-0000		1	SUPPORT	
070	1532268-0000		2	AXLE LINK	
080	1532269-0000		2	TIE ROD	
090	1350440-0000		2	LEVER	
100	1532270-0000		1	SUPPORT	
TPA 0500SQ SMILE (See drawing on page: 3-116)					
020	2606277-0000		1	FOLDING DEVICE	
030	2606278-0000		1	FOLDING DEVICE	
060	2529673-0000		1	SUPPORT	
070	1532268-0000		2	AXLE LINK	
080	2527531-0000		2	TIE ROD	
090	2529676-0000		1	LEVER	
100	2529674-0000		1	SUPPORT	
220	2529675-0000		1	LEVER	
TPA 1000SQ (See drawing on page: 3-114)					
020	1296180-0000		1	FOLDING DEVICE	
030	1296181-0000		1	FOLDING DEVICE	
060	1347600-0000		1	SUPPORT	
070	1499765-0000		2	AXLE LINK	
080	1519340-0000		2	TIE ROD	
090	1350440-0000		2	LEVER	
100	1350441-0000		1	SUPPORT	
TPA 1000SQ SMILE (See drawing on page: 3-116)					
020	2529671-0000		1	FOLDING DEVICE	
030	2529672-0000		1	FOLDING DEVICE	
060	2553343-0000		1	SUPPORT	
070	2553346-0000		2	AXLE LINK	
080	2553345-0000		2	TIE ROD	
090	2529676-0000		1	LEVER	
100	2553344-0000		1	SUPPORT	
220	2529675-0000		1	LEVER	
Common Parts					
010	1282708-0000		4	BUSHING	
040	1347495-0000		2	AXLE PIN	
050	1347496-0000		2	SCREW	
110	312105-0447		2	SCREW M6S ISO 4017 M8X12 A480	
120	312105-0451		4	SCREW M6S ISO 4017 M8X20 A480	
130	312115-0366		4	SCREW ISO4762 M6X12 A4	
140	312605-0318		2	HEXAGON NUT, M6M M8 A280	
150	312812-0318		2	HEXAGON NUT, NY-LOCK M8 A480	
160	312902-0318		2	NUT HEX. LEFT THREAD, M8 A280	
170	315105-0165		4	WASHER BRB8,4X16RFR	
180	315202-0107		2	O-RING 9,1X1,6 MM	
190	90115-0139		2	ROD END, ID=8 MM, M8X1,25	
200	90115-0180		2	ROD END, ID=8 MM, M8X1,25 LH	
210	90134-0058		2	CONNECTION	

FLAP HEATER VARIANT

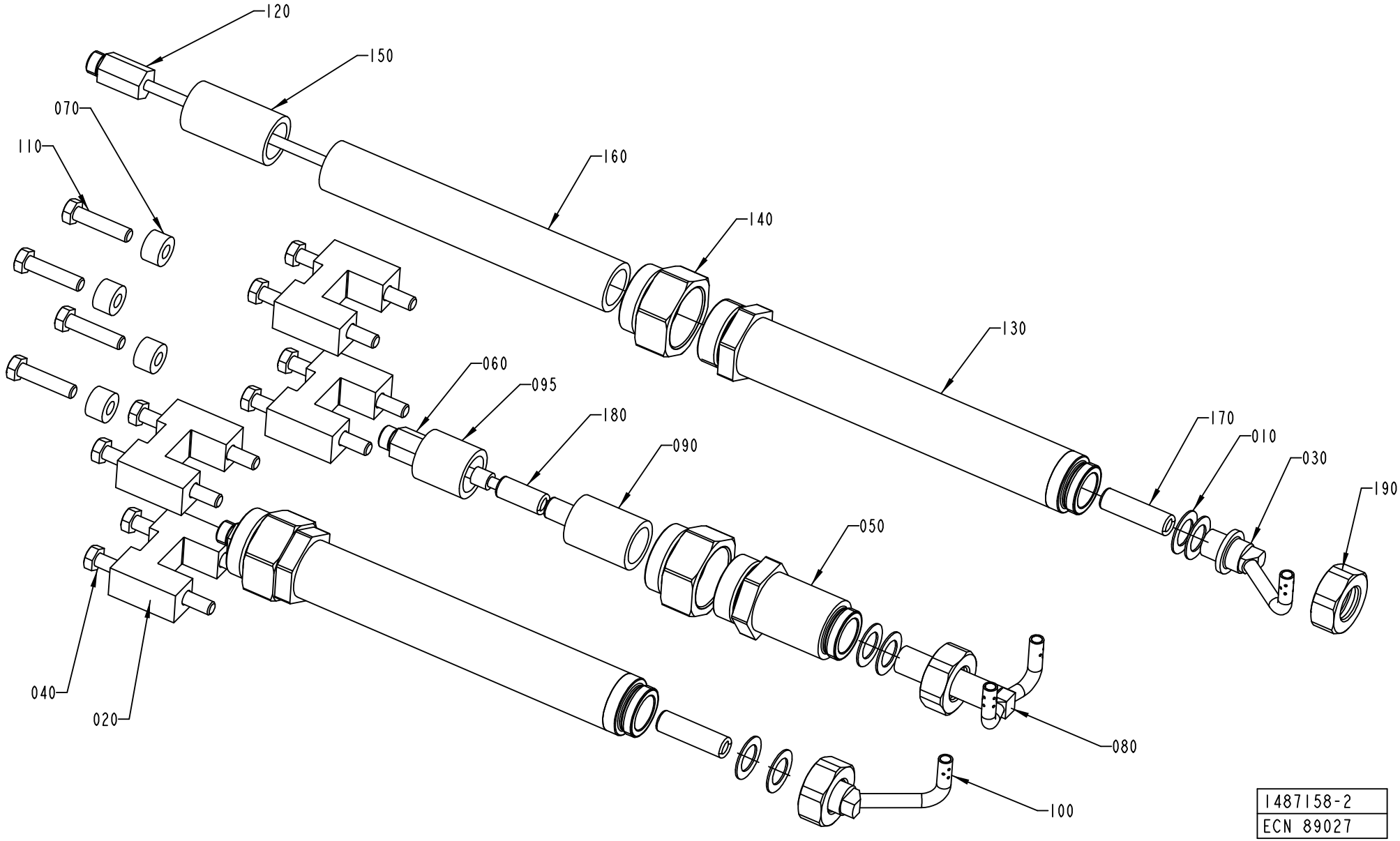

ECM: 195182 - 20041203
Group number: 1487158-0300
Assembly Drawing: 1487158-2_1_AA

This list covers pages from 3-118 to 3-127

Pos	Part No	UN	Qty	Description	Page No
TPA 0330SQ (See drawing on page: 3-118)					
010	263673-0000		6	GASKET	
020	1498163-0000		8	SPACER	
030	1532284-0000		1	NOZZLE	
040	312109-0460		8	SCREW M6S ISO 4017 M8X45 A480	
050	1549389-0000		1	SPACER	
060	1296072-0000		1	EXTENSION	
070	1285874-0000		4	SPACER	
080	1532285-0000		1	NOZZLE	
090	23765-0005		1	INSULATING PIPE	
095	23765-0004		1	INSULATING PIPE	
100	1532286-0000		1	NOZZLE	
110	312109-0457		4	SCREW M6S ISO 4017 M8X35 A480	
120	1346646-0000		2	EXTENSION	
130	1549388-0000		2	SPACER	
140	1549390-0000		3	NUT	
150	23765-0003		2	INSULATING PIPE	
160	23765-0002		2	INSULATING PIPE	
170	252766-0001		2	INSULATING PIPE	
180	252766-0001		2	INSULATING PIPE	
190	1317085-0000		2	NUT	
200	359710-0001		3	WARNING SIGN ISO, HOT SURFACE	
TPA 0500SQ (See drawing on page: 3-118)					
010	263673-0000		6	GASKET	
020	1285874-0000		8	SPACER	
030	1558328-0000		1	NOZZLE	
040	312109-0457		8	SCREW M6S ISO 4017 M8X35 A480	
050	1549389-0000		1	SPACER	
060	1296072-0000		1	EXTENSION	
070	1285874-0000		4	SPACER	
080	2501612-0000		1	NOZZLE	
090	23765-0004		1	INSULATING PIPE	
095	23765-0005		1	INSULATING PIPE	
100	1558329-0000		1	NOZZLE	
110	312109-0457		4	SCREW M6S ISO 4017 M8X35 A480	
120	1346646-0000		2	EXTENSION	
130	1549388-0000		2	SPACER	
140	1549390-0000		3	NUT	
150	23765-0003		2	INSULATING PIPE	
160	23765-0002		2	INSULATING PIPE	
170	252766-0002		2	INSULATING PIPE	
180	252766-0001		2	INSULATING PIPE	
190	1317085-0000		2	NUT	
200	359710-0001		3	WARNING SIGN ISO, HOT SURFACE	
TPA 1000SQ (See drawing on page: 3-118)					
010	263673-0000		9	GASKET	
020	1519339-0000		8	SPACER	
030	1549127-0000		1	NOZZLE	
040	312105-0465		8	SCREW M6S ISO 4014 M8X70 A480	
050	2545433-0000		1	SPACER	
060	1285870-0000		1	EXTENSION	
070	1334632-0000		4	SPACER	
080	1519336-0000		1	NOZZLE	
095	23765-0005		1	INSULATING PIPE	
100	1549126-0000		1	NOZZLE	
110	312109-0461		4	SCREW M6S ISO 4017 M8X50 A480	
120	1285310-0000		2	EXTENSION	
130	2545135-0000		2	SPACER	
140	1549390-0000		3	NUT	
150	23765-0003		2	INSULATING PIPE	
160	23765-0001		2	INSULATING PIPE	
170	252766-0002		2	INSULATING PIPE	
180	252766-0002		1	INSULATING PIPE	
190	1317085-0000		2	NUT	
200	359710-0001		3	WARNING SIGN ISO, HOT SURFACE	
TBA 0500B QC, TBA 1000B QC (See drawing on page: 3-122)					
010	263673-0000		6	GASKET	
030	1350422-0000		1	NOZZLE	
050	1549389-0000		1	SPACER	
060	1296072-0000		1	EXTENSION	
070	1498163-0000		12	SPACER	
080	1296387-0000		1	NOZZLE	
090	23765-0004		1	INSULATING PIPE	
095	23765-0005		1	INSULATING PIPE	
100	1350421-0000		1	NOZZLE	
110	312105-0459		12	SCREW M6S ISO 4014 M8X40 A480	
120	1285310-0000		2	EXTENSION	
130	2545135-0000		2	SPACER	
140	1549390-0000		3	NUT	
150	23765-0003		2	INSULATING PIPE	
160	23765-0001		2	INSULATING PIPE	
170	252766-0002		2	INSULATING PIPE	
180	252766-0001		2	INSULATING PIPE	
190	1317085-0000		2	NUT	

Machine Type | Group Description | Used-In | Group Number | Page No

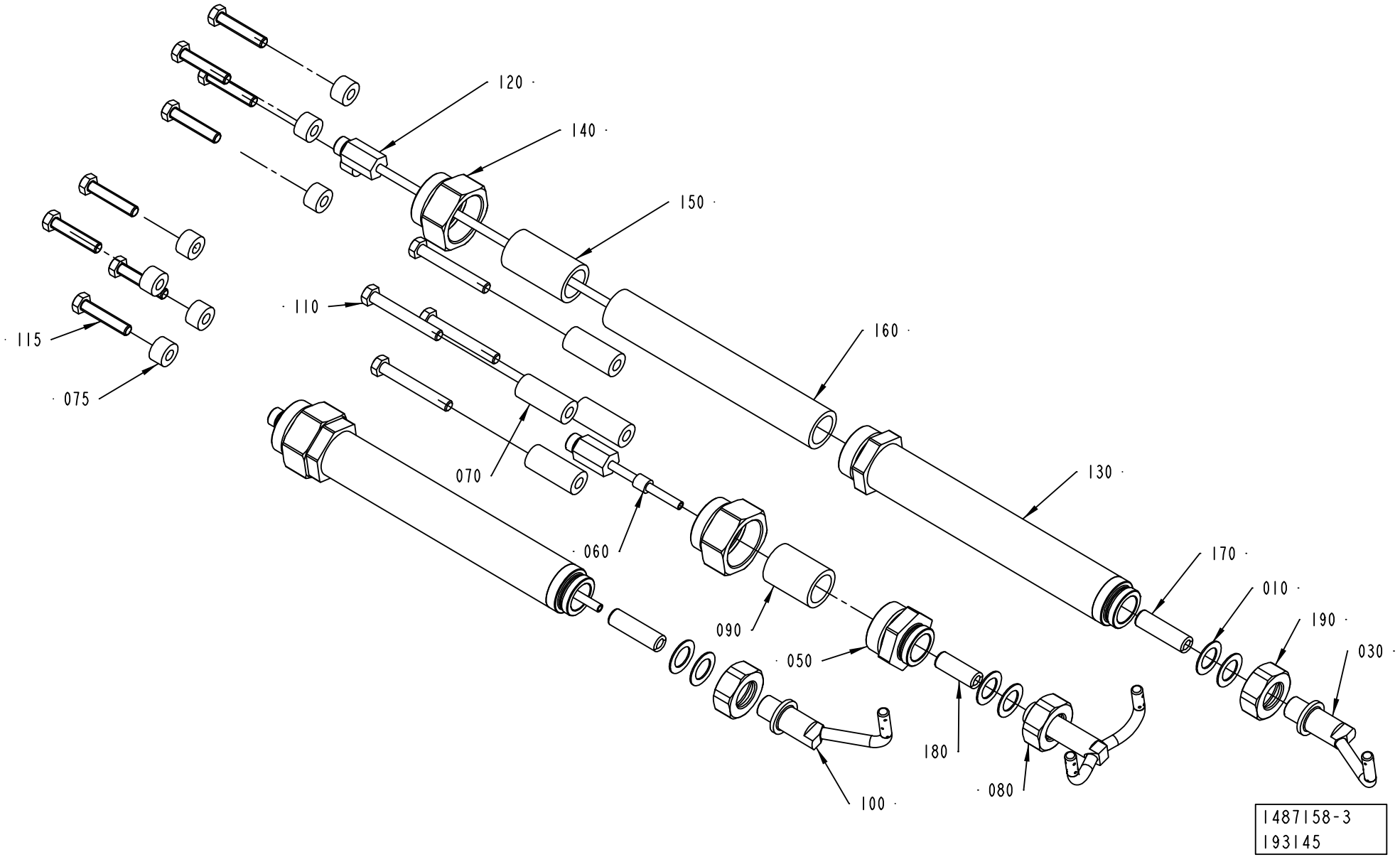
120
140
150
110
160
115
075
070
130
060
170
010
190
090
030
050
180
080
100
1487158-3
193145

ECM: 195182 - 20041203
Group number: 1487158-0300
Assembly Drawing: 1487158-3_1_AB

This list covers pages from 3-118 to 3-127

Pos	Part No	UN	Qty	Description	Page No
TBA 0500B QC, TBA 1000B QC (Cont'd) (See drawing on page: 3-122)					
200	359710-0001		3	WARNING SIGN ISO, HOT SURFACE	
TBA 0200B NOQC (See drawing on page: 3-118)					
010	263673-0000		6	GASKET	
020	1346642-0000		4	SPACER	
030	1346644-0000		1	NOZZLE	
040	312105-0471		8	SCREW M6S ISO 4014 M8X100 A480	
050	1549389-0000		1	SPACER	
060	1296072-0000		1	EXTENSION	
070	1285874-0000		4	SPACER	
080	1346581-0000		1	NOZZLE	
090	23765-0005		1	INSULATING PIPE	
095	23765-0004		1	INSULATING PIPE	
100	1346643-0000		1	NOZZLE	
110	312109-0457		4	SCREW M6S ISO 4017 M8X35 A480	
120	1346646-0000		2	EXTENSION	
130	1549388-0000		2	SPACER	
140	1549390-0000		3	NUT	
150	23765-0003		2	INSULATING PIPE	
160	23765-0002		2	INSULATING PIPE	
170	252766-0001		2	INSULATING PIPE	
180	252766-0001		2	INSULATING PIPE	
190	1317085-0000		2	NUT	
200	359710-0001		3	WARNING SIGN ISO, HOT SURFACE	
TBA 0200B QC, TBA 0330S QC, TBA 0250B QC (See drawing on page: 3-118)					
010	263673-0000		6	GASKET	
020	1285874-0000		8	SPACER	
030	1346644-0000		1	NOZZLE	
040	312105-0457		4	SCREW M6S ISO 4014 M8X35 A480	
050	1549389-0000		1	SPACER	
060	1296072-0000		1	EXTENSION	
070	2545006-0000		4	SPACER	
080	1346581-0000		1	NOZZLE	
090	23765-0005		1	INSULATING PIPE	
095	23765-0004		1	INSULATING PIPE	
100	1346643-0000		1	NOZZLE	
110	312105-0459		8	SCREW M6S ISO 4014 M8X40 A480	
120	1285310-0000		2	EXTENSION	
130	2545135-0000		2	SPACER	
140	1549390-0000		3	NUT	
150	23765-0003		2	INSULATING PIPE	
160	23765-0001		2	INSULATING PIPE	
170	252766-0002		2	INSULATING PIPE	
180	252766-0001		2	INSULATING PIPE	
190	1317085-0000		2	NUT	
200	359710-0001		3	WARNING SIGN ISO, HOT SURFACE	
TBA 0200S (See drawing on page: 3-118)					
010	263673-0000		6	GASKET	
020	1285874-0000		8	SPACER	
030	1346679-0000		1	NOZZLE	
040	312109-0457		8	SCREW M6S ISO 4017 M8X35 A480	
050	1549389-0000		1	SPACER	
060	1296072-0000		1	EXTENSION	
070	1285874-0000		4	SPACER	
080	1346580-0000		1	NOZZLE	
090	23765-0005		1	INSULATING PIPE	
095	23765-0004		1	INSULATING PIPE	
100	1346678-0000		1	NOZZLE	
110	312109-0457		4	SCREW M6S ISO 4017 M8X35 A480	
120	1346646-0000		2	EXTENSION	
130	1549388-0000		2	SPACER	
140	1549390-0000		3	NUT	
150	23765-0003		2	INSULATING PIPE	
160	23765-0002		2	INSULATING PIPE	
170	252766-0001		2	INSULATING PIPE	
180	252766-0001		1	INSULATING PIPE	
190	1317085-0000		2	NUT	
200	359710-0001		3	WARNING SIGN ISO, HOT SURFACE	
TBA 0250B NOQC (See drawing on page: 3-118)					
010	263673-0000		6	GASKET	
020	1346641-0000		4	SPACER	
030	1346644-0000		1	NOZZLE	
040	312105-0466		8	SCREW M6S ISO 4014 M8X75 A480	
050	1549389-0000		1	SPACER	
060	1296072-0000		1	EXTENSION	
070	1285874-0000		4	SPACER	
080	1346581-0000		1	NOZZLE	
090	23765-0005		1	INSULATING PIPE	
095	23765-0004		1	INSULATING PIPE	
100	1346643-0000		1	NOZZLE	
110	312109-0457		4	SCREW M6S ISO 4017 M8X35 A480	
120	1346646-0000		2	EXTENSION	
130	1549388-0000		2	SPACER	
140	1549390-0000		3	NUT	

Machine Type | Group Description | Used-In | Group Number | Page No

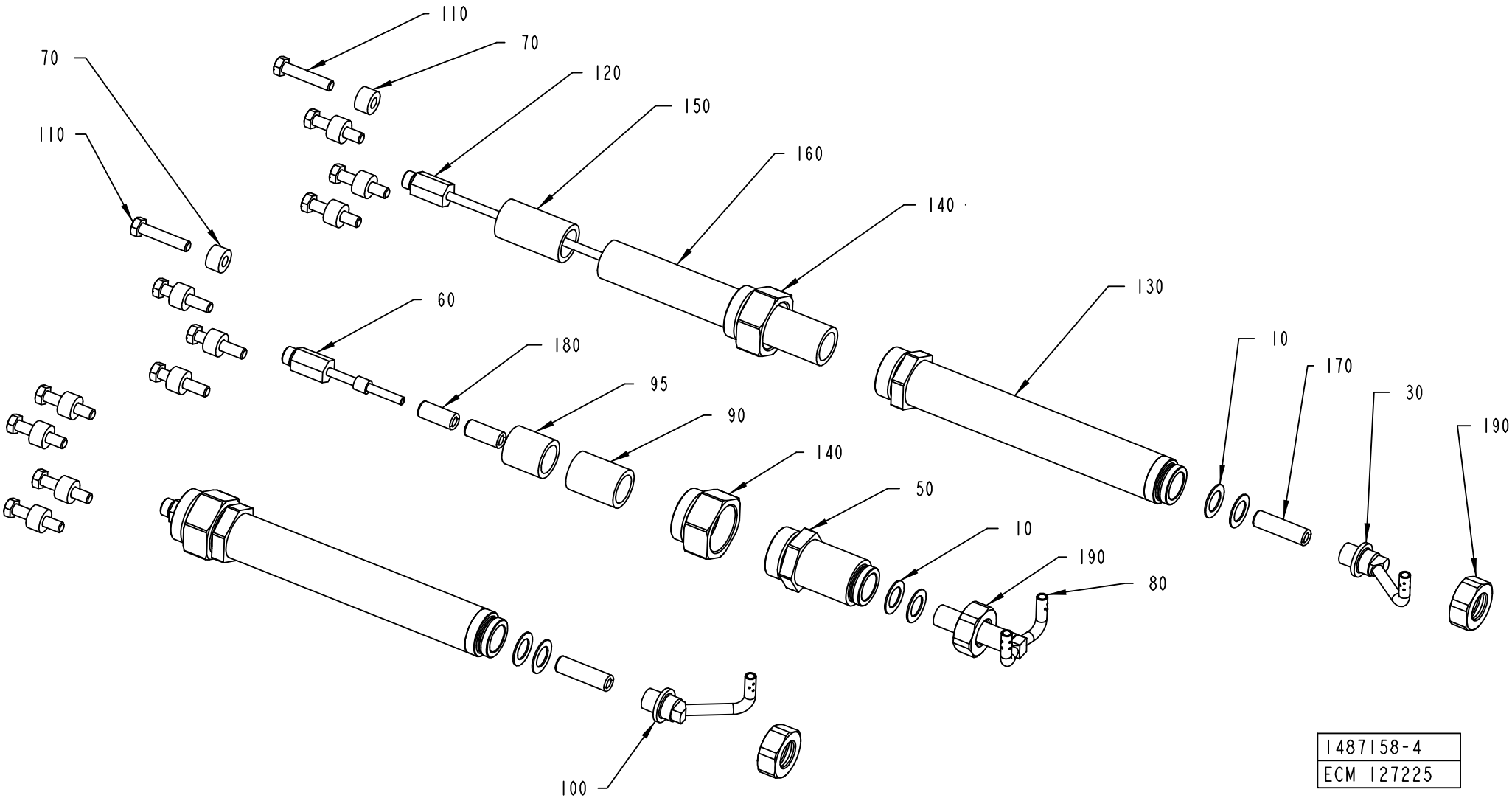
110
70
120
150
160
140
70
110
60
180
95
90
140
50
10
190
80
130
10
170
30
190
100
1487158-4
ECM 127225

Pos	Part No	UN	Qty	Description	Page No
TBA 0250B NOQC (Cont'd) (See drawing on page: 3-118)					
160	23765-0002		2	INSULATING PIPE	
170	252766-0001		2	INSULATING PIPE	
180	252766-0001		2	INSULATING PIPE	
190	1317085-0000		2	NUT	
200	359710-0001		3	WARNING SIGN ISO, HOT SURFACE	
TBA 0250S QC, TBA 0200M QC (See drawing on page: 3-118)					
010	263673-0000		6	GASKET	
020	1498163-0000		8	SPACER	
030	1346644-0000		1	NOZZLE	
040	312105-0457		4	SCREW M6S ISO 4014 M8X35 A480	
050	1549389-0000		1	SPACER	
060	1296072-0000		1	EXTENSION	
070	1285874-0000		4	SPACER	
080	2545236-0000		1	NOZZLE	
090	23765-0005		1	INSULATING PIPE	
100	1346643-0000		1	NOZZLE	
110	312105-0459		8	SCREW M6S ISO 4014 M8X40 A480	
120	1285310-0000		2	EXTENSION	
130	2545135-0000		2	SPACER	
160	23765-0001		2	INSULATING PIPE	
170	252766-0002		2	INSULATING PIPE	
180	252766-0001		1	INSULATING PIPE	
190	1317085-0000		2	NUT	
TBA 0500B NOQC (See drawing on page: 3-118)					
010	263673-0000		6	GASKET	
020	1296153-0000		4	GUIDE	
030	1350422-0000		1	NOZZLE	
040	312105-0466		8	SCREW M6S ISO 4014 M8X75 A480	
050	1549389-0000		1	SPACER	
060	1296072-0000		1	EXTENSION	
080	1296387-0000		1	NOZZLE	
090	23765-0004		1	INSULATING PIPE	
095	23765-0005		1	INSULATING PIPE	
100	1350421-0000		1	NOZZLE	
110	312109-0457		4	SCREW M6S ISO 4017 M8X35 A480	
120	1346646-0000		2	EXTENSION	
130	1549388-0000		2	SPACER	
140	1549390-0000		3	NUT	
150	23765-0003		2	INSULATING PIPE	
160	23765-0002		2	INSULATING PIPE	
170	252766-0001		2	INSULATING PIPE	
180	252766-0001		2	INSULATING PIPE	
190	1317085-0000		2	NUT	
200	359710-0001		3	WARNING SIGN ISO, HOT SURFACE	
TBA 0500S (See drawing on page: 3-118)					
010	263673-0000		6	GASKET	
020	1511692-0000		8	SPACER	
030	1499446-0000		1	NOZZLE	
040	312105-0464		8	SCREW M6S ISO 4014 M8X65 A480	
050	1549389-0000		1	SPACER	
060	1296072-0000		1	EXTENSION	
070	1523497-0000		4	SPACER	
080	1499445-0000		1	NOZZLE	
090	23765-0004		1	INSULATING PIPE	
095	23765-0005		1	INSULATING PIPE	
100	1499444-0000		1	NOZZLE	
110	312109-0457		4	SCREW M6S ISO 4017 M8X35 A480	
120	1285310-0000		2	EXTENSION	
130	2545135-0000		2	SPACER	
140	1549390-0000		3	NUT	
150	23765-0003		2	INSULATING PIPE	
160	23765-0001		2	INSULATING PIPE	
170	252766-0002		2	INSULATING PIPE	
180	252766-0001		2	INSULATING PIPE	
190	1317085-0000		2	NUT	
200	359710-0001		3	WARNING SIGN ISO, HOT SURFACE	
TBA 1000B NOQC (See drawing on page: 3-118)					
010	263673-0000		6	GASKET	
020	1296153-0000		4	GUIDE	
030	1350422-0000		1	NOZZLE	
040	312105-0466		8	SCREW M6S ISO 4014 M8X75 A480	
050	1549389-0000		1	SPACER	
060	1296072-0000		1	EXTENSION	
080	1296387-0000		1	NOZZLE	
090	23765-0004		1	INSULATING PIPE	
095	23765-0005		1	INSULATING PIPE	
100	1350421-0000		1	NOZZLE	
110	312109-0457		4	SCREW M6S ISO 4017 M8X35 A480	
120	1285310-0000		2	EXTENSION	
130	2545135-0000		2	SPACER	
140	1549390-0000		3	NUT	
150	23765-0003		2	INSULATING PIPE	
160	23765-0001		2	INSULATING PIPE	

See previous drawings pages: 3-118, 3-120, 3-122.

Pos	Part No	UN	Qty	Description	Page No
TBA 1000B NOQC (Cont'd) (See drawing on page: 3-118)					
170	252766-0002		2	INSULATING PIPE	
180	252766-0001		2	INSULATING PIPE	
190	1317085-0000		2	NUT	
200	359710-0001		3	WARNING SIGN ISO, HOT SURFACE	
TBA 1000S (See drawing on page: 3-118)					
010	263673-0000		6	GASKET	
020	1348043-0000		8	SPACER	
030	1296068-0000		1	NOZZLE	
040	312109-0460		8	SCREW M6S ISO 4017 M8X45 A480	
050	1549389-0000		1	SPACER	
060	1296072-0000		1	EXTENSION	
080	1296066-0000		1	NOZZLE	
090	23765-0004		1	INSULATING PIPE	
095	23765-0005		1	INSULATING PIPE	
100	1296067-0000		1	NOZZLE	
110	312109-0457		4	SCREW M6S ISO 4017 M8X35 A480	
120	1285310-0000		2	EXTENSION	
130	2545135-0000		2	SPACER	
140	1549390-0000		3	NUT	
150	23765-0003		2	INSULATING PIPE	
160	23765-0001		2	INSULATING PIPE	
170	252766-0002		2	INSULATING PIPE	
180	252766-0001		2	INSULATING PIPE	
190	1317085-0000		2	NUT	
200	359710-0001		3	WARNING SIGN ISO, HOT SURFACE	
TBA 1000SQ (See drawing on page: 3-118)					
010	263673-0000		6	GASKET	
020	1285874-0000		8	SPACER	
030	1498147-0000		1	NOZZLE	
040	312109-0457		8	SCREW M6S ISO 4017 M8X35 A480	
050	1549389-0000		1	SPACER	
060	1296072-0000		1	EXTENSION	
070	1285874-0000		4	SPACER	
080	1490039-0000		1	NOZZLE	
090	23765-0004		1	INSULATING PIPE	
095	23765-0005		1	INSULATING PIPE	
100	1498146-0000		1	NOZZLE	
110	312109-0457		4	SCREW M6S ISO 4017 M8X35 A480	
120	1285310-0000		2	EXTENSION	
130	2545135-0000		2	SPACER	
140	1549390-0000		3	NUT	
150	23765-0003		2	INSULATING PIPE	
160	23765-0001		2	INSULATING PIPE	
170	252766-0002		2	INSULATING PIPE	
180	252766-0001		2	INSULATING PIPE	
190	1317085-0000		2	NUT	
200	359710-0001		3	WARNING SIGN ISO, HOT SURFACE	
TBA 1500S (See drawing on page: 3-118)					
010	263673-0000		9	GASKET	
020	1317804-0000		8	SPACER	
030	1317802-0000		1	NOZZLE	
040	312109-0461		8	SCREW M6S ISO 4017 M8X50 A480	
050	2545433-0000		1	SPACER	
060	1285870-0000		1	EXTENSION	
070	2545537-0000		4	SPACER	
080	1317801-0000		1	NOZZLE	
095	23765-0005		1	INSULATING PIPE	
100	1317803-0000		1	NOZZLE	
110	312109-0463		4	SCREW M6S ISO 4017 M8X60 A480	
120	1285310-0000		2	EXTENSION	
130	2545135-0000		2	SPACER	
140	1549390-0000		3	NUT	
150	23765-0003		2	INSULATING PIPE	
160	23765-0001		2	INSULATING PIPE	
170	252766-0002		2	INSULATING PIPE	
180	252766-0001		2	INSULATING PIPE	
190	1317085-0000		2	NUT	
200	359710-0001		3	WARNING SIGN ISO, HOT SURFACE	
TBA 1890S QC, TBA 2000S QC (See drawing on page: 3-120)					
010	263673-0000		9	GASKET	
030	2598500-0000		1	NOZZLE	
050	2545433-0000		1	SPACER	
060	1296072-0000		1	EXTENSION	
070	2618683-0000		4	SPACER	
075	1498163-0000		8	SPACER	
080	2598498-0000		1	NOZZLE	
090	23765-0004		1	INSULATING PIPE	
100	2598499-0000		1	NOZZLE	
110	312109-0463		4	SCREW M6S ISO 4017 M8X60 A480	
115	312109-0459		8	SCREW M6S ISO 4017 M8X40 A480	
120	2598503-0000		2	EXTENSION	
130	2545135-0000		2	SPACER	
140	1549390-0000		3	NUT	

See previous drawings pages: 3-118, 3-120, 3-122.

Pos	Part No	UN	Qty	Description	Page No
TBA 1890S QC, TBA 2000S QC (Cont'd) (See drawing on page: 3-120)					
150	23765-0003		2	INSULATING PIPE	
160	23765-0001		2	INSULATING PIPE	
170	252766-0002		2	INSULATING PIPE	
180	252766-0004		1	INSULATING PIPE	
190	1317085-0000		2	NUT	

Pos	Part No	UN	Qty	Description	Page No

PRESSURE DEVICE

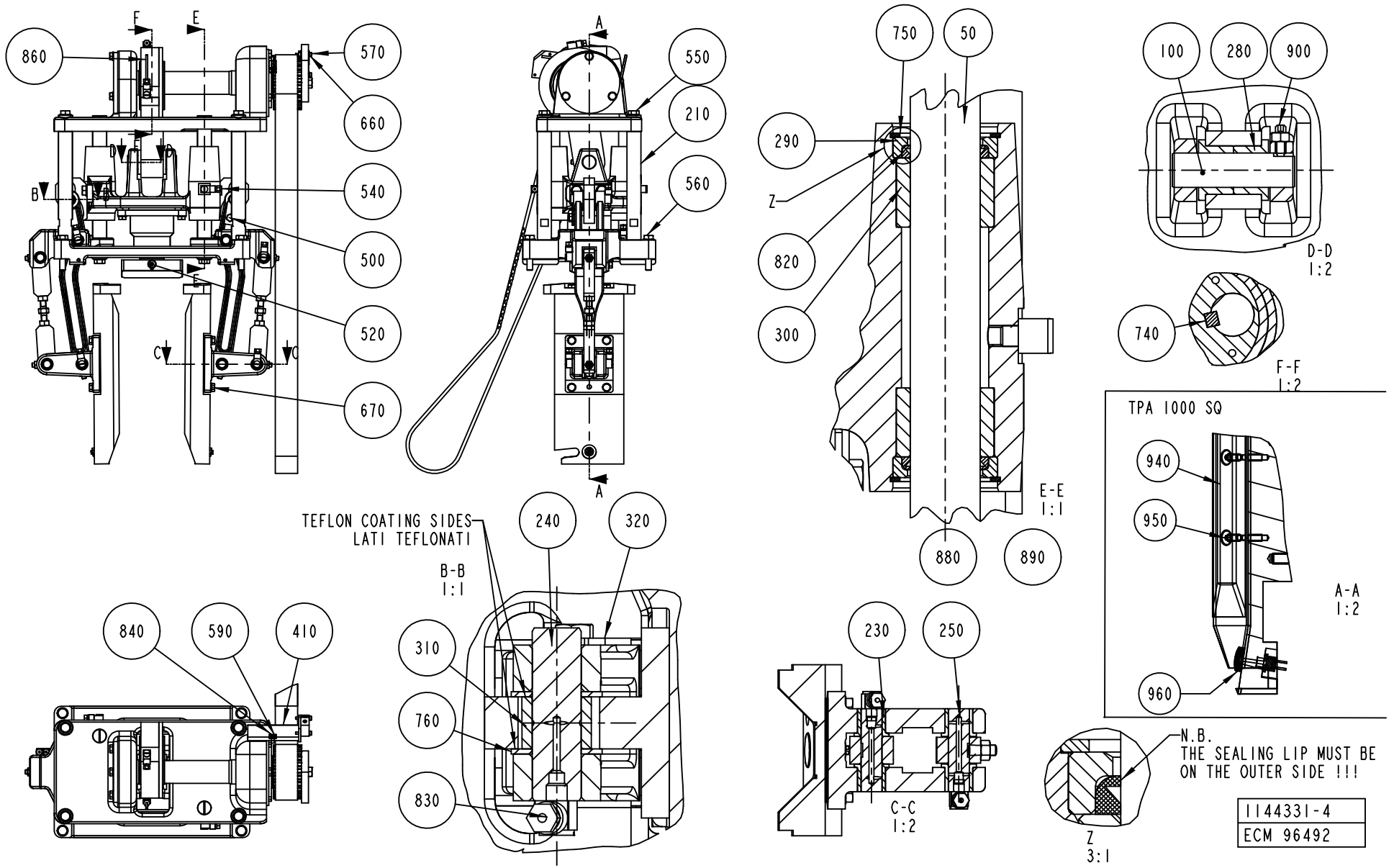

1144331-4
ECM 96492

ECM: 190917 - 20041104
Group number: 1144331-0300
Assembly Drawing: 1144331-4_1_AE

This list covers pages from 3-128 to 3-135

Pos	Part No	UN	Qty	Description	Page No
TBA 1890S QC, TBA 2000S QC					
080	2662142-0000		1	SPRING	
450	1144978-0000		2	CAM	
470	2661429-0000		1	PUSHER	
475	2661429-0000		1	PUSHER	
480	2660841-0000		1	PUSHER	
500	312105-0366		7	SCREW M6S ISO 4017 M6X12 A480	
520	312105-0370		3	SCREW M6S ISO 4017 M6X20 A480	
530	312605-0316		8	HEXAGON NUT, M6M M6 A280	
580	312115-0370		5	SCREW ISO4762 M6X20 A4	
630	312605-0316		9	HEXAGON NUT, M6M M6 A280	
650	315103-0153		3	WASHER, BRB, 6,4/12,H=1,5 NIPL BR	
655	2594902-0000		2	CATCH	
670	315105-0153		14	WASHER BRB6,4X12RFR	
TPA 0330SQ					
080	1260895-0000		1	SPRING	
450	1144486-0000		2	CAM	
470	1532289-0000		1	PUSHER	
475	1532290-0000		1	PUSHER	
480	1532291-0000		1	PLATE	
500	312105-0366		8	SCREW M6S ISO 4017 M6X12 A480	
520	312105-0370		11	SCREW M6S ISO 4017 M6X20 A480	
530	312105-0372		8	SCREW M6S ISO 4017 M6X25 A480	
580	312115-0370		1	SCREW ISO4762 M6X20 A4	
630	312605-0316		9	HEXAGON NUT, M6M M6 A280	
650	315103-0153		3	WASHER, BRB, 6,4/12,H=1,5 NIPL BR	
670	315105-0153		15	WASHER BRB6,4X12RFR	
910	1558821-0000		2	VOLUME BULGE	
920	312105-0293		2	SCREW M6S ISO 4017 M4X16 A470	
930	315105-0136		2	WASHER BRB4,3XRFR	
TPA 0500SQ					
045	2541877-0000		2	NAIL	
080	1144492-0000		1	SPRING	
400	2635167-0000		8	VOLUME BULGE	
450	1144486-0000		2	CAM	
470	1558178-0000		1	PUSHER	
475	1558047-0000		1	PUSHER	
480	1558184-0000		1	PLATE	
500	312105-0366		8	SCREW M6S ISO 4017 M6X12 A480	
520	312105-0370		3	SCREW M6S ISO 4017 M6X20 A480	
530	312105-0372		8	SCREW M6S ISO 4017 M6X25 A480	
580	312115-0370		1	SCREW ISO4762 M6X20 A4	
630	312605-0316		11	HEXAGON NUT, M6M M6 A280	
650	315103-0153		5	WASHER, BRB, 6,4/12,H=1,5 NIPL BR	
670	315105-0153		15	WASHER BRB6,4X12RFR	
940	2602613-0000		4	VOLUME BULGE	
943	2559008-0000		2	VOLUME BULGE	
945	2611875-0000		2	SHIM	
950	312145-0289		12	SCREW ISO 2009 MFS M4X10 A4	
960	2541878-0000		6	WASHER	
970	312105-0287		10	SCREW M6S ISO4017 M4X8 A470	
980	315105-0136		10	WASHER BRB4,3XRFR	
990	2640075-0000		2	VOLUME BULGE	
TPA 1000SQ					
045	2541877-0000		2	NAIL	
080	1143530-0000		1	SPRING	
450	1144486-0000		2	CAM	
470	1523884-0000		1	FLAP	
475	1523885-0000		1	PUSHER	
480	1523826-0000		1	PUSHER	
500	312105-0366		8	SCREW M6S ISO 4017 M6X12 A480	
520	312105-0370		3	SCREW M6S ISO 4017 M6X20 A480	
530	312105-0372		8	SCREW M6S ISO 4017 M6X25 A480	
580	312115-0370		1	SCREW ISO4762 M6X20 A4	
630	312605-0316		11	HEXAGON NUT, M6M M6 A280	
650	315103-0153		3	WASHER, BRB, 6,4/12,H=1,5 NIPL BR	
670	315105-0153		15	WASHER BRB6,4X12RFR	
940	1523467-0000		4	VOLUME BULGE	
950	312155-0289		8	SCREW DIN 7991 MF6S M4X10 A480	
960	2541878-0000		6	WASHER	
TBA 0500B QC, TBA 1000B QC					
080	1144492-0000		1	SPRING	
450	1144978-0000		2	CAM	
470	2524512-0000		1	PUSHER	
475	2524512-0000		1	PUSHER	
480	1260702-0000		1	PLATE	
500	312105-0366		8	SCREW M6S ISO 4017 M6X12 A480	
520	312105-0370		11	SCREW M6S ISO 4017 M6X20 A480	
530	312105-0372		8	SCREW M6S ISO 4017 M6X25 A480	
580	312115-0370		1	SCREW ISO4762 M6X20 A4	
630	312605-0316		9	HEXAGON NUT, M6M M6 A280	
650	315103-0153		3	WASHER, BRB, 6,4/12,H=1,5 NIPL BR	
670	315105-0153		15	WASHER BRB6,4X12RFR	
TBA 0200B NOQC					

Machine Type | Group Description | Used-In | Group Number | Page No

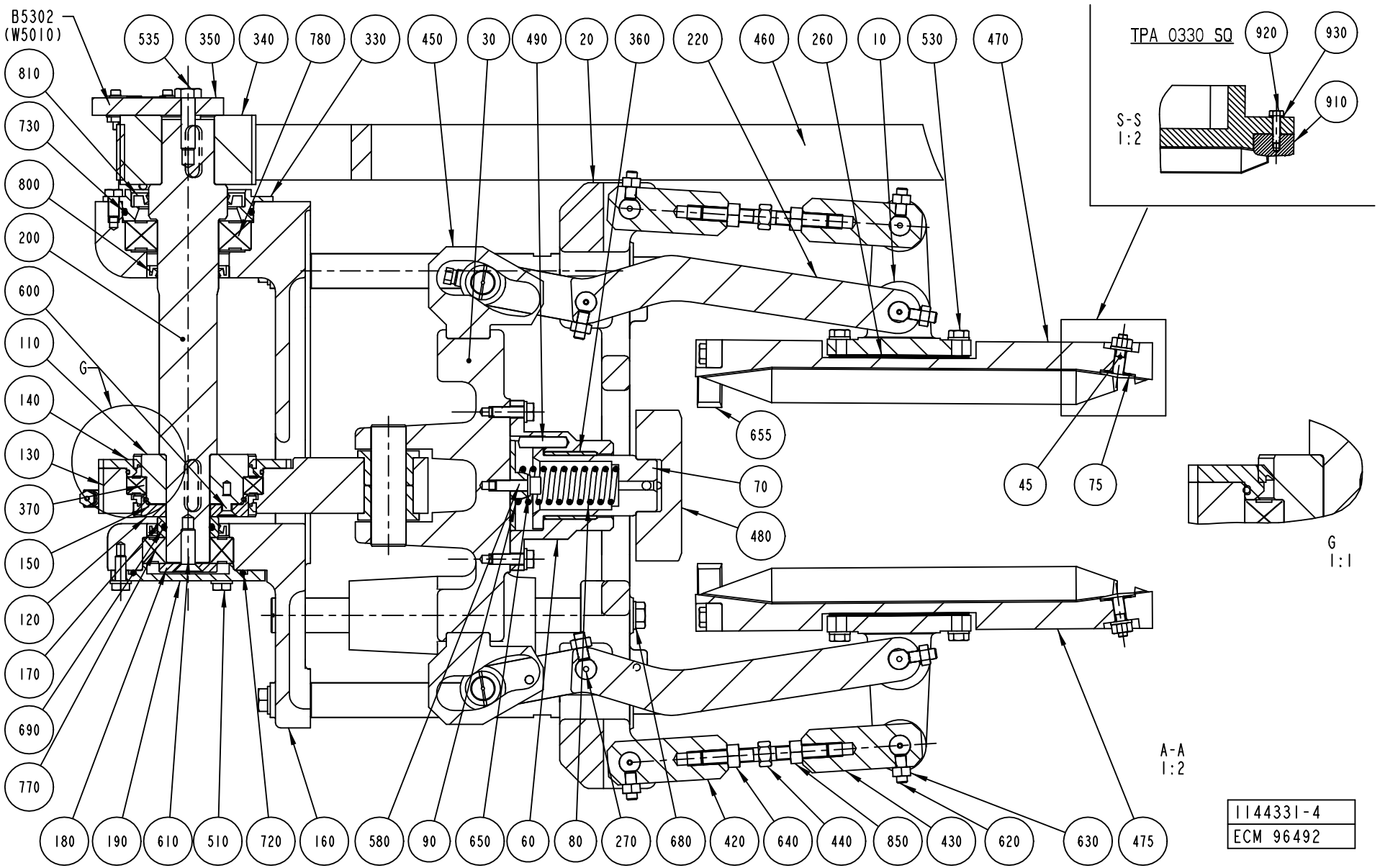
B5302
(W5010)
535
350
340
780
330
450
30
490
20
360
220
460
260
10
530
470
810
730
800
200
600
110
140
130
370
150
120
170
690
770
G
655
70
480
45
75
180
190
610
510
720
160
580
90
650
60
80
270
680
420
640
440
850
430
620
630
475
TPA 0330 SQ
920
930
910
S-S
1:2
G
1:1
A-A
1:2
1144331-4
ECM 96492

ECM: 190917 - 20041104
Group number: 1144331-0300
Assembly Drawing: 1144331-4_2_AE

This list covers pages from 3-128 to 3-135

Pos	Part No	UN	Qty	Description	Page No
TBA 0200B NOQC (Cont'd)					
080	1260895-0000		1	SPRING	
450	1144978-0000		2	CAM	
470	1334999-0000		1	PUSHER	
475	1334999-0000		1	PUSHER	
480	1350809-0000		1	BLOCK	
500	312105-0366		8	SCREW M6S ISO 4017 M6X12 A480	
520	312105-0370		11	SCREW M6S ISO 4017 M6X20 A480	
530	312105-0372		8	SCREW M6S ISO 4017 M6X25 A480	
580	312115-0370		1	SCREW ISO4762 M6X20 A4	
630	312605-0316		9	HEXAGON NUT, M6M M6 A280	
650	315103-0153		3	WASHER, BRB, 6,4/12,H=1,5 NIPL BR	
670	315105-0153		15	WASHER BRB6,4X12RFR	
TBA 0200B QC, TBA 0330S QC, TBA 0250B QC					
080	1144492-0000		1	SPRING	
450	1144978-0000		2	CAM	
470	2605125-0000		1	PUSHER	
475	2605125-0000		1	PUSHER	
480	2651145-0000		1	BLOCK	
500	312105-0366		8	SCREW M6S ISO 4017 M6X12 A480	
520	312105-0370		11	SCREW M6S ISO 4017 M6X20 A480	
530	312105-0372		8	SCREW M6S ISO 4017 M6X25 A480	
580	312115-0370		1	SCREW ISO4762 M6X20 A4	
630	312605-0316		9	HEXAGON NUT, M6M M6 A280	
650	315103-0153		3	WASHER, BRB, 6,4/12,H=1,5 NIPL BR	
670	315105-0153		15	WASHER BRB6,4X12RFR	
TBA 0200S					
080	1260895-0000		1	SPRING	
450	1144978-0000		2	CAM	
470	1260889-0000		1	PUSHER	
475	1260889-0000		1	PUSHER	
480	1260888-0000		1	BLOCK	
500	312105-0366		8	SCREW M6S ISO 4017 M6X12 A480	
520	312105-0370		11	SCREW M6S ISO 4017 M6X20 A480	
530	312105-0372		8	SCREW M6S ISO 4017 M6X25 A480	
580	312115-0370		1	SCREW ISO4762 M6X20 A4	
630	312605-0316		9	HEXAGON NUT, M6M M6 A280	
650	315103-0153		3	WASHER, BRB, 6,4/12,H=1,5 NIPL BR	
670	315105-0153		15	WASHER BRB6,4X12RFR	
TBA 0250B NOQC					
080	1260895-0000		1	SPRING	
450	1144978-0000		2	CAM	
470	1350810-0000		1	PUSHER	
475	1350810-0000		1	PUSHER	
480	1350809-0000		1	BLOCK	
500	312105-0366		8	SCREW M6S ISO 4017 M6X12 A480	
520	312105-0370		11	SCREW M6S ISO 4017 M6X20 A480	
530	312105-0372		8	SCREW M6S ISO 4017 M6X25 A480	
580	312115-0370		1	SCREW ISO4762 M6X20 A4	
630	312605-0316		9	HEXAGON NUT, M6M M6 A280	
650	315103-0153		3	WASHER, BRB, 6,4/12,H=1,5 NIPL BR	
670	315105-0153		15	WASHER BRB6,4X12RFR	
TBA 0250S, TBA 0200M					
080	1144492-0000		1	SPRING	
450	1144978-0000		2	CAM	
470	2686876-0000		1	PUSHER	
475	2686876-0000		1	PUSHER	
480	2522197-0000		1	PLATE	
520	312105-0370		3	SCREW M6S ISO 4017 M6X20 A480	
530	312105-0372		8	SCREW M6S ISO 4017 M6X25 A480	
630	312605-0316		9	HEXAGON NUT, M6M M6 A280	
650	315103-0153		3	WASHER, BRB, 6,4/12,H=1,5 NIPL BR	
TBA 0500B NOQC					
080	1144492-0000		1	SPRING	
450	1144978-0000		2	CAM	
470	1539872-0000		1	PUSHER	
475	1539872-0000		1	PUSHER	
480	1260702-0000		1	PLATE	
500	312105-0366		8	SCREW M6S ISO 4017 M6X12 A480	
520	312105-0370		11	SCREW M6S ISO 4017 M6X20 A480	
530	312105-0372		8	SCREW M6S ISO 4017 M6X25 A480	
580	312115-0370		1	SCREW ISO4762 M6X20 A4	
630	312605-0316		9	HEXAGON NUT, M6M M6 A280	
650	315103-0153		3	WASHER, BRB, 6,4/12,H=1,5 NIPL BR	
670	315105-0153		15	WASHER BRB6,4X12RFR	
TBA 0500S					
080	1144492-0000		1	SPRING	
450	1144978-0000		2	CAM	
470	1499144-0000		2	PUSHER	
475	1499144-0000		1	PUSHER	
480	1499143-0000		1	PLATE	
500	312105-0366		8	SCREW M6S ISO 4017 M6X12 A480	
520	312105-0370		11	SCREW M6S ISO 4017 M6X20 A480	
530	312105-0372		8	SCREW M6S ISO 4017 M6X25 A480	

Machine Type | Group Description | Used-In | Group Number | Page No

See previous drawings pages: 3-128, 3-130.

ECM: 190917 - 20041104
Group number: 1144331-0300
Assembly Drawing: 1144331-4_2_AE

This list covers pages from 3-128 to 3-135

Pos	Part No	UN	Qty	Description	Page No
TBA 0500S (Cont'd)					
580	312115-0370		1	SCREW ISO4762 M6X20 A4	
630	312605-0316		9	HEXAGON NUT, M6M M6 A280	
650	315103-0153		3	WASHER, BRB, 6,4/12,H=1,5 NIPL BR	
670	315105-0153		15	WASHER BRB6,4X12RFR	
TBA 1000B NOQC					
080	1144492-0000		1	SPRING	
450	1144978-0000		2	CAM	
470	1260701-0000		1	PUSHER	
475	1260701-0000		1	PUSHER	
480	1260702-0000		1	PLATE	
500	312105-0366		8	SCREW M6S ISO 4017 M6X12 A480	
520	312105-0370		11	SCREW M6S ISO 4017 M6X20 A480	
530	312105-0372		8	SCREW M6S ISO 4017 M6X25 A480	
580	312115-0370		1	SCREW ISO4762 M6X20 A4	
630	312605-0316		9	HEXAGON NUT, M6M M6 A280	
650	315103-0153		3	WASHER, BRB, 6,4/12,H=1,5 NIPL BR	
670	315105-0153		15	WASHER BRB6,4X12RFR	
TBA 1000S					
080	1144492-0000		1	SPRING	
450	1144978-0000		2	CAM	
470	1144928-0000		1	PUSHER	
475	1144928-0000		1	PUSHER	
480	1144932-0000		1	PLATE	
500	312105-0366		8	SCREW M6S ISO 4017 M6X12 A480	
520	312105-0370		11	SCREW M6S ISO 4017 M6X20 A480	
530	312105-0372		8	SCREW M6S ISO 4017 M6X25 A480	
580	312115-0370		1	SCREW ISO4762 M6X20 A4	
630	312605-0316		9	HEXAGON NUT, M6M M6 A280	
650	315103-0153		3	WASHER, BRB, 6,4/12,H=1,5 NIPL BR	
670	315105-0153		15	WASHER BRB6,4X12RFR	
TBA 1000SQ					
080	1144492-0000		1	SPRING	
450	1144978-0000		2	CAM	
470	1490032-0000		2	PUSHER	
475	1490032-0000		1	PUSHER	
480	1490031-0000		1	PLATE	
480	1549940-0000		1	PUSHER	
500	312105-0366		8	SCREW M6S ISO 4017 M6X12 A480	
520	312105-0370		14	SCREW M6S ISO 4017 M6X20 A480	
530	312105-0372		8	SCREW M6S ISO 4017 M6X25 A480	
580	312115-0370		1	SCREW ISO4762 M6X20 A4	
630	312605-0316		9	HEXAGON NUT, M6M M6 A280	
650	315103-0153		3	WASHER, BRB, 6,4/12,H=1,5 NIPL BR	
670	315105-0153		15	WASHER BRB6,4X12RFR	
TBA 1500S					
080	1144492-0000		1	SPRING	
450	1144978-0000		2	CAM	
470	1317654-0000		1	PUSHER	
475	1317654-0000		1	PUSHER	
480	1317655-0000		1	PLATE	
500	312105-0366		8	SCREW M6S ISO 4017 M6X12 A480	
520	312105-0370		15	SCREW M6S ISO 4017 M6X20 A480	
530	312105-0372		8	SCREW M6S ISO 4017 M6X25 A480	
580	312115-0370		1	SCREW ISO4762 M6X20 A4	
630	312605-0316		9	HEXAGON NUT, M6M M6 A280	
650	315103-0153		3	WASHER, BRB, 6,4/12,H=1,5 NIPL BR	
655	1317787-0000		2	CATCH	
670	315105-0153		15	WASHER BRB6,4X12RFR	
Common Parts					
010	1144482-0000		2	SUPPORT	
020	1144483-0000		1	PLATE	
030	1144485-0000		1	SUPPORT	
050	1144488-0000		2	COLUMN	
060	1144489-0000		1	FLANGE	
070	1478189-0000		1	SUPPORT	
090	1144493-0000		1	WASHER	
100	1144494-0000		1	AXLE PIN	
110	1144495-0000		1	ECCENTRIC	
120	1144496-0000		1	ECCENTRIC	
130	1346539-0000		1	CONNECTING ROD	
140	1144498-0000		1	FLANGE	
150	90091-0408		2	BEARING SEAL 70X78X5	
160	1144500-0000		1	SUPPORT	
170	1144501-0000		1	SPACER	
180	1144502-0000		1	WASHER	
190	1144503-0000		1	FLANGE	
200	1349516-0000		1	SHAFT	
210	1144505-0000		4	COLUMN	
220	1144506-0000		2	LEVER	
230	1144507-0000		16	BUSHING	
240	1144508-0000		2	AXLE PIN	
250	1317362-0000		6	SHAFT	
260	1144511-0000		6	SHIM	

See previous drawings pages: 3-128, 3-130.

ECM: 190917 - 20041104
Group number: 1144331-0300
Assembly Drawing: 1144331-4_2_AE

This list covers pages from 3-128 to 3-135

Pos	Part No	UN	Qty	Description	Page No
Common Parts (Cont'd)					
270	1317363-0000		2	SHAFT	
280	1144514-0000		2	BUSHING	
290	1144515-0000		4	INSERT	
300	1144517-0000		4	BUSHING	
310	1144520-0000		2	ROLLER	
320	1144521-0000		2	CLAMP	
330	1347018-0000		1	PLUG	
340	1349517-0000		1	TOOTHED PULLEY	
350	1349519-0000		1	ACTIVATOR	
360	90240-0317		1	BUSHING, 35X39X30 MM	
370	90214-0229		1	BALL BEARING, 65X85X10 MM	
380	90242-0271		1	O-RING 63,22X1,78 MM	
390	90242-0270		1	O-RING 82,27X1,78 MM	
410	1349518-0000		1	SUPPORT	
420	1144914-0000		2	LEVER	
430	1144915-0000		2	LEVER	
440	1144916-0000		2	ADJUSTING SCREW	
460	1348537-0000		1	TIMING BELT	
490	1498029-0000		1	PIN	
510	312105-0368		3	SCREW M6S ISO 4017 M6X16 A480	
535	312105-0455		1	SCREW M6S ISO 4017 M8X30 A480	
540	312105-0451		4	SCREW M6S ISO 4017 M8X20 A480	
550	312105-0457		6	SCREW M6S ISO 4014 M8X35 A480	
560	312109-0460		4	SCREW M6S ISO 4017 M8X45 A480	
570	312115-0230		2	SCREW ISO4762 M3X20 A4	
590	312125-0287		1	SCREW ISO 1207 M4X8 A4	
600	312155-0327		6	SCREW DIN 7991 MF6S M5X12 A480	
610	312155-0453		1	SCREW DIN 7991 MF6S M8X25 A480	
620	312318-0368		9	SCREW ISO4029 M6X16 A4	
640	312605-0318		2	HEXAGON NUT, M6M M8 A280	
660	315105-0124		2	WASHER BRB3,2X6RFR	
680	315105-0165		14	WASHER BRB8,4X16RFR	
690	315202-0217		1	O-RING 24,2X3 MM	
720	315202-0303		1	O-RING 59,5X3 MM	
730	315202-0305		1	O-RING 69,5X3 MM	
740	315705-0267		2	PARALLEL KEY W. ROUND ENDS 8X7X30 MM	
750	315753-0122		4	RETAINING RING FOR BORE DIN 472 30 A2	
760	321130-0200		4	THRUST WASHER, 14X26X1,5 MM	
770	321313-0105		1	BALL BEARING, 25X52X15MM	
780	321313-0107		1	BALL BEARING, 35X72X17MM	
800	90091-0297		2	RADIAL SEAL 35X47X7 MM DUST LIP	
810	90091-0298		1	RADIAL SEAL 45X65X8 MM DUST LIP	
820	90091-0380		4	SCRAPER, EXCLUDER 20X24,8X3,7 MM	
830	90134-0058		14	CONNECTION	
840	90165-0056		1	PIPE CLIP FOR TUBE D=4 MM	
850	312902-0318		2	NUT HEX. LEFT THREAD, M8 A280	
880	352113-0102		5	CLIP-STRIP, BLACK 188X4,8 MM	
890	352113-0101		8	CLIP STRIP, 92X2,5 MM	
900	312311-0370		1	SCREW ISO4028 M6X20 FZB	
B5302	90044-0194		1	PROX.SW. IN5329/IN3002-BPKG	

Machine Type	Group Description	Used-In	Group Number	Page No

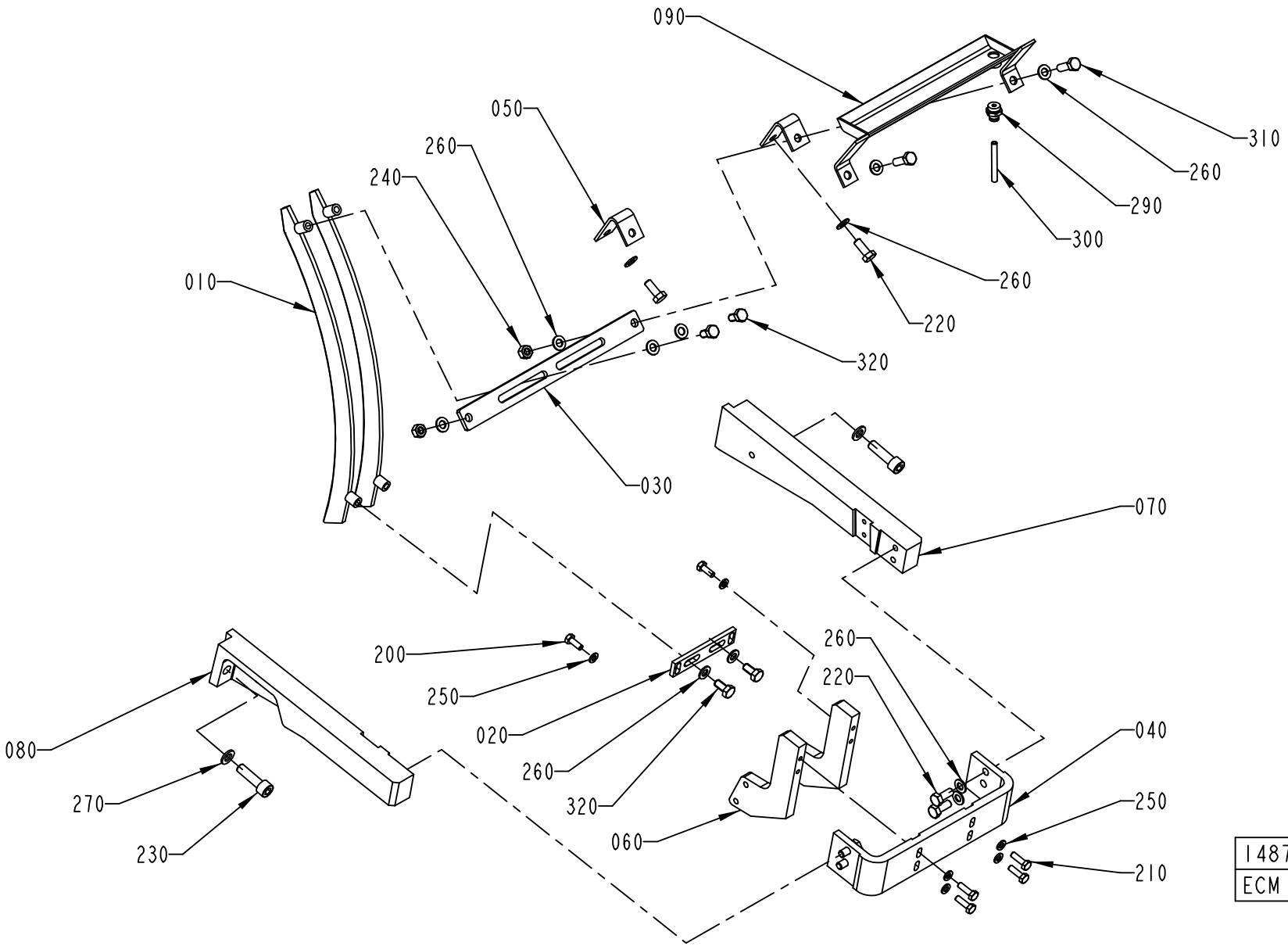
090
050
260
240
010
310
260
290
300
260
220
320
030
070
200
250
020
260
320
060
260
220
040
250
210
080
270
230
1487825-3
ECM 111612

ECM: 180382 - 20041013
Group number: 1487825-0200
Assembly Drawing: 1487825-3_1_AB

This list covers pages from 3-136 to 3-139

Pos	Part No	UN	Qty	Description	Page No
TBA 0500S, TBA 0500B, TBA 0330S, TBA 1000S, TBA 1000SQ, TBA 1000B, TBA 0200B, TBA 0250S, TBA 0200S, TBA 0200M, TBA 0250B, TPA 0330SQ (See drawing on page: 3-136)					
010	1558941-0000		2	RAIL	
050	1144899-0000		2	SUPPORT	
070	2512817-0000		1	SUPPORTING ARM	
080	2512834-0000		1	SUPPORTING ARM	
090	1478127-0000		1	DRIP PLATE	
220	312105-0451		6	SCREW M6S ISO 4017 M8X20 A480	
240	312605-0318		2	HEXAGON NUT, M6M M8 A280	
260	315105-0165		14	WASHER BRB8,4X16RFR	
310	312105-0453		2	SCREW M6S ISO 4017 M8X25 A480	
320	312105-0449		4	SCREW M6S ISO 4017 M8X16 A480	
TBA 1500S, TPA 1000SQ, TBA 1890S, TBA 2000S (See drawing on page: 3-138)					
010	1538963-0000		2	RAIL	
050	1346588-0000		1	DRIP PLATE	
070	1517564-0000		1	SUPPORTING ARM	
080	1517568-0000		1	SUPPORTING ARM	
220	312105-0451		10	SCREW M6S ISO 4017 M8X20 A480	
240	312605-0318		2	HEXAGON NUT, M6M M8 A280	
260	315105-0165		14	WASHER BRB8,4X16RFR	
320	312105-0449		2	SCREW M6S ISO 4017 M8X16 A480	
TPA 0500SQ (See drawing on page: 3-136)					
010	1558941-0000		2	RAIL	
050	1144899-0000		1	SUPPORT	
080	2512834-0000		1	SUPPORTING ARM	
090	1478127-0000		1	DRIP PLATE	
220	312105-0451		5	SCREW M6S ISO 4017 M8X20 A480	
240	312605-0318		1	HEXAGON NUT, M6M M8 A280	
260	315105-0165		12	WASHER BRB8,4X16RFR	
310	312105-0453		2	SCREW M6S ISO 4017 M8X25 A480	
320	312105-0449		4	SCREW M6S ISO 4017 M8X16 A480	
Common Parts					
020	1517567-0000		1	PLATE	
030	1144552-0000		1	PLATE	
040	1517563-0000		1	BRACKET	
060	1517302-0000		2	SUPPORT PLATE	
200	312105-0368		2	SCREW M6S ISO 4017 M6X16 A480	
210	312105-0370		4	SCREW M6S ISO 4017 M6X20 A480	
230	312115-0497		2	SCREW ISO4762 M10X35 A4	
250	315105-0153		6	WASHER BRB6,4X12RFR	
270	315105-0171		2	WASHER BRB10X18	
290	342722-0203		1	STRAIGHT COUPLING	
300	90166-0132	MM	2000	TUBE 6 MM PA,TRANSP.	

Machine Type | Group Description | Used-In | Group Number | Page No

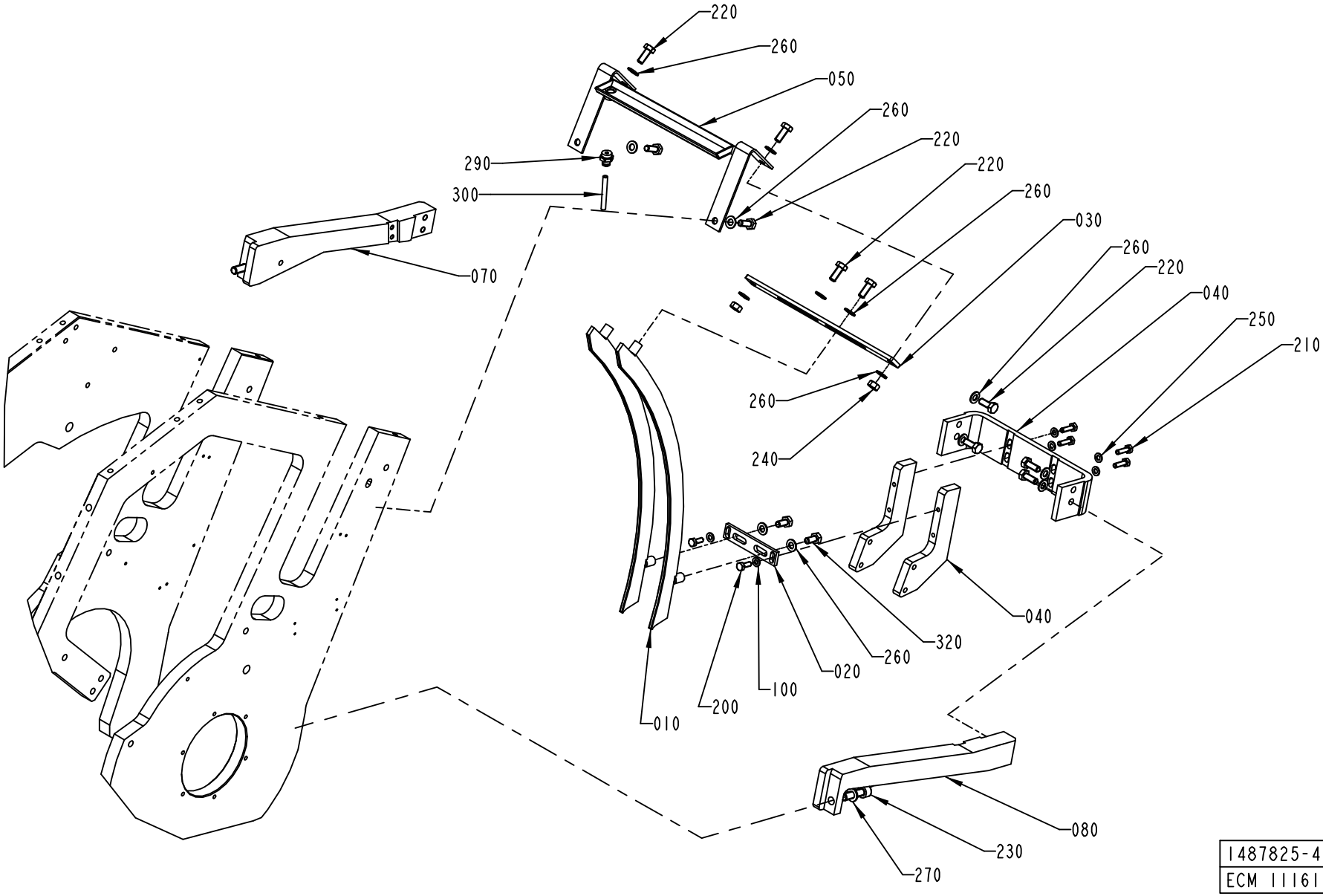
220
260
050
260
220
220
260
030
260
220
040
250
210
290
300
070
260
240
320
040
260
020
100
200
010
080
230
270
1487825-4
ECM 111612

ECM: 180382 - 20041013
Group number: 1487825-0200
Assembly Drawing: 1487825-4_1_AB

This list covers pages from 3-136 to 3-139

Pos	Part No	UN	Qty	Description	Page No
TBA 0500S, TBA 0500B, TBA 0330S, TBA 1000S, TBA 1000SQ, TBA 1000B, TBA 0200B, TBA 0250S, TBA 0200S, TBA 0200M, TBA 0250B, TPA 0330SQ (See drawing on page: 3-136)					
010	1558941-0000		2	RAIL	
050	1144899-0000		2	SUPPORT	
070	2512817-0000		1	SUPPORTING ARM	
080	2512834-0000		1	SUPPORTING ARM	
090	1478127-0000		1	DRIP PLATE	
220	312105-0451		6	SCREW M6S ISO 4017 M8X20 A480	
240	312605-0318		2	HEXAGON NUT, M6M M8 A280	
260	315105-0165		14	WASHER BRB8,4X16RFR	
310	312105-0453		2	SCREW M6S ISO 4017 M8X25 A480	
320	312105-0449		4	SCREW M6S ISO 4017 M8X16 A480	
TBA 1500S, TPA 1000SQ, TBA 1890S, TBA 2000S (See drawing on page: 3-138)					
010	1538963-0000		2	RAIL	
050	1346588-0000		1	DRIP PLATE	
070	1517564-0000		1	SUPPORTING ARM	
080	1517568-0000		1	SUPPORTING ARM	
220	312105-0451		10	SCREW M6S ISO 4017 M8X20 A480	
240	312605-0318		2	HEXAGON NUT, M6M M8 A280	
260	315105-0165		14	WASHER BRB8,4X16RFR	
320	312105-0449		2	SCREW M6S ISO 4017 M8X16 A480	
TPA 0500SQ (See drawing on page: 3-136)					
010	1558941-0000		2	RAIL	
050	1144899-0000		1	SUPPORT	
080	2512834-0000		1	SUPPORTING ARM	
090	1478127-0000		1	DRIP PLATE	
220	312105-0451		5	SCREW M6S ISO 4017 M8X20 A480	
240	312605-0318		1	HEXAGON NUT, M6M M8 A280	
260	315105-0165		12	WASHER BRB8,4X16RFR	
310	312105-0453		2	SCREW M6S ISO 4017 M8X25 A480	
320	312105-0449		4	SCREW M6S ISO 4017 M8X16 A480	
Common Parts					
020	1517567-0000		1	PLATE	
030	1144552-0000		1	PLATE	
040	1517563-0000		1	BRACKET	
060	1517302-0000		2	SUPPORT PLATE	
200	312105-0368		2	SCREW M6S ISO 4017 M6X16 A480	
210	312105-0370		4	SCREW M6S ISO 4017 M6X20 A480	
230	312115-0497		2	SCREW ISO4762 M10X35 A4	
250	315105-0153		6	WASHER BRB6,4X12RFR	
270	315105-0171		2	WASHER BRB10X18	
290	342722-0203		1	STRAIGHT COUPLING	
300	90166-0132	MM	2000	TUBE 6 MM PA,TRANSP.	

Machine Type | Group Description | Used-In | Group Number | Page No

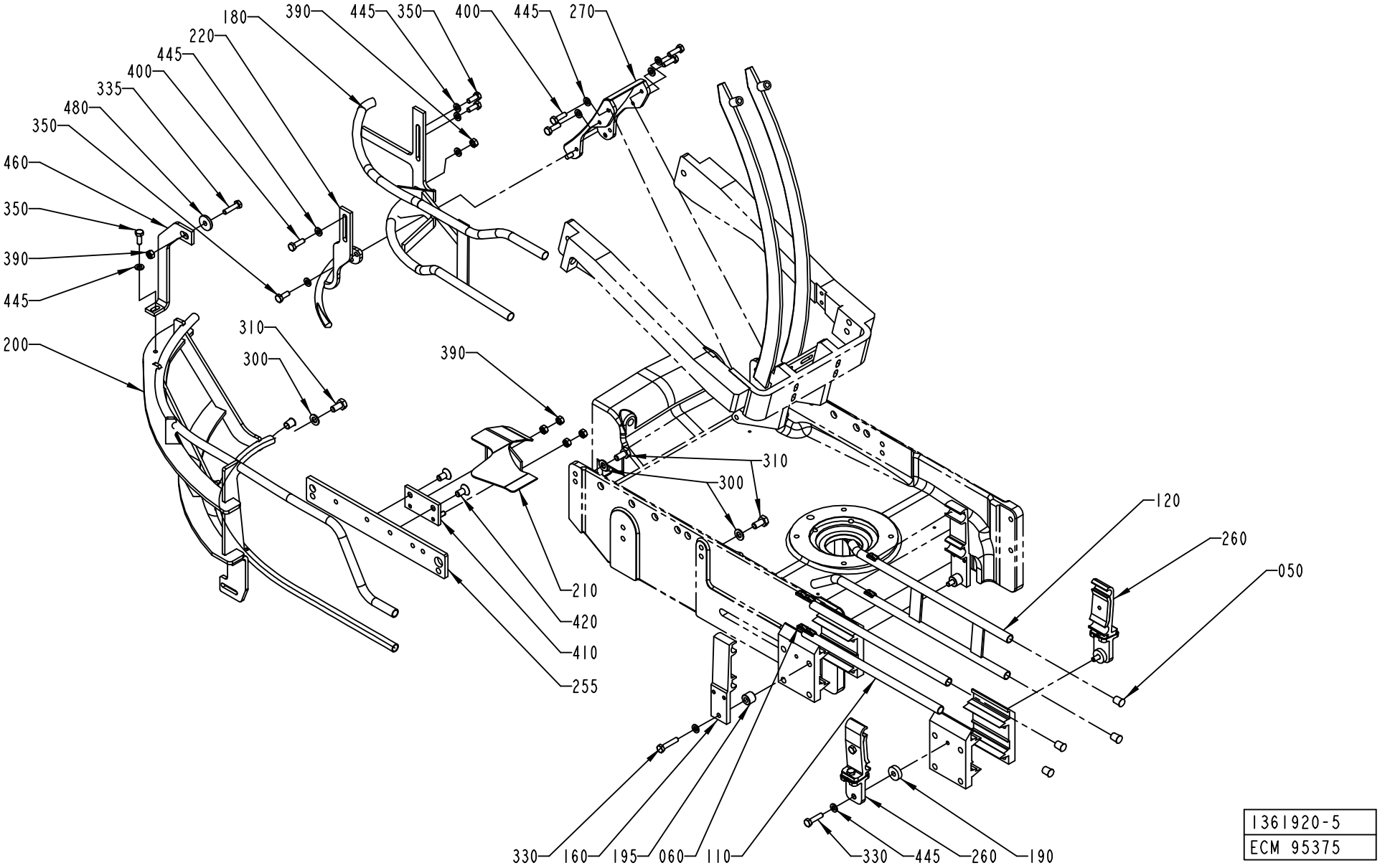
180
390
445
350
400
445
270
220
445
400
335
480
350
460
350
390
445
200
310
300
390
310
300
120
260
050
210
420
410
255
330
160
195
060
110
330
445
260
190
1361920-5
ECM 95375

ECM: 180379 - 20041013
Group number: 1361920-0400
Assembly Drawing: 1361920-5_1_AA

This list covers pages from 3-140 to 3-147

Pos	Part No	UN	Qty	Description	Page No
TPA 1000SQ (See drawing on page: 3-140)					
050	484701-0000		10	SHUTTER	
060	1020146-0000		6	LOCKING BLOCK REPL BY 1020290-101	
110	1279582-0000		2	RAIL	
120	1548550-0000		1	RAIL	
160	1334113-0000		2	HOLDER	
180	1548114-0000		1	RAIL	
190	1285253-0000		2	SPACER	
195	1317218-0000		2	SPACER	
200	2527766-0000		1	RAIL	
210	1548348-0000		1	GUIDE	
220	1548349-0000		1	RAIL	
260	1366777-0101		2	ANGLED RAIL HOLDER TPC21	**3-149**
270	1538970-0000		1	SLIDE	
300	315105-0165		3	WASHER BRB8,4X16RFR	
310	312105-0449		3	SCREW M6S ISO 4017 M8X16 A480	
330	312105-0374		2	SCREW M6S ISO 4014 M6X30 A480	
335	312105-0372		3	SCREW M6S ISO 4017 M6X25 A480	
350	312105-0368		4	SCREW M6S ISO 4017 M6X16 A480	
390	312605-0316		6	HEXAGON NUT, M6M M6 A280	
400	312105-0370		5	SCREW M6S ISO 4017 M6X20 A480	
410	1548551-0000		1	SPACER	
420	312155-0449		2	SCREW DIN 7991 MF6S M8X16 A480	
445	315105-0153		14	WASHER BRB6,4X12RFR	
460	2532864-0000		1	BRACKET	
480	315125-0153		1	WASHER TBRSB 6,4X22X4 A4	
TBA 0500B QC, TBA 0500B NOQC, TBA 1000B QC (See drawing on page: 3-142)					
050	484701-0000		14	SHUTTER	
060	1020146-0000		10	LOCKING BLOCK REPL BY 1020290-101	
110	1279582-0000		2	RAIL	
120	1487684-0000		1	RAIL	
150	1499413-0000		1	HOLDER	
160	1285009-0000		2	HOLDER	
180	2517495-0000		1	RAIL	
190	1285253-0000		10	SPACER	
200	1539869-0000		1	RAIL	
210	1487177-0000		1	GUIDE	
220	2518100-0000		1	RAIL	
260	1020142-0002		2	RAIL HOLDER, B55 WIDTH 30 MM	
270	1538970-0000		1	SLIDE	
300	315105-0165		5	WASHER BRB8,4X16RFR	
310	312105-0449		5	SCREW M6S ISO 4017 M8X16 A480	
330	312105-0374		5	SCREW M6S ISO 4014 M6X30 A480	
350	312105-0368		4	SCREW M6S ISO 4017 M6X16 A480	
360	312155-0329		1	SCREW DIN 7991 MF6S M5X16 A480	
370	315105-0146		1	WASHER BRB5,3X10RFR	
380	312605-0314		1	HEXAGON NUT, M6M M5 A280	
390	312605-0316		1	HEXAGON NUT, M6M M6 A280	
400	312105-0370		5	SCREW M6S ISO 4017 M6X20 A480	
445	315105-0153		14	WASHER BRB6,4X12RFR	
TBA 0200B NOQC, TBA 0250B NOQC (See drawing on page: 3-142)					
050	484701-0000		14	SHUTTER	
060	1020146-0000		10	LOCKING BLOCK REPL BY 1020290-101	
110	1279582-0000		2	RAIL	
120	1487684-0000		1	RAIL	
160	1285009-0000		2	HOLDER	
180	2520346-0000		1	RAIL	
200	1346739-0000		1	GUIDE	
210	1487177-0000		1	GUIDE	
220	2518100-0000		1	RAIL	
260	1020142-0002		2	RAIL HOLDER, B55 WIDTH 30 MM	
270	1538970-0000		1	SLIDE	
300	315105-0165		5	WASHER BRB8,4X16RFR	
310	312105-0449		5	SCREW M6S ISO 4017 M8X16 A480	
330	312105-0370		4	SCREW M6S ISO 4017 M6X20 A480	
350	312105-0368		4	SCREW M6S ISO 4017 M6X16 A480	
390	312605-0316		1	HEXAGON NUT, M6M M6 A280	
400	312105-0370		9	SCREW M6S ISO 4017 M6X20 A480	
445	315105-0153		13	WASHER BRB6,4X12RFR	
TBA 0200B QC, TBA 0330S QC, TBA 0250B QC (See drawing on page: 3-142)					
050	484701-0000		13	SHUTTER	
060	1020146-0000		10	LOCKING BLOCK REPL BY 1020290-101	
110	1279582-0000		2	RAIL	
120	2558754-0000		1	RAIL	
160	1285009-0000		2	HOLDER	
180	2537127-0000		1	RAIL	
200	2559052-0000		1	RAIL	
210	2538110-0000		1	RAIL	
220	2545232-0000		1	RAIL	
260	1020142-0002		2	RAIL HOLDER, B55 WIDTH 30 MM	
270	2523480-0000		1	SLIDE	
300	315105-0165		5	WASHER BRB8,4X16RFR	
310	312105-0449		5	SCREW M6S ISO 4017 M8X16 A480	
330	312105-0370		4	SCREW M6S ISO 4017 M6X20 A480	

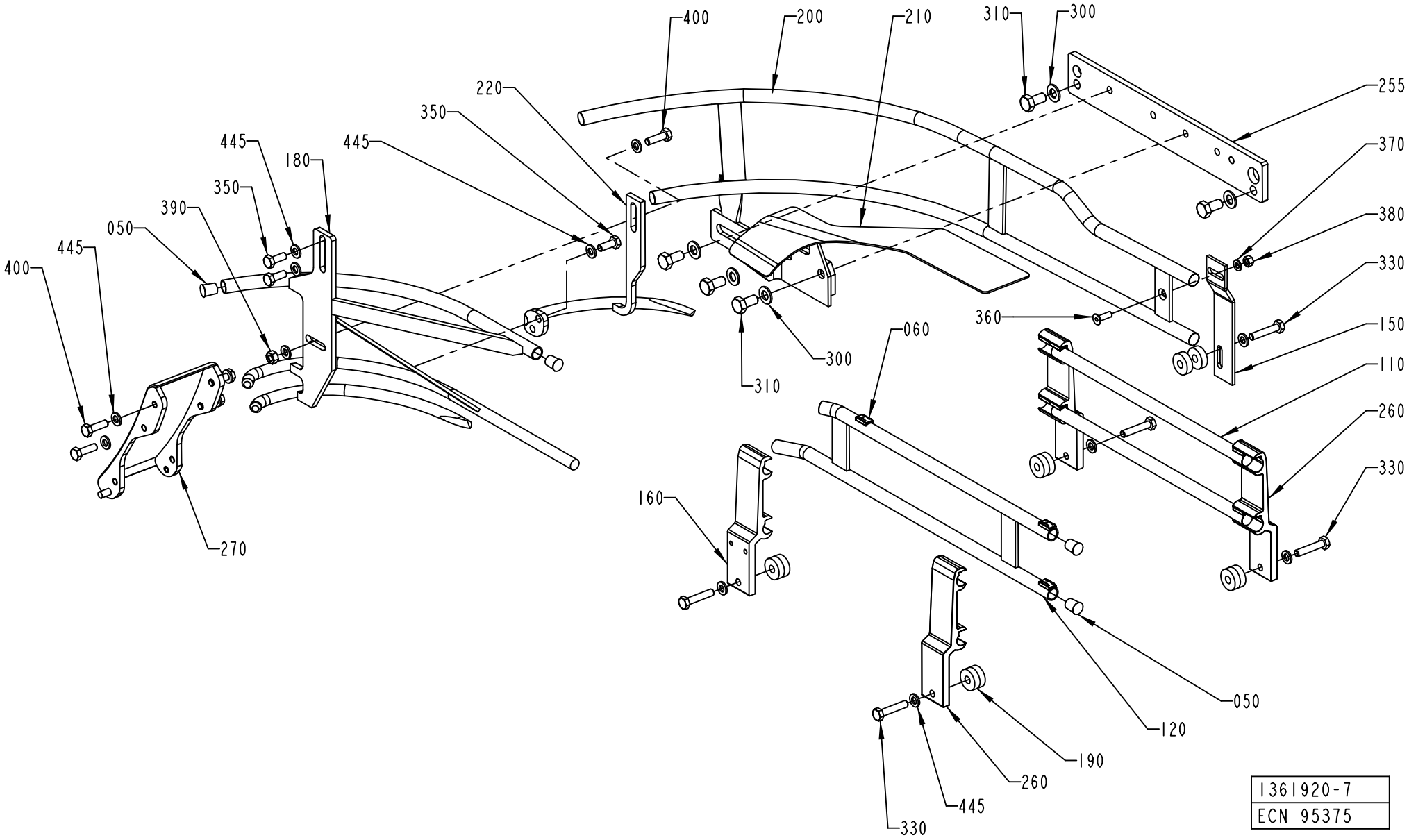
400
200
210
310
300
255
220
350
445
180
445
370
350
390
380
050
445
330
400
360
150
060
300
310
110
260
160
330
270
050
120
190
260
445
330
1361920-7
ECN 95375

ECM: 180379 - 20041013
Group number: 1361920-0400
Assembly Drawing: 1361920-7_1_AA

This list covers pages from 3-140 to 3-147

Pos	Part No	UN	Qty	Description	Page No
TBA 0200B QC, TBA 0330S QC, TBA 0250B QC (Cont'd) (See drawing on page: 3-142)					
350	312105-0368		4	SCREW M6S ISO 4017 M6X16 A480	
390	312605-0316		1	HEXAGON NUT, M6M M6 A280	
400	312105-0370		5	SCREW M6S ISO 4017 M6X20 A480	
445	315105-0153		13	WASHER BRB6,4X12RFR	
TBA 0200S (See drawing on page: 3-142)					
050	484701-0000		14	SHUTTER	
060	1020146-0000		10	LOCKING BLOCK REPL BY 1020290-101	
110	1279582-0000		2	RAIL	
120	1487684-0000		1	RAIL	
160	1285009-0000		2	HOLDER	
180	2537127-0000		1	RAIL	
200	2537819-0000		1	RAIL	
210	2538110-0000		1	RAIL	
220	2545232-0000		1	RAIL	
260	1020142-0002		2	RAIL HOLDER, B55 WIDTH 30 MM	
270	2523480-0000		1	SLIDE	
300	315105-0165		5	WASHER BRB8,4X16RFR	
310	312105-0449		5	SCREW M6S ISO 4017 M8X16 A480	
330	312105-0370		4	SCREW M6S ISO 4017 M6X20 A480	
350	312105-0368		4	SCREW M6S ISO 4017 M6X16 A480	
390	312605-0316		1	HEXAGON NUT, M6M M6 A280	
400	312105-0370		5	SCREW M6S ISO 4017 M6X20 A480	
445	315105-0153		13	WASHER BRB6,4X12RFR	
TBA 0250S, TBA 0200M (See drawing on page: 3-142)					
050	484701-0000		13	SHUTTER	
060	1020146-0000		10	LOCKING BLOCK REPL BY 1020290-101	
120	2558754-0000		1	RAIL	
160	1285009-0000		2	HOLDER	
180	2537127-0000		1	RAIL	
200	2678414-0000		1	RAIL	
210	2538110-0000		1	RAIL	
220	2545232-0000		1	RAIL	
260	1020142-0002		2	RAIL HOLDER, B55 WIDTH 30 MM	
270	2523480-0000		1	SLIDE	
300	315105-0165		5	WASHER BRB8,4X16RFR	
330	312105-0370		4	SCREW M6S ISO 4017 M6X20 A480	
350	312105-0368		4	SCREW M6S ISO 4017 M6X16 A480	
390	312605-0316		1	HEXAGON NUT, M6M M6 A280	
400	312105-0370		5	SCREW M6S ISO 4017 M6X20 A480	
445	315105-0153		13	WASHER BRB6,4X12RFR	
TBA 0500S (See drawing on page: 3-142)					
050	484701-0000		10	SHUTTER	
060	1020146-0000		10	LOCKING BLOCK REPL BY 1020290-101	
110	1279582-0000		2	RAIL	
120	1487684-0000		1	RAIL	
160	1285009-0000		2	HOLDER	
180	2520183-0000		1	RAIL	
200	1524349-0000		1	GUIDE	
210	1487177-0000		1	GUIDE	
220	2518100-0000		1	RAIL	
260	1020142-0002		2	RAIL HOLDER, B55 WIDTH 30 MM	
270	1538970-0000		1	SLIDE	
300	315105-0165		5	WASHER BRB8,4X16RFR	
310	312105-0449		5	SCREW M6S ISO 4017 M8X16 A480	
350	312105-0368		4	SCREW M6S ISO 4017 M6X16 A480	
390	312605-0316		1	HEXAGON NUT, M6M M6 A280	
400	312105-0370		9	SCREW M6S ISO 4017 M6X20 A480	
445	315105-0153		13	WASHER BRB6,4X12RFR	
TBA 1000S, TBA 1000B NOQC (See drawing on page: 3-142)					
050	484701-0000		14	SHUTTER	
060	1020146-0000		10	LOCKING BLOCK REPL BY 1020290-101	
110	1279582-0000		2	RAIL	
120	1487684-0000		1	RAIL	
150	1499413-0000		1	HOLDER	
160	1285009-0000		2	HOLDER	
180	2517495-0000		1	RAIL	
190	1285253-0000		10	SPACER	
200	1285258-0000		1	RAIL	
210	1487177-0000		1	GUIDE	
220	2518100-0000		1	RAIL	
260	1020142-0002		2	RAIL HOLDER, B55 WIDTH 30 MM	
270	1538970-0000		1	SLIDE	
300	315105-0165		5	WASHER BRB8,4X16RFR	
310	312105-0449		5	SCREW M6S ISO 4017 M8X16 A480	
330	312105-0374		5	SCREW M6S ISO 4014 M6X30 A480	
350	312105-0368		4	SCREW M6S ISO 4017 M6X16 A480	
360	312155-0329		1	SCREW DIN 7991 MF6S M5X16 A480	
370	315105-0146		1	WASHER BRB5,3X10RFR	
380	312605-0314		1	HEXAGON NUT, M6M M5 A280	
390	312605-0316		1	HEXAGON NUT, M6M M6 A280	
400	312105-0370		5	SCREW M6S ISO 4017 M6X20 A480	
445	315105-0153		14	WASHER BRB6,4X12RFR	
TBA 1000SQ (See drawing on page: 3-144)					

Machine Type | Group Description | Used-In | Group Number | Page No

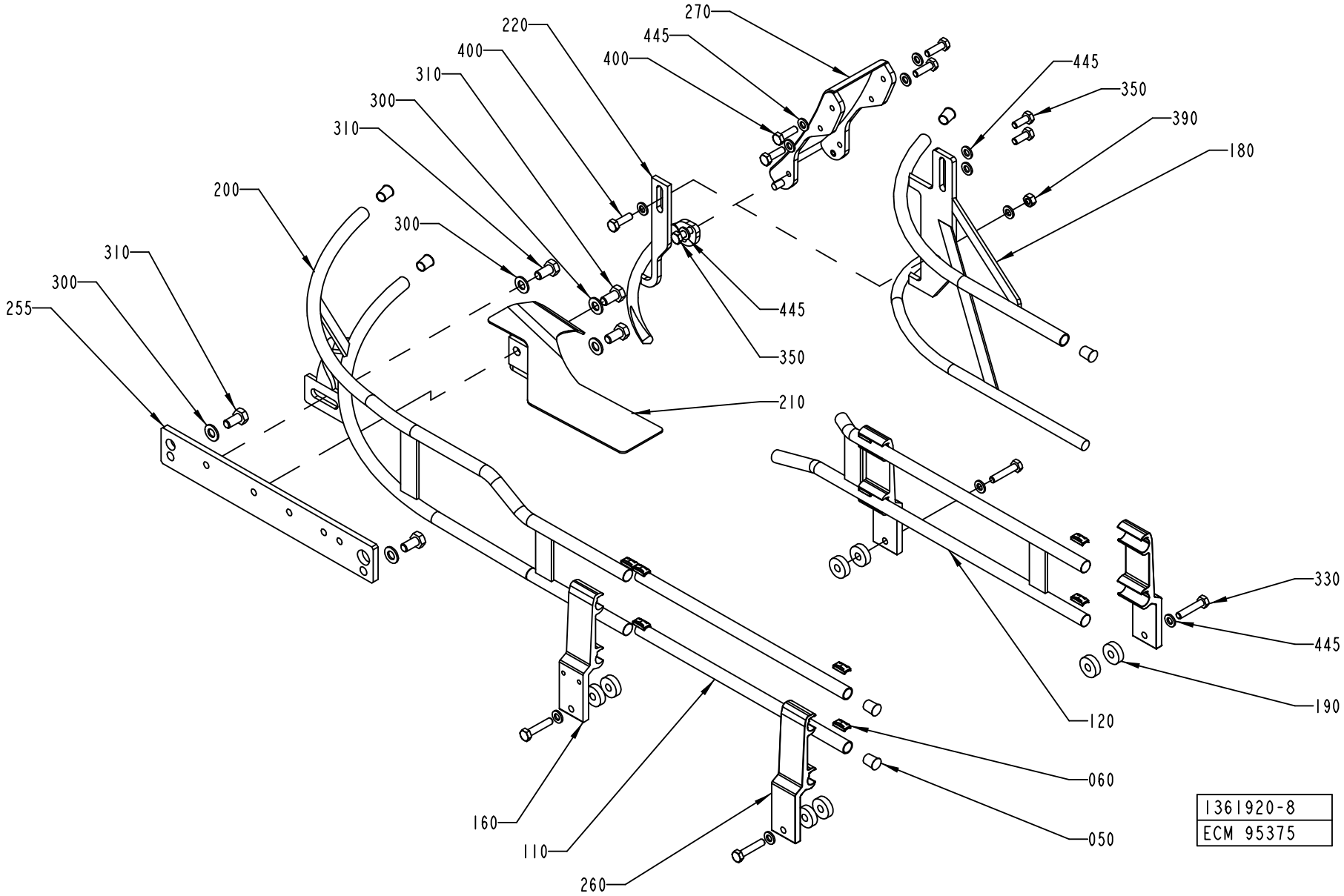
270
220
445
400
400
310
300
310
200
300
445
350
210
445
350
390
180
310
300
255
330
445
190
120
060
050
160
110
260
1361920-8
ECM 95375

ECM: 180379 - 20041013
Group number: 1361920-0400
Assembly Drawing: 1361920-8_1_AA

This list covers pages from 3-140 to 3-147

Pos	Part No	UN	Qty	Description	Page No
TBA 1000SQ (Cont'd) (See drawing on page: 3-144)					
050	484701-0000		14	SHUTTER	
060	1020146-0000		10	LOCKING BLOCK REPL BY 1020290-101	
110	1279582-0000		2	RAIL	
120	1296079-0000		1	RAIL	
160	1285009-0000		2	HOLDER	
180	2522145-0000		1	RAIL	
190	1285253-0000		8	SPACER	
200	1519540-0000		1	RAIL	
210	1349806-0000		1	GUIDE	
220	2522181-0000		1	RAIL	
260	1020142-0002		2	RAIL HOLDER, B55 WIDTH 30 MM	
270	1538970-0000		1	SLIDE	
300	315105-0165		5	WASHER BRB8,4X16RFR	
310	312105-0449		5	SCREW M6S ISO 4017 M8X16 A480	
330	312105-0374		4	SCREW M6S ISO 4014 M6X30 A480	
350	312105-0368		4	SCREW M6S ISO 4017 M6X16 A480	
390	312605-0316		1	HEXAGON NUT, M6M M6 A280	
400	312105-0370		5	SCREW M6S ISO 4017 M6X20 A480	
445	315105-0153		13	WASHER BRB6,4X12RFR	
TBA 1500S (See drawing on page: 3-142)					
050	484701-0000		16	SHUTTER	
060	1020146-0000		10	LOCKING BLOCK REPL BY 1020290-101	
110	1279582-0000		2	RAIL	
120	1487684-0000		1	RAIL	
150	1499413-0000		1	HOLDER	
160	1285009-0000		2	HOLDER	
180	2504412-0000		1	RAIL	
190	1317218-0000		5	SPACER	
200	1285258-0000		1	RAIL	
210	1487177-0000		1	GUIDE	
220	2504414-0000		1	RAIL	
260	1020142-0002		2	RAIL HOLDER, B55 WIDTH 30 MM	
270	1538970-0000		1	SLIDE	
300	315105-0165		5	WASHER BRB8,4X16RFR	
310	312105-0449		5	SCREW M6S ISO 4017 M8X16 A480	
330	312105-0374		5	SCREW M6S ISO 4014 M6X30 A480	
350	312105-0368		4	SCREW M6S ISO 4017 M6X16 A480	
360	312155-0329		1	SCREW DIN 7991 MF6S M5X16 A480	
370	315105-0146		1	WASHER BRB5,3X10RFR	
380	312605-0314		1	HEXAGON NUT, M6M M5 A280	
390	312605-0316		1	HEXAGON NUT, M6M M6 A280	
400	312105-0370		5	SCREW M6S ISO 4017 M6X20 A480	
445	315105-0153		14	WASHER BRB6,4X12RFR	
TBA 1890S QC, TBA 2000S QC (See drawing on page: 3-146)					
050	484701-0000		18	SHUTTER	
110	2640076-0000		2	RAIL	
120	2639832-0000		1	RAIL	
160	1550743-0100		2	RAIL HOLDER	**3-151**
180	2635406-0000		1	RAIL	
200	2635543-0000		1	RAIL	
210	2652206-0000		1	GUIDE	
220	2654985-0000		1	RAIL	
260	1550743-0100		2	RAIL HOLDER	**3-151**
270	1538970-0000		1	SLIDE	
300	315105-0165		4	WASHER BRB8,4X16RFR	
305	2655500-0000		1	WASHER	
310	312105-0449		4	SCREW M6S ISO 4017 M8X16 A480	
315	312105-0451		1	SCREW M6S ISO 4017 M8X20 A480	
350	312105-0368		3	SCREW M6S ISO 4017 M6X16 A480	
390	312605-0316		1	HEXAGON NUT, M6M M6 A280	
400	312105-0370		5	SCREW M6S ISO 4017 M6X20 A480	
445	315105-0153		9	WASHER BRB6,4X12RFR	
TPA 0330SQ (See drawing on page: 3-144)					
050	484701-0000		10	SHUTTER	
060	1020146-0000		6	LOCKING BLOCK REPL BY 1020290-101	
110	1279582-0000		2	RAIL	
120	1296079-0000		1	RAIL	
160	1285009-0000		2	HOLDER	
180	2555391-0000		1	RAIL	
190	1285253-0000		2	SPACER	
200	1532294-0000		1	RAIL	
220	2555392-0000		1	RAIL	
260	1366777-0101		2	ANGLED RAIL HOLDER TPC21	**3-149**
270	2523480-0000		1	SLIDE	
300	315105-0165		3	WASHER BRB8,4X16RFR	
310	312105-0449		3	SCREW M6S ISO 4017 M8X16 A480	
330	312105-0370		4	SCREW M6S ISO 4017 M6X20 A480	
350	312105-0368		4	SCREW M6S ISO 4017 M6X16 A480	
390	312605-0316		1	HEXAGON NUT, M6M M6 A280	
400	312105-0370		9	SCREW M6S ISO 4017 M6X20 A480	
445	315105-0153		13	WASHER BRB6,4X12RFR	
TPA 0500SQ (See drawing on page: 3-140)					
050	484701-0000		8	SHUTTER	

Machine Type | Group Description | Used-In | Group Number | Page No

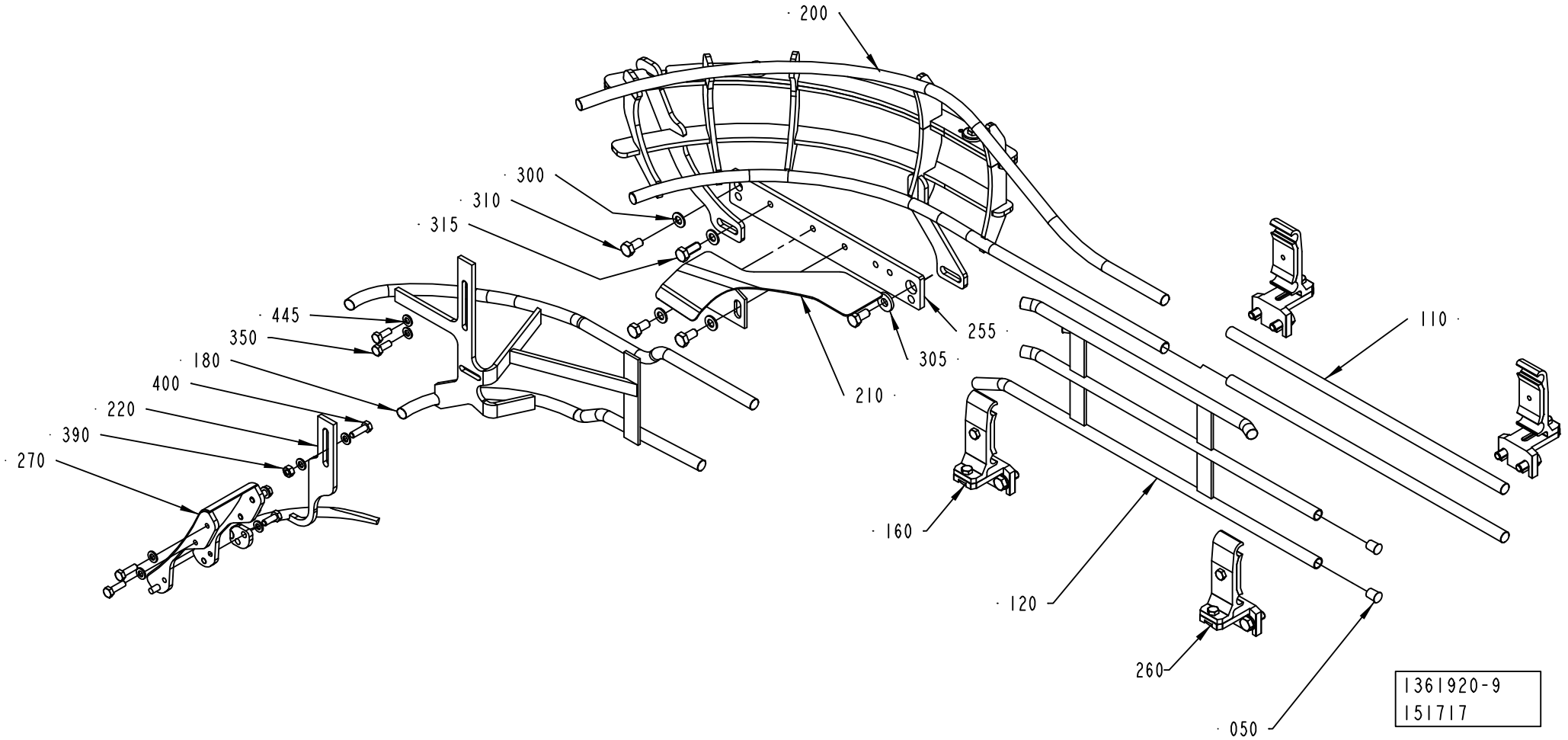
200
300
310
315
445
350
180
400
220
390
270
255
305
210
110
160
120
260
050
1361920-9
151717

Pos	Part No	UN	Qty	Description	Page No
TPA 0500SQ (Cont'd) (See drawing on page: 3-140)					
110	1279582-0000		2	RAIL	
120	1296079-0000		1	RAIL	
160	1334113-0000		2	HOLDER	
180	2529115-0000		1	RAIL	
190	1285253-0000		4	SPACER	
200	2652893-0000		1	RAIL	
220	2522181-0000		1	RAIL	
260	1366777-0101		2	ANGLED RAIL HOLDER TPC21	**3-149**
270	1538970-0000		1	SLIDE	
300	315105-0165		3	WASHER BRB8,4X16RFR	
310	312105-0449		3	SCREW M6S ISO 4017 M8X16 A480	
330	312105-0370		4	SCREW M6S ISO 4017 M6X20 A480	
335	312105-0372		1	SCREW M6S ISO 4017 M6X25 A480	
350	312105-0368		3	SCREW M6S ISO 4017 M6X16 A480	
390	312605-0316		2	HEXAGON NUT, M6M M6 A280	
400	312105-0370		6	SCREW M6S ISO 4017 M6X20 A480	
445	315105-0153		14	WASHER BRB6,4X12RFR	
460	2554263-0000		1	BRACKET	
480	315125-0153		1	WASHER TBRSB 6,4X22X4 A4	
Common Parts					
255	1478235-0000		1	PLATE	

Pos	Part No	UN	Qty	Description	Page No

ANGLED RAIL HOLDER TPC21

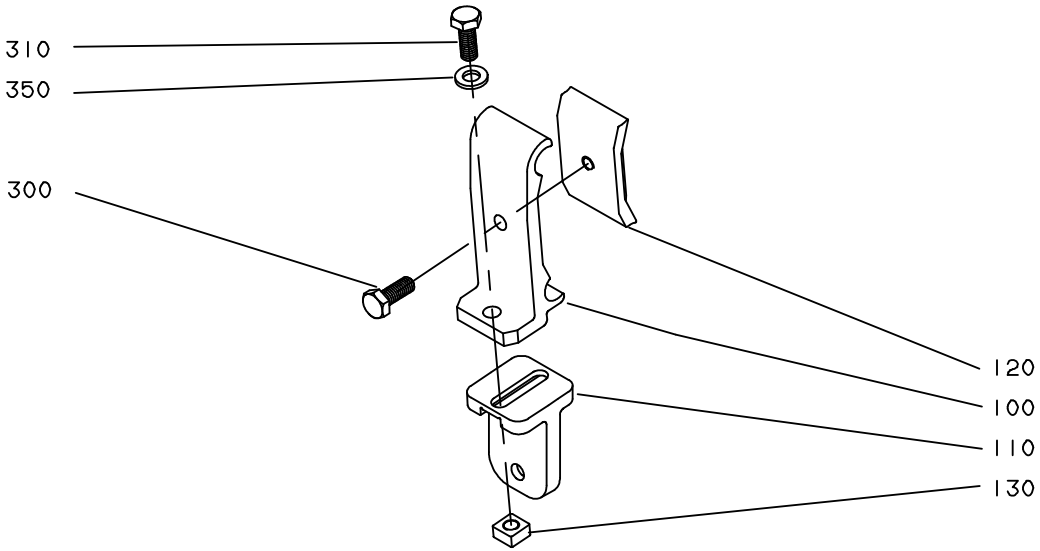

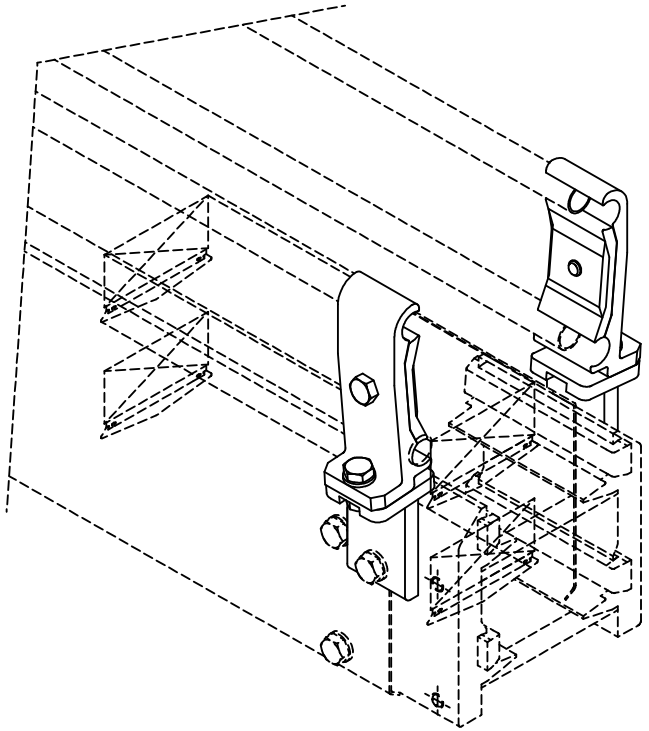

S-1366777-1
ECN 81455

ECM: 189515 - 20041104
Group number: 1366777-0101
Assembly Drawing: 1366777-1_1_AA

Pos	Part No	UN	Qty	Description	Page No
-					
100	1366726-0000		1	HOLDER	
110	1359085-0000		1	T-HOLDER	
120	1366727-0000		1	CLAMP	
130	1359565-0000		1	NUT	
300	312105-0366		1	SCREW M6S ISO 4017 M6X12 A480	
310	312105-0368		1	SCREW M6S ISO 4017 M6X16 A480	
350	315105-0153		1	WASHER BRB6,4X12RFR	

Pos	Part No	UN	Qty	Description	Page No

RAIL HOLDER

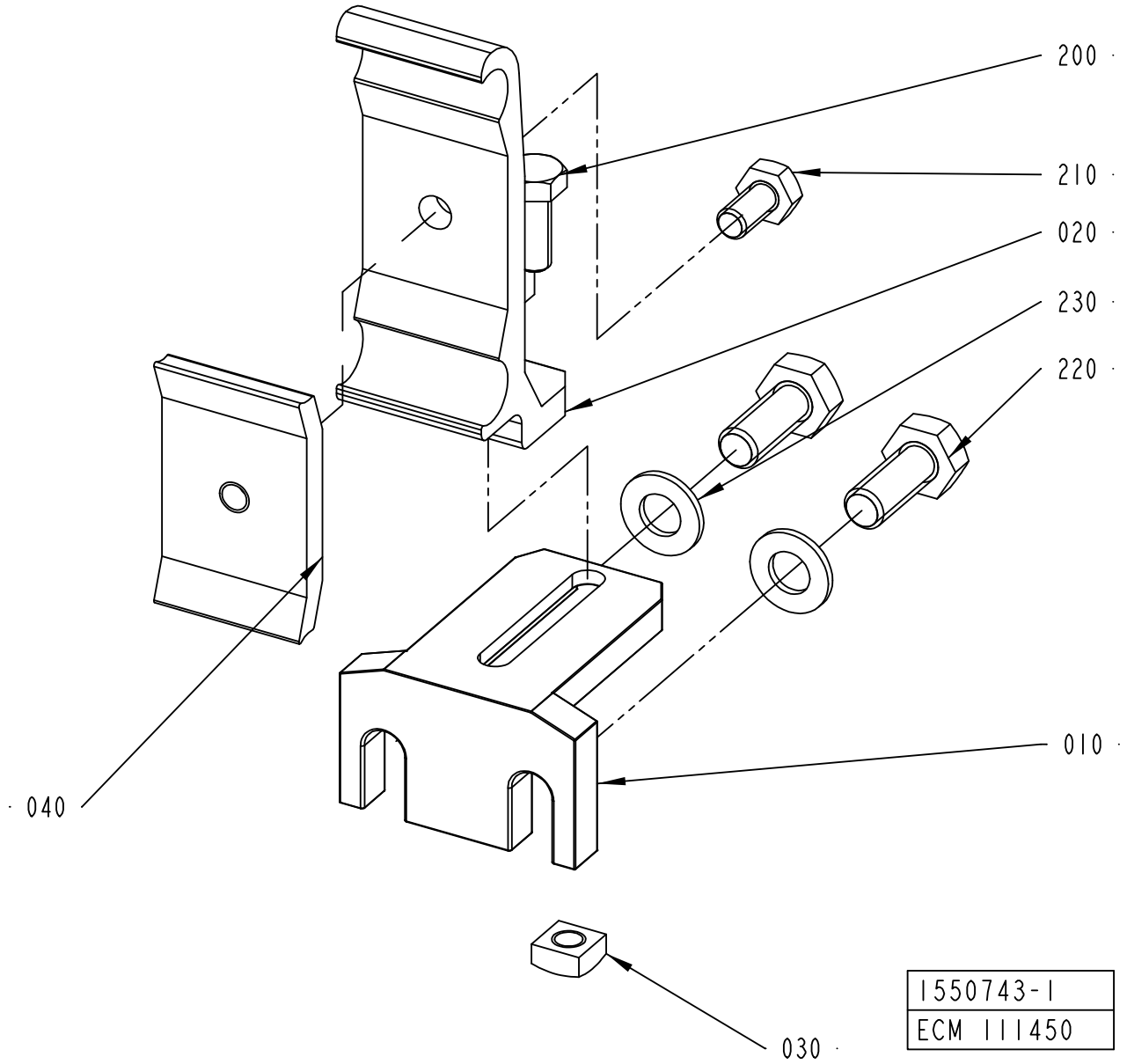

ECM: 129860 - 20031113
Group number: 1550743-0100
Assembly Drawing: 1550743-1_1_AB

Pos	Part No	UN	Qty	Description	Page No
-					
010	1550772-0000		1	HOLDER	
020	1550773-0000		1	RAIL HOLDER	
030	1359565-0000		1	NUT	
040	1366727-0000		1	CLAMP	
200	312105-0368		1	SCREW M6S ISO 4017 M6X16 A480	
210	312105-0366		1	SCREW M6S ISO 4017 M6X12 A480	
220	312105-0451		2	SCREW M6S ISO 4017 M8X20 A480	
230	315105-0165		2	WASHER BRB8,4X16RFR	

Pos	Part No	UN	Qty	Description	Page No

This page is intentionally left blank.

ECM: 111628 - 20021128
Group number: 1361921-0400
Assembly Drawing:

Pos	Part No	UN	Qty	Description	Page No
-					
010	1487038-0200		1	OUTFEED WHEEL	**3-155, 3-157, 3-159, 3-161**
020	1538644-0100		1	OUTFEED BELT	**3-163**

Pos	Part No	UN	Qty	Description	Page No

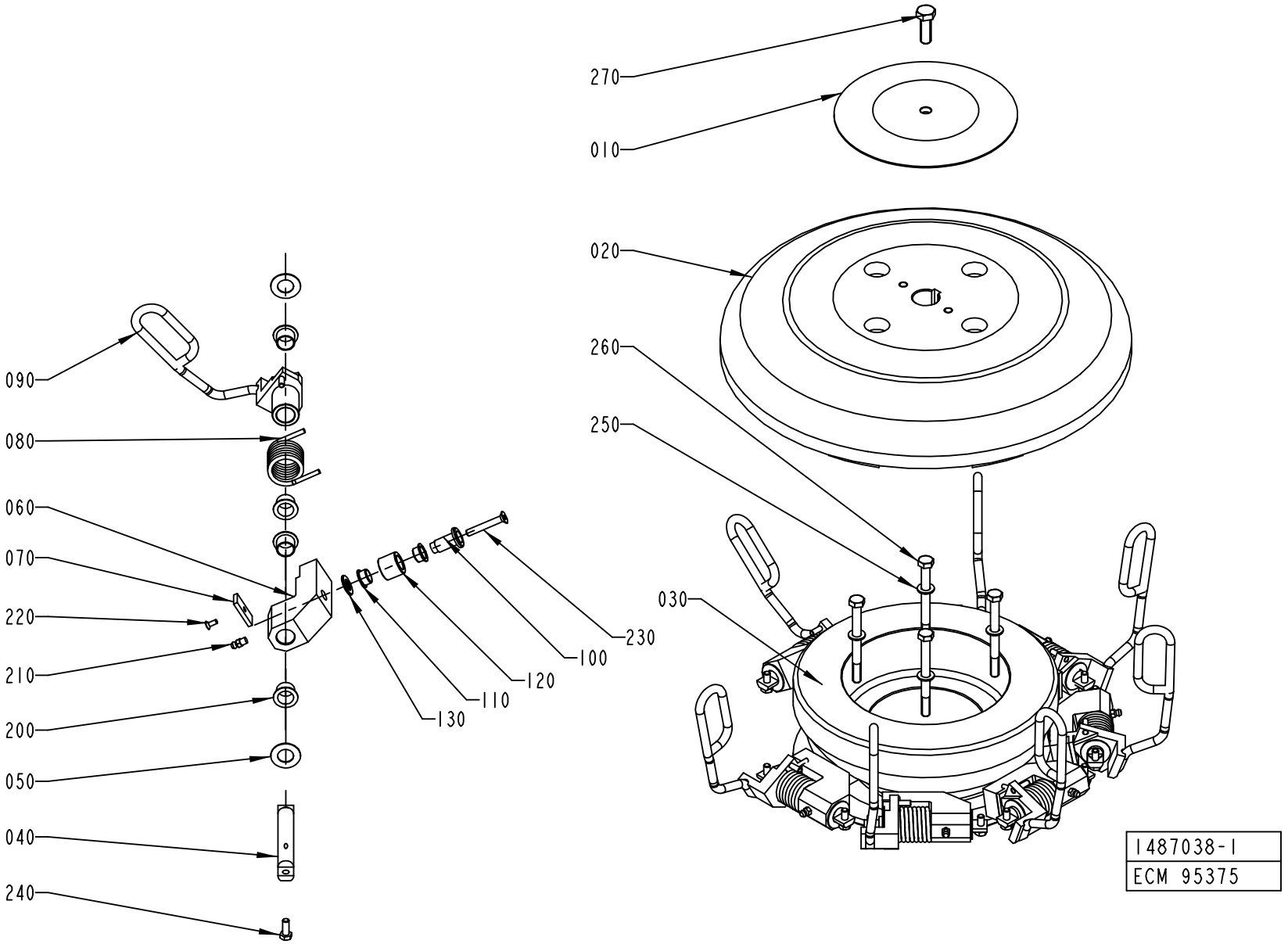
270
010
020
260
250
030
090
080
060
070
220
210
200
050
040
240
230
100
120
110
130
1487038-1
ECM 95375

ECM: 190919 - 20041104
Group number: 1487038-0200
Assembly Drawing: 1487038-1_1_AB

This list covers pages from 3-154 to 3-161

Pos	Part No	UN	Qty	Description	Page No
TBA 0200B NOQC, TBA 0250B NOQC (See drawing on page: 3-156)					
020	1484289-0000		1	HATCH	
030	1478228-0000		1	CAM	
040	1348540-0000		8	PIVOT AXLE	
050	1260852-0000		16	WASHER	
060	1348538-0000		8	LEVER	
070	1348631-0000		8	PLATE	
080	1282864-0000		8	SPRING	
090	1532516-0000		8	CARRIER	
100	1260851-0000		8	AXLE PIN	
110	1144662-0000		16	BUSHING	
120	1260853-0000		8	RING	
130	1285254-0000		8	WASHER	
200	90240-0263		32	FLANGE BUSHING, 15X17X12 MM	
210	344502-0021		8	GREASE NIPPLE STRAIGHT M6	
220	312155-0289		8	SCREW DIN 7991 MF6S M4X10 A480	
230	312155-0378		8	SCREW DIN 7991 MF6S M6X40 A480	
240	312105-0368		16	SCREW M6S ISO 4017 M6X16 A480	
TBA 0200B QC, TBA 0330S QC, TBA 0330S NOQC, TBA 0250B QC (See drawing on page: 3-160)					
020	2532580-0000		1	HATCH	
030	2540593-0000		1	CAM	
040	1350543-0000		8	AXLE PIN	
050	1260852-0000		16	WASHER	
060	2556526-0000		8	LEVER	
080	1349985-0000		8	SPRING	
090	2563274-0000		8	CARRIER	
100	1260851-0000		8	AXLE PIN	
110	1144662-0000		16	BUSHING	
120	1260853-0000		8	RING	
130	1285254-0000		8	WASHER	
200	90240-0263		16	FLANGE BUSHING, 15X17X12 MM	
210	344502-0021		8	GREASE NIPPLE STRAIGHT M6	
230	312155-0378		8	SCREW DIN 7991 MF6S M6X40 A480	
240	312105-0368		16	SCREW M6S ISO 4017 M6X16 A480	
280	2545245-0000		8	BUSHING	
290	90240-0258		8	BUSHING, 15X17X15 MM	
TBA 0250S, TBA 0200S, TBA 0200M (See drawing on page: 3-158)					
020	1478925-0000		1	HATCH	
030	2540593-0000		1	CAM	
040	1350543-0000		12	AXLE PIN	
050	1260852-0000		24	WASHER	
060	2556526-0000		12	LEVER	
080	1349985-0000		12	SPRING	
090	2563274-0000		12	CARRIER	
100	1260851-0000		12	AXLE PIN	
110	1144662-0000		24	BUSHING	
120	1260853-0000		12	RING	
130	1285254-0000		12	WASHER	
200	90240-0263		24	FLANGE BUSHING, 15X17X12 MM	
210	344502-0021		12	GREASE NIPPLE STRAIGHT M6	
230	312155-0378		12	SCREW DIN 7991 MF6S M6X40 A480	
240	312105-0368		12	SCREW M6S ISO 4017 M6X16 A480	
280	2545245-0000		12	BUSHING	
290	90240-0258		12	BUSHING, 15X17X15 MM	
TBA 0500S, TBA 0500B, TBA 1000S, TBA 1000B (See drawing on page: 3-156)					
020	1484289-0000		1	HATCH	
030	1478228-0000		1	CAM	
040	1348540-0000		8	PIVOT AXLE	
050	1260852-0000		16	WASHER	
060	1348538-0000		8	LEVER	
070	1348631-0000		8	PLATE	
080	1282864-0000		8	SPRING	
090	1511225-0000		8	CARRIER	
100	1260851-0000		8	AXLE PIN	
110	1144662-0000		16	BUSHING	
120	1260853-0000		8	RING	
130	1285254-0000		8	WASHER	
200	90240-0263		32	FLANGE BUSHING, 15X17X12 MM	
210	344502-0021		8	GREASE NIPPLE STRAIGHT M6	
220	312155-0289		8	SCREW DIN 7991 MF6S M4X10 A480	
230	312155-0378		8	SCREW DIN 7991 MF6S M6X40 A480	
240	312105-0368		16	SCREW M6S ISO 4017 M6X16 A480	
TBA 1000SQ (See drawing on page: 3-154)					
020	1484289-0000		1	HATCH	
030	1478228-0000		1	CAM	
040	1348540-0000		8	PIVOT AXLE	
050	1260852-0000		16	WASHER	
060	1348538-0000		8	LEVER	
070	1348631-0000		8	PLATE	
080	1296176-0000		8	SPRING	
090	1478227-0000		8	CARRIER	
100	1260851-0000		8	AXLE PIN	
110	1144662-0000		16	BUSHING	
120	1260853-0000		8	RING	

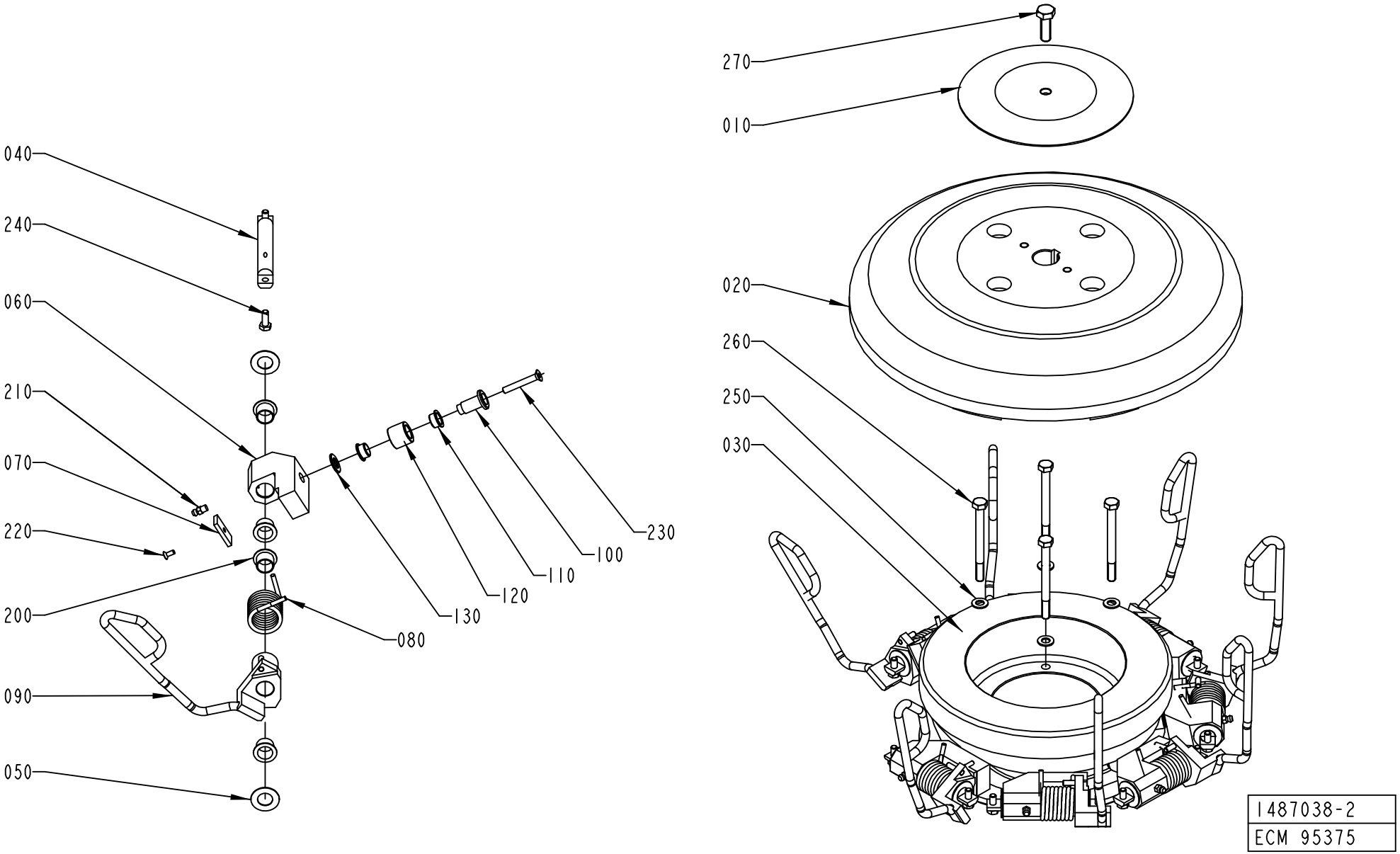
040
240
060
210
070
220
200
090
050
080
130
120
110
100
230
270
010
020
260
250
030
1487038-2
ECM 95375

ECM: 190919 - 20041104
Group number: 1487038-0200
Assembly Drawing: 1487038-2_1_AB

This list covers pages from 3-154 to 3-161

Pos	Part No	UN	Qty	Description	Page No
TBA 1000SQ (Cont'd) (See drawing on page: 3-154)					
130	1285254-0000		8	WASHER	
200	90240-0263		32	FLANGE BUSHING, 15X17X12 MM	
210	344502-0021		8	GREASE NIPPLE STRAIGHT M6	
220	312155-0289		8	SCREW DIN 7991 MF6S M4X10 A480	
230	312155-0378		8	SCREW DIN 7991 MF6S M6X40 A480	
240	312105-0368		16	SCREW M6S ISO 4017 M6X16 A480	
TBA 1500S (See drawing on page: 3-156)					
020	1484289-0000		1	HATCH	
030	1478228-0000		1	CAM	
040	1348540-0000		8	PIVOT AXLE	
050	1260852-0000		16	WASHER	
060	1348538-0000		8	LEVER	
070	1348631-0000		8	PLATE	
080	1282864-0000		8	SPRING	
090	1487159-0000		8	CARRIER	
100	1260851-0000		8	AXLE PIN	
110	1144662-0000		16	BUSHING	
120	1260853-0000		8	RING	
130	1285254-0000		8	WASHER	
200	90240-0263		32	FLANGE BUSHING, 15X17X12 MM	
210	344502-0021		8	GREASE NIPPLE STRAIGHT M6	
220	312155-0289		8	SCREW DIN 7991 MF6S M4X10 A480	
230	312155-0378		8	SCREW DIN 7991 MF6S M6X40 A480	
240	312105-0368		16	SCREW M6S ISO 4017 M6X16 A480	
TBA 1890S QC, TBA 2000S QC (See drawing on page: 3-160)					
020	2594911-0000		1	HATCH	
030	2540593-0000		1	CAM	
040	1348540-0000		6	PIVOT AXLE	
050	1260852-0000		12	WASHER	
060	2594910-0000		6	LEVER	
080	1349985-0000		6	SPRING	
090	2664596-0000		6	CARRIER	
100	1260851-0000		6	AXLE PIN	
110	1144662-0000		12	BUSHING	
120	1260853-0000		6	RING	
130	1285254-0000		6	WASHER	
200	90240-0263		12	FLANGE BUSHING, 15X17X12 MM	
210	344502-0021		6	GREASE NIPPLE STRAIGHT M6	
230	312155-0378		6	SCREW DIN 7991 MF6S M6X40 A480	
240	312105-0368		12	SCREW M6S ISO 4017 M6X16 A480	
280	2545245-0000		6	BUSHING	
290	90240-0258		6	BUSHING, 15X17X15 MM	
TPA 0330SQ (See drawing on page: 3-158)					
020	1478925-0000		1	HATCH	
030	1478228-0000		1	CAM	
040	1350543-0000		12	AXLE PIN	
050	1260852-0000		24	WASHER	
060	2556525-0000		12	LEVER	
080	1549615-0000		12	SPRING	
090	2545382-0000		12	CARRIER	
100	1260851-0000		12	AXLE PIN	
110	1144662-0000		24	BUSHING	
120	1260853-0000		12	RING	
130	1285254-0000		12	WASHER	
200	90240-0263		24	FLANGE BUSHING, 15X17X12 MM	
210	344502-0021		12	GREASE NIPPLE STRAIGHT M6	
230	312155-0378		12	SCREW DIN 7991 MF6S M6X40 A480	
240	312105-0368		12	SCREW M6S ISO 4017 M6X16 A480	
280	2545245-0000		12	BUSHING	
290	90240-0258		12	BUSHING, 15X17X15 MM	
TPA 0500SQ (See drawing on page: 3-160)					
020	2532580-0000		1	HATCH	
030	2540594-0000		1	CAM	
040	1350543-0000		8	AXLE PIN	
050	1260852-0000		16	WASHER	
060	2556525-0000		8	LEVER	
080	1549615-0000		8	SPRING	
090	2529664-0000		8	CARRIER	
100	1260851-0000		8	AXLE PIN	
110	1144662-0000		16	BUSHING	
120	1260853-0000		8	RING	
130	1285254-0000		8	WASHER	
200	90240-0263		16	FLANGE BUSHING, 15X17X12 MM	
210	344502-0021		8	GREASE NIPPLE STRAIGHT M6	
230	312155-0378		8	SCREW DIN 7991 MF6S M6X40 A480	
240	312105-0368		16	SCREW M6S ISO 4017 M6X16 A480	
280	2545245-0000		8	BUSHING	
290	90240-0258		8	BUSHING, 15X17X15 MM	
TPA 1000SQ (See drawing on page: 3-160)					
020	2532580-0000		1	HATCH	
030	2540594-0000		1	CAM	
040	1350543-0000		8	AXLE PIN	
050	1260852-0000		16	WASHER	

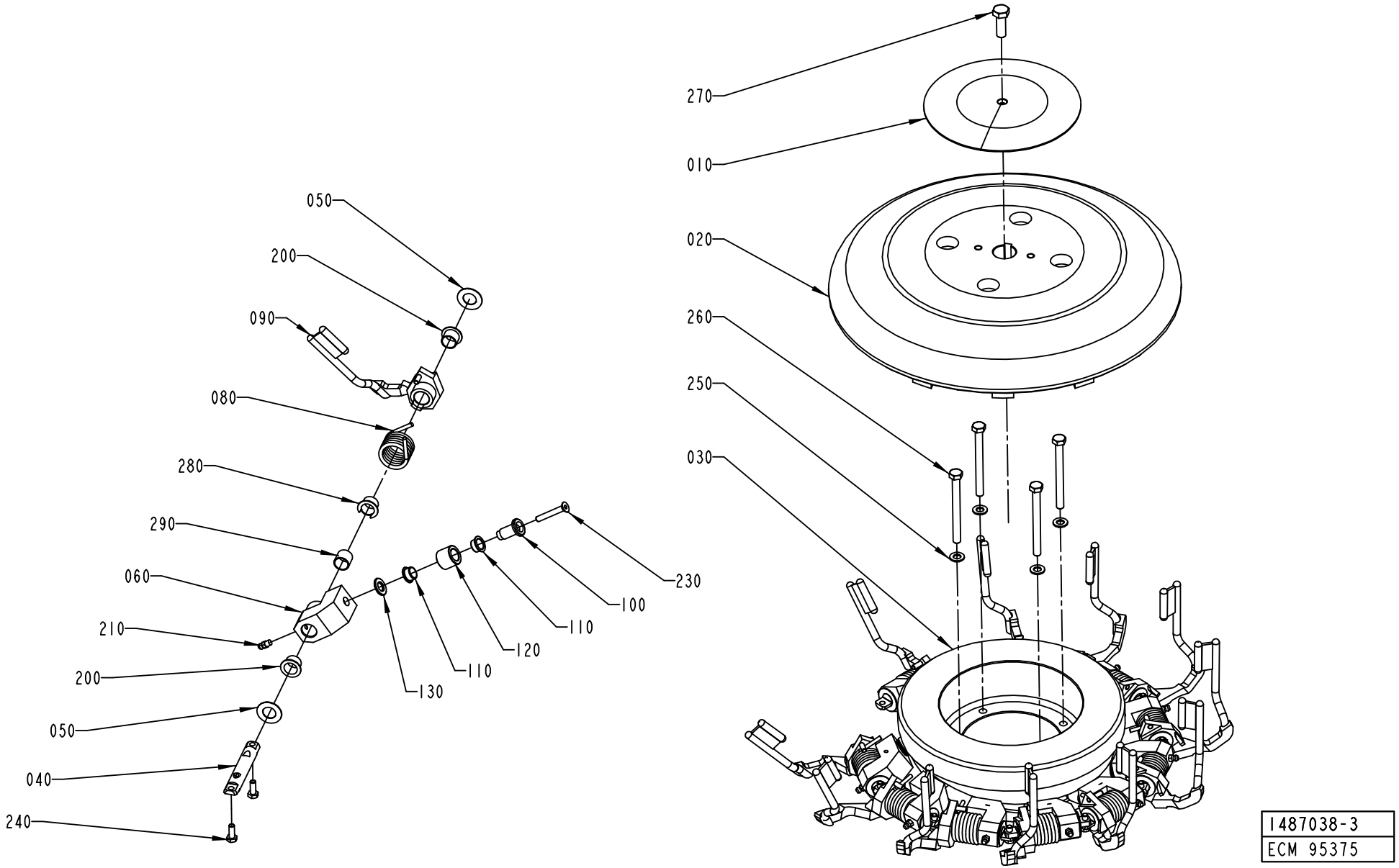
270
010
020
260
250
030
050
200
090
080
280
290
060
210
200
050
040
240
230
100
110
120
110
130
1487038-3
ECM 95375

Pos	Part No	UN	Qty	Description	Page No
TPA 1000SQ (Cont'd) (See drawing on page: 3-160)					
060	2556525-0000		8	LEVER	
080	1549615-0000		8	SPRING	
090	2543231-0000		8	CARRIER	
100	1260851-0000		8	AXLE PIN	
110	1144662-0000		16	BUSHING	
120	1260853-0000		8	RING	
130	1285254-0000		8	WASHER	
200	90240-0263		16	FLANGE BUSHING, 15X17X12 MM	
210	344502-0021		8	GREASE NIPPLE STRAIGHT M6	
230	312155-0378		8	SCREW DIN 7991 MF6S M6X40 A480	
240	312105-0368		16	SCREW M6S ISO 4017 M6X16 A480	
280	2545245-0000		8	BUSHING	
290	90240-0258		8	BUSHING, 15X17X15 MM	
Common Parts					
010	1478558-0000		1	WASHER	
250	315105-0165		4	WASHER BRB8,4X16RFR	
260	312105-0469		4	SCREW M6S ISO 4014 M8X90 A480	
270	312105-0495		1	SCREW M6S ISO 4017 M10X30 A480	

Pos	Part No	UN	Qty	Description	Page No

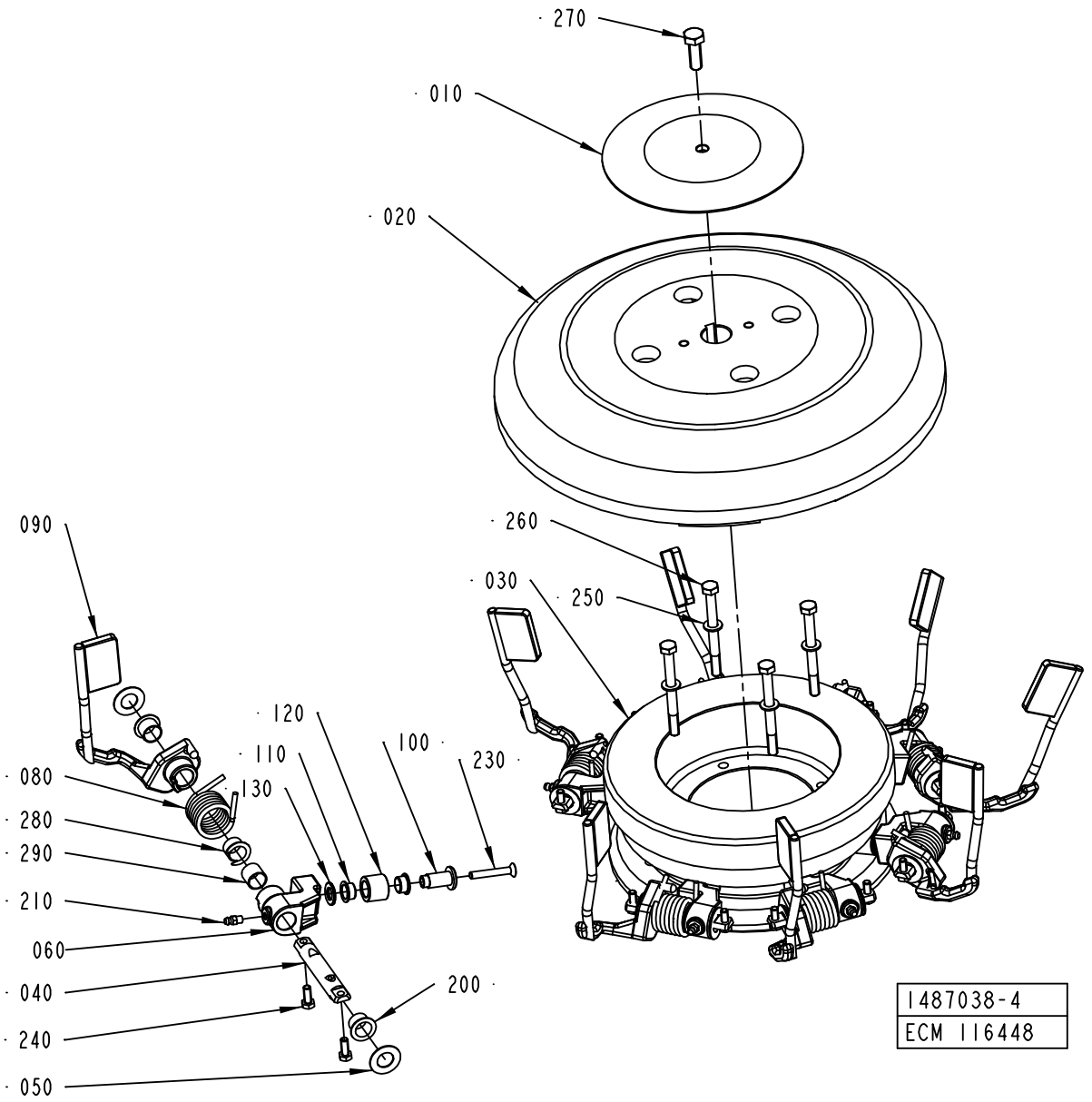
270
010
020
090
260
030
250
120
110
100
230
080
130
280
290
210
060
040
200
240
050
1487038-4
ECM 116448

ECM: 190919 - 20041104
Group number: 1487038-0200
Assembly Drawing: 1487038-4_1_AA

This list covers pages from 3-154 to 3-161

Pos	Part No	UN	Qty	Description	Page No	Pos	Part No	UN	Qty	Description	Page No

SEE PREVIOUS LISTS PAGES: 3-155, 3-157, 3-159.

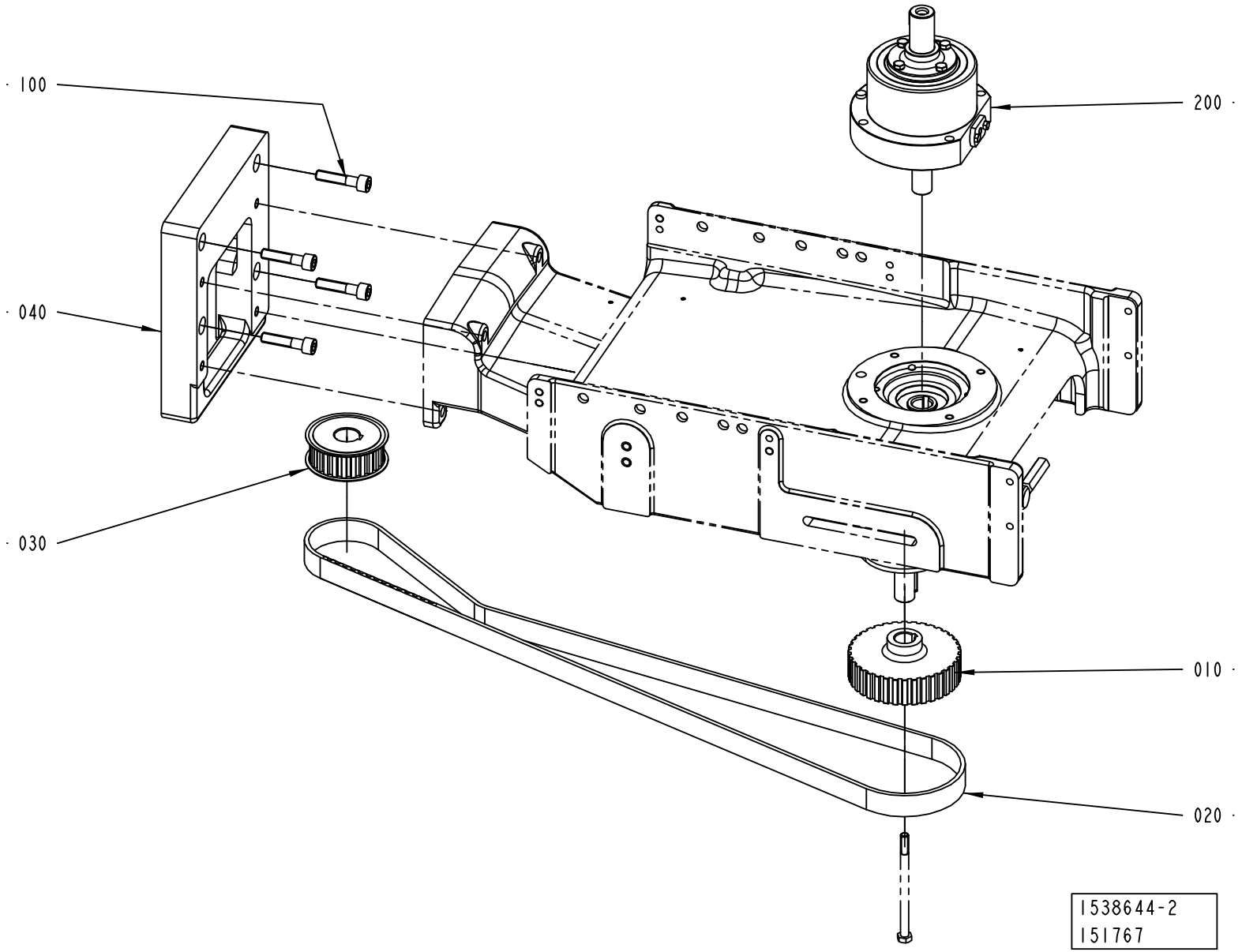
100
200
040
030
010
020
1538644-2
151767

ECM: 193082 - 20041203
Group number: 1538644-0100
Assembly Drawing: 1538644-2_1_AA

Pos	Part No	UN	Qty	Description	Page No
TBA 0250S, TBA 0200S, TBA 0200M, TPA 0330SQ					
010	1499064-0000		1	PULLEY	
020	1499059-0000		1	TIMING BELT	
TBA 0500S, TBA 0500B, TBA 0330S, TBA 1000S, TBA 1000SQ, TBA 1000B, TBA 0200B, TBA 0250B, TPA 0500SQ					
010	1498620-0000		1	PULLEY	
020	1498529-0000		1	TIMING BELT	
TBA 1500S, TPA 1000SQ					
010	1498620-0000		1	PULLEY	
020	1498528-0000		1	TIMING BELT	
040	1349160-0000		1	SPACER	
TBA 1890S, TBA 2000S					
010	2588329-0000		1	PULLEY	
020	2616227-0000		1	TIMING BELT	
030	2588328-0000		1	PULLEY	
040	1349160-0000		1	SPACER	
100	312115-0500		4	SCREW ISO4762 M10X45 A4	
Common Parts					
200	2697138-0100		1	CLUTCH	**3-165**

Pos	Part No	UN	Qty	Description	Page No

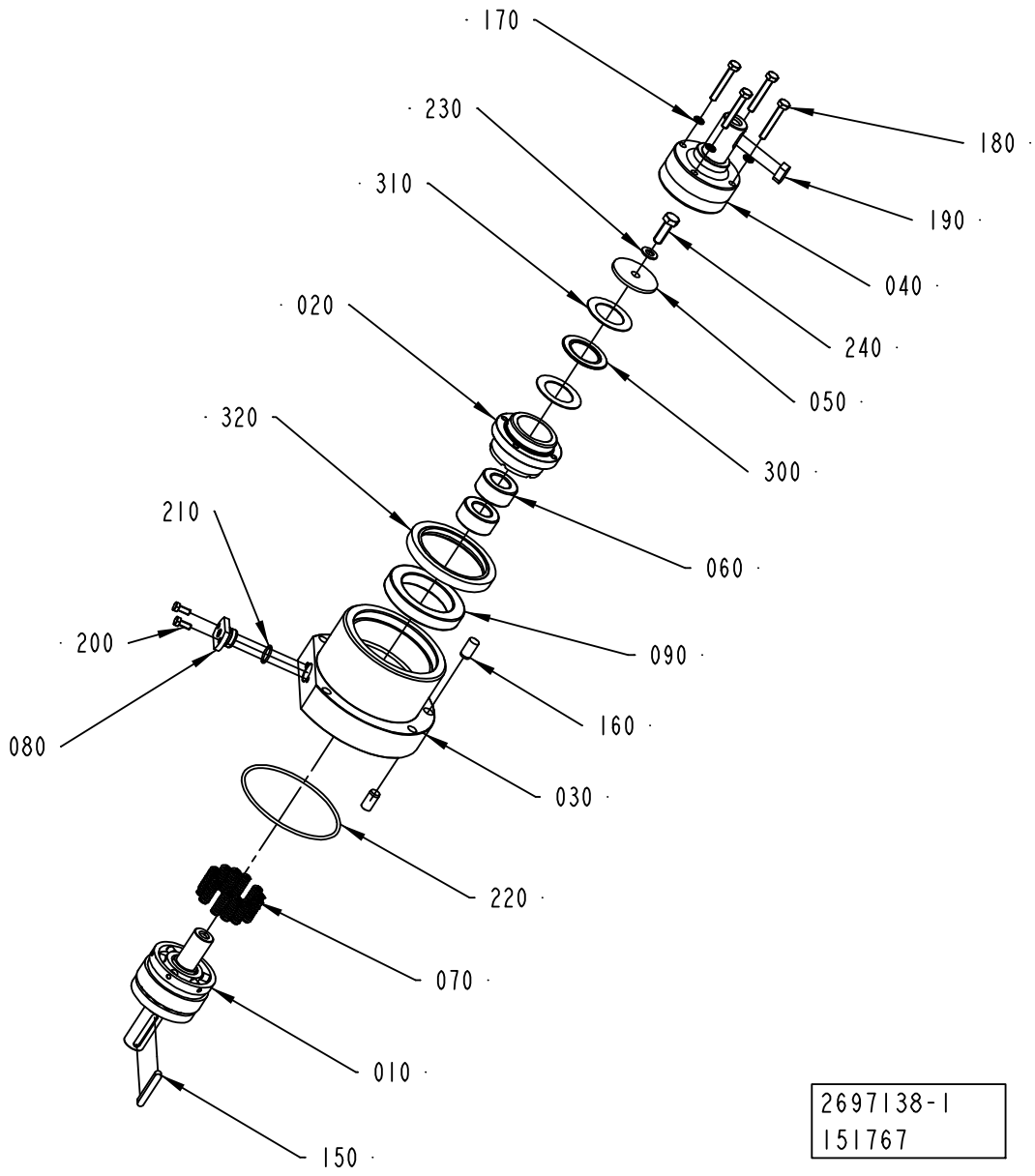
170
230
310
020
320
210
200
080
180
190
040
240
050
300
060
090
160
030
220
070
010
150
2697138-1
151767

ECM: 193084 - 20041203
Group number: 2697138-0100
Assembly Drawing: 2697138-1_1_AA

Pos	Part No	UN	Qty	Description	Page No
START FM TBA 1890S, START FM TBA 2000S					
010	1282343-0000		1	BLOCK	
020	1350564-0000		1	CLAMP HUB	
030	1478905-0000		1	FLANGE	
040	1478753-0000		1	SHAFT	
050	1260832-0000		1	WASHER	
060	1484448-0000		2	BEARING ROLLER	
070	1282345-0000		12	SPRING	
080	1282335-0000		1	FLANGE	
090	1484447-0000		1	BALL BEARING	
150	315705-0239		1	PARALLEL KEY W. ROUND ENDS 6X6X40 MM	
160	311103-0454		2	PARALLEL PIN ISO 2338 10M6X20 A1	
170	315211-0103		4	BONDED SEAL SS/NBR90 M6	
180	312109-0378		4	SCREW M6S ISO4017 M6X40 A480	
190	315705-0263		1	PARALLEL KEY W. ROUND ENDS 8X7X20 MM	
200	312105-0327		2	SCREW M6S ISO 4017 M5X12 A480	
210	315202-0113		1	O-RING 15,1X1,6 MM	
220	315202-0311		1	O-RING 99,5X3 MM	
230	315105-0165		1	WASHER BRB8,4X16RFR	
240	312105-0453		1	SCREW M6S ISO 4017 M8X25 A480	
300	90083-0052		1	NEEDLE ROLLER THRUST BEARING, 30X47X2 MM	
310	90083-0053		2	SHAFT LOCATING WASHER, 30X47X1MM	
320	90091-0416		1	RADIAL SEAL 70X90X10 MM DUST LIP	
TBA 1890S, TBA 2000S					
010	2644178-0000		1	BLOCK	
020	2644177-0000		1	CLAMP HUB	
030	1478905-0000		1	FLANGE	
040	1478753-0000		1	SHAFT	
050	1260832-0000		1	WASHER	
060	1484448-0000		2	BEARING ROLLER	
070	1282345-0000		12	SPRING	
080	1282335-0000		1	FLANGE	
090	1484447-0000		1	BALL BEARING	
150	315705-0239		1	PARALLEL KEY W. ROUND ENDS 6X6X40 MM	
160	311103-0454		2	PARALLEL PIN ISO 2338 10M6X20 A1	
170	315211-0103		4	BONDED SEAL SS/NBR90 M6	
180	312109-0378		4	SCREW M6S ISO4017 M6X40 A480	
190	315705-0263		1	PARALLEL KEY W. ROUND ENDS 8X7X20 MM	
200	312105-0327		2	SCREW M6S ISO 4017 M5X12 A480	
210	315202-0113		1	O-RING 15,1X1,6 MM	
220	315202-0311		1	O-RING 99,5X3 MM	
230	315105-0165		1	WASHER BRB8,4X16RFR	

Pos	Part No	UN	Qty	Description	Page No
240	312105-0453		1	SCREW M6S ISO 4017 M8X25 A480	
300	90083-0052		1	NEEDLE ROLLER THRUST BEARING, 30X47X2 MM	
310	90083-0053		2	SHAFT LOCATING WASHER, 30X47X1MM	
320	90091-0416		1	RADIAL SEAL 70X90X10 MM DUST LIP	

Machine Type | Group Description | Used-In | Group Number | Page No

This page is intentionally left blank.

ECM: 182044 - 20041013
Group number: 2634511-0100
Assembly Drawing:

Pos	Part No	UN	Qty	Description	Page No
DIFFFIN DIFFWHEEL					
010	1517322-0100		1	FIN TYPE	**3-169**
020	1517298-0200		1	INFEED CONVEYOR	**3-181**
030	1524370-0100		1	WHEEL DIFFERENCE	**3-193**
040	2541714-0100		1	DROP CHUTE CRADLE	**3-195**
DIFFFIN SAMEWHEEL					
010	1517322-0100		1	FIN TYPE	**3-169**
045	2701063-0100		1	DROP CHUTE VARIANT	**3-197**
080	2530418-0000		1	SPRING	
SAMEFIN DIFFWHEEL					
020	1517298-0200		1	INFEED CONVEYOR	**3-181**
030	1524370-0100		1	WHEEL DIFFERENCE	**3-193**
040	2541714-0100		1	DROP CHUTE CRADLE	**3-195**
050	2702374-0100		1	CONVEYOR	**3-199**
SAMEFIN SAMEWHEEL					
045	2701063-0100		1	DROP CHUTE VARIANT	**3-197**
050	2702374-0100		1	CONVEYOR	**3-199**
080	2530418-0000		1	SPRING	
Common Parts					
060	2678844-0100		1	PT FLEX HOLES	**3-201**

Pos	Part No	UN	Qty	Description	Page No

Machine Type	Group Description	Used-In	Group Number	Page No

This page is intentionally left blank.

ECM: 182039 - 20041013
Group number: 1517322-0100
Assembly Drawing:

Pos	Part No	UN	Qty	Description	Page No
TBA 0500S, TBA 0500B, TBA 0330S, TBA 1000S, TBA 1000B, TBA 0200B, TBA 0250S, TBA 0200S, TBA 0200M, TBA 0250B, TBA 1500S					
010	1490112-0100		1	OUTFEED CONVEYOR	**3-171, 3-173**
TBA 1000SQ, TPA 0330SQ, TPA 1000SQ, TPA 0500SQ					
010	1490112-0100		1	OUTFEED CONVEYOR	**3-171, 3-173**
030	1512339-0100		1	PHOTOCELL OUTFEED	**3-175, 3-177**
TBA 1890S, TBA 2000S					
010	2598508-0100		1	INFEED/OUTFEED CONVEYOR	**3-179**

Pos	Part No	UN	Qty	Description	Page No

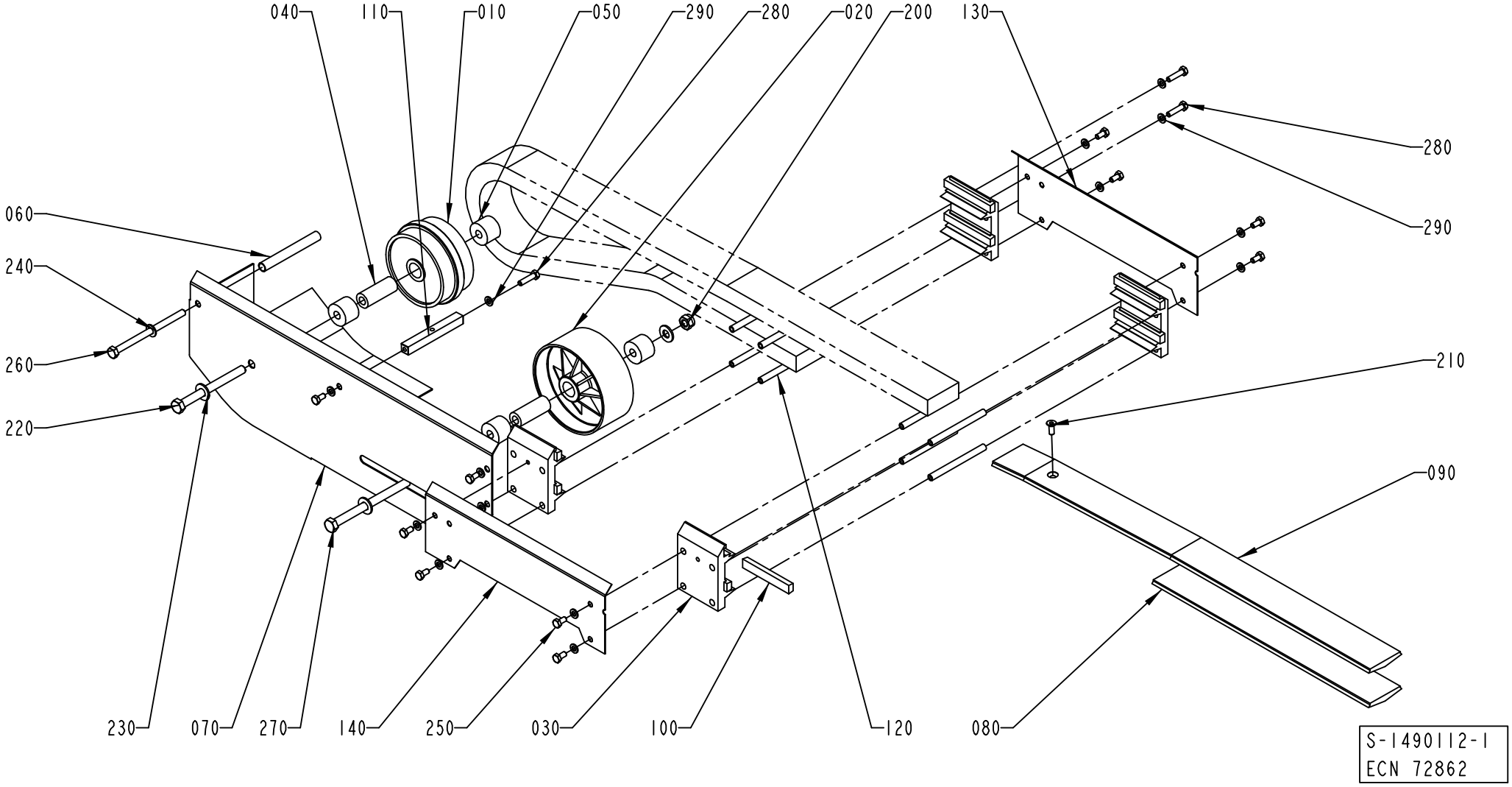
040
110
010
050
290
280
020
200
130
280
290
060
240
260
220
210
090
230
070
270
140
250
030
100
120
080
S-1490112-1
ECN 72862

Pos	Part No	UN	Qty	Description	Page No
TBA 0500S, TBA 0500B, TBA 0330S, TBA 1000S, TBA 1000B, TBA 0200B, TBA 0250S, TBA 0200S, TBA 0200M, TBA 0250B, TBA 1500S (See drawing on page: 3-172)					
010	245039-0000		1	GUIDE WHEEL	
070	1285265-0000		1	PLATE	
090	1279573-0000		1	SLIDE RAIL U	
TBA 1000SQ, TPA 0330SQ (See drawing on page: 3-170)					
010	2678417-0000		1	WHEEL	
070	1296081-0000		1	PLATE	
090	1279573-0000		1	SLIDE RAIL U	
TPA 1000SQ, TPA 0500SQ (See drawing on page: 3-170)					
010	2678417-0000		1	WHEEL	
070	1548354-0000		1	COVER	
090	1548353-0000		1	SLIDE RAIL	
Common Parts					
020	476975-0000		1	WHEEL	
030	457696-0001		4	JOINT PIECE	
040	229207-0000		2	BEARING SLEEVE	
050	1144943-0000		4	SPACER	
060	1285306-0000		1	SPACER	
080	1279587-0000		1	SLIDE RAIL U	
100	466074-0002		8	SLIDER	
110	1285266-0000		1	SPACER	
120	476220-0000		8	SPACER	
130	1279585-0000		1	SUPPORT	
140	1279586-0000		1	SUPPORT	
150	90165-0056		3	PIPE CLIP FOR TUBE D=4 MM	
200	312812-0320		1	HEXAGON NUT, NY-LOCK M10 A480	
210	312155-0368		1	SCREW DIN 7991 MF6S M6X16 A480	
220	312105-0513		1	SCREW M6S ISO 4014 M10X110 A480	
230	315105-0173		3	WASHER BRB10,5X22RFR	
240	315105-0165		1	WASHER BRB8,4X16RFR	
250	312105-0366		11	SCREW M6S ISO 4017 M6X12 A480	
260	312105-0475		1	SCREW M6S ISO 4014 M8X120 A480	
270	312105-0517		1	SCREW M6S ISO 4014 M10X130 A480	
280	312105-0372		3	SCREW M6S ISO 4017 M6X25 A480	
285	312105-0323		3	SCREW M6S ISO 4017 M5X8 A480	
290	315105-0153		14	WASHER BRB6,4X12RFR	
300	315105-0146		3	WASHER BRB5,3X10RFR	
310	312605-0314		3	HEXAGON NUT, M6M M5 A280	

Pos	Part No	UN	Qty	Description	Page No

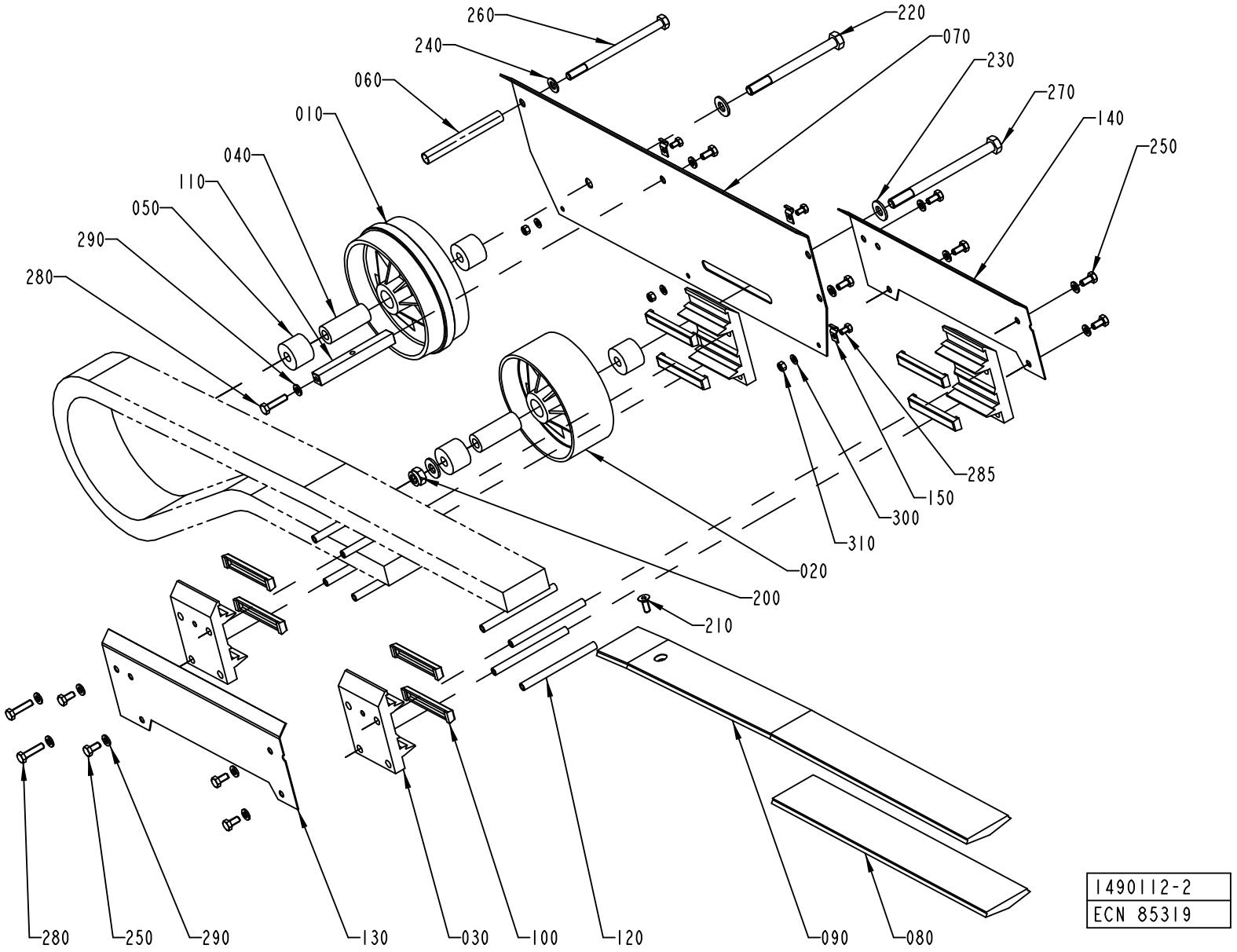
260
240
060
010
040
110
050
290
280
220
070
230
270
140
250
285
150
300
310
020
200
210
280
250
290
130
030
100
120
090
080
1490112-2
ECN 85319

ECM: 180383 - 20041013
Group number: 1490112-0100
Assembly Drawing: 1490112-2_1_AB

This list covers pages from 3-170 to 3-173

Pos	Part No	UN	Qty	Description	Page No
TBA 0500S, TBA 0500B, TBA 0330S, TBA 1000S, TBA 1000B, TBA 0200B, TBA 0250S, TBA 0200S, TBA 0200M, TBA 0250B, TBA 1500S (See drawing on page: 3-172)					
010	245039-0000		1	GUIDE WHEEL	
070	1285265-0000		1	PLATE	
090	1279573-0000		1	SLIDE RAIL U	
TBA 1000SQ, TPA 0330SQ (See drawing on page: 3-170)					
010	2678417-0000		1	WHEEL	
070	1296081-0000		1	PLATE	
090	1279573-0000		1	SLIDE RAIL U	
TPA 1000SQ, TPA 0500SQ (See drawing on page: 3-170)					
010	2678417-0000		1	WHEEL	
070	1548354-0000		1	COVER	
090	1548353-0000		1	SLIDE RAIL	
Common Parts					
020	476975-0000		1	WHEEL	
030	457696-0001		4	JOINT PIECE	
040	229207-0000		2	BEARING SLEEVE	
050	1144943-0000		4	SPACER	
060	1285306-0000		1	SPACER	
080	1279587-0000		1	SLIDE RAIL U	
100	466074-0002		8	SLIDER	
110	1285266-0000		1	SPACER	
120	476220-0000		8	SPACER	
130	1279585-0000		1	SUPPORT	
140	1279586-0000		1	SUPPORT	
150	90165-0056		3	PIPE CLIP FOR TUBE D=4 MM	
200	312812-0320		1	HEXAGON NUT, NY-LOCK M10 A480	
210	312155-0368		1	SCREW DIN 7991 MF6S M6X16 A480	
220	312105-0513		1	SCREW M6S ISO 4014 M10X110 A480	
230	315105-0173		3	WASHER BRB10,5X22RFR	
240	315105-0165		1	WASHER BRB8,4X16RFR	
250	312105-0366		11	SCREW M6S ISO 4017 M6X12 A480	
260	312105-0475		1	SCREW M6S ISO 4014 M8X120 A480	
270	312105-0517		1	SCREW M6S ISO 4014 M10X130 A480	
280	312105-0372		3	SCREW M6S ISO 4017 M6X25 A480	
285	312105-0323		3	SCREW M6S ISO 4017 M5X8 A480	
290	315105-0153		14	WASHER BRB6,4X12RFR	
300	315105-0146		3	WASHER BRB5,3X10RFR	
310	312605-0314		3	HEXAGON NUT, M6M M5 A280	

Pos	Part No	UN	Qty	Description	Page No

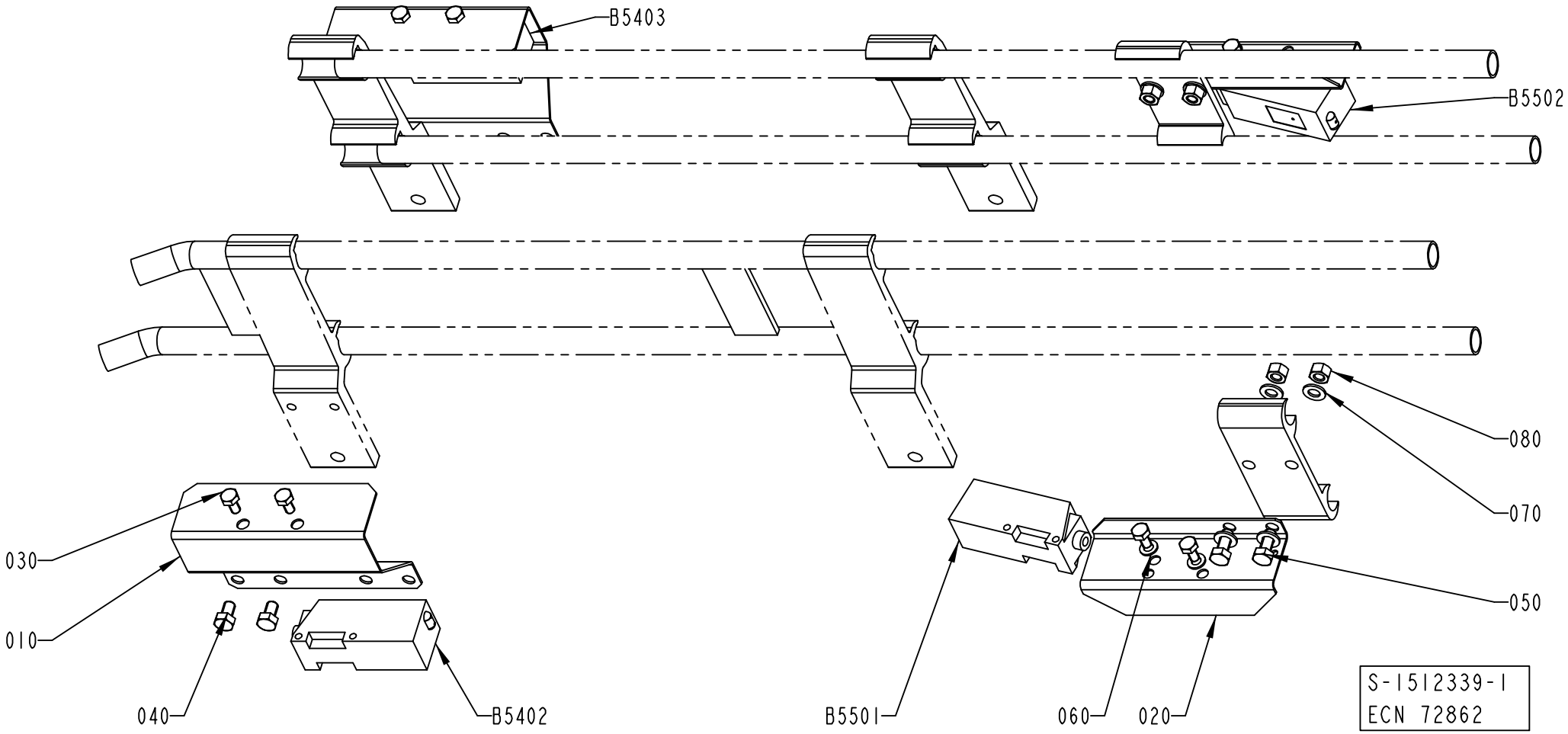
B5403
B5502
080
070
050
030
010
040
B5402
B5501
060
020
S-1512339-1
ECN 72862

Pos	Part No	UN	Qty	Description	Page No
A3/FLEX TBA 1890S, A3/FLEX TBA 2000S (See drawing on page: 3-176)					
025	1020637-0000		4	HOLDER	
A3/FLEX TBA 0500B, A3/FLEX TBA 1000B, A3/FLEX TBA 1000S, A3/FLEX TBA 1000SQ, A3/FLEX TPA 1000SQ, A3/FLEX TBA 0200S, A3/FLEX TBA 1500S, A3/FLEX TBA 0200B, A3/FLEX TBA 0250B, A3/FLEX TBA 0330S, A3/FLEX TPA 0330SQ, A3/FLEX TPA 0500SQ, A3/FLEX TBA 0200M, A3/FLEX TBA 0250S, A3/FLEX TBA 0500S (See drawing on page: 3-174)					
025	1020637-0000		2	HOLDER	
Common Parts					
010	1285010-0000		2	HOLDER	
020	1086889-0000		2	COVER	
030	312105-0287		8	SCREW M6S ISO4017 M4X8 A470	
040	312105-0323		4	SCREW M6S ISO 4017 M5X8 A480	
050	312105-0327		4	SCREW M6S ISO 4017 M5X12 A480	
060	315105-0136		4	WASHER BRB4,3XRFR	
070	315105-0146		8	WASHER BRB5,3X10RFR	
080	312605-0314		4	HEXAGON NUT, M6M M5 A280	
B5402	90232-0104		1	PH.CELL E3S-CT61-D-5M	
B5403	90232-0103		1	PH.CELL E3S-CT61-L-5M	
B5501	90232-0104		1	PH.CELL E3S-CT61-D-5M	
B5502	90232-0103		1	PH.CELL E3S-CT61-L-5M	

Pos	Part No	UN	Qty	Description	Page No

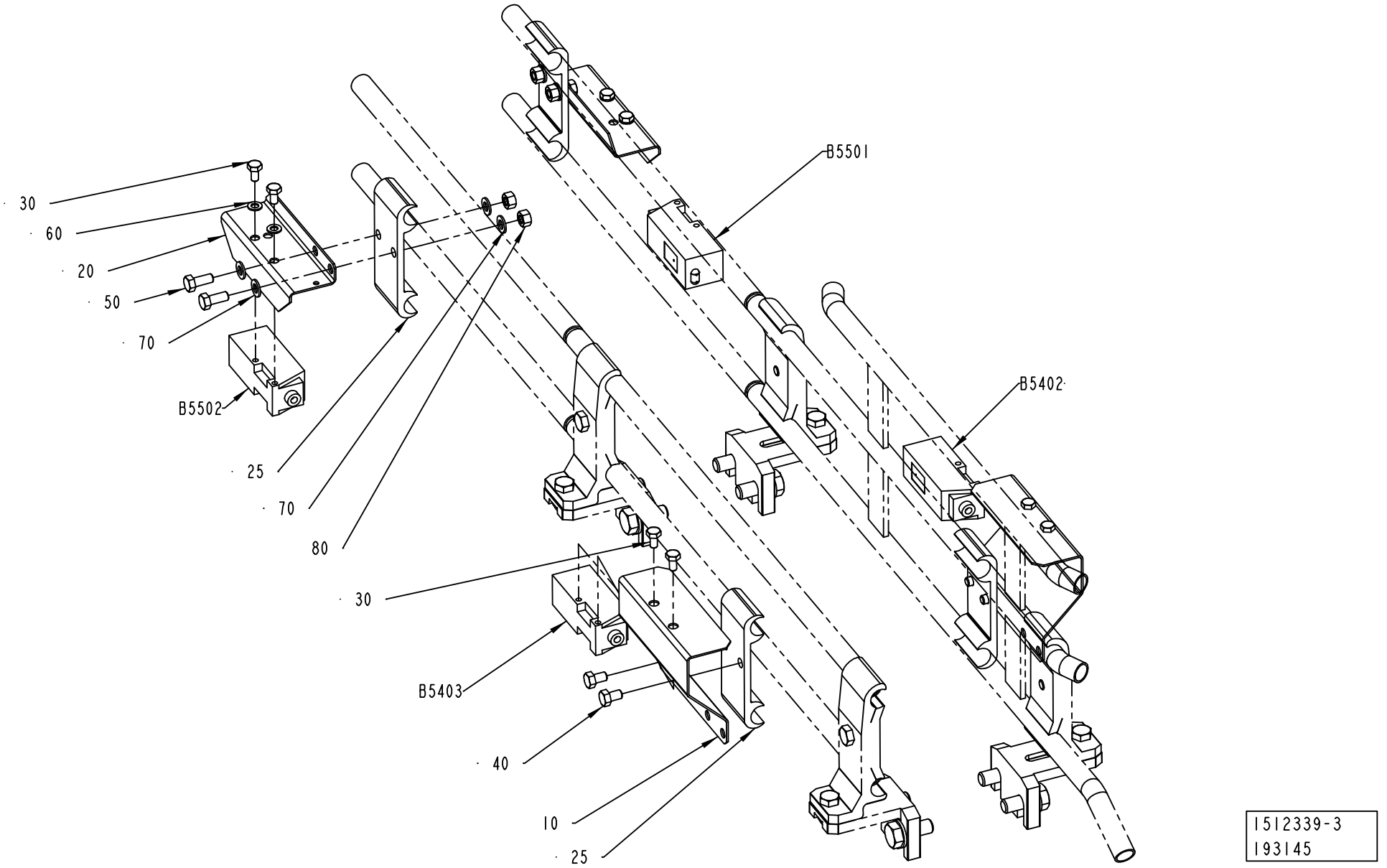
30
60
20
50
70
B5502
25
70
80
30
B5403
40
10
25
B5501
B5402
1512339-3
193145

ECM: 195183 - 20041203
Group number: 1512339-0100
Assembly Drawing: 1512339-3_1_AA

This list covers pages from 3-174 to 3-177

Pos	Part No	UN	Qty	Description	Page No
A3/FLEX TBA 1890S, A3/FLEX TBA 2000S (See drawing on page: 3-176)					
025	1020637-0000		4	HOLDER	
A3/FLEX TBA 0500B, A3/FLEX TBA 1000B, A3/FLEX TBA 1000S, A3/FLEX TBA 1000SQ, A3/FLEX TPA 1000SQ, A3/FLEX TBA 0200S, A3/FLEX TBA 1500S, A3/FLEX TBA 0200B, A3/FLEX TBA 0250B, A3/FLEX TBA 0330S, A3/FLEX TPA 0330SQ, A3/FLEX TPA 0500SQ, A3/FLEX TBA 0200M, A3/FLEX TBA 0250S, A3/FLEX TBA 0500S (See drawing on page: 3-174)					
025	1020637-0000		2	HOLDER	
Common Parts					
010	1285010-0000		2	HOLDER	
020	1086889-0000		2	COVER	
030	312105-0287		8	SCREW M6S ISO4017 M4X8 A470	
040	312105-0323		4	SCREW M6S ISO 4017 M5X8 A480	
050	312105-0327		4	SCREW M6S ISO 4017 M5X12 A480	
060	315105-0136		4	WASHER BRB4,3XRFR	
070	315105-0146		8	WASHER BRB5,3X10RFR	
080	312605-0314		4	HEXAGON NUT, M6M M5 A280	
B5402	90232-0104		1	PH.CELL E3S-CT61-D-5M	
B5403	90232-0103		1	PH.CELL E3S-CT61-L-5M	
B5501	90232-0104		1	PH.CELL E3S-CT61-D-5M	
B5502	90232-0103		1	PH.CELL E3S-CT61-L-5M	

Pos	Part No	UN	Qty	Description	Page No

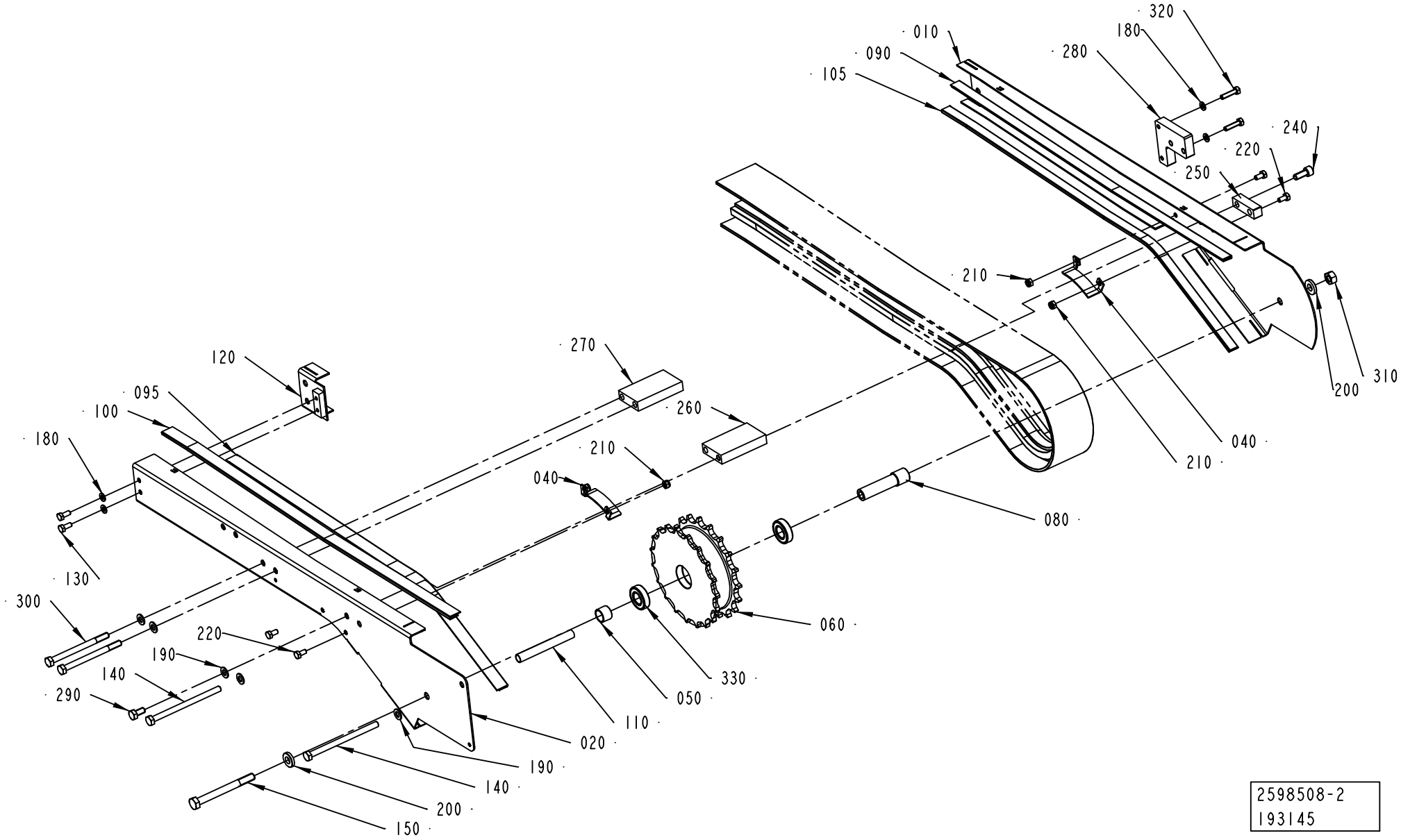
320
180
010
090
280
105
240
220
250
210
310
200
040
210
270
120
095
100
260
180
210
040
080
130
300
060
220
190
330
140
050
290
110
020
190
140
200
150
2598508-2
193145

ECM: 195187 - 20041203
Group number: 2598508-0100
Assembly Drawing: 2598508-2_1_AB

Pos	Part No	UN	Qty	Description	Page No
-					
010	2699107-0000		1	SIDE PLATE	
020	2699106-0000		1	SIDE PLATE	
040	2652311-0000		1	PLATE	
050	2699109-0000		1	SPACER	
060	2656672-0000		1	SPROCKET	
080	2699108-0000		1	SHAFT	
090	1550595-6600		1	SLIDING STRIP	
095	1550595-6700		1	SLIDING STRIP	
100	1550595-7000		1	SLIDING STRIP	
105	1550595-7110		1	SLIDING STRIP	
110	2598513-0000		2	SPACER	
120	2598514-0000		1	COVER	
130	312105-0367		2	SCREW M6S ISO 4017 M6X14 A480	
140	312105-0475		2	SCREW M6S ISO 4014 M8X120 A480	
150	312105-0511		1	SCREW M6S ISO 4014 M10X100 A480	
180	315105-0153		4	WASHER BRB6,4X12RFR	
190	315105-0165		5	WASHER BRB8,4X16RFR	
200	315111-0173		2	WASHER PLAIN, TBRB 10,5/22 H=4	
210	312812-0316		4	HEXAGON NUT, NY-LOCK M6 A480	
220	312105-0366		4	SCREW M6S ISO 4017 M6X12 A480	
240	312115-0451		1	SCREW ISO4762 M8X20 A4	
250	2619210-0000		1	SPACER	
260	2619211-0000		1	SPACER	
270	2619212-0000		1	SPACER	
280	2619213-0000		1	SPACER	
290	312105-0449		1	SCREW M6S ISO 4017 M8X16 A480	
300	312105-0471		2	SCREW M6S ISO 4014 M8X100 A480	
310	312605-0320		1	HEXAGON NUT, M6M M10 A280	
320	312105-0372		2	SCREW M6S ISO 4017 M6X25 A480	
330	1550348-0002		2	BEARING	

Pos	Part No	UN	Qty	Description	Page No

This page is intentionally left blank.

ECM: 180384 - 20041013
Group number: 1517298-0200
Assembly Drawing:

Pos	Part No	UN	Qty	Description	Page No
TBA 0500S, TBA 0500B, TBA 0300S, TBA 1000S, TBA 1000SQ, TBA 1000B, TBA 0200B, TBA 0250S, TBA 0200S, TBA 0200M, TBA 0250B, TPA 0330SQ, TPA 0500SQ					
010	1517299-0200		1	INFEED CONVEYOR LONG	**3-183**
TBA 1500S, TPA 1000SQ					
020	1517300-0300		1	INFEED CONVEYOR SHORT	**3-187**
TBA 1890S, TBA 2000S					
030	2678710-0100		1	INFEED CONVEYOR SHORT	**3-189**

Pos	Part No	UN	Qty	Description	Page No

INFEED CONVEYOR LONG

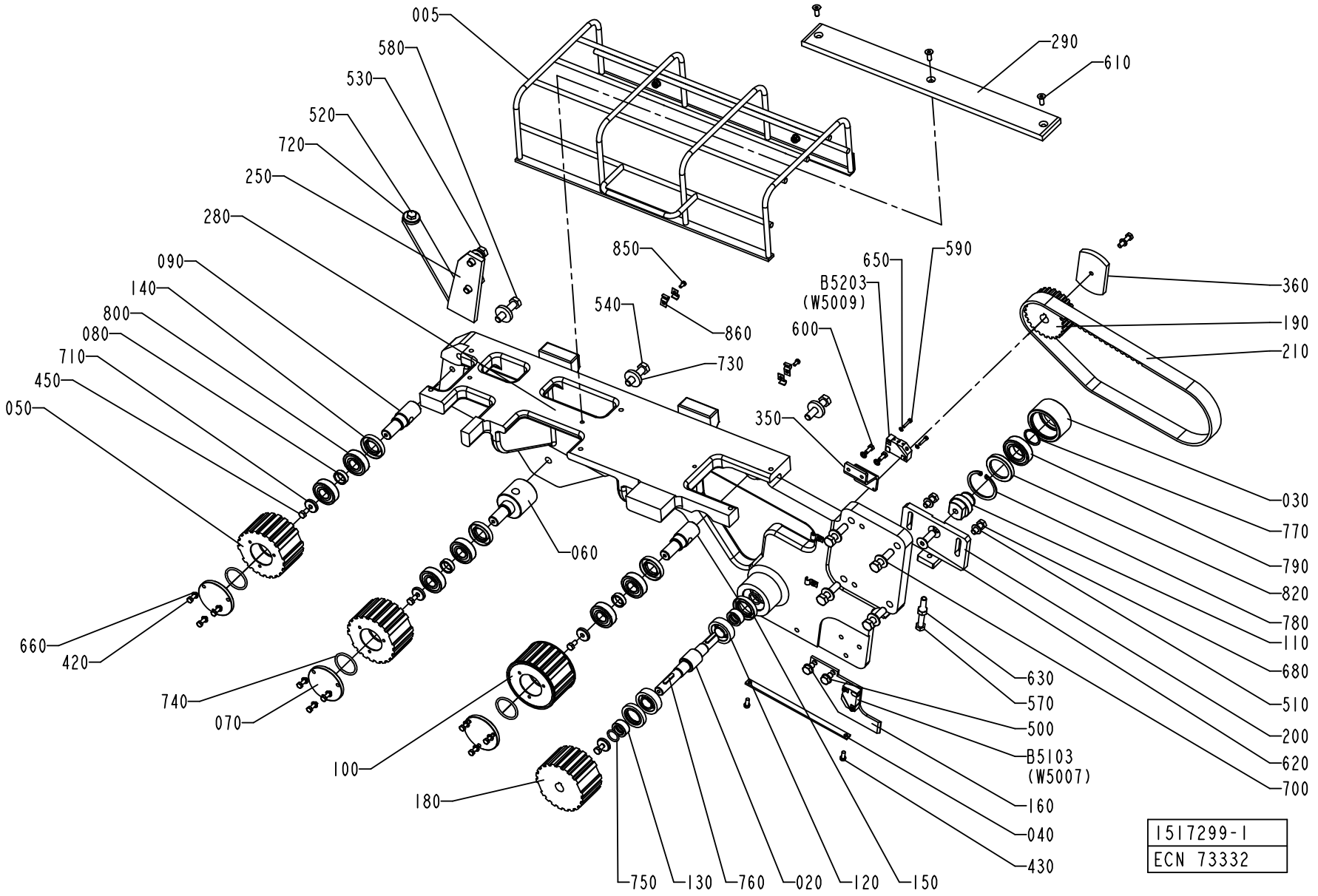

ECM: 189518 - 20041104
Group number: 1517299-0200
Assembly Drawing: 1517299-1_1_AA

Pos	Part No	UN	Qty	Description	Page No
A3/FLEX					
250	2552445-0000		1	SUPPORT	
Common Parts					
005	1144645-0200		1	PROTECTIVE COVER	**3-185**
020	1144470-0000		1	SHAFT	
030	1144581-0000		1	ROLLER	
040	1144593-0000		1	PLATE	
050	1348921-0000		2	TOOTHED PULLEY	
060	1144595-0000		1	ECCENTRIC SHAFT	
070	1144596-0000		3	PLUG	
080	1144597-0000		3	SPACER	
090	1484620-0000		2	SHAFT	
100	1348922-0000		1	TOOTHED PULLEY	
110	1144619-0000		1	SHAFT	
120	90214-0219		2	CYL.ROLLER BEARING, 17X40X12 MM	
130	1144625-0000		2	SPACER	
140	90091-0440		3	RADIAL SEAL 22X40X7 MM DUST LIP	
150	1498068-0000		2	SEAL RING	
160	1144760-0000		1	PLATE	
180	1144784-0000		1	TOOTHED PULLEY	
190	1144788-0000		1	TOOTHED PULLEY	
200	1144794-0000		1	SUPPORT	
210	1144841-0000		1	TIMING BELT	
280	1347699-0000		1	PLATE	
290	1260941-0000		1	SLIDE	
350	1279688-0000		1	SUPPORT	
360	1347410-0000		1	ACTIVATOR	
420	312105-0329		9	SCREW M6S ISO 4017 M5X16 A480	
430	312105-0327		2	SCREW M6S ISO 4017 M5X12 A480	
450	312105-0366		4	SCREW M6S ISO 4017 M6X12 A480	
500	312105-0447		2	SCREW M6S ISO 4017 M8X12 A480	
510	312105-0451		2	SCREW M6S ISO 4017 M8X20 A480	
520	312105-0453		1	SCREW M6S ISO 4017 M8X25 A480	
530	312105-0495		2	SCREW M6S ISO 4017 M10X30 A480	
540	312109-0499		5	SCREW M6S ISO 4017 M10X40 A480	
570	312109-0463		1	SCREW M6S ISO 4017 M8X60 A480	
580	312109-0500		2	SCREW M6S ISO 4017 M10X45 A480	
590	312115-0228		4	SCREW ISO4762 M3X16 A4	
600	312125-0327		2	SCREW ISO 1207 M5X12 A4	
610	312151-0368		3	SCREW EN 10642 MF6S M6X16 10.9 EL.PL	
620	312155-0495		1	SCREW DIN 7991 MF6S M10X30 A480	
630	312605-0318		1	HEXAGON NUT, M6M M8 A280	
650	315105-0124		4	WASHER BRB3,2X6RFR	
660	315105-0146		11	WASHER BRB5,3X10RFR	
680	315105-0165		4	WASHER BRB8,4X16RFR	
700	315105-0173		6	WASHER BRB10,5X22RFR	
710	315125-0153		4	WASHER TBRSB 6,4X22X4 A4	
720	315125-0165		1	WASHER TBRSB 8,4X26X5 A4	
730	315125-0173		3	WASHER TBRSB 10,5X28X6 A4	
740	315202-0221		3	O-RING 34,2X3 MM	
750	315202-0267		2	O-RING 16,3X2,4 MM	
760	315705-0202		2	PARALLEL KEY W ROUND ENDS 5X5X25MM	
770	315751-0119		1	RETAINING RING FOR SHAFT DIN 471 25 A2	
780	90141-0019		1	RETAINING RING FOR BORE DIN 472 50 A2	
790	321308-0205		1	BALL BEARING, 25X47X12MM	
800	321313-0103		6	BALL BEARING, 17X40X12MM	
820	90091-0297		1	RADIAL SEAL 35X47X7 MM DUST LIP	
850	312125-0287		4	SCREW ISO 1207 M4X8 A4	
860	90165-0057		6	PIPE CLIP FOR TUBE D=6 MM	
B5103	90044-0194		1	PROX.SW. IN5329/IN3002-BPKG	
B5203	90044-0194		1	PROX.SW. IN5329/IN3002-BPKG	

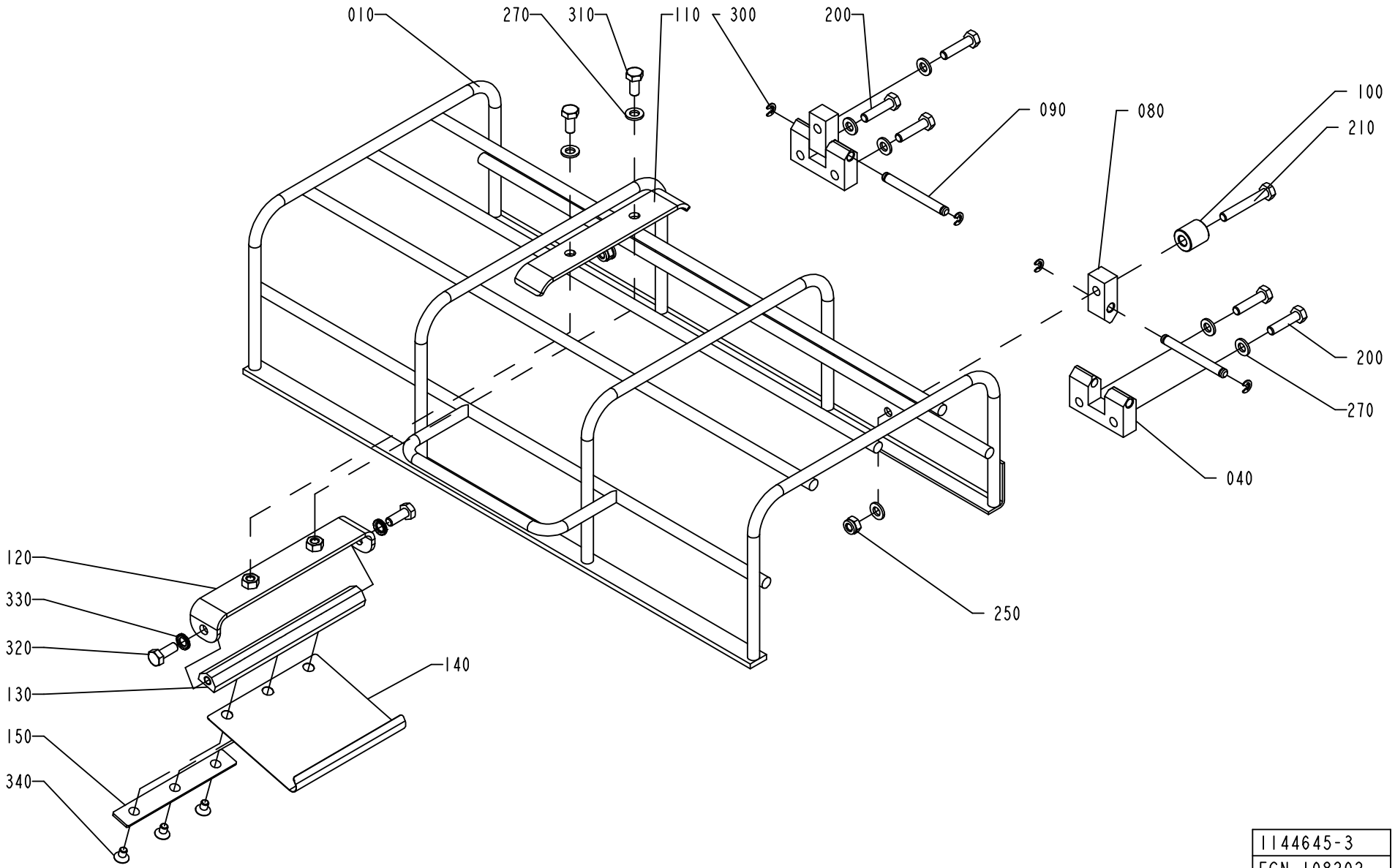

1144645-3
ECN 108202

ECM: 181276 - 20041104
Group number: 1144645-0200
Assembly Drawing: 1144645-3_1_AC

Pos	Part No	UN	Qty	Description	Page No
-					
010	1260894-0000		1	PROTECTION	
040	1144667-0000		2	HINGE	
080	1144668-0000		2	HINGE	
090	1144669-0000		2	PIN	
100	1360149-0000		1	SPACER	
110	1499476-0000		1	HOLDER	
120	2527792-0000		1	SUPPORT	
130	2527793-0000		1	SHAFT	
140	2530418-0000		1	SPRING	
150	2540612-0000		1	PLATE	
200	312105-0372		5	SCREW M6S ISO 4017 M6X25 A480	
210	312105-0378		1	SCREW M6S ISO 4014 M6X40 A480	
250	312812-0316		2	HEXAGON NUT, NY-LOCK M6 A480	
270	315105-0153		9	WASHER BRB6,4X12RFR	
300	315755-0106		4	RETAINING RING SHAFT DIN 6799 4 A2	
310	312105-0367		2	SCREW M6S ISO 4017 M6X14 A480	
320	312105-0368		2	SCREW M6S ISO 4017 M6X16 A480	
330	90062-0061		2	LOCK WASHER NORD-LOCK,6,5/10,8, T=2,2	
340	312155-0323		3	SCREW DIN 7991 MF6S M5X8 A480	

Pos	Part No	UN	Qty	Description	Page No

INFEED CONVEYOR SHORT

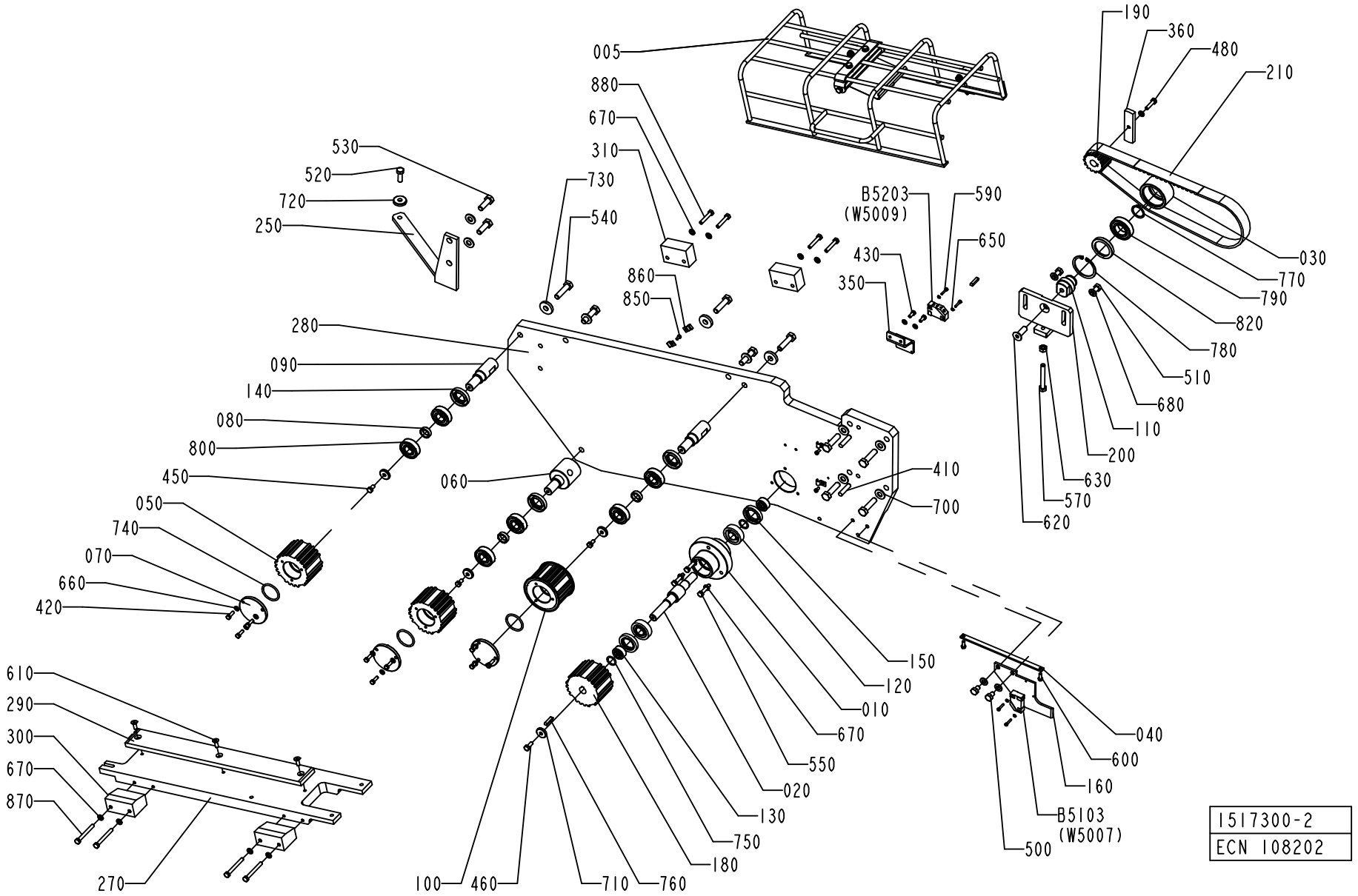

ECM: 193742 - 20041119
Group number: 1517300-0300
Assembly Drawing: 1517300-2_1_AA

Pos	Part No	UN	Qty	Description	Page No
A3/FLEX					
250	2572563-0000		1	SUPPORT	
Common Parts					
005	1144645-0200		1	PROTECTIVE COVER	**3-185**
010	1144468-0000		1	BEARING HOUSING	
020	1144470-0000		1	SHAFT	
030	1144581-0000		1	ROLLER	
040	1144593-0000		1	PLATE	
050	2547015-0000		2	TOOTHED PULLEY	
060	1144595-0000		1	ECCENTRIC SHAFT	
070	1144596-0000		3	PLUG	
080	1144597-0000		3	SPACER	
090	1144598-0000		2	SHAFT	
100	2547017-0000		1	TOOTHED PULLEY	
110	1144619-0000		1	SHAFT	
120	90214-0219		2	CYL.ROLLER BEARING, 17X40X12 MM	
130	1144625-0000		2	SPACER	
140	90091-0404		3	RADIAL SEAL 22X40X7 MM DUST LIP	
150	90091-0406		2	RADIAL SEAL 25X40X7 MM DUST LIP	
160	1144760-0000		1	PLATE	
180	927859-0000		1	TOOTHED PULLY	
190	1282681-0000		1	TOOTHED PULLEY	
200	1144794-0000		1	SUPPORT	
210	1144841-0000		1	TIMING BELT	
270	1348957-0000		1	BRACKET	
280	2547187-0000		1	PLATE	
290	1348963-0000		1	SLIDE	
300	1285956-0000		2	BLOCK	
310	1285955-0000		2	PLATE	
350	1279688-0000		1	SUPPORT	
360	1279689-0000		1	ACTIVATOR	
410	311103-0407		2	PARALLEL PIN ISO 2338 8M6X35 A1	
420	312105-0329		9	SCREW M6S ISO 4017 M5X16 A480	
430	312105-0327		2	SCREW M6S ISO 4017 M5X12 A480	
450	312105-0366		3	SCREW M6S ISO 4017 M6X12 A480	
460	312105-0368		1	SCREW M6S ISO 4017 M6X16 A480	
480	312105-0372		1	SCREW M6S ISO 4017 M6X25 A480	
500	312105-0447		2	SCREW M6S ISO 4017 M8X12 A480	
510	312105-0451		2	SCREW M6S ISO 4017 M8X20 A480	
520	312105-0453		1	SCREW M6S ISO 4017 M8X25 A480	
530	312105-0495		2	SCREW M6S ISO 4017 M10X30 A480	
540	312109-0499		9	SCREW M6S ISO 4017 M10X40 A480	
550	312109-0374		3	SCREW M6S ISO 4017 M6X30 A480	
570	312109-0463		1	SCREW M6S ISO 4017 M8X60 A480	
590	312115-0228		4	SCREW ISO4762 M3X16 A4	
600	312125-0327		2	SCREW ISO 1207 M5X12 A4	
610	312151-0368		3	SCREW EN 10642 MF6S M6X16 10.9 EL.PL	
620	312155-0495		1	SCREW DIN 7991 MF6S M10X30 A480	
630	312605-0318		1	HEXAGON NUT, M6M M8 A280	
650	315105-0124		4	WASHER BRB3,2X6RFR	
660	315105-0146		11	WASHER BRB5,3X10RFR	
670	315105-0153		12	WASHER BRB6,4X12RFR	
680	315105-0165		4	WASHER BRB8,4X16RFR	
700	315105-0173		8	WASHER BRB10,5X22RFR	
710	315125-0153		4	WASHER TBRSB 6,4X22X4 A4	
720	315125-0165		1	WASHER TBRSB 8,4X26X5 A4	
730	315125-0173		3	WASHER TBRSB 10,5X28X6 A4	
740	315202-0221		3	O-RING 34,2X3 MM	
750	315202-0267		2	O-RING 16,3X2,4 MM	
760	315705-0202		2	PARALLEL KEY W ROUND ENDS 5X5X25MM	
770	315751-0119		1	RETAINING RING FOR SHAFT DIN 471 25 A2	
780	90141-0019		1	RETAINING RING FOR BORE DIN 472 50 A2	
790	321308-0205		1	BALL BEARING, 25X47X12MM	
800	321313-0103		6	BALL BEARING, 17X40X12MM	
820	90091-0297		1	RADIAL SEAL 35X47X7 MM DUST LIP	
850	312125-0287		4	SCREW ISO 1207 M4X8 A4	
860	90165-0057		6	PIPE CLIP FOR TUBE D=6 MM	
870	312105-0381		4	SCREW M6S ISO 4014 M6X55 A480	
880	312105-0376		4	SCREW M6S ISO 4014 M6X35 A480	
B5103	90044-0194		1	PROX.SW. IN5329/IN3002-BPKG	
B5203	90044-0194		1	PROX.SW. IN5329/IN3002-BPKG	

Machine Type | Group Description | Used-In | Group Number | Page No

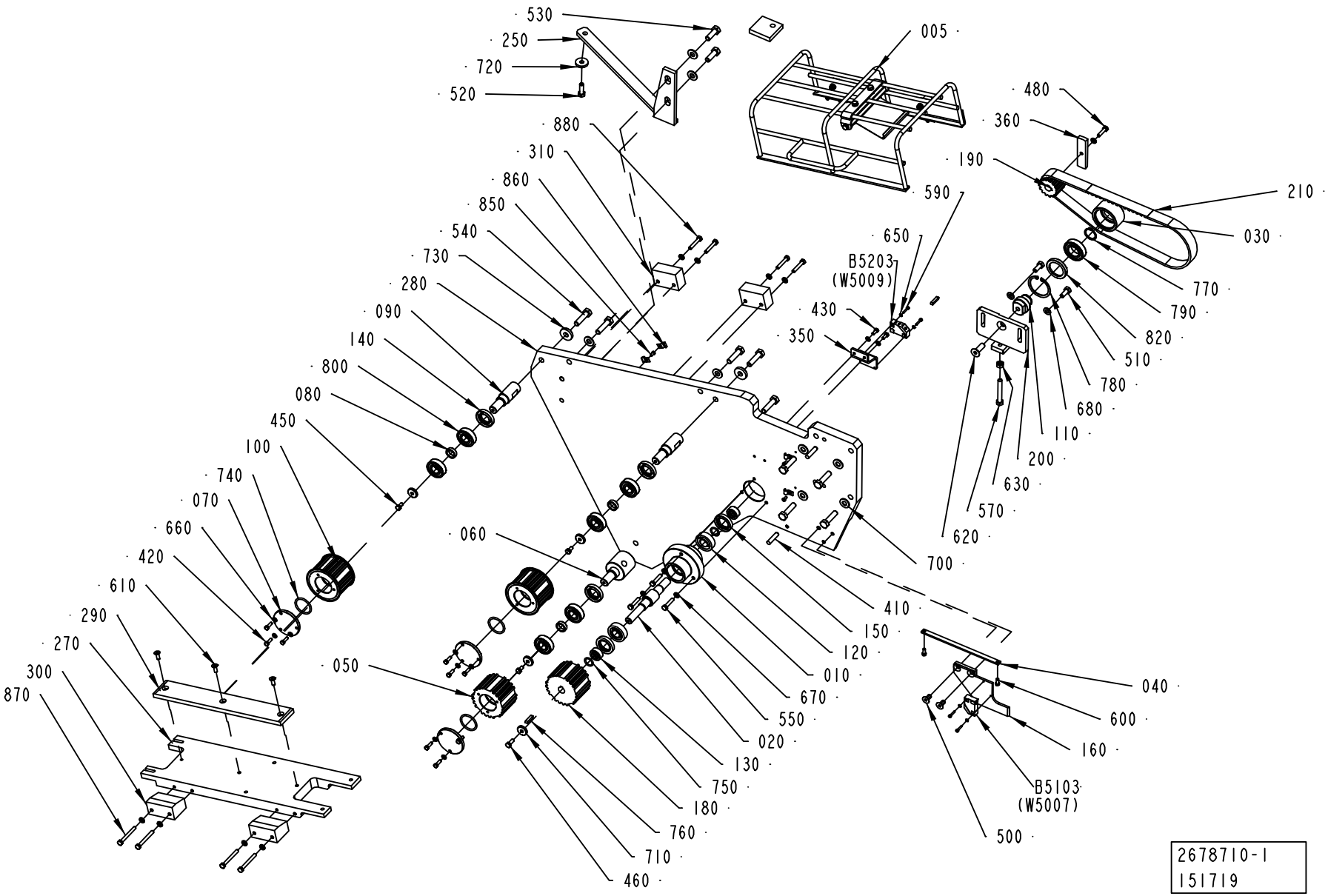
530
250
720
520
880
310
860
850
540
730
280
090
140
800
080
450
100
740
070
660
420
610
290
270
300
870
005
480
360
190
590
650
B5203
(W5009)
430
350
210
030
770
790
820
510
780
680
110
200
630
570
620
700
410
150
120
010
670
550
020
130
750
180
760
710
460
060
050
040
600
160
B5103
(W5007)
500
2678710-1
151719

ECM: 190931 - 20041104
Group number: 2678710-0100
Assembly Drawing: 2678710-1_1_AA

Pos	Part No	UN	Qty	Description	Page No
A3/FLEX					
250	2678708-0000		1	SUPPORT	
Common Parts					
005	2678709-0100		1	PROTECTIVE COVER	**3-191**
010	1144468-0000		1	BEARING HOUSING	
020	1144470-0000		1	SHAFT	
030	1144581-0000		1	ROLLER	
040	1144593-0000		1	PLATE	
050	2547015-0000		1	TOOTHED PULLEY	
060	1144595-0000		1	ECCENTRIC SHAFT	
070	1144596-0000		3	PLUG	
080	1144597-0000		3	SPACER	
090	1144598-0000		2	SHAFT	
100	2547017-0000		2	TOOTHED PULLEY	
110	1144619-0000		1	SHAFT	
120	90214-0219		2	CYL.ROLLER BEARING, 17X40X12 MM	
130	1144625-0000		2	SPACER	
140	90091-0404		3	RADIAL SEAL 22X40X7 MM DUST LIP	
150	90091-0406		2	RADIAL SEAL 25X40X7 MM DUST LIP	
160	2610764-0000		1	PLATE	
180	927859-0000		1	TOOTHED PULLY	
190	1282681-0000		1	TOOTHED PULLEY	
200	1144794-0000		1	SUPPORT	
210	1144841-0000		1	TIMING BELT	
270	2665197-0000		1	BRACKET	
280	2678753-0000		1	PLATE	
290	2665199-0000		1	SLIDE	
300	1285956-0000		2	BLOCK	
310	1285955-0000		2	PLATE	
350	1279688-0000		1	SUPPORT	
360	1279689-0000		1	ACTIVATOR	
410	311103-0407		2	PARALLEL PIN ISO 2338 8M6X35 A1	
420	312105-0329		9	SCREW M6S ISO 4017 M5X16 A480	
430	312105-0327		2	SCREW M6S ISO 4017 M5X12 A480	
450	312105-0366		3	SCREW M6S ISO 4017 M6X12 A480	
460	312105-0368		1	SCREW M6S ISO 4017 M6X16 A480	
480	312105-0372		1	SCREW M6S ISO 4017 M6X25 A480	
500	312155-0449		2	SCREW DIN 7991 MF6S M8X16 A480	
510	312105-0451		2	SCREW M6S ISO 4017 M8X20 A480	
520	312105-0453		1	SCREW M6S ISO 4017 M8X25 A480	
530	312105-0495		2	SCREW M6S ISO 4017 M10X30 A480	
540	312109-0499		9	SCREW M6S ISO 4017 M10X40 A480	
550	312109-0374		3	SCREW M6S ISO 4017 M6X30 A480	
570	312109-0463		1	SCREW M6S ISO 4017 M8X60 A480	
590	312115-0228		4	SCREW ISO4762 M3X16 A4	
600	312125-0327		2	SCREW ISO 1207 M5X12 A4	
610	312151-0368		3	SCREW EN 10642 MF6S M6X16 10.9 EL.PL	
620	312155-0495		1	SCREW DIN 7991 MF6S M10X30 A480	
630	312605-0318		1	HEXAGON NUT, M6M M8 A280	
650	315105-0124		4	WASHER BRB3,2X6RFR	
660	315105-0146		11	WASHER BRB5,3X10RFR	
670	315105-0153		12	WASHER BRB6,4X12RFR	
680	315105-0165		2	WASHER BRB8,4X16RFR	
700	315105-0173		8	WASHER BRB10,5X22RFR	
710	315125-0153		4	WASHER TBRSB 6,4X22X4 A4	
720	315125-0165		1	WASHER TBRSB 8,4X26X5 A4	
730	315125-0173		3	WASHER TBRSB 10,5X28X6 A4	
740	315202-0221		3	O-RING 34,2X3 MM	
750	315202-0267		2	O-RING 16,3X2,4 MM	
760	315705-0202		2	PARALLEL KEY W ROUND ENDS 5X5X25MM	
770	315751-0119		1	RETAINING RING FOR SHAFT DIN 471 25 A2	
780	90141-0019		1	RETAINING RING FOR BORE DIN 472 50 A2	
790	321308-0205		1	BALL BEARING, 25X47X12MM	
800	321313-0103		6	BALL BEARING, 17X40X12MM	
820	90091-0297		1	RADIAL SEAL 35X47X7 MM DUST LIP	
850	312125-0287		4	SCREW ISO 1207 M4X8 A4	
860	90165-0057		6	PIPE CLIP FOR TUBE D=6 MM	
870	312105-0381		4	SCREW M6S ISO 4014 M6X55 A480	
880	312105-0376		4	SCREW M6S ISO 4014 M6X35 A480	
B5103	90044-0194		1	PROX.SW. IN5329/IN3002-BPKG	
B5203	90044-0194		1	PROX.SW. IN5329/IN3002-BPKG	

Machine Type | Group Description | Used-In | Group Number | Page No

PROTECTIVE COVER

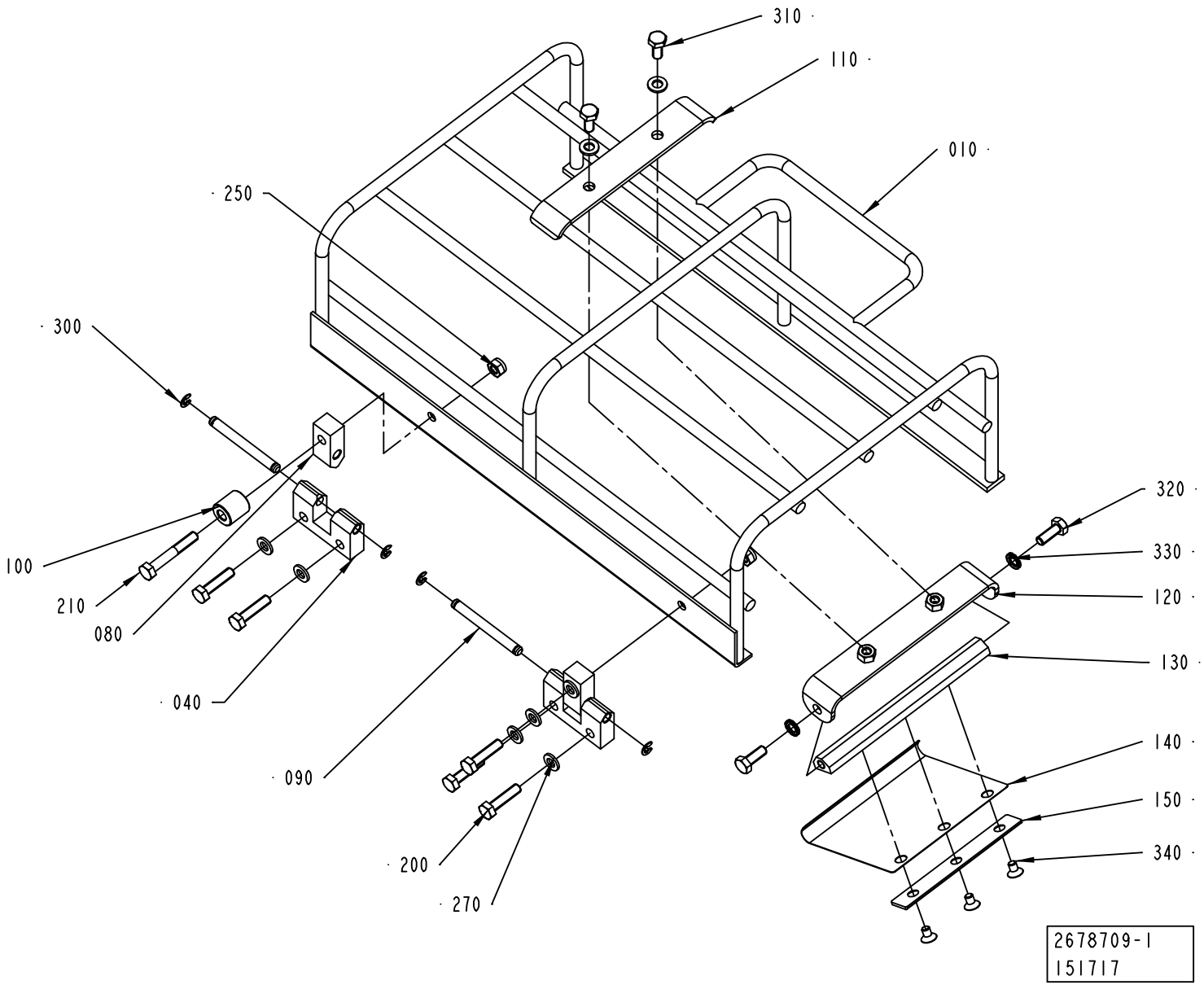

ECM: 190930 - 20041104
Group number: 2678709-0100
Assembly Drawing: 2678709-1_1_AA

Pos	Part No	UN	Qty	Description	Page No
-					
010	2665198-0000		1	PROTECTION	
040	1144667-0000		2	HINGE	
080	1144668-0000		2	HINGE	
090	1144669-0000		2	PIN	
100	1360149-0000		1	SPACER	
110	1499476-0000		1	HOLDER	
120	2527792-0000		1	SUPPORT	
130	2527793-0000		1	SHAFT	
140	2530418-0000		1	SPRING	
150	2540612-0000		1	PLATE	
200	312105-0372		5	SCREW M6S ISO 4017 M6X25 A480	
210	312105-0378		1	SCREW M6S ISO 4014 M6X40 A480	
250	312812-0316		2	HEXAGON NUT, NY-LOCK M6 A480	
270	315105-0153		9	WASHER BRB6,4X12RFR	
300	315755-0106		4	RETAINING RING SHAFT DIN 6799 4 A2	
310	312105-0367		2	SCREW M6S ISO 4017 M6X14 A480	
320	312105-0368		2	SCREW M6S ISO 4017 M6X16 A480	
330	90062-0061		2	LOCK WASHER NORD-LOCK,6,5/10,8, T=2,2	
340	312155-0323		3	SCREW DIN 7991 MF6S M5X8 A480	

Pos	Part No	UN	Qty	Description	Page No

This page is intentionally left blank.

ECM: 73332 - 20000411
Group number: 1524370-0100
Assembly Drawing:

Pos	Part No	UN	Qty	Description	Page No
-					
010	1349160-0000		1	SPACER	
020	312115-0500		4	SCREW ISO4762 M10X45 A4	
030	312105-0507		2	SCREW M6S ISO 4014 M10X80 A480	
040	312115-0497		2	SCREW ISO4762 M10X35 A4	
050	315105-0173		4	WASHER BRB10,5X22RFR	

Pos	Part No	UN	Qty	Description	Page No

DROP CHUTE CRADLE

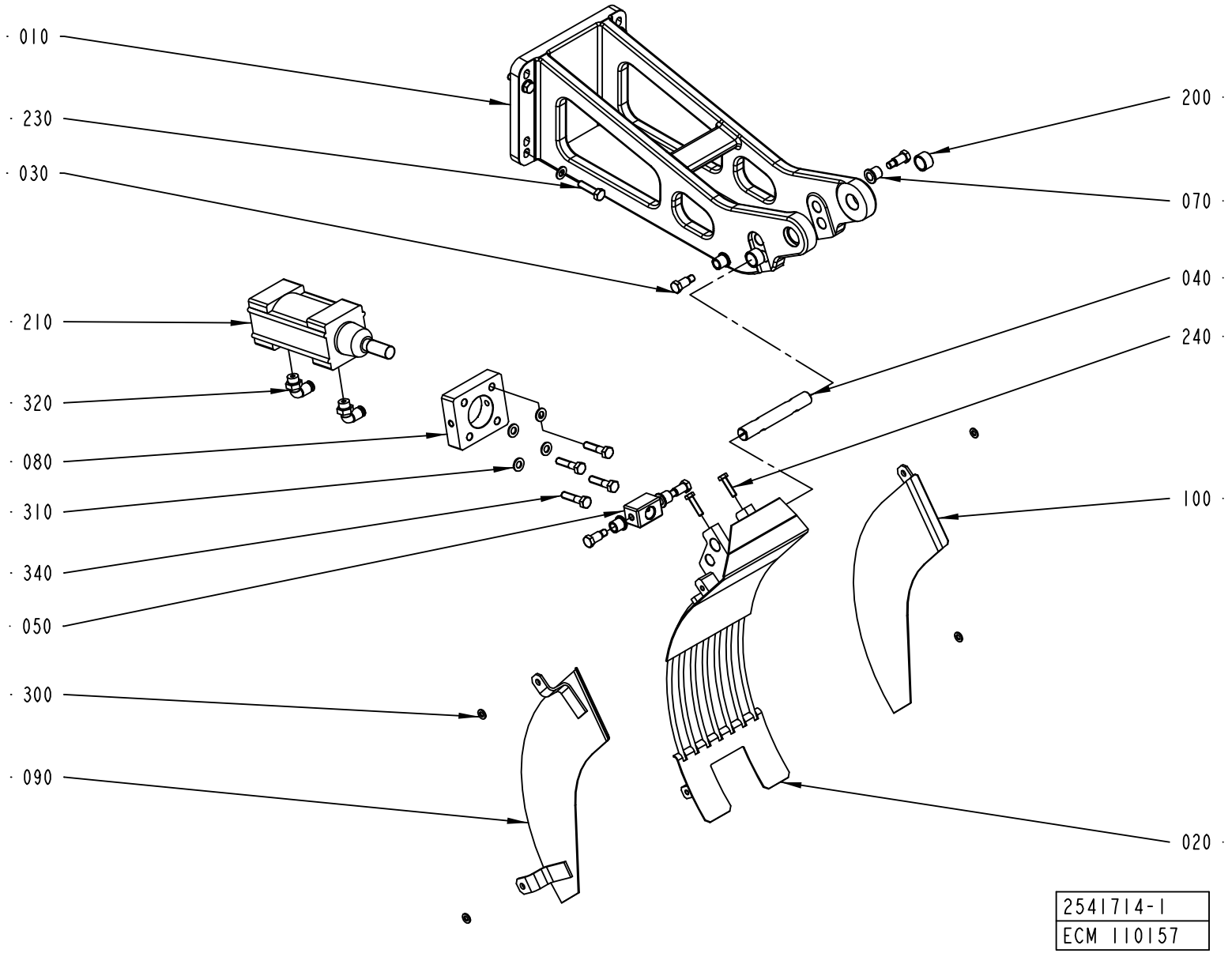

ECM: 192033 - 20041119
Group number: 2541714-0100
Assembly Drawing: 2541714-1_1_AA

Pos	Part No	UN	Qty	Description	Page No
TBA 0200B QC, TBA 0330S QC, TBA 0250B QC (See drawing on page: 3-194)					
020	1484258-0000		1	CRADLE	
090	2650807-0000		1	SIDE PLATE	
100	2650808-0000		1	SIDE PLATE	
300	315105-0153		4	WASHER BRB6,4X12RFR	
TBA 0500B QC (See drawing on pages: 3-194)					
020	1484258-0000		1	CRADLE	
090	2605993-0000		1	SIDE PLATE	
100	2605994-0000		1	SIDE PLATE	
TBA 0500S, TBA 1000S, TBA 1000SQ, TBA 0250S, TBA 0200S, TBA 0200M, TPA 0330SQ, TPA 0500SQ, TBA 0500B NOQC, TBA 1000B NOQC, TBA 0200B NOQC, TBA 0330S NOQC, TBA 0250B NOQC (See drawing on page: 3-194)					
020	1484258-0000		1	CRADLE	
090	1285023-0000		1	SIDE PLATE	
100	1285022-0000		1	SIDE PLATE	
300	315105-0153		4	WASHER BRB6,4X12RFR	
TBA 1000B QC (See drawing on page: 3-194)					
020	1484258-0000		1	CRADLE	
090	1285023-0000		1	SIDE PLATE	
100	1285022-0000		1	SIDE PLATE	
TBA 1500S (See drawing on page: 3-194)					
020	1348920-0000		1	CRADLE	
090	1348854-0000		1	PLATE	
100	1349017-0000		1	PLATE	
300	315105-0153		4	WASHER BRB6,4X12RFR	
TBA 1890S QC, TBA 2000S QC (See drawing on page: 3-194)					
020	2665204-0000		1	CRADLE	
090	2665205-0000		1	PLATE	
100	2665206-0000		1	PLATE	
TPA 1000SQ (See drawing on page: 3-194)					
020	1348920-0000		1	CRADLE	
090	1517472-0000		1	SIDE PLATE	
100	1517473-0000		1	SIDE PLATE	
300	315105-0153		4	WASHER BRB6,4X12RFR	
Common Parts					
010	2540823-0000		1	BRACKET	
030	449190-0000		4	SHAFT	
040	1144579-0000		1	AXLE	
050	1144577-0000		1	BLOCK	
070	1478928-0000		4	BUSHING	
080	2594886-0000		1	PLATE	
200	321116-0234		2	BEAR. BUSH. WITHOUT FL, 16X20X12 MM	
210	90450-0504		1	DOUBLE ACTING, PROFILE, CYL 50-25	
230	312105-0455		4	SCREW M6S ISO 4017 M8X30 A480	
240	312105-0372		2	SCREW M6S ISO 4017 M6X25 A480	
310	315105-0165		8	WASHER BRB8,4X16RFR	
320	90458-2957		2	ELBOW PIPE JOINT, EXT.THREAD, D=6MM-G1/4	
340	312105-0457		4	SCREW M6S ISO 4014 M8X35 A480	

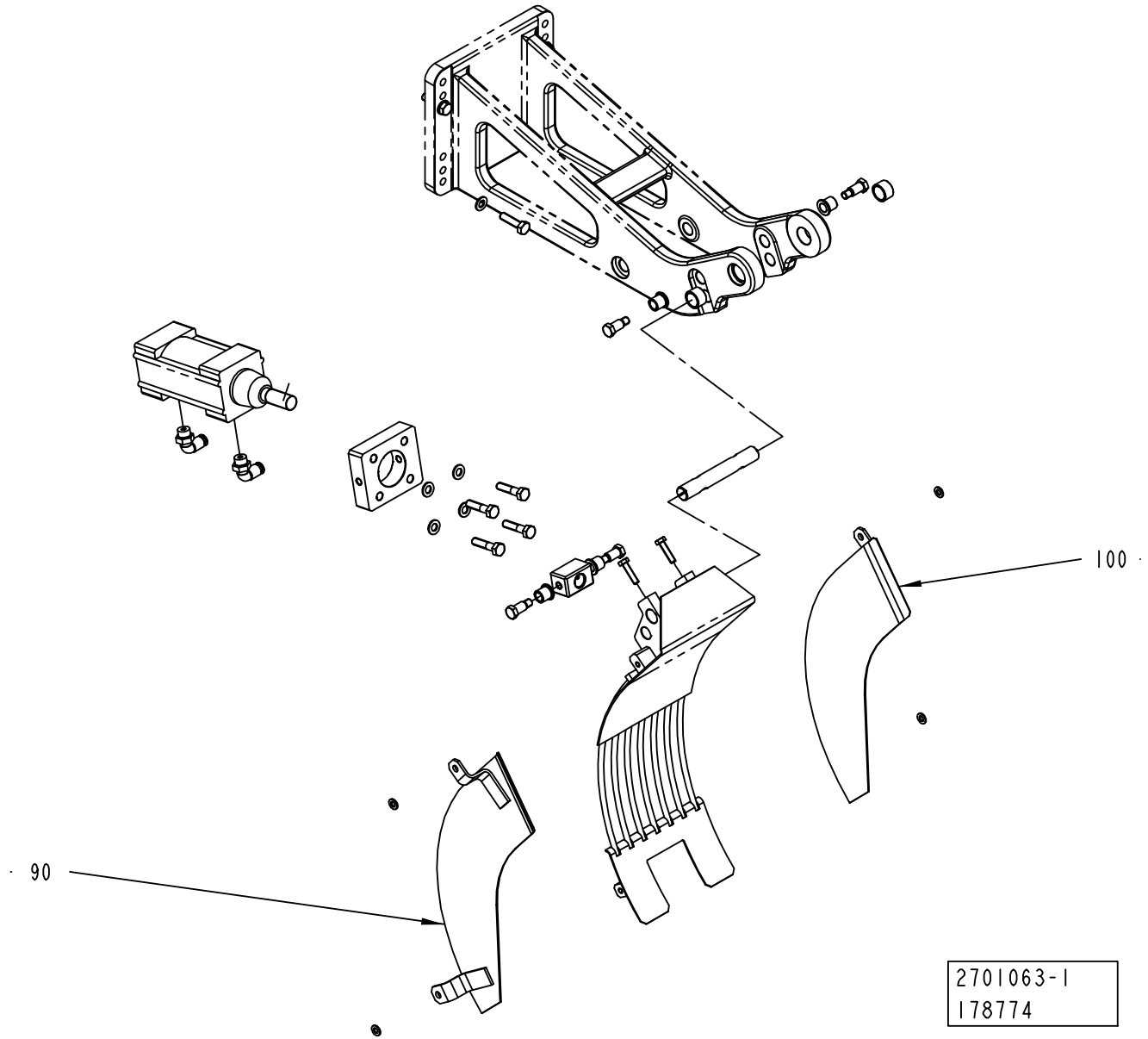
100
90
2701063-1
178774

ECM: 195065 - 20041203
Group number: 2701063-0100
Assembly Drawing: 2701063-1_1_AA

Pos	Part No	UN	Qty	Description	Page No
TBA 0200B QC, TBA 0330S QC, TBA 0250B QC					
090	2650807-0000		1	SIDE PLATE	
100	2650808-0000		1	SIDE PLATE	
TBA 0500B QC					
090	2605993-0000		1	SIDE PLATE	
100	2605994-0000		1	SIDE PLATE	
TBA 0500S, TBA 1000S, TBA 1000SQ, TBA 1000B, TBA 0250S, TBA 0200S, TBA 0200M, TPA 0330SQ, TPA 0500SQ, TBA 0500B NOQC, TBA 0200B NOQC, TBA 0330S NOQC, TBA 0250B NOQC					
090	1285023-0000		1	SIDE PLATE	
100	1285022-0000		1	SIDE PLATE	
TBA 1500S					
090	1348854-0000		1	PLATE	
100	1349017-0000		1	PLATE	
TBA 1890S QC, TBA 2000S QC					
090	2665205-0000		1	PLATE	
100	2665206-0000		1	PLATE	
TPA 1000SQ					
090	1517472-0000		1	SIDE PLATE	
100	1517473-0000		1	SIDE PLATE	

Pos	Part No	UN	Qty	Description	Page No

Machine Type | Group Description | Used-In | Group Number | Page No

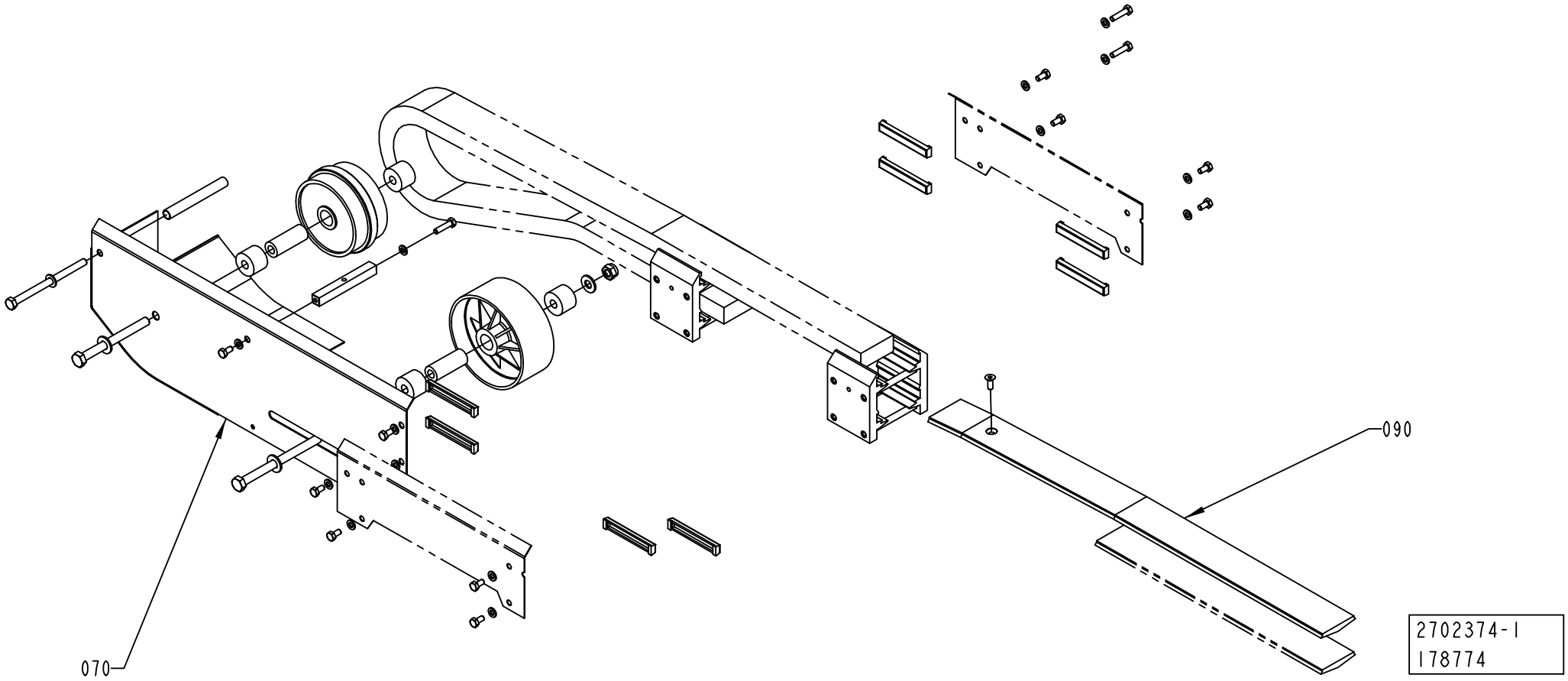
090
070
2702374-1
178774

ECM: 182051 - 20041013
Group number: 2702374-0100
Assembly Drawing: 2702374-1_1_AA

Pos	Part No	UN	Qty	Description	Page No
TBA 1000SQ, TPA 0330SQ					
070	1296081-0000		1	PLATE	
090	1279573-0000		1	SLIDE RAIL U	
TPA 1000SQ, TPA 0500SQ					
070	1548354-0000		1	COVER	
090	1548353-0000		1	SLIDE RAIL	

Pos	Part No	UN	Qty	Description	Page No

This page is intentionally left blank.

ECM: 172249 - 20040531
Group number: 2678844-0100
Assembly Drawing:

Pos	Part No	UN	Qty	Description	Page No
PT/FLEX					
000	2678706-0101		1	DOCUMENT FOLDER	
010	2642049-0100		1	MECHANICAL REBUILDING	**3-203, 3-205, 3-207**
020	2564076-0100		1	START-UP KIT	**3-297**
030	2587337-0100		1	SETTING TEMPLATE	**3-299**
040	2564075-0100		1	OPENING SPECIFICATION	**3-301**

Pos	Part No	UN	Qty	Description	Page No

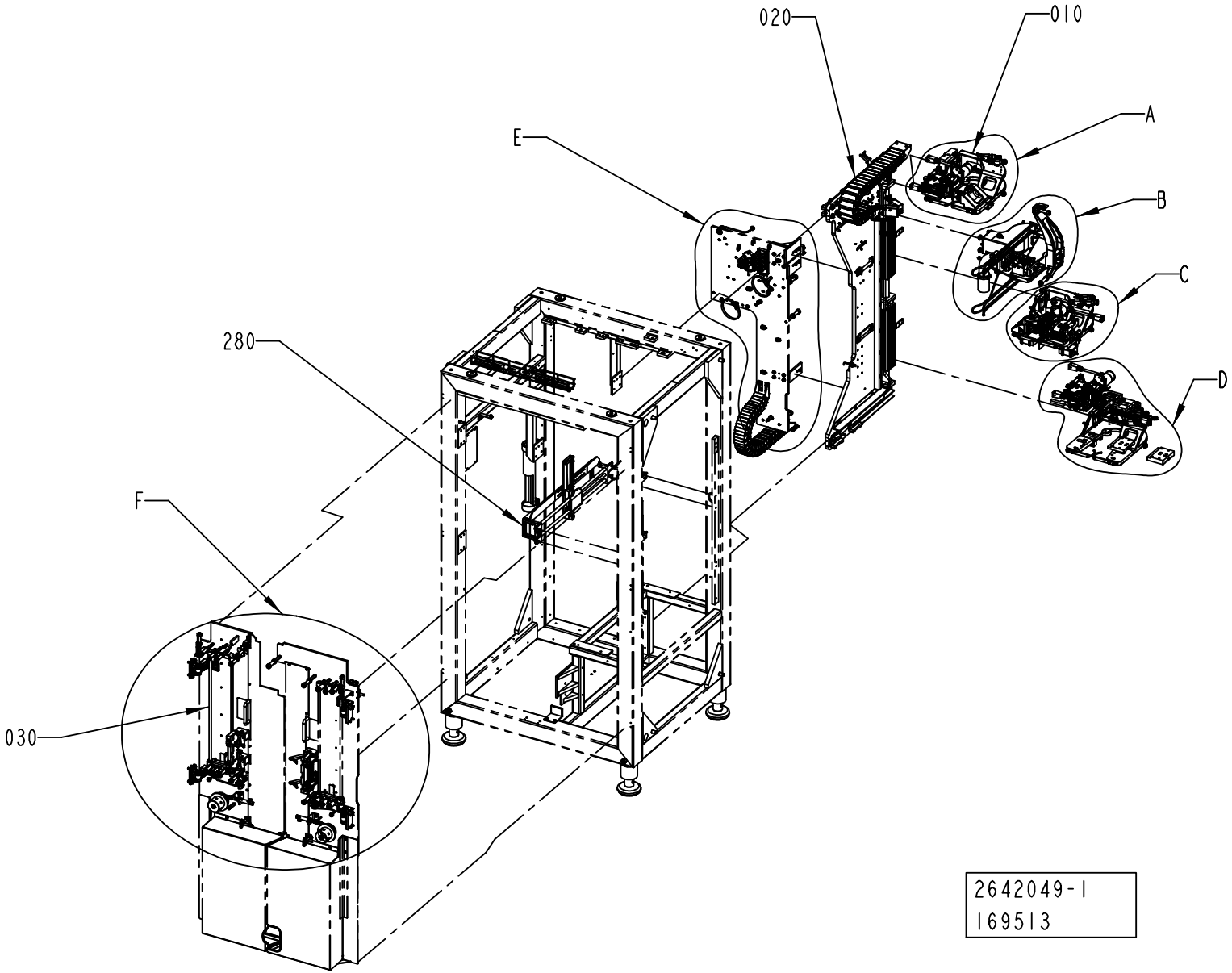
020
010
A
E
B
C
280
D
F
030
2642049-1
169513

Pos	Part No	UN	Qty	Description	Page No
NO OUTER PATCH					
280	2511311-0200		1	FOLDING DEVICE	**3-209**
OUTER PATCH					
010	2546302-0200		1	OUTER PATCH APPLICATOR	**3-213**
020	2686489-0100		1	PANEL	**3-237**
030	2686488-0100		1	OUTER PATCH MAGAZINE	**3-241, 3-243**
270	2693161-0100		1	INSTALLATION MATERIAL	**3-261**
Common Parts					
040	2546278-0100		1	PUNCH UNIT	**3-265**
050	2564058-0100		1	TURNING DEVICE	**3-267**
060	2564061-0100		1	OUTER PATCH FEEDER	**3-233**
070	2546297-0100		1	OUTER PATCH FEEDER	**3-225**
080	2564059-0100		1	TAB FEEDER	**3-269**
090	2546275-0100		1	TAB FEEDER	**3-271**
100	2546271-0100		1	TAB C'JAW	**3-273**
110	1548368-0000		1	PLATE	
120	2553327-0000		1	PLATE	
130	2546285-0100		1	PATCH C'JAW	**3-275**
140	2511291-0100		1	PATCH FEEDER	**3-277**
150	2564060-0100		1	PATCH FEEDER	**3-279**
160	2564053-0100		1	OUTER PATCH MAGAZINE	**3-259**
170	2564052-0100		1	MAGAZINE	**3-253**
180	2533683-0100		1	SPLICING TABLE	**3-257**
190	2553315-0100		1	BOBBIN HOLDER	**3-249**
200	2533684-0100		1	SPLICING TABLE	**3-281**
210	2564050-0100		1	MAGAZINE	**3-283**
220	2533682-0100		1	BOBBIN HOLDER	**3-285**
230	2564057-0100		1	TAB MAGAZINE	**3-287**
240	2533681-0100		1	BOBBIN HOLDER	**3-289**
250	2533685-0100		1	SPLICING TABLE	**3-291**
260	2564056-0100		1	MAGAZINE	**3-293**
290	2564051-0100		1	PATCH MAGAZINE	**3-295**

Pos	Part No	UN	Qty	Description	Page No

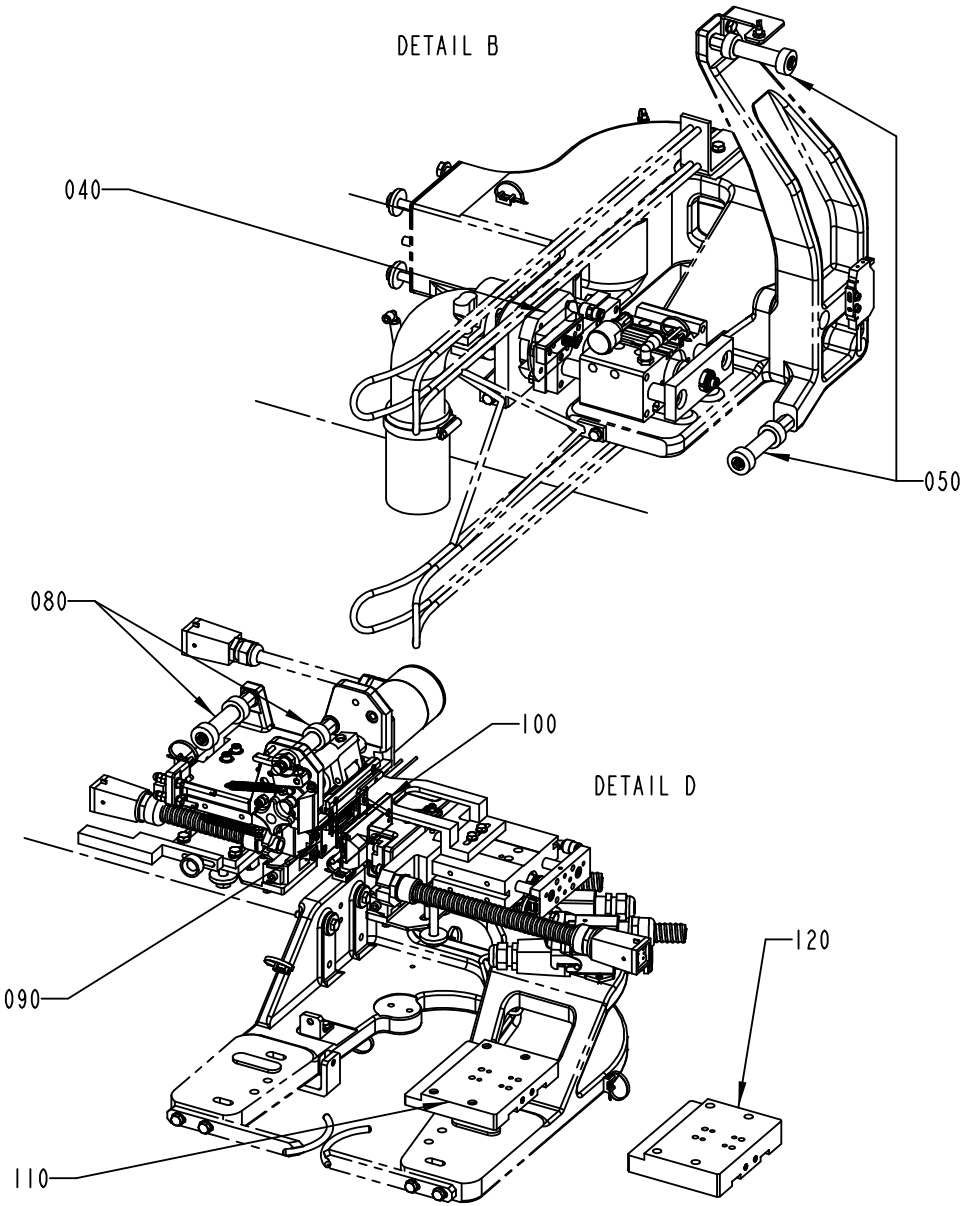
DETAIL B
040
050
080
100
DETAIL D
090
120
110

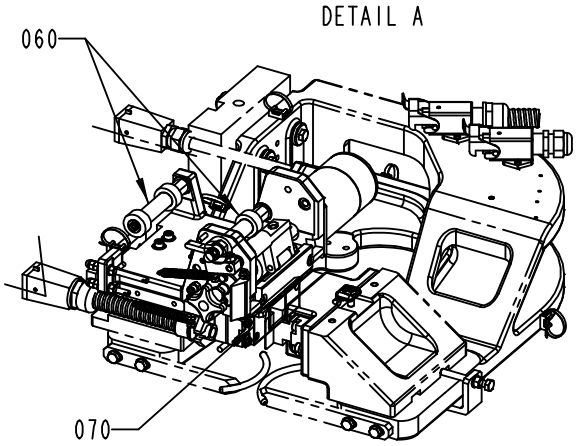
DETAIL A
060
070

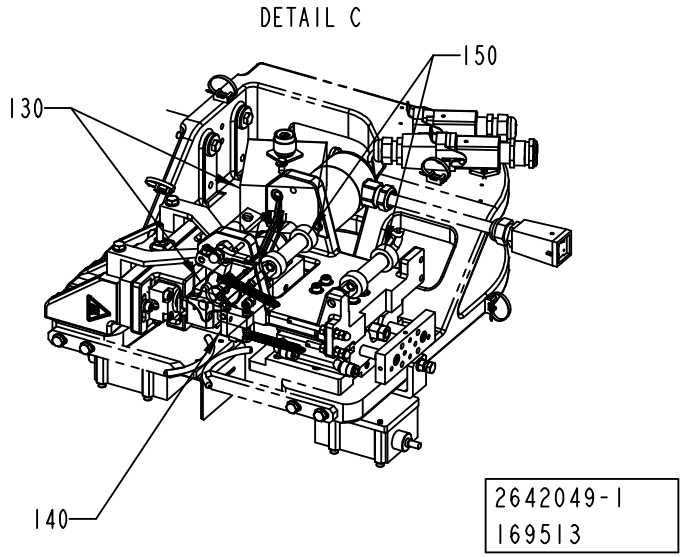
DETAIL C
150
130
140
2642049-1
169513

Pos	Part No	UN	Qty	Description	Page No
NO OUTER PATCH					
280	2511311-0200		1	FOLDING DEVICE	**3-209**
OUTER PATCH					
010	2546302-0200		1	OUTER PATCH APPLICATOR	**3-213**
020	2686489-0100		1	PANEL	**3-237**
030	2686488-0100		1	OUTER PATCH MAGAZINE	**3-241, 3-243**
270	2693161-0100		1	INSTALLATION MATERIAL	**3-261**
Common Parts					
040	2546278-0100		1	PUNCH UNIT	**3-265**
050	2564058-0100		1	TURNING DEVICE	**3-267**
060	2564061-0100		1	OUTER PATCH FEEDER	**3-233**
070	2546297-0100		1	OUTER PATCH FEEDER	**3-225**
080	2564059-0100		1	TAB FEEDER	**3-269**
090	2546275-0100		1	TAB FEEDER	**3-271**
100	2546271-0100		1	TAB C'JAW	**3-273**
110	1548368-0000		1	PLATE	
120	2553327-0000		1	PLATE	
130	2546285-0100		1	PATCH C'JAW	**3-275**
140	2511291-0100		1	PATCH FEEDER	**3-277**
150	2564060-0100		1	PATCH FEEDER	**3-279**
160	2564053-0100		1	OUTER PATCH MAGAZINE	**3-259**
170	2564052-0100		1	MAGAZINE	**3-253**
180	2533683-0100		1	SPLICING TABLE	**3-257**
190	2553315-0100		1	BOBBIN HOLDER	**3-249**
200	2533684-0100		1	SPLICING TABLE	**3-281**
210	2564050-0100		1	MAGAZINE	**3-283**
220	2533682-0100		1	BOBBIN HOLDER	**3-285**
230	2564057-0100		1	TAB MAGAZINE	**3-287**
240	2533681-0100		1	BOBBIN HOLDER	**3-289**
250	2533685-0100		1	SPLICING TABLE	**3-291**
260	2564056-0100		1	MAGAZINE	**3-293**
290	2564051-0100		1	PATCH MAGAZINE	**3-295**

Pos	Part No	UN	Qty	Description	Page No

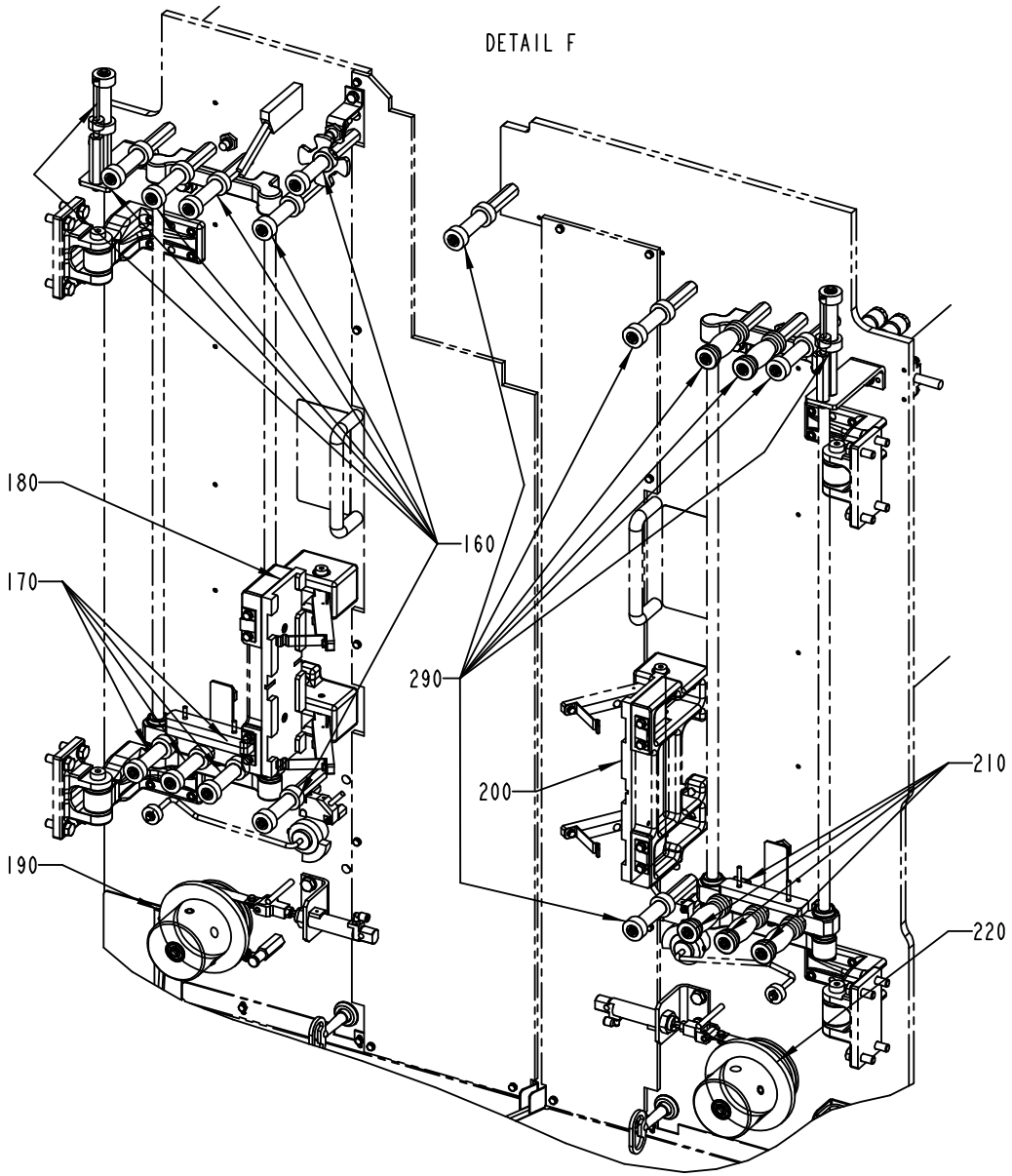
DETAIL F
180
170
160
290
200
210
190
220

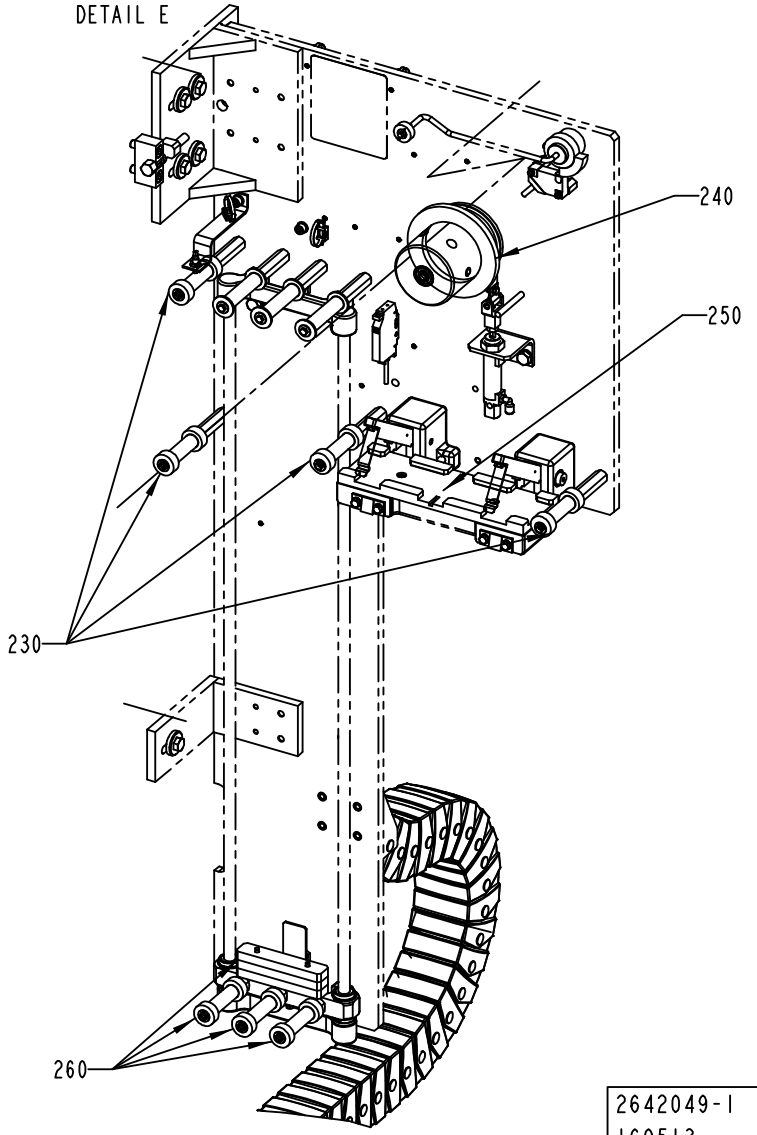
DETAIL E
240
250
230
260
2642049-1
169513

Pos	Part No	UN	Qty	Description	Page No
NO OUTER PATCH					
280	2511311-0200		1	FOLDING DEVICE	**3-209**
OUTER PATCH					
010	2546302-0200		1	OUTER PATCH APPLICATOR	**3-213**
020	2686489-0100		1	PANEL	**3-237**
030	2686488-0100		1	OUTER PATCH MAGAZINE	**3-241, 3-243**
270	2693161-0100		1	INSTALLATION MATERIAL	**3-261**
Common Parts					
040	2546278-0100		1	PUNCH UNIT	**3-265**
050	2564058-0100		1	TURNING DEVICE	**3-267**
060	2564061-0100		1	OUTER PATCH FEEDER	**3-233**
070	2546297-0100		1	OUTER PATCH FEEDER	**3-225**
080	2564059-0100		1	TAB FEEDER	**3-269**
090	2546275-0100		1	TAB FEEDER	**3-271**
100	2546271-0100		1	TAB C'JAW	**3-273**
110	1548368-0000		1	PLATE	
120	2553327-0000		1	PLATE	
130	2546285-0100		1	PATCH C'JAW	**3-275**
140	2511291-0100		1	PATCH FEEDER	**3-277**
150	2564060-0100		1	PATCH FEEDER	**3-279**
160	2564053-0100		1	OUTER PATCH MAGAZINE	**3-259**
170	2564052-0100		1	MAGAZINE	**3-253**
180	2533683-0100		1	SPLICING TABLE	**3-257**
190	2553315-0100		1	BOBBIN HOLDER	**3-249**
200	2533684-0100		1	SPLICING TABLE	**3-281**
210	2564050-0100		1	MAGAZINE	**3-283**
220	2533682-0100		1	BOBBIN HOLDER	**3-285**
230	2564057-0100		1	TAB MAGAZINE	**3-287**
240	2533681-0100		1	BOBBIN HOLDER	**3-289**
250	2533685-0100		1	SPLICING TABLE	**3-291**
260	2564056-0100		1	MAGAZINE	**3-293**
290	2564051-0100		1	PATCH MAGAZINE	**3-295**

Pos	Part No	UN	Qty	Description	Page No

Machine Type | Group Description | Used-In | Group Number | Page No

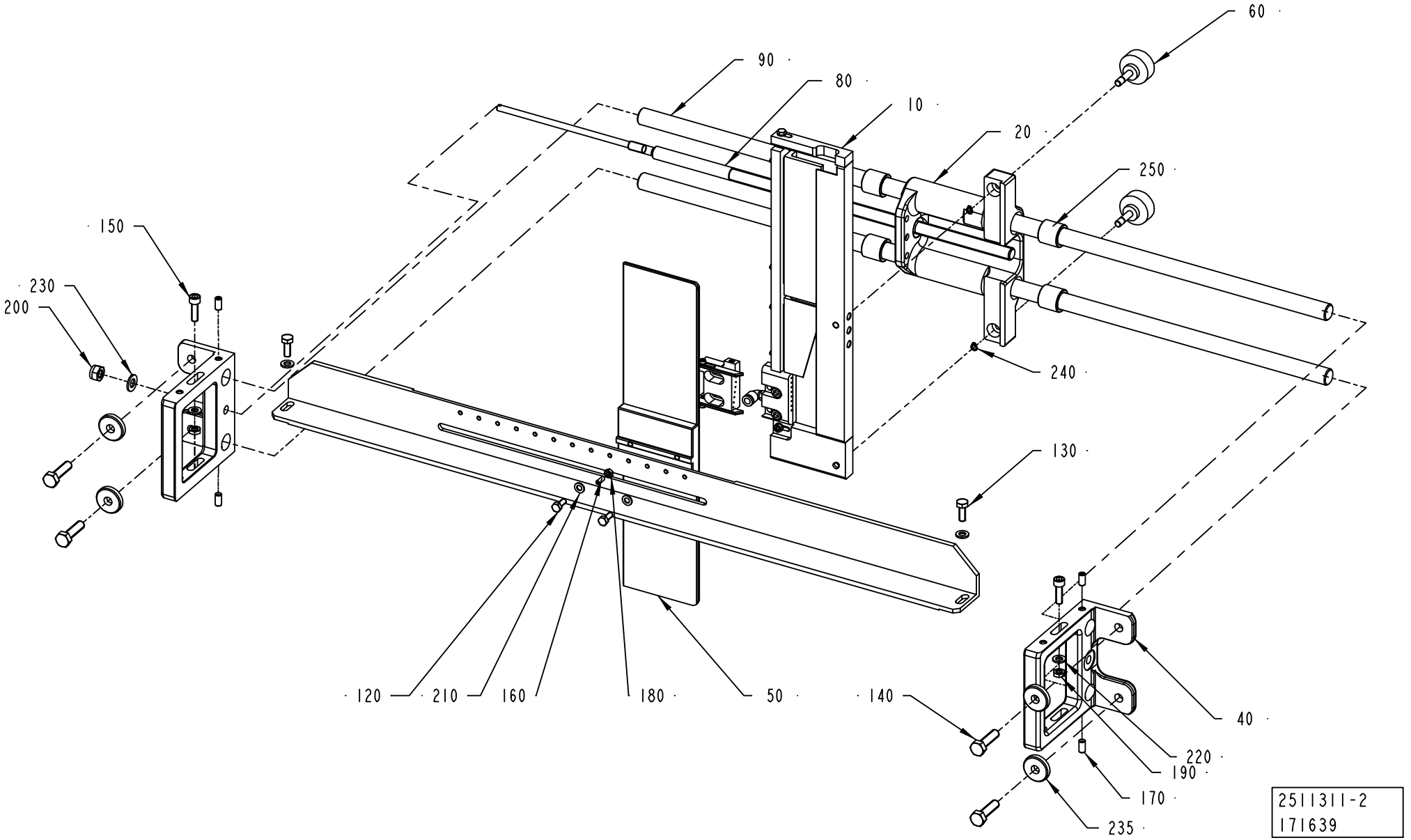
60
90
80
10
20
250
150
230
200
240
130
120
210
160
180
50
140
40
220
190
170
235
2511311-2
171639

ECM: 173873 - 20041129
Group number: 2511311-0200
Assembly Drawing: 2511311-2_1_AB

Pos	Part No	UN	Qty	Description	Page No
-					
010	1499225-0200		1	FOLDING PART	**3-211**
020	1523302-0000		1	HOUSING	
030	2695491-0000		1	ANGLE BRACKET	
040	1499216-0000		2	PLATE	
050	2695492-0000		1	PLATE	
060	1532447-0000		2	HANDLE	
080	1538668-0000		1	GUIDE ROD	
090	1538247-0000		2	AXLE PIN	
120	312105-0327		2	SCREW M6S ISO 4017 M5X12 A480	
130	312105-0368		2	SCREW M6S ISO 4017 M6X16 A480	
140	312105-0455		4	SCREW M6S ISO 4017 M8X30 A480	
150	312115-0370		2	SCREW ISO4762 M6X20 A4	
160	312318-0287		1	SCREW ISO4029 M4X8 A4	
170	312318-0366		4	SCREW ISO4029 M6X12 A4	
180	312605-0312		1	HEXAGON NUT, M6M M4 A280	
190	312625-0316		2	HEXAGON THIN NUT, EN 24035 ML6M M6 A4	
200	312812-0318		1	HEXAGON NUT, NY-LOCK M8 A480	
210	315105-0146		2	WASHER BRB5,3X10RFR	
220	315105-0153		4	WASHER BRB6,4X12RFR	
230	315105-0165		1	WASHER BRB8,4X16RFR	
235	315125-0165		4	WASHER TBRSB 8,4X26X5 A4	
240	315750-0102		2	RETAINING RING SHAFT DIN 471 ST 5	
250	321105-0204		4	BEAR. BUSH. WITHOUT FL, 16X22X20 MM	

Pos	Part No	UN	Qty	Description	Page No

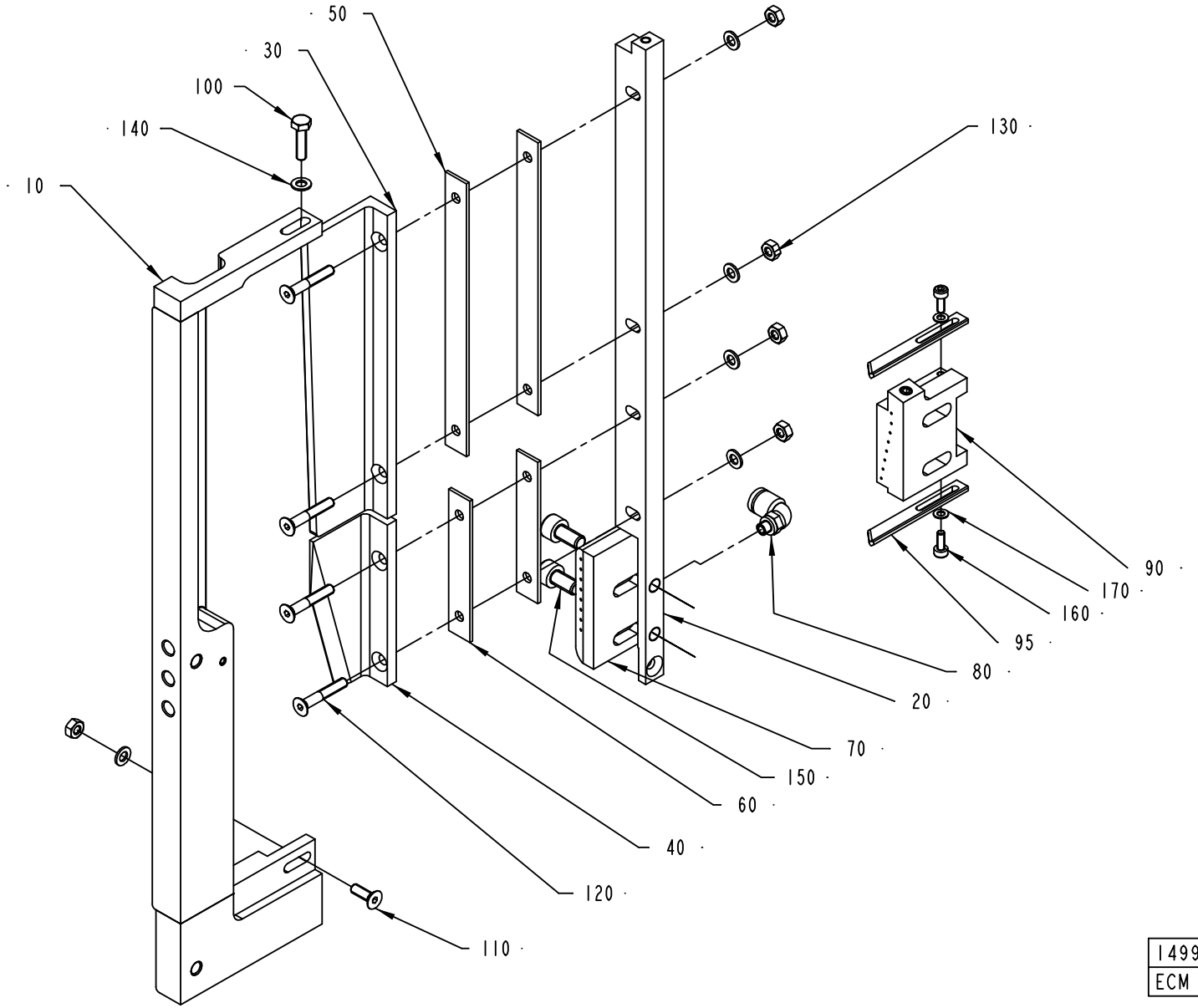

1499225-2
ECM 159864

ECM: 174748 - 20041129
Group number: 1499225-0200
Assembly Drawing: 1499225-2_1_AA

Pos	Part No	UN	Qty	Description	Page No
-					
010	1499229-0000		1	RAIL	
020	2658050-0000		1	PLATE	
030	929823-0000		1	PAPER GUIDE	
040	929825-0000		1	PAPER GUIDE	
050	1499227-0000		2	SHIM	
060	1499228-0000		2	SHIM	
070	2658051-0000		1	AIR NOZZLE	
080	90457-0922		1	ELBOW PIPE JOINT, EXT.THREAD, D=6MM M5	
090	2658049-0000		1	AIR NOZZLE	
095	2674511-0000		2	CAM	
100	312105-0293		1	SCREW M6S ISO 4017 M4X16 A470	
110	312155-0291		1	SCREW DIN 7991 MF6S M4X12 A480	
120	312155-0297		4	SCREW DIN 7991 MF6S M4X25 A480	
130	312605-0312		5	HEXAGON NUT, M6M M4 A280	
140	315105-0136		6	WASHER BRB4,3XRFR	
150	312115-0364		2	SCREW ISO4762 M6X10 A4	
160	312115-0222		2	SCREW ISO4762 M3X8 A4	
170	315105-0124		2	WASHER BRB3,2X6RFR	

Pos	Part No	UN	Qty	Description	Page No

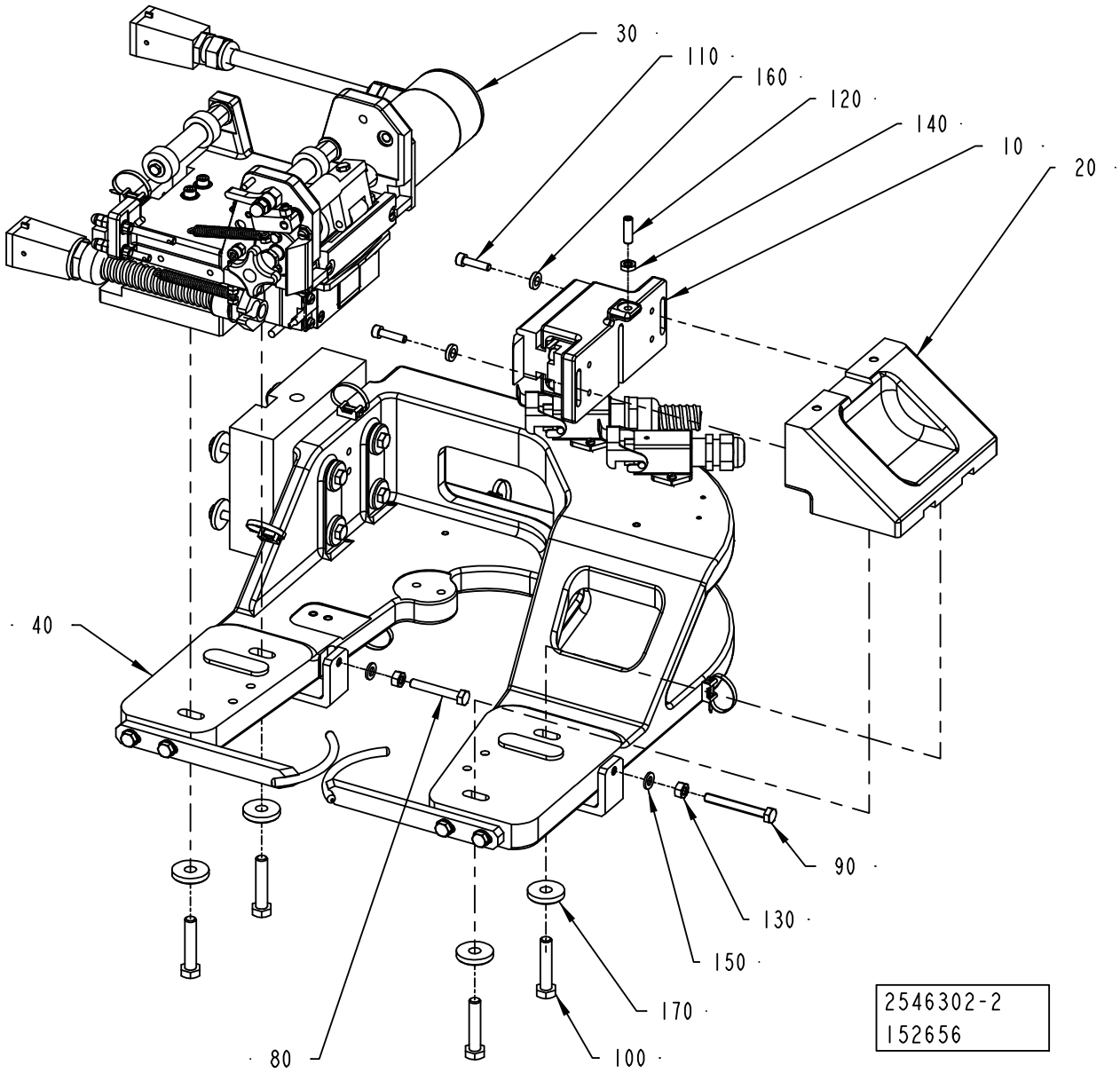
30
110
160
120
140
10
20
40
90
130
150
170
80
100
2546302-2
152656

ECM: 185962 - 20041005
Group number: 2546302-0200
Assembly Drawing: 2546302-2_1_AA

Pos	Part No	UN	Qty	Description	Page No
-					
010	2546295-0100		1	SEALING UNIT	**3-215**
020	2546296-0100		1	OUTER PATCH C'JAW	**3-219**
030	2546300-0100		1	OUTER PATCH FEEDER	**3-221**
040	2546301-0200		1	MOUNTING BRACKET	**3-235**
080	312109-0378		1	SCREW M6S ISO4017 M6X40 A480	
090	312109-0380		1	SCREW M6S ISO 4017 M6X50 A480	
100	312109-0459		4	SCREW M6S ISO 4017 M8X40 A480	
110	312115-0331		2	SCREW ISO4762 M5X20 A4	
120	312318-0370		1	SCREW ISO4029 M6X20 A4	
130	312605-0316		2	HEXAGON NUT, M6M M6 A280	
140	312625-0316		1	HEXAGON THIN NUT, EN 24035 ML6M M6 A4	
150	315105-0153		2	WASHER BRB6,4X12RFR	
160	315115-0153		2	WASHER PLAIN, TBRB 6,4/12 H=3	
170	315125-0165		4	WASHER TBRSB 8,4X26X5 A4	

Pos	Part No	UN	Qty	Description	Page No

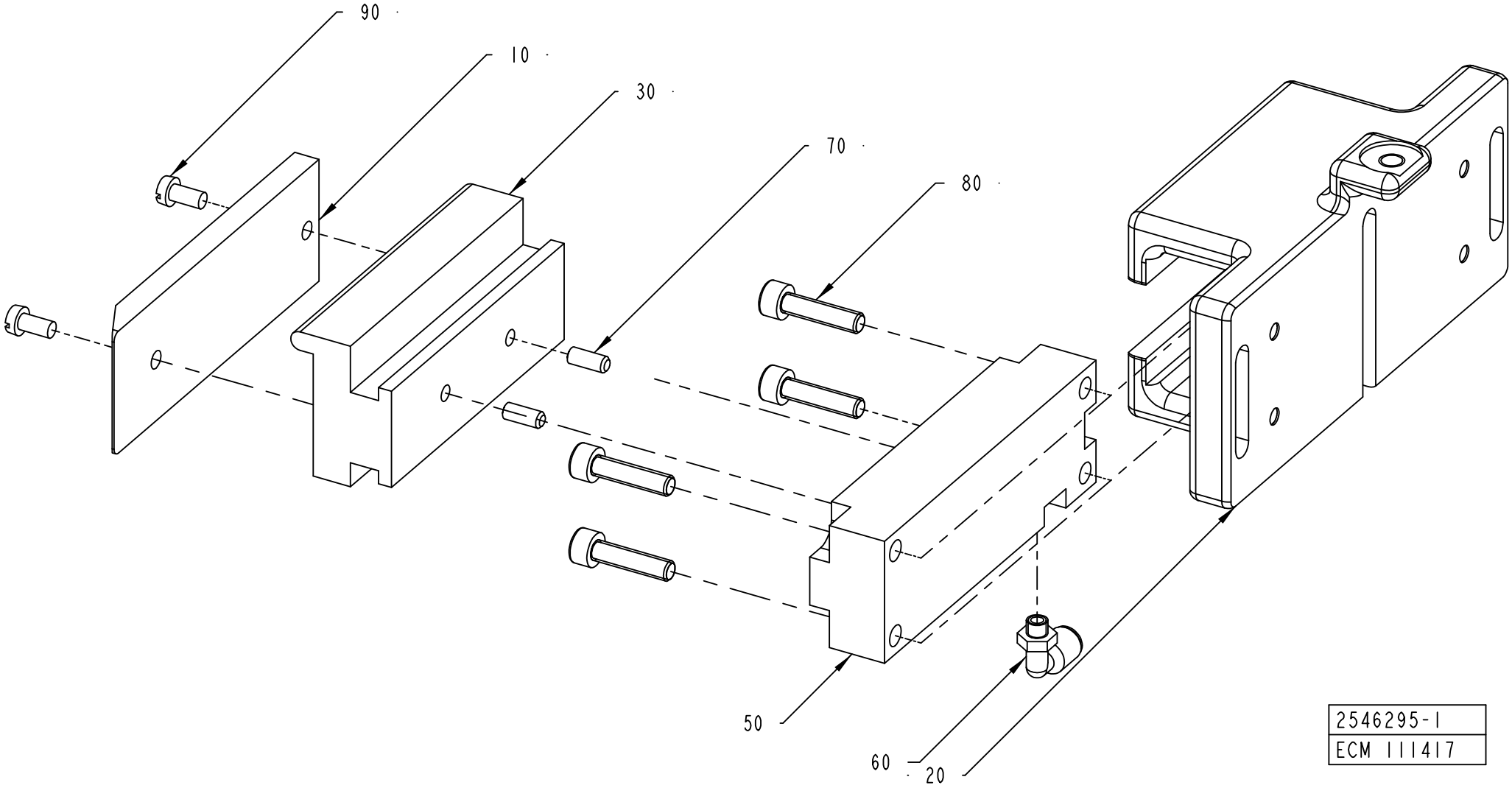
90
10
30
70
80
50
60
20
2546295-1
ECM 111417

ECM: 185956 - 20041005
Group number: 2546295-0100
Assembly Drawing: 2546295-1_1_AA

Pos	Part No	UN	Qty	Description	Page No
-					
010	2546294-0100		1	OUTER PATCH C'JAW	**3-217**
020	1498496-0000		1	GUIDE	
030	1498115-0000		1	BLOCK	
050	90450-0380		1	SINGLE ACTING, PANCAKE EV-20/75-5	
060	90458-2954		1	ELBOW PIPE JOINT, EXT.THREAD, D=4MM M5	
070	311103-0267		2	PARALLEL PIN ISO 2338 4M6X10 A1	
080	312115-0331		4	SCREW ISO4762 M5X20 A4	
090	312125-0287		2	SCREW ISO 1207 M4X8 A4	

Pos	Part No	UN	Qty	Description	Page No

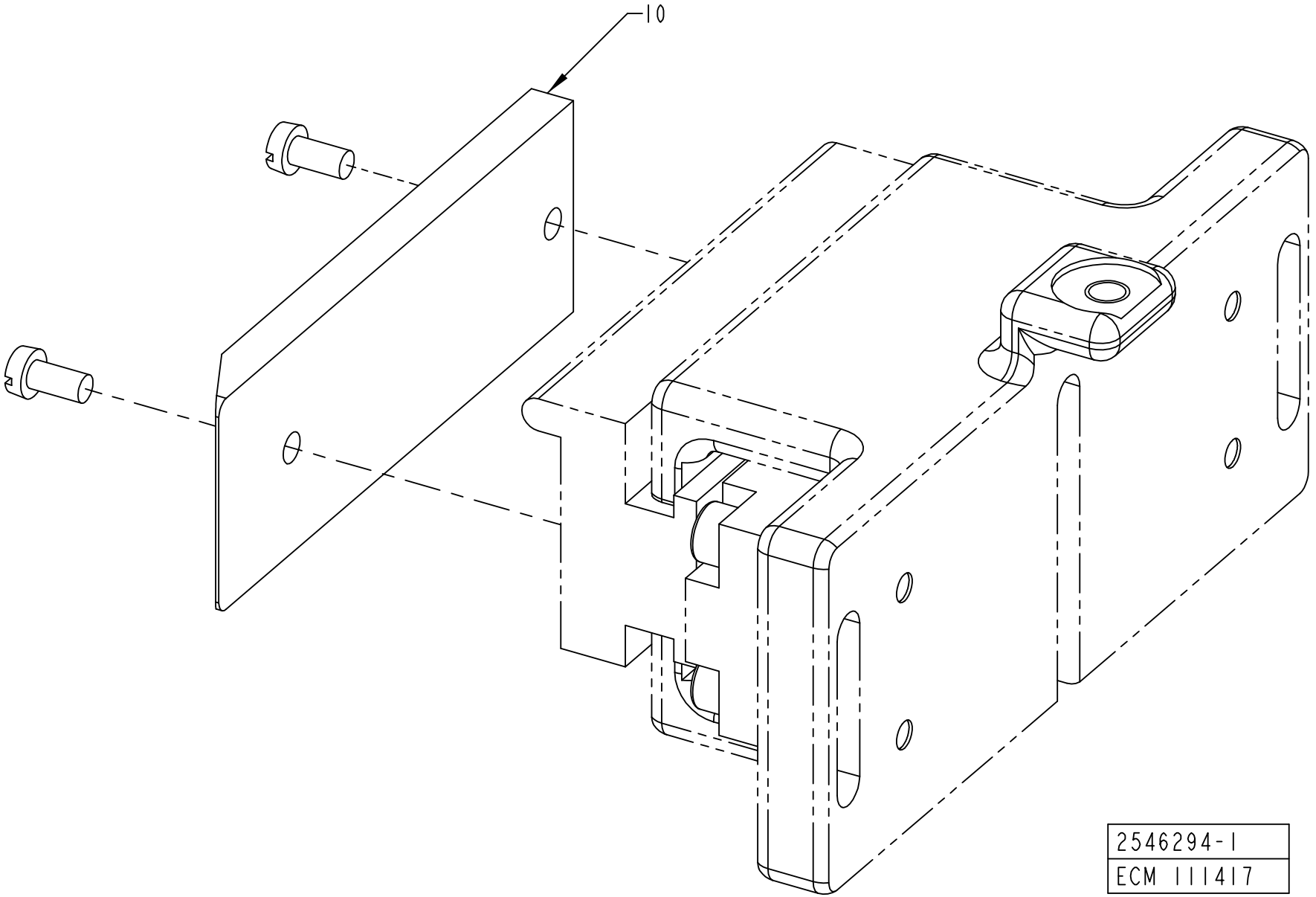
10
2546294-1
ECM 111417

ECM: 185955 - 20041005
Group number: 2546294-0100
Assembly Drawing: 2546294-1_1_AA

Pos	Part No	UN	Qty	Description	Page No	Pos	Part No	UN	Qty	Description	Page No
HOLE72											
010	2546303-0000		1	SEALING PLATE							

OUTER PATCH C'JAW

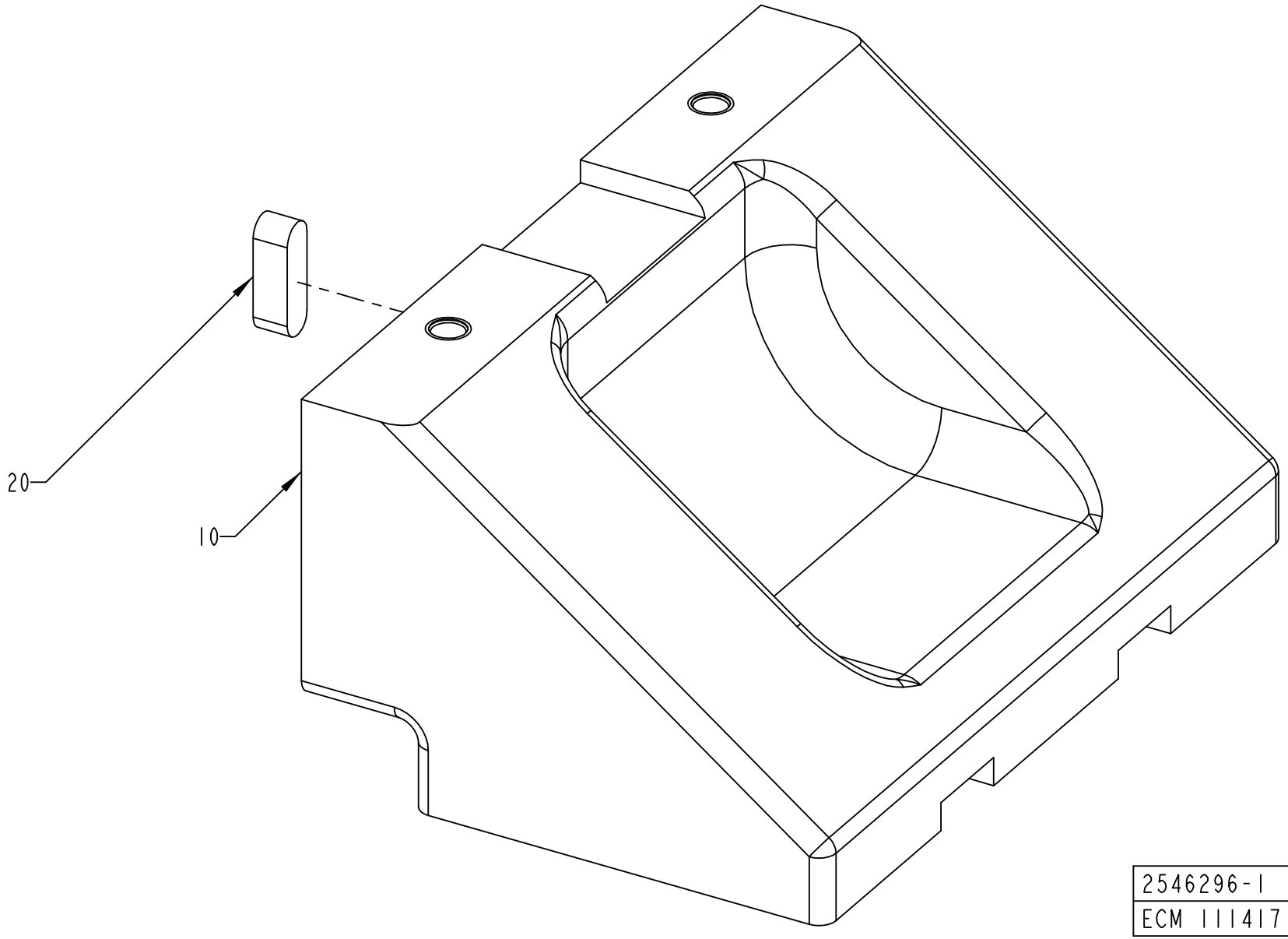

2546296-1
ECM 111417

ECM: 185957 - 20041005
Group number: 2546296-0100
Assembly Drawing: 2546296-1_1_AA

Pos	Part No	UN	Qty	Description	Page No
-					
010	1498113-0000		1	BRACKET	
020	315705-0232		1	PARALLEL KEY W. ROUND ENDS 6X6X20 MM	

Pos	Part No	UN	Qty	Description	Page No

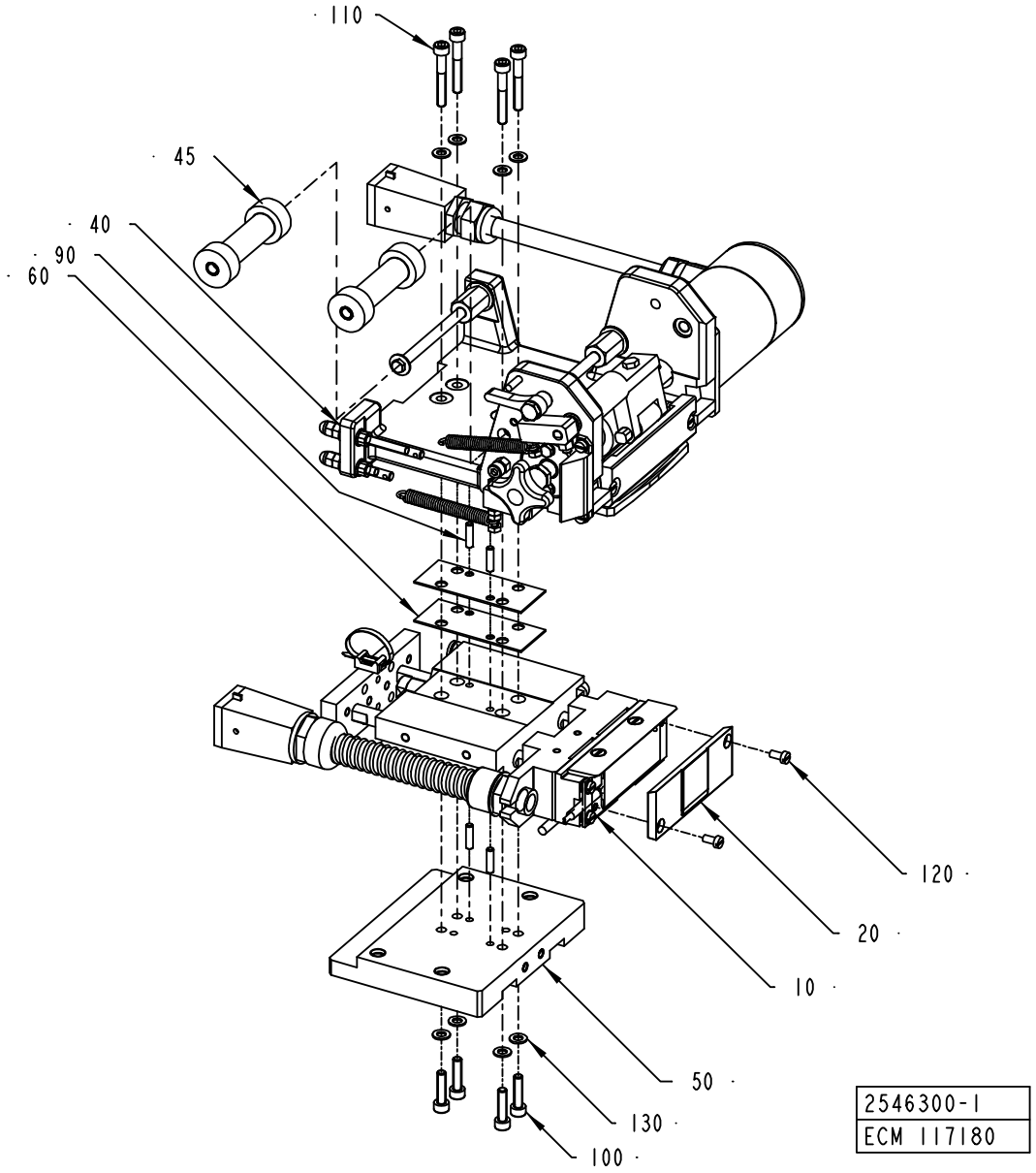
110
45
40
90
60
120
20
10
50
130
100
2546300-1
ECM 117180

ECM: 185960 - 20041005
Group number: 2546300-0100
Assembly Drawing: 2546300-1_1_AB

Pos	Part No	UN	Qty	Description	Page No
-					
010	2525370-0100		1	SEALING UNIT	**3-223**
020	2546297-0100		1	OUTER PATCH FEEDER	**3-225**
040	2546299-0100		1	OUTER PATCH FEEDER	**3-227**
045	2564061-0100		1	OUTER PATCH FEEDER	**3-233**
050	1548368-0000		1	PLATE	
060	2533680-0000		2	SHIM	
090	311101-0270		2	PARALLEL PIN ISO 2338 4H6X16 ST	
100	312115-0331		4	SCREW ISO4762 M5X20 A4	
110	312115-0337		4	SCREW ISO4762 M5X35 A4	
120	312125-0287		2	SCREW ISO 1207 M4X8 A4	
130	315105-0146		8	WASHER BRB5,3X10RFR	

Pos	Part No	UN	Qty	Description	Page No

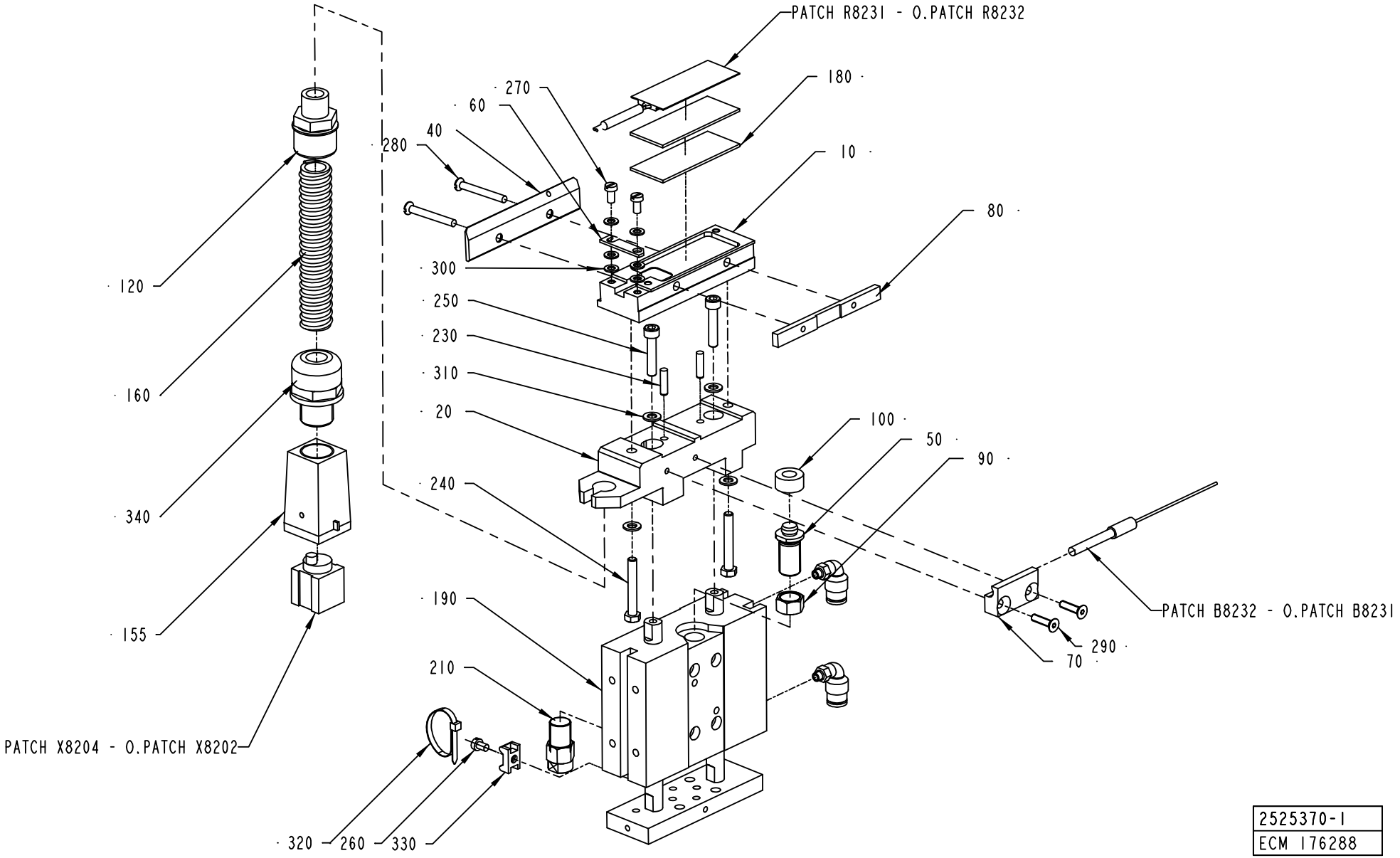

2525370-1
ECM 176288

ECM: 181239 - 20041130
Group number: 2525370-0100
Assembly Drawing: 2525370-1_1_AC

Pos	Part No	UN	Qty	Description	Page No
-					
010	1519364-0000		1	INSULATING RAIL	
020	1517713-0000		1	HOLDER	
040	1519379-0000		1	FLAT KNIFE	
050	2512836-0000		1	STOP SCREW	
060	1349916-0000		1	CLAMP	
070	1478479-0000		1	HOLDER	
080	1487264-0000		1	PLATE	
090	2525377-0000		1	NUT	
100	2526700-0000		1	SPRING	
120	90012-0063		1	CABLE GLAND PR 15,2	
150	90110-0371		1	COVER, HDC-HA-3-TOVL1/11165247-A/1	
160	90152-0033	M	1	SPIRAL CONDUIT FOR PR 15,2(PG 9)	
180	90411-0018		2	INSULATOR, ALU-SILICATE HM 15643	
190	90457-0197		1	CYLINDER WITH INT. GUIDING BORE 25	
200	90458-2164		2	ELBOW PIPE JOINT, EXT.THREAD,D=6MM M5	
210	90458-2460		1	ADJUSTABLE MECH. STOP, FOR CYL. 2711	
230	311103-0270		2	PARALLEL PIN ISO 2338 4M6X16 A1	
240	312105-0337		2	SCREW M6S ISO 4014 M5X35 A480	
250	312115-0333		2	SCREW ISO4762 M5X25 A4	
260	312125-0285		1	SCREW ISO 1207 M4X6 A4	
270	312125-0287		2	SCREW ISO 1207 M4X8 A4	
280	312145-0301		2	SCREW ISO 2009 MFS M4X35 A4	
290	312155-0291		2	SCREW DIN 7991 MF6S M4X12 A480	
300	315105-0136		6	WASHER BRB4,3XRFR	
310	315105-0146		4	WASHER BRB5,3X10RFR	
320	352113-0101		1	CLIP STRIP, 92X2,5 MM	
330	352113-0205		1	ANCHOR PLATES FOR STRIPS, TYPE TM2S8-C10	
340	352136-0113		1	GLAND FITTING PR18,6/PG11 DI=12MM	
B8231B8232	90326-0060		1	THERMOCOUPLE, CR-AL	
R8231R8232	907136-0000		1	HEATER	
	90411-0018		*1*	*INSULATOR, ALU-SILICATE HM 15643*	
X8202X8204	90110-0295		1	CONNECTOR 4 POLE + EARTH	

Pos	Part No	UN	Qty	Description	Page No

Machine Type	Group Description	Used-In	Group Number	Page No

OUTER PATCH FEEDER

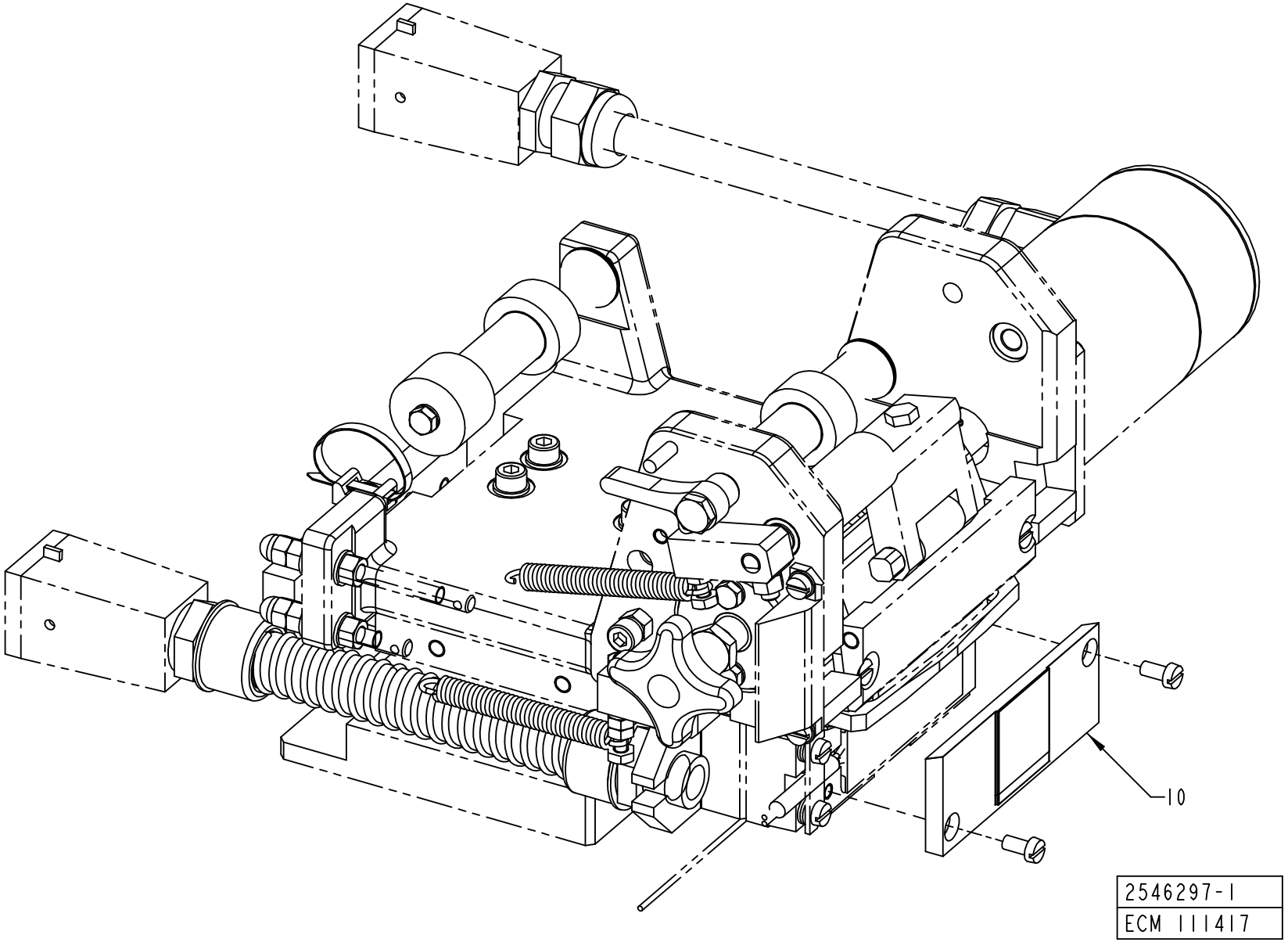

ECM: 185958 - 20041005
Group number: 2546297-0100
Assembly Drawing: 2546297-1_1_AA

Pos	Part No	UN	Qty	Description	Page No	Pos	Part No	UN	Qty	Description	Page No
HOLE72											
010	2504616-0000		1	SEALING PLATE							

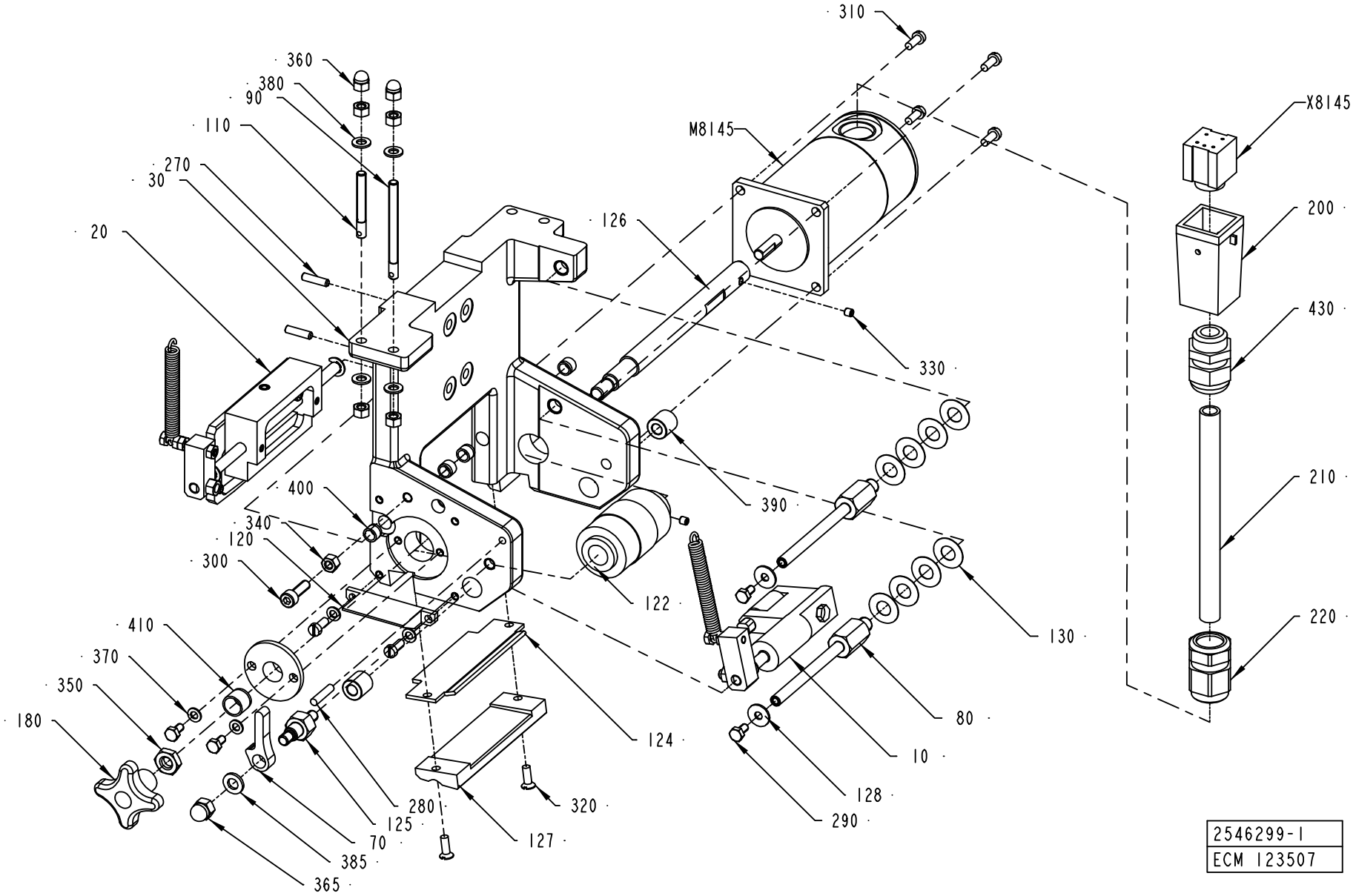
310
360
380
90
110
270
30
20
M8145
126
330
X8145
200
430
210
220
390
400
340
120
300
122
130
410
370
350
180
124
80
10
128
290
280
125
70
385
365
320
127
2546299-1
ECM 123507

ECM: 190620 - 20041201
Group number: 2546299-0100
Assembly Drawing: 2546299-1_1_AC

Pos	Part No	UN	Qty	Description	Page No
-					
010	1558230-0100		1	COUNTER ROLLER	**3-229**
020	1558231-0100		1	KNIFE	**3-231**
030	1517711-0000		1	BRACKET	
070	1498704-0000		1	LEVER	
080	1519544-0000		2	SHAFT	
090	1519996-0000		1	SHAFT	
110	1538231-0000		1	SHAFT	
120	2546281-0000		1	SLIDE	
122	2559354-0000		1	ROLLER	
124	2564062-0000		1	GUIDE	
125	2587325-0000		1	SHAFT	
126	2564064-0000		1	SHAFT	
127	2564071-0000		1	GUIDE	
128	2033-0005		2	WASHER	
130	2033-0008		8	WASHER	
180	90051-0007		1	STELLAR KNOB, INT. THREAD, NO. 40	
200	90110-0372		1	PLUG HOOD	
210	90220-0107	M		SCR. CABLE 5X0,75MM2	
220	90458-0438		1	GLAND, EXTENDED WITH INSERT, M20X1,5	
270	311101-0270		2	PARALLEL PIN ISO 2338 4H6X16 ST	
280	311101-0272		1	PARALLEL PIN ISO 2338 4H6X20 ST	
290	312105-0287		4	SCREW M6S ISO4017 M4X8 A470	
300	312115-0329		1	SCREW ISO4762 M5X16 A4	
310	312125-0289		6	SCREW ISO 1207 M4X10 A4	
320	312145-0291		2	SCREW ISO 2009 MFS M4X12 A4	
330	312318-0283		2	SCREW ISO4029 M4X4 A4	
340	312605-0314		5	HEXAGON NUT, M6M M5 A280	
350	312621-0318		1	ROD END,NUT M8	
360	312705-0314		2	NUT HEX. DOMED CAP MHM-6 M5 A280	
365	312705-0316		1	NUT HEX. DOMED CAP MHM-6 M6 A280	
370	315105-0136		4	WASHER BRB4,3XRFR	
380	315105-0146		4	WASHER BRB5,3X10RFR	
385	315105-0153		1	WASHER BRB6,4X12RFR	
390	321105-0127		2	BEAR. BUSH. WITHOUT FL, 6X12X12 MM	
400	321120-0101		4	BEARING BUSHING W/O FLANGE,6/8X6	
410	321120-0104		1	BEARBUSHING W/O FL,ANGE 10/12X10	
430	352103-0106		1	CABLE GLAND, ST 11, PR18,6/PG11	
M8145	90458-0523		1	STEPPER MOTOR SM 56.2.18J3 Z(202)	
X8145	90110-0295		1	CONNECTOR 4 POLE + EARTH	

Pos	Part No	UN	Qty	Description	Page No

Machine Type | Group Description | Used-In | Group Number | Page No

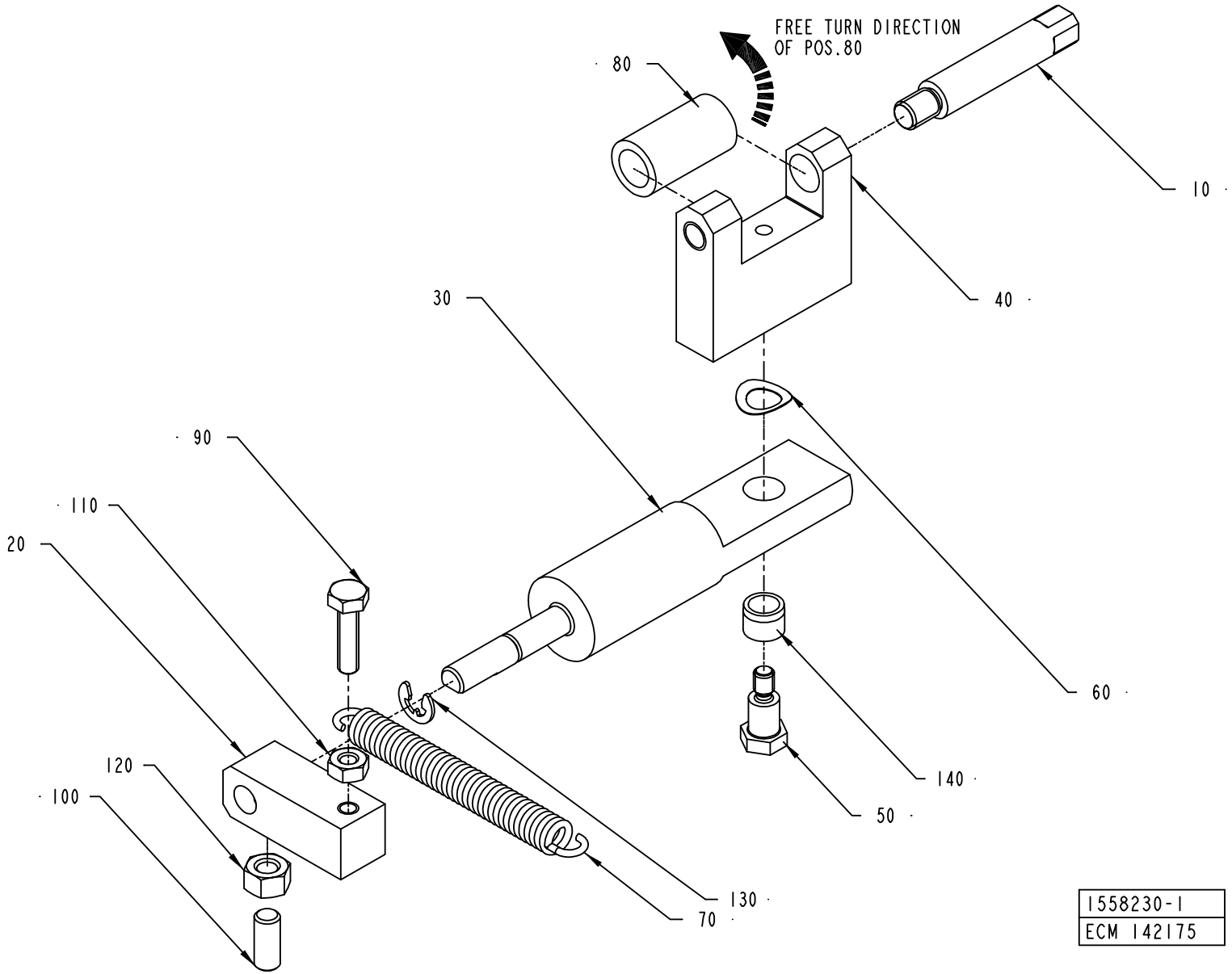
FREE TURN DIRECTION
OF POS.80
80
10
40
30
90
110
20
60
120
140
100
50
130
70
1558230-1
ECM 142175

ECM: 185730 - 20041005
Group number: 1558230-0100
Assembly Drawing: 1558230-1_1_AB

Pos	Part No	UN	Qty	Description	Page No
-					
010	905413-0000		1	SHAFT	
020	1519543-0000		1	HOLDER	
030	1523168-0000		1	SHAFT	
040	1523169-0000		1	BRACKET	
050	905415-0000		1	SHAFT	
060	907487-0000		1	WASHER-CURVED	
070	907719-0000		1	SPRING	
080	90348-0031		1	FREE WHEEL COUPLING	
090	312105-0293		1	SCREW M6S ISO 4017 M4X16 A470	
100	312318-0327		1	SCREW ISO4029 M5X12 A4	
110	312605-0312		1	HEXAGON NUT, M6M M4 A280	
120	312605-0314		1	HEXAGON NUT, M6M M5 A280	
130	315755-0106		1	RETAINING RING SHAFT DIN 6799 4 A2	
140	321120-0101		1	BEARING BUSHING W/O FLANGE,6/8X6	

Pos	Part No	UN	Qty	Description	Page No

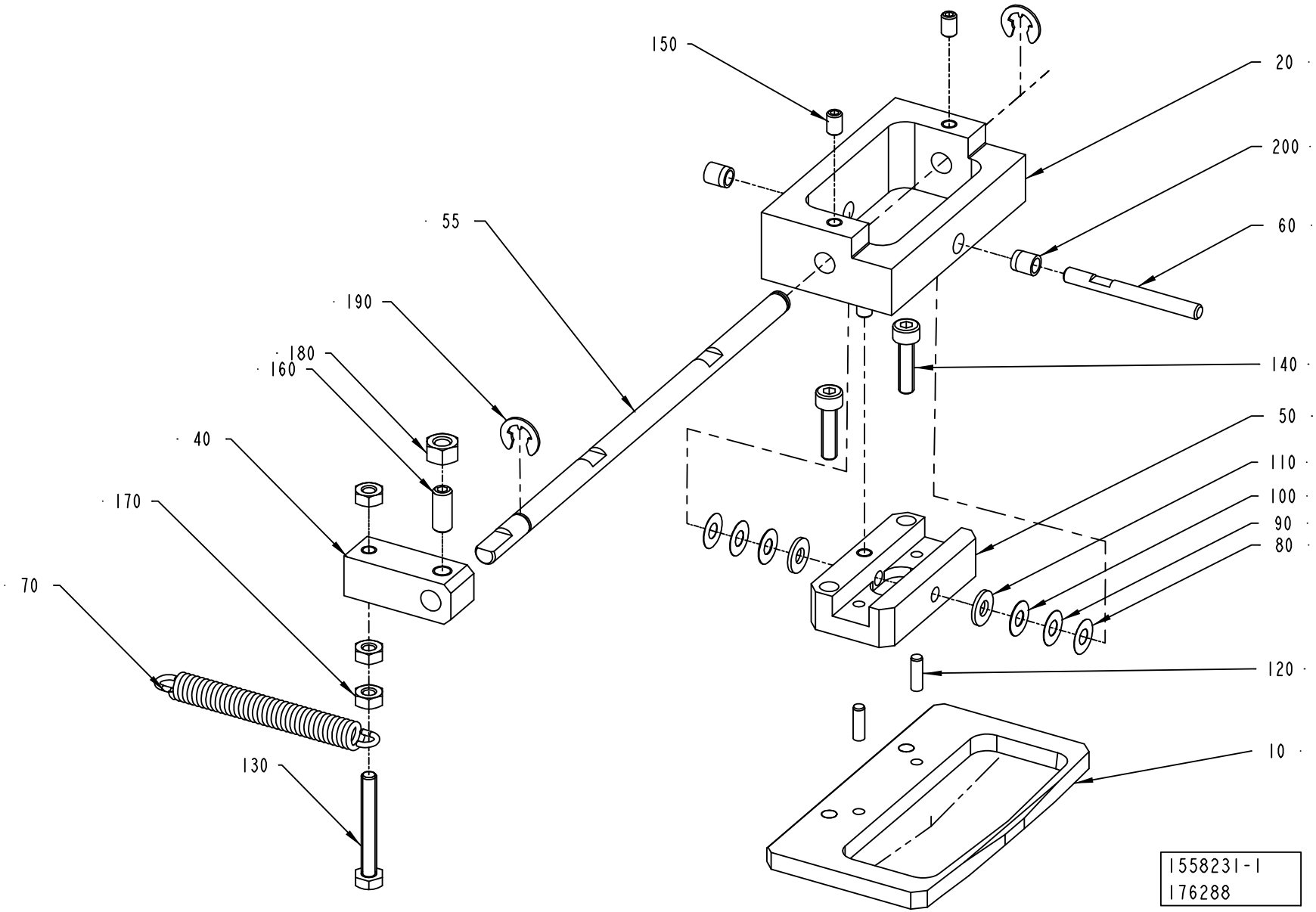
150
20
200
60
55
190
180
160
140
40
50
110
100
90
80
170
70
120
130
10
1558231-1
176288

ECM: 181238 - 20041130
Group number: 1558231-0100
Assembly Drawing: 1558231-1_1_AC

Pos	Part No	UN	Qty	Description	Page No
-					
010	2500097-0000		1	KNIFE	
020	1519365-0000		1	PIVOT PLATE	
040	1519543-0000		1	HOLDER	
050	1523159-0000		1	PIVOT PLATE	
055	2564066-0000		1	SHAFT	
060	1523160-0000		1	PIN	
070	907719-0000		1	SPRING	
080	1350785-0001		1	SHIM	
090	1350785-0002		1	SHIM	
100	1350785-0003		1	SHIM	
110	1350785-0004		1	SHIM	
120	311103-0233		2	PARALLEL PIN ISO 2338 3M6X10 A1	
130	312105-0299		1	SCREW M6S ISO 4017 M4X30 A470	
140	312115-0293		2	SCREW ISO4762 M4X16 A4	
150	312318-0285		3	SCREW ISO4029 M4X6 A4	
160	312318-0327		1	SCREW ISO4029 M5X12 A4	
170	312605-0312		3	HEXAGON NUT, M6M M4 A280	
180	312605-0314		1	HEXAGON NUT, M6M M5 A280	
190	315755-0107		2	RETAINING RING SHAFT DIN 6799 5 A2	
200	321120-0092		2	BEARING BUSHING W/O FL, 4X5,5X6 MM	

Pos	Part No	UN	Qty	Description	Page No

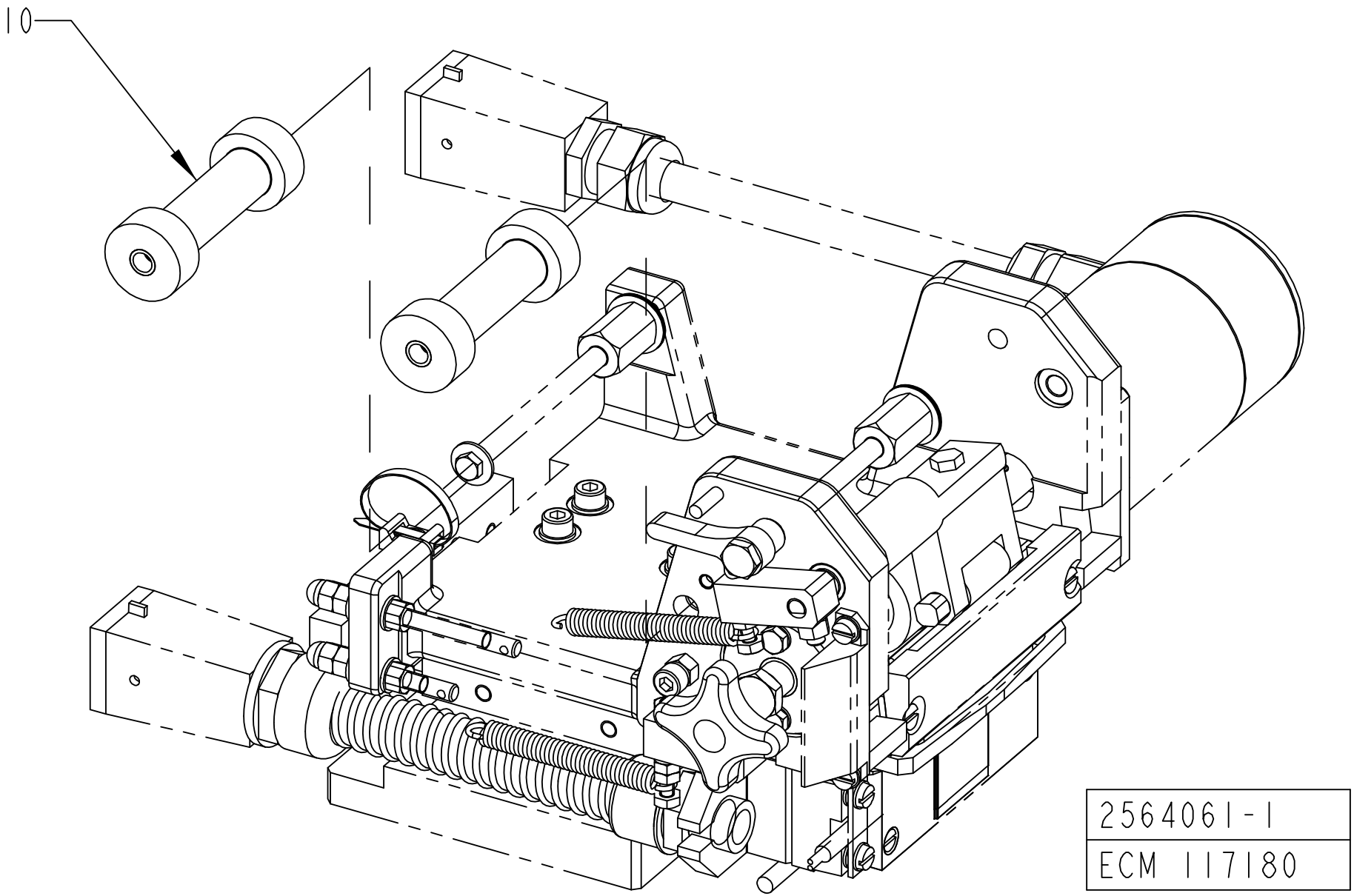
10
2564061-1
ECM 117180

ECM: 187572 - 20041201
Group number: 2564061-0100
Assembly Drawing: 2564061-1_1_AA

Pos	Part No	UN	Qty	Description	Page No
HOLE72					
010	2564044-0004		2	ROLLER	

Pos	Part No	UN	Qty	Description	Page No

MOUNTING BRACKET

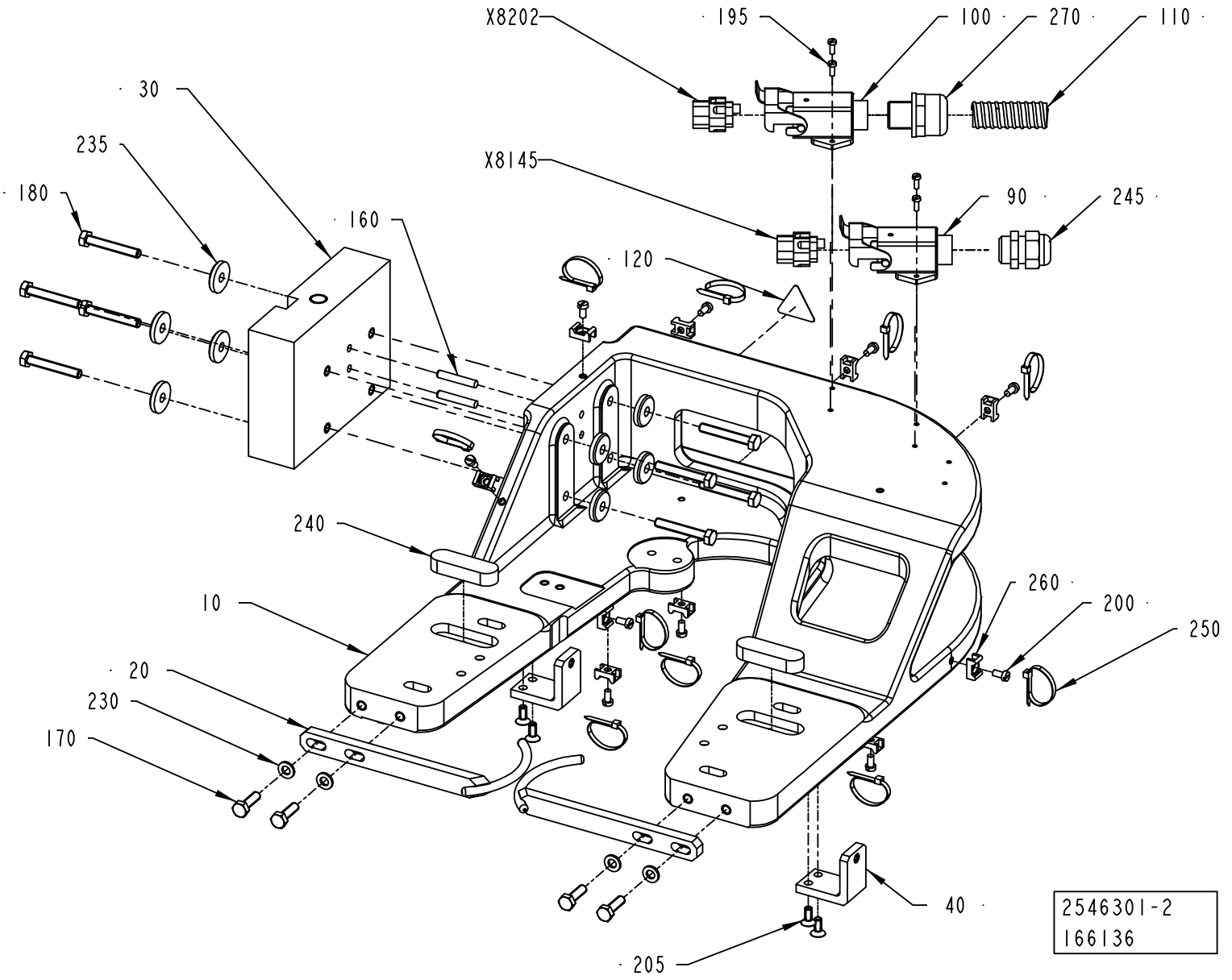

ECM: 190622 - 20041201
Group number: 2546301-0200
Assembly Drawing: 2546301-2_1_AB

Pos	Part No	UN	Qty	Description	Page No
-					
010	2660825-0000		1	BRACKET	
020	1558246-0000		2	PAPER GUIDE	
030	2525381-0000		1	FASTENING BRACKET	
040	2511314-0000		2	BRACKET	
090	90110-0369		1	BASE HOUSING	
100	90110-0370		1	BASE HOUSING	
110	90152-0033	M	3	SPIRAL CONDUIT FOR PR 15,2(PG 9)	
120	90194-0143		1	WARNING SIGN ISO, HOT SURFACE	
160	311103-0314		2	PARALLEL PIN ISO 2338 5M6X30 A1	
170	312105-0370		4	SCREW M6S ISO 4017 M6X20 A480	
180	312109-0378		8	SCREW M6S ISO4017 M6X40 A480	
195	312125-0222		4	SCREW ISO 1207 M3X8 A4	
200	312125-0287		11	SCREW ISO 1207 M4X8 A4	
205	312155-0327		4	SCREW DIN 7991 MF6S M5X12 A480	
210	315105-0124		2	WASHER BRB3,2X6RFR	
230	315105-0153		4	WASHER BRB6,4X12RFR	
235	315125-0153		8	WASHER TBRSB 6,4X22X4 A4	
240	315701-0396		2	PARALLEL KEY W. ROUND ENDS 16X10X50 MM	
245	352103-0106		1	CABLE GLAND, ST 11, PR18,6/PG11	
250	352113-0101		11	CLIP STRIP, 92X2,5 MM	
260	352113-0205		11	ANCHOR PLATES FOR STRIPS, TYPE TM2S8-C10	
270	352136-0113		1	GLAND FITTING PR18,6/PG11 DI=12MM	
X8145	90110-0296		1	FEMALE INSERT HDC-HA-4BS 149840-B/2	
X8202	90110-0296		1	FEMALE INSERT HDC-HA-4BS 149840-B/2	

Pos	Part No	UN	Qty	Description	Page No

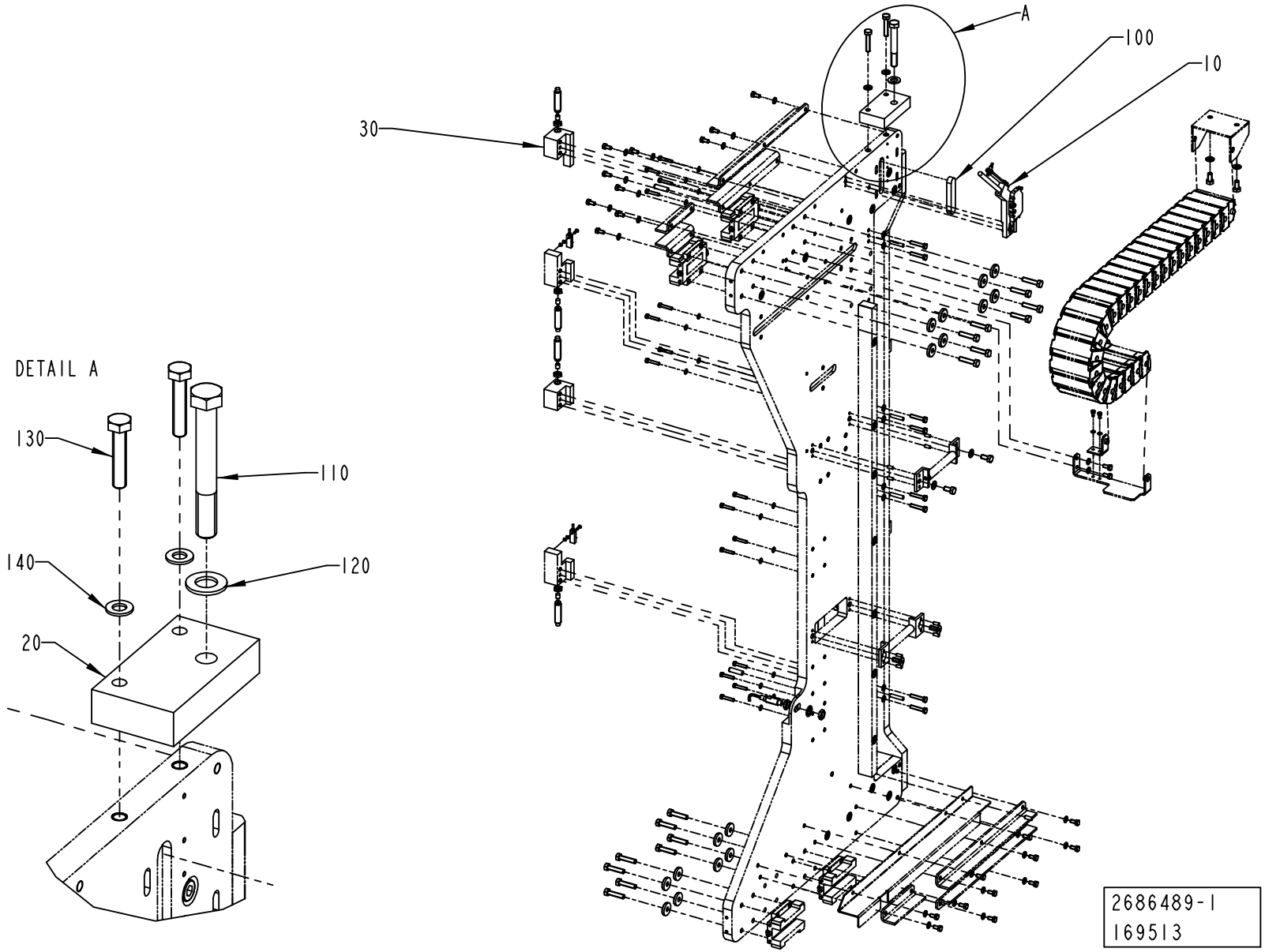
A
100
10
30
DETAIL A
130
110
140
120
20
2686489-1
169513

ECM: 172241 - 20040531
Group number: 2686489-0100
Assembly Drawing: 2686489-1_1_AA

Pos	Part No	UN	Qty	Description	Page No
TPA 0330SQ HOLE48					
030	2506561-0000		1	SUPPORT	
Common Parts					
010	2511307-0100		1	TURNING DEVICE	**3-239**
020	2525382-0000		1	BRACKET	
100	315701-0401		1	PARALLEL KEY W. ROUND ENDS 16X10X80 MM	
110	312105-0550		1	SCREW M6S ISO 4014 M12X90 A480	
120	315105-0178		1	WASHER BRB13X24RFR	
130	312109-0459		2	SCREW M6S ISO 4017 M8X40 A480	
140	315105-0165		2	WASHER BRB8,4X16RFR	

Pos	Part No	UN	Qty	Description	Page No

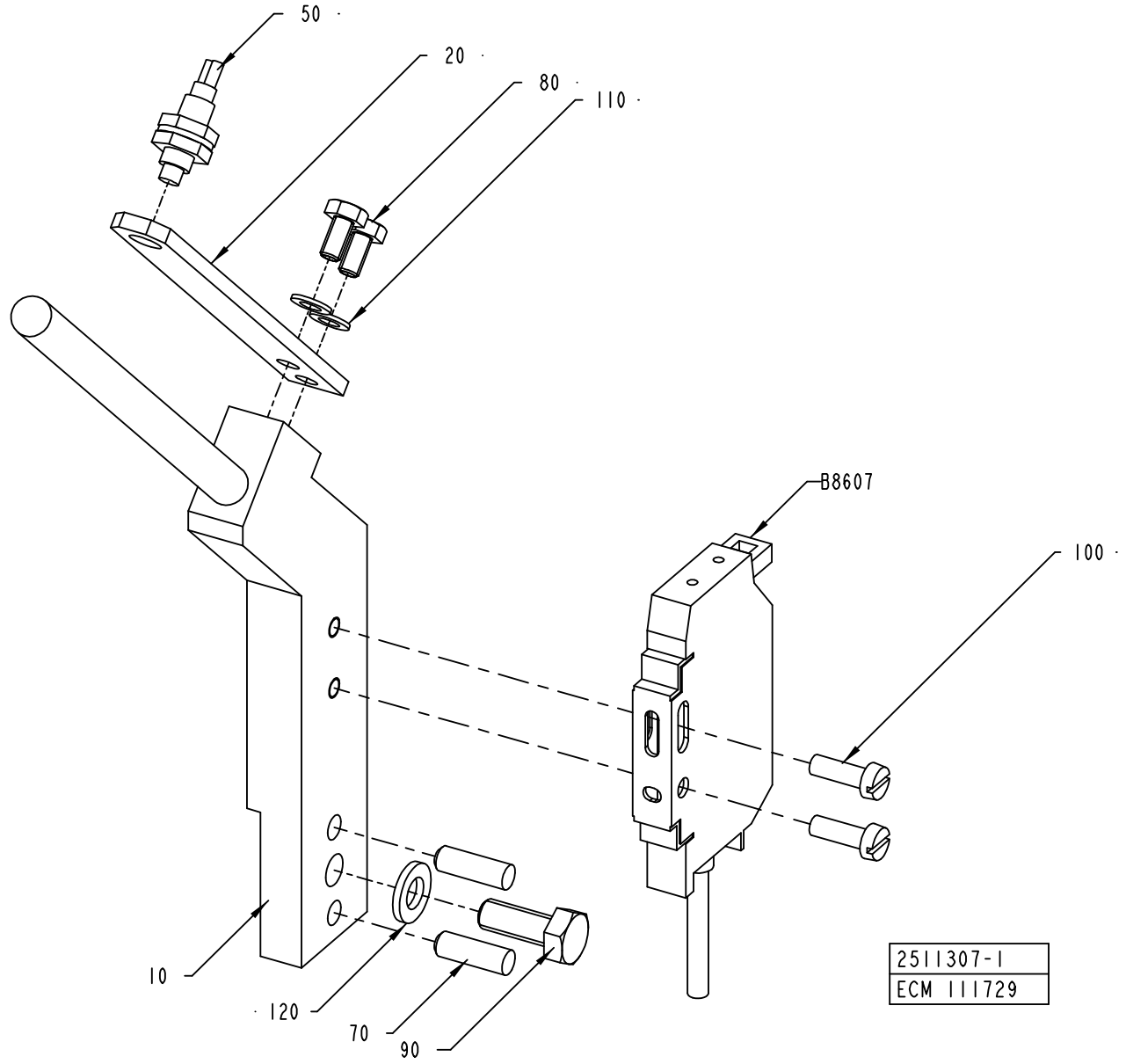
50
20
80
110
B8607
100
10
120
70
90
2511307-1
ECM 111729

ECM: 185812 - 20041005
Group number: 2511307-0100
Assembly Drawing: 2511307-1_1_AA

Pos	Part No	UN	Qty	Description	Page No
-					
010	2503481-0000		1	GUIDE	
020	2503483-0000		1	BRACKET	
050	90232-0325		1	FIBRE E32-DC200	
070	311103-0308		2	PARALLEL PIN ISO 2338 5M6X16 A1	
080	312105-0287		2	SCREW M6S ISO4017 M4X8 A470	
090	312105-0368		1	SCREW M6S ISO 4017 M6X16 A480	
100	312125-0291		2	SCREW ISO 1207 M4X12 A4	
110	315105-0136		2	WASHER BRB4,3XRFR	
120	315105-0153		1	WASHER BRB6,4X12RFR	
B8607	90232-0123		1	PH.CELL WLL170-P135-6011723	

Pos	Part No	UN	Qty	Description	Page No

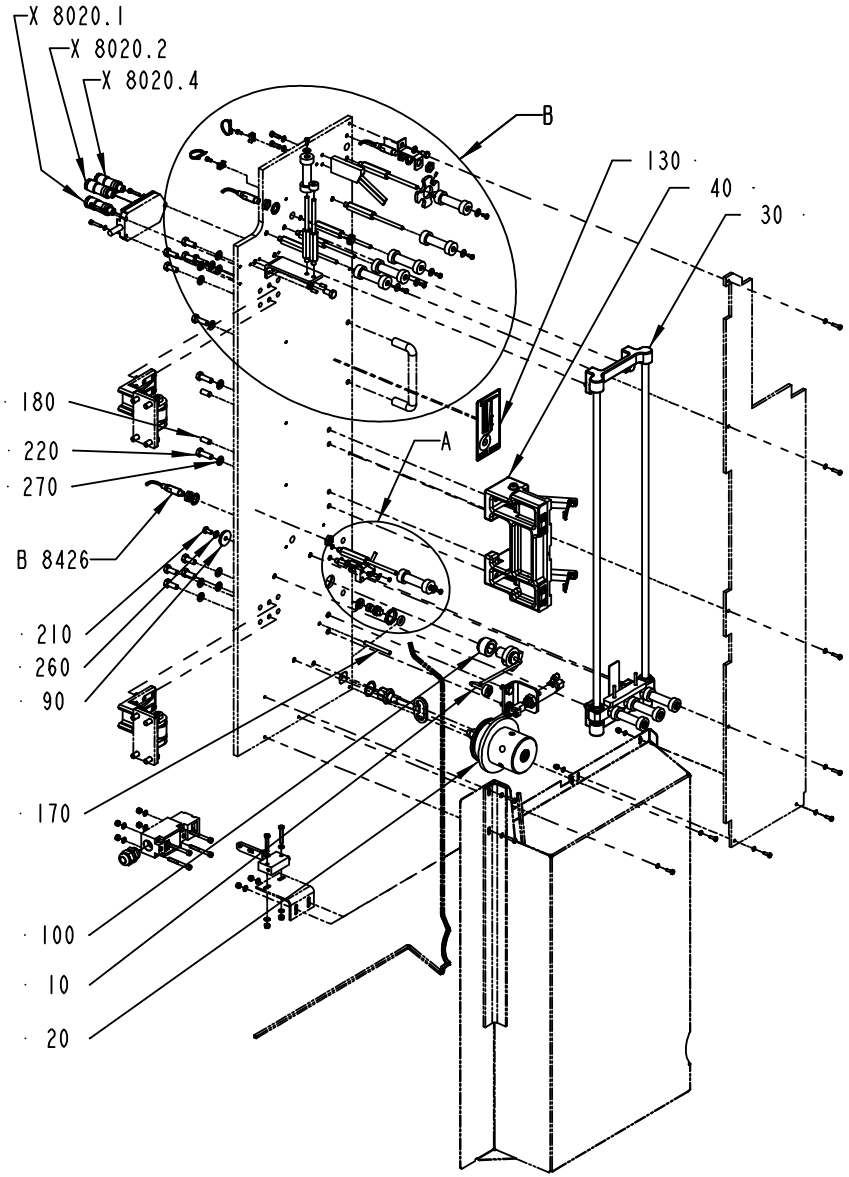

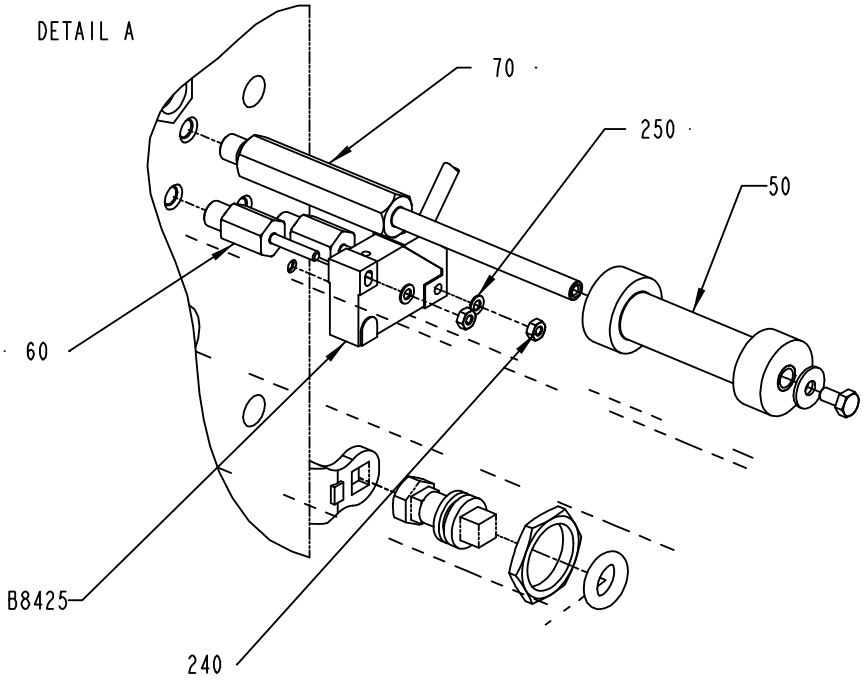

2686488-1
169513

ECM: 171634 - 20040531
Group number: 2686488-0100
Assembly Drawing: 2686488-1_1_AA

This list covers pages from 3-240 to 3-243

Pos	Part No	UN	Qty	Description	Page No
-					
010	1499255-0100		1	DETECTOR	**3-245**
020	2506566-0100		1	BOBBIN HOLDER	**3-247**
030	2506581-0100		1	MAGAZINE	**3-251**
040	2525366-0100		1	SPLICING TABLE	**3-255**
050	2564053-0100		1	OUTER PATCH MAGAZINE	**3-259**
060	1499250-0000		2	AXLE PIN	
070	1499251-0002		8	AXLE PIN	
080	2033-0005		7	WASHER	
090	1498347-0000		1	WASHER	
100	1499253-0000		1	BUSHING	
110	1523262-0000		1	FLAG	
120	1523263-0001		1	BRACKET	
130	2564073-0000		1	LABEL	
140	2639394-0000		1	GUIDE FORK	
150	2525373-0000		1	WHEEL	
160	1539125-0000		1	BRACKET	
170	311103-0369		1	PARALLEL PIN ISO 2338 6M6X60 A1	
180	311103-0401		2	PARALLEL PIN ISO 2338 8M6X20 A1	
190	312105-0287		7	SCREW M6S ISO4017 M4X8 A470	
200	312105-0364		1	SCREW M6S ISO 4017 M6X10 A480	
210	312105-0366		1	SCREW M6S ISO 4017 M6X12 A480	
220	312105-0453		12	SCREW M6S ISO 4017 M8X25 A480	
230	312318-0220		2	SCREW ISO4029 M3X6 A4	
240	312605-0310		2	HEXAGON NUT, M6M M3 A280	
250	315105-0124		2	WASHER BRB3,2X6RFR	
260	315105-0153		2	WASHER BRB6,4X12RFR	
270	315105-0165		13	WASHER BRB8,4X16RFR	
280	312105-0329		2	SCREW M6S ISO 4017 M5X16 A480	
B8425	90044-0194		1	PROX.SW. IN5329/IN3002-BPKG	
B8426	90458-0675		1	PROXIMITY SENSOR, E2EG-X5MB1-5M	
B8427	90458-0675		1	PROXIMITY SENSOR, E2EG-X5MB1-5M	
B8428	90458-0675		1	PROXIMITY SENSOR, E2EG-X5MB1-5M	
X8020.1	90459-0964		1	CONNECTOR MALE 4 PINS	
X8020.2	90459-0964		1	CONNECTOR MALE 4 PINS	
X8020.4	90459-0964		1	CONNECTOR MALE 4 PINS	

Pos	Part No	UN	Qty	Description	Page No

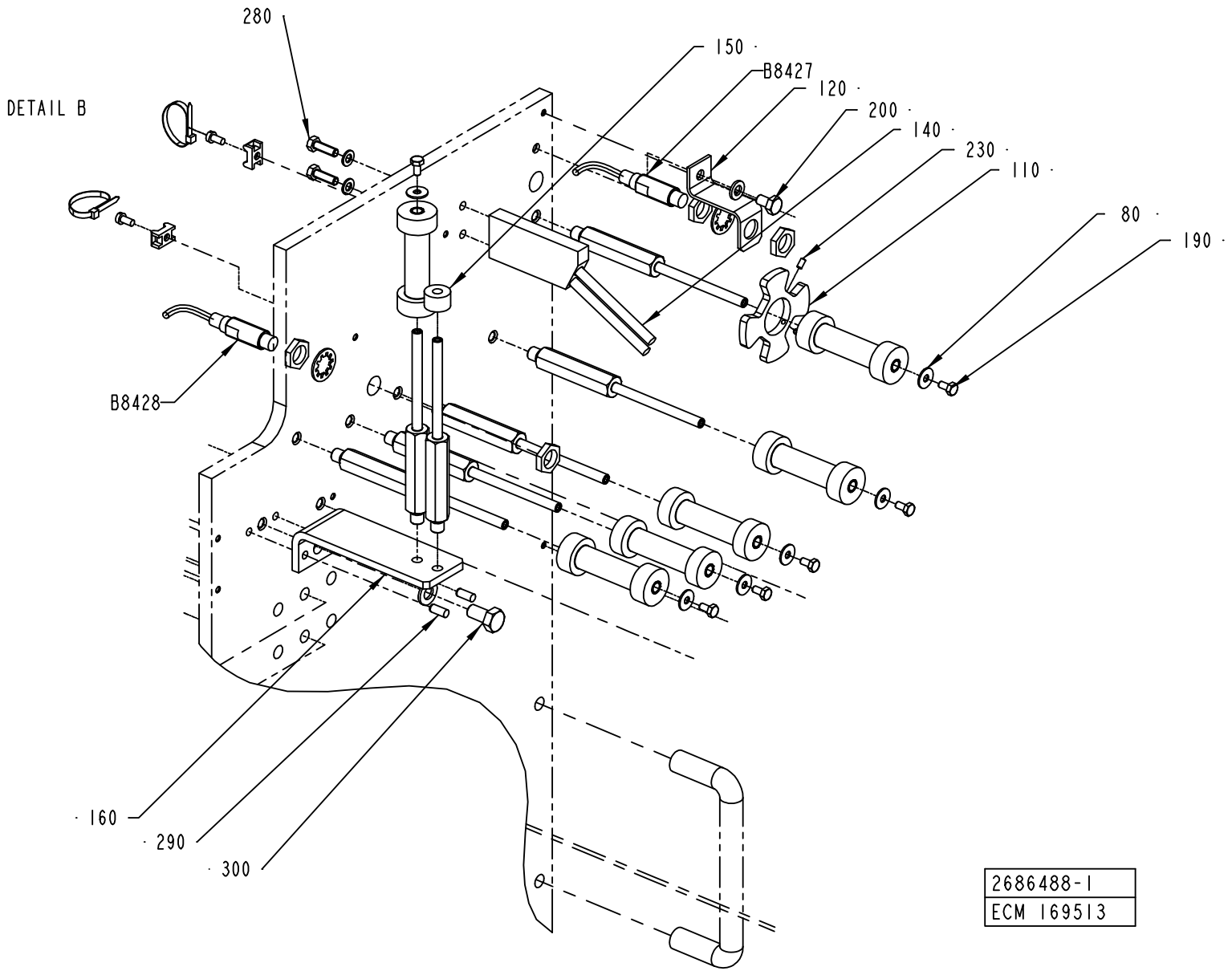

2686488-1
ECM 169513

ECM: 171634 - 20040531
Group number: 2686488-0100
Assembly Drawing: 2686488-1_2_AA

This list covers pages from 3-240 to 3-243

Pos	Part No	UN	Qty	Description	Page No
-					
010	1499255-0100		1	DETECTOR	**3-245**
020	2506566-0100		1	BOBBIN HOLDER	**3-247**
030	2506581-0100		1	MAGAZINE	**3-251**
040	2525366-0100		1	SPLICING TABLE	**3-255**
050	2564053-0100		1	OUTER PATCH MAGAZINE	**3-259**
060	1499250-0000		2	AXLE PIN	
070	1499251-0002		8	AXLE PIN	
080	2033-0005		7	WASHER	
090	1498347-0000		1	WASHER	
100	1499253-0000		1	BUSHING	
110	1523262-0000		1	FLAG	
120	1523263-0001		1	BRACKET	
130	2564073-0000		1	LABEL	
140	2639394-0000		1	GUIDE FORK	
150	2525373-0000		1	WHEEL	
160	1539125-0000		1	BRACKET	
170	311103-0369		1	PARALLEL PIN ISO 2338 6M6X60 A1	
180	311103-0401		2	PARALLEL PIN ISO 2338 8M6X20 A1	
190	312105-0287		7	SCREW M6S ISO4017 M4X8 A470	
200	312105-0364		1	SCREW M6S ISO 4017 M6X10 A480	
210	312105-0366		1	SCREW M6S ISO 4017 M6X12 A480	
220	312105-0453		12	SCREW M6S ISO 4017 M8X25 A480	
230	312318-0220		2	SCREW ISO4029 M3X6 A4	
240	312605-0310		2	HEXAGON NUT, M6M M3 A280	
250	315105-0124		2	WASHER BRB3,2X6RFR	
260	315105-0153		2	WASHER BRB6,4X12RFR	
270	315105-0165		13	WASHER BRB8,4X16RFR	
280	312105-0329		2	SCREW M6S ISO 4017 M5X16 A480	
B8425	90044-0194		1	PROX.SW. IN5329/IN3002-BPKG	
B8426	90458-0675		1	PROXIMITY SENSOR, E2EG-X5MB1-5M	
B8427	90458-0675		1	PROXIMITY SENSOR, E2EG-X5MB1-5M	
B8428	90458-0675		1	PROXIMITY SENSOR, E2EG-X5MB1-5M	
X8020.1	90459-0964		1	CONNECTOR MALE 4 PINS	
X8020.2	90459-0964		1	CONNECTOR MALE 4 PINS	
X8020.4	90459-0964		1	CONNECTOR MALE 4 PINS	

Pos	Part No	UN	Qty	Description	Page No

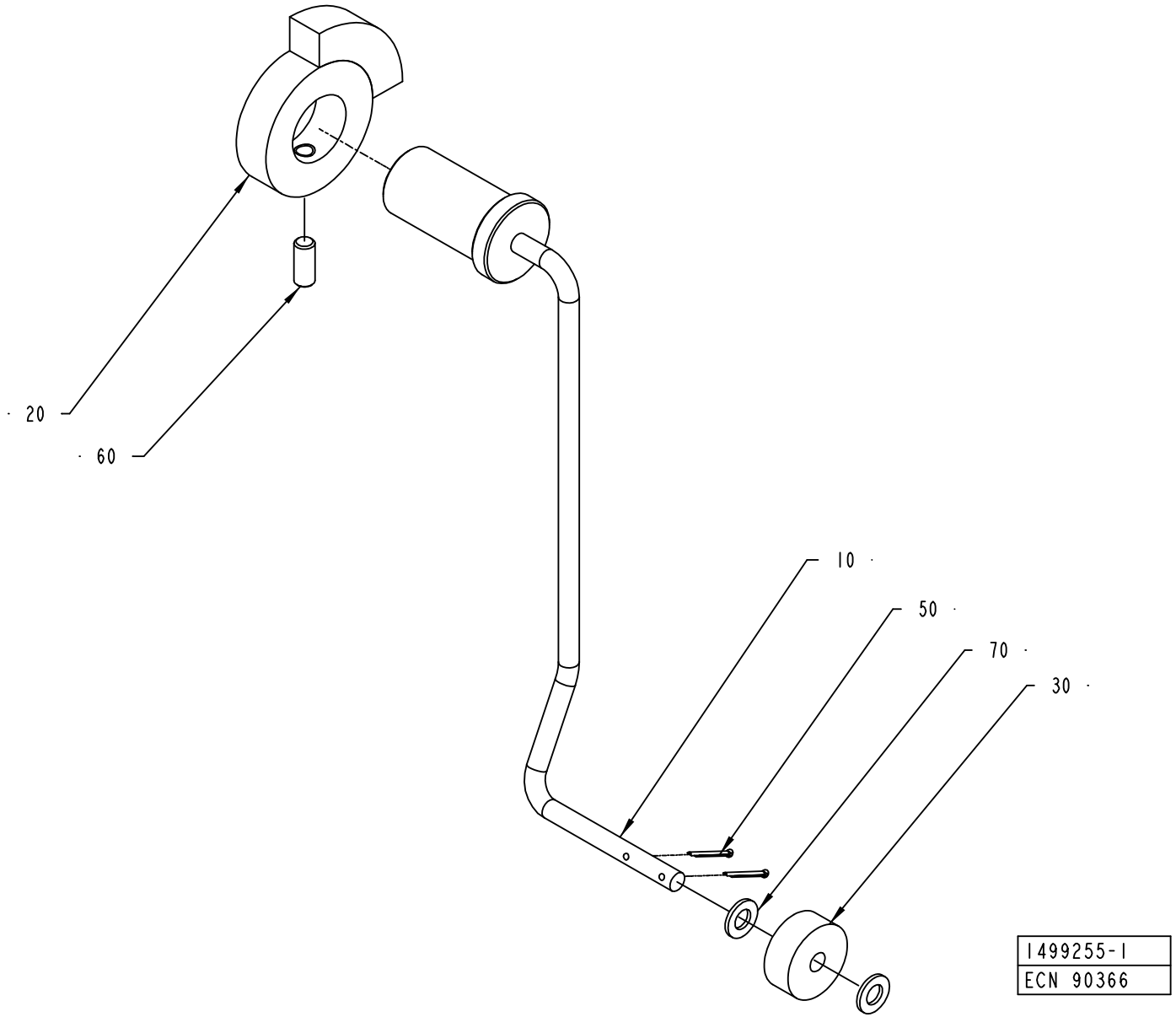
20
60
10
50
70
30
1499255-1
ECN 90366

ECM: 185715 - 20041005
Group number: 1499255-0100
Assembly Drawing: 1499255-1_1_AA

Pos	Part No	UN	Qty	Description	Page No
-					
010	1499252-0000		1	ARM	
020	533972-0000		1	INDICATOR CURVE	
030	234844-0000		1	WHEEL	
050	311411-0138		2	SPLIT PIN SP1,6X12RFR	
060	312318-0327		1	SCREW ISO4029 M5X12 A4	
070	315105-0146		2	WASHER BRB5,3X10RFR	

Pos	Part No	UN	Qty	Description	Page No

BOBBIN HOLDER

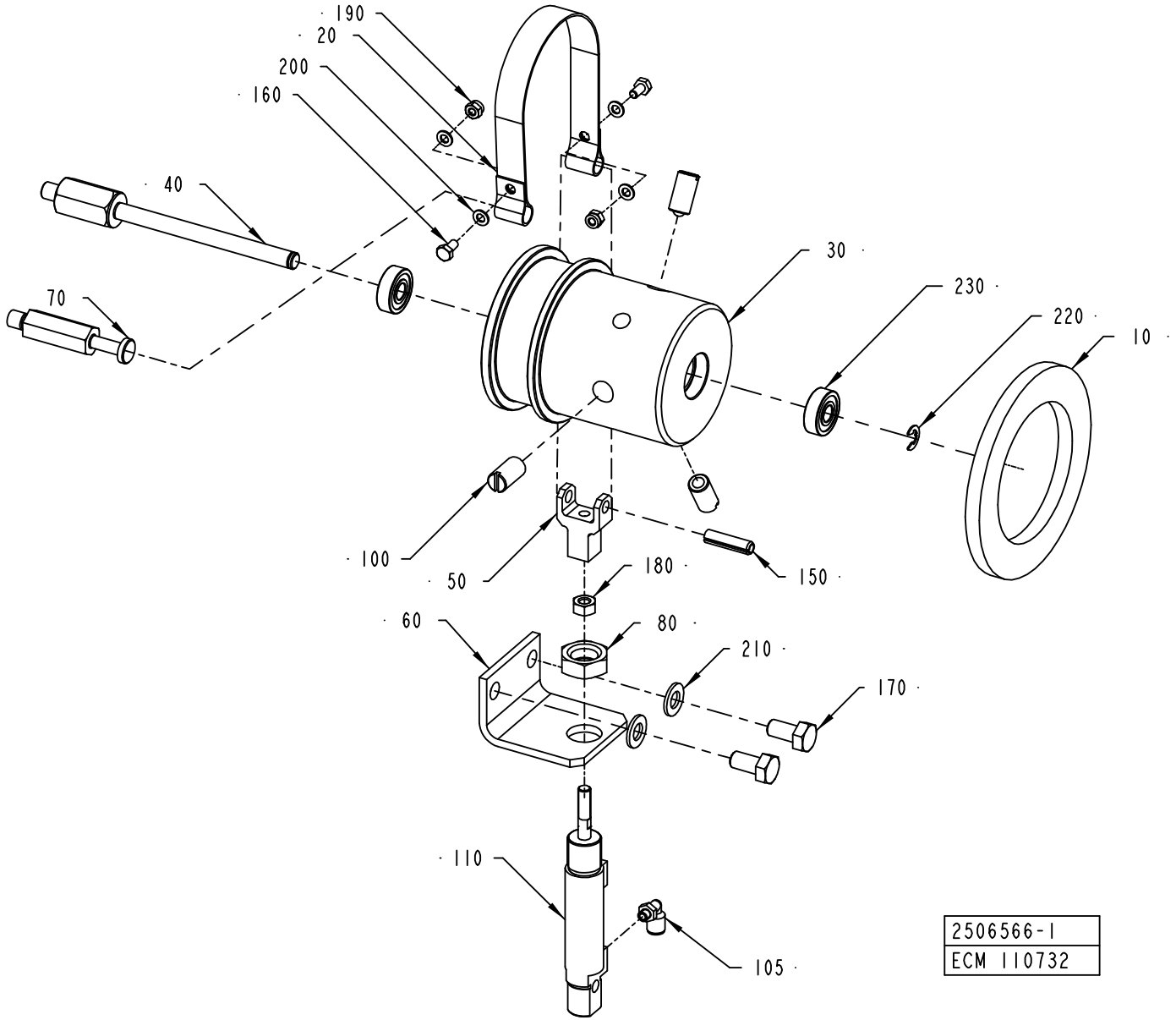

ECM: 185777 - 20041005
Group number: 2506566-0100
Assembly Drawing: 2506566-1_1_AA

Pos	Part No	UN	Qty	Description	Page No
-					
010	2553315-0100		1	BOBBIN HOLDER	**3-249**
020	1498303-0000		1	BELT	
030	1498360-0000		1	HUB	
040	2506563-0000		1	SHAFT	
050	2506564-0000		1	GUIDE FORK	
060	2506565-0000		1	BRACKET	
070	2511316-0000		1	PIN	
080	2511317-0000		1	NUT	
100	90287-0106		3	SCREW SPRINGLOAD. SLOTTED HEAD M10X21	
105	90458-2954		1	ELBOW PIPE JOINT, EXT.THREAD, D=4MM M5	
110	90459-0844		1	SINGLE ACTING, MINI-ISO, CYL 12-10	
150	311112-0341		1	SPRING PIN, ISO 8752 6X24-C	
160	312105-0287		2	SCREW M6S ISO4017 M4X8 A470	
170	312105-0449		2	SCREW M6S ISO 4017 M8X16 A480	
180	312605-0316		1	HEXAGON NUT, M6M M6 A280	
190	312812-0312		2	HEXAGON NUT, NY-LOCK M4 A480	
200	315105-0136		4	WASHER BRB4,3XRFR	
210	315105-0165		2	WASHER BRB8,4X16RFR	
220	315755-0108		1	RETAINING RING SHAFT DIN 6799 6 A2	
230	321302-0298		2	BALL BEARING, 8X22X7 MM	

Pos	Part No	UN	Qty	Description	Page No

BOBBIN HOLDER

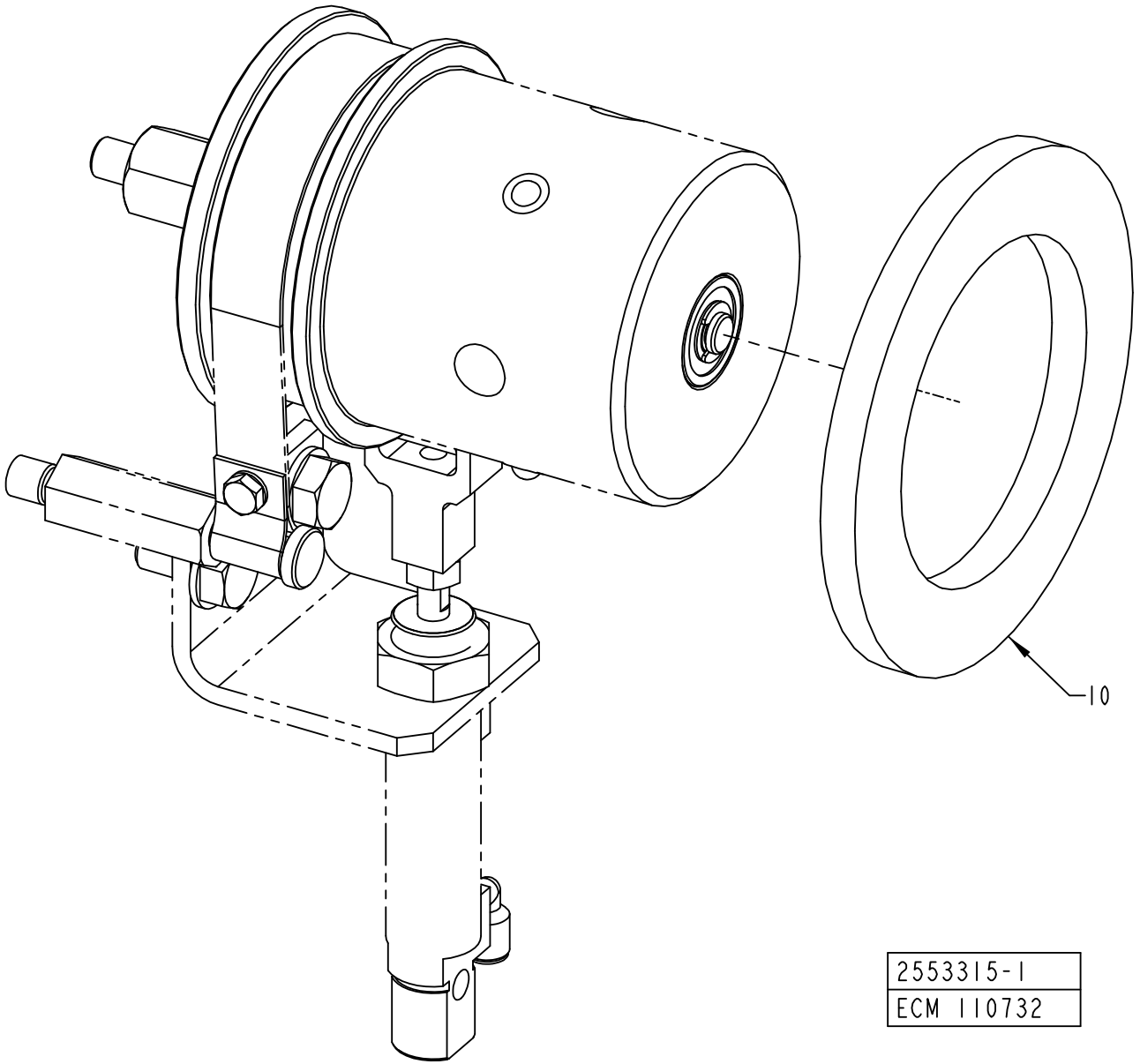

ECM: 111550 - 20021122
Group number: 2553315-0100
Assembly Drawing: 2553315-1_1_AA

Pos	Part No	UN	Qty	Description	Page No	Pos	Part No	UN	Qty	Description	Page No
HOLE72											
010	1347952-0003		1	SPACER							

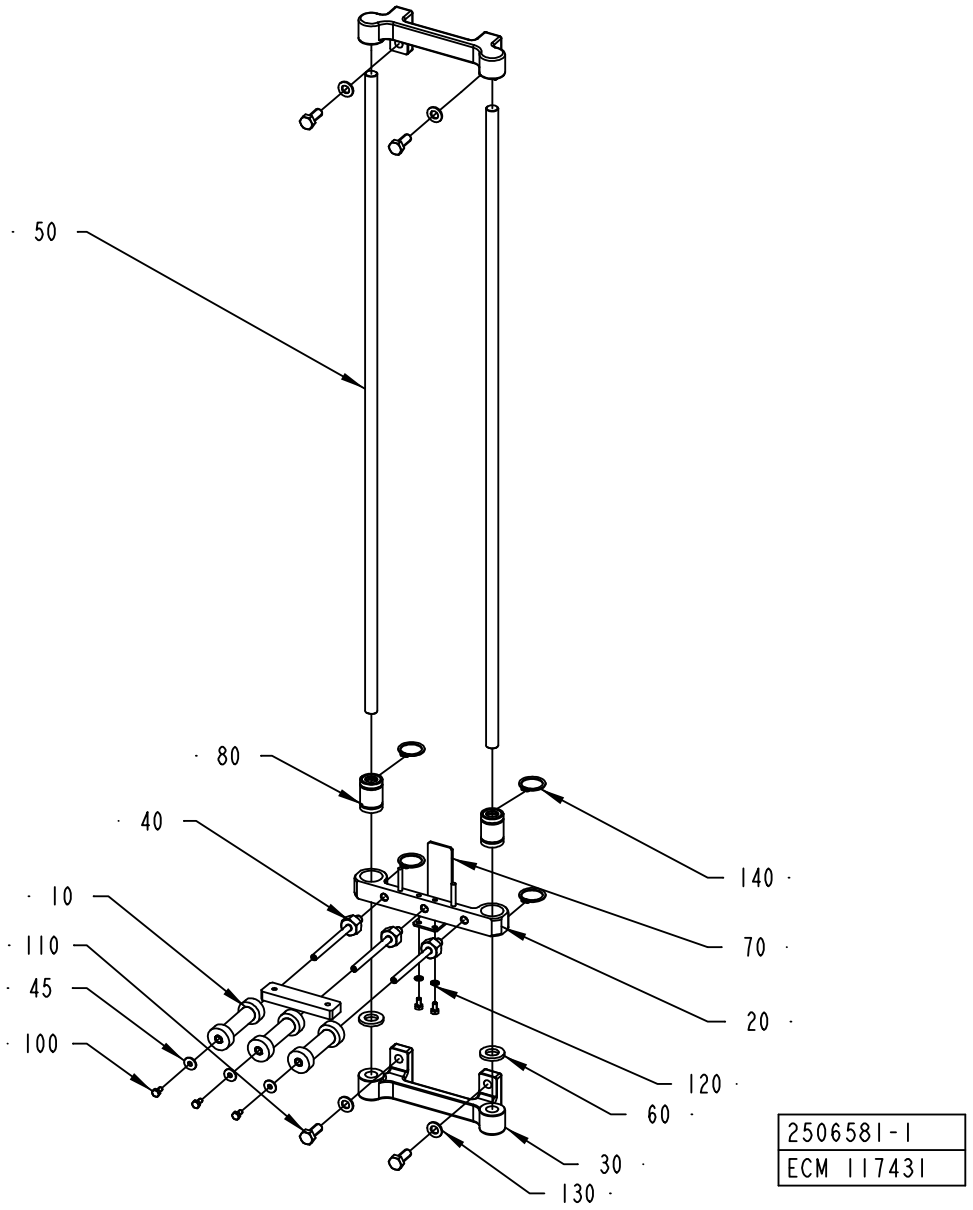
50
80
40
10
110
45
100
140
70
20
120
60
30
130
2506581-1
ECM 117431

ECM: 185782 - 20041005
Group number: 2506581-0100
Assembly Drawing: 2506581-1_1_AB

Pos	Part No	UN	Qty	Description	Page No
-					
010	2564052-0100		1	MAGAZINE	**3-253**
020	2506587-0000		1	BRACKET	
030	2506588-0000		2	BRACKET	
040	2511271-0001		3	SHAFT	
045	2033-0005		3	WASHER	
050	2506589-0002		2	GUIDE RAIL	
060	2511272-0000		2	WASHER	
070	2525371-0000		1	PHOTOCELL BRACKET	
080	90189-0049		2	BALL BUSHING, 12X22X32 MM	
100	312105-0287		5	SCREW M6S ISO4017 M4X8 A470	
110	312105-0451		4	SCREW M6S ISO 4017 M8X20 A480	
120	315105-0136		2	WASHER BRB4,3XRFR	
130	315105-0165		4	WASHER BRB8,4X16RFR	
140	315751-0117		4	RETAINING RING FOR SHAFT DIN 471 22 A2	

Pos	Part No	UN	Qty	Description	Page No

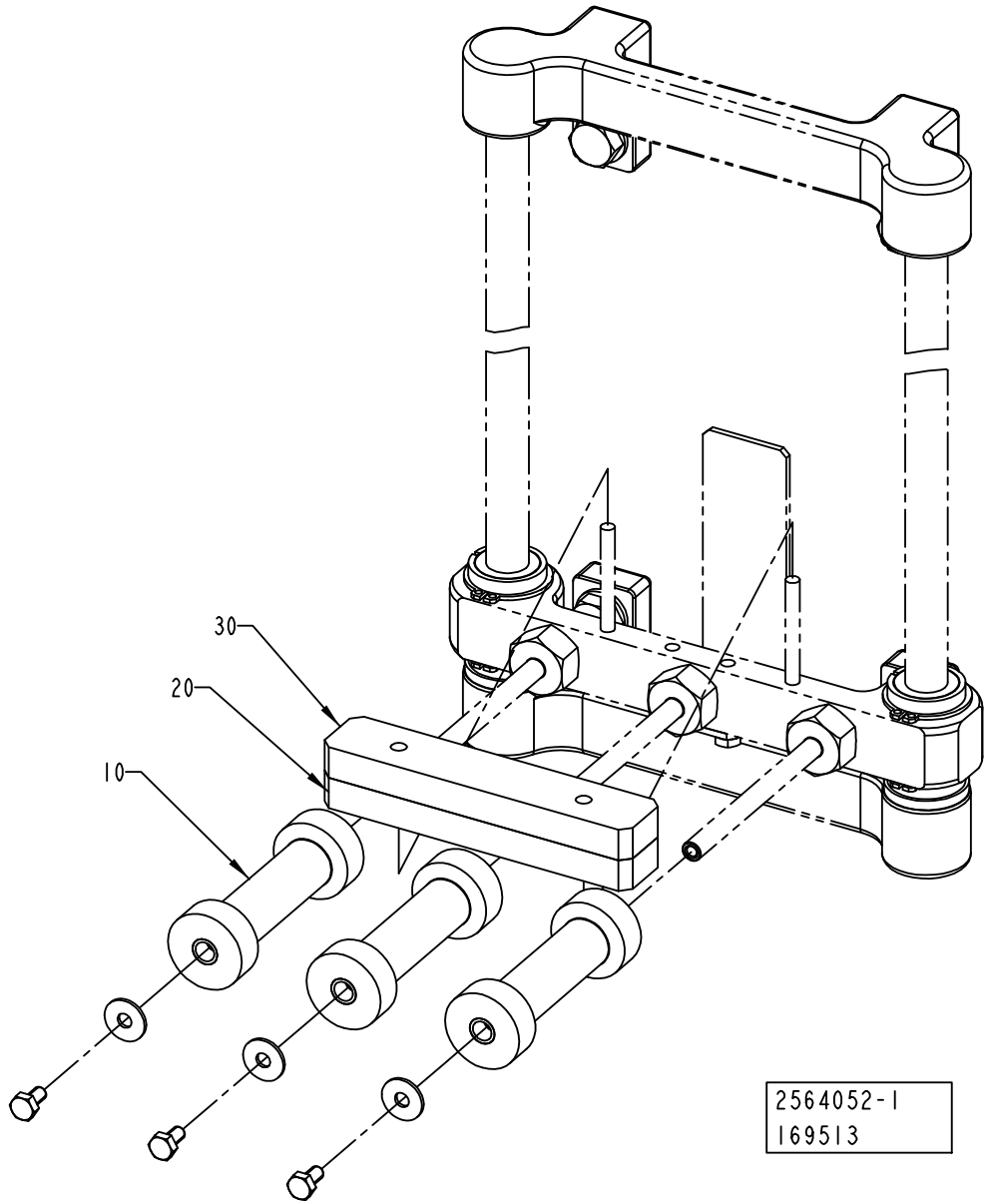
30
20
10
2564052-1
169513

ECM: 188273 - 20041104
Group number: 2564052-0100
Assembly Drawing: 2564052-1_1_AB

Pos	Part No	UN	Qty	Description	Page No
HOLE72					
010	2564043-0003		3	ROLLER	
Common Parts					
020	2608240-0002		1	WEIGHT	
030	2608240-0001		1	WEIGHT	

Pos	Part No	UN	Qty	Description	Page No

SPLICING TABLE

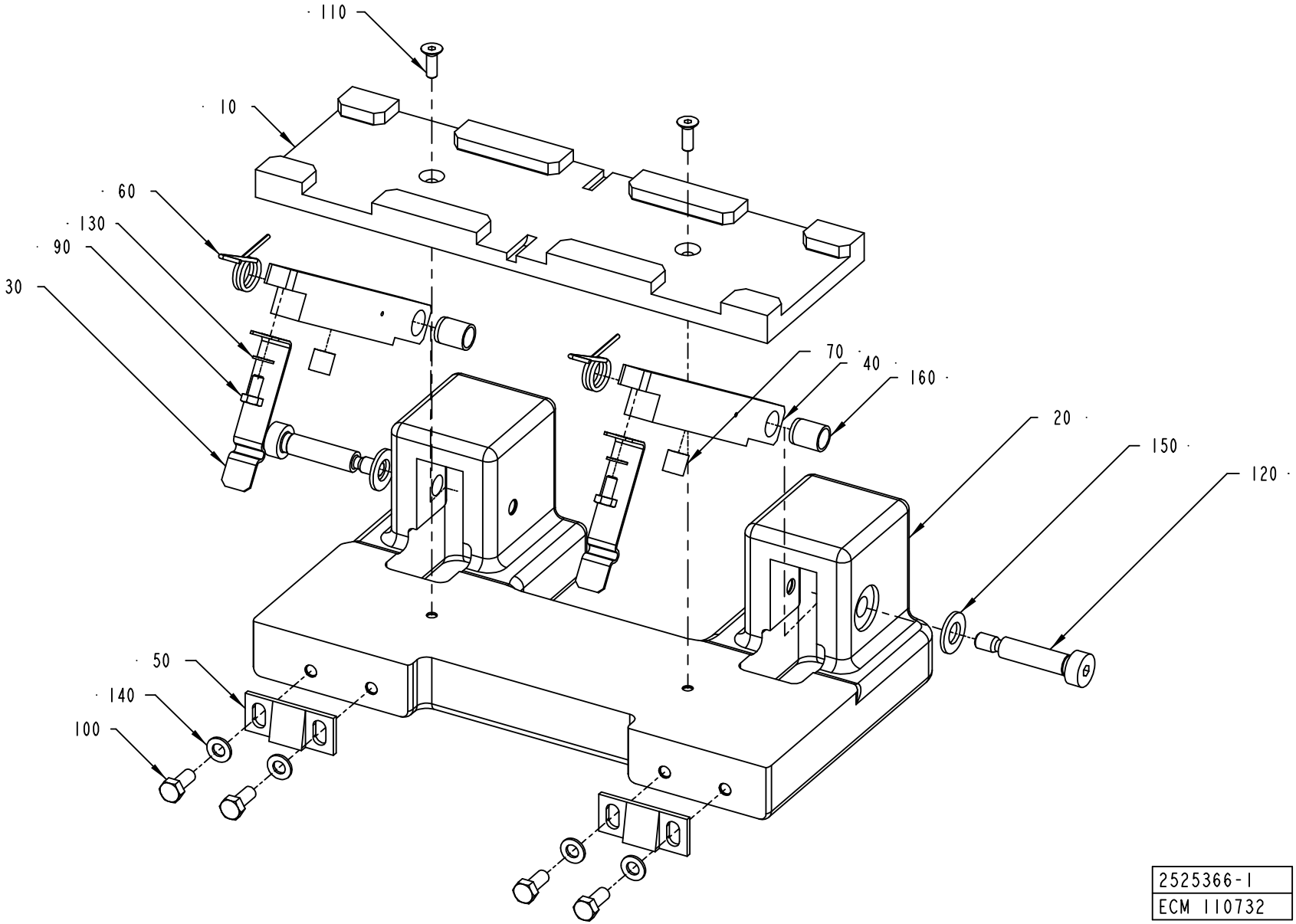

ECM: 185815 - 20041005
Group number: 2525366-0100
Assembly Drawing: 2525366-1_1_AA

Pos	Part No	UN	Qty	Description	Page No
-					
010	2533683-0100		1	SPLICING TABLE	**3-257**
020	2525349-0000		1	BRACKET	
030	1519463-0000		2	LOCKING CLAMP	
040	2525360-0000		2	LOCKING FINGER	
050	532022-0000		2	LOCK BAR	
060	544427-0000		2	TURN SPRING	
070	2525368-0000		2	PUSHER	
090	312105-0287		2	SCREW M6S ISO4017 M4X8 A470	
100	312105-0327		4	SCREW M6S ISO 4017 M5X12 A480	
110	312155-0291		2	SCREW DIN 7991 MF6S M4X12 A480	
120	312180-0455		2	SCREW ISO7379 H8X30	
130	315105-0136		2	WASHER BRB4,3XRFR	
140	315105-0146		4	WASHER BRB5,3X10RFR	
150	315105-0165		2	WASHER BRB8,4X16RFR	
160	321120-0100		2	BEARING BUSHING W/O FLANGE 8/10X12	

Pos	Part No	UN	Qty	Description	Page No

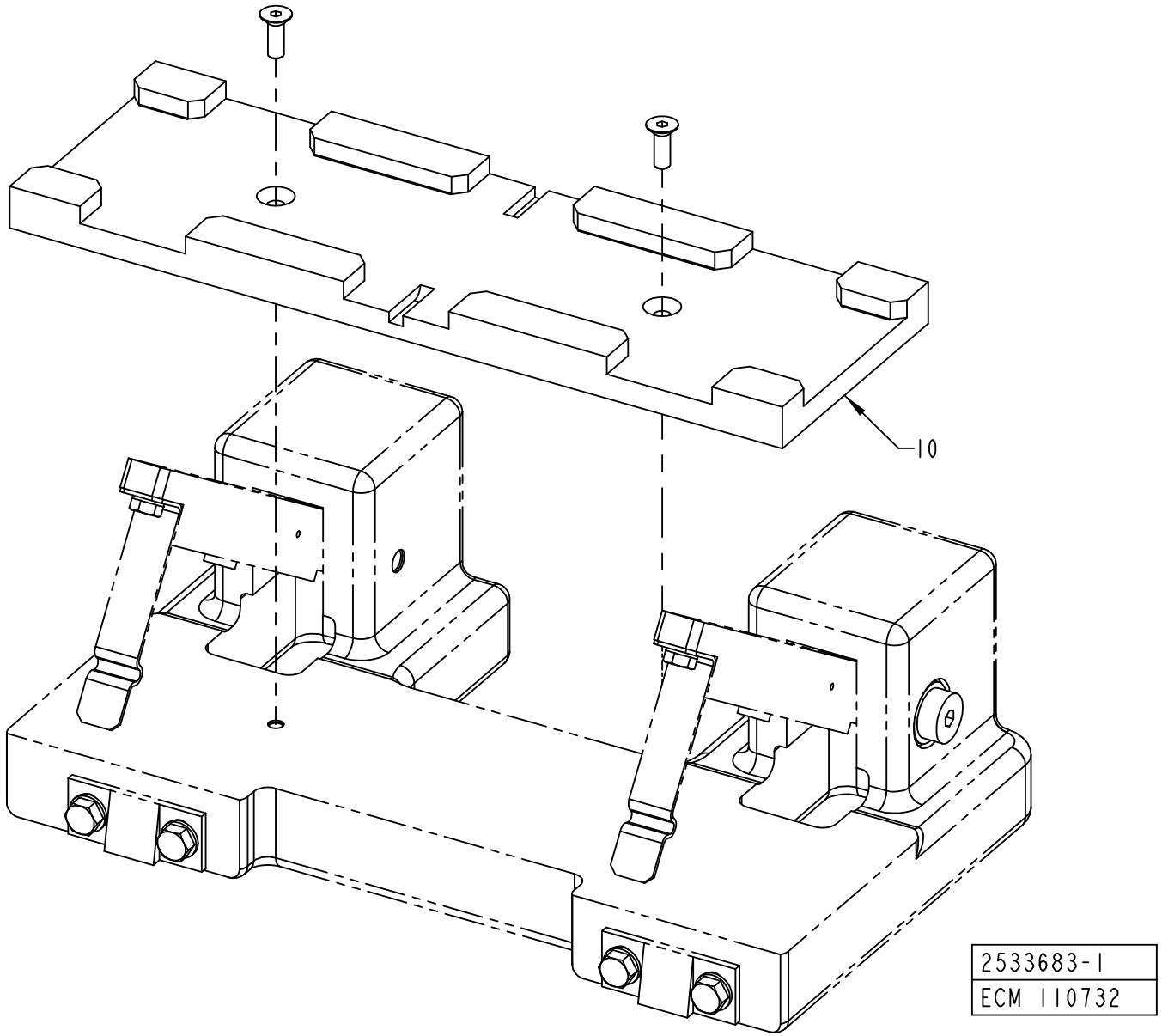
10
2533683-1
ECM 110732

ECM: 188274 - 20041104
Group number: 2533683-0100
Assembly Drawing: 2533683-1_1_AA

Pos	Part No	UN	Qty	Description	Page No
HOLE72					
010	1499296-0002		1	GUIDE	

Pos	Part No	UN	Qty	Description	Page No

Machine Type | Group Description | Used-In | Group Number | Page No

OUTER PATCH MAGAZINE

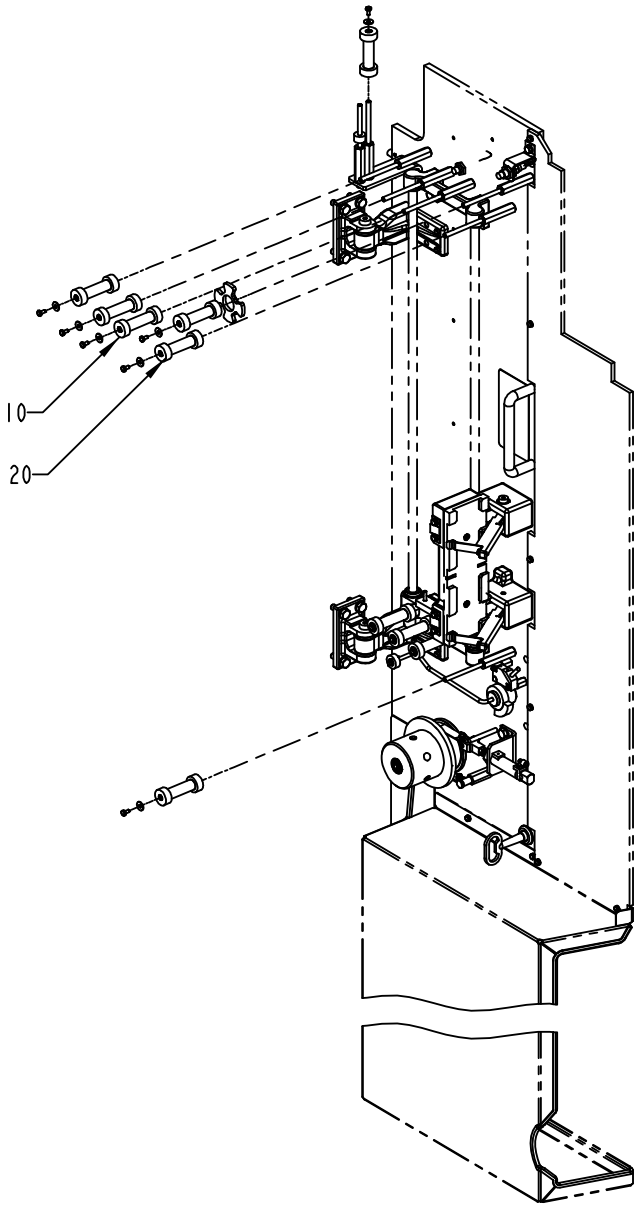

2564053-1
ECM 123507

ECM: 188275 - 20041104
Group number: 2564053-0100
Assembly Drawing: 2564053-1_1_AB

Pos	Part No	UN	Qty	Description	Page No
HOLE72					
010	2564043-0003		2	ROLLER	
020	2564044-0004		5	ROLLER	

Pos	Part No	UN	Qty	Description	Page No

Machine Type | Group Description | Used-In | Group Number | Page No

This page is intentionally left blank.

ECM: 134803 - 20040531
Group number: 2693161-0100
Assembly Drawing:

Pos	Part No	UN	Qty	Description	Page No
-					
010	2545239-0100		1	ELECTRIC MATERIALS	**3-263**
020	90166-0081	M	8	TUBE 6 MM PA BLUE	
030	90166-0109	M	9	TUBE 4 MM PA,TRANSP.	

Pos	Part No	UN	Qty	Description	Page No

Machine Type | Group Description | Used-In | Group Number | Page No

This page is intentionally left blank.

ECM: 107947 - 20021220
Group number: 2545239-0100
Assembly Drawing:

Pos	Part No	UN	Qty	Description	Page No
-					
010	90110-0385		1	MARKING HOLDER, 4.242.3853.0	
020	90119-0056		1	RELAY, AUXILIARY MK3P5-S 24VDC	
020	90119-0056		1	RELAY, AUXILIARY MK3P5-S 24VDC	
030	90129-0006		1	BASE, S3-B	
040	90220-0183	M	3	SCR. CABLE 2X0,34MM2	
050	351160-0102	M	20	CABLE (1UNIT = 100M)	
060	351162-0102	M	3	CABLE AWM 1X0,75 MM2 YELLOW-GREEN	
070	352113-0101		20	CLIP STRIP, 92X2,5 MM	
080	352113-0102		30	CLIP-STRIP, BLACK 188X4,8 MM	
090	353001-0115		5	END SLEEVE 2,5/14	
100	353001-0116		30	END SLEEVE H0.5/14 ORANGE	
110	353001-0119		50	END SLEEVE H 1.0/14 YELLOW	
120	353103-0120		5	CABLE SHOE 1,25 MM2 RED	
130	353300-0003		1	SHRINKABLE HOSE	
140	353300-0006		1	SHRINKABLE HOSE	
150	359000-0031		5	MARKING CO01/3"JORD"	
160	359000-0032		5	MARKING CO02/3"JORD"	
170	359000-0100		10	MARKING CO01/3"0"	
180	359000-0101		20	MARKING CO01/3"1"	
190	359000-0102		10	MARKING CO01/3"2"	
200	359000-0103		10	MARKING CO01/3"3"	
210	359000-0104		10	MARKING CO01/3"4"	
220	359000-0105		10	MARKING CO01/3"5"	
230	359000-0106		10	MARKING CO01/3"6"	
240	359000-0109		10	MARKING CO01/3"9"	
250	359000-0200		10	MARKING CO02/3"0"	
260	359000-0201		20	MARKING CO02/3"1"	
270	359000-0202		10	MARKING CO02/3"2"	
280	359000-0203		10	MARKING CO02/3"3"	
290	359000-0204		10	MARKING CO02/3"4"	
300	359000-0205		10	MARKING CO02/3"5"	
310	359000-0206		10	MARKING CO02/3"6"	
320	359000-0207		10	MARKING CO02/3"7"	
330	359000-0208		10	MARKING CO02/3"8"	
340	359000-0209		10	MARKING COLLAR 02/3 "9" YELLOW	
350	359000-0672		5	MARKING CO02/3"W"	
360	359005-0010		2	MARKING LABEL KIT 0 - 9, 04.841.2150.0	
370	359005-0050		1	MARKING LABEL KIT X, 04.841.4550.0	
380	359009-0100		5	CABLE MARKER, YELLOW, PK 2/4, 0	
390	359009-0101		5	CABLE MARKER, YELLOW, PK 2/4, 1	
400	359009-0104		5	CABLE MARKER, YELLOW, PK 2/4, 4	
410	359009-0109		5	CABLE MARKER, YELLOW, PK 2/4, 9	
420	359009-0222		5	CABLE MARKER, YELLOW, PK 2/4, W	

Machine Type | Group Description | Used-In | Group Number | Page No

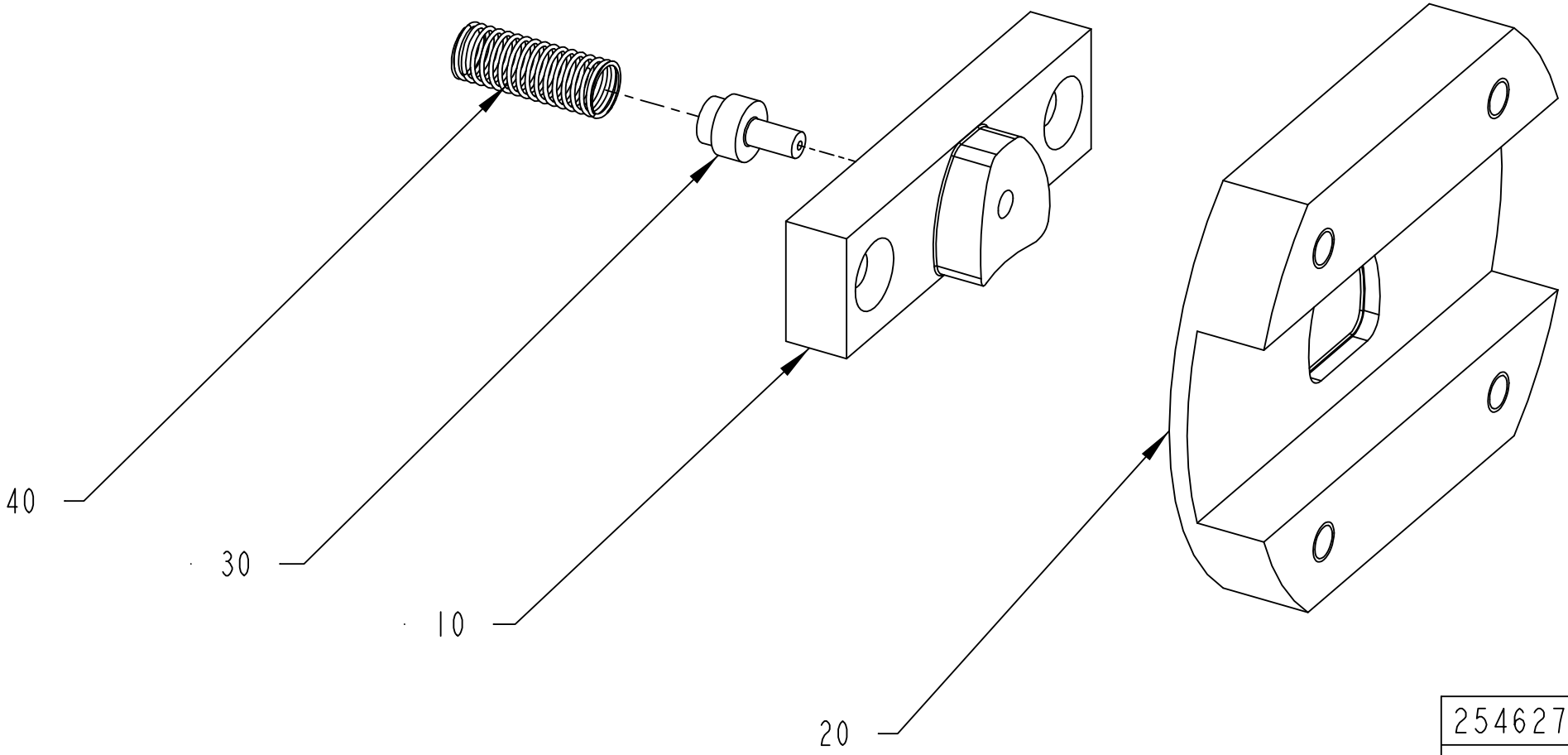

2546278-1
ECM 117180

ECM: 178212 - 20041130
Group number: 2546278-0100
Assembly Drawing: 2546278-1_1_AB

Pos	Part No	UN	Qty	Description	Page No
HOLE60					
010	1484230-0000		1	PUNCH	
020	1484231-0000		1	DIE	
HOLE72					
010	2511644-0000		1	PUNCH	
020	2511639-0000		1	DIE	
030	2501815-0000		1	PIN	
040	90335-0005		1	SPRING	
HOLE90					
010	2603683-0000		1	PUNCH	
020	2603682-0000		1	DIE	
HOLE91					
010	2604554-0000		1	PUNCH	
020	2604555-0000		1	DIE	
HOLE95					
010	2657828-0000		1	PUNCH	
020	2657829-0000		1	DIE	

Pos	Part No	UN	Qty	Description	Page No

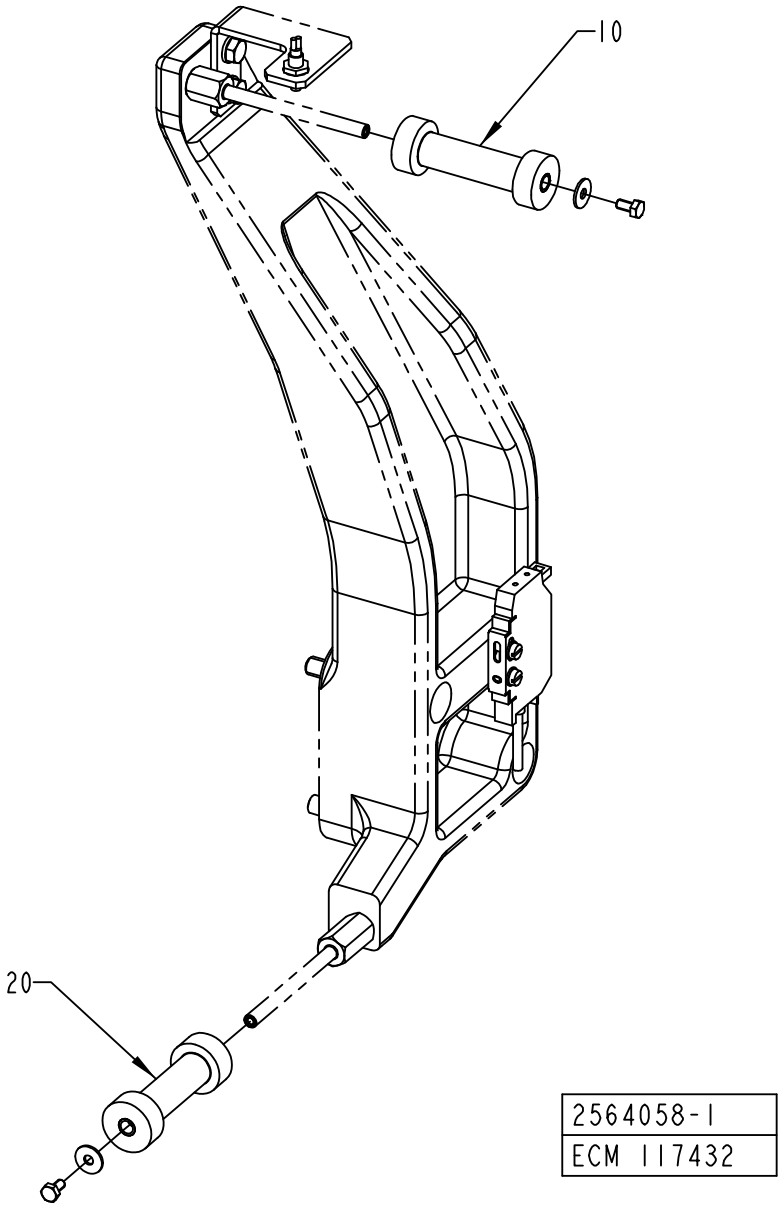
10
20
2564058-1
ECM 117432

ECM: 180505 - 20041130
Group number: 2564058-0100
Assembly Drawing: 2564058-1_1_AA

Pos	Part No	UN	Qty	Description	Page No
HOLE60					
010	2564043-0007		1	ROLLER	
020	2564044-0009		1	ROLLER	
HOLE72					
010	2564043-0002		1	ROLLER	
020	2564044-0002		1	ROLLER	
HOLE90					
010	2564043-0004		1	ROLLER	
020	2564044-0005		1	ROLLER	
HOLE95, HOLE91					
010	2564043-0005		1	ROLLER	
020	2564044-0006		1	ROLLER	

Pos	Part No	UN	Qty	Description	Page No

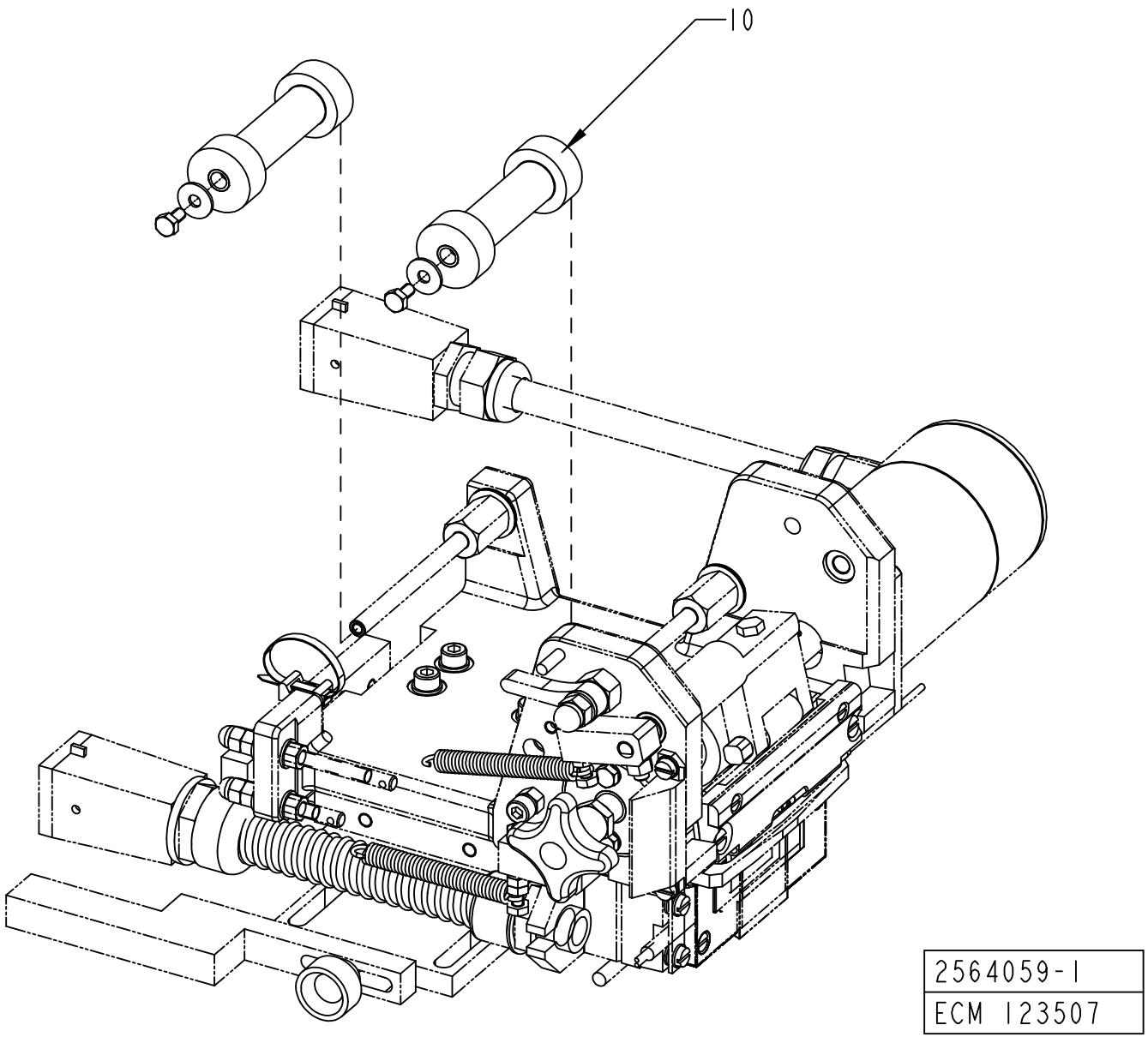
10
2564059-1
ECM 123507

ECM: 180888 - 20041130
Group number: 2564059-0100
Assembly Drawing: 2564059-1_1_AB

Pos	Part No	UN	Qty	Description	Page No
TBA 0200B HOLE95, TBA 0250B HOLE95, TBA 0330S HOLE95, TBA 0375S HOLE95, TBA 0500S HOLE95					
010	2564044-0011		2	ROLLER	
TBA 1000B HOLE95, TBA 1000S HOLE95, TBA 1000SQ HOLE95, TBA 1500S HOLE95, TBA 1890S HOLE91, TBA 1890S HOLE95, TBA 2000S HOLE91, TBA 2000S HOLE95					
010	2564044-0012		2	ROLLER	
TBA 1000S HOLE90					
010	2564044-0008		2	ROLLER	
TPA 0330SQ HOLE48					
010	2564044-0001		2	ROLLER	
TPA 1000SQ HOLE60					
010	2564044-0014		2	ROLLER	

Pos	Part No	UN	Qty	Description	Page No

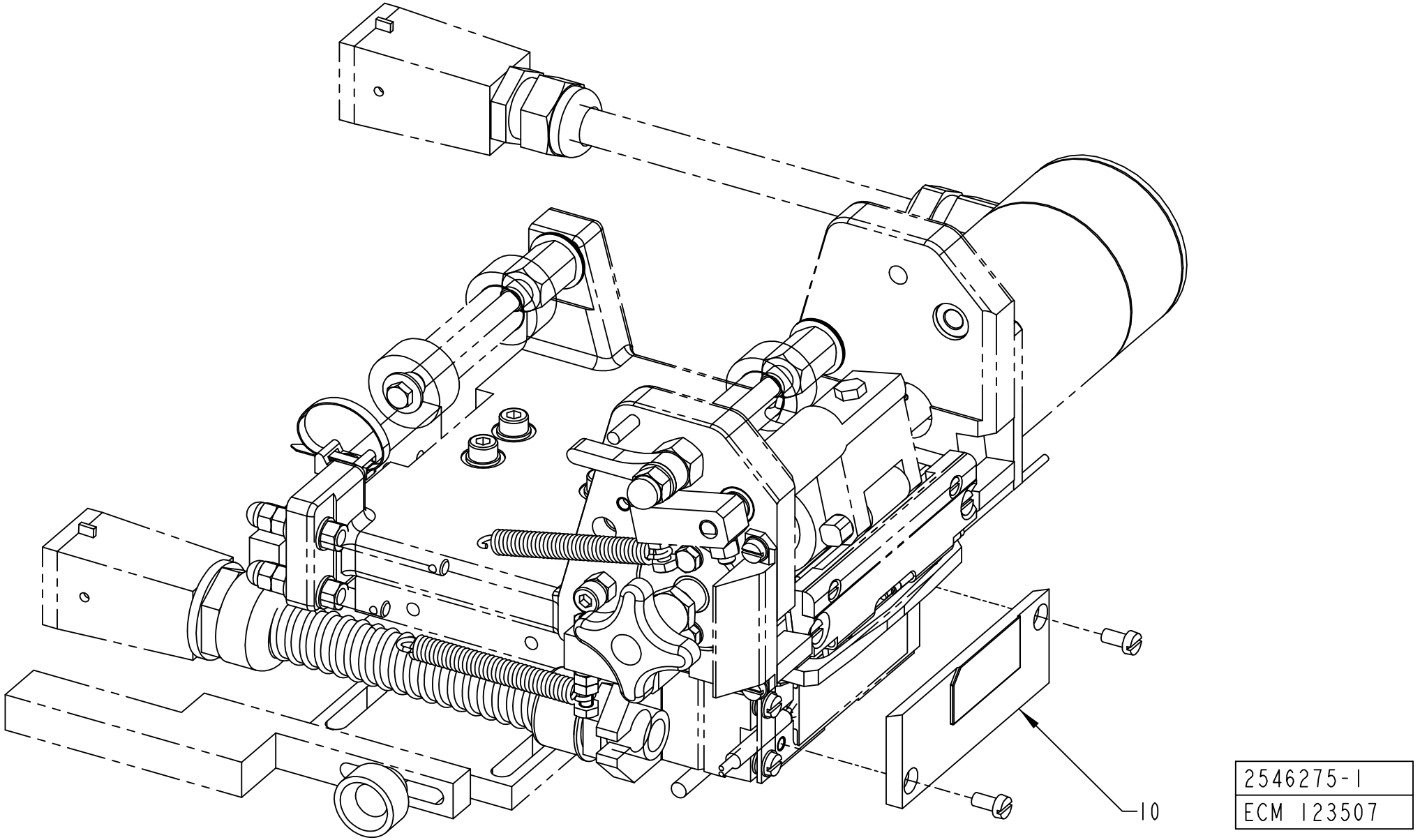
10
2546275-1
ECM 123507

ECM: 178210 - 20041130
Group number: 2546275-0100
Assembly Drawing: 2546275-1_1_AB

Pos	Part No	UN	Qty	Description	Page No
TBA 0200B HOLE95, TBA 0250B HOLE95, TBA 0330S HOLE95, TBA 0375S HOLE95, TBA 0500S HOLE95					
010	2526551-0000		1	SEALING PLATE	
TBA 1000B HOLE95, TBA 1000S HOLE95, TBA 1000SQ HOLE95, TBA 1500S HOLE95, TBA 1890S HOLE95, TBA 2000S HOLE95					
010	2658078-0000		1	SEALING PLATE	
TBA 1000S HOLE90					
010	2603681-0000		1	SEALING PLATE	
TBA 1890S HOLE91, TBA 2000S HOLE91					
010	2604551-0000		1	SEALING PLATE	
TPA 0330SQ HOLE48					
010	2511642-0000		1	SEALING PLATE	
TPA 1000SQ HOLE60					
010	2563986-0000		1	SEALING PLATE	

Pos	Part No	UN	Qty	Description	Page No

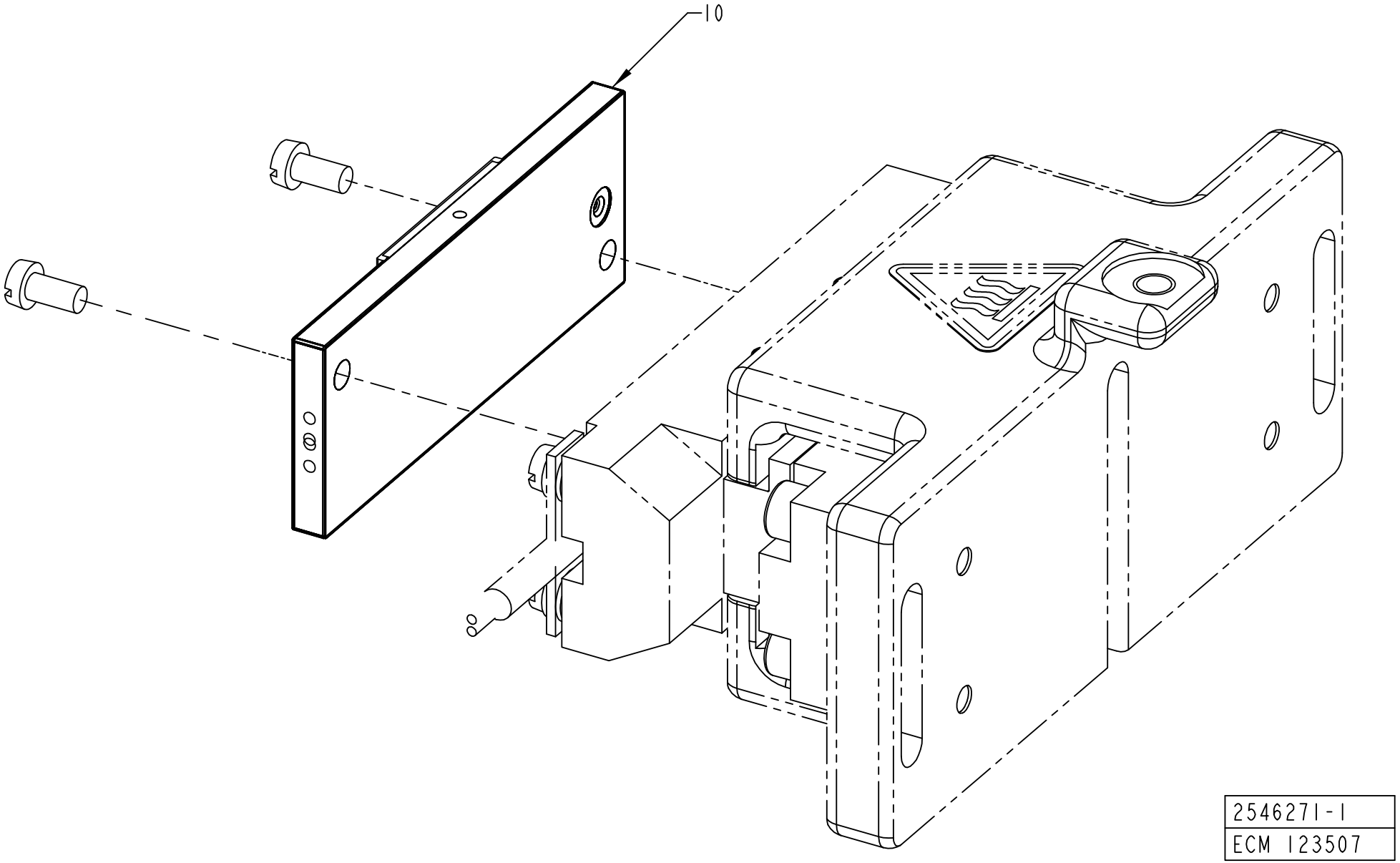
10
2546271-1
ECM 123507

ECM: 178207 - 20041130
Group number: 2546271-0100
Assembly Drawing: 2546271-1_1_AB

Pos	Part No	UN	Qty	Description	Page No
TBA 1000B HOLE95, TBA 1000S HOLE95, TBA 1000SQ HOLE95, TBA 1500S HOLE95, TBA 1890S HOLE95, TBA 2000S HOLE95, TBA 0200B HOLE95, TBA 0250B HOLE95, TBA 0330S HOLE95, TBA 0375S HOLE95, TBA 0500S HOLE95					
010	2563974-0000		1	SEALING PLATE	
TBA 1000S HOLE90					
010	2579886-0000		1	SEALING PLATE	
TBA 1890S HOLE91, TBA 2000S HOLE91					
010	2648819-0000		1	SEALING PLATE	
TPA 0330SQ HOLE48					
010	2511651-0000		1	SEALING PLATE	
TPA 1000SQ HOLE60					
010	2579882-0000		1	SEALING PLATE	

Pos	Part No	UN	Qty	Description	Page No

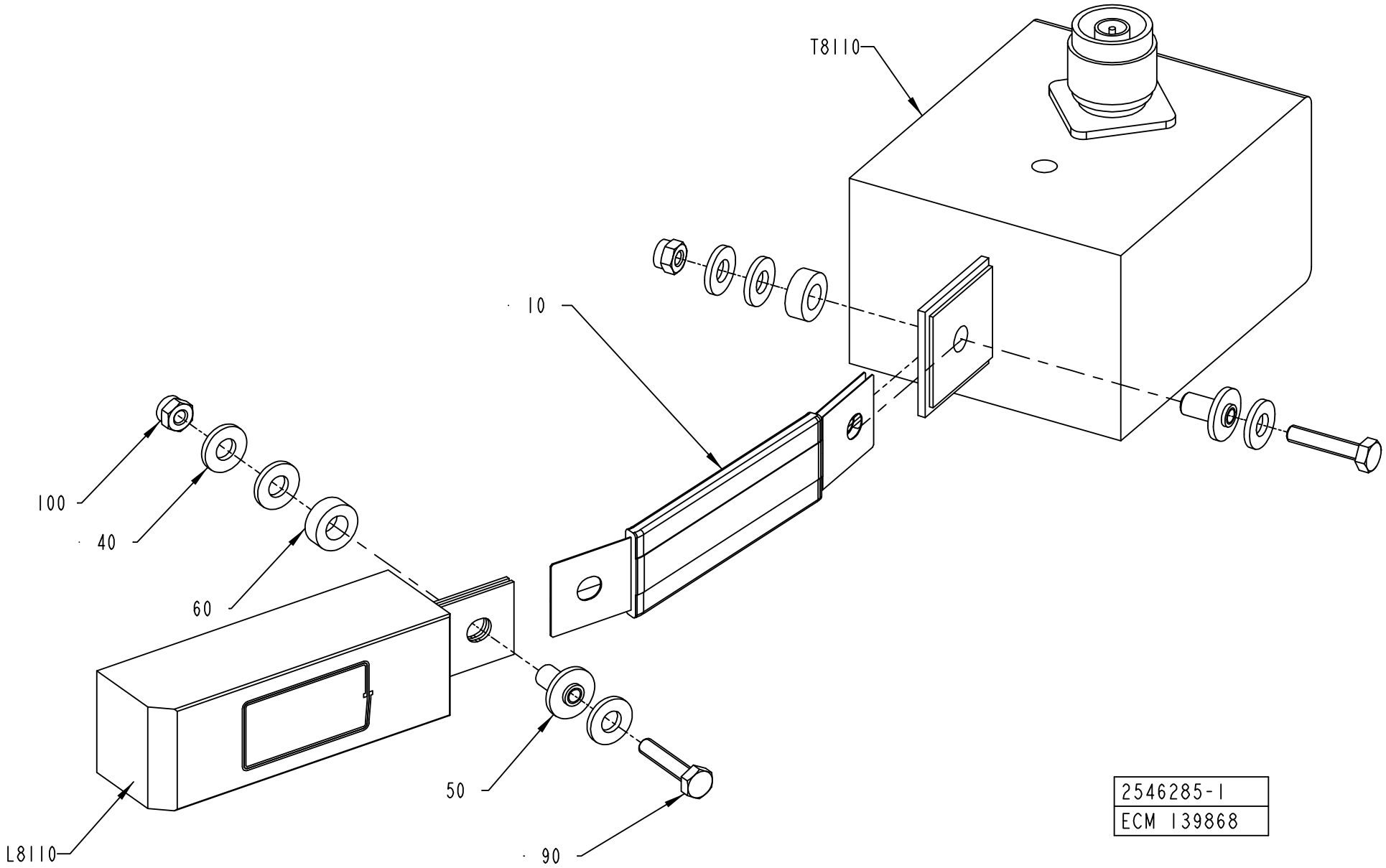
T8110
10
100
40
60
50
90
L8110
2546285-1
ECM 139868

ECM: 185085 - 20041213
Group number: 2546285-0100
Assembly Drawing: 2546285-1_1_AC

Pos	Part No	UN	Qty	Description	Page No
HOLE60					
L8110	1533363-0000		1	INDUCTOR	
L8110	1533363-0000		1	INDUCTOR	
T8110	67379-0216		1	TRANSFORMER	
T8110	67379-0216		1	TRANSFORMER	
HOLE72					
L8110	1566708-0000		1	INDUCTOR	
L8110	1566708-0000		1	INDUCTOR	
T8110	67379-0224		1	TRANSFORMER	
T8110	67379-0224		1	TRANSFORMER	
HOLE90					
L8110	1533364-0000		1	INDUCTOR	
L8110	1533364-0000		1	INDUCTOR	
T8110	67379-0224		1	TRANSFORMER	
T8110	67379-0224		1	TRANSFORMER	
HOLE91					
L8110	1533361-0000		1	INDUCTOR	
L8110	1533361-0000		1	INDUCTOR	
T8110	67379-0216		1	TRANSFORMER	
T8110	67379-0216		1	TRANSFORMER	
HOLE95					
L8110	1533360-0000		1	INDUCTOR	
L8110	1533360-0000		1	INDUCTOR	
T8110	67379-0216		1	TRANSFORMER	
T8110	67379-0216		1	TRANSFORMER	
Common Parts					
010	1140889-0000		1	BUSBAR	
040	28509-0000		6	WASHER	
050	32544-0000		2	INSULATION NUT	
060	32644-0000		2	WASHER	
080	90459-2130		1	TAPE, ADHESIVE SI TAPE MON3154535033CL	
090	312105-0295		2	SCREW M6S ISO4017 M4X20 A470	
100	312812-0312		2	HEXAGON NUT, NY-LOCK M4 A480	

Pos	Part No	UN	Qty	Description	Page No

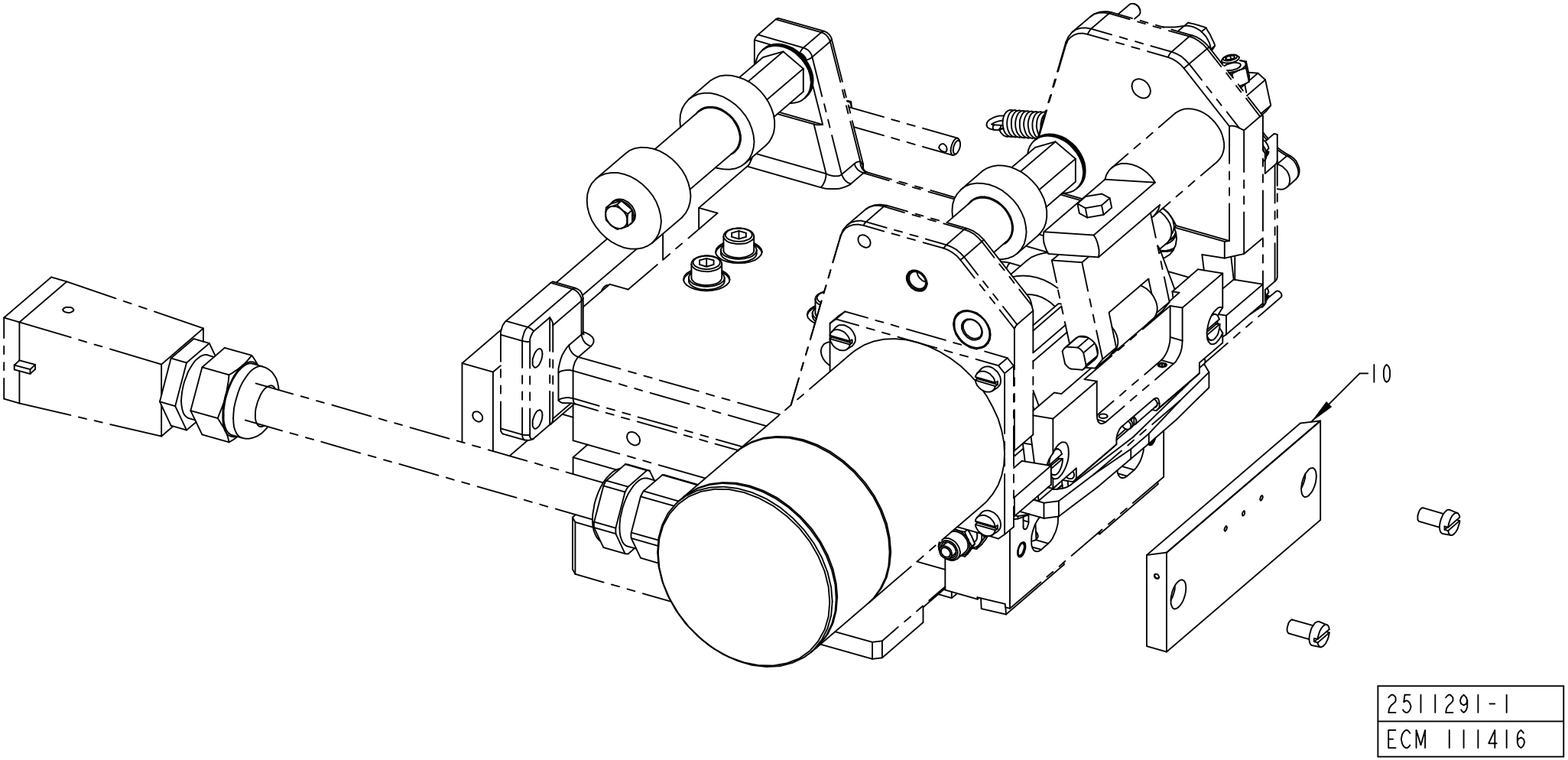
10
2511291-1
ECM 111416

ECM: 178199 - 20041130
Group number: 2511291-0100
Assembly Drawing: 2511291-1_1_AA

Pos	Part No	UN	Qty	Description	Page No
HOLE72					
020	2546293-0000		1	SEALING PLATE	
HOLE60, HOLE90, HOLE95, HOLE91					
010	2533715-0000		1	SEALING PLATE	

Pos	Part No	UN	Qty	Description	Page No

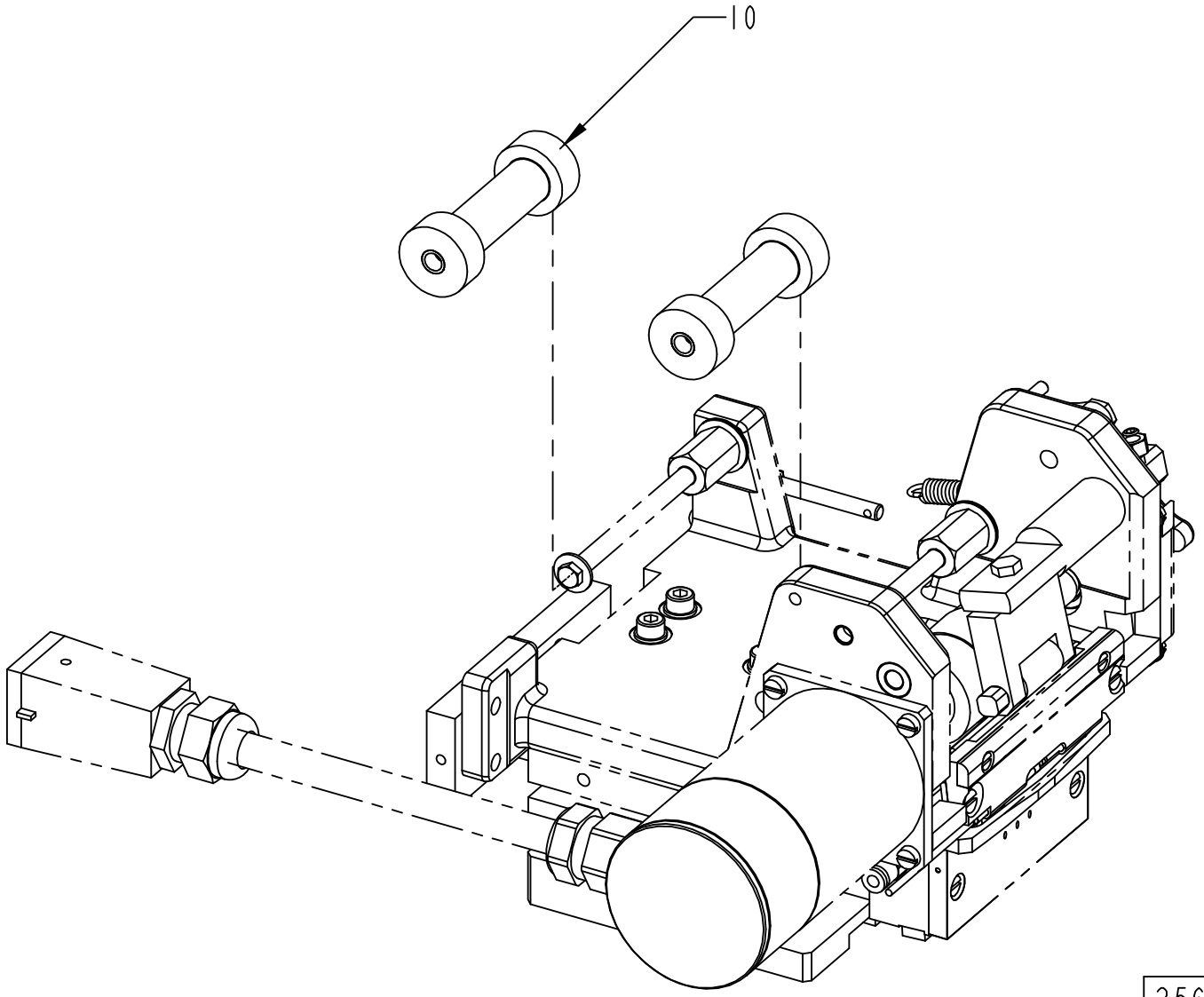

2564060-1
ECM 117180

ECM: 180889 - 20041130
Group number: 2564060-0100
Assembly Drawing: 2564060-1_1_AA

Pos	Part No	UN	Qty	Description	Page No
HOLE60					
010	2564044-0009		2	ROLLER	
HOLE72					
010	2564044-0002		2	ROLLER	
HOLE90					
010	2564044-0005		2	ROLLER	
HOLE95, HOLE91					
010	2564044-0006		2	ROLLER	

Pos	Part No	UN	Qty	Description	Page No

SPLICING TABLE

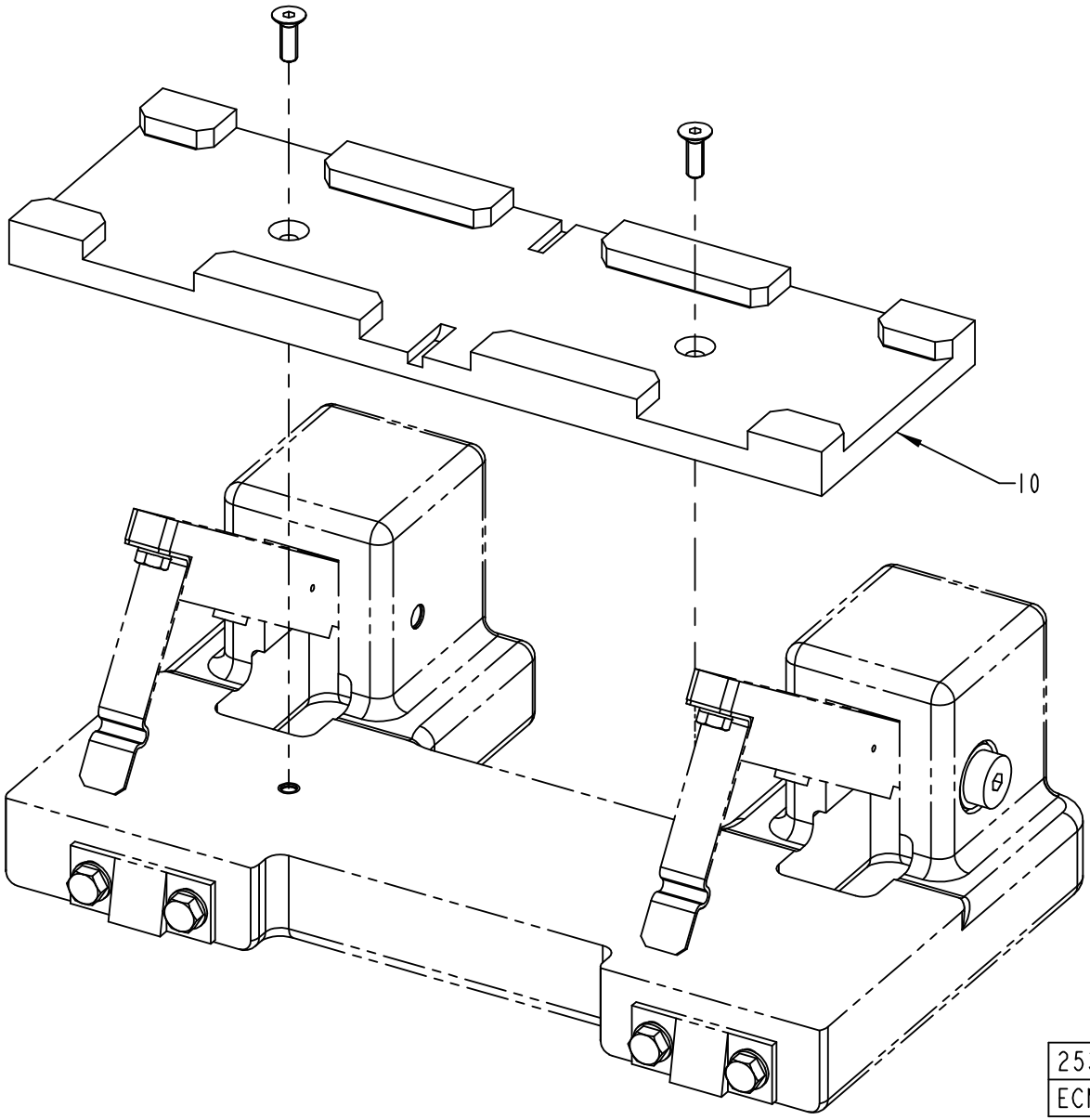

ECM: 178204 - 20041130
Group number: 2533684-0100
Assembly Drawing: 2533684-1_1_AA

Pos	Part No	UN	Qty	Description	Page No
HOLE60					
010	1499296-0014		1	GUIDE	
HOLE72					
010	1499296-0001		1	GUIDE	
HOLE90					
010	1499296-0003		1	GUIDE	
HOLE95, HOLE91					
010	1499296-0004		1	GUIDE	

Pos	Part No	UN	Qty	Description	Page No

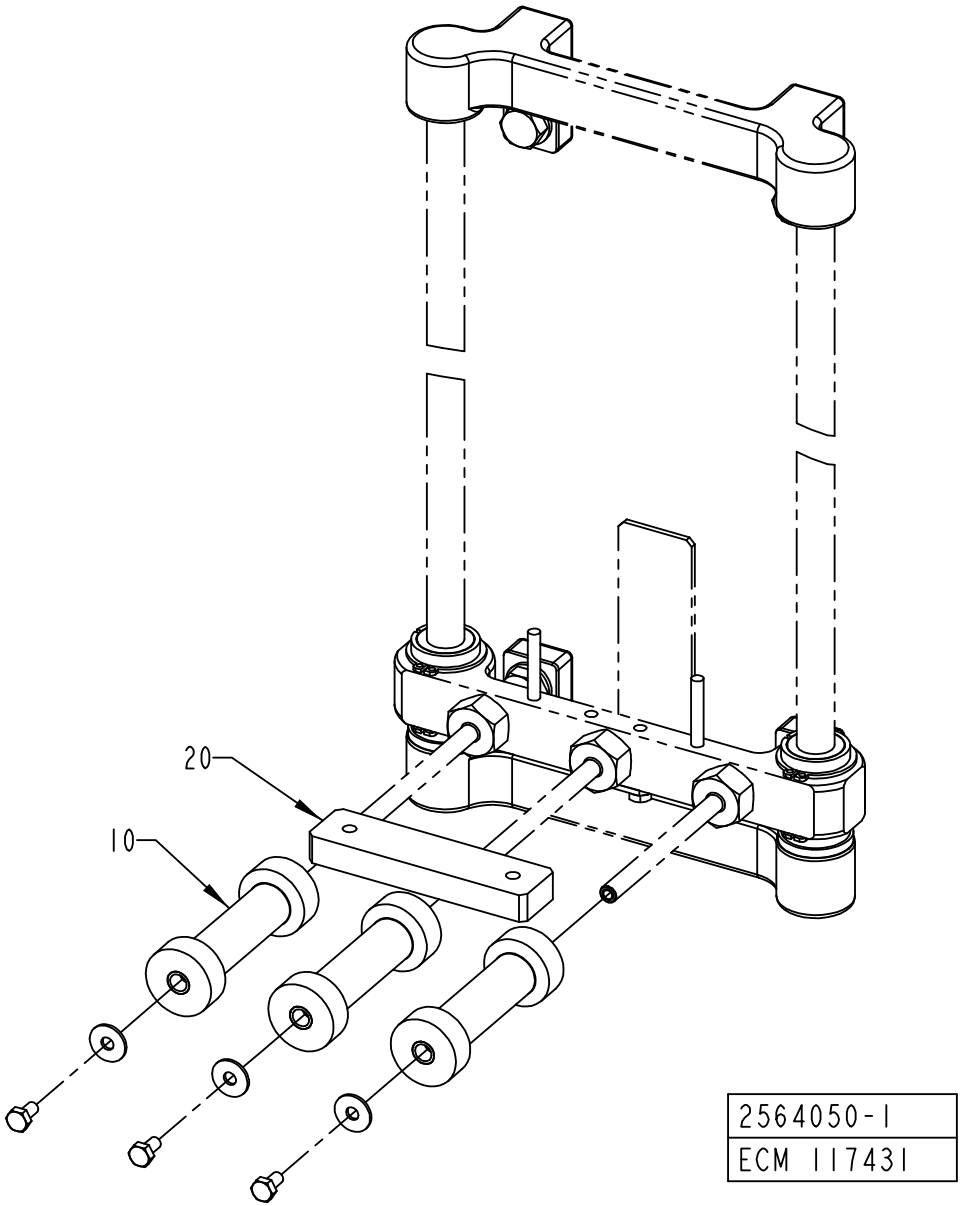
20
10
2564050-1
ECM 117431

ECM: 180509 - 20041130
Group number: 2564050-0100
Assembly Drawing: 2564050-1_1_AA

Pos	Part No	UN	Qty	Description	Page No
HOLE60					
010	2564043-0007		3	ROLLER	
020	2608240-0001		1	WEIGHT	
HOLE72					
010	2645650-0000		3	ROLLER	
010	*321138-0060*		*2*	*BUSHING, 6X8X6 MM*	
HOLE90					
010	2564043-0004		3	ROLLER	
020	2608240-0001		1	WEIGHT	
HOLE95, HOLE91					
010	2564043-0005		3	ROLLER	
020	2608240-0001		1	WEIGHT	

Pos	Part No	UN	Qty	Description	Page No

BOBBIN HOLDER

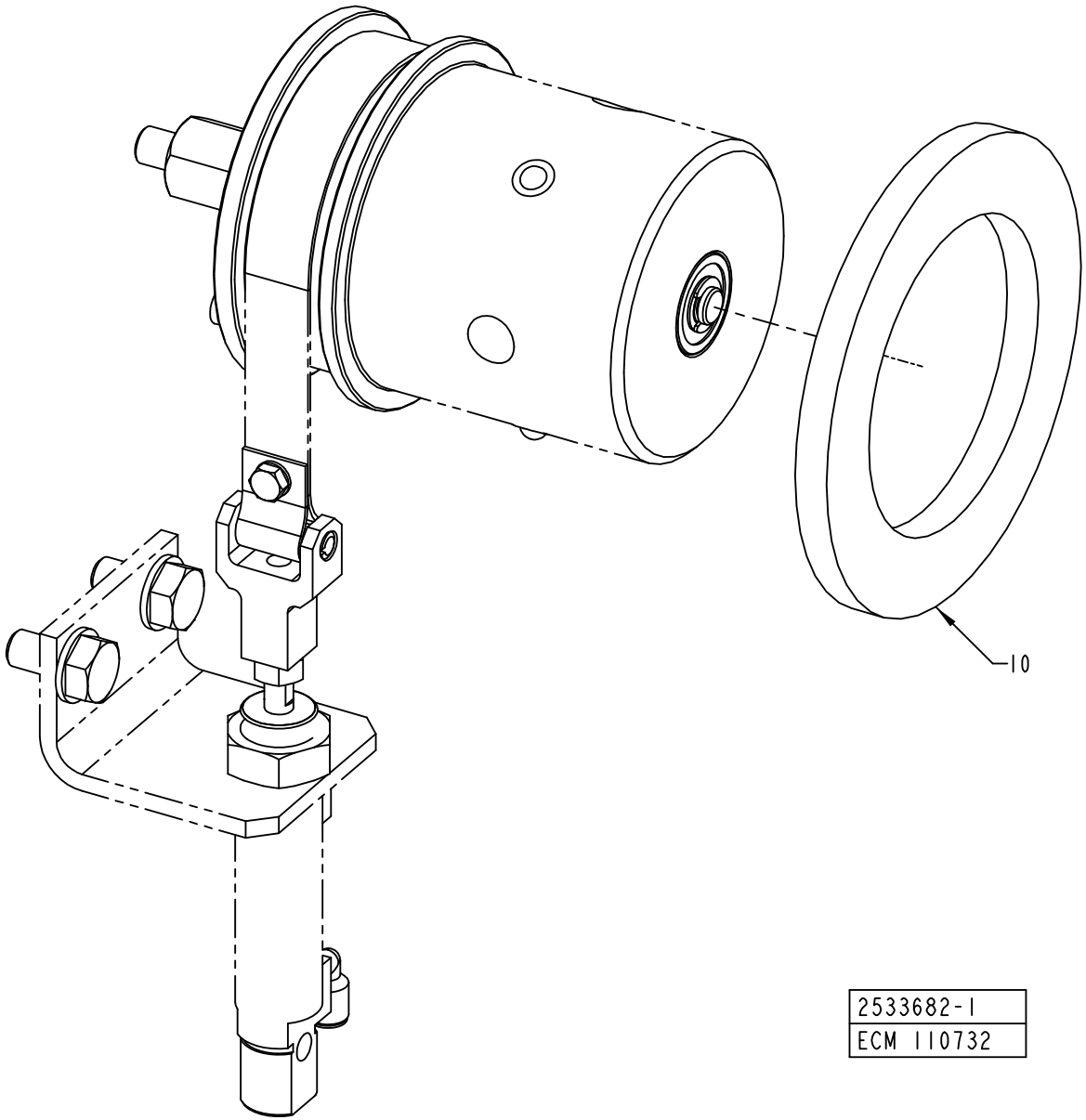

ECM: 178203 - 20041130
Group number: 2533682-0100
Assembly Drawing: 2533682-1_1_AA

Pos	Part No	UN	Qty	Description	Page No
HOLE60					
010	1347952-0017		1	SPACER	
HOLE72					
010	1347952-0002		1	SPACER	
HOLE90					
010	1347952-0004		1	SPACER	
HOLE95, HOLE91					
010	1347952-0006		1	SPACER	

Pos	Part No	UN	Qty	Description	Page No

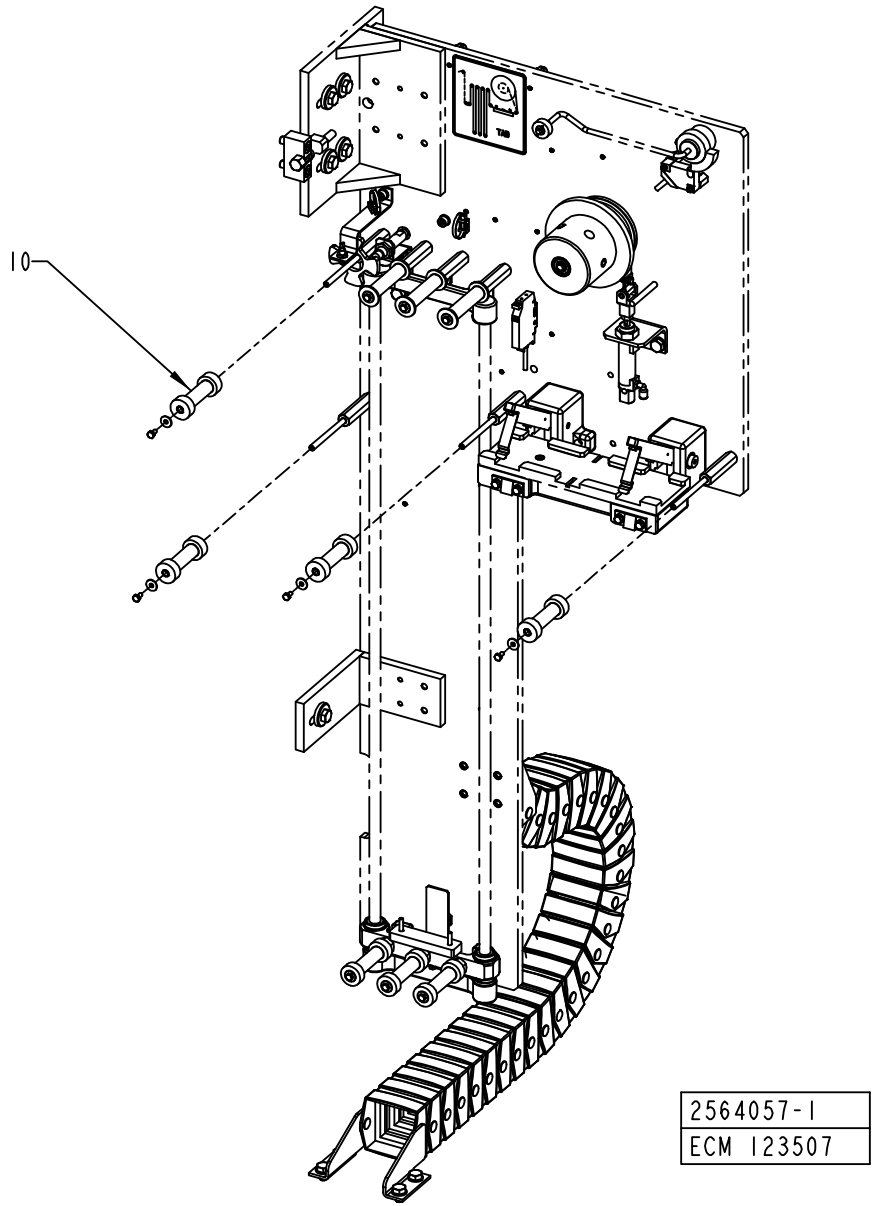
10
2564057-1
ECM 123507

ECM: 180512 - 20041130
Group number: 2564057-0100
Assembly Drawing: 2564057-1_1_AB

Pos	Part No	UN	Qty	Description	Page No
TBA 0200B HOLE95, TBA 0250B HOLE95, TBA 0330S HOLE95, TBA 0375S HOLE95, TBA 0500S HOLE95					
010	2564044-0011		4	ROLLER	
TBA 1000B HOLE95, TBA 1000S HOLE95, TBA 1000SQ HOLE95, TBA 1500S HOLE95, TBA 1890S HOLE91, TBA 1890S HOLE95, TBA 2000S HOLE91, TBA 2000S HOLE95					
010	2564044-0012		4	ROLLER	
TBA 1000S HOLE90					
010	2564044-0008		4	ROLLER	
TPA 0330SQ HOLE48					
010	2564044-0001		4	ROLLER	
TPA 1000SQ HOLE60					
010	2564044-0014		4	ROLLER	

Pos	Part No	UN	Qty	Description	Page No

BOBBIN HOLDER

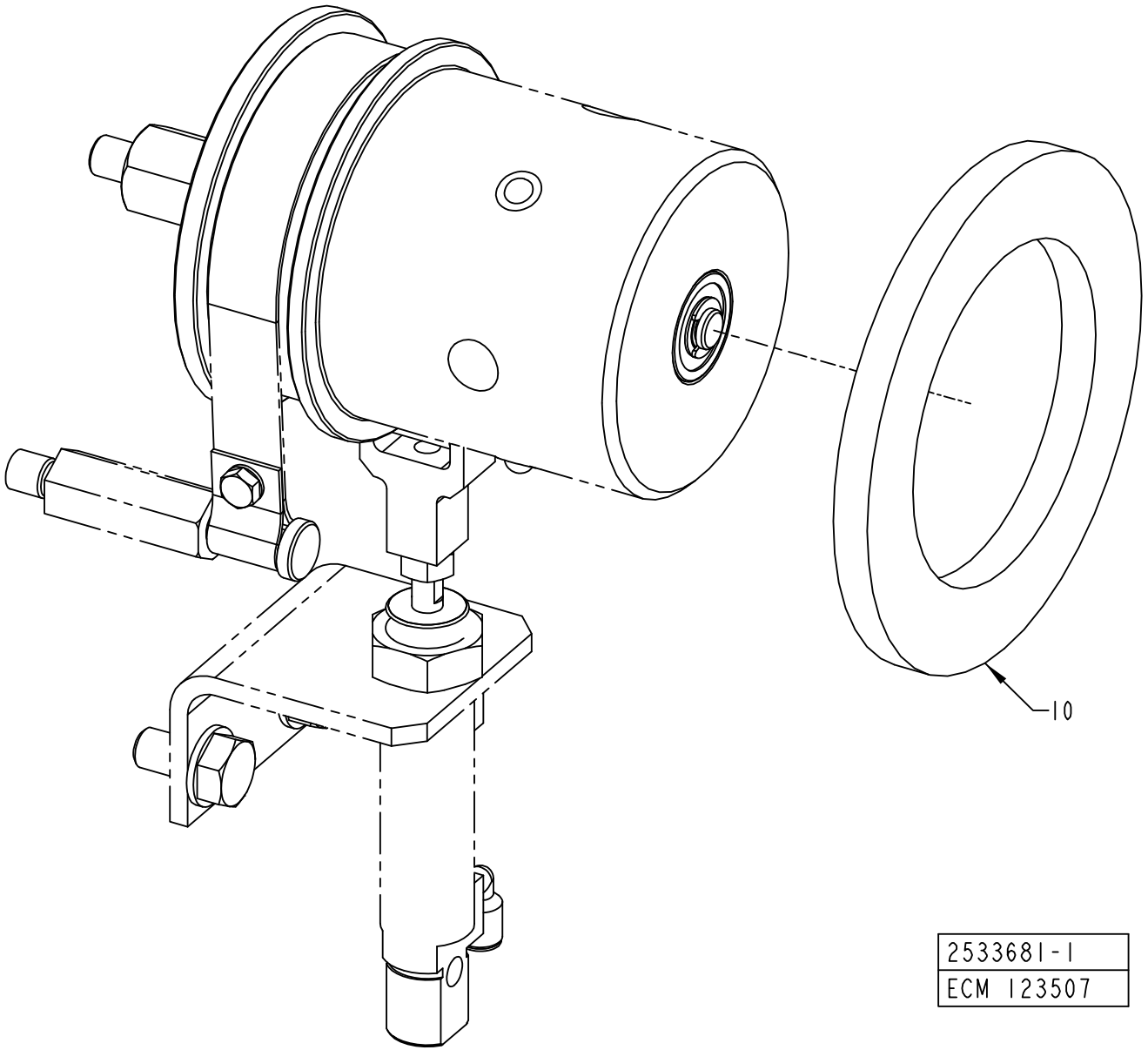

2533681-1
ECM 123507

ECM: 178202 - 20041130
Group number: 2533681-0100
Assembly Drawing: 2533681-1_1_AB

Pos	Part No	UN	Qty	Description	Page No
TBA 0200B HOLE95, TBA 0250B HOLE95, TBA 0330S HOLE95, TBA 0375S HOLE95, TBA 0500S HOLE95					
010	1347952-0010		1	SPACER	
TBA 1000B HOLE95, TBA 1000S HOLE95, TBA 1000SQ HOLE95, TBA 1500S HOLE95, TBA 1890S HOLE91, TBA 1890S HOLE95, TBA 2000S HOLE91, TBA 2000S HOLE95					
010	1347952-0011		1	SPACER	
TBA 1000S HOLE90					
010	1347952-0008		1	SPACER	
TPA 0330SQ HOLE48					
010	1347952-0016		1	SPACER	
TPA 1000SQ HOLE60					
010	1347952-0015		1	SPACER	

Pos	Part No	UN	Qty	Description	Page No

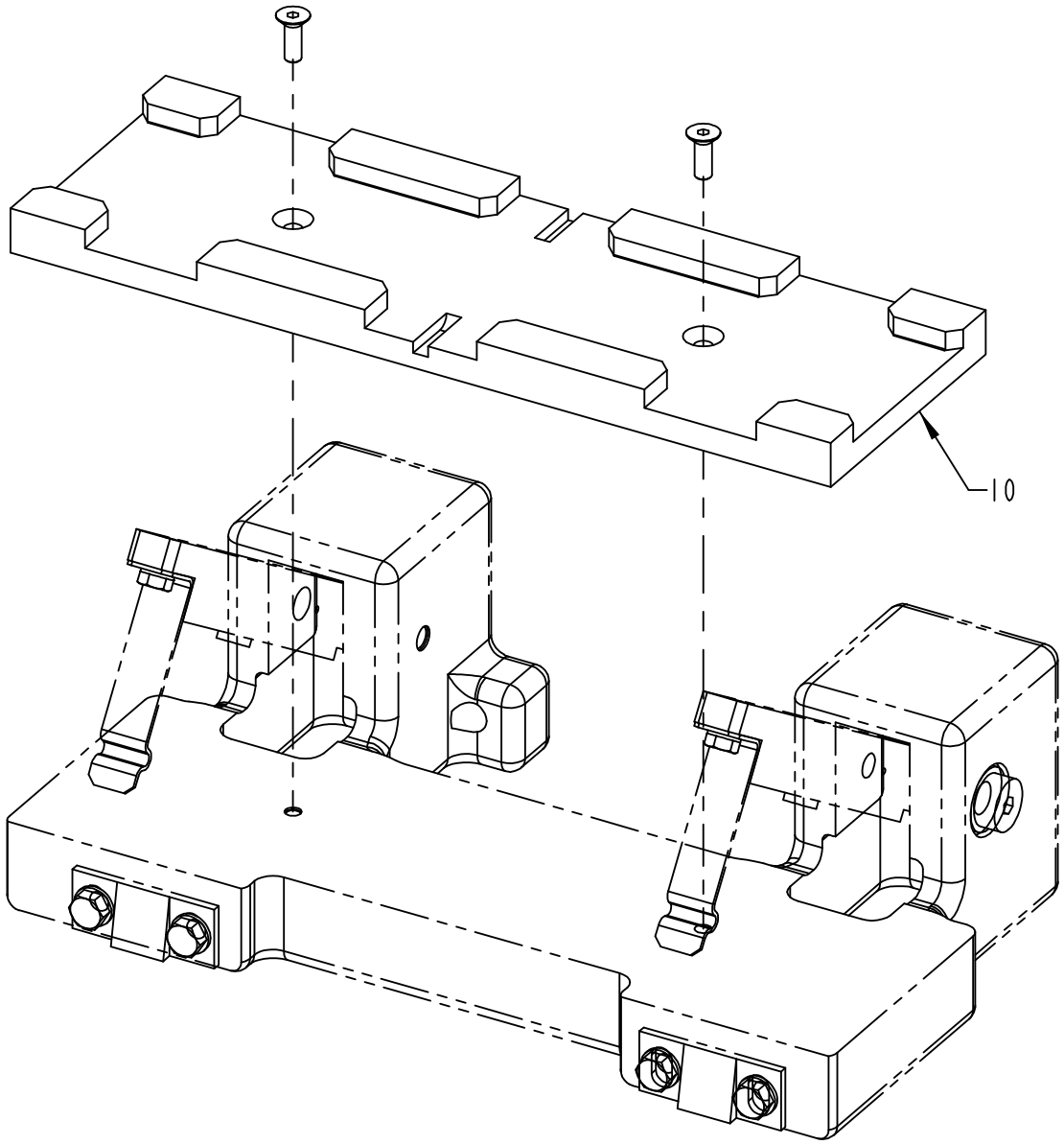

2533685-1
ECM 123507

ECM: 178205 - 20041130
Group number: 2533685-0100
Assembly Drawing: 2533685-1_1_AB

Pos	Part No	UN	Qty	Description	Page No
TBA 0200B HOLE95, TBA 0250B HOLE95, TBA 0330S HOLE95, TBA 0375S HOLE95, TBA 0500S HOLE95					
010	1499296-0007		1	GUIDE	
TBA 1000B HOLE95, TBA 1000S HOLE95, TBA 1000SQ HOLE95, TBA 1500S HOLE95, TBA 1890S HOLE91, TBA 1890S HOLE95, TBA 2000S HOLE91, TBA 2000S HOLE95					
010	1499296-0008		1	GUIDE	
TBA 1000S HOLE90					
010	1499296-0015		1	GUIDE	
TPA 0330SQ HOLE48					
010	1499296-0013		1	GUIDE	
TPA 1000SQ HOLE60					
010	1499296-0011		1	GUIDE	

Pos	Part No	UN	Qty	Description	Page No

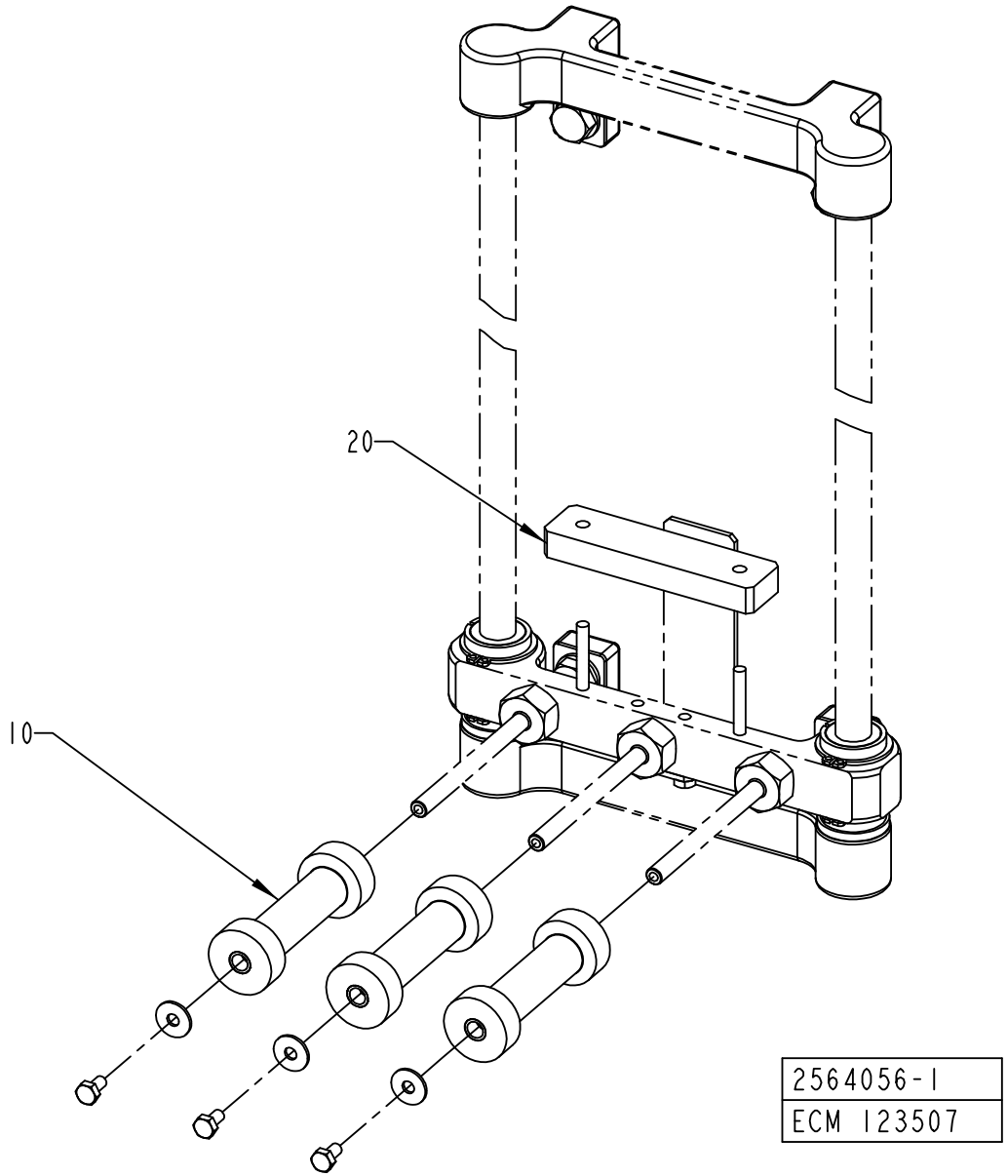
20
10
2564056-1
ECM 123507

ECM: 180511 - 20041130
Group number: 2564056-0100
Assembly Drawing: 2564056-1_1_AB

Pos	Part No	UN	Qty	Description	Page No
TBA 0200B HOLE95, TBA 0250B HOLE95, TBA 0330S HOLE95, TBA 0375S HOLE95, TBA 0500S HOLE95					
010	2564043-0008		3	ROLLER	
020	2608240-0003		1	WEIGHT	
TBA 1000B HOLE95, TBA 1000S HOLE95, TBA 1000SQ HOLE95, TBA 1500S HOLE95, TBA 1890S HOLE91, TBA 1890S HOLE95, TBA 2000S HOLE91, TBA 2000S HOLE95					
010	2564043-0009		3	ROLLER	
020	2608240-0004		1	WEIGHT	
TBA 1000S HOLE90					
010	2564043-0006		3	ROLLER	
020	2608240-0004		1	WEIGHT	
TPA 0330SQ HOLE48					
010	2564043-0001		3	ROLLER	
TPA 1000SQ HOLE60					
010	2564043-0012		3	ROLLER	
020	2608240-0004		1	WEIGHT	

Pos	Part No	UN	Qty	Description	Page No

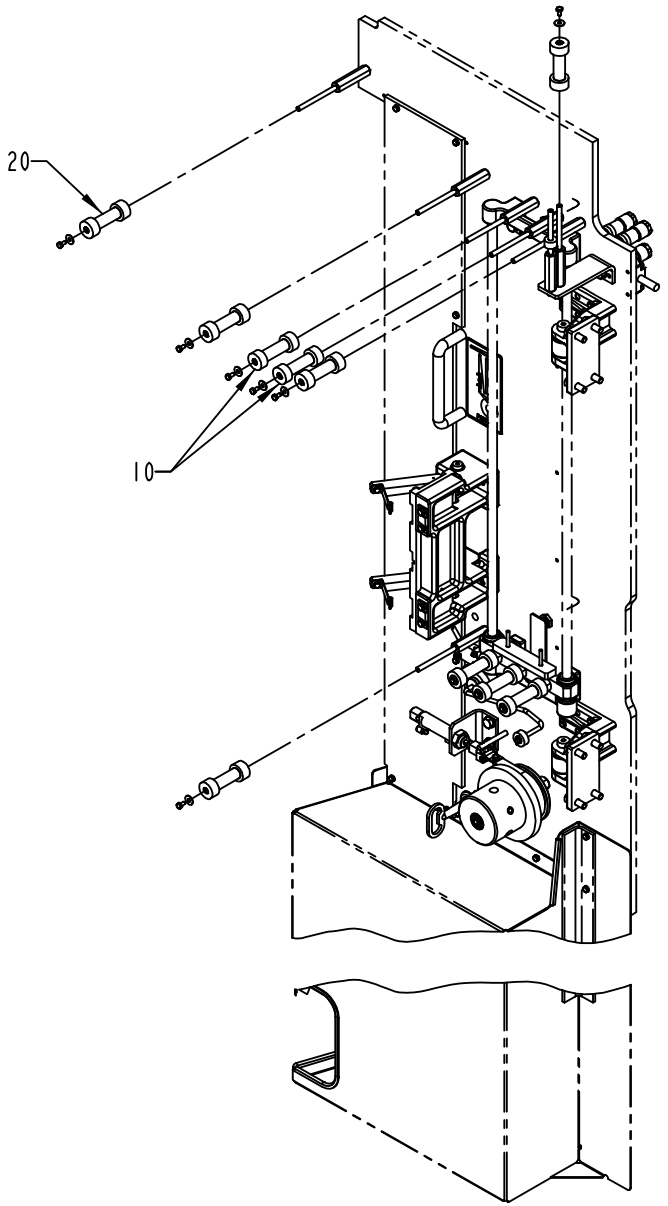

2564051-1
ECM 139868

ECM: 180510 - 20041130
Group number: 2564051-0100
Assembly Drawing: 2564051-1_1_AB

Pos	Part No	UN	Qty	Description	Page No
HOLE60					
010	2564043-0007		2	ROLLER	
020	2564044-0009		5	ROLLER	
HOLE72					
010	2645650-0000		2	ROLLER	
010	*321138-0060*		*2*	*BUSHING, 6X8X6 MM*	
020	2564044-0002		5	ROLLER	
HOLE90					
010	2564043-0004		2	ROLLER	
020	2564044-0005		5	ROLLER	
HOLE95, HOLE91					
010	2564043-0005		2	ROLLER	
020	2564044-0006		5	ROLLER	

Pos	Part No	UN	Qty	Description	Page No

This page is intentionally left blank.

ECM: 190612 - 20041201
Group number: 2564076-0100
Assembly Drawing:

Pos	Part No	UN	Qty	Description	Page No
HOLE60					
010	1533363-0000		1	INDUCTOR	
010	1533363-0000		1	INDUCTOR	
020	2526531-0000		1	SEALING PLATE	
030	2563986-0000		1	SEALING PLATE	
130	90144-0070		1	TAPE, AL 30µM 19MM BLACK	
HOLE72					
010	1566708-0000		1	INDUCTOR	
010	1566708-0000		1	INDUCTOR	
020	2525292-0000		1	SEALING PLATE	
030	2511640-0000		1	SEALING PLATE	
040	2504616-0000		1	SEALING PLATE	
120	90144-0069		1	PE TAPE,BLACK ON ALUMINUM 24X24 MM	
HOLE90					
010	1533364-0000		1	INDUCTOR	
010	1533364-0000		1	INDUCTOR	
020	2603681-0000		1	SEALING PLATE	
030	2579886-0000		1	SEALING PLATE	
100	90144-0071		1	TAPE, AL 30µM 16MM BLACK (REPLACED)	
HOLE91					
010	1533361-0000		1	INDUCTOR	
010	1533361-0000		1	INDUCTOR	
020	2648819-0000		1	SEALING PLATE	
030	2604551-0000		1	SEALING PLATE	
100	90144-0071		1	TAPE, AL 30µM 16MM BLACK (REPLACED)	
HOLE95					
010	1533360-0000		1	INDUCTOR	
010	1533360-0000		1	INDUCTOR	
020	2563974-0000		1	SEALING PLATE	
030	2658078-0000		1	SEALING PLATE	
100	90144-0071		1	TAPE, AL 30µM 16MM BLACK (REPLACED)	
Common Parts					
130	2660847-0000		1	TAPE	
200	2608237-0000		1	SPOGNE	

Pos	Part No	UN	Qty	Description	Page No

This page is intentionally left blank.

ECM: 166580 - 20040726
Group number: 2587337-0100
Assembly Drawing:

Pos	Part No	UN	Qty	Description	Page No
TBA 1000B HOLE95					
010	2672800-0000		1	TEMPLATE	
TBA 1000S HOLE90					
010	2651573-0000		1	TEMPLATE	
TBA 1000S HOLE95					
010	2672799-0000		1	TEMPLATE	
TBA 1000SQ HOLE95					
010	2672798-0000		1	TEMPLATE	
TBA 1500S HOLE95					
010	2672797-0000		1	TEMPLATE	
TBA 1890S HOLE91, TBA 2000S HOLE91					
010	2664765-0000		1	TEMPLATE	
TBA 1890S HOLE95, TBA 2000S HOLE95					
010	2664766-0000		1	TEMPLATE	

Pos	Part No	UN	Qty	Description	Page No

This page is intentionally left blank.

ECM: 180890 - 20041130
Group number: 2564075-0100
Assembly Drawing:

Pos	Part No	UN	Qty	Description	Page No	Pos	Part No	UN	Qty	Description	Page No
TBA 0200B HOLE95											
010	2696580-0000		1	OPENING SPECIFICATION							
TBA 0250B HOLE95											
010	2697205-0000		1	OPENING SPECIFICATION							
TBA 0330S HOLE95											
010	2695493-0000		1	OPENING SPECIFICATION							
TBA 1000B HOLE95											
010	2658047-0000		1	OPENING SPECIFICATION							
TBA 1000S HOLE90											
010	2579887-0000		1	OPENING SPECIFICATION							
TBA 1000S HOLE95											
010	2658048-0000		1	OPENING SPECIFICATION							
TBA 1000SQ HOLE95											
010	2658046-0000		1	OPENING SPECIFICATION							
TBA 1500S HOLE95											
010	2658045-0000		1	OPENING SPECIFICATION							
TBA 1890S HOLE91											
010	2664768-0000		1	OPENING SPECIFICATION							
TBA 1890S HOLE95											
010	2664767-0000		1	OPENING SPECIFICATION							
TBA 2000S HOLE91											
010	2604557-0000		1	OPENING SPECIFICATION							
TBA 2000S HOLE95											
010	2608239-0000		1	OPENING SPECIFICATION							
TPA 0330SQ HOLE48											
010	2514030-0000		1	OPENING SPECIFICATION							
TPA 1000SQ HOLE60											
010	2526540-0000		1	OPENING SPECIFICATION							

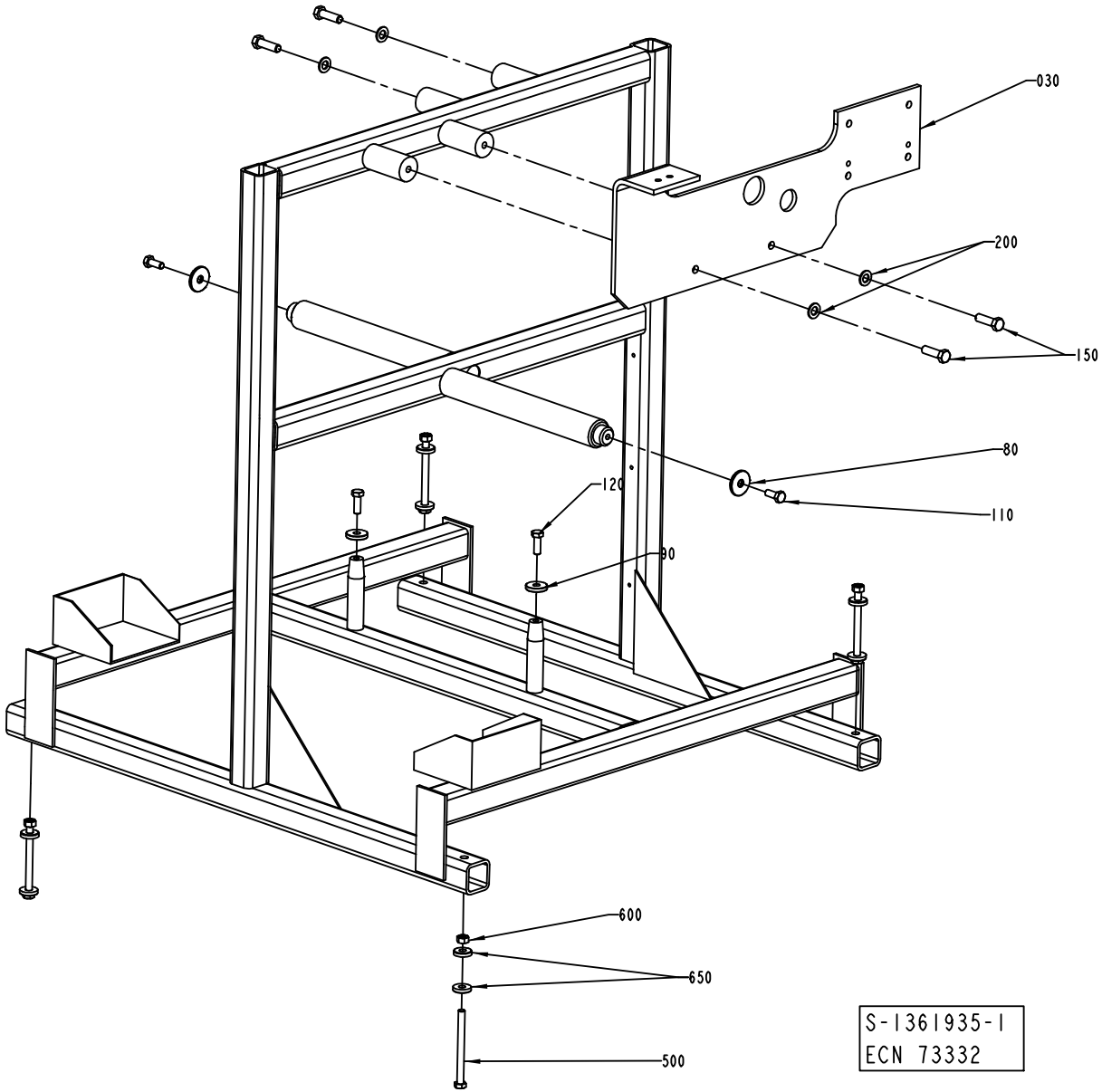
030
200
150
80
110
120
90
600
650
500
S-1361935-1
ECN 73332

ECM: 73332 - 20000411
Group number: 1361935-0100
Assembly Drawing: 1361935-1_1_AB

Pos	Part No	UN	Qty	Description	Page No
-					
020	1361934-0000		1	FRAME	
030	1363780-0000		1	CARRIER	
080	1144620-0000		2	WASHER	
090	1144681-0000		2	WASHER	
110	312105-0493		2	SCREW M6S ISO 4017 M10X25 A480	
120	312105-0495		2	SCREW M6S ISO 4017 M10X30 A480	
150	312105-0540		4	SCREW M6S ISO 4017 M12X40 A480	
200	315105-0178		4	WASHER BRB13X24RFR	
500	312101-0515		4	SCREW M6S M10X120 FZB	
600	312601-0320		4	HEXAGON NUT, DIN 934 M10 8 FZB	
650	315121-0173		8	WASHER PLAIN, TBRSB 10,5/28 H=6	

Pos	Part No	UN	Qty	Description	Page No

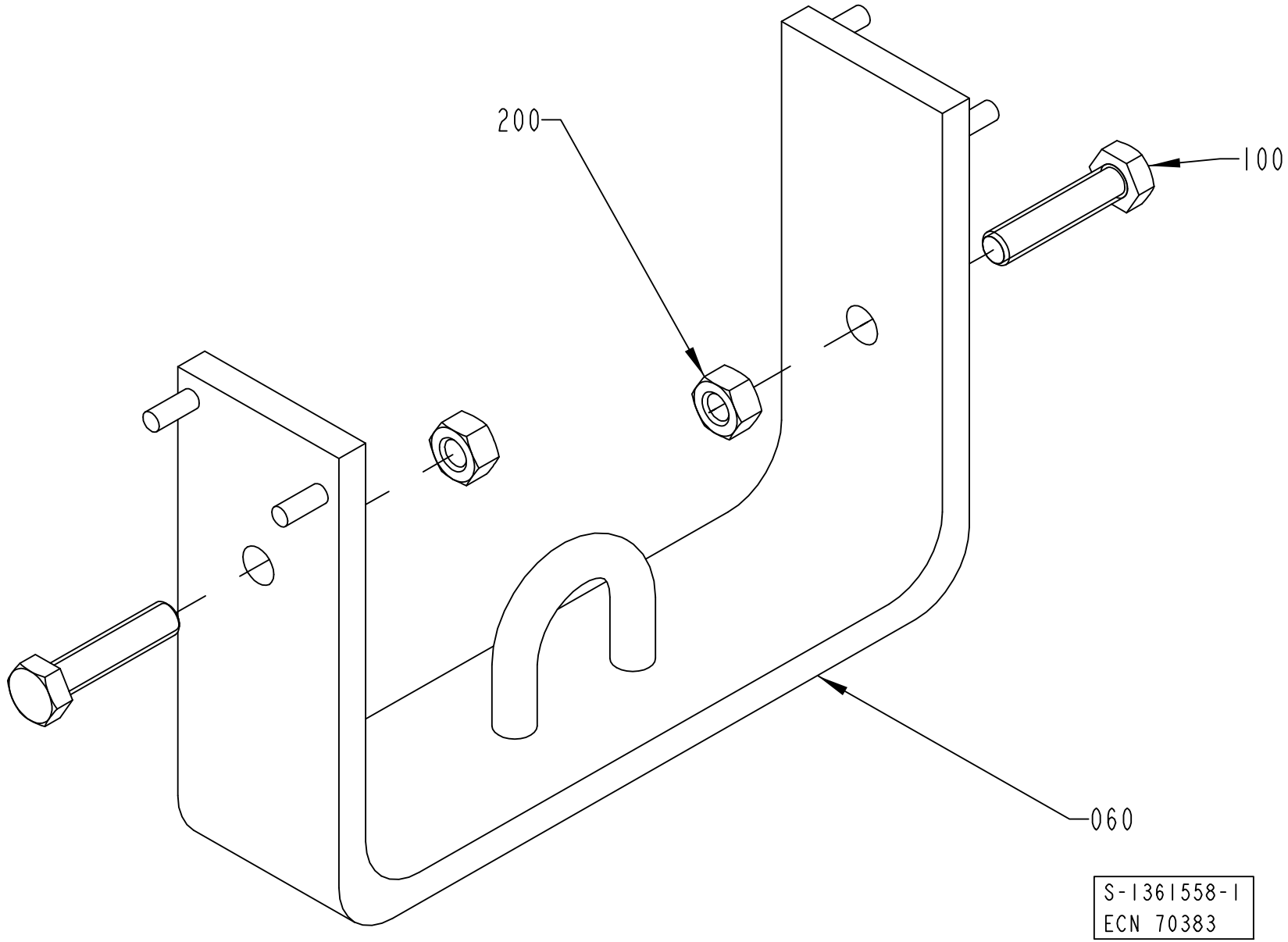
200
100
060
S-1361558-1
ECN 70383

ECM: 73332 - 20000411
Group number: 1361558-0100
Assembly Drawing: 1361558-1_1_AA

Pos	Part No	UN	Qty	Description	Page No
-					
020	1363791-0000		1	BRACKET	
100	312109-0500		2	SCREW M6S ISO 4017 M10X45 A480	
200	312605-0320		2	HEXAGON NUT, M6M M10 A280	

Pos	Part No	UN	Qty	Description	Page No

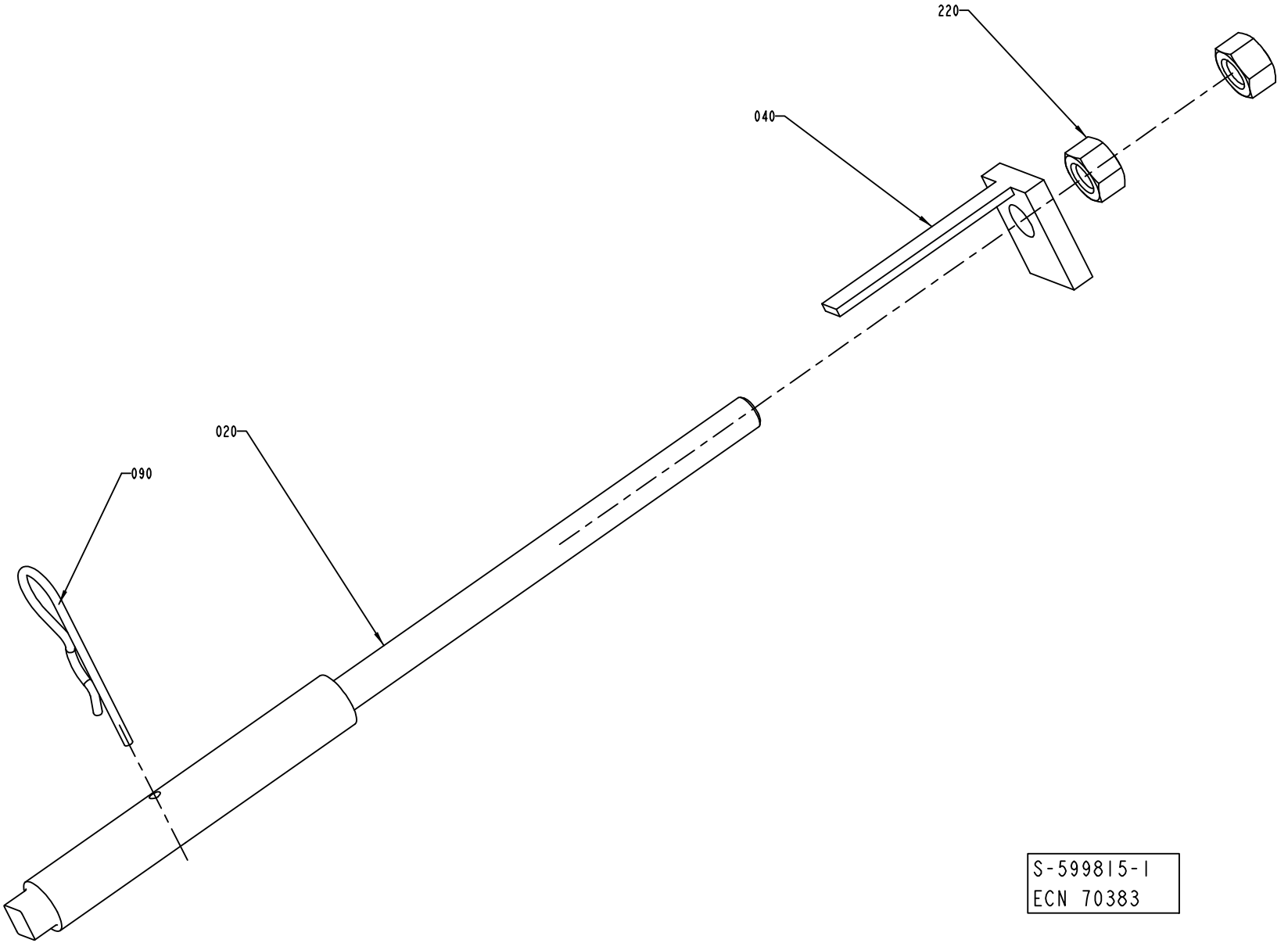

S-599815-I
ECN 70383

ECM: 118983 - 20021217
Group number: 599815-0100
Assembly Drawing: 599815-1_1_AA

Pos	Part No	UN	Qty	Description	Page No
-					
020	598095-0000		2	SCREW	
040	598096-0000		2	WASHER	
090	90258-0060		2	COTTER	
220	312605-0322		4	HEXAGON NUT, M6M M12 A280	

Pos	Part No	UN	Qty	Description	Page No

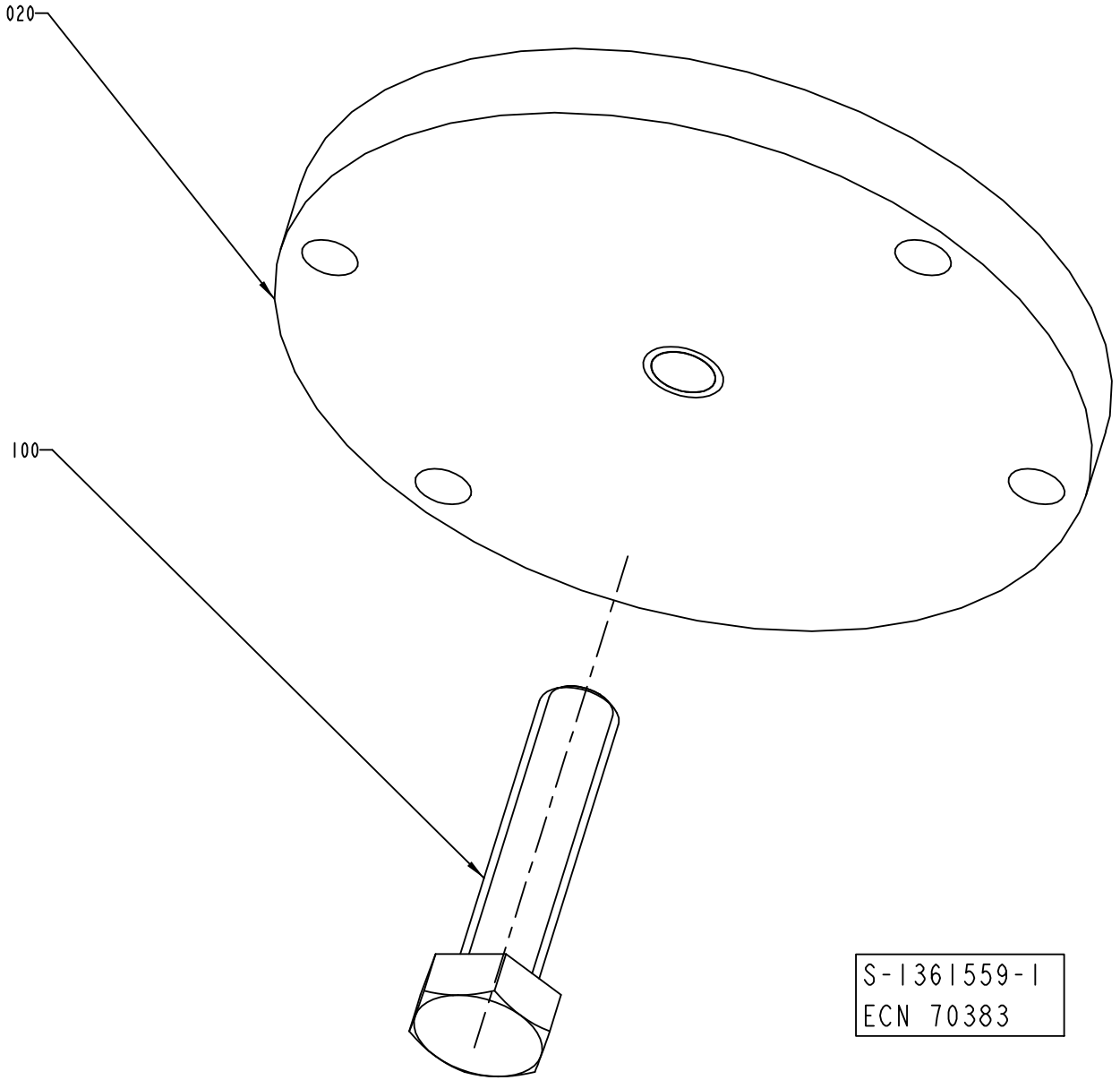
020
100
S-1361559-1
ECN 70383

ECM: 70383 - 19990301
Group number: 1361559-0100
Assembly Drawing: 1361559-1_1_AA

Pos	Part No	UN	Qty	Description	Page No
-					
020	1361547-0000		1	PULLER	
100	312109-0500		1	SCREW M6S ISO 4017 M10X45 A480	

Pos	Part No	UN	Qty	Description	Page No

PAPER REEL HOLDER

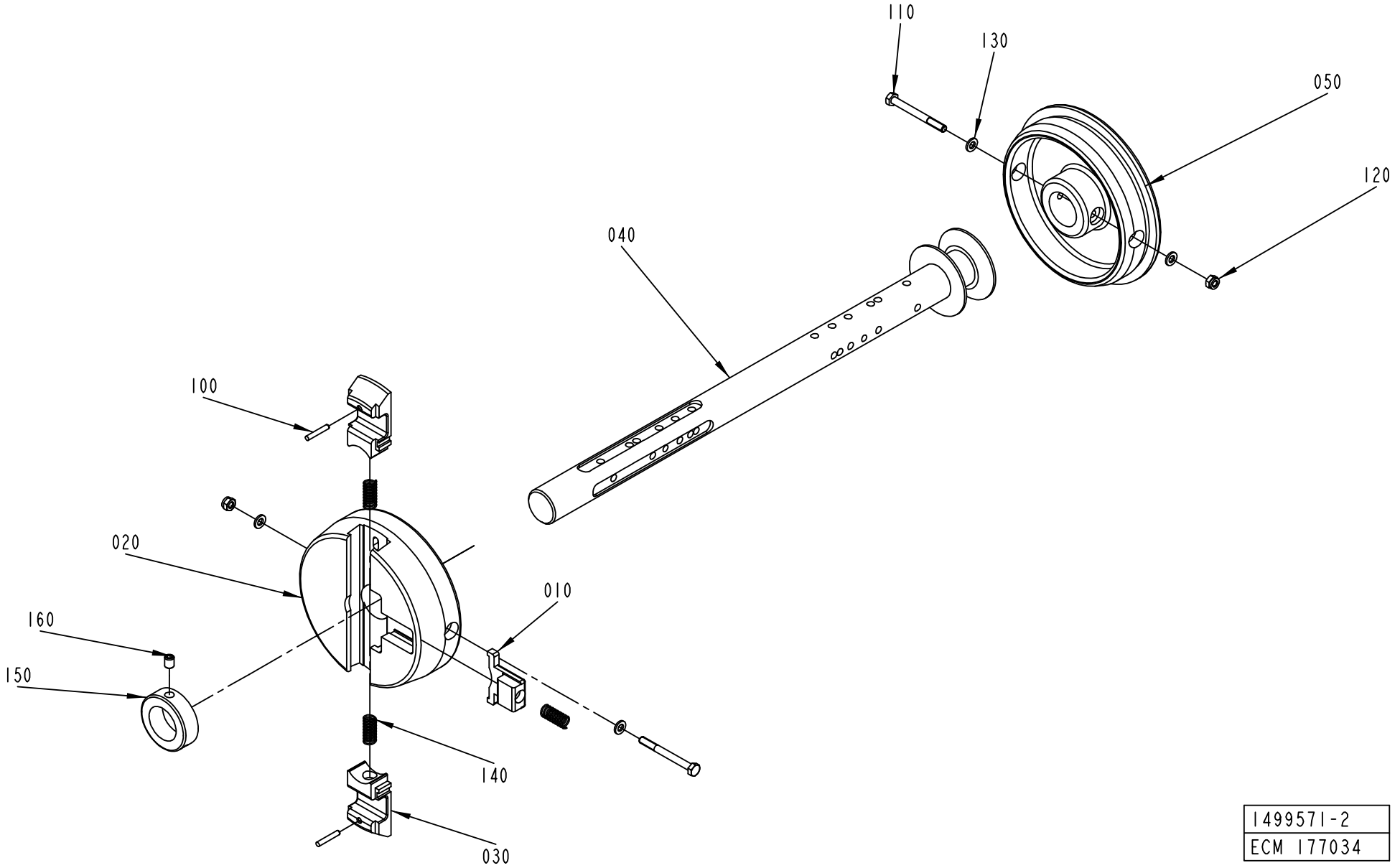

1499571-2
ECM 177034

ECM: 178371 - 20041025
Group number: 1499571-0100
Assembly Drawing: 1499571-2_1_AF

Pos	Part No	UN	Qty	Description	Page No
A3/FLEX					
040	2656299-0000		1	SHAFT	
150	315742-0123		1	RETAINING RING 32 SMS 199	
160	312318-0445		1	SCREW ISO4029 M8X10 A4	
Common Parts					
010	272728-0000		1	BARRIER	
020	1512265-0000		1	SLEEVE	
030	575002-0000		2	PLUNGER	
050	1512266-0000		1	SLEEVE	
100	311103-0274		2	PARALLELL PIN, M6, 4X25 MM	
110	312105-0382		2	SCREW M6S ISO 4014 M6X60 A480	
120	312812-0316		2	HEXAGON NUT, NY-LOCK M6 A480	
130	315105-0153		4	WASHER BRB6,4X12RFR	
140	90335-0025		3	COMP. SPRING 22010, 1X11X26	

Pos	Part No	UN	Qty	Description	Page No

This page is intentionally left blank.

ECM: 194882 - 20041203
Group number: 2641396-0100
Assembly Drawing:

Pos	Part No	UN	Qty	Description	Page No
TBA 0200S					
010	2523766-0010		4	BRACKET	
020	2508205-0010		8	BRACKET	
TBA 0250S, TBA 0200M					
010	2523766-0009		4	BRACKET	
020	2508205-0009		8	BRACKET	
TBA 0330S, TBA 0200B, TBA 0250B					
010	2523766-0007		4	BRACKET	
020	2508205-0007		8	BRACKET	
TBA 0500B, TBA 1000B, TBA 1500S					
010	2523766-0001		4	BRACKET	
020	2508205-0001		8	BRACKET	
TBA 0500S					
010	2523766-0005		4	BRACKET	
020	2508205-0005		8	BRACKET	
TBA 1000S					
010	2523766-0002		4	BRACKET	
020	2508205-0002		8	BRACKET	
TBA 1000SQ					
010	2523766-0003		4	BRACKET	
020	2508205-0003		8	BRACKET	
TBA 1890S, TBA 2000S					
010	2701881-0000		4	BRACKET	
020	2701847-0000		8	BRACKET	
TPA 0330SQ					
010	2523766-0008		4	BRACKET	
020	2508205-0008		8	BRACKET	
TPA 0500SQ					
010	2523766-0006		4	BRACKET	
020	2508205-0006		8	BRACKET	
TPA 1000SQ					
010	2523766-0012		4	BRACKET	
020	2508205-0012		8	BRACKET	
Common Parts					
030	2701846-0000		4	FLANGE	
040	2701880-0000		2	FLANGE	

Pos	Part No	UN	Qty	Description	Page No

Machine Type | Group Description | Used-In | Group Number | Page No

This page is intentionally left blank.

ECM: 194883 - 20041203
Group number: 2641398-0100
Assembly Drawing:

Pos	Part No	UN	Qty	Description	Page No
TBA 0330S, TBA 0200B, TBA 0250B, TBA 1500S, TPA 0330SQ, TPA 1000SQ, TPA 0500SQ					
010	1511769-0000		1	ROLLER	
TBA 0500S, TBA 0500B, TBA 1000S, TBA 1000SQ, TBA 1000B, TBA 0250S, TBA 0200S, TBA 0200M					
010	1538496-0000		1	ROLLER	

Pos	Part No	UN	Qty	Description	Page No

This page is intentionally left blank.

ECM: 190480 - 20041102
Group number: 2655614-0100
Assembly Drawing:

Pos	Part No	UN	Qty	Description	Page No
TBA 0200B QC, TBA 0330S QC, TBA 0250B QC					
010	67380-0214		1	TRANSFORMER	
010	67380-0214		1	TRANSFORMER	
TBA 0200S, TBA 1500S, TPA 1000SQ					
010	67380-0213		1	TRANSFORMER	
010	67380-0213		1	TRANSFORMER	
TBA 0500S, TBA 0500B, TBA 1000S, TBA 1000SQ, TBA 1000B, TBA 0250S, TBA 0200M, TPA 0330SQ, TPA 0500SQ, TBA 1890S, TBA 2000S					
010	67380-0207		1	TRANSFORMER	
010	67380-0207		1	TRANSFORMER	

Pos	Part No	UN	Qty	Description	Page No

Tetra Pak

SPC
Spare Parts Catalogue

This page is intentionally left blank.

ECM: 190482 - 20041102
Group number: 2698249-0100
Assembly Drawing:

Pos	Part No	UN	Qty	Description	Page No
NOQC START FM QC					
020	2636081-0100		1	FLAP HEATER	**4-5**
030	2698251-0000		1	BOX	
QC START FM QC, QC START FM NOQC					
010	2593831-0100		1	VOLUME KIT	**4-25**
020	2636081-0100		1	FLAP HEATER	**4-5**
030	2698251-0000		1	BOX	

Pos	Part No	UN	Qty	Description	Page No

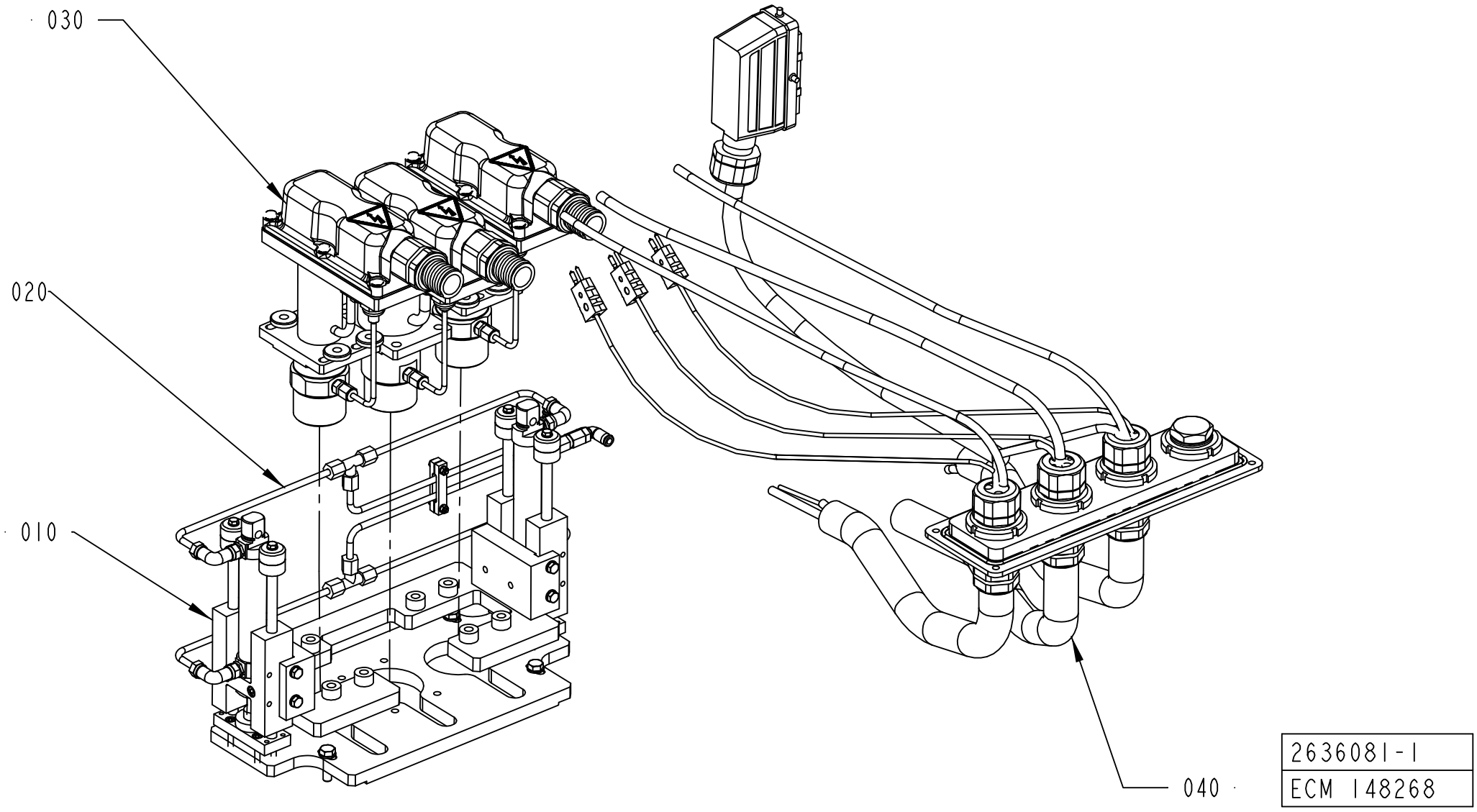
030
020
010
040
2636081-1
ECM 148268

ECM: 181736 - 20040923
Group number: 2636081-0100
Assembly Drawing: 2636081-1_1_AA

Pos	Part No	UN	Qty	Description	Page No
TBA 1000B QC START FM NOQC, TBA 0500B START FM NOQC, TBA 0200B START FM NOQC, TBA 0250B START FM NOQC, TBA 0330S START FM NOQC					
010	2535538-0100		1	FRAME	**4-7, 4-9, 4-11, 4-13**
020	2636082-0100		1	FLAP HEATER	**4-17**
030	2641480-0100		1	HEATING PART	**4-19**
040	2660376-0100		1	CABLE HARNESS	**4-21**
NOQC START FM QC					
010	2544339-0100		1	FRAME	**4-23**
TBA 1000S START FM QC, TBA 1000Sq START FM QC, TBA 1500S START FM QC, TBA 1000B NOQC START FM QC, TBA 0200S START FM QC, TPA 1000Sq START FM QC, TPA 0330SQ START FM QC, TPA 0500SQ START FM QC					
010	2544339-0100		1	FRAME	**4-23**
010	2535538-0100		1	FRAME	**4-7, 4-9, 4-11, 4-13**
020	2636082-0100		1	FLAP HEATER	**4-17**
030	2641480-0100		1	HEATING PART	**4-19**
040	2660376-0100		1	CABLE HARNESS	**4-21**
QC START FM QC					
010	2535538-0100		1	FRAME	**4-7, 4-9, 4-11, 4-13**
030	2641480-0100		1	HEATING PART	**4-19**
040	2660376-0100		1	CABLE HARNESS	**4-21**

Pos	Part No	UN	Qty	Description	Page No

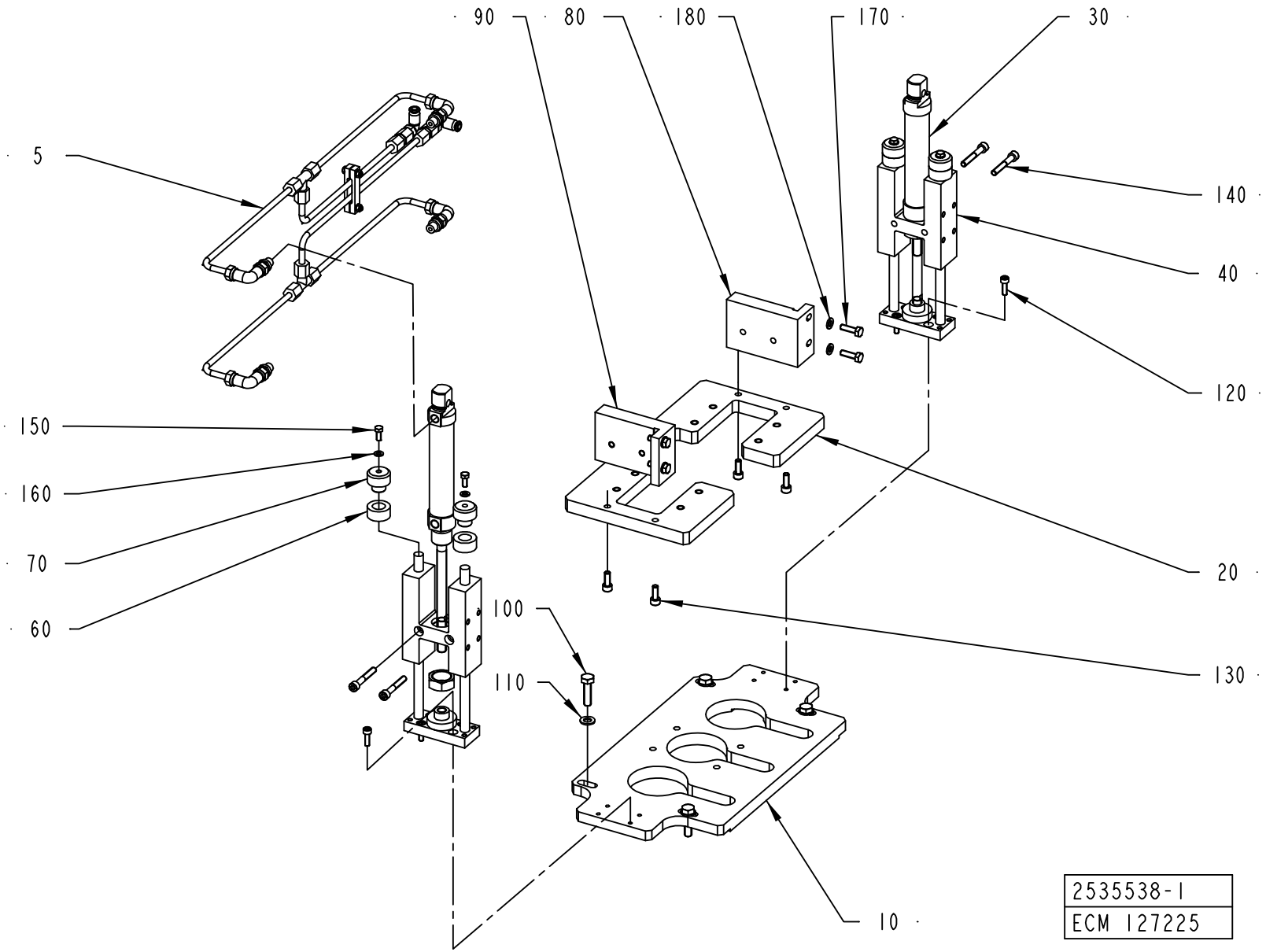
90
80
180
170
30
5
140
40
120
150
160
70
60
20
100
110
130
10
2535538-1
ECM 127225

ECM: 196751 - 20041215
Group number: 2535538-0100
Assembly Drawing: 2535538-1_1_AB

This list covers pages from 4-6 to 4-13

Pos	Part No	UN	Qty	Description	Page No
A3/FLEX TBA 0200B, A3/FLEX TBA 0250B, A3/FLEX TBA 0330S (See drawing on pages: 4-8, 4-10)					
010	2520163-0000		1	PLATE	
020	2520165-0000		1	GUIDE PLATE	
030	90459-0953		2	DOUBLE ACTING, ROUND, CYL 25-80	
040	90459-0952		2	LINEAR GUIDE UNIT, BORE 25-STROKE 80	
060	2599020-0000		4	STOP	
065	2604507-0000		2	SPACER	
075	2604508-0000		2	SPACER	
100	312105-0327		4	SCREW M6S ISO 4017 M5X12 A480	
120	90458-0058		8	SCREW M5X60 A280	
170	312105-0370		4	SCREW M6S ISO 4017 M6X20 A480	
190	90335-0178		2	COMP. SPRING 22060, 1X13,5X36,5	
200	2604509-0000		2	KNOB	
210	2604510-0000		2	SHAFT	
A3/FLEX TBA 0200M, A3/FLEX TBA 0250S (See drawing on pages: 4-6, 4-12)					
010	2520163-0000		1	PLATE	
020	2520165-0000		1	GUIDE PLATE	
030	90459-0953		2	DOUBLE ACTING, ROUND, CYL 25-80	
040	90459-0952		2	LINEAR GUIDE UNIT, BORE 25-STROKE 80	
060	2646470-0000		4	RUBBER DAMPER	
065	2656985-0000		2	SPACER	
100	312105-0327		4	SCREW M6S ISO 4017 M5X12 A480	
120	312115-0329		8	SCREW ISO4762 M5X16 A4	
120	90458-0058		8	SCREW M5X60 A280	
170	312105-0370		8	SCREW M6S ISO 4017 M6X20 A480	
A3/FLEX TBA 0500B, A3/FLEX TBA 1000B (See drawing on page: 4-6)					
010	2520163-0000		1	PLATE	
020	2520165-0000		1	GUIDE PLATE	
030	90459-0953		2	DOUBLE ACTING, ROUND, CYL 25-80	
040	90459-0952		2	LINEAR GUIDE UNIT, BORE 25-STROKE 80	
060	2623870-0000		4	RUBBER DAMPER	
100	312105-0327		4	SCREW M6S ISO 4017 M5X12 A480	
120	312115-0329		8	SCREW ISO4762 M5X16 A4	
170	312105-0370		4	SCREW M6S ISO 4017 M6X20 A480	
A3/FLEX TBA 1890S, A3/FLEX TBA 2000S (See drawing on page: 4-12)					
010	2520163-0000		1	PLATE	
020	2520165-0000		1	GUIDE PLATE	
030	90459-0953		2	DOUBLE ACTING, ROUND, CYL 25-80	
040	90459-0952		2	LINEAR GUIDE UNIT, BORE 25-STROKE 80	
060	2710505-0000		4	STOP	
100	312105-0327		4	SCREW M6S ISO 4017 M5X12 A480	
120	312115-0333		8	SCREW ISO4762 M5X25 A4	
170	312105-0370		4	SCREW M6S ISO 4017 M6X20 A480	
260	312318-0285		4	SCREW ISO4029 M4X6 A4	
Common Parts					
005	2535540-0100		1	PNEUMATIC CIRCUIT	**4-15**
010	2660573-0000		1	BASIC PLATE	
020	2660575-0000		1	GUIDE PLATE	
030	90459-3119		2	DOUBLE ACTING, MINI-ISO, CYL. 25-100	
040	90459-3118		2	LINEAR GUIDE UNIT, BORE 25-STROKE 100	
060	2623870-0000		4	RUBBER DAMPER	
060	2660610-0000		4	RUBBER DAMPER	
060	2660737-0000		4	STOP	
070	2623869-0000		4	RUBBER HOLDER	
075	2660732-0000		2	SPACER	
080	2623623-0000		1	CYLINDER BRACKET	
090	2623624-0000		1	CYLINDER BRACKET	
100	312105-0327		4	SCREW M6S ISO 4017 M5X12 A480	
110	312105-0455		4	SCREW M6S ISO 4017 M8X30 A480	
130	312115-0368		4	SCREW ISO4762 M6X16 A4	
140	312115-0378		4	SCREW ISO4762 M6X40 A4 80	
150	315105-0146		4	WASHER BRB5,3X10RFR	
160	315105-0165		4	WASHER BRB8,4X16RFR	
170	312105-0370		4	SCREW M6S ISO 4017 M6X20 A480	
180	315105-0153		4	WASHER BRB6,4X12RFR	
210	2675077-0000		2	SUPPORT	
210	2604510-0000		2	SHAFT	
240	312105-0372		8	SCREW M6S ISO 4017 M6X25 A480	
250	315111-0156		8	WASHER PLAIN, TBRB 6,7/14 H=3	

Machine Type | Group Description | Used-In | Group Number | Page No

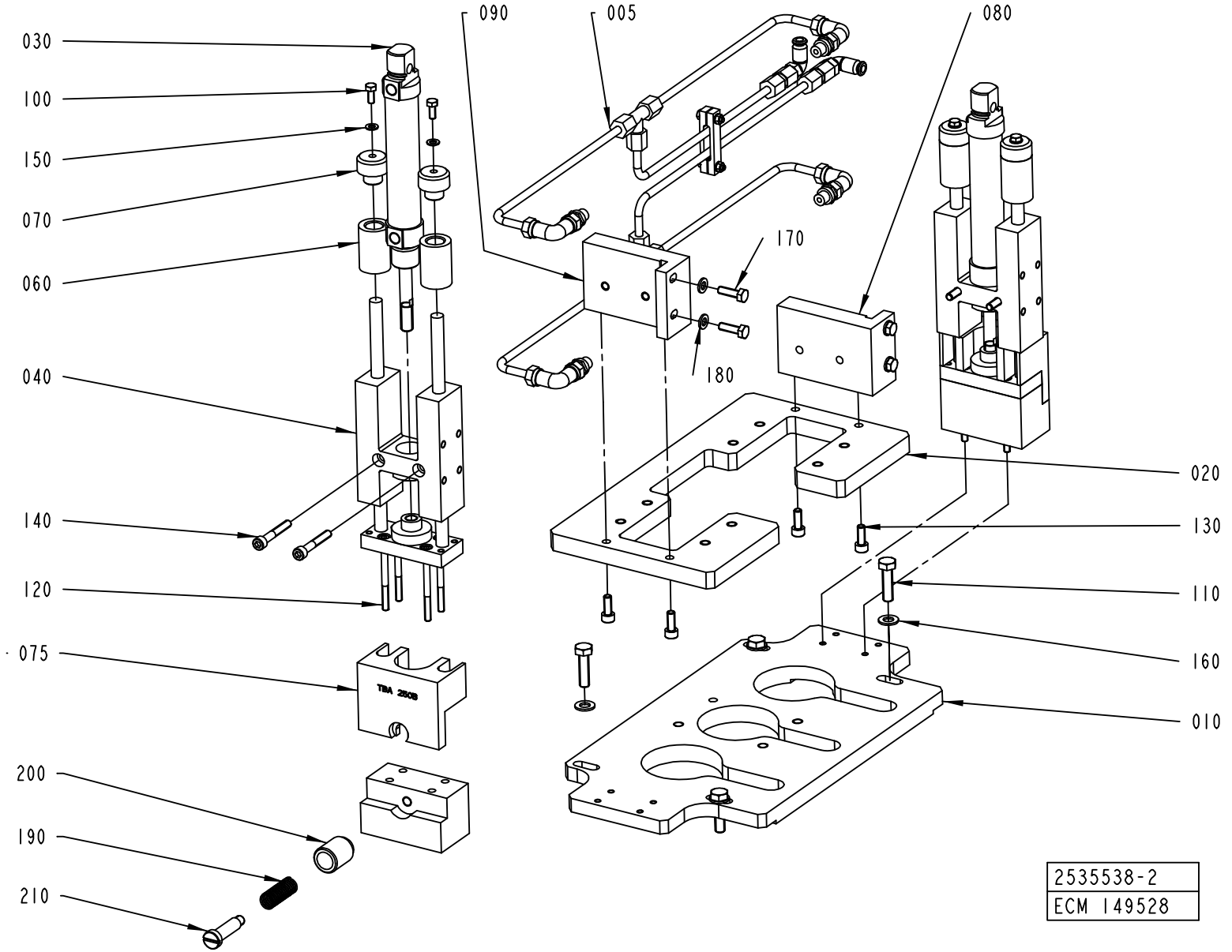
030
100
150
070
060
040
140
120
075
200
190
210
090
005
080
170
180
020
130
110
160
010
TBA 2608
2535538-2
ECM 149528

ECM: 196751 - 20041215
Group number: 2535538-0100
Assembly Drawing: 2535538-2_1_AA

This list covers pages from 4-6 to 4-13

Pos	Part No	UN	Qty	Description	Page No
A3/FLEX TBA 0200B, A3/FLEX TBA 0250B, A3/FLEX TBA 0330S (See drawing on pages: 4-8, 4-10)					
010	2520163-0000		1	PLATE	
020	2520165-0000		1	GUIDE PLATE	
030	90459-0953		2	DOUBLE ACTING, ROUND, CYL 25-80	
040	90459-0952		2	LINEAR GUIDE UNIT, BORE 25-STROKE 80	
060	2599020-0000		4	STOP	
065	2604507-0000		2	SPACER	
075	2604508-0000		2	SPACER	
100	312105-0327		4	SCREW M6S ISO 4017 M5X12 A480	
120	90458-0058		8	SCREW M5X60 A280	
170	312105-0370		4	SCREW M6S ISO 4017 M6X20 A480	
190	90335-0178		2	COMP. SPRING 22060, 1X13,5X36,5	
200	2604509-0000		2	KNOB	
210	2604510-0000		2	SHAFT	
A3/FLEX TBA 0200M, A3/FLEX TBA 0250S (See drawing on pages: 4-6, 4-12)					
010	2520163-0000		1	PLATE	
020	2520165-0000		1	GUIDE PLATE	
030	90459-0953		2	DOUBLE ACTING, ROUND, CYL 25-80	
040	90459-0952		2	LINEAR GUIDE UNIT, BORE 25-STROKE 80	
060	2646470-0000		4	RUBBER DAMPER	
065	2656985-0000		2	SPACER	
100	312105-0327		4	SCREW M6S ISO 4017 M5X12 A480	
120	312115-0329		8	SCREW ISO4762 M5X16 A4	
120	90458-0058		8	SCREW M5X60 A280	
170	312105-0370		8	SCREW M6S ISO 4017 M6X20 A480	
A3/FLEX TBA 0500B, A3/FLEX TBA 1000B (See drawing on page: 4-6)					
010	2520163-0000		1	PLATE	
020	2520165-0000		1	GUIDE PLATE	
030	90459-0953		2	DOUBLE ACTING, ROUND, CYL 25-80	
040	90459-0952		2	LINEAR GUIDE UNIT, BORE 25-STROKE 80	
060	2623870-0000		4	RUBBER DAMPER	
100	312105-0327		4	SCREW M6S ISO 4017 M5X12 A480	
120	312115-0329		8	SCREW ISO4762 M5X16 A4	
170	312105-0370		4	SCREW M6S ISO 4017 M6X20 A480	
A3/FLEX TBA 1890S, A3/FLEX TBA 2000S (See drawing on page: 4-12)					
010	2520163-0000		1	PLATE	
020	2520165-0000		1	GUIDE PLATE	
030	90459-0953		2	DOUBLE ACTING, ROUND, CYL 25-80	
040	90459-0952		2	LINEAR GUIDE UNIT, BORE 25-STROKE 80	
060	2710505-0000		4	STOP	
100	312105-0327		4	SCREW M6S ISO 4017 M5X12 A480	
120	312115-0333		8	SCREW ISO4762 M5X25 A4	
170	312105-0370		4	SCREW M6S ISO 4017 M6X20 A480	
260	312318-0285		4	SCREW ISO4029 M4X6 A4	
Common Parts					
005	2535540-0100		1	PNEUMATIC CIRCUIT	**4-15**
010	2660573-0000		1	BASIC PLATE	
020	2660575-0000		1	GUIDE PLATE	
030	90459-3119		2	DOUBLE ACTING, MINI-ISO, CYL. 25-100	
040	90459-3118		2	LINEAR GUIDE UNIT, BORE 25-STROKE 100	
060	2623870-0000		4	RUBBER DAMPER	
060	2660610-0000		4	RUBBER DAMPER	
060	2660737-0000		4	STOP	
070	2623869-0000		4	RUBBER HOLDER	
075	2660732-0000		2	SPACER	
080	2623623-0000		1	CYLINDER BRACKET	
090	2623624-0000		1	CYLINDER BRACKET	
100	312105-0327		4	SCREW M6S ISO 4017 M5X12 A480	
110	312105-0455		4	SCREW M6S ISO 4017 M8X30 A480	
130	312115-0368		4	SCREW ISO4762 M6X16 A4	
140	312115-0378		4	SCREW ISO4762 M6X40 A4 80	
150	315105-0146		4	WASHER BRB5,3X10RFR	
160	315105-0165		4	WASHER BRB8,4X16RFR	
170	312105-0370		4	SCREW M6S ISO 4017 M6X20 A480	
180	315105-0153		4	WASHER BRB6,4X12RFR	
210	2675077-0000		2	SUPPORT	
210	2604510-0000		2	SHAFT	
240	312105-0372		8	SCREW M6S ISO 4017 M6X25 A480	
250	315111-0156		8	WASHER PLAIN, TBRB 6,7/14 H=3	

Machine Type | Group Description | Used-In | Group Number | Page No

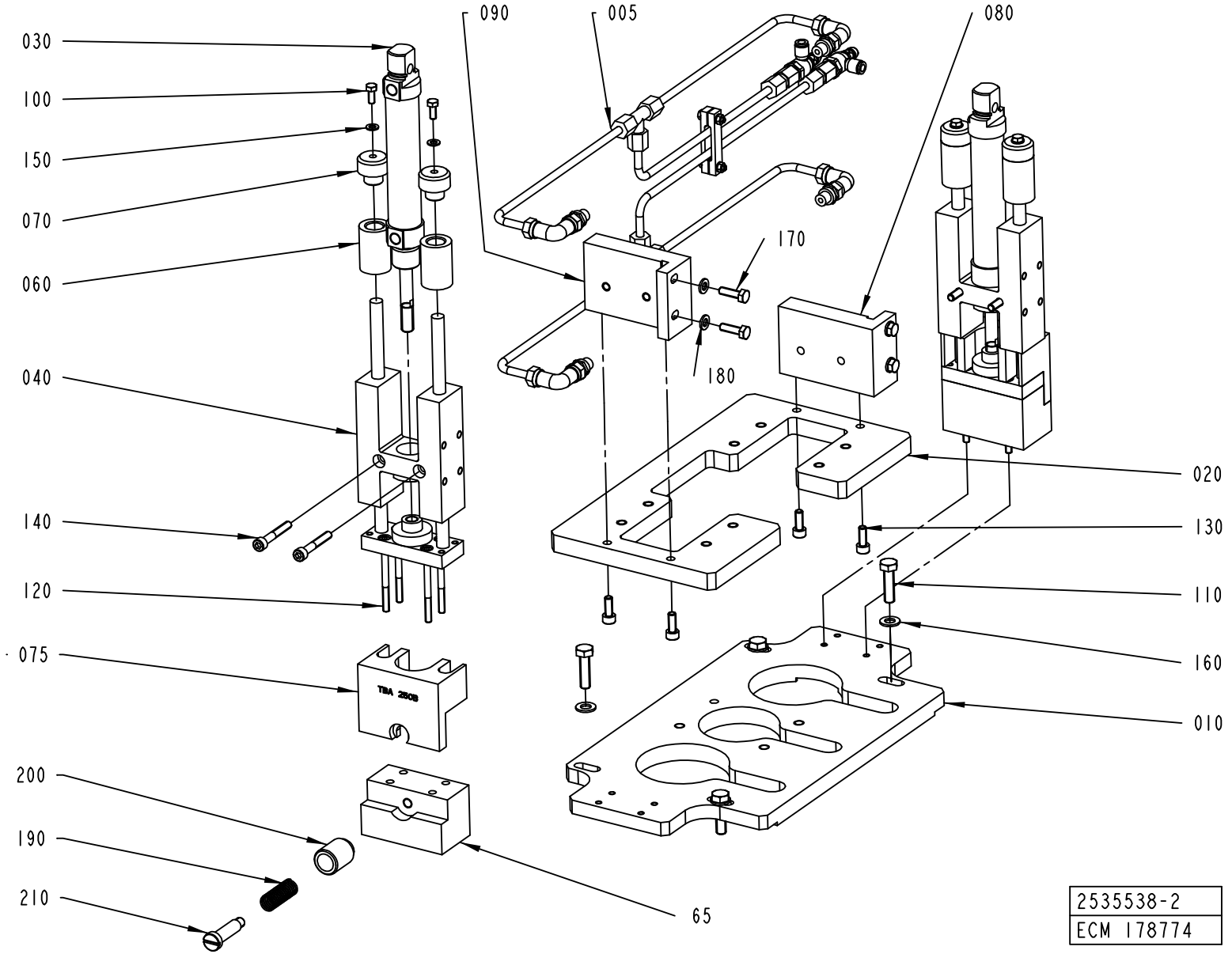
090
005
080
030
100
150
070
060
170
180
040
020
140
130
120
110
075
160
010
200
190
210
65
2535538-2
ECM 178774

ECM: 196751 - 20041215
Group number: 2535538-0100
Assembly Drawing: 2535538-2_1_AB

This list covers pages from 4-6 to 4-13

Pos	Part No	UN	Qty	Description	Page No
A3/FLEX TBA 0200B, A3/FLEX TBA 0250B, A3/FLEX TBA 0330S (See drawing on pages: 4-8, 4-10)					
010	2520163-0000		1	PLATE	
020	2520165-0000		1	GUIDE PLATE	
030	90459-0953		2	DOUBLE ACTING, ROUND, CYL 25-80	
040	90459-0952		2	LINEAR GUIDE UNIT, BORE 25-STROKE 80	
060	2599020-0000		4	STOP	
065	2604507-0000		2	SPACER	
075	2604508-0000		2	SPACER	
100	312105-0327		4	SCREW M6S ISO 4017 M5X12 A480	
120	90458-0058		8	SCREW M5X60 A280	
170	312105-0370		4	SCREW M6S ISO 4017 M6X20 A480	
190	90335-0178		2	COMP. SPRING 22060, 1X13,5X36,5	
200	2604509-0000		2	KNOB	
210	2604510-0000		2	SHAFT	
A3/FLEX TBA 0200M, A3/FLEX TBA 0250S (See drawing on pages: 4-6, 4-12)					
010	2520163-0000		1	PLATE	
020	2520165-0000		1	GUIDE PLATE	
030	90459-0953		2	DOUBLE ACTING, ROUND, CYL 25-80	
040	90459-0952		2	LINEAR GUIDE UNIT, BORE 25-STROKE 80	
060	2646470-0000		4	RUBBER DAMPER	
065	2656985-0000		2	SPACER	
100	312105-0327		4	SCREW M6S ISO 4017 M5X12 A480	
120	312115-0329		8	SCREW ISO4762 M5X16 A4	
120	90458-0058		8	SCREW M5X60 A280	
170	312105-0370		8	SCREW M6S ISO 4017 M6X20 A480	
A3/FLEX TBA 0500B, A3/FLEX TBA 1000B (See drawing on page: 4-6)					
010	2520163-0000		1	PLATE	
020	2520165-0000		1	GUIDE PLATE	
030	90459-0953		2	DOUBLE ACTING, ROUND, CYL 25-80	
040	90459-0952		2	LINEAR GUIDE UNIT, BORE 25-STROKE 80	
060	2623870-0000		4	RUBBER DAMPER	
100	312105-0327		4	SCREW M6S ISO 4017 M5X12 A480	
120	312115-0329		8	SCREW ISO4762 M5X16 A4	
170	312105-0370		4	SCREW M6S ISO 4017 M6X20 A480	
A3/FLEX TBA 1890S, A3/FLEX TBA 2000S (See drawing on page: 4-12)					
010	2520163-0000		1	PLATE	
020	2520165-0000		1	GUIDE PLATE	
030	90459-0953		2	DOUBLE ACTING, ROUND, CYL 25-80	
040	90459-0952		2	LINEAR GUIDE UNIT, BORE 25-STROKE 80	
060	2710505-0000		4	STOP	
100	312105-0327		4	SCREW M6S ISO 4017 M5X12 A480	
120	312115-0333		8	SCREW ISO4762 M5X25 A4	
170	312105-0370		4	SCREW M6S ISO 4017 M6X20 A480	
260	312318-0285		4	SCREW ISO4029 M4X6 A4	
Common Parts					
005	2535540-0100		1	PNEUMATIC CIRCUIT	**4-15**
010	2660573-0000		1	BASIC PLATE	
020	2660575-0000		1	GUIDE PLATE	
030	90459-3119		2	DOUBLE ACTING, MINI-ISO, CYL. 25-100	
040	90459-3118		2	LINEAR GUIDE UNIT, BORE 25-STROKE 100	
060	2623870-0000		4	RUBBER DAMPER	
060	2660610-0000		4	RUBBER DAMPER	
060	2660737-0000		4	STOP	
070	2623869-0000		4	RUBBER HOLDER	
075	2660732-0000		2	SPACER	
080	2623623-0000		1	CYLINDER BRACKET	
090	2623624-0000		1	CYLINDER BRACKET	
100	312105-0327		4	SCREW M6S ISO 4017 M5X12 A480	
110	312105-0455		4	SCREW M6S ISO 4017 M8X30 A480	
130	312115-0368		4	SCREW ISO4762 M6X16 A4	
140	312115-0378		4	SCREW ISO4762 M6X40 A4 80	
150	315105-0146		4	WASHER BRB5,3X10RFR	
160	315105-0165		4	WASHER BRB8,4X16RFR	
170	312105-0370		4	SCREW M6S ISO 4017 M6X20 A480	
180	315105-0153		4	WASHER BRB6,4X12RFR	
210	2675077-0000		2	SUPPORT	
210	2604510-0000		2	SHAFT	
240	312105-0372		8	SCREW M6S ISO 4017 M6X25 A480	
250	315111-0156		8	WASHER PLAIN, TBRB 6,7/14 H=3	

Machine Type | Group Description | Used-In | Group Number | Page No

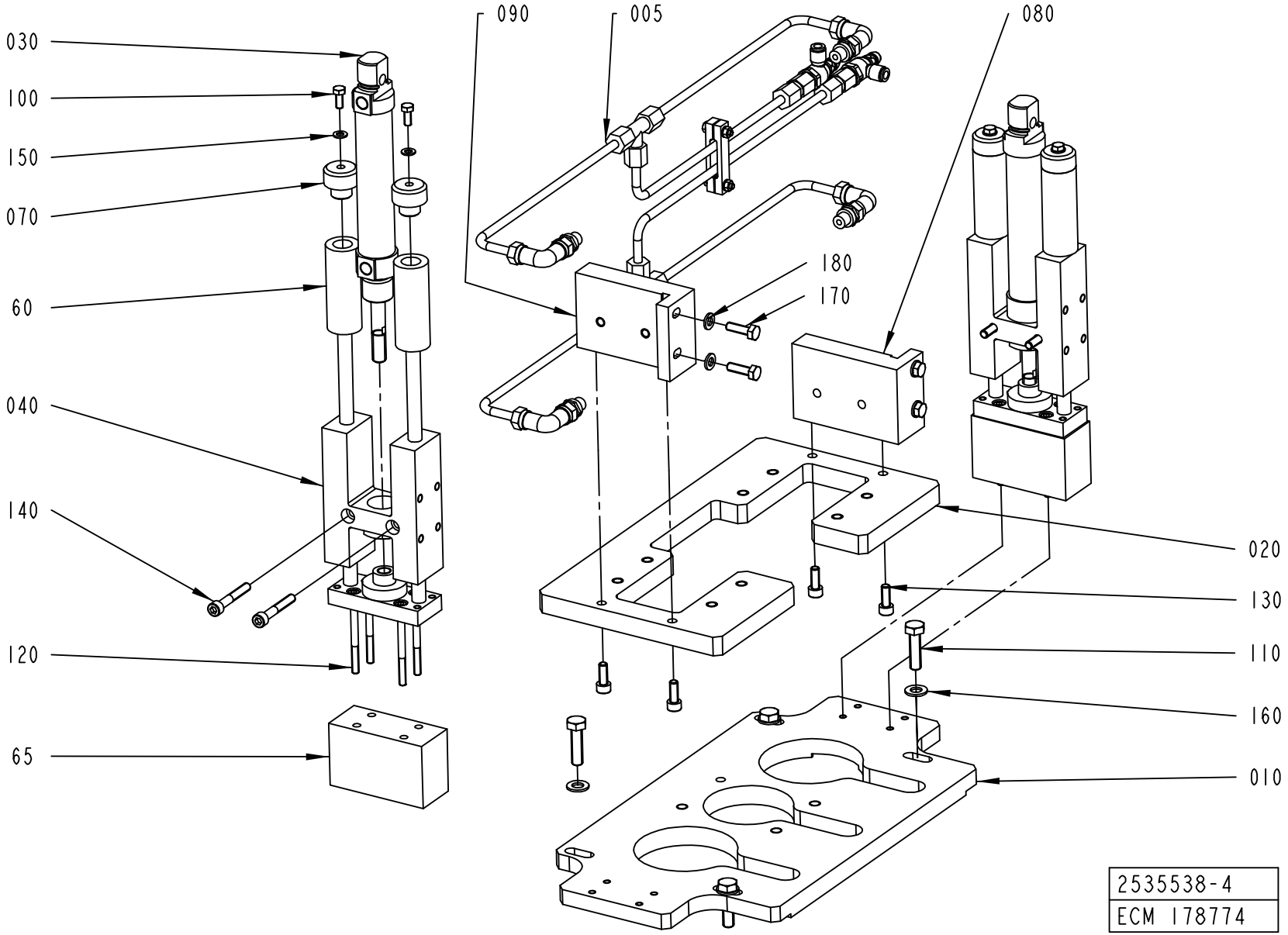
030
100
150
070
60
040
140
120
65
090
005
080
180
170
020
130
110
160
010
2535538-4
ECM 178774

ECM: 196751 - 20041215
Group number: 2535538-0100
Assembly Drawing: 2535538-4_1_AA

This list covers pages from 4-6 to 4-13

Pos	Part No	UN	Qty	Description	Page No
A3/FLEX TBA 0200B, A3/FLEX TBA 0250B, A3/FLEX TBA 0330S (See drawing on pages: 4-8, 4-10)					
010	2520163-0000		1	PLATE	
020	2520165-0000		1	GUIDE PLATE	
030	90459-0953		2	DOUBLE ACTING, ROUND, CYL 25-80	
040	90459-0952		2	LINEAR GUIDE UNIT, BORE 25-STROKE 80	
060	2599020-0000		4	STOP	
065	2604507-0000		2	SPACER	
075	2604508-0000		2	SPACER	
100	312105-0327		4	SCREW M6S ISO 4017 M5X12 A480	
120	90458-0058		8	SCREW M5X60 A280	
170	312105-0370		4	SCREW M6S ISO 4017 M6X20 A480	
190	90335-0178		2	COMP. SPRING 22060, 1X13,5X36,5	
200	2604509-0000		2	KNOB	
210	2604510-0000		2	SHAFT	
A3/FLEX TBA 0200M, A3/FLEX TBA 0250S (See drawing on pages: 4-6, 4-12)					
010	2520163-0000		1	PLATE	
020	2520165-0000		1	GUIDE PLATE	
030	90459-0953		2	DOUBLE ACTING, ROUND, CYL 25-80	
040	90459-0952		2	LINEAR GUIDE UNIT, BORE 25-STROKE 80	
060	2646470-0000		4	RUBBER DAMPER	
065	2656985-0000		2	SPACER	
100	312105-0327		4	SCREW M6S ISO 4017 M5X12 A480	
120	312115-0329		8	SCREW ISO4762 M5X16 A4	
120	90458-0058		8	SCREW M5X60 A280	
170	312105-0370		8	SCREW M6S ISO 4017 M6X20 A480	
A3/FLEX TBA 0500B, A3/FLEX TBA 1000B (See drawing on page: 4-6)					
010	2520163-0000		1	PLATE	
020	2520165-0000		1	GUIDE PLATE	
030	90459-0953		2	DOUBLE ACTING, ROUND, CYL 25-80	
040	90459-0952		2	LINEAR GUIDE UNIT, BORE 25-STROKE 80	
060	2623870-0000		4	RUBBER DAMPER	
100	312105-0327		4	SCREW M6S ISO 4017 M5X12 A480	
120	312115-0329		8	SCREW ISO4762 M5X16 A4	
170	312105-0370		4	SCREW M6S ISO 4017 M6X20 A480	
A3/FLEX TBA 1890S, A3/FLEX TBA 2000S (See drawing on page: 4-12)					
010	2520163-0000		1	PLATE	
020	2520165-0000		1	GUIDE PLATE	
030	90459-0953		2	DOUBLE ACTING, ROUND, CYL 25-80	
040	90459-0952		2	LINEAR GUIDE UNIT, BORE 25-STROKE 80	
060	2710505-0000		4	STOP	
100	312105-0327		4	SCREW M6S ISO 4017 M5X12 A480	
120	312115-0333		8	SCREW ISO4762 M5X25 A4	
170	312105-0370		4	SCREW M6S ISO 4017 M6X20 A480	
260	312318-0285		4	SCREW ISO4029 M4X6 A4	
Common Parts					
005	2535540-0100		1	PNEUMATIC CIRCUIT	**4-15**
010	2660573-0000		1	BASIC PLATE	
020	2660575-0000		1	GUIDE PLATE	
030	90459-3119		2	DOUBLE ACTING, MINI-ISO, CYL. 25-100	
040	90459-3118		2	LINEAR GUIDE UNIT, BORE 25-STROKE 100	
060	2623870-0000		4	RUBBER DAMPER	
060	2660610-0000		4	RUBBER DAMPER	
060	2660737-0000		4	STOP	
070	2623869-0000		4	RUBBER HOLDER	
075	2660732-0000		2	SPACER	
080	2623623-0000		1	CYLINDER BRACKET	
090	2623624-0000		1	CYLINDER BRACKET	
100	312105-0327		4	SCREW M6S ISO 4017 M5X12 A480	
110	312105-0455		4	SCREW M6S ISO 4017 M8X30 A480	
130	312115-0368		4	SCREW ISO4762 M6X16 A4	
140	312115-0378		4	SCREW ISO4762 M6X40 A4 80	
150	315105-0146		4	WASHER BRB5,3X10RFR	
160	315105-0165		4	WASHER BRB8,4X16RFR	
170	312105-0370		4	SCREW M6S ISO 4017 M6X20 A480	
180	315105-0153		4	WASHER BRB6,4X12RFR	
210	2675077-0000		2	SUPPORT	
210	2604510-0000		2	SHAFT	
240	312105-0372		8	SCREW M6S ISO 4017 M6X25 A480	
250	315111-0156		8	WASHER PLAIN, TBRB 6,7/14 H=3	

Machine Type | Group Description | Used-In | Group Number | Page No

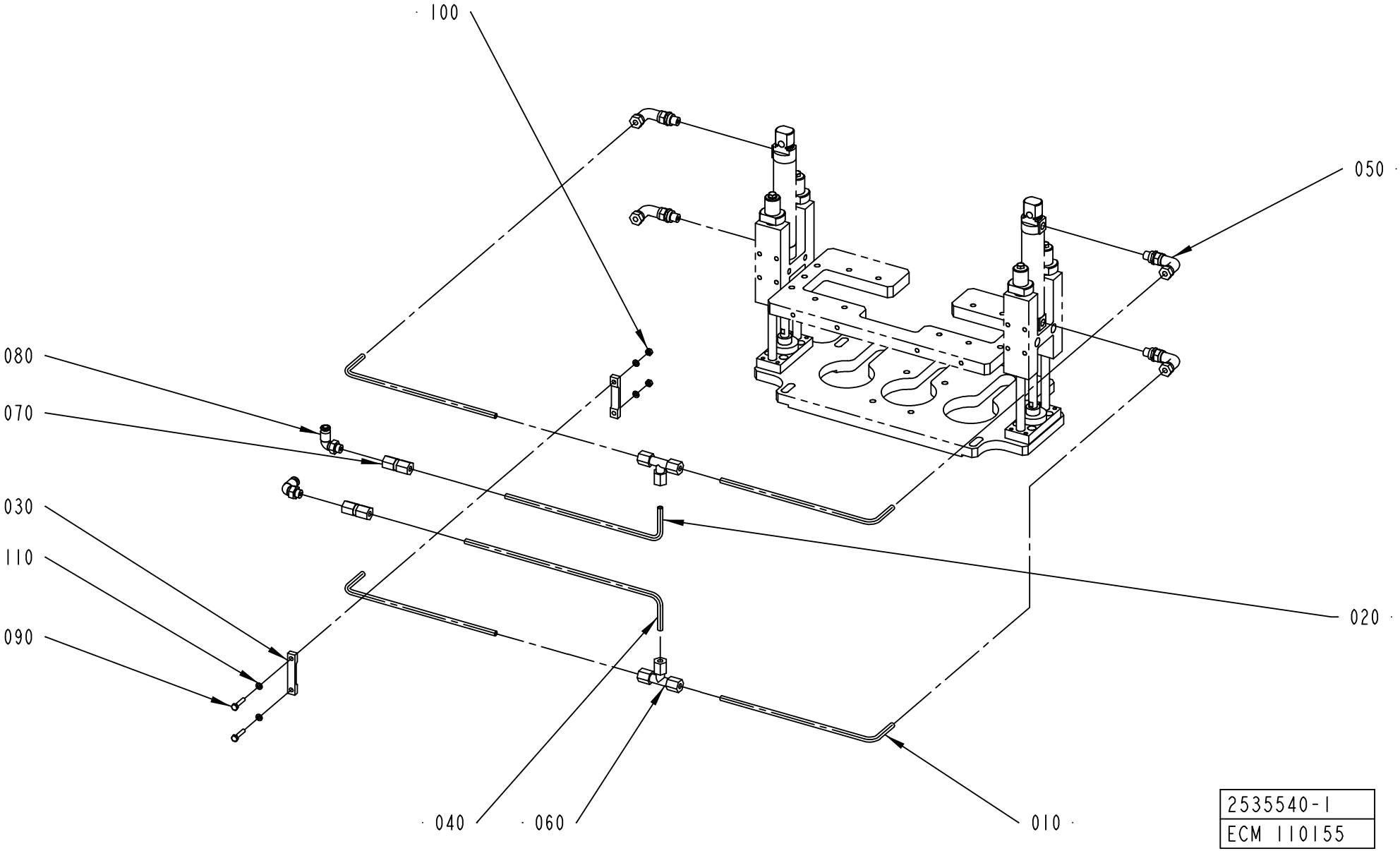
100
050
080
070
030
110
090
020
040
060
010
2535540-1
ECM 110155

ECM: 190867 - 20041119
Group number: 2535540-0100
Assembly Drawing: 2535540-1_1_AA

Pos	Part No	UN	Qty	Description	Page No
A3/FLEX (See drawing on page: 4-14)					
010	2535757-0000		4	PIPE	
020	2535758-0000		1	PIPE	
040	2535937-0000		1	PIPE	
080	90235-0846		2	THROTTLE CHECK VALVE G1/8", MANUAL, 6	
Common Parts					
010	2535757-0000		4	PIPE	
020	2598941-0000		1	PIPE	
030	2535759-0000		2	BRACKET	
040	2660604-0000		1	PIPE	
050	90030-0171		4	ADJUSTABLE ELBOW CONNECTION,EXT 6-G1/8	
060	90030-0076		2	CONN. T-PIPE T-6	
070	342725-0102		2	CONN. STR. PIPE GI-6-G1/8	
080	90458-2956		2	ELBOW PIPE JOINT, EXT.THREAD, D=6MM-G1/8	
090	312105-0295		2	SCREW M6S ISO4017 M4X20 A470	
100	312605-0312		2	HEXAGON NUT, M6M M4 A280	
110	315105-0136		4	WASHER BRB4,3XRFR	

Pos	Part No	UN	Qty	Description	Page No

This page is intentionally left blank.

ECM: 194881 - 20041203
Group number: 2636082-0100
Assembly Drawing:

Pos	Part No	UN	Qty	Description	Page No
A3/FLEX TBA 0500B, A3/FLEX TBA 1000B, A3/FLEX TBA 1000S, A3/FLEX TBA 1000SQ, A3/FLEX TPA 1000SQ, A3/FLEX TBA 0200S, A3/FLEX TBA 1500S, A3/FLEX TBA 0200B, A3/FLEX TBA 0250B, A3/FLEX TBA 0330S, A3/FLEX TPA 0330SQ, A3/FLEX TPA 0500SQ, A3/FLEX TBA 0200M, A3/FLEX TBA 0250S, A3/FLEX TBA 0500S					
060	2512829-0000		1	PNEUMATIC DIAGRAM	
A3/FLEX TBA 1890S, A3/FLEX TBA 2000S					
060	2719737-0000		1	PNEUMATIC DIAGRAM	
Common Parts					
010	90042-0215		1	VALVE BODY 5/2 UNISTABLE	
020	90042-0538		1	PILOT VALVE L=500MM	
030	342716-0203		2	REDUCER 6-8	
040	90055-0172		2	ELBOW WITH TAILPIECE 8/8 MM	
050	90166-0013	MM	4000	TUBE 8 MM PA BLUE	
060	2512829-0000		1	PNEUMATIC DIAGRAM	
110	90235-0846		1	THROTTLE CHECK VALVE G1/8", MANUAL, 6	
120	90235-0846		1	THROTTLE CHECK VALVE G1/8", MANUAL, 6	

Pos	Part No	UN	Qty	Description	Page No

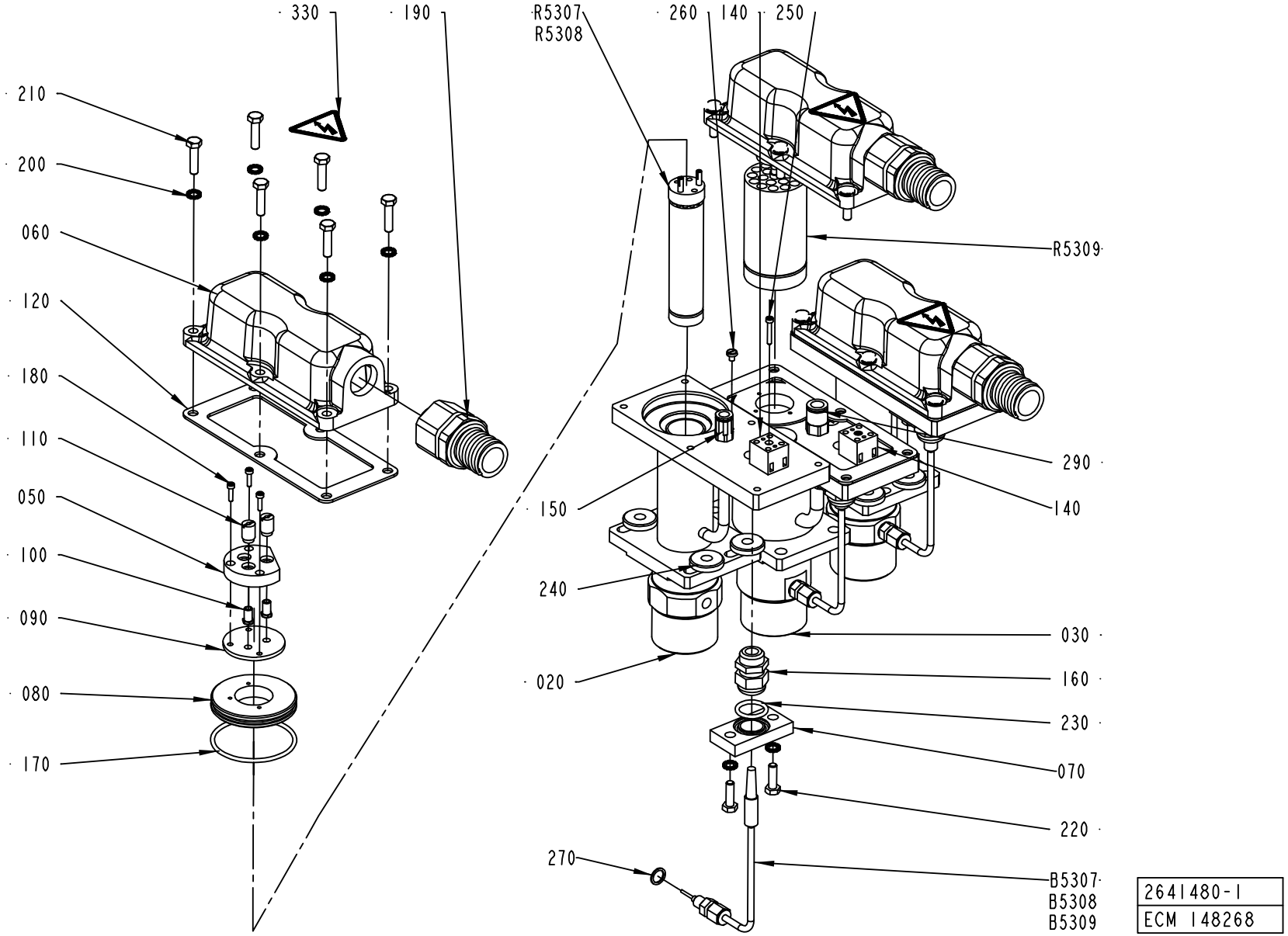
330
190
210
200
060
120
180
110
050
100
090
080
170
R5307
R5308
260
140
250
R5309
290
140
150
240
030
020
160
230
070
220
270
B5307
B5308
B5309
2641480-1
ECM 148268

ECM: 148862 - 20031128
Group number: 2641480-0100
Assembly Drawing: 2641480-1_1_AA

Pos	Part No	UN	Qty	Description	Page No
-					
020	1296070-0000		2	HEATING PIPE	
030	1285293-0000		1	HEATING PIPE	
050	294464-0000		3	BASE PLATE	
060	1484096-0000		3	COVER	
070	1285311-0000		3	PLATE	
080	1285307-0000		3	SPACER	
090	1285308-0000		3	GASKET	
100	270927-0000		6	SCREW	
110	266739-0000		6	CABLE GLAND	
120	1285312-0000		3	GASKET	
140	90195-0020		3	TERMINAL BLOCK, 1977.2	
150	342722-0204		2	PIPE COUPLING	
160	352103-0106		3	CABLE GLAND, ST 11, PR18,6/PG11	
170	315204-0303		3	O-RING 59,5X3 MM	
180	312115-0226		9	SCREW ISO4762 M3X12 A4	
190	353247-0005		3	HOSE GLAND EMC PG21 EXTENDED	
200	90062-0015		24	LOCK WASHER SERRAT.EXT.GEAR,6,4/11 H=0,7	
210	312105-0372		18	SCREW M6S ISO 4017 M6X25 A480	
220	312105-0370		6	SCREW M6S ISO 4017 M6X20 A480	
230	315204-0215		3	O-RING 19,2X3 MM	
240	315125-0165		8	WASHER TBRSB 8,4X26X5 A4	
250	312115-0230		3	SCREW ISO4762 M3X20 A4	
260	312132-0284		3	SCREW SLOT. PAN HEAD MSCS M4X5	
270	315234-0109		3	WASHER,PL.RND.CU.10,3/13,5 H=1,0	
290	342722-0211		1	STRAIGHT COUPLING D=10-G1/4"	
330	359705-0015		3	WARNING SIGN ISO, RISK OF ELECTRIC SHOCK	
B5307	90326-0081		1	THERMOCOUPLE, ISA TYPE K.	
B5308	90326-0081		1	THERMOCOUPLE, ISA TYPE K.	
B5309	90326-0081		1	THERMOCOUPLE, ISA TYPE K.	
R5307	90459-0707		1	HEATING ELEMENT, 1500W/220V	
R5308	90459-0707		1	HEATING ELEMENT, 1500W/220V	
R5309	90206-0030		1	HEATING ELEMENT, 3000W, 220V	

Pos	Part No	UN	Qty	Description	Page No

Machine Type	Group Description	Used-In	Group Number	Page No

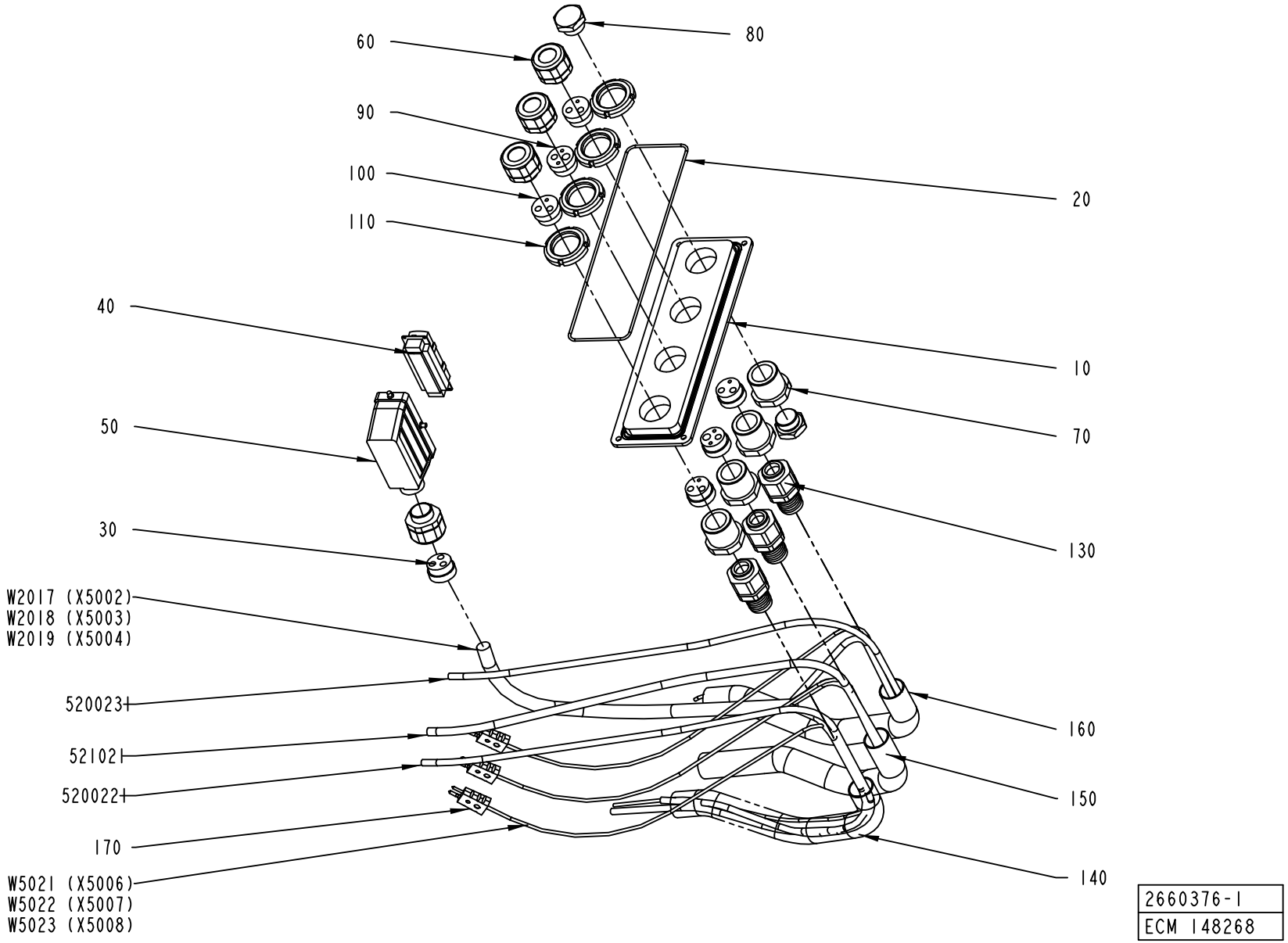
60
80
90
100
110
20
40
10
50
70
30
130
W2017 (X5002)
W2018 (X5003)
W2019 (X5004)
520023
160
52102
150
520022
170
140
W5021 (X5006)
W5022 (X5007)
W5023 (X5008)
2660376-1
ECM 148268

ECM: 151747 - 20031128
Group number: 2660376-0100
Assembly Drawing: 2660376-1_1_AA

Pos	Part No	UN	Qty	Description	Page No
-					
010	2514370-0000		1	PLATE	
020	90161-0001	MM	800	O-RING MATERIAL 3 MM	
030	2527371-0000		1	INSERT	
040	90110-0150		1	MALE INSERT 121110 0000	
050	90110-0228		1	CABLE HOOD 24-POL 71.350.2428.0	
060	353241-0003		4	GLAND W/O INSERT PG21 EXTENDED	
070	2514372-0000		4	BUSHING	
080	2514371-0000		2	PLUG	
090	1484093-0000		2	INSERT	
100	1484379-0000		4	INSERT	
110	312805-0108		4	NUT ROUND WITH SLOTS M40X1,5 FE	
130	353247-0005		3	HOSE GLAND EMC PG21 EXTENDED	
140	90152-0070	MM	490	METAL HOSE, 32,5X26, UL 2621	
150	90152-0070	MM	360	METAL HOSE, 32,5X26, UL 2621	
160	90152-0070	MM	510	METAL HOSE, 32,5X26, UL 2621	
170	90326-0022		3	PLUG, MALE YELLOW CR-AL	
5200221	90166-0013	MM	1200	TUBE 8 MM PA BLUE	
5200231	90166-0013	MM	1200	TUBE 8 MM PA BLUE	
521021	90166-0216	MM	1150	TUBE 10 MM PUR BLUE	
W2017	351150-0412	MM	2000	CABLE OLFLEX 3X1,5 MM2 LIGHT/GREY	
W2018	351150-0412	MM	2000	CABLE OLFLEX 3X1,5 MM2 LIGHT/GREY	
W2019	351150-0412	MM	2000	CABLE OLFLEX 3X1,5 MM2 LIGHT/GREY	
W5021	90220-0034	MM	7500	THERMOCABLE TEX/SITW-20F-KX 2X0,5MM2	
W5022	90220-0034	MM	7500	THERMOCABLE TEX/SITW-20F-KX 2X0,5MM2	
W5023	90220-0034	MM	7500	THERMOCABLE TEX/SITW-20F-KX 2X0,5MM2	

Pos	Part No	UN	Qty	Description	Page No

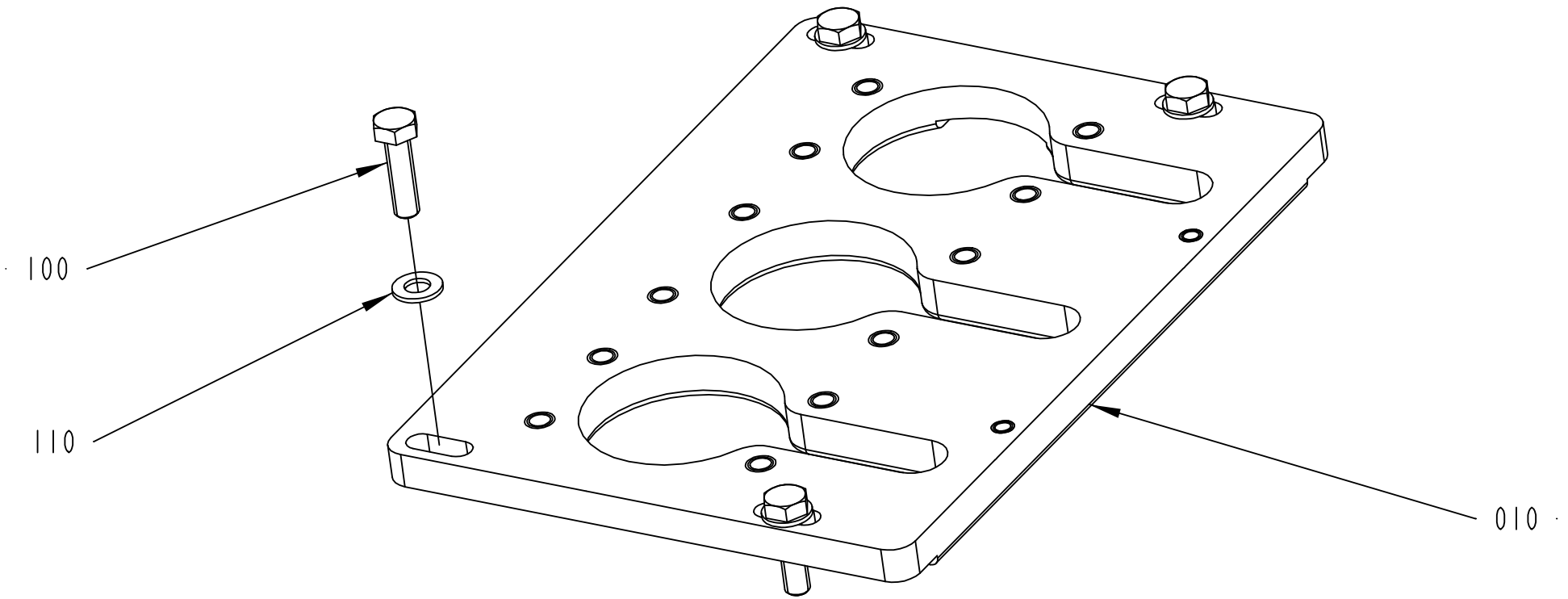

2544339-1
ECM 116811

ECM: 189491 - 20041104
Group number: 2544339-0100
Assembly Drawing: 2544339-1_1_AA

Pos	Part No	UN	Qty	Description	Page No
-					
010	1285291-0000		1	PLATE	
100	315105-0165		4	WASHER BRB8,4X16RFR	
110	312105-0453		4	SCREW M6S ISO 4017 M8X25 A480	

Pos	Part No	UN	Qty	Description	Page No

This page is intentionally left blank.

ECM: 194880 - 20041203
Group number: 2593831-0100
Assembly Drawing:

Pos	Part No	UN	Qty	Description	Page No
TBA 0200B					
010	2594512-0103		2	VOLUME FLAP	
010	2594512-0105		2	VOLUME FLAP	
020	1548460-0103		2	VOLUME FLAP	
020	1548460-0105		2	VOLUME FLAP	
030	2527703-0103		1	GUIDE	
030	2527703-0104		1	GUIDE	
040	2527704-0103		1	GUIDE	
040	2527704-0104		1	GUIDE	
TBA 0200M					
010	2594512-0106		2	VOLUME FLAP	
020	1548460-0106		2	VOLUME FLAP	
030	2527703-0110		1	GUIDE	
040	2527704-0110		1	GUIDE	
TBA 0250B					
010	2594512-0103		2	VOLUME FLAP	
010	2594512-0104		2	VOLUME FLAP	
020	1548460-0103		2	VOLUME FLAP	
020	1548460-0104		2	VOLUME FLAP	
030	2527703-0103		1	GUIDE	
030	2527703-0105		1	GUIDE	**4-27, 4-29**
040	2527704-0103		1	GUIDE	
040	2527704-0105		1	GUIDE	**4-31, 4-33**
TBA 0250S					
010	2594512-0107		2	VOLUME FLAP	
020	1548460-0107		2	VOLUME FLAP	
030	2527703-0111		1	GUIDE	
040	2527704-0111		1	GUIDE	
TBA 0330S					
010	2594512-0104		2	VOLUME FLAP	
010	2594512-0105		2	VOLUME FLAP	
020	1548460-0104		2	VOLUME FLAP	
020	1548460-0105		2	VOLUME FLAP	
030	2527703-0104		1	GUIDE	
030	2527703-0105		1	GUIDE	**4-27, 4-29**
040	2527704-0104		1	GUIDE	
040	2527704-0105		1	GUIDE	**4-31, 4-33**
080	2603489-0000		8	BOTTOM	
TBA 0500B					
010	2594512-0101		2	VOLUME FLAP	**4-35, 4-37**
020	1548460-0101		2	VOLUME FLAP	**4-39, 4-41**
030	2527703-0101		1	GUIDE	
040	2527704-0101		1	GUIDE	
050	1285023-0000		1	SIDE PLATE	
060	1285022-0000		1	SIDE PLATE	
TBA 1000B					
010	2594512-0102		2	VOLUME FLAP	
020	1548460-0102		2	VOLUME FLAP	
030	2527703-0102		1	GUIDE	
040	2527704-0102		1	GUIDE	
050	2605993-0000		1	SIDE PLATE	
060	2605994-0000		1	SIDE PLATE	
TBA 1890S					
010	2695955-0102		2	VOLUME FLAP	**4-43**
020	2695955-0102		2	VOLUME FLAP	**4-43**
030	2527703-0109		1	GUIDE	
040	2527704-0109		1	GUIDE	
080	2616219-0000		8	BOTTOM	
TBA 2000S					
010	2695955-0101		2	VOLUME FLAP	
020	2695955-0101		2	VOLUME FLAP	
030	2527703-0108		1	GUIDE	
040	2527704-0108		1	GUIDE	
080	2616218-0000		8	BOTTOM	

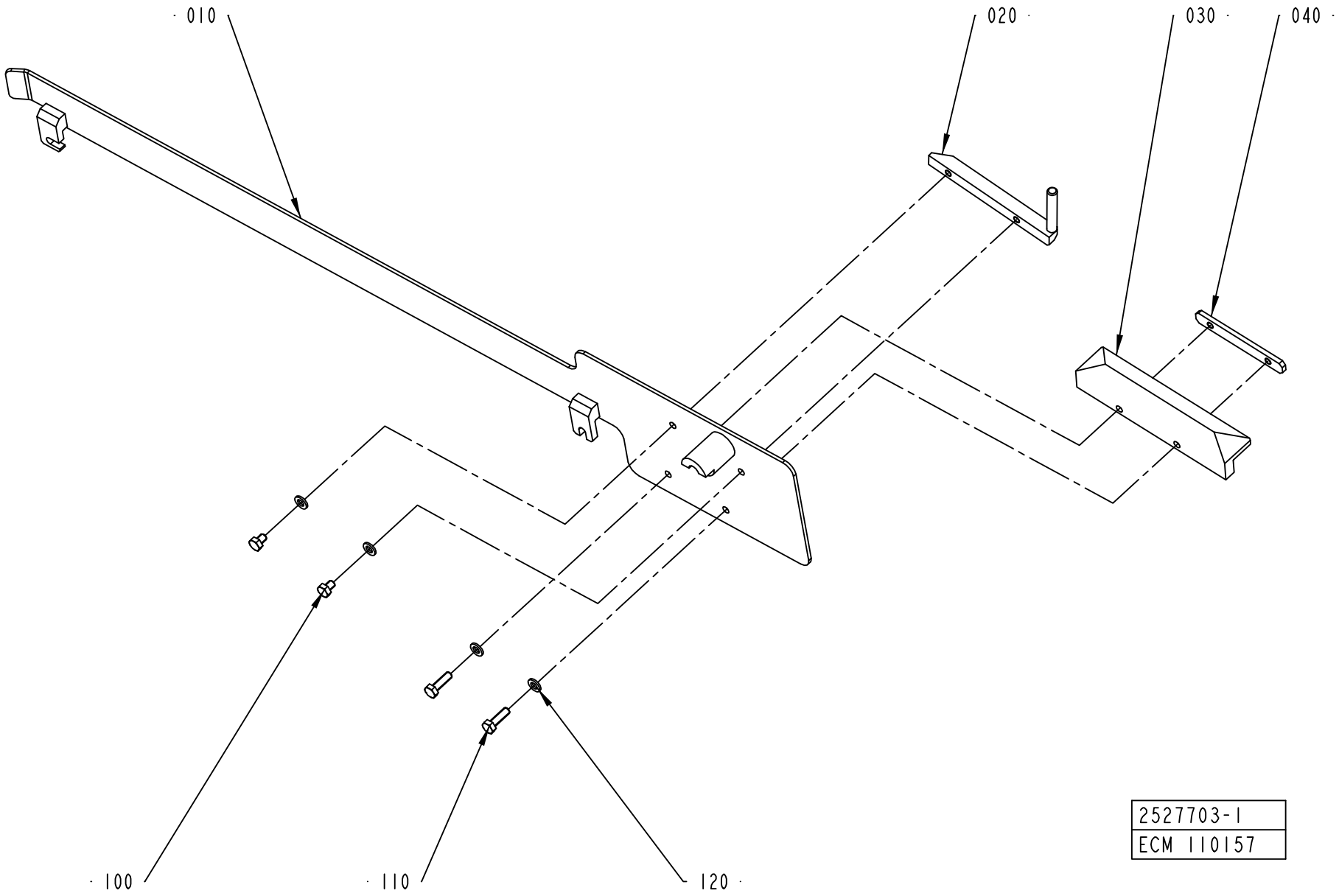
010
020
030
040
100
110
120
2527703-1
ECM 110157

ECM: 178774 -
Group number: 2527703-0105
Assembly Drawing: 2527703-1_1_AA

This list covers pages from 4-26 to 4-29

Pos	Part No	UN	Qty	Description	Page No
TBA 0200B (See drawing on pages: 3-68, 4-28)					
010	2526579-0000		1	GUIDE	
020	1348154-0000		1	BAR	
030	1348142-0000		1	SLIDE	
040	1348169-0000		1	PLATE	
050	2664201-0000		1	GUIDE	
110	312105-0370		2	SCREW M6S ISO 4017 M6X20 A480	
120	315105-0153		6	WASHER BRB6,4X12RFR	
130	312605-0316		2	HEXAGON NUT, M6M M6 A280	
TBA 0200M (See drawing on pages: 3-68, 4-28)					
010	2657936-0000		1	GUIDE	
020	2657933-0000		1	BAR	
030	2657934-0000		1	SLIDE	
040	1348169-0000		1	PLATE	
050	1517527-0000		1	GUIDE	
110	312105-0370		2	SCREW M6S ISO 4017 M6X20 A480	
120	315105-0153		6	WASHER BRB6,4X12RFR	
130	312605-0316		2	HEXAGON NUT, M6M M6 A280	
TBA 0250B (See drawing on pages: 3-68, 4-28)					
010	2526579-0000		1	GUIDE	
020	1348153-0000		1	BAR	
030	1348141-0000		1	SLIDE	
040	1348169-0000		1	PLATE	
050	2664201-0000		1	GUIDE	
110	312105-0370		2	SCREW M6S ISO 4017 M6X20 A480	
120	315105-0153		6	WASHER BRB6,4X12RFR	
130	312605-0316		2	HEXAGON NUT, M6M M6 A280	
TBA 0250S (See drawing on pages: 3-68, 4-28)					
010	2657936-0000		1	GUIDE	
020	2529607-0000		1	BAR	
030	2529606-0000		1	SLIDE	
040	1279409-0000		1	PLATE	
050	1517527-0000		1	GUIDE	
110	312105-0370		2	SCREW M6S ISO 4017 M6X20 A480	
120	315105-0153		6	WASHER BRB6,4X12RFR	
130	312605-0316		2	HEXAGON NUT, M6M M6 A280	
TBA 0330S (See drawing on pages: 3-68, 4-28)					
010	2526579-0000		1	GUIDE	
020	2544999-0000		1	BAR	
030	2544998-0000		1	SLIDE	
040	1279409-0000		1	PLATE	
050	2664201-0000		1	GUIDE	
110	312105-0370		2	SCREW M6S ISO 4017 M6X20 A480	
120	315105-0153		6	WASHER BRB6,4X12RFR	
130	312605-0316		2	HEXAGON NUT, M6M M6 A280	
TBA 0500B, TBA 1000B					
110	312105-0370		2	SCREW M6S ISO 4017 M6X20 A480	
120	315105-0153		6	WASHER BRB6,4X12RFR	
Common Parts					
010	2678621-0000		1	GUIDE	
010	2665203-0000		1	GUIDE	
010	2522167-0000		1	GUIDE	
010	2518130-0000		1	GUIDE	
020	1539878-0000		1	BAR	
020	1334271-0000		1	BAR	
020	1348150-0000		1	BAR	
030	1348139-0000		1	SLIDE	
030	2594906-0000		1	SLIDE	
030	1539875-0000		1	SLIDE	
030	2598488-0000		1	SLIDE	
040	1539876-0000		1	PLATE	
100	312105-0362		2	SCREW M6S ISO 4017 M6X8 A480	
110	312109-0374		3	SCREW M6S ISO 4017 M6X30 A480	
120	315105-0153		5	WASHER BRB6,4X12RFR	

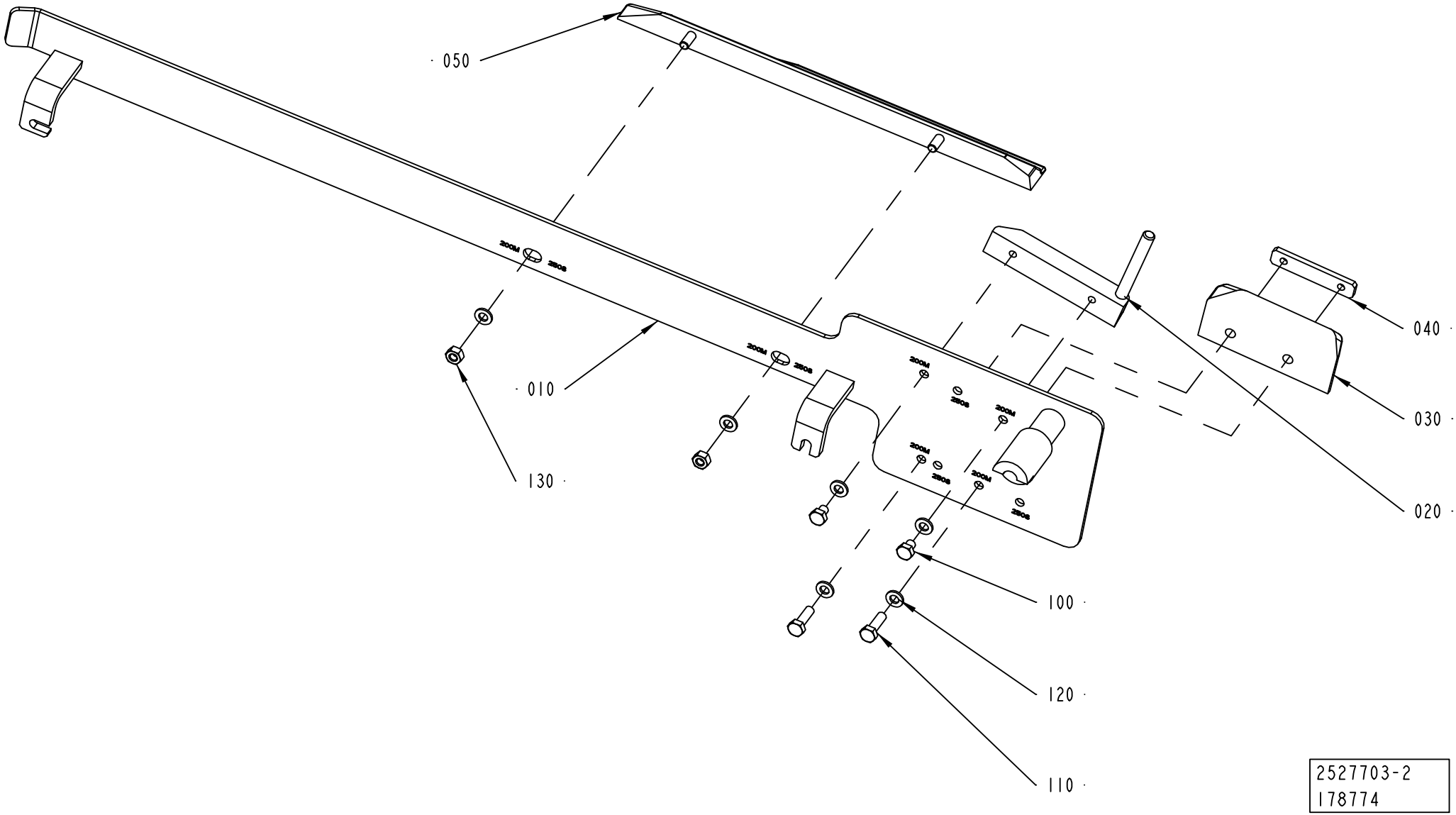
050
010
130
040
030
020
100
120
110
2527703-2
178774

ECM: 178774 -
Group number: 2527703-0105
Assembly Drawing: 2527703-2_1_AA

This list covers pages from 4-26 to 4-29

Pos	Part No	UN	Qty	Description	Page No
TBA 0200B (See drawing on pages: 3-68, 4-28)					
010	2526579-0000		1	GUIDE	
020	1348154-0000		1	BAR	
030	1348142-0000		1	SLIDE	
040	1348169-0000		1	PLATE	
050	2664201-0000		1	GUIDE	
110	312105-0370		2	SCREW M6S ISO 4017 M6X20 A480	
120	315105-0153		6	WASHER BRB6,4X12RFR	
130	312605-0316		2	HEXAGON NUT, M6M M6 A280	
TBA 0200M (See drawing on pages: 3-68, 4-28)					
010	2657936-0000		1	GUIDE	
020	2657933-0000		1	BAR	
030	2657934-0000		1	SLIDE	
040	1348169-0000		1	PLATE	
050	1517527-0000		1	GUIDE	
110	312105-0370		2	SCREW M6S ISO 4017 M6X20 A480	
120	315105-0153		6	WASHER BRB6,4X12RFR	
130	312605-0316		2	HEXAGON NUT, M6M M6 A280	
TBA 0250B (See drawing on pages: 3-68, 4-28)					
010	2526579-0000		1	GUIDE	
020	1348153-0000		1	BAR	
030	1348141-0000		1	SLIDE	
040	1348169-0000		1	PLATE	
050	2664201-0000		1	GUIDE	
110	312105-0370		2	SCREW M6S ISO 4017 M6X20 A480	
120	315105-0153		6	WASHER BRB6,4X12RFR	
130	312605-0316		2	HEXAGON NUT, M6M M6 A280	
TBA 0250S (See drawing on pages: 3-68, 4-28)					
010	2657936-0000		1	GUIDE	
020	2529607-0000		1	BAR	
030	2529606-0000		1	SLIDE	
040	1279409-0000		1	PLATE	
050	1517527-0000		1	GUIDE	
110	312105-0370		2	SCREW M6S ISO 4017 M6X20 A480	
120	315105-0153		6	WASHER BRB6,4X12RFR	
130	312605-0316		2	HEXAGON NUT, M6M M6 A280	
TBA 0330S (See drawing on pages: 3-68, 4-28)					
010	2526579-0000		1	GUIDE	
020	2544999-0000		1	BAR	
030	2544998-0000		1	SLIDE	
040	1279409-0000		1	PLATE	
050	2664201-0000		1	GUIDE	
110	312105-0370		2	SCREW M6S ISO 4017 M6X20 A480	
120	315105-0153		6	WASHER BRB6,4X12RFR	
130	312605-0316		2	HEXAGON NUT, M6M M6 A280	
TBA 0500B, TBA 1000B					
110	312105-0370		2	SCREW M6S ISO 4017 M6X20 A480	
120	315105-0153		6	WASHER BRB6,4X12RFR	
Common Parts					
010	2678621-0000		1	GUIDE	
010	2665203-0000		1	GUIDE	
010	2522167-0000		1	GUIDE	
010	2518130-0000		1	GUIDE	
020	1539878-0000		1	BAR	
020	1334271-0000		1	BAR	
020	1348150-0000		1	BAR	
030	1348139-0000		1	SLIDE	
030	2594906-0000		1	SLIDE	
030	1539875-0000		1	SLIDE	
030	2598488-0000		1	SLIDE	
040	1539876-0000		1	PLATE	
100	312105-0362		2	SCREW M6S ISO 4017 M6X8 A480	
110	312109-0374		3	SCREW M6S ISO 4017 M6X30 A480	
120	315105-0153		5	WASHER BRB6,4X12RFR	

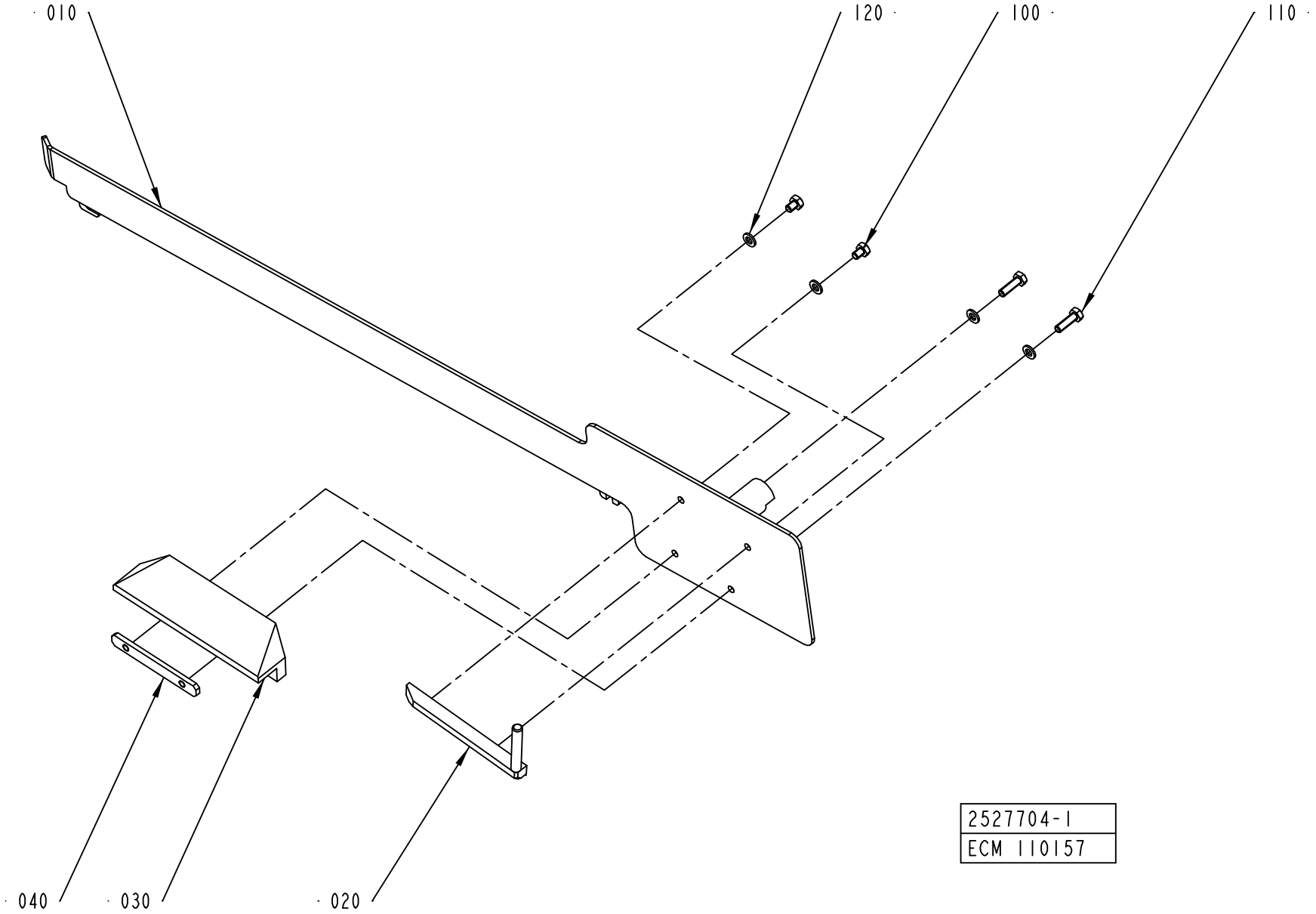
010
120
100
110
040
030
020
2527704-1
ECM 110157

ECM: 178774 -
Group number: 2527704-0105
Assembly Drawing: 2527704-1_1_AA

This list covers pages from 4-30 to 4-33

Pos	Part No	UN	Qty	Description	Page No
TBA 0200B (See drawing on pages: 3-64, 4-32)					
010	2526578-0000		1	GUIDE	
020	1348148-0000		1	BAR	
030	1348136-0000		1	SLIDE	
040	1348169-0000		1	PLATE	
050	2664200-0000		1	GUIDE	
120	315105-0153		6	WASHER BRB6,4X12RFR	
130	312605-0316		2	HEXAGON NUT, M6M M6 A280	
TBA 0200M (See drawing on pages: 3-64, 4-32)					
010	2657937-0000		1	GUIDE	
020	2657932-0000		1	BAR	
030	2657935-0000		1	SLIDE	
040	1348169-0000		1	PLATE	
050	1517526-0000		1	GUIDE	
110	312105-0370		2	SCREW M6S ISO 4017 M6X20 A480	
120	315105-0153		6	WASHER BRB6,4X12RFR	
130	312605-0316		2	HEXAGON NUT, M6M M6 A280	
TBA 0250B (See drawing on pages: 3-64, 4-32)					
010	2526578-0000		1	GUIDE	
020	1348147-0000		1	BAR	
030	1348135-0000		1	SLIDE	
040	1348169-0000		1	PLATE	
050	2664200-0000		1	GUIDE	
120	315105-0153		6	WASHER BRB6,4X12RFR	
130	312605-0316		2	HEXAGON NUT, M6M M6 A280	
TBA 0250S (See drawing on pages: 3-64, 4-32)					
010	2657937-0000		1	GUIDE	
020	2529608-0000		1	BAR	
030	2529605-0000		1	SLIDE	
040	1279409-0000		1	PLATE	
050	1517526-0000		1	GUIDE	
110	312105-0370		2	SCREW M6S ISO 4017 M6X20 A480	
120	315105-0153		6	WASHER BRB6,4X12RFR	
130	312605-0316		2	HEXAGON NUT, M6M M6 A280	
TBA 0330S (See drawing on pages: 3-64, 4-32)					
010	2526578-0000		1	GUIDE	
020	2545000-0000		1	BAR	
030	2544997-0000		1	SLIDE	
040	1279409-0000		1	PLATE	
050	2664200-0000		1	GUIDE	
120	315105-0153		6	WASHER BRB6,4X12RFR	
130	312605-0316		2	HEXAGON NUT, M6M M6 A280	

Pos	Part No	UN	Qty	Description	Page No
TBA 0500B, TBA 1000B (See drawing on pages: 3-62, 4-30)					
110	312105-0370		2	SCREW M6S ISO 4017 M6X20 A480	
120	315105-0153		6	WASHER BRB6,4X12RFR	
Common Parts					
010	2518129-0000		1	GUIDE	
010	2665202-0000		1	GUIDE	
010	2678622-0000		1	GUIDE	
010	2522166-0000		1	GUIDE	
020	1348144-0000		1	BAR	
020	1317805-0000		1	BAR	
020	1539877-0000		1	BAR	
030	1348133-0000		1	SLIDE	
030	2598487-0000		1	SLIDE	
030	2594905-0000		1	SLIDE	
030	1539874-0000		1	SLIDE	
040	1539876-0000		1	PLATE	
100	312105-0362		2	SCREW M6S ISO 4017 M6X8 A480	
110	312109-0374		3	SCREW M6S ISO 4017 M6X30 A480	
120	315105-0153		5	WASHER BRB6,4X12RFR	

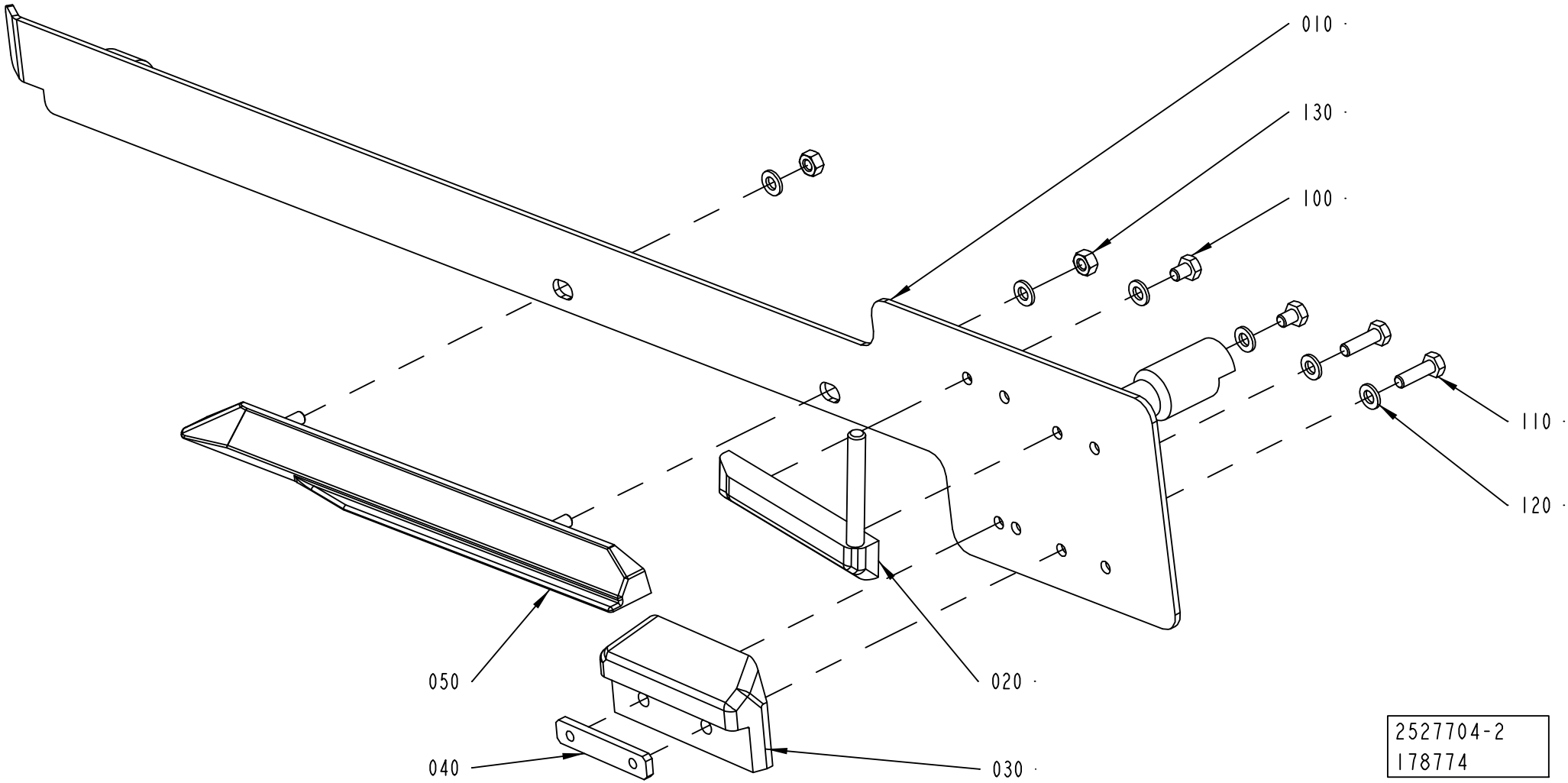
010
130
100
110
120
050
020
040
030
2527704-2
178774

ECM: 178774 -
Group number: 2527704-0105
Assembly Drawing: 2527704-2_1_AA

This list covers pages from 4-30 to 4-33

Pos	Part No	UN	Qty	Description	Page No
TBA 0200B (See drawing on pages: 3-64, 4-32)					
010	2526578-0000		1	GUIDE	
020	1348148-0000		1	BAR	
030	1348136-0000		1	SLIDE	
040	1348169-0000		1	PLATE	
050	2664200-0000		1	GUIDE	
120	315105-0153		6	WASHER BRB6,4X12RFR	
130	312605-0316		2	HEXAGON NUT, M6M M6 A280	
TBA 0200M (See drawing on pages: 3-64, 4-32)					
010	2657937-0000		1	GUIDE	
020	2657932-0000		1	BAR	
030	2657935-0000		1	SLIDE	
040	1348169-0000		1	PLATE	
050	1517526-0000		1	GUIDE	
110	312105-0370		2	SCREW M6S ISO 4017 M6X20 A480	
120	315105-0153		6	WASHER BRB6,4X12RFR	
130	312605-0316		2	HEXAGON NUT, M6M M6 A280	
TBA 0250B (See drawing on pages: 3-64, 4-32)					
010	2526578-0000		1	GUIDE	
020	1348147-0000		1	BAR	
030	1348135-0000		1	SLIDE	
040	1348169-0000		1	PLATE	
050	2664200-0000		1	GUIDE	
120	315105-0153		6	WASHER BRB6,4X12RFR	
130	312605-0316		2	HEXAGON NUT, M6M M6 A280	
TBA 0250S (See drawing on pages: 3-64, 4-32)					
010	2657937-0000		1	GUIDE	
020	2529608-0000		1	BAR	
030	2529605-0000		1	SLIDE	
040	1279409-0000		1	PLATE	
050	1517526-0000		1	GUIDE	
110	312105-0370		2	SCREW M6S ISO 4017 M6X20 A480	
120	315105-0153		6	WASHER BRB6,4X12RFR	
130	312605-0316		2	HEXAGON NUT, M6M M6 A280	
TBA 0330S (See drawing on pages: 3-64, 4-32)					
010	2526578-0000		1	GUIDE	
020	2545000-0000		1	BAR	
030	2544997-0000		1	SLIDE	
040	1279409-0000		1	PLATE	
050	2664200-0000		1	GUIDE	
120	315105-0153		6	WASHER BRB6,4X12RFR	
130	312605-0316		2	HEXAGON NUT, M6M M6 A280	

Pos	Part No	UN	Qty	Description	Page No
TBA 0500B, TBA 1000B (See drawing on pages: 3-62, 4-30)					
110	312105-0370		2	SCREW M6S ISO 4017 M6X20 A480	
120	315105-0153		6	WASHER BRB6,4X12RFR	
Common Parts					
010	2518129-0000		1	GUIDE	
010	2665202-0000		1	GUIDE	
010	2678622-0000		1	GUIDE	
010	2522166-0000		1	GUIDE	
020	1348144-0000		1	BAR	
020	1317805-0000		1	BAR	
020	1539877-0000		1	BAR	
030	1348133-0000		1	SLIDE	
030	2598487-0000		1	SLIDE	
030	2594905-0000		1	SLIDE	
030	1539874-0000		1	SLIDE	
040	1539876-0000		1	PLATE	
100	312105-0362		2	SCREW M6S ISO 4017 M6X8 A480	
110	312109-0374		3	SCREW M6S ISO 4017 M6X30 A480	
120	315105-0153		5	WASHER BRB6,4X12RFR	

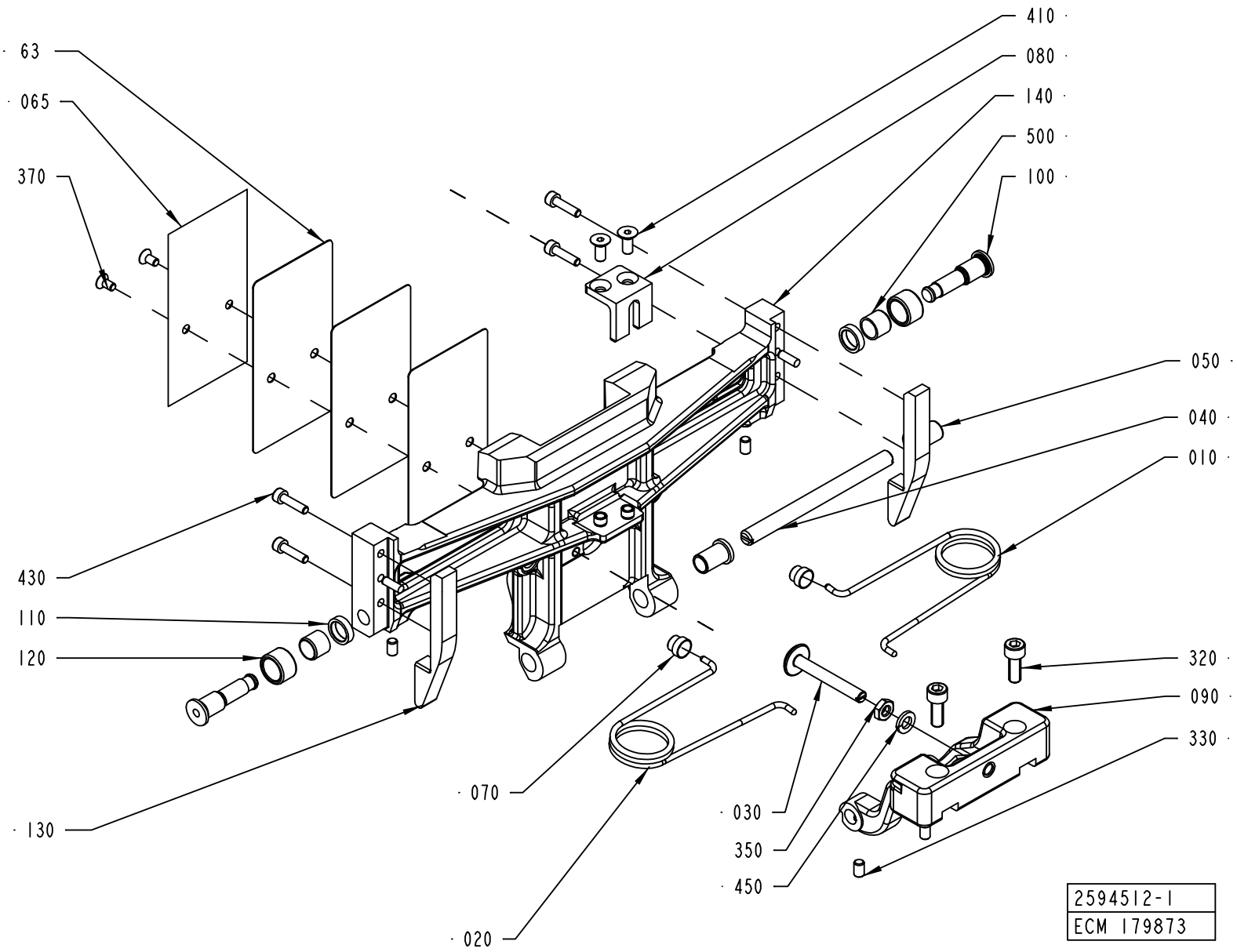
63
065
370
410
080
140
500
100
050
040
010
430
110
120
320
090
330
070
030
350
450
130
020
2594512-1
ECM 179873

ECM: 179873 -
Group number: 2594512-0101
Assembly Drawing: 2594512-1_1_AB

This list covers pages from 4-34 to 4-37

Pos	Part No	UN	Qty	Description	Page No
TBA 0250B (See drawing on pages: 2-48, 4-36)					
010	1350263-0000		1	SPRING RIGHT	
020	1350264-0000		1	SPRING LEFT	
030	1511338-0000		1	STOP	
040	1499327-0000		1	SHAFT	
050	2530313-0000		2	BUSHING	
063	2605166-0000		4	VOLUME SHIM	
065	2609925-0000		1	VOLUME BULGE	
080	2693446-0000		1	STOPPER	
090	2606102-0000		1	FLAP HOLDER	
130	2606218-0000		2	CAM	
140	2605191-0000		1	VOLUME FLAP	
320	312115-0368		2	SCREW ISO4762 M6X16 A4	
370	312155-0287		2	SCREW DIN 7991 MF6S M4X8 A480	
410	312155-0327		2	SCREW DIN 7991 MF6S M5X12 A480	
440	312115-0289		4	SCREW ISO4762 M4X10 A4	
450	315402-0156		1	LOCK WASHER FBB 6,5	
TBA 0330S, TBA 0200B, TBA 0250S, TBA 0200M (See drawing on pages: 2-46, 4-34)					
010	1350263-0000		1	SPRING RIGHT	
020	1350264-0000		1	SPRING LEFT	
040	1499327-0000		1	SHAFT	
050	2530313-0000		2	BUSHING	
320	312115-0368		2	SCREW ISO4762 M6X16 A4	
370	312155-0287		2	SCREW DIN 7991 MF6S M4X8 A480	
450	315402-0156		1	LOCK WASHER FBB 6,5	
TBA 0500B (See drawing on pages: 2-46, 4-34)					
010	1350263-0000		1	SPRING RIGHT	
020	1350264-0000		1	SPRING LEFT	
030	1499348-0000		1	STOP	
040	1487946-0000		1	SHAFT	
050	1487948-0000		2	BUSHING	
063	1511336-0000		3	VOLUME SHIM	
065	1511335-0000		1	VOLUME BULGE	
080	1499349-0000		1	STOPPER	
090	1499346-0000		1	FLAP HOLDER	
130	1499350-0000		2	CAM	
140	1499357-0000		1	VOLUME FLAP	
320	312115-0368		2	SCREW ISO4762 M6X16 A4	
370	312145-0289		2	SCREW ISO 2009 MFS M4X10 A4	
410	312155-0323		2	SCREW DIN 7991 MF6S M5X8 A480	
430	312115-0291		4	SCREW ISO4762 M4X12 A4	
TBA 1000B (See drawing on pages: 2-46, 4-34)					
010	1348483-0000		1	SPRING RIGHT	
020	1348484-0000		1	SPRING LEFT	
030	1487945-0000		1	STOP	
040	1487946-0000		1	SHAFT	
050	1487948-0000		2	BUSHING	
063	1511337-0000		3	VOLUME SHIM	
065	26075-0000		1	VOLUME BULGE	
080	1487943-0000		1	STOPPER	
090	1499345-0000		1	FLAP HOLDER	
130	1499356-0000		2	CAM	
140	1499358-0000		1	VOLUME FLAP	
320	312115-0368		2	SCREW ISO4762 M6X16 A4	
370	312141-0222		2	SCREW ISO 2009 MFS M3X8 4.8 EL.PL	
410	312115-0323		2	SCREW ISO4762 M5X8 A4	
430	312115-0287		4	SCREW ISO4762 M4X8 A4	
Common Parts					
030	1511339-0000		1	STOP	
063	2640139-0000		3	VOLUME SHIM	
063	2654290-0000		3	VOLUME SHIM	
063	2662169-0000		3	VOLUME SHIM	
063	1538637-0000		3	VOLUME SHIM	
065	2640138-0000		1	VOLUME BULGE	
065	2662168-0000		1	VOLUME BULGE	
065	1524310-0000		1	VOLUME BULGE	
065	979931-0000		1	VOLUME BULGE	
070	1144601-0000		2	GUIDE STUD	
080	1499328-0000		1	STOPPER	
080	2606219-0000		1	STOPPER	
080	1499336-0000		1	STOPPER	
090	2605869-0000		1	FLAP HOLDER	
100	1512146-0000		2	AXLE PIN	
110	1512147-0000		2	WASHER	
120	1499355-0000		2	ROLLER	
130	2649443-0000		2	CAM	
130	2662431-0000		2	CAM	
130	2629237-0000		2	CAM	
130	2629236-0000		2	CAM	
140	2604493-0000		1	VOLUME FLAP	
140	2604495-0000		1	VOLUME FLAP	
140	2661451-0000		1	VOLUME FLAP	
140	2639866-0000		1	VOLUME FLAP	
330	312318-0323		4	SCREW ISO4029 M5X8 A4	

Machine Type Group Description Used-In Group Number Page No

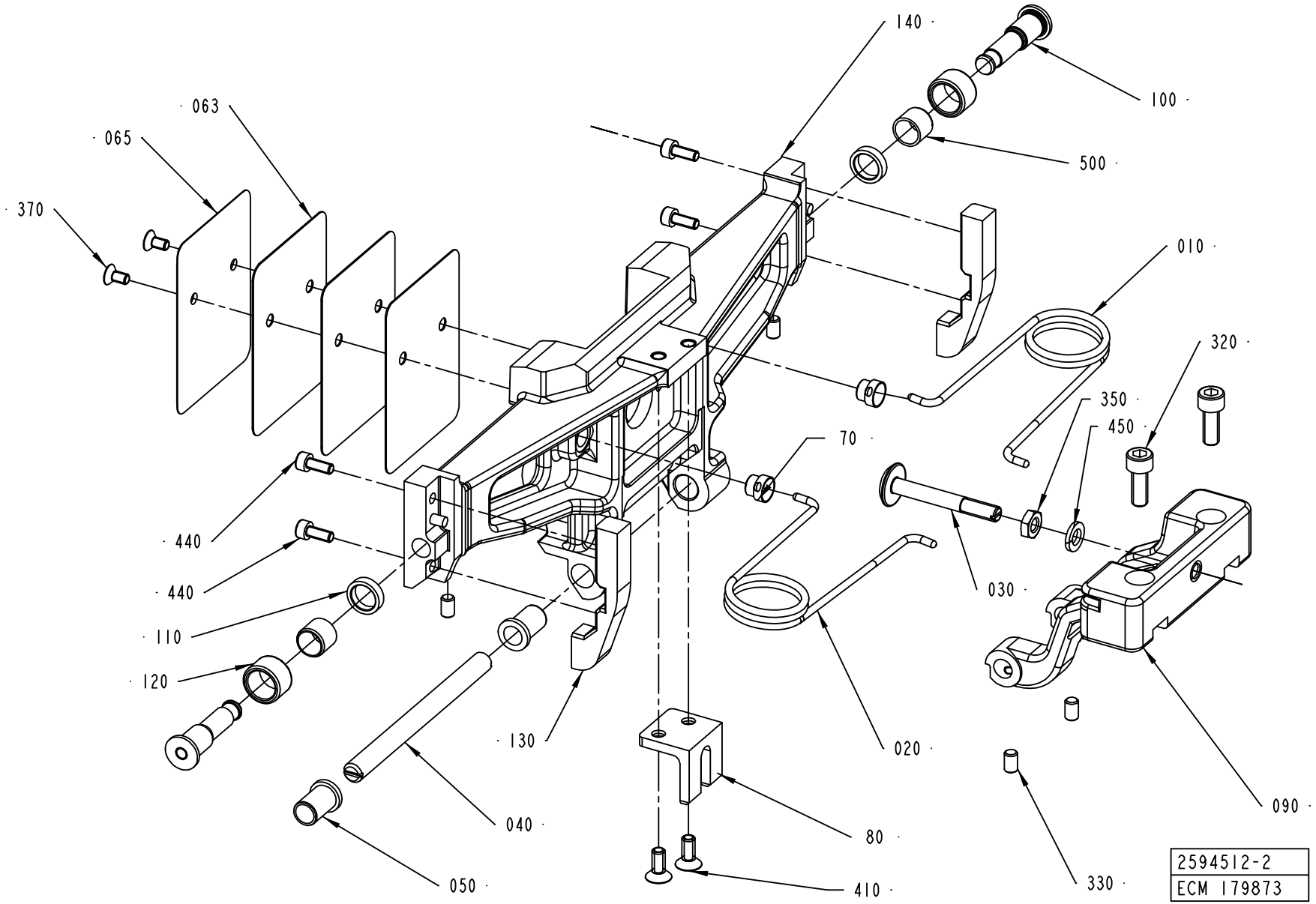
140
100
063
065
500
370
010
320
350
450
70
440
440
030
110
120
130
020
040
80
090
050
410
330
2594512-2
ECM 179873

Pos	Part No	UN	Qty	Description	Page No
Common Parts (Cont'd)					
350	312625-0316		1	HEXAGON THIN NUT, EN 24035 ML6M M6 A4	
410	312155-0325		2	SCREW DIN 7991 MF6S M5X10 A480	
430	312115-0293		4	SCREW ISO4762 M4X16 A4	
430	312115-0289		4	SCREW ISO4762 M4X10 A4	
500	321136-0140		2	BUSHING, 10X12X10 MM	

Pos	Part No	UN	Qty	Description	Page No

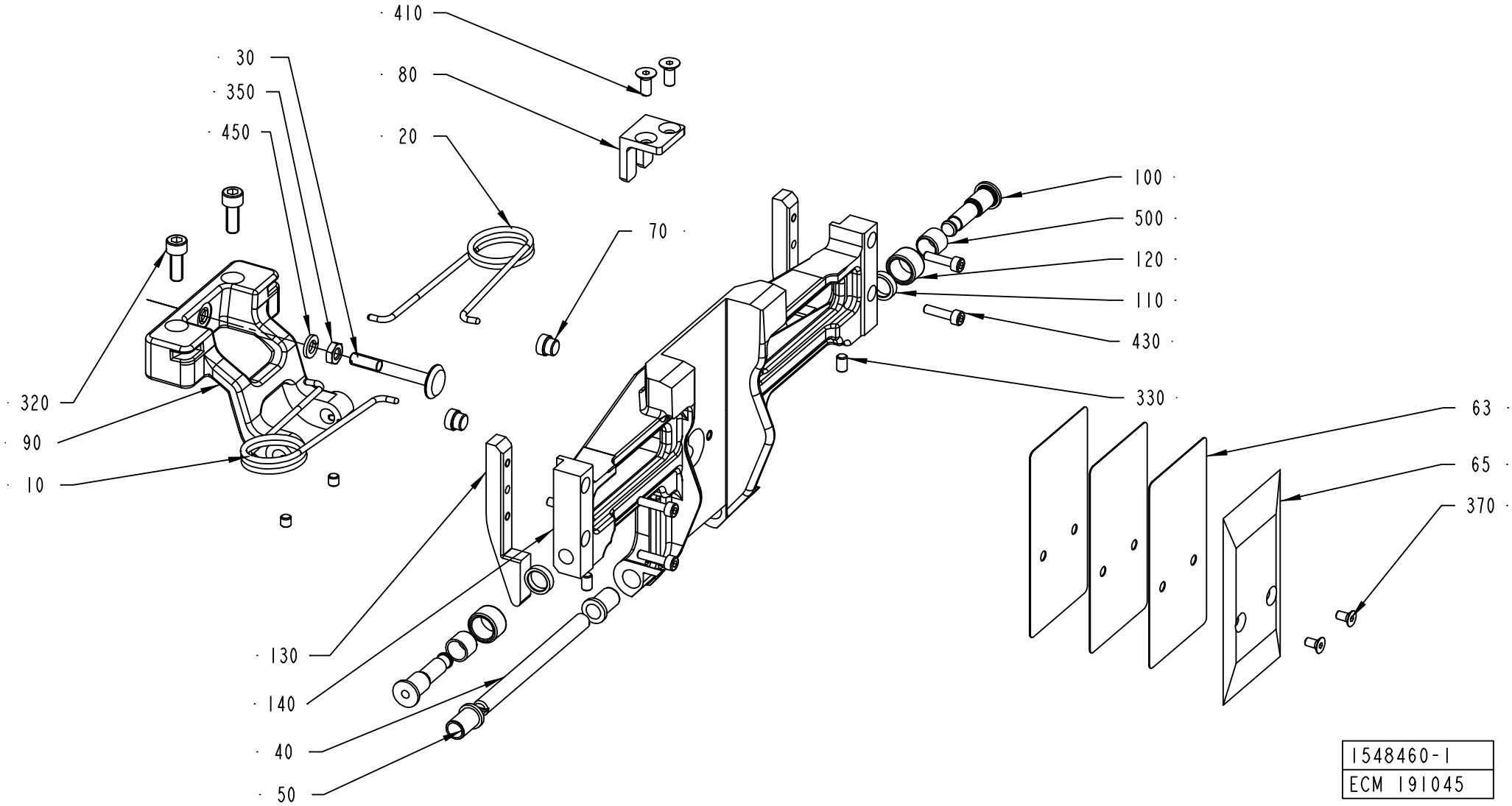
410
30
80
350
20
450
100
500
70
120
110
430
320
330
63
90
65
10
370
130
140
40
50
1548460-1
ECM 191045

ECM: 191045 -
Group number: 1548460-0101
Assembly Drawing: 1548460-1_1_AC

This list covers pages from 4-38 to 4-41

Pos	Part No	UN	Qty	Description	Page No
TBA 0330S, TBA 0200B, TBA 0250S, TBA 0200M (See drawing on pages: 2-50, 4-38)					
010	1350263-0000		1	SPRING RIGHT	
020	1350264-0000		1	SPRING LEFT	
040	1499327-0000		1	SHAFT	
050	2530313-0000		2	BUSHING	
370	312155-0287		2	SCREW DIN 7991 MF6S M4X8 A480	
450	315402-0156		1	LOCK WASHER FBB 6,5	
TBA 0500B (See drawing on pages: 2-50, 4-38)					
010	1350263-0000		1	SPRING RIGHT	
020	1350264-0000		1	SPRING LEFT	
030	1499348-0000		1	STOP	
040	1487946-0000		1	SHAFT	
050	1487948-0000		2	BUSHING	
063	1511336-0000		3	VOLUME SHIM	
065	1511335-0000		1	VOLUME BULGE	
080	1499349-0000		1	STOPPER	
090	1499346-0000		1	FLAP HOLDER	
130	1499350-0000		2	CAM	
140	1499357-0000		1	VOLUME FLAP	
370	312145-0289		2	SCREW ISO 2009 MFS M4X10 A4	
410	312155-0323		2	SCREW DIN 7991 MF6S M5X8 A480	
430	312115-0291		4	SCREW ISO4762 M4X12 A4	
TBA 1000B (See drawing on pages: 2-50, 4-38)					
010	1348483-0000		1	SPRING RIGHT	
020	1348484-0000		1	SPRING LEFT	
030	1487945-0000		1	STOP	
040	1487946-0000		1	SHAFT	
050	1487948-0000		2	BUSHING	
063	1511337-0000		3	VOLUME SHIM	
065	26075-0000		1	VOLUME BULGE	
080	1487943-0000		1	STOPPER	
090	1499345-0000		1	FLAP HOLDER	
130	1499356-0000		2	CAM	
140	1499358-0000		1	VOLUME FLAP	
370	312141-0222		2	SCREW ISO 2009 MFS M3X8 4.8 EL.PL	
410	312115-0323		2	SCREW ISO4762 M5X8 A4	
430	312115-0287		4	SCREW ISO4762 M4X8 A4	
Common Parts					
030	1511339-0000		1	STOP	
030	1511338-0000		1	STOP	
063	2640139-0000		3	VOLUME SHIM	
063	2662169-0000		3	VOLUME SHIM	
063	2654290-0000		3	VOLUME SHIM	
063	2605166-0000		4	VOLUME SHIM	
063	1538637-0000		3	VOLUME SHIM	
065	2609925-0000		1	VOLUME BULGE	
065	2640138-0000		1	VOLUME BULGE	
065	979931-0000		1	VOLUME BULGE	
065	1524310-0000		1	VOLUME BULGE	
065	2662168-0000		1	VOLUME BULGE	
070	1144601-0000		2	GUIDE STUD	
080	2693446-0000		1	STOPPER	
080	2606219-0000		1	STOPPER	
080	1499336-0000		1	STOPPER	
080	1499328-0000		1	STOPPER	
090	2606102-0000		1	FLAP HOLDER	
090	2605869-0000		1	FLAP HOLDER	
100	1512146-0000		2	AXLE PIN	
110	1512147-0000		2	WASHER	
120	1499355-0000		2	ROLLER	
130	2606218-0000		2	CAM	
130	2629237-0000		2	CAM	
130	2629236-0000		2	CAM	
130	2649443-0000		2	CAM	
130	2662431-0000		2	CAM	
140	2639867-0000		1	VOLUME FLAP	
140	2661450-0000		1	VOLUME FLAP	
140	2604494-0000		1	1OLUME FLAP	
140	2605192-0000		1	VOLUME FLAP	
140	2604496-0000		1	VOLUME FLAP	
320	312115-0368		2	SCREW ISO4762 M6X16 A4	
330	312318-0323		4	SCREW ISO4029 M5X8 A4	
350	312625-0316		1	HEXAGON THIN NUT, EN 24035 ML6M M6 A4	
410	312155-0325		2	SCREW DIN 7991 MF6S M5X10 A480	
410	312155-0327		2	SCREW DIN 7991 MF6S M5X12 A480	
430	312115-0289		4	SCREW ISO4762 M4X10 A4	
430	312115-0293		4	SCREW ISO4762 M4X16 A4	
440	312115-0289		4	SCREW ISO4762 M4X10 A4	
500	321136-0140		2	BUSHING, 10X12X10 MM	

Machine Type | Group Description | Used-In | Group Number | Page No

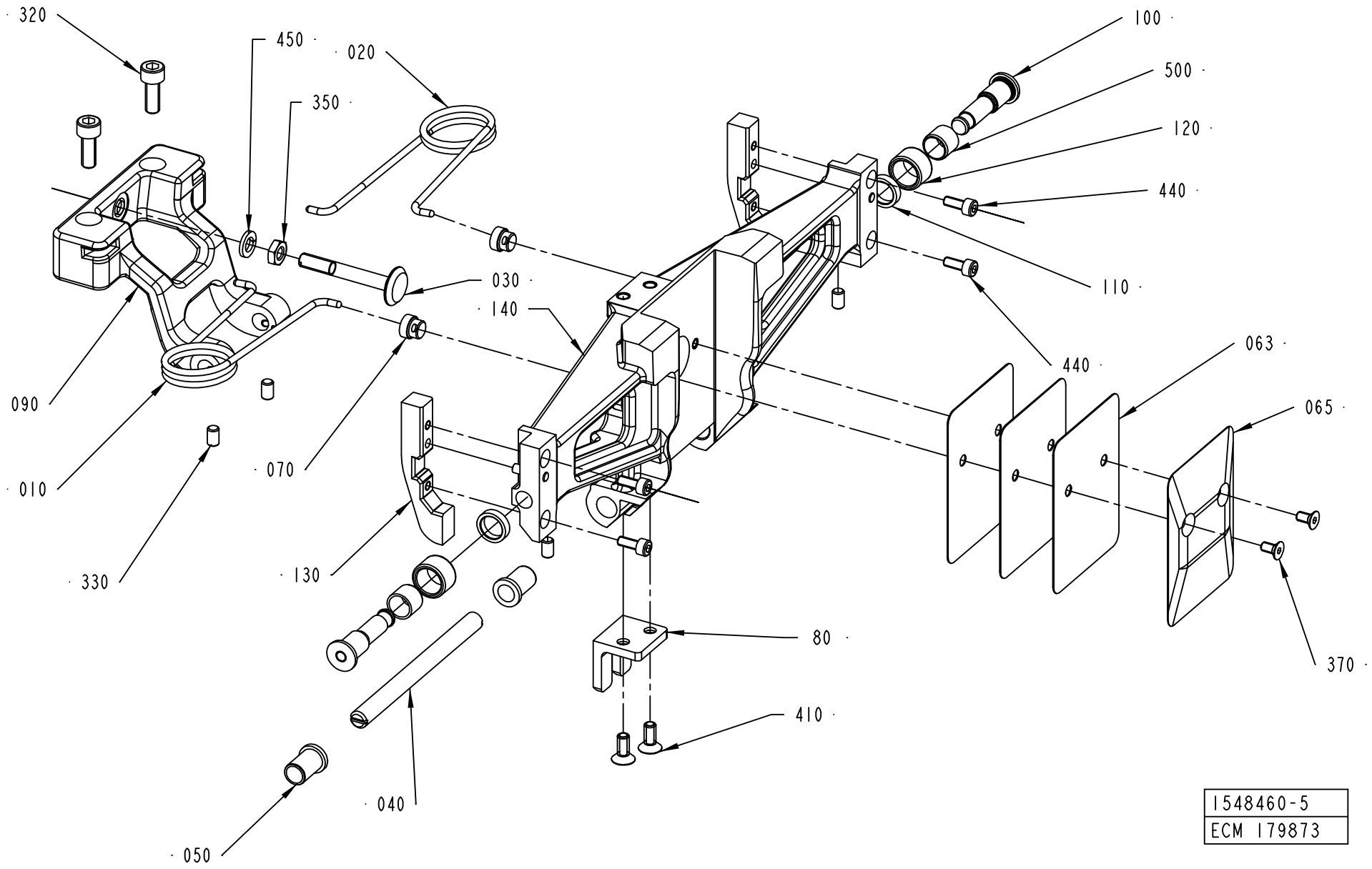
320
450
020
350
100
500
120
440
030
140
110
440
063
065
090
010
070
330
130
80
370
410
040
050
1548460-5
ECM 179873

ECM: 191045 -
Group number: 1548460-0101
Assembly Drawing: 1548460-5_1_AB

This list covers pages from 4-38 to 4-41

Pos	Part No	UN	Qty	Description	Page No
TBA 0330S, TBA 0200B, TBA 0250S, TBA 0200M (See drawing on pages: 2-50, 4-38)					
010	1350263-0000		1	SPRING RIGHT	
020	1350264-0000		1	SPRING LEFT	
040	1499327-0000		1	SHAFT	
050	2530313-0000		2	BUSHING	
370	312155-0287		2	SCREW DIN 7991 MF6S M4X8 A480	
450	315402-0156		1	LOCK WASHER FBB 6,5	
TBA 0500B (See drawing on pages: 2-50, 4-38)					
010	1350263-0000		1	SPRING RIGHT	
020	1350264-0000		1	SPRING LEFT	
030	1499348-0000		1	STOP	
040	1487946-0000		1	SHAFT	
050	1487948-0000		2	BUSHING	
063	1511336-0000		3	VOLUME SHIM	
065	1511335-0000		1	VOLUME BULGE	
080	1499349-0000		1	STOPPER	
090	1499346-0000		1	FLAP HOLDER	
130	1499350-0000		2	CAM	
140	1499357-0000		1	VOLUME FLAP	
370	312145-0289		2	SCREW ISO 2009 MFS M4X10 A4	
410	312155-0323		2	SCREW DIN 7991 MF6S M5X8 A480	
430	312115-0291		4	SCREW ISO4762 M4X12 A4	
TBA 1000B (See drawing on pages: 2-50, 4-38)					
010	1348483-0000		1	SPRING RIGHT	
020	1348484-0000		1	SPRING LEFT	
030	1487945-0000		1	STOP	
040	1487946-0000		1	SHAFT	
050	1487948-0000		2	BUSHING	
063	1511337-0000		3	VOLUME SHIM	
065	26075-0000		1	VOLUME BULGE	
080	1487943-0000		1	STOPPER	
090	1499345-0000		1	FLAP HOLDER	
130	1499356-0000		2	CAM	
140	1499358-0000		1	VOLUME FLAP	
370	312141-0222		2	SCREW ISO 2009 MFS M3X8 4.8 EL.PL	
410	312115-0323		2	SCREW ISO4762 M5X8 A4	
430	312115-0287		4	SCREW ISO4762 M4X8 A4	
Common Parts					
030	1511339-0000		1	STOP	
030	1511338-0000		1	STOP	
063	2640139-0000		3	VOLUME SHIM	
063	2662169-0000		3	VOLUME SHIM	
063	2654290-0000		3	VOLUME SHIM	
063	2605166-0000		4	VOLUME SHIM	
063	1538637-0000		3	VOLUME SHIM	
065	2609925-0000		1	VOLUME BULGE	
065	2640138-0000		1	VOLUME BULGE	
065	979931-0000		1	VOLUME BULGE	
065	1524310-0000		1	VOLUME BULGE	
065	2662168-0000		1	VOLUME BULGE	
070	1144601-0000		2	GUIDE STUD	
080	2693446-0000		1	STOPPER	
080	2606219-0000		1	STOPPER	
080	1499336-0000		1	STOPPER	
080	1499328-0000		1	STOPPER	
090	2606102-0000		1	FLAP HOLDER	
090	2605869-0000		1	FLAP HOLDER	
100	1512146-0000		2	AXLE PIN	
110	1512147-0000		2	WASHER	
120	1499355-0000		2	ROLLER	
130	2606218-0000		2	CAM	
130	2629237-0000		2	CAM	
130	2629236-0000		2	CAM	
130	2649443-0000		2	CAM	
130	2662431-0000		2	CAM	
140	2639867-0000		1	VOLUME FLAP	
140	2661450-0000		1	VOLUME FLAP	
140	2604494-0000		1	1OLUME FLAP	
140	2605192-0000		1	VOLUME FLAP	
140	2604496-0000		1	VOLUME FLAP	
320	312115-0368		2	SCREW ISO4762 M6X16 A4	
330	312318-0323		4	SCREW ISO4029 M5X8 A4	
350	312625-0316		1	HEXAGON THIN NUT, EN 24035 ML6M M6 A4	
410	312155-0325		2	SCREW DIN 7991 MF6S M5X10 A480	
410	312155-0327		2	SCREW DIN 7991 MF6S M5X12 A480	
430	312115-0289		4	SCREW ISO4762 M4X10 A4	
430	312115-0293		4	SCREW ISO4762 M4X16 A4	
440	312115-0289		4	SCREW ISO4762 M4X10 A4	
500	321136-0140		2	BUSHING, 10X12X10 MM	

Machine Type | Group Description | Used-In | Group Number | Page No

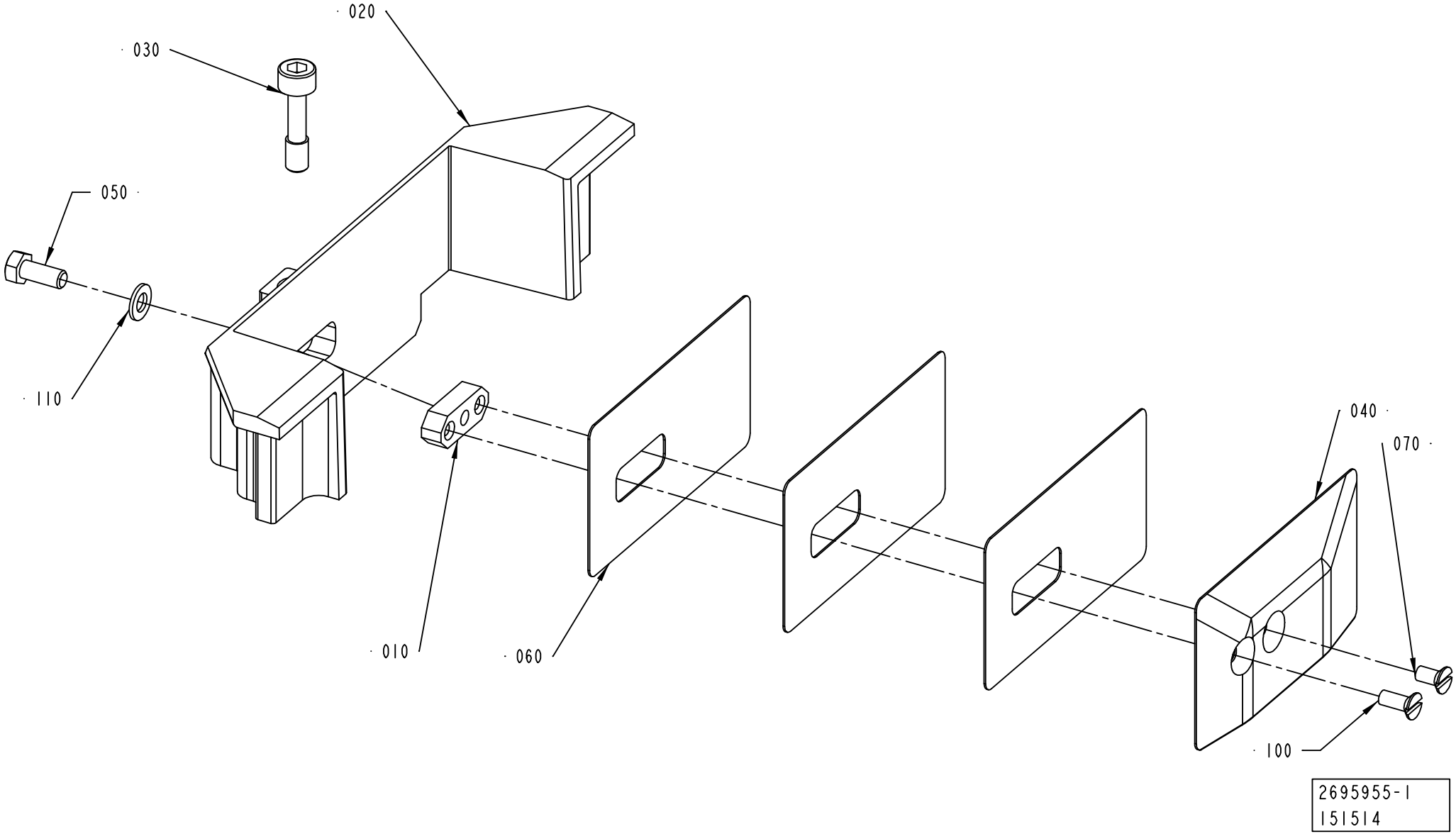
020
030
050
110
010
060
040
070
100
2695955-1
151514

ECM: 151514 -
Group number: 2695955-0102
Assembly Drawing: 2695955-1_1_AA

Pos	Part No	UN	Qty	Description	Page No
TBA 2000S					
020	2588307-0000		1	VOLUME FLAP	
040	2672746-0000		1	VOLUME BULGE	
060	2672745-0000		3	VOLUME SHIM	
Common Parts					
010	1037734-0000		1	WEDGE	
020	2588306-0000		1	VOLUME FLAP	
030	2594896-0000		2	SCREW	
040	2594889-0000		1	VOLUME BULGE	
050	312105-0327		1	SCREW M6S ISO 4017 M5X12 A480	
060	2594891-0000		3	VOLUME SHIM	
070	312145-0287		1	SCREW ISO 2009 MFS M4X8 A4	
100	312145-0289		1	SCREW ISO 2009 MFS M4X10 A4	
110	315105-0146		1	WASHER BRB5,3X10RFR	

Pos	Part No	UN	Qty	Description	Page No

Tetra Pak

SPC
Spare Parts Catalogue

Part No	Description	Page No
2033-0005	WASHER	3-227, 3-241, 3-243, 3-251
2033-0008	WASHER	3-227
2033-0011	WASHER	1-5, 1-7, 1-9, 1-11, 1-13, 1-35, 1-37, 1-39, 1-41, 1-43, 1-45, 1-47, 1-55, 1-57, 1-59, 1-151, 1-153
12242-0003	GASKET 48X38X5,5	1-101, 1-103, 1-105
14600-0000	HOOD	1-17, 1-19, 1-21
19972-0000	WASHER	2-7, 2-9, 2-11, 2-15, 2-17, 2-19, 2-57, 2-63
22462-0000	SHAFT	2-103, 2-105, 2-133, 2-135
22463-0000	ROLL	2-103, 2-105, 2-133, 2-135
23765-0001	INSULATING PIPE	3-119, 3-121, 3-123, 3-125, 3-127
23765-0002	INSULATING PIPE	3-119, 3-121, 3-123, 3-125, 3-127
23765-0003	INSULATING PIPE	3-119, 3-121, 3-123, 3-125, 3-127
23765-0004	INSULATING PIPE	3-119, 3-121, 3-123, 3-125, 3-127
23765-0005	INSULATING PIPE	3-119, 3-121, 3-123, 3-125, 3-127
24928-0000	LOCKING RUBBER	1-17, 1-19, 1-21
26075-0000	VOLUME BULGE	2-47, 2-49, 2-51, 2-53, 4-35, 4-37, 4-39, 4-41
28509-0000	WASHER	2-75, 2-77, 2-79, 2-83, 2-117, 2-119, 2-121, 3-275
32079-0000	WASHER	2-83
32544-0000	INSULATION NUT	2-75, 2-77, 2-79, 2-83, 2-117, 2-119, 2-121, 3-275
32644-0000	WASHER	3-275
67379-0101	TRANSFORMER	2-83
67379-0105	TRANSFORMER	2-83
67379-0206	TRANSFORMER	2-83
67379-0216	TRANSFORMER	3-275
67379-0224	TRANSFORMER	3-275
67379-0249	TRANSFORMER	2-83
67379-0258	TRANSFORMER	2-83
67379-0269	TRANSFORMER	2-83
67379-0404	TRANSFORMER	1-91
67379-0405	TRANSFORMER	1-91
67379-0412	TRANSFORMER	1-91
67379-0414	TRANSFORMER	1-91
67379-0417	TRANSFORMER	1-91
67380-0207	TRANSFORMER	3-317
67380-0213	TRANSFORMER	3-317
67380-0214	TRANSFORMER	3-317
90005-0002	WASHER 16/6,7X1,5	2-23, 2-25, 2-35, 2-37
90005-0060	WASHER PLAIN, RBS 6,4/M6)/18,H=1,5	1-11, 1-13
90005-0082	WASHER PLAIN ROUND 4,3(M4)/12,H=1	2-57, 2-63
90012-0063	CABLE GLAND PR 15,2	3-223
90028-0020	CONE TUBE 2,5MM	2-7, 2-9, 2-11, 2-15, 2-17, 2-19, 2-57, 2-63, 2-147, 2-149, 2-151, 2-153, 2-169, 3-109
90028-0022	CONE TUBE 6 MM	2-159, 2-169
90028-0024	CONE TUBE 4 MM	2-147, 2-149
90028-0025	CONE TUBE 6 MM	3-109
90030-0065	PIPE CONNECTION	2-65, 2-67, 2-109, 2-111
90030-0076	CONN. T-PIPE T-6	4-15
90030-0171	ADJUSTABLE ELBOW CONNECTION,EXT 6-G1/8	4-15
90030-0257	CONN. ELBOW, 8-R1/8, EXT.THREAD	2-85, 2-87, 2-89, 2-125, 2-127, 2-129
90032-0039	BLOCK 4 WAYS	2-147, 2-149
90032-0040	BLOCK 6 WAYS	3-109
90039-0022	TACKLE BLOCK, NO. BV-225/500	1-71
90042-0215	VALVE BODY 5/2 UNISTABLE	4-17
90042-0392	CONTACT 2 POLE + EARTH	1-141
90042-0538	PILOT VALVE L=500MM	4-17
90042-0582	COIL NORGREN QM/48/127/21	1-141
90044-0194	PROX.SW. IN5329/IN3002-BPKG	1-97, 1-99, 1-101, 1-103, 1-105, 3-129, 3-131, 3-133, 3-135, 3-183, 3-187, 3-189, 3-241, 3-243
90044-0310	KEY FOR SAFETY SWITCH, AZ 15/16 B1	1-135, 1-137
90051-0007	STELLAR KNOB, INT. THREAD, NO. 40	3-227
90051-0087	LOCK KNOB, NO. GN 617 A5	1-119, 1-121
90055-0172	ELBOW WITH TAILPIECE 8/8 MM	4-17
90062-0015	LOCK WASHER SERRAT.EXT.GEAR,6,4/11 H=0,7	4-19
90062-0061	LOCK WASHER NORD-LOCK,6,5/10,8, T=2,2	2-23, 2-25, 2-35, 2-37, 3-185, 3-191
90083-0052	NEEDLE ROLLER THRUST BEARING, 30X47X2 MM	3-165
90083-0053	SHAFT LOCATING WASHER, 30X47X1MM	3-165
90087-0019	PLUG M10X1 STAINLESS	2-147, 2-149, 2-169, 3-109
90091-0074	WEAR RING 35X40X5,3 MM	2-73
90091-0169	WEAR RING 12X15X3,2 MM	2-107
90091-0216	PISTON SEAL, GLIDORING 7,1X12X2,2 MM	2-107
90091-0297	RADIAL SEAL 35X47X7 MM DUST LIP	3-109, 3-111, 3-113, 3-129, 3-131, 3-133, 3-135, 3-183, 3-187, 3-189
90091-0298	RADIAL SEAL 45X65X8 MM DUST LIP	3-129, 3-131, 3-133, 3-135
90091-0299	RADIAL SEAL 30X52X7 MM DUST LIP	3-111, 3-113
90091-0359	X-SEAL 36,17X2,62 MM	2-73
90091-0360	BACK-UP RING 37,5X1,4 MM	2-73
90091-0361	SCRAPER, EXCLUDER2 30X34,8X3,7 MM	2-93, 2-95, 2-97
90091-0362	SCRAPER, EXCLUDER2 18X22,8X3,7 MM	2-73
90091-0364	ROD SEAL, STEPSEAL 18X25,3X3,2 MM	2-73
90091-0365	SEAL GLIDORING 11,55X19,05X3,2M	2-107
90091-0366	WEAR RING 18X23X3,9 MM	2-73
90091-0367	WEAR RING 16X18X3,1 MM	2-107
90091-0368	WEAR RING 30X45X5,3 MM	2-73
90091-0380	SCRAPER, EXCLUDER 20X24,8X3,7 MM	3-129, 3-131, 3-133, 3-135

Part No	Description	Page No
90091-0391	SEAL SLYDRING	2-73
90091-0398	PISTON SEAL, GLID RING T 20,5X28X3,2 MM	2-73
90091-0404	RADIAL SEAL 22X40X7 MM DUST LIP	3-187, 3-189
90091-0406	RADIAL SEAL 25X40X7 MM DUST LIP	3-187, 3-189
90091-0408	BEARING SEAL 70X78X5	3-129, 3-131, 3-133, 3-135
90091-0416	RADIAL SEAL 70X90X10 MM DUST LIP	3-165
90091-0428	PISTON SEAL, GLID RING T 27,5X34,5X3,2 M	2-73
90091-0440	RADIAL SEAL 22X40X7 MM DUST LIP	3-183
90092-0052	METERING VALVE 10 MM3	2-147, 2-149, 2-169, 3-109
90092-0054	METERING VALVE 50 MM3	3-109
90099-0007	HEXAGON NUT, M10X1, E 63 137 10	1-119, 1-121
90099-0027	HEXAGON NUT, M14, DIN936	1-97, 1-99
90110-0150	MALE INSERT 121110 0000	4-21
90110-0228	CABLE HOOD 24-POL 71.350.2428.0	4-21
90110-0235	CABLE CONTACT, PX0739/S	2-161, 2-163, 2-165
90110-0295	CONNECTOR 4 POLE + EARTH	3-223, 3-227
90110-0296	FEMALE INSERT HDC-HA-4BS 149840-B/2	3-235
90110-0369	BASE HOUSING	3-235
90110-0370	BASE HOUSING	3-235
90110-0371	COVER, HDC-HA-3-TOVL1/11165247-A/1	3-223
90110-0372	PLUG HOOD	3-227
90110-0385	MARKING HOLDER, 4.242.3853.0	3-263
90113-0113	FILTER REGULATOR, B64G-NNK-AD3-RMN	1-141
90113-0155	SOFT START VALVE	1-141
90113-0407	YOKE SINGLE, Y64A-4GA-N1N	1-141
90113-0413	END CONNECTOR G3/4, 18-026-981	1-141
90113-0427	SHUT OFF VALVE G1/8, T64T-NNS-001	1-141
90115-0134	ROD END, ID=10 MM, M10X1,25	3-89, 3-91
90115-0137	ROD END, ID=6 MM, M6X1	3-21, 3-23, 3-25, 3-75, 3-77, 3-79, 3-81
90115-0139	ROD END, ID=8 MM, M8X1,25	3-115, 3-117
90115-0180	ROD END, ID=8 MM, M8X1,25 LH	3-115, 3-117
90115-0181	ROD END, ID=10 MM M10X1,5	3-111, 3-113
90115-0182	ROD END, ID=10 MM M10X1,5LH	3-111, 3-113
90119-0056	RELAY, AUXILIARY MK3P5-S 24VDC	3-263
90129-0006	BASE, S3-B	3-263
90134-0030	SLEEVE FOR PLASTIC TUBE	2-169, 3-109
90134-0038	BUSHING/NUT INLET/OUTLET 4 MM	2-147, 2-149
90134-0039	BUSHING VALVE CONNECTION 2,5 MM	2-147, 2-149, 3-109
90134-0052	PLUG DOSING BLOCK	2-169, 3-109
90134-0055	BUSHING/NUT INLET/OUTLET 6 MM	2-159, 2-169, 3-109
90134-0058	CONNECTION .	2-85, 2-87, 2-89, 2-125, 2-127, 2-129, 3-115, 3-117, 3-129, 3-131, 3-133, 3-135
90134-0063	BUSHING/NUT M8X1, D=2,5 MM	2-7, 2-9, 2-11, 2-15, 2-17, 2-19, 2-57, 2-63, 2-151, 2-153
90134-0065	CONNECTION M6 TUBE 2,5 MM	2-147, 2-149
90134-0068	CONNECTION	2-85, 2-87, 2-89, 2-125, 2-127, 2-129
90140-0021	ELBOW, 90 INT/EXT, 20201/8-1/8	1-141
90141-0015	RETAINING RING FOR SHAFT DIN 471 8 A2	2-73
90141-0016	RETAINING RING FOR SHAFT DIN 471 10 A2	1-97, 1-99, 1-101, 1-103, 1-105, 1-119, 1-121, 2-155, 2-157
90141-0019	RETAINING RING FOR BORE DIN 472 50 A2	3-109, 3-183, 3-187, 3-189
90141-0029	CIRCLIP	2-103, 2-105, 2-133, 2-135
90144-0069	PE TAPE,BLACK ON ALUMINUM 24X24 MM	3-297
90144-0070	TAPE, AL 30µM 19MM BLACK	3-297
90144-0071	TAPE, AL 30µM 16MM BLACK (REPLACED)	3-297
90144-0073	TREBOFLON-TAPE W=13MM	1-23
90152-0033	SPIRAL CONDUIT FOR PR 15,2(PG 9)	3-223, 3-235
90152-0050	SPIRAL CONDUIT, 20X13, UL 1313	1-135
90152-0070	METAL HOSE, 32,5X26, UL 2621	4-21
90153-0015	ADHESIVE,LOCTITE IS 496/CYANOLOT 303	2-93, 2-95, 2-97
90153-0023	ADHESIVE, SILICON 251470 TUB 90CC	1-133
90157-0021	LOCKING FLUID LOCTITE 270	2-141, 2-143, 2-145
90157-0037	THREAD SEALANT LOCTITE 542	1-91
90161-0001	O-RING MATERIAL 3 MM	4-21
90163-0063	QUICK COUPLING, (M) 5450-6/4	2-159
90165-0056	PIPE CLIP FOR TUBE D=4 MM	2-65, 2-67, 2-85, 2-87, 2-89, 2-109, 2-111, 2-125, 2-127, 2-129, 3-129, 3-131, 3-133, 3-135, 3-171, 3-173
90165-0057	PIPE CLIP FOR TUBE D=6 MM ...	3-21, 3-23, 3-25, 3-75, 3-77, 3-79, 3-81, 3-183, 3-187, 3-189
90165-0058	PIPE CLIP FOR TUBE D=25 MM	2-65, 2-67, 2-85, 2-87, 2-89, 2-109, 2-111, 2-125, 2-127, 2-129, 2-147, 2-149
90166-0013	TUBE 8 MM PA BLUE	3-9, 3-11, 3-13, 3-15, 3-17, 3-57, 3-59, 4-17, 4-21
90166-0068	TUBE 12 MM PA BLUE	1-143
90166-0081	TUBE 6 MM PA BLUE	2-161, 2-163, 2-165, 3-261
90166-0108	TUBE 6 MM PA,TRANSP.	2-169, 3-109
90166-0109	TUBE 4 MM PA,TRANSP.	3-261
90166-0118	TUBE 8 MM PA BLACK	1-91, 3-27, 3-29, 3-83, 3-85, 3-87
90166-0132	TUBE 6 MM PA,TRANSP.	2-159, 3-137, 3-139
90166-0143	TUBE 2,5 MM PA,TRANSP.	2-147, 2-149, 2-169, 3-109
90166-0216	TUBE 10 MM PUR BLUE	4-21
90187-0088	BALL VALVE G1/4, NPBR	1-143
90189-0049	BALL BUSHING, 12X22X32 MM	3-251
90194-0143	WARNING SIGN ISO, HOT SURFACE	3-235
90195-0020	TERMINAL BLOCK, 1977.2	4-19
90206-0030	HEATING ELEMENT, 3000W, 220V	4-19
90208-0087	CLAMPING ELEMENT WITH SLEEVE, 45X59 MM	3-49, 3-51, 3-99, 3-101, 3-103
90214-0105	SPHERICAL BALL BEARING, 15X35X14 MM	1-113

Part No	Description	Page No
90214-0138	BALL BEARING, 5X19X6 MM	1-95
90214-0219	CYL.ROLLER BEARING, 17X40X12 MM	3-183, 3-187, 3-189
90214-0229	BALL BEARING, 65X85X10 MM	3-129, 3-131, 3-133, 3-135
90220-0034	THERMOCABLE TEX/SITW-20F-KX 2X0,5MM2	4-21
90220-0107	SCR. CABLE 5X0,75MM2	3-227
90220-0183	SCR. CABLE 2X0,34MM2	3-263
90224-0229	REDUCER, ART.NO RMM 1238	1-143
90232-0103	PH.CELL E3S-CT61-L-5M	3-175, 3-177
90232-0104	PH.CELL E3S-CT61-D-5M	3-175, 3-177
90232-0123	PH.CELL WLL170-P135-6011723	3-239
90232-0325	FIBRE E32-DC200	3-239
90235-0731	THROTTLE CHECK VALVE, G1/4", SCO-606-1/4	3-21, 3-23, 3-25, 3-75, 3-77, 3-79, 3-81
90235-0846	THROTTLE CHECK VALVE G1/8", MANUAL, 6	1-101, 1-103, 1-105, 4-15, 4-17
90239-0489	ROD END, CLEVIS WITH AXLE M6X1,25	1-97, 1-99, 1-101, 1-103, 1-105
90240-0172	FLANGE BUSHING, 8X12X10 MM	1-5, 1-7, 1-9, 1-11, 1-13, 1-35, 1-37, 1-39, 1-41, 1-43, 1-45, 1-47, 1-55, 1-57, 1-59, 1-151, 1-153
90240-0180	FLANGE BUSHING 10X14X15MM	2-155, 2-157
90240-0258	BUSHING, 15X17X15 MM	3-155, 3-157, 3-159
90240-0263	FLANGE BUSHING, 15X17X12 MM	3-155, 3-157, 3-159
90240-0317	BUSHING, 35X39X30 MM	3-129, 3-131, 3-133, 3-135
90242-0093	O-RING MATERIAL 1,5 MM	2-93, 2-95, 2-97
90242-0270	O-RING 82,27X1,78 MM	1-107, 1-109, 1-111, 3-129, 3-131, 3-133, 3-135
90242-0271	O-RING 63,22X1,78 MM	3-129, 3-131, 3-133, 3-135
90258-0060	COTTER	3-307
90261-0016	PLUG, BLIND, PLASTIC GPN300V2	2-7, 2-9, 2-11, 2-15, 2-17, 2-19
90266-0019	PIPE	2-147, 2-149
90266-0165	BRASS PIPE	2-85, 2-87, 2-89, 2-125, 2-127, 2-129
90287-0106	SCREW SPRINGLOAD. SLOTTED HEAD M10X21	3-247
90287-0148	SCREW SPRINGLOAD. SLOTTED HEAD M5X12	2-161, 2-163, 2-165
90287-0261	SCREW MC6S M5X55 A270	1-95
90287-0322	SCREW M6S M14X40 70	1-71
90287-0347	BOLT	1-71
90326-0022	PLUG, MALE YELLOW CR-AL	4-21
90326-0060	THERMOCOUPLE, CR-AL	3-223
90326-0081	THERMOCOUPLE, ISA TYPE K.	4-19
90328-0001	SILENCER, 338/130 B140-00-120	1-141
90328-0026	SILENCER G1/4	1-23
90330-0185	NIPPLES,REDUCING,INT THR, RC1/8 - R 1/8	1-141
90335-0005	SPRING	3-265
90335-0024	COMP. SPRING 22250, 1,25X13,75X27	2-161, 2-163, 2-165
90335-0025	COMP. SPRING 22010, 1X11X26	3-311
90335-0036	COMP. SPRING 22450, 1,6X14,1X24	3-21, 3-23, 3-25, 3-75, 3-77, 3-79, 3-81
90335-0089	TENSION SPRING 41490, 0,9X10X23	1-95
90335-0091	TENSION SPRING 41890, 1,2X13X48,2	1-119, 1-121
90335-0178	COMP. SPRING 22060, 1X13,5X36,5	4-7, 4-9, 4-11, 4-13
90347-0039	DAMPER	1-135, 1-137
90347-0182	SHOCK ABSORBER, YSR-16-20-C	1-123, 1-125
90348-0031	FREE WHEEL COUPLING	3-229
90411-0018	INSULATOR, ALU-SILICATE HM 15643	3-223
90424-0068	AIR NOZZLE, G1/4, MOD. 216 BSP	3-9, 3-11, 3-13, 3-15, 3-17, 3-21, 3-23, 3-25, 3-57, 3-59, 3-75, 3-77, 3-79, 3-81
90450-0003	SINGLE ACTING, MINI-ISO, CYL 20-25	1-119, 1-121
90450-0380	SINGLE ACTING, PANCAKE EV-20/75-5	3-215
90450-0504	DOUBLE ACTING, PROFILE, CYL 50-25	3-195
90450-0756	BRACKET, REAR EYE 32	1-97, 1-99, 1-101, 1-103, 1-105
90457-0100	RESERVATORVZS-2	1-143
90457-0197	CYLINDER WITH INT. GUIDING BORE 25	3-223
90457-0922	ELBOW PIPE JOINT, EXT.THREAD, D=6MM M5	3-211
90458-0058	SCREW M5X60 A280	2-83, 4-7, 4-9, 4-11, 4-13
90458-0073	WASHER 6,4/30, H=1,5	2-23, 2-25, 2-35, 2-37
90458-0138	PROX.SW. E2EG-X1R5B1-5M	1-23
90458-0429	HOSE GLAND W/O INSERT M20 EXTENDED	1-135, 1-137
90458-0438	GLAND, EXTENDED WITH INSERT, M20X1,5	3-227
90458-0523	STEPPER MOTOR SM 56.2.18J3 Z(202)	3-227
90458-0528	DOUBLE ACTING, COMPACT, CYL 32-25	1-97, 1-99, 1-101, 1-103, 1-105
90458-0601	CONTRAST SCANNER, KT15W-P2110S01	2-161, 2-163, 2-165
90458-0639	VARILIP 20X30X7 MM	1-97, 1-99, 1-113
90458-0640	O-RING 88,62X1,78 MM	1-113, 1-145
90458-0675	PROXIMITY SENSOR, E2EG-X5MB1-5M	3-241, 3-243
90458-1704	BALL BEARING, 15X35X11 MM	1-97, 1-99, 1-107, 1-109, 1-111
90458-2164	ELBOW PIPE JOINT, EXT.THREAD,D=6MM M5	3-223
90458-2241	PRESSURE SWITCH 0,5-10 BAR ADJUSTABLE	1-141
90458-2460	ADJUSTABLE MECH. STOP, FOR CYL. 2711	3-223
90458-2950	BALL BEARING, 5X16X5 MM	1-129
90458-2954	ELBOW PIPE JOINT, EXT.THREAD, D=4MM M5	3-215, 3-247
90458-2956	ELBOW PIPE JOINT, EXT.THREAD, D=6MM-G1/8	1-23, 4-15
90458-2957	ELBOW PIPE JOINT, EXT.THREAD, D=6MM-G1/4	3-195
90458-2958	ELBOW PIPE JOINT, EXT.THREAD, D=8MM-G1/4	3-57, 3-59, 3-75, 3-77, 3-79, 3-81
90458-2960	ELBOW PIPE JOINT, EXT.THREAD,D=12MM-G3/8	1-23, 1-139
90459-0094	O-RING 133,07X1,78 MM	1-113, 1-145
90459-0098	THRUST BALL BEARING, 15X28X9 MM	1-113
90459-0472	KEY SAF.SW. AZ 16 02ZVRK-M20-2152-2254	1-135, 1-137
90459-0626	DISCETTE BOX FOR TWO 3,5" FLOPPYDISKS	2-167
90459-0707	HEATING ELEMENT, 1500W/220V	4-19

Part No	Description	Page No
90459-0729	HEXAGONAL PROTECTIVE CAP GPN 1000	1-17, 1-19, 1-21
90459-0844	SINGLE ACTING, MINI-ISO, CYL 12-10	3-247
90459-0952	LINEAR GUIDE UNIT, BORE 25-STROKE 80	4-7, 4-9, 4-11, 4-13
90459-0953	DOUBLE ACTING, ROUND, CYL 25-80	4-7, 4-9, 4-11, 4-13
90459-0964	CONNECTOR MALE 4 PINS	3-241, 3-243
90459-0969	COMP. SPRING A D22430, 1,6X11,6X58,5	3-107
90459-1228	SCREW ISO 1207 M3X4 A4	1-35, 1-37, 1-39, 1-41, 1-43, 1-45, 1-47
90459-1314	O-RING 491X3 MM	1-133
90459-1501	CABLE SEALING, 12023/I, ELFA. 44-625-78	2-161, 2-163, 2-165
90459-1627	O-RING 114,02X1,78 MM	1-107, 1-109, 1-111
90459-1728	SCREW ISO4029 M6X45 A4	1-97, 1-99
90459-1953	DOUBLE ACTING, MINI-ISO, CYL. 25-10	3-89, 3-91
90459-2130	TAPE, ADHESIVE SI TAPE MON3154535033CL	3-275
90459-2132	WEAR RING 17X22X5,6 MM	2-107
90459-2145	BACK-UP RING 43,5X1,4 MM	2-73
90459-2146	X-SEAL 42,52X2,62 MM	2-73
90459-2172	SEAL GLYDRING 14,55X22X3,2 MM	2-107
90459-2173	SEAL GLYDRING 32,5X40X3,2 MM	2-73
90459-2258	SEAL GLYDRING 25,1X30X2,2 MM	2-103, 2-105, 2-133, 2-135
90459-2363	O-RING MATERIAL 1,78 MM	2-93, 2-95, 2-97
90459-2590	ROD END, CLEVIS WITH AXLE M8	1-119, 1-121
90459-3118	LINEAR GUIDE UNIT, BORE 25-STROKE 100	4-7, 4-9, 4-11, 4-13
90459-3119	DOUBLE ACTING, MINI-ISO, CYL. 25-100	4-7, 4-9, 4-11, 4-13
90459-4932	REAR CLEVIS FOOT MOUNTING , CRLBN-20/25	3-89, 3-91
107426-0000	GUIDE SLEEVE	2-73
229207-0000	BEARING SLEEVE	3-171, 3-173
232979-0000	PRESSURE ROLLER	1-17, 1-19, 1-21, 1-73, 1-75, 1-77, 1-79, 1-81, 1-83
234844-0000	WHEEL	3-245
245039-0000	GUIDE WHEEL	3-171, 3-173
252766-0001	INSULATING PIPE	3-119, 3-121, 3-123, 3-125, 3-127
252766-0002	INSULATING PIPE	3-119, 3-121, 3-123, 3-125, 3-127
252766-0004	INSULATING PIPE	3-119, 3-121, 3-123, 3-125, 3-127
255978-0000	FORK	1-17, 1-19, 1-21
257330-0000	PRESSURE ROLLER	1-17, 1-19, 1-21, 1-73, 1-75, 1-77, 1-79, 1-81, 1-83
263311-0000	WASHER	1-91
263655-0006	SHAFT	1-29, 1-31
263655-0007	SHAFT	1-29, 1-31
263655-0009	SHAFT	1-29, 1-31
263655-0015	SHAFT	1-29, 1-31
263655-0018	SHAFT	1-29, 1-31
263673-0000	GASKET	3-119, 3-121, 3-123, 3-125, 3-127
266739-0000	CABLE GLAND	4-19
267728-0000	SHAFT	1-17, 1-19, 1-21
269151-0000	SHAFT	1-61, 1-63
270927-0000	SCREW	4-19
271860-0000	CLAMP BLOCK	1-135, 1-137
272479-0000	PRESSURE ROLLER	1-17, 1-19, 1-21, 1-73, 1-75, 1-77, 1-79, 1-81, 1-83
272728-0000	BARRIER	3-311
273953-0000	SEAL	1-29, 1-31
294464-0000	BASE PLATE	4-19
295377-0001	HOOD	1-17, 1-19, 1-21
295377-0003	HOOD	1-17, 1-19, 1-21
311101-0270	PARALLEL PIN ISO 2338 4H6X16 ST	3-221, 3-227
311101-0272	PARALLEL PIN ISO 2338 4H6X20 ST	3-227
311103-0232	PARALLEL PIN ISO 2338 3M6X8 A1	1-29, 1-31
311103-0233	PARALLEL PIN ISO 2338 3M6X10 A1	3-231
311103-0267	PARALLEL PIN ISO 2338 4M6X10 A1	2-69, 2-71, 2-113, 2-115, 3-215
311103-0268	PARALLEL PIN ISO 2338 4M6X12 A1	3-105
311103-0270	PARALLEL PIN ISO 2338 4M6X16 A1	1-123, 1-125, 3-223
311103-0274	PARALLELL PIN, M6, 4X25 MM	3-311
311103-0276	PARALLEL PIN ISO 2338 4M6X30 A1	1-61, 1-63
311103-0306	PARALLEL PIN ISO 2338 5M6X12 A1	1-61, 1-63, 2-151, 2-153
311103-0308	PARALLEL PIN ISO 2338 5M6X16 A1	1-61, 1-63, 3-239
311103-0310	PARALLEL PIN ISO 2338 5M6X20 A1	2-141, 2-143, 2-145
311103-0312	PARALLELL PIN, M6, 5X25 MM	1-61, 1-63
311103-0314	PARALLEL PIN ISO 2338 5M6X30 A1	3-235
311103-0353	PARALLEL PIN ISO 2338 6M6X20 A1	1-11, 1-13
311103-0369	PARALLEL PIN ISO 2338 6M6X60 A1	3-241, 3-243
311103-0399	PARALLEL PIN ISO 2338 8M6X16 A1	2-141, 2-143, 2-145
311103-0400	PARALLEL PIN ISO 2338 8M6X18 A1	2-147, 2-149
311103-0401	PARALLEL PIN ISO 2338 8M6X20 A1	1-133, 3-241, 3-243
311103-0402	PARALLEL PIN ISO 2338 8M6X22 A1	2-141, 2-143, 2-145
311103-0407	PARALLEL PIN ISO 2338 8M6X35 A1	3-187, 3-189
311103-0413	PARALLEL PIN ISO 2338 8M6X50 A1	1-135, 1-137
311103-0454	PARALLEL PIN ISO 2338 10M6X20 A1	3-165
311103-1274	PARALLEL PIN ISO 2338 4M6X24 A1	1-29, 1-31
311112-0256	SPRING PIN, ISO 8752 4X20-C	1-113
311112-0258	SPRING PIN, ISO 8752 4X24-C	1-119, 1-121
311112-0341	SPRING PIN, ISO 8752 6X24-C	3-247
311411-0138	SPLIT PIN SP1,6X12RFR	3-245
312101-0515	SCREW M6S M10X120 FZB	3-303
312105-0287	SCREW M6S ISO4017 M4X8 A470	1-23, 1-61, 1-63, 1-123, 1-125, 2-23, 2-25, 2-35, 2-37, 2-57, 2-63, 3-21, 3-23, 3-25, 3-75, 3-77, 3-79, 3-81, 3-109, 3-129, 3-131, 3-133, 3-135, 3-175, 3-177, 3-227, 3-239, 3-241, 3-243, 3-247, 3-251, 3-255

Part No	Description	Page No
312105-0289 ..	SCREW M6S ISO 4017 M4X10 A470	1-35, 1-37, 1-39, 1-41, 1-43, 1-45, 1-47, 1-101, 1-103 ..... 1-105, 3-49, 3-51
312105-0291 ..	SCREW M6S ISO 4017 M4X12 A470	..... 1-101, 1-103, 1-105, 1-123, 1-125, 3-109
312105-0293 ..	SCREW M6S ISO 4017 M4X16 A470	..... 3-129, 3-131, 3-133, 3-135, 3-211, 3-229
312105-0295 ..	SCREW M6S ISO4017 M4X20 A470	..... 2-83, 3-275, 4-15
312105-0299 ..	SCREW M6S ISO 4017 M4X30 A470	 3-231
312105-0301 ..	SCREW M6S ISO 4017 M4X35 A470	 1-91
312105-0323 ..	SCREW M6S ISO 4017 M5X8 A480	..... 1-87, 1-89, 3-171, 3-173, 3-175, 3-177
312105-0325 ..	SCREW M6S ISO 4017 M5X10 A480	1-61, 1-63, 1-113, 2-23, 2-25, 2-35, 2-37, 2-161, 2-163, 2-165
312105-0327 ..	SCREW M6S ISO 4017 M5X12 A480	1-35, 1-37, 1-39, 1-41, 1-43, 1-45, 1-47, 1-55, 1-57, 1-59 1-61, 1-63, 1-97, 1-99, 1-113, 2-7, 2-9, 2-11, 2-15, 2-17, 2-19, 2-23, 2-25, 2-35, 2-37, 2-59, 3-165 ..... 3-175, 3-177, 3-183, 3-187, 3-189, 3-209, 3-255, 4-7, 4-9, 4-11, 4-13, 4-43
312105-0328 ..	SCREW M6S ISO 4017 M5X14 A480	..... 2-7, 2-9, 2-11, 2-15, 2-17, 2-19, 2-23, 2-25, 2-35, 2-37
312105-0329 ..	SCREW M6S ISO 4017 M5X16 A480	1-11, 1-13, 1-35, 1-37, 1-39, 1-41, 1-43, 1-45, 1-47, 1-55 .... 1-57, 1-59, 1-107, 1-109, 1-111, 1-145, 2-141, 2-143, 2-145, 3-183, 3-187, 3-189, 3-241, 3-243
312105-0331 ..	SCREW M6S ISO 4017 M5X20 A480	1-5, 1-7, 1-11, 1-13, 1-55, 1-57, 1-59, 1-113, 1-135, 1-137 ..... 2-23, 2-25, 2-35, 2-37, 2-141, 2-143, 2-145
312105-0337 ..	SCREW M6S ISO 4014 M5X35 A480	 3-223
312105-0341 ..	SCREW M6S ISO 4014 M5X50 A480	..... 2-23, 2-25, 2-35, 2-37
312105-0362 ..	SCREW M6S ISO 4017 M6X8 A480	1-61, 1-63, 1-91, 2-85, 2-87, 2-89, 2-125, 2-127, 2-129, 3-9 ..... 3-11, 3-13, 3-15, 3-17, 3-63, 3-65, 3-67, 3-69, 3-71, 4-27, 4-29, 4-31, 4-33
312105-0364 ..	SCREW M6S ISO 4017 M6X10 A480	1-61, 1-63, 2-23, 2-25, 2-35, 2-37, 3-9, 3-11, 3-13, 3-15 ..... 3-17, 3-37, 3-39, 3-41, 3-97, 3-241, 3-243
312105-0366 ..	SCREW M6S ISO 4017 M6X12 A480	1-23, 1-87, 1-89, 1-101, 1-103, 1-105, 1-107, 1-109, 1-111 1-123, 1-125, 1-139, 1-151, 1-153, 2-7, 2-9, 2-11, 2-15, 2-17, 2-19, 2-23, 2-25, 2-35, 2-37, 2-93 2-95, 2-97, 2-147, 2-149, 2-151, 2-153, 3-7, 3-9, 3-11, 3-13, 3-15, 3-17, 3-21, 3-23, 3-25, 3-27 3-29, 3-75, 3-77, 3-79, 3-81, 3-83, 3-85, 3-87, 3-89, 3-91, 3-129, 3-131, 3-133, 3-135, 3-149, 3-151 ..... 3-171, 3-173, 3-179, 3-183, 3-187, 3-189, 3-241, 3-243
312105-0367 ..	SCREW M6S ISO 4017 M6X14 A480	1-119, 1-121, 1-135, 1-137, 2-23, 2-25, 2-35, 2-37, 3-179 ..... 3-185, 3-191
312105-0368 ..	SCREW M6S ISO 4017 M6X16 A480	1-11, 1-13, 1-61, 1-63, 1-67, 1-69, 1-101, 1-103, 1-105 1-113, 1-123, 1-125, 1-133, 1-143, 1-145, 2-7, 2-9, 2-11, 2-15, 2-17, 2-19, 2-23, 2-25, 2-35, 2-37 2-85, 2-87, 2-89, 2-125, 2-127, 2-129, 2-141, 2-143, 2-145, 2-161, 2-163, 2-165, 3-9, 3-11, 3-13 3-15, 3-17, 3-21, 3-23, 3-25, 3-27, 3-29, 3-49, 3-51, 3-75, 3-77, 3-79, 3-81, 3-83, 3-85, 3-87, 3-89 3-91, 3-111, 3-113, 3-129, 3-131, 3-133, 3-135, 3-137, 3-139, 3-141, 3-143, 3-145, 3-147, 3-149 ..... 3-151, 3-155, 3-157, 3-159, 3-185, 3-187, 3-189, 3-191, 3-209, 3-239
312105-0370 ..	SCREW M6S ISO 4017 M6X20 A480	1-11, 1-13, 1-23, 1-61, 1-63, 1-97, 1-99, 1-101, 1-103 1-105, 1-107, 1-109, 1-111, 1-119, 1-121, 1-123, 1-125, 1-129, 1-151, 1-153, 2-57, 2-63, 2-141 2-143, 2-145, 2-147, 2-149, 3-7, 3-9, 3-11, 3-13, 3-15, 3-17, 3-49, 3-51, 3-57, 3-59, 3-63, 3-65 3-67, 3-69, 3-71, 3-89, 3-91, 3-99, 3-101, 3-103, 3-109, 3-129, 3-131, 3-133, 3-135, 3-137, 3-139 ..... 3-141, 3-143, 3-145, 3-147, 3-235, 4-7, 4-9, 4-11, 4-13, 4-19, 4-27, 4-29, 4-31, 4-33
312105-0371 ..	SCREW M6S ISO 4017 M6X22 A480	 1-145
312105-0372 ..	SCREW M6S ISO 4017 M6X25 A480	1-29, 1-31, 1-61, 1-63, 1-67, 1-69, 1-107, 1-109, 1-111 1-113, 3-9, 3-11, 3-13, 3-15, 3-17, 3-57, 3-59, 3-129, 3-131, 3-133, 3-135, 3-141, 3-143, 3-145 ..... 3-147, 3-171, 3-173, 3-179, 3-185, 3-187, 3-189, 3-191, 3-195, 4-7, 4-9, 4-11, 4-13, 4-19
312105-0374 ..	SCREW M6S ISO 4014 M6X30 A480	..... 3-7, 3-109, 3-141, 3-143, 3-145, 3-147
312105-0376 ..	SCREW M6S ISO 4014 M6X35 A480	3-9, 3-11, 3-13, 3-15, 3-17, 3-49, 3-51, 3-97, 3-99, 3-101 ..... 3-103, 3-187, 3-189
312105-0378 ..	SCREW M6S ISO 4014 M6X40 A480	..... 3-49, 3-51, 3-185, 3-191
312105-0379 ..	SCREW M6S ISO 4014 M6X45 A480	 3-7
312105-0381 ..	SCREW M6S ISO 4014 M6X55 A480	..... 2-159, 3-187, 3-189
312105-0382 ..	SCREW M6S ISO 4014 M6X60 A480	..... 3-7, 3-311
312105-0447 ..	SCREW M6S ISO 4017 M8X12 A480	..... 1-145, 2-91, 2-131, 3-115, 3-117, 3-183, 3-187
312105-0449 ..	SCREW M6S ISO 4017 M8X16 A480	1-5, 1-7, 1-135, 1-137, 2-161, 2-163, 2-165, 3-21, 3-23 ..... 3-25, 3-75, 3-77, 3-79, 3-81, 3-137, 3-139, 3-141, 3-143, 3-145, 3-147, 3-179, 3-247
312105-0451 ..	SCREW M6S ISO 4017 M8X20 A480	1-5, 1-7, 1-11, 1-13, 1-29, 1-31, 1-41, 1-43, 1-45, 1-47 1-55, 1-57, 1-59, 1-61, 1-63, 1-97, 1-99, 1-123, 1-125, 1-135, 1-137, 1-139, 3-21, 3-23, 3-25, 3-37 3-39, 3-41, 3-75, 3-77, 3-79, 3-81, 3-115, 3-117, 3-129, 3-131, 3-133, 3-135, 3-137, 3-139, 3-141 ..... 3-143, 3-145, 3-147, 3-151, 3-183, 3-187, 3-189, 3-251
312105-0452 ..	SCREW M6S ISO 4017 M8X22 A4 80	1-55, 1-57, 1-59, 1-67, 1-69, 1-145, 1-151, 1-153, 2-155 ..... 2-157, 3-83, 3-85, 3-87
312105-0453 ..	SCREW M6S ISO 4017 M8X25 A480	1-55, 1-57, 1-59, 3-21, 3-23, 3-25, 3-37, 3-39, 3-41, 3-49 3-51, 3-75, 3-77, 3-79, 3-81, 3-99, 3-101, 3-103, 3-111, 3-113, 3-137, 3-139, 3-165, 3-183, 3-187 ..... 3-189, 3-241, 3-243, 4-23
312105-0455 ..	SCREW M6S ISO 4017 M8X30 A480	1-17, 1-19, 1-21, 2-141, 2-143, 2-145, 2-147, 2-149, 3-37 ..... 3-39, 3-41, 3-89, 3-91, 3-109, 3-129, 3-131, 3-133, 3-135, 3-195, 3-209, 4-7, 4-9, 4-11, 4-13
312105-0457 ..	SCREW M6S ISO 4014 M8X35 A480	2-141, 2-143, 2-145, 2-147, 2-149, 3-21, 3-23, 3-25, 3-75 3-77, 3-79, 3-81, 3-89, 3-91, 3-119, 3-121, 3-123, 3-125, 3-127, 3-129, 3-131, 3-133, 3-135, 3-195
312105-0459 ..	SCREW M6S ISO 4014 M8X40 A480	..... 3-119, 3-121, 3-123, 3-125, 3-127
312105-0460 ..	SCREW M6S ISO 4014 M8X45 A480	2-65, 2-67, 2-85, 2-87, 2-89, 2-109, 2-111, 2-125, 2-127, 2-129
312105-0461 ..	SCREW M6S ISO 4014 M8X50 A480	..... 3-37, 3-39, 3-41
312105-0462 ..	SCREW M6S ISO 4014 M8X55 A480	..... 1-29, 1-31, 3-37, 3-39, 3-41
312105-0463 ..	SCREW M6S ISO 4014 M8X60 A480	..... 3-37, 3-39, 3-41, 3-83, 3-85, 3-87
312105-0464 ..	SCREW M6S ISO 4014 M8X65 A480	2-141, 2-143, 2-145, 3-37, 3-39, 3-41, 3-83, 3-85, 3-87 ..... 3-119, 3-121, 3-123, 3-125, 3-127
312105-0465 ..	SCREW M6S ISO 4014 M8X70 A480	3-27, 3-29, 3-37, 3-39, 3-41, 3-89, 3-91, 3-119, 3-121 ..... 3-123, 3-125, 3-127
312105-0466 ..	SCREW M6S ISO 4014 M8X75 A480	3-27, 3-29, 3-37, 3-39, 3-41, 3-119, 3-121, 3-123, 3-125 3-127
312105-0467 ..	SCREW M6S ISO 4014 M8X80 A480	..... 3-27, 3-29, 3-37, 3-39, 3-41, 3-89, 3-91
312105-0469 ..	SCREW M6S ISO 4014 M8X90 A480	2-91, 2-131, 3-27, 3-29, 3-37, 3-39, 3-41, 3-155, 3-157, 3-159
312105-0471 ..	SCREW M6S ISO 4014 M8X100 A480	..... 3-119, 3-121, 3-123, 3-125, 3-127, 3-179
312105-0475 ..	SCREW M6S ISO 4014 M8X120 A480	..... 3-171, 3-173, 3-179
312105-0489 ..	SCREW M6S ISO 4017 M10X16 A480	..... 3-111, 3-113

Part No	Description	Page No
312105-0493 ..	SCREW M6S ISO 4017 M10X25 A480	1-35, 1-37, 1-39, 3-109, 3-303
312105-0495 ..	SCREW M6S ISO 4017 M10X30 A480	1-17, 1-19, 1-21, 1-29, 1-31, 3-89, 3-91, 3-111, 3-113, 3-155, 3-157, 3-159, 3-183, 3-187, 3-189, 3-303
312105-0506 ..	SCREW M6S ISO 4014 M10X75 A480	1-71
312105-0507 ..	SCREW M6S ISO 4014 M10X80 A480	3-193
312105-0511 ..	SCREW M6S ISO 4014 M10X100 A480	3-179
312105-0513 ..	SCREW M6S ISO 4014 M10X110 A480	3-171, 3-173
312105-0517 ..	SCREW M6S ISO 4014 M10X130 A480	3-171, 3-173
312105-0540 ..	SCREW M6S ISO 4017 M12X40 A480	3-303
312105-0550 ..	SCREW M6S ISO 4014 M12X90 A480	3-237
312109-0374 ..	SCREW M6S ISO 4017 M6X30 A480	1-123, 1-125, 3-9, 3-11, 3-13, 3-15, 3-17, 3-57, 3-59, 3-63, 3-65, 3-67, 3-69, 3-71, 3-187, 3-189, 4-27, 4-29, 4-31, 4-33
312109-0376 ..	SCREW M6S ISO 4017 M6X35 A480	1-123, 1-125, 3-9, 3-11, 3-13, 3-15, 3-17, 3-57, 3-59, 3-109
312109-0378 ..	SCREW M6S ISO4017 M6X40 A480	3-165, 3-213, 3-235
312109-0380 ..	SCREW M6S ISO 4017 M6X50 A480	3-213
312109-0457 ..	SCREW M6S ISO 4017 M8X35 A480	3-37, 3-39, 3-41, 3-89, 3-91, 3-119, 3-121, 3-123, 3-125, 3-127
312109-0459 ..	SCREW M6S ISO 4017 M8X40 A480	1-29, 1-31, 1-41, 1-43, 1-45, 1-47, 3-119, 3-121, 3-123, 3-125, 3-127, 3-213, 3-237
312109-0460 ..	SCREW M6S ISO 4017 M8X45 A480	1-41, 1-43, 1-45, 1-47, 3-89, 3-91, 3-111, 3-113, 3-119, 3-121, 3-123, 3-125, 3-127, 3-129, 3-131, 3-133, 3-135
312109-0461 ..	SCREW M6S ISO 4017 M8X50 A480	1-29, 1-31, 1-41, 1-43, 1-45, 1-47, 3-37, 3-39, 3-41, 3-119, 3-121, 3-123, 3-125, 3-127
312109-0463 ..	SCREW M6S ISO 4017 M8X60 A480	3-109, 3-119, 3-121, 3-123, 3-125, 3-127, 3-183, 3-187, 3-189
312109-0499 ..	SCREW M6S ISO 4017 M10X40 A480	3-183, 3-187, 3-189
312109-0500 ..	SCREW M6S ISO 4017 M10X45 A480	3-183, 3-305, 3-309
312109-0501 ..	SCREW M6S ISO 4017 M10X50 A480	1-123, 1-125
312115-0222 ..	SCREW ISO4762 M3X8 A4	3-211
312115-0226 ..	SCREW ISO4762 M3X12 A4	4-19
312115-0228 ..	SCREW ISO4762 M3X16 A4	3-183, 3-187, 3-189
312115-0230 ..	SCREW ISO4762 M3X20 A4	3-129, 3-131, 3-133, 3-135, 4-19
312115-0285 ..	SCREW ISO4762 M4X6 A4	2-65, 2-67, 2-85, 2-87, 2-89, 2-109, 2-111, 2-125, 2-127, 2-129
312115-0287 ..	SCREW ISO4762 M4X8 A4	1-23, 2-47, 2-49, 2-51, 2-53, 4-35, 4-37, 4-39, 4-41
312115-0289 ..	SCREW ISO4762 M4X10 A4	2-47, 2-49, 2-51, 2-53, 4-35, 4-37, 4-39, 4-41
312115-0291 ..	SCREW ISO4762 M4X12 A4	1-119, 1-121, 2-47, 2-49, 2-51, 2-53, 2-147, 2-149, 3-107, 4-35, 4-37, 4-39, 4-41
312115-0293 ..	SCREW ISO4762 M4X16 A4	2-47, 2-49, 2-51, 2-53, 2-147, 2-149, 3-231, 4-35, 4-37, 4-39, 4-41
312115-0297 ..	SCREW ISO4762 M4X25 A4	2-75, 2-77, 2-79, 2-117, 2-119, 2-121
312115-0305 ..	SCREW ISO4762 M4X50 A4	2-75, 2-77, 2-79, 2-117, 2-119, 2-121
312115-0323 ..	SCREW ISO4762 M5X8 A4	2-47, 2-49, 2-51, 2-53, 4-35, 4-37, 4-39, 4-41
312115-0325 ..	SCREW ISO4762 M5X10 A4	1-101, 1-103, 1-105, 2-93, 2-95, 2-97
312115-0327 ..	SCREW ISO4762 M5X12 A4	1-101, 1-103, 1-105, 2-65, 2-67, 2-75, 2-77, 2-79, 2-93, 2-95, 2-97, 2-109, 2-111, 2-117, 2-119, 2-121, 3-97
312115-0329 ..	SCREW ISO4762 M5X16 A4	2-23, 2-25, 2-35, 2-37, 2-65, 2-67, 2-75, 2-77, 2-79, 2-93, 2-95, 2-97, 2-109, 2-111, 2-117, 2-119, 2-121, 3-227, 4-7, 4-9, 4-11, 4-13
312115-0331 ..	SCREW ISO4762 M5X20 A4	1-101, 1-103, 1-105, 1-135, 1-137, 2-93, 2-95, 2-97, 3-213, 3-215, 3-221
312115-0333 ..	SCREW ISO4762 M5X25 A4	3-97, 3-223, 4-7, 4-9, 4-11, 4-13
312115-0337 ..	SCREW ISO4762 M5X35 A4	3-221
312115-0364 ..	SCREW ISO4762 M6X10 A4	3-211
312115-0366 ..	SCREW ISO4762 M6X12 A4	1-123, 1-125, 2-23, 2-25, 2-35, 2-37, 3-115, 3-117
312115-0367 ..	SCREW ISO4762 M6X14 A4	2-7, 2-9, 2-11, 2-15, 2-17, 2-19, 2-23, 2-25, 2-35, 2-37
312115-0368 ..	SCREW ISO4762 M6X16 A4	1-113, 2-23, 2-25, 2-35, 2-37, 2-47, 2-49, 2-51, 2-53, 3-89, 3-91, 4-7, 4-9, 4-11, 4-13, 4-35, 4-37, 4-39, 4-41
312115-0370 ..	SCREW ISO4762 M6X20 A4	1-119, 1-121, 3-99, 3-101, 3-103, 3-129, 3-131, 3-133, 3-135, 3-209
312115-0372 ..	SCREW ISO4762 M6X25 A4	2-23, 2-25, 2-35, 2-37, 2-73
312115-0374 ..	SCREW ISO4762 M6X30 A4	1-119, 1-121, 3-89, 3-91
312115-0378 ..	SCREW ISO4762 M6X40 A4 80	2-23, 2-25, 2-35, 2-37, 4-7, 4-9, 4-11, 4-13
312115-0379 ..	SCREW ISO4762 M6X45 A4	2-93, 2-95, 2-97
312115-0380 ..	SCREW ISO4762 M6X50 A4	2-73
312115-0447 ..	SCREW ISO4762 M8X12 A4	2-65, 2-67, 2-109, 2-111
312115-0449 ..	SCREW ISO4762 M8X16 A4	3-21, 3-23, 3-25, 3-75, 3-77, 3-79, 3-81, 3-89, 3-91
312115-0451 ..	SCREW ISO4762 M8X20 A4	1-41, 1-43, 1-45, 1-47, 3-179
312115-0457 ..	SCREW ISO4762 M8X35 A4	2-73
312115-0459 ..	SCREW ISO4762 M8X40 A4	2-73
312115-0461 ..	SCREW ISO4762 M8X50 A4	2-73
312115-0497 ..	SCREW ISO4762 M10X35 A4	3-137, 3-139, 3-193
312115-0500 ..	SCREW ISO4762 M10X45 A4	3-163, 3-193
312125-0222 ..	SCREW ISO 1207 M3X8 A4	3-235
312125-0228 ..	SCREW ISO 1207 M3X16 A4	1-97, 1-99, 1-101, 1-103, 1-105
312125-0230 ..	SCREW ISO 1207 M3X20 A4	3-111, 3-113
312125-0234 ..	SCREW ISO 1207 M3X30 A4	3-111, 3-113
312125-0285 ..	SCREW ISO 1207 M4X6 A4	1-123, 1-125, 3-223
312125-0287 ..	SCREW ISO 1207 M4X8 A4	1-139, 3-129, 3-131, 3-133, 3-135, 3-183, 3-187, 3-189, 3-215, 3-221, 3-223, 3-235
312125-0289 ..	SCREW ISO 1207 M4X10 A4	3-227
312125-0291 ..	SCREW ISO 1207 M4X12 A4	3-239
312125-0295 ..	SCREW ISO 1207 M4X20 A4	2-75, 2-77, 2-79, 2-117, 2-119, 2-121
312125-0327 ..	SCREW ISO 1207 M5X12 A4	3-183, 3-187, 3-189
312132-0284 ..	SCREW SLOT. PAN HEAD MSCS M4X5	4-19
312141-0222 ..	SCREW ISO 2009 MFS M3X8 4.8 EL.PL	2-47, 2-49, 2-51, 2-53, 4-35, 4-37, 4-39, 4-41
312145-0222 ..	SCREW ISO 2009 MFS M3X8 A4	1-101, 1-103, 1-105
312145-0224 ..	SCREW ISO 2009 MFS M3X10 A4	1-101, 1-103, 1-105
312145-0234 ..	SCREW ISO 2009 MFS M3X30 A4	2-93, 2-95, 2-97
312145-0238 ..	SCREW COUNTERS.SLOT.HD. MFS M3X40 SS	2-93, 2-95, 2-97

Part No	Description	Page No
312145-0287 ..	SCREW ISO 2009 MFS M4X8 A4	2-7, 2-9, 2-11, 2-15, 2-17, 2-19, 2-59, 4-43
312145-0289 ..	SCREW ISO 2009 MFS M4X10 A4	2-7, 2-9, 2-11, 2-15, 2-17, 2-19, 2-47, 2-49, 2-51, 2-53, 2-57 2-59, 2-63, 3-129, 3-131, 3-133, 3-135, 4-35, 4-37, 4-39, 4-41, 4-43
312145-0291 ..	SCREW ISO 2009 MFS M4X12 A4	2-7, 2-9, 2-11, 2-15, 2-17, 2-19, 3-227
312145-0301 ..	SCREW ISO 2009 MFS M4X35 A4	3-223
312151-0368 ..	SCREW EN 10642 MF6S M6X16 10.9 EL.PL	3-183, 3-187, 3-189
312155-0285 ..	SCREW HEX.SOCK.COUNT.MF6S M4X6 A480	2-93, 2-95, 2-97
312155-0287 ..	SCREW DIN 7991 MF6S M4X8 A480	2-47, 2-49, 2-51, 2-53, 2-75, 2-77, 2-79, 2-85, 2-87, 2-89 2-93, 2-95, 2-97, 2-117, 2-119, 2-121, 2-125, 2-127, 2-129, 3-49, 3-51, 3-99, 3-101, 3-103, 4-35 4-37, 4-39, 4-41
312155-0289 ..	SCREW DIN 7991 MF6S M4X10 A480	2-7, 2-9, 2-11, 2-15, 2-17, 2-19, 3-49, 3-51, 3-129, 3-131 3-133, 3-135, 3-155, 3-157, 3-159
312155-0291 ..	SCREW DIN 7991 MF6S M4X12 A480	3-211, 3-223, 3-255
312155-0295 ..	SCREW DIN 7991 MF6S M4X20 A480	2-147, 2-149
312155-0297 ..	SCREW DIN 7991 MF6S M4X25 A480	3-109, 3-211
312155-0323 ..	SCREW DIN 7991 MF6S M5X8 A480	2-47, 2-49, 2-51, 2-53, 2-65, 2-67, 2-85, 2-87, 2-89, 2-109 2-111, 2-125, 2-127, 2-129, 3-185, 3-191, 4-35, 4-37, 4-39, 4-41
312155-0325 ..	SCREW DIN 7991 MF6S M5X10 A480	1-113, 2-47, 2-49, 2-51, 2-53, 2-75, 2-77, 2-79, 2-117 2-119, 2-121, 4-35, 4-37, 4-39, 4-41
312155-0327 ..	SCREW DIN 7991 MF6S M5X12 A480	2-47, 2-49, 2-51, 2-53, 2-57, 2-63, 3-107, 3-129, 3-131 3-133, 3-135, 3-235, 4-35, 4-37, 4-39, 4-41
312155-0329 ..	SCREW DIN 7991 MF6S M5X16 A480	1-135, 1-137, 3-141, 3-143, 3-145, 3-147
312155-0339 ..	SCREW DIN 7991 MF6S M5X40 A480	2-23, 2-25, 2-35, 2-37
312155-0366 ..	SCREW DIN 7991 MF6S M6X12 A480	3-89, 3-91
312155-0368 ..	SCREW DIN 7991 MF6S M6X16 A480	3-171, 3-173
312155-0370 ..	SCREW DIN 7991 MF6S M6X20 A480	3-49, 3-51, 3-99, 3-101, 3-103
312155-0376 ..	SCREW DIN 7991 MF6S M6X35 A480	3-49, 3-51
312155-0378 ..	SCREW DIN 7991 MF6S M6X40 A480	3-49, 3-51, 3-155, 3-157, 3-159
312155-0380 ..	SCREW DIN 7991 MF6S M6X50 A480	3-49, 3-51
312155-0449 ..	SCREW DIN 7991 MF6S M8X16 A480	1-61, 1-63, 3-141, 3-143, 3-145, 3-147, 3-189
312155-0453 ..	SCREW DIN 7991 MF6S M8X25 A480	3-129, 3-131, 3-133, 3-135
312155-0459 ..	SCREW DIN 7991 MF6S M8X40 A480	3-37, 3-39, 3-41, 3-89, 3-91
312155-0461 ..	SCREW DIN 7991 MF6S M8X50 A480	3-89, 3-91
312155-0495 ..	SCREW DIN 7991 MF6S M10X30 A480	3-109, 3-183, 3-187, 3-189
312155-0499 ..	SCREW DIN 7991 MF6S M10X40 A480	3-49, 3-51, 3-99, 3-101, 3-103
312180-0455 ..	SCREW ISO7379 H8X30	3-255
312180-0491 ..	SCREW ISO7379 H10X20	1-119, 1-121
312311-0370 ..	SCREW ISO4028 M6X20 FZB	3-129, 3-131, 3-133, 3-135
312318-0220 ..	SCREW ISO4029 M3X6 A4	3-241, 3-243
312318-0283 ..	SCREW ISO4029 M4X4 A4	3-227
312318-0284 ..	SCREW ISO4029 M4X5 A4	1-123, 1-125
312318-0285 ..	SCREW ISO4029 M4X6 A4	1-9, 2-7, 2-9, 2-11, 2-15, 2-17, 2-19, 2-57, 2-63, 3-231, 4-7, 4-9, 4-11, 4-13
312318-0287 ..	SCREW ISO4029 M4X8 A4	1-127, 2-151, 2-153, 3-209
312318-0289 ..	SCREW ISO4029 M4X10 A4	1-35, 1-37, 1-39, 1-41, 1-43, 1-45, 1-47
312318-0323 ..	SCREW ISO4029 M5X8 A4	2-47, 2-49, 2-51, 2-53, 2-161, 2-163, 2-165, 4-35, 4-37, 4-39, 4-41
312318-0327 ..	SCREW ISO4029 M5X12 A4	3-107, 3-229, 3-231, 3-245
312318-0329 ..	SCREW ISO4029 M5X16 A4	2-57, 2-63, 2-75, 2-77, 2-79, 2-93, 2-95, 2-97, 2-117, 2-119, 2-121
312318-0362 ..	SCREW ISO4029 M6X8 A4	3-111, 3-113
312318-0366 ..	SCREW ISO4029 M6X12 A4	1-127, 3-209
312318-0368 ..	SCREW ISO4029 M6X16 A4	3-129, 3-131, 3-133, 3-135
312318-0370 ..	SCREW ISO4029 M6X20 A4	3-213
312318-0376 ..	SCREW ISO4029 M6X35 A4	1-101, 1-103, 1-105
312318-0443 ..	SCREW ISO4029 M8X8 A4	1-133
312318-0445 ..	SCREW ISO4029 M8X10 A4	3-311
312601-0320 ..	HEXAGON NUT, DIN 934 M10 8 FZB	3-303
312605-0310 ..	HEXAGON NUT, M6M M3 A280	3-241, 3-243
312605-0312 ..	HEXAGON NUT, M6M M4 A280	1-61, 1-63, 1-91, 1-101, 1-103, 1-105, 1-123, 1-125, 2-83 2-141, 2-143, 2-145, 3-209, 3-211, 3-229, 3-231, 4-15
312605-0314 ..	HEXAGON NUT, M6M M5 A280	1-61, 1-63, 1-85, 1-91, 1-145, 2-65, 2-67, 2-109, 2-111, 3-141 3-143, 3-145, 3-147, 3-171, 3-173, 3-175, 3-177, 3-227, 3-229, 3-231
312605-0316 ..	HEXAGON NUT, M6M M6 A280	1-61, 1-63, 1-91, 1-97, 1-99, 1-101, 1-103, 1-105, 1-107, 1-109 1-111, 1-113, 1-123, 1-125, 1-143, 1-145, 2-85, 2-87, 2-89, 2-125, 2-127, 2-129, 2-141, 2-143 2-145, 2-147, 2-149, 3-9, 3-11, 3-13, 3-15, 3-17, 3-21, 3-23, 3-25, 3-57, 3-59, 3-63, 3-65, 3-67 3-69, 3-71, 3-75, 3-77, 3-79, 3-81, 3-129, 3-131, 3-133, 3-135, 3-141, 3-143, 3-145, 3-147, 3-213 3-247, 4-27, 4-29, 4-31, 4-33
312605-0318 ..	HEXAGON NUT, M6M M8 A280	1-17, 1-19, 1-21, 1-61, 1-63, 1-139, 1-145, 2-23, 2-25, 2-35 2-37, 2-91, 2-131, 2-155, 2-157, 3-27, 3-29, 3-37, 3-39, 3-41, 3-83, 3-85, 3-87, 3-89, 3-91, 3-115 3-117, 3-129, 3-131, 3-133, 3-135, 3-137, 3-139, 3-183, 3-187, 3-189
312605-0320 ..	HEXAGON NUT, M6M M10 A280	1-17, 1-19, 1-21, 1-71, 1-123, 1-125, 3-109, 3-111, 3-113 3-179, 3-305
312605-0322 ..	HEXAGON NUT, M6M M12 A280	1-97, 1-99, 1-101, 1-103, 1-105, 3-109, 3-307
312607-0318 ..	HEXAGON NUT, EN 24032 M6M M8 A480	2-57, 2-63
312621-0318 ..	ROD END,NUT M8	3-227
312625-0316 ..	HEXAGON THIN NUT, EN 24035 ML6M M6 A4	1-97, 1-99, 1-101, 1-103, 1-105, 1-119, 1-121 2-47, 2-49, 2-51, 2-53, 3-209, 3-213, 4-35, 4-37, 4-39, 4-41
312625-0318 ..	HEXAGON THIN NUT, EN 24035 ML6M M8 A4	2-85, 2-87, 2-89, 2-125, 2-127, 2-129
312705-0310 ..	NUT HEX. DOMED CAP MHM-6 M3 A2	1-101, 1-103, 1-105
312705-0312 ..	NUT HEX. DOMED CAP MHM-6 M4 A280	1-101, 1-103, 1-105
312705-0314 ..	NUT HEX. DOMED CAP MHM-6 M5 A280	3-227
312705-0316 ..	NUT HEX. DOMED CAP MHM-6 M6 A280	1-113, 1-127, 1-151, 1-153, 3-227
312705-0318 ..	NUT HEX. DOMED CAP MHM-6 M8 A280	1-151, 1-153
312805-0108 ..	NUT ROUND WITH SLOTS M40X1,5 FE	4-21
312812-0312 ..	HEXAGON NUT, NY-LOCK M4 A480	3-9, 3-11, 3-13, 3-15, 3-17, 3-57, 3-59, 3-247, 3-275
312812-0316 ..	HEXAGON NUT, NY-LOCK M6 A480	1-123, 1-125, 3-179, 3-185, 3-191, 3-311

Part No	Description	Page No
312812-0318	HEXAGON NUT, NY-LOCK M8 A480	3-115, 3-117, 3-209
312812-0320	HEXAGON NUT, NY-LOCK M10 A480	3-171, 3-173
312902-0318	NUT HEX. LEFT THREAD, M8 A280	3-115, 3-117, 3-129, 3-131, 3-133, 3-135
312902-0320	NUT HEX. LEFT THREAD, M10 A280	3-111, 3-113
315101-0182	WASHER PLAIN, BRB, 15/26 H=2	1-71
315103-0153	WASHER, BRB, 6,4/12,H=1,5 NIPL BR	1-107, 1-109, 1-111, 3-49, 3-51, 3-129, 3-131, 3-133, 3-135
315105-0124	WASHER BRB3,2X6RFR	1-97, 1-99, 1-101, 1-103, 1-105, 3-111, 3-113, 3-129, 3-131, 3-133, 3-135, 3-183, 3-187, 3-189, 3-211, 3-235, 3-241, 3-243
315105-0136	WASHER BRB4,3XRFR	1-23, 1-101, 1-103, 1-105, 1-119, 1-121, 1-123, 1-125, 3-21, 3-23, 3-25 3-49, 3-51, 3-75, 3-77, 3-79, 3-81, 3-109, 3-129, 3-131, 3-133, 3-135, 3-175, 3-177, 3-211, 3-223 3-227, 3-239, 3-247, 3-251, 3-255, 4-15
315105-0146	WASHER BRB5,3X10RFR	1-85, 1-87, 1-89, 1-91, 1-101, 1-103, 1-105, 1-113, 1-135, 1-137 1-145, 2-7, 2-9, 2-11, 2-15, 2-17, 2-19, 2-23, 2-25, 2-35, 2-37, 2-59, 2-65, 2-67, 2-75, 2-77, 2-79 2-93, 2-95, 2-97, 2-109, 2-111, 2-117, 2-119, 2-121, 3-97, 3-141, 3-143, 3-145, 3-147, 3-171, 3-173 3-175, 3-177, 3-183, 3-187, 3-189, 3-209, 3-221, 3-223, 3-227, 3-245, 3-255, 4-7, 4-9, 4-11, 4-13, 4-43
315105-0153	WASHER BRB6,4X12RFR	1-23, 1-61, 1-63, 1-87, 1-89, 1-91, 1-101, 1-103, 1-105, 1-119, 1-121 1-123, 1-125, 1-133, 1-139, 1-143, 1-145, 1-151, 1-153, 2-7, 2-9, 2-11, 2-15, 2-17, 2-19, 2-23, 2-25 2-35, 2-37, 2-57, 2-63, 2-141, 2-143, 2-145, 2-147, 2-149, 2-151, 2-153, 2-159, 3-9, 3-11, 3-13 3-15, 3-17, 3-21, 3-23, 3-25, 3-27, 3-29, 3-37, 3-39, 3-41, 3-49, 3-51, 3-57, 3-59, 3-63, 3-65, 3-67 3-69, 3-71, 3-75, 3-77, 3-79, 3-81, 3-83, 3-85, 3-87, 3-89, 3-91, 3-97, 3-99, 3-101, 3-103, 3-109 3-111, 3-113, 3-129, 3-131, 3-133, 3-135, 3-137, 3-139, 3-141, 3-143, 3-145, 3-147, 3-149, 3-171 3-173, 3-179, 3-185, 3-187, 3-189, 3-191, 3-195, 3-209, 3-213, 3-227, 3-235, 3-239, 3-241, 3-243 3-311, 4-7, 4-9, 4-11, 4-13, 4-27, 4-29, 4-31, 4-33
315105-0156	WASHER BRB 6.7X14 RFR	1-123, 1-125, 1-127, 3-97
315105-0165	WASHER BRB8,4X16RFR	1-29, 1-31, 1-41, 1-43, 1-45, 1-47, 1-55, 1-57, 1-59, 1-61, 1-63, 1-67 1-69, 1-119, 1-121, 1-139, 1-145, 2-65, 2-67, 2-85, 2-87, 2-89, 2-91, 2-109, 2-111, 2-125, 2-127 2-129, 2-131, 2-141, 2-143, 2-145, 2-147, 2-149, 2-155, 2-157, 2-161, 2-163, 2-165, 3-21, 3-23 3-25, 3-27, 3-29, 3-37, 3-39, 3-41, 3-49, 3-51, 3-75, 3-77, 3-79, 3-81, 3-83, 3-85, 3-87, 3-89, 3-91 3-99, 3-101, 3-103, 3-107, 3-109, 3-111, 3-113, 3-115, 3-117, 3-129, 3-131, 3-133, 3-135, 3-137 3-139, 3-141, 3-143, 3-145, 3-147, 3-151, 3-155, 3-157, 3-159, 3-165, 3-171, 3-173, 3-179, 3-183 ... 3-187, 3-189, 3-195, 3-209, 3-237, 3-241, 3-243, 3-247, 3-251, 3-255, 4-7, 4-9, 4-11, 4-13, 4-23
315105-0171	WASHER BRB10X18	3-89, 3-91, 3-111, 3-113, 3-137, 3-139
315105-0173	WASHER BRB10,5X22RFR	1-17, 1-19, 1-21, 2-93, 2-95, 2-97, 3-21, 3-23, 3-25, 3-75, 3-77, 3-79 3-81, 3-111, 3-113, 3-171, 3-173, 3-183, 3-187, 3-189, 3-193
315105-0178	WASHER BRB13X24RFR	3-109, 3-237, 3-303
315111-0156	WASHER PLAIN, TBRB 6,7/14 H=3	4-7, 4-9, 4-11, 4-13
315111-0173	WASHER PLAIN, TBRB 10,5/22 H=4	3-179
315115-0153	WASHER PLAIN, TBRB 6,4/12 H=3	3-7, 3-99, 3-101, 3-103, 3-213
315121-0173	WASHER PLAIN, TBRSB 10,5/28 H=6	3-303
315125-0153	WASHER TBRSB 6,4X22X4 A4	1-29, 1-31, 1-67, 1-69, 3-141, 3-143, 3-145, 3-147, 3-183, 3-187 3-189, 3-235
315125-0165	WASHER TBRSB 8,4X26X5 A4	2-161, 2-163, 2-165, 3-183, 3-187, 3-189, 3-209, 3-213, 4-19
315125-0173	WASHER TBRSB 10,5X28X6 A4	1-29, 1-31, 3-183, 3-187, 3-189
315202-0101	O-RING 3,1X1,6 MM	2-69, 2-71, 2-113, 2-115
315202-0104	O-RING 6,1X1,6 MM	2-93, 2-95, 2-97
315202-0105	O-RING 7,1X1,6 MM	2-69, 2-71, 2-73, 2-113, 2-115
315202-0107	O-RING 9,1X1,6 MM	3-115, 3-117
315202-0110	O-RING 12,1X1,6 MM	2-107
315202-0113	O-RING 15,1X1,6 MM	3-165
315202-0116	O-RING 18,1X1,6 MM	2-85, 2-87, 2-89, 2-125, 2-127, 2-129
315202-0118	O-RING 22,1X1,6 MM	2-107
315202-0208	O-RING 9,3X2,4 MM	2-85, 2-87, 2-89, 2-125, 2-127, 2-129
315202-0217	O-RING 24,2X3 MM	3-111, 3-113, 3-129, 3-131, 3-133, 3-135
315202-0221	O-RING 34,2X3 MM	3-183, 3-187, 3-189
315202-0225	O-RING 44,2X3 MM	3-49, 3-51, 3-99, 3-101, 3-103
315202-0267	O-RING 16,3X2,4 MM	3-183, 3-187, 3-189
315202-0303	O-RING 59,5X3 MM	3-129, 3-131, 3-133, 3-135
315202-0305	O-RING 69,5X3 MM	3-109, 3-129, 3-131, 3-133, 3-135
315202-0311	O-RING 99,5X3 MM	3-49, 3-51, 3-99, 3-101, 3-103, 3-165
315204-0105	O-RING 7,1X1,6 MM	2-93, 2-95, 2-97
315204-0122	O-RING 32,1X1,6 MM	1-97, 1-99
315204-0215	O-RING 19,2X3 MM	1-17, 1-19, 1-21, 1-73, 1-75, 1-77, 1-79, 1-81, 1-83, 4-19
315204-0219	O-RING 29,2X3 MM	1-17, 1-19, 1-21, 1-73, 1-75, 1-77, 1-79, 1-81, 1-83
315204-0223	O-RING 39,2X3 MM	1-17, 1-19, 1-21, 1-73, 1-75, 1-77, 1-79, 1-81, 1-83
315204-0303	O-RING 59,5X3 MM	4-19
315204-0324	O-RING 164,3X5,7 MM	1-29, 1-31
315205-0713	O-RING 29,87X1,78 MM	1-107, 1-109, 1-111
315205-0716	O-RING 34,65X1,78 MM	1-97, 1-99, 1-113
315205-0802	O-RING 41,0X1,78 MM	1-107, 1-109, 1-111
315205-0803	O-RING 44,17X1,78 MM	1-113
315205-0804	O-RING 47,35X1,78 MM	1-101, 1-103, 1-105
315205-0805	O-RING 53,7X1,78 MM	1-113
315205-0807	O-RING 94,97X1,78 MM	1-113
315205-0808	O-RING 7,59X2,62 MM	1-87, 1-89
315211-0103	BONDED SEAL SS/NBR90 M6	2-85, 2-87, 2-89, 2-93, 2-95, 2-97, 2-125, 2-127, 2-129, 3-165
315211-0104	BONDED SEAL SS/NBR90 M8	2-65, 2-67, 2-109, 2-111
315234-0109	WASHER,PL.RND.CU.10,3/13,5 H=1,0	4-19
315402-0156	LOCK WASHER FBB 6,5	2-47, 2-49, 2-51, 2-53, 4-35, 4-37, 4-39, 4-41
315701-0396	PARALLEL KEY W. ROUND ENDS 16X10X50 MM	3-235
315701-0401	PARALLEL KEY W. ROUND ENDS 16X10X80 MM	3-237
315705-0164	PARALLEL KEY W. ROUND ENDS 4X4X8 MM	1-61, 1-63
315705-0201	PARALLEL KEY W. ROUND ENDS 5X5X20 MM	2-93, 2-95, 2-97
315705-0202	PARALLEL KEY W ROUND ENDS 5X5X25MM	3-183, 3-187, 3-189

Part No	Description	Page No
315705-0232 ..	PARALLEL KEY W. ROUND ENDS 6X6X20 MM	3-219
315705-0239 ..	PARALLEL KEY W. ROUND ENDS 6X6X40 MM	3-165
315705-0263 ..	PARALLEL KEY W. ROUND ENDS 8X7X20 MM	3-165
315705-0267 ..	PARALLEL KEY W. ROUND ENDS 8X7X30 MM	3-111, 3-113, 3-129, 3-131, 3-133, 3-135
315705-0270 ..	PARALLEL KEY W. ROUND ENDS 8X7X40 MM	3-111, 3-113
315705-0301 ..	PARALLEL KEY W. ROUND ENDS 10X8X40 MM	1-61, 1-63
315742-0123 ..	RETAINING RING 32 SMS 199	3-311
315750-0102 ..	RETAINING RING SHAFT DIN 471 ST 5	3-209
315751-0103 ..	RETAINING RING FOR SHAFT DIN 471 6 A2	1-123, 1-125
315751-0112 ..	RETAINING RING FOR SHAFT DIN 471 15 A2	1-107, 1-109, 1-111, 1-119, 1-121
315751-0117 ..	RETAINING RING FOR SHAFT DIN 471 22 A2	3-251
315751-0119 ..	RETAINING RING FOR SHAFT DIN 471 25 A2	1-119, 1-121, 3-109, 3-183, 3-187, 3-189
315753-0122 ..	RETAINING RING FOR BORE DIN 472 30 A2	1-127, 3-129, 3-131, 3-133, 3-135
315753-0124 ..	RETAINING RING FOR BORE DIN 472 35 A2	1-113
315753-0132 ..	RETAINING RING FOR BORE DIN 472 52 A2	3-111, 3-113
315755-0106 ..	RETAINING RING SHAFT DIN 6799 4 A2	3-185, 3-191, 3-229
315755-0107 ..	RETAINING RING SHAFT DIN 6799 5 A2	3-231
315755-0108 ..	RETAINING RING SHAFT DIN 6799 6 A2	1-127, 3-247
315755-0109 ..	RETAINING RING SHAFT DIN 6799 7 A2	1-119, 1-121
315755-0113 ..	RETAINING RING SHAFT DIN 6799 15 A2	3-89, 3-91
316810-0106 ..	PIPE CLIP FOR TUBE D=8 MM	3-75, 3-77, 3-79, 3-81, 3-109
321105-0127 ..	BEAR. BUSH. WITHOUT FL, 6X12X12 MM	3-227
321105-0204 ..	BEAR. BUSH. WITHOUT FL, 16X22X20 MM	3-209
321116-0234 ..	BEAR. BUSH. WITHOUT FL, 16X20X12 MM	3-195
321120-0092 ..	BEARING BUSHING W/O FL, 4X5,5X6 MM	3-231
321120-0100 ..	BEARING BUSHING W/O FLANGE 8/10X12	3-255
321120-0101 ..	BEARING BUSHING W/O FLANGE,6/8X6	3-227, 3-229
321120-0104 ..	BEARBUSHING W/O FL,ANGE 10/12X10	3-227
321120-0108 ..	BEARBUSHING W/O FL 12X14X8	2-141, 2-143, 2-145
321130-0200 ..	THRUST WASHER, 14X26X1,5 MM	3-129, 3-131, 3-133, 3-135
321136-0140 ..	BUSHING, 10X12X10 MM	2-47, 2-49, 2-51, 2-53, 4-35, 4-37, 4-39, 4-41
321137-0140 ..	BUSHING, 10X14X10 MM	1-61, 1-63
321138-0183 ..	BUSHING, 12X14X15 MM	3-105
321141-0138 ..	BEARING BUSHING W/O FL, 10X12X8 MM	1-123, 1-125
321153-0136 ..	FLANGE BUSHING, 10X12X6 MM	3-89, 3-91
321302-0298 ..	BALL BEARING, 8X22X7 MM	3-247
321308-0205 ..	BALL BEARING, 25X47X12MM	1-119, 1-121, 3-109, 3-111, 3-113, 3-183, 3-187, 3-189
321313-0100 ..	BALL BEARING, 10X30X9 MM	1-127
321313-0103 ..	BALL BEARING, 17X40X12MM	3-183, 3-187, 3-189
321313-0105 ..	BALL BEARING, 25X52X15MM	3-111, 3-113, 3-129, 3-131, 3-133, 3-135
321313-0107 ..	BALL BEARING, 35X72X17MM	3-129, 3-131, 3-133, 3-135
321316-0206 ..	BALL BEARING, 30X72X19 MM	3-109

Part No	Description	Page No
342700-0201 ..	NIPPLES,HEXAGON,EXT.G-THREAD G1/4"-G1/8"	1-141
342700-0205 ..	NIPPLES,HEXAGON,EXT.G-THREAD G1/2"-G1/4"	1-143
342701-0209 ..	BUSHING,INT./EXT.G-THREAD G3/4"-G3/8"	1-139
342703-0208 ..	NUT, PIPES & CONNECTORS,NUT M-8 SS	1-87, 1-89
342706-0130 ..	ACCESSORIES, INSERT SLEEVE 6 MM	2-159
342713-0209 ..	PLUG (1UNIT = 10PC)	1-141, 2-85, 2-87, 2-89, 2-93, 2-95, 2-97, 2-125, 2-127, 2-129
342716-0203 ..	REDUCER 6-8	4-17
342722-0202 ..	PIPE COUPLING 1/8" D=6MM	1-97, 1-99
342722-0203 ..	STRAIGHT COUPLING	3-137, 3-139
342722-0204 ..	PIPE COUPLING	4-19
342722-0211 ..	STRAIGHT COUPLING D=10-G1/4"	4-19
342725-0102 ..	CONN. STR. PIPE GI-6-G1/8	4-15
342728-0103 ..	PIPE COUPLING 8 MM	3-9, 3-11, 3-13, 3-15, 3-17, 3-57, 3-59
342732-0104 ..	ELBOW PIPE JOINT, EXT.THREAD, D=8MM-G1/4	3-9, 3-11, 3-13, 3-15, 3-17, 3-21, 3-23, 3-25
342735-0109 ..	ELBOW PIPE JOINT	1-143
342742-0110 ..	T-COUPLING,ADJUST,F.PLAST.TUBE 12-G3/8"	1-143
342840-0103 ..	CLAMPING PIECE	1-25, 1-27
342850-0304 ..	GASKET 35,4X49,1X5,2 1"1/2 FDA	1-25, 1-27, 1-73, 1-75, 1-77, 1-79, 1-81, 1-83
342850-0305 ..	GASKET 47,8X62,6X5,2 MM 2" FDA	1-25, 1-27
342850-0306 ..	GASKET 60,3X76,1X5,2 MM 2"1/2 FDA	1-25, 1-27
342921-0121 ..	STRAIGHT COUPLING,EXT.THREADED 8/6-G1/8"	3-37, 3-39, 3-41
342931-0121 ..	ELBOW 90 COUPL.,EXT.THREAD 8/6-G1/8"	1-91, 1-141, 3-27, 3-29, 3-37, 3-39, 3-41, 3-83, 3-85, 3-87, 3-97
342980-0121 ..	BANJO-CONNECTION,RING 8/6-G1/8"	2-65, 2-67, 2-109, 2-111
342980-0303 ..	BANJO-HOLLOW BOLT COUPL,EXT.THR.01-G1/8"	2-65, 2-67, 2-109, 2-111
342981-0122 ..	BANJO CONNEC,RING,FOR PLAST.TUBE 8-G1/4"	3-21, 3-23, 3-25, 3-75, 3-77, 3-79, 3-81
344502-0021 ..	GREASE NIPPLE STRAIGHT M6	3-155, 3-157, 3-159
350002-0006 ..	PUSH-IN L-FITTING QSL-F-G1/8-6	3-89, 3-91
351150-0405 ..	CABLE OLFLEX 5X0,75 MM2 LIGHT/GREY	1-135
351150-0412 ..	CABLE OLFLEX 3X1,5 MM2 LIGHT/GREY	4-21
351160-0102 ..	CABLE (1UNIT = 100M)	3-263
351162-0102 ..	CABLE AWM 1X0,75 MM2 YELLOW-GREEN	3-263
352103-0106 ..	CABLE GLAND, ST 11, PR18,6/PG11	3-227, 3-235, 4-19
352113-0101 ..	CLIP STRIP, 92X2,5 MM	2-85, 2-87, 2-89, 2-125, 2-127, 2-129, 3-109, 3-129, 3-131, 3-133, 3-135, 3-223, 3-235, 3-263
352113-0102 ..	CLIP-STRIP, BLACK 188X4,8 MM	1-139, 3-27, 3-29, 3-83, 3-85, 3-87, 3-109, 3-129, 3-131, 3-133, 3-135, 3-263
352113-0205 ..	ANCHOR PLATES FOR STRIPS, TYPE TM2S8-C10	1-123, 1-125, 1-139, 3-223, 3-235
352136-0113 ..	GLAND FITTING PR18,6/PG11 DI=12MM	3-223, 3-235
353001-0115 ..	END SLEEVE 2,5/14	3-263
353001-0116 ..	END SLEEVE H0.5/14 ORANGE	3-263
353001-0119 ..	END SLEEVE H 1.0/14 YELLOW	3-263

Part No	Description	Page No
353103-0120	CABLE SHOE 1,25 MM2 RED	3-263
353241-0003	GLAND W/O INSERT PG21 EXTENDED	4-21
353243-0009	HOSE GLAND W/O INSERT PG13,5 EXTENDED	1-135
353247-0005	HOSE GLAND EMC PG21 EXTENDED	4-19, 4-21
353249-0011	INSERT, SINGEL HOLE, EK 153/11	1-135, 1-137
353300-0003	SHRINKABLE HOSE	3-263
353300-0006	SHRINKABLE HOSE	3-263
359000-0031	MARKING CO01/3"JORD"	3-263
359000-0032	MARKING CO02/3"JORD"	3-263
359000-0100	MARKING CO01/3"0"	3-263
359000-0101	MARKING CO01/3"1"	3-263
359000-0102	MARKING CO01/3"2"	3-263
359000-0103	MARKING CO01/3"3"	3-263
359000-0104	MARKING CO01/3"4"	3-263
359000-0105	MARKING CO01/3"5"	3-263
359000-0106	MARKING CO01/3"6"	3-263
359000-0109	MARKING CO01/3"9"	3-263
359000-0200	MARKING CO02/3"0"	3-263
359000-0201	MARKING CO02/3"1"	3-263
359000-0202	MARKING CO02/3"2"	3-263
359000-0203	MARKING CO02/3"3"	3-263
359000-0204	MARKING CO02/3"4"	3-263
359000-0205	MARKING CO02/3"5"	3-263
359000-0206	MARKING CO02/3"6"	3-263
359000-0207	MARKING CO02/3"7"	3-263
359000-0208	MARKING CO02/3"8"	3-263
359000-0209	MARKING COLLAR 02/3 "9" YELLOW	3-263
359000-0672	MARKING CO02/3"W"	3-263
359005-0010	MARKING LABEL KIT 0 - 9, 04.841.2150.0	3-263
359005-0050	MARKING LABEL KIT X, 04.841.4550.0	3-263
359009-0100	CABLE MARKER, YELLOW, PK 2/4, 0	3-263
359009-0101	CABLE MARKER, YELLOW, PK 2/4, 1	3-263
359009-0104	CABLE MARKER, YELLOW, PK 2/4, 4	3-263
359009-0109	CABLE MARKER, YELLOW, PK 2/4, 9	3-263
359009-0222	CABLE MARKER, YELLOW, PK 2/4, W	3-263
359705-0007	WARNING SIGN ISO, HOT SURFACE	1-135, 1-137
359705-0015	WARNING SIGN ISO, RISK OF ELECTRIC SHOCK	4-19
359710-0001	WARNING SIGN ISO, HOT SURFACE	3-119, 3-121, 3-123, 3-125, 3-127
434320-0000	AXLE PIN	2-7, 2-9, 2-11, 2-15, 2-17, 2-19, 2-57, 2-63
434321-0000	CURVE ROLLER	2-7, 2-9, 2-11, 2-15, 2-17, 2-19, 2-57, 2-63
434665-0000	HOOD	1-17, 1-19, 1-21
436556-0000	CURVE ROLLER	2-7, 2-9, 2-11, 2-15, 2-17, 2-19
441737-0000	WASHER	1-135, 1-137
441739-0000	WASHER	1-135, 1-137
449190-0000	SHAFT	3-195
456796-0000	ROLLER	1-29, 1-31
457696-0001	JOINT PIECE	3-171, 3-173
466042-0000	SEAL	1-29, 1-31
466046-0000	ROLLER	1-29, 1-31
466074-0002	SLIDER	3-171, 3-173
466089-0000	SEAL	1-29, 1-31
466092-0000	ROLL	1-29, 1-31
476220-0000	SPACER	3-171, 3-173
476975-0000	WHEEL	3-171, 3-173
484701-0000	SHUTTER	3-141, 3-143, 3-145, 3-147
490901-0000	SEAL	1-29, 1-31
499387-0000	PRESSURE ROLLER	1-17, 1-19, 1-21, 1-73, 1-75, 1-77, 1-79, 1-81, 1-83
532022-0000	LOCK BAR	3-255
533972-0000	INDICATOR CURVE	3-245
544427-0000	TURN SPRING	3-255
544894-0000	SPRING	1-17, 1-19, 1-21
560122-0000	SUPPORT ROLLER	2-155, 2-157
567743-0000	SEAL	1-29, 1-31
567746-0001	ROLLER, (STD.SIZE)	1-35, 1-37, 1-39
569058-0000	SUPPORT ROLLER	2-155, 2-157
573504-0000	ROLLER	1-29, 1-31
574336-0000	SEAL	1-29, 1-31
575002-0000	PLUNGER	3-311
575034-0000	ROUND NUT	1-135, 1-137
578684-0000	SPRING BRACKET	1-119, 1-121
579318-0000	SEAL	1-29, 1-31
583727-0000	SHAFT	1-127
598095-0000	SCREW	3-307
598096-0000	WASHER	3-307
598101-0000	BEARING HOUSING	3-109
599815-0100	HOLDING FIXTURE	3-3
751491-0000	ROLL	1-55, 1-57, 1-59
751492-0000	ROLL	1-55, 1-57, 1-59
751502-0000	ROLLER	1-35, 1-37, 1-39
751604-0000	SPRING	1-17, 1-19, 1-21
752115-0000	PLUNGER	2-107
752126-0000	FORMING ROLLER	1-55, 1-57, 1-59
752127-0000	FORMING ROLLER	1-55, 1-57, 1-59
752128-0000	FORMING ROLLER	1-55, 1-57, 1-59

Part No	Description	Page No
752156-0000 ..	FLANGE BUSHING	1-41, 1-43, 1-45, 1-47, 1-55, 1-57, 1-59
752186-0002 ..	SHAFT	1-55, 1-57, 1-59
752186-0004 ..	SHAFT	1-35, 1-37, 1-39
752186-0005 ..	SHAFT	1-9, 1-35, 1-37, 1-39, 1-55, 1-57, 1-59
752186-0006 ..	SHAFT	1-41, 1-43, 1-45, 1-47, 1-55, 1-57, 1-59
752186-0007 ..	SHAFT	1-41, 1-43, 1-45, 1-47
752186-0008 ..	SHAFT	1-55, 1-57, 1-59
752186-0009 ..	SHAFT	1-55, 1-57, 1-59
752186-0012 ..	SHAFT	1-55, 1-57, 1-59
752186-0013 ..	SHAFT	1-55, 1-57, 1-59
752186-0014 ..	SHAFT	1-35, 1-37, 1-39
752186-0015 ..	SHAFT	1-35, 1-37, 1-39, 1-41, 1-43, 1-45, 1-47
752186-0016 ..	SHAFT	1-11, 1-13, 1-35, 1-37, 1-39
752186-0019 ..	SHAFT	1-55, 1-57, 1-59
752288-0000 ..	SLEEVE	2-107
905413-0000 ..	SHAFT	3-229
905415-0000 ..	SHAFT	3-229
906254-0000 ..	ROLLER	1-119, 1-121
907136-0000 ..	HEATER	3-223
907487-0000 ..	WASHER-CURVED	3-229
907719-0000 ..	SPRING	3-229, 3-231
925998-0000 ..	DIAPHRAGM	1-23
926907-0000 ..	SCREW	1-23
926934-0000 ..	SUPPORT	1-23
927044-0000 ..	SPACER	1-23
927203-0000 ..	COVER	1-23
927252-0000 ..	COMPRESSION SPRING	1-73, 1-75, 1-77, 1-79, 1-81, 1-83, 2-137
927323-0000 ..	SPACER	2-137
927440-0000 ..	LINK	2-137
927441-0000 ..	NUT	2-137
927859-0000 ..	TOOTHED PULLY	3-187, 3-189
929284-0000 ..	ROLLER	1-29, 1-31
929286-0000 ..	SEAL	1-29, 1-31
929355-0000 ..	ROLLER TPA 330	2-155, 2-157
929372-0000 ..	PISTON	2-73
929823-0000 ..	PAPER GUIDE	3-211
929825-0000 ..	PAPER GUIDE	3-211
950351-0000 ..	SHAFT	2-73
978757-0000 ..	ROLLER 180-284ML	2-155, 2-157
978760-0000 ..	ROLLER TBA200SL	2-155, 2-157
979434-0000 ..	FERRULE	1-23
979813-0000 ..	PLUG	1-73, 1-75, 1-77, 1-79, 1-81, 1-83
979931-0000 ..	VOLUME BULGE	2-47, 2-49, 2-51, 2-53, 4-35, 4-37, 4-39, 4-41
1020142-0002 .	RAIL HOLDER, B55 WIDTH 30 MM	3-141, 3-143, 3-145, 3-147
1020146-0000 .	LOCKING BLOCK REPL BY 1020290-101	3-141, 3-143, 3-145, 3-147
1020637-0000 .	HOLDER	3-175, 3-177
1035828-0000 .	VOLUME BULGE	2-7, 2-9, 2-11, 2-15, 2-17, 2-19
1035831-0000 .	VOLUME SHIM	1-73, 1-75, 1-77, 1-79, 1-81, 1-83, 2-7, 2-9, 2-11, 2-15, 2-17, 2-19
1035871-0000 .	SCREW	2-93, 2-95, 2-97
1036278-0000 .	SLEEVE	2-107
1036279-0000 .	PLUNGER	2-107
1036343-0000 .	SCREW	2-65, 2-67, 2-109, 2-111
1036389-0000 .	LID	2-125, 2-127, 2-129
1036483-0000 .	SEAL	2-3
1036494-0000 .	GUIDE BUSHING	2-93, 2-95, 2-97
1036495-0000 .	BUSHING	2-85, 2-87, 2-89, 2-125, 2-127, 2-129
1036584-0000 .	WASHER	2-75, 2-77, 2-79, 2-117, 2-119, 2-121
1036585-0000 .	EAR	2-85, 2-87, 2-89, 2-125, 2-127, 2-129
1036622-0000 .	GUIDE ROLLER	1-127
1036623-0000 .	GUIDE ROLLER	1-127
1036664-0000 .	LID	2-85, 2-87, 2-89
1036673-0000 .	WASHER	1-67, 1-69, 2-161, 2-163, 2-165
1036674-0000 .	FASTENING PLATE	2-161, 2-163, 2-165
1036685-0000 .	BRACKET	2-161, 2-163, 2-165
1036954-0000 .	AXLE SUPPORT	1-29, 1-31
1036955-0000 .	AXLE SUPPORT	1-29, 1-31
1037254-0000 .	SHIM	1-73, 1-75, 1-77, 1-79, 1-81, 1-83, 2-3
1037733-0000 .	VOLUME BULGE	2-7, 2-9, 2-11, 2-15, 2-17, 2-19
1037734-0000 .	WEDGE	2-7, 2-9, 2-11, 2-15, 2-17, 2-19, 2-59, 4-43
1037735-0000 .	VOLUME SHIM	1-73, 1-75, 1-77, 1-79, 1-81, 1-83, 2-7, 2-9, 2-11, 2-15, 2-17, 2-19
1037885-0000 .	REAMED BOLT	1-29, 1-31
1038240-0000 .	SPACER	2-73
1038576-0000 .	AXLE SUPPORT	1-29, 1-31
1038637-0000 .	WEDGE	2-7, 2-9, 2-11, 2-15, 2-17, 2-19
1038638-0000 .	VOLUME BULGE	2-7, 2-9, 2-11, 2-15, 2-17, 2-19
1038639-0000 .	VOLUME SHIM	2-7, 2-9, 2-11, 2-15, 2-17, 2-19
1040753-0000 .	VOLUME FLAP	2-7, 2-9, 2-11, 2-15, 2-17, 2-19
1040754-0000 .	VOLUME BULGE	2-7, 2-9, 2-11, 2-15, 2-17, 2-19
1040755-0000 .	VOLUME SHIM	1-73, 1-75, 1-77, 1-79, 1-81, 1-83, 2-7, 2-9, 2-11, 2-15, 2-17, 2-19
1040756-0000 .	WEDGE	2-7, 2-9, 2-11, 2-15, 2-17, 2-19
1086889-0000 .	COVER	3-175, 3-177
1110083-0002 .	DOLLY	1-73, 1-75, 1-77, 1-79, 1-81, 1-83, 2-93, 2-95, 2-97
1110930-0000 .	INDUCTOR	1-73, 1-75, 1-77, 1-79, 1-81, 1-83, 2-75, 2-77, 2-79, 2-117, 2-119, 2-121
1110931-0000 .	INDUCTOR	1-73, 1-75, 1-77, 1-79, 1-81, 1-83, 2-75, 2-77, 2-79, 2-117, 2-119, 2-121

Part No	Description	Page No
1110932-0000	.INDUCTOR	1-73, 1-75, 1-77, 1-79, 1-81, 1-83, 2-75, 2-77, 2-79, 2-117, 2-119, 2-121
1110934-0000	.INDUCTOR	1-73, 1-75, 1-77, 1-79, 1-81, 1-83, 2-75, 2-77, 2-79, 2-117, 2-119, 2-121
1110936-0000	.INDUCTOR	1-73, 1-75, 1-77, 1-79, 1-81, 1-83, 2-75, 2-77, 2-79, 2-117, 2-119, 2-121
1110937-0000	.INDUCTOR	1-73, 1-75, 1-77, 1-79, 1-81, 1-83, 2-75, 2-77, 2-79, 2-117, 2-119, 2-121
1110938-0000	.INDUCTOR	1-73, 1-75, 1-77, 1-79, 1-81, 1-83, 2-75, 2-77, 2-79, 2-117, 2-119, 2-121
1129431-0000	.WASHER	1-29, 1-31
1129552-0000	.KNOB	2-65, 2-67, 2-109, 2-111
1129833-0000	.GUIDE ROLLER	2-65, 2-67, 2-109, 2-111
1140077-0000	.RING	1-91
1140889-0000	.BUSBAR	3-275
1143215-0000	.SPRING	2-23, 2-25, 2-35, 2-37
1143216-0000	.SPRING	2-23, 2-25, 2-35, 2-37
1143530-0000	.SPRING	3-129, 3-131, 3-133, 3-135
1144264-0000	.HUB	3-49, 3-51, 3-99, 3-101, 3-103
1144312-0000	.AXLE PIN	3-49, 3-51, 3-99, 3-101, 3-103
1144324-0300	.FRAMEWORK	3-5
1144329-0300	.PULL-DOWN DEVICE	3-5
1144331-0300	.PRESSURE DEVICE	3-5
1144335-0000	.ROLLER	3-49, 3-51, 3-99, 3-101, 3-103
1144354-0000	.WASHER	3-49, 3-51, 3-99, 3-101, 3-103
1144356-0000	.COVER	3-49, 3-51, 3-99, 3-101, 3-103
1144417-0000	.BUSHING	3-49, 3-51, 3-99, 3-101, 3-103
1144468-0000	.BEARING HOUSING	3-187, 3-189
1144470-0000	.SHAFT	3-183, 3-187, 3-189
1144472-0000	.LEVER	3-111, 3-113
1144473-0000	.LEVER	3-111, 3-113
1144475-0000	.BRACKET	3-111, 3-113
1144476-0000	.BRACKET	3-111, 3-113
1144482-0000	.SUPPORT	3-129, 3-131, 3-133, 3-135
1144483-0000	.PLATE	3-129, 3-131, 3-133, 3-135
1144485-0000	.SUPPORT	3-129, 3-131, 3-133, 3-135
1144486-0000	.CAM	3-129, 3-131, 3-133, 3-135
1144488-0000	.COLUMN	3-129, 3-131, 3-133, 3-135
1144489-0000	.FLANGE	3-129, 3-131, 3-133, 3-135
1144492-0000	.SPRING	3-129, 3-131, 3-133, 3-135
1144493-0000	.WASHER	3-129, 3-131, 3-133, 3-135
1144494-0000	.AXLE PIN	3-129, 3-131, 3-133, 3-135
1144495-0000	.ECCENTRIC	3-129, 3-131, 3-133, 3-135
1144496-0000	.ECCENTRIC	3-129, 3-131, 3-133, 3-135
1144498-0000	.FLANGE	3-129, 3-131, 3-133, 3-135
1144500-0000	.SUPPORT	3-129, 3-131, 3-133, 3-135
1144501-0000	.SPACER	3-129, 3-131, 3-133, 3-135
1144502-0000	.WASHER	3-129, 3-131, 3-133, 3-135
1144503-0000	.FLANGE	3-129, 3-131, 3-133, 3-135
1144505-0000	.COLUMN	3-129, 3-131, 3-133, 3-135
1144506-0000	.LEVER	3-129, 3-131, 3-133, 3-135
1144507-0000	.BUSHING	3-129, 3-131, 3-133, 3-135
1144508-0000	.AXLE PIN	3-129, 3-131, 3-133, 3-135
1144511-0000	.SHIM	3-129, 3-131, 3-133, 3-135
1144514-0000	.BUSHING	3-129, 3-131, 3-133, 3-135
1144515-0000	.INSERT	3-129, 3-131, 3-133, 3-135
1144517-0000	.BUSHING	3-129, 3-131, 3-133, 3-135
1144520-0000	.ROLLER	3-129, 3-131, 3-133, 3-135
1144521-0000	.CLAMP	3-129, 3-131, 3-133, 3-135
1144552-0000	.PLATE	3-137, 3-139
1144555-0000	.STUD SCREW	3-27, 3-29, 3-37, 3-39, 3-41, 3-83, 3-85, 3-87
1144566-0000	.FLANGE	3-111, 3-113
1144577-0000	.BLOCK	3-195
1144579-0000	.AXLE	3-195
1144581-0000	.ROLLER	3-183, 3-187, 3-189
1144593-0000	.PLATE	3-183, 3-187, 3-189
1144595-0000	.ECCENTRIC SHAFT	3-183, 3-187, 3-189
1144596-0000	.PLUG	3-183, 3-187, 3-189
1144597-0000	.SPACER	3-183, 3-187, 3-189
1144598-0000	.SHAFT	3-187, 3-189
1144601-0000	.GUIDE STUD	2-23, 2-25, 2-35, 2-37, 2-47, 2-49, 2-51, 2-53, 4-35, 4-37, 4-39, 4-41
1144618-0000	.FLANGE	3-109
1144619-0000	.SHAFT	3-183, 3-187, 3-189
1144620-0000	.WASHER	3-109, 3-303
1144621-0000	.PLATE	3-9, 3-11, 3-13, 3-15, 3-17, 3-63, 3-65, 3-67, 3-69, 3-71
1144625-0000	.SPACER	3-183, 3-187, 3-189
1144645-0200	.PROTECTIVE COVER	3-183, 3-187
1144662-0000	.BUSHING	3-155, 3-157, 3-159
1144665-0000	.SEAL RING	3-109
1144667-0000	.HINGE	3-185, 3-191
1144668-0000	.HINGE	3-185, 3-191
1144669-0000	.PIN	3-185, 3-191
1144678-0000	.SHAFT	3-111, 3-113
1144681-0000	.WASHER	3-111, 3-113, 3-303
1144683-0000	.AXLE PIN	3-111, 3-113
1144684-0000	.SPACER	3-111, 3-113
1144685-0000	.SCREW	3-111, 3-113
1144686-0000	.TIE ROD	3-111, 3-113
1144687-0000	.TIE ROD	3-111, 3-113

Part No	Description	Page No
1144688-0000	.SCREW	3-111, 3-113
1144719-0000	.RAIL	3-37, 3-39, 3-41
1144760-0000	.PLATE	3-183, 3-187
1144783-0000	.TIMING BELT	3-9, 3-11, 3-13, 3-15, 3-17, 3-57, 3-59
1144784-0000	.TOOTHED PULLEY	3-183
1144788-0000	.TOOTHED PULLEY	3-183
1144794-0000	.SUPPORT	3-183, 3-187, 3-189
1144797-0000	.SUPPORT	3-109
1144802-0000	.PULLEY	1-95
1144839-0000	.BLOCK	3-109
1144841-0000	.TIMING BELT	3-183, 3-187, 3-189
1144892-0000	.GUIDE RIGHT	3-27, 3-29, 3-83, 3-85, 3-87
1144893-0000	.GUIDE LEFT	3-27, 3-29, 3-83, 3-85, 3-87
1144897-0000	.FOLDING BAR	3-37, 3-39, 3-41
1144898-0000	.FOLDING BAR	3-37, 3-39, 3-41
1144899-0000	.SUPPORT	3-137, 3-139
1144900-0000	.SUPPORT	3-109
1144901-0000	.GUIDE	3-21, 3-23, 3-25
1144902-0000	.SUPPORT	3-21, 3-23, 3-25, 3-75, 3-77, 3-79, 3-81
1144905-0000	.SUPPORT	3-27, 3-29
1144914-0000	.LEVER	3-129, 3-131, 3-133, 3-135
1144915-0000	.LEVER	3-129, 3-131, 3-133, 3-135
1144916-0000	.ADJUSTING SCREW	3-129, 3-131, 3-133, 3-135
1144918-0000	.PLATE	3-9, 3-11, 3-13, 3-15, 3-17, 3-57, 3-59
1144919-0000	.CARRIER	3-9, 3-11, 3-13, 3-15, 3-17, 3-57, 3-59
1144924-0000	.BOTTOM	3-49, 3-51
1144926-0000	.FLAP	3-49, 3-51
1144927-0000	.FLAP	3-49, 3-51
1144928-0000	.PUSHER	3-129, 3-131, 3-133, 3-135
1144932-0000	.PLATE	3-129, 3-131, 3-133, 3-135
1144933-0000	.BLOCK	3-111, 3-113
1144941-0000	.COVERING PLATE	3-21, 3-23, 3-25, 3-75, 3-77, 3-79, 3-81
1144943-0000	.SPACER	3-171, 3-173
1144974-0000	.ADJUSTING PLATE	3-21, 3-23, 3-25, 3-75, 3-77, 3-79, 3-81
1144975-0000	.ATTACHMENT PLATE	3-21, 3-23, 3-25, 3-75, 3-77, 3-79, 3-81
1144976-0000	.STOP SCREW	3-21, 3-23, 3-25, 3-75, 3-77, 3-79, 3-81
1144978-0000	.CAM	3-129, 3-131, 3-133, 3-135
1144979-0000	.WASHER	3-21, 3-23, 3-25, 3-75, 3-77, 3-79, 3-81
1144990-0000	.FOLDING BAR	3-37, 3-39, 3-41
1195397-0000	.COMPRESSION SPRING	1-23
1254109-0000	.BRACKET	2-161, 2-163, 2-165
1254110-0000	.BRACKET	2-161, 2-163, 2-165
1254111-0000	.BRACKET	2-161, 2-163, 2-165
1255389-0000	.BUSHING	2-93, 2-95, 2-97
1255390-0000	.BUSHING	2-93, 2-95, 2-97
1255457-0000	.CARRIER RULER	2-103, 2-105
1255458-0000	.CARRIER RULER	2-103, 2-105
1255459-0000	.CARRIER RULER	2-103, 2-105
1255460-0000	.CARRIER RULER	2-103, 2-105
1255461-0000	.CARRIER RULER	2-133, 2-135
1255462-0000	.CARRIER RULER	2-133, 2-135
1255463-0000	.CARRIER RULER	2-133, 2-135
1255464-0000	.CARRIER RULER	2-133, 2-135
1255540-0000	.WASHER	2-137
1255541-0000	.BUSHING	2-7, 2-9, 2-11, 2-15, 2-17, 2-19
1255916-0000	.BUSHING	2-57, 2-63
1260328-0000	.SPRING	2-73
1260659-0000	.SPRING	1-73, 1-75, 1-77, 1-79, 1-81, 1-83, 2-137
1260700-0000	.BLOCK	3-111, 3-113
1260701-0000	.PUSHER	3-129, 3-131, 3-133, 3-135
1260702-0000	.PLATE	3-129, 3-131, 3-133, 3-135
1260703-0000	.BOTTOM	3-49, 3-51
1260704-0000	.FLAP	3-49, 3-51, 3-99, 3-101, 3-103
1260705-0000	.FLAP	3-49, 3-51
1260709-0000	.GUIDE UPPER R	3-27, 3-29
1260710-0000	.GUIDE UPPER L	3-27, 3-29
1260714-0000	.SPACER	3-7
1260824-0000	.SPACER RING	3-111, 3-113
1260832-0000	.WASHER	3-165
1260851-0000	.AXLE PIN	3-155, 3-157, 3-159
1260852-0000	.WASHER	3-155, 3-157, 3-159
1260853-0000	.RING	3-155, 3-157, 3-159
1260885-0000	.FLAP	3-49, 3-51
1260886-0000	.FLAP	3-49, 3-51
1260887-0000	.BLOCK	3-111, 3-113
1260888-0000	.BLOCK	3-129, 3-131, 3-133, 3-135
1260889-0000	.PUSHER	3-129, 3-131, 3-133, 3-135
1260894-0000	.PROTECTION	3-185
1260895-0000	.SPRING	3-129, 3-131, 3-133, 3-135
1260931-0000	.SCREW	3-109
1260941-0000	.SLIDE	3-183
1260944-0000	.BUSHING	3-111, 3-113
1279409-0000	.PLATE	3-9, 3-11, 3-13, 3-15, 3-17, 3-63, 3-65, 3-67, 3-69, 3-71, 4-27, 4-29, 4-31, 4-33
1279559-0000	.ARM	3-49, 3-51, 3-99, 3-101, 3-103

Part No	Description	Page No
1279573-0000	.SLIDE RAIL U	3-171, 3-173, 3-199
1279582-0000	.RAIL	3-141, 3-143, 3-145, 3-147
1279585-0000	.SUPPORT	3-171, 3-173
1279586-0000	.SUPPORT	3-171, 3-173
1279587-0000	.SLIDE RAIL U	3-171, 3-173
1279670-0000	.SPACER	3-7
1279688-0000	.SUPPORT	3-183, 3-187, 3-189
1279689-0000	.ACTIVATOR	3-187, 3-189
1282287-0000	.CARRIER	3-9, 3-11, 3-13, 3-15, 3-17, 3-57, 3-59
1282290-0000	.GUIDE	3-9, 3-11, 3-13, 3-15, 3-17, 3-57, 3-59
1282291-0000	.GUIDE	3-9, 3-11, 3-13, 3-15, 3-17, 3-57, 3-59
1282294-0000	.FOLDING BAR	3-37, 3-39, 3-41
1282295-0000	.FOLDING BAR	3-37, 3-39, 3-41
1282335-0000	.FLANGE	3-165
1282343-0000	.BLOCK	3-165
1282345-0000	.SPRING	3-165
1282681-0000	.TOOTHED PULLEY	3-187, 3-189
1282705-0000	.SUPPORT	3-27, 3-29, 3-83, 3-85, 3-87
1282708-0000	.BUSHING	3-49, 3-51, 3-99, 3-101, 3-103, 3-115, 3-117
1282844-0000	.SUPPORT	3-109
1282848-0000	.CARRIER	3-9, 3-11, 3-13, 3-15, 3-17, 3-57, 3-59
1282864-0000	.SPRING	3-155, 3-157, 3-159
1285009-0000	.HOLDER	3-141, 3-143, 3-145, 3-147
1285010-0000	.HOLDER	3-175, 3-177
1285012-0300	.FOLDING PART	3-5
1285014-0000	.DISTRIBUTOR	3-21, 3-23, 3-25, 3-75, 3-77, 3-79, 3-81
1285022-0000	.SIDE PLATE	3-195, 3-197, 4-25
1285023-0000	.SIDE PLATE	3-195, 3-197, 4-25
1285253-0000	.SPACER	3-141, 3-143, 3-145, 3-147
1285254-0000	.WASHER	3-155, 3-157, 3-159
1285258-0000	.RAIL	3-141, 3-143, 3-145, 3-147
1285265-0000	.PLATE	3-171, 3-173
1285266-0000	.SPACER	3-171, 3-173
1285267-0000	.SUPPORT	3-27, 3-29, 3-83, 3-85, 3-87
1285291-0000	.PLATE	4-23
1285293-0000	.HEATING PIPE	4-19
1285299-0000	.BRACKET	3-21, 3-23, 3-25, 3-75, 3-77, 3-79, 3-81
1285306-0000	.SPACER	3-171, 3-173
1285307-0000	.SPACER	4-19
1285308-0000	.GASKET	4-19
1285310-0000	.EXTENSION	3-119, 3-121, 3-123, 3-125, 3-127
1285311-0000	.PLATE	4-19
1285312-0000	.GASKET	4-19
1285870-0000	.EXTENSION	3-119, 3-121, 3-123, 3-125, 3-127
1285874-0000	.SPACER	3-119, 3-121, 3-123, 3-125, 3-127
1285955-0000	.PLATE	3-187, 3-189
1285956-0000	.BLOCK	3-187, 3-189
1296066-0000	.NOZZLE	3-119, 3-121, 3-123, 3-125, 3-127
1296067-0000	.NOZZLE	3-119, 3-121, 3-123, 3-125, 3-127
1296068-0000	.NOZZLE	3-119, 3-121, 3-123, 3-125, 3-127
1296070-0000	.HEATING PIPE	4-19
1296072-0000	.EXTENSION	3-119, 3-121, 3-123, 3-125, 3-127
1296079-0000	.RAIL	3-141, 3-143, 3-145, 3-147
1296081-0000	.PLATE	3-171, 3-173, 3-199
1296153-0000	.GUIDE	3-119, 3-121, 3-123, 3-125, 3-127
1296176-0000	.SPRING	3-155, 3-157, 3-159
1296180-0000	.FOLDING DEVICE	3-115, 3-117
1296181-0000	.FOLDING DEVICE	3-115, 3-117
1296387-0000	.NOZZLE	3-119, 3-121, 3-123, 3-125, 3-127
1296969-0000	.SCREW HOLDER	3-49, 3-51, 3-99, 3-101, 3-103
1296970-0000	.SCREW BUSHING	3-49, 3-51, 3-99, 3-101, 3-103
1317042-0000	.RAIL	3-37, 3-39, 3-41
1317043-0000	.SUPPORT	3-37, 3-39, 3-41, 3-89, 3-91
1317047-0000	.RAIL	3-37, 3-39, 3-41
1317085-0000	.NUT	3-119, 3-121, 3-123, 3-125, 3-127
1317088-0000	.SPACER	3-27, 3-29, 3-37, 3-39, 3-41
1317211-0000	.COVERING PLATE	3-21, 3-23, 3-25, 3-75, 3-77, 3-79, 3-81
1317213-0000	.ADJUSTING PLATE	3-21, 3-23, 3-25, 3-75, 3-77, 3-79, 3-81
1317216-0000	.FOLDING BAR	3-37, 3-39, 3-41
1317217-0000	.FOLDING BAR	3-37, 3-39, 3-41
1317218-0000	.SPACER	3-7, 3-53, 3-55, 3-141, 3-143, 3-145, 3-147
1317362-0000	.SHAFT	3-129, 3-131, 3-133, 3-135
1317363-0000	.SHAFT	3-129, 3-131, 3-133, 3-135
1317438-0000	.FORK	1-17, 1-19, 1-21
1317439-0000	.CATCH	2-35, 2-37
1317440-0000	.STOP PIN	2-23, 2-25, 2-35, 2-37
1317475-0000	.BRACKET	1-67, 1-69
1317476-0000	.BRACKET	1-67, 1-69
1317554-0000	.FLAP	3-49, 3-51
1317555-0000	.FLAP	3-49, 3-51
1317556-0000	.BOTTOM	3-49, 3-51
1317633-0000	.SPRING	3-21, 3-23, 3-25
1317650-0000	.GUIDE	3-9, 3-11, 3-13, 3-15, 3-17
1317651-0000	.GUIDE	3-9, 3-11, 3-13, 3-15, 3-17

Part No	Description	Page No
1317652-0000	.FOLDING BAR	3-37, 3-39, 3-41
1317653-0000	.FOLDING BAR	3-37, 3-39, 3-41
1317654-0000	.PUSHER	3-129, 3-131, 3-133, 3-135
1317655-0000	.PLATE	3-129, 3-131, 3-133, 3-135
1317656-0000	.INSERT	3-49, 3-51
1317711-0000	.SHAFT	1-127
1317712-0000	.SHAFT	1-127
1317740-0000	.RUBBER SLEEVE	2-23, 2-25, 2-35, 2-37
1317741-0000	.CATCH	2-23, 2-25
1317742-0000	.CANTILEVER	2-23, 2-25, 2-35, 2-37
1317787-0000	.CATCH	3-129, 3-131, 3-133, 3-135
1317789-0000	.BLOCK	3-111, 3-113
1317801-0000	.NOZZLE	3-119, 3-121, 3-123, 3-125, 3-127
1317802-0000	.NOZZLE	3-119, 3-121, 3-123, 3-125, 3-127
1317803-0000	.NOZZLE	3-119, 3-121, 3-123, 3-125, 3-127
1317804-0000	.SPACER	3-119, 3-121, 3-123, 3-125, 3-127
1317805-0000	.BAR	3-9, 3-11, 3-13, 3-15, 3-17, 3-63, 3-65, 4-31, 4-33
1317823-0000	.CANTILEVER	2-23, 2-25, 2-35, 2-37
1317824-0000	.CATCH	2-23, 2-25, 2-35, 2-37
1334012-0000	.GUIDE UPPER L	3-27, 3-29
1334013-0000	.GUIDE UPPER R	3-27, 3-29
1334018-0000	.SHIM	3-111, 3-113
1334081-0000	.CURVE	2-141, 2-143, 2-145
1334113-0000	.HOLDER	3-141, 3-143, 3-145, 3-147
1334271-0000	.BAR	3-9, 3-11, 3-13, 3-15, 3-17, 3-67, 3-69, 3-71, 4-27, 4-29
1334328-0000	.SPACER	3-111, 3-113
1334447-0000	.SPACER	3-27, 3-29, 3-83, 3-85, 3-87
1334480-0000	.SUPPORT	3-21, 3-23, 3-25, 3-75, 3-77, 3-79, 3-81
1334523-0000	.SUPPORT	3-27, 3-29
1334559-0000	.GUIDE UPPER R	3-27, 3-29, 3-83, 3-85, 3-87
1334560-0000	.GUIDE UPPER L	3-27, 3-29, 3-83, 3-85, 3-87
1334561-0000	.SLIDE	3-9, 3-11, 3-13, 3-15, 3-17
1334562-0000	.SLIDE	3-9, 3-11, 3-13, 3-15, 3-17
1334632-0000	.SPACER	3-119, 3-121, 3-123, 3-125, 3-127
1334633-0200	.VOLUME FLAP CUTTING	2-5
1334634-0200	.VOLUME FLAP PRESSURE	2-5
1334635-0200	.SHOCK ABSORBER	2-5
1334636-0200	.SHOCK ABSORBER	2-5
1334718-0000	.SPACER	3-37, 3-39, 3-41
1334856-0000	.COUNTER ROLLER	1-35, 1-37, 1-39
1334910-0000	.BRACKET	2-161, 2-163, 2-165
1334999-0000	.PUSHER	3-129, 3-131, 3-133, 3-135
1338941-0000	.BOTTOM	3-99, 3-101, 3-103
1346149-0000	.FOLDING BAR	3-37, 3-39, 3-41
1346150-0000	.FOLDING BAR	3-37, 3-39, 3-41
1346153-0000	.STOP PIN	2-23, 2-25, 2-35, 2-37
1346157-0000	.VOLUME BULGE	2-7, 2-9, 2-11, 2-15, 2-17, 2-19
1346158-0000	.VOLUME SHIM	1-73, 1-75, 1-77, 1-79, 1-81, 1-83, 2-7, 2-9, 2-11, 2-15, 2-17, 2-19
1346340-0000	.BRACKET	3-27, 3-29, 3-83, 3-85, 3-87
1346343-0000	.RAIL	3-37, 3-39, 3-41, 3-89, 3-91
1346344-0000	.RAIL	3-37, 3-39, 3-41, 3-89, 3-91
1346471-0000	.WEDGE	3-9, 3-11, 3-13, 3-15, 3-17, 3-57, 3-59
1346539-0000	.CONNECTING ROD	3-129, 3-131, 3-133, 3-135
1346580-0000	.NOZZLE	3-119, 3-121, 3-123, 3-125, 3-127
1346581-0000	.NOZZLE	3-119, 3-121, 3-123, 3-125, 3-127
1346588-0000	.DRIP PLATE	3-137, 3-139
1346641-0000	.SPACER	3-119, 3-121, 3-123, 3-125, 3-127
1346642-0000	.SPACER	3-119, 3-121, 3-123, 3-125, 3-127
1346643-0000	.NOZZLE	3-119, 3-121, 3-123, 3-125, 3-127
1346644-0000	.NOZZLE	3-119, 3-121, 3-123, 3-125, 3-127
1346646-0000	.EXTENSION	3-119, 3-121, 3-123, 3-125, 3-127
1346678-0000	.NOZZLE	3-119, 3-121, 3-123, 3-125, 3-127
1346679-0000	.NOZZLE	3-119, 3-121, 3-123, 3-125, 3-127
1346736-0000	.WEDGE	3-9, 3-11, 3-13, 3-15, 3-17, 3-57, 3-59
1346739-0000	.GUIDE	3-141, 3-143, 3-145, 3-147
1347018-0000	.PLUG	3-129, 3-131, 3-133, 3-135
1347057-0000	.GUIDE	3-21, 3-23, 3-25, 3-75, 3-77, 3-79, 3-81
1347108-0000	.PLATE	3-109
1347109-0000	.PLATE	3-109
1347410-0000	.ACTIVATOR	3-183
1347495-0000	.AXLE PIN	3-115, 3-117
1347496-0000	.SCREW	3-115, 3-117
1347526-0000	.BRACKET	2-23, 2-25, 2-35, 2-37
1347600-0000	.SUPPORT	3-115, 3-117
1347699-0000	.PLATE	3-183
1347952-0002	.SPACER	3-285
1347952-0003	.SPACER	3-249
1347952-0004	.SPACER	3-285
1347952-0006	.SPACER	3-285
1347952-0008	.SPACER	3-289
1347952-0010	.SPACER	3-289
1347952-0011	.SPACER	3-289
1347952-0015	.SPACER	3-289
1347952-0016	.SPACER	3-289

Part No	Description	Page No
1347952-0017	.SPACER	3-285
1348041-0000	.SPACER	3-27, 3-29
1348042-0000	.SPACER	3-37, 3-39, 3-41
1348043-0000	.SPACER	3-119, 3-121, 3-123, 3-125, 3-127
1348047-0000	.FORK	1-17, 1-19, 1-21
1348048-0000	.FORK	1-17, 1-19, 1-21
1348049-0000	.FORK	1-17, 1-19, 1-21
1348056-0300	.FOLDING PART	3-111, 3-113
1348132-0000	.SLIDE	3-9, 3-11, 3-13, 3-15, 3-17
1348133-0000	.SLIDE	3-9, 3-11, 3-13, 3-15, 3-17, 3-63, 3-65, 4-31, 4-33
1348134-0000	.SLIDE	3-9, 3-11, 3-13, 3-15, 3-17
1348135-0000	.SLIDE	3-9, 3-11, 3-13, 3-15, 3-17, 3-63, 3-65, 4-31, 4-33
1348136-0000	.SLIDE	3-9, 3-11, 3-13, 3-15, 3-17, 3-63, 3-65, 4-31, 4-33
1348138-0000	.SLIDE	3-9, 3-11, 3-13, 3-15, 3-17
1348139-0000	.SLIDE	3-9, 3-11, 3-13, 3-15, 3-17, 3-67, 3-69, 3-71, 4-27, 4-29
1348140-0000	.SLIDE	3-9, 3-11, 3-13, 3-15, 3-17
1348141-0000	.SLIDE	3-9, 3-11, 3-13, 3-15, 3-17, 3-67, 3-69, 3-71, 4-27, 4-29
1348142-0000	.SLIDE	3-9, 3-11, 3-13, 3-15, 3-17, 3-67, 3-69, 3-71, 4-27, 4-29
1348144-0000	.BAR	3-9, 3-11, 3-13, 3-15, 3-17, 3-63, 3-65, 4-31, 4-33
1348145-0000	.BAR	3-9, 3-11, 3-13, 3-15, 3-17
1348146-0000	.BAR	3-9, 3-11, 3-13, 3-15, 3-17
1348147-0000	.BAR	3-9, 3-11, 3-13, 3-15, 3-17, 3-63, 3-65, 4-31, 4-33
1348148-0000	.BAR	3-9, 3-11, 3-13, 3-15, 3-17, 3-63, 3-65, 4-31, 4-33
1348150-0000	.BAR	3-9, 3-11, 3-13, 3-15, 3-17, 3-67, 3-69, 3-71, 4-27, 4-29
1348151-0000	.BAR	3-9, 3-11, 3-13, 3-15, 3-17
1348152-0000	.BAR	3-9, 3-11, 3-13, 3-15, 3-17
1348153-0000	.BAR	3-9, 3-11, 3-13, 3-15, 3-17, 3-67, 3-69, 3-71, 4-27, 4-29
1348154-0000	.BAR	3-9, 3-11, 3-13, 3-15, 3-17, 3-67, 3-69, 3-71, 4-27, 4-29
1348169-0000	.PLATE	3-9, 3-11, 3-13, 3-15, 3-17, 3-63, 3-65, 3-67, 3-69, 3-71, 4-27, 4-29, 4-31, 4-33
1348359-0000	.BRACKET	1-67, 1-69
1348483-0000	.SPRING RIGHT	2-23, 2-25, 2-35, 2-37, 2-47, 2-49, 2-51, 2-53, 4-35, 4-37, 4-39, 4-41
1348484-0000	.SPRING LEFT	2-23, 2-25, 2-35, 2-37, 2-47, 2-49, 2-51, 2-53, 4-35, 4-37, 4-39, 4-41
1348504-0000	.SLEEVE	2-73
1348537-0000	.TIMING BELT	3-129, 3-131, 3-133, 3-135
1348538-0000	.LEVER	3-155, 3-157, 3-159
1348540-0000	.PIVOT AXLE	3-155, 3-157, 3-159
1348545-0000	.RAIL	2-75, 2-77, 2-79
1348546-0000	.RAIL	2-117, 2-119, 2-121
1348631-0000	.PLATE	3-155, 3-157, 3-159
1348808-0000	.CURVE	2-141, 2-143, 2-145
1348809-0000	.CURVE	2-141, 2-143, 2-145
1348854-0000	.PLATE	3-195, 3-197
1348920-0000	.CRADLE	3-195
1348921-0000	.TOOTHED PULLEY	3-183
1348922-0000	.TOOTHED PULLEY	3-183
1348955-0000	.KNIFE	1-73, 1-75, 1-77, 1-79, 1-81, 1-83, 2-137
1348956-0000	.KNIFE	1-73, 1-75, 1-77, 1-79, 1-81, 1-83, 2-137
1348957-0000	.BRACKET	3-187
1348963-0000	.SLIDE	3-187
1348966-0000	.KNIFE	1-73, 1-75, 1-77, 1-79, 1-81, 1-83, 2-137
1349017-0000	.PLATE	3-195, 3-197
1349087-0000	.DISTRIBUTOR	3-21, 3-23, 3-25, 3-75, 3-77, 3-79, 3-81
1349152-0000	.TIMING BELT	3-9, 3-11, 3-13, 3-15, 3-17, 3-57, 3-59
1349160-0000	.SPACER	3-163, 3-193
1349208-0000	.VOLUME SHIM	1-73, 1-75, 1-77, 1-79, 1-81, 1-83, 2-7, 2-9, 2-11, 2-15, 2-17, 2-19
1349319-0000	.CANTILEVER	2-23, 2-25, 2-35, 2-37
1349320-0000	.CATCH	2-23, 2-25, 2-35, 2-37
1349516-0000	.SHAFT	3-129, 3-131, 3-133, 3-135
1349517-0000	.TOOTHED PULLEY	3-129, 3-131, 3-133, 3-135
1349518-0000	.SUPPORT	3-129, 3-131, 3-133, 3-135
1349519-0000	.ACTIVATOR	3-129, 3-131, 3-133, 3-135
1349584-0000	.BUSHING	2-75, 2-77, 2-79, 2-93, 2-95, 2-97, 2-117, 2-119, 2-121
1349595-0000	.SLEEVE	2-73
1349596-0000	.CUTTING JAW	2-93, 2-95, 2-97
1349599-0000	.HOLDER	2-75, 2-77, 2-79, 2-117, 2-119, 2-121
1349612-0000	.PISTON	2-73
1349741-0000	.CURVE	2-141, 2-143, 2-145
1349744-0000	.VOLUME CAM	2-141, 2-143, 2-145
1349806-0000	.GUIDE	3-141, 3-143, 3-145, 3-147
1349851-0000	.ROLL	1-35, 1-37, 1-39
1349916-0000	.CLAMP	3-223
1349925-0000	.PLATE	2-93, 2-95, 2-97
1349980-0000	.SHAFT	2-75, 2-77, 2-79, 2-93, 2-95, 2-97, 2-117, 2-119, 2-121
1349985-0000	.SPRING	3-155, 3-157, 3-159
1350263-0000	.SPRING RIGHT	2-23, 2-25, 2-35, 2-37, 2-47, 2-49, 2-51, 2-53, 4-35, 4-37, 4-39, 4-41
1350264-0000	.SPRING LEFT	2-23, 2-25, 2-35, 2-37, 2-47, 2-49, 2-51, 2-53, 4-35, 4-37, 4-39, 4-41
1350421-0000	.NOZZLE	3-119, 3-121, 3-123, 3-125, 3-127
1350422-0000	.NOZZLE	3-119, 3-121, 3-123, 3-125, 3-127
1350423-0000	.FOLDING BAR	3-27, 3-29, 3-83, 3-85, 3-87
1350424-0000	.GUIDE RIGHT	3-27, 3-29, 3-83, 3-85, 3-87
1350425-0000	.GUIDE LEFT	3-27, 3-29, 3-83, 3-85, 3-87
1350440-0000	.LEVER	3-115, 3-117
1350441-0000	.SUPPORT	3-115, 3-117
1350543-0000	.AXLE PIN	3-155, 3-157, 3-159

Part No	Description	Page No
1350564-0000	.CLAMP HUB	3-165
1350721-0000	.STUD SCREW	3-27, 3-29, 3-37, 3-39, 3-41
1350785-0001	.SHIM	3-231
1350785-0002	.SHIM	3-231
1350785-0003	.SHIM	3-231
1350785-0004	.SHIM	3-231
1350808-0000	.BLOCK	3-111, 3-113
1350809-0000	.BLOCK	3-129, 3-131, 3-133, 3-135
1350810-0000	.PUSHER	3-129, 3-131, 3-133, 3-135
1359085-0000	.T-HOLDER	3-149
1359565-0000	.NUT	3-149, 3-151
1360149-0000	.SPACER	3-185, 3-191
1360318-0000	.CARRIER RULER	2-103, 2-105
1360319-0000	.CARRIER RULER	2-133, 2-135
1361547-0000	.PULLER	3-309
1361558-0100	.LIFTING KIT-WHEEL	3-3
1361559-0100	.PULLER	3-3
1361918-0300	.WHEEL	3-5
1361920-0400	.RAIL OUTFEED	3-5
1361921-0400	.VOLUME KIT OUT FEED	3-5
1361922-0200	.DROP CHUTE VARIANT	3-5
1361923-0200	.INFEED CONVEYOR VARIANT	3-5
1361934-0000	.FRAME	3-303
1361935-0100	.FRAME	3-3
1363768-0000	.BOX	3-3
1363779-0000	.BOX	1-3
1363780-0000	.CARRIER	3-303
1363790-0000	.BOX	2-3
1363791-0000	.BRACKET	3-305
1366726-0000	.HOLDER	3-149
1366727-0000	.CLAMP	3-149, 3-151
1366777-0101	.ANGLED RAIL HOLDER TPC21	3-141, 3-143, 3-145, 3-147
1478127-0000	.DRIP PLATE	3-137, 3-139
1478189-0000	.SUPPORT	3-129, 3-131, 3-133, 3-135
1478214-0000	.SLIDE	3-9, 3-11, 3-13, 3-15, 3-17
1478215-0000	.SLIDE	3-9, 3-11, 3-13, 3-15, 3-17
1478227-0000	.CARRIER	3-155, 3-157, 3-159
1478228-0000	.CAM	3-155, 3-157, 3-159
1478235-0000	.PLATE	3-141, 3-143, 3-145, 3-147
1478358-0000	.VOLUME FLAP	2-7, 2-9, 2-11, 2-15, 2-17, 2-19
1478359-0000	.ROLLER	1-151, 1-153
1478393-0000	.CATCH	2-23, 2-25, 2-35, 2-37
1478395-0000	.CATCH	2-23, 2-25, 2-35, 2-37
1478396-0000	.STOP	2-23, 2-25, 2-35, 2-37
1478417-0000	.ROLLER	3-109
1478418-0000	.AXLE BOLT	3-109
1478479-0000	.HOLDER	3-223
1478497-0000	.VOLUME CAM	2-141, 2-143, 2-145
1478558-0000	.WASHER	3-155, 3-157, 3-159
1478753-0000	.SHAFT	3-165
1478768-0100	.KNIFE	2-5
1478813-0000	.SPACER	1-23
1478814-0000	.SENSOR	1-23
1478905-0000	.FLANGE	3-165
1478925-0000	.HATCH	3-155, 3-157, 3-159
1478926-0000	.GUIDE RIGHT	3-27, 3-29, 3-83, 3-85, 3-87
1478927-0000	.GUIDE LEFT	3-27, 3-29, 3-83, 3-85, 3-87
1478928-0000	.BUSHING	3-195
1478966-0000	.LINK	2-137
1478967-0000	.WASHER	2-137
1478968-0000	.LINK	2-137
1484002-0000	.PLATE	2-93, 2-95, 2-97
1484003-0000	.PLATE	2-93, 2-95, 2-97
1484093-0000	.INSERT	4-21
1484096-0000	.COVER	4-19
1484211-0000	.WASHER	2-137
1484230-0000	.PUNCH	3-265
1484231-0000	.DIE	3-265
1484250-0000	.VOLUME CAM	2-141, 2-143, 2-145
1484251-0000	.VOLUME CAM	2-141, 2-143, 2-145
1484258-0000	.CRADLE	3-195
1484289-0000	.HATCH	3-155, 3-157, 3-159
1484379-0000	.INSERT	4-21
1484447-0000	.BALL BEARING	3-165
1484448-0000	.BEARING ROLLER	3-165
1484620-0000	.SHAFT	3-183
1484697-0000	.RAIL	1-123, 1-125
1484745-0100	.WEB GUIDE	1-117, 1-149
1484750-0000	.BRACKET	1-127
1484865-0000	.VOLUME FLAP	2-15, 2-17, 2-19
1484866-0000	.VOLUME FLAP	2-7, 2-9, 2-11
1484867-0000	.VOLUME FLAP	2-7, 2-9, 2-11
1484868-0000	.VOLUME FLAP	2-15, 2-17, 2-19
1487038-0200	.OUTFEED WHEEL	3-153

Part No	Description	Page No
1487158-0300	.FLAP HEATER VARIANT	3-5
1487159-0000	.CARRIER	3-155, 3-157, 3-159
1487177-0000	.GUIDE	3-141, 3-143, 3-145, 3-147
1487264-0000	.PLATE	3-223
1487338-0100	.SUPPORT LEVEL DETECTOR	1-3
1487504-0000	.WASHER	2-141, 2-143, 2-145
1487505-0001	.WASHER	2-141, 2-143, 2-145
1487505-0002	.WASHER	2-141, 2-143, 2-145
1487618-0000	.CUTTING JAW	2-93, 2-95, 2-97
1487619-0000	.PLATE	2-93, 2-95, 2-97
1487626-0000	.VOLUME BULGE	2-7, 2-9, 2-11, 2-15, 2-17, 2-19
1487627-0000	.VOLUME SHIM	1-73, 1-75, 1-77, 1-79, 1-81, 1-83, 2-7, 2-9, 2-11, 2-15, 2-17, 2-19
1487628-0000	.WEDGE	2-7, 2-9, 2-11, 2-15, 2-17, 2-19
1487684-0000	.RAIL	3-141, 3-143, 3-145, 3-147
1487738-0000	.FLAP	3-49, 3-51
1487739-0000	.FLAP	3-49, 3-51
1487763-0000	.SHAFT	1-119, 1-121
1487821-0000	.SPACER	3-109
1487825-0200	.RAIL	3-5
1487922-0000	.FOLDING DEVICE	3-115, 3-117
1487923-0000	.FOLDING DEVICE	3-115, 3-117
1487929-0000	.SPACER	3-7
1487943-0000	.STOPPER	2-47, 2-49, 2-51, 2-53, 4-35, 4-37, 4-39, 4-41
1487945-0000	.STOP	2-47, 2-49, 2-51, 2-53, 4-35, 4-37, 4-39, 4-41
1487946-0000	.SHAFT	2-47, 2-49, 2-51, 2-53, 4-35, 4-37, 4-39, 4-41
1487948-0000	.BUSHING	2-47, 2-49, 2-51, 2-53, 4-35, 4-37, 4-39, 4-41
1487954-0000	.CUTTING JAW	2-93, 2-95, 2-97
1487955-0000	.HOLDER	2-75, 2-77, 2-79, 2-117, 2-119, 2-121
1490031-0000	.PLATE	3-129, 3-131, 3-133, 3-135
1490032-0000	.PUSHER	3-129, 3-131, 3-133, 3-135
1490033-0000	.SLIDE	3-9, 3-11, 3-13, 3-15, 3-17
1490034-0000	.SLIDE	3-9, 3-11, 3-13, 3-15, 3-17
1490035-0000	.BAR	3-9, 3-11, 3-13, 3-15, 3-17
1490036-0000	.BAR	3-9, 3-11, 3-13, 3-15, 3-17
1490039-0000	.NOZZLE	3-119, 3-121, 3-123, 3-125, 3-127
1490112-0100	.OUTFEED CONVEYOR	3-169
1490220-0000	.ANGLE BRACKET	1-123, 1-125
1490762-0000	.ROLLER	1-29, 1-31
1490765-0000	.ROLLER	1-35, 1-37, 1-39
1494664-0000	.AXLE LINK	1-123, 1-125
1498029-0000	.PIN	3-129, 3-131, 3-133, 3-135
1498068-0000	.SEAL RING	3-183
1498113-0000	.BRACKET	3-219
1498115-0000	.BLOCK	3-215
1498130-0000	.PLATE	1-97, 1-99
1498131-0000	.BRACKET	1-97, 1-99
1498132-0000	.SHAFT	1-97, 1-99, 1-101, 1-103, 1-105
1498133-0000	.ARM	1-97, 1-99
1498134-0000	.PLATE	1-97, 1-99
1498135-0000	.ARM	1-97, 1-99
1498143-0000	.LOCKING RING	1-17, 1-19, 1-21
1498146-0000	.NOZZLE	3-119, 3-121, 3-123, 3-125, 3-127
1498147-0000	.NOZZLE	3-119, 3-121, 3-123, 3-125, 3-127
1498161-0000	.SUPPORT	3-27, 3-29
1498163-0000	.SPACER	3-119, 3-121, 3-123, 3-125, 3-127
1498303-0000	.BELT	3-247
1498347-0000	.WASHER	3-241, 3-243
1498360-0000	.HUB	3-247
1498496-0000	.GUIDE	3-215
1498526-0000	.REGULATOR BODY	1-23
1498528-0000	.TIMING BELT	3-163
1498529-0000	.TIMING BELT	3-163
1498620-0000	.PULLEY	3-163
1498621-0000	.SPRING	1-17, 1-19, 1-21
1498704-0000	.LEVER	3-227
1498790-0000	.SHAFT	1-97, 1-99
1498791-0000	.FLANGE	1-97, 1-99
1498827-0000	.FOLDING BAR	3-37, 3-39, 3-41
1498828-0000	.FOLDING BAR	3-37, 3-39, 3-41
1498849-0000	.BUSBAR	2-75, 2-77, 2-79
1498850-0000	.BUSBAR	2-117, 2-119, 2-121
1499059-0000	.TIMING BELT	3-163
1499064-0000	.PULLEY	3-163
1499071-0000	.SPACER	3-27, 3-29, 3-37, 3-39, 3-41
1499072-0000	.SPACER	3-37, 3-39, 3-41
1499094-0000	.SPACER SCREW	3-37, 3-39, 3-41
1499103-0000	.TIE ROD	3-115, 3-117
1499114-0000	.LOCKING RING	1-17, 1-19, 1-21
1499135-0000	.GUIDE	3-9, 3-11, 3-13, 3-15, 3-17
1499136-0000	.GUIDE	3-9, 3-11, 3-13, 3-15, 3-17
1499139-0000	.BLOCK	3-111, 3-113
1499140-0000	.SPACER	3-7
1499141-0000	.FLAP	3-49, 3-51
1499142-0000	.FLAP	3-49, 3-51

Part No	Description	Page No
1499143-0000	.PLATE	3-129, 3-131, 3-133, 3-135
1499144-0000	.PUSHER	3-129, 3-131, 3-133, 3-135
1499150-0000	.RAIL	3-37, 3-39, 3-41, 3-89, 3-91
1499151-0000	.RAIL	3-37, 3-39, 3-41, 3-89, 3-91
1499216-0000	.PLATE	3-209
1499225-0200	.FOLDING PART	3-209
1499227-0000	.SHIM	3-211
1499228-0000	.SHIM	3-211
1499229-0000	.RAIL	3-211
1499250-0000	.AXLE PIN	3-241, 3-243
1499251-0002	.AXLE PIN	3-241, 3-243
1499252-0000	.ARM	3-245
1499253-0000	.BUSHING	3-241, 3-243
1499255-0100	.DETECTOR	3-241, 3-243
1499296-0001	.GUIDE	3-281
1499296-0002	.GUIDE	3-257
1499296-0003	.GUIDE	3-281
1499296-0004	.GUIDE	3-281
1499296-0007	.GUIDE	3-291
1499296-0008	.GUIDE	3-291
1499296-0011	.GUIDE	3-291
1499296-0013	.GUIDE	3-291
1499296-0014	.GUIDE	3-281
1499296-0015	.GUIDE	3-291
1499320-0000	.TIE ROD	2-85, 2-87, 2-89, 2-125, 2-127, 2-129
1499327-0000	.SHAFT	2-47, 2-49, 2-51, 2-53, 4-35, 4-37, 4-39, 4-41
1499328-0000	.STOPPER	2-47, 2-49, 2-51, 2-53, 4-35, 4-37, 4-39, 4-41
1499336-0000	.STOPPER	2-47, 2-49, 2-51, 2-53, 4-35, 4-37, 4-39, 4-41
1499345-0000	.FLAP HOLDER	2-47, 2-49, 2-51, 2-53, 4-35, 4-37, 4-39, 4-41
1499346-0000	.FLAP HOLDER	2-47, 2-49, 2-51, 2-53, 4-35, 4-37, 4-39, 4-41
1499348-0000	.STOP	2-47, 2-49, 2-51, 2-53, 4-35, 4-37, 4-39, 4-41
1499349-0000	.STOPPER	2-47, 2-49, 2-51, 2-53, 4-35, 4-37, 4-39, 4-41
1499350-0000	.CAM	2-47, 2-49, 2-51, 2-53, 4-35, 4-37, 4-39, 4-41
1499351-0200	.ROLLER UNIT	2-147, 2-149
1499355-0000	.ROLLER	2-47, 2-49, 2-51, 2-53, 4-35, 4-37, 4-39, 4-41
1499356-0000	.CAM	2-47, 2-49, 2-51, 2-53, 4-35, 4-37, 4-39, 4-41
1499357-0000	.VOLUME FLAP	2-47, 2-49, 2-51, 2-53, 4-35, 4-37, 4-39, 4-41
1499358-0000	.VOLUME FLAP	2-47, 2-49, 2-51, 2-53, 4-35, 4-37, 4-39, 4-41
1499400-0000	.GUIDE	3-9, 3-11, 3-13, 3-15, 3-17
1499401-0000	.GUIDE	3-9, 3-11, 3-13, 3-15, 3-17
1499402-0000	.SPACER	3-37, 3-39, 3-41
1499411-0000	.COUNTER ROLLER	1-35, 1-37, 1-39
1499413-0000	.HOLDER	3-141, 3-143, 3-145, 3-147
1499417-0000	.BAR	3-9, 3-11, 3-13, 3-15, 3-17
1499418-0000	.SLIDE	3-9, 3-11, 3-13, 3-15, 3-17
1499422-0000	.SLIDE	3-9, 3-11, 3-13, 3-15, 3-17
1499423-0000	.BAR	3-9, 3-11, 3-13, 3-15, 3-17
1499426-0000	.GUIDE	3-9, 3-11, 3-13, 3-15, 3-17
1499427-0000	.GUIDE	3-9, 3-11, 3-13, 3-15, 3-17
1499444-0000	.NOZZLE	3-119, 3-121, 3-123, 3-125, 3-127
1499445-0000	.NOZZLE	3-119, 3-121, 3-123, 3-125, 3-127
1499446-0000	.NOZZLE	3-119, 3-121, 3-123, 3-125, 3-127
1499475-0000	.HOLDER	3-9, 3-11, 3-13, 3-15, 3-17, 3-57, 3-59
1499476-0000	.HOLDER	3-9, 3-11, 3-13, 3-15, 3-17, 3-57, 3-59, 3-185, 3-191
1499566-0000	.WASHER	1-123, 1-125
1499571-0100	.PAPER REEL HOLDER	3-3
1499594-0000	.VOLUME CAM	2-141, 2-143, 2-145
1499635-0000	.LEVER	3-111, 3-113
1499636-0000	.ROLLER	1-35, 1-37, 1-39
1499675-0000	.VOLUME BULGE	2-7, 2-9, 2-11, 2-15, 2-17, 2-19
1499678-0000	.ROLLER	2-155, 2-157
1499765-0000	.AXLE LINK	3-115, 3-117
1499901-0000	.VOLUME FLAP	2-7, 2-9, 2-11
1499902-0000	.VOLUME FLAP	2-15, 2-17, 2-19
1511067-0000	.CARRIER RULER	2-103, 2-105
1511188-0000	.CARRIER RULER	2-133, 2-135
1511225-0000	.CARRIER	3-155, 3-157, 3-159
1511250-0000	.VOLUME FLAP	2-7, 2-9, 2-11
1511251-0000	.VOLUME FLAP	2-15, 2-17, 2-19
1511253-0000	.VOLUME SHIM	1-73, 1-75, 1-77, 1-79, 1-81, 1-83, 2-7, 2-9, 2-11, 2-15, 2-17, 2-19
1511254-0000	.BUSHING	2-7, 2-9, 2-11, 2-15, 2-17, 2-19
1511335-0000	.VOLUME BULGE	2-47, 2-49, 2-51, 2-53, 4-35, 4-37, 4-39, 4-41
1511336-0000	.VOLUME SHIM	1-73, 1-75, 1-77, 1-79, 1-81, 1-83, 2-47, 2-49, 2-51, 2-53, 4-35, 4-37, 4-39, 4-41
1511337-0000	.VOLUME SHIM	1-73, 1-75, 1-77, 1-79, 1-81, 1-83, 2-47, 2-49, 2-51, 2-53, 4-35, 4-37, 4-39, 4-41
1511338-0000	.STOP	2-47, 2-49, 2-51, 2-53, 4-35, 4-37, 4-39, 4-41
1511339-0000	.STOP	2-47, 2-49, 2-51, 2-53, 4-35, 4-37, 4-39, 4-41
1511351-0000	.FOLDING FLAP	2-103, 2-105, 2-133, 2-135
1511352-0000	.FOLDING FLAP	2-103, 2-105, 2-133, 2-135
1511492-0000	.SHAFT	1-151, 1-153
1511556-0000	.SET SCREW	2-23, 2-25, 2-35, 2-37
1511558-0000	.BOTTOM	3-49, 3-51
1511600-0000	.SPACER	1-23
1511692-0000	.SPACER	3-119, 3-121, 3-123, 3-125, 3-127
1511697-0000	..FOLDING FLAP	2-103, 2-105, 2-133, 2-135

Part No	Description	Page No
1511698-0000	.FOLDING FLAP	2-103, 2-105, 2-133, 2-135
1511699-0000	.FOLDING FLAP	2-103, 2-105, 2-133, 2-135
1511700-0000	.FOLDING FLAP	2-103, 2-105, 2-133, 2-135
1511769-0000	.ROLLER	1-97, 1-99, 1-107, 1-109, 1-111, 3-315
1512146-0000	.AXLE PIN	2-47, 2-49, 2-51, 2-53, 4-35, 4-37, 4-39, 4-41
1512147-0000	.WASHER	2-47, 2-49, 2-51, 2-53, 4-35, 4-37, 4-39, 4-41
1512265-0000	.SLEEVE	3-311
1512266-0000	.SLEEVE	3-311
1512267-0000	.ECCENTRIC BUSHING	1-119, 1-121
1512307-0000	.GUIDE	3-9, 3-11, 3-13, 3-15, 3-17
1512308-0000	.GUIDE	3-9, 3-11, 3-13, 3-15, 3-17
1512324-0000	.CURVE	2-141, 2-143, 2-145
1512325-0000	.VOLUME CAM	2-141, 2-143, 2-145
1512339-0100	.PHOTOCELL OUTFEED	3-169
1512430-0000	.VOLUME SHIM	1-123, 1-125
1512484-0000	.ROLLER	2-155, 2-157
1512526-0000	.STEERING	1-127
1512563-0200	.PRESSURE JAW LEFT	2-5
1512564-0200	.CARRIER CUTTING LEFT	2-5
1512565-0200	.CUTTING JAW LEFT	2-5
1512568-0200	.PRESSURE JAW RIGHT	2-5
1512569-0200	.CARRIER CUTTING RIGHT	2-5
1512570-0200	.CUTTING JAW RIGHT	2-5
1512579-0000	.BRACKET	2-23, 2-25, 2-35, 2-37
1517053-0000	.SPRING	1-17, 1-19, 1-21
1517113-0000	.RAIL	1-123, 1-125
1517242-0000	.GUIDE	3-9, 3-11, 3-13, 3-15, 3-17
1517243-0000	.GUIDE	3-9, 3-11, 3-13, 3-15, 3-17
1517298-0200	.INFEED CONVEYOR	3-167
1517299-0200	.INFEED CONVEYOR LONG	3-181
1517300-0300	.INFEED CONVEYOR SHORT	3-181
1517302-0000	.SUPPORT PLATE	3-137, 3-139
1517322-0100	.FIN TYPE	3-167
1517472-0000	.SIDE PLATE	3-195, 3-197
1517473-0000	.SIDE PLATE	3-195, 3-197
1517474-0000	.GUIDE	3-9, 3-11, 3-13, 3-15, 3-17
1517475-0000	.GUIDE	3-9, 3-11, 3-13, 3-15, 3-17
1517476-0000	.WEDGE	3-9, 3-11, 3-13, 3-15, 3-17
1517477-0000	.PLATE	3-9, 3-11, 3-13, 3-15, 3-17
1517478-0000	.BAR	3-9, 3-11, 3-13, 3-15, 3-17
1517479-0000	.BAR	3-9, 3-11, 3-13, 3-15, 3-17
1517480-0000	.SLIDE	3-9, 3-11, 3-13, 3-15, 3-17
1517481-0000	.SLIDE	3-9, 3-11, 3-13, 3-15, 3-17
1517524-0000	.GUIDE	3-9, 3-11, 3-13, 3-15, 3-17
1517525-0000	.GUIDE	3-9, 3-11, 3-13, 3-15, 3-17
1517526-0000	.GUIDE	3-9, 3-11, 3-13, 3-15, 3-17, 3-63, 3-65, 4-31, 4-33
1517527-0000	.GUIDE	3-9, 3-11, 3-13, 3-15, 3-17, 3-67, 3-69, 3-71, 4-27, 4-29
1517563-0000	.BRACKET	3-137, 3-139
1517564-0000	.SUPPORTING ARM	3-137, 3-139
1517567-0000	.PLATE	3-137, 3-139
1517568-0000	.SUPPORTING ARM	3-137, 3-139
1517711-0000	.BRACKET	3-227
1517713-0000	.HOLDER	3-223
1519089-0000	.GUIDE	3-9, 3-11, 3-13, 3-15, 3-17
1519090-0000	.GUIDE	3-9, 3-11, 3-13, 3-15, 3-17
1519093-0000	.GUIDE	3-9, 3-11, 3-13, 3-15, 3-17
1519094-0000	.GUIDE	3-9, 3-11, 3-13, 3-15, 3-17
1519156-0000	.AIR DISTRIBUTOR	1-101, 1-103, 1-105
1519158-0000	.LID	1-101, 1-103, 1-105
1519159-0000	.BUSHING	1-101, 1-103, 1-105
1519160-0000	.SHAFT	1-101, 1-103, 1-105
1519163-0000	.ARM	1-101, 1-103, 1-105
1519166-0000	.BUSHING	1-101, 1-103, 1-105
1519336-0000	.NOZZLE	3-119, 3-121, 3-123, 3-125, 3-127
1519338-0000	.TIMING BELT	3-9, 3-11, 3-13, 3-15, 3-17
1519339-0000	.SPACER	3-119, 3-121, 3-123, 3-125, 3-127
1519340-0000	.TIE ROD	3-115, 3-117
1519341-0000	.BLOCK	3-111, 3-113
1519344-0000	.CARRIER	3-9, 3-11, 3-13, 3-15, 3-17
1519345-0000	.GUIDE	3-9, 3-11, 3-13, 3-15, 3-17
1519346-0000	.GUIDE	3-9, 3-11, 3-13, 3-15, 3-17
1519352-0000	.GUIDE	3-21, 3-23, 3-25
1519355-0000	.SPACER	3-37, 3-39, 3-41
1519358-0000	.GUIDE	3-27, 3-29
1519359-0000	.GUIDE	3-27, 3-29
1519364-0000	.INSULATING RAIL	3-223
1519365-0000	.PIVOT PLATE	3-231
1519379-0000	.FLAT KNIFE	3-223
1519463-0000	.LOCKING CLAMP	3-255
1519485-0000	.SPRING	1-17, 1-19, 1-21
1519540-0000	.RAIL	3-141, 3-143, 3-145, 3-147
1519543-0000	.HOLDER	3-229, 3-231
1519544-0000	.SHAFT	3-227
1519578-0000	.MOUNTING BLOCK	1-123, 1-125

Part No	Description	Page No
1519583-0000	.BRACKET	1-119, 1-121
1519591-0000	.RAIL PIN	1-123, 1-125
1519769-0000	.FOLDING BAR	3-37, 3-39, 3-41
1519770-0000	.FOLDING BAR	3-37, 3-39, 3-41
1519944-0000	.BRACKET	1-123, 1-125
1519996-0000	.SHAFT	3-227
1520052-0000	.INDUCTOR	1-73, 1-75, 1-77, 1-79, 1-81, 1-83, 2-75, 2-77, 2-79, 2-117, 2-119, 2-121
1520167-0000	.INDUCTOR	1-73, 1-75, 1-77, 1-79, 1-81, 1-83, 2-75, 2-77, 2-79, 2-117, 2-119, 2-121
1520455-0000	.CUTTING RAIL	2-93, 2-95, 2-97
1520493-0000	.CUTTING RAIL	2-93, 2-95, 2-97
1520494-0000	.CUTTING RAIL	2-93, 2-95, 2-97
1520633-0002	.DOLLY	2-93, 2-95, 2-97
1520633-0005	.DOLLY	1-73, 1-75, 1-77, 1-79, 1-81, 1-83, 2-93, 2-95, 2-97
1523145-0000	.BEARING HOUSING	2-93, 2-95, 2-97
1523146-0000	.FOLDING FLAP	2-103, 2-105, 2-133, 2-135
1523147-0000	.FOLDING FLAP	2-103, 2-105, 2-133, 2-135
1523148-0000	.CARRIER RULER	2-133, 2-135
1523159-0000	.PIVOT PLATE	3-231
1523160-0000	.PIN	3-231
1523162-0000	.SCREW	2-85, 2-87, 2-89, 2-125, 2-127, 2-129
1523168-0000	.SHAFT	3-229
1523169-0000	.BRACKET	3-229
1523177-0000	.CARRIER RULER	2-103, 2-105
1523262-0000	.FLAG	3-241, 3-243
1523263-0001	.BRACKET	3-241, 3-243
1523302-0000	.HOUSING	3-209
1523467-0000	.VOLUME BULGE	3-49, 3-51, 3-129, 3-131, 3-133, 3-135
1523475-0000	.CANTILEVER	2-23, 2-25, 2-35, 2-37
1523490-0000	.VOLUME BULGE	2-141, 2-143, 2-145
1523497-0000	.SPACER	3-119, 3-121, 3-123, 3-125, 3-127
1523498-0000	.SPACER	3-27, 3-29
1523826-0000	.PUSHER	3-129, 3-131, 3-133, 3-135
1523827-0000	.SCREW	2-93, 2-95, 2-97
1523884-0000	.FLAP	3-129, 3-131, 3-133, 3-135
1523885-0000	.PUSHER	3-129, 3-131, 3-133, 3-135
1523926-0000	.SPACER	3-27, 3-29, 3-37, 3-39, 3-41
1523927-0000	.SPACER SCREW	3-37, 3-39, 3-41
1524035-0000	.VOLUME BULGE	2-7, 2-9, 2-11, 2-15, 2-17, 2-19, 3-49, 3-51
1524147-0000	.ROLLER	1-55, 1-57, 1-59
1524148-0000	.ROLLER	1-55, 1-57, 1-59
1524149-0000	.ROLLER	1-55, 1-57, 1-59
1524150-0000	.ROLLER	1-55, 1-57, 1-59
1524151-0000	.ROLLER	1-41, 1-43, 1-45, 1-47
1524152-0000	.ROLLER	1-41, 1-43, 1-45, 1-47
1524156-0000	.ROLLER	1-35, 1-37, 1-39
1524310-0000	.VOLUME BULGE	2-47, 2-49, 2-51, 2-53, 4-35, 4-37, 4-39, 4-41
1524349-0000	.GUIDE	3-141, 3-143, 3-145, 3-147
1524370-0100	.WHEEL DIFFERENCE	3-167
1524414-0000	.SEAL	1-29, 1-31
1524416-0000	.ROLLER	1-29, 1-31
1524421-0000	.ROLLER	2-155, 2-157
1524484-0000	.FLAP	3-49, 3-51
1524547-0000	.COUNTER ROLLER	1-35, 1-37, 1-39
1532231-0000	.CONNECTION	1-101, 1-103, 1-105
1532254-0000	.SPACER	3-7
1532256-0000	.CARRIER	3-9, 3-11, 3-13, 3-15, 3-17
1532257-0000	.SLIDE	3-9, 3-11, 3-13, 3-15, 3-17
1532258-0000	.SLIDE	3-9, 3-11, 3-13, 3-15, 3-17
1532261-0000	.GUIDE	3-9, 3-11, 3-13, 3-15, 3-17
1532262-0000	.GUIDE	3-9, 3-11, 3-13, 3-15, 3-17
1532263-0000	.GUIDE	3-9, 3-11, 3-13, 3-15, 3-17
1532264-0000	.GUIDE	3-9, 3-11, 3-13, 3-15, 3-17
1532266-0000	.BLOCK	3-111, 3-113
1532267-0000	.SUPPORT	3-115, 3-117
1532268-0000	.AXLE LINK	3-115, 3-117
1532269-0000	.TIE ROD	3-115, 3-117
1532270-0000	.SUPPORT	3-115, 3-117
1532275-0000	.FOLDING BAR	3-37, 3-39, 3-41
1532276-0000	.FOLDING BAR	3-37, 3-39, 3-41
1532280-0000	.RAIL	3-37, 3-39, 3-41
1532281-0000	.RAIL	3-37, 3-39, 3-41
1532284-0000	.NOZZLE	3-119, 3-121, 3-123, 3-125, 3-127
1532285-0000	.NOZZLE	3-119, 3-121, 3-123, 3-125, 3-127
1532286-0000	.NOZZLE	3-119, 3-121, 3-123, 3-125, 3-127
1532287-0000	.VOLUME FLAP	2-7, 2-9, 2-11, 2-15, 2-17, 2-19
1532289-0000	.PUSHER	3-129, 3-131, 3-133, 3-135
1532290-0000	.PUSHER	3-129, 3-131, 3-133, 3-135
1532291-0000	.PLATE	3-129, 3-131, 3-133, 3-135
1532293-0000	.VOLUME SHIM	1-73, 1-75, 1-77, 1-79, 1-81, 1-83, 2-7, 2-9, 2-11, 2-15, 2-17, 2-19
1532294-0000	.RAIL	3-141, 3-143, 3-145, 3-147
1532297-0000	.FLAP	3-49, 3-51
1532298-0000	.FLAP	3-49, 3-51
1532447-0000	.HANDLE	3-209
1532516-0000	.CARRIER	3-155, 3-157, 3-159

Part No	Description	Page No
1533046-0000	.INDUCTOR	1-73, 1-75, 1-77, 1-79, 1-81, 1-83, 2-75, 2-77, 2-79, 2-117, 2-119, 2-121
1533051-0000	.CUTTING RAIL	2-93, 2-95, 2-97
1533360-0000	.INDUCTOR	3-275, 3-297
1533361-0000	.INDUCTOR	3-275, 3-297
1533363-0000	.INDUCTOR	3-275, 3-297
1533364-0000	.INDUCTOR	3-275, 3-297
1533493-0000	.BUSBAR	1-95
1538186-0000	.BRACKET	3-37, 3-39, 3-41
1538231-0000	.SHAFT	3-227
1538247-0000	.AXLE PIN	3-209
1538256-0000	.CARRIER RULER	2-103, 2-105
1538264-0000	.CURVE	2-141, 2-143, 2-145
1538265-0000	.VOLUME CAM	2-141, 2-143, 2-145
1538348-0000	.CATCH	2-93, 2-95, 2-97
1538349-0000	.CATCH	2-73
1538496-0000	.ROLLER	1-97, 1-99, 3-315
1538521-0000	.BUSHING	2-23, 2-25, 2-35, 2-37
1538637-0000	.VOLUME SHIM	1-73, 1-75, 1-77, 1-79, 1-81, 1-83, 2-47, 2-49, 2-51, 2-53, 4-35, 4-37, 4-39, 4-41
1538644-0100	.OUTFEED BELT	3-153
1538668-0000	.GUIDE ROD	3-209
1538769-0000	.CARRIER RULER	2-133, 2-135
1538770-0000	.BOTTOM	3-49, 3-51
1538890-0000	.RAIL	3-37, 3-39, 3-41
1538891-0000	.RAIL	3-37, 3-39, 3-41
1538952-0000	.FORK	1-17, 1-19, 1-21
1538953-0000	.SHAFT	1-17, 1-19, 1-21
1538963-0000	.RAIL	3-137, 3-139
1538970-0000	.SLIDE	3-141, 3-143, 3-145, 3-147
1539125-0000	.BRACKET	3-241, 3-243
1539172-0000	.CANTILEVER	2-23, 2-25, 2-35, 2-37
1539174-0000	.BUSHING	1-91
1539175-0000	.PLATE	1-91
1539840-0000	.VOLUME BULGE	2-15, 2-17, 2-19
1539841-0000	.VOLUME BULGE	2-7, 2-9, 2-11, 2-15, 2-17, 2-19
1539842-0000	.VOLUME SHIM	2-15, 2-17, 2-19
1539843-0000	.VOLUME SHIM	1-73, 1-75, 1-77, 1-79, 1-81, 1-83, 2-7, 2-9, 2-11, 2-15, 2-17, 2-19
1539869-0000	.RAIL	3-141, 3-143, 3-145, 3-147
1539871-0000	.SPACER	3-27, 3-29, 3-37, 3-39, 3-41, 3-89, 3-91
1539872-0000	.PUSHER	3-129, 3-131, 3-133, 3-135
1539873-0000	.SPACER	3-37, 3-39, 3-41
1539874-0000	.SLIDE	3-9, 3-11, 3-13, 3-15, 3-17, 3-63, 3-65, 4-31, 4-33
1539875-0000	.SLIDE	3-9, 3-11, 3-13, 3-15, 3-17, 3-67, 3-69, 3-71, 4-27, 4-29
1539876-0000	.PLATE	3-9, 3-11, 3-13, 3-15, 3-17, 3-63, 3-65, 3-67, 3-69, 3-71, 4-27, 4-29, 4-31, 4-33
1539877-0000	.BAR	3-9, 3-11, 3-13, 3-15, 3-17, 3-63, 3-65, 4-31, 4-33
1539878-0000	.BAR	3-9, 3-11, 3-13, 3-15, 3-17, 3-67, 3-69, 3-71, 4-27, 4-29
1539879-0000	.GUIDE	3-9, 3-11, 3-13, 3-15, 3-17
1539880-0000	.GUIDE	3-9, 3-11, 3-13, 3-15, 3-17
1539881-0000	.FOLDING BAR	3-37, 3-39, 3-41
1539882-0000	.FOLDING BAR	3-37, 3-39, 3-41
1539886-0000	.CANTILEVER	2-23, 2-25, 2-35, 2-37
1539887-0000	.CATCH	2-23, 2-25, 2-35, 2-37
1539900-0000	.RIGHT UPPER GUIDE	3-27, 3-29, 3-83, 3-85, 3-87
1539902-0000	.VOLUME SHIM	1-73, 1-75, 1-77, 1-79, 1-81, 1-83, 2-7, 2-9, 2-11, 2-15, 2-17, 2-19
1539903-0000	.VOLUME BULGE	2-7, 2-9, 2-11, 2-15, 2-17, 2-19
1539904-0000	.VOLUME FLAP	2-7, 2-9, 2-11
1539983-0000	.GUIDE	3-9, 3-11, 3-13, 3-15, 3-17
1539984-0000	.GUIDE	3-9, 3-11, 3-13, 3-15, 3-17
1548114-0000	.RAIL	3-141, 3-143, 3-145, 3-147
1548230-0000	.BODY	1-23
1548348-0000	.GUIDE	3-141, 3-143, 3-145, 3-147
1548349-0000	.RAIL	3-141, 3-143, 3-145, 3-147
1548353-0000	.SLIDE RAIL	3-171, 3-173, 3-199
1548354-0000	.COVER	3-171, 3-173, 3-199
1548368-0000	.PLATE	3-203, 3-205, 3-207, 3-221
1548460-0100	.VOLUME FLAP PRESSURE	2-5
1548460-0101	.VOLUME FLAP	4-25
1548460-0102	.VOLUME FLAP	4-25
1548460-0103	.VOLUME FLAP	4-25
1548460-0104	.VOLUME FLAP	4-25
1548460-0105	.VOLUME FLAP	4-25
1548460-0106	.VOLUME FLAP	4-25
1548460-0107	.VOLUME FLAP	4-25
1548527-0000	.FOLDING BAR	3-37, 3-39, 3-41
1548528-0000	.FOLDING BAR	3-37, 3-39, 3-41
1548531-0000	.ROLLER	1-41, 1-43, 1-45, 1-47
1548540-0000	.ROLLER	1-41, 1-43, 1-45, 1-47
1548541-0000	.OLLER	1-41, 1-43, 1-45, 1-47
1548550-0000	.RAIL	3-141, 3-143, 3-145, 3-147
1548551-0000	.SPACER	3-141, 3-143, 3-145, 3-147
1548612-0000	.COVERING PLATE	3-21, 3-23, 3-25, 3-75, 3-77, 3-79, 3-81
1548876-0100	.IH EQUIPMENT	1-3
1548892-0100	.CALENDER ROLLER	1-95
1548940-0000	.SPRING	2-85, 2-87, 2-89, 2-125, 2-127, 2-129
1549125-0000	.PLUG	2-7, 2-9, 2-11

Part No	Description	Page No
1549126-0000	.NOZZLE	3-119, 3-121, 3-123, 3-125, 3-127
1549127-0000	.NOZZLE	3-119, 3-121, 3-123, 3-125, 3-127
1549312-0000	.INSERT	2-65, 2-67, 2-85, 2-87, 2-89, 2-109, 2-111, 2-125, 2-127, 2-129
1549378-0000	.SPRING	1-73, 1-75, 1-77, 1-79, 1-81, 1-83, 2-65, 2-67, 2-109, 2-111
1549388-0000	.SPACER	3-119, 3-121, 3-123, 3-125, 3-127
1549389-0000	.SPACER	3-119, 3-121, 3-123, 3-125, 3-127
1549390-0000	.NUT	3-119, 3-121, 3-123, 3-125, 3-127
1549406-0000	.PACKAGE GUIDE	3-27, 3-29
1549411-0000	.PACKAGE GUIDE	3-27, 3-29
1549508-0000	.SPACER SCREW	3-37, 3-39, 3-41
1549512-0000	.SPACER	3-7
1549513-0000	.SLIDE	3-9, 3-11, 3-13, 3-15, 3-17
1549514-0000	.SLIDE	3-9, 3-11, 3-13, 3-15, 3-17
1549515-0000	.BAR	3-9, 3-11, 3-13, 3-15, 3-17
1549516-0000	.BAR	3-9, 3-11, 3-13, 3-15, 3-17
1549517-0000	.GUIDE	3-9, 3-11, 3-13, 3-15, 3-17
1549518-0000	.GUIDE	3-9, 3-11, 3-13, 3-15, 3-17
1549522-0000	.GUIDE	3-9, 3-11, 3-13, 3-15, 3-17
1549523-0000	.GUIDE	3-9, 3-11, 3-13, 3-15, 3-17
1549614-0000	.LEFT UPPER GUIDE	3-27, 3-29, 3-83, 3-85, 3-87
1549615-0000	.SPRING	3-155, 3-157, 3-159
1549803-0000	.BEARING HOUSING	2-93, 2-95, 2-97
1549804-0000	.BEARING HOUSING	2-93, 2-95, 2-97
1549806-0000	.BEARING HOUSING	2-93, 2-95, 2-97
1549807-0000	.BEARING HOUSING	2-93, 2-95, 2-97
1549808-0000	.BEARING HOUSING	2-93, 2-95, 2-97
1549809-0000	.BEARING HOUSING	2-93, 2-95, 2-97
1549822-0000	.FOLDING FLAP	2-103, 2-105, 2-133, 2-135
1549823-0000	.FOLDING FLAP	2-103, 2-105, 2-133, 2-135
1549824-0000	.CARRIER RULER	2-103, 2-105
1549825-0000	.CARRIER RULER	2-133, 2-135
1549826-0000	.BEARING HOUSING	2-93, 2-95, 2-97
1549828-0000	.KNIFE	1-73, 1-75, 1-77, 1-79, 1-81, 1-83, 2-137
1549829-0000	.VOLUME BULGE	2-7, 2-9, 2-11, 2-15, 2-17, 2-19
1549830-0000	.VOLUME SHIM	1-73, 1-75, 1-77, 1-79, 1-81, 1-83, 2-7, 2-9, 2-11, 2-15, 2-17, 2-19
1549831-0000	.WEDGE	2-7, 2-9, 2-11, 2-15, 2-17, 2-19
1549832-0000	.PLUG	2-7, 2-9, 2-11
1549834-0000	.VOLUME BULGE	2-75, 2-77, 2-79, 2-117, 2-119, 2-121
1549836-0000	.VOLUME FLAP	2-7, 2-9, 2-11
1549837-0000	.VOLUME FLAP	2-15, 2-17, 2-19
1549843-0000	.VOLUME CAM	2-141, 2-143, 2-145
1549844-0000	.FLAP	3-49, 3-51
1549940-0000	.PUSHER	3-129, 3-131, 3-133, 3-135
1549992-0000	.HINGE FLANGE	1-135, 1-137
1549993-0000	.HINGE FLANGE	1-135, 1-137
1549994-0000	.SPACER	1-135, 1-137
1550348-0002	.BEARING	3-179
1550595-6600	.SLIDING STRIP	3-179
1550595-6700	.SLIDING STRIP	3-179
1550595-7000	.SLIDING STRIP	3-179
1550595-7110	.SLIDING STRIP	3-179
1550743-0100	.RAIL HOLDER	3-141, 3-143, 3-145, 3-147
1550772-0000	.HOLDER	3-151
1550773-0000	.RAIL HOLDER	3-151
1558008-0000	.BLOCK	3-111, 3-113
1558020-0000	.ROD	3-111, 3-113
1558047-0000	.PUSHER	3-129, 3-131, 3-133, 3-135
1558123-0000	.VOLUME FLAP	2-15, 2-17, 2-19
1558178-0000	.PUSHER	3-129, 3-131, 3-133, 3-135
1558184-0000	.PLATE	3-129, 3-131, 3-133, 3-135
1558221-0000	.BRACKET	1-139
1558230-0100	.COUNTER ROLLER	3-227
1558231-0100	.KNIFE	3-227
1558246-0000	.PAPER GUIDE	3-235
1558251-0000	.SHAFT	1-129
1558252-0000	.SCREW	1-129
1558253-0000	.ROLLER	1-129
1558328-0000	.NOZZLE	3-119, 3-121, 3-123, 3-125, 3-127
1558329-0000	.NOZZLE	3-119, 3-121, 3-123, 3-125, 3-127
1558441-0000	.BRACKET	1-91
1558522-0100	.ADJUSTING ROLLER	1-95, 1-131
1558700-0000	.CARRIER	3-9, 3-11, 3-13, 3-15, 3-17
1558701-0000	.BUSHING	2-7, 2-9, 2-11, 2-15, 2-17, 2-19
1558713-0000	.SPACER SCREW	3-37, 3-39, 3-41
1558733-0000	.VOLUME BULGE	2-93, 2-95, 2-97
1558734-0000	.VOLUME BULGE	2-75, 2-77, 2-79, 2-117, 2-119, 2-121
1558735-0000	.SPACER	3-27, 3-29, 3-37, 3-39, 3-41
1558736-0000	.SPACER	3-27, 3-29
1558748-0000	.FLANGE	1-113
1558749-0000	.FLANGE	1-113
1558750-0000	.FLANGE	1-113
1558751-0000	.FLANGE	1-113
1558752-0000	.FLANGE	1-113
1558754-0000	.LID	1-113

Part No	Description	Page No
1558755-0000	.FLANGE	1-113
1558756-0000	.HOUSING	1-113
1558757-0000	.NUT	1-113
1558758-0000	.SHAFT	1-113
1558760-0000	.KNOB	1-113
1558761-0000	.SHAFT	1-113
1558762-0000	.LID	1-113
1558763-0000	.SLIDER	1-113
1558764-0000	.FLANGE	1-113
1558765-0000	.FLANGE	1-113
1558766-0000	.BUSHING	1-113
1558768-0000	.WASHER	1-113
1558817-0000	.VOLUME BULGE	2-7, 2-9, 2-11, 2-15, 2-17, 2-19
1558819-0000	.RAIL	2-75, 2-77, 2-79
1558820-0000	.RAIL	2-117, 2-119, 2-121
1558821-0000	.VOLUME BULGE	3-129, 3-131, 3-133, 3-135
1558830-0000	.COOLING PLATE	1-91
1558831-0000	.COOLING PLATE	1-91
1558864-0000	.CARRIER	3-9, 3-11, 3-13, 3-15, 3-17
1558910-0000	.SPACER	3-27, 3-29
1558932-0100	.TOP SECTION	3-19
1558934-0000	.GUIDE	3-21, 3-23, 3-25
1558935-0100	.TOP RAIL	3-19
1558940-0200	.FLAP GUIDE	3-19
1558941-0000	.RAIL	3-137, 3-139
1566708-0000	.INDUCTOR	3-275, 3-297
2500071-0000	.O-RING	1-17, 1-19, 1-21
2500078-0000	.BODY	1-23
2500081-0000	.ELBOW PIPE	1-73, 1-75, 1-77, 1-79, 1-81, 1-83
2500082-0000	.MOUNTING PLATE	1-17, 1-19, 1-21
2500097-0000	.KNIFE	3-231
2500591-0000	.VOLUME BULGE	2-75, 2-77, 2-79, 2-117, 2-119, 2-121
2501310-0100	.FILLING PIPE	1-3
2501311-0000	.FILLING PIPE	1-17, 1-19, 1-21
2501312-0000	.CLEANING CUP	1-25, 1-27
2501612-0000	.NOZZLE	3-119, 3-121, 3-123, 3-125, 3-127
2501815-0000	.PIN	3-265
2501851-0000	.CURVE	2-141, 2-143, 2-145
2503481-0000	.GUIDE	3-239
2503483-0000	.BRACKET	3-239
2503688-0000	.VOLUME BULGE	2-75, 2-77, 2-79, 2-117, 2-119, 2-121
2503689-0000	.VOLUME BULGE	2-93, 2-95, 2-97
2503699-0000	.VOLUME BULGE	2-93, 2-95, 2-97
2503700-0000	.VOLUME BULGE	2-75, 2-77, 2-79, 2-117, 2-119, 2-121
2504412-0000	.RAIL	3-141, 3-143, 3-145, 3-147
2504414-0000	.RAIL	3-141, 3-143, 3-145, 3-147
2504616-0000	.SEALING PLATE	3-225, 3-297
2505277-0000	.BEARING HOUSING	2-93, 2-95, 2-97
2506269-0000	.BUSHING	1-93, 1-147
2506273-0000	.LEVER	1-93, 1-147
2506561-0000	.SUPPORT	3-237
2506563-0000	.SHAFT	3-247
2506564-0000	.GUIDE FORK	3-247
2506565-0000	.BRACKET	3-247
2506566-0100	.BOBBIN HOLDER	3-241, 3-243
2506578-0100	.TANK	1-139
2506581-0100	.MAGAZINE	3-241, 3-243
2506587-0000	.BRACKET	3-251
2506588-0000	.BRACKET	3-251
2506589-0002	.GUIDE RAIL	3-251
2507048-0000	.GASKET	1-17, 1-19, 1-21
2507059-0200	.REGULATING VALVE	1-3
2507076-0000	.FOLDING FLAP	2-103, 2-105, 2-133, 2-135
2507077-0000	.FOLDING FLAP	2-103, 2-105, 2-133, 2-135
2507085-0000	.FOLDING FLAP	2-103, 2-105, 2-133, 2-135
2507086-0000	.FOLDING FLAP	2-103, 2-105, 2-133, 2-135
2507092-0000	.FOLDING FLAP	2-103, 2-105, 2-133, 2-135
2507093-0000	.FOLDING FLAP	2-103, 2-105, 2-133, 2-135
2507096-0000	.FOLDING FLAP	2-103, 2-105, 2-133, 2-135
2507097-0000	.FOLDING FLAP	2-103, 2-105, 2-133, 2-135
2508205-0001	.BRACKET	3-313
2508205-0002	.BRACKET	3-313
2508205-0003	.BRACKET	3-313
2508205-0005	.BRACKET	3-313
2508205-0006	.BRACKET	3-313
2508205-0007	.BRACKET	3-313
2508205-0008	.BRACKET	3-313
2508205-0009	.BRACKET	3-313
2508205-0010	.BRACKET	3-313
2508205-0012	.BRACKET	3-313
2508292-0000	.BUSHING	1-61, 1-63
2508297-0000	.WASHER	1-61, 1-63
2508309-0000	.PLATE	1-61, 1-63
2508311-0000	.PLATE	1-61, 1-63

Part No	Description	Page No
2509674-0000	.BRACKET	1-101, 1-103, 1-105
2509681-0000	.RAIL	1-101, 1-103, 1-105
2509935-0000	.SPACER	3-37, 3-39, 3-41
2509936-0000	.SPACER SCREW	3-37, 3-39, 3-41
2509937-0000	.SPACER	3-37, 3-39, 3-41
2509938-0000	.BOTTOM	3-49, 3-51
2511271-0001	.SHAFT	3-251
2511272-0000	.WASHER	3-251
2511291-0100	.PATCH FEEDER	3-203, 3-205, 3-207
2511307-0100	.TURNING DEVICE	3-237
2511311-0200	.FOLDING DEVICE	3-203, 3-205, 3-207
2511314-0000	.BRACKET	3-235
2511316-0000	.PIN	3-247
2511317-0000	.NUT	3-247
2511639-0000	.DIE	3-265
2511640-0000	.SEALING PLATE	3-297
2511642-0000	.SEALING PLATE	3-271
2511644-0000	.PUNCH	3-265
2511651-0000	.SEALING PLATE	3-273
2512737-0000	.ROLLER	1-41, 1-43, 1-45, 1-47
2512738-0000	.ROLLER	1-41, 1-43, 1-45, 1-47
2512740-0000	.ROLLER	1-41, 1-43, 1-45, 1-47
2512741-0000	.ROLLER	1-41, 1-43, 1-45, 1-47
2512742-0000	.ROLLER	1-41, 1-43, 1-45, 1-47
2512746-0000	.ROLLER	1-55, 1-57, 1-59
2512748-0000	.ROLLER	1-55, 1-57, 1-59
2512749-0000	.ROLLER	1-55, 1-57, 1-59
2512762-0000	.ROLLER	1-41, 1-43, 1-45, 1-47
2512779-0000	.RING	1-29, 1-31
2512780-0100	.SEAL	1-3
2512817-0000	.SUPPORTING ARM	3-137, 3-139
2512829-0000	.PNEUMATIC DIAGRAM	4-17
2512834-0000	.SUPPORTING ARM	3-137, 3-139
2512836-0000	.STOP SCREW	3-223
2512936-0100	.CLEANING CUP	1-3
2513013-0000	.SHAFT	2-75, 2-77, 2-79, 2-93, 2-95, 2-97, 2-117, 2-119, 2-121
2513014-0000	.CUTTING JAW	2-93, 2-95, 2-97
2513015-0000	.HOLDER	2-75, 2-77, 2-79, 2-117, 2-119, 2-121
2514030-0000	.OPENING SPECIFICATION	3-301
2514045-0000	.CARRIER	2-65, 2-67
2514047-0000	.CARRIER	2-109, 2-111
2514048-0200	.CARRIER PRESSURE LEFT	2-5
2514049-0000	.CARRIER	2-65, 2-67
2514050-0200	.CARRIER PRESSURE RIGHT	2-5
2514051-0000	.CARRIER	2-109, 2-111
2514370-0000	.PLATE	4-21
2514371-0000	.PLUG	4-21
2514372-0000	.BUSHING	4-21
2514507-0000	.ROLLER	1-41, 1-43, 1-45, 1-47
2514508-0000	.ROLLER	1-41, 1-43, 1-45, 1-47
2514509-0000	.ROLLER	1-41, 1-43, 1-45, 1-47
2514510-0000	.ROLLER	1-41, 1-43, 1-45, 1-47
2514511-0000	.ROLLER	1-41, 1-43, 1-45, 1-47
2514514-0000	.INDUCTOR	1-61, 1-63
2514521-0000	.ROLLER	1-55, 1-57, 1-59
2514522-0000	.INDUCTOR	1-61, 1-63
2517495-0000	.RAIL	3-141, 3-143, 3-145, 3-147
2518035-0000	.FLAP	3-99, 3-101, 3-103
2518098-0000	.COUNTER ROLLER	1-35, 1-37, 1-39
2518100-0000	.RAIL	3-141, 3-143, 3-145, 3-147
2518129-0000	.GUIDE	3-63, 3-65, 4-31, 4-33
2518130-0000	.GUIDE	3-67, 3-69, 3-71, 4-27, 4-29
2520160-0000	.CLAMP	3-57, 3-59
2520163-0000	.PLATE	4-7, 4-9, 4-11, 4-13
2520165-0000	.GUIDE PLATE	4-7, 4-9, 4-11, 4-13
2520168-0000	.SLIDE	3-107
2520170-0000	.FLAP	3-107
2520172-0000	.FOLDING PART	3-89, 3-91
2520175-0000	.FOLDING PART	3-89, 3-91
2520178-0000	.GUIDE	3-83, 3-85, 3-87
2520179-0000	.GUIDE	3-83, 3-85, 3-87
2520183-0000	.RAIL	3-141, 3-143, 3-145, 3-147
2520346-0000	.RAIL	3-141, 3-143, 3-145, 3-147
2520470-0000	.CARRIER RULER	2-103, 2-105
2520471-0000	.CARRIER RULER	2-133, 2-135
2520472-0000	.VOLUME FLAP	2-15, 2-17, 2-19
2520473-0000	.VOLUME BULGE	2-7, 2-9, 2-11, 2-15, 2-17, 2-19
2520474-0000	.VOLUME SHIM	2-7, 2-9, 2-11, 2-15, 2-17, 2-19
2522129-0100	.INFEED CONVEYOR VARIANT	3-5
2522145-0000	.RAIL	3-141, 3-143, 3-145, 3-147
2522166-0000	.GUIDE	3-63, 3-65, 4-31, 4-33
2522167-0000	.GUIDE	3-67, 3-69, 3-71, 4-27, 4-29
2522181-0000	.RAIL	3-141, 3-143, 3-145, 3-147
2522197-0000	.PLATE	3-129, 3-131, 3-133, 3-135

Part No	Description	Page No
2522199-0000	.BLOCK	3-111, 3-113
2522201-0000	.FLAP	3-99, 3-101, 3-103
2522202-0000	.SPACER	3-7, 3-53, 3-55
2522213-0004	.SHAFT	1-41, 1-43, 1-45, 1-47, 1-55, 1-57, 1-59
2522213-0005	.SHAFT	1-55, 1-57, 1-59
2522213-0006	.SHAFT	1-5, 1-7, 1-11, 1-13, 1-35, 1-37, 1-39, 1-55, 1-57, 1-59
2522213-0007	.SHAFT	1-5, 1-7, 1-41, 1-43, 1-45, 1-47
2522213-0008	.SHAFT	1-55, 1-57, 1-59
2522213-0009	.SHAFT	1-55, 1-57, 1-59
2522213-0010	.SHAFT	1-55, 1-57, 1-59
2522213-0015	.SHAFT	1-11, 1-13, 1-41, 1-43, 1-45, 1-47
2522213-0016	.SHAFT	1-11, 1-13
2522213-0017	.SHAFT	1-11, 1-13
2522213-0019	.SHAFT	1-55, 1-57, 1-59
2522213-0020	.SHAFT	1-55, 1-57, 1-59
2522234-0000	.LEVER	1-115
2523268-0000	.SHAFT	1-17, 1-19, 1-21, 1-73, 1-75, 1-77, 1-79, 1-81, 1-83
2523480-0000	.SLIDE	3-141, 3-143, 3-145, 3-147
2523766-0001	.BRACKET	3-313
2523766-0002	.BRACKET	3-313
2523766-0003	.BRACKET	3-313
2523766-0005	.BRACKET	3-313
2523766-0006	.BRACKET	3-313
2523766-0007	.BRACKET	3-313
2523766-0008	.BRACKET	3-313
2523766-0009	.BRACKET	3-313
2523766-0010	.BRACKET	3-313
2523766-0012	.BRACKET	3-313
2523811-0100	.WHEEL	3-5
2523812-0100	.FLAP	3-99, 3-101, 3-103
2524388-0000	.VOLUME FLAP	2-7, 2-9, 2-11
2524512-0000	.PUSHER	3-129, 3-131, 3-133, 3-135
2524600-0100	.PRESSURE ROLLER	1-117, 1-149
2524601-0000	.AXLE PIN	1-119, 1-121
2524602-0000	.HANDLE	1-119, 1-121
2524603-0000	.HOLDER	1-119, 1-121
2524604-0000	.ROCKER ARM	1-119, 1-121
2525292-0000	.SEALING PLATE	3-297
2525349-0000	.BRACKET	3-255
2525360-0000	.LOCKING FINGER	3-255
2525366-0100	.SPLICING TABLE	3-241, 3-243
2525368-0000	.PUSHER	3-255
2525370-0100	.SEALING UNIT	3-221
2525371-0000	.PHOTOCELL BRACKET	3-251
2525373-0000	.WHEEL	3-241, 3-243
2525377-0000	.NUT	3-223
2525381-0000	.FASTENING BRACKET	3-235
2525382-0000	.BRACKET	3-237
2526531-0000	.SEALING PLATE	3-297
2526540-0000	.OPENING SPECIFICATION	3-301
2526551-0000	.SEALING PLATE	3-271
2526563-0000	.HANDLE	3-107
2526567-0000	.CYLINDER	3-107
2526575-0000	.FOLDING BAR	3-83, 3-85, 3-87
2526578-0000	.GUIDE	3-63, 3-65, 4-31, 4-33
2526579-0000	.GUIDE	3-67, 3-69, 3-71, 4-27, 4-29
2526700-0000	.SPRING	3-223
2526810-0000	.HOLDER	2-93, 2-95, 2-97
2526811-0000	.HOLDER	2-75, 2-77, 2-79, 2-117, 2-119, 2-121
2526812-0000	.SHAFT	2-75, 2-77, 2-79, 2-93, 2-95, 2-97, 2-117, 2-119, 2-121
2526825-0000	.WASHER	1-35, 1-37, 1-39, 1-41, 1-43, 1-45, 1-47
2526826-0000	.BUSHING	1-35, 1-37, 1-39, 1-41, 1-43, 1-45, 1-47
2526827-0000	.SHAFT	1-35, 1-37, 1-39, 1-41, 1-43, 1-45, 1-47
2526830-0000	.SHAFT	1-35, 1-37, 1-39, 1-41, 1-43, 1-45, 1-47
2526832-0000	.SPRING	1-35, 1-37, 1-39, 1-41, 1-43, 1-45, 1-47
2526833-0000	.NUT	1-35, 1-37, 1-39, 1-41, 1-43, 1-45, 1-47
2526836-0000	.BUSHING	1-35, 1-37, 1-39, 1-41, 1-43, 1-45, 1-47
2526858-0000	.DOWEL	1-65
2527371-0000	.INSERT	4-21
2527529-0000	.GUIDE UPPER L	3-27, 3-29
2527530-0000	.GUIDE UPPER R	3-27, 3-29
2527531-0000	.TIE ROD	3-115, 3-117
2527703-0100	.GUIDE	3-57, 3-59
2527703-0101	.GUIDE	4-25
2527703-0102	.GUIDE	4-25
2527703-0103	.GUIDE	4-25
2527703-0104	.GUIDE	4-25
2527703-0105	.GUIDE	4-25
2527703-0108	.GUIDE	4-25
2527703-0109	.GUIDE	4-25
2527703-0110	.GUIDE	4-25
2527703-0111	.GUIDE	4-25
2527704-0100	.GUIDE	3-57, 3-59
2527704-0101	.GUIDE	4-25

Part No	Description	Page No
2527704-0102	.GUIDE	4-25
2527704-0103	.GUIDE	4-25
2527704-0104	.GUIDE	4-25
2527704-0105	.GUIDE	4-25
2527704-0108	.GUIDE	4-25
2527704-0109	.GUIDE	4-25
2527704-0110	.GUIDE	4-25
2527704-0111	.GUIDE	4-25
2527725-0000	.CATCH	2-23, 2-25, 2-35, 2-37
2527766-0000	.RAIL	3-141, 3-143, 3-145, 3-147
2527792-0000	.SUPPORT	3-185, 3-191
2527793-0000	.SHAFT	3-185, 3-191
2528073-0000	.LID	1-113
2528096-0000	.RING	1-29, 1-31
2528097-0000	.PLATE	1-29, 1-31
2528104-0000	.PIPE	1-17, 1-19, 1-21
2528112-0000	.BRACKET	1-151, 1-153
2528113-0000	.BRACKET	1-151, 1-153
2528114-0000	.COVER PLATE	1-151, 1-153
2528115-0000	.UPPER FORMING RING	1-41, 1-43, 1-45, 1-47
2528116-0000	.UPPER FORMING RING	1-41, 1-43, 1-45, 1-47
2528117-0000	.UPPER FORMING RING	1-41, 1-43, 1-45, 1-47
2528118-0001	.LOCK PLATE	1-41, 1-43, 1-45, 1-47
2528118-0002	.LOCK PLATE	1-41, 1-43, 1-45, 1-47
2528118-0003	.LOCK PLATE	1-35, 1-37, 1-39, 1-41, 1-43, 1-45, 1-47
2528118-0004	.LOCK PLATE	1-35, 1-37, 1-39, 1-41, 1-43, 1-45, 1-47
2528118-0005	.LOCK PLATE	1-35, 1-37, 1-39, 1-41, 1-43, 1-45, 1-47
2528119-0001	.LOCK PLATE	1-41, 1-43, 1-45, 1-47
2528119-0002	.LOCK PLATE	1-41, 1-43, 1-45, 1-47
2528119-0003	.LOCK PLATE	1-35, 1-37, 1-39, 1-41, 1-43, 1-45, 1-47
2528119-0004	.LOCK PLATE	1-35, 1-37, 1-39, 1-41, 1-43, 1-45, 1-47
2528119-0005	.LOCK PLATE	1-35, 1-37, 1-39, 1-41, 1-43, 1-45, 1-47
2528120-0000	.LOWER FORMING RING	1-35, 1-37, 1-39
2528121-0000	.UPPER FORMING RING	1-35, 1-37, 1-39
2528122-0000	.LOWER FORMING RING	1-35, 1-37, 1-39
2528123-0001	.LOCK PLATE	1-41, 1-43, 1-45, 1-47, 1-55, 1-57, 1-59
2528123-0002	.LOCK PLATE	1-35, 1-37, 1-39, 1-41, 1-43, 1-45, 1-47, 1-55, 1-57, 1-59
2528123-0003	.LOCK PLATE	1-35, 1-37, 1-39, 1-41, 1-43, 1-45, 1-47
2528123-0004	.LOCK PLATE	1-35, 1-37, 1-39, 1-41, 1-43, 1-45, 1-47
2528123-0005	.LOCK PLATE	1-41, 1-43, 1-45, 1-47
2528123-0006	.LOCK PLATE	1-11, 1-13
2528123-0007	.LOCK PLATE	1-55, 1-57, 1-59
2528123-0008	.LOCK PLATE	1-55, 1-57, 1-59
2528123-0009	.LOCK PLATE	1-11, 1-13
2528124-0000	.LOWER FORMING RING	1-35, 1-37, 1-39
2528125-0000	.LOWER FORMING RING	1-35, 1-37, 1-39
2528126-0000	.LOWER FORMING RING	1-35, 1-37, 1-39
2528135-0000	.SHAFT	1-95
2528136-0000	.SQUEE-GEE ROLLER	1-97, 1-99, 1-107, 1-109, 1-111
2528144-0000	.FRAME	1-137
2528145-0100	.DOOR	1-131
2529115-0000	.RAIL	3-141, 3-143, 3-145, 3-147
2529416-0000	.SHAFT	1-17, 1-19, 1-21, 1-73, 1-75, 1-77, 1-79, 1-81, 1-83
2529417-0000	.SHAFT	1-17, 1-19, 1-21, 1-73, 1-75, 1-77, 1-79, 1-81, 1-83
2529418-0000	.SHAFT	1-17, 1-19, 1-21, 1-73, 1-75, 1-77, 1-79, 1-81, 1-83
2529419-0000	.SHAFT	1-17, 1-19, 1-21, 1-73, 1-75, 1-77, 1-79, 1-81, 1-83
2529420-0000	.SHAFT	1-17, 1-19, 1-21, 1-73, 1-75, 1-77, 1-79, 1-81, 1-83
2529546-0000	.SUPPORT	1-129
2529547-0100	.PAPER GUIDE	1-117, 1-149
2529549-0000	.PLATE	1-119, 1-121
2529603-0000	.GUIDE	3-9, 3-11, 3-13, 3-15, 3-17
2529604-0000	.GUIDE	3-9, 3-11, 3-13, 3-15, 3-17
2529605-0000	.SLIDE	3-9, 3-11, 3-13, 3-15, 3-17, 3-63, 3-65, 4-31, 4-33
2529606-0000	.SLIDE	3-9, 3-11, 3-13, 3-15, 3-17, 3-67, 3-69, 3-71, 4-27, 4-29
2529607-0000	.BAR	3-9, 3-11, 3-13, 3-15, 3-17, 3-67, 3-69, 3-71, 4-27, 4-29
2529608-0000	.BAR	3-9, 3-11, 3-13, 3-15, 3-17, 3-63, 3-65, 4-31, 4-33
2529609-0000	.GUIDE	3-9, 3-11, 3-13, 3-15, 3-17
2529610-0000	.GUIDE	3-9, 3-11, 3-13, 3-15, 3-17
2529664-0000	.CARRIER	3-155, 3-157, 3-159
2529671-0000	.FOLDING DEVICE	3-115, 3-117
2529672-0000	.FOLDING DEVICE	3-115, 3-117
2529673-0000	.SUPPORT	3-115, 3-117
2529674-0000	.SUPPORT	3-115, 3-117
2529675-0000	.LEVER	3-115, 3-117
2529676-0000	.LEVER	3-115, 3-117
2529750-0000	.COVERING PANEL	1-73, 1-75, 1-77, 1-79, 1-81, 1-83
2529785-0000	.KNOB	3-57, 3-59
2529786-0000	.KNOB	3-57, 3-59
2529909-0000	.FOLDING BAR	3-37, 3-39, 3-41
2529910-0000	.FOLDING BAR	3-37, 3-39, 3-41
2530124-0000	.ROLLER	2-155, 2-157
2530201-0000	.SPACER SCREW	3-37, 3-39, 3-41
2530313-0000	.BUSHING	2-7, 2-9, 2-11, 2-15, 2-17, 2-19, 2-47, 2-49, 2-51, 2-53, 4-35, 4-37, 4-39, 4-41
2530418-0000	.SPRING	3-167, 3-185, 3-191

Part No	Description	Page No
2530508-0000	.TIE ROD	2-85, 2-87, 2-89, 2-125, 2-127, 2-129
2531038-0000	.FRAME	1-135
2531039-0100	.DOOR	1-131
2531040-0000	.GASKET	1-135, 1-137
2531041-0000	.GLASS PANE	1-135, 1-137
2531042-0100	.UPPER SECTION	1-95
2531043-0100	.HOUSING	1-131
2531044-0000	.BOX FRAME	1-133
2531056-0000	.LOWER FORMING RING	1-35, 1-37, 1-39
2531057-0000	.LOWER FORMING RING	1-35, 1-37, 1-39
2531060-0000	.BRACKET	1-61, 1-63
2531114-0000	.CARRIER	2-85, 2-87, 2-89
2531703-0000	.BUSHING	2-75, 2-77, 2-79, 2-93, 2-95, 2-97, 2-117, 2-119, 2-121
2532580-0000	.HATCH	3-155, 3-157, 3-159
2532837-0000	.TUBE FLUSHING DEVICE	2-159
2532838-0000	.TUBE FLUSHING DEVICE	2-159
2532864-0000	.BRACKET	3-141, 3-143, 3-145, 3-147
2532895-0001	.LOCK PLATE	1-55, 1-57, 1-59
2532895-0002	.LOCK PLATE	1-55, 1-57, 1-59
2532895-0003	.LOCK PLATE	1-5, 1-7, 1-11, 1-13, 1-55, 1-57, 1-59
2532895-0004	.LOCK PLATE	1-11, 1-13, 1-55, 1-57, 1-59
2532895-0005	.LOCK PLATE	1-5, 1-7
2532895-0006	.LOCK PLATE	1-55, 1-57, 1-59
2532895-0008	.LOCK PLATE	1-11, 1-13, 1-55, 1-57, 1-59
2532895-0009	.LOCK PLATE	1-5, 1-7, 1-11, 1-13
2532898-0000	.BRACKET	1-61, 1-63
2532899-0000	.BRACKET	1-61, 1-63
2532900-0000	.LOWER FORMING RING	1-35, 1-37, 1-39
2532911-0000	.ROLLER	1-95
2532912-0001	.LOCK PLATE	1-55, 1-57, 1-59
2532912-0002	.LOCK PLATE	1-55, 1-57, 1-59
2532914-0000	.SPACER	1-41, 1-43, 1-45, 1-47
2532915-0000	.WASHER	1-101, 1-103, 1-105
2532916-0000	.AIR GUIDE	1-101, 1-103, 1-105
2532918-0000	.HOLDER	1-101, 1-103, 1-105
2532919-0000	.PLATE	1-101, 1-103, 1-105
2532922-0000	.PLATE	1-101, 1-103, 1-105
2532925-0000	.INDUCTOR	1-61, 1-63
2532934-0100	.AIR KNIFE	1-95
2532938-0000	.INDUCTOR	1-61, 1-63
2532963-0000	.DEFLECTOR	1-133
2532964-0000	.DEFLECTOR	1-133
2532965-0000	.ROLLER	1-41, 1-43, 1-45, 1-47
2532969-0000	.SHAFT	1-97, 1-99
2532973-0000	.KNOB	1-35, 1-37, 1-39, 1-41, 1-43, 1-45, 1-47
2532979-0000	.SPACER	1-91
2532983-0000	.FLANGE	1-107, 1-109, 1-111
2532984-0000	.FLANGE	1-107, 1-109, 1-111
2533680-0000	.SHIM	3-221
2533681-0100	.BOBBIN HOLDER	3-203, 3-205, 3-207
2533682-0100	.BOBBIN HOLDER	3-203, 3-205, 3-207
2533683-0100	.SPLICING TABLE	3-203, 3-205, 3-207, 3-255
2533684-0100	.SPLICING TABLE	3-203, 3-205, 3-207
2533685-0100	.SPLICING TABLE	3-203, 3-205, 3-207
2533715-0000	.SEALING PLATE	3-277
2533736-0000	.SLEEVE	2-141, 2-143, 2-145
2533737-0000	.RAIL BRACKET	2-141, 2-143, 2-145
2533740-0000	.RAIL BRACKET	2-141, 2-143, 2-145
2533741-0000	.RAIL BRACKET	2-141, 2-143, 2-145
2533742-0000	.RAIL BRACKET	2-141, 2-143, 2-145
2533744-0000	.RAIL BRACKET	2-141, 2-143, 2-145
2533745-0000	.RAIL BRACKET	2-141, 2-143, 2-145
2533747-0000	.RAIL BRACKET	2-141, 2-143, 2-145
2535443-0000	.PIVOT PIN	2-141, 2-143, 2-145
2535538-0100	.FRAME	4-5
2535540-0100	.PNEUMATIC CIRCUIT	4-7, 4-9, 4-11, 4-13
2535757-0000	.PIPE	4-15
2535758-0000	.PIPE	4-15
2535759-0000	.BRACKET	4-15
2535937-0000	.PIPE	4-15
2536026-0000	.CARRIER	2-125, 2-127, 2-129
2537127-0000	.RAIL	3-141, 3-143, 3-145, 3-147
2537128-0100	.DROP CHUTE VARIANT	3-5
2537129-0000	.SPACER	3-53, 3-55
2537819-0000	.RAIL	3-141, 3-143, 3-145, 3-147
2538110-0000	.RAIL	3-141, 3-143, 3-145, 3-147
2539453-0000	.SPRING	1-17, 1-19, 1-21
2540593-0000	.CAM	3-155, 3-157, 3-159
2540594-0000	.CAM	3-155, 3-157, 3-159
2540609-0000	.KNOB	3-53, 3-55
2540612-0000	.PLATE	3-185, 3-191
2540615-0000	.CLEANING CUP	1-25, 1-27
2540823-0000	.BRACKET	3-195
2541125-0000	.SCREW	3-27, 3-29

Part No	Description	Page No
2541633-0000	.FLANGE	1-107, 1-109, 1-111
2541634-0100	.EDGE ROLLER	1-3
2541635-0100	.SQUEE-GEE ROLLER	1-95
2541637-0000	.SHAFT	1-107, 1-109, 1-111
2541639-0000	.LID	1-107, 1-109, 1-111
2541640-0000	.FLANGE	1-107, 1-109, 1-111
2541641-0000	.FLANGE	1-107, 1-109, 1-111
2541643-0000	.FLANGE	1-97, 1-99
2541647-0000	.LID	1-107, 1-109, 1-111
2541648-0000	.LID	1-107, 1-109, 1-111
2541650-0000	.LID	1-97, 1-99
2541651-0000	.PLATE	1-135, 1-137
2541664-0000	.COVER	1-91
2541681-0000	.WASHER	1-97, 1-99
2541682-0000	.BUSHING	1-97, 1-99
2541714-0100	.DROP CHUTE CRADLE	3-167
2541877-0000	.NAIL	3-129, 3-131, 3-133, 3-135
2541878-0000	.WASHER	3-129, 3-131, 3-133, 3-135
2543231-0000	.CARRIER	3-155, 3-157, 3-159
2543242-0000	.ANGLE BLOCK	3-9, 3-11, 3-13, 3-15, 3-17
2543480-0100	.FOLDING PART	3-5
2543481-0100	.TOP SECTION	3-73
2543482-0100	.TOP RAIL	3-73
2544339-0100	.FRAME	4-5
2544342-0000	.BRACKET	3-89, 3-91
2544881-0000	.ROLLER	1-55, 1-57, 1-59
2544882-0000	.COUNTER ROLLER	1-35, 1-37, 1-39
2544883-0000	.PLATE	1-97, 1-99
2544884-0000	.PLATE	1-97, 1-99
2544885-0000	.ARM	1-97, 1-99
2544886-0000	.ARM	1-97, 1-99
2544891-0000	.INSULATING PLATE	1-61, 1-63
2544892-0000	.INSULATING PLATE	1-61, 1-63
2544893-0000	.INSULATING PLATE	1-61, 1-63
2544894-0000	.INSULATING PLATE	1-61, 1-63
2544897-0000	.BRACKET	1-61, 1-63
2544898-0000	.SHAFT	1-61, 1-63
2544990-0000	.VOLUME FLAP	2-7, 2-9, 2-11
2544991-0000	.VOLUME FLAP	2-15, 2-17, 2-19
2544992-0000	.VOLUME BULGE	2-7, 2-9, 2-11, 2-15, 2-17, 2-19
2544993-0000	.VOLUME SHIM	2-7, 2-9, 2-11, 2-15, 2-17, 2-19
2544995-0000	.GUIDE	3-9, 3-11, 3-13, 3-15, 3-17
2544996-0000	.GUIDE	3-9, 3-11, 3-13, 3-15, 3-17
2544997-0000	.SLIDE	3-9, 3-11, 3-13, 3-15, 3-17, 3-63, 3-65, 4-31, 4-33
2544998-0000	.SLIDE	3-9, 3-11, 3-13, 3-15, 3-17, 3-67, 3-69, 3-71, 4-27, 4-29
2544999-0000	.BAR	3-9, 3-11, 3-13, 3-15, 3-17, 3-67, 3-69, 3-71, 4-27, 4-29
2545000-0000	.BAR	3-9, 3-11, 3-13, 3-15, 3-17, 3-63, 3-65, 4-31, 4-33
2545006-0000	.SPACER	3-119, 3-121, 3-123, 3-125, 3-127
2545135-0000	.SPACER	3-119, 3-121, 3-123, 3-125, 3-127
2545232-0000	.RAIL	3-141, 3-143, 3-145, 3-147
2545236-0000	.NOZZLE	3-119, 3-121, 3-123, 3-125, 3-127
2545239-0100	.ELECTRIC MATERIALS	3-261
2545245-0000	.BUSHING	3-155, 3-157, 3-159
2545382-0000	.CARRIER	3-155, 3-157, 3-159
2545433-0000	.SPACER	3-119, 3-121, 3-123, 3-125, 3-127
2545537-0000	.SPACER	3-119, 3-121, 3-123, 3-125, 3-127
2545545-0000	.INSERT	3-9, 3-11, 3-13, 3-15, 3-17
2546229-0100	.ADAPTION TRANSFORMER	2-69, 2-71, 2-113, 2-115
2546271-0100	.TAB C'JAW	3-203, 3-205, 3-207
2546275-0100	.TAB FEEDER	3-203, 3-205, 3-207
2546278-0100	.PUNCH UNIT	3-203, 3-205, 3-207
2546281-0000	.SLIDE	3-227
2546285-0100	.PATCH C'JAW	3-203, 3-205, 3-207
2546293-0000	.SEALING PLATE	3-277
2546294-0100	.OUTER PATCH C'JAW	3-215
2546295-0100	.SEALING UNIT	3-213
2546296-0100	.OUTER PATCH C'JAW	3-213
2546297-0100	.OUTER PATCH FEEDER	3-203, 3-205, 3-207, 3-221
2546299-0100	.OUTER PATCH FEEDER	3-221
2546300-0100	.OUTER PATCH FEEDER	3-213
2546301-0200	.MOUNTING BRACKET	3-213
2546302-0200	.OUTER PATCH APPLICATOR	3-203, 3-205, 3-207
2546303-0000	.SEALING PLATE	3-217
2546474-0000	.INDUCTOR	1-73, 1-75, 1-77, 1-79, 1-81, 1-83, 2-75, 2-77, 2-79, 2-117, 2-119, 2-121
2546475-0000	.RAIL	2-75, 2-77, 2-79
2546476-0000	.RAIL	2-117, 2-119, 2-121
2546501-0000	.FOLDING FLAP	2-103, 2-105, 2-133, 2-135
2547010-0000	.BRACKET	2-7, 2-9, 2-11, 2-15, 2-17, 2-19
2547011-0000	.VOLUME FLAP	2-7, 2-9, 2-11
2547012-0000	.VOLUME FLAP	2-15, 2-17, 2-19
2547015-0000	.TOOTHED PULLEY	3-187, 3-189
2547017-0000	.TOOTHED PULLEY	3-187, 3-189
2547187-0000	.PLATE	3-187
2547376-0100	.KNOB	1-61, 1-63

Part No	Description	Page No
2547377-0000	.WASHER	1-61, 1-63
2547388-0000	.AXLE PIN	1-61, 1-63
2547398-0000	.LID	1-145
2547399-0000	.LID	1-145
2547404-0000	.BRACKET	1-61, 1-63
2547405-0000	.BRACKET	1-61, 1-63
2547406-0000	.ROLLER	1-97, 1-99, 1-107, 1-109, 1-111
2547407-0000	.PIPE	1-95
2547420-0100	.EDGE ROLLER	1-3
2547421-0100	.FORMING RING	1-3
2547422-0100	.UPPER FORMING RING	1-3
2550211-0000	.VOLUME BULGE	3-49, 3-51
2550891-0000	.BENDING ROLLER	1-113
2550893-0000	.BENDING ROLLER	1-113
2551120-0000	.CARRIER	3-9, 3-11, 3-13, 3-15, 3-17
2552003-0100	.FORMING UNIT	2-3
2552005-0100	.PRESSURE JAW	2-69, 2-71, 2-113, 2-115
2552006-0100	.INDUCTOR LEFT	2-69, 2-71
2552007-0100	.INDUCTOR RIGHT	2-113, 2-115
2552008-0100	.CUTTING JAW	2-91, 2-131
2552009-0100	.FOLDING FLAP LEFT	2-91
2552010-0100	.PISTON	2-91, 2-131
2552011-0100	.FOLDING FLAP RIGHT	2-131
2552022-0000	.GUIDE	3-21, 3-23, 3-25, 3-75, 3-77, 3-79, 3-81
2552140-0000	.BRACKET	1-11, 1-13
2552141-0000	.BRACKET	1-11, 1-13
2552142-0000	.BRACKET	1-11, 1-13
2552143-0000	.BRACKET	1-11, 1-13
2552144-0000	.ROLL	1-11, 1-13
2552155-0000	.ROLL	1-11, 1-13
2552158-0000	.SCREW	1-11, 1-13
2552160-0000	.SUPPORT RING	1-55, 1-57, 1-59
2552161-0000	.SUPPORT RING	1-55, 1-57, 1-59
2552176-0001	.LOCK PLATE	1-55, 1-57, 1-59
2552176-0003	.LOCK PLATE	1-55, 1-57, 1-59
2552177-0001	.LOCK PLATE	1-55, 1-57, 1-59
2552177-0003	.LOCK PLATE	1-55, 1-57, 1-59
2552187-0000	.ROLLER	1-55, 1-57, 1-59
2552188-0000	.ROLLER	1-55, 1-57, 1-59
2552189-0000	.LOWER FORMING RING	1-35, 1-37, 1-39
2552190-0000	.LOWER FORMING RING	1-35, 1-37, 1-39
2552191-0000	.LOWER FORMING RING	1-35, 1-37, 1-39
2552192-0000	.LOWER FORMING RING	1-35, 1-37, 1-39
2552193-0000	.LOWER FORMING RING	1-35, 1-37, 1-39
2552194-0000	.LOWER FORMING RING	1-35, 1-37, 1-39
2552195-0000	.UPPER FORMING RING	1-41, 1-43, 1-45, 1-47
2552196-0000	.UPPER FORMING RING	1-41, 1-43, 1-45, 1-47
2552197-0000	.UPPER FORMING RING	1-41, 1-43, 1-45, 1-47
2552198-0000	.UPPER FORMING RING	1-41, 1-43, 1-45, 1-47
2552199-0000	.UPPER FORMING RING	1-41, 1-43, 1-45, 1-47
2552200-0000	.UPPER FORMING RING	1-41, 1-43, 1-45, 1-47
2552205-0000	.ROLLER	1-55, 1-57, 1-59
2552206-0000	.ROLLER	1-55, 1-57, 1-59
2552445-0000	.SUPPORT	3-183
2552655-0000	.ROLLER	1-29, 1-31
2552656-0000	.ROLLER	1-29, 1-31
2553284-0000	.BLOCK	3-21, 3-23, 3-25, 3-75, 3-77, 3-79, 3-81
2553315-0100	.BOBBIN HOLDER	3-203, 3-205, 3-207, 3-247
2553327-0000	.PLATE	3-203, 3-205, 3-207
2553343-0000	.SUPPORT	3-115, 3-117
2553344-0000	.SUPPORT	3-115, 3-117
2553345-0000	.TIE ROD	3-115, 3-117
2553346-0000	.AXLE LINK	3-115, 3-117
2553347-0000	.FOLDING BAR	3-37, 3-39, 3-41
2553348-0000	.FOLDING BAR	3-37, 3-39, 3-41
2554263-0000	.BRACKET	3-141, 3-143, 3-145, 3-147
2555082-0000	.SPACER SCREW	3-83, 3-85, 3-87, 3-89, 3-91
2555391-0000	.RAIL	3-141, 3-143, 3-145, 3-147
2555392-0000	.RAIL	3-141, 3-143, 3-145, 3-147
2555394-0100	.START-UP KIT	1-3
2555404-0000	.FLAP	3-49, 3-51
2555590-0000	.SIGN	1-41, 1-43, 1-45, 1-47
2555606-0000	.LOWER FORMING RING	1-35, 1-37, 1-39
2555607-0000	.LOWER FORMING RING	1-35, 1-37, 1-39
2555608-0000	.LOWER FORMING RING	1-35, 1-37, 1-39
2555613-0000	.BUSHING	1-113
2555614-0000	.BRACKET	1-61, 1-63
2555615-0000	.BRACKET	1-61, 1-63
2555616-0000	.ROLLER	1-61, 1-63
2555617-0000	.PIN	1-61, 1-63
2555618-0000	.SHAFT	1-61, 1-63
2555619-0000	.BRACKET	1-61, 1-63
2555620-0000	.COVER	1-61, 1-63
2555623-0000	.COVER	1-61, 1-63

Part No	Description	Page No
2555625-0000	.ROLL	1-61, 1-63
2555627-0100	.PRESSURE ROLLER	1-3
2555635-0000	.SIGNS	1-35, 1-37, 1-39
2555637-0000	.GUIDE	3-21, 3-23, 3-25, 3-75, 3-77, 3-79, 3-81
2556525-0000	.LEVER	3-155, 3-157, 3-159
2556526-0000	.LEVER	3-155, 3-157, 3-159
2556615-0000	.PIPE CONNECTION	2-159
2556893-0100	.TUBE FLUSHING	2-139
2556894-0000	.TUBE FLUSHING DEVICE	2-159
2556895-0000	.TUBE FLUSHING DEVICE	2-159
2557612-0000	.SPRING	2-23, 2-25, 2-35, 2-37
2557613-0000	.SPRING	2-23, 2-25, 2-35, 2-37
2558127-0000	.SPACER	3-89, 3-91
2558144-0000	.BOTTOM	3-49, 3-51
2558145-0000	.FLAP	3-49, 3-51
2558703-0000	.GUIDE UPPER L	3-83, 3-85, 3-87
2558704-0000	.GUIDE UPPER R	3-83, 3-85, 3-87
2558754-0000	.RAIL	3-141, 3-143, 3-145, 3-147
2558920-0000	.STOP	2-35, 2-37
2558921-0000	.STOP	2-23, 2-25
2558922-0000	.STOP	2-35, 2-37
2558923-0000	.STOP	2-23, 2-25
2558929-0000	.BAR	2-23, 2-25, 2-35, 2-37
2559008-0000	.VOLUME BULGE	3-129, 3-131, 3-133, 3-135
2559052-0000	.RAIL	3-141, 3-143, 3-145, 3-147
2559062-0100	.LOWER FORMING RING	1-3
2559066-0000	.STUD SCREW	1-91
2559097-0000	.UPPER FORMING RING	1-41, 1-43, 1-45, 1-47
2559098-0000	.UPPER FORMING RING	1-41, 1-43, 1-45, 1-47
2559099-0000	.UPPER FORMING RING	1-41, 1-43, 1-45, 1-47
2559101-0000	.ROLLER	1-41, 1-43, 1-45, 1-47
2559102-0000	.RING	1-29, 1-31
2559103-0000	.PLATE	1-29, 1-31
2559104-0000	.PLATE	1-29, 1-31
2559105-0000	.SUPPORT RING	1-55, 1-57, 1-59
2559354-0000	.ROLLER	3-227
2559424-0000	.CUTTING JAW	2-93, 2-95, 2-97
2559425-0000	.CLAMP HOLDER	2-75, 2-77, 2-79, 2-117, 2-119, 2-121
2562664-0000	.ROLL	1-11, 1-13
2562667-0002	.LOCK PLATE	1-11, 1-13
2562667-0008	.LOCK PLATE	1-55, 1-57, 1-59
2562667-0009	.LOCK PLATE	1-55, 1-57, 1-59
2562684-0000	.ROLL	1-11, 1-13
2562685-0000	.ROLLER	1-41, 1-43, 1-45, 1-47
2562686-0000	.ROLLER	1-41, 1-43, 1-45, 1-47
2562692-0000	.BRACKET	1-11, 1-13
2562693-0000	.BRACKET	1-11, 1-13
2562694-0000	.ROLLER	1-11, 1-13
2562695-0000	.ROLLER	1-11, 1-13
2562696-0000	.BRACKET	1-11, 1-13
2562697-0000	.BRACKET	1-11, 1-13
2562704-0000	.BODY	1-23
2562709-0000	.ROLLER	1-29, 1-31
2562710-0000	.RING	1-29, 1-31
2562711-0000	.PLATE	1-29, 1-31
2563183-0000	.GUIDE RAIL	1-123, 1-125
2563274-0000	.CARRIER	3-155, 3-157, 3-159
2563289-0000	.LOWER FILLING PIPE	1-17, 1-19, 1-21
2563290-0000	.PRESSURE FLANGE	1-17, 1-19, 1-21
2563292-0000	.STOP PIN	1-17, 1-19, 1-21
2563293-0000	.LOWER FILLING PIPE	1-17, 1-19, 1-21
2563294-0000	.PRESSURE FLANGE	1-17, 1-19, 1-21
2563295-0000	.STOP PIN	1-17, 1-19, 1-21
2563296-0000	.LOWER FILLING PIPE	1-17, 1-19, 1-21
2563666-0000	.CANTILEVER	2-23, 2-25, 2-35, 2-37
2563667-0000	.SHAFT	2-23, 2-25, 2-35, 2-37
2563669-0000	.SPRING	2-23, 2-25, 2-35, 2-37
2563670-0000	.SPRING	2-23, 2-25, 2-35, 2-37
2563671-0000	.SHAFT	2-23, 2-25, 2-35, 2-37
2563672-0000	.HOLDER	2-23, 2-25, 2-35, 2-37
2563766-0000	.BODY	1-23
2563974-0000	.SEALING PLATE	3-273, 3-297
2563986-0000	.SEALING PLATE	3-271, 3-297
2564043-0001	.ROLLER	3-293
2564043-0002	.ROLLER	3-267
2564043-0003	.ROLLER	3-253, 3-259
2564043-0004	.ROLLER	3-267, 3-283, 3-295
2564043-0005	.ROLLER	3-267, 3-283, 3-295
2564043-0006	.ROLLER	3-293
2564043-0007	.ROLLER	3-267, 3-283, 3-295
2564043-0008	.ROLLER	3-293
2564043-0009	.ROLLER	3-293
2564043-0012	.ROLLER	3-293
2564044-0001	.ROLLER	3-269, 3-287

Part No	Description	Page No
2564044-0002	.ROLLER	3-267, 3-279, 3-295
2564044-0004	.ROLLER	3-233, 3-259
2564044-0005	.ROLLER	3-267, 3-279, 3-295
2564044-0006	.ROLLER	3-267, 3-279, 3-295
2564044-0008	.ROLLER	3-269, 3-287
2564044-0009	.ROLLER	3-267, 3-279, 3-295
2564044-0011	.ROLLER	3-269, 3-287
2564044-0012	.ROLLER	3-269, 3-287
2564044-0014	.ROLLER	3-269, 3-287
2564050-0100	.MAGAZINE	3-203, 3-205, 3-207
2564051-0100	.PATCH MAGAZINE	3-203, 3-205, 3-207
2564052-0100	.MAGAZINE	3-203, 3-205, 3-207, 3-251
2564053-0100	.OUTER PATCH MAGAZINE	3-203, 3-205, 3-207, 3-241, 3-243
2564054-0100	.AIR INLET	1-139
2564056-0100	.MAGAZINE	3-203, 3-205, 3-207
2564057-0100	.TAB MAGAZINE	3-203, 3-205, 3-207
2564058-0100	.TURNING DEVICE	3-203, 3-205, 3-207
2564059-0100	.TAB FEEDER	3-203, 3-205, 3-207
2564060-0100	.PATCH FEEDER	3-203, 3-205, 3-207
2564061-0100	.OUTER PATCH FEEDER	3-203, 3-205, 3-207, 3-221
2564062-0000	.GUIDE	3-227
2564064-0000	.SHAFT	3-227
2564066-0000	.SHAFT	3-231
2564071-0000	.GUIDE	3-227
2564073-0000	.LABEL	3-241, 3-243
2564075-0100	.OPENING SPECIFICATION	3-201
2564076-0100	.START-UP KIT	3-201
2564347-0000	.FLAP	3-49, 3-51
2564562-0000	.ROLLER	1-123, 1-125
2564596-0000	.FLOAT	1-17, 1-19, 1-21
2564597-0000	.FLOAT	1-17, 1-19, 1-21
2564598-0000	.FLOAT	1-17, 1-19, 1-21
2564599-0000	.FLOAT	1-17, 1-19, 1-21
2564600-0000	.FLOAT	1-17, 1-19, 1-21
2564601-0000	.FLOAT	1-17, 1-19, 1-21
2564602-0000	.FLOAT	1-17, 1-19, 1-21
2564683-0000	.CURVE	2-141, 2-143, 2-145
2565424-0000	.ROLLER	1-35, 1-37, 1-39
2565425-0000	.COUNTER ROLLER	1-35, 1-37, 1-39
2565430-0000	.SUPPORT RING	1-55, 1-57, 1-59
2565431-0000	.SUPPORT RING	1-55, 1-57, 1-59
2565436-0000	.FILLING PIPE	1-17, 1-19, 1-21
2565437-0000	.CLEANING CUP	1-25, 1-27
2565440-0000	.INDUCTOR	1-61, 1-63
2565441-0000	.INSULATING PLATE	1-61, 1-63
2565444-0000	.FILLING PIPE	1-17, 1-19, 1-21
2565513-0000	.ROLLER	1-35, 1-37, 1-39
2565561-0001	.PAM - SAM EASY DOWNLOAD	2-167
2566317-0000	.CARRIER RULER	2-133, 2-135
2566318-0000	.CARRIER RULER	2-103, 2-105
2566319-0000	.FOLDING FLAP	2-103, 2-105, 2-133, 2-135
2566320-0000	.FOLDING FLAP	2-103, 2-105, 2-133, 2-135
2566321-0000	.FLAP	3-99, 3-101, 3-103
2566323-0000	.FLAP	3-99, 3-101, 3-103
2566325-0000	.BEARING HOUSING	2-93, 2-95, 2-97
2566327-0000	.CARRIER	2-125, 2-127, 2-129
2566328-0000	.PLATE	2-85, 2-87, 2-89, 2-125, 2-127, 2-129
2566329-0000	.CARRIER	2-85, 2-87, 2-89
2566330-0000	.SLEEVE	2-107
2566331-0000	.PLUNGER	2-107
2566332-0000	.SHAFT	2-57, 2-63
2566333-0000	.HOLDER	2-57, 2-63
2566336-0000	.BEARING HOUSING	2-73
2566338-0000	.CATCH	2-73
2566339-0000	.CATCH	2-93, 2-95, 2-97
2566340-0000	.CARRIER	2-65, 2-67
2566341-0000	.CARRIER	2-109, 2-111
2569908-0000	.HOUSING	2-73
2570015-0000	.PRESSURE FLANGE	1-17, 1-19, 1-21
2570017-0000	.PRESSURE FLANGE	1-17, 1-19, 1-21
2570301-0000	.CUTTING JAW	2-93, 2-95, 2-97
2570302-0000	.CLAMP HOLDER	2-75, 2-77, 2-79, 2-117, 2-119, 2-121
2570848-0000	.HOLDER	2-75, 2-77, 2-79, 2-117, 2-119, 2-121
2570849-0000	.BUSHING	2-75, 2-77, 2-79, 2-93, 2-95, 2-97, 2-117, 2-119, 2-121
2570850-0000	.CUTTING JAW	2-93, 2-95, 2-97
2571843-0000	.CARRIER	2-85, 2-87, 2-89
2572248-0000	.CARRIER	2-125, 2-127, 2-129
2572563-0000	.SUPPORT	3-187
2575119-0000	.GUIDE	1-71
2575120-0100	.LIFTING UNIT	1-3
2575631-0000	.RAIL BRACKET	2-141, 2-143, 2-145
2579882-0000	.SEALING PLATE	3-273
2579886-0000	.SEALING PLATE	3-273, 3-297
2579887-0000	.OPENING SPECIFICATION	3-301

Part No	Description	Page No
2579988-0000	.CUTTING JAW	2-93, 2-95, 2-97
2579989-0000	.HOLDER	2-75, 2-77, 2-79, 2-117, 2-119, 2-121
2579990-0000	.SHAFT	2-75, 2-77, 2-79, 2-93, 2-95, 2-97, 2-117, 2-119, 2-121
2579991-0000	.HOLDER	2-75, 2-77, 2-79, 2-117, 2-119, 2-121
2582002-0000	.VOLUME FLAP	2-15, 2-17, 2-19
2582003-0100	.GUIDE RAIL	1-117, 1-149
2582020-0000	.RAIL BRACKET	2-141, 2-143, 2-145
2582574-0000	.BODY	1-65
2582575-0000	.KNOB	1-65
2582616-0000	.PLATE	1-29, 1-31
2582623-0000	.SEAL	1-29, 1-31
2582629-0000	.RING	1-29, 1-31
2582630-0000	.ROLLER	1-29, 1-31
2582651-0000	.AIR GUIDE	1-101, 1-103, 1-105
2582652-0000	.AIR GUIDE	1-101, 1-103, 1-105
2582654-0000	.PLATE	1-101, 1-103, 1-105
2582655-0000	.HOLDER	1-101, 1-103, 1-105
2582668-0000	.PLATE	1-123, 1-125
2582680-0000	.BEARING HOUSING	2-93, 2-95, 2-97
2587235-0000	.VOLUME FLAP	2-15, 2-17, 2-19
2587236-0000	.VOLUME FLAP	2-7, 2-9, 2-11
2587325-0000	.SHAFT	3-227
2587337-0100	.SETTING TEMPLATE	3-201
2587466-0000	.INDUCTOR	1-73, 1-75, 1-77, 1-79, 1-81, 1-83, 2-75, 2-77, 2-79
2587467-0000	.INDUCTOR	1-73, 1-75, 1-77, 1-79, 1-81, 1-83, 2-117, 2-119, 2-121
2588013-0000	.BRACKET	2-65, 2-67, 2-109, 2-111
2588291-0000	.TIE ROD	2-85, 2-87, 2-89, 2-125, 2-127, 2-129
2588292-0000	.PLATE	2-93, 2-95, 2-97
2588293-0000	.HOLDER	2-75, 2-77, 2-79, 2-117, 2-119, 2-121
2588294-0000	.LID	2-73
2588295-0000	.SLEEVE	2-73
2588296-0000	.PISTON	2-73
2588297-0000	.SHAFT	2-73
2588299-0000	.BUSHING	2-93, 2-95, 2-97
2588300-0000	.RAIL BRACKET	2-141, 2-143, 2-145
2588301-0000	.CURVE	2-141, 2-143, 2-145
2588302-0000	.VOLUME CAM	2-141, 2-143, 2-145
2588303-0000	.SCREW	2-93, 2-95, 2-97
2588304-0000	.VOLUME FLAP	2-57
2588305-0000	.VOLUME FLAP	2-63
2588306-0000	.VOLUME FLAP	2-59, 4-43
2588307-0000	.VOLUME FLAP	2-59, 4-43
2588327-0000	.INSERT	3-99, 3-101, 3-103
2588328-0000	.PULLEY	1-95, 3-163
2588329-0000	.PULLEY	3-163
2589108-0000	.BENDING ROLLER	1-117
2591790-0000	.BLOCK	3-111, 3-113
2592525-0000	.FILLING PIPE	1-17, 1-19, 1-21
2592530-0000	.PLATE	1-85
2592544-0000	.FILLING PIPE	1-17, 1-19, 1-21
2592554-0000	.LOWER FORMING RING	1-35, 1-37, 1-39
2593831-0100	.VOLUME KIT	4-3
2594043-0000	.SHOCK ABSORBER	1-23
2594058-0000	.GUIDE	3-97
2594512-0100	.VOLUME FLAP CUTTING	2-5
2594512-0101	.VOLUME FLAP	4-25
2594512-0102	.VOLUME FLAP	4-25
2594512-0103	.VOLUME FLAP	4-25
2594512-0104	.VOLUME FLAP	4-25
2594512-0105	.VOLUME FLAP	4-25
2594512-0106	.VOLUME FLAP	4-25
2594512-0107	.VOLUME FLAP	4-25
2594596-0000	.BRACKET	1-9
2594601-0000	.RAIL	1-101, 1-103, 1-105
2594617-0000	.STOP PIN	1-17, 1-19, 1-21
2594629-0000	.FILLING PIPE	1-17, 1-19, 1-21
2594636-0000	.BRACKET	1-61, 1-63
2594644-0000	.ROLLER	1-35, 1-37, 1-39
2594886-0000	.PLATE	3-195
2594887-0000	.SPACER	2-141, 2-143, 2-145
2594888-0000	.VOLUME BULGE	2-57, 2-63
2594889-0000	.VOLUME BULGE	2-59, 4-43
2594890-0000	.VOLUME SHIM	1-73, 1-75, 1-77, 1-79, 1-81, 1-83, 2-57, 2-63
2594891-0000	.VOLUME SHIM	1-73, 1-75, 1-77, 1-79, 1-81, 1-83, 2-59, 4-43
2594892-0000	.SPRING	2-73
2594893-0000	.WEDGE	2-57, 2-63
2594896-0000	.SCREW	2-59, 4-43
2594902-0000	.CATCH	3-129, 3-131, 3-133, 3-135
2594905-0000	.SLIDE	3-63, 3-65, 4-31, 4-33
2594906-0000	.SLIDE	3-67, 3-69, 3-71, 4-27, 4-29
2594910-0000	.LEVER	3-155, 3-157, 3-159
2594911-0000	.HATCH	3-155, 3-157, 3-159
2595704-0000	.FOLDING PART	3-89, 3-91
2595705-0000	.FOLDING PART	3-89, 3-91

Part No	Description	Page No
2595706-0000	.BRACKET	3-89, 3-91
2595707-0000	.FOLDING PART	3-89, 3-91
2595708-0000	.FOLDING PART	3-89, 3-91
2595709-0000	.FOLDING PART	3-89, 3-91
2597324-0100	.VOLUME FLAP	2-5
2597325-0100	.VOLUME FLAP	2-5
2597329-0100	.CURVE UNIT	2-139
2597768-0000	.BRACKET	3-97
2597769-0000	.GUIDE	3-97
2598008-0000	.STOP PIN	1-17, 1-19, 1-21
2598010-0000	.STOP PIN	1-17, 1-19, 1-21
2598015-0000	.LOWER FILLING PIPE	1-17, 1-19, 1-21
2598017-0000	.PRESSURE FLANGE	1-17, 1-19, 1-21
2598018-0000	.LOWER FILLING PIPE	1-17, 1-19, 1-21
2598485-0000	.CLAMP	3-97
2598486-0000	.CLAMP	3-97
2598487-0000	.SLIDE	3-63, 3-65, 4-31, 4-33
2598488-0000	.SLIDE	3-67, 3-69, 3-71, 4-27, 4-29
2598491-0000	.FOLDING PART	3-89, 3-91
2598492-0000	.FOLDING PART	3-89, 3-91
2598493-0000	.BRACKET	3-89, 3-91
2598494-0000	.FOLDING PART	3-89, 3-91
2598495-0000	.FOLDING PART	3-89, 3-91
2598496-0000	.FOLDING PART	3-89, 3-91
2598497-0000	.FOLDING PART	3-89, 3-91
2598498-0000	.NOZZLE	3-119, 3-121, 3-123, 3-125, 3-127
2598499-0000	.NOZZLE	3-119, 3-121, 3-123, 3-125, 3-127
2598500-0000	.NOZZLE	3-119, 3-121, 3-123, 3-125, 3-127
2598503-0000	.EXTENSION	3-119, 3-121, 3-123, 3-125, 3-127
2598508-0100	.INFEED/OUTFEED CONVEYOR	3-169
2598513-0000	.SPACER	3-179
2598514-0000	.COVER	3-179
2598706-0000	.BAR	3-111, 3-113
2598820-0000	.SPACER	3-53, 3-55
2598941-0000	.PIPE	4-15
2599020-0000	.STOP	4-7, 4-9, 4-11, 4-13
2599044-0000	.BRACKET	3-97
2599738-0000	.ECCENTRIC	2-141, 2-143, 2-145
2599739-0000	.ECCENTRIC	2-141, 2-143, 2-145
2599847-0000	.SPACER	3-89, 3-91
2601237-0000	.BENDING ROLLER	1-113
2601239-0000	.SPRING	1-17, 1-19, 1-21
2601247-0000	.INDUCTOR	1-61, 1-63
2601248-0000	.INSULATING PLATE	1-61, 1-63
2601249-0000	.BRACKET	1-61, 1-63
2601269-0000	.ROLLER	1-11, 1-13
2601271-0000	.ROLLER	1-11, 1-13
2601272-0000	.ROLLER	1-11, 1-13
2601273-0000	.ROLLER	1-11, 1-13
2601278-0000	.ROLLER	1-55, 1-57, 1-59
2601279-0000	.ROLLER	1-55, 1-57, 1-59
2601285-0000	.ROLLER	1-55, 1-57, 1-59
2601286-0000	.ROLLER	1-55, 1-57, 1-59, 1-151, 1-153
2601289-0000	.INDUCTOR	1-61, 1-63
2601307-0000	.INSULATING PLATE	1-61, 1-63
2601308-0000	.ROLLER	1-35, 1-37, 1-39
2601309-0000	.ROLLER	1-35, 1-37, 1-39
2601321-0000	.FILLING PIPE	1-17, 1-19, 1-21
2601324-0000	.LOWER FORMING RING	1-35, 1-37, 1-39
2601325-0000	.LOWER FORMING RING	1-35, 1-37, 1-39
2601326-0000	.LOWER FORMING RING	1-35, 1-37, 1-39
2601327-0000	.ROLLER	1-35, 1-37, 1-39
2601328-0000	.ROLLER	1-35, 1-37, 1-39
2601330-0000	.LOWER FORMING RING	1-35, 1-37, 1-39
2601331-0000	.LOWER FORMING RING	1-35, 1-37, 1-39
2601332-0000	.LOWER FORMING RING	1-35, 1-37, 1-39
2601333-0000	.ROLLER	1-41, 1-43, 1-45, 1-47
2601334-0000	.ROLLER	1-41, 1-43, 1-45, 1-47
2601445-0000	.FOLDING PART	3-89, 3-91
2601455-0000	.FOLDING PART	3-89, 3-91
2601464-0000	.FOLDING PART	3-89, 3-91
2601465-0000	.FOLDING PART	3-89, 3-91
2601468-0000	.PRESSURE FLANGE	1-17, 1-19, 1-21
2601469-0000	.PRESSURE FLANGE	1-17, 1-19, 1-21
2601470-0000	.PRESSURE FLANGE	1-17, 1-19, 1-21
2601472-0000	.PRESSURE FLANGE	1-17, 1-19, 1-21
2601474-0000	.PRESSURE FLANGE	1-17, 1-19, 1-21
2602592-0000	.FOLDING PART	3-89, 3-91
2602613-0000	.VOLUME BULGE	3-129, 3-131, 3-133, 3-135
2602614-0000	.BOTTOM	3-49, 3-51
2602655-0000	.ROLLER	2-155, 2-157
2603138-0000	.BRACKET	3-97
2603140-0000	.GUIDE	3-97
2603147-0000	.PLATE	3-89, 3-91

Part No	Description	Page No
2603148-0000	.CLAMP	3-97
2603151-0000	.SHIM	2-85, 2-87, 2-89, 2-125, 2-127, 2-129
2603374-0000	.ECCENTRIC	2-151, 2-153
2603376-0000	.AXLE PIN	2-151, 2-153
2603378-0000	.ROLLER	2-151, 2-153
2603488-0000	.FLAP	3-107
2603489-0000	.BOTTOM	3-107, 4-25
2603490-0000	.SLIDE	3-107
2603546-0000	.SLIDE PLATE	1-101, 1-103, 1-105
2603547-0000	.FOLDING PART	3-89, 3-91
2603548-0000	.FOLDING PART	3-89, 3-91
2603630-0000	.SLIDE PLATE	1-101, 1-103, 1-105
2603659-0000	.FOLDING PART	3-89, 3-91
2603660-0000	.FOLDING PART	3-89, 3-91
2603661-0000	.BRACKET	3-89, 3-91
2603662-0000	.BRACKET	3-89, 3-91
2603663-0000	.SPACER	3-27, 3-29, 3-37, 3-39, 3-41, 3-83, 3-85, 3-87
2603664-0000	.RAIL	3-89, 3-91
2603681-0000	.SEALING PLATE	3-271, 3-297
2603682-0000	.DIE	3-265
2603683-0000	.PUNCH	3-265
2603823-0000	.BOTTOM PLATE	1-101, 1-103, 1-105
2603824-0000	.COUNTER PLATE	1-101, 1-103, 1-105
2603826-0100	.FOLDING PART	3-73
2603827-0100	.FLAP GUIDE	3-73
2604493-0000	.VOLUME FLAP	2-47, 2-49, 4-35, 4-37
2604494-0000	.1OLUME FLAP	2-51, 2-53, 4-39, 4-41
2604495-0000	.VOLUME FLAP	2-47, 2-49, 4-35, 4-37
2604496-0000	.VOLUME FLAP	2-51, 2-53, 4-39, 4-41
2604507-0000	.SPACER	4-7, 4-9, 4-11, 4-13
2604508-0000	.SPACER	4-7, 4-9, 4-11, 4-13
2604509-0000	.KNOB	4-7, 4-9, 4-11, 4-13
2604510-0000	.SHAFT	4-7, 4-9, 4-11, 4-13
2604551-0000	.SEALING PLATE	3-271, 3-297
2604554-0000	.PUNCH	3-265
2604555-0000	.DIE	3-265
2604557-0000	.OPENING SPECIFICATION	3-301
2604564-0000	.CUTTING JAW	2-93, 2-95, 2-97
2604565-0000	.HOLDER	2-75, 2-77, 2-79, 2-117, 2-119, 2-121
2605066-0000	.CURVE	2-147, 2-149
2605125-0000	.PUSHER	3-129, 3-131, 3-133, 3-135
2605148-0000	.STOP PIN	1-17, 1-19, 1-21
2605166-0000	.VOLUME SHIM	1-73, 1-75, 1-77, 1-79, 1-81, 1-83, 2-47, 2-49, 2-51, 2-53, 4-35, 4-37, 4-39, 4-41
2605191-0000	.VOLUME FLAP	2-47, 2-49, 4-35, 4-37
2605192-0000	.VOLUME FLAP	2-51, 2-53, 4-39, 4-41
2605213-0000	.RAIL	3-89, 3-91
2605226-0200	.ROLLER UNIT	2-147, 2-149
2605869-0000	.FLAP HOLDER	2-47, 2-49, 2-51, 2-53, 4-35, 4-37, 4-39, 4-41
2605875-0000	.FOLDING FLAP	2-103, 2-105, 2-133, 2-135
2605876-0000	.FOLDING FLAP	2-103, 2-105, 2-133, 2-135
2605993-0000	.SIDE PLATE	3-195, 3-197, 4-25
2605994-0000	.SIDE PLATE	3-195, 3-197, 4-25
2606102-0000	.FLAP HOLDER	2-47, 2-49, 2-51, 2-53, 4-35, 4-37, 4-39, 4-41
2606218-0000	.CAM	2-47, 2-49, 2-51, 2-53, 4-35, 4-37, 4-39, 4-41
2606219-0000	.STOPPER	2-47, 2-49, 2-51, 2-53, 4-35, 4-37, 4-39, 4-41
2606277-0000	.FOLDING DEVICE	3-115, 3-117
2606278-0000	.FOLDING DEVICE	3-115, 3-117
2606289-0000	.BOTTOM	3-49, 3-51
2606305-0000	.VOLUME FLAP	2-7, 2-9, 2-11
2606306-0000	.VOLUME FLAP	2-15, 2-17, 2-19
2606891-0000	.ECCENTRIC	2-141, 2-143, 2-145
2606892-0000	.ECCENTRIC	2-141, 2-143, 2-145
2607087-0000	.BOTTOM PLATE	1-101, 1-103, 1-105
2607440-0000	.SLIDE PLATE	1-101, 1-103, 1-105
2608149-0000	.ROLLER	2-155, 2-157
2608150-0000	.ROLLER	2-155, 2-157
2608237-0000	.SPOGNE	3-297
2608239-0000	.OPENING SPECIFICATION	3-301
2608240-0001	.WEIGHT	3-253, 3-283
2608240-0002	.WEIGHT	3-253
2608240-0003	.WEIGHT	3-293
2608240-0004	.WEIGHT	3-293
2609303-0000	.WEIGHT	1-95
2609368-0000	.TIE ROD	3-115, 3-117
2609369-0000	.FOLDING BAR	3-37, 3-39, 3-41
2609370-0000	.FOLDING BAR	3-37, 3-39, 3-41
2609371-0000	.SPACER	3-37, 3-39, 3-41
2609372-0000	.GUIDE	3-75, 3-77, 3-79, 3-81
2609923-0000	.WASHER	2-151, 2-153
2609925-0000	.VOLUME BULGE	2-47, 2-49, 2-51, 2-53, 4-35, 4-37, 4-39, 4-41
2610764-0000	.PLATE	3-189
2610779-0000	.BLOCK	3-111, 3-113
2610793-0000	.BLOCK	2-147, 2-149
2610954-0000	.RAIL	2-75, 2-77, 2-79

Part No	Description	Page No
2610955-0000	.RAIL	2-117, 2-119, 2-121
2610956-0000	.INDUCTOR	2-75, 2-77, 2-79, 2-117, 2-119, 2-121
2610957-0000	.FOLDING FLAP	2-103, 2-105, 2-133, 2-135
2610974-0000	.ROLLER	2-155, 2-157
2611000-0000	.CUTTING JAW	2-93, 2-95, 2-97
2611001-0000	.CLAMP HOLDER	2-75, 2-77, 2-79, 2-117, 2-119, 2-121
2611012-0000	.ROLLER	1-41, 1-43, 1-45, 1-47
2611013-0000	.UPPER FORMING RING	1-41, 1-43, 1-45, 1-47
2611016-0000	.ROLLER	1-41, 1-43, 1-45, 1-47
2611017-0000	.ROLLER	1-41, 1-43, 1-45, 1-47
2611020-0000	.ROLLER	1-41, 1-43, 1-45, 1-47
2611021-0000	.UPPER FORMING RING	1-41, 1-43, 1-45, 1-47
2611022-0000	.UPPER FORMING RING	1-41, 1-43, 1-45, 1-47
2611023-0000	.UPPER FORMING RING	1-41, 1-43, 1-45, 1-47
2611024-0000	.SPACER	1-41, 1-43, 1-45, 1-47
2611025-0000	.ROLLER	1-55, 1-57, 1-59
2611026-0000	.ROLLER	1-55, 1-57, 1-59
2611027-0000	.ROLLER	1-55, 1-57, 1-59
2611028-0000	.SUPPORT ROLLER	1-55, 1-57, 1-59
2611038-0000	.SUPPORT RING	1-55, 1-57, 1-59
2611039-0000	.ROLLER	1-5, 1-7, 1-11, 1-13
2611040-0000	.ROLLER	1-5, 1-7, 1-11, 1-13
2611041-0000	.SUPPORT ROLLER	1-5, 1-7, 1-11, 1-13
2611044-0000	.PLATE	1-29, 1-31
2611045-0000	.RING	1-29, 1-31
2611046-0000	.PLATE	1-29, 1-31
2611047-0000	.RING	1-29, 1-31
2611053-0000	.INDUCTOR	1-61, 1-63
2611054-0000	.INSULATING PLATE	1-61, 1-63
2611056-0000	.INSULATING PLATE	1-61, 1-63
2611072-0000	.SCREW	1-9
2611408-0000	.BRACKET	2-161, 2-163, 2-165
2611655-0000	.CLAMP HOLDER	2-75, 2-77, 2-79, 2-117, 2-119, 2-121
2611710-0000	.CUTTING JAW	2-93, 2-95, 2-97
2611875-0000	.SHIM	3-129, 3-131, 3-133, 3-135
2613645-0100	.CURVE UNIT	2-139
2613647-0100	.VOLUME CURVE PIECE	2-5
2613648-0100	.SUPPORT ROLLER	2-139
2613763-0000	.SLEEVE	2-147, 2-149
2613764-0000	.SLEEVE	2-141, 2-143, 2-145, 2-147, 2-149
2613809-0000	.SPACER	2-147, 2-149
2614371-0000	.ROLLER BRACKET	2-147, 2-149
2614372-0000	.SLEEVE	2-141, 2-143, 2-145, 2-147, 2-149
2614373-0000	.ROLLER BRACKET	2-147, 2-149
2614376-0001	.WASHER	2-141, 2-143, 2-145, 2-147, 2-149
2614376-0002	.WASHER	2-141, 2-143, 2-145, 2-147, 2-149
2616217-0000	.BOTTOM	3-105
2616218-0000	.BOTTOM	3-105, 4-25
2616219-0000	.BOTTOM	3-105, 4-25
2616220-0000	.BOW CLAMP	2-161, 2-163, 2-165
2616224-0100	.PHOTOCELL UNIT	2-5
2616227-0000	.TIMING BELT	3-163
2616229-0000	.BLOCK	3-111, 3-113
2616231-0000	.ROLLER	1-29, 1-31
2618259-0000	.SPACER	2-147, 2-149
2618302-0000	.PIVOT PIN	2-147, 2-149
2618377-0000	.ECCENTRIC	2-141, 2-143, 2-145, 2-147, 2-149
2618378-0000	.ECCENTRIC	2-141, 2-143, 2-145, 2-147, 2-149
2618683-0000	.SPACER	3-119, 3-121, 3-123, 3-125, 3-127
2619069-0000	.SLIDE	1-85
2619171-0000	.PLATE	1-85
2619198-0000	.SHAFT	2-155, 2-157
2619199-0000	.ROLLER	2-155, 2-157
2619200-0000	.PLATE	2-155, 2-157
2619210-0000	.SPACER	3-179
2619211-0000	.SPACER	3-179
2619212-0000	.SPACER	3-179
2619213-0000	.SPACER	3-179
2619319-0000	.SHAFT	2-155, 2-157
2619574-0000	.SPACER	3-53, 3-55
2619759-0000	.SLIDE	1-85
2623623-0000	.CYLINDER BRACKET	4-7, 4-9, 4-11, 4-13
2623624-0000	.CYLINDER BRACKET	4-7, 4-9, 4-11, 4-13
2623783-0000	.PLATE	2-155, 2-157
2623869-0000	.RUBBER HOLDER	4-7, 4-9, 4-11, 4-13
2623870-0000	.RUBBER DAMPER	4-7, 4-9, 4-11, 4-13
2624543-0000	.SPACER	2-141, 2-143, 2-145
2624544-0000	.PIVOT PIN	2-141, 2-143, 2-145
2624554-0000	.FOLDING FLAP	2-103, 2-105, 2-133, 2-135
2624555-0000	.FOLDING FLAP	2-103, 2-105, 2-133, 2-135
2628598-0000	.SPACER	2-141, 2-143, 2-145
2629236-0000	.CAM	2-47, 2-49, 2-51, 2-53, 4-35, 4-37, 4-39, 4-41
2629237-0000	.CAM	2-47, 2-49, 2-51, 2-53, 4-35, 4-37, 4-39, 4-41
2629239-0000	.TUBE FLUSHING DEVICE	2-159

Part No	Description	Page No
2629240-0000	.TUBE FLUSHING DEVICE	2-159
2629336-0000	.BOTTOM	3-107
2629344-0000	.SPACER	3-89, 3-91
2632565-0000	.SHAFT	1-35, 1-37, 1-39
2632817-0000	.PLATE	2-155, 2-157
2632818-0000	.SHAFT	2-155, 2-157
2633438-0000	.SPACER	2-141, 2-143, 2-145
2634509-0100	.VOLUME KIT	3-3
2634511-0100	.MECHANICAL DIFFERENCES	3-5
2634515-0000	.CANTILEVER	2-23, 2-25, 2-35, 2-37
2634523-0000	.LOWER FILLING PIPE	1-17, 1-19, 1-21
2634524-0000	.PRESSURE FLANGE	1-17, 1-19, 1-21
2634565-0001	.PAM - SAM EASY DOWNLOAD	2-167
2634567-0001	.PAM - SAM EASY DOWNLOAD	2-167
2634569-0001	.PAM - SAM EASY DOWNLOAD	2-167
2634571-0001	.PAM - SAM EASY DOWNLOAD	2-167
2634573-0001	.PAM - SAM EASY DOWNLOAD	2-167
2634575-0001	.PAM - SAM EASY DOWNLOAD	2-167
2634577-0001	.PAM - SAM EASY DOWNLOAD	2-167
2634579-0001	.PAM - SAM EASY DOWNLOAD	2-167
2634581-0001	.PAM - SAM EASY DOWNLOAD	2-167
2634583-0001	.PAM - SAM EASY DOWNLOAD	2-167
2634585-0001	.PAM - SAM EASY DOWNLOAD	2-167
2634926-0000	.SUPPORT ROLLER	1-55, 1-57, 1-59
2634930-0000	.SUPPORT ROLLER	1-11, 1-13
2634931-0000	.BRACKET	1-11, 1-13
2634932-0000	.BRACKET	1-151, 1-153
2634933-0000	.BRACKET	1-151, 1-153
2634934-0000	.SHAFT	1-151, 1-153
2634943-0000	.ROLLER	1-5, 1-7
2634944-0000	.UPPER FORMING RING	1-41, 1-43, 1-45, 1-47
2634945-0000	.UPPER FORMING RING	1-41, 1-43, 1-45, 1-47
2634946-0000	.UPPER FORMING RING	1-41, 1-43, 1-45, 1-47
2634947-0000	.ROLLER	1-41, 1-43, 1-45, 1-47
2634948-0000	.ROLLER	1-41, 1-43, 1-45, 1-47
2634949-0000	.ROLLER	1-41, 1-43, 1-45, 1-47
2634950-0000	.UPPER FORMING RING	1-41, 1-43, 1-45, 1-47
2634951-0000	.UPPER FORMING RING	1-41, 1-43, 1-45, 1-47
2634952-0000	.UPPER FORMING RING	1-41, 1-43, 1-45, 1-47
2634953-0000	.ROLLER	1-41, 1-43, 1-45, 1-47
2634954-0000	.ROLLER	1-41, 1-43, 1-45, 1-47
2634955-0000	.ROLLER	1-41, 1-43, 1-45, 1-47
2634956-0000	.ROLLER	1-41, 1-43, 1-45, 1-47
2634957-0000	.ROLLER	1-41, 1-43, 1-45, 1-47
2634958-0000	.ROLLER	1-41, 1-43, 1-45, 1-47
2634961-0000	.SHIM	1-41, 1-43, 1-45, 1-47
2634967-0000	.SUPPORT RING	1-55, 1-57, 1-59
2634968-0000	.ROLLER	1-55, 1-57, 1-59
2634969-0000	.ROLLER	1-55, 1-57, 1-59
2634970-0000	.ROLLER	1-55, 1-57, 1-59
2634971-0000	.ROLLER	1-55, 1-57, 1-59
2634983-0000	.ROLLER	1-41, 1-43, 1-45, 1-47
2634984-0000	.ROLLER	1-41, 1-43, 1-45, 1-47
2634985-0000	.ROLLER	1-41, 1-43, 1-45, 1-47
2634987-0000	.SPACER	1-41, 1-43, 1-45, 1-47
2634988-0000	.ROLLER	1-41, 1-43, 1-45, 1-47
2634989-0000	.ROLLER	1-41, 1-43, 1-45, 1-47
2634990-0000	.ROLLER	1-41, 1-43, 1-45, 1-47
2634991-0000	.UPPER FORMING RING	1-41, 1-43, 1-45, 1-47
2634992-0000	.UPPER FORMING RING	1-41, 1-43, 1-45, 1-47
2634995-0000	.FLOAT	1-17, 1-19, 1-21
2635167-0000	.VOLUME BULGE	3-129, 3-131, 3-133, 3-135
2635406-0000	.RAIL	3-141, 3-143, 3-145, 3-147
2635543-0000	.RAIL	3-141, 3-143, 3-145, 3-147
2636081-0100	.FLAP HEATER	4-3
2636082-0100	.FLAP HEATER	4-5
2636399-0000	.FLAP	3-107
2636400-0000	.BOTTOM	3-107
2636401-0000	.SLIDE	3-107
2638180-0000	.INSERT	3-99, 3-101, 3-103
2639127-0000	.FOLDING BAR	3-37, 3-39, 3-41
2639128-0000	.FOLDING BAR	3-37, 3-39, 3-41
2639393-0000	.SPACER	3-37, 3-39, 3-41
2639394-0000	.GUIDE FORK	3-241, 3-243
2639832-0000	.RAIL	3-141, 3-143, 3-145, 3-147
2639866-0000	.VOLUME FLAP	2-47, 2-49, 4-35, 4-37
2639867-0000	.VOLUME FLAP	2-51, 2-53, 4-39, 4-41
2640075-0000	.VOLUME BULGE	3-129, 3-131, 3-133, 3-135
2640076-0000	.RAIL	3-141, 3-143, 3-145, 3-147
2640138-0000	.VOLUME BULGE	2-47, 2-49, 2-51, 2-53, 4-35, 4-37, 4-39, 4-41
2640139-0000	.VOLUME SHIM	1-73, 1-75, 1-77, 1-79, 1-81, 1-83, 2-47, 2-49, 2-51, 2-53, 4-35, 4-37, 4-39, 4-41
2640353-0000	.BRACKET	1-5, 1-7
2640354-0000	.ROLLER	1-5, 1-7
2640963-0000	.BRACKET	2-161, 2-163, 2-165

Part No	Description	Page No
2640991-0000	.SLIDE	1-61, 1-63
2640992-0000	.SLIDE	1-61, 1-63
2640993-0000	.PLATE	1-61, 1-63
2641000-0000	.SHAFT	1-61, 1-63
2641225-0000	.INSERT	2-65, 2-67, 2-85, 2-87, 2-89, 2-109, 2-111, 2-125, 2-127, 2-129
2641282-0000	.COUNTER ROLLER	1-35, 1-37, 1-39
2641285-0000	.ROLLER	1-41, 1-43, 1-45, 1-47
2641286-0000	.ROLLER	1-41, 1-43, 1-45, 1-47
2641287-0000	.ROLLER	1-41, 1-43, 1-45, 1-47
2641288-0000	.ROLLER	1-41, 1-43, 1-45, 1-47
2641289-0000	.ROLLER	1-41, 1-43, 1-45, 1-47
2641290-0000	.ROLLER	1-41, 1-43, 1-45, 1-47
2641294-0000	.STOP PIN	1-17, 1-19, 1-21
2641297-0000	.PRESSURE FLANGE	1-17, 1-19, 1-21
2641317-0000	.PIPE	1-87, 1-89
2641318-0000	.NOZZLE	1-87, 1-89
2641319-0000	.BRACKET	1-87, 1-89
2641396-0100	.BENDING ROLLER	3-3
2641398-0100	.SQUEE-GEE ROLLER	3-3
2641480-0100	.HEATING PART	4-5
2641923-0000	.WASHER	1-61, 1-63
2642049-0100	.MECHANICAL REBUILDING	3-201
2642097-0000	.PLATE	2-155, 2-157
2642943-0000	.BEARING HOUSING	2-93, 2-95, 2-97
2642988-0100	.PLATE	1-3
2644177-0000	.CLAMP HUB	3-165
2644178-0000	.BLOCK	3-165
2644397-0000	.HOLDER	2-75, 2-77, 2-79, 2-117, 2-119, 2-121
2645568-0000	.CUTTING JAW	2-93, 2-95, 2-97
2645650-0000	.ROLLER	3-283, 3-295
2646344-0000	.PLATE	2-155, 2-157
2646345-0000	.SHAFT	2-155, 2-157
2646470-0000	.RUBBER DAMPER	4-7, 4-9, 4-11, 4-13
2648819-0000	.SEALING PLATE	3-273, 3-297
2648846-0000	.SHAFT	2-155, 2-157
2648847-0000	.PLATE	2-155, 2-157
2649130-0000	.GUIDE RAIL	3-89, 3-91
2649131-0000	.GUIDE RAIL	3-89, 3-91
2649132-0000	.GUIDE RAIL	3-89, 3-91
2649133-0000	.GUIDE RAIL	3-89, 3-91
2649134-0000	.BRACKET	3-89, 3-91
2649135-0000	.SPACER	3-89, 3-91
2649139-0000	.SPACER	3-89, 3-91
2649441-0000	.SHAFT	2-155, 2-157
2649442-0000	.PLATE	2-155, 2-157
2649443-0000	.CAM	2-47, 2-49, 2-51, 2-53, 4-35, 4-37, 4-39, 4-41
2650807-0000	.SIDE PLATE	3-195, 3-197
2650808-0000	.SIDE PLATE	3-195, 3-197
2650812-0000	.SHAFT	2-155, 2-157
2650813-0000	.BRACKET	1-67, 1-69
2650814-0000	.BOW CLAMP	2-161, 2-163, 2-165
2650815-0000	.BRACKET	2-161, 2-163, 2-165
2650817-0000	.SPRING	1-73, 1-75, 1-77, 1-79, 1-81, 1-83, 3-105
2651145-0000	.BLOCK	3-129, 3-131, 3-133, 3-135
2651146-0000	.FLAP	3-99, 3-101, 3-103
2651573-0000	.TEMPLATE	3-299
2651695-0000	.COVER PLATE	1-151, 1-153
2651789-0000	.ROLLER	1-11, 1-13
2651790-0000	.ROLLER	1-11, 1-13
2652191-0000	.KNOB	3-53, 3-55, 3-57, 3-59
2652199-0001	.PAM - SAM EASY DOWNLOAD	2-167
2652202-0001	.PAM - SAM EASY DOWNLOAD	2-167
2652206-0000	.GUIDE	3-141, 3-143, 3-145, 3-147
2652311-0000	.PLATE	3-179
2652888-0000	.SHAFT	3-105
2652889-0000	.SCREW	3-105
2652892-0000	.PLATE	2-155, 2-157
2652893-0000	.RAIL	3-141, 3-143, 3-145, 3-147
2652896-0000	.SHAFT	2-23, 2-25, 2-35, 2-37
2654290-0000	.VOLUME SHIM	1-73, 1-75, 1-77, 1-79, 1-81, 1-83, 2-47, 2-49, 2-51, 2-53, 4-35, 4-37, 4-39, 4-41
2654985-0000	.RAIL	3-141, 3-143, 3-145, 3-147
2655095-0000	.BRACKET	2-161, 2-163, 2-165
2655096-0000	.SLIDE	2-161, 2-163, 2-165
2655097-0000	.KNOB	2-161, 2-163, 2-165
2655098-0000	.SHAFT	2-161, 2-163, 2-165
2655500-0000	.WASHER	3-141, 3-143, 3-145, 3-147
2655614-0100	.TRANSFORMER	3-3
2656299-0000	.SHAFT	3-311
2656672-0000	.SPROCKET	3-179
2656899-0000	.BRACKET	1-67, 1-69
2656985-0000	.SPACER	4-7, 4-9, 4-11, 4-13
2657136-0100	.ELECTRICAL DOCUMENT	2-3
2657828-0000	.PUNCH	3-265
2657829-0000	.DIE	3-265

Part No	Description	Page No
2657857-0000	.UPPER FORMING RING	1-41, 1-43, 1-45, 1-47
2657858-0000	.UPPER FORMING RING	1-41, 1-43, 1-45, 1-47
2657859-0000	.UPPER FORMING RING	1-41, 1-43, 1-45, 1-47
2657860-0000	.BRACKET	1-5, 1-7
2657873-0100	.LONGITUDINAL SEALING	1-3
2657886-0000	.COUNTER PLATE	1-101, 1-103, 1-105
2657887-0000	.HORN	1-95
2657888-0000	.HORN	1-95
2657922-0000	.SHUTTER	1-23
2657923-0000	.COUNTER ROLLER	1-35, 1-37, 1-39
2657925-0000	.ROLLER	1-9
2657932-0000	.BAR	3-63, 3-65, 4-31, 4-33
2657933-0000	.BAR	3-67, 3-69, 3-71, 4-27, 4-29
2657934-0000	.SLIDE	3-67, 3-69, 3-71, 4-27, 4-29
2657935-0000	.SLIDE	3-63, 3-65, 4-31, 4-33
2657936-0000	.GUIDE	3-67, 3-69, 3-71, 4-27, 4-29
2657937-0000	.GUIDE	3-63, 3-65, 4-31, 4-33
2658045-0000	.OPENING SPECIFICATION	3-301
2658046-0000	.OPENING SPECIFICATION	3-301
2658047-0000	.OPENING SPECIFICATION	3-301
2658048-0000	.OPENING SPECIFICATION	3-301
2658049-0000	.AIR NOZZLE	3-211
2658050-0000	.PLATE	3-211
2658051-0000	.AIR NOZZLE	3-211
2658078-0000	.SEALING PLATE	3-271, 3-297
2658390-0100	.BOTTOM	3-99, 3-101, 3-103
2660222-0000	.CAM	2-147, 2-149
2660376-0100	.CABLE HARNESS	4-5
2660400-0000	.STOP	2-57, 2-63
2660401-0000	.CATCH	2-57, 2-63
2660476-0100	.LUBRICATION PIPE FITTING	2-3
2660573-0000	.BASIC PLATE	4-7, 4-9, 4-11, 4-13
2660575-0000	.GUIDE PLATE	4-7, 4-9, 4-11, 4-13
2660604-0000	.PIPE	4-15
2660610-0000	.RUBBER DAMPER	4-7, 4-9, 4-11, 4-13
2660732-0000	.SPACER	4-7, 4-9, 4-11, 4-13
2660737-0000	.STOP	4-7, 4-9, 4-11, 4-13
2660825-0000	.BRACKET	3-235
2660841-0000	.PUSHER	3-129, 3-131, 3-133, 3-135
2660847-0000	.TAPE	3-297
2661153-0000	.SPACER	3-53, 3-55
2661429-0000	.PUSHER	3-129, 3-131, 3-133, 3-135
2661450-0000	.VOLUME FLAP	2-51, 2-53, 4-39, 4-41
2661451-0000	.VOLUME FLAP	2-47, 2-49, 4-35, 4-37
2662142-0000	.SPRING	1-73, 1-75, 1-77, 1-79, 1-81, 1-83, 3-129, 3-131, 3-133, 3-135
2662165-0000	.SPRING	1-73, 1-75, 1-77, 1-79, 1-81, 1-83, 2-23, 2-25, 2-35, 2-37
2662166-0000	.SPRING	1-73, 1-75, 1-77, 1-79, 1-81, 1-83, 2-23, 2-25, 2-35, 2-37
2662167-0000	.BUSHING	2-23, 2-25, 2-35, 2-37
2662168-0000	.VOLUME BULGE	2-47, 2-49, 2-51, 2-53, 4-35, 4-37, 4-39, 4-41
2662169-0000	.VOLUME SHIM	1-73, 1-75, 1-77, 1-79, 1-81, 1-83, 2-47, 2-49, 2-51, 2-53, 4-35, 4-37, 4-39, 4-41
2662431-0000	.CAM	2-47, 2-49, 2-51, 2-53, 4-35, 4-37, 4-39, 4-41
2662639-0000	.ROLLER	1-95
2663375-0000	.WASHER	2-23, 2-25, 2-35, 2-37
2663376-0000	.WASHER	2-23, 2-25, 2-35, 2-37
2664035-0000	.SPACER SCREW	3-89, 3-91
2664098-0000	.FILLING PIPE	1-17, 1-19, 1-21
2664200-0000	.GUIDE	3-63, 3-65, 4-31, 4-33
2664201-0000	.GUIDE	3-67, 3-69, 3-71, 4-27, 4-29
2664280-0000	.HOLDER	2-75, 2-77, 2-79, 2-117, 2-119, 2-121
2664596-0000	.CARRIER	1-73, 1-75, 1-77, 1-79, 1-81, 1-83, 3-155, 3-157, 3-159
2664603-0000	.CAM	2-147, 2-149
2664761-0000	.KNIFE	1-73, 1-75, 1-77, 1-79, 1-81, 1-83, 2-137
2664762-0000	.CUTTING JAW	2-93, 2-95, 2-97
2664765-0000	.TEMPLATE	3-299
2664766-0000	.TEMPLATE	3-299
2664767-0000	.OPENING SPECIFICATION	3-301
2664768-0000	.OPENING SPECIFICATION	3-301
2664779-0000	.PLATE	2-155, 2-157
2664780-0000	.PLATE	2-155, 2-157
2665188-0000	.CUTTING JAW	2-93, 2-95, 2-97
2665197-0000	.BRACKET	3-189
2665198-0000	.PROTECTION	3-191
2665199-0000	.SLIDE	3-189
2665200-0000	.GUIDE	3-57, 3-59
2665201-0000	.GUIDE	3-57, 3-59
2665202-0000	.GUIDE	3-63, 3-65, 4-31, 4-33
2665203-0000	.GUIDE	3-67, 3-69, 3-71, 4-27, 4-29
2665204-0000	.CRADLE	3-195
2665205-0000	.PLATE	3-195, 3-197
2665206-0000	.PLATE	3-195, 3-197
2665624-0000	.BENDING ROLLER	1-149
2668565-0000	.NOZZLE	1-87, 1-89
2668569-0000	.PLUG	1-87, 1-89
2671730-0100	.AIR NOZZLE	1-3

Part No	Description	Page No
2672745-0000	.VOLUME SHIM	1-73, 1-75, 1-77, 1-79, 1-81, 1-83, 2-59, 4-43
2672746-0000	.VOLUME BULGE	2-59, 4-43
2672797-0000	.TEMPLATE	3-299
2672798-0000	.TEMPLATE	3-299
2672799-0000	.TEMPLATE	3-299
2672800-0000	.TEMPLATE	3-299
2672936-0000	.SHUTTER	1-23
2672937-0000	.SHUTTER	1-23
2672938-0000	.SHUTTER	1-23
2672949-0000	.FILLING PIPE	1-17, 1-19, 1-21
2672950-0000	.ROLLER	1-41, 1-43, 1-45, 1-47
2672951-0000	.ROLLER	1-41, 1-43, 1-45, 1-47
2672952-0000	.ROLLER	1-41, 1-43, 1-45, 1-47
2672953-0000	.ROLLER	1-41, 1-43, 1-45, 1-47
2672954-0000	.ROLLER	1-41, 1-43, 1-45, 1-47
2672955-0000	.ROLLER	1-41, 1-43, 1-45, 1-47
2672962-0000	.CONNECTING PIPE	1-95
2672968-0000	.INSULATING PLATE	1-61, 1-63
2672970-0000	.ROLLER	1-55, 1-57, 1-59
2672978-0000	.ROLLER	1-41, 1-43, 1-45, 1-47
2672979-0000	.ROLLER	1-41, 1-43, 1-45, 1-47
2672980-0000	.ROLLER	1-41, 1-43, 1-45, 1-47
2672981-0000	.ROLLER	1-41, 1-43, 1-45, 1-47
2672984-0000	.INDUCTOR	1-61, 1-63
2672985-0000	.ROLLER	1-55, 1-57, 1-59
2672986-0000	.ROLLER	1-55, 1-57, 1-59
2672994-0000	.HOOD	1-17, 1-19, 1-21
2673005-0000	.FILLING PIPE	1-17, 1-19, 1-21
2673015-0000	.FORK	1-17, 1-19, 1-21
2673016-0000	.FORK	1-17, 1-19, 1-21
2673021-0000	.SHAFT	1-17, 1-19, 1-21
2673022-0000	.SHAFT	1-17, 1-19, 1-21
2673023-0000	.LOWER FORMING RING	1-35, 1-37, 1-39
2674188-0100	.EDGE ROLLER	1-3
2674511-0000	.CAM	3-211
2674566-0001	.PAM - SAM EASY DOWNLOAD	2-167
2675077-0000	.SUPPORT	4-7, 4-9, 4-11, 4-13
2675580-0001	.PAM - SAM EASY DOWNLOAD	2-167
2676815-0000	.FOLDING BAR	3-83, 3-85, 3-87
2676816-0000	.FOLDING BAR	3-83, 3-85, 3-87
2677636-0000	.LEVER	1-93, 1-115
2677899-0000	.WASHER	2-161, 2-163, 2-165
2678414-0000	.RAIL	3-141, 3-143, 3-145, 3-147
2678417-0000	.WHEEL	3-171, 3-173
2678621-0000	.GUIDE	3-67, 3-69, 3-71, 4-27, 4-29
2678622-0000	.GUIDE	3-63, 3-65, 4-31, 4-33
2678706-0101	.DOCUMENT FOLDER	3-201
2678708-0000	.SUPPORT	3-189
2678709-0100	.PROTECTIVE COVER	3-189
2678710-0100	.INFEED CONVEYOR SHORT	3-181
2678753-0000	.PLATE	3-189
2678844-0100	.PT FLEX HOLES	3-167
2679598-0000	.SPLASH PLATE	1-95
2679599-0000	.CHUTE	1-95
2679884-0000	.BRACKET	2-161, 2-163, 2-165
2679885-0000	.SLIDE	2-161, 2-163, 2-165
2679886-0000	.KNOB	2-161, 2-163, 2-165
2679889-0000	.SPRING	1-17, 1-19, 1-21
2680193-0000	.ROLLER	1-55, 1-57, 1-59
2680195-0000	.ROLLER	1-41, 1-43, 1-45, 1-47
2680196-0000	.ROLLER	1-41, 1-43, 1-45, 1-47
2680197-0000	.ROLLER	1-41, 1-43, 1-45, 1-47
2680198-0000	.ROLLER	1-41, 1-43, 1-45, 1-47
2680201-0000	.ROLLER	1-41, 1-43, 1-45, 1-47
2681259-0000	.RAIL	1-123, 1-125
2681260-0000	.RAIL	1-123, 1-125
2681261-0000	.SHAFT	1-119, 1-121
2681262-0000	.BRACKET	1-119, 1-121
2681263-0000	.BUSHING	1-119, 1-121
2681266-0000	.WASHER	1-119, 1-121
2681267-0000	.PLATE	1-123, 1-125
2681535-0000	.SHAFT	1-123, 1-125
2682167-0000	.ROLLER	1-55, 1-57, 1-59
2682168-0000	.ROLLER	1-55, 1-57, 1-59
2682169-0000	.ROLLER	1-55, 1-57, 1-59
2682170-0000	.ROLLER	1-55, 1-57, 1-59
2685277-0000	.FILLING PIPE	1-17, 1-19, 1-21
2685285-0000	.BRACKET	1-17, 1-19, 1-21
2685306-0000	.PRESSURE FLANGE	1-17, 1-19, 1-21
2685311-0000	.CONNECTING PIPE	1-95
2685417-0000	.BUSHING	1-93, 1-115
2685631-0000	.ROLLER	1-55, 1-57, 1-59
2685632-0000	.ROLLER	1-55, 1-57, 1-59
2685633-0000	.ROLLER	1-55, 1-57, 1-59

Part No	Description	Page No
2686144-0000	.SHAFT	2-75, 2-77, 2-79, 2-93, 2-95, 2-97, 2-117, 2-119, 2-121
2686488-0100	.OUTER PATCH MAGAZINE	3-203, 3-205, 3-207
2686489-0100	.PANEL	3-203, 3-205, 3-207
2686861-0000	.ROLLER	1-35, 1-37, 1-39
2686876-0000	.PUSHER	3-129, 3-131, 3-133, 3-135
2687097-0001	.PAM - SAM EASY DOWNLOAD	2-167
2687100-0001	.PAM - SAM EASY DOWNLOAD	2-167
2687103-0001	.PAM - SAM EASY DOWNLOAD	2-167
2687106-0001	.PAM - SAM EASY DOWNLOAD	2-167
2688917-0000	.ROLLER	2-155, 2-157
2689138-0000	.MOUNTING BLOCK	1-123, 1-125
2689172-0000	.SPACER	1-41, 1-43, 1-45, 1-47
2689173-0000	.MOUNTING BLOCK	1-123, 1-125
2690494-0100	.PNEUMATIC SYSTEM	1-95
2691359-0000	.INDUCTOR	1-61, 1-63
2691695-0100	.BOX 5 - SUPERSTRUCTURE	1-3
2693161-0100	.INSTALLATION MATERIAL	3-203, 3-205, 3-207
2693197-0000	.INSERT	3-99, 3-101, 3-103
2693199-0000	.PLATE	1-123, 1-125
2693200-0000	.SCREW	3-99, 3-101, 3-103
2693446-0000	.STOPPER	2-47, 2-49, 2-51, 2-53, 4-35, 4-37, 4-39, 4-41
2693622-0000	.SPACER	1-23
2694714-0000	.GUIDE	1-61, 1-63
2694715-0000	.SUPPORT	1-61, 1-63
2694716-0000	.PLATE	1-61, 1-63
2695408-0000	.HOLDER	2-153
2695409-0000	.HOLDER	2-151
2695491-0000	.ANGLE BRACKET	3-209
2695492-0000	.PLATE	3-209
2695493-0000	.OPENING SPECIFICATION	3-301
2695800-0000	.INDUCTOR	1-61, 1-63
2695955-0100	.VOLUME FLAP	2-55, 2-61
2695955-0101	.VOLUME FLAP	4-25
2695955-0102	.VOLUME FLAP	4-25
2696156-0100	.VOLUME FLAP	2-61
2696182-0100	.VOLUME FLAP	2-55
2696580-0000	.OPENING SPECIFICATION	3-301
2697138-0100	.CLUTCH	3-163
2697205-0000	.OPENING SPECIFICATION	3-301
2697307-0000	.CURVE	2-141, 2-143, 2-145
2698011-0000	.BUSBAR	2-75, 2-77, 2-79
2698012-0000	.BUSBAR	2-117, 2-119, 2-121
2698178-0000	.BUSBAR	1-95
2698251-0000	.BOX	4-3
2698520-0000	.LEVER	1-147
2699106-0000	.SIDE PLATE	3-179
2699107-0000	.SIDE PLATE	3-179
2699108-0000	.SHAFT	3-179
2699109-0000	.SPACER	3-179
2699870-0001	.PAM - SAM EASY DOWNLOAD	2-167
2699873-0001	.PAM - SAM EASY DOWNLOAD	2-167
2700151-0000	.LID	2-73
2701063-0100	.DROP CHUTE VARIANT	3-167
2701755-0001	.PAM - SAM EASY DOWNLOAD	2-167
2701758-0001	.PAM - SAM EASY DOWNLOAD	2-167
2701846-0000	.FLANGE	3-313
2701847-0000	.BRACKET	3-313
2701880-0000	.FLANGE	3-313
2701881-0000	.BRACKET	3-313
2701978-0100	.LID ADAPTER	1-95
2702068-0000	.BOX	1-95
2702374-0100	.CONVEYOR	3-167
2703095-0000	.ROCKER ARM	1-119, 1-121
2703096-0000	.SUPPORT	1-119, 1-121
2709302-0000	.ROLLER	1-55, 1-57, 1-59
2709785-0000	.ROLLER	1-35, 1-37, 1-39
2710505-0000	.STOP	4-7, 4-9, 4-11, 4-13
2713376-0000	.BRACKET	1-127
2713377-0000	.SUPPORT	1-129
2716447-0001	.PAM - SAM EASY DOWNLOAD	2-167
2716449-0001	.PAM - SAM EASY DOWNLOAD	2-167
2718901-0000	.SEAL	1-29, 1-31
2719737-0000	.PNEUMATIC DIAGRAM	4-17
2720207-0000	.SLIDE	1-85
2720717-0000	.ROLLER	1-41, 1-43, 1-45, 1-47
2720718-0000	.UPPER FORMING RING	1-41, 1-43, 1-45, 1-47
2721431-0100	.SUPPORT RAIL	1-95
2721432-0100	.SUPPORT RAIL	1-95
2721433-0100	.SUPPORT RAIL	1-3
2721434-0000	.SHAFT	1-95
2728205-0100	.KIT	1-95
2731260-0100	.KIT	1-95

Part No	Description	Page No	Part No	Description	Page No

Tetra Pak

SPC
Spare Parts Catalogue

Pos	Part No	Description	Page No
B			
B1321	90458-0138	PROX.SW. E2EG-X1R5B1-5M	1-23
B1322	1478814-0000	SENSOR	1-23
B1405	90044-0194	PROX.SW. IN5329/IN3002-BPKG	1-101, 1-103, 1-105
B1502	90044-0194	PROX.SW. IN5329/IN3002-BPKG	1-97, 1-99
B1504	90459-0472	KEY SAF.SW. AZ 16 02ZVRK-M20-2152-2254	1-137
B1509	90459-0472	KEY SAF.SW. AZ 16 02ZVRK-M20-2152-2254	1-135
B5103	90044-0194	PROX.SW. IN5329/IN3002-BPKG	3-183, 3-187, 3-189
B5203	90044-0194	PROX.SW. IN5329/IN3002-BPKG	3-183, 3-187, 3-189
B5302	90044-0194	PROX.SW. IN5329/IN3002-BPKG	3-129, 3-131, 3-133, 3-135
B5307	90326-0081	THERMOCOUPLE, ISA TYPE K.	4-19
B5308	90326-0081	THERMOCOUPLE, ISA TYPE K.	4-19
B5309	90326-0081	THERMOCOUPLE, ISA TYPE K.	4-19
B5402	90232-0104	PH.CELL E3S-CT61-D-5M	3-175, 3-177
B5403	90232-0103	PH.CELL E3S-CT61-L-5M	3-175, 3-177
B5501	90232-0104	PH.CELL E3S-CT61-D-5M	3-175, 3-177
B5502	90232-0103	PH.CELL E3S-CT61-L-5M	3-175, 3-177
B8420	90458-2241	PRESSURE SWITCH 0,5-10 BAR ADJUSTABLE	1-141
B8425	90044-0194	PROX.SW. IN5329/IN3002-BPKG	3-241, 3-243
B8426	90458-0675	PROXIMITY SENSOR, E2EG-X5MB1-5M	3-241, 3-243
B8427	90458-0675	PROXIMITY SENSOR, E2EG-X5MB1-5M	3-241, 3-243
B8428	90458-0675	PROXIMITY SENSOR, E2EG-X5MB1-5M	3-241, 3-243
B8607	90232-0123	PH.CELL WLL170-P135-6011723	3-239
B43011	90458-0601	CONTRAST SCANNER, KT15W-P2110S01	2-161, 2-163, 2-165
B43012	90458-0601	CONTRAST SCANNER, KT15W-P2110S01	2-161, 2-163, 2-165
F			
FF010	2662142-0000	SPRING	1-73, 1-75, 1-77, 1-79, 1-81, 1-83
FF020	2650817-0000	SPRING	1-73, 1-75, 1-77, 1-79, 1-81, 1-83
FF030	2664596-0000	CARRIER	1-73, 1-75, 1-77, 1-79, 1-81, 1-83
J			
JS010	1110083-0002	DOLLY	1-73, 1-75, 1-77, 1-79, 1-81, 1-83
JS010	1520633-0005	DOLLY	1-73, 1-75, 1-77, 1-79, 1-81, 1-83
JS020	1110930-0000	INDUCTOR	1-73, 1-75, 1-77, 1-79, 1-81, 1-83
JS020	1110931-0000	INDUCTOR	1-73, 1-75, 1-77, 1-79, 1-81, 1-83
JS020	1110932-0000	INDUCTOR	1-73, 1-75, 1-77, 1-79, 1-81, 1-83
JS020	1110934-0000	INDUCTOR	1-73, 1-75, 1-77, 1-79, 1-81, 1-83
JS020	1110936-0000	INDUCTOR	1-73, 1-75, 1-77, 1-79, 1-81, 1-83
JS020	1110937-0000	INDUCTOR	1-73, 1-75, 1-77, 1-79, 1-81, 1-83
JS020	1110938-0000	INDUCTOR	1-73, 1-75, 1-77, 1-79, 1-81, 1-83
JS020	1520052-0000	INDUCTOR	1-73, 1-75, 1-77, 1-79, 1-81, 1-83
JS020	1520167-0000	INDUCTOR	1-73, 1-75, 1-77, 1-79, 1-81, 1-83
JS020	1533046-0000	INDUCTOR	1-73, 1-75, 1-77, 1-79, 1-81, 1-83
JS020	2546474-0000	INDUCTOR	1-73, 1-75, 1-77, 1-79, 1-81, 1-83
JS020	2587466-0000	INDUCTOR	1-73, 1-75, 1-77, 1-79, 1-81, 1-83
JS020	2587467-0000	INDUCTOR	1-73, 1-75, 1-77, 1-79, 1-81, 1-83
JS030	1035831-0000	VOLUME SHIM	1-73, 1-75, 1-77, 1-79, 1-81, 1-83
JS030	1037735-0000	VOLUME SHIM	1-73, 1-75, 1-77, 1-79, 1-81, 1-83
JS030	1040755-0000	VOLUME SHIM	1-73, 1-75, 1-77, 1-79, 1-81, 1-83
JS030	1346158-0000	VOLUME SHIM	1-73, 1-75, 1-77, 1-79, 1-81, 1-83
JS030	1349208-0000	VOLUME SHIM	1-73, 1-75, 1-77, 1-79, 1-81, 1-83
JS030	1487627-0000	VOLUME SHIM	1-73, 1-75, 1-77, 1-79, 1-81, 1-83
JS030	1511253-0000	VOLUME SHIM	1-73, 1-75, 1-77, 1-79, 1-81, 1-83
JS030	1511336-0000	VOLUME SHIM	1-73, 1-75, 1-77, 1-79, 1-81, 1-83
JS030	1511337-0000	VOLUME SHIM	1-73, 1-75, 1-77, 1-79, 1-81, 1-83
JS030	1532293-0000	VOLUME SHIM	1-73, 1-75, 1-77, 1-79, 1-81, 1-83
JS030	1538637-0000	VOLUME SHIM	1-73, 1-75, 1-77, 1-79, 1-81, 1-83
JS030	1539902-0000	VOLUME SHIM	1-73, 1-75, 1-77, 1-79, 1-81, 1-83
JS030	1549830-0000	VOLUME SHIM	1-73, 1-75, 1-77, 1-79, 1-81, 1-83
JS030	2594891-0000	VOLUME SHIM	1-73, 1-75, 1-77, 1-79, 1-81, 1-83
JS030	2605166-0000	VOLUME SHIM	1-73, 1-75, 1-77, 1-79, 1-81, 1-83
JS030	2640139-0000	VOLUME SHIM	1-73, 1-75, 1-77, 1-79, 1-81, 1-83
JS030	2654290-0000	VOLUME SHIM	1-73, 1-75, 1-77, 1-79, 1-81, 1-83
JS030	2662169-0000	VOLUME SHIM	1-73, 1-75, 1-77, 1-79, 1-81, 1-83
JS035	1539843-0000	VOLUME SHIM	1-73, 1-75, 1-77, 1-79, 1-81, 1-83
JS035	2594890-0000	VOLUME SHIM	1-73, 1-75, 1-77, 1-79, 1-81, 1-83
JS035	2672745-0000	VOLUME SHIM	1-73, 1-75, 1-77, 1-79, 1-81, 1-83
JS040	1348955-0000	KNIFE	1-73, 1-75, 1-77, 1-79, 1-81, 1-83
JS040	1348956-0000	KNIFE	1-73, 1-75, 1-77, 1-79, 1-81, 1-83
JS040	1348966-0000	KNIFE	1-73, 1-75, 1-77, 1-79, 1-81, 1-83
JS040	1549828-0000	KNIFE	1-73, 1-75, 1-77, 1-79, 1-81, 1-83
JS040	2664761-0000	KNIFE	1-73, 1-75, 1-77, 1-79, 1-81, 1-83
JS050	1037254-0000	SHIM	1-73, 1-75, 1-77, 1-79, 1-81, 1-83
JS060	927252-0000	COMPRESSION SPRING	1-73, 1-75, 1-77, 1-79, 1-81, 1-83
JS060	1260659-0000	SPRING	1-73, 1-75, 1-77, 1-79, 1-81, 1-83
JS070	2662165-0000	SPRING	1-73, 1-75, 1-77, 1-79, 1-81, 1-83
JS080	2662166-0000	SPRING	1-73, 1-75, 1-77, 1-79, 1-81, 1-83
JS090	1549378-0000	SPRING	1-73, 1-75, 1-77, 1-79, 1-81, 1-83
L			
L4309	1110930-0000	INDUCTOR	2-75, 2-77, 2-79, 2-117, 2-119, 2-121
L4309	1110931-0000	INDUCTOR	2-75, 2-77, 2-79, 2-117, 2-119, 2-121
L4309	1110932-0000	INDUCTOR	2-75, 2-77, 2-79, 2-117, 2-119, 2-121
L4309	1110934-0000	INDUCTOR	2-75, 2-77, 2-79, 2-117, 2-119, 2-121
L4309	1110936-0000	INDUCTOR	2-75, 2-77, 2-79, 2-117, 2-119, 2-121

Pos	Part No	Description	Page No
L			
L4309	1110937-0000	INDUCTOR	2-75, 2-77, 2-79, 2-117, 2-119, 2-121
L4309	1110938-0000	INDUCTOR	2-75, 2-77, 2-79, 2-117, 2-119, 2-121
L4309	1520052-0000	INDUCTOR	2-75, 2-77, 2-79, 2-117, 2-119, 2-121
L4309	1520167-0000	INDUCTOR	2-75, 2-77, 2-79, 2-117, 2-119, 2-121
L4309	1533046-0000	INDUCTOR	2-75, 2-77, 2-79, 2-117, 2-119, 2-121
L4309	2546474-0000	INDUCTOR	2-75, 2-77, 2-79, 2-117, 2-119, 2-121
L4309	2587466-0000	INDUCTOR	2-75, 2-77, 2-79
L4309	2587467-0000	INDUCTOR	2-117, 2-119, 2-121
L4309	2610956-0000	INDUCTOR	2-75, 2-77, 2-79, 2-117, 2-119, 2-121
L8110	1533360-0000	INDUCTOR	3-275
L8110	1533361-0000	INDUCTOR	3-275
L8110	1533363-0000	INDUCTOR	3-275
L8110	1533364-0000	INDUCTOR	3-275
L8110	1566708-0000	INDUCTOR	3-275
M			
M8145	90458-0523	STEPPER MOTOR SM 56.2.18J3 Z(202)	3-227
R			
R5307	90459-0707	HEATING ELEMENT, 1500W/220V	4-19
R5308	90459-0707	HEATING ELEMENT, 1500W/220V	4-19
R5309	90206-0030	HEATING ELEMENT, 3000W, 220V	4-19
S			
SU010	232979-0000	PRESSURE ROLLER	1-73, 1-75, 1-77, 1-79, 1-81, 1-83
SU010	257330-0000	PRESSURE ROLLER	1-73, 1-75, 1-77, 1-79, 1-81, 1-83
SU010	272479-0000	PRESSURE ROLLER	1-73, 1-75, 1-77, 1-79, 1-81, 1-83
SU010	499387-0000	PRESSURE ROLLER	1-73, 1-75, 1-77, 1-79, 1-81, 1-83
SU020	2523268-0000	SHAFT	1-73, 1-75, 1-77, 1-79, 1-81, 1-83
SU020	2529416-0000	SHAFT	1-73, 1-75, 1-77, 1-79, 1-81, 1-83
SU020	2529417-0000	SHAFT	1-73, 1-75, 1-77, 1-79, 1-81, 1-83
SU020	2529418-0000	SHAFT	1-73, 1-75, 1-77, 1-79, 1-81, 1-83
SU020	2529419-0000	SHAFT	1-73, 1-75, 1-77, 1-79, 1-81, 1-83
SU020	2529420-0000	SHAFT	1-73, 1-75, 1-77, 1-79, 1-81, 1-83
SU030	315204-0215	O-RING 19,2X3 MM	1-73, 1-75, 1-77, 1-79, 1-81, 1-83
SU030	315204-0219	O-RING 29,2X3 MM	1-73, 1-75, 1-77, 1-79, 1-81, 1-83
SU030	315204-0223	O-RING 39,2X3 MM	1-73, 1-75, 1-77, 1-79, 1-81, 1-83
SU040	2500081-0000	ELBOW PIPE	1-73, 1-75, 1-77, 1-79, 1-81, 1-83
SU050	2529750-0000	COVERING PANEL	1-73, 1-75, 1-77, 1-79, 1-81, 1-83
SU060	979813-0000	PLUG	1-73, 1-75, 1-77, 1-79, 1-81, 1-83
SU070	342850-0304	GASKET 35,4X49,1X5,2 1"1/2 FDA	1-73, 1-75, 1-77, 1-79, 1-81, 1-83
T			
T1402	67379-0404	TRANSFORMER	1-91
T1402	67379-0405	TRANSFORMER	1-91
T1402	67379-0412	TRANSFORMER	1-91
T1402	67379-0414	TRANSFORMER	1-91
T1402	67379-0417	TRANSFORMER	1-91
T8110	67379-0216	TRANSFORMER	3-275
T8110	67379-0224	TRANSFORMER	3-275
W			
W1067	351150-0405	CABLE OLFLEX 5X0,75 MM2 LIGHT/GREY	1-135
W2017	351150-0412	CABLE OLFLEX 3X1,5 MM2 LIGHT/GREY	4-21
W2018	351150-0412	CABLE OLFLEX 3X1,5 MM2 LIGHT/GREY	4-21
W2019	351150-0412	CABLE OLFLEX 3X1,5 MM2 LIGHT/GREY	4-21
W5021	90220-0034	THERMOCABLE TEX/SITW-20F-KX 2X0,5MM2	4-21
W5022	90220-0034	THERMOCABLE TEX/SITW-20F-KX 2X0,5MM2	4-21
W5023	90220-0034	THERMOCABLE TEX/SITW-20F-KX 2X0,5MM2	4-21
X			
X8020.1	90459-0964	CONNECTOR MALE 4 PINS	3-241
X8020.2	90459-0964	CONNECTOR MALE 4 PINS	3-241
X8020.4	90459-0964	CONNECTOR MALE 4 PINS	3-241
X8020.1	90459-0964	CONNECTOR MALE 4 PINS	3-243
X8020.2	90459-0964	CONNECTOR MALE 4 PINS	3-243
X8020.4	90459-0964	CONNECTOR MALE 4 PINS	3-243
X8145	90110-0295	CONNECTOR 4 POLE + EARTH	3-227
X8145	90110-0296	FEMALE INSERT HDC-HA-4BS 149840-B/2	3-235
X8202	90110-0296	FEMALE INSERT HDC-HA-4BS 149840-B/2	3-235
Y			
Y8401	90042-0582	COIL NORGREN QM/48/127/21	1-141

Tetra Pak

SPC binder labels. 40 mm Full width *Note! This page is generated* **automatically.**
using the **variable definitions** *made in the* **front page** *file!!*

VCK Tetra Pak A3/Flex
648597-0100
Issue: 2005-01 Doc No: SPC-81868-0104

VCK Tetra Pak A3/Flex
648597-0100
Issue: 2005-01 Doc No: SPC-81868-0104

VCK Tetra Pak A3/Flex
648597-0100
Issue: 2005-01 Doc No: SPC-81868-0104

VCK Tetra Pak A3/Flex
648597-0100
Issue: 2005-01 Doc No: SPC-81868-0104

VCK Tetra Pak A3/Flex
648597-0100
Issue: 2005-01 Doc No: SPC-81868-0104

VCK Tetra Pak A3/Flex
648597-0100
Issue: 2005-01 Doc No: SPC-81868-0104

VCK Tetra Pak A3/Flex
648597-0100
Issue: 2005-01 Doc No: SPC-81868-0104

VCK Tetra Pak A3/Flex
648597-0100
Issue: 2005-01 Doc No: SPC-81868-0104

VCK Tetra Pak A3/Flex
648597-0100
Issue: 2005-01 Doc No: SPC-81868-0104

VCK Tetra Pak A3/Flex
648597-0100
Issue: 2005-01 Doc No: SPC-81868-0104

VCK Tetra Pak A3/Flex
648597-0100
Issue: 2005-01 Doc No: SPC-81868-0104

SPC binder labels. 30 mm Half width *Note! This page is generated* **automatically.**
using the **variable definitions** *made in the* **front page** *file!!*

VCK Tetra Pak A3/Flex
648597-0100
Issue: 2005-01 Doc No: SPC-81868-0104

VCK Tetra Pak A3/Flex
648597-0100
Issue: 2005-01 Doc No: SPC-81868-0104

VCK Tetra Pak A3/Flex
648597-0100
Issue: 2005-01 Doc No: SPC-81868-0104

VCK Tetra Pak A3/Flex
648597-0100
Issue: 2005-01 Doc No: SPC-81868-0104

VCK Tetra Pak A3/Flex
648597-0100
Issue: 2005-01 Doc No: SPC-81868-0104

VCK Tetra Pak A3/Flex
648597-0100
Issue: 2005-01 Doc No: SPC-81868-0104

VCK Tetra Pak A3/Flex
648597-0100
Issue: 2005-01 Doc No: SPC-81868-0104

VCK Tetra Pak A3/Flex
648597-0100
Issue: 2005-01 Doc No: SPC-81868-0104

VCK Tetra Pak A3/Flex
648597-0100
Issue: 2005-01 Doc No: SPC-81868-0104

VCK Tetra Pak A3/Flex
648597-0100
Issue: 2005-01 Doc No: SPC-81868-0104

VCK Tetra Pak A3/Flex
648597-0100
Issue: 2005-01 Doc No: SPC-81868-0104

VCK Tetra Pak A3/Flex
648597-0100
Issue: 2005-01 Doc No: SPC-81868-0104

VCK Tetra Pak A3/Flex
648597-0100
Issue: 2005-01 Doc No: SPC-81868-0104