SPC

Spare Parts Catalogue

VCK Tetra Pak A3/Flex

648597-0100

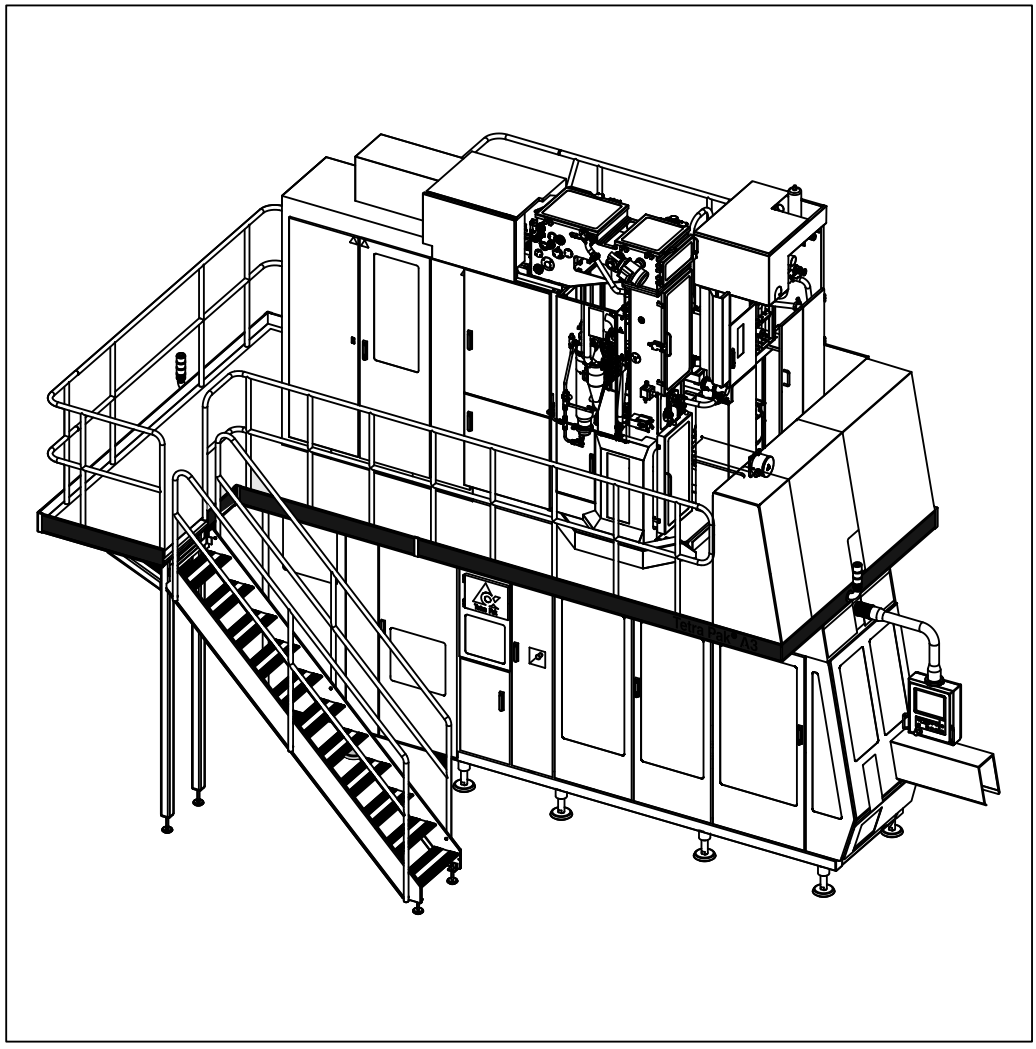

Tetra Pak

Doc. No: SPC-81868-0115

Picture not available yet

The position numbers in the illustration correspond with the chapter numbers listed on the next page.

Copyright © 2009 Tetra Pak Group

All rights reserved. No part of this document may be reproduced or copied in any form or by any means without written permission from Tetra Pak Packaging Solutions .

Tetra Pak and all Tetra Pak products are trademarks belonging to the Tetra Pak Group.

The content of this manual is in accordance with the design and construction of the machine or equipment at the time of publishing. Tetra Pak reserves the right to introduce design modifications without prior notice.

This document was produced by:

Tetra Pak Packaging Solutions
Via Delfini 1
411 00 Modena
ITALY

Additional copies can be ordered from Tetra Pak. When ordering additional copies, always provide the document number.

Doc. No. SPC-81868-0115

Issue 2009-06

This document is valid from:

22334/00227

Series No/Machine No Sign.

SPC

Spare Parts Catalogue

VCK Tetra Pak A3/Flex
648597-0100

i Introduction

1 Box 2 - Superstructure

2 Box 3 - Jaw System

3 Box 4 - Final Folder

4 Box6 - Volume Kit

ii Part Number Index

iii Ref. Des. Parts Index

Machine or equipment configurations that this catalogue is valid for are described on the next page.

Doc. No: SPC-81868-0115

Issue 2009-06

Tetra Pak

Tetra Pak Packaging Solutions

Valid for:

Name	Drawing Specification and Development Step	Additional Information
VCK Tera Pak A3/Flex	648597-0100	

Update Log for Doc. No. SPC-81868-0115

This table shows all changes made to this catalogue, including installed rebuilding kits, added or removed pages.

Date	Installed Kit	Added Pages (Doc. No.)	Removed Pages	Signature

Date	Installed Kit	Added Pages (Doc. No.)	Removed Pages	Signature

i Introduction

en About the Introduction Chapter
This chapter contains basic information about this catalogue and related Tetra Pak equipment.

bg За уводната глава
Тази глава съдържа основна информация за този каталог и приложимото Tetra Pak оборудване.

cs O kapitole Úvod
Tato kapitola obsahuje základní informace o této příručce a souvisejícím zařízení Tetra Pak.

da Om indledningen
Kapitlet indeholder grundlæggende oplysninger om dette katalog og tilhørende Tetra Pak-udstyr.

de Über das Einleitungskapitel
Diese Kapitel enthält grundlegende Informationen über diesen Katalog und die zugehörige Tetra Pak-Ausrüstung

el Σχετικά με το Κεφάλαιο 'Εισαγωγή'
Αυτό το κεφάλαιο περιέχει βασικές πληροφορίες για τον παρόντα κατάλογο και τον σχετικό εξοπλισμό της Tetra Pak.

es Acerca del capítulo Introducción
Este capítulo contiene información básica sobre este catálogo y el equipo Tetra Pak relacionado.

et Sissejuhatava peatüki kohta
See peatükk sisaldab teavet käesoleva kataloogi ja sellega seonduva Tetra Paki seadme kohta.

fi Tietoja Johdanto-luvusta
Tässä luvussa on perustietoja tästä luettelosta ja Tetra Pak -laitteesta.

fr À propos du chapitre Introduction
Ce chapitre contient les informations de base à propos de ce catalogue et de l'équipement Tetra Pak concerné.

hu A Bevezetés fejezetről
Ez a fejezet alapvető információkat tartalmaz a katalógusról és a hozzá tartozó Tetra Pak berendezésről.

is Um inngangskaflann
Þessi kafli inniheldur grundvallarupplýsingar um þennan vörulista og tengdan Tetra Pak búnað.

it Informazioni sul capitolo Introduzione
Questo capitolo contiene informazioni generali sul presente catalogo e sulla relativa macchina Tetra Pak.

lt Apie įvadinį skyrių
Šiame skyriuje pateikta pagrindinė informacija apie šį katalogą ir su juo susijusią "Tetra Pak" įrangą.

lv Par Ievada nodaļu
Šī nodaļa ietver galveno informāciju par šo katalogu un saistītajām Tetra Pak iekārtām.

nl Over de inleiding
Dit hoofdstuk bevat basisinformatie omtrent deze catalogus en aanverwante Tetra Pak-installatie.

no Om kapitlet Introduksjon
Dette kapitlet inneholder grunnleggende informasjon om denne katalogen og relatert Tetra Pak-utstyr.

pl Informacje na temat rozdziału wprowadzającego
Rozdział wprowadzający zawiera podstawowe informacje dotyczące niniejszego katalogu i związanej z nim maszyny Tetra Pak.

pt Acerca do Capítulo de Introdução
Este capítulo contém informações básicas sobre este catálogo e os equipamentos relacionados da Tetra Pak.

ro Despre capitolul introductiv
Acest capitol conține informații de bază despre acest catalog și despre echipamentul Tetra Pak corelat.

sk O kapitole Úvod
Táto kapitola obsahuje základné informácie o tomto návode a informácie súvisiace so zariadením Tetra Pak.

sl O uvodnem poglavju
To poglavje vsebuje osnovne informacije o tem katalogu in opremi Tetra Pak.

sv Om inledningskapitlet
Det här kapitlet innehåller grundläggande information om katalogen och Tetra Pak-utrustningen.

Introduction

Illustrations . . . . . i - 5
English Text . . . . . i - 7

Увод

Илюстрации . . . . . i - 5
Текст на български език . . . . . i -11

Úvod

Obrázky . . . . . i -5
Český text . . . . . i - 15

Indledning

Illustrationer . . . . . i - 5
Dansk tekst . . . . . i - 19

Einleitung

Abbildungen . . . . . i - 5
Deutscher Text . . . . . i - 23

Εισαγωγή

Εικόνες . . . . . i - 5
Ελληνικό Κείμενο . . . . . i - 27

Introducción

Ilustraciones . . . . . i - 5
Texto en español . . . . . i - 31

Sissejuhatus

Joonised . . . . . i - 5
Eestikeelne tekst . . . . . i - 35

Johdanto

Kuvat . . . . . i - 5
Suomenkielinen teksti . . . . . i - 39

Introduction

Illustrations . . . . . i - 5
Texte français . . . . . i - 43

Bevezetés

Ábrák . . . . . i - 5
Magyar szöveg . . . . . i - 47

Inngangur

Skýringarmyndir . . . . . i - 5
Íslenskur texti . . . . . i - 51

Introduzione

Figure . . . . . i - 5
Testo in italiano . . . . . i - 55

Įvadas

Paveikslėliai . . . . . i - 5
Lietuviškas tekstas . . . . . i - 59

Ievads

Ilustrācijas . . . . . i - 5
Teksts latviešu valodā . . . . . i - 63

Inleiding

Afbeeldingen . . . . . i - 5
Nederlands tekst . . . . . i - 67

Introduksjon

Illustrasjoner . . . . . i - 5
Norsk tekst . . . . . i - 71

Wprowadzenie

Rysunki . . . . . i - 5
Tekst polski . . . . . i - 75

Introdução

Ilustrações . . . . . i - 5
Texto em português . . . . . i - 79

Introducere

Ilustrații . . . . . i - 5
Text în limba română . . . . . i - 83

Úvod

Ilustrácie . . . . . i – 5
Slovenský text . . . . . i - 87

Uvod

Slike . . . . . i - 5
Slovensko besedilo . . . . . i - 91

Inledning

Bilder . . . . . i - 5
Svensk text . . . . . i - 95

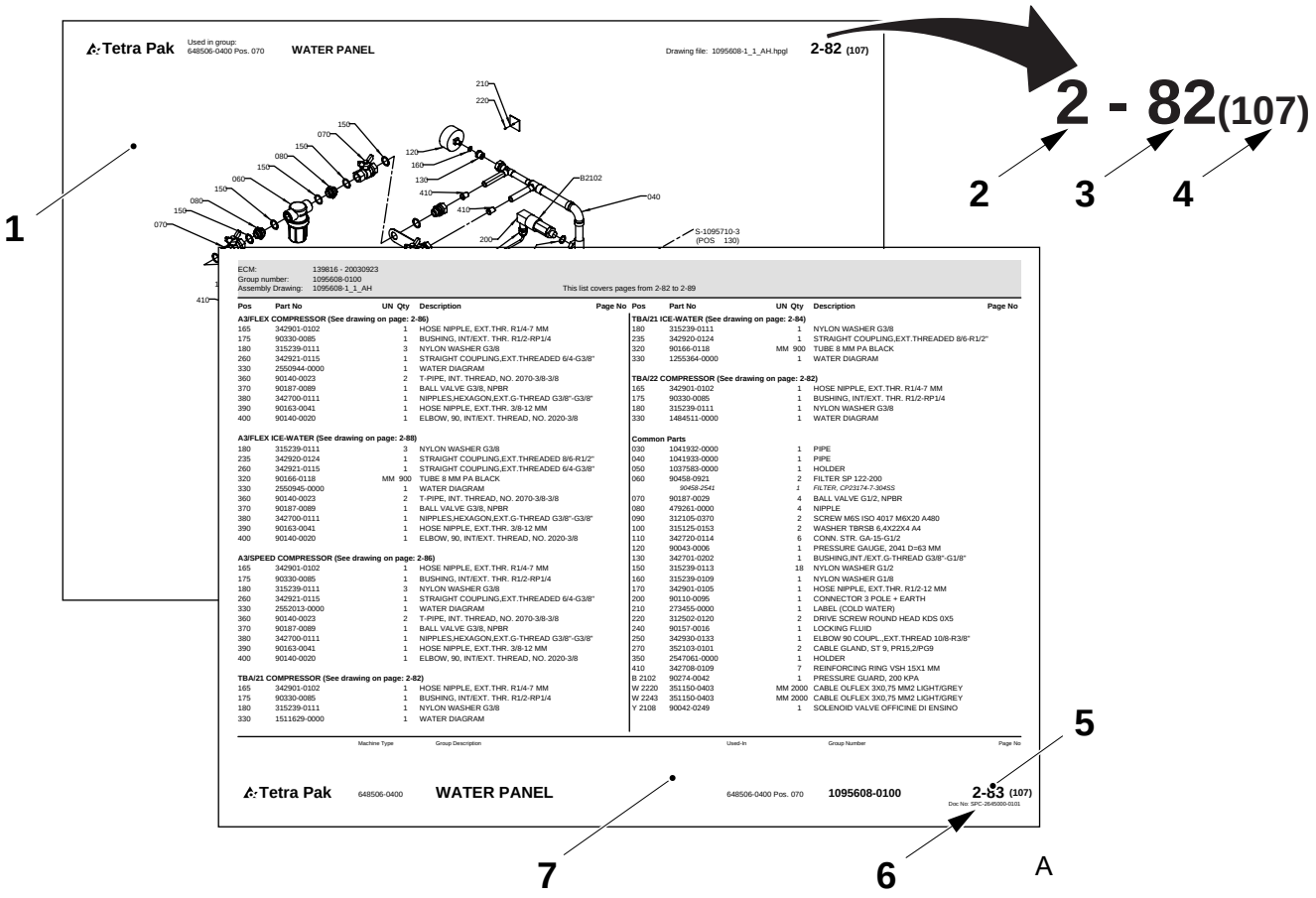
Tetra Pak
Used in group: 648506-0400 Pos. 070
WATER PANEL
Drawing file: 1095608-1_1_AH.hpgl
2-82 (107)
2 - 82(107)
1
2
3
4
5
6
7
A
ECM: 139816 - 20030923
Group number: 1095608-0100
Assembly Drawing: 1095608-1_1_AH
This list covers pages from 2-82 to 2-89
Tetra Pak
648506-0400
WATER PANEL
648506-0400 Pos. 070
1095608-0100
2-83 (107)

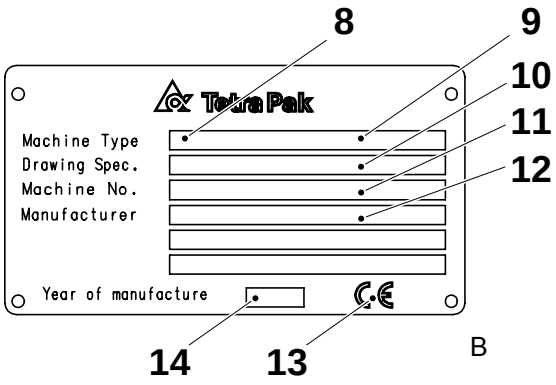
8
9
10
11
12
Tetra Pak
Machine Type
Drawing Spec.
Machine No.
Manufacturer
Year of manufacture
14
13
B

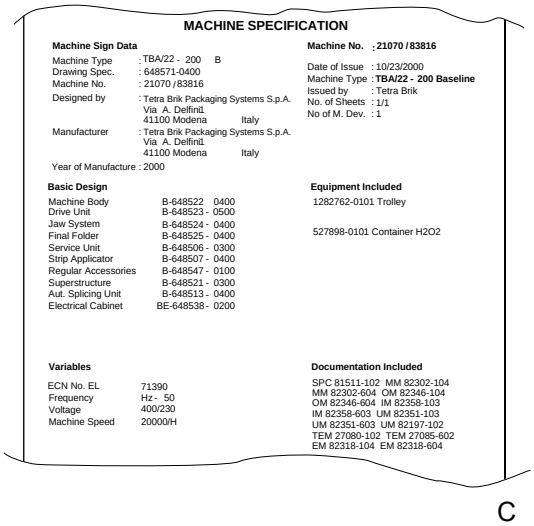
MACHINE SPECIFICATION
Machine Sign Data
Machine Type : TBA/22 - 200 B
Drawing Spec. : 648571-0400
Machine No. : 21070 / 83816
Designed by : Tetra Brik Packaging Systems S.p.A. Via A. Delfini1 41100 Modena Italy
Manufacturer : Tetra Brik Packaging Systems S.p.A. Via A. Delfini1 41100 Modena Italy
Year of Manufacture : 2000
Machine No. ; 21070 / 83816
Date of Issue : 10/23/2000
Machine Type : TBA/22 - 200 Baseline
Issued by : Tetra Brik
No. of Sheets : 1/1
No of M. Dev. : 1
Basic Design
Machine Body B-648522 0400
Drive Unit B-648523 - 0500
Jaw System B-648524 - 0400
Final Folder B-648525 - 0400
Service Unit B-648506 - 0300
Strip Applicator B-648507 - 0400
Regular Accessories B-648547 - 0100
Superstructure B-648521 - 0300
Aut. Splicing Unit B-648513 - 0400
Electrical Cabinet BE-648538 - 0200
Equipment Included
1282762-0101 Trolley
527898-0101 Container H2O2
Variables
ECN No. EL 71390
Frequency Hz - 50
Voltage 400/230
Machine Speed 20000/H
Documentation Included
SPC 81511-102 MM 82302-104
MM 82302-604 OM 82346-104
OM 82346-604 IM 82358-103
IM 82358-603 UM 82351-103
UM 82351-603 UM 82197-102
TEM 27080-102 TEM 27085-602
EM 82318-104 EM 82318-604
C

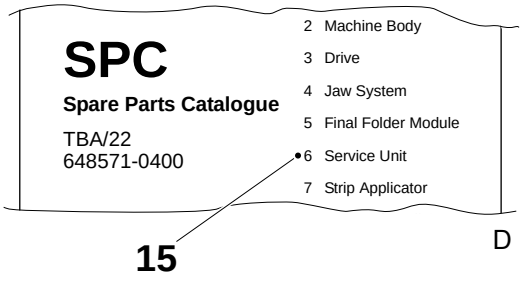
SPC
Spare Parts Catalogue
TBA/22
648571-0400
2 Machine Body
3 Drive
4 Jaw System
5 Final Folder Module
6 Service Unit
7 Strip Applicator
15
D

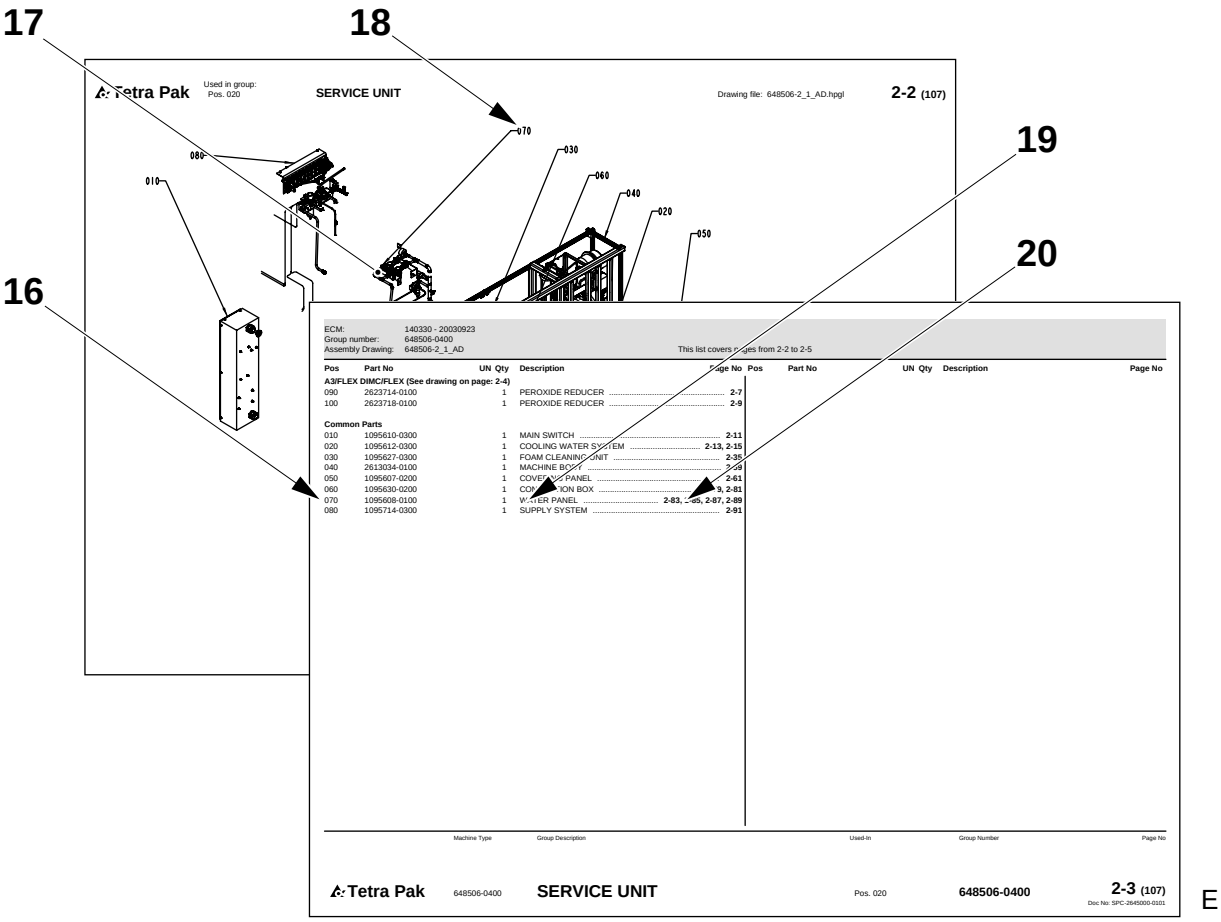
17
18
19
20
16
Tetra Pak
Used in group:
Pos. 020
SERVICE UNIT
Drawing file: 648506-2_1_AD.hpgl
2-2 (107)
070
030
080
060
010
040
020
050
ECM: 140330 - 20030923
Group number: 648506-0400
Assembly Drawing: 648506-2_1_AD
This list covers pages from 2-2 to 2-5
Pos Part No UN Qty Description Page No
A3/FLEX DIMC/FLEX (See drawing on page: 2-4)
090 2623714-0100 1 PEROXIDE REDUCER 2-7
100 2623718-0100 1 PEROXIDE REDUCER 2-9
Common Parts
010 1095610-0300 1 MAIN SWITCH 2-11
020 1095612-0300 1 COOLING WATER SYSTEM 2-13, 2-15
030 1095627-0300 1 FOAM CLEANING UNIT 2-35
040 2613034-0100 1 MACHINE BODY 2-39
050 1095607-0200 1 COVERING PANEL 2-61
060 1095630-0200 1 CONNECTION BOX 2-79, 2-81
070 1095608-0100 1 WATER PANEL 2-83, 2-85, 2-87, 2-89
080 1095714-0300 1 SUPPLY SYSTEM 2-91
Pos Part No UN Qty Description Page No
Machine Type Group Description Used-In Group Number Page No
Tetra Pak 648506-0400 SERVICE UNIT Pos. 020 648506-0400 2-3 (107)
Doc No: SPC-2645000-0101
E

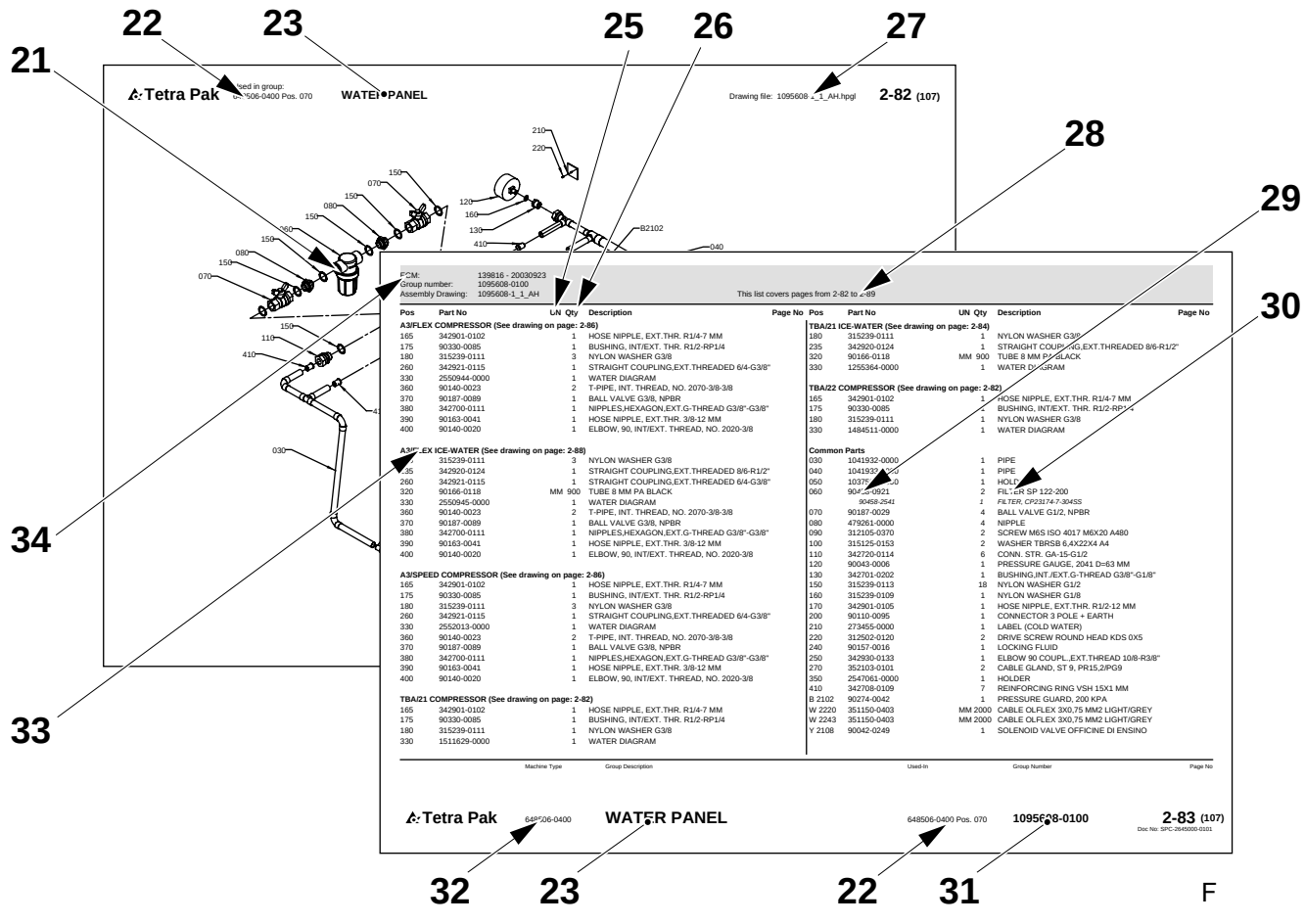
22
23
25
26
27
21
28
29
30
34
33
Tetra Pak
Used in group:
Pos. 070
WATER PANEL
Drawing file: 1095608-1_1_AH.hpgl
2-82 (107)
210
220
150
070
080
150
150
080
150
070
120
160
130
410
B2102
040
030
110
410
ECM: 139816 - 20030923
Group number: 1095608-0100
Assembly Drawing: 1095608-1_1_AH
This list covers pages from 2-82 to 2-89
Pos Part No UN Qty Description Page No
A3/FLEX COMPRESSOR (See drawing on page: 2-86)
165 342901-0102 1 HOSE NIPPLE, EXT.THR. R1/4-7 MM
175 90330-0085 1 BUSHING, INT/EXT. THR. R1/2-RP1/4
180 315239-0111 3 NYLON WASHER G3/8
260 342921-0115 1 STRAIGHT COUPLING,EXT.THREADED 6/4-G3/8"
330 2550944-0000 1 WATER DIAGRAM
360 90140-0023 2 T-PIPE, INT. THREAD, NO. 2070-3/8-3/8
370 90187-0089 1 BALL VALVE G3/8, NPBR
380 342700-0111 1 NIPPLES,HEXAGON,EXT.G-THREAD G3/8"-G3/8"
390 90163-0041 1 HOSE NIPPLE, EXT.THR. 3/8-12 MM
400 90140-0020 1 ELBOW, 90, INT/EXT. THREAD, NO. 2020-3/8
A3/FLEX ICE-WATER (See drawing on page: 2-88)
235 315239-0111 3 NYLON WASHER G3/8
235 342920-0124 1 STRAIGHT COUPLING,EXT.THREADED 8/6-R1/2"
260 342921-0115 1 STRAIGHT COUPLING,EXT.THREADED 6/4-G3/8"
320 90166-0118 MM 900 TUBE 8 MM PA BLACK
330 2550945-0000 1 WATER DIAGRAM
360 90140-0023 2 T-PIPE, INT. THREAD, NO. 2070-3/8-3/8
370 90187-0089 1 BALL VALVE G3/8, NPBR
380 342700-0111 1 NIPPLES,HEXAGON,EXT.G-THREAD G3/8"-G3/8"
390 90163-0041 1 HOSE NIPPLE, EXT.THR. 3/8-12 MM
400 90140-0020 1 ELBOW, 90, INT/EXT. THREAD, NO. 2020-3/8
A3/SPEED COMPRESSOR (See drawing on page: 2-86)
165 342901-0102 1 HOSE NIPPLE, EXT.THR. R1/4-7 MM
175 90330-0085 1 BUSHING, INT/EXT. THR. R1/2-RP1/4
180 315239-0111 3 NYLON WASHER G3/8
260 342921-0115 1 STRAIGHT COUPLING,EXT.THREADED 6/4-G3/8"
330 2552013-0000 1 WATER DIAGRAM
360 90140-0023 2 T-PIPE, INT. THREAD, NO. 2070-3/8-3/8
370 90187-0089 1 BALL VALVE G3/8, NPBR
380 342700-0111 1 NIPPLES,HEXAGON,EXT.G-THREAD G3/8"-G3/8"
390 90163-0041 1 HOSE NIPPLE, EXT.THR. 3/8-12 MM
400 90140-0020 1 ELBOW, 90, INT/EXT. THREAD, NO. 2020-3/8
TBA/21 COMPRESSOR (See drawing on page: 2-82)
165 342901-0102 1 HOSE NIPPLE, EXT.THR. R1/4-7 MM
175 90330-0085 1 BUSHING, INT/EXT. THR. R1/2-RP1/4
180 315239-0111 1 NYLON WASHER G3/8
330 1511629-0000 1 WATER DIAGRAM
TBA/21 ICE-WATER (See drawing on page: 2-84)
180 315239-0111 1 NYLON WASHER G3/8
235 342920-0124 1 STRAIGHT COUPLING,EXT.THREADED 8/6-R1/2"
320 90166-0118 MM 900 TUBE 8 MM PA BLACK
330 1255364-0000 1 WATER DIAGRAM
TBA/22 COMPRESSOR (See drawing on page: 2-82)
165 342901-0102 1 HOSE NIPPLE, EXT.THR. R1/4-7 MM
175 90330-0085 1 BUSHING, INT/EXT. THR. R1/2-RP1/4
180 315239-0111 1 NYLON WASHER G3/8
330 1484511-0000 1 WATER DIAGRAM
Common Parts
030 1041932-0000 1 PIPE
040 1041933-0000 1 PIPE
050 1037[illegible]-0000 1 HOLDER
060 90458-0921 2 FILTER SP 122-200
90458-2541 FILTER, CP23174-7-304SS
070 90187-0029 4 BALL VALVE G1/2, NPBR
080 479261-0000 4 NIPPLE
090 312105-0370 2 SCREW M6S ISO 4017 M6X20 A480
100 315125-0153 2 WASHER TBRSB 6,4X22X4 A4
110 342720-0114 6 CONN. STR. GA-15-G1/2
120 90043-0006 1 PRESSURE GAUGE, 2041 D=63 MM
130 342701-0202 1 BUSHING,INT./EXT.G-THREAD G3/8"-G1/8"
150 315239-0113 18 NYLON WASHER G1/2
160 315239-0109 1 NYLON WASHER G1/8
170 342901-0105 1 HOSE NIPPLE, EXT.THR. R1/2-12 MM
200 90110-0095 1 CONNECTOR 3 POLE + EARTH
210 273455-0000 1 LABEL (COLD WATER)
220 312502-0120 2 DRIVE SCREW ROUND HEAD KDS 0X5
240 90157-0016 1 LOCKING FLUID
250 342930-0133 1 ELBOW 90 COUPL.,EXT.THREAD 10/8-R3/8"
270 352103-0101 2 CABLE GLAND, ST 9, PR15,2/PG9
350 2547061-0000 1 HOLDER
410 342708-0109 7 REINFORCING RING VSH 15X1 MM
B 2102 90274-0042 1 PRESSURE GUARD, 200 KPA
W 2220 351150-0403 MM 2000 CABLE OLFLEX 3X0,75 MM2 LIGHT/GREY
W 2243 351150-0403 MM 2000 CABLE OLFLEX 3X0,75 MM2 LIGHT/GREY
Y 2108 90042-0249 1 SOLENOID VALVE OFFICINE DI ENSINO
Pos Part No UN Qty Description Page No
Machine Type Group Description Used-In Group Number Page No
Tetra Pak 648506-0400 WATER PANEL 648506-0400 Pos. 070 1095608-0100 2-83 (107)
Doc No: SPC-2645000-0101
32 23 22 31
F

Introduction

Manual Information

Tetra Pak recommends reading all delivered manuals carefully. Make sure that the delivered manuals are available to personnel who operate or maintain the equipment.

It is important to keep this catalogue for the lifetime of the equipment and to pass the catalogue on to any subsequent holder or user.

Tetra Pak will not be held responsible for any damage to the equipment caused by not following the instructions given in the manuals that accompany this equipment.

Delivered Manuals

Manuals delivered with this equipment may include

- CM
  The Conversion Manual provides technicians with information on converting the equipment between different production modes.
- EM
  The Electrical Manual provides technicians with information about the equipment's electrical system.
- IM
  The Installation Manual provides technicians with information required to safely install the equipment.
- MM
  The Maintenance Manual provides technicians with information on maintaining the equipment.
- OM
  The Operation Manual manual provides the operator with information on handling and operating the equipment before, during, and after production.
- SPC
  The Spare Parts Catalogue provides the information necessary to order spare parts from Tetra Pak
- TeM
  The Technical Manual
  - provides technicians with information required to safely install the equipment
  - provides technicians with information on maintaining the equipment
  - provides technicians with information about the machine's/ equipment's electrical system
  - provides the information necessary to order spare parts from Tetra Pak.

Page Layout

Refer to the illustration (A) on page i-5: The main pages in a Spare Parts Catalogue consist of an illustration page (1) and a corresponding list page (7). The page number (5) is shown in the header of an illustration page and in the footer of a list page. The document number (6) is shown in the footer of a list page.

Page Numbering

Refer to the illustration (A) on page i-5: A page number (5) has three parts:

- chapter number (2)
- consecutive page number within the chapter (3)
- total number of pages in the chapter (4)

Machine Introduction

Manufacturer

For the manufacturer's name and address, see the second page of this catalogue.

Service

To order spare parts for this machine, or to report problems associated with operating this machine, contact the nearest Tetra Pak office.

Contact the Liaison with other inquiries, comments, or suggestions for improvement regarding the equipment and its documentation.

Identification

CE Classification

This equipment complies with the basic health and safety regulations of the European Economic Area (EEA).

Machine Plate

The illustration (B) on page i-5 shows an example of a machine plate. An illustration of the valid machine plate and its location on the equipment is shown in the Introduction chapter of the manuals delivered with this equipment. The machine plate contains the data listed below, needed when contacting Tetra Pak concerning this specific equipment.

- Machine type (8)
- Volume (9)
- Drawing specifications (10)
- Machine serial number (11)
- Manufacturer (12)
- CE mark (13)
- Year of manufacture (14)

The illustration (C) on page i-5 shows an example of a machine specification. Make sure that the equipment data listed in the front pages of this manual corresponds to the machine plate data and the machine specification.

How to Use This Spare Parts Catalogue

Locate a Spare Part Number

a) Refer to the illustration (D) on page i-5: Go to the chapter number (15) indicated beside the main group that contains the part you want to locate.

Items b) and c) refer to the illustration (E) on page i-6.

b) On the main group illustration, look for the machine subgroup (17) that contains the part or subgroup you are looking for. Note the position number (18) and go to the list page that follows the illustration.

c) Look for the position number/reference designation (16) or the subgroup name (19). Go to the corresponding page number (20) listed in the right-hand column. Tetra Pak has chosen to always use the function oriented structure for reference designation. The prefix indicating function oriented structure (=) is not shown in the reference designation.

Items d) and e) refer to the illustration (F) on page i-6.

d) Locate the part (21) that you are looking for on the subgroup illustration and note the part's position number.

e) The part number (29) and part description (30) are listed beside the position number on the list page.

Information Listed in a Spare Parts Catalogue

The list below refers to the illustration (F) on page i-6. A Spare Parts Catalogue contains the following information about groups, subgroups, and spare parts for the equipment:

- Group structure reference (22). Indicates the next higher group in the equipment list structure.
- Group name (23)
- Unit of measure (25)
- Quantity (26)
- Assembly drawing number (27)
- List page range (28). Included if there are multiple pages in the group illustration or list.
- Part or subgroup number (29)
- Subgroup name or part description (30)
- Group number (31)
- Equipment number (32)
- Group information heading (33). Indicates if the section below the heading is for a specific machine variant or if it is a list of common parts. If a list has more than one variant and each variant has its own assembly drawing, a page reference to the variant's assembly drawing is shown.
- Internal information (34)

Увод

Информация за ръководството

Tetra Pak Ви препоръчва да прочетете внимателно всички доставени ръководства. Проверете дали доставените ръководства са достъпни за служителите, които поддържат или работят с оборудването.

Важно е да запазите този каталог през целия живот на оборудването и да го предадете на трети лица, които ще използват или съхраняват оборудването.

Tetra Pak не може да бъде държана под отговорност за щети върху оборудването, причинени от неспазване на даденте инструкции в ръководствата, които съпровождат оборудването.

Доставени ръководства

Ръководствата, доставени с това оборудване, могат да включват

- CM
  Ръководството за приспособяване осигурява на техническите лица информация за приспособяването на оборудване към различни производствени режими.
- EM
  Електрическото ръководство осигурява на техническите лица информация за електрическата система на оборудването.
- IM
  Ръководството за инсталиране предоставя на техническите лица информацията, която е необходима за безопасно инсталиране на оборудването.
- MM
  Ръководството за поддръжка предоставя на техническите лица информация относно поддържането на оборудването.
- OM
  Ръководството за операции предоставя на операторите информация за това, как да боравят и функционират с оборудването преди, по време на и след производство.
- SPC
  Каталогът с резервни части предоставя необходимата информация за поръчка на резервни части от Tetra Pak
- TeM
  Техническото ръководство
  - предоставя на техническите лица необходимата информация за безопасно инсталиране на оборудването
  - предоставя на техническите лица информация за поддръжка на оборудването
  - предоставя на техническите лица информация за електрическата система на машината/оборудването
  - предоставя необходимата информация за поръчка на резервни части от Tetra Pak.

Формат на страниците

Разгледайте илюстрация (A) на страница i-5: Главните страници в Каталога с резервни части се състоят от страница с илюстрация (1) и прилежаща страница със списък (7). Номерът на страницата (5) е посочен в горната част на страницата с илюстрация и в долната част на страницата със списъка. Номерът на документа (6) е показан в долната част на страницата със списъка.

Номериране на страници

Разгледайте илюстрация (A) на страница i-5: Един номер на страница (5) има три части:

- номер на глава (2)
- последователен номер на страница в една глава (3)
- общ брой страници в главата (4)

Машини Увод

Производител

Вижте втората страница на този каталог, за да проверите името и адреса на производителя.

Обслужване

За да поръчате резервни части за тази машина или да докладвате за проблеми, свързани с работата с тази машина, се свържете с най-близкия офис на Tetra Pak.

Свържете се с отдела за контакти с клиенти за други запитвания, коментари и предложения за подобрение по отношение на оборудването и прилежащата му документация.

Идентификация

Класификация на ЦЕ

Това оборудване отговаря на основните наредби, свързани с опазване на здравето и безопасността на Европейската Икономическа Общност (ЕИО).

Табелка на машина

Илюстрация (B) на страница i-5 показва пример с табелка на машина. В уводната глава на ръководствата, доставени с това оборудване, е показана илюстрация с валидната табелка на машината и нейното положение върху оборудването. Табелката на машината съдържа посочените по-долу данни, които Ви трябват, когато се свързвате с Tetra Pak относно това специфично оборудване.

- Тип машина (8)
- Обем (9)
- Спесификации за чертане (10)
- Сериен номер на машината (11)
- Производител (12)
- CE печат (13)
- Година на производство (14)

Илюстрация (C) на страница i-5 показва пример със спесификация за машина. Проверете дали данните за оборудването, изброени на предните страници в това ръководство отговарят на данните от табелката на машината и на спесификацията на машината.

Как да използвате този Каталог за резервни части

Намерете Номер на резервна част

a) Разгледайте илюстрация (D) на страница i-5: Отидете в глава номер (15) посочена до главната група, която съдържа частта, която искате да намерите.

Артикули b) и c) се отнасят до илюстрация (E) на страница i-6.

b) На главната обща илюстрация вижте подгрупата на машината (17), която съдържа частта или подгрупата, която търсите. Намерете номера на позицията (18) и отворете на страницата със списъка, която е след илюстрацията.

c) Намерете номера на позицията/референцията (16) или името на подгрупата (19). Отворете съответстващия номер на страница (20) в дясната колона. Tetra Pak е избрала да използва винаги функционално-ориентирана структура при обозначаване на референциите. Префиксът, който показва функционално-ориентирана структура (=) не е посочен в обозначаването на референциите.

Артикули d) и e) се отнасят до илюстрация (F) на страница i-6.

d) Намерете частта (21), която търсите в илюстрацията на подгрупата и запомнете номера на частта.

e) Номерът на частта (29) и описанието на частта (30) са изброени до номера на позицията на страницата със списъка.

Изброена информация в Каталога с резервни части

По-долу посоченият списък се отнася до илюстрация (F) на страница i-6. Каталогът с резервни части съдържа следната информация за групи, подгрупи и резервни части за оборудването:

- Референция за структурата (22). Показва следващата по-голяма група в структурата със списъка на оборудването.
- Име на група (23)
- Единица мярка (25)
- Количество (26)
- Номер за монтажен чертеж (27)
- Обхват на страницата със списък (28). Включен, ако има няколко страници в илюстрацията на групата или списъка.
- Номер на част или подгрупа (29)
- Име на подгрупа или описание на част (30)
- Номер на група (31)
- Номер на оборудване (32)
- Референция за информацията за групата (33). Показва дали частта под заглавието е за специфична версия на машината или е списък с общи части. Ако един списък има повече от един вариант и всеки вариант има собствен монтажен чертеж, се показва референцията на страницата към монтажния чертеж на варианта.
- Вътрешна информация (34)

Úvod

Informace o manuálu

Tetra Pak doporučuje, abyste si pozorně přečetli všechny dodané příručky. Přesvědčte se, že dodané manuály jsou k dispozici personálu, který obsluhuje nebo provádí údržbu zařízení.

Je důležité ponechat si tuto příručku po celou dobu životnosti zařízení a předat ho jakémukoliv následujícímu vlastníkovi nebo uživateli.

Tetra Pak nebude odpovídat za žádné škody zařízení, způsobené nedodržováním pokynů uvedených v této příručce.

Dodané příručky

Příručky dodané s tímto zařízením mohou obsahovat

- CM
  Konverzní manuál (CM) poskytuje technikům informace o konverzi zařízení mezi různými výrobními režimy.
- EM
  Elektrický manuál (EM) poskytuje technikům informace o elektrickém systému tohoto zařízení.
- IM
  Instalační manuál (IM) poskytuje technikům informace potřebné k bezpečné instalaci zařízení.
- MM
  Údržbový manuál (MM) poskytuje technikům informace o údržbě tohoto zařízení.
- OM
  Provozní manuál (OM) poskytuje operátorovi informace o manipulaci s tímto zařízením a provozu před, během a po výrobě.
- SPC
  Katalog náhradních dílů (SPC) poskytuje informace potřebné pro objednávání náhradních dílů od společnosti Tetra Pak
- TeM
  Technický manuál
  - poskytuje technikům informace potřebné k bezpečné instalaci tohoto zařízení
  - poskytuje technikům informace o údržbě tohoto zařízení
  - poskytuje technikům informace o elektrickém systému tohoto zařízení
  - poskytuje informace potřebné pro objednávání náhradních dílů od společnosti Tetra Pak

Rozvržení stránky

Viz obrázek (A) na straně i-5: Hlavní strany Katalogu náhradních dílů obsahují stranu s obrázky (1) a odpovídající stranu seznamu (7). Číslo strany (5) je uvedeno v záhlaví strany s obrázky a v zápatí strany seznamu. Číslo dokumentu (6) je uvedeno v zápatí strany seznamu.

Číslování stran

Viz obrázek (A) na straně i-5: Číslo strany (5) sestává ze tří částí:

- číslo kapitoly (2)
- pořadové číslo strany (3) v kapitole
- celkový počet stránek (4) v kapitole

Úvod ke stroji

Výrobce

Název a adresa výrobce je uvedena na druhé straně tohoto katalogu.

Servis

Chcete-li objednat náhradní díly nebo ohlásit problémy související s provozem tohoto stroje, kontaktujte nejbližší kancelář Tetra Pak.

S dalšími dotazy, připomínkami nebo náměty na vylepšení ohledně zařízení a této dokumentace se obracejte na kontaktní osobu.

Identifikace

Klasifikace CE

Toto zařízení splňuje základní zdravotní a bezpečnostní předpisy Evropského hospodářského prostoru (EEA).

Štítek na stroji

Obrázek (B) na straně i-5 znázorňuje příklad štítku na stroji. Obrázek platného štítku na stroji a jeho umístění na zařízení je uveden v příručkách dodaných s tímto strojem v kapitole Úvod. Na štítku jsou uvedeny údaje potřebné při kontaktování společnosti Tetra Pak, týkající se tohoto specifického zařízení.

- Typ stroje (8)
- Objem (9)
- Výkresové specifikace (10)
- Výrobní číslo stroje (11)
- Výrobce (12)
- Označení CE (13)
- Rok výroby (14)

Obrázek (C) na straně i-5 zobrazuje příklad specifikace stroje. Přesvědčte se, že údaje o zařízení uvedená v seznamu na předních stranách tohoto manuálu odpovídají údajům štítku na stroji a specifikaci stroje.

Jak používat tento Katalog náhradních dílů

Vyhledejte číslo náhradního dílu

a) Viz obrázek (D) na straně i-5: Přejděte na číslo kapitoly (15) uvedené vedle hlavní skupiny, která obsahuje hledaný díl.

Položky b) a c) odkazují na obrázek (E) na straně i-6.

b) Na vyobrazení hlavní skupiny vyhledejte strojní podskupinu (17), která obsahuje hledaný díl nebo podskupinu. Poznamenejte si číslo pozice (18) a přejděte na stranu seznamu vyplývající z obrázku.

c) Vyhledejte číslo pozice/označení odkazu (16) nebo název podskupiny (19). Přejděte na odpovídající číslo strany (20) v seznamu v pravém sloupci. Tetra Pak zvolil pro označování odkazu používat vždy uspořádání orientované na funkci. Prefix indikující uspořádání orientované na funkci (=) není uveden v označení odkazu.

Položky d) a e) odkazují na obrázek (F) na straně i-6.

d) Vyhledejte díl (21), který hledáte na vyobrazení podskupiny a poznamenejte si číslo pozice dílu.

e) Číslo dílu (29) a popis dílu (30) jsou uvedeny v seznamu vedle čísla pozice na straně seznamu.

Informace uvedené v seznamu v Katalogu náhradních dílů

Níže uvedený seznam odkazuje na obrázek (F) na straně i-6. Katalog náhradních dílů obsahuje následující informace o skupinách, podskupinách a náhradních dílech pro toto zařízení:

- Odkaz na uspořádání skupiny (22). Indikuje další vyšší skupinu v uspořádání seznamu zařízení.
- Název skupiny (23)
- Měrná jednotka (25)
- Množství (26)
- Číslo montážního výkresu (27)
- Rozsah stran seznamu (28). Včetně toho, zda existuje více stran v obrázku skupiny nebo seznamu.
- Díl nebo číslo podskupiny (29)
- Název podskupiny nebo popis dílu (30)
- Číslo skupiny (31)
- Číslo zařízení (32)
- Záhlaví informace o skupině (33). Indikuje, že oddíl pod záhlavím je pro specifickou variantu stroje nebo jde-li o seznam běžných dílů. Jestliže seznam obsahuje více než jednu variantu a každá varianta má svůj vlastní montážní výkres, pak je uveden odkaz na stranu montážního výkresu této varianty.
- Interní informace (34)

Indledning

Oplysninger om manualen

Tetra Pak anbefaler, at alle leverede manualer læses omhyggeligt. Sørg for, at de udleverede manualer er til rådighed for personale, som arbejder med eller vedligeholder udstyret.

Det er vigtigt at opbevare dette katalog hele udstyrets levetid og give kataloget videre til eventuelt kommende ejere eller brugere.

Tetra Pak kan ikke holdes ansvarlig for eventuel beskadigelse af udstyr, der opstår, fordi instruktionerne i manualerne til dette udstyr ikke følges.

Udleverede manualer

De manualer, der leveres sammen med dette udstyr, kan omfatte

- CM
  Denne konverteringsmanual forsyner teknikere med oplysninger om konvertering af udstyret mellem forskellige produktionstilstande.
- EM
  Denne elektriske manual forsyner teknikere med informationer om udstyrets elektriske system.
- IM
  Denne installationsmanual forsyner teknikere med nødvendig information i forbindelse med sikker installation af udstyret.
- MM
  Denne vedligeholdelsesmanual forsyner teknikere med information om vedligeholdelse af udstyret.
- OM
  Denne betjeningsmanual giver operatøren oplysninger om betjening af udstyret før, under og efter produktion.
- SPC
  Denne reservedelskatalog indeholder oplysninger, der er nødvendig for at bestille reservedele fra Tetra Pak
- TeM
  Den tekniske manual
  – forsyner teknikere med information, der er nødvendig for en sikker installation af udstyret.
  – forsyner teknikere med information om vedligeholdelse af udstyret.
  – forsyner teknikere med information om maskinens/udstyrets elektriske system.
  – indeholder de informationer, der er nødvendige for at kunne bestille reservedele fra Tetra Pak.

Sidelayout

Se illustration (A) på side i-5: Hovedsiderne i et reservedelskatalog består af en illustrationsside (1) og en tilsvarende listeside (7). Sidenummeret (5) vises i sidehovedet på en illlustrationsside og i sidefoden på en listeside. Dokumentnummeret (6) vises i sidefoden på en listeside.

Sidenummerering

Se illustrationen (A) på side i-5: Et sidenummer (5) har tre dele:

- kapitelnummer (2)
- fortløbende sidenummer i kapitlet (3)
- samlet sideantal i kapitlet (4)

Præsentation af maskinen

Producent

Producentens navn og adresse findes på side to i dette katalog.

Service

Kontakt nærmeste Tetra Pak-kontor for at bestille reservedele eller rapportere problemer i forbindelse med betjening af denne maskine.

Henvendelse til vores kontaktperson med andre forespørgsler, kommentarer eller forslag til forbedring angående udstyr og dokumentation.

Identificering

CE-klassificering

Dette udstyr lever op til de grundlæggende regulativer for sundhed og sikkerhed indenfor den Europæiske Økonomiske Samarbejdsområde (EØS).

Maskinskilt

Illustrationen (B) på side i-5 viser et eksempel på et maskinskilt.
En illustration af et gyldigt maskinskilt og dets placering på udstyret er vist i indledningskapitlet i de manualer, der leveres med dette udstyr. Maskinskiltet indeholder nedennævnte data. Disse er nødvendige ved kontakt med Tetra Pak vedrørende dette specifikke udstyr.

- Maskintype (8)
- Volumen (9)
- Tegningsspecifikationer (10)
- Maskinens serienummer (11)
- Producent (12)
- CE-mærke (13)
- Produktionsår (14)

Illustrationen (C) på side i-5 viser et eksempel på en maskinspecifikation. Kontroller, at de udstyrsdata, der er anført på de første sider i denne manual, svarer til maskinskiltsdataene og maskinspecifikationen.

Sådan bruges dette reservedelskatalog.

Find et reservedelsnummer

a) Se illustrationen (D) på side i-5: Gå til kapitelnummeret (15), der er angivet ved siden af hovedgruppen, der indeholder den del, der ønskes fundet.

Punkterne b) og c) refererer til illustrationen (E) på side i-6.

b) I hovedgruppeillustrationen skal man se efter maskinundergruppen (17), som indeholder den del eller undergruppe, der søges. Bemærk placeringsnummeret (18), og gå til listesiden, som følger illustrationen.

c) Se efter placeringsnummeret/henvisningsbetegnelse (16) eller undergruppens navn (19). Gå til det tilsvarende sidenummer (20) angivet i den højre kolonne. Tetra Pak har valgt altid at anvende den funktionsorienterede struktur til henvisningsbetegnelse. Præfikset angiver funktionsorienteret struktur (=) ikke vist i henvisningsbetegnelsen.

Punkterne d) og e) refererer til illustrationen (F) på side i-6.

d) Find den del (21), du søger i undergruppeillustrationen, og notér delens placeringsnummer.

e) Reservedelsnummeret (29) og -beskrivelsen (30) er angivet ved siden af placeringsnummeret på listesiden.

Informationer der er angivet i et reservedelskatalog

Listen nedenfor refererer til illustrationen (F) på side i-6. Et reservedelskatalog indeholder følgende informationer om grupper, undergrupper og reservedele til udstyret:

- Gruppestrukturreference (22). Angiver næste overordnede gruppe i udstyrslistestrukturen.
- Gruppenavn (23)
- Måleenhed (25)
- Antal (26)
- Samletegningsnummer (27)
- Listens sideområde (28). Er angivet, hvis gruppeillustrationen eller -listen inkluderer mange sider.
- Del- eller undergruppenummer (29)
- Undergruppens navn eller delsbeskrivelse (30)
- Gruppenummer (31)
- Udstyrsnummer (32)
- Overskrift for gruppeinformation (33). Angiver, om afsnittet under overskriften er for en specifik maskinvariant, eller om det er en liste over fælles dele. Hvis en liste har mere end én variant, og hver variant har sin egen samletegning, vises en sidereference til variantens samletegning.
- Intern information (34)

Einleitung

Informationen über das Handbuch

Tetra Pak empfiehlt, alle mitgelieferten Handbücher sorgfältig durchzulesen. Stellen Sie sicher, dass die Handbücher dem Personal, das die Ausrüstung betreibt oder wartet, zur Verfügung steht.

Es ist wichtig, dass Sie diesen Katalog für die gesamte Lebensdauer der Ausrüstung vorliegen haben und einem etwaigen Nachbesitzer oder -betreiber übergeben.

Tetra Pak haftet nicht für Schäden an der Ausrüstung, die aufgrund von Nichtbeachtung der Anweisungen aus den Handbüchern, die mit diesem Gerät geliefert werden, entstehen.

Gelieferte Handbücher

Die Handbücher, die mit dieser Ausrüstung geliefert wird, können Folgendes beinhalten

- CM
  Das Umbauhandbuch gibt den Technikern Informationen über den Umbau der Ausrüstung zwischen verschiedenen Produktionsweisen.
- EM
  Das Elektrohandbuch gibt den Technikern Informationen zum Elektrosystem der Ausrüstung.
- IM
  Das Installationshandbuch gibt den Technikern Informationen für die sichere Installation der Ausrüstung.
- MM
  Das Wartungshandbuch gibt den Technikern Informationen für die Wartung der Ausrüstung.
- OM
  Das Betriebshandbuch gibt dem Bediener Informationen über die Bedienung und den Betrieb der Ausrüstung vor, während und nach der Produktion.
- SPC
  Der Ersatzteilkatalog liefert die Informationen, die für die Bestellung von Ersatzteilen bei Tetra Pak erforderlich sind.
- TeM
  Das technische Handbuch
  - gibt den Technikern Informationen für die sichere Installation der Ausrüstung
  - gibt den Technikern Informationen für die Wartung der Ausrüstung
  - gibt den Techniker Informationen zum Elektrosystem der Ausrüstung/der Maschine
  - liefert die Informationen, die für die Bestellung von Ersatzteilen bei Tetra Pak erforderlich sind.

Seitenlayout

Bezugnahme auf Abbildung (A) auf Seite i-5: Die Hauptseiten in einem Ersatzteilkatalog bestehen aus einer Abbildungsseite (1) und einer entsprechenden Listenseite (7). Die Seitennummer (5) wird in der Kopfzeile einer Abbildungsseite und in der Fußzeile einer Listenseite aufgeführt. Die Dokumentennummer (6) wird in der Fußzeile einer Listenseite aufgeführt.

Seitennummerierung

Bezugnahme auf Abbildung (A) auf Seite i-5: Eine Seitennummer (5) besteht aus drei Teilen:

- Kapitelnummer (2)
- Fortlaufende Seitennummer innerhalb des Kapitels (3)
- Gesamtzahl der Seiten im Kapitel (4)

Einführung zur Maschine

Hersteller

Bitte entnehmen Sie den Namen und die Adresse des Herstellers der zweiten Seite dieses Katalogs.

Service

Zur Bestellung von Ersatzteilen für diese Maschine oder um Probleme im Zusammenhang mit dem Betrieb dieser Maschine zu melden, wenden Sie sich bitte an das nächstgelegene Büro von Tetra Pak.

Wenden Sie sich bei anderen Anfragen, Kommentaren oder Verbesserungsvorschlägen mit Bezug auf die Ausrüstung und seine Dokumentation an die Verbindungsstelle.

Identifizierung

CE-Klassifizierung

Diese Ausrüstung erfüllt die wesentlichen Anforderungen des Europäischen Wirtschaftsraum (EWR) für Gesundheitsschutz und die Sicherheit.

Maschinenschild

Die Abbildung (B) auf Seite i-5 zeigt ein Beispiel eines Maschinenschilds. Die Abbildung eines gültigen Maschinenschildes und seine Position auf der Ausrüstung wird im Einleitungskapitel der mit dieser Ausrüstung gelieferten Handbücher gezeigt. Das Maschinenschild enthält die Daten, die erforderlich sind, wenn Sie sich bezüglich dieser speziallen Ausrüstung an Tetra Pak wenden.

- Maschinentyp (8)
- Volumen (9)
- Zeichnungsspezifikationen (10)
- Seriennummer der Maschine (11)
- Hersteller (12)
- CE-Zeichen (13)
- Baujahr (14)

Die Abbildung (C) auf Seite i-5 zeigt ein Beispiel einer Maschinenspezifikation. Stellen Sie sicher, dass die Ausrüstungsdaten, die in den vorderen Seiten dieses Handbuchs aufgelistet sind, mit den Maschinenschilddaten und der Maschinenspezifikation übereinstimmen.

Benutzung dieses Ersatzteilkatalogs

Finden einer Ersatzteilnummer

a) Bezugnahme auf Abbildung (D) auf Seite i-5: Weiter zur Kapitel nummer (15), die neben der Hauptgruppe angegeben ist, die das entsprechende Teil enthält.

Die Positionen b) und c) beziehen sich auf die Abbildung (E) auf Seite i-6.

b) Suchen Sie auf der Hauptgruppenillustration nach der Maschinen-Untergruppe (17), die das gesuchte Teil oder die Untergruppe enthält. Notieren Sie die Positionsnummer (18) und gehen Sie dann zur Listenseite, die der Abbildung folgt.

c) Suchen Sie nach der Positionsnummer/Referenzbezeichnung (16) oder dem Namen der Untergruppe (19). Gehen Sie zur entsprechenden Seitennummer (20), die in der rechten Spalte aufgelistet ist. Tetra Pak hat sich dazu entschieden, stets eine funktionsorientierte Struktur für die Referenzbezeichnung zu verwenden. Die vorangestellte Kennzeichnung, welche die funktionsorientierte Struktur angibt (=), wird in der Referenzbezeichnung nicht angezeigt.

Die Positionen d) und e) beziehen sich auf die Abbildung (F) auf Seite i-6.

d) Finden Sie das gesuchte Teil (21) auf der Abbildung der Untergruppe und notieren Sie die Positionsnummer des Teils.

e) Die Teilenummer (29) und die Teilebeschreibung (30) werden neben der Positionsnummer auf der Listenseite aufgelistet.

In einem Ersatzteilkatalog aufgelistete Informationen

Die folgende Liste bezieht sich auf die Abbildung (F) auf Seite i-6. Ein Ersatzteilkatalog enthält folgende Informationen über Gruppen, Untergruppen und Ersatzteile für die Ausrüstung:

- Gruppenstrukturreferenz (22). Sie gibt die nächst höhere Gruppe in der Ausrüstungslistenstruktur an.
- Gruppenname (23)
- Maßeinheit (25)
- Menge (26)
- Nummer der Zusammenbauzeichnung (27)
- Listenseitenbereich (28). Enthalten, wenn es mehrere Seiten in der Gruppenabbildung oder Liste gibt.
- Teile- oder Untergruppennummer (29)
- Untergruppenname oder Teilebeschreibung (30)
- Gruppennummer (31)
- Ausrüstungsnummer (32)
- Gruppeninformationsüberschrift (33). Gibt an, ob sich der Abschnitt unter der Überschrift auf eine spezifische Maschinenvariante bezieht oder ob es sich um eine Liste der allgemeinen Teile handelt. Wenn eine Liste mehr als eine Variante hat und jede Variante über eine eigene Zusammenbauzeichnung verfügt, wird eine Seitenreferenz zur Zusammenbauzeichnung angezeigt.
- Interne Informationen (34)

Εισαγωγή

Πληροφορίες για το Εγχειρίδιο

Η Tetra Pak σάς συνιστά να διαβάζετε προσεκτικά όλα τα παρεχόμενα εγχειρίδια. Εξασφαλίζετε ότι όλα τα παρεχόμενα εγχειρίδια διατίθενται στο προσωπικό που χειρίζεται ή συντηρεί τον εξοπλισμό.

Είναι σημαντικό να διατηρείτε αυτό τον κατάλογο καθ' όλη τη διάρκεια ζωής του εξοπλισμού καθώς και να παραδίδετε τον κατάλογο στον τυχόν επόμενο ιδιοκτήτη ή χρήστη του εξοπλισμού.

Η Tetra Pak δεν πρόκειται να αναλάβει καμία ευθύνη για οποιαδήποτε ζημιά που μπορεί να προκληθεί στον εξοπλισμό εξαιτίας της μη τήρησης των οδηγιών οι οποίες παρέχονται στα εγχειρίδια που συνοδεύουν αυτό τον εξοπλισμό.

Παρεχόμενα Εγχειρίδια

Στα εγχειρίδια που παρέχονται μαζί μ' αυτό τον εξοπλισμό, μπορεί να περιλαμβάνονται τα εξής:

- CM
  Αυτό το Εγχειρίδιο Μετατροπής παρέχει στους τεχνικούς πληροφορίες για τη μετατροπή του εξοπλισμού μεταξύ των διάφορων λειτουργιών παραγωγής.
- EM
  Αυτό το Ηλεκτρικό Εγχειρίδιο παρέχει στους τεχνικούς πληροφορίες για το ηλεκτρικό σύστημα του εξοπλισμού.
- IM
  Αυτό το Εγχειρίδιο Εγκατάστασης παρέχει στους τεχνικούς τις απαιτούμενες πληροφορίες για την ασφαλή εγκατάσταση του εξοπλισμού.
- MM
  Αυτό το Εγχειρίδιο Συντήρησης παρέχει στους τεχνικούς πληροφορίες για τη συντήρηση του εξοπλισμού.
- OM
  Αυτό το Εγχειρίδιο Χειρισμού παρέχει στο χειριστή πληροφορίες για το χειρισμό και τη λειτουργία του εξοπλισμού πριν, κατά τη διάρκεια και μετά την παραγωγή.
- SPC
  Αυτός ο Κατάλογος Ανταλλακτικών παρέχει τις απαραίτητες πληροφορίες για την παραγγελία ανταλλακτικών από την Tetra Pak.
- TeM
  Το Τεχνικό Εγχειρίδιο
  - παρέχει στους τεχνικούς τις απαιτούμενες πληροφορίες για την ασφαλή εγκατάσταση του εξοπλισμού
  - παρέχει στους τεχνικούς πληροφορίες για τη συντήρηση του εξοπλισμού
  - παρέχει στους τεχνικούς πληροφορίες για το ηλεκτρικό σύστημα του εξοπλισμού/μηχανής
  - παρέχει τις απαραίτητες πληροφορίες για την παραγγελία ανταλλακτικών από την Tetra Pak.

Διάταξη Σελίδων

Ανατρέξτε στην εικόν (A) της σελίδας i-5: Οι κύριες σελίδες ενός Καταλόγου Ανταλλακτικών αποτελούνται από μία εικονογραφημένη σελίδα (1) και από μία αντίστοιχη σελίδα λίστας (7). Ο αριθμός σελίδας (5) εμφανίζεται στην κεφαλίδα μιας εικονογραφημένης σελίδας και στο υποσέλιδο μιας σελίδας λίστας. Ο αριθμός εγγράφου (6) εμφανίζεται στο υποσέλιδο μιας σελίδας λίστας.

Αρίθμηση Σελίδων

Ανατρέξτε στην εικόνα (A) της σελίδας i-5: Ένας αριθμός σελίδας (5) αποτελείται από τα εξής τρία μέρη:

- αριθμός κεφαλαίου (2)
- αύξων αριθμός σελίδας του κεφαλαίου (3)
- συνολικός αριθμός σελίδων του κεφαλαίου (4)

Παρουσίαση Μηχανής

Κατασκευαστής

Για το όνομα και τη διεύθυνση του κατασκευαστή, ανατρέξτε στη δεύτερη σελίδα αυτού του καταλόγου.

Τεχνική Εξυπηρέτηση

Για να παραγγείλετε ανταλλακτικά για τη συγκεκριμένη μηχανή ή για να αναφέρετε προβλήματα που σχετίζονται με τη λειτουργία αυτής της μηχανής, επικοινωνήστε με το πλησιέστερο γραφείο της Tetra Pak.

Εάν έχετε άλλου είδους ερωτήσεις, σχόλια ή προτάσεις βελτίωσης σχετικά με τον εξοπλισμό και την έγγραφη τεκμηρίωσή του, επικοινωνήστε με το Τμήμα Σχέσεων.

Στοιχεία Ταυτότητας

Σήμανση CE

Αυτός ο εξοπλισμός συμμορφώνεται με τους βασικούς κανονισμούς υγείας και ασφάλειας του Ευρωπαϊκού Οικονομικού Χώρου (ΕΟΧ).

Πινακίδα Αναγνώρισης Μηχανής

Η εικόνα (B) της σελίδας i-5 δείχνει ένα παράδειγμα μιας πινακίδας αναγνώρισης μηχανής.
Μια εικόνα που δείχνει την ενδεδειγμένη μορφή και θέση της πινακίδας αναγνώρισης μηχανής στον εξοπλισμό, παρουσιάζεται στο κεφάλαιο 'Εισαγωγή' των εγχειριδίων που παρέχονται μ' αυτόν τον εξοπλισμό.
Η πινακίδα αναγνώρισης μηχανής αναγράφει τα δεδομένα που παρατίθενται στη συνέχεια, τα οποία είναι απαραίτητα όταν επικοινωνείτε με την Tetra Pak για θέματα που αφορούν αυτό το συγκεκριμένο εξοπλισμό.

- Τύπος μηχανής (8)
- Χωρητικότητα (9)
- Στοιχεία σχεδίου (10)
- Αριθμός σειράς μηχανής (11)
- Κατασκευαστής (12)
- Σήμανση CE (13)
- Έτος κατασκευής (14)

Η εικόνα (Γ) της σελίδας i-5 δείχνει ένα παράδειγμα τεχνικών χαρακτηριστικών μηχανής. Βεβαιωθείτε ότι τα δεδομένα εξοπλισμού που παρατίθενται στις πρώτες σελίδες αυτού του εγχειριδίου συμφωνούν με τα δεδομένα της πινακίδας αναγνώρισης μηχανής και των τεχνικών χαρακτηριστικών μηχανής.

Πώς Χρησιμοποιείται Αυτός ο Κατάλογος Ανταλλακτικών

Εύρεση ενός Αριθμού Ανταλλακτικού

a) Ανατρέξτε στην εικόνα (Δ) της σελίδας i-5: Πηγαίνετε στον αριθμό κεφαλαίου (15) που υποδεικνύεται δίπλα από την κύρια ομάδα της μηχανής η οποία περιλαμβάνει το εξάρτημα που θέλετε να βρείτε.

Τα βήματα b) και c) αναφέρονται στην εικόνα (Ε) της σελίδας i-6.

b) Στην εικόνα της κύριας ομάδας μηχανής, αναζητήστε την υποομάδα μηχανής (17) η οποία περιλαμβάνει το εξάρτημα ή την υποομάδα που αναζητάτε. Σημειώστε τον αριθμό θέσης (18) και πηγαίνετε στη σελίδα λίστας που ακολουθεί την εικόνα.

c) Αναζητήστε τον αριθμό θέσης/ονομασία αναφοράς (16) ή το όνομα υποομάδας (19). Πηγαίνετε στον αντίστοιχο αριθμό σελίδας (20) που αναγράφεται στη δεξιά στήλη. Η Tetra Pak έχει επιλέξει να χρησιμοποιεί πάντα δομή ονομασίας αναφοράς με βάση τη λειτουργία. Το πρόθεμα που υποδεικνύει τη δομή με βάση τη λειτουργία (=) δε φαίνεται στο διάγραμμα αναφοράς.

Τα βήματα d) και e) αναφέρονται στην εικόνα (ΣΤ) της σελίδας i-6.

d) Βρείτε το εξάρτημα (21) που αναζητάτε στην εικόνα υποομάδας μηχανής και σημειώστε τον αριθμό θέσης του εξαρτήματος.

e) Ο αριθμός του εξαρτήματος (29) και η περιγραφή του εξαρτήματος (30) παρατίθενται δίπλα στον αριθμό θέσης στη σελίδα λίστας.

Πληροφορίες που Περιέχονται σε έναν Κατάλογο Ανταλλακτικών

Η λίστα που ακολουθεί αναφέρεται στην εικόνα (F) της σελίδας i-6. Ένας Κατάλογος Ανταλλακτικών περιέχει τις παρακάτω πληροφορίες σχετικά με τις ομάδες, τις υποομάδες και τα ανταλλακτικά του εξοπλισμού:

- Αναφορά δομής ομάδας (22). Υποδηλώνει την επόμενη μεγαλύτερη ομάδα στη δομή λίστας του εξοπλισμού.
- Όνομα ομάδας (23)
- Μονάδα μέτρησης (25)
- Ποσότητα (26)
- Αριθμός σχεδίου συγκροτήματος (27)
- Περιοχή σελίδων λίστας (28). Περιλαμβάνεται εφόσον η εικόνα ή η λίστα μιας ομάδας εκτίθεται σε περισσότερες από μία σελίδες.
- Αριθμός εξαρτήματος ή υποομάδας (29)
- Αριθμός υποομάδας ή περιγραφή εξαρτήματος (30)
- Αριθμός ομάδας (31)
- Αριθμός εξοπλισμού (32)
- Επικεφαλίδα πληροφοριών ομάδας (33). Υποδεικνύει εάν η ενότητα κάτω από την επικεφαλίδα αφορά μια συγκεκριμένη παραλλαγή μηχανής ή αποτελεί μια λίστα κοινών εξαρτημάτων. Σε περίπτωση που μια λίστα περιέχει περισσότερες από μία παραλλαγές και κάθε παραλλαγή έχει ξεχωριστό σχέδιο συγκροτήματος, εμφανίζεται μια παραπομπή προς τη σελίδα όπου βρίσκεται το σχέδιο συγκροτήματος της παραλλαγής.
- Εσωτερικές πληροφορίες (34)

Introducción

Información sobre el manual

Tetra Pak recomienda leer atentamente todos los manuales suministrados. Asegúrese de que los manuales están disponibles para el personal que opera o mantiene el equipo.

Es importante conservar este catálogo durante la vida útil del equipo, así como facilitárselo a cualquier propietario o usuario posterior.

Tetra Pak no se responsabilizará de daños en el equipo por no seguir las instrucciones proporcionadas en los manuales que acompañan este equipo.

Manuales entregados

Los manuales entregados con este equipo pueden incluir:

- CM
  El Manual de conversión proporciona a los técnicos información sobre cómo convertir el equipo a diferentes modos de producción.
- EM
  El Manual eléctrico proporciona a los técnicos información sobre el sistema eléctrico del equipo.
- IM
  El Manual de instalación proporciona a los técnicos la información necesaria para instalar el equipo de manera segura.
- MM
  El Manual de mantenimiento proporciona a los técnicos información sobre el mantenimiento del equipo.
- OM
  El Manual de funcionamiento proporciona al operador información sobre el manejo y el funcionamiento del equipo antes, durante y después de la producción.
- SPC
  El Catálogo de recambios proporciona la información necesaria para pedir las piezas de recambio a Tetra Pak.
- TeM
  El Manual técnico
  - proporciona a los técnicos la información necesaria para instalar de manera segura el equipo
  - proporciona a los técnicos información sobre el mantenimiento del equipo
  - proporciona a los técnicos información sobre el sistema eléctrico de la máquina/equipo
  - proporciona la información necesaria para pedir las piezas de recambio a Tetra Pak.

Organización de las páginas

Consultar la ilustración (A) en la página i-5: Las páginas principales en un Catálogo de recambios se componen de una página de ilustración (1) y una página de lista correspondiente (7). El número de la página (5) se muestra en el encabezado de una página de ilustración y en el pie de página de una página de lista. El número del documento (6) se muestra en el pie de página de una página de lista.

Numeración de las páginas

Consulte la ilustración (A) en la página i-5: Un número de página (5) consta de tres partes:

- número de capítulo (2)
- número de página consecutivo dentro del capítulo (3)
- número total de páginas del capítulo (4)

Introducción a la máquina

Fabricante

Para obtener el nombre y la dirección del fabricante, véase la segunda página de este catálogo.

Servicio

Para pedir recambios para esta máquina o informar de problemas asociados con el funcionamiento de la misma, póngase en contacto con la oficina de Tetra Pak más cercana.

Póngase en contacto con el representante para otras consultas, comentarios o consejos sobre mejoras referidos al equipo y su documentación.

Identificación

Clasificación de la CE

Este equipo cumple con la normativa básica sobre salud y seguridad del Espacio Económico Europeo (EEE).

Placa de máquina

La ilustración (B) en la página i-5 muestra un ejemplo de una placa de máquina.
En el capítulo Introducción de los manuales entregados con este equipo, se muestra una ilustración de la placa de máquina válida y su ubicación en el equipo. La placa de máquina contiene los datos que se enumeran a continuación, requeridos al ponerse en contacto con Tetra Pak en relación con este equipo específico.

- Tipo de máquina (8)
- Volumen (9)
- Especificaciones de plano (10)
- Número de serie de la máquina (11)
- Fabricante (12)
- Marca de la CE (13)
- Año de fabricación (14)

La ilustración (C) en la página i-5 muestra un ejemplo de especificación de la máquina. Asegúrese de que los datos de equipo que se enumeran en las páginas de la cubierta de este manual corresponden a los datos de la placa y las especificaciones de la máquina.

Cómo utilizar este Catálogo de recambios

Localizar un número de recambio

a) Consulte la ilustración (D) en la página i-5: Vaya al número de capítulo (15) indicado junto al grupo principal que contiene la pieza que desea localizar.

Los puntos b) y c) hacen referencia a la ilustración (E) en la página i-6.

b) En la ilustración del grupo principal, busque el subgrupo de la máquina (17) que contiene la pieza o el subgrupo que busca. Anote el número de posición (18) y vaya a la página de lista que sigue a la ilustración.

c) Busque el número de posición/denominación de referencia (16) o el nombre del subgrupo (19). Vaya al número de página correspondiente (20) que aparece en la columna de la derecha. Tetra Pak ha elegido utilizar siempre la estructura orientada a la función para la denominación de referencia. El prefijo que indica la estructura orientada a la función (=) no aparece en la denominación de referencia.

Los puntos d) y e) hacen referencia a la ilustración (F) en la página i-6.

d) Localice la pieza (21) que busca en la ilustración del subgrupo y anote el número de posición de la pieza.

e) El número de pieza (29) y la descripción de la misma (30) aparecen junto al número de posición en la página de lista.

Información que contiene un Catálogo de recambios

La lista que aparece a continuación hace referencia a la ilustración (F) en la página i-6. Un Catálogo de recambios contiene la siguiente información sobre grupos, subgrupos y recambios para el equipo:

- Referencia de estructura de grupo (22). Indica el siguiente grupo más alto en la estructura de lista del equipo.
- Nombre del grupo (23)
- Unidad de medida (25)
- Cantidad (26)
- Número de dibujo del conjunto (27)
- Intervalo de página de lista (28). Incluido si hay varias páginas en la ilustración o lista de grupo.
- Número de pieza o subgrupo (29)
- Nombre de subgrupo o descripción de pieza (30)
- Número de grupo (31)
- Número de equipo (32)
- Encabezado de información de grupo (33). Indica si la sección que aparece debajo del encabezado corresponde a una variante específica de la máquina o si es una lista de piezas comunes. Si la lista tiene más de una variante y cada variante tiene su propio dibujo de conjunto, se muestra una referencia de página al dibujo de conjunto de la variante.
- Información interna (34)

Sissejuhatus

Juhendi teave

Tetra Pak soovitab kõik juhendid hoolikalt läbi lugeda. Kontrollige, et juhendid oleksid seadmetega töötavatele ja neid hooldavatele isikutele kättesaadavad.

Kataloog tuleb seadme kasutusaja vältel alles hoida ning järgmisele omanikule või kasutajale edasi anda.

Tetra Pak ei vastuta seadme vigastuste eest, mis on tekkinud seadmega kaasnevate juhendite mittejärgimise tõttu.

Kaasaolevad juhendid

Seadmega kaasasolevad juhendid võivad sisaldada järgmist:

- CM
  Ümberseadistusjuhend annab tehnikutele teavet seadme ümber seadistamise kohta eri tootmisrežiimide korral.
- EM
  Elektrijuhend annab tehnikutele informatsiooni seadme elektrisüsteemi kohta.
- IM
  Paigaldusjuhend annab tehnikutele vajalikku teavet seadme ohutu paigaldamise kohta.
- MM
  Hooldusjuhend annab tehnikutele teavet seadme hoolduse kohta.
- OM
  Kasutusjuhend annab operaatorile teavet seadme käsitsemise ja kasutamise kohta enne tootmist, selle ajal ja pärast seda.
- SPC
  Varuosade kataloog annab vajalikku teavet Tetra Pakilt varuosade tellimiseks
- TeM
  Tehniline juhend
  - annab tehnikutele vajalikku teavet seadme ohutuks paigaldamiseks
  - annab tehnikutele teavet seadme hooldamise kohta
  - annab tehnikutele teavet masina/seadme elektrisüsteemi kohta
  - annab vajalikku teavet Tetra Pakilt varuosade tellimiseks.

Lehekülje kujundus

Vt joonist (A) lk i-5: Varuosade kataloogi põhilehtedeks on jooniste lehekülg (1) ja vastav loeteluleht (7). Lehekülje number (5) on toodud joonistelehe päises ja loetelulehe jaluses. Dokumendi number (6) on toodud loetelulehe jaluses.

Lehekülje nummerdus

Vt joonist (A) lk i-5: Lehekülje number (5) koosneb kolmest osast:

- peatüki number (2)
- järgneva lehekülje number (3) peatükis
- lehekülgede koguarv peatükis (4)

Sissejuhatus masina kohta

Tootja

Tootja nimi ja aadress on toodud kataloogi teisel lehel.

Teenindus

Masina varuosade tellimiseks või masina kasutamisega seonduvate probleemide teatamiseks võtke ühendust lähima Tetra Pak kontoriga.

Seadme ja dokumendiga seonduvate küsimuste, kommentaaride ja parandusettepanekute puhul võtke ühendust ettevõtte esindajaga.

Identifikatsioon

CE klassifikatsioon

Seade on kooskõlas Euroopa Majanduspiirkonna (EEA) tervishoiu- ja ohutusnõuetega.

Masina andmeplaat

Joonisel (B) leheküljel i-5 on kujutatud masina andmeplaati. Masina andmeplaadi joonis ja selle asukoht seadmel on toodud seadmega kaasasoleva juhendi sissejuhatavas peatükis. Masina andmeplaadil on toodud allpool loetletud andmed, mida vajate antud konkreetse seadmega seoses Tetra Paki poole pöördudes.

- Masina tüüp (8)
- Maht (9)
- Joonisspetsifikatsioonid (10)
- Masina seerianumber (11)
- Tootja (12)
- CE tähis (13)
- Tootmisaasta (14)

Joonisel (C) leheküljel i-5 on kujutatud näide masina spetsifikatsioonist. Veenduge, et juhendi esimestel lehekülgedel toodud andmed seadme kohta vastavad masina andmesildil olevatele andmetele ja masina spetsifikatsioonile.

Kuidas varuosade kataloogi kasutada

Leidke varuosa number

a) Vt joonist (D) lk i-5: Leidke peatükk, mille number (15) on toodud selle põhirühma juures, mis sisaldab otsitavat varuosa.

Punktid b) ja c) viitavad joonisele (E) lk i-6.

b) Põhirühma joonisel leidke masina alamrühm (17), mis sisaldab otsitavat osa või alamrühma. Leidke positsiooninumber (18) ja avage joonisele järgnev loeteluleht.

c) Leidke positsiooninumber/viite tähis (16) või alamgrupi nimetus (19). Avage parempoolses veerus loetletud vastav lehekülje number (20). Tetra Pak on valinud viite tähise puhul alatiseks kasutamiseks funktsioonile suunatud struktuuri. Funktsioonile suunatud struktuuri prefiks (=) pole viite tähises näidatud.

Punktid d) ja e) viitavad jooniselerefer (F) lk i-6.

d) Leidke otsitav osa (21) alamrühma joonisel ja seejärel osa positsioonnumber.

e) Osa number (29) ja osa kirjeldus (30) on toodud loetelulehel positsioonnumbri kõrval.

Varuosade kataloogis toodud teave

Allpool toodud loetelui viitab joonisele (F) lk i-6. Varuosade kataloog sisaldab järgmist teavet seadme rühmade, alamrühmade ja varuosade kohta:

- Rühmastruktuuri viide (22). Märgib seadme loetelu struktuuris järgmist kõrgemat rühma.
- Rühma nimetus (23)
- Mõõtühik (25)
- Kogus (26)
- Koostejoonise number (27)
- Loetelu lehekülgede vahemik (28). Kaasatud kui rühma joonised või loetelu on toodud mitmel lehel.
- Osa või alamrühma number (29)
- Alamrühma nimetus või osa kirjeldus (30)
- Rühma number (31)
- Seadme number (32)
- Rühma teabe pealkiri (33). Näitab, kas pealkirja all toodud jaotis on konkreetse masinavariandi kohta või on tegemist tavaliste varuosade loeteluga. Kui loetelus on toodud rohkem kui üks variant ja iga variandi jaoks on oma koostejoonis, esitatakse viide selle variandi koostejoonise leheküljele.
- Siseteave (34)

Johdanto

Tietoja käsikirjasta

Tetra Pak suosittelee kaikkien toimitettavien oppaiden lukemista huolellisesti. Varmista, että toimitetut oppaat ovat laitetta käyttävän tai huoltavan henkilökunnan saatavilla.

Tämä luettelo on säilytettävä laitteen käyttöiän ajan ja toimitettava edelleen mahdolliselle seuraavalle omistajalle tai käyttäjälle.

Tetra Pak ei vastaa laitevaurioista, jotka aiheutuvat laitteen mukana tulevissa oppaissa annettujen ohjeiden noudattamatta jättämisestä.

Toimitettavat ohjeet

Tämän laitteen mukana toimitettaviin ohjeisiin kuuluvat:

- CM
  Muunnoskirjassa on teknikoille tarkoitettuja ohjeita laitteiston muuttamisesta eri tuotantotiloihin.
- EM
  Sähkökirjassa on teknikoille tarkoitettuja tietoja laitteen sähköjärjestelmästä.
- IM
  Asennuskäsikirjassa on teknikoille tarkoitettuja tietoja, jotka tarvitaan laitteen turvallista asentamista varten.
- MM
  Huoltokäsikirjassa on teknikoille tarkoitettuja tietoja tämän laitteen huoltamisesta.
- OM
  Käyttäjän käsikirjassa on käyttäjälle tarkoitettuja tietoja laitteen käsittelystä ja käyttämisestä ennen tuotantoa, tuotannon aikana ja sen jälkeen.
- SPC
  Varaosaluettelossa on tietoja, joita tarvitaan varaosien tilaamiseen Tetra Pakilta.
- TeM
  Tekninen käsikirja
  - sisältää teknikoille tarkoitettuja tietoja, joita tarvitaan laitteen turvallista asentamista varten
  - sisältää teknikoille tarkoitettuja tietoja laitteen huoltamisesta
  - sisältää teknikoille tarkoitettuja tietoja koneen/laitteen sähköjärjestelmästä
  - sisältää tietoja, joita tarvitaan varaosien tilaamiseen Tetra Pakilta.

Sivujen asettelu

Katso kuva (A) sivulla i-5: Varaosaluettelon pääsivut koostuvat kuvasivusta (1) ja sitä vastaavasta luettelosivusta (7). Sivunumero (5) näytetään kuvasivun ylätunnisteessa ja luettelosivun alatunnisteessa. Asiakirjan numero (6) näytetään luettelosivun alatunnisteessa.

Sivunumerointi

Katso kuva (A) sivulla i-5: Sivunumerossa (5) on kolme osaa:

- luvun numero (2)
- perättäinen sivunumero (3) luvun sisällä
- luvun kokonaissivumäärä (4).

Koneen esittely

Valmistaja

Valmistajan nimi ja osoite on ilmoitettu tämän luettelon toisella sivulla.

Huolto

Jos haluat tilata tähän koneeseen varaosia tai jos tämän koneen käytössä ilmenee ongelmia, jotka haluat raportoida, ota yhteyttä lähimpään Tetra Pakin toimistoon.

Jos sinulla on muuta kysyttävää, huomautettavaa tai ehdotuksia ja sen asiakirjoja koskevista parannuksista, ota yhteys yhteyshenkilöön.

Tunnistetiedot

CE-luokitus

Tämä laite vastaa Euroopan talousalueen (ETA) terveyttä ja turvallisuutta koskevia perusvaatimuksia.

Koneen tyyppikilpi

Kuvassa (B) sivulla i-5 on esimerkki koneen tyyppikilvestä. Voimassa olevan tyyppikilven kuva ja sen sijainti koneessa käy ilmi laitteiston mukana tulleiden ohjeiden Johdanto-luvusta. Tyyppikilvessä on tarvitsemasi Tetra Pakin voimassa olevat yhteystiedot, kun on kyseessä tämä nimenomainen laite.

- Konetyyppi (8)
- Tilavuus (9)
- Piirustuserittely (10)
- Koneen sarjanumero (11)
- Valmistaja (12)
- CE-merkki (13)
- Valmistusvuosi (14)

Kuvassa (C) sivulla i-5 on esimerkki koneen erittelystä. Varmista, että tämän ohjeen etusivuilla ilmoitetut laitetiedot vastaavat tyyppikilven ja kone-erittelyn tietoja.

Tämän varaosaluettelon käyttäminen

Etsi varaosan numero

a) Katso kuva (D) sivulla i-5: Siirry lukuun (15), joka on ilmoitettu etsittävän osan pääryhmän vieressä.

Kohdat b) ja c) viittaavat kuvaan (E) sivulla i-6.

b) Etsi pääryhmän kuvasta koneen alaryhmä (17), joka sisältää etsimäsi osan tai alaryhmän. Merkitse muistiin paikkanumero (18) ja siirry luettelosivulle, joka seuraa kuvaa.

c) Etsi paikkanumero (16) tai alaryhmän nimi (19). Siirry vastaavalle sivunumerolle (20), joka on ilmoitettu oikeassa sarakkeessa. Tetra Pak on päättänyt aina noudattaa toimintoperusteista rakennetta viitemerkinnöissä. Viitemerkinnässä ei esitetä toimintoperusteisen rakenteen osoittavaa etuliitettä (=).

Kohdat d) ja e) viittaavat kuvaan (F) sivulla i-6.

d) Hae etsittävä osa (21) alaryhmän kuvasta ja merkitse osan paikkanumero muistiin.

e) Osanumero (29) ja osan kuvaus (30) on annettu paikkanumeron vieressä luettelosivulla.

Varaosaluettelossa olevat tiedot

Alla oleva luettelo viittaa kuvaan (F) sivulla i-6. Varaosaluettelo sisältää seuraavat tiedot ryhmistä, alaryhmistä ja laitteen varaosista:

- Ryhmärakenneviite (22). Osoittaa seuraavaksi ylemmän ryhmän laiteluettelorakenteessa.
- Ryhmän nimi (23)
- Mittayksikkö (25)
- Määrä (26)
- Kokoonpanopiirustuksen numero (27)
- Luettelon sivualue (28). Tämä on mukana, jos ryhmäkuvassa tai luettelossa on useita sivuja.
- Osan tai alaryhmän numero (29)
- Alaryhmän nimi tai osan kuvaus (30)
- Ryhmän numero (31)
- Laitteen numero (32)
- Ryhmätietojen otsikko (33). Osoittaa, koskeeko alla oleva osio tiettyä koneversiota vai onko kyseessä yhteisten osien luettelo. Jos luettelolla on useampi kuin yksi versio ja kullakin versiolla on oma kokoonpanopiirustuksensa, näytetään version kokoonpanopiirustuksen sivuviittaus.
- Sisäiset tiedot (34)

Introduction

Informations sur ce manuel

Tetra Pak recommande de lire attentivement tous les manuels remis. S'assurer que ceux-ci sont accessibles au personnel d'exploitation et de maintenance de l'équipement.

Il est important de conserver ce catalogue pendant la durée de vie de l'équipement et de le transmettre à tout détenteur ou à tout utilisateur ultérieur de l'équipement.

Tetra Pak ne pourra être tenu responsable d'aucun dommage causé à l'équipement suite au non respect des instructions fournies dans les manuels remis avec cet équipement.

Manuels remis

Les manuels remis avec cet équipement peuvent comprendre

- CM
  Le Manuel de Conversion contient les informations destinées aux techniciens pour la conversion de l'équipement en vue des différents modes de production.
- EM
  Le Manuel Electrique fournit aux techniciens des informations sur le système électrique de l'équipement.
- IM
  Le Manuel d'Installation fournit les informations nécessaires aux techniciens pour installer l'équipement en toute sécurité.
- MM
  Le Manuel d'Entretien contient les informations nécessaires aux techniciens pour la maintenance de l'équipement.
- OM
  Le Manuel d'Utilisation fournit à l'opérateur les informations nécessaires à la manutention et à l'exploitation de l'équipement, avant, pendant et après la production.
- SPC
  Le Catalogue des Pièces de Rechange contient les informations permettant de commander des pièces de rechange auprès de Tetra Pak
- TeM
  Le Manuel Technique
  - contient les informations nécessaires aux techniciens pour installer l'équipement en toute sécurité.
  - contient les informations nécessaires aux techniciens pour la maintenance de l'équipement.
  - fournit aux techniciens des informations sur le système électrique de la machine/de l'équipement.
  - fournit les informations permettant de commander des pièces de rechange auprès de Tetra Pak.

Mise en page

Reportez-vous au schéma (A) page i-5 : Dans un catalogue de Pièces de Rechange, les pages principales sont les pages de schémas (1) et les pages de listes correspondantes (7). Le numéro de page (5) est indiqué en en-tête sur une page de schéma et en bas de page sur une page de liste. Le numéro de document (6) est indiqué au bas d'une page de liste.

Numérotation des pages

Reportez-vous au schéma (A) page i-5 : Un numéro de page (5) se compose de trois éléments :

- numéro du chapitre (2)
- numéro de page séquentiel à l'intérieur du chapitre (3)
- nombre total de pages du chapitre (4)

Présentation de la machine

Fabricant

Les nom et adresse du fabricant sont donnés en deuxième page de ce catalogue.

Assistance technique

Pour commander des pièces de rechange pour cette machine ou signaler un problème lié à son fonctionnement, contactez l'agence Tetra Pak la plus proche.

Contactez le responsable de liaison pour tout autre renseignement, commentaire ou suggestion d'amélioration relatifs à l'équipement et à sa documentation.

Identification

Certification CE

Cet équipement est conforme aux réglementations essentielles en matière d'hygiène et de sécurité de l'Espace économique européen (EEE).

Plaque signalétique de la machine

Le schéma (B) de la page i-5 reproduit un exemple de plaque signalétique de la machine.
Le chapitre Introduction des manuels remis avec cet équipement comprend une reproduction de la plaque signalétique valide de la machine et indique son emplacement sur l'équipement. La plaque comporte les caractéristiques indiquées ci-dessous, nécessaires pour prendre contact avec Tetra Pak à propos de cet équipement spécifique.

- Type de la machine (8)
- Volume (9)
- Caractéristiques schéma (10)
- Numéro de série de la machine (11)
- Fabricant (12)
- Marquage CE (13)
- Année de fabrication (14)

Le schéma (C) de la page i-5 reproduit un exemple de plaque signalétique de la machine. Assurez-vous que les données relatives à l'équipement qui se trouvent au début de ce manuel correspondent bien aux données figurant sur la plaque signalétique de la machine et à ses spécifications.

Comment utiliser ce Catalogue des Pièces de Rechange

Trouver un numéro de pièce de rechange

a) Reportez-vous au schéma (D) page i-5 : Allez au numéro de chapitre (15) indiqué à côté du groupe principal contenant la pièce que vous recherchez.

Les éléments b) et c) se rapportent au schéma (E) de la page i-6.

b) Sur le schéma du groupe principal, recherchez le sous-groupe de la machine (17) contenant la pièce ou le sous-groupe que vous recherchez. Notez le numéro de position (18) et reportez-vous à la page de liste suivant le schéma.

c) Recherchez le numéro de position/la désignation de référence (16) ou le nom du sous-groupe (19). Allez au numéro de page correspondant (20) figurant dans la liste de la colonne de droite. Tetra Pak a pris le parti de toujours utiliser la structure de la fonction pour la désignation de la référence. Le préfixe indiquant la structure de la fonction (=) ne figure pas dans la désignation de la référence.

Les éléments d) et e) se rapportent au schéma (F) de la page i-6.

d) Repérez la pièce (21) que vous recherchez dans le schéma du sous-groupe et notez le numéro de position de la pièce.

e) Le numéro de la pièce (29) et sa description (30) figurent à côté du numéro de position sur la page de liste.

Informations données dans un Catalogue de Pièces de Rechange

La liste ci-dessous se rapporte au schéma (F) de la page i-6. Un Catalogue de Pièces de Rechange contient les informations suivantes concernant les groupes, sous-groupes et pièces de rechange de l'équipement :

- Référence de structure de groupe (22). Indique le groupe immédiatement supérieur dans la structure de liste de l'équipement.
- Nom du groupe (23)
- Unité de mesure (25)
- Quantité (26)
- Numéro de plan de montage (27)
- Groupe de pages de liste (28). Indiqué si la liste ou l'illustration du groupe comporte plusieurs pages.
- Numéro de pièce ou de sous-groupe (29)
- Nom du sous-groupe ou description de la pièce (30)
- Numéro de groupe (31)
- Numéro de l'équipement (32)
- Titre information du groupe (33) Indique si la section en-dessous du titre est destinée à une variante spécifique de la machine ou s'il s'agit d'une liste de pièces communes. Si une liste comprend plus d'une variante et que chaque variante a son propre plan de montage, une référence de page est donnée pour le plan de montage de la variante.
- Information interne (34)

Bevezetés

Kézikönyvre vonatkozó információk

A Tetra Pak javasolja, hogy az összes kapott kézikönyvet gondosan olvassa el. Gondoskodjon róla, hogy a kézikönyvek a berendezést üzemeltető és karbantartó személyzet számára elérhetők legyenek.

Fontos, hogy megőrizzék ezt a katalógust a berendezés élettartama alatt, és átadják a következő tulajdonosoknak és felhasználóknak.

A Tetra Pak nem vállal felelősséget a berendezés semmilyen megrongálódása esetén, ha nem követték a berendezéshez tartozó kézikönyvekben leírt utasításokat.

Szállított kézikönyvek

A berendezéssel szállított kézikönyvek az alábbiak lehetnek

- CM
  Az Átállási kézikönyv a műszaki szakemberek számára a berendezés különböző gyártási módjai közötti átállásra vonatkozó információkat tartalmaz.
- EM
  A Villamossági kézikönyv a berendezés elektronikai rendszerére vonatkozó információkat szolgáltat a műszaki szakemberek részére.
- IM
  Az Üzembe helyezési kézikönyv a berendezés biztonságos üzembe helyezésére vonatkozó információkat biztosít a technikai szakemberek részére.
- MM
  A Karbantartási kézikönyv a berendezés karbantartására vonatkozó információkat biztosít a technikai szakemberek részére.
- OM
  Az Üzemeltetési kézikönyv az üzemeltető személyzetnek szolgáltat a berendezés kezelésére és üzemeltetésére, a feldolgozás előtti, közbeni és utáni teendőkre vonatkozó információkat.
- SPC
  A Tartalékalkatrész-katalógus információt biztosít a pótalkatrészek Tetra Pak-tól történő megrendeléséhez.
- TeM
  A Technikai kézikönyv
  – a berendezés biztonságos üzembe helyezésére vonatkozó információkat biztosít a technikai szakemberek részére.
  – a berendezés karbantartására vonatkozó információkat biztosít a technikai szakemberek részére.
  – a gép/berendezés elektromos rendszerére vonatkotó információkat szolgáltat a technikai szakemberek számára.
  – információkat biztosít a pótalkatrészek Tetra Pak-tól történő megrendeléséhez.

Oldalelrendezés

Tekintse meg az i-5 oldalon lévő (A) ábrát: A Tartalékalkatrész-katalógus főoldalai egy rajzoldalból (1) és egy hozzá tartozó listaoldalból (7) állnak. Az oldalszám (5) a rajzoldal fejlécében és a listaoldal láblécében látható. A dokumentum száma (6) a listaoldal láblécében jelenik meg.

Oldalszámozás

Tekintse meg az i-5 oldalon lévő (A) ábrát: Az oldalszám (5) három részből áll:

- fejezetszám (2)
- folyamatos oldalszám (3) a fejezeten belül
- összes oldalszám (4) a fejezeten belül.

Bevezetés

Gyártó

A gyártó neve és címe a katalógus második oldalán található.

Szerviz

A gép valamely pótalkatrészének megrendelése vagy a berendezés működésével kapcsolatos zavarok bejelentése végett forduljon a legközelebbi Tetra Pak képviselethez.

Bármilyen más, a berendezésre illetve a dokumentációra vonatkozó kérdéseivel, megjegyzéseivel vagy javaslataival forduljon területi képviselőjéhez.

Azonosítás

CE besorolás

Ez a berendezés megfelel az Európai Gazdasági Régió (EEA) alapvető egészségügyi és biztonsági előírásainak.

Gépcímke

A(z) i-5 oldalon található (B) ábra a gépcímke egy példáját mutatja be. Egy érvényes gépcímkét és megfelelő elhelyezését ábrázoló rajz látható a berendezéssel szállított kézikönyv Bevezetés fejezetében. A gépcímke azokat az alább felsorolt adatokat tartalmazza, amelyek a Tetra Pak-kal történő, a berendezésre vonatkozó kommunikációhoz szükségesek.

- Géptípus (8)
- Térfogat (9)
- Tervrajzok (10)
- A gép sorozatszáma (11)
- Gyártó (12)
- CE jelzés (13)
- Gyártási év (14)

A(z) i-5 oldalon található (C) ábra a gép műszaki specifikációjának egy példáját mutatja be. Győződjön meg róla, hogy a kézikönyv első lapjain közölt berendezésadatok megegyeznek a gép adattábláján és a gép műszaki leírásában megjelenő információkkal.

A Tartalékalkatrész-katalógus használata

A tartalékalkatrész számának kikeresése

a) Tekintse meg a(z) i-5 oldalon lévő (D) ábrát: Lapozzon a keresett alkatrészt tartalmazó főcsoport mellett feltüntetett (15) számú fejezetre.

A b) és c) elemek az i-6 oldalon található ábrára vonatkoznak.

b) A főcsoport-ábrán keresse meg azt az alcsoportot (17), amelyik a keresett alkatrészt vagy alcsoportot tartalmazza. Jegyezze meg a pozíciószámot (18), majd lapozzon az ábrát követő listaoldalra.

c) Keresse meg a lejegyzett pozíciószámot/hivatkozási megjelölést (16) vagy a keresett alcsoport nevét (19). Lapozzon a jobb oldali oszlopban feltüntetett számú (20) oldalra. A Tetra Pak a hivatkozási jelöléseket mindig funkció-orientált struktúra alapján végzi el. Az előtaggal jelölt funkció-orientált struktúra (=) nem jelenik meg a hivatkozási jelölésben.

A d) és e) elemek az i-6 oldalon található (F) ábrára vonatkoznak.

d) Az alcsoport ábrán keresse meg a kívánt alkatrészt (21), és jegyezze meg az alkatrész pozíciószámát.

e) Az alkatrész száma (29) és leírása (30) a listaoldalon, a pozíciószám mellett látható.

A Tartalékalkatrész-katalógusban megtalálható információk

Az alábbi lista az i-6 oldalon található (F) ábrára vonatkozik.
A Tartalékalkatrész-katalógus a következő, csoportokra, alcsoportokra és pótalkatrészekre vonatkozó adatokat tartalmazza:

- Csoportstruktúra-hivatkozás (22). A berendezés listás struktúrájában közvetlenül az aktuális csoport fölött álló csoportot jelöli.
- Csoportnév (23)
- Mértékegység (25)
- Mennyiség (26)
- Összeszerelési rajzszám (27)
- Lista oldaltartománya (28). Abban az esetben jelenik meg, ha a csoport ábrája vagy listája többoldalas.
- Alkatrész vagy alcsoport száma (29)
- Alcsoport neve vagy alkatrész leírása (30)
- Csoportszám (31)
- Berendezésszám (32)
- Csoportinformáció fejléce (33). Azt mutatja, hogy a fejléc után következő rész egy speciális gépváltozatra vonatkozik vagy az általános pótalkatrészek listája. Ha a listának több változata van, és mindegyikhez saját összeszerelési rajz tartozik, az illető összeszerelési rajz oldalhivatkozása is megjelenik.
- Belső információ (34)

Inngangur

Upplýsingar um handbók

Tetra Pak mælir með því að allar handbækur sem afhentar eru séu lesnar vandlega. Gætið þess að afhentar handbækur séu tiltækar fyrir starfsfólk sem vinnur við eða viðheldur tækjabúnaðinum.

Það er mikilvægt að halda upp á þennan vörulista allan líftíma tækjabúnaðarins og að láta síðari eiganda eða notanda hafa vörulistann.

Ekki er hægt að gera Tetra Pak ábyrgt fyrir neinum skemmdum sem verða á tækjabúnaðinum vegna þess að ekki er farið eftir leiðbeiningunum í þeim handbókum sem fylgja tækjabúnaðinum.

Afhentar handbækur

Handbækur sem afhentar eru með þessum tækjabúnaði geta verið

- CM
  Breytingahandbók, sem veitir tæknimönnum upplýsingar um breytingar á tækjabúnaðinum milli mismunandi framleiðsluhama.
- EM
  Rafmagnshandbók, sem veitir tæknimönnum upplýsingar um rafkerfi tækjabúnaðarins.
- IM
  Uppsetningarhandbók, sem veitir tæknimönnum nauðsynlegar upplýsingar til að setja tækjabúnaðinn upp á öruggan hátt.
- MM
  Viðhaldshandbók, sem eitir tæknimönnum upplýsingar um viðhald tækjabúnaðarins.
- OM
  Notkunarhandbók, sem veitir stjórnandanum upplýsingar um meðhöndlun og notkun tækjabúnaðarins, fyrir, eftir og meðan á framleiðslu stendur.
- SPC
  Varahlutavörulisti, sem veitir nauðsynlegar upplýsingar til pöntunar varahluta frá Tetra Pak.
- TeM
  Tæknihandbók
  - sem veitir tæknimönnum nauðsynlegar upplýsingar til að setja tækjabúnaðinn upp á öruggan hátt
  - sem veitir tæknimönnum upplýsingar um viðhald tækjabúnaðarins
  - sem veitir tæknimönnum upplýsingar um rafkerfi vélarinnar/ tækjabúnaðarins
  - sem veitir nauðsynlegar upplýsingar til pöntunar varahluta frá Tetra Pak.

Umbrot

Sjá skýringarmynd (A) á síðu i-5: Aðalsíðurnar í Varahlutavörulistanum samanstanda af skýringarsíðu (1) og samsvarandi listasíðu (7). Síðunúmerið (5) er sýnt í haus síðunnar með skýringarmyndinni og í fæti listasíðunnar. Skjalnúmerið (6) er sýnt í fæti listasíðunnar.

Númerun síðu

Sjá skýringarmynd (A) á síðu i-5: Síðunúmer (5) er í þremur hlutum:

- kaflanúmer (2)
- samfellt síðunúmer innan kaflans (3)
- heildarfjölda blaðsíðna í kaflanum (4)

Kynning á vél

Framleiðandi

Fyrir nafn og heimilisfang framleiðanda, sjá síðu tvö í þessum vörulista.

Þjónusta

Til að panta varahluti fyrir þessa vél, eða til að tilkynna vandamál sem tengjast notkun þessarar vélar, skal hafa samband við næstu Tetra Pak skrifstofu.

Hafðu samband við Samskiptatengsl með aðrar fyrirspurnir, athugasemdir eða uppástungur varðandi tækjabúnaðinn og fylgiskjöl hans.

Kennsl

CE flokkun

Þessi tækjabúnaður er í samræmi við grundvallar heilbrigðis- og öryggisreglugerðir á Evrópska efnahags svæðinu (EES).

Nafnplata

Skýringarmynd (B) á síðu i-5 sýnir dæmi um nafnplötu.
Skýringarmynd af gildri nafnplötu og staðsetningu hennar á tækjabúnaðinum er sýnd í Inngangskafla handbókanna sem afhentar eru með þessum tækjabúnaði. Á nafnplötunni eru upplýsingarnar sem taldar eru upp hér að neðan, sem þörf er á þegar haft er samband við Tetra Pak varðandi þennan tiltekna tækjabúnað.

- Vélartegund (8)
- Fjöldi (9)
- Teikniupplýsingar (10)
- Raðnúmer vélar (11)
- Framleiðandi (12)
- CE merki (13)
- Framleiðsluár (14)

Skýringarmynd (C) á síðu i-5 sýnir dæmi um tæknilýsingu vélar. Gættu þess að upplýsingar um tækjabúnað sem talinn er upp á fremstu síðum þessarar handbóka samsvari upplýsingum á nafnplötu og tæknilýsingu vélar.

Hvernig nota á þennan Varahlutavörulista

Finndu varahlutarnúmer

a) Sjá skýringarmynd (D) á síðu i-5: Farðu í kaflanúmerið (15) sem gefið er til kynna við hlið aðalflokksins sem inniheldur hlutinn sem þú vilt finna.

Atriði b) og c) vísa til skýringarmyndar (E) á síðu i-6:

b) Á skýringarmynd aðalflokksins skaltu leita að undirflokki (17) vélarinnar, sem inniheldur hlutinn eða undirflokkinn sem þú ert að leita að. Taktu eftir stöðunúmerinu (18) og farðu á listasíðuna sem fylgir skýringarmyndinni.

c) Leitaðu að stöðunúmeri/tilvísunartitli (16) eða heiti undirflokksins (19). Farðu á samsvarandi síðunúmer (20) sem sýnt er í hægri dálkinum. Tetra Pak hefur kosið að nota alltaf sérhæfða skipan fyrir tilvísunartitla. Forskeytið sem gefur til kynna sérhæfða skipan (=) er ekki sýnt í tilvísunartitlinum.

Atriði d) og e) vísa til skýringarmyndar (F) á síðu i-6:

d) Finndu hlutinn (21) sem þú ert að leita að á undirflokksskýringarmyndinni og taktu eftir stöðunúmeri hlutarins.

e) Hlutarnúmerið (29) og lýsing hlutar (30) eru skráð hjá stöðunúmerinu á listasíðunni.

Upplýsingar skráðar í Varahlutavörulista

Listinn að neðan vísar til skýringarmyndar (F) á síðu i-6: Varahlutavörulisti inniheldur eftirfarandi upplýsingar um flokka, undirflokka og varahluti fyrir tækjabúnaðinn:

- Tilvísun flokkaskipunar (22). Gefur til kynna næsta flokk fyrir ofan í listaskipan tækjabúnaðarins.
- Heiti flokks (23)
- Mælieining (25)
- Magn (26)
- Númer samsetningarteikningar (27)
- Röð listasíðu (28). Fylgir með ef það eru margar blaðsíður í skýringarmynd eða lista flokksins.
- Númer hlutar eða undirflokks (29)
- Heiti undirflokks eða lýsing hlutar (30)
- Númer flokks (31)
- Númer tækjabúnaðar (32)
- Fyrirsögn flokkaskipunar (33). Gefur til kynna ef kaflinn fyrir neðan fyrirsögnina er fyrir sérstakt afbrigði vélar eða ef hann er listi yfir algenga hluti. Ef listi er með meira en eitt afbrigði og hvert afbrigði á sína eigin samsetningarteikningu, er sýnd blaðsíðutilvísun til samsetningarteikningar afbrigðisins.
- Innri upplýsingar (34)

Introduzione

Informazioni sul manuale

Tetra Pak consiglia di leggere con attenzione tutti i manuali forniti in dotazione. Assicurarsi che tutti i manuali in dotazione siano disponibili per il personale addetto al funzionamento o alla manutenzione della macchina.

È importante conservare il presente catalogo per tutta la durata della macchina e consegnarlo al successivo proprietario o utilizzatore.

Tetra Pak non sarà da ritenersi responsabile per eventuali danni alla macchina causati dal mancato rispetto delle istruzioni fornite nei manuali che accompagnano questa macchina.

Manuali in dotazione

I manuali consegnati con la presente macchina possono comprendere:

- CM (Manuale di conversione)
  Questo manuale fornisce ai tecnici le informazioni necessarie per la conversione della macchina da una modalità di produzione a un'altra.
- EM (Manuale elettrico)
  Questo manuale fornisce ai tecnici informazioni sull'impianto elettrico della macchina.
- IM (Manuale d'installazione)
  Questo manuale fornisce ai tecnici le informazioni necessarie per installare in sicurezza la macchina.
- MM (Manuale di manutenzione)
  Questo manuale fornisce ai tecnici le informazioni sulla manutenzione della macchina.
- OM (Manuale operativo)
  Questo manuale fornisce all'operatore le informazioni sull'utilizzo e il funzionamento della macchina prima, durante e dopo la produzione.
- SPC (Catalogo dei pezzi di ricambio)
  Questo catalogo fornisce le informazioni necessarie per ordinare i pezzi di ricambio a Tetra Pak.
- TeM (Manuale tecnico)
  Questo manuale:
  - fornisce ai tecnici le informazioni necessarie per installare in sicurezza la macchina
  - fornisce ai tecnici le informazioni sulla manutenzione della macchina
  - fornisce ai tecnici informazioni sull'impianto elettrico della macchina
  - fornisce le informazioni necessarie per ordinare i pezzi di ricambio a Tetra Pak.

Schema delle pagine

Consultare la figura (A) a pagina i-5: Le pagine principali di un Catalogo dei pezzi di ricambio sono costituite da una pagina con la figura (1) e una pagina elenco corrispondente (7). Il numero di pagina (5) è indicato nell'intestazione delle pagine con le figure e nel piè di pagina delle pagine elenco. Il codice del documento (6) è indicato nel piè di pagina delle pagine elenco.

Numerazione delle pagine

Consultare la figura (A) a pagina i-5: Il numero di pagina (5) è suddiviso in tre parti:

- numero del capitolo (2)
- numero progressivo di pagina all'interno del capitolo (3)
- numero totale di pagine nel capitolo (4)

Introduzione alla macchina

Fabbricante

Il nome e l'indirizzo del fabbricante sono riportati sulla seconda pagina del presente catalogo.

Assistenza

Per ordinare i pezzi di ricambio per questa macchina oppure per riferire problemi associati al funzionamento della macchina, contattare l'ufficio Tetra Pak più vicino.

Per tutte le altre richieste, commenti o suggerimenti per eventuali miglioramenti da apportare alla macchina e alla relativa documentazione, contattare il responsabile di collegamento.

Identificazione

Classificazione CE

Questa macchina è conforme alle principali norme sanitarie e di sicurezza dell'Area Economica Europea (EEA).

Targhetta della macchina

La figura (B) a pagina i-5 mostra un esempio di targhetta della macchina. Il capitolo Introduzione di tutti i manuali consegnati con la presente macchina contiene invece la figura della targhetta della macchina valida e la sua posizione sulla macchina. La targhetta riporta i dati elencati qui sotto, che sono necessari per contattare Tetra Pak in relazione a questa macchina specifica.

- Tipo di macchina (8)
- Volume (9)
- Specifiche disegno (10)
- Numero di matricola della macchina (11)
- Fabbricante (12)
- Marchio CE (13)
- Anno di fabbricazione (14)

La figura (C) a pagina i-5 mostra un esempio delle specifiche di una macchina. Verificare che i dati relativi alla macchina elencati nelle pagine iniziali del presente manuale corrispondano ai dati riportati sulla targhetta della macchina e nelle specifiche della macchina.

Come usare questo Catalogo dei pezzi di ricambio

Individuare il numero del pezzo di ricambio

a) Consultare la figura (D) a pagina i-5: andare al numero del capitolo (15) indicato accanto al gruppo principale che contiene il pezzo che si desidera individuare.

I punti b) e c) fanno riferimento alla figura (E) a pagina i-6.

b) Nella figura del gruppo principale, identificare il sottogruppo della macchina (17) che contiene il pezzo o il sottogruppo cercato. Annotare il numero di posizione (18) e andare alla pagina elenco che segue la figura.

c) Identificare il numero di posizione/l'indicazione di riferimento (16) o il nome del sottogruppo (19). Andare al numero di pagina corrispondente (20) indicato nella colonna di destra. Per le indicazioni di riferimento, Tetra Pak ha scelto di usare sempre la struttura "function-oriented". Il prefisso che indica la struttura "function-oriented" (=) non è mostrato nell'indicazione di riferimento.

I punti d) e e) fanno riferimento alla figura (F) a pagina i-6.

d) Individuare il pezzo (21) cercato sulla figura del sottogruppo e annotare il numero di posizione del pezzo.

e) Il numero del pezzo (29) e la descrizione del pezzo (30) sono indicati accanto al numero di posizione sulla pagina elenco.

Informazioni contenute nel Catalogo dei pezzi di ricambio

L'elenco seguente fa riferimento alla figura (F) a pagina i-6. Il Catalogo dei pezzi di ricambio contiene le seguenti informazioni sui gruppi, i sottogruppi e i pezzi di ricambio della macchina:

- Riferimento struttura gruppo (22). Indica il gruppo superiore successivo nella struttura elenco della macchina.
- Nome gruppo (23)
- Unità di misura (25)
- Quantità (26)
- Numero disegno di assemblaggio (27)
- Intervallo delle pagine elenco (28). Questa informazione è presente se la figura o l'elenco relativi al gruppo occupano più di una pagina del manuale.
- Numero pezzo o sottogruppo (29)
- Nome sottogruppo o descrizione pezzo (30)
- Numero gruppo (31)
- Numero macchina (32)
- Intestazione informazioni gruppo (33). Indica se la sezione che segue l'intestazione si riferisce a una variante di macchina specifica oppure se si tratta di un elenco di parti comuni. Se un elenco contiene più di una variante ed esiste un disegno di assemblaggio specifico per ogni variante, viene fornito il riferimento alla pagina in cui è mostrato il disegno di assemblaggio relativo alla variante.
- Informazioni interne (34)

Įvadas

Informacija apie instrukciją

"Tetra Pak" rekomenduoja atidžiai perskaityti visas pateiktas instrukcijas. Pasirūpinkite, kad instrukcijos būtų prieinamos darbuotojams, kurie eksploatuoja arba prižiūri įrangą.

Svarbu šį katalogą išsaugoti visą įrangos tarnavimo laiką ir perduoti jį kitam įrangos savininkui arba naudotojui.

"Tetra Pak" neprisiima atsakomybės už įrangos sugadinimą, jei nesilaikoma nurodymų, pateiktų prie šios įrangos pridedamuose kataloguose.

Pateikiamos instrukcijos

Su šia įranga pateikiamose instrukcijose gali būti

- CM
  Transformacijos instrukcija, suteikianti technikams informaciją apie įrangos transformavimą skirtingiems gamybos režimams.
- EM
  Elektrinės dalies instrukcija, suteikianti technikams informaciją apie įrangos elektros sistemą.
- IM
  Įrengimo instrukcija, suteikianti technikams informaciją, reikalingą norint saugiai sumontuoti įrangą.
- MM
  Techninės priežiūros instrukcija, suteikianti technikams informaciją apie įrangos priežiūrą.
- OM
  Eksploatavimo instrukcijos paskirtis yra suteikti informaciją operatoriui, kaip naudoti ir valdyti įrangą prieš gamybos procesą, jo metu ir po jo.
- SPC
  Atsarginių dalių katalogas, kuriame yra informacija, reikalinga atsarginėms dalims iš "Tetra Pak" užsakyti
- TeM
  Techninė instrukcija
  – suteikia technikams informaciją, reikalingą saugiai sumontuoti įrangą
  – suteikia technikams informaciją apie įrangos priežiūrą
  – suteikia technikams informaciją apie įrangos elektros sistemą
  – suteikia informaciją, reikalingą užsakyti iš "Tetra Pak" atsargines dalis

Puslapių išdėstymas

Žr. paveikslėlį (A) puslapyje i-5. Pagrindiniai atsarginių dalių katalogo puslapiai sudaryti iš paveikslėlio puslapio (1) ir atitinkamo sąrašo puslapio (7). Puslapio numeris (5) nurodomas paveikslėlio puslapio viršuje ir sąrašo puslapio apačioje. Dokumento numeris (6) nurodomas sąrašo puslapio apačioje.

Puslapių numeravimas

Žr. iliustraciją (A) puslapyje i-5. Puslapio numerį (5) sudaro trys dalys:

- skyriaus numeris (2)
- puslapio eilės numeris (3) skyriuje
- bendras puslapių skaičius (4) skyriuje

Įrenginio pristatymas

Gamintojas

Gamintojo pavadinimas ir adresas pateikti antrajame šio katalogo puslapyje.

Aptarnavimas

Jei reikia šiai įrangai užsakyti atsarginių dalių arba pranešti apie jos eksploatavimo nesklandumus, kreipkitės į artimiausią "Tetra Pak" biurą.

Su kitais klausimais, pastabomis ar įrangos ir jos dokumentacijos tobulinimo pasiūlymais kreipkitės į savo kontaktinį asmenį.

Identifikavimas

CE klasifikacija

Šis įrenginys atitinka esminius Europos ekonominės erdvės (EEE) sveikatos ir saugumo reikalavimus.

Vardinė plokštelė

Puslapyje i-5 pateiktame paveikslėlyje (B) parodytas įrangos vardinės plokštelės pavyzdys.
Atitinkamos įrangos vardinė plokštelė ir jos vieta ant įrangos parodoma su šia įranga pateikiamų instrukcijų įvade. Įrangos vardinėje plokštelėje pateikiami žemiau nurodyti duomenys, kurie reikalingi kreipiantis į "Tetra Pak" dėl konkretaus įrenginio.

- Mašinos tipas (8)
- Tomas (9)
- Brėžinių specifikacijos (10)
- Įrangos serijos numeris (11)
- Gamintojas (12)
- CE ženklas (13)
- Pagaminimo metai (14)

Paveikslėlyje (C) puslapyje i-5 parodytas įrangos specifikacijos pavyzdys. Patikrinkite, ar šios instrukcijos pirmuosiuose puslapiuose nurodyti duomenys atitinka duomenis vardinėje plokštelėje ir įrangos specifikaciją.

Kaip naudotis atsarginių dalių katalogu

Atsarginės dalies numerio suradimas

a) Žr. iliustraciją (D) puslapyje i-5. Atsiverskite skyrių (15), nurodytą šalia pagrindinio mazgo, kuriame yra jūsų ieškoma dalis.

Punktai b) ir c) atitinka paveikslėlį (E) puslapyje i-6.

b) Pagrindinio mazgo paveikslėlyje suraskite smulkesnį įrangos mazgą (17), kuriame yra jūsų ieškoma dalis arba mazgas. Pasižiūrėkite pozicijos numerį (18) ir suraskite jį toliau pateiktame sąraše.

c) Suraskite pozicijos numerį/pavadinimą (16) arba smulkesnio mazgo pavadinimą (19). Atsiverskite dešiniajame stulpelyje nurodytą puslapį (20). "Tetra Pak" nusprendė pavadinimuose visada naudoti paskirtį atitinkančią struktūrą. Pavadinimuose nepateikiamas paskirtį atitinkančios struktūros prefiksas (=).

Punktai d) ir e) atitinka paveikslėlį (F) puslapyje i-6.

d) Suraskite ieškomą dalį (21) smulkesnio mazgo paveikslėlyje ir pasižiūrėkite dalies pozicijos numerį.

e) Dalies numeris (29) ir dalies aprašymas (30) sąrašo puslapyje nurodyti šalia pozicijos numerio.

Atsarginių dalių kataloge pateikiama informacija

Žemiau pateiktas sąrašas atitinka paveikslėlį (F) puslapyje i-6. Atsarginių dalių kataloge apie įrangos mazgus, smulkesnius mazgus ir atsargines dalis pateikiama tokia informacija:

- Struktūrinė mazgo nuoroda (22). Nurodo stambesnį mazgą įrangos sąrašo struktūroje.
- Mazgo pavadinimas (23)
- Matavimo vienetai (25)
- Kiekis (26)
- Surinkimo brėžinio numeris (27)
- Sąrašo puslapių intervalas (28) Pateikiamas, jei mazgo paveikslėlis arba sąrašas užima kelis puslapius.
- Dalies arba smulkesnio mazgo numeris (29)
- Smulkesnio mazgo arba dalies aprašymas (30)
- Mazgo numeris (31)
- Įrangos numeris (32)
- Informacijos apie mazgą puslapio antraštė (33). Nurodo, ar po antrašte pateikta informacija yra specifinio įrangos varianto, ar tai paprastų dalių sąrašas. Jei yra daugiau kaip vienas sąrašo variantas ir kiekvienam variantui yra atskiras surinkimo brėžinys, nurodomas puslapis, kuriame pateiktas konkretaus varianto surinkimo brėžinys.
- Vidinė informacija (34)

Ievads

Informācija par rokasgrāmatu

Tetra Pak iesaka rūpīgi izlasīt visas piegādātās rokasgrāmatas. Jānodrošina, lai piegādātas rokasgrāmatas būtu pieejamas personālam, kas apkalpo iekārtas vai veic to apkopi.

Šo katalogu ir nepieciešams saglabāt visu laiku, kamēr iekārtas tiek izmantotas, un nodot katalogu nākamajam īpašniekam vai lietotājam.

Tetra Pak neatbild par jebkuriem iekārtas bojājumiem, kuri rodas līdz ar iekārtu piegādāto instrukciju neievērošanas rezultātā.

Piegādātas rokasgrāmatas

Līdz ar iekārtu var tikt piegādātas šādas rokasgrāmatas

- CM
  Pārslēgšanas rokasgrāmata sniedz tehniķiem informāciju par iekārtas pārslēgšanu dažādos atšķirīgos ražošanas režīmos.
- EM
  Elektriskās instalācijas rokasgrāmata sniedz tehniķiem informāciju par iekārtas elektriskās instalācijas sistēmu.
- IM
  Uzstādīšanas rokasgrāmata sniedz tehniķiem informāciju, kas nepieciešama drošai iekārtas uzstādīšanai.
- MM
  Apkopes rokasgrāmata sniedz tehniķiem informāciju par iekārtas apkopi.
- OM
  Ekspluatācijas rokasgrāmata sniedz apkalpojošajam personālam informāciju par iekārtas apkalpošanu un ekspluatēšanu pirms darba sākuma, darba laikā un pēc darba beigām.
- SPC
  Rezerves daļu katalogs sniedz informāciju, kas nepieciešama, lai pasūtītu rezerves daļas no Tetra Pak
- TeM
  Tehniskā rokasgrāmata
  - sniedz tehniķiem informāciju, kas nepieciešama drošai iekārtas uzstādīšanai
  - sniedz tehniķiem informāciju par iekārtas apkopi
  - sniedz tehniķiem informāciju par mašīnas/iekārtas elektrisko instalāciju
  - sniedz informāciju, kas nepieciešama, lai pasūtītu rezerves daļas no Tetra Pak.

Lappuses izkārtojums

Skatīt ilustrāciju (A) i-5 lappusē: Galvenās lappuses Rezerves daļu katalogā sastāv no ilustrāciju lapas (1) un atbilstīgās saraksta lapas (7). Lappuses numurs (5) ir norādīts ilustrāciju lapas galvenē un saraksta lapas kājenē. Dokumenta numurs (6) ir norādīts saraksta lapas kājenē.

Lappušu numerācija

Skatīt ilustrāciju (A) lappusē i-5: Lappuses numurs (5) sastāv no trim daļām:

- nodaļas numura (2)
- secīga lappuses numura nodaļas ietvaros (3)
- kopējā lappušu skaita nodaļā (3)

Iepazīstināšana ar iekārtu

Ražotājs

Ražotāja nosaukumu un adresi skatīt šī kataloga otrajā lappusē.

Serviss

Lai pasūtītu rezerves daļas šai mašīnai vai lai ziņotu par problēmām saistībā ar šīs mašīnas ekspluatāciju, sazinieties ar tuvāko Tetra Pak pārstāvniecību.

Ja Jums ir citi jautājumi, piezīmes vai ieteikumi par iekārtas un tās dokumentācijas uzlabošanu, tad lūdzam sazināties ar Sakaru biroju.

Identifikācija

EK klasifikācija

Šī iekārta atbilst galvenajām Eiropas Ekonomiskās Zonas (EEA) regulām, kuras attiecas uz veselību un drošību.

Mašīnas tipa plāksnīte

Ilustrācijā (B) i-5 lappusē ir redzams mašīnas tipa plāksnītes paraugs. Aktuālās mašīnas tipa plāksnīte un tās atrašanās vieta uz iekārtas ir parādīta līdz ar šo iekārtu piegādāto rokasgrāmatu Ievada nodaļā. Mašīnas tipa plāksnīte ietver turpmāk uzskaitīto informāciju, kura ir nepieciešama, sazinoties ar Tetra Pak par šo konkrēto iekārtu.

- Mašīnas tips (8)
- Daudzums (9)
- Rasējuma specifikācijas (10)
- Mašīnas sērijas numurs (11)
- Ražotājs (12)
- CE apzīmējums (13)
- Izgatavošanas gads (14)

Ilustrācijā (C) lappusē i-5 ir parādīts mašīnas specifikācijas paraugs. Pārliecinieties, ka šīs rokasgrāmatas titullapās minētā informācija par iekārtu atbilst tai, kas norādīta uz mašīnas tipa plāksnītes un mašīnas specifikācijā.

Rezerves daļu kataloga lietošana

Vajadzīgās rezerves daļas numura atrašana

a) Skatiet ilustrāciju (D) lappusē i-5: Atrodiet nodaļas numuru (15), kas norādīts līdzās galvenajai grupai, kurā ietilpst Jūsu meklētā rezerves daļa.

Pozīcijas b) un c) skatiet ilustrāciju (E) lappusē i-6.

b) Galvenās grupas ilustrācijā atrodiet mašīnas apakšgrupu (17), kurā ietilpst Jūsu meklētā detaļa vai apakšgrupa. Atzīmējiet pozīcijas numuru (18) un pievērsieties saraksta lappusei, kura seko šai ilustrācijai.

c) Sameklējiet atbilstīgo pozīcijas numuru (16) vai apakšgrupas nosaukumu (19). Pievērsieties atbilstīgajam lappuses numuram (20), kas norādīts ailē pa labi. Tetra Pak norādes apzīmēšanai ir izvēlējies vienmēr izmantot uz funkciju orientētu struktūru. Priedēklis, kas norāda uz funkciju orientētu struktūru (=), norādes apzīmējumā nav parādīts.

Pozīcijas d) un e) skatiet ilustrāciju (F) lappusē i-6.

d) Atrodiet vajadzīgo rezerves daļu (21) apakšgrupas ilustrācijā un atzīmējiet šīs detaļas pozīcijas numuru.

e) Šīs detaļas numurs (29) un apraksts (30) atrodas saraksta lapā līdzās pozīcijas numuram.

Rezerves daļu katalogā sniegtā informācija

Šis saraksts attiecas uz ilustrāciju (F) lappusē i-6. Rezerves daļu katalogs satur šādu informāciju par grupām, apakšgrupām un iekārtas rezerves daļām:

- Grupas struktūras norāde (22). Norāda nākamo augstāko grupu iekārtas saraksta struktūrā.
- Grupas nosaukums (23)
- Mērvienība (25)
- Skaits (26)
- Montāžas rasējuma numurs (27)
- Saraksta lappuses zona (28). Tiek izmantota tad, ja grupas ilustrācija vai saraksts ir uz vairākām lappusēm.
- Daļas vai apakšgrupas numurs (29)
- Apakšgrupas nosaukums vai daļas apraksts (30)
- Grupas numurs (31)
- Iekārtas numurs (32)
- Grupas informācijas iedaļas apzīmējums (33). Norāda, vai iedaļa zem šī apzīmējuma attiecas uz noteiktu mašīnas variantu, vai arī tas ir kopējo rezerves daļu saraksts. Ja sarakstam ir vairāk nekā viens variants un katram variantam ir savs montāžas rasējums, tad tiek dota atsauce uz lappusi, kur atrodams katra varianta montāžas rasējums.
- Iekšējā informācija (34)

Inleiding

Informatiehandboek

Tetra Pak adviseert alle meegeleverde handboeken zorgvuldig te lezen. Controleer of het bedienende of onderhoudspersoneel van de machine de beschikking heeft over de meegeleverde handboeken

Het is belangrijk deze catalogus tijdens de levensduur van de machine te bewaren en de catalogus door te geven aan iedere volgende eigenaar of gebruiker.

Tetra Pak stelt zich niet aansprakelijk voor eventuele schade aan de installatie als gevolg van het niet naleven van de instructies die in de meegeleverde handboeken worden gegeven.

Meegeleverde handboeken

De bij deze installatie meegeleverde handboeken omvatten

- CM
  Het conversiehandboek geeft technici informatie met betrekking tot de ombouw van de installatie tussen verschillende productiemodi.
- EM
  Het elektriciteitshandboek informeerttechnici omtrent het elektrischesysteem van de installatie.
- IM
  Het installatiehandboek informeert technici hoe men de installatie op veilige wijze installeert.
- MM
  Het onderhoudshandboek geeft technici informatie over het onderhoud van de installatie.
- OM
  Het bedieningshandboek informeert de operator betreffende het omgaan met en het bedienen van de installatie voor, tijdens en na de productie.
- SPC
  De reserveonderdelencatalogus geeft de nodige informatie omtrent het bestellen van reserveonderdelen bij Tetra Pak
- TeM
  Het technische handboek
  - informeert technici hoe men de installatie op veilige wijze installeert
  - informeert technici omtrent het onderhoud van de installatie
  - informeert technici omtrent het elektrische systeem van de machine/ installatie
  - informeert over welke informatie men nodig heeft om reserveonderdelen bij Tetra Pak te bestellen.

Pagina layout

Zie afbeelding (A) op pagina i-5: De belangrijkste bladzijden van een reserveonderdelencatalogus bestaan uit een bladzijde met afbeeldingen (1) en een bladzijde met een corresponderende lijst (7). Het bladzijde-nummer (5) is te vinden in de kop van een bladzijde met een afbeelding en in de voetnoot van een lijstbladzijde. Het documentennummer (6) is te vinden in de voetnoot van een lijstbladzijde.

Bladzijdenummering

Zie afbeelding (A) op pagina: i-5: Een bladzijdenummer (5) bestaat uit drie delen:

- hoofdstuknummer (2)
- opeenvolgend bladzijdenummer in het hoofdstuk (3)
- totaal aantal bladzijden in het hoofdstuk (4)

Introductie van de machine

Fabrikant

Zie de tweede bladzijde van deze catalogus voor naam en adres van de fabrikant.

Service

Neem voor het bestellen van reserveonderdelen voor deze machine, of om bedieningsproblemen met betrekking tot deze machine te melden, contact op met de dichtstbijzijnde Tetra Pak vestiging.

Neem contact op met de contactpersoon voor verdere informatie, opmerkingen of suggesties ter verbetering van de installatie en de bijbehorende documentatie.

Identificatie

CE-classificatie

Deze installatie voldoet aan de basisvoorschriften voor gezondheid en veiligheid voor het Europese Economische Gebied (EEG).

Machineplaatje

Afbeelding (B) op bladzijde i-5 toont een voorbeeld van een machineplaatje. Een afbeelding van het geldige machineplaatje en de plaatsing ervan worden getoond in de Inleiding van de handboeken, die bij deze installatie worden meegeleverd. Het machineplaatje bevat onderstaande gegevens, die men nodig heeft wanneer men omtrent de desbetreffende installatie contact opneemt met Tetra Pak.

- Machinetype (8)
- Volume (9)
- Specificatietekeningen (10)
- Serienummer van de machine (11)
- Fabrikant (12)
- CE-markering (13)
- Jaar van fabrikage (14)

Afbeelding (C) op pagina i-5 toont een voorbeeld van een machinespecificatie. Controleer of de gegevens betreffende de installatie op de eerste bladzijden van dit handboek overeenkomen met de gegevens op het machineplaatje en de machinespecificatie.

Gebruik van de reserveonderdelencatalogus

Vinden van het bestelnummer van een reserveonderdeel

a) Zie afbeelding (D) op pagina i-5: Ga naar het hoofdstuknummer (15) dat wordt aangeven naast de hoofdgroep waarin zich het door u gezochte onderdeel bevindt.

Items b) en c) verwijzen naar afbeelding (E) op pagina i-6.

b) Op de afbeelding van de hoofdgroep zoekt u de machinesubgroep (17), die het gezochte onderdeel of de gezochte subgroep bevat. Noteer het positienummer (18) en ga naar de lijstbladzijde die op de afbeelding volgt.

c) Zoek naar het positienummer/de referentie (16) of de subgroep-naam (19). Ga naar de corresponderende bladzijde (20) die in de rechterkolom staat vermeld. Tetra Pak heeft voor de benoeming van de referenties gekozen voor de functiegeoriënteerde structuur. De prefixaanduidende functiegeoriënteerde structuur (=) wordt niet in de referentie getoond.

Items d) en e) verwijzen naar afbeelding (F) op pagina i-6.

d) Zoek het gewenste deel (21) op de subgroepafbeelding en noteer het positienummer van het onderdeel.

e) Het bestelnummer (29) en de omschrijving (30) van het onderdeel staan naast het positienummer op de lijstbladzijde.

Informatie die in een reserveonderdelencatalogus wordt gegeven

De onderstaande lijst verwijst naar afbeelding (F) op bladzijde i-6. Een reserveonderdelencatalogus bevat de volgende informatie over groepen, subgroepen en reserveronderdelen voor de installatie:

- Referentie groepstructuur (22). Geeft de volgende hogere groep in de lijststructuur van de installatie aan.
- Groepsnaam (23)
- Meeteenheid (25)
- Hoeveelheid (26)
- Nummer montagetekening (27)
- Lijst bladzijdenreeks (28). Wordt vermeld wanneer er meerdere bladzijden in de groepsafbeelding of -lijst voorkomen.
- Deel- of subgroepnummer (29)
- Subgroepnaam of onderdeelbeschrijving (30)
- Groepsnummer (31)
- Machinenummer (32)
- Titel groepsinformatie (33). Geeft aan of het gedeelte onder de titel voor een specifieke machinesoort is of dat het een lijst met gebruikelijke onderdelen is. Indien een lijst meer dan één type bevat en ieder type zijn eigen montagetekening heeft, wordt een bladzijdereferentie getoond voor de montagetekening van het type.
- Interne informatie (34)

Introduksjon

Informasjon om manualen

Tetra Pak anbefaler at du leser nøye gjennom alle leverte manualer. Sørg for at manualene er tilgjengelige for alle som betjener eller vedlikeholder utstyret.

Det er viktig at du tar vare på denne katalogen under hele levetiden til utstyret og at du gir den videre til eventuelle nye eiere eller brukere.

Tetra Pak vil ikke være ansvarlig for skader på utstyret som oppstår fordi brukeren ikke følger instruksjonene i manualene som følger med utstyret.

Leverte manualer

Manualene som leveres med dette utstyret, kan inkludere

- CM
  Konverteringsmanualen gir teknikere informasjon om hvordan de konverterer utstyret mellom ulike produksjonsmodi.
- EM
  Den elektriske manualen gir teknikere informasjon om utstyrets elektriske system.
- IM
  Installasjonsmanualen gir teknikere informasjon som kreves for å kunne installere utstyret på en sikker måte.
- MM
  Vedlikeholdsmanualen gir teknikere informasjon om vedlikehold av utstyret.
- OM
  Driftsmanualen gir operatøren informasjon om hvordan han håndterer og bruker utstyret før, under og etter produksjon.
- SPC
  Reservedelskatalogen inneholder informasjon som du trenger for å bestille reservedeler fra Tetra Pak
- TeM
  Den tekniske manualen
  – gir teknikere informasjon om sikker installasjon av utstyret
  – gir teknikere informasjon om vedlikehold av utstyret
  – gir teknikere informasjon om maskinens/utstyrets elektriske system
  – inneholder informasjon som du trenger for å bestille reservedeler fra Tetra Pak.

Sideoppsett

Se illustrasjonen (A) på side i-5: Hovedsidene i reservedelskatalogen består av en illustrasjonsside (1) og en korresponderende listeside (7). Sidenummeret (5) vises i topteksten på illustrasjonssiden og i bunnteksten på listesiden. Dokumentnummeret (6) vises i bunnteksten på listesiden.

Sidenummerering

Se illustrasjonen (A) på side i-5: Et sidenummer (5) består av tre deler:

- kapittelnummer (2)
- etterfølgende sidenummer i kapitlet (3)
- det totale antall sider i kapitlet (4)

Introduksjon av maskinen

Produsent

Hvis du ønsker produsentens navn og adresse, kan du se side to i denne katalogen.

Service

Når du skal bestille reservedeler til denne maskinen eller rapportere problemer forbundet med driften av denne maskinen, må du kontakte ditt nærmeste Tetra Pak-kontor.

Når det gjelder andre forespørsler, kommentarer eller forslag til forbedringer av utstyret og dets dokumentasjon, kan du ta kontakt med din kontaktperson.

Identifisering

CE-klassifisering

Dette utstyret er i overensstemmelse med de grunnleggende helse- og sikkerhetsforskriftene i Det europeiske økonomiske samarbeidsområdet (EØS).

Maskinplate

Illustrasjonen (B) på side i-5 viser et eksempel på en maskinplate.
En illustrasjon av en gyldig maskinplate og hvor denne er plassert på utstyret, er vist i introduksjonskapitlet i manualene som følger med dette utstyret. Maskinplaten inneholder nedenstående data, som du trenger når du skal kontakte Tetra Pak angående dette bestemte utstyret.

- Maskintype (8)
- Volum (9)
- Tegningsspesifikasjoner (10)
- Maskin-serienummer (11)
- Produsent (12)
- CE-merke (13)
- Produksjonsår (14)

Illustrasjonen (C) på side i-5 viser et eksempel på en maskinspesifikasjon. Sørg for at utstyrsdataene som står oppført foran i denne manualen, samsvarer med dataene på maskinplaten og maskinspesifikasjonen.

Hvordan bruke denne reservedelskatalogen

Finn et reservedelsnummer

a) Se illustrasjonen (D) på side i-5: Gå til kapittelnummeret (15) som er angitt ved siden av hovedgruppen som inneholder delen du vil finne.

Punkt b) og c) viser til illustrasjonen (E) på side i-6.

b) På hovedgruppeillustrasjonen ser du etter maskinundergruppen (17) som inneholder delen eller undergruppen du ser etter. Merk deg posisjonsnummeret (18), og gå til listesiden som kommer etter illustrasjonen.

c) Se etter posisjonsnummeret/referansebetegnelsen (16) eller undergruppenavnet (19). Gå til det korresponderende sidenummeret (20) som står oppført i høyre kolonne. Tetra Pak har valgt å alltid bruke den funksjonsorienterte inndelingen for referansebetegnelse. Prefiksen som angir funksjonsorientert inndeling (=), er ikke vist i referansebetegnelsen.

Punkt d) og e) viser til illustrasjonen (F) på side i-6.

d) Finn delen (21) du ser etter på undergruppeillustrasjonen, og merk deg delens posisjonsnummer.

e) Delenummeret (29) og delebeskrivelsen (30) finner du ved siden av posisjonsnummeret på listesiden.

Informasjon i en reservedelskatalog

Listen nedenfor viser til illustrasjonen (F) på side i-6. En reservedelskatalog inneholder følgende informasjon om grupper, undergrupper og reservedeler for utstyret:

- Gruppeinndelingsreferanse (22). Angir den neste gruppen opp i inndelingen av utstyrslisten.
- Gruppenavn (23)
- Målenhet (25)
- Antall (26)
- Tegningsnummer (27)
- Listesideområde (28). Inkludert hvis det er flere sider i gruppe-illustrasjonen eller listen.
- Dele- eller undergruppenummer (29)
- Undergruppenavn eller delebeskrivelse (30)
- Gruppenummer (31)
- Utstyrsnummer (32)
- Gruppeinformasjonsoverskrift (33). Angir om avsnittet under overskriften er for en bestemt maskinvariant eller om det er en liste over vanlige deler. Hvis en liste har flere varianter og hver variant har sin egen sammenstillingstegning, vises det en sidereferanse til variantens sammenstillingstegning.
- Intern informasjon (34)

Wprowadzenie

Informacje na temat instrukcji

Firma Tetra Pak zaleca dokładne przeczytanie wszystkich dostarczonych instrukcji. Należy upewnić się, że dostarczone instrukcje są dostępne dla personelu, który obsługuje lub konserwuje maszynę.

Należy przechowywać ten katalog przez cały okres użytkowania maszyny i przekazać go kolejnemu właścicielowi lub użytkownikowi.

Firma Tetra Pak nie będzie ponosić odpowiedzialności za jakiekolwiek uszkodzenia maszyny spowodowane niestosowaniem się do zaleceń zawartych w instrukcjach dostarczonych z maszyną.

Dostarczone instrukcje

W skład dokumentacji dostarczonej z maszyną wchodzą:

- Instrukcja konwersji (CM)
  W tej instrukcji zawarte są informacje dotyczące dostosowania maszyny do różnych trybów produkcji.
- Instrukcja dotycząca wyposażenia elektrycznego (EM)
  W tej instrukcji zawarte są informacje dotyczące układu elektrycznego maszyny.
- Instrukcja instalacji (IM)
  W tej instrukcji zawarte są informacje niezbędne do bezpiecznego zainstalowania maszyny.
- Instrukcja konserwacji (MM)
  W tej instrukcji zawarte są informacje dotyczące konserwacji maszyny.
- Instrukcja obsługi (OM)
  W tej instrukcji zawarte są informacje dotyczące obsługi maszyny przed rozpoczęciem produkcji, w jej trakcie oraz po jej zakończeniu.
- Katalog części zamiennych (SPC)
  W katalogu zawarte są informacje dotyczące zamawiania części zamiennych w firmie Tetra Pak.
- Instrukcja techniczna (TeM)
  Instrukcja techniczna zawiera informacje:
  - dotyczące bezpiecznego instalowania maszyny,
  - dotyczące konserwacji maszyny,
  - dotyczące układu elektrycznego maszyny,
  - dotyczące zamawiania części zamiennych w firmie Tetra Pak.

Układ strony

Patrz rysunek (A) na stronie i-5: Główne strony w Katalogu części zamiennych składają się ze strony zawierającej rysunek (1) i odpowiadającej jej strony zawierającej listę (7). Numer strony (5) znajduje się w nagłówku strony zawierającej rysunek i w stopce strony zawierającej listę. Numer dokumentu (6) znajduje się w stopce strony zawierającej listę.

Numeracja stron

Patrz rysunek (A) na stronie i-5: Numer strony (5) składa się z trzech części:

- numeru rozdziału (2),
- kolejnego numeru strony w rozdziale (3),
- całkowitej liczby stron w rozdziale (4).

Ogólne informacje o maszynie

Producent

Nazwę i adres producenta można znaleźć na drugiej stronie niniejszego katalogu.

Serwis

Aby zamówić części zapasowe do tej maszyny lub zgłosić problemy związane z jej pracą, należy skontaktować się z najbliższym biurem Tetra Pak.

Można kontaktować się także w przypadku innych zapytań, uwag lub sugestii dotyczących udoskonalenia urządzenia i dokumentacji.

Identyfikacja

Klasyfikacja CE

Maszyna spełnia podstawowe wymogi z zakresu bezpieczeństwa i ochrony zdrowia obowiązujące w Europejskiej Strefie Ekonomicznej (EEA).

Tabliczka znamionowa

Na rysunku (B), znajdującym się na stronie i-5, pokazano przykładową tabliczkę znamionową.
Rysunek prawidłowej tabliczki znamionowej oraz jej umiejscowienie na maszynie pokazano w rozdziale Wprowadzenie zawartym w instrukcjach dostarczonych z maszyną. Tabliczka znamionowa zawiera następujące dane potrzebne w przypadku kontaktowania się z firmą Tetra Pak w sprawie dotyczącej danej maszyny:

- typ maszyny (8),
- objętość (9),
- specyfikacje rysunkowe (10),
- numer seryjny maszyny (11),
- nazwę producenta (12),
- oznaczenie CE (13),
- rok produkcji (14).

Na rysunku (C) zamieszczonym na stronie i-5 pokazano przykład specyfikacji maszyny. Należy sprawdzić, czy dane dotyczące maszyny przedstawione na pierwszej stronie tej instrukcji odpowiadają danym zawartym na tabliczce znamionowej maszyny oraz specyfikacji maszyny.

Jak korzystać z niniejszego Katalogu części zamiennych

Należy odnaleźć numer części zamiennej

a) Zapoznaj się z rysunkiem (D) na stronie i-5: przejdź do numeru rozdziału (15) pokazanego obok głównej grupy zawierającej część, którą chcesz odszukać.

Punkty b) i c) odnoszą się do rysunku (E) na stronie i-6.

b) Na rysunku grupy głównej odszukaj podgrupę maszyny (17), która zawiera odpowiednią część lub podgrupę, której szukasz. Zanotuj numer pozycji (18) i przejdź do strony z listą odpowiadającą rysunkowi.

c) Odszukaj numer pozycji/oznaczenie odnośnika (16) lub nazwę podgrupy (19). Przejdź do odpowiedniego numeru strony (20) podanego w kolumnie umieszczonej po prawej stronie. Firma Tetra Pak w przypadku oznaczenia odnośnika korzysta ze struktury ukierunkowanej na funkcję. Przedrostek wskazujący strukturę ukierunkowaną na funkcję (=) nie jest pokazany w oznaczeniu odnośnika.

Punkty d) i e) odnoszą się do rysunku (F) na stronie i-6.

d) Na rysunku podgrupyodszukaj odpowiednią część (21) i zanotuj numer pozycji części.

e) Numer części (29) oraz jej opis (30) podano na stronie zawierającej listę obok numeru pozycji.

Informacje zawarte w Katalogu części zamiennych

Poniższa lista odnosi się do rysunku (F), znajdującego się na stronie i-6. Katalog części zamiennych zawiera następujące informacje o grupach, podgrupach oraz częściach zamiennych maszyny:

- Odnośnik struktury grup (22). Wskazuje następną wyższą grupę zawartą w strukturze listy maszyny.
- Nazwa grupy (23).
- Jednostka miary (25).
- Liczba (26).
- Numer rysunku złożeniowego (27).
- Zakres stron zawierających listę (28). Podany w przypadku występowania wielu stron zawierających rysunek grupy lub listę.
- Numer części lub podgrupy (29).
- Nazwa podgrupy lub opis części (30).
- Numer grupy (31).
- Numer maszyny (32).
- Nagłówek informacyjny grupy (33). Wskazuje, czy sekcja umieszczona pod nagłówkiem dotyczy określonego wariantu maszyny, czy też jest to lista wspólna dla wszystkich wariantów. Jeśli lista występuje w wielu wariantach i dla każdego z nich dostępny jest osobny rysunek złożeniowy, podany jest odnośnik strony do rysunku złożeniowego dla danego wariantu.
- Informacje wewnętrzne (34).

Introdução

Informações sobre o Manual

A Tetra Pak recomenda que leia atentamente todos os manuais incluídos. Certifique-se de que os manuais incluídos estão disponíveis para o pessoal que utiliza ou faz a manutenção do equipamento.

É importante que mantenha este catálogo durante toda a vida útil do equipamento, devendo ainda ser fornecido a quaisquer proprietários e operadores subsequentes do mesmo.

A Tetra Pak não será responsável por quaisquer danos no equipamento provocados pelo não seguimento das instruções fornecidas nos manuais que acompanham este equipamento.

Manuais Fornecidos

Os manuais fornecidos com este equipamento podem incluir

- CM
  O Manual de Conversão (Conversion Manual) fornece aos técnicos informações sobre a conversão do equipamento entre modos de produção diferentes.
- EM
  O Manual Eléctrico (Electrical Manual) fornece aos técnicos informações sobre o sistema eléctrico do equipamento.
- IM
  O Manual de Instalação (Installation Manual) fornece aos técnicos as informações necessárias à instalação do equipamento em segurança.
- MM
  O Manual de Manutenção (Maintenance Manual) fornece aos técnicos informações sobre como realizar a manutenção do equipamento.
- OM
  O Manual de Funcionamento (Operation Manual) fornece ao operador informações sobre o manuseamento e funcionamento do equipamento antes, durante e após a produção.
- SPC
  O Spare Parts Catalogue (Catálogo das Peças Sobressalentes) fornece as informações necessárias para encomendar peças sobressalentes à Tetra Pak
- TeM
  O Manual Técnico (Technical Manual)
  - fornece aos técnicos as informações necessárias à instalação do equipamento em segurança
  - fornece aos técnicos informações sobre a manutenção do equipamento
  - fornece aos técnicos informações sobre o sistema eléctrico da máquina/equipamento
  - fornece as informações necessárias para encomendar peças sobressalentes à Tetra Pak.

Desenho da Página

Consulte a ilustração (A) na página i-5: As páginas principais num Catálogo de Peças Sobressalentes são constituídas por uma página de ilustração (1) e uma página de lista correspondente (7). O número de página (5) é apresentado no cabeçalho de uma página de ilustração e no rodapé de uma página de lista. O número do documento (6) é apresentado no rodapé de uma página de lista.

Numeração das Páginas

Consulte a ilustração (A) na página i-5: Um número de página (5) tem três partes:

- número do capítulo (2)
- número das páginas consecutivas dentro do capítulo (3)
- número de páginas total no capítulo (4)

Introdução da Máquina

Fabricante

Quanto ao nome e endereço do fabricante, consulte a segunda página deste catálogo.

Manutenção

Para encomendar peças sobressalentes para esta máquina ou para apresentar relatórios de problemas associados com o funcionamento desta máquina, contacte os escritórios mais próximos da Tetra Pak.

Contacte a Ligação com outras questões, comentários ou sugestões para melhoria referentes ao equipamento e à sua documentação.

Identificação

Classificação da CE

Este equipamento está em conformidade com as regulamentações básicas da saúde e segurança da Área Económica Europeia (AEE).

Chapa de Identificação da Máquina

A ilustração (B) na página i-5 mostra um exemplo de uma chapa de identificação da máquina.
No capítulo Introdução dos manuais entregues com este equipamento é apresentada uma ilustração da chapa de identificação válida da máquina e a sua localização no equipamento. A chapa de identificação da máquina contém os dados listados em baixo, necessários quando contactar a Tetra Pak em relação a este equipamento específico.

- Tipo de máquina (8)
- Volume (9)
- Especificações do desenho (10)
- Número de série da máquina (11)
- Fabricante (12)
- Marca da CE (13)
- Ano de fabricação (14)

A ilustração (C) na página i-5 mostra um exemplo de uma especificação da máquina. Certifique-se de que os dados do equipamento listados nas primeiras páginas deste manual correspondem aos dados indicados na chapa de identificação da máquina e às especificações da máquina.

Como utilizar este Catálogo de Peças Sobressalentes

Localize o Número da Peça Sobressalente

a) Consulte a ilustração (D) na página i-5: Vá para o número do capítulo (15) indicado no grupo principal que contém a peça que pretende localizar.

Os itens b) e c) referem-se à ilustração (E) na página i-6:

b) Na ilustração do grupo principal, procure o subgrupo da máquina (17) que contém a peça ou o subgrupo que procura. Tome nota do número de posição (18) e vá para a página de lista a seguir à ilustração.

c) Procure o número de posição/designação de referência (16) ou o nome do subgrupo (19). Vá para o número de página correspondente (20) indicado na coluna do lado direito. A Tetra Pak preferiu utilizar sempre a estrutura orientada para a função como designação de referência. O prefixo que inicia a estrutura orientada para a função (=) não está indicada na designação de referência.

Os itens d) e e) referem-se à ilustração (F) na página i-6:

d) Localize a peça (21) que procura na ilustração do subgrupo e tome nota do número de posição da peça.

e) O número de peça (29) e a descrição da peça (30) são apresentados ao lado do número da posição na página de lista.

Informações listadas num Catálogo de Peças Sobressalentes

A lista em baixo refere-se à ilustração (F) na página i-6: Um Catálogo de Peças Sobressalentes contém as seguintes informações sobre grupos, subgrupos e peças sobressalentes para o equipamento:

- Referência da estrutura do grupo (22). Indica o grupo mais elevado seguinte na estrutura da lista do equipamento.
- Nome do grupo (23)
- Unidade de medida (25)
- Quantidade (26)
- Número de série do conjunto (27)
- Intervalo de páginas da lista (28). Incluído se existirem várias páginas na ilustração ou na lista do grupo.
- Número de peça ou subgrupo (29)
- Nome do subgrupo ou descrição da peça (30)
- Número do grupo (31)
- Número do equipamento (32)
- Cabeçalho das informações do grupo (33). Indica se a secção em baixo do cabeçalho é de uma variante específica da máquina ou se é uma lista de peças comuns. Se uma lista tiver mais de uma variante e cada variante tiver o seu próprio desenho de conjunto, é apresentada uma referência de página ao desenho do conjunto da variante.
- Informações internas (34)

Introducere

Informații despre manual

Tetra Pak recomandă citirea cu atenție a tuturor manualelor livrate. Asigurați-vă că manualele livrate sunt puse la îndemâna personalului care exploatează sau întreține echipamentul.

Este important să păstrați acest catalog pe întreaga durată de viață a echipamentului și să transmiteți catalogul deținătorilor sau utilizatorilor ulteriori.

Tetra Pak nu va fi răspunzător pentru niciun defect al echipamentului cauzat prin nerespectarea instrucțiunilor date în manualele care însoțesc acest echipament.

Manuale livrate

Manualele livrate cu acest echipament pot include

- CM
  Manualul de conversie furnizează tehnicienilor informații despre conversia echipamentului între diferite moduri de producție.
- EM
  Manualul electric furnizează tehnicienilor informații despre sistemul electric al echipamentului.
- IM
  Manualul de instalare furnizează tehnicienilor informații necesare pentru instalarea în siguranță a echipamentului.
- MM
  Manualul de întreținere furnizează tehnicienilor informații cu privire la întreținerea echipamentului.
- OM
  Manualul de exploatare pune la dispoziție operatorilor informații despre manevrarea și exploatarea echipamentului înainte, în timpul și după producție.
- SPC
  Catalogul pieselor de schimb furnizează informații necesare pentru comandarea pieselor de schimb de la Tetra Pak.
- TeM
  Manualul tehnic
  – furnizează tehnicienilor informații necesare pentru instalarea în siguranță a echipamentului
  – furnizează tehnicienilor informații necesare cu privire la întreținerea echipamentului
  – furnizează tehnicienilor informații despre sistemul electric al mașinii/echipamentului
  – furnizează informații necesare pentru comandarea pieselor de schimb de la Tetra Pak.

Configurația paginilor

Examinați ilustrația (A) de pe pagina i-5: Paginile principale dintr-un catalog de piese de schimb constau dintr-o pagină de ilustrare (1) și o pagină de liste corespunzătoare (7). Numărul paginii (5) apare în antetul unei pagini de ilustrare și în subsolul unei pagini de liste. Numărul documentului (6) apare în subsolul unei pagini de liste.

Numerotarea paginilor

Examinați ilustrația (A) de la pagina i-5: Un număr de pagină (5) are trei părți:

- numărul capitolului (2)
- numărul paginii consecutive din cadrul capitolului (3)
- număr total de pagini din capitol (4)

Prezentare introductivă a mașinii

Producător

Pentru numele și adresa producătorului, consultați pagina a doua a acestui catalog.

Service

Pentru comandarea pieselor de schimb pentru această mașină sau pentru a raporta problemele asociate cu exploatarea acestei mașini, contactați cel mai apropiat birou Tetra Pak.

Contactați Liaison cu privire la alte întrebări, comentarii sau sugestii legate de îmbunătățirea echipamentului și a documentației acestuia.

Identificare

Clasificare CE

Acest echipament este fabricat în conformitate cu reglementările de bază cu privire la sănătate și siguranță din Zona economică europeană (EEA).

Plăcuța mașinii

Ilustrația (B) de la pagina i-5 arată un exemplu al unei plăcuțe de mașină. O ilustrație a plăcuței valide a mașinii și a poziției acesteia pe echipament este arătată în capitolul introductiv al manualelor livrate împreună cu acest echipament. Plăcuța mașinii conține datele listate mai jos, necesare în cazul în care contactați Tetra Pak în legătură cu acest echipament specific.

- Tip mașină (8)
- Volum (9)
- Specificații de desen (10)
- Număr de serie al mașinii (11)
- Producător (12)
- Marcaj CE (13)
- Anul fabricației (14)

Ilustrația (C) de la pagina i-5 arată un exemplu al unei specificații de mașină. Asigurați-vă că datele specifice echipamentului, listate în paginile din față ale acestui manual, corespund cu datele de pe plăcuța mașinii și cu specificațiile mașinii.

Cum se utilizează acest catalog de piese de schimb

Localizarea unui număr de piesă de schimb

a) Examinați ilustrația (D) de la pagina i-5: Treceți la numărul de capitol (15) indicat lângă grupa principală care conține piesa pe care doriți să o localizați.

Articolele b) și c) se referă la ilustrația (E) de la pagina i-6.

b) Pe ilustrația grupei principale, căutați subgrupa aferentă mașinii (17) care conține piesa sau subgrupa pe care o căutați. Notați numărul poziției (18) și treceți la pagina de liste care urmează după ilustrație.

c) Căutați numărul poziției/marcarea de referință (16) sau numele subgrupei (19). Treceți la numărul de pagină corespunzător (20) listat în coloana din partea dreaptă. Tetra Pak a optat ca întotdeauna să utilizeze structura orientată pe funcție pentru marcarea de referință. Prefixul care indică structura orientată pe funcție (=) nu este arătat în marcarea de referință.

Articolele d) și e) se referă la ilustrația (F) de la pagina i-6.

d) Localizați piesa (21) pe care o căutați pe ilustrația subgrupei și notați numărul de poziție al piesei.

e) Numărul piesei (29) și descrierea piesei (30) sunt listate lângă numărul de poziție de pe pagina de liste.

Informațiile listate într-un catalog de piese de schimb

Lista de mai jos se referă la ilustrația (F) de la pagina i-6. Un catalog de piese de schimb conține următoarele informații despre grupe, subgrupe și piese de schimb pentru echipament:

- Referința despre structura grupelor (22). Indică următoarea grupă superioară din structura de liste a echipamentului.
- Numele grupei (23)
- Unitatea de măsură (25)
- Cantitatea (26)
- Numărul de desen de ansamblu (27)
- Intervalul de pagini de liste (28). Inclus dacă există mai multe pagini în ilustrația sau lista grupei.
- Numărul piesei sau al subgrupei (29)
- Numele subgrupei sau descrierea piesei (30)
- Numărul grupei (31)
- Numărul echipamentului (32)
- Antet cu informații despre grupă (33). Indică dacă secțiunea de sub antet se referă la o anumită variantă de mașină sau este o listă de piese comune. Dacă o listă are mai multe variante și fiecare variantă are propriul său desen de ansamblu, este arătată o referință de pagină pentru desenul de ansamblu al variantei.
- Informații interne (34)

Úvod

Informácie o návode

Spoločnosť Tetra Pak odporúča, starostlivo si prečítať všetky dodané návody. Dbajte, aby pracovníci, obsluhujúci zariadenie alebo zabezpečujúci jeho údržbu, mali vždy dodané návody k dispozícii.

Je dôležité, aby bol tento katalóg k dispozícii počas celého času životnosti zariadenia, a aby sa katalóg dostal aj k jeho prípadnému ďalšiemu držiteľovi alebo používateľovi.

Spoločnosť Tetra Pak nepreberá zodpovednosť za akékoľvek poškodenie zariadenia spôsobené nedodržaním pokynov uvedených v návodoch dodávaných s týmto zariadením.

Dodané návody

S týmto zariadením vám mohli byť dodané nasledujúce návody:

- CM
  Návod na prestavovanie poskytuje technikom informácie o prestavovaní zariadenia do rôznych výrobných režimov.
- EM
  Elektrotechnický návod poskytujetechnikom informácie o elektrickom systéme zariadenia.
- IM
  Návod na inštaláciu poskytuje technikom informácie potrebné na bezpečnú inštaláciu zariadenia.
- MM
  Návod na údržbu poskytujetechnikom informácie o údržbe zariadenia.
- OM
  Návod na obsluhu poskytuje obsluhe informácie o zaobchádzaní a obsluhe zariadenia pred, počas a po prevádzke.
- SPC
  Katalóg náhradných dielcov poskytuje informácie potrebné na objednávanie náhradných dielcov od spoločnosti Tetra Pak
- TeM
  Technický návod
  - poskytuje technikom informácie potrebné na bezpečnú inštaláciu zariadenia
  - poskytuje technikom informácie o údržbe zariadenia
  - poskytuje technikom informácie o elektrickom systéme stroja/ zariadenia
  - poskytuje informácie potrebné na objednávanie náhradných dielcov od spoločnosti Tetra Pak.

Rozloženie strany

Pozri ilustráciu (A) na strane i-5: Hlavné strany Katalógu náhradných dielcov obsahujú stránku s ilustráciami (1) a príslušnú stranu so zoznamom (7). Číslo strany (5) sa uvádza v záhlaví na strane s ilustráciami a v päte strany so zoznamom. Číslo dokumentu (6) sa uvádza v päte strany so zoznamom.

Číslovanie strán

Pozri ilustráciu (A) na strane i-5: Číslo strany (5) má tri časti:

- číslo kapitoly (2)
- poradové číslo strany v rámci kapitoly (3)
- celkový počet strán v kapitole (4)

Základné informácie o stroji

Výrobca

Meno a adresa výrobcu sa uvádza na druhej strane tohto katalógu.

Servis

Pri objednávaní náhradných dielcov pre tento stroj alebo na nahlasovanie problémov súvisiacich s prevádzkou tohto stroja sa obráťte na najbližšie zastúpenie spoločnosti Tetra Pak.

S ostatnými otázkami, pripomienkami a podnetmi na vylepšenie stroja alebo zariadenia a jeho dokumentácie sa obracajte na kontaktnú osobu.

Identifikácia

Klasifikácia CE

Toto zariadenie spĺňa základné predpisy o ochrane zdravia a bezpečnosti Európskeho hospodárskeho priestoru (EEA).

Typový štítok stroja

Na ilustrácii (B) na strane i-5 uvádzame príklad typového štítku. Ilustrácia platného typového štítku stroja a jeho umiestnenia na zariadení sa uvádza v kapitole Úvod v návodoch, dodaných s týmto zariadením. Typový štítok obsahuje dolu údaje uvedené, potrebné pri kontaktoch so spoločnosťou Tetra Pak ohľadom tohto špecifického zariadenia.

- Typ stroja (8)
- Objem (9)
- Údaje o výkrese (10)
- Výrobné číslo stroja (11)
- Výrobca (12)
- Značka CE (13)
- Rok výroby (14)

Ilustrácia (C) na strane i-5 zobrazuje príklad špecifikácie stroja. Presvedčite sa, že údaje zariadenia uvedené na predných stranách tohto návodu zodpovedajú údajom na typovom štítku a v špecifikácii stroja.

Ako sa tento Katalóg náhradných dielcov používa

Vyhľadanie čísla náhradného dielca

a) Pozri ilustráciu (D) na strane i-5: Prejdite na číslo kapitoly (15) uvedené vedľa hlavnej skupiny obsahujúcej dielec, ktorý chcete vyhľadať.

Položky b) a c) odkazujú na ilustráciu (E) na strane i-6.

b) Na ilustrácii hlavnej skupiny hľadajte podskupinu stroja (17), ktorý obsahuje dielec alebo podskupinu, ktorú hľadáte. Poznamenajte si číslo položky (18) a prejdite stranu so zoznamom nasledujúcu po ilustrácii.

c) Vyhľadajte číslo položky/referenčné označenie (16) alebo názov podskupiny (19). Prejdite na príslušné číslo strany (20) uvedené v zozname v pravom stĺpci. Spoločnosť Tetra Pak sa rozhodla vždy používať funkčne zameranú štruktúru na referenčné označovanie. Predčíslie udávajúce funkčne orientovanú štruktúra (=) sa v referenčnom označení nezobrazuje.

Položky d) a e) odkazujú na ilustráciu (F) na strane i-6.

d) Nájdite dielec (21), ktorý hľadáte, na ilustrácii podskupiny a poznamenajte si číslo položky daného dielca.

e) Číslo dielca (29) a popis dielca (30) sa uvádza vedľa čísla položky na stránke so zoznamom.

Informácie uvádzané v Katalógu náhradných dielcov

Dolu uvedený zoznam odkazuje na ilustráciu (F) na strane i-6. Katalóg náhradných dielcov obsahuje nasledujúce informácia o skupinách, podskupinách a náhradných dielcov zariadenia:

- Referenčná štruktúrna skupina (22). Označuje najbližšiu vyššiu skupinu v štruktúre zoznamu zariadenia.
- Názobv skupiny (23)
- Jednotka merania (25)
- Množstvo (26)
- Číslo výkresu celkovej zostavy (27)
- Rozsah strán zoznamu (28). Uvádza sa, ak má ilustrácia alebo zoznam skupiny viac strán.
- Číslo dielca alebo podskupiny (29)
- Názov podskupiny alebo popis dielca (30)
- Číslo skupiny (31)
- Číslo zariadenia (32)
- Záhlavie informácií o skupine (33). Uvádza, či je časť nasledujúca pod záhlavím určená pre špecifický variant stroja, alebo či ide o zoznam spoločných dielcov. Ak má zoznam viac ako jeden variant a každý z variantov má vlastný výkres celkovej zostavy, uvádza sa odkaz na stranu s výkresom zostavy daného variantu.
- Interné informácie (34)

Uvod

Informacije o priročnikih

Tetra Pak priporoča, da natančno preberete vse priložene priročnike. Osebje, ki upravlja in vzdržuje opremo mora imeti dostop do priloženih priročnikov.

Katalog hranite v celotnem času uporabe opreme. V primeru, ko opremo pridobi drug imetnik ali uporabnik, mu obenem izročite tudi katalog.

Podjetje Tetra Pak ne prevzema odgovornosti za poškodbe na opremi, ki nastanejo zaradi neupoštevanja navodil iz priročnikov, ki so priloženi opremi.

Priloženi priročniki

Priročniki, ki so priloženi tej opremi, lahko vključujejo

- Priročnik za zamenjavo (CM)
  V tem priročniku so podatki, ki tehnikom omogočajo izvesti zamenjavo opreme med različnimi načini proizvodnje.
- Elektrotehnični priročnik (EM)
  Priročnik vsebuje podatke za tehnike o električnem sistemu opreme.
- Priročnik za montažo (IM)
  Priročnik vsebuje podatke, ki jih tehniki potrebujejo za varno montažo opreme.
- Priročnik za vzdrževanje (MM)
  Priročnik vsebuje podatke za tehnike o vzdrževanju opreme.
- Priročnik za obratovanje (OM)
  Priročnik je namenjen informiranju za pravilno rokovanje in upravljanje s strojem pred, med in po proizvodnem postopku.
- Katalog nadomestnih delov (SPC)
  Katalog vsebuje potrebne podatke za naročilo nadomestnih delov pri podjetju Tetra Pak.
- Tehnični priročnik (TeM)
  Priročnik
  - vsebuje podatke, ki jih tehniki potrebujejo za varno montažo opreme;
  - vsebuje podatke za tehnike o vzdrževanju opreme;
  - vsebuje podatke za tehnike o električnem sistemu stroja/opreme;
  - vsebuje potrebne podatke za naročilo nadomestnih delov pri podjetju Tetra Pak.

Postavitev strani

Poglejte sliko (A) na strani i-5: Glavne strani v Katalogu nadomestnih delov sestavljata stran s sliko (1) in ustrezna stran s seznamom (7). Številka strani (5) je prikazana na vrhu strani s sliko in na dnu strani s seznamom. Številka dokumenta (6) je prikazana na dnu strani s seznamom.

Številčenje strani

Oglejte si sliko (A) na strani i-5: Številka strani (5) ima tri dele:

- številko poglavja (2);
- zaporedno številko strani v poglavju (3);
- število vseh strani v poglavju (4).

Predstavitev stroja

Proizvajalec

Ime in naslov proizvajalca najdete na drugi strani kataloga.

Servisiranje

Za naročanje nadomestnih delov za stroj ter za sporočanje motenj pri delovanju stroja se obrnite na najbližjo servisno službo podjetja Tetra Pak.

V primeru drugih zahtev, komentarjev, predlogov za izboljšavo opreme ali dokumentacije se obrnite na odgovorno osebo.

Identifikacijska oznaka

CE-klasifikacija

Oprema je izdelana v skladu z osnovnimi zdravstvenimi in varnostnimi predpisi Evropskega gospodarskega prostora (EGS).

Napisna ploščica

Slika (B) na strani i-5 prikazuje primer napisne ploščice.
Sliko veljavne napisne ploščice in njeno mesto na opremi najdete v uvodnem poglavju priloženih priročnikov. Ploščica vsebuje spodaj navedene podatke, ki jih potrebujete, ko se v zvezi z določeno opremo obrnete na podjetje Tetra Pak:

- tip stroja (8);
- prostornino (9);
- specifikacije risbe (10);
- serijsko številko stroja (11);
- proizvajalca (12);
- oznako CE (13);
- leto izdelave (14).

Slika (C) na strani i-5 prikazuje primer specifikacije stroja. Podatki o opremi, navedeni na prvih straneh tega priročnika, se morajo ujemati s podatki o stroju, navedenimi na napisni ploščici in v specifikacijah.

Uporaba Kataloga nadomestnih delov

Iskanje številke nadomestnega dela

a) Oglejte si sliko (D) na strani i-5: Poiščite številko poglavja (15), navedeno poleg glavne skupine, ki vsebuje iskani del.

Točki b) in c) se nanašata na sliko (E) na strani i-6.

b) Na sliki glavne skupine poiščite podskupino stroja (17), ki vsebuje iskani del ali podskupino. Zapomnite si pozicijsko številko (18) in poiščite stran s seznamom, ki pripada sliki.

c) Poiščite pozicijsko številko/referenčno oznako (16) ali ime podskupine (19). Pojdite na stran (20), navedeno v desnem stolpcu. Tetra Pak za referenčno označevanje vedno uporablja funkcijsko strukturo. Predpona, ki označuje funkcijsko strukturo (=), ni prikazana v referenčni oznaki.

Točki d) in e) se nanašata na sliko (F) na strani i-6.

d) Na sliki podskupine poiščite del (21), ki ga iščete, in si zapomnite njegovo pozicijsko številko.

e) Številka (29) in opis dela (30) sta navedena poleg pozicijske številke na strani s seznamom.

Informacije v Katalogu nadomestnih delov

Spodnji seznam se nanaša na sliko (F) na strani i-6. Katalog nadomestnih delov vsebuje naslednje informacije o skupinah, podskupinah in nadomestnih delih za opremo:

- referenco strukture skupine (22); Označuje naslednjo višjo skupino v strukturi seznamov opreme.
- ime skupine (23);
- mersko enoto (25);
- količino (26);
- številko sestavne risbe (27);
- število strani seznama (28); Če je slika ali seznam skupine sestavljen iz več strani.
- številko dela ali podskupine (29);
- ime podskupine ali opis dela (30);
- številko skupine (31);
- številko opreme (32);
- naslov z informacijami o skupini (33). Označuje, ali je razdelek pod naslovom namenjen specifični izvedbi stroja ali gre za seznam skupnih delov. Če ima seznam več izvedb in če ima vsaka od njih svojo sestavno risbo, je ob vsaki izvedbi navedena referenčna stran s sestavno risbo.
- interne informacije (34).

Inledning

Information om manualen

Tetra Pak rekommenderar att alla manualer läses noggrant. Se till att manualerna är tillgängliga för personalen som använder eller underhåller utrustningen.

Det är viktigt att denna katalog behålls under utrustningens livslängd, och att den överlämnas till varje efterföljande innehavare eller användare av utrustningen.

Tetra Pak tar inte ansvar för någon skada på utrustningen som orsakats av att instruktionerna i medföljande manualer inte har följts.

Medföljande manualer

Följande manualer kan levereras tillsammans med utrustningen:

- CM
  Konverteringsmanualen (CM) innehåller information för tekniker om hur man konverterar utrustningen mellan olika produktionslägen.
- EM
  Den elektriska manualen (EM) innehåller information för tekniker om utrustningens elektriska system.
- IM
  Installationsmanualen (IM) innehåller information för tekniker om hur utrustningen installeras på ett säkert sätt.
- MM
  Underhållsmanualen (MM) innehåller information för tekniker om hur utrustningen underhålls.
- OM
  Driftsmanualen (OM) innehåller information för operatören om hur utrustningen ska hanteras före, under och efter produktion.
- SPC
  Reservdelskatalogen (SPC) innehåller den information som behövs för att beställa reservdelar från Tetra Pak.
- TeM
  Den tekniska manualen (TeM)
  - innehåller information för tekniker om hur utrustningen installeras på ett säkert sätt.
  - innehåller information för tekniker om hur utrustningen underhålls.
  - innehåller information för tekniker om maskinens/utrustningens elektriska system.
  - innehåller den information som behövs för att beställa reservdelar från Tetra Pak.

Sidlayout

Se bild (A) på sidan i-5: Huvudsidorna i reservdelskatalogen består av en bildsida (1) och en motsvarande listsida (7). Sidnumret (5) visas i sidhuvudet på bildsidan och i sidfoten på listsidan. Dokumentnumret (6) visas i sidfoten på listsidan.

Sidnumrering

Se bild (A) på sidan i-5: Ett sidnummer (5) består av tre delar:

- kapitlets nummer (2)
- löpande sidnummer inom kapitlet (3)
- totalt sidantal i kapitlet (4)

Introduktion till maskinen

Tillverkare

Tillverkarens namn och adress finns på sidan 2 i katalogen.

Service

För att beställa reservdelar till denna maskin eller för att rapportera problem som uppstått i samband med driften kontaktar du närmaste Tetra Pak-kontor.

Om du har andra frågor, kommentarer eller förslag till förbättringar av utrustningen och dokumentationen vänder du dig till din kontaktperson på Tetra Pak.

Identifiering

CE-märkning

Denna utrustning överensstämmer med den grundläggande hälso- och säkerhetslagstiftningen inom Europeiska ekonomiska samarbetsområdet (EES).

Maskinskylt

Bild (B) på sidan i-5 visar ett exempel på en maskinskylt.
En bild på giltig maskinskylt och dess placering på utrustningen visas i inledningskapitlet som medföljer utrustningen. Skylten innehåller de uppgifter som listas nedan och som behövs vid kontakt med Tetra Pak angående utrustningen.

- Maskintyp (8)
- Volym (9)
- Ritningsspecifikationer (10)
- Maskinnummer (11)
- Tillverkare (12)
- CE-märkning (13)
- Tillverkningsår (14)

Bild (C) på sidan i-5 visar ett exempel på en maskinspecifikation. Kontrollera att informationen om utrustningen som listas på de första sidorna i manualen motsvarar informationen på maskinskylten och i maskinspecifikationen.

Använda reservdelskatalogen

Hitta ett reservdelsnummer

a) Se bild (D) på sidan i-5: Gå till kapitelnumret (15) som står vid sidan om huvudgruppen som innehåller den del du vill hitta.

Punkt b) och c) hänvisar till bild (E) på sidan i-6.

b) På huvudgruppsbilden letar du efter den maskinundergrupp (17) som innehåller delen eller undergruppen du letar efter. Notera positionsnumret (18) och gå till listsidan som anges efter bilden.

c) Leta efter positionsnumret/referensbeteckningen (16) eller undergruppsnamnet (19). Gå till motsvarande sidnummer (20) som listas i den högra kolumnen. Tetra Pak har valt allt alltid använda en funktionsorienterad struktur för referensbeteckningarna. Prefixet för funktionsorienterad struktur (=) visas inte i referensbeteckningen.

Punkt d) och e) hänvisar till bild (F) på sidan i-6.

d) Leta reda på delen (21) i undergruppsbilden och notera delens positionsnummer.

e) Reservdelsnumret (29) och reservdelsbeskrivningen (30) står bredvid positionsnumret på listsidan.

Information i reservdelskatalogen

Listan nedan hänvisar till bild (F) på sidan i-6. Reservdelskatalogen innehåller följande information om grupper, undergrupper och reservdelar för utrustningen:

- Gruppstrukturreferens (22). Anger nästa högre grupp i utrustningslistans struktur.
- Gruppnamn (23)
- Måttenhet (25)
- Kvantitet (26)
- Monteringsritningsnummer (27)
- Listsideintervall (28). Anges om det finns flera sidor i gruppbilden eller grupplistan.
- Reservdels- eller undergruppsnummer (29)
- Undergruppsnamn eller reservdelsbeskrivning (30)
- Gruppnummer (31)
- Utrustningsnummer (32)
- Gruppinformationsrubrik (33). Anger om avsnittet under rubriken gäller en viss maskinvariant eller om det är en lista över allmänna delar. Om en lista har fler än en variant och varje variant har sin egen monteringsritning visas en sidhänvisning till variantens monteringsritning.
- Intern information (34)

SPC
Spare Parts Catalogue

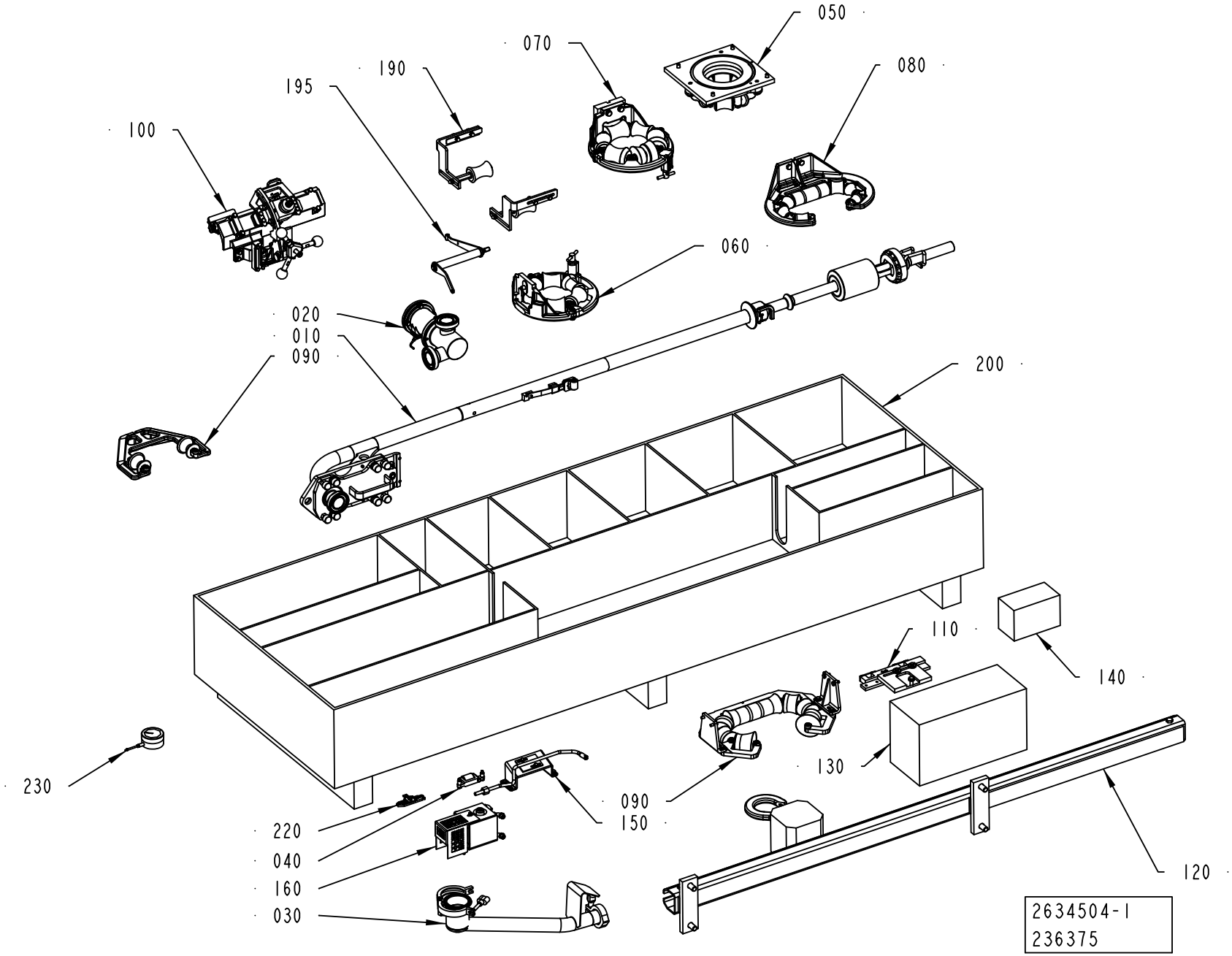
050
070
080
190
195
100
060
020
010
090
200
110
140
130
230
090
150
220
040
160
030
120
2634504-1
236375

ECM: 374848 - 20090101
Group number: 2634504-0100
Assembly Drawing: 2634504-1_1_AD

This list covers pages from 1-2 to 1-7

Pos	Part No	UN	Qty	Description	Page No
TBA 0200B, TBA 0250B, TBA 0330S					
010	2501310-0100		1	FILLING PIPE	**1-9, 1-11, 1-13, 1-15**
020	2507059-0300		1	REGULATING VALVE	**1-17**
030	2512936-0100		1	CLEANING CUP	**1-19, 1-21**
050	2512780-0100		1	SEAL	**1-23, 1-25, 1-27, 1-29**
060	2559062-0200		1	LOWER FORMING RING	**1-31, 1-33, 1-35, 1-37, 1-39**
070	2547422-0200		1	UPPER FORMING RING	**1-41, 1-43, 1-45, 1-47, 1-49, 1-51, 1-53, 1-55, 1-57**
080	2547421-0100		1	FORMING RING	**1-59, 1-61, 1-63, 1-65**
090	2674188-0100		1	EDGE ROLLER	**1-67, 1-69**
100	2657873-0100		1	LONGITUDINAL SEALING	**1-71, 1-73, 1-75**
110	1487338-0200		1	SUPPORT LEVEL DETECTOR	**1-79, 1-81, 1-83, 1-85**
120	2575120-0100		1	LIFTING UNIT	**1-87**
130	2555394-0150		1	START-UP KIT	**1-89, 1-91, 1-93, 1-95, 1-97, 1-99**
140	2642988-0100		1	PLATE	**1-101**
150	2671730-0100		1	AIR NOZZLE	**1-103, 1-105**
160	1548876-0100		1	IH EQUIPMENT	**1-107**
180	2691695-0100		1	BOX 5 - SUPERSTRUCTURE	**1-109, 1-111**
190	2541634-0100		1	EDGE ROLLER	**1-169, 1-171**
195	2738040-0100		1	SPLICE DETECTOR	**1-173**
200	1363779-0000		1	BOX	
220	2793320-0100		1	TEMPLATE	**1-175**
TBA 0200M, TBA 0200S, TBA 0250S, TPA 0250SQ, TPA 0200SQ					
010	2501310-0100		1	FILLING PIPE	**1-9, 1-11, 1-13, 1-15**
020	2507059-0300		1	REGULATING VALVE	**1-17**
030	2512936-0100		1	CLEANING CUP	**1-19, 1-21**
050	2512780-0100		1	SEAL	**1-23, 1-25, 1-27, 1-29**
060	2559062-0200		1	LOWER FORMING RING	**1-31, 1-33, 1-35, 1-37, 1-39**
070	2547422-0200		1	UPPER FORMING RING	**1-41, 1-43, 1-45, 1-47, 1-49, 1-51, 1-53, 1-55, 1-57**
080	2547421-0100		1	FORMING RING	**1-59, 1-61, 1-63, 1-65**
090	2674188-0100		1	EDGE ROLLER	**1-67, 1-69**
100	2657873-0100		1	LONGITUDINAL SEALING	**1-71, 1-73, 1-75**
110	1487338-0200		1	SUPPORT LEVEL DETECTOR	**1-79, 1-81, 1-83, 1-85**
120	2575120-0100		1	LIFTING UNIT	**1-87**
130	2555394-0150		1	START-UP KIT	**1-89, 1-91, 1-93, 1-95, 1-97, 1-99**
140	2642988-0100		1	PLATE	**1-101**
150	2671730-0100		1	AIR NOZZLE	**1-103, 1-105**
160	1548876-0100		1	IH EQUIPMENT	**1-107**
180	2691695-0100		1	BOX 5 - SUPERSTRUCTURE	**1-109, 1-111**
190	2541634-0100		1	EDGE ROLLER	**1-169, 1-171**
200	1363779-0000		1	BOX	
220	2793320-0100		1	TEMPLATE	**1-175**
TBA 0200SQ, TBA 0500S, TBA 1000SQ, TBA 1000S, TBA 1500S, TPA 0330SQ, TPA 0500SQ, TBA 0250SQ					
010	2501310-0100		1	FILLING PIPE	**1-9, 1-11, 1-13, 1-15**
020	2507059-0300		1	REGULATING VALVE	**1-17**
030	2512936-0100		1	CLEANING CUP	**1-19, 1-21**
050	2512780-0100		1	SEAL	**1-23, 1-25, 1-27, 1-29**
060	2559062-0200		1	LOWER FORMING RING	**1-31, 1-33, 1-35, 1-37, 1-39**
070	2547422-0200		1	UPPER FORMING RING	**1-41, 1-43, 1-45, 1-47, 1-49, 1-51, 1-53, 1-55, 1-57**
080	2547421-0100		1	FORMING RING	**1-59, 1-61, 1-63, 1-65**
100	2657873-0100		1	LONGITUDINAL SEALING	**1-71, 1-73, 1-75**
110	1487338-0200		1	SUPPORT LEVEL DETECTOR	**1-79, 1-81, 1-83, 1-85**
120	2575120-0100		1	LIFTING UNIT	**1-87**
130	2555394-0150		1	START-UP KIT	**1-89, 1-91, 1-93, 1-95, 1-97, 1-99**
140	2642988-0100		1	PLATE	**1-101**
150	2671730-0100		1	AIR NOZZLE	**1-103, 1-105**
160	1548876-0100		1	IH EQUIPMENT	**1-107**
180	2691695-0100		1	BOX 5 - SUPERSTRUCTURE	**1-109, 1-111**
190	2541634-0100		1	EDGE ROLLER	**1-169, 1-171**
200	1363779-0000		1	BOX	
220	2793320-0100		1	TEMPLATE	**1-175**
TBA 0500B, TBA 1000B					
010	2501310-0100		1	FILLING PIPE	**1-9, 1-11, 1-13, 1-15**
020	2507059-0300		1	REGULATING VALVE	**1-17**
030	2512936-0100		1	CLEANING CUP	**1-19, 1-21**
040	2555627-0100		1	PRESSURE ROLLER	**1-177**
050	2512780-0100		1	SEAL	**1-23, 1-25, 1-27, 1-29**
060	2559062-0200		1	LOWER FORMING RING	**1-31, 1-33, 1-35, 1-37, 1-39**
070	2547422-0200		1	UPPER FORMING RING	**1-41, 1-43, 1-45, 1-47, 1-49, 1-51, 1-53, 1-55, 1-57**
080	2547421-0100		1	FORMING RING	**1-59, 1-61, 1-63, 1-65**
100	2657873-0100		1	LONGITUDINAL SEALING	**1-71, 1-73, 1-75**
110	1487338-0200		1	SUPPORT LEVEL DETECTOR	**1-79, 1-81, 1-83, 1-85**
120	2575120-0100		1	LIFTING UNIT	**1-87**
130	2555394-0150		1	START-UP KIT	**1-89, 1-91, 1-93, 1-95, 1-97, 1-99**
140	2642988-0100		1	PLATE	**1-101**
150	2671730-0100		1	AIR NOZZLE	**1-103, 1-105**
160	1548876-0100		1	IH EQUIPMENT	**1-107**
180	2691695-0100		1	BOX 5 - SUPERSTRUCTURE	**1-109, 1-111**
190	2541634-0100		1	EDGE ROLLER	**1-169, 1-171**
200	1363779-0000		1	BOX	
220	2793320-0100		1	TEMPLATE	**1-175**

Machine Type | Group Description | Used-In | Group Number | Page No

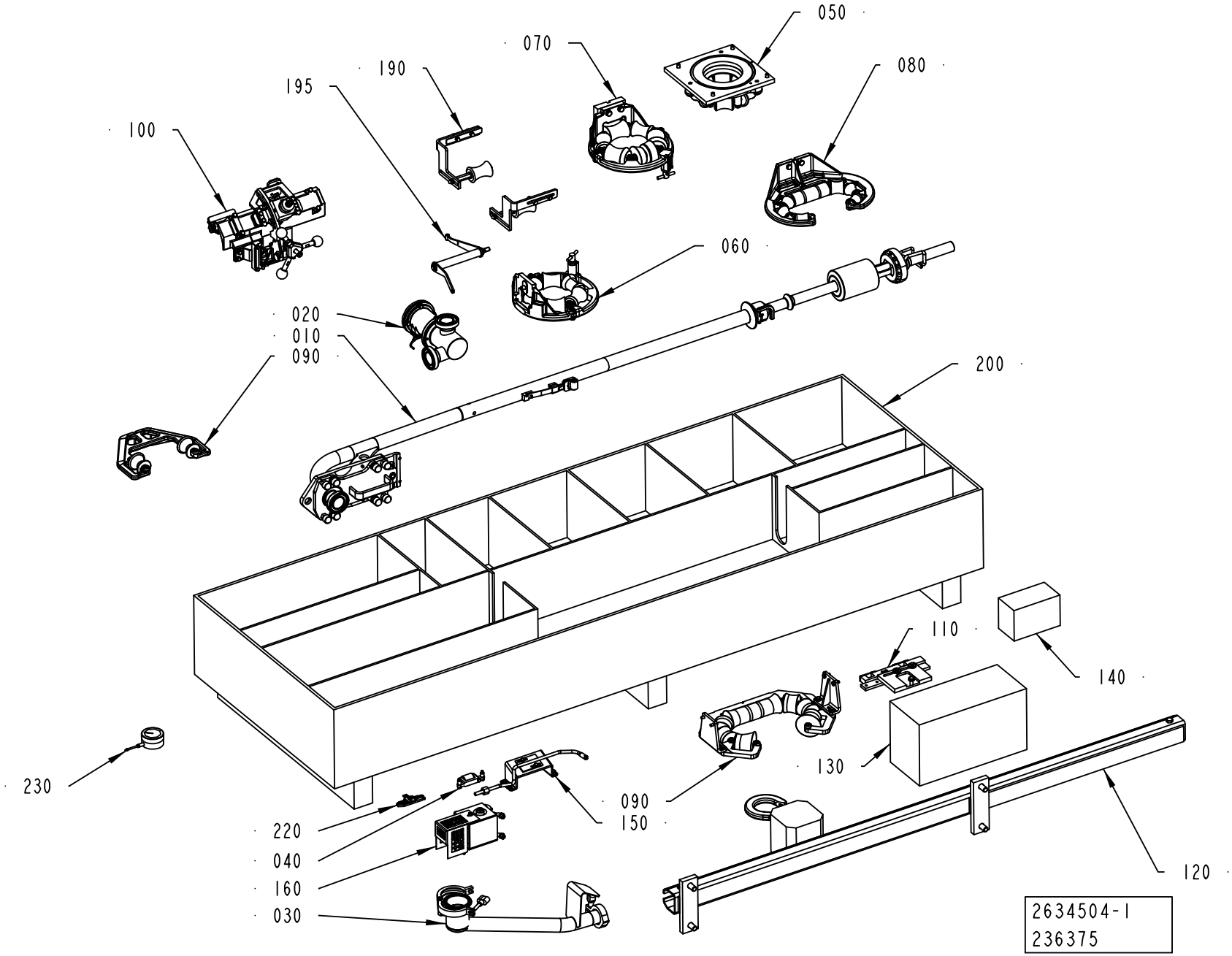
050
070
080
190
195
100
060
020
010
090
200
110
140
130
230
090
150
220
040
160
030
120
2634504-1
236375

ECM: 374848 - 20090101
Group number: 2634504-0100
Assembly Drawing: 2634504-1_1_AD

This list covers pages from 1-2 to 1-7

Pos	Part No	UN	Qty	Description	Page No
TBA 1890S, TBA 2000S, TBA 1400B (Cont'd)					
010	2501310-0100		1	FILLING PIPE	**1-9, 1-11, 1-13, 1-15**
020	2507059-0300		1	REGULATING VALVE	**1-17**
030	2512936-0100		1	CLEANING CUP	**1-19, 1-21**
040	2555627-0100		1	PRESSURE ROLLER	**1-177**
050	2512780-0100		1	SEAL	**1-23, 1-25, 1-27, 1-29**
060	2559062-0200		1	LOWER FORMING RING	**1-31, 1-33, 1-35, 1-37, 1-39**
070	2547422-0200		1	UPPER FORMING RING	**1-41, 1-43, 1-45, 1-47, 1-49, 1-51, 1-53, 1-55, 1-57**
080	2547421-0100		1	FORMING RING	**1-59, 1-61, 1-63, 1-65**
090	2547420-0100		1	EDGE ROLLER	**1-179, 1-181, 1-183**
100	2657873-0100		1	LONGITUDINAL SEALING	**1-71, 1-73, 1-75**
110	1487338-0200		1	SUPPORT LEVEL DETECTOR	**1-79, 1-81, 1-83, 1-85**
120	2575120-0100		1	LIFTING UNIT	**1-87**
130	2555394-0150		1	START-UP KIT	**1-89, 1-91, 1-93, 1-95, 1-97, 1-99**
140	2642988-0100		1	PLATE	**1-101**
150	2671730-0100		1	AIR NOZZLE	**1-103, 1-105**
160	1548876-0100		1	IH EQUIPMENT	**1-107**
180	2691695-0100		1	BOX 5 - SUPERSTRUCTURE	**1-109, 1-111**
190	2541634-0100		1	EDGE ROLLER	**1-169, 1-171**
200	1363779-0000		1	BOX	
210	2685408-0000		1	TEMPLATE	
220	2793320-0100		1	TEMPLATE	**1-175**
230	90459-7315		1	PUSH DYNAMOMETER 20 - 200N, DT120	
TBA 1000SQ QC and START FM TBA 1000SQ NOQC, TBA 0500SQ QC and START FM TBA 1000SQ NOQC					
110	1487338-0200		1	SUPPORT LEVEL DETECTOR	**1-79, 1-81, 1-83, 1-85**
120	2575120-0100		1	LIFTING UNIT	**1-87**
130	2555394-0150		1	START-UP KIT	**1-89, 1-91, 1-93, 1-95, 1-97, 1-99**
200	1363779-0000		1	BOX	
TBA 1000SQ QC not START FM TBA 1000SQ NOQC, TBA 0500SQ QC not START FM TBA 1000SQ NOQC					
010	2501310-0100		1	FILLING PIPE	**1-9, 1-11, 1-13, 1-15**
020	2507059-0300		1	REGULATING VALVE	**1-17**
030	2512936-0100		1	CLEANING CUP	**1-19, 1-21**
050	2512780-0100		1	SEAL	**1-23, 1-25, 1-27, 1-29**
060	2559062-0200		1	LOWER FORMING RING	**1-31, 1-33, 1-35, 1-37, 1-39**
070	2547422-0200		1	UPPER FORMING RING	**1-41, 1-43, 1-45, 1-47, 1-49, 1-51, 1-53, 1-55, 1-57**
080	2547421-0100		1	FORMING RING	**1-59, 1-61, 1-63, 1-65**
100	2657873-0100		1	LONGITUDINAL SEALING	**1-71, 1-73, 1-75**
110	1487338-0200		1	SUPPORT LEVEL DETECTOR	**1-79, 1-81, 1-83, 1-85**
120	2575120-0100		1	LIFTING UNIT	**1-87**
130	2555394-0150		1	START-UP KIT	**1-89, 1-91, 1-93, 1-95, 1-97, 1-99**
140	2642988-0100		1	PLATE	**1-101**
150	2671730-0100		1	AIR NOZZLE	**1-103, 1-105**
160	1548876-0100		1	IH EQUIPMENT	**1-107**
180	2691695-0100		1	BOX 5 - SUPERSTRUCTURE	**1-109, 1-111**
190	2541634-0100		1	EDGE ROLLER	**1-169, 1-171**
200	1363779-0000		1	BOX	
220	2793320-0100		1	TEMPLATE	**1-175**
TPA 1000SQ NOQC					
010	2501310-0100		1	FILLING PIPE	**1-9, 1-11, 1-13, 1-15**
020	2507059-0300		1	REGULATING VALVE	**1-17**
030	2512936-0100		1	CLEANING CUP	**1-19, 1-21**
040	2555627-0100		1	PRESSURE ROLLER	**1-177**
050	2512780-0100		1	SEAL	**1-23, 1-25, 1-27, 1-29**
060	2559062-0200		1	LOWER FORMING RING	**1-31, 1-33, 1-35, 1-37, 1-39**
070	2547422-0200		1	UPPER FORMING RING	**1-41, 1-43, 1-45, 1-47, 1-49, 1-51, 1-53, 1-55, 1-57**
080	2547421-0100		1	FORMING RING	**1-59, 1-61, 1-63, 1-65**
100	2657873-0100		1	LONGITUDINAL SEALING	**1-71, 1-73, 1-75**
110	1487338-0200		1	SUPPORT LEVEL DETECTOR	**1-79, 1-81, 1-83, 1-85**
120	2575120-0100		1	LIFTING UNIT	**1-87**
130	2555394-0150		1	START-UP KIT	**1-89, 1-91, 1-93, 1-95, 1-97, 1-99**
140	2642988-0100		1	PLATE	**1-101**
150	2671730-0100		1	AIR NOZZLE	**1-103, 1-105**
160	1548876-0100		1	IH EQUIPMENT	**1-107**
180	2691695-0100		1	BOX 5 - SUPERSTRUCTURE	**1-109, 1-111**
190	2541634-0100		1	EDGE ROLLER	**1-169, 1-171**
200	1363779-0000		1	BOX	
220	2793320-0100		1	TEMPLATE	**1-175**
230	90459-7315		1	PUSH DYNAMOMETER 20 - 200N, DT120	
TPA 1000SQ QC, TPA 0750SQ QC					
010	2501310-0100		1	FILLING PIPE	**1-9, 1-11, 1-13, 1-15**
020	2507059-0300		1	REGULATING VALVE	**1-17**
030	2512936-0100		1	CLEANING CUP	**1-19, 1-21**
040	2555627-0100		1	PRESSURE ROLLER	**1-177**
050	2512780-0100		1	SEAL	**1-23, 1-25, 1-27, 1-29**
060	2559062-0200		1	LOWER FORMING RING	**1-31, 1-33, 1-35, 1-37, 1-39**
070	2547422-0200		1	UPPER FORMING RING	**1-41, 1-43, 1-45, 1-47, 1-49, 1-51, 1-53, 1-55, 1-57**
080	2547421-0100		1	FORMING RING	**1-59, 1-61, 1-63, 1-65**
100	2657873-0100		1	LONGITUDINAL SEALING	**1-71, 1-73, 1-75**
110	1487338-0200		1	SUPPORT LEVEL DETECTOR	**1-79, 1-81, 1-83, 1-85**
120	2575120-0100		1	LIFTING UNIT	**1-87**

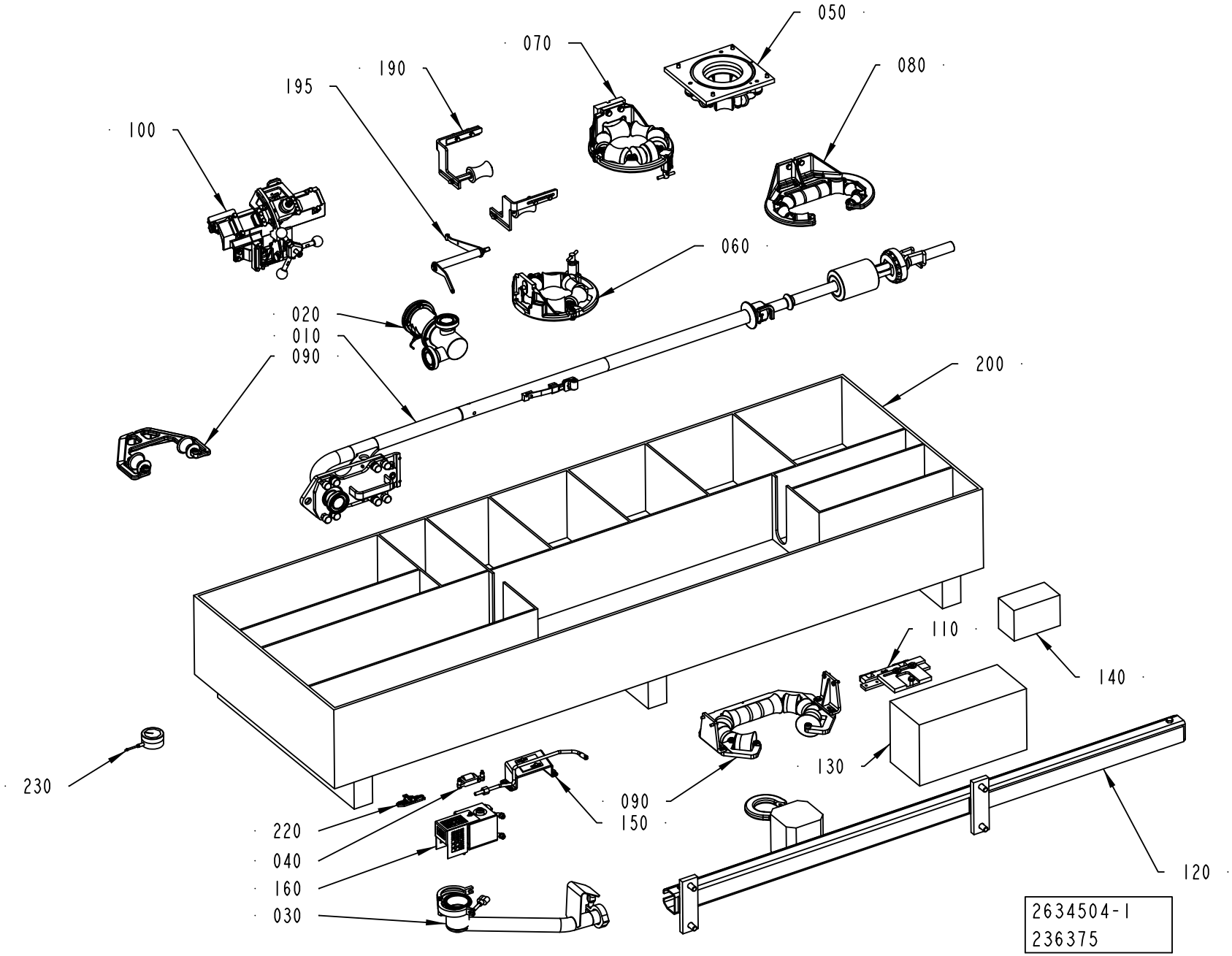
050
070
080
190
195
100
060
020
010
090
200
110
140
130
230
090
150
220
040
160
030
120
2634504-1
236375

Pos	Part No	UN	Qty	Description	Page No
TPA 1000SQ QC, TPA 0750SQ QC (Cont'd)					
130	2555394-0150		1	START-UP KIT	**1-89, 1-91, 1-93, 1-95, 1-97, 1-99**
140	2642988-0100		1	PLATE	**1-101**
150	2671730-0100		1	AIR NOZZLE	**1-103, 1-105**
160	1548876-0100		1	IH EQUIPMENT	**1-107**
180	2691695-0100		1	BOX 5 - SUPERSTRUCTURE	**1-109, 1-111**
190	2541634-0100		1	EDGE ROLLER	**1-169, 1-171**
200	1363779-0000		1	BOX	
220	2793320-0100		1	TEMPLATE	**1-175**
230	90459-7315		1	PUSH DYNAMOMETER 20 - 200N, DT120	

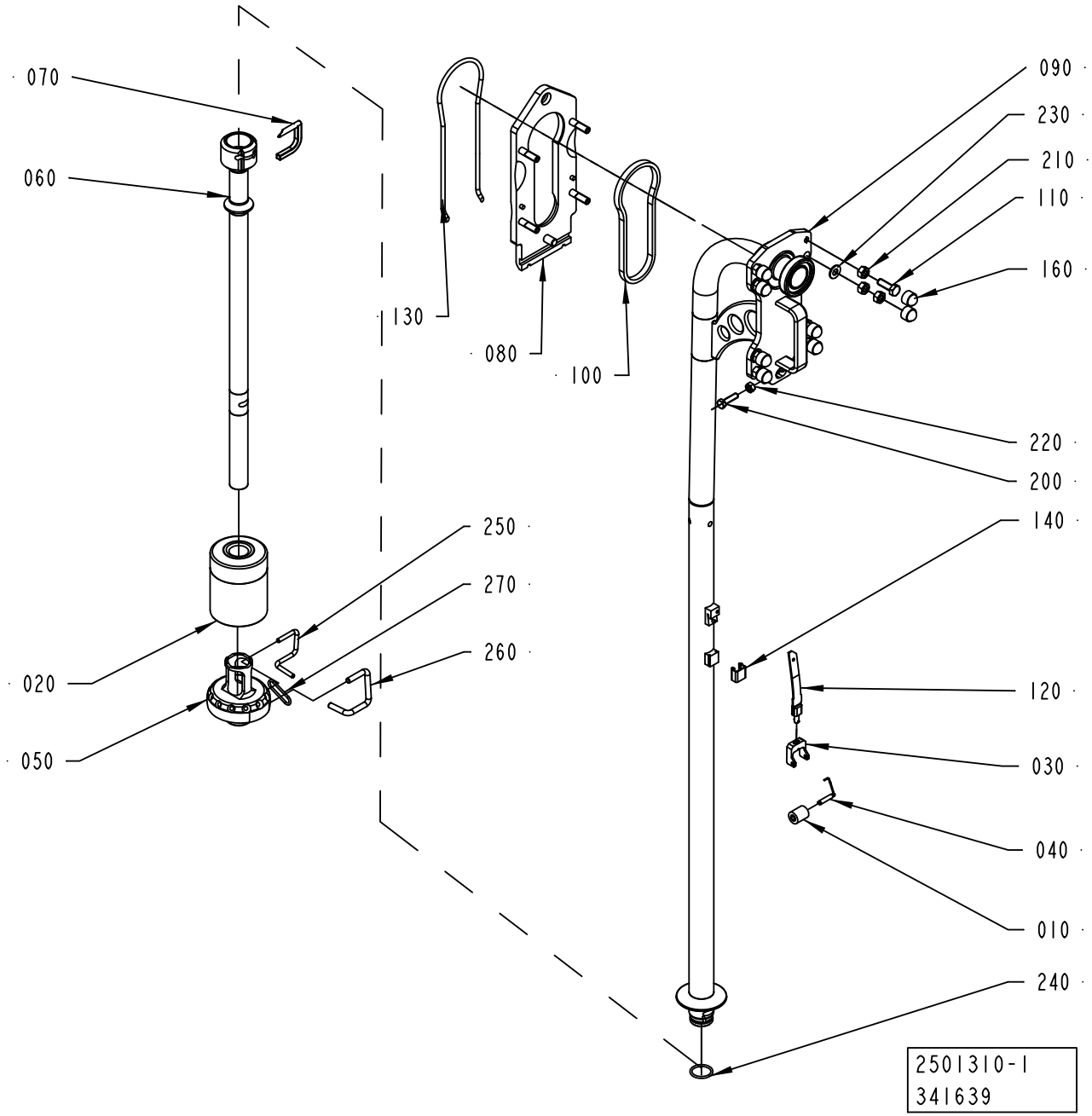
070
060
130
080
100
090
230
210
110
160
220
200
250
270
260
140
020
050
120
030
040
010
240
2501310-1
341639

ECM: 387791 - 20090402
Group number: 2501310-0100
Assembly Drawing: 2501310-1_1_AG

This list covers pages from 1-8 to 1-15

Pos	Part No	UN	Qty	Description	Page No
TBA 1500S (See drawing on page: 1-8)					
010	232979-0000		1	PRESSURE ROLLER (PAK OF 10)	
020	2597531-0000		1	5019011FLOAT	
	2878907-0000		*1*	*CUTTING ARM*	
030	1348048-0000		1	FORK	
040	2523268-0000		1	SHAFT	
050	2598017-0000		1	PRESSURE FLANGE	
060	2826467-0000		1	FILLING PIPE	
070	2809846-0000		1	STOP PIN	
090	2826478-0000		1	FILLING PIPE	
120	2826393-0000		1	SPRING	
140	14600-0000		1	HOOD	
240	315204-0219		1	O-RING 29,2X3 MM	
250	2803986-0000		1	STOP PIN	
260	2803987-0000		1	STOP PIN	
270	2886173-0000		1	LOCKING RING	
TBA 1890S QC, TBA 2000S QC, TBA 1400B (See drawing on pages: 1-12, 1-14)					
010	232979-0000		2	PRESSURE ROLLER (PAK OF 10)	
020	2634995-0000		1	FLOAT	
030	1538952-0000		1	FORK	
040	1538953-0000		1	SHAFT	
050	3004968-0000		1	FLANGE	
060	3004969-0000		1	PIPE	
070	2809849-0000		1	STOP PIN	
090	2832554-0000		1	FILLING PIPE	
120	2826397-0000		1	SPRING	
140	2672994-0000		1	HOOD	
170	24928-0000		4	LOCKING RUBBER	
185	2638077-0000		2	SHAFT	
190	2685285-0000		1	BRACKET	
240	315204-0223		1	O-RING 39,2X3 MM	
260	2881463-0000		1	LOCKING DEVICE	
TGA 1000SQ, TGA 0750SQ, TGA 0500SQ (See drawing on page: 1-8)					
010	257330-0000		1	PRESSURE ROLLER (10 PCS)	
020	2826457-0000		1	FLOAT	
030	1348049-0000		1	FORK	
040	2529420-0000		1	SHAFT	
050	2651707-0000		1	PRESSURE FLANGE	
060	2960448-0000		1	LOWER FILLING TUBE	
070	2809846-0000		1	STOP PIN	
090	2960579-0000		1	FILLING PIPE	
120	2894434-0000		1	SPRING	
140	14600-0000		1	HOOD	
240	315204-0219		1	O-RING 29,2X3 MM	
250	2803986-0000		1	STOP PIN	
260	2803987-0000		1	STOP PIN	
270	2886173-0000		1	LOCKING RING	
TPA 0250SQ, TPA 0200SQ (See drawing on page: 1-10)					
010	272479-0000		1	PRESSURE ROLLER (10PCS)	
020	2826456-0000		1	FLOAT	
030	255978-0000		1	FORK	
040	2529416-0000		1	SHAFT	
050	2809851-0000		1	PRESSURE FLANGE	
060	2731438-0000		1	FILLING PIPE	
070	2809845-0000		2	STOP PIN	
075	2887700-0000		1	STOP PIN	
090	2826479-0000		1	FILLING PIPE	
120	2826389-0000		1	SPRING	
140	295377-0001		1	HOOD	
150	1499114-0000		1	LOCK RING	
240	315204-0215		1	O-RING 19,2X3 MM	
TPA 0330SQ (See drawing on page: 1-10)					
010	257330-0000		1	PRESSURE ROLLER (10 PCS)	
020	2826454-0000		1	FLOAT	
030	1348047-0000		1	FORK	
040	2529417-0000		1	SHAFT	
050	2601470-0000		1	PRESSURE FLANGE	
060	2826470-0000		1	FILLING PIPE	
070	2809845-0000		2	STOP PIN	
075	2563292-0000		1	STOP PIN	
090	2826479-0000		1	FILLING PIPE	
120	2826396-0000		1	SPRING	
140	295377-0003		1	HOOD	
150	1498143-0000		1	LOCK RING	
240	315204-0215		1	O-RING 19,2X3 MM	
TPA 0500SQ (See drawing on page: 1-8)					
010	2607089-0000		1	PRESSURE ROLLER	
020	2826455-0000		1	FLOAT	
030	2673015-0000		1	FORK	
040	2673021-0000		1	SHAFT	
050	2601474-0000		1	PRESSURE FLANGE	
060	2885429-0000		1	FILLING PIPE	
070	2809847-0000		1	STOP PIN	
090	2832555-0000		1	FILLING PIPE	

Machine Type | Group Description | Used-In | Group Number | Page No

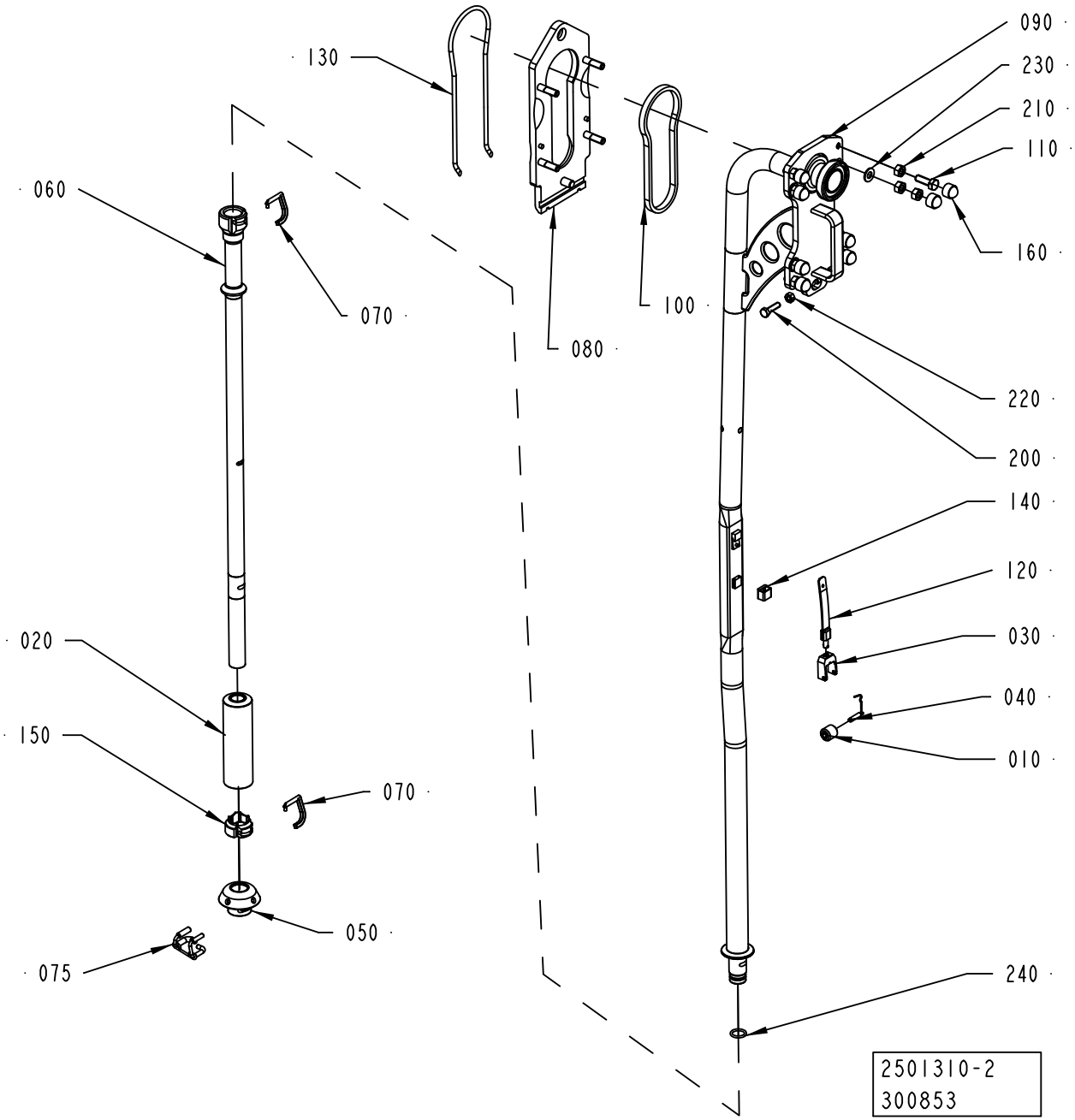
130
090
230
210
110
060
160
070
100
080
220
200
140
120
020
030
040
150
070
010
050
075
240
2501310-2
300853

Pos	Part No	UN	Qty	Description	Page No
TPA 0500SQ (Cont'd) (See drawing on page: 1-8)					
120	2959681-0000		1	SPRING	
140	2959682-0000		1	HOOD	
240	315204-0219		1	O-RING 29,2X3 MM	
250	2803986-0000		1	STOP PIN	
260	2803987-0000		1	STOP PIN	
270	2886173-0000		1	LOCKING RING	
TPA 1000SQ QC, TPA 0750SQ QC (See drawing on page: 1-12)					
010	2607089-0000		2	PRESSURE ROLLER	
020	2826457-0000		1	FLOAT	
030	2715652-0000		1	FORK	
040	2634972-0000		1	SHAFT	
050	2570017-0000		1	PRESSURE FLANGE	
060	2770494-0000		1	FILLING PIPE	
070	2809846-0000		1	STOP PIN	
090	2832553-0000		1	FILLING PIPE	
120	2826390-0000		1	SPRING	
140	2572071-0000		1	HOOD	
170	24928-0000		4	LOCKING RUBBER	
185	499011-0000		2	SHAFT	
190	2715569-0000		1	BRACKET	
240	315204-0219		1	O-RING 29,2X3 MM	
250	2803986-0000		1	STOP PIN	
260	2803987-0000		1	STOP PIN	
270	2886173-0000		1	LOCKING RING	
TBA 1000B DIMC NOQC (See drawing on page: 1-8)					
010	232979-0000		1	PRESSURE ROLLER (PAK OF 10)	
020	2597531-0000		1	5019011FLOAT	
	2878907-0000		*1*	*CUTTING ARM*	
030	1348048-0000		1	FORK	
040	2523268-0000		1	SHAFT	
050	2563294-0000		1	PRESSURE FLANGE	
060	2826464-0000		1	FILLING PIPE	
070	2809846-0000		1	STOP PIN	
090	2826478-0000		1	FILLING PIPE	
120	2826393-0000		1	SPRING	
140	14600-0000		1	HOOD	
240	315204-0219		1	O-RING 29,2X3 MM	
250	2803986-0000		1	STOP PIN	
260	2803987-0000		1	STOP PIN	
270	2886173-0000		1	LOCKING RING	
TBA 0200B QC, TBA 0330S QC, TBA 0250B QC (See drawing on page: 1-10)					
010	257330-0000		1	PRESSURE ROLLER (10 PCS)	
020	2826455-0000		1	FLOAT	
030	1317438-0000		1	FORK	
040	2529418-0000		1	SHAFT	
050	2601472-0000		1	PRESSURE FLANGE	
060	2826474-0000		1	FILLING PIPE	
070	2809845-0000		2	STOP PIN	
075	2563292-0000		1	STOP PIN	
090	2826479-0000		1	FILLING PIPE	
120	2826391-0000		1	SPRING	
140	295377-0003		1	HOOD	
150	1498143-0000		1	LOCK RING	
240	315204-0215		1	O-RING 19,2X3 MM	
TBA 0200M, TBA 0250S (See drawing on page: 1-10)					
010	272479-0000		1	PRESSURE ROLLER (10PCS)	
020	2826456-0000		1	FLOAT	
030	255978-0000		1	FORK	
040	2529416-0000		1	SHAFT	
050	2809850-0000		1	PRESSURE FLANGE	
060	2826471-0000		1	FILLING PIPE	
070	2809845-0000		2	STOP PIN	
075	2887700-0000		1	STOP PIN	
090	2826479-0000		1	FILLING PIPE	
120	2826392-0000		1	SPRING	
140	295377-0001		1	HOOD	
150	1499114-0000		1	LOCK RING	
240	315204-0215		1	O-RING 19,2X3 MM	
TBA 0200S (See drawing on page: 1-10)					
010	272479-0000		1	PRESSURE ROLLER (10PCS)	
020	2826456-0000		1	FLOAT	
030	255978-0000		1	FORK	
040	2529416-0000		1	SHAFT	
050	2809851-0000		1	PRESSURE FLANGE	
060	2826465-0000		1	FILLING PIPE	
070	2809845-0000		2	STOP PIN	
075	2887700-0000		1	STOP PIN	
090	2826479-0000		1	FILLING PIPE	
120	2826392-0000		1	SPRING	
140	295377-0001		1	HOOD	
150	1499114-0000		1	LOCK RING	
240	315204-0215		1	O-RING 19,2X3 MM	
TBA 0200SQ, TBA 0250SQ (See drawing on page: 1-10)					

Machine Type | Group Description | Used-In | Group Number | Page No

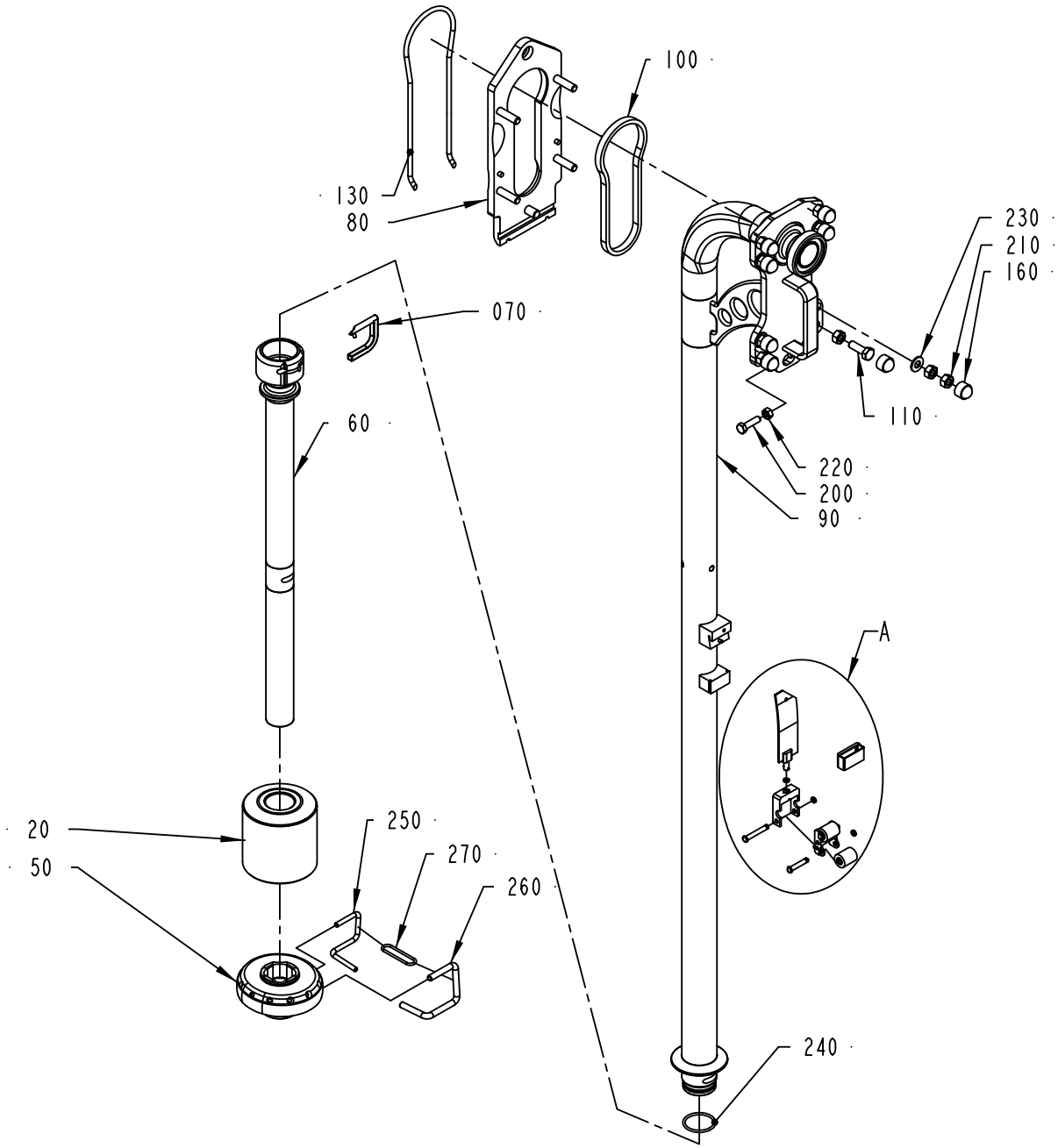

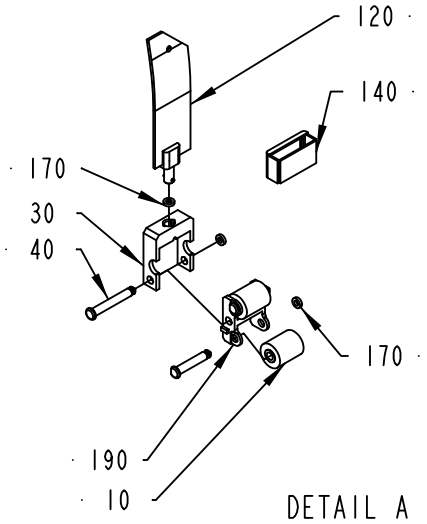

DETAIL A
SCALE 1:4

2501310-3
313276

ECM: 387791 - 20090402
Group number: 2501310-0100
Assembly Drawing: 2501310-3_1_AG

This list covers pages from 1-8 to 1-15

Pos	Part No	UN	Qty	Description	Page No
TBA 0200SQ, TBA 0250SQ (Cont'd) (See drawing on page: 1-10)					
010	2607089-0000		1	PRESSURE ROLLER	
020	2826455-0000		1	FLOAT	
030	1317438-0000		1	FORK	
040	2529418-0000		1	SHAFT	
050	2657902-0000		1	PRESSURE FLANGE	
060	2826473-0000		1	FILLING PIPE	
070	2809845-0000		2	STOP PIN	
075	2563292-0000		1	STOP PIN	
090	2826479-0000		1	FILLING PIPE	
120	2826391-0000		1	SPRING	
140	295377-0003		1	HOOD	
150	1498143-0000		1	LOCK RING	
240	315204-0215		1	O-RING 19,2X3 MM	
TBA 0500B NOQC, TBA 1000B NODIMC NOQC (See drawing on page: 1-12)					
010	232979-0000		2	PRESSURE ROLLER (PAK OF 10)	
020	2597531-0000		1	5019011FLOAT	
	2878907-0000		*1*	*CUTTING ARM*	
030	2846311-0000		1	FORK	
040	1538953-0000		1	SHAFT	
050	2563294-0000		1	PRESSURE FLANGE	
060	2826464-0000		1	FILLING PIPE	
070	2809846-0000		1	STOP PIN	
090	2826478-0000		1	FILLING PIPE	
120	2826390-0000		1	SPRING	
140	2572071-0000		1	HOOD	
170	24928-0000		4	LOCKING RUBBER	
185	2638077-0000		2	SHAFT	
190	2846309-0000		1	BRACKET	
240	315204-0219		1	O-RING 29,2X3 MM	
250	2803986-0000		1	STOP PIN	
260	2803987-0000		1	STOP PIN	
270	2886173-0000		1	LOCKING RING	
TBA 0500B QC, TBA 1000B QC (See drawing on page: 1-12)					
010	232979-0000		2	PRESSURE ROLLER (PAK OF 10)	
020	2597531-0000		1	5019011FLOAT	
	2878907-0000		*1*	*CUTTING ARM*	
030	2846311-0000		1	FORK	
040	1538953-0000		1	SHAFT	
050	2634524-0000		1	PRESSURE FLANGE	
060	2826472-0000		1	FILLING PIPE	
070	2809846-0000		1	STOP PIN	
090	2826478-0000		1	FILLING PIPE	
120	2826390-0000		1	SPRING	
140	2572071-0000		1	HOOD	
170	24928-0000		4	LOCKING RUBBER	
185	2638077-0000		2	SHAFT	
190	2846309-0000		1	BRACKET	
240	315204-0219		1	O-RING 29,2X3 MM	
250	2803986-0000		1	STOP PIN	
260	2803987-0000		1	STOP PIN	
270	2886173-0000		1	LOCKING RING	
TBA 0500S (See drawing on page: 1-8)					
010	257330-0000		1	PRESSURE ROLLER (10 PCS)	
020	2826453-0000		1	FLOAT	
030	2673016-0000		1	FORK	
040	2673022-0000		1	SHAFT	
050	2601468-0000		1	PRESSURE FLANGE	
060	2866755-0000		1	FILLING PIPE	
070	2809846-0000		1	STOP PIN	
090	2832555-0000		1	FILLING PIPE	
120	2826393-0000		1	SPRING	
140	14600-0000		1	HOOD	
240	315204-0219		1	O-RING 29,2X3 MM	
250	2803986-0000		1	STOP PIN	
260	2803987-0000		1	STOP PIN	
270	2886173-0000		1	LOCKING RING	
TBA 0500SQ, TBA 1000SQ (See drawing on page: 1-8)					
010	257330-0000		1	PRESSURE ROLLER (10 PCS)	
020	2826452-0000		1	FLOAT	
030	1348049-0000		1	FORK	
040	2529420-0000		1	SHAFT	
050	2601469-0000		1	PRESSURE FLANGE	
060	2826463-0000		1	FILLING PIPE	
070	2809846-0000		1	STOP PIN	
090	2826478-0000		1	FILLING PIPE	
120	2826395-0000		1	SPRING	
140	434665-0000		1	HOOD	
240	315204-0219		1	O-RING 29,2X3 MM	
250	2803986-0000		1	STOP PIN	
260	2803987-0000		1	STOP PIN	
270	2886173-0000		1	LOCKING RING	
TBA 1000S (See drawing on page: 1-8)					
010	499387-0000		1	PRESSURE ROLLER - (10 PCS)	

Machine Type | Group Description | Used-In | Group Number | Page No

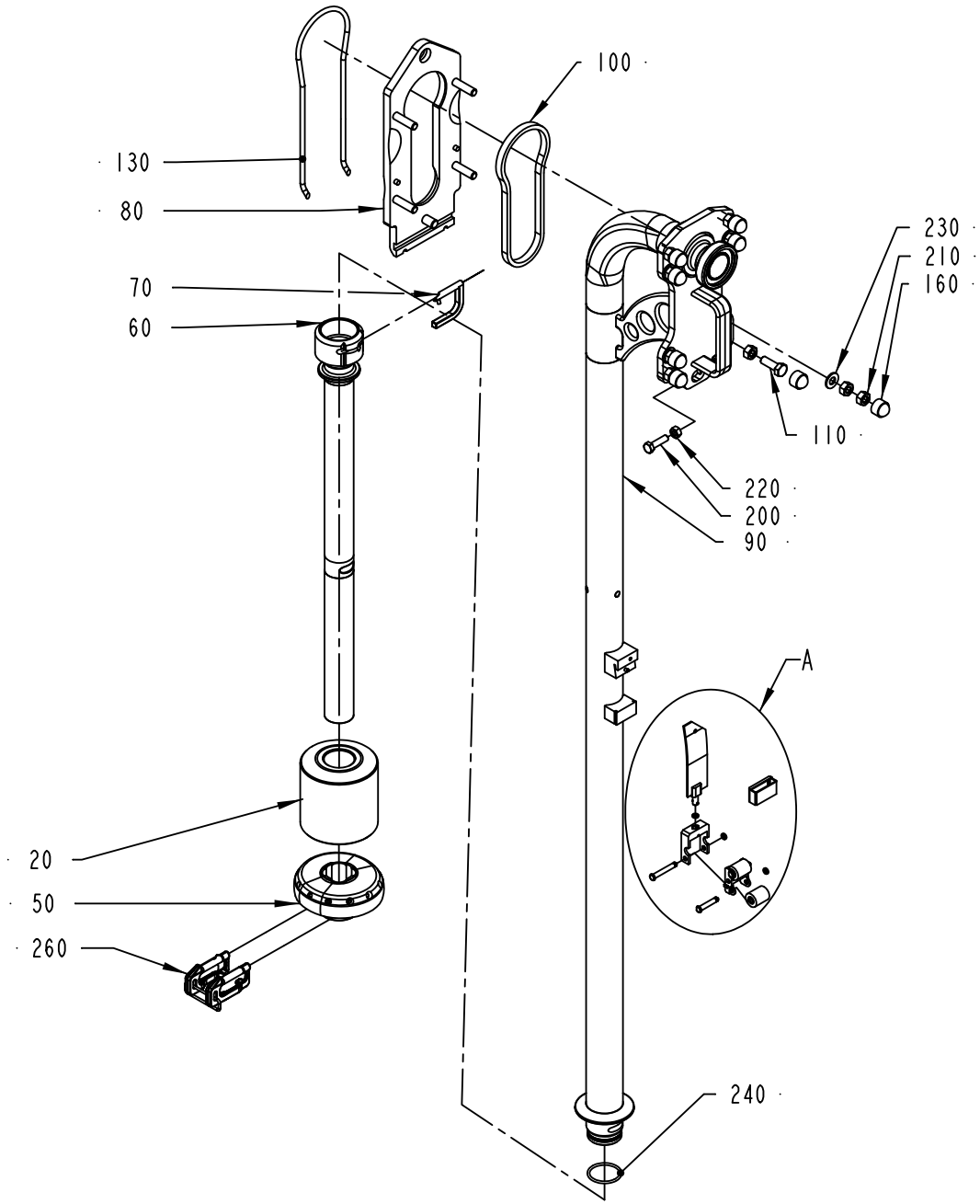

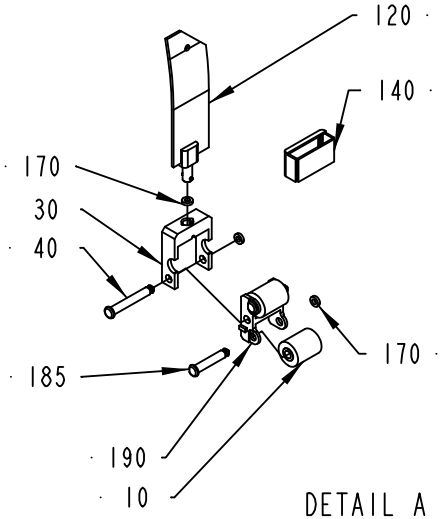

DETAIL A
SCALE 1:4

2501310-11
376139

ECM: 387791 - 20090402
Group number: 2501310-0100
Assembly Drawing: 2501310-11_1_AA

This list covers pages from 1-8 to 1-15

Pos	Part No	UN	Qty	Description	Page No
TBA 1000S (Cont'd) (See drawing on page: 1-8)					
020	2597531-0000		1	5019011FLOAT	
	2878907-0000		*1*	*CUTTING ARM*	
030	1348047-0000		1	FORK	
040	2529419-0000		1	SHAFT	
050	2826458-0000		1	PRESSURE FLANGE	
060	2826463-0000		1	FILLING PIPE	
070	2809846-0000		1	STOP PIN	
090	2826478-0000		1	FILLING PIPE	
120	2826395-0000		1	SPRING	
140	434665-0000		1	HOOD	
240	315204-0219		1	O-RING 29,2X3 MM	
250	2803986-0000		1	STOP PIN	
260	2803987-0000		1	STOP PIN	
270	2886173-0000		1	LOCKING RING	
Common Parts					
080	2500082-0000		1	MOUNTING PLATE	
100	2507048-0000		1	GASKET	
110	312105-0495		4	SCREW M6S ISO 4017 M10X30 A480	
130	2500071-0000		1	O-RING	
160	90459-0729		8	HEXAGONAL PROTECTIVE CAP GPN 1000	
200	312105-0455		2	SCREW M6S ISO 4017 M8X30 A480	
210	312605-0320		12	HEXAGON NUT, M6M M10 A280	
220	312605-0318		2	HEXAGON NUT, M6M M8 A280	
230	315105-0173		4	WASHER BRB 10,5X22 RFR	

Pos	Part No	UN	Qty	Description	Page No

REGULATING VALVE

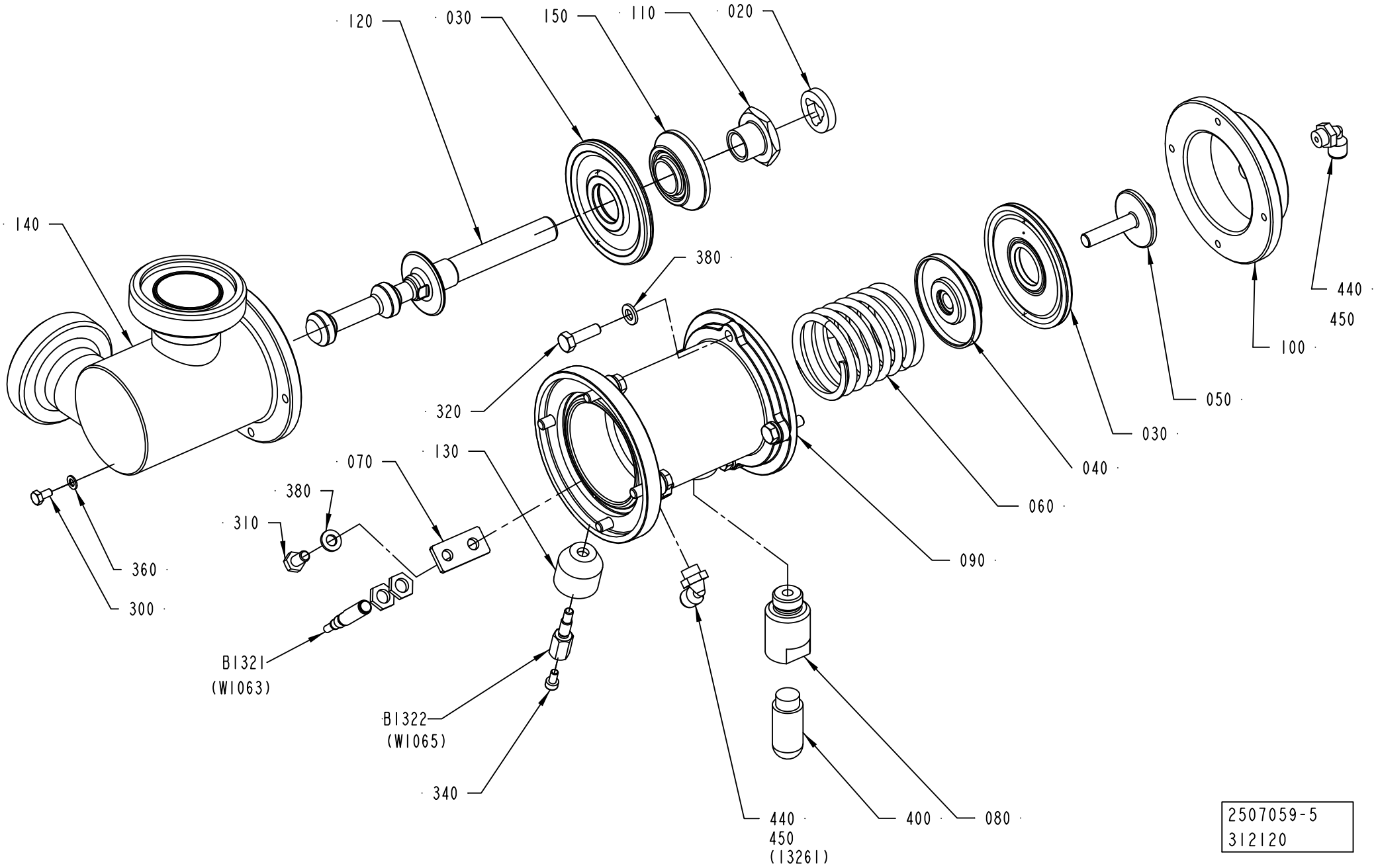

2507059-5
312120

ECM: 383501 - 20090115
Group number: 2507059-0300
Assembly Drawing: 2507059-5_1_AB

Pos	Part No	UN	Qty	Description	Page No
A3/FLEX TBA 0200S, A3/FLEX TBA 0200B, A3/FLEX TBA 0250B, A3/FLEX TBA 0330S, A3/FLEX TPA 0330SQ, A3/FLEX TBA 0200M, A3/FLEX TBA 0250S, A3/FLEX TPA 0250SQ, A3/FLEX TPA 0200SQ, A3/FLEX TBA 0200SQ, A3/FLEX TBA 0250SQ					
120	2790432-0000		1	SHUTTER	
140	2562704-0000		1	BODY	
A3/FLEX TBA 0500B, A3/FLEX TBA 1000B, A3/FLEX TBA 1000S, A3/FLEX TBA 1000SQ, A3/FLEX TPA 1000SQ, A3/FLEX TPA 0500SQ, A3/FLEX TBA 0500S, A3/FLEX TPA 0750SQ, A3/FLEX TBA 0500SQ, A3/FLEX TGA 1000SQ, A3/FLEX TGA 0500SQ, A3/FLEX TGA 0750SQ					
120	2790430-0000		1	SHUTTER	
140	1548230-0000		1	BODY	
A3/FLEX TBA 1500S, A3/FLEX TBA 1400B					
120	2790431-0000		1	SHUTTER	
140	1498526-0000		1	REGULATOR BODY	
A3/FLEX TBA 1890S, A3/FLEX TBA 2000S					
120	2790429-0000		1	SHUTTER	
140	2500078-0000		1	BODY	
Common Parts					
020	2594043-0000		1	SHOCK ABSORBER	
030	925998-0000		2	DIAPHRAGM	
040	2693622-0000		1	SPACER	
050	926907-0000		1	SCREW	
060	1195397-0000		1	COMPRESSION SPRING	
070	926934-0000		1	SUPPORT	
080	927044-0000		1	SPACER	
090	2790433-0000		1	BODY	
100	927203-0000		1	COVER	
110	979434-0000		1	FERRULE	
130	1478813-0000		1	SPACER	
150	1511600-0000		1	SPACER	
300	312105-0287		1	SCREW M6S ISO 4017 M4X8 A470	
310	312105-0366		1	SCREW M6S ISO 4017 M6X12 A480	
320	312105-0370		8	SCREW M6S ISO 4017 M6X20 A480	
340	312115-0287		1	SCREW ISO4762 M4X8 A4 80	
360	315105-0136		1	WASHER BRB 4,3X8 RFR	
380	315105-0153		9	WASHER BRB 6,4X12 RFR	
400	90328-0026		1	SILENCER G1/4"	
440	90458-2956		2	ELBOW PIPE JOINT, EXT.THREAD, D=6MM-G1/8	
450	90144-0073		1	TREBOFLON-TAPE W=13MM	
B1321	90600-0473		1	INDUCTIVE SWITCH E2A-S08KS01-WP-B1-TP 5M	
B1322	1478814-0000		1	SENSOR	

Pos	Part No	UN	Qty	Description	Page No

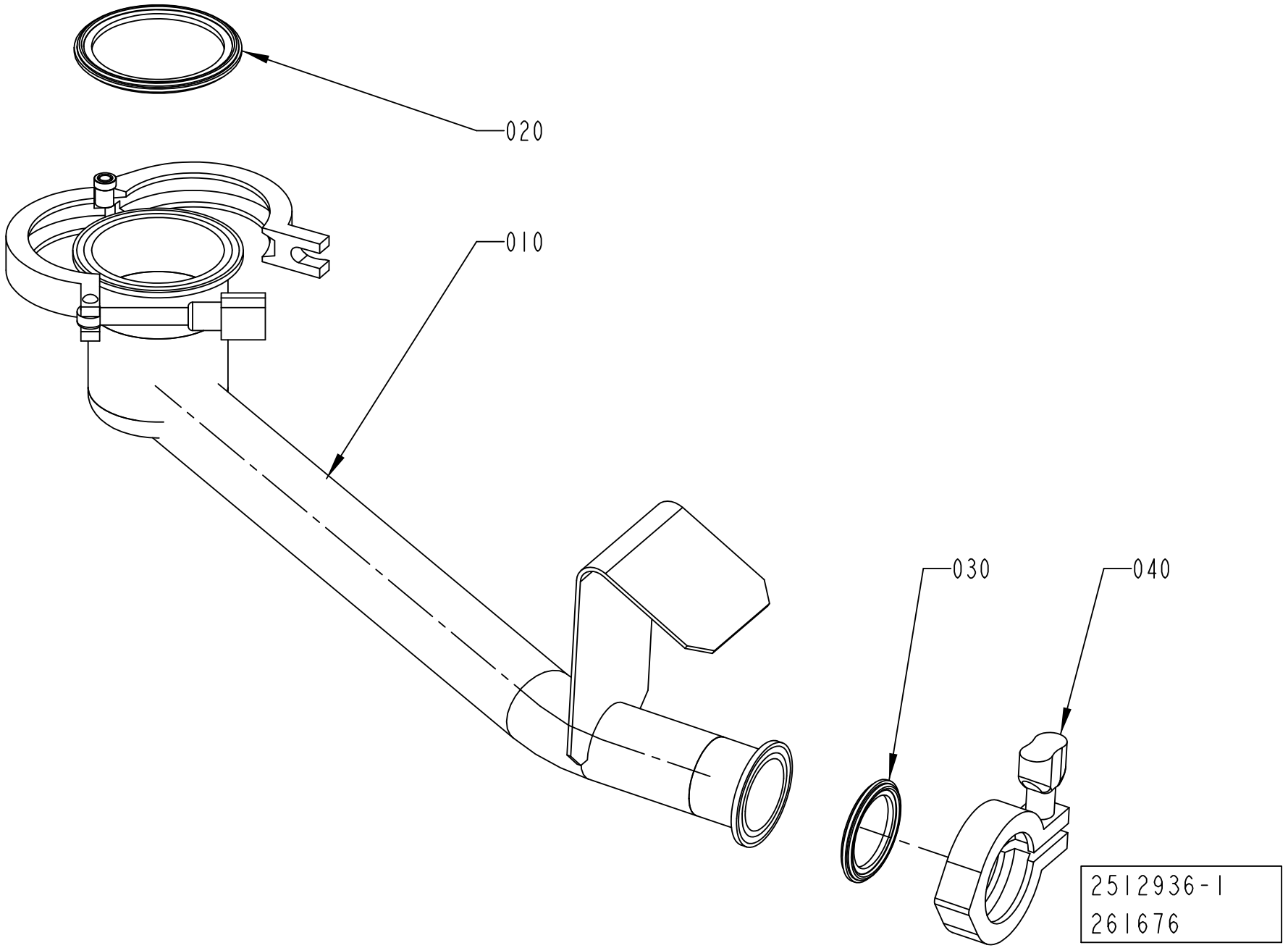
020
010
030
040
2512936-1
261676

Pos	Part No	UN	Qty	Description	Page No
TBA 0200M, TBA 0200B, TBA 0200SQ, TBA 0200S, TBA 0250S, TBA 0250B, TBA 0330S, TPA 0330SQ, TPA 0250SQ, TPA 0200SQ, TBA 0250SQ (See drawing on page: 1-20)					
010	2833035-0000		1	CLEANING CUP	
030	342850-0304		2	GASKET 35,4X49,1X5,2 1"1/2 FDA	
TBA 0500S, TPA 1000SQ, TPA 0500SQ, TPA 0750SQ (See drawing on page: 1-18)					
010	2833036-0000		1	CLEANING CUP	
020	342850-0305		1	GASKET 47,8X62,6X5,2 MM 2" FDA	
030	342850-0304		1	GASKET 35,4X49,1X5,2 1"1/2 FDA	
TBA 0500SQ, TBA 1000B, TBA 1000SQ, TBA 1000S, TBA 1500S, TBA 1890S, TBA 2000S, TBA 1400B (See drawing on page: 1-18)					
010	2832620-0000		1	CLEANING CUP	
020	342850-0306		1	GASKET 60,3X76,1X5,2 MM 2"1/2 FDA 3-A	
030	342850-0304		1	GASKET 35,4X49,1X5,2 1"1/2 FDA	
TGA 1000SQ, TGA 0750SQ, TGA 0500SQ (See drawing on page: 1-18)					
010	2960455-0000		1	CLEANING CUP	
020	342850-0305		1	GASKET 47,8X62,6X5,2 MM 2" FDA	
030	342850-0304		1	GASKET 35,4X49,1X5,2 1"1/2 FDA	
TGA 1500SQ (See drawing on page: 1-18)					
010	2977498-0000		1	CLEANING CUP	
020	342850-0305		1	GASKET 47,8X62,6X5,2 MM 2" FDA	
030	342850-0304		1	GASKET 35,4X49,1X5,2 1"1/2 FDA	
Common Parts					
040	342840-0103		1	CLAMPING PIECE	

Pos	Part No	UN	Qty	Description	Page No

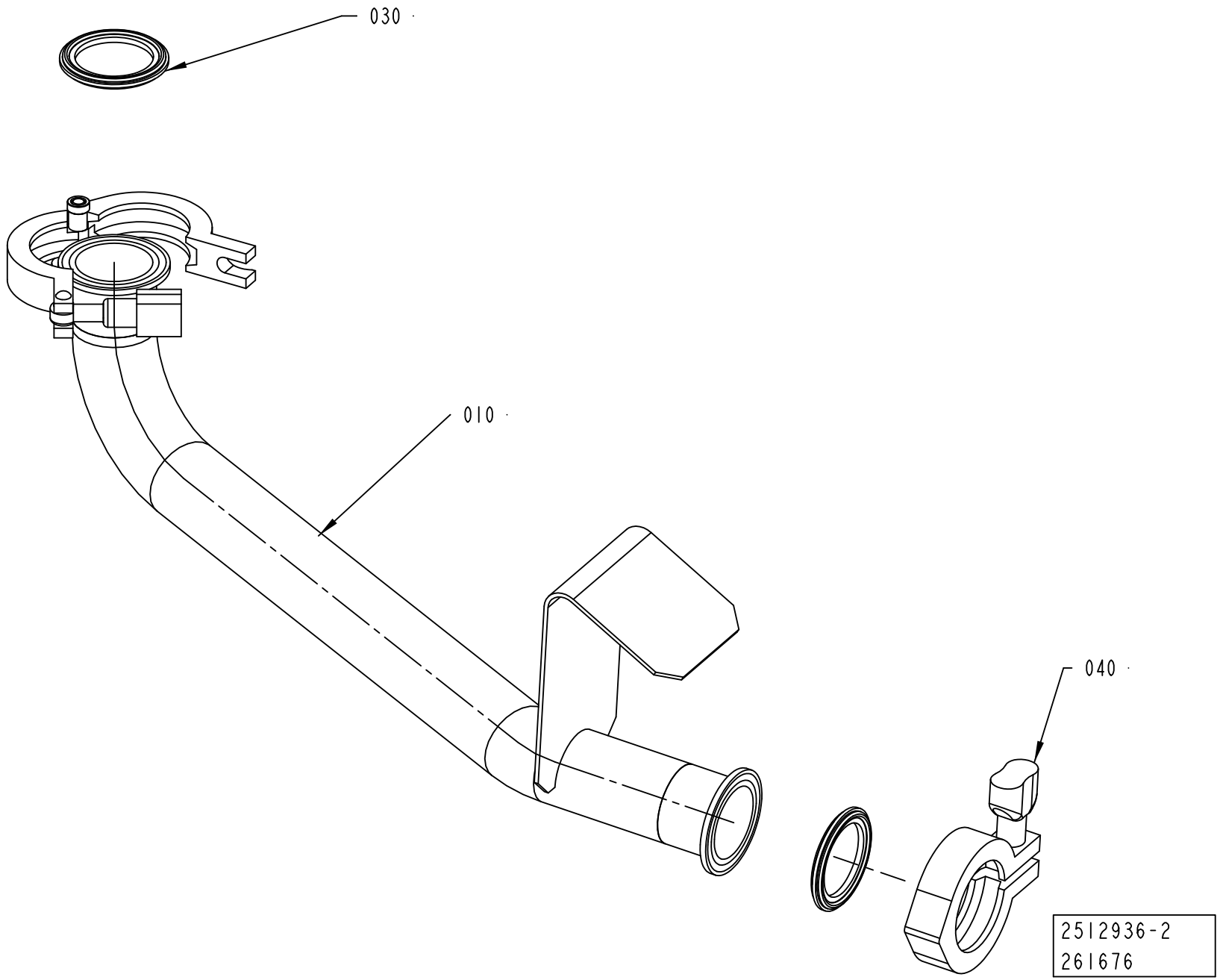
030
010
040
2512936-2
261676

Pos	Part No	UN	Qty	Description	Page No
TBA 0200M, TBA 0200B, TBA 0200SQ, TBA 0200S, TBA 0250S, TBA 0250B, TBA 0330S, TPA 0330SQ, TPA 0250SQ, TPA 0200SQ, TBA 0250SQ (See drawing on page: 1-20)					
010	2833035-0000		1	CLEANING CUP	
030	342850-0304		2	GASKET 35,4X49,1X5,2 1"1/2 FDA	
TBA 0500S, TPA 1000SQ, TPA 0500SQ, TPA 0750SQ (See drawing on page: 1-18)					
010	2833036-0000		1	CLEANING CUP	
020	342850-0305		1	GASKET 47,8X62,6X5,2 MM 2" FDA	
030	342850-0304		1	GASKET 35,4X49,1X5,2 1"1/2 FDA	
TBA 0500SQ, TBA 1000B, TBA 1000SQ, TBA 1000S, TBA 1500S, TBA 1890S, TBA 2000S, TBA 1400B (See drawing on page: 1-18)					
010	2832620-0000		1	CLEANING CUP	
020	342850-0306		1	GASKET 60,3X76,1X5,2 MM 2"1/2 FDA 3-A	
030	342850-0304		1	GASKET 35,4X49,1X5,2 1"1/2 FDA	
TGA 1000SQ, TGA 0750SQ, TGA 0500SQ (See drawing on page: 1-18)					
010	2960455-0000		1	CLEANING CUP	
020	342850-0305		1	GASKET 47,8X62,6X5,2 MM 2" FDA	
030	342850-0304		1	GASKET 35,4X49,1X5,2 1"1/2 FDA	
TGA 1500SQ (See drawing on page: 1-18)					
010	2977498-0000		1	CLEANING CUP	
020	342850-0305		1	GASKET 47,8X62,6X5,2 MM 2" FDA	
030	342850-0304		1	GASKET 35,4X49,1X5,2 1"1/2 FDA	
Common Parts					
040	342840-0103		1	CLAMPING PIECE	

Pos	Part No	UN	Qty	Description	Page No

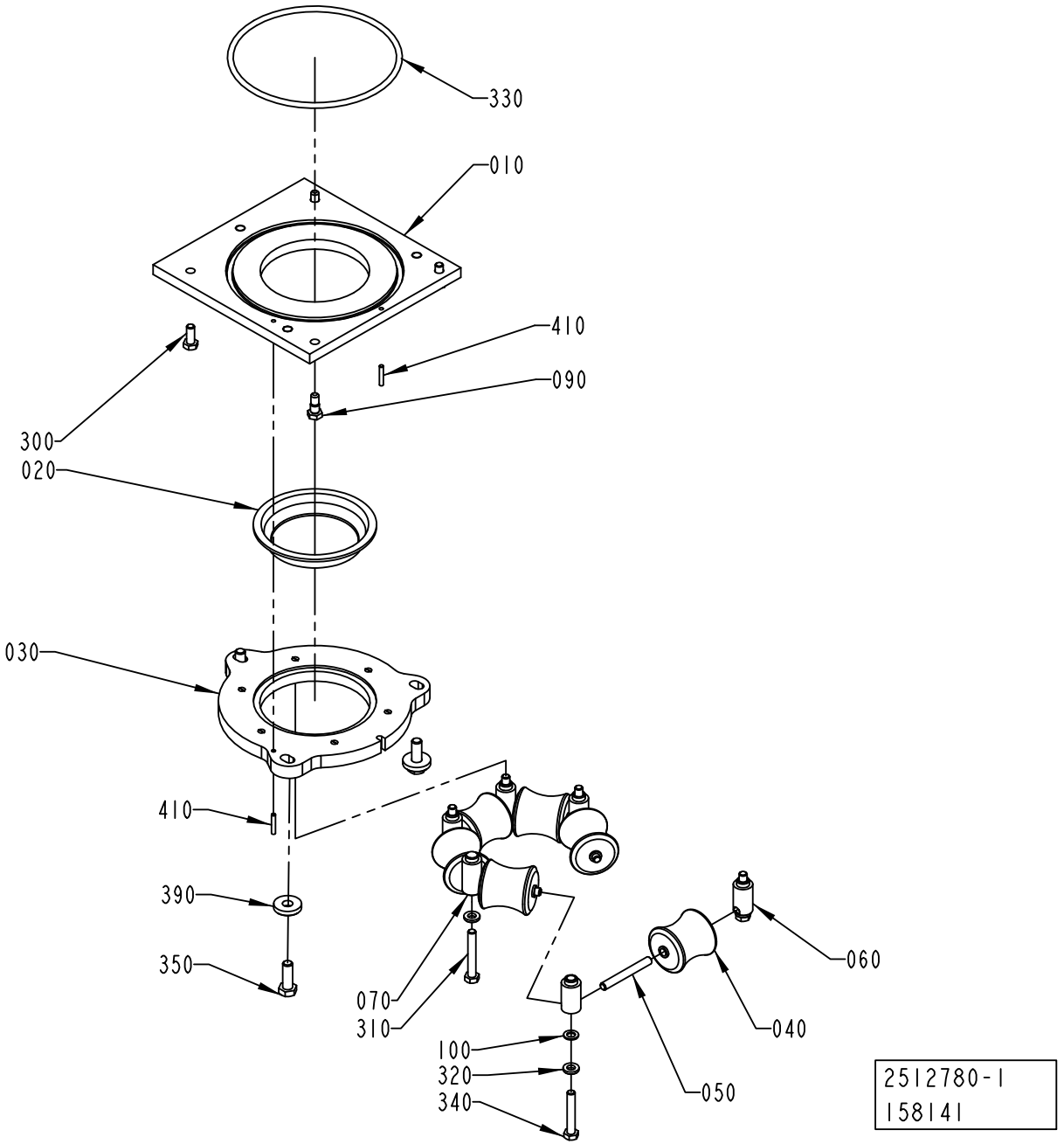
330
010
410
090
300
020
030
410
390
350
070
310
060
040
100
320
340
050
2512780-1
158141

ECM: 380517 - 20090402
Group number: 2512780-0100
Assembly Drawing: 2512780-1_1_AB

This list covers pages from 1-22 to 1-29

Pos	Part No	UN	Qty	Description	Page No
TBA 0200B, TBA 0200SQ, TBA 0250B, TBA 0330S, TBA 0250SQ (See drawing on page: 1-24)					
010	2528097-0000		1	PLATE	
020	273953-0000		1	SEAL	
030	2528096-0000		1	RING	
040	456796-0000		2	ROLLER	
050	263655-0006		2	SHAFT	
060	1038576-0000		4	AXLE SUPPORT	
340	312109-0459		4	SCREW M6S ISO 4017 M8X40 A480	
350	312105-0372		3	SCREW M6S ISO 4017 M6X25 A480	
390	315115-0153		3	WASHER PLAIN, TBRB 6,4/12 H=3	
410	311103-1274		1	PARALLEL PIN ISO 2338 4M6X24 A1	
TBA 0200M, TBA 0250S (See drawing on page: 1-24)					
010	2611044-0000		1	PLATE	
020	574336-0000		1	SEAL	
030	2611045-0000		1	RING	
040	2616231-0000		2	ROLLER	
050	263655-0018		2	SHAFT	
060	1038576-0000		4	AXLE SUPPORT	
340	312109-0459		4	SCREW M6S ISO 4017 M8X40 A480	
350	312105-0372		3	SCREW M6S ISO 4017 M6X25 A480	
390	315115-0153		3	WASHER PLAIN, TBRB 6,4/12 H=3	
410	311103-1274		1	PARALLEL PIN ISO 2338 4M6X24 A1	
TBA 0200S, TPA 0250SQ, TPA 0200SQ (See drawing on page: 1-24)					
010	2562711-0000		1	PLATE	
020	490901-0000		1	SEAL	
030	2562710-0000		1	RING	
040	2562709-0000		2	ROLLER	
050	263655-0018		2	SHAFT	
060	1038576-0000		4	AXLE SUPPORT	
340	312109-0459		4	SCREW M6S ISO 4017 M8X40 A480	
350	312105-0372		3	SCREW M6S ISO 4017 M6X25 A480	
390	315115-0153		3	WASHER PLAIN, TBRB 6,4/12 H=3	
410	311103-1274		1	PARALLEL PIN ISO 2338 4M6X24 A1	
TBA 0500B, TBA 1000B, TBA 1500S (See drawing on page: 1-22)					
010	2559104-0000		1	PLATE	
020	466042-0000		1	SEAL	
030	2512779-0000		1	RING	
040	466046-0000		6	ROLLER	
050	263655-0009		6	SHAFT	
060	1036954-0000		4	AXLE SUPPORT	
070	1036955-0000		2	AXLE SUPPORT	
100	1129431-0000		4	WASHER	
310	312105-0462		2	SCREW M6S ISO 4014 M8X55 A480	
320	315115-0165		6	WASHER PLAIN, TBRB 8,4/16 H=3	
340	312109-0461		4	SCREW M6S ISO 4017 M8X50 A480	
350	312105-0495		3	SCREW M6S ISO 4017 M10X30 A480	
390	315125-0173		3	WASHER TBRSB 10,5X28X6 A4	
410	311103-1274		2	PARALLEL PIN ISO 2338 4M6X24 A1	
TBA 0500S (See drawing on page: 1-22)					
010	2559103-0000		1	PLATE	
020	466089-0000		1	SEAL	
030	2559102-0000		1	RING	
040	466092-0000		6	ROLL	
050	263655-0007		6	SHAFT	
060	1036954-0000		4	AXLE SUPPORT	
070	1036955-0000		2	AXLE SUPPORT	
100	1129431-0000		4	WASHER	
310	312105-0462		2	SCREW M6S ISO 4014 M8X55 A480	
320	315115-0165		6	WASHER PLAIN, TBRB 8,4/16 H=3	
340	312109-0461		4	SCREW M6S ISO 4017 M8X50 A480	
350	312105-0495		3	SCREW M6S ISO 4017 M10X30 A480	
390	315125-0173		3	WASHER TBRSB 10,5X28X6 A4	
410	311103-1274		2	PARALLEL PIN ISO 2338 4M6X24 A1	
TBA 0500SQ, TBA 1000SQ (See drawing on page: 1-22)					
010	2559104-0000		1	PLATE	
020	579318-0000		1	SEAL	
030	2512779-0000		1	RING	
040	1490762-0000		6	ROLLER	
050	263655-0009		6	SHAFT	
060	1036954-0000		4	AXLE SUPPORT	
070	1036955-0000		2	AXLE SUPPORT	
100	1129431-0000		4	WASHER	
310	312105-0462		2	SCREW M6S ISO 4014 M8X55 A480	
320	315115-0165		6	WASHER PLAIN, TBRB 8,4/16 H=3	
340	312109-0461		4	SCREW M6S ISO 4017 M8X50 A480	
350	312105-0495		3	SCREW M6S ISO 4017 M10X30 A480	
390	315125-0173		3	WASHER TBRSB 10,5X28X6 A4	
410	311103-1274		2	PARALLEL PIN ISO 2338 4M6X24 A1	
TBA 1000S (See drawing on page: 1-22)					
010	2559104-0000		1	PLATE	
020	567743-0000		1	SEAL	
030	2512779-0000		1	RING	
040	573504-0000		6	ROLLER	
050	263655-0009		6	SHAFT	

Machine Type | Group Description | Used-In | Group Number | Page No

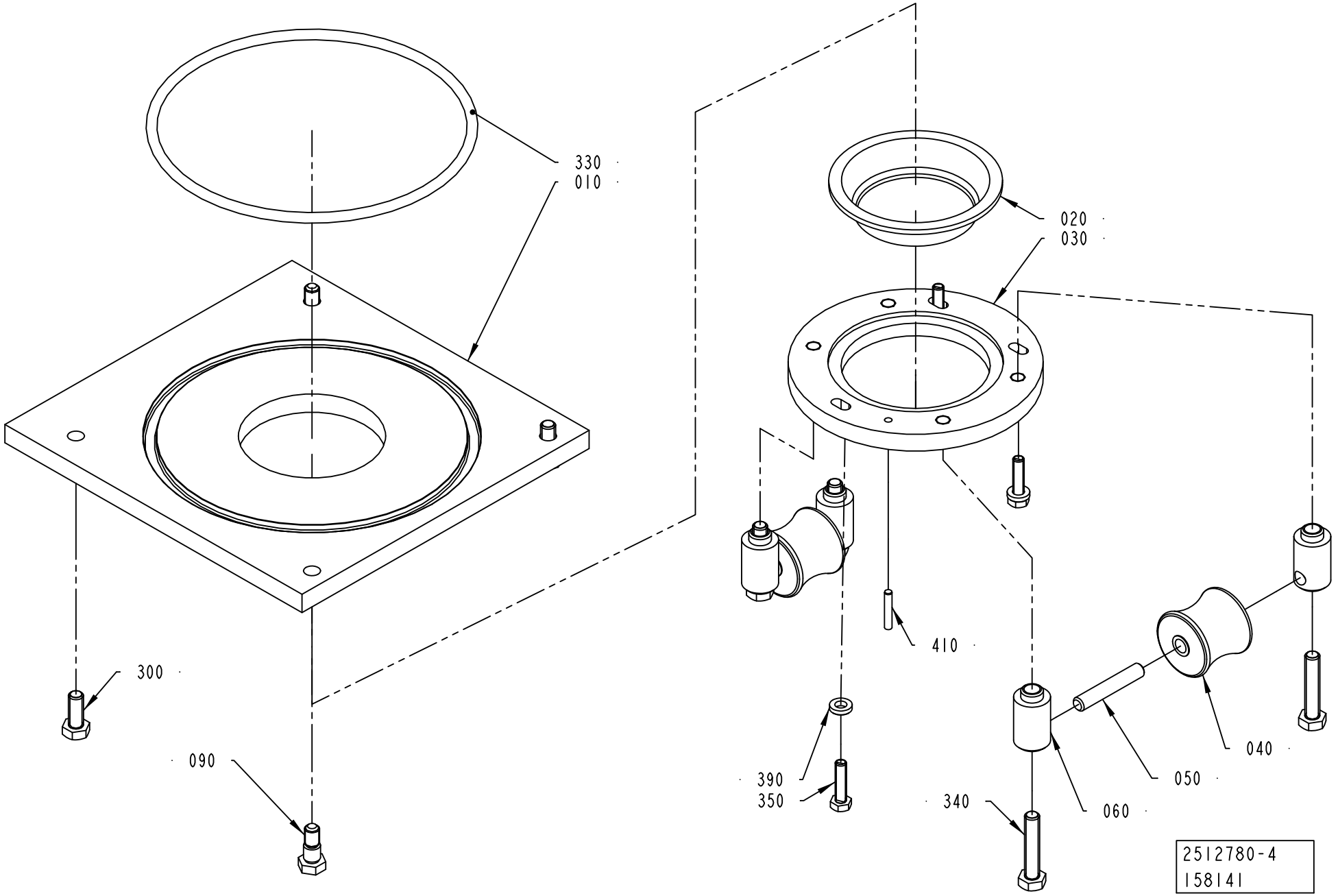
330
010
020
030
300
090
410
390
350
340
060
050
040
2512780-4
158141

ECM: 380517 - 20090402
Group number: 2512780-0100
Assembly Drawing: 2512780-4_1_AB

This list covers pages from 1-22 to 1-29

Pos	Part No	UN	Qty	Description	Page No
TBA 1000S (Cont'd) (See drawing on page: 1-22)					
060	1036954-0000		4	AXLE SUPPORT	
070	1036955-0000		2	AXLE SUPPORT	
100	1129431-0000		4	WASHER	
310	312105-0462		2	SCREW M6S ISO 4014 M8X55 A480	
320	315115-0165		6	WASHER PLAIN, TBRB 8,4/16 H=3	
340	312109-0461		4	SCREW M6S ISO 4017 M8X50 A480	
350	312105-0495		3	SCREW M6S ISO 4017 M10X30 A480	
390	315125-0173		3	WASHER TBRSB 10,5X28X6 A4	
410	311103-1274		2	PARALLEL PIN ISO 2338 4M6X24 A1	
TBA 1890S, TBA 2000S, TBA 1400B (See drawing on page: 1-22)					
010	2582616-0000		1	PLATE	
020	2582623-0000		1	SEAL	
030	2582629-0000		1	RING	
040	2582630-0000		6	ROLLER	
050	263655-0015		6	SHAFT	
060	1036954-0000		4	AXLE SUPPORT	
070	1036955-0000		2	AXLE SUPPORT	
100	1129431-0000		4	WASHER	
310	312105-0462		2	SCREW M6S ISO 4014 M8X55 A480	
320	315115-0165		6	WASHER PLAIN, TBRB 8,4/16 H=3	
340	312109-0461		4	SCREW M6S ISO 4017 M8X50 A480	
350	312105-0495		3	SCREW M6S ISO 4017 M10X30 A480	
390	315125-0173		3	WASHER TBRSB 10,5X28X6 A4	
410	311103-1274		2	PARALLEL PIN ISO 2338 4M6X24 A1	
TGA 1000SQ, TGA 0750SQ, TGA 0500SQ (See drawing on page: 1-28)					
010	2872373-0000		1	PLATE	
020	2641271-0000		1	SEAL	
410	311103-1274		1	PARALLEL PIN ISO 2338 4M6X24 A1	
TGA 1500SQ (See drawing on page: 1-28)					
010	2968252-0000		1	PLATE	
020	466042-0000		1	SEAL	
410	311103-1274		1	PARALLEL PIN ISO 2338 4M6X24 A1	
TPA 0330SQ (See drawing on page: 1-24)					
010	2528097-0000		1	PLATE	
020	929286-0000		1	SEAL	
030	2528096-0000		1	RING	
040	929284-0000		2	ROLLER	
050	263655-0006		2	SHAFT	
060	1038576-0000		4	AXLE SUPPORT	
340	312109-0459		4	SCREW M6S ISO 4017 M8X40 A480	
350	312105-0372		3	SCREW M6S ISO 4017 M6X25 A480	
390	315115-0153		3	WASHER PLAIN, TBRB 6,4/12 H=3	
410	311103-1274		1	PARALLEL PIN ISO 2338 4M6X24 A1	
TPA 0500SQ (See drawing on page: 1-26)					
010	2611046-0000		1	PLATE	
020	2718901-0000		1	SEAL	
030	2611047-0000		1	RING	
040	2552655-0000		5	ROLLER	
045	2552656-0000		1	ROLLER	
050	263655-0007		6	SHAFT	
060	1036954-0000		4	AXLE SUPPORT	
070	1036955-0000		2	AXLE SUPPORT	
100	1129431-0000		4	WASHER	
310	312105-0462		2	SCREW M6S ISO 4014 M8X55 A480	
320	315115-0165		6	WASHER PLAIN, TBRB 8,4/16 H=3	
340	312109-0461		4	SCREW M6S ISO 4017 M8X50 A480	
350	312105-0495		3	SCREW M6S ISO 4017 M10X30 A480	
390	315125-0173		3	WASHER TBRSB 10,5X28X6 A4	
410	311103-1274		2	PARALLEL PIN ISO 2338 4M6X24 A1	
TPA 1000SQ, TPA 0750SQ (See drawing on page: 1-22)					
010	2559103-0000		1	PLATE	
020	1524414-0000		1	SEAL	
030	2559102-0000		1	RING	
040	1524416-0000		6	ROLLER	
050	263655-0007		6	SHAFT	
060	1036954-0000		4	AXLE SUPPORT	
070	1036955-0000		2	AXLE SUPPORT	
100	1129431-0000		4	WASHER	
310	312105-0462		2	SCREW M6S ISO 4014 M8X55 A480	
320	315115-0165		6	WASHER PLAIN, TBRB 8,4/16 H=3	
340	312109-0461		4	SCREW M6S ISO 4017 M8X50 A480	
350	312105-0495		3	SCREW M6S ISO 4017 M10X30 A480	
390	315125-0173		3	WASHER TBRSB 10,5X28X6 A4	
410	311103-1274		2	PARALLEL PIN ISO 2338 4M6X24 A1	
Common Parts					
090	1037885-0000		2	REAMED BOLT	
300	312105-0451		2	SCREW M6S ISO 4017 M8X20 A480	
330	315204-0324		1	O-RING 164,3X5,7 MM	

Machine Type | Group Description | Used-In | Group Number | Page No

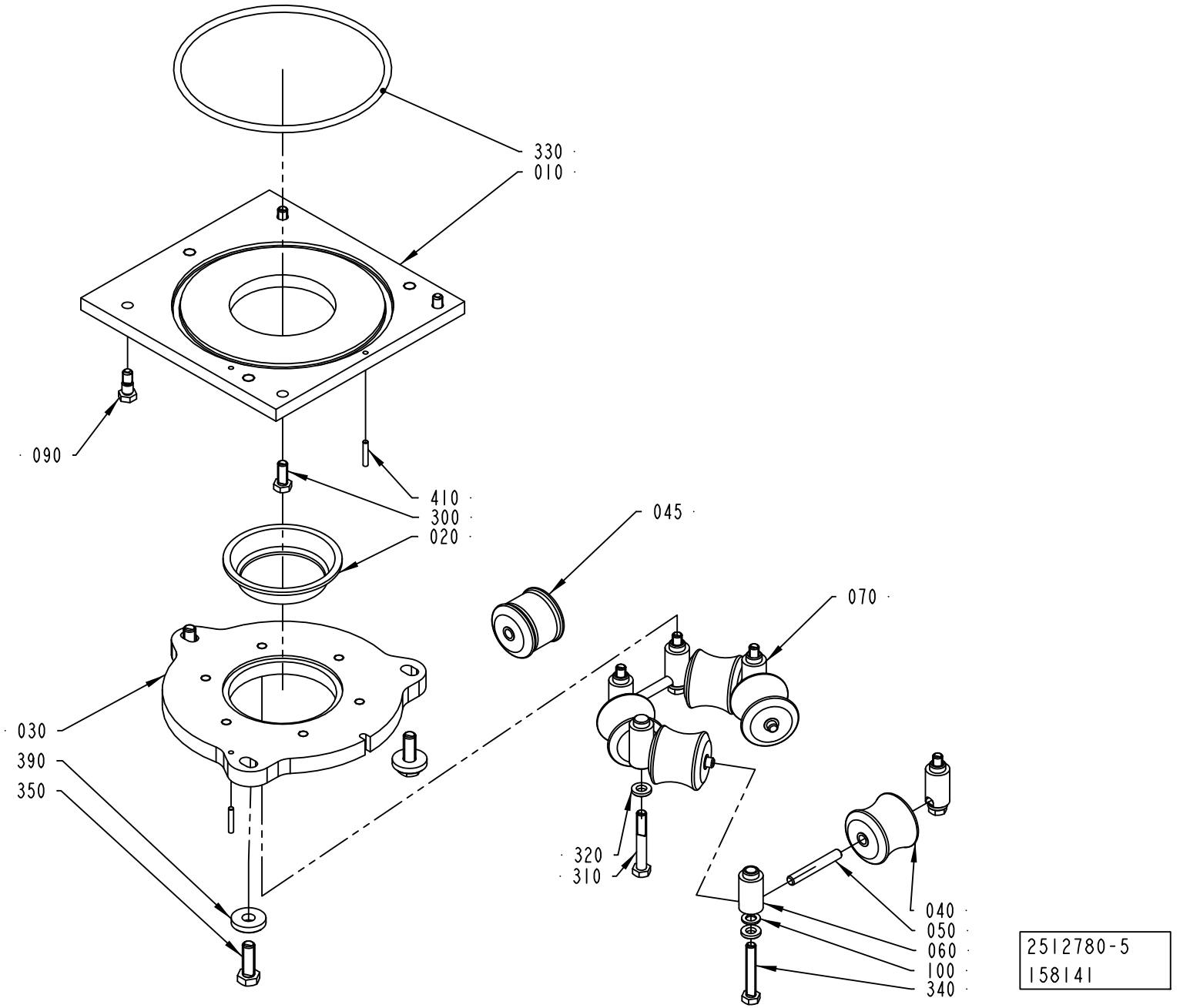
330
010
090
410
300
020
045
070
030
390
350
320
310
040
050
060
100
340
2512780-5
158141

Pos	Part No	UN	Qty	Description	Page No
SEE PREVIOUS LISTS PAGES: 1-23, 1-25.					

Pos	Part No	UN	Qty	Description	Page No

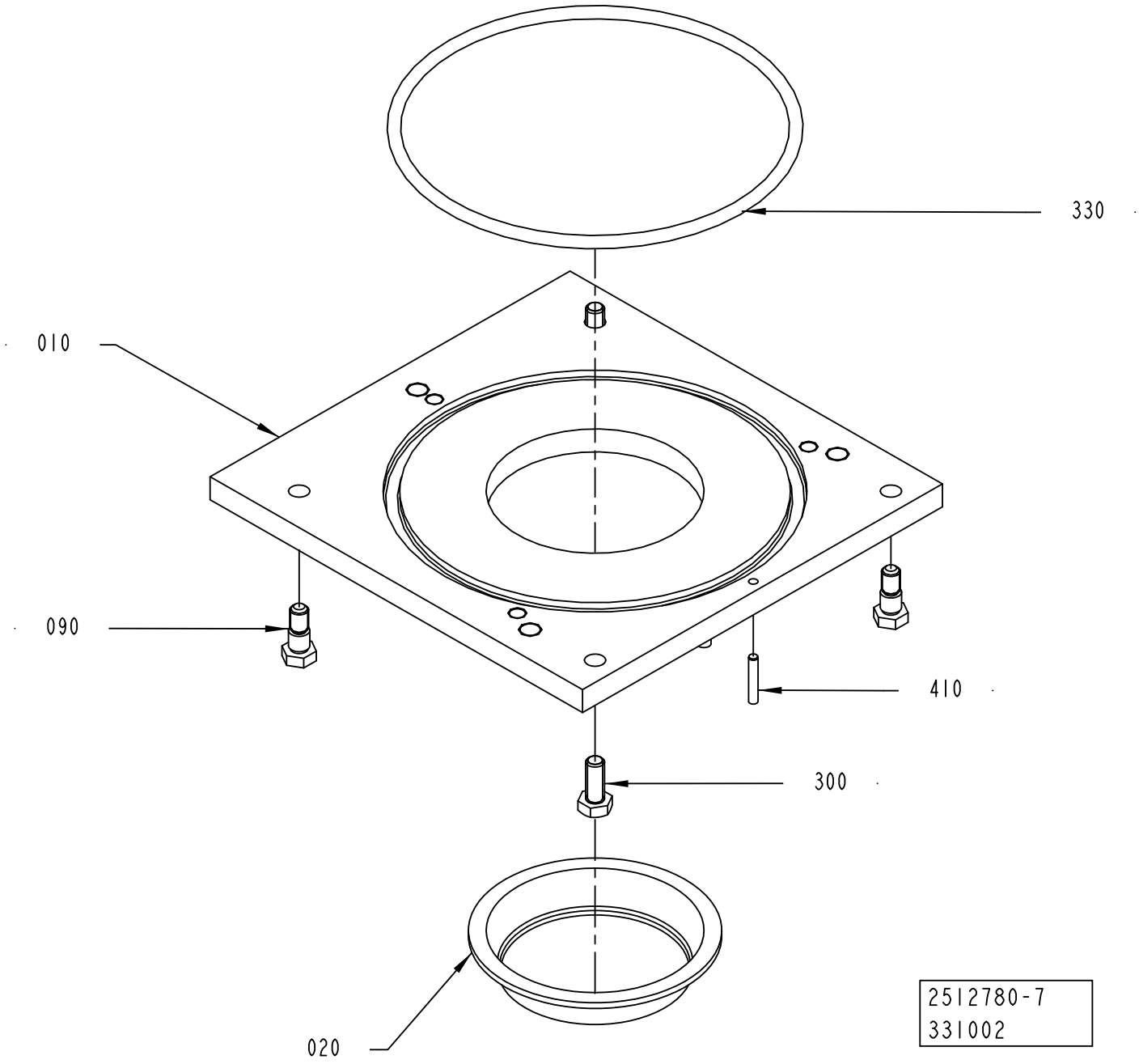
330
010
090
410
300
020
2512780-7
331002

Pos	Part No	UN	Qty	Description	Page No
SEE PREVIOUS LISTS PAGES: 1-23, 1-25.					

Pos	Part No	UN	Qty	Description	Page No

LOWER FORMING RING

Drawing file: 2559062-4_1_AA.hpgl

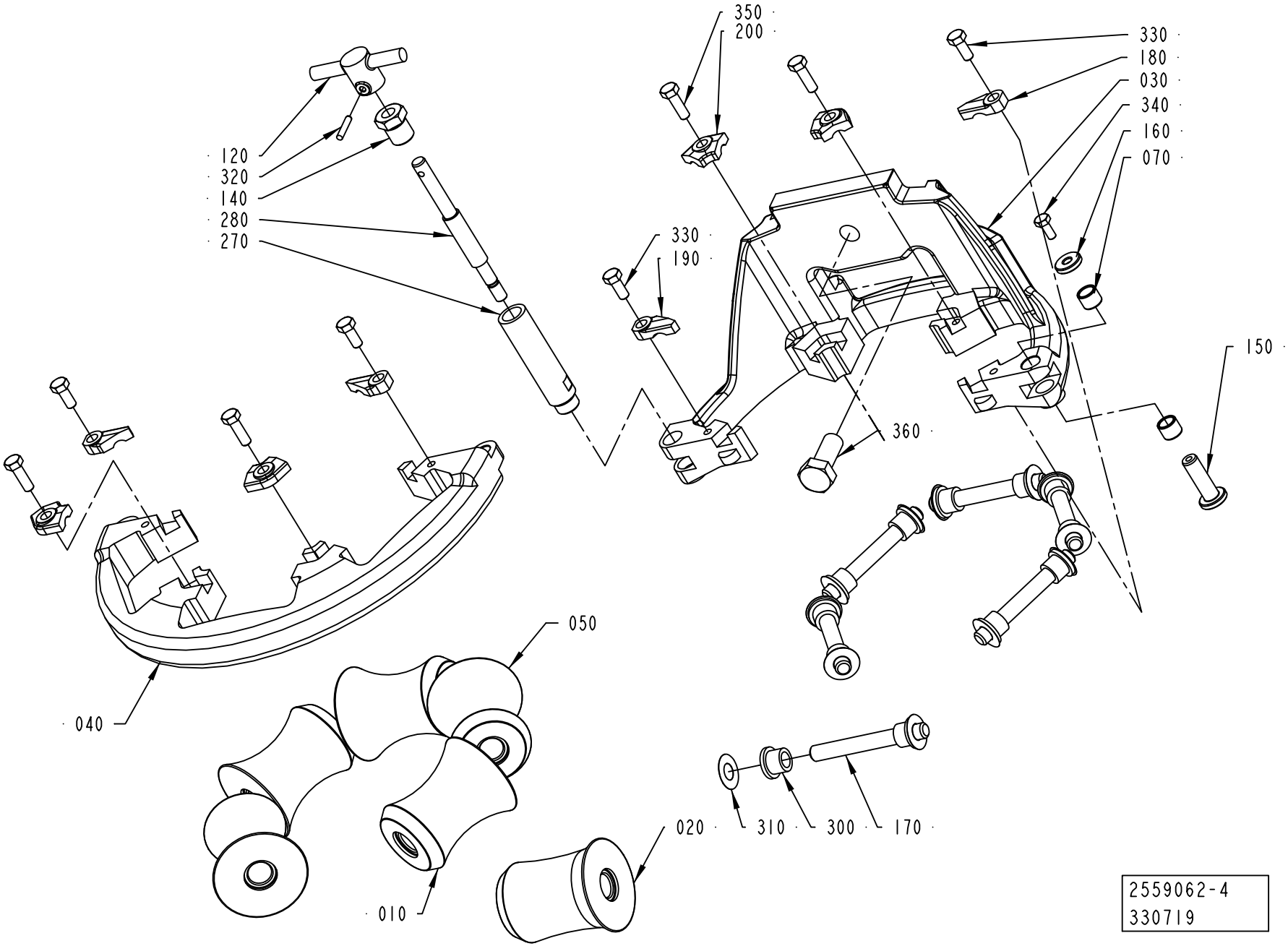

ECM: 387755 - 20090402
Group number: 2559062-0200
Assembly Drawing: 2559062-4_1_AA

This list covers pages from 1-30 to 1-39

Pos	Part No	UN	Qty	Description	Page No
TBA 0200B, TBA 0250B, TBA 0330S (See drawing on page: 1-36)					
010	751502-0000		5	ROLLER	
020	2544882-0000		1	COUNTER ROLLER	
030	2764024-0000		1	LOWER FORMING RING	
040	2736630-0000		1	LOWER FORMING RING	
170	752186-0005		6	SHAFT	
180	2528119-0005		2	LOCK PLATE	
190	2528118-0005		2	LOCK PLATE	
200	2528123-0004		4	LOCK PLATE	
TBA 0200M, TBA 0250S (See drawing on page: 1-36)					
010	2601308-0000		5	ROLLER	
020	2601309-0000		1	ROLLER	
030	2764030-0000		1	LOWER FORMING RING	
040	2736629-0000		1	LOWER FORMING RING	
170	752186-0004		6	SHAFT	
180	2528119-0003		2	LOCK PLATE	
190	2528118-0003		2	LOCK PLATE	
200	2528123-0002		4	LOCK PLATE	
TBA 0200S, TPA 0250SQ, TPA 0200SQ (See drawing on page: 1-36)					
010	2565424-0000		5	ROLLER	
020	2565425-0000		1	COUNTER ROLLER	
030	2764028-0000		1	LOWER FORMING RING	
040	2736628-0000		1	LOWER FORMING RING	
170	752186-0004		6	SHAFT	
180	2528119-0005		2	LOCK PLATE	
190	2528118-0005		2	LOCK PLATE	
200	2528123-0004		4	LOCK PLATE	
TBA 0200SQ, TBA 0250SQ (See drawing on page: 1-36)					
010	751502-0000		5	ROLLER	
020	2720846-0000		1	COUNTER ROLLER	
030	2764024-0000		1	LOWER FORMING RING	
040	2736630-0000		1	LOWER FORMING RING	
170	752186-0005		6	SHAFT	
180	2528119-0005		2	LOCK PLATE	
190	2528118-0005		2	LOCK PLATE	
200	2528123-0004		4	LOCK PLATE	
TBA 0500B, TBA 1000B (See drawing on page: 1-30)					
010	1349851-0000		3	ROLL	
020	2876664-0000		1	COUNTER ROLLER	
030	2764026-0000		1	LOWER FORMING RING	
040	2700546-0000		1	FRONT RING	
050	1349853-0000		2	ROLL	
170	752186-0014		6	SHAFT	
180	2528119-0004		2	LOCK PLATE	
190	2528118-0004		2	LOCK PLATE	
200	2528123-0004		4	LOCK PLATE	
TBA 0500S (See drawing on page: 1-36)					
010	1499636-0000		5	ROLLER	
020	2709785-0000		1	ROLLER	
030	2764025-0000		1	LOWER FORMING RING	
040	2731503-0000		1	LOWER FORMING RING	
170	2522213-0006		6	SHAFT	
180	2528119-0005		2	LOCK PLATE	
190	2528118-0005		2	LOCK PLATE	
200	2528123-0004		4	LOCK PLATE	
TBA 0500SQ, TBA 1000SQ (See drawing on page: 1-36)					
010	1490765-0000		5	ROLLER	
020	1499411-0000		1	COUNTER ROLLER	
030	2764023-0000		1	LOWER FORMING RING	
040	2736705-0000		1	LOWER FORMING RING	
170	752186-0016		6	SHAFT	
180	2528119-0004		2	LOCK PLATE	
190	2528118-0004		2	LOCK PLATE	
200	2528123-0004		4	LOCK PLATE	
TBA 1000S (See drawing on page: 1-36)					
010	567746-0001		5	ROLLER (STANDARD SIZE)	
020	1334856-0000		1	COUNTER ROLLER	
030	2764027-0000		1	LOWER FORMING RING	
040	2721423-0000		1	FORMING RING	
170	752186-0016		6	SHAFT	
180	2528119-0005		2	LOCK PLATE	
190	2528118-0005		2	LOCK PLATE	
200	2528123-0004		4	LOCK PLATE	
TBA 1500S (See drawing on page: 1-36)					
010	1349851-0000		5	ROLL	
020	2518098-0000		1	COUNTER ROLLER	
030	2764026-0000		1	LOWER FORMING RING	
040	2700546-0000		1	FRONT RING	
170	752186-0014		6	SHAFT	
180	2528119-0004		2	LOCK PLATE	
190	2528118-0004		2	LOCK PLATE	
200	2528123-0004		4	LOCK PLATE	
TBA 1890S, TBA 2000S, TBA 1400B (See drawing on page: 1-34)					
010	2565513-0000		5	ROLLER	

Machine Type | Group Description | Used-In | Group Number | Page No

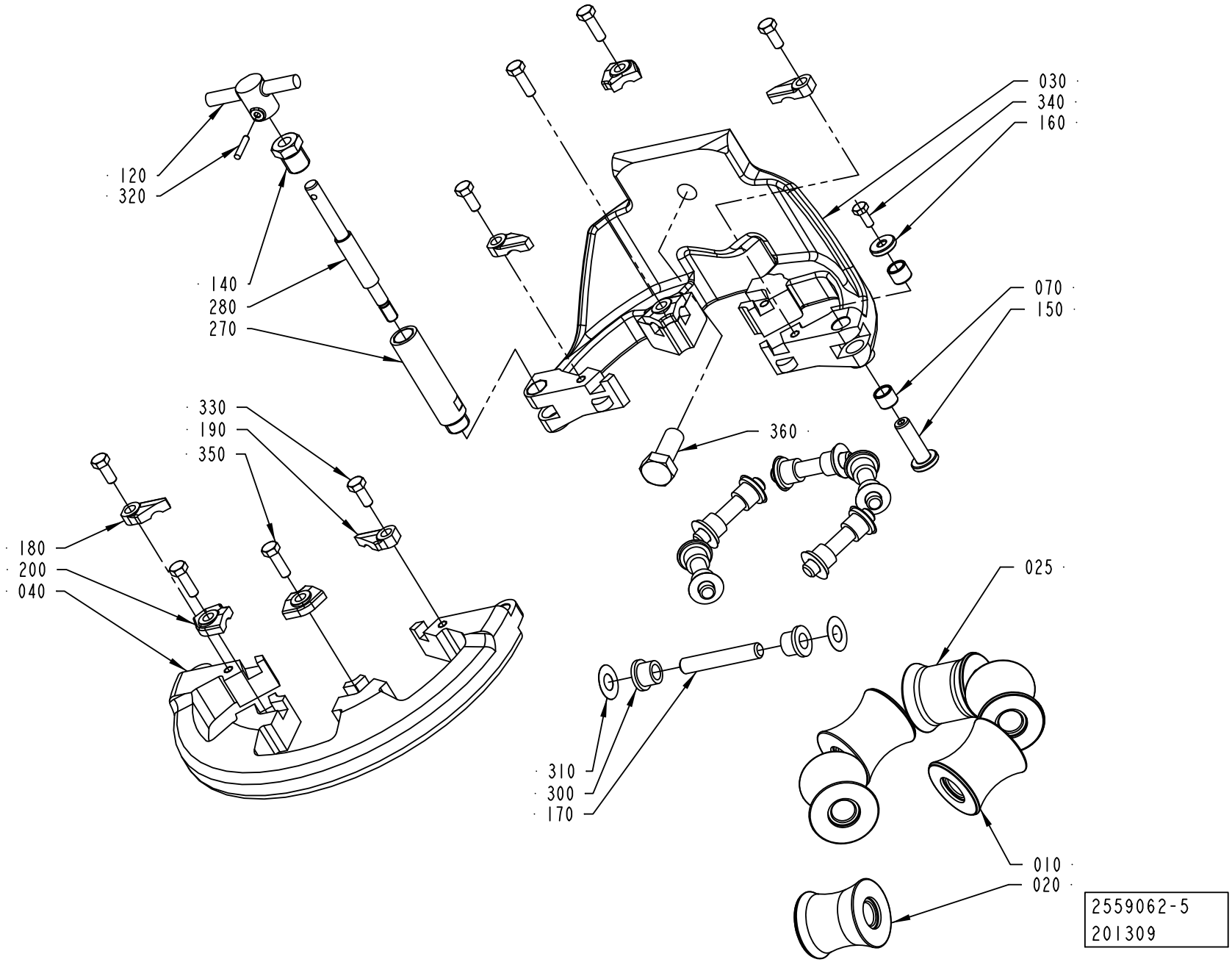
120
320
140
280
270
330
190
350
180
200
040
030
340
160
070
150
360
310
300
170
025
010
020
2559062-5
201309

ECM: 387755 - 20090402
Group number: 2559062-0200
Assembly Drawing: 2559062-5_1_AA

This list covers pages from 1-30 to 1-39

Pos	Part No	UN	Qty	Description	Page No
TBA 1890S, TBA 2000S, TBA 1400B (Cont'd) (See drawing on page: 1-34)					
020	2657923-0000		1	COUNTER ROLLER	
030	2764029-0000		1	LOWER FORMING RING	
040	2673023-0000		1	LOWER FORMING RING	
170	752186-0015		6	SHAFT	
180	2528119-0004		2	LOCK PLATE	
190	2528118-0004		2	LOCK PLATE	
200	2528123-0004		4	LOCK PLATE	
TGA 1000SQ, TGA 0750SQ, TGA 0500SQ (See drawing on page: 1-36)					
010	2611069-0001		5	ROLLER	
020	2611070-0000		1	COUNTER ROLLER	
030	2764025-0000		1	LOWER FORMING RING	
040	2731503-0000		1	LOWER FORMING RING	
170	2522213-0006		6	SHAFT	
180	2528119-0005		2	LOCK PLATE	
190	2528118-0005		2	LOCK PLATE	
200	2528123-0004		4	LOCK PLATE	
TPA 0330SQ (See drawing on page: 1-36)					
010	2594644-0000		5	ROLLER	
020	2641282-0000		1	COUNTER ROLLER	
030	2764024-0000		1	LOWER FORMING RING	
040	2736630-0000		1	LOWER FORMING RING	
170	752186-0005		6	SHAFT	
180	2528119-0005		2	LOCK PLATE	
190	2528118-0005		2	LOCK PLATE	
200	2528123-0004		4	LOCK PLATE	
TPA 0500SQ (See drawing on page: 1-32)					
010	2601328-0000		4	ROLLER	
020	2686861-0000		1	ROLLER	
025	2601327-0000		1	ROLLER	
030	2764031-0000		1	LOWER FORMING RING	
040	2731506-0000		1	LOWER FORMING RING	
170	752186-0005		6	SHAFT	
180	2528119-0004		2	LOCK PLATE	
190	2528118-0004		2	LOCK PLATE	
200	2528123-0003		4	LOCK PLATE	
TPA 1000SQ, TPA 0750SQ (See drawing on page: 1-38)					
010	1524156-0000		2	ROLLER	
020	1524547-0000		1	COUNTER ROLLER	
025	2833215-0000		1	ROLLER	
030	2764025-0000		1	LOWER FORMING RING	
040	2731503-0000		1	LOWER FORMING RING	
050	2833085-0000		1	ROLLER	
060	2833086-0000		1	ROLLER	
170	2522213-0006		6	SHAFT	
180	2528119-0005		2	LOCK PLATE	
190	2528118-0005		2	LOCK PLATE	
200	2528123-0004		4	LOCK PLATE	
Common Parts					
070	2526826-0000		2	BUSHING	
120	2764036-0000		1	KNOB	
140	2731428-0000		1	NUT	
150	2526827-0000		1	SHAFT	
160	2526825-0000		1	WASHER	
270	2764032-0000		1	SHAFT	
280	2764033-0000		1	SHAFT	
300	90240-0172		12	FLANGE BUSHING, 8X12X10 MM	
310	2033-0011		12	WASHER	
320	311103-0236		1	PARALLEL PIN ISO 2338 3M6X16 A1	
330	312105-0327		4	SCREW M6S ISO 4017 M5X12 A480	
340	312105-0289		1	SCREW M6S H4X10 A4 70 ISO4017/DIN933	
350	312105-0329		4	SCREW M6S ISO 4017 M5X16 A480	
360	312105-0493		1	SCREW M6S ISO 4017 M10X25 A480	

Machine Type | Group Description | Used-In | Group Number | Page No

LOWER FORMING RING

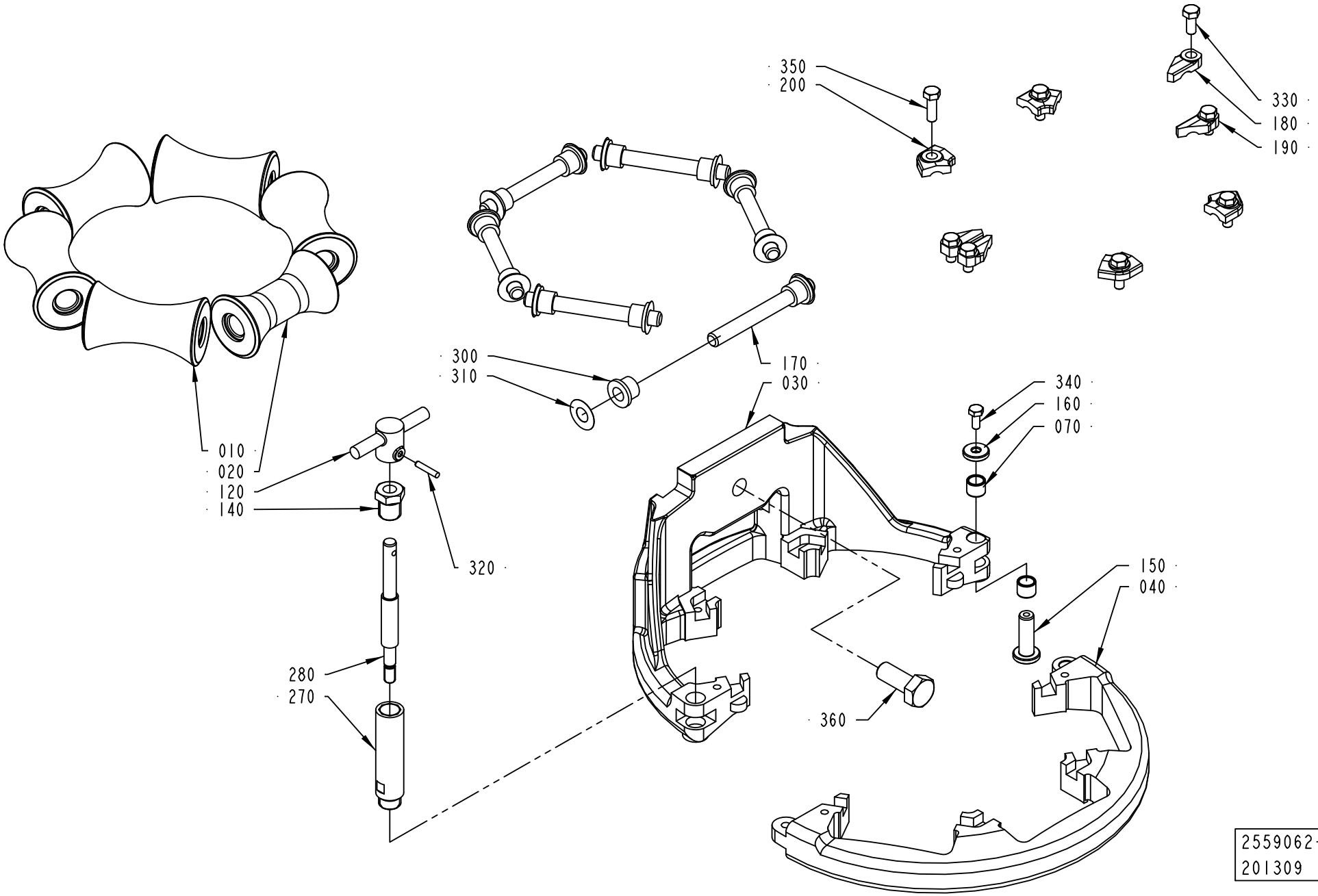

ECM: 387755 - 20090402
Group number: 2559062-0200
Assembly Drawing: 2559062-6_1_AA

This list covers pages from 1-30 to 1-39

Pos	Part No	UN	Qty	Description	Page No
SEE PREVIOUS LISTS PAGES: 1-31, 1-33.					

Pos	Part No	UN	Qty	Description	Page No

LOWER FORMING RING

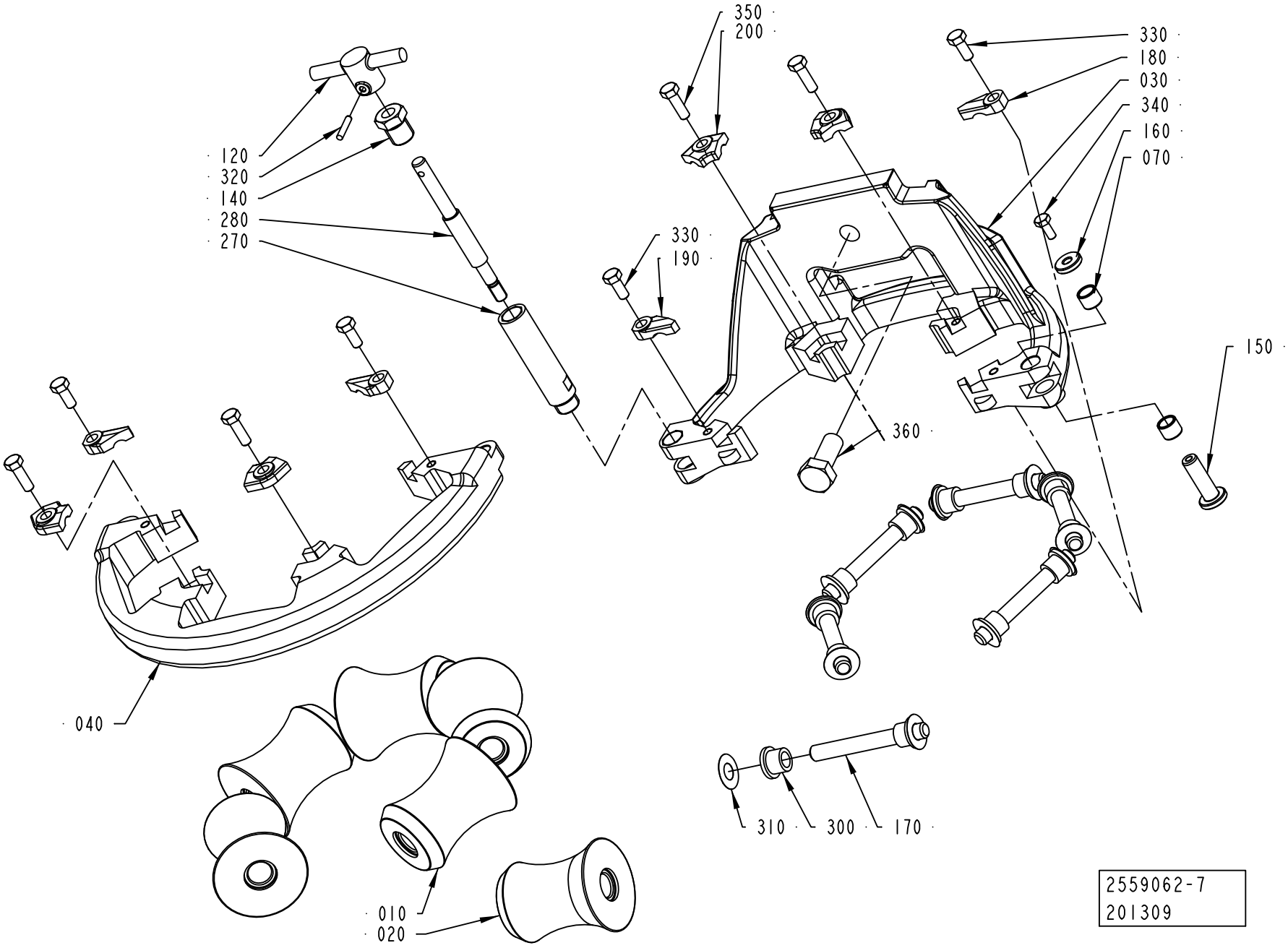

ECM: 387755 - 20090402
Group number: 2559062-0200
Assembly Drawing: 2559062-7_1_AA

This list covers pages from 1-30 to 1-39

Pos	Part No	UN	Qty	Description	Page No
SEE PREVIOUS LISTS PAGES: 1-31, 1-33.					

Pos	Part No	UN	Qty	Description	Page No

LOWER FORMING RING

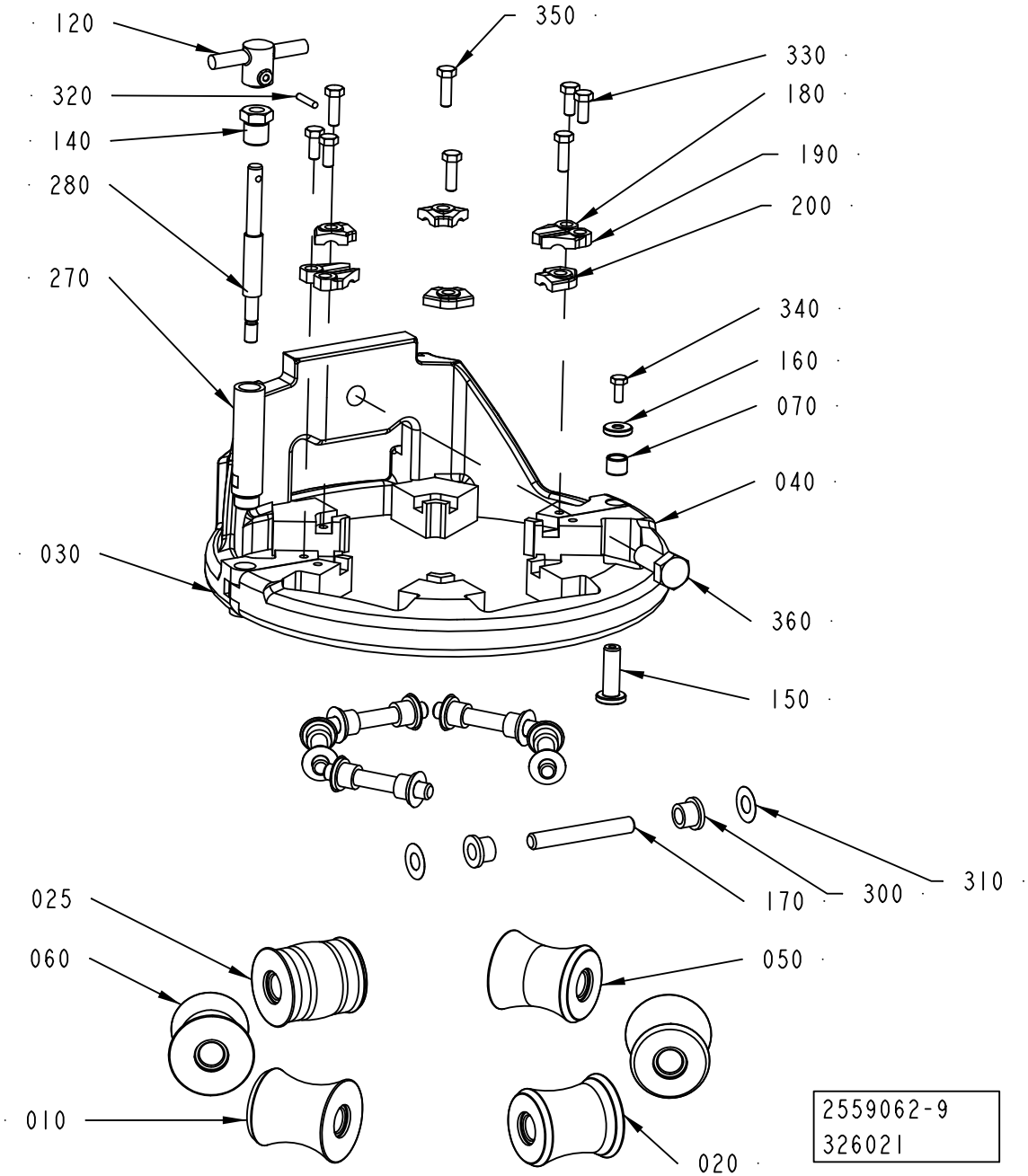

ECM: 387755 - 20090402
Group number: 2559062-0200
Assembly Drawing: 2559062-9_1_AA

This list covers pages from 1-30 to 1-39

Pos	Part No	UN	Qty	Description	Page No
SEE PREVIOUS LISTS PAGES: 1-31, 1-33.					

Pos	Part No	UN	Qty	Description	Page No

UPPER FORMING RING

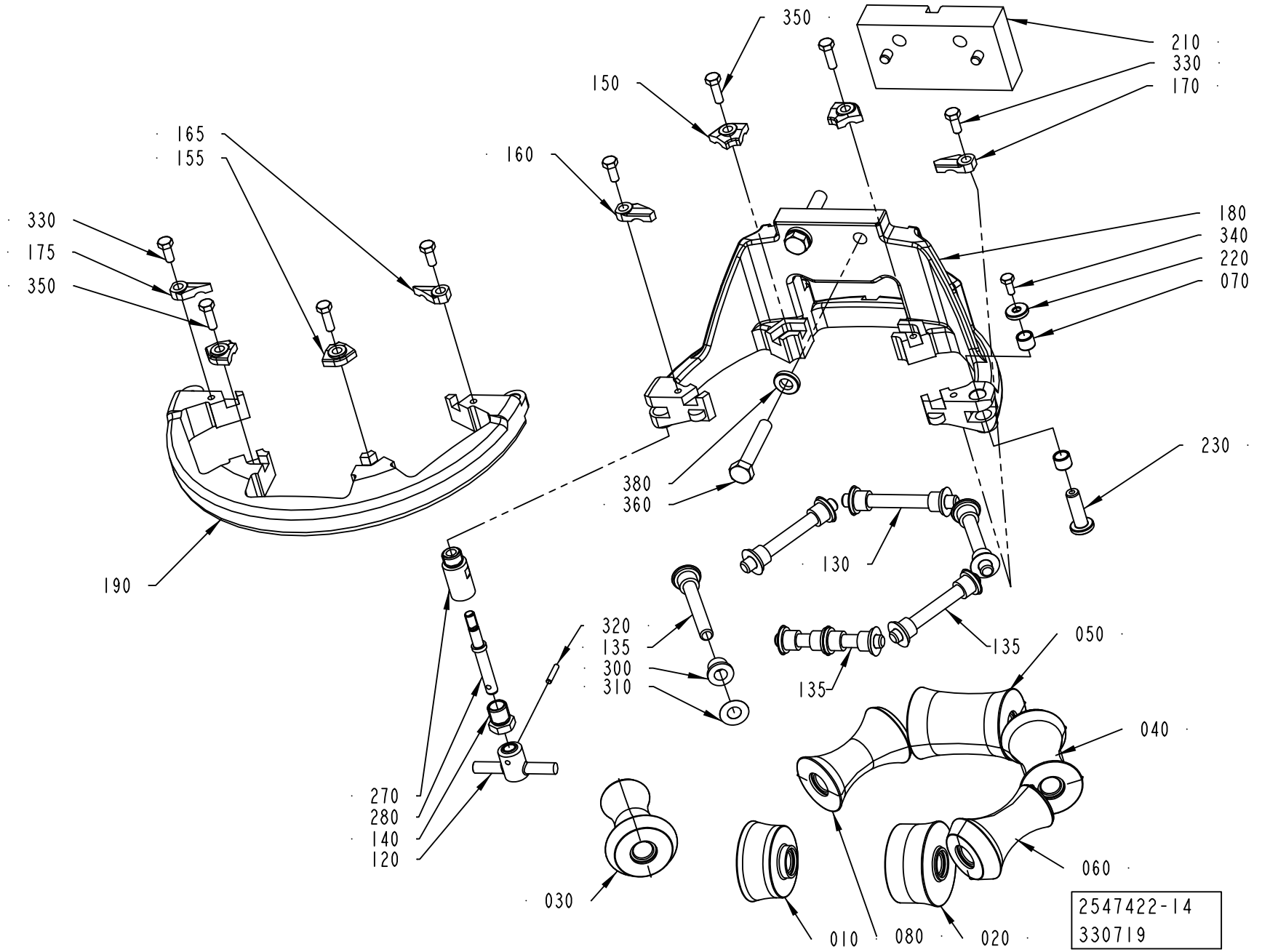

ECM: 375730 - 20090101
Group number: 2547422-0200
Assembly Drawing: 2547422-14_1_AA

This list covers pages from 1-40 to 1-57

Pos	Part No	UN	Qty	Description	Page No
A3/FLEX TBA 0500B, A3/FLEX TBA 1000B (See drawing on page: 1-40)					
010	2895460-0000		1	ROLLER	
020	2895463-0000		1	ROLLER	
030	2895459-0000		1	ROLLER	
040	2895461-0000		1	ROLLER	
050	2895457-0000		1	ROLLER	
060	2895462-0000		1	ROLLER	
080	2895458-0000		1	ROLLER	
130	752186-0015		3	SHAFT	
135	752186-0007		3	SHAFT	
150	2528123-0004		2	LOCK PLATE	
155	2528123-0008		2	LOCK PLATE	
160	2528118-0005		1	LOCK PLATE	
165	2528118-0001		1	LOCK PLATE	
170	2528119-0005		1	LOCK PLATE	
175	2528119-0001		1	LOCK PLATE	
180	2764022-0000		1	UPPER FORMING RING	
190	2736677-0000		1	UPPER FORMING RING	
210	2696412-0000		1	SPACER	
300	90240-0172		14	FLANGE BUSHING, 8X12X10 MM	
360	312109-0460		2	SCREW M6S ISO 4017 M8X45 A480	
380	315115-0165		2	WASHER PLAIN, TBRB 8,4/16 H=3	
TBA 0200B, TBA 0250B, TBA 0330S (See drawing on page: 1-42)					
010	2641285-0000		1	ROLLER	
020	2641286-0000		1	ROLLER	
030	2641287-0000		1	ROLLER	
040	2641288-0000		2	ROLLER	
050	2641289-0000		1	ROLLER	
060	2641290-0000		1	ROLLER	
130	2522213-0015		6	SHAFT	
150	2528123-0003		4	LOCK PLATE	
160	2528118-0003		2	LOCK PLATE	
170	2528119-0003		2	LOCK PLATE	
180	2764020-0000		1	UPPER FORMING RING	
190	2736636-0000		1	UPPER FORMING RING	
210	2634987-0000		1	SPACER	
300	90240-0172		10	FLANGE BUSHING, 8X12X10 MM	
360	312105-0451		2	SCREW M6S ISO 4017 M8X20 A480	
370	752156-0000		4	FLANGE BUSHING	
400	312115-0451		2	SCREW ISO4762 M8X20 A4 80	
TBA 0200M, TBA 0250S (See drawing on page: 1-42)					
010	2634988-0000		1	ROLLER	
020	2634989-0000		1	ROLLER	
030	2611012-0000		1	ROLLER	
040	2601334-0000		2	ROLLER	
050	2601333-0000		1	ROLLER	
060	2634990-0000		1	ROLLER	
130	2522213-0004		6	SHAFT	
150	2528123-0001		4	LOCK PLATE	
160	2528118-0002		2	LOCK PLATE	
170	2528119-0002		2	LOCK PLATE	
180	2764016-0000		1	UPPER FORMING RING	
190	2736635-0000		1	UPPER FORMING RING	
210	2634987-0000		1	SPACER	
300	90240-0172		10	FLANGE BUSHING, 8X12X10 MM	
360	312105-0451		2	SCREW M6S ISO 4017 M8X20 A480	
370	752156-0000		4	FLANGE BUSHING	
400	312115-0451		2	SCREW ISO4762 M8X20 A4 80	
TBA 0200S, TPA 0250SQ, TPA 0200SQ (See drawing on page: 1-42)					
010	2634984-0000		1	ROLLER	
020	2634985-0000		1	ROLLER	
030	2634949-0000		1	ROLLER	
040	2634948-0000		2	ROLLER	
050	2634947-0000		1	ROLLER	
060	2634983-0000		1	ROLLER	
130	2522213-0004		6	SHAFT	
150	2528123-0001		4	LOCK PLATE	
160	2528118-0002		2	LOCK PLATE	
170	2528119-0002		2	LOCK PLATE	
180	2764018-0000		1	UPPER FORMING RING	
190	2736634-0000		1	UPPER FORMING RING	
210	2634987-0000		1	SPACER	
300	90240-0172		10	FLANGE BUSHING, 8X12X10 MM	
360	312105-0451		2	SCREW M6S ISO 4017 M8X20 A480	
370	752156-0000		4	FLANGE BUSHING	
400	312115-0451		2	SCREW ISO4762 M8X20 A4 80	
TBA 0200SQ, TBA 0250SQ (See drawing on page: 1-42)					
010	2759322-0000		1	ROLLER	
020	2759323-0000		1	ROLLER	
030	2641287-0000		1	ROLLER	
040	2641288-0000		2	ROLLER	
050	2641289-0000		1	ROLLER	
060	2641290-0000		1	ROLLER	
130	2522213-0015		6	SHAFT	

Machine Type | Group Description | Used-In | Group Number | Page No

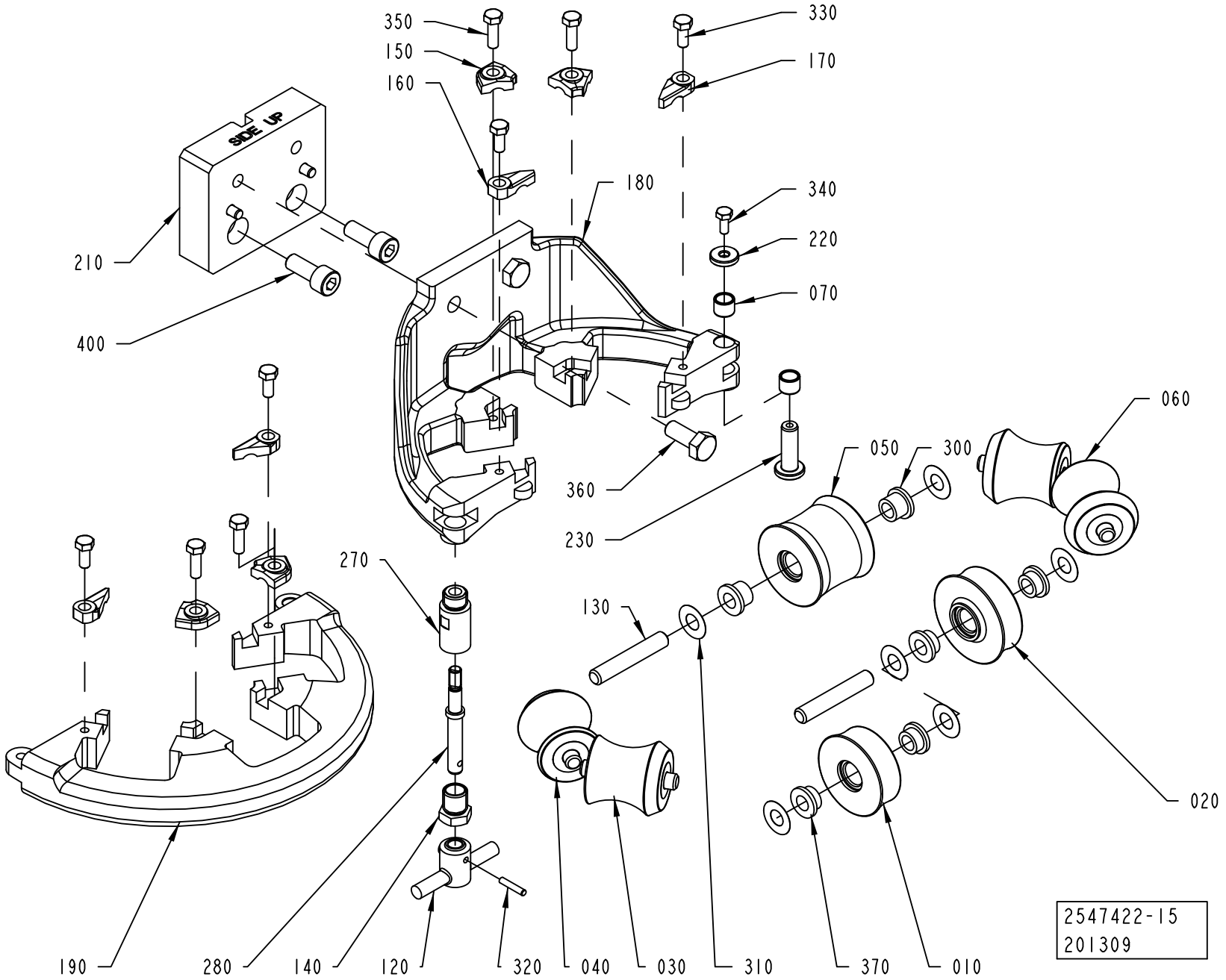
350
150
160
330
170
180
340
220
070
210
400
SIDE UP
360
230
270
060
050
300
130
020
190
280
140
120
320
040
030
310
370
010
2547422-15
201309

Pos	Part No	UN	Qty	Description	Page No
TBA 0200SQ, TBA 0250SQ (Cont'd) (See drawing on page: 1-42)					
150	2528123-0003		4	LOCK PLATE	
160	2528118-0003		2	LOCK PLATE	
170	2528119-0003		2	LOCK PLATE	
180	2764020-0000		1	UPPER FORMING RING	
190	2736636-0000		1	UPPER FORMING RING	
210	2634987-0000		1	SPACER	
300	90240-0172		10	FLANGE BUSHING, 8X12X10 MM	
360	312105-0451		2	SCREW M6S ISO 4017 M8X20 A480	
370	752156-0000		4	FLANGE BUSHING	
400	312115-0451		2	SCREW ISO4762 M8X20 A4 80	
TBA 0500S (See drawing on page: 1-54)					
010	2611020-0000		1	ROLLER	
020	2720717-0000		1	ROLLER	
030	2672980-0000		1	ROLLER	
040	2672979-0000		2	ROLLER	
050	2672978-0000		1	ROLLER	
060	2672981-0000		1	ROLLER	
130	2522213-0007		6	SHAFT	
150	2528123-0005		4	LOCK PLATE	
160	2528118-0005		2	LOCK PLATE	
170	2528119-0005		2	LOCK PLATE	
180	2764021-0000		1	UPPER FORMING RING	
190	2736631-0000		1	UPPER FORMING RING	
210	2532914-0000		1	SPACER	
300	90240-0172		14	FLANGE BUSHING, 8X12X10 MM	
360	312109-0459		2	SCREW M6S ISO 4017 M8X40 A480	
TBA 0500SQ, TBA 1000SQ (See drawing on page: 1-50)					
010	2532965-0000		1	ROLLER	
020	1548541-0000		1	ROLLER	
030	1548531-0000		4	ROLLER	
060	1548540-0000		1	ROLLER	
130	752186-0007		6	SHAFT	
150	2528123-0004		4	LOCK PLATE	
160	2528118-0004		2	LOCK PLATE	
170	2528119-0004		2	LOCK PLATE	
180	2764013-0000		1	UPPER FORMING RING	
190	2736697-0000		1	UPPER FORMING RING	
210	2532914-0000		1	SPACER	
300	90240-0172		14	FLANGE BUSHING, 8X12X10 MM	
360	312109-0459		2	SCREW M6S ISO 4017 M8X40 A480	
TBA 1000S (See drawing on page: 1-52)					
010	2512737-0000		1	ROLLER	
020	2512738-0000		1	ROLLER	
030	2512740-0000		1	ROLLER	
040	2512741-0000		2	ROLLER	
050	2512742-0000		2	ROLLER	
130	752186-0007		6	SHAFT	
150	2528123-0001		4	LOCK PLATE	
160	2528118-0001		2	LOCK PLATE	
170	2528119-0001		2	LOCK PLATE	
180	2764014-0000		1	UPPER FORMING RING	
190	2736676-0000		1	UPPER FORMING RING	
210	2532914-0000		1	SPACER	
300	90240-0172		14	FLANGE BUSHING, 8X12X10 MM	
360	312109-0459		2	SCREW M6S ISO 4017 M8X40 A480	
TBA 1500S (See drawing on page: 1-56)					
010	2751479-0000		1	ROLLER	
020	2751478-0000		1	ROLLER	
030	2751483-0000		1	ROLLER	
040	2751481-0000		2	ROLLER	
050	2751480-0000		1	ROLLER	
060	2751482-0000		1	ROLLER	
130	752186-0015		3	SHAFT	
135	752186-0007		3	SHAFT	
150	2528123-0004		2	LOCK PLATE	
155	2528123-0008		2	LOCK PLATE	
160	2528118-0005		1	LOCK PLATE	
165	2528118-0001		1	LOCK PLATE	
170	2528119-0005		1	LOCK PLATE	
175	2528119-0001		1	LOCK PLATE	
180	2764022-0000		1	UPPER FORMING RING	
190	2736677-0000		1	UPPER FORMING RING	
210	2696412-0000		1	SPACER	
300	90240-0172		14	FLANGE BUSHING, 8X12X10 MM	
360	312109-0460		2	SCREW M6S ISO 4017 M8X45 A480	
380	315115-0165		2	WASHER PLAIN, TBRB 8,4/16 H=3	
TBA 1890S, TBA 2000S, TBA 1400B (See drawing on page: 1-48)					
010	2634958-0000		1	ROLLER	
020	2634957-0000		1	ROLLER	
030	2634956-0000		1	ROLLER	
040	2634954-0000		2	ROLLER	
050	2634953-0000		1	ROLLER	
060	2634955-0000		1	ROLLER	

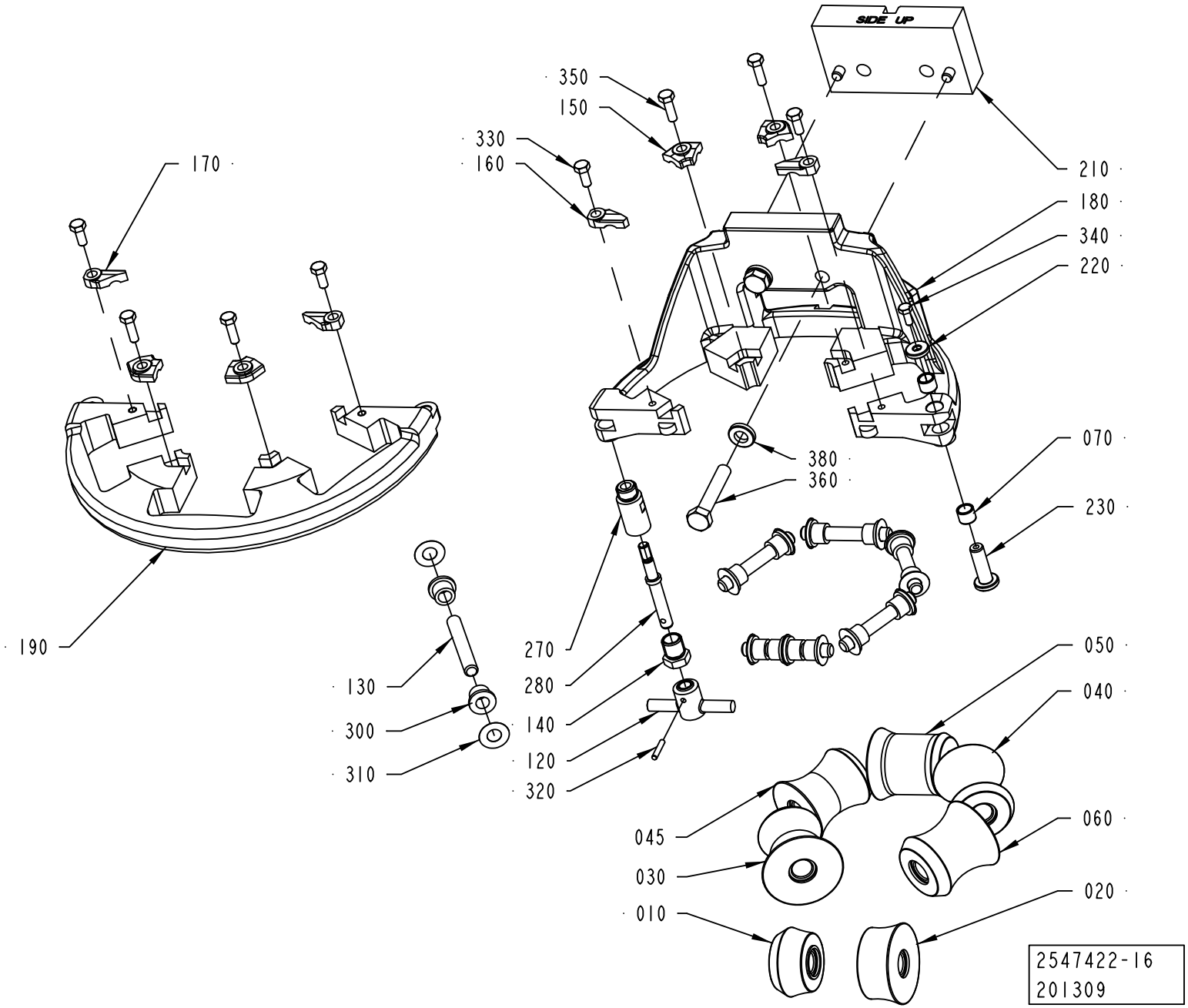
SIDE UP
350
150
330
160
170
210
180
340
220
380
360
070
230
190
270
280
140
120
320
130
300
310
050
040
045
030
010
060
020
2547422-16
201309

ECM: 375730 - 20090101
Group number: 2547422-0200
Assembly Drawing: 2547422-16_1_AA

This list covers pages from 1-40 to 1-57

Pos	Part No	UN	Qty	Description	Page No
TBA 1890S, TBA 2000S, TBA 1400B (Cont'd) (See drawing on page: 1-48)					
130	752186-0015		6	SHAFT	
150	2528123-0002		4	LOCK PLATE	
160	2528118-0003		2	LOCK PLATE	
170	2528119-0003		2	LOCK PLATE	
180	2764019-0000		1	UPPER FORMING RING	
190	2736633-0000		1	UPPER FORMING RING	
210	2946883-0000		1	SPACER	
300	90240-0172		14	FLANGE BUSHING, 8X12X10 MM	
360	312109-0459		2	SCREW M6S ISO 4017 M8X40 A480	
380	315105-0165		2	WASHER BRB 8,4X16 RFR	
TGA 1000SQ, TGA 0750SQ, TGA 0500SQ (See drawing on page: 1-46)					
010	2611067-0000		1	ROLLER	
020	2611068-0000		1	ROLLER	
040	2611065-0001		2	ROLLER	
050	2611064-0001		1	ROLLER	
060	2611066-0000		2	ROLLER	
130	2522213-0007		6	SHAFT	
150	2528123-0005		4	LOCK PLATE	
160	2528118-0005		2	LOCK PLATE	
170	2528119-0005		2	LOCK PLATE	
180	2793351-0000		1	UPPER FORMING RING	
190	2736631-0000		1	UPPER FORMING RING	
210	2532914-0000		1	SPACER	
300	90240-0172		14	FLANGE BUSHING, 8X12X10 MM	
360	312109-0459		2	SCREW M6S ISO 4017 M8X40 A480	
TPA 0330SQ (See drawing on page: 1-42)					
010	2672950-0000		1	ROLLER	
020	2672951-0000		1	ROLLER	
030	2672955-0000		1	ROLLER	
040	2672953-0000		2	ROLLER	
050	2672954-0000		1	ROLLER	
060	2672952-0000		1	ROLLER	
130	2522213-0015		6	SHAFT	
150	2528123-0003		4	LOCK PLATE	
160	2528118-0003		2	LOCK PLATE	
170	2528119-0003		2	LOCK PLATE	
180	2764020-0000		1	UPPER FORMING RING	
190	2736636-0000		1	UPPER FORMING RING	
210	2689172-0000		1	SPACER	
300	90240-0172		10	FLANGE BUSHING, 8X12X10 MM	
360	312105-0451		2	SCREW M6S ISO 4017 M8X20 A480	
370	752156-0000		4	FLANGE BUSHING	
400	312115-0451		2	SCREW ISO4762 M8X20 A4 80	
TPA 0500SQ (See drawing on page: 1-44)					
010	2680198-0000		1	ROLLER	
020	2680201-0000		1	ROLLER	
030	2680197-0000		1	ROLLER	
040	2611016-0000		1	ROLLER	
045	2680196-0000		1	ROLLER	
050	2680195-0000		1	ROLLER	
060	2611017-0000		1	ROLLER	
130	752186-0006		6	SHAFT	
150	2528123-0003		4	LOCK PLATE	
160	2528118-0004		2	LOCK PLATE	
170	2528119-0004		2	LOCK PLATE	
180	2764017-0000		1	UPPER FORMING RING	
190	2736632-0000		1	UPPER FORMING RING	
210	2611024-0000		1	SPACER	
300	90240-0172		14	FLANGE BUSHING, 8X12X10 MM	
360	312109-0460		2	SCREW M6S ISO 4017 M8X45 A480	
380	315115-0165		2	WASHER PLAIN, TBRB 8,4/16 H=3	
TPA 1000SQ, TPA 0750SQ (See drawing on page: 1-46)					
010	2851583-0000		1	ROLLER	
020	2851586-0000		1	ROLLER	
030	1524151-0000		2	ROLLER	
040	2833088-0000		2	ROLLER	
050	2833212-0000		1	ROLLER	
130	2522213-0007		6	SHAFT	
150	2528123-0005		4	LOCK PLATE	
160	2528118-0005		2	LOCK PLATE	
170	2528119-0005		2	LOCK PLATE	
180	2764015-0000		1	UPPER FORMING RING	
190	2736631-0000		1	UPPER FORMING RING	
210	2696411-0000		1	SPACER	
300	90240-0172		14	FLANGE BUSHING, 8X12X10 MM	
360	312109-0459		2	SCREW M6S ISO 4017 M8X40 A480	
Common Parts					
070	2526826-0000		2	BUSHING	
120	2764036-0000		1	KNOB	
140	2731428-0000		1	NUT	
220	2526825-0000		1	WASHER	
230	2526827-0000		1	SHAFT	
270	2764034-0000		1	SHAFT	

Machine Type | Group Description | Used-In | Group Number | Page No

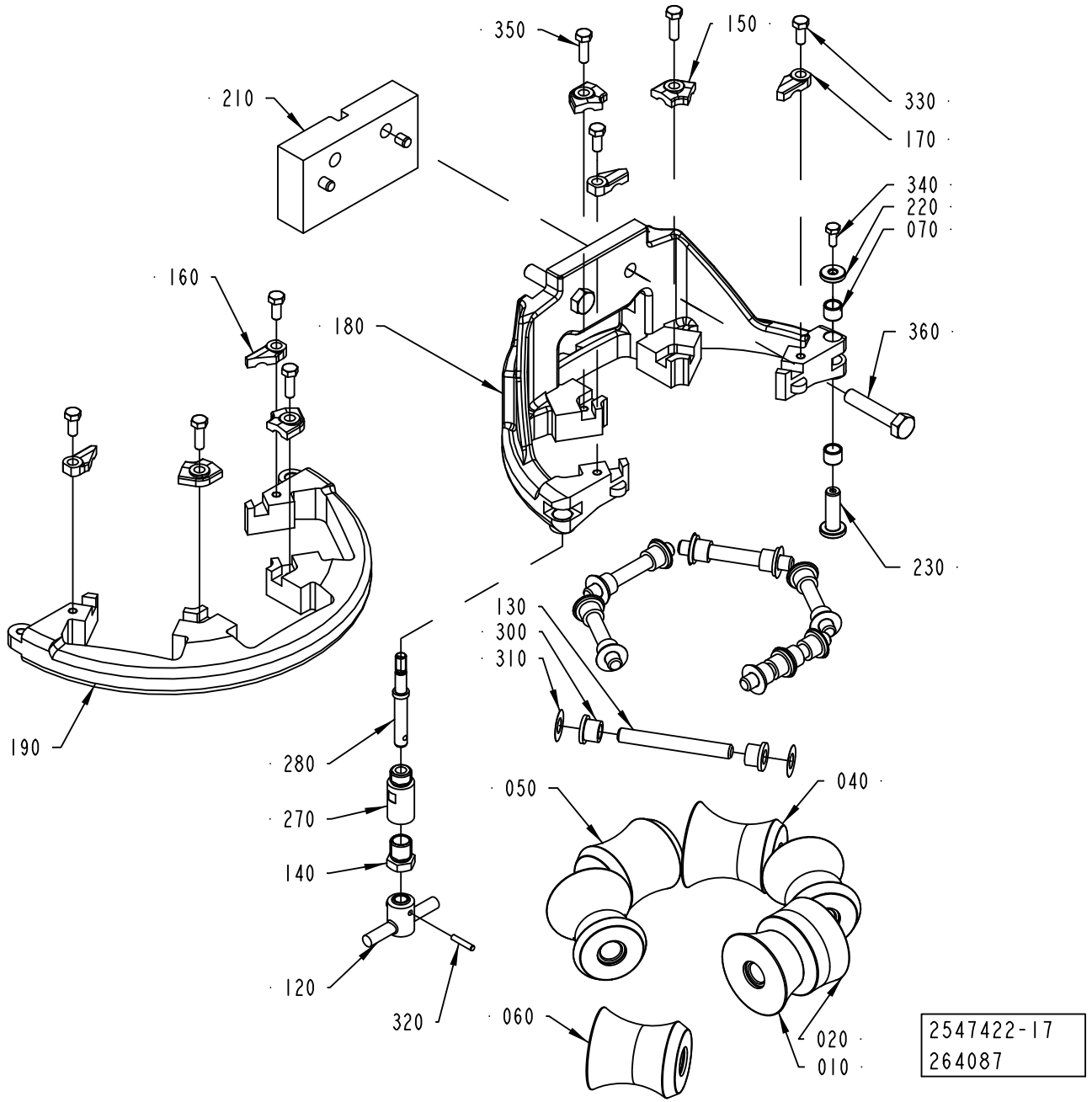
350
150
210
330
170
340
220
070
160
180
360
230
130
300
310
190
280
270
140
120
320
050
040
060
020
010
2547422-17
264087

Pos	Part No	UN	Qty	Description	Page No
Common Parts (Cont'd)					
280	2764035-0000		1	SHAFT	
310	2033-0011		14	WASHER	
320	311103-0236		1	PARALLEL PIN ISO 2338 3M6X16 A1	
330	312105-0327		4	SCREW M6S ISO 4017 M5X12 A480	
340	312105-0289		1	SCREW M6S H4X10 A4 70 ISO4017/DIN933	
350	312105-0329		4	SCREW M6S ISO 4017 M5X16 A480	

Pos	Part No	UN	Qty	Description	Page No

UPPER FORMING RING

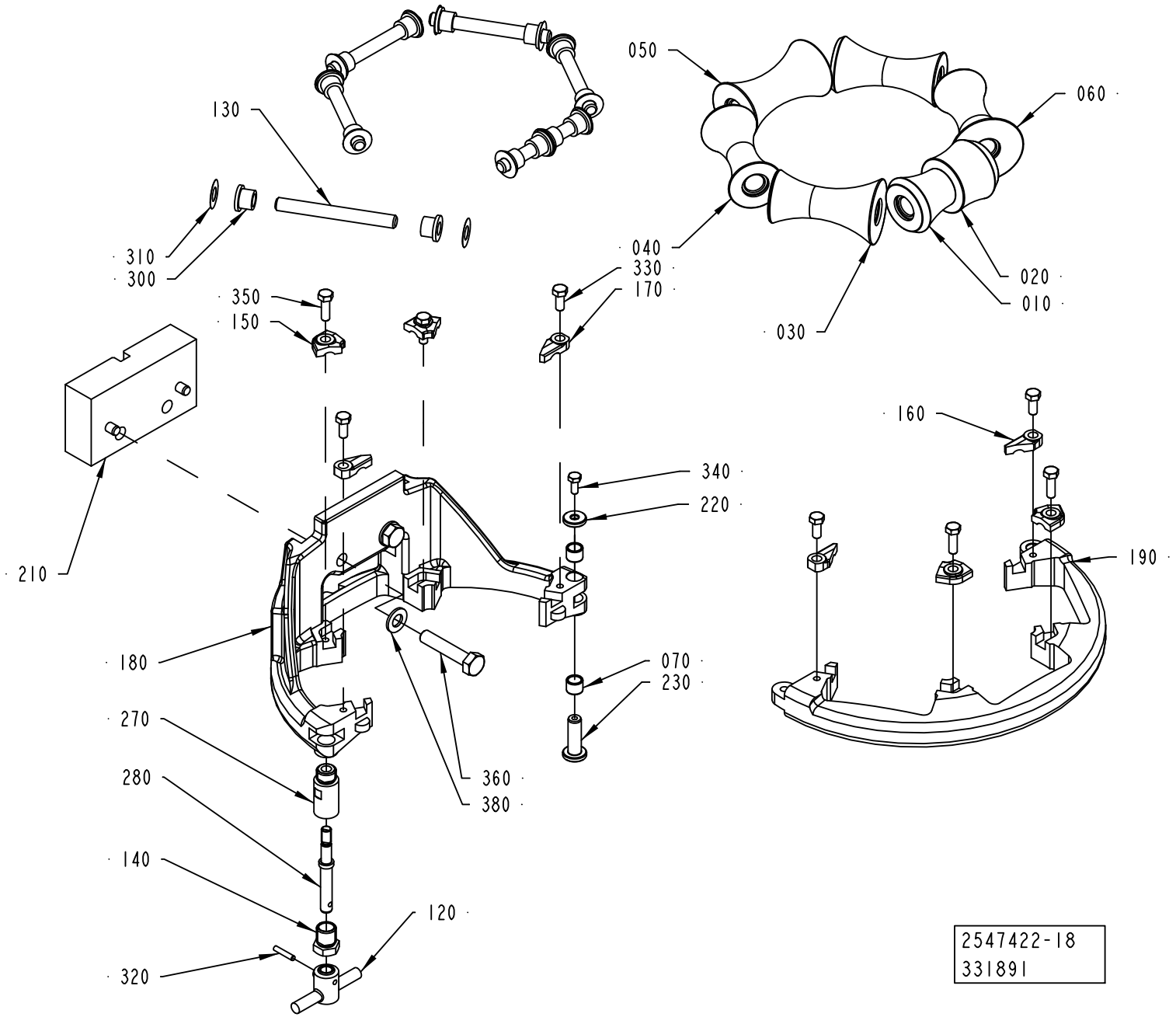

ECM: 375730 - 20090101
Group number: 2547422-0200
Assembly Drawing: 2547422-18_1_AB

This list covers pages from 1-40 to 1-57

Pos	Part No	UN	Qty	Description	Page No
SEE PREVIOUS LISTS PAGES: 1-41, 1-43, 1-45, 1-47.					

Pos	Part No	UN	Qty	Description	Page No

UPPER FORMING RING

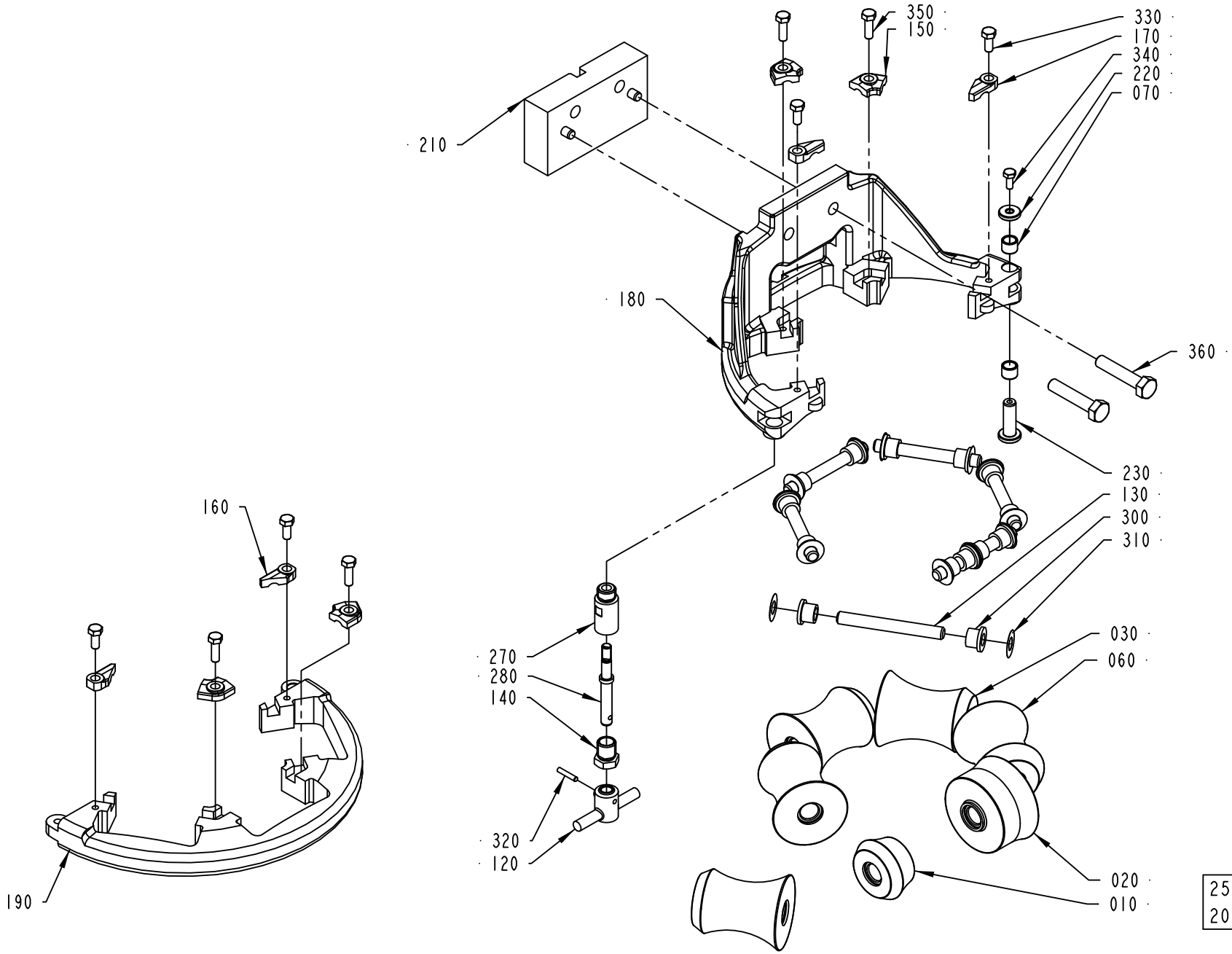

ECM: 375730 - 20090101
Group number: 2547422-0200
Assembly Drawing: 2547422-19_1_AA

This list covers pages from 1-40 to 1-57

Pos	Part No	UN	Qty	Description	Page No
SEE PREVIOUS LISTS PAGES: 1-41, 1-43, 1-45, 1-47.					

Pos	Part No	UN	Qty	Description	Page No

UPPER FORMING RING

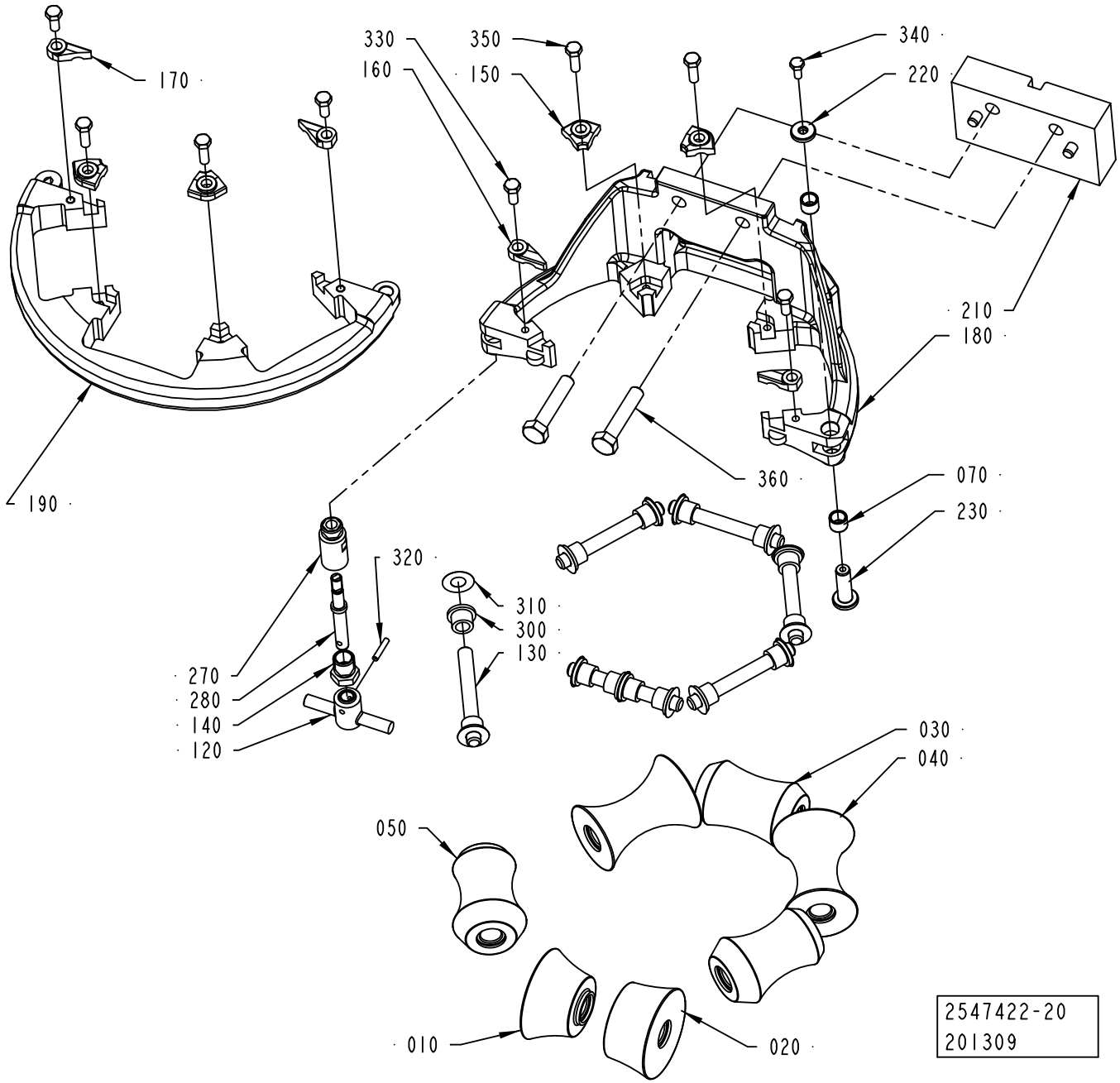

ECM: 375730 - 20090101
Group number: 2547422-0200
Assembly Drawing: 2547422-20_1_AA

This list covers pages from 1-40 to 1-57

Pos	Part No	UN	Qty	Description	Page No
SEE PREVIOUS LISTS PAGES: 1-41, 1-43, 1-45, 1-47.					

Pos	Part No	UN	Qty	Description	Page No

UPPER FORMING RING

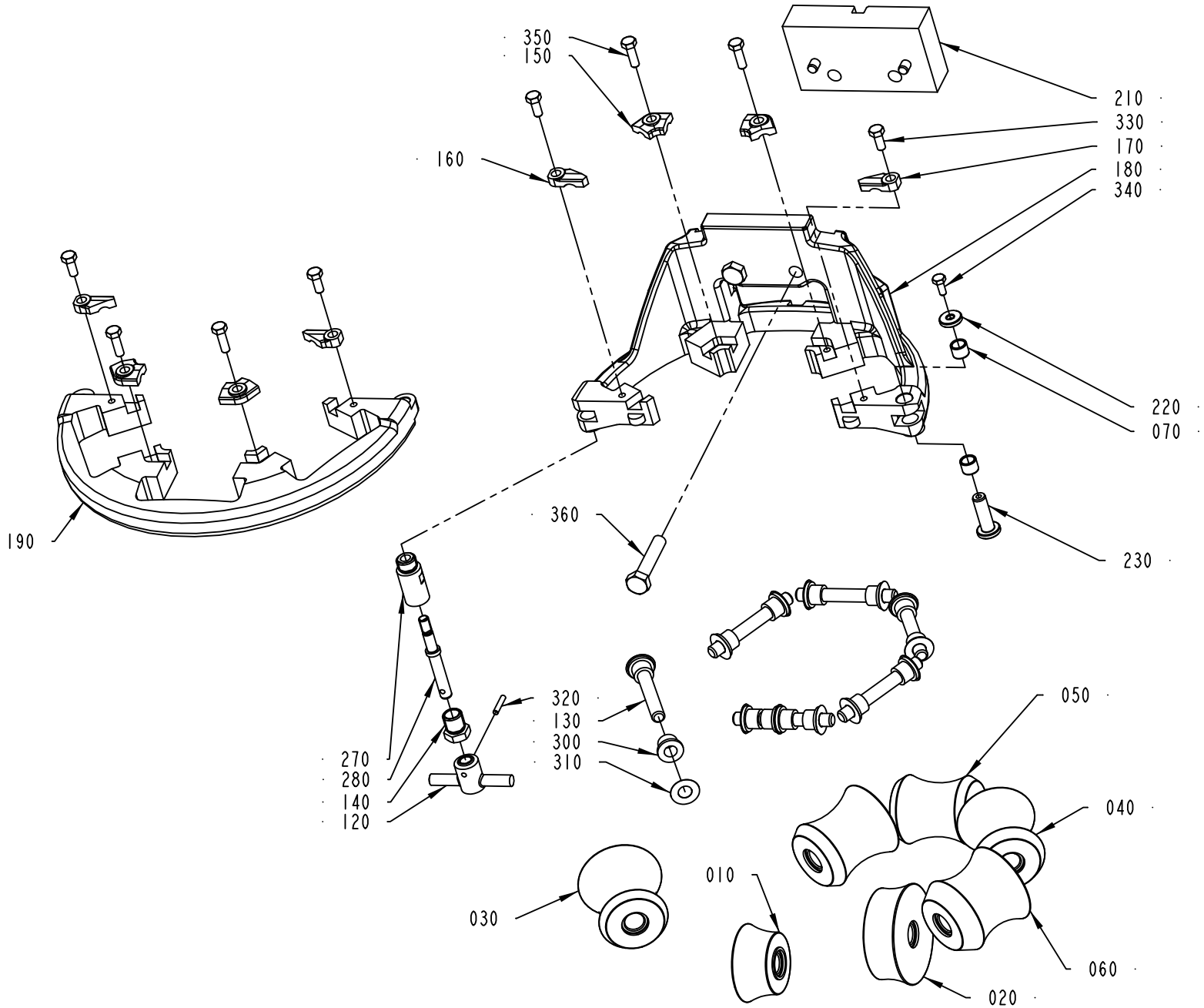

Pos	Part No	UN	Qty	Description	Page No
SEE PREVIOUS LISTS PAGES: 1-41, 1-43, 1-45, 1-47.					

Pos	Part No	UN	Qty	Description	Page No

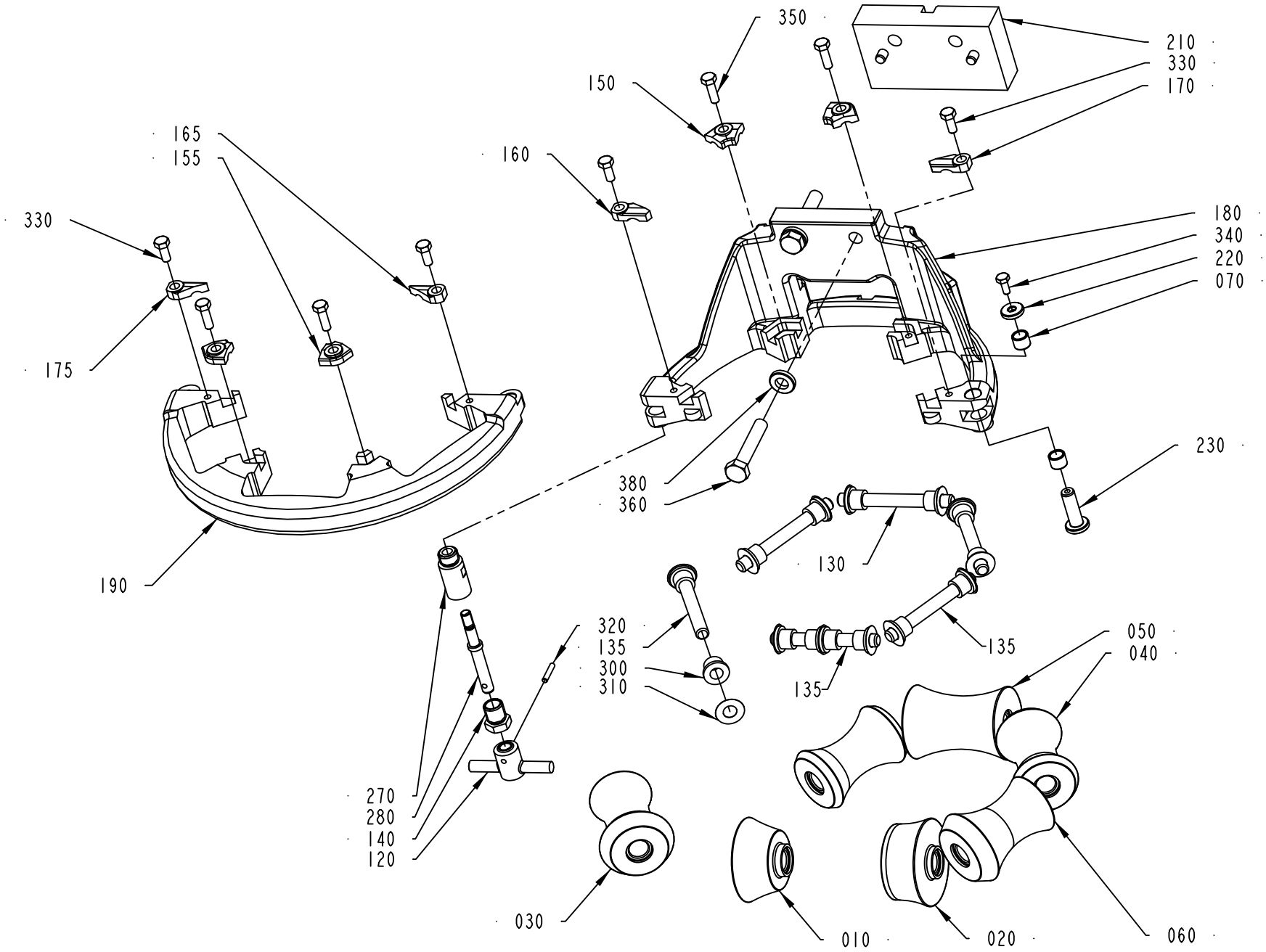

2547422-22
201309

ECM: 375730 - 20090101
Group number: 2547422-0200
Assembly Drawing: 2547422-22_1_AA

This list covers pages from 1-40 to 1-57

Pos	Part No	UN	Qty	Description	Page No
SEE PREVIOUS LISTS PAGES: 1-41, 1-43, 1-45, 1-47.					

Pos	Part No	UN	Qty	Description	Page No

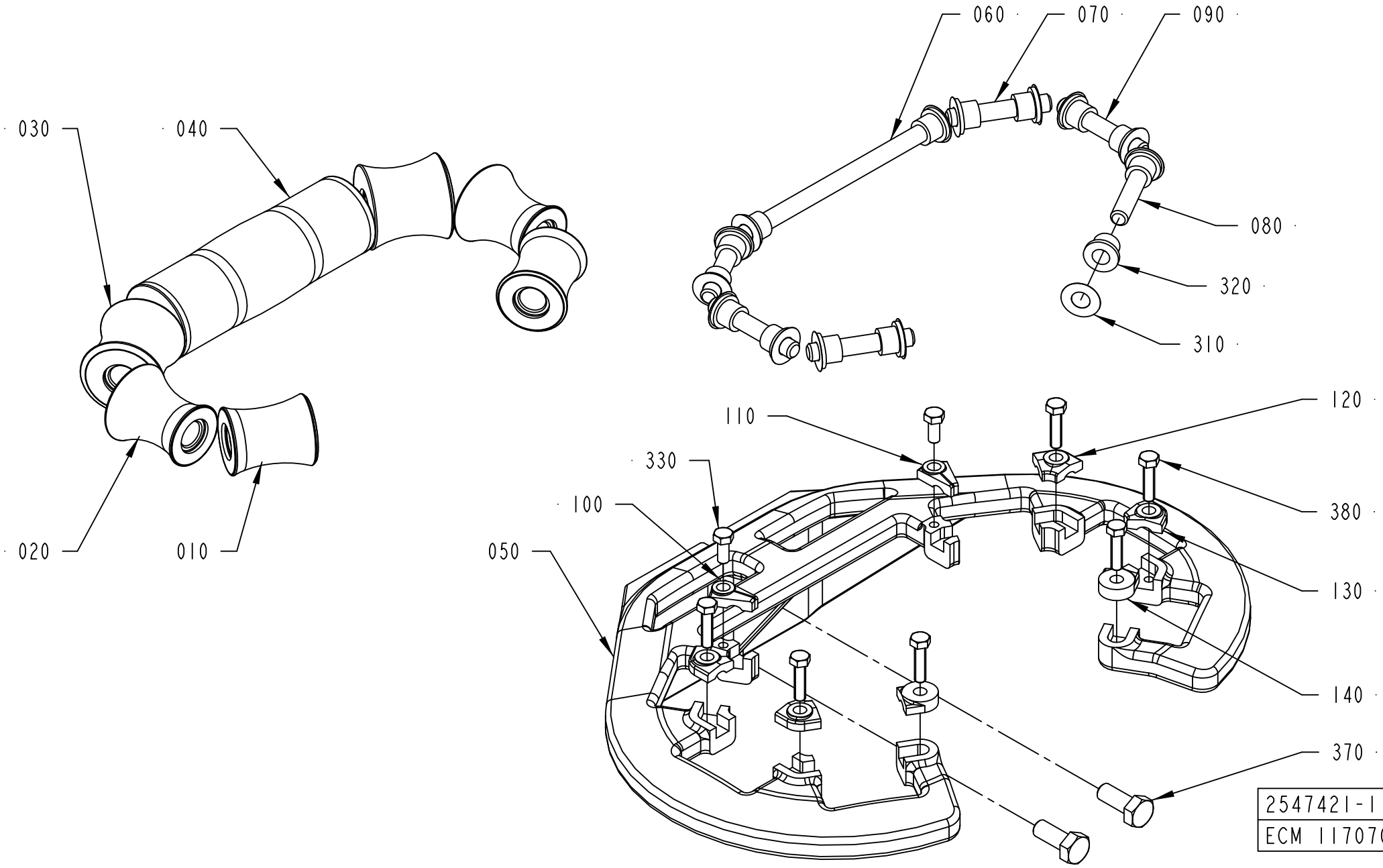
060
070
090
080
320
310
030
040
020
010
120
110
330
380
100
130
050
140
370
2547421-1
ECM 117070

ECM: 350583 - 20080703
Group number: 2547421-0100
Assembly Drawing: 2547421-1_1_AA

This list covers pages from 1-58 to 1-65

Pos	Part No	UN	Qty	Description	Page No
TBA 0500S (See drawing on page: 1-58)					
010	2672986-0000		2	ROLLER	
020	2672985-0000		2	ROLLER	
030	2672970-0000		2	ROLLER	
040	2709302-0000		1	ROLLER	
050	2611038-0000		1	SUPPORT RING	
060	752186-0009		1	SHAFT	
070	752186-0012		2	SHAFT	
080	752186-0012		2	SHAFT	
090	752186-0002		2	SHAFT	
120	2562667-0008		6	LOCK PLATE	
140	2532895-0001		2	LOCK PLATE	
310	2033-0011		14	WASHER	
320	90240-0172		14	FLANGE BUSHING, 8X12X10 MM	
370	312105-0451		2	SCREW M6S ISO 4017 M8X20 A480	
380	312105-0331		8	SCREW M6S ISO 4017 M5X20 A480	
TBA 1890S, TBA 2000S, TBA 1400B (See drawing on page: 1-62)					
010	2601286-0000		2	ROLLER	
020	2601285-0000		2	ROLLER	
030	2601279-0000		2	ROLLER	
040	2601278-0000		1	ROLLER	
050	2634926-0000		1	SUPPORT ROLLER	
060	2522213-0019		1	SHAFT	
070	752186-0006		2	SHAFT	
080	2522213-0020		2	SHAFT	
090	752186-0019		2	SHAFT	
120	2562667-0008		4	LOCK PLATE	
130	2528123-0007		2	LOCK PLATE	
140	2532895-0002		2	LOCK PLATE	
310	2033-0011		14	WASHER	
320	90240-0172		14	FLANGE BUSHING, 8X12X10 MM	
350	315105-0165		2	WASHER BRB 8,4X16 RFR	
370	312105-0452		2	SCREW M6S ISO 4017 M8X22 A480	
380	312105-0329		8	SCREW M6S ISO 4017 M5X16 A480	
TGA 1000SQ, TGA 0750SQ, TGA 0500SQ (See drawing on page: 1-58)					
010	2725532-0000		2	ROLLER	
020	2725531-0000		2	ROLLER	
030	2725530-0000		2	ROLLER	
040	2731442-0000		1	ROLLER	
050	2731446-0000		1	SUPPORT ROLLER	
060	2522213-0008		1	SHAFT	
070	752186-0012		2	SHAFT	
090	752186-0004		4	SHAFT	
120	2562667-0008		6	LOCK PLATE	
140	2532895-0001		2	LOCK PLATE	
310	2033-0011		14	WASHER	
320	90240-0172		14	FLANGE BUSHING, 8X12X10 MM	
370	312105-0453		2	SCREW M6S ISO 4017 M8X25 A480	
380	312105-0331		8	SCREW M6S ISO 4017 M5X20 A480	
TPA 0330SQ (See drawing on page: 1-58)					
010	2682169-0000		2	ROLLER	
020	2682168-0000		2	ROLLER	
030	2682167-0000		2	ROLLER	
040	2682170-0000		1	ROLLER	
050	2611038-0000		1	SUPPORT RING	
060	752186-0009		1	SHAFT	
070	752186-0012		2	SHAFT	
080	752186-0012		2	SHAFT	
090	752186-0002		2	SHAFT	
120	2562667-0008		6	LOCK PLATE	
140	2532895-0001		2	LOCK PLATE	
310	2033-0011		14	WASHER	
320	90240-0172		14	FLANGE BUSHING, 8X12X10 MM	
370	312105-0453		2	SCREW M6S ISO 4017 M8X25 A480	
380	312105-0331		8	SCREW M6S ISO 4017 M5X20 A480	
TPA 0500SQ (See drawing on page: 1-58)					
010	2680193-0000		2	ROLLER	
020	2685633-0000		2	ROLLER	
030	2685632-0000		2	ROLLER	
040	2685631-0000		1	ROLLER	
050	2611038-0000		1	SUPPORT RING	
060	752186-0009		1	SHAFT	
070	752186-0012		2	SHAFT	
080	752186-0012		2	SHAFT	
090	752186-0002		2	SHAFT	
120	2562667-0008		6	LOCK PLATE	
140	2532895-0001		2	LOCK PLATE	
310	2033-0011		14	WASHER	
320	90240-0172		14	FLANGE BUSHING, 8X12X10 MM	
370	312105-0453		2	SCREW M6S ISO 4017 M8X25 A480	
380	312105-0331		8	SCREW M6S ISO 4017 M5X20 A480	
TPA 1000SQ, TPA 0750SQ (See drawing on page: 1-64)					
010	2889461-0000		2	ROLLER	
020	2901229-0000		2	ROLLER	

Machine Type | Group Description | Used-In | Group Number | Page No

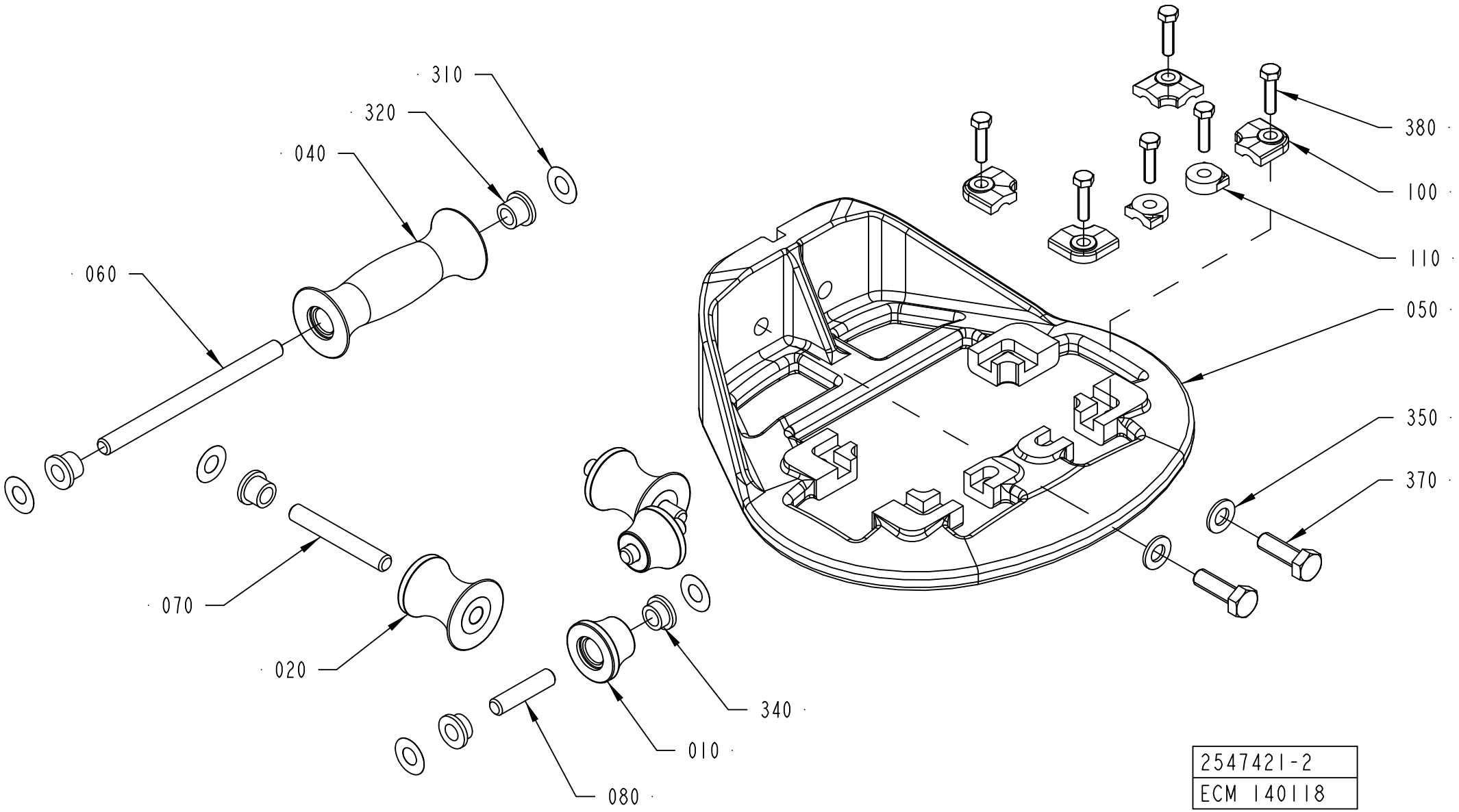
310
320
040
060
070
020
080
010
340
380
100
110
050
350
370
2547421-2
ECM 140118

Pos	Part No	UN	Qty	Description	Page No
TPA 1000SQ, TPA 0750SQ (Cont'd) (See drawing on page: 1-64)					
030	2901228-0000		2	ROLLER	
040	2901291-0000		1	ROLLER	
050	2907975-0000		1	BRACKET	
060	2889464-0000		1	SHAFT	
070	752186-0006		2	SHAFT	
080	752186-0001		2	SHAFT	
090	752186-0004		2	SHAFT	
120	2889463-0000		2	LOCK PLATE	
130	2889462-0000		6	PLATE	
160	2907974-0000		1	FRAME	
310	2033-0011		14	WASHER	
320	90240-0172		14	FLANGE BUSHING, 8X12X10 MM	
330	312105-0329		2	SCREW M6S ISO 4017 M5X16 A480	
370	312105-0449		2	SCREW M6S ISO 4017 M8X16 A480	
380	312105-0325		6	SCREW M6S ISO 4017 M5X10 A480	
400	312109-0374		4	SCREW M6S ISO 4017 M6X30 A480	
A3/FLEX TBA 1000S (See drawing on page: 1-58)					
010	2512748-0000		2	ROLLER	
020	2512749-0000		2	ROLLER	
030	2512746-0000		2	ROLLER	
040	2514521-0000		2	ROLLER	
050	2552161-0000		1	SUPPORT RING	
060	2522213-0005		1	SHAFT	
070	752186-0005		2	SHAFT	
080	2522213-0004		2	SHAFT	
090	752186-0019		2	SHAFT	
100	2552176-0003		1	LOCK PLATE	
110	2552177-0003		1	LOCK PLATE	
120	2528123-0007		2	LOCK PLATE	
130	2528123-0001		2	LOCK PLATE	
140	2532895-0003		2	LOCK PLATE	
310	2033-0011		16	WASHER	
320	90240-0172		16	FLANGE BUSHING, 8X12X10 MM	
330	312105-0327		2	SCREW M6S ISO 4017 M5X12 A480	
370	312105-0451		2	SCREW M6S ISO 4017 M8X20 A480	
380	312105-0331		6	SCREW M6S ISO 4017 M5X20 A480	
A3/FLEX TBA 1000SQ, A3/FLEX TBA 0500SQ (See drawing on page: 1-58)					
010	2634971-0000		2	ROLLER	
020	2634970-0000		2	ROLLER	
030	2634969-0000		2	ROLLER	
040	2634968-0000		1	ROLLER	
050	2634967-0000		1	SUPPORT RING	
060	2522213-0008		1	SHAFT	
070	752186-0012		2	SHAFT	
080	2522213-0009		4	SHAFT	
120	2562667-0009		6	LOCK PLATE	
140	2532895-0003		2	LOCK PLATE	
310	2033-0011		14	WASHER	
320	90240-0172		14	FLANGE BUSHING, 8X12X10 MM	
370	312105-0451		2	SCREW M6S ISO 4017 M8X20 A480	
380	312105-0331		8	SCREW M6S ISO 4017 M5X20 A480	
TBA 0200B, TBA 0250B, TBA 0330S (See drawing on page: 1-60)					
010	2544881-0000		2	ROLLER	
020	751492-0000		2	ROLL	
040	751491-0000		1	ROLL	
050	2565431-0000		1	SUPPORT RING	
060	2522213-0005		1	SHAFT	
070	2522213-0006		2	SHAFT	
080	2522213-0004		2	SHAFT	
100	2532912-0002		4	LOCK PLATE	
110	2532895-0003		2	LOCK PLATE	
310	2033-0011		10	WASHER	
320	90240-0172		10	FLANGE BUSHING, 8X12X10 MM	
350	315105-0165		2	WASHER BRB 8,4X16 RFR	
370	312105-0453		2	SCREW M6S ISO 4017 M8X25 A480	
380	312105-0331		6	SCREW M6S ISO 4017 M5X20 A480	
TBA 0200M, TBA 0250S (See drawing on page: 1-60)					
010	2611027-0000		2	ROLLER	
020	2611026-0000		2	ROLLER	
040	2611025-0000		1	ROLLER	
050	2611028-0000		1	SUPPORT ROLLER	
060	752186-0008		1	SHAFT	
070	2522213-0006		2	SHAFT	
080	752186-0013		2	SHAFT	
100	2532912-0002		4	LOCK PLATE	
110	2532895-0006		2	LOCK PLATE	
310	2033-0011		10	WASHER	
320	90240-0172		6	FLANGE BUSHING, 8X12X10 MM	
340	752156-0000		4	FLANGE BUSHING	
350	315105-0165		2	WASHER BRB 8,4X16 RFR	
370	312105-0453		2	SCREW M6S ISO 4017 M8X25 A480	
380	312105-0331		6	SCREW M6S ISO 4017 M5X20 A480	
TBA 0200S, TPA 0250SQ, TPA 0200SQ (See drawing on page: 1-60)					

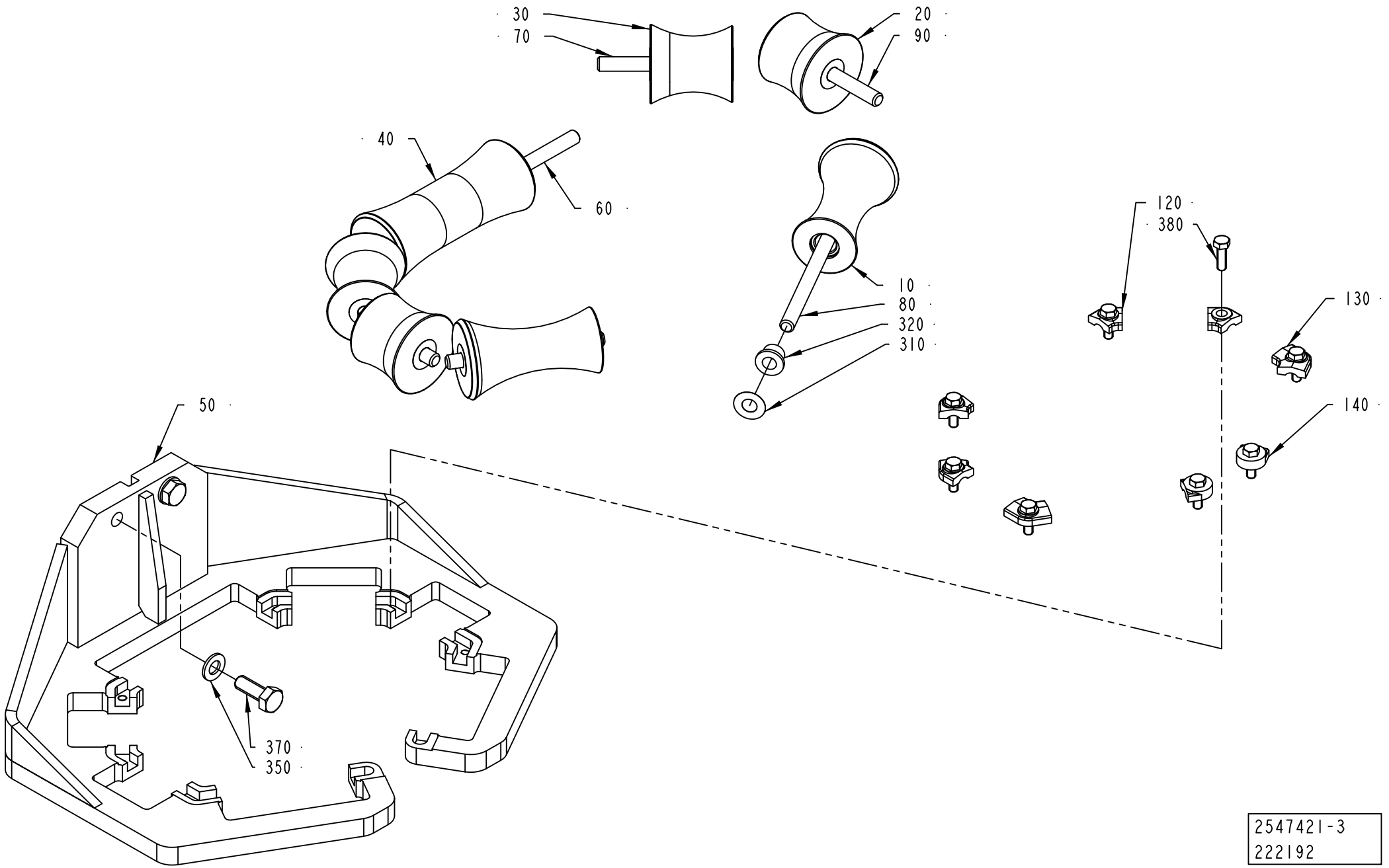

2547421-3
222192

ECM: 350583 - 20080703
Group number: 2547421-0100
Assembly Drawing: 2547421-3_1_AB

This list covers pages from 1-58 to 1-65

Pos	Part No	UN	Qty	Description	Page No
TBA 0200S, TPA 0250SQ, TPA 0200SQ (Cont'd) (See drawing on page: 1-60)					
010	752128-0000		2	FORMING ROLLER	
020	752127-0000		2	FORMING ROLLER	
040	752126-0000		1	FORMING ROLLER	
050	2565430-0000		1	SUPPORT RING	
060	752186-0008		1	SHAFT	
070	2522213-0006		2	SHAFT	
080	2522213-0010		2	SHAFT	
100	2532912-0001		4	LOCK PLATE	
110	2532895-0002		2	LOCK PLATE	
310	2033-0011		10	WASHER	
320	90240-0172		6	FLANGE BUSHING, 8X12X10 MM	
340	752156-0000		4	FLANGE BUSHING	
350	315105-0165		2	WASHER BRB 8,4X16 RFR	
370	312105-0453		2	SCREW M6S ISO 4017 M8X25 A480	
380	312105-0331		6	SCREW M6S ISO 4017 M5X20 A480	
TBA 0200SQ, TBA 0250SQ (See drawing on page: 1-62)					
010	2761021-0000		2	ROLLER	
020	2761020-0000		2	ROLLER	
030	2761019-0000		2	ROLLER	
040	2761018-0000		1	ROLLER	
050	2761017-0000		1	SUPPORT RING	
060	2522213-0004		1	SHAFT	
070	752186-0006		2	SHAFT	
080	752186-0006		2	SHAFT	
090	2522213-0006		2	SHAFT	
120	2761022-0000		2	LOCK PLATE	
130	2528123-0007		4	LOCK PLATE	
140	2532895-0002		2	LOCK PLATE	
310	2033-0011		14	WASHER	
320	90240-0172		14	FLANGE BUSHING, 8X12X10 MM	
370	312105-0453		2	SCREW M6S ISO 4017 M8X25 A480	
380	312105-0331		8	SCREW M6S ISO 4017 M5X20 A480	
TBA 0500B, TBA 1000B, TBA 1500S (See drawing on page: 1-58)					
010	2552206-0000		2	ROLLER	
020	2552205-0000		2	ROLLER	
030	2552188-0000		2	ROLLER	
040	2552187-0000		1	ROLLER	
050	2552160-0000		1	SUPPORT RING	
060	2522213-0005		1	SHAFT	
070	752186-0005		2	SHAFT	
080	2522213-0004		2	SHAFT	
090	752186-0019		2	SHAFT	
100	2552176-0001		1	LOCK PLATE	
110	2552177-0001		1	LOCK PLATE	
120	2528123-0002		2	LOCK PLATE	
130	2528123-0008		2	LOCK PLATE	
140	2532895-0004		2	LOCK PLATE	
310	2033-0011		14	WASHER	
320	90240-0172		14	FLANGE BUSHING, 8X12X10 MM	
330	312105-0327		2	SCREW M6S ISO 4017 M5X12 A480	
370	312105-0451		2	SCREW M6S ISO 4017 M8X20 A480	
380	312105-0331		6	SCREW M6S ISO 4017 M5X20 A480	

Machine Type | Group Description | Used-In | Group Number | Page No

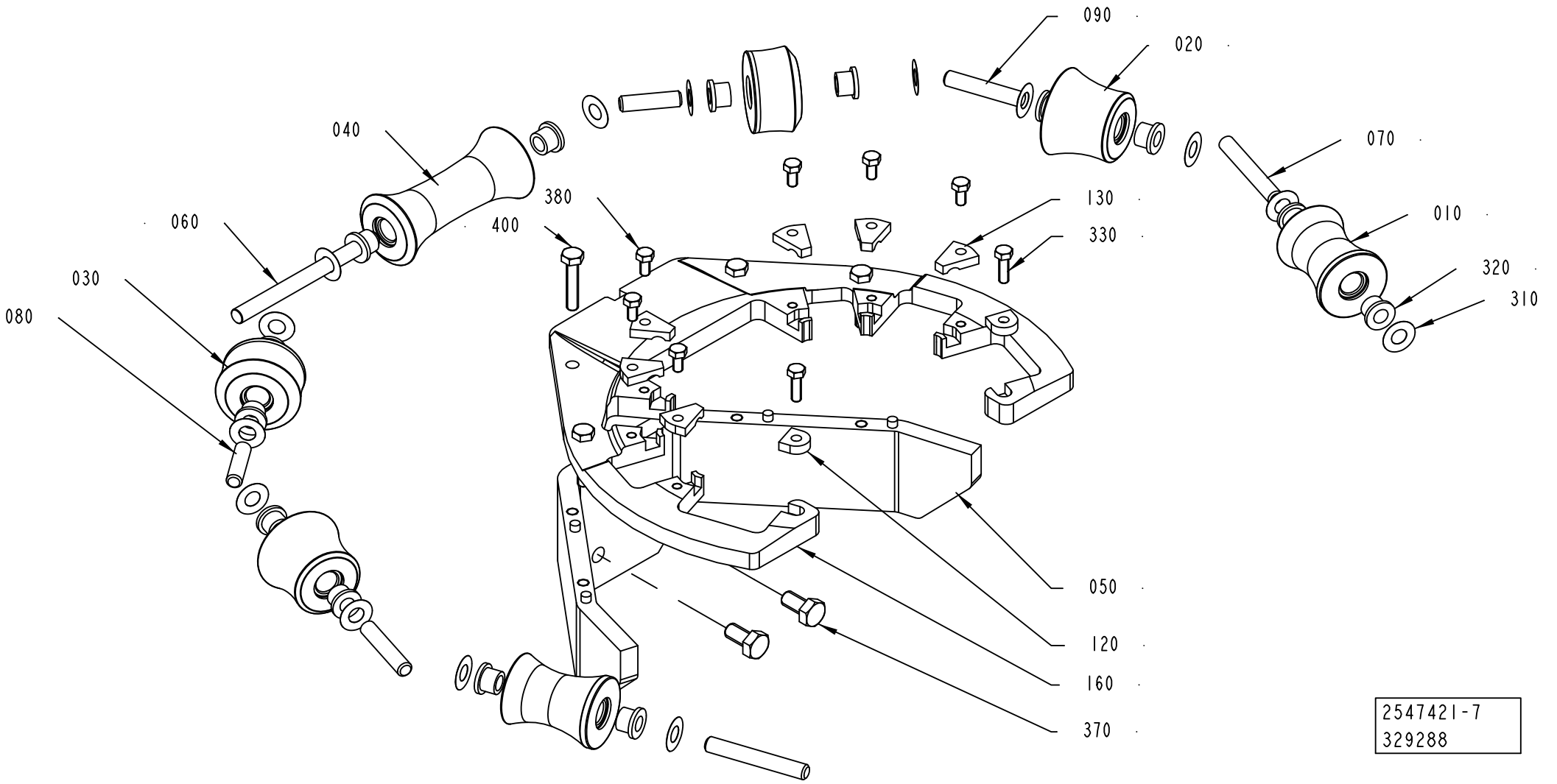
090
020
040
070
060
380
130
010
400
330
030
320
080
310
050
120
160
370
2547421-7
329288

ECM: 350583 - 20080703
Group number: 2547421-0100
Assembly Drawing: 2547421-7_1_AA

This list covers pages from 1-58 to 1-65

Pos	Part No	UN	Qty	Description	Page No
SEE PREVIOUS LISTS PAGES: 1-59, 1-61, 1-63.					

Pos	Part No	UN	Qty	Description	Page No

Machine Type | Group Description | Used-In | Group Number | Page No

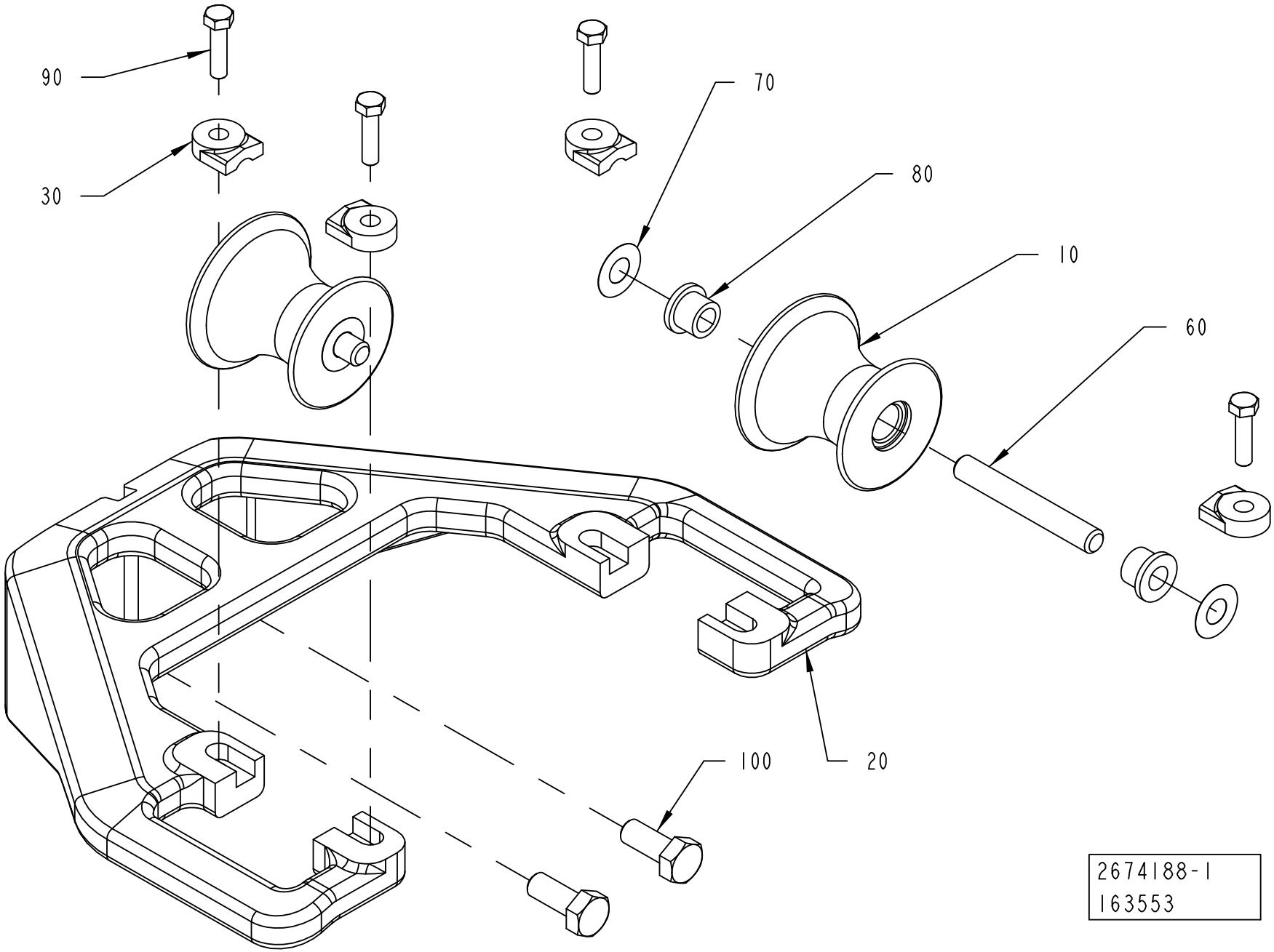
90
30
70
80
10
60
100
20
2674188-1
163553

Pos	Part No	UN	Qty	Description	Page No
TBA 0200B, TBA 0250B, TBA 0330S (See drawing on page: 1-66)					
010	2634943-0000		2	ROLLER	
020	2657860-0000		1	BRACKET	
030	2532895-0005		4	LOCK PLATE	
060	2522213-0007		2	SHAFT	
070	2033-0011		4	WASHER	
080	90240-0172		4	FLANGE BUSHING, 8X12X10 MM	
090	312105-0329		4	SCREW M6S ISO 4017 M5X16 A480	
100	312105-0449		2	SCREW M6S ISO 4017 M8X16 A480	
TBA 0200M, TBA 0250S (See drawing on page: 1-68)					
005	2611039-0000		1	ROLLER	
010	2611040-0000		2	ROLLER	
020	2611041-0000		1	SUPPORT ROLLER	
030	2532895-0009		4	LOCK PLATE	
040	2532895-0003		2	LOCK PLATE	
060	2522213-0006		3	SHAFT	
070	2033-0011		6	WASHER	
080	90240-0172		6	FLANGE BUSHING, 8X12X10 MM	
090	312105-0331		6	SCREW M6S ISO 4017 M5X20 A480	
100	312105-0451		2	SCREW M6S ISO 4017 M8X20 A480	
TBA 0200S, TPA 0250SQ, TPA 0200SQ (See drawing on page: 1-66)					
010	2640354-0000		2	ROLLER	
020	2640353-0000		1	BRACKET	
030	2532895-0009		4	LOCK PLATE	
060	2522213-0006		2	SHAFT	
070	2033-0011		4	WASHER	
080	90240-0172		4	FLANGE BUSHING, 8X12X10 MM	
090	312105-0331		4	SCREW M6S ISO 4017 M5X20 A480	
100	312105-0451		2	SCREW M6S ISO 4017 M8X20 A480	

Pos	Part No	UN	Qty	Description	Page No

EDGE ROLLER

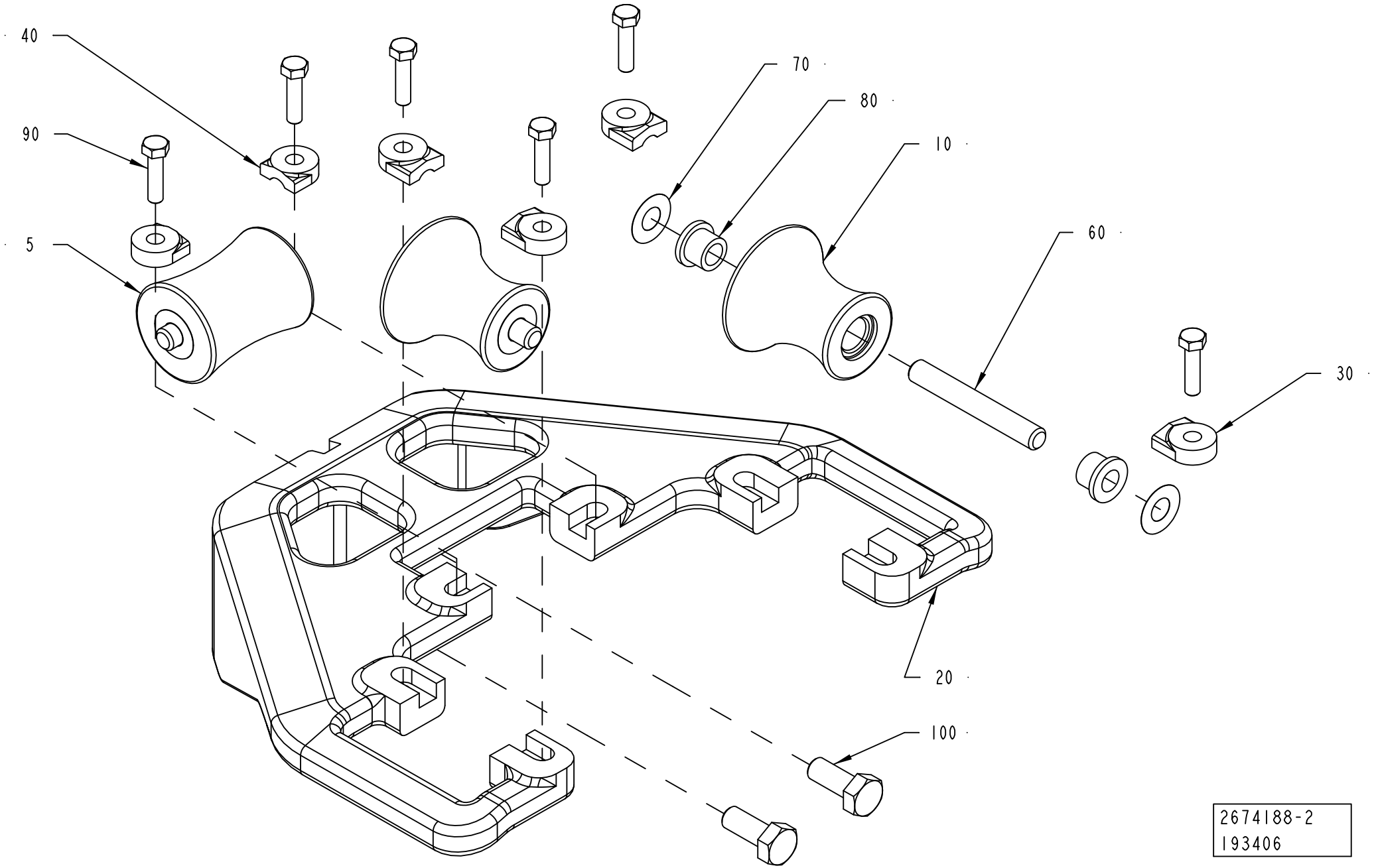

Pos	Part No	UN	Qty	Description	Page No
TBA 0200B, TBA 0250B, TBA 0330S (See drawing on page: 1-66)					
010	2634943-0000		2	ROLLER	
020	2657860-0000		1	BRACKET	
030	2532895-0005		4	LOCK PLATE	
060	2522213-0007		2	SHAFT	
070	2033-0011		4	WASHER	
080	90240-0172		4	FLANGE BUSHING, 8X12X10 MM	
090	312105-0329		4	SCREW M6S ISO 4017 M5X16 A480	
100	312105-0449		2	SCREW M6S ISO 4017 M8X16 A480	
TBA 0200M, TBA 0250S (See drawing on page: 1-68)					
005	2611039-0000		1	ROLLER	
010	2611040-0000		2	ROLLER	
020	2611041-0000		1	SUPPORT ROLLER	
030	2532895-0009		4	LOCK PLATE	
040	2532895-0003		2	LOCK PLATE	
060	2522213-0006		3	SHAFT	
070	2033-0011		6	WASHER	
080	90240-0172		6	FLANGE BUSHING, 8X12X10 MM	
090	312105-0331		6	SCREW M6S ISO 4017 M5X20 A480	
100	312105-0451		2	SCREW M6S ISO 4017 M8X20 A480	
TBA 0200S, TPA 0250SQ, TPA 0200SQ (See drawing on page: 1-66)					
010	2640354-0000		2	ROLLER	
020	2640353-0000		1	BRACKET	
030	2532895-0009		4	LOCK PLATE	
060	2522213-0006		2	SHAFT	
070	2033-0011		4	WASHER	
080	90240-0172		4	FLANGE BUSHING, 8X12X10 MM	
090	312105-0331		4	SCREW M6S ISO 4017 M5X20 A480	
100	312105-0451		2	SCREW M6S ISO 4017 M8X20 A480	

Pos	Part No	UN	Qty	Description	Page No

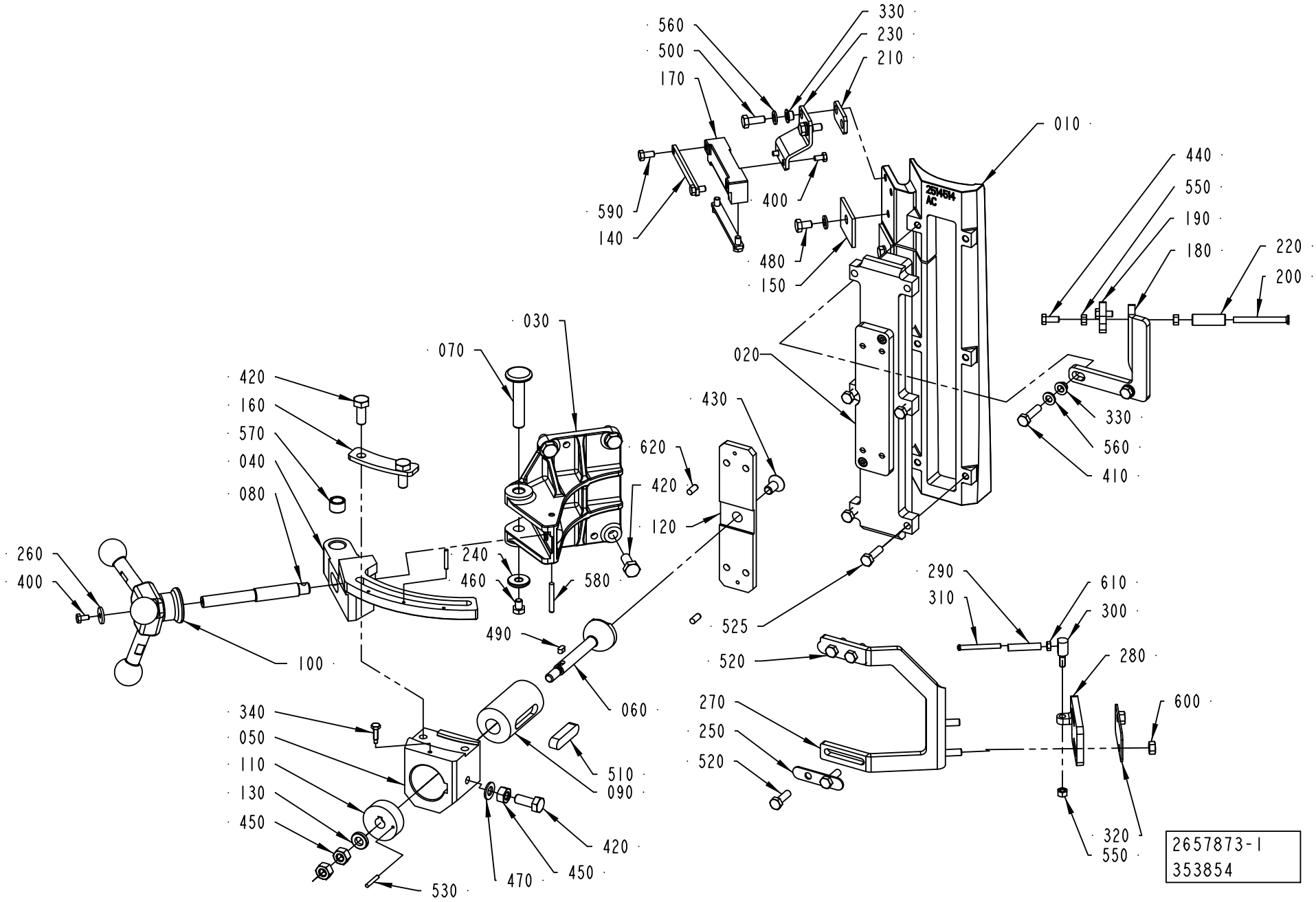
560
500
170
330
230
210
010
590
140
400
480
150
440
550
190
180
220
200
020
330
560
410
030
070
420
160
570
040
080
620
420
120
430
240
460
580
260
400
100
490
060
525
290
310
610
300
280
520
270
250
520
600
340
050
110
130
450
510
090
420
530
470
450
320
550
2657873-1
353854

ECM: 387753 - 20090402
Group number: 2657873-0100
Assembly Drawing: 2657873-1_1_AG

This list covers pages from 1-70 to 1-75

Pos	Part No	UN	Qty	Description	Page No
TBA 0250B, TBA 0330S, TBA 0250SQ, TBA 0200SQ, TBA 0200B (See drawing on page: 1-70)					
010	2532938-0000		1	INDUCTOR	
020	2862741-0000		1	INSULATING PLATE	
180	2547404-0000		1	BRACKET	
190	2547405-0000		1	BRACKET	
200	269151-0000		1	SHAFT	
220	2555625-0000		1	ROLL	
270	2555614-0000		1	BRACKET	
280	2555619-0000		1	BRACKET	
290	2555616-0000		1	ROLLER	
410	312105-0372		2	SCREW M6S ISO 4017 M6X25 A480	
440	312105-0327		2	SCREW M6S ISO 4017 M5X12 A480	
520	312105-0370		8	SCREW M6S ISO 4017 M6X20 A480	
550	312605-0314		1	HEXAGON NUT, M6M M5 A280	
610	312605-0312		1	HEXAGON NUT, M6M M4 A280	
TBA 0200M, TBA 0250S (See drawing on page: 1-70)					
010	2611053-0000		1	INDUCTOR	
020	2862740-0000		1	INSULATING PLATE	
180	2547404-0000		1	BRACKET	
190	2547405-0000		1	BRACKET	
200	269151-0000		1	SHAFT	
220	2555625-0000		1	ROLL	
270	2555614-0000		1	BRACKET	
280	2555619-0000		1	BRACKET	
290	2555616-0000		1	ROLLER	
410	312105-0372		2	SCREW M6S ISO 4017 M6X25 A480	
440	312105-0327		2	SCREW M6S ISO 4017 M5X12 A480	
520	312105-0370		8	SCREW M6S ISO 4017 M6X20 A480	
550	312605-0314		1	HEXAGON NUT, M6M M5 A280	
610	312605-0312		1	HEXAGON NUT, M6M M4 A280	
TBA 0200S, TPA 0250SQ, TPA 0200SQ (See drawing on page: 1-70)					
010	2565440-0000		1	INDUCTOR	
020	2862739-0000		1	INSULATING PLATE	
180	2547404-0000		1	BRACKET	
190	2547405-0000		1	BRACKET	
200	269151-0000		1	SHAFT	
220	2555625-0000		1	ROLL	
270	2555614-0000		1	BRACKET	
280	2555619-0000		1	BRACKET	
290	2555616-0000		1	ROLLER	
410	312105-0372		2	SCREW M6S ISO 4017 M6X25 A480	
440	312105-0327		2	SCREW M6S ISO 4017 M5X12 A480	
520	312105-0370		8	SCREW M6S ISO 4017 M6X20 A480	
550	312605-0314		1	HEXAGON NUT, M6M M5 A280	
610	312605-0312		1	HEXAGON NUT, M6M M4 A280	
TBA 0500B, TBA 1000B, TBA 1500S (See drawing on page: 1-70)					
010	2514514-0000		1	INDUCTOR	
020	2862742-0000		1	INSULATING PLATE	
180	2547404-0000		1	BRACKET	
190	2547405-0000		1	BRACKET	
200	269151-0000		1	SHAFT	
220	2555625-0000		1	ROLL	
270	2555614-0000		1	BRACKET	
280	2555615-0000		1	BRACKET	
290	2555616-0000		1	ROLLER	
410	312105-0372		2	SCREW M6S ISO 4017 M6X25 A480	
440	312105-0327		2	SCREW M6S ISO 4017 M5X12 A480	
520	312105-0370		8	SCREW M6S ISO 4017 M6X20 A480	
550	312605-0314		1	HEXAGON NUT, M6M M5 A280	
610	312605-0312		1	HEXAGON NUT, M6M M4 A280	
TBA 0500S (See drawing on page: 1-70)					
010	2672984-0000		1	INDUCTOR	
020	2862743-0000		1	INSULATING PLATE	
180	2547404-0000		1	BRACKET	
190	2547405-0000		1	BRACKET	
200	269151-0000		1	SHAFT	
220	2555625-0000		1	ROLL	
270	2555614-0000		1	BRACKET	
280	2555615-0000		1	BRACKET	
290	2555616-0000		1	ROLLER	
410	312105-0372		2	SCREW M6S ISO 4017 M6X25 A480	
440	312105-0327		2	SCREW M6S ISO 4017 M5X12 A480	
520	312105-0370		8	SCREW M6S ISO 4017 M6X20 A480	
550	312605-0314		1	HEXAGON NUT, M6M M5 A280	
610	312605-0312		1	HEXAGON NUT, M6M M4 A280	
TBA 0500SQ, TBA 1000SQ (See drawing on page: 1-70)					
010	2532925-0000		1	INDUCTOR	
020	2862744-0000		1	INSULATING PLATE	
180	2547404-0000		1	BRACKET	
190	2547405-0000		1	BRACKET	
200	269151-0000		1	SHAFT	
220	2555625-0000		1	ROLL	
270	2555614-0000		1	BRACKET	
280	2555615-0000		1	BRACKET	

Machine Type | Group Description | Used-In | Group Number | Page No

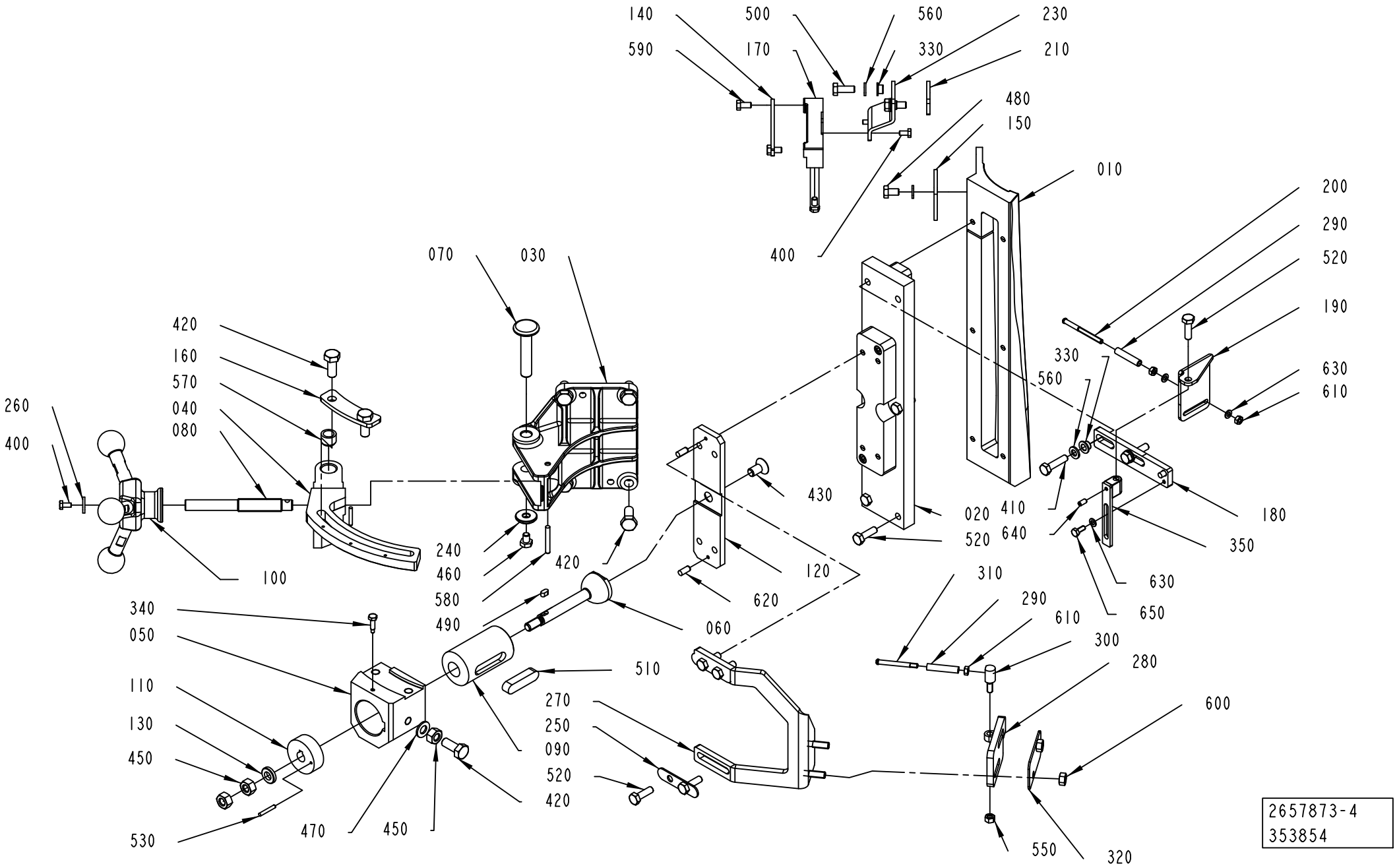

2657873-4
353854

Pos	Part No	UN	Qty	Description	Page No
TBA 0500SQ, TBA 1000SQ (Cont'd) (See drawing on page: 1-70)					
290	2555616-0000		1	ROLLER	
410	312105-0372		2	SCREW M6S ISO 4017 M6X25 A480	
440	312105-0327		2	SCREW M6S ISO 4017 M5X12 A480	
520	312105-0370		8	SCREW M6S ISO 4017 M6X20 A480	
550	312605-0314		1	HEXAGON NUT, M6M M5 A280	
610	312605-0312		1	HEXAGON NUT, M6M M4 A280	
TBA 1000S (See drawing on page: 1-70)					
010	2514522-0000		1	INDUCTOR	
020	2862745-0000		1	INSULATING PLATE	
180	2547404-0000		1	BRACKET	
190	2547405-0000		1	BRACKET	
200	269151-0000		1	SHAFT	
220	2555625-0000		1	ROLL	
270	2555614-0000		1	BRACKET	
280	2555615-0000		1	BRACKET	
290	2555616-0000		1	ROLLER	
410	312105-0374		2	SCREW M6S ISO 4014 M6X30 A480	
440	312105-0327		2	SCREW M6S ISO 4017 M5X12 A480	
520	312105-0370		4	SCREW M6S ISO 4017 M6X20 A480	
525	312105-0371		4	SCREW M6S ISO 4017 M6X22 A480	
550	312605-0314		1	HEXAGON NUT, M6M M5 A280	
610	312605-0312		1	HEXAGON NUT, M6M M4 A280	
TBA 1890S, TBA 2000S, TBA 1400B (See drawing on page: 1-70)					
010	2601247-0000		1	INDUCTOR	
020	2862746-0000		1	INSULATING PLATE	
180	2601249-0000		1	BRACKET	
190	2547405-0000		1	BRACKET	
200	269151-0000		1	SHAFT	
220	2555625-0000		1	ROLL	
270	2594636-0000		1	BRACKET	
280	2555615-0000		1	BRACKET	
290	2555616-0000		1	ROLLER	
410	312105-0372		2	SCREW M6S ISO 4017 M6X25 A480	
440	312105-0327		2	SCREW M6S ISO 4017 M5X12 A480	
520	312105-0370		7	SCREW M6S ISO 4017 M6X20 A480	
550	312605-0314		1	HEXAGON NUT, M6M M5 A280	
610	312605-0312		1	HEXAGON NUT, M6M M4 A280	
TPA 0330SQ (See drawing on page: 1-70)					
010	2695800-0000		1	INDUCTOR	
020	2862741-0000		1	INSULATING PLATE	
180	2547404-0000		1	BRACKET	
190	2547405-0000		1	BRACKET	
200	269151-0000		1	SHAFT	
220	2555625-0000		1	ROLL	
270	2555614-0000		1	BRACKET	
280	2555619-0000		1	BRACKET	
290	2555616-0000		1	ROLLER	
410	312105-0372		2	SCREW M6S ISO 4017 M6X25 A480	
440	312105-0327		2	SCREW M6S ISO 4017 M5X12 A480	
520	312105-0370		8	SCREW M6S ISO 4017 M6X20 A480	
550	312605-0314		1	HEXAGON NUT, M6M M5 A280	
610	312605-0312		1	HEXAGON NUT, M6M M4 A280	
TPA 0500SQ (See drawing on page: 1-72)					
010	2897152-0000		1	INDUCTOR	
020	2897150-0000		1	INSULATING PLATE	
180	2976353-0000		1	BRACKET	
190	2940946-0000		1	BRACKET	
200	2887790-0000		1	SHAFT	
270	2555614-0000		1	BRACKET	
280	2555619-0000		1	BRACKET	
290	2555616-0000		2	ROLLER	
350	2976352-0000		1	BRACKET	
410	312105-0374		2	SCREW M6S ISO 4014 M6X30 A480	
520	312105-0370		9	SCREW M6S ISO 4017 M6X20 A480	
550	312605-0314		3	HEXAGON NUT, M6M M5 A280	
610	312605-0312		4	HEXAGON NUT, M6M M4 A280	
630	315105-0136		3	WASHER BRB 4,3X8 RFR	
640	312318-0287		1	SCREW ISO4029 M4X8 A4	
650	312105-0289		1	SCREW M6S H4X10 A4 70 ISO4017/DIN933	
TPA 1000SQ, TPA 0750SQ, TGA 1000SQ, TGA 0750SQ, TGA 0500SQ (See drawing on page: 1-70)					
010	2601289-0000		1	INDUCTOR	
020	2862748-0000		1	INSULATING PLATE	
180	2547404-0000		1	BRACKET	
190	2547405-0000		1	BRACKET	
200	269151-0000		1	SHAFT	
220	2555625-0000		1	ROLL	
270	2555614-0000		1	BRACKET	
280	2555615-0000		1	BRACKET	
290	2555616-0000		1	ROLLER	
410	312105-0372		2	SCREW M6S ISO 4017 M6X25 A480	
440	312105-0327		2	SCREW M6S ISO 4017 M5X12 A480	
520	312105-0370		8	SCREW M6S ISO 4017 M6X20 A480	
550	312605-0314		1	HEXAGON NUT, M6M M5 A280	

See previous drawings pages: 1-70, 1-72.

ECM: 387753 - 20090402
Group number: 2657873-0100
Assembly Drawing: 2657873-4_1_AB

This list covers pages from 1-70 to 1-75

Pos	Part No	UN	Qty	Description	Page No
TPA 1000SQ, TPA 0750SQ, TGA 1000SQ, TGA 0750SQ, TGA 0500SQ (Cont'd) (See drawing on page: 1-70)					
610	312605-0312		1	HEXAGON NUT, M6M M4 A280	
Common Parts					
030	2544897-0000		1	BRACKET	
040	2694714-0000		1	GUIDE	
050	2694715-0000		1	SUPPORT	
060	2641000-0000		1	SHAFT	
070	2547388-0000		1	AXLE PIN	
080	2544898-0000		1	SHAFT	
090	2640991-0000		1	SLIDE	
100	2547376-0200		1	KNOB	**1-77**
110	2640992-0000		1	SLIDE	
120	2640993-0000		1	PLATE	
130	315115-0165		1	WASHER PLAIN, TBRB 8,4/16 H=3	
140	2508309-0000		2	PLATE	
150	2508311-0000		2	PLATE	
160	2694716-0000		1	PLATE	
170	2531060-0000		1	BRACKET	
210	2532898-0000		1	BRACKET	
230	2532899-0000		1	BRACKET	
240	2508297-0000		1	WASHER	
250	2555623-0000		2	COVER	
260	2547377-0000		1	WASHER	
300	2555617-0000		1	PIN	
310	2555618-0000		1	SHAFT	
320	2555620-0000		1	COVER	
330	2508292-0000		4	BUSHING	
340	2725526-0000		1	SCREW	
400	312105-0287		3	SCREW M6S ISO 4017 M4X8 A470	
420	312105-0451		7	SCREW M6S ISO 4017 M8X20 A480	
430	312155-0449		1	SCREW DIN 7991 MF6S M8X16 A4 70	
450	312605-0318		3	HEXAGON NUT, M6M M8 A280	
460	312105-0362		1	SCREW M6S ISO 4017 M6X8 A480	
470	315105-0165		1	WASHER BRB 8,4X16 RFR	
480	312105-0364		2	SCREW M6S ISO 4017 M6X10 A480	
490	315705-0164		1	PARALLEL KEY W. ROUND ENDS 4X4X8 MM	
500	312105-0368		2	SCREW M6S ISO 4017 M6X16 A480	
510	315705-0301		1	PARALLEL KEY W. ROUND ENDS 10X8X40 MM	
530	311103-0238		2	PARALLEL PIN ISO 2338 3M6X20 A1	
560	315105-0153		6	WASHER BRB 6,4X12 RFR	
570	90600-3313		2	BUSHING, 10X14X10 MM	
580	311103-0276		1	PARALLEL PIN ISO 2338 4M6X30 A1	
590	312105-0325		4	SCREW M6S ISO 4017 M5X10 A480	
600	312605-0316		2	HEXAGON NUT, M6M M6 A280	
620	311103-0306		2	PARALLEL PIN ISO 2338 5M6X12 A1	

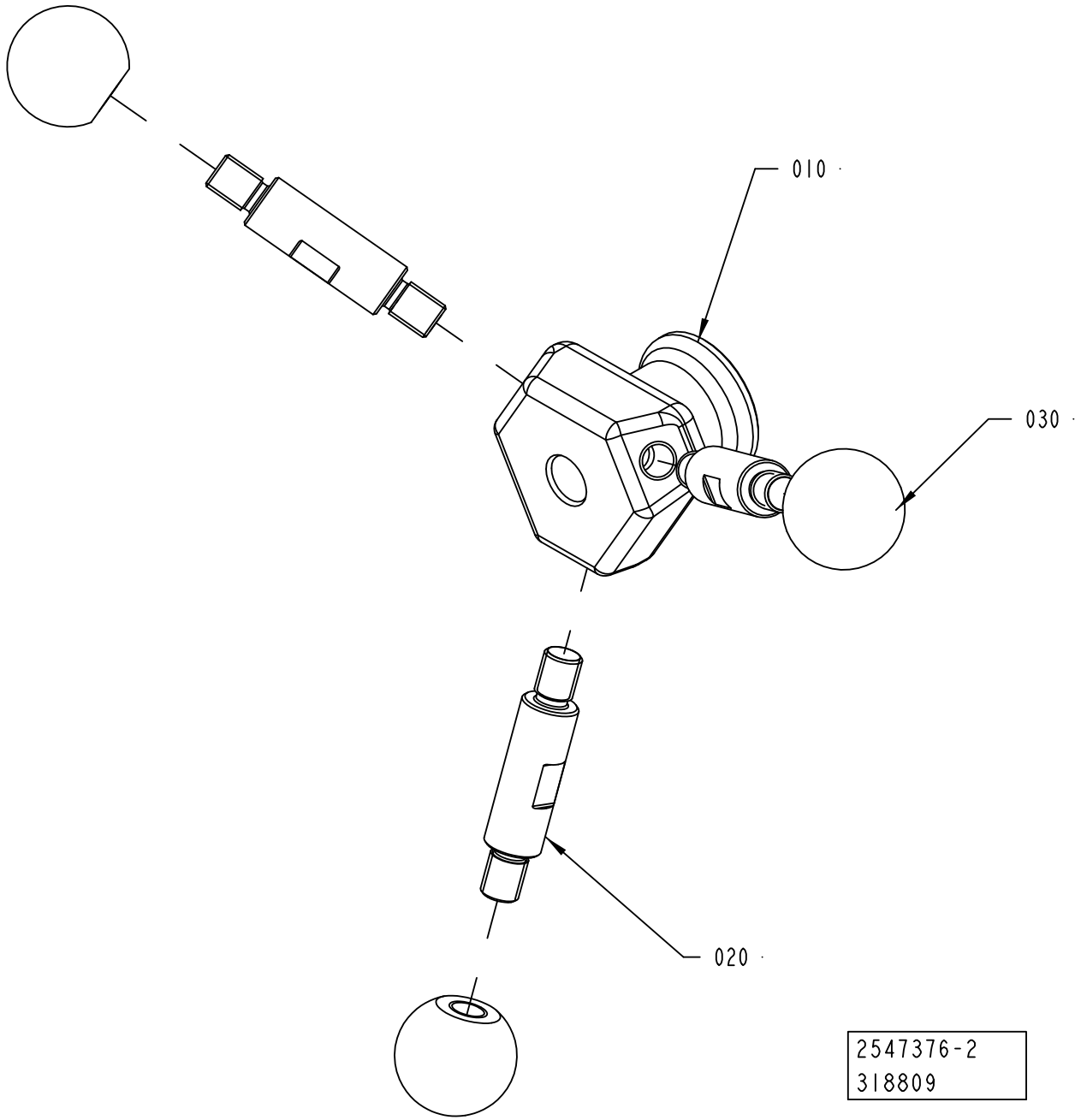
010
030
020
2547376-2
318809

ECM: 318865 - 20070913
Group number: 2547376-0200
Assembly Drawing: 2547376-2_1_AA

Pos	Part No	UN	Qty	Description	Page No
-					
010	2874716-0000		1	BODY	
020	2874715-0000		3	STUD SCREW	
030	2874717-0000		3	KNOB	

Pos	Part No	UN	Qty	Description	Page No

SUPPORT LEVEL DETECTOR

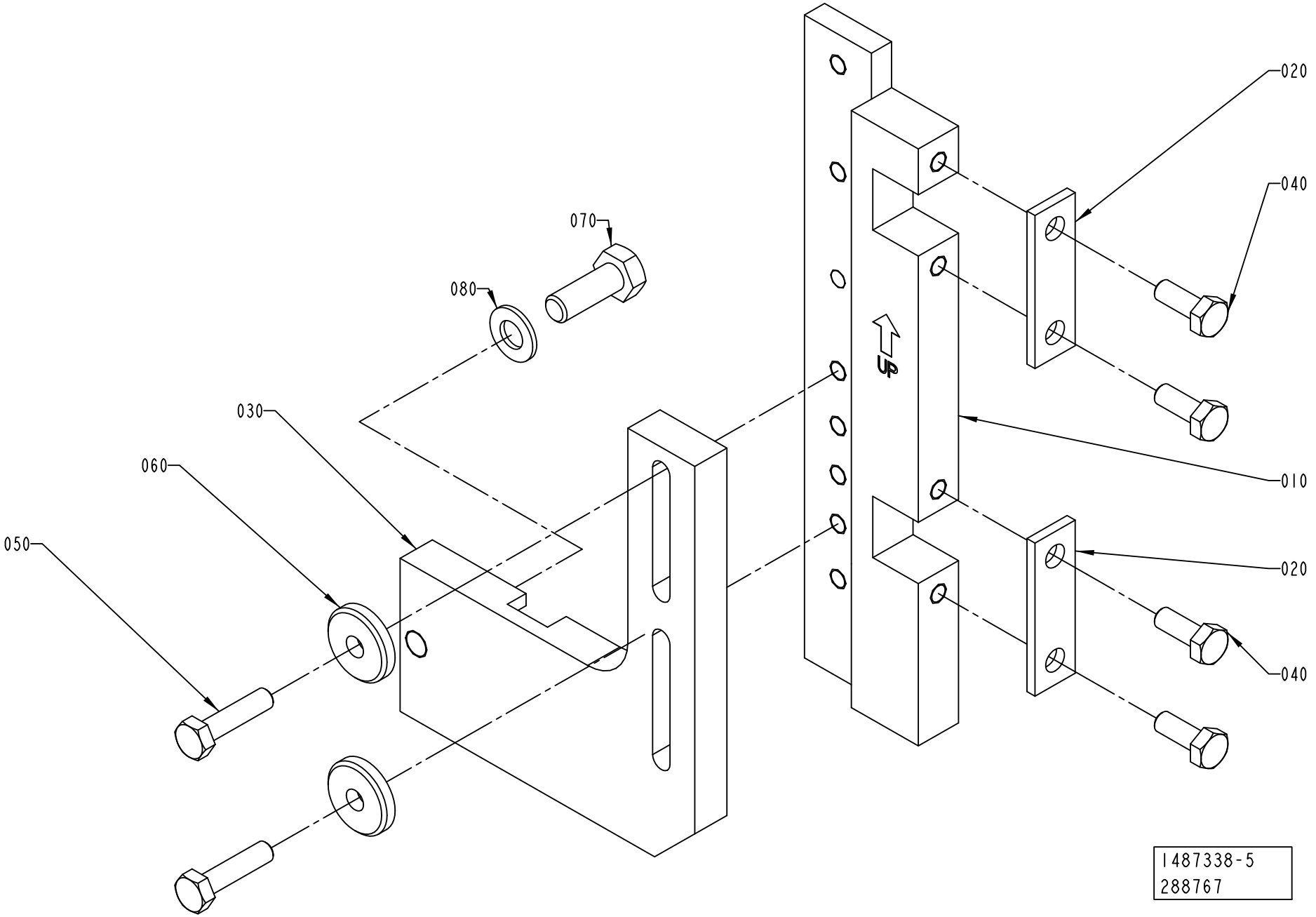

Pos	Part No	UN	Qty	Description	Page No
TBA 0200M, TBA 0200B, TBA 0200SQ, TBA 0250S, TBA 0250B, TBA 0330S, TPA 0330SQ, TPA 0250SQ, TPA 0200SQ, TBA 0250SQ (See drawing on page: 1-78)					
010	2715298-0000		1	BRACKET	
030	1348359-0000		1	BRACKET	
TBA 0200S, TPA 0500SQ (See drawing on page: 1-82)					
010	2715298-0000		1	BRACKET	
030	2874952-0000		1	BRACKET	
TBA 0500S, TBA 0500SQ, TBA 0500B, TBA 1000B, TBA 1000SQ, TBA 1000S, TBA 1500S, TPA 1000SQ NOQC (See drawing on page: 1-80)					
010	2715298-0000		1	BRACKET	
030	1317475-0000		1	BRACKET	
TBA 1890S, TBA 2000S, TBA 1400B (See drawing on page: 1-80)					
010	2715299-0000		1	BRACKET	
030	2656899-0000		1	BRACKET	
TGA 1000SQ, TGA 0750SQ, TGA 0500SQ (See drawing on page: 1-84)					
010	2888153-0000		1	BRACKET	
020	2797439-0000		1	FASTENING PLATE	
030	1317475-0000		1	BRACKET	
040	312105-0368		2	SCREW M6S ISO 4017 M6X16 A480	
TPA 1000SQ QC, TPA 0750SQ QC (See drawing on page: 1-80)					
010	2715299-0000		1	BRACKET	
030	1317475-0000		1	BRACKET	
Common Parts					
020	1036673-0000		2	WASHER	
040	312105-0368		4	SCREW M6S ISO 4017 M6X16 A480	
050	312105-0372		2	SCREW M6S ISO 4017 M6X25 A480	
060	315125-0153		2	WASHER TBRSB 6,4X22X4 A4	
070	312105-0452		1	SCREW M6S ISO 4017 M8X22 A480	
080	315105-0165		1	WASHER BRB 8,4X16 RFR	

Pos	Part No	UN	Qty	Description	Page No

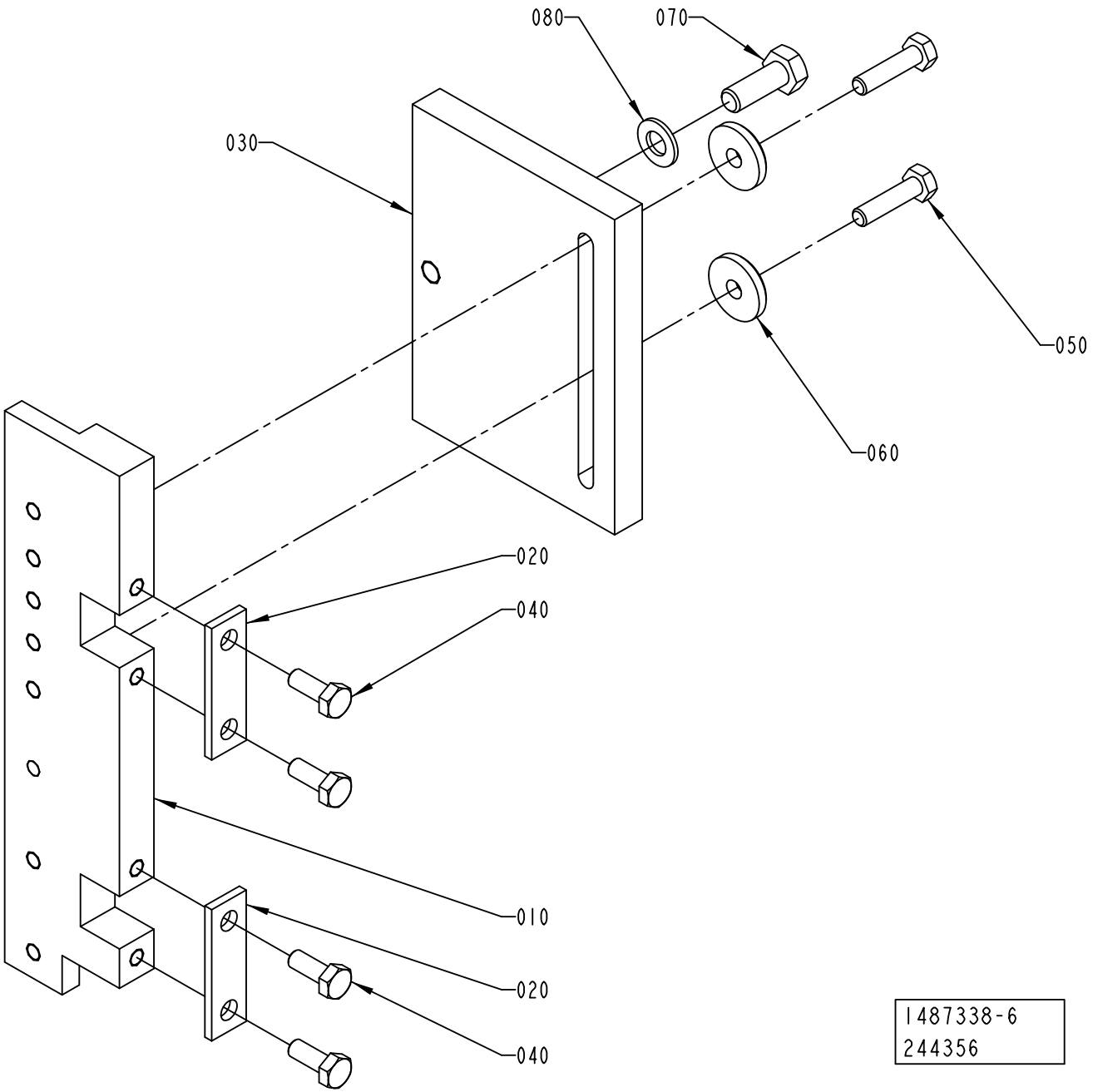
080
070
030
050
060
020
040
010
020
040
1487338-6
244356

Pos	Part No	UN	Qty	Description	Page No
TBA 0200M, TBA 0200B, TBA 0200SQ, TBA 0250S, TBA 0250B, TBA 0330S, TPA 0330SQ, TPA 0250SQ, TPA 0200SQ, TBA 0250SQ (See drawing on page: 1-78)					
010	2715298-0000		1	BRACKET	
030	1348359-0000		1	BRACKET	
TBA 0200S, TPA 0500SQ (See drawing on page: 1-82)					
010	2715298-0000		1	BRACKET	
030	2874952-0000		1	BRACKET	
TBA 0500S, TBA 0500SQ, TBA 0500B, TBA 1000B, TBA 1000SQ, TBA 1000S, TBA 1500S, TPA 1000SQ NOQC (See drawing on page: 1-80)					
010	2715298-0000		1	BRACKET	
030	1317475-0000		1	BRACKET	
TBA 1890S, TBA 2000S, TBA 1400B (See drawing on page: 1-80)					
010	2715299-0000		1	BRACKET	
030	2656899-0000		1	BRACKET	
TGA 1000SQ, TGA 0750SQ, TGA 0500SQ (See drawing on page: 1-84)					
010	2888153-0000		1	BRACKET	
020	2797439-0000		1	FASTENING PLATE	
030	1317475-0000		1	BRACKET	
040	312105-0368		2	SCREW M6S ISO 4017 M6X16 A480	
TPA 1000SQ QC, TPA 0750SQ QC (See drawing on page: 1-80)					
010	2715299-0000		1	BRACKET	
030	1317475-0000		1	BRACKET	
Common Parts					
020	1036673-0000		2	WASHER	
040	312105-0368		4	SCREW M6S ISO 4017 M6X16 A480	
050	312105-0372		2	SCREW M6S ISO 4017 M6X25 A480	
060	315125-0153		2	WASHER TBRSB 6,4X22X4 A4	
070	312105-0452		1	SCREW M6S ISO 4017 M8X22 A480	
080	315105-0165		1	WASHER BRB 8,4X16 RFR	

Pos	Part No	UN	Qty	Description	Page No

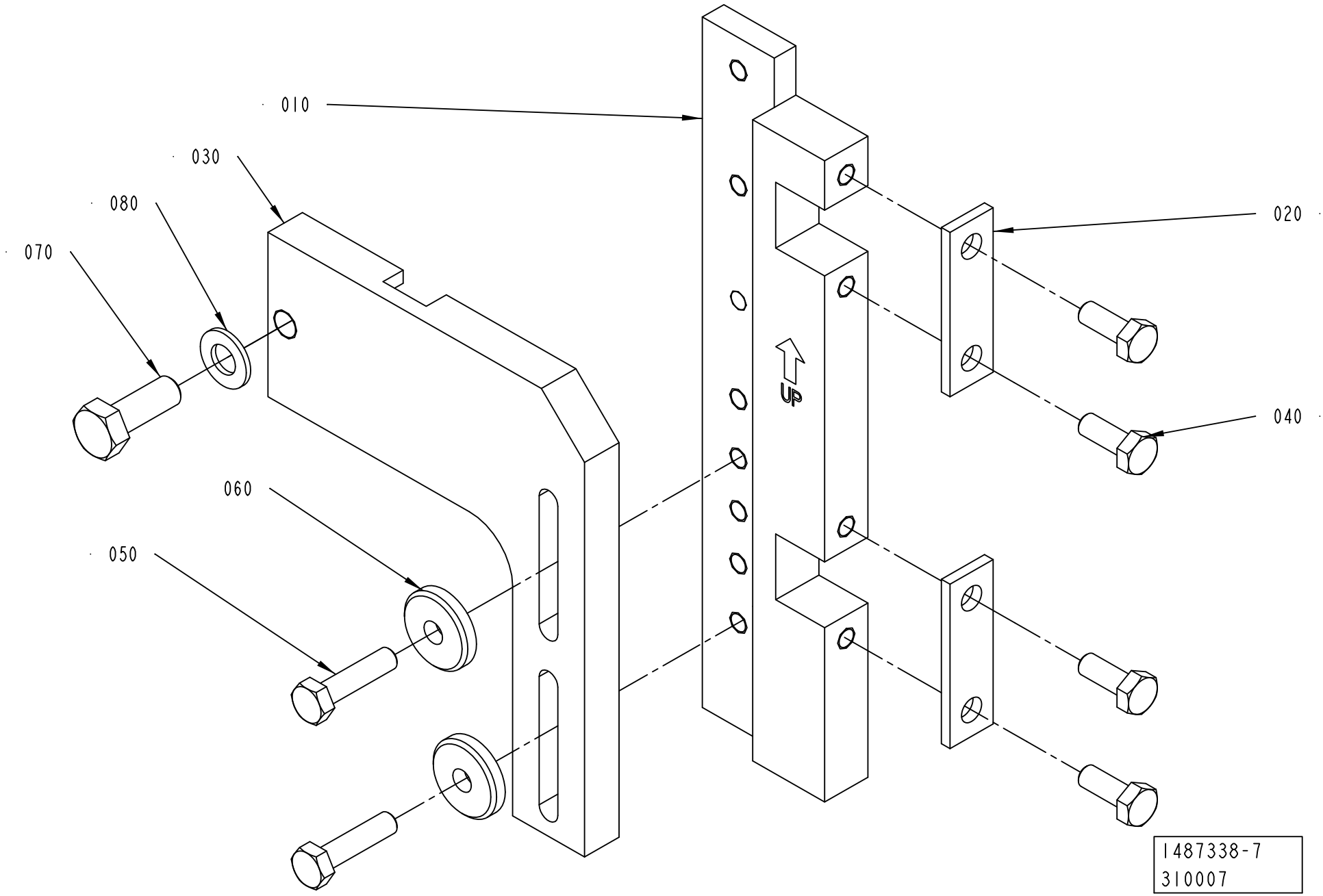
010
030
080
070
020
040
060
050
1487338-7
310007

Pos	Part No	UN	Qty	Description	Page No
TBA 0200M, TBA 0200B, TBA 0200SQ, TBA 0250S, TBA 0250B, TBA 0330S, TPA 0330SQ, TPA 0250SQ, TPA 0200SQ, TBA 0250SQ (See drawing on page: 1-78)					
010	2715298-0000		1	BRACKET	
030	1348359-0000		1	BRACKET	
TBA 0200S, TPA 0500SQ (See drawing on page: 1-82)					
010	2715298-0000		1	BRACKET	
030	2874952-0000		1	BRACKET	
TBA 0500S, TBA 0500SQ, TBA 0500B, TBA 1000B, TBA 1000SQ, TBA 1000S, TBA 1500S, TPA 1000SQ NOQC (See drawing on page: 1-80)					
010	2715298-0000		1	BRACKET	
030	1317475-0000		1	BRACKET	
TBA 1890S, TBA 2000S, TBA 1400B (See drawing on page: 1-80)					
010	2715299-0000		1	BRACKET	
030	2656899-0000		1	BRACKET	
TGA 1000SQ, TGA 0750SQ, TGA 0500SQ (See drawing on page: 1-84)					
010	2888153-0000		1	BRACKET	
020	2797439-0000		1	FASTENING PLATE	
030	1317475-0000		1	BRACKET	
040	312105-0368		2	SCREW M6S ISO 4017 M6X16 A480	
TPA 1000SQ QC, TPA 0750SQ QC (See drawing on page: 1-80)					
010	2715299-0000		1	BRACKET	
030	1317475-0000		1	BRACKET	
Common Parts					
020	1036673-0000		2	WASHER	
040	312105-0368		4	SCREW M6S ISO 4017 M6X16 A480	
050	312105-0372		2	SCREW M6S ISO 4017 M6X25 A480	
060	315125-0153		2	WASHER TBRSB 6,4X22X4 A4	
070	312105-0452		1	SCREW M6S ISO 4017 M8X22 A480	
080	315105-0165		1	WASHER BRB 8,4X16 RFR	

Pos	Part No	UN	Qty	Description	Page No

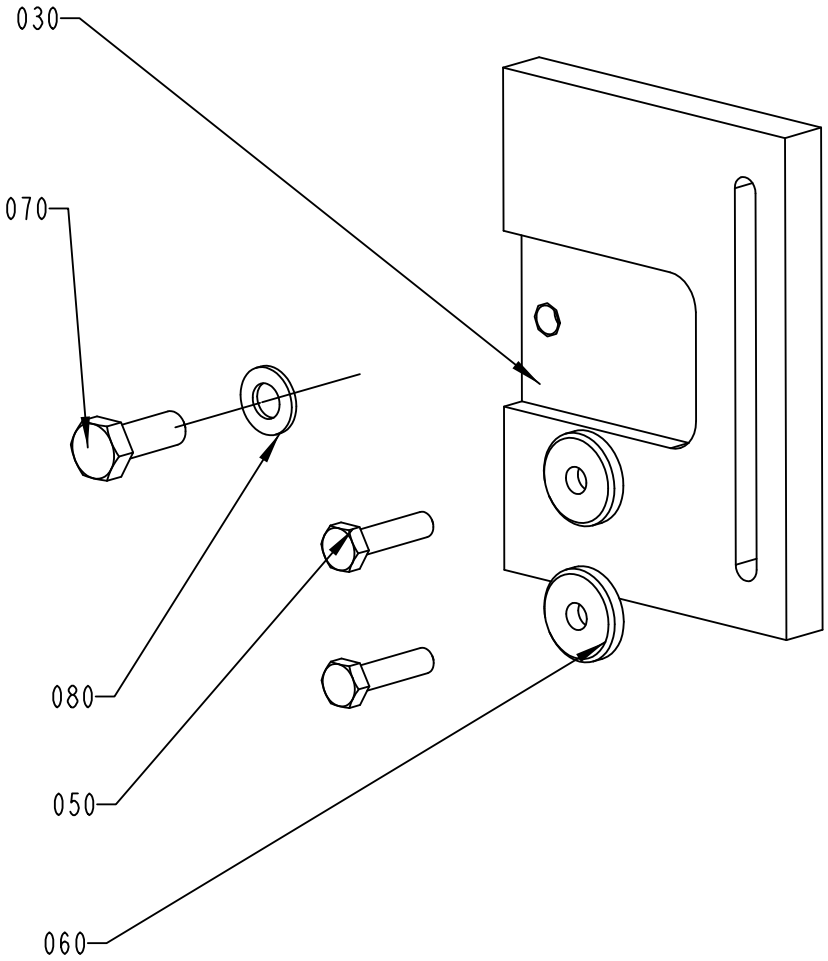
030
070
080
050
060

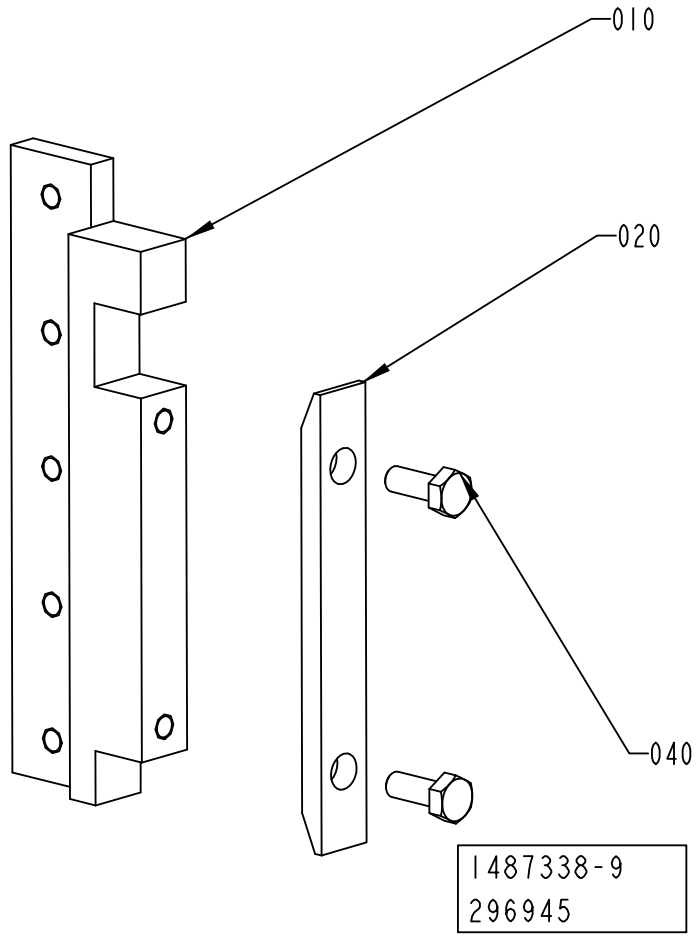
010
020
040
1487338-9
296945

Pos	Part No	UN	Qty	Description	Page No
TBA 0200M, TBA 0200B, TBA 0200SQ, TBA 0250S, TBA 0250B, TBA 0330S, TPA 0330SQ, TPA 0250SQ, TPA 0200SQ, TBA 0250SQ (See drawing on page: 1-78)					
010	2715298-0000		1	BRACKET	
030	1348359-0000		1	BRACKET	
TBA 0200S, TPA 0500SQ (See drawing on page: 1-82)					
010	2715298-0000		1	BRACKET	
030	2874952-0000		1	BRACKET	
TBA 0500S, TBA 0500SQ, TBA 0500B, TBA 1000B, TBA 1000SQ, TBA 1000S, TBA 1500S, TPA 1000SQ NOQC (See drawing on page: 1-80)					
010	2715298-0000		1	BRACKET	
030	1317475-0000		1	BRACKET	
TBA 1890S, TBA 2000S, TBA 1400B (See drawing on page: 1-80)					
010	2715299-0000		1	BRACKET	
030	2656899-0000		1	BRACKET	
TGA 1000SQ, TGA 0750SQ, TGA 0500SQ (See drawing on page: 1-84)					
010	2888153-0000		1	BRACKET	
020	2797439-0000		1	FASTENING PLATE	
030	1317475-0000		1	BRACKET	
040	312105-0368		2	SCREW M6S ISO 4017 M6X16 A480	
TPA 1000SQ QC, TPA 0750SQ QC (See drawing on page: 1-80)					
010	2715299-0000		1	BRACKET	
030	1317475-0000		1	BRACKET	
Common Parts					
020	1036673-0000		2	WASHER	
040	312105-0368		4	SCREW M6S ISO 4017 M6X16 A480	
050	312105-0372		2	SCREW M6S ISO 4017 M6X25 A480	
060	315125-0153		2	WASHER TBRSB 6,4X22X4 A4	
070	312105-0452		1	SCREW M6S ISO 4017 M8X22 A480	
080	315105-0165		1	WASHER BRB 8,4X16 RFR	

Pos	Part No	UN	Qty	Description	Page No

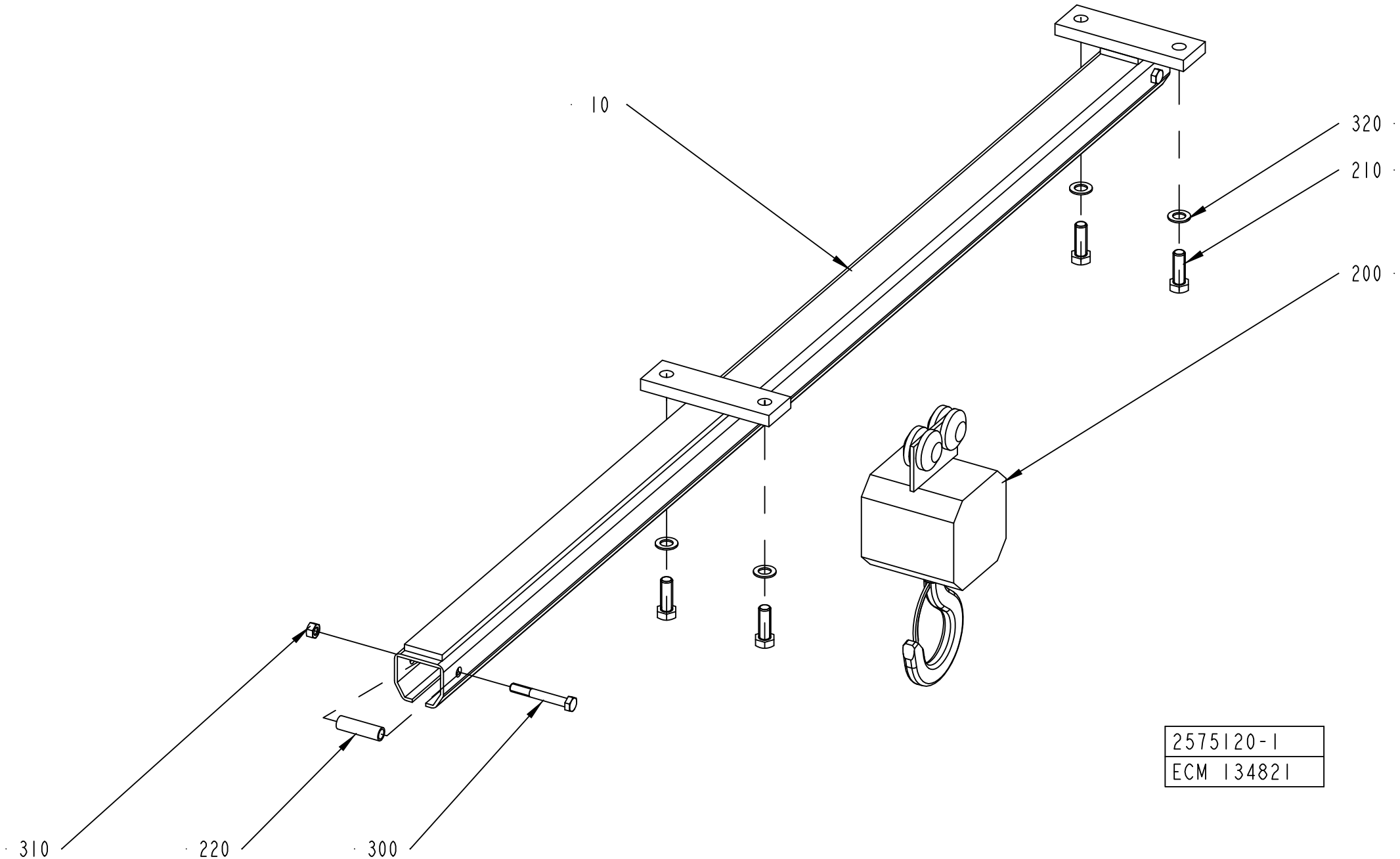
10
320
210
200
310
220
300
2575120-1
ECM 134821

ECM: 136051 - 20030704
Group number: 2575120-0100
Assembly Drawing: 2575120-1_1_AA

Pos	Part No	UN	Qty	Description	Page No
-					
10	2575119-0000		1	GUIDE	
200	90039-0022		1	TACKLE BLOCK, NO. BV-225/500	
210	90287-0322		4	SCREW M6S M14X40 70	
220	90287-0347		2	BOLT	
300	312105-0506		2	SCREW M6S ISO 4014 M10X75 A480	
310	312605-0320		2	HEXAGON NUT, M6M M10 A280	
320	315101-0182		4	WASHER PLAIN, BRB, 15/26 H=2	

Pos	Part No	UN	Qty	Description	Page No

This page is intentionally left blank.

ECM: 331132 - 20080624
Group number: 2555394-0150
Assembly Drawing:

This list covers pages from 1-88 to 1-99

Pos	Part No	UN	Qty	Description	Page No
TPA 0330SQ HI					
JS060	2774493-0000		2	COMPRESSION SPRING	
JS040	1348966-0000		2	KNIFE	
JS030	1539902-0000		8	VOLUME SHIM	
JS020	1520167-0000		2	INDUCTOR	
JS010	1110083-0002		12	DOLLY	
SU070	342850-0304		1	GASKET 35,4X49,1X5,2 1"1/2 FDA	
SU060	979813-0000		1	PLUG	
SU050	2529750-0000		1	COVERING PANEL	
SU040	2500081-0000		1	ELBOW PIPE	
SU030	315204-0215		2	O-RING 19,2X3 MM	
SU020	2529417-0000		1	SHAFT	
SU010	257330-0000		3	PRESSURE ROLLER (10 PCS)	
TPA 0500SQ HI					
JS060	1538109-0000		2	COMPRESSION SPRING	
JS040	1549828-0000		2	KNIFE	
JS030	1549830-0000		24	VOLUME SHIM	
JS020	2587467-0000		1	INDUCTOR	
JS020	2587466-0000		1	INDUCTOR	
JS010	1110083-0002		12	DOLLY	
SU070	342850-0304		1	GASKET 35,4X49,1X5,2 1"1/2 FDA	
SU060	979813-0000		1	PLUG	
SU050	2529750-0000		1	COVERING PANEL	
SU040	2500081-0000		1	ELBOW PIPE	
SU030	315204-0219		2	O-RING 29,2X3 MM	
SU020	2529420-0000		1	SHAFT	
SU010	257330-0000		3	PRESSURE ROLLER (10 PCS)	
TPA 0500SQ NOHI					
JS060	1538109-0000		2	COMPRESSION SPRING	
JS040	1549828-0000		2	KNIFE	
JS030	1549830-0000		24	VOLUME SHIM	
JS020	2587467-0000		1	INDUCTOR	
JS020	2587466-0000		1	INDUCTOR	
JS010	1110083-0002		12	DOLLY	
SU030	315204-0219		2	O-RING 29,2X3 MM	
SU020	2529420-0000		1	SHAFT	
SU010	257330-0000		3	PRESSURE ROLLER (10 PCS)	
TPA 0750SQ QC HI, TPA 1000SQ QC HI					
FF050	2945064-0000		3	FINGER	
JS060	1538109-0000		2	COMPRESSION SPRING	
JS040	1348956-0000		2	KNIFE	
JS035	2660390-0000		12	VOLUME SHIM	
JS030	2660393-0000		12	VOLUME SHIM	
JS020	2663378-0000		1	INDUCTOR	
JS020	2663377-0000		1	INDUCTOR	
JS010	1520633-0002		12	DOLLY	
SU070	342850-0304		1	GASKET 35,4X49,1X5,2 1"1/2 FDA	
SU060	979813-0000		1	PLUG	
SU050	2529750-0000		1	COVERING PANEL	
SU040	2500081-0000		1	ELBOW PIPE	
SU030	315204-0219		2	O-RING 29,2X3 MM	
SU020	2529420-0000		1	SHAFT	
SU010	257330-0000		6	PRESSURE ROLLER (10 PCS)	
TPA 1000SQ NOQC HI					
JS060	1538109-0000		2	COMPRESSION SPRING	
JS040	1348956-0000		2	KNIFE	
JS035	1539843-0000		6	VOLUME SHIM	
JS020	2663377-0000		1	INDUCTOR	
JS020	2663378-0000		1	INDUCTOR	
JS010	1520633-0002		12	DOLLY	
SU070	342850-0304		1	GASKET 35,4X49,1X5,2 1"1/2 FDA	
SU060	979813-0000		1	PLUG	
SU050	2529750-0000		1	COVERING PANEL	
SU040	2500081-0000		1	ELBOW PIPE	
SU030	315204-0219		2	O-RING 29,2X3 MM	
SU020	2529420-0000		1	SHAFT	
SU010	257330-0000		6	PRESSURE ROLLER (10 PCS)	
TBA 1000S LIGHTCAP					
	90240-0180		12	FLANGE BUSHING 10X14X15MM	
JS100	2767478-0001		2	ROLLER	
JS100	2767478-0003		2	ROLLER	
JS100	2767478-0004		2	ROLLER	
JS060	1538109-0000		2	COMPRESSION SPRING	
JS040	1348955-0000		2	KNIFE	
JS030	1040755-0000		8	VOLUME SHIM	
JS020	1566843-0000		2	INDUCTOR	
JS010	1110083-0002		12	DOLLY	
SU080	2811775-0000		1	SEAL	
SU030	315204-0219		2	O-RING 29,2X3 MM	
SU020	2529419-0000		1	SHAFT	
SU010	499387-0000		3	PRESSURE ROLLER - (10 PCS)	
TBA 1000S NOMOLDEDCAP HI					
JS060	1538109-0000		2	COMPRESSION SPRING	
JS040	1348955-0000		2	KNIFE	

Machine Type | Group Description | Used-In | Group Number | Page No

This page is intentionally left blank.

Pos	Part No	UN	Qty	Description	Page No
TBA 1000S NOMOLDEDCAP HI (Cont'd)					
JS030	1040755-0000		8	VOLUME SHIM	
JS020	1110937-0000		2	INDUCTOR	
JS010	1110083-0002		12	DOLLY	
SU070	342850-0304		1	GASKET 35,4X49,1X5,2 1"1/2 FDA	
SU060	979813-0000		1	PLUG	
SU050	2529750-0000		1	COVERING PANEL	
SU040	2500081-0000		1	ELBOW PIPE	
SU030	315204-0219		2	O-RING 29,2X3 MM	
SU020	2529419-0000		1	SHAFT	
SU010	499387-0000		3	PRESSURE ROLLER - (10 PCS)	
TBA 1000S NOMOLDEDCAP NOHI					
JS060	1538109-0000		2	COMPRESSION SPRING	
JS040	1348955-0000		2	KNIFE	
JS030	1040755-0000		8	VOLUME SHIM	
JS020	1110937-0000		2	INDUCTOR	
JS010	1110083-0002		12	DOLLY	
SU030	315204-0219		2	O-RING 29,2X3 MM	
SU020	2529419-0000		1	SHAFT	
SU010	499387-0000		3	PRESSURE ROLLER - (10 PCS)	
TBA 1000S STDA7 HI					
	90240-0180		12	FLANGE BUSHING 10X14X15MM	
JS100	2767478-0003		2	ROLLER	
JS100	2767478-0004		2	ROLLER	
JS100	2767478-0001		2	ROLLER	
JS060	1538109-0000		2	COMPRESSION SPRING	
JS040	1348955-0000		2	KNIFE	
JS030	1040755-0000		8	VOLUME SHIM	
JS020	2546474-0000		2	INDUCTOR	
JS010	1110083-0002		12	DOLLY	
SU070	342850-0304		1	GASKET 35,4X49,1X5,2 1"1/2 FDA	
SU060	979813-0000		1	PLUG	
SU050	2529750-0000		1	COVERING PANEL	
SU040	2500081-0000		1	ELBOW PIPE	
SU030	315204-0219		2	O-RING 29,2X3 MM	
SU020	2529419-0000		1	SHAFT	
SU010	499387-0000		3	PRESSURE ROLLER - (10 PCS)	
TBA 1000S STDA7 NOHI					
	90240-0180		12	FLANGE BUSHING 10X14X15MM	
JS100	2767478-0003		2	ROLLER	
JS100	2767478-0004		2	ROLLER	
JS100	2767478-0001		2	ROLLER	
JS060	1538109-0000		2	COMPRESSION SPRING	
JS040	1348955-0000		2	KNIFE	
JS030	1040755-0000		8	VOLUME SHIM	
JS020	2546474-0000		2	INDUCTOR	
JS010	1110083-0002		12	DOLLY	
SU030	315204-0219		2	O-RING 29,2X3 MM	
SU020	2529419-0000		1	SHAFT	
SU010	499387-0000		3	PRESSURE ROLLER - (10 PCS)	
TBA 1000SQ NOQC HI					
JS060	1538109-0000		2	COMPRESSION SPRING	
JS040	1348955-0000		2	KNIFE	
JS030	1487627-0000		8	VOLUME SHIM	
JS020	1110936-0000		2	INDUCTOR	
JS010	1110083-0002		12	DOLLY	
SU070	342850-0304		1	GASKET 35,4X49,1X5,2 1"1/2 FDA	
SU060	979813-0000		1	PLUG	
SU050	2529750-0000		1	COVERING PANEL	
SU040	2500081-0000		1	ELBOW PIPE	
SU030	315204-0219		2	O-RING 29,2X3 MM	
SU020	2529420-0000		1	SHAFT	
SU010	257330-0000		3	PRESSURE ROLLER (10 PCS)	
TBA 1000SQ NOQC NO HI					
JS060	1538109-0000		2	COMPRESSION SPRING	
JS040	1348955-0000		2	KNIFE	
JS030	1487627-0000		8	VOLUME SHIM	
JS020	1110936-0000		2	INDUCTOR	
JS010	1110083-0002		12	DOLLY	
SU030	315204-0219		2	O-RING 29,2X3 MM	
SU020	2529420-0000		1	SHAFT	
SU010	257330-0000		3	PRESSURE ROLLER (10 PCS)	
TBA 1000SQ QC NOHI, TBA 0500SQ QC NOHI					
JS060	1538109-0000		2	COMPRESSION SPRING	
JS040	1348955-0000		2	KNIFE	
JS030	1487627-0000		8	VOLUME SHIM	
JS030	2827055-0000		8	VOLUME SHIM	
JS020	1110936-0000		2	INDUCTOR	
JS010	1110083-0002		12	DOLLY	
SU030	315204-0219		2	O-RING 29,2X3 MM	
SU020	2529420-0000		1	SHAFT	
SU010	257330-0000		3	PRESSURE ROLLER (10 PCS)	
TBA 1500S HI					
JS060	1538109-0000		2	COMPRESSION SPRING	

This page is intentionally left blank.

ECM: 331132 - 20080624
Group number: 2555394-0150
Assembly Drawing:

This list covers pages from 1-88 to 1-99

Pos	Part No	UN	Qty	Description	Page No
TBA 1500S HI (Cont'd)					
JS040	1348955-0000		2	KNIFE	
JS030	1349208-0000		8	VOLUME SHIM	
JS020	1110938-0000		2	INDUCTOR	
JS010	1110083-0002		12	DOLLY	
SU070	342850-0304		1	GASKET 35,4X49,1X5,2 1"1/2 FDA	
SU060	979813-0000		1	PLUG	
SU050	2529750-0000		1	COVERING PANEL	
SU040	2500081-0000		1	ELBOW PIPE	
SU030	315204-0219		2	O-RING 29,2X3 MM	
SU020	2523268-0000		1	SHAFT	
SU010	232979-0000		3	PRESSURE ROLLER (PAK OF 10)	
TBA 1500S NOHI					
JS060	1538109-0000		2	COMPRESSION SPRING	
JS040	1348955-0000		2	KNIFE	
JS030	1349208-0000		8	VOLUME SHIM	
JS020	1110938-0000		2	INDUCTOR	
JS010	1110083-0002		12	DOLLY	
SU030	315204-0219		2	O-RING 29,2X3 MM	
SU020	2523268-0000		1	SHAFT	
SU010	232979-0000		3	PRESSURE ROLLER (PAK OF 10)	
TBA 2000S HI, TBA 1890S HI, TBA 1400B HI					
JS060	1538109-0000		2	COMPRESSION SPRING	
JS040	2664761-0000		2	KNIFE	
JS035	2594890-0000		8	VOLUME SHIM	
JS035	2672745-0000		8	VOLUME SHIM	
JS030	2594891-0000		8	VOLUME SHIM	
JS020	1533046-0000		2	INDUCTOR	
JS010	1520633-0005		12	DOLLY	
SU070	342850-0304		1	GASKET 35,4X49,1X5,2 1"1/2 FDA	
SU060	979813-0000		1	PLUG	
SU050	2529750-0000		1	COVERING PANEL	
SU040	2500081-0000		1	ELBOW PIPE	
SU030	315204-0223		2	O-RING 39,2X3 MM	
SU010	232979-0000		6	PRESSURE ROLLER (PAK OF 10)	
TGA 0500SQ					
FF040	2838228-0000		12	SHIM	
FF010	2838224-0000		4	SHIM	
JS060	1538109-0000		2	COMPRESSION SPRING	
JS040	1348956-0000		2	KNIFE	
JS030	2909853-0000		8	SHIM	
JS020	1566783-0000		2	INDUCTOR	
JS010	1520633-0002		12	DOLLY	
SU030	315204-0219		2	O-RING 29,2X3 MM	
SU020	2529420-0000		1	SHAFT	
SU010	257330-0000		3	PRESSURE ROLLER (10 PCS)	
TGA 0750SQ					
FF040	2843903-0000		12	SHIM	
FF010	2843899-0000		4	SHIM	
JS060	1538109-0000		2	COMPRESSION SPRING	
JS040	1348956-0000		2	KNIFE	
JS030	2909852-0000		8	SHIM	
JS020	1566783-0000		2	INDUCTOR	
JS010	1520633-0002		12	DOLLY	
SU030	315204-0219		2	O-RING 29,2X3 MM	
SU020	2529420-0000		1	SHAFT	
SU010	257330-0000		3	PRESSURE ROLLER (10 PCS)	
TGA 1000SQ					
FF040	2878048-0000		4	SHIM	
FF020	2680332-0000		4	SHIM	
FF010	2743397-0000		4	SHIM	
JS060	1538109-0000		2	COMPRESSION SPRING	
JS040	1348956-0000		2	KNIFE	
JS030	2660293-0000		8	VOLUME SHIM	
JS020	1566783-0000		2	INDUCTOR	
JS010	1110083-0002		12	DOLLY	
SU030	315204-0219		2	O-RING 29,2X3 MM	
SU020	2529420-0000		1	SHAFT	
SU010	257330-0000		3	PRESSURE ROLLER (10 PCS)	
TPA 0200SQ QC HI, TPA 0250SQ QC HI					
JS060	2774493-0000		2	COMPRESSION SPRING	
JS040	1348966-0000		2	KNIFE	
JS030	2674328-0000		16	VOLUME SHIM	
JS030	1549594-0000		16	VOLUME SHIM	
JS020	1110930-0000		2	INDUCTOR	
JS010	1110083-0002		12	DOLLY	
SU070	342850-0304		1	GASKET 35,4X49,1X5,2 1"1/2 FDA	
SU060	979813-0000		1	PLUG	
SU050	2529750-0000		1	COVERING PANEL	
SU040	2500081-0000		1	ELBOW PIPE	
SU030	315204-0215		2	O-RING 19,2X3 MM	
SU020	2529416-0000		1	SHAFT	
SU010	272479-0000		3	PRESSURE ROLLER (10PCS)	
TPA 0250SQ NOQC HI					

Machine Type | Group Description | Used-In | Group Number | Page No

This page is intentionally left blank.

Pos	Part No	UN	Qty	Description	Page No
TPA 0250SQ NOQC HI (Cont'd)					
JS060	2774493-0000		2	COMPRESSION SPRING	
JS040	1348966-0000		2	KNIFE	
JS030	2674328-0000		16	VOLUME SHIM	
JS020	1110930-0000		2	INDUCTOR	
JS010	1110083-0002		12	DOLLY	
SU070	342850-0304		1	GASKET 35,4X49,1X5,2 1"1/2 FDA	
SU060	979813-0000		1	PLUG	
SU050	2529750-0000		1	COVERING PANEL	
SU040	2500081-0000		1	ELBOW PIPE	
SU030	315204-0215		2	O-RING 19,2X3 MM	
SU020	2529416-0000		1	SHAFT	
TBA 0200B HI, TBA 0250B HI, TBA 0330S HI					
JS060	2774493-0000		2	COMPRESSION SPRING	
JS040	1348966-0000		2	KNIFE	
JS030	1538637-0000		8	VOLUME SHIM	
JS030	2605166-0000		8	VOLUME SHIM	
JS030	2654290-0000		8	VOLUME SHIM	
JS030	1346158-0000		8	VOLUME SHIM	
JS020	1110932-0000		2	INDUCTOR	
JS010	1110083-0002		12	DOLLY	
SU070	342850-0304		1	GASKET 35,4X49,1X5,2 1"1/2 FDA	
SU060	979813-0000		1	PLUG	
SU050	2529750-0000		1	COVERING PANEL	
SU040	2500081-0000		1	ELBOW PIPE	
SU030	315204-0215		2	O-RING 19,2X3 MM	
SU020	2529418-0000		1	SHAFT	
SU010	257330-0000		3	PRESSURE ROLLER (10 PCS)	
TBA 0200B NOHI, TBA 0250B NOHI, TBA 0330S NOHI					
JS060	2774493-0000		2	COMPRESSION SPRING	
JS040	1348966-0000		2	KNIFE	
JS030	1538637-0000		8	VOLUME SHIM	
JS030	1346158-0000		8	VOLUME SHIM	
JS030	2654290-0000		8	VOLUME SHIM	
JS030	2605166-0000		8	VOLUME SHIM	
JS020	1110932-0000		2	INDUCTOR	
JS010	1110083-0002		12	DOLLY	
SU030	315204-0215		2	O-RING 19,2X3 MM	
SU020	2529418-0000		1	SHAFT	
SU010	257330-0000		3	PRESSURE ROLLER (10 PCS)	
TBA 0200S HI					
JS060	2774493-0000		2	COMPRESSION SPRING	
JS040	1348966-0000		2	KNIFE	
JS030	1037735-0000		8	VOLUME SHIM	
JS020	1110930-0000		2	INDUCTOR	
JS010	1110083-0002		12	DOLLY	
SU070	342850-0304		1	GASKET 35,4X49,1X5,2 1"1/2 FDA	
SU060	979813-0000		1	PLUG	
SU050	2529750-0000		1	COVERING PANEL	
SU040	2500081-0000		1	ELBOW PIPE	
SU030	315204-0215		2	O-RING 19,2X3 MM	
SU020	2529416-0000		1	SHAFT	
SU010	272479-0000		3	PRESSURE ROLLER (10PCS)	
TBA 0200S NOHI					
JS060	2774493-0000		2	COMPRESSION SPRING	
JS040	1348966-0000		2	KNIFE	
JS030	1037735-0000		8	VOLUME SHIM	
JS020	1110930-0000		2	INDUCTOR	
JS010	1110083-0002		12	DOLLY	
SU030	315204-0215		2	O-RING 19,2X3 MM	
SU020	2529416-0000		1	SHAFT	
SU010	272479-0000		3	PRESSURE ROLLER (10PCS)	
TBA 0200SQ NOHI, TBA 0250SQ NOHI					
JS060	2774493-0000		2	COMPRESSION SPRING	
JS040	1348966-0000		2	KNIFE	
JS030	2678839-0000		16	VOLUME SHIM	
JS030	2678717-0000		16	VOLUME SHIM	
JS020	2767760-0000		2	INDUCTOR	
JS010	1566845-0002		12	DOLLY	
SU030	315204-0215		2	O-RING 19,2X3 MM	
SU020	2529418-0000		1	SHAFT	
SU010	2607089-0000		3	PRESSURE ROLLER	
TBA 0250S HI, TBA 0200M HI					
JS060	2774493-0000		2	COMPRESSION SPRING	
JS040	1348966-0000		2	KNIFE	
JS030	2640139-0000		8	VOLUME SHIM	
JS030	2662169-0000		8	VOLUME SHIM	
JS020	1110931-0000		2	INDUCTOR	
JS010	1110083-0002		12	DOLLY	
SU070	342850-0304		1	GASKET 35,4X49,1X5,2 1"1/2 FDA	
SU060	979813-0000		1	PLUG	
SU050	2529750-0000		1	COVERING PANEL	
SU040	2500081-0000		1	ELBOW PIPE	
SU020	2529416-0000		1	SHAFT	

Machine Type Group Description Used-In Group Number Page No

This page is intentionally left blank.

ECM: 331132 - 20080624
Group number: 2555394-0150
Assembly Drawing:

This list covers pages from 1-88 to 1-99

Pos	Part No	UN	Qty	Description	Page No
TBA 0250S HI, TBA 0200M HI (Cont'd)					
SU010	272479-0000		3	PRESSURE ROLLER (10PCS)	
TBA 0250S NOHI, TBA 0200M NOHI					
JS060	2774493-0000		2	COMPRESSION SPRING	
JS040	1348966-0000		2	KNIFE	
JS030	2662169-0000		8	VOLUME SHIM	
JS030	2640139-0000		8	VOLUME SHIM	
JS020	1110931-0000		2	INDUCTOR	
JS010	1110083-0002		12	DOLLY	
SU020	2529416-0000		1	SHAFT	
SU010	272479-0000		3	PRESSURE ROLLER (10PCS)	
TBA 0250SQ HI, TBA 0200SQ HI					
JS060	2774493-0000		2	COMPRESSION SPRING	
JS040	1348966-0000		2	KNIFE	
JS030	2678717-0000		16	VOLUME SHIM	
JS030	2678839-0000		16	VOLUME SHIM	
JS020	2767760-0000		2	INDUCTOR	
JS010	1566845-0002		12	DOLLY	
SU070	342850-0304		1	GASKET 35,4X49,1X5,2 1"1/2 FDA	
SU060	979813-0000		1	PLUG	
SU050	2529750-0000		1	COVERING PANEL	
SU040	2500081-0000		1	ELBOW PIPE	
SU030	315204-0215		2	O-RING 19,2X3 MM	
SU020	2529418-0000		1	SHAFT	
SU010	2607089-0000		3	PRESSURE ROLLER	
TBA 0500B QC HI, TBA 1000B QC HI					
JS060	1538109-0000		2	COMPRESSION SPRING	
JS040	1348955-0000		2	KNIFE	
JS030	1511337-0000		8	VOLUME SHIM	
JS030	1511336-0000		8	VOLUME SHIM	
JS020	1110938-0000		2	INDUCTOR	
JS010	1110083-0002		12	DOLLY	
SU070	342850-0304		1	GASKET 35,4X49,1X5,2 1"1/2 FDA	
SU060	979813-0000		1	PLUG	
SU050	2529750-0000		1	COVERING PANEL	
SU040	2500081-0000		1	ELBOW PIPE	
SU030	315204-0219		2	O-RING 29,2X3 MM	
SU020	2523268-0000		1	SHAFT	
SU010	232979-0000		3	PRESSURE ROLLER (PAK OF 10)	
TBA 0500S HI					
JS060	1538109-0000		2	COMPRESSION SPRING	
JS040	1348956-0000		2	KNIFE	
JS030	1511253-0000		8	VOLUME SHIM	
JS020	1110934-0000		2	INDUCTOR	
JS010	1110083-0002		12	DOLLY	
SU070	342850-0304		1	GASKET 35,4X49,1X5,2 1"1/2 FDA	
SU060	979813-0000		1	PLUG	
SU050	2529750-0000		1	COVERING PANEL	
SU040	2500081-0000		1	ELBOW PIPE	
SU030	315204-0219		2	O-RING 29,2X3 MM	
SU020	2529420-0000		1	SHAFT	
SU010	499387-0000		3	PRESSURE ROLLER - (10 PCS)	
TBA 0500S NOHI					
JS060	1538109-0000		2	COMPRESSION SPRING	
JS040	1348956-0000		2	KNIFE	
JS030	1511253-0000		8	VOLUME SHIM	
JS020	1110934-0000		2	INDUCTOR	
JS010	1110083-0002		12	DOLLY	
SU030	315204-0219		2	O-RING 29,2X3 MM	
SU020	2529420-0000		1	SHAFT	
SU010	499387-0000		3	PRESSURE ROLLER - (10 PCS)	
TBA 1000B NOQC NOMOLDEDCAP HI					
JS060	1538109-0000		2	COMPRESSION SPRING	
JS040	1348955-0000		2	KNIFE	
JS030	1035831-0000		8	VOLUME SHIM	
JS020	1110938-0000		2	INDUCTOR	
JS010	1110083-0002		12	DOLLY	
SU070	342850-0304		1	GASKET 35,4X49,1X5,2 1"1/2 FDA	
SU060	979813-0000		1	PLUG	
SU050	2529750-0000		1	COVERING PANEL	
SU040	2500081-0000		1	ELBOW PIPE	
SU030	315204-0219		2	O-RING 29,2X3 MM	
SU020	2523268-0000		1	SHAFT	
SU010	232979-0000		3	PRESSURE ROLLER (PAK OF 10)	
TBA 1000B NOQC NOMOLDEDCAP NOHI					
JS060	1538109-0000		2	COMPRESSION SPRING	
JS040	1348955-0000		2	KNIFE	
JS030	1035831-0000		8	VOLUME SHIM	
JS020	1110938-0000		2	INDUCTOR	
JS010	1110083-0002		12	DOLLY	
SU030	315204-0219		2	O-RING 29,2X3 MM	
SU020	2523268-0000		1	SHAFT	
SU010	232979-0000		3	PRESSURE ROLLER (PAK OF 10)	
TBA 1000B NOQC STDA7 HI					

Machine Type | Group Description | Used-In | Group Number | Page No

This page is intentionally left blank.

Pos	Part No	UN	Qty	Description	Page No
TBA 1000B NOQC STDA7 HI (Cont'd)					
	90240-0180		8	FLANGE BUSHING 10X14X15MM	
JS100	2767478-0003		2	ROLLER	
JS100	2767478-0002		2	ROLLER	
JS060	1538109-0000		2	COMPRESSION SPRING	
JS040	1348955-0000		2	KNIFE	
JS030	1035831-0000		8	VOLUME SHIM	
JS020	2610956-0000		2	INDUCTOR	
JS010	1110083-0002		12	DOLLY	
SU070	342850-0304		1	GASKET 35,4X49,1X5,2 1"1/2 FDA	
SU060	979813-0000		1	PLUG	
SU050	2529750-0000		1	COVERING PANEL	
SU040	2500081-0000		1	ELBOW PIPE	
SU030	315204-0219		2	O-RING 29,2X3 MM	
SU020	2523268-0000		1	SHAFT	
SU010	232979-0000		3	PRESSURE ROLLER (PAK OF 10)	
TBA 1000B NOQC STDA7 NOHI					
	90240-0180		8	FLANGE BUSHING 10X14X15MM	
JS100	2767478-0002		2	ROLLER	
JS100	2767478-0003		2	ROLLER	
JS060	1538109-0000		2	COMPRESSION SPRING	
JS040	1348955-0000		2	KNIFE	
JS030	1035831-0000		8	VOLUME SHIM	
JS020	2610956-0000		2	INDUCTOR	
JS010	1110083-0002		12	DOLLY	
SU030	315204-0219		2	O-RING 29,2X3 MM	
SU020	2523268-0000		1	SHAFT	
SU010	232979-0000		3	PRESSURE ROLLER (PAK OF 10)	
TBA 1000B QC NOHI, TBA 0500B QC NOHI					
JS060	1538109-0000		2	COMPRESSION SPRING	
JS040	1348955-0000		2	KNIFE	
JS030	1511336-0000		8	VOLUME SHIM	
JS030	1511337-0000		8	VOLUME SHIM	
JS020	1110938-0000		2	INDUCTOR	
JS010	1110083-0002		12	DOLLY	
SU030	315204-0219		2	O-RING 29,2X3 MM	
SU020	2523268-0000		1	SHAFT	
SU010	232979-0000		3	PRESSURE ROLLER (PAK OF 10)	
Common Parts					
FF030	263673-0000		4	GASKET	
JS050	1037254-0000		12	SHIM	

Pos	Part No	UN	Qty	Description	Page No

This page is intentionally left blank.

ECM: 998235 - 20061101
Group number: 2642988-0100
Assembly Drawing:

Pos	Part No	UN	Qty	Description	Page No
TBA 0200B, TBA 0200SQ, TBA 0250B, TBA 0330S, TPA 0330SQ, TBA 0250SQ					
010	2619171-0000		1	PLATE	
020	2844044-0000		1	SLIDE	
040	312605-0314		4	HEXAGON NUT, M6M M5 A280	
050	315105-0146		4	WASHER BRB 5,3X10 RFR	
TBA 0200M, TBA 0200S, TBA 0250S, TPA 0250SQ, TPA 0200SQ					
010	2619171-0000		1	PLATE	
020	2844043-0000		1	SLIDE	
040	312605-0314		4	HEXAGON NUT, M6M M5 A280	
050	315105-0146		4	WASHER BRB 5,3X10 RFR	
TBA 0500S, TPA 1000SQ, TPA 0750SQ					
010	2619171-0000		1	PLATE	
020	2844045-0000		1	SLIDE	
040	312605-0314		4	HEXAGON NUT, M6M M5 A280	
050	315105-0146		4	WASHER BRB 5,3X10 RFR	
TBA 0500SQ, TBA 0500B, TBA 1000B, TBA 1000SQ, TBA 1000S, TBA 1500S, TGA 1000SQ					
010	2619171-0000		1	PLATE	
020	2844047-0000		1	SLIDE	
040	312605-0314		4	HEXAGON NUT, M6M M5 A280	
050	315105-0146		4	WASHER BRB 5,3X10 RFR	
TBA 1890S, TBA 2000S, TBA 1400B					
010	2592530-0000		1	PLATE	
TPA 0500SQ					
010	2619171-0000		1	PLATE	
020	2844046-0000		1	SLIDE	
040	312605-0314		4	HEXAGON NUT, M6M M5 A280	
050	315105-0146		4	WASHER BRB 5,3X10 RFR	

Pos	Part No	UN	Qty	Description	Page No

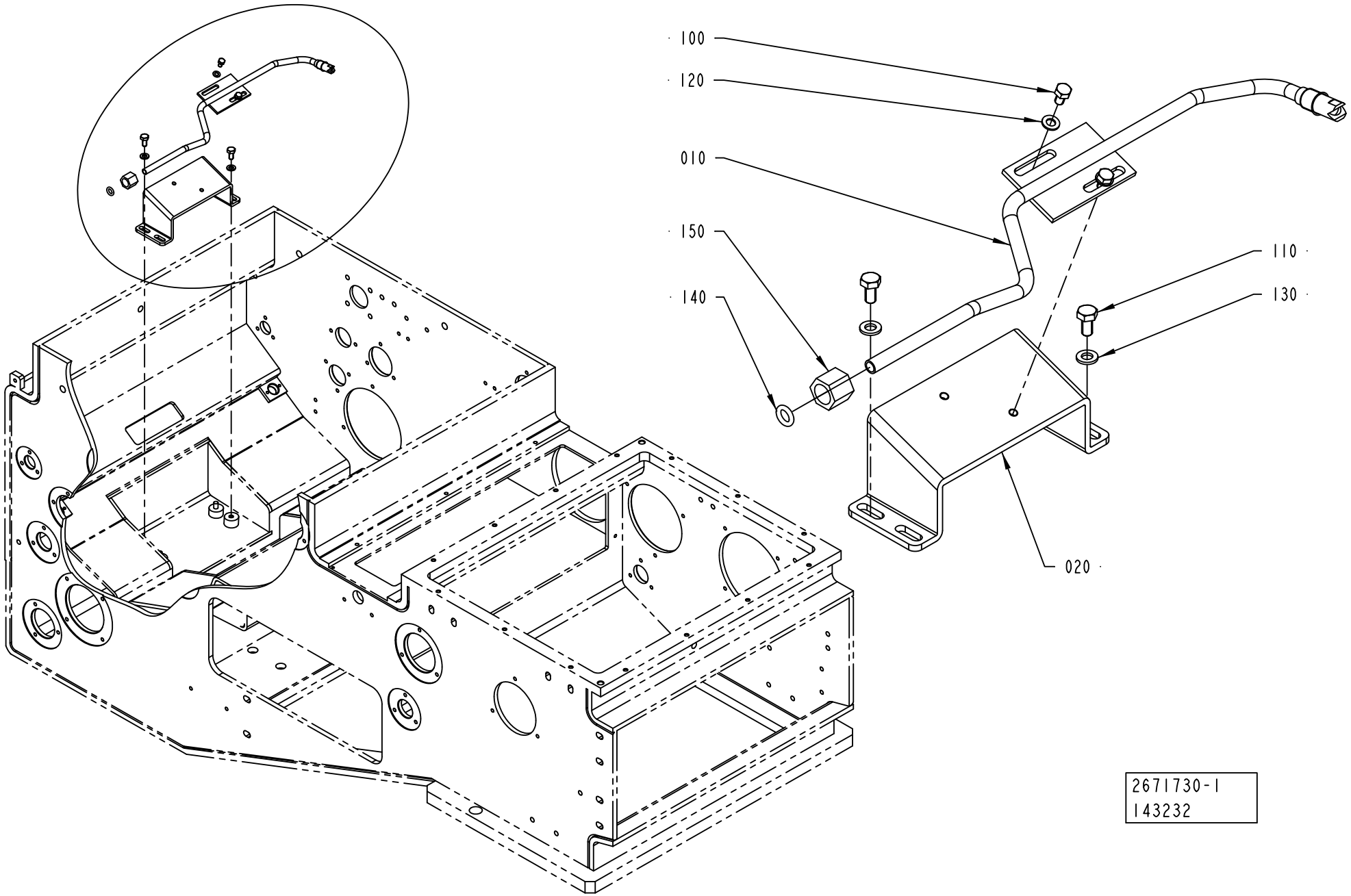
100
120
010
150
140
110
130
020
2671730-1
143232

ECM: 322231 - 20080101
Group number: 2671730-0100
Assembly Drawing: 2671730-1_1_AA

This list covers pages from 1-102 to 1-105

Pos	Part No	UN	Qty	Description	Page No
A3/FLEX TBA 0200S, A3/FLEX TBA 0200M, A3/FLEX TBA 0250S (See drawing on page: 1-104)					
010	2668569-0000		1	PLUG	
140	315205-0808		1	O-RING 7,59X2,62 MM	
A3/FLEX TBA 0500B, A3/FLEX TBA 1000B, A3/FLEX TBA 1000S, A3/FLEX TBA 1500S, A3/FLEX TBA 0200B, A3/FLEX TBA 0250B, A3/FLEX TBA 0330S, A3/FLEX TBA 0500S, A3/FLEX TPA 1000S (See drawing on page: 1-102)					
010	2872375-0000		1	NOZZLE	
140	315205-0808		1	O-RING 7,59X2,62 MM	
150	342703-0208		1	NUT, PIPES & CONNECTORS,NUT M-8 SS	
A3/FLEX TBA 1000SQ, A3/FLEX TPA 1000SQ, A3/FLEX TPA 0330SQ, A3/FLEX TPA 0500SQ, A3/FLEX TPA 0250SQ, A3/FLEX TPA 0200SQ, A3/FLEX TPA 0750SQ, A3/FLEX TBA 0200SQ, A3/FLEX TBA 0250SQ, A3/FLEX TBA 0500SQ, A3/FLEX TGA 1000SQ, A3/FLEX TGA 0500SQ, A3/FLEX TGA 0750SQ (See drawing on page: 1-102)					
010	2668565-0000		1	NOZZLE	
140	315205-0808		1	O-RING 7,59X2,62 MM	
150	342703-0208		1	NUT, PIPES & CONNECTORS,NUT M-8 SS	
A3/FLEX TBA 1890S, A3/FLEX TBA 2000S, A3/FLEX TBA 1400B (See drawing on page: 1-102)					
010	2641317-0000		1	PIPE	
140	315205-0808		1	O-RING 7,59X2,62 MM	
150	342703-0208		1	NUT, PIPES & CONNECTORS,NUT M-8 SS	
Common Parts					
020	2641319-0000		1	BRACKET	
100	312105-0323		2	SCREW M6S ISO 4017 M5X8 A480	
110	312105-0366		2	SCREW M6S ISO 4017 M6X12 A480	
120	315105-0146		2	WASHER BRB 5,3X10 RFR	
130	315105-0153		2	WASHER BRB 6,4X12 RFR	

Pos	Part No	UN	Qty	Description	Page No

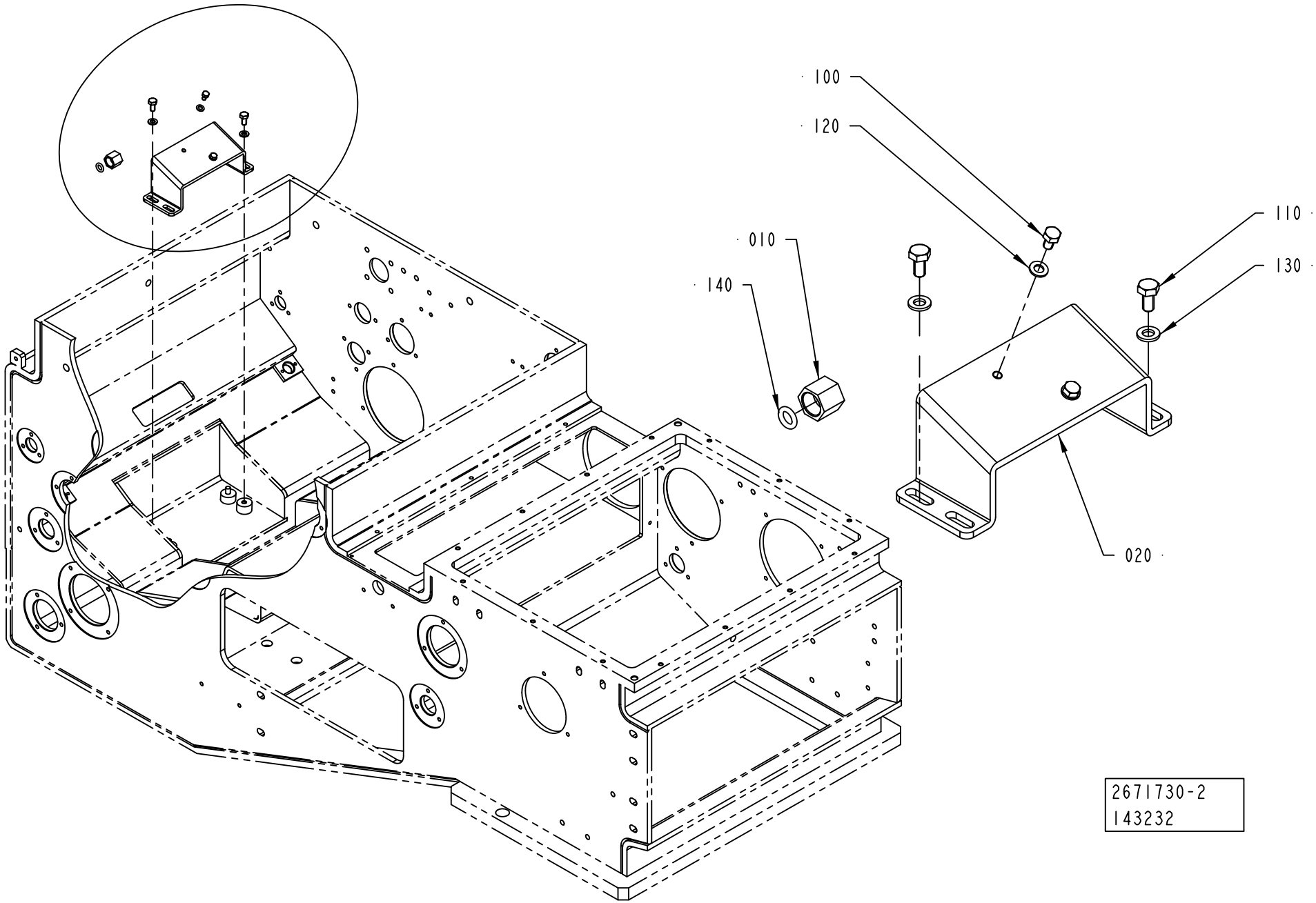
100
120
110
130
010
140
020
2671730-2
143232

ECM: 322231 - 20080101
Group number: 2671730-0100
Assembly Drawing: 2671730-2_1_AA

This list covers pages from 1-102 to 1-105

Pos	Part No	UN	Qty	Description	Page No
A3/FLEX TBA 0200S, A3/FLEX TBA 0200M, A3/FLEX TBA 0250S (See drawing on page: 1-104)					
010	2668569-0000		1	PLUG	
140	315205-0808		1	O-RING 7,59X2,62 MM	
A3/FLEX TBA 0500B, A3/FLEX TBA 1000B, A3/FLEX TBA 1000S, A3/FLEX TBA 1500S, A3/FLEX TBA 0200B, A3/FLEX TBA 0250B, A3/FLEX TBA 0330S, A3/FLEX TBA 0500S, A3/FLEX TPA 1000S (See drawing on page: 1-102)					
010	2872375-0000		1	NOZZLE	
140	315205-0808		1	O-RING 7,59X2,62 MM	
150	342703-0208		1	NUT, PIPES & CONNECTORS,NUT M-8 SS	
A3/FLEX TBA 1000SQ, A3/FLEX TPA 1000SQ, A3/FLEX TPA 0330SQ, A3/FLEX TPA 0500SQ, A3/FLEX TPA 0250SQ, A3/FLEX TPA 0200SQ, A3/FLEX TPA 0750SQ, A3/FLEX TBA 0200SQ, A3/FLEX TBA 0250SQ, A3/FLEX TBA 0500SQ, A3/FLEX TGA 1000SQ, A3/FLEX TGA 0500SQ, A3/FLEX TGA 0750SQ (See drawing on page: 1-102)					
010	2668565-0000		1	NOZZLE	
140	315205-0808		1	O-RING 7,59X2,62 MM	
150	342703-0208		1	NUT, PIPES & CONNECTORS,NUT M-8 SS	
A3/FLEX TBA 1890S, A3/FLEX TBA 2000S, A3/FLEX TBA 1400B (See drawing on page: 1-102)					
010	2641317-0000		1	PIPE	
140	315205-0808		1	O-RING 7,59X2,62 MM	
150	342703-0208		1	NUT, PIPES & CONNECTORS,NUT M-8 SS	
Common Parts					
020	2641319-0000		1	BRACKET	
100	312105-0323		2	SCREW M6S ISO 4017 M5X8 A480	
110	312105-0366		2	SCREW M6S ISO 4017 M6X12 A480	
120	315105-0146		2	WASHER BRB 5,3X10 RFR	
130	315105-0153		2	WASHER BRB 6,4X12 RFR	

Pos	Part No	UN	Qty	Description	Page No

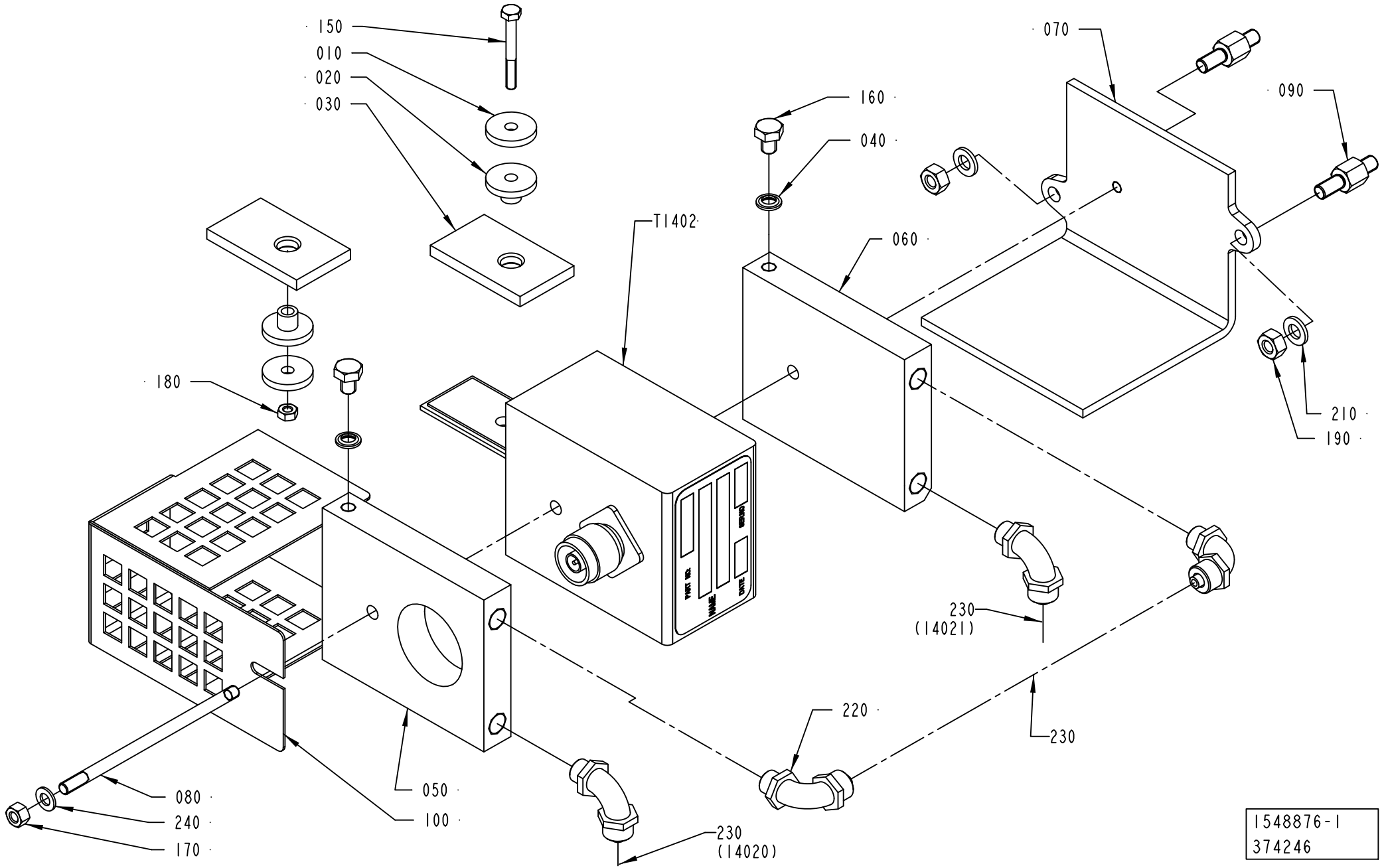
150
010
020
030
070
090
160
040
T1402
060
180
210
190
230
(14021)
220
230
080
240
170
050
100
230
(14020)
1548876-1
374246

ECM: 376422 - 20090401
Group number: 1548876-0100
Assembly Drawing: 1548876-1_1_AB

Pos	Part No	UN	Qty	Description	Page No
A3/FLEX TBA 0200B, A3/FLEX TBA 0250B, A3/FLEX TBA 0330S, A3/FLEX TPA 0330SQ, A3/FLEX TBA 0500S					
230	90166-0118	MM	6000	TUBE 8 MM PA BLACK	
T1402	67379-0412		1	TRANSFORMER	
A3/FLEX TBA 0200S, A3/FLEX TBA 1890S, A3/FLEX TBA 2000S, A3/FLEX TBA 0200M, A3/FLEX TBA 0250S, A3/FLEX TPA 0200SQ QC, A3/FLEX TPA 0250SQ QC, A3/FLEX TBA 0200SQ, A3/FLEX TBA 0250SQ, A3/FLEX TBA 1400B					
230	90166-0118	MM	6000	TUBE 8 MM PA BLACK	
T1402	67379-0414		1	TRANSFORMER	
A3/FLEX TBA 0500B, A3/FLEX TBA 1000B, A3/FLEX TPA 1000SQ, A3/FLEX TBA 1500S, A3/FLEX TPA 0750SQ, A3/FLEX TGA 1000SQ, A3/FLEX TGA 0500SQ, A3/FLEX TGA 0750SQ					
230	90166-0118	MM	6000	TUBE 8 MM PA BLACK	
T1402	67379-0417		1	TRANSFORMER	
A3/FLEX TBA 1000S DIMC/FLEX					
230	90166-0118	MM	6000	TUBE 8 MM PA BLACK	
T1402	67379-0405		1	TRANSFORMER	
A3/FLEX TBA 1000S NODIMC					
230	90166-0118	MM	6000	TUBE 8 MM PA BLACK	
T1402	67379-0404		1	TRANSFORMER	
A3/FLEX TBA 1000SQ, A3/FLEX TPA 0500SQ, A3/FLEX TBA 0500SQ					
230	90166-0118	MM	6000	TUBE 8 MM PA BLACK	
T1402	67379-0407		1	TRANSFORMER	
Common Parts					
010	263311-0000		2	WASHER	
020	1539174-0000		2	BUSHING	
030	1539175-0000		2	PLATE	
040	315211-0103		2	BONDED SEAL SS/NBR90 M6	
050	1558830-0000		1	COOLING PLATE	
060	1558831-0000		1	COOLING PLATE	
070	1558441-0000		1	BRACKET	
080	2559066-0000		1	STUD SCREW	
090	2532979-0000		2	SPACER	
100	2541664-0000		1	COVER	
150	312105-0301		1	SCREW M6S ISO 4017 M4X35 A470	
160	312105-0362		2	SCREW M6S ISO 4017 M6X8 A480	
170	312605-0314		1	HEXAGON NUT, M6M M5 A280	
180	312605-0312		1	HEXAGON NUT, M6M M4 A280	
190	312605-0316		2	HEXAGON NUT, M6M M6 A280	
210	315105-0153		2	WASHER BRB 6,4X12 RFR	
220	342931-0121		4	ELBOW 90 COUPL.,EXT.THREAD 8/6-G1/8"	
240	315105-0146		1	WASHER BRB 5,3X10 RFR	
250	90157-0037		1	THREAD SEALANT LOCTITE 542	

Pos	Part No	UN	Qty	Description	Page No

Machine Type | Group Description | Used-In | Group Number | Page No

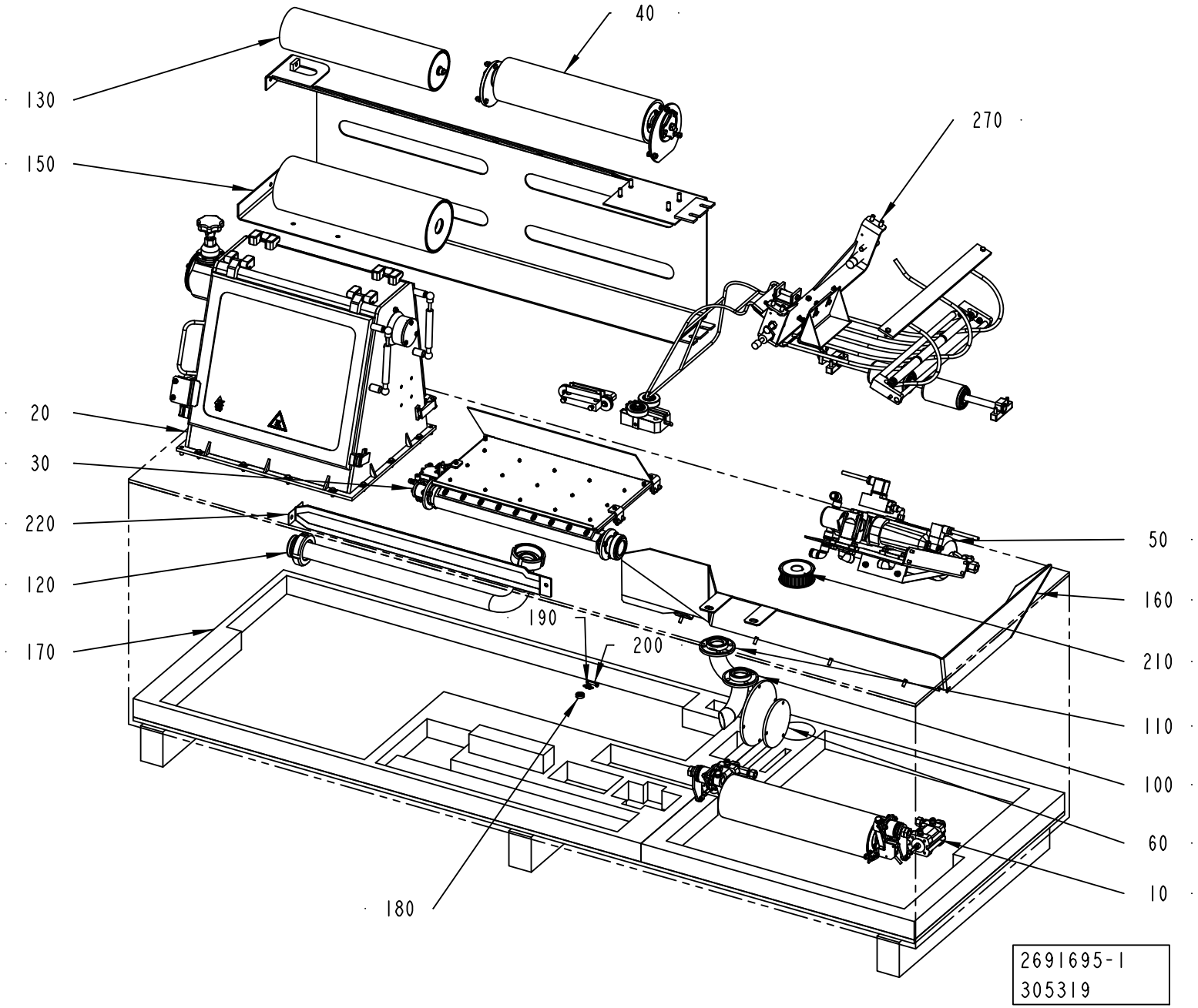
40
130
150
270
20
30
220
120
170
190
200
50
160
210
110
100
60
10
180
2691695-1
305319

ECM: 335186 - 20080101
Group number: 2691695-0100
Assembly Drawing: 2691695-1_1_AC

This list covers pages from 1-108 to 1-111

Pos	Part No	UN	Qty	Description	Page No
START FM TBA 2000S, START FM TBA 1890S, START FM TBA 1400B (See drawing on page: 1-110)					
010	1548892-0100		1	CALENDER ROLLER	**1-113, 1-115, 1-117**
030	2532934-0100		1	AIR KNIFE	**1-119, 1-121, 1-123**
040	2541635-0100		1	SQUEE-GEE ROLLER	**1-125, 1-127, 1-129, 1-131, 1-133**
090	1558522-0100		1	ADJUSTING ROLLER	**1-135, 1-137**
110	2547407-0000		2	PIPE	
120	2672962-0000		1	CONNECTING PIPE	
130	2532911-0000		1	ROLLER	
170	2702068-0000		1	BOX	
190	90335-0089		1	TENSION SPRING 41490, 0,9X10X23	
200	2528135-0000		1	SHAFT	
210	1144802-0000		1	PULLEY	
270	2731260-0100		1	KIT	**1-139**
TBA 1890S, TBA 2000S, TBA 1400B (See drawing on page: 1-108)					
010	1548892-0100		1	CALENDER ROLLER	**1-113, 1-115, 1-117**
020	2531042-0100		1	UPPER SECTION	**1-153**
030	2532934-0100		1	AIR KNIFE	**1-119, 1-121, 1-123**
040	2541635-0100		1	SQUEE-GEE ROLLER	**1-125, 1-127, 1-129, 1-131, 1-133**
060	2701978-0100		1	LID ADAPTER	**1-161**
100	2657888-0000		1	HORN	
110	2657887-0000		1	HORN	
120	2685311-0000		1	CONNECTING PIPE	
130	2662639-0000		1	ROLLER	
150	2679599-0000		1	CHUTE	
160	2679598-0000		1	SPLASH PLATE	
170	2702068-0000		1	BOX	
180	90214-0138		1	BALL BEARING, 5X19X6 MM	
190	90459-5581		1	TENSION SPRING 1,2X23X8,5	
200	2721434-0000		1	SHAFT	
210	2588328-0000		1	PULLEY	
220	2863174-0000		1	BUSBAR	
230	90217-0348		2	GASKET 35,4X46,8X4 MM	
240	90459-4179		2	GASKET 30,5X42X4 MM FDA	
270	2728205-0100		1	KIT	**1-163**
280	2794783-0100		1	SIMULATOR	**1-167**

Pos	Part No	UN	Qty	Description	Page No

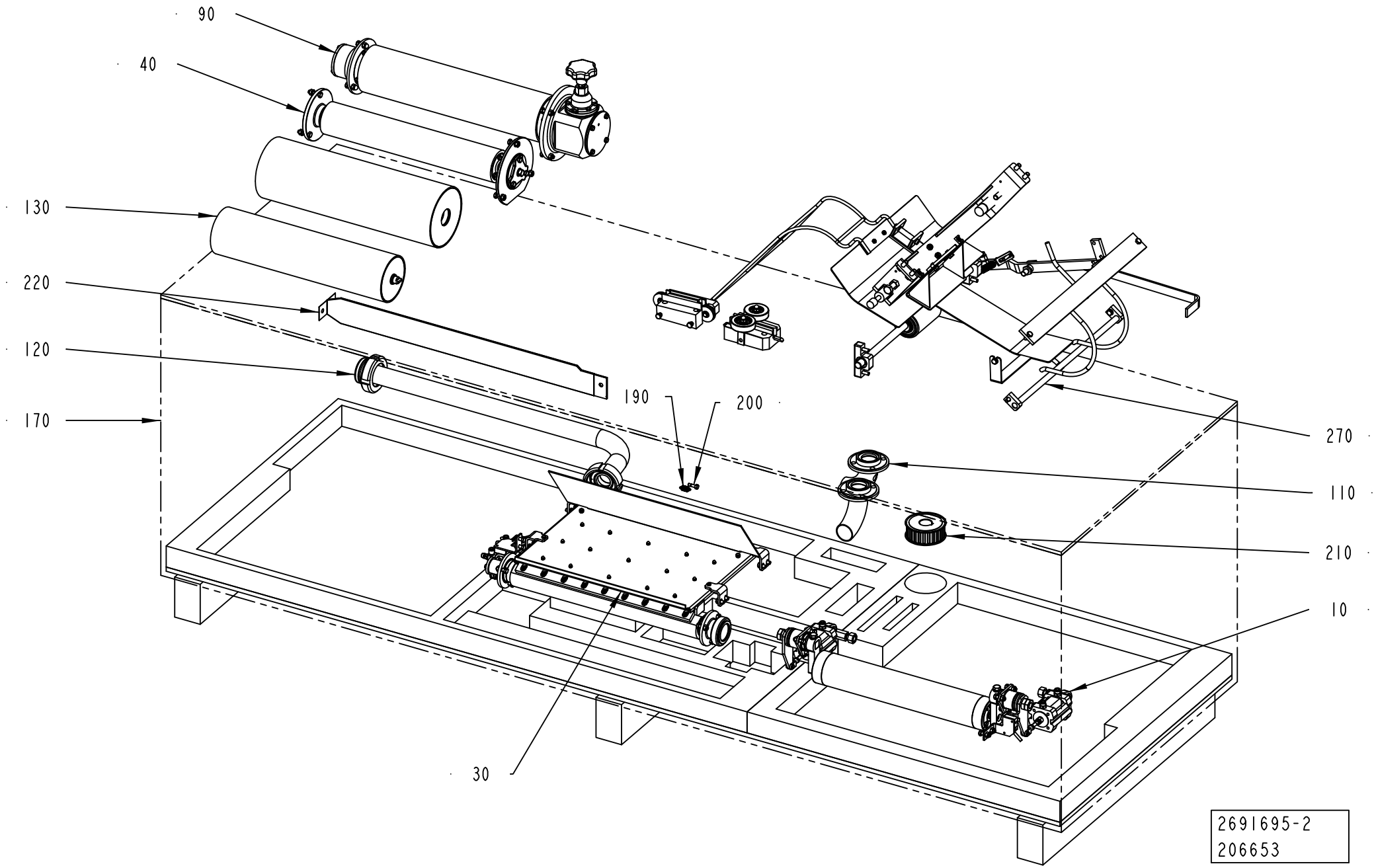
90
40
130
220
120
170
190
200
270
110
210
10
30
2691695-2
206653

ECM: 335186 - 20080101
Group number: 2691695-0100
Assembly Drawing: 2691695-2_1_AA

This list covers pages from 1-108 to 1-111

Pos	Part No	UN	Qty	Description	Page No
START FM TBA 2000S, START FM TBA 1890S, START FM TBA 1400B (See drawing on page: 1-110)					
010	1548892-0100		1	CALENDER ROLLER	**1-113, 1-115, 1-117**
030	2532934-0100		1	AIR KNIFE	**1-119, 1-121, 1-123**
040	2541635-0100		1	SQUEE-GEE ROLLER	**1-125, 1-127, 1-129, 1-131, 1-133**
090	1558522-0100		1	ADJUSTING ROLLER	**1-135, 1-137**
110	2547407-0000		2	PIPE	
120	2672962-0000		1	CONNECTING PIPE	
130	2532911-0000		1	ROLLER	
170	2702068-0000		1	BOX	
190	90335-0089		1	TENSION SPRING 41490, 0,9X10X23	
200	2528135-0000		1	SHAFT	
210	1144802-0000		1	PULLEY	
270	2731260-0100		1	KIT	**1-139**
TBA 1890S, TBA 2000S, TBA 1400B (See drawing on page: 1-108)					
010	1548892-0100		1	CALENDER ROLLER	**1-113, 1-115, 1-117**
020	2531042-0100		1	UPPER SECTION	**1-153**
030	2532934-0100		1	AIR KNIFE	**1-119, 1-121, 1-123**
040	2541635-0100		1	SQUEE-GEE ROLLER	**1-125, 1-127, 1-129, 1-131, 1-133**
060	2701978-0100		1	LID ADAPTER	**1-161**
100	2657888-0000		1	HORN	
110	2657887-0000		1	HORN	
120	2685311-0000		1	CONNECTING PIPE	
130	2662639-0000		1	ROLLER	
150	2679599-0000		1	CHUTE	
160	2679598-0000		1	SPLASH PLATE	
170	2702068-0000		1	BOX	
180	90214-0138		1	BALL BEARING, 5X19X6 MM	
190	90459-5581		1	TENSION SPRING 1,2X23X8,5	
200	2721434-0000		1	SHAFT	
210	2588328-0000		1	PULLEY	
220	2863174-0000		1	BUSBAR	
230	90217-0348		2	GASKET 35,4X46,8X4 MM	
240	90459-4179		2	GASKET 30,5X42X4 MM FDA	
270	2728205-0100		1	KIT	**1-163**
280	2794783-0100		1	SIMULATOR	**1-167**

Pos	Part No	UN	Qty	Description	Page No

CALENDER ROLLER

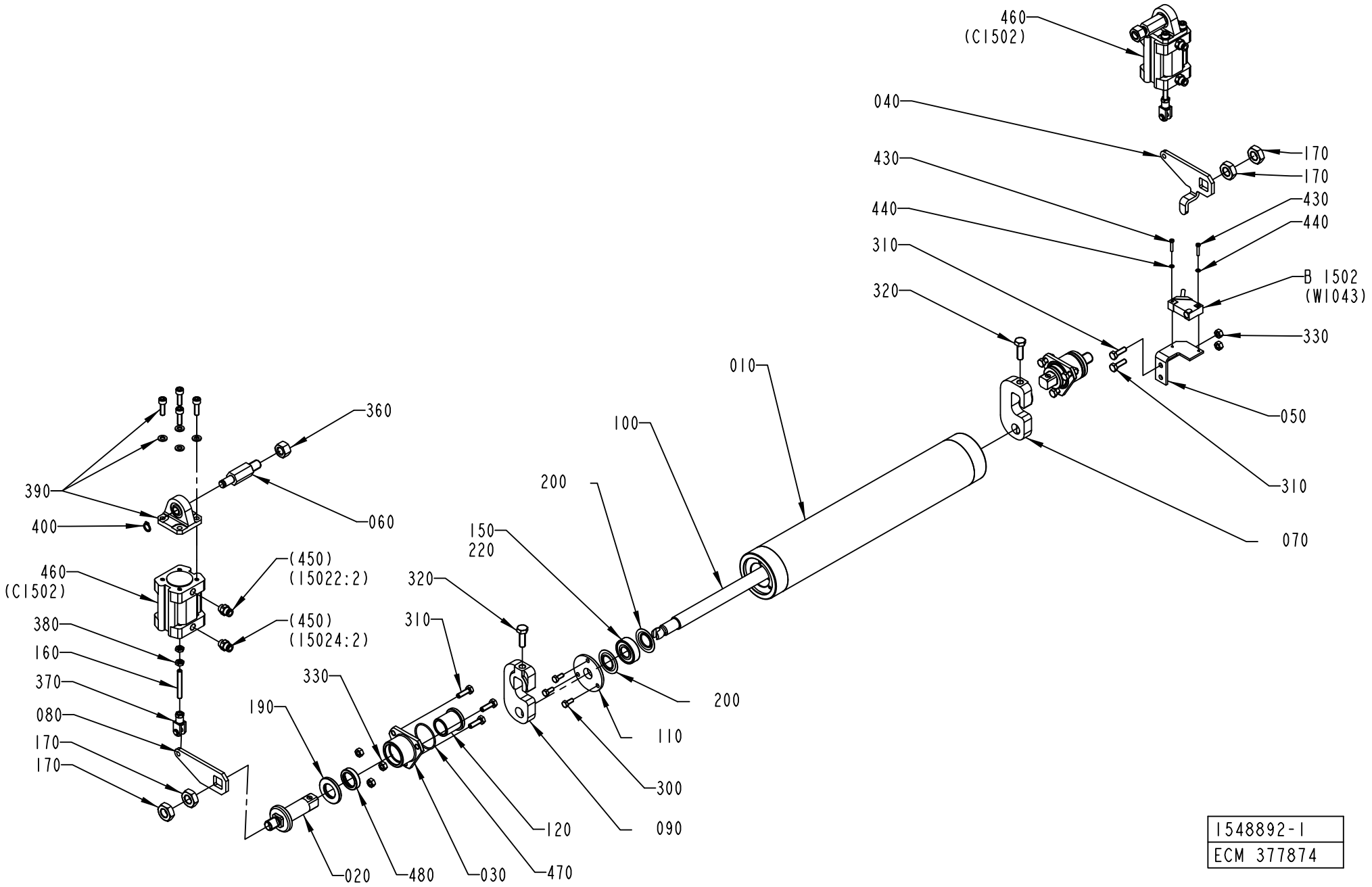

1548892-1
ECM 377874

ECM: 379848 - 20090401
Group number: 1548892-0100
Assembly Drawing: 1548892-1_1_AC

This list covers pages from 1-112 to 1-117

Pos	Part No	UN	Qty	Description	Page No
A3/FLEX TBA 0200S NODIMC, A3/FLEX TBA 1000S NODIMC, A3/FLEX TBA 1000B NODIMC, A3/FLEX TBA 0500B NODIMC, A3/FLEX TBA 0250S NODIMC, A3/FLEX TBA 0200M NODIMC (See drawing on page: 1-112)					
010	1538496-0000		1	ROLLER	
040	1498130-0000		1	PLATE	
060	1498132-0000		2	SHAFT	
070	2936482-0000		1	ARM	
080	1498134-0000		1	PLATE	
090	2936481-0000		1	ARM	
200	90214-0303		4	SEALING RING, 18,6X35X2 MM	
320	312105-0453		2	SCREW M6S ISO 4017 M8X25 A480	
390	90450-0756		2	BRACKET, REAR EYE 32	
400	90141-0016		2	RETAINING RING FOR SHAFT DIN 471 10 SS	
460	90458-0528		2	DOUBLE ACTING, COMPACT, CYL 32-25	
A3/FLEX TBA 1000S STDA7, A3/FLEX TBA 1000B STDA7, A3/FLEX TBA 1000S LIGHTCAP (See drawing on page: 1-116)					
010	2528136-0000		1	SQUEE-GEE ROLLER	
040	1498130-0000		1	PLATE	
060	1498132-0000		2	SHAFT	
070	2936482-0000		1	ARM	
080	1498134-0000		1	PLATE	
090	2936481-0000		1	ARM	
200	90214-0303		2	SEALING RING, 18,6X35X2 MM	
320	312105-0453		2	SCREW M6S ISO 4017 M8X25 A480	
390	90450-0756		2	BRACKET, REAR EYE 32	
400	90141-0016		2	RETAINING RING FOR SHAFT DIN 471 10 SS	
460	90458-0528		2	DOUBLE ACTING, COMPACT, CYL 32-25	
500	2763979-0000		8	SHIM	
A3/FLEX TBA 1000SQ NODIMC, A3/FLEX TPA 1000SQ NODIMC, A3/FLEX TBA 1500S NODIMC, A3/FLEX TBA 0200B NODIMC, A3/FLEX TBA 0250B NODIMC, A3/FLEX TBA 0330S NODIMC, A3/FLEX TPA 0330SQ NODIMC, A3/FLEX TPA 0500SQ NODIMC, A3/FLEX TBA 0500S NODIMC, A3/FLEX TPA 0200SQ NODIMC, A3/FLEX TPA 0250SQ NODIMC, A3/FLEX TPA 0750SQ NODIMC, A3/FLEX TBA 0200SQ NODIMC, A3/FLEX TBA 0250SQ NODIMC, A3/FLEX TGA 1000SQ NODIMC, A3/FLEX TBA 0500SQ NODIMC, A3/FLEX TGA 0500SQ NODIMC, A3/FLEX TGA 0750SQ NODIMC (See drawing on page: 1-112)					
010	1511769-0000		1	ROLLER	
040	1498130-0000		1	PLATE	
060	1498132-0000		2	SHAFT	
070	2936482-0000		1	ARM	
080	1498134-0000		1	PLATE	
090	2936481-0000		1	ARM	
200	90214-0303		4	SEALING RING, 18,6X35X2 MM	
320	312105-0453		2	SCREW M6S ISO 4017 M8X25 A480	
390	90450-0756		2	BRACKET, REAR EYE 32	
400	90141-0016		2	RETAINING RING FOR SHAFT DIN 471 10 SS	
460	90458-0528		2	DOUBLE ACTING, COMPACT, CYL 32-25	
A3/FLEX TBA 2000S NODIMC, A3/FLEX TBA 1890S NODIMC, A3/FLEX TBA 1400B NODIMC (See drawing on page: 1-114)					
010	2547406-0000		1	ROLLER	
040	2544883-0000		1	PLATE	
060	1498132-0000		2	SHAFT	
070	2544885-0000		1	ARM	
080	2544884-0000		1	PLATE	
090	2544886-0000		1	ARM	
200	90214-0303		4	SEALING RING, 18,6X35X2 MM	
320	312105-0451		2	SCREW M6S ISO 4017 M8X20 A480	
390	90450-0756		2	BRACKET, REAR EYE 32	
400	90141-0016		2	RETAINING RING FOR SHAFT DIN 471 10 SS	
460	90458-0528		2	DOUBLE ACTING, COMPACT, CYL 32-25	
A3/FLEX TPA 500SQ LIGHTCAP (See drawing on page: 1-116)					
010	2951499-0000		1	SQUEE-GEE ROLLER	
040	1498130-0000		1	PLATE	
060	1498132-0000		2	SHAFT	
070	2936482-0000		1	ARM	
080	1498134-0000		1	PLATE	
090	2936481-0000		1	ARM	
200	90214-0303		2	SEALING RING, 18,6X35X2 MM	
320	312105-0453		2	SCREW M6S ISO 4017 M8X25 A480	
390	90450-0756		2	BRACKET, REAR EYE 32	
400	90141-0016		2	RETAINING RING FOR SHAFT DIN 471 10 SS	
460	90458-0528		2	DOUBLE ACTING, COMPACT, CYL 32-25	
500	2763979-0000		8	SHIM	
Common Parts					
020	2532969-0000		2	SHAFT	
030	2541643-0000		2	FLANGE	
050	1498131-0000		1	BRACKET	
100	1498790-0000		1	SHAFT	
110	2931911-0000		2	BEARING COVER	
120	2541682-0000		2	BUSHING	
150	90458-1704		2	BALL BEARING, 15X35X11 MM	
160	90459-1728		2	SCREW ISO4029 M6X45 A4	
170	90099-0027		4	HEXAGON NUT, M14, DIN936	
190	2541681-0000		2	WASHER	
220	90296-0091		1	LUBRICATION GREASE	
300	312105-0327		6	SCREW M6S ISO 4017 M5X12 A480	
310	312105-0370		8	SCREW M6S ISO 4017 M6X20 A480	

Machine Type | Group Description | Used-In | Group Number | Page No

CALENDER ROLLER

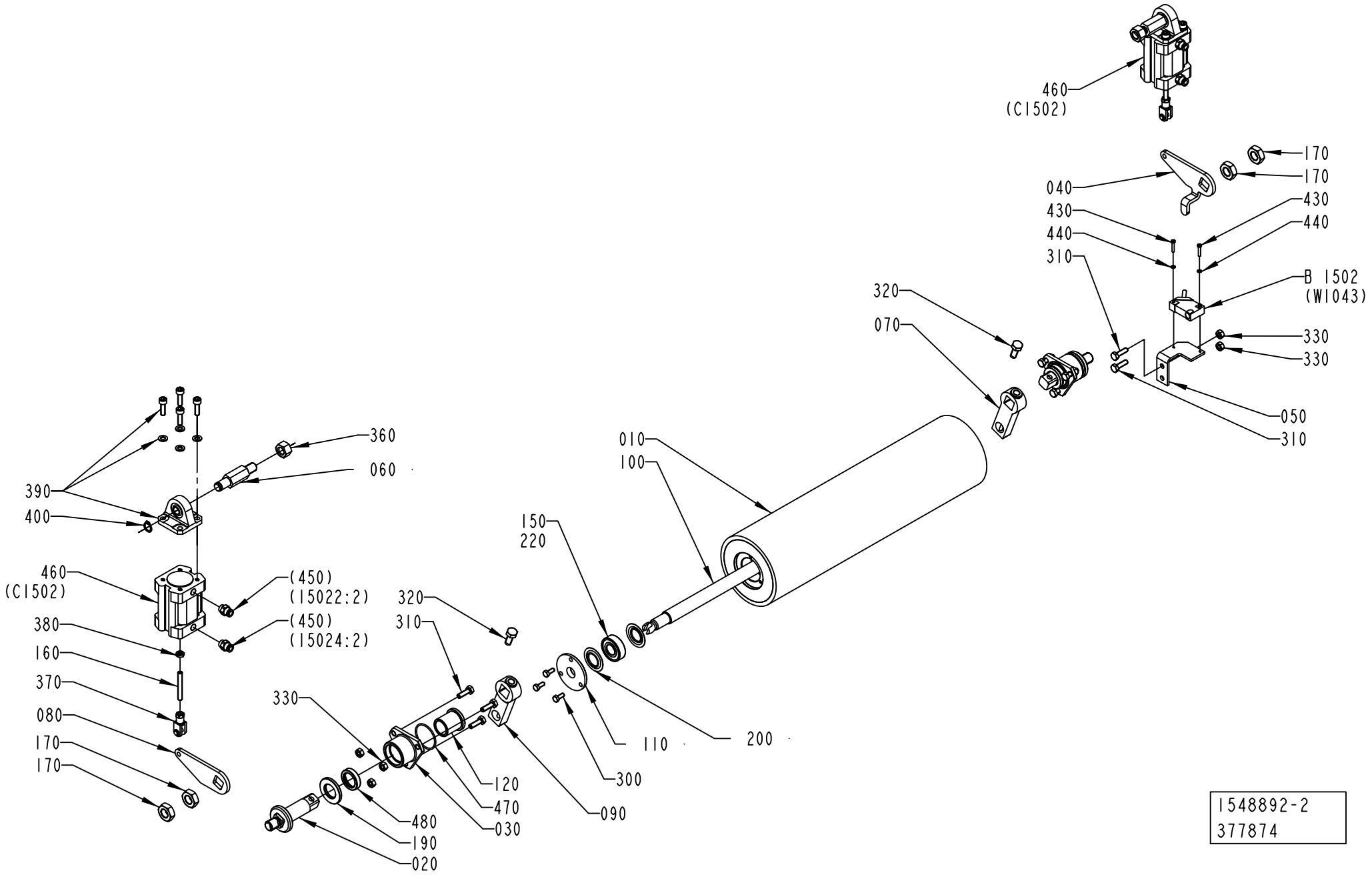

Pos	Part No	UN	Qty	Description	Page No
Common Parts (Cont'd)					
330	312605-0316		8	HEXAGON NUT, M6M M6 A280	
360	312605-0322		2	HEXAGON NUT, M6M M12 A280	
370	90239-0489		2	ROD END, CLEVIS WITH AXLE M6X1,25	
380	312625-0316		4	HEXAGON THIN NUT, EN 24035 ML6M M6 A4	
430	312125-0228		2	SCREW ISO 1207 M3X16 A4	
440	315105-0124		2	WASHER BRB 3,2X6 RFR	
450	342722-0202		4	PIPE COUPLING 1/8" D=6MM	
470	315205-0716		2	O-RING 34,65X1,78 MM	
480	90458-0639		2	VARILIP 20X30X7 MM	
B1502	90044-0194		1	PROX.SW. IN5329/IN3002-BPKG(EX90044-104)	

Pos	Part No	UN	Qty	Description	Page No

CALENDER ROLLER

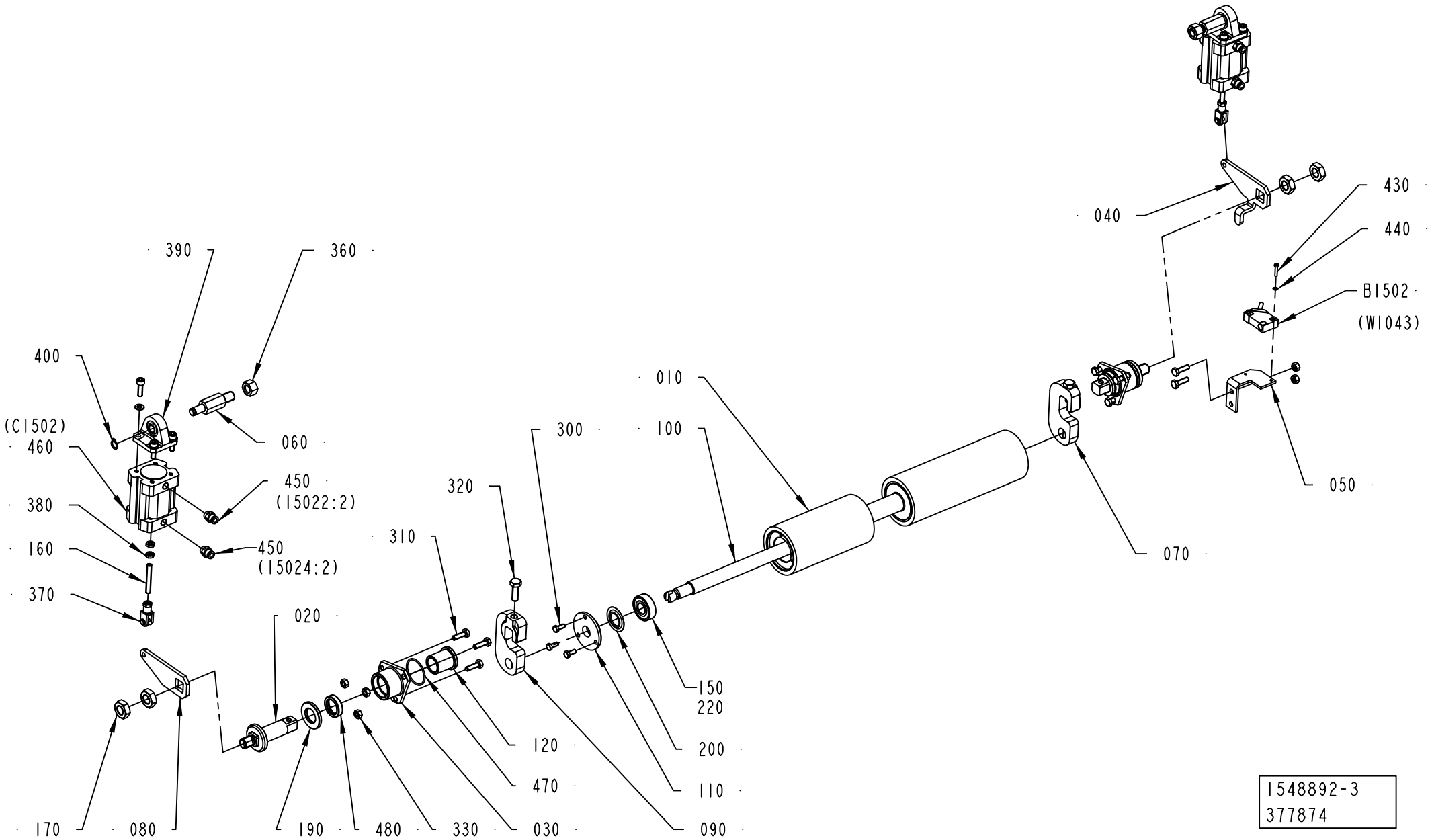

1548892-3
377874

ECM: 379848 - 20090401
Group number: 1548892-0100
Assembly Drawing: 1548892-3_1_AB

This list covers pages from 1-112 to 1-117

Pos	Part No	UN	Qty	Description	Page No
SEE PREVIOUS LISTS PAGES: 1-113, 1-115.					

Pos	Part No	UN	Qty	Description	Page No

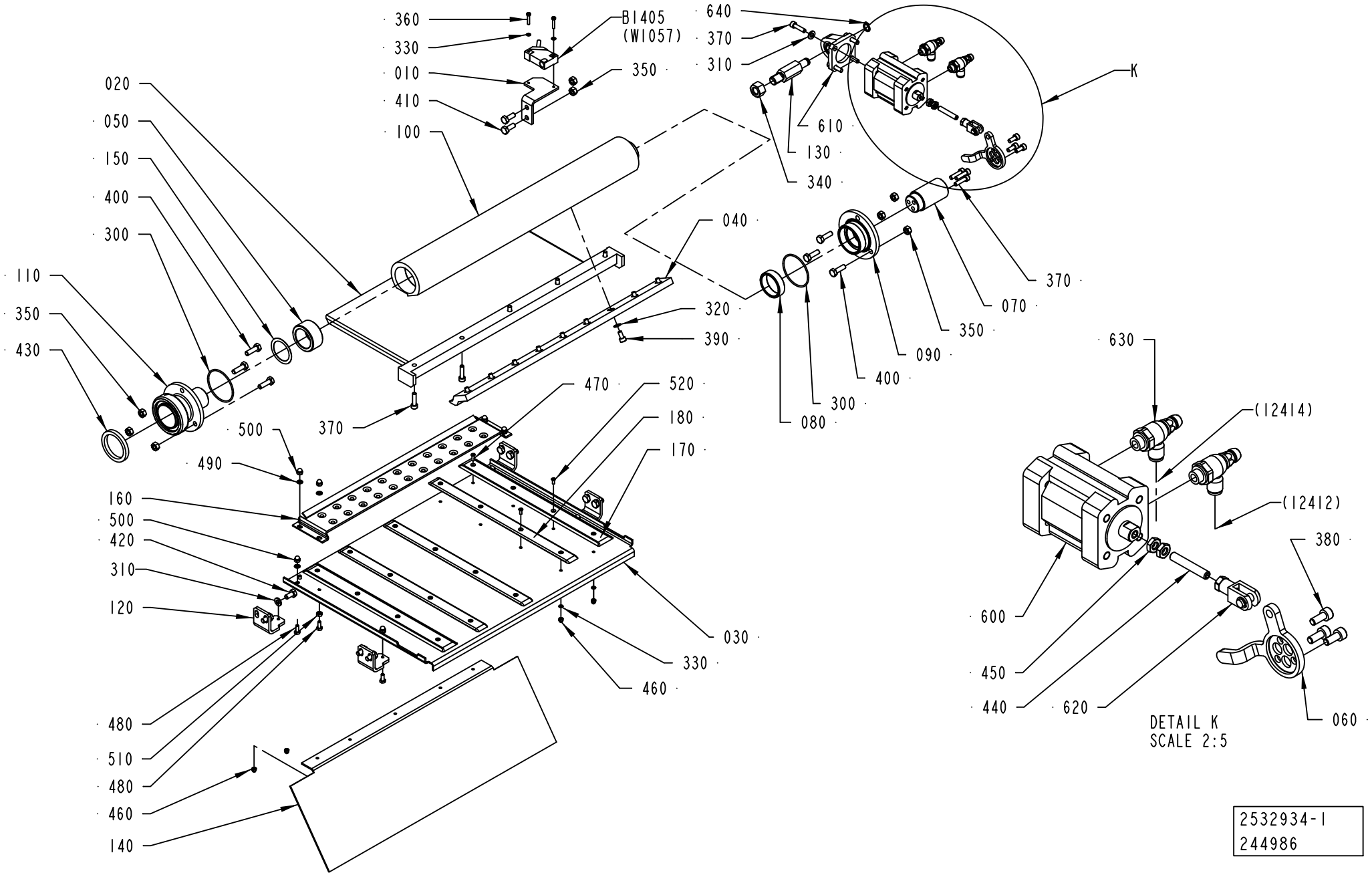
360
330
010
410
100
B1405
(W1057)
350
640
370
310
K
610
130
340
020
050
150
400
300
040
110
350
430
320
390
370
070
350
090
400
300
080
630
(12414)
(12412)
380
600
450
440
620
060
DETAIL K
SCALE 2:5
470
520
180
170
500
370
490
160
500
420
310
120
030
330
460
480
510
480
460
140
2532934-1
244986

ECM: 359126 - 20081002
Group number: 2532934-0100
Assembly Drawing: 2532934-1_1_AD

This list covers pages from 1-118 to 1-123

Pos	Part No	UN	Qty	Description	Page No
A3/FLEX TBA 0200S NODIMC, A3/FLEX TBA 1000SQ NODIMC, A3/FLEX TBA 1000S NODIMC, A3/FLEX TBA 1000B NODIMC, A3/FLEX TBA 0500B NODIMC, A3/FLEX TPA 1000SQ NODIMC, A3/FLEX TBA 1500S NODIMC, A3/FLEX TBA 0200B NODIMC, A3/FLEX TBA 0250B NODIMC, A3/FLEX TBA 0330S NODIMC, A3/FLEX TPA 0330SQ NODIMC, A3/FLEX TPA 0500SQ NODIMC, A3/FLEX TBA 0250S NODIMC, A3/FLEX TBA 0200M NODIMC, A3/FLEX TBA 0500S NODIMC, A3/FLEX TPA 0200SQ NODIMC, A3/FLEX TPA 0250SQ NODIMC, A3/FLEX TPA 0750SQ NODIMC, A3/FLEX TBA 0200SQ NODIMC, A3/FLEX TBA 0250SQ NODIMC, A3/FLEX TGA 1000SQ NODIMC, A3/FLEX TBA 0500SQ NODIMC, A3/FLEX TGA 0500SQ NODIMC, A3/FLEX TGA 0750SQ NODIMC (See drawing on page: 1-118)					
020	2532916-0000		1	AIR GUIDE	
030	2603823-0000		1	BOTTOM PLATE	
040	2509681-0000		1	RAIL	
120	2532918-0000		4	HOLDER	
140	2532919-0000		1	PLATE	
160	2603824-0000		1	COUNTER PLATE	
170	2603546-0000		2	SLIDE PLATE	
180	2603630-0000		3	SLIDE PLATE	
330	315105-0124		22	WASHER BRB 3,2X6 RFR	
460	312705-0310		20	NUT HEX. DOMED CAP MHM-6 M3 A2	
470	312145-0224		5	SCREW ISO 2009 MFS M3X10 A4	
520	312145-0222		15	SCREW ISO 2009 MFS M3X8 A4	
A3/FLEX TBA 1000S LIGHTCAP (See drawing on page: 1-120)					
020	2532916-0000		1	AIR GUIDE	
030	2716441-0000		1	BOTTOM PLATE	
040	2509681-0000		1	RAIL	
120	2532918-0000		4	HOLDER	
140	2716442-0000		1	PLATE	
160	2603824-0000		1	COUNTER PLATE	
180	2603630-0000		2	SLIDE PLATE	
190	2607440-0000		1	SLIDE PLATE	
330	315105-0124		14	WASHER BRB 3,2X6 RFR	
460	312705-0310		12	NUT HEX. DOMED CAP MHM-6 M3 A2	
470	312145-0224		2	SCREW ISO 2009 MFS M3X10 A4	
520	312145-0222		10	SCREW ISO 2009 MFS M3X8 A4	
A3/FLEX TBA 1000S STDA7, A3/FLEX TBA 1000B STDA7 (See drawing on page: 1-120)					
020	2532916-0000		1	AIR GUIDE	
030	2607087-0000		1	BOTTOM PLATE	
040	2509681-0000		1	RAIL	
120	2532918-0000		4	HOLDER	
140	2532922-0000		1	PLATE	
160	2603824-0000		1	COUNTER PLATE	
180	2603630-0000		2	SLIDE PLATE	
190	2607440-0000		1	SLIDE PLATE	
330	315105-0124		14	WASHER BRB 3,2X6 RFR	
460	312705-0310		12	NUT HEX. DOMED CAP MHM-6 M3 A2	
470	312145-0224		2	SCREW ISO 2009 MFS M3X10 A4	
520	312145-0222		10	SCREW ISO 2009 MFS M3X8 A4	
A3/FLEX TBA 2000S NODIMC, A3/FLEX TBA 1890S NODIMC, A3/FLEX TBA 1400B NODIMC (See drawing on page: 1-122)					
020	2582651-0000		1	AIR GUIDE	
030	2582652-0000		1	AIR GUIDE	
040	2594601-0000		1	RAIL	
120	2582655-0000		4	HOLDER	
140	2582654-0000		1	PLATE	
160	2657886-0000		1	COUNTER PLATE	
170	2603546-0000		2	SLIDE PLATE	
180	2603630-0000		3	SLIDE PLATE	
330	315105-0124		22	WASHER BRB 3,2X6 RFR	
460	312705-0310		20	NUT HEX. DOMED CAP MHM-6 M3 A2	
470	312145-0224		5	SCREW ISO 2009 MFS M3X10 A4	
520	312145-0222		15	SCREW ISO 2009 MFS M3X8 A4	
650	312105-0291		2	SCREW M6S ISO 4017 M4X12 A470	
A3/FLEX TPA 500SQ LIGHTCAP (See drawing on page: 1-120)					
020	2532916-0000		1	AIR GUIDE	
030	2951500-0000		1	PLATE	
040	2509681-0000		1	RAIL	
120	2532918-0000		4	HOLDER	
140	2951504-0000		1	PLATE	
160	2603824-0000		1	COUNTER PLATE	
180	2603630-0000		2	SLIDE PLATE	
190	2607440-0000		1	SLIDE PLATE	
330	315105-0124		14	WASHER BRB 3,2X6 RFR	
460	312705-0310		12	NUT HEX. DOMED CAP MHM-6 M3 A2	
470	312145-0224		2	SCREW ISO 2009 MFS M3X10 A4	
520	312145-0222		10	SCREW ISO 2009 MFS M3X8 A4	
Common Parts					
010	2509674-0000		1	BRACKET	
050	1519166-0000		1	BUSHING	
060	1519163-0000		1	ARM	
070	1519160-0000		1	SHAFT	
080	1519159-0000		1	BUSHING	
090	1519158-0000		1	LID	
100	1519156-0000		1	AIR DISTRIBUTOR	
110	1532231-0000		1	CONNECTION	
130	1498132-0000		1	SHAFT	

Machine Type | Group Description | Used-In | Group Number | Page No

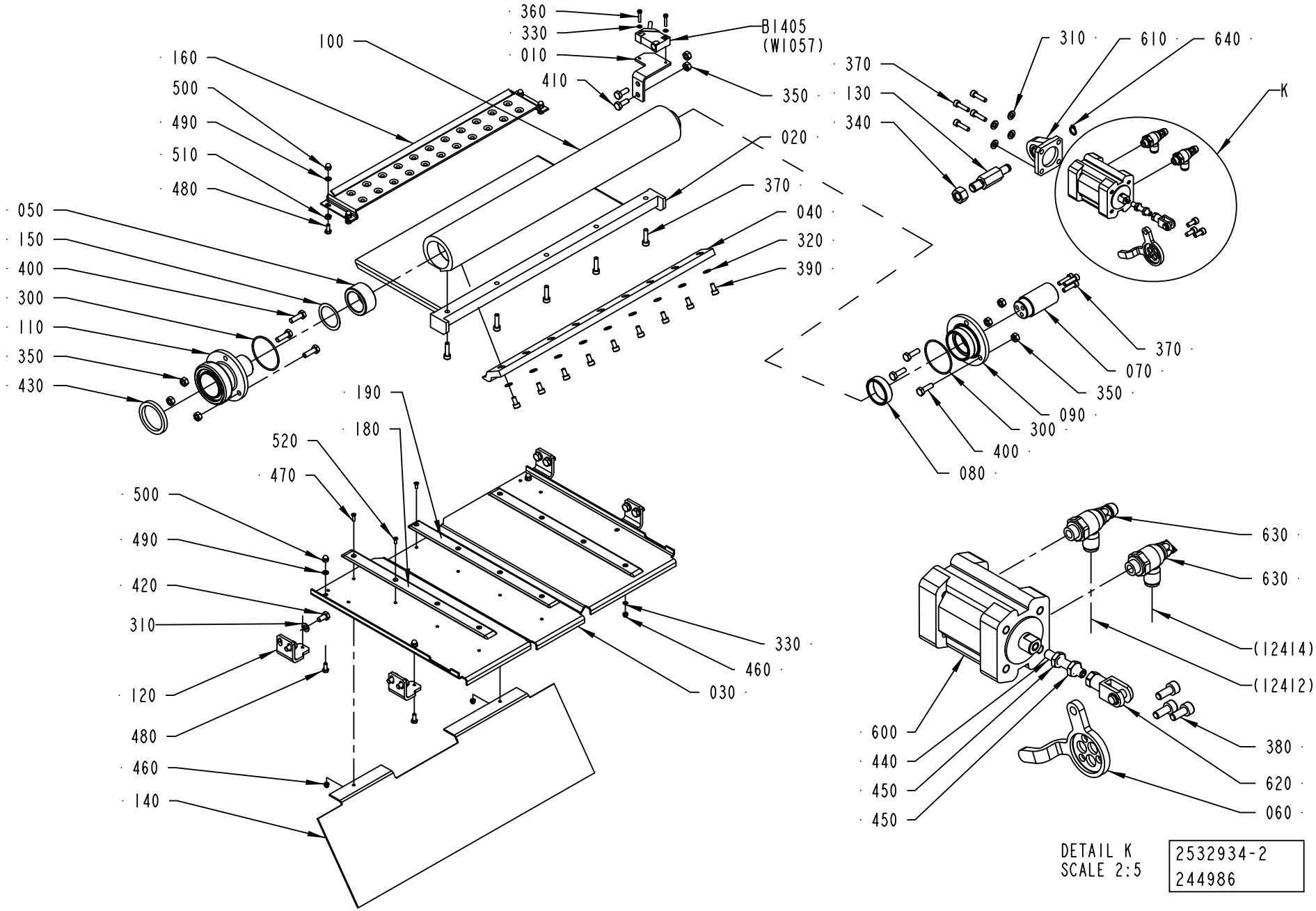

DETAIL K
SCALE 2:5

2532934-2
244986

Pos	Part No	UN	Qty	Description	Page No
Common Parts (Cont'd)					
150	2532915-0000		2	WASHER	
300	315205-0804		2	O-RING 47,35X1,78 MM	
310	315105-0153		12	WASHER BRB 6,4X12 RFR	
320	315105-0146		9	WASHER BRB 5,3X10 RFR	
340	312605-0322		1	HEXAGON NUT, M6M M12 A280	
350	312605-0316		8	HEXAGON NUT, M6M M6 A280	
360	312125-0228		2	SCREW ISO 1207 M3X16 A4	
370	312115-0331		12	SCREW ISO4762 M5X20 A4 80	
380	312115-0327		3	SCREW ISO4762 M5X12 A4 80	
390	312115-0325		9	SCREW ISO4762 M5X10 A4 80	
400	312105-0370		6	SCREW M6S ISO 4017 M6X20 A480	
410	312105-0368		2	SCREW M6S ISO 4017 M6X16 A480	
420	312105-0366		8	SCREW M6S ISO 4017 M6X12 A480	
430	12242-0003		1	GASKET 48X38X5,5	
440	312318-0376		1	SCREW ISO4029 M6X35 A4	
450	312625-0316		2	HEXAGON THIN NUT, EN 24035 ML6M M6 A4	
480	312105-0289		8	SCREW M6S H4X10 A4 70 ISO4017/DIN933	
490	315105-0136		8	WASHER BRB 4,3X8 RFR	
500	312705-0312		8	NUT HEX. DOMED CAP MHM-6 M4 A280	
510	312605-0312		4	HEXAGON NUT, M6M M4 A280	
600	90458-0528		1	DOUBLE ACTING, COMPACT, CYL 32-25	
610	90450-0756		1	BRACKET, REAR EYE 32	
620	90239-0489		1	ROD END, CLEVIS WITH AXLE M6X1,25	
630	90235-0846		2	THROTTLE CHECK VALVE G1/8", MANUAL, 6	
640	90141-0016		1	RETAINING RING FOR SHAFT DIN 471 10 SS	
B1405	90044-0194		1	PROX.SW. IN5329/IN3002-BPKG(EX90044-104)	

Pos	Part No	UN	Qty	Description	Page No

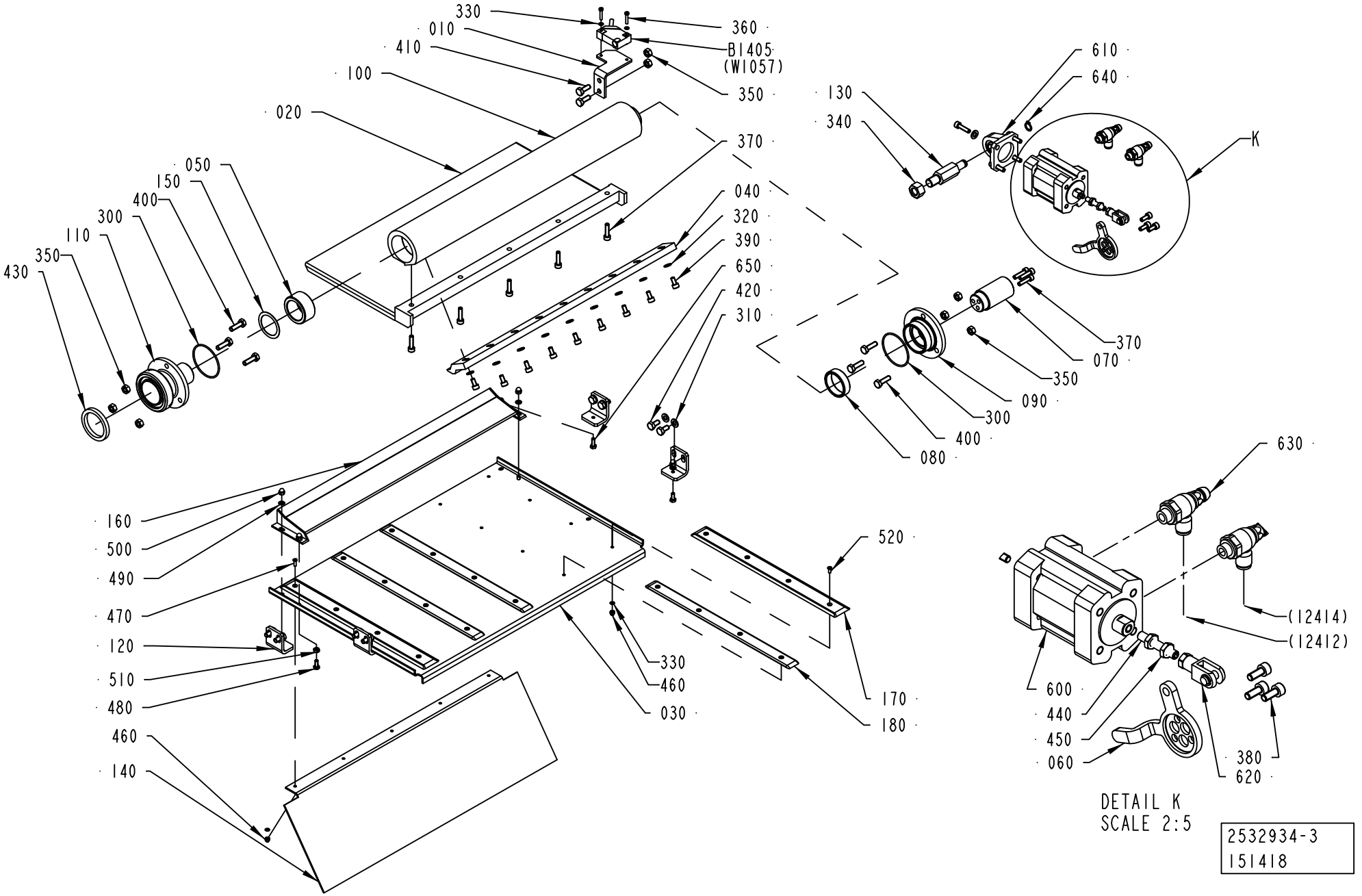
330
010
410
100
020
050
150
400
300
110
350
430
360
B1405
(W1057)
350
370
040
320
390
650
420
310
610
640
130
340
K
370
070
350
090
300
400
080
160
500
490
470
120
510
480
460
140
520
330
460
030
170
180
630
(12414)
(12412)
600
440
450
060
380
620
DETAIL K
SCALE 2:5
2532934-3
151418

ECM: 359126 - 20081002
Group number: 2532934-0100
Assembly Drawing: 2532934-3_1_AA

This list covers pages from 1-118 to 1-123

Pos	Part No	UN	Qty	Description	Page No
SEE PREVIOUS LISTS PAGES: 1-119, 1-121.					

Pos	Part No	UN	Qty	Description	Page No

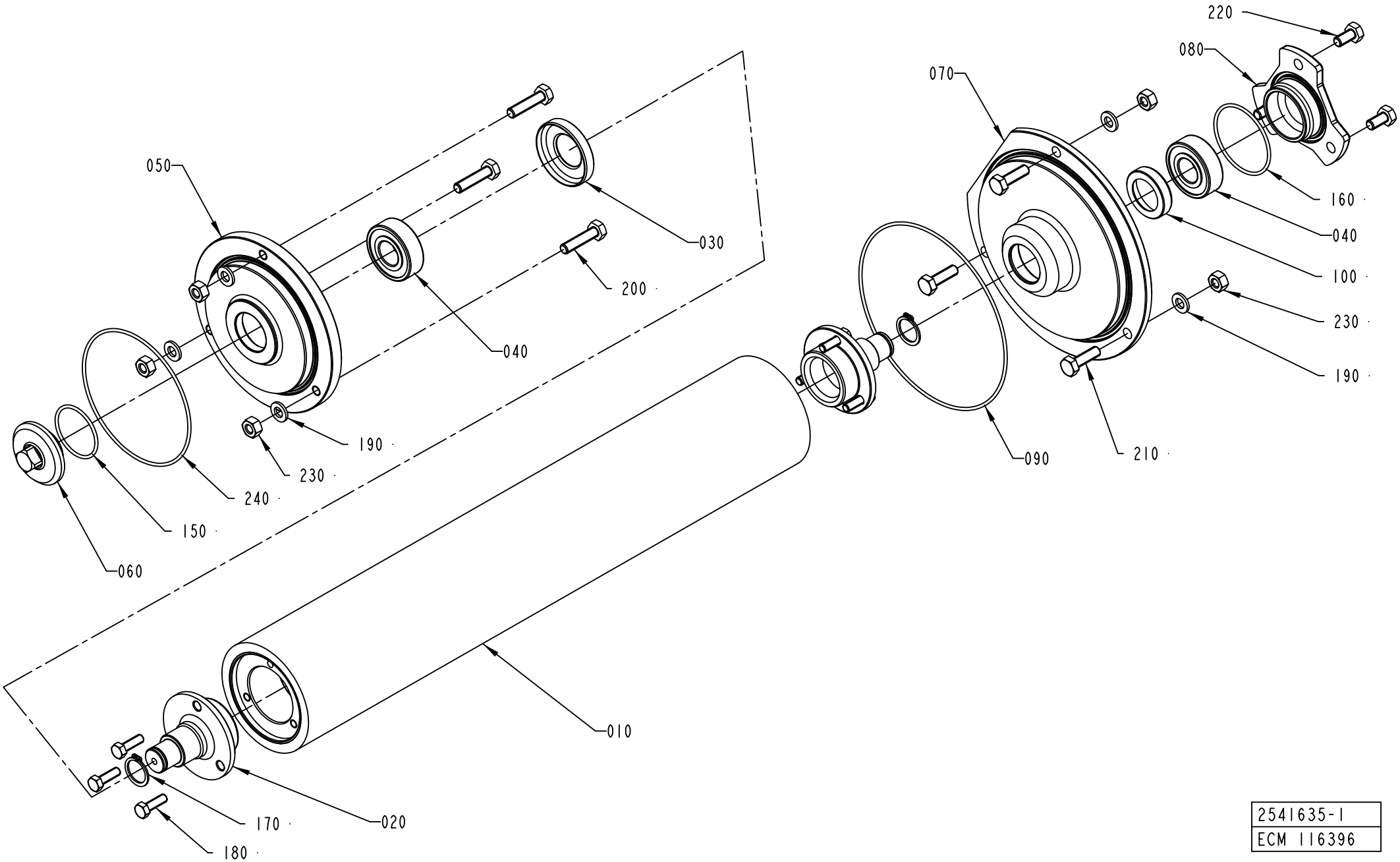

2541635-1
ECM 116396

ECM: 359127 - 20081002
Group number: 2541635-0100
Assembly Drawing: 2541635-1_1_AA

This list covers pages from 1-124 to 1-133

Pos	Part No	UN	Qty	Description	Page No
A3/FLEX TBA 0200S NODIMC, A3/FLEX TBA 1000SQ NODIMC, A3/FLEX TBA 1000S NODIMC, A3/FLEX TBA 1000B NODIMC, A3/FLEX TBA 0500B NODIMC, A3/FLEX TPA 1000SQ NODIMC, A3/FLEX TBA 1500S NODIMC, A3/FLEX TBA 0200B NODIMC, A3/FLEX TBA 0250B NODIMC, A3/FLEX TBA 0330S NODIMC, A3/FLEX TPA 0330SQ NODIMC, A3/FLEX TPA 0500SQ NODIMC, A3/FLEX TBA 0250S NODIMC, A3/FLEX TBA 0200M NODIMC, A3/FLEX TBA 0500S NODIMC, A3/FLEX TPA 0200SQ NODIMC, A3/FLEX TPA 0250SQ NODIMC, A3/FLEX TPA 0750SQ NODIMC, A3/FLEX TBA 0200SQ NODIMC, A3/FLEX TBA 0250SQ NODIMC, A3/FLEX TGA 1000SQ NODIMC, A3/FLEX TBA 0500SQ NODIMC, A3/FLEX TGA 0500SQ NODIMC, A3/FLEX TGA 0750SQ NODIMC (See drawing on page: 1-124)					
010	1511769-0000		1	ROLLER	
050	2541633-0000		1	FLANGE	
070	2532984-0000		1	FLANGE	
A3/FLEX TBA 1000S LIGHTCAP (See drawing on pages: 1-130, 1-132)					
010	2528136-0000		1	SQUEE-GEE ROLLER	
050	2709213-0000		1	FLANGE	
070	2709214-0000		1	FLANGE	
A3/FLEX TBA 1000S STDA7, A3/FLEX TBA 1000B STDA7 (See drawing on page: 1-126)					
010	2528136-0000		1	SQUEE-GEE ROLLER	
050	2541633-0000		1	FLANGE	
070	2532984-0000		1	FLANGE	
A3/FLEX TBA 2000S NODIMC, A3/FLEX TBA 1890S NODIMC, A3/FLEX TBA 1400B NODIMC (See drawing on page: 1-128)					
010	2547406-0000		1	ROLLER	
050	2541641-0000		1	FLANGE	
070	2541640-0000		1	FLANGE	
A3/FLEX TPA 500SQ LIGHTCAP (See drawing on page: 1-128)					
010	2951499-0000		1	SQUEE-GEE ROLLER	
050	2709213-0000		1	FLANGE	
070	2709214-0000		1	FLANGE	
Common Parts					
020	2541637-0000		2	SHAFT	
030	2541647-0000		1	LID	
040	90458-1704		2	BALL BEARING, 15X35X11 MM	
060	2532983-0000		1	FLANGE	
080	2541639-0000		1	LID	
090	90459-1627		1	O-RING 114,02X1,78 MM	
100	2541648-0000		1	LID	
150	315205-0713		1	O-RING 29,87X1,78 MM	
160	315205-0802		1	O-RING 41,0X1,78 MM	
170	315751-0112		2	RETAINING RING FOR SHAFT DIN 471 15 SS	
180	312105-0327		6	SCREW M6S ISO 4017 M5X12 A480	
190	315103-0153		6	WASHER, BRB, 6,4/12,H=1,5 NIPL BR	
200	312105-0372		3	SCREW M6S ISO 4017 M6X25 A480	
210	312105-0370		3	SCREW M6S ISO 4017 M6X20 A480	
220	312105-0366		3	SCREW M6S ISO 4017 M6X12 A480	
230	312605-0316		6	HEXAGON NUT, M6M M6 A280	
240	90242-0126		1	O-RING 82,27X1,78 MM	

Machine Type | Group Description | Used-In | Group Number | Page No

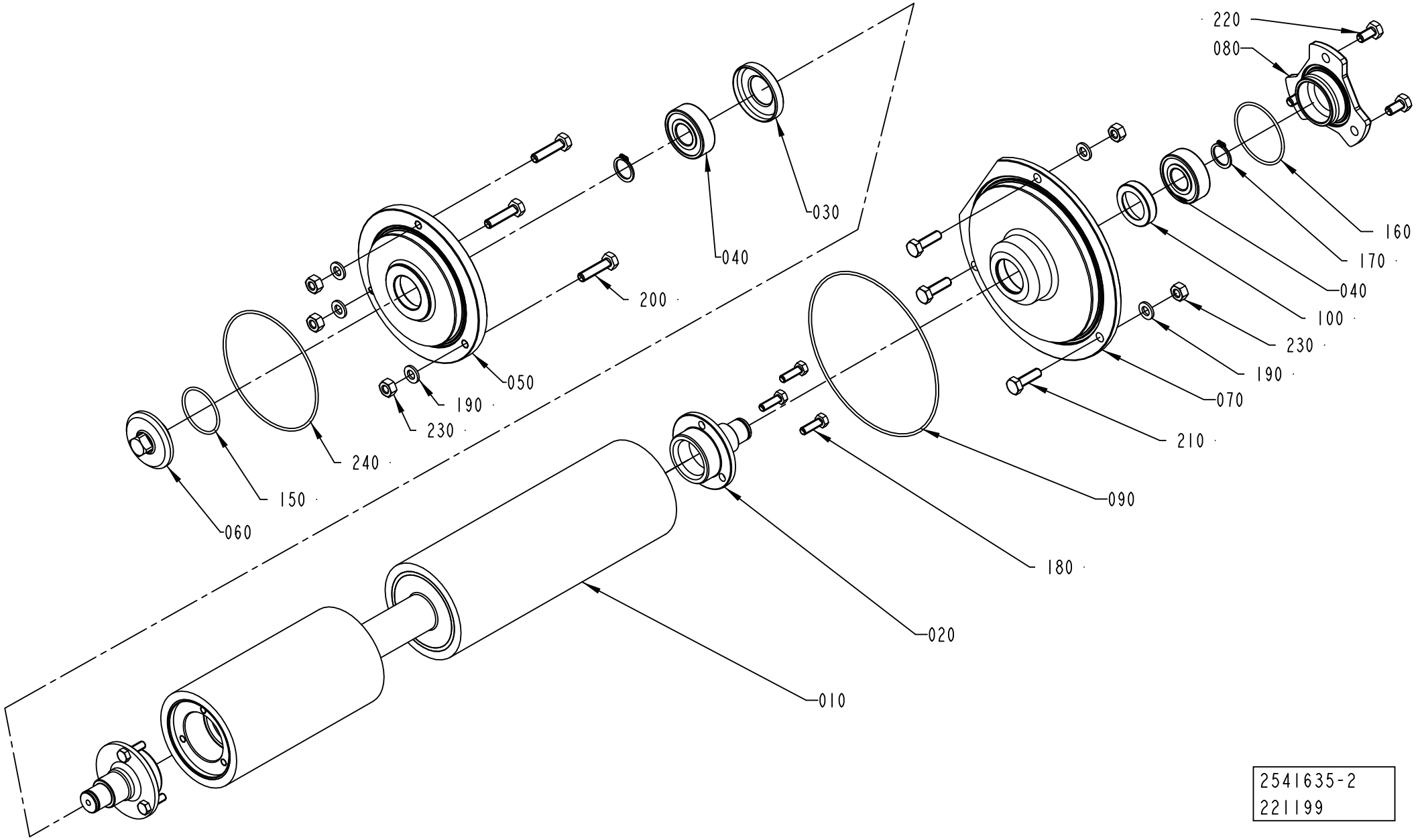
220
080
160
170
040
100
230
190
070
210
030
040
200
050
190
230
240
150
060
090
180
020
010
2541635-2
221199

ECM: 359127 - 20081002
Group number: 2541635-0100
Assembly Drawing: 2541635-2_1_AB

This list covers pages from 1-124 to 1-133

Pos	Part No	UN	Qty	Description	Page No
A3/FLEX TBA 0200S NODIMC, A3/FLEX TBA 1000SQ NODIMC, A3/FLEX TBA 1000S NODIMC, A3/FLEX TBA 1000B NODIMC, A3/FLEX TBA 0500B NODIMC, A3/FLEX TPA 1000SQ NODIMC, A3/FLEX TBA 1500S NODIMC, A3/FLEX TBA 0200B NODIMC, A3/FLEX TBA 0250B NODIMC, A3/FLEX TBA 0330S NODIMC, A3/FLEX TPA 0330SQ NODIMC, A3/FLEX TPA 0500SQ NODIMC, A3/FLEX TBA 0250S NODIMC, A3/FLEX TBA 0200M NODIMC, A3/FLEX TBA 0500S NODIMC, A3/FLEX TPA 0200SQ NODIMC, A3/FLEX TPA 0250SQ NODIMC, A3/FLEX TPA 0750SQ NODIMC, A3/FLEX TBA 0200SQ NODIMC, A3/FLEX TBA 0250SQ NODIMC, A3/FLEX TGA 1000SQ NODIMC, A3/FLEX TBA 0500SQ NODIMC, A3/FLEX TGA 0500SQ NODIMC, A3/FLEX TGA 0750SQ NODIMC (See drawing on page: 1-124)					
010	1511769-0000		1	ROLLER	
050	2541633-0000		1	FLANGE	
070	2532984-0000		1	FLANGE	
A3/FLEX TBA 1000S LIGHTCAP (See drawing on pages: 1-130, 1-132)					
010	2528136-0000		1	SQUEE-GEE ROLLER	
050	2709213-0000		1	FLANGE	
070	2709214-0000		1	FLANGE	
A3/FLEX TBA 1000S STDA7, A3/FLEX TBA 1000B STDA7 (See drawing on page: 1-126)					
010	2528136-0000		1	SQUEE-GEE ROLLER	
050	2541633-0000		1	FLANGE	
070	2532984-0000		1	FLANGE	
A3/FLEX TBA 2000S NODIMC, A3/FLEX TBA 1890S NODIMC, A3/FLEX TBA 1400B NODIMC (See drawing on page: 1-128)					
010	2547406-0000		1	ROLLER	
050	2541641-0000		1	FLANGE	
070	2541640-0000		1	FLANGE	
A3/FLEX TPA 500SQ LIGHTCAP (See drawing on page: 1-128)					
010	2951499-0000		1	SQUEE-GEE ROLLER	
050	2709213-0000		1	FLANGE	
070	2709214-0000		1	FLANGE	
Common Parts					
020	2541637-0000		2	SHAFT	
030	2541647-0000		1	LID	
040	90458-1704		2	BALL BEARING, 15X35X11 MM	
060	2532983-0000		1	FLANGE	
080	2541639-0000		1	LID	
090	90459-1627		1	O-RING 114,02X1,78 MM	
100	2541648-0000		1	LID	
150	315205-0713		1	O-RING 29,87X1,78 MM	
160	315205-0802		1	O-RING 41,0X1,78 MM	
170	315751-0112		2	RETAINING RING FOR SHAFT DIN 471 15 SS	
180	312105-0327		6	SCREW M6S ISO 4017 M5X12 A480	
190	315103-0153		6	WASHER, BRB, 6,4/12,H=1,5 NIPL BR	
200	312105-0372		3	SCREW M6S ISO 4017 M6X25 A480	
210	312105-0370		3	SCREW M6S ISO 4017 M6X20 A480	
220	312105-0366		3	SCREW M6S ISO 4017 M6X12 A480	
230	312605-0316		6	HEXAGON NUT, M6M M6 A280	
240	90242-0126		1	O-RING 82,27X1,78 MM	

Machine Type | Group Description | Used-In | Group Number | Page No

SQUEE-GEE ROLLER

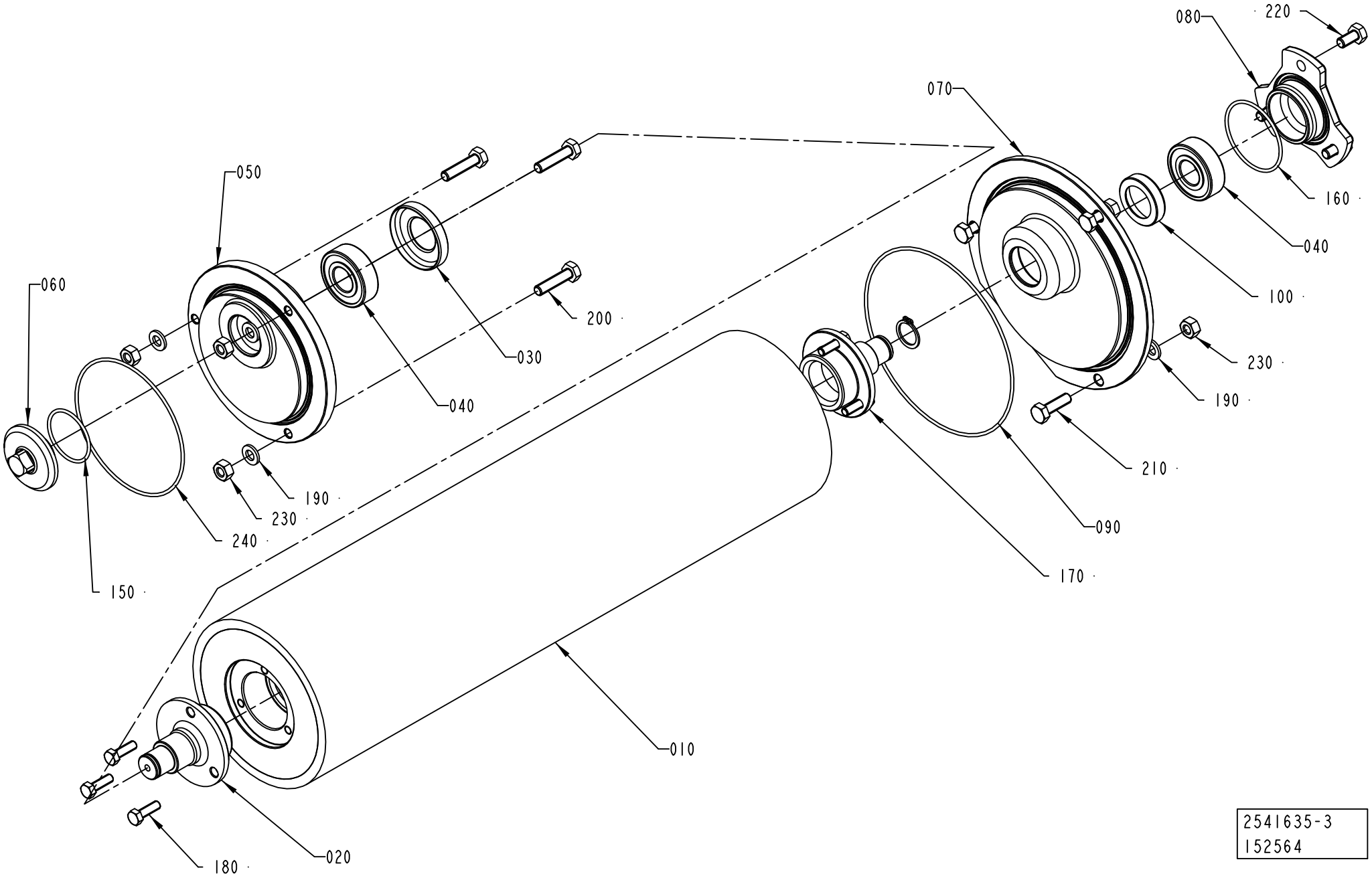

ECM: 359127 - 20081002
Group number: 2541635-0100
Assembly Drawing: 2541635-3_1_AA

This list covers pages from 1-124 to 1-133

Pos	Part No	UN	Qty	Description	Page No
A3/FLEX TBA 0200S NODIMC, A3/FLEX TBA 1000SQ NODIMC, A3/FLEX TBA 1000S NODIMC, A3/FLEX TBA 1000B NODIMC, A3/FLEX TBA 0500B NODIMC, A3/FLEX TPA 1000SQ NODIMC, A3/FLEX TBA 1500S NODIMC, A3/FLEX TBA 0200B NODIMC, A3/FLEX TBA 0250B NODIMC, A3/FLEX TBA 0330S NODIMC, A3/FLEX TPA 0330SQ NODIMC, A3/FLEX TPA 0500SQ NODIMC, A3/FLEX TBA 0250S NODIMC, A3/FLEX TBA 0200M NODIMC, A3/FLEX TBA 0500S NODIMC, A3/FLEX TPA 0200SQ NODIMC, A3/FLEX TPA 0250SQ NODIMC, A3/FLEX TPA 0750SQ NODIMC, A3/FLEX TBA 0200SQ NODIMC, A3/FLEX TBA 0250SQ NODIMC, A3/FLEX TGA 1000SQ NODIMC, A3/FLEX TBA 0500SQ NODIMC, A3/FLEX TGA 0500SQ NODIMC, A3/FLEX TGA 0750SQ NODIMC (See drawing on page: 1-124)					
010	1511769-0000		1	ROLLER	
050	2541633-0000		1	FLANGE	
070	2532984-0000		1	FLANGE	
A3/FLEX TBA 1000S LIGHTCAP (See drawing on pages: 1-130, 1-132)					
010	2528136-0000		1	SQUEE-GEE ROLLER	
050	2709213-0000		1	FLANGE	
070	2709214-0000		1	FLANGE	
A3/FLEX TBA 1000S STDA7, A3/FLEX TBA 1000B STDA7 (See drawing on page: 1-126)					
010	2528136-0000		1	SQUEE-GEE ROLLER	
050	2541633-0000		1	FLANGE	
070	2532984-0000		1	FLANGE	
A3/FLEX TBA 2000S NODIMC, A3/FLEX TBA 1890S NODIMC, A3/FLEX TBA 1400B NODIMC (See drawing on page: 1-128)					
010	2547406-0000		1	ROLLER	
050	2541641-0000		1	FLANGE	
070	2541640-0000		1	FLANGE	
A3/FLEX TPA 500SQ LIGHTCAP (See drawing on page: 1-128)					
010	2951499-0000		1	SQUEE-GEE ROLLER	
050	2709213-0000		1	FLANGE	
070	2709214-0000		1	FLANGE	
Common Parts					
020	2541637-0000		2	SHAFT	
030	2541647-0000		1	LID	
040	90458-1704		2	BALL BEARING, 15X35X11 MM	
060	2532983-0000		1	FLANGE	
080	2541639-0000		1	LID	
090	90459-1627		1	O-RING 114,02X1,78 MM	
100	2541648-0000		1	LID	
150	315205-0713		1	O-RING 29,87X1,78 MM	
160	315205-0802		1	O-RING 41,0X1,78 MM	
170	315751-0112		2	RETAINING RING FOR SHAFT DIN 471 15 SS	
180	312105-0327		6	SCREW M6S ISO 4017 M5X12 A480	
190	315103-0153		6	WASHER, BRB, 6,4/12,H=1,5 NIPL BR	
200	312105-0372		3	SCREW M6S ISO 4017 M6X25 A480	
210	312105-0370		3	SCREW M6S ISO 4017 M6X20 A480	
220	312105-0366		3	SCREW M6S ISO 4017 M6X12 A480	
230	312605-0316		6	HEXAGON NUT, M6M M6 A280	
240	90242-0126		1	O-RING 82,27X1,78 MM	

Machine Type | Group Description | Used-In | Group Number | Page No

SQUEE-GEE ROLLER

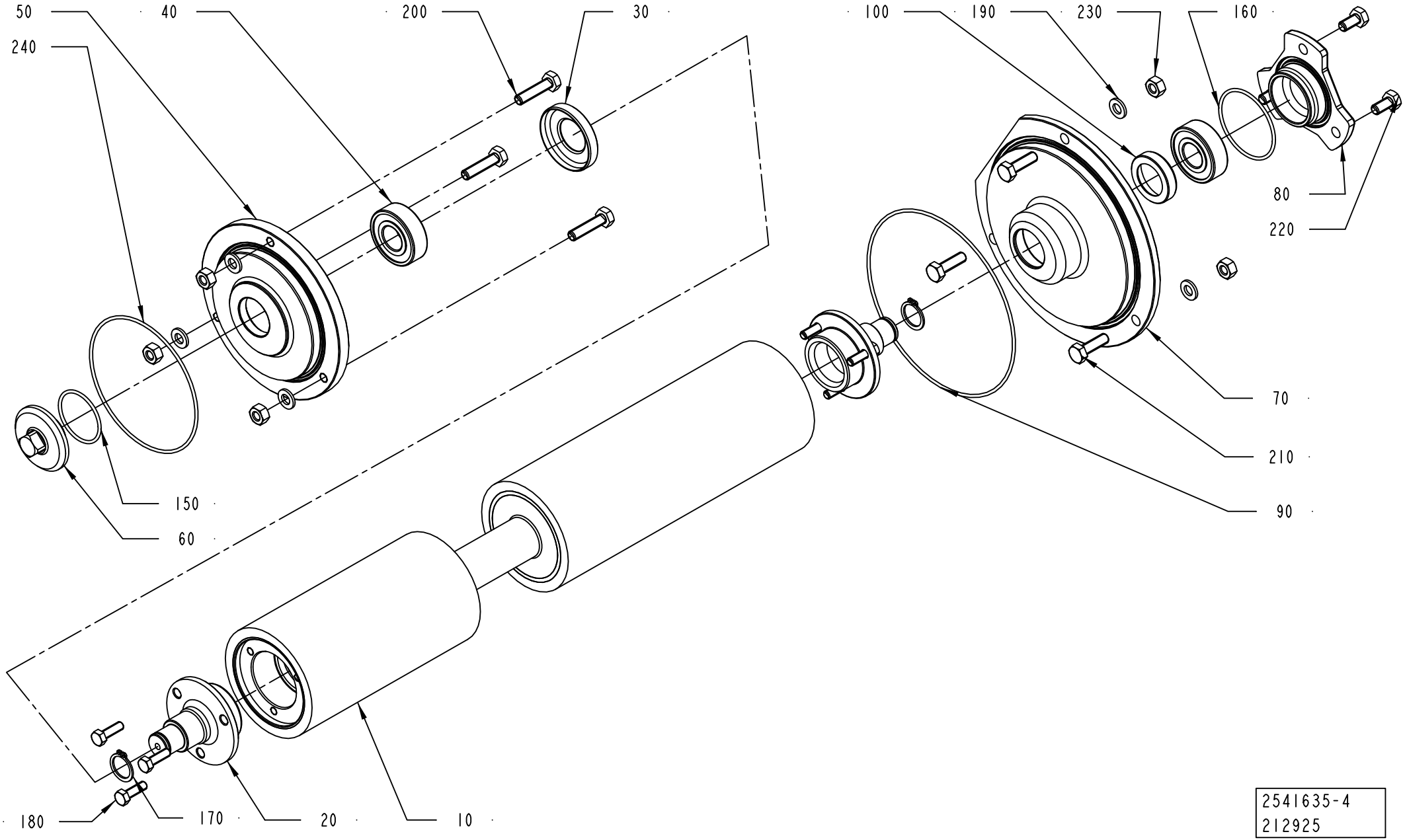

2541635-4
212925

ECM: 359127 - 20081002
Group number: 2541635-0100
Assembly Drawing: 2541635-4_1_AA

This list covers pages from 1-124 to 1-133

Pos	Part No	UN	Qty	Description	Page No
A3/FLEX TBA 0200S NODIMC, A3/FLEX TBA 1000SQ NODIMC, A3/FLEX TBA 1000S NODIMC, A3/FLEX TBA 1000B NODIMC, A3/FLEX TBA 0500B NODIMC, A3/FLEX TPA 1000SQ NODIMC, A3/FLEX TBA 1500S NODIMC, A3/FLEX TBA 0200B NODIMC, A3/FLEX TBA 0250B NODIMC, A3/FLEX TBA 0330S NODIMC, A3/FLEX TPA 0330SQ NODIMC, A3/FLEX TPA 0500SQ NODIMC, A3/FLEX TBA 0250S NODIMC, A3/FLEX TBA 0200M NODIMC, A3/FLEX TBA 0500S NODIMC, A3/FLEX TPA 0200SQ NODIMC, A3/FLEX TPA 0250SQ NODIMC, A3/FLEX TPA 0750SQ NODIMC, A3/FLEX TBA 0200SQ NODIMC, A3/FLEX TBA 0250SQ NODIMC, A3/FLEX TGA 1000SQ NODIMC, A3/FLEX TBA 0500SQ NODIMC, A3/FLEX TGA 0500SQ NODIMC, A3/FLEX TGA 0750SQ NODIMC (See drawing on page: 1-124)					
010	1511769-0000		1	ROLLER	
050	2541633-0000		1	FLANGE	
070	2532984-0000		1	FLANGE	
A3/FLEX TBA 1000S LIGHTCAP (See drawing on pages: 1-130, 1-132)					
010	2528136-0000		1	SQUEE-GEE ROLLER	
050	2709213-0000		1	FLANGE	
070	2709214-0000		1	FLANGE	
A3/FLEX TBA 1000S STDA7, A3/FLEX TBA 1000B STDA7 (See drawing on page: 1-126)					
010	2528136-0000		1	SQUEE-GEE ROLLER	
050	2541633-0000		1	FLANGE	
070	2532984-0000		1	FLANGE	
A3/FLEX TBA 2000S NODIMC, A3/FLEX TBA 1890S NODIMC, A3/FLEX TBA 1400B NODIMC (See drawing on page: 1-128)					
010	2547406-0000		1	ROLLER	
050	2541641-0000		1	FLANGE	
070	2541640-0000		1	FLANGE	
A3/FLEX TPA 500SQ LIGHTCAP (See drawing on page: 1-128)					
010	2951499-0000		1	SQUEE-GEE ROLLER	
050	2709213-0000		1	FLANGE	
070	2709214-0000		1	FLANGE	
Common Parts					
020	2541637-0000		2	SHAFT	
030	2541647-0000		1	LID	
040	90458-1704		2	BALL BEARING, 15X35X11 MM	
060	2532983-0000		1	FLANGE	
080	2541639-0000		1	LID	
090	90459-1627		1	O-RING 114,02X1,78 MM	
100	2541648-0000		1	LID	
150	315205-0713		1	O-RING 29,87X1,78 MM	
160	315205-0802		1	O-RING 41,0X1,78 MM	
170	315751-0112		2	RETAINING RING FOR SHAFT DIN 471 15 SS	
180	312105-0327		6	SCREW M6S ISO 4017 M5X12 A480	
190	315103-0153		6	WASHER, BRB, 6,4/12,H=1,5 NIPL BR	
200	312105-0372		3	SCREW M6S ISO 4017 M6X25 A480	
210	312105-0370		3	SCREW M6S ISO 4017 M6X20 A480	
220	312105-0366		3	SCREW M6S ISO 4017 M6X12 A480	
230	312605-0316		6	HEXAGON NUT, M6M M6 A280	
240	90242-0126		1	O-RING 82,27X1,78 MM	

Machine Type | Group Description | Used-In | Group Number | Page No

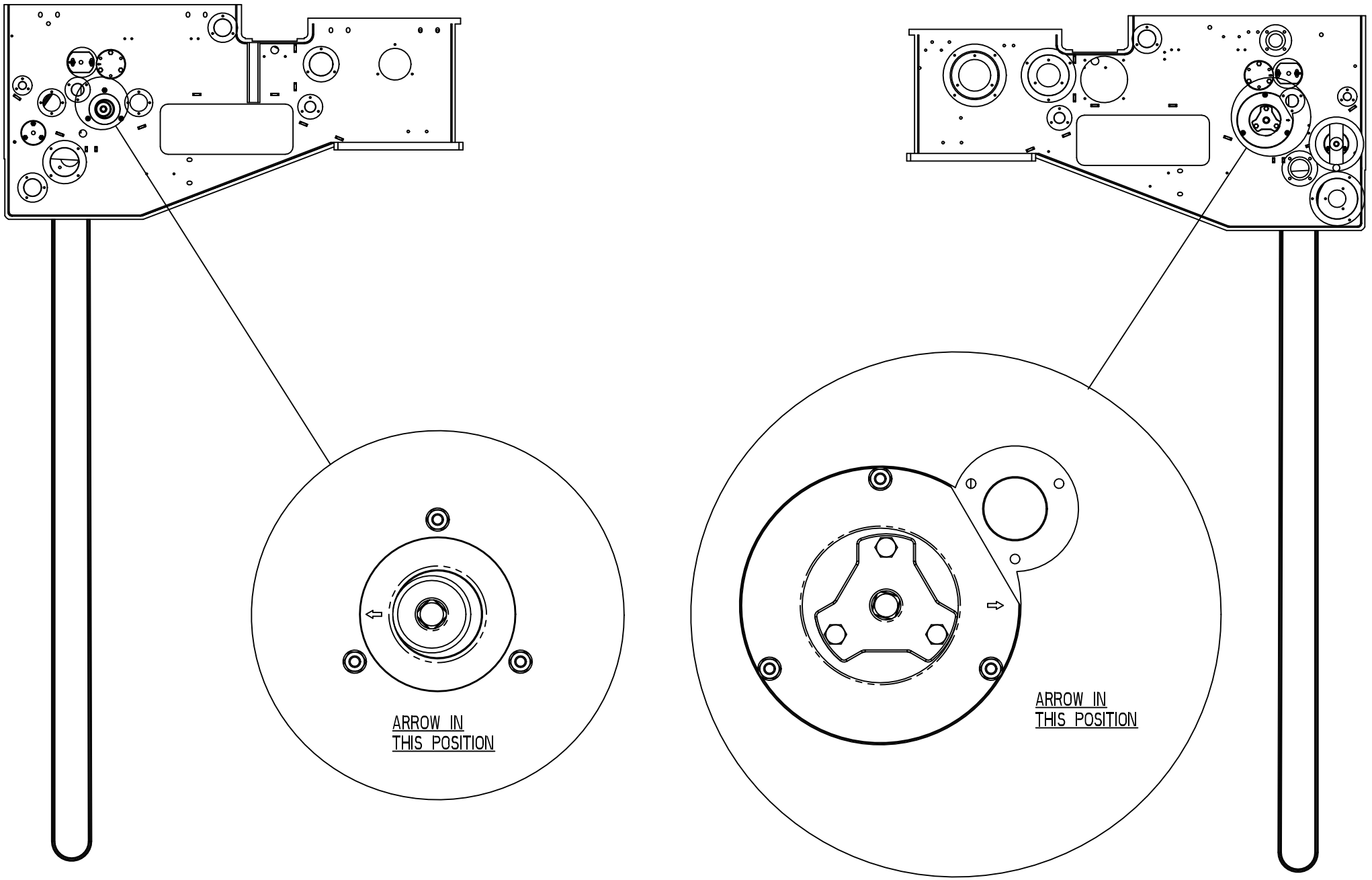
ARROW IN
THIS POSITION
ARROW IN
THIS POSITION

ECM: 359127 - 20081002
Group number: 2541635-0100
Assembly Drawing: 2541635-4_2_AA

This list covers pages from 1-124 to 1-133

Pos	Part No	UN	Qty	Description	Page No
A3/FLEX TBA 0200S NODIMC, A3/FLEX TBA 1000SQ NODIMC, A3/FLEX TBA 1000S NODIMC, A3/FLEX TBA 1000B NODIMC, A3/FLEX TBA 0500B NODIMC, A3/FLEX TPA 1000SQ NODIMC, A3/FLEX TBA 1500S NODIMC, A3/FLEX TBA 0200B NODIMC, A3/FLEX TBA 0250B NODIMC, A3/FLEX TBA 0330S NODIMC, A3/FLEX TPA 0330SQ NODIMC, A3/FLEX TPA 0500SQ NODIMC, A3/FLEX TBA 0250S NODIMC, A3/FLEX TBA 0200M NODIMC, A3/FLEX TBA 0500S NODIMC, A3/FLEX TPA 0200SQ NODIMC, A3/FLEX TPA 0250SQ NODIMC, A3/FLEX TPA 0750SQ NODIMC, A3/FLEX TBA 0200SQ NODIMC, A3/FLEX TBA 0250SQ NODIMC, A3/FLEX TGA 1000SQ NODIMC, A3/FLEX TBA 0500SQ NODIMC, A3/FLEX TGA 0500SQ NODIMC, A3/FLEX TGA 0750SQ NODIMC (See drawing on page: 1-124)					
010	1511769-0000		1	ROLLER	
050	2541633-0000		1	FLANGE	
070	2532984-0000		1	FLANGE	
A3/FLEX TBA 1000S LIGHTCAP (See drawing on pages: 1-130, 1-132)					
010	2528136-0000		1	SQUEE-GEE ROLLER	
050	2709213-0000		1	FLANGE	
070	2709214-0000		1	FLANGE	
A3/FLEX TBA 1000S STDA7, A3/FLEX TBA 1000B STDA7 (See drawing on page: 1-126)					
010	2528136-0000		1	SQUEE-GEE ROLLER	
050	2541633-0000		1	FLANGE	
070	2532984-0000		1	FLANGE	
A3/FLEX TBA 2000S NODIMC, A3/FLEX TBA 1890S NODIMC, A3/FLEX TBA 1400B NODIMC (See drawing on page: 1-128)					
010	2547406-0000		1	ROLLER	
050	2541641-0000		1	FLANGE	
070	2541640-0000		1	FLANGE	
A3/FLEX TPA 500SQ LIGHTCAP (See drawing on page: 1-128)					
010	2951499-0000		1	SQUEE-GEE ROLLER	
050	2709213-0000		1	FLANGE	
070	2709214-0000		1	FLANGE	
Common Parts					
020	2541637-0000		2	SHAFT	
030	2541647-0000		1	LID	
040	90458-1704		2	BALL BEARING, 15X35X11 MM	
060	2532983-0000		1	FLANGE	
080	2541639-0000		1	LID	
090	90459-1627		1	O-RING 114,02X1,78 MM	
100	2541648-0000		1	LID	
150	315205-0713		1	O-RING 29,87X1,78 MM	
160	315205-0802		1	O-RING 41,0X1,78 MM	
170	315751-0112		2	RETAINING RING FOR SHAFT DIN 471 15 SS	
180	312105-0327		6	SCREW M6S ISO 4017 M5X12 A480	
190	315103-0153		6	WASHER, BRB, 6,4/12,H=1,5 NIPL BR	
200	312105-0372		3	SCREW M6S ISO 4017 M6X25 A480	
210	312105-0370		3	SCREW M6S ISO 4017 M6X20 A480	
220	312105-0366		3	SCREW M6S ISO 4017 M6X12 A480	
230	312605-0316		6	HEXAGON NUT, M6M M6 A280	
240	90242-0126		1	O-RING 82,27X1,78 MM	

Machine Type | Group Description | Used-In | Group Number | Page No

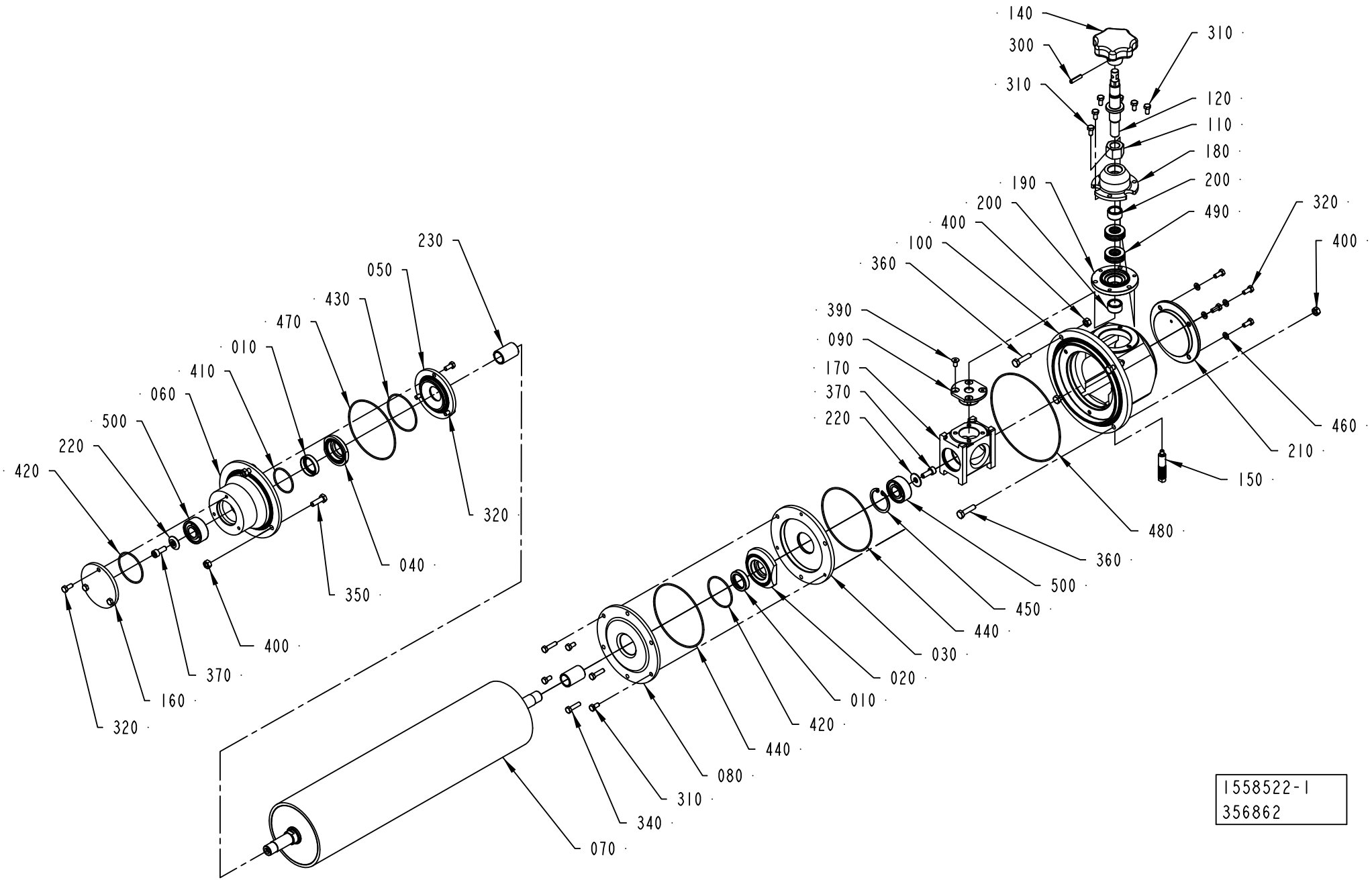
140
300
310
310
120
110
180
200
490
190
200
400
100
360
390
090
170
370
220
320
400
460
210
150
480
360
500
450
440
030
020
010
420
440
080
310
340
070
230
050
430
470
010
410
060
500
220
420
320
040
350
400
370
160
320
1558522-1
356862

ECM: 361624 - 20081002
Group number: 1558522-0100
Assembly Drawing: 1558522-1_1_AD

This list covers pages from 1-134 to 1-137

Pos	Part No	UN	Qty	Description	Page No
A3/FLEX DIMC/FLEX (See drawing on page: 1-136)					
070	2550893-0000		1	BENDING ROLLER	
A3/FLEX TBA 2000S NODIMC, A3/FLEX TBA 1890S NODIMC, A3/FLEX TBA 1400B NODIMC (See drawing on page: 1-134)					
070	2601237-0000		1	BENDING ROLLER	
A3/FLEX TPA 500SQ LIGHTCAP (See drawing on page: 1-136)					
070	2951498-0000		1	ROLLER	
A3/FLEX TBA 0200S NODIMC, A3/FLEX TBA 1000SQ NODIMC, A3/FLEX TBA 1000S NODIMC, A3/FLEX TBA 1000B NODIMC, A3/FLEX TBA 0500B NODIMC, A3/FLEX TPA 1000SQ NODIMC, A3/FLEX TBA 1500S NODIMC, A3/FLEX TBA 0200B NODIMC, A3/FLEX TBA 0250B NODIMC, A3/FLEX TBA 0330S NODIMC, A3/FLEX TPA 0330SQ NODIMC, A3/FLEX TPA 0500SQ NODIMC, A3/FLEX TBA 0250S NODIMC, A3/FLEX TBA 0200M NODIMC, A3/FLEX TBA 0500S NODIMC, A3/FLEX TPA 0200SQ NODIMC, A3/FLEX TPA 0250SQ NODIMC, A3/FLEX TPA 0750SQ NODIMC, A3/FLEX TBA 0200SQ NODIMC, A3/FLEX TBA 0250SQ NODIMC, A3/FLEX TGA 1000SQ NODIMC, A3/FLEX TBA 0500SQ NODIMC, A3/FLEX TGA 0500SQ NODIMC, A3/FLEX TGA 0750SQ NODIMC (See drawing on page: 1-134)					
070	2550891-0000		1	BENDING ROLLER	
Common Parts					
010	90458-0639		2	VARILIP 20X30X7 MM	
020	1558748-0000		1	FLANGE	
030	1558749-0000		1	FLANGE	
040	1558750-0000		1	FLANGE	
050	1558751-0000		1	FLANGE	
060	1558752-0000		1	FLANGE	
080	1558754-0000		1	LID	
090	1558755-0000		1	FLANGE	
100	1558756-0000		1	HOUSING	
110	1558757-0000		1	NUT	
120	1558758-0000		1	SHAFT	
140	1558760-0000		1	KNOB	
150	1558761-0000		1	SHAFT	
160	1558762-0000		1	LID	
170	1558763-0000		1	SLIDER	
180	1558764-0000		1	FLANGE	
190	1558765-0000		1	FLANGE	
200	1558766-0000		2	BUSHING	
210	2528073-0000		1	LID	
220	1558768-0000		2	WASHER	
230	2555613-0000		2	BUSHING	
300	311112-0256		1	SPRING PIN, ISO 8752 4X20-C	
310	312105-0325		9	SCREW M6S ISO 4017 M5X10 A480	
320	312105-0327		10	SCREW M6S ISO 4017 M5X12 A480	
340	312105-0331		3	SCREW M6S ISO 4017 M5X20 A480	
350	312105-0370		3	SCREW M6S ISO 4017 M6X20 A480	
360	312105-0372		4	SCREW M6S ISO 4017 M6X25 A480	
370	312115-0368		2	SCREW ISO4762 M6X16 A4 80	
390	312155-0325		4	SCREW DIN 7991 MF6S M5X10 A4 70	
400	312605-0316		7	HEXAGON NUT, M6M M6 A280	
410	315205-0716		1	O-RING 34,65X1,78 MM	
420	315205-0803		2	O-RING 44,17X1,78 MM	
430	315205-0805		1	O-RING 53,7X1,78 MM	
440	315205-0807		2	O-RING 94,97X1,78 MM	
450	315753-0124		1	RETAINING RING FOR BORE DIN 472 35 A2	
460	315105-0146		4	WASHER BRB 5,3X10 RFR	
470	90458-0640		1	O-RING 88,62X1,78 MM	
480	90459-0094		1	O-RING 133,07X1,78 MM	
490	90459-0098		2	THRUST BALL BEARING, 15X28X9 MM	
500	90214-0105		2	SPHERICAL BALL BEARING, 15X35X14 MM	

Machine Type	Group Description	Used-In	Group Number	Page No

ADJUSTING ROLLER

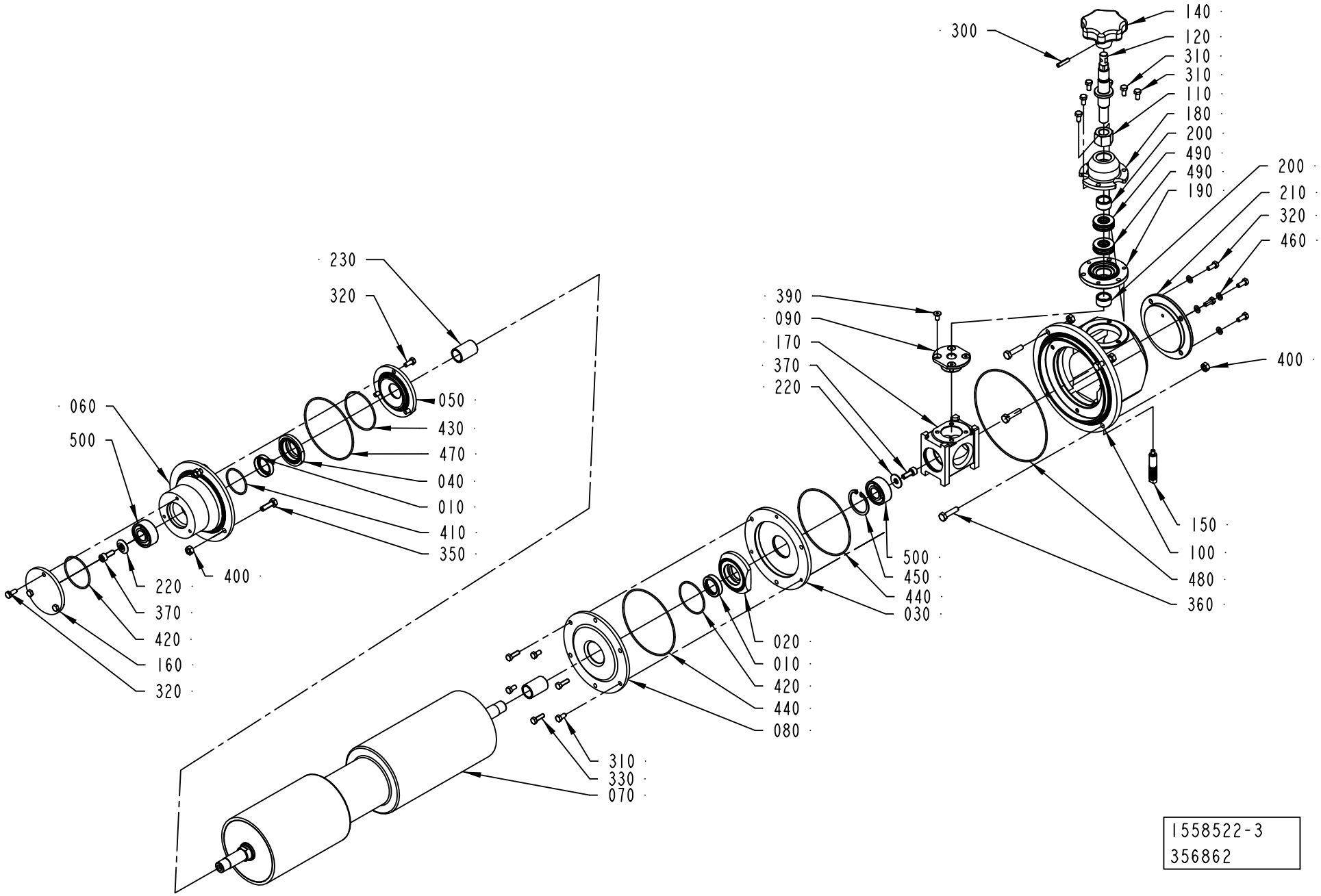

ECM: 361624 - 20081002
Group number: 1558522-0100
Assembly Drawing: 1558522-3_1_AC

This list covers pages from 1-134 to 1-137

Pos	Part No	UN	Qty	Description	Page No
A3/FLEX DIMC/FLEX (See drawing on page: 1-136)					
070	2550893-0000		1	BENDING ROLLER	
A3/FLEX TBA 2000S NODIMC, A3/FLEX TBA 1890S NODIMC, A3/FLEX TBA 1400B NODIMC (See drawing on page: 1-134)					
070	2601237-0000		1	BENDING ROLLER	
A3/FLEX TPA 500SQ LIGHTCAP (See drawing on page: 1-136)					
070	2951498-0000		1	ROLLER	
A3/FLEX TBA 0200S NODIMC, A3/FLEX TBA 1000SQ NODIMC, A3/FLEX TBA 1000S NODIMC, A3/FLEX TBA 1000B NODIMC, A3/FLEX TBA 0500B NODIMC, A3/FLEX TPA 1000SQ NODIMC, A3/FLEX TBA 1500S NODIMC, A3/FLEX TBA 0200B NODIMC, A3/FLEX TBA 0250B NODIMC, A3/FLEX TBA 0330S NODIMC, A3/FLEX TPA 0330SQ NODIMC, A3/FLEX TPA 0500SQ NODIMC, A3/FLEX TBA 0250S NODIMC, A3/FLEX TBA 0200M NODIMC, A3/FLEX TBA 0500S NODIMC, A3/FLEX TPA 0200SQ NODIMC, A3/FLEX TPA 0250SQ NODIMC, A3/FLEX TPA 0750SQ NODIMC, A3/FLEX TBA 0200SQ NODIMC, A3/FLEX TBA 0250SQ NODIMC, A3/FLEX TGA 1000SQ NODIMC, A3/FLEX TBA 0500SQ NODIMC, A3/FLEX TGA 0500SQ NODIMC, A3/FLEX TGA 0750SQ NODIMC (See drawing on page: 1-134)					
070	2550891-0000		1	BENDING ROLLER	
Common Parts					
010	90458-0639		2	VARILIP 20X30X7 MM	
020	1558748-0000		1	FLANGE	
030	1558749-0000		1	FLANGE	
040	1558750-0000		1	FLANGE	
050	1558751-0000		1	FLANGE	
060	1558752-0000		1	FLANGE	
080	1558754-0000		1	LID	
090	1558755-0000		1	FLANGE	
100	1558756-0000		1	HOUSING	
110	1558757-0000		1	NUT	
120	1558758-0000		1	SHAFT	
140	1558760-0000		1	KNOB	
150	1558761-0000		1	SHAFT	
160	1558762-0000		1	LID	
170	1558763-0000		1	SLIDER	
180	1558764-0000		1	FLANGE	
190	1558765-0000		1	FLANGE	
200	1558766-0000		2	BUSHING	
210	2528073-0000		1	LID	
220	1558768-0000		2	WASHER	
230	2555613-0000		2	BUSHING	
300	311112-0256		1	SPRING PIN, ISO 8752 4X20-C	
310	312105-0325		9	SCREW M6S ISO 4017 M5X10 A480	
320	312105-0327		10	SCREW M6S ISO 4017 M5X12 A480	
340	312105-0331		3	SCREW M6S ISO 4017 M5X20 A480	
350	312105-0370		3	SCREW M6S ISO 4017 M6X20 A480	
360	312105-0372		4	SCREW M6S ISO 4017 M6X25 A480	
370	312115-0368		2	SCREW ISO4762 M6X16 A4 80	
390	312155-0325		4	SCREW DIN 7991 MF6S M5X10 A4 70	
400	312605-0316		7	HEXAGON NUT, M6M M6 A280	
410	315205-0716		1	O-RING 34,65X1,78 MM	
420	315205-0803		2	O-RING 44,17X1,78 MM	
430	315205-0805		1	O-RING 53,7X1,78 MM	
440	315205-0807		2	O-RING 94,97X1,78 MM	
450	315753-0124		1	RETAINING RING FOR BORE DIN 472 35 A2	
460	315105-0146		4	WASHER BRB 5,3X10 RFR	
470	90458-0640		1	O-RING 88,62X1,78 MM	
480	90459-0094		1	O-RING 133,07X1,78 MM	
490	90459-0098		2	THRUST BALL BEARING, 15X28X9 MM	
500	90214-0105		2	SPHERICAL BALL BEARING, 15X35X14 MM	

Machine Type	Group Description	Used-In	Group Number	Page No

This page is intentionally left blank.

ECM: 195184 - 20041203
Group number: 2731260-0100
Assembly Drawing:

Pos	Part No	UN	Qty	Description	Page No
-					
010	2524600-0100		1	PRESSURE ROLLER	**1-141, 1-143**
020	2582003-0100		1	GUIDE RAIL	**1-145, 1-147**
030	2589108-0000		1	BENDING ROLLER	
040	1484745-0100		1	WEB GUIDE	**1-149**
050	2529547-0100		1	PAPER GUIDE	**1-151**

Pos	Part No	UN	Qty	Description	Page No

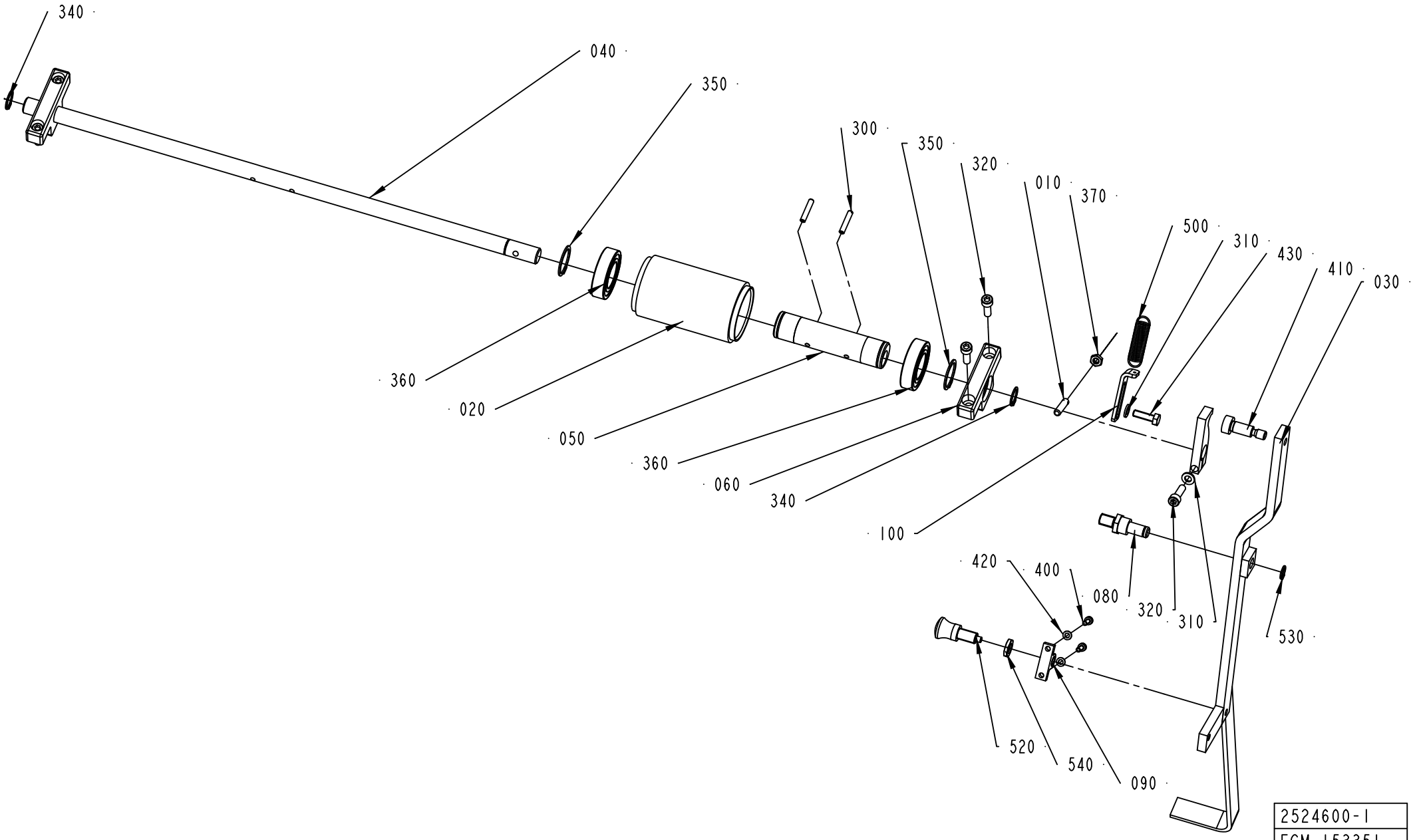
340
040
350
300
350
320
010
370
500
310
430
410
030
360
020
050
360
060
340
100
420
400
080
320
310
530
520
540
090
2524600-1
ECM 153351

ECM: 383468 - 20090402
Group number: 2524600-0100
Assembly Drawing: 2524600-1_1_AB

This list covers pages from 1-140 to 1-143

Pos	Part No	UN	Qty	Description	Page No
A3/FLEX TBA 1890S, A3/FLEX TBA 2000S, A3/FLEX TBA 1400B (See drawing on page: 1-142)					
020	906254-0000		2	ROLLER	
030	90450-0003		1	SINGLE ACTING, MINI-ISO, CYL 20-25	
040	2681261-0000		1	SHAFT	
050	1512267-0000		2	ECCENTRIC BUSHING	
060	2681262-0000		2	BRACKET	
070	2703095-0000		1	ROCKER ARM	
080	2703096-0000		1	SUPPORT	
090	2681263-0000		2	BUSHING	
100	2681266-0000		1	WASHER	
300	311112-0258		4	SPRING PIN, ISO 8752 4X24-C	
310	315755-0109		1	RETAINING RING SHAFT DIN 6799 7 A2	
320	312115-0374		2	SCREW ISO4762 M6X30 A4 80	
350	315751-0119		4	RETAINING RING FOR SHAFT DIN 471 25 SS	
360	321308-0205		4	BALL BEARING, 25X47X12MM	
370	315105-0165		1	WASHER BRB 8,4X16 RFR	
400	312105-0367		1	SCREW M6S ISO 4017 M6X14 A480	
410	90459-2590		1	ROD END, CLEVIS WITH AXLE M8	
420	312115-0370		4	SCREW ISO4762 M6X20 A4 80	
450	90166-0117	M	7	HOSE 4/6 PVC BLUE	
560	350002-0006		1	PUSH-IN L-FITTING QSL-F-G1/8-6	
A3/FLEX TBA 0500B, A3/FLEX TBA 1000B, A3/FLEX TBA 1000S, A3/FLEX TBA 1000SQ, A3/FLEX TPA 1000SQ, A3/FLEX TBA 0200S, A3/FLEX TBA 1500S, A3/FLEX TBA 0200B, A3/FLEX TBA 0250B, A3/FLEX TBA 0330S, A3/FLEX TPA 0330SQ, A3/FLEX TPA 0500SQ, A3/FLEX TBA 0200M, A3/FLEX TBA 0250S, A3/FLEX TBA 0500S, A3/FLEX TPA 0250SQ, A3/FLEX TPA 0200SQ, A3/FLEX TPA 0750SQ, A3/FLEX TBA 0200SQ, A3/FLEX TBA 0250SQ, A3/FLEX TBA 0500SQ, A3/FLEX TGA 1000SQ, A3/FLEX TGA 0500SQ, A3/FLEX TGA 0750SQ (See drawing on page: 1-140)					
010	578684-0000		1	SPRING BRACKET	
020	906254-0000		1	ROLLER	
030	2524602-0000		1	HANDLE	
040	1487763-0000		1	SHAFT	
050	1512267-0000		1	ECCENTRIC BUSHING	
060	1519583-0000		2	BRACKET	
070	2524604-0000		1	ROCKER ARM	
080	2524601-0000		1	AXLE PIN	
090	2524603-0000		1	HOLDER	
100	2529549-0000		1	PLATE	
300	311112-0258		2	SPRING PIN, ISO 8752 4X24-C	
310	315105-0153		2	WASHER BRB 6,4X12 RFR	
320	312115-0370		5	SCREW ISO4762 M6X20 A4 80	
350	315751-0119		2	RETAINING RING FOR SHAFT DIN 471 25 SS	
360	321308-0205		2	BALL BEARING, 25X47X12MM	
370	312625-0316		1	HEXAGON THIN NUT, EN 24035 ML6M M6 A4	
400	312115-0291		2	SCREW ISO4762 M4X12 A4 80	
410	312180-0491		1	SCREW ISO7379 H10X20	
420	315105-0136		2	WASHER BRB 4,3X8 RFR	
430	312105-0370		1	SCREW M6S ISO 4017 M6X20 A480	
500	90335-0091		1	TENSION SPRING 41890, 1,2X13X48,2	
520	90051-0087		1	LOCK KNOB, NO. GN 617 A5	
530	90141-0016		1	RETAINING RING FOR SHAFT DIN 471 10 SS	
540	90099-0007		1	HEXAGON NUT, M10X1, E 63 137 10	
Common Parts					
340	315751-0112		2	RETAINING RING FOR SHAFT DIN 471 15 SS	

Machine Type	Group Description	Used-In	Group Number	Page No

PRESSURE ROLLER

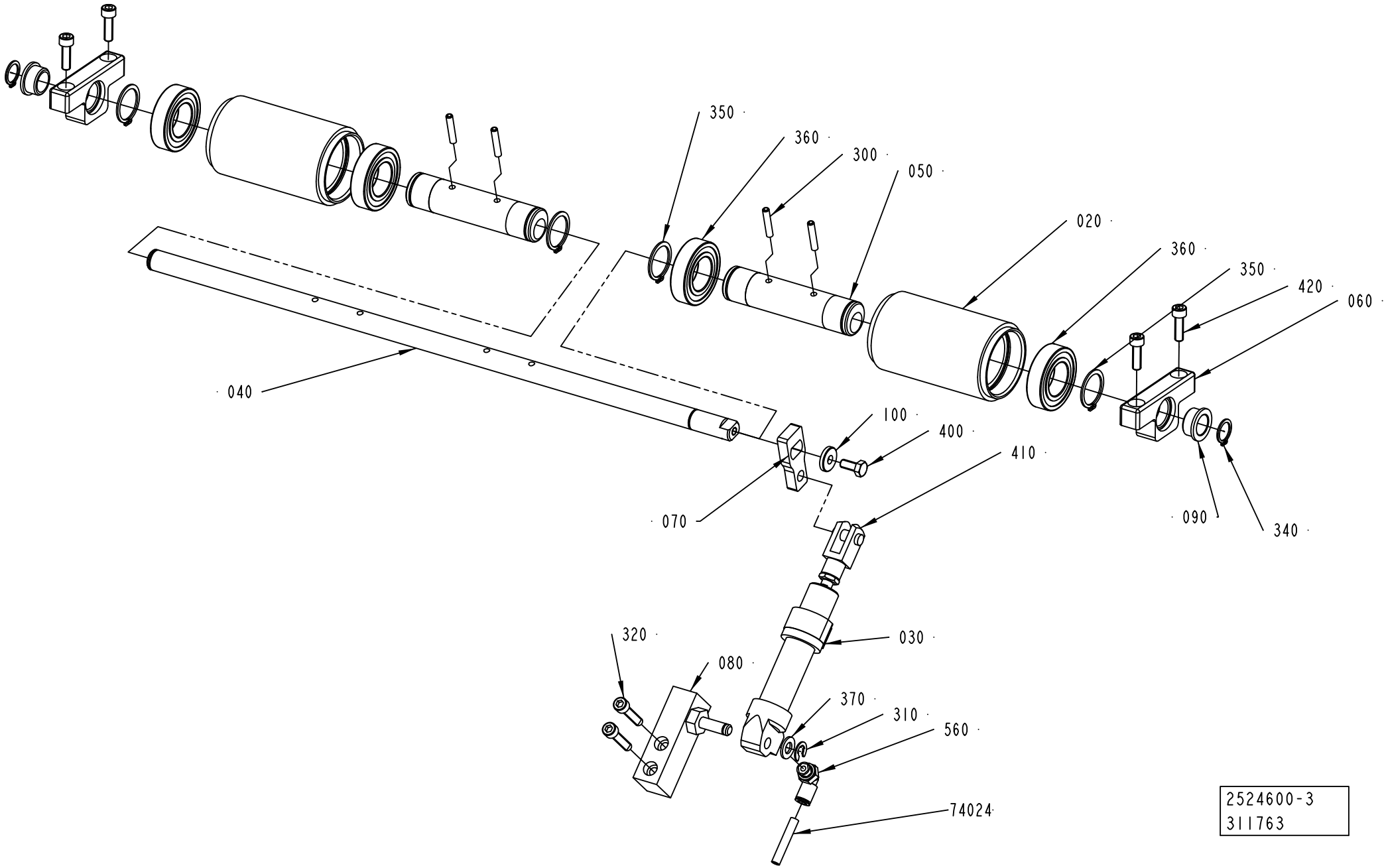

ECM: 383468 - 20090402
Group number: 2524600-0100
Assembly Drawing: 2524600-3_1_AE

This list covers pages from 1-140 to 1-143

Pos	Part No	UN	Qty	Description	Page No
A3/FLEX TBA 1890S, A3/FLEX TBA 2000S, A3/FLEX TBA 1400B (See drawing on page: 1-142)					
020	906254-0000		2	ROLLER	
030	90450-0003		1	SINGLE ACTING, MINI-ISO, CYL 20-25	
040	2681261-0000		1	SHAFT	
050	1512267-0000		2	ECCENTRIC BUSHING	
060	2681262-0000		2	BRACKET	
070	2703095-0000		1	ROCKER ARM	
080	2703096-0000		1	SUPPORT	
090	2681263-0000		2	BUSHING	
100	2681266-0000		1	WASHER	
300	311112-0258		4	SPRING PIN, ISO 8752 4X24-C	
310	315755-0109		1	RETAINING RING SHAFT DIN 6799 7 A2	
320	312115-0374		2	SCREW ISO4762 M6X30 A4 80	
350	315751-0119		4	RETAINING RING FOR SHAFT DIN 471 25 SS	
360	321308-0205		4	BALL BEARING, 25X47X12MM	
370	315105-0165		1	WASHER BRB 8,4X16 RFR	
400	312105-0367		1	SCREW M6S ISO 4017 M6X14 A480	
410	90459-2590		1	ROD END, CLEVIS WITH AXLE M8	
420	312115-0370		4	SCREW ISO4762 M6X20 A4 80	
450	90166-0117	M	7	HOSE 4/6 PVC BLUE	
560	350002-0006		1	PUSH-IN L-FITTING QSL-F-G1/8-6	
A3/FLEX TBA 0500B, A3/FLEX TBA 1000B, A3/FLEX TBA 1000S, A3/FLEX TBA 1000SQ, A3/FLEX TPA 1000SQ, A3/FLEX TBA 0200S, A3/FLEX TBA 1500S, A3/FLEX TBA 0200B, A3/FLEX TBA 0250B, A3/FLEX TBA 0330S, A3/FLEX TPA 0330SQ, A3/FLEX TPA 0500SQ, A3/FLEX TBA 0200M, A3/FLEX TBA 0250S, A3/FLEX TBA 0500S, A3/FLEX TPA 0250SQ, A3/FLEX TPA 0200SQ, A3/FLEX TPA 0750SQ, A3/FLEX TBA 0200SQ, A3/FLEX TBA 0250SQ, A3/FLEX TBA 0500SQ, A3/FLEX TGA 1000SQ, A3/FLEX TGA 0500SQ, A3/FLEX TGA 0750SQ (See drawing on page: 1-140)					
010	578684-0000		1	SPRING BRACKET	
020	906254-0000		1	ROLLER	
030	2524602-0000		1	HANDLE	
040	1487763-0000		1	SHAFT	
050	1512267-0000		1	ECCENTRIC BUSHING	
060	1519583-0000		2	BRACKET	
070	2524604-0000		1	ROCKER ARM	
080	2524601-0000		1	AXLE PIN	
090	2524603-0000		1	HOLDER	
100	2529549-0000		1	PLATE	
300	311112-0258		2	SPRING PIN, ISO 8752 4X24-C	
310	315105-0153		2	WASHER BRB 6,4X12 RFR	
320	312115-0370		5	SCREW ISO4762 M6X20 A4 80	
350	315751-0119		2	RETAINING RING FOR SHAFT DIN 471 25 SS	
360	321308-0205		2	BALL BEARING, 25X47X12MM	
370	312625-0316		1	HEXAGON THIN NUT, EN 24035 ML6M M6 A4	
400	312115-0291		2	SCREW ISO4762 M4X12 A4 80	
410	312180-0491		1	SCREW ISO7379 H10X20	
420	315105-0136		2	WASHER BRB 4,3X8 RFR	
430	312105-0370		1	SCREW M6S ISO 4017 M6X20 A480	
500	90335-0091		1	TENSION SPRING 41890, 1,2X13X48,2	
520	90051-0087		1	LOCK KNOB, NO. GN 617 A5	
530	90141-0016		1	RETAINING RING FOR SHAFT DIN 471 10 SS	
540	90099-0007		1	HEXAGON NUT, M10X1, E 63 137 10	
Common Parts					
340	315751-0112		2	RETAINING RING FOR SHAFT DIN 471 15 SS	

Machine Type	Group Description	Used-In	Group Number	Page No

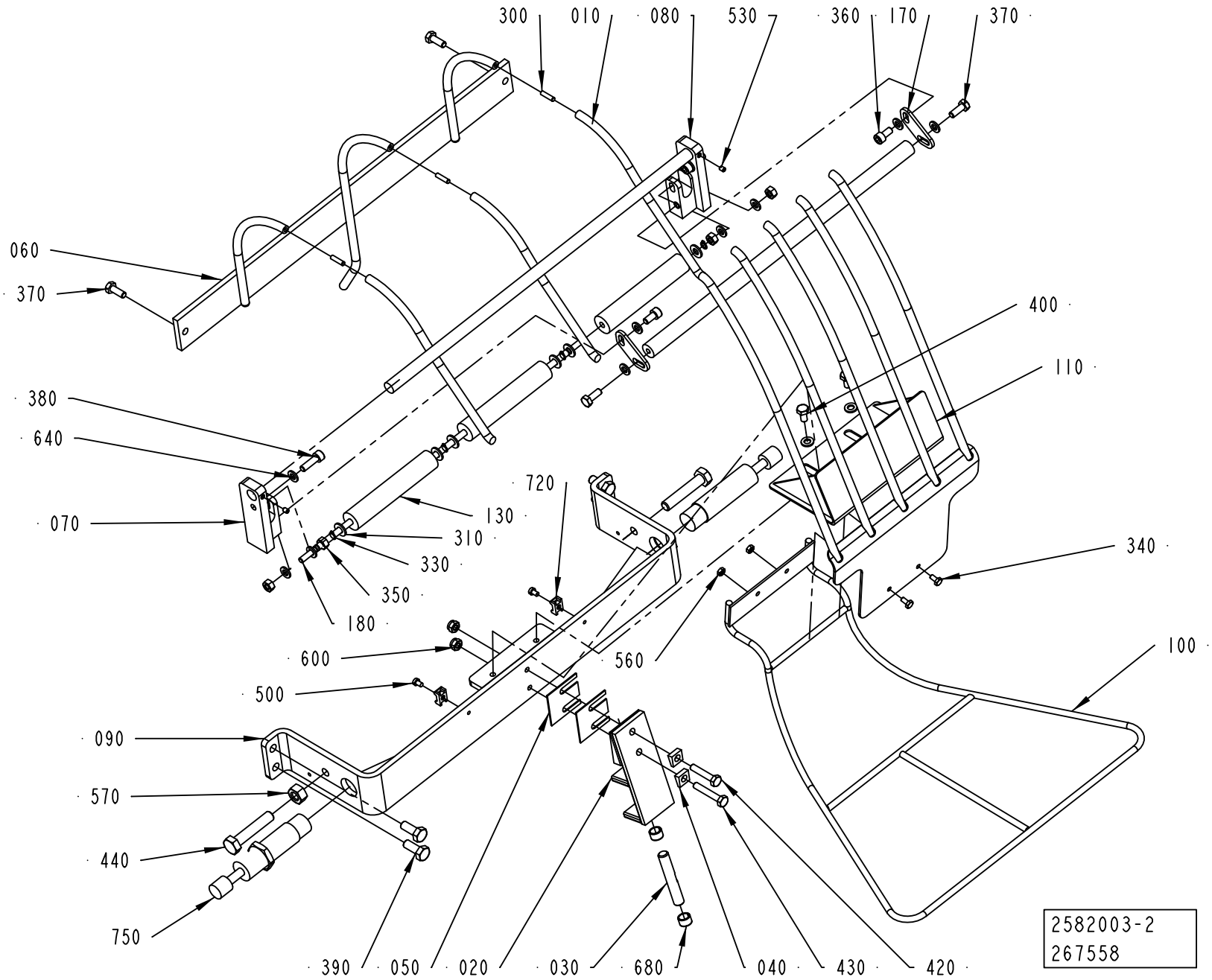
300
010
080
530
360
170
370
060
370
400
110
380
640
720
130
070
310
330
340
350
180
600
560
100
500
090
570
440
750
390
050
020
030
680
040
430
420
2582003-2
267558

ECM: 361858 - 20081001
Group number: 2582003-0100
Assembly Drawing: 2582003-2_1_AC

This list covers pages from 1-144 to 1-147

Pos	Part No	UN	Qty	Description	Page No
A3/FLEX TBA 0500B, A3/FLEX TBA 1000B, A3/FLEX TBA 1000S, A3/FLEX TBA 1000SQ, A3/FLEX TPA 1000SQ, A3/FLEX TBA 0200S, A3/FLEX TBA 1500S, A3/FLEX TBA 0200B, A3/FLEX TBA 0250B, A3/FLEX TBA 0330S, A3/FLEX TPA 0330SQ, A3/FLEX TPA 0500SQ, A3/FLEX TBA 0200M, A3/FLEX TBA 0250S, A3/FLEX TBA 0500S, A3/FLEX TPA 0250SQ, A3/FLEX TPA 0200SQ, A3/FLEX TPA 0750SQ, A3/FLEX TBA 0200SQ, A3/FLEX TBA 0250SQ, A3/FLEX TBA 0500SQ, A3/FLEX TGA 1000SQ, A3/FLEX TGA 0500SQ, A3/FLEX TGA 0750SQ (See drawing on page: 1-146)					
010	2913272-0000		1	RAIL	
060	2913271-0000		1	RAIL	
070	1519578-0000		2	MOUNTING BLOCK	
110	2582668-0000		1	PLATE	
190	1519591-0000		1	RAIL PIN	
300	311103-0270		3	PARALLEL PIN ISO 2338 4M6X16 A1	
360	312105-0366		3	SCREW M6S ISO 4017 M6X12 A480	
640	315105-0153		5	WASHER BRB 6,4X12 RFR	
760	312105-0291		1	SCREW M6S ISO 4017 M4X12 A470	
770	315105-0136		1	WASHER BRB 4,3X8 RFR	
A3/FLEX TBA 1890S, A3/FLEX TBA 2000S, A3/FLEX TBA 1400B (See drawing on page: 1-144)					
010	2681260-0000		1	RAIL	
060	2681259-0000		1	RAIL	
070	2689138-0000		1	MOUNTING BLOCK	
080	2689173-0000		1	MOUNTING BLOCK	
110	2681267-0000		1	PLATE	
130	2831674-0000		3	ROLLER	
170	2693199-0000		2	PLATE	
180	2681535-0000		1	SHAFT	
300	311103-0270		3	PARALLEL PIN ISO 2338 4M6X16 A1	
310	315105-0156		6	WASHER BRB 6,7X14 RFR	
330	315751-0103		4	RETAINING RING FOR SHAFT DIN 471 6 SS	
350	312605-0316		4	HEXAGON NUT, M6M M6 A280	
360	312115-0366		2	SCREW ISO4762 M6X12 A4 80	
400	312105-0366		2	SCREW M6S ISO 4017 M6X12 A480	
640	315105-0153		8	WASHER BRB 6,4X12 RFR	
Common Parts					
020	1490220-0000		1	ANGLE BRACKET	
030	1494664-0000		1	AXLE LINK	
040	1499566-0000		2	WASHER	
050	1512430-0000		2	VOLUME SHIM	
090	1519944-0000		1	BRACKET	
100	2563183-0000		1	GUIDE RAIL	
340	312105-0287		2	SCREW M6S ISO 4017 M4X8 A470	
370	312105-0368		4	SCREW M6S ISO 4017 M6X16 A480	
380	312105-0370		2	SCREW M6S ISO 4017 M6X20 A480	
390	312105-0451		4	SCREW M6S ISO 4017 M8X20 A480	
420	312109-0374		1	SCREW M6S ISO 4017 M6X30 A480	
430	312109-0376		1	SCREW M6S ISO 4017 M6X35 A480	
440	312109-0501		2	SCREW M6S ISO 4017 M10X50 A480	
500	312125-0285		2	SCREW ISO 1207 M4X6 A4	
530	312318-0284		2	SCREW ISO4029 M4X5 A4	
560	312605-0312		2	HEXAGON NUT, M6M M4 A280	
570	312605-0320		2	HEXAGON NUT, M6M M10 A280	
600	312812-0316		2	HEXAGON NUT, NY-LOCK M6 A480	
680	321141-0138		2	BEARING BUSH W/O FLANGE, 10X12X8 MM	
720	352113-0205		2	ANCHOR PLATES FOR STRIPS, TYPE TM2S8-C10	
750	90347-0182		2	SHOCK ABSORBER, YSR-16-20-C	

Machine Type | Group Description | Used-In | Group Number | Page No

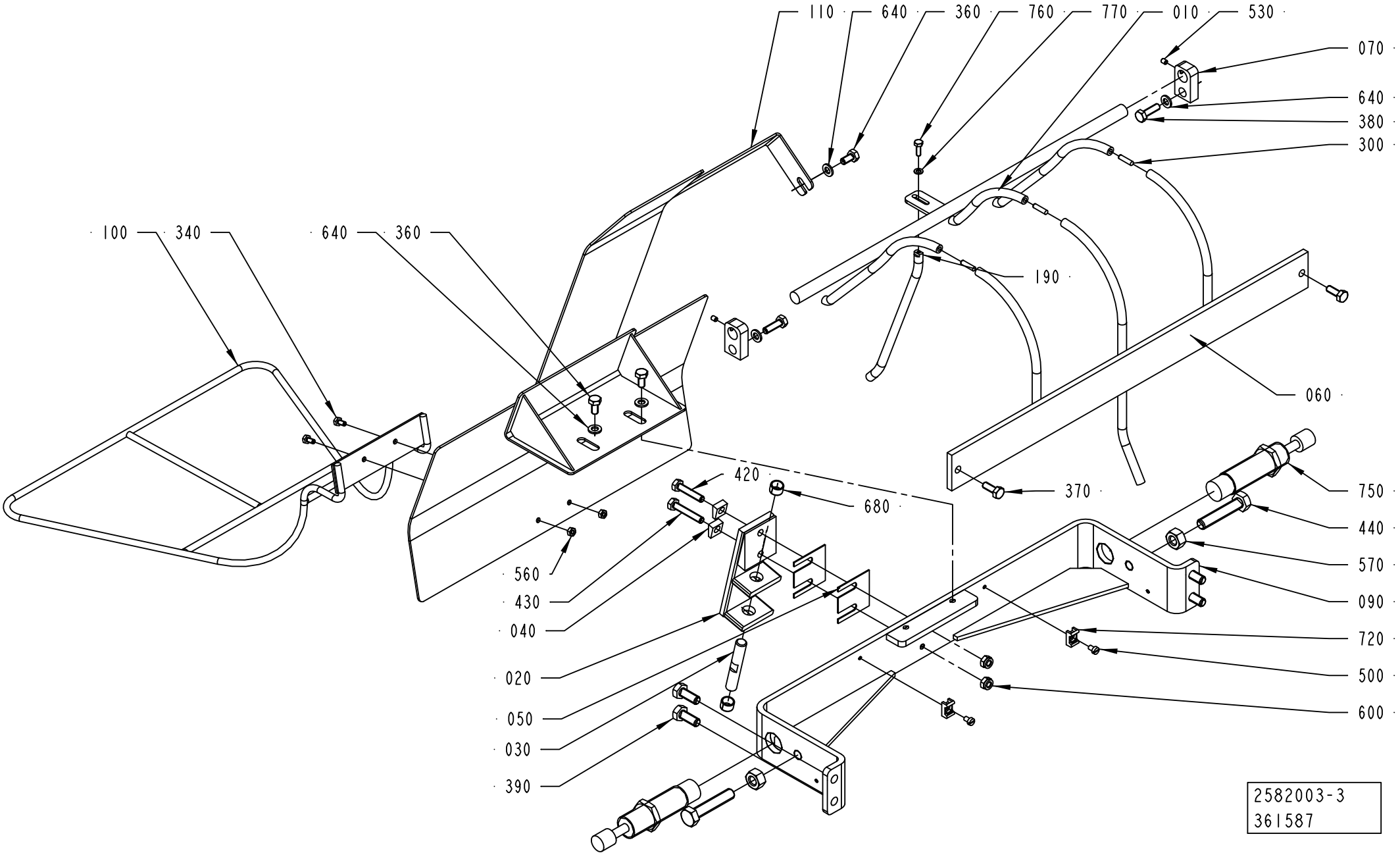
110
640
360
760
770
010
530
070
640
380
300
100
340
640
360
190
060
370
420
680
750
440
570
090
560
430
040
020
050
030
390
720
500
600
2582003-3
361587

ECM: 361858 - 20081001
Group number: 2582003-0100
Assembly Drawing: 2582003-3_1_AB

This list covers pages from 1-144 to 1-147

Pos	Part No	UN	Qty	Description	Page No
A3/FLEX TBA 0500B, A3/FLEX TBA 1000B, A3/FLEX TBA 1000S, A3/FLEX TBA 1000SQ, A3/FLEX TPA 1000SQ, A3/FLEX TBA 0200S, A3/FLEX TBA 1500S, A3/FLEX TBA 0200B, A3/FLEX TBA 0250B, A3/FLEX TBA 0330S, A3/FLEX TPA 0330SQ, A3/FLEX TPA 0500SQ, A3/FLEX TBA 0200M, A3/FLEX TBA 0250S, A3/FLEX TBA 0500S, A3/FLEX TPA 0250SQ, A3/FLEX TPA 0200SQ, A3/FLEX TPA 0750SQ, A3/FLEX TBA 0200SQ, A3/FLEX TBA 0250SQ, A3/FLEX TBA 0500SQ, A3/FLEX TGA 1000SQ, A3/FLEX TGA 0500SQ, A3/FLEX TGA 0750SQ (See drawing on page: 1-146)					
010	2913272-0000		1	RAIL	
060	2913271-0000		1	RAIL	
070	1519578-0000		2	MOUNTING BLOCK	
110	2582668-0000		1	PLATE	
190	1519591-0000		1	RAIL PIN	
300	311103-0270		3	PARALLEL PIN ISO 2338 4M6X16 A1	
360	312105-0366		3	SCREW M6S ISO 4017 M6X12 A480	
640	315105-0153		5	WASHER BRB 6,4X12 RFR	
760	312105-0291		1	SCREW M6S ISO 4017 M4X12 A470	
770	315105-0136		1	WASHER BRB 4,3X8 RFR	
A3/FLEX TBA 1890S, A3/FLEX TBA 2000S, A3/FLEX TBA 1400B (See drawing on page: 1-144)					
010	2681260-0000		1	RAIL	
060	2681259-0000		1	RAIL	
070	2689138-0000		1	MOUNTING BLOCK	
080	2689173-0000		1	MOUNTING BLOCK	
110	2681267-0000		1	PLATE	
130	2831674-0000		3	ROLLER	
170	2693199-0000		2	PLATE	
180	2681535-0000		1	SHAFT	
300	311103-0270		3	PARALLEL PIN ISO 2338 4M6X16 A1	
310	315105-0156		6	WASHER BRB 6,7X14 RFR	
330	315751-0103		4	RETAINING RING FOR SHAFT DIN 471 6 SS	
350	312605-0316		4	HEXAGON NUT, M6M M6 A280	
360	312115-0366		2	SCREW ISO4762 M6X12 A4 80	
400	312105-0366		2	SCREW M6S ISO 4017 M6X12 A480	
640	315105-0153		8	WASHER BRB 6,4X12 RFR	
Common Parts					
020	1490220-0000		1	ANGLE BRACKET	
030	1494664-0000		1	AXLE LINK	
040	1499566-0000		2	WASHER	
050	1512430-0000		2	VOLUME SHIM	
090	1519944-0000		1	BRACKET	
100	2563183-0000		1	GUIDE RAIL	
340	312105-0287		2	SCREW M6S ISO 4017 M4X8 A470	
370	312105-0368		4	SCREW M6S ISO 4017 M6X16 A480	
380	312105-0370		2	SCREW M6S ISO 4017 M6X20 A480	
390	312105-0451		4	SCREW M6S ISO 4017 M8X20 A480	
420	312109-0374		1	SCREW M6S ISO 4017 M6X30 A480	
430	312109-0376		1	SCREW M6S ISO 4017 M6X35 A480	
440	312109-0501		2	SCREW M6S ISO 4017 M10X50 A480	
500	312125-0285		2	SCREW ISO 1207 M4X6 A4	
530	312318-0284		2	SCREW ISO4029 M4X5 A4	
560	312605-0312		2	HEXAGON NUT, M6M M4 A280	
570	312605-0320		2	HEXAGON NUT, M6M M10 A280	
600	312812-0316		2	HEXAGON NUT, NY-LOCK M6 A480	
680	321141-0138		2	BEARING BUSH W/O FLANGE, 10X12X8 MM	
720	352113-0205		2	ANCHOR PLATES FOR STRIPS, TYPE TM2S8-C10	
750	90347-0182		2	SHOCK ABSORBER, YSR-16-20-C	

Machine Type | Group Description | Used-In | Group Number | Page No

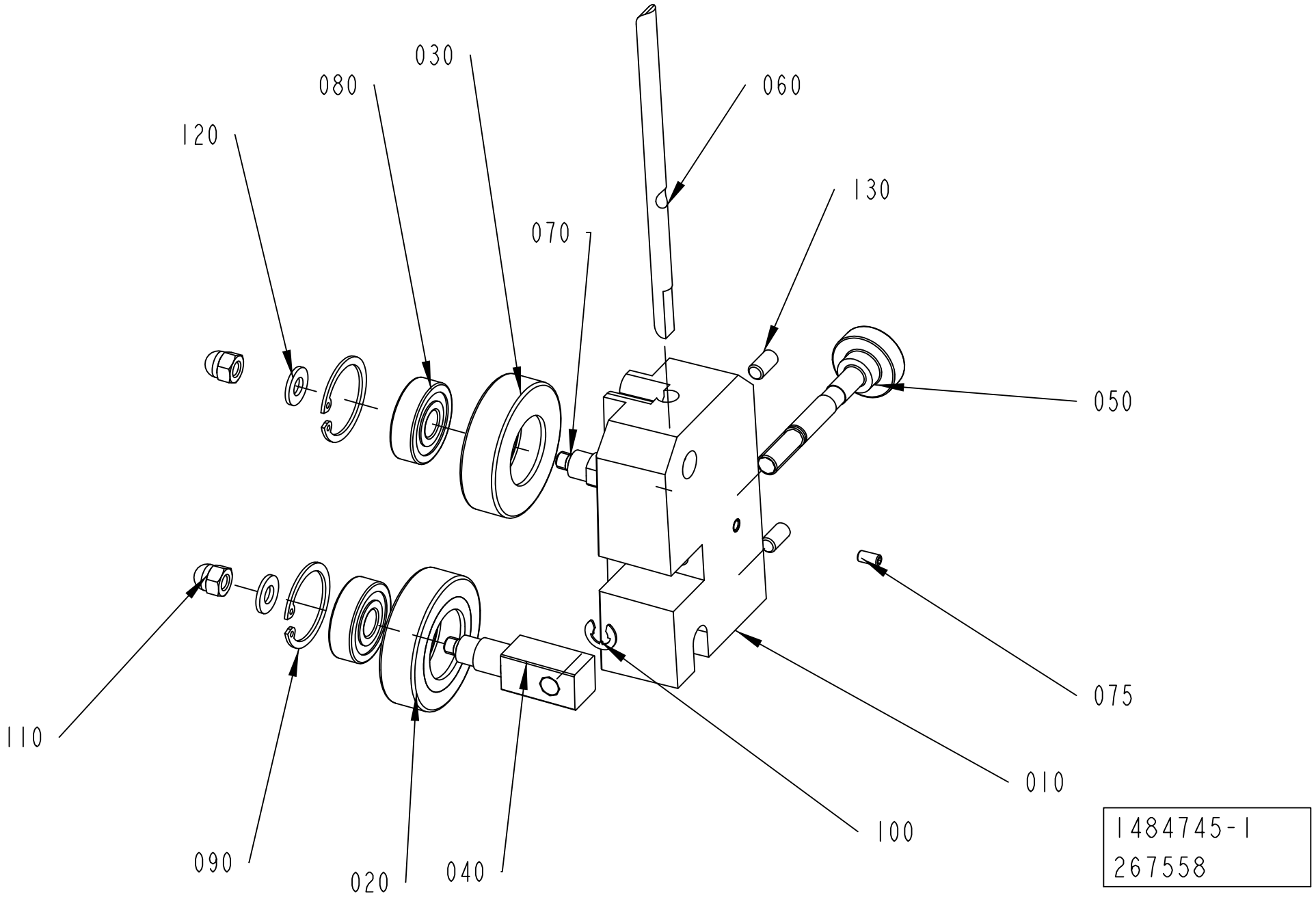
030
080
120
060
130
070
050
075
110
010
100
090
020
040
1484745-1
267558

ECM: 383478 - 20090402
Group number: 1484745-0100
Assembly Drawing: 1484745-1_1_AE

Pos	Part No	UN	Qty	Description	Page No
A3/FLEX TBA 1890S, A3/FLEX TBA 2000S, A3/FLEX TBA 1400B					
010	2831676-0000		1	BRACKET	
A3/FLEX TBA 0500B, A3/FLEX TBA 1000B, A3/FLEX TBA 1000S, A3/FLEX TBA 1000SQ, A3/FLEX TPA 1000SQ, A3/FLEX TBA 0200S, A3/FLEX TBA 1500S, A3/FLEX TBA 0200B, A3/FLEX TBA 0250B, A3/FLEX TBA 0330S, A3/FLEX TPA 0330SQ, A3/FLEX TPA 0500SQ, A3/FLEX TBA 0200M, A3/FLEX TBA 0250S, A3/FLEX TBA 0500S, A3/FLEX TPA 0250SQ, A3/FLEX TPA 0200SQ, A3/FLEX TPA 0750SQ, A3/FLEX TBA 0200SQ, A3/FLEX TBA 0250SQ, A3/FLEX TBA 0500SQ, A3/FLEX TGA 1000SQ, A3/FLEX TGA 0500SQ, A3/FLEX TGA 0750SQ					
010	2831675-0000		1	BRACKET	
Common Parts					
020	1036623-0000		1	GUIDE ROLLER	
030	1036622-0000		1	GUIDE ROLLER	
040	1317711-0000		1	SHAFT	
050	1317712-0000		1	SHAFT	
060	1512526-0000		1	STEERING	
070	583727-0000		1	SHAFT	
075	312318-0287		1	SCREW ISO4029 M4X8 A4	
080	321313-0100		2	BALL BEARING, 10X30X9 MM	
090	315753-0122		2	RETAINING RING FOR BORE DIN 472 30 A2	
100	315755-0108		1	RETAINING RING SHAFT DIN 6799 6 A2	
110	312705-0316		2	NUT HEX. DOMED CAP MHM-6 M6 A280	
120	315105-0156		2	WASHER BRB 6,7X14 RFR	
130	312318-0366		2	SCREW ISO4029 M6X12 A4	

Pos	Part No	UN	Qty	Description	Page No

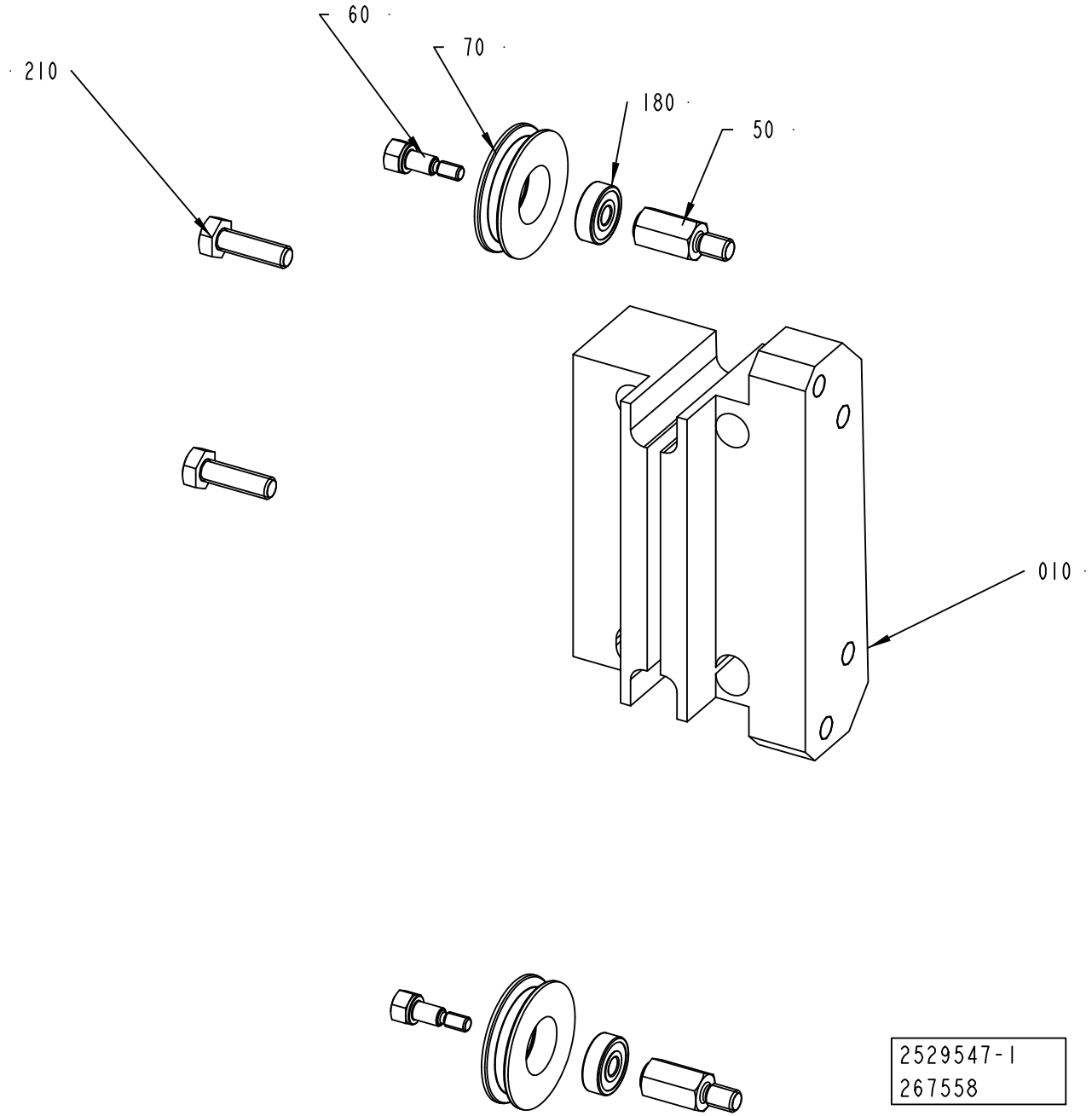
60
70
180
50
210
010
2529547-1
267558

ECM: 383466 - 20090402
Group number: 2529547-0100
Assembly Drawing: 2529547-1_1_AC

Pos	Part No	UN	Qty	Description	Page No
A3/FLEX					
010	2831678-0000		1	SUPPORT	
Common Parts					
050	1558251-0000		2	SHAFT	
060	1558252-0000		2	SCREW	
070	1558253-0000		2	ROLLER	
180	90458-2950		2	BALL BEARING, 5X16X5 MM	
210	312105-0370		2	SCREW M6S ISO 4017 M6X20 A480	

Pos	Part No	UN	Qty	Description	Page No

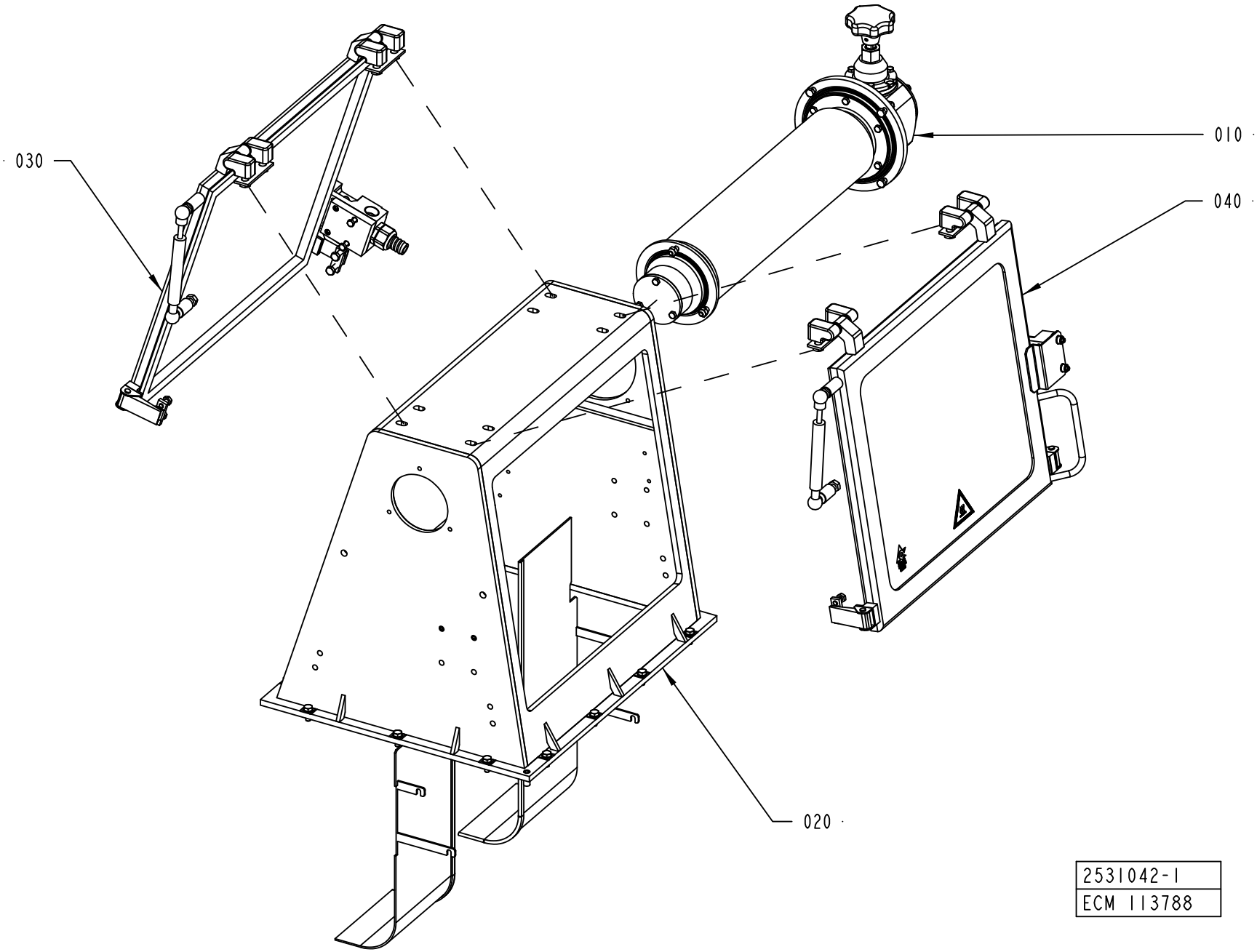
030
010
040
020
2531042-1
ECM 113788

ECM: 315335 - 20070628
Group number: 2531042-0100
Assembly Drawing: 2531042-1_1_AA

Pos	Part No	UN	Qty	Description	Page No
-					
010	1558522-0100		1	ADJUSTING ROLLER	**1-135, 1-137**
020	2531043-0100		1	HOUSING	**1-155**
030	2531039-0150		1	DOOR	**1-157**
040	2528145-0150		1	DOOR	**1-159**

Pos	Part No	UN	Qty	Description	Page No

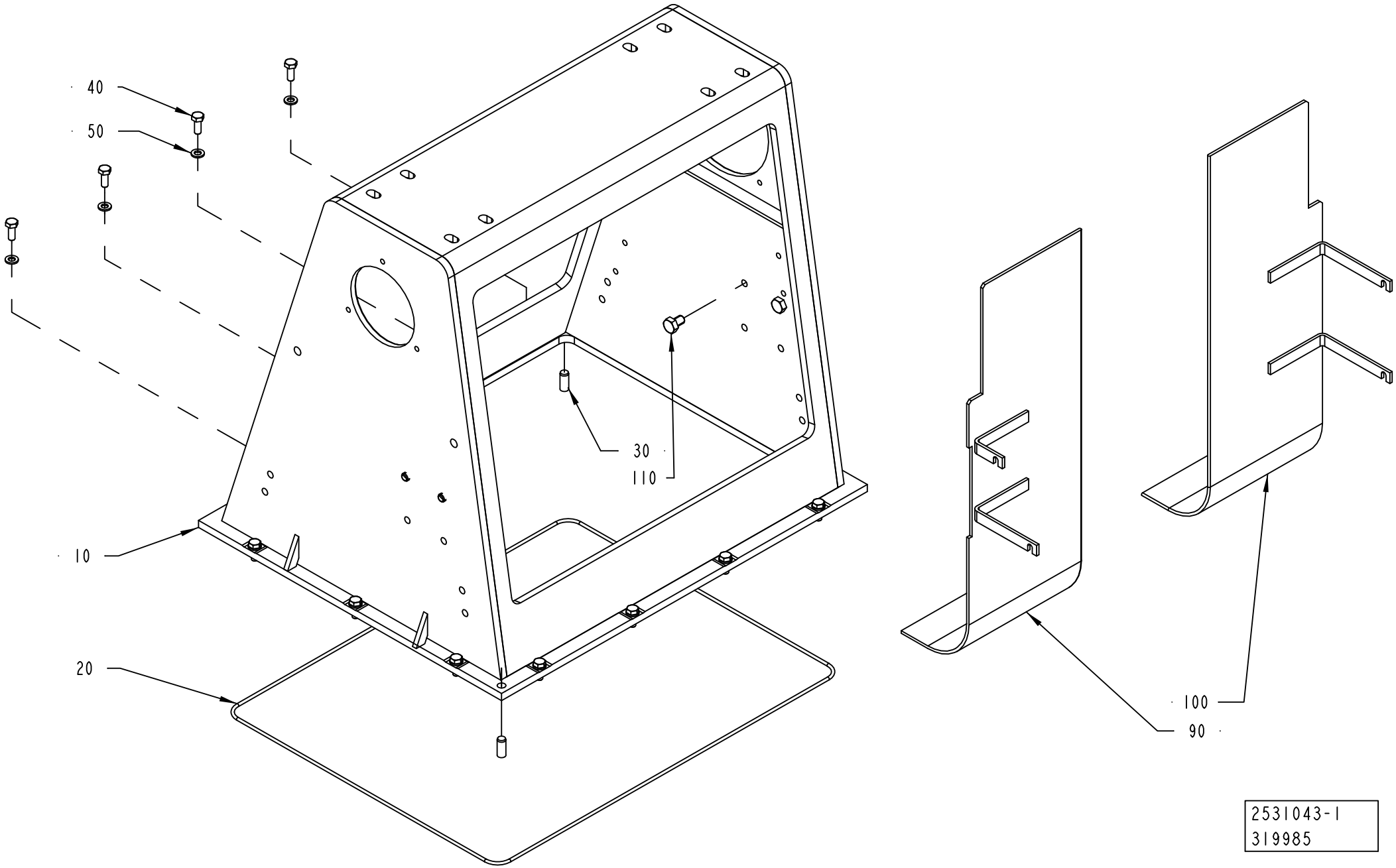
40
50
30
110
10
20
100
90
2531043-1
319985

ECM: 326055 - 20080103
Group number: 2531043-0100
Assembly Drawing: 2531043-1_1_AB

Pos	Part No	UN	Qty	Description	Page No
A3/FLEX TBA 1890S, A3/FLEX TBA 2000S, A3/FLEX TBA 1400B					
090	2532963-0000		1	DEFLECTOR	
100	2532964-0000		1	DEFLECTOR	
Common Parts					
010	2531044-0000		1	BOX FRAME	
020	90459-1314		1	O-RING 491X3 MM	
030	311103-0401		2	PARALLEL PIN ISO 2338 8M6X20 A1	
040	312105-0368		14	SCREW M6S ISO 4017 M6X16 A480	
050	315105-0153		14	WASHER BRB 6,4X12 RFR	
060	90153-0023		1	ADHESIVE, SILICON 251470 TUB 90CC(UN1993	
110	312105-0447		4	SCREW M6S ISO 4017 M8X12 A480	

Pos	Part No	UN	Qty	Description	Page No

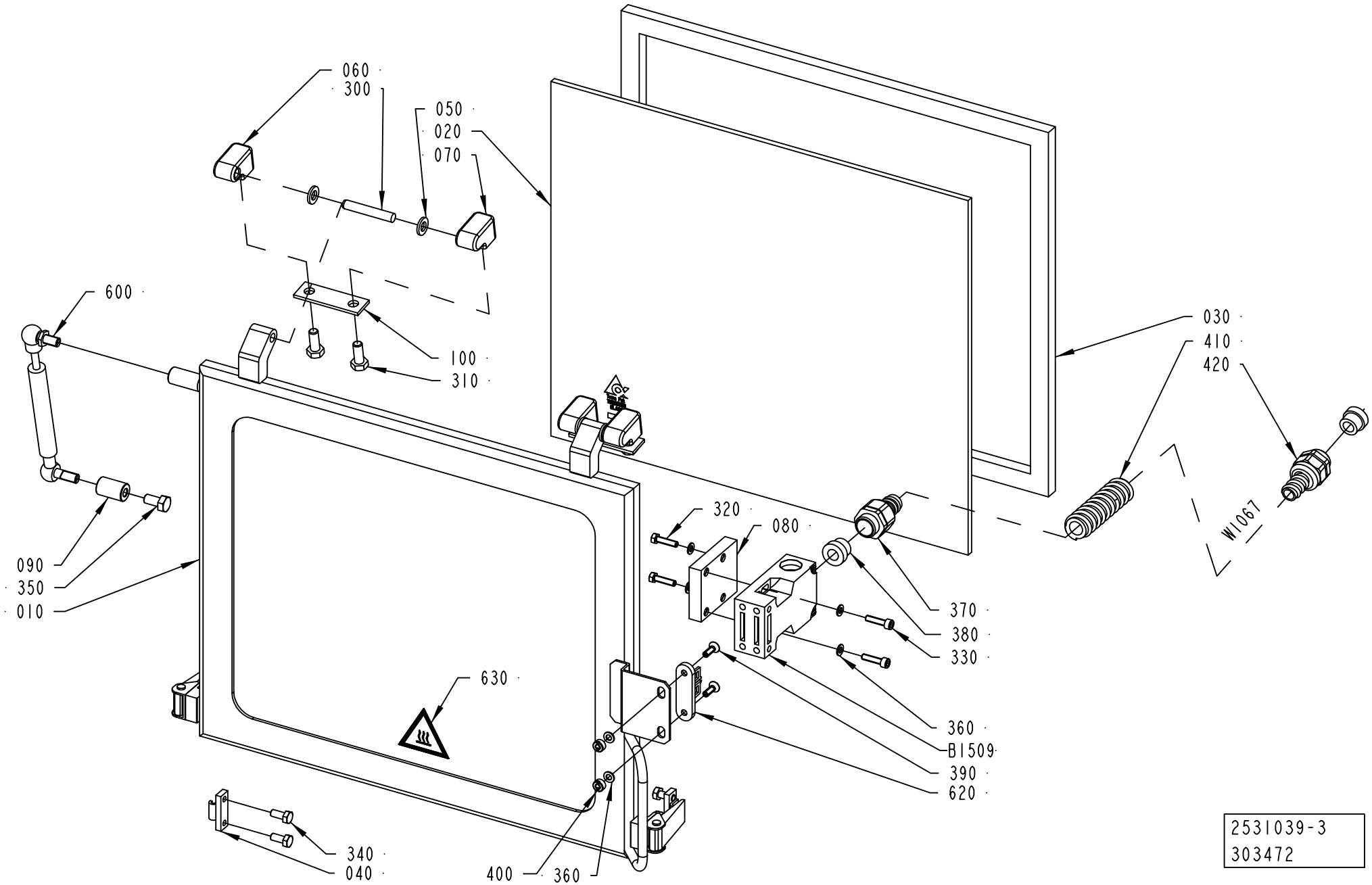
060
300
050
020
070
600
100
310
030
410
420
W1067
090
350
010
320
080
370
380
330
630
360
B1509
390
620
340
040
400
360
2531039-3
303472

ECM: 304243 - 20070417
Group number: 2531039-0150
Assembly Drawing: 2531039-3_1_AA

Pos	Part No	UN	Qty	Description	Page No
-					
010	2531038-0000		1	FRAME	
020	2874750-0000		1	GLASS PANE	
030	2531040-0000		1	GASKET	
040	271860-0000		2	CLAMP BLOCK	
050	441739-0000		4	WASHER	
060	1549992-0000		2	HINGE FLANGE	
070	1549993-0000		2	HINGE FLANGE	
080	2541651-0000		1	PLATE	
090	1549994-0000		1	SPACER	
100	441737-0000		2	WASHER	
300	311103-0413		2	PARALLEL PIN ISO 2338 8M6X50 A1	
310	312105-0451		4	SCREW M6S ISO 4017 M8X20 A480	
320	312105-0331		2	SCREW M6S ISO 4017 M5X20 A480	
330	312115-0331		2	SCREW ISO4762 M5X20 A4 80	
340	312105-0367		4	SCREW M6S ISO 4017 M6X14 A480	
350	312105-0449		1	SCREW M6S ISO 4017 M8X16 A480	
360	315105-0146		6	WASHER BRB 5,3X10 RFR	
370	90458-0429		1	HOSE GLAND W/O INSERT M20 EXTENDED	
380	353249-0011		2	INSERT, SINGLE HOLE, EK 153/11	
390	312155-0329		2	SCREW DIN 7991 MF6S M5X16 A4 70	
400	575034-0000		2	ROUND NUT	
410	90152-0050	M	1	SPIRAL CONDUIT, 20X13, UL 1313	
420	353243-0009		1	HOSE GLAND W/O INSERT PG13,5 EXTENDED	
600	90347-0039		1	DAMPER	
620	90044-0310		1	KEY FOR SAFETY SWITCH AZ 15/16 B1	
630	359705-0007		1	WARNING SIGN ISO, HOT SURFACE	
B1509	90459-0472		1	KEY SAF.SW. AZ 16 02ZVRK-M20-2152-2254	
W1067	351150-0405	M	1.7	CABLE OLFLEX 5X0,75 MM2 LIGHT/GREY	

Pos	Part No	UN	Qty	Description	Page No

Machine Type | Group Description | Used-In | Group Number | Page No

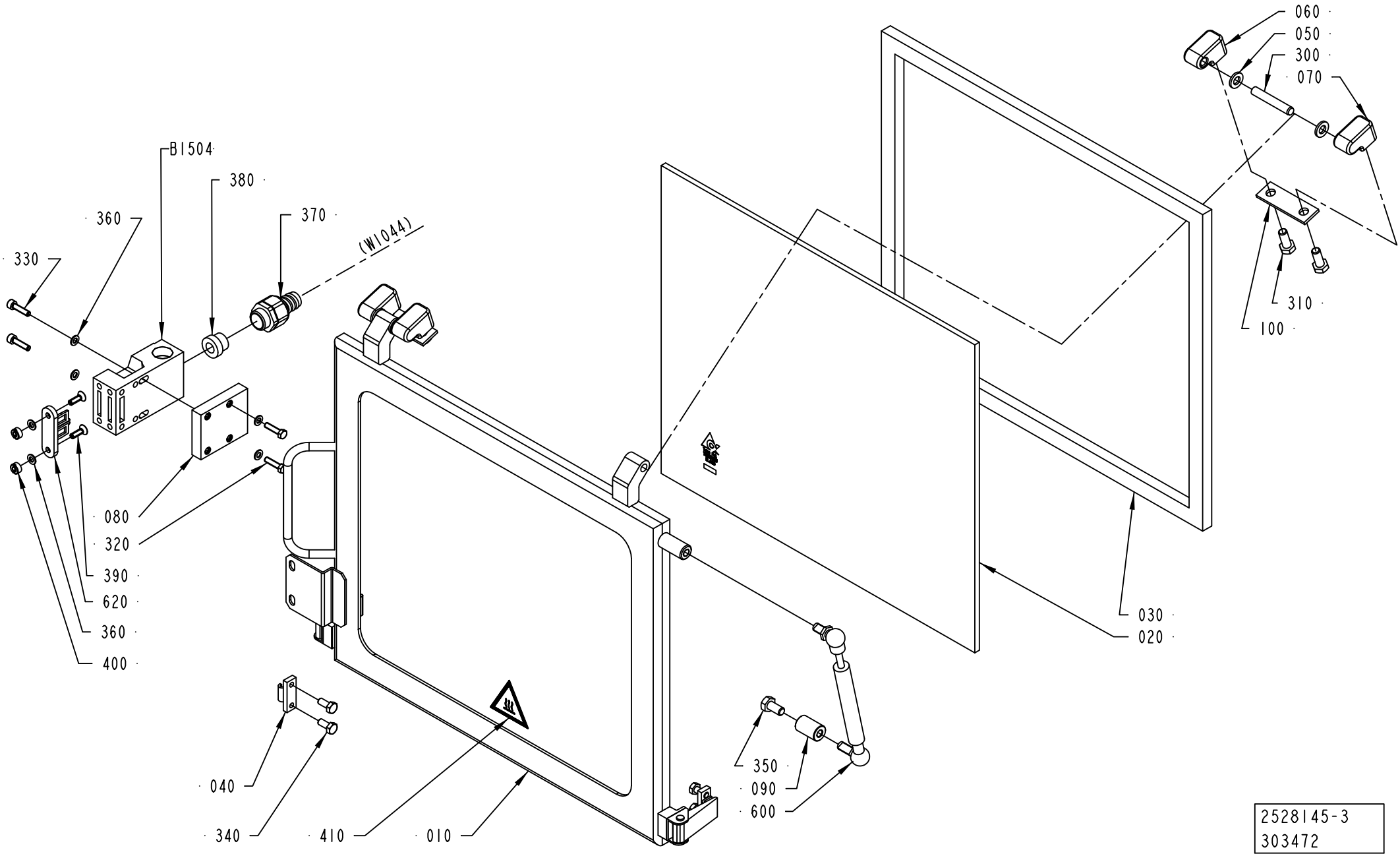

2528145-3
303472

ECM: 304245 - 20070417
Group number: 2528145-0150
Assembly Drawing: 2528145-3_1_AA

Pos	Part No	UN	Qty	Description	Page No
-					
010	2528144-0000		1	FRAME	
020	2874750-0000		1	GLASS PANE	
030	2531040-0000		1	GASKET	
040	271860-0000		2	CLAMP BLOCK	
050	441739-0000		4	WASHER	
060	1549992-0000		2	HINGE FLANGE	
070	1549993-0000		2	HINGE FLANGE	
080	2541651-0000		1	PLATE	
090	1549994-0000		1	SPACER	
100	441737-0000		2	WASHER	
300	311103-0413		2	PARALLEL PIN ISO 2338 8M6X50 A1	
310	312105-0451		4	SCREW M6S ISO 4017 M8X20 A480	
320	312105-0331		2	SCREW M6S ISO 4017 M5X20 A480	
330	312115-0331		2	SCREW ISO4762 M5X20 A4 80	
340	312105-0367		4	SCREW M6S ISO 4017 M6X14 A480	
350	312105-0449		1	SCREW M6S ISO 4017 M8X16 A480	
360	315105-0146		6	WASHER BRB 5,3X10 RFR	
370	90458-0429		1	HOSE GLAND W/O INSERT M20 EXTENDED	
380	353249-0011		1	INSERT, SINGLE HOLE, EK 153/11	
390	312155-0329		2	SCREW DIN 7991 MF6S M5X16 A4 70	
400	575034-0000		2	ROUND NUT	
410	359705-0007		1	WARNING SIGN ISO, HOT SURFACE	
600	90347-0039		1	DAMPER	
620	90044-0310		1	KEY FOR SAFETY SWITCH AZ 15/16 B1	
B1504	90459-0472		1	KEY SAF.SW. AZ 16 02ZVRK-M20-2152-2254	

Pos	Part No	UN	Qty	Description	Page No

This page is intentionally left blank.

ECM: 193085 - 20041203
Group number: 2701978-0100
Assembly Drawing:

Pos	Part No	UN	Qty	Description	Page No
-					
010	2547398-0000		1	LID	
020	2547399-0000		1	LID	
100	312105-0371		7	SCREW M6S ISO 4017 M6X22 A480	
110	312105-0452		5	SCREW M6S ISO 4017 M8X22 A480	
120	312605-0316		9	HEXAGON NUT, M6M M6 A280	
130	312605-0318		6	HEXAGON NUT, M6M M8 A280	
140	315105-0165		5	WASHER BRB 8,4X16 RFR	
150	312105-0447		2	SCREW M6S ISO 4017 M8X12 A480	
160	312105-0329		2	SCREW M6S ISO 4017 M5X16 A480	
170	315105-0146		2	WASHER BRB 5,3X10 RFR	
180	312605-0314		2	HEXAGON NUT, M6M M5 A280	
190	312105-0368		2	SCREW M6S ISO 4017 M6X16 A480	
195	315105-0153		2	WASHER BRB 6,4X12 RFR	
200	90458-0640		1	O-RING 88,62X1,78 MM	
210	90459-0094		1	O-RING 133,07X1,78 MM	

Pos	Part No	UN	Qty	Description	Page No

This page is intentionally left blank.

ECM: 222206 - 20050711
Group number: 2728205-0100
Assembly Drawing:

Pos	Part No	UN	Qty	Description	Page No
-					
010	2524600-0100		1	PRESSURE ROLLER	**1-141, 1-143**
020	2582003-0100		1	GUIDE RAIL	**1-145, 1-147**
030	2665624-0000		1	BENDING ROLLER	
040	1484745-0100		1	WEB GUIDE	**1-149**
050	2529547-0100		1	PAPER GUIDE	**1-151**
060	2774468-0100		1	REBUILD. KIT VALVE PANEL	**1-165**

Pos	Part No	UN	Qty	Description	Page No

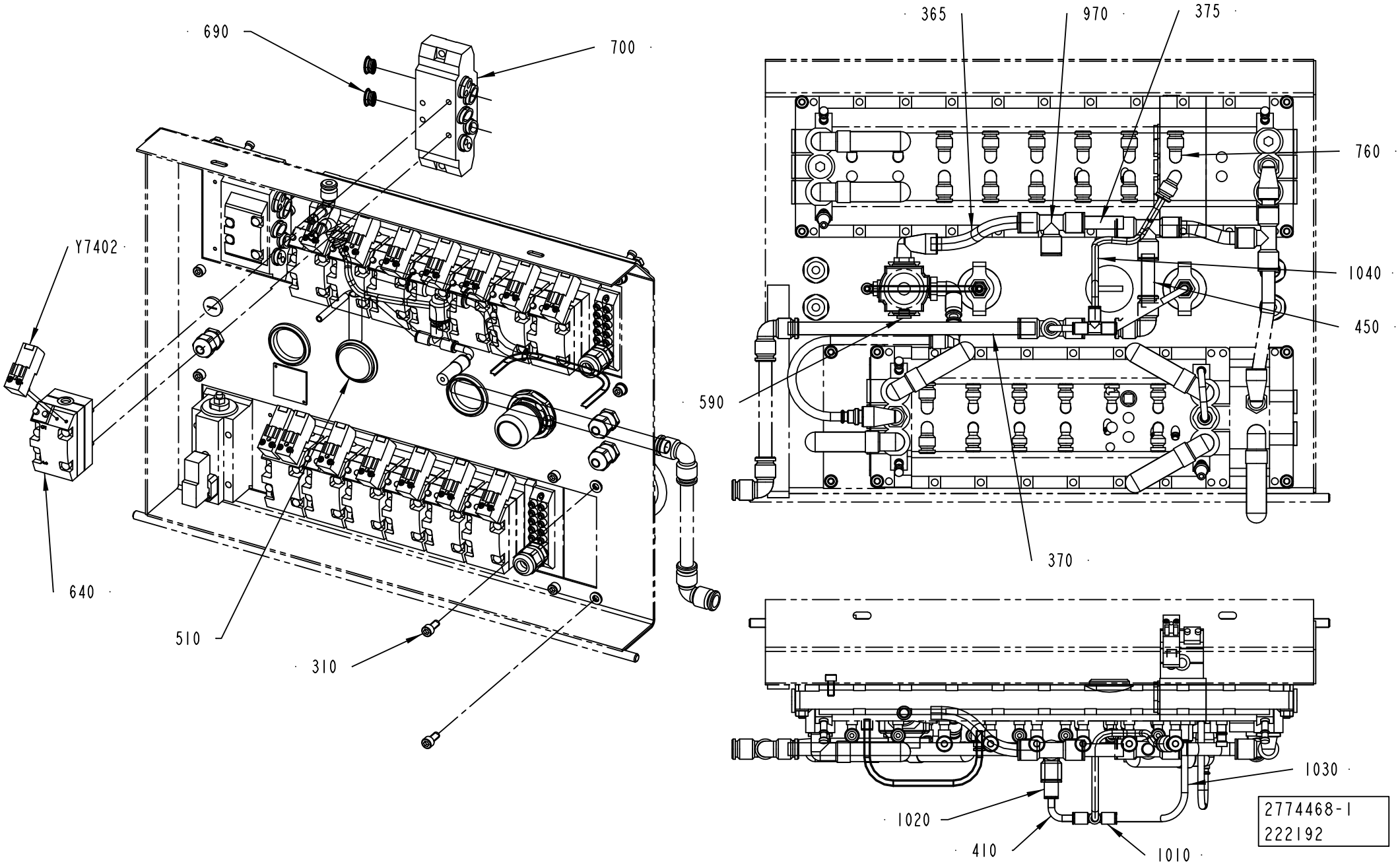
690
700
Y7402
640
510
310
365
970
375
760
1040
450
590
370
1030
1020
410
1010
2774468-1
222192

ECM: 222207 - 20050711
Group number: 2774468-0100
Assembly Drawing: 2774468-1_1_AA

Pos	Part No	UN	Qty	Description	Page No
-					
310	312115-0367		2	SCREW ISO4762 M6X14 A4 80	
365	90166-0068	MM	100	TUBE 12 MM PA BLUE	
370	90166-0068	MM	230	TUBE 12 MM PA BLUE	
375	90166-0068	MM	50	TUBE 12 MM PA BLUE	
410	90166-0117	MM	50	HOSE 4/6 PVC BLUE	
450	90166-0068	MM	65	TUBE 12 MM PA BLUE	
510	90002-0010		1	BLANK-OFF PLUG, PR 37 SKINDICHT-BLK29	
590	342713-0209		1	PLUG (QUANT.MINIMA= 10PC).	
640	90042-0215		1	VALVE BODY 5/2 UNISTABLE	
690	90042-0528		2	BLANKING KIT SEALS ISO SIZE 1	
700	90042-0532		1	BASE PLATE ISO SIZE 1	
760	90055-0173		2	ELBOW WITH TAILPIECE 8/6 MM	
970	342748-0109		1	T-CONNECTION 12MM	
1010	350005-0002		1	PUSH-IN T-FITTING QST-F-6	
1020	350006-0007		1	PUSH-IN FITTING QS-F-12H-6	
1030	90166-0117	MM	150	HOSE 4/6 PVC BLUE	
1040	90166-0117	MM	230	HOSE 4/6 PVC BLUE	
Y7402	90042-0591		1	PILOT VALVE, 04938-333-08	

Pos	Part No	UN	Qty	Description	Page No

This page is intentionally left blank.

ECM: 239421 - 20060101
Group number: 2794783-0100
Assembly Drawing:

Pos	Part No	UN	Qty	Description	Page No
-					
	2794784-0001		1	SIMULATION FOR TBA1890S VCK AND UK	
0010	*2794785-0001*		*1*	*LABEL DVD*	
0020	*2794925-0001*		*1*	*MANUFACTURING INSTRUCTION*	
0030	*2794926-1001*		*1*	*PROGRAM OBJECT CODE*	
0040	*2794927-0001*		*1*	*DOCUMENT DESCRIPTION*	
0050	*90459-7134*		*1*	*RECORDABLE DVD, DVD-R*	

Pos	Part No	UN	Qty	Description	Page No

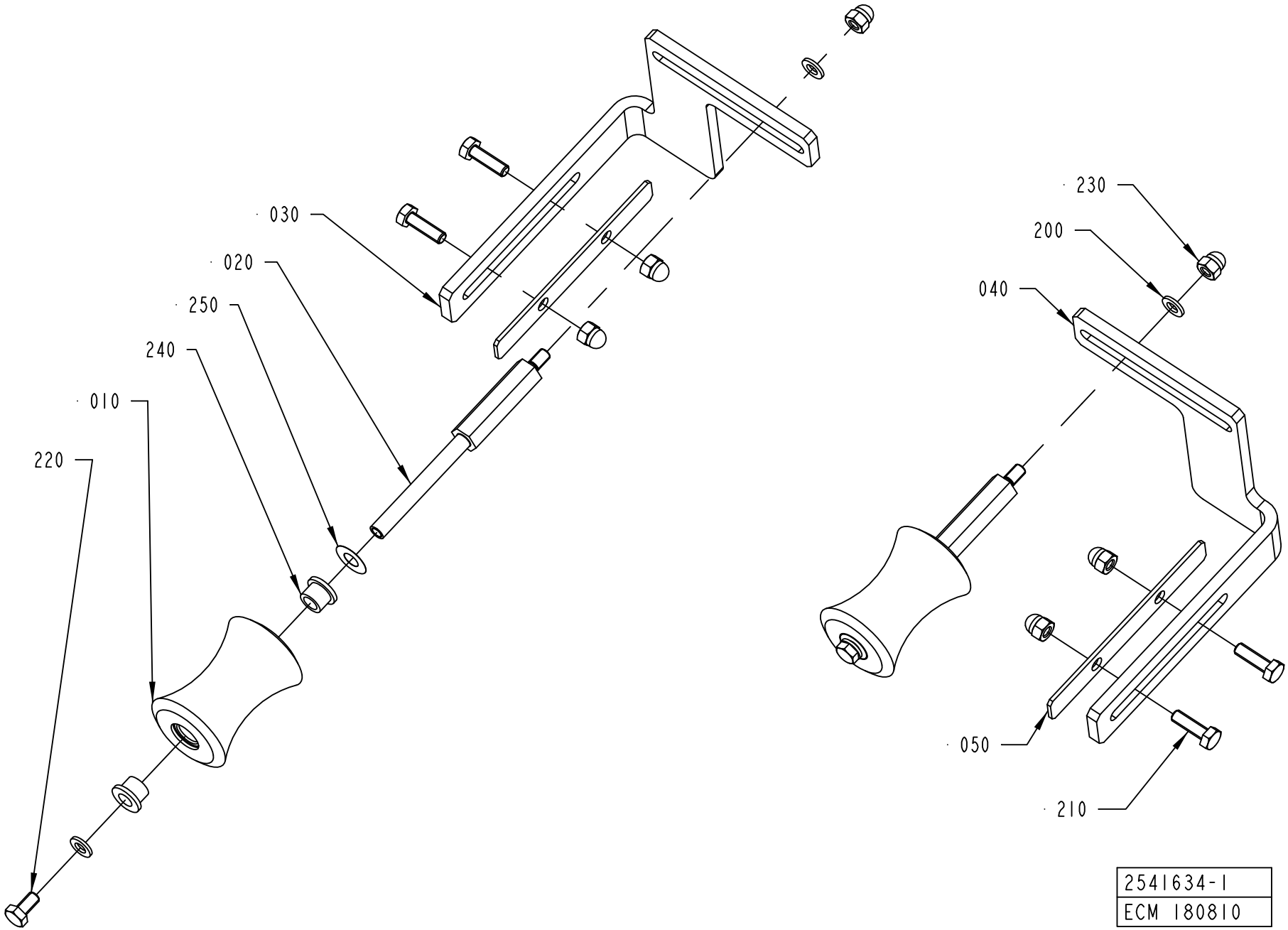
030
020
250
240
010
220
230
200
040
050
210
2541634-1
ECM 180810

Pos	Part No	UN	Qty	Description	Page No
A3/FLEX TBA 0500B, A3/FLEX TBA 1000B, A3/FLEX TBA 1000S, A3/FLEX TBA 1000SQ, A3/FLEX TBA 0200S, A3/FLEX TBA 1500S, A3/FLEX TBA 0200B, A3/FLEX TBA 0250B, A3/FLEX TBA 0330S, A3/FLEX TPA 0330SQ, A3/FLEX TPA 0500SQ, A3/FLEX TBA 0200M, A3/FLEX TBA 0250S, A3/FLEX TBA 0500S, A3/FLEX TPA 0250SQ, A3/FLEX TPA 0200SQ, A3/FLEX TBA 0200SQ, A3/FLEX TBA 0250SQ, A3/FLEX TBA 0500SQ, A3/FLEX TGA 1000SQ, A3/FLEX TGA 0500SQ, A3/FLEX TGA 0750SQ (See drawing on page: 1-168)					
010	1478359-0000		2	ROLLER	
020	1511492-0000		2	SHAFT	
030	2528112-0000		1	BRACKET	
040	2528113-0000		1	BRACKET	
050	2528114-0000		2	COVER PLATE	
200	315105-0153		4	WASHER BRB 6,4X12 RFR	
210	312105-0370		4	SCREW M6S ISO 4017 M6X20 A480	
220	312105-0366		2	SCREW M6S ISO 4017 M6X12 A480	
230	312705-0316		6	NUT HEX. DOMED CAP MHM-6 M6 A280	
240	90240-0172		4	FLANGE BUSHING, 8X12X10 MM	
A3/FLEX TBA 1890S, A3/FLEX TBA 2000S, A3/FLEX TBA 1400B (See drawing on page: 1-170)					
010	2601286-0000		2	ROLLER	
020	2634934-0000		2	SHAFT	
030	2634932-0000		1	BRACKET	
040	2634933-0000		1	BRACKET	
050	2651695-0000		2	COVER PLATE	
200	315105-0153		4	WASHER BRB 6,4X12 RFR	
210	312105-0452		4	SCREW M6S ISO 4017 M8X22 A480	
220	312105-0366		2	SCREW M6S ISO 4017 M6X12 A480	
230	312705-0316		2	NUT HEX. DOMED CAP MHM-6 M6 A280	
240	90240-0172		4	FLANGE BUSHING, 8X12X10 MM	
260	312705-0318		4	NUT HEX. DOMED CAP MHM-6 M8 A280	
A3/FLEX TPA 1000SQ, A3/FLEX TPA 0750SQ (See drawing on page: 1-168)					
010	2885029-0000		2	ROLLER	
020	1511492-0000		2	SHAFT	
030	2528112-0000		1	BRACKET	
040	2528113-0000		1	BRACKET	
050	2528114-0000		2	COVER PLATE	
200	315105-0153		4	WASHER BRB 6,4X12 RFR	
210	312105-0370		4	SCREW M6S ISO 4017 M6X20 A480	
220	312105-0366		2	SCREW M6S ISO 4017 M6X12 A480	
230	312705-0316		6	NUT HEX. DOMED CAP MHM-6 M6 A280	
240	90240-0172		4	FLANGE BUSHING, 8X12X10 MM	
Common Parts					
250	2033-0011		2	WASHER	

Pos	Part No	UN	Qty	Description	Page No

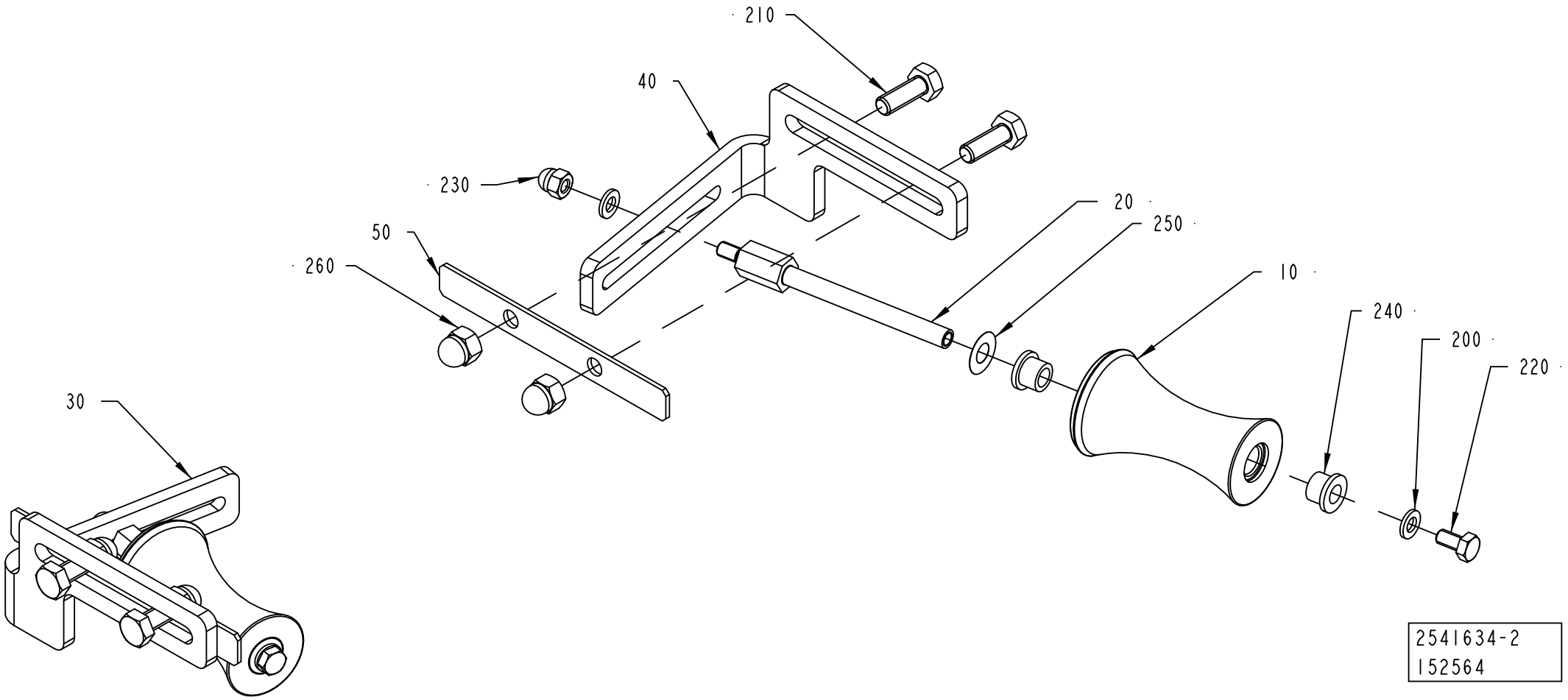
210
40
230
20
250
50
260
10
240
200
220
30
2541634-2
152564

Pos	Part No	UN	Qty	Description	Page No
A3/FLEX TBA 0500B, A3/FLEX TBA 1000B, A3/FLEX TBA 1000S, A3/FLEX TBA 1000SQ, A3/FLEX TBA 0200S, A3/FLEX TBA 1500S, A3/FLEX TBA 0200B, A3/FLEX TBA 0250B, A3/FLEX TBA 0330S, A3/FLEX TPA 0330SQ, A3/FLEX TPA 0500SQ, A3/FLEX TBA 0200M, A3/FLEX TBA 0250S, A3/FLEX TBA 0500S, A3/FLEX TPA 0250SQ, A3/FLEX TPA 0200SQ, A3/FLEX TBA 0200SQ, A3/FLEX TBA 0250SQ, A3/FLEX TBA 0500SQ, A3/FLEX TGA 1000SQ, A3/FLEX TGA 0500SQ, A3/FLEX TGA 0750SQ (See drawing on page: 1-168)					
010	1478359-0000		2	ROLLER	
020	1511492-0000		2	SHAFT	
030	2528112-0000		1	BRACKET	
040	2528113-0000		1	BRACKET	
050	2528114-0000		2	COVER PLATE	
200	315105-0153		4	WASHER BRB 6,4X12 RFR	
210	312105-0370		4	SCREW M6S ISO 4017 M6X20 A480	
220	312105-0366		2	SCREW M6S ISO 4017 M6X12 A480	
230	312705-0316		6	NUT HEX. DOMED CAP MHM-6 M6 A280	
240	90240-0172		4	FLANGE BUSHING, 8X12X10 MM	
A3/FLEX TBA 1890S, A3/FLEX TBA 2000S, A3/FLEX TBA 1400B (See drawing on page: 1-170)					
010	2601286-0000		2	ROLLER	
020	2634934-0000		2	SHAFT	
030	2634932-0000		1	BRACKET	
040	2634933-0000		1	BRACKET	
050	2651695-0000		2	COVER PLATE	
200	315105-0153		4	WASHER BRB 6,4X12 RFR	
210	312105-0452		4	SCREW M6S ISO 4017 M8X22 A480	
220	312105-0366		2	SCREW M6S ISO 4017 M6X12 A480	
230	312705-0316		2	NUT HEX. DOMED CAP MHM-6 M6 A280	
240	90240-0172		4	FLANGE BUSHING, 8X12X10 MM	
260	312705-0318		4	NUT HEX. DOMED CAP MHM-6 M8 A280	
A3/FLEX TPA 1000SQ, A3/FLEX TPA 0750SQ (See drawing on page: 1-168)					
010	2885029-0000		2	ROLLER	
020	1511492-0000		2	SHAFT	
030	2528112-0000		1	BRACKET	
040	2528113-0000		1	BRACKET	
050	2528114-0000		2	COVER PLATE	
200	315105-0153		4	WASHER BRB 6,4X12 RFR	
210	312105-0370		4	SCREW M6S ISO 4017 M6X20 A480	
220	312105-0366		2	SCREW M6S ISO 4017 M6X12 A480	
230	312705-0316		6	NUT HEX. DOMED CAP MHM-6 M6 A280	
240	90240-0172		4	FLANGE BUSHING, 8X12X10 MM	
Common Parts					
250	2033-0011		2	WASHER	

Pos	Part No	UN	Qty	Description	Page No

SPLICE DETECTOR

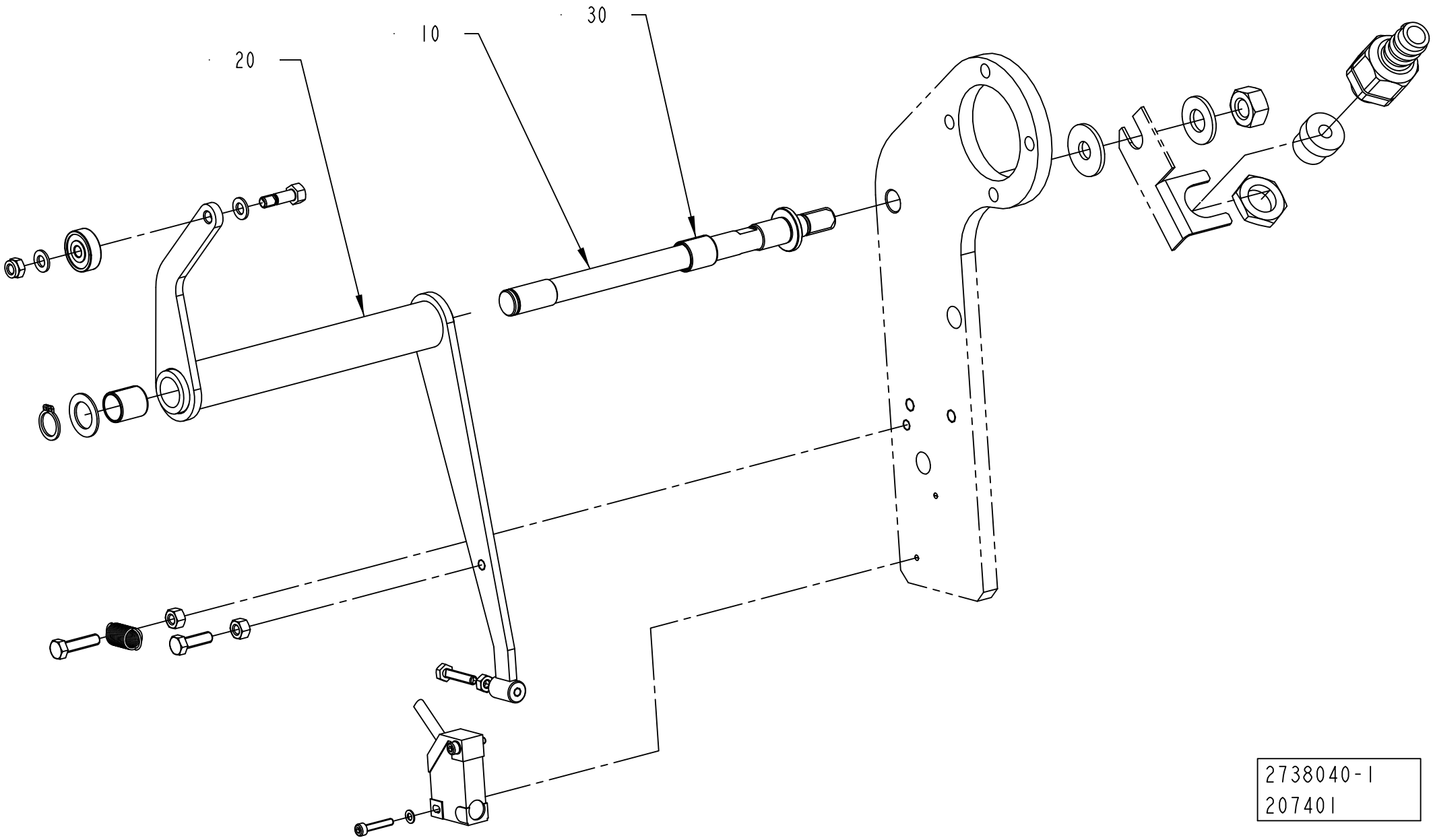

ECM: 207401 - 20050630
Group number: 2738040-0100
Assembly Drawing: 2738040-1_1_AA

Pos	Part No	UN	Qty	Description	Page No
-					
010	2707506-0000		1	SHAFT	
020	2690377-0000		1	BRACKET	
030	321141-0183		2	BEARING BUSH W/O FLANGE, 12X14X15 MM	

Pos	Part No	UN	Qty	Description	Page No

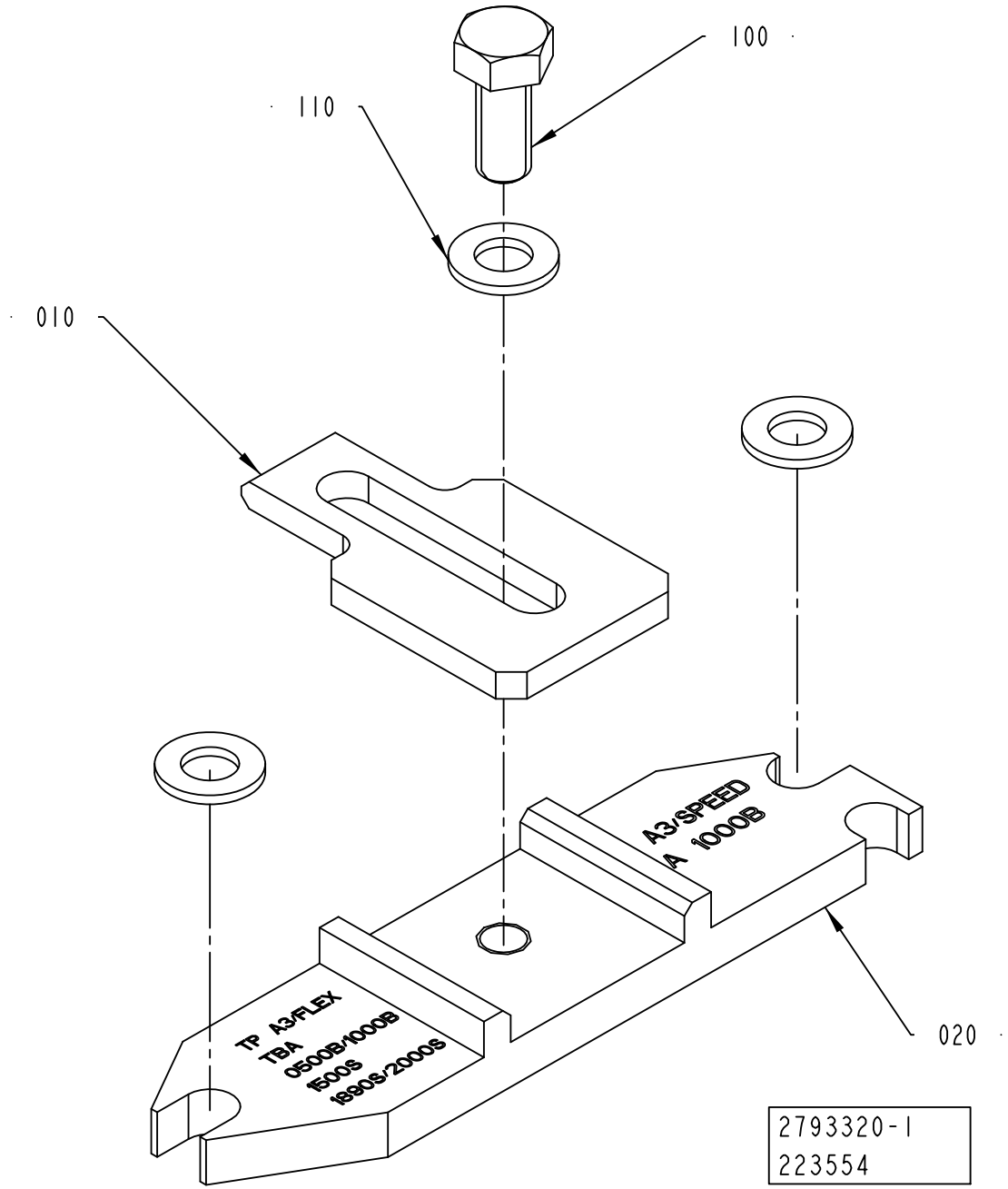
100
110
010
020
A3/SPEED
A 1000B
TP A3/FLEX
TBA
0500B/1000B
1500S
1890S/2000S
2793320-1
223554

ECM: 313942 - 20070702
Group number: 2793320-0100
Assembly Drawing: 2793320-1_1_AA

Pos	Part No	UN	Qty	Description	Page No
TBA 0200B, TBA 0250B, TBA 0330S					
020	2793328-0000		1	PLATE	
TBA 0200M, TBA 0200S, TBA 0250S					
020	2793325-0000		1	PLATE	
TBA 0200SQ, TBA 0250SQ					
020	2793331-0000		1	PLATE	
TBA 0500B, TBA 1000B, TBA 1500S, TBA 1890S, TBA 2000S, TBA 1400B					
020	2793321-0000		1	PLATE	
TBA 0500S					
020	2793326-0000		1	PLATE	
TBA 0500SQ, TBA 1000SQ					
020	2793319-0000		1	PLATE	
TBA 1000S					
020	2793322-0000		1	PLATE	
TPA 0250SQ, TPA 0200SQ					
020	2793327-0000		1	PLATE	
TPA 0330SQ					
020	2793324-0000		1	PLATE	
TPA 0500SQ					
020	2793323-0000		1	PLATE	
TPA 1000SQ, TPA 0750SQ, TPA 1000SQ NOQC, TGA 1000SQ, TGA 0750SQ, TGA 0500SQ					
020	2793329-0000		1	PLATE	
Common Parts					
010	2736719-0000		1	PLATE	
100	312105-0327		1	SCREW M6S ISO 4017 M5X12 A480	
110	315105-0146		3	WASHER BRB 5,3X10 RFR	

Pos	Part No	UN	Qty	Description	Page No

Machine Type | Group Description | Used-In | Group Number | Page No

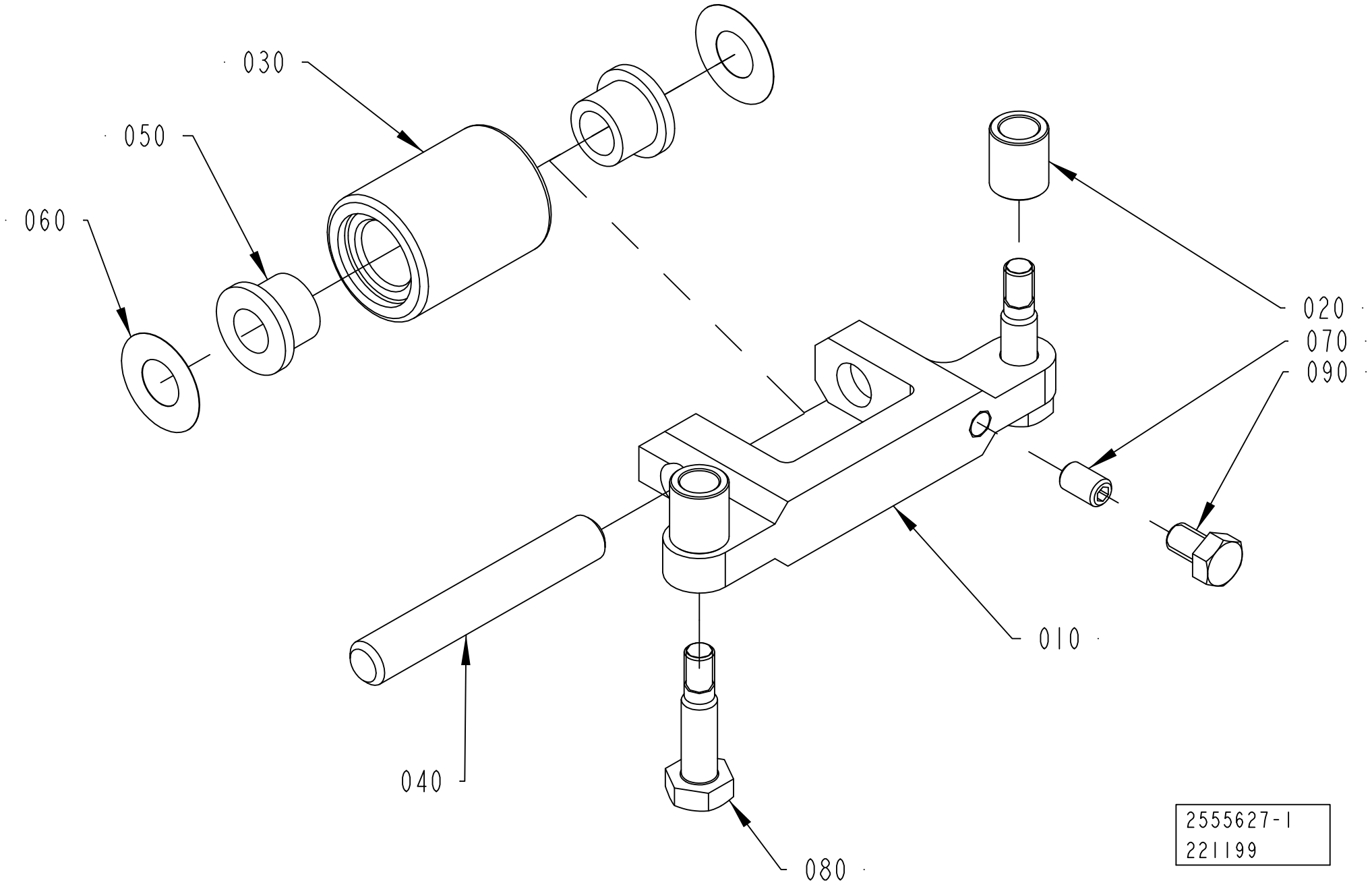
030
050
060
020
070
090
010
040
080
2555627-1
221199

ECM: 344004 - 20080402
Group number: 2555627-0100
Assembly Drawing: 2555627-1_1_AB

Pos	Part No	UN	Qty	Description	Page No
A3/FLEX TBA 0500B, A3/FLEX TBA 1000B					
010	2764009-0000		1	BRACKET	
020	2715649-0005		2	SPACER	
030	2826410-0000		1	ROLLER	
080	2715650-0003		2	SCREW	
A3/FLEX TBA 1000SQ					
010	2659361-0000		1	BRACKET	
020	2715649-0008		2	SPACER	
030	2715570-0000		1	ROLLER	
080	2715650-0005		2	SCREW	
A3/FLEX TBA 1890S, A3/FLEX TBA 2000S, A3/FLEX TBA 1400B					
010	2594596-0000		1	BRACKET	
020	2715649-0004		2	SPACER	
030	2657925-0000		1	ROLLER	
080	2715650-0002		2	SCREW	
A3/FLEX TPA 1000SQ, A3/FLEX TPA 0750SQ					
010	2715567-0000		1	BRACKET	
020	2715649-0005		2	SPACER	
030	2715570-0000		1	ROLLER	
080	2715650-0006		2	SCREW	
Common Parts					
040	2522213-0015		1	SHAFT	
050	90240-0172		2	FLANGE BUSHING, 8X12X10 MM	
060	2033-0011		2	WASHER	
070	312318-0323		1	SCREW ISO4029 M5X8 A4	
090	312105-0323		1	SCREW M6S ISO 4017 M5X8 A480	

Pos	Part No	UN	Qty	Description	Page No

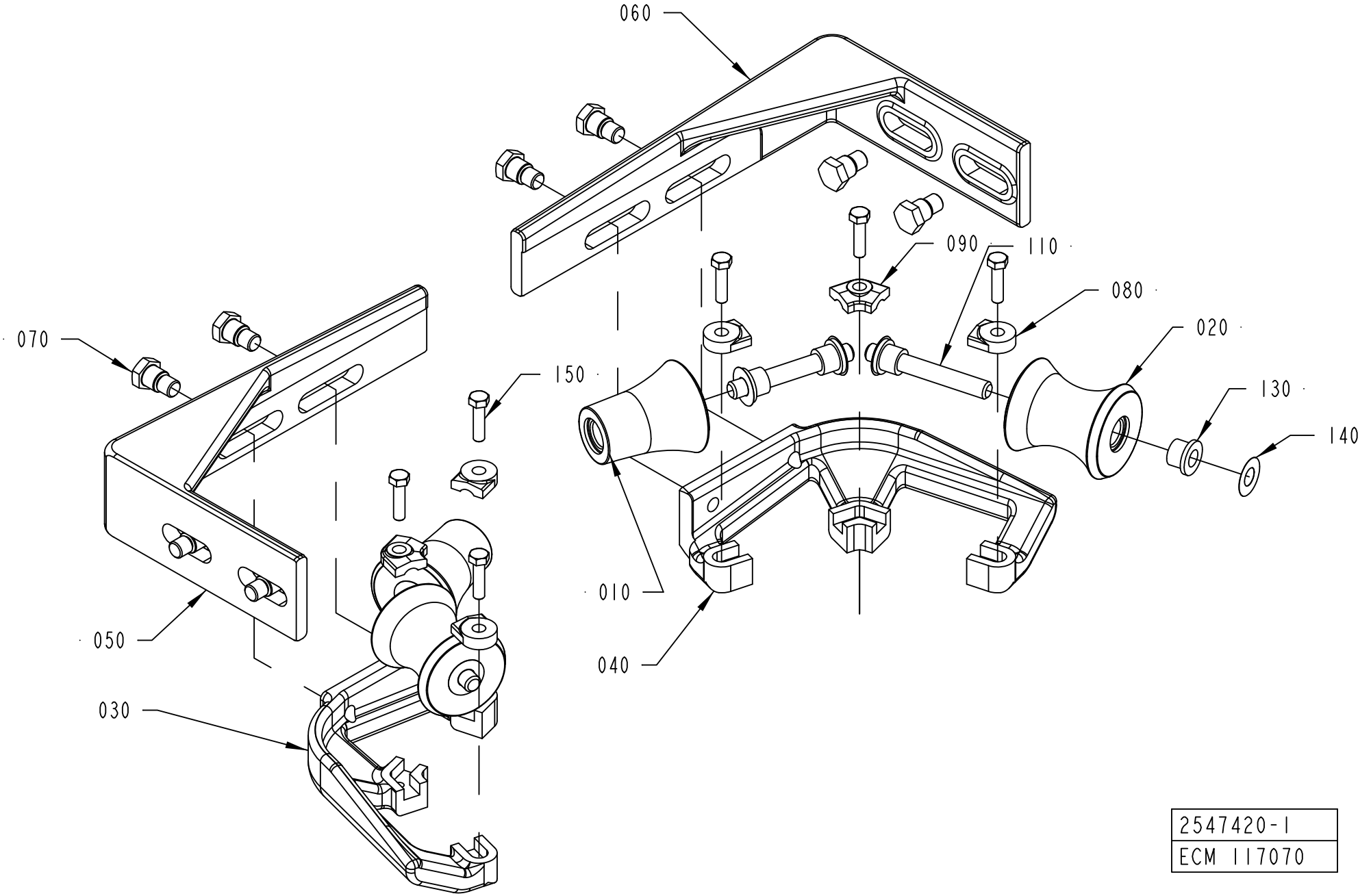
060
090
110
080
020
070
150
130
140
010
050
040
030
2547420-1
ECM 117070

ECM: 316087 - 20071001
Group number: 2547420-0100
Assembly Drawing: 2547420-1_1_AA

This list covers pages from 1-178 to 1-183

Pos	Part No	UN	Qty	Description	Page No
TBA 0200S (See drawing on page: 1-182)					
010	2651790-0000		2	ROLLER	
020	2651789-0000		2	ROLLER	
030	2552140-0000		1	BRACKET	
040	2552141-0000		1	BRACKET	
050	2803221-0000		1	BRACKET	
060	2803220-0000		1	BRACKET	
070	2552158-0000		4	SCREW	
080	2532895-0008		4	LOCK PLATE	
090	2528123-0006		2	LOCK PLATE	
110	752186-0016		4	SHAFT	
130	90240-0172		8	FLANGE BUSHING, 8X12X10 MM	
140	2033-0011		8	WASHER	
150	312105-0331		6	SCREW M6S ISO 4017 M5X20 A480	
230	312105-0455		4	SCREW M6S ISO 4017 M8X30 A480	
240	315105-0165		4	WASHER BRB 8,4X16 RFR	
250	312605-0318		4	HEXAGON NUT, M6M M8 A280	
TBA 0500B, TBA 1000B (See drawing on page: 1-178)					
010	2651790-0000		2	ROLLER	
020	2651789-0000		2	ROLLER	
030	2552140-0000		1	BRACKET	
040	2552141-0000		1	BRACKET	
050	2552142-0000		1	BRACKET	
060	2552143-0000		1	BRACKET	
070	2552158-0000		8	SCREW	
080	2532895-0008		4	LOCK PLATE	
090	2528123-0006		2	LOCK PLATE	
110	752186-0016		4	SHAFT	
130	90240-0172		8	FLANGE BUSHING, 8X12X10 MM	
140	2033-0011		8	WASHER	
150	312105-0331		6	SCREW M6S ISO 4017 M5X20 A480	
TBA 1000S, TBA 1500S (See drawing on page: 1-178)					
010	2552144-0000		2	ROLL	
020	2562664-0000		2	ROLL	
030	2552140-0000		1	BRACKET	
040	2552141-0000		1	BRACKET	
050	2552142-0000		1	BRACKET	
060	2552143-0000		1	BRACKET	
070	2552158-0000		8	SCREW	
080	2532895-0008		4	LOCK PLATE	
090	2528123-0006		2	LOCK PLATE	
110	752186-0016		4	SHAFT	
130	90240-0172		8	FLANGE BUSHING, 8X12X10 MM	
140	2033-0011		8	WASHER	
150	312105-0331		6	SCREW M6S ISO 4017 M5X20 A480	
TBA 1000SQ (See drawing on page: 1-178)					
010	2552155-0000		2	ROLL	
020	2562684-0000		2	ROLL	
030	2552140-0000		1	BRACKET	
040	2552141-0000		1	BRACKET	
050	2552142-0000		1	BRACKET	
060	2552143-0000		1	BRACKET	
070	2552158-0000		8	SCREW	
080	2532895-0008		4	LOCK PLATE	
090	2528123-0006		2	LOCK PLATE	
110	752186-0016		4	SHAFT	
130	90240-0172		8	FLANGE BUSHING, 8X12X10 MM	
140	2033-0011		8	WASHER	
150	312105-0331		6	SCREW M6S ISO 4017 M5X20 A480	
TBA 1890S, TBA 2000S, TBA 1400B (See drawing on page: 1-180)					
010	2601269-0000		1	ROLLER	
015	2601272-0000		2	ROLLER	
020	2601271-0000		2	ROLLER	
025	2601273-0000		2	ROLLER	
050	2634930-0000		1	SUPPORT ROLLER	
060	2634931-0000		2	BRACKET	
080	2532895-0004		2	LOCK PLATE	
090	2562667-0002		6	LOCK PLATE	
100	2522213-0016		1	SHAFT	
110	2522213-0015		4	SHAFT	
120	2522213-0017		2	SHAFT	
130	90240-0172		14	FLANGE BUSHING, 8X12X10 MM	
140	2033-0011		14	WASHER	
150	312105-0329		8	SCREW M6S ISO 4017 M5X16 A480	
160	312105-0368		4	SCREW M6S ISO 4017 M6X16 A480	
170	312105-0370		4	SCREW M6S ISO 4017 M6X20 A480	
180	90005-0060		4	WASHER PLAIN, RBS 6,4/M6)/18,H=1,5	
190	311103-0353		2	PARALLEL PIN ISO 2338 6M6X20 A1	
TPA 1000SQ, TPA 0750SQ (See drawing on page: 1-178)					
010	2562694-0000		2	ROLLER	
020	2562695-0000		2	ROLLER	
030	2562696-0000		1	BRACKET	
040	2562697-0000		1	BRACKET	
050	2562692-0000		1	BRACKET	

Machine Type | Group Description | Used-In | Group Number | Page No

EDGE ROLLER

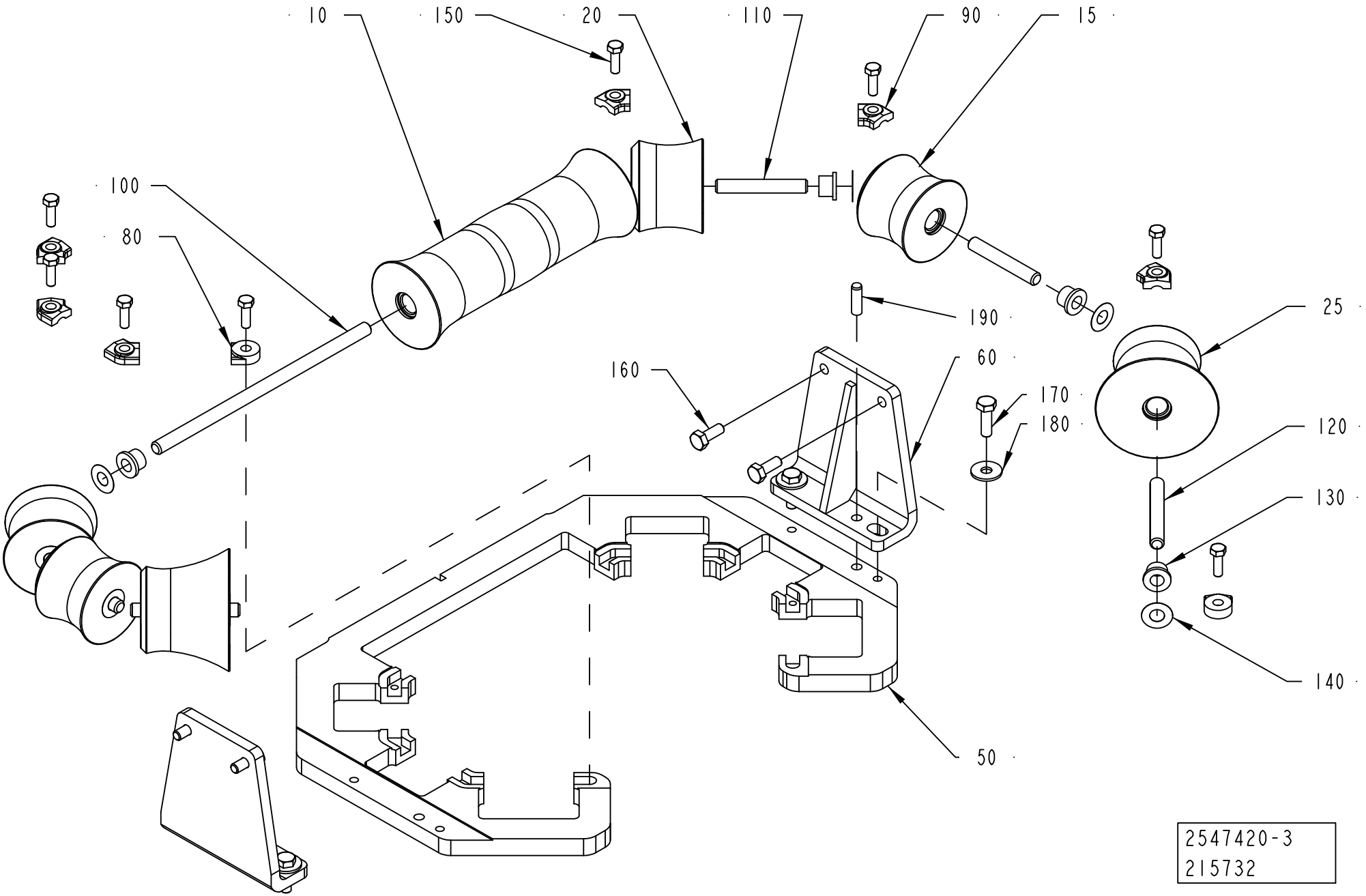
10
150
20
110
90
15
100
80
190
25
160
60
170
180
120
130
140
50
2547420-3
215732

Pos	Part No	UN	Qty	Description	Page No
TPA 1000SQ, TPA 0750SQ (Cont'd) (See drawing on page: 1-178)					
060	2562693-0000		1	BRACKET	
070	2552158-0000		8	SCREW	
080	2532895-0008		4	LOCK PLATE	
090	2528123-0009		2	LOCK PLATE	
110	752186-0016		4	SHAFT	
130	90240-0172		8	FLANGE BUSHING, 8X12X10 MM	
140	2033-0011		8	WASHER	
150	312105-0331		6	SCREW M6S ISO 4017 M5X20 A480	

Pos	Part No	UN	Qty	Description	Page No

EDGE ROLLER

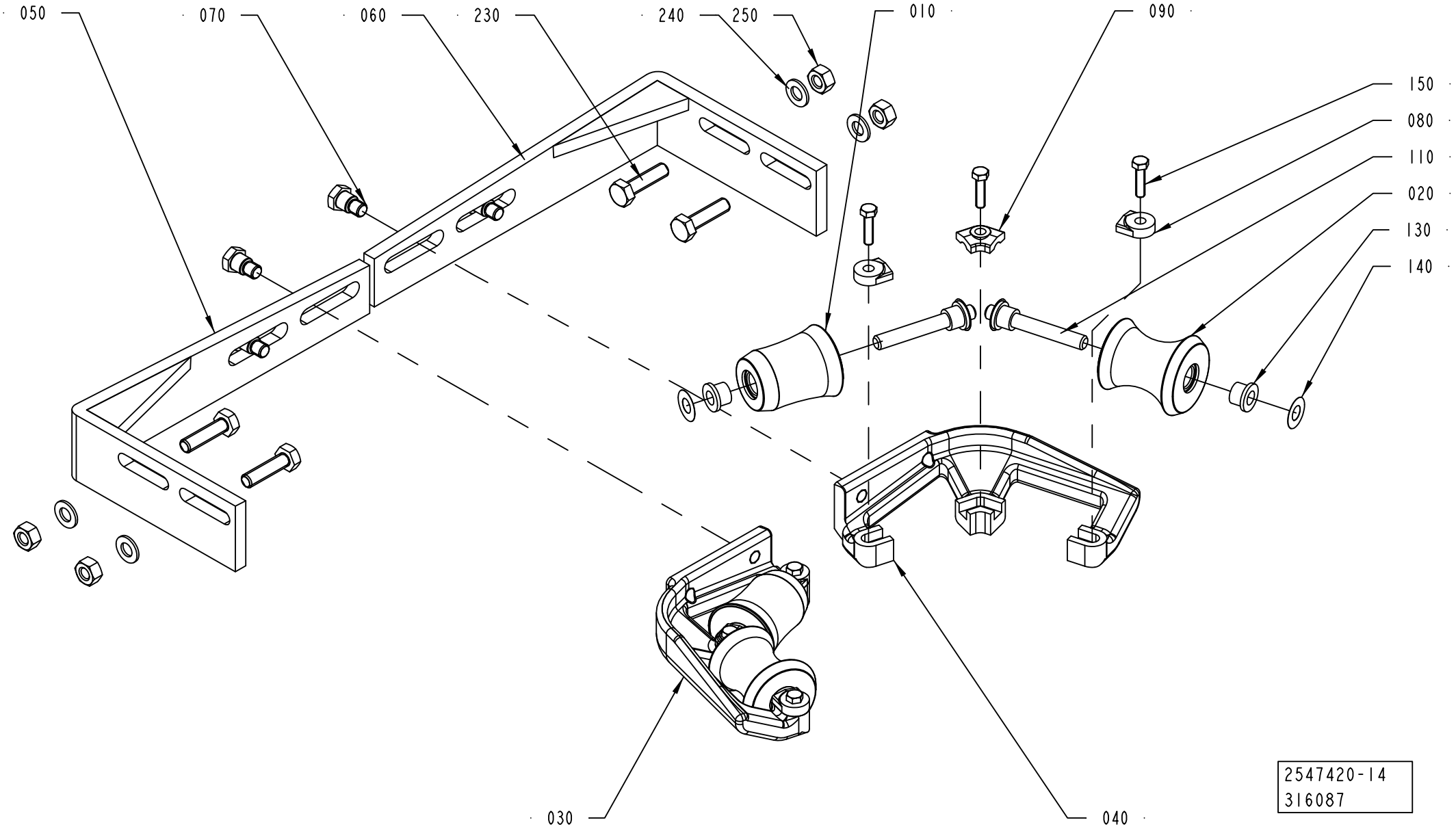
050
070
060
230
240
250
010
090
150
080
110
020
130
140
030
040
2547420-14
316087

Pos	Part No	UN	Qty	Description	Page No
SEE PREVIOUS LISTS PAGES: 1-179, 1-181.					

Pos	Part No	UN	Qty	Description	Page No

Tetra Pak

SPC
Spare Parts Catalogue

This page is intentionally left blank.

ECM: 370451 - 20090101
Group number: 2634505-0100
Assembly Drawing:

Pos	Part No	UN	Qty	Description	Page No
A3/FLEX TBA 0250SQ QC, A3/FLEX TBA 0200SQ QC					
080	2761023-0100		1	ARM FOLDING FLAP	**2-5**
090	2761024-0100		1	ARM FOLDING FLAP	**2-7**
Common Parts					
010	2552003-0100		1	FORMING UNIT	**2-9**
020	2613644-0100		1	CANTILEVER	**2-261**
030	2986657-0100		1	CONTROL UNIT	**2-263**
040	2986658-0100		1	CENTERING UNIT	**2-265**
050	2660476-0100		1	LUBRICATION PIPE FITTING	**2-267**
060	1037254-0000		12	SHIM	
070	1036483-0000		2	SEAL	
100	1363790-0000		1	BOX	

Pos	Part No	UN	Qty	Description	Page No

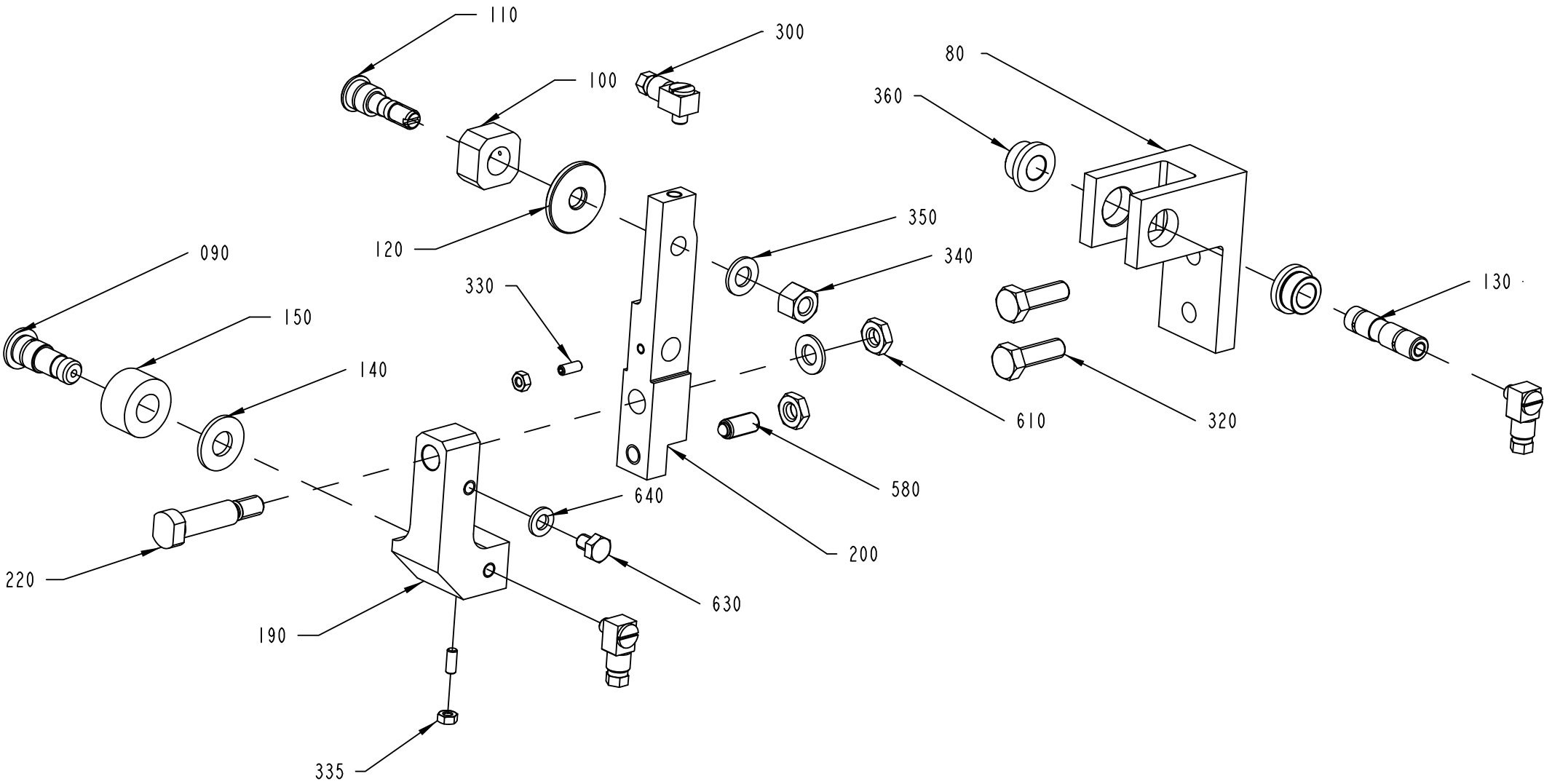
110
300
100
80
360
120
350
340
090
330
150
140
130
610
320
580
640
200
220
630
190
335

ECM: 216953 - 20050628
Group number: 2761023-0100
Assembly Drawing: 2761023-1_1_AA

Pos	Part No	UN	Qty	Description	Page No
-					
080	1338793-0000		1	BRACKET	
090	1036620-0000		1	SHAFT	
100	256628-0000		1	PIECE	
110	256629-0001		1	AXLE PIN	
120	441706-0000		1	WASHER	
130	1036615-0000		1	SHAFT	
140	1036616-0000		1	WASHER	
150	1036618-0000		1	ROLL	
190	1348671-0000		1	JOINT LEFT	
200	2682199-0000		1	ARM	
220	1348669-0000		1	SCREW	
300	90134-0058		3	CONNECTION	
320	312105-0453		2	SCREW M6S ISO 4017 M8X25 A480	
330	312318-0289		2	SCREW ISO4029 M4X10 A4	
335	312605-0312		2	HEXAGON NUT, M6M M4 A280	
340	312811-0318		1	NUT HEX.LOCK HELI COIL M8 SS	
350	315105-0165		2	WASHER BRB 8,4X16 RFR	
360	321101-0163		2	FLANGE BUSHING, 10X16X10 MM	
580	90287-0112		1	SCREW SPRINGLOAD. SLOTTED HEAD M8X16	
610	312625-0318		2	HEXAGON THIN NUT, EN 24035 ML6M M8 A4	
630	312105-0362		1	SCREW M6S ISO 4017 M6X8 A480	
640	315105-0153		1	WASHER BRB 6,4X12 RFR	

Pos	Part No	UN	Qty	Description	Page No

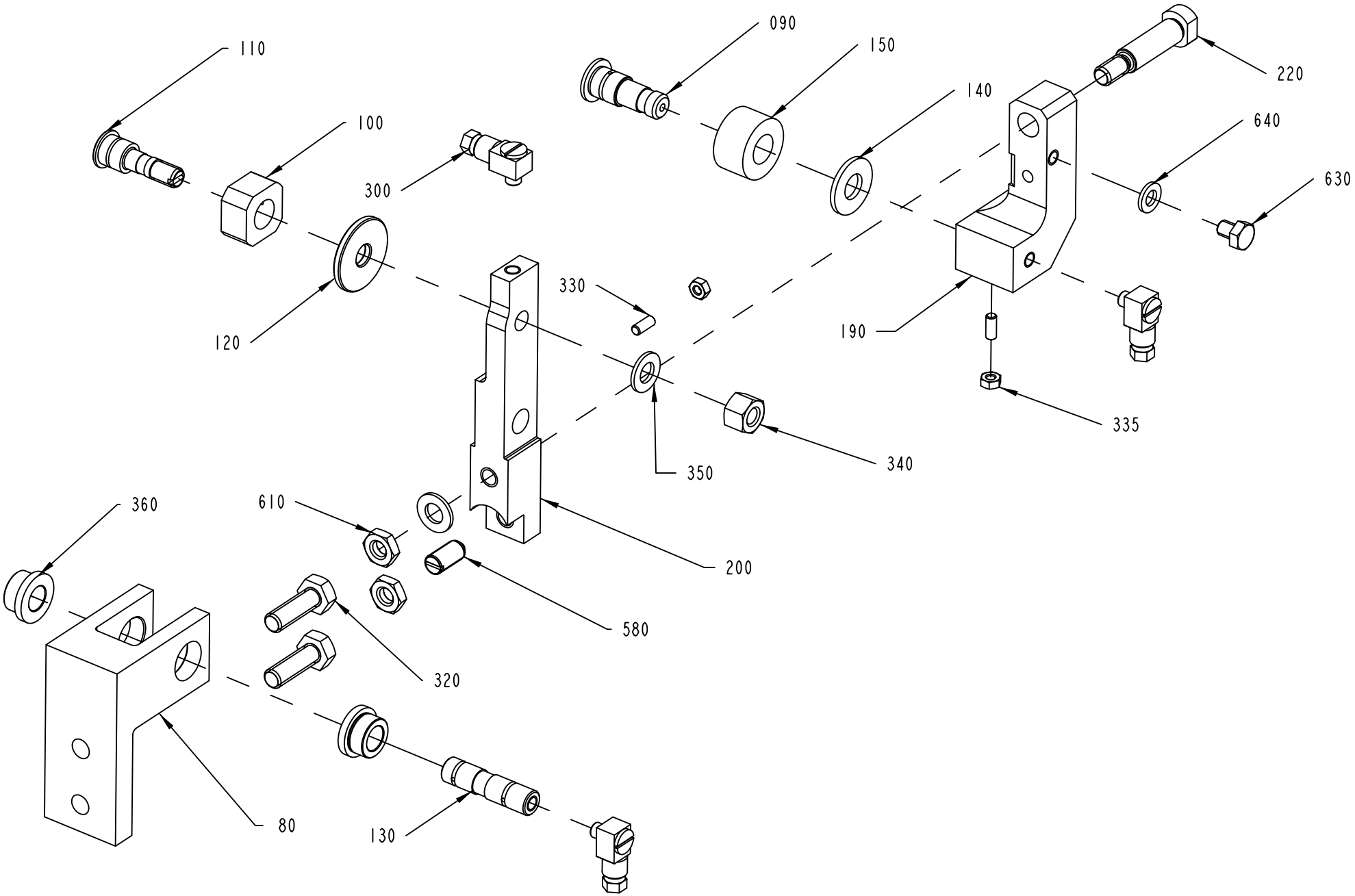
110
100
300
120
090
150
140
220
640
630
190
335
330
340
350
360
610
200
580
320
80
130

ECM: 216953 - 20050628
Group number: 2761024-0100
Assembly Drawing: 2761024-1_1_AA

Pos	Part No	UN	Qty	Description	Page No
-					
080	1338793-0000		1	BRACKET	
090	1036620-0000		1	SHAFT	
100	256628-0000		1	PIECE	
110	256629-0001		1	AXLE PIN	
120	441706-0000		1	WASHER	
130	1036615-0000		1	SHAFT	
140	1036616-0000		1	WASHER	
150	1036618-0000		1	ROLL	
190	1348671-0000		1	JOINT LEFT	
200	2682198-0000		1	ARM	
220	1348669-0000		1	SCREW	
300	90134-0058		3	CONNECTION	
320	312105-0453		2	SCREW M6S ISO 4017 M8X25 A480	
330	312318-0289		2	SCREW ISO4029 M4X10 A4	
335	312605-0312		2	HEXAGON NUT, M6M M4 A280	
340	312811-0318		1	NUT HEX.LOCK HELI COIL M8 SS	
350	315105-0165		2	WASHER BRB 8,4X16 RFR	
360	321101-0163		2	FLANGE BUSHING, 10X16X10 MM	
580	90287-0112		1	SCREW SPRINGLOAD. SLOTTED HEAD M8X16	
610	312625-0318		2	HEXAGON THIN NUT, EN 24035 ML6M M8 A4	
630	312105-0362		1	SCREW M6S ISO 4017 M6X8 A480	
640	315105-0153		1	WASHER BRB 6,4X12 RFR	

Pos	Part No	UN	Qty	Description	Page No

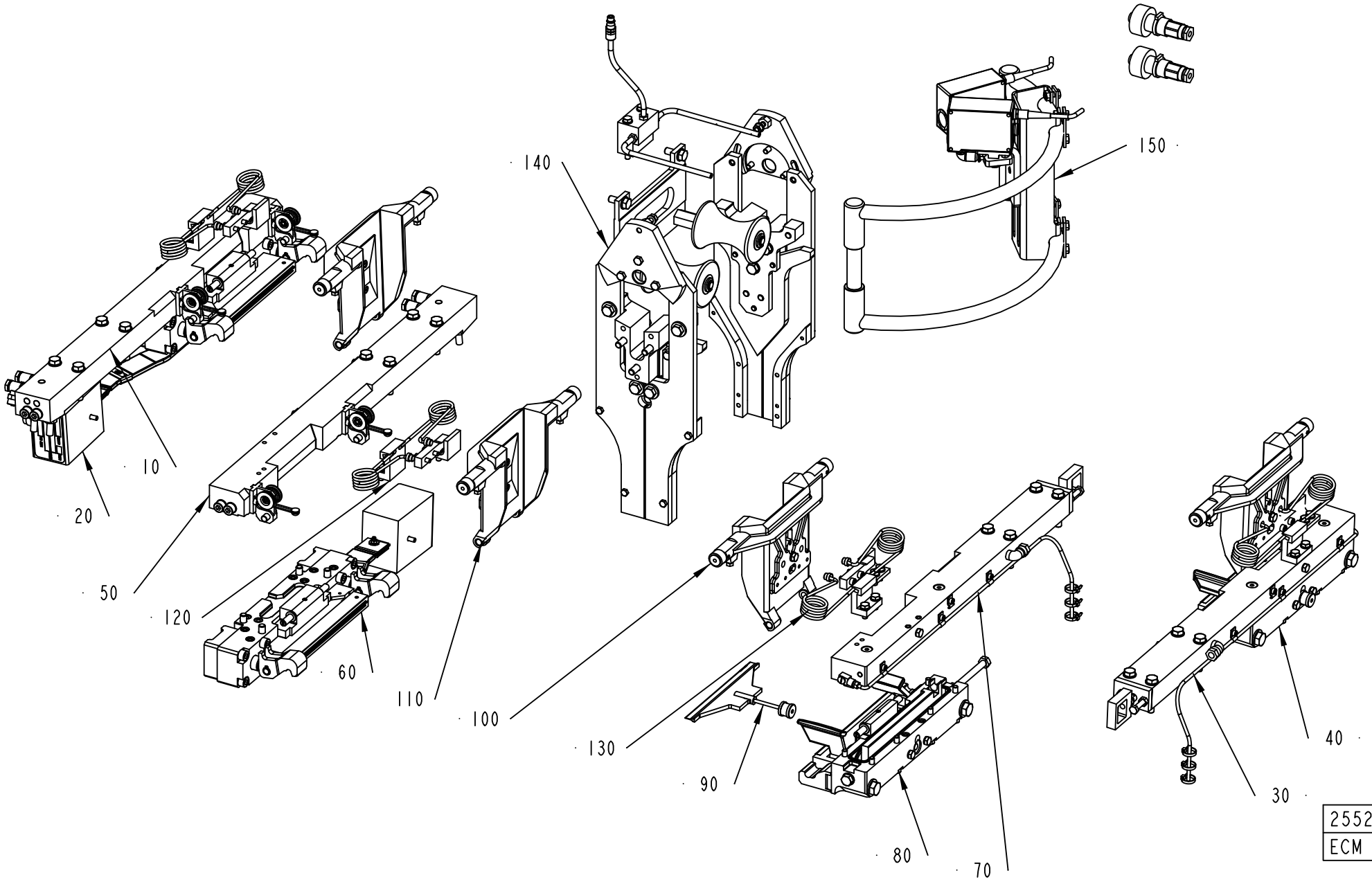
140
150
10
20
50
120
60
110
100
130
90
80
70
40
30
2552003-1
ECM 128689

ECM: 340726 - 20080215
Group number: 2552003-0100
Assembly Drawing: 2552003-1_1_AB

Pos	Part No	UN	Qty	Description	Page No
A3/FLEX NOQC					
100	1334633-0200		2	VOLUME FLAP CUTTING	**2-11, 2-13, 2-15, 2-17, 2-19**
110	1334634-0200		2	VOLUME FLAP PRESSURE	**2-21, 2-23, 2-25, 2-27, 2-29**
120	1334635-0200		2	SHOCK ABSORBER	**2-31, 2-33, 2-35, 2-37, 2-39, 2-41**
130	1334636-0200		2	SHOCK ABSORBER	**2-43, 2-45, 2-47, 2-49, 2-51, 2-53**
A3/FLEX TBA 0500B QC, A3/FLEX TBA 1000B QC, A3/FLEX TBA 0250B QC, A3/FLEX TBA 0200B QC, A3/FLEX TBA 0330S QC, A3/FLEX TBA 0200M QC, A3/FLEX TBA 0250S QC, A3/FLEX TPA 1000SQ QC, A3/FLEX TPA 0750SQ QC, A3/FLEX TPA 0200SQ QC, A3/FLEX TPA 0250SQ QC, A3/FLEX TBA 0250SQ QC, A3/FLEX TBA 0200SQ QC, A3/FLEX TBA 0500SQ QC, A3/FLEX TBA 1000SQ QC					
100	2594512-0200		2	VOLUME FLAP	**2-55, 2-57, 2-59, 2-61, 2-63, 2-65**
110	1548460-0200		2	VOLUME FLAP	**2-69, 2-71, 2-73, 2-75, 2-77, 2-79**
A3/FLEX TBA 1890S QC, A3/FLEX TBA 2000S QC, A3/FLEX TBA 1400B					
100	2597325-0100		2	VOLUME FLAP	**2-83**
110	2597324-0100		2	VOLUME FLAP	**2-91**
120	1334635-0200		2	SHOCK ABSORBER	**2-31, 2-33, 2-35, 2-37, 2-39, 2-41**
130	1334636-0200		2	SHOCK ABSORBER	**2-43, 2-45, 2-47, 2-49, 2-51, 2-53**
A3/FLEX TGA 0500SQ					
100	2922540-0100		1	VOLUME FLAP CUTTING RIGHT	**2-97**
105	2928232-0100		1	VOLUME FLAP CUTTING LEFT	**2-99**
110	2922539-0100		1	VOLUME FLAP PRESSURE RIGHT	**2-101**
115	2928233-0100		1	VOLUME FLAP PRESSURE LEFT	**2-103**
A3/FLEX TGA 1000SQ, A3/FLEX TGA 0750SQ					
100	2698638-0100		1	VOLUME FLAP CUTTING RIGHT	**2-105**
105	2928230-0100		1	VOLUME FLAP CUTTING LEFT	**2-109**
110	2698639-0100		1	VOLUME FLAP PRESSURE RIGHT	**2-111**
115	2928231-0100		1	VOLUME FLAP PRESSURE LEFT	**2-115**
Common Parts					
010	2514048-0200		1	CARRIER PRESSURE LEFT	**2-119, 2-121, 2-123, 2-125**
020	1512563-0200		1	PRESSURE JAW LEFT	**2-127, 2-129**
030	1512564-0200		1	CARRIER CUTTING LEFT	**2-147, 2-149, 2-151, 2-153, 2-155**
040	1512565-0300		1	CUTTING JAW LEFT	**2-157**
050	2514050-0200		1	CARRIER PRESSURE RIGHT	**2-179, 2-181, 2-183, 2-185**
060	1512568-0200		1	PRESSURE JAW RIGHT	**2-187, 2-189**
070	1512569-0200		1	CARRIER CUTTING RIGHT	**2-203, 2-205, 2-207, 2-209, 2-211**
080	1512570-0300		1	CUTTING JAW RIGHT	**2-213**
090	1478768-0200		2	KNIFE	**2-223**
140	2613647-0100		1	VOLUME CURVE PIECE	**2-225**
150	2616224-0200		1	PHOTOCELL UNIT	**2-253, 2-255, 2-257, 2-259**

Pos	Part No	UN	Qty	Description	Page No

Machine Type | Group Description | Used-In | Group Number | Page No

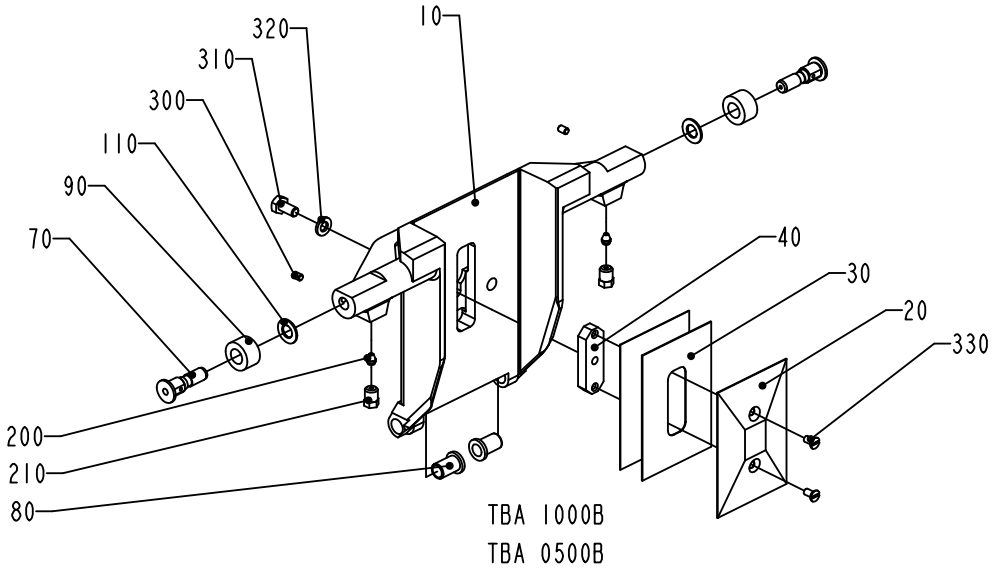

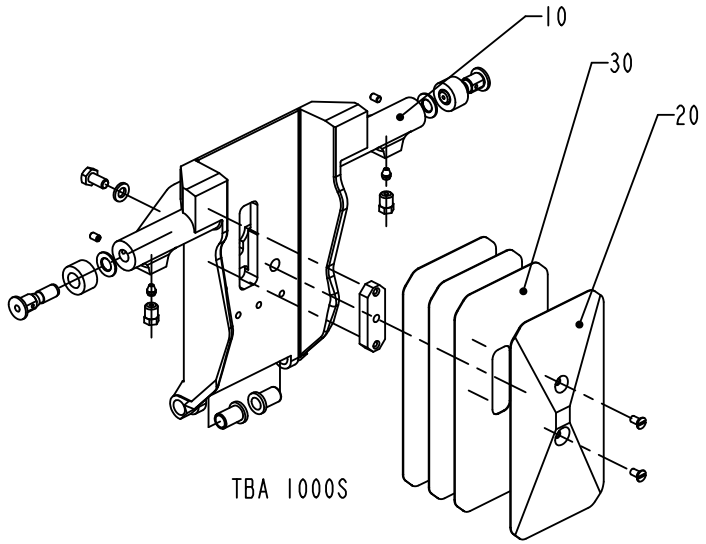

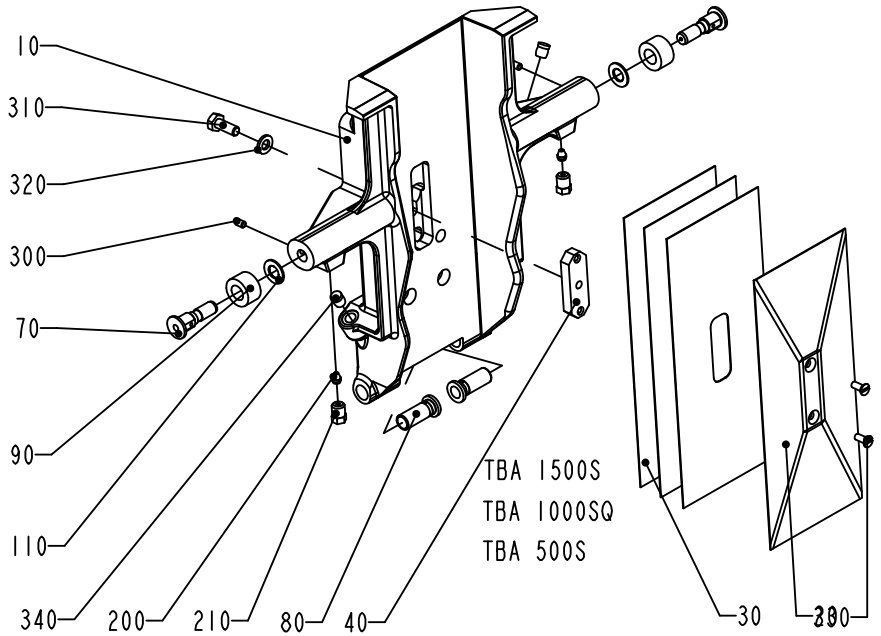

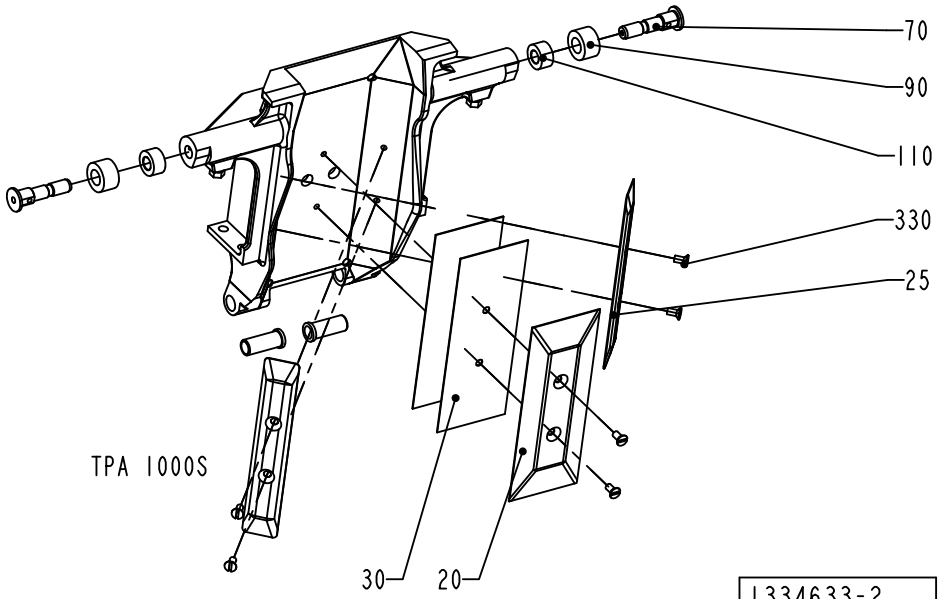

1334633-2
ECN 80471

ECM: 383399 - 20090402
Group number: 1334633-0200
Assembly Drawing: 1334633-2_1_AD

This list covers pages from 2-10 to 2-19

Pos	Part No	UN	Qty	Description	Page No
TBA 0200B (See drawing on page: 2-12)					
010	1499901-0000		1	VOLUME FLAP	
020	1038638-0000		1	VOLUME BULGE	
030	1038639-0000		2	VOLUME SHIM	
040	1038637-0000		1	WEDGE	
070	2993134-0000		2	AXLE PIN	
080	1255541-0000		2	BUSHING	
090	2993136-0000		2	ROLLER	
110	19972-0000		2	WASHER	
310	312105-0327		1	SCREW M6S ISO 4017 M5X12 A480	
320	315105-0146		1	WASHER BRB 5,3X10 RFR	
330	312145-0287		2	SCREW ISO 2009 MFS M4X8 A4	
TBA 0200S (See drawing on page: 2-12)					
010	1484866-0000		1	VOLUME FLAP	
020	1037733-0000		1	VOLUME BULGE	
030	1037735-0000		2	VOLUME SHIM	
040	1037734-0000		1	WEDGE	
070	2993134-0000		2	AXLE PIN	
080	1255541-0000		2	BUSHING	
090	2993136-0000		2	ROLLER	
110	19972-0000		2	WASHER	
310	312105-0327		1	SCREW M6S ISO 4017 M5X12 A480	
320	315105-0146		1	WASHER BRB 5,3X10 RFR	
330	312145-0287		2	SCREW ISO 2009 MFS M4X8 A4	
TBA 0250B (See drawing on page: 2-12)					
010	1484867-0000		1	VOLUME FLAP	
020	1346157-0000		1	VOLUME BULGE	
030	1346158-0000		2	VOLUME SHIM	
040	1037734-0000		1	WEDGE	
070	2993134-0000		2	AXLE PIN	
080	1255541-0000		2	BUSHING	
090	2993136-0000		2	ROLLER	
110	19972-0000		2	WASHER	
310	312105-0327		1	SCREW M6S ISO 4017 M5X12 A480	
320	315105-0146		1	WASHER BRB 5,3X10 RFR	
330	312145-0287		2	SCREW ISO 2009 MFS M4X8 A4	
TBA 0250S (See drawing on page: 2-12)					
010	2524388-0000		1	VOLUME FLAP	
020	2520473-0000		1	VOLUME BULGE	
030	2520474-0000		3	VOLUME SHIM	
040	1037734-0000		1	WEDGE	
070	2993134-0000		2	AXLE PIN	
080	1255541-0000		2	BUSHING	
090	2993136-0000		2	ROLLER	
110	19972-0000		2	WASHER	
310	312105-0328		1	SCREW M6S ISO 4017 M5X14 A480	
320	315105-0146		1	WASHER BRB 5,3X10 RFR	
330	312145-0287		2	SCREW ISO 2009 MFS M4X8 A4	
TBA 0330S (See drawing on page: 2-12)					
010	2544990-0000		1	VOLUME FLAP	
020	2544992-0000		1	VOLUME BULGE	
030	2544993-0000		3	VOLUME SHIM	
040	1037734-0000		1	WEDGE	
070	2993134-0000		2	AXLE PIN	
080	1255541-0000		2	BUSHING	
090	2993136-0000		2	ROLLER	
110	19972-0000		2	WASHER	
310	312105-0328		1	SCREW M6S ISO 4017 M5X14 A480	
320	315105-0146		1	WASHER BRB 5,3X10 RFR	
330	312145-0287		2	SCREW ISO 2009 MFS M4X8 A4	
TBA 0500B (See drawing on page: 2-10)					
010	1532287-0000		1	VOLUME FLAP	
020	1558817-0000		1	VOLUME BULGE	
030	1532293-0000		2	VOLUME SHIM	
070	2993134-0000		2	AXLE PIN	
080	1255541-0000		2	BUSHING	
090	2993136-0000		2	ROLLER	
110	19972-0000		2	WASHER	
310	312105-0327		1	SCREW M6S ISO 4017 M5X12 A480	
320	315105-0146		1	WASHER BRB 5,3X10 RFR	
TBA 0500S (See drawing on page: 2-10)					
010	1511250-0000		1	VOLUME FLAP	
020	1524035-0000		1	VOLUME BULGE	
030	1511253-0000		3	VOLUME SHIM	
040	1487628-0000		1	WEDGE	
070	2993134-0000		2	AXLE PIN	
080	1511254-0000		2	BUSHING	
090	2993135-0000		2	ROLLER	
110	19972-0000		2	WASHER	
310	312105-0368		1	SCREW M6S ISO 4017 M6X16 A480	
320	315105-0153		1	WASHER BRB 6,4X12 RFR	
330	312145-0289		2	SCREW ISO 2009 MFS M4X10 A4	
340	90261-0016		2	PLUG, BLIND, PLASTIC GPN300V2	
TBA 1000B (See drawing on page: 2-10)					

Machine Type | Group Description | Used-In | Group Number | Page No

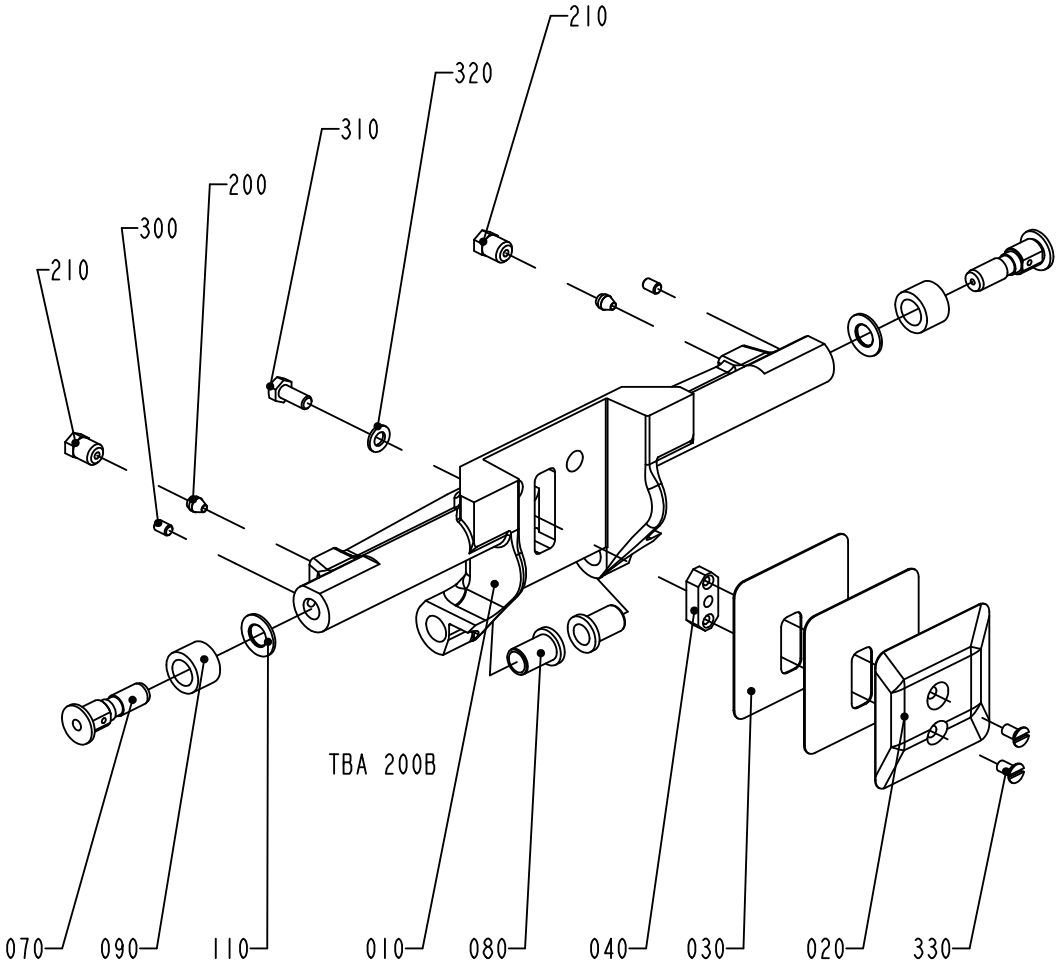

TBA 200B

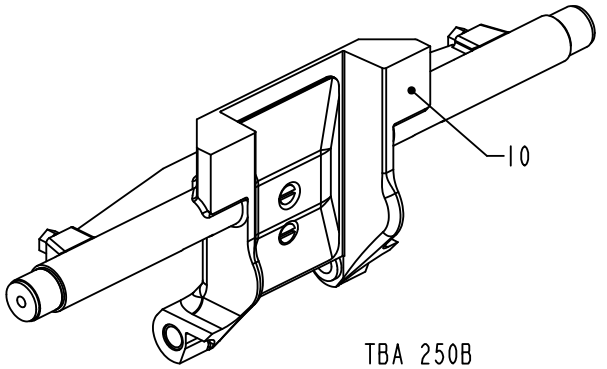

TBA 250B

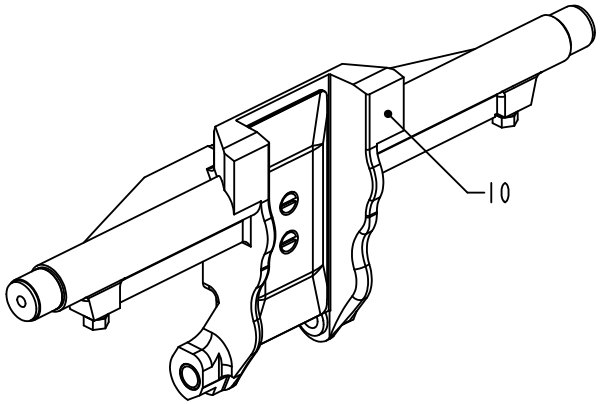

TBA 200S

1334633-3
ECN 72770

ECM: 383399 - 20090402
Group number: 1334633-0200
Assembly Drawing: 1334633-3_1_AB

This list covers pages from 2-10 to 2-19

Pos	Part No	UN	Qty	Description	Page No
TBA 1000B (Cont'd) (See drawing on page: 2-10)					
010	2982668-0000		1	VOLUME FLAP	
020	1035828-0000		1	VOLUME BULGE	
030	1035831-0000		3	VOLUME SHIM	
040	1040756-0000		1	WEDGE	
070	2993134-0000		2	AXLE PIN	
080	1255541-0000		2	BUSHING	
090	2993135-0000		2	ROLLER	
110	19972-0000		2	WASHER	
310	312105-0366		1	SCREW M6S ISO 4017 M6X12 A480	
320	315105-0153		1	WASHER BRB 6,4X12 RFR	
330	312145-0287		2	SCREW ISO 2009 MFS M4X8 A4	
TBA 1000S (See drawing on page: 2-10)					
010	2982665-0000		1	VOLUME FLAP	
020	1040754-0000		1	VOLUME BULGE	
030	1040755-0000		3	VOLUME SHIM	
040	1040756-0000		1	WEDGE	
070	2993134-0000		2	AXLE PIN	
080	1255541-0000		2	BUSHING	
090	2993135-0000		2	ROLLER	
110	19972-0000		2	WASHER	
310	312105-0366		1	SCREW M6S ISO 4017 M6X12 A480	
320	315105-0153		1	WASHER BRB 6,4X12 RFR	
330	312145-0287		2	SCREW ISO 2009 MFS M4X8 A4	
TBA 1000SQ (See drawing on page: 2-10)					
010	2606305-0000		1	VOLUME FLAP	
020	1487626-0000		1	VOLUME BULGE	
030	1487627-0000		3	VOLUME SHIM	
040	1040756-0000		1	WEDGE	
070	2993134-0000		2	AXLE PIN	
080	1558701-0000		2	BUSHING	
090	2993135-0000		2	ROLLER	
110	19972-0000		2	WASHER	
310	312115-0367		1	SCREW ISO4762 M6X14 A4 80	
320	315105-0153		1	WASHER BRB 6,4X12 RFR	
330	312145-0291		2	SCREW ISO 2009 MFS M4X12 A4	
TBA 1500S (See drawing on page: 2-10)					
010	2587236-0000		1	VOLUME FLAP	
020	1499675-0000		1	VOLUME BULGE	
030	1349208-0000		3	VOLUME SHIM	
040	1040756-0000		1	WEDGE	
070	2993134-0000		2	AXLE PIN	
080	1558701-0000		2	BUSHING	
090	2993135-0000		2	ROLLER	
110	19972-0000		2	WASHER	
310	312105-0368		1	SCREW M6S ISO 4017 M6X16 A480	
320	315105-0153		1	WASHER BRB 6,4X12 RFR	
330	312145-0289		2	SCREW ISO 2009 MFS M4X10 A4	
340	90261-0016		2	PLUG, BLIND, PLASTIC GPN300V2	
TPA 0250SQ (See drawing on page: 2-16)					
010	2530256-0000		1	VOLUME FLAP	
020	2581994-0000		2	VOLUME BULGE	
030	1549594-0000		6	VOLUME SHIM	
070	2993134-0000		2	AXLE PIN	
080	1255541-0000		2	BUSHING	
090	2993136-0000		2	ROLLER	
110	19972-0000		2	WASHER	
320	315105-0146		2	WASHER BRB 5,3X10 RFR	
325	312705-0314		2	NUT HEX. DOMED CAP MHM-6 M5 A280	
TPA 0330SQ (See drawing on page: 2-14)					
010	1539904-0000		1	VOLUME FLAP	
020	1539903-0000		2	VOLUME BULGE	
030	1539902-0000		6	VOLUME SHIM	
070	2993134-0000		2	AXLE PIN	
080	1255541-0000		2	BUSHING	
090	2993136-0000		2	ROLLER	
110	19972-0000		2	WASHER	
320	315105-0146		2	WASHER BRB 5,3X10 RFR	
325	312105-0327		2	SCREW M6S ISO 4017 M5X12 A480	
TPA 0500SQ (See drawing on page: 2-18)					
010	1549836-0000		1	VOLUME FLAP	
025	1549829-0000		2	VOLUME BULGE	
035	1549830-0000		6	VOLUME SHIM	
040	1549831-0000		2	WEDGE	
050	1549832-0000		1	PLUG	
070	2993134-0000		2	AXLE PIN	
080	2530313-0000		2	BUSHING	
090	2993135-0000		2	ROLLER	
110	19972-0000		2	WASHER	
310	312105-0327		3	SCREW M6S ISO 4017 M5X12 A480	
320	315105-0146		3	WASHER BRB 5,3X10 RFR	
370	312155-0289		4	SCREW DIN 7991 MF6S M4X10 A4 70	
TPA 1000SQ (See drawing on page: 2-18)					
010	2547011-0000		1	VOLUME FLAP	

Machine Type | Group Description | Used-In | Group Number | Page No

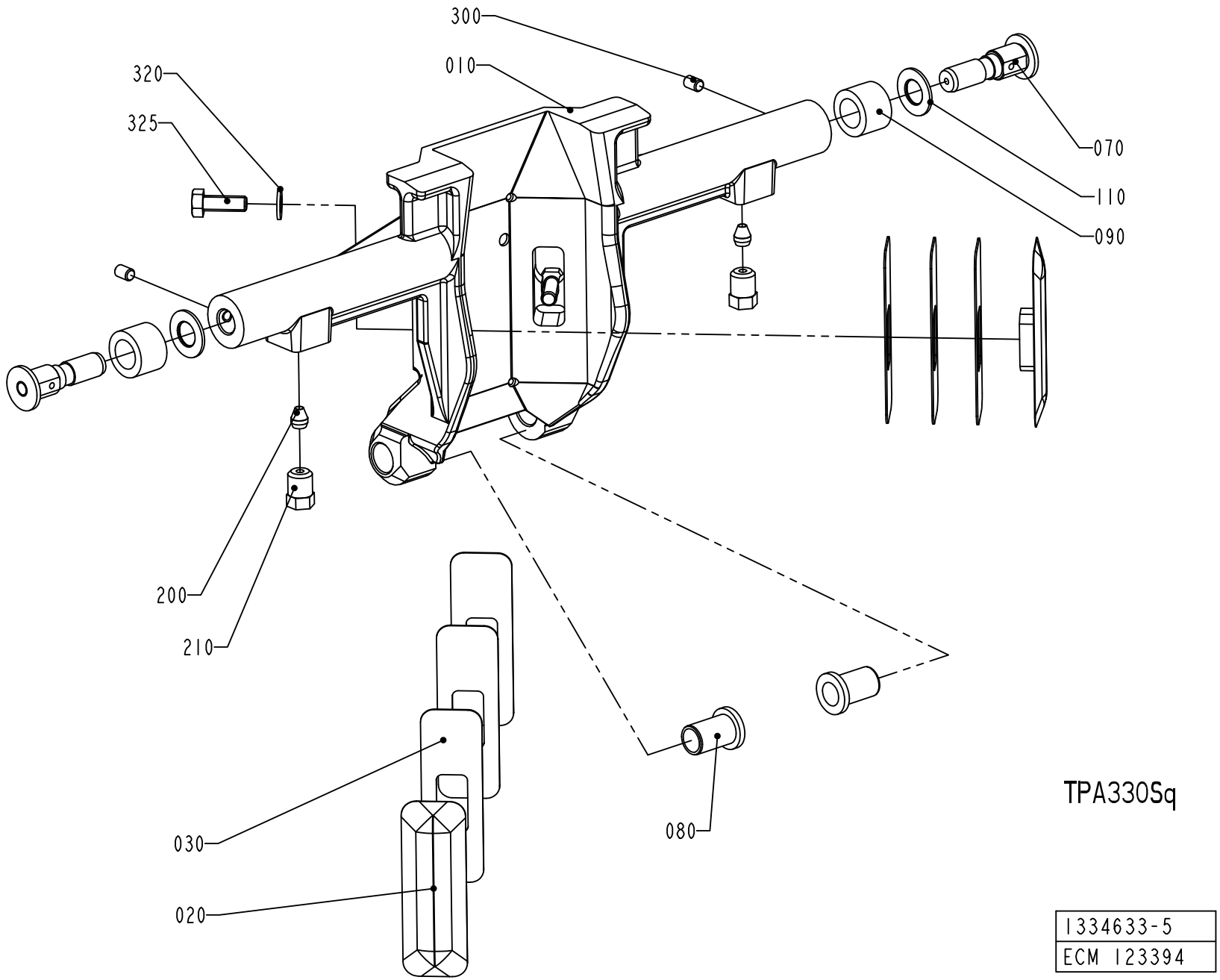
300
010
320
325
070
110
090
200
210
030
020
080
TPA330Sq
1334633-5
ECM 123394

ECM: 383399 - 20090402
Group number: 1334633-0200
Assembly Drawing: 1334633-5_1_AB

This list covers pages from 2-10 to 2-19

Pos	Part No	UN	Qty	Description	Page No
TPA 1000SQ (Cont'd) (See drawing on page: 2-18)					
020	1539840-0000		1	VOLUME BULGE	
025	1539841-0000		2	VOLUME BULGE	
030	1539842-0000		3	VOLUME SHIM	
035	1539843-0000		6	VOLUME SHIM	
040	1040756-0000		3	WEDGE	
060	2547010-0000		1	BRACKET	
070	2993134-0000		2	AXLE PIN	
080	1255541-0000		2	BUSHING	
090	2993135-0000		2	ROLLER	
110	19972-0000		2	WASHER	
320	315105-0153		3	WASHER BRB 6,4X12 RFR	
360	312105-0368		3	SCREW M6S ISO 4017 M6X16 A480	
370	312155-0289		6	SCREW DIN 7991 MF6S M4X10 A4 70	
Common Parts					
200	90028-0020		2	CONE TUBE 2,5MM	
210	90134-0063		2	BUSHING/NUT M8X1, D=2,5 MM	
300	312318-0285		2	SCREW ISO4029 M4X6 A4	

Pos	Part No	UN	Qty	Description	Page No

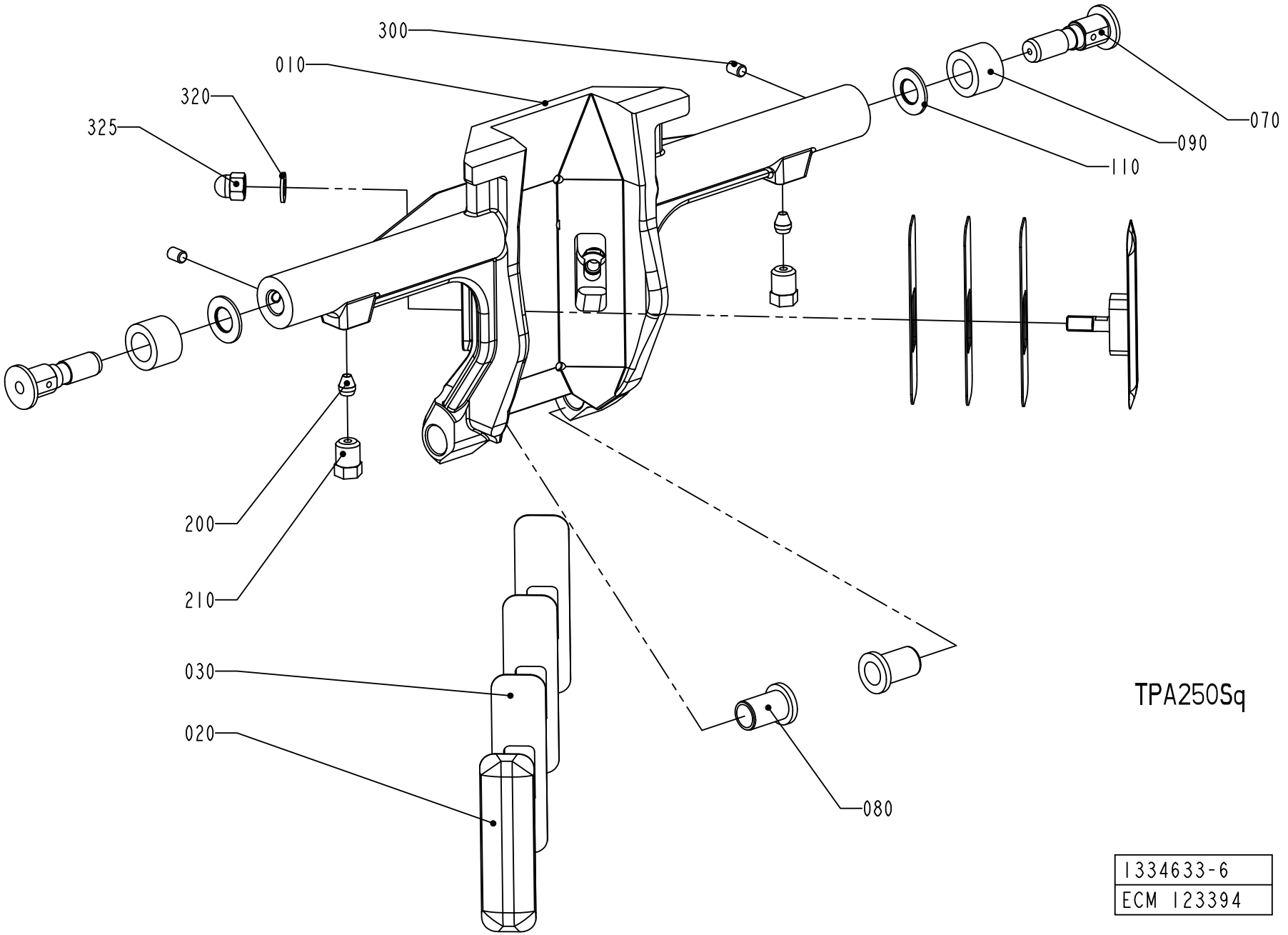
300
010
320
325
070
090
110
200
210
030
020
080
TPA250Sq
1334633-6
ECM 123394

ECM: 383399 - 20090402
Group number: 1334633-0200
Assembly Drawing: 1334633-6_1_AA

This list covers pages from 2-10 to 2-19

Pos	Part No	UN	Qty	Description	Page No
SEE PREVIOUS LISTS PAGES: 2-11, 2-13, 2-15.					

Pos	Part No	UN	Qty	Description	Page No

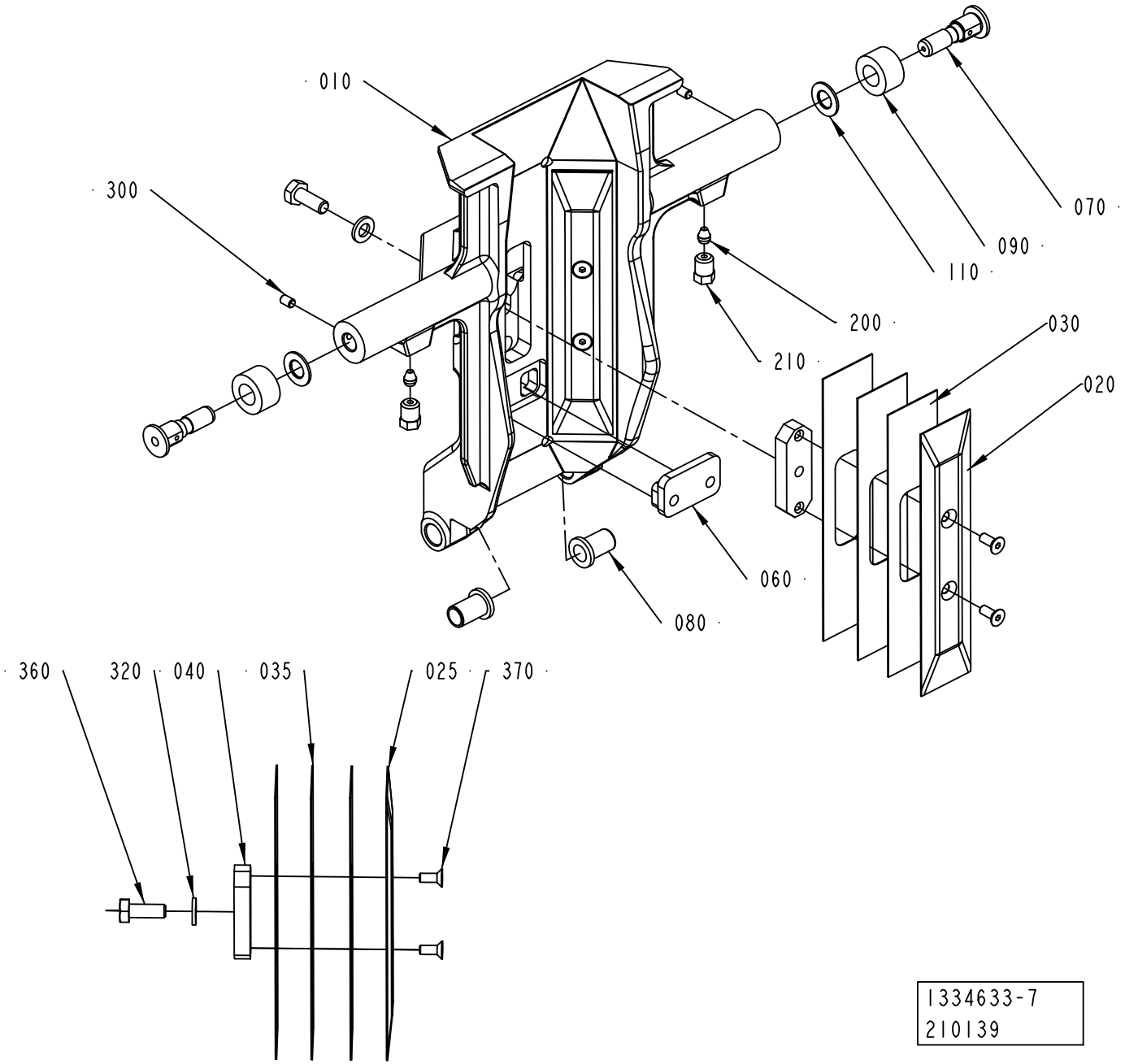
010
300
070
090
110
200
210
030
020
060
080
360
320
040
035
025
370
1334633-7
210139

ECM: 383399 - 20090402
Group number: 1334633-0200
Assembly Drawing: 1334633-7_1_AB

This list covers pages from 2-10 to 2-19

Pos	Part No	UN	Qty	Description	Page No
SEE PREVIOUS LISTS PAGES: 2-11, 2-13, 2-15.					

Pos	Part No	UN	Qty	Description	Page No

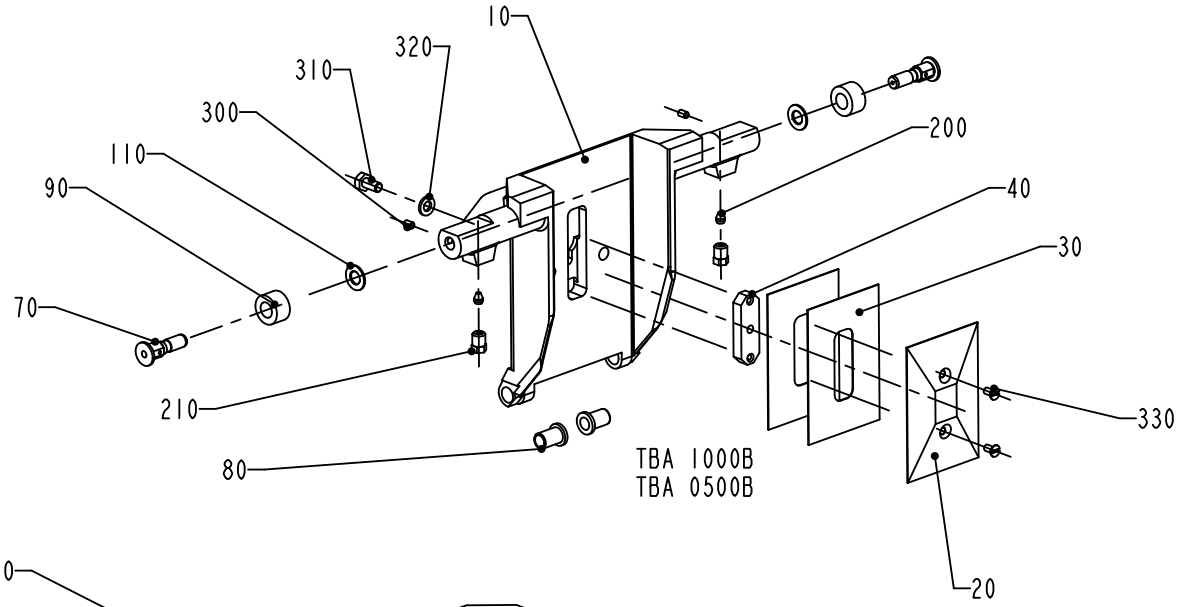

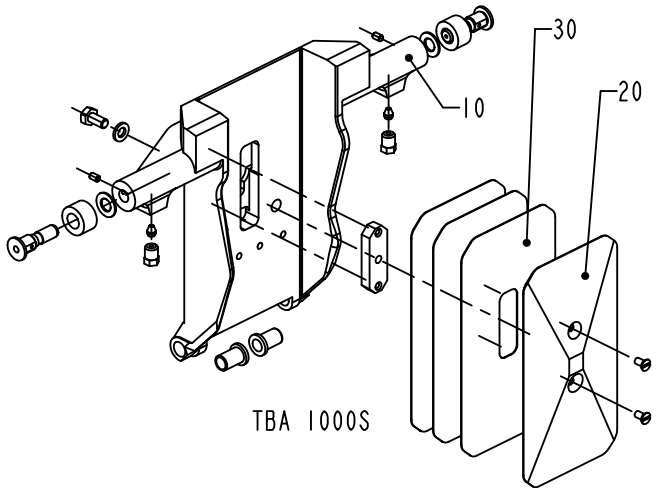

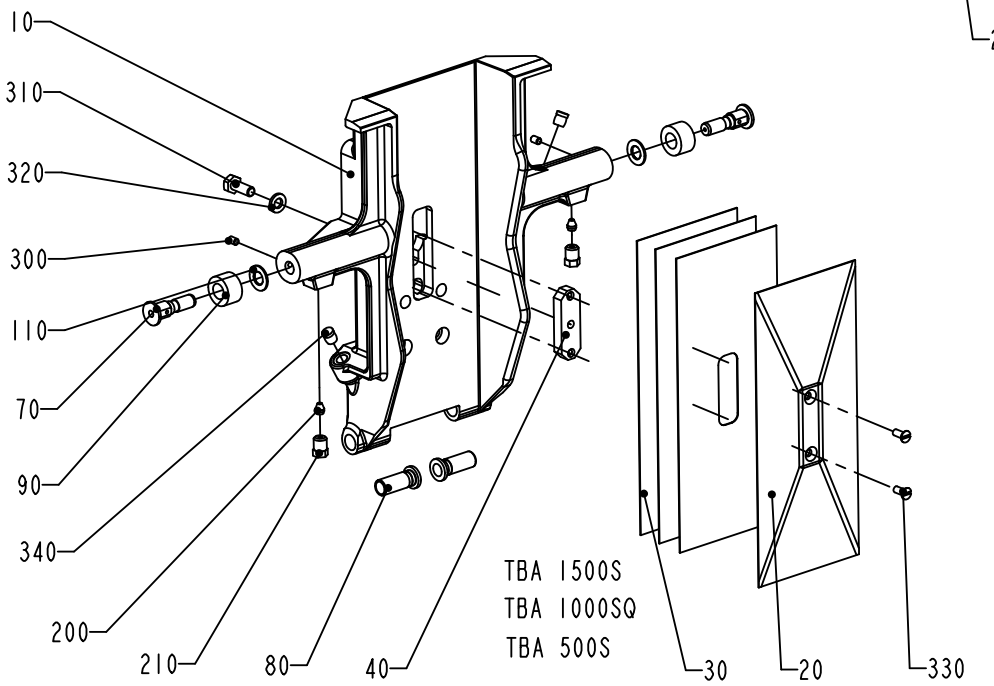

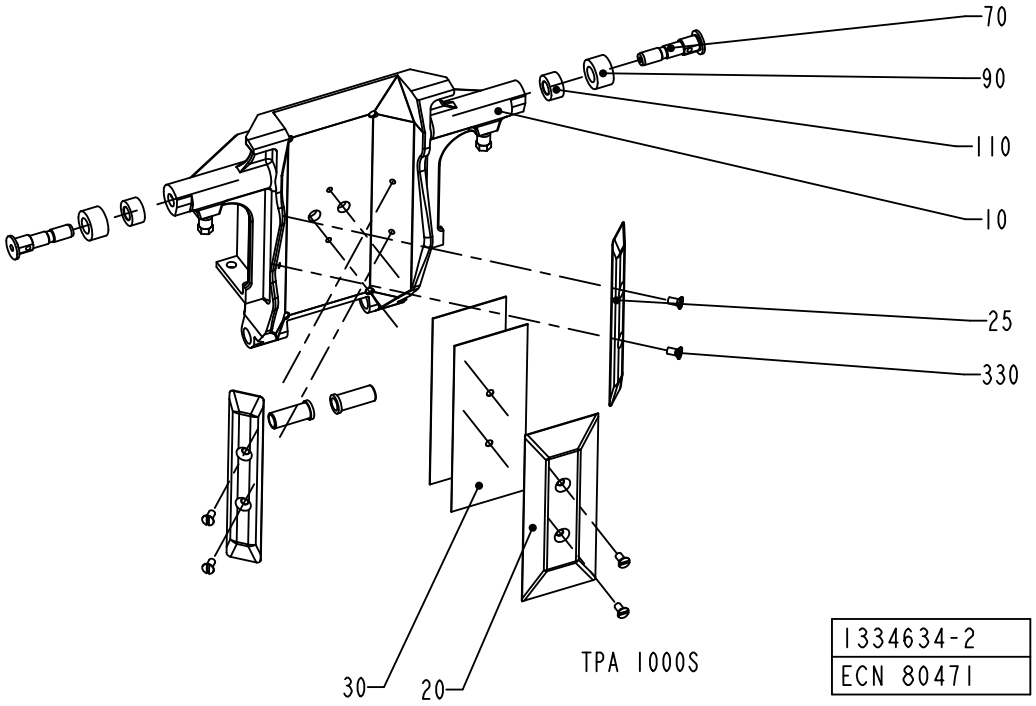

1334634-2
ECN 80471

ECM: 376894 - 20090401
Group number: 1334634-0200
Assembly Drawing: 1334634-2_1_AD

This list covers pages from 2-20 to 2-29

Pos	Part No	UN	Qty	Description	Page No
TPA 1000SQ SMILE (See drawing on page: 2-28)					
010	2582002-0000		1	VOLUME FLAP	
020	1539840-0000		1	VOLUME BULGE	
025	1539841-0000		2	VOLUME BULGE	
030	1539842-0000		3	VOLUME SHIM	
035	1539843-0000		6	VOLUME SHIM	
040	1040756-0000		3	WEDGE	
060	2547010-0000		1	BRACKET	
070	2993134-0000		2	AXLE PIN	
080	1255541-0000		2	BUSHING	
090	2993135-0000		2	ROLLER	
110	19972-0000		2	WASHER	
310	312105-0368		3	SCREW M6S ISO 4017 M6X16 A480	
320	315105-0153		3	WASHER BRB 6,4X12 RFR	
370	312155-0289		6	SCREW DIN 7991 MF6S M4X10 A4 70	
TBA 0200B (See drawing on page: 2-22)					
010	1499902-0000		1	VOLUME FLAP	
020	1038638-0000		1	VOLUME BULGE	
030	1038639-0000		2	VOLUME SHIM	
040	1038637-0000		1	WEDGE	
070	2993134-0000		2	AXLE PIN	
080	1255541-0000		2	BUSHING	
090	2993136-0000		2	ROLLER	
110	19972-0000		2	WASHER	
310	312105-0327		1	SCREW M6S ISO 4017 M5X12 A480	
320	315105-0146		1	WASHER BRB 5,3X10 RFR	
330	312145-0287		2	SCREW ISO 2009 MFS M4X8 A4	
TBA 0200S (See drawing on page: 2-22)					
010	1484865-0000		1	VOLUME FLAP	
020	1037733-0000		1	VOLUME BULGE	
030	1037735-0000		2	VOLUME SHIM	
040	1037734-0000		1	WEDGE	
070	2993134-0000		2	AXLE PIN	
080	1255541-0000		2	BUSHING	
090	2993136-0000		2	ROLLER	
110	19972-0000		2	WASHER	
310	312105-0327		1	SCREW M6S ISO 4017 M5X12 A480	
320	315105-0146		1	WASHER BRB 5,3X10 RFR	
330	312145-0287		2	SCREW ISO 2009 MFS M4X8 A4	
TBA 0250B (See drawing on page: 2-22)					
010	1484868-0000		1	VOLUME FLAP	
020	1346157-0000		1	VOLUME BULGE	
030	1346158-0000		2	VOLUME SHIM	
040	1037734-0000		1	WEDGE	
070	2993134-0000		2	AXLE PIN	
080	1255541-0000		2	BUSHING	
090	2993136-0000		2	ROLLER	
110	19972-0000		2	WASHER	
310	312105-0327		1	SCREW M6S ISO 4017 M5X12 A480	
320	315105-0146		1	WASHER BRB 5,3X10 RFR	
330	312145-0287		2	SCREW ISO 2009 MFS M4X8 A4	
TBA 0250S (See drawing on page: 2-22)					
010	2520472-0000		1	VOLUME FLAP	
020	2520473-0000		1	VOLUME BULGE	
030	2520474-0000		3	VOLUME SHIM	
040	1037734-0000		1	WEDGE	
070	2993134-0000		2	AXLE PIN	
080	1255541-0000		2	BUSHING	
090	2993136-0000		2	ROLLER	
110	19972-0000		2	WASHER	
310	312105-0328		1	SCREW M6S ISO 4017 M5X14 A480	
320	315105-0146		1	WASHER BRB 5,3X10 RFR	
330	312145-0287		2	SCREW ISO 2009 MFS M4X8 A4	
TBA 0330S (See drawing on page: 2-22)					
010	2544991-0000		1	VOLUME FLAP	
020	2544992-0000		1	VOLUME BULGE	
030	2544993-0000		3	VOLUME SHIM	
040	1037734-0000		1	WEDGE	
070	2993134-0000		2	AXLE PIN	
080	1255541-0000		2	BUSHING	
090	2993136-0000		2	ROLLER	
110	19972-0000		2	WASHER	
310	312105-0328		1	SCREW M6S ISO 4017 M5X14 A480	
320	315105-0146		1	WASHER BRB 5,3X10 RFR	
330	312145-0287		2	SCREW ISO 2009 MFS M4X8 A4	
TBA 0500B (See drawing on page: 2-20)					
010	1532287-0000		1	VOLUME FLAP	
020	1558817-0000		1	VOLUME BULGE	
030	1532293-0000		2	VOLUME SHIM	
070	2993134-0000		2	AXLE PIN	
080	1255541-0000		2	BUSHING	
090	2993136-0000		2	ROLLER	
110	19972-0000		2	WASHER	
310	312105-0327		1	SCREW M6S ISO 4017 M5X12 A480	

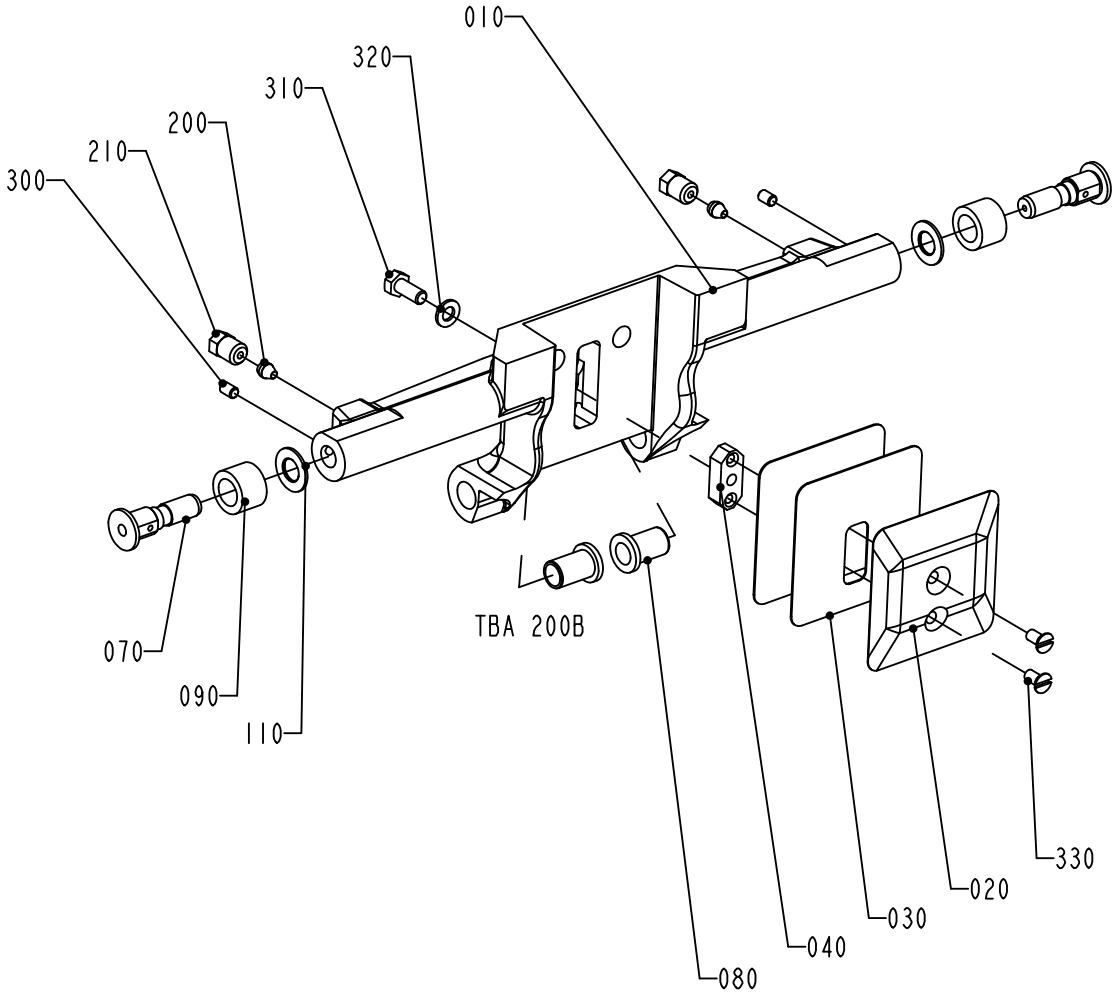

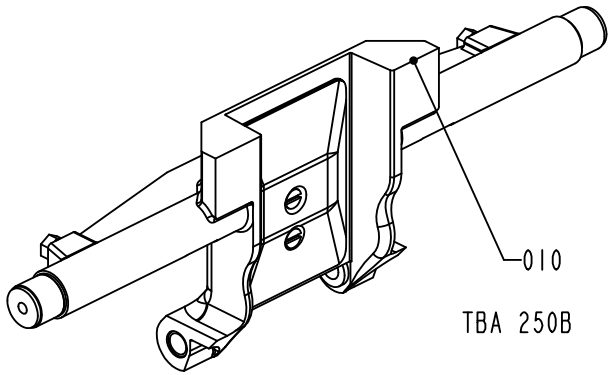

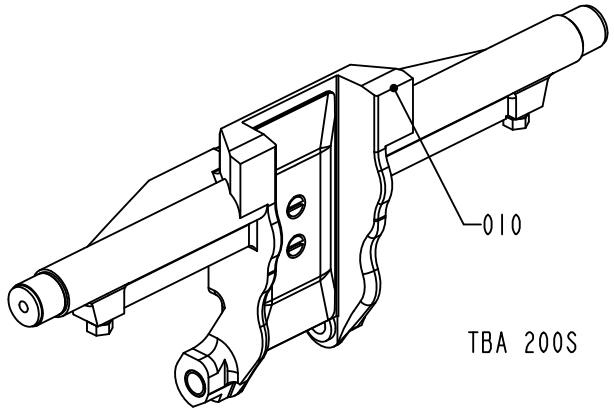

1334634-3
ECN 72770

ECM: 376894 - 20090401
Group number: 1334634-0200
Assembly Drawing: 1334634-3_1_AB

This list covers pages from 2-20 to 2-29

Pos	Part No	UN	Qty	Description	Page No
TBA 0500B (Cont'd) (See drawing on page: 2-20)					
320	315105-0146		1	WASHER BRB 5,3X10 RFR	
TBA 0500S (See drawing on page: 2-20)					
010	1511251-0000		1	VOLUME FLAP	
020	1524035-0000		1	VOLUME BULGE	
030	1511253-0000		3	VOLUME SHIM	
040	1487628-0000		1	WEDGE	
070	2993134-0000		2	AXLE PIN	
080	1511254-0000		2	BUSHING	
090	2993135-0000		2	ROLLER	
110	19972-0000		2	WASHER	
310	312105-0368		1	SCREW M6S ISO 4017 M6X16 A480	
320	315105-0153		1	WASHER BRB 6,4X12 RFR	
330	312145-0291		2	SCREW ISO 2009 MFS M4X12 A4	
340	90261-0016		2	PLUG, BLIND, PLASTIC GPN300V2	
TBA 1000B (See drawing on page: 2-20)					
010	2982668-0000		1	VOLUME FLAP	
020	1035828-0000		1	VOLUME BULGE	
030	1035831-0000		3	VOLUME SHIM	
040	1040756-0000		1	WEDGE	
070	2993134-0000		2	AXLE PIN	
080	1255541-0000		2	BUSHING	
090	2993135-0000		2	ROLLER	
110	19972-0000		2	WASHER	
310	312105-0366		1	SCREW M6S ISO 4017 M6X12 A480	
320	315105-0153		1	WASHER BRB 6,4X12 RFR	
330	312145-0287		2	SCREW ISO 2009 MFS M4X8 A4	
TBA 1000S (See drawing on page: 2-20)					
010	2982665-0000		1	VOLUME FLAP	
020	1040754-0000		1	VOLUME BULGE	
030	1040755-0000		3	VOLUME SHIM	
040	1040756-0000		1	WEDGE	
070	2993134-0000		2	AXLE PIN	
080	1255541-0000		2	BUSHING	
090	2993135-0000		2	ROLLER	
110	19972-0000		2	WASHER	
310	312105-0366		1	SCREW M6S ISO 4017 M6X12 A480	
320	315105-0153		1	WASHER BRB 6,4X12 RFR	
330	312145-0287		2	SCREW ISO 2009 MFS M4X8 A4	
TBA 1000SQ (See drawing on page: 2-20)					
010	2606306-0000		1	VOLUME FLAP	
020	1487626-0000		1	VOLUME BULGE	
030	1487627-0000		3	VOLUME SHIM	
040	1040756-0000		1	WEDGE	
070	2993134-0000		2	AXLE PIN	
080	1558701-0000		2	BUSHING	
090	2993135-0000		2	ROLLER	
110	19972-0000		2	WASHER	
310	312115-0367		1	SCREW ISO4762 M6X14 A4 80	
320	315105-0153		1	WASHER BRB 6,4X12 RFR	
330	312145-0291		2	SCREW ISO 2009 MFS M4X12 A4	
TBA 1500S (See drawing on page: 2-20)					
010	2587235-0000		1	VOLUME FLAP	
020	1499675-0000		1	VOLUME BULGE	
030	1349208-0000		3	VOLUME SHIM	
040	1040756-0000		1	WEDGE	
070	2993134-0000		2	AXLE PIN	
080	1558701-0000		2	BUSHING	
090	2993135-0000		2	ROLLER	
110	19972-0000		2	WASHER	
310	312105-0368		1	SCREW M6S ISO 4017 M6X16 A480	
320	315105-0153		1	WASHER BRB 6,4X12 RFR	
330	312145-0289		2	SCREW ISO 2009 MFS M4X10 A4	
340	90261-0016		2	PLUG, BLIND, PLASTIC GPN300V2	
TPA 0250SQ (See drawing on page: 2-26)					
010	2530257-0000		1	VOLUME FLAP	
020	2581994-0000		2	VOLUME BULGE	
030	1549594-0000		6	VOLUME SHIM	
070	2993134-0000		2	AXLE PIN	
080	1255541-0000		2	BUSHING	
090	2993136-0000		2	ROLLER	
110	19972-0000		2	WASHER	
320	315105-0146		2	WASHER BRB 5,3X10 RFR	
325	312705-0314		2	NUT HEX. DOMED CAP MHM-6 M5 A280	
TPA 0330SQ (See drawing on page: 2-24)					
010	1558123-0000		1	VOLUME FLAP	
020	1539903-0000		2	VOLUME BULGE	
030	1539902-0000		6	VOLUME SHIM	
070	2993134-0000		2	AXLE PIN	
080	1255541-0000		2	BUSHING	
090	2993136-0000		2	ROLLER	
110	19972-0000		2	WASHER	
320	315105-0146		2	WASHER BRB 5,3X10 RFR	
325	312105-0327		2	SCREW M6S ISO 4017 M5X12 A480	

Machine Type | Group Description | Used-In | Group Number | Page No

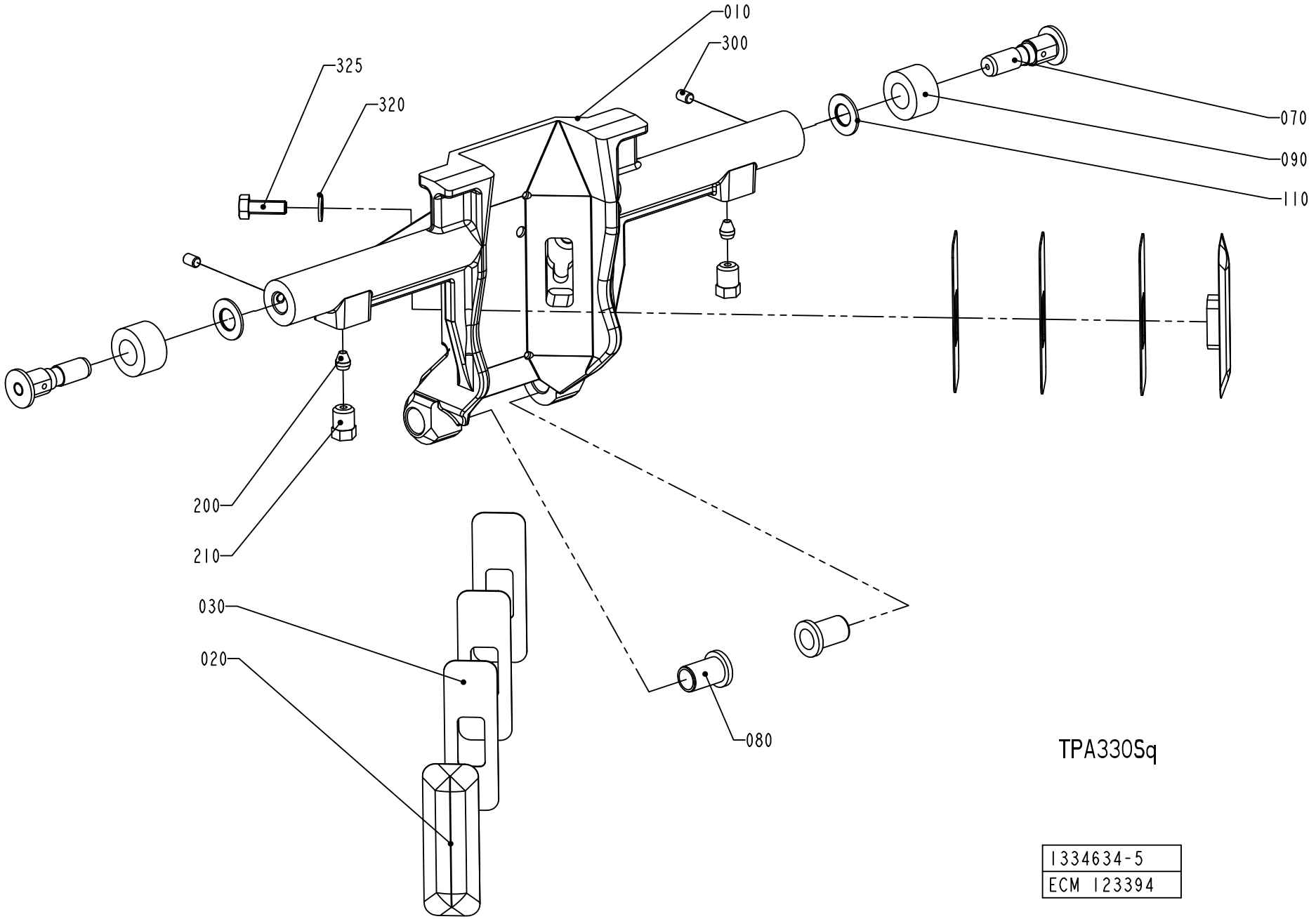
010
300
325
320
070
090
110
200
210
030
020
080
TPA330Sq
1334634-5
ECM 123394

Pos	Part No	UN	Qty	Description	Page No
TPA 0500SQ SMILE (Cont'd) (See drawing on page: 2-28)					
010	1549837-0000		1	VOLUME FLAP	
020	1549829-0000		1	VOLUME BULGE	
025	1549829-0000		2	VOLUME BULGE	
030	1549830-0000		3	VOLUME SHIM	
035	1549830-0000		6	VOLUME SHIM	
040	1549831-0000		3	WEDGE	
070	2993134-0000		2	AXLE PIN	
080	2530313-0000		2	BUSHING	
090	2993135-0000		2	ROLLER	
110	19972-0000		2	WASHER	
310	312105-0327		3	SCREW M6S ISO 4017 M5X12 A480	
320	315105-0146		3	WASHER BRB 5,3X10 RFR	
370	312155-0289		6	SCREW DIN 7991 MF6S M4X10 A4 70	
TPA 1000SQ FT (See drawing on page: 2-28)					
010	2547012-0000		1	VOLUME FLAP	
020	1539840-0000		1	VOLUME BULGE	
025	1539841-0000		2	VOLUME BULGE	
030	1539842-0000		3	VOLUME SHIM	
035	1539843-0000		6	VOLUME SHIM	
040	1040756-0000		3	WEDGE	
060	2547010-0000		1	BRACKET	
070	2993134-0000		2	AXLE PIN	
080	1255541-0000		2	BUSHING	
090	2993135-0000		2	ROLLER	
110	19972-0000		2	WASHER	
320	315105-0153		3	WASHER BRB 6,4X12 RFR	
360	312105-0368		3	SCREW M6S ISO 4017 M6X16 A480	
370	312155-0289		6	SCREW DIN 7991 MF6S M4X10 A4 70	
Common Parts					
200	90028-0020		2	CONE TUBE 2,5MM	
210	90134-0063		2	BUSHING/NUT M8X1, D=2,5 MM	
300	312318-0285		2	SCREW ISO4029 M4X6 A4	

Pos	Part No	UN	Qty	Description	Page No

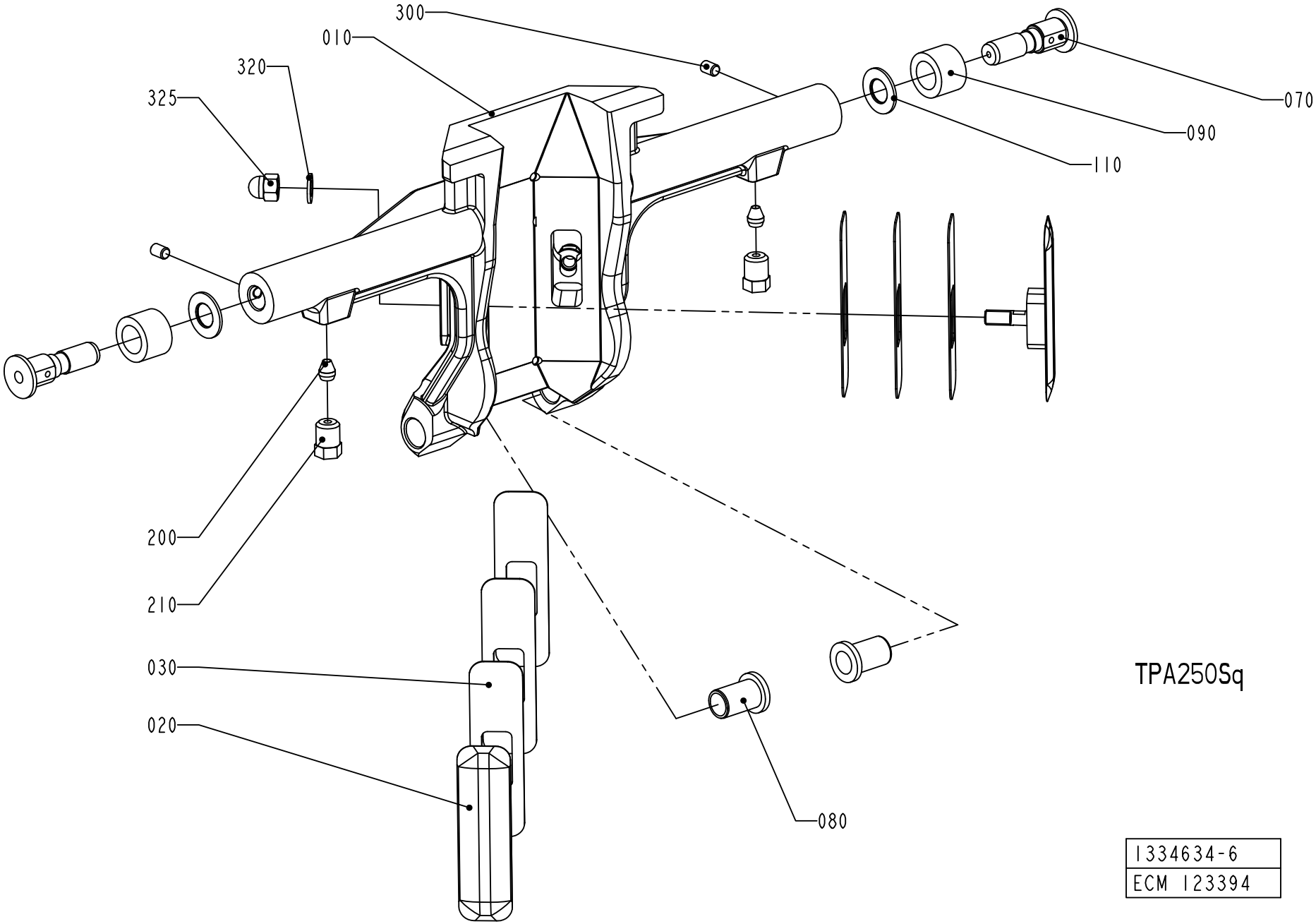
300
010
320
325
070
090
110
200
210
030
020
080
TPA250Sq
1334634-6
ECM 123394

ECM: 376894 - 20090401
Group number: 1334634-0200
Assembly Drawing: 1334634-6_1_AA

This list covers pages from 2-20 to 2-29

Pos	Part No	UN	Qty	Description	Page No
SEE PREVIOUS LISTS PAGES: 2-21, 2-23, 2-25.					

Pos	Part No	UN	Qty	Description	Page No

VOLUME FLAP PRESSURE

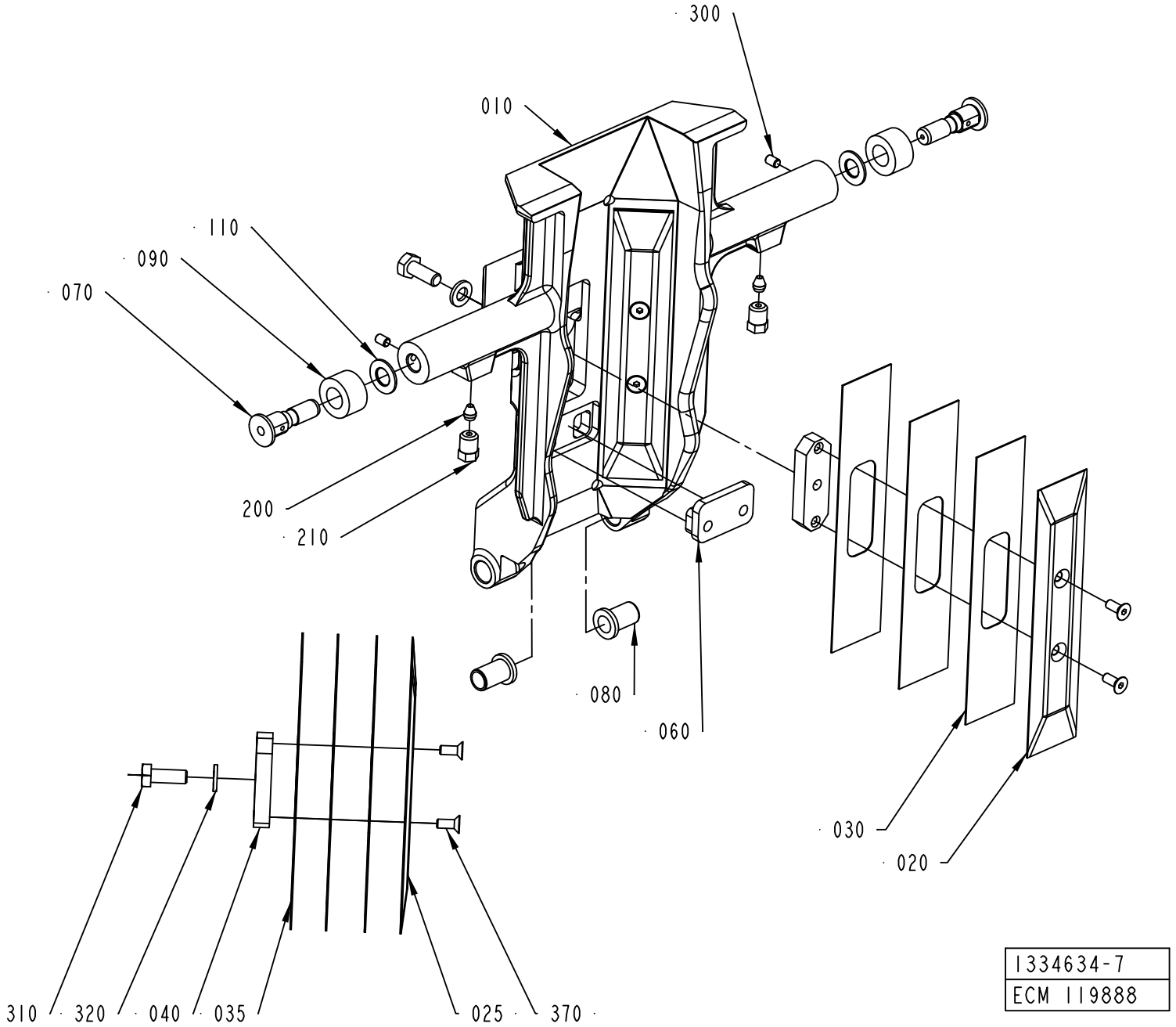

ECM: 376894 - 20090401
Group number: 1334634-0200
Assembly Drawing: 1334634-7_1_AA

This list covers pages from 2-20 to 2-29

Pos	Part No	UN	Qty	Description	Page No
SEE PREVIOUS LISTS PAGES: 2-21, 2-23, 2-25.					

Pos	Part No	UN	Qty	Description	Page No

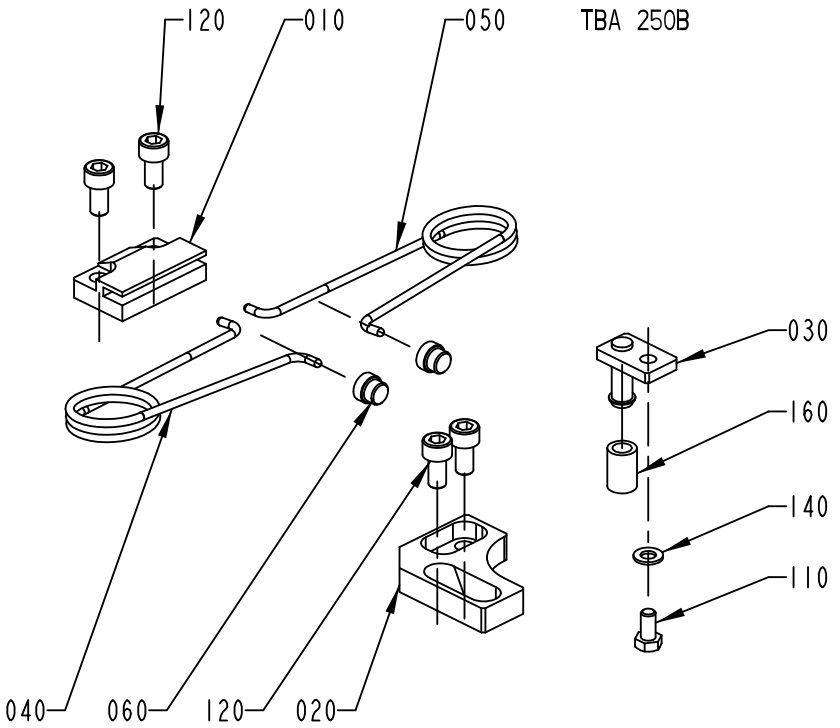

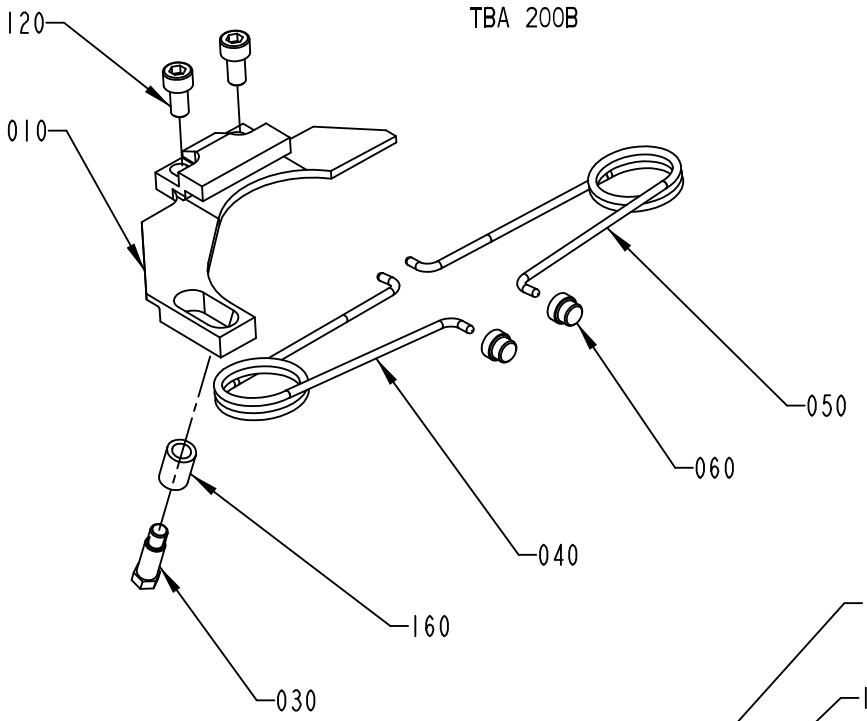

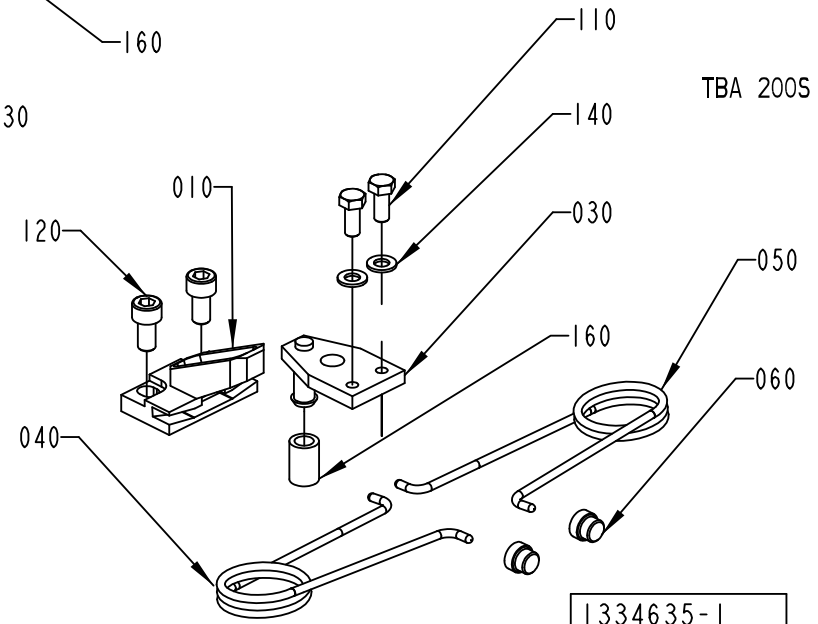

1334635-1
ECN 73647

ECM: 383398 - 20090402
Group number: 1334635-0200
Assembly Drawing: 1334635-1_1_AF

This list covers pages from 2-30 to 2-41

Pos	Part No	UN	Qty	Description	Page No
TBA 0200B (See drawing on page: 2-30)					
010	1512579-0000		1	BRACKET	
030	1346153-0000		1	STOP PIN	
040	1350263-0000		1	SPRING RIGHT	
050	1350264-0000		1	SPRING LEFT	
060	1144601-0000		2	GUIDE STUD	
120	312115-0366		2	SCREW ISO4762 M6X12 A4 80	
160	1317740-0000		1	RUBBER SLEEVE	
TBA 0200S (See drawing on page: 2-30)					
010	1317823-0000		1	CANTILEVER	
030	1317824-0000		1	CATCH	
040	1350263-0000		1	SPRING RIGHT	
050	1350264-0000		1	SPRING LEFT	
060	1144601-0000		2	GUIDE STUD	
110	312105-0327		2	SCREW M6S ISO 4017 M5X12 A480	
120	312115-0366		2	SCREW ISO4762 M6X12 A4 80	
140	315105-0146		2	WASHER BRB 5,3X10 RFR	
160	1317740-0000		1	RUBBER SLEEVE	
TBA 0250B (See drawing on page: 2-30)					
010	1317742-0000		1	CANTILEVER	
020	1317741-0000		1	CATCH	
030	1317440-0000		1	STOP PIN	
040	1350263-0000		1	SPRING RIGHT	
050	1350264-0000		1	SPRING LEFT	
060	1144601-0000		2	GUIDE STUD	
110	312105-0325		1	SCREW M6S ISO 4017 M5X10 A480	
120	312115-0366		4	SCREW ISO4762 M6X12 A4 80	
140	315105-0146		1	WASHER BRB 5,3X10 RFR	
160	1317740-0000		1	RUBBER SLEEVE	
TBA 0250S, TBA 0330S, TPA 0250SQ (See drawing on page: 2-34)					
010	1539172-0000		1	CANTILEVER	
030	2527725-0000		1	CATCH	
040	1350263-0000		1	SPRING RIGHT	
050	1350264-0000		1	SPRING LEFT	
060	1144601-0000		2	GUIDE STUD	
110	312105-0328		2	SCREW M6S ISO 4017 M5X14 A480	
120	312115-0368		2	SCREW ISO4762 M6X16 A4 80	
TBA 0500B (See drawing on page: 2-34)					
010	1539886-0000		1	CANTILEVER	
030	1539887-0000		1	CATCH	
040	1350263-0000		1	SPRING RIGHT	
050	1350264-0000		1	SPRING LEFT	
060	1144601-0000		2	GUIDE STUD	
110	312105-0327		2	SCREW M6S ISO 4017 M5X12 A480	
120	312115-0366		2	SCREW ISO4762 M6X12 A4 80	
TBA 0500S (See drawing on page: 2-32)					
010	1349319-0000		1	CANTILEVER	
030	1349320-0000		1	CATCH	
040	1143216-0000		1	SPRING	
050	1143215-0000		1	SPRING	
060	1144601-0000		2	GUIDE STUD	
110	312115-0374		2	SCREW ISO4762 M6X30 A4 80	
115	312605-0316		2	HEXAGON NUT, M6M M6 A280	
120	312115-0378		2	SCREW ISO4762 M6X40 A4 80	
170	1511556-0000		1	SET SCREW	
180	312605-0318		1	HEXAGON NUT, M6M M8 A280	
TBA 1000B (See drawing on page: 2-32)					
010	1347526-0000		1	BRACKET	
020	1478396-0000		1	STOP	
030	1478393-0000		1	CATCH	
040	1348483-0000		1	SPRING RIGHT	
050	1348484-0000		1	SPRING LEFT	
060	1144601-0000		2	GUIDE STUD	
100	312105-0368		4	SCREW M6S ISO 4017 M6X16 A480	
110	312115-0329		2	SCREW ISO4762 M5X16 A4 80	
130	315105-0153		4	WASHER BRB 6,4X12 RFR	
TBA 1000S (See drawing on page: 2-32)					
010	1347526-0000		1	BRACKET	
020	1478396-0000		1	STOP	
030	1478395-0000		1	CATCH	
040	1348483-0000		1	SPRING RIGHT	
050	1348484-0000		1	SPRING LEFT	
060	1144601-0000		2	GUIDE STUD	
100	312105-0368		4	SCREW M6S ISO 4017 M6X16 A480	
110	312115-0329		2	SCREW ISO4762 M5X16 A4 80	
130	315105-0153		4	WASHER BRB 6,4X12 RFR	
TBA 1000SQ (See drawing on page: 2-32)					
010	1349319-0000		1	CANTILEVER	
030	1349320-0000		1	CATCH	
040	1143216-0000		1	SPRING	
050	1143215-0000		1	SPRING	
060	1144601-0000		2	GUIDE STUD	
110	312105-0368		2	SCREW M6S ISO 4017 M6X16 A480	
115	312605-0316		2	HEXAGON NUT, M6M M6 A280	

Machine Type | Group Description | Used-In | Group Number | Page No

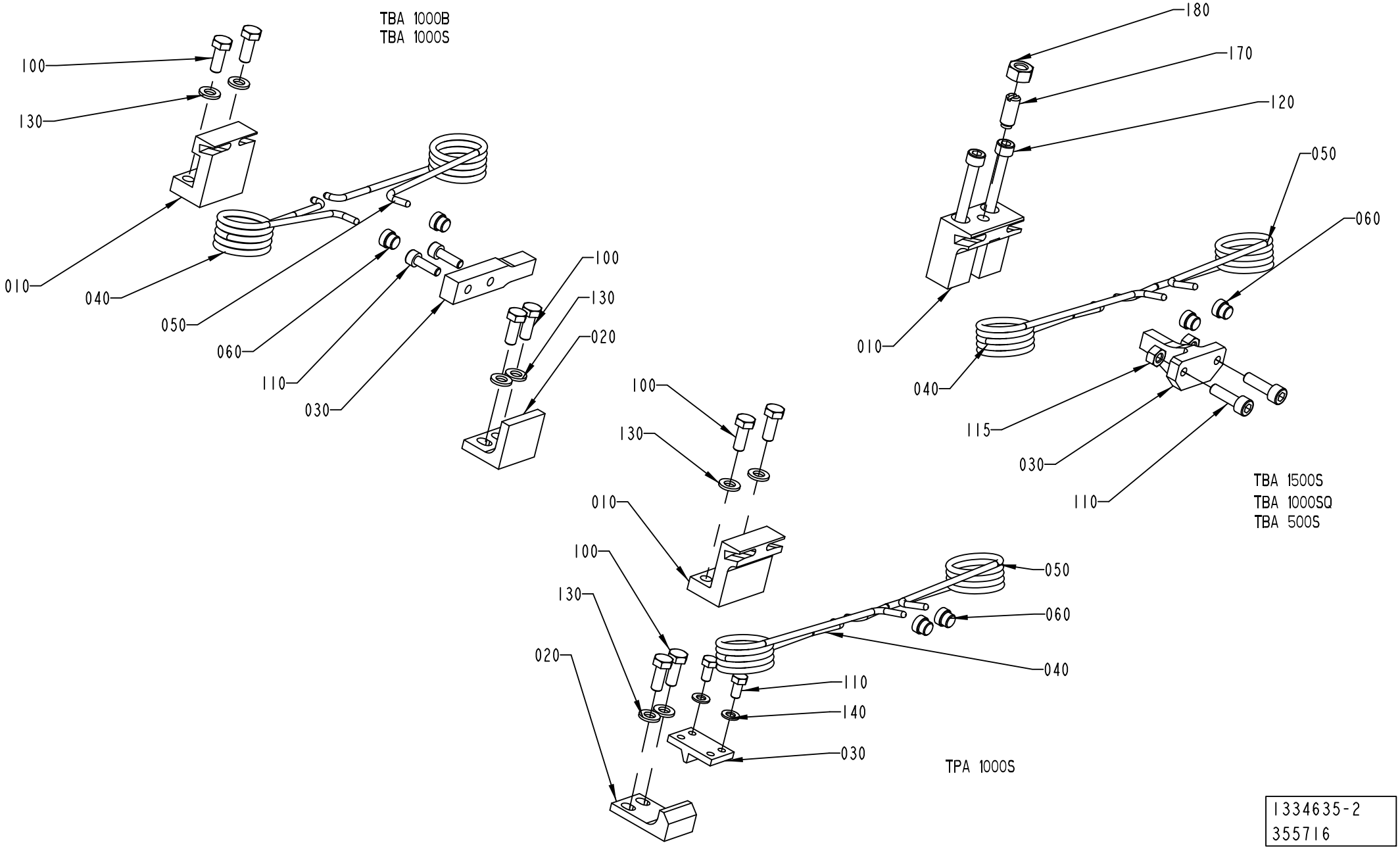

1334635-2
355716

Pos	Part No	UN	Qty	Description	Page No
TBA 1000SQ (Cont'd) (See drawing on page: 2-32)					
120	312115-0378		2	SCREW ISO4762 M6X40 A4 80	
170	1511556-0000		1	SET SCREW	
180	312605-0318		1	HEXAGON NUT, M6M M8 A280	
TBA 1500S (See drawing on page: 2-32)					
010	1349319-0000		1	CANTILEVER	
030	1349320-0000		1	CATCH	
040	1143216-0000		1	SPRING	
050	1143215-0000		1	SPRING	
060	1144601-0000		2	GUIDE STUD	
110	312115-0370		2	SCREW ISO4762 M6X20 A4 80	
115	312605-0316		2	HEXAGON NUT, M6M M6 A280	
120	312115-0378		2	SCREW ISO4762 M6X40 A4 80	
170	1511556-0000		1	SET SCREW	
180	312605-0318		1	HEXAGON NUT, M6M M8 A280	
TBA 1890S, TBA 2000S, TBA 1400B (See drawing on page: 2-40)					
010	2634515-0000		1	CANTILEVER	
040	2662165-0000		1	SPRING	
050	2662166-0000		1	SPRING	
075	2652896-0000		2	SHAFT	
080	2662167-0000		2	BUSHING	
090	2663376-0000		2	WASHER	
095	2663375-0000		2	WASHER	
100	312115-0367		2	SCREW ISO4762 M6X14 A4 80	
120	312105-0331		1	SCREW M6S ISO 4017 M5X20 A480	
125	312105-0341		2	SCREW M6S ISO 4014 M5X50 A480	
130	315105-0146		3	WASHER BRB 5,3X10 RFR	
190	312105-0367		2	SCREW M6S ISO 4017 M6X14 A480	
TPA 0330SQ (See drawing on page: 2-34)					
010	1539172-0000		1	CANTILEVER	
030	1539887-0000		1	CATCH	
040	1350263-0000		1	SPRING RIGHT	
050	1350264-0000		1	SPRING LEFT	
060	1144601-0000		2	GUIDE STUD	
110	312105-0325		2	SCREW M6S ISO 4017 M5X10 A480	
120	312115-0368		2	SCREW ISO4762 M6X16 A4 80	
TPA 0500SQ (See drawing on page: 2-36)					
010	2563666-0000		1	CANTILEVER	
030	2527725-0000		1	CATCH	
040	2679736-0000		1	SPRING	
050	2679735-0000		1	SPRING	
070	2563671-0000		1	SHAFT	
075	2563667-0000		2	SHAFT	
080	1538521-0000		2	BUSHING	
085	1539348-0000		2	HOLDER	
110	312105-0327		2	SCREW M6S ISO 4017 M5X12 A480	
120	312115-0366		2	SCREW ISO4762 M6X12 A4 80	
130	315105-0153		2	WASHER BRB 6,4X12 RFR	
190	312155-0339		2	SCREW DIN 7991 MF6S M5X40 A4 70	
200	312115-0367		2	SCREW ISO4762 M6X14 A4 80	
210	90005-0002		2	WASHER 16/6,7X1,5	
220	312105-0287		2	SCREW M6S ISO 4017 M4X8 A470	
TPA 1000SQ (See drawing on page: 2-38)					
010	1523475-0000		1	CANTILEVER	
020	2558921-0000		1	STOP	
025	2558923-0000		1	PARAGEM	
040	2557613-0000		1	SPRING	
050	2557612-0000		1	SPRING	
060	1144601-0000		2	GUIDE STUD	
070	2558929-0000		1	BAR	
100	312105-0368		10	SCREW M6S ISO 4017 M6X16 A480	
120	312105-0364		2	SCREW M6S ISO 4017 M6X10 A480	
130	315105-0153		10	WASHER BRB 6,4X12 RFR	
150	90062-0061		2	LOCK WASHER NORD-LOCK,6,5/10,8, T=2,2	

Machine Type | Group Description | Used-In | Group Number | Page No

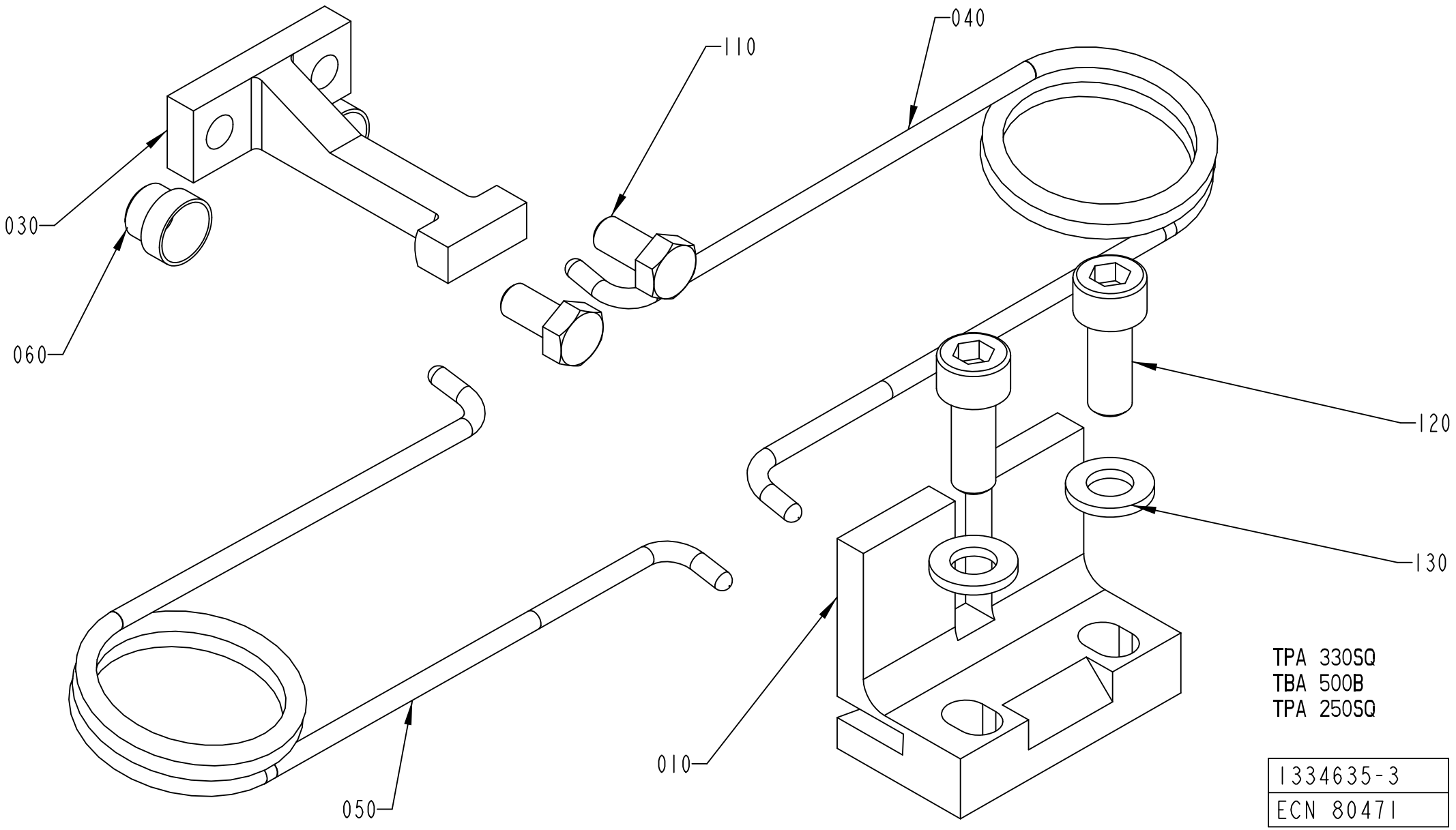
040
110
030
060
120
130
050
010
TPA 330SQ
TBA 500B
TPA 250SQ
1334635-3
ECN 80471

ECM: 383398 - 20090402
Group number: 1334635-0200
Assembly Drawing: 1334635-3_1_AA

This list covers pages from 2-30 to 2-41

Pos	Part No	UN	Qty	Description	Page No
SEE PREVIOUS LISTS PAGES: 2-31, 2-33.					

Pos	Part No	UN	Qty	Description	Page No

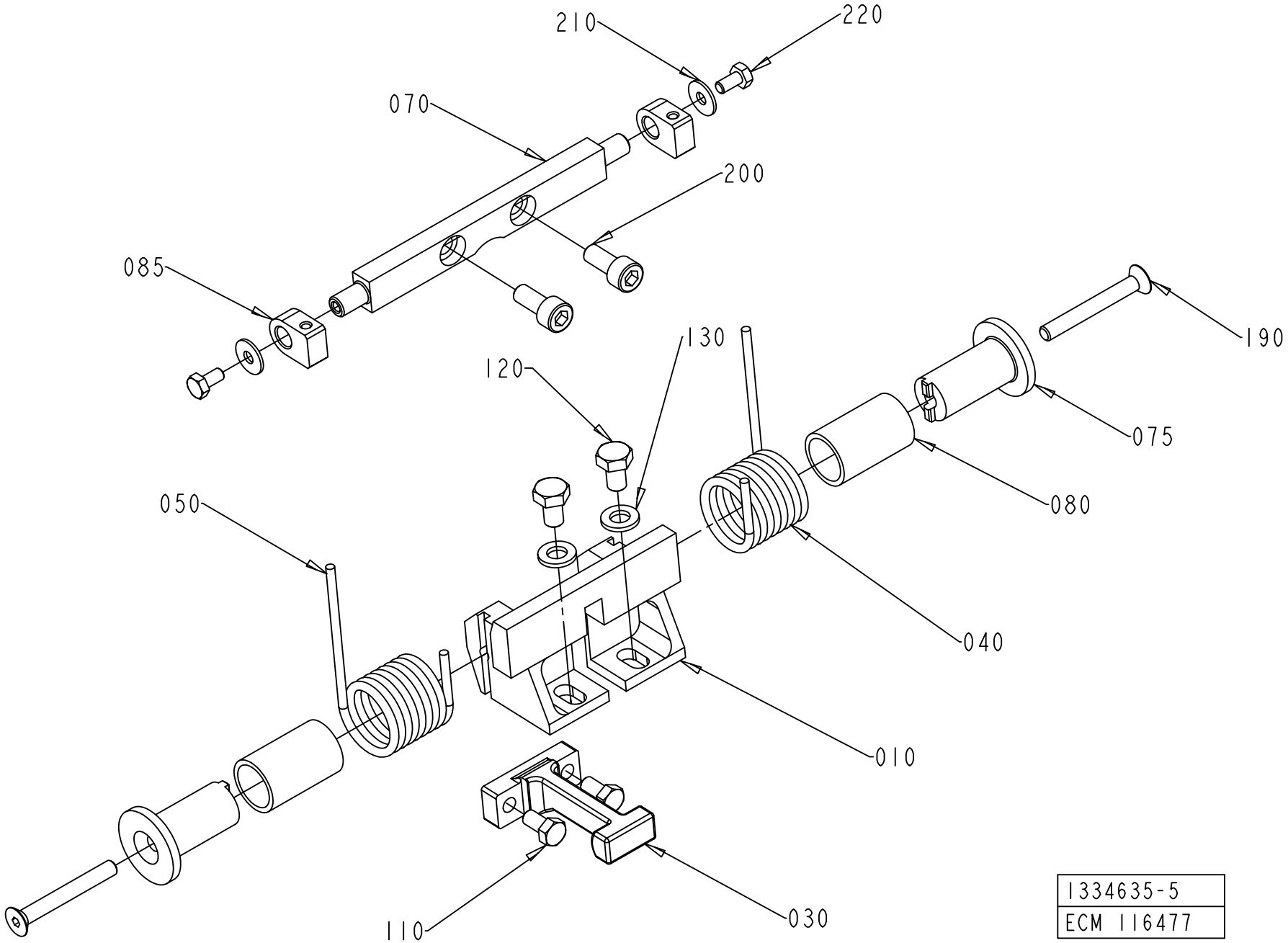

1334635-5
ECM 116477

ECM: 383398 - 20090402
Group number: 1334635-0200
Assembly Drawing: 1334635-5_1_AA

This list covers pages from 2-30 to 2-41

Pos	Part No	UN	Qty	Description	Page No
SEE PREVIOUS LISTS PAGES: 2-31, 2-33.					

Pos	Part No	UN	Qty	Description	Page No

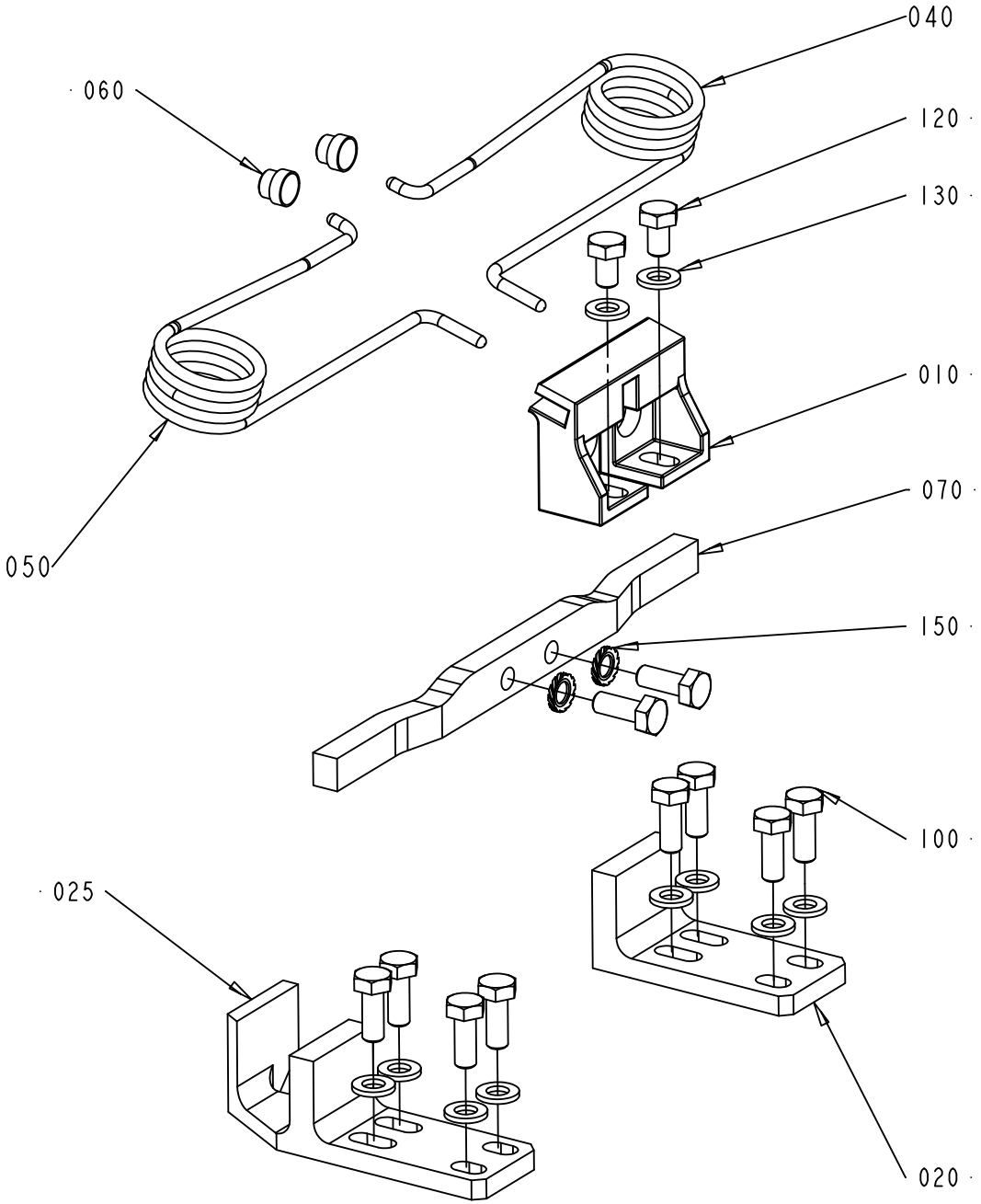

1334635-6
ECM 119888

ECM: 383398 - 20090402
Group number: 1334635-0200
Assembly Drawing: 1334635-6_1_AA

This list covers pages from 2-30 to 2-41

Pos	Part No	UN	Qty	Description	Page No
SEE PREVIOUS LISTS PAGES: 2-31, 2-33.					

Pos	Part No	UN	Qty	Description	Page No

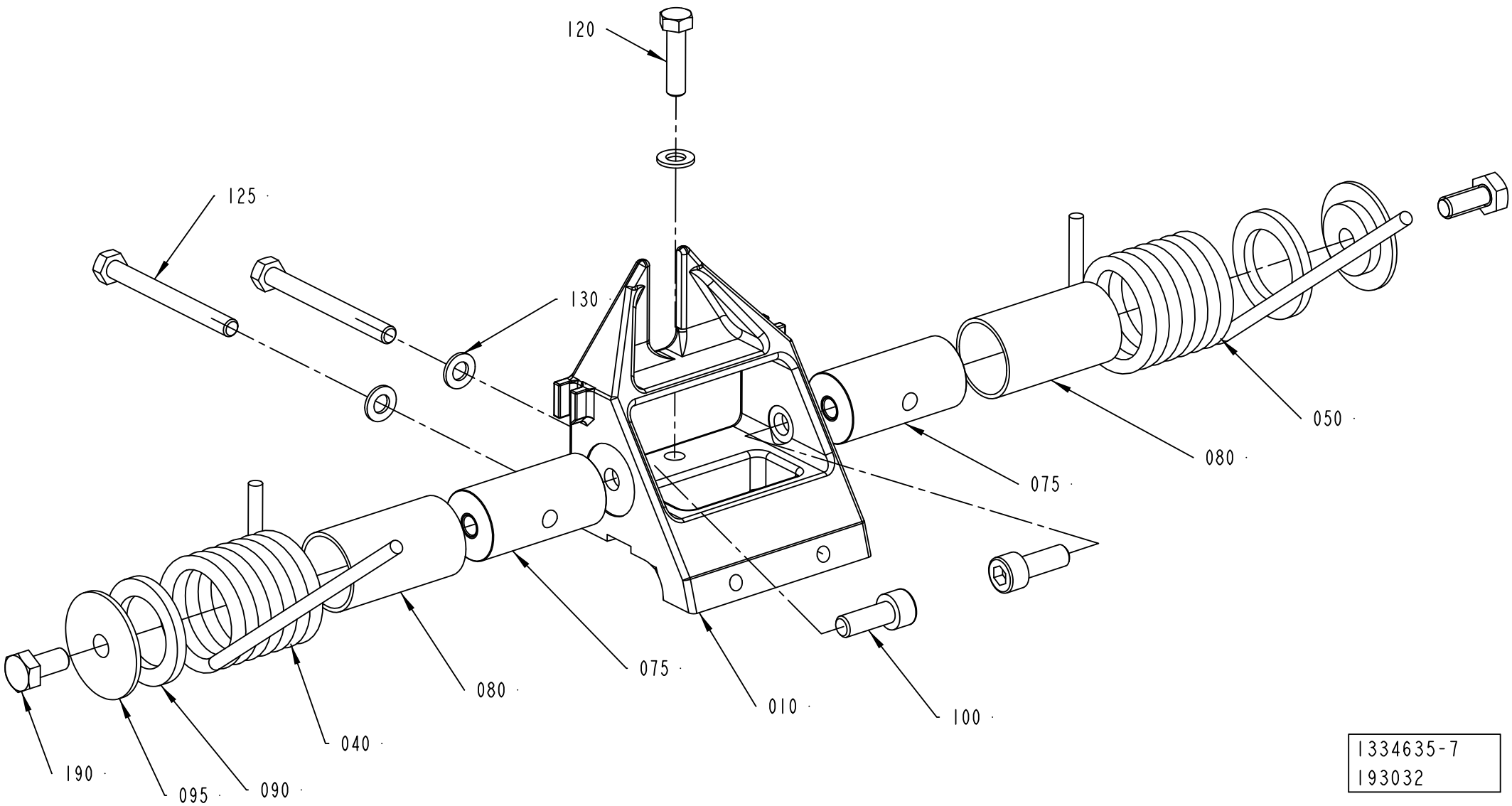

1334635-7
193032

ECM: 383398 - 20090402
Group number: 1334635-0200
Assembly Drawing: 1334635-7_1_AB

This list covers pages from 2-30 to 2-41

Pos	Part No	UN	Qty	Description	Page No
SEE PREVIOUS LISTS PAGES: 2-31, 2-33.					

Pos	Part No	UN	Qty	Description	Page No

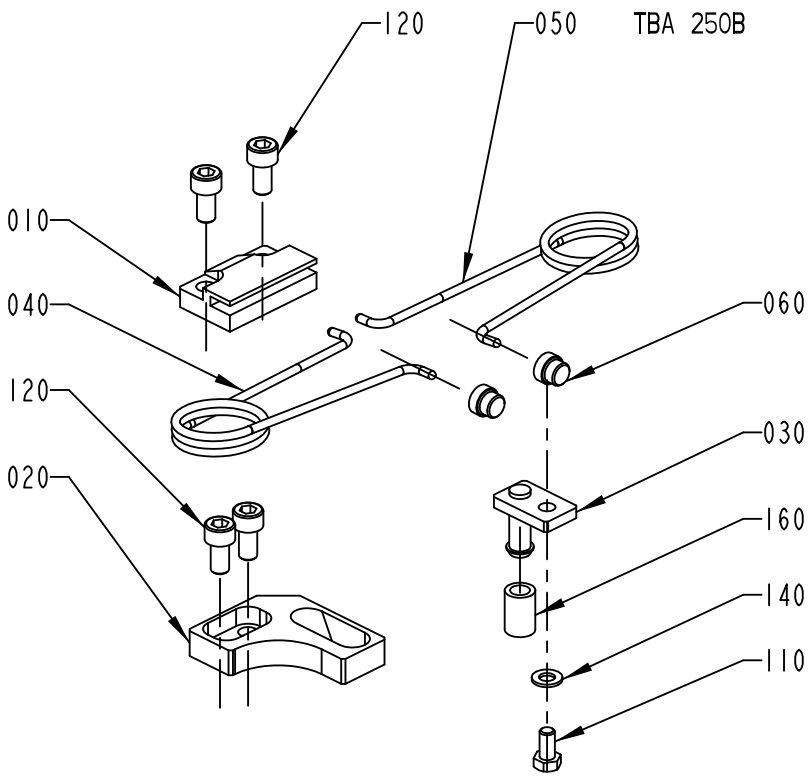

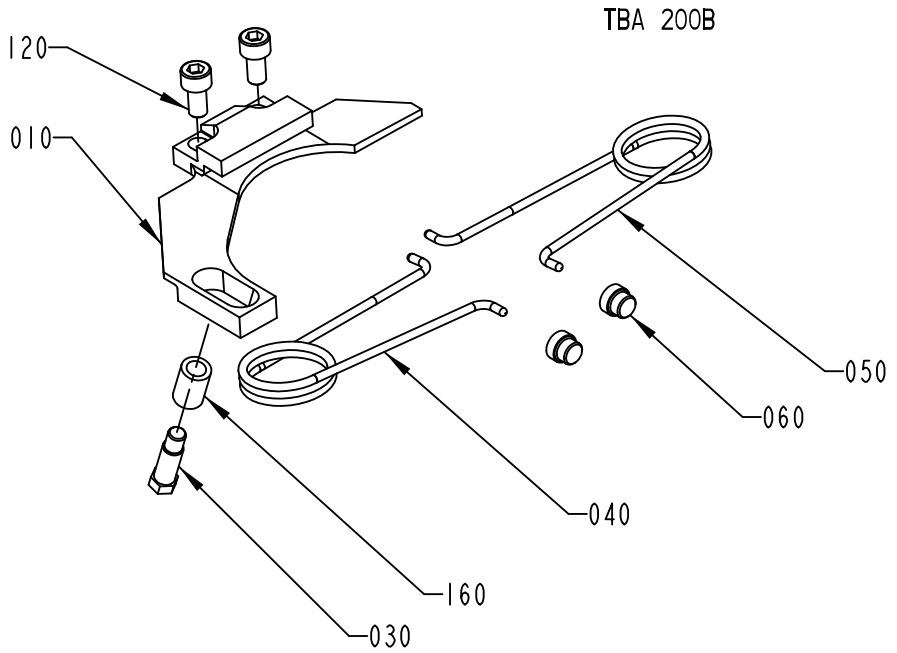

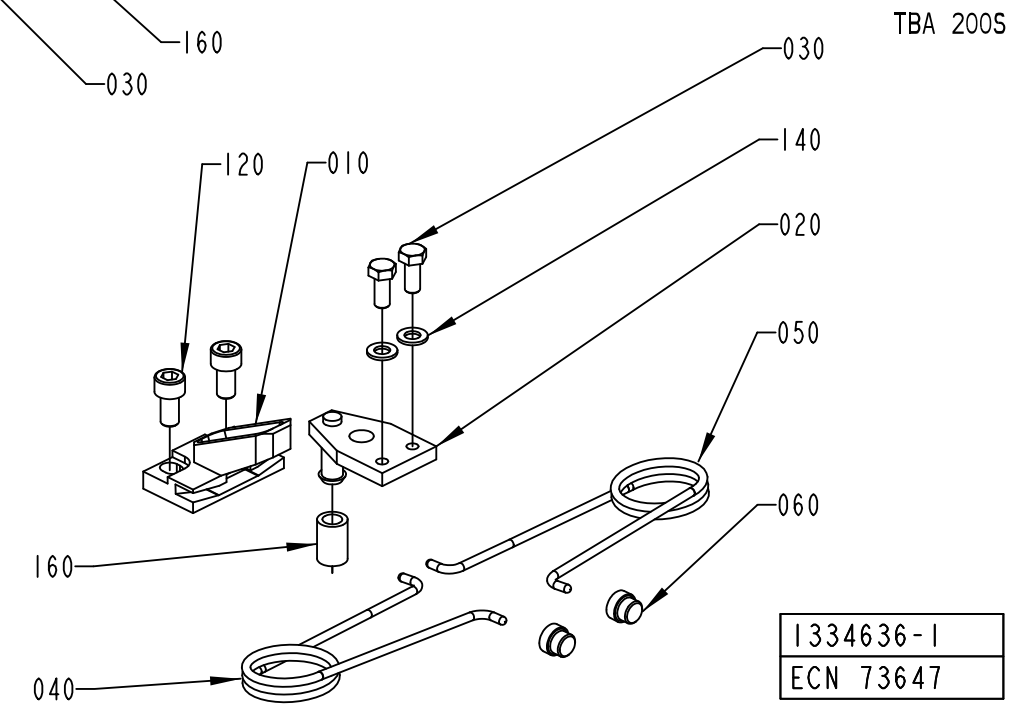

1334636-1
ECN 73647

ECM: 383397 - 20090402
Group number: 1334636-0200
Assembly Drawing: 1334636-1_1_AF

This list covers pages from 2-42 to 2-53

Pos	Part No	UN	Qty	Description	Page No
TBA 0200B (See drawing on page: 2-42)					
010	1512579-0000		1	BRACKET	
030	1346153-0000		1	STOP PIN	
040	1350263-0000		1	SPRING RIGHT	
050	1350264-0000		1	SPRING LEFT	
060	1144601-0000		2	GUIDE STUD	
120	312115-0366		2	SCREW ISO4762 M6X12 A4 80	
160	1317740-0000		1	RUBBER SLEEVE	
TBA 0200S (See drawing on page: 2-42)					
010	1317823-0000		1	CANTILEVER	
030	1317824-0000		1	CATCH	
040	1350263-0000		1	SPRING RIGHT	
050	1350264-0000		1	SPRING LEFT	
060	1144601-0000		2	GUIDE STUD	
110	312105-0327		2	SCREW M6S ISO 4017 M5X12 A480	
120	312115-0366		2	SCREW ISO4762 M6X12 A4 80	
140	315105-0146		2	WASHER BRB 5,3X10 RFR	
160	1317740-0000		1	RUBBER SLEEVE	
TBA 0250B (See drawing on page: 2-42)					
010	1317742-0000		1	CANTILEVER	
020	1317439-0000		1	CATCH	
030	1317440-0000		1	STOP PIN	
040	1350263-0000		1	SPRING RIGHT	
050	1350264-0000		1	SPRING LEFT	
060	1144601-0000		2	GUIDE STUD	
110	312105-0325		1	SCREW M6S ISO 4017 M5X10 A480	
120	312115-0366		4	SCREW ISO4762 M6X12 A4 80	
140	315105-0146		1	WASHER BRB 5,3X10 RFR	
160	1317740-0000		1	RUBBER SLEEVE	
TBA 0250S, TBA 0330S, TPA 0250SQ (See drawing on page: 2-46)					
010	1539172-0000		1	CANTILEVER	
030	2527725-0000		1	CATCH	
040	1350263-0000		1	SPRING RIGHT	
050	1350264-0000		1	SPRING LEFT	
060	1144601-0000		2	GUIDE STUD	
110	312105-0328		2	SCREW M6S ISO 4017 M5X14 A480	
120	312115-0368		2	SCREW ISO4762 M6X16 A4 80	
TBA 0500B (See drawing on page: 2-46)					
010	1539886-0000		1	CANTILEVER	
030	1539887-0000		1	CATCH	
040	1350263-0000		1	SPRING RIGHT	
050	1350264-0000		1	SPRING LEFT	
060	1144601-0000		2	GUIDE STUD	
110	312105-0327		2	SCREW M6S ISO 4017 M5X12 A480	
120	312115-0366		2	SCREW ISO4762 M6X12 A4 80	
TBA 0500S (See drawing on page: 2-44)					
010	1349319-0000		1	CANTILEVER	
030	1349320-0000		1	CATCH	
040	1143216-0000		1	SPRING	
050	1143215-0000		1	SPRING	
060	1144601-0000		2	GUIDE STUD	
110	312115-0374		2	SCREW ISO4762 M6X30 A4 80	
115	312605-0316		2	HEXAGON NUT, M6M M6 A280	
120	312115-0378		2	SCREW ISO4762 M6X40 A4 80	
170	1511556-0000		1	SET SCREW	
180	312605-0318		1	HEXAGON NUT, M6M M8 A280	
TBA 1000B (See drawing on page: 2-44)					
010	1347526-0000		1	BRACKET	
020	1478396-0000		1	STOP	
030	1478393-0000		1	CATCH	
040	1348483-0000		1	SPRING RIGHT	
050	1348484-0000		1	SPRING LEFT	
060	1144601-0000		2	GUIDE STUD	
100	312105-0368		4	SCREW M6S ISO 4017 M6X16 A480	
110	312115-0329		2	SCREW ISO4762 M5X16 A4 80	
130	315105-0153		4	WASHER BRB 6,4X12 RFR	
TBA 1000S (See drawing on page: 2-44)					
010	1347526-0000		1	BRACKET	
020	1478396-0000		1	STOP	
030	1478395-0000		1	CATCH	
040	1348483-0000		1	SPRING RIGHT	
050	1348484-0000		1	SPRING LEFT	
060	1144601-0000		2	GUIDE STUD	
100	312105-0368		4	SCREW M6S ISO 4017 M6X16 A480	
110	312115-0329		2	SCREW ISO4762 M5X16 A4 80	
130	315105-0153		4	WASHER BRB 6,4X12 RFR	
TBA 1000SQ (See drawing on page: 2-44)					
010	1349319-0000		1	CANTILEVER	
030	1349320-0000		1	CATCH	
040	1143216-0000		1	SPRING	
050	1143215-0000		1	SPRING	
060	1144601-0000		2	GUIDE STUD	
110	312105-0368		2	SCREW M6S ISO 4017 M6X16 A480	
115	312605-0316		2	HEXAGON NUT, M6M M6 A280	

Machine Type | Group Description | Used-In | Group Number | Page No

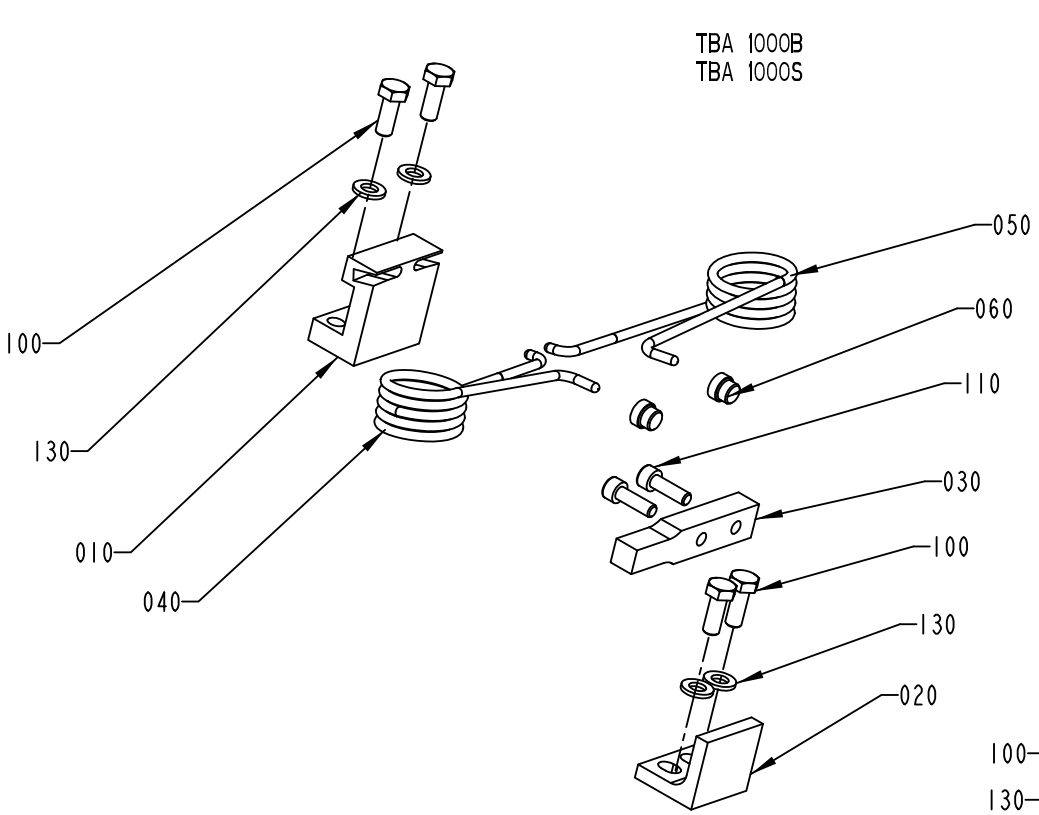

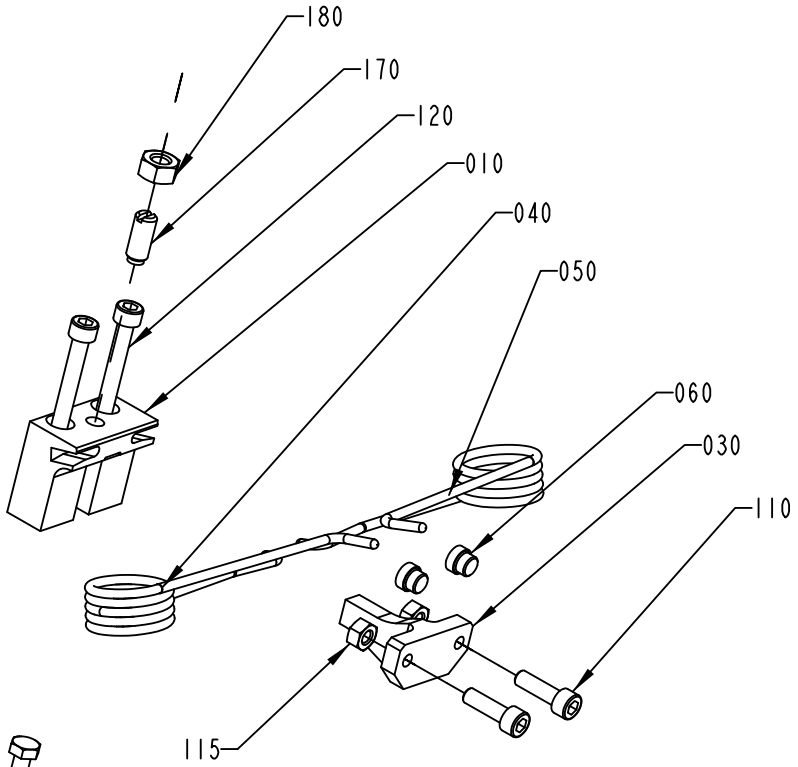

TBA 1500S
TBA 1000SQ
TBA 500S

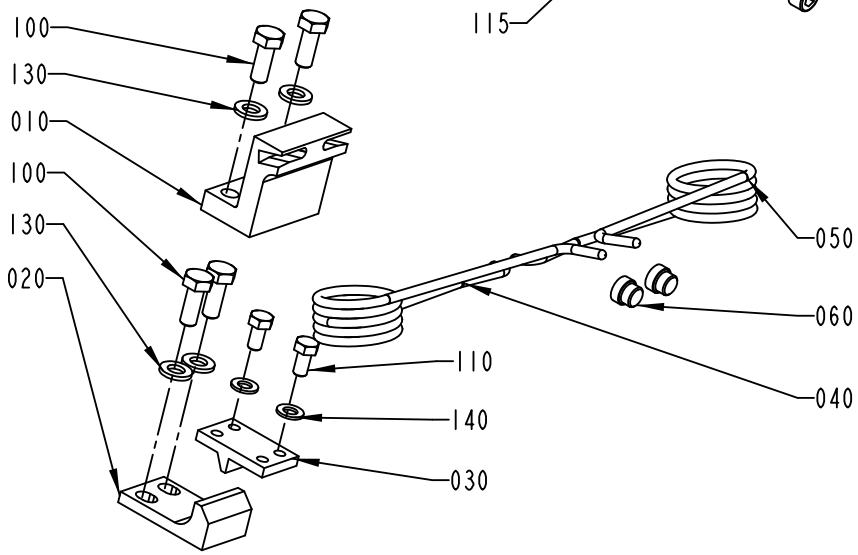

TPA 1000S

1334636-2
355716

Pos	Part No	UN	Qty	Description	Page No
TBA 1000SQ (Cont'd) (See drawing on page: 2-44)					
120	312115-0378		2	SCREW ISO4762 M6X40 A4 80	
170	1511556-0000		1	SET SCREW	
180	312605-0318		1	HEXAGON NUT, M6M M8 A280	
TBA 1500S (See drawing on page: 2-44)					
010	1349319-0000		1	CANTILEVER	
030	1349320-0000		1	CATCH	
040	1143216-0000		1	SPRING	
050	1143215-0000		1	SPRING	
060	1144601-0000		2	GUIDE STUD	
110	312115-0370		2	SCREW ISO4762 M6X20 A4 80	
115	312605-0316		2	HEXAGON NUT, M6M M6 A280	
120	312115-0378		2	SCREW ISO4762 M6X40 A4 80	
170	1511556-0000		1	SET SCREW	
180	312605-0318		1	HEXAGON NUT, M6M M8 A280	
TBA 1890S, TBA 2000S, TBA 1400B (See drawing on page: 2-52)					
010	2634515-0000		1	CANTILEVER	
040	2662165-0000		1	SPRING	
050	2662166-0000		1	SPRING	
075	2652896-0000		2	SHAFT	
080	2662167-0000		2	BUSHING	
090	2663376-0000		2	WASHER	
095	2663375-0000		2	WASHER	
100	312115-0367		2	SCREW ISO4762 M6X14 A4 80	
120	312105-0331		1	SCREW M6S ISO 4017 M5X20 A480	
125	312105-0341		2	SCREW M6S ISO 4014 M5X50 A480	
130	315105-0146		3	WASHER BRB 5,3X10 RFR	
190	312105-0367		2	SCREW M6S ISO 4017 M6X14 A480	
TPA 0330SQ (See drawing on page: 2-46)					
010	1539172-0000		1	CANTILEVER	
030	1539887-0000		1	CATCH	
040	1350263-0000		1	SPRING RIGHT	
050	1350264-0000		1	SPRING LEFT	
060	1144601-0000		2	GUIDE STUD	
110	312105-0325		2	SCREW M6S ISO 4017 M5X10 A480	
120	312115-0368		2	SCREW ISO4762 M6X16 A4 80	
TPA 0500SQ (See drawing on page: 2-48)					
010	2563666-0000		1	CANTILEVER	
030	2527725-0000		1	CATCH	
040	2679736-0000		1	SPRING	
050	2679735-0000		1	SPRING	
070	2563671-0000		1	SHAFT	
075	2563667-0000		2	SHAFT	
080	1538521-0000		2	BUSHING	
085	1539348-0000		2	HOLDER	
110	312105-0327		2	SCREW M6S ISO 4017 M5X12 A480	
120	312115-0366		2	SCREW ISO4762 M6X12 A4 80	
130	315105-0153		2	WASHER BRB 6,4X12 RFR	
190	312155-0339		2	SCREW DIN 7991 MF6S M5X40 A4 70	
200	312115-0367		2	SCREW ISO4762 M6X14 A4 80	
210	90005-0002		2	WASHER 16/6,7X1,5	
220	312105-0287		2	SCREW M6S ISO 4017 M4X8 A470	
TPA 1000SQ (See drawing on page: 2-50)					
010	1523475-0000		1	CANTILEVER	
020	2558920-0000		1	STOP	
025	2558922-0000		1	PARAGEMS	
040	2557613-0000		1	SPRING	
050	2557612-0000		1	SPRING	
060	1144601-0000		2	GUIDE STUD	
070	2558929-0000		1	BAR	
100	312105-0368		10	SCREW M6S ISO 4017 M6X16 A480	
120	312105-0364		2	SCREW M6S ISO 4017 M6X10 A480	
130	315105-0153		10	WASHER BRB 6,4X12 RFR	
150	90062-0061		2	LOCK WASHER NORD-LOCK,6,5/10,8, T=2,2	

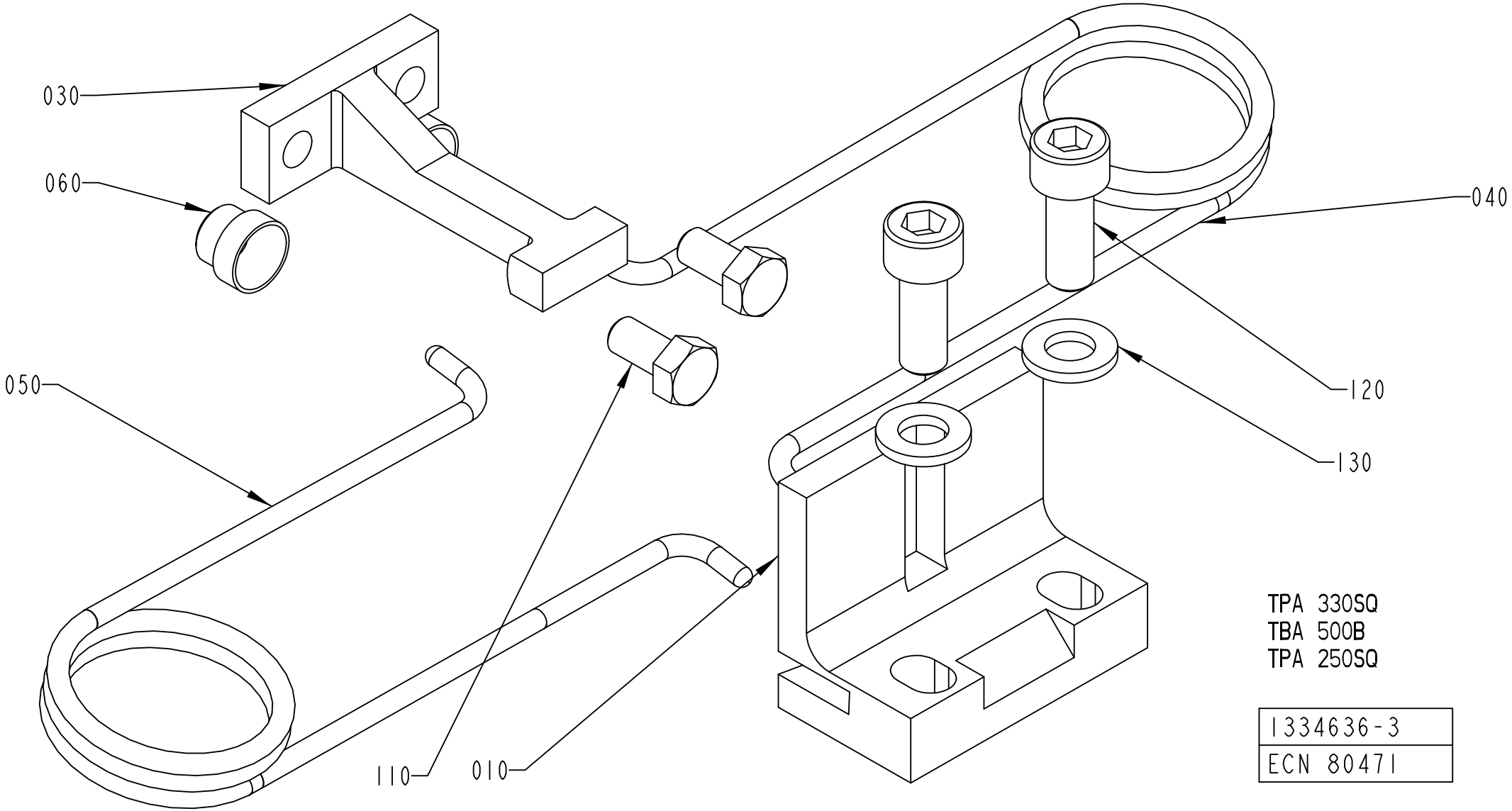
030
060
040
050
120
130
110
010
TPA 330SQ
TBA 500B
TPA 250SQ
1334636-3
ECN 80471

Pos	Part No	UN	Qty	Description	Page No
SEE PREVIOUS LISTS PAGES: 2-43, 2-45.					

Pos	Part No	UN	Qty	Description	Page No

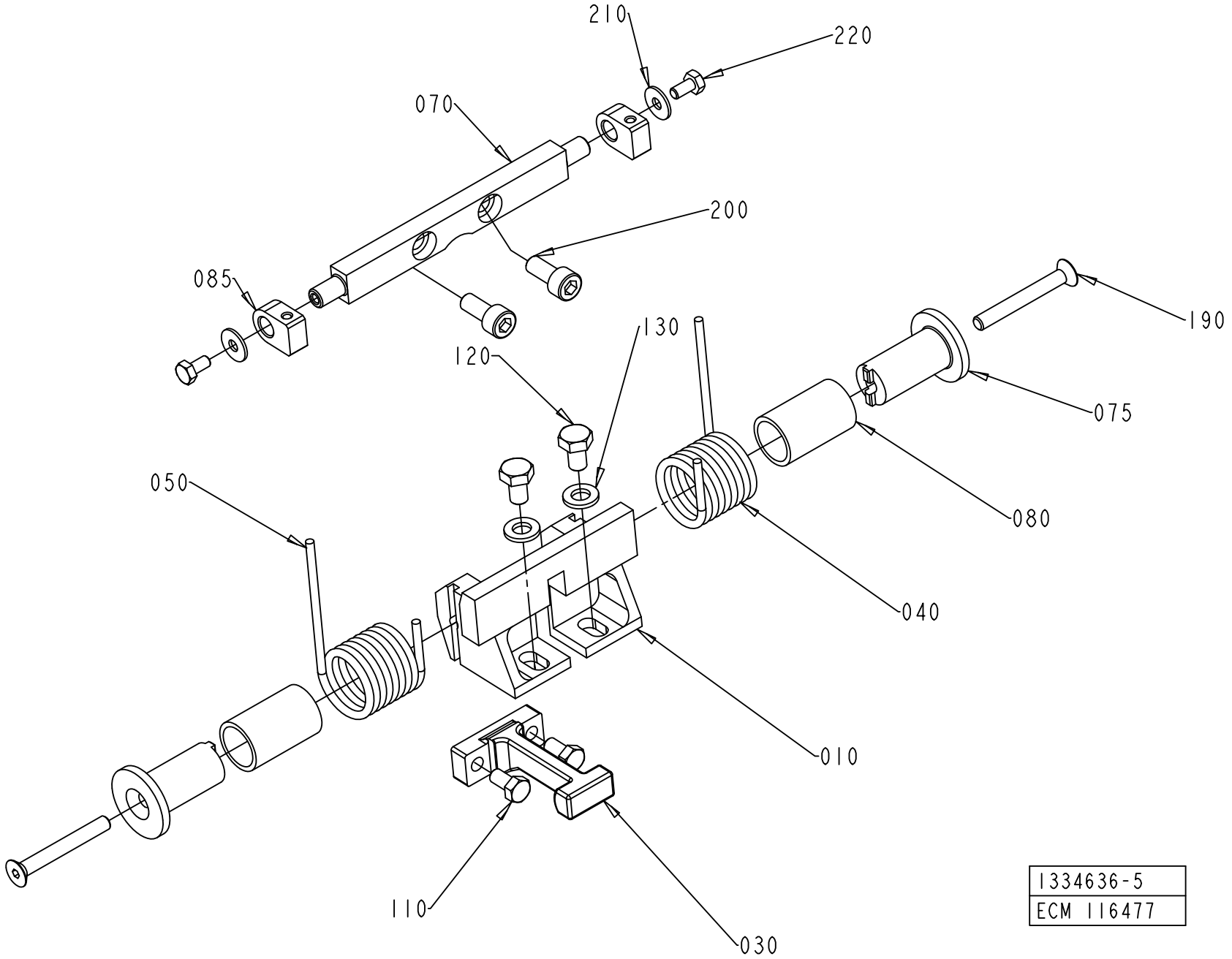
210
220
070
200
085
190
130
120
075
050
080
040
010
110
030
1334636-5
ECM 116477

ECM: 383397 - 20090402
Group number: 1334636-0200
Assembly Drawing: 1334636-5_1_AA

This list covers pages from 2-42 to 2-53

Pos	Part No	UN	Qty	Description	Page No
SEE PREVIOUS LISTS PAGES: 2-43, 2-45.					

Pos	Part No	UN	Qty	Description	Page No

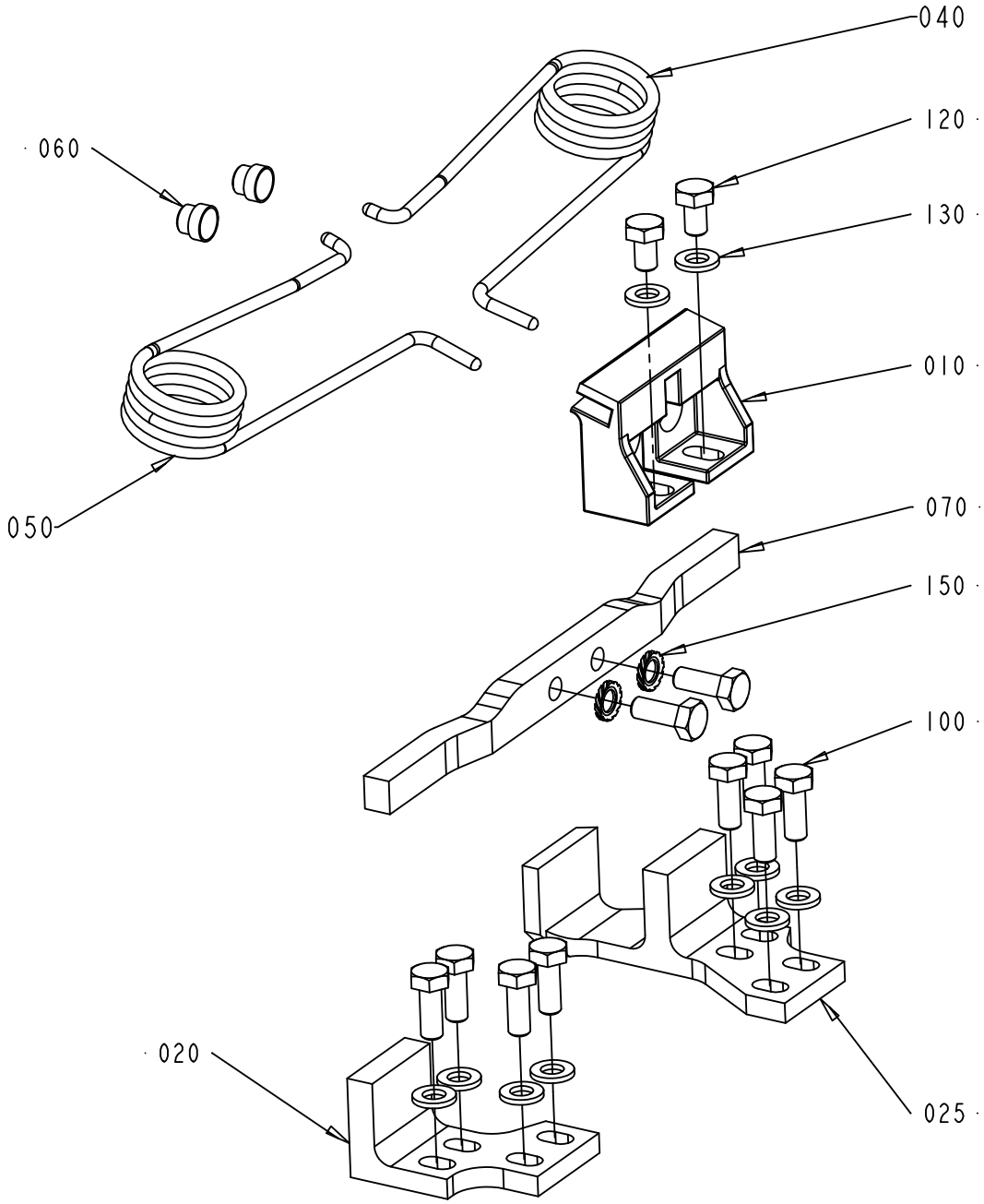

1334636-6
ECM 119888

Pos	Part No	UN	Qty	Description	Page No
SEE PREVIOUS LISTS PAGES: 2-43, 2-45.					

Pos	Part No	UN	Qty	Description	Page No

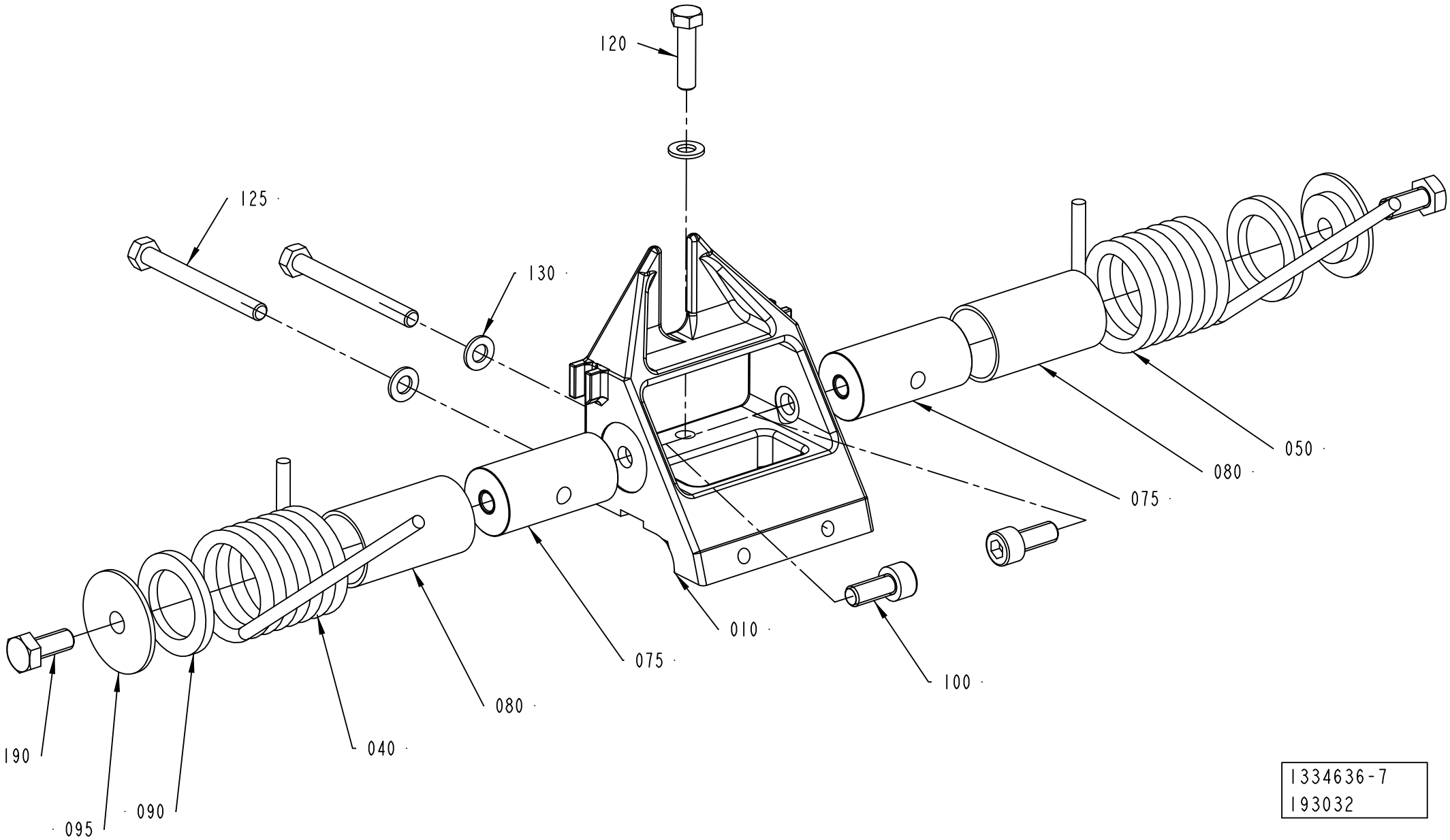

1334636-7
193032

ECM: 383397 - 20090402
Group number: 1334636-0200
Assembly Drawing: 1334636-7_1_AB

This list covers pages from 2-42 to 2-53

Pos	Part No	UN	Qty	Description	Page No
SEE PREVIOUS LISTS PAGES: 2-43, 2-45.					

Pos	Part No	UN	Qty	Description	Page No

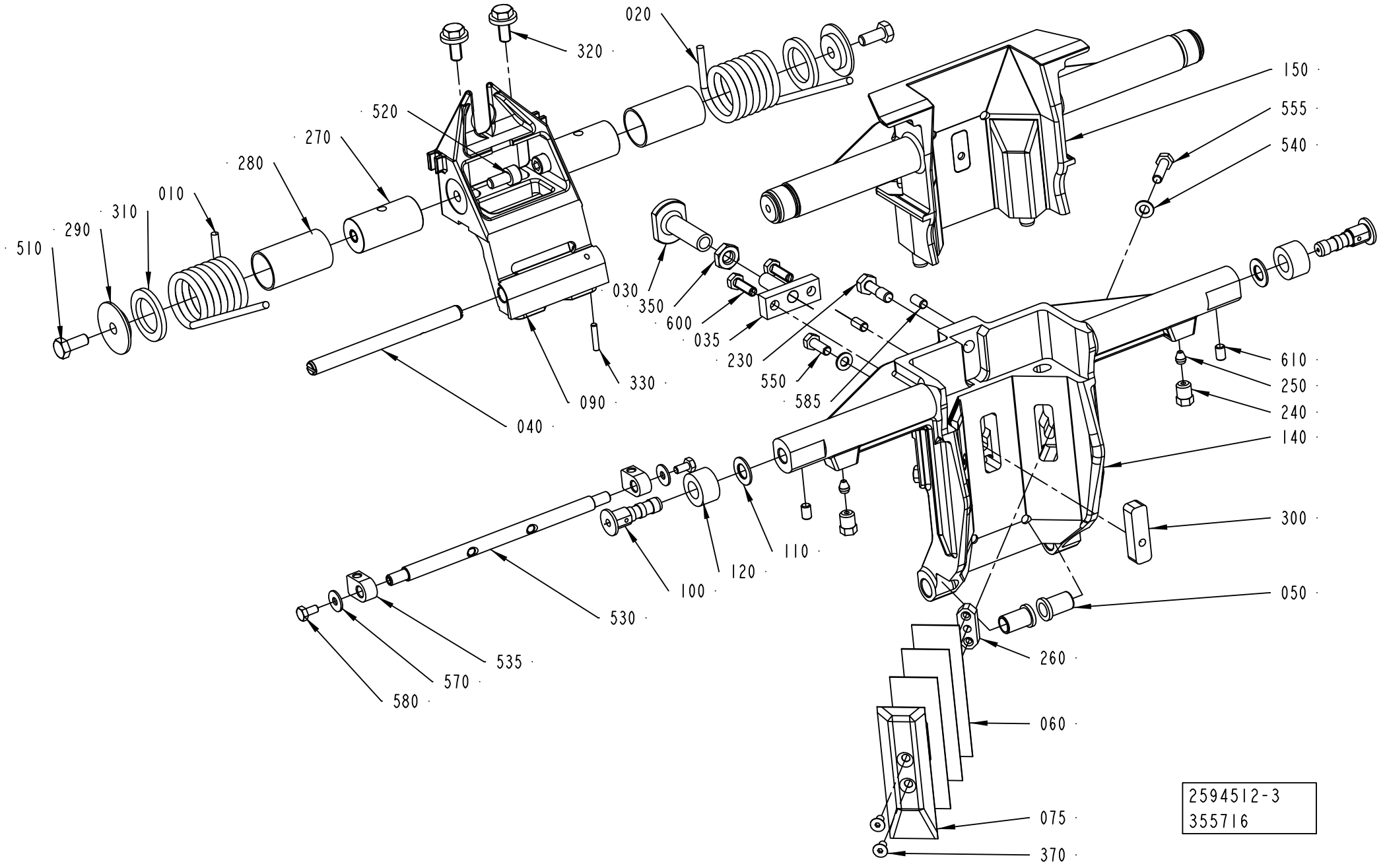
020
320
520
270
280
010
310
290
510
150
555
540
030
350
600
035
230
550
585
330
090
040
610
250
240
140
300
050
110
120
100
530
535
570
580
260
060
075
370
2594512-3
355716

ECM: 383392 - 20090402
Group number: 2594512-0200
Assembly Drawing: 2594512-3_1_AC

This list covers pages from 2-54 to 2-65

Pos	Part No	UN	Qty	Description	Page No
TBA 0200B (See drawing on page: 2-62)					
010	1350263-0000		1	SPRING RIGHT	
020	1350264-0000		1	SPRING LEFT	
030	1511339-0000		1	STOP	
040	1499327-0000		1	SHAFT	
050	2530313-0000		2	BUSHING	
063	1538637-0000		3	VOLUME SHIM	
065	1524310-0000		1	VOLUME BULGE	
070	1144601-0000		2	GUIDE STUD	
080	1499328-0000		1	STOPPER	
090	2605869-0000		1	FLAP HOLDER	
100	1512146-0000		2	AXLE PIN	
110	1512147-0000		2	WASHER	
120	1499355-0000		2	ROLLER	
130	2629237-0000		2	CAM	
140	2604493-0000		1	VOLUME FLAP	
320	312115-0366		2	SCREW ISO4762 M6X12 A4 80	
330	312318-0320		2	SCREW ISO4029 M5X5 A4	
340	312318-0323		2	SCREW ISO4029 M5X8 A4	
350	312812-0316		1	HEXAGON NUT, NY-LOCK M6 A480	
370	312155-0287		2	SCREW DIN 7991 MF6S M4X8 A4 70	
410	312155-0325		2	SCREW DIN 7991 MF6S M5X10 A4 70	
430	312115-0289		4	SCREW ISO4762 M4X10 A4 80	
500	321136-0140		2	BUSHING, 10X12X10 MM	
TBA 0200M (See drawing on page: 2-62)					
010	2771123-0000		1	SPRING	
020	2771122-0000		1	SPRING	
030	2768909-0000		1	STOP	
040	1499327-0000		1	SHAFT	
050	2530313-0000		2	BUSHING	
063	2640139-0000		3	VOLUME SHIM	
065	2640138-0000		1	VOLUME BULGE	
070	1144601-0000		2	GUIDE STUD	
080	2846670-0000		1	STOPPER	
090	2768910-0000		1	FLAP HOLDER	
100	1512146-0000		2	AXLE PIN	
110	1512147-0000		2	WASHER	
120	1499355-0000		2	ROLLER	
130	2649443-0000		2	CAM	
140	2639866-0000		1	VOLUME FLAP	
320	312115-0366		2	SCREW ISO4762 M6X12 A4 80	
330	312318-0320		2	SCREW ISO4029 M5X5 A4	
340	312318-0323		2	SCREW ISO4029 M5X8 A4	
350	312812-0318		1	HEXAGON NUT, NY-LOCK M8 A480	
370	312155-0287		2	SCREW DIN 7991 MF6S M4X8 A4 70	
410	312155-0325		2	SCREW DIN 7991 MF6S M5X10 A4 70	
430	312115-0291		4	SCREW ISO4762 M4X12 A4 80	
500	321136-0140		2	BUSHING, 10X12X10 MM	
TBA 0200SQ (See drawing on page: 2-64)					
010	2746136-0000		1	SPRING	
020	2746137-0000		1	SPRING	
030	2676934-0000		1	STOP	
040	2668315-0000		1	SHAFT	
050	2676933-0000		2	BUSHING	
063	2678717-0000		6	VOLUME SHIM	
065	2678838-0000		1	VOLUME BULGE	
070	1144601-0000		2	GUIDE STUD	
080	2773929-0000		1	STOPPER	
090	2668312-0000		1	FLAP HOLDER	
100	1512146-0000		2	AXLE PIN	
110	1512147-0000		2	WASHER	
120	1499355-0000		2	ROLLER	
130	2678713-0000		2	CAM	
140	2747138-0000		1	VOLUME FLAP	
320	312115-0366		2	SCREW ISO4762 M6X12 A4 80	
330	312318-0320		2	SCREW ISO4029 M5X5 A4	
340	312318-0320		2	SCREW ISO4029 M5X5 A4	
350	312812-0316		1	HEXAGON NUT, NY-LOCK M6 A480	
370	312155-0287		2	SCREW DIN 7991 MF6S M4X8 A4 70	
410	312155-0323		2	SCREW DIN 7991 MF6S M5X8 A4 70	
440	312115-0289		4	SCREW ISO4762 M4X10 A4 80	
500	321136-0140		2	BUSHING, 10X12X10 MM	
TBA 0250B (See drawing on page: 2-64)					
010	2771123-0000		1	SPRING	
020	2771122-0000		1	SPRING	
030	2768909-0000		1	STOP	
040	1499327-0000		1	SHAFT	
050	2530313-0000		2	BUSHING	
063	2605166-0000		4	VOLUME SHIM	
065	2609925-0000		1	VOLUME BULGE	
070	1144601-0000		2	GUIDE STUD	
080	2838351-0000		1	STOPPER	
090	2768910-0000		1	FLAP HOLDER	
100	1512146-0000		2	AXLE PIN	

Machine Type | Group Description | Used-In | Group Number | Page No

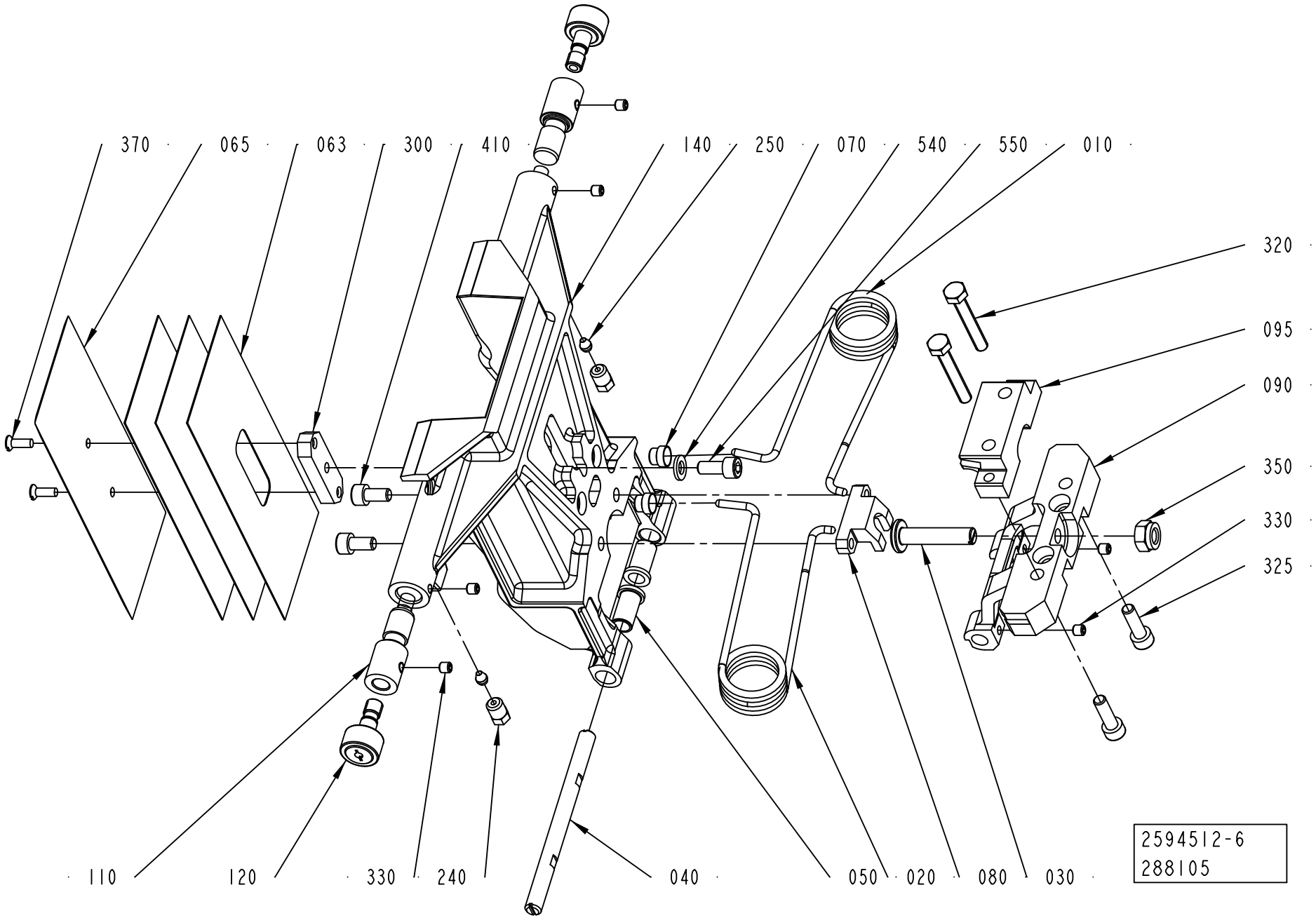
370
065
063
300
410
140
250
070
540
550
010
320
095
090
350
330
325
110
120
330
240
040
050
020
080
030
2594512-6
288105

ECM: 383392 - 20090402
Group number: 2594512-0200
Assembly Drawing: 2594512-6_1_AA

This list covers pages from 2-54 to 2-65

Pos	Part No	UN	Qty	Description	Page No
TBA 0250B (Cont'd) (See drawing on page: 2-64)					
110	1512147-0000		2	WASHER	
120	1499355-0000		2	ROLLER	
130	2606218-0000		2	CAM	
140	2605191-0000		1	VOLUME FLAP	
320	312115-0366		2	SCREW ISO4762 M6X12 A4 80	
330	312318-0320		2	SCREW ISO4029 M5X5 A4	
340	312318-0323		2	SCREW ISO4029 M5X8 A4	
350	312812-0318		1	HEXAGON NUT, NY-LOCK M8 A480	
370	312155-0287		2	SCREW DIN 7991 MF6S M4X8 A4 70	
410	312155-0327		2	SCREW DIN 7991 MF6S M5X12 A4 70	
440	312115-0287		4	SCREW ISO4762 M4X8 A4 80	
500	321136-0140		2	BUSHING, 10X12X10 MM	
TBA 0250S (See drawing on page: 2-62)					
010	2771123-0000		1	SPRING	
020	2771122-0000		1	SPRING	
030	2768909-0000		1	STOP	
040	1499327-0000		1	SHAFT	
050	2530313-0000		2	BUSHING	
063	2662169-0000		3	VOLUME SHIM	
065	2662168-0000		1	VOLUME BULGE	
070	1144601-0000		2	GUIDE STUD	
080	2768908-0000		1	STOPPER	
090	2768910-0000		1	FLAP HOLDER	
100	1512146-0000		2	AXLE PIN	
110	1512147-0000		2	WASHER	
120	1499355-0000		2	ROLLER	
130	2662431-0000		2	CAM	
140	2661451-0000		1	VOLUME FLAP	
320	312115-0366		2	SCREW ISO4762 M6X12 A4 80	
330	312318-0320		2	SCREW ISO4029 M5X5 A4	
340	312318-0323		2	SCREW ISO4029 M5X8 A4	
350	312812-0318		1	HEXAGON NUT, NY-LOCK M8 A480	
370	312155-0287		2	SCREW DIN 7991 MF6S M4X8 A4 70	
410	312155-0327		2	SCREW DIN 7991 MF6S M5X12 A4 70	
430	312115-0293		4	SCREW ISO4762 M4X16 A4 80	
500	321136-0140		2	BUSHING, 10X12X10 MM	
TBA 0250SQ (See drawing on page: 2-64)					
010	2746136-0000		1	SPRING	
020	2746137-0000		1	SPRING	
030	2839822-0000		1	STOP	
040	2668315-0000		1	SHAFT	
050	2676933-0000		2	BUSHING	
063	2678839-0000		6	VOLUME SHIM	
065	2678840-0000		1	VOLUME BULGE	
070	1144601-0000		2	GUIDE STUD	
080	2839679-0000		1	STOPPER	
090	2839678-0000		1	FLAP HOLDER	
100	1512146-0000		2	AXLE PIN	
110	1512147-0000		2	WASHER	
120	1499355-0000		2	ROLLER	
130	2678714-0000		2	CAM	
140	2747142-0000		1	VOLUME FLAP	
320	312115-0366		2	SCREW ISO4762 M6X12 A4 80	
330	312318-0320		2	SCREW ISO4029 M5X5 A4	
340	312318-0320		2	SCREW ISO4029 M5X5 A4	
350	312812-0318		1	HEXAGON NUT, NY-LOCK M8 A480	
370	312155-0287		2	SCREW DIN 7991 MF6S M4X8 A4 70	
410	312155-0323		2	SCREW DIN 7991 MF6S M5X8 A4 70	
440	312115-0289		4	SCREW ISO4762 M4X10 A4 80	
500	321136-0140		2	BUSHING, 10X12X10 MM	
TBA 0330S (See drawing on page: 2-62)					
010	2771123-0000		1	SPRING	
020	2771122-0000		1	SPRING	
030	2768909-0000		1	STOP	
040	1499327-0000		1	SHAFT	
050	2530313-0000		2	BUSHING	
063	2654290-0000		3	VOLUME SHIM	
065	979931-0000		1	VOLUME BULGE	
070	1144601-0000		2	GUIDE STUD	
080	2768908-0000		1	STOPPER	
090	2768910-0000		1	FLAP HOLDER	
100	1512146-0000		2	AXLE PIN	
110	1512147-0000		2	WASHER	
120	1499355-0000		2	ROLLER	
130	2629236-0000		2	CAM	
140	2604495-0000		1	VOLUME FLAP	
320	312115-0366		2	SCREW ISO4762 M6X12 A4 80	
330	312318-0320		2	SCREW ISO4029 M5X5 A4	
340	312318-0323		2	SCREW ISO4029 M5X8 A4	
350	312812-0318		1	HEXAGON NUT, NY-LOCK M8 A480	
370	312155-0287		2	SCREW DIN 7991 MF6S M4X8 A4 70	
410	312155-0327		2	SCREW DIN 7991 MF6S M5X12 A4 70	
430	312115-0293		4	SCREW ISO4762 M4X16 A4 80	

Machine Type | Group Description | Used-In | Group Number | Page No

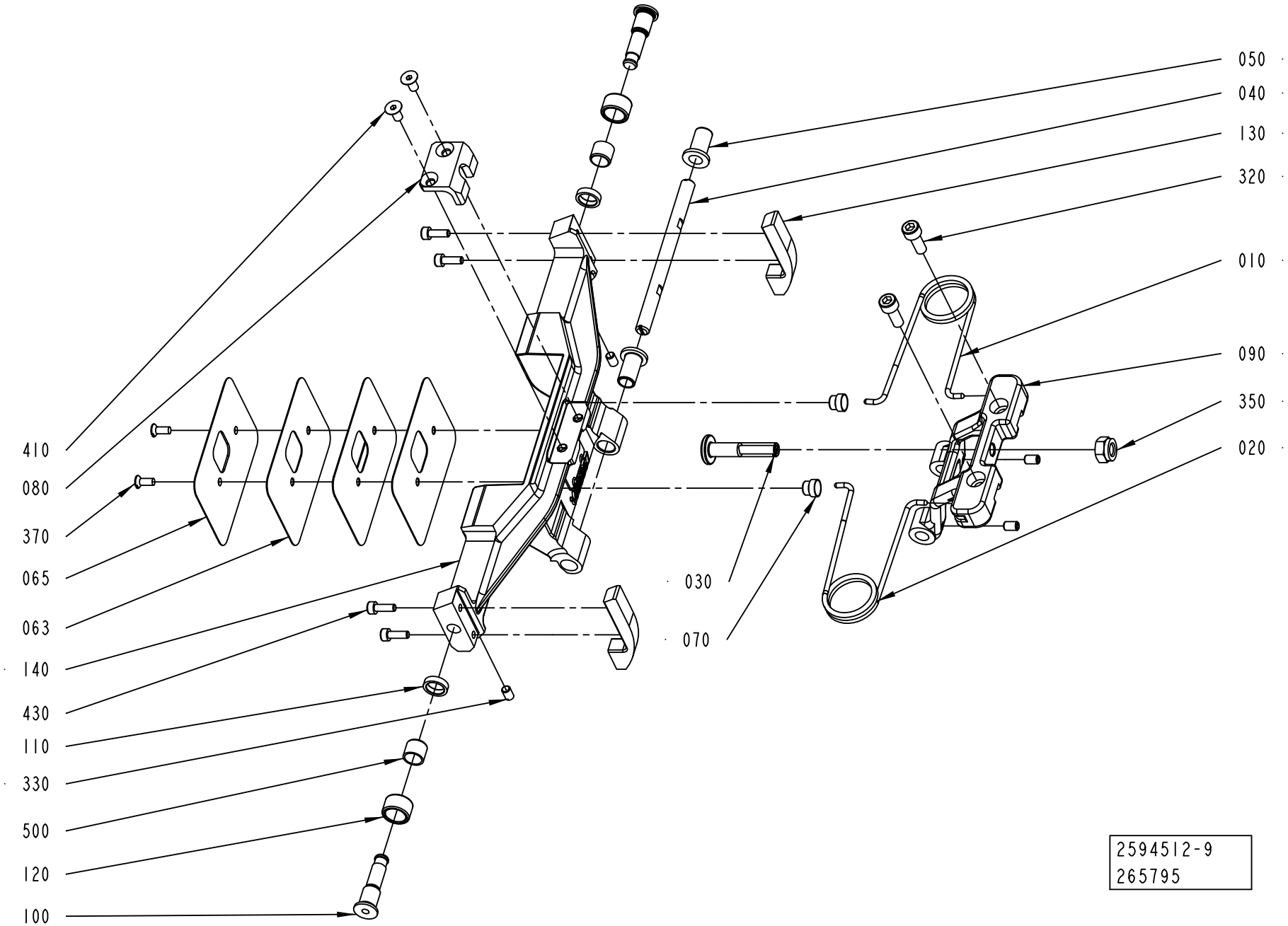
050
040
130
320
010
090
350
020
030
070
410
080
370
065
063
140
430
110
330
500
120
100
2594512-9
265795

ECM: 383392 - 20090402
Group number: 2594512-0200
Assembly Drawing: 2594512-9_1_AA

This list covers pages from 2-54 to 2-65

Pos	Part No	UN	Qty	Description	Page No
TBA 0330S (Cont'd) (See drawing on page: 2-62)					
500	321136-0140		2	BUSHING, 10X12X10 MM	
TBA 0500B (See drawing on page: 2-58)					
010	1350263-0000		1	SPRING RIGHT	
020	1350264-0000		1	SPRING LEFT	
030	2725392-0000		1	STOP	
040	1487946-0000		1	SHAFT	
050	1487948-0000		2	BUSHING	
063	2844777-0000		3	VOLUME SHIM	
065	2844776-0000		1	VOLUME BULGE	
070	1144601-0000		2	GUIDE STUD	
080	2838629-0000		1	STOPPER	
090	2838479-0000		1	FLAP HOLDER	
100	1512146-0000		2	AXLE PIN	
110	1512147-0000		2	WASHER	
120	1499355-0000		2	ROLLER	
130	1499350-0000		2	CAM	
140	2839175-0000		1	VOLUME FLAP	
320	312115-0366		2	SCREW ISO4762 M6X12 A4 80	
330	312318-0323		2	SCREW ISO4029 M5X8 A4	
340	312318-0323		2	SCREW ISO4029 M5X8 A4	
350	312812-0318		1	HEXAGON NUT, NY-LOCK M8 A480	
370	312145-0289		2	SCREW ISO 2009 MFS M4X10 A4	
410	312155-0325		2	SCREW DIN 7991 MF6S M5X10 A4 70	
430	312115-0291		4	SCREW ISO4762 M4X12 A4 80	
500	321136-0140		2	BUSHING, 10X12X10 MM	
TBA 0500SQ (See drawing on page: 2-56)					
010	2771123-0000		1	SPRING	
020	2771122-0000		1	SPRING	
030	2832350-0000		1	STOP	
040	2817789-0000		1	SHAFT	
050	2829261-0000		2	BUSHING	
063	2827055-0000		3	VOLUME SHIM	
065	2846997-0000		1	VOLUME BULGE	
070	1144601-0000		2	GUIDE STUD	
080	2826596-0000		1	STOPPER	
090	2812890-0000		1	FLAP HOLDER	
120	2846185-0000		2	ROLLER	
140	2871119-0000		1	VOLUME FLAP	
320	312115-0366		2	SCREW ISO4762 M6X12 A4 80	
330	312318-0320		2	SCREW ISO4029 M5X5 A4	
340	312318-0320		2	SCREW ISO4029 M5X5 A4	
350	312812-0318		1	HEXAGON NUT, NY-LOCK M8 A480	
370	312145-0289		2	SCREW ISO 2009 MFS M4X10 A4	
410	312155-0325		2	SCREW DIN 7991 MF6S M5X10 A4 70	
TBA 1000B (See drawing on page: 2-62)					
010	1348483-0000		1	SPRING RIGHT	
020	1348484-0000		1	SPRING LEFT	
030	2725392-0000		1	STOP	
040	1487946-0000		1	SHAFT	
050	1487948-0000		2	BUSHING	
063	1511337-0000		3	VOLUME SHIM	
065	26075-0000		1	VOLUME BULGE	
070	1144601-0000		2	GUIDE STUD	
080	2725393-0000		1	STOPPER	
090	2725394-0000		1	FLAP HOLDER	
090	1499345-0000		1	FLAP HOLDER	
100	1512146-0000		2	AXLE PIN	
110	1512147-0000		2	WASHER	
120	1499355-0000		2	ROLLER	
130	1499356-0000		2	CAM	
140	1499358-0000		1	VOLUME FLAP	
320	312115-0366		2	SCREW ISO4762 M6X12 A4 80	
330	312318-0323		2	SCREW ISO4029 M5X8 A4	
340	312318-0323		2	SCREW ISO4029 M5X8 A4	
350	312812-0318		1	HEXAGON NUT, NY-LOCK M8 A480	
370	312141-0222		2	SCREW ISO 2009 MFS M3X8 4.8 EL.PL	
410	312115-0331		1	SCREW ISO4762 M5X20 A4 80	
430	312115-0287		4	SCREW ISO4762 M4X8 A4 80	
500	321136-0140		2	BUSHING, 10X12X10 MM	
TBA 1000SQ (See drawing on page: 2-56)					
010	1143216-0000		1	SPRING	
020	1143215-0000		1	SPRING	
030	2832351-0000		1	STOP	
040	2817789-0000		1	SHAFT	
050	2829261-0000		2	BUSHING	
063	1487627-0000		3	VOLUME SHIM	
065	1487626-0000		1	VOLUME BULGE	
070	1144601-0000		2	GUIDE STUD	
080	2825378-0000		1	STOPPER	
090	2812890-0000		1	FLAP HOLDER	
095	2825377-0000		1	CANTILEVER	
110	2859597-0000		2	SPACER	
120	2846185-0000		2	ROLLER	

Machine Type | Group Description | Used-In | Group Number | Page No

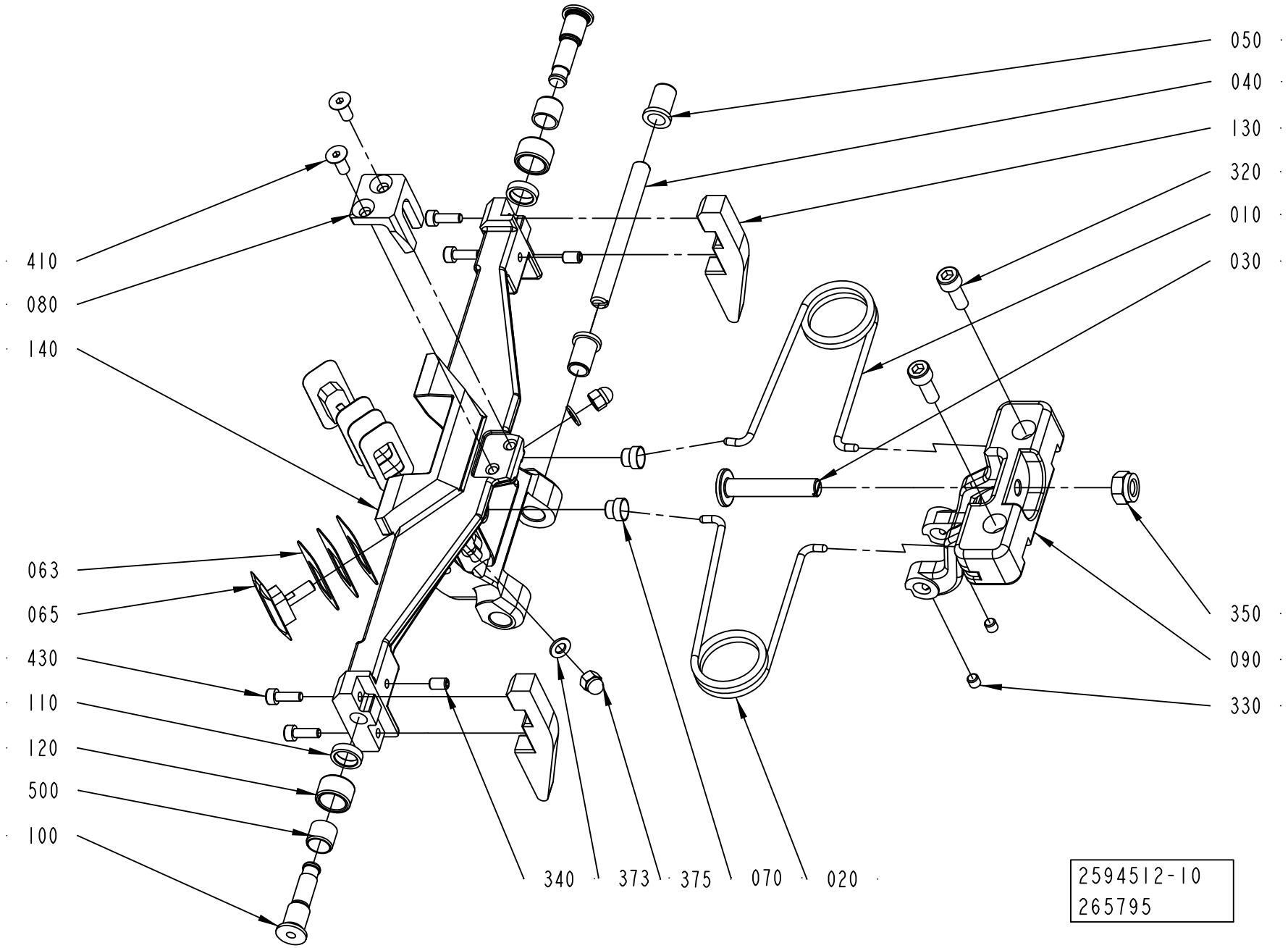
050
040
130
320
010
030
410
080
140
063
065
430
110
120
500
100
350
090
330
340
373
375
070
020
2594512-10
265795

Pos	Part No	UN	Qty	Description	Page No
TBA 1000SQ (Cont'd) (See drawing on page: 2-56)					
140	2825375-0000		1	VOLUME FLAP	
300	1040756-0000		1	WEDGE	
320	312115-0376		2	SCREW ISO4762 M6X35 A4 80	
325	312115-0370		2	SCREW ISO4762 M6X20 A4 80	
330	312318-0320		2	SCREW ISO4029 M5X5 A4	
340	312318-0320		4	SCREW ISO4029 M5X5 A4	
350	312812-0318		1	HEXAGON NUT, NY-LOCK M8 A480	
370	312145-0291		2	SCREW ISO 2009 MFS M4X12 A4	
410	312115-0366		2	SCREW ISO4762 M6X12 A4 80	
540	315105-0153		1	WASHER BRB 6,4X12 RFR	
550	312115-0367		1	SCREW ISO4762 M6X14 A4 80	
TPA 0200SQ (See drawing on page: 2-60)					
010	2771123-0000		1	SPRING	
020	2771122-0000		1	SPRING	
030	2843006-0000		1	STOP	
040	2674327-0000		1	SHAFT	
050	2530313-0000		2	BUSHING	
063	2674328-0000		6	VOLUME SHIM	
065	2674329-0000		2	VOLUME BULGE	
070	1144601-0000		2	GUIDE STUD	
080	2839410-0000		1	STOPPER	
090	2839411-0000		1	FLAP HOLDER	
100	1512146-0000		2	AXLE PIN	
110	1512147-0000		2	WASHER	
120	1499355-0000		2	ROLLER	
130	2674326-0000		2	CAM	
140	2674332-0000		1	VOLUME FLAP	
320	312115-0366		2	SCREW ISO4762 M6X12 A4 80	
330	312318-0320		2	SCREW ISO4029 M5X5 A4	
340	312318-0323		2	SCREW ISO4029 M5X8 A4	
350	312812-0318		1	HEXAGON NUT, NY-LOCK M8 A480	
373	315105-0146		2	WASHER BRB 5,3X10 RFR	
375	312705-0314		2	NUT HEX. DOMED CAP MHM-6 M5 A280	
410	312155-0327		2	SCREW DIN 7991 MF6S M5X12 A4 70	
430	312115-0291		4	SCREW ISO4762 M4X12 A4 80	
500	321136-0140		2	BUSHING, 10X12X10 MM	
TPA 0250SQ (See drawing on page: 2-60)					
010	2771123-0000		1	SPRING	
020	2771122-0000		1	SPRING	
030	2843006-0000		1	STOP	
040	2674327-0000		1	SHAFT	
050	2530313-0000		2	BUSHING	
063	1549594-0000		6	VOLUME SHIM	
065	2581994-0000		2	VOLUME BULGE	
070	1144601-0000		2	GUIDE STUD	
080	2839410-0000		1	STOPPER	
090	2839411-0000		1	FLAP HOLDER	
100	1512146-0000		2	AXLE PIN	
110	1512147-0000		2	WASHER	
120	1499355-0000		2	ROLLER	
130	2674325-0000		2	CAM	
140	2674334-0000		1	VOLUME FLAP	
320	312115-0366		2	SCREW ISO4762 M6X12 A4 80	
330	312318-0320		2	SCREW ISO4029 M5X5 A4	
340	312318-0323		2	SCREW ISO4029 M5X8 A4	
350	312812-0318		1	HEXAGON NUT, NY-LOCK M8 A480	
373	315105-0146		2	WASHER BRB 5,3X10 RFR	
375	312705-0314		2	NUT HEX. DOMED CAP MHM-6 M5 A280	
410	312155-0327		2	SCREW DIN 7991 MF6S M5X12 A4 70	
430	312115-0291		4	SCREW ISO4762 M4X12 A4 80	
500	321136-0140		2	BUSHING, 10X12X10 MM	
TPA 1000SQ, TPA 0750SQ (See drawing on page: 2-54)					
010	2663360-0000		1	SPRING	
020	2663361-0000		1	SPRING	
030	2660400-0000		1	STOP	
035	2660401-0000		1	CATCH	
040	2658258-0000		1	SHAFT	
050	2530313-0000		2	BUSHING	
060	2660393-0000		6	VOLUME SHIM	
075	2660392-0000		2	VOLUME BULGE	
090	2658257-0000		1	FLAP HOLDER	
100	2759331-0000		2	SHAFT	
110	19972-0000		2	WASHER	
120	2993135-0000		2	ROLLER	
140	2660379-0000		1	VOLUME FLAP	
150	2705813-0100		1	VOLUME FLAP	**2-67**
230	2660391-0000		1	SCREW	
240	90134-0063		2	BUSHING/NUT M8X1, D=2,5 MM	
250	90028-0020		2	CONE TUBE 2,5MM	
260	1037734-0000		2	WEDGE	
270	2652896-0000		2	SHAFT	
280	2662167-0000		2	BUSHING	
290	2663375-0000		2	WASHER	

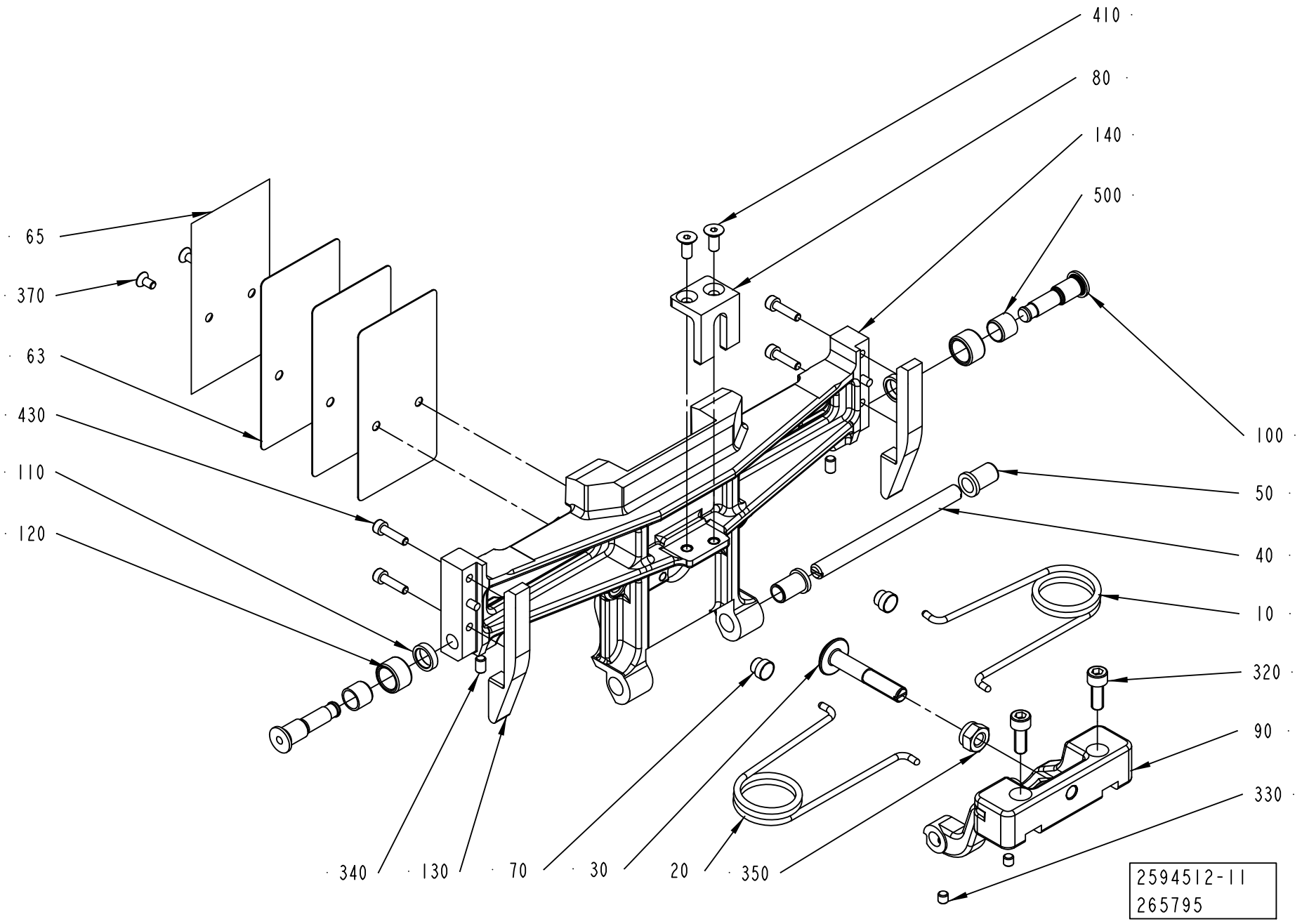
410
80
140
500
65
370
63
430
110
120
100
50
40
10
320
90
330
340
130
70
30
20
350
2594512-11
265795

Pos	Part No	UN	Qty	Description	Page No
TPA 1000SQ, TPA 0750SQ (Cont'd) (See drawing on page: 2-54)					
300	2660397-0000		1	WEDGE	
310	2663376-0000		2	WASHER	
320	2663372-0000		2	SCREW	
330	311103-0236		1	PARALLEL PIN ISO 2338 3M6X16 A1	
340	312318-0323		2	SCREW ISO4029 M5X8 A4	
350	312625-0318		1	HEXAGON THIN NUT, EN 24035 ML6M M8 A4	
370	312155-0287		4	SCREW DIN 7991 MF6S M4X8 A4 70	
510	312105-0367		2	SCREW M6S ISO 4017 M6X14 A480	
515	312318-0285		2	SCREW ISO4029 M4X6 A4	
520	312115-0366		2	SCREW ISO4762 M6X12 A4 80	
530	2566332-0000		1	SHAFT	
535	2566333-0000		2	HOLDER (STAFFA)	
540	315105-0146		3	WASHER BRB 5,3X10 RFR	
550	312105-0328		1	SCREW M6S ISO 4017 M5X14 A480	
555	312105-0331		2	SCREW M6S ISO 4017 M5X20 A480	
570	90005-0082		2	WASHER PLAIN ROUND 4,3(M4)/12,H=1	
580	312105-0287		2	SCREW M6S ISO 4017 M4X8 A470	
585	312318-0325		2	SCREW ISO4029 M5X10 A4	
600	312105-0329		2	SCREW M6S ISO 4017 M5X16 A480	
610	312318-0323		2	SCREW ISO4029 M5X8 A4	

Pos	Part No	UN	Qty	Description	Page No

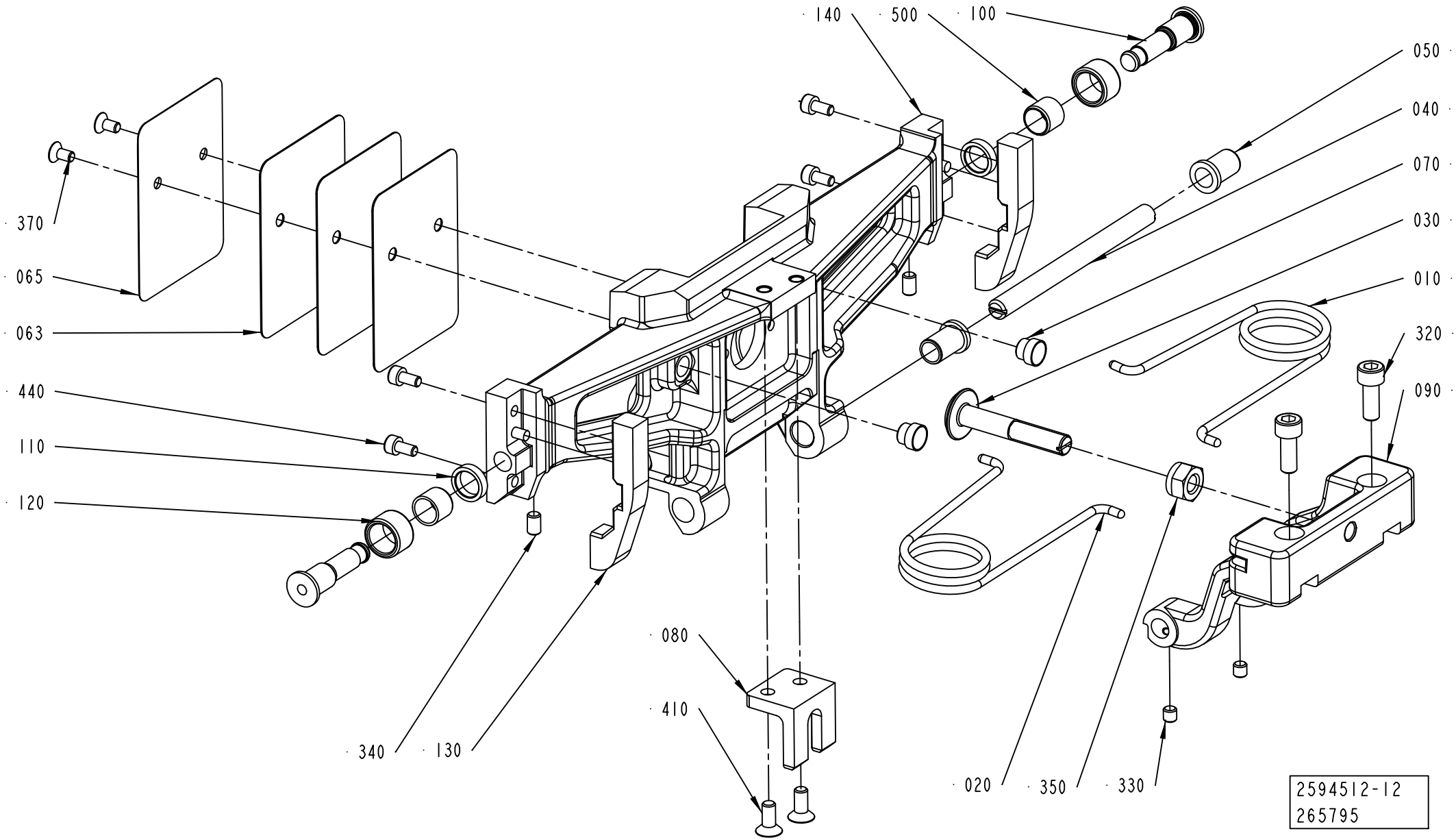
140
500
100
050
040
070
030
010
320
090
370
065
063
440
110
120
080
410
340
130
020
350
330
2594512-12
265795

ECM: 383392 - 20090402
Group number: 2594512-0200
Assembly Drawing: 2594512-12_1_AA

This list covers pages from 2-54 to 2-65

Pos	Part No	UN	Qty	Description	Page No
SEE PREVIOUS LISTS PAGES: 2-55, 2-57, 2-59, 2-61, 2-63.					

Pos	Part No	UN	Qty	Description	Page No

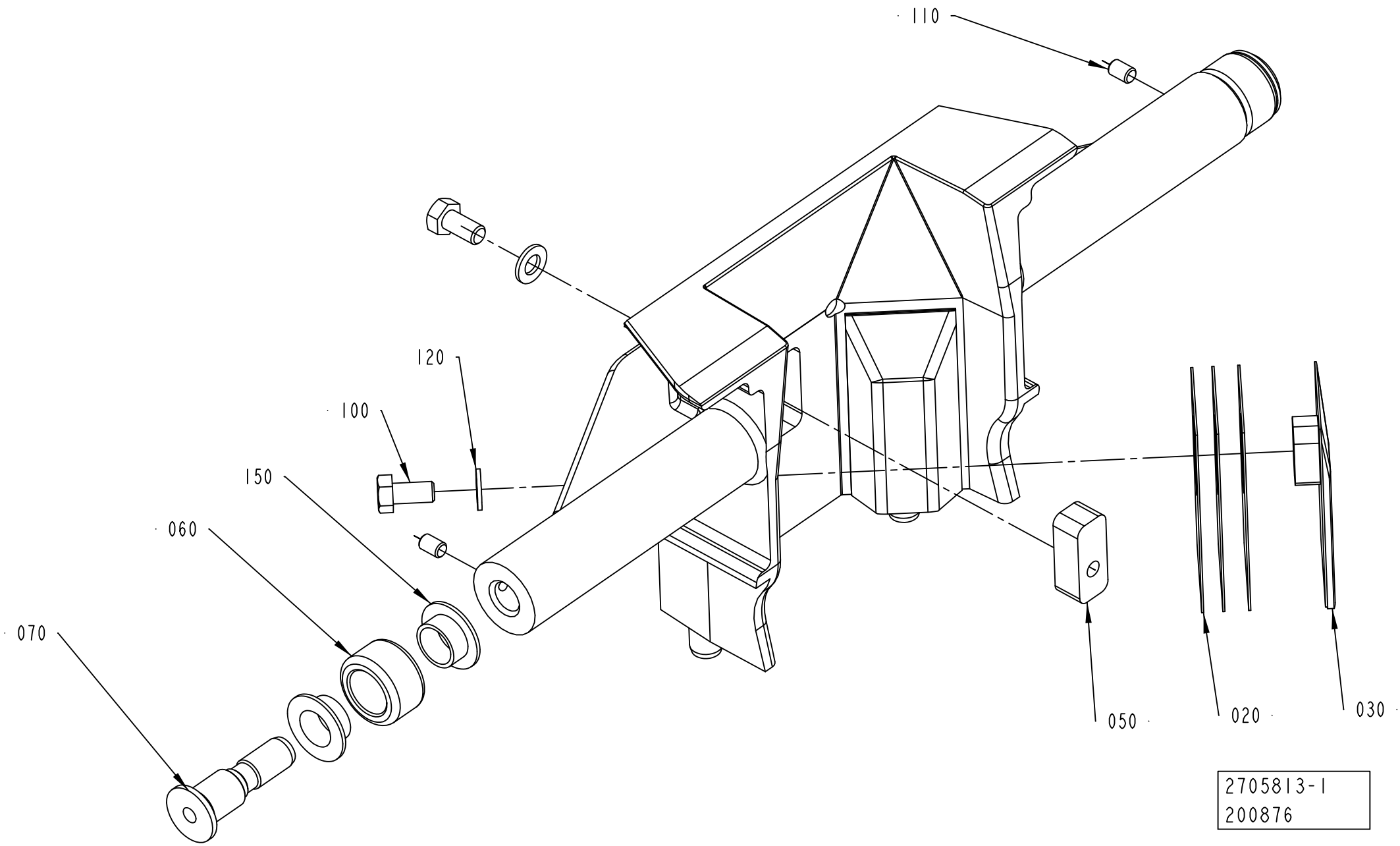
110
120
100
150
060
070
050
020
030
2705813-1
200876

ECM: 202683 - 20050402
Group number: 2705813-0100
Assembly Drawing: 2705813-1_1_AA

Pos	Part No	UN	Qty	Description	Page No
TPA 0750SQ					
010	2660384-0000		1	VOLUME FLAP	
TPA 1000SQ					
010	2660383-0000		1	VOLUME FLAP	
020	2660390-0000		6	VOLUME SHIM	
030	2660395-0000		2	VOLUME BULGE	
050	2660398-0000		1	WEDGE	
060	2660399-0000		2	ROLLER	
070	2594709-0000		2	AXLE PIN	
100	312105-0325		3	SCREW M6S ISO 4017 M5X10 A480	
110	312318-0285		2	SCREW ISO4029 M4X6 A4	
120	315105-0146		3	WASHER BRB 5,3X10 RFR	
150	90240-0289		4	FLANGE BUSHING, 10X12X6 MM	

Pos	Part No	UN	Qty	Description	Page No

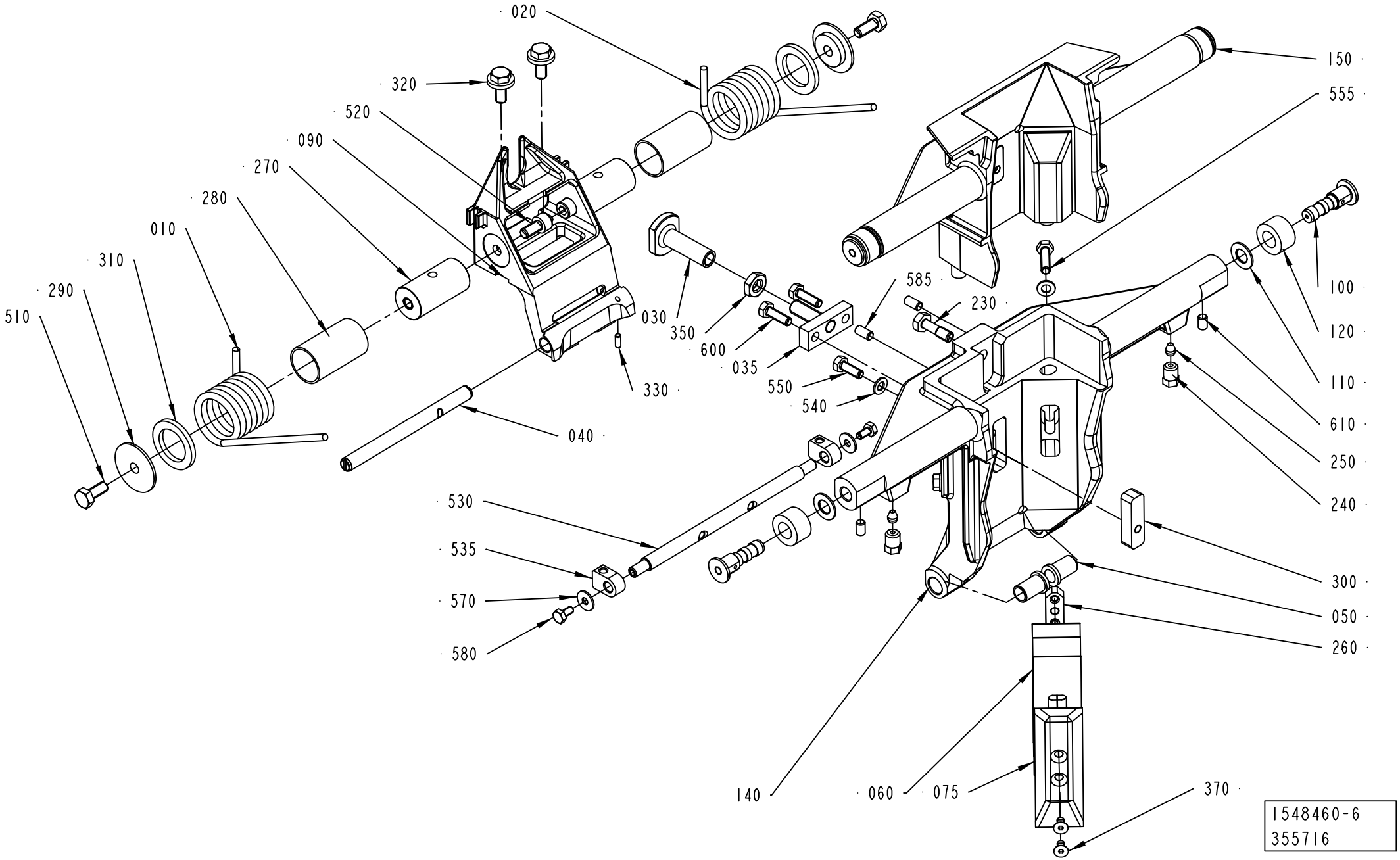
020
320
520
090
270
280
010
310
290
510
030
350
600
035
330
040
585
230
550
540
150
555
100
120
110
610
250
240
530
535
570
580
300
050
260
140
060
075
370
1548460-6
355716

ECM: 383396 - 20090402
Group number: 1548460-0200
Assembly Drawing: 1548460-6_1_AC

This list covers pages from 2-68 to 2-79

Pos	Part No	UN	Qty	Description	Page No
TBA 0200B (See drawing on page: 2-76)					
010	1350263-0000		1	SPRING RIGHT	
020	1350264-0000		1	SPRING LEFT	
030	1511339-0000		1	STOP	
040	1499327-0000		1	SHAFT	
050	2530313-0000		2	BUSHING	
063	1538637-0000		3	VOLUME SHIM	
065	1524310-0000		1	VOLUME BULGE	
070	1144601-0000		2	GUIDE STUD	
080	1499328-0000		1	STOPPER	
090	2605869-0000		1	FLAP HOLDER	
100	1512146-0000		2	AXLE PIN	
110	1512147-0000		2	WASHER	
120	1499355-0000		2	ROLLER	
130	2629237-0000		2	CAM	
140	2604494-0000		1	VOLUME FLAP	
320	312115-0366		2	SCREW ISO4762 M6X12 A4 80	
330	312318-0320		2	SCREW ISO4029 M5X5 A4	
340	312318-0323		2	SCREW ISO4029 M5X8 A4	
350	312812-0316		1	HEXAGON NUT, NY-LOCK M6 A480	
370	312155-0287		2	SCREW DIN 7991 MF6S M4X8 A4 70	
410	312155-0325		2	SCREW DIN 7991 MF6S M5X10 A4 70	
430	312115-0289		4	SCREW ISO4762 M4X10 A4 80	
500	321136-0140		2	BUSHING, 10X12X10 MM	
TBA 0200M (See drawing on page: 2-76)					
010	2771123-0000		1	SPRING	
020	2771122-0000		1	SPRING	
030	2768909-0000		1	STOP	
040	1499327-0000		1	SHAFT	
050	2530313-0000		2	BUSHING	
063	2640139-0000		3	VOLUME SHIM	
065	2640138-0000		1	VOLUME BULGE	
070	1144601-0000		2	GUIDE STUD	
080	2846670-0000		1	STOPPER	
090	2768910-0000		1	FLAP HOLDER	
100	1512146-0000		2	AXLE PIN	
110	1512147-0000		2	WASHER	
120	1499355-0000		2	ROLLER	
130	2649443-0000		2	CAM	
140	2639867-0000		1	VOLUME FLAP	
320	312115-0366		2	SCREW ISO4762 M6X12 A4 80	
330	312318-0320		2	SCREW ISO4029 M5X5 A4	
340	312318-0323		2	SCREW ISO4029 M5X8 A4	
350	312812-0318		1	HEXAGON NUT, NY-LOCK M8 A480	
370	312155-0287		2	SCREW DIN 7991 MF6S M4X8 A4 70	
410	312155-0325		2	SCREW DIN 7991 MF6S M5X10 A4 70	
430	312115-0291		4	SCREW ISO4762 M4X12 A4 80	
500	321136-0140		2	BUSHING, 10X12X10 MM	
TBA 0200SQ (See drawing on page: 2-78)					
010	2746136-0000		1	SPRING	
020	2746137-0000		1	SPRING	
030	2676934-0000		1	STOP	
040	2668315-0000		1	SHAFT	
050	2676933-0000		2	BUSHING	
063	2678717-0000		6	VOLUME SHIM	
065	2678838-0000		1	VOLUME BULGE	
070	1144601-0000		2	GUIDE STUD	
080	2773929-0000		1	STOPPER	
090	2668312-0000		1	FLAP HOLDER	
100	1512146-0000		2	AXLE PIN	
110	1512147-0000		2	WASHER	
120	1499355-0000		2	ROLLER	
130	2678713-0000		2	CAM	
140	2747138-0000		1	VOLUME FLAP	
320	312115-0366		2	SCREW ISO4762 M6X12 A4 80	
330	312318-0320		2	SCREW ISO4029 M5X5 A4	
340	312318-0320		2	SCREW ISO4029 M5X5 A4	
350	312812-0316		1	HEXAGON NUT, NY-LOCK M6 A480	
370	312155-0287		2	SCREW DIN 7991 MF6S M4X8 A4 70	
410	312155-0323		2	SCREW DIN 7991 MF6S M5X8 A4 70	
440	312115-0289		4	SCREW ISO4762 M4X10 A4 80	
500	321136-0140		2	BUSHING, 10X12X10 MM	
TBA 0250B (See drawing on page: 2-78)					
010	2771123-0000		1	SPRING	
020	2771122-0000		1	SPRING	
030	2768909-0000		1	STOP	
040	1499327-0000		1	SHAFT	
050	2530313-0000		2	BUSHING	
063	2605166-0000		4	VOLUME SHIM	
065	2609925-0000		1	VOLUME BULGE	
070	1144601-0000		2	GUIDE STUD	
080	2838351-0000		1	STOPPER	
090	2768910-0000		1	FLAP HOLDER	
100	1512146-0000		2	AXLE PIN	

Machine Type | Group Description | Used-In | Group Number | Page No

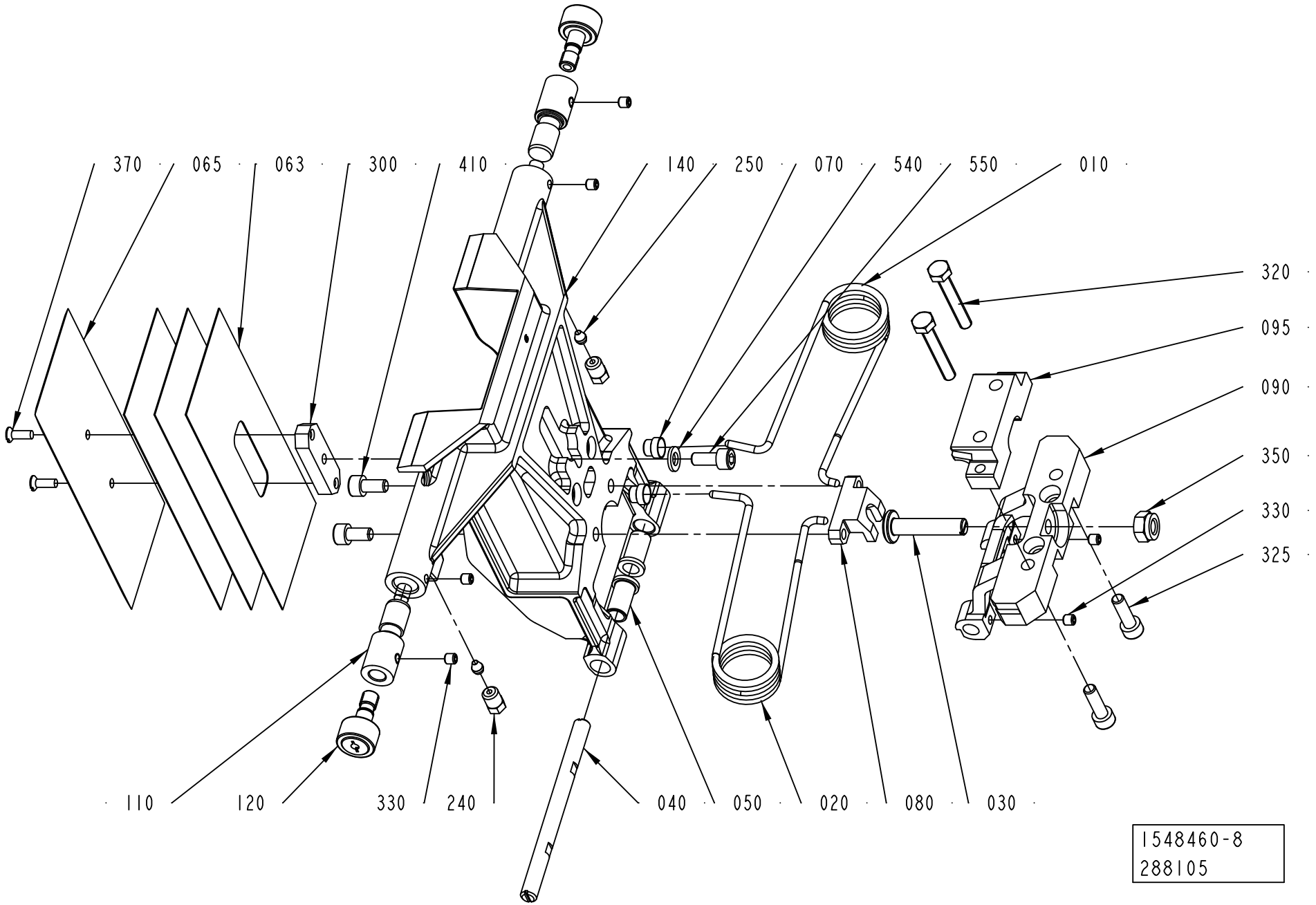
370
065
063
300
410
140
250
070
540
550
010
320
095
090
350
330
325
110
120
330
240
040
050
020
080
030
1548460-8
288105

ECM: 383396 - 20090402
Group number: 1548460-0200
Assembly Drawing: 1548460-8_1_AA

This list covers pages from 2-68 to 2-79

Pos	Part No	UN	Qty	Description	Page No
TBA 0250B (Cont'd) (See drawing on page: 2-78)					
110	1512147-0000		2	WASHER	
120	1499355-0000		2	ROLLER	
130	2606218-0000		2	CAM	
140	2605192-0000		1	VOLUME FLAP	
320	312115-0366		2	SCREW ISO4762 M6X12 A4 80	
330	312318-0320		2	SCREW ISO4029 M5X5 A4	
340	312318-0323		2	SCREW ISO4029 M5X8 A4	
350	312812-0318		1	HEXAGON NUT, NY-LOCK M8 A480	
370	312155-0287		2	SCREW DIN 7991 MF6S M4X8 A4 70	
410	312155-0327		2	SCREW DIN 7991 MF6S M5X12 A4 70	
440	312115-0287		4	SCREW ISO4762 M4X8 A4 80	
500	321136-0140		2	BUSHING, 10X12X10 MM	
TBA 0250S (See drawing on page: 2-76)					
010	2771123-0000		1	SPRING	
020	2771122-0000		1	SPRING	
030	2768909-0000		1	STOP	
040	1499327-0000		1	SHAFT	
050	2530313-0000		2	BUSHING	
063	2662169-0000		3	VOLUME SHIM	
065	2662168-0000		1	VOLUME BULGE	
070	1144601-0000		2	GUIDE STUD	
080	2768908-0000		1	STOPPER	
090	2768910-0000		1	FLAP HOLDER	
100	1512146-0000		2	AXLE PIN	
110	1512147-0000		2	WASHER	
120	1499355-0000		2	ROLLER	
130	2662431-0000		2	CAM	
140	2661450-0000		1	VOLUME FLAP	
320	312115-0366		2	SCREW ISO4762 M6X12 A4 80	
330	312318-0320		2	SCREW ISO4029 M5X5 A4	
340	312318-0323		2	SCREW ISO4029 M5X8 A4	
350	312812-0318		1	HEXAGON NUT, NY-LOCK M8 A480	
370	312155-0287		2	SCREW DIN 7991 MF6S M4X8 A4 70	
410	312155-0327		2	SCREW DIN 7991 MF6S M5X12 A4 70	
430	312115-0293		4	SCREW ISO4762 M4X16 A4 80	
500	321136-0140		2	BUSHING, 10X12X10 MM	
TBA 0250SQ (See drawing on page: 2-78)					
010	2746136-0000		1	SPRING	
020	2746137-0000		1	SPRING	
030	2839822-0000		1	STOP	
040	2668315-0000		1	SHAFT	
050	2676933-0000		2	BUSHING	
063	2678839-0000		6	VOLUME SHIM	
065	2678840-0000		1	VOLUME BULGE	
070	1144601-0000		2	GUIDE STUD	
080	2839679-0000		1	STOPPER	
090	2839678-0000		1	FLAP HOLDER	
100	1512146-0000		2	AXLE PIN	
110	1512147-0000		2	WASHER	
120	1499355-0000		2	ROLLER	
130	2678714-0000		2	CAM	
140	2747142-0000		1	VOLUME FLAP	
320	312115-0366		2	SCREW ISO4762 M6X12 A4 80	
330	312318-0320		2	SCREW ISO4029 M5X5 A4	
340	312318-0320		2	SCREW ISO4029 M5X5 A4	
350	312812-0318		1	HEXAGON NUT, NY-LOCK M8 A480	
370	312155-0287		2	SCREW DIN 7991 MF6S M4X8 A4 70	
410	312155-0323		2	SCREW DIN 7991 MF6S M5X8 A4 70	
440	312115-0289		4	SCREW ISO4762 M4X10 A4 80	
500	321136-0140		2	BUSHING, 10X12X10 MM	
TBA 0330S (See drawing on page: 2-76)					
010	2771123-0000		1	SPRING	
020	2771122-0000		1	SPRING	
030	2768909-0000		1	STOP	
040	1499327-0000		1	SHAFT	
050	2530313-0000		2	BUSHING	
063	2654290-0000		3	VOLUME SHIM	
065	979931-0000		1	VOLUME BULGE	
070	1144601-0000		2	GUIDE STUD	
080	2768908-0000		1	STOPPER	
090	2768910-0000		1	FLAP HOLDER	
100	1512146-0000		2	AXLE PIN	
110	1512147-0000		2	WASHER	
120	1499355-0000		2	ROLLER	
130	2629236-0000		2	CAM	
140	2604496-0000		1	VOLUME FLAP	
320	312115-0366		2	SCREW ISO4762 M6X12 A4 80	
330	312318-0320		2	SCREW ISO4029 M5X5 A4	
340	312318-0323		2	SCREW ISO4029 M5X8 A4	
350	312812-0318		1	HEXAGON NUT, NY-LOCK M8 A480	
370	312155-0287		2	SCREW DIN 7991 MF6S M4X8 A4 70	
410	312155-0327		2	SCREW DIN 7991 MF6S M5X12 A4 70	
430	312115-0293		4	SCREW ISO4762 M4X16 A4 80	

Machine Type | Group Description | Used-In | Group Number | Page No

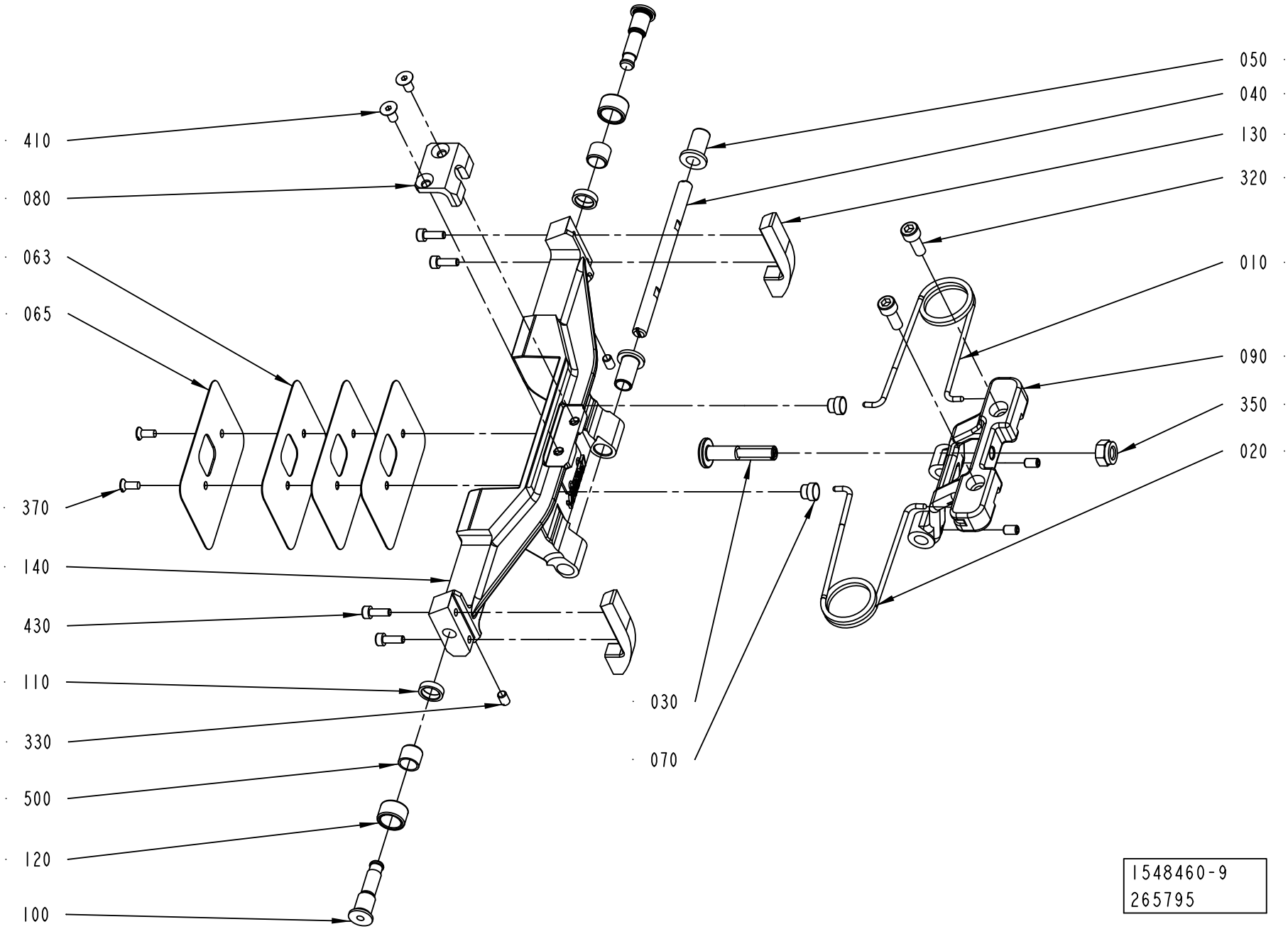
410
080
063
065
370
140
430
110
330
500
120
100
050
040
130
320
010
090
350
020
030
070
1548460-9
265795

ECM: 383396 - 20090402
Group number: 1548460-0200
Assembly Drawing: 1548460-9_1_AA

This list covers pages from 2-68 to 2-79

Pos	Part No	UN	Qty	Description	Page No
TBA 0330S (Cont'd) (See drawing on page: 2-76)					
500	321136-0140		2	BUSHING, 10X12X10 MM	
TBA 0500B (See drawing on page: 2-72)					
010	1350263-0000		1	SPRING RIGHT	
020	1350264-0000		1	SPRING LEFT	
030	2725392-0000		1	STOP	
040	1487946-0000		1	SHAFT	
050	1487948-0000		2	BUSHING	
063	2844777-0000		3	VOLUME SHIM	
065	2844776-0000		1	VOLUME BULGE	
070	1144601-0000		2	GUIDE STUD	
080	2838629-0000		1	STOPPER	
090	2838479-0000		1	FLAP HOLDER	
100	1512146-0000		2	AXLE PIN	
110	1512147-0000		2	WASHER	
120	1499355-0000		2	ROLLER	
130	1499350-0000		2	CAM	
140	2839175-0000		1	VOLUME FLAP	
320	312115-0366		2	SCREW ISO4762 M6X12 A4 80	
330	312318-0323		2	SCREW ISO4029 M5X8 A4	
340	312318-0323		2	SCREW ISO4029 M5X8 A4	
350	312812-0318		1	HEXAGON NUT, NY-LOCK M8 A480	
370	312145-0289		2	SCREW ISO 2009 MFS M4X10 A4	
410	312155-0325		2	SCREW DIN 7991 MF6S M5X10 A4 70	
430	312115-0291		4	SCREW ISO4762 M4X12 A4 80	
500	321136-0140		2	BUSHING, 10X12X10 MM	
TBA 0500SQ (See drawing on page: 2-70)					
010	2771123-0000		1	SPRING	
020	2771122-0000		1	SPRING	
030	2832350-0000		1	STOP	
040	2817789-0000		1	SHAFT	
050	2829261-0000		2	BUSHING	
063	2827055-0000		3	VOLUME SHIM	
065	2846997-0000		1	VOLUME BULGE	
070	1144601-0000		2	GUIDE STUD	
080	2826596-0000		1	STOPPER	
090	2812890-0000		1	FLAP HOLDER	
120	2846185-0000		2	ROLLER	
140	2871119-0000		1	VOLUME FLAP	
240	90134-0063		2	BUSHING/NUT M8X1, D=2,5 MM	
250	90028-0020		2	CONE TUBE 2,5MM	
320	312115-0366		2	SCREW ISO4762 M6X12 A4 80	
330	312318-0320		2	SCREW ISO4029 M5X5 A4	
340	312318-0323		2	SCREW ISO4029 M5X8 A4	
350	312812-0318		1	HEXAGON NUT, NY-LOCK M8 A480	
370	312145-0289		2	SCREW ISO 2009 MFS M4X10 A4	
410	312155-0325		2	SCREW DIN 7991 MF6S M5X10 A4 70	
TBA 1000B (See drawing on page: 2-76)					
010	1348483-0000		1	SPRING RIGHT	
020	1348484-0000		1	SPRING LEFT	
030	2725392-0000		1	STOP	
040	1487946-0000		1	SHAFT	
050	1487948-0000		2	BUSHING	
063	1511337-0000		3	VOLUME SHIM	
065	26075-0000		1	VOLUME BULGE	
070	1144601-0000		2	GUIDE STUD	
080	2725393-0000		1	STOPPER	
090	2725394-0000		1	FLAP HOLDER	
100	1512146-0000		2	AXLE PIN	
110	1512147-0000		2	WASHER	
120	1499355-0000		2	ROLLER	
130	1499356-0000		2	CAM	
140	1499358-0000		1	VOLUME FLAP	
320	312115-0366		2	SCREW ISO4762 M6X12 A4 80	
330	312318-0323		2	SCREW ISO4029 M5X8 A4	
340	312318-0323		2	SCREW ISO4029 M5X8 A4	
350	312812-0318		1	HEXAGON NUT, NY-LOCK M8 A480	
370	312141-0222		2	SCREW ISO 2009 MFS M3X8 4.8 EL.PL	
410	312115-0331		1	SCREW ISO4762 M5X20 A4 80	
430	312115-0287		4	SCREW ISO4762 M4X8 A4 80	
500	321136-0140		2	BUSHING, 10X12X10 MM	
TBA 1000SQ (See drawing on page: 2-70)					
010	1143216-0000		1	SPRING	
020	1143215-0000		1	SPRING	
030	2832351-0000		1	STOP	
040	2817789-0000		1	SHAFT	
050	2829261-0000		2	BUSHING	
063	1487627-0000		3	VOLUME SHIM	
065	1487626-0000		1	VOLUME BULGE	
070	1144601-0000		2	GUIDE STUD	
080	2825378-0000		1	STOPPER	
090	2812890-0000		1	FLAP HOLDER	
095	2825377-0000		1	CANTILEVER	
110	2859597-0000		2	SPACER	

Machine Type | Group Description | Used-In | Group Number | Page No

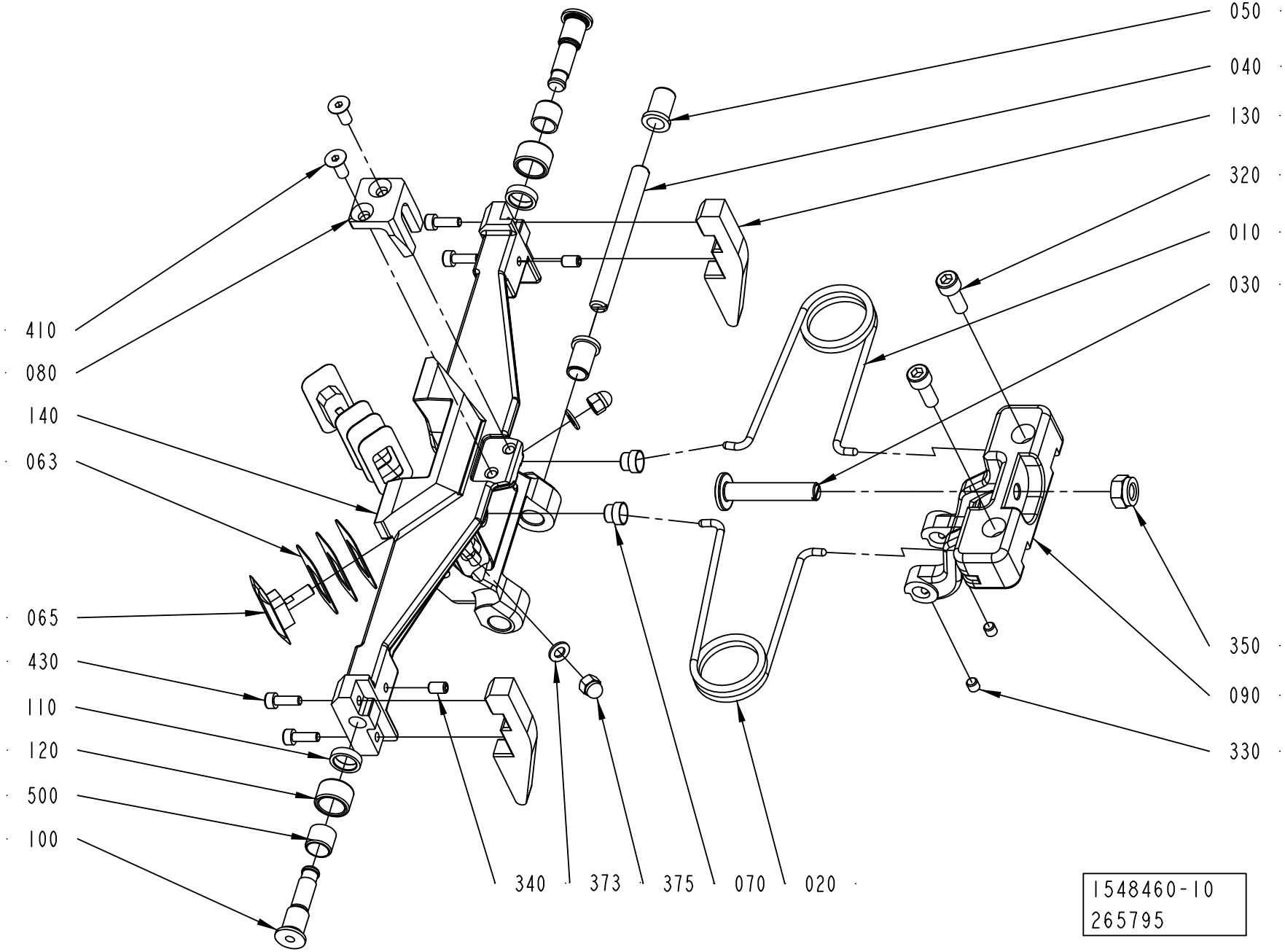
050
040
130
320
010
030
410
080
140
063
065
430
110
120
500
100
350
090
330
340
373
375
070
020
1548460-10
265795

Pos	Part No	UN	Qty	Description	Page No
TBA 1000SQ (Cont'd) (See drawing on page: 2-70)					
120	2846185-0000		2	ROLLER	
140	2825376-0000		1	VOLUME FLAP	
240	90134-0063		2	BUSHING/NUT M8X1, D=2,5 MM	
250	90028-0020		2	CONE TUBE 2,5MM	
300	1040756-0000		1	WEDGE	
320	312115-0376		2	SCREW ISO4762 M6X35 A4 80	
325	312115-0370		2	SCREW ISO4762 M6X20 A4 80	
330	312318-0320		2	SCREW ISO4029 M5X5 A4	
340	312318-0320		4	SCREW ISO4029 M5X5 A4	
350	312812-0318		1	HEXAGON NUT, NY-LOCK M8 A480	
370	312145-0291		2	SCREW ISO 2009 MFS M4X12 A4	
410	312115-0366		2	SCREW ISO4762 M6X12 A4 80	
540	315105-0153		1	WASHER BRB 6,4X12 RFR	
550	312115-0367		1	SCREW ISO4762 M6X14 A4 80	
TPA 0200SQ (See drawing on page: 2-74)					
010	2771123-0000		1	SPRING	
020	2771122-0000		1	SPRING	
030	2843006-0000		1	STOP	
040	2674327-0000		1	SHAFT	
050	2530313-0000		2	BUSHING	
063	2674328-0000		6	VOLUME SHIM	
065	2674329-0000		2	VOLUME BULGE	
070	1144601-0000		2	GUIDE STUD	
080	2839410-0000		1	STOPPER	
090	2839411-0000		1	FLAP HOLDER	
100	1512146-0000		2	AXLE PIN	
110	1512147-0000		2	WASHER	
120	1499355-0000		2	ROLLER	
130	2674326-0000		2	CAM	
140	2674331-0000		1	VOLUME FLAP	
320	312115-0366		2	SCREW ISO4762 M6X12 A4 80	
330	312318-0320		2	SCREW ISO4029 M5X5 A4	
340	312318-0323		2	SCREW ISO4029 M5X8 A4	
350	312812-0318		1	HEXAGON NUT, NY-LOCK M8 A480	
373	315105-0146		2	WASHER BRB 5,3X10 RFR	
375	312705-0314		2	NUT HEX. DOMED CAP MHM-6 M5 A280	
410	312155-0327		2	SCREW DIN 7991 MF6S M5X12 A4 70	
430	312115-0291		4	SCREW ISO4762 M4X12 A4 80	
500	321136-0140		2	BUSHING, 10X12X10 MM	
TPA 0250SQ (See drawing on page: 2-74)					
010	2771123-0000		1	SPRING	
020	2771122-0000		1	SPRING	
030	2843006-0000		1	STOP	
040	2674327-0000		1	SHAFT	
050	2530313-0000		2	BUSHING	
063	1549594-0000		6	VOLUME SHIM	
065	2581994-0000		2	VOLUME BULGE	
070	1144601-0000		2	GUIDE STUD	
080	2839410-0000		1	STOPPER	
090	2839411-0000		1	FLAP HOLDER	
100	1512146-0000		2	AXLE PIN	
110	1512147-0000		2	WASHER	
120	1499355-0000		2	ROLLER	
130	2674325-0000		2	CAM	
140	2674333-0000		1	VOLUME FLAP	
320	312115-0366		2	SCREW ISO4762 M6X12 A4 80	
330	312318-0320		2	SCREW ISO4029 M5X5 A4	
340	312318-0323		2	SCREW ISO4029 M5X8 A4	
350	312812-0318		1	HEXAGON NUT, NY-LOCK M8 A480	
373	315105-0146		2	WASHER BRB 5,3X10 RFR	
375	312705-0314		2	NUT HEX. DOMED CAP MHM-6 M5 A280	
410	312155-0327		2	SCREW DIN 7991 MF6S M5X12 A4 70	
430	312115-0291		4	SCREW ISO4762 M4X12 A4 80	
500	321136-0140		2	BUSHING, 10X12X10 MM	
TPA 1000SQ, TPA 0750SQ (See drawing on page: 2-68)					
010	2663360-0000		1	SPRING	
020	2663361-0000		1	SPRING	
030	2660400-0000		1	STOP	
035	2660401-0000		1	CATCH	
040	2658258-0000		1	SHAFT	
050	2530313-0000		2	BUSHING	
060	2660393-0000		6	VOLUME SHIM	
075	2660392-0000		2	VOLUME BULGE	
090	2658256-0000		1	FLAP HOLDER	
100	2759331-0000		2	SHAFT	
110	19972-0000		2	WASHER	
120	2993135-0000		2	ROLLER	
140	2660380-0000		1	VOLUME FLAP	
150	2705812-0100		1	VOLUME FLAP	**2-81**
230	2660391-0000		1	SCREW	
240	90134-0063		2	BUSHING/NUT M8X1, D=2,5 MM	
250	90028-0020		2	CONE TUBE 2,5MM	
260	1037734-0000		2	WEDGE	

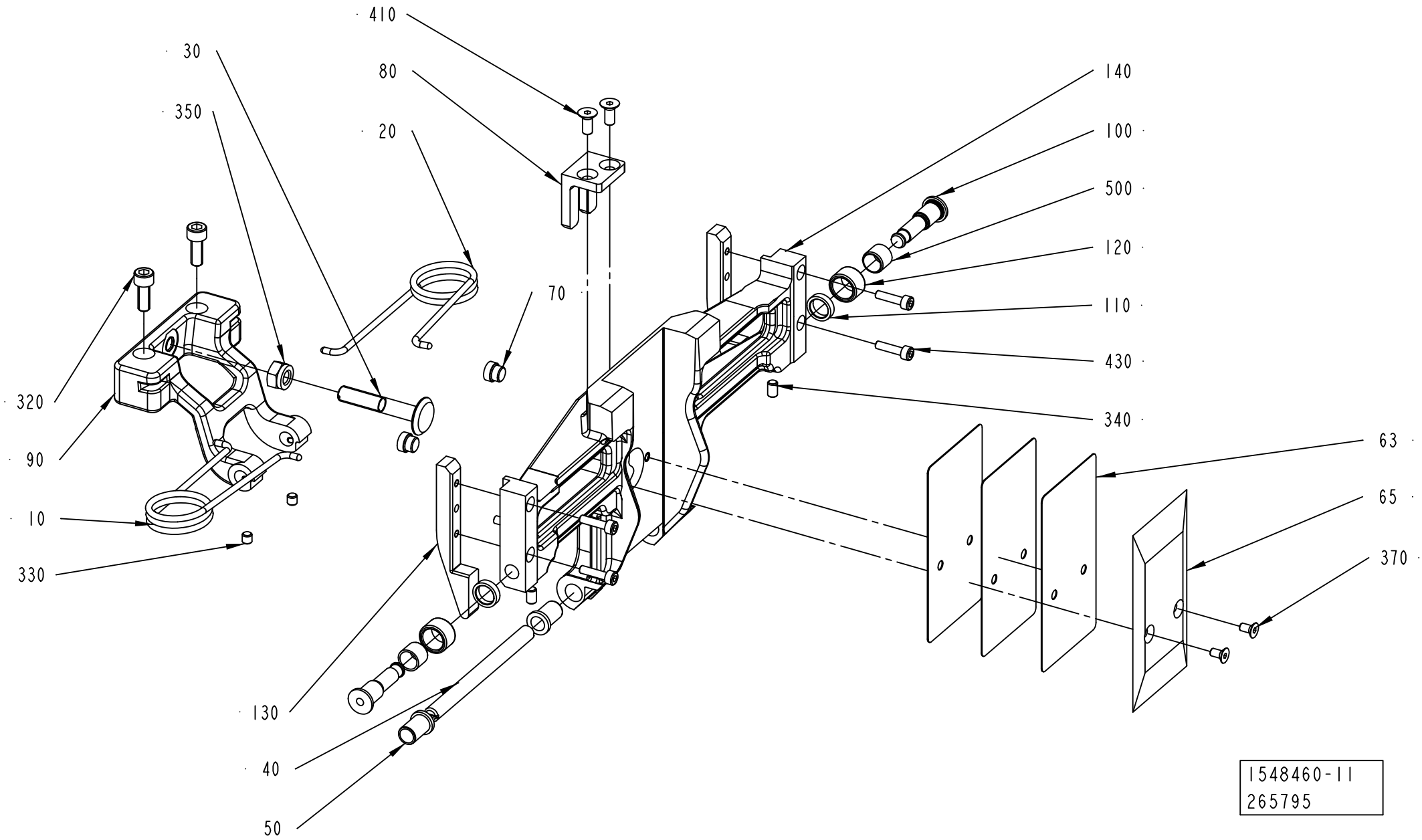
410
30
80
350
20
140
100
500
120
70
110
430
320
340
90
63
10
65
330
370
130
40
50
1548460-11
265795

Pos	Part No	UN	Qty	Description	Page No
TPA 1000SQ, TPA 0750SQ (Cont'd) (See drawing on page: 2-68)					
270	2652896-0000		2	SHAFT	
280	2662167-0000		2	BUSHING	
290	2663375-0000		2	WASHER	
300	2660397-0000		1	WEDGE	
310	2663376-0000		2	WASHER	
320	2663372-0000		2	SCREW	
330	311103-0232		1	PARALLEL PIN ISO 2338 3M6X8 A1	
340	312318-0323		2	SCREW ISO4029 M5X8 A4	
350	312625-0318		1	HEXAGON THIN NUT, EN 24035 ML6M M8 A4	
370	312155-0287		4	SCREW DIN 7991 MF6S M4X8 A4 70	
510	312105-0367		2	SCREW M6S ISO 4017 M6X14 A480	
515	312318-0285		2	SCREW ISO4029 M4X6 A4	
520	312115-0366		2	SCREW ISO4762 M6X12 A4 80	
530	2566332-0000		1	SHAFT	
535	2566333-0000		2	HOLDER (STAFFA)	
540	315105-0146		3	WASHER BRB 5,3X10 RFR	
550	312105-0328		1	SCREW M6S ISO 4017 M5X14 A480	
555	312105-0331		2	SCREW M6S ISO 4017 M5X20 A480	
570	90005-0082		2	WASHER PLAIN ROUND 4,3(M4)/12,H=1	
580	312105-0287		2	SCREW M6S ISO 4017 M4X8 A470	
585	312318-0325		2	SCREW ISO4029 M5X10 A4	
600	312105-0329		2	SCREW M6S ISO 4017 M5X16 A480	
610	312318-0323		2	SCREW ISO4029 M5X8 A4	

Pos	Part No	UN	Qty	Description	Page No

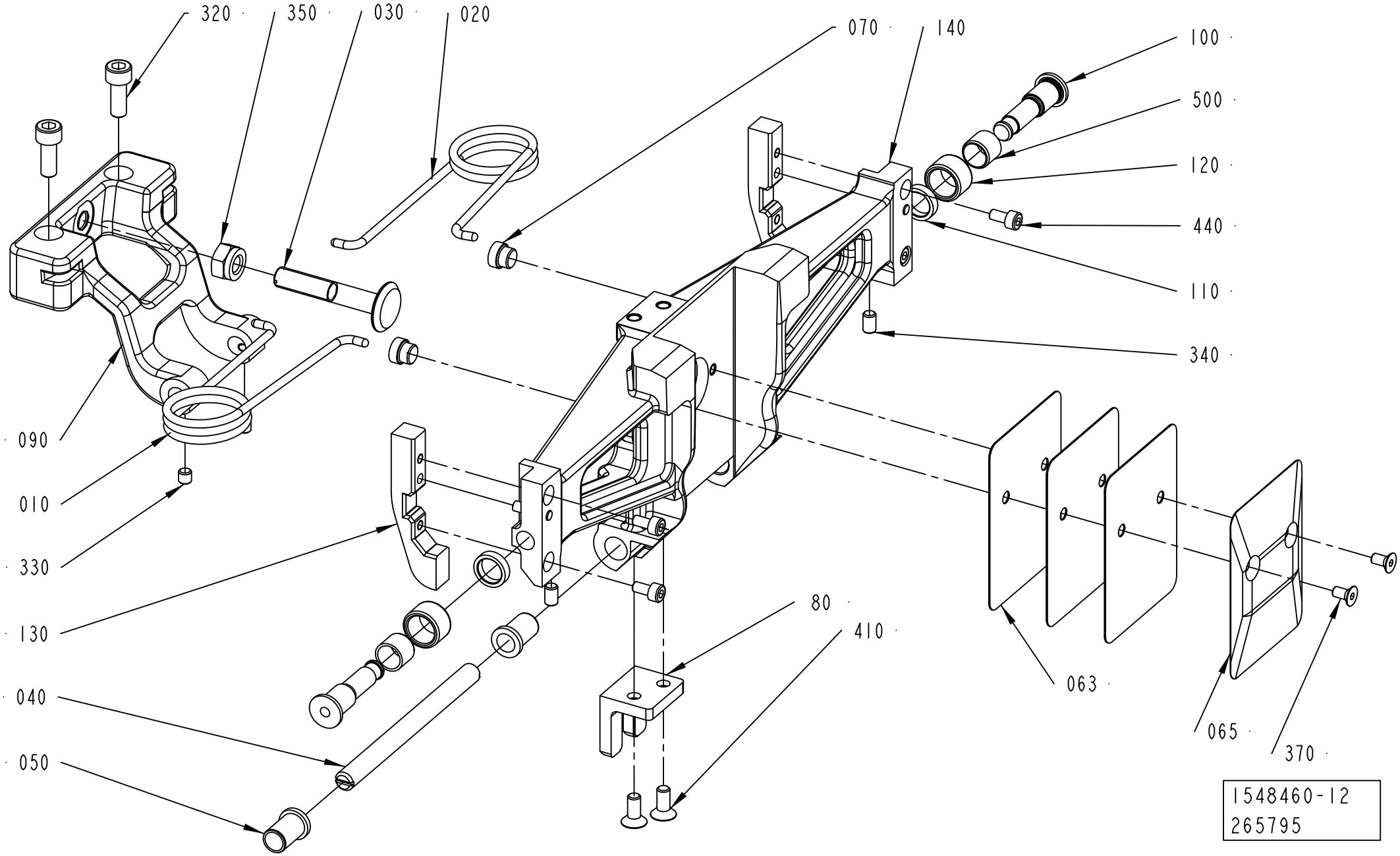
320
350
030
020
070
140
100
500
120
440
110
340
090
010
330
130
040
050
80
410
063
065
370
1548460-12
265795

Pos	Part No	UN	Qty	Description	Page No
SEE PREVIOUS LISTS PAGES: 2-69, 2-71, 2-73, 2-75, 2-77.					

Pos	Part No	UN	Qty	Description	Page No

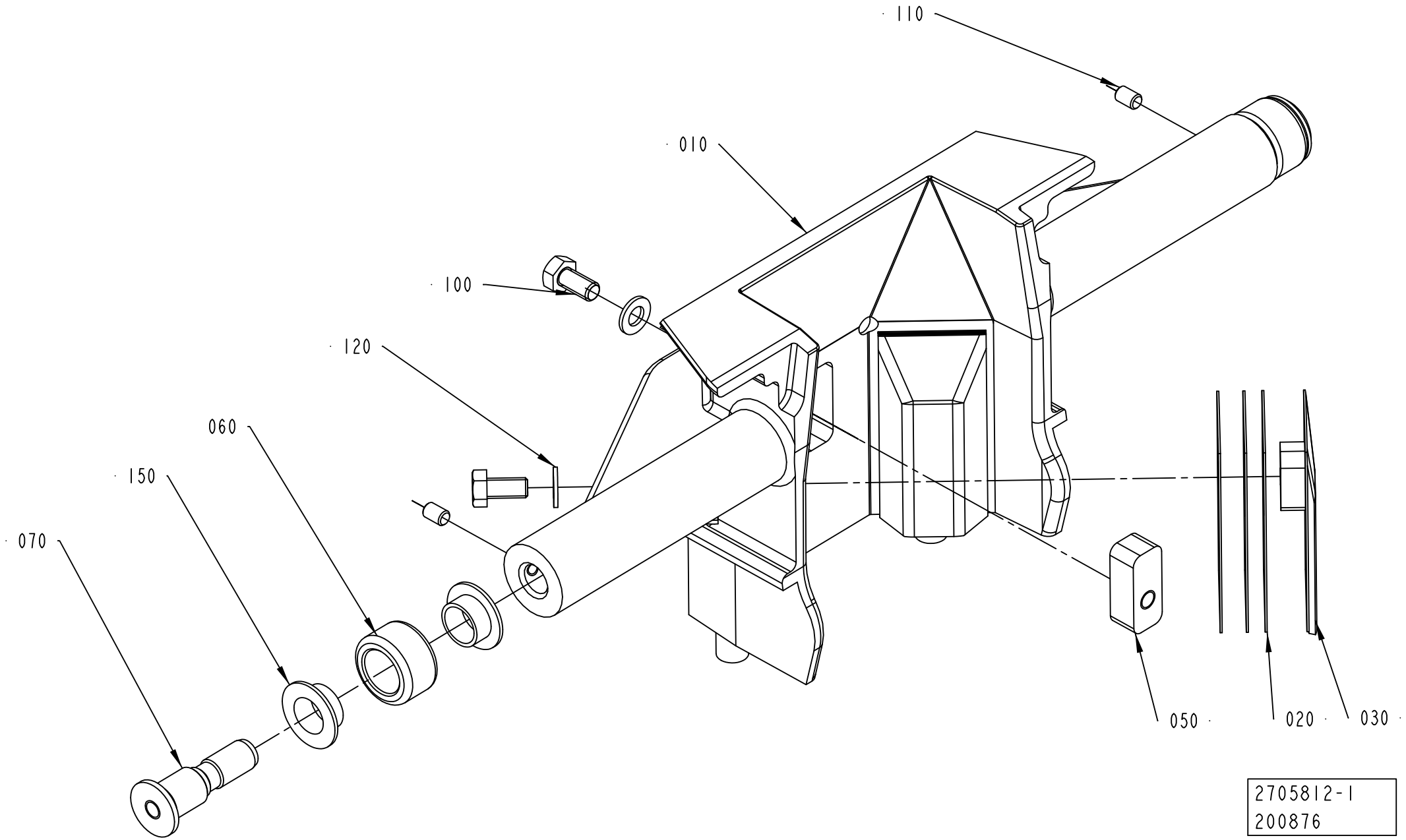
110
010
100
120
060
150
070
050
020
030
2705812-1
200876

ECM: 202682 - 20050402
Group number: 2705812-0100
Assembly Drawing: 2705812-1_1_AA

Pos	Part No	UN	Qty	Description	Page No
TPA 0750SQ					
010	2660382-0000		1	VOLUME FLAP	
TPA 1000SQ					
010	2660381-0000		1	VOLUME FLAP	
020	2660390-0000		6	VOLUME SHIM	
030	2660395-0000		2	VOLUME BULGE	
050	2660398-0000		1	WEDGE	
060	2660399-0000		2	ROLLER	
070	2594709-0000		2	AXLE PIN	
100	312105-0325		3	SCREW M6S ISO 4017 M5X10 A480	
110	312318-0285		2	SCREW ISO4029 M4X6 A4	
120	315105-0146		3	WASHER BRB 5,3X10 RFR	
150	90240-0289		4	FLANGE BUSHING, 10X12X6 MM	

Pos	Part No	UN	Qty	Description	Page No

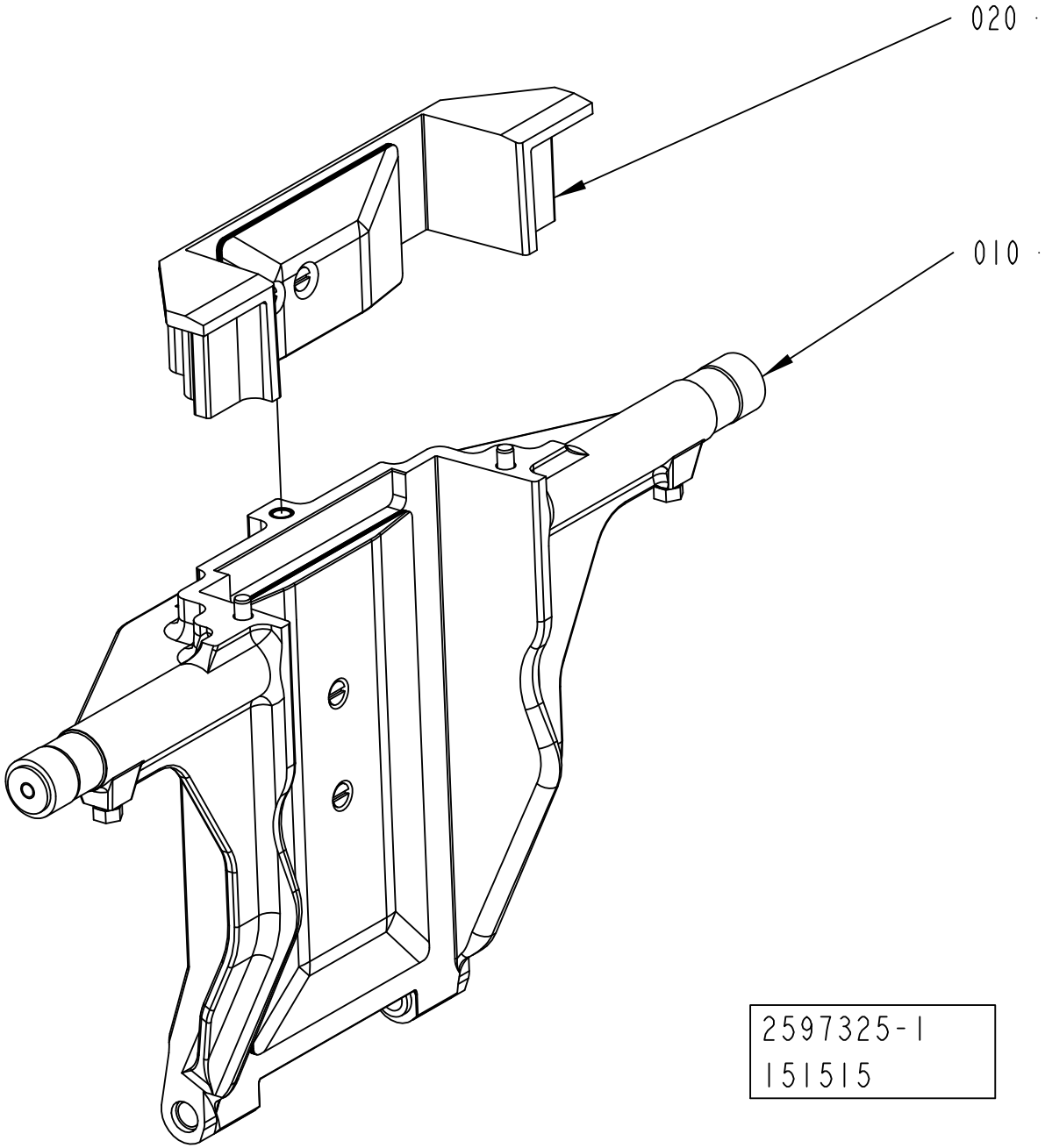
020
010
2597325-1
151515

ECM: 360778 - 20081001
Group number: 2597325-0100
Assembly Drawing: 2597325-1_1_AA

Pos	Part No	UN	Qty	Description	Page No
TBA 1890S QC, TBA 2000S QC					
020	2695955-0100		1	VOLUME FLAP	**2-85**
Common Parts					
010	2696182-0100		1	VOLUME FLAP	**2-87, 2-89**

Pos	Part No	UN	Qty	Description	Page No

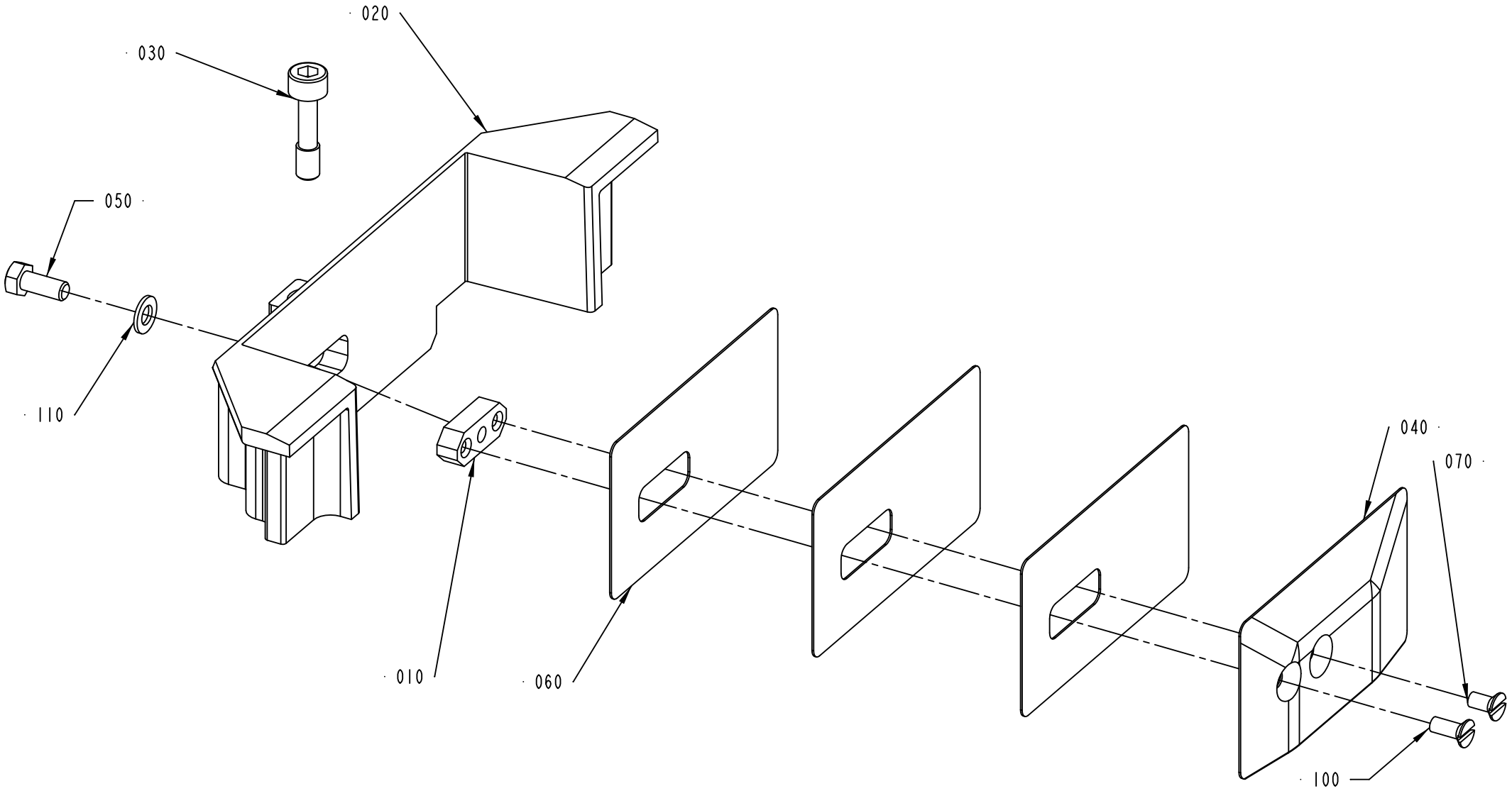
020
030
050
110
010
060
040
070
100
2695955-1
151514

ECM: 210192 - 20060509
Group number: 2695955-0100
Assembly Drawing: 2695955-1_1_AA

Pos	Part No	UN	Qty	Description	Page No
TBA 1890S					
020	2588306-0000		1	VOLUME FLAP	
040	2594889-0000		1	VOLUME BULGE	
060	2594891-0000		3	VOLUME SHIM	
TBA 2000S					
020	2588307-0000		1	VOLUME FLAP	
040	2672746-0000		1	VOLUME BULGE	
060	2672745-0000		3	VOLUME SHIM	
Common Parts					
010	1037734-0000		1	WEDGE	
030	2594896-0000		2	SCREW	
050	312105-0327		1	SCREW M6S ISO 4017 M5X12 A480	
070	312145-0287		1	SCREW ISO 2009 MFS M4X8 A4	
100	312145-0289		1	SCREW ISO 2009 MFS M4X10 A4	
110	315105-0146		1	WASHER BRB 5,3X10 RFR	

Pos	Part No	UN	Qty	Description	Page No

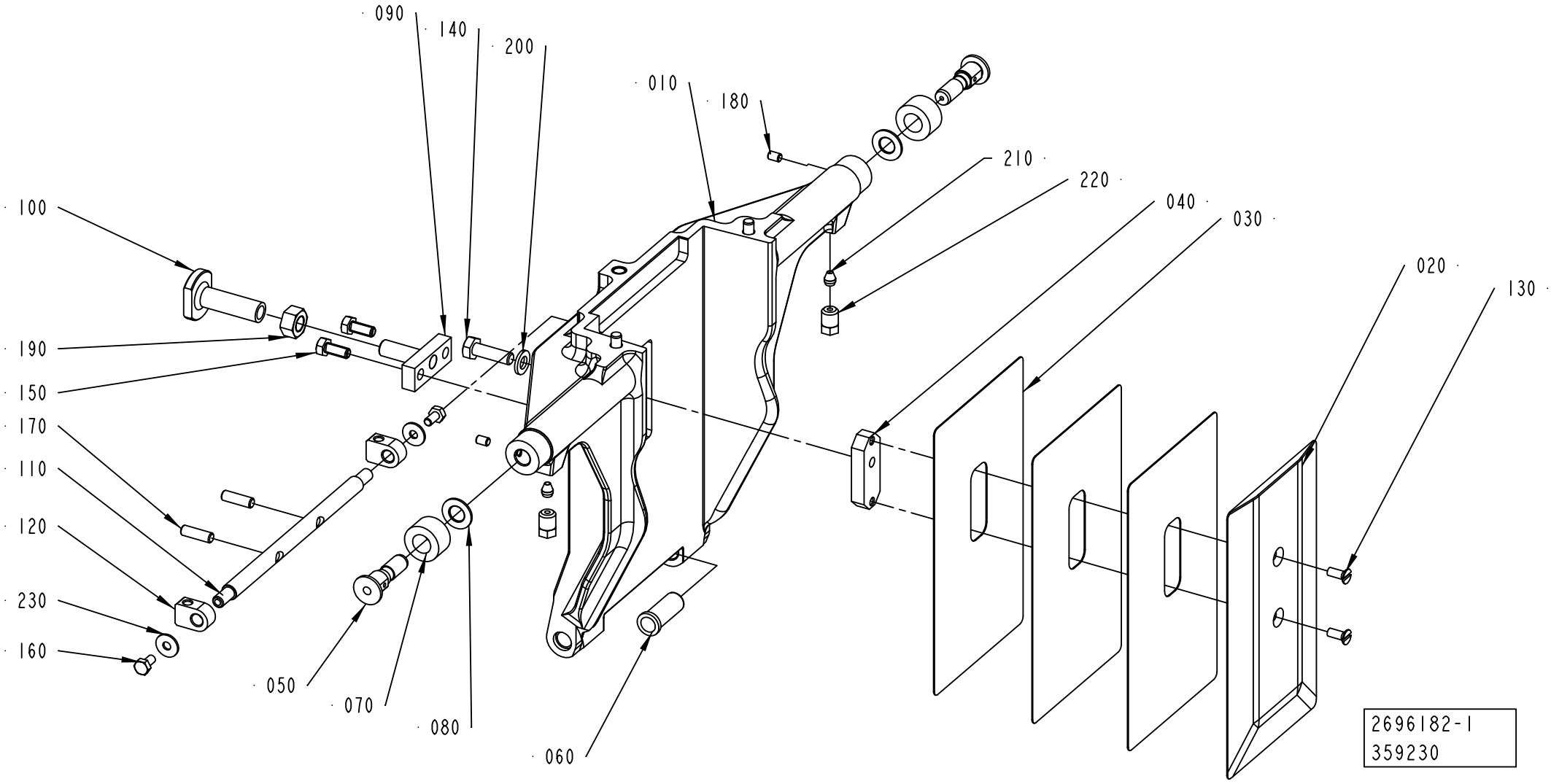
090
140
200
010
180
210
220
040
030
020
130
100
190
150
170
110
120
230
160
050
070
080
060
2696182-1
359230

ECM: 369776 - 20090101
Group number: 2696182-0100
Assembly Drawing: 2696182-1_1_AC

This list covers pages from 2-86 to 2-89

Pos	Part No	UN	Qty	Description	Page No
TBA 1400B (See drawing on page: 2-88)					
010	2764044-0000		1	VOLUME FLAP	
020	2764046-0000		1	VOLUME BULGE	
030	2764047-0000		3	VOLUME SHIM	
040	2764045-0000		1	WEDGE	
TBA 1890S QC, TBA 2000S QC (See drawing on page: 2-86)					
010	2588304-0000		1	VOLUME FLAP	
020	2594888-0000		1	VOLUME BULGE	
030	2594890-0000		3	VOLUME SHIM	
040	2594893-0000		1	WEDGE	
Common Parts					
050	2993134-0000		2	AXLE PIN	
060	1255916-0000		2	BUSHING	
070	2993135-0000		2	ROLLER	
080	19972-0000		2	WASHER	
090	2660401-0000		1	CATCH	
100	2660400-0000		1	STOP	
110	2566332-0000		1	SHAFT	
120	2566333-0000		2	HOLDER (STAFFA)	
130	312145-0289		2	SCREW ISO 2009 MFS M4X10 A4	
140	312105-0370		1	SCREW M6S ISO 4017 M6X20 A480	
150	312105-0327		2	SCREW M6S ISO 4017 M5X12 A480	
160	312105-0287		2	SCREW M6S ISO 4017 M4X8 A470	
170	312318-0329		2	SCREW ISO4029 M5X16 A4	
180	312318-0285		2	SCREW ISO4029 M4X6 A4	
190	312607-0318		1	HEXAGON NUT, EN 24032 M6M M8 A480	
200	315105-0153		1	WASHER BRB 6,4X12 RFR	
210	90028-0020		2	CONE TUBE 2,5MM	
220	90134-0063		2	BUSHING/NUT M8X1, D=2,5 MM	
230	90005-0082		2	WASHER PLAIN ROUND 4,3(M4)/12,H=1	

Pos	Part No	UN	Qty	Description	Page No

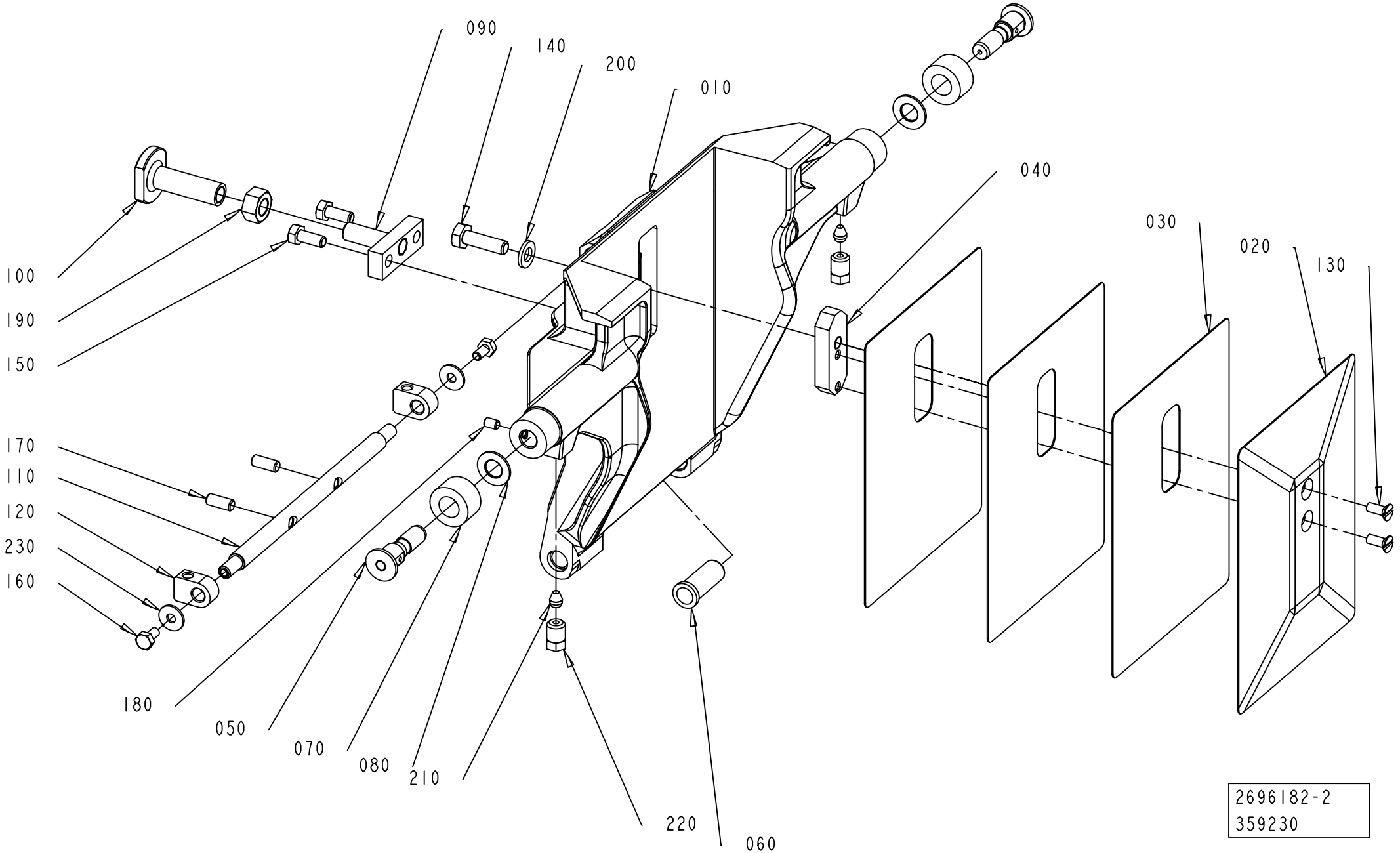
090
140
200
010
040
030
020
130
100
190
150
170
110
120
230
160
180
050
070
080
210
220
060
2696182-2
359230

ECM: 369776 - 20090101
Group number: 2696182-0100
Assembly Drawing: 2696182-2_1_AA

This list covers pages from 2-86 to 2-89

Pos	Part No	UN	Qty	Description	Page No
TBA 1400B (See drawing on page: 2-88)					
010	2764044-0000		1	VOLUME FLAP	
020	2764046-0000		1	VOLUME BULGE	
030	2764047-0000		3	VOLUME SHIM	
040	2764045-0000		1	WEDGE	
TBA 1890S QC, TBA 2000S QC (See drawing on page: 2-86)					
010	2588304-0000		1	VOLUME FLAP	
020	2594888-0000		1	VOLUME BULGE	
030	2594890-0000		3	VOLUME SHIM	
040	2594893-0000		1	WEDGE	
Common Parts					
050	2993134-0000		2	AXLE PIN	
060	1255916-0000		2	BUSHING	
070	2993135-0000		2	ROLLER	
080	19972-0000		2	WASHER	
090	2660401-0000		1	CATCH	
100	2660400-0000		1	STOP	
110	2566332-0000		1	SHAFT	
120	2566333-0000		2	HOLDER (STAFFA)	
130	312145-0289		2	SCREW ISO 2009 MFS M4X10 A4	
140	312105-0370		1	SCREW M6S ISO 4017 M6X20 A480	
150	312105-0327		2	SCREW M6S ISO 4017 M5X12 A480	
160	312105-0287		2	SCREW M6S ISO 4017 M4X8 A470	
170	312318-0329		2	SCREW ISO4029 M5X16 A4	
180	312318-0285		2	SCREW ISO4029 M4X6 A4	
190	312607-0318		1	HEXAGON NUT, EN 24032 M6M M8 A480	
200	315105-0153		1	WASHER BRB 6,4X12 RFR	
210	90028-0020		2	CONE TUBE 2,5MM	
220	90134-0063		2	BUSHING/NUT M8X1, D=2,5 MM	
230	90005-0082		2	WASHER PLAIN ROUND 4,3(M4)/12,H=1	

Pos	Part No	UN	Qty	Description	Page No

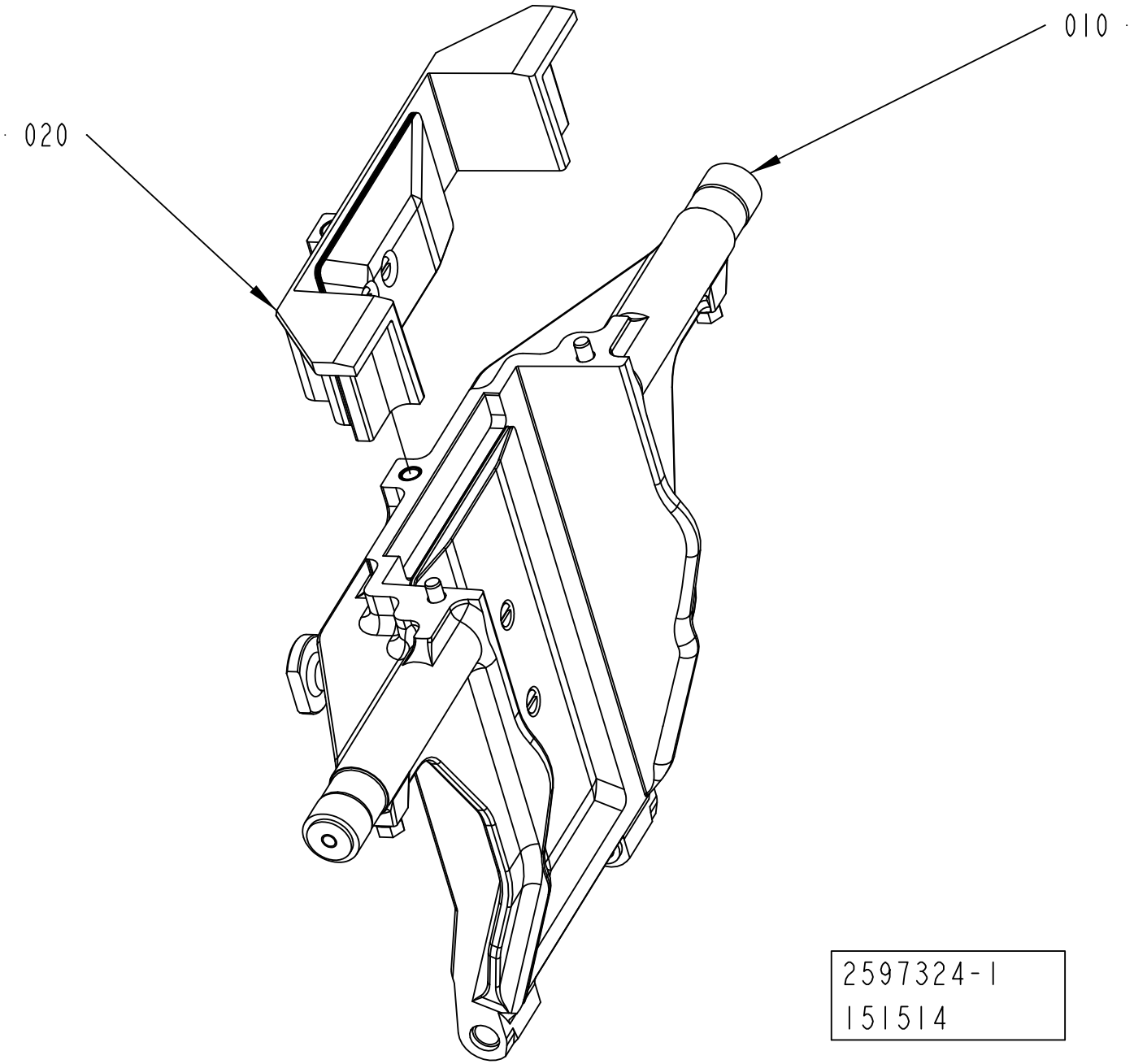
010
020
2597324-1
151514

ECM: 360777 - 20081001
Group number: 2597324-0100
Assembly Drawing: 2597324-1_1_AA

Pos	Part No	UN	Qty	Description	Page No
TBA 1890S QC, TBA 2000S QC					
020	2695955-0100		1	VOLUME FLAP	**2-85**
Common Parts					
010	2696156-0100		1	VOLUME FLAP	**2-93, 2-95**

Pos	Part No	UN	Qty	Description	Page No

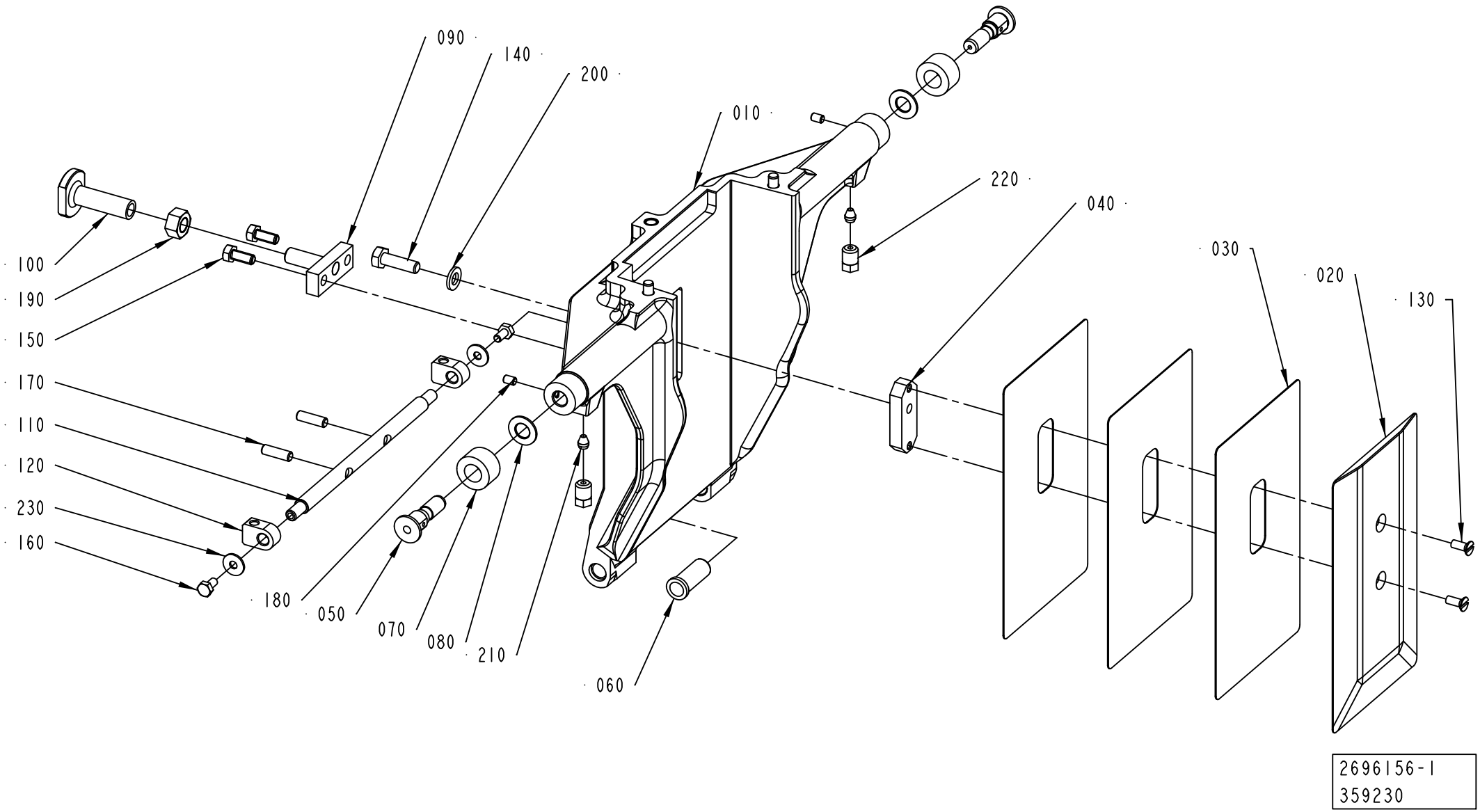
090
140
200
010
220
040
030
020
130
100
190
150
170
110
120
230
160
180
050
070
080
210
060
2696156-1
359230

ECM: 369777 - 20090101
Group number: 2696156-0100
Assembly Drawing: 2696156-1_1_AC

This list covers pages from 2-92 to 2-95

Pos	Part No	UN	Qty	Description	Page No
TBA 1400B (See drawing on page: 2-94)					
010	2764043-0000		1	VOLUME FLAP	
020	2764046-0000		1	VOLUME BULGE	
030	2764047-0000		3	VOLUME SHIM	
040	2764045-0000		1	WEDGE	
TBA 1890S QC, TBA 2000S QC (See drawing on page: 2-92)					
010	2588305-0000		1	VOLUME FLAP	
020	2594888-0000		1	VOLUME BULGE	
030	2594890-0000		3	VOLUME SHIM	
040	2594893-0000		1	WEDGE	
Common Parts					
050	2993134-0000		2	AXLE PIN	
060	1255916-0000		2	BUSHING	
070	2993135-0000		2	ROLLER	
080	19972-0000		2	WASHER	
090	2660401-0000		1	CATCH	
100	2660400-0000		1	STOP	
110	2566332-0000		1	SHAFT	
120	2566333-0000		2	HOLDER (STAFFA)	
130	312145-0289		2	SCREW ISO 2009 MFS M4X10 A4	
140	312105-0370		1	SCREW M6S ISO 4017 M6X20 A480	
150	312105-0327		2	SCREW M6S ISO 4017 M5X12 A480	
160	312105-0287		2	SCREW M6S ISO 4017 M4X8 A470	
170	312318-0329		2	SCREW ISO4029 M5X16 A4	
180	312318-0285		2	SCREW ISO4029 M4X6 A4	
190	312607-0318		1	HEXAGON NUT, EN 24032 M6M M8 A480	
200	315105-0153		1	WASHER BRB 6,4X12 RFR	
210	90028-0020		2	CONE TUBE 2,5MM	
220	90134-0063		2	BUSHING/NUT M8X1, D=2,5 MM	
230	90005-0082		2	WASHER PLAIN ROUND 4,3(M4)/12,H=1	

Pos	Part No	UN	Qty	Description	Page No

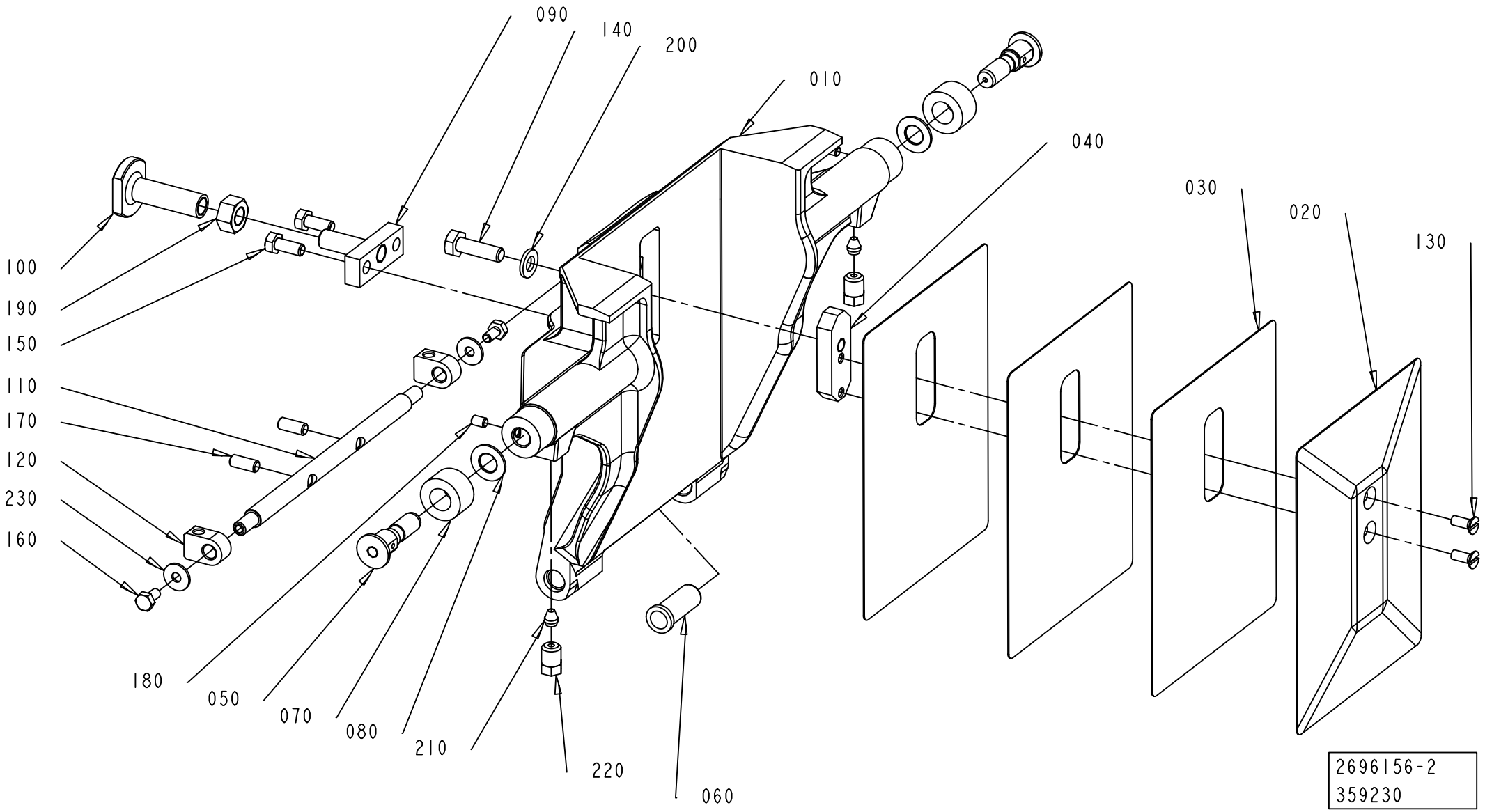
090
140
200
010
040
030
020
130
100
190
150
110
170
120
230
160
180
050
070
080
210
220
060
2696156-2
359230

Pos	Part No	UN	Qty	Description	Page No
TBA 1400B (See drawing on page: 2-94)					
010	2764043-0000		1	VOLUME FLAP	
020	2764046-0000		1	VOLUME BULGE	
030	2764047-0000		3	VOLUME SHIM	
040	2764045-0000		1	WEDGE	
TBA 1890S QC, TBA 2000S QC (See drawing on page: 2-92)					
010	2588305-0000		1	VOLUME FLAP	
020	2594888-0000		1	VOLUME BULGE	
030	2594890-0000		3	VOLUME SHIM	
040	2594893-0000		1	WEDGE	
Common Parts					
050	2993134-0000		2	AXLE PIN	
060	1255916-0000		2	BUSHING	
070	2993135-0000		2	ROLLER	
080	19972-0000		2	WASHER	
090	2660401-0000		1	CATCH	
100	2660400-0000		1	STOP	
110	2566332-0000		1	SHAFT	
120	2566333-0000		2	HOLDER (STAFFA)	
130	312145-0289		2	SCREW ISO 2009 MFS M4X10 A4	
140	312105-0370		1	SCREW M6S ISO 4017 M6X20 A480	
150	312105-0327		2	SCREW M6S ISO 4017 M5X12 A480	
160	312105-0287		2	SCREW M6S ISO 4017 M4X8 A470	
170	312318-0329		2	SCREW ISO4029 M5X16 A4	
180	312318-0285		2	SCREW ISO4029 M4X6 A4	
190	312607-0318		1	HEXAGON NUT, EN 24032 M6M M8 A480	
200	315105-0153		1	WASHER BRB 6,4X12 RFR	
210	90028-0020		2	CONE TUBE 2,5MM	
220	90134-0063		2	BUSHING/NUT M8X1, D=2,5 MM	
230	90005-0082		2	WASHER PLAIN ROUND 4,3(M4)/12,H=1	

Pos	Part No	UN	Qty	Description	Page No

VOLUME FLAP CUTTING RIGHT

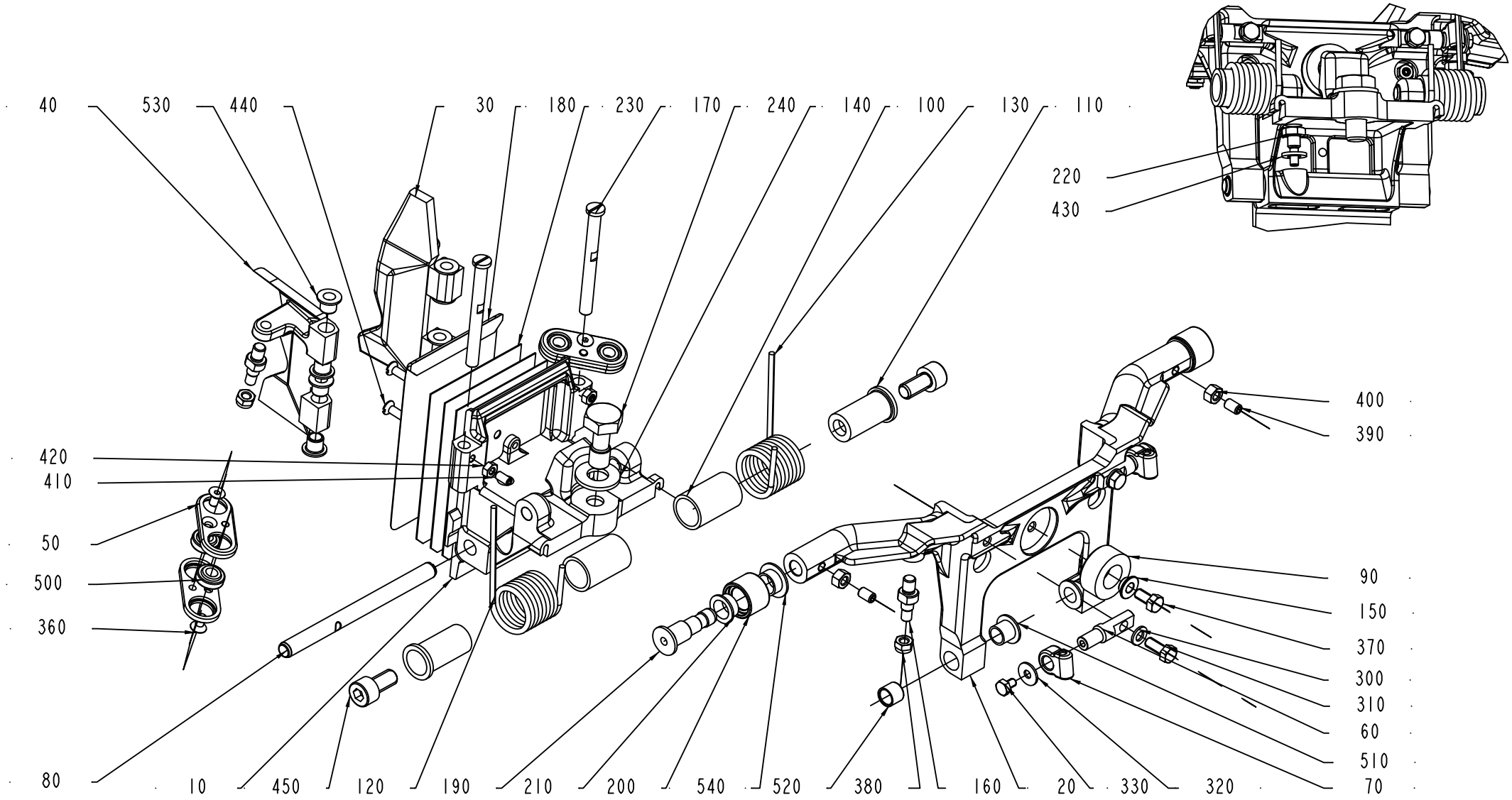

2922540-1
319762

ECM: 326429 - 20080102
Group number: 2922540-0100
Assembly Drawing: 2922540-1_1_AA

Pos	Part No	UN	Qty	Description	Page No
-					
010	2917412-0004		1	FLAP HOLDER	
020	2917413-0000		1	FRAME	
030	2917416-0000		1	FLAP	
040	2917417-0000		1	FLAP	
050	2862307-0000		4	LEVER	
060	2917418-0000		2	PIN	
070	2928239-0000		2	HOLDER	
080	2649660-0000		1	SHAFT	
090	2862308-0000		1	DAMPER	
100	1538521-0000		2	BUSHING	
110	2917419-0000		2	PIN	
120	2922536-0000		1	SPRING	
130	2922537-0000		1	SPRING	
140	315105-0173		1	WASHER BRB 10,5X22 RFR	
150	2572197-0000		1	SPACER	
160	2909850-0000		4	SPACER SCREW	
170	2866740-0000		2	SHAFT	
180	2909185-0000		1	VOLUME BULGE	
190	2868844-0000		2	AXLE PIN	
200	2660295-0000		2	ROLLER	
210	2660296-0000		2	BUSHING	
220	2922489-0000		1	PIN	
230	2909853-0000		3	SHIM	
240	2922524-0000		1	SCREW	
300	315105-0146		2	WASHER BRB 5,3X10 RFR	
310	312105-0327		2	SCREW M6S ISO 4017 M5X12 A480	
320	90005-0082		2	WASHER PLAIN ROUND 4,3(M4)/12,H=1	
330	312105-0285		2	SCREW M6S ISO 4017 M4X6 A470	
360	312155-0287		4	SCREW DIN 7991 MF6S M4X8 A4 70	
370	312105-0325		1	SCREW M6S ISO 4017 M5X10 A480	
380	312812-0314		4	HEXAGON NUT, NY-LOCK M5 A480	
390	312318-0323		2	SCREW ISO4029 M5X8 A4	
400	312605-0314		2	HEXAGON NUT, M6M M5 A280	
410	312318-0287		2	SCREW ISO4029 M4X8 A4	
420	312605-0312		2	HEXAGON NUT, M6M M4 A280	
430	315105-0153		1	WASHER BRB 6,4X12 RFR	
440	312145-0291		2	SCREW ISO 2009 MFS M4X12 A4	
450	312115-0449		2	SCREW ISO4762 M8X16 A4 80	
500	90600-3582		4	SPHERICAL BEARING, GE 6 TGR	
510	90240-0260		2	FLANGE BUSHING, 8X10X9 MM	
520	90458-0353		2	BUSHING, 8X10X8 MM	
530	321155-0062		8	FLANGE BUSHING, 6X8X6 MM	
540	90240-0289		2	FLANGE BUSHING, 10X12X6 MM	

Machine Type | Group Description | Used-In | Group Number | Page No

VOLUME FLAP CUTTING LEFT

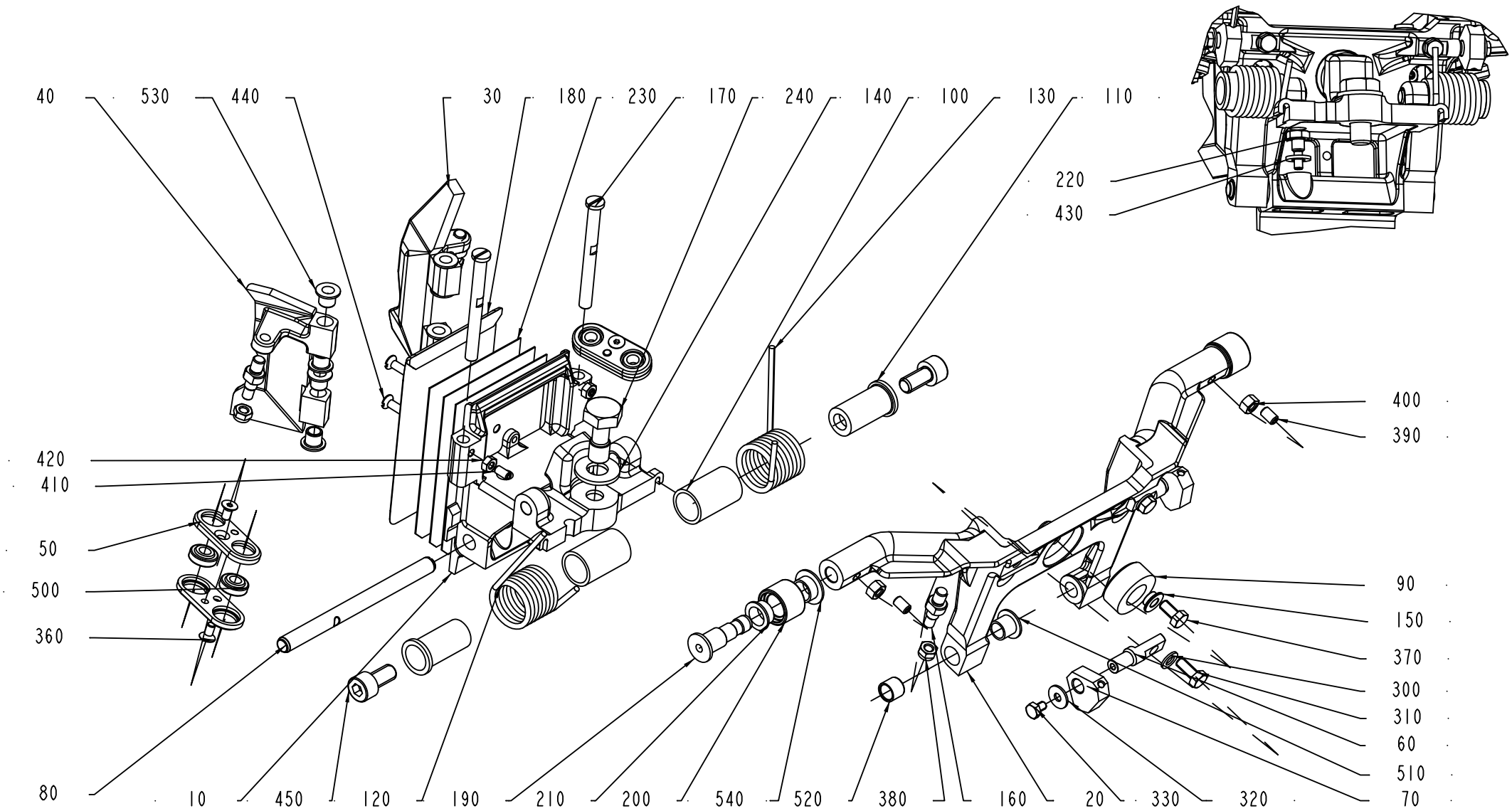

ECM: 326430 - 20080102
Group number: 2928232-0100
Assembly Drawing: 2928232-1_1_AA

Pos	Part No	UN	Qty	Description	Page No
-					
010	2917412-0001		1	FLAP HOLDER	
020	2917413-0000		1	FRAME	
030	2917416-0000		1	FLAP	
040	2917417-0000		1	FLAP	
050	2862307-0000		4	LEVER	
060	2917418-0000		2	PIN	
070	2928239-0000		2	HOLDER	
080	2649660-0000		1	SHAFT	
090	2862308-0000		1	DAMPER	
100	1538521-0000		2	BUSHING	
110	2917419-0000		2	PIN	
120	2922536-0000		1	SPRING	
130	2922537-0000		1	SPRING	
140	315105-0173		1	WASHER BRB 10,5X22 RFR	
150	2572197-0000		1	SPACER	
160	2909850-0000		4	SPACER SCREW	
170	2866740-0000		2	SHAFT	
180	2909185-0000		1	VOLUME BULGE	
190	2868844-0000		2	AXLE PIN	
200	2660295-0000		2	ROLLER	
210	2660296-0000		2	BUSHING	
220	2922489-0000		1	PIN	
230	2909853-0000		3	SHIM	
240	2922524-0000		1	SCREW	
300	315105-0146		2	WASHER BRB 5,3X10 RFR	
310	312105-0327		2	SCREW M6S ISO 4017 M5X12 A480	
320	90005-0082		2	WASHER PLAIN ROUND 4,3(M4)/12,H=1	
330	312105-0285		2	SCREW M6S ISO 4017 M4X6 A470	
360	312155-0287		4	SCREW DIN 7991 MF6S M4X8 A4 70	
370	312105-0325		1	SCREW M6S ISO 4017 M5X10 A480	
380	312812-0314		4	HEXAGON NUT, NY-LOCK M5 A480	
390	312318-0323		2	SCREW ISO4029 M5X8 A4	
400	312605-0314		2	HEXAGON NUT, M6M M5 A280	
410	312318-0287		2	SCREW ISO4029 M4X8 A4	
420	312605-0312		2	HEXAGON NUT, M6M M4 A280	
430	315105-0153		1	WASHER BRB 6,4X12 RFR	
440	312145-0291		2	SCREW ISO 2009 MFS M4X12 A4	
450	312115-0449		2	SCREW ISO4762 M8X16 A4 80	
500	90600-3582		4	SPHERICAL BEARING, GE 6 TGR	
510	90240-0260		2	FLANGE BUSHING, 8X10X9 MM	
520	90458-0353		2	BUSHING, 8X10X8 MM	
530	321155-0062		8	FLANGE BUSHING, 6X8X6 MM	
540	90240-0289		2	FLANGE BUSHING, 10X12X6 MM	

Machine Type | Group Description | Used-In | Group Number | Page No

VOLUME FLAP PRESSURE RIGHT

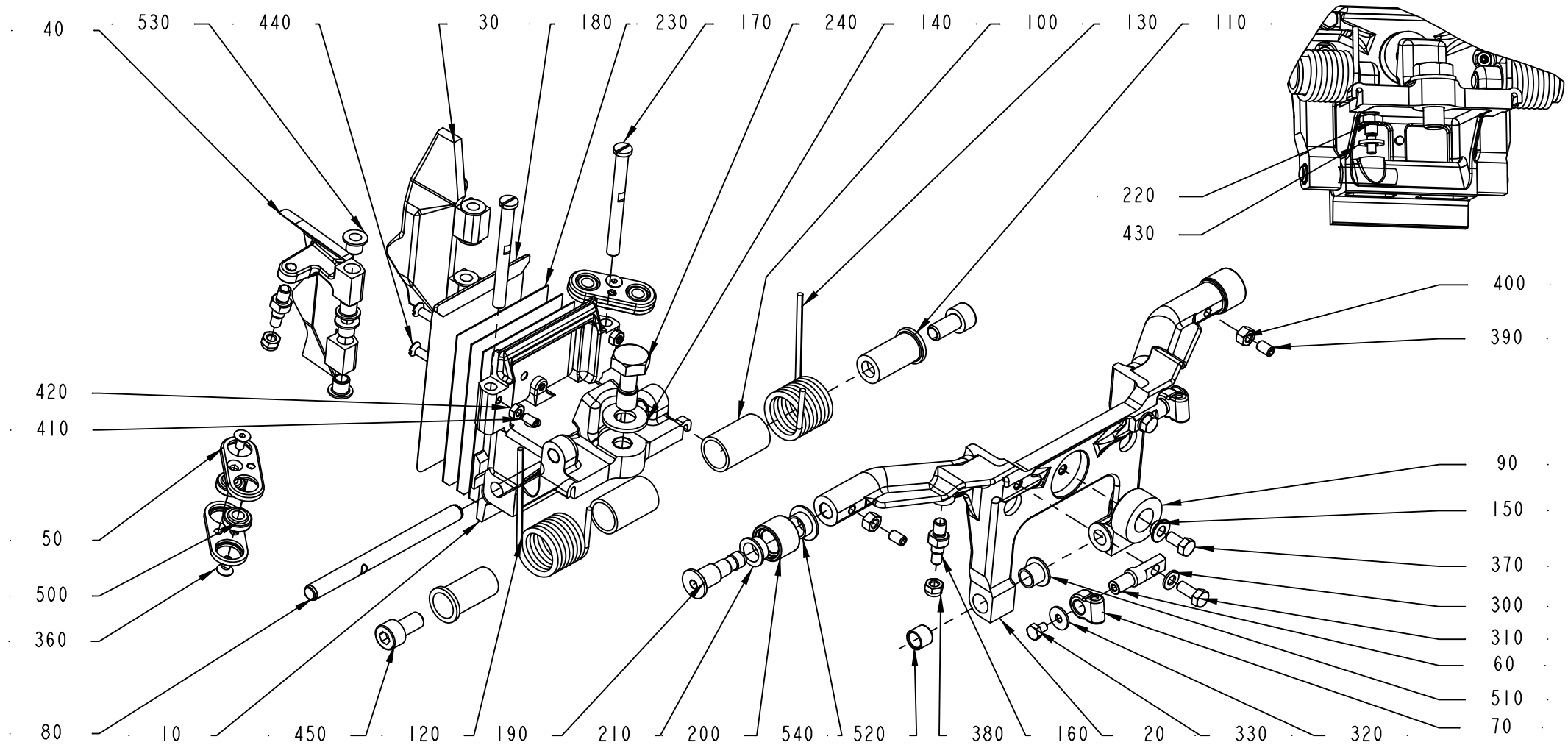

ECM: 326428 - 20080102
Group number: 2922539-0100
Assembly Drawing: 2922539-1_1_AA

Pos	Part No	UN	Qty	Description	Page No
-					
010	2917412-0002		1	FLAP HOLDER	
020	2917413-0000		1	FRAME	
030	2917414-0000		1	FLAP	
040	2917415-0000		1	FLAP	
050	2862307-0000		4	LEVER	
060	2917418-0000		2	PIN	
070	2928239-0000		2	HOLDER	
080	2649660-0000		1	SHAFT	
090	2862308-0000		1	DAMPER	
100	1538521-0000		2	BUSHING	
110	2917419-0000		2	PIN	
120	2922536-0000		1	SPRING	
130	2922537-0000		1	SPRING	
140	315105-0173		1	WASHER BRB 10,5X22 RFR	
150	2572197-0000		1	SPACER	
160	2909850-0000		4	SPACER SCREW	
170	2866740-0000		2	SHAFT	
180	2909185-0000		1	VOLUME BULGE	
190	2868844-0000		2	AXLE PIN	
200	2660295-0000		2	ROLLER	
210	2660296-0000		2	BUSHING	
220	2922489-0000		1	PIN	
230	2909853-0000		3	SHIM	
240	2922524-0000		1	SCREW	
300	315105-0146		2	WASHER BRB 5,3X10 RFR	
310	312105-0327		2	SCREW M6S ISO 4017 M5X12 A480	
320	90005-0082		2	WASHER PLAIN ROUND 4,3(M4)/12,H=1	
330	312105-0285		2	SCREW M6S ISO 4017 M4X6 A470	
360	312155-0287		4	SCREW DIN 7991 MF6S M4X8 A4 70	
370	312105-0325		1	SCREW M6S ISO 4017 M5X10 A480	
380	312812-0314		4	HEXAGON NUT, NY-LOCK M5 A480	
390	312318-0323		2	SCREW ISO4029 M5X8 A4	
400	312605-0314		2	HEXAGON NUT, M6M M5 A280	
410	312318-0287		2	SCREW ISO4029 M4X8 A4	
420	312605-0312		2	HEXAGON NUT, M6M M4 A280	
430	315105-0153		1	WASHER BRB 6,4X12 RFR	
440	312145-0291		2	SCREW ISO 2009 MFS M4X12 A4	
450	312115-0449		2	SCREW ISO4762 M8X16 A4 80	
500	90600-3582		4	SPHERICAL BEARING, GE 6 TGR	
510	90240-0260		2	FLANGE BUSHING, 8X10X9 MM	
520	90458-0353		2	BUSHING, 8X10X8 MM	
530	321155-0062		8	FLANGE BUSHING, 6X8X6 MM	
540	90240-0289		2	FLANGE BUSHING, 10X12X6 MM	

Machine Type | Group Description | Used-In | Group Number | Page No

VOLUME FLAP PRESSURE LEFT

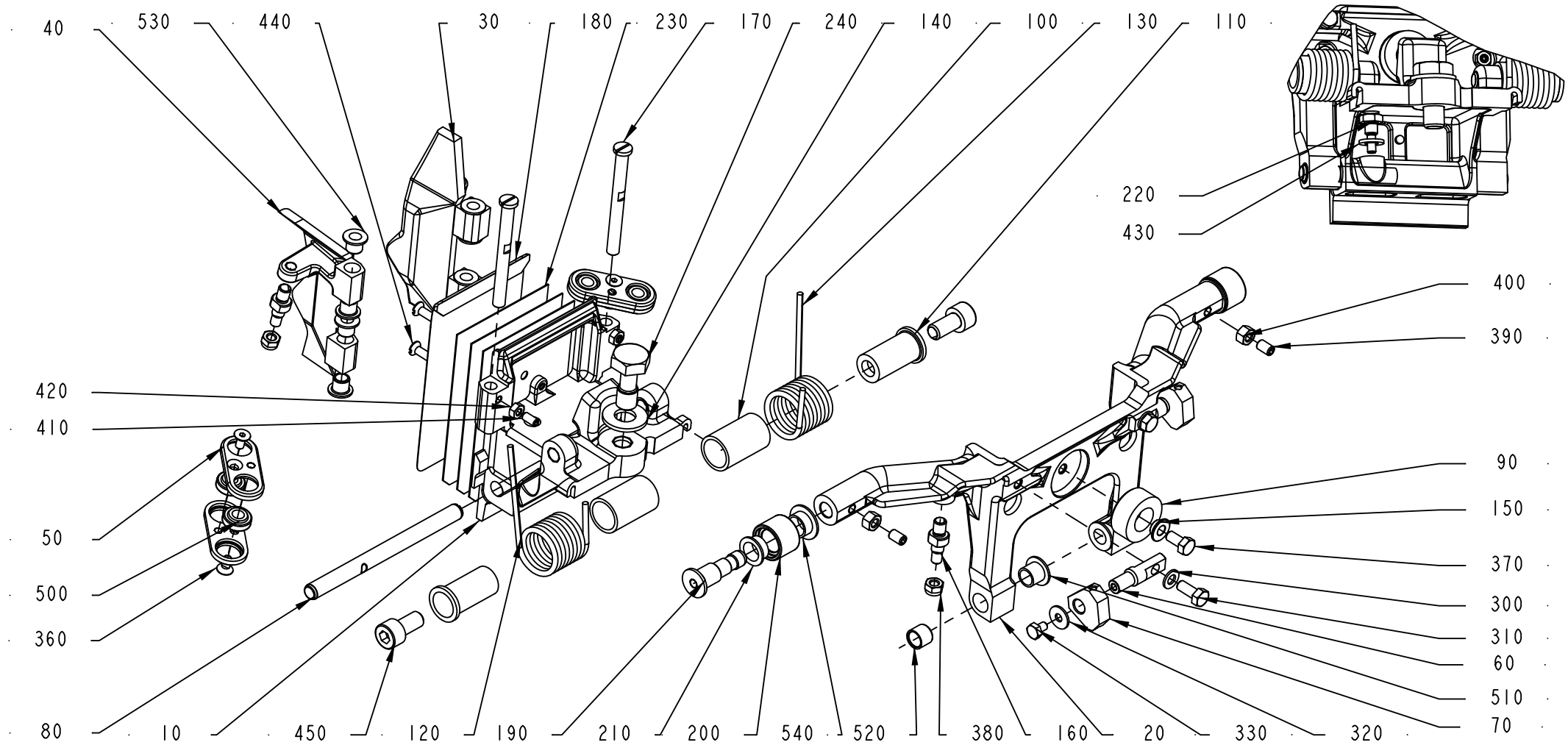

ECM: 326431 - 20080102
Group number: 2928233-0100
Assembly Drawing: 2928233-1_1_AA

Pos	Part No	UN	Qty	Description	Page No
-					
010	2917412-0003		1	FLAP HOLDER	
020	2917413-0000		1	FRAME	
030	2917414-0000		1	FLAP	
040	2917415-0000		1	FLAP	
050	2862307-0000		4	LEVER	
060	2917418-0000		2	PIN	
070	2928239-0000		2	HOLDER	
080	2649660-0000		1	SHAFT	
090	2862308-0000		1	DAMPER	
100	1538521-0000		2	BUSHING	
110	2917419-0000		2	PIN	
120	2922536-0000		1	SPRING	
130	2922537-0000		1	SPRING	
140	315105-0173		1	WASHER BRB 10,5X22 RFR	
150	2572197-0000		1	SPACER	
160	2909850-0000		4	SPACER SCREW	
170	2866740-0000		2	SHAFT	
180	2909185-0000		1	VOLUME BULGE	
190	2868844-0000		2	AXLE PIN	
200	2660295-0000		2	ROLLER	
210	2660296-0000		2	BUSHING	
220	2922489-0000		1	PIN	
230	2909853-0000		3	SHIM	
240	2922524-0000		1	SCREW	
300	315105-0146		2	WASHER BRB 5,3X10 RFR	
310	312105-0327		2	SCREW M6S ISO 4017 M5X12 A480	
320	90005-0082		2	WASHER PLAIN ROUND 4,3(M4)/12,H=1	
330	312105-0285		2	SCREW M6S ISO 4017 M4X6 A470	
360	312155-0287		4	SCREW DIN 7991 MF6S M4X8 A4 70	
370	312105-0325		1	SCREW M6S ISO 4017 M5X10 A480	
380	312812-0314		4	HEXAGON NUT, NY-LOCK M5 A480	
390	312318-0323		2	SCREW ISO4029 M5X8 A4	
400	312605-0314		2	HEXAGON NUT, M6M M5 A280	
410	312318-0287		2	SCREW ISO4029 M4X8 A4	
420	312605-0312		2	HEXAGON NUT, M6M M4 A280	
430	315105-0153		1	WASHER BRB 6,4X12 RFR	
440	312145-0291		2	SCREW ISO 2009 MFS M4X12 A4	
450	312115-0449		2	SCREW ISO4762 M8X16 A4 80	
500	90600-3582		4	SPHERICAL BEARING, GE 6 TGR	
510	90240-0260		2	FLANGE BUSHING, 8X10X9 MM	
520	90458-0353		2	BUSHING, 8X10X8 MM	
530	321155-0062		8	FLANGE BUSHING, 6X8X6 MM	
540	90240-0289		2	FLANGE BUSHING, 10X12X6 MM	

Machine Type | Group Description | Used-In | Group Number | Page No

VOLUME FLAP CUTTING RIGHT

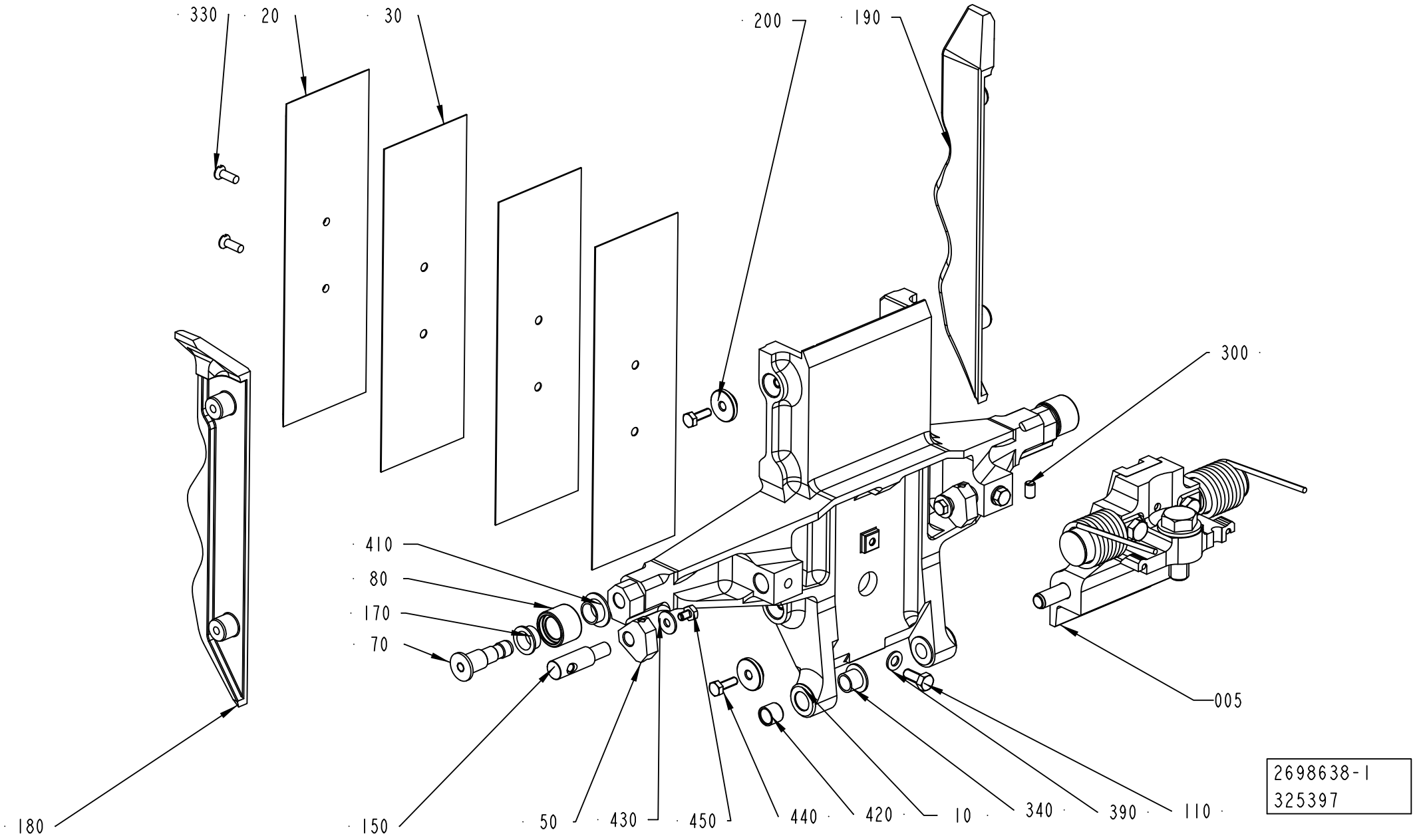

ECM: 326427 - 20080102
Group number: 2698638-0100
Assembly Drawing: 2698638-1_1_AB

Pos	Part No	UN	Qty	Description	Page No
A3/FLEX TGA 0750SQ					
010	2682187-0000		1	VOLUME FLAP	
020	2909851-0000		1	VOLUME BULGE	
030	2909852-0000		3	SHIM	
180	2682190-0000		1	FLAP	
190	2682191-0000		1	FLAP	
A3/FLEX TGA 1000SQ					
010	2660289-0000		1	VOLUME FLAP	
020	2660292-0000		1	VOLUME BULGE	
030	2660293-0000		3	VOLUME SHIM	
180	2682172-0000		1	FLAP	
190	2682173-0000		1	FLAP	
Common Parts					
005	2928238-0100		1	SHOCK ABSORBER	**2-107**
050	2928239-0000		2	HOLDER	
070	2868844-0000		2	AXLE PIN	
080	2660295-0000		2	ROLLER	
150	2594702-0000		2	SHAFT	
170	2660296-0000		2	BUSHING	
200	2682174-0000		4	WASHER	
300	312318-0323		2	SCREW ISO4029 M5X8 A4	
330	312145-0291		2	SCREW ISO 2009 MFS M4X12 A4	
340	90240-0260		2	FLANGE BUSHING, 8X10X9 MM	
350	312105-0327		2	SCREW M6S ISO 4017 M5X12 A480	
390	315105-0146		2	WASHER BRB 5,3X10 RFR	
410	90240-0289		2	FLANGE BUSHING, 10X12X6 MM	
420	90458-0353		2	BUSHING, 8X10X8 MM	
430	90005-0082		2	WASHER PLAIN ROUND 4,3(M4)/12,H=1	
440	312105-0291		4	SCREW M6S ISO 4017 M4X12 A470	

Pos	Part No	UN	Qty	Description	Page No

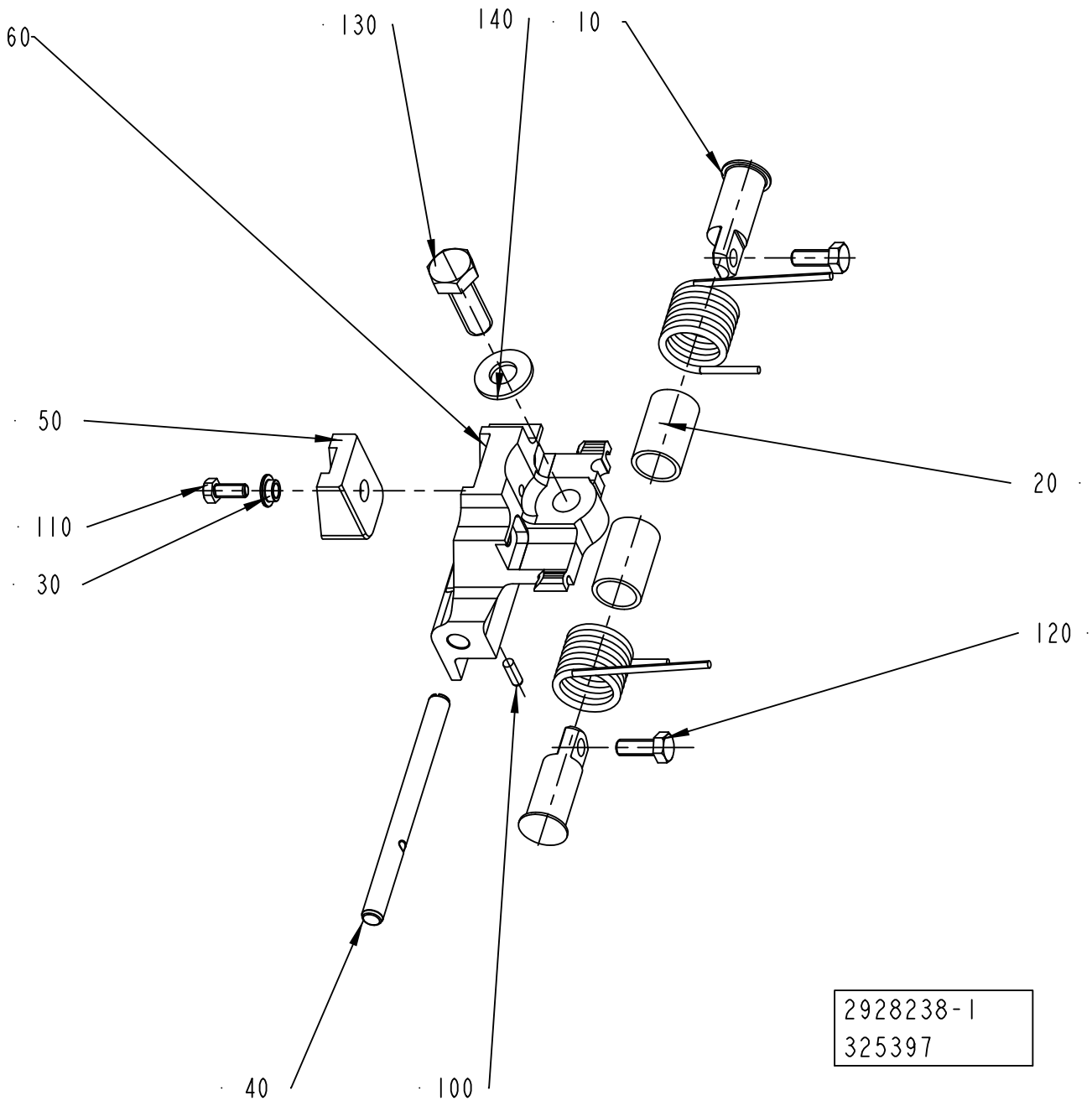
60
130
140
10
50
20
110
30
120
40
100
2928238-1
325397

ECM: 383386 - 20090402
Group number: 2928238-0100
Assembly Drawing: 2928238-1_1_AA

Pos	Part No	UN	Qty	Description	Page No
-					
010	1519811-0000		2	SHAFT	
020	1538521-0000		2	BUSHING	
030	2572197-0000		1	SPACER	
040	2649660-0000		1	SHAFT	
050	2649677-0000		1	DAMPER	
060	2928234-0004		1	HOLDER	
100	311103-0268		1	PARALLEL PIN ISO 2338 4M6X12 A1	
110	312105-0327		1	SCREW M6S ISO 4017 M5X12 A480	
120	312105-0368		2	SCREW M6S ISO 4017 M6X16 A480	
130	312105-0495		1	SCREW M6S ISO 4017 M10X30 A480	
140	315105-0173		1	WASHER BRB 10,5X22 RFR	
150	2922537-0000		1	SPRING	
160	2922536-0000		1	SPRING	

Pos	Part No	UN	Qty	Description	Page No

VOLUME FLAP CUTTING LEFT

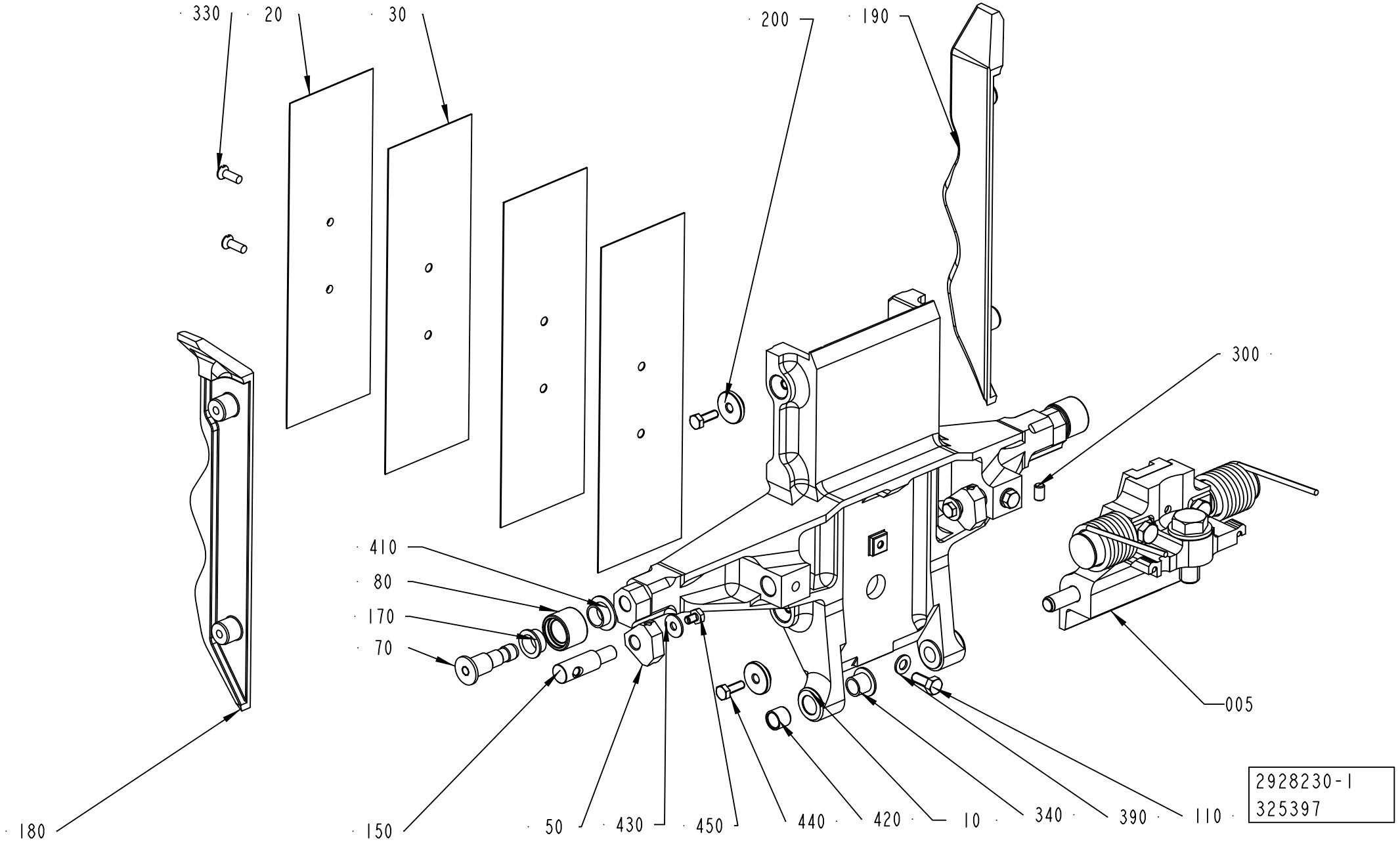

ECM: 326422 - 20080102
Group number: 2928230-0100
Assembly Drawing: 2928230-1_1_AA

Pos	Part No	UN	Qty	Description	Page No
A3/FLEX TGA 0750SQ					
010	2682187-0000		1	VOLUME FLAP	
020	2909851-0000		1	VOLUME BULGE	
030	2909852-0000		3	SHIM	
180	2682190-0000		1	FLAP	
190	2682191-0000		1	FLAP	
A3/FLEX TGA 1000SQ					
010	2660289-0000		1	VOLUME FLAP	
020	2660292-0000		1	VOLUME BULGE	
030	2660293-0000		3	VOLUME SHIM	
180	2682172-0000		1	FLAP	
190	2682173-0000		1	FLAP	
Common Parts					
005	2928238-0100		1	SHOCK ABSORBER	**2-107**
050	2928239-0000		2	HOLDER	
070	2868844-0000		2	AXLE PIN	
080	2660295-0000		2	ROLLER	
150	2594702-0000		2	SHAFT	
170	2660296-0000		2	BUSHING	
200	2682174-0000		4	WASHER	
300	312318-0323		2	SCREW ISO4029 M5X8 A4	
330	312145-0291		2	SCREW ISO 2009 MFS M4X12 A4	
340	90240-0260		2	FLANGE BUSHING, 8X10X9 MM	
350	312105-0327		2	SCREW M6S ISO 4017 M5X12 A480	
390	315105-0146		2	WASHER BRB 5,3X10 RFR	
410	90240-0289		2	FLANGE BUSHING, 10X12X6 MM	
420	90458-0353		2	BUSHING, 8X10X8 MM	
430	90005-0082		2	WASHER PLAIN ROUND 4,3(M4)/12,H=1	
440	312105-0291		4	SCREW M6S ISO 4017 M4X12 A470	

Pos	Part No	UN	Qty	Description	Page No

VOLUME FLAP PRESSURE RIGHT

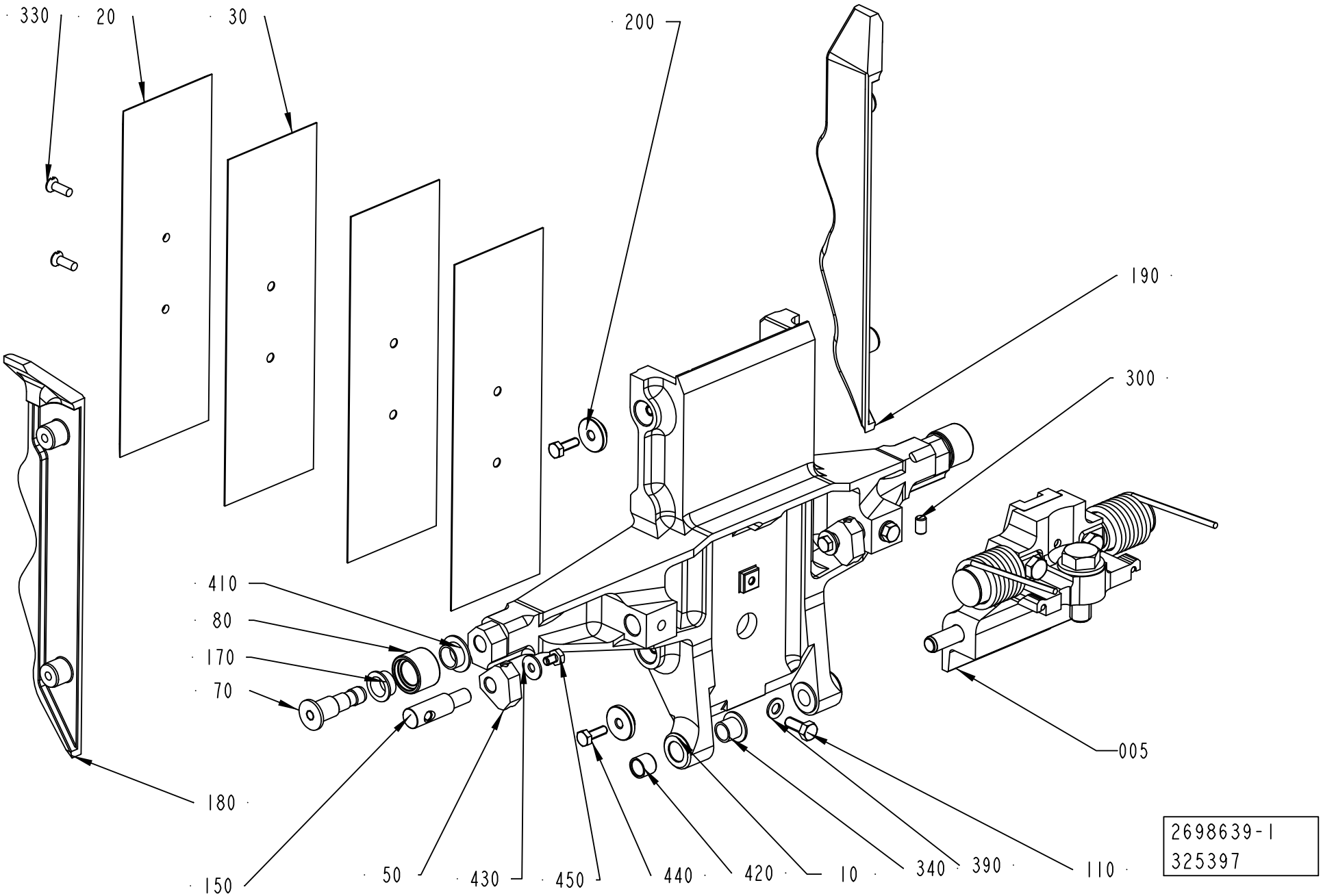

ECM: 326600 - 20080102
Group number: 2698639-0100
Assembly Drawing: 2698639-1_1_AB

Pos	Part No	UN	Qty	Description	Page No
A3/FLEX TGA 0750SQ					
010	2682187-0000		1	VOLUME FLAP	
020	2909851-0000		1	VOLUME BULGE	
030	2909852-0000		3	SHIM	
180	2682188-0000		1	FLAP	
190	2682189-0000		1	FLAP	
A3/FLEX TGA 1000SQ					
010	2660289-0000		1	VOLUME FLAP	
020	2660292-0000		1	VOLUME BULGE	
030	2660293-0000		3	VOLUME SHIM	
180	2660308-0000		1	FLAP	
190	2660309-0000		1	FLAP	
Common Parts					
005	2928236-0100		1	SHOCK ABSORBER	**2-113**
050	2928239-0000		2	HOLDER	
070	2594709-0000		2	AXLE PIN	
080	2660295-0000		2	ROLLER	
150	2594702-0000		2	SHAFT	
170	2660296-0000		2	BUSHING	
200	2682174-0000		4	WASHER	
300	312318-0287		2	SCREW ISO4029 M4X8 A4	
330	312145-0291		2	SCREW ISO 2009 MFS M4X12 A4	
340	90240-0260		2	FLANGE BUSHING, 8X10X9 MM	
350	312105-0327		2	SCREW M6S ISO 4017 M5X12 A480	
390	315105-0146		2	WASHER BRB 5,3X10 RFR	
410	90240-0289		2	FLANGE BUSHING, 10X12X6 MM	
420	90458-0353		2	BUSHING, 8X10X8 MM	
430	90005-0082		2	WASHER PLAIN ROUND 4,3(M4)/12,H=1	
440	312105-0291		4	SCREW M6S ISO 4017 M4X12 A470	

Pos	Part No	UN	Qty	Description	Page No

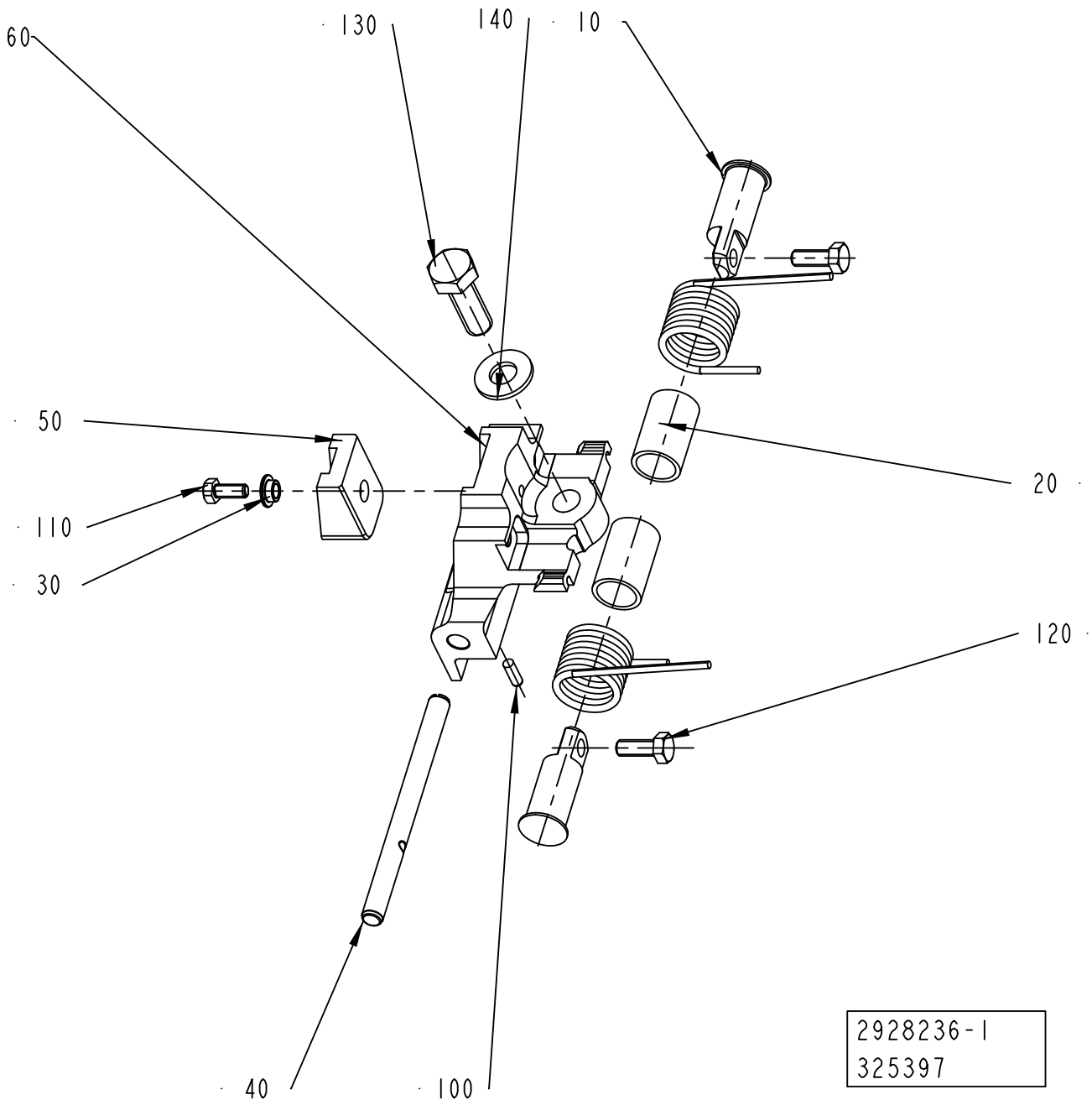
60
130
140
10
50
20
110
30
120
40
100
2928236-1
325397

ECM: 383388 - 20090402
Group number: 2928236-0100
Assembly Drawing: 2928236-1_1_AA

Pos	Part No	UN	Qty	Description	Page No
-					
010	1519811-0000		2	SHAFT	
020	1538521-0000		2	BUSHING	
030	2572197-0000		1	SPACER	
040	2649660-0000		1	SHAFT	
050	2649677-0000		1	DAMPER	
060	2928234-0002		1	HOLDER	
100	311103-0268		1	PARALLEL PIN ISO 2338 4M6X12 A1	
110	312105-0327		1	SCREW M6S ISO 4017 M5X12 A480	
120	312105-0368		2	SCREW M6S ISO 4017 M6X16 A480	
130	312105-0495		1	SCREW M6S ISO 4017 M10X30 A480	
140	315105-0173		1	WASHER BRB 10,5X22 RFR	
150	2922537-0000		1	SPRING	
160	2922536-0000		1	SPRING	

Pos	Part No	UN	Qty	Description	Page No

VOLUME FLAP PRESSURE LEFT

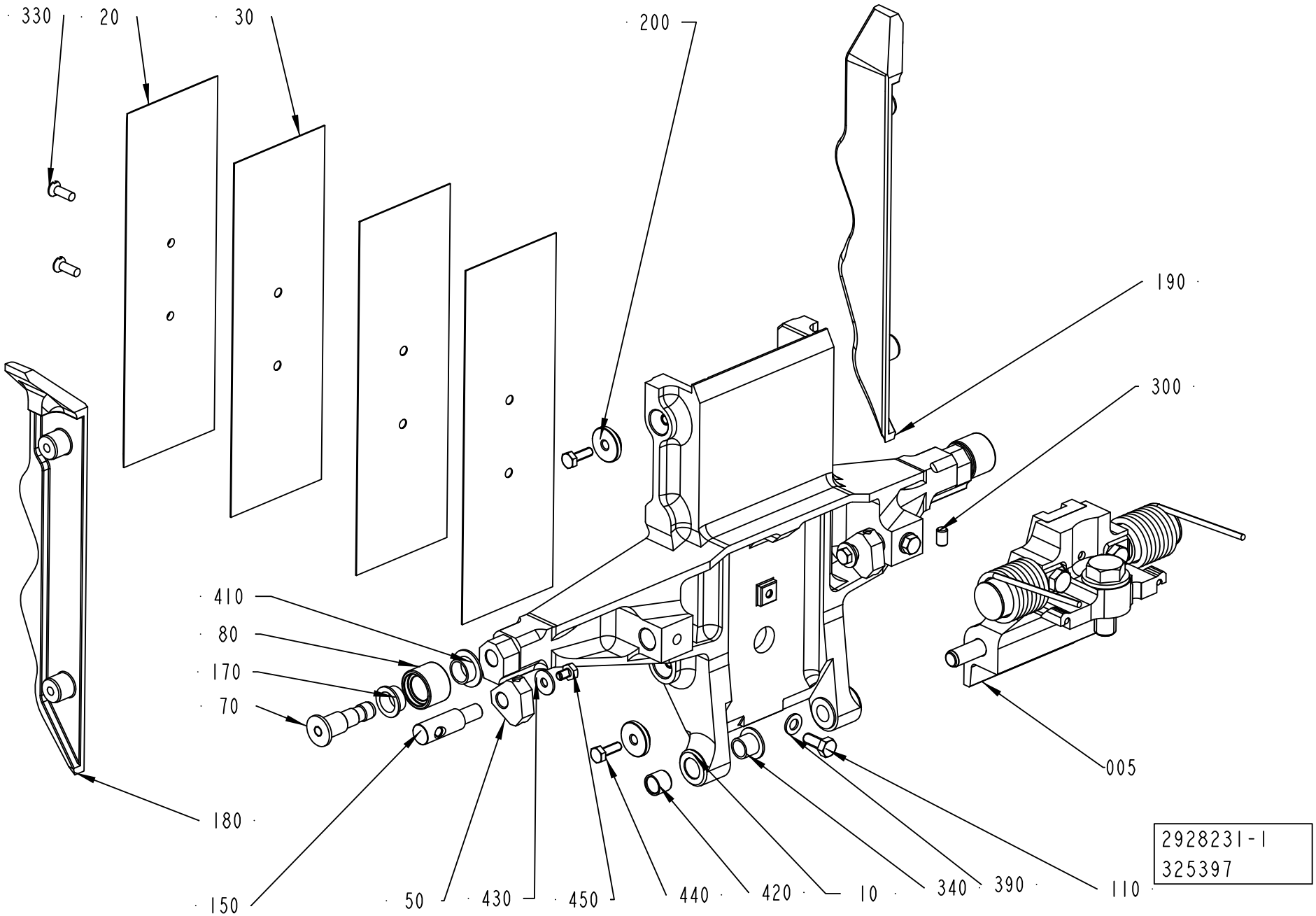

ECM: 326421 - 20080102
Group number: 2928231-0100
Assembly Drawing: 2928231-1_1_AA

Pos	Part No	UN	Qty	Description	Page No
A3/FLEX TGA 0750SQ					
010	2682187-0000		1	VOLUME FLAP	
020	2909851-0000		1	VOLUME BULGE	
030	2909852-0000		3	SHIM	
180	2682188-0000		1	FLAP	
190	2682189-0000		1	FLAP	
A3/FLEX TGA 1000SQ					
010	2660289-0000		1	VOLUME FLAP	
020	2660292-0000		1	VOLUME BULGE	
030	2660293-0000		3	VOLUME SHIM	
180	2660308-0000		1	FLAP	
190	2660309-0000		1	FLAP	
Common Parts					
005	2928237-0100		1	SHOCK ABSORBER	**2-117**
050	2928239-0000		2	HOLDER	
070	2594709-0000		2	AXLE PIN	
080	2660295-0000		2	ROLLER	
150	2594702-0000		2	SHAFT	
170	2660296-0000		2	BUSHING	
200	2682174-0000		4	WASHER	
300	312318-0287		2	SCREW ISO4029 M4X8 A4	
330	312145-0291		2	SCREW ISO 2009 MFS M4X12 A4	
340	90240-0260		2	FLANGE BUSHING, 8X10X9 MM	
350	312105-0327		2	SCREW M6S ISO 4017 M5X12 A480	
390	315105-0146		2	WASHER BRB 5,3X10 RFR	
410	90240-0289		2	FLANGE BUSHING, 10X12X6 MM	
420	90458-0353		2	BUSHING, 8X10X8 MM	
430	90005-0082		2	WASHER PLAIN ROUND 4,3(M4)/12,H=1	
440	312105-0291		4	SCREW M6S ISO 4017 M4X12 A470	

Pos	Part No	UN	Qty	Description	Page No

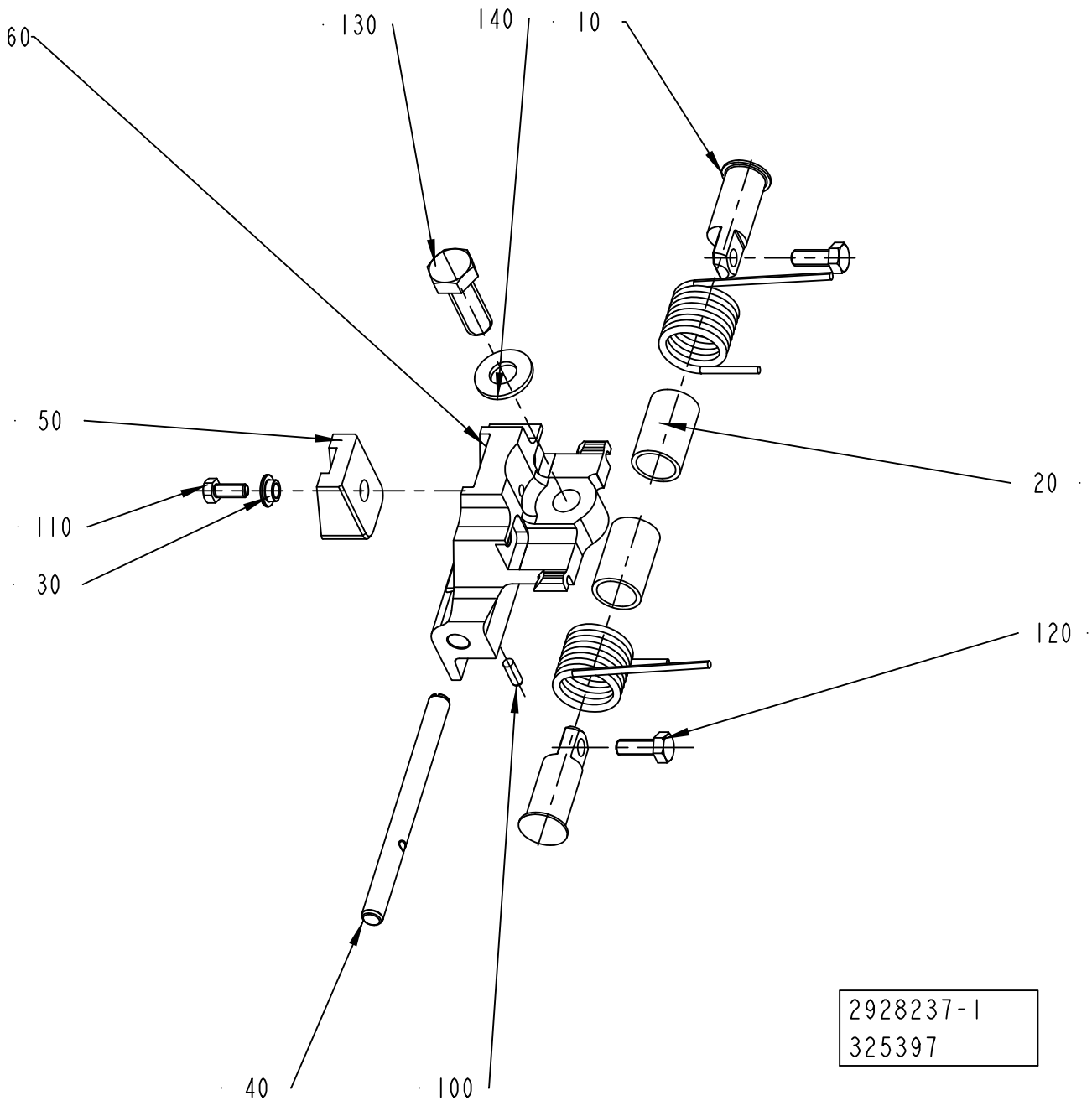
60
130
140
10
50
20
110
30
120
40
100
2928237-1
325397

ECM: 383387 - 20090402
Group number: 2928237-0100
Assembly Drawing: 2928237-1_1_AA

Pos	Part No	UN	Qty	Description	Page No
-					
010	1519811-0000		2	SHAFT	
020	1538521-0000		2	BUSHING	
030	2572197-0000		1	SPACER	
040	2649660-0000		1	SHAFT	
050	2649677-0000		1	DAMPER	
060	2928234-0003		1	HOLDER	
100	311103-0268		1	PARALLEL PIN ISO 2338 4M6X12 A1	
110	312105-0327		1	SCREW M6S ISO 4017 M5X12 A480	
120	312105-0368		2	SCREW M6S ISO 4017 M6X16 A480	
130	312105-0495		1	SCREW M6S ISO 4017 M10X30 A480	
140	315105-0173		1	WASHER BRB 10,5X22 RFR	
150	2922537-0000		1	SPRING	
160	2922536-0000		1	SPRING	

Pos	Part No	UN	Qty	Description	Page No

CARRIER PRESSURE LEFT

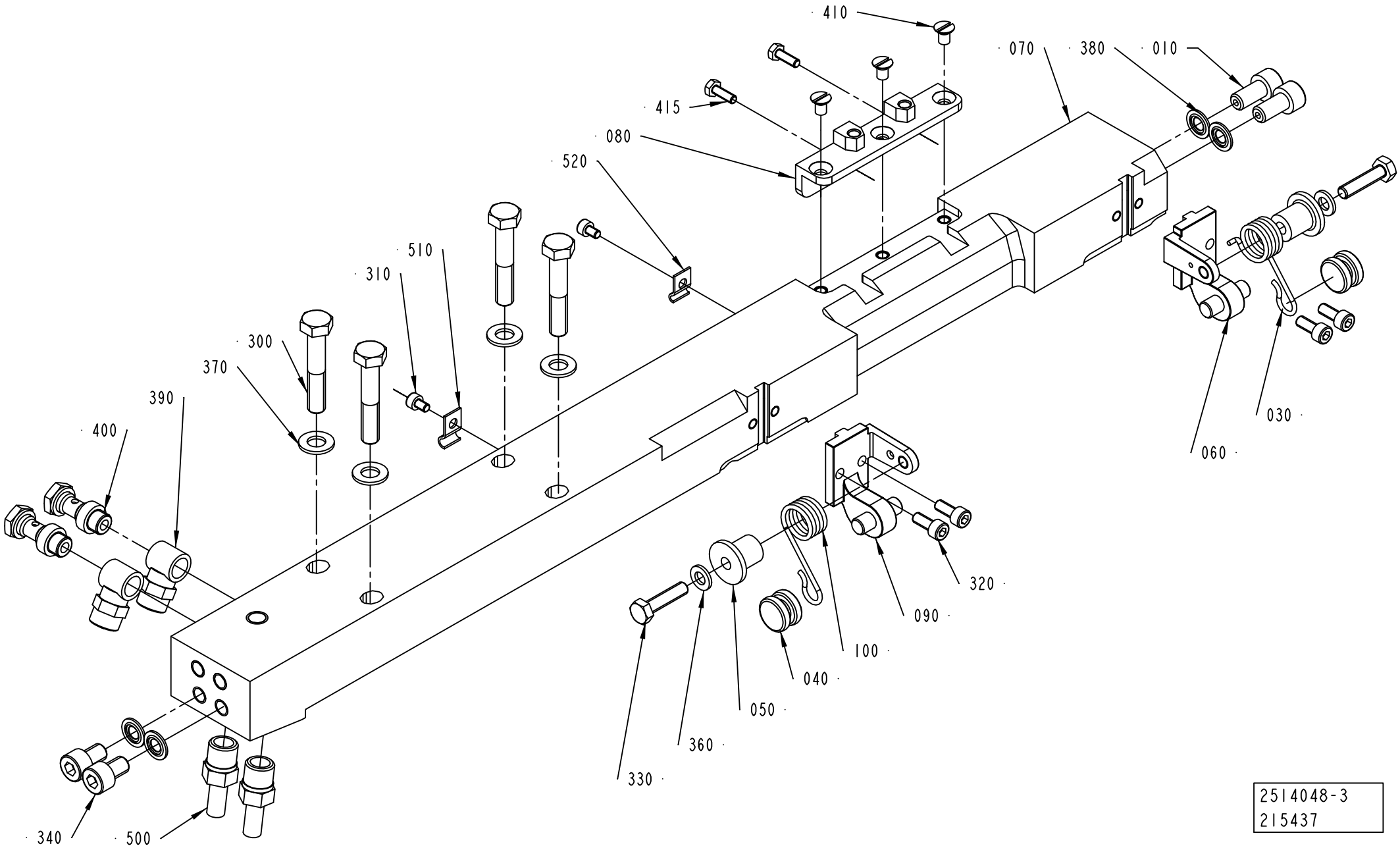

2514048-3
215437

ECM: 998080 - 20081001
Group number: 2514048-0200
Assembly Drawing: 2514048-3_1_AB

This list covers pages from 2-118 to 2-125

Pos	Part No	UN	Qty	Description	Page No
A3/FLEX NOQC (See drawing on page: 2-120)					
070	2514049-0000		1	CARRIER	
310	312115-0285		2	SCREW ISO4762 M4X6 A4 80	
510	90165-0056		1	PIPE CLIP FOR TUBE D=4 MM	
520	90165-0058		1	PIPE CLIP FOR TUBE D=2,5 MM	
A3/FLEX TBA 0200M QC, A3/FLEX TBA 0250S QC (See drawing on page: 2-122)					
070	2514045-0000		1	CARRIER	
080	2641225-0000		1	INSERT	
410	312145-0323		3	SCREW ISO 2009 MFS M5X8 A4	
A3/FLEX TBA 0500B QC, A3/FLEX TBA 1000B QC, A3/FLEX TBA 0250B QC, A3/FLEX TBA 0200B QC, A3/FLEX TBA 0330S QC, A3/FLEX TPA 0200SQ QC, A3/FLEX TPA 0250SQ QC, A3/FLEX TBA 0250SQ QC, A3/FLEX TBA 0200SQ QC (See drawing on page: 2-122)					
070	2514045-0000		1	CARRIER	
080	1549312-0000		1	INSERT	
410	312145-0323		3	SCREW ISO 2009 MFS M5X8 A4	
A3/FLEX TBA 1890S QC, A3/FLEX TBA 2000S QC, A3/FLEX TBA 1400B (See drawing on page: 2-120)					
070	2566340-0000		1	CARRIER	
310	312115-0285		2	SCREW ISO4762 M4X6 A4 80	
510	90165-0056		1	PIPE CLIP FOR TUBE D=4 MM	
520	90165-0058		1	PIPE CLIP FOR TUBE D=2,5 MM	
A3/FLEX TGA 1000SQ, A3/FLEX TGA 0500SQ, A3/FLEX TGA 0750SQ (See drawing on page: 2-124)					
070	2594712-0000		1	CARRIER	
540	311103-0308		1	PARALLEL PIN ISO 2338 5M6X16 A1	
700	90153-0053		1	ADHESIVE, LOCTITE 648 TEMP 150`C 50ML	
A3/FLEX TPA 1000SQ QC, A3/FLEX TPA 0750SQ QC, A3/FLEX TBA 0500SQ QC, A3/FLEX TBA 1000SQ QC (See drawing on page: 2-118)					
070	2647115-0000		1	CARRIER	
080	2647114-0000		1	INSERT	
310	312115-0285		2	SCREW ISO4762 M4X6 A4 80	
410	312145-0323		3	SCREW ISO 2009 MFS M5X8 A4	
415	312105-0291		2	SCREW M6S ISO 4017 M4X12 A470	
510	90165-0056		1	PIPE CLIP FOR TUBE D=4 MM	
520	90165-0058		1	PIPE CLIP FOR TUBE D=2,5 MM	
Common Parts					
010	1036343-0000		2	SCREW	
030	2547589-0000		1	SPRING	
040	2530296-0000		2	ROLLER	
050	2532531-0000		2	ROLLER	
060	2530293-0000		1	BRACKET	
090	2530292-0000		1	BRACKET	
100	2547588-0000		1	SPRING	
300	312105-0460		4	SCREW M6S ISO 4014 M8X45 A480	
320	312115-0327		4	SCREW ISO4762 M5X12 A4 80	
330	312105-0372		2	SCREW M6S ISO 4017 M6X25 A480	
340	312115-0447		2	SCREW ISO4762 M8X12 A4 80	
360	315105-0153		2	WASHER BRB 6,4X12 RFR	
370	315105-0165		4	WASHER BRB 8,4X16 RFR	
380	315211-0104		4	BONDED SEAL SS/NBR90 M8	
390	342980-0121		2	BANJO-CONNECTION,RING 8/6-G1/8	
400	342980-0303		2	BANJO-HOLLOW BOLT COUPL,EXT.THR.01-G1/8	
500	90030-0065		2	PIPE CONNECTION	

Machine Type | Group Description | Used-In | Group Number | Page No

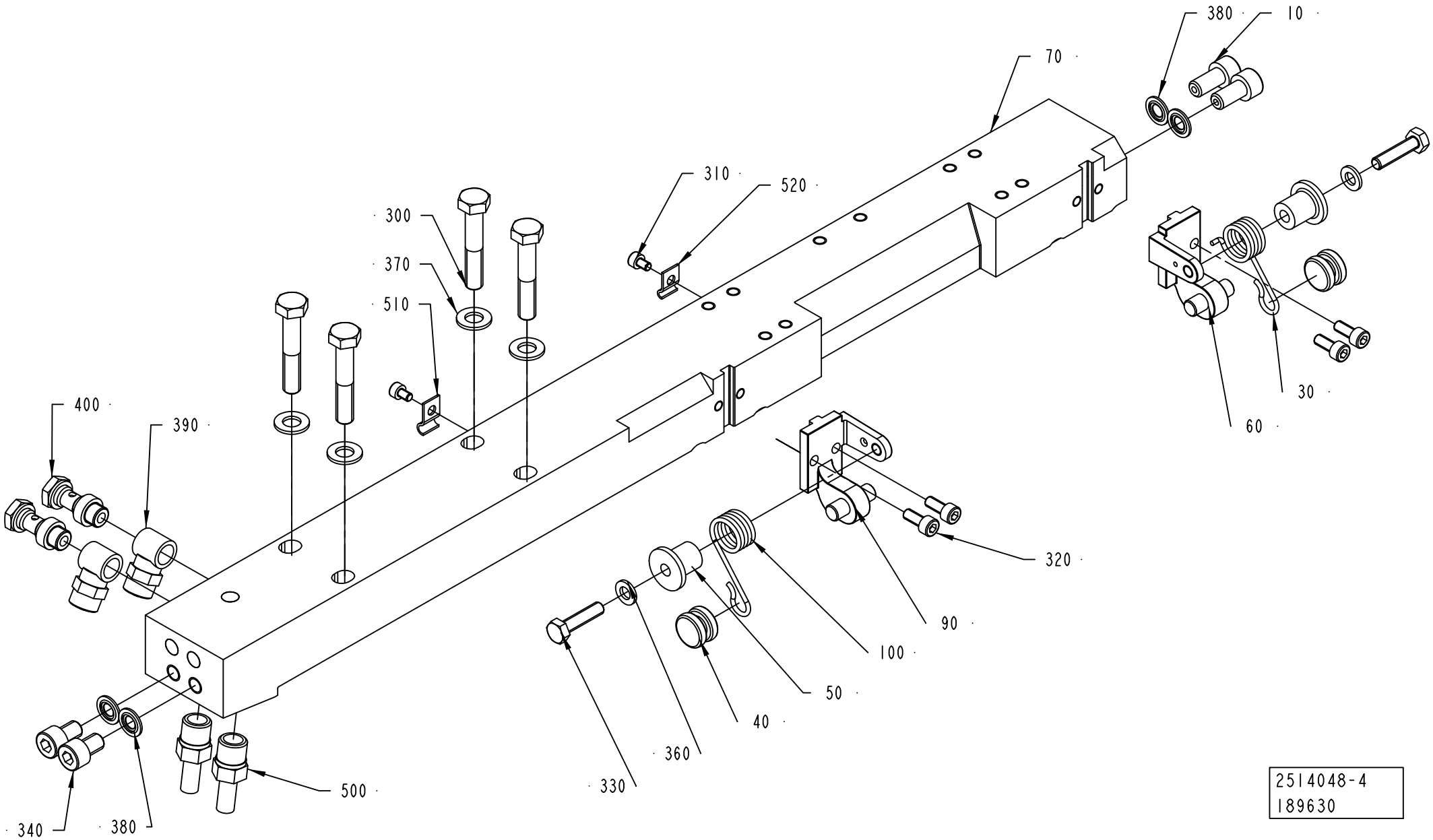
380
10
70
310
520
300
370
510
400
390
30
60
320
90
100
50
40
360
330
500
340
380
2514048-4
189630

ECM: 998080 - 20081001
Group number: 2514048-0200
Assembly Drawing: 2514048-4_1_AA

This list covers pages from 2-118 to 2-125

Pos	Part No	UN	Qty	Description	Page No
A3/FLEX NOQC (See drawing on page: 2-120)					
070	2514049-0000		1	CARRIER	
310	312115-0285		2	SCREW ISO4762 M4X6 A4 80	
510	90165-0056		1	PIPE CLIP FOR TUBE D=4 MM	
520	90165-0058		1	PIPE CLIP FOR TUBE D=2,5 MM	
A3/FLEX TBA 0200M QC, A3/FLEX TBA 0250S QC (See drawing on page: 2-122)					
070	2514045-0000		1	CARRIER	
080	2641225-0000		1	INSERT	
410	312145-0323		3	SCREW ISO 2009 MFS M5X8 A4	
A3/FLEX TBA 0500B QC, A3/FLEX TBA 1000B QC, A3/FLEX TBA 0250B QC, A3/FLEX TBA 0200B QC, A3/FLEX TBA 0330S QC, A3/FLEX TPA 0200SQ QC, A3/FLEX TPA 0250SQ QC, A3/FLEX TBA 0250SQ QC, A3/FLEX TBA 0200SQ QC (See drawing on page: 2-122)					
070	2514045-0000		1	CARRIER	
080	1549312-0000		1	INSERT	
410	312145-0323		3	SCREW ISO 2009 MFS M5X8 A4	
A3/FLEX TBA 1890S QC, A3/FLEX TBA 2000S QC, A3/FLEX TBA 1400B (See drawing on page: 2-120)					
070	2566340-0000		1	CARRIER	
310	312115-0285		2	SCREW ISO4762 M4X6 A4 80	
510	90165-0056		1	PIPE CLIP FOR TUBE D=4 MM	
520	90165-0058		1	PIPE CLIP FOR TUBE D=2,5 MM	
A3/FLEX TGA 1000SQ, A3/FLEX TGA 0500SQ, A3/FLEX TGA 0750SQ (See drawing on page: 2-124)					
070	2594712-0000		1	CARRIER	
540	311103-0308		1	PARALLEL PIN ISO 2338 5M6X16 A1	
700	90153-0053		1	ADHESIVE, LOCTITE 648 TEMP 150`C 50ML	
A3/FLEX TPA 1000SQ QC, A3/FLEX TPA 0750SQ QC, A3/FLEX TBA 0500SQ QC, A3/FLEX TBA 1000SQ QC (See drawing on page: 2-118)					
070	2647115-0000		1	CARRIER	
080	2647114-0000		1	INSERT	
310	312115-0285		2	SCREW ISO4762 M4X6 A4 80	
410	312145-0323		3	SCREW ISO 2009 MFS M5X8 A4	
415	312105-0291		2	SCREW M6S ISO 4017 M4X12 A470	
510	90165-0056		1	PIPE CLIP FOR TUBE D=4 MM	
520	90165-0058		1	PIPE CLIP FOR TUBE D=2,5 MM	
Common Parts					
010	1036343-0000		2	SCREW	
030	2547589-0000		1	SPRING	
040	2530296-0000		2	ROLLER	
050	2532531-0000		2	ROLLER	
060	2530293-0000		1	BRACKET	
090	2530292-0000		1	BRACKET	
100	2547588-0000		1	SPRING	
300	312105-0460		4	SCREW M6S ISO 4014 M8X45 A480	
320	312115-0327		4	SCREW ISO4762 M5X12 A4 80	
330	312105-0372		2	SCREW M6S ISO 4017 M6X25 A480	
340	312115-0447		2	SCREW ISO4762 M8X12 A4 80	
360	315105-0153		2	WASHER BRB 6,4X12 RFR	
370	315105-0165		4	WASHER BRB 8,4X16 RFR	
380	315211-0104		4	BONDED SEAL SS/NBR90 M8	
390	342980-0121		2	BANJO-CONNECTION,RING 8/6-G1/8	
400	342980-0303		2	BANJO-HOLLOW BOLT COUPL,EXT.THR.01-G1/8	
500	90030-0065		2	PIPE CONNECTION	

Machine Type | Group Description | Used-In | Group Number | Page No

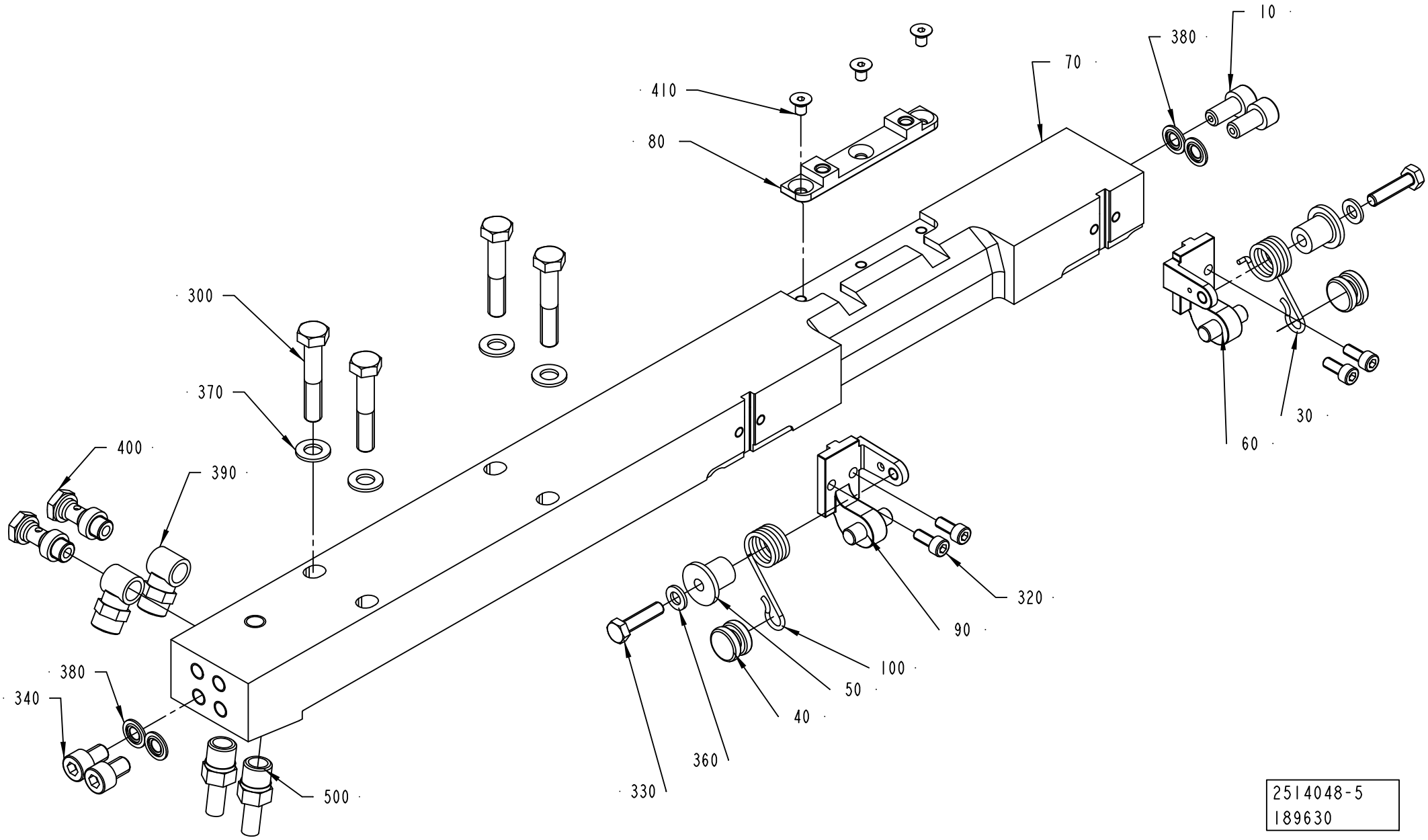
10
380
70
410
80
300
370
400
390
380
340
500
330
360
40
50
100
90
320
60
30
2514048-5
189630

ECM: 998080 - 20081001
Group number: 2514048-0200
Assembly Drawing: 2514048-5_1_AA

This list covers pages from 2-118 to 2-125

Pos	Part No	UN	Qty	Description	Page No
A3/FLEX NOQC (See drawing on page: 2-120)					
070	2514049-0000		1	CARRIER	
310	312115-0285		2	SCREW ISO4762 M4X6 A4 80	
510	90165-0056		1	PIPE CLIP FOR TUBE D=4 MM	
520	90165-0058		1	PIPE CLIP FOR TUBE D=2,5 MM	
A3/FLEX TBA 0200M QC, A3/FLEX TBA 0250S QC (See drawing on page: 2-122)					
070	2514045-0000		1	CARRIER	
080	2641225-0000		1	INSERT	
410	312145-0323		3	SCREW ISO 2009 MFS M5X8 A4	
A3/FLEX TBA 0500B QC, A3/FLEX TBA 1000B QC, A3/FLEX TBA 0250B QC, A3/FLEX TBA 0200B QC, A3/FLEX TBA 0330S QC, A3/FLEX TPA 0200SQ QC, A3/FLEX TPA 0250SQ QC, A3/FLEX TBA 0250SQ QC, A3/FLEX TBA 0200SQ QC (See drawing on page: 2-122)					
070	2514045-0000		1	CARRIER	
080	1549312-0000		1	INSERT	
410	312145-0323		3	SCREW ISO 2009 MFS M5X8 A4	
A3/FLEX TBA 1890S QC, A3/FLEX TBA 2000S QC, A3/FLEX TBA 1400B (See drawing on page: 2-120)					
070	2566340-0000		1	CARRIER	
310	312115-0285		2	SCREW ISO4762 M4X6 A4 80	
510	90165-0056		1	PIPE CLIP FOR TUBE D=4 MM	
520	90165-0058		1	PIPE CLIP FOR TUBE D=2,5 MM	
A3/FLEX TGA 1000SQ, A3/FLEX TGA 0500SQ, A3/FLEX TGA 0750SQ (See drawing on page: 2-124)					
070	2594712-0000		1	CARRIER	
540	311103-0308		1	PARALLEL PIN ISO 2338 5M6X16 A1	
700	90153-0053		1	ADHESIVE, LOCTITE 648 TEMP 150`C 50ML	
A3/FLEX TPA 1000SQ QC, A3/FLEX TPA 0750SQ QC, A3/FLEX TBA 0500SQ QC, A3/FLEX TBA 1000SQ QC (See drawing on page: 2-118)					
070	2647115-0000		1	CARRIER	
080	2647114-0000		1	INSERT	
310	312115-0285		2	SCREW ISO4762 M4X6 A4 80	
410	312145-0323		3	SCREW ISO 2009 MFS M5X8 A4	
415	312105-0291		2	SCREW M6S ISO 4017 M4X12 A470	
510	90165-0056		1	PIPE CLIP FOR TUBE D=4 MM	
520	90165-0058		1	PIPE CLIP FOR TUBE D=2,5 MM	
Common Parts					
010	1036343-0000		2	SCREW	
030	2547589-0000		1	SPRING	
040	2530296-0000		2	ROLLER	
050	2532531-0000		2	ROLLER	
060	2530293-0000		1	BRACKET	
090	2530292-0000		1	BRACKET	
100	2547588-0000		1	SPRING	
300	312105-0460		4	SCREW M6S ISO 4014 M8X45 A480	
320	312115-0327		4	SCREW ISO4762 M5X12 A4 80	
330	312105-0372		2	SCREW M6S ISO 4017 M6X25 A480	
340	312115-0447		2	SCREW ISO4762 M8X12 A4 80	
360	315105-0153		2	WASHER BRB 6,4X12 RFR	
370	315105-0165		4	WASHER BRB 8,4X16 RFR	
380	315211-0104		4	BONDED SEAL SS/NBR90 M8	
390	342980-0121		2	BANJO-CONNECTION,RING 8/6-G1/8	
400	342980-0303		2	BANJO-HOLLOW BOLT COUPL,EXT.THR.01-G1/8	
500	90030-0065		2	PIPE CONNECTION	

Machine Type | Group Description | Used-In | Group Number | Page No

CARRIER PRESSURE LEFT

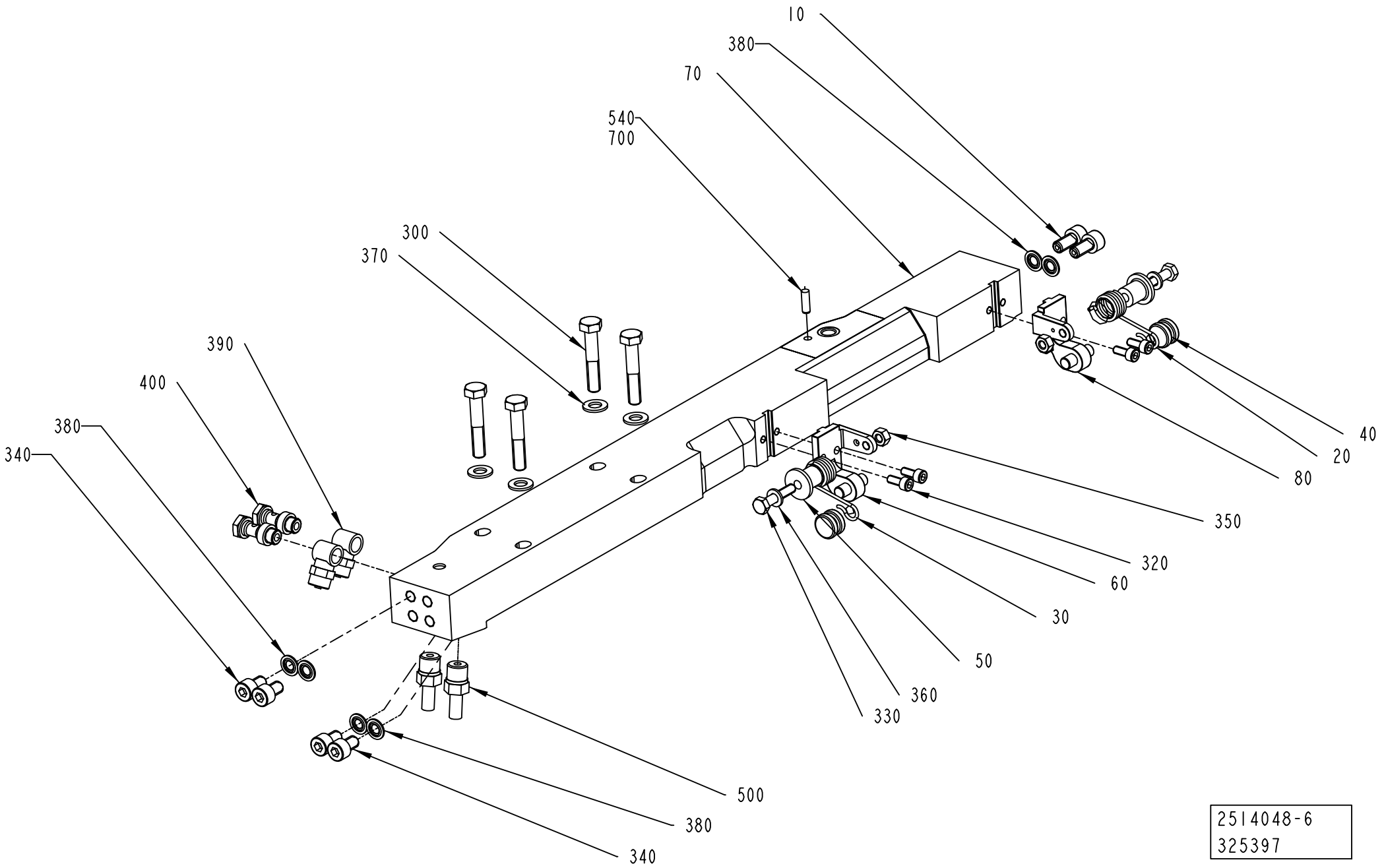

2514048-6
325397

ECM: 998080 - 20081001
Group number: 2514048-0200
Assembly Drawing: 2514048-6_1_AB

This list covers pages from 2-118 to 2-125

Pos	Part No	UN	Qty	Description	Page No
A3/FLEX NOQC (See drawing on page: 2-120)					
070	2514049-0000		1	CARRIER	
310	312115-0285		2	SCREW ISO4762 M4X6 A4 80	
510	90165-0056		1	PIPE CLIP FOR TUBE D=4 MM	
520	90165-0058		1	PIPE CLIP FOR TUBE D=2,5 MM	
A3/FLEX TBA 0200M QC, A3/FLEX TBA 0250S QC (See drawing on page: 2-122)					
070	2514045-0000		1	CARRIER	
080	2641225-0000		1	INSERT	
410	312145-0323		3	SCREW ISO 2009 MFS M5X8 A4	
A3/FLEX TBA 0500B QC, A3/FLEX TBA 1000B QC, A3/FLEX TBA 0250B QC, A3/FLEX TBA 0200B QC, A3/FLEX TBA 0330S QC, A3/FLEX TPA 0200SQ QC, A3/FLEX TPA 0250SQ QC, A3/FLEX TBA 0250SQ QC, A3/FLEX TBA 0200SQ QC (See drawing on page: 2-122)					
070	2514045-0000		1	CARRIER	
080	1549312-0000		1	INSERT	
410	312145-0323		3	SCREW ISO 2009 MFS M5X8 A4	
A3/FLEX TBA 1890S QC, A3/FLEX TBA 2000S QC, A3/FLEX TBA 1400B (See drawing on page: 2-120)					
070	2566340-0000		1	CARRIER	
310	312115-0285		2	SCREW ISO4762 M4X6 A4 80	
510	90165-0056		1	PIPE CLIP FOR TUBE D=4 MM	
520	90165-0058		1	PIPE CLIP FOR TUBE D=2,5 MM	
A3/FLEX TGA 1000SQ, A3/FLEX TGA 0500SQ, A3/FLEX TGA 0750SQ (See drawing on page: 2-124)					
070	2594712-0000		1	CARRIER	
540	311103-0308		1	PARALLEL PIN ISO 2338 5M6X16 A1	
700	90153-0053		1	ADHESIVE, LOCTITE 648 TEMP 150`C 50ML	
A3/FLEX TPA 1000SQ QC, A3/FLEX TPA 0750SQ QC, A3/FLEX TBA 0500SQ QC, A3/FLEX TBA 1000SQ QC (See drawing on page: 2-118)					
070	2647115-0000		1	CARRIER	
080	2647114-0000		1	INSERT	
310	312115-0285		2	SCREW ISO4762 M4X6 A4 80	
410	312145-0323		3	SCREW ISO 2009 MFS M5X8 A4	
415	312105-0291		2	SCREW M6S ISO 4017 M4X12 A470	
510	90165-0056		1	PIPE CLIP FOR TUBE D=4 MM	
520	90165-0058		1	PIPE CLIP FOR TUBE D=2,5 MM	
Common Parts					
010	1036343-0000		2	SCREW	
030	2547589-0000		1	SPRING	
040	2530296-0000		2	ROLLER	
050	2532531-0000		2	ROLLER	
060	2530293-0000		1	BRACKET	
090	2530292-0000		1	BRACKET	
100	2547588-0000		1	SPRING	
300	312105-0460		4	SCREW M6S ISO 4014 M8X45 A480	
320	312115-0327		4	SCREW ISO4762 M5X12 A4 80	
330	312105-0372		2	SCREW M6S ISO 4017 M6X25 A480	
340	312115-0447		2	SCREW ISO4762 M8X12 A4 80	
360	315105-0153		2	WASHER BRB 6,4X12 RFR	
370	315105-0165		4	WASHER BRB 8,4X16 RFR	
380	315211-0104		4	BONDED SEAL SS/NBR90 M8	
390	342980-0121		2	BANJO-CONNECTION,RING 8/6-G1/8	
400	342980-0303		2	BANJO-HOLLOW BOLT COUPL,EXT.THR.01-G1/8	
500	90030-0065		2	PIPE CONNECTION	

Machine Type | Group Description | Used-In | Group Number | Page No

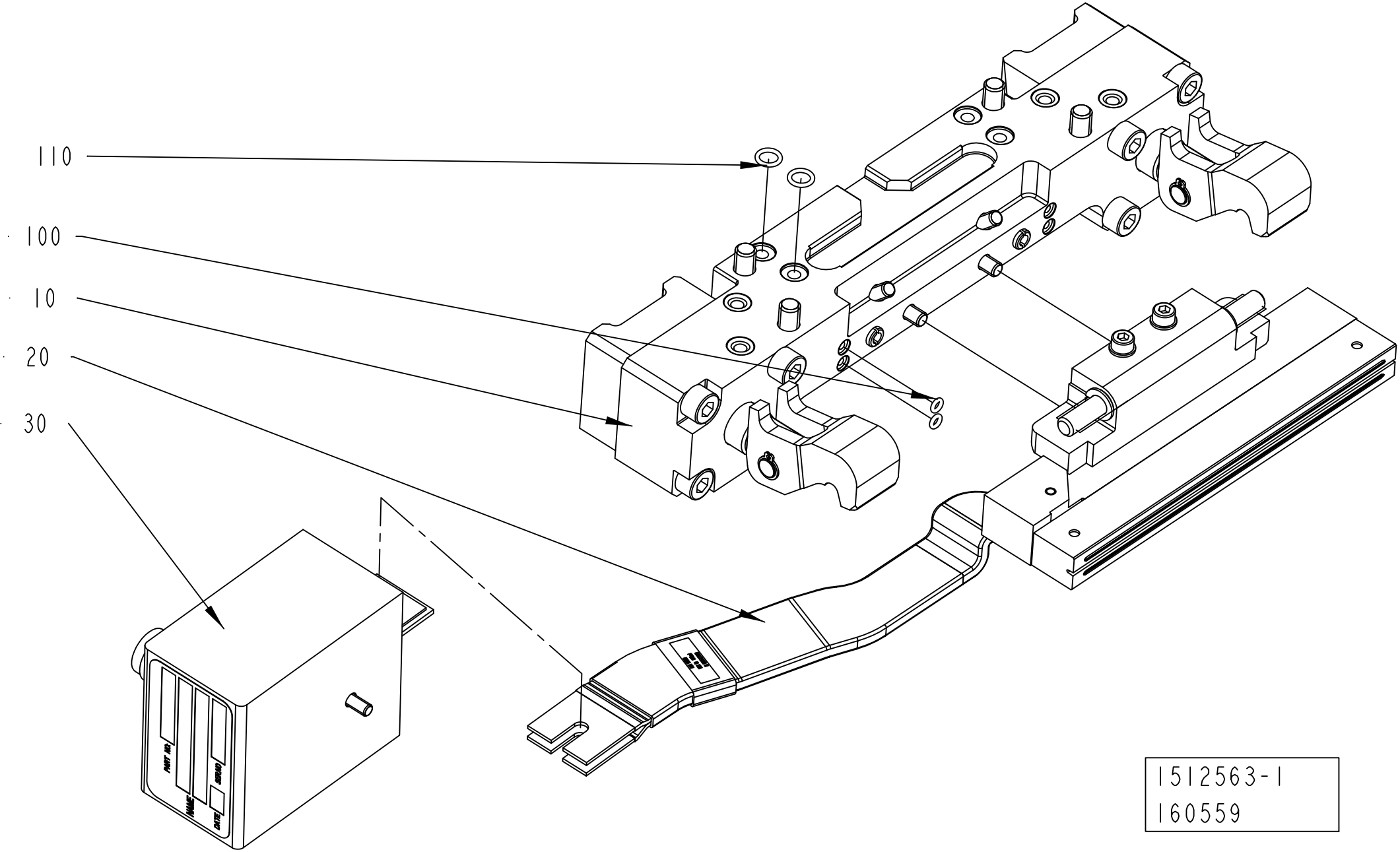

1512563-1
160559

ECM: 315249 - 20080101
Group number: 1512563-0200
Assembly Drawing: 1512563-1_1_AB

This list covers pages from 2-126 to 2-129

Pos	Part No	UN	Qty	Description	Page No
TBA 1890S QC, TBA 2000S QC, TBA 1400B (See drawing on pages: 2-126, 2-128)					
120	311103-0267		1	PARALLEL PIN ISO 2338 4M6X10 A1	
Common Parts					
010	2552005-0100		1	PRESSURE JAW	**2-131**
020	2552006-0100		1	INDUCTOR LEFT	**2-133, 2-135, 2-137, 2-139, 2-141, 2-143**
030	2546229-0100		1	ADAPTION TRANSFORMER	**2-145**
100	315202-0101		2	O-RING 3,1X1,6 MM	
110	315202-0105		2	O-RING 7,1X1,6 MM	

Pos	Part No	UN	Qty	Description	Page No

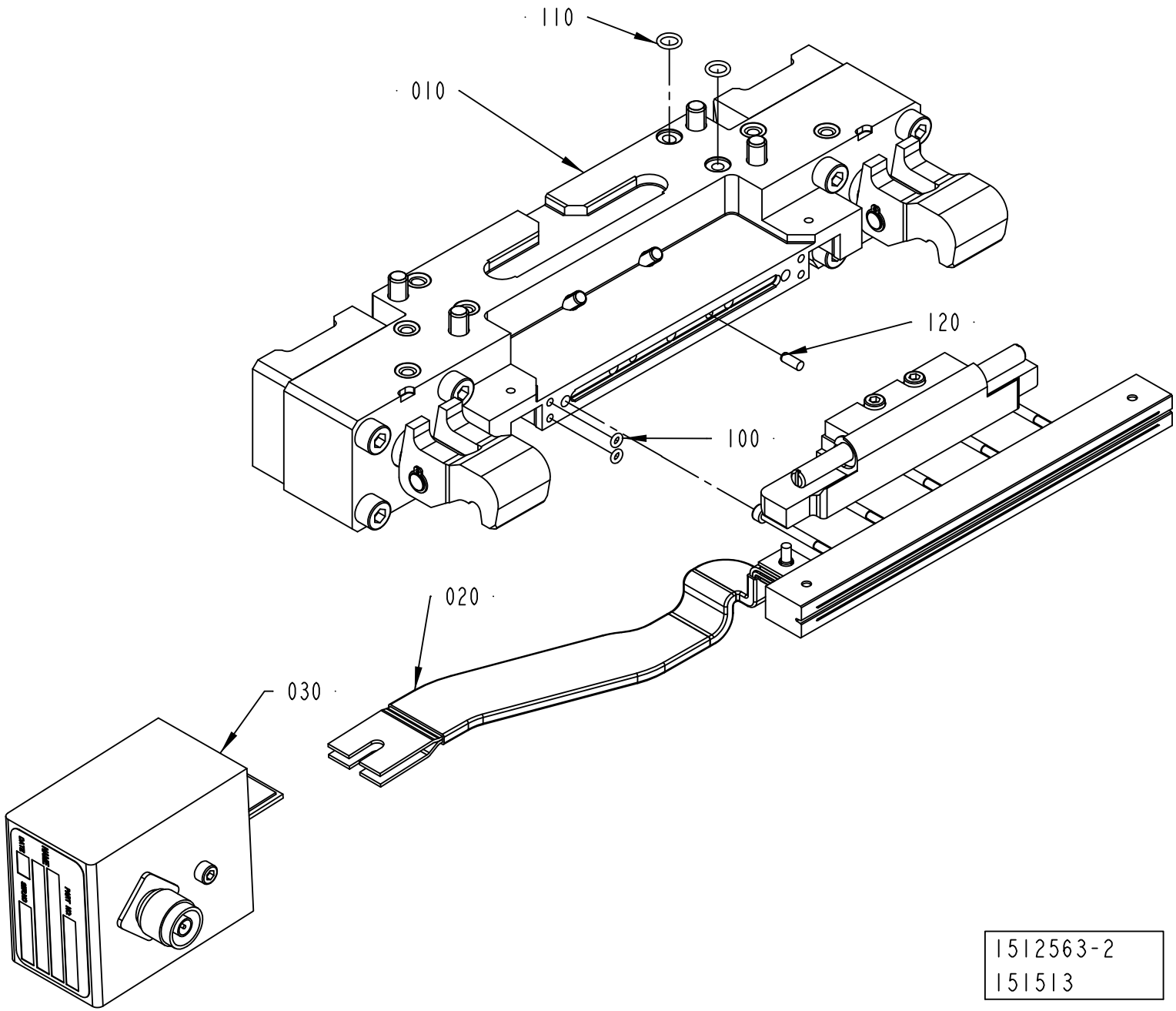
110
010
120
100
020
030
1512563-2
151513

ECM: 315249 - 20080101
Group number: 1512563-0200
Assembly Drawing: 1512563-2_1_AA

This list covers pages from 2-126 to 2-129

Pos	Part No	UN	Qty	Description	Page No
TBA 1890S QC, TBA 2000S QC, TBA 1400B (See drawing on pages: 2-126, 2-128)					
120	311103-0267		1	PARALLEL PIN ISO 2338 4M6X10 A1	
Common Parts					
010	2552005-0100		1	PRESSURE JAW	**2-131**
020	2552006-0100		1	INDUCTOR LEFT	**2-133, 2-135, 2-137, 2-139, 2-141, 2-143**
030	2546229-0100		1	ADAPTION TRANSFORMER	**2-145**
100	315202-0101		2	O-RING 3,1X1,6 MM	
110	315202-0105		2	O-RING 7,1X1,6 MM	

Pos	Part No	UN	Qty	Description	Page No

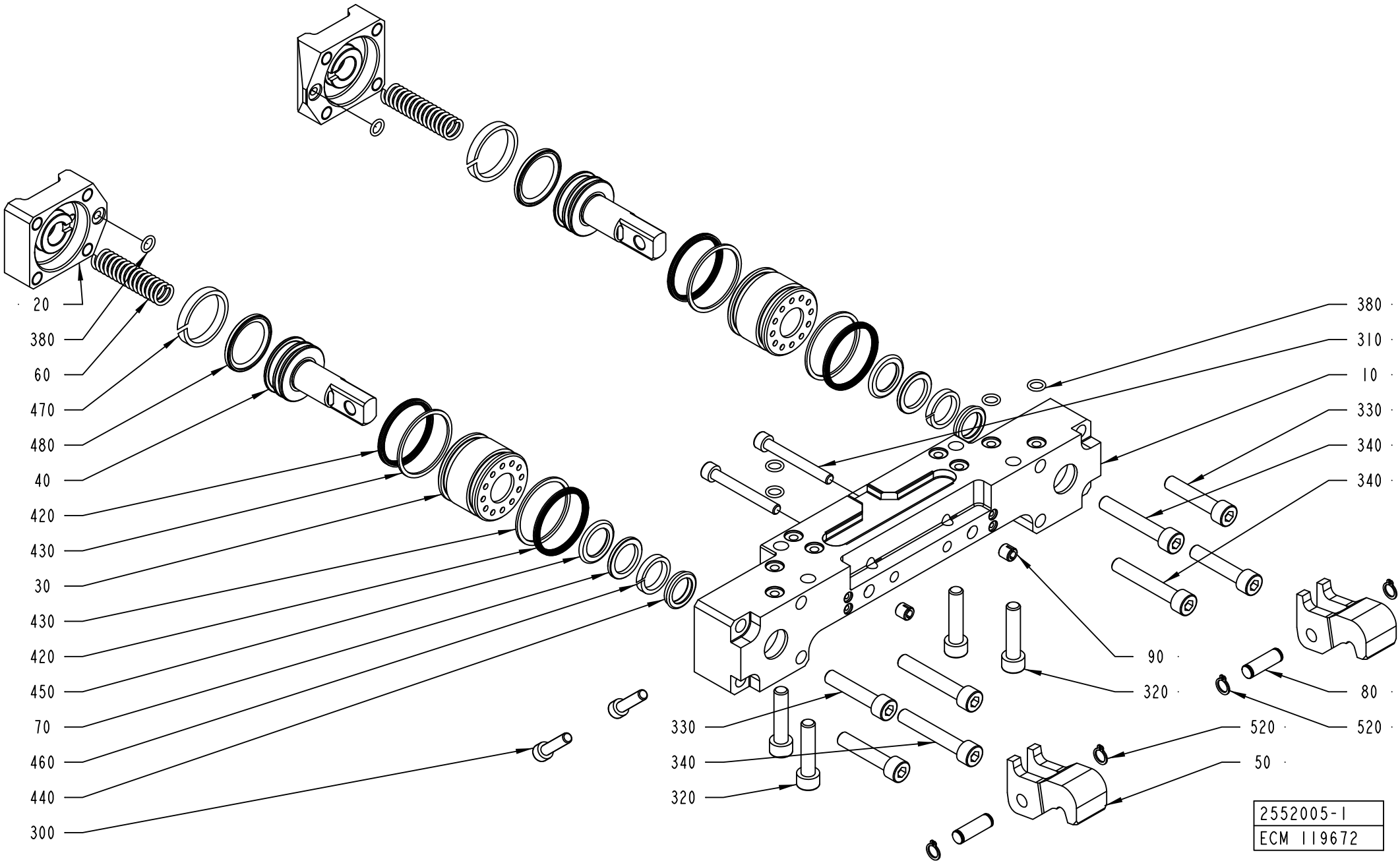
20
380
60
470
480
40
420
430
30
430
420
450
70
460
440
300
380
310
10
330
340
340
90
320
80
520
520
50
330
340
320
2552005-1
ECM 119672

ECM: 315373 - 20080101
Group number: 2552005-0100
Assembly Drawing: 2552005-1_1_AA

Pos	Part No	UN	Qty	Description	Page No
TBA 0200M, TBA 0200B, TBA 0200SQ, TBA 0200S, TBA 0250S, TBA 0250B, TBA 0330S, TPA 0330SQ, TPA 0250SQ, TPA 0200SQ, TBA 0250SQ					
010	2569908-0000		1	HOUSING	
020	2700151-0000		2	LID	
030	1349595-0000		2	SLEEVE	
040	929372-0000		2	PISTON	
050	1538349-0000		2	CATCH	
060	1260328-0000		2	SPRING	
080	950351-0000		2	SHAFT	
090	107426-0000		2	GUIDE SLEEVE	
300	312115-0372		2	SCREW ISO4762 M6X25 A4 80	
310	312115-0380		2	SCREW ISO4762 M6X50 A4 80	
330	312115-0459		4	SCREW ISO4762 M8X40 A4 80	
420	90091-0359		4	X-SEAL 36,17X2,62 MM	
430	90091-0360		4	BACK-UP RING 37,5X1,4 MM	
470	90091-0391		2	SEAL SLYDRING	
480	90091-0398		2	PISTON SEAL GLIDE RING T 20,5X28X3,2 MM	
TBA 0500S, TBA 0500SQ, TBA 0500B, TBA 1000B, TBA 1000SQ, TBA 1000S, TBA 1500S, TPA 1000SQ, TPA 0500SQ, TPA 0750SQ					
010	2569908-0000		1	HOUSING	
020	2700151-0000		2	LID	
030	1348504-0000		2	SLEEVE	
040	1349612-0000		2	PISTON	
050	1538349-0000		2	CATCH	
060	1260328-0000		2	SPRING	
080	950351-0000		2	SHAFT	
090	107426-0000		2	GUIDE SLEEVE	
300	312115-0372		2	SCREW ISO4762 M6X25 A4 80	
310	312115-0380		2	SCREW ISO4762 M6X50 A4 80	
330	312115-0459		4	SCREW ISO4762 M8X40 A4 80	
420	90091-0359		4	X-SEAL 36,17X2,62 MM	
430	90091-0360		4	BACK-UP RING 37,5X1,4 MM	
470	90091-0368		2	WEAR RING 30X45X5,3 MM	
480	90091-0428		2	PISTON SEAL GLIDE RING T 27,5X34,5X3,2 M	
TBA 1890S, TBA 2000S, TBA 1400B					
010	2566336-0000		1	BEARING HOUSING	
020	2588294-0000		2	LID	
030	2588295-0000		2	SLEEVE	
040	2588296-0000		2	PISTON	
050	2566338-0000		2	CATCH	
060	2594892-0000		2	SPRING	
080	2588297-0000		2	SHAFT	
300	312115-0372		2	SCREW ISO4762 M6X25 A4 80	
420	90459-2146		4	X-SEAL 42,52X2,62 MM	
430	90459-2145		4	BACK-UP RING 43,5X1,4 MM	
470	90091-0074		2	WEAR RING 35X40X5,3 MM	
480	90459-2173		2	SEAL GLYDRING 32,5X40X3,2 MM	
TGA 1000SQ, TGA 0750SQ, TGA 0500SQ					
010	2612745-0000		1	BEARING HOUSING	
020	2700151-0000		2	LID	
030	1348504-0000		2	SLEEVE	
040	1349612-0000		2	PISTON	
050	1538349-0000		2	CATCH	
060	1260328-0000		2	SPRING	
080	950351-0000		2	SHAFT	
090	107426-0000		2	GUIDE SLEEVE	
310	312115-0380		2	SCREW ISO4762 M6X50 A4 80	
330	312115-0459		4	SCREW ISO4762 M8X40 A4 80	
420	90091-0359		4	X-SEAL 36,17X2,62 MM	
430	90091-0360		4	BACK-UP RING 37,5X1,4 MM	
470	90091-0368		2	WEAR RING 30X45X5,3 MM	
480	90091-0428		2	PISTON SEAL GLIDE RING T 27,5X34,5X3,2 M	
Common Parts					
070	1038240-0000		2	SPACER	
320	312115-0457		4	SCREW ISO4762 M8X35 A4 80	
340	312115-0461		4	SCREW ISO4762 M8X50 A4 80	
380	315202-0105		6	O-RING 7,1X1,6 MM	
440	90091-0362		2	SCRAPER, EXCLUDER2 18X22,8X3,7 MM	
450	90091-0364		2	ROD SEAL, STEPSEAL 18X25,3X3,2 MM	
460	90091-0366		2	WEAR RING 18X23X3.9	
520	90141-0015		4	RETAINING RING FOR SHAFT DIN 471 8 SS	

Machine Type | Group Description | Used-In | Group Number | Page No

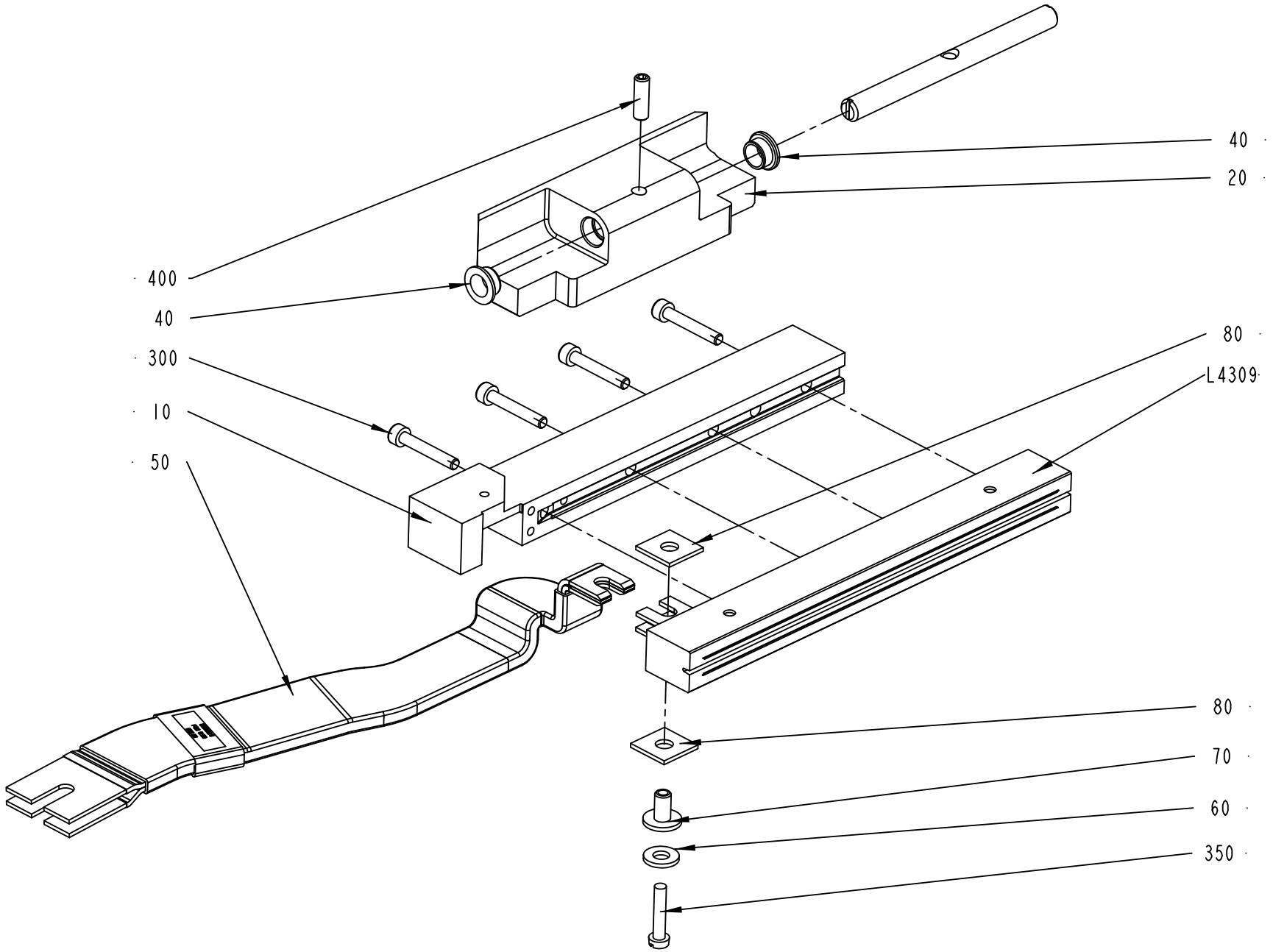

2552006-1
160559

ECM: 378264 - 20081127
Group number: 2552006-0100
Assembly Drawing: 2552006-1_1_AB

This list covers pages from 2-132 to 2-143

Pos	Part No	UN	Qty	Description	Page No
TBA 1890S QC, TBA 2000S QC (See drawing on page: 2-138)					
020	2588293-0000		1	HOLDER	
030	2686144-0000		1	SHAFT	
040	2531703-0000		2	BUSHING	
050	2698011-0000		1	BUSBAR	
300	312115-0305		5	SCREW ISO4762 M4X50 A4 80	
400	312115-0327		2	SCREW ISO4762 M5X12 A4 80	
L4309	1533046-0000		1	INDUCTOR	
TGA 1000SQ, TGA 0750SQ, TGA 0500SQ (See drawing on page: 2-142)					
010	2649675-0000		1	RAIL	
050	1498849-0000		1	BUSBAR	
090	2698631-0000		1	VOLUME BULGE	
300	312115-0297		4	SCREW ISO4762 M4X25 A4 80	
370	312105-0370		1	SCREW M6S ISO 4017 M6X20 A480	
420	315105-0153		1	WASHER BRB 6,4X12 RFR	
L4309	1566783-0000		1	INDUCTOR	
TPA 0200SQ QC, TPA 0250SQ QC (See drawing on page: 2-136)					
010	1348545-0000		1	RAIL	
020	2674335-0000		1	HOLDER	
050	1498849-0000		1	BUSBAR	
300	312115-0297		3	SCREW ISO4762 M4X25 A4 80	
L4309	1110930-0000		1	INDUCTOR	
TPA 0330SQ (See drawing on page: 2-138)					
010	1348545-0000		1	RAIL	
020	2611655-0000		1	CLAMP HOLDER	
030	2513013-0000		1	SHAFT	
040	2531703-0000		2	BUSHING	
050	1498849-0000		1	BUSBAR	
300	312115-0297		3	SCREW ISO4762 M4X25 A4 80	
400	312115-0327		2	SCREW ISO4762 M5X12 A4 80	
L4309	1520167-0000		1	INDUCTOR	
TPA 0750SQ SMILE QC, TPA 1000SQ SMILE QC (See drawing on page: 2-140)					
010	1558819-0000		1	RAIL	
020	2660404-0000		1	HOLDER	
050	1498849-0000		1	BUSBAR	
090	2503700-0000		1	VOLUME BULGE	
100	2500591-0000		1	VOLUME BULGE	
300	312115-0297		4	SCREW ISO4762 M4X25 A4 80	
360	311103-0234		1	PARALLEL PIN ISO 2338 3M6X12 A1	
370	312155-0287		2	SCREW DIN 7991 MF6S M4X8 A4 70	
380	312155-0325		2	SCREW DIN 7991 MF6S M5X10 A4 70	
L4309	2663378-0000		1	INDUCTOR	
TPA 1000SQ FT NOQC (See drawing on page: 2-138)					
010	1558819-0000		1	RAIL	
020	2579989-0000		1	HOLDER	
030	2579990-0000		1	SHAFT	
040	2531703-0000		2	BUSHING	
050	1498849-0000		1	BUSBAR	
090	2503700-0000		1	VOLUME BULGE	
300	312115-0297		4	SCREW ISO4762 M4X25 A4 80	
370	312155-0287		2	SCREW DIN 7991 MF6S M4X8 A4 70	
400	312115-0327		2	SCREW ISO4762 M5X12 A4 80	
L4309	2663378-0000		1	INDUCTOR	
TPA 1000SQ SMILE NOQC (See drawing on page: 2-138)					
010	1558819-0000		1	RAIL	
020	2579991-0000		1	HOLDER	
030	2579990-0000		1	SHAFT	
040	2531703-0000		2	BUSHING	
050	1498849-0000		1	BUSBAR	
090	2503700-0000		1	VOLUME BULGE	
100	2500591-0000		1	VOLUME BULGE	
300	312115-0297		4	SCREW ISO4762 M4X25 A4 80	
370	312155-0287		2	SCREW DIN 7991 MF6S M4X8 A4 70	
380	312155-0325		2	SCREW DIN 7991 MF6S M5X10 A4 70	
400	312115-0327		2	SCREW ISO4762 M5X12 A4 80	
L4309	2663378-0000		1	INDUCTOR	
TPA 500SQ LIGHTCAP (See drawing on page: 2-140)					
010	2969719-0000		1	RAIL	
020	2570848-0000		1	HOLDER	
030	2513013-0000		1	SHAFT	
040	2570849-0000		2	BUSHING	
050	1498849-0000		1	BUSBAR	
090	2503688-0000		1	VOLUME BULGE	
100	2969721-0000		1	VOLUME BULGE	
300	312115-0297		4	SCREW ISO4762 M4X25 A4 80	
360	311103-0234		1	PARALLEL PIN ISO 2338 3M6X12 A1	
370	312155-0287		2	SCREW DIN 7991 MF6S M4X8 A4 70	
380	312155-0325		2	SCREW DIN 7991 MF6S M5X10 A4 70	
400	312115-0329		2	SCREW ISO4762 M5X16 A4 80	
L4309	2978582-0000		1	INDUCTOR	
TPA 500SQ NOMOLDEDCAP (See drawing on page: 2-140)					
010	1558819-0000		1	RAIL	
020	2570848-0000		1	HOLDER	
030	2513013-0000		1	SHAFT	

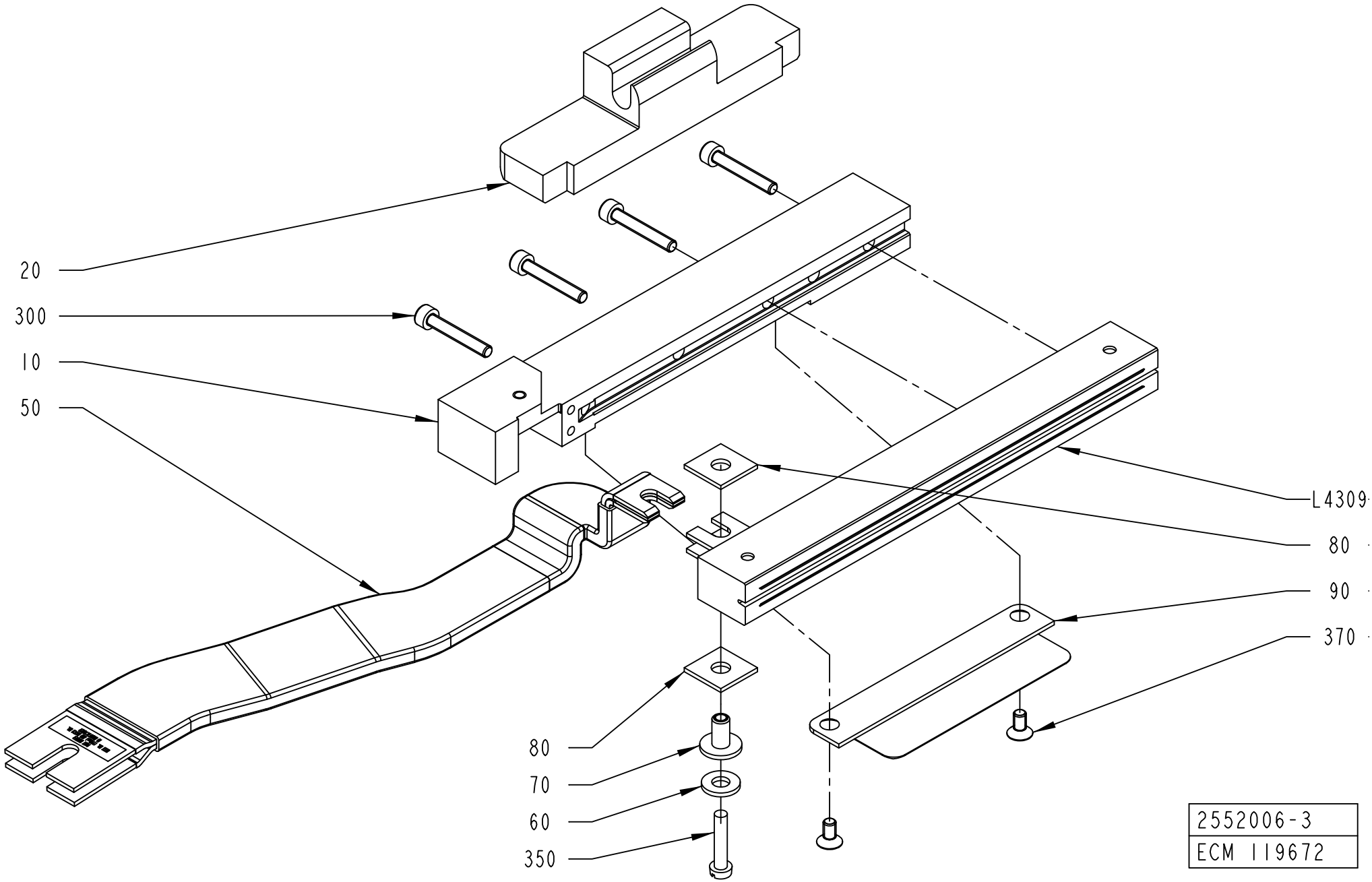
20
300
10
50
L4309
80
90
370
80
70
60
350
2552006-3
ECM 119672

Pos	Part No	UN	Qty	Description	Page No
TPA 500SQ NOMOLDEDCAP (Cont'd) (See drawing on page: 2-140)					
040	2570849-0000		2	BUSHING	
090	2503688-0000		1	VOLUME BULGE	
100	1549834-0000		1	VOLUME BULGE	
300	312115-0297		4	SCREW ISO4762 M4X25 A4 80	
360	311103-0234		1	PARALLEL PIN ISO 2338 3M6X12 A1	
370	312155-0287		2	SCREW DIN 7991 MF6S M4X8 A4 70	
380	312155-0325		2	SCREW DIN 7991 MF6S M5X10 A4 70	
400	312115-0329		2	SCREW ISO4762 M5X16 A4 80	
L4309	2587466-0000		1	INDUCTOR	
TBA 0200B NOQC, TBA 0250B NOQC (See drawing on page: 2-132)					
010	1348545-0000		1	RAIL	
020	1349599-0000		1	HOLDER	
030	1349980-0000		1	SHAFT	
040	1349584-0000		2	BUSHING	
050	1498849-0000		1	BUSBAR	
300	312115-0297		3	SCREW ISO4762 M4X25 A4 80	
400	312318-0329		1	SCREW ISO4029 M5X16 A4	
L4309	1110932-0000		1	INDUCTOR	
TBA 0200B QC, TBA 0330S QC, TBA 0250B QC (See drawing on page: 2-134)					
010	1348545-0000		1	RAIL	
020	2604565-0000		1	HOLDER	
050	1498849-0000		1	BUSBAR	
300	312115-0297		3	SCREW ISO4762 M4X25 A4 80	
L4309	1110932-0000		1	INDUCTOR	
TBA 0200M QC, TBA 0250S QC (See drawing on page: 2-136)					
010	1348545-0000		1	RAIL	
020	2644397-0000		1	HOLDER	
050	1498849-0000		1	BUSBAR	
300	312115-0297		3	SCREW ISO4762 M4X25 A4 80	
L4309	1110931-0000		1	INDUCTOR	
TBA 0200S (See drawing on page: 2-138)					
010	1348545-0000		1	RAIL	
020	2513015-0000		1	HOLDER	
030	2513013-0000		1	SHAFT	
040	2531703-0000		2	BUSHING	
050	1498849-0000		1	BUSBAR	
300	312115-0297		3	SCREW ISO4762 M4X25 A4 80	
400	312115-0329		2	SCREW ISO4762 M5X16 A4 80	
L4309	1110930-0000		1	INDUCTOR	
TBA 0200SQ, TBA 0250SQ (See drawing on page: 2-134)					
010	1558819-0000		1	RAIL	
020	2668318-0000		1	HOLDER	
050	1498849-0000		1	BUSBAR	
090	2679953-0000		1	VOLUME BULGE	
300	312115-0297		3	SCREW ISO4762 M4X25 A4 80	
370	312155-0287		2	SCREW DIN 7991 MF6S M4X8 A4 70	
L4309	2767760-0000		1	INDUCTOR	
TBA 0500B QC, TBA 1000B QC (See drawing on page: 2-134)					
010	1558819-0000		1	RAIL	
020	1487955-0000		1	HOLDER	
050	1498849-0000		1	BUSBAR	
090	1558734-0000		1	VOLUME BULGE	
300	312115-0297		4	SCREW ISO4762 M4X25 A4 80	
370	312155-0287		2	SCREW DIN 7991 MF6S M4X8 A4 70	
L4309	1110938-0000		1	INDUCTOR	
TBA 0500S (See drawing on page: 2-138)					
010	1348545-0000		1	RAIL	
020	2611001-0000		1	CLAMP HOLDER	
030	2579990-0000		1	SHAFT	
040	2531703-0000		2	BUSHING	
050	1498849-0000		1	BUSBAR	
300	312115-0297		4	SCREW ISO4762 M4X25 A4 80	
400	312115-0327		2	SCREW ISO4762 M5X12 A4 80	
L4309	1110934-0000		1	INDUCTOR	
TBA 0500SQ QC, TBA 1000SQ QC (See drawing on page: 2-134)					
010	1348545-0000		1	RAIL	
020	2812891-0000		1	HOLDER	
050	1498849-0000		1	BUSBAR	
300	312115-0297		4	SCREW ISO4762 M4X25 A4 80	
L4309	1110936-0000		1	INDUCTOR	
TBA 1000B NOQC NOMOLDEDCAP (See drawing on page: 2-138)					
010	1348545-0000		1	RAIL	
020	2664280-0000		1	HOLDER	
030	2526812-0000		1	SHAFT	
040	2531703-0000		2	BUSHING	
050	1498849-0000		1	BUSBAR	
300	312115-0297		4	SCREW ISO4762 M4X25 A4 80	
410	315105-0146		2	WASHER BRB 5,3X10 RFR	
L4309	1110938-0000		1	INDUCTOR	
TBA 1000B NOQC STDA7 (See drawing on page: 2-138)					
010	2610954-0000		1	RAIL	
020	2664280-0000		1	HOLDER	
030	2526812-0000		1	SHAFT	

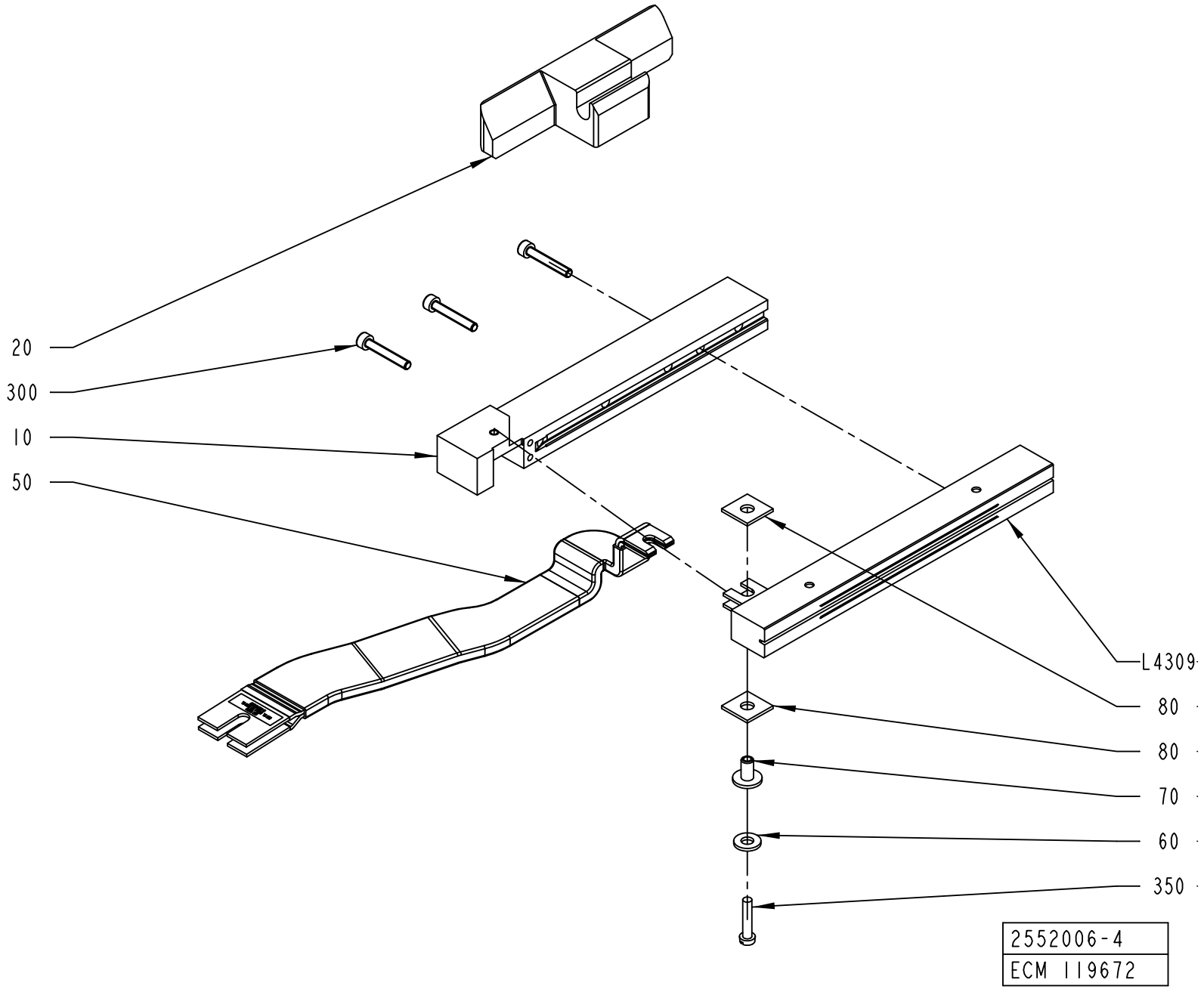
20
300
10
50
L4309
80
80
70
60
350
2552006-4
ECM 119672

Pos	Part No	UN	Qty	Description	Page No
TBA 1000B NOQC STDA7 (Cont'd) (See drawing on page: 2-138)					
040	2531703-0000		2	BUSHING	
050	1498849-0000		1	BUSBAR	
300	312115-0297		4	SCREW ISO4762 M4X25 A4 80	
410	315105-0146		2	WASHER BRB 5,3X10 RFR	
L4309	2610956-0000		1	INDUCTOR	
TBA 1000S LIGHTCAP (See drawing on page: 2-138)					
010	2766751-0000		1	RAIL	
020	2559425-0000		1	CLAMP HOLDER	
030	2526812-0000		1	SHAFT	
040	2531703-0000		2	BUSHING	
050	1498849-0000		1	BUSBAR	
300	312115-0297		4	SCREW ISO4762 M4X25 A4 80	
400	312115-0327		2	SCREW ISO4762 M5X12 A4 80	
L4309	1566843-0000		1	INDUCTOR	
TBA 1000S NOMOLDEDCAP (See drawing on page: 2-138)					
010	1348545-0000		1	RAIL	
020	2559425-0000		1	CLAMP HOLDER	
030	2526812-0000		1	SHAFT	
040	2531703-0000		2	BUSHING	
050	1498849-0000		1	BUSBAR	
300	312115-0297		4	SCREW ISO4762 M4X25 A4 80	
400	312115-0327		2	SCREW ISO4762 M5X12 A4 80	
L4309	1110937-0000		1	INDUCTOR	
TBA 1000S STDA7 (See drawing on page: 2-138)					
010	2546475-0000		1	RAIL	
020	2559425-0000		1	CLAMP HOLDER	
030	2526812-0000		1	SHAFT	
040	2531703-0000		2	BUSHING	
050	1498849-0000		1	BUSBAR	
300	312115-0297		4	SCREW ISO4762 M4X25 A4 80	
400	312115-0327		2	SCREW ISO4762 M5X12 A4 80	
L4309	2546474-0000		1	INDUCTOR	
TBA 1000SQ NOQC (See drawing on page: 2-138)					
010	1348545-0000		1	RAIL	
020	2526811-0000		1	HOLDER	
030	2526812-0000		1	SHAFT	
040	2531703-0000		2	BUSHING	
050	1498849-0000		1	BUSBAR	
300	312115-0297		4	SCREW ISO4762 M4X25 A4 80	
400	312115-0327		2	SCREW ISO4762 M5X12 A4 80	
L4309	1110936-0000		1	INDUCTOR	

Pos	Part No	UN	Qty	Description	Page No
TBA 1400B (See drawing on page: 2-138)					
020	2588293-0000		1	HOLDER	
030	2686144-0000		1	SHAFT	
040	2531703-0000		2	BUSHING	
050	2698011-0000		1	BUSBAR	
300	312115-0305		5	SCREW ISO4762 M4X50 A4 80	
400	312115-0327		2	SCREW ISO4762 M5X12 A4 80	
L4309	2841895-0000		1	INDUCTOR	
	1533046-0000		*1*	*INDUCTOR*	
TBA 1500S (See drawing on page: 2-138)					
010	1348545-0000		1	RAIL	
020	2570302-0000		1	CLAMP HOLDER	
030	2526812-0000		1	SHAFT	
040	2531703-0000		2	BUSHING	
050	1498849-0000		1	BUSBAR	
300	312115-0297		4	SCREW ISO4762 M4X25 A4 80	
400	312115-0327		2	SCREW ISO4762 M5X12 A4 80	
L4309	1110938-0000		1	INDUCTOR	
Common Parts					
060	28509-0000		1	WASHER	
070	32544-0000		1	INSULATION NUT	
080	1036584-0000		2	WASHER	
350	312125-0295		1	SCREW ISO 1207 M4X20 A4	

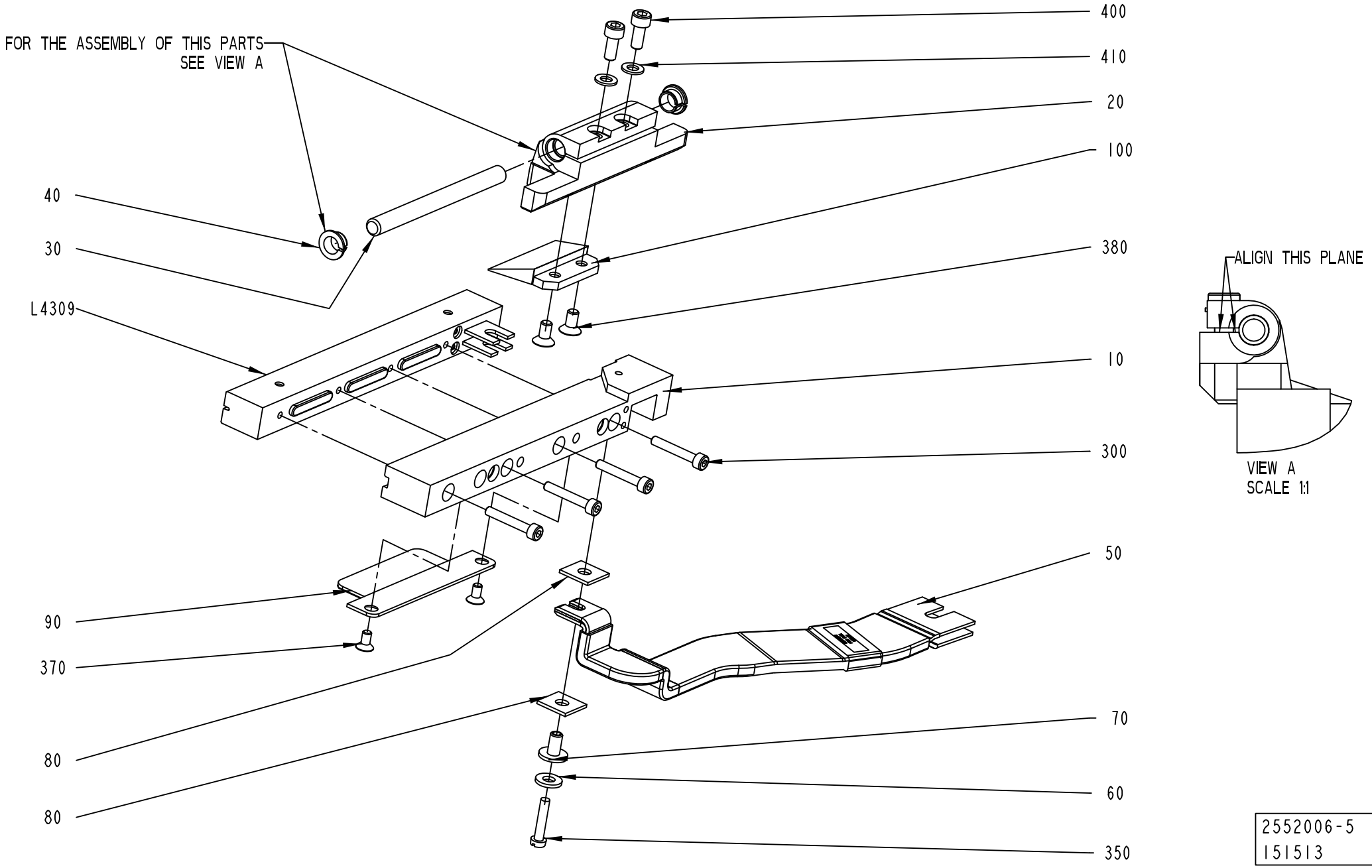
FOR THE ASSEMBLY OF THIS PARTS SEE VIEW A
400
410
20
100
380
10
300
50
70
60
350
40
30
L4309
90
370
80
80
ALIGN THIS PLANE
VIEW A
SCALE 1:1
2552006-5
151513

Pos	Part No	UN	Qty	Description	Page No
SEE PREVIOUS LISTS PAGES: 2-133, 2-135, 2-137.					

Pos	Part No	UN	Qty	Description	Page No

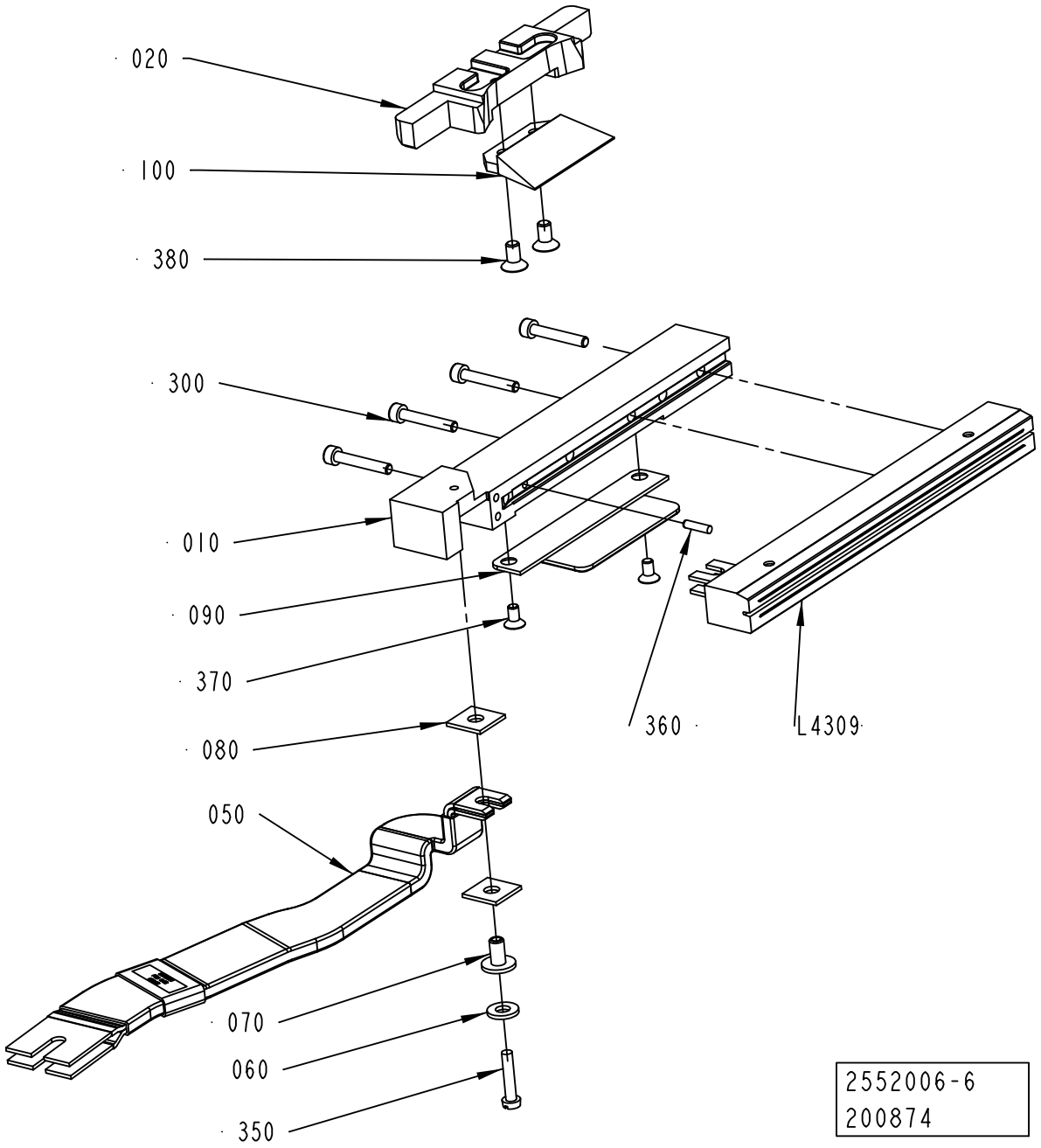
020
100
380
300
010
090
370
080
050
070
060
350
360
L4309
2552006-6
200874

Pos	Part No	UN	Qty	Description	Page No
SEE PREVIOUS LISTS PAGES: 2-133, 2-135, 2-137.					

Pos	Part No	UN	Qty	Description	Page No

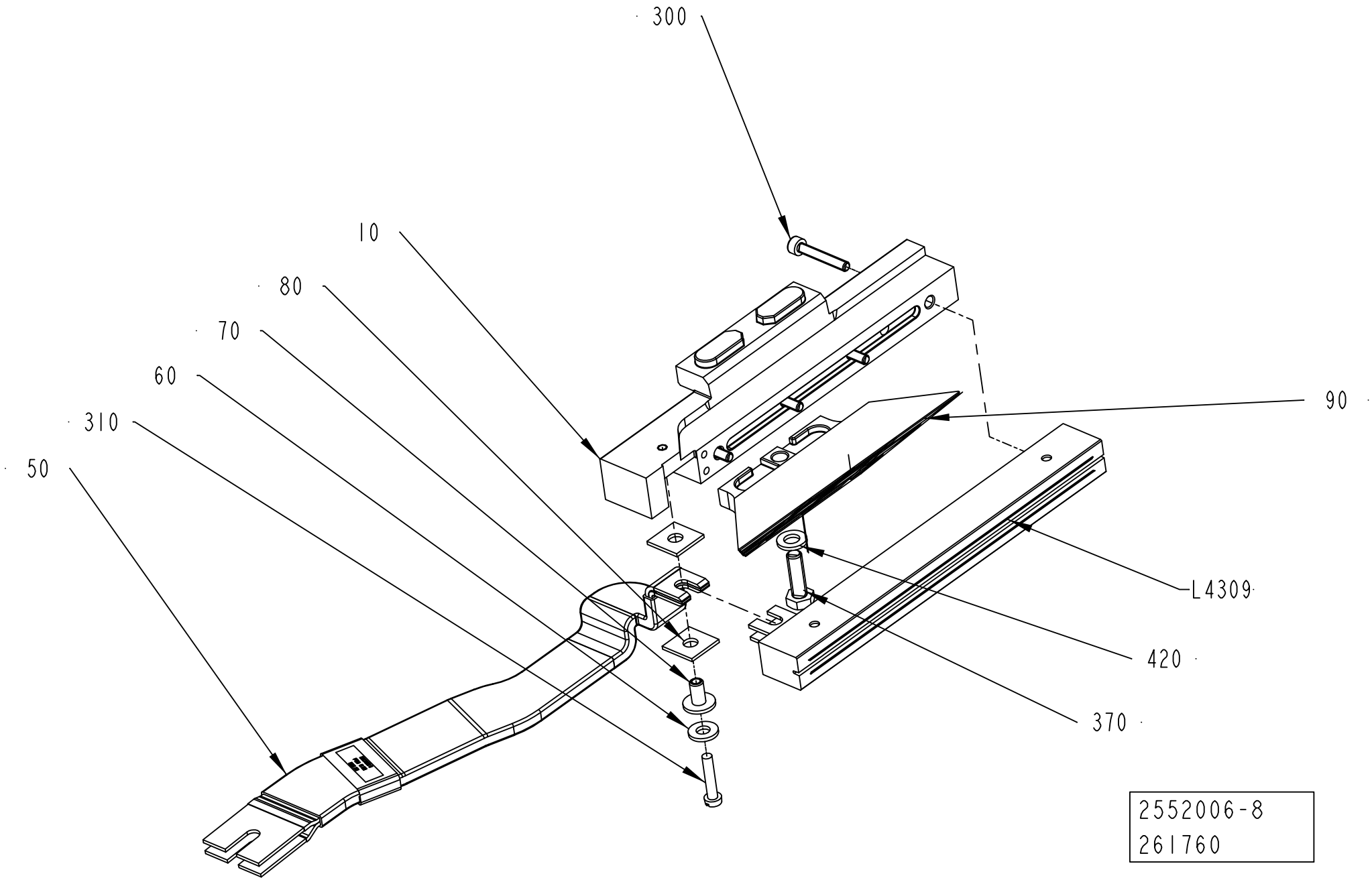
300
10
80
70
60
310
50
90
L4309
420
370
2552006-8
261760

ECM: 378264 - 20081127
Group number: 2552006-0100
Assembly Drawing: 2552006-8_1_AA

This list covers pages from 2-132 to 2-143

Pos	Part No	UN	Qty	Description	Page No
SEE PREVIOUS LISTS PAGES: 2-133, 2-135, 2-137.					

Pos	Part No	UN	Qty	Description	Page No

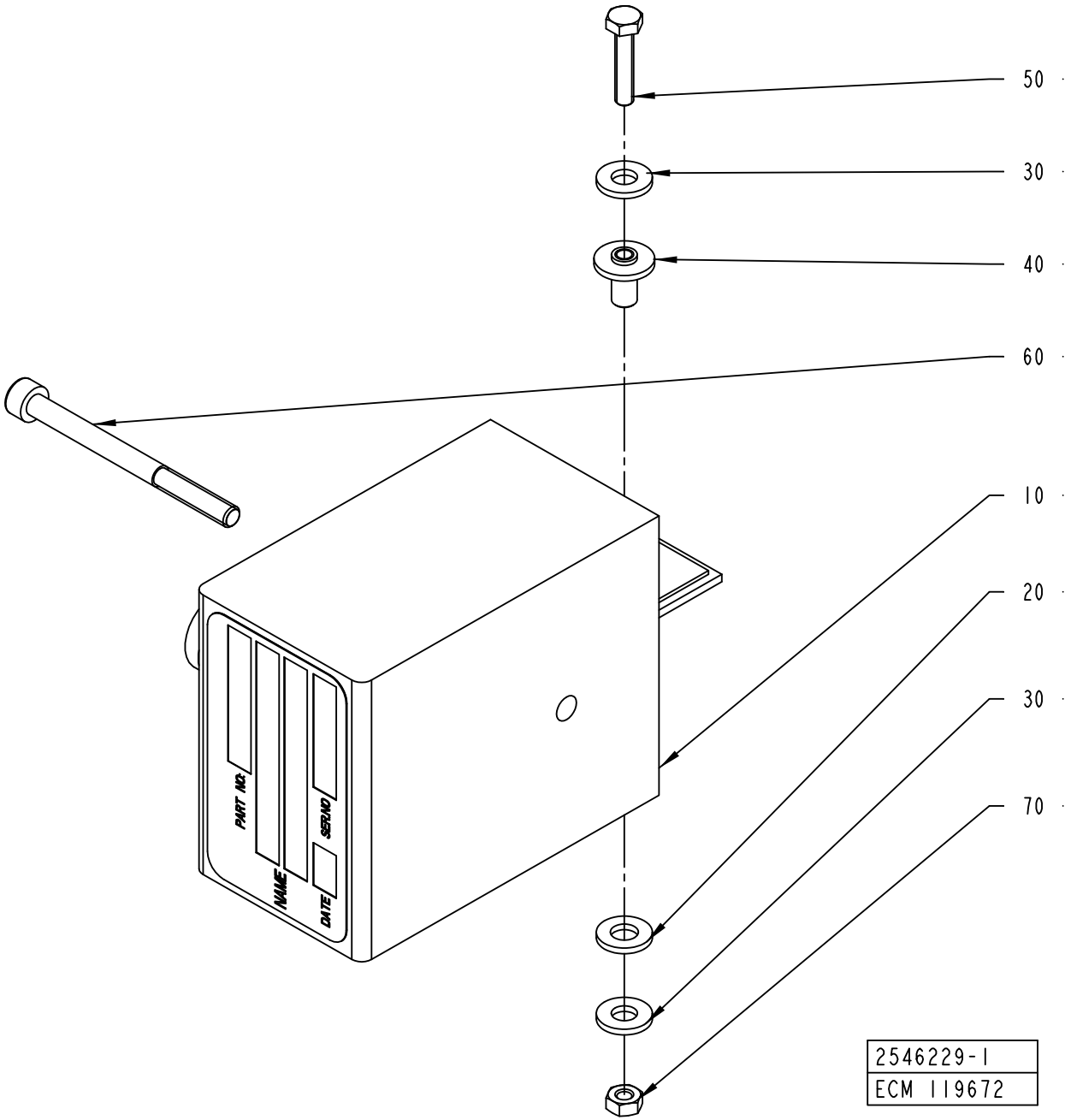
50
30
40
60
10
20
30
70
PART NO.
SER.NO
NAME
DATE
2546229-1
ECM 119672

ECM: 360774 - 20081001
Group number: 2546229-0100
Assembly Drawing: 2546229-1_1_AA

Pos	Part No	UN	Qty	Description	Page No
TBA 0200B, TBA 0250B, TBA 0330S					
010	67379-0269		1	TRANSFORMER	
TBA 0200M, TBA 0250S, TPA 0200SQ, TPA 0500SQ, TPA 0250SQ QC					
010	67379-0206		1	TRANSFORMER	
TBA 0200S					
010	67379-0105		1	TRANSFORMER	
TBA 0200SQ, TPA 0250SQ NOQC, TBA 0250SQ					
010	67379-0114		1	TRANSFORMER	
TBA 0500S					
010	67379-0106		1	TRANSFORMER	
TBA 0500SQ, TBA 0500B, TBA 1000B, TBA 1000SQ, TBA 1000S, TBA 1500S					
010	67379-0101		1	TRANSFORMER	
TPA 0330SQ					
010	67379-0269		1	TRANSFORMER	
TPA 1000SQ, TBA 1890S, TBA 2000S, TPA 0750SQ, TBA 1400B, TGA 1000SQ, TGA 0750SQ, TGA 0500SQ					
010	67379-0249		1	TRANSFORMER	
Common Parts					
020	32079-0000		1	WASHER	
030	28509-0000		2	WASHER	
040	32544-0000		2	INSULATION NUT	
050	312105-0295		1	SCREW M6S ISO 4017 M4X20 A470	
060	90458-0058		1	SCREW M5X60 A280	
070	312605-0312		2	HEXAGON NUT, M6M M4 A280	

Pos	Part No	UN	Qty	Description	Page No

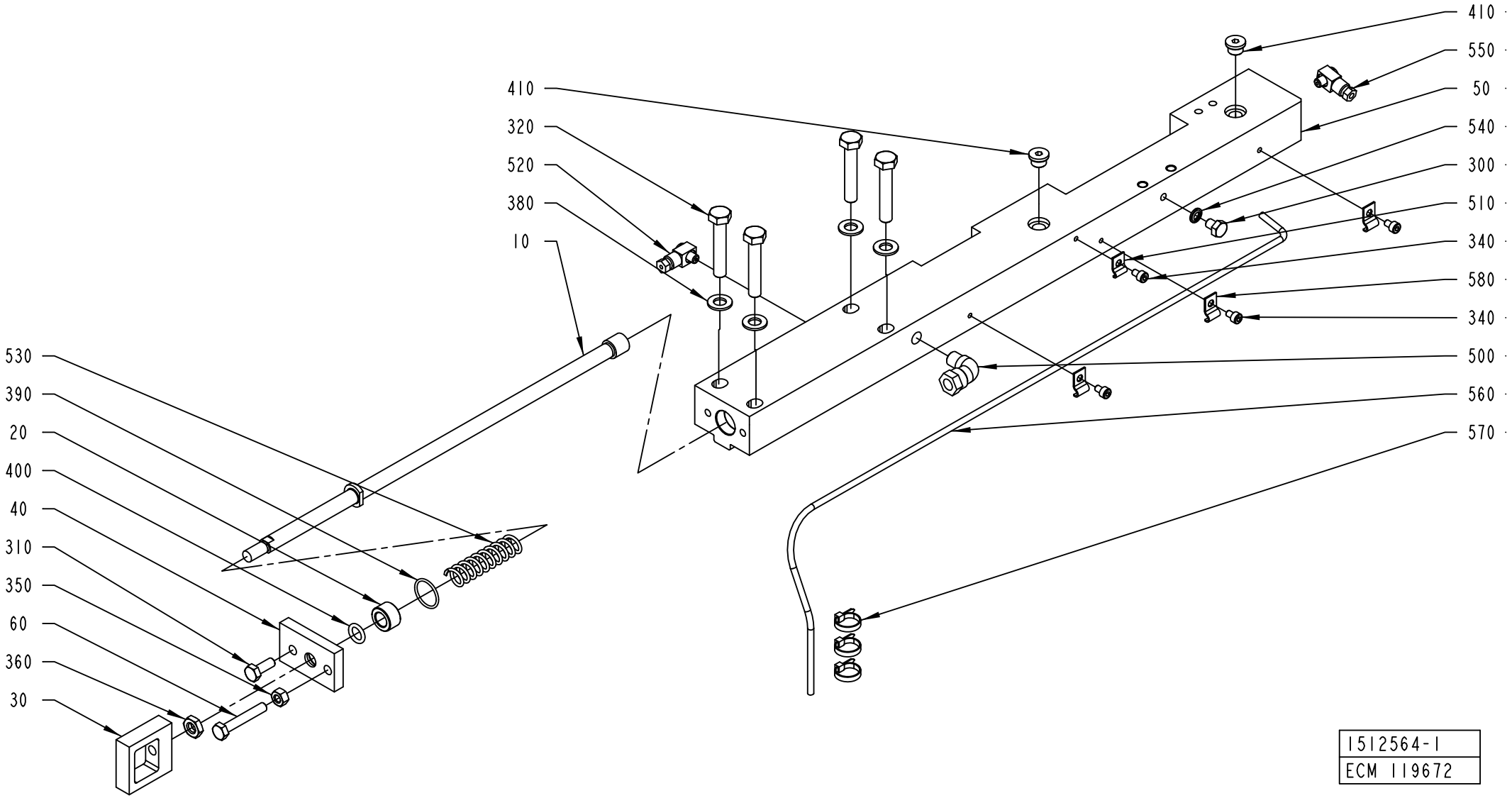
410
320
520
380
10
530
390
20
400
40
310
350
60
360
30
410
550
50
540
300
510
340
580
340
500
560
570
1512564-1
ECM 119672

ECM: 360267 - 20081001
Group number: 1512564-0200
Assembly Drawing: 1512564-1_1_AA

This list covers pages from 2-146 to 2-155

Pos	Part No	UN	Qty	Description	Page No
TBA 0200B QC, TBA 0330S QC, TBA 0250B QC, TPA 0200SQ QC, TPA 0250SQ QC (See drawing on page: 2-148)					
010	2530508-0000		1	TIE ROD	
050	2571843-0000		1	CARRIER	
070	1549312-0000		1	INSERT	
300	312105-0362		1	SCREW M6S ISO 4017 M6X8 A480	
340	312115-0285		4	SCREW ISO4762 M4X6 A4 80	
345	312145-0323		3	SCREW ISO 2009 MFS M5X8 A4	
400	315202-0208		1	O-RING 9,3X2,4 MM	
510	90165-0058		1	PIPE CLIP FOR TUBE D=2,5 MM	
520	90134-0058		1	CONNECTION	
540	315211-0103		1	BONDED SEAL SS/NBR90 M6	
550	90134-0068		1	CONNECTION	
560	90166-0109	MM	800	TUBE 4 MM PA TRANSP.	
580	90165-0056		3	PIPE CLIP FOR TUBE D=4 MM	
TBA 0200M, TBA 0250S (See drawing on page: 2-148)					
010	2530508-0000		1	TIE ROD	
050	2571843-0000		1	CARRIER	
070	2641225-0000		1	INSERT	
300	312105-0362		1	SCREW M6S ISO 4017 M6X8 A480	
340	312115-0285		4	SCREW ISO4762 M4X6 A4 80	
345	312145-0323		3	SCREW ISO 2009 MFS M5X8 A4	
400	315202-0208		1	O-RING 9,3X2,4 MM	
510	90165-0058		1	PIPE CLIP FOR TUBE D=2,5 MM	
520	90134-0058		1	CONNECTION	
540	315211-0103		1	BONDED SEAL SS/NBR90 M6	
550	90134-0068		1	CONNECTION	
560	90166-0109	MM	800	TUBE 4 MM PA TRANSP.	
580	90165-0056		3	PIPE CLIP FOR TUBE D=4 MM	
TBA 0200S, TBA 0500S, TPA 0330SQ, TPA 0500SQ, TBA 0200B NOQC, TBA 0250B NOQC (See drawing on page: 2-146)					
010	2530508-0000		1	TIE ROD	
050	2531114-0000		1	CARRIER	
300	312105-0362		1	SCREW M6S ISO 4017 M6X8 A480	
340	312115-0285		4	SCREW ISO4762 M4X6 A4 80	
400	315202-0208		1	O-RING 9,3X2,4 MM	
510	90165-0058		1	PIPE CLIP FOR TUBE D=2,5 MM	
520	90134-0058		1	CONNECTION	
540	315211-0103		1	BONDED SEAL SS/NBR90 M6	
550	90134-0068		1	CONNECTION	
560	90166-0109	MM	800	TUBE 4 MM PA TRANSP.	
580	90165-0056		3	PIPE CLIP FOR TUBE D=4 MM	
TBA 0200SQ QC, TBA 0250SQ QC (See drawing on page: 2-148)					
010	2737034-0000		1	TIE ROD	
050	2571843-0000		1	CARRIER	
070	1549312-0000		1	INSERT	
300	312105-0362		1	SCREW M6S ISO 4017 M6X8 A480	
340	312115-0285		4	SCREW ISO4762 M4X6 A4 80	
345	312145-0323		3	SCREW ISO 2009 MFS M5X8 A4	
400	315202-0208		1	O-RING 9,3X2,4 MM	
510	90165-0058		1	PIPE CLIP FOR TUBE D=2,5 MM	
520	90134-0058		1	CONNECTION	
540	315211-0103		1	BONDED SEAL SS/NBR90 M6	
550	90134-0068		1	CONNECTION	
560	90166-0109	MM	800	TUBE 4 MM PA TRANSP.	
580	90165-0056		3	PIPE CLIP FOR TUBE D=4 MM	
TBA 0500B QC, TBA 1000B QC (See drawing on page: 2-148)					
010	1499320-0000		1	TIE ROD	
050	2571843-0000		1	CARRIER	
070	1549312-0000		1	INSERT	
300	312105-0362		1	SCREW M6S ISO 4017 M6X8 A480	
340	312115-0285		4	SCREW ISO4762 M4X6 A4 80	
345	312145-0323		3	SCREW ISO 2009 MFS M5X8 A4	
400	315202-0208		1	O-RING 9,3X2,4 MM	
510	90165-0058		1	PIPE CLIP FOR TUBE D=2,5 MM	
520	90134-0058		1	CONNECTION	
540	315211-0103		1	BONDED SEAL SS/NBR90 M6	
550	90134-0068		1	CONNECTION	
560	90166-0109	MM	800	TUBE 4 MM PA TRANSP.	
580	90165-0056		3	PIPE CLIP FOR TUBE D=4 MM	
TBA 0500SQ QC, TBA 1000SQ QC (See drawing on page: 2-150)					
010	1499320-0000		1	TIE ROD	
050	2647116-0000		1	CARRIER	
070	2647114-0000		1	INSERT	
290	312105-0291		2	SCREW M6S ISO 4017 M4X12 A470	
300	312105-0362		1	SCREW M6S ISO 4017 M6X8 A480	
340	312115-0285		4	SCREW ISO4762 M4X6 A4 80	
345	312145-0323		3	SCREW ISO 2009 MFS M5X8 A4	
400	315202-0208		1	O-RING 9,3X2,4 MM	
510	90165-0058		1	PIPE CLIP FOR TUBE D=2,5 MM	
520	90134-0058		1	CONNECTION	
540	315211-0103		1	BONDED SEAL SS/NBR90 M6	
550	90134-0068		1	CONNECTION	
560	90166-0109	MM	800	TUBE 4 MM PA TRANSP.	

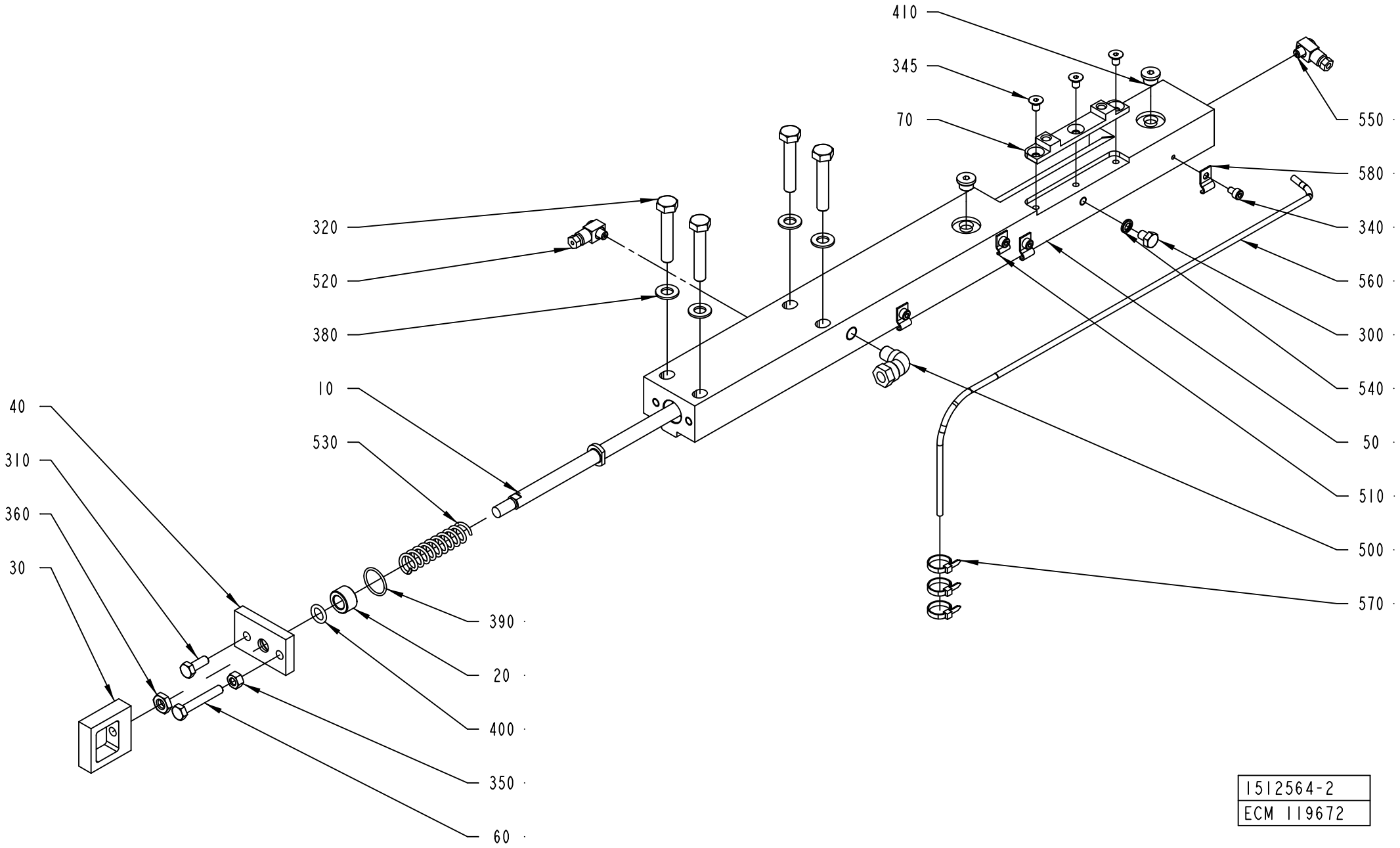

1512564-2
ECM 119672

ECM: 360267 - 20081001
Group number: 1512564-0200
Assembly Drawing: 1512564-2_1_AA

This list covers pages from 2-146 to 2-155

Pos	Part No	UN	Qty	Description	Page No
TBA 0500SQ QC, TBA 1000SQ QC (Cont'd) (See drawing on page: 2-150)					
580	90165-0056		3	PIPE CLIP FOR TUBE D=4 MM	
TBA 1000SQ, TBA 1000S, TBA 1500S, TBA 1000B NOQC, TPA 1000SQ NOQC (See drawing on page: 2-146)					
010	1499320-0000		1	TIE ROD	
050	2531114-0000		1	CARRIER	
300	312105-0362		1	SCREW M6S ISO 4017 M6X8 A480	
340	312115-0285		4	SCREW ISO4762 M4X6 A4 80	
400	315202-0208		1	O-RING 9,3X2,4 MM	
510	90165-0058		1	PIPE CLIP FOR TUBE D=2,5 MM	
520	90134-0058		1	CONNECTION	
540	315211-0103		1	BONDED SEAL SS/NBR90 M6	
550	90134-0068		1	CONNECTION	
560	90166-0109	MM	800	TUBE 4 MM PA TRANSP.	
580	90165-0056		3	PIPE CLIP FOR TUBE D=4 MM	
TBA 1890S QC, TBA 2000S QC, TBA 1400B (See drawing on page: 2-152)					
010	2588291-0000		1	TIE ROD	
050	2566329-0000		1	CARRIER	
070	2566328-0000		1	PLATE	
300	312105-0362		1	SCREW M6S ISO 4017 M6X8 A480	
340	312115-0285		4	SCREW ISO4762 M4X6 A4 80	
400	315202-0208		1	O-RING 9,3X2,4 MM	
510	90165-0058		1	PIPE CLIP FOR TUBE D=2,5 MM	
520	90134-0058		1	CONNECTION	
540	315211-0103		1	BONDED SEAL SS/NBR90 M6	
550	90134-0068		1	CONNECTION	
560	90166-0109	MM	800	TUBE 4 MM PA TRANSP.	
580	90165-0056		3	PIPE CLIP FOR TUBE D=4 MM	
590	312155-0287		3	SCREW DIN 7991 MF6S M4X8 A4 70	
600	2603151-0000		1	SHIM	
TGA 1000SQ, TGA 0750SQ, TGA 0500SQ (See drawing on page: 2-154)					
010	2588291-0000		1	TIE ROD	
040	2612747-0000		1	COVER	
050	2594714-0000		1	CARRIER	
300	312105-0362		3	SCREW M6S ISO 4017 M6X8 A480	
400	90459-3388		1	SCRAPER, 10X16X4,7 MM	
420	311103-0308		1	PARALLEL PIN ISO 2338 5M6X16 A1	
540	315211-0103		3	BONDED SEAL SS/NBR90 M6	
700	90153-0053		1	ADHESIVE, LOCTITE 648 TEMP 150`C 50ML	
TPA 1000SQ QC, TPA 0750SQ QC (See drawing on page: 2-150)					
010	2530508-0000		1	TIE ROD	
050	2647116-0000		1	CARRIER	
070	2647114-0000		1	INSERT	
290	312105-0291		2	SCREW M6S ISO 4017 M4X12 A470	
300	312105-0362		1	SCREW M6S ISO 4017 M6X8 A480	
340	312115-0285		4	SCREW ISO4762 M4X6 A4 80	
345	312145-0323		3	SCREW ISO 2009 MFS M5X8 A4	
400	315202-0208		1	O-RING 9,3X2,4 MM	
510	90165-0058		1	PIPE CLIP FOR TUBE D=2,5 MM	
520	90134-0058		1	CONNECTION	
540	315211-0103		1	BONDED SEAL SS/NBR90 M6	
550	90134-0068		1	CONNECTION	
560	90166-0109	MM	800	TUBE 4 MM PA TRANSP.	
580	90165-0056		3	PIPE CLIP FOR TUBE D=4 MM	
Common Parts					
020	1036495-0000		1	BUSHING	
030	1036585-0000		1	EAR	
040	1036664-0000		1	LID	
060	1523162-0000		1	SCREW	
310	312105-0368		1	SCREW M6S ISO 4017 M6X16 A480	
320	312105-0460		4	SCREW M6S ISO 4014 M8X45 A480	
350	312605-0316		1	HEXAGON NUT, M6M M6 A280	
360	312625-0318		1	HEXAGON THIN NUT, EN 24035 ML6M M8 A4	
380	315105-0165		4	WASHER BRB 8,4X16 RFR	
390	315202-0116		1	O-RING 18,1X1,6 MM	
410	342713-0209		2	PLUG (QUANT.MINIMA= 10PC).	
500	90030-0257		1	CONN. ELBOW, 8-R1/8, EXT.THREAD	
530	1548940-0000		1	SPRING	
570	352113-0101		3	CABLE TIE, BLACK 92X2,5 MM	

Machine Type | Group Description | Used-In | Group Number | Page No

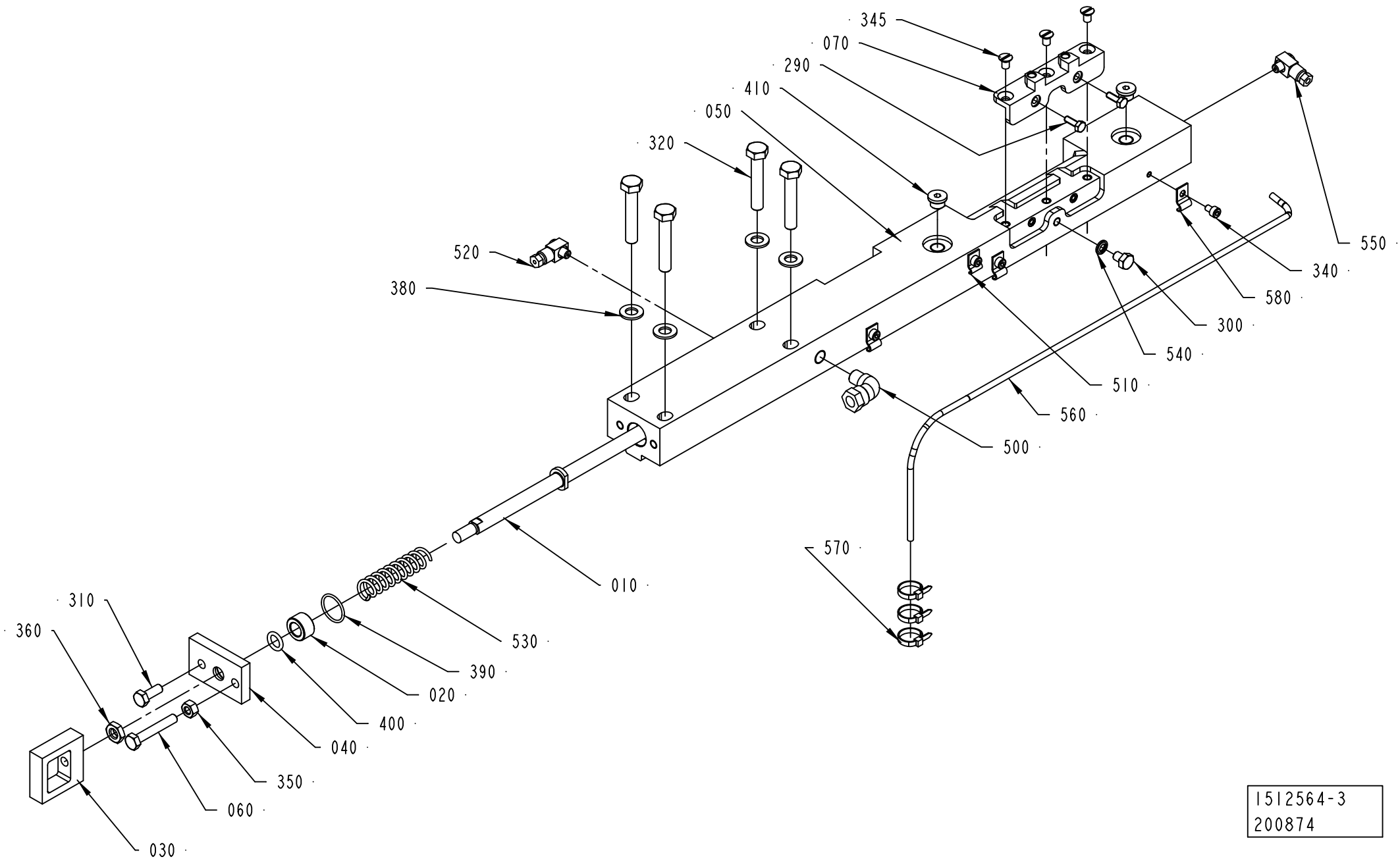

1512564-3
200874

ECM: 360267 - 20081001
Group number: 1512564-0200
Assembly Drawing: 1512564-3_1_AA

This list covers pages from 2-146 to 2-155

Pos	Part No	UN	Qty	Description	Page No
SEE PREVIOUS LISTS PAGES: 2-147, 2-149.					

Pos	Part No	UN	Qty	Description	Page No

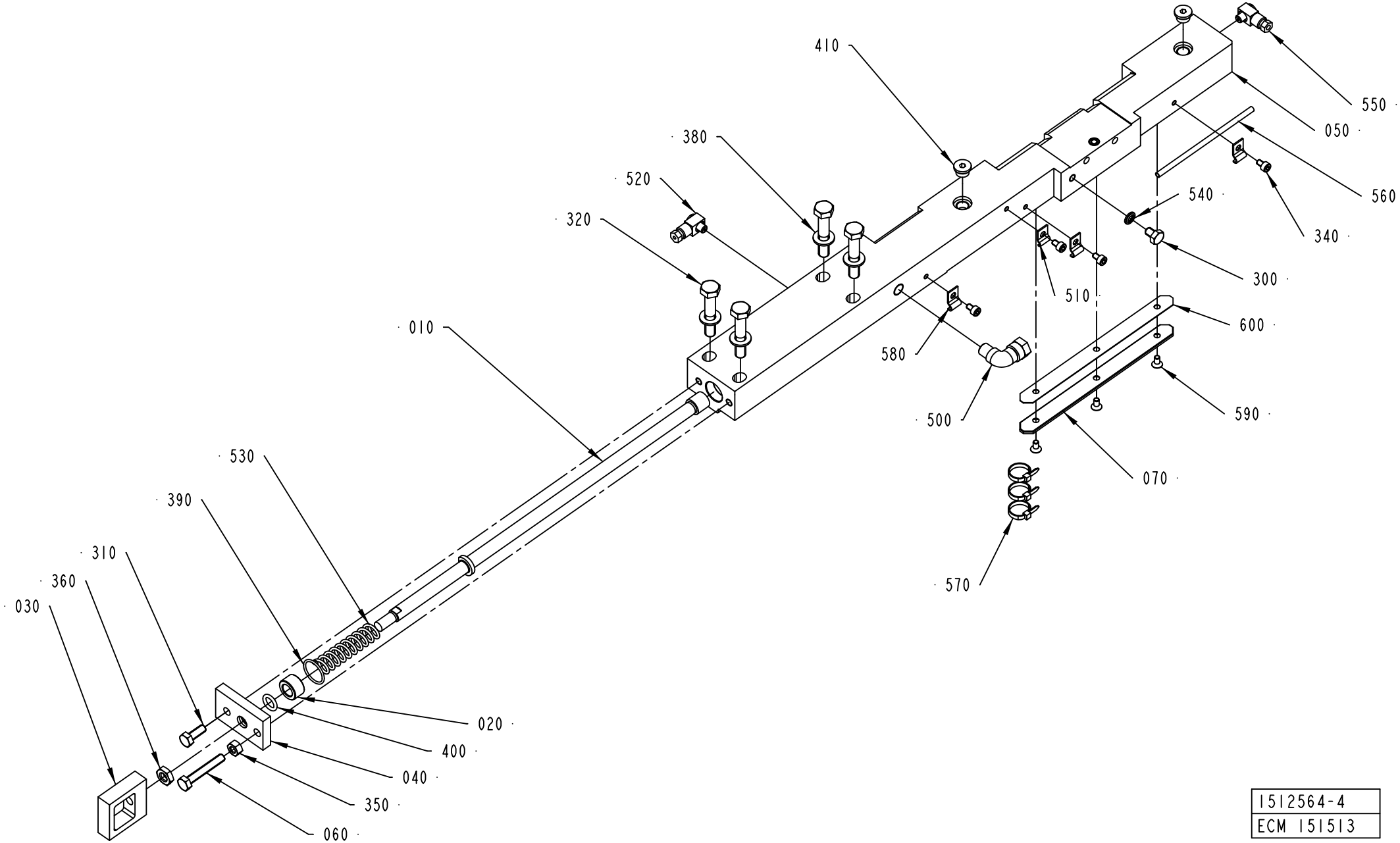

1512564-4
ECM 151513

ECM: 360267 - 20081001
Group number: 1512564-0200
Assembly Drawing: 1512564-4_1_AA

This list covers pages from 2-146 to 2-155

Pos	Part No	UN	Qty	Description	Page No
SEE PREVIOUS LISTS PAGES: 2-147, 2-149.					

Pos	Part No	UN	Qty	Description	Page No

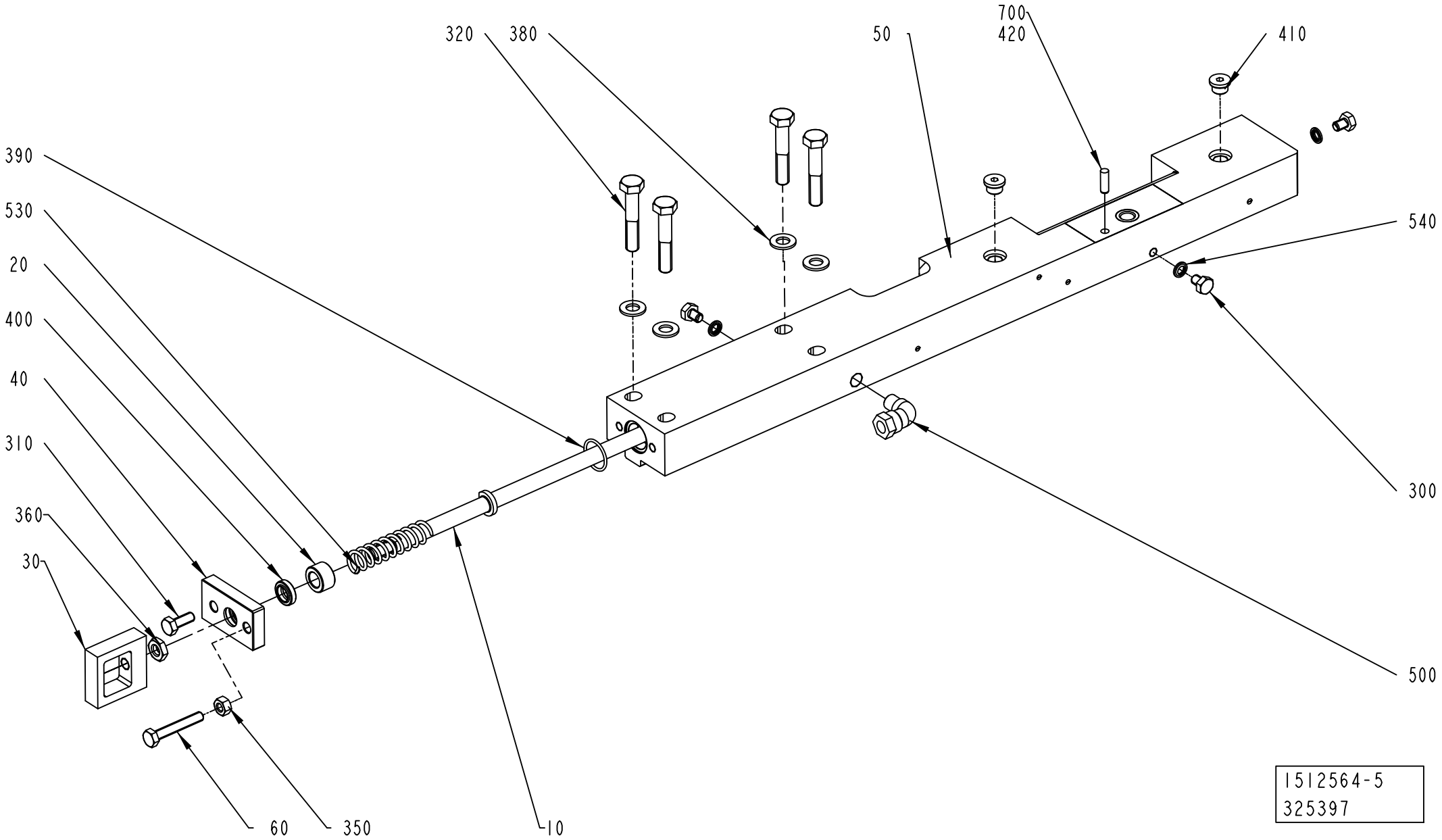
320
380
50
700
420
410
390
530
20
400
40
310
360
30
540
300
500
60
350
10
1512564-5
325397

ECM: 360267 - 20081001
Group number: 1512564-0200
Assembly Drawing: 1512564-5_1_AB

This list covers pages from 2-146 to 2-155

Pos	Part No	UN	Qty	Description	Page No
SEE PREVIOUS LISTS PAGES: 2-147, 2-149.					

Pos	Part No	UN	Qty	Description	Page No

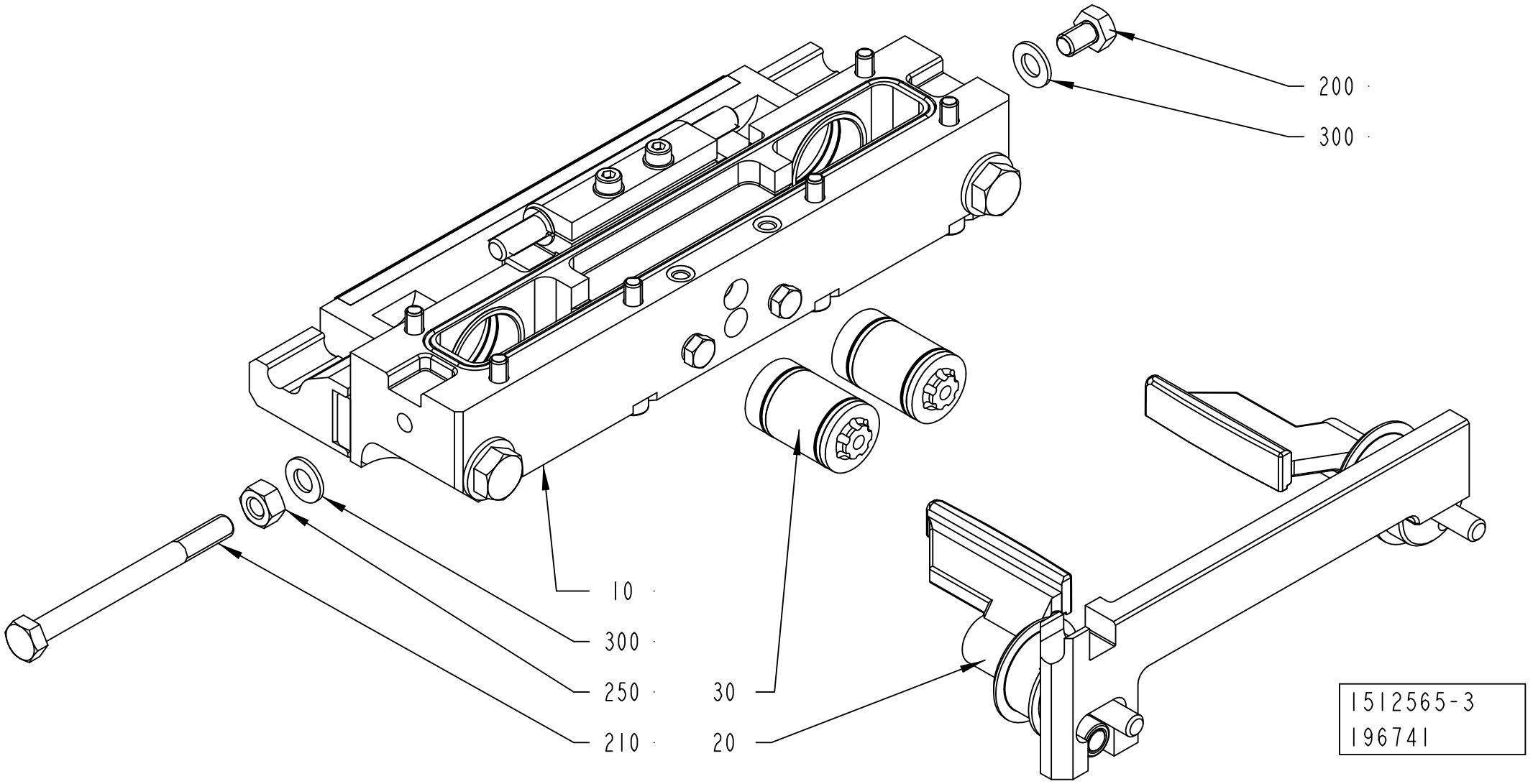
200
300
10
300
250
210
30
20
1512565-3
196741

ECM: 272004 - 20060831
Group number: 1512565-0300
Assembly Drawing: 1512565-3_1_AA

Pos	Part No	UN	Qty	Description	Page No
-					
010	2552008-0200		1	CUTTING JAW	**2-159, 2-161, 2-163, 2-165, 2-167**
020	2552009-0100		1	FOLDING FLAP LEFT	**2-169, 2-171, 2-173, 2-175**
030	2552010-0200		2	PISTON	**2-177**
200	312105-0447		1	SCREW M6S ISO 4017 M8X12 A480	
210	312105-0469		1	SCREW M6S ISO 4014 M8X90 A480	
250	312605-0318		1	HEXAGON NUT, M6M M8 A280	
300	315105-0165		2	WASHER BRB 8,4X16 RFR	

Pos	Part No	UN	Qty	Description	Page No

Machine Type | Group Description | Used-In | Group Number | Page No

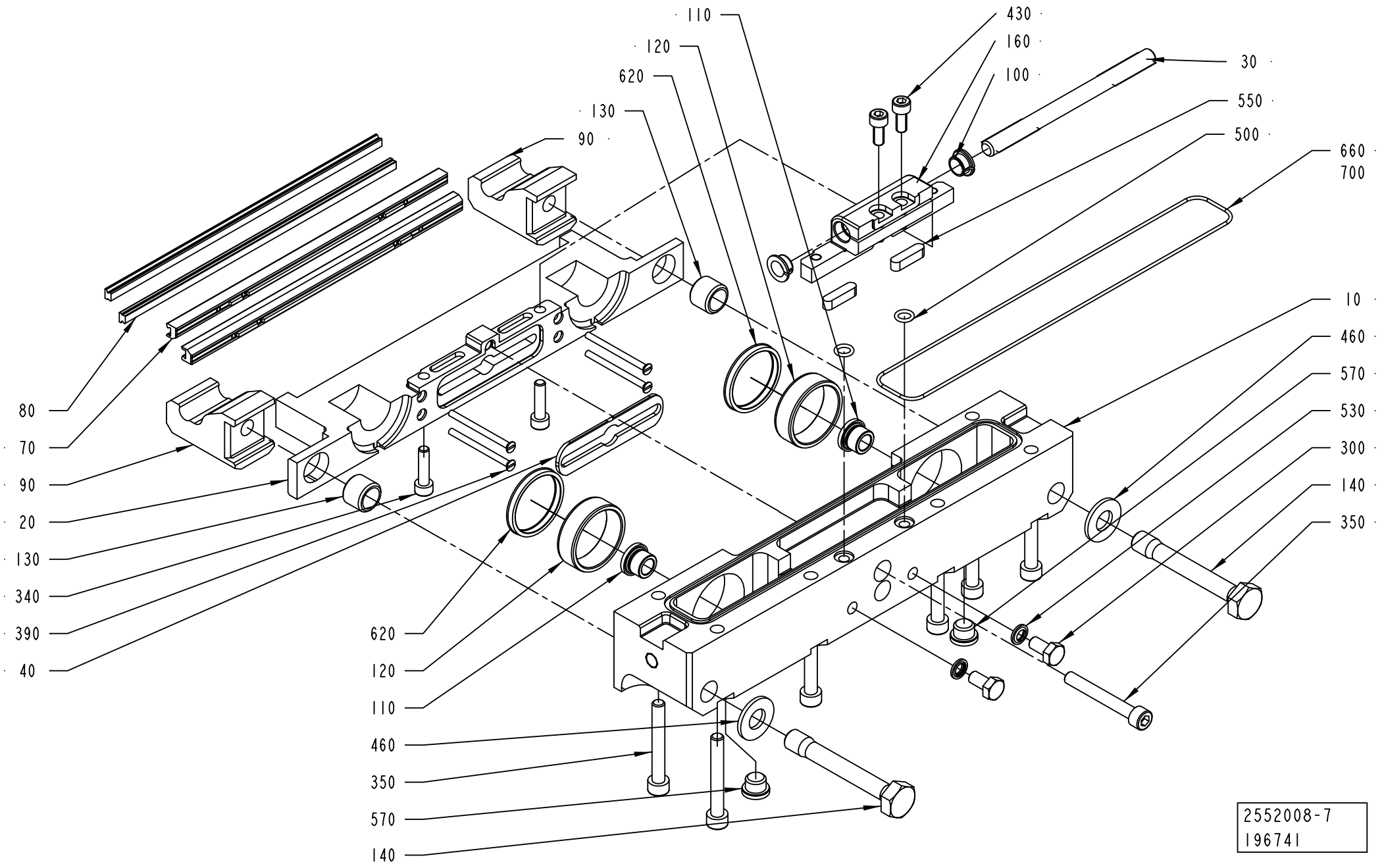
110
120
620
130
90
430
160
100
30
550
500
660
700
10
460
570
530
300
140
350
80
70
90
20
130
340
390
40
620
120
110
460
350
570
140
2552008-7
196741

ECM: 370698 - 20090101
Group number: 2552008-0200
Assembly Drawing: 2552008-7_1_AA

This list covers pages from 2-158 to 2-167

Pos	Part No	UN	Qty	Description	Page No
TPA 1000SQ NOQC (See drawing on page: 2-162)					
010	2775285-0000		1	BEARING HOUSING	
020	2579988-0000		1	CUTTING JAW	
030	2579990-0000		1	SHAFT	
040	1487619-0000		1	PLATE	
070	1520494-0000		2	CUTTING RAIL	
080	1520633-0002		2	DOLLY	
090	1538348-0000		2	CATCH	
100	2531703-0000		2	BUSHING	
120	1255389-0000		2	BUSHING	
140	1035871-0000		2	SCREW	
150	2503699-0000		1	VOLUME BULGE	
390	312145-0238		2	SCREW ISO 2009 MFS M3X40 A4	
400	312145-0236		2	SCREW ISO 2009 MFS M3X35 A4	
410	312155-0287		2	SCREW DIN 7991 MF6S M4X8 A4 70	
430	312115-0327		2	SCREW ISO4762 M5X12 A4 80	
500	315202-0104		2	O-RING 6,1X1,6 MM	
620	90091-0361		2	SCRAPER, EXCLUDER2 30X34,8X3,7 MM	
660	90242-0093	MM	550	O-RING MATERIAL 1,5 MM	
TPA 1000SQ QC, TPA 0750SQ QC (See drawing on page: 2-162)					
010	2775285-0000		1	BEARING HOUSING	
020	2658265-0000		1	CUTTING JAW	
040	1487619-0000		1	PLATE	
070	1520494-0000		2	CUTTING RAIL	
080	1520633-0002		2	DOLLY	
090	1538348-0000		2	CATCH	
120	1255389-0000		2	BUSHING	
140	1035871-0000		2	SCREW	
390	312145-0238		2	SCREW ISO 2009 MFS M3X40 A4	
400	312145-0236		2	SCREW ISO 2009 MFS M3X35 A4	
500	315202-0104		2	O-RING 6,1X1,6 MM	
620	90091-0361		2	SCRAPER, EXCLUDER2 30X34,8X3,7 MM	
660	90242-0093	MM	550	O-RING MATERIAL 1,5 MM	
TBA 0200B QC, TBA 0330S QC, TBA 0250B QC (See drawing on page: 2-160)					
010	2774548-0000		1	BEARING HOUSING	
020	2604564-0000		1	CUTTING JAW	
050	1484002-0000		1	PLATE	
060	1484003-0000		1	PLATE	
070	1520493-0000		2	CUTTING RAIL	
080	1110083-0002		2	DOLLY	
090	1538348-0000		2	CATCH	
120	1255389-0000		2	BUSHING	
140	1035871-0000		2	SCREW	
390	312145-0234		4	SCREW ISO 2009 MFS M3X30 A4	
500	315202-0104		2	O-RING 6,1X1,6 MM	
620	90091-0361		2	SCRAPER, EXCLUDER2 30X34,8X3,7 MM	
660	90242-0093	MM	550	O-RING MATERIAL 1,5 MM	
TBA 0200M QC, TBA 0250S QC (See drawing on page: 2-164)					
010	2775286-0000		1	BEARING HOUSING	
020	2645568-0000		1	CUTTING JAW	
050	1484002-0000		1	PLATE	
060	1484003-0000		1	PLATE	
070	1520493-0000		2	CUTTING RAIL	
080	1110083-0002		2	DOLLY	
090	1538348-0000		2	CATCH	
390	312145-0234		4	SCREW ISO 2009 MFS M3X30 A4	
TBA 0200S (See drawing on page: 2-162)					
010	2775290-0000		1	BEARING HOUSING	
020	2513014-0000		1	CUTTING JAW	
030	2513013-0000		1	SHAFT	
050	1484002-0000		1	PLATE	
060	1484003-0000		1	PLATE	
070	1520493-0000		2	CUTTING RAIL	
080	1110083-0002		2	DOLLY	
090	1538348-0000		2	CATCH	
100	2531703-0000		2	BUSHING	
120	1255389-0000		2	BUSHING	
140	1035871-0000		2	SCREW	
390	312145-0234		4	SCREW ISO 2009 MFS M3X30 A4	
430	312115-0329		2	SCREW ISO4762 M5X16 A4 80	
500	315202-0104		2	O-RING 6,1X1,6 MM	
620	90091-0361		2	SCRAPER, EXCLUDER2 30X34,8X3,7 MM	
TBA 0200SQ QC, TBA 0250SQ QC (See drawing on page: 2-160)					
010	2774548-0000		1	BEARING HOUSING	
020	2668319-0000		1	CUTTING JAW	
050	1484002-0000		1	PLATE	
060	1484003-0000		1	PLATE	
070	1520493-0000		2	CUTTING RAIL	
080	1566845-0002		2	DOLLY	
090	1538348-0000		2	CATCH	
120	1255389-0000		2	BUSHING	
140	1035871-0000		2	SCREW	
150	2679952-0000		1	VOLUME BULGE	
390	312145-0234		4	SCREW ISO 2009 MFS M3X30 A4	

Machine Type | Group Description | Used-In | Group Number | Page No

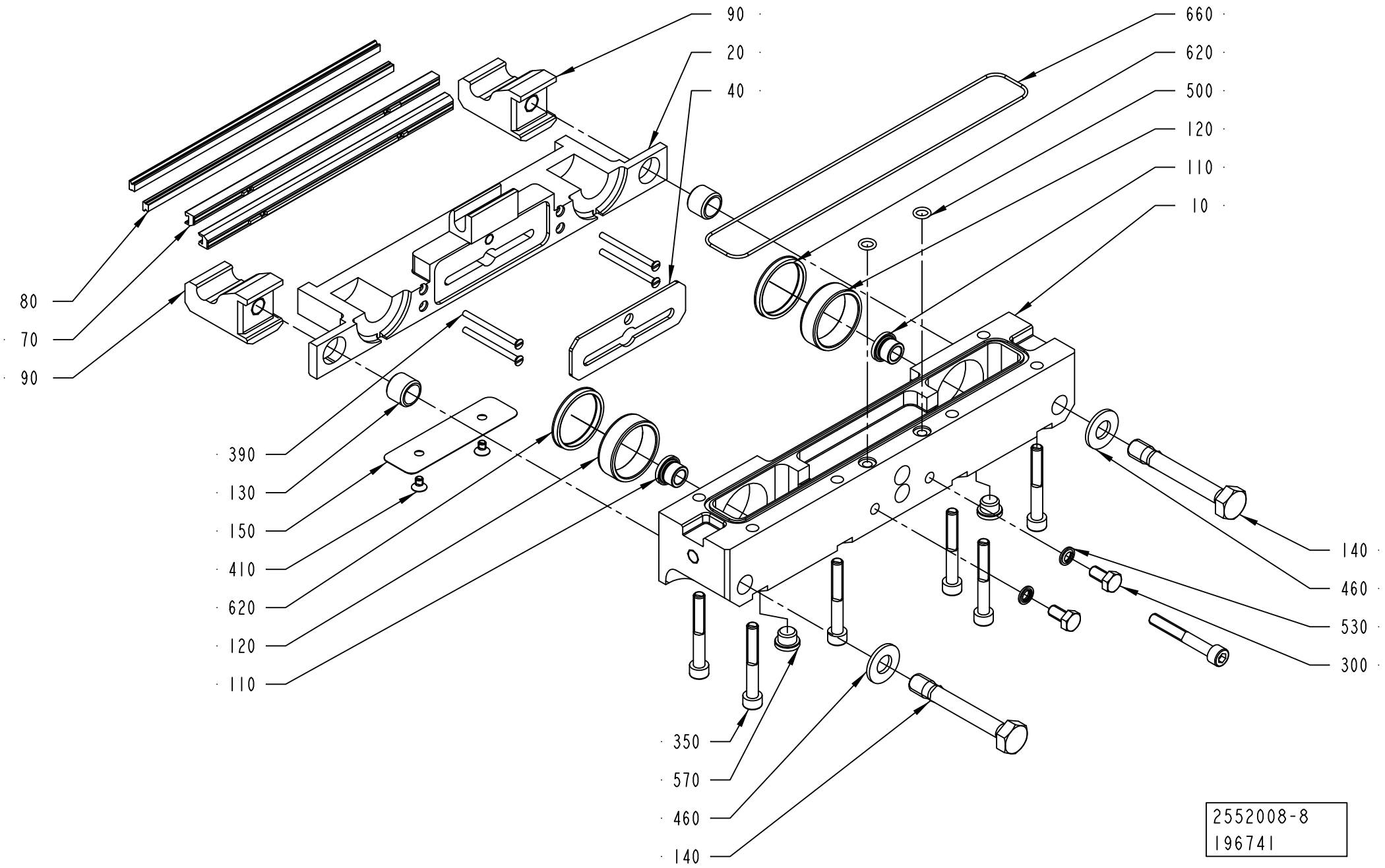
90
20
40
660
620
500
120
110
10
80
70
90
390
130
150
410
620
120
110
140
460
530
300
350
570
460
140
2552008-8
196741

ECM: 370698 - 20090101
Group number: 2552008-0200
Assembly Drawing: 2552008-8_1_AA

This list covers pages from 2-158 to 2-167

Pos	Part No	UN	Qty	Description	Page No
TBA 0200SQ QC, TBA 0250SQ QC (Cont'd) (See drawing on page: 2-160)					
410	90287-0295		2	SCREW HEX.SOCK.COUNT.MF6S M3X8 A280	
500	315202-0104		2	O-RING 6,1X1,6 MM	
620	90091-0361		2	SCRAPER, EXCLUDER2 30X34,8X3,7 MM	
660	90242-0093	MM	550	O-RING MATERIAL 1,5 MM	
TBA 0500B QC, TBA 1000B QC (See drawing on page: 2-160)					
010	2775287-0000		1	BEARING HOUSING	
020	1487954-0000		1	CUTTING JAW	
040	1349925-0000		1	PLATE	
070	1520455-0000		2	CUTTING RAIL	
080	1110083-0002		2	DOLLY	
090	1538348-0000		2	CATCH	
120	1255389-0000		2	BUSHING	
140	1035871-0000		2	SCREW	
150	1558733-0000		1	VOLUME BULGE	
390	312145-0238		4	SCREW ISO 2009 MFS M3X40 A4	
410	312155-0285		2	SCREW DIN 7991 MF6S M4X6 A4 70	
500	315202-0104		2	O-RING 6,1X1,6 MM	
620	90091-0361		2	SCRAPER, EXCLUDER2 30X34,8X3,7 MM	
660	90242-0093	MM	550	O-RING MATERIAL 1,5 MM	
TBA 0500S (See drawing on page: 2-162)					
010	2775292-0000		1	BEARING HOUSING	
020	2611000-0000		1	CUTTING JAW	
030	2579990-0000		1	SHAFT	
040	1487619-0000		1	PLATE	
070	1520494-0000		2	CUTTING RAIL	
080	1110083-0002		2	DOLLY	
090	1538348-0000		2	CATCH	
100	2531703-0000		2	BUSHING	
120	1255389-0000		2	BUSHING	
140	1035871-0000		2	SCREW	
390	312145-0234		4	SCREW ISO 2009 MFS M3X30 A4	
430	312115-0327		2	SCREW ISO4762 M5X12 A4 80	
500	315202-0104		2	O-RING 6,1X1,6 MM	
620	90091-0361		2	SCRAPER, EXCLUDER2 30X34,8X3,7 MM	
660	90242-0093	MM	550	O-RING MATERIAL 1,5 MM	
TBA 0500SQ QC, TBA 1000SQ QC (See drawing on page: 2-158)					
010	2774547-0000		1	BEARING HOUSING	
020	1487618-0000		1	CUTTING JAW	
040	1487619-0000		1	PLATE	
070	1520494-0000		2	CUTTING RAIL	
080	1110083-0002		2	DOLLY	
090	1538348-0000		2	CATCH	
120	1255389-0000		2	BUSHING	
140	1035871-0000		2	SCREW	
160	2825379-0000		1	HOLDER	
340	312115-0331		2	SCREW ISO4762 M5X20 A4 80	
390	312145-0238		4	SCREW ISO 2009 MFS M3X40 A4	
500	315202-0104		2	O-RING 6,1X1,6 MM	
550	315705-0201		2	PARALLEL KEY W. ROUND ENDS 5X5X20 MM	
620	90091-0361		2	SCRAPER, EXCLUDER2 30X34,8X3,7 MM	
660	90242-0093	MM	550	O-RING MATERIAL 1,5 MM	
TBA 1000B NOQC (See drawing on page: 2-162)					
010	2775287-0000		1	BEARING HOUSING	
020	2665188-0000		1	CUTTING JAW	
030	2526812-0000		1	SHAFT	
040	1349925-0000		1	PLATE	
070	1520455-0000		2	CUTTING RAIL	
080	1110083-0002		2	DOLLY	
090	1538348-0000		2	CATCH	
100	2531703-0000		2	BUSHING	
120	1255389-0000		2	BUSHING	
140	1035871-0000		2	SCREW	
390	312145-0238		4	SCREW ISO 2009 MFS M3X40 A4	
430	312115-0329		2	SCREW ISO4762 M5X16 A4 80	
440	315105-0146		2	WASHER BRB 5,3X10 RFR	
500	315202-0104		2	O-RING 6,1X1,6 MM	
620	90091-0361		2	SCRAPER, EXCLUDER2 30X34,8X3,7 MM	
660	90242-0093	MM	550	O-RING MATERIAL 1,5 MM	
TBA 1000S (See drawing on page: 2-162)					
010	2775288-0000		1	BEARING HOUSING	
020	2559424-0000		1	CUTTING JAW	
030	2526812-0000		1	SHAFT	
040	1349925-0000		1	PLATE	
070	1520455-0000		2	CUTTING RAIL	
080	1110083-0002		2	DOLLY	
090	1538348-0000		2	CATCH	
100	2531703-0000		2	BUSHING	
120	1255389-0000		2	BUSHING	
140	1035871-0000		2	SCREW	
390	312145-0238		4	SCREW ISO 2009 MFS M3X40 A4	
430	312115-0327		2	SCREW ISO4762 M5X12 A4 80	
500	315202-0104		2	O-RING 6,1X1,6 MM	
620	90091-0361		2	SCRAPER, EXCLUDER2 30X34,8X3,7 MM	

Machine Type | Group Description | Used-In | Group Number | Page No

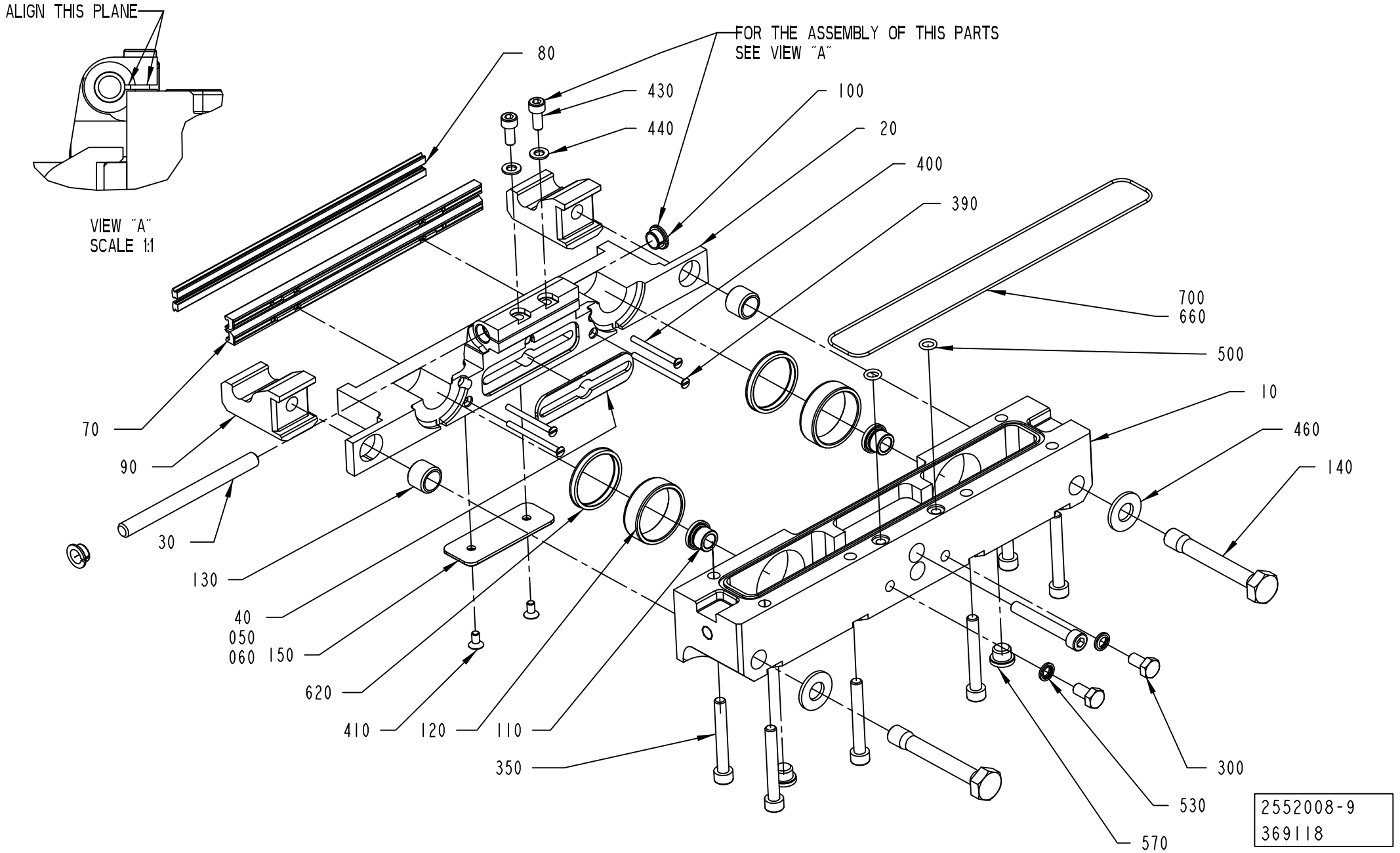
ALIGN THIS PLANE
VIEW "A"
SCALE 1:1
FOR THE ASSEMBLY OF THIS PARTS
SEE VIEW "A"
80
430
440
100
20
400
390
700
660
500
10
460
140
70
90
30
130
40
050
060
150
620
410
120
110
350
300
530
570
2552008-9
369118

Pos	Part No	UN	Qty	Description	Page No
TBA 1000S (Cont'd) (See drawing on page: 2-162)					
660	90242-0093	MM	550	O-RING MATERIAL 1,5 MM	
TBA 1000SQ NOQC (See drawing on page: 2-158)					
010	2774547-0000		1	BEARING HOUSING	
020	1487618-0000		1	CUTTING JAW	
030	2526812-0000		1	SHAFT	
040	1487619-0000		1	PLATE	
070	1520494-0000		2	CUTTING RAIL	
080	1110083-0002		2	DOLLY	
090	1538348-0000		2	CATCH	
100	2531703-0000		2	BUSHING	
120	1255389-0000		2	BUSHING	
140	1035871-0000		2	SCREW	
160	2526810-0000		1	HOLDER	
340	312115-0331		2	SCREW ISO4762 M5X20 A4 80	
390	312145-0238		4	SCREW ISO 2009 MFS M3X40 A4	
430	312115-0327		2	SCREW ISO4762 M5X12 A4 80	
500	315202-0104		2	O-RING 6,1X1,6 MM	
550	315705-0201		2	PARALLEL KEY W. ROUND ENDS 5X5X20 MM	
620	90091-0361		2	SCRAPER, EXCLUDER2 30X34,8X3,7 MM	
660	90242-0093	MM	550	O-RING MATERIAL 1,5 MM	
TBA 1500S (See drawing on page: 2-162)					
010	2775287-0000		1	BEARING HOUSING	
020	2570301-0000		1	CUTTING JAW	
030	2526812-0000		1	SHAFT	
040	1349925-0000		1	PLATE	
070	1520455-0000		2	CUTTING RAIL	
080	1110083-0002		2	DOLLY	
090	1538348-0000		2	CATCH	
100	2531703-0000		2	BUSHING	
120	1255389-0000		2	BUSHING	
140	1035871-0000		2	SCREW	
390	312145-0238		4	SCREW ISO 2009 MFS M3X40 A4	
430	312115-0327		2	SCREW ISO4762 M5X12 A4 80	
500	315202-0104		2	O-RING 6,1X1,6 MM	
620	90091-0361		2	SCRAPER, EXCLUDER2 30X34,8X3,7 MM	
660	90242-0093	MM	550	O-RING MATERIAL 1,5 MM	
TBA 1890S QC, TBA 2000S QC, TBA 1400B (See drawing on page: 2-162)					
010	2775283-0000		1	BEARING HOUSING	
020	2664762-0000		1	CUTTING JAW	
030	2686144-0000		1	SHAFT	
040	2588292-0000		1	PLATE	
070	1533051-0000		2	CUTTING RAIL	
080	1520633-0005		2	DOLLY	
090	2566339-0000		2	CATCH	
100	2531703-0000		2	BUSHING	
120	2588299-0000		2	BUSHING	
140	2588303-0000		2	SCREW	
390	312145-0238		8	SCREW ISO 2009 MFS M3X40 A4	
430	312115-0325		2	SCREW ISO4762 M5X10 A4 80	
500	315204-0105		2	O-RING 7,1X1,6 MM	
620	90091-0361		2	SCRAPER, EXCLUDER2 30X34,8X3,7 MM	
660	90459-2363		1	O-RING MATERIAL 1,78 MM	
TGA 1000SQ, TGA 0750SQ, TGA 0500SQ (See drawing on page: 2-166)					
010	2660286-0000		1	BEARING HOUSING	
020	2649674-0000		1	CUTTING JAW	
040	1349925-0000		1	PLATE	
070	1520494-0000		2	CUTTING RAIL	
080	1520633-0002		2	DOLLY	
090	1538348-0000		2	CATCH	
120	2612738-0000		2	BUSHING	
140	1035871-0000		2	SCREW	
150	2698631-0000		1	VOLUME BULGE	
400	312145-0236		4	SCREW ISO 2009 MFS M3X35 A4	
410	312105-0370		1	SCREW M6S ISO 4017 M6X20 A480	
450	315105-0153		1	WASHER BRB 6,4X12 RFR	
TPA 0200SQ QC, TPA 0250SQ QC (See drawing on page: 2-160)					
010	2775290-0000		1	BEARING HOUSING	
020	2674336-0000		1	CUTTING JAW	
050	1484002-0000		1	PLATE	
060	1484003-0000		1	PLATE	
070	1520493-0000		2	CUTTING RAIL	
080	1110083-0002		2	DOLLY	
090	1538348-0000		2	CATCH	
120	1255389-0000		2	BUSHING	
140	1035871-0000		2	SCREW	
390	312145-0234		4	SCREW ISO 2009 MFS M3X30 A4	
500	315202-0104		2	O-RING 6,1X1,6 MM	
620	90091-0361		2	SCRAPER, EXCLUDER2 30X34,8X3,7 MM	
660	90242-0093	MM	550	O-RING MATERIAL 1,5 MM	
TPA 0330SQ (See drawing on page: 2-162)					
010	2775293-0000		1	BEARING HOUSING	
020	2611710-0000		1	CUTTING JAW	
030	2513013-0000		1	SHAFT	

Machine Type | Group Description | Used-In | Group Number | Page No

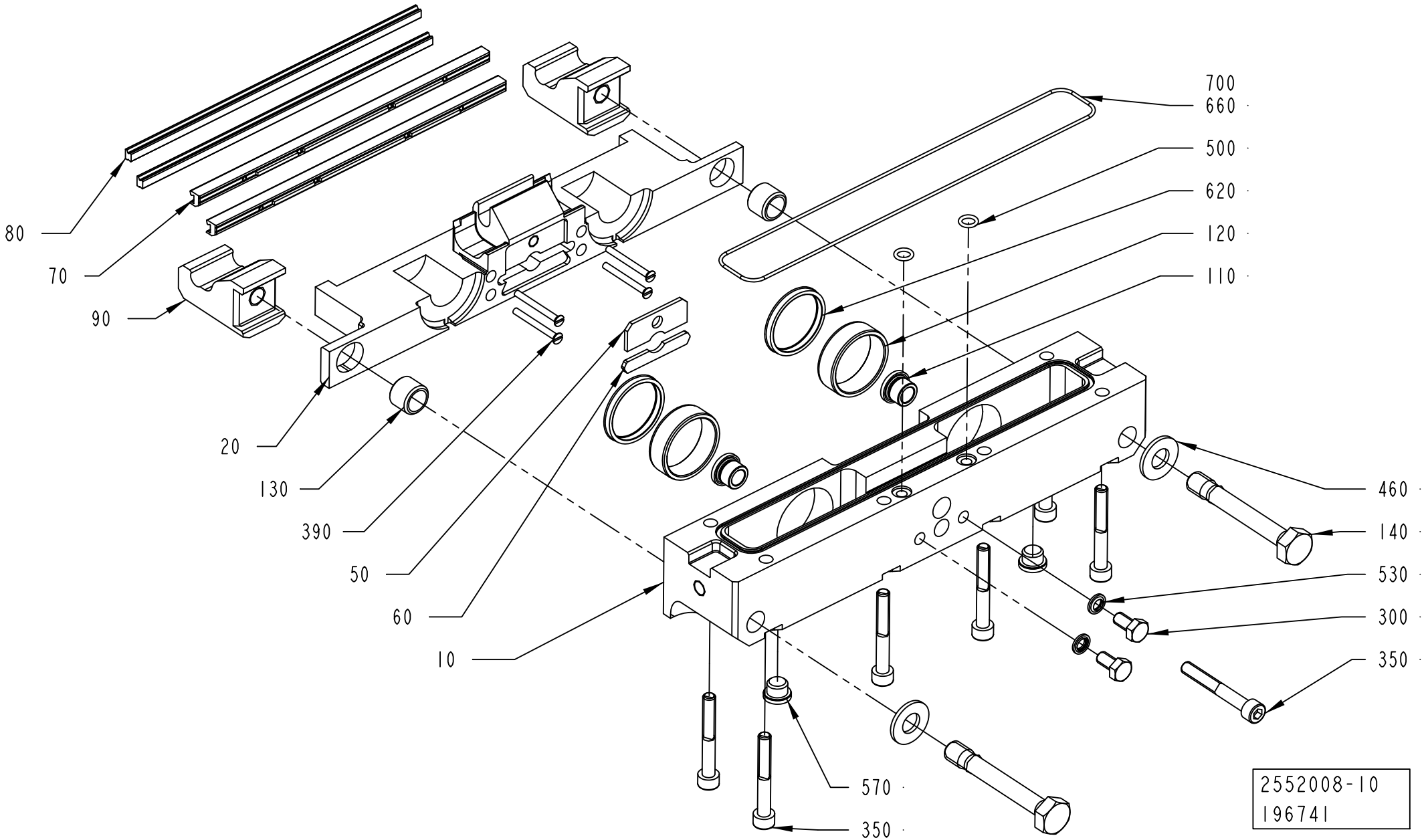
700
660
500
620
120
110
80
70
90
20
130
390
50
60
10
460
140
530
300
350
570
350
2552008-10
196741

Pos	Part No	UN	Qty	Description	Page No
TPA 0330SQ (Cont'd) (See drawing on page: 2-162)					
050	1484002-0000		1	PLATE	
060	1484003-0000		1	PLATE	
070	1520493-0000		2	CUTTING RAIL	
080	1110083-0002		2	DOLLY	
090	1538348-0000		2	CATCH	
100	2531703-0000		2	BUSHING	
120	1255389-0000		2	BUSHING	
140	1035871-0000		2	SCREW	
390	312145-0234		4	SCREW ISO 2009 MFS M3X30 A4	
430	312115-0327		2	SCREW ISO4762 M5X12 A4 80	
500	315202-0104		2	O-RING 6,1X1,6 MM	
620	90091-0361		2	SCRAPER, EXCLUDER2 30X34,8X3,7 MM	
660	90242-0093	MM	550	O-RING MATERIAL 1,5 MM	
TPA 0500SQ (See drawing on page: 2-162)					
010	2775284-0000		1	BEARING HOUSING	
020	2570850-0000		1	CUTTING JAW	
030	2513013-0000		1	SHAFT	
050	1484002-0000		1	PLATE	
060	1484003-0000		1	PLATE	
070	1520493-0000		2	CUTTING RAIL	
080	1110083-0002		2	DOLLY	
090	1538348-0000		2	CATCH	
100	2570849-0000		2	BUSHING	
120	1255389-0000		2	BUSHING	
140	1035871-0000		2	SCREW	
150	2503689-0000		1	VOLUME BULGE	
390	312145-0238		4	SCREW ISO 2009 MFS M3X40 A4	
410	312155-0287		2	SCREW DIN 7991 MF6S M4X8 A4 70	
430	312115-0327		2	SCREW ISO4762 M5X12 A4 80	
500	315202-0104		2	O-RING 6,1X1,6 MM	
620	90091-0361		2	SCRAPER, EXCLUDER2 30X34,8X3,7 MM	
660	90242-0093	MM	550	O-RING MATERIAL 1,5 MM	
Common Parts					
110	1255390-0000		2	BUSHING	
130	1036494-0000		2	GUIDE BUSHING	
300	312105-0366		2	SCREW M6S ISO 4017 M6X12 A480	
350	312115-0379		7	SCREW ISO4762 M6X45 A4 80	
460	315105-0173		2	WASHER BRB 10,5X22 RFR	
530	315211-0103		2	BONDED SEAL SS/NBR90 M6	
570	342713-0209		2	PLUG (QUANT.MINIMA= 10PC).	
700	90153-0015		1	ADHESIVE,LOCTITE IS 496/CYANOLOT 303	

Pos	Part No	UN	Qty	Description	Page No

CUTTING JAW

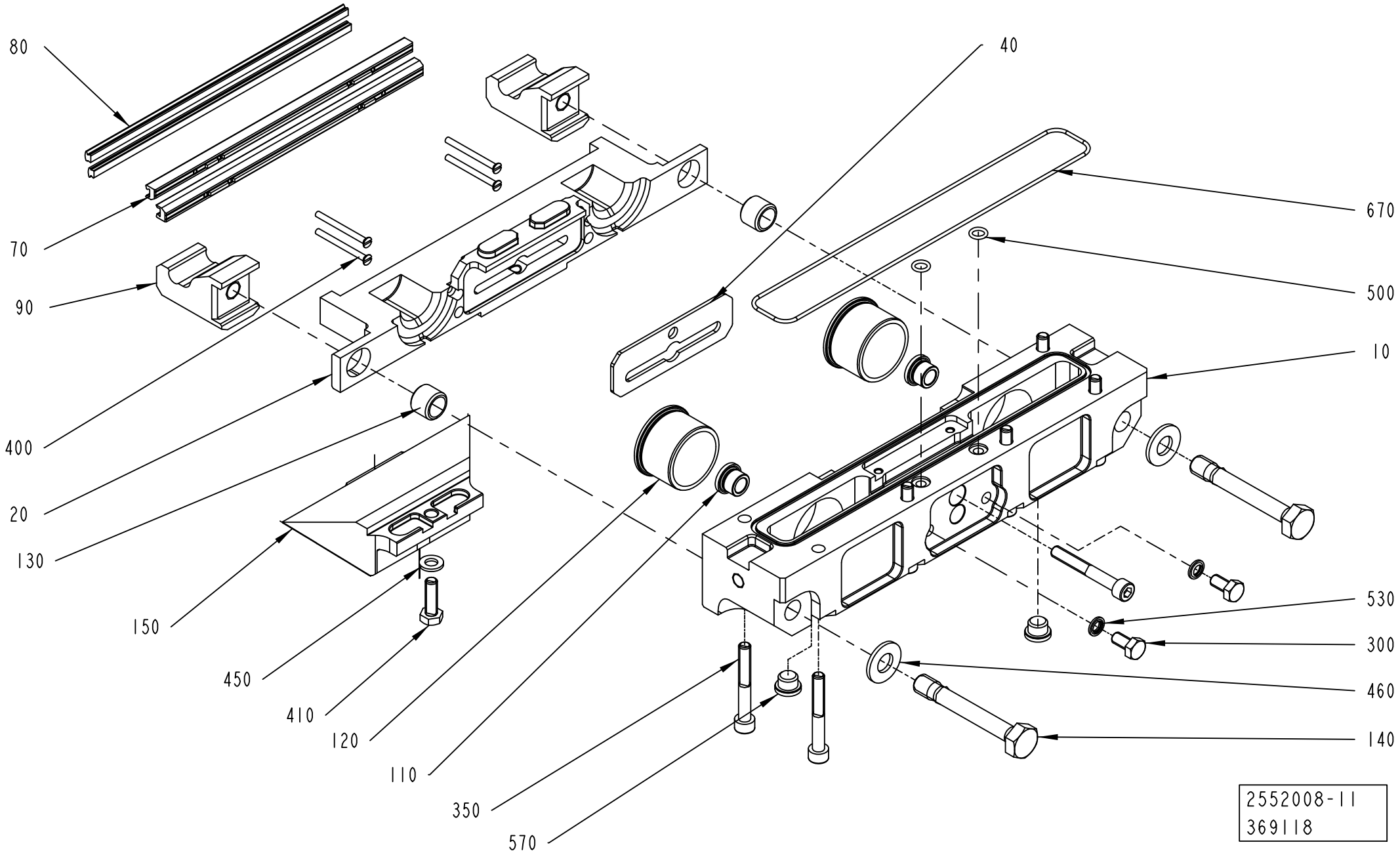
80
70
90
400
20
130
150
450
410
120
110
350
570
40
670
500
10
530
300
460
140
2552008-11
369118

ECM: 370698 - 20090101
Group number: 2552008-0200
Assembly Drawing: 2552008-11_1_AB

This list covers pages from 2-158 to 2-167

Pos	Part No	UN	Qty	Description	Page No

SEE PREVIOUS LISTS PAGES: 2-159, 2-161, 2-163, 2-165.

Pos	Part No	UN	Qty	Description	Page No

FOLDING FLAP LEFT

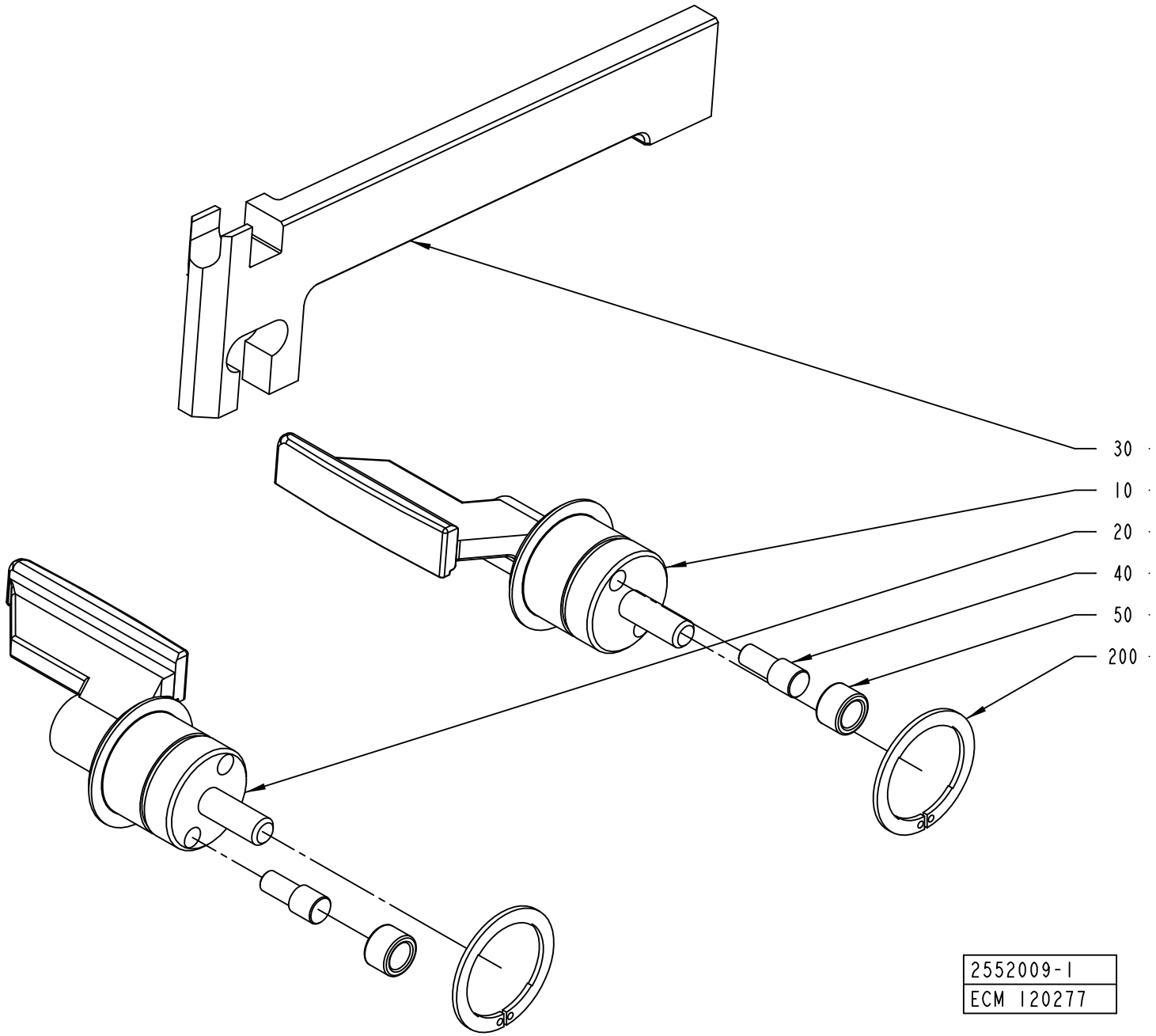

ECM: 320892 - 20080101
Group number: 2552009-0100
Assembly Drawing: 2552009-1_1_AA

This list covers pages from 2-168 to 2-175

Pos	Part No	UN	Qty	Description	Page No
TPA 0330SQ (See drawing on page: 2-168)					
010	2507096-0000		1	FOLDING FLAP	
020	2507097-0000		1	FOLDING FLAP	
030	1538256-0000		1	CARRIER RULER	
TPA 0500SQ (See drawing on page: 2-168)					
010	1549822-0000		1	FOLDING FLAP	
020	1549823-0000		1	FOLDING FLAP	
030	1549824-0000		1	CARRIER RULER	
TPA 1000SQ NOQC, TPA 1000SQ QC, TPA 0750SQ QC (See drawing on page: 2-168)					
010	1523146-0000		1	FOLDING FLAP	
020	1523147-0000		1	FOLDING FLAP	
030	1523177-0000		1	CARRIER RULER	
TBA 0200B QC, TBA 0330S QC (See drawing on page: 2-168)					
010	2605875-0000		1	FOLDING FLAP	
020	2605876-0000		1	FOLDING FLAP	
030	1255459-0000		1	CARRIER RULER	
TBA 0200M QC, TBA 0250S QC					
010	2624554-0000		1	FOLDING FLAP	
020	2624555-0000		1	FOLDING FLAP	
030	2520470-0000		1	CARRIER RULER	
TBA 0200S (See drawing on page: 2-168)					
010	2624554-0000		1	FOLDING FLAP	
020	2624555-0000		1	FOLDING FLAP	
030	1255458-0000		1	CARRIER RULER	
TBA 0200SQ QC, TBA 0250SQ QC (See drawing on page: 2-168)					
010	2668313-0000		1	FOLDING FLAP	
020	2668314-0000		1	FOLDING FLAP	
030	2736138-0000		1	CARRIER RULER	
TBA 0250B QC					
010	2605875-0000		1	FOLDING FLAP	
020	2605876-0000		1	FOLDING FLAP	
030	1255459-0000		1	CARRIER RULER	
TBA 0500B NOQC, TBA 1000B NOQC NOMOLDEDCAP (See drawing on page: 2-168)					
010	1511697-0000		1	FOLDING FLAP	
020	1511698-0000		1	FOLDING FLAP	
030	1255457-0000		1	CARRIER RULER	
TBA 0500B QC, TBA 1000B QC (See drawing on page: 2-168)					
010	1511352-0000		1	FOLDING FLAP	
020	1511351-0000		1	FOLDING FLAP	
030	1255457-0000		1	CARRIER RULER	
TBA 0500S (See drawing on page: 2-168)					
010	2507085-0000		1	FOLDING FLAP	
020	2507086-0000		1	FOLDING FLAP	
030	1511067-0000		1	CARRIER RULER	
TBA 0500SQ QC, TBA 1000SQ QC (See drawing on page: 2-174)					
010	2843851-0000		1	FOLDING FLAP	
020	2843850-0000		1	FOLDING FLAP	
030	1360318-0000		1	CARRIER RULER	
070	2843780-0000		2	PLATE	
260	312105-0323		4	SCREW M6S ISO 4017 M5X8 A480	
TBA 1000B NOQC STDA7 (See drawing on page: 2-168)					
010	1511697-0000		1	FOLDING FLAP	
020	1511698-0000		1	FOLDING FLAP	
030	1255457-0000		1	CARRIER RULER	
TBA 1000S NOMOLDEDCAP, TBA 1000S STDA7, TBA 1000S LIGHTCAP (See drawing on page: 2-168)					
010	1511699-0000		1	FOLDING FLAP	
020	1511700-0000		1	FOLDING FLAP	
030	1255460-0000		1	CARRIER RULER	
TBA 1000SQ NOQC (See drawing on page: 2-168)					
010	2507076-0000		1	FOLDING FLAP	
020	2507077-0000		1	FOLDING FLAP	
030	1360318-0000		1	CARRIER RULER	
TBA 1500S (See drawing on page: 2-168)					
010	2507092-0000		1	FOLDING FLAP	
020	2507093-0000		1	FOLDING FLAP	
030	1255457-0000		1	CARRIER RULER	
TBA 1890S QC, TBA 2000S QC, TBA 1400B (See drawing on page: 2-170)					
010	2566319-0000		1	FOLDING FLAP	
020	2566320-0000		1	FOLDING FLAP	
030	2566318-0000		1	CARRIER RULER	
210	90459-2258		2	SEAL GLYDRING 25,1X30X2,2 MM	
TGA 1000SQ, TGA 0750SQ, TGA 0500SQ (See drawing on page: 2-172)					
010	2660290-0000		1	FOLDING FLAP	
020	2660291-0000		1	FOLDING FLAP	
030	2649664-0000		1	CARRIER RULER	
060	2660294-0000		1	PLATE	
210	90459-2258		2	SEAL GLYDRING 25,1X30X2,2 MM	
250	312145-0287		2	SCREW ISO 2009 MFS M4X8 A4	
TPA 0200SQ QC, TPA 0250SQ QC					
010	2728883-0000		1	OLDING FLAP	
020	2728884-0000		1	OLDING FLAP	
030	1255458-0000		1	CARRIER RULER	
Common Parts					
040	22462-0000		2	SHAFT	

Machine Type | Group Description | Used-In | Group Number | Page No

FOLDING FLAP LEFT

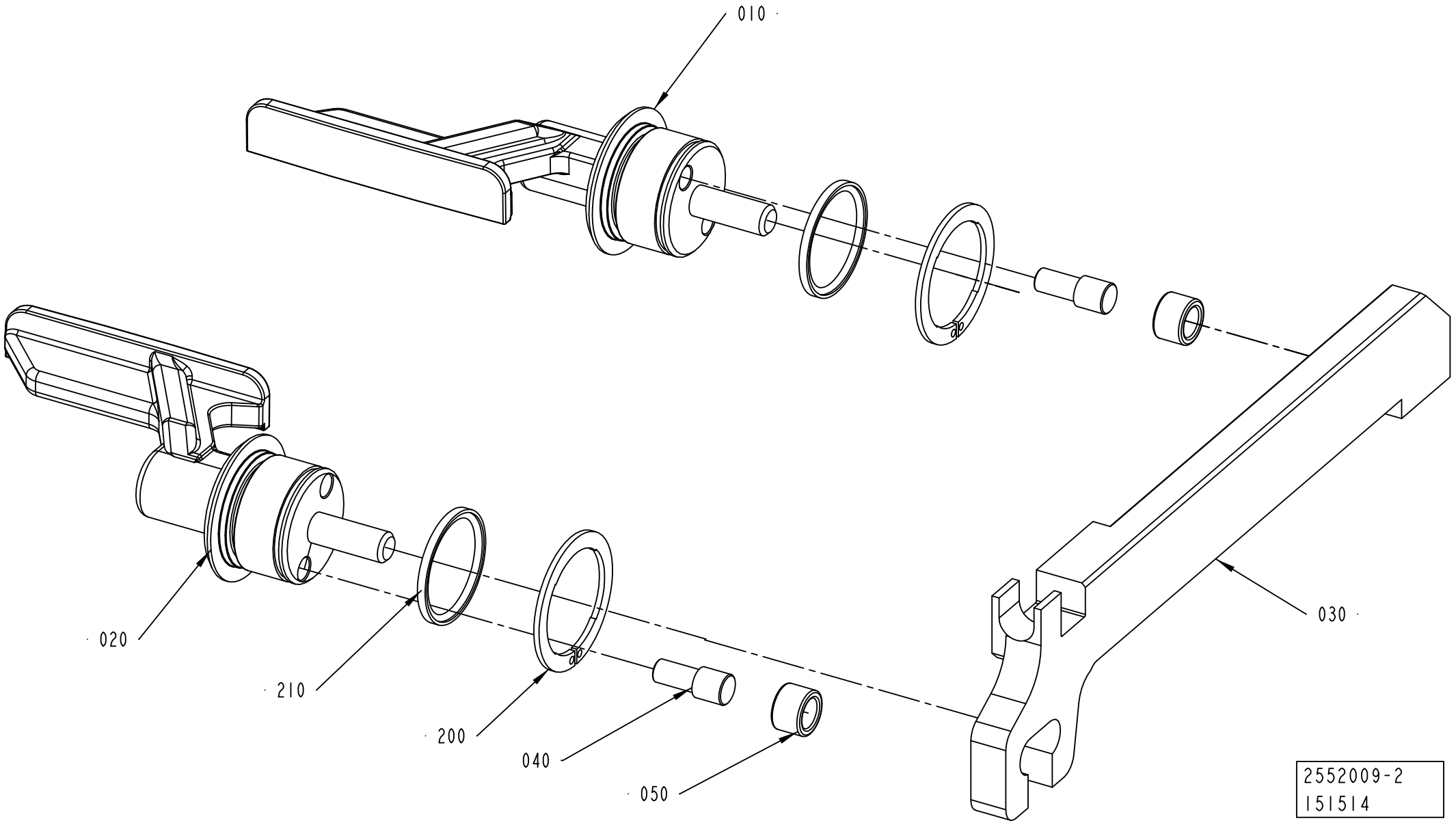

Pos	Part No	UN	Qty	Description	Page No
Common Parts (Cont'd)					
050	22463-0000		2	ROLL	
200	90141-0029		2	CIRCLIP	

Pos	Part No	UN	Qty	Description	Page No

FOLDING FLAP LEFT

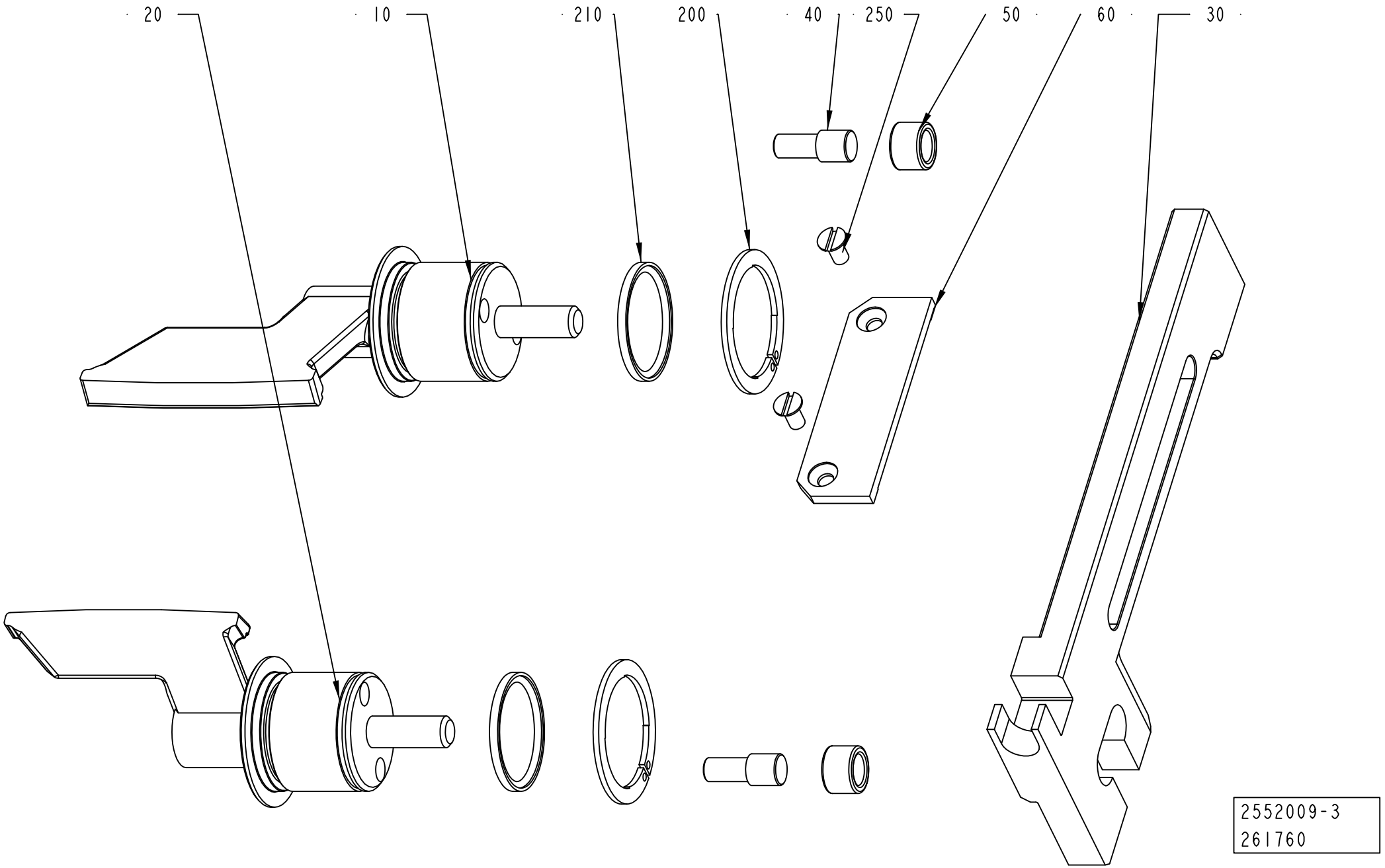

ECM: 320892 - 20080101
Group number: 2552009-0100
Assembly Drawing: 2552009-3_1_AA

This list covers pages from 2-168 to 2-175

Pos	Part No	UN	Qty	Description	Page No
SEE PREVIOUS LISTS PAGES: 2-169, 2-171.					

Pos	Part No	UN	Qty	Description	Page No

FOLDING FLAP LEFT

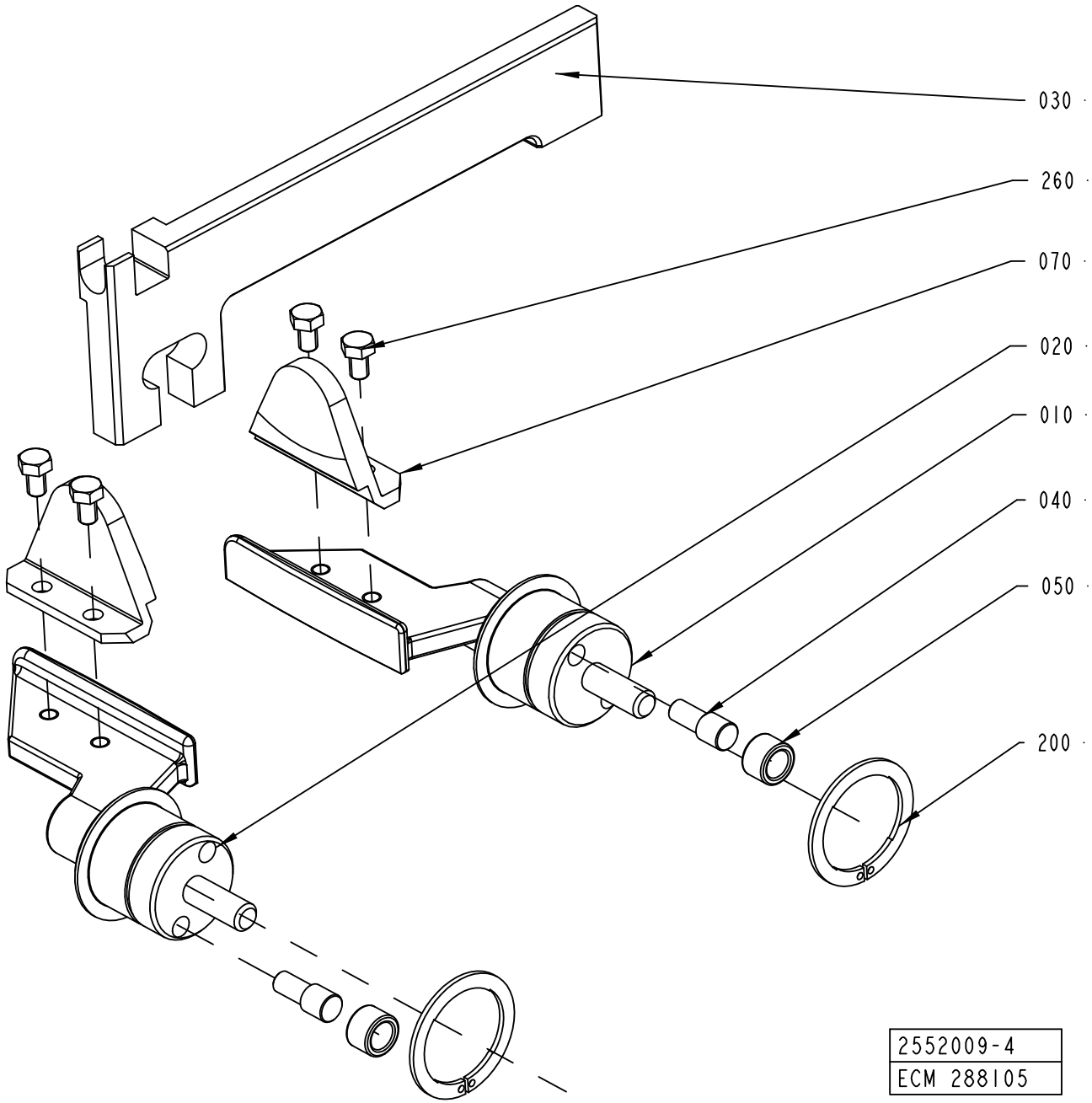

ECM: 320892 - 20080101
Group number: 2552009-0100
Assembly Drawing: 2552009-4_1_AA

This list covers pages from 2-168 to 2-175

Pos	Part No	UN	Qty	Description	Page No
SEE PREVIOUS LISTS PAGES: 2-169, 2-171.					

Pos	Part No	UN	Qty	Description	Page No

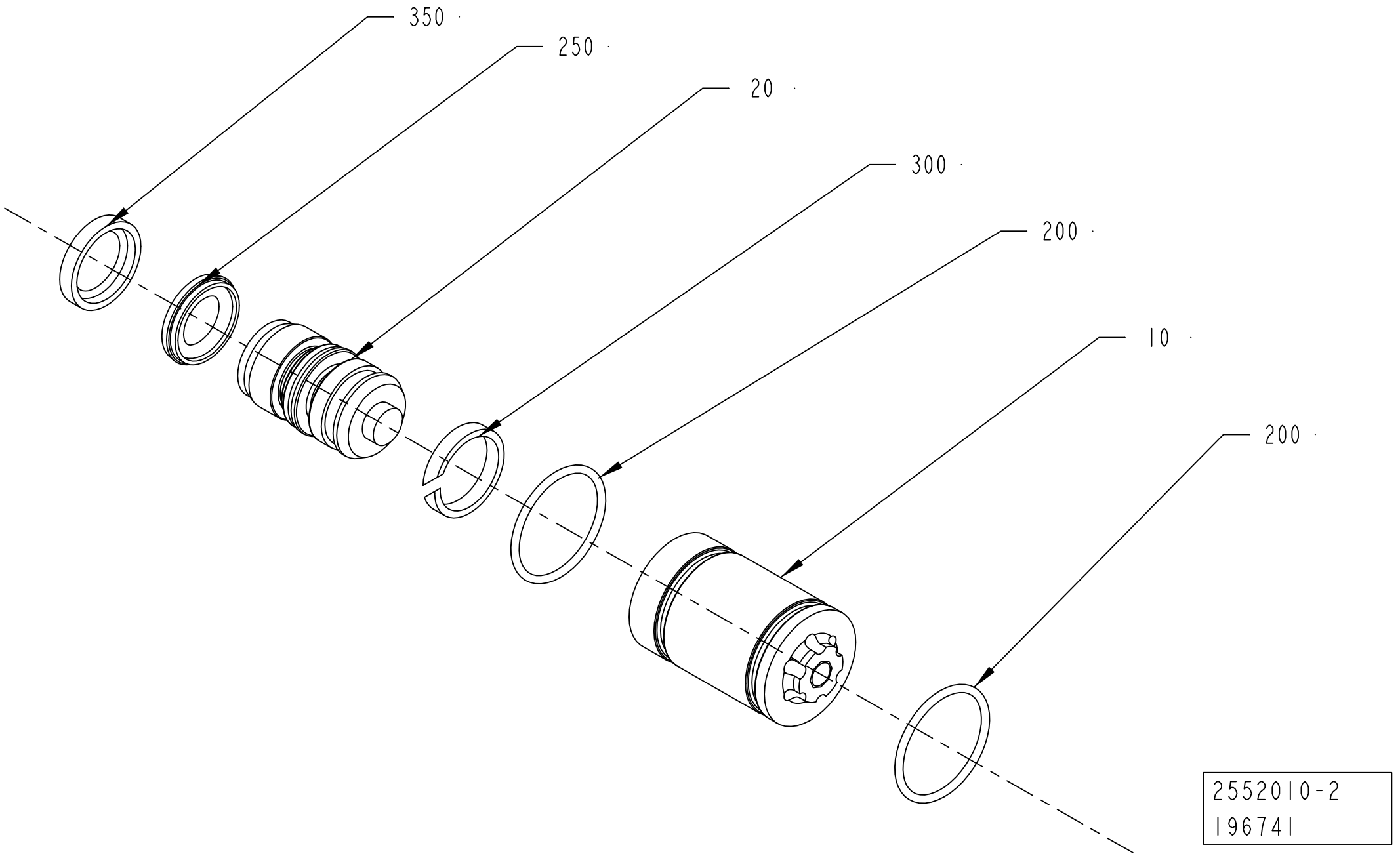
350
250
20
300
200
10
200
2552010-2
196741

ECM: 383393 - 20090402
Group number: 2552010-0200
Assembly Drawing: 2552010-2_1_AA

Pos	Part No	UN	Qty	Description	Page No
TBA 0200M, TBA 0200B, TBA 0200SQ, TBA 0200S, TBA 0250S, TBA 0250B, TBA 0330S, TPA 0330SQ, TPA 0250SQ, TPA 0200SQ, TBA 0250SQ					
010	752288-0000		1	SLEEVE	
020	2737771-0000		1	PLUNGER	
200	315202-0110		1	O-RING 12,1X1,6 MM	
250	90459-6021		1	PISTON SEAL STEPSEAL 7,2X12X2,2 MM	
300	90459-6027		1	WEAR RING 9X12X3,2 MM	
350	90459-6025		1	PISTON SEAL 6,2X12X3,2 MM	
TBA 0500S, TBA 0500SQ, TBA 0500B, TBA 1000B, TBA 1000SQ, TBA 1000S, TBA 1500S, TPA 1000SQ, TPA 0500SQ, TGA 1000SQ, TGA 0750SQ, TGA 0500SQ					
010	1036278-0000		1	SLEEVE	
020	2737773-0000		1	PLUNGER	
200	315202-0118		2	O-RING 22,1X1,6 MM	
250	90459-6019		1	PISTON SEAL STEPSEAL 11,5X19X3,2 MM	
300	90459-6026		1	WEAR RING 16X19X3,2 MM	
350	90459-6023		1	PISTON SEAL 13X19X3,2 MM	
TBA 1890S, TBA 2000S, TBA 1400B					
010	2566330-0000		1	SLEEVE	
020	2737772-0000		1	PLUNGER	
200	315202-0119		2	O-RING 25,1X1,6 MM	
250	90459-6022		1	PISTON SEAL STEPSEAL 14,5X22X3,2 MM	
300	90459-5968		1	WEAR RING 19X22X3,2 MM	
350	90459-6024		1	PISTON SEAL 16X22X3,2 MM	

Pos	Part No	UN	Qty	Description	Page No

CARRIER PRESSURE RIGHT

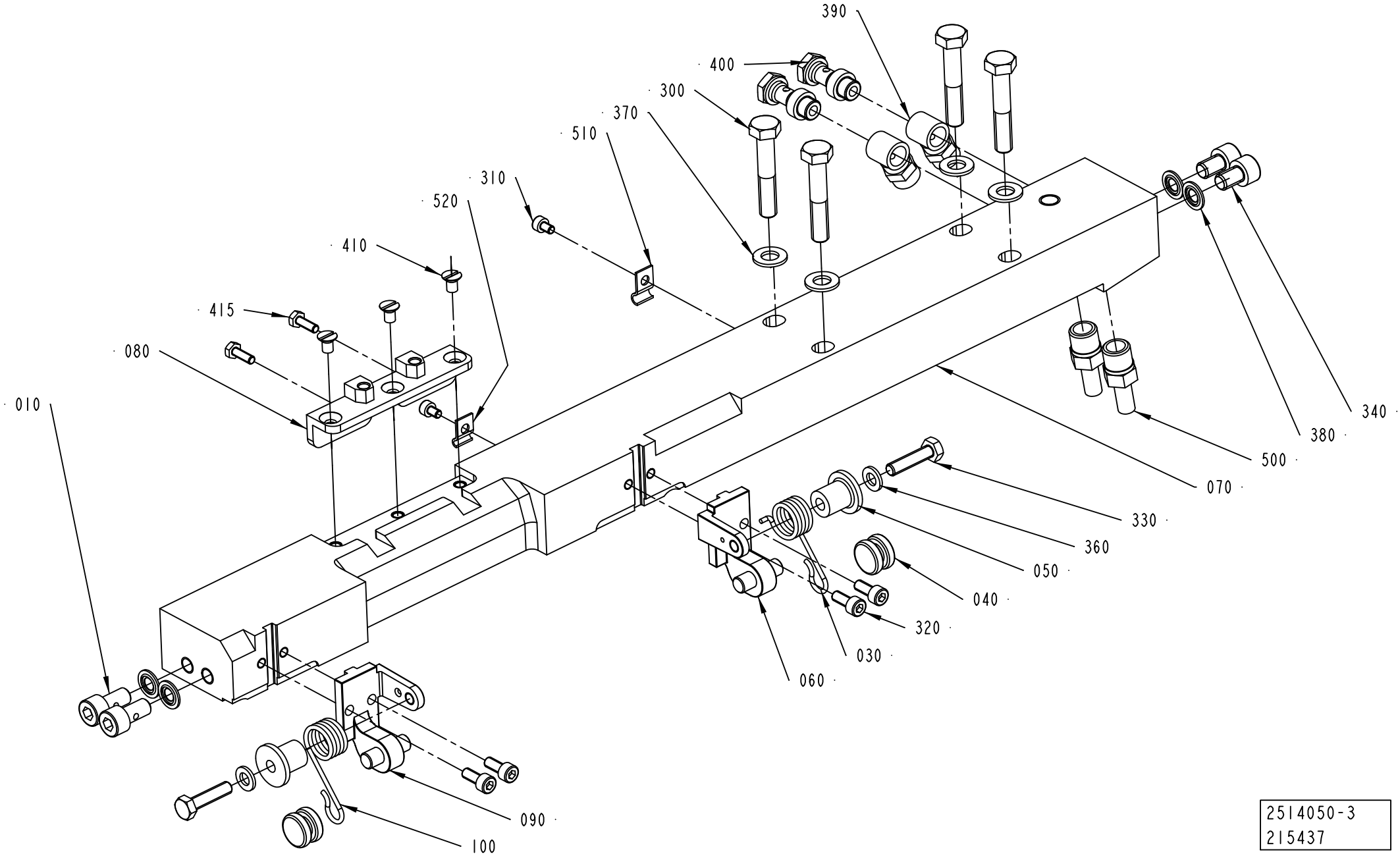

2514050-3
215437

ECM: 998080 - 20081001
Group number: 2514050-0200
Assembly Drawing: 2514050-3_1_AB

This list covers pages from 2-178 to 2-185

Pos	Part No	UN	Qty	Description	Page No
A3/FLEX NOQC (See drawing on page: 2-180)					
070	2514051-0000		1	CARRIER	
310	312115-0285		2	SCREW ISO4762 M4X6 A4 80	
510	90165-0056		1	PIPE CLIP FOR TUBE D=4 MM	
520	90165-0058		1	PIPE CLIP FOR TUBE D=2,5 MM	
A3/FLEX TBA 0200M QC, A3/FLEX TBA 0250S QC (See drawing on page: 2-182)					
070	2514047-0000		1	CARRIER	
080	2641225-0000		1	INSERT	
410	312145-0323		3	SCREW ISO 2009 MFS M5X8 A4	
A3/FLEX TPA 0200SQ QC, A3/FLEX TPA 0250SQ QC, A3/FLEX TBA 0250SQ QC, A3/FLEX TBA 0200SQ QC, A3/FLEX TBA 0500B QC, A3/FLEX TBA 1000B QC, A3/FLEX TBA 0250B QC, A3/FLEX TBA 0200B QC, A3/FLEX TBA 0330S QC (See drawing on page: 2-182)					
070	2514047-0000		1	CARRIER	
080	1549312-0000		1	INSERT	
410	312145-0323		3	SCREW ISO 2009 MFS M5X8 A4	
A3/FLEX TBA 1890S QC, A3/FLEX TBA 2000S QC, A3/FLEX TBA 1400B (See drawing on page: 2-180)					
070	2566341-0000		1	CARRIER	
310	312115-0285		2	SCREW ISO4762 M4X6 A4 80	
510	90165-0056		1	PIPE CLIP FOR TUBE D=4 MM	
520	90165-0058		1	PIPE CLIP FOR TUBE D=2,5 MM	
A3/FLEX TGA 1000SQ, A3/FLEX TGA 0500SQ, A3/FLEX TGA 0750SQ (See drawing on page: 2-184)					
070	2594715-0000		1	CARRIER	
540	311103-0308		1	PARALLEL PIN ISO 2338 5M6X16 A1	
700	90153-0053		1	ADHESIVE, LOCTITE 648 TEMP 150`C 50ML	
A3/FLEX TPA 1000SQ QC, A3/FLEX TPA 0750SQ QC, A3/FLEX TBA 0500SQ QC, A3/FLEX TBA 1000SQ QC (See drawing on page: 2-178)					
070	2647117-0000		1	CARRIER	
080	2647114-0000		1	INSERT	
310	312115-0285		2	SCREW ISO4762 M4X6 A4 80	
410	312145-0323		3	SCREW ISO 2009 MFS M5X8 A4	
415	312105-0291		2	SCREW M6S ISO 4017 M4X12 A470	
510	90165-0056		1	PIPE CLIP FOR TUBE D=4 MM	
520	90165-0058		1	PIPE CLIP FOR TUBE D=2,5 MM	
Common Parts					
010	1036343-0000		2	SCREW	
030	2547589-0000		1	SPRING	
040	2530296-0000		2	ROLLER	
050	2532531-0000		2	ROLLER	
060	2530293-0000		1	BRACKET	
090	2530292-0000		1	BRACKET	
100	2547588-0000		1	SPRING	
300	312105-0460		4	SCREW M6S ISO 4014 M8X45 A480	
320	312115-0327		4	SCREW ISO4762 M5X12 A4 80	
330	312105-0372		2	SCREW M6S ISO 4017 M6X25 A480	
340	312115-0447		2	SCREW ISO4762 M8X12 A4 80	
360	315105-0153		2	WASHER BRB 6,4X12 RFR	
370	315105-0165		4	WASHER BRB 8,4X16 RFR	
380	315211-0104		4	BONDED SEAL SS/NBR90 M8	
390	342980-0121		2	BANJO-CONNECTION,RING 8/6-G1/8	
400	342980-0303		2	BANJO-HOLLOW BOLT COUPL,EXT.THR.01-G1/8	
500	90030-0065		2	PIPE CONNECTION	

Machine Type | Group Description | Used-In | Group Number | Page No

CARRIER PRESSURE RIGHT

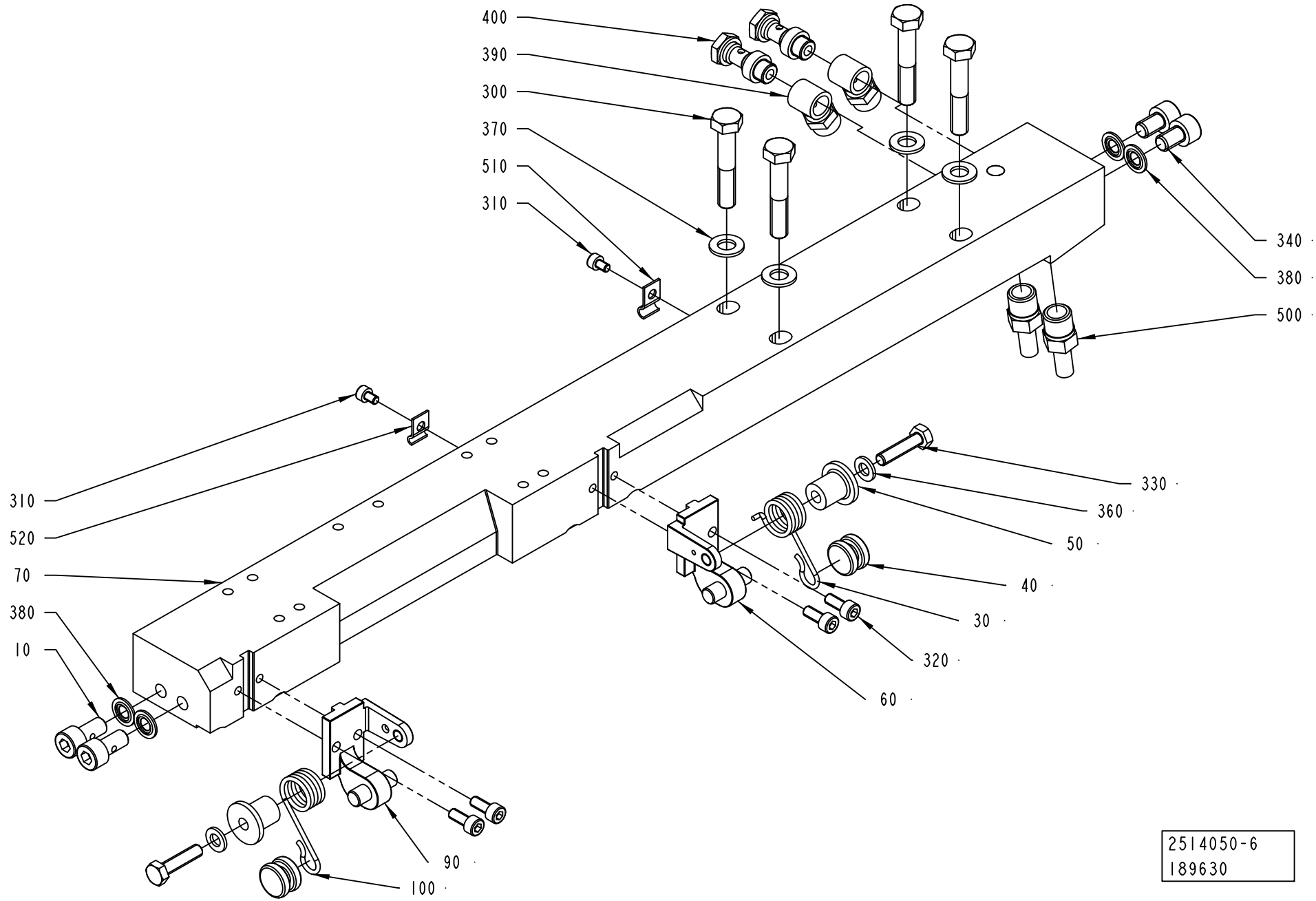

ECM: 998080 - 20081001
Group number: 2514050-0200
Assembly Drawing: 2514050-6_1_AA

This list covers pages from 2-178 to 2-185

Pos	Part No	UN	Qty	Description	Page No
A3/FLEX NOQC (See drawing on page: 2-180)					
070	2514051-0000		1	CARRIER	
310	312115-0285		2	SCREW ISO4762 M4X6 A4 80	
510	90165-0056		1	PIPE CLIP FOR TUBE D=4 MM	
520	90165-0058		1	PIPE CLIP FOR TUBE D=2,5 MM	
A3/FLEX TBA 0200M QC, A3/FLEX TBA 0250S QC (See drawing on page: 2-182)					
070	2514047-0000		1	CARRIER	
080	2641225-0000		1	INSERT	
410	312145-0323		3	SCREW ISO 2009 MFS M5X8 A4	
A3/FLEX TPA 0200SQ QC, A3/FLEX TPA 0250SQ QC, A3/FLEX TBA 0250SQ QC, A3/FLEX TBA 0200SQ QC, A3/FLEX TBA 0500B QC, A3/FLEX TBA 1000B QC, A3/FLEX TBA 0250B QC, A3/FLEX TBA 0200B QC, A3/FLEX TBA 0330S QC (See drawing on page: 2-182)					
070	2514047-0000		1	CARRIER	
080	1549312-0000		1	INSERT	
410	312145-0323		3	SCREW ISO 2009 MFS M5X8 A4	
A3/FLEX TBA 1890S QC, A3/FLEX TBA 2000S QC, A3/FLEX TBA 1400B (See drawing on page: 2-180)					
070	2566341-0000		1	CARRIER	
310	312115-0285		2	SCREW ISO4762 M4X6 A4 80	
510	90165-0056		1	PIPE CLIP FOR TUBE D=4 MM	
520	90165-0058		1	PIPE CLIP FOR TUBE D=2,5 MM	
A3/FLEX TGA 1000SQ, A3/FLEX TGA 0500SQ, A3/FLEX TGA 0750SQ (See drawing on page: 2-184)					
070	2594715-0000		1	CARRIER	
540	311103-0308		1	PARALLEL PIN ISO 2338 5M6X16 A1	
700	90153-0053		1	ADHESIVE, LOCTITE 648 TEMP 150`C 50ML	
A3/FLEX TPA 1000SQ QC, A3/FLEX TPA 0750SQ QC, A3/FLEX TBA 0500SQ QC, A3/FLEX TBA 1000SQ QC (See drawing on page: 2-178)					
070	2647117-0000		1	CARRIER	
080	2647114-0000		1	INSERT	
310	312115-0285		2	SCREW ISO4762 M4X6 A4 80	
410	312145-0323		3	SCREW ISO 2009 MFS M5X8 A4	
415	312105-0291		2	SCREW M6S ISO 4017 M4X12 A470	
510	90165-0056		1	PIPE CLIP FOR TUBE D=4 MM	
520	90165-0058		1	PIPE CLIP FOR TUBE D=2,5 MM	
Common Parts					
010	1036343-0000		2	SCREW	
030	2547589-0000		1	SPRING	
040	2530296-0000		2	ROLLER	
050	2532531-0000		2	ROLLER	
060	2530293-0000		1	BRACKET	
090	2530292-0000		1	BRACKET	
100	2547588-0000		1	SPRING	
300	312105-0460		4	SCREW M6S ISO 4014 M8X45 A480	
320	312115-0327		4	SCREW ISO4762 M5X12 A4 80	
330	312105-0372		2	SCREW M6S ISO 4017 M6X25 A480	
340	312115-0447		2	SCREW ISO4762 M8X12 A4 80	
360	315105-0153		2	WASHER BRB 6,4X12 RFR	
370	315105-0165		4	WASHER BRB 8,4X16 RFR	
380	315211-0104		4	BONDED SEAL SS/NBR90 M8	
390	342980-0121		2	BANJO-CONNECTION,RING 8/6-G1/8	
400	342980-0303		2	BANJO-HOLLOW BOLT COUPL,EXT.THR.01-G1/8	
500	90030-0065		2	PIPE CONNECTION	

Machine Type | Group Description | Used-In | Group Number | Page No

CARRIER PRESSURE RIGHT

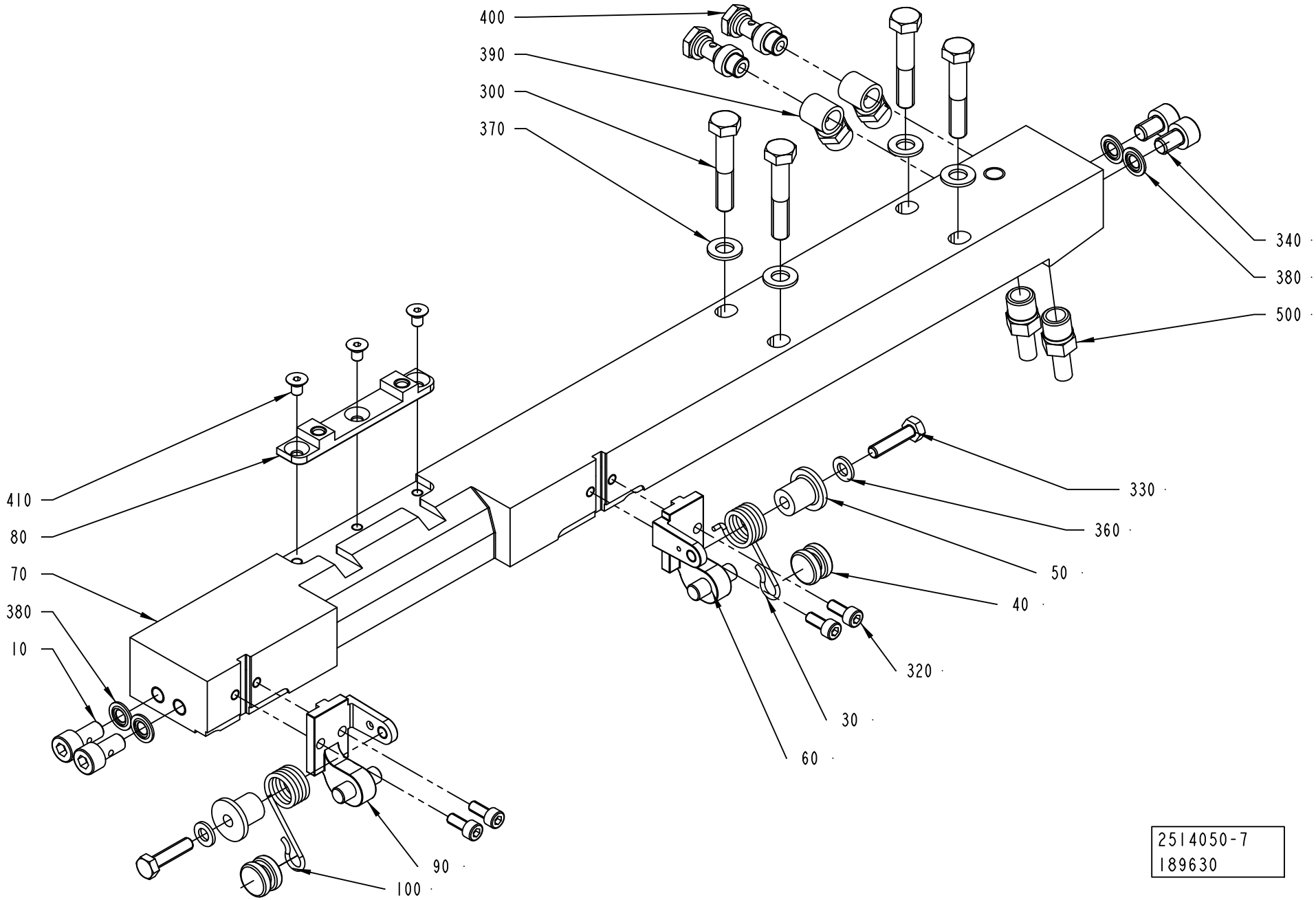

ECM: 998080 - 20081001
Group number: 2514050-0200
Assembly Drawing: 2514050-7_1_AA

This list covers pages from 2-178 to 2-185

Pos	Part No	UN	Qty	Description	Page No
A3/FLEX NOQC (See drawing on page: 2-180)					
070	2514051-0000		1	CARRIER	
310	312115-0285		2	SCREW ISO4762 M4X6 A4 80	
510	90165-0056		1	PIPE CLIP FOR TUBE D=4 MM	
520	90165-0058		1	PIPE CLIP FOR TUBE D=2,5 MM	
A3/FLEX TBA 0200M QC, A3/FLEX TBA 0250S QC (See drawing on page: 2-182)					
070	2514047-0000		1	CARRIER	
080	2641225-0000		1	INSERT	
410	312145-0323		3	SCREW ISO 2009 MFS M5X8 A4	
A3/FLEX TPA 0200SQ QC, A3/FLEX TPA 0250SQ QC, A3/FLEX TBA 0250SQ QC, A3/FLEX TBA 0200SQ QC, A3/FLEX TBA 0500B QC, A3/FLEX TBA 1000B QC, A3/FLEX TBA 0250B QC, A3/FLEX TBA 0200B QC, A3/FLEX TBA 0330S QC (See drawing on page: 2-182)					
070	2514047-0000		1	CARRIER	
080	1549312-0000		1	INSERT	
410	312145-0323		3	SCREW ISO 2009 MFS M5X8 A4	
A3/FLEX TBA 1890S QC, A3/FLEX TBA 2000S QC, A3/FLEX TBA 1400B (See drawing on page: 2-180)					
070	2566341-0000		1	CARRIER	
310	312115-0285		2	SCREW ISO4762 M4X6 A4 80	
510	90165-0056		1	PIPE CLIP FOR TUBE D=4 MM	
520	90165-0058		1	PIPE CLIP FOR TUBE D=2,5 MM	
A3/FLEX TGA 1000SQ, A3/FLEX TGA 0500SQ, A3/FLEX TGA 0750SQ (See drawing on page: 2-184)					
070	2594715-0000		1	CARRIER	
540	311103-0308		1	PARALLEL PIN ISO 2338 5M6X16 A1	
700	90153-0053		1	ADHESIVE, LOCTITE 648 TEMP 150`C 50ML	
A3/FLEX TPA 1000SQ QC, A3/FLEX TPA 0750SQ QC, A3/FLEX TBA 0500SQ QC, A3/FLEX TBA 1000SQ QC (See drawing on page: 2-178)					
070	2647117-0000		1	CARRIER	
080	2647114-0000		1	INSERT	
310	312115-0285		2	SCREW ISO4762 M4X6 A4 80	
410	312145-0323		3	SCREW ISO 2009 MFS M5X8 A4	
415	312105-0291		2	SCREW M6S ISO 4017 M4X12 A470	
510	90165-0056		1	PIPE CLIP FOR TUBE D=4 MM	
520	90165-0058		1	PIPE CLIP FOR TUBE D=2,5 MM	
Common Parts					
010	1036343-0000		2	SCREW	
030	2547589-0000		1	SPRING	
040	2530296-0000		2	ROLLER	
050	2532531-0000		2	ROLLER	
060	2530293-0000		1	BRACKET	
090	2530292-0000		1	BRACKET	
100	2547588-0000		1	SPRING	
300	312105-0460		4	SCREW M6S ISO 4014 M8X45 A480	
320	312115-0327		4	SCREW ISO4762 M5X12 A4 80	
330	312105-0372		2	SCREW M6S ISO 4017 M6X25 A480	
340	312115-0447		2	SCREW ISO4762 M8X12 A4 80	
360	315105-0153		2	WASHER BRB 6,4X12 RFR	
370	315105-0165		4	WASHER BRB 8,4X16 RFR	
380	315211-0104		4	BONDED SEAL SS/NBR90 M8	
390	342980-0121		2	BANJO-CONNECTION,RING 8/6-G1/8	
400	342980-0303		2	BANJO-HOLLOW BOLT COUPL,EXT.THR.01-G1/8	
500	90030-0065		2	PIPE CONNECTION	

Machine Type | Group Description | Used-In | Group Number | Page No

CARRIER PRESSURE RIGHT

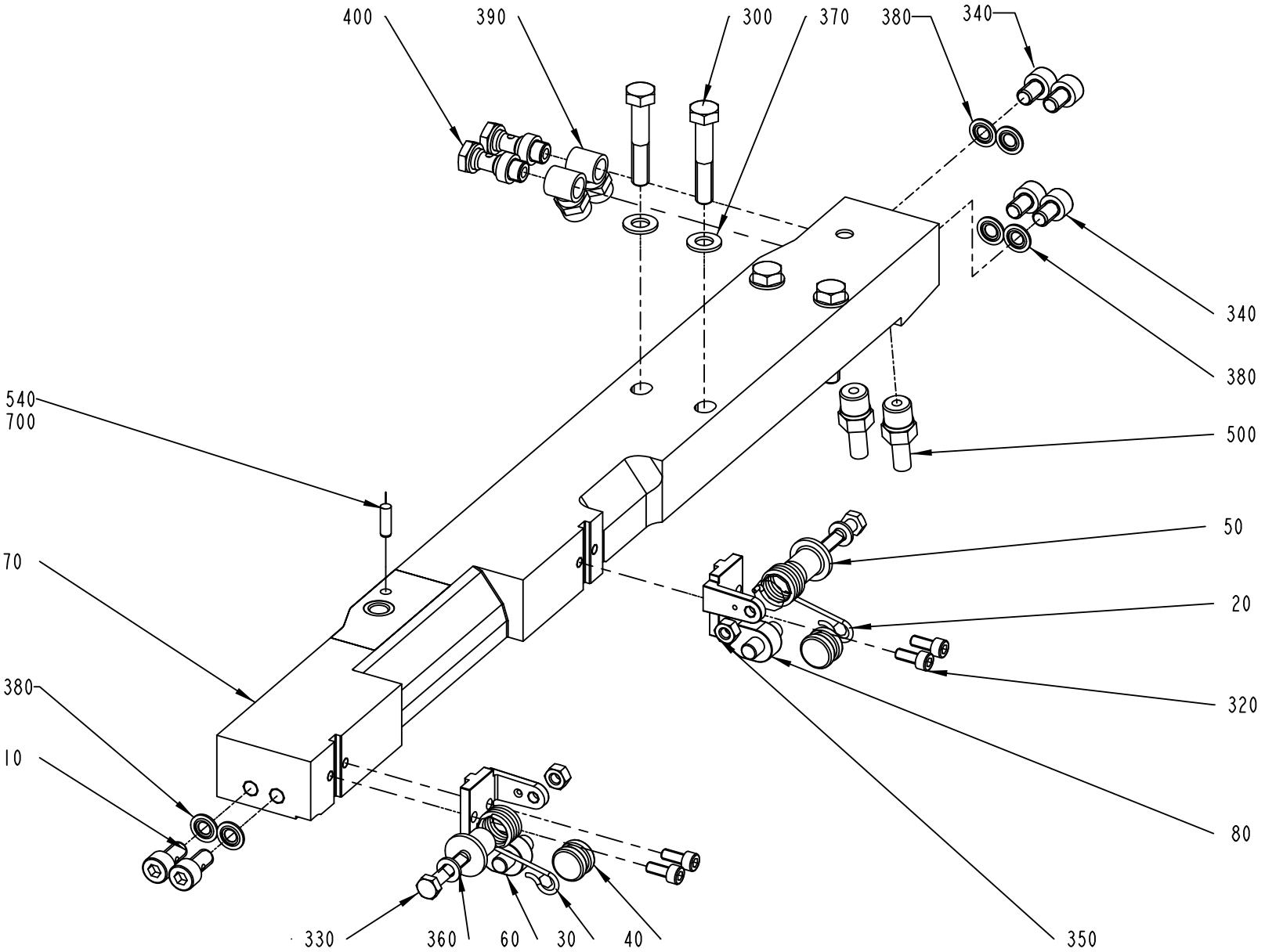

ECM: 998080 - 20081001
Group number: 2514050-0200
Assembly Drawing: 2514050-8_1_AB

This list covers pages from 2-178 to 2-185

Pos	Part No	UN	Qty	Description	Page No
A3/FLEX NOQC (See drawing on page: 2-180)					
070	2514051-0000		1	CARRIER	
310	312115-0285		2	SCREW ISO4762 M4X6 A4 80	
510	90165-0056		1	PIPE CLIP FOR TUBE D=4 MM	
520	90165-0058		1	PIPE CLIP FOR TUBE D=2,5 MM	
A3/FLEX TBA 0200M QC, A3/FLEX TBA 0250S QC (See drawing on page: 2-182)					
070	2514047-0000		1	CARRIER	
080	2641225-0000		1	INSERT	
410	312145-0323		3	SCREW ISO 2009 MFS M5X8 A4	
A3/FLEX TPA 0200SQ QC, A3/FLEX TPA 0250SQ QC, A3/FLEX TBA 0250SQ QC, A3/FLEX TBA 0200SQ QC, A3/FLEX TBA 0500B QC, A3/FLEX TBA 1000B QC, A3/FLEX TBA 0250B QC, A3/FLEX TBA 0200B QC, A3/FLEX TBA 0330S QC (See drawing on page: 2-182)					
070	2514047-0000		1	CARRIER	
080	1549312-0000		1	INSERT	
410	312145-0323		3	SCREW ISO 2009 MFS M5X8 A4	
A3/FLEX TBA 1890S QC, A3/FLEX TBA 2000S QC, A3/FLEX TBA 1400B (See drawing on page: 2-180)					
070	2566341-0000		1	CARRIER	
310	312115-0285		2	SCREW ISO4762 M4X6 A4 80	
510	90165-0056		1	PIPE CLIP FOR TUBE D=4 MM	
520	90165-0058		1	PIPE CLIP FOR TUBE D=2,5 MM	
A3/FLEX TGA 1000SQ, A3/FLEX TGA 0500SQ, A3/FLEX TGA 0750SQ (See drawing on page: 2-184)					
070	2594715-0000		1	CARRIER	
540	311103-0308		1	PARALLEL PIN ISO 2338 5M6X16 A1	
700	90153-0053		1	ADHESIVE, LOCTITE 648 TEMP 150`C 50ML	
A3/FLEX TPA 1000SQ QC, A3/FLEX TPA 0750SQ QC, A3/FLEX TBA 0500SQ QC, A3/FLEX TBA 1000SQ QC (See drawing on page: 2-178)					
070	2647117-0000		1	CARRIER	
080	2647114-0000		1	INSERT	
310	312115-0285		2	SCREW ISO4762 M4X6 A4 80	
410	312145-0323		3	SCREW ISO 2009 MFS M5X8 A4	
415	312105-0291		2	SCREW M6S ISO 4017 M4X12 A470	
510	90165-0056		1	PIPE CLIP FOR TUBE D=4 MM	
520	90165-0058		1	PIPE CLIP FOR TUBE D=2,5 MM	
Common Parts					
010	1036343-0000		2	SCREW	
030	2547589-0000		1	SPRING	
040	2530296-0000		2	ROLLER	
050	2532531-0000		2	ROLLER	
060	2530293-0000		1	BRACKET	
090	2530292-0000		1	BRACKET	
100	2547588-0000		1	SPRING	
300	312105-0460		4	SCREW M6S ISO 4014 M8X45 A480	
320	312115-0327		4	SCREW ISO4762 M5X12 A4 80	
330	312105-0372		2	SCREW M6S ISO 4017 M6X25 A480	
340	312115-0447		2	SCREW ISO4762 M8X12 A4 80	
360	315105-0153		2	WASHER BRB 6,4X12 RFR	
370	315105-0165		4	WASHER BRB 8,4X16 RFR	
380	315211-0104		4	BONDED SEAL SS/NBR90 M8	
390	342980-0121		2	BANJO-CONNECTION,RING 8/6-G1/8	
400	342980-0303		2	BANJO-HOLLOW BOLT COUPL,EXT.THR.01-G1/8	
500	90030-0065		2	PIPE CONNECTION	

Machine Type | Group Description | Used-In | Group Number | Page No

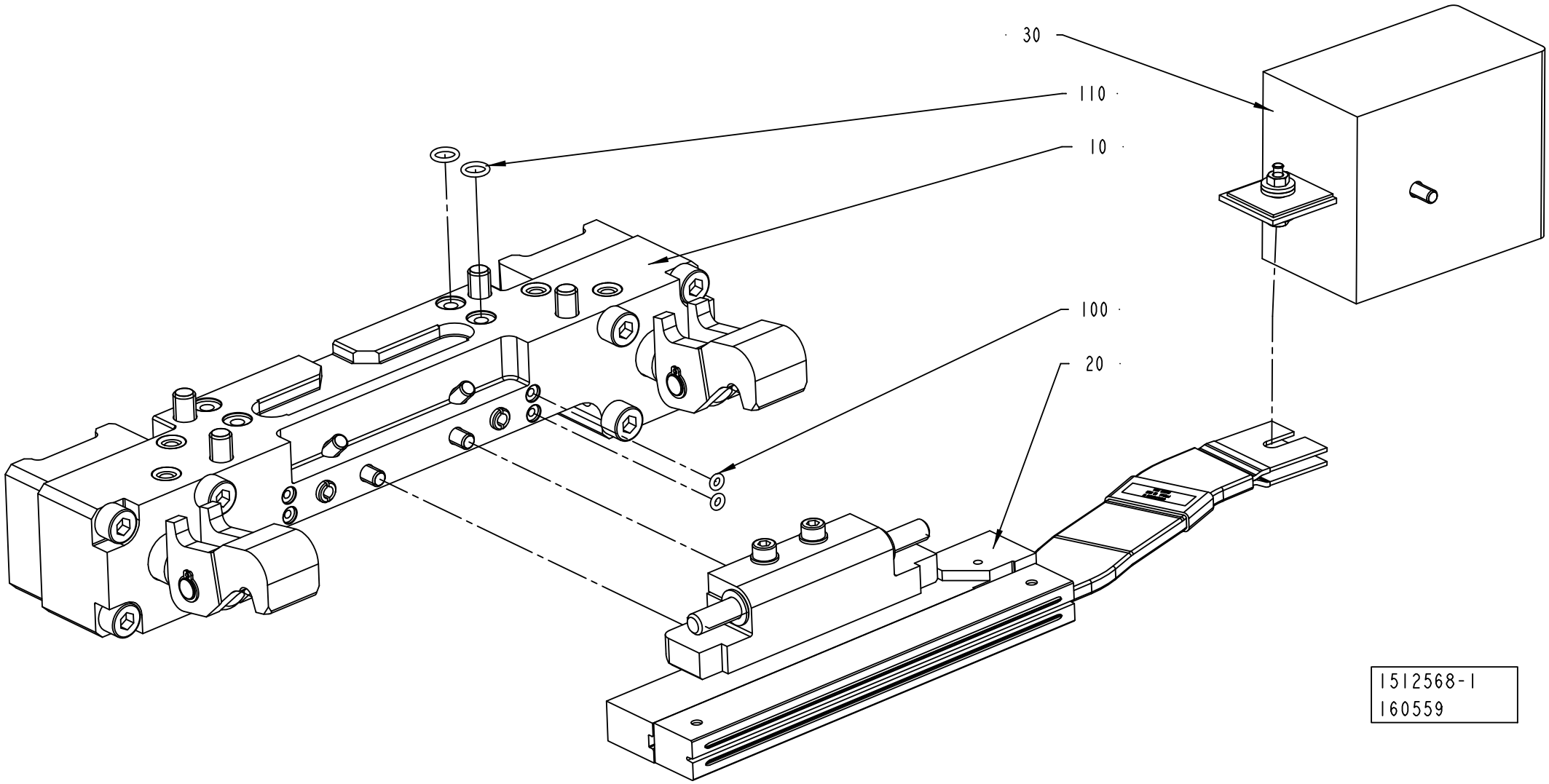
30
110
10
100
20
1512568-1
160559

Pos	Part No	UN	Qty	Description	Page No
TBA 1890S QC, TBA 2000S QC, TBA 1400B (See drawing on pages: 2-186, 2-188)					
120	311103-0267		1	PARALLEL PIN ISO 2338 4M6X10 A1	
Common Parts					
010	2552005-0100		1	PRESSURE JAW	**2-131**
020	2552007-0100		1	INDUCTOR RIGHT	**2-191, 2-193, 2-195, 2-197, 2-199, 2-201**
030	2546229-0100		1	ADAPTION TRANSFORMER	**2-145**
100	315202-0101		2	O-RING 3,1X1,6 MM	
110	315202-0105		2	O-RING 7,1X1,6 MM	

Pos	Part No	UN	Qty	Description	Page No

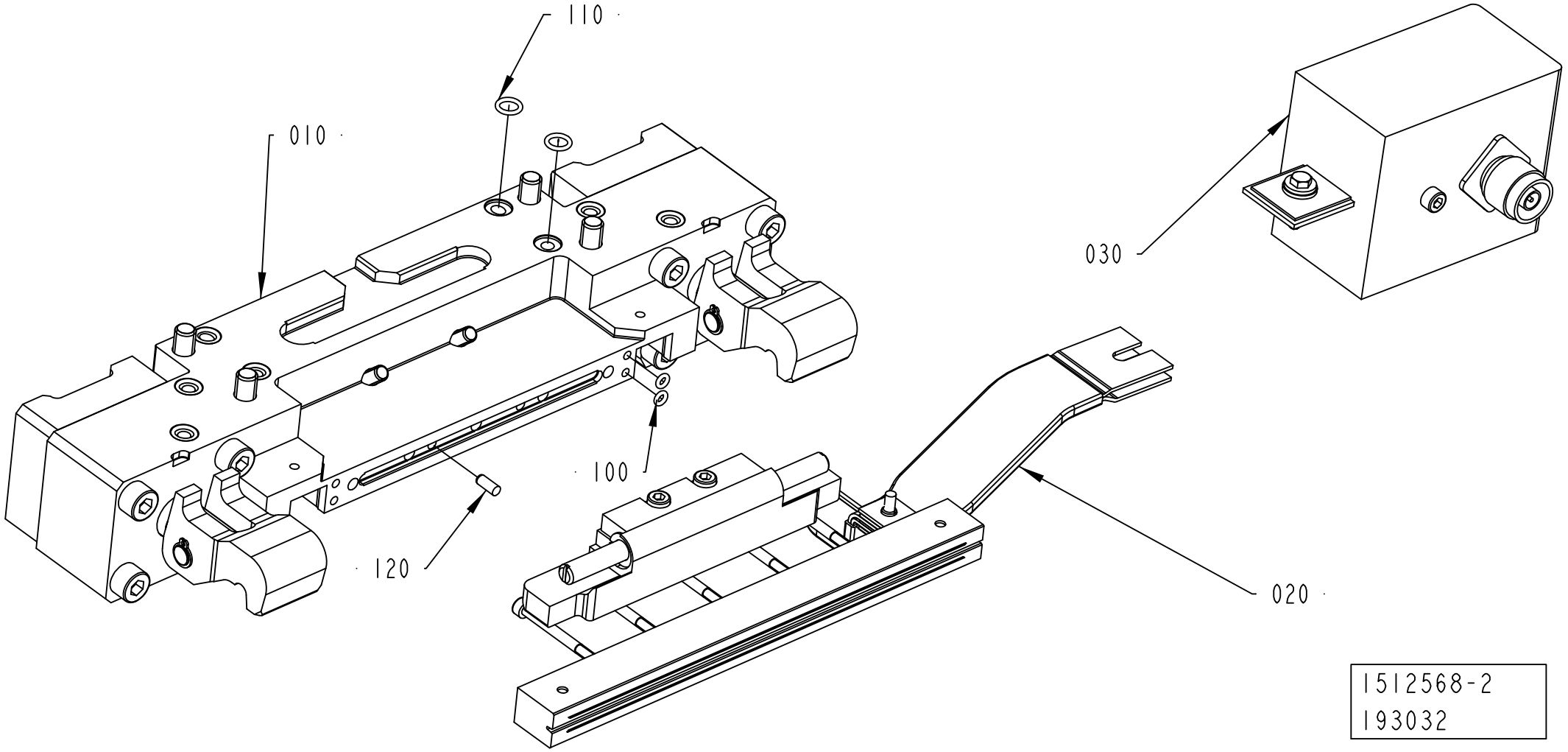
110
010
030
100
120
020
1512568-2
193032

Pos	Part No	UN	Qty	Description	Page No
TBA 1890S QC, TBA 2000S QC, TBA 1400B (See drawing on pages: 2-186, 2-188)					
120	311103-0267		1	PARALLEL PIN ISO 2338 4M6X10 A1	
Common Parts					
010	2552005-0100		1	PRESSURE JAW	**2-131**
020	2552007-0100		1	INDUCTOR RIGHT	**2-191, 2-193, 2-195, 2-197, 2-199, 2-201**
030	2546229-0100		1	ADAPTION TRANSFORMER	**2-145**
100	315202-0101		2	O-RING 3,1X1,6 MM	
110	315202-0105		2	O-RING 7,1X1,6 MM	

Pos	Part No	UN	Qty	Description	Page No

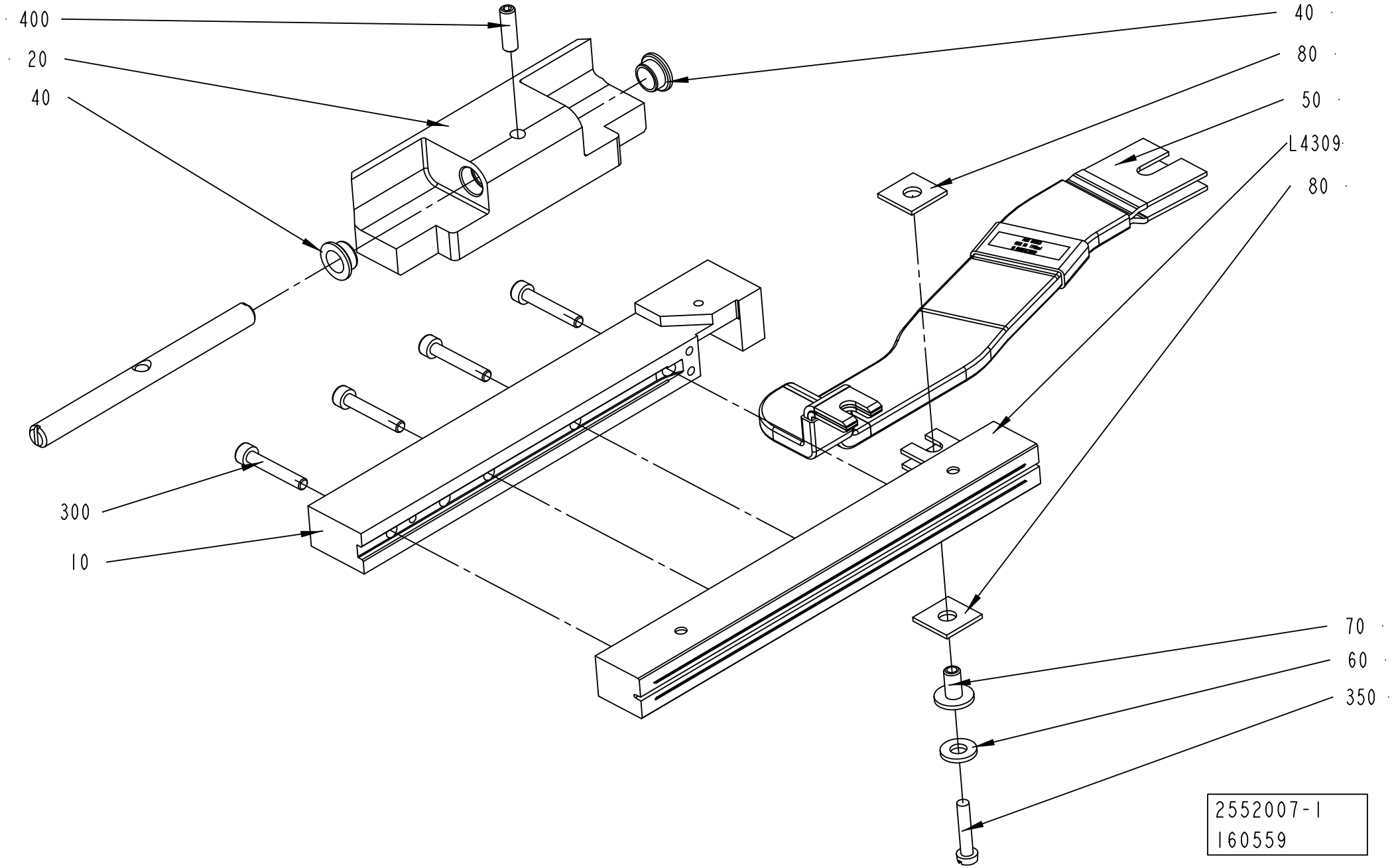
400
20
40
40
80
50
L4309
80
300
10
70
60
350
2552007-1
160559

ECM: 378266 - 20081127
Group number: 2552007-0100
Assembly Drawing: 2552007-1_1_AB

This list covers pages from 2-190 to 2-201

Pos	Part No	UN	Qty	Description	Page No
TBA 1500S (See drawing on page: 2-196)					
010	1348546-0000		1	RAIL	
020	2570302-0000		1	CLAMP HOLDER	
030	2526812-0000		1	SHAFT	
040	2531703-0000		2	BUSHING	
050	1498850-0000		1	BUSBAR	
300	312115-0297		4	SCREW ISO4762 M4X25 A4 80	
400	312115-0327		2	SCREW ISO4762 M5X12 A4 80	
L4309	1110938-0000		1	INDUCTOR	
TBA 1890S QC, TBA 2000S QC (See drawing on page: 2-196)					
020	2588293-0000		1	HOLDER	
030	2686144-0000		1	SHAFT	
040	2531703-0000		2	BUSHING	
050	2698012-0000		1	BUSBAR	
300	312115-0305		5	SCREW ISO4762 M4X50 A4 80	
400	312115-0327		2	SCREW ISO4762 M5X12 A4 80	
L4309	1533046-0000		1	INDUCTOR	
TGA 1000SQ, TGA 0750SQ, TGA 0500SQ (See drawing on page: 2-200)					
010	2649676-0000		1	RAIL	
050	1498850-0000		1	BUSBAR	
090	2698631-0000		1	VOLUME BULGE	
300	312115-0297		4	SCREW ISO4762 M4X25 A4 80	
370	312105-0370		1	SCREW M6S ISO 4017 M6X20 A480	
420	315105-0153		1	WASHER BRB 6,4X12 RFR	
L4309	1566783-0000		1	INDUCTOR	
TPA 0200SQ QC, TPA 0250SQ QC (See drawing on page: 2-194)					
010	1348546-0000		1	RAIL	
020	2674335-0000		1	HOLDER	
050	1498850-0000		1	BUSBAR	
300	312115-0297		3	SCREW ISO4762 M4X25 A4 80	
L4309	1110930-0000		1	INDUCTOR	
TPA 0330SQ (See drawing on page: 2-196)					
010	1348546-0000		1	RAIL	
020	2611655-0000		1	CLAMP HOLDER	
030	2513013-0000		1	SHAFT	
040	2531703-0000		2	BUSHING	
050	1498850-0000		1	BUSBAR	
300	312115-0297		3	SCREW ISO4762 M4X25 A4 80	
400	312115-0327		2	SCREW ISO4762 M5X12 A4 80	
L4309	1520167-0000		1	INDUCTOR	
TPA 0750SQ SMILE QC, TPA 1000SQ SMILE QC (See drawing on page: 2-198)					
010	1558820-0000		1	RAIL	
020	2660404-0000		1	HOLDER	
050	1498850-0000		1	BUSBAR	
090	2503700-0000		1	VOLUME BULGE	
100	2500591-0000		1	VOLUME BULGE	
300	312115-0297		4	SCREW ISO4762 M4X25 A4 80	
360	311103-0234		1	PARALLEL PIN ISO 2338 3M6X12 A1	
370	312155-0287		2	SCREW DIN 7991 MF6S M4X8 A4 70	
380	312155-0325		2	SCREW DIN 7991 MF6S M5X10 A4 70	
L4309	2663377-0000		1	INDUCTOR	
TPA 1000SQ FT NOQC (See drawing on page: 2-196)					
010	1558820-0000		1	RAIL	
020	2579989-0000		1	HOLDER	
030	2579990-0000		1	SHAFT	
040	2531703-0000		2	BUSHING	
050	1498850-0000		1	BUSBAR	
090	2503700-0000		1	VOLUME BULGE	
300	312115-0297		4	SCREW ISO4762 M4X25 A4 80	
370	312155-0287		2	SCREW DIN 7991 MF6S M4X8 A4 70	
400	312115-0327		2	SCREW ISO4762 M5X12 A4 80	
L4309	2663377-0000		1	INDUCTOR	
TPA 1000SQ SMILE NOQC (See drawing on page: 2-196)					
010	1558820-0000		1	RAIL	
020	2579991-0000		1	HOLDER	
030	2579990-0000		1	SHAFT	
040	2531703-0000		2	BUSHING	
050	1498850-0000		1	BUSBAR	
090	2503700-0000		1	VOLUME BULGE	
100	2500591-0000		1	VOLUME BULGE	
300	312115-0297		4	SCREW ISO4762 M4X25 A4 80	
370	312155-0287		2	SCREW DIN 7991 MF6S M4X8 A4 70	
380	312155-0325		2	SCREW DIN 7991 MF6S M5X10 A4 70	
400	312115-0327		2	SCREW ISO4762 M5X12 A4 80	
L4309	2663377-0000		1	INDUCTOR	
TPA 500SQ LIGHTCAP (See drawing on page: 2-198)					
010	2969720-0000		1	RAIL	
020	2570848-0000		1	HOLDER	
030	2513013-0000		1	SHAFT	
040	2570849-0000		1	BUSHING	
050	1498850-0000		1	BUSBAR	
090	2503688-0000		1	VOLUME BULGE	
100	2969721-0000		1	VOLUME BULGE	
300	312115-0297		4	SCREW ISO4762 M4X25 A4 80	

Machine Type | Group Description | Used-In | Group Number | Page No

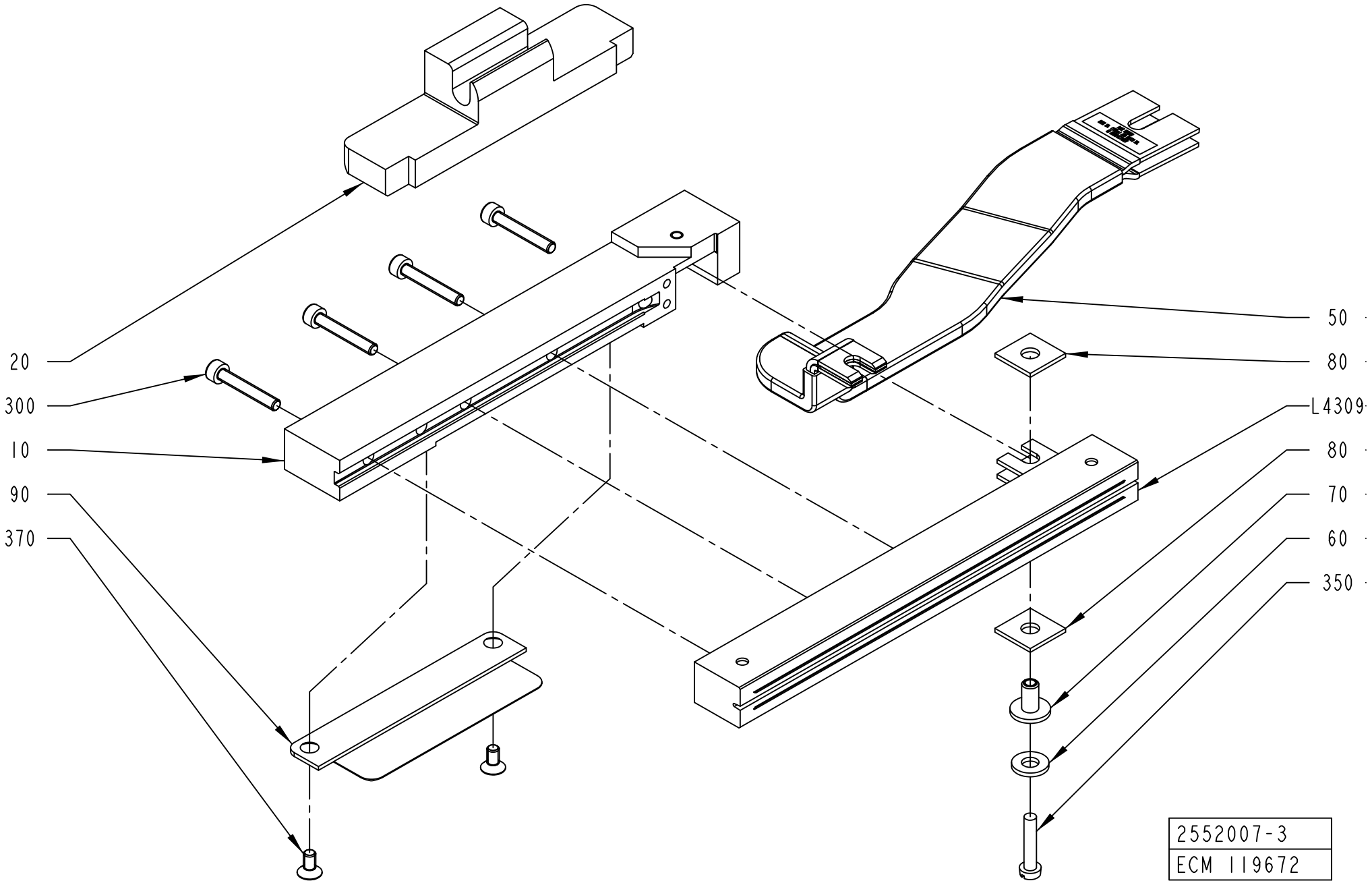
20
300
10
90
370
50
80
L4309
80
70
60
350
2552007-3
ECM 119672

ECM: 378266 - 20081127
Group number: 2552007-0100
Assembly Drawing: 2552007-3_1_AA

This list covers pages from 2-190 to 2-201

Pos	Part No	UN	Qty	Description	Page No
TPA 500SQ LIGHTCAP (Cont'd) (See drawing on page: 2-198)					
360	311103-0234		1	PARALLEL PIN ISO 2338 3M6X12 A1	
370	312155-0287		2	SCREW DIN 7991 MF6S M4X8 A4 70	
380	312155-0325		2	SCREW DIN 7991 MF6S M5X10 A4 70	
400	312115-0329		2	SCREW ISO4762 M5X16 A4 80	
L4309	2978583-0000		1	INDUCTOR	
TPA 500SQ NOMOLDEDCAP (See drawing on page: 2-198)					
010	1558820-0000		1	RAIL	
020	2570848-0000		1	HOLDER	
030	2513013-0000		1	SHAFT	
040	2570849-0000		1	BUSHING	
050	1498850-0000		1	BUSBAR	
090	2503688-0000		1	VOLUME BULGE	
100	1549834-0000		1	VOLUME BULGE	
300	312115-0297		4	SCREW ISO4762 M4X25 A4 80	
360	311103-0234		1	PARALLEL PIN ISO 2338 3M6X12 A1	
370	312155-0287		2	SCREW DIN 7991 MF6S M4X8 A4 70	
380	312155-0325		2	SCREW DIN 7991 MF6S M5X10 A4 70	
400	312115-0329		2	SCREW ISO4762 M5X16 A4 80	
L4309	2587467-0000		1	INDUCTOR	
TBA 0200B NOQC, TBA 0250B NOQC (See drawing on page: 2-190)					
010	1348546-0000		1	RAIL	
020	1349599-0000		1	HOLDER	
030	1349980-0000		1	SHAFT	
040	1349584-0000		2	BUSHING	
050	1498850-0000		1	BUSBAR	
300	312115-0297		3	SCREW ISO4762 M4X25 A4 80	
400	312318-0329		1	SCREW ISO4029 M5X16 A4	
L4309	1110932-0000		1	INDUCTOR	
TBA 0200B QC, TBA 0250B QC (See drawing on page: 2-192)					
010	1348546-0000		1	RAIL	
020	2604565-0000		1	HOLDER	
050	1498850-0000		1	BUSBAR	
300	312115-0297		3	SCREW ISO4762 M4X25 A4 80	
TBA 0200M QC, TBA 0250S QC (See drawing on page: 2-194)					
010	1348546-0000		1	RAIL	
020	2644397-0000		1	HOLDER	
050	1498850-0000		1	BUSBAR	
300	312115-0297		3	SCREW ISO4762 M4X25 A4 80	
L4309	1110931-0000		1	INDUCTOR	
TBA 0200S (See drawing on page: 2-196)					
010	1348546-0000		1	RAIL	
020	2513015-0000		1	HOLDER	
030	2513013-0000		1	SHAFT	
040	2531703-0000		2	BUSHING	
050	1498850-0000		1	BUSBAR	
300	312115-0297		3	SCREW ISO4762 M4X25 A4 80	
400	312115-0329		2	SCREW ISO4762 M5X16 A4 80	
L4309	1110930-0000		1	INDUCTOR	
TBA 0200SQ, TBA 0250SQ (See drawing on page: 2-192)					
010	1558820-0000		1	RAIL	
020	2668318-0000		1	HOLDER	
050	1498850-0000		1	BUSBAR	
090	2679953-0000		1	VOLUME BULGE	
300	312115-0297		3	SCREW ISO4762 M4X25 A4 80	
370	312155-0287		2	SCREW DIN 7991 MF6S M4X8 A4 70	
L4309	2767760-0000		1	INDUCTOR	
TBA 0330S QC (See drawing on page: 2-192)					
010	1348546-0000		1	RAIL	
020	2604565-0000		1	HOLDER	
050	1498850-0000		1	BUSBAR	
300	312115-0297		3	SCREW ISO4762 M4X25 A4 80	
L4309	1110932-0000		1	INDUCTOR	
TBA 0500B QC, TBA 1000B QC (See drawing on page: 2-192)					
010	1558820-0000		1	RAIL	
020	1487955-0000		1	HOLDER	
050	1498850-0000		1	BUSBAR	
090	1558734-0000		1	VOLUME BULGE	
300	312115-0297		4	SCREW ISO4762 M4X25 A4 80	
370	312155-0287		2	SCREW DIN 7991 MF6S M4X8 A4 70	
L4309	1110938-0000		1	INDUCTOR	
TBA 0500S (See drawing on page: 2-196)					
010	1348546-0000		1	RAIL	
020	2611001-0000		1	CLAMP HOLDER	
030	2579990-0000		1	SHAFT	
040	2531703-0000		2	BUSHING	
050	1498850-0000		1	BUSBAR	
300	312115-0297		4	SCREW ISO4762 M4X25 A4 80	
400	312115-0327		2	SCREW ISO4762 M5X12 A4 80	
L4309	1110934-0000		1	INDUCTOR	
TBA 0500SQ QC, TBA 1000SQ QC (See drawing on page: 2-192)					
010	1348546-0000		1	RAIL	
020	2812891-0000		1	HOLDER	
050	1498850-0000		1	BUSBAR	

Machine Type | Group Description | Used-In | Group Number | Page No

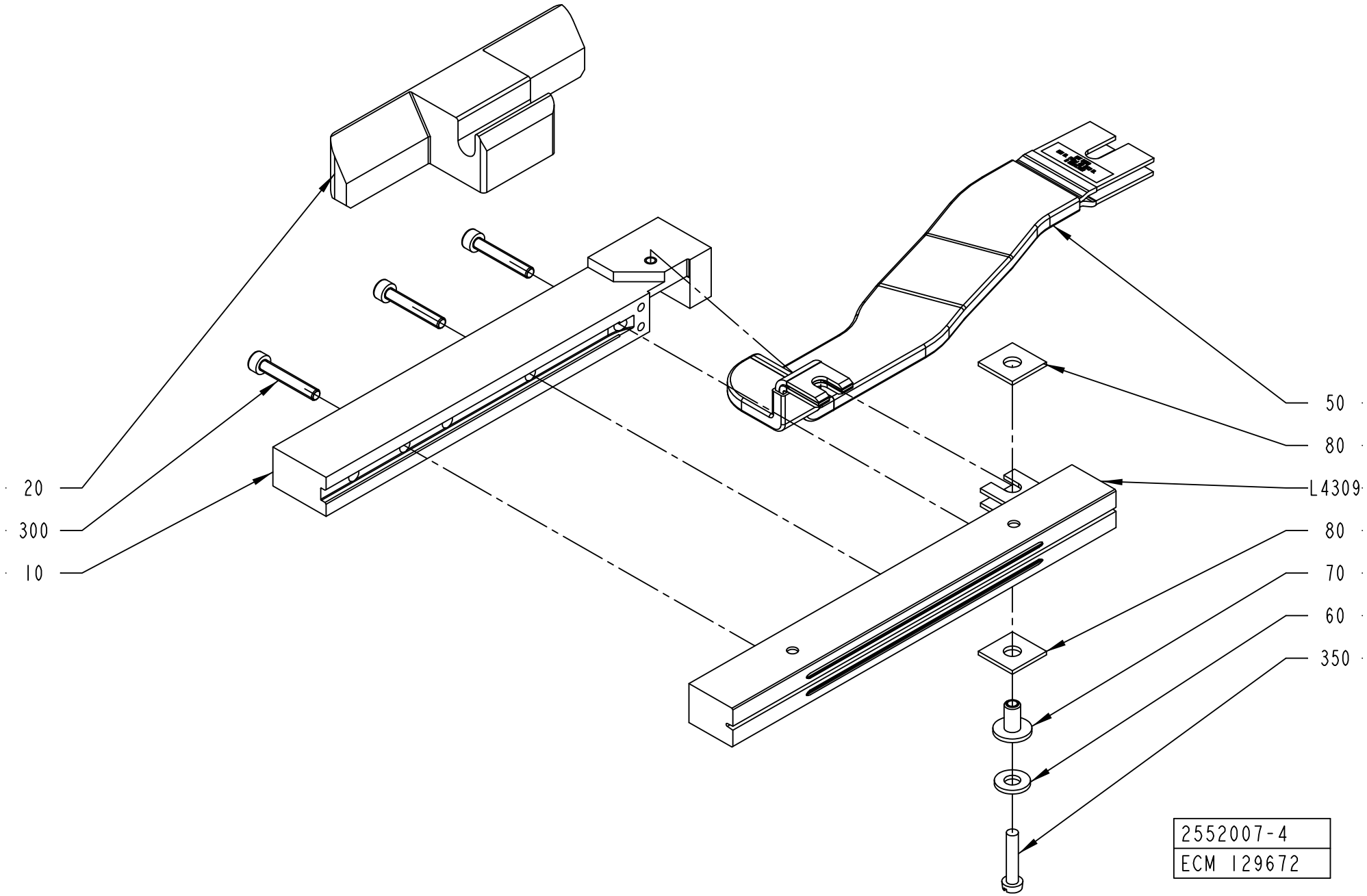
20
300
10
50
80
L4309
80
70
60
350
2552007-4
ECM 129672

ECM: 378266 - 20081127
Group number: 2552007-0100
Assembly Drawing: 2552007-4_1_AA

This list covers pages from 2-190 to 2-201

Pos	Part No	UN	Qty	Description	Page No
TBA 0500SQ QC, TBA 1000SQ QC (Cont'd) (See drawing on page: 2-192)					
300	312115-0297		4	SCREW ISO4762 M4X25 A4 80	
L4309	1110936-0000		1	INDUCTOR	
TBA 1000B NOQC NOMOLDEDCAP (See drawing on page: 2-196)					
010	1348546-0000		1	RAIL	
020	2664280-0000		1	HOLDER	
030	2526812-0000		1	SHAFT	
040	2531703-0000		2	BUSHING	
050	1498850-0000		1	BUSBAR	
300	312115-0297		4	SCREW ISO4762 M4X25 A4 80	
400	312115-0329		2	SCREW ISO4762 M5X16 A4 80	
410	315105-0146		2	WASHER BRB 5,3X10 RFR	
L4309	1110938-0000		1	INDUCTOR	
TBA 1000B NOQC STDA7 (See drawing on page: 2-196)					
010	2610955-0000		1	RAIL	
020	2664280-0000		1	HOLDER	
030	2526812-0000		1	SHAFT	
040	2531703-0000		2	BUSHING	
050	1498850-0000		1	BUSBAR	
300	312115-0297		4	SCREW ISO4762 M4X25 A4 80	
400	312115-0329		2	SCREW ISO4762 M5X16 A4 80	
410	315105-0146		2	WASHER BRB 5,3X10 RFR	
L4309	2610956-0000		1	INDUCTOR	
TBA 1000S LIGHTCAP (See drawing on page: 2-196)					
010	2766752-0000		1	RAIL	
020	2559425-0000		1	CLAMP HOLDER	
030	2526812-0000		1	SHAFT	
040	2531703-0000		2	BUSHING	
050	1498850-0000		1	BUSBAR	
300	312115-0297		4	SCREW ISO4762 M4X25 A4 80	
400	312115-0327		2	SCREW ISO4762 M5X12 A4 80	
L4309	1566843-0000		1	INDUCTOR	
TBA 1000S NOMOLDEDCAP (See drawing on page: 2-196)					
010	1348546-0000		1	RAIL	
020	2559425-0000		1	CLAMP HOLDER	
030	2526812-0000		1	SHAFT	
040	2531703-0000		2	BUSHING	
050	1498850-0000		1	BUSBAR	
300	312115-0297		4	SCREW ISO4762 M4X25 A4 80	
400	312115-0327		2	SCREW ISO4762 M5X12 A4 80	
L4309	1110937-0000		1	INDUCTOR	
TBA 1000S STDA7 (See drawing on page: 2-196)					
010	2546476-0000		1	RAIL	
020	2559425-0000		1	CLAMP HOLDER	
030	2526812-0000		1	SHAFT	
040	2531703-0000		2	BUSHING	
050	1498850-0000		1	BUSBAR	
300	312115-0297		4	SCREW ISO4762 M4X25 A4 80	
400	312115-0327		2	SCREW ISO4762 M5X12 A4 80	
L4309	2546474-0000		1	INDUCTOR	
TBA 1000SQ NOQC (See drawing on page: 2-196)					
010	1348546-0000		1	RAIL	
020	2526811-0000		1	HOLDER	
030	2526812-0000		1	SHAFT	
040	2531703-0000		2	BUSHING	
050	1498850-0000		1	BUSBAR	
300	312115-0297		4	SCREW ISO4762 M4X25 A4 80	
400	312115-0327		2	SCREW ISO4762 M5X12 A4 80	
L4309	1110936-0000		1	INDUCTOR	
TBA 1400B (See drawing on page: 2-196)					
020	2588293-0000		1	HOLDER	
030	2686144-0000		1	SHAFT	
040	2531703-0000		2	BUSHING	
050	2698012-0000		1	BUSBAR	
300	312115-0305		5	SCREW ISO4762 M4X50 A4 80	
400	312115-0327		2	SCREW ISO4762 M5X12 A4 80	
L4309	2841895-0000		1	INDUCTOR	
	1533046-0000		*1*	*INDUCTOR*	
Common Parts					
060	28509-0000		1	WASHER	
070	32544-0000		1	INSULATION NUT	
080	1036584-0000		2	WASHER	
350	312125-0295		1	SCREW ISO 1207 M4X20 A4	

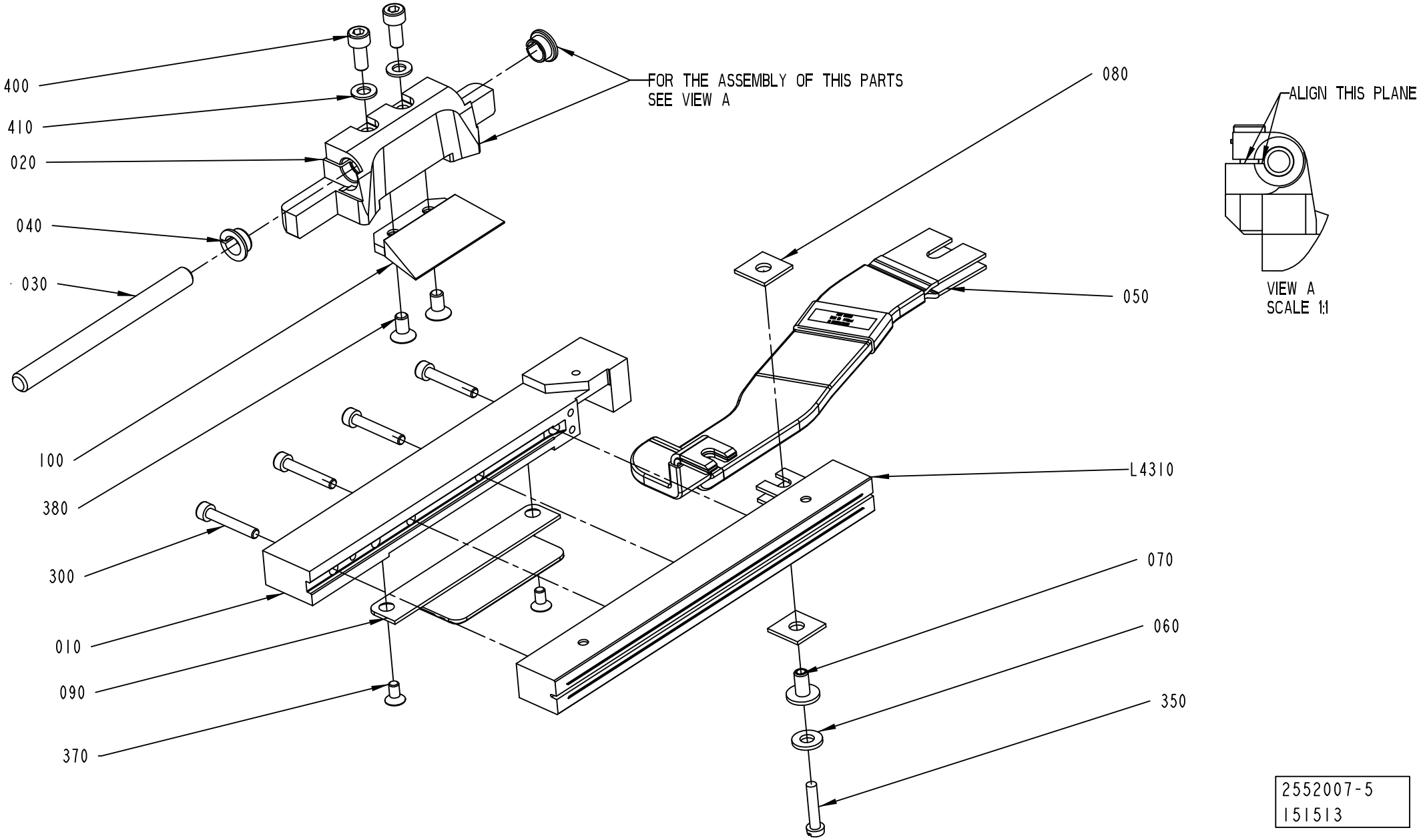
400
410
020
040
030
100
380
300
010
090
370
FOR THE ASSEMBLY OF THIS PARTS
SEE VIEW A
080
050
L4310
070
060
350
ALIGN THIS PLANE
VIEW A
SCALE 1:1
2552007-5
151513

Pos	Part No	UN	Qty	Description	Page No
SEE PREVIOUS LISTS PAGES: 2-191, 2-193, 2-195.					

Pos	Part No	UN	Qty	Description	Page No

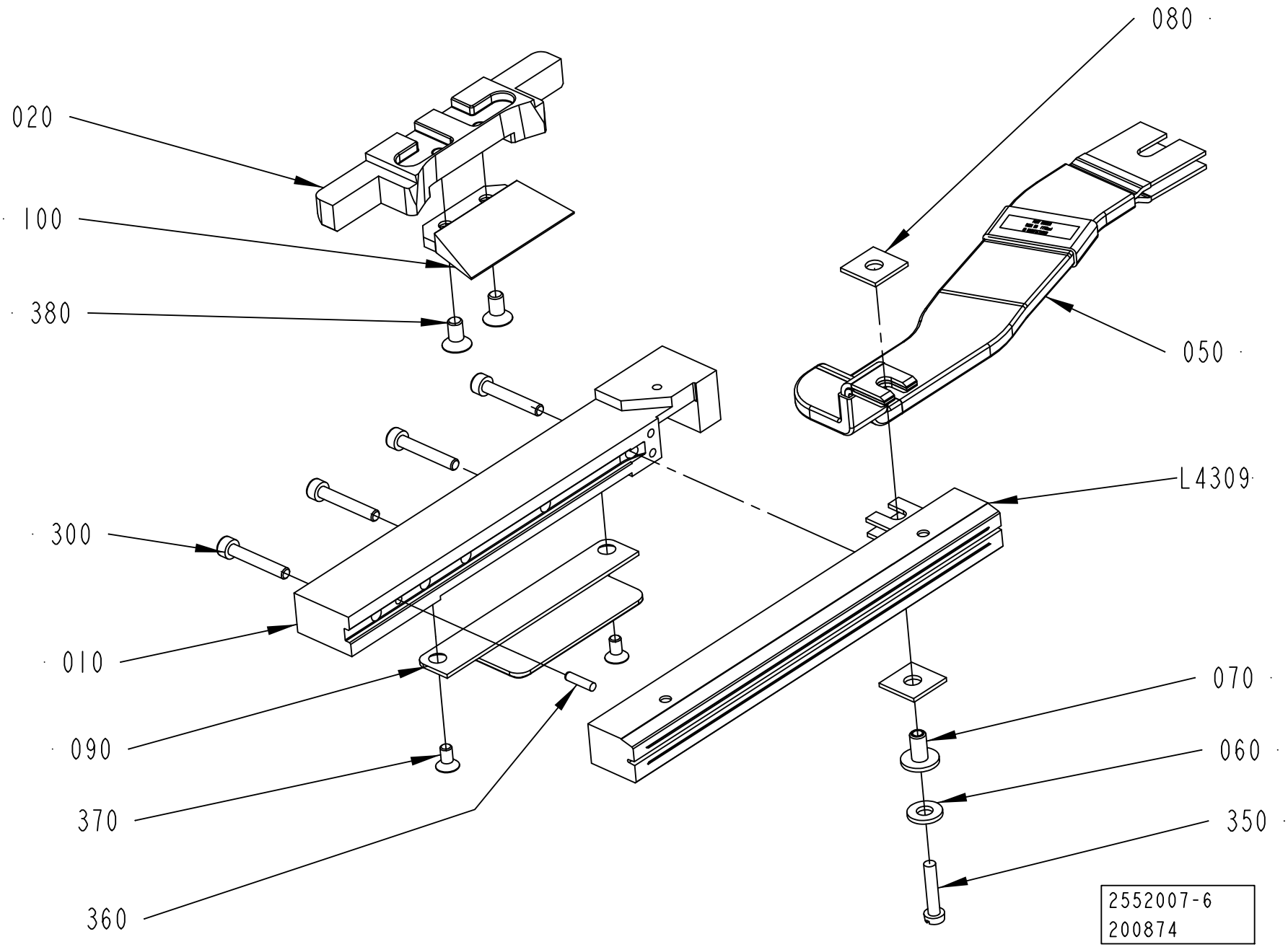
080
020
100
380
050
L4309
300
010
090
370
360
070
060
350
2552007-6
200874

ECM: 378266 - 20081127
Group number: 2552007-0100
Assembly Drawing: 2552007-6_1_AA

This list covers pages from 2-190 to 2-201

Pos	Part No	UN	Qty	Description	Page No
SEE PREVIOUS LISTS PAGES: 2-191, 2-193, 2-195.					

Pos	Part No	UN	Qty	Description	Page No

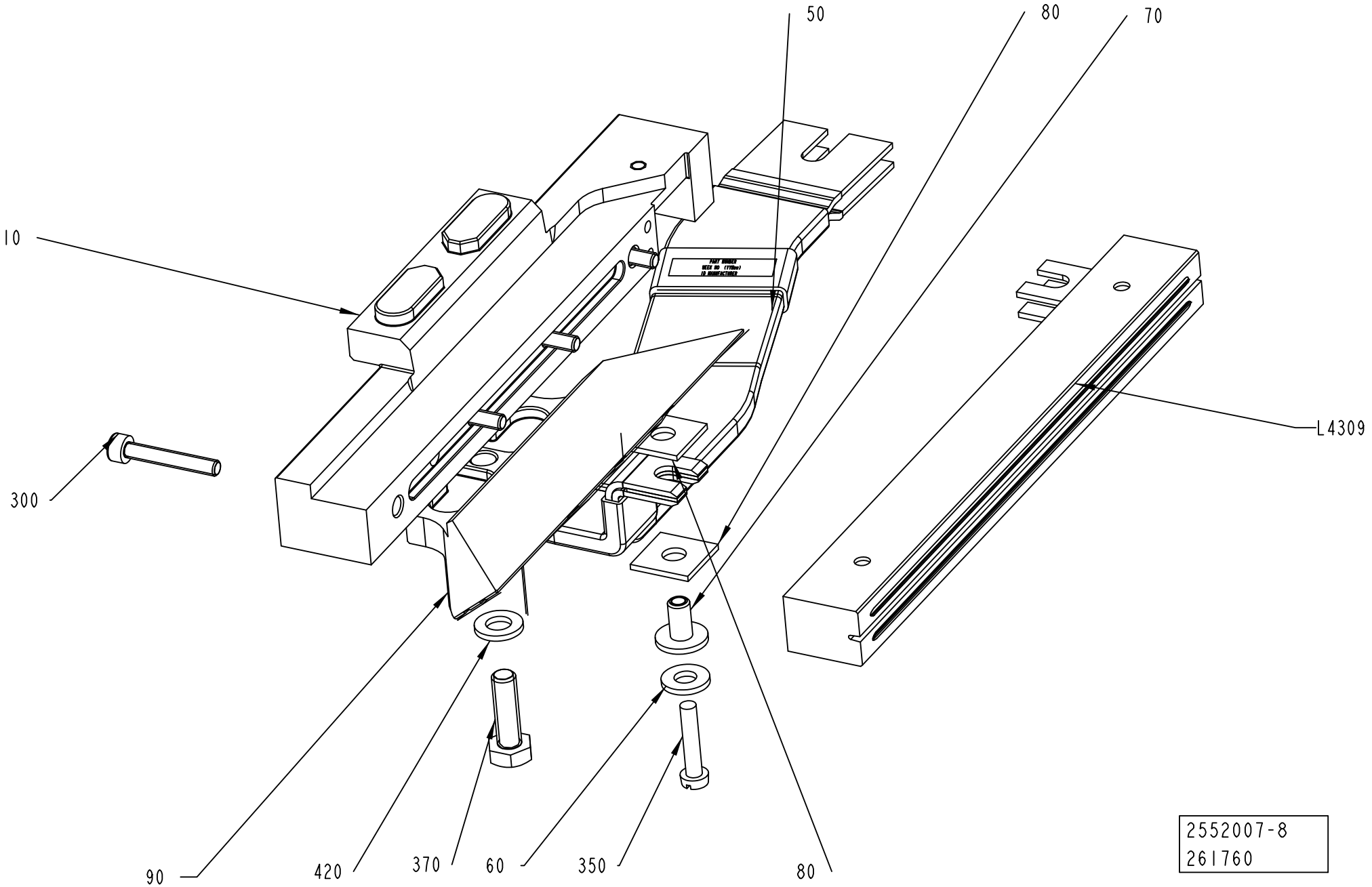
50
80
70
10
L4309
300
90
420
370
60
350
80
2552007-8
261760

Pos	Part No	UN	Qty	Description	Page No
SEE PREVIOUS LISTS PAGES: 2-191, 2-193, 2-195.					

Pos	Part No	UN	Qty	Description	Page No

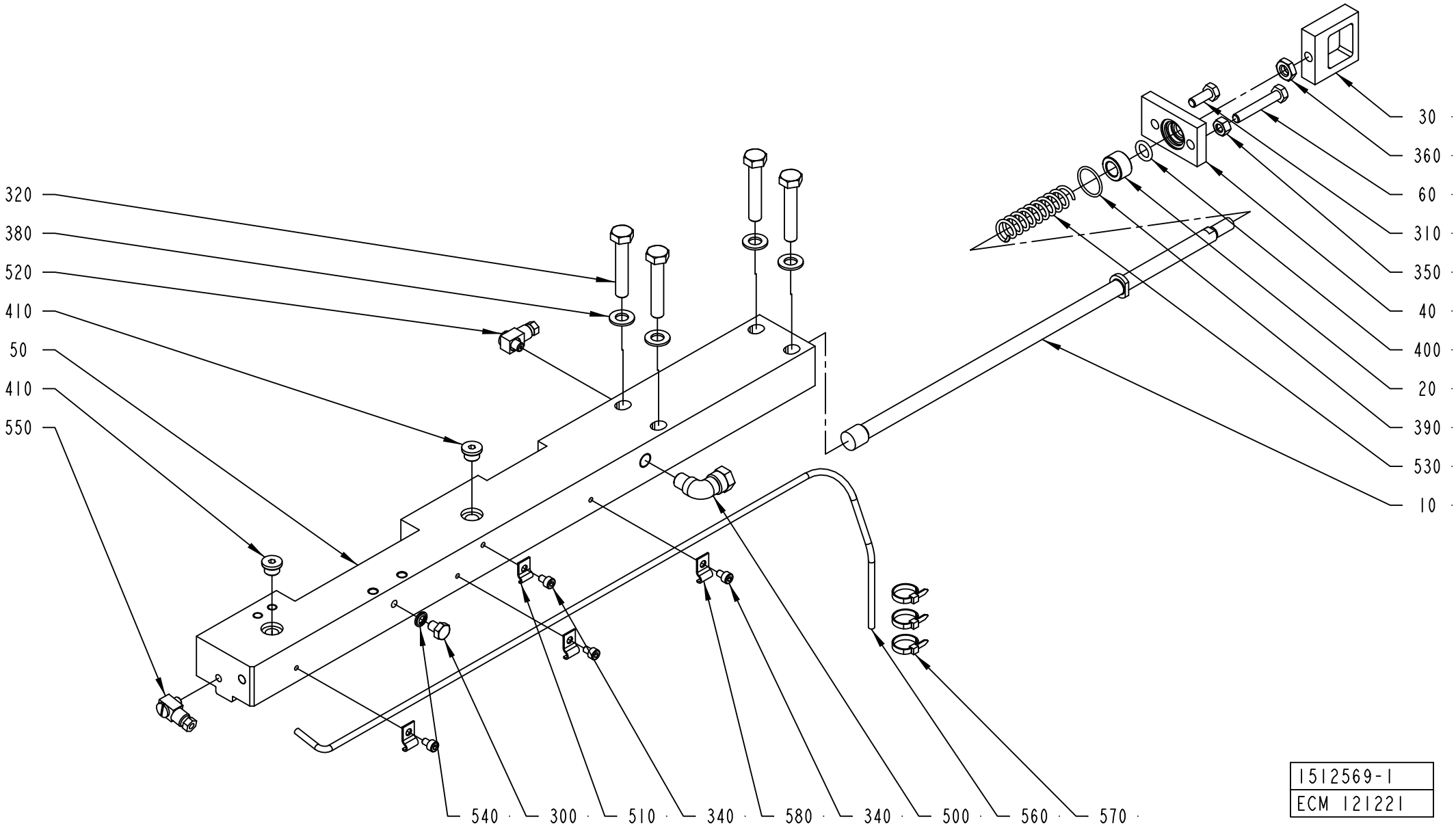
320
380
520
410
50
410
550
30
360
60
310
350
40
400
20
390
530
10
540
300
510
340
580
340
500
560
570
1512569-1
ECM 121221

ECM: 360268 - 20081001
Group number: 1512569-0200
Assembly Drawing: 1512569-1_1_AA

This list covers pages from 2-202 to 2-211

Pos	Part No	UN	Qty	Description	Page No
TBA 0200B QC, TBA 0330S QC, TBA 0250B QC, TPA 0200SQ QC, TPA 0250SQ QC (See drawing on page: 2-204)					
010	2530508-0000		1	TIE ROD	
050	2572248-0000		1	CARRIER	
070	1549312-0000		1	INSERT	
300	312105-0362		1	SCREW M6S ISO 4017 M6X8 A480	
340	312115-0285		4	SCREW ISO4762 M4X6 A4 80	
345	312145-0323		3	SCREW ISO 2009 MFS M5X8 A4	
400	315202-0208		1	O-RING 9,3X2,4 MM	
510	90165-0058		1	PIPE CLIP FOR TUBE D=2,5 MM	
520	90134-0058		1	CONNECTION	
540	315211-0103		1	BONDED SEAL SS/NBR90 M6	
550	90134-0068		1	CONNECTION	
560	90166-0109	MM	800	TUBE 4 MM PA TRANSP.	
580	90165-0056		3	PIPE CLIP FOR TUBE D=4 MM	
TBA 0200M QC, TBA 0250S QC (See drawing on page: 2-204)					
010	2530508-0000		1	TIE ROD	
050	2572248-0000		1	CARRIER	
070	2641225-0000		1	INSERT	
300	312105-0362		1	SCREW M6S ISO 4017 M6X8 A480	
340	312115-0285		4	SCREW ISO4762 M4X6 A4 80	
345	312145-0323		3	SCREW ISO 2009 MFS M5X8 A4	
400	315202-0208		1	O-RING 9,3X2,4 MM	
510	90165-0058		1	PIPE CLIP FOR TUBE D=2,5 MM	
520	90134-0058		1	CONNECTION	
540	315211-0103		1	BONDED SEAL SS/NBR90 M6	
550	90134-0068		1	CONNECTION	
560	90166-0109	MM	800	TUBE 4 MM PA TRANSP.	
580	90165-0056		3	PIPE CLIP FOR TUBE D=4 MM	
TBA 0200S, TBA 0500S, TPA 0330SQ, TPA 0500SQ, TBA 0200B NOQC, TBA 0250B NOQC (See drawing on page: 2-202)					
010	2530508-0000		1	TIE ROD	
050	2536026-0000		1	CARRIER	
300	312105-0362		1	SCREW M6S ISO 4017 M6X8 A480	
340	312115-0285		4	SCREW ISO4762 M4X6 A4 80	
400	315202-0208		1	O-RING 9,3X2,4 MM	
510	90165-0058		1	PIPE CLIP FOR TUBE D=2,5 MM	
520	90134-0058		1	CONNECTION	
540	315211-0103		1	BONDED SEAL SS/NBR90 M6	
550	90134-0068		1	CONNECTION	
560	90166-0109	MM	800	TUBE 4 MM PA TRANSP.	
580	90165-0056		3	PIPE CLIP FOR TUBE D=4 MM	
TBA 0200SQ QC, TBA 0250SQ QC (See drawing on page: 2-204)					
010	2737034-0000		1	TIE ROD	
050	2572248-0000		1	CARRIER	
070	1549312-0000		1	INSERT	
300	312105-0362		1	SCREW M6S ISO 4017 M6X8 A480	
340	312115-0285		4	SCREW ISO4762 M4X6 A4 80	
345	312145-0323		3	SCREW ISO 2009 MFS M5X8 A4	
400	315202-0208		1	O-RING 9,3X2,4 MM	
510	90165-0058		1	PIPE CLIP FOR TUBE D=2,5 MM	
520	90134-0058		1	CONNECTION	
540	315211-0103		1	BONDED SEAL SS/NBR90 M6	
550	90134-0068		1	CONNECTION	
560	90166-0109	MM	800	TUBE 4 MM PA TRANSP.	
580	90165-0056		3	PIPE CLIP FOR TUBE D=4 MM	
TBA 0500B QC, TBA 1000B QC (See drawing on page: 2-204)					
010	1499320-0000		1	TIE ROD	
050	2572248-0000		1	CARRIER	
070	1549312-0000		1	INSERT	
300	312105-0362		1	SCREW M6S ISO 4017 M6X8 A480	
340	312115-0285		4	SCREW ISO4762 M4X6 A4 80	
345	312145-0323		3	SCREW ISO 2009 MFS M5X8 A4	
400	315202-0208		1	O-RING 9,3X2,4 MM	
510	90165-0058		1	PIPE CLIP FOR TUBE D=2,5 MM	
520	90134-0058		1	CONNECTION	
540	315211-0103		1	BONDED SEAL SS/NBR90 M6	
550	90134-0068		1	CONNECTION	
560	90166-0109	MM	800	TUBE 4 MM PA TRANSP.	
580	90165-0056		3	PIPE CLIP FOR TUBE D=4 MM	
TBA 0500SQ QC, TBA 1000SQ QC (See drawing on page: 2-206)					
010	1499320-0000		1	TIE ROD	
050	2647118-0000		1	CARRIER	
070	2647114-0000		1	INSERT	
290	312105-0291		2	SCREW M6S ISO 4017 M4X12 A470	
300	312105-0362		1	SCREW M6S ISO 4017 M6X8 A480	
340	312115-0285		4	SCREW ISO4762 M4X6 A4 80	
345	312145-0323		3	SCREW ISO 2009 MFS M5X8 A4	
400	315202-0208		1	O-RING 9,3X2,4 MM	
510	90165-0058		1	PIPE CLIP FOR TUBE D=2,5 MM	
520	90134-0058		1	CONNECTION	
540	315211-0103		1	BONDED SEAL SS/NBR90 M6	
550	90134-0068		1	CONNECTION	
560	90166-0109	MM	800	TUBE 4 MM PA TRANSP.	

Machine Type | Group Description | Used-In | Group Number | Page No

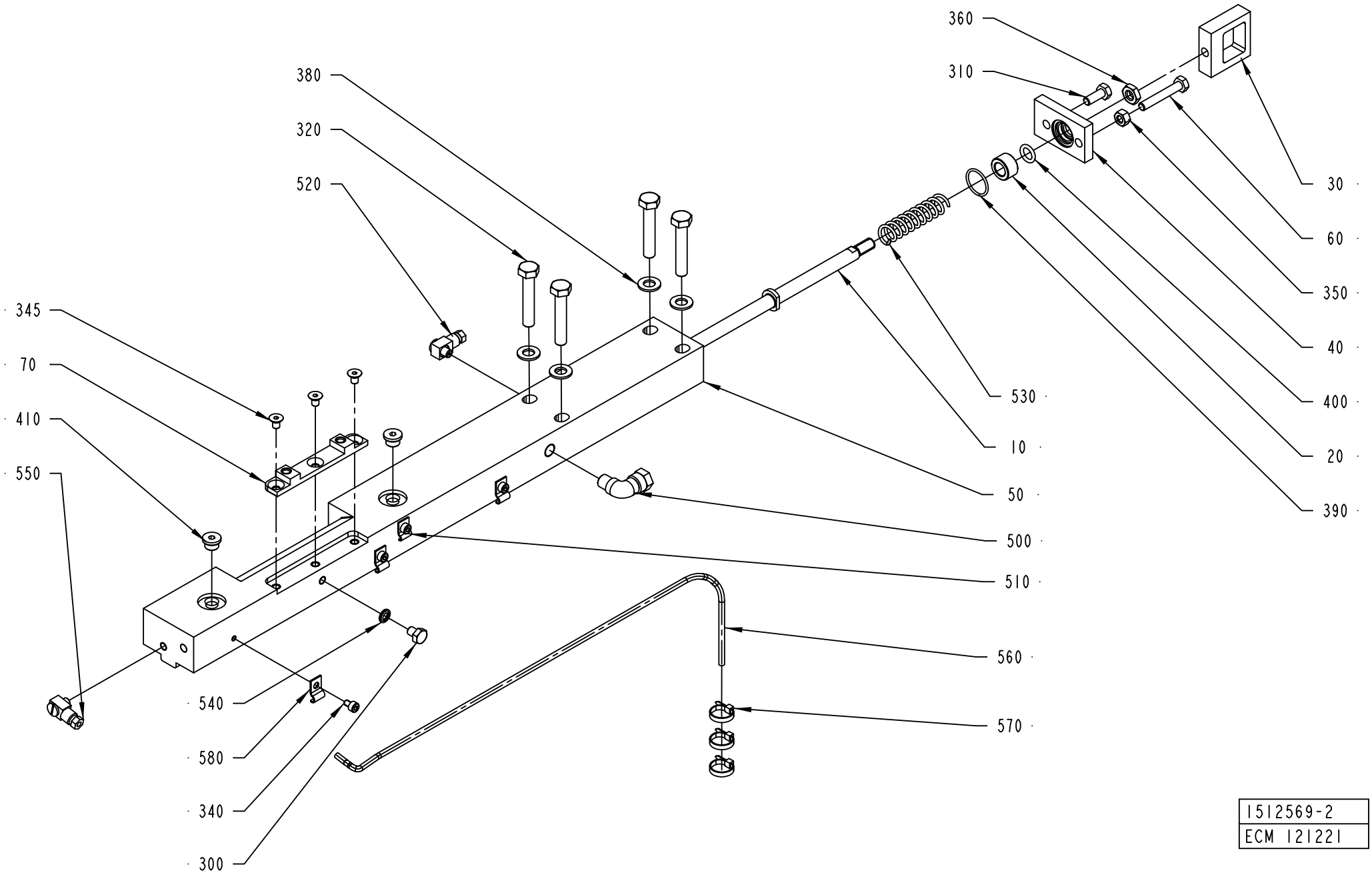

1512569-2
ECM 121221

ECM: 360268 - 20081001
Group number: 1512569-0200
Assembly Drawing: 1512569-2_1_AA

This list covers pages from 2-202 to 2-211

Pos	Part No	UN	Qty	Description	Page No
TBA 0500SQ QC, TBA 1000SQ QC (Cont'd) (See drawing on page: 2-206)					
580	90165-0056		3	PIPE CLIP FOR TUBE D=4 MM	
TBA 1000SQ, TBA 1000S, TBA 1500S, TBA 1000B NOQC, TPA 1000SQ NOQC (See drawing on page: 2-202)					
010	1499320-0000		1	TIE ROD	
050	2536026-0000		1	CARRIER	
300	312105-0362		1	SCREW M6S ISO 4017 M6X8 A480	
340	312115-0285		4	SCREW ISO4762 M4X6 A4 80	
400	315202-0208		1	O-RING 9,3X2,4 MM	
510	90165-0058		1	PIPE CLIP FOR TUBE D=2,5 MM	
520	90134-0058		1	CONNECTION	
540	315211-0103		1	BONDED SEAL SS/NBR90 M6	
550	90134-0068		1	CONNECTION	
560	90166-0109	MM	800	TUBE 4 MM PA TRANSP.	
580	90165-0056		3	PIPE CLIP FOR TUBE D=4 MM	
TBA 1890S QC, TBA 2000S QC, TBA 1400B (See drawing on page: 2-208)					
010	2588291-0000		1	TIE ROD	
050	2566327-0000		1	CARRIER	
070	2566328-0000		1	PLATE	
300	312105-0362		1	SCREW M6S ISO 4017 M6X8 A480	
340	312115-0285		4	SCREW ISO4762 M4X6 A4 80	
400	315202-0208		1	O-RING 9,3X2,4 MM	
510	90165-0058		1	PIPE CLIP FOR TUBE D=2,5 MM	
520	90134-0058		1	CONNECTION	
540	315211-0103		1	BONDED SEAL SS/NBR90 M6	
550	90134-0068		1	CONNECTION	
560	90166-0109	MM	800	TUBE 4 MM PA TRANSP.	
580	90165-0056		3	PIPE CLIP FOR TUBE D=4 MM	
590	312155-0287		3	SCREW DIN 7991 MF6S M4X8 A4 70	
600	2603151-0000		1	SHIM	
TGA 1000SQ, TGA 0750SQ, TGA 0500SQ (See drawing on page: 2-210)					
010	2588291-0000		1	TIE ROD	
040	2612747-0000		1	COVER	
050	2594717-0000		1	CARRIER	
300	312105-0362		3	SCREW M6S ISO 4017 M6X8 A480	
400	90459-3388		1	SCRAPER, 10X16X4,7 MM	
420	311103-0308		1	PARALLEL PIN ISO 2338 5M6X16 A1	
540	315211-0103		3	BONDED SEAL SS/NBR90 M6	
700	90153-0053		1	ADHESIVE, LOCTITE 648 TEMP 150`C 50ML	
TPA 1000SQ QC, TPA 0750SQ QC (See drawing on page: 2-206)					
010	2530508-0000		1	TIE ROD	
050	2647118-0000		1	CARRIER	
070	2647114-0000		1	INSERT	
290	312105-0291		2	SCREW M6S ISO 4017 M4X12 A470	
300	312105-0362		1	SCREW M6S ISO 4017 M6X8 A480	
340	312115-0285		4	SCREW ISO4762 M4X6 A4 80	
345	312145-0323		3	SCREW ISO 2009 MFS M5X8 A4	
400	315202-0208		1	O-RING 9,3X2,4 MM	
510	90165-0058		1	PIPE CLIP FOR TUBE D=2,5 MM	
520	90134-0058		1	CONNECTION	
540	315211-0103		1	BONDED SEAL SS/NBR90 M6	
550	90134-0068		1	CONNECTION	
560	90166-0109	MM	800	TUBE 4 MM PA TRANSP.	
580	90165-0056		3	PIPE CLIP FOR TUBE D=4 MM	
Common Parts					
020	1036495-0000		1	BUSHING	
030	1036585-0000		1	EAR	
040	1036389-0000		1	LID	
060	1523162-0000		1	SCREW	
310	312105-0368		1	SCREW M6S ISO 4017 M6X16 A480	
320	312105-0460		4	SCREW M6S ISO 4014 M8X45 A480	
350	312605-0316		1	HEXAGON NUT, M6M M6 A280	
360	312625-0318		1	HEXAGON THIN NUT, EN 24035 ML6M M8 A4	
380	315105-0165		4	WASHER BRB 8,4X16 RFR	
390	315202-0116		1	O-RING 18,1X1,6 MM	
410	342713-0209		2	PLUG (QUANT.MINIMA= 10PC).	
500	90030-0257		1	CONN. ELBOW, 8-R1/8, EXT.THREAD	
530	1548940-0000		1	SPRING	
570	352113-0101		3	CABLE TIE, BLACK 92X2,5 MM	

Machine Type | Group Description | Used-In | Group Number | Page No

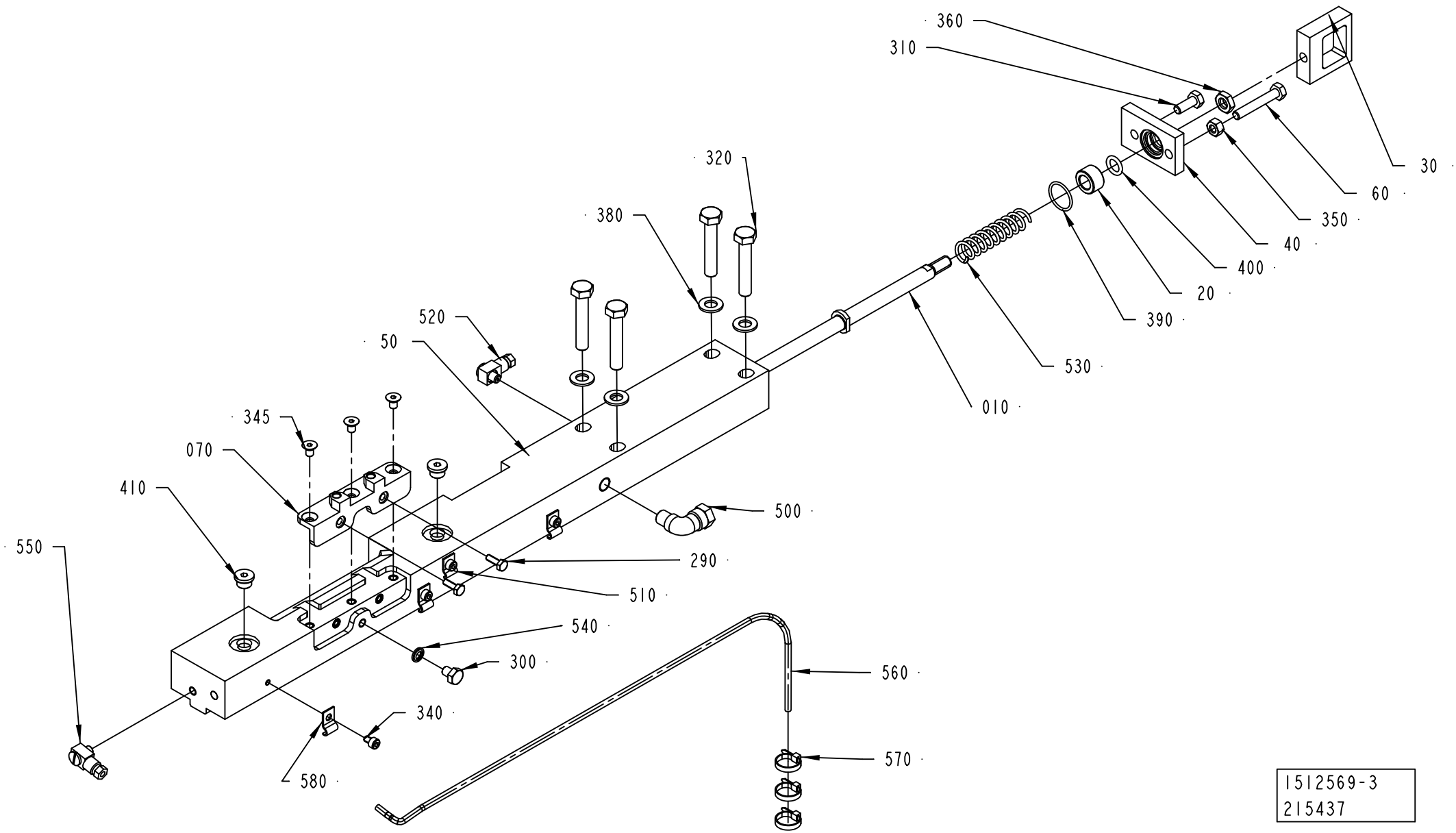
360
310
320
380
520
50
345
070
410
550
500
290
510
540
300
340
580
560
570
010
530
390
20
400
40
350
60
30
1512569-3
215437

ECM: 360268 - 20081001
Group number: 1512569-0200
Assembly Drawing: 1512569-3_1_AB

This list covers pages from 2-202 to 2-211

Pos	Part No	UN	Qty	Description	Page No	Pos	Part No	UN	Qty	Description	Page No

SEE PREVIOUS LISTS PAGES: 2-203, 2-205.

CARRIER CUTTING RIGHT

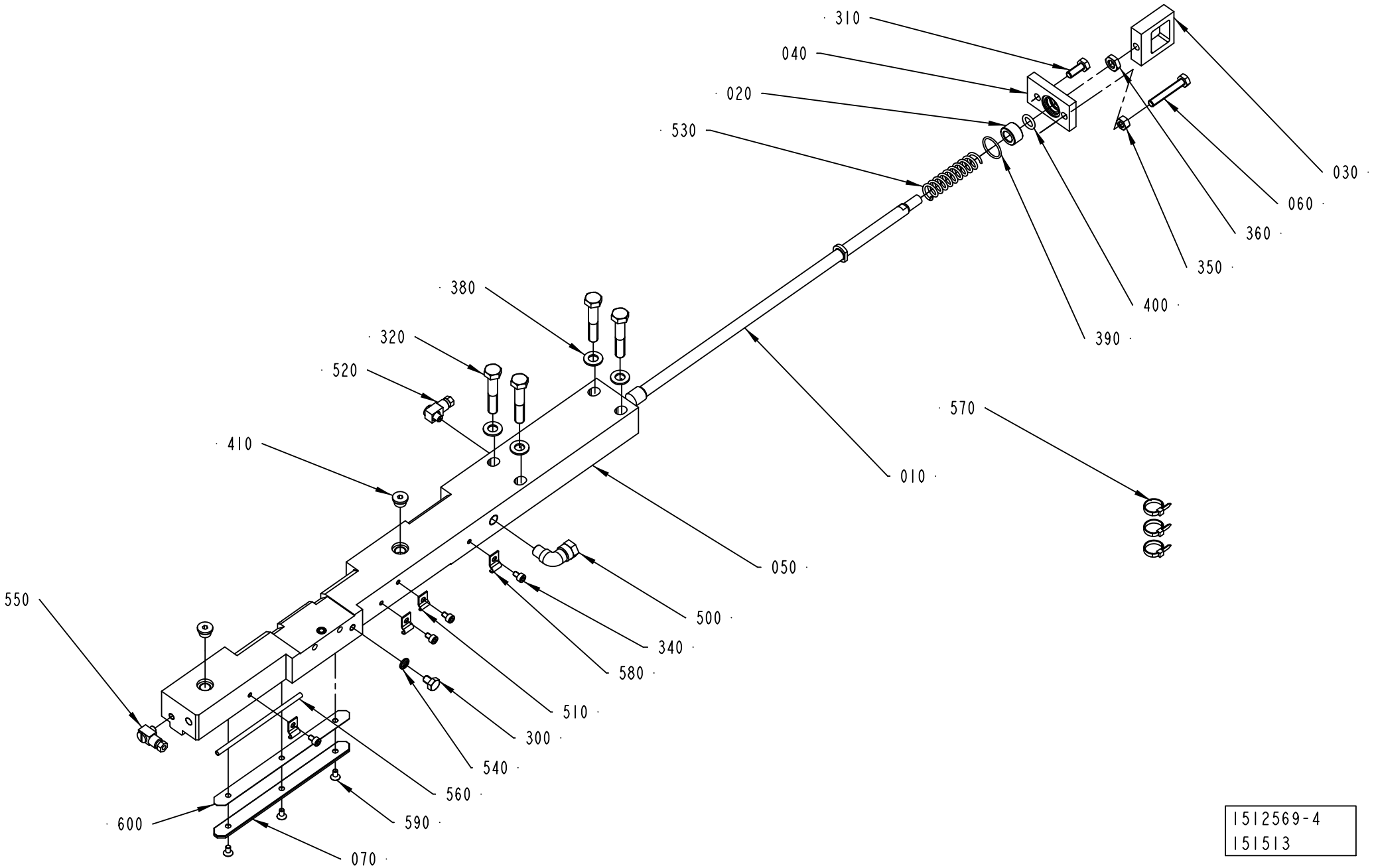

1512569-4
151513

ECM: 360268 - 20081001
Group number: 1512569-0200
Assembly Drawing: 1512569-4_1_AA

This list covers pages from 2-202 to 2-211

Pos	Part No	UN	Qty	Description	Page No	Pos	Part No	UN	Qty	Description	Page No

SEE PREVIOUS LISTS PAGES: 2-203, 2-205.

CARRIER CUTTING RIGHT

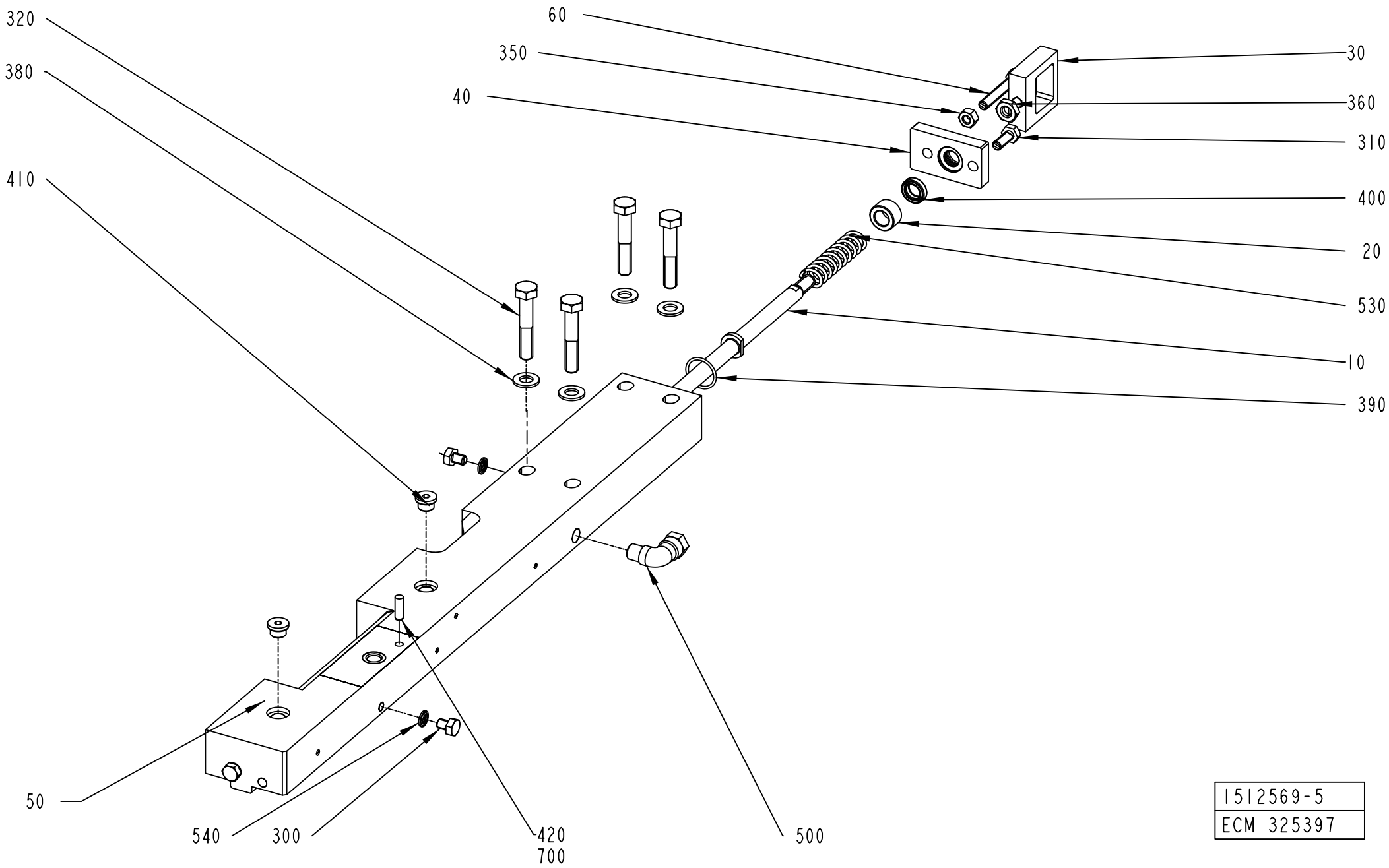

1512569-5
ECM 325397

Pos	Part No	UN	Qty	Description	Page No
SEE PREVIOUS LISTS PAGES: 2-203, 2-205.					

Pos	Part No	UN	Qty	Description	Page No

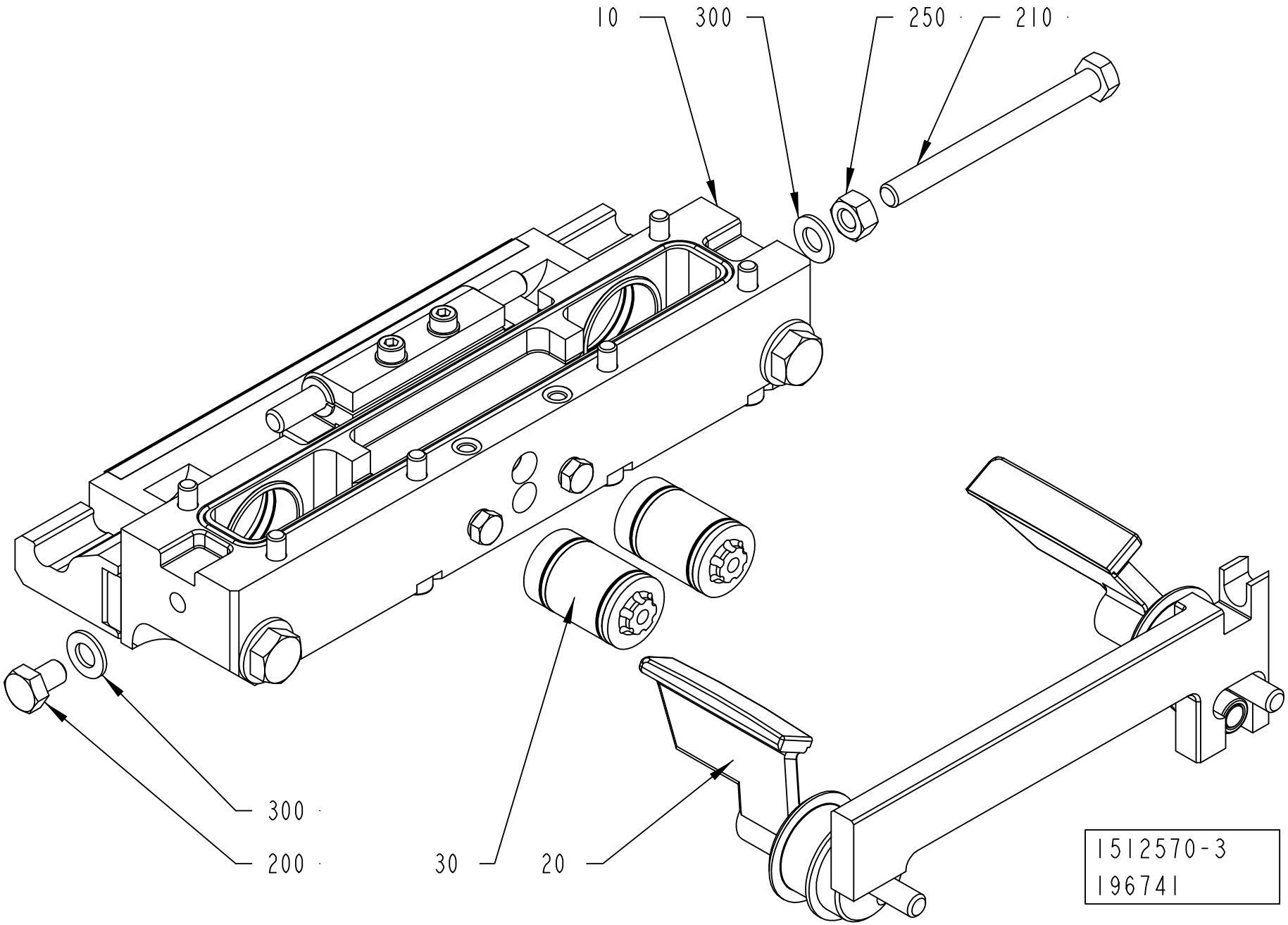
10
300
250
210
300
200
30
20
1512570-3
196741

ECM: 235785 - 20060101
Group number: 1512570-0300
Assembly Drawing: 1512570-3_1_AA

Pos	Part No	UN	Qty	Description	Page No
-					
010	2552008-0200		1	CUTTING JAW	**2-159, 2-161, 2-163, 2-165, 2-167**
020	2552011-0100		1	FOLDING FLAP RIGHT	**2-215, 2-217, 2-219, 2-221**
030	2552010-0200		2	PISTON	**2-177**
200	312105-0447		1	SCREW M6S ISO 4017 M8X12 A480	
210	312105-0469		1	SCREW M6S ISO 4014 M8X90 A480	
250	312605-0318		1	HEXAGON NUT, M6M M8 A280	
300	315105-0165		2	WASHER BRB 8,4X16 RFR	

Pos	Part No	UN	Qty	Description	Page No

Machine Type | Group Description | Used-In | Group Number | Page No

FOLDING FLAP RIGHT

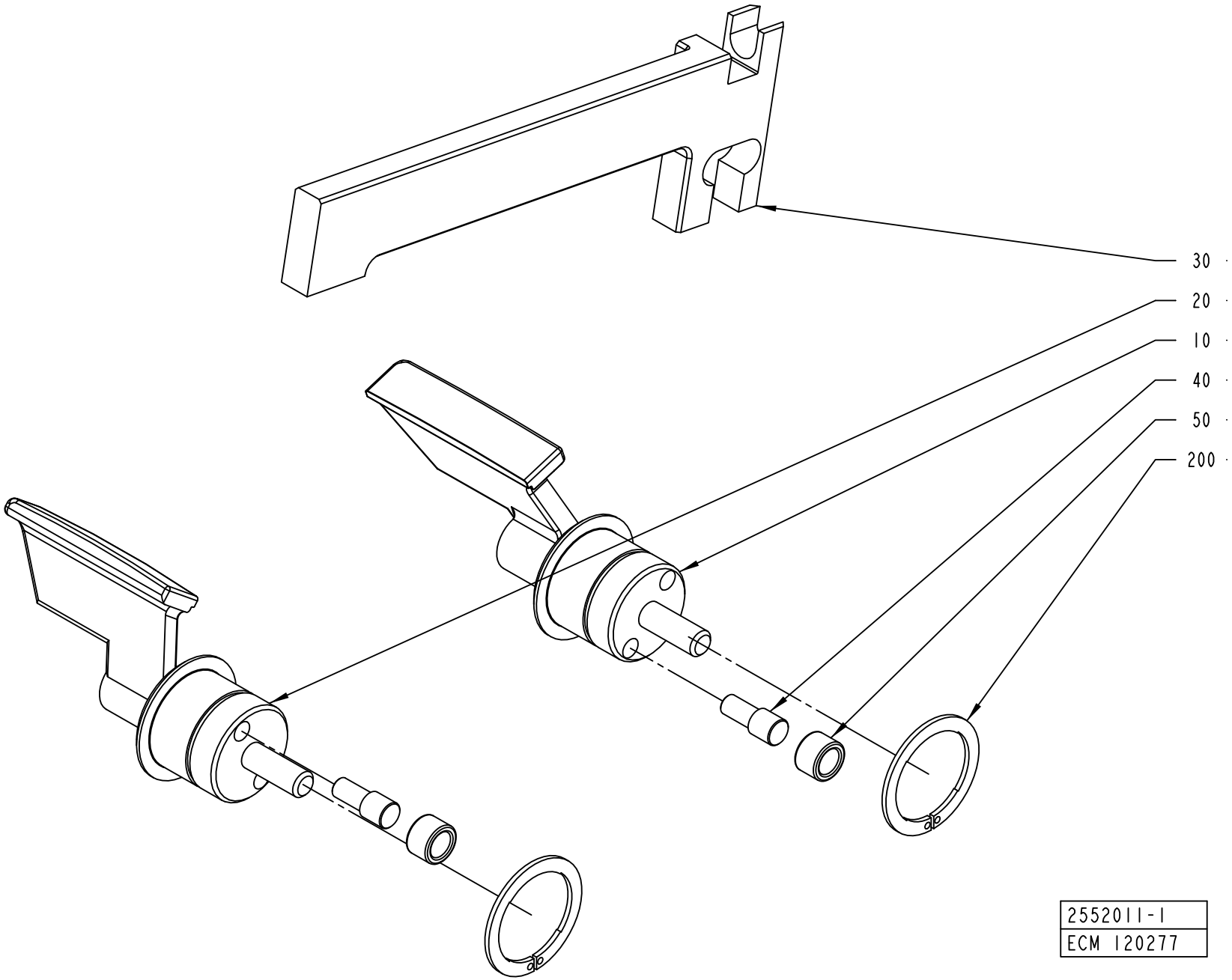

ECM: 360775 - 20081001
Group number: 2552011-0100
Assembly Drawing: 2552011-1_1_AA

This list covers pages from 2-214 to 2-221

Pos	Part No	UN	Qty	Description	Page No
TPA 0500SQ (See drawing on page: 2-214)					
010	1549822-0000		1	FOLDING FLAP	
020	1549823-0000		1	FOLDING FLAP	
030	1549825-0000		1	CARRIER RULER	
TPA 1000SQ NOQC, TPA 1000SQ QC, TPA 0750SQ QC (See drawing on page: 2-214)					
010	1523146-0000		1	FOLDING FLAP	
020	1523147-0000		1	FOLDING FLAP	
030	1523148-0000		1	CARRIER RULER	
TBA 0200B QC, TBA 0330S QC, TBA 0250B QC (See drawing on page: 2-214)					
010	2605875-0000		1	FOLDING FLAP	
020	2605876-0000		1	FOLDING FLAP	
030	1255463-0000		1	CARRIER RULER	
TBA 0200M QC, TBA 0250S QC					
010	2624554-0000		1	FOLDING FLAP	
020	2624555-0000		1	FOLDING FLAP	
030	2520471-0000		1	CARRIER RULER	
TBA 0200S (See drawing on page: 2-214)					
010	2624554-0000		1	FOLDING FLAP	
020	2624555-0000		1	FOLDING FLAP	
030	1255462-0000		1	CARRIER RULER	
TBA 0200SQ QC, TBA 0250SQ QC (See drawing on page: 2-214)					
010	2668313-0000		1	FOLDING FLAP	
020	2668314-0000		1	FOLDING FLAP	
030	2736139-0000		1	CARRIER RULER	
TBA 0500B NOQC, TBA 1000B NOQC NOMOLDEDCAP (See drawing on page: 2-214)					
010	1511697-0000		1	FOLDING FLAP	
020	1511698-0000		1	FOLDING FLAP	
030	1255461-0000		1	CARRIER RULER	
TBA 0500B QC, TBA 1000B QC (See drawing on page: 2-214)					
010	1511352-0000		1	FOLDING FLAP	
020	1511351-0000		1	FOLDING FLAP	
030	1255461-0000		1	CARRIER RULER	
TBA 0500S (See drawing on page: 2-214)					
010	2507085-0000		1	FOLDING FLAP	
020	2507086-0000		1	FOLDING FLAP	
030	1511188-0000		1	CARRIER RULER	
TBA 0500SQ QC, TBA 1000SQ QC (See drawing on page: 2-220)					
010	2843850-0000		1	FOLDING FLAP	
020	2843851-0000		1	FOLDING FLAP	
030	1360319-0000		1	CARRIER RULER	
070	2843780-0000		2	PLATE	
260	312105-0323		4	SCREW M6S ISO 4017 M5X8 A480	
TBA 1000B NOQC STDA7 (See drawing on page: 2-214)					
010	1511697-0000		1	FOLDING FLAP	
020	1511698-0000		1	FOLDING FLAP	
030	1255461-0000		1	CARRIER RULER	
TBA 1000S NOMOLDEDCAP, TBA 1000S STDA7, TBA 1000S LIGHTCAP (See drawing on page: 2-214)					
010	1511699-0000		1	FOLDING FLAP	
020	1511700-0000		1	FOLDING FLAP	
030	1255464-0000		1	CARRIER RULER	
TBA 1000SQ NOQC (See drawing on page: 2-214)					
010	2507076-0000		1	FOLDING FLAP	
020	2507077-0000		1	FOLDING FLAP	
030	1360319-0000		1	CARRIER RULER	
TBA 1500S (See drawing on page: 2-214)					
010	2507092-0000		1	FOLDING FLAP	
020	2507093-0000		1	FOLDING FLAP	
030	1255461-0000		1	CARRIER RULER	
TBA 1890S QC, TBA 2000S QC, TBA 1400B (See drawing on page: 2-216)					
010	2566319-0000		1	FOLDING FLAP	
020	2566320-0000		1	FOLDING FLAP	
030	2566317-0000		1	CARRIER RULER	
210	90459-2258		2	SEAL GLYDRING 25,1X30X2,2 MM	
TGA 1000SQ, TGA 0750SQ, TGA 0500SQ (See drawing on page: 2-218)					
010	2660290-0000		1	FOLDING FLAP	
020	2660291-0000		1	FOLDING FLAP	
030	2660285-0000		1	CARRIER RULER	
060	2660294-0000		1	PLATE	
210	90459-2258		2	SEAL GLYDRING 25,1X30X2,2 MM	
250	312145-0287		2	SCREW ISO 2009 MFS M4X8 A4	
TPA 0200SQ QC, TPA 0250SQ QC					
010	2728883-0000		1	OLDING FLAP	
020	2728884-0000		1	OLDING FLAP	
030	1255462-0000		1	CARRIER RULER	
TPA 0330SQ (See drawing on page: 2-214)					
010	2507096-0000		1	FOLDING FLAP	
020	2507097-0000		1	FOLDING FLAP	
030	1538769-0000		1	CARRIER RULER	
Common Parts					
040	22462-0000		2	SHAFT	
050	22463-0000		2	ROLL	
200	90141-0029		2	CIRCLIP	

Machine Type	Group Description	Used-In	Group Number	Page No

FOLDING FLAP RIGHT

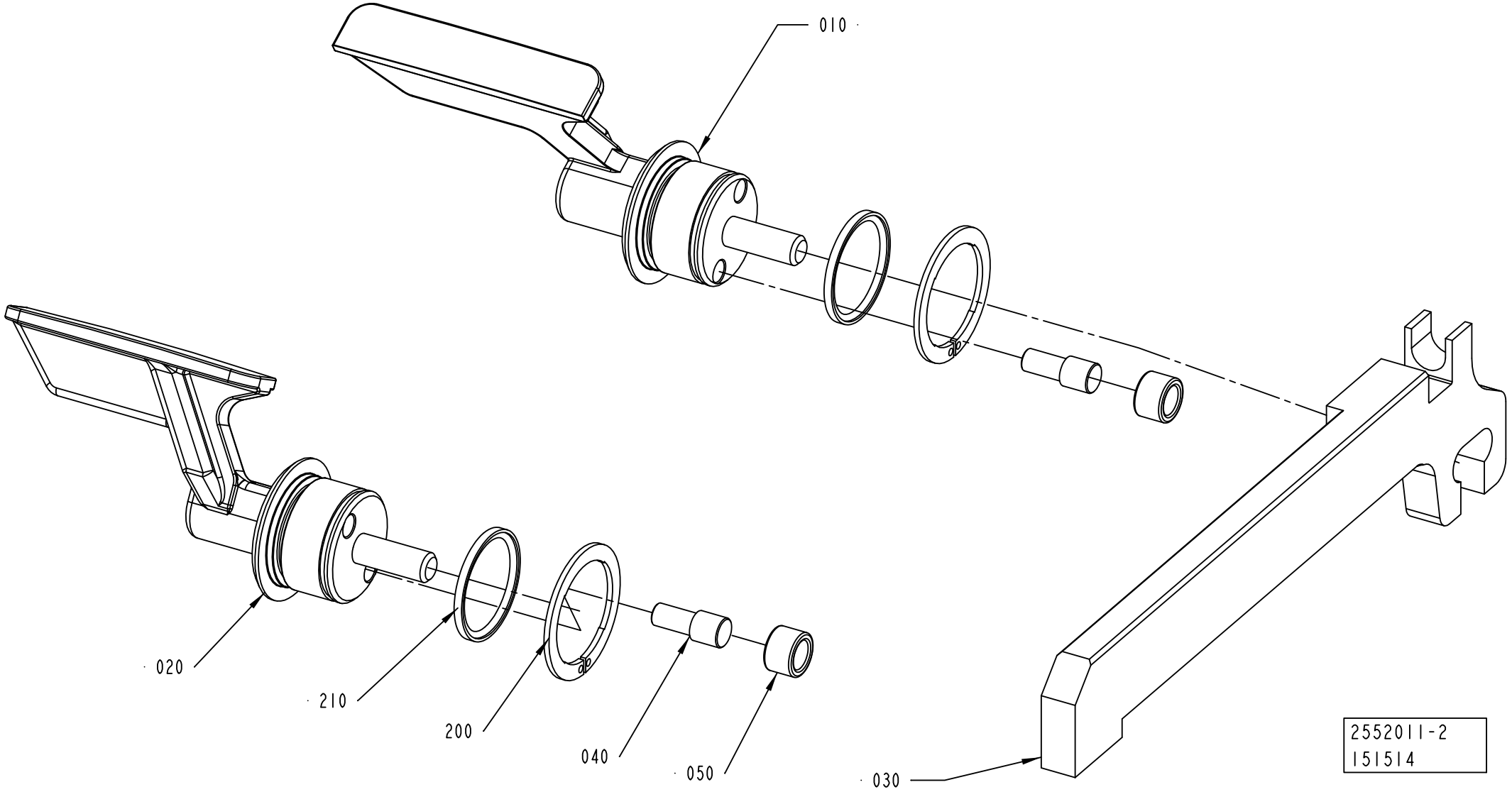

ECM: 360775 - 20081001
Group number: 2552011-0100
Assembly Drawing: 2552011-2_1_AA

This list covers pages from 2-214 to 2-221

Pos	Part No	UN	Qty	Description	Page No
TPA 0500SQ (See drawing on page: 2-214)					
010	1549822-0000		1	FOLDING FLAP	
020	1549823-0000		1	FOLDING FLAP	
030	1549825-0000		1	CARRIER RULER	
TPA 1000SQ NOQC, TPA 1000SQ QC, TPA 0750SQ QC (See drawing on page: 2-214)					
010	1523146-0000		1	FOLDING FLAP	
020	1523147-0000		1	FOLDING FLAP	
030	1523148-0000		1	CARRIER RULER	
TBA 0200B QC, TBA 0330S QC, TBA 0250B QC (See drawing on page: 2-214)					
010	2605875-0000		1	FOLDING FLAP	
020	2605876-0000		1	FOLDING FLAP	
030	1255463-0000		1	CARRIER RULER	
TBA 0200M QC, TBA 0250S QC					
010	2624554-0000		1	FOLDING FLAP	
020	2624555-0000		1	FOLDING FLAP	
030	2520471-0000		1	CARRIER RULER	
TBA 0200S (See drawing on page: 2-214)					
010	2624554-0000		1	FOLDING FLAP	
020	2624555-0000		1	FOLDING FLAP	
030	1255462-0000		1	CARRIER RULER	
TBA 0200SQ QC, TBA 0250SQ QC (See drawing on page: 2-214)					
010	2668313-0000		1	FOLDING FLAP	
020	2668314-0000		1	FOLDING FLAP	
030	2736139-0000		1	CARRIER RULER	
TBA 0500B NOQC, TBA 1000B NOQC NOMOLDEDCAP (See drawing on page: 2-214)					
010	1511697-0000		1	FOLDING FLAP	
020	1511698-0000		1	FOLDING FLAP	
030	1255461-0000		1	CARRIER RULER	
TBA 0500B QC, TBA 1000B QC (See drawing on page: 2-214)					
010	1511352-0000		1	FOLDING FLAP	
020	1511351-0000		1	FOLDING FLAP	
030	1255461-0000		1	CARRIER RULER	
TBA 0500S (See drawing on page: 2-214)					
010	2507085-0000		1	FOLDING FLAP	
020	2507086-0000		1	FOLDING FLAP	
030	1511188-0000		1	CARRIER RULER	
TBA 0500SQ QC, TBA 1000SQ QC (See drawing on page: 2-220)					
010	2843850-0000		1	FOLDING FLAP	
020	2843851-0000		1	FOLDING FLAP	
030	1360319-0000		1	CARRIER RULER	
070	2843780-0000		2	PLATE	
260	312105-0323		4	SCREW M6S ISO 4017 M5X8 A480	
TBA 1000B NOQC STDA7 (See drawing on page: 2-214)					
010	1511697-0000		1	FOLDING FLAP	
020	1511698-0000		1	FOLDING FLAP	
030	1255461-0000		1	CARRIER RULER	
TBA 1000S NOMOLDEDCAP, TBA 1000S STDA7, TBA 1000S LIGHTCAP (See drawing on page: 2-214)					
010	1511699-0000		1	FOLDING FLAP	
020	1511700-0000		1	FOLDING FLAP	
030	1255464-0000		1	CARRIER RULER	
TBA 1000SQ NOQC (See drawing on page: 2-214)					
010	2507076-0000		1	FOLDING FLAP	
020	2507077-0000		1	FOLDING FLAP	
030	1360319-0000		1	CARRIER RULER	
TBA 1500S (See drawing on page: 2-214)					
010	2507092-0000		1	FOLDING FLAP	
020	2507093-0000		1	FOLDING FLAP	
030	1255461-0000		1	CARRIER RULER	
TBA 1890S QC, TBA 2000S QC, TBA 1400B (See drawing on page: 2-216)					
010	2566319-0000		1	FOLDING FLAP	
020	2566320-0000		1	FOLDING FLAP	
030	2566317-0000		1	CARRIER RULER	
210	90459-2258		2	SEAL GLYDRING 25,1X30X2,2 MM	
TGA 1000SQ, TGA 0750SQ, TGA 0500SQ (See drawing on page: 2-218)					
010	2660290-0000		1	FOLDING FLAP	
020	2660291-0000		1	FOLDING FLAP	
030	2660285-0000		1	CARRIER RULER	
060	2660294-0000		1	PLATE	
210	90459-2258		2	SEAL GLYDRING 25,1X30X2,2 MM	
250	312145-0287		2	SCREW ISO 2009 MFS M4X8 A4	
TPA 0200SQ QC, TPA 0250SQ QC					
010	2728883-0000		1	OLDING FLAP	
020	2728884-0000		1	OLDING FLAP	
030	1255462-0000		1	CARRIER RULER	
TPA 0330SQ (See drawing on page: 2-214)					
010	2507096-0000		1	FOLDING FLAP	
020	2507097-0000		1	FOLDING FLAP	
030	1538769-0000		1	CARRIER RULER	
Common Parts					
040	22462-0000		2	SHAFT	
050	22463-0000		2	ROLL	
200	90141-0029		2	CIRCLIP	

Machine Type	Group Description	Used-In	Group Number	Page No

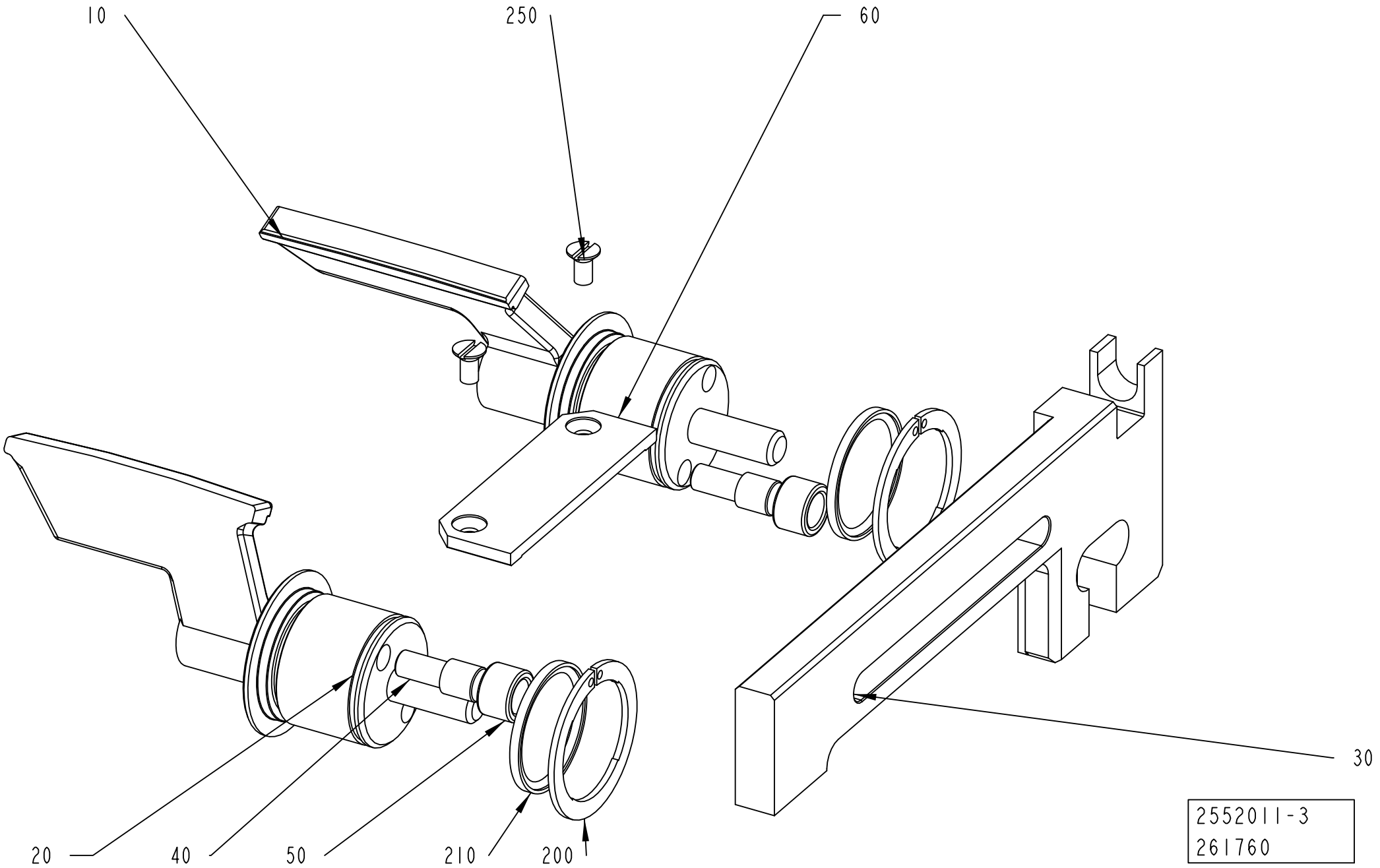
10
250
60
30
20
40
50
210
200
2552011-3
261760

ECM: 360775 - 20081001
Group number: 2552011-0100
Assembly Drawing: 2552011-3_1_AA

This list covers pages from 2-214 to 2-221

Pos	Part No	UN	Qty	Description	Page No
TPA 0500SQ (See drawing on page: 2-214)					
010	1549822-0000		1	FOLDING FLAP	
020	1549823-0000		1	FOLDING FLAP	
030	1549825-0000		1	CARRIER RULER	
TPA 1000SQ NOQC, TPA 1000SQ QC, TPA 0750SQ QC (See drawing on page: 2-214)					
010	1523146-0000		1	FOLDING FLAP	
020	1523147-0000		1	FOLDING FLAP	
030	1523148-0000		1	CARRIER RULER	
TBA 0200B QC, TBA 0330S QC, TBA 0250B QC (See drawing on page: 2-214)					
010	2605875-0000		1	FOLDING FLAP	
020	2605876-0000		1	FOLDING FLAP	
030	1255463-0000		1	CARRIER RULER	
TBA 0200M QC, TBA 0250S QC					
010	2624554-0000		1	FOLDING FLAP	
020	2624555-0000		1	FOLDING FLAP	
030	2520471-0000		1	CARRIER RULER	
TBA 0200S (See drawing on page: 2-214)					
010	2624554-0000		1	FOLDING FLAP	
020	2624555-0000		1	FOLDING FLAP	
030	1255462-0000		1	CARRIER RULER	
TBA 0200SQ QC, TBA 0250SQ QC (See drawing on page: 2-214)					
010	2668313-0000		1	FOLDING FLAP	
020	2668314-0000		1	FOLDING FLAP	
030	2736139-0000		1	CARRIER RULER	
TBA 0500B NOQC, TBA 1000B NOQC NOMOLDEDCAP (See drawing on page: 2-214)					
010	1511697-0000		1	FOLDING FLAP	
020	1511698-0000		1	FOLDING FLAP	
030	1255461-0000		1	CARRIER RULER	
TBA 0500B QC, TBA 1000B QC (See drawing on page: 2-214)					
010	1511352-0000		1	FOLDING FLAP	
020	1511351-0000		1	FOLDING FLAP	
030	1255461-0000		1	CARRIER RULER	
TBA 0500S (See drawing on page: 2-214)					
010	2507085-0000		1	FOLDING FLAP	
020	2507086-0000		1	FOLDING FLAP	
030	1511188-0000		1	CARRIER RULER	
TBA 0500SQ QC, TBA 1000SQ QC (See drawing on page: 2-220)					
010	2843850-0000		1	FOLDING FLAP	
020	2843851-0000		1	FOLDING FLAP	
030	1360319-0000		1	CARRIER RULER	
070	2843780-0000		2	PLATE	
260	312105-0323		4	SCREW M6S ISO 4017 M5X8 A480	
TBA 1000B NOQC STDA7 (See drawing on page: 2-214)					
010	1511697-0000		1	FOLDING FLAP	
020	1511698-0000		1	FOLDING FLAP	
030	1255461-0000		1	CARRIER RULER	
TBA 1000S NOMOLDEDCAP, TBA 1000S STDA7, TBA 1000S LIGHTCAP (See drawing on page: 2-214)					
010	1511699-0000		1	FOLDING FLAP	
020	1511700-0000		1	FOLDING FLAP	
030	1255464-0000		1	CARRIER RULER	
TBA 1000SQ NOQC (See drawing on page: 2-214)					
010	2507076-0000		1	FOLDING FLAP	
020	2507077-0000		1	FOLDING FLAP	
030	1360319-0000		1	CARRIER RULER	
TBA 1500S (See drawing on page: 2-214)					
010	2507092-0000		1	FOLDING FLAP	
020	2507093-0000		1	FOLDING FLAP	
030	1255461-0000		1	CARRIER RULER	
TBA 1890S QC, TBA 2000S QC, TBA 1400B (See drawing on page: 2-216)					
010	2566319-0000		1	FOLDING FLAP	
020	2566320-0000		1	FOLDING FLAP	
030	2566317-0000		1	CARRIER RULER	
210	90459-2258		2	SEAL GLYDRING 25,1X30X2,2 MM	
TGA 1000SQ, TGA 0750SQ, TGA 0500SQ (See drawing on page: 2-218)					
010	2660290-0000		1	FOLDING FLAP	
020	2660291-0000		1	FOLDING FLAP	
030	2660285-0000		1	CARRIER RULER	
060	2660294-0000		1	PLATE	
210	90459-2258		2	SEAL GLYDRING 25,1X30X2,2 MM	
250	312145-0287		2	SCREW ISO 2009 MFS M4X8 A4	
TPA 0200SQ QC, TPA 0250SQ QC					
010	2728883-0000		1	OLDING FLAP	
020	2728884-0000		1	OLDING FLAP	
030	1255462-0000		1	CARRIER RULER	
TPA 0330SQ (See drawing on page: 2-214)					
010	2507096-0000		1	FOLDING FLAP	
020	2507097-0000		1	FOLDING FLAP	
030	1538769-0000		1	CARRIER RULER	
Common Parts					
040	22462-0000		2	SHAFT	
050	22463-0000		2	ROLL	
200	90141-0029		2	CIRCLIP	

Machine Type	Group Description	Used-In	Group Number	Page No

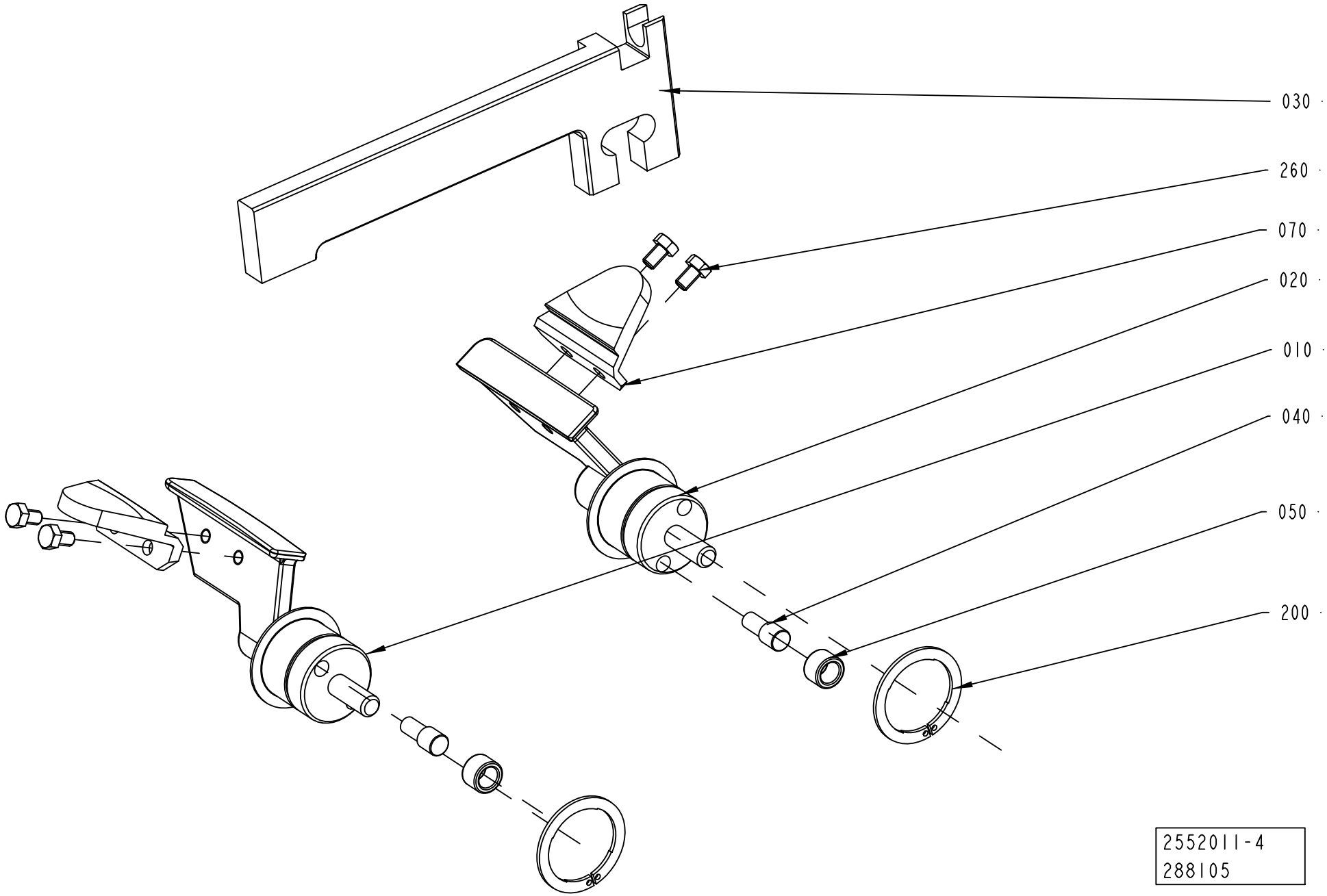
030
260
070
020
010
040
050
200
2552011-4
288105

ECM: 360775 - 20081001
Group number: 2552011-0100
Assembly Drawing: 2552011-4_1_AA

This list covers pages from 2-214 to 2-221

Pos	Part No	UN	Qty	Description	Page No
TPA 0500SQ (See drawing on page: 2-214)					
010	1549822-0000		1	FOLDING FLAP	
020	1549823-0000		1	FOLDING FLAP	
030	1549825-0000		1	CARRIER RULER	
TPA 1000SQ NOQC, TPA 1000SQ QC, TPA 0750SQ QC (See drawing on page: 2-214)					
010	1523146-0000		1	FOLDING FLAP	
020	1523147-0000		1	FOLDING FLAP	
030	1523148-0000		1	CARRIER RULER	
TBA 0200B QC, TBA 0330S QC, TBA 0250B QC (See drawing on page: 2-214)					
010	2605875-0000		1	FOLDING FLAP	
020	2605876-0000		1	FOLDING FLAP	
030	1255463-0000		1	CARRIER RULER	
TBA 0200M QC, TBA 0250S QC					
010	2624554-0000		1	FOLDING FLAP	
020	2624555-0000		1	FOLDING FLAP	
030	2520471-0000		1	CARRIER RULER	
TBA 0200S (See drawing on page: 2-214)					
010	2624554-0000		1	FOLDING FLAP	
020	2624555-0000		1	FOLDING FLAP	
030	1255462-0000		1	CARRIER RULER	
TBA 0200SQ QC, TBA 0250SQ QC (See drawing on page: 2-214)					
010	2668313-0000		1	FOLDING FLAP	
020	2668314-0000		1	FOLDING FLAP	
030	2736139-0000		1	CARRIER RULER	
TBA 0500B NOQC, TBA 1000B NOQC NOMOLDEDCAP (See drawing on page: 2-214)					
010	1511697-0000		1	FOLDING FLAP	
020	1511698-0000		1	FOLDING FLAP	
030	1255461-0000		1	CARRIER RULER	
TBA 0500B QC, TBA 1000B QC (See drawing on page: 2-214)					
010	1511352-0000		1	FOLDING FLAP	
020	1511351-0000		1	FOLDING FLAP	
030	1255461-0000		1	CARRIER RULER	
TBA 0500S (See drawing on page: 2-214)					
010	2507085-0000		1	FOLDING FLAP	
020	2507086-0000		1	FOLDING FLAP	
030	1511188-0000		1	CARRIER RULER	
TBA 0500SQ QC, TBA 1000SQ QC (See drawing on page: 2-220)					
010	2843850-0000		1	FOLDING FLAP	
020	2843851-0000		1	FOLDING FLAP	
030	1360319-0000		1	CARRIER RULER	
070	2843780-0000		2	PLATE	
260	312105-0323		4	SCREW M6S ISO 4017 M5X8 A480	
TBA 1000B NOQC STDA7 (See drawing on page: 2-214)					
010	1511697-0000		1	FOLDING FLAP	
020	1511698-0000		1	FOLDING FLAP	
030	1255461-0000		1	CARRIER RULER	
TBA 1000S NOMOLDEDCAP, TBA 1000S STDA7, TBA 1000S LIGHTCAP (See drawing on page: 2-214)					
010	1511699-0000		1	FOLDING FLAP	
020	1511700-0000		1	FOLDING FLAP	
030	1255464-0000		1	CARRIER RULER	
TBA 1000SQ NOQC (See drawing on page: 2-214)					
010	2507076-0000		1	FOLDING FLAP	
020	2507077-0000		1	FOLDING FLAP	
030	1360319-0000		1	CARRIER RULER	
TBA 1500S (See drawing on page: 2-214)					
010	2507092-0000		1	FOLDING FLAP	
020	2507093-0000		1	FOLDING FLAP	
030	1255461-0000		1	CARRIER RULER	
TBA 1890S QC, TBA 2000S QC, TBA 1400B (See drawing on page: 2-216)					
010	2566319-0000		1	FOLDING FLAP	
020	2566320-0000		1	FOLDING FLAP	
030	2566317-0000		1	CARRIER RULER	
210	90459-2258		2	SEAL GLYDRING 25,1X30X2,2 MM	
TGA 1000SQ, TGA 0750SQ, TGA 0500SQ (See drawing on page: 2-218)					
010	2660290-0000		1	FOLDING FLAP	
020	2660291-0000		1	FOLDING FLAP	
030	2660285-0000		1	CARRIER RULER	
060	2660294-0000		1	PLATE	
210	90459-2258		2	SEAL GLYDRING 25,1X30X2,2 MM	
250	312145-0287		2	SCREW ISO 2009 MFS M4X8 A4	
TPA 0200SQ QC, TPA 0250SQ QC					
010	2728883-0000		1	OLDING FLAP	
020	2728884-0000		1	OLDING FLAP	
030	1255462-0000		1	CARRIER RULER	
TPA 0330SQ (See drawing on page: 2-214)					
010	2507096-0000		1	FOLDING FLAP	
020	2507097-0000		1	FOLDING FLAP	
030	1538769-0000		1	CARRIER RULER	
Common Parts					
040	22462-0000		2	SHAFT	
050	22463-0000		2	ROLL	
200	90141-0029		2	CIRCLIP	

Machine Type	Group Description	Used-In	Group Number	Page No

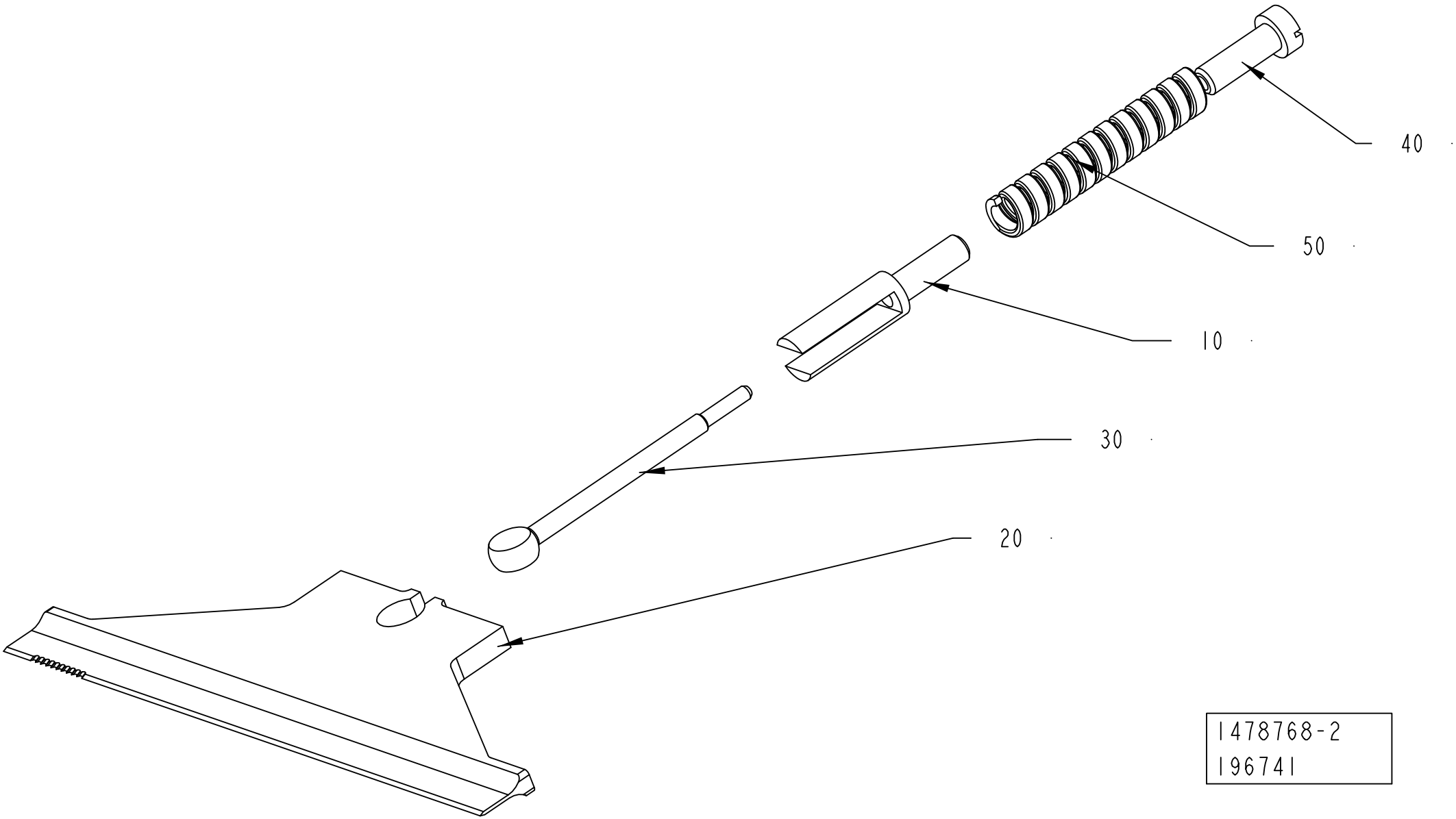
40
50
10
30
20
1478768-2
196741

ECM: 345077 - 20080701
Group number: 1478768-0200
Assembly Drawing: 1478768-2_1_AA

Pos	Part No	UN	Qty	Description	Page No
TBA 0200M, TBA 0200B, TBA 0200SQ, TBA 0200S, TBA 0250S, TBA 0250B, TBA 0330S, TPA 0330SQ, TPA 0250SQ, TPA 0200SQ, TBA 0250SQ					
020	1348966-0000		1	KNIFE	
050	2774493-0000		1	COMPRESSION SPRING	
TBA 0500S, TPA 1000SQ, TPA 0750SQ, TGA 1000SQ, TGA 0750SQ, TGA 0500SQ					
020	1348956-0000		1	KNIFE	
050	1538109-0000		1	COMPRESSION SPRING	
TBA 0500SQ, TBA 0500B, TBA 1000B, TBA 1000SQ, TBA 1000S, TBA 1500S					
020	1348955-0000		1	KNIFE	
050	1538109-0000		1	COMPRESSION SPRING	
TBA 1890S, TBA 2000S, TBA 1400B					
020	2664761-0000		1	KNIFE	
050	1538109-0000		1	COMPRESSION SPRING	
TPA 0500SQ					
020	1549828-0000		1	KNIFE	
050	1538109-0000		1	COMPRESSION SPRING	
Common Parts					
010	1285006-0000		1	SPACER	
030	1285003-0000		1	LINK	
040	1285005-0000		1	NUT	

Pos	Part No	UN	Qty	Description	Page No

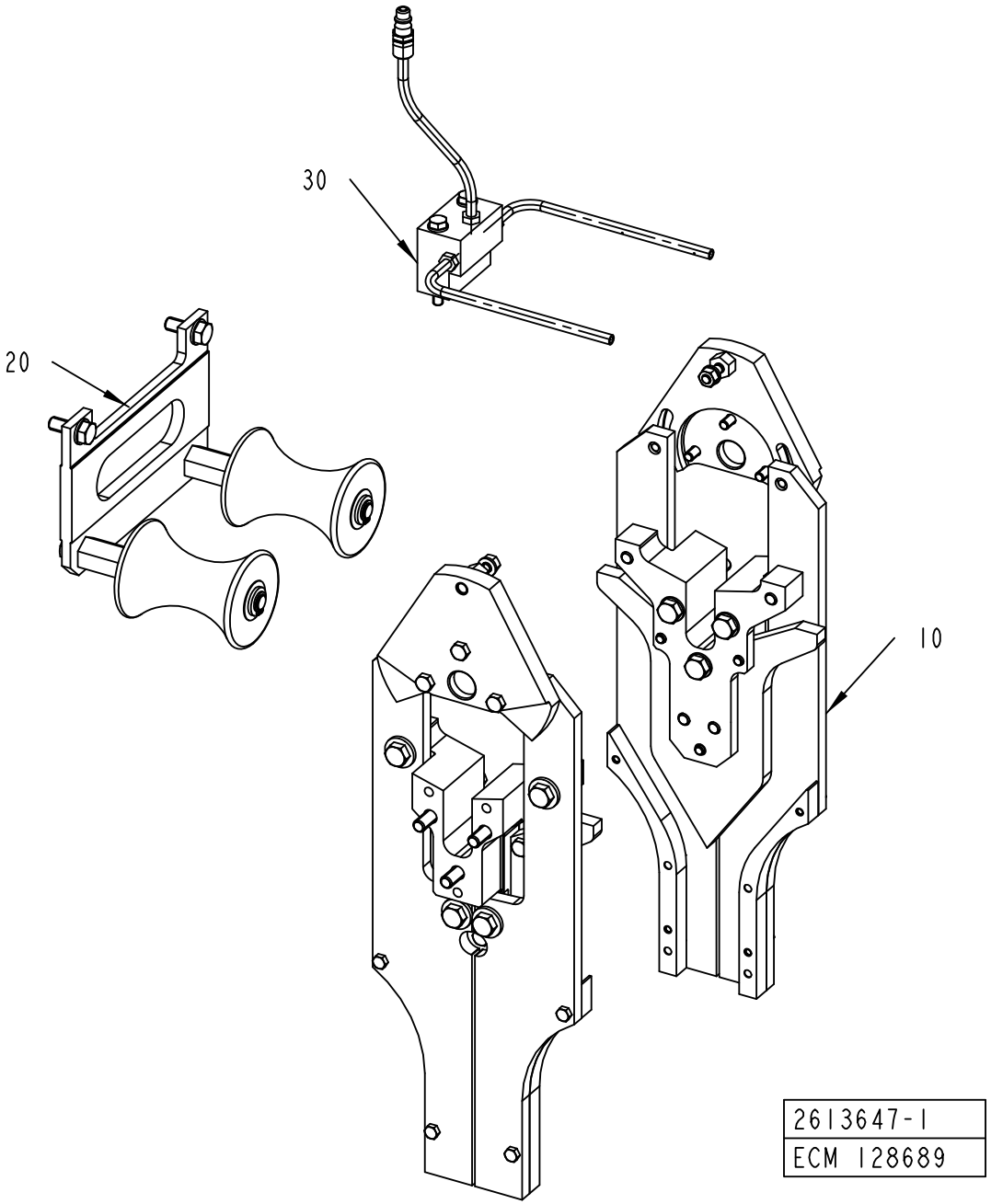
30
20
10
2613647-1
ECM 128689

ECM: 345371 - 20080701
Group number: 2613647-0100
Assembly Drawing: 2613647-1_1_AA

Pos	Part No	UN	Qty	Description	Page No
TBA 0200B, TBA 0250B, TBA 0330S, TBA 0500B QC, TBA 1000B QC, TBA 0200M QC, TBA 0250S QC, TPA 0200SQ QC, TPA 0250SQ QC, TBA 0200SQ QC, TBA 0250SQ QC					
010	2613645-0100		1	CURVE UNIT	**2-227, 2-229**
TBA 0200S, TBA 0500S, TBA 1500S, TPA 0330SQ, TPA 0500SQ, TBA 1000S NOMOLDEDCAP, TBA 1000S STDA7, TBA 1000B NOQC NOMOLDEDCAP, TBA 1000B NOQC STDA7, TBA 1890S QC, TBA 2000S QC, TPA 1000SQ NOQC, TPA 1000SQ QC, TPA 0750SQ QC, TBA 1400B, TGA 1000SQ, TBA 1000S LIGHTCAP, TBA 1000SQ NOQC, TBA 0500SQ QC, TBA 1000SQ QC, TGA 0750SQ, TGA 0500SQ					
010	2597329-0100		1	CURVE UNIT	**2-235, 2-237, 2-239, 2-241, 2-243, 2-245**
Common Parts					
020	2613648-0100		1	SUPPORT ROLLER	**2-247, 2-249**
030	2556893-0100		1	TUBE FLUSHING	**2-251**

Pos	Part No	UN	Qty	Description	Page No

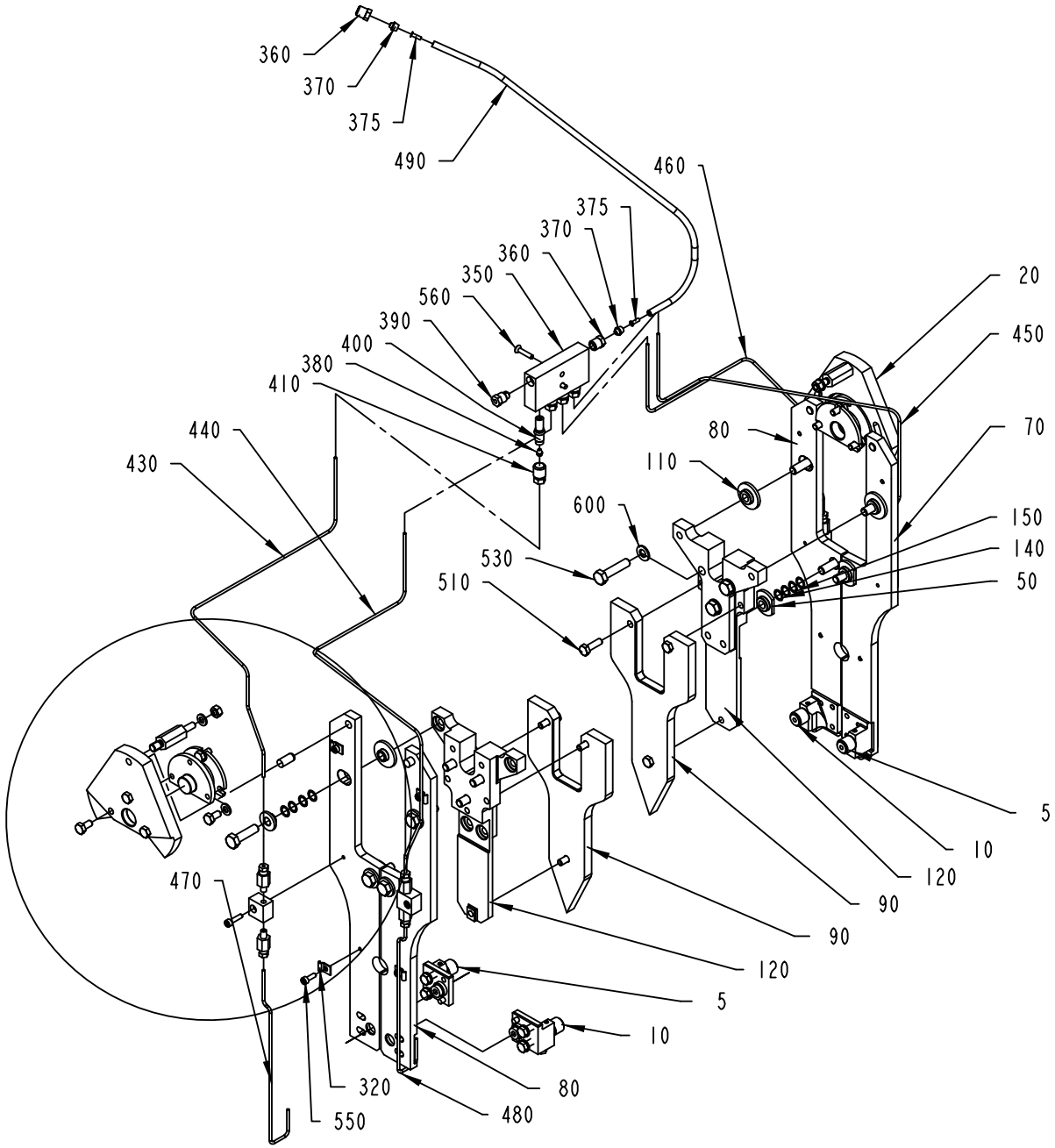

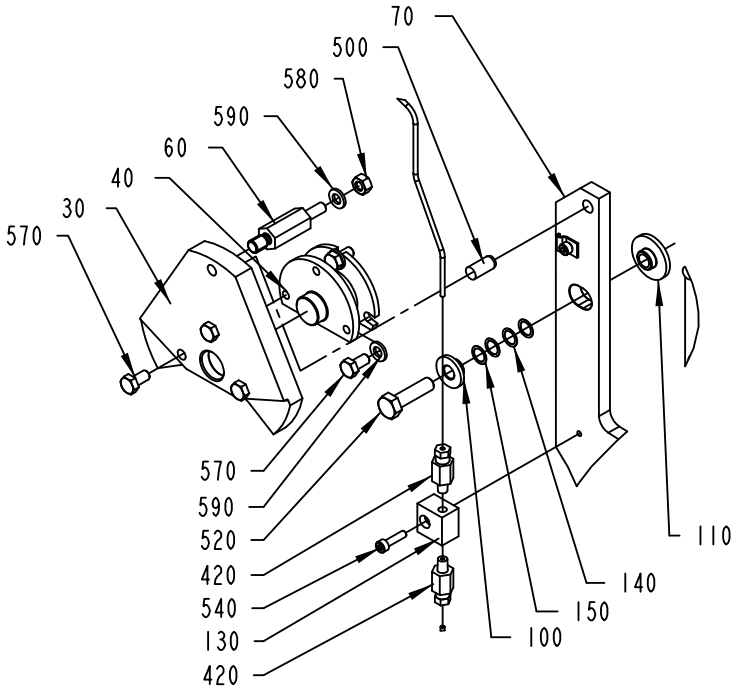

2613645-1
364260

ECM: 367797 - 20090101
Group number: 2613645-0100
Assembly Drawing: 2613645-1_1_AF

This list covers pages from 2-226 to 2-229

Pos	Part No	UN	Qty	Description	Page No
TBA 0200B, TBA 0250B, TBA 0330S (See drawing on page: 2-228)					
020	2618377-0000		1	ECCENTRIC	
030	2618378-0000		1	ECCENTRIC	
060	2618302-0000		2	PIVOT PIN	
090	2771550-0000		2	CAM	
115	2769546-0000		6	SPACER	
360	90134-0055		2	BUSHING/NUT INLET/OUTLET 6 MM	
370	90028-0025		2	CONE TUBE 6 MM	
375	90134-0030		2	SLEEVE FOR PLASTIC TUBE	
470	90266-0019	MM	260	PIPE	
480	90266-0019	MM	260	PIPE	
490	90166-0108	MM	500	TUBE 6 MM PA TRANSP.	
570	312105-0366		12	SCREW M6S ISO 4017 M6X12 A480	
590	315105-0153		8	WASHER BRB 6,4X12 RFR	
TBA 0200M, TBA 0250S (See drawing on page: 2-228)					
020	2618377-0000		1	ECCENTRIC	
030	2618378-0000		1	ECCENTRIC	
060	2618302-0000		2	PIVOT PIN	
090	2769340-0000		2	CAM	
115	2769546-0000		6	SPACER	
360	90134-0055		2	BUSHING/NUT INLET/OUTLET 6 MM	
370	90028-0025		2	CONE TUBE 6 MM	
375	90134-0030		2	SLEEVE FOR PLASTIC TUBE	
470	90266-0019	MM	260	PIPE	
480	90266-0019	MM	260	PIPE	
490	90166-0108	MM	500	TUBE 6 MM PA TRANSP.	
570	312105-0366		12	SCREW M6S ISO 4017 M6X12 A480	
590	315105-0153		8	WASHER BRB 6,4X12 RFR	
TBA 0200SQ, TBA 0250SQ (See drawing on page: 2-226)					
020	2618377-0000		1	ECCENTRIC	
030	2618378-0000		1	ECCENTRIC	
060	2618302-0000		2	PIVOT PIN	
090	2747139-0000		2	CAM	
360	90134-0038		1	BUSHING/NUT INLET/OUTLET 4 MM	
370	90028-0024		1	CONE TUBE 4 MM	
470	90266-0019	MM	290	PIPE	
480	90266-0019	MM	290	PIPE	
570	312105-0366		12	SCREW M6S ISO 4017 M6X12 A480	
590	315105-0153		8	WASHER BRB 6,4X12 RFR	
TBA 0500B, TBA 1000B (See drawing on page: 2-226)					
020	2618377-0000		1	ECCENTRIC	
030	2618378-0000		1	ECCENTRIC	
060	2618302-0000		2	PIVOT PIN	
090	2605066-0000		2	CURVE	
360	90134-0055		2	BUSHING/NUT INLET/OUTLET 6 MM	
370	90028-0025		2	CONE TUBE 6 MM	
375	90134-0030		2	SLEEVE FOR PLASTIC TUBE	
470	90266-0019	MM	260	PIPE	
480	90266-0019	MM	260	PIPE	
490	90166-0108	MM	500	TUBE 6 MM PA TRANSP.	
570	312105-0366		12	SCREW M6S ISO 4017 M6X12 A480	
590	315105-0153		8	WASHER BRB 6,4X12 RFR	
TPA 0250SQ, TPA 0200SQ (See drawing on page: 2-228)					
020	2618377-0000		1	ECCENTRIC	
030	2618378-0000		1	ECCENTRIC	
060	2618302-0000		2	PIVOT PIN	
090	2771551-0000		2	CAM	
115	2769546-0000		6	SPACER	
360	90134-0055		2	BUSHING/NUT INLET/OUTLET 6 MM	
370	90028-0025		2	CONE TUBE 6 MM	
375	90134-0030		2	SLEEVE FOR PLASTIC TUBE	
470	90266-0019	MM	260	PIPE	
480	90266-0019	MM	260	PIPE	
490	90166-0108	MM	500	TUBE 6 MM PA TRANSP.	
570	312105-0366		12	SCREW M6S ISO 4017 M6X12 A480	
590	315105-0153		8	WASHER BRB 6,4X12 RFR	
Common Parts					
005	2605226-0200		2	ROLLER UNIT	**2-231**
010	1499351-0200		2	ROLLER UNIT	**2-233**
040	2618259-0000		2	SPACER	
050	2613763-0000		4	SLEEVE	
070	2614371-0000		2	ROLLER BRACKET	
080	2614373-0000		2	ROLLER BRACKET	
100	2614372-0000		8	SLEEVE	
110	2613764-0000		4	SLEEVE	
120	2613809-0000		2	SPACER	
130	2610793-0000		4	BLOCK	
140	2614376-0001		16	WASHER	
150	2614376-0002		16	WASHER	
320	90165-0058		8	PIPE CLIP FOR TUBE D=2,5 MM	
350	90032-0039		1	BLOCK 4 WAYS	
380	90028-0020		4	CONE TUBE 2,5MM	
390	90087-0019		1	PLUG M10X1 STAINLESS	
400	90092-0052		4	METERING VALVE 10 MM3	

Machine Type | Group Description | Used-In | Group Number | Page No

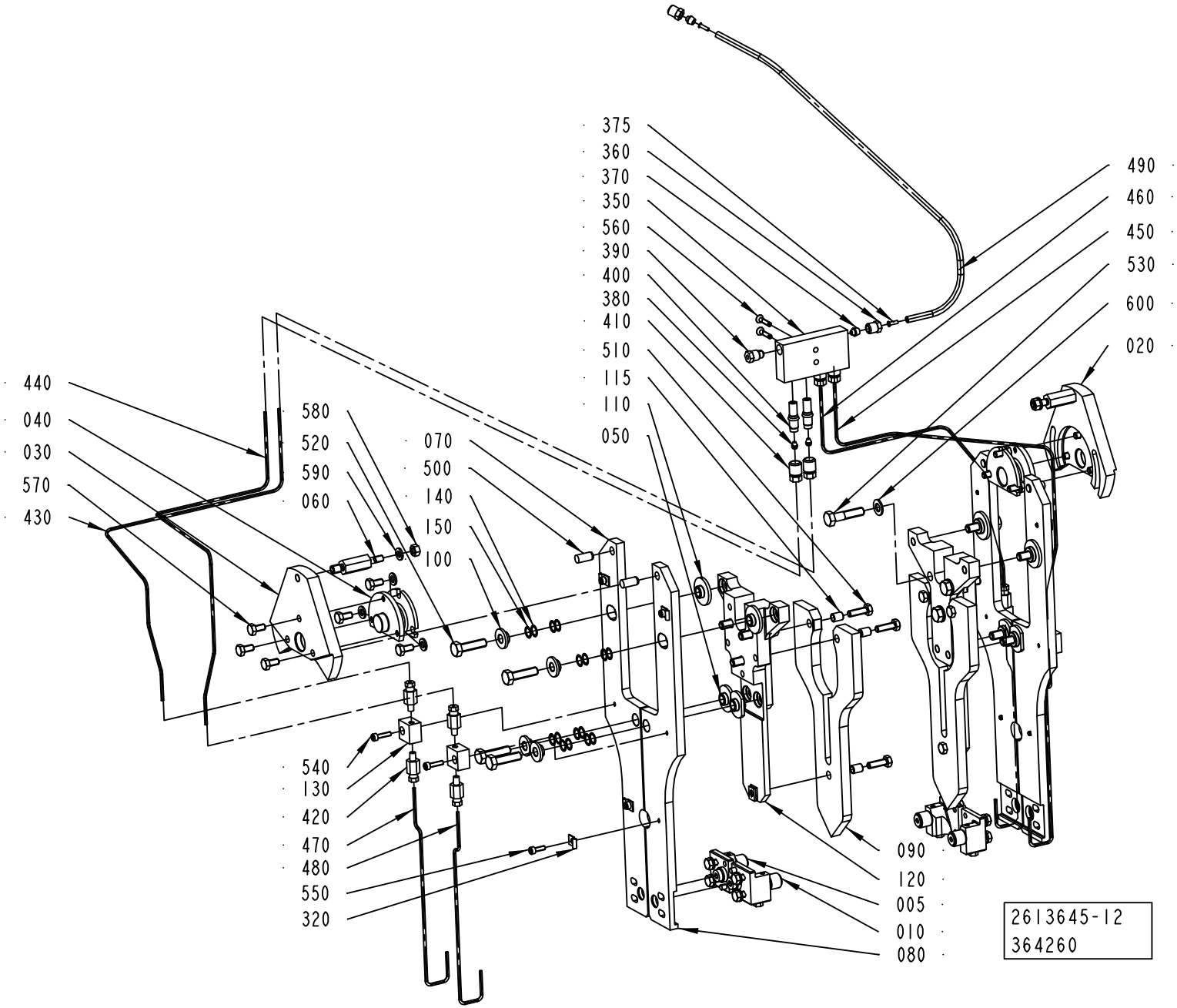
375
360
370
350
560
390
400
380
410
510
115
110
050
490
460
450
530
600
020
440
040
030
570
430
580
520
590
060
070
500
140
150
100
540
130
420
470
480
550
320
090
120
005
010
080
2613645-12
364260

ECM: 367797 - 20090101
Group number: 2613645-0100
Assembly Drawing: 2613645-12_1_AB

This list covers pages from 2-226 to 2-229

Pos	Part No	UN	Qty	Description	Page No
Common Parts (Cont'd)					
410	90134-0039		4	BUSHING VALVE CONNECTION 2,5 MM	
420	90134-0065		8	CONNECTION M6 TUBE 2,5 MM	
430	90166-0143	MM	550	TUBE 2,5 MM PA TRANSP.	
440	90166-0143	MM	650	TUBE 2,5 MM PA TRANSP.	
450	90166-0143	MM	600	TUBE 2,5 MM PA TRANSP.	
460	90166-0143	MM	500	TUBE 2,5 MM PA TRANSP.	
500	311103-0400		4	PARALLEL PIN ISO 2338 8M6X18 A	
510	312105-0370		6	SCREW M6S ISO 4017 M6X20 A480	
520	312105-0455		8	SCREW M6S ISO 4017 M8X30 A480	
530	312105-0457		6	SCREW M6S ISO 4014 M8X35 A480	
540	312115-0293		4	SCREW ISO4762 M4X16 A4 80	
550	312115-0291		8	SCREW ISO4762 M4X12 A4 80	
560	312155-0295		2	SCREW DIN 7991 MF6S M4X20 A4 70	
580	312605-0316		2	HEXAGON NUT, M6M M6 A280	
600	315105-0165		6	WASHER BRB 8,4X16 RFR	

Pos	Part No	UN	Qty	Description	Page No

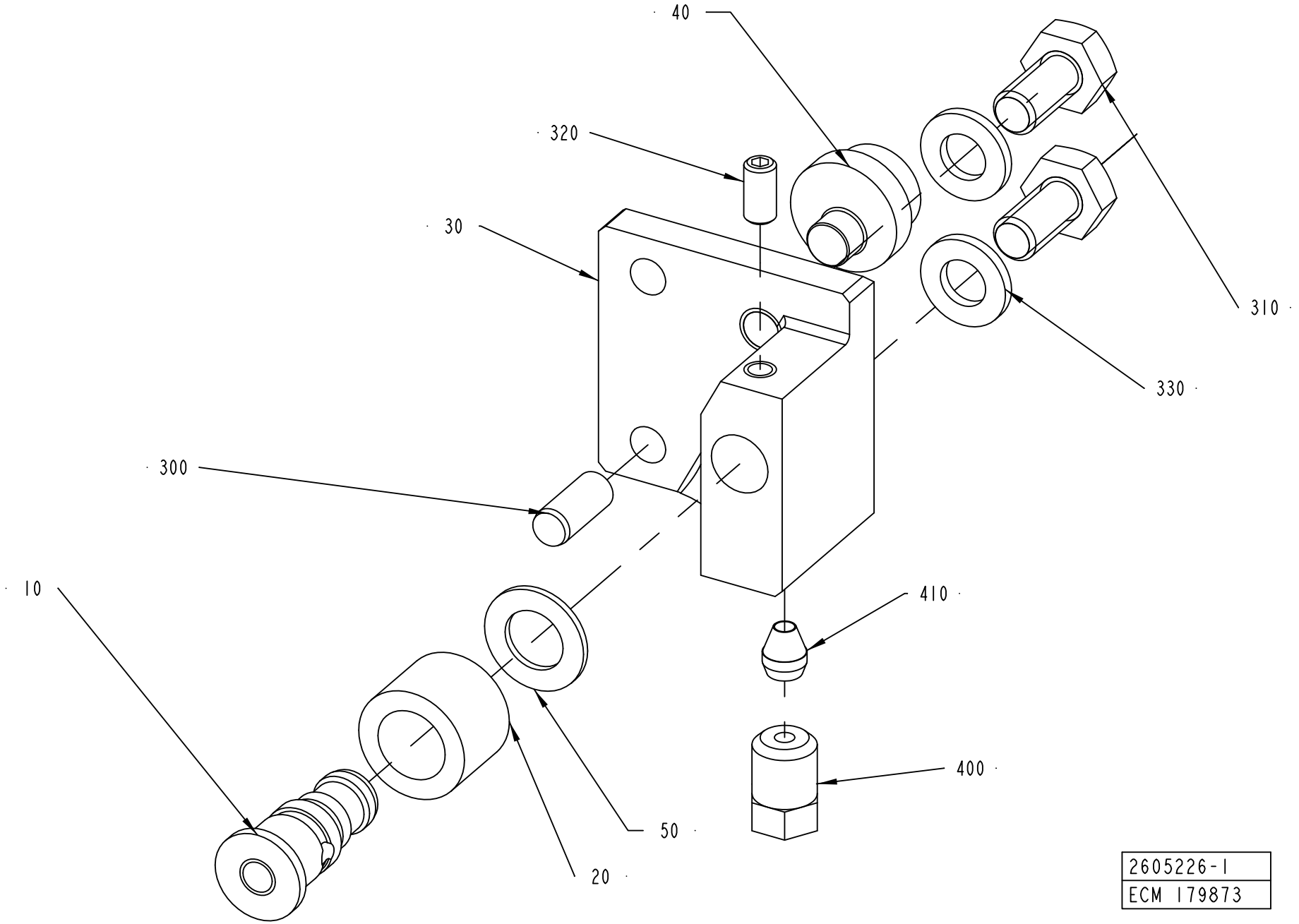
40
320
30
310
330
300
10
410
400
50
20
2605226-1
ECM 179873

ECM: 340825 - 20080215
Group number: 2605226-0200
Assembly Drawing: 2605226-1_1_AB

Pos	Part No	UN	Qty	Description	Page No
TBA 0200M, TBA 0200B, TBA 0200SQ, TBA 0250S, TBA 0250B, TBA 0330S, TBA 0500B, TBA 1000B, TPA 0250SQ, TPA 0200SQ, TBA 0250SQ					
030	2695409-0000		1	HOLDER	
Common Parts					
010	2603376-0000		1	AXLE PIN	
020	2603378-0000		1	ROLLER	
040	2603374-0000		1	ECCENTRIC	
050	2609923-0000		1	WASHER	
300	311103-0306		1	PARALLEL PIN ISO 2338 5M6X12 A1	
310	312105-0366		2	SCREW M6S ISO 4017 M6X12 A480	
320	312318-0287		1	SCREW ISO4029 M4X8 A4	
330	315105-0153		2	WASHER BRB 6,4X12 RFR	
400	90134-0063		1	BUSHING/NUT M8X1, D=2,5 MM	
410	90028-0020		1	CONE TUBE 2,5MM	

Pos	Part No	UN	Qty	Description	Page No

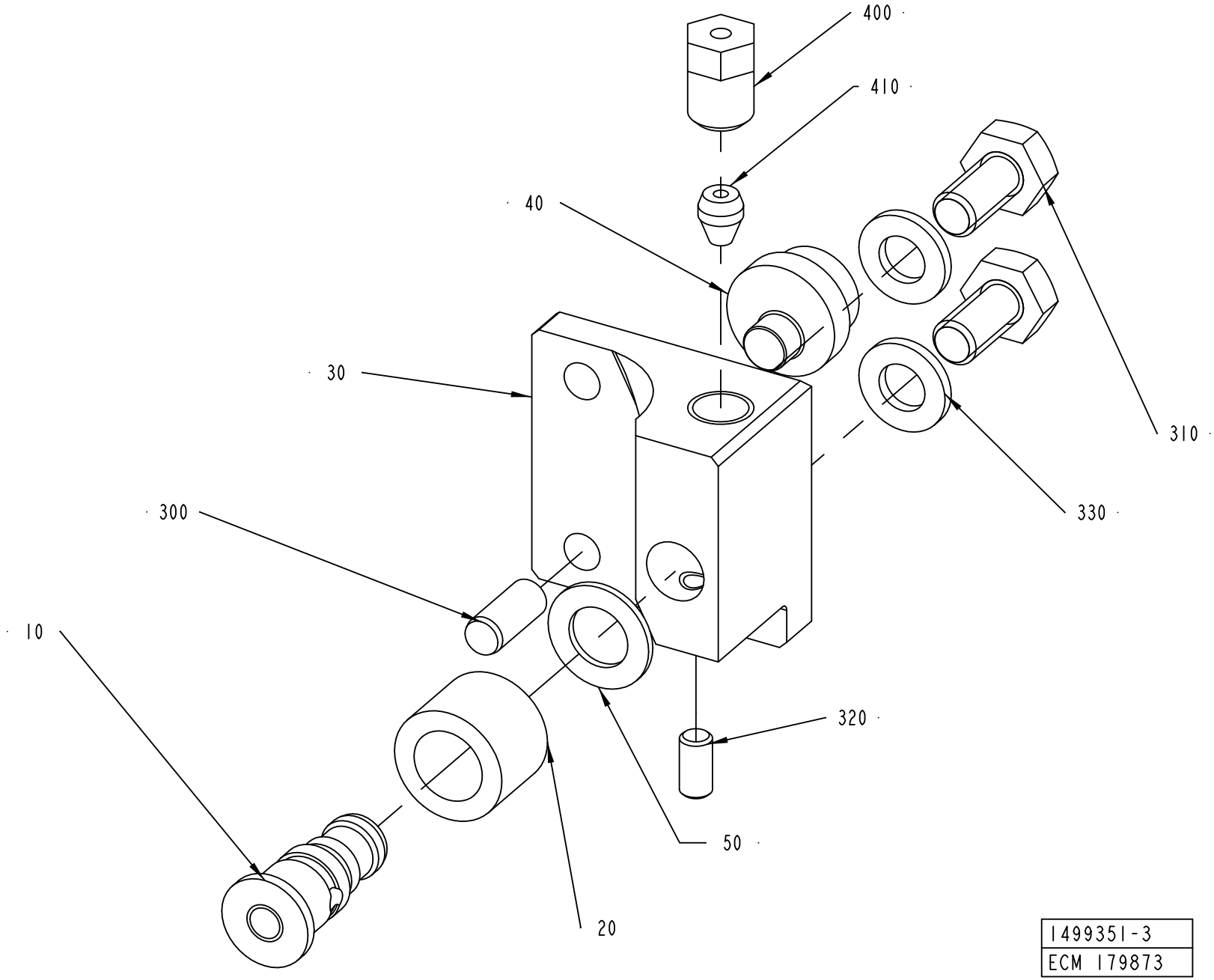
400
410
40
30
310
330
300
10
320
50
20
1499351-3
ECM 179873

ECM: 340719 - 20080215
Group number: 1499351-0200
Assembly Drawing: 1499351-3_1_AB

Pos	Part No	UN	Qty	Description	Page No
TBA 0200M, TBA 0200B, TBA 0200SQ, TBA 0250S, TBA 0250B, TBA 0330S, TBA 0500B, TBA 1000B, TPA 0250SQ, TPA 0200SQ, TBA 0250SQ					
030	2695408-0000		1	HOLDER	
Common Parts					
010	2603376-0000		1	AXLE PIN	
020	2603378-0000		1	ROLLER	
040	2603374-0000		1	ECCENTRIC	
050	2609923-0000		1	WASHER	
300	311103-0306		1	PARALLEL PIN ISO 2338 5M6X12 A1	
310	312105-0366		2	SCREW M6S ISO 4017 M6X12 A480	
320	312318-0287		1	SCREW ISO4029 M4X8 A4	
330	315105-0153		2	WASHER BRB 6,4X12 RFR	
400	90134-0063		1	BUSHING/NUT M8X1, D=2,5 MM	
410	90028-0020		1	CONE TUBE 2,5MM	

Pos	Part No	UN	Qty	Description	Page No

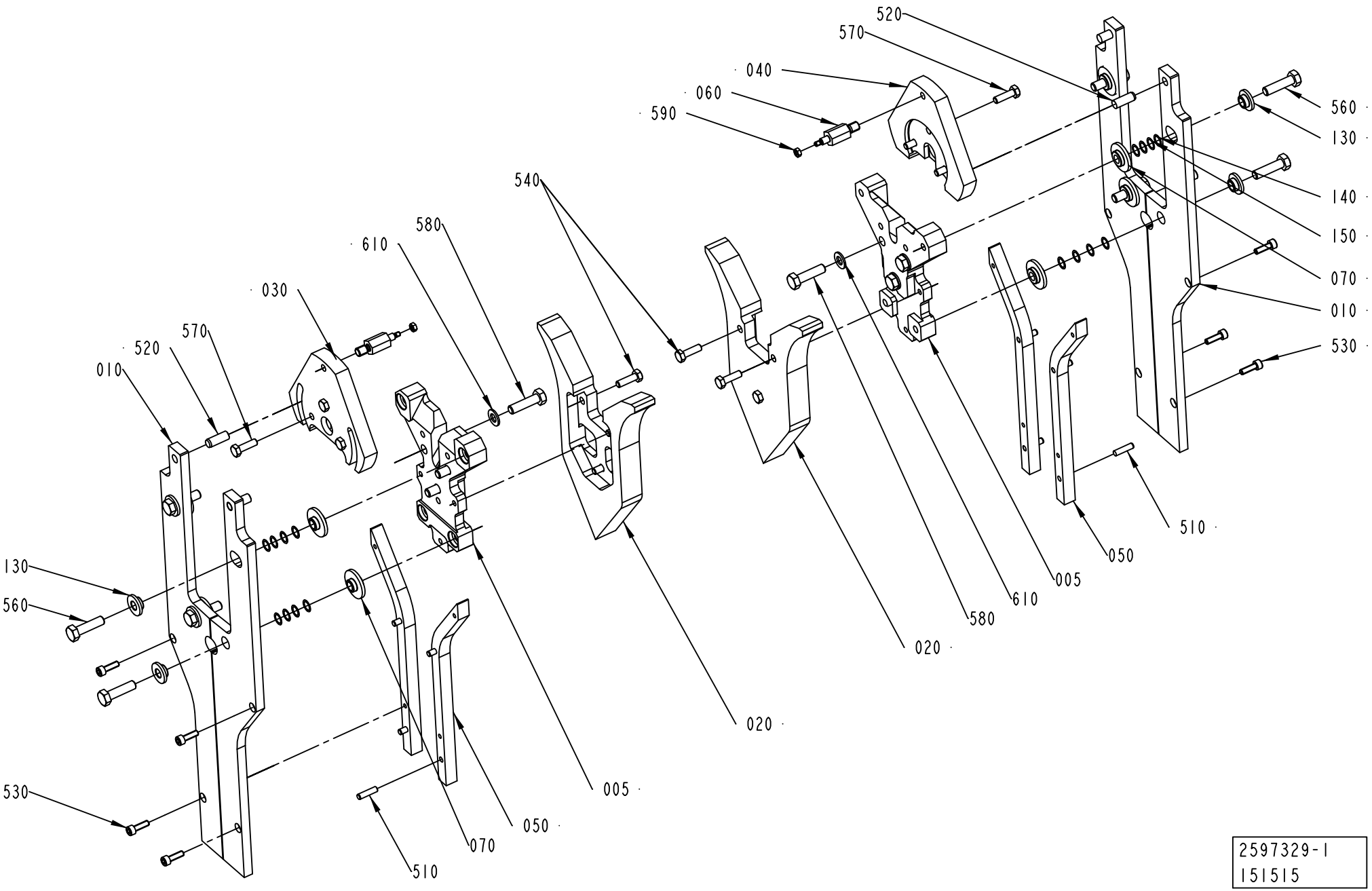

2597329-1
151515

ECM: 375460 - 20090102
Group number: 2597329-0100
Assembly Drawing: 2597329-1_1_AA

This list covers pages from 2-234 to 2-245

Pos	Part No	UN	Qty	Description	Page No
TBA 0200S (See drawing on page: 2-236)					
005	2628598-0000		2	SPACER	
010	2533740-0000		4	RAIL BRACKET	
020	1334081-0000		2	CURVE	
030	2606891-0000		1	ECCENTRIC	
040	2606892-0000		1	ECCENTRIC	
050	1478497-0000		4	VOLUME CAM	
060	2624544-0000		2	PIVOT PIN	
070	2533736-0000		8	SLEEVE	
120	321120-0108		4	BEARING BUSH W/O FLANGE, 12X14X8 MM	
130	1487504-0000		8	WASHER	
140	1487505-0001		16	WASHER	
150	1487505-0002		16	WASHER	
520	311103-0399		4	PARALLEL PIN ISO 2338 8M6X16 A1	
530	312105-0331		8	SCREW M6S ISO 4017 M5X20 A480	
560	312105-0457		8	SCREW M6S ISO 4014 M8X35 A480	
570	312105-0368		6	SCREW M6S ISO 4017 M6X16 A480	
580	312105-0464		6	SCREW M6S ISO 4014 M8X65 A480	
590	312605-0316		2	HEXAGON NUT, M6M M6 A280	
600	315105-0153		2	WASHER BRB 6,4X12 RFR	
TBA 0500S (See drawing on page: 2-236)					
005	2624543-0000		2	SPACER	
010	2533745-0000		4	RAIL BRACKET	
020	1512324-0000		2	CURVE	
030	2618378-0000		1	ECCENTRIC	
040	2618377-0000		1	ECCENTRIC	
050	1512325-0000		4	VOLUME CAM	
060	2624544-0000		2	PIVOT PIN	
070	2533736-0000		8	SLEEVE	
120	321120-0108		4	BEARING BUSH W/O FLANGE, 12X14X8 MM	
130	1487504-0000		8	WASHER	
140	1487505-0001		16	WASHER	
150	1487505-0002		16	WASHER	
520	311103-0399		4	PARALLEL PIN ISO 2338 8M6X16 A1	
530	312105-0331		8	SCREW M6S ISO 4017 M5X20 A480	
560	312105-0457		8	SCREW M6S ISO 4014 M8X35 A480	
570	312105-0368		6	SCREW M6S ISO 4017 M6X16 A480	
580	312105-0464		6	SCREW M6S ISO 4014 M8X65 A480	
590	312605-0316		2	HEXAGON NUT, M6M M6 A280	
600	315105-0153		2	WASHER BRB 6,4X12 RFR	
TBA 0500SQ QC, TBA 1000SQ QC (See drawing on page: 2-242)					
005	2850478-0000		2	SPACER	
010	2850479-0000		4	RAIL BRACKET	
020	2850480-0000		2	CURVE	
030	2618378-0000		1	ECCENTRIC	
040	2618377-0000		1	ECCENTRIC	
050	2834330-0000		2	VOLUME CAM	
060	2618302-0000		2	PIVOT PIN	
070	2533736-0000		8	SLEEVE	
080	2834331-0000		2	VOLUME CAM	
090	2618259-0000		2	SPACER	
120	321120-0108		4	BEARING BUSH W/O FLANGE, 12X14X8 MM	
130	1487504-0000		8	WASHER	
140	1487505-0001		16	WASHER	
150	1487505-0002		16	WASHER	
520	311103-0399		4	PARALLEL PIN ISO 2338 8M6X16 A1	
530	312105-0331		8	SCREW M6S ISO 4017 M5X20 A480	
560	312105-0457		8	SCREW M6S ISO 4014 M8X35 A480	
570	312105-0366		6	SCREW M6S ISO 4017 M6X12 A480	
580	312105-0460		6	SCREW M6S ISO 4014 M8X45 A480	
590	312605-0316		2	HEXAGON NUT, M6M M6 A280	
600	315105-0153		2	WASHER BRB 6,4X12 RFR	
TBA 1000B (See drawing on page: 2-236)					
005	2624543-0000		2	SPACER	
010	2533741-0000		4	RAIL BRACKET	
020	1348808-0000		2	CURVE	
030	2618378-0000		1	ECCENTRIC	
040	2618377-0000		1	ECCENTRIC	
050	1484250-0000		4	VOLUME CAM	
060	2624544-0000		2	PIVOT PIN	
070	2533736-0000		8	SLEEVE	
120	321120-0108		4	BEARING BUSH W/O FLANGE, 12X14X8 MM	
130	1487504-0000		8	WASHER	
140	1487505-0001		16	WASHER	
150	1487505-0002		16	WASHER	
520	311103-0399		4	PARALLEL PIN ISO 2338 8M6X16 A1	
530	312105-0331		8	SCREW M6S ISO 4017 M5X20 A480	
560	312105-0457		8	SCREW M6S ISO 4014 M8X35 A480	
570	312105-0368		6	SCREW M6S ISO 4017 M6X16 A480	
580	312105-0464		6	SCREW M6S ISO 4014 M8X65 A480	
590	312605-0316		2	HEXAGON NUT, M6M M6 A280	
600	315105-0153		2	WASHER BRB 6,4X12 RFR	
TBA 1000S (See drawing on page: 2-236)					
005	2624543-0000		2	SPACER	

Machine Type | Group Description | Used-In | Group Number | Page No

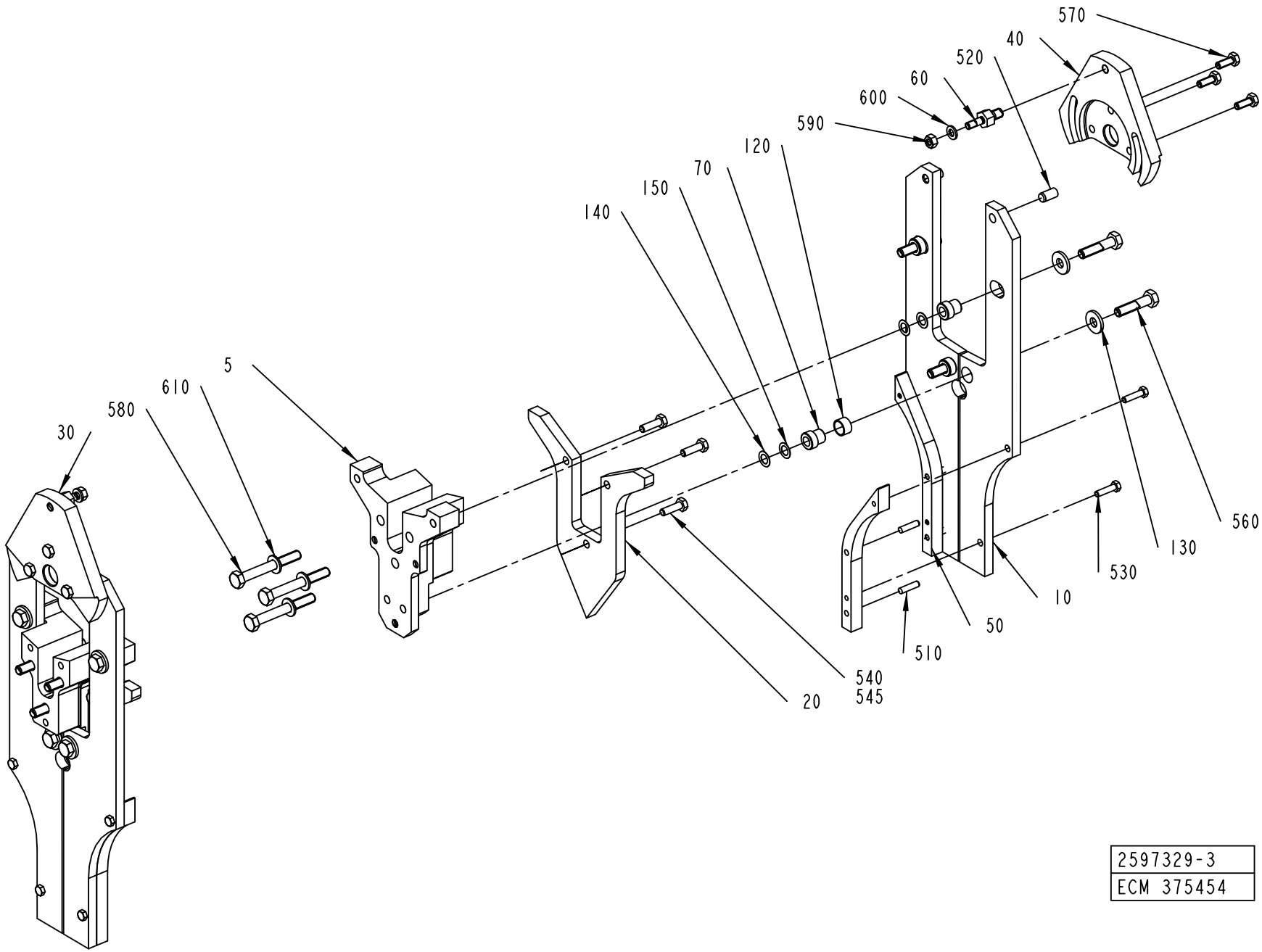

2597329-3
ECM 375454

ECM: 375460 - 20090102
Group number: 2597329-0100
Assembly Drawing: 2597329-3_1_AD

This list covers pages from 2-234 to 2-245

Pos	Part No	UN	Qty	Description	Page No
TBA 1000S (Cont'd) (See drawing on page: 2-236)					
010	2533742-0000		4	RAIL BRACKET	
020	1348809-0000		2	CURVE	
030	2618378-0000		1	ECCENTRIC	
040	2618377-0000		1	ECCENTRIC	
050	1484251-0000		4	VOLUME CAM	
060	2624544-0000		2	PIVOT PIN	
070	2533736-0000		8	SLEEVE	
120	321120-0108		4	BEARING BUSH W/O FLANGE, 12X14X8 MM	
130	1487504-0000		8	WASHER	
140	1487505-0001		16	WASHER	
150	1487505-0002		16	WASHER	
520	311103-0399		4	PARALLEL PIN ISO 2338 8M6X16 A1	
530	312105-0331		8	SCREW M6S ISO 4017 M5X20 A480	
560	312105-0457		8	SCREW M6S ISO 4014 M8X35 A480	
570	312105-0368		6	SCREW M6S ISO 4017 M6X16 A480	
580	312105-0464		6	SCREW M6S ISO 4014 M8X65 A480	
590	312605-0316		2	HEXAGON NUT, M6M M6 A280	
600	315105-0153		2	WASHER BRB 6,4X12 RFR	
TBA 1000SQ (See drawing on page: 2-236)					
005	2624543-0000		2	SPACER	
010	2533744-0000		4	RAIL BRACKET	
020	2501851-0000		2	CURVE	
030	2618378-0000		1	ECCENTRIC	
040	2618377-0000		1	ECCENTRIC	
050	1499594-0000		4	VOLUME CAM	
060	2624544-0000		2	PIVOT PIN	
070	2533736-0000		8	SLEEVE	
120	321120-0108		4	BEARING BUSH W/O FLANGE, 12X14X8 MM	
130	1487504-0000		8	WASHER	
140	1487505-0001		16	WASHER	
150	1487505-0002		16	WASHER	
520	311103-0399		4	PARALLEL PIN ISO 2338 8M6X16 A1	
530	312105-0331		8	SCREW M6S ISO 4017 M5X20 A480	
560	312105-0457		8	SCREW M6S ISO 4014 M8X35 A480	
570	312105-0368		6	SCREW M6S ISO 4017 M6X16 A480	
580	312105-0464		6	SCREW M6S ISO 4014 M8X65 A480	
590	312605-0316		2	HEXAGON NUT, M6M M6 A280	
600	315105-0153		2	WASHER BRB 6,4X12 RFR	
TBA 1400B (See drawing on page: 2-240)					
005	2764048-0000		2	SPACER	
010	2588300-0000		4	RAIL BRACKET	
020	2771441-0000		2	CURVE	
030	2599739-0000		1	ECCENTRIC	
040	2599738-0000		1	ECCENTRIC	
050	2764049-0000		2	VOLUME CAM	
055	2764050-0000		2	VOLUME CAM	
060	2535443-0000		2	PIVOT PIN	
070	2613764-0000		8	SLEEVE	
080	2774452-0000		6	SPACER	
130	2614372-0000		8	SLEEVE	
140	2614376-0001		32	WASHER	
150	2614376-0002		32	WASHER	
520	311103-0402		4	PARALLEL PIN ISO 2338 8M6X22 A1	
530	312105-0329		8	SCREW M6S ISO 4017 M5X16 A480	
545	90157-0021		1	LOCKING FLUID LOCTITE 270	
560	312105-0455		8	SCREW M6S ISO 4017 M8X30 A480	
570	312105-0370		6	SCREW M6S ISO 4017 M6X20 A480	
580	312105-0455		6	SCREW M6S ISO 4017 M8X30 A480	
590	312605-0312		2	HEXAGON NUT, M6M M4 A280	
TBA 1500S (See drawing on page: 2-236)					
005	2633438-0000		2	SPACER	
010	2533737-0000		4	RAIL BRACKET	
020	1349741-0000		2	CURVE	
030	2618378-0000		1	ECCENTRIC	
040	2618377-0000		1	ECCENTRIC	
050	1349744-0000		4	VOLUME CAM	
060	2624544-0000		2	PIVOT PIN	
070	2533736-0000		8	SLEEVE	
120	321120-0108		4	BEARING BUSH W/O FLANGE, 12X14X8 MM	
130	1487504-0000		8	WASHER	
140	1487505-0001		16	WASHER	
150	1487505-0002		16	WASHER	
520	311103-0399		4	PARALLEL PIN ISO 2338 8M6X16 A1	
530	312105-0331		8	SCREW M6S ISO 4017 M5X20 A480	
560	312105-0457		8	SCREW M6S ISO 4014 M8X35 A480	
570	312105-0368		6	SCREW M6S ISO 4017 M6X16 A480	
580	312105-0464		6	SCREW M6S ISO 4014 M8X65 A480	
590	312605-0316		2	HEXAGON NUT, M6M M6 A280	
600	315105-0153		2	WASHER BRB 6,4X12 RFR	
TBA 1890S QC, TBA 2000S QC (See drawing on page: 2-234)					
005	2594887-0000		2	SPACER	
010	2588300-0000		4	RAIL BRACKET	
020	2588301-0000		2	CURVE	

Machine Type | Group Description | Used-In | Group Number | Page No

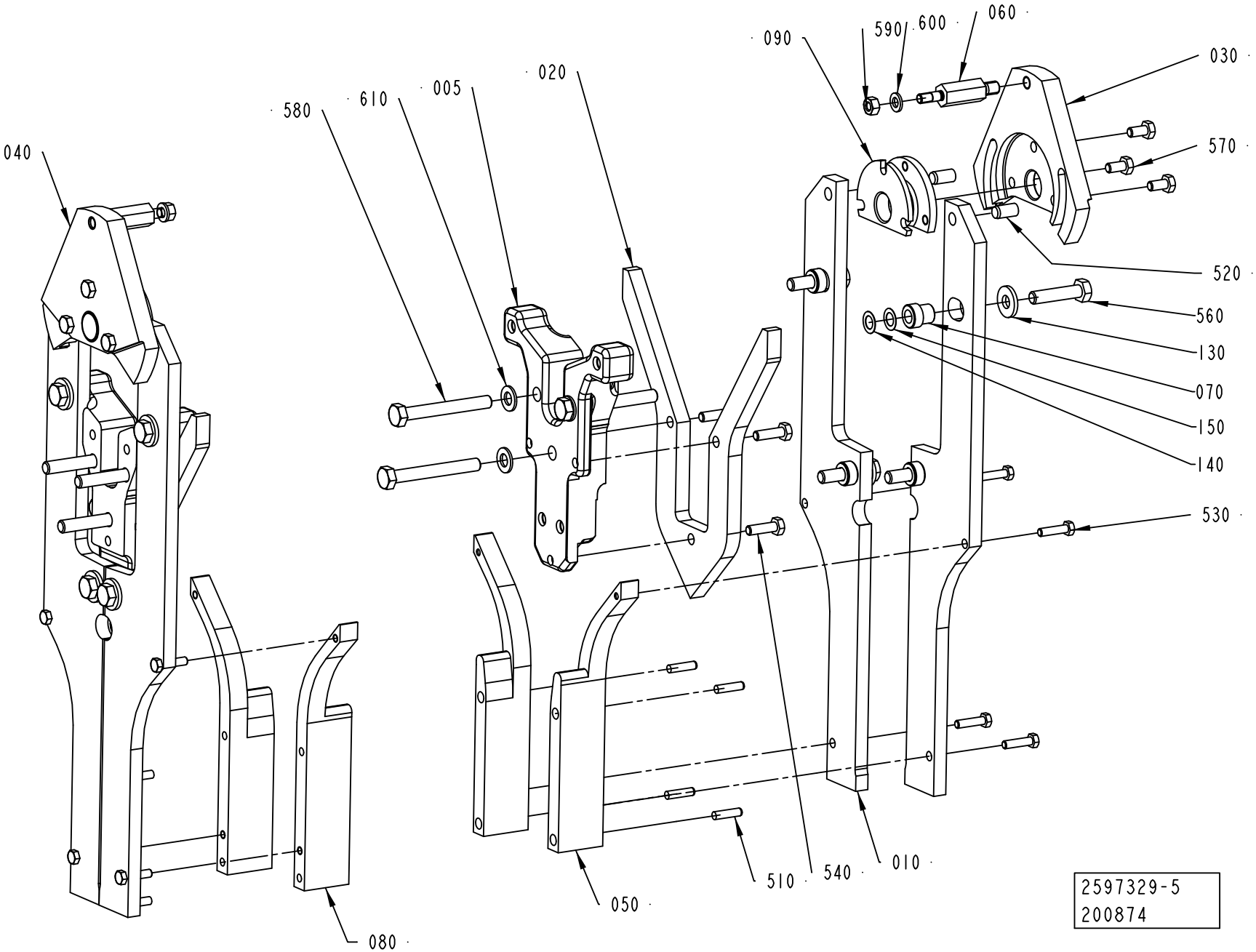
040
580
610
005
020
090
590
600
060
030
570
520
560
130
070
150
140
530
080
050
510
540
010
2597329-5
200874

ECM: 375460 - 20090102
Group number: 2597329-0100
Assembly Drawing: 2597329-5_1_AA

This list covers pages from 2-234 to 2-245

Pos	Part No	UN	Qty	Description	Page No
TBA 1890S QC, TBA 2000S QC (Cont'd) (See drawing on page: 2-234)					
030	2599739-0000		1	ECCENTRIC	
040	2599738-0000		1	ECCENTRIC	
050	2588302-0000		4	VOLUME CAM	
060	2535443-0000		2	PIVOT PIN	
070	2613764-0000		8	SLEEVE	
130	2614372-0000		8	SLEEVE	
140	2614376-0001		32	WASHER	
150	2614376-0002		32	WASHER	
520	311103-0402		4	PARALLEL PIN ISO 2338 8M6X22 A1	
530	312105-0329		8	SCREW M6S ISO 4017 M5X16 A480	
545	90157-0021		1	LOCKING FLUID LOCTITE 270	
560	312105-0455		8	SCREW M6S ISO 4017 M8X30 A480	
570	312105-0370		6	SCREW M6S ISO 4017 M6X20 A480	
580	312105-0455		6	SCREW M6S ISO 4017 M8X30 A480	
590	312605-0312		2	HEXAGON NUT, M6M M4 A280	
TGA 1000SQ, TGA 0750SQ, TGA 0500SQ (See drawing on page: 2-244)					
005	2612750-0000		2	SPACER	
010	2854053-0000		2	RAIL BRACKET	
015	2854052-0000		2	RAIL BRACKET	
030	2618378-0000		1	ECCENTRIC	
040	2618377-0000		1	ECCENTRIC	
050	2896790-0000		2	CAM	
055	2896791-0000		2	CAM	
060	2624544-0000		2	PIVOT PIN	
070	2927281-0000		8	SLEEVE	
100	2867643-0000		2	BRACKET	
110	2854056-0000		2	BRACKET	
130	2614372-0000		8	SLEEVE	
140	2614376-0001		16	WASHER	
150	2614376-0002		16	WASHER	
530	312115-0327		12	SCREW ISO4762 M5X12 A4 80	
560	312105-0457		8	SCREW M6S ISO 4014 M8X35 A480	
570	312105-0368		6	SCREW M6S ISO 4017 M6X16 A480	
580	312105-0460		6	SCREW M6S ISO 4014 M8X45 A480	
590	312605-0316		2	HEXAGON NUT, M6M M6 A280	
620	312115-0364		8	SCREW ISO4762 M6X10 A4 80	
TPA 0330SQ (See drawing on page: 2-236)					
005	2628598-0000		2	SPACER	
010	2533747-0000		4	RAIL BRACKET	
020	1538264-0000		2	CURVE	
030	2606891-0000		1	ECCENTRIC	
040	2606892-0000		1	ECCENTRIC	
050	1538265-0000		4	VOLUME CAM	
060	2624544-0000		2	PIVOT PIN	
070	2533736-0000		8	SLEEVE	
120	321120-0108		4	BEARING BUSH W/O FLANGE, 12X14X8 MM	
130	1487504-0000		8	WASHER	
140	1487505-0001		16	WASHER	
150	1487505-0002		16	WASHER	
520	311103-0399		4	PARALLEL PIN ISO 2338 8M6X16 A1	
530	312105-0331		8	SCREW M6S ISO 4017 M5X20 A480	
560	312105-0457		8	SCREW M6S ISO 4014 M8X35 A480	
570	312105-0368		6	SCREW M6S ISO 4017 M6X16 A480	
580	312105-0464		6	SCREW M6S ISO 4014 M8X65 A480	
590	312605-0316		2	HEXAGON NUT, M6M M6 A280	
600	315105-0153		2	WASHER BRB 6,4X12 RFR	
TPA 0500SQ (See drawing on page: 2-236)					
005	2624543-0000		2	SPACER	
010	2582020-0000		4	RAIL BRACKET	
020	2697307-0000		2	CURVE	
030	2618378-0000		1	ECCENTRIC	
040	2618377-0000		1	ECCENTRIC	
050	1549843-0000		4	VOLUME CAM	
060	2624544-0000		2	PIVOT PIN	
070	2533736-0000		8	SLEEVE	
120	321120-0108		4	BEARING BUSH W/O FLANGE, 12X14X8 MM	
130	1487504-0000		8	WASHER	
140	1487505-0001		16	WASHER	
150	1487505-0002		16	WASHER	
520	311103-0399		4	PARALLEL PIN ISO 2338 8M6X16 A1	
530	312105-0331		8	SCREW M6S ISO 4017 M5X20 A480	
560	312105-0457		8	SCREW M6S ISO 4014 M8X35 A480	
570	312105-0368		6	SCREW M6S ISO 4017 M6X16 A480	
580	312105-0464		6	SCREW M6S ISO 4014 M8X65 A480	
590	312605-0316		2	HEXAGON NUT, M6M M6 A280	
600	315105-0153		2	WASHER BRB 6,4X12 RFR	
TPA 1000SQ NOQC (See drawing on page: 2-236)					
005	2633438-0000		2	SPACER	
010	2575631-0000		4	RAIL BRACKET	
020	2564683-0000		2	CURVE	
030	2618378-0000		1	ECCENTRIC	
040	2618377-0000		1	ECCENTRIC	
050	1523490-0000		4	VOLUME BULGE	

Machine Type | Group Description | Used-In | Group Number | Page No

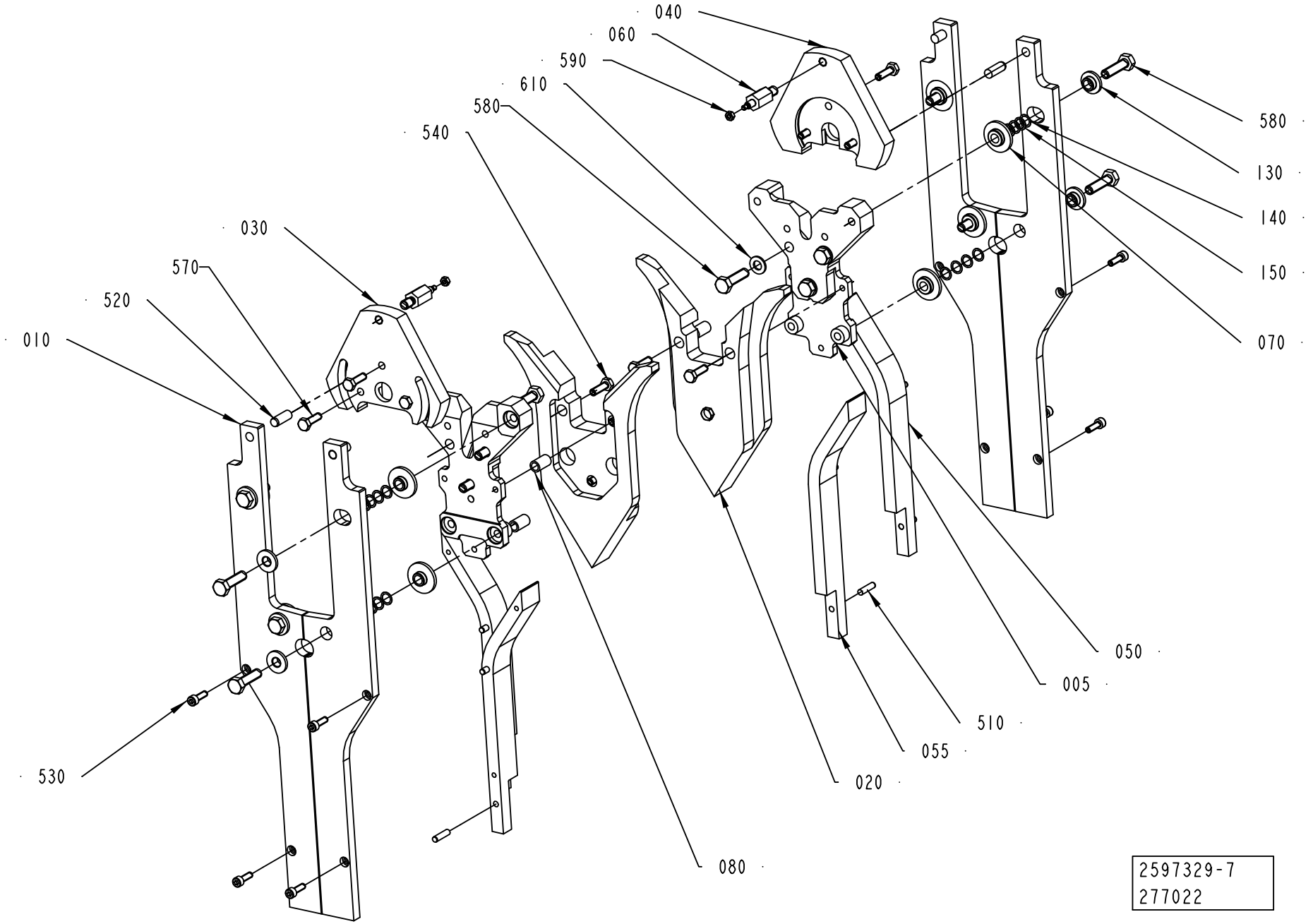
040
060
590
610
580
540
030
570
520
010
530
080
020
055
510
005
050
070
150
140
130
580
2597329-7
277022

Pos	Part No	UN	Qty	Description	Page No
TPA 1000SQ NOQC (Cont'd) (See drawing on page: 2-236)					
060	2624544-0000		2	PIVOT PIN	
070	2533736-0000		8	SLEEVE	
120	321120-0108		4	BEARING BUSH W/O FLANGE, 12X14X8 MM	
130	1487504-0000		8	WASHER	
140	1487505-0001		16	WASHER	
150	1487505-0002		16	WASHER	
520	311103-0399		4	PARALLEL PIN ISO 2338 8M6X16 A1	
530	312105-0331		8	SCREW M6S ISO 4017 M5X20 A480	
560	312105-0457		8	SCREW M6S ISO 4014 M8X35 A480	
570	312105-0368		6	SCREW M6S ISO 4017 M6X16 A480	
580	312105-0464		6	SCREW M6S ISO 4014 M8X65 A480	
590	312605-0316		2	HEXAGON NUT, M6M M6 A280	
600	315105-0153		2	WASHER BRB 6,4X12 RFR	
TPA 1000SQ QC, TPA 0750SQ QC (See drawing on page: 2-238)					
005	2658251-0000		2	SPACER	
010	2658252-0000		4	RAIL BRACKET	
020	2658253-0000		2	CURVE	
030	2606891-0000		1	ECCENTRIC	
040	2606892-0000		1	ECCENTRIC	
050	2662640-0000		2	VOLUME CAM	
060	2618302-0000		2	PIVOT PIN	
070	2533736-0000		8	SLEEVE	
080	2662641-0000		2	VOLUME CAM	
090	2618259-0000		2	SPACER	
120	321120-0108		4	BEARING BUSH W/O FLANGE, 12X14X8 MM	
130	1487504-0000		8	WASHER	
140	1487505-0001		16	WASHER	
150	1487505-0002		16	WASHER	
520	311103-0399		4	PARALLEL PIN ISO 2338 8M6X16 A1	
530	312105-0331		8	SCREW M6S ISO 4017 M5X20 A480	
560	312105-0457		8	SCREW M6S ISO 4014 M8X35 A480	
570	312105-0366		6	SCREW M6S ISO 4017 M6X12 A480	
580	312105-0464		6	SCREW M6S ISO 4014 M8X65 A480	
590	312605-0316		2	HEXAGON NUT, M6M M6 A280	
600	315105-0153		2	WASHER BRB 6,4X12 RFR	
Common Parts					
510	311103-0310		8	PARALLEL PIN ISO 2338 5M6X20 A1	
540	312105-0370		6	SCREW M6S ISO 4017 M6X20 A480	
610	315105-0165		6	WASHER BRB 8,4X16 RFR	

Pos	Part No	UN	Qty	Description	Page No

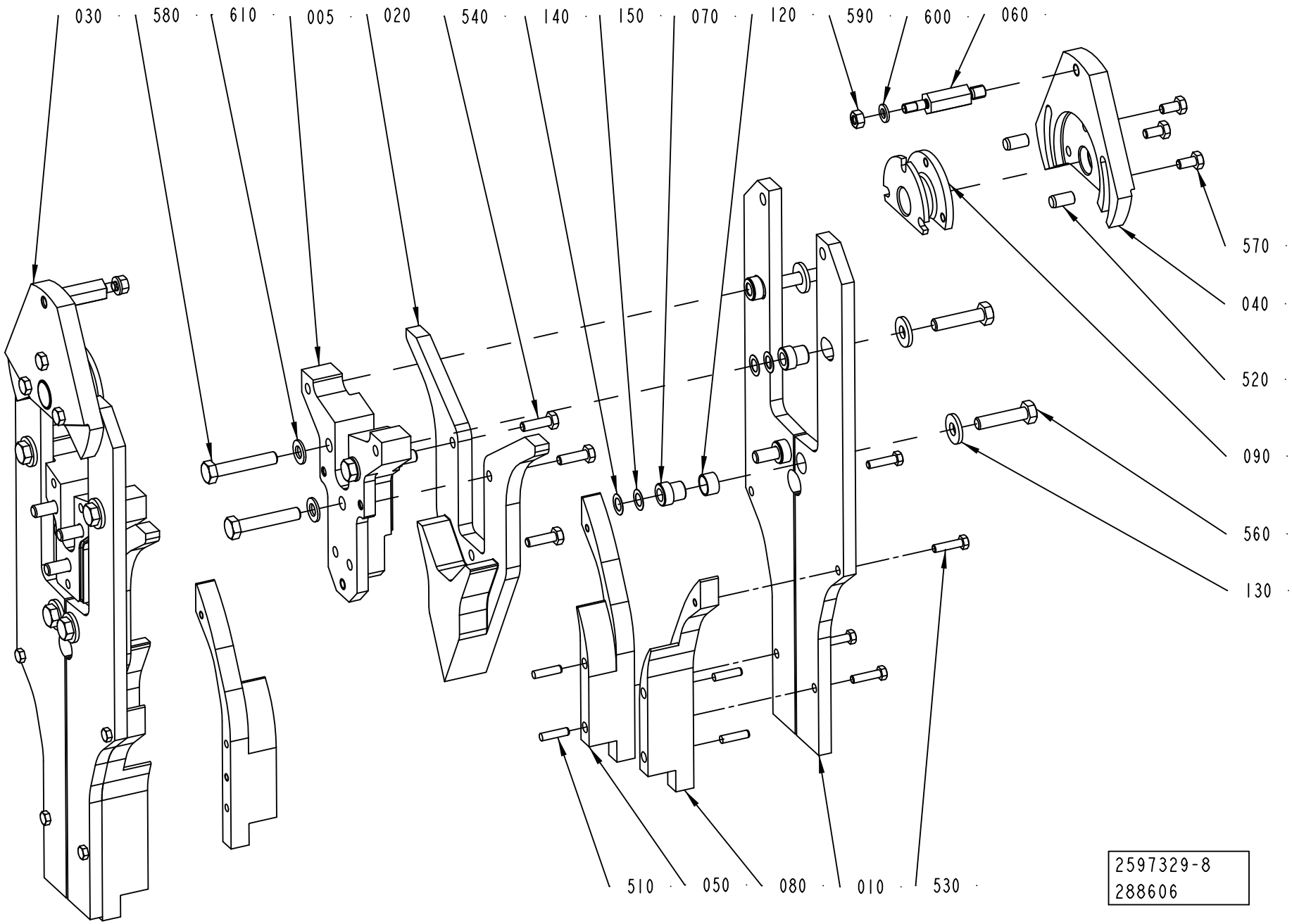
030
580
610
005
020
540
140
150
070
120
590
600
060
570
040
520
090
560
130
510
050
080
010
530
2597329-8
288606

Pos	Part No	UN	Qty	Description	Page No	Pos	Part No	UN	Qty	Description	Page No

SEE PREVIOUS LISTS PAGES: 2-235, 2-237, 2-239, 2-241.

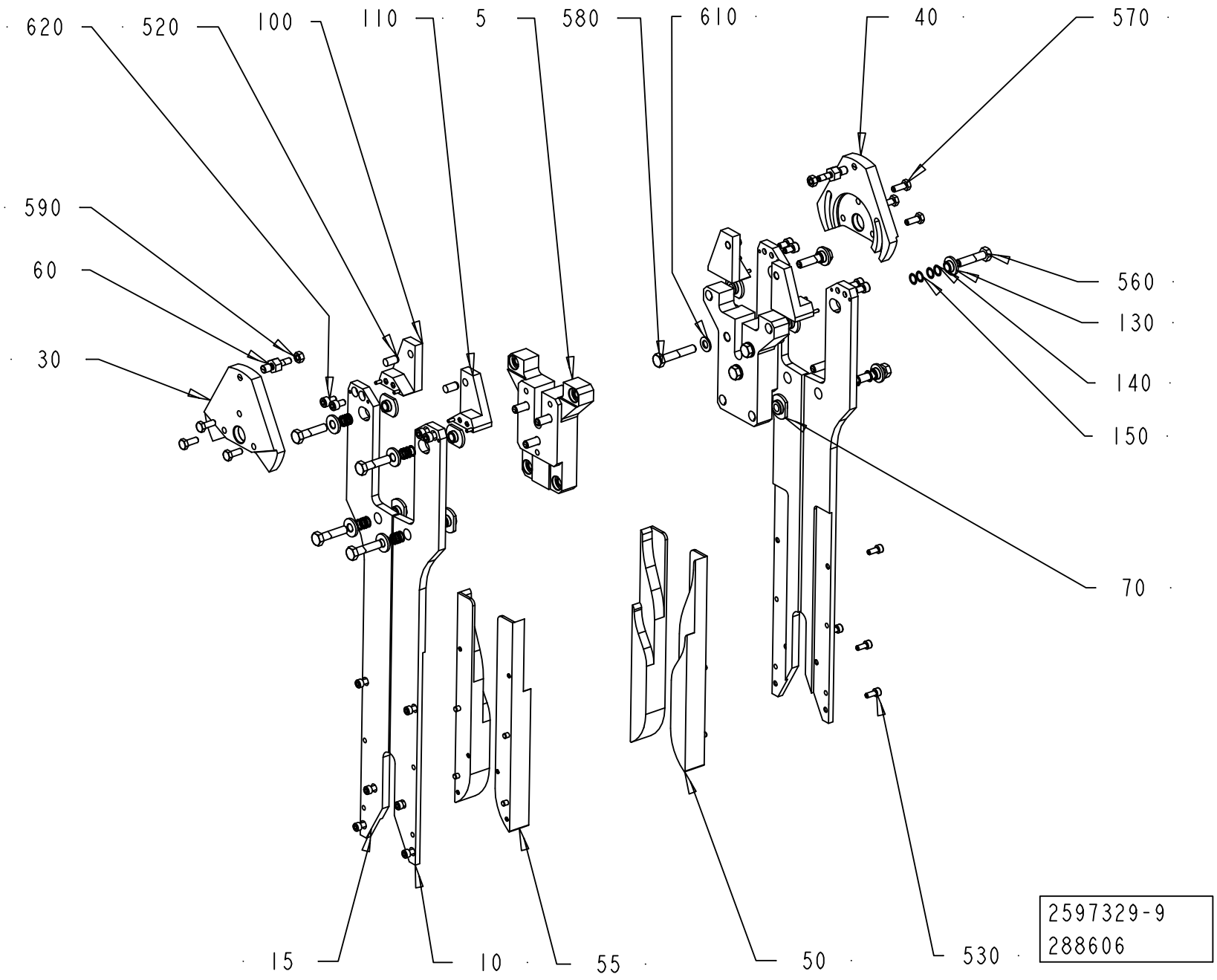
620
520
100
110
5
580
610
40
570
590
60
30
560
130
140
150
70
15
10
55
50
530
2597329-9
288606

Pos	Part No	UN	Qty	Description	Page No
SEE PREVIOUS LISTS PAGES: 2-235, 2-237, 2-239, 2-241.					

Pos	Part No	UN	Qty	Description	Page No

SUPPORT ROLLER

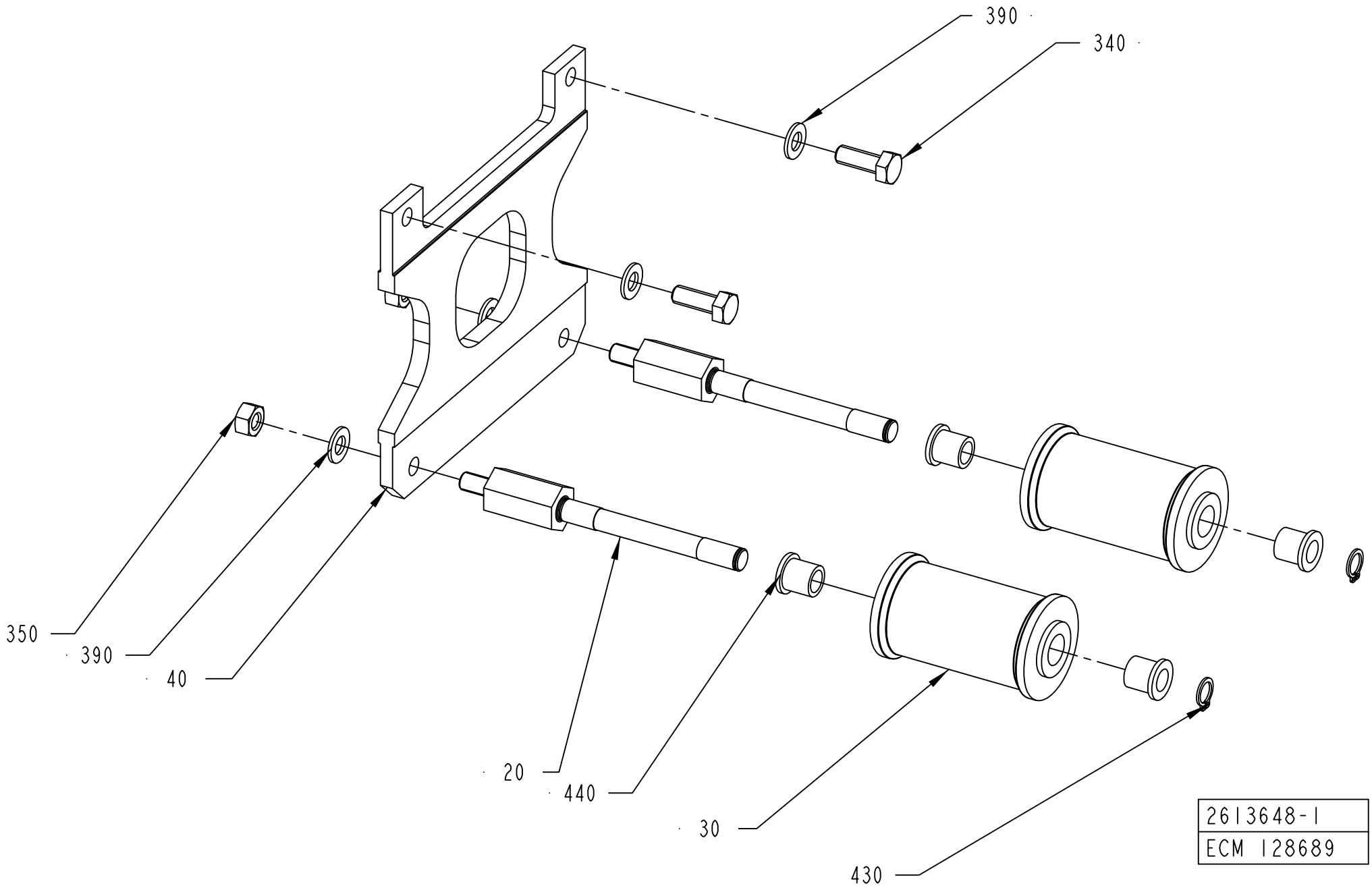

ECM: 363023 - 20081002
Group number: 2613648-0100
Assembly Drawing: 2613648-1_1_AA

This list covers pages from 2-246 to 2-249

Pos	Part No	UN	Qty	Description	Page No
TBA 1000B NOQC STDA7 (See drawing on page: 2-248)					
020	2619198-0000		2	SHAFT	
030	2767478-0001		2	ROLLER	
040	2623783-0000		1	PLATE	
350	312605-0318		2	HEXAGON NUT, M6M M8 A280	
390	315105-0165		4	WASHER BRB 8,4X16 RFR	
430	312705-0316		2	NUT HEX. DOMED CAP MHM-6 M6 A280	
440	90240-0180		4	FLANGE BUSHING 10X14X15MM	
450	315125-0153		2	WASHER TBRSB 6,4X22X4 A4	
TBA 1000S NOMOLDEDCAP (See drawing on page: 2-246)					
020	2619198-0000		2	SHAFT	
030	569058-0000		2	SUPPORT ROLLER	
040	2623783-0000		1	PLATE	
350	312605-0318		2	HEXAGON NUT, M6M M8 A280	
390	315105-0165		4	WASHER BRB 8,4X16 RFR	
430	312705-0316		2	NUT HEX. DOMED CAP MHM-6 M6 A280	
440	90240-0180		4	FLANGE BUSHING 10X14X15MM	
450	315125-0153		2	WASHER TBRSB 6,4X22X4 A4	
TBA 1000S STDA7, TBA 1000S LIGHTCAP (See drawing on page: 2-248)					
020	2619198-0000		2	SHAFT	
030	2767478-0002		2	ROLLER	
040	2623783-0000		1	PLATE	
350	312605-0318		2	HEXAGON NUT, M6M M8 A280	
390	315105-0165		4	WASHER BRB 8,4X16 RFR	
430	312705-0316		2	NUT HEX. DOMED CAP MHM-6 M6 A280	
440	90240-0180		4	FLANGE BUSHING 10X14X15MM	
450	315125-0153		2	WASHER TBRSB 6,4X22X4 A4	
TBA 1500S (See drawing on page: 2-246)					
020	2648846-0000		2	SHAFT	
030	560122-0000		2	SUPPORT ROLLER	
040	2648847-0000		1	PLATE	
390	315105-0165		2	WASHER BRB 8,4X16 RFR	
430	312705-0316		2	NUT HEX. DOMED CAP MHM-6 M6 A280	
440	90240-0180		4	FLANGE BUSHING 10X14X15MM	
450	315125-0153		2	WASHER TBRSB 6,4X22X4 A4	
TBA 1890S QC, TBA 2000S QC, TBA 1400B (See drawing on page: 2-246)					
020	2650812-0000		2	SHAFT	
030	2602655-0000		2	ROLLER	
040	2652892-0000		1	PLATE	
350	312605-0318		2	HEXAGON NUT, M6M M8 A280	
390	315105-0165		4	WASHER BRB 8,4X16 RFR	
430	312705-0316		2	NUT HEX. DOMED CAP MHM-6 M6 A280	
440	90240-0180		4	FLANGE BUSHING 10X14X15MM	
450	315125-0153		2	WASHER TBRSB 6,4X22X4 A4	
TGA 1000SQ, TGA 0750SQ, TGA 0500SQ (See drawing on page: 2-246)					
020	2698625-0000		2	SHAFT	
030	2677383-0000		2	ROLLER	
040	2698626-0000		1	PLATE	
390	315105-0165		2	WASHER BRB 8,4X16 RFR	
430	312705-0316		2	NUT HEX. DOMED CAP MHM-6 M6 A280	
440	90240-0180		4	FLANGE BUSHING 10X14X15MM	
450	315125-0153		2	WASHER TBRSB 6,4X22X4 A4	
TPA 0200SQ QC, TPA 0250SQ QC (See drawing on page: 2-246)					
020	2646345-0000		2	SHAFT	
030	978760-0000		2	ROLLER TBA200SL	
040	2674323-0000		1	PLATE	
350	312605-0318		2	HEXAGON NUT, M6M M8 A280	
390	315105-0165		4	WASHER BRB 8,4X16 RFR	
TPA 0330SQ (See drawing on page: 2-246)					
020	2619319-0000		2	SHAFT	
030	929355-0000		2	ROLLER TPA 330	
040	2664779-0000		1	PLATE	
350	312605-0318		2	HEXAGON NUT, M6M M8 A280	
390	315105-0165		4	WASHER BRB 8,4X16 RFR	
430	312705-0316		2	NUT HEX. DOMED CAP MHM-6 M6 A280	
440	90240-0180		4	FLANGE BUSHING 10X14X15MM	
450	315125-0153		2	WASHER TBRSB 6,4X22X4 A4	
TPA 1000SQ NOQC, TPA 1000SQ QC, TPA 0750SQ QC (See drawing on page: 2-246)					
020	2648846-0000		2	SHAFT	
030	1524421-0000		2	ROLLER	
040	2642097-0000		1	PLATE	
390	315105-0165		2	WASHER BRB 8,4X16 RFR	
430	312705-0316		2	NUT HEX. DOMED CAP MHM-6 M6 A280	
440	90240-0180		4	FLANGE BUSHING 10X14X15MM	
450	315125-0153		2	WASHER TBRSB 6,4X22X4 A4	
TPA 500SQ LIGHTCAP (See drawing on page: 2-246)					
020	2619198-0000		2	SHAFT	
030	2959397-0002		2	ROLLER	
040	2664780-0000		1	PLATE	
350	312605-0318		2	HEXAGON NUT, M6M M8 A280	
390	315105-0165		4	WASHER BRB 8,4X16 RFR	
430	312705-0316		2	NUT HEX. DOMED CAP MHM-6 M6 A280	
440	90240-0180		4	FLANGE BUSHING 10X14X15MM	
450	315125-0153		2	WASHER TBRSB 6,4X22X4 A4	

Machine Type | Group Description | Used-In | Group Number | Page No

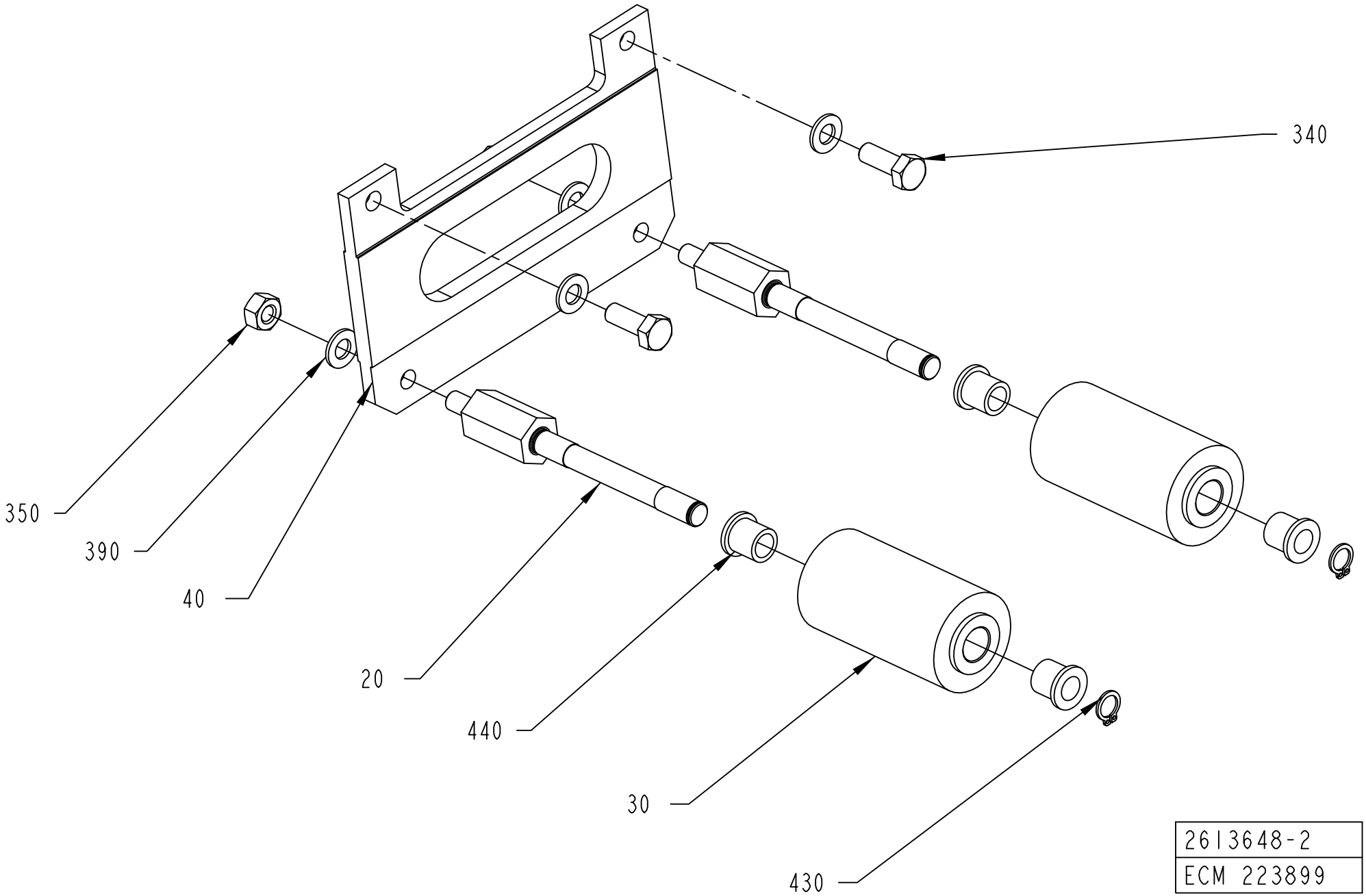
340
350
390
40
20
440
30
430
2613648-2
ECM 223899

ECM: 363023 - 20081002
Group number: 2613648-0100
Assembly Drawing: 2613648-2_1_AB

This list covers pages from 2-246 to 2-249

Pos	Part No	UN	Qty	Description	Page No
TPA 500SQ NOMOLDEDCAP (Cont'd) (See drawing on page: 2-246)					
020	2619198-0000		2	SHAFT	
030	2688917-0000		2	ROLLER	
040	2664780-0000		1	PLATE	
350	312605-0318		2	HEXAGON NUT, M6M M8 A280	
390	315105-0165		4	WASHER BRB 8,4X16 RFR	
430	312705-0316		2	NUT HEX. DOMED CAP MHM-6 M6 A280	
440	90240-0180		4	FLANGE BUSHING 10X14X15MM	
450	315125-0153		2	WASHER TBRSB 6,4X22X4 A4	
TBA 0200B QC, TBA 0330S QC, TBA 0250B QC (See drawing on page: 2-246)					
020	2646345-0000		2	SHAFT	
030	978757-0000		2	ROLLER 180-284ML	
040	2646344-0000		1	PLATE	
350	312605-0318		2	HEXAGON NUT, M6M M8 A280	
390	315105-0165		4	WASHER BRB 8,4X16 RFR	
430	312705-0316		2	NUT HEX. DOMED CAP MHM-6 M6 A280	
440	90240-0180		4	FLANGE BUSHING 10X14X15MM	
450	315125-0153		2	WASHER TBRSB 6,4X22X4 A4	
TBA 0200M QC, TBA 0250S QC (See drawing on page: 2-246)					
020	2649441-0000		2	SHAFT	
030	2530124-0000		2	ROLLER	
040	2649442-0000		1	PLATE	
350	312605-0318		2	HEXAGON NUT, M6M M8 A280	
390	315105-0165		4	WASHER BRB 8,4X16 RFR	
430	312705-0316		2	NUT HEX. DOMED CAP MHM-6 M6 A280	
440	90240-0180		4	FLANGE BUSHING 10X14X15MM	
450	315125-0153		2	WASHER TBRSB 6,4X22X4 A4	
TBA 0200S					
020	2632818-0000		2	SHAFT	
030	978760-0000		2	ROLLER TBA200SL	
040	2632817-0000		1	PLATE	
350	312605-0318		2	HEXAGON NUT, M6M M8 A280	
390	315105-0165		4	WASHER BRB 8,4X16 RFR	
430	312705-0316		2	NUT HEX. DOMED CAP MHM-6 M6 A280	
440	90240-0180		4	FLANGE BUSHING 10X14X15MM	
450	315125-0153		2	WASHER TBRSB 6,4X22X4 A4	
TBA 0200SQ QC, TBA 0250SQ QC (See drawing on page: 2-246)					
020	2646345-0000		2	SHAFT	
030	2696806-0000		2	ROLLER	
040	2681244-0000		1	PLATE	
350	312605-0318		2	HEXAGON NUT, M6M M8 A280	
390	315105-0165		4	WASHER BRB 8,4X16 RFR	
430	312705-0316		2	NUT HEX. DOMED CAP MHM-6 M6 A280	
440	90240-0180		4	FLANGE BUSHING 10X14X15MM	
450	315125-0153		2	WASHER TBRSB 6,4X22X4 A4	
TBA 0500B QC, TBA 1000B QC (See drawing on page: 2-246)					
020	2619198-0000		2	SHAFT	
030	2619199-0000		2	ROLLER	
040	2619200-0000		1	PLATE	
350	312605-0318		2	HEXAGON NUT, M6M M8 A280	
390	315105-0165		4	WASHER BRB 8,4X16 RFR	
430	312705-0316		2	NUT HEX. DOMED CAP MHM-6 M6 A280	
440	90240-0180		4	FLANGE BUSHING 10X14X15MM	
450	315125-0153		2	WASHER TBRSB 6,4X22X4 A4	
TBA 0500S (See drawing on page: 2-246)					
020	2619198-0000		2	SHAFT	
030	1512484-0000		2	ROLLER	
040	2664780-0000		1	PLATE	
350	312605-0318		2	HEXAGON NUT, M6M M8 A280	
390	315105-0165		6	WASHER BRB 8,4X16 RFR	
430	312705-0316		2	NUT HEX. DOMED CAP MHM-6 M6 A280	
440	90240-0180		4	FLANGE BUSHING 10X14X15MM	
450	315125-0153		2	WASHER TBRSB 6,4X22X4 A4	
TBA 0500SQ, TBA 1000SQ (See drawing on page: 2-246)					
020	2619198-0000		2	SHAFT	
030	1499678-0000		2	ROLLER	
040	2623783-0000		1	PLATE	
350	312605-0318		2	HEXAGON NUT, M6M M8 A280	
390	315105-0165		4	WASHER BRB 8,4X16 RFR	
430	312705-0316		2	NUT HEX. DOMED CAP MHM-6 M6 A280	
440	90240-0180		4	FLANGE BUSHING 10X14X15MM	
450	315125-0153		2	WASHER TBRSB 6,4X22X4 A4	
TBA 1000B NOQC NOMOLDEDCAP (See drawing on page: 2-246)					
020	2619198-0000		2	SHAFT	
030	560122-0000		2	SUPPORT ROLLER	
040	2623783-0000		1	PLATE	
350	312605-0318		2	HEXAGON NUT, M6M M8 A280	
390	315105-0165		4	WASHER BRB 8,4X16 RFR	
430	312705-0316		2	NUT HEX. DOMED CAP MHM-6 M6 A280	
440	90240-0180		4	FLANGE BUSHING 10X14X15MM	
450	315125-0153		2	WASHER TBRSB 6,4X22X4 A4	
Common Parts					
340	312105-0452		2	SCREW M6S ISO 4017 M8X22 A480	
430	312705-0316		2	NUT HEX. DOMED CAP MHM-6 M6 A280	
440	90240-0180		4	FLANGE BUSHING 10X14X15MM	
450	315125-0153		2	WASHER TBRSB 6,4X22X4 A4	

Machine Type | Group Description | Used-In | Group Number | Page No

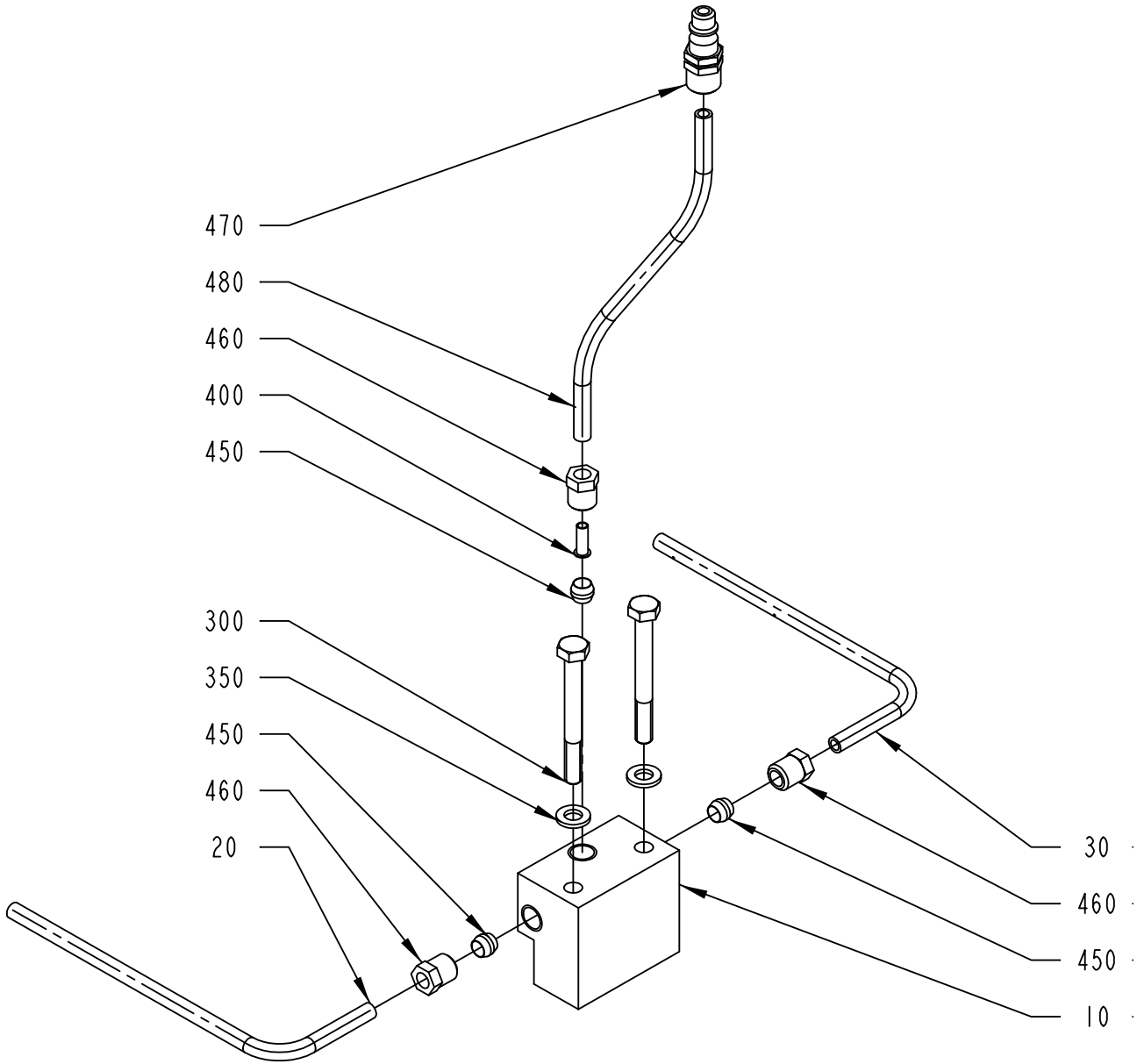
470
480
460
400
450
300
350
450
460
20
30
460
450
10
2556893-1
ECM 120277

ECM: 345082 - 20080701
Group number: 2556893-0100
Assembly Drawing: 2556893-1_1_AA

Pos	Part No	UN	Qty	Description	Page No
TBA 0200M, TBA 0200B, TBA 0200SQ, TBA 0200S, TBA 0250S, TBA 0250B, TBA 0330S, TBA 0500S, TPA 0330SQ, TPA 0250SQ, TPA 0200SQ, TPA 0500SQ, TBA 0250SQ					
020	2556894-0000		1	TUBE FLUSHING DEVICE	
030	2556895-0000		1	TUBE FLUSHING DEVICE	
TBA 0500SQ, TBA 0500B, TBA 1000B, TBA 1000SQ, TBA 1000S, TBA 1500S, TPA 1000SQ					
020	2532837-0000		1	TUBE FLUSHING DEVICE	
030	2532838-0000		1	TUBE FLUSHING DEVICE	
TBA 1890S, TBA 2000S, TBA 1400B					
020	2629240-0000		1	TUBE FLUSHING DEVICE	
030	2629239-0000		1	TUBE FLUSHING DEVICE	
TPA 0750SQ, TGA 1000SQ, TGA 0750SQ, TGA 0500SQ					
020	2658298-0000		1	TUBE FLUSHING DEVICE	
030	2658299-0000		1	TUBE FLUSHING DEVICE	
Common Parts					
010	2556615-0000		1	.PIPE CONNECTION	
300	312105-0381		2	SCREW M6S ISO 4014 M6X55 A480	
350	315105-0153		2	WASHER BRB 6,4X12 RFR	
400	342706-0130		1	ACCESSORIES, INSERT SLEEVE 6 MM	
450	90028-0022		3	CONE TUBE 6 MM	
460	90134-0055		3	BUSHING/NUT INLET/OUTLET 6 MM	
470	90163-0063		1	QUICK COUPLING, (M) 5450-6/4	
480	90166-0132	MM	1500	TUBE 6 MM PA,TRANSP.	

Pos	Part No	UN	Qty	Description	Page No

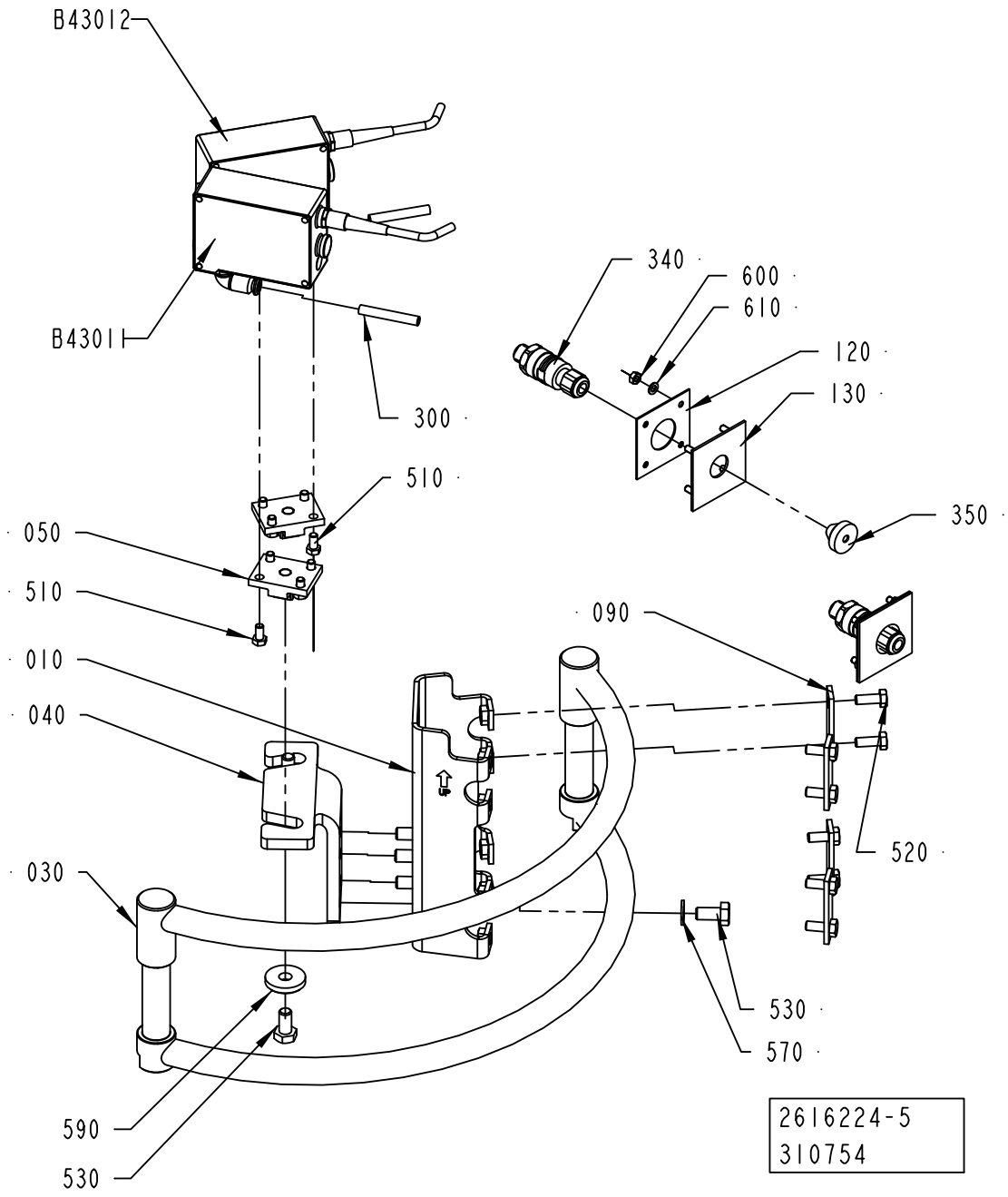
B43012
B43011
300
340
600
610
120
130
350
510
050
510
010
040
090
520
030
530
570
590
530
2616224-5
310754

ECM: 345373 - 20080701
Group number: 2616224-0200
Assembly Drawing: 2616224-5_1_AB

This list covers pages from 2-252 to 2-259

Pos	Part No	UN	Qty	Description	Page No
TPA 0330SQ (See drawing on page: 2-252)					
010	2715295-0000		1	BRACKET	
040	1254111-0000		1	BRACKET	
090	1036673-0000		4	WASHER	
120	2727703-0000		2	GASKET	
130	2878583-0000		2	PLATE	
340	90459-6570		2	CONNECTOR M12 5-POLES MALE, RSCN5/7	
350	90015-0020		2	LEAD-IN, TET5-7, E-1458016	
590	315125-0165		2	WASHER TBRSB 8,4X26X5 A4	
600	312605-0312		8	HEXAGON NUT, M6M M4 A280	
610	315105-0136		8	WASHER BRB 4,3X8 RFR	
TPA 0500SQ (See drawing on page: 2-256)					
010	2715295-0000		1	BRACKET	
040	1254111-0000		1	BRACKET	
090	1036673-0000		4	WASHER	
120	2727703-0000		2	GASKET	
130	2878583-0000		2	PLATE	
340	90459-6570		2	CONNECTOR M12 5-POLES MALE, RSCN5/7	
350	90015-0020		2	LEAD-IN, TET5-7, E-1458016	
590	315125-0165		2	WASHER TBRSB 8,4X26X5 A4	
600	312605-0312		8	HEXAGON NUT, M6M M4 A280	
610	315105-0136		8	WASHER BRB 4,3X8 RFR	
TBA 0200B, TBA 0250B, TBA 0330S (See drawing on page: 2-254)					
010	2715296-0000		1	BRACKET	
020	2655096-0000		1	SLIDE	
040	2655095-0000		1	BRACKET	
060	2655097-0000		1	KNOB	
070	2655098-0000		1	SHAFT	
080	90335-0024		1	COMP. SPRING 22250, 1,25X13,75X27	
090	1036673-0000		4	WASHER	
100	90287-0148		4	SCREW SPRINGLOAD. SLOTTED HEAD M5X12	
110	312318-0323		4	SCREW ISO4029 M5X8 A4	
120	2727703-0000		2	GASKET	
130	2878583-0000		2	PLATE	
340	90459-6570		2	CONNECTOR M12 5-POLES MALE, RSCN5/7	
350	90015-0020		2	LEAD-IN, TET5-7, E-1458016	
590	315125-0165		2	WASHER TBRSB 8,4X26X5 A4	
600	312605-0312		8	HEXAGON NUT, M6M M4 A280	
610	315105-0136		8	WASHER BRB 4,3X8 RFR	
TBA 0200M, TBA 0250S (See drawing on page: 2-254)					
010	2715296-0000		1	BRACKET	
020	2679885-0000		1	SLIDE	
040	2679884-0000		1	BRACKET	
060	2679886-0000		1	KNOB	
070	2655098-0000		1	SHAFT	
080	90335-0024		1	COMP. SPRING 22250, 1,25X13,75X27	
090	1036673-0000		4	WASHER	
100	90287-0148		4	SCREW SPRINGLOAD. SLOTTED HEAD M5X12	
110	312318-0323		4	SCREW ISO4029 M5X8 A4	
120	2727703-0000		2	GASKET	
130	2878583-0000		2	PLATE	
340	90459-6570		2	CONNECTOR M12 5-POLES MALE, RSCN5/7	
350	90015-0020		2	LEAD-IN, TET5-7, E-1458016	
600	312605-0312		8	HEXAGON NUT, M6M M4 A280	
610	315105-0136		8	WASHER BRB 4,3X8 RFR	
TBA 0200S (See drawing on page: 2-252)					
010	2715295-0000		1	BRACKET	
040	1254110-0000		1	BRACKET	
090	1036673-0000		4	WASHER	
120	2727703-0000		2	GASKET	
130	2878583-0000		2	PLATE	
340	90459-6570		2	CONNECTOR M12 5-POLES MALE, RSCN5/7	
350	90015-0020		2	LEAD-IN, TET5-7, E-1458016	
590	315125-0165		2	WASHER TBRSB 8,4X26X5 A4	
600	312605-0312		8	HEXAGON NUT, M6M M4 A280	
610	315105-0136		8	WASHER BRB 4,3X8 RFR	
TBA 0200SQ, TBA 0250SQ (See drawing on page: 2-258)					
010	2715296-0000		1	BRACKET	
020	2735474-0000		1	SLIDE	
040	2735473-0000		1	BRACKET	
060	2724929-0000		1	KNOB	
065	2724932-0000		1	NUT	
070	2724930-0000		1	SCREW	
080	90335-0024		1	COMP. SPRING 22250, 1,25X13,75X27	
090	1036673-0000		4	WASHER	
100	90287-0148		4	SCREW SPRINGLOAD. SLOTTED HEAD M5X12	
120	2727703-0000		2	GASKET	
130	2878583-0000		2	PLATE	
590	315125-0165		2	WASHER TBRSB 8,4X26X5 A4	
600	312605-0312		8	HEXAGON NUT, M6M M4 A280	
610	315105-0136		8	WASHER BRB 4,3X8 RFR	
TBA 0500B, TBA 1000B, TBA 1500S (See drawing on page: 2-252)					
010	2715295-0000		1	BRACKET	
040	1254109-0000		1	BRACKET	

Machine Type | Group Description | Used-In | Group Number | Page No

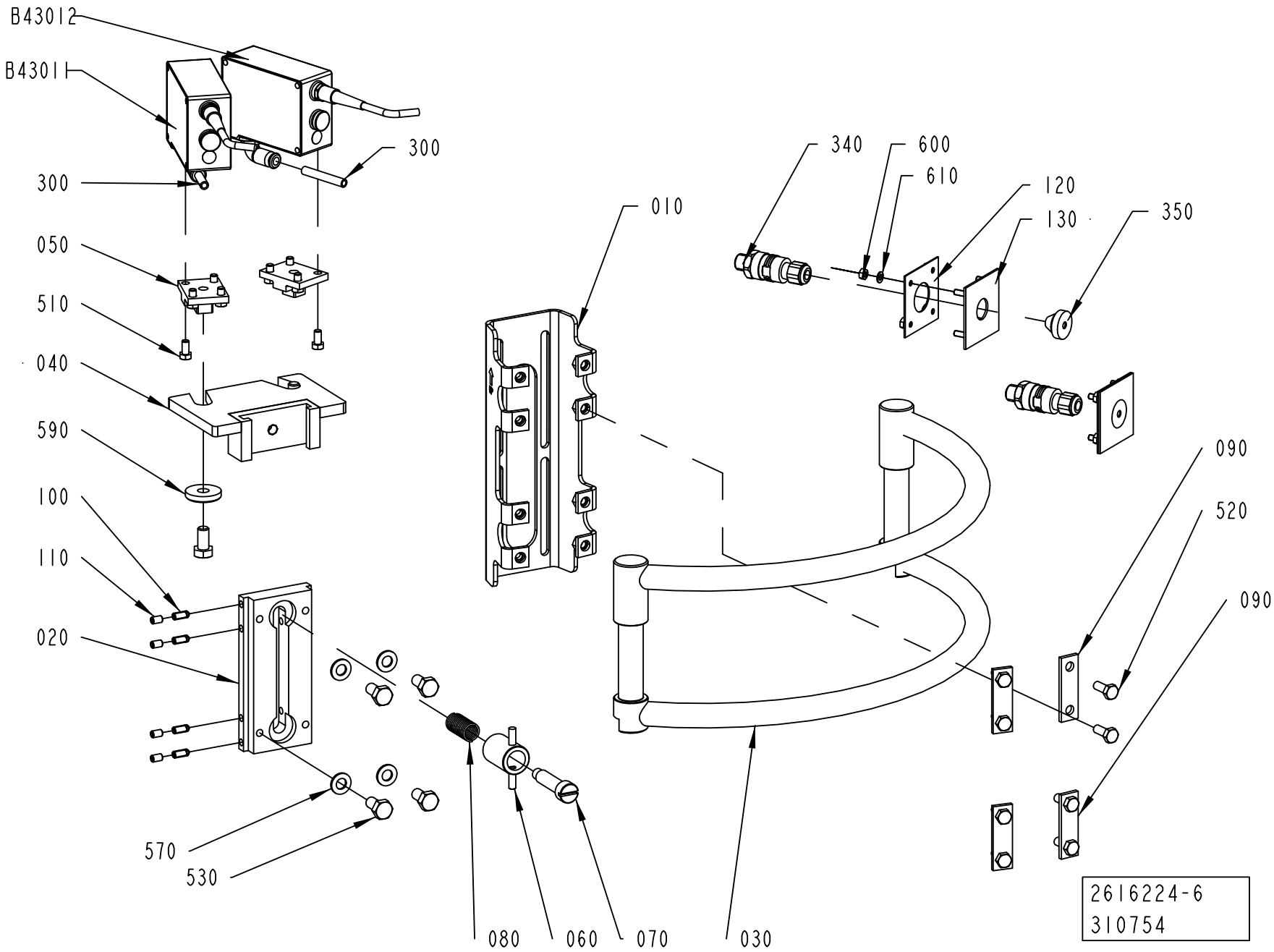
B43012
B43011
300
300
050
510
040
590
100
110
020
570
530
080
060
070
030
010
340
600
610
120
130
350
090
520
090
2616224-6
310754

Pos	Part No	UN	Qty	Description	Page No
TBA 0500B, TBA 1000B, TBA 1500S (Cont'd) (See drawing on page: 2-252)					
090	1036673-0000		4	WASHER	
120	2727703-0000		2	GASKET	
130	2878583-0000		2	PLATE	
340	90459-6570		2	CONNECTOR M12 5-POLES MALE, RSCN5/7	
350	90015-0020		2	LEAD-IN, TET5-7, E-1458016	
590	315125-0165		2	WASHER TBRSB 8,4X26X5 A4	
600	312605-0312		8	HEXAGON NUT, M6M M4 A280	
610	315105-0136		8	WASHER BRB 4,3X8 RFR	
TBA 0500S, TPA 1000SQ NOQC, TPA 1000SQ QC, TPA 0750SQ QC (See drawing on page: 2-252)					
010	2715295-0000		1	BRACKET	
040	2719081-0000		1	BRACKET	
090	1036673-0000		4	WASHER	
120	2727703-0000		2	GASKET	
130	2878583-0000		2	PLATE	
340	90459-6570		2	CONNECTOR M12 5-POLES MALE, RSCN5/7	
350	90015-0020		2	LEAD-IN, TET5-7, E-1458016	
590	315125-0165		2	WASHER TBRSB 8,4X26X5 A4	
600	312605-0312		8	HEXAGON NUT, M6M M4 A280	
610	315105-0136		8	WASHER BRB 4,3X8 RFR	
TBA 0500SQ, TBA 1000SQ, TBA 1000S (See drawing on page: 2-252)					
010	2715295-0000		1	BRACKET	
040	2694095-0000		1	BRACKET	
090	1036673-0000		4	WASHER	
120	2727703-0000		2	GASKET	
130	2878583-0000		2	PLATE	
340	90459-6570		2	CONNECTOR M12 5-POLES MALE, RSCN5/7	
350	90015-0020		2	LEAD-IN, TET5-7, E-1458016	
590	315125-0165		2	WASHER TBRSB 8,4X26X5 A4	
600	312605-0312		8	HEXAGON NUT, M6M M4 A280	
610	315105-0136		8	WASHER BRB 4,3X8 RFR	
TBA 1400B (See drawing on page: 2-252)					
010	2715295-0000		1	BRACKET	
040	2861573-0000		1	BRACKET	
090	1036673-0000		4	WASHER	
120	2727703-0000		2	GASKET	
130	2878583-0000		2	PLATE	
340	90459-6570		2	CONNECTOR M12 5-POLES MALE, RSCN5/7	
350	90015-0020		2	LEAD-IN, TET5-7, E-1458016	
590	2677899-0000		2	WASHER	
600	312605-0312		8	HEXAGON NUT, M6M M4 A280	
610	315105-0136		8	WASHER BRB 4,3X8 RFR	
TBA 1890S, TBA 2000S (See drawing on page: 2-252)					
010	2715295-0000		1	BRACKET	
040	2715302-0000		1	BRACKET	
090	1036673-0000		4	WASHER	
120	2727703-0000		2	GASKET	
130	2878583-0000		2	PLATE	
340	90459-6570		2	CONNECTOR M12 5-POLES MALE, RSCN5/7	
350	90015-0020		2	LEAD-IN, TET5-7, E-1458016	
590	2677899-0000		2	WASHER	
600	312605-0312		8	HEXAGON NUT, M6M M4 A280	
610	315105-0136		8	WASHER BRB 4,3X8 RFR	
TGA 1000SQ, TGA 0750SQ, TGA 0500SQ (See drawing on page: 2-258)					
010	2795023-0000		1	BRACKET	
020	2797465-0000		1	SLIDE	
040	2800296-0000		1	BRACKET	
060	2724929-0000		1	KNOB	
065	2724932-0000		1	NUT	
070	2724930-0000		1	SCREW	
080	90335-0024		1	COMP. SPRING 22250, 1,25X13,75X27	
090	2797439-0000		2	FASTENING PLATE	
100	90287-0148		4	SCREW SPRINGLOAD. SLOTTED HEAD M5X12	
120	2727703-0000		2	GASKET	
130	2878583-0000		2	PLATE	
340	90459-6570		2	CONNECTOR M12 5-POLES MALE, RSCN5/7	
350	90015-0020		2	LEAD-IN, TET5-7, E-1458016	
590	315125-0165		2	WASHER TBRSB 8,4X26X5 A4	
600	312605-0312		8	HEXAGON NUT, M6M M4 A280	
610	315105-0136		8	WASHER BRB 4,3X8 RFR	
TPA 0250SQ, TPA 0200SQ (See drawing on page: 2-258)					
010	2715296-0000		1	BRACKET	
020	2724928-0000		1	SLIDE	
040	2724927-0000		1	BRACKET	
060	2724929-0000		1	KNOB	
065	2724932-0000		1	NUT	
070	2724930-0000		1	SCREW	
080	90335-0024		1	COMP. SPRING 22250, 1,25X13,75X27	
090	1036673-0000		4	WASHER	
100	90287-0148		4	SCREW SPRINGLOAD. SLOTTED HEAD M5X12	
110	312318-0323		4	SCREW ISO4029 M5X8 A4	
120	2727703-0000		2	GASKET	
130	2878583-0000		2	PLATE	
340	90459-6570		2	CONNECTOR M12 5-POLES MALE, RSCN5/7	

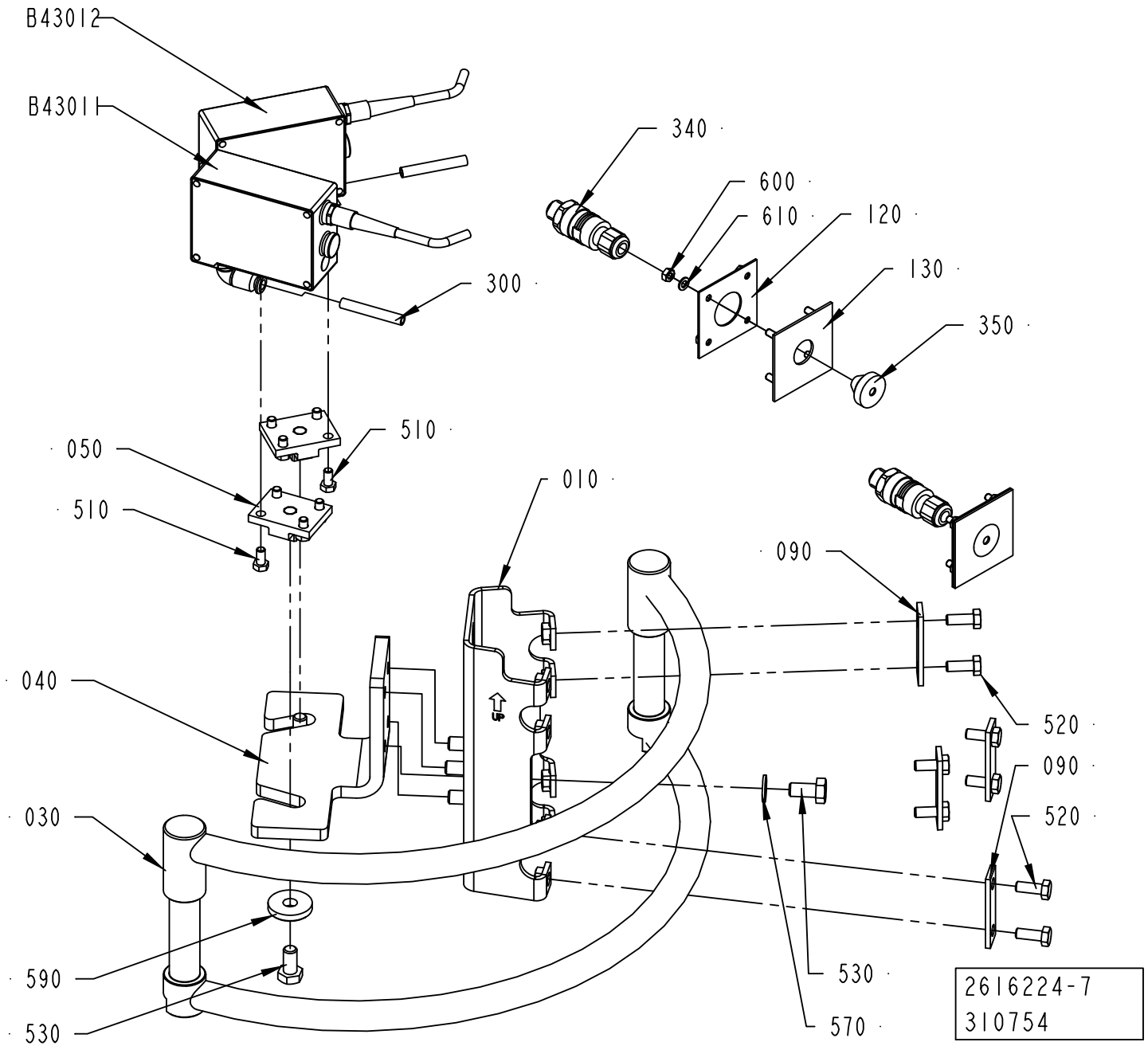
B43012
B43011
300
340
600
610
120
130
350
510
050
510
010
090
040
030
590
530
520
090
520
530
570
2616224-7
310754

Pos	Part No	UN	Qty	Description	Page No
TPA 0250SQ, TPA 0200SQ (Cont'd) (See drawing on page: 2-258)					
350	90015-0020		2	LEAD-IN, TET5-7, E-1458016	
590	315125-0165		2	WASHER TBRSB 8,4X26X5 A4	
600	312605-0312		8	HEXAGON NUT, M6M M4 A280	
610	315105-0136		8	WASHER BRB 4,3X8 RFR	
Common Parts					
030	2715297-0000		1	BOW CLAMP	
050	1036674-0000		2	FASTENING PLATE	
300	90166-0081	MM	1500	TUBE 6 MM PA BLUE	
510	312105-0325		8	SCREW M6S ISO 4017 M5X10 A480	
520	312105-0368		8	SCREW M6S ISO 4017 M6X16 A480	
530	312105-0449		6	SCREW M6S ISO 4017 M8X16 A480	
570	315105-0165		4	WASHER BRB 8,4X16 RFR	
B43011	90458-0601		1	CONTRAST SCANNER, KT15W-P2110S01	
	342732-0102		*1*	*ELBOW PIPE JOINT, EXT.THREAD, D=6MM-G1/8*	
B43012	90458-0601		1	CONTRAST SCANNER, KT15W-P2110S01	
	342732-0102		*1*	*ELBOW PIPE JOINT, EXT.THREAD, D=6MM-G1/8*	

Pos	Part No	UN	Qty	Description	Page No

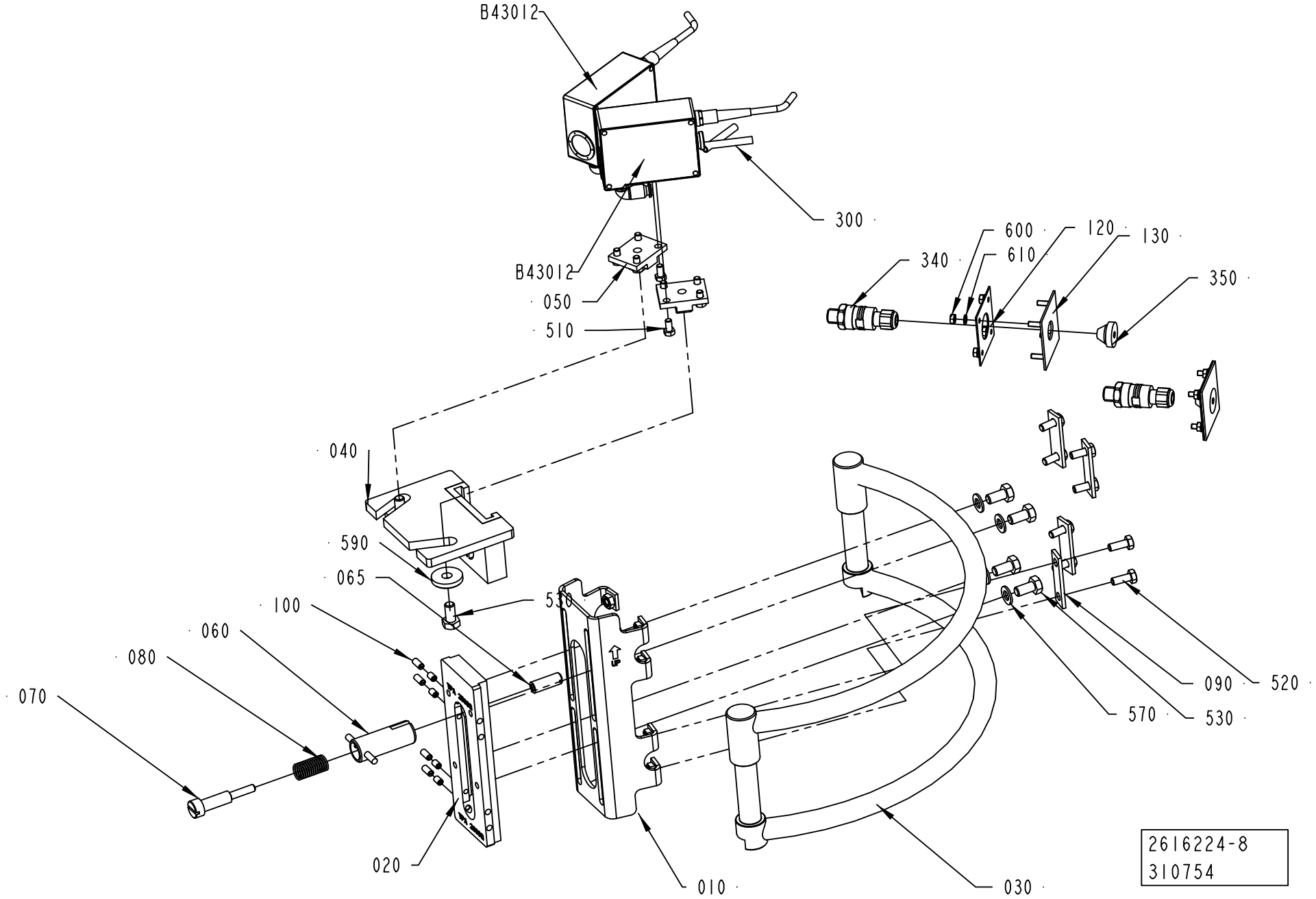
B43012
300
B43012
050
510
600
120
130
340
610
350
040
590
065
530
100
060
080
070
090
520
570
530
020
010
030
2616224-8
310754

Pos	Part No	UN	Qty	Description	Page No
SEE PREVIOUS LISTS PAGES: 2-253, 2-255, 2-257.					

Pos	Part No	UN	Qty	Description	Page No

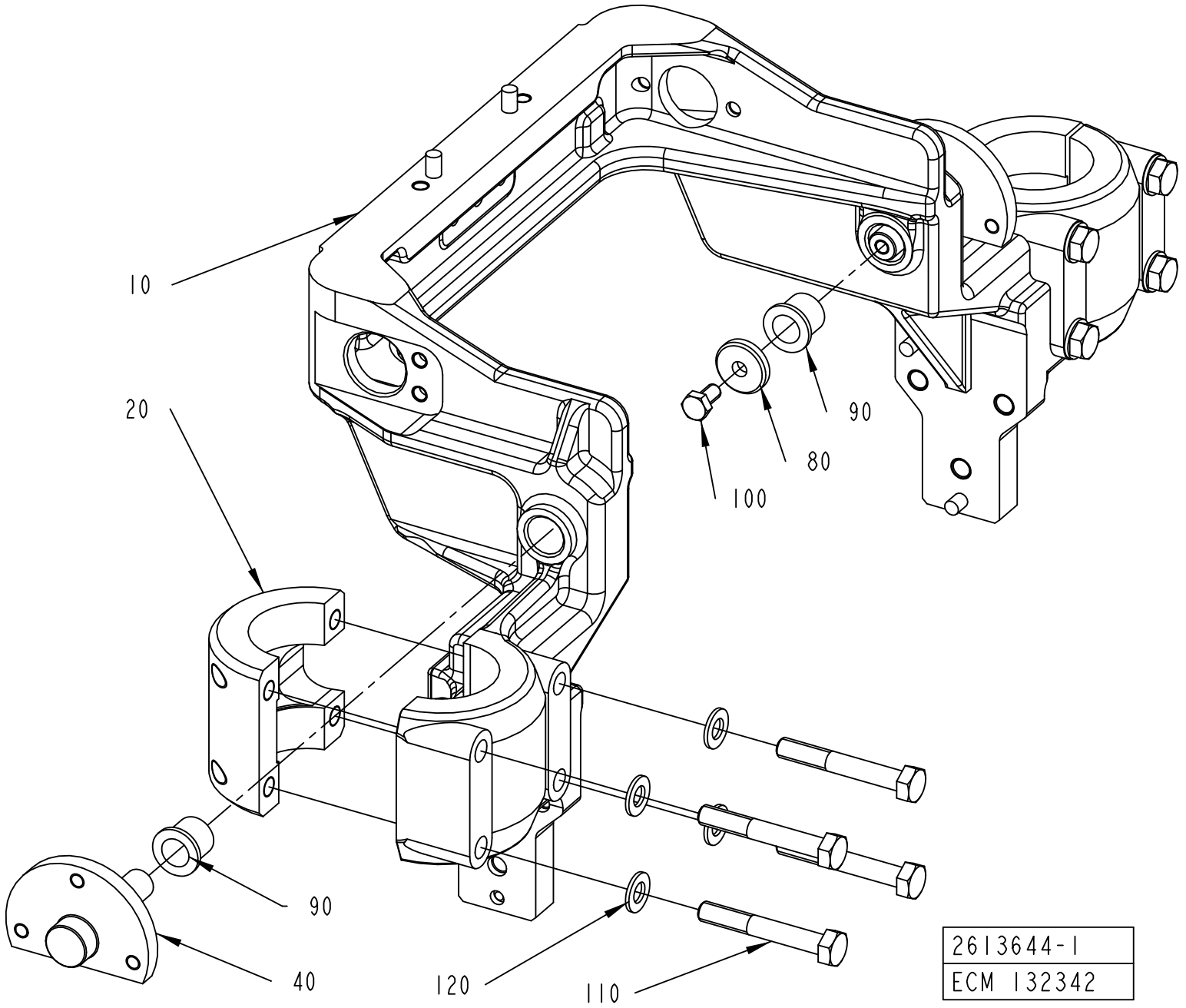
10
20
90
80
100
90
40
120
110
2613644-1
ECM 132342

ECM: 189482 - 20050103
Group number: 2613644-0100
Assembly Drawing: 2613644-1_1_AA

Pos	Part No	UN	Qty	Description	Page No
-					
010	2587464-0000		1	CANTILEVER	
020	2614039-0000		2	CLAMP	
040	2598065-0000		2	SUPPORT	
080	315125-0153		2	WASHER TBRSB 6,4X22X4 A4	
090	90458-1404		4	FLANGE BUSHING, 12X16X16 MM	
100	312105-0366		2	SCREW M6S ISO 4017 M6X12 A480	
110	312105-0462		8	SCREW M6S ISO 4014 M8X55 A480	
120	315105-0165		8	WASHER BRB 8,4X16 RFR	

Pos	Part No	UN	Qty	Description	Page No

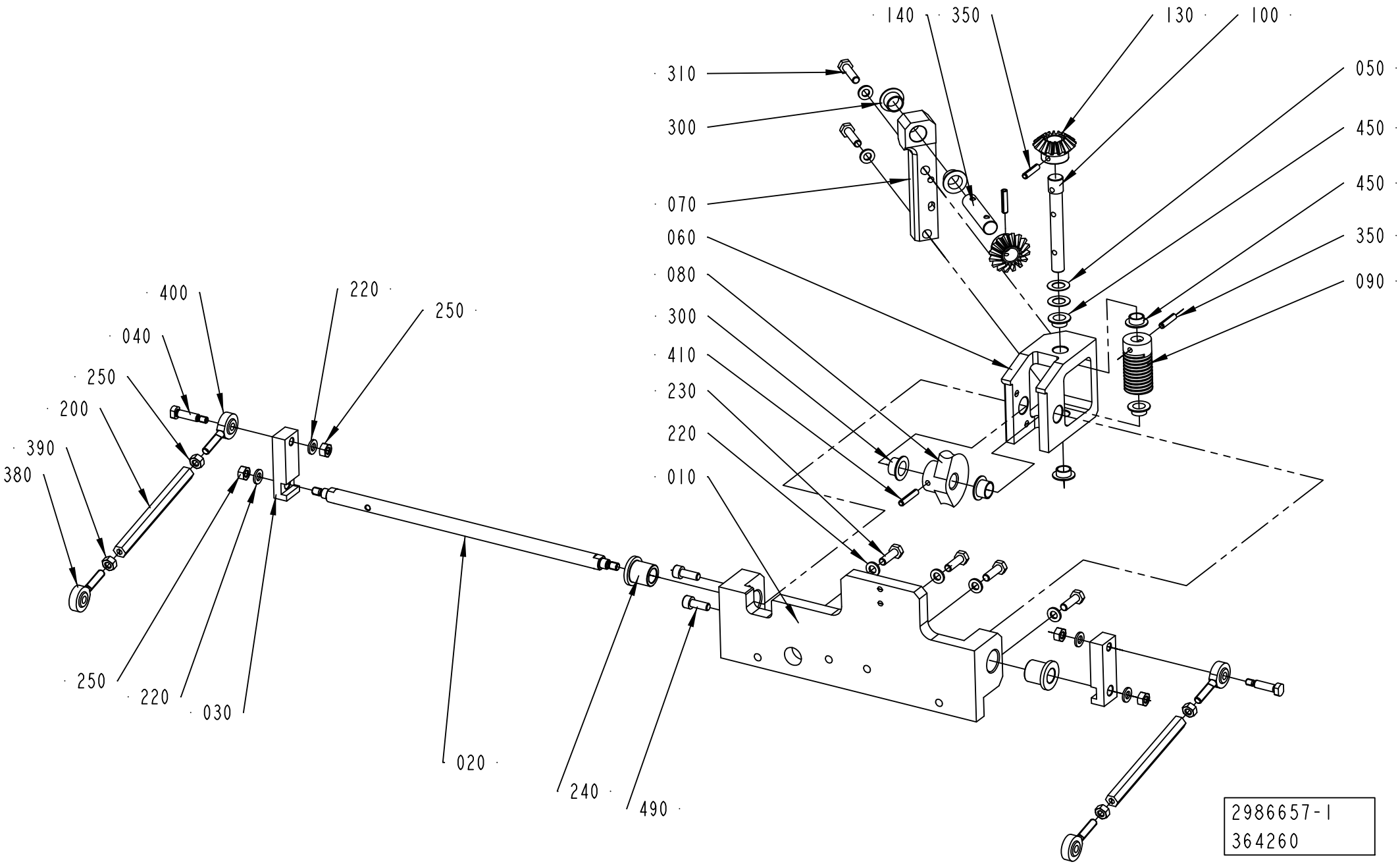
140
350
130
100
310
300
070
060
080
300
410
230
220
010
050
450
450
350
090
400
040
250
200
390
380
250
220
030
220
250
020
240
490
2986657-1
364260

ECM: 367799 - 20090101
Group number: 2986657-0100
Assembly Drawing: 2986657-1_1_AA

Pos	Part No	UN	Qty	Description	Page No
-					
010	2602657-0000		1	LOCK PLATE	
020	2602658-0000		1	SHAFT	
030	2535441-0000		2	LEVER	
040	2535442-0000		2	PIVOT PIN	
050	2691421-0000		2	SHIM	
060	2665720-0000		1	SUPPORT	
070	2665722-0000		1	SUPPORT	
080	2681618-0000		1	WORM WHEEL	
090	2681619-0000		1	WORM GEAR	
100	2665721-0000		1	SHAFT	
130	2681617-0000		2	GEAR WHEEL	
140	2599742-0000		1	SHAFT	
200	2535461-0000		2	CONNECTING ROD	
220	315105-0153		10	WASHER BRB 6,4X12 RFR	
230	312105-0370		4	SCREW M6S ISO 4017 M6X20 A480	
240	321111-0163		2	FLANGE BUSHING, 12X18X20 MM	
250	312605-0316		6	HEXAGON NUT, M6M M6 A280	
300	90240-0261		4	FLANGE BUSHING, 12X14X9 MM	
310	312105-0372		2	SCREW M6S ISO 4017 M6X25 A480	
350	311112-0256		3	SPRING PIN, ISO 8752 4X20-C	
380	90459-4505		2	ROD END, ID=6MM, M6X1 LH	
390	312902-0316		2	NUT HEX. LEFT THREAD, M6 A280	
400	90459-4504		2	ROD END, ID=6MM, M6X1	
410	311112-0258		1	SPRING PIN, ISO 8752 4X24-C	
450	90240-0289		4	FLANGE BUSHING, 10X12X6 MM	
490	312115-0368		2	SCREW ISO4762 M6X16 A4 80	

Pos	Part No	UN	Qty	Description	Page No

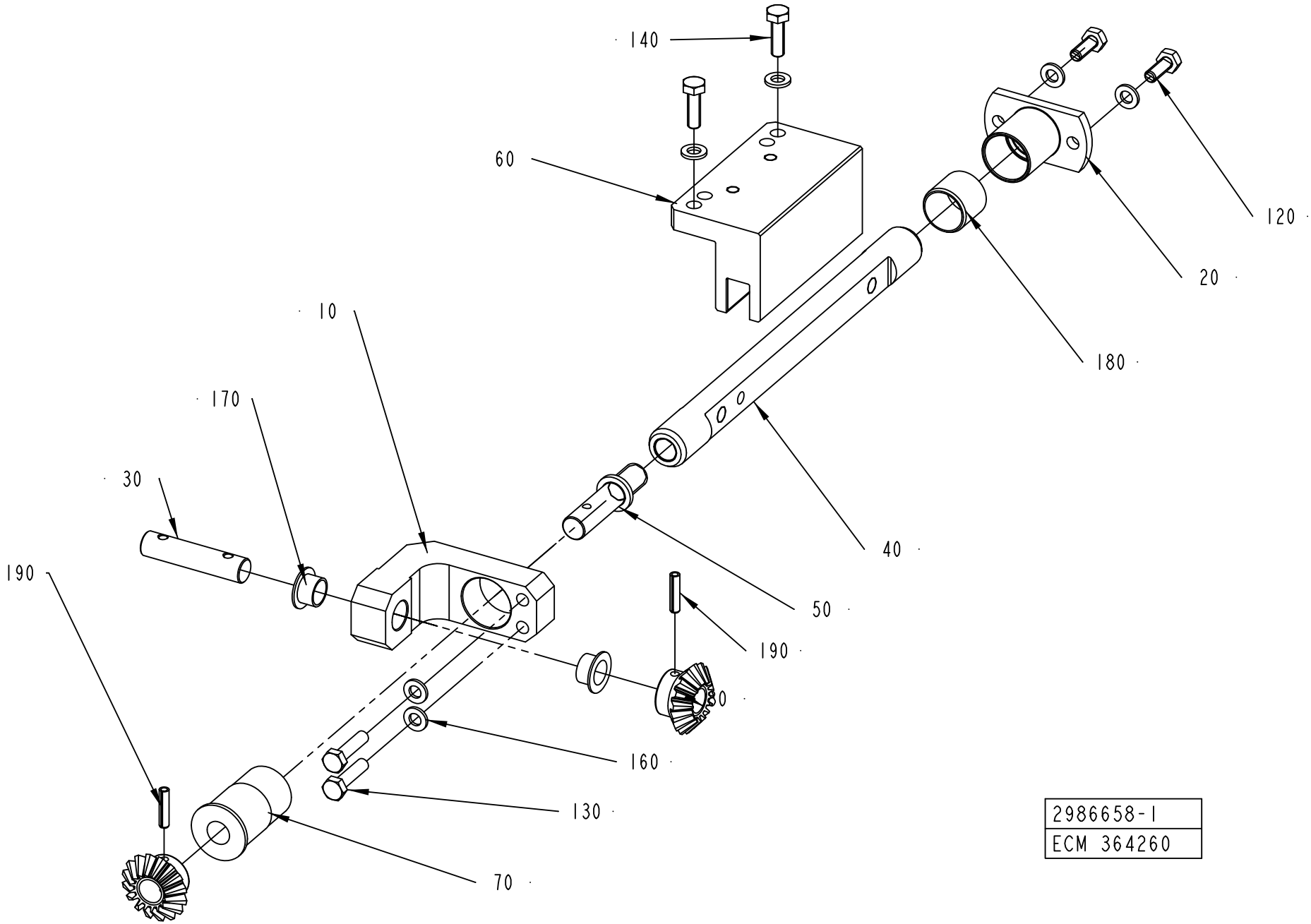
140
60
120
20
180
10
170
30
190
40
50
190
160
130
70
2986658-1
ECM 364260

ECM: 367800 - 20090101
Group number: 2986658-0100
Assembly Drawing: 2986658-1_1_AA

Pos	Part No	UN	Qty	Description	Page No
-					
010	2711289-0000		1	SUPPORT	
020	2599741-0000		1	SUPPORT	
030	2599742-0000		1	SHAFT	
040	2599743-0000		1	SHAFT	
050	2598067-0000		1	SHAFT	
060	2614038-0000		1	SPACER	
070	2623513-0000		1	BUSHING	
080	2681617-0000		2	GEAR WHEEL	
120	312105-0368		2	SCREW M6S ISO 4017 M6X16 A480	
130	312105-0372		2	SCREW M6S ISO 4017 M6X25 A480	
140	312105-0370		2	SCREW M6S ISO 4017 M6X20 A480	
160	315105-0153		6	WASHER BRB 6,4X12 RFR	
170	90240-0261		2	FLANGE BUSHING, 12X14X9 MM	
180	321133-0260		1	BUSHING, 20X23X20 MM	
190	311112-0256		2	SPRING PIN, ISO 8752 4X20-C	

Pos	Part No	UN	Qty	Description	Page No

This page is intentionally left blank.

ECM: 223571 - 20050701
Group number: 2660476-0100
Assembly Drawing:

Pos	Part No	UN	Qty	Description	Page No
-					
	90134-0030		5	SLEEVE FOR PLASTIC TUBE	
	90092-0052		8	METERING VALVE 10 MM3	
	90087-0019		5	PLUG M10X1 STAINLESS	
	90030-0098		4	ACCESSORIES, FERRULE 8	
	90028-0022		10	CONE TUBE 6 MM	
	90028-0020		8	CONE TUBE 2,5MM	
	90134-0039		8	BUSHING VALVE CONNECTION 2,5 MM	
	90134-0052		8	PLUG DOSING BLOCK	
	90134-0055		4	BUSHING/NUT INLET/OUTLET 6 MM	
	90166-0108	MM	2500	TUBE 6 MM PA TRANSP.	
	90166-0143	MM	3000	TUBE 2,5 MM PA TRANSP.	
	342703-0208		4	NUT, PIPES & CONNECTORS,NUT M-8 SS	

Pos	Part No	UN	Qty	Description	Page No

Tetra Pak

SPC
Spare Parts Catalogue

This page is intentionally left blank.

ECM: 305344 - 20070701
Group number: 2634506-0100
Assembly Drawing:

Pos	Part No	UN	Qty	Description	Page No
-					
010	2634509-0100		1	VOLUME KIT	**3-5**
050	1361935-0100		1	FRAME	**3-393**
060	1361558-0100		1	LIFTING KIT-WHEEL	**3-395**
070	599815-0100		2	HOLDING FIXTURE	**3-397**
080	1361559-0100		1	PULLER	**3-399**
100	1499571-0100		2	PAPER REEL HOLDER	**3-401**
110	2641396-0100		1	BENDING ROLLER	**3-403**
120	2641398-0100		1	SQUEE-GEE ROLLER	**3-405**
130	2655614-0100		1	TRANSFORMER	**3-407**
140	2897156-0100		1	WEIGHT	**3-409**
150	1363768-0000		1	BOX	

Pos	Part No	UN	Qty	Description	Page No

This page is intentionally left blank.

ECM: 998009 - 20070101
Group number: 2634509-0100
Assembly Drawing:

Pos	Part No	UN	Qty	Description	Page No
NOQC					
010	1361922-0200		1	DROP CHUTE VARIANT	**3-7**
020	1361923-0200		1	INFEED CONVEYOR VARIANT	**3-9, 3-11, 3-13, 3-15, 3-17**
050	1285012-0300		1	FOLDING PART	**3-19**
060	1361918-0300		1	WHEEL	**3-51, 3-53**
QC					
010	2537128-0100		1	DROP CHUTE VARIANT	**3-55, 3-57, 3-59**
020	2522129-0100		1	INFEED CONVEYOR VARIANT	**3-61, 3-63, 3-65, 3-67**
050	2543480-0100		1	FOLDING PART	**3-85**
060	2523811-0100		1	WHEEL	**3-129, 3-131, 3-133**
Common Parts					
030	1144324-0300		1	FRAMEWORK	**3-145, 3-147**
040	1144329-0300		1	PULL-DOWN DEVICE	**3-149, 3-151, 3-153, 3-155**
070	1487158-0300		1	FLAP HEATER VARIANT	**3-173, 3-175, 3-177, 3-179, 3-181, 3-183**
080	1144331-0300		1	PRESSURE DEVICE	**3-185, 3-187, 3-189, 3-191, 3-193, 3-195**
090	2732825-0100		1	RAIL	**3-201, 3-203**
100	2732820-0100		1	RAIL OUT FEED	**3-205, 3-207, 3-209, 3-211, 3-213, 3-215**
110	1361921-0400		1	VOLUME KIT OUT FEED	**3-221**
120	2634511-0100		1	MECHANICAL DIFFERENCES	**3-235**

Pos	Part No	UN	Qty	Description	Page No

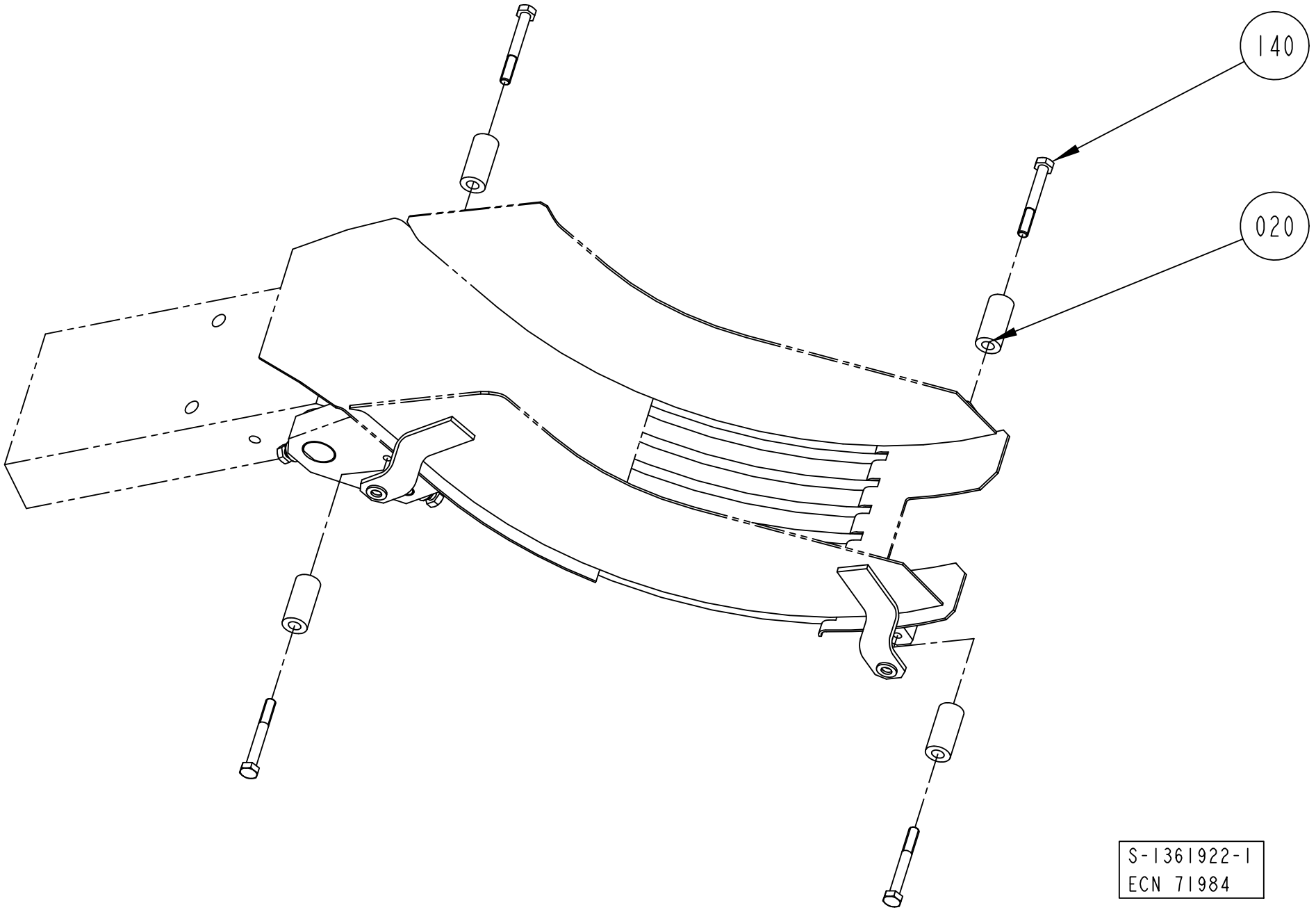
140
020
S-1361922-1
ECN 71984

ECM: 316420 - 20080103
Group number: 1361922-0200
Assembly Drawing: 1361922-1_1_AC

Pos	Part No	UN	Qty	Description	Page No
TBA 0200B, TBA 0250B, TBA 0330S					
020	1317218-0000		4	SPACER	
140	312105-0374		4	SCREW M6S ISO 4014 M6X30 A480	
TBA 0200S					
020	315115-0153		4	WASHER PLAIN, TBRB 6,4/12 H=3	
140	312105-0370		4	SCREW M6S ISO 4017 M6X20 A480	
TBA 0250S					
020	2522202-0000		4	SPACER	
140	312105-0374		4	SCREW M6S ISO 4014 M6X30 A480	
TBA 0500B, TBA 1000B					
020	1260714-0000		4	SPACER	
140	312105-0382		4	SCREW M6S ISO 4014 M6X60 A480	
TBA 0500S					
020	1499140-0000		4	SPACER	
140	312105-0379		4	SCREW M6S ISO 4014 M6X45 A480	
TBA 1000S					
020	1279670-0000		4	SPACER	
140	312105-0382		4	SCREW M6S ISO 4014 M6X60 A480	
TBA 1000SQ					
020	1487929-0000		4	SPACER	
140	312105-0379		4	SCREW M6S ISO 4014 M6X45 A480	
TBA 1500S					
140	312105-0366		4	SCREW M6S ISO 4017 M6X12 A480	
TPA 0250SQ					
020	315115-0153		4	WASHER PLAIN, TBRB 6,4/12 H=3	
140	312105-0370		4	SCREW M6S ISO 4017 M6X20 A480	
TPA 0330SQ					
020	1532254-0000		4	SPACER	
140	312105-0374		4	SCREW M6S ISO 4014 M6X30 A480	
TPA 0500SQ					
020	1549512-0000		4	SPACER	
140	312105-0374		4	SCREW M6S ISO 4014 M6X30 A480	

Pos	Part No	UN	Qty	Description	Page No

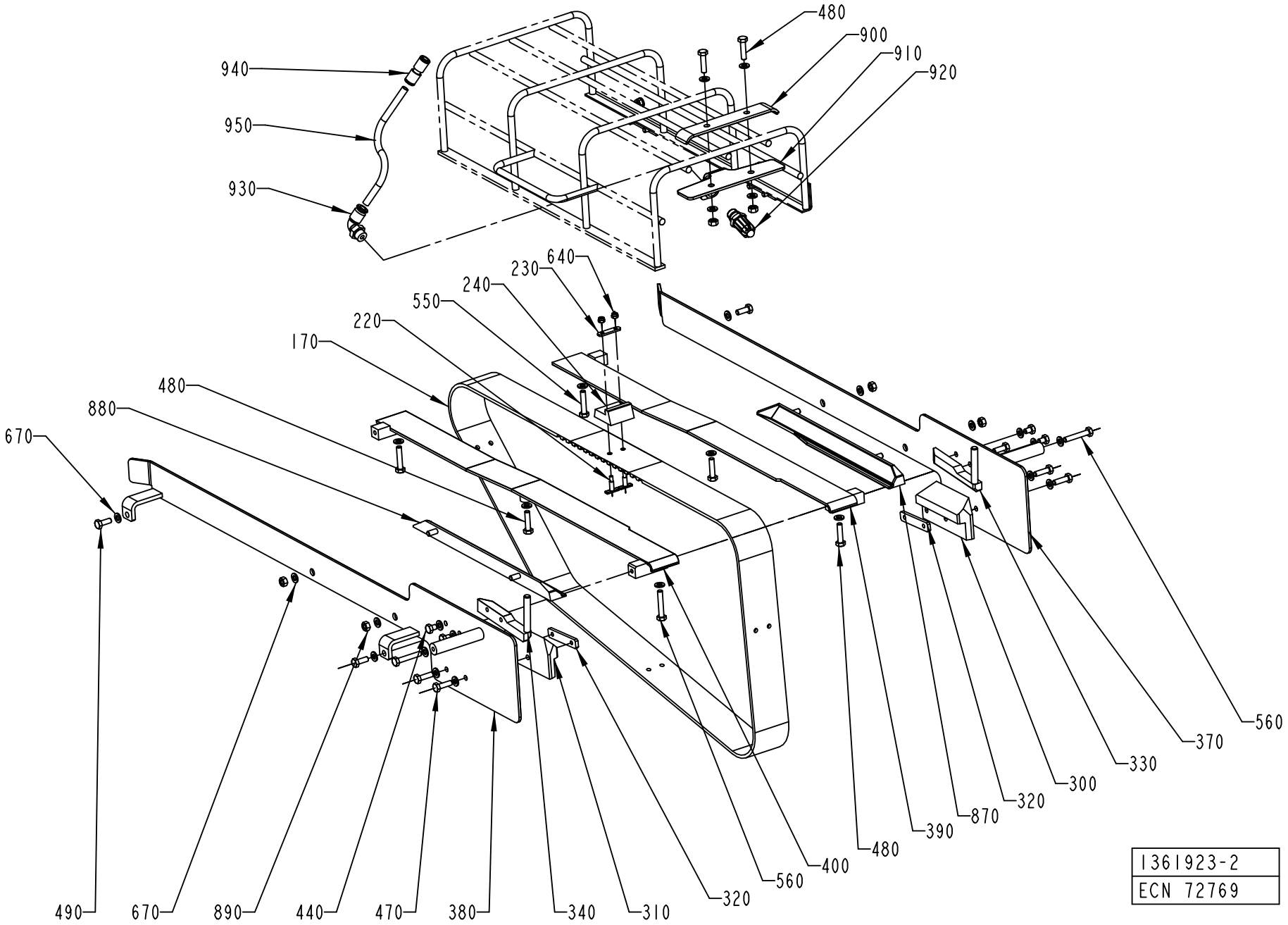
480
900
910
920
940
950
930
640
230
240
550
220
170
480
880
670
560
370
330
300
320
870
390
480
400
560
320
340
310
380
470
440
890
670
490
1361923-2
ECN 72769

ECM: 272743 - 20080215
Group number: 1361923-0200
Assembly Drawing: 1361923-2_1_AC

This list covers pages from 3-8 to 3-17

Pos	Part No	UN	Qty	Description	Page No
TPA 1000SQ (See drawing on page: 3-8)					
170	1519338-0000		1	TIMING BELT	
220	1517476-0000		6	WEDGE	
230	1517477-0000		3	PLATE	
240	1519344-0000		3	CARRIER	
300	1517481-0000		1	SLIDE	
310	1517480-0000		1	SLIDE	
320	2543242-0000		2	ANGLE BLOCK	
330	1517478-0000		1	BAR	
340	1517479-0000		1	BAR	
370	1517474-0000		1	GUIDE	
380	1517475-0000		1	GUIDE	
390	1519345-0000		1	GUIDE	
400	1519346-0000		1	GUIDE	
440	312105-0366		4	SCREW M6S ISO 4017 M6X12 A480	
470	312105-0368		4	SCREW M6S ISO 4017 M6X16 A480	
480	312105-0372		3	SCREW M6S ISO 4017 M6X25 A480	
500	312105-0364		4	SCREW M6S ISO 4017 M6X10 A480	
550	312109-0376		2	SCREW M6S ISO 4017 M6X35 A480	
560	312105-0376		3	SCREW M6S ISO 4014 M6X35 A480	
640	312812-0312		6	HEXAGON NUT, NY-LOCK M4 A480	
670	315105-0153		20	WASHER BRB 6,4X12 RFR	
870	2637665-0000		1	GUIDE	
880	2637666-0000		1	GUIDE	
TBA 0200B (See drawing on page: 3-8)					
170	1144783-0000		1	TIMING BELT	
220	1346736-0000		8	WEDGE	
230	1144918-0000		4	PLATE	
240	1282287-0000		4	CARRIER	
300	1348136-0000		1	SLIDE	
310	1348142-0000		1	SLIDE	
320	1348169-0000		2	PLATE	
330	1348148-0000		1	BAR	
340	1348154-0000		1	BAR	
370	1499427-0000		1	GUIDE	
380	1499426-0000		1	GUIDE	
390	1282290-0000		1	GUIDE	
400	1282291-0000		1	GUIDE	
440	312105-0362		4	SCREW M6S ISO 4017 M6X8 A480	
470	312105-0370		4	SCREW M6S ISO 4017 M6X20 A480	
480	312105-0372		5	SCREW M6S ISO 4017 M6X25 A480	
550	312109-0374		2	SCREW M6S ISO 4017 M6X30 A480	
560	312105-0376		3	SCREW M6S ISO 4014 M6X35 A480	
640	312812-0312		6	HEXAGON NUT, NY-LOCK M4 A480	
670	315105-0153		20	WASHER BRB 6,4X12 RFR	
870	2637665-0000		1	GUIDE	
880	2637666-0000		1	GUIDE	
TBA 0200S (See drawing on page: 3-8)					
170	1144783-0000		1	TIMING BELT	
220	1346736-0000		8	WEDGE	
230	1144918-0000		4	PLATE	
240	1282287-0000		4	CARRIER	
300	1348134-0000		1	SLIDE	
310	1348140-0000		1	SLIDE	
320	1348169-0000		2	PLATE	
330	1348146-0000		1	BAR	
340	1348152-0000		1	BAR	
370	1499136-0000		1	GUIDE	
380	1499135-0000		1	GUIDE	
390	1282290-0000		1	GUIDE	
400	1282291-0000		1	GUIDE	
440	312105-0362		4	SCREW M6S ISO 4017 M6X8 A480	
470	312105-0370		4	SCREW M6S ISO 4017 M6X20 A480	
480	312105-0372		5	SCREW M6S ISO 4017 M6X25 A480	
550	312109-0374		2	SCREW M6S ISO 4017 M6X30 A480	
560	312105-0376		3	SCREW M6S ISO 4014 M6X35 A480	
640	312812-0312		8	HEXAGON NUT, NY-LOCK M4 A480	
670	315105-0153		28	WASHER BRB 6,4X12 RFR	
870	1517524-0000		1	GUIDE	
880	1517525-0000		1	GUIDE	
890	312605-0316		6	HEXAGON NUT, M6M M6 A280	
900	1499476-0000		1	HOLDER	
910	1499475-0000		1	HOLDER	
920	90424-0068		1	AIR NOZZLE, G1/4, MOD. 216 BSP	
930	342732-0104		1	ELBOW PIPE JOINT, EXT.THREAD, D=8MM-G1/4	
940	342728-0103		1	PIPE COUPLING 8 MM	
950	90166-0013	MM	700	TUBE 8 MM PA BLUE	
TBA 0200S (See drawing on page: 3-8)					
170	1144783-0000		1	TIMING BELT	
220	1346736-0000		8	WEDGE	
230	1144918-0000		4	PLATE	
240	1282287-0000		4	CARRIER	
300	1348134-0000		1	SLIDE	
310	1348140-0000		1	SLIDE	
320	1348169-0000		2	PLATE	
330	1348146-0000		1	BAR	
340	1348152-0000		1	BAR	
370	1499136-0000		1	GUIDE	
380	1499135-0000		1	GUIDE	
390	1282290-0000		1	GUIDE	
400	1282291-0000		1	GUIDE	
440	312105-0362		4	SCREW M6S ISO 4017 M6X8 A480	
470	312105-0370		4	SCREW M6S ISO 4017 M6X20 A480	
480	312105-0372		5	SCREW M6S ISO 4017 M6X25 A480	
550	312109-0374		2	SCREW M6S ISO 4017 M6X30 A480	
560	312105-0376		3	SCREW M6S ISO 4014 M6X35 A480	
640	312812-0312		8	HEXAGON NUT, NY-LOCK M4 A480	
670	315105-0153		28	WASHER BRB 6,4X12 RFR	
870	1517524-0000		1	GUIDE	
880	1517525-0000		1	GUIDE	
890	312605-0316		6	HEXAGON NUT, M6M M6 A280	
900	1499476-0000		1	HOLDER	
910	1499475-0000		1	HOLDER	
920	90424-0068		1	AIR NOZZLE, G1/4, MOD. 216 BSP	
930	342732-0104		1	ELBOW PIPE JOINT, EXT.THREAD, D=8MM-G1/4	
940	342728-0103		1	PIPE COUPLING 8 MM	
950	90166-0013	MM	700	TUBE 8 MM PA BLUE	

INFEED CONVEYOR VARIANT

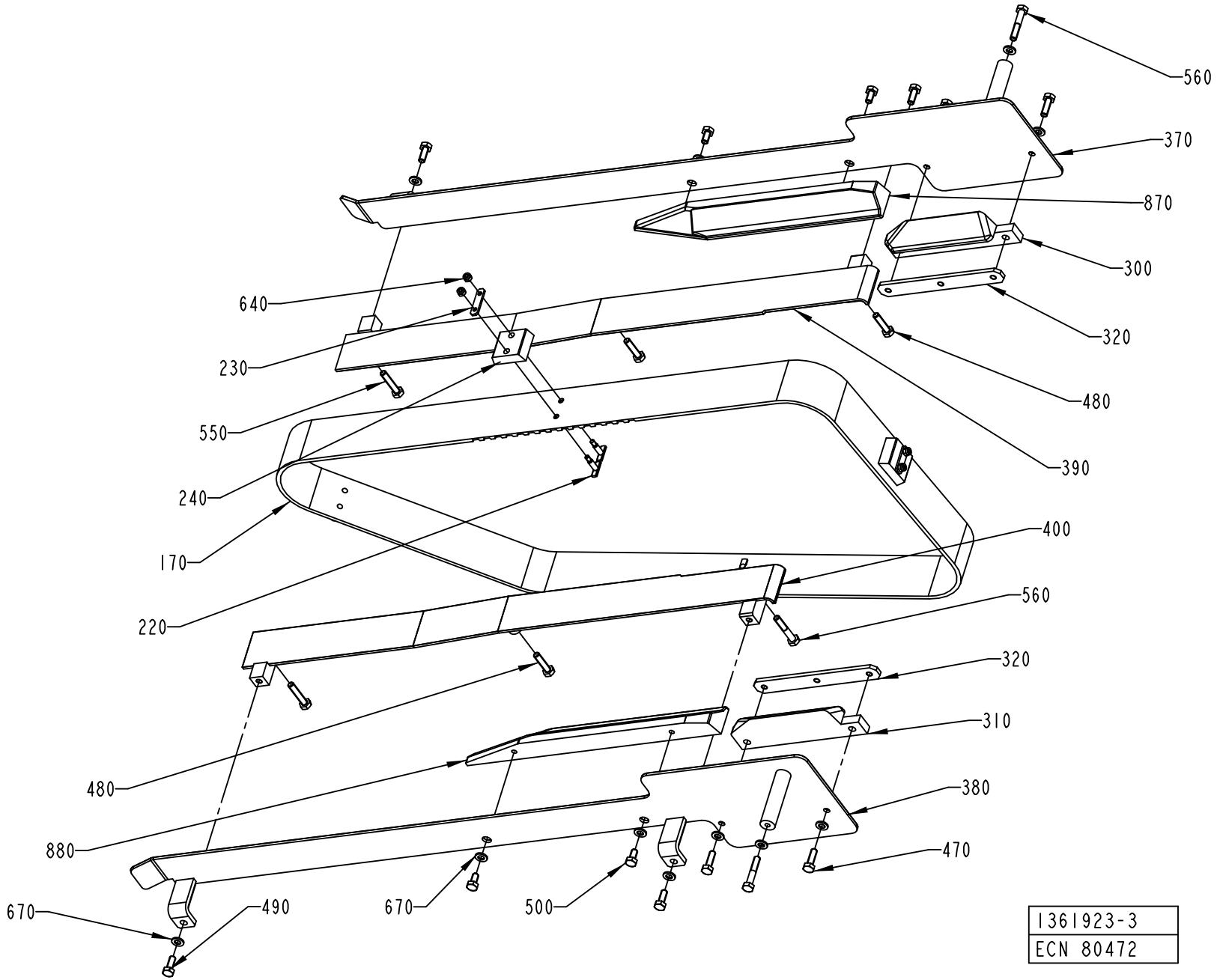

Pos	Part No	UN	Qty	Description	Page No
TBA 0250B (Cont'd) (See drawing on page: 3-8)					
170	1144783-0000		1	TIMING BELT	
220	1346736-0000		8	WEDGE	
230	1144918-0000		4	PLATE	
240	1282287-0000		4	CARRIER	
300	1348135-0000		1	SLIDE	
310	1348141-0000		1	SLIDE	
320	1348169-0000		2	PLATE	
330	1348147-0000		1	BAR	
340	1348153-0000		1	BAR	
370	1499427-0000		1	GUIDE	
380	1499426-0000		1	GUIDE	
390	1282290-0000		1	GUIDE	
400	1282291-0000		1	GUIDE	
440	312105-0362		4	SCREW M6S ISO 4017 M6X8 A480	
470	312105-0370		4	SCREW M6S ISO 4017 M6X20 A480	
480	312105-0372		5	SCREW M6S ISO 4017 M6X25 A480	
550	312109-0374		2	SCREW M6S ISO 4017 M6X30 A480	
560	312105-0376		3	SCREW M6S ISO 4014 M6X35 A480	
640	312812-0312		8	HEXAGON NUT, NY-LOCK M4 A480	
670	315105-0153		28	WASHER BRB 6,4X12 RFR	
870	1517526-0000		1	GUIDE	
880	1517527-0000		1	GUIDE	
890	312605-0316		6	HEXAGON NUT, M6M M6 A280	
900	1499476-0000		1	HOLDER	
910	1499475-0000		1	HOLDER	
920	90424-0068		1	AIR NOZZLE, G1/4, MOD. 216 BSP	
930	342732-0104		1	ELBOW PIPE JOINT, EXT.THREAD, D=8MM-G1/4	
940	342728-0103		1	PIPE COUPLING 8 MM	
950	90166-0013	MM	700	TUBE 8 MM PA BLUE	
TBA 0250S (See drawing on page: 3-8)					
170	1144783-0000		1	TIMING BELT	
220	1346736-0000		8	WEDGE	
230	1144918-0000		4	PLATE	
240	2551120-0000		4	CARRIER	
300	2529605-0000		1	SLIDE	
310	2529606-0000		1	SLIDE	
320	1279409-0000		2	PLATE	
330	2529608-0000		1	BAR	
340	2529607-0000		1	BAR	
370	2529603-0000		1	GUIDE	
380	2529604-0000		1	GUIDE	
390	1282290-0000		1	GUIDE	
400	1282291-0000		1	GUIDE	
440	312105-0362		4	SCREW M6S ISO 4017 M6X8 A480	
470	312105-0370		4	SCREW M6S ISO 4017 M6X20 A480	
480	312105-0372		5	SCREW M6S ISO 4017 M6X25 A480	
640	312812-0312		8	HEXAGON NUT, NY-LOCK M4 A480	
670	315105-0153		28	WASHER BRB 6,4X12 RFR	
870	1517524-0000		1	GUIDE	
880	1517525-0000		1	GUIDE	
890	312605-0316		6	HEXAGON NUT, M6M M6 A280	
900	1499476-0000		1	HOLDER	
910	1499475-0000		1	HOLDER	
920	90424-0068		1	AIR NOZZLE, G1/4, MOD. 216 BSP	
930	342732-0104		1	ELBOW PIPE JOINT, EXT.THREAD, D=8MM-G1/4	
940	342728-0103		1	PIPE COUPLING 8 MM	
950	90166-0013	MM	700	TUBE 8 MM PA BLUE	
TBA 0330S (See drawing on page: 3-8)					
170	1144783-0000		1	TIMING BELT	
230	1144918-0000		4	PLATE	
240	1282287-0000		4	CARRIER	
300	2544997-0000		1	SLIDE	
310	2544998-0000		1	SLIDE	
320	1279409-0000		2	PLATE	
330	2545000-0000		1	BAR	
340	2544999-0000		1	BAR	
370	2544996-0000		1	GUIDE	
380	2544995-0000		1	GUIDE	
390	2529610-0000		1	GUIDE	
400	2529609-0000		1	GUIDE	
440	312105-0362		4	SCREW M6S ISO 4017 M6X8 A480	
470	312105-0370		4	SCREW M6S ISO 4017 M6X20 A480	
480	312105-0372		3	SCREW M6S ISO 4017 M6X25 A480	
550	312109-0374		2	SCREW M6S ISO 4017 M6X30 A480	
560	312105-0376		3	SCREW M6S ISO 4014 M6X35 A480	
640	312812-0312		8	HEXAGON NUT, NY-LOCK M4 A480	
670	315105-0153		16	WASHER BRB 6,4X12 RFR	
890	312605-0316		2	HEXAGON NUT, M6M M6 A280	
TBA 0500B (See drawing on page: 3-8)					
170	1144783-0000		1	TIMING BELT	
220	1346471-0000		8	WEDGE	
230	1144918-0000		4	PLATE	
240	1558700-0000		4	CARRIER	
300	1539874-0000		1	SLIDE	

INFEED CONVEYOR VARIANT

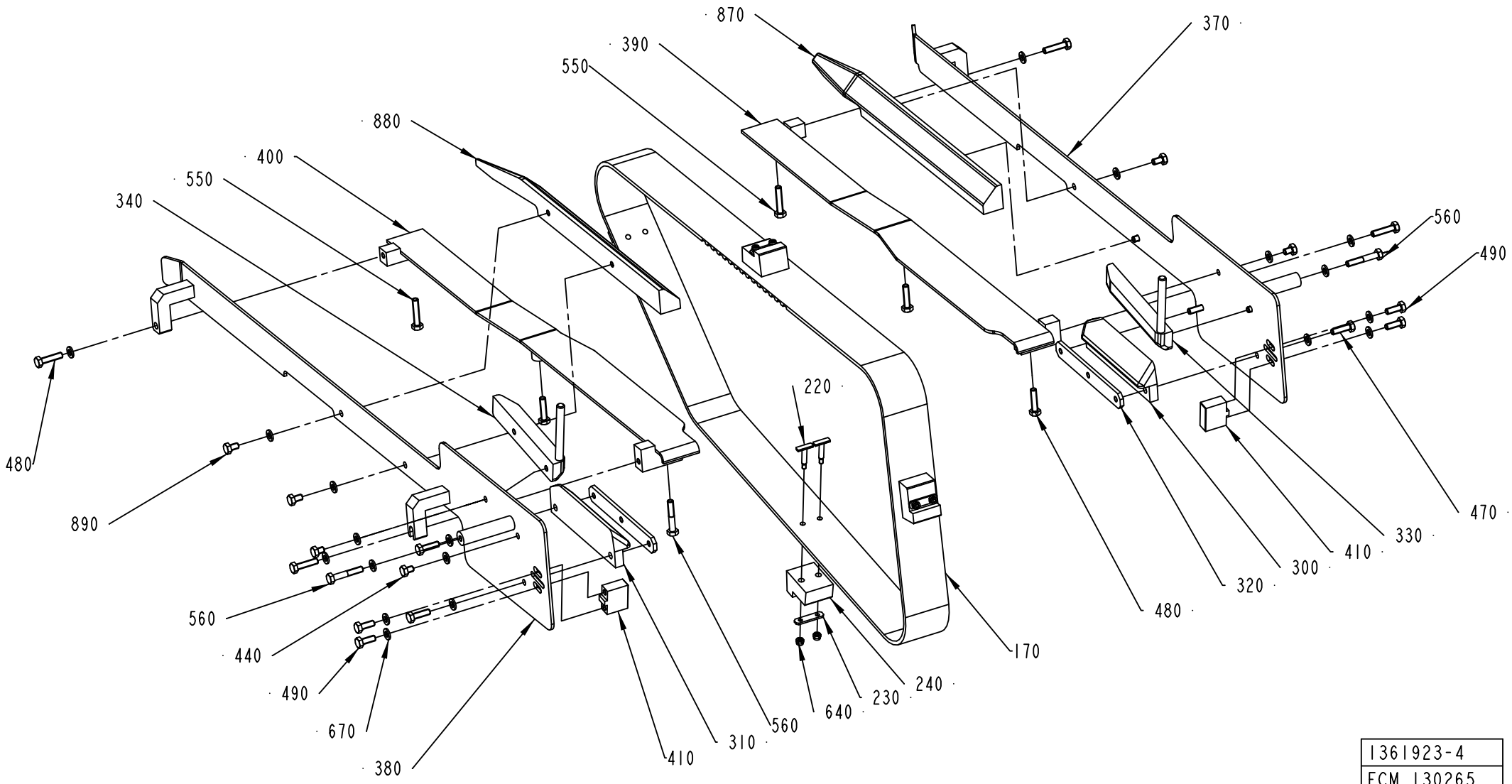

1361923-4
ECM 130265

ECM: 272743 - 20080215
Group number: 1361923-0200
Assembly Drawing: 1361923-4_1_AB

This list covers pages from 3-8 to 3-17

Pos	Part No	UN	Qty	Description	Page No
TBA 0500B (Cont'd) (See drawing on page: 3-8)					
310	1539875-0000		1	SLIDE	
320	1539876-0000		2	PLATE	
330	1539877-0000		1	BAR	
340	1539878-0000		1	BAR	
370	1539879-0000		1	GUIDE	
380	1539880-0000		1	GUIDE	
390	1317651-0000		1	GUIDE	
400	1317650-0000		1	GUIDE	
470	312105-0370		4	SCREW M6S ISO 4017 M6X20 A480	
480	312105-0372		3	SCREW M6S ISO 4017 M6X25 A480	
550	312109-0374		2	SCREW M6S ISO 4017 M6X30 A480	
560	312105-0376		3	SCREW M6S ISO 4014 M6X35 A480	
640	312812-0312		8	HEXAGON NUT, NY-LOCK M4 A480	
670	315105-0153		20	WASHER BRB 6,4X12 RFR	
TBA 0500S (See drawing on page: 3-8)					
170	1144783-0000		1	TIMING BELT	
220	1346736-0000		8	WEDGE	
230	1144918-0000		4	PLATE	
240	1282287-0000		4	CARRIER	
300	1499418-0000		1	SLIDE	
310	1499422-0000		1	SLIDE	
320	1144621-0000		2	PLATE	
330	1499417-0000		1	BAR	
340	1499423-0000		1	BAR	
370	1499401-0000		1	GUIDE	
380	1499400-0000		1	GUIDE	
390	1317651-0000		1	GUIDE	
400	1317650-0000		1	GUIDE	
440	312105-0362		4	SCREW M6S ISO 4017 M6X8 A480	
470	312105-0370		4	SCREW M6S ISO 4017 M6X20 A480	
480	312105-0372		3	SCREW M6S ISO 4017 M6X25 A480	
550	312109-0374		2	SCREW M6S ISO 4017 M6X30 A480	
560	312105-0376		3	SCREW M6S ISO 4014 M6X35 A480	
640	312812-0312		8	HEXAGON NUT, NY-LOCK M4 A480	
670	315105-0153		20	WASHER BRB 6,4X12 RFR	
TBA 1000B (See drawing on page: 3-8)					
170	1144783-0000		1	TIMING BELT	
220	1346471-0000		8	WEDGE	
230	1144918-0000		4	PLATE	
240	1144919-0000		4	CARRIER	
300	1348133-0000		1	SLIDE	
310	1348139-0000		1	SLIDE	
320	1279409-0000		2	PLATE	
330	1348144-0000		1	BAR	
340	1348150-0000		1	BAR	
370	1519089-0000		1	GUIDE	
380	1519090-0000		1	GUIDE	
390	1282290-0000		1	GUIDE	
400	1282291-0000		1	GUIDE	
440	312105-0362		4	SCREW M6S ISO 4017 M6X8 A480	
470	312105-0370		4	SCREW M6S ISO 4017 M6X20 A480	
480	312105-0372		3	SCREW M6S ISO 4017 M6X25 A480	
550	312109-0374		2	SCREW M6S ISO 4017 M6X30 A480	
560	312105-0376		3	SCREW M6S ISO 4014 M6X35 A480	
640	312812-0312		8	HEXAGON NUT, NY-LOCK M4 A480	
670	315105-0153		20	WASHER BRB 6,4X12 RFR	
TBA 1000S (See drawing on page: 3-8)					
170	1144783-0000		1	TIMING BELT	
220	1346471-0000		8	WEDGE	
230	1144918-0000		4	PLATE	
240	1144919-0000		4	CARRIER	
300	1348132-0000		1	SLIDE	
310	1348138-0000		1	SLIDE	
320	1279409-0000		2	PLATE	
330	1348145-0000		1	BAR	
340	1348151-0000		1	BAR	
370	1517242-0000		1	GUIDE	
380	1517243-0000		1	GUIDE	
390	1317651-0000		1	GUIDE	
400	1317650-0000		1	GUIDE	
440	312105-0362		4	SCREW M6S ISO 4017 M6X8 A480	
470	312105-0370		4	SCREW M6S ISO 4017 M6X20 A480	
480	312105-0372		3	SCREW M6S ISO 4017 M6X25 A480	
550	312109-0374		2	SCREW M6S ISO 4017 M6X30 A480	
560	312105-0376		3	SCREW M6S ISO 4014 M6X35 A480	
640	312812-0312		8	HEXAGON NUT, NY-LOCK M4 A480	
670	315105-0153		20	WASHER BRB 6,4X12 RFR	
TBA 1000SQ (See drawing on page: 3-8)					
170	1144783-0000		1	TIMING BELT	
220	1346471-0000		8	WEDGE	
230	1144918-0000		4	PLATE	
240	1282848-0000		4	CARRIER	
300	1490033-0000		1	SLIDE	

Machine Type | Group Description | Used-In | Group Number | Page No

See previous drawings pages: 3-8, 3-10, 3-12.

ECM: 272743 - 20080215
Group number: 1361923-0200
Assembly Drawing: 1361923-4_1_AB

This list covers pages from 3-8 to 3-17

Pos	Part No	UN	Qty	Description	Page No
TBA 1000SQ (Cont'd) (See drawing on page: 3-8)					
310	1490034-0000		1	SLIDE	
320	1144621-0000		2	PLATE	
330	1490035-0000		1	BAR	
340	1490036-0000		1	BAR	
370	1512308-0000		1	GUIDE	
380	1512307-0000		1	GUIDE	
390	1317651-0000		1	GUIDE	
400	1317650-0000		1	GUIDE	
440	312105-0362		4	SCREW M6S ISO 4017 M6X8 A480	
470	312105-0370		4	SCREW M6S ISO 4017 M6X20 A480	
480	312105-0372		3	SCREW M6S ISO 4017 M6X25 A480	
550	312109-0374		2	SCREW M6S ISO 4017 M6X30 A480	
560	312105-0376		3	SCREW M6S ISO 4014 M6X35 A480	
640	312812-0312		8	HEXAGON NUT, NY-LOCK M4 A480	
670	315105-0153		20	WASHER BRB 6,4X12 RFR	
TBA 1500S (See drawing on page: 3-8)					
170	1349152-0000		1	TIMING BELT	
220	1346471-0000		6	WEDGE	
230	1144918-0000		3	PLATE	
240	1282848-0000		3	CARRIER	
300	1334561-0000		1	SLIDE	
310	1334562-0000		1	SLIDE	
320	1144621-0000		2	PLATE	
330	1317805-0000		1	BAR	
340	1334271-0000		1	BAR	
370	1519093-0000		1	GUIDE	
380	1519094-0000		1	GUIDE	
390	1478215-0000		1	SLIDE	
400	1478214-0000		1	SLIDE	
440	312105-0362		4	SCREW M6S ISO 4017 M6X8 A480	
470	312105-0370		4	SCREW M6S ISO 4017 M6X20 A480	
480	312105-0372		3	SCREW M6S ISO 4017 M6X25 A480	
550	312109-0374		2	SCREW M6S ISO 4017 M6X30 A480	
560	312105-0376		3	SCREW M6S ISO 4014 M6X35 A480	
640	312812-0312		6	HEXAGON NUT, NY-LOCK M4 A480	
670	315105-0153		20	WASHER BRB 6,4X12 RFR	
TPA 0250SQ (See drawing on page: 3-8)					
170	1144783-0000		1	TIMING BELT	
220	1346736-0000		8	WEDGE	
230	1144918-0000		4	PLATE	
240	1558864-0000		4	CARRIER	
300	1549852-0000		1	SLIDE	
310	1549853-0000		1	SLIDE	
320	1144621-0000		2	PLATE	
330	1549854-0000		1	BAR	
340	1549855-0000		1	BAR	
370	1549856-0000		1	GUIDE	
380	1549857-0000		1	GUIDE	
390	1317651-0000		1	GUIDE	
400	1317650-0000		1	GUIDE	
440	312105-0362		4	SCREW M6S ISO 4017 M6X8 A480	
480	312105-0372		5	SCREW M6S ISO 4017 M6X25 A480	
500	312105-0364		4	SCREW M6S ISO 4017 M6X10 A480	
550	312109-0374		2	SCREW M6S ISO 4017 M6X30 A480	
640	312812-0312		8	HEXAGON NUT, NY-LOCK M4 A480	
670	315105-0153		24	WASHER BRB 6,4X12 RFR	
870	1539894-0000		1	GUIDE	
880	1539895-0000		1	GUIDE	
890	312605-0316		2	HEXAGON NUT, M6M M6 A280	
900	1499476-0000		1	HOLDER	
910	1499475-0000		1	HOLDER	
920	90424-0068		1	AIR NOZZLE, G1/4, MOD. 216 BSP	
930	342732-0104		1	ELBOW PIPE JOINT, EXT.THREAD, D=8MM-G1/4	
940	342728-0103		1	PIPE COUPLING 8 MM	
950	90166-0013	MM	700	TUBE 8 MM PA BLUE	
TPA 0330SQ (See drawing on page: 3-10)					
170	1144783-0000		1	TIMING BELT	
220	1346736-0000		8	WEDGE	
230	1144918-0000		4	PLATE	
240	1558864-0000		4	CARRIER	
300	1532257-0000		1	SLIDE	
310	1532258-0000		1	SLIDE	
320	1144621-0000		2	PLATE	
370	1532261-0000		1	GUIDE	
380	1532262-0000		1	GUIDE	
390	1317651-0000		1	GUIDE	
400	1317650-0000		1	GUIDE	
470	312105-0370		4	SCREW M6S ISO 4017 M6X20 A480	
480	312105-0372		3	SCREW M6S ISO 4017 M6X25 A480	
500	312105-0366		4	SCREW M6S ISO 4017 M6X12 A480	
550	312109-0374		2	SCREW M6S ISO 4017 M6X30 A480	
560	312105-0376		3	SCREW M6S ISO 4014 M6X35 A480	
640	312812-0312		8	HEXAGON NUT, NY-LOCK M4 A480	

Machine Type | Group Description | Used-In | Group Number | Page No

See previous drawings pages: 3-8, 3-10, 3-12.

Pos	Part No	UN	Qty	Description	Page No
TPA 0330SQ (Cont'd) (See drawing on page: 3-10)					
670	315105-0153		20	WASHER BRB 6,4X12 RFR	
870	1532263-0000		1	GUIDE	
880	1532264-0000		1	GUIDE	
TPA 0500SQ (See drawing on page: 3-12)					
170	1144783-0000		1	TIMING BELT	
220	1346471-0000		8	WEDGE	
230	1144918-0000		4	PLATE	
240	1532256-0000		4	CARRIER	
300	1549513-0000		1	SLIDE	
310	1549514-0000		1	SLIDE	
320	1144621-0000		2	PLATE	
330	1549515-0000		1	BAR	
340	1549516-0000		1	BAR	
370	1549517-0000		1	GUIDE	
380	1549518-0000		1	GUIDE	
390	1549523-0000		1	GUIDE	
400	1549522-0000		1	GUIDE	
410	2545545-0000		2	INSERT	
440	312105-0362		4	SCREW M6S ISO 4017 M6X8 A480	
470	312105-0370		4	SCREW M6S ISO 4017 M6X20 A480	
480	312105-0372		7	SCREW M6S ISO 4017 M6X25 A480	
550	312109-0374		2	SCREW M6S ISO 4017 M6X30 A480	
560	312105-0376		3	SCREW M6S ISO 4014 M6X35 A480	
640	312812-0312		8	HEXAGON NUT, NY-LOCK M4 A480	
670	315105-0153		28	WASHER BRB 6,4X12 RFR	
870	1539983-0000		1	GUIDE	
880	1539984-0000		1	GUIDE	
890	312105-0364		4	SCREW M6S ISO 4017 M6X10 A480	
Common Parts					
490	312105-0368		4	SCREW M6S ISO 4017 M6X16 A480	

Pos	Part No	UN	Qty	Description	Page No

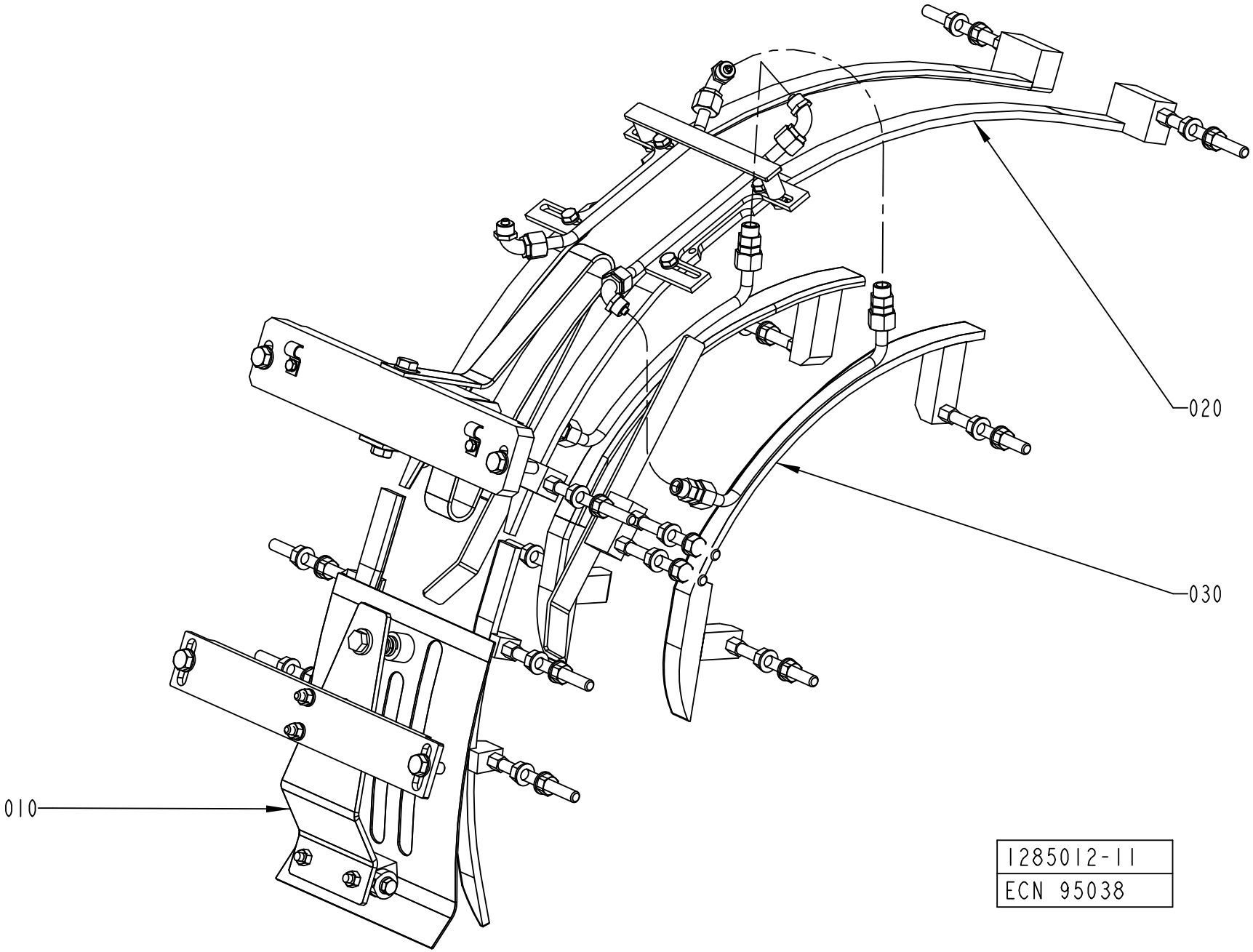
020
030
010
1285012-11
ECN 95038

ECM: 110175 - 20030403
Group number: 1285012-0300
Assembly Drawing: 1285012-11_1_AA

Pos	Part No	UN	Qty	Description	Page No
-					
010	1558932-0100		1	TOP SECTION	**3-21, 3-23, 3-25**
020	1558935-0100		1	TOP RAIL	**3-27, 3-29, 3-31, 3-33, 3-35**
030	1558940-0200		1	FLAP GUIDE	**3-37, 3-39, 3-41, 3-43, 3-45, 3-47, 3-49**

Pos	Part No	UN	Qty	Description	Page No

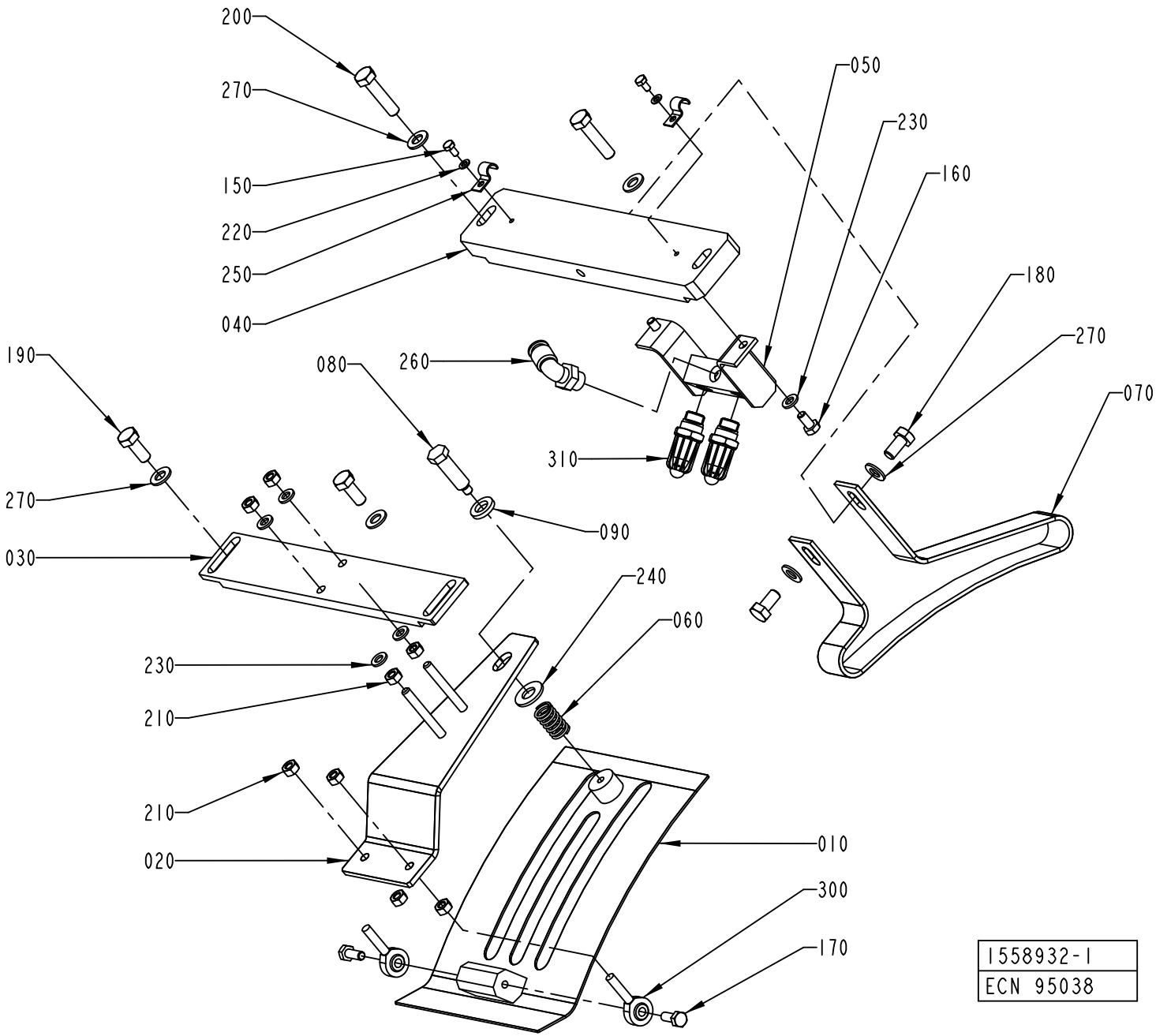
200
270
150
220
250
040
050
230
160
180
270
070
080
260
310
190
270
030
090
240
060
230
210
210
020
010
300
170
1558932-1
ECN 95038

Pos	Part No	UN	Qty	Description	Page No
TBA 0200B, TBA 0250B (See drawing on page: 3-20)					
010	1317211-0000		1	COVERING PLATE	
020	1317213-0000		1	ADJUSTING PLATE	
030	1144975-0000		1	ATTACHMENT PLATE	
040	1144902-0000		1	SUPPORT	
060	1317633-0000		1	SPRING	
150	312105-0287		2	SCREW M6S ISO 4017 M4X8 A470	
190	312105-0451		2	SCREW M6S ISO 4017 M8X20 A480	
210	312605-0316		8	HEXAGON NUT, M6M M6 A280	
220	315105-0136		2	WASHER BRB 4,3X8 RFR	
230	315105-0153		4	WASHER BRB 6,4X12 RFR	
250	90165-0057		2	PIPE CLIP FOR TUBE D=6 MM	
270	315105-0165		4	WASHER BRB 8,4X16 RFR	
TBA 0200S (See drawing on page: 3-20)					
010	1317211-0000		1	COVERING PLATE	
020	1317213-0000		1	ADJUSTING PLATE	
030	1144975-0000		1	ATTACHMENT PLATE	
040	1144902-0000		1	SUPPORT	
060	1317633-0000		1	SPRING	
070	1144901-0000		1	GUIDE	
150	312105-0287		2	SCREW M6S ISO 4017 M4X8 A470	
180	312105-0449		2	SCREW M6S ISO 4017 M8X16 A480	
190	312105-0451		2	SCREW M6S ISO 4017 M8X20 A480	
210	312605-0316		8	HEXAGON NUT, M6M M6 A280	
220	315105-0136		2	WASHER BRB 4,3X8 RFR	
230	315105-0153		4	WASHER BRB 6,4X12 RFR	
250	90165-0057		2	PIPE CLIP FOR TUBE D=6 MM	
270	315105-0165		6	WASHER BRB 8,4X16 RFR	
TBA 0250S (See drawing on page: 3-24)					
010	1317211-0000		1	COVERING PLATE	
020	1317213-0000		1	ADJUSTING PLATE	
030	1144975-0000		1	ATTACHMENT PLATE	
040	1144902-0000		1	SUPPORT	
060	90335-0036		1	COMP. SPRING 22450, 1,6X14,1X24	
070	2555637-0000		1	GUIDE	
150	312105-0287		2	SCREW M6S ISO 4017 M4X8 A470	
180	312105-0451		1	SCREW M6S ISO 4017 M8X20 A480	
190	312105-0451		2	SCREW M6S ISO 4017 M8X20 A480	
210	312605-0316		8	HEXAGON NUT, M6M M6 A280	
220	315105-0136		2	WASHER BRB 4,3X8 RFR	
230	315105-0153		4	WASHER BRB 6,4X12 RFR	
250	90165-0057		2	PIPE CLIP FOR TUBE D=6 MM	
270	315105-0165		6	WASHER BRB 8,4X16 RFR	
TBA 0330S (See drawing on page: 3-24)					
010	1317211-0000		1	COVERING PLATE	
020	1317213-0000		1	ADJUSTING PLATE	
030	1144975-0000		1	ATTACHMENT PLATE	
040	1144902-0000		1	SUPPORT	
050	1349087-0000		1	DISTRIBUTOR	
060	90335-0036		1	COMP. SPRING 22450, 1,6X14,1X24	
070	2552022-0000		1	GUIDE	
150	312105-0287		2	SCREW M6S ISO 4017 M4X8 A470	
160	312105-0366		2	SCREW M6S ISO 4017 M6X12 A480	
180	312105-0451		1	SCREW M6S ISO 4017 M8X20 A480	
190	312105-0451		2	SCREW M6S ISO 4017 M8X20 A480	
210	312605-0316		8	HEXAGON NUT, M6M M6 A280	
220	315105-0136		2	WASHER BRB 4,3X8 RFR	
230	315105-0153		6	WASHER BRB 6,4X12 RFR	
250	90165-0057		2	PIPE CLIP FOR TUBE D=6 MM	
260	342732-0104		1	ELBOW PIPE JOINT, EXT.THREAD, D=8MM-G1/4	
270	315105-0165		6	WASHER BRB 8,4X16 RFR	
310	90424-0068		1	AIR NOZZLE, G1/4, MOD. 216 BSP	
320	2553284-0000		1	BLOCK	
TBA 0500S, TBA 0500B, TBA 1000B, TBA 1000S (See drawing on page: 3-20)					
010	1144941-0000		1	COVERING PLATE	
020	1144974-0000		1	ADJUSTING PLATE	
030	1144975-0000		1	ATTACHMENT PLATE	
040	1144902-0000		1	SUPPORT	
050	1285014-0000		1	DISTRIBUTOR	
060	90335-0036		1	COMP. SPRING 22450, 1,6X14,1X24	
070	1144901-0000		1	GUIDE	
150	312105-0287		2	SCREW M6S ISO 4017 M4X8 A470	
160	312105-0366		2	SCREW M6S ISO 4017 M6X12 A480	
180	312105-0449		2	SCREW M6S ISO 4017 M8X16 A480	
190	312105-0451		2	SCREW M6S ISO 4017 M8X20 A480	
210	312605-0316		8	HEXAGON NUT, M6M M6 A280	
220	315105-0136		2	WASHER BRB 4,3X8 RFR	
230	315105-0153		6	WASHER BRB 6,4X12 RFR	
250	90165-0057		2	PIPE CLIP FOR TUBE D=6 MM	
260	342732-0104		1	ELBOW PIPE JOINT, EXT.THREAD, D=8MM-G1/4	
270	315105-0165		6	WASHER BRB 8,4X16 RFR	
310	90424-0068		2	AIR NOZZLE, G1/4, MOD. 216 BSP	
TBA 1000SQ (See drawing on page: 3-20)					
010	1144941-0000		1	COVERING PLATE	

Machine Type Group Description Used-In Group Number Page No

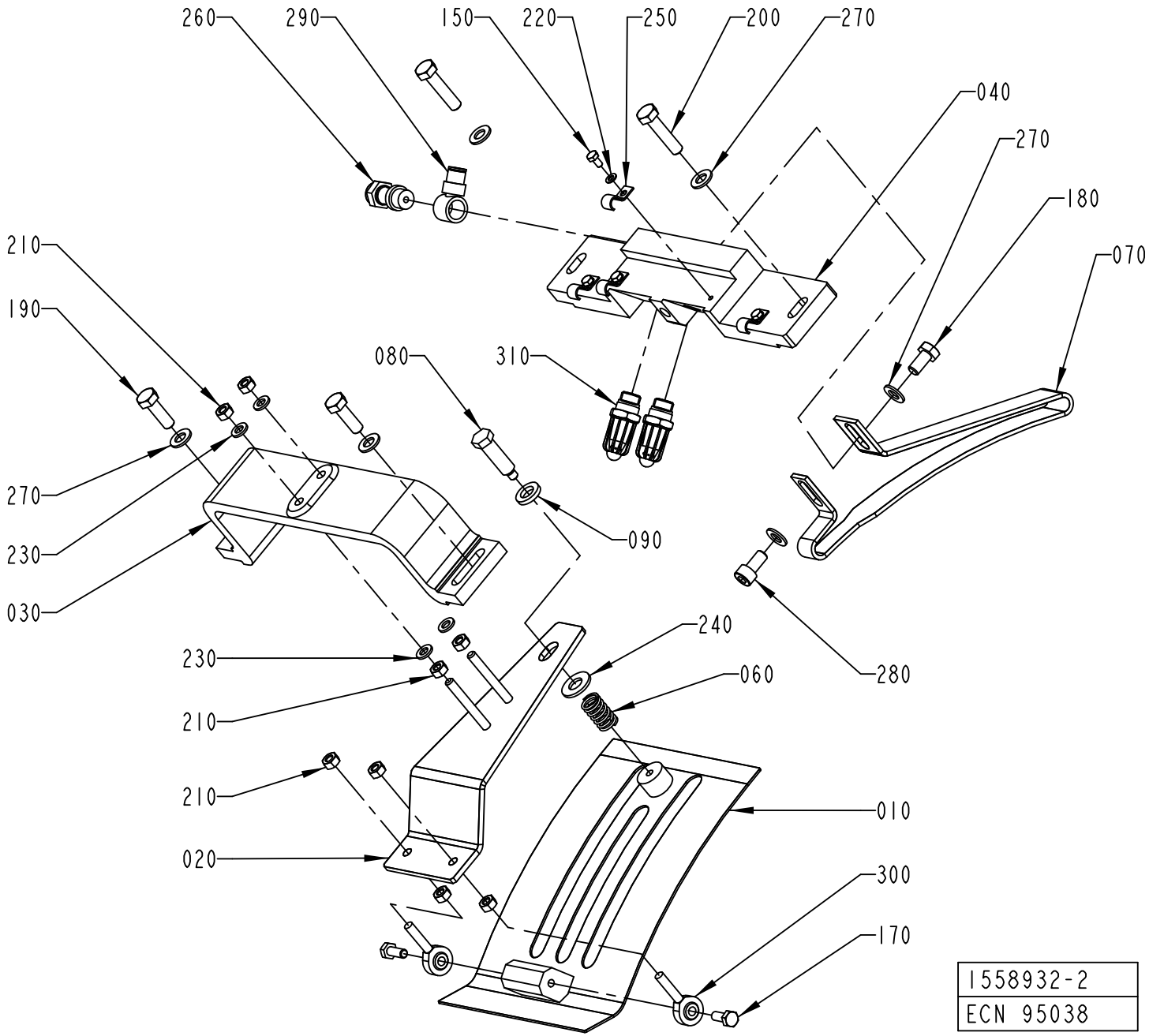
260
290
150
220
250
200
270
040
270
180
070
210
190
080
310
270
230
030
090
240
230
060
280
210
210
020
010
300
170
1558932-2
ECN 95038

Pos	Part No	UN	Qty	Description	Page No
TBA 1000SQ (Cont'd) (See drawing on page: 3-20)					
020	1144974-0000		1	ADJUSTING PLATE	
030	1144975-0000		1	ATTACHMENT PLATE	
040	1144902-0000		1	SUPPORT	
050	1349087-0000		1	DISTRIBUTOR	
060	90335-0036		1	COMP. SPRING 22450, 1,6X14,1X24	
150	312105-0287		2	SCREW M6S ISO 4017 M4X8 A470	
160	312105-0366		2	SCREW M6S ISO 4017 M6X12 A480	
190	312105-0451		2	SCREW M6S ISO 4017 M8X20 A480	
210	312605-0316		8	HEXAGON NUT, M6M M6 A280	
220	315105-0136		2	WASHER BRB 4,3X8 RFR	
230	315105-0153		6	WASHER BRB 6,4X12 RFR	
250	90165-0057		2	PIPE CLIP FOR TUBE D=6 MM	
260	342732-0104		1	ELBOW PIPE JOINT, EXT.THREAD, D=8MM-G1/4	
270	315105-0165		4	WASHER BRB 8,4X16 RFR	
310	90424-0068		1	AIR NOZZLE, G1/4, MOD. 216 BSP	
TBA 1500S (See drawing on page: 3-22)					
010	1144941-0000		1	COVERING PLATE	
020	1144974-0000		1	ADJUSTING PLATE	
030	1285299-0000		1	BRACKET	
040	1334480-0000		1	SUPPORT	
060	90335-0036		1	COMP. SPRING 22450, 1,6X14,1X24	
070	1347057-0000		1	GUIDE	
150	312105-0287		4	SCREW M6S ISO 4017 M4X8 A470	
180	312105-0449		1	SCREW M6S ISO 4017 M8X16 A480	
190	312105-0453		2	SCREW M6S ISO 4017 M8X25 A480	
210	312605-0316		8	HEXAGON NUT, M6M M6 A280	
220	315105-0136		4	WASHER BRB 4,3X8 RFR	
230	315105-0153		4	WASHER BRB 6,4X12 RFR	
250	90165-0057		4	PIPE CLIP FOR TUBE D=6 MM	
260	90235-0731		1	THROTTLE CHECK VALVE, G1/4", SCO-606-1/4	
270	315105-0165		6	WASHER BRB 8,4X16 RFR	
280	312115-0449		1	SCREW ISO4762 M8X16 A4 80	
290	342981-0122		1	BANJO CONNEC,RING,FOR PLAST.TUBE 8-G1/4"	
310	90424-0068		2	AIR NOZZLE, G1/4, MOD. 216 BSP	
TPA 0250SQ (See drawing on page: 3-20)					
010	1317211-0000		1	COVERING PLATE	
020	1317213-0000		1	ADJUSTING PLATE	
030	1144975-0000		1	ATTACHMENT PLATE	
040	1144902-0000		1	SUPPORT	
060	90335-0036		1	COMP. SPRING 22450, 1,6X14,1X24	
070	2555637-0000		1	GUIDE	
150	312105-0287		2	SCREW M6S ISO 4017 M4X8 A470	
180	312105-0449		2	SCREW M6S ISO 4017 M8X16 A480	
190	312105-0451		2	SCREW M6S ISO 4017 M8X20 A480	
210	312605-0316		8	HEXAGON NUT, M6M M6 A280	
220	315105-0136		2	WASHER BRB 4,3X8 RFR	
230	315105-0153		4	WASHER BRB 6,4X12 RFR	
250	90165-0057		2	PIPE CLIP FOR TUBE D=6 MM	
270	315105-0165		6	WASHER BRB 8,4X16 RFR	
TPA 0330SQ (See drawing on page: 3-20)					
010	1317211-0000		1	COVERING PLATE	
020	1317213-0000		1	ADJUSTING PLATE	
030	1144975-0000		1	ATTACHMENT PLATE	
040	1144902-0000		1	SUPPORT	
050	1349087-0000		1	DISTRIBUTOR	
060	90335-0036		1	COMP. SPRING 22450, 1,6X14,1X24	
070	1558934-0000		1	GUIDE	
150	312105-0287		2	SCREW M6S ISO 4017 M4X8 A470	
160	312105-0366		2	SCREW M6S ISO 4017 M6X12 A480	
180	312105-0449		1	SCREW M6S ISO 4017 M8X16 A480	
190	312105-0451		2	SCREW M6S ISO 4017 M8X20 A480	
210	312605-0316		8	HEXAGON NUT, M6M M6 A280	
220	315105-0136		2	WASHER BRB 4,3X8 RFR	
230	315105-0153		6	WASHER BRB 6,4X12 RFR	
250	90165-0057		2	PIPE CLIP FOR TUBE D=6 MM	
260	342732-0104		1	ELBOW PIPE JOINT, EXT.THREAD, D=8MM-G1/4	
270	315105-0165		5	WASHER BRB 8,4X16 RFR	
310	90424-0068		1	AIR NOZZLE, G1/4, MOD. 216 BSP	
TPA 0500SQ (See drawing on page: 3-24)					
010	1548612-0000		1	COVERING PLATE	
020	1144974-0000		1	ADJUSTING PLATE	
030	1144975-0000		1	ATTACHMENT PLATE	
040	1144902-0000		1	SUPPORT	
050	1349087-0000		1	DISTRIBUTOR	
060	90335-0036		1	COMP. SPRING 22450, 1,6X14,1X24	
070	2552022-0000		1	GUIDE	
150	312105-0287		2	SCREW M6S ISO 4017 M4X8 A470	
160	312105-0366		2	SCREW M6S ISO 4017 M6X12 A480	
180	312105-0451		1	SCREW M6S ISO 4017 M8X20 A480	
190	312105-0451		2	SCREW M6S ISO 4017 M8X20 A480	
210	312605-0316		8	HEXAGON NUT, M6M M6 A280	
220	315105-0136		2	WASHER BRB 4,3X8 RFR	
230	315105-0153		6	WASHER BRB 6,4X12 RFR	

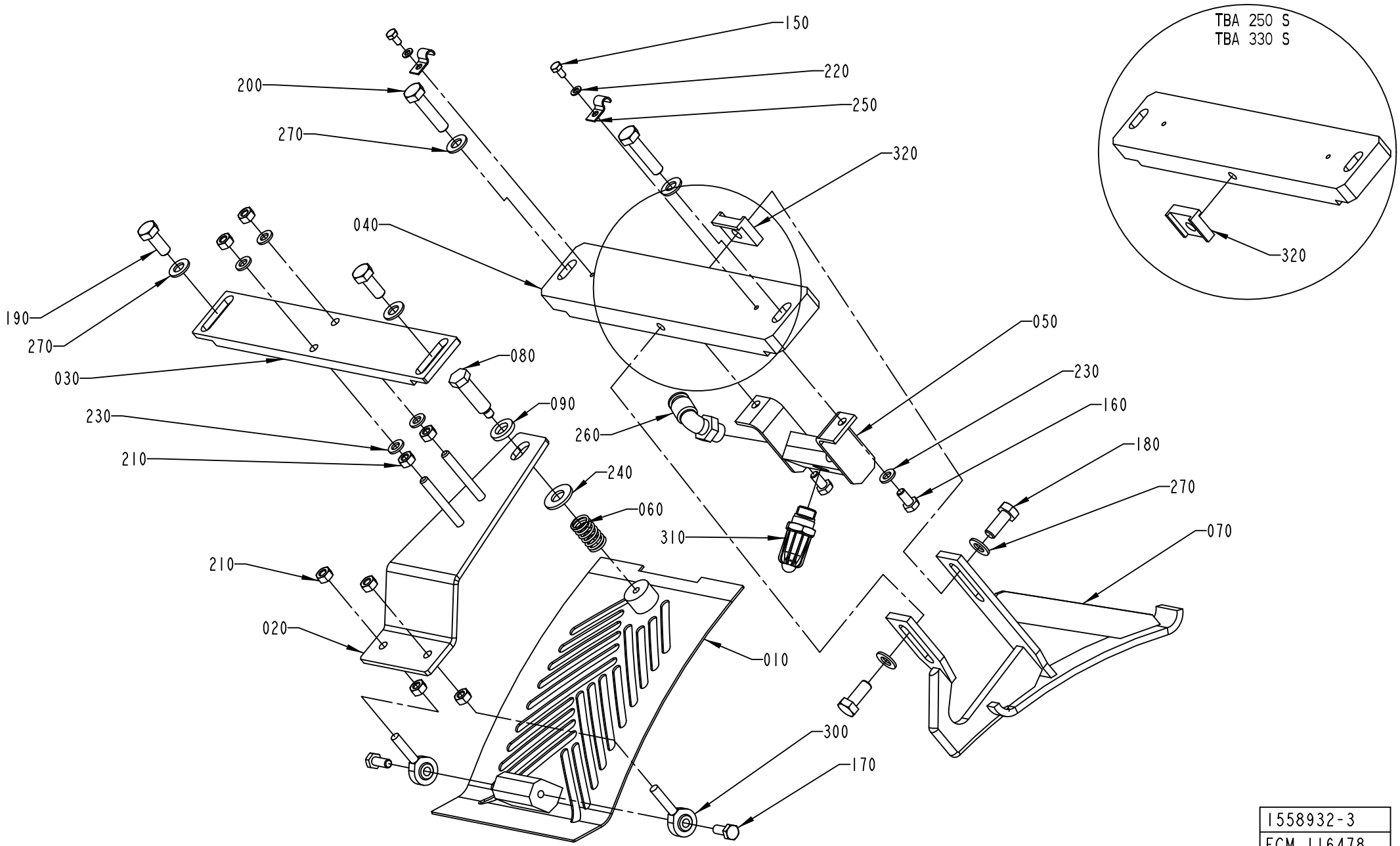

1558932-3
ECM 116478

Pos	Part No	UN	Qty	Description	Page No
TPA 0500SQ (Cont'd) (See drawing on page: 3-24)					
250	90165-0057		2	PIPE CLIP FOR TUBE D=6 MM	
260	342732-0104		1	ELBOW PIPE JOINT, EXT.THREAD, D=8MM-G1/4	
270	315105-0165		6	WASHER BRB 8,4X16 RFR	
310	90424-0068		1	AIR NOZZLE, G1/4, MOD. 216 BSP	
320	2553284-0000		1	BLOCK	
TPA 1000SQ (See drawing on page: 3-22)					
010	1548612-0000		1	COVERING PLATE	
020	1144974-0000		1	ADJUSTING PLATE	
030	1285299-0000		1	BRACKET	
040	2618424-0000		1	SUPPORT	
060	90335-0036		1	COMP. SPRING 22450, 1,6X14,1X24	
070	2618425-0000		1	GUIDE	
150	312105-0287		4	SCREW M6S ISO 4017 M4X8 A470	
180	312105-0449		1	SCREW M6S ISO 4017 M8X16 A480	
190	312105-0453		2	SCREW M6S ISO 4017 M8X25 A480	
210	312605-0316		10	HEXAGON NUT, M6M M6 A280	
220	315105-0136		4	WASHER BRB 4,3X8 RFR	
230	315105-0153		4	WASHER BRB 6,4X12 RFR	
250	90165-0057		4	PIPE CLIP FOR TUBE D=6 MM	
260	90235-0731		1	THROTTLE CHECK VALVE, G1/4", SCO-606-1/4	
270	315105-0165		5	WASHER BRB 8,4X16 RFR	
280	312115-0449		1	SCREW ISO4762 M8X16 A4 80	
290	342981-0122		1	BANJO CONNEC,RING,FOR PLAST.TUBE 8-G1/4"	
310	90424-0068		2	AIR NOZZLE, G1/4, MOD. 216 BSP	
Common Parts					
080	1144976-0000		1	STOP SCREW	
090	1144979-0000		1	WASHER	
170	312105-0368		2	SCREW M6S ISO 4017 M6X16 A480	
200	312105-0457		2	SCREW M6S ISO 4014 M8X35 A480	
240	315105-0173		1	WASHER BRB 10,5X22 RFR	
300	90115-0137		2	ROD END, ID=6 MM, M6X1	

Pos	Part No	UN	Qty	Description	Page No

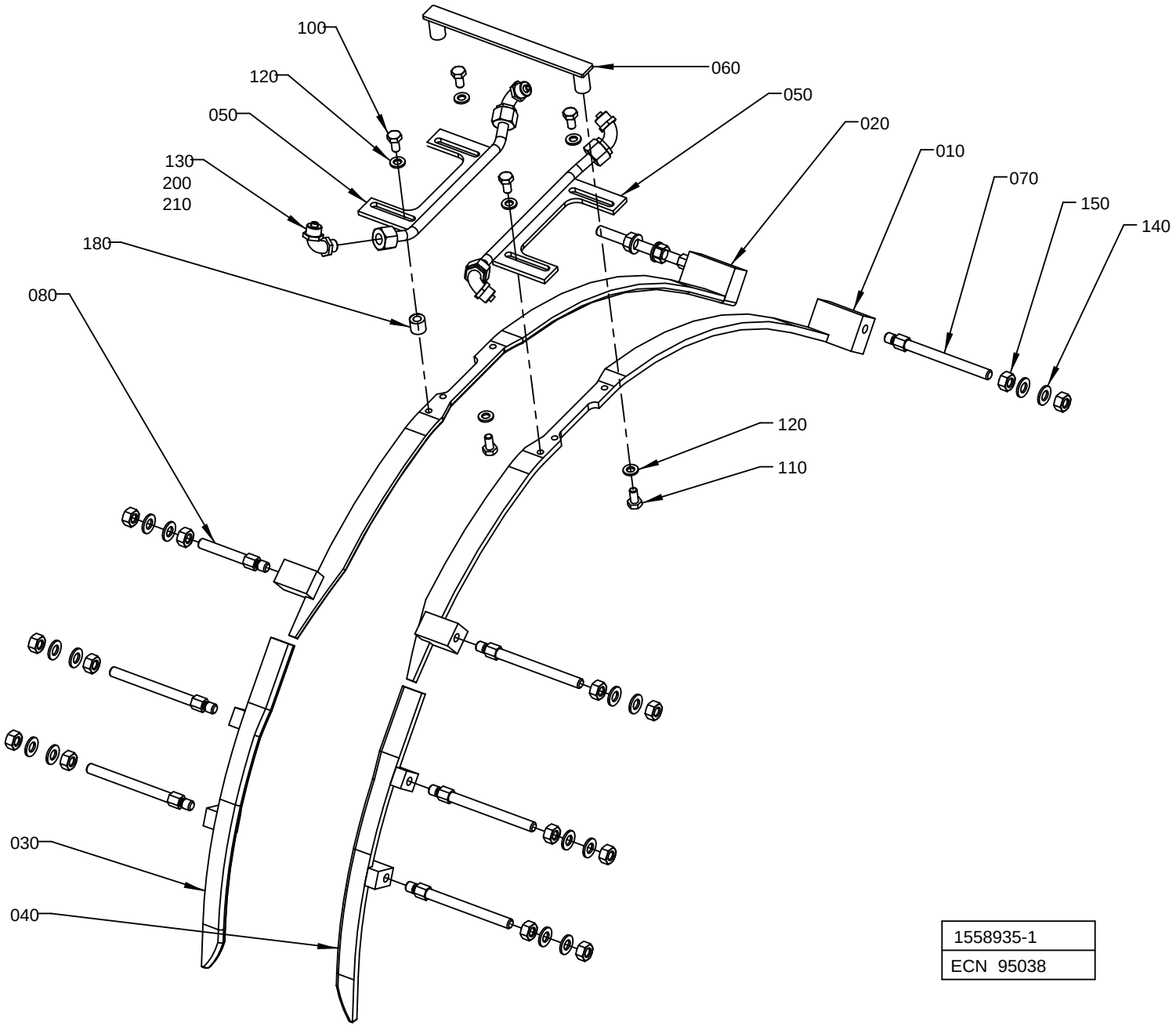

1558935-1
ECN 95038

ECM: 316425 - 20080103
Group number: 1558935-0100
Assembly Drawing: 1558935-1_1_AA

This list covers pages from 3-26 to 3-35

Pos	Part No	UN	Qty	Description	Page No
TPA 1000SQ (See drawing on page: 3-28)					
010	1350424-0000		1	GUIDE RIGHT	
020	1350425-0000		1	GUIDE LEFT	
030	1519358-0000		1	GUIDE	
040	1519359-0000		1	GUIDE	
060	1346340-0000		1	BRACKET	
090	1523926-0000		8	SPACER	
100	312105-0368		4	SCREW M6S ISO 4017 M6X16 A480	
140	315105-0165		8	WASHER BRB 8,4X16 RFR	
160	2541125-0000		8	SCREW	
180	1282705-0000		4	SUPPORT	
TBA 0200B, TBA 0200S, TBA 0250B (See drawing on page: 3-26)					
010	1478926-0000		1	GUIDE RIGHT	
020	1478927-0000		1	GUIDE LEFT	
030	1334013-0000		1	GUIDE UPPER R	
040	1334012-0000		1	GUIDE UPPER L	
060	1346340-0000		1	BRACKET	
070	1144555-0000		7	STUD SCREW	
080	1334523-0000		1	SUPPORT	
100	312105-0366		4	SCREW M6S ISO 4017 M6X12 A480	
140	315105-0165		16	WASHER BRB 8,4X16 RFR	
150	312605-0318		16	HEXAGON NUT, M6M M8 A280	
TBA 0250S (See drawing on page: 3-26)					
010	1478926-0000		1	GUIDE RIGHT	
020	1478927-0000		1	GUIDE LEFT	
030	1539900-0000		1	RIGHT UPPER GUIDE	
040	1549614-0000		1	LEFT UPPER GUIDE	
060	1346340-0000		1	BRACKET	
070	1144555-0000		7	STUD SCREW	
080	1334523-0000		1	SUPPORT	
100	312105-0366		4	SCREW M6S ISO 4017 M6X12 A480	
140	315105-0165		16	WASHER BRB 8,4X16 RFR	
150	312605-0318		16	HEXAGON NUT, M6M M8 A280	
TBA 0330S (See drawing on page: 3-26)					
010	1144892-0000		1	GUIDE RIGHT	
020	1144893-0000		1	GUIDE LEFT	
030	1539900-0000		1	RIGHT UPPER GUIDE	
040	1549614-0000		1	LEFT UPPER GUIDE	
060	1346340-0000		1	BRACKET	
070	1144555-0000		8	STUD SCREW	
100	312105-0366		4	SCREW M6S ISO 4017 M6X12 A480	
140	315105-0165		16	WASHER BRB 8,4X16 RFR	
150	312605-0318		16	HEXAGON NUT, M6M M8 A280	
TBA 0500B (See drawing on page: 3-30)					
010	1144892-0000		1	GUIDE RIGHT	
020	1144893-0000		1	GUIDE LEFT	
030	1539900-0000		1	RIGHT UPPER GUIDE	
040	1549614-0000		1	LEFT UPPER GUIDE	
060	1144905-0000		1	SUPPORT	
090	1539871-0000		4	SPACER	
095	1334447-0000		4	SPACER	
140	315105-0165		8	WASHER BRB 8,4X16 RFR	
160	312105-0465		8	SCREW M6S ISO 4014 M8X70 A480	
TBA 0500S (See drawing on page: 3-30)					
010	1144892-0000		1	GUIDE RIGHT	
020	1144893-0000		1	GUIDE LEFT	
030	1260709-0000		1	GUIDE UPPER R	
040	1260710-0000		1	GUIDE UPPER L	
060	1144905-0000		1	SUPPORT	
090	1499071-0000		4	SPACER	
095	1523498-0000		4	SPACER	
100	312105-0366		4	SCREW M6S ISO 4017 M6X12 A480	
140	315105-0165		8	WASHER BRB 8,4X16 RFR	
160	312105-0466		8	SCREW M6S ISO 4014 M8X75 A480	
TBA 1000B (See drawing on page: 3-28)					
010	1144892-0000		1	GUIDE RIGHT	
020	1144893-0000		1	GUIDE LEFT	
030	1260709-0000		1	GUIDE UPPER R	
040	1260710-0000		1	GUIDE UPPER L	
060	1144905-0000		1	SUPPORT	
090	2603663-0000		8	SPACER	
100	312105-0366		4	SCREW M6S ISO 4017 M6X12 A480	
140	315105-0165		8	WASHER BRB 8,4X16 RFR	
160	312105-0464		7	SCREW M6S ISO 4014 M8X65 A480	
TBA 1000S (See drawing on page: 3-26)					
010	1144892-0000		1	GUIDE RIGHT	
020	1144893-0000		1	GUIDE LEFT	
030	1260709-0000		1	GUIDE UPPER R	
040	1260710-0000		1	GUIDE UPPER L	
060	1144905-0000		1	SUPPORT	
070	1144555-0000		7	STUD SCREW	
080	1350721-0000		1	STUD SCREW	
100	312105-0366		4	SCREW M6S ISO 4017 M6X12 A480	
140	315105-0165		16	WASHER BRB 8,4X16 RFR	

Machine Type Group Description Used-In Group Number Page No

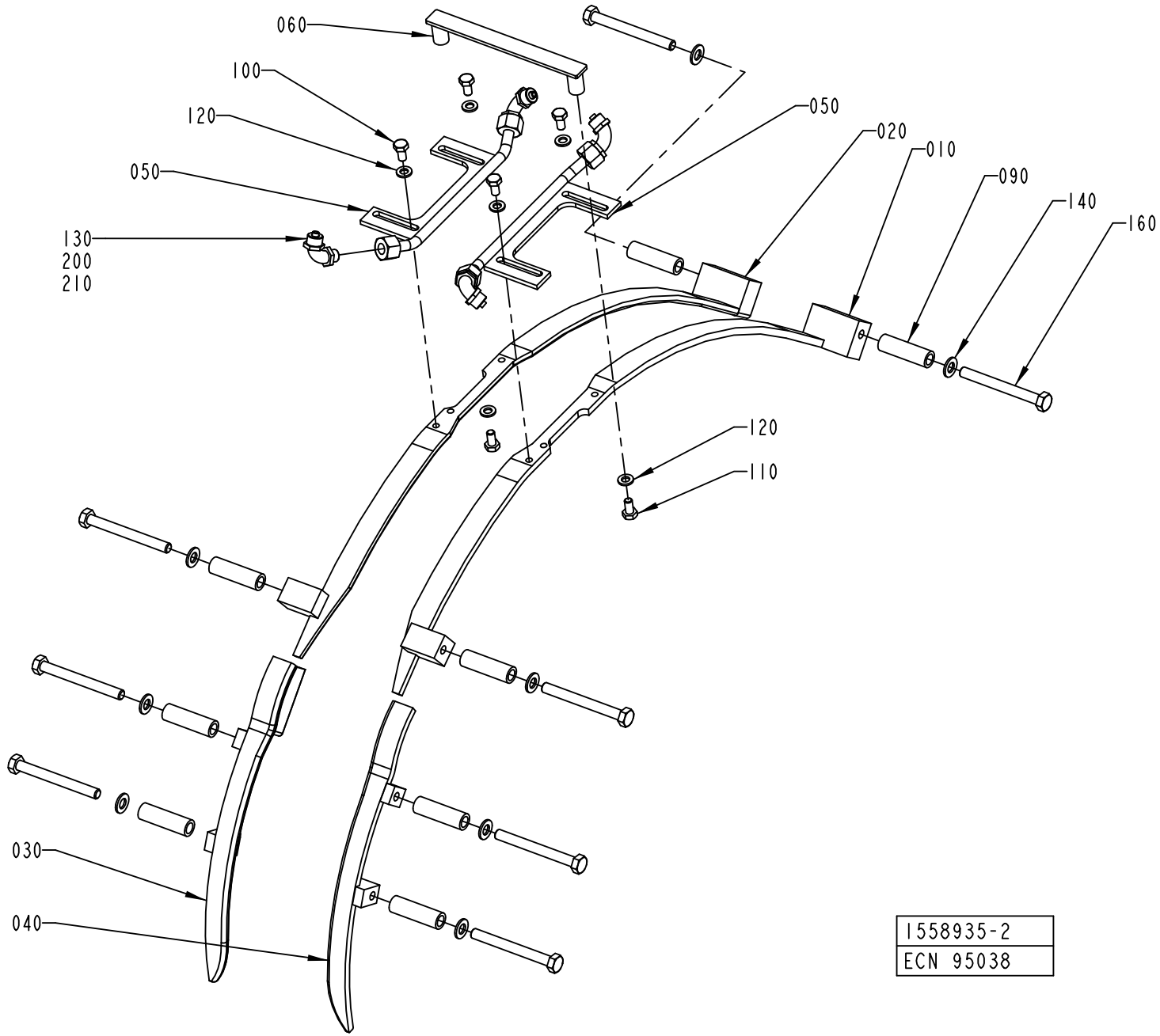
060
100
120
050
130
200
210
050
020
010
090
140
160
120
110
030
040
1558935-2
ECN 95038

ECM: 316425 - 20080103
Group number: 1558935-0100
Assembly Drawing: 1558935-2_1_AA

This list covers pages from 3-26 to 3-35

Pos	Part No	UN	Qty	Description	Page No
TBA 1000S (Cont'd) (See drawing on page: 3-26)					
150	312605-0318		16	HEXAGON NUT, M6M M8 A280	
TBA 1000SQ (See drawing on page: 3-28)					
010	1144892-0000		1	GUIDE RIGHT	
020	1144893-0000		1	GUIDE LEFT	
030	1549411-0000		1	PACKAGE GUIDE	
040	1549406-0000		1	PACKAGE GUIDE	
060	1498161-0000		1	SUPPORT	
090	1499071-0000		8	SPACER	
100	312105-0366		4	SCREW M6S ISO 4017 M6X12 A480	
140	315105-0165		8	WASHER BRB 8,4X16 RFR	
160	312105-0466		8	SCREW M6S ISO 4014 M8X75 A480	
TBA 1500S (See drawing on page: 3-32)					
010	1350424-0000		1	GUIDE RIGHT	
020	1350425-0000		1	GUIDE LEFT	
030	1334559-0000		1	GUIDE UPPER R	
040	1334560-0000		1	GUIDE UPPER L	
060	1285267-0000		1	SUPPORT	
090	1317088-0000		4	SPACER	
095	1348041-0000		2	SPACER	
098	1317088-0000		2	SPACER	
100	312105-0368		4	SCREW M6S ISO 4017 M6X16 A480	
140	315105-0165		8	WASHER BRB 8,4X16 RFR	
160	312105-0465		4	SCREW M6S ISO 4014 M8X70 A480	
165	312105-0465		2	SCREW M6S ISO 4014 M8X70 A480	
170	312105-0467		2	SCREW M6S ISO 4014 M8X80 A480	
180	1282705-0000		4	SUPPORT	
TPA 0250SQ (See drawing on page: 3-32)					
010	1144892-0000		1	GUIDE RIGHT	
020	1144893-0000		1	GUIDE LEFT	
030	1539900-0000		1	RIGHT UPPER GUIDE	
040	1549614-0000		1	LEFT UPPER GUIDE	
060	1346340-0000		1	BRACKET	
090	1539898-0000		4	SPACER	
095	1558526-0000		2	SPACER	
098	1558735-0000		2	SPACER	
100	312105-0366		4	SCREW M6S ISO 4017 M6X12 A480	
140	315105-0165		8	WASHER BRB 8,4X16 RFR	
160	312105-0469		4	SCREW M6S ISO 4014 M8X90 A480	
165	312105-0467		2	SCREW M6S ISO 4014 M8X80 A480	
170	312105-0469		2	SCREW M6S ISO 4014 M8X90 A480	
TPA 0330SQ (See drawing on page: 3-32)					
010	1144892-0000		1	GUIDE RIGHT	
020	1144893-0000		1	GUIDE LEFT	
030	1539900-0000		1	RIGHT UPPER GUIDE	
040	1549614-0000		1	LEFT UPPER GUIDE	
060	1346340-0000		1	BRACKET	
090	1558735-0000		4	SPACER	
095	1558736-0000		2	SPACER	
098	1558910-0000		2	SPACER	
100	312105-0366		4	SCREW M6S ISO 4017 M6X12 A480	
140	315105-0165		8	WASHER BRB 8,4X16 RFR	
160	312105-0469		4	SCREW M6S ISO 4014 M8X90 A480	
165	312105-0467		2	SCREW M6S ISO 4014 M8X80 A480	
170	312105-0469		2	SCREW M6S ISO 4014 M8X90 A480	
TPA 0500SQ (See drawing on page: 3-34)					
010	1144892-0000		1	GUIDE RIGHT	
020	1144893-0000		1	GUIDE LEFT	
030	2527530-0000		1	GUIDE UPPER R	
040	2527529-0000		1	GUIDE UPPER L	
060	1346340-0000		1	BRACKET	
070	1144555-0000		3	STUD SCREW	
080	1334523-0000		1	SUPPORT	
090	1558910-0000		4	SPACER	
100	312105-0366		4	SCREW M6S ISO 4017 M6X12 A480	
140	315105-0165		12	WASHER BRB 8,4X16 RFR	
150	312605-0318		8	HEXAGON NUT, M6M M8 A280	
160	312105-0467		4	SCREW M6S ISO 4014 M8X80 A480	
Common Parts					
050	1350423-0000		2	FOLDING BAR	
110	312105-0366		2	SCREW M6S ISO 4017 M6X12 A480	
120	315105-0153		6	WASHER BRB 6,4X12 RFR	
130	342931-0121		4	ELBOW 90 COUPL.,EXT.THREAD 8/6-G1/8"	
200	90166-0118	MM	1500	TUBE 8 MM PA BLACK	
210	352113-0102		10	CABLE TIE, BLACK 188X4,8 MM	

Machine Type | Group Description | Used-In | Group Number | Page No

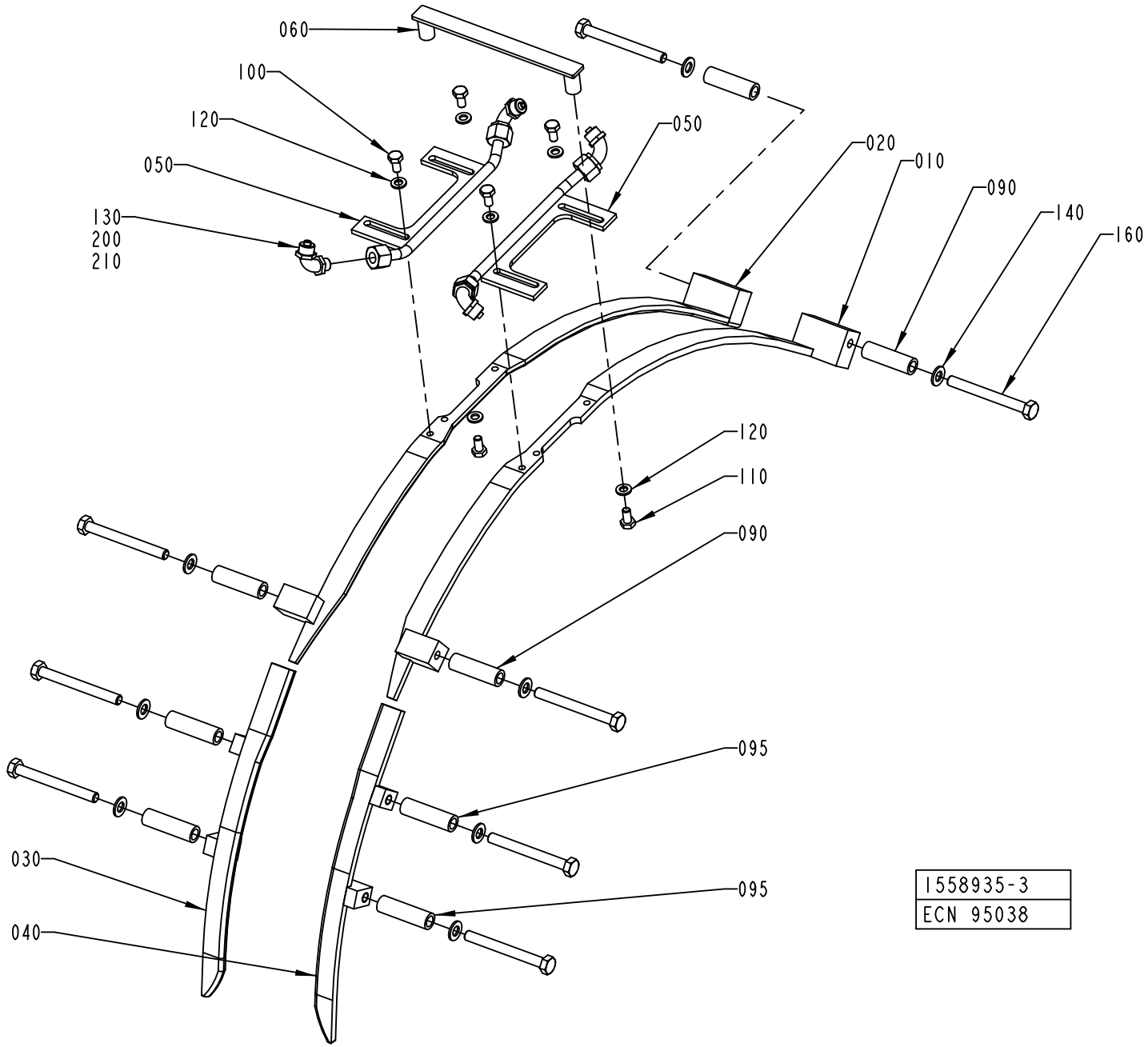
060
100
120
050
130
200
210
050
020
010
090
140
160
120
110
090
095
095
030
040
1558935-3
ECN 95038

Pos	Part No	UN	Qty	Description	Page No
SEE PREVIOUS LISTS PAGES: 3-27, 3-29.					

Pos	Part No	UN	Qty	Description	Page No

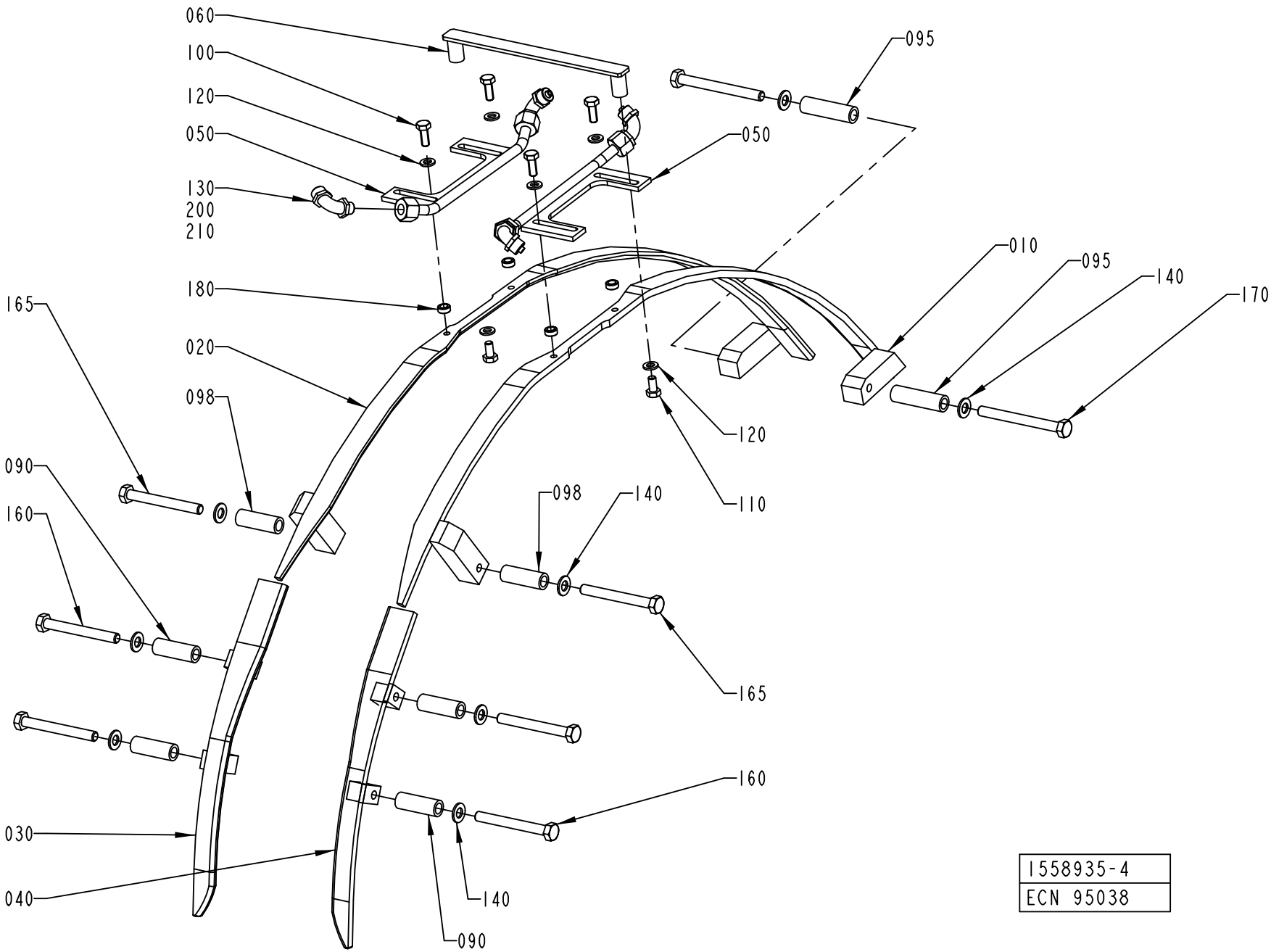
060
100
120
050
130
200
210
180
165
020
098
090
160
030
040
095
050
010
095
140
170
120
110
098
140
165
160
140
090
1558935-4
ECN 95038

Pos	Part No	UN	Qty	Description	Page No
SEE PREVIOUS LISTS PAGES: 3-27, 3-29.					

Pos	Part No	UN	Qty	Description	Page No

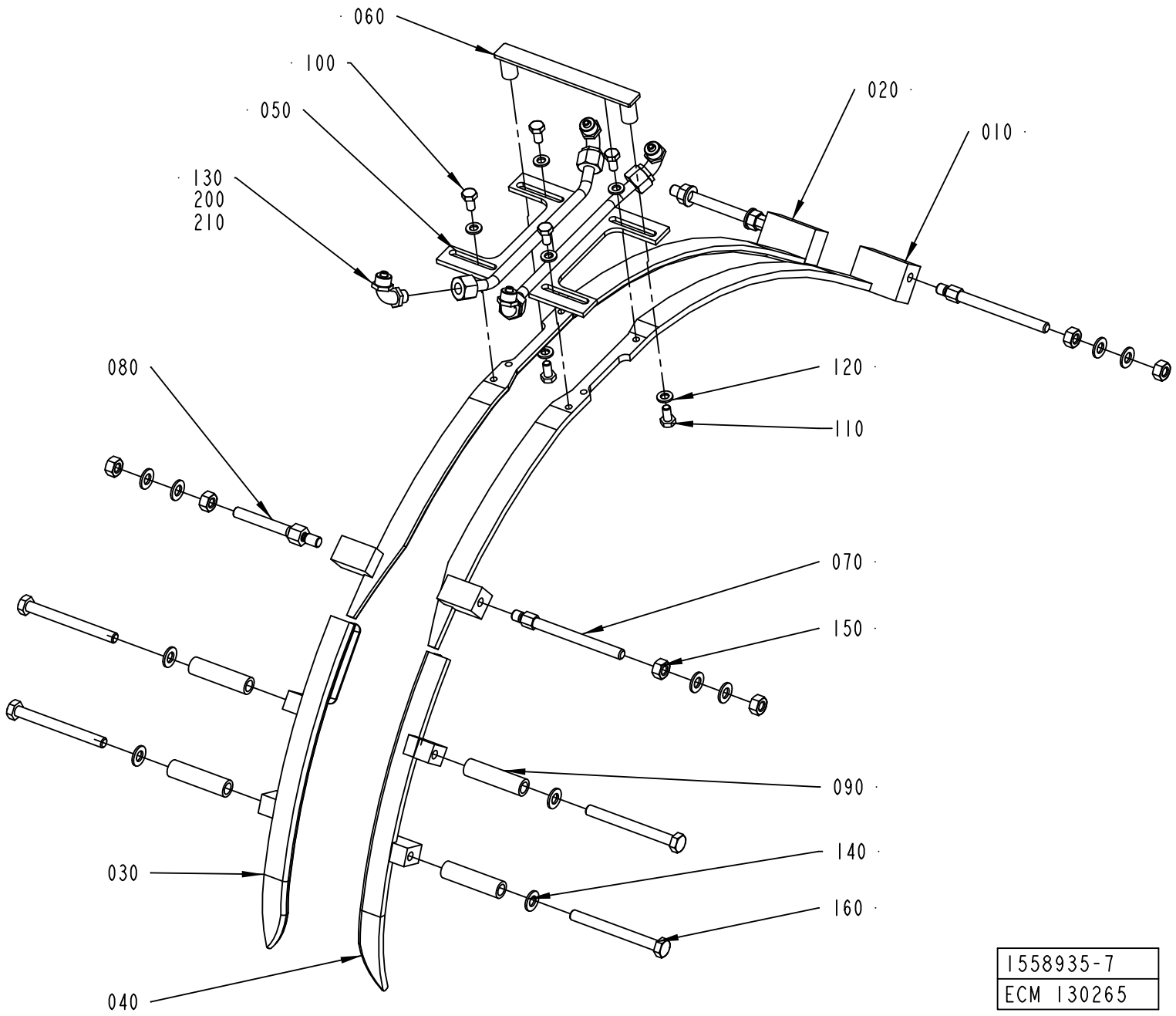
060
100
050
130
200
210
020
010
080
120
110
070
150
090
140
160
030
040
1558935-7
ECM 130265

Pos	Part No	UN	Qty	Description	Page No

SEE PREVIOUS LISTS PAGES: 3-27, 3-29.

Pos	Part No	UN	Qty	Description	Page No

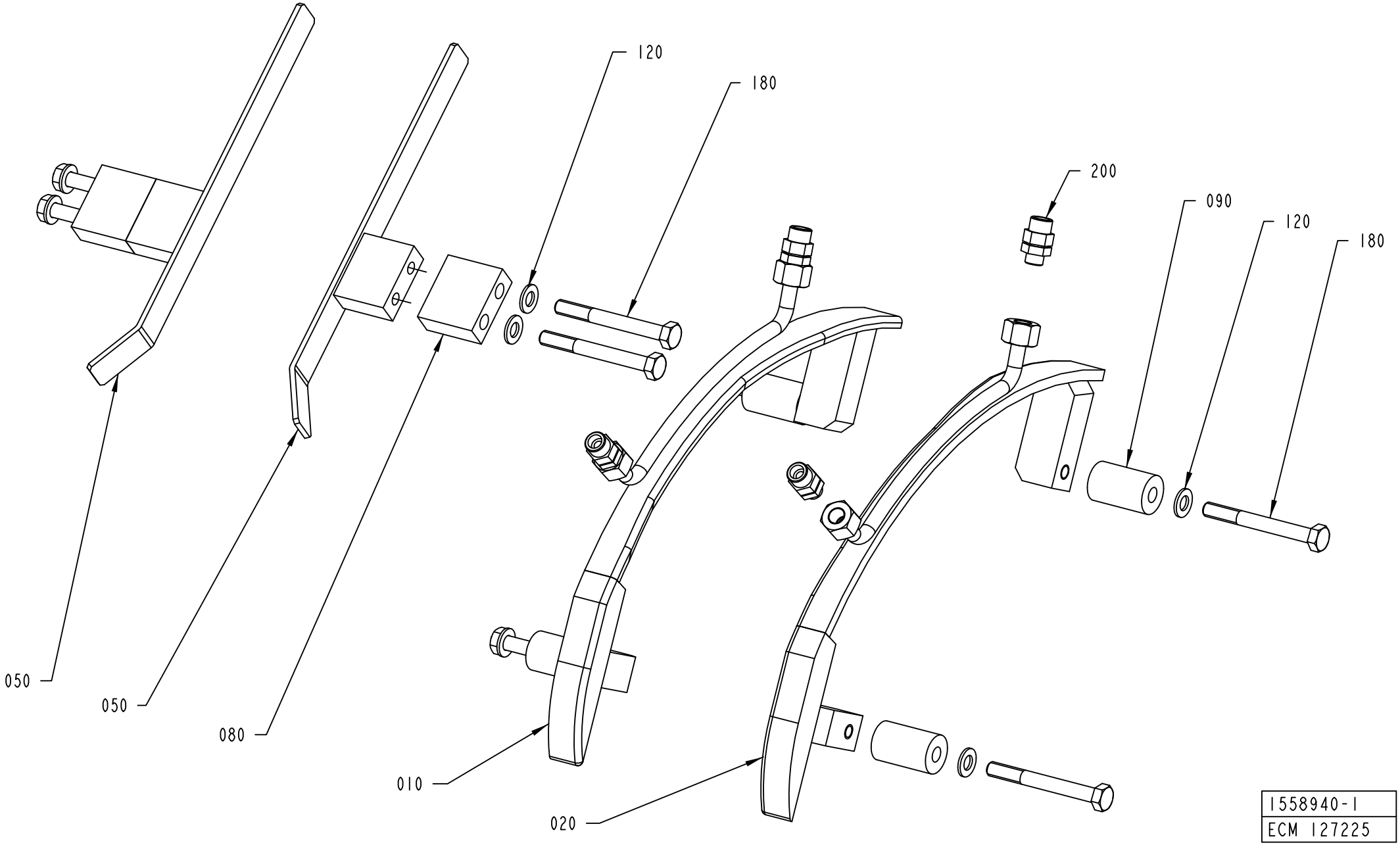

1558940-1
ECM 127225

ECM: 317880 - 20080103
Group number: 1558940-0200
Assembly Drawing: 1558940-1_1_AB

This list covers pages from 3-36 to 3-49

Pos	Part No	UN	Qty	Description	Page No
TPA 1000SQ, TPA 1000SQ SMILE (See drawing on page: 3-44)					
010	2553347-0000		1	FOLDING BAR	
020	2553348-0000		1	FOLDING BAR	
030	1317043-0000		2	SUPPORT	
040	1499150-0000		1	RAIL	
050	1499151-0000		1	RAIL	
060	1523927-0000		2	SPACER SCREW	
080	1519355-0000		4	SPACER	
090	1523926-0000		2	SPACER	
100	312109-0457		4	SCREW M6S ISO 4017 M8X35 A480	
110	312105-0462		4	SCREW M6S ISO 4014 M8X55 A480	
120	315105-0165		20	WASHER BRB 8,4X16 RFR	
130	312605-0318		2	HEXAGON NUT, M6M M8 A280	
160	312155-0459		2	SCREW DIN 7991 MF6S M8X40 A4 70	
170	312105-0453		2	SCREW M6S ISO 4017 M8X25 A480	
180	312105-0467		2	SCREW M6S ISO 4014 M8X80 A480	
200	342921-0121		4	STRAIGHT CPLNG,EXT.THREADED 8/6-G1/8INCH	
210	1538890-0000		1	RAIL	
220	1538891-0000		1	RAIL	
230	1519355-0000		4	SPACER	
240	1538186-0000		2	BRACKET	
250	312105-0462		4	SCREW M6S ISO 4014 M8X55 A480	
260	312105-0455		2	SCREW M6S ISO 4017 M8X30 A480	
TBA 0200B (See drawing on page: 3-38)					
010	1346149-0000		1	FOLDING BAR	
020	1346150-0000		1	FOLDING BAR	
040	1346343-0000		1	RAIL	
050	1346344-0000		1	RAIL	
060	1144555-0000		7	STUD SCREW	
065	1350721-0000		1	STUD SCREW	
070	1144990-0000		2	FOLDING BAR	
120	315105-0165		16	WASHER BRB 8,4X16 RFR	
130	312605-0318		16	HEXAGON NUT, M6M M8 A280	
140	315105-0153		4	WASHER BRB 6,4X12 RFR	
150	312105-0364		4	SCREW M6S ISO 4017 M6X10 A480	
200	342931-0121		4	ELBOW 90 COUPL.,EXT.THREAD 8/6-G1/8"	
TBA 0200S (See drawing on page: 3-38)					
010	1282294-0000		1	FOLDING BAR	
020	1282295-0000		1	FOLDING BAR	
040	1346343-0000		1	RAIL	
050	1346344-0000		1	RAIL	
060	1144555-0000		7	STUD SCREW	
065	1350721-0000		1	STUD SCREW	
070	1144990-0000		2	FOLDING BAR	
120	315105-0165		16	WASHER BRB 8,4X16 RFR	
130	312605-0318		16	HEXAGON NUT, M6M M8 A280	
140	315105-0153		4	WASHER BRB 6,4X12 RFR	
150	312105-0364		4	SCREW M6S ISO 4017 M6X10 A480	
200	342931-0121		4	ELBOW 90 COUPL.,EXT.THREAD 8/6-G1/8"	
TBA 0250B (See drawing on page: 3-38)					
010	1317217-0000		1	FOLDING BAR	
020	1317216-0000		1	FOLDING BAR	
040	1346343-0000		1	RAIL	
050	1346344-0000		1	RAIL	
060	1144555-0000		7	STUD SCREW	
065	1350721-0000		1	STUD SCREW	
070	1144990-0000		2	FOLDING BAR	
120	315105-0165		16	WASHER BRB 8,4X16 RFR	
130	312605-0318		16	HEXAGON NUT, M6M M8 A280	
140	315105-0153		4	WASHER BRB 6,4X12 RFR	
150	312105-0364		4	SCREW M6S ISO 4017 M6X10 A480	
200	342931-0121		4	ELBOW 90 COUPL.,EXT.THREAD 8/6-G1/8"	
TBA 0500B (See drawing on page: 3-42)					
010	1539881-0000		1	FOLDING BAR	
020	1539882-0000		1	FOLDING BAR	
040	1346343-0000		1	RAIL	
050	1346344-0000		1	RAIL	
060	1558713-0000		2	SPACER SCREW	
080	1539873-0000		4	SPACER	
090	1539871-0000		2	SPACER	
110	312109-0461		4	SCREW M6S ISO 4017 M8X50 A480	
120	315105-0165		8	WASHER BRB 8,4X16 RFR	
130	312605-0318		2	HEXAGON NUT, M6M M8 A280	
180	312105-0464		2	SCREW M6S ISO 4014 M8X65 A480	
200	342921-0121		4	STRAIGHT CPLNG,EXT.THREADED 8/6-G1/8INCH	
TBA 0500S (See drawing on page: 3-40)					
010	1519770-0000		1	FOLDING BAR	
020	1519769-0000		1	FOLDING BAR	
030	1317043-0000		2	SUPPORT	
040	1499150-0000		1	RAIL	
050	1499151-0000		1	RAIL	
060	1499402-0000		2	SPACER	
080	1499072-0000		4	SPACER	
090	1499071-0000		2	SPACER	

Machine Type | Group Description | Used-In | Group Number | Page No

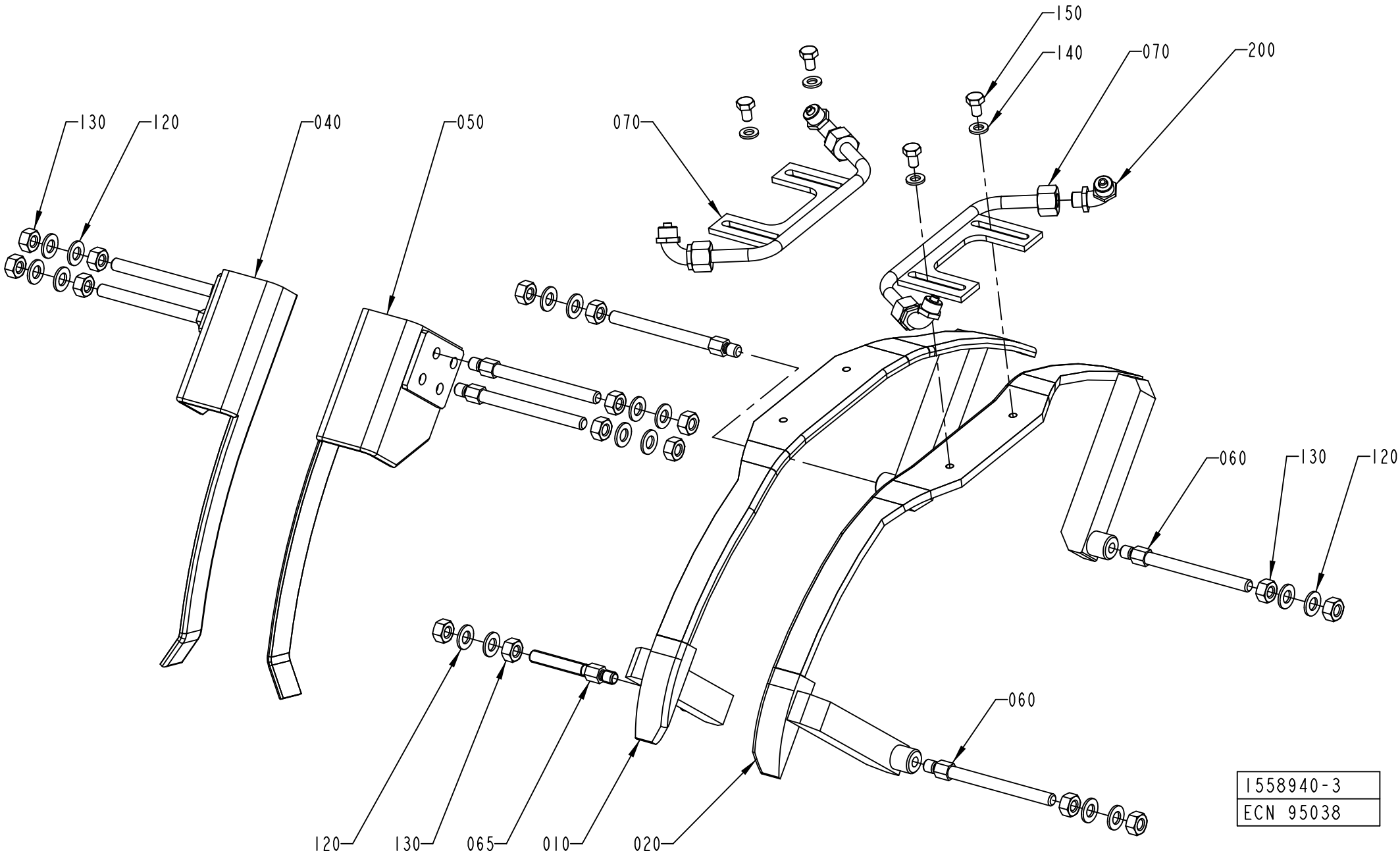
150
140
070
200
130
120
040
050
070
060
130
120
120
130
065
010
020
060
1558940-3
ECN 95038

ECM: 317880 - 20080103
Group number: 1558940-0200
Assembly Drawing: 1558940-3_1_AA

This list covers pages from 3-36 to 3-49

Pos	Part No	UN	Qty	Description	Page No
TBA 0500S (Cont'd) (See drawing on page: 3-40)					
100	312109-0457		4	SCREW M6S ISO 4017 M8X35 A480	
110	312105-0463		4	SCREW M6S ISO 4014 M8X60 A480	
120	315105-0165		12	WASHER BRB 8,4X16 RFR	
130	312605-0318		2	HEXAGON NUT, M6M M8 A280	
180	312105-0466		2	SCREW M6S ISO 4014 M8X75 A480	
200	342921-0121		4	STRAIGHT CPLNG,EXT.THREADED 8/6-G1/8INCH	
TBA 1000B NOMOLDEDCAP (See drawing on pages: 3-36, 3-48)					
010	2639127-0000		1	FOLDING BAR	
020	2639128-0000		1	FOLDING BAR	
050	1144719-0000		2	RAIL	
080	2639393-0000		2	SPACER	
090	2603663-0000		3	SPACER	
120	315105-0165		8	WASHER BRB 8,4X16 RFR	
130	312605-0318		1	HEXAGON NUT, M6M M8 A280	
180	312105-0465		7	SCREW M6S ISO 4014 M8X70 A480	
190	1558713-0000		1	SPACER SCREW	
200	342921-0121		4	STRAIGHT CPLNG,EXT.THREADED 8/6-G1/8INCH	
TBA 1000B STDA7 (See drawing on page: 3-40)					
010	2609370-0000		1	FOLDING BAR	
020	2609369-0000		1	FOLDING BAR	
030	1317043-0000		2	SUPPORT	
040	1499150-0000		1	RAIL	
050	1499151-0000		1	RAIL	
060	2509936-0000		2	SPACER SCREW	
080	2609371-0000		4	SPACER	
090	2603663-0000		2	SPACER	
100	312109-0457		4	SCREW M6S ISO 4017 M8X35 A480	
110	312105-0462		4	SCREW M6S ISO 4014 M8X55 A480	
120	315105-0165		14	WASHER BRB 8,4X16 RFR	
130	312605-0318		2	HEXAGON NUT, M6M M8 A280	
160	312155-0459		2	SCREW DIN 7991 MF6S M8X40 A4 70	
170	312105-0453		2	SCREW M6S ISO 4017 M8X25 A480	
180	312105-0466		2	SCREW M6S ISO 4014 M8X75 A480	
200	342931-0121		4	ELBOW 90 COUPL.,EXT.THREAD 8/6-G1/8"	
250	312105-0462		4	SCREW M6S ISO 4014 M8X55 A480	
TBA 1000S NOMOLDEDCAP (See drawing on page: 3-46)					
010	1144897-0000		1	FOLDING BAR	
020	1144898-0000		1	FOLDING BAR	
050	1144719-0000		2	RAIL	
060	1144555-0000		8	STUD SCREW	
120	315105-0165		16	WASHER BRB 8,4X16 RFR	
130	312605-0318		16	HEXAGON NUT, M6M M8 A280	
200	342921-0121		4	STRAIGHT CPLNG,EXT.THREADED 8/6-G1/8INCH	
TBA 1000S STDA7, TBA 1000S LIGHTCAP (See drawing on page: 3-40)					
010	1498827-0000		1	FOLDING BAR	
020	1498828-0000		1	FOLDING BAR	
030	1317043-0000		2	SUPPORT	
040	1317042-0000		1	RAIL	
050	1317047-0000		1	RAIL	
060	2509936-0000		2	SPACER SCREW	
080	2509937-0000		4	SPACER	
090	2509935-0000		2	SPACER	
100	312109-0457		4	SCREW M6S ISO 4017 M8X35 A480	
110	312105-0461		4	SCREW M6S ISO 4014 M8X50 A480	
120	315105-0165		14	WASHER BRB 8,4X16 RFR	
130	312605-0318		2	HEXAGON NUT, M6M M8 A280	
160	312155-0459		2	SCREW DIN 7991 MF6S M8X40 A4 70	
170	312105-0451		2	SCREW M6S ISO 4017 M8X20 A480	
180	312105-0464		2	SCREW M6S ISO 4014 M8X65 A480	
200	342931-0121		4	ELBOW 90 COUPL.,EXT.THREAD 8/6-G1/8"	
TBA 1000SQ (See drawing on page: 3-40)					
010	1498827-0000		1	FOLDING BAR	
020	1498828-0000		1	FOLDING BAR	
030	1317043-0000		2	SUPPORT	
040	1317042-0000		1	RAIL	
050	1317047-0000		1	RAIL	
060	1499094-0000		2	SPACER SCREW	
080	1499072-0000		4	SPACER	
090	1499071-0000		2	SPACER	
100	312109-0457		4	SCREW M6S ISO 4017 M8X35 A480	
110	312105-0463		4	SCREW M6S ISO 4014 M8X60 A480	
120	315105-0165		14	WASHER BRB 8,4X16 RFR	
130	312605-0318		2	HEXAGON NUT, M6M M8 A280	
160	312155-0459		2	SCREW DIN 7991 MF6S M8X40 A4 70	
170	312105-0451		2	SCREW M6S ISO 4017 M8X20 A480	
180	312105-0466		2	SCREW M6S ISO 4014 M8X75 A480	
200	342931-0121		4	ELBOW 90 COUPL.,EXT.THREAD 8/6-G1/8"	
TBA 1500S (See drawing on page: 3-40)					
010	1317653-0000		1	FOLDING BAR	
020	1317652-0000		1	FOLDING BAR	
030	1317043-0000		2	SUPPORT	
040	1317042-0000		1	RAIL	
050	1317047-0000		1	RAIL	

Machine Type | Group Description | Used-In | Group Number | Page No

FLAP GUIDE

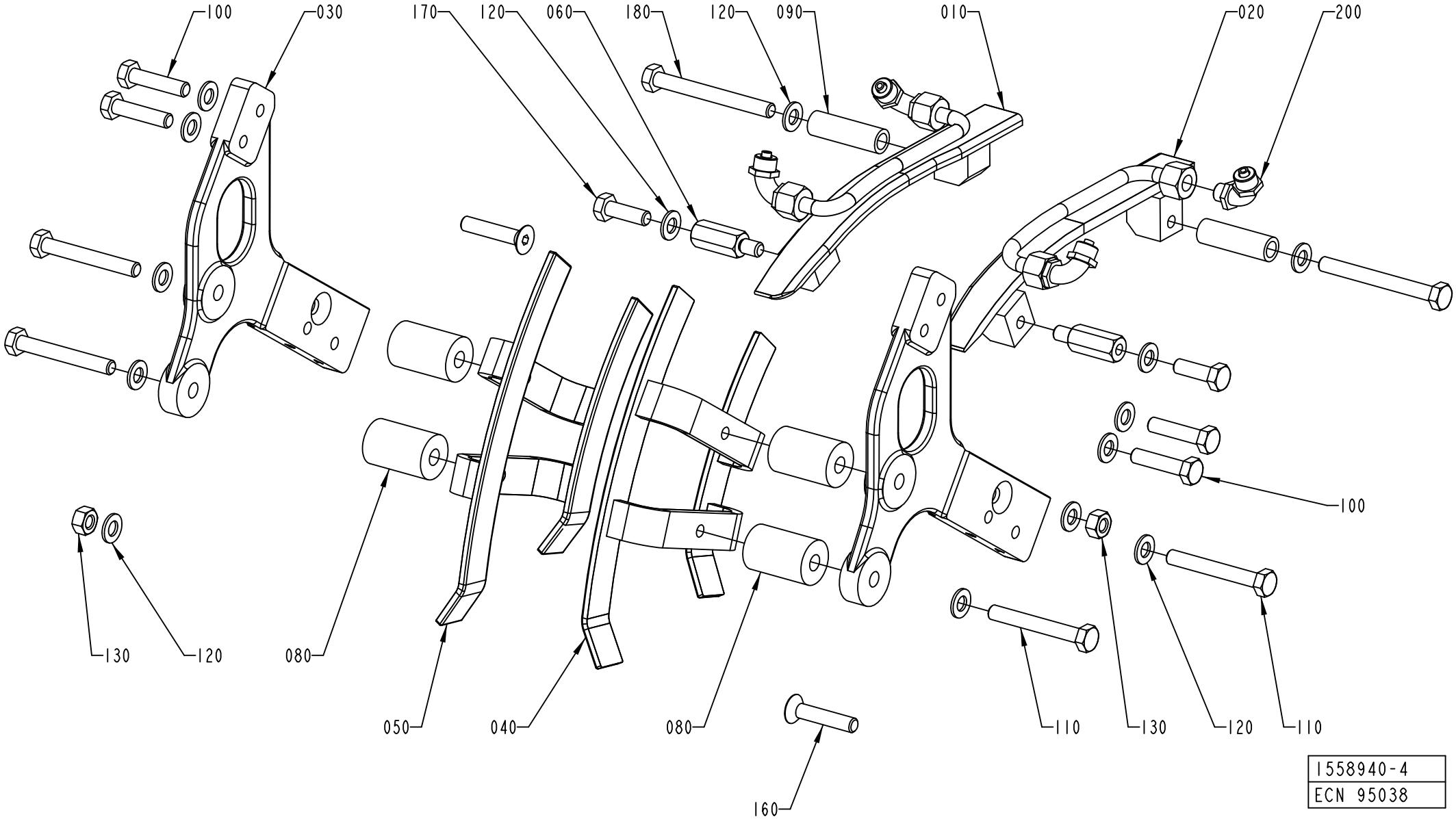
100
030
170
120
060
180
120
090
010
020
200
100
130
120
080
050
040
080
160
110
130
120
110
1558940-4
ECN 95038

Pos	Part No	UN	Qty	Description	Page No
TBA 1500S (Cont'd) (See drawing on page: 3-40)					
060	1348042-0000		2	SPACER	
080	1334718-0000		4	SPACER	
090	1317088-0000		2	SPACER	
100	312109-0457		4	SCREW M6S ISO 4017 M8X35 A480	
110	312109-0461		4	SCREW M6S ISO 4017 M8X50 A480	
120	315105-0165		12	WASHER BRB 8,4X16 RFR	
130	312605-0318		2	HEXAGON NUT, M6M M8 A280	
180	312105-0465		2	SCREW M6S ISO 4014 M8X70 A480	
200	342931-0121		4	ELBOW 90 COUPL.,EXT.THREAD 8/6-G1/8"	
TPA 0250SQ (See drawing on page: 3-40)					
010	1532275-0000		1	FOLDING BAR	
020	1532276-0000		1	FOLDING BAR	
030	1317043-0000		2	SUPPORT	
040	1532281-0000		1	RAIL	
050	1532280-0000		1	RAIL	
060	1558889-0000		2	SPACER SCREW	
080	1558527-0000		4	SPACER	
090	1539898-0000		2	SPACER	
100	312109-0457		4	SCREW M6S ISO 4017 M8X35 A480	
110	312105-0464		4	SCREW M6S ISO 4014 M8X65 A480	
120	315105-0165		14	WASHER BRB 8,4X16 RFR	
130	312605-0318		2	HEXAGON NUT, M6M M8 A280	
160	312155-0459		2	SCREW DIN 7991 MF6S M8X40 A4 70	
170	312105-0453		2	SCREW M6S ISO 4017 M8X25 A480	
180	312105-0469		2	SCREW M6S ISO 4014 M8X90 A480	
200	342921-0121		4	STRAIGHT CPLNG,EXT.THREADED 8/6-G1/8INCH	
TPA 0330SQ (See drawing on page: 3-40)					
010	1532275-0000		1	FOLDING BAR	
020	1532276-0000		1	FOLDING BAR	
030	1317043-0000		2	SUPPORT	
040	1532281-0000		1	RAIL	
050	1532280-0000		1	RAIL	
060	1499094-0000		2	SPACER SCREW	
080	1499072-0000		4	SPACER	
090	1558735-0000		2	SPACER	
100	312109-0457		4	SCREW M6S ISO 4017 M8X35 A480	
110	312105-0463		4	SCREW M6S ISO 4014 M8X60 A480	
120	315105-0165		14	WASHER BRB 8,4X16 RFR	
130	312605-0318		2	HEXAGON NUT, M6M M8 A280	
160	312155-0459		2	SCREW DIN 7991 MF6S M8X40 A4 70	
170	312105-0453		2	SCREW M6S ISO 4017 M8X25 A480	
180	312105-0469		2	SCREW M6S ISO 4014 M8X90 A480	
200	342921-0121		4	STRAIGHT CPLNG,EXT.THREADED 8/6-G1/8INCH	
TPA 0500SQ SMILE (See drawing on page: 3-40)					
010	2529910-0000		1	FOLDING BAR	
020	2529909-0000		1	FOLDING BAR	
030	1317043-0000		2	SUPPORT	
040	1499150-0000		1	RAIL	
050	1499151-0000		1	RAIL	
060	2530201-0000		2	SPACER SCREW	
080	1549508-0000		4	SPACER SCREW	
090	1558910-0000		2	SPACER	
100	312109-0457		4	SCREW M6S ISO 4017 M8X35 A480	
110	312105-0451		4	SCREW M6S ISO 4017 M8X20 A480	
120	315105-0165		14	WASHER BRB 8,4X16 RFR	
130	312605-0318		2	HEXAGON NUT, M6M M8 A280	
160	312155-0459		2	SCREW DIN 7991 MF6S M8X40 A4 70	
170	312105-0453		2	SCREW M6S ISO 4017 M8X25 A480	
180	312105-0467		2	SCREW M6S ISO 4014 M8X80 A480	
200	342921-0121		4	STRAIGHT CPLNG,EXT.THREADED 8/6-G1/8INCH	

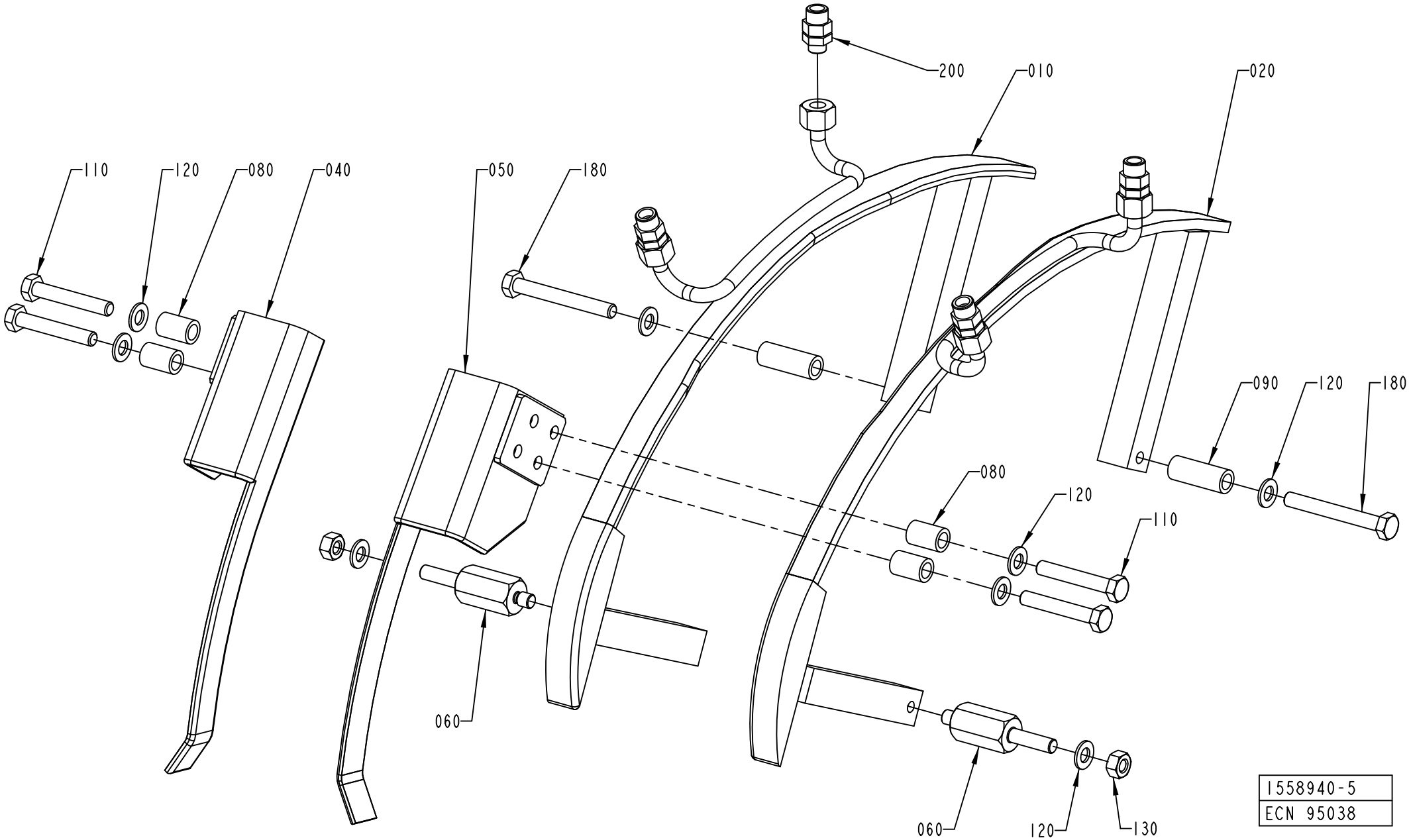
200
010
020
110
120
080
040
050
180
090
120
180
080
120
110
060
060
120
130
1558940-5
ECN 95038

Pos	Part No	UN	Qty	Description	Page No

SEE PREVIOUS LISTS PAGES: 3-37, 3-39, 3-41.

Pos	Part No	UN	Qty	Description	Page No

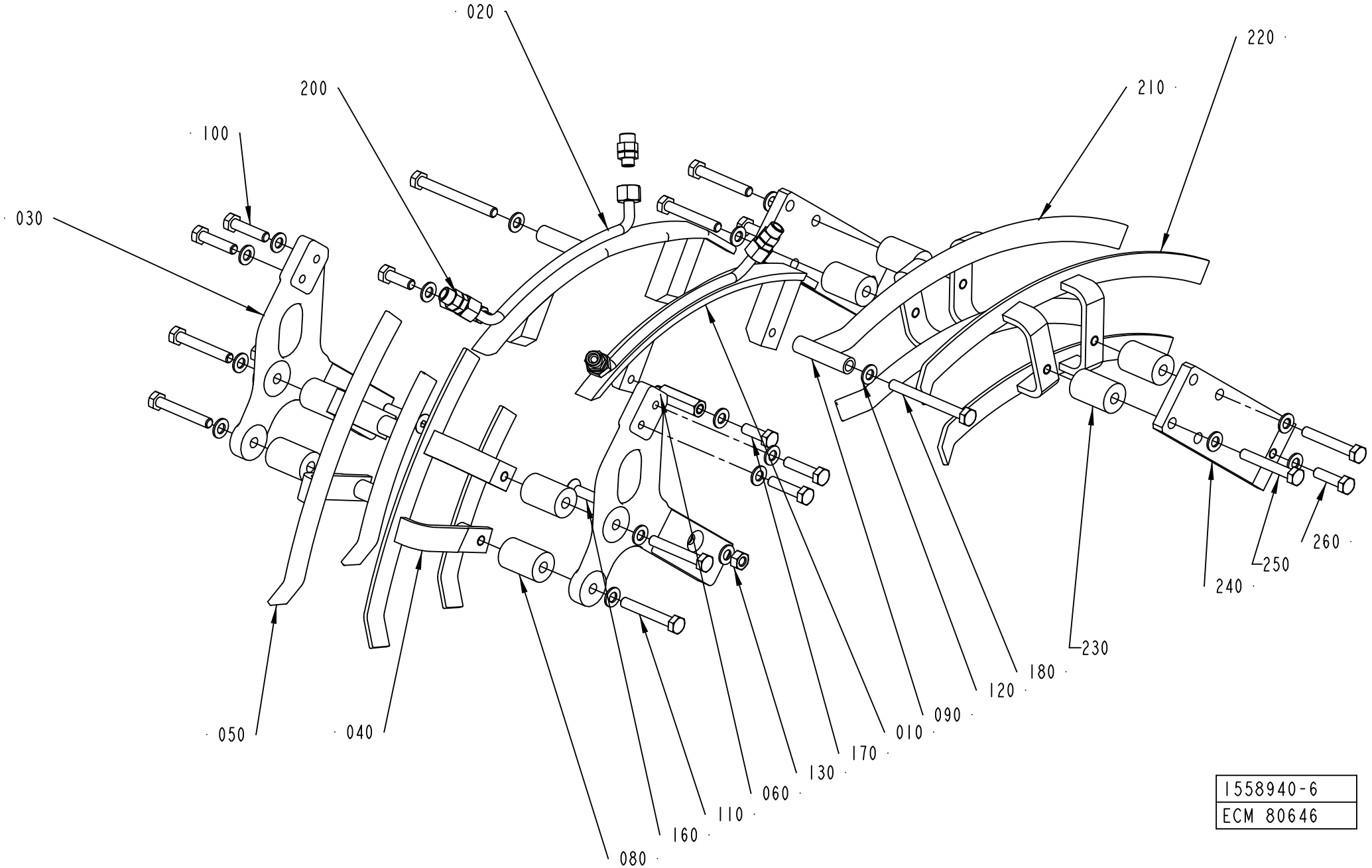
020
200
100
030
220
210
260
250
240
230
180
120
090
010
170
130
060
110
160
080
050
040
1558940-6
ECM 80646

Pos	Part No	UN	Qty	Description	Page No
SEE PREVIOUS LISTS PAGES: 3-37, 3-39, 3-41.					

Pos	Part No	UN	Qty	Description	Page No

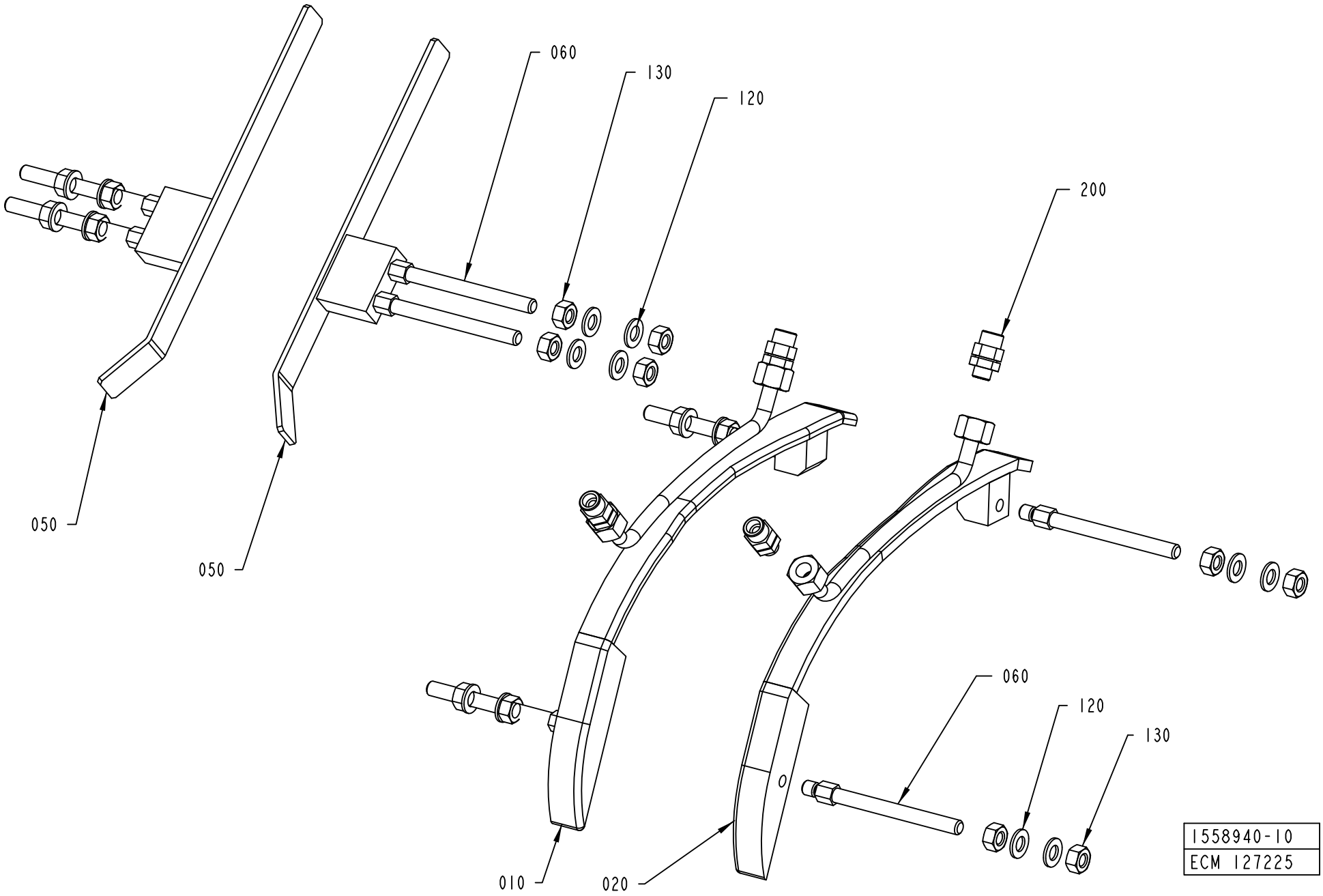
060
130
120
200
050
050
060
120
130
010
020
1558940-10
ECM 127225

Pos	Part No	UN	Qty	Description	Page No
SEE PREVIOUS LISTS PAGES: 3-37, 3-39, 3-41.					

Pos	Part No	UN	Qty	Description	Page No

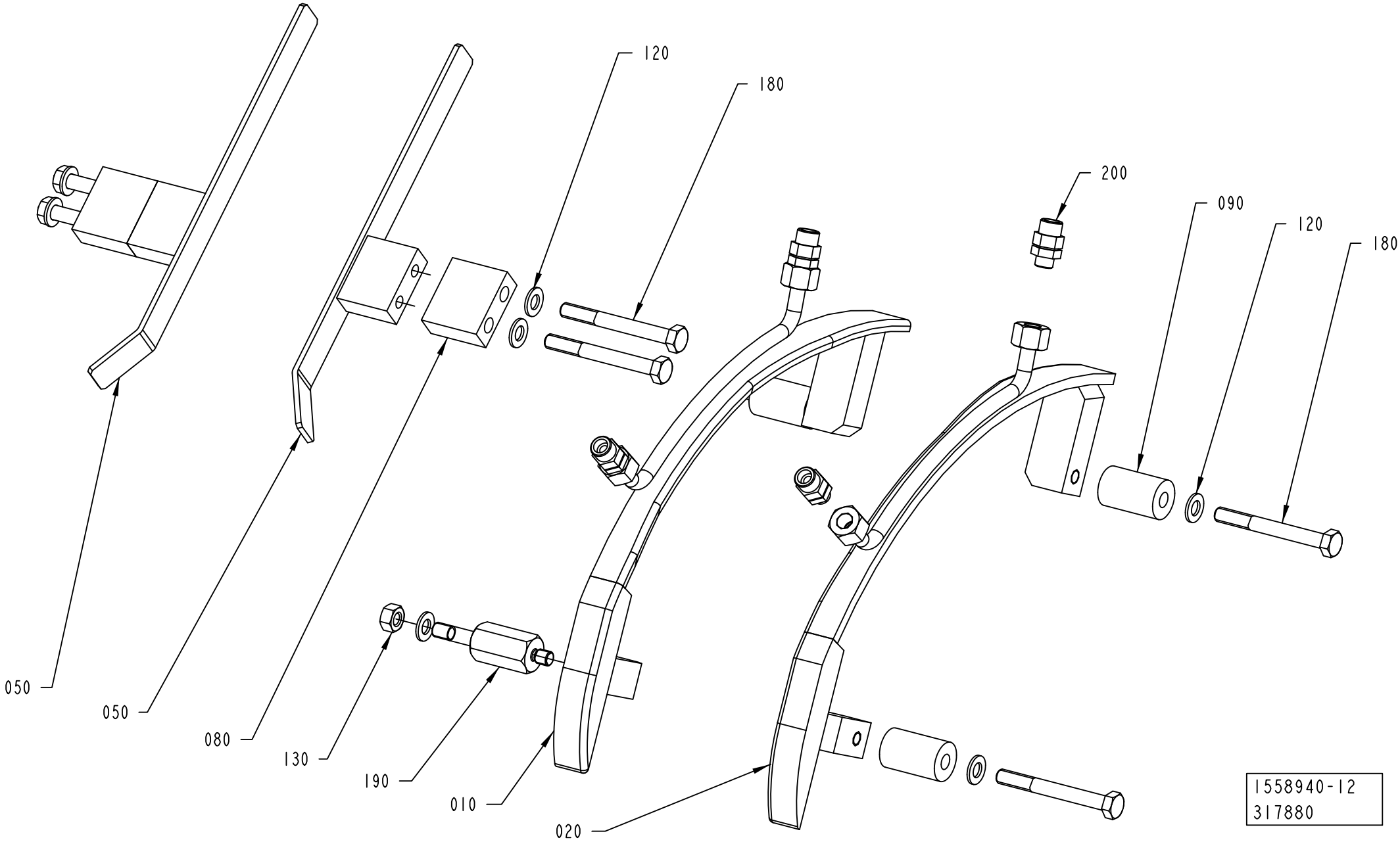
120
180
200
090
120
180
050
050
080
130
190
010
020
1558940-12
317880

Pos	Part No	UN	Qty	Description	Page No
SEE PREVIOUS LISTS PAGES: 3-37, 3-39, 3-41.					

Pos	Part No	UN	Qty	Description	Page No

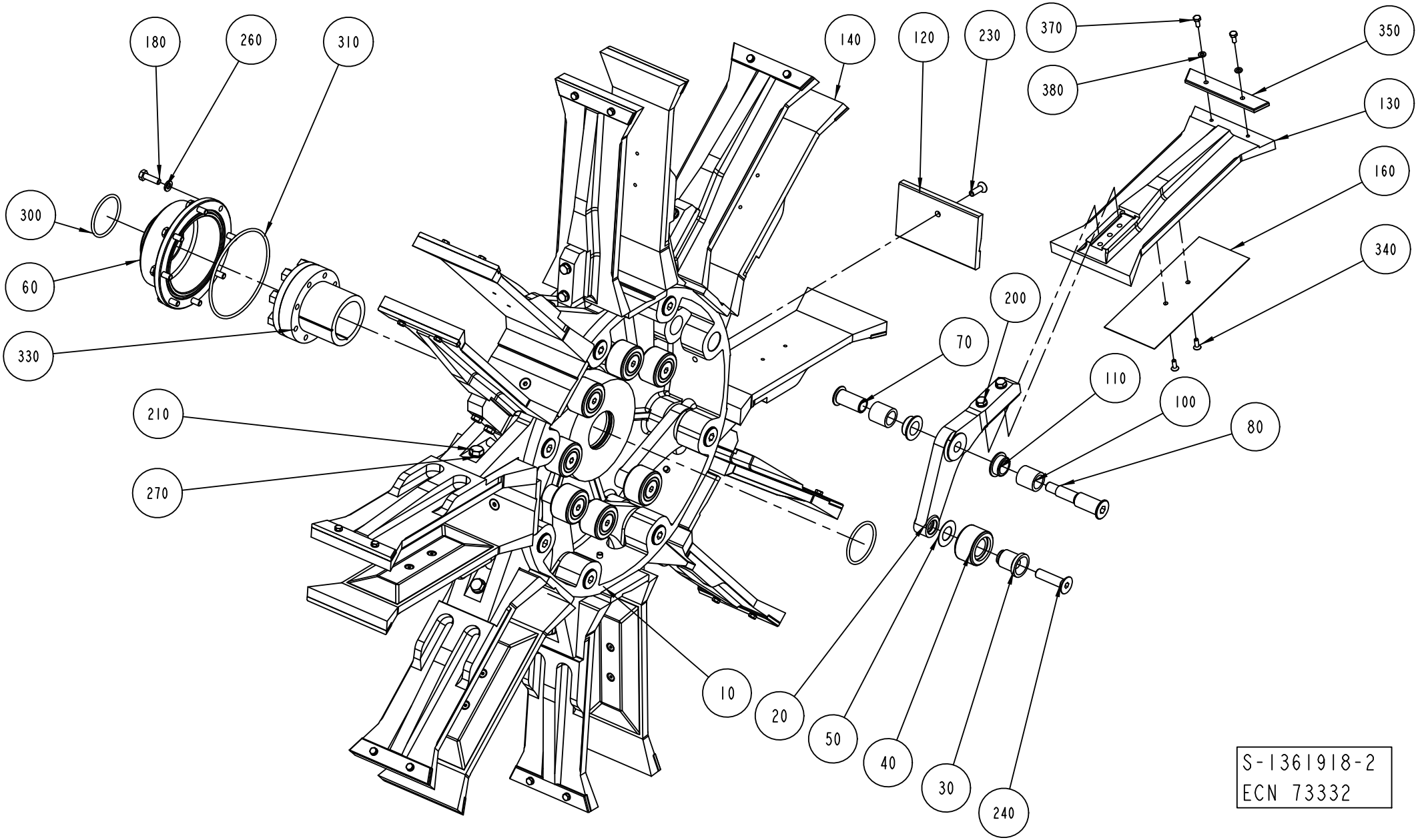
180
260
310
140
120
230
370
350
380
130
160
300
340
60
200
70
330
110
100
210
80
270
10
20
50
40
30
240
S-1361918-2
ECN 73332

ECM: 363219 - 20081001
Group number: 1361918-0300
Assembly Drawing: 1361918-2_1_AB

This list covers pages from 3-50 to 3-53

Pos	Part No	UN	Qty	Description	Page No
A3/FLEX TPA 0330SQ					
010	1144264-0000		1	HUB	
130	1532297-0000		8	FLAP	
140	1532298-0000		8	FLAP	
200	312105-0376		16	SCREW M6S ISO 4014 M6X35 A480	
210	312105-0453		8	SCREW M6S ISO 4017 M8X25 A480	
260	315105-0153		24	WASHER BRB 6,4X12 RFR	
A3/FLEX TPA 1000SQ					
010	1144264-0000		1	HUB	
120	1538770-0000		8	BOTTOM	
130	2555404-0000		8	FLAP	
130	1524484-0000		8	FLAP	
160	1523467-0000		8	VOLUME BULGE	
200	312105-0378		16	SCREW M6S ISO 4014 M6X40 A480	
210	312105-0453		8	SCREW M6S ISO 4017 M8X25 A480	
230	312155-0378		8	SCREW DIN 7991 MF6S M6X40 A4 70	
260	315105-0153		24	WASHER BRB 6,4X12 RFR	
340	312155-0289		16	SCREW DIN 7991 MF6S M4X10 A4 70	
A3/FLEX TBA 1000B STDA7					
010	1144264-0000		1	HUB	
120	2606289-0000		8	BOTTOM	
130	1260704-0000		8	FLAP	
140	1260705-0000		8	FLAP	
200	312105-0376		16	SCREW M6S ISO 4014 M6X35 A480	
210	312105-0453		8	SCREW M6S ISO 4017 M8X25 A480	
230	312155-0380		8	SCREW DIN 7991 MF6S M6X50 A4 70	
260	315105-0153		24	WASHER BRB 6,4X12 RFR	
A3/FLEX TBA 1000S LIGHTCAP					
010	1144264-0000		1	HUB	
120	2837065-0000		8	BOTTOM	
130	1144926-0000		8	FLAP	
140	1144927-0000		8	FLAP	
160	2550211-0000		8	VOLUME BULGE	
200	312105-0376		16	SCREW M6S ISO 4014 M6X35 A480	
210	312105-0453		8	SCREW M6S ISO 4017 M8X25 A480	
230	312155-0370		8	SCREW DIN 7991 MF6S M6X20 A4 70	
260	315105-0153		24	WASHER BRB 6,4X12 RFR	
340	312155-0287		16	SCREW DIN 7991 MF6S M4X8 A4 70	
A3/FLEX TBA 1000S STDA7					
010	1144264-0000		1	HUB	
120	2509938-0000		8	BOTTOM	
130	1144926-0000		8	FLAP	
140	1144927-0000		8	FLAP	
160	2550211-0000		8	VOLUME BULGE	
200	312105-0376		16	SCREW M6S ISO 4014 M6X35 A480	
210	312105-0453		8	SCREW M6S ISO 4017 M8X25 A480	
230	312155-0370		8	SCREW DIN 7991 MF6S M6X20 A4 70	
260	315105-0153		24	WASHER BRB 6,4X12 RFR	
340	312155-0287		16	SCREW DIN 7991 MF6S M4X8 A4 70	
A3/FLEX TPA 1000SQ SMILE					
010	1144264-0000		1	HUB	
120	2802612-0000		8	BOTTOM	
130	1524484-0000		8	FLAP	
140	2558145-0000		8	FLAP	
160	1523467-0000		8	VOLUME BULGE	
200	312105-0378		16	SCREW M6S ISO 4014 M6X40 A480	
210	312105-0453		8	SCREW M6S ISO 4017 M8X25 A480	
230	312155-0380		8	SCREW DIN 7991 MF6S M6X50 A4 70	
260	315103-0153		32	WASHER, BRB, 6,4/12,H=1,5 NIPL BR	
340	312155-0289		16	SCREW DIN 7991 MF6S M4X10 A4 70	
A3/FLEX TPA 500SQ LIGHTCAP					
010	1144264-0000		1	HUB	
120	2958720-0000		8	BOTTOM	
130	1549844-0000		8	FLAP	
140	2564347-0000		8	FLAP	
200	312105-0376		16	SCREW M6S ISO 4014 M6X35 A480	
210	312105-0453		8	SCREW M6S ISO 4017 M8X25 A480	
230	312105-0368		8	SCREW M6S ISO 4017 M6X16 A480	
260	315103-0153		32	WASHER, BRB, 6,4/12,H=1,5 NIPL BR	
A3/FLEX TPA 500SQ NOMOLDEDCAP					
010	1144264-0000		1	HUB	
120	2602614-0000		8	BOTTOM	
130	1549844-0000		8	FLAP	
140	2564347-0000		8	FLAP	
200	312105-0376		16	SCREW M6S ISO 4014 M6X35 A480	
230	312105-0368		8	SCREW M6S ISO 4017 M6X16 A480	
260	315103-0153		32	WASHER, BRB, 6,4/12,H=1,5 NIPL BR	
A3/FLEX TBA 0200S					
010	1144264-0000		1	HUB	
130	1260885-0000		8	FLAP	
140	1260886-0000		8	FLAP	
200	312105-0376		16	SCREW M6S ISO 4014 M6X35 A480	
210	312105-0453		8	SCREW M6S ISO 4017 M8X25 A480	
260	315105-0153		24	WASHER BRB 6,4X12 RFR	

Machine Type | Group Description | Used-In | Group Number | Page No

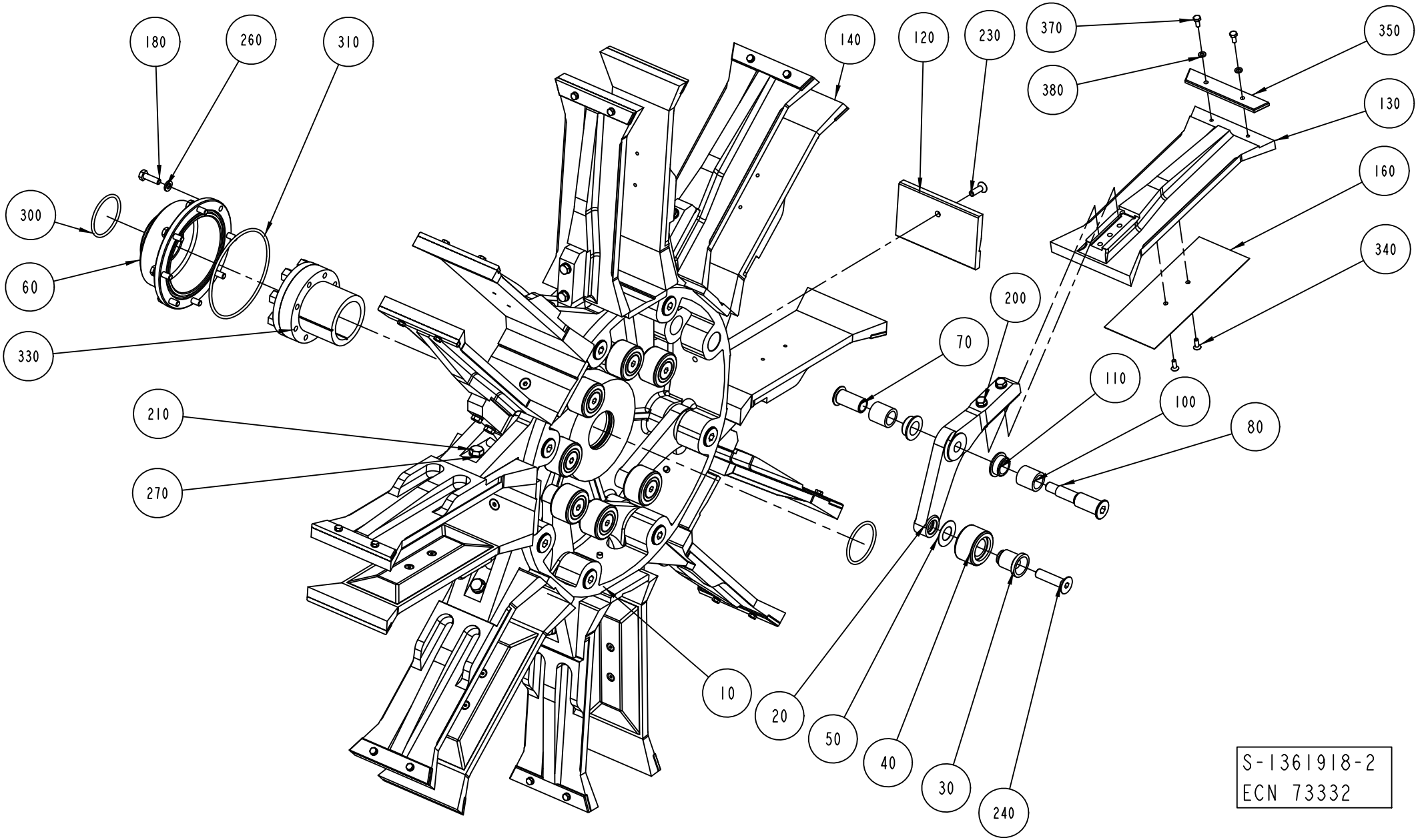
180
260
310
140
120
230
370
350
380
130
160
300
340
60
200
70
330
110
100
210
80
270
10
20
50
40
30
240
S-1361918-2
ECN 73332

ECM: 363219 - 20081001
Group number: 1361918-0300
Assembly Drawing: 1361918-2_1_AB

This list covers pages from 3-50 to 3-53

Pos	Part No	UN	Qty	Description	Page No
A3/FLEX TBA 0500S (Cont'd)					
010	1144264-0000		1	HUB	
130	1499141-0000		8	FLAP	
140	1499142-0000		8	FLAP	
160	1524035-0000		8	VOLUME BULGE	
200	312105-0376		16	SCREW M6S ISO 4014 M6X35 A480	
210	312105-0453		8	SCREW M6S ISO 4017 M8X25 A480	
260	315105-0153		24	WASHER BRB 6,4X12 RFR	
340	312155-0289		16	SCREW DIN 7991 MF6S M4X10 A4 70	
A3/FLEX TBA 1000B NOMOLDEDCAP					
010	1144264-0000		1	HUB	
120	1260703-0000		8	BOTTOM	
130	1260704-0000		8	FLAP	
140	1260705-0000		8	FLAP	
200	312105-0376		16	SCREW M6S ISO 4014 M6X35 A480	
210	312105-0453		8	SCREW M6S ISO 4017 M8X25 A480	
230	312155-0380		8	SCREW DIN 7991 MF6S M6X50 A4 70	
260	315105-0153		24	WASHER BRB 6,4X12 RFR	
A3/FLEX TBA 1000S NOMOLDEDCAP					
010	1144264-0000		1	HUB	
120	1144924-0000		8	BOTTOM	
130	1144926-0000		8	FLAP	
140	1144927-0000		8	FLAP	
160	2550211-0000		8	VOLUME BULGE	
200	312105-0376		16	SCREW M6S ISO 4014 M6X35 A480	
210	312105-0453		8	SCREW M6S ISO 4017 M8X25 A480	
230	312155-0370		8	SCREW DIN 7991 MF6S M6X20 A4 70	
260	315105-0153		24	WASHER BRB 6,4X12 RFR	
340	312155-0287		16	SCREW DIN 7991 MF6S M4X8 A4 70	
A3/FLEX TBA 1000SQ					
010	1144264-0000		1	HUB	
120	1511558-0000		8	BOTTOM	
130	1487739-0000		8	FLAP	
140	1487738-0000		8	FLAP	
200	312105-0376		16	SCREW M6S ISO 4014 M6X35 A480	
210	312105-0453		8	SCREW M6S ISO 4017 M8X25 A480	
230	312155-0370		8	SCREW DIN 7991 MF6S M6X20 A4 70	
260	315105-0153		24	WASHER BRB 6,4X12 RFR	
A3/FLEX TBA 1500S					
010	1144264-0000		1	HUB	
120	1317556-0000		8	BOTTOM	
130	1317554-0000		8	FLAP	
140	1317555-0000		8	FLAP	
200	312105-0376		16	SCREW M6S ISO 4014 M6X35 A480	
210	312105-0453		8	SCREW M6S ISO 4017 M8X25 A480	
230	312155-0376		8	SCREW DIN 7991 MF6S M6X35 A4 70	
260	315105-0153		24	WASHER BRB 6,4X12 RFR	
350	1317656-0000		16	INSERT	
370	312105-0289		32	SCREW M6S H4X10 A4 70 ISO4017/DIN933	
380	315105-0136		32	WASHER BRB 4,3X8 RFR	
Common Parts					
020	1279559-0000		8	ARM	
030	1144312-0000		8	AXLE PIN	
040	1144335-0000		8	ROLLER	
050	1144354-0000		8	WASHER	
060	1144356-0000		1	COVER	
070	1296970-0000		8	SCREW BUSHING	
080	1296969-0000		8	SCREW HOLDER	
100	1144417-0000		16	BUSHING	
110	1282708-0000		16	BUSHING	
180	312105-0370		8	SCREW M6S ISO 4017 M6X20 A480	
240	312155-0499		8	SCREW DIN 7991 MF6S M10X40 A4 70	
270	315105-0165		8	WASHER BRB 8,4X16 RFR	
300	315202-0225		2	O-RING 44,2X3 MM	
310	315202-0311		1	O-RING 99,5X3 MM	
330	90208-0087		1	CLAMPING ELEMENT WITH SLEEVE, 45X59 MM	

Machine Type	Group Description	Used-In	Group Number	Page No

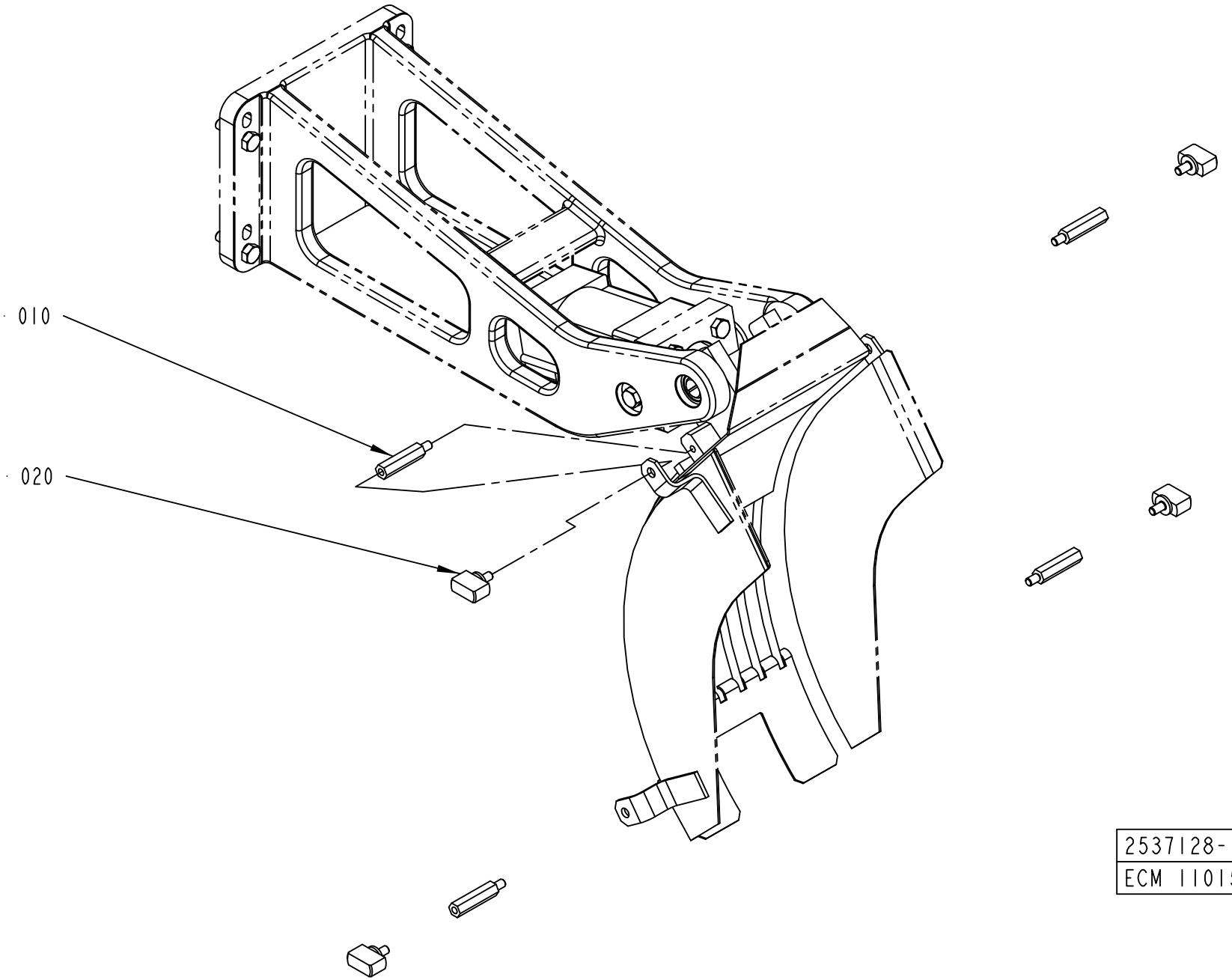

2537128-1
ECM 110157

Pos	Part No	UN	Qty	Description	Page No
TBA 0200B, TBA 0250B, TBA 0330S (See drawing on page: 3-54)					
010	1317218-0000		4	SPACER	
020	2529785-0000		4	KNOB	
TBA 0200M, TBA 0250S					
010	2522202-0000		4	SPACER	
020	2652191-0000		4	KNOB	
TBA 0200SQ, TBA 0250SQ (See drawing on page: 3-54)					
010	1317218-0000		4	SPACER	
020	2652191-0000		4	KNOB	
TBA 0500B, TBA 1000B (See drawing on page: 3-54)					
010	2537129-0000		4	SPACER	
020	2540609-0000		4	KNOB	
TBA 0500SQ, TBA 1000SQ (See drawing on page: 3-56)					
010	2598820-0000		2	SPACER	
020	2540609-0000		4	KNOB	
030	2619574-0000		2	SPACER	
TBA 1890S, TBA 2000S, TBA 1400B (See drawing on page: 3-58)					
010	2661153-0000		4	SPACER	
020	2540609-0000		4	KNOB	
040	315402-0156		4	LOCK WASHER FBB 6,5	
TPA 0250SQ, TPA 0200SQ (See drawing on page: 3-54)					
010	2598819-0000		4	SPACER	
020	2652191-0000		4	KNOB	
TPA 1000SQ, TPA 0750SQ (See drawing on page: 3-54)					
020	2540609-0000		4	KNOB	

Pos	Part No	UN	Qty	Description	Page No

Machine Type | Group Description | Used-In | Group Number | Page No

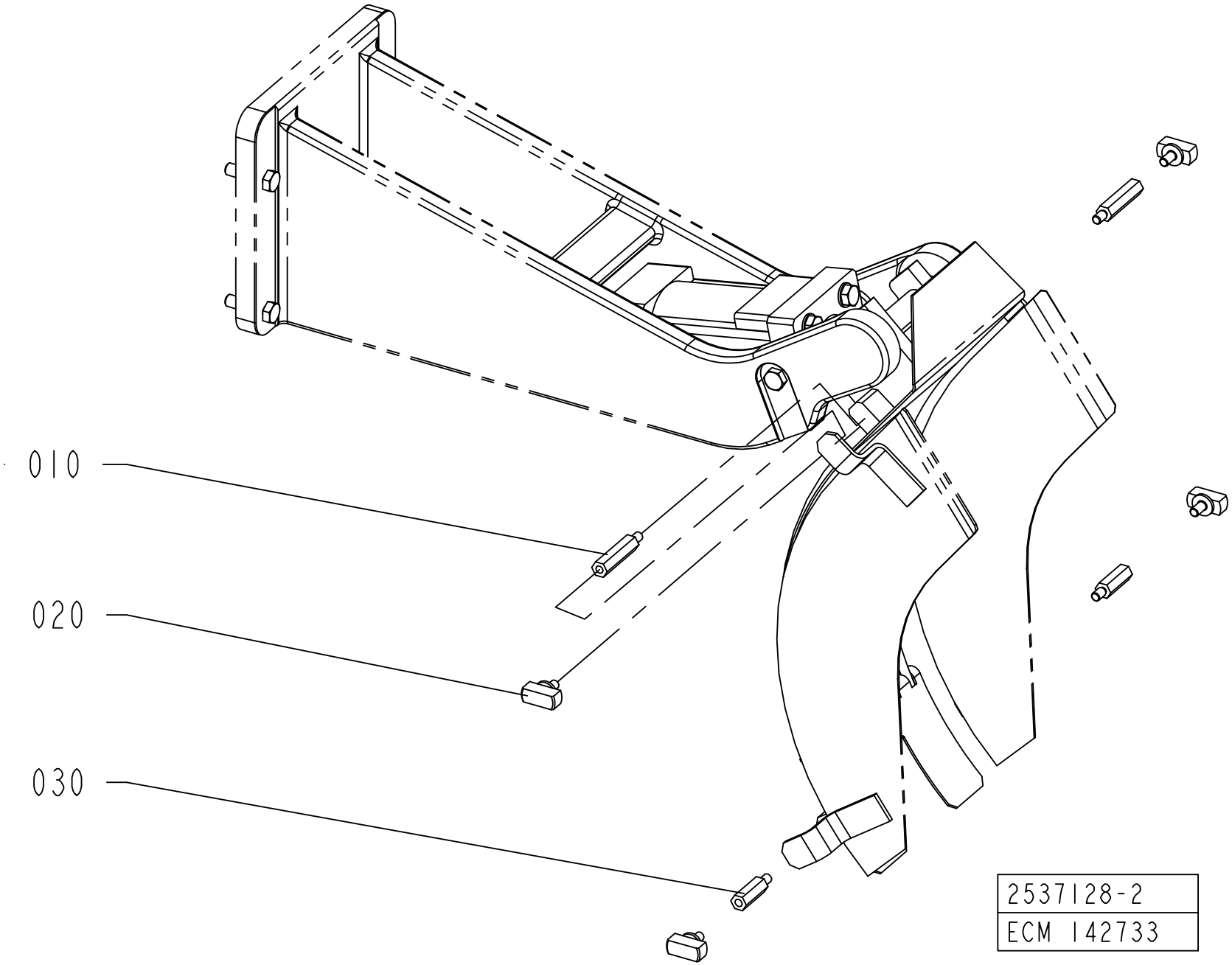
010
020
030
2537128-2
ECM 142733

Pos	Part No	UN	Qty	Description	Page No
TBA 0200B, TBA 0250B, TBA 0330S (See drawing on page: 3-54)					
010	1317218-0000		4	SPACER	
020	2529785-0000		4	KNOB	
TBA 0200M, TBA 0250S					
010	2522202-0000		4	SPACER	
020	2652191-0000		4	KNOB	
TBA 0200SQ, TBA 0250SQ (See drawing on page: 3-54)					
010	1317218-0000		4	SPACER	
020	2652191-0000		4	KNOB	
TBA 0500B, TBA 1000B (See drawing on page: 3-54)					
010	2537129-0000		4	SPACER	
020	2540609-0000		4	KNOB	
TBA 0500SQ, TBA 1000SQ (See drawing on page: 3-56)					
010	2598820-0000		2	SPACER	
020	2540609-0000		4	KNOB	
030	2619574-0000		2	SPACER	
TBA 1890S, TBA 2000S, TBA 1400B (See drawing on page: 3-58)					
010	2661153-0000		4	SPACER	
020	2540609-0000		4	KNOB	
040	315402-0156		4	LOCK WASHER FBB 6,5	
TPA 0250SQ, TPA 0200SQ (See drawing on page: 3-54)					
010	2598819-0000		4	SPACER	
020	2652191-0000		4	KNOB	
TPA 1000SQ, TPA 0750SQ (See drawing on page: 3-54)					
020	2540609-0000		4	KNOB	

Pos	Part No	UN	Qty	Description	Page No

Machine Type | Group Description | Used-In | Group Number | Page No

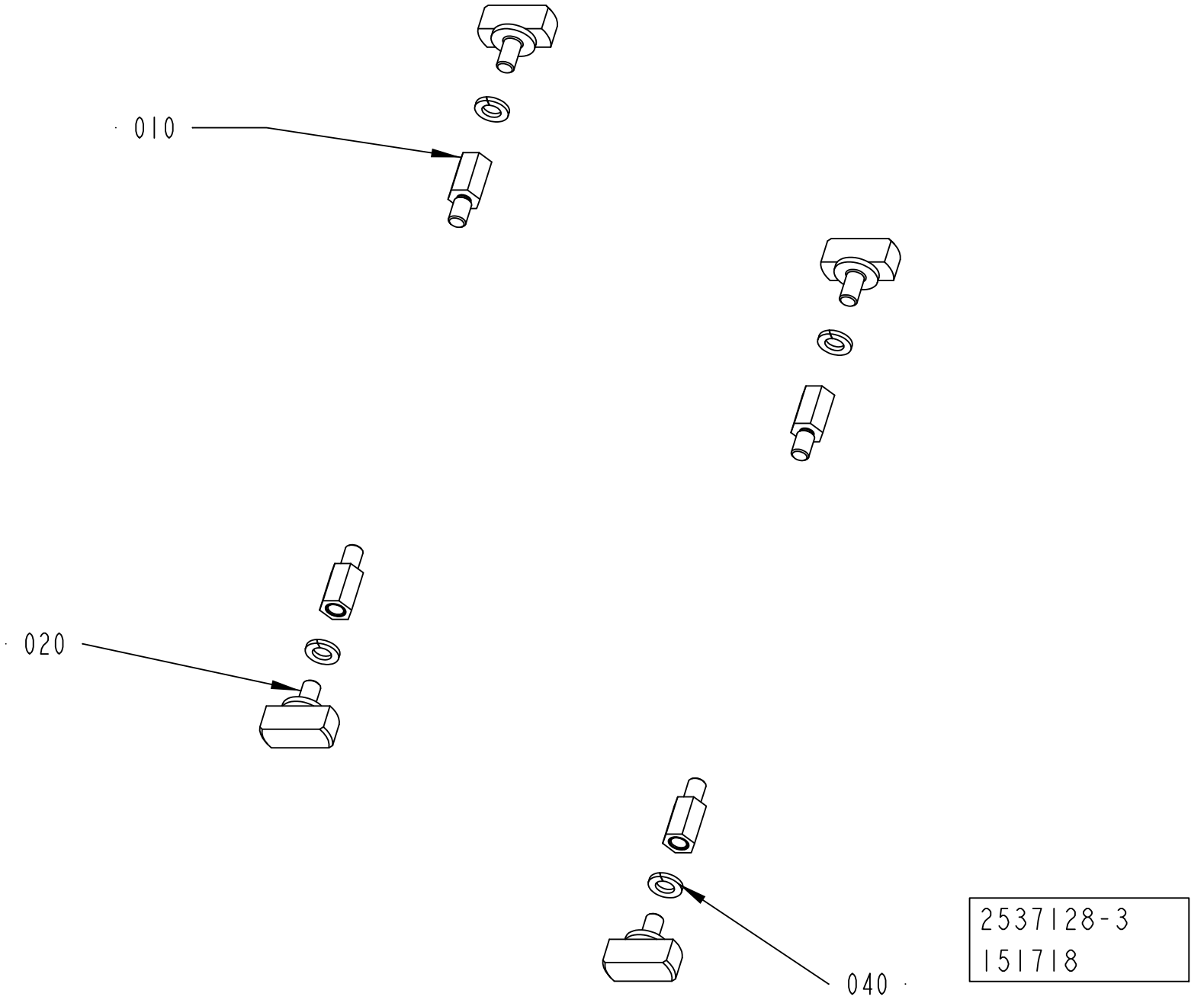
010
020
040
2537128-3
151718

Pos	Part No	UN	Qty	Description	Page No
TBA 0200B, TBA 0250B, TBA 0330S (See drawing on page: 3-54)					
010	1317218-0000		4	SPACER	
020	2529785-0000		4	KNOB	
TBA 0200M, TBA 0250S					
010	2522202-0000		4	SPACER	
020	2652191-0000		4	KNOB	
TBA 0200SQ, TBA 0250SQ (See drawing on page: 3-54)					
010	1317218-0000		4	SPACER	
020	2652191-0000		4	KNOB	
TBA 0500B, TBA 1000B (See drawing on page: 3-54)					
010	2537129-0000		4	SPACER	
020	2540609-0000		4	KNOB	
TBA 0500SQ, TBA 1000SQ (See drawing on page: 3-56)					
010	2598820-0000		2	SPACER	
020	2540609-0000		4	KNOB	
030	2619574-0000		2	SPACER	
TBA 1890S, TBA 2000S, TBA 1400B (See drawing on page: 3-58)					
010	2661153-0000		4	SPACER	
020	2540609-0000		4	KNOB	
040	315402-0156		4	LOCK WASHER FBB 6,5	
TPA 0250SQ, TPA 0200SQ (See drawing on page: 3-54)					
010	2598819-0000		4	SPACER	
020	2652191-0000		4	KNOB	
TPA 1000SQ, TPA 0750SQ (See drawing on page: 3-54)					
020	2540609-0000		4	KNOB	

Pos	Part No	UN	Qty	Description	Page No

Machine Type | Group Description | Used-In | Group Number | Page No

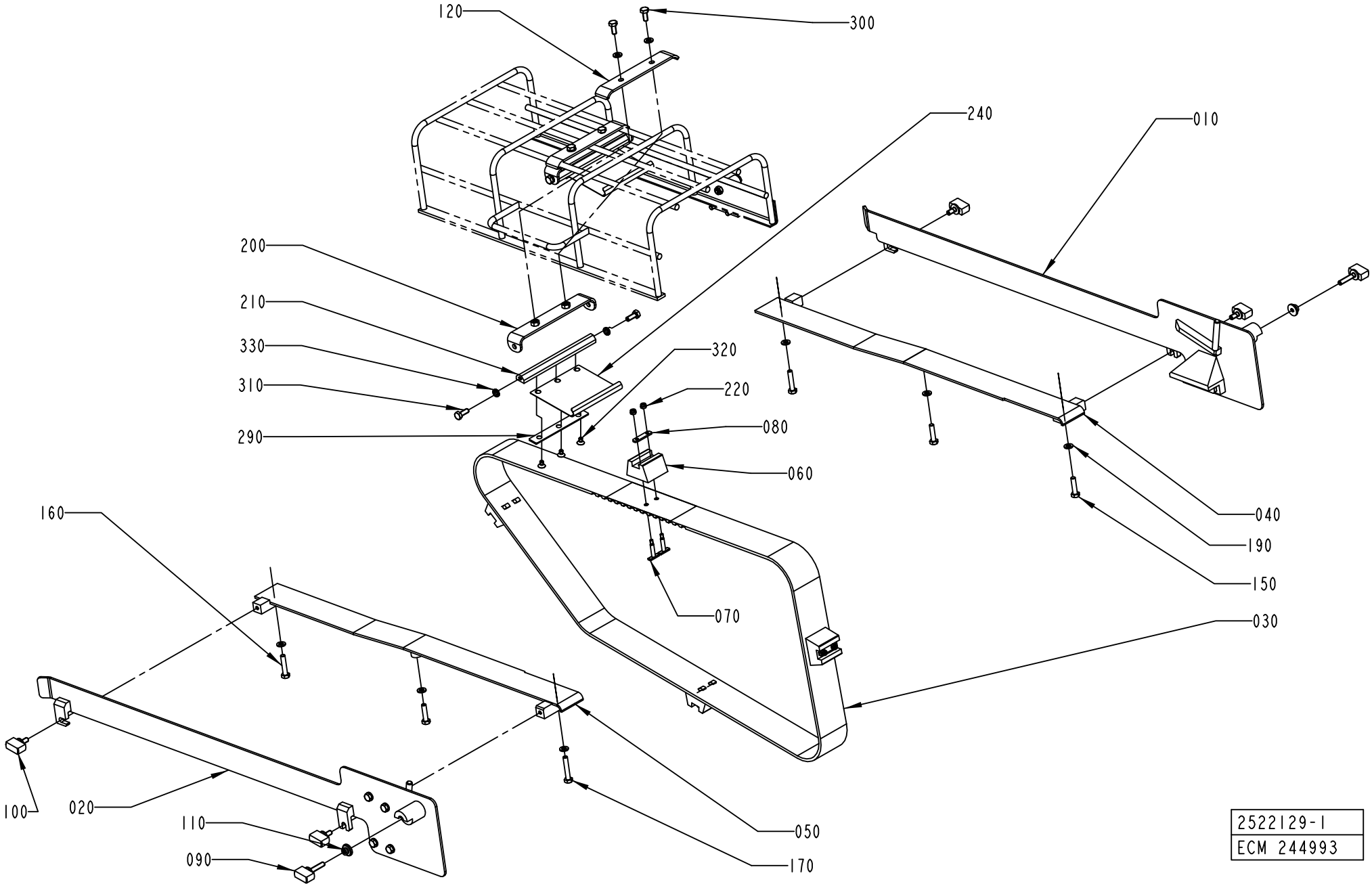
120
300
240
010
200
210
330
310
290
320
220
080
060
160
040
190
150
070
030
100
020
110
090
050
170
2522129-1
ECM 244993

ECM: 343888 - 20080702
Group number: 2522129-0100
Assembly Drawing: 2522129-1_1_AB

This list covers pages from 3-60 to 3-67

Pos	Part No	UN	Qty	Description	Page No
TBA 0200B, TBA 0250B, TBA 0330S (See drawing on page: 3-66)					
030	1144783-0000		1	TIMING BELT	
040	1282290-0000		1	GUIDE	
050	1282291-0000		1	GUIDE	
060	1282287-0000		4	CARRIER	
070	1346736-0000		8	WEDGE	
080	1144918-0000		4	PLATE	
090	2652191-0000		2	KNOB	
100	2529786-0000		4	KNOB	
110	2520160-0000		2	CLAMP	
120	1499476-0000		1	HOLDER	
130	1499475-0000		1	HOLDER	
150	312105-0372		5	SCREW M6S ISO 4017 M6X25 A480	
160	312109-0374		2	SCREW M6S ISO 4017 M6X30 A480	
190	315105-0153		10	WASHER BRB 6,4X12 RFR	
220	312812-0312		8	HEXAGON NUT, NY-LOCK M4 A480	
230	312605-0316		2	HEXAGON NUT, M6M M6 A280	
250	90424-0068		1	AIR NOZZLE, G1/4, MOD. 216 BSP	
260	90458-2958		1	ELBOW PIPE JOINT, EXT.THREAD, D=8MM-G1/4	
270	342728-0102		1	PIPE COUPLING 6 MM	
280	315400-0001	MM	2820	TUBE PUN-H-6X1-BL	
285	342716-0203		2	REDUCER 6-8	
TBA 0200M, TBA 0250S (See drawing on page: 3-64)					
030	1144783-0000		1	TIMING BELT	
040	1282290-0000		1	GUIDE	
050	1282291-0000		1	GUIDE	
060	1282287-0000		4	CARRIER	
070	1346736-0000		8	WEDGE	
080	1144918-0000		4	PLATE	
090	2652191-0000		2	KNOB	
100	2529786-0000		4	KNOB	
110	2520160-0000		2	CLAMP	
120	1499476-0000		1	HOLDER	
130	1499475-0000		1	HOLDER	
150	312105-0372		5	SCREW M6S ISO 4017 M6X25 A480	
160	312109-0374		2	SCREW M6S ISO 4017 M6X30 A480	
190	315105-0153		10	WASHER BRB 6,4X12 RFR	
220	312812-0312		8	HEXAGON NUT, NY-LOCK M4 A480	
230	312605-0316		2	HEXAGON NUT, M6M M6 A280	
250	90424-0068		1	AIR NOZZLE, G1/4, MOD. 216 BSP	
260	90458-2958		1	ELBOW PIPE JOINT, EXT.THREAD, D=8MM-G1/4	
270	342728-0102		1	PIPE COUPLING 6 MM	
275	350015-0001		1	Y-FITTING QSY-F-6	
280	315400-0001	MM	700	TUBE PUN-H-6X1-BL	
285	342716-0200		1	REDUCER 4-5	
TBA 0200SQ, TBA 0250SQ (See drawing on page: 3-64)					
030	1144783-0000		1	TIMING BELT	
040	1317651-0000		1	GUIDE	
050	1317650-0000		1	GUIDE	
060	1282287-0000		4	CARRIER	
070	1346471-0000		8	WEDGE	
080	1144918-0000		4	PLATE	
090	2652191-0000		2	KNOB	
100	2529786-0000		4	KNOB	
110	2725826-0000		2	CLAMP	
115	2725827-0000		2	SPACER	
120	1499476-0000		1	HOLDER	
120	2668244-0000		1	HOLDER	
150	312105-0372		3	SCREW M6S ISO 4017 M6X25 A480	
160	312109-0374		2	SCREW M6S ISO 4017 M6X30 A480	
190	315105-0153		6	WASHER BRB 6,4X12 RFR	
220	312812-0312		8	HEXAGON NUT, NY-LOCK M4 A480	
230	312605-0316		2	HEXAGON NUT, M6M M6 A280	
250	90424-0068		1	AIR NOZZLE, G1/4, MOD. 216 BSP	
260	342732-0104		1	ELBOW PIPE JOINT, EXT.THREAD, D=8MM-G1/4	
270	342728-0102		1	PIPE COUPLING 6 MM	
275	350015-0001		1	Y-FITTING QSY-F-6	
280	315400-0001	MM	700	TUBE PUN-H-6X1-BL	
285	342716-0200		1	REDUCER 4-5	
TBA 0500B, TBA 1000B (See drawing on page: 3-60)					
030	1144783-0000		1	TIMING BELT	
040	2779739-0000		1	GUIDE	
050	2779738-0000		1	GUIDE	
060	1144919-0000		4	CARRIER	
070	1346471-0000		8	WEDGE	
080	1144918-0000		4	PLATE	
090	2529785-0000		2	KNOB	
100	2529786-0000		4	KNOB	
110	2520160-0000		2	CLAMP	
120	1499476-0000		1	HOLDER	
150	312105-0372		3	SCREW M6S ISO 4017 M6X25 A480	
160	312109-0374		2	SCREW M6S ISO 4017 M6X30 A480	
190	315105-0153		10	WASHER BRB 6,4X12 RFR	
200	2527792-0000		1	SUPPORT	

Machine Type | Group Description | Used-In | Group Number | Page No

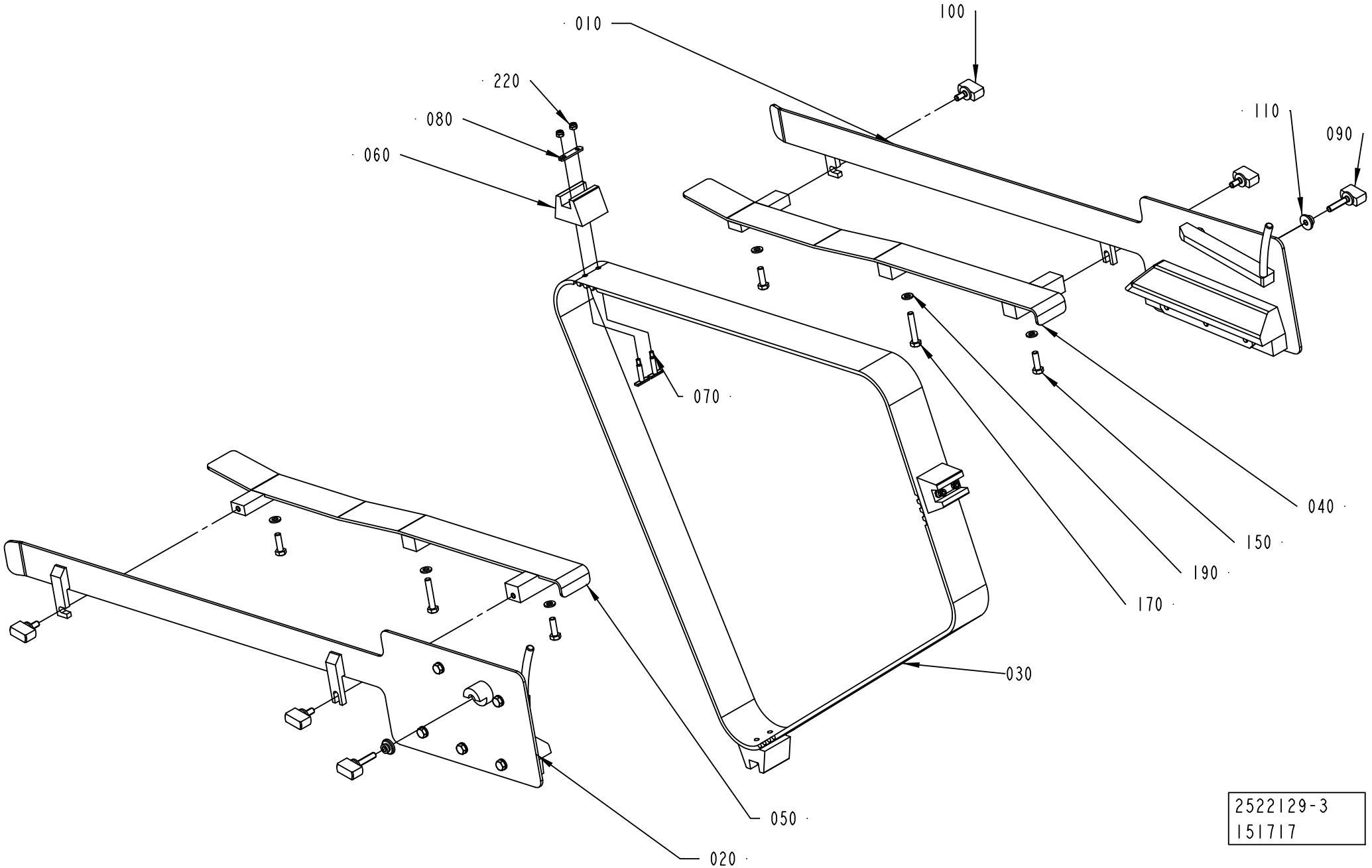
010
100
220
080
060
110
090
070
040
150
190
170
030
050
020
2522129-3
151717

ECM: 343888 - 20080702
Group number: 2522129-0100
Assembly Drawing: 2522129-3_1_AA

This list covers pages from 3-60 to 3-67

Pos	Part No	UN	Qty	Description	Page No
TBA 0500B, TBA 1000B (Cont'd) (See drawing on page: 3-60)					
210	2527793-0000		1	SHAFT	
220	312812-0312		8	HEXAGON NUT, NY-LOCK M4 A480	
240	2530418-0000		1	SPRING	
290	2540612-0000		1	PLATE	
300	312105-0367		2	SCREW M6S ISO 4017 M6X14 A480	
310	312105-0368		2	SCREW M6S ISO 4017 M6X16 A480	
320	312155-0323		3	SCREW DIN 7991 MF6S M5X8 A4 70	
330	90062-0061		2	LOCK WASHER NORD-LOCK,6,5/10,8, T=2,2	
TBA 0500SQ, TBA 1000SQ (See drawing on page: 3-60)					
030	1144783-0000		1	TIMING BELT	
040	1317651-0000		1	GUIDE	
050	1317650-0000		1	GUIDE	
060	1282848-0000		4	CARRIER	
070	1346471-0000		8	WEDGE	
080	1144918-0000		4	PLATE	
090	2529785-0000		2	KNOB	
100	2529786-0000		4	KNOB	
110	2520160-0000		2	CLAMP	
120	1499476-0000		2	HOLDER	
150	312105-0372		3	SCREW M6S ISO 4017 M6X25 A480	
160	312109-0374		2	SCREW M6S ISO 4017 M6X30 A480	
190	315105-0153		10	WASHER BRB 6,4X12 RFR	
200	2527792-0000		2	SUPPORT	
210	2527793-0000		2	SHAFT	
220	312812-0312		8	HEXAGON NUT, NY-LOCK M4 A480	
240	2530418-0000		2	SPRING	
290	2540612-0000		2	PLATE	
300	312105-0367		4	SCREW M6S ISO 4017 M6X14 A480	
310	312105-0368		4	SCREW M6S ISO 4017 M6X16 A480	
320	312155-0323		6	SCREW DIN 7991 MF6S M5X8 A4 70	
330	90062-0061		4	LOCK WASHER NORD-LOCK,6,5/10,8, T=2,2	
TBA 1890S, TBA 2000S, TBA 1400B (See drawing on page: 3-62)					
030	1349152-0000		1	TIMING BELT	
040	2665201-0000		1	GUIDE	
050	2665200-0000		1	GUIDE	
060	1282848-0000		3	CARRIER	
070	1346471-0000		6	WEDGE	
080	1144918-0000		3	PLATE	
090	2529785-0000		2	KNOB	
100	2529786-0000		4	KNOB	
110	2520160-0000		2	CLAMP	
150	312105-0370		4	SCREW M6S ISO 4017 M6X20 A480	
190	315105-0153		6	WASHER BRB 6,4X12 RFR	
220	312812-0312		6	HEXAGON NUT, NY-LOCK M4 A480	
TPA 0250SQ, TPA 0200SQ (See drawing on page: 3-64)					
030	1144783-0000		1	TIMING BELT	
040	1317651-0000		1	GUIDE	
050	1317650-0000		1	GUIDE	
060	1282287-0000		4	CARRIER	
070	1346736-0000		8	WEDGE	
080	1144918-0000		4	PLATE	
090	2652191-0000		2	KNOB	
100	2529786-0000		4	KNOB	
110	2725826-0000		2	CLAMP	
115	2725827-0000		2	SPACER	
120	1499476-0000		1	HOLDER	
120	2668244-0000		1	HOLDER	
150	312105-0372		5	SCREW M6S ISO 4017 M6X25 A480	
160	312109-0374		2	SCREW M6S ISO 4017 M6X30 A480	
190	315105-0153		10	WASHER BRB 6,4X12 RFR	
220	312812-0312		8	HEXAGON NUT, NY-LOCK M4 A480	
230	312605-0316		2	HEXAGON NUT, M6M M6 A280	
250	90424-0068		1	AIR NOZZLE, G1/4, MOD. 216 BSP	
260	90458-2958		1	ELBOW PIPE JOINT, EXT.THREAD, D=8MM-G1/4	
270	342728-0102		1	PIPE COUPLING 6 MM	
275	350015-0001		1	Y-FITTING QSY-F-6	
280	315400-0001	MM	700	TUBE PUN-H-6X1-BL	
285	342716-0200		1	REDUCER 4-5	
TPA 1000SQ, TPA 0750SQ (See drawing on page: 3-60)					
030	1519338-0000		1	TIMING BELT	
040	1519346-0000		1	GUIDE	
050	1519345-0000		1	GUIDE	
060	1519344-0000		3	CARRIER	
070	1517476-0000		6	WEDGE	
080	1517477-0000		3	PLATE	
090	2529785-0000		2	KNOB	
100	2529786-0000		4	KNOB	
110	2520160-0000		2	CLAMP	
150	312105-0372		3	SCREW M6S ISO 4017 M6X25 A480	
160	312109-0374		2	SCREW M6S ISO 4017 M6X30 A480	
190	315105-0153		6	WASHER BRB 6,4X12 RFR	
220	312812-0312		6	HEXAGON NUT, NY-LOCK M4 A480	
Common Parts					

Machine Type	Group Description	Used-In	Group Number	Page No

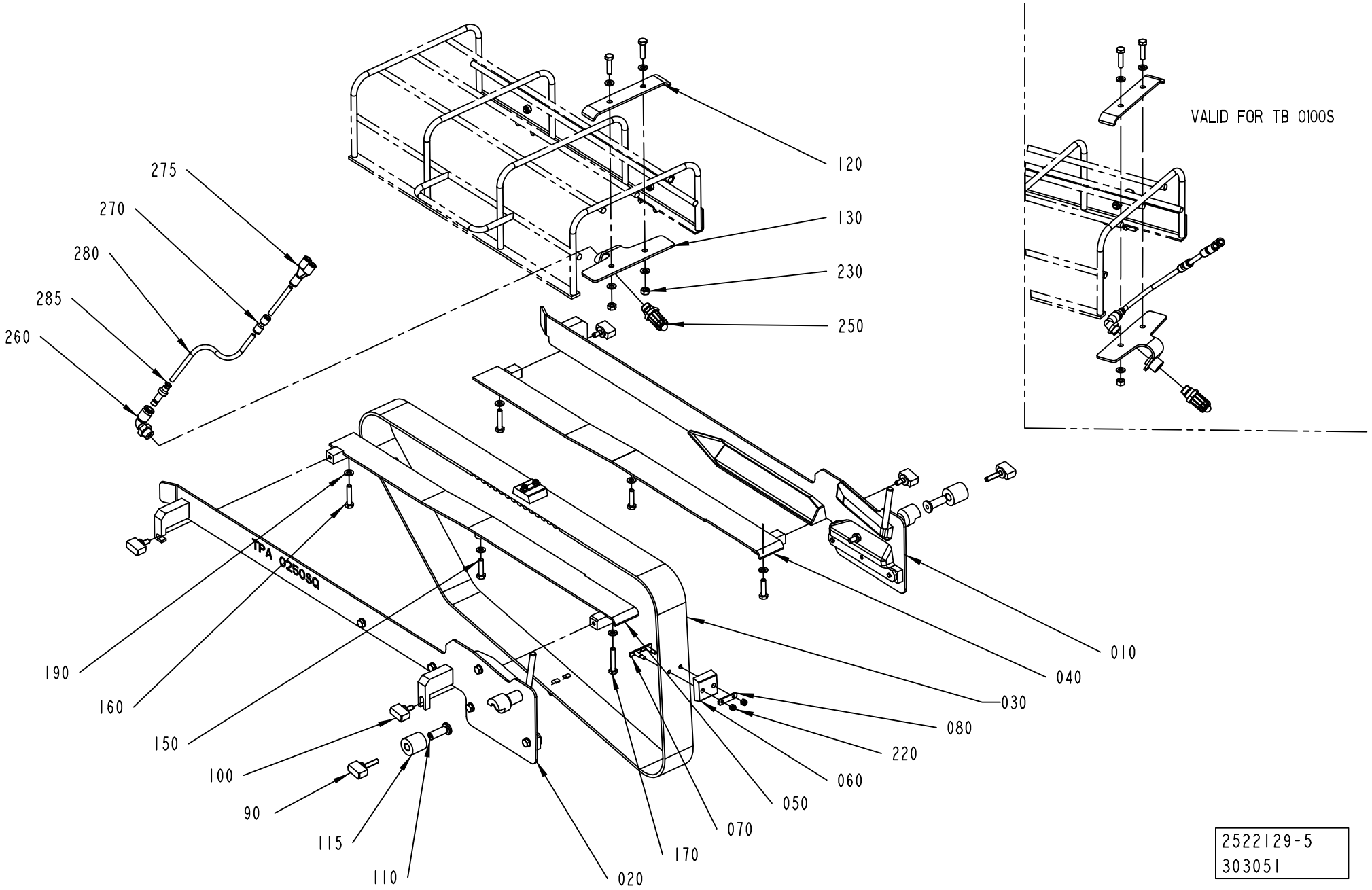
VALID FOR TB 0100S
TPA 025080
275
270
280
285
260
120
130
230
250
190
160
150
100
90
115
110
020
170
070
050
060
220
080
030
040
010
2522129-5
303051

Pos	Part No	UN	Qty	Description	Page No
Common Parts (Cont'd)					
010	2527704-0100		1	GUIDE	**3-69, 3-71, 3-73, 3-75**
020	2527703-0100		1	GUIDE	**3-77, 3-79, 3-81, 3-83**
170	312109-0376		1	SCREW M6S ISO 4017 M6X35 A480	

Pos	Part No	UN	Qty	Description	Page No

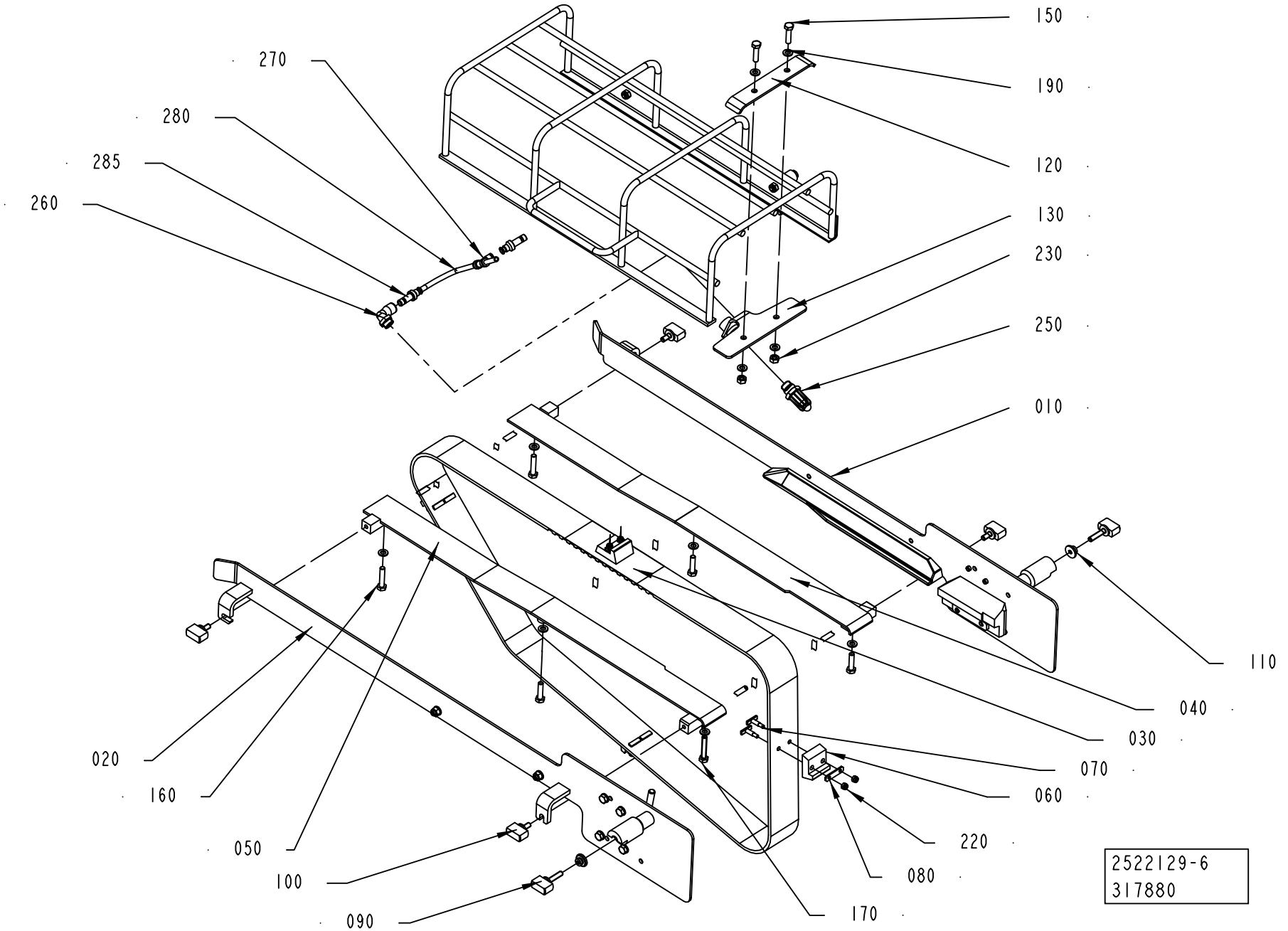
150
190
120
130
230
250
010
110
040
030
070
060
220
080
170
270
280
285
260
020
160
050
100
090
2522129-6
317880

Pos	Part No	UN	Qty	Description	Page No
SEE PREVIOUS LISTS PAGES: 3-61, 3-63, 3-65.					

Pos	Part No	UN	Qty	Description	Page No

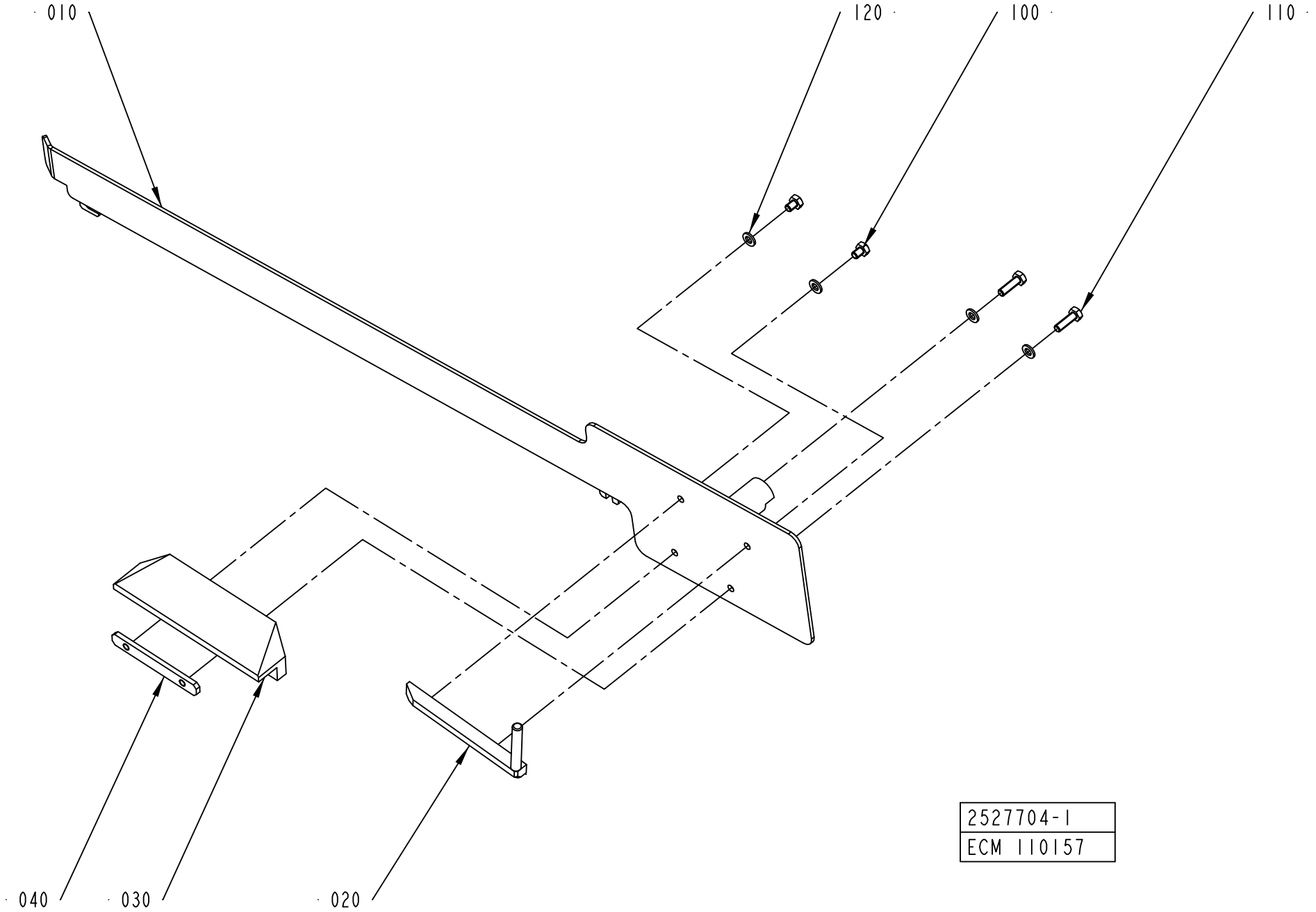
010
120
100
110
040
030
020
2527704-1
ECM 110157

ECM: 344755 - 20080702
Group number: 2527704-0100
Assembly Drawing: 2527704-1_1_AA

This list covers pages from 3-68 to 3-75

Pos	Part No	UN	Qty	Description	Page No
TBA 0250SQ (See drawing on page: 3-74)					
010	2668224-0000		1	GUIDE	
020	2668232-0000		1	BAR	
030	2668233-0000		1	SLIDE	
040	1348169-0000		1	PLATE	
050	2668225-0000		1	GUIDE	
100	312105-0364		2	SCREW M6S ISO 4017 M6X10 A480	
110	312105-0370		2	SCREW M6S ISO 4017 M6X20 A480	
120	315105-0153		6	WASHER BRB 6,4X12 RFR	
140	312105-0364		2	SCREW M6S ISO 4017 M6X10 A480	
TBA 0330S (See drawing on page: 3-70)					
010	2526578-0000		1	GUIDE	
020	2545000-0000		1	BAR	
030	2544997-0000		1	SLIDE	
040	1279409-0000		1	PLATE	
050	2664200-0000		1	GUIDE	
100	312105-0366		2	SCREW M6S ISO 4017 M6X12 A480	
120	315105-0153		6	WASHER BRB 6,4X12 RFR	
130	312605-0316		2	HEXAGON NUT, M6M M6 A280	
TBA 0500B (See drawing on page: 3-68)					
010	2522166-0000		1	GUIDE	
020	1539877-0000		1	BAR	
030	1539874-0000		1	SLIDE	
040	1539876-0000		1	PLATE	
100	312105-0366		2	SCREW M6S ISO 4017 M6X12 A480	
110	312105-0370		2	SCREW M6S ISO 4017 M6X20 A480	
120	315105-0153		6	WASHER BRB 6,4X12 RFR	
TBA 0500SQ (See drawing on page: 3-72)					
010	2848493-0000		1	GUIDE	
020	2529277-0000		1	BAR	
030	2860106-0000		1	SLIDE	
040	2529279-0000		1	PLATE	
050	2619728-0000		1	GUIDE	
100	312105-0366		2	SCREW M6S ISO 4017 M6X12 A480	
110	312105-0370		2	SCREW M6S ISO 4017 M6X20 A480	
120	315105-0153		6	WASHER BRB 6,4X12 RFR	
130	312105-0366		2	SCREW M6S ISO 4017 M6X12 A480	
TBA 1000B (See drawing on page: 3-68)					
010	2518129-0000		1	GUIDE	
020	1348144-0000		1	BAR	
030	1348133-0000		1	SLIDE	
040	1279409-0000		1	PLATE	
100	312105-0366		2	SCREW M6S ISO 4017 M6X12 A480	
110	312105-0370		2	SCREW M6S ISO 4017 M6X20 A480	
120	315105-0153		6	WASHER BRB 6,4X12 RFR	
TBA 1000SQ (See drawing on page: 3-68)					
010	2848491-0000		1	GUIDE	
020	1490035-0000		1	BAR	
030	1490033-0000		1	SLIDE	
040	1144621-0000		1	PLATE	
100	312105-0366		2	SCREW M6S ISO 4017 M6X12 A480	
110	312105-0370		2	SCREW M6S ISO 4017 M6X20 A480	
120	315105-0153		4	WASHER BRB 6,4X12 RFR	
TBA 1400B (See drawing on page: 3-68)					
010	2771438-0000		1	GUIDE	
020	2776826-0000		1	BAR	
030	2771440-0000		1	SLIDE	
040	2771439-0000		1	PLATE	
100	312105-0366		2	SCREW M6S ISO 4017 M6X12 A480	
110	312109-0374		2	SCREW M6S ISO 4017 M6X30 A480	
120	315105-0153		4	WASHER BRB 6,4X12 RFR	
TBA 1890S (See drawing on page: 3-68)					
010	2665202-0000		1	GUIDE	
020	1317805-0000		1	BAR	
030	2594905-0000		1	SLIDE	
040	1144621-0000		1	PLATE	
100	312105-0366		2	SCREW M6S ISO 4017 M6X12 A480	
110	312109-0374		3	SCREW M6S ISO 4017 M6X30 A480	
120	315105-0153		5	WASHER BRB 6,4X12 RFR	
TBA 2000S (See drawing on page: 3-68)					
010	2678622-0000		1	GUIDE	
020	1317805-0000		1	BAR	
030	2598487-0000		1	SLIDE	
040	1144621-0000		1	PLATE	
100	312105-0366		2	SCREW M6S ISO 4017 M6X12 A480	
110	312109-0374		3	SCREW M6S ISO 4017 M6X30 A480	
120	315105-0153		5	WASHER BRB 6,4X12 RFR	
TPA 0200SQ (See drawing on page: 3-70)					
010	2674250-0000		1	GUIDE	
020	2674251-0000		1	BAR	
030	2674252-0000		1	SLIDE	
040	2674248-0000		1	PLATE	
050	1539894-0000		1	GUIDE	
100	312105-0366		2	SCREW M6S ISO 4017 M6X12 A480	

Machine Type | Group Description | Used-In | Group Number | Page No

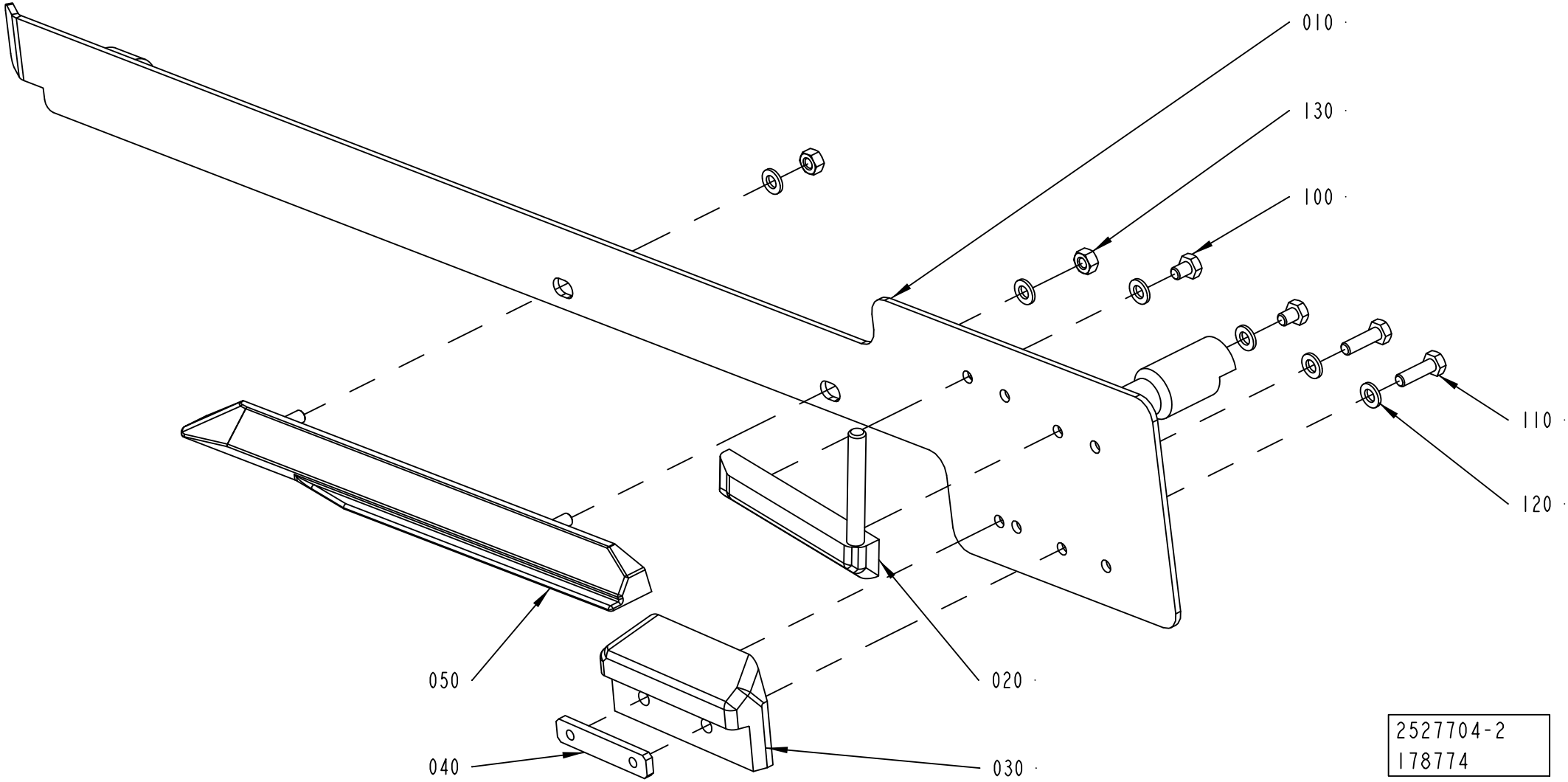
010
130
100
110
120
050
020
040
030
2527704-2
178774

Pos	Part No	UN	Qty	Description	Page No
TPA 0200SQ (Cont'd) (See drawing on page: 3-70)					
110	312105-0370		2	SCREW M6S ISO 4017 M6X20 A480	
120	315105-0153		6	WASHER BRB 6,4X12 RFR	
130	312105-0366		2	SCREW M6S ISO 4017 M6X12 A480	
TPA 0250SQ (See drawing on page: 3-70)					
010	2674249-0000		1	GUIDE	
020	1549854-0000		1	BAR	
030	1549852-0000		1	SLIDE	
040	1144621-0000		1	PLATE	
050	1539894-0000		1	GUIDE	
100	312105-0366		2	SCREW M6S ISO 4017 M6X12 A480	
110	312105-0370		2	SCREW M6S ISO 4017 M6X20 A480	
120	315105-0153		6	WASHER BRB 6,4X12 RFR	
130	312105-0366		2	SCREW M6S ISO 4017 M6X12 A480	
TPA 0750SQ (See drawing on page: 3-74)					
010	2647087-0000		1	GUIDE	
020	2647088-0000		1	BAR	
030	2647090-0000		1	SLIDE	
040	2647092-0000		1	ANGLE BLOCK	
050	2637665-0000		1	GUIDE	
100	312105-0364		2	SCREW M6S ISO 4017 M6X10 A480	
110	312105-0368		4	SCREW M6S ISO 4017 M6X16 A480	
120	315105-0153		6	WASHER BRB 6,4X12 RFR	
TPA 1000SQ (See drawing on page: 3-74)					
010	2647083-0000		1	GUIDE	
020	2647084-0000		1	BAR	
030	2675323-0000		1	SLIDE	
040	2543242-0000		1	ANGLE BLOCK	
050	2637665-0000		1	GUIDE	
100	312105-0364		2	SCREW M6S ISO 4017 M6X10 A480	
110	312105-0368		4	SCREW M6S ISO 4017 M6X16 A480	
120	315105-0153		6	WASHER BRB 6,4X12 RFR	
TBA 0200B (See drawing on page: 3-70)					
010	2526578-0000		1	GUIDE	
020	1348148-0000		1	BAR	
030	1348136-0000		1	SLIDE	
040	1348169-0000		1	PLATE	
050	2664200-0000		1	GUIDE	
100	312105-0366		2	SCREW M6S ISO 4017 M6X12 A480	
120	315105-0153		6	WASHER BRB 6,4X12 RFR	
130	312605-0316		2	HEXAGON NUT, M6M M6 A280	
TBA 0200M (See drawing on page: 3-70)					
010	2657937-0000		1	GUIDE	
020	2657932-0000		1	BAR	
030	2657935-0000		1	SLIDE	
040	1348169-0000		1	PLATE	
050	1517526-0000		1	GUIDE	
100	312105-0366		2	SCREW M6S ISO 4017 M6X12 A480	
110	312105-0370		2	SCREW M6S ISO 4017 M6X20 A480	
120	315105-0153		6	WASHER BRB 6,4X12 RFR	
130	312605-0316		2	HEXAGON NUT, M6M M6 A280	
TBA 0200SQ (See drawing on page: 3-74)					
010	2752647-0000		1	GUIDE	
020	2668226-0000		1	BAR	
030	2668227-0000		1	SLIDE	
040	1348169-0000		1	PLATE	
050	2668225-0000		1	GUIDE	
100	312105-0364		2	SCREW M6S ISO 4017 M6X10 A480	
110	312105-0370		2	SCREW M6S ISO 4017 M6X20 A480	
120	315105-0153		6	WASHER BRB 6,4X12 RFR	
140	312105-0364		2	SCREW M6S ISO 4017 M6X10 A480	
TBA 0250B (See drawing on page: 3-70)					
010	2526578-0000		1	GUIDE	
020	1348147-0000		1	BAR	
030	1348135-0000		1	SLIDE	
040	1348169-0000		1	PLATE	
050	2664200-0000		1	GUIDE	
100	312105-0366		2	SCREW M6S ISO 4017 M6X12 A480	
120	315105-0153		6	WASHER BRB 6,4X12 RFR	
130	312605-0316		2	HEXAGON NUT, M6M M6 A280	
TBA 0250S (See drawing on page: 3-70)					
010	2657937-0000		1	GUIDE	
020	2529608-0000		1	BAR	
030	2529605-0000		1	SLIDE	
040	1279409-0000		1	PLATE	
050	1517526-0000		1	GUIDE	
100	312105-0366		2	SCREW M6S ISO 4017 M6X12 A480	
110	312105-0370		2	SCREW M6S ISO 4017 M6X20 A480	
120	315105-0153		6	WASHER BRB 6,4X12 RFR	
130	312605-0316		2	HEXAGON NUT, M6M M6 A280	

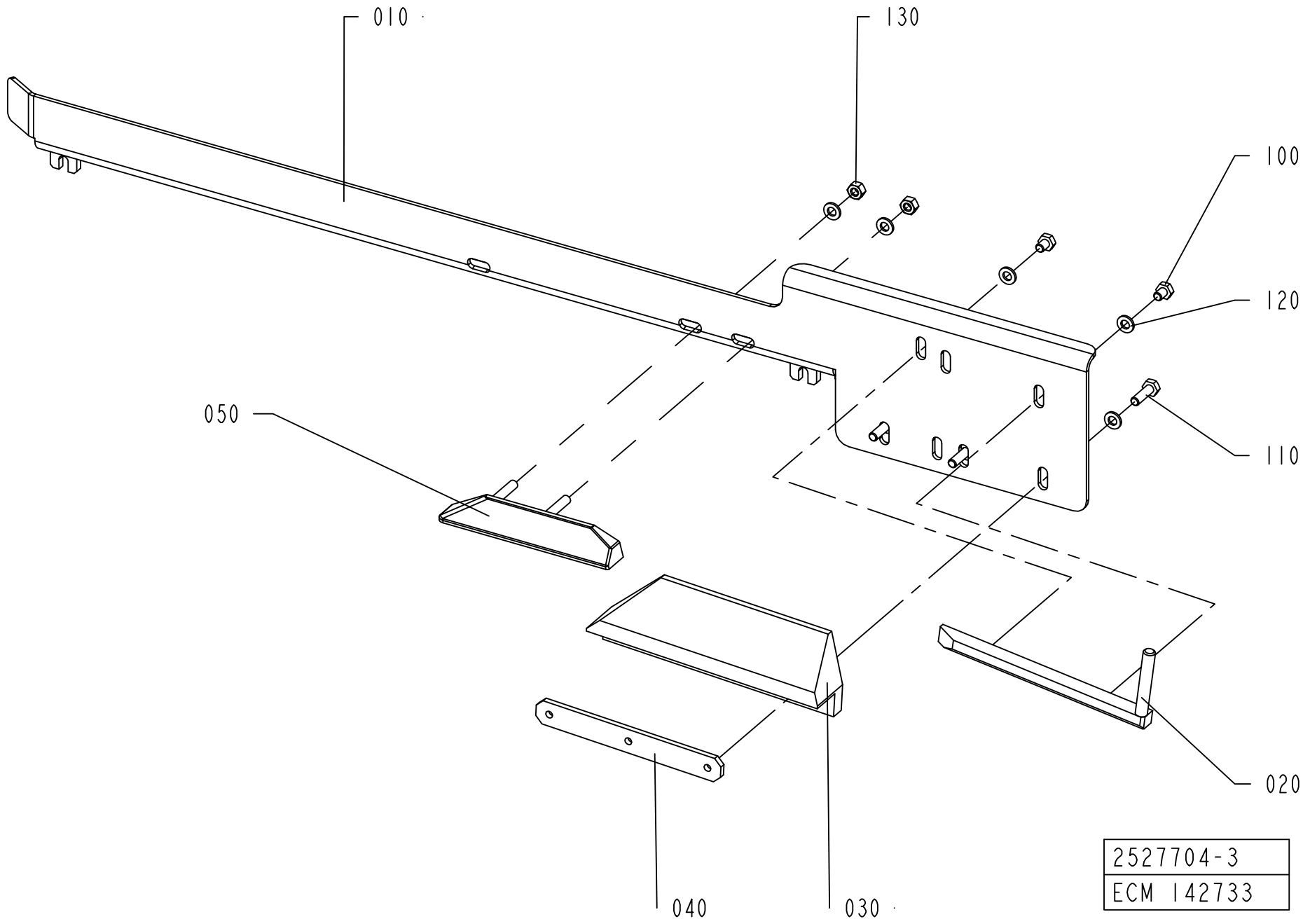
010
130
100
120
110
050
020
040
030
2527704-3
ECM 142733

Pos	Part No	UN	Qty	Description	Page No
SEE PREVIOUS LISTS PAGES: 3-69, 3-71.					

Pos	Part No	UN	Qty	Description	Page No

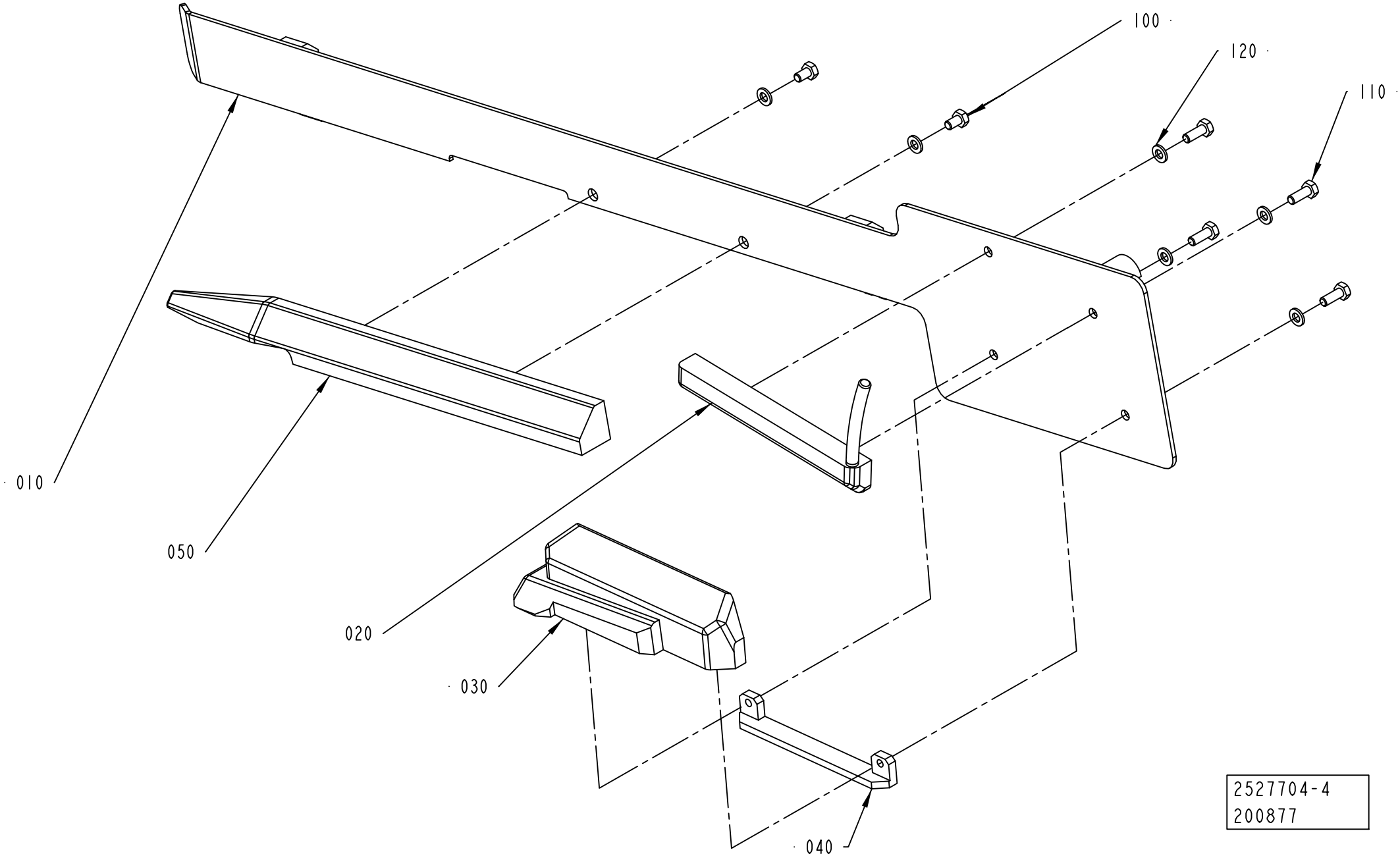
100
120
110
010
050
020
030
040
2527704-4
200877

Pos	Part No	UN	Qty	Description	Page No
SEE PREVIOUS LISTS PAGES: 3-69, 3-71.					

Pos	Part No	UN	Qty	Description	Page No

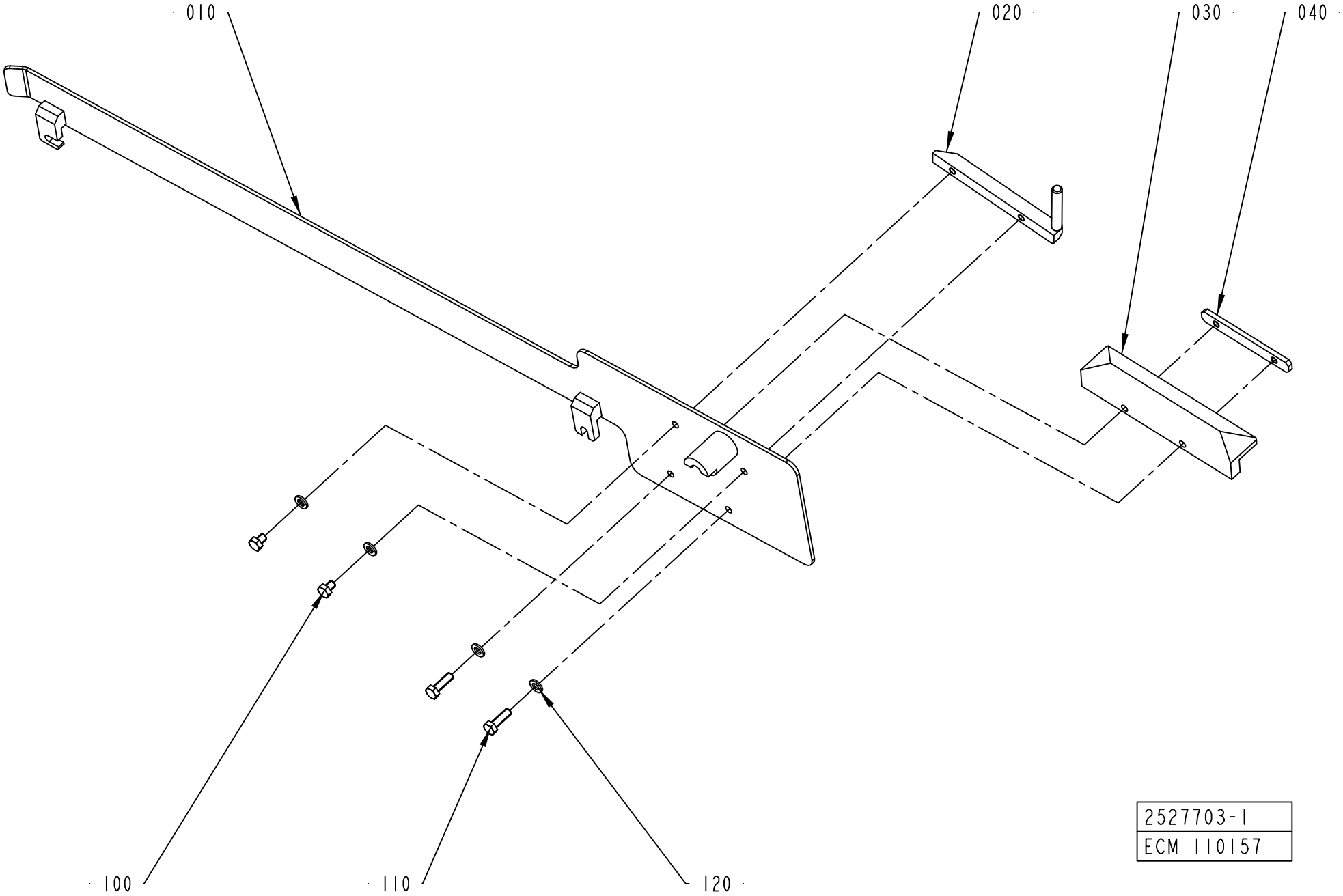
010
020
030
040
100
110
120
2527703-1
ECM 110157

ECM: 344754 - 20080702
Group number: 2527703-0100
Assembly Drawing: 2527703-1_1_AA

This list covers pages from 3-76 to 3-83

Pos	Part No	UN	Qty	Description	Page No
TBA 0250S (See drawing on page: 3-78)					
010	2657936-0000		1	GUIDE	
020	2529607-0000		1	BAR	
030	2529606-0000		1	SLIDE	
040	1279409-0000		1	PLATE	
050	1517527-0000		1	GUIDE	
100	312105-0366		2	SCREW M6S ISO 4017 M6X12 A480	
110	312105-0370		2	SCREW M6S ISO 4017 M6X20 A480	
120	315105-0153		6	WASHER BRB 6,4X12 RFR	
130	312605-0316		2	HEXAGON NUT, M6M M6 A280	
TBA 0250SQ (See drawing on page: 3-82)					
010	2668228-0000		1	GUIDE	
020	2668234-0000		1	BAR	
030	2668235-0000		1	SLIDE	
040	1348169-0000		1	PLATE	
050	2668229-0000		1	GUIDE	
100	312105-0366		2	SCREW M6S ISO 4017 M6X12 A480	
110	312105-0370		2	SCREW M6S ISO 4017 M6X20 A480	
120	315105-0153		6	WASHER BRB 6,4X12 RFR	
140	312105-0364		2	SCREW M6S ISO 4017 M6X10 A480	
TBA 0330S (See drawing on page: 3-78)					
010	2526579-0000		1	GUIDE	
020	2544999-0000		1	BAR	
030	2544998-0000		1	SLIDE	
040	1279409-0000		1	PLATE	
050	2664201-0000		1	GUIDE	
100	312105-0366		2	SCREW M6S ISO 4017 M6X12 A480	
110	312105-0370		2	SCREW M6S ISO 4017 M6X20 A480	
120	315105-0153		6	WASHER BRB 6,4X12 RFR	
130	312605-0316		2	HEXAGON NUT, M6M M6 A280	
TBA 0500B (See drawing on page: 3-76)					
010	2522167-0000		1	GUIDE	
020	1539878-0000		1	BAR	
030	1539875-0000		1	SLIDE	
040	1539876-0000		1	PLATE	
100	312105-0366		2	SCREW M6S ISO 4017 M6X12 A480	
110	312105-0370		2	SCREW M6S ISO 4017 M6X20 A480	
120	315105-0153		6	WASHER BRB 6,4X12 RFR	
TBA 0500SQ (See drawing on page: 3-80)					
010	2848492-0000		1	GUIDE	
020	2529278-0000		1	BAR	
030	2860107-0000		1	SLIDE	
040	2529279-0000		1	PLATE	
050	2619727-0000		1	GUIDE	
100	312105-0366		2	SCREW M6S ISO 4017 M6X12 A480	
110	312105-0370		2	SCREW M6S ISO 4017 M6X20 A480	
120	315105-0153		6	WASHER BRB 6,4X12 RFR	
130	312105-0366		2	SCREW M6S ISO 4017 M6X12 A480	
TBA 1000B (See drawing on pages: 3-76, 3-80)					
010	2518130-0000		1	GUIDE	
020	1348150-0000		1	BAR	
030	1348139-0000		1	SLIDE	
040	1279409-0000		1	PLATE	
100	312105-0366		2	SCREW M6S ISO 4017 M6X12 A480	
110	312105-0370		2	SCREW M6S ISO 4017 M6X20 A480	
120	315105-0153		6	WASHER BRB 6,4X12 RFR	
TBA 1000SQ (See drawing on page: 3-76)					
010	2848490-0000		1	GUIDE	
020	1490036-0000		1	BAR	
030	1490034-0000		1	SLIDE	
040	1144621-0000		1	PLATE	
100	312105-0366		2	SCREW M6S ISO 4017 M6X12 A480	
110	312105-0370		2	SCREW M6S ISO 4017 M6X20 A480	
120	315105-0153		7	WASHER BRB 6,4X12 RFR	
TBA 1400B (See drawing on page: 3-76)					
010	2771442-0000		1	GUIDE	
020	2776825-0000		1	BAR	
030	2771443-0000		1	SLIDE	
040	2771439-0000		1	PLATE	
100	312105-0366		2	SCREW M6S ISO 4017 M6X12 A480	
110	312109-0374		2	SCREW M6S ISO 4017 M6X30 A480	
120	315105-0153		4	WASHER BRB 6,4X12 RFR	
TBA 1890S (See drawing on page: 3-76)					
010	2665203-0000		1	GUIDE	
020	1334271-0000		1	BAR	
030	2594906-0000		1	SLIDE	
040	1144621-0000		1	PLATE	
100	312105-0366		2	SCREW M6S ISO 4017 M6X12 A480	
110	312109-0374		3	SCREW M6S ISO 4017 M6X30 A480	
120	315105-0153		5	WASHER BRB 6,4X12 RFR	
TBA 2000S (See drawing on page: 3-76)					
010	2678621-0000		1	GUIDE	
020	1334271-0000		1	BAR	
030	2598488-0000		1	SLIDE	

Machine Type	Group Description	Used-In	Group Number	Page No

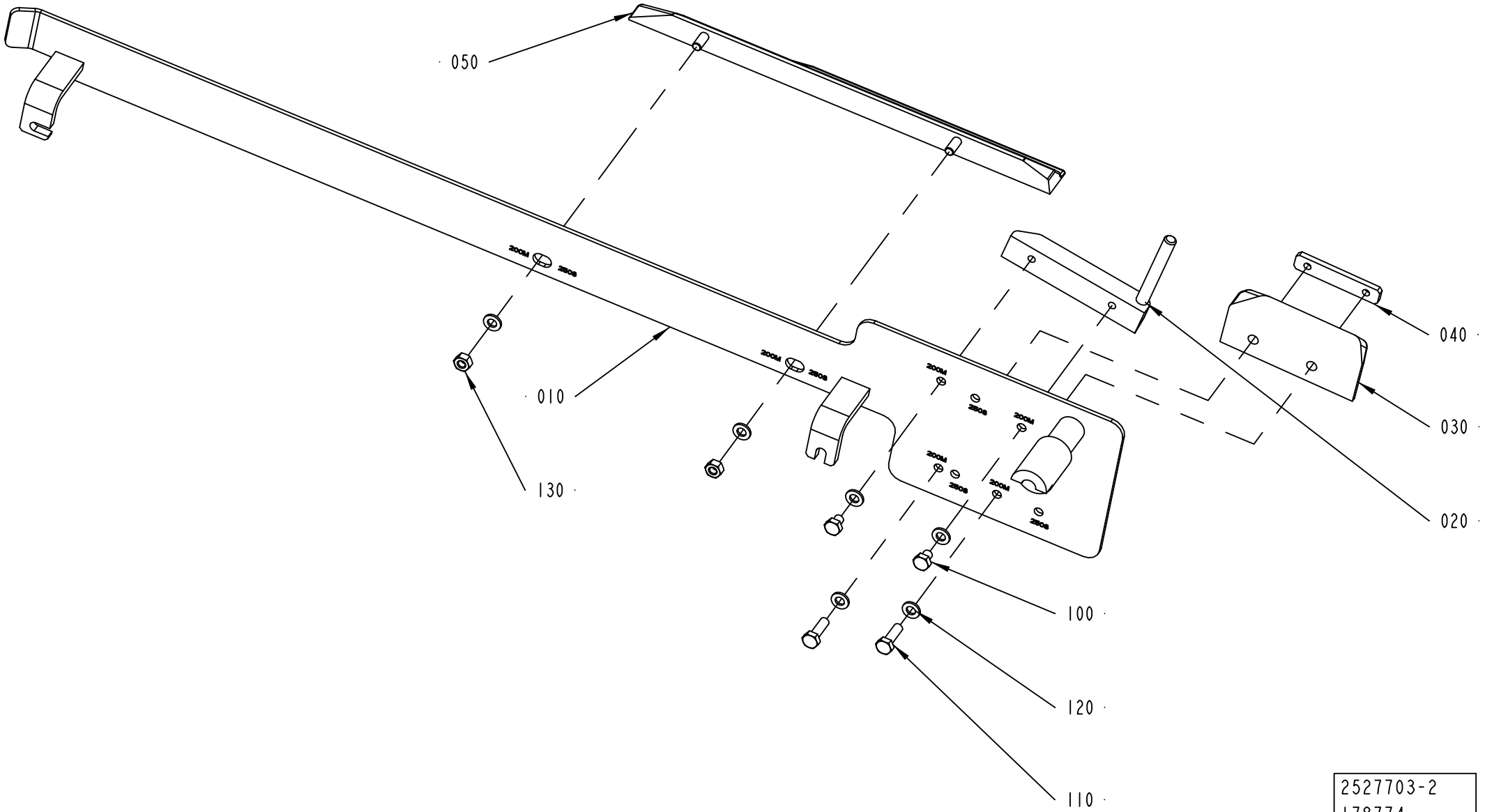
050
010
130
040
030
020
100
120
110
2527703-2
178774

ECM: 344754 - 20080702
Group number: 2527703-0100
Assembly Drawing: 2527703-2_1_AA

This list covers pages from 3-76 to 3-83

Pos	Part No	UN	Qty	Description	Page No
TBA 2000S (Cont'd) (See drawing on page: 3-76)					
040	1144621-0000		1	PLATE	
100	312105-0366		2	SCREW M6S ISO 4017 M6X12 A480	
110	312109-0374		3	SCREW M6S ISO 4017 M6X30 A480	
120	315105-0153		5	WASHER BRB 6,4X12 RFR	
TPA 0200SQ (See drawing on page: 3-78)					
010	2674245-0000		1	GUIDE	
020	2674246-0000		1	BAR	
030	2674247-0000		1	SLIDE	
040	2674248-0000		1	PLATE	
050	1539895-0000		1	GUIDE	
100	312105-0366		2	SCREW M6S ISO 4017 M6X12 A480	
110	312105-0370		2	SCREW M6S ISO 4017 M6X20 A480	
120	315105-0153		6	WASHER BRB 6,4X12 RFR	
130	312105-0366		2	SCREW M6S ISO 4017 M6X12 A480	
TPA 0250SQ (See drawing on page: 3-78)					
010	2674244-0000		1	GUIDE	
020	1549855-0000		1	BAR	
030	1549853-0000		1	SLIDE	
040	1144621-0000		1	PLATE	
050	1539895-0000		1	GUIDE	
100	312105-0366		2	SCREW M6S ISO 4017 M6X12 A480	
110	312105-0370		2	SCREW M6S ISO 4017 M6X20 A480	
120	315105-0153		6	WASHER BRB 6,4X12 RFR	
130	312105-0366		2	SCREW M6S ISO 4017 M6X12 A480	
TPA 0750SQ (See drawing on page: 3-82)					
010	2647086-0000		1	GUIDE	
020	2647089-0000		1	BAR	
030	2647091-0000		1	SLIDE	
040	2647092-0000		1	ANGLE BLOCK	
050	2637666-0000		1	GUIDE	
100	312105-0364		2	SCREW M6S ISO 4017 M6X10 A480	
110	312105-0368		4	SCREW M6S ISO 4017 M6X16 A480	
120	315105-0153		6	WASHER BRB 6,4X12 RFR	
TPA 1000SQ (See drawing on page: 3-82)					
010	2647082-0000		1	GUIDE	
020	2647085-0000		1	BAR	
030	2675322-0000		1	SLIDE	
040	2543242-0000		1	ANGLE BLOCK	
050	2637666-0000		1	GUIDE	
100	312105-0364		2	SCREW M6S ISO 4017 M6X10 A480	
110	312105-0368		4	SCREW M6S ISO 4017 M6X16 A480	
120	315105-0153		6	WASHER BRB 6,4X12 RFR	
TBA 0200B (See drawing on page: 3-78)					
010	2526579-0000		1	GUIDE	
020	1348154-0000		1	BAR	
030	1348142-0000		1	SLIDE	
040	1348169-0000		1	PLATE	
050	2664201-0000		1	GUIDE	
100	312105-0366		2	SCREW M6S ISO 4017 M6X12 A480	
110	312105-0370		2	SCREW M6S ISO 4017 M6X20 A480	
120	315105-0153		6	WASHER BRB 6,4X12 RFR	
130	312605-0316		2	HEXAGON NUT, M6M M6 A280	
TBA 0200M (See drawing on page: 3-78)					
010	2657936-0000		1	GUIDE	
020	2657933-0000		1	BAR	
030	2657934-0000		1	SLIDE	
040	1348169-0000		1	PLATE	
050	1517527-0000		1	GUIDE	
100	312105-0366		2	SCREW M6S ISO 4017 M6X12 A480	
110	312105-0370		2	SCREW M6S ISO 4017 M6X20 A480	
120	315105-0153		6	WASHER BRB 6,4X12 RFR	
130	312605-0316		2	HEXAGON NUT, M6M M6 A280	
TBA 0200SQ (See drawing on page: 3-82)					
010	2752648-0000		1	GUIDE	
020	2668230-0000		1	BAR	
030	2668231-0000		1	SLIDE	
040	1348169-0000		1	PLATE	
050	2668229-0000		1	GUIDE	
100	312105-0366		2	SCREW M6S ISO 4017 M6X12 A480	
110	312105-0370		2	SCREW M6S ISO 4017 M6X20 A480	
120	315105-0153		6	WASHER BRB 6,4X12 RFR	
140	312105-0364		2	SCREW M6S ISO 4017 M6X10 A480	
TBA 0250B (See drawing on page: 3-78)					
010	2526579-0000		1	GUIDE	
020	1348153-0000		1	BAR	
030	1348141-0000		1	SLIDE	
040	1348169-0000		1	PLATE	
050	2664201-0000		1	GUIDE	
100	312105-0366		2	SCREW M6S ISO 4017 M6X12 A480	
110	312105-0370		2	SCREW M6S ISO 4017 M6X20 A480	
120	315105-0153		6	WASHER BRB 6,4X12 RFR	
130	312605-0316		2	HEXAGON NUT, M6M M6 A280	

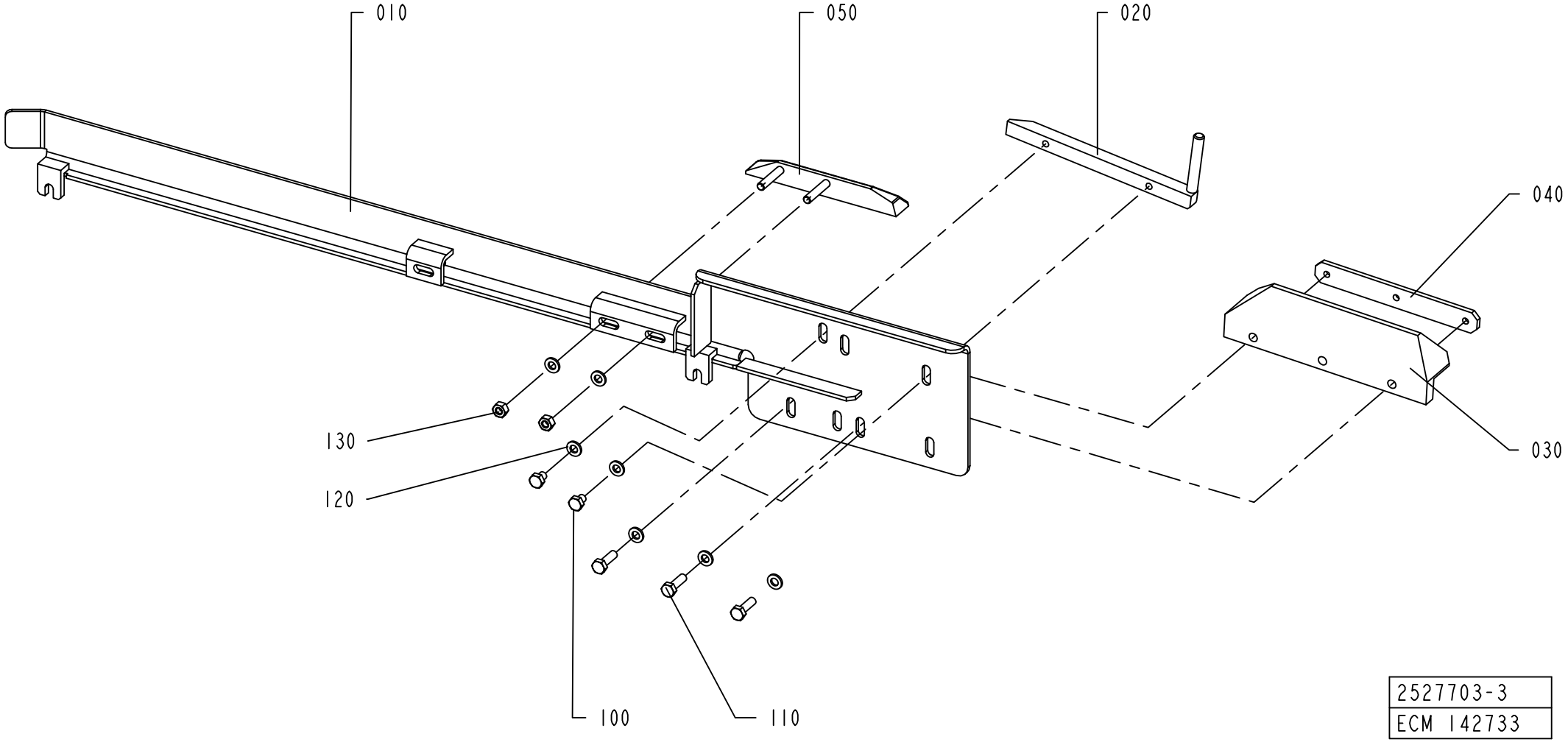

2527703-3
ECM 142733

Pos	Part No	UN	Qty	Description	Page No
SEE PREVIOUS LISTS PAGES: 3-77, 3-79.					

Pos	Part No	UN	Qty	Description	Page No

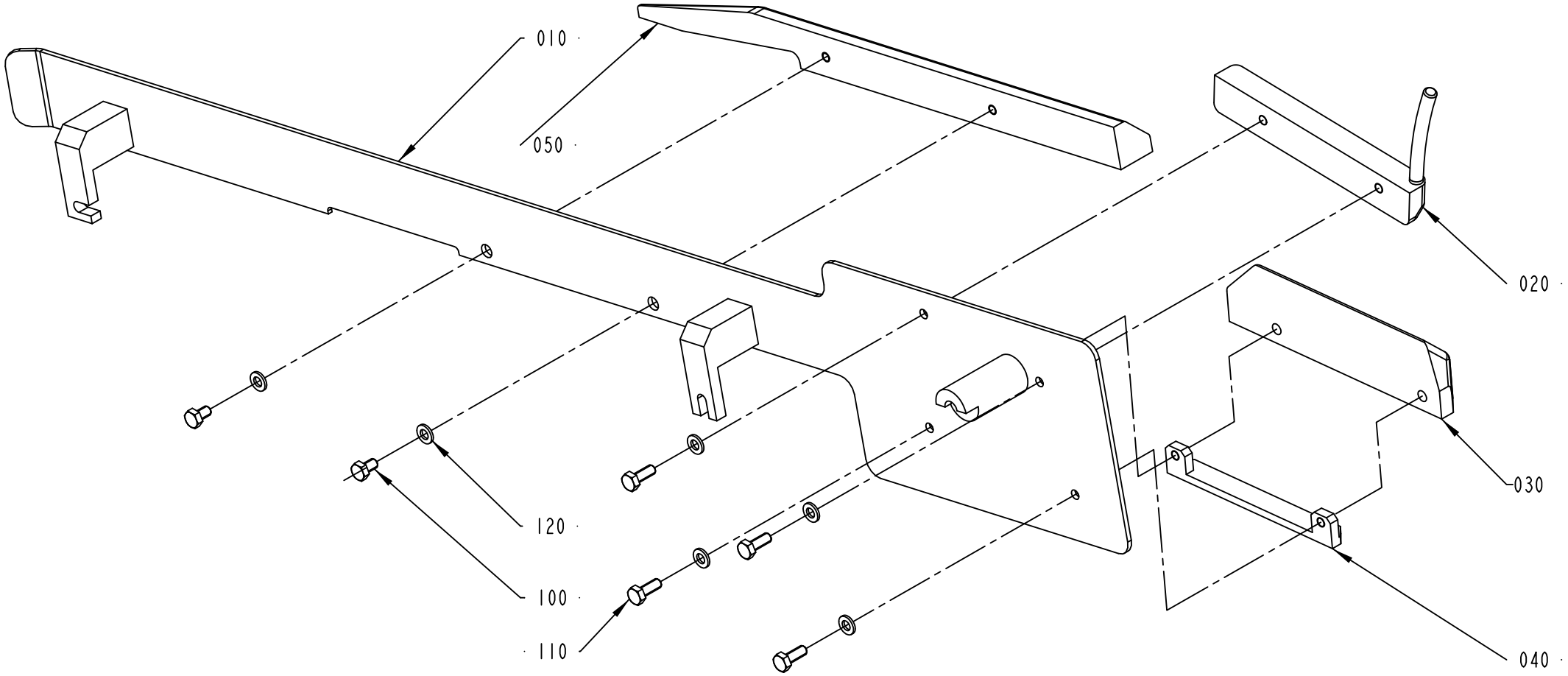

2527703-4
200877

Pos	Part No	UN	Qty	Description	Page No
SEE PREVIOUS LISTS PAGES: 3-77, 3-79.					

Pos	Part No	UN	Qty	Description	Page No

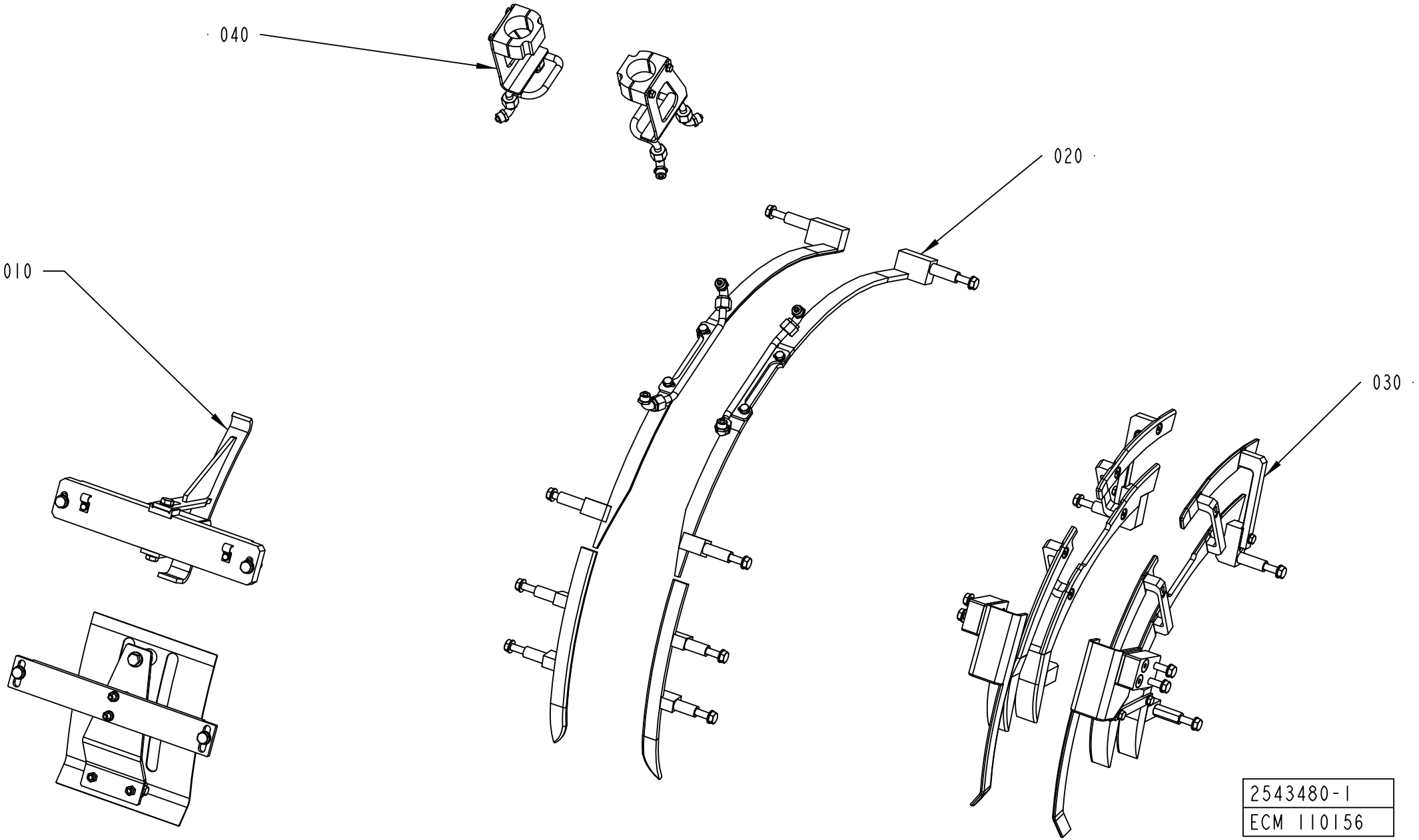
040
020
010
030
2543480-1
ECM 110156

ECM: 127231 - 20031103
Group number: 2543480-0100
Assembly Drawing: 2543480-1_1_AA

Pos	Part No	UN	Qty	Description	Page No
-					
010	2543481-0100		1	TOP SECTION	**3-87, 3-89, 3-91, 3-93, 3-95**
020	2543482-0100		1	TOP RAIL	**3-97, 3-99, 3-101, 3-103, 3-105**
030	2603827-0100		1	FLAP GUIDE	**3-107, 3-109, 3-111, 3-113, 3-115, 3-117, 3-119, 3-121**
040	2603826-0100		1	FOLDING PART	**3-123, 3-125, 3-127**

Pos	Part No	UN	Qty	Description	Page No

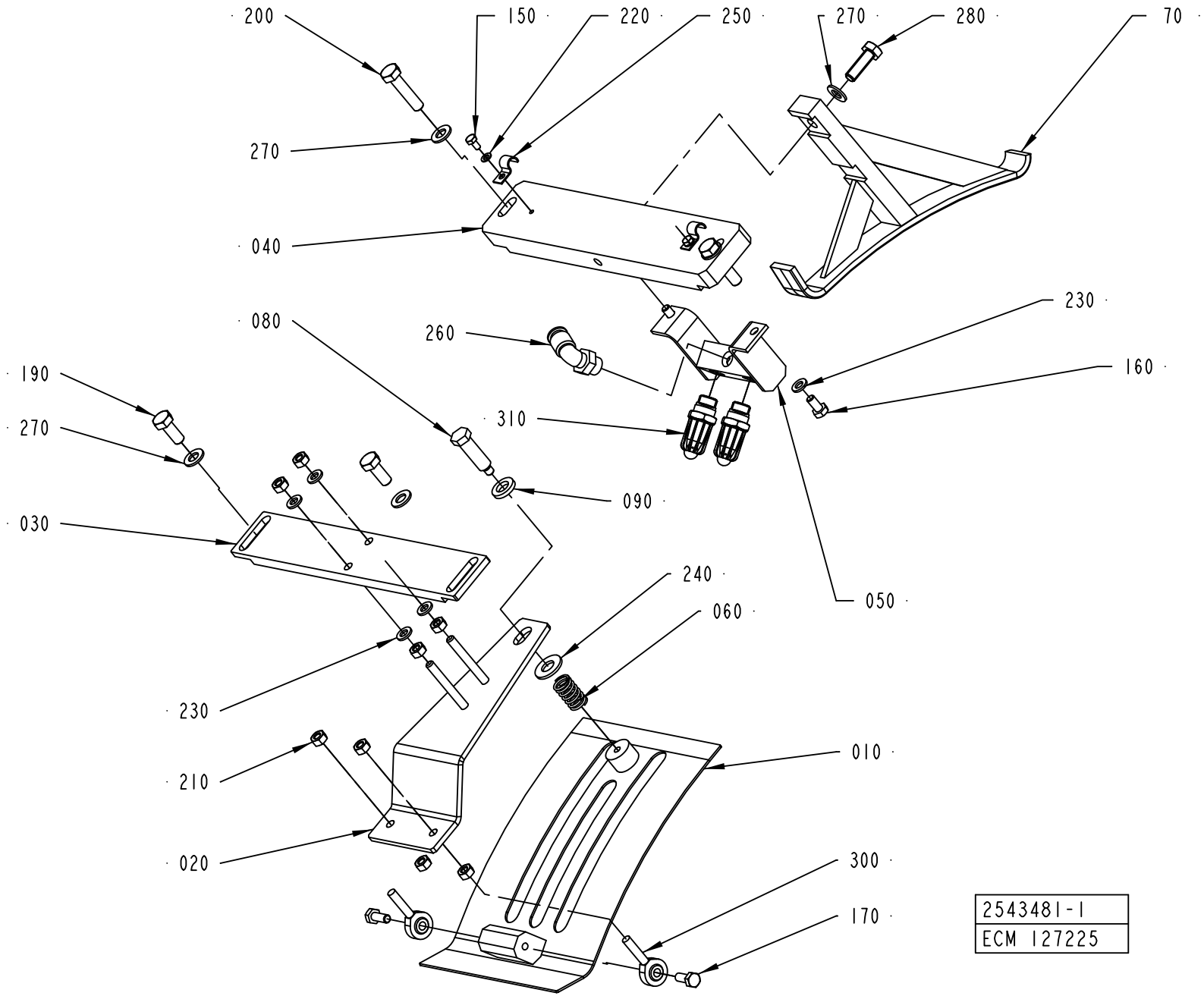
200
150
220
250
270
280
70
270
040
080
260
230
160
190
270
310
090
030
240
060
050
230
210
010
020
300
170
2543481-1
ECM 127225

ECM: 317880 - 20080103
Group number: 2543481-0100
Assembly Drawing: 2543481-1_1_AB

This list covers pages from 3-86 to 3-95

Pos	Part No	UN	Qty	Description	Page No
TBA 0200B, TBA 0250B, TBA 0330S (See drawing on page: 3-90)					
010	1317211-0000		1	COVERING PLATE	
020	1317213-0000		1	ADJUSTING PLATE	
030	1144975-0000		1	ATTACHMENT PLATE	
040	1144902-0000		1	SUPPORT	
050	1349087-0000		1	DISTRIBUTOR	
070	2552022-0000		1	GUIDE	
100	2553284-0000		1	BLOCK	
150	312105-0287		2	SCREW M6S ISO 4017 M4X8 A470	
160	312105-0366		2	SCREW M6S ISO 4017 M6X12 A480	
190	312105-0451		2	SCREW M6S ISO 4017 M8X20 A480	
200	312105-0457		2	SCREW M6S ISO 4014 M8X35 A480	
220	315105-0136		2	WASHER BRB 4,3X8 RFR	
230	315105-0153		6	WASHER BRB 6,4X12 RFR	
250	90165-0057		2	PIPE CLIP FOR TUBE D=6 MM	
260	90458-2958		1	ELBOW PIPE JOINT, EXT.THREAD, D=8MM-G1/4	
270	315105-0165		6	WASHER BRB 8,4X16 RFR	
310	90424-0068		1	AIR NOZZLE, G1/4, MOD. 216 BSP	
TBA 0200M, TBA 0250S (See drawing on page: 3-92)					
010	1317211-0000		1	COVERING PLATE	
020	1317213-0000		1	ADJUSTING PLATE	
030	1144975-0000		1	ATTACHMENT PLATE	
040	1144902-0000		1	SUPPORT	
070	2555637-0000		1	GUIDE	
150	312105-0287		2	SCREW M6S ISO 4017 M4X8 A470	
190	312105-0451		4	SCREW M6S ISO 4017 M8X20 A480	
200	312105-0457		2	SCREW M6S ISO 4014 M8X35 A480	
220	315105-0136		2	WASHER BRB 4,3X8 RFR	
230	315105-0153		4	WASHER BRB 6,4X12 RFR	
250	90165-0057		2	PIPE CLIP FOR TUBE D=6 MM	
270	315105-0165		6	WASHER BRB 8,4X16 RFR	
TBA 0200SQ, TPA 0250SQ, TPA 0200SQ, TBA 0250SQ (See drawing on page: 3-90)					
010	1317211-0000		1	COVERING PLATE	
020	1317213-0000		1	ADJUSTING PLATE	
030	1144975-0000		1	ATTACHMENT PLATE	
040	2647111-0000		1	SUPPORT	
070	2668243-0000		1	GUIDE	
100	2668242-0000		1	BLOCK	
150	312105-0287		2	SCREW M6S ISO 4017 M4X8 A470	
190	312105-0451		2	SCREW M6S ISO 4017 M8X20 A480	
200	312105-0457		2	SCREW M6S ISO 4014 M8X35 A480	
220	315105-0136		2	WASHER BRB 4,3X8 RFR	
230	315105-0153		4	WASHER BRB 6,4X12 RFR	
250	90165-0057		2	PIPE CLIP FOR TUBE D=6 MM	
270	315105-0165		6	WASHER BRB 8,4X16 RFR	
TBA 0500B, TBA 1000B (See drawing on page: 3-86)					
010	1144941-0000		1	COVERING PLATE	
020	1144974-0000		1	ADJUSTING PLATE	
030	1144975-0000		1	ATTACHMENT PLATE	
040	1144902-0000		1	SUPPORT	
050	1285014-0000		1	DISTRIBUTOR	
070	2609372-0000		1	GUIDE	
150	312105-0287		2	SCREW M6S ISO 4017 M4X8 A470	
160	312105-0366		2	SCREW M6S ISO 4017 M6X12 A480	
180	312105-0449		1	SCREW M6S ISO 4017 M8X16 A480	
190	312105-0451		2	SCREW M6S ISO 4017 M8X20 A480	
200	312105-0457		2	SCREW M6S ISO 4014 M8X35 A480	
220	315105-0136		2	WASHER BRB 4,3X8 RFR	
230	315105-0153		6	WASHER BRB 6,4X12 RFR	
250	90165-0057		2	PIPE CLIP FOR TUBE D=6 MM	
260	90458-2958		1	ELBOW PIPE JOINT, EXT.THREAD, D=8MM-G1/4	
270	315105-0165		5	WASHER BRB 8,4X16 RFR	
280	312105-0453		1	SCREW M6S ISO 4017 M8X25 A480	
310	90424-0068		2	AIR NOZZLE, G1/4, MOD. 216 BSP	
TBA 0500SQ, TBA 1000SQ (See drawing on page: 3-94)					
010	1144941-0000		1	COVERING PLATE	
020	1144974-0000		1	ADJUSTING PLATE	
030	1144975-0000		1	ATTACHMENT PLATE	
190	312105-0451		2	SCREW M6S ISO 4017 M8X20 A480	
230	315105-0153		6	WASHER BRB 6,4X12 RFR	
270	315105-0165		2	WASHER BRB 8,4X16 RFR	
TBA 1890S, TBA 2000S, TBA 1400B (See drawing on page: 3-88)					
010	1548612-0000		1	COVERING PLATE	
020	1144974-0000		1	ADJUSTING PLATE	
030	1285299-0000		1	BRACKET	
040	1334480-0000		1	SUPPORT	
070	1347057-0000		1	GUIDE	
150	312105-0287		4	SCREW M6S ISO 4017 M4X8 A470	
180	312105-0449		1	SCREW M6S ISO 4017 M8X16 A480	
190	312105-0453		2	SCREW M6S ISO 4017 M8X25 A480	
200	312105-0457		2	SCREW M6S ISO 4014 M8X35 A480	
220	315105-0136		4	WASHER BRB 4,3X8 RFR	
230	315105-0153		4	WASHER BRB 6,4X12 RFR	
250	316810-0106		4	PIPE CLIP FOR TUBE D=8 MM	

Machine Type | Group Description | Used-In | Group Number | Page No

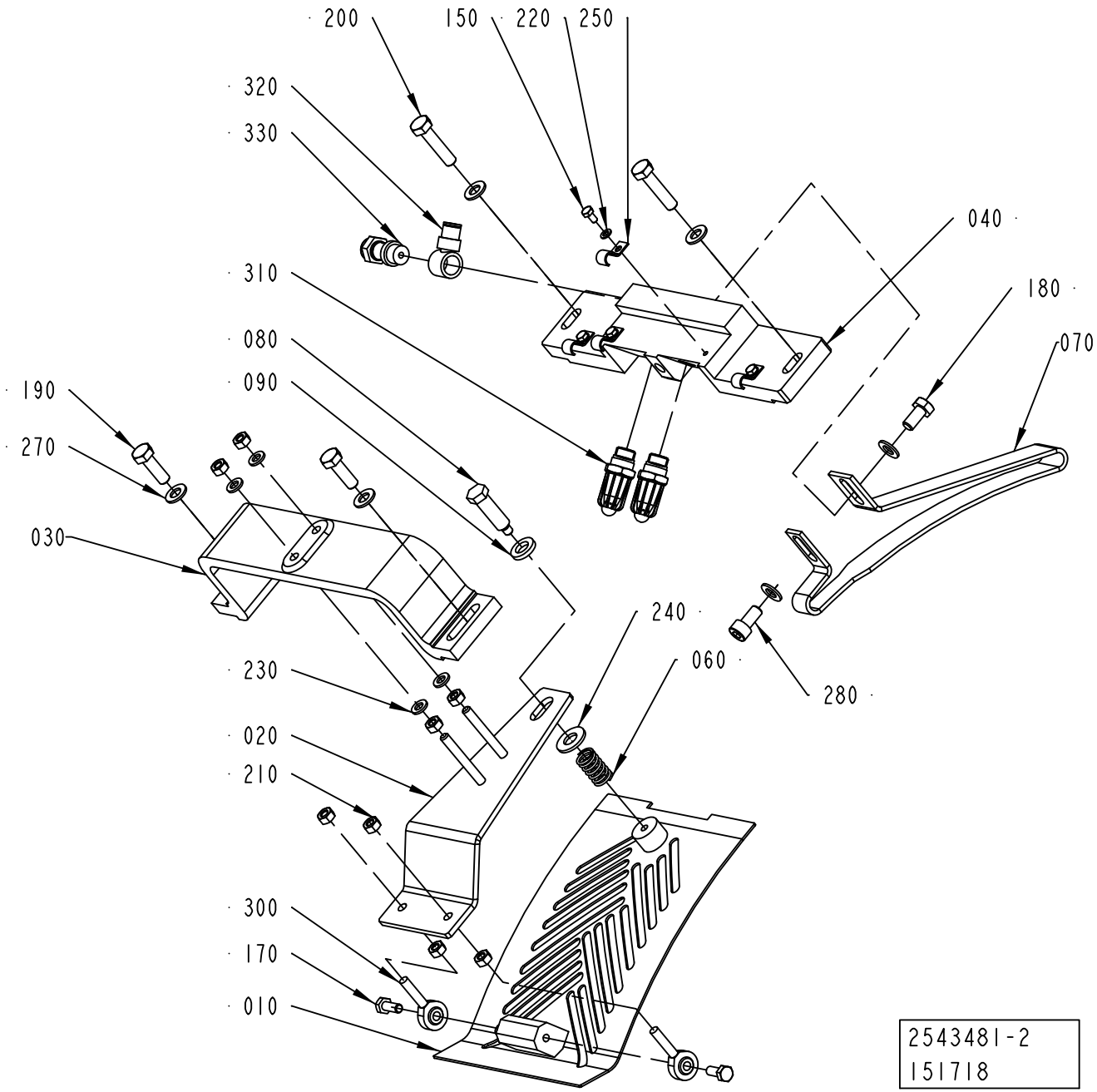
200
150
220
250
320
330
310
080
090
190
270
030
040
180
070
240
060
280
230
020
210
300
170
010
2543481-2
151718

Pos	Part No	UN	Qty	Description	Page No
TBA 1890S, TBA 2000S, TBA 1400B (Cont'd) (See drawing on page: 3-88)					
270	315105-0165		6	WASHER BRB 8,4X16 RFR	
280	312115-0449		1	SCREW ISO4762 M8X16 A4 80	
310	90424-0068		2	AIR NOZZLE, G1/4, MOD. 216 BSP	
320	342981-0122		1	BANJO CONNEC,RING,FOR PLAST.TUBE 8-G1/4"	
330	90235-0731		1	THROTTLE CHECK VALVE, G1/4", SCO-606-1/4	
TPA 1000SQ, TPA 0750SQ (See drawing on page: 3-88)					
010	2629303-0000		1	COVERING PLATE	
020	1144974-0000		1	ADJUSTING PLATE	
030	1285299-0000		1	BRACKET	
040	2647111-0000		1	SUPPORT	
070	2647112-0000		1	GUIDE	
150	312105-0287		2	SCREW M6S ISO 4017 M4X8 A470	
180	312105-0449		1	SCREW M6S ISO 4017 M8X16 A480	
190	312105-0453		2	SCREW M6S ISO 4017 M8X25 A480	
200	312105-0457		2	SCREW M6S ISO 4014 M8X35 A480	
220	315105-0136		2	WASHER BRB 4,3X8 RFR	
230	315105-0153		4	WASHER BRB 6,4X12 RFR	
250	90165-0057		2	PIPE CLIP FOR TUBE D=6 MM	
270	315105-0165		6	WASHER BRB 8,4X16 RFR	
280	312105-0449		1	SCREW M6S ISO 4017 M8X16 A480	
Common Parts					
060	90335-0036		1	COMP. SPRING 22450, 1,6X14,1X24	
080	1144976-0000		1	STOP SCREW	
090	1144979-0000		1	WASHER	
170	312105-0368		2	SCREW M6S ISO 4017 M6X16 A480	
210	312605-0316		8	HEXAGON NUT, M6M M6 A280	
240	315105-0173		1	WASHER BRB 10,5X22 RFR	
300	90115-0137		2	ROD END, ID=6 MM, M6X1	

Pos	Part No	UN	Qty	Description	Page No

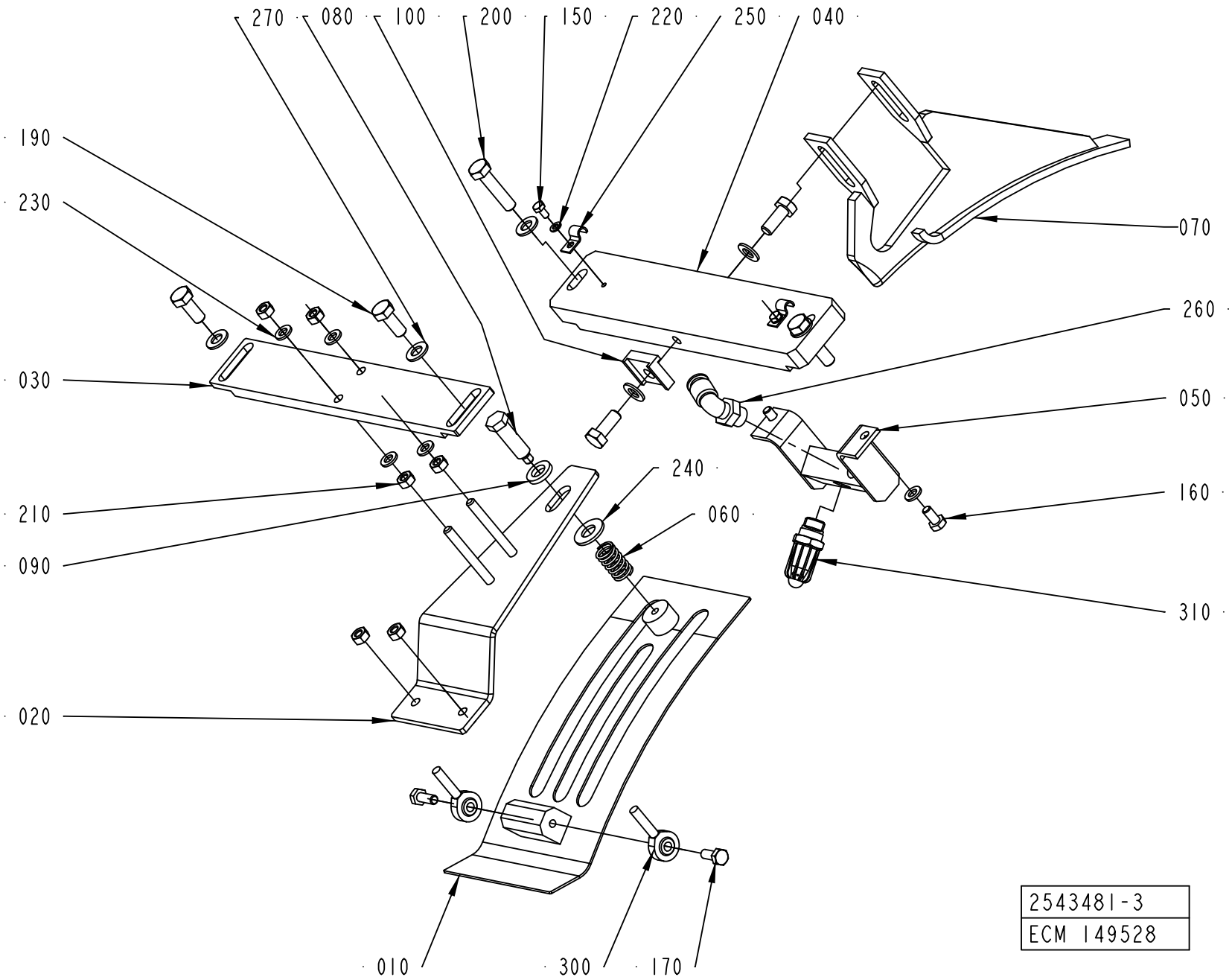
270
080
100
200
150
220
250
040
190
230
070
260
030
050
240
160
060
210
090
310
020
010
300
170
2543481-3
ECM 149528

Pos	Part No	UN	Qty	Description	Page No
SEE PREVIOUS LISTS PAGES: 3-87, 3-89.					

Pos	Part No	UN	Qty	Description	Page No

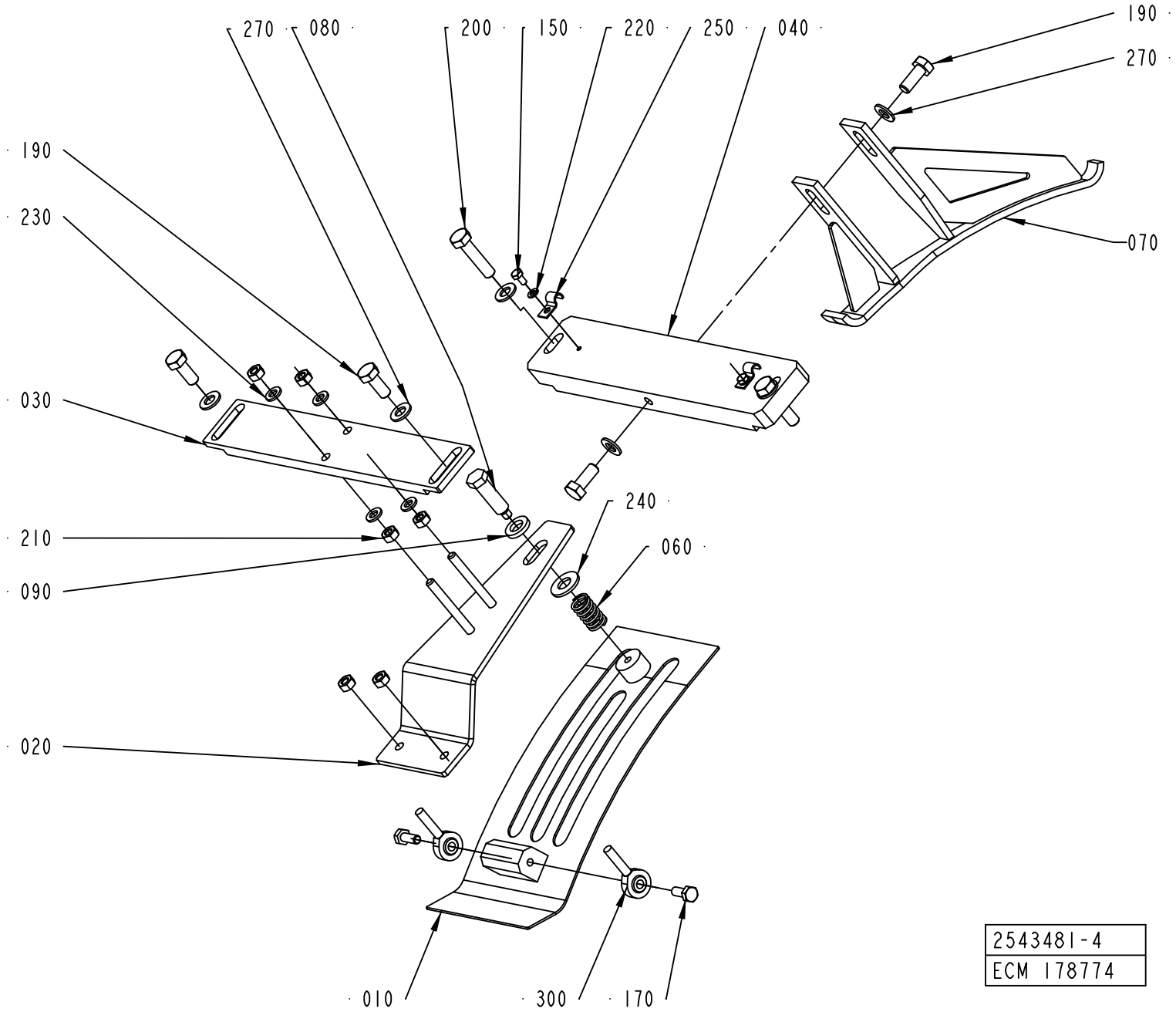
270
080
200
150
220
250
040
190
270
190
230
070
030
240
210
060
090
020
010
300
170
2543481-4
ECM 178774

Pos	Part No	UN	Qty	Description	Page No
SEE PREVIOUS LISTS PAGES: 3-87, 3-89.					

Pos	Part No	UN	Qty	Description	Page No

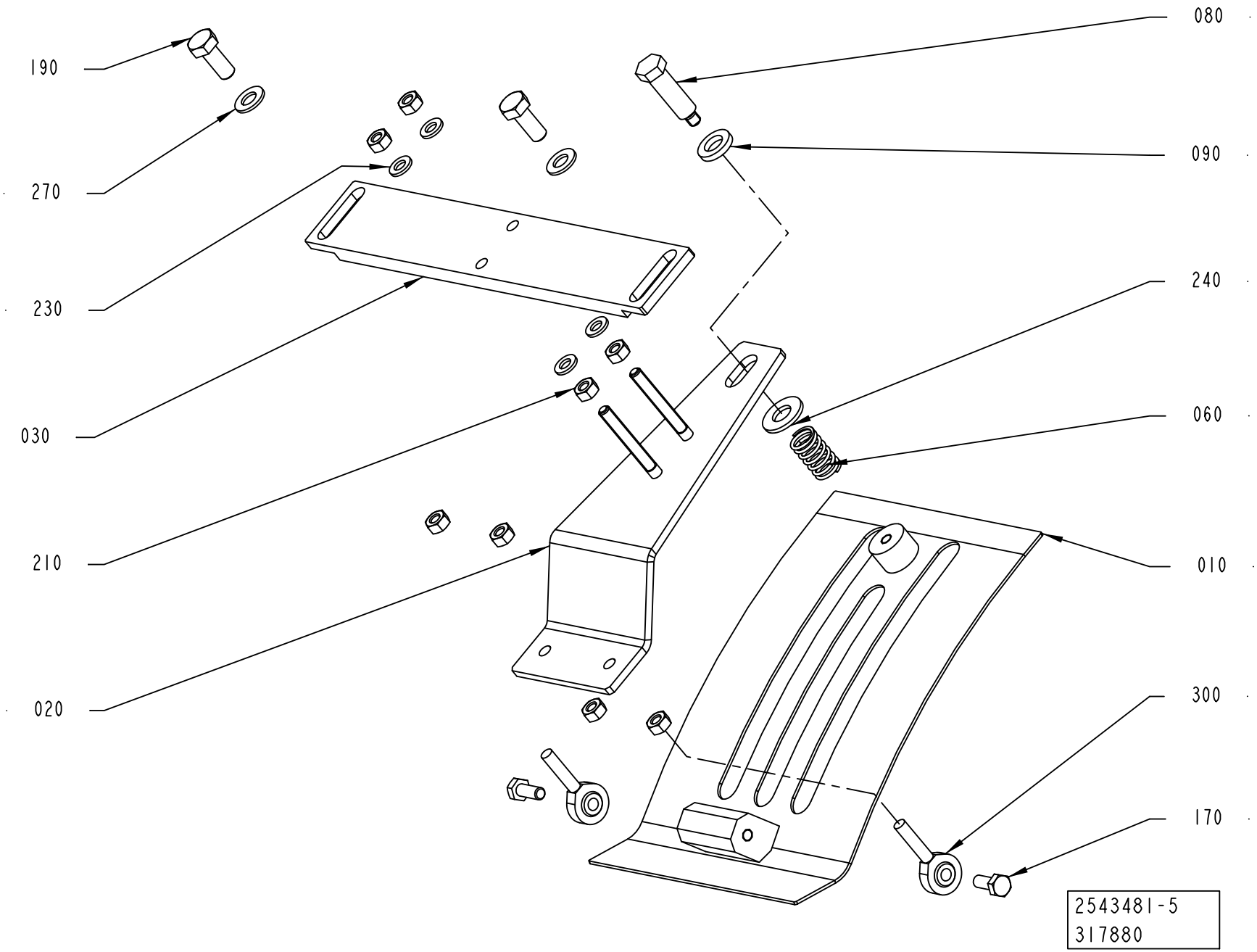
080
190
090
270
240
230
060
030
010
210
300
020
170
2543481-5
317880

Pos	Part No	UN	Qty	Description	Page No
SEE PREVIOUS LISTS PAGES: 3-87, 3-89.					

Pos	Part No	UN	Qty	Description	Page No

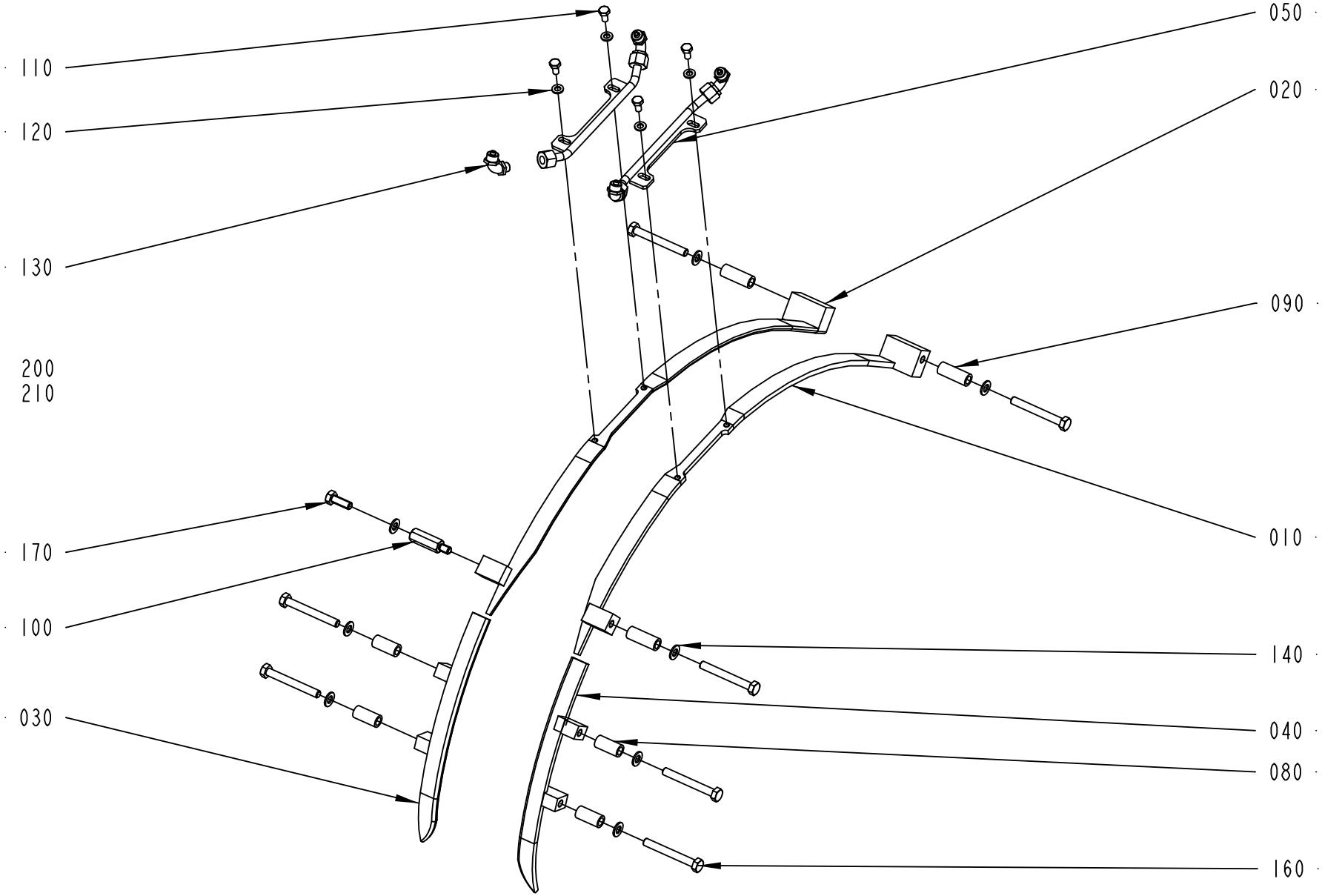

2543482-1
ECM 110156

ECM: 344760 - 20080702
Group number: 2543482-0100
Assembly Drawing: 2543482-1_1_AA

This list covers pages from 3-96 to 3-105

Pos	Part No	UN	Qty	Description	Page No
TBA 0200B, TBA 0250B, TBA 0330S (See drawing on page: 3-100)					
010	1144892-0000		1	GUIDE RIGHT	
020	1144893-0000		1	GUIDE LEFT	
030	2558704-0000		1	GUIDE UPPER R	
040	2558703-0000		1	GUIDE UPPER L	
050	2676815-0000		1	FOLDING BAR	
055	2676816-0000		1	FOLDING BAR	
060	1346340-0000		1	BRACKET	
070	1144555-0000		7	STUD SCREW	
075	1334523-0000		1	SUPPORT	
110	312105-0366		6	SCREW M6S ISO 4017 M6X12 A480	
120	315105-0153		6	WASHER BRB 6,4X12 RFR	
140	315105-0165		16	WASHER BRB 8,4X16 RFR	
150	312605-0318		16	HEXAGON NUT, M6M M8 A280	
TBA 0200M, TBA 0250S (See drawing on page: 3-100)					
010	1478926-0000		1	GUIDE RIGHT	
020	1478927-0000		1	GUIDE LEFT	
030	1539900-0000		1	RIGHT UPPER GUIDE	
040	1549614-0000		1	LEFT UPPER GUIDE	
050	2676815-0000		1	FOLDING BAR	
055	2676816-0000		1	FOLDING BAR	
060	1346340-0000		1	BRACKET	
070	1144555-0000		7	STUD SCREW	
075	1334523-0000		1	SUPPORT	
110	312105-0366		6	SCREW M6S ISO 4017 M6X12 A480	
120	315105-0153		6	WASHER BRB 6,4X12 RFR	
140	315105-0165		16	WASHER BRB 8,4X16 RFR	
150	312605-0318		16	HEXAGON NUT, M6M M8 A280	
TBA 0200SQ, TBA 0250SQ (See drawing on page: 3-102)					
010	1144892-0000		1	GUIDE RIGHT	
020	1144893-0000		1	GUIDE LEFT	
030	2558704-0000		1	GUIDE UPPER R	
040	2558703-0000		1	GUIDE UPPER L	
050	2676815-0000		1	FOLDING BAR	
055	2676816-0000		1	FOLDING BAR	
060	1346340-0000		1	BRACKET	
080	2750544-0000		4	SPACER	
090	1539898-0000		2	SPACER	
110	312105-0366		6	SCREW M6S ISO 4017 M6X12 A480	
120	315105-0153		6	WASHER BRB 6,4X12 RFR	
140	315105-0165		8	WASHER BRB 8,4X16 RFR	
160	312105-0467		6	SCREW M6S ISO 4014 M8X80 A480	
170	312105-0451		1	SCREW M6S ISO 4017 M8X20 A480	
175	312155-0449		2	SCREW DIN 7991 MF6S M8X16 A4 70	
180	2698299-0000		2	BRACKET	
190	312105-0455		1	SCREW M6S ISO 4017 M8X30 A480	
TBA 0500B, TBA 1000B (See drawing on page: 3-96)					
010	2520178-0000		1	GUIDE	
020	2520179-0000		1	GUIDE	
030	1539900-0000		1	RIGHT UPPER GUIDE	
040	1549614-0000		1	LEFT UPPER GUIDE	
050	2526575-0000		2	FOLDING BAR	
080	1334447-0000		4	SPACER	
090	2603663-0000		3	SPACER	
100	2555082-0000		1	SPACER SCREW	
110	312105-0366		4	SCREW M6S ISO 4017 M6X12 A480	
120	315105-0153		4	WASHER BRB 6,4X12 RFR	
140	315105-0165		8	WASHER BRB 8,4X16 RFR	
160	312105-0464		7	SCREW M6S ISO 4014 M8X65 A480	
170	312105-0452		1	SCREW M6S ISO 4017 M8X22 A480	
TBA 0500SQ, TBA 1000SQ (See drawing on page: 3-104)					
010	1144892-0000		1	GUIDE RIGHT	
020	1144893-0000		1	GUIDE LEFT	
030	1549411-0000		1	PACKAGE GUIDE	
040	1549406-0000		1	PACKAGE GUIDE	
050	2676815-0000		1	FOLDING BAR	
055	2676816-0000		1	FOLDING BAR	
060	1498161-0000		1	SUPPORT	
090	1499071-0000		6	SPACER	
110	312105-0366		6	SCREW M6S ISO 4017 M6X12 A480	
120	315105-0153		10	WASHER BRB 6,4X12 RFR	
140	315105-0165		8	WASHER BRB 8,4X16 RFR	
160	312105-0466		6	SCREW M6S ISO 4014 M8X75 A480	
250	312109-0374		4	SCREW M6S ISO 4017 M6X30 A480	
260	312105-0451		2	SCREW M6S ISO 4017 M8X20 A480	
270	2852009-0000		1	BRACKET	
TBA 1890S, TBA 2000S, TBA 1400B (See drawing on page: 3-98)					
010	1350424-0000		1	GUIDE RIGHT	
020	1350425-0000		1	GUIDE LEFT	
030	1334559-0000		1	GUIDE UPPER R	
040	1334560-0000		1	GUIDE UPPER L	
050	1350423-0000		2	FOLDING BAR	
080	1334447-0000		4	SPACER	
090	2752533-0000		4	SPACER	

Machine Type Group Description Used-In Group Number Page No

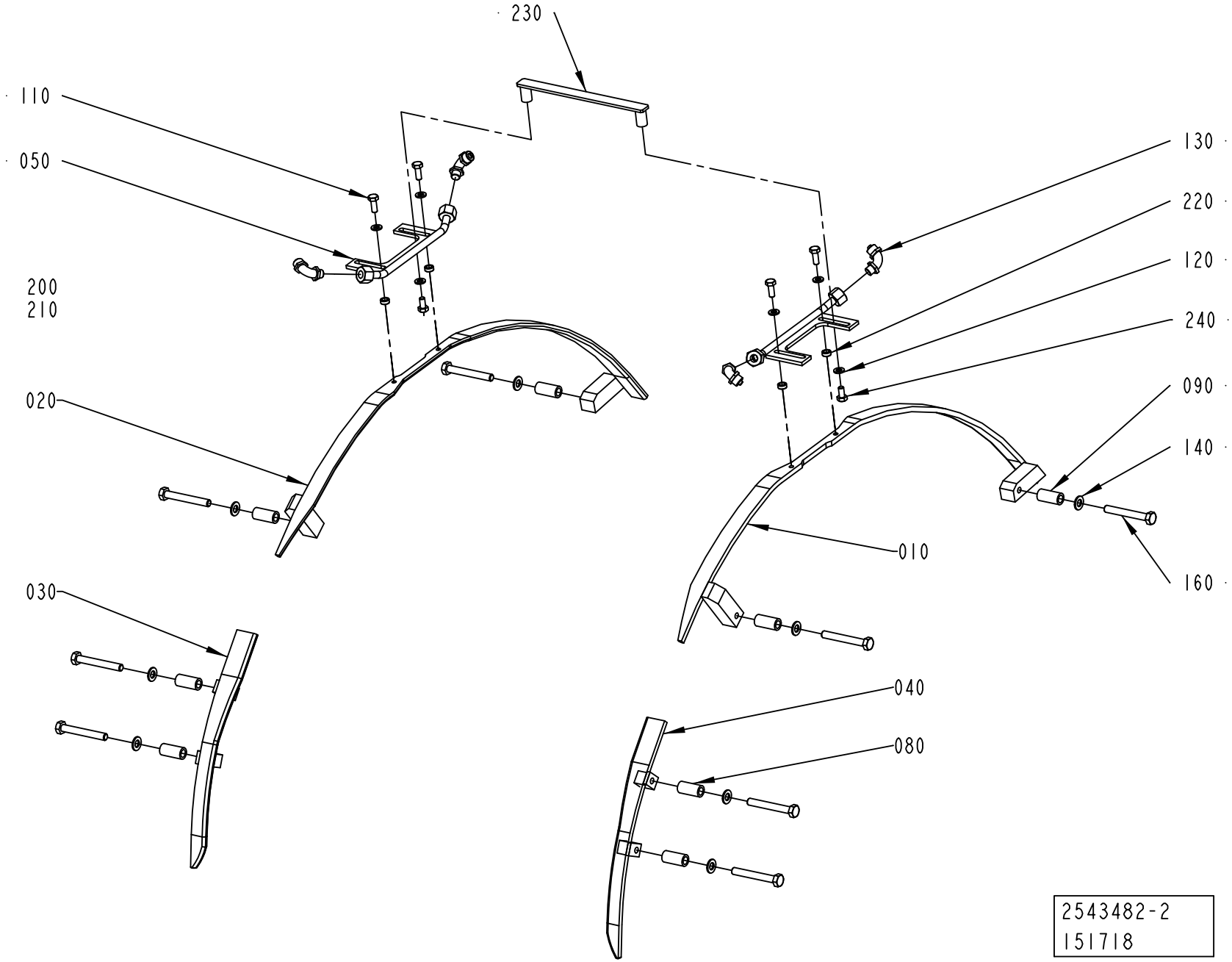
230
110
050
200
210
020
030
130
220
120
240
090
140
010
160
040
080
2543482-2
151718

ECM: 344760 - 20080702
Group number: 2543482-0100
Assembly Drawing: 2543482-2_1_AA

This list covers pages from 3-96 to 3-105

Pos	Part No	UN	Qty	Description	Page No
TBA 1890S, TBA 2000S, TBA 1400B (Cont'd) (See drawing on page: 3-98)					
110	312105-0368		4	SCREW M6S ISO 4017 M6X16 A480	
120	315105-0153		6	WASHER BRB 6,4X12 RFR	
140	315105-0165		8	WASHER BRB 8,4X16 RFR	
160	312105-0463		8	SCREW M6S ISO 4014 M8X60 A480	
220	1282705-0000		4	SUPPORT	
230	1285267-0000		1	SUPPORT	
240	312105-0366		2	SCREW M6S ISO 4017 M6X12 A480	
TPA 0250SQ, TPA 0200SQ (See drawing on page: 3-102)					
010	1144892-0000		1	GUIDE RIGHT	
020	1144893-0000		1	GUIDE LEFT	
030	2735125-0000		1	GUIDE UPPER	
040	2735126-0000		1	GUIDE UPPER	
050	2676815-0000		1	FOLDING BAR	
055	2676816-0000		1	FOLDING BAR	
060	1346340-0000		1	BRACKET	
080	1558910-0000		4	SPACER	
090	1558526-0000		2	SPACER	
110	312105-0366		4	SCREW M6S ISO 4017 M6X12 A480	
120	315105-0153		6	WASHER BRB 6,4X12 RFR	
140	315105-0165		8	WASHER BRB 8,4X16 RFR	
160	312105-0469		6	SCREW M6S ISO 4014 M8X90 A480	
170	312105-0451		1	SCREW M6S ISO 4017 M8X20 A480	
175	312105-0449		2	SCREW M6S ISO 4017 M8X16 A480	
180	2698299-0000		2	BRACKET	
190	312105-0455		1	SCREW M6S ISO 4017 M8X30 A480	
TPA 1000SQ, TPA 0750SQ (See drawing on page: 3-98)					
010	2647120-0000		1	GUIDE	
020	2647119-0000		1	GUIDE	
030	2642178-0000		1	GUIDE UPPER	
040	2642177-0000		1	GUIDE UPPER	
050	1350423-0000		2	FOLDING BAR	
090	1539898-0000		8	SPACER	
110	312105-0368		4	SCREW M6S ISO 4017 M6X16 A480	
120	315105-0153		6	WASHER BRB 6,4X12 RFR	
140	315105-0165		8	WASHER BRB 8,4X16 RFR	
160	2541125-0000		8	SCREW	
220	1282705-0000		4	SUPPORT	
230	1346340-0000		1	BRACKET	
240	312105-0366		2	SCREW M6S ISO 4017 M6X12 A480	
Common Parts					
130	342931-0121		4	ELBOW 90 COUPL.,EXT.THREAD 8/6-G1/8"	
200	90166-0118	MM	1500	TUBE 8 MM PA BLACK	
210	352113-0102		10	CABLE TIE, BLACK 188X4,8 MM	

Machine Type	Group Description	Used-In	Group Number	Page No

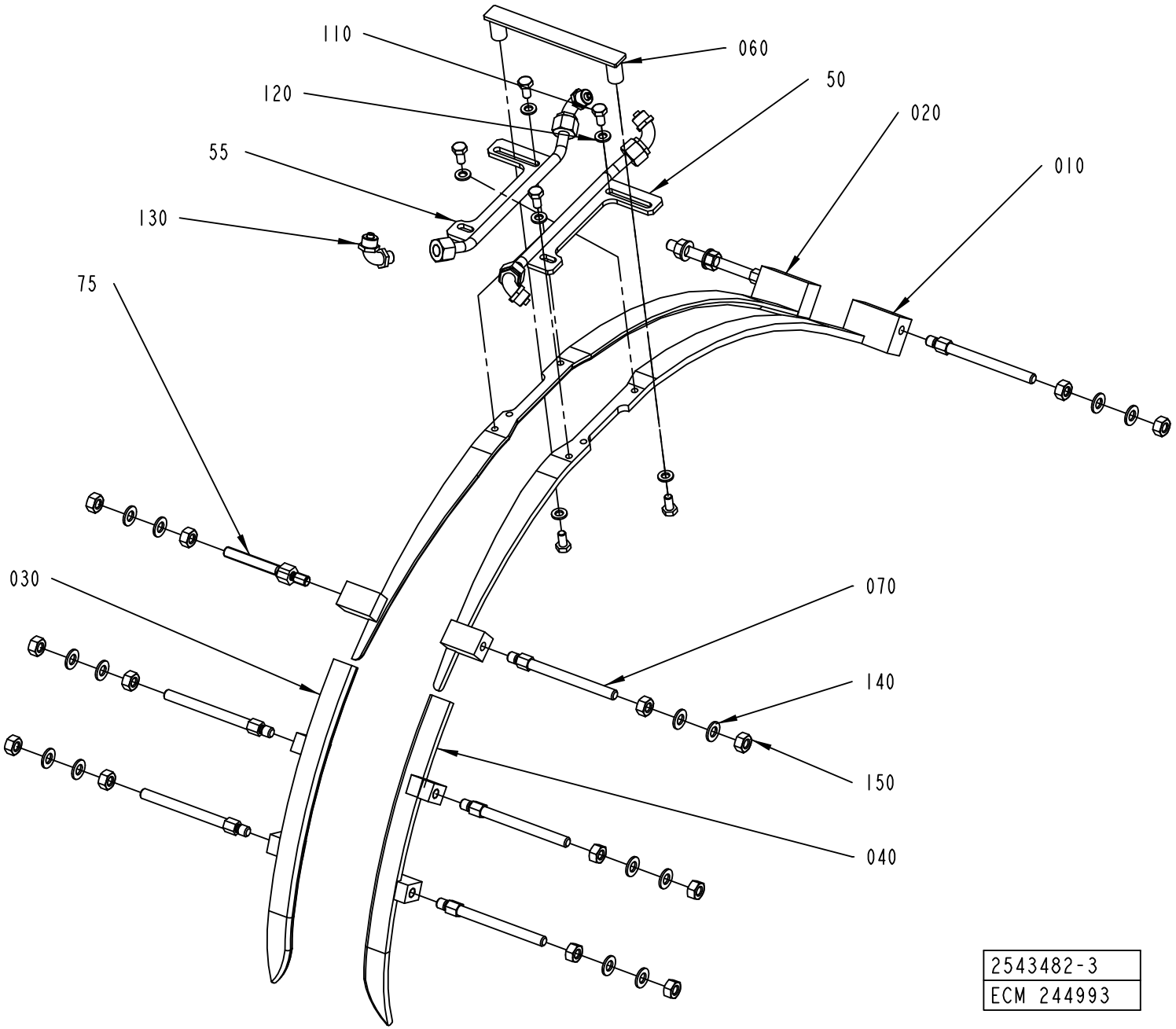
110
060
120
50
020
55
010
130
75
030
070
140
150
040
2543482-3
ECM 244993

Pos	Part No	UN	Qty	Description	Page No
SEE PREVIOUS LISTS PAGES: 3-97, 3-99.					

Pos	Part No	UN	Qty	Description	Page No

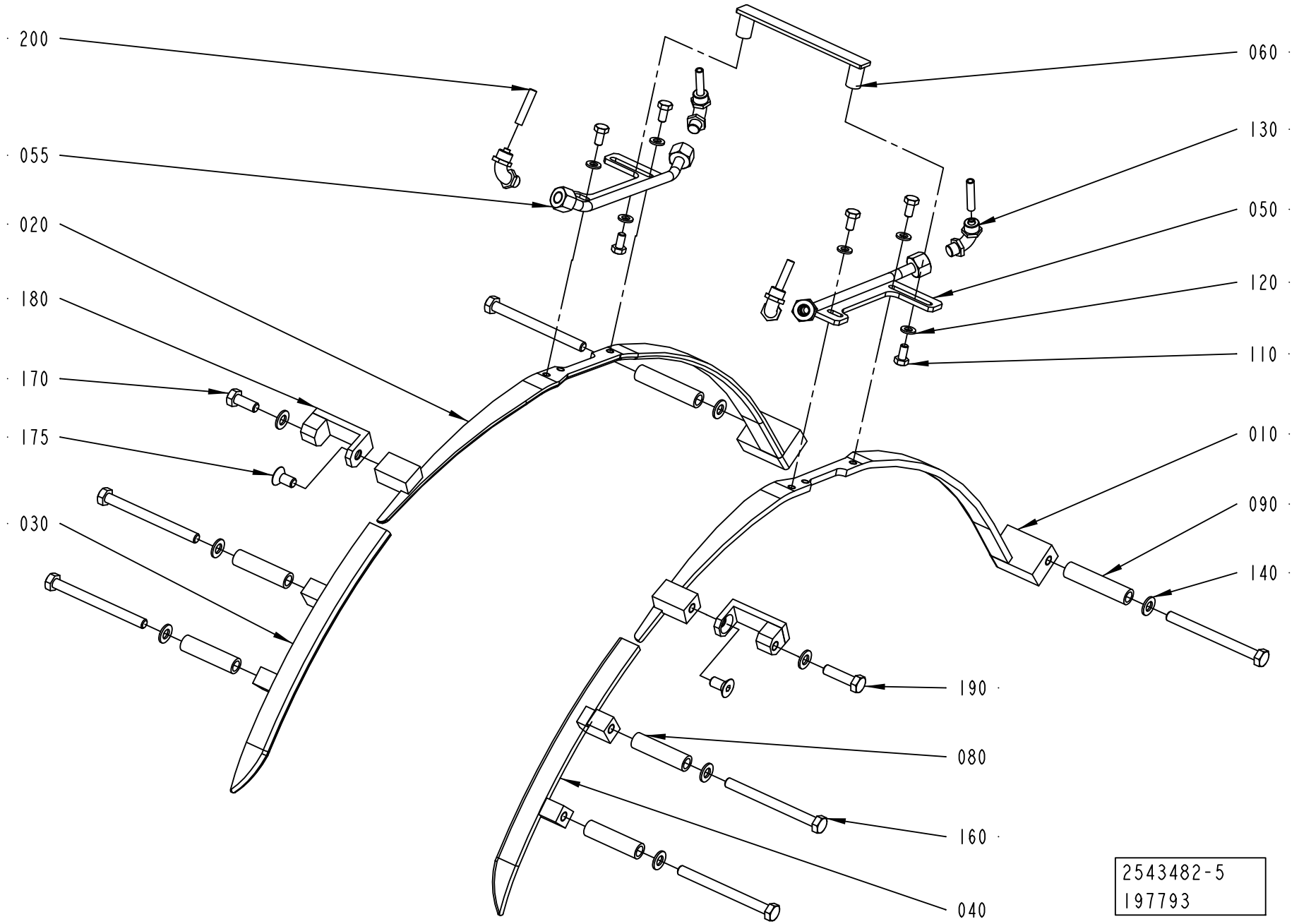
200
055
020
180
170
175
030
060
130
050
120
110
010
090
140
190
080
160
040
2543482-5
197793

Pos	Part No	UN	Qty	Description	Page No
SEE PREVIOUS LISTS PAGES: 3-97, 3-99.					

Pos	Part No	UN	Qty	Description	Page No

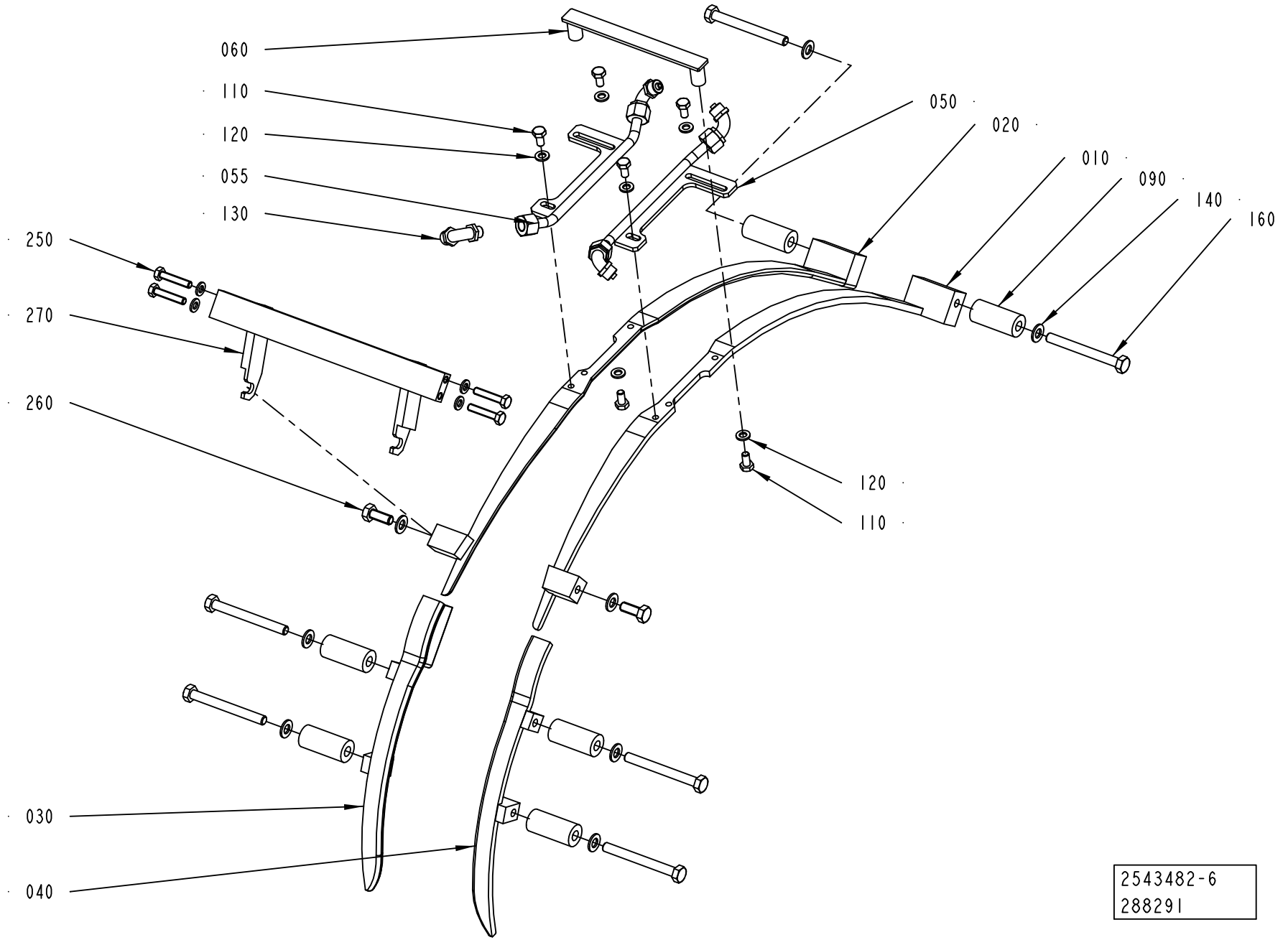
060
110
120
055
130
250
270
260
030
040
050
020
010
090
140
160
120
110
2543482-6
288291

Pos	Part No	UN	Qty	Description	Page No
SEE PREVIOUS LISTS PAGES: 3-97, 3-99.					

Pos	Part No	UN	Qty	Description	Page No

FLAP GUIDE

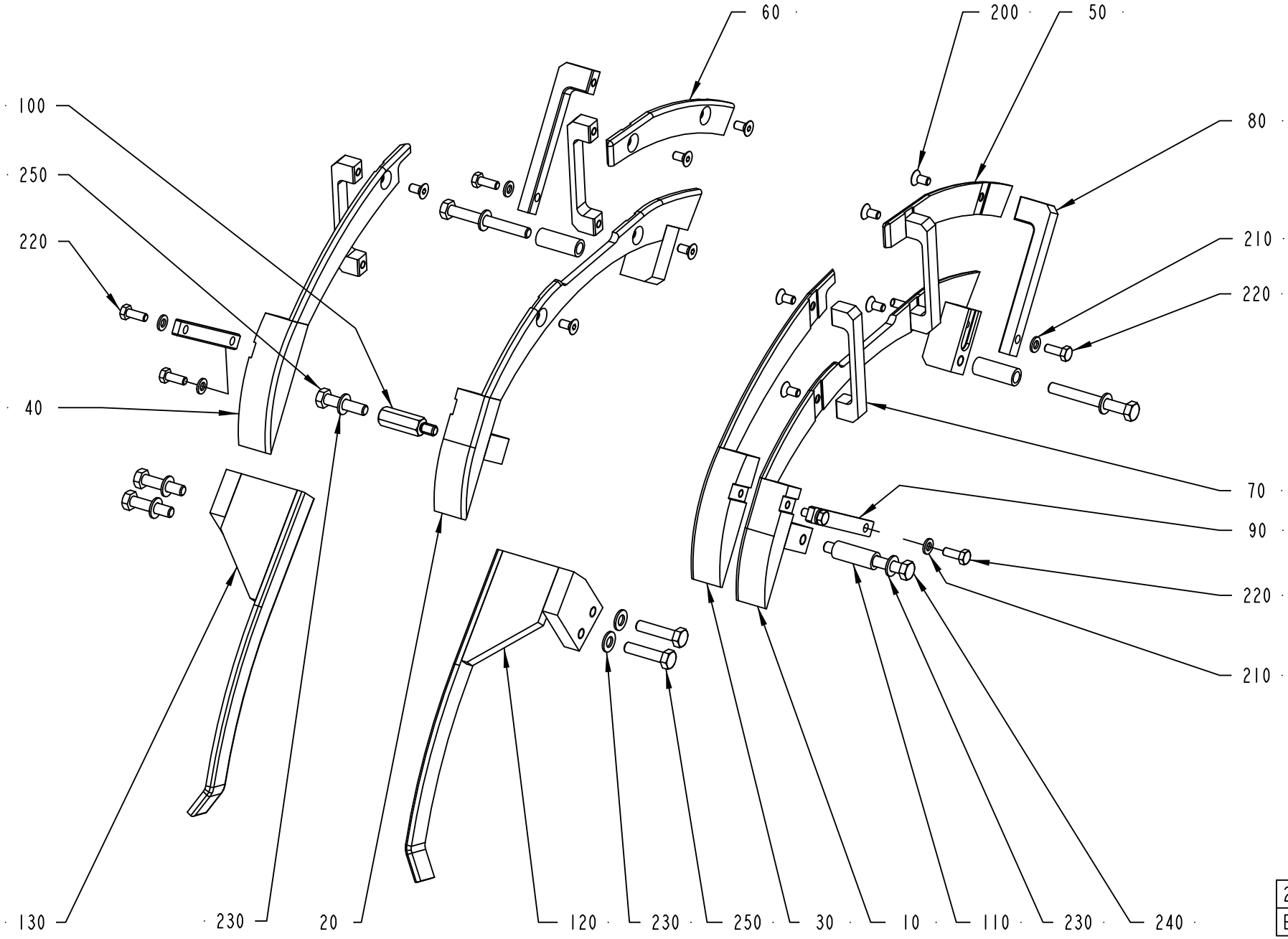

2603827-1
ECM 127225

ECM: 316409 - 20080103
Group number: 2603827-0100
Assembly Drawing: 2603827-1_1_AA

This list covers pages from 3-106 to 3-121

Pos	Part No	UN	Qty	Description	Page No
TBA 0200B, TBA 0250B, TBA 0330S (See drawing on page: 3-110)					
010	2595707-0000		1	FOLDING PART	
020	2601445-0000		1	FOLDING PART	
030	2595704-0000		1	FOLDING PART	
040	2601455-0000		1	FOLDING PART	
050	2595705-0000		1	FOLDING PART	
060	2601465-0000		1	FOLDING PART	
070	2595706-0000		8	BRACKET	
110	2599847-0000		3	SPACER	
120	1346344-0000		1	RAIL	
130	1346343-0000		1	RAIL	
140	2595708-0000		1	FOLDING PART	
150	2602592-0000		1	FOLDING PART	
160	2595709-0000		1	FOLDING PART	
170	2601464-0000		1	FOLDING PART	
180	2558127-0000		2	SPACER	
190	2664035-0000		1	SPACER SCREW	
210	315105-0153		24	WASHER BRB 6,4X12 RFR	
220	312105-0370		24	SCREW M6S ISO 4017 M6X20 A480	
230	315105-0165		8	WASHER BRB 8,4X16 RFR	
240	312105-0467		3	SCREW M6S ISO 4014 M8X80 A480	
250	312105-0457		4	SCREW M6S ISO 4014 M8X35 A480	
260	312155-0461		4	SCREW DIN 7991 MF6S M8X50A4 70	
270	312105-0455		1	SCREW M6S ISO 4017 M8X30 A480	
TBA 0200M, TBA 0250S (See drawing on page: 3-114)					
010	2595707-0000		1	FOLDING PART	
020	2601445-0000		1	FOLDING PART	
030	2649130-0000		1	GUIDE RAIL	
040	2649132-0000		1	GUIDE RAIL	
050	2649131-0000		1	GUIDE RAIL	
060	2649133-0000		1	GUIDE RAIL	
070	2649134-0000		8	BRACKET	
110	2804857-0000		4	SPACER SCREW	
120	1346344-0000		1	RAIL	
130	1346343-0000		1	RAIL	
180	2649139-0000		2	SPACER	
210	315105-0153		16	WASHER BRB 6,4X12 RFR	
220	312105-0370		16	SCREW M6S ISO 4017 M6X20 A480	
230	315105-0165		8	WASHER BRB 8,4X16 RFR	
240	312105-0457		4	SCREW M6S ISO 4014 M8X35 A480	
250	312105-0457		4	SCREW M6S ISO 4014 M8X35 A480	
260	312155-0461		4	SCREW DIN 7991 MF6S M8X50A4 70	

Pos	Part No	UN	Qty	Description	Page No
TBA 0200SQ, TBA 0250SQ (See drawing on page: 3-116)					
010	2668248-0000		1	FOLDING PART	
020	2668251-0000		1	FOLDING PART	
030	2668250-0000		1	GUIDE RAIL	
040	2668252-0000		1	GUIDE RAIL	
050	2668249-0000		1	GUIDE RAIL	
060	2668253-0000		1	GUIDE RAIL	
090	2647126-0000		2	BRACKET	
110	2895561-0000		2	SPACER	
115	2752534-0000		4	SPACER	
120	2708323-0000		1	RAIL	
130	2708322-0000		1	RAIL	
180	2668254-0000		2	BRACKET	
190	2674266-0000		2	SPACER	
210	315105-0153		8	WASHER BRB 6,4X12 RFR	
220	312105-0370		8	SCREW M6S ISO 4017 M6X20 A480	
230	315105-0165		12	WASHER BRB 8,4X16 RFR	
240	312105-0469		2	SCREW M6S ISO 4014 M8X90 A480	
250	312105-0455		4	SCREW M6S ISO 4017 M8X30 A480	
260	312105-0466		4	SCREW M6S ISO 4014 M8X75 A480	
270	312105-0465		2	SCREW M6S ISO 4014 M8X70 A480	
TBA 0500B, TBA 1000B (See drawing on page: 3-106)					
010	2520175-0000		1	FOLDING PART	
020	2520172-0000		1	FOLDING PART	
030	2603659-0000		1	FOLDING PART	
040	2603660-0000		1	FOLDING PART	
050	2603548-0000		1	FOLDING PART	
060	2603547-0000		1	FOLDING PART	
070	2603662-0000		4	BRACKET	
080	2603661-0000		2	BRACKET	
090	2544342-0000		2	BRACKET	
100	2555082-0000		1	SPACER SCREW	
110	1539871-0000		3	SPACER	
120	2603664-0000		1	RAIL	
130	2605213-0000		1	RAIL	
200	312155-0366		10	SCREW DIN 7991 MF6S M6X12 A4 70	
210	315105-0153		6	WASHER BRB 6,4X12 RFR	
220	312105-0368		6	SCREW M6S ISO 4017 M6X16 A480	
230	315105-0165		8	WASHER BRB 8,4X16 RFR	
240	312105-0465		3	SCREW M6S ISO 4014 M8X70 A480	
250	312105-0457		5	SCREW M6S ISO 4014 M8X35 A480	
TBA 0500SQ, TBA 1000SQ (See drawing on page: 3-120)					

Machine Type Group Description Used-In Group Number Page No

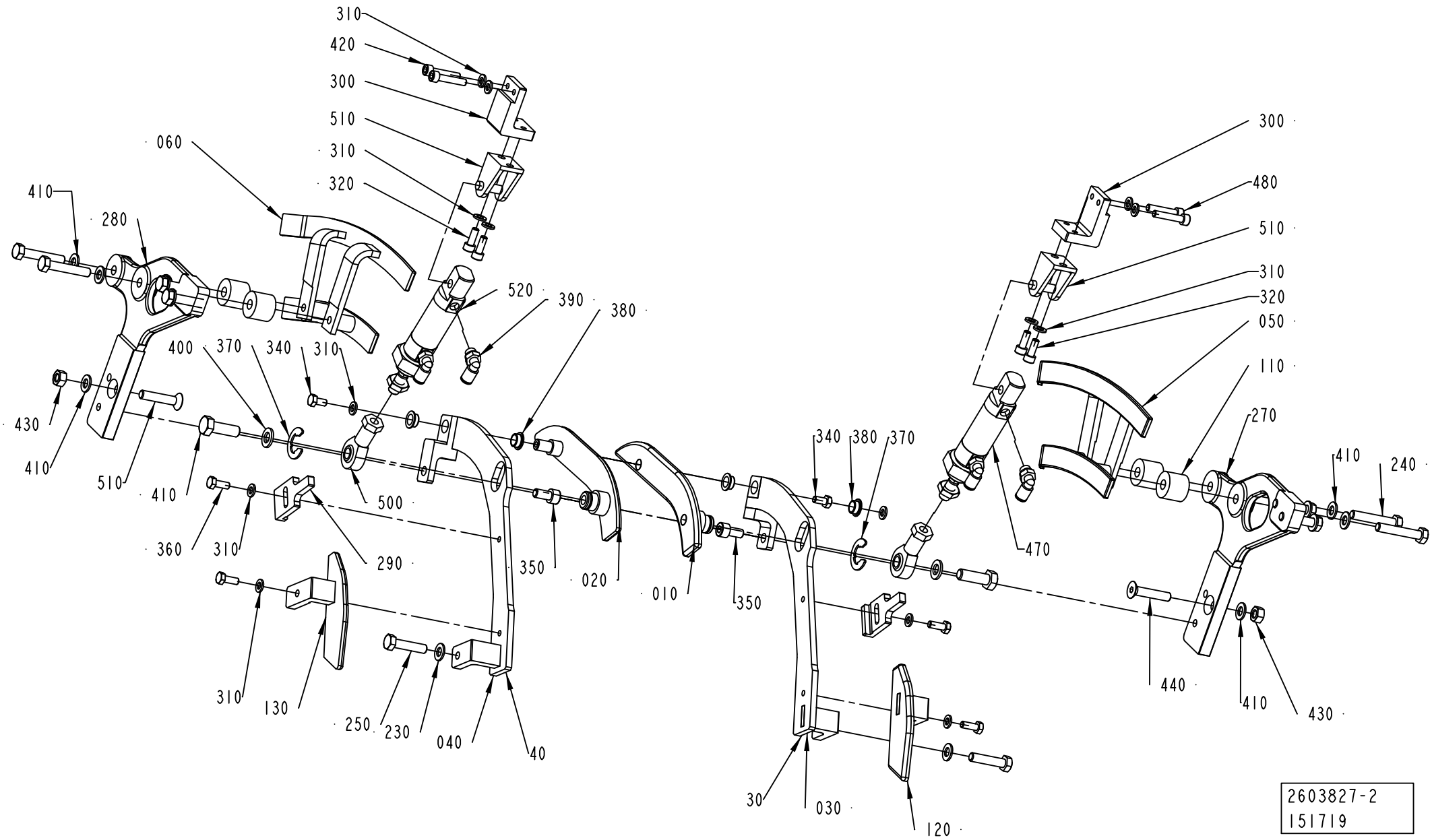
310
420
300
510
310
320
060
410
280
520
390
380
400
370
340
310
430
410
510
410
500
360
310
290
350
020
010
350
340
380
370
470
300
480
510
310
320
050
110
270
410
240
440
410
430
310
130
250
230
040
40
30
030
120
2603827-2
151719

ECM: 316409 - 20080103
Group number: 2603827-0100
Assembly Drawing: 2603827-2_1_AA

This list covers pages from 3-106 to 3-121

Pos	Part No	UN	Qty	Description	Page No
TBA 0500SQ, TBA 1000SQ (Cont'd) (See drawing on page: 3-120)					
010	1144555-0000		4	STUD SCREW	
020	2529217-0000		1	RAIL	
030	2529219-0000		1	RAIL	
040	2529232-0000		1	FOLDING BAR	
050	2529240-0000		1	FOLDING BAR	
060	2588216-0000		1	GUIDE	
070	2588217-0000		1	GUIDE	
080	2588218-0000		2	STRUT	
090	2849961-0000		1	GUIDE	
100	2849962-0000		1	GUIDE	
110	2876334-0000		2	HOLDER	
120	2598822-0000		1	GUIDE PIN	
130	2598823-0000		1	GUIDE PIN	
140	2619703-0000		4	SPACER	
150	2619384-0000		2	HOLDER	
160	2598986-0000		1	RAIL	
170	2598987-0000		1	RAIL	
190	2851645-0000		4	SPACER	
200	2851646-0000		4	SPACER	
510	312105-0455		8	SCREW M6S ISO 4017 M8X30 A480	
520	312105-0463		4	SCREW M6S ISO 4014 M8X60 A480	
530	312109-0457		4	SCREW M6S ISO 4017 M8X35 A480	
540	312605-0318		20	HEXAGON NUT, M6M M8 A280	
550	312105-0461		4	SCREW M6S ISO 4014 M8X50 A480	
560	315105-0165		44	WASHER BRB 8,4X16 RFR	
660	312105-0467		4	SCREW M6S ISO 4014 M8X80 A480	
TBA 1400B (See drawing on page: 3-118)					
010	2775359-0000		1	FOLDING PART	
020	2772887-0000		1	FOLDING PART	
030	2776216-0000		1	FOLDING PART	
040	2772885-0000		1	FOLDING PART	
050	2775361-0000		1	RAIL	
060	2772892-0000		1	RAIL	
110	2776217-0000		4	SPACER	
120	2775360-0000		1	FOLDING PART	
130	2772890-0000		1	FOLDING PART	
230	315105-0165		12	WASHER BRB 8,4X16 RFR	
240	312105-0464		4	SCREW M6S ISO 4014 M8X65 A480	
250	312109-0457		6	SCREW M6S ISO 4017 M8X35 A480	
280	1317043-0000		2	SUPPORT	
290	2603147-0000		2	PLATE	
300	2772891-0000		2	BRACKET	
310	315105-0153		18	WASHER BRB 6,4X12 RFR	
320	312115-0368		4	SCREW ISO4762 M6X16 A4 80	
340	312105-0366		2	SCREW M6S ISO 4017 M6X12 A480	
350	312115-0449		2	SCREW ISO4762 M8X16 A4 80	
360	312105-0368		4	SCREW M6S ISO 4017 M6X16 A480	
370	315755-0113		2	RETAINING RING SHAFT DIN 6799 15 A2	
380	321153-0136		4	FLANGE BUSHING, 10X12X6 MM	
390	350002-0006		4	PUSH-IN L-FITTING QSL-F-G1/8-6	
400	315105-0171		2	WASHER BRB 10X18 RFR	
410	312105-0495		2	SCREW M6S ISO 4017 M10X30 A480	
420	312115-0374		4	SCREW ISO4762 M6X30 A4 80	
430	312605-0318		2	HEXAGON NUT, M6M M8 A280	
440	312155-0459		2	SCREW DIN 7991 MF6S M8X40 A4 70	
500	90115-0134		2	ROD END, ID=10 MM, M10X1,25	
510	90459-4932		2	REAR CLEVIS FOOT MOUNTING , CRLBN-20/25	
520	90459-1953		2	DOUBLE ACTING, MINI-ISO, CYL. 25-10	
TBA 1890S, TBA 2000S (See drawing on page: 3-108)					
010	2598497-0000		1	FOLDING PART	
020	2598496-0000		1	FOLDING PART	
030	2598495-0000		1	FOLDING PART	
040	2598494-0000		1	FOLDING PART	
050	1499151-0000		1	RAIL	
060	1499150-0000		1	RAIL	
110	2629344-0000		4	SPACER	
120	2598492-0000		1	FOLDING PART	
130	2598491-0000		1	FOLDING PART	
230	315105-0165		12	WASHER BRB 8,4X16 RFR	
240	312109-0460		4	SCREW M6S ISO 4017 M8X45 A480	
250	312109-0457		6	SCREW M6S ISO 4017 M8X35 A480	
280	1317043-0000		2	SUPPORT	
290	2603147-0000		2	PLATE	
300	2598493-0000		2	BRACKET	
310	315105-0153		14	WASHER BRB 6,4X12 RFR	
320	312115-0368		4	SCREW ISO4762 M6X16 A4 80	
340	312105-0366		2	SCREW M6S ISO 4017 M6X12 A480	
350	312115-0449		2	SCREW ISO4762 M8X16 A4 80	
360	312105-0368		4	SCREW M6S ISO 4017 M6X16 A480	
370	315755-0113		2	RETAINING RING SHAFT DIN 6799 15 A2	
380	321153-0136		4	FLANGE BUSHING, 10X12X6 MM	
390	350002-0006		4	PUSH-IN L-FITTING QSL-F-G1/8-6	
400	315105-0171		2	WASHER BRB 10X18 RFR	

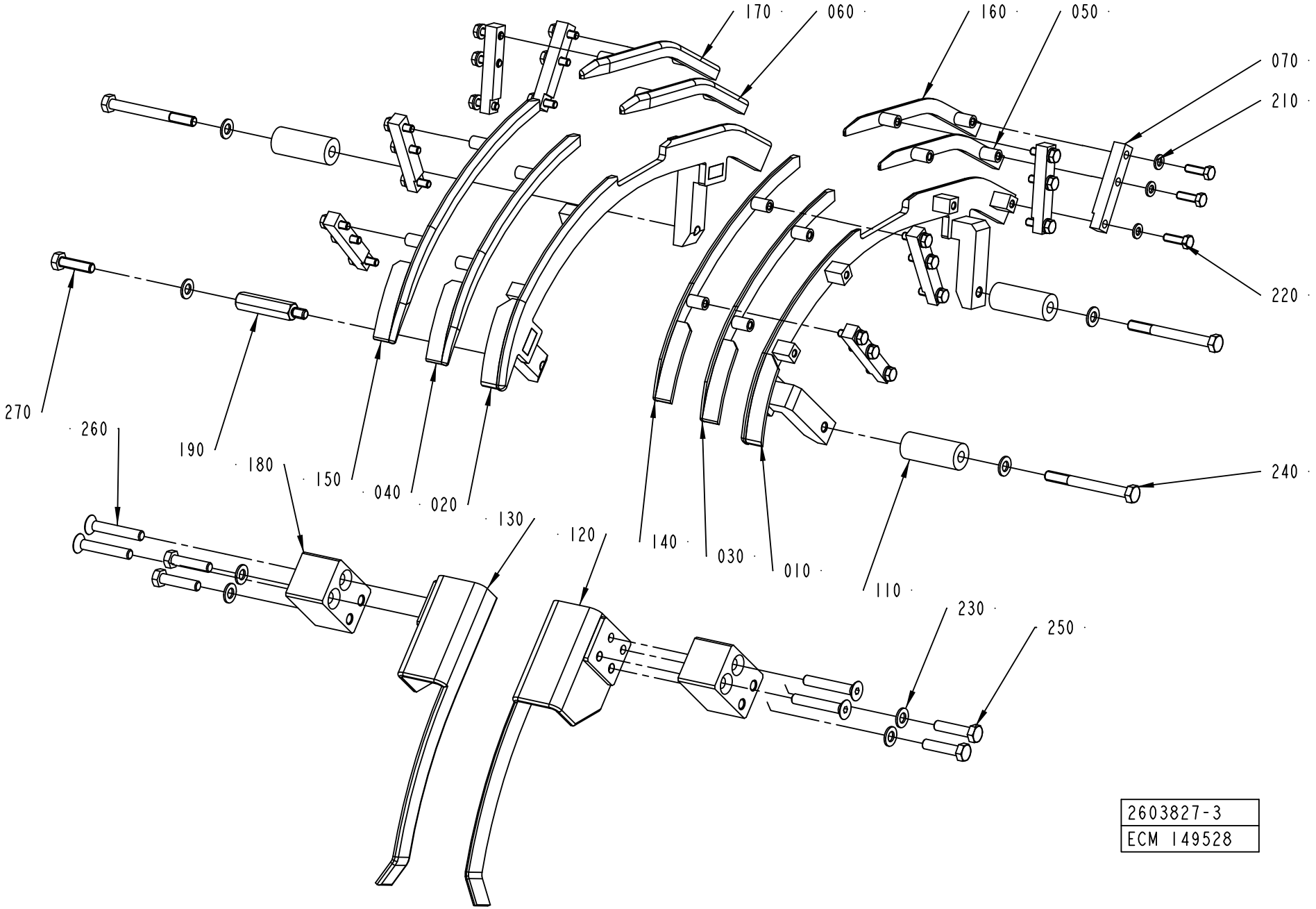
170
060
160
050
070
210
220
270
260
190
180
150
040
020
130
120
140
030
010
110
230
250
240
2603827-3
ECM 149528

Pos	Part No	UN	Qty	Description	Page No
TBA 1890S, TBA 2000S (Cont'd) (See drawing on page: 3-108)					
410	312105-0495		2	SCREW M6S ISO 4017 M10X30 A480	
420	312115-0374		4	SCREW ISO4762 M6X30 A4 80	
430	312605-0318		2	HEXAGON NUT, M6M M8 A280	
440	312155-0459		2	SCREW DIN 7991 MF6S M8X40 A4 70	
500	90115-0134		2	ROD END, ID=10 MM, M10X1,25	
510	90459-4932		2	REAR CLEVIS FOOT MOUNTING , CRLBN-20/25	
520	90459-1953		2	DOUBLE ACTING, MINI-ISO, CYL. 25-10	
TPA 0250SQ, TPA 0200SQ (See drawing on page: 3-116)					
010	2674260-0000		1	FOLDING PART	
020	2674261-0000		1	FOLDING PART	
030	2674262-0000		1	FOLDING PART	
040	2674263-0000		1	FOLDING PART	
050	2674264-0000		1	FOLDING PART	
060	2674265-0000		1	FOLDING PART	
090	2647126-0000		2	BRACKET	
110	2674267-0000		2	SPACER	
120	2735128-0000		1	RAIL	
130	2735127-0000		1	RAIL	
180	2674268-0000		2	SPACER	
190	2674266-0000		2	SPACER	
210	315105-0153		8	WASHER BRB 6,4X12 RFR	
220	312105-0370		8	SCREW M6S ISO 4017 M6X20 A480	
230	315105-0165		8	WASHER BRB 8,4X16 RFR	
240	312105-0469		2	SCREW M6S ISO 4014 M8X90 A480	
250	312105-0455		4	SCREW M6S ISO 4017 M8X30 A480	
260	312155-0455		4	SCREW DIN 7991 MF6S M8X30 A4 70	
270	312105-0465		2	SCREW M6S ISO 4014 M8X70 A480	
TPA 1000SQ, TPA 0750SQ (See drawing on page: 3-112)					
010	2647128-0000		1	FOLDING PART	
020	2647127-0000		1	FOLDING PART	
030	2647122-0000		1	FOLDING PART	
040	2647121-0000		1	FOLDING PART	
050	2647130-0000		1	FOLDING PART	
060	2647129-0000		1	FOLDING PART	
070	2647126-0000		2	BRACKET	
080	2644368-0000		2	BRACKET	
110	1519355-0000		12	SPACER	
220	312105-0455		6	SCREW M6S ISO 4017 M8X30 A480	
230	315105-0165		18	WASHER BRB 8,4X16 RFR	
240	312105-0462		12	SCREW M6S ISO 4014 M8X55 A480	

Pos	Part No	UN	Qty	Description	Page No

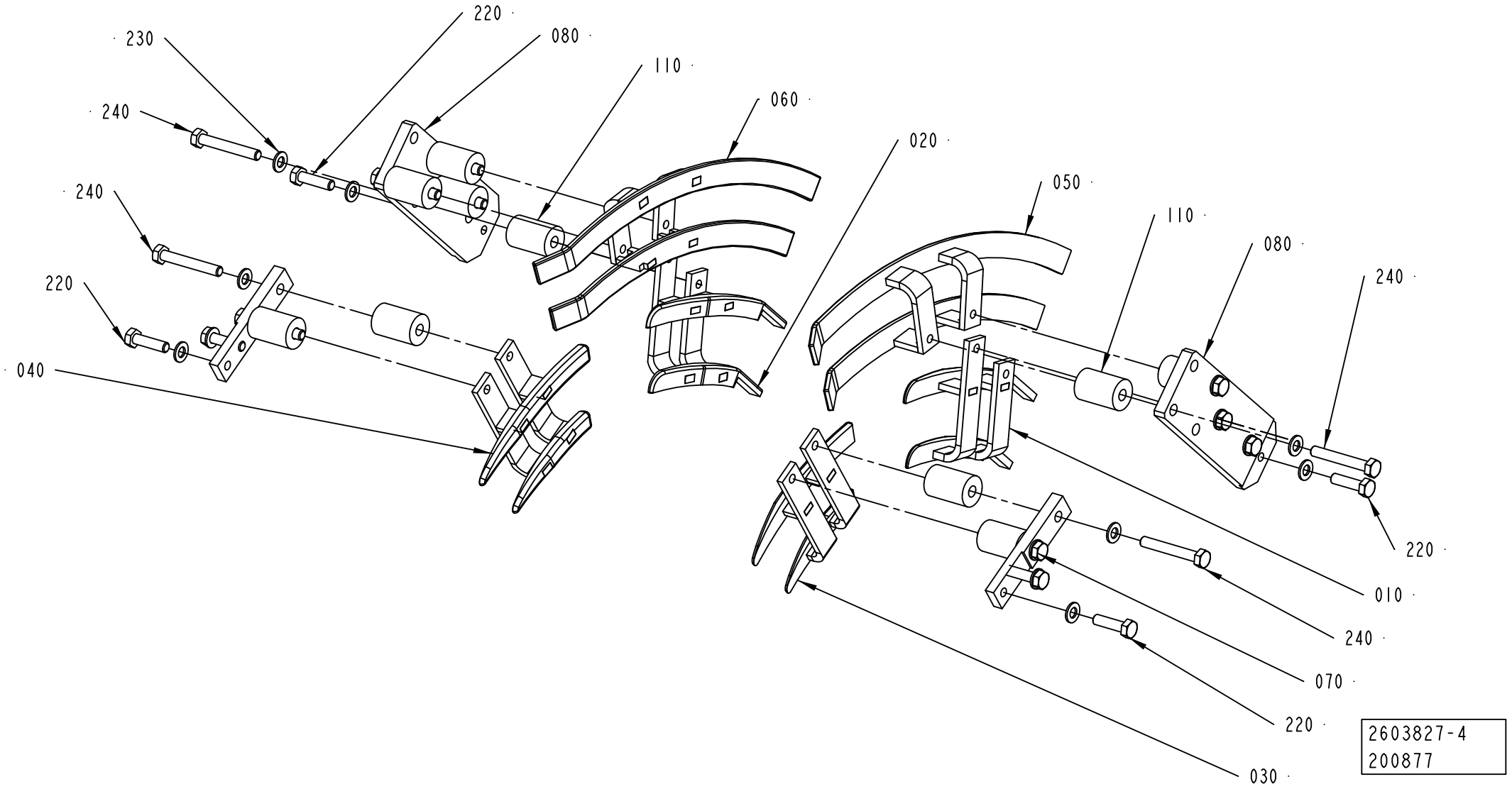
230
220
080
110
060
240
240
220
040
020
050
110
080
240
220
010
240
070
220
030
2603827-4
200877

Pos	Part No	UN	Qty	Description	Page No
SEE PREVIOUS LISTS PAGES: 3-107, 3-109, 3-111.					

Pos	Part No	UN	Qty	Description	Page No

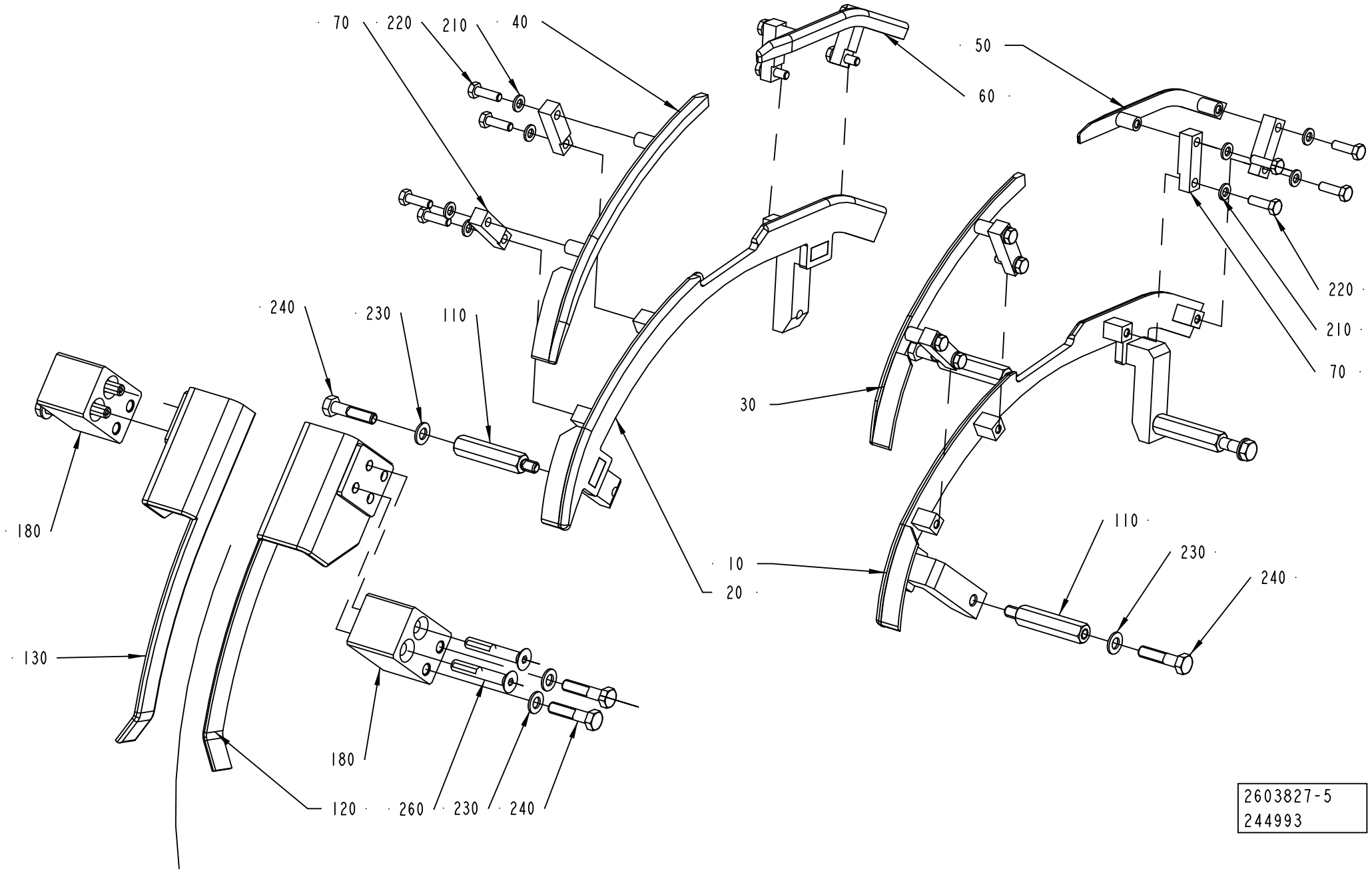
70
220
210
40
50
60
240
230
110
30
180
10
20
130
110
230
240
180
120
260
230
240
220
210
70
2603827-5
244993

Pos	Part No	UN	Qty	Description	Page No
SEE PREVIOUS LISTS PAGES: 3-107, 3-109, 3-111.					

Pos	Part No	UN	Qty	Description	Page No

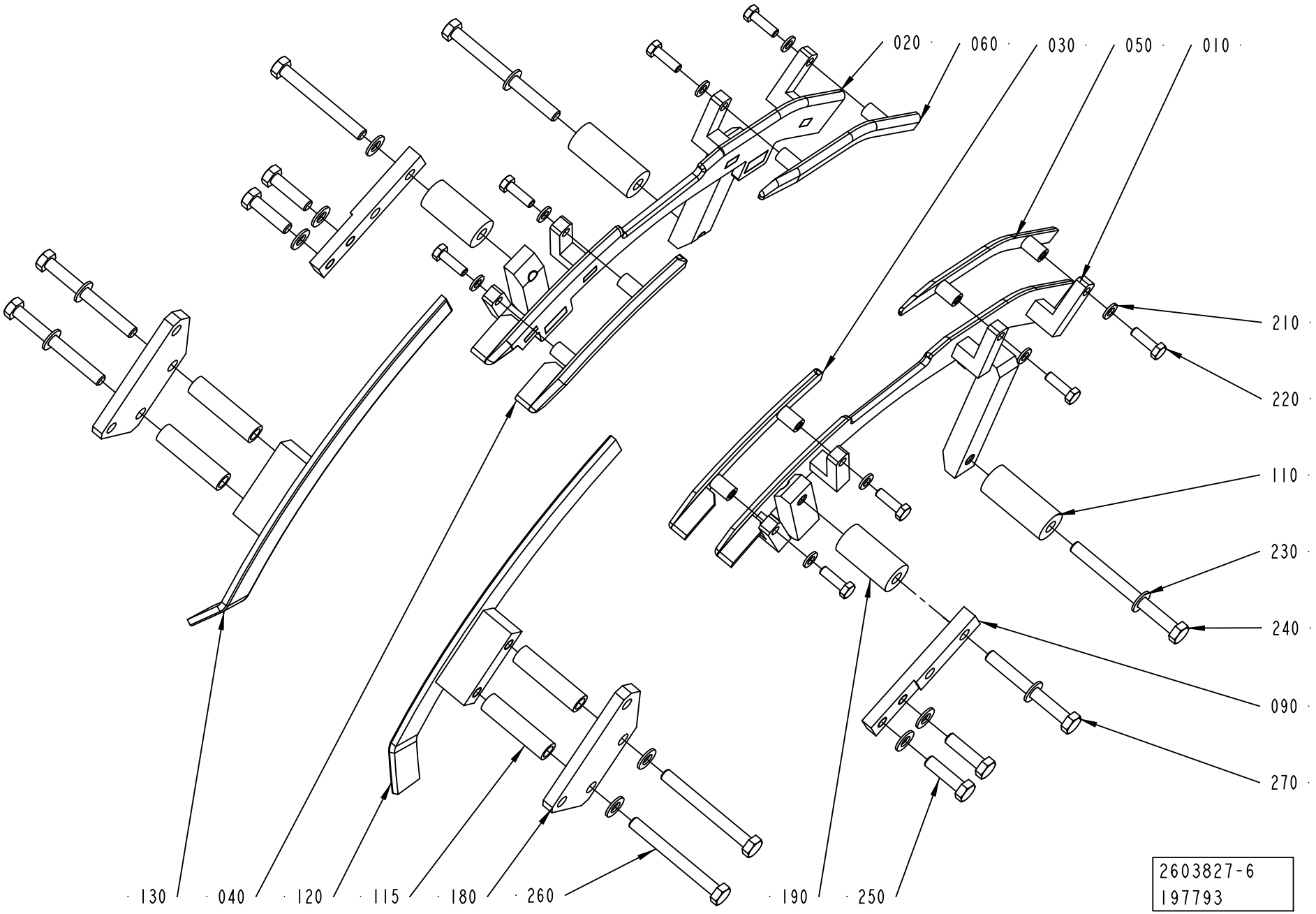
020
060
030
050
010
210
220
110
230
240
090
270
130
040
120
115
180
260
190
250
2603827-6
197793

Pos	Part No	UN	Qty	Description	Page No
SEE PREVIOUS LISTS PAGES: 3-107, 3-109, 3-111.					

Pos	Part No	UN	Qty	Description	Page No

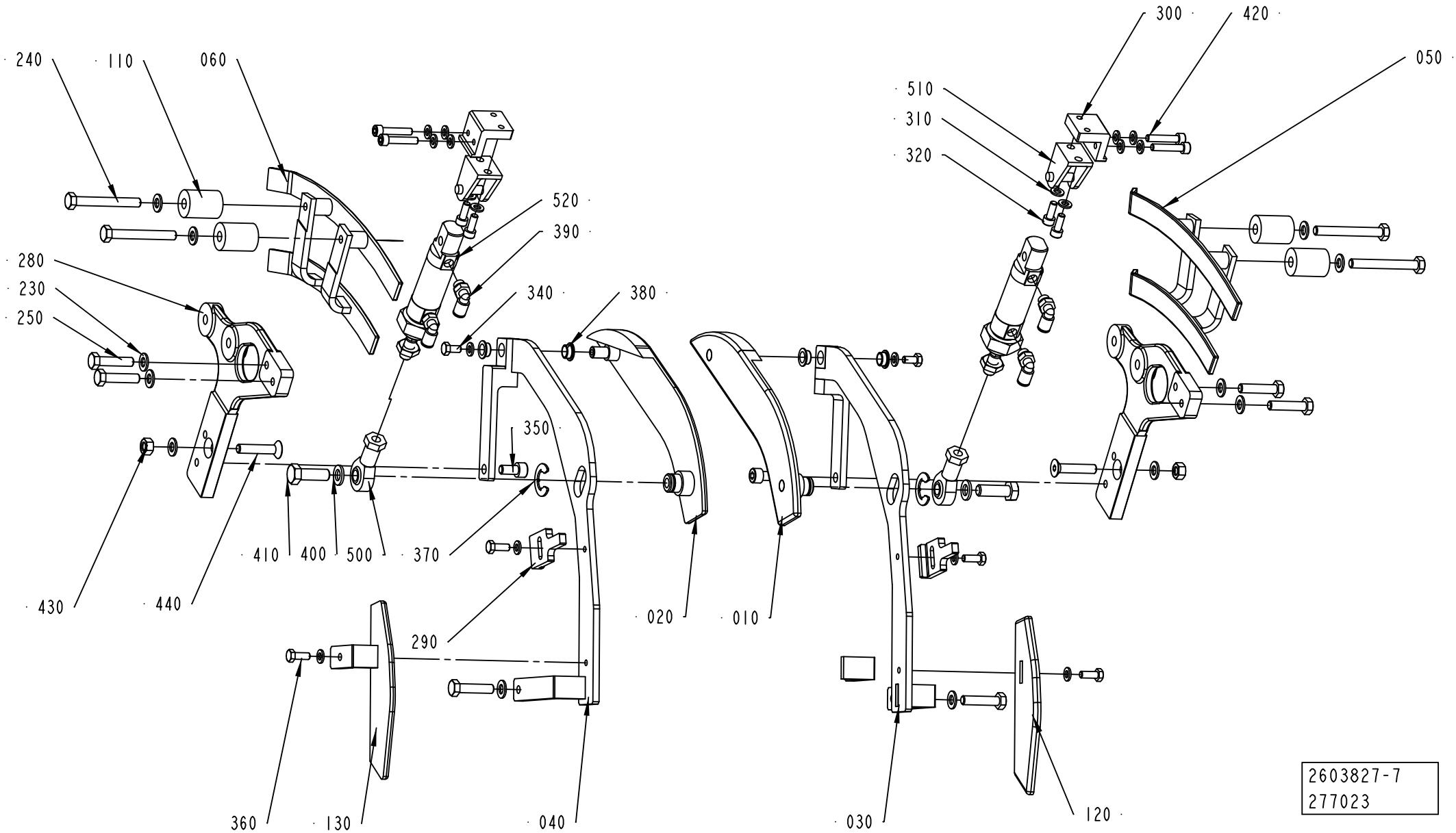
240
110
060
300
420
050
510
310
320
520
390
280
230
250
340
380
350
410
400
500
370
430
440
290
020
010
360
130
040
030
120
2603827-7
277023

ECM: 316409 - 20080103
Group number: 2603827-0100
Assembly Drawing: 2603827-7_1_AA

This list covers pages from 3-106 to 3-121

Pos	Part No	UN	Qty	Description	Page No
SEE PREVIOUS LISTS PAGES: 3-107, 3-109, 3-111.					

Pos	Part No	UN	Qty	Description	Page No

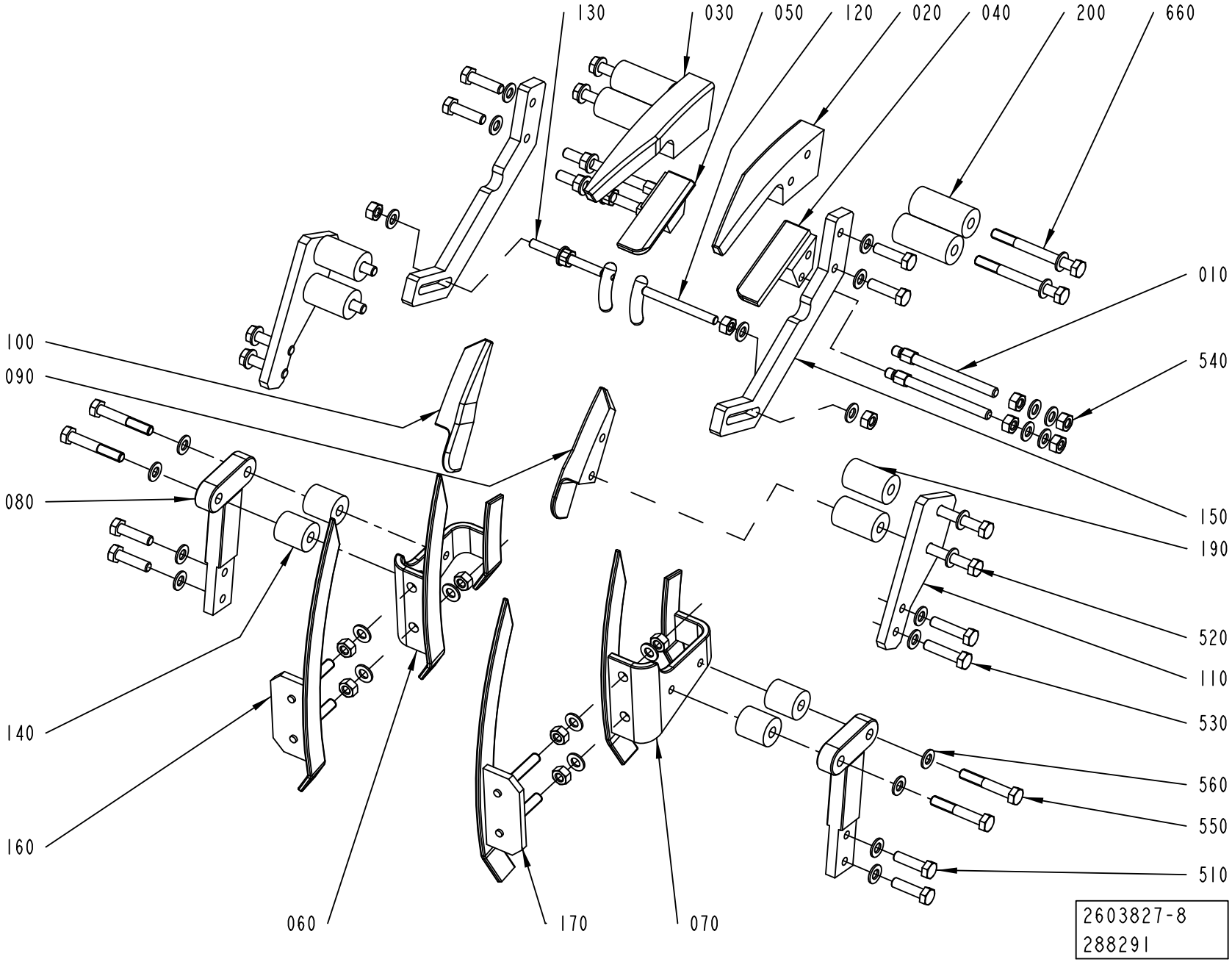
130
030
050
120
020
040
200
660
010
540
100
090
080
150
190
520
110
530
140
560
160
550
510
060
170
070
2603827-8
288291

ECM: 316409 - 20080103
Group number: 2603827-0100
Assembly Drawing: 2603827-8_1_AA

This list covers pages from 3-106 to 3-121

Pos	Part No	UN	Qty	Description	Page No
SEE PREVIOUS LISTS PAGES: 3-107, 3-109, 3-111.					

Pos	Part No	UN	Qty	Description	Page No

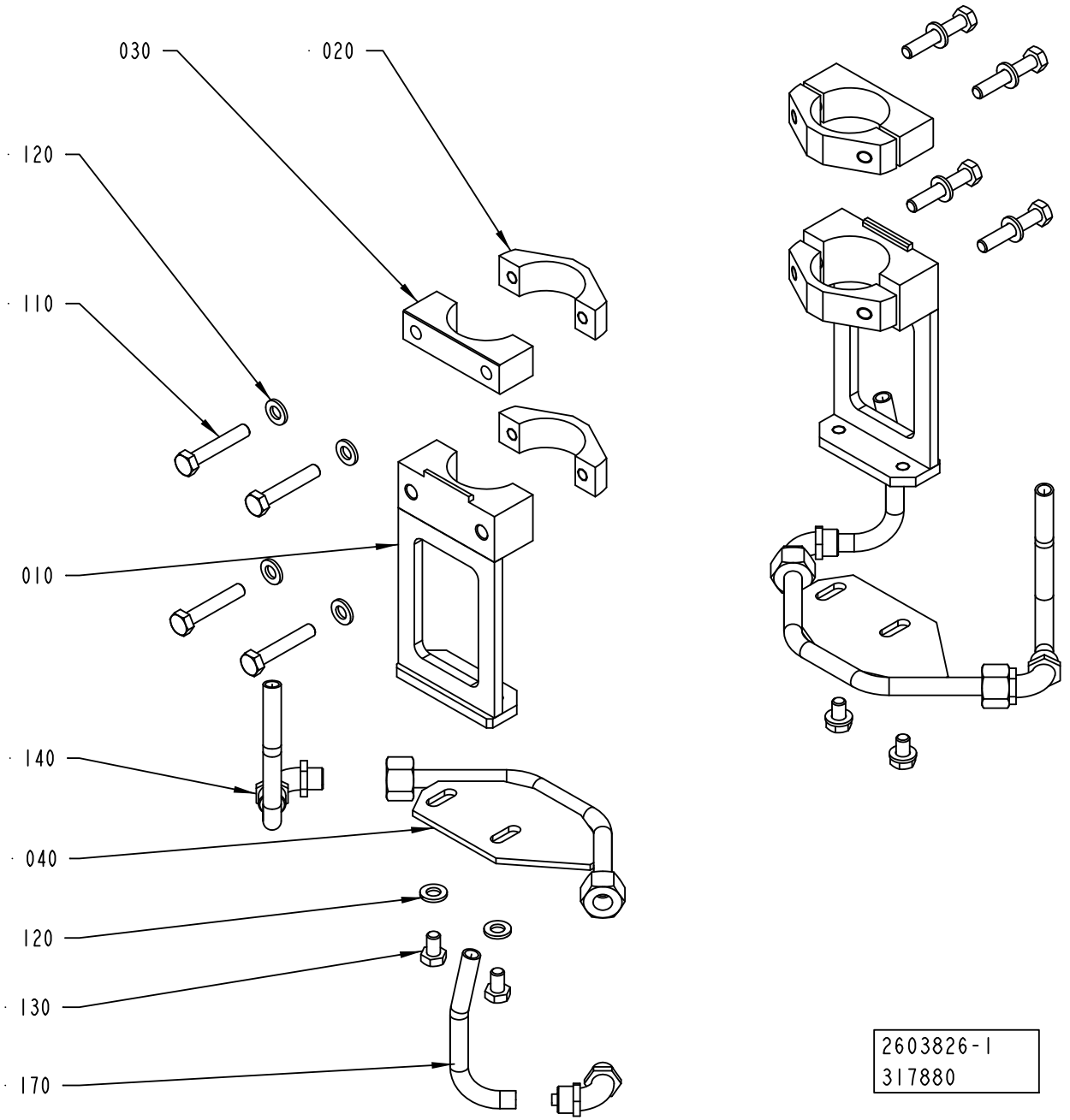
030
020
120
110
010
140
040
120
130
170
2603826-1
317880

ECM: 344870 - 20080702
Group number: 2603826-0100
Assembly Drawing: 2603826-1_1_AB

This list covers pages from 3-122 to 3-127

Pos	Part No	UN	Qty	Description	Page No
TBA 0200M, TBA 0200B, TBA 0250S, TBA 0250B, TBA 0330S (See drawing on page: 3-122)					
010	2599044-0000		2	BRACKET	
020	2598486-0000		4	CLAMP	
030	2598485-0000		2	CLAMP	
040	2594058-0000		2	GUIDE	
100	315105-0153		8	WASHER BRB 6,4X12 RFR	
110	312105-0376		8	SCREW M6S ISO 4014 M6X35 A480	
120	315105-0153		4	WASHER BRB 6,4X12 RFR	
130	312105-0364		4	SCREW M6S ISO 4017 M6X10 A480	
140	342931-0121		4	ELBOW 90 COUPL.,EXT.THREAD 8/6-G1/8"	
TBA 0200SQ, TBA 0250SQ (See drawing on page: 3-122)					
010	2599044-0000		2	BRACKET	
020	2598486-0000		4	CLAMP	
030	2598485-0000		2	CLAMP	
040	2668247-0000		2	GUIDE	
100	315105-0153		8	WASHER BRB 6,4X12 RFR	
110	312105-0376		8	SCREW M6S ISO 4014 M6X35 A480	
120	315105-0153		4	WASHER BRB 6,4X12 RFR	
130	312105-0364		4	SCREW M6S ISO 4017 M6X10 A480	
TBA 0500B, TBA 1000B (See drawing on page: 3-122)					
010	2597768-0000		2	BRACKET	
020	2598486-0000		4	CLAMP	
030	2598485-0000		2	CLAMP	
040	2597769-0000		2	GUIDE	
100	315105-0153		8	WASHER BRB 6,4X12 RFR	
110	312105-0376		8	SCREW M6S ISO 4014 M6X35 A480	
120	315105-0153		4	WASHER BRB 6,4X12 RFR	
130	312105-0364		4	SCREW M6S ISO 4017 M6X10 A480	
140	342931-0121		4	ELBOW 90 COUPL.,EXT.THREAD 8/6-G1/8"	
TBA 0500SQ, TBA 1000SQ (See drawing on page: 3-124)					
010	2660549-0000		1	BRACKET	
020	2598486-0000		4	CLAMP	
030	2598485-0000		2	CLAMP	
040	2660550-0000		1	GUIDE	
050	2660552-0000		1	BRACKET	
060	2660555-0000		1	GUIDE	
100	315105-0153		8	WASHER BRB 6,4X12 RFR	
110	312105-0376		8	SCREW M6S ISO 4014 M6X35 A480	
120	315105-0153		4	WASHER BRB 6,4X12 RFR	
130	312105-0364		4	SCREW M6S ISO 4017 M6X10 A480	
TBA 1890S, TBA 2000S, TBA 1400B (See drawing on page: 3-122)					
010	2603138-0000		2	BRACKET	
020	2603148-0000		2	CLAMP	
040	2603140-0000		2	GUIDE	
110	312115-0333		4	SCREW ISO4762 M5X25 A4 80	
120	315105-0146		4	WASHER BRB 5,3X10 RFR	
130	312115-0327		4	SCREW ISO4762 M5X12 A4 80	
140	342931-0121		4	ELBOW 90 COUPL.,EXT.THREAD 8/6-G1/8"	
TPA 0250SQ, TPA 0200SQ (See drawing on page: 3-126)					
010	2599044-0000		2	BRACKET	
020	2598486-0000		4	CLAMP	
030	2598485-0000		2	CLAMP	
040	2674259-0000		2	GUIDE	
100	315105-0153		4	WASHER BRB 6,4X12 RFR	
110	312105-0376		4	SCREW M6S ISO 4014 M6X35 A480	
130	312105-0325		4	SCREW M6S ISO 4017 M5X10 A480	
140	342931-0121		4	ELBOW 90 COUPL.,EXT.THREAD 8/6-G1/8"	
150	312115-0372		4	SCREW ISO4762 M6X25 A4 80	
TPA 1000SQ, TPA 0750SQ (See drawing on page: 3-122)					
010	2597768-0000		2	BRACKET	
020	2598486-0000		4	CLAMP	
030	2598485-0000		2	CLAMP	
040	2647131-0000		2	GUIDE	
100	315105-0153		8	WASHER BRB 6,4X12 RFR	
110	312105-0376		8	SCREW M6S ISO 4014 M6X35 A480	
120	315105-0153		4	WASHER BRB 6,4X12 RFR	
130	312105-0364		4	SCREW M6S ISO 4017 M6X10 A480	
140	342931-0121		4	ELBOW 90 COUPL.,EXT.THREAD 8/6-G1/8"	
Common Parts					
170	90166-0118	MM	1500	TUBE 8 MM PA BLACK	

Machine Type | Group Description | Used-In | Group Number | Page No

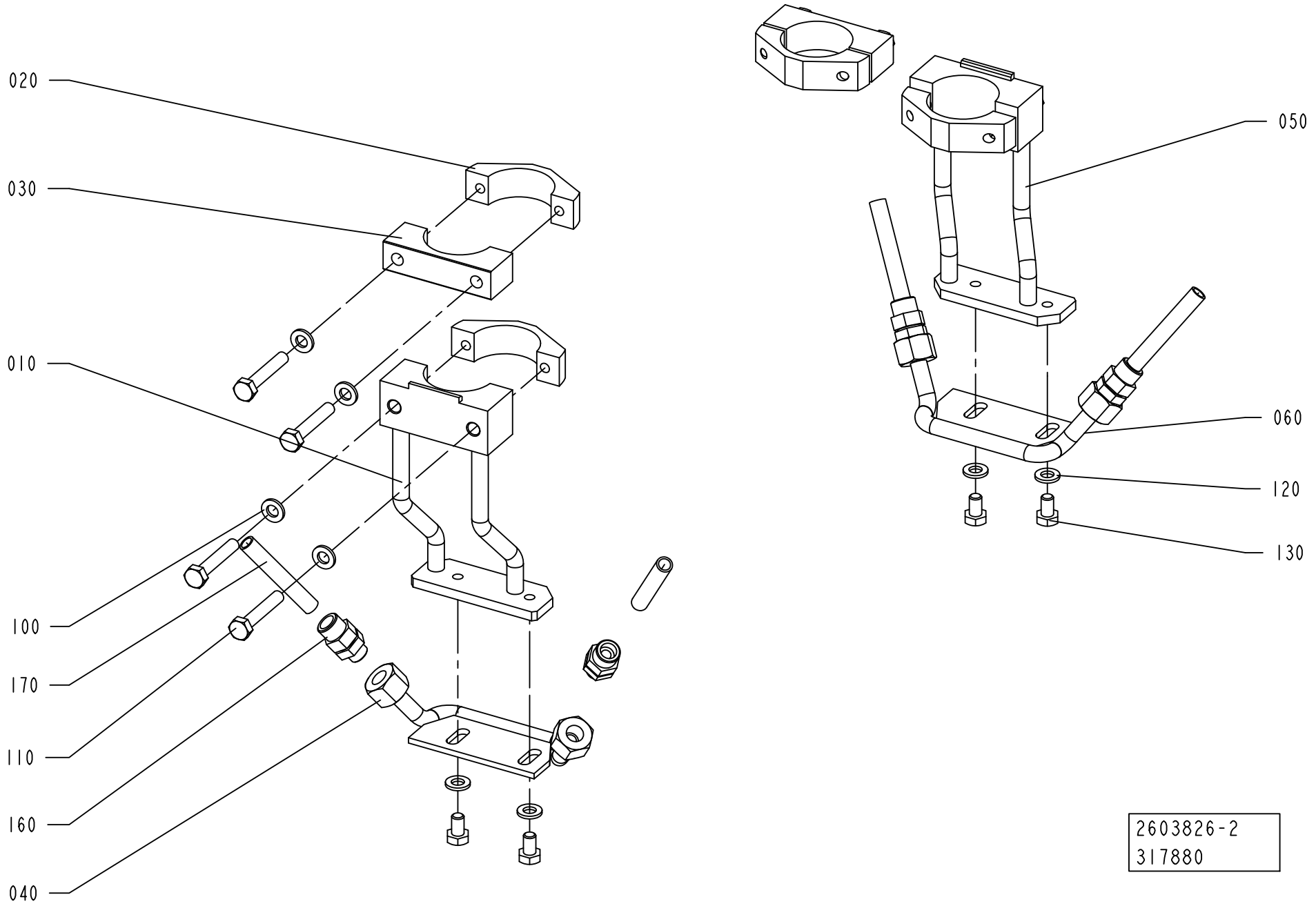
020
030
010
100
170
110
160
040
050
060
120
130
2603826-2
317880

ECM: 344870 - 20080702
Group number: 2603826-0100
Assembly Drawing: 2603826-2_1_AB

This list covers pages from 3-122 to 3-127

Pos	Part No	UN	Qty	Description	Page No
TBA 0200M, TBA 0200B, TBA 0250S, TBA 0250B, TBA 0330S (See drawing on page: 3-122)					
010	2599044-0000		2	BRACKET	
020	2598486-0000		4	CLAMP	
030	2598485-0000		2	CLAMP	
040	2594058-0000		2	GUIDE	
100	315105-0153		8	WASHER BRB 6,4X12 RFR	
110	312105-0376		8	SCREW M6S ISO 4014 M6X35 A480	
120	315105-0153		4	WASHER BRB 6,4X12 RFR	
130	312105-0364		4	SCREW M6S ISO 4017 M6X10 A480	
140	342931-0121		4	ELBOW 90 COUPL.,EXT.THREAD 8/6-G1/8"	
TBA 0200SQ, TBA 0250SQ (See drawing on page: 3-122)					
010	2599044-0000		2	BRACKET	
020	2598486-0000		4	CLAMP	
030	2598485-0000		2	CLAMP	
040	2668247-0000		2	GUIDE	
100	315105-0153		8	WASHER BRB 6,4X12 RFR	
110	312105-0376		8	SCREW M6S ISO 4014 M6X35 A480	
120	315105-0153		4	WASHER BRB 6,4X12 RFR	
130	312105-0364		4	SCREW M6S ISO 4017 M6X10 A480	
TBA 0500B, TBA 1000B (See drawing on page: 3-122)					
010	2597768-0000		2	BRACKET	
020	2598486-0000		4	CLAMP	
030	2598485-0000		2	CLAMP	
040	2597769-0000		2	GUIDE	
100	315105-0153		8	WASHER BRB 6,4X12 RFR	
110	312105-0376		8	SCREW M6S ISO 4014 M6X35 A480	
120	315105-0153		4	WASHER BRB 6,4X12 RFR	
130	312105-0364		4	SCREW M6S ISO 4017 M6X10 A480	
140	342931-0121		4	ELBOW 90 COUPL.,EXT.THREAD 8/6-G1/8"	
TBA 0500SQ, TBA 1000SQ (See drawing on page: 3-124)					
010	2660549-0000		1	BRACKET	
020	2598486-0000		4	CLAMP	
030	2598485-0000		2	CLAMP	
040	2660550-0000		1	GUIDE	
050	2660552-0000		1	BRACKET	
060	2660555-0000		1	GUIDE	
100	315105-0153		8	WASHER BRB 6,4X12 RFR	
110	312105-0376		8	SCREW M6S ISO 4014 M6X35 A480	
120	315105-0153		4	WASHER BRB 6,4X12 RFR	
130	312105-0364		4	SCREW M6S ISO 4017 M6X10 A480	
TBA 1890S, TBA 2000S, TBA 1400B (See drawing on page: 3-122)					
010	2603138-0000		2	BRACKET	
020	2603148-0000		2	CLAMP	
040	2603140-0000		2	GUIDE	
110	312115-0333		4	SCREW ISO4762 M5X25 A4 80	
120	315105-0146		4	WASHER BRB 5,3X10 RFR	
130	312115-0327		4	SCREW ISO4762 M5X12 A4 80	
140	342931-0121		4	ELBOW 90 COUPL.,EXT.THREAD 8/6-G1/8"	
TPA 0250SQ, TPA 0200SQ (See drawing on page: 3-126)					
010	2599044-0000		2	BRACKET	
020	2598486-0000		4	CLAMP	
030	2598485-0000		2	CLAMP	
040	2674259-0000		2	GUIDE	
100	315105-0153		4	WASHER BRB 6,4X12 RFR	
110	312105-0376		4	SCREW M6S ISO 4014 M6X35 A480	
130	312105-0325		4	SCREW M6S ISO 4017 M5X10 A480	
140	342931-0121		4	ELBOW 90 COUPL.,EXT.THREAD 8/6-G1/8"	
150	312115-0372		4	SCREW ISO4762 M6X25 A4 80	
TPA 1000SQ, TPA 0750SQ (See drawing on page: 3-122)					
010	2597768-0000		2	BRACKET	
020	2598486-0000		4	CLAMP	
030	2598485-0000		2	CLAMP	
040	2647131-0000		2	GUIDE	
100	315105-0153		8	WASHER BRB 6,4X12 RFR	
110	312105-0376		8	SCREW M6S ISO 4014 M6X35 A480	
120	315105-0153		4	WASHER BRB 6,4X12 RFR	
130	312105-0364		4	SCREW M6S ISO 4017 M6X10 A480	
140	342931-0121		4	ELBOW 90 COUPL.,EXT.THREAD 8/6-G1/8"	
Common Parts					
170	90166-0118	MM	1500	TUBE 8 MM PA BLACK	

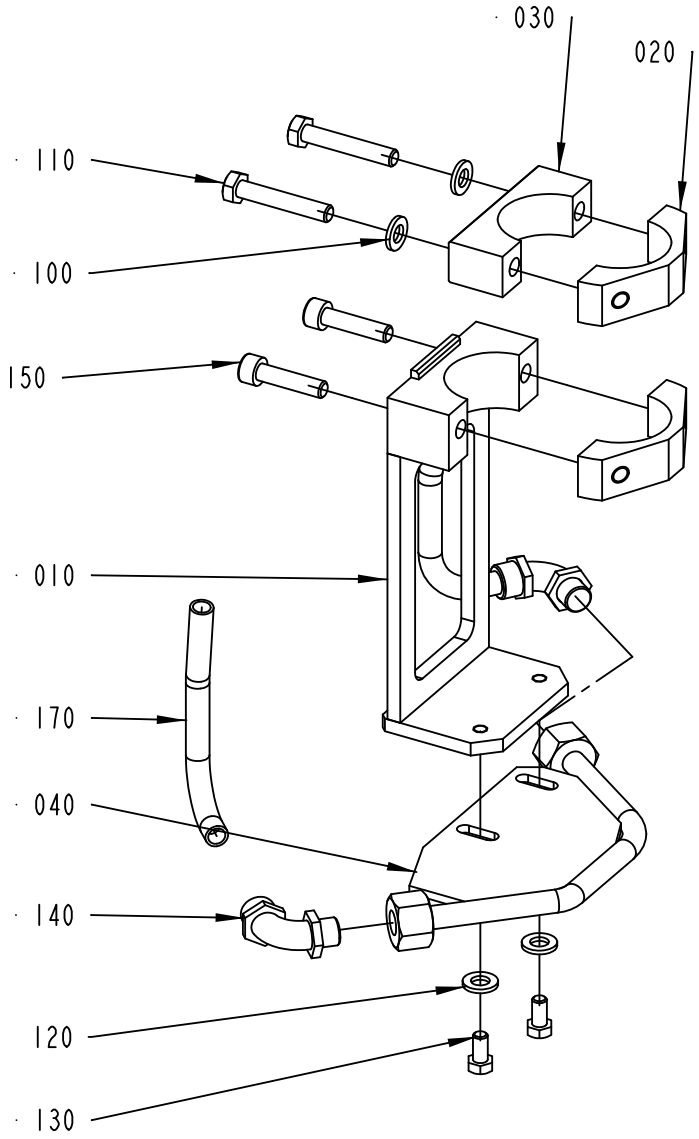
030
020
110
100
150
010
170
040
140
120
130

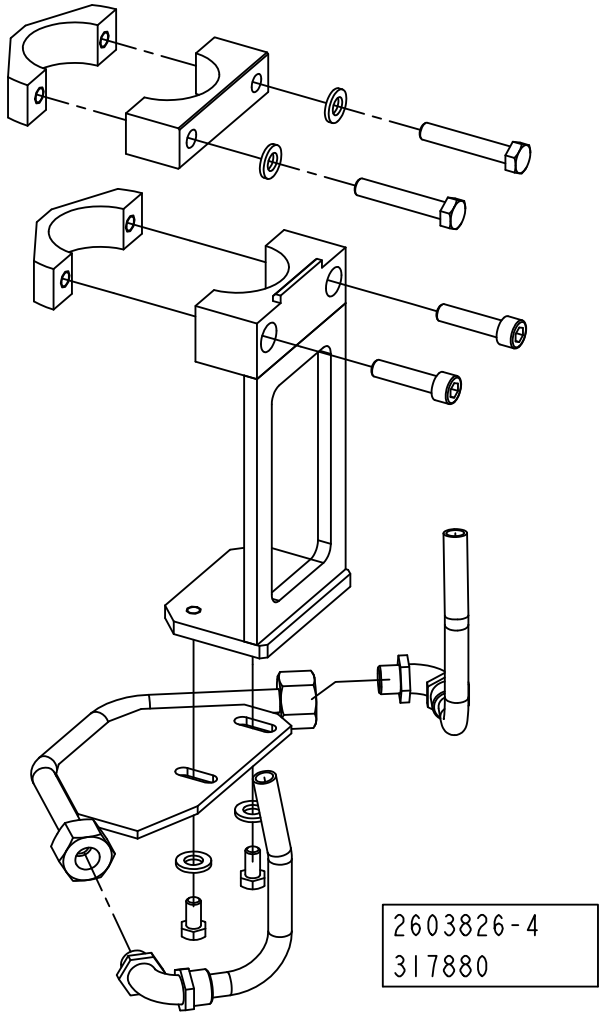
2603826-4
317880

ECM: 344870 - 20080702
Group number: 2603826-0100
Assembly Drawing: 2603826-4_1_AB

This list covers pages from 3-122 to 3-127

Pos	Part No	UN	Qty	Description	Page No
TBA 0200M, TBA 0200B, TBA 0250S, TBA 0250B, TBA 0330S (See drawing on page: 3-122)					
010	2599044-0000		2	BRACKET	
020	2598486-0000		4	CLAMP	
030	2598485-0000		2	CLAMP	
040	2594058-0000		2	GUIDE	
100	315105-0153		8	WASHER BRB 6,4X12 RFR	
110	312105-0376		8	SCREW M6S ISO 4014 M6X35 A480	
120	315105-0153		4	WASHER BRB 6,4X12 RFR	
130	312105-0364		4	SCREW M6S ISO 4017 M6X10 A480	
140	342931-0121		4	ELBOW 90 COUPL.,EXT.THREAD 8/6-G1/8"	
TBA 0200SQ, TBA 0250SQ (See drawing on page: 3-122)					
010	2599044-0000		2	BRACKET	
020	2598486-0000		4	CLAMP	
030	2598485-0000		2	CLAMP	
040	2668247-0000		2	GUIDE	
100	315105-0153		8	WASHER BRB 6,4X12 RFR	
110	312105-0376		8	SCREW M6S ISO 4014 M6X35 A480	
120	315105-0153		4	WASHER BRB 6,4X12 RFR	
130	312105-0364		4	SCREW M6S ISO 4017 M6X10 A480	
TBA 0500B, TBA 1000B (See drawing on page: 3-122)					
010	2597768-0000		2	BRACKET	
020	2598486-0000		4	CLAMP	
030	2598485-0000		2	CLAMP	
040	2597769-0000		2	GUIDE	
100	315105-0153		8	WASHER BRB 6,4X12 RFR	
110	312105-0376		8	SCREW M6S ISO 4014 M6X35 A480	
120	315105-0153		4	WASHER BRB 6,4X12 RFR	
130	312105-0364		4	SCREW M6S ISO 4017 M6X10 A480	
140	342931-0121		4	ELBOW 90 COUPL.,EXT.THREAD 8/6-G1/8"	
TBA 0500SQ, TBA 1000SQ (See drawing on page: 3-124)					
010	2660549-0000		1	BRACKET	
020	2598486-0000		4	CLAMP	
030	2598485-0000		2	CLAMP	
040	2660550-0000		1	GUIDE	
050	2660552-0000		1	BRACKET	
060	2660555-0000		1	GUIDE	
100	315105-0153		8	WASHER BRB 6,4X12 RFR	
110	312105-0376		8	SCREW M6S ISO 4014 M6X35 A480	
120	315105-0153		4	WASHER BRB 6,4X12 RFR	
130	312105-0364		4	SCREW M6S ISO 4017 M6X10 A480	
TBA 1890S, TBA 2000S, TBA 1400B (See drawing on page: 3-122)					
010	2603138-0000		2	BRACKET	
020	2603148-0000		2	CLAMP	
040	2603140-0000		2	GUIDE	
110	312115-0333		4	SCREW ISO4762 M5X25 A4 80	
120	315105-0146		4	WASHER BRB 5,3X10 RFR	
130	312115-0327		4	SCREW ISO4762 M5X12 A4 80	
140	342931-0121		4	ELBOW 90 COUPL.,EXT.THREAD 8/6-G1/8"	
TPA 0250SQ, TPA 0200SQ (See drawing on page: 3-126)					
010	2599044-0000		2	BRACKET	
020	2598486-0000		4	CLAMP	
030	2598485-0000		2	CLAMP	
040	2674259-0000		2	GUIDE	
100	315105-0153		4	WASHER BRB 6,4X12 RFR	
110	312105-0376		4	SCREW M6S ISO 4014 M6X35 A480	
130	312105-0325		4	SCREW M6S ISO 4017 M5X10 A480	
140	342931-0121		4	ELBOW 90 COUPL.,EXT.THREAD 8/6-G1/8"	
150	312115-0372		4	SCREW ISO4762 M6X25 A4 80	
TPA 1000SQ, TPA 0750SQ (See drawing on page: 3-122)					
010	2597768-0000		2	BRACKET	
020	2598486-0000		4	CLAMP	
030	2598485-0000		2	CLAMP	
040	2647131-0000		2	GUIDE	
100	315105-0153		8	WASHER BRB 6,4X12 RFR	
110	312105-0376		8	SCREW M6S ISO 4014 M6X35 A480	
120	315105-0153		4	WASHER BRB 6,4X12 RFR	
130	312105-0364		4	SCREW M6S ISO 4017 M6X10 A480	
140	342931-0121		4	ELBOW 90 COUPL.,EXT.THREAD 8/6-G1/8"	
Common Parts					
170	90166-0118	MM	1500	TUBE 8 MM PA BLACK	

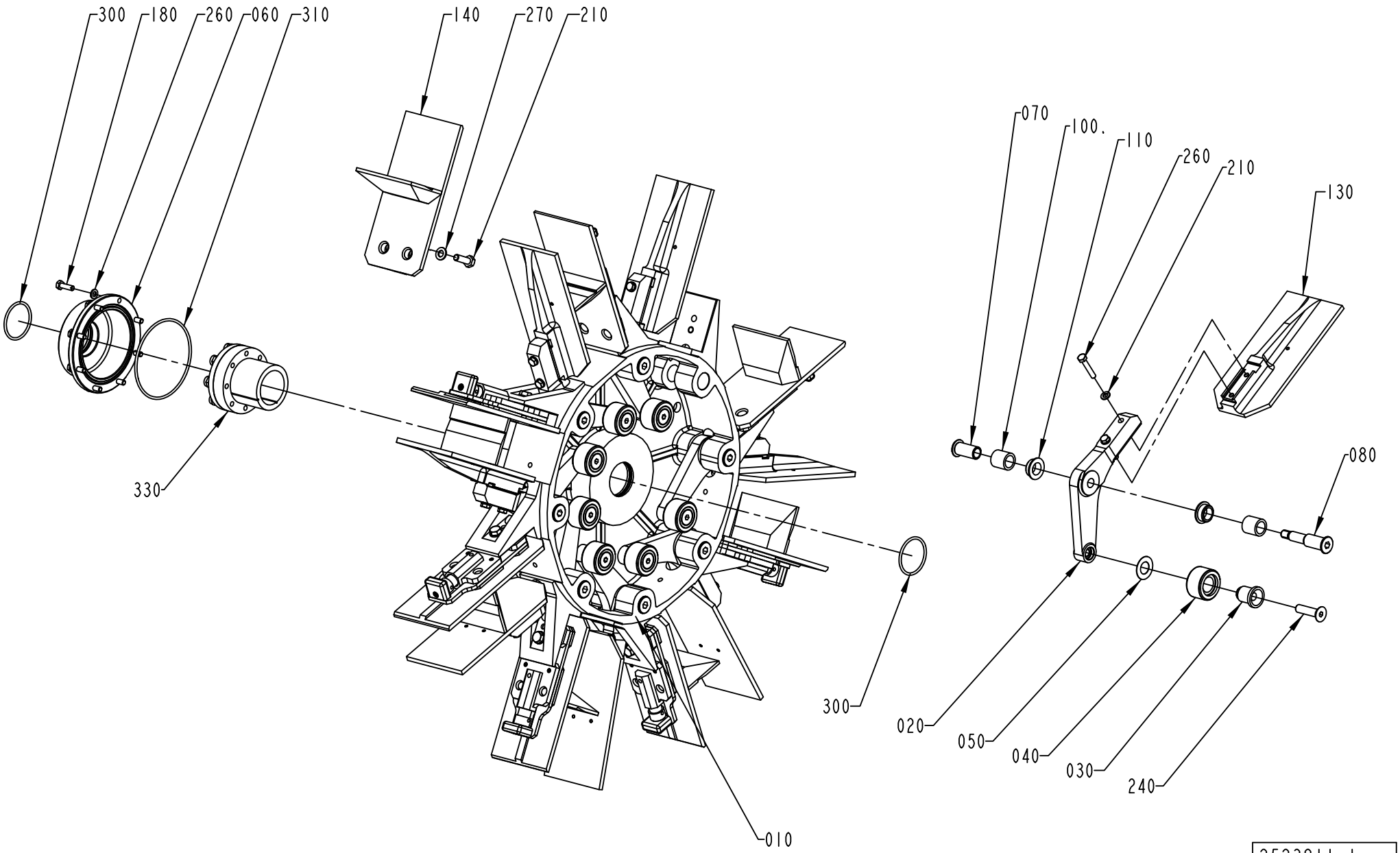

2523811-1
ECM 110155

ECM: 343889 - 20080702
Group number: 2523811-0100
Assembly Drawing: 2523811-1_1_AA

This list covers pages from 3-128 to 3-133

Pos	Part No	UN	Qty	Description	Page No
TPA 0250SQ, TPA 0200SQ (See drawing on page: 3-128)					
010	1558737-0000		1	HUB	
130	2658237-0100		8	FLAP	**3-135**
140	2523812-0100		8	FLAP	**3-137, 3-139, 3-141**
200	312105-0376		16	SCREW M6S ISO 4014 M6X35 A480	
260	315105-0153		24	WASHER BRB 6,4X12 RFR	
TPA 1000SQ, TPA 0750SQ (See drawing on page: 3-128)					
010	1144264-0000		1	HUB	
130	2658237-0100		8	FLAP	**3-135**
140	2523812-0100		8	FLAP	**3-137, 3-139, 3-141**
160	2802612-0000		8	BOTTOM	
190	312155-0379		8	SCREW DIN 7991 MF6S M6X45 A4 70	
200	312105-0378		16	SCREW M6S ISO 4014 M6X40 A480	
260	315105-0153		24	WASHER BRB 6,4X12 RFR	
1000SQ NODIMC, 0500SQ NODIMC (See drawing on page: 3-130)					
010	1144264-0000		1	HUB	
120	2539277-0000		8	SHIM	
130	2518035-0000		8	FLAP	
140	2523812-0100		8	FLAP	**3-137, 3-139, 3-141**
160	1511558-0000		8	BOTTOM	
190	312155-0370		8	SCREW DIN 7991 MF6S M6X20 A4 70	
200	312105-0376		16	SCREW M6S ISO 4014 M6X35 A480	
260	315105-0153		24	WASHER BRB 6,4X12 RFR	
0500B NODIMC, 1000B NODIMC (See drawing on page: 3-130)					
010	1144264-0000		1	HUB	
120	2539277-0000		8	SHIM	
130	1260704-0000		8	FLAP	
140	2523812-0100		8	FLAP	**3-137, 3-139, 3-141**
200	312105-0376		16	SCREW M6S ISO 4014 M6X35 A480	
260	315105-0153		24	WASHER BRB 6,4X12 RFR	
TBA 0200B, TBA 0250B, TBA 0330S (See drawing on page: 3-128)					
010	1144264-0000		1	HUB	
130	2651146-0000		8	FLAP	
140	2523812-0100		8	FLAP	**3-137, 3-139, 3-141**
190	312155-0370		8	SCREW DIN 7991 MF6S M6X20 A4 70	
200	312105-0376		16	SCREW M6S ISO 4014 M6X35 A480	
260	315105-0153		24	WASHER BRB 6,4X12 RFR	
TBA 0200M, TBA 0250S (See drawing on page: 3-128)					
010	1144264-0000		1	HUB	
130	2522201-0000		8	FLAP	
140	2523812-0100		8	FLAP	**3-137, 3-139, 3-141**
190	312155-0370		8	SCREW DIN 7991 MF6S M6X20 A4 70	

Pos	Part No	UN	Qty	Description	Page No
TBA 0200SQ, TBA 0250SQ (See drawing on page: 3-128)					
010	1144264-0000		1	HUB	
130	2668223-0000		8	FLAP	
140	2523812-0100		8	FLAP	**3-137, 3-139, 3-141**
190	312155-0370		8	SCREW DIN 7991 MF6S M6X20 A4 70	
200	312105-0376		16	SCREW M6S ISO 4014 M6X35 A480	
260	315105-0153		24	WASHER BRB 6,4X12 RFR	
TBA 0500B, TBA 1000B (See drawing on page: 3-130)					
010	1144264-0000		1	HUB	
130	1260704-0000		8	FLAP	
140	2523812-0100		8	FLAP	**3-137, 3-139, 3-141**
200	312105-0376		16	SCREW M6S ISO 4014 M6X35 A480	
260	315105-0153		24	WASHER BRB 6,4X12 RFR	
TBA 0500SQ, TBA 1000SQ (See drawing on page: 3-130)					
010	1144264-0000		1	HUB	
120	2539277-0000		8	SHIM	
130	1487739-0000		8	FLAP	
140	2523812-0100		8	FLAP	**3-137, 3-139, 3-141**
160	1511558-0000		8	BOTTOM	
190	312155-0370		8	SCREW DIN 7991 MF6S M6X20 A4 70	
200	312105-0376		16	SCREW M6S ISO 4014 M6X35 A480	
260	315105-0153		24	WASHER BRB 6,4X12 RFR	
TBA 1890S, TBA 2000S, TBA 1400B (See drawing on page: 3-132)					
010	1144264-0000		1	HUB	
090	2693197-0000		32	INSERT	
130	2566321-0000		8	FLAP	
140	2566323-0000		8	FLAP	
150	2638180-0000		16	INSERT	
160	2658390-0100		8	BOTTOM	**3-143**
170	2588327-0000		8	INSERT	
190	312115-0370		8	SCREW ISO4762 M6X20 A4 80	
200	2693200-0000		16	SCREW	
205	315115-0153		16	WASHER PLAIN, TBRB 6,4/12 H=3	
250	312155-0287		32	SCREW DIN 7991 MF6S M4X8 A4 70	
260	315105-0153		8	WASHER BRB 6,4X12 RFR	
Common Parts					
020	1279559-0000		8	ARM	
030	1144312-0000		8	AXLE PIN	
040	1144335-0000		8	ROLLER	
050	1144354-0000		8	WASHER	
060	1144356-0000		1	COVER	
070	1296970-0000		8	SCREW BUSHING	

Machine Type | Group Description | Used-In | Group Number | Page No

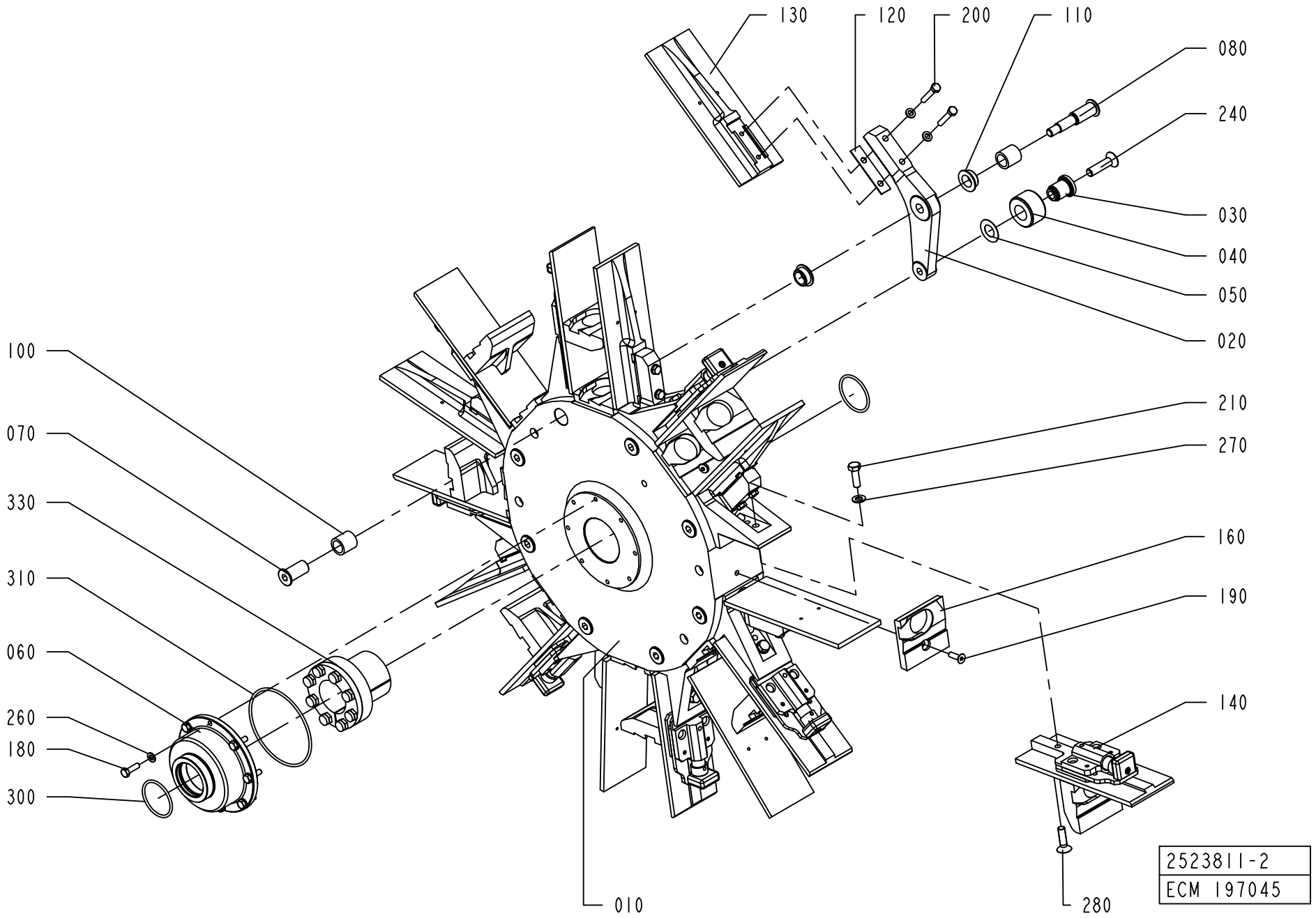
130
120
200
110
080
240
030
040
050
020
100
070
330
310
060
260
180
300
210
270
160
190
140
010
280
2523811-2
ECM 197045

Pos	Part No	UN	Qty	Description	Page No
Common Parts (Cont'd)					
080	1296969-0000		8	SCREW HOLDER	
100	1144417-0000		16	BUSHING	
110	1282708-0000		16	BUSHING	
180	312105-0370		8	SCREW M6S ISO 4017 M6X20 A480	
210	312105-0453		8	SCREW M6S ISO 4017 M8X25 A480	
240	312155-0499		8	SCREW DIN 7991 MF6S M10X40 A4 70	
270	315105-0165		8	WASHER BRB 8,4X16 RFR	
300	315202-0225		2	O-RING 44,2X3 MM	
310	315202-0311		1	O-RING 99,5X3 MM	
330	90208-0087		1	CLAMPING ELEMENT WITH SLEEVE, 45X59 MM	

Pos	Part No	UN	Qty	Description	Page No

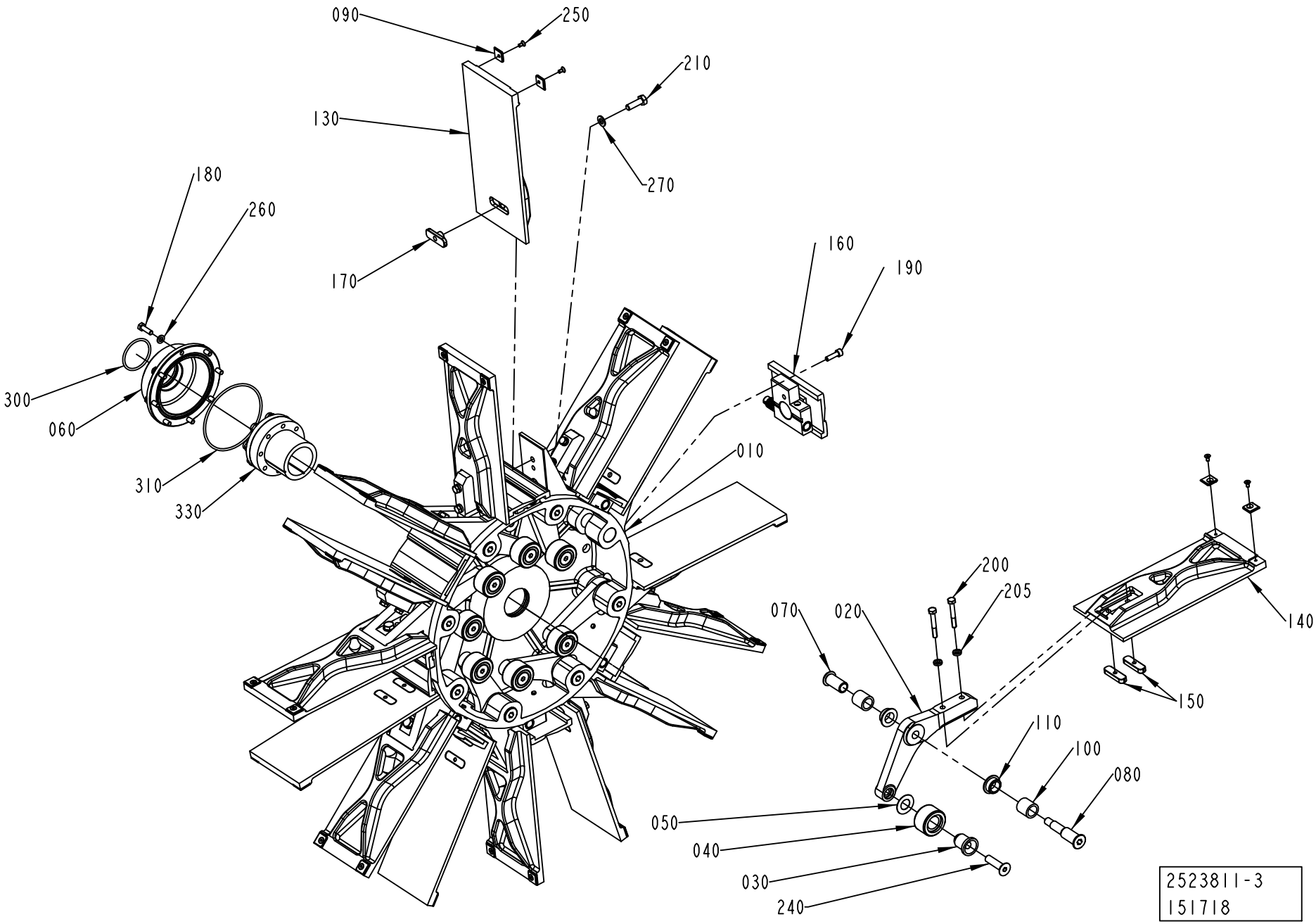
090
250
210
130
270
180
260
170
160
190
300
060
010
310
330
200
205
070
020
140
150
110
100
080
050
040
030
240
2523811-3
151718

Pos	Part No	UN	Qty	Description	Page No
SEE PREVIOUS LISTS PAGES: 3-129, 3-131.					

Pos	Part No	UN	Qty	Description	Page No

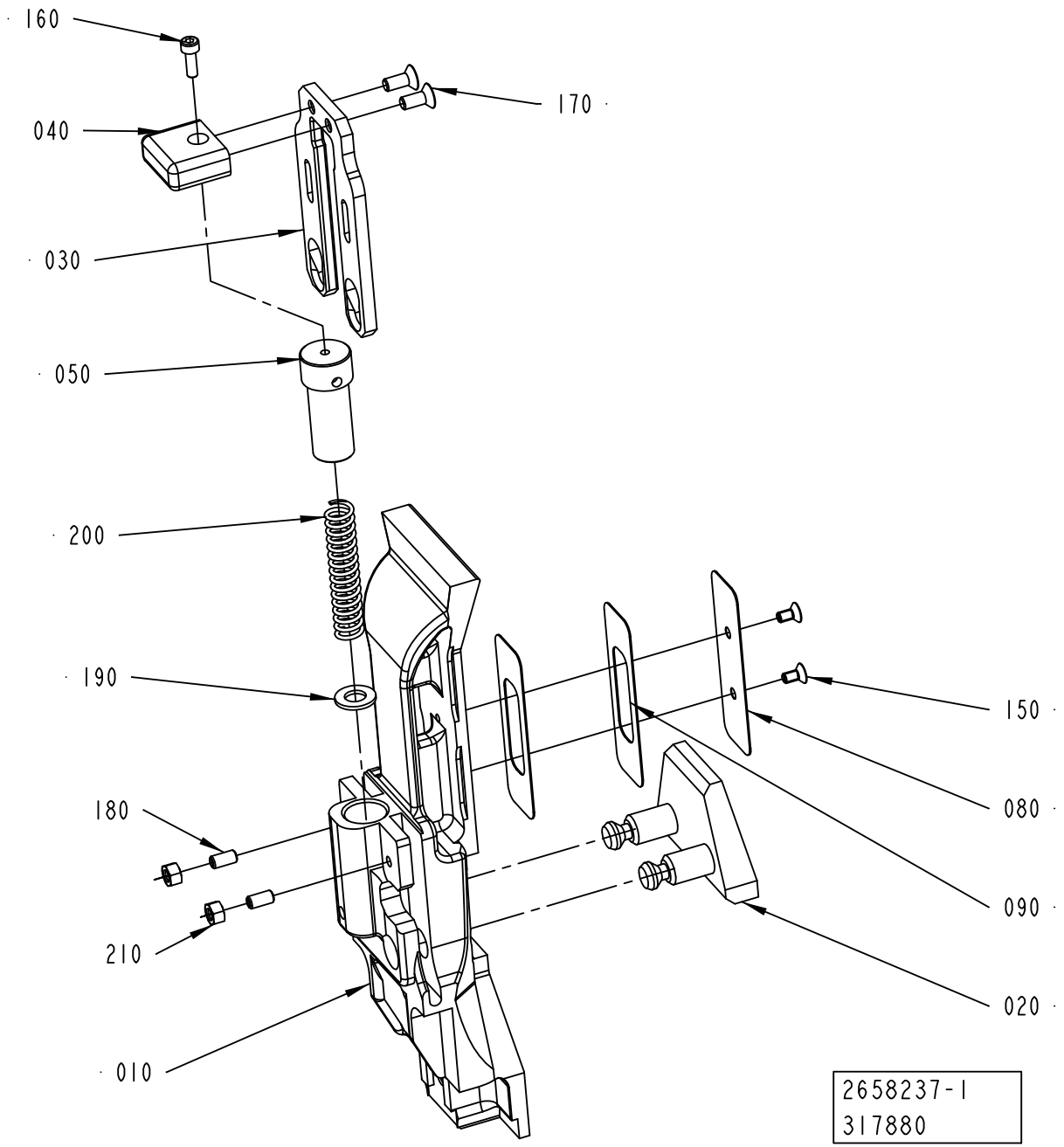
160
170
040
030
050
200
190
150
080
180
090
210
020
010
2658237-1
317880

ECM: 317888 - 20080103
Group number: 2658237-0100
Assembly Drawing: 2658237-1_1_AB

Pos	Part No	UN	Qty	Description	Page No
TPA 0250SQ, TPA 0200SQ					
010	2862750-0000		1	FLAP	
020	2674238-0000		1	BOTTOM	
030	2674239-0000		1	SLIDE	
TPA 0750SQ					
010	2658238-0000		1	FLAP	
020	2658239-0000		1	BOTTOM	
030	2658241-0000		1	SLIDE	
080	1549829-0000		1	VOLUME BULGE	
090	1549830-0000		2	VOLUME SHIM	
150	312155-0287		2	SCREW DIN 7991 MF6S M4X8 A4 70	
TPA 1000SQ					
010	2658238-0000		1	FLAP	
020	2658240-0000		1	BOTTOM	
030	2658241-0000		1	SLIDE	
080	1549829-0000		1	VOLUME BULGE	
090	1549830-0000		2	VOLUME SHIM	
150	312155-0287		2	SCREW DIN 7991 MF6S M4X8 A4 70	
Common Parts					
040	2526563-0000		1	HANDLE	
050	2526567-0000		1	CYLINDER	
160	312115-0291		1	SCREW ISO4762 M4X12 A4 80	
170	312155-0327		2	SCREW DIN 7991 MF6S M5X12 A4 70	
180	312318-0325		2	SCREW ISO4029 M5X10 A4	
190	315105-0165		1	WASHER BRB 8,4X16 RFR	
200	90459-0969		1	COMP. SPRING A D22430, 1,6X11,6X58,5	
210	312605-0314		2	HEXAGON NUT, M6M M5 A280	

Pos	Part No	UN	Qty	Description	Page No

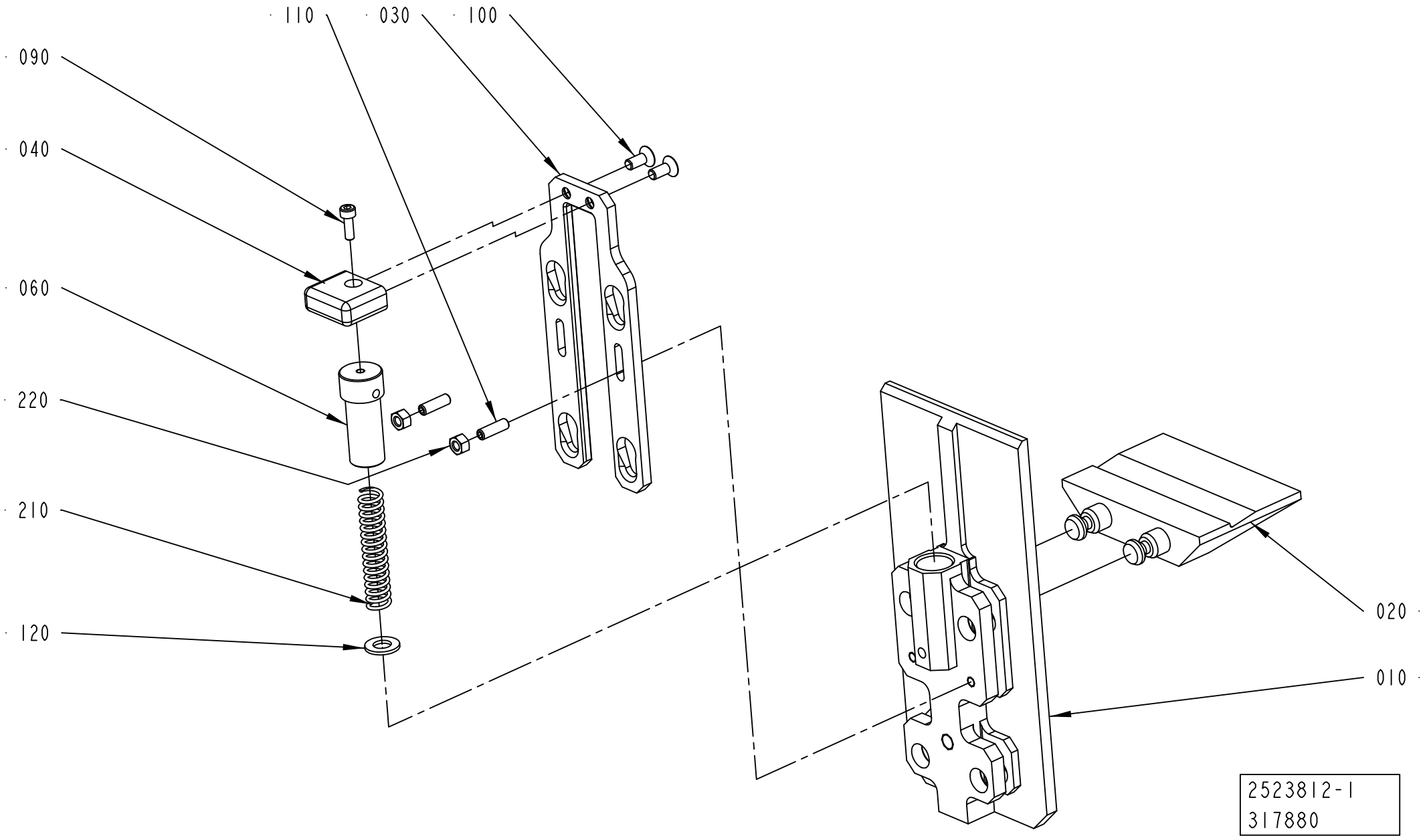
110
030
100
090
040
060
220
210
120
020
010
2523812-1
317880

ECM: 344752 - 20080702
Group number: 2523812-0100
Assembly Drawing: 2523812-1_1_AC

This list covers pages from 3-136 to 3-141

Pos	Part No	UN	Qty	Description	Page No
TPA 0750SQ (See drawing on page: 3-138)					
010	2658242-0000		1	FLAP	
020	2663373-0000		1	BOTTOM	
030	2658241-0000		1	SLIDE	
110	312318-0329		2	SCREW ISO4029 M5X16 A4	
200	90157-0021		1	LOCKING FLUID LOCTITE 270	
220	312605-0314		2	HEXAGON NUT, M6M M5 A280	
TPA 1000SQ (See drawing on page: 3-138)					
010	2658242-0000		1	FLAP	
020	2658240-0000		1	BOTTOM	
030	2658241-0000		1	SLIDE	
110	312318-0329		2	SCREW ISO4029 M5X16 A4	
200	90157-0021		1	LOCKING FLUID LOCTITE 270	
220	312605-0314		2	HEXAGON NUT, M6M M5 A280	
0500B NODIMC, 1000B NODIMC (See drawing on page: 3-136)					
010	2520170-0000		1	FLAP	
020	2629336-0000		1	BOTTOM	
030	2520168-0000		1	SLIDE	
110	312318-0327		2	SCREW ISO4029 M5X12 A4	
TBA 0200B, TBA 0250B, TBA 0330S (See drawing on page: 3-140)					
010	2603488-0000		1	FLAP	
020	2603489-0000		1	BOTTOM	
030	2603490-0000		1	SLIDE	
110	312318-0331		2	SCREW ISO4029 M5X20 A4	
220	312605-0314		2	HEXAGON NUT, M6M M5 A280	
TBA 0200M, TBA 0250S (See drawing on page: 3-136)					
010	2636399-0000		1	FLAP	
020	2636400-0000		1	BOTTOM	
030	2636401-0000		1	SLIDE	
110	312318-0331		2	SCREW ISO4029 M5X20 A4	
220	312605-0314		2	HEXAGON NUT, M6M M5 A280	
TBA 0200SQ, TBA 0250SQ (See drawing on page: 3-136)					
010	2668221-0000		1	FLAP	
020	2668220-0000		1	BOTTOM	
030	2668222-0000		1	SLIDE	
110	312318-0329		2	SCREW ISO4029 M5X16 A4	
220	312605-0314		2	HEXAGON NUT, M6M M5 A280	
TBA 0500B, TBA 1000B (See drawing on page: 3-136)					
010	2520170-0000		1	FLAP	
020	2629336-0000		1	BOTTOM	
030	2520168-0000		1	SLIDE	
110	312318-0329		2	SCREW ISO4029 M5X16 A4	
220	312605-0314		2	HEXAGON NUT, M6M M5 A280	
TBA 0500SQ, TBA 1000SQ, 1000SQ NODIMC, 0500SQ NODIMC (See drawing on page: 3-136)					
010	2553615-0000		1	FLAP	
020	2796652-0000		1	BOTTOM	
030	2553617-0000		1	SLIDE	
110	312318-0327		2	SCREW ISO4029 M5X12 A4	
TPA 0250SQ, TPA 0200SQ (See drawing on page: 3-136)					
010	2862749-0000		1	FLAP	
020	2674241-0000		1	BOTTOM	
030	2674239-0000		1	SLIDE	
110	312318-0325		2	SCREW ISO4029 M5X10 A4	
Common Parts					
040	2526563-0000		1	HANDLE	
060	2526567-0000		1	CYLINDER	
090	312115-0291		1	SCREW ISO4762 M4X12 A4 80	
100	312155-0327		2	SCREW DIN 7991 MF6S M5X12 A4 70	
120	315105-0165		1	WASHER BRB 8,4X16 RFR	
210	90459-0969		1	COMP. SPRING A D22430, 1,6X11,6X58,5	
220	312605-0314		2	HEXAGON NUT, M6M M5 A280	

Machine Type | Group Description | Used-In | Group Number | Page No

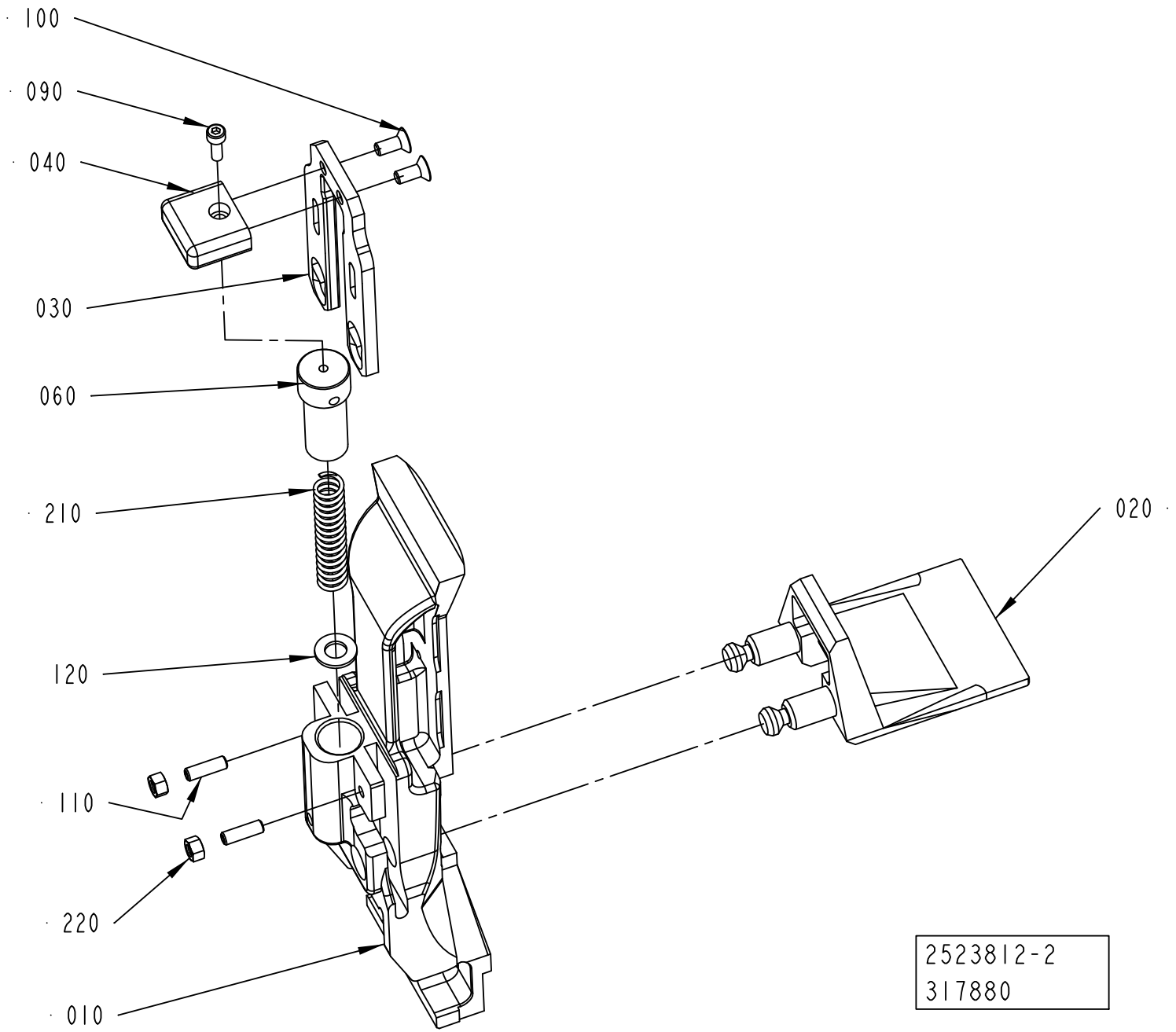
100
090
040
030
060
210
020
120
110
220
010
2523812-2
317880

ECM: 344752 - 20080702
Group number: 2523812-0100
Assembly Drawing: 2523812-2_1_AB

This list covers pages from 3-136 to 3-141

Pos	Part No	UN	Qty	Description	Page No
TPA 0750SQ (See drawing on page: 3-138)					
010	2658242-0000		1	FLAP	
020	2663373-0000		1	BOTTOM	
030	2658241-0000		1	SLIDE	
110	312318-0329		2	SCREW ISO4029 M5X16 A4	
200	90157-0021		1	LOCKING FLUID LOCTITE 270	
220	312605-0314		2	HEXAGON NUT, M6M M5 A280	
TPA 1000SQ (See drawing on page: 3-138)					
010	2658242-0000		1	FLAP	
020	2658240-0000		1	BOTTOM	
030	2658241-0000		1	SLIDE	
110	312318-0329		2	SCREW ISO4029 M5X16 A4	
200	90157-0021		1	LOCKING FLUID LOCTITE 270	
220	312605-0314		2	HEXAGON NUT, M6M M5 A280	
0500B NODIMC, 1000B NODIMC (See drawing on page: 3-136)					
010	2520170-0000		1	FLAP	
020	2629336-0000		1	BOTTOM	
030	2520168-0000		1	SLIDE	
110	312318-0327		2	SCREW ISO4029 M5X12 A4	
TBA 0200B, TBA 0250B, TBA 0330S (See drawing on page: 3-140)					
010	2603488-0000		1	FLAP	
020	2603489-0000		1	BOTTOM	
030	2603490-0000		1	SLIDE	
110	312318-0331		2	SCREW ISO4029 M5X20 A4	
220	312605-0314		2	HEXAGON NUT, M6M M5 A280	
TBA 0200M, TBA 0250S (See drawing on page: 3-136)					
010	2636399-0000		1	FLAP	
020	2636400-0000		1	BOTTOM	
030	2636401-0000		1	SLIDE	
110	312318-0331		2	SCREW ISO4029 M5X20 A4	
220	312605-0314		2	HEXAGON NUT, M6M M5 A280	
TBA 0200SQ, TBA 0250SQ (See drawing on page: 3-136)					
010	2668221-0000		1	FLAP	
020	2668220-0000		1	BOTTOM	
030	2668222-0000		1	SLIDE	
110	312318-0329		2	SCREW ISO4029 M5X16 A4	
220	312605-0314		2	HEXAGON NUT, M6M M5 A280	
TBA 0500B, TBA 1000B (See drawing on page: 3-136)					
010	2520170-0000		1	FLAP	
020	2629336-0000		1	BOTTOM	
030	2520168-0000		1	SLIDE	
110	312318-0329		2	SCREW ISO4029 M5X16 A4	
220	312605-0314		2	HEXAGON NUT, M6M M5 A280	
TBA 0500SQ, TBA 1000SQ, 1000SQ NODIMC, 0500SQ NODIMC (See drawing on page: 3-136)					
010	2553615-0000		1	FLAP	
020	2796652-0000		1	BOTTOM	
030	2553617-0000		1	SLIDE	
110	312318-0327		2	SCREW ISO4029 M5X12 A4	
TPA 0250SQ, TPA 0200SQ (See drawing on page: 3-136)					
010	2862749-0000		1	FLAP	
020	2674241-0000		1	BOTTOM	
030	2674239-0000		1	SLIDE	
110	312318-0325		2	SCREW ISO4029 M5X10 A4	
Common Parts					
040	2526563-0000		1	HANDLE	
060	2526567-0000		1	CYLINDER	
090	312115-0291		1	SCREW ISO4762 M4X12 A4 80	
100	312155-0327		2	SCREW DIN 7991 MF6S M5X12 A4 70	
120	315105-0165		1	WASHER BRB 8,4X16 RFR	
210	90459-0969		1	COMP. SPRING A D22430, 1,6X11,6X58,5	

Machine Type	Group Description	Used-In	Group Number	Page No

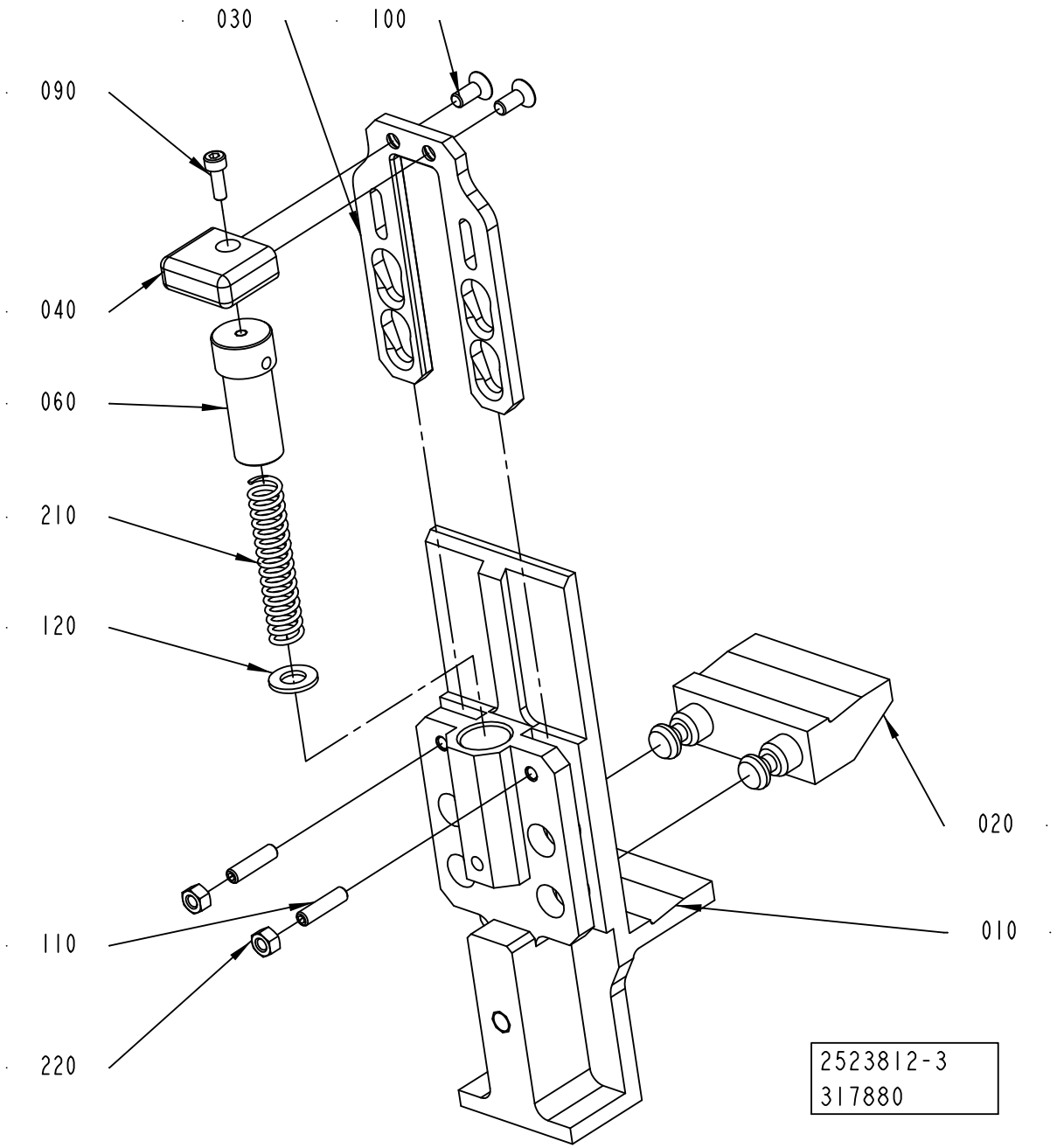
030
100
090
040
060
210
120
020
110
010
220
2523812-3
317880

ECM: 344752 - 20080702
Group number: 2523812-0100
Assembly Drawing: 2523812-3_1_AA

This list covers pages from 3-136 to 3-141

Pos	Part No	UN	Qty	Description	Page No
TPA 0750SQ (See drawing on page: 3-138)					
010	2658242-0000		1	FLAP	
020	2663373-0000		1	BOTTOM	
030	2658241-0000		1	SLIDE	
110	312318-0329		2	SCREW ISO4029 M5X16 A4	
200	90157-0021		1	LOCKING FLUID LOCTITE 270	
220	312605-0314		2	HEXAGON NUT, M6M M5 A280	
TPA 1000SQ (See drawing on page: 3-138)					
010	2658242-0000		1	FLAP	
020	2658240-0000		1	BOTTOM	
030	2658241-0000		1	SLIDE	
110	312318-0329		2	SCREW ISO4029 M5X16 A4	
200	90157-0021		1	LOCKING FLUID LOCTITE 270	
220	312605-0314		2	HEXAGON NUT, M6M M5 A280	
0500B NODIMC, 1000B NODIMC (See drawing on page: 3-136)					
010	2520170-0000		1	FLAP	
020	2629336-0000		1	BOTTOM	
030	2520168-0000		1	SLIDE	
110	312318-0327		2	SCREW ISO4029 M5X12 A4	
TBA 0200B, TBA 0250B, TBA 0330S (See drawing on page: 3-140)					
010	2603488-0000		1	FLAP	
020	2603489-0000		1	BOTTOM	
030	2603490-0000		1	SLIDE	
110	312318-0331		2	SCREW ISO4029 M5X20 A4	
220	312605-0314		2	HEXAGON NUT, M6M M5 A280	
TBA 0200M, TBA 0250S (See drawing on page: 3-136)					
010	2636399-0000		1	FLAP	
020	2636400-0000		1	BOTTOM	
030	2636401-0000		1	SLIDE	
110	312318-0331		2	SCREW ISO4029 M5X20 A4	
220	312605-0314		2	HEXAGON NUT, M6M M5 A280	
TBA 0200SQ, TBA 0250SQ (See drawing on page: 3-136)					
010	2668221-0000		1	FLAP	
020	2668220-0000		1	BOTTOM	
030	2668222-0000		1	SLIDE	
110	312318-0329		2	SCREW ISO4029 M5X16 A4	
220	312605-0314		2	HEXAGON NUT, M6M M5 A280	
TBA 0500B, TBA 1000B (See drawing on page: 3-136)					
010	2520170-0000		1	FLAP	
020	2629336-0000		1	BOTTOM	
030	2520168-0000		1	SLIDE	
110	312318-0329		2	SCREW ISO4029 M5X16 A4	
220	312605-0314		2	HEXAGON NUT, M6M M5 A280	
TBA 0500SQ, TBA 1000SQ, 1000SQ NODIMC, 0500SQ NODIMC (See drawing on page: 3-136)					
010	2553615-0000		1	FLAP	
020	2796652-0000		1	BOTTOM	
030	2553617-0000		1	SLIDE	
110	312318-0327		2	SCREW ISO4029 M5X12 A4	
TPA 0250SQ, TPA 0200SQ (See drawing on page: 3-136)					
010	2862749-0000		1	FLAP	
020	2674241-0000		1	BOTTOM	
030	2674239-0000		1	SLIDE	
110	312318-0325		2	SCREW ISO4029 M5X10 A4	
Common Parts					
040	2526563-0000		1	HANDLE	
060	2526567-0000		1	CYLINDER	
090	312115-0291		1	SCREW ISO4762 M4X12 A4 80	
100	312155-0327		2	SCREW DIN 7991 MF6S M5X12 A4 70	
120	315105-0165		1	WASHER BRB 8,4X16 RFR	
210	90459-0969		1	COMP. SPRING A D22430, 1,6X11,6X58,5	
220	312605-0314		2	HEXAGON NUT, M6M M5 A280	

Machine Type | Group Description | Used-In | Group Number | Page No

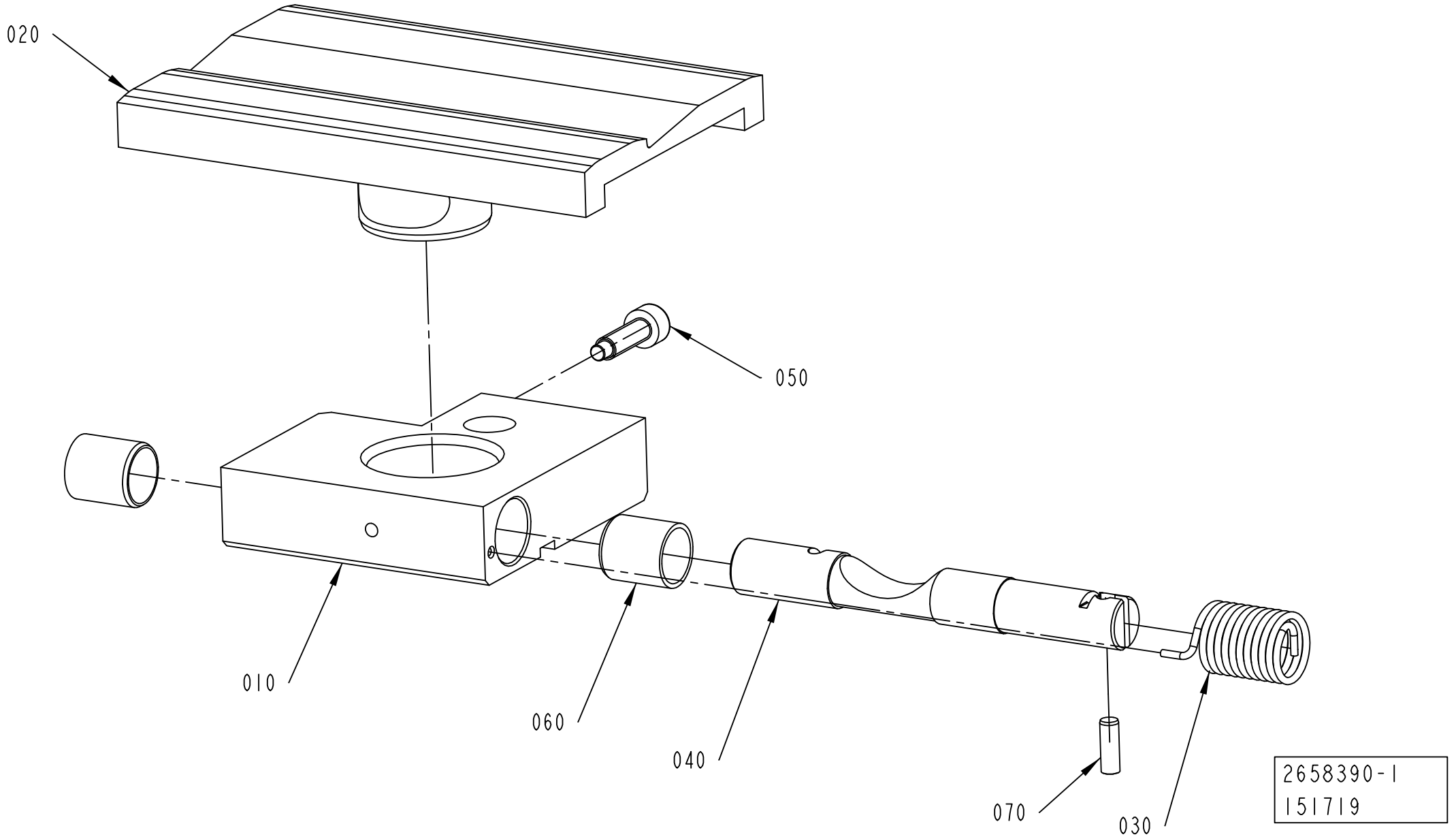
020
050
010
060
040
070
030
2658390-1
151719

ECM: 277421 - 20070102
Group number: 2658390-0100
Assembly Drawing: 2658390-1_1_AA

Pos	Part No	UN	Qty	Description	Page No
TBA 1400B					
020	2771494-0000		1	BOTTOM	
TBA 1890S					
020	2616218-0000		1	BOTTOM	
TBA 2000S					
020	2616219-0000		1	BOTTOM	
Common Parts					
010	2616217-0000		1	BOTTOM	
030	2650817-0000		1	SPRING	
040	2652888-0000		1	SHAFT	
050	2652889-0000		1	SCREW	
060	321138-0183		2	BUSHING, 12X14X15 MM	
070	311103-0268		1	PARALLEL PIN ISO 2338 4M6X12 A1	

Pos	Part No	UN	Qty	Description	Page No

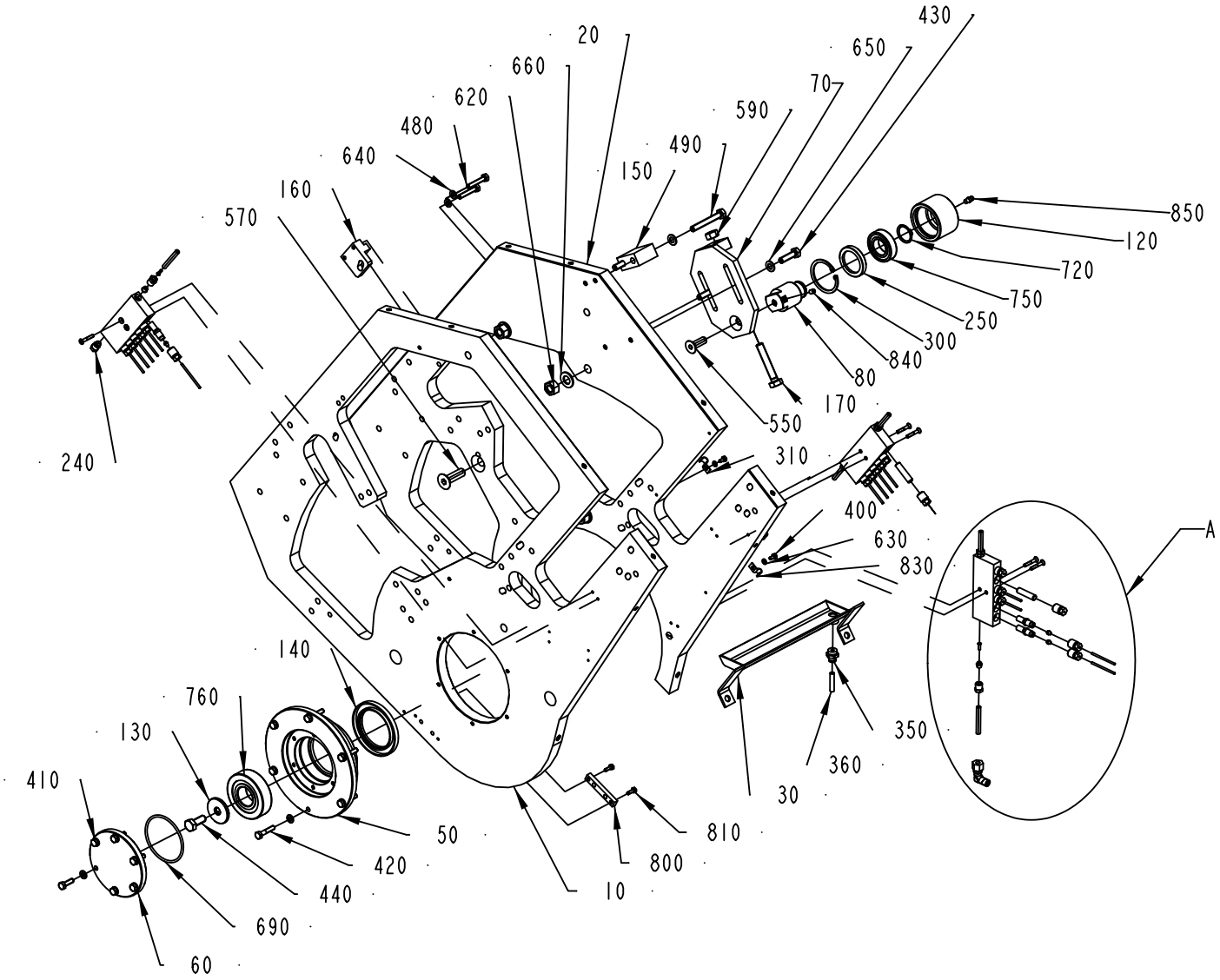
20
660
620
480
640
160
570
240
150
490
590
70
650
430
850
120
720
750
250
300
840
80
170
550
310
400
630
830
A
350
360
30
810
800
10
140
760
130
410
50
420
440
690
60

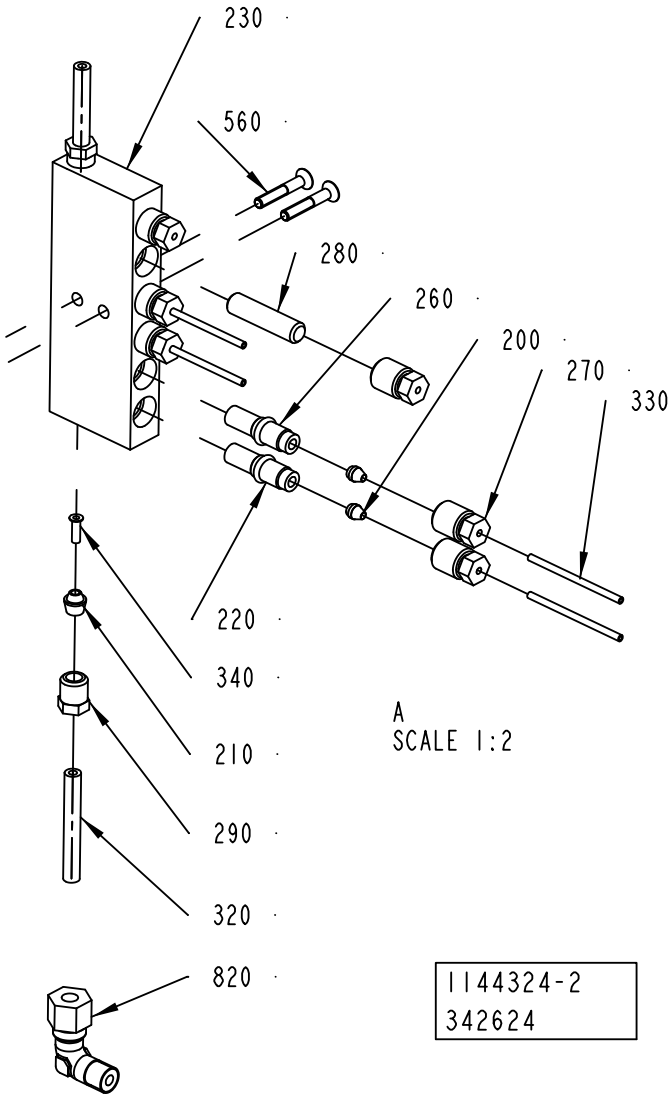
230
560
280
260
200
270
330
220
340
210
290
320
820
A
SCALE 1:2
1144324-2
342624

ECM: 342624 - 20080702
Group number: 1144324-0300
Assembly Drawing: 1144324-2_1_AF

This list covers pages from 3-144 to 3-147

Pos	Part No	UN	Qty	Description	Page No
A3/FLEX TBA 1890S QC, A3/FLEX TBA 2000S QC, A3/FLEX TBA 1400B (See drawing on pages: 3-144, 3-146)					
160	1282844-0000		1	SUPPORT	
260	90092-0052		13	METERING VALVE 10 MM3	
270	90134-0039		18	BUSHING VALVE CONNECTION 2,5 MM	
280	90134-0052		4	PLUG DOSING BLOCK	
A3/FLEX TBA 1000B, A3/FLEX TBA 1000S, A3/FLEX TBA 0200S, A3/FLEX TBA 1500S, A3/FLEX TBA 0250B QC, A3/FLEX TBA 0200B QC, A3/FLEX TBA 0330S QC, A3/FLEX TBA 0200M QC, A3/FLEX TBA 0250S QC (See drawing on pages: 3-144, 3-146)					
160	1144900-0000		1	SUPPORT	
260	90092-0052		14	METERING VALVE 10 MM3	
270	90134-0039		18	BUSHING VALVE CONNECTION 2,5 MM	
280	90134-0052		4	PLUG DOSING BLOCK	
A3/FLEX TBA 1000SQ, A3/FLEX TPA 0330SQ, A3/FLEX TPA 0500SQ, A3/FLEX TPA 1000SQ QC, A3/FLEX TPA 0750SQ QC, A3/FLEX TPA 0200SQ QC, A3/FLEX TPA 0250SQ QC, A3/FLEX TPA 1000SQ NOQC, A3/FLEX TBA 0250SQ QC, A3/FLEX TBA 0200SQ QC, A3/FLEX TBA 0500SQ QC (See drawing on pages: 3-144, 3-146)					
160	1282844-0000		1	SUPPORT	
260	90092-0052		16	METERING VALVE 10 MM3	
270	90134-0039		16	BUSHING VALVE CONNECTION 2,5 MM	
270	90134-0040		2	BUSHING VALVE CONNECTION 4 MM	
280	90134-0052		2	PLUG DOSING BLOCK	
A3/FLEX TBA 0500B QC, A3/FLEX TBA 1000B QC, A3/FLEX TBA 0500S (See drawing on pages: 3-144, 3-146)					
160	1282844-0000		1	SUPPORT	
260	90092-0052		14	METERING VALVE 10 MM3	
270	90134-0039		18	BUSHING VALVE CONNECTION 2,5 MM	
280	90134-0052		4	PLUG DOSING BLOCK	
Common Parts					
010	1347109-0000		1	PLATE	
020	1347108-0000		1	PLATE	
050	598101-0000		1	BEARING HOUSING	
060	1144618-0000		1	FLANGE	
070	1144797-0000		1	SUPPORT	
080	2963361-0000		1	SHAFT	
120	2963360-0000		1	ROLLER	
130	1144620-0000		1	WASHER	
140	1144665-0000		1	SEAL RING	
150	1144839-0000		1	BLOCK	
170	1260931-0000		1	SCREW	
180	2727659-0000		1	PROTECTION PLATE	
190	2767105-0000		1	PROTECTION PLATE	
200	90028-0020		14	CONE TUBE 2,5MM	
210	90028-0025		5	CONE TUBE 6 MM	
220	90092-0054		1	METERING VALVE 50 MM3	
230	90032-0040		3	BLOCK 6 WAYS	
240	90087-0019		1	PLUG M10X1 STAINLESS	
250	90091-0297		1	RADIAL SEAL 35X47X7 MM DUST LIP	
290	90134-0055		5	BUSHING/NUT INLET/OUTLET 6 MM	
300	90141-0019		1	RETAINING RING FOR BORE DIN 472 50 A2	
310	316810-0106		3	PIPE CLIP FOR TUBE D=8 MM	
320	90166-0108	M	4	TUBE 6 MM PA TRANSP.	
330	90166-0143	M	9	TUBE 2,5 MM PA TRANSP.	
340	90134-0030		6	SLEEVE FOR PLASTIC TUBE	
400	312105-0287		5	SCREW M6S ISO 4017 M4X8 A470	
410	312105-0370		6	SCREW M6S ISO 4017 M6X20 A480	
420	312105-0374		6	SCREW M6S ISO 4014 M6X30 A480	
430	312105-0455		2	SCREW M6S ISO 4017 M8X30 A480	
440	312105-0493		1	SCREW M6S ISO 4017 M10X25 A480	
480	312109-0376		2	SCREW M6S ISO 4017 M6X35 A480	
490	312109-0463		2	SCREW M6S ISO 4017 M8X60 A480	
550	312155-0495		1	SCREW DIN 7991 MF6S M10X30 A4 70	
560	312155-0297		6	SCREW DIN 7991 MF6S M4X25 A4 70	
570	312155-0540		1	SCREW DIN 7991 MF6S M12X40 A4 70	
590	312605-0320		1	HEXAGON NUT, M6M M10 A280	
620	312605-0322		3	HEXAGON NUT, M6M M12 A280	
630	315105-0136		5	WASHER BRB 4,3X8 RFR	
640	315105-0153		14	WASHER BRB 6,4X12 RFR	
650	315105-0165		4	WASHER BRB 8,4X16 RFR	
660	315105-0178		3	WASHER BRB 13X24 RFR	
690	315202-0305		1	O-RING 69,5X3 MM	
720	315751-0119		1	RETAINING RING FOR SHAFT DIN 471 25 SS	
750	321306-0105		1	BALL BEARING, 25X47X12 MM	
760	321316-0206		1	BALL BEARING, 30X72X19 MM	
780	352113-0102		3	CABLE TIE, BLACK 188X4,8 MM	
790	352113-0101		7	CABLE TIE, BLACK 92X2,5 MM	
800	1487821-0000		1	SPACER	
810	312105-0291		2	SCREW M6S ISO 4017 M4X12 A470	
820	90030-0200		1	CONN. ELBOW, 6-M10X1, EXT.THREAD	
830	90165-0057		2	PIPE CLIP FOR TUBE D=6 MM	
840	312318-0362		1	SCREW ISO4029 M6X8 A4	
850	344502-0021		1	GREASE NIPPLE STRAIGHT M6	
860	90296-0068		1	SHELL ALVANIA GREASE EP 2	

Machine Type	Group Description	Used-In	Group Number	Page No

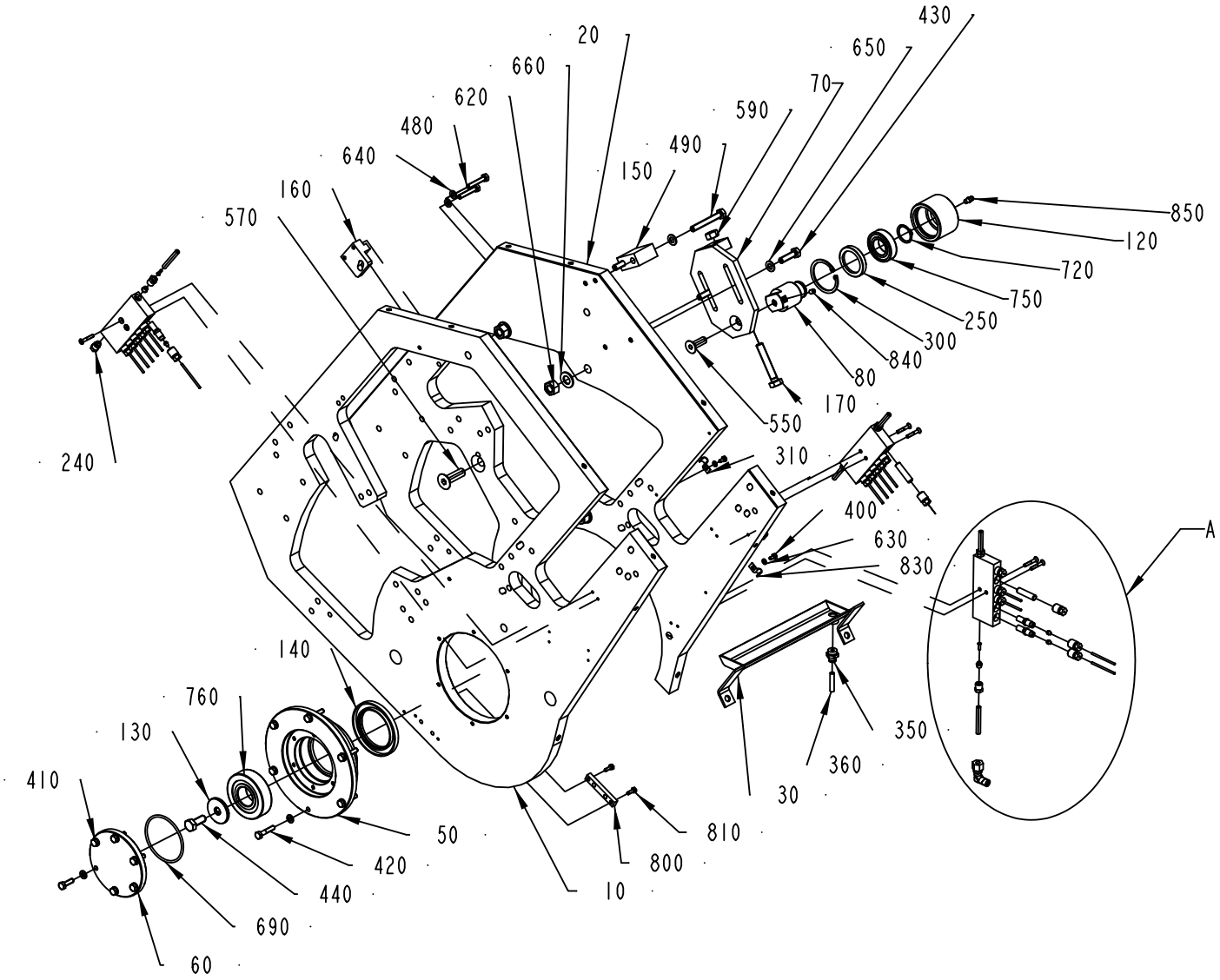
20
660
620
480
640
160
570
240
150
490
590
70
650
430
850
120
720
750
250
300
840
80
170
550
310
400
630
830
A
350
360
30
810
800
10
140
760
130
410
50
420
440
690
60

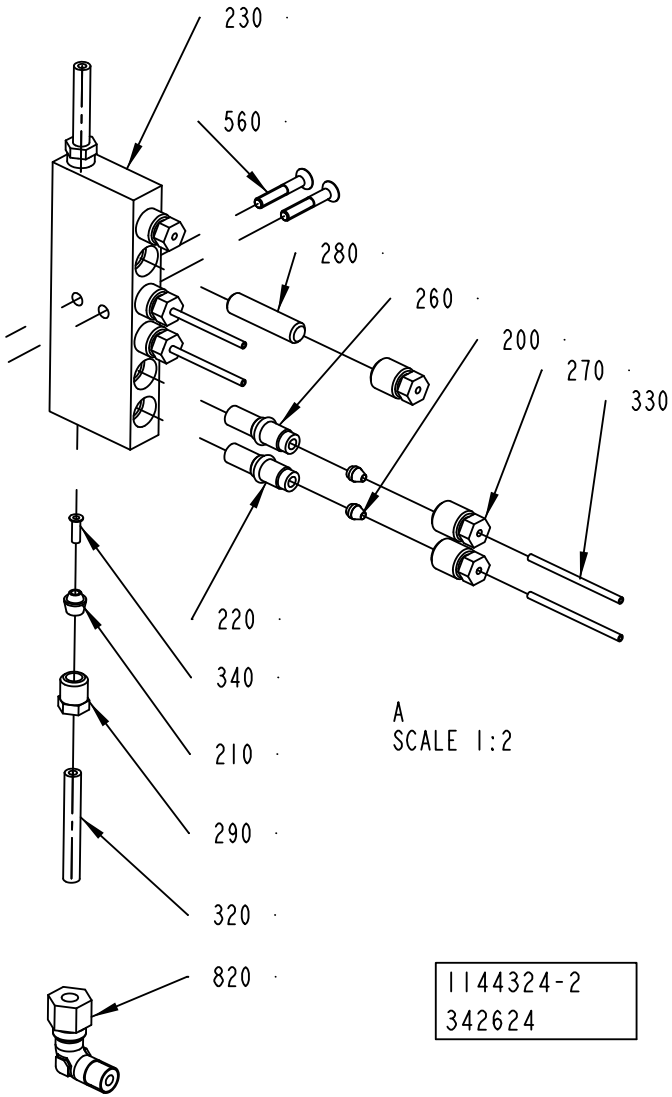
230
560
280
260
200
270
330
220
340
210
290
320
820
A
SCALE 1:2
1144324-2
342624

Pos	Part No	UN	Qty	Description	Page No
Common Parts (Cont'd)					
850	344502-0021		1	GREASE NIPPLE STRAIGHT M6	
860	90296-0068		1	SHELL ALVANIA GREASE EP 2	

Pos	Part No	UN	Qty	Description	Page No

PULL-DOWN DEVICE

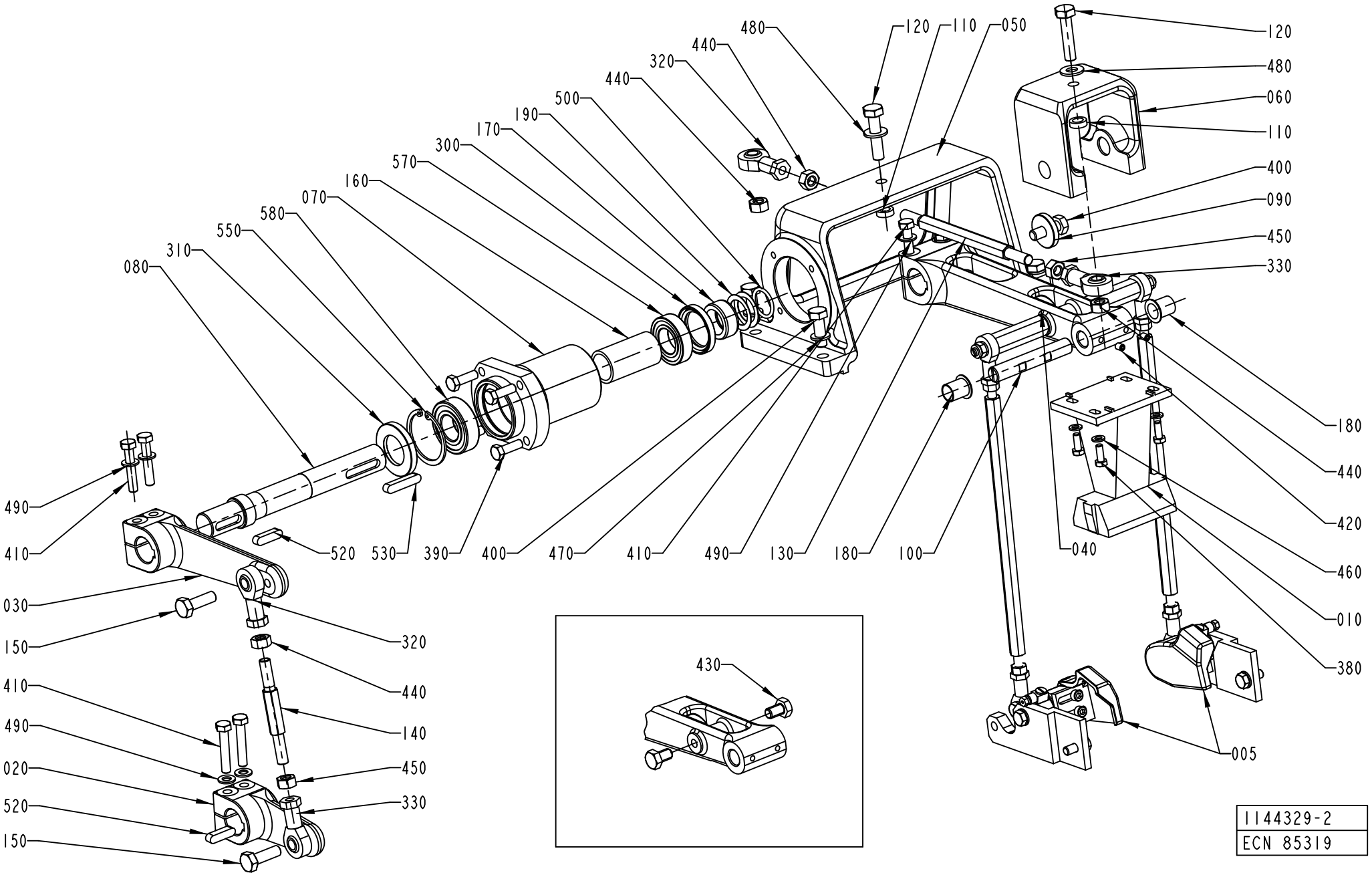

ECM: 339619 - 20080215
Group number: 1144329-0300
Assembly Drawing: 1144329-2_1_AB

This list covers pages from 3-148 to 3-155

Pos	Part No	UN	Qty	Description	Page No
TPA 0250SQ NOQC (See drawing on page: 3-148)					
005	1348056-0300		1	FOLDING PART	**3-157, 3-159**
010	1549846-0000		1	BLOCK	
TPA 0330SQ (See drawing on page: 3-148)					
005	1348056-0300		1	FOLDING PART	**3-157, 3-159**
010	1532266-0000		1	BLOCK	
TPA 0500SQ (See drawing on page: 3-150)					
005	1348056-0300		1	FOLDING PART	**3-157, 3-159**
010	2610779-0000		1	BLOCK	
200	2598706-0000		2	BAR	
590	312125-0230		4	SCREW ISO 1207 M3X20 A4	
600	315105-0124		4	WASHER BRB 3,2X6 RFR	
TPA 1000SQ NOQC (See drawing on page: 3-148)					
005	1348056-0300		1	FOLDING PART	**3-157, 3-159**
010	1519341-0000		1	BLOCK	
TPA 1000SQ QC, TPA 0750SQ QC (See drawing on page: 3-152)					
005	2588130-0100		1	FOLDING FIN DEVICE	**3-161, 3-163**
010	2647110-0000		1	BLOCK	
610	342748-0102		1	T-CONNECTION 6MM	
620	350002-0006		2	PUSH-IN L-FITTING QSL-F-G1/8-6	
630	315400-0001	MM	1500	TUBE PUN-H-6X1-BL	
TBA 0200B NOQC, TBA 0330S NOQC, TBA 0250B NOQC (See drawing on page: 3-148)					
010	1350808-0000		1	BLOCK	
430	312105-0489		2	SCREW M6S ISO 4017 M10X16 A480	
TBA 0200B QC, TBA 0330S QC, TBA 0250B QC (See drawing on page: 3-148)					
010	2591790-0000		1	BLOCK	
430	312105-0489		2	SCREW M6S ISO 4017 M10X16 A480	
TBA 0200M, TBA 0250S (See drawing on page: 3-148)					
010	2522199-0000		1	BLOCK	
430	312105-0489		2	SCREW M6S ISO 4017 M10X16 A480	
TBA 0200S (See drawing on page: 3-148)					
010	1260887-0000		1	BLOCK	
430	312105-0489		2	SCREW M6S ISO 4017 M10X16 A480	
TBA 0200SQ, TBA 0250SQ (See drawing on page: 3-152)					
005	2588130-0100		1	FOLDING FIN DEVICE	**3-161, 3-163**
010	2668239-0000		1	BLOCK	
TBA 0500B, TBA 1000B NOMOLDEDCAP (See drawing on page: 3-148)					
010	1260700-0000		1	BLOCK	
430	312105-0489		2	SCREW M6S ISO 4017 M10X16 A480	
TBA 0500S (See drawing on page: 3-148)					
010	1499139-0000		1	BLOCK	
430	312105-0489		2	SCREW M6S ISO 4017 M10X16 A480	
TBA 0500SQ QC, TBA 1000SQ QC (See drawing on pages: 3-150, 3-154)					
005	2588130-0100		1	FOLDING FIN DEVICE	**3-161, 3-163**
005	1348056-0300		1	FOLDING PART	**3-157, 3-159**
010	1558008-0000		1	BLOCK	
010	2769843-0000		1	BLOCK	
200	1558020-0000		2	ROD	
210	2769844-0000		4	GRUB SCREW	
590	312125-0234		4	SCREW ISO 1207 M3X30 A4	
600	315105-0124		4	WASHER BRB 3,2X6 RFR	
620	350002-0002		1	PUSH-IN L-FITTING QSL-F-M5-6	
630	315400-0001	MM	1500	TUBE PUN-H-6X1-BL	
TBA 1000B STDA7 (See drawing on page: 3-148)					
005	1348056-0300		1	FOLDING PART	**3-157, 3-159**
010	1260700-0000		1	BLOCK	
TBA 1000S NOMOLDEDCAP (See drawing on page: 3-148)					
010	1144933-0000		1	BLOCK	
430	312105-0489		2	SCREW M6S ISO 4017 M10X16 A480	
TBA 1000S STDA7, TBA 1000S LIGHTCAP (See drawing on page: 3-150)					
005	1348056-0300		1	FOLDING PART	**3-157, 3-159**
010	1144933-0000		1	BLOCK	
TBA 1000SQ					
005	1348056-0300		1	FOLDING PART	**3-157, 3-159**
010	1558008-0000		1	BLOCK	
200	1558020-0000		2	ROD	
590	312125-0234		4	SCREW ISO 1207 M3X30 A4	
600	315105-0124		4	WASHER BRB 3,2X6 RFR	
TBA 1500S (See drawing on page: 3-148)					
010	1317789-0000		1	BLOCK	
430	312105-0489		2	SCREW M6S ISO 4017 M10X16 A480	
TBA 1890S QC, TBA 2000S QC, TBA 1400B (See drawing on page: 3-150)					
010	2616229-0000		1	BLOCK	
430	312105-0489		2	SCREW M6S ISO 4017 M10X16 A480	
590	312125-0234		4	SCREW ISO 1207 M3X30 A4	
600	315105-0124		4	WASHER BRB 3,2X6 RFR	
TPA 0200SQ QC, TPA 0250SQ QC (See drawing on page: 3-152)					
005	2588130-0100		1	FOLDING FIN DEVICE	**3-161, 3-163**
010	2674253-0000		1	BLOCK	
Common Parts					
020	1144472-0000		1	LEVER	
030	1144473-0000		1	LEVER	
040	1499635-0000		1	LEVER	
050	1144475-0000		1	BRACKET	

Machine Type | Group Description | Used-In | Group Number | Page No

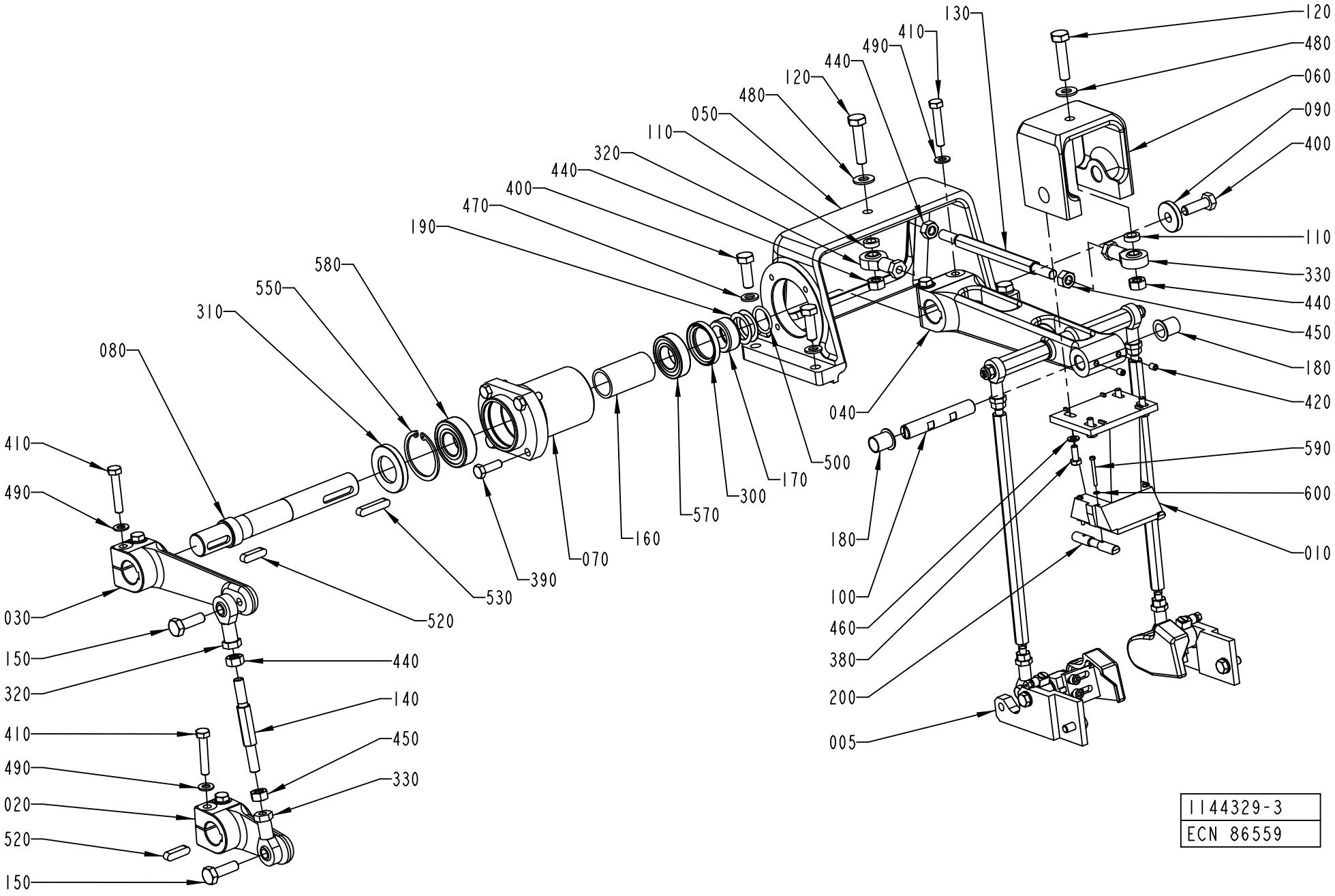
130
120
480
410
490
060
440
090
120
400
480
050
110
110
320
330
440
400
440
450
470
180
190
420
580
040
550
590
310
500
600
080
170
300
570
160
070
390
530
520
180
100
460
380
200
005
010
410
490
030
150
320
440
140
410
450
490
330
020
520
150
1144329-3
ECN 86559

Pos	Part No	UN	Qty	Description	Page No
Common Parts (Cont'd)					
060	1144476-0000		1	BRACKET	
070	1144566-0000		1	FLANGE	
080	1144678-0000		1	SHAFT	
090	1144681-0000		1	WASHER	
100	1144683-0000		1	AXLE PIN	
110	1144684-0000		2	SPACER	
120	1144685-0000		2	SCREW	
130	1144686-0000		1	TIE ROD	
140	1144687-0000		1	TIE ROD	
150	1144688-0000		2	SCREW	
160	1260824-0000		1	SPACER RING	
170	1334328-0000		1	SPACER	
180	1260944-0000		2	BUSHING	
190	1334018-0000		4	SHIM	
300	90091-0297		1	RADIAL SEAL 35X47X7 MM DUST LIP	
310	90091-0299		1	RADIAL SEAL 30X52X7 MM DUST LIP	
320	90115-0181		2	ROD END, ID=10 MM M10X1,5	
330	90115-0182		2	ROD END, ID=10 MM M10X1,5LH	
380	312105-0368		4	SCREW M6S ISO 4017 M6X16 A480	
390	312105-0455		4	SCREW M6S ISO 4017 M8X30 A480	
400	312105-0495		5	SCREW M6S ISO 4017 M10X30 A480	
410	312109-0460		6	SCREW M6S ISO 4017 M8X45 A480	
420	312318-0362		2	SCREW ISO4029 M6X8 A4	
440	312605-0320		4	HEXAGON NUT, M6M M10 A280	
450	312902-0320		2	NUT HEX. LEFT THREAD, M10 A280	
460	315105-0153		4	WASHER BRB 6,4X12 RFR	
470	315105-0171		4	WASHER BRB 10X18 RFR	
480	315105-0173		2	WASHER BRB 10,5X22 RFR	
490	315105-0165		10	WASHER BRB 8,4X16 RFR	
500	315202-0217		1	O-RING 24,2X3 MM	
520	315705-0267		1	PARALLEL KEY W. ROUND ENDS 8X7X30 MM	
530	315705-0270		1	PARALLEL KEY W. ROUND ENDS 8X7X40 MM	
550	315753-0132		1	RETAINING RING FOR BORE DIN 472 52 A2	
570	321308-0205		1	BALL BEARING, 25X47X12MM	
580	321313-0105		1	BALL BEARING, 25X52X15MM	

Pos	Part No	UN	Qty	Description	Page No

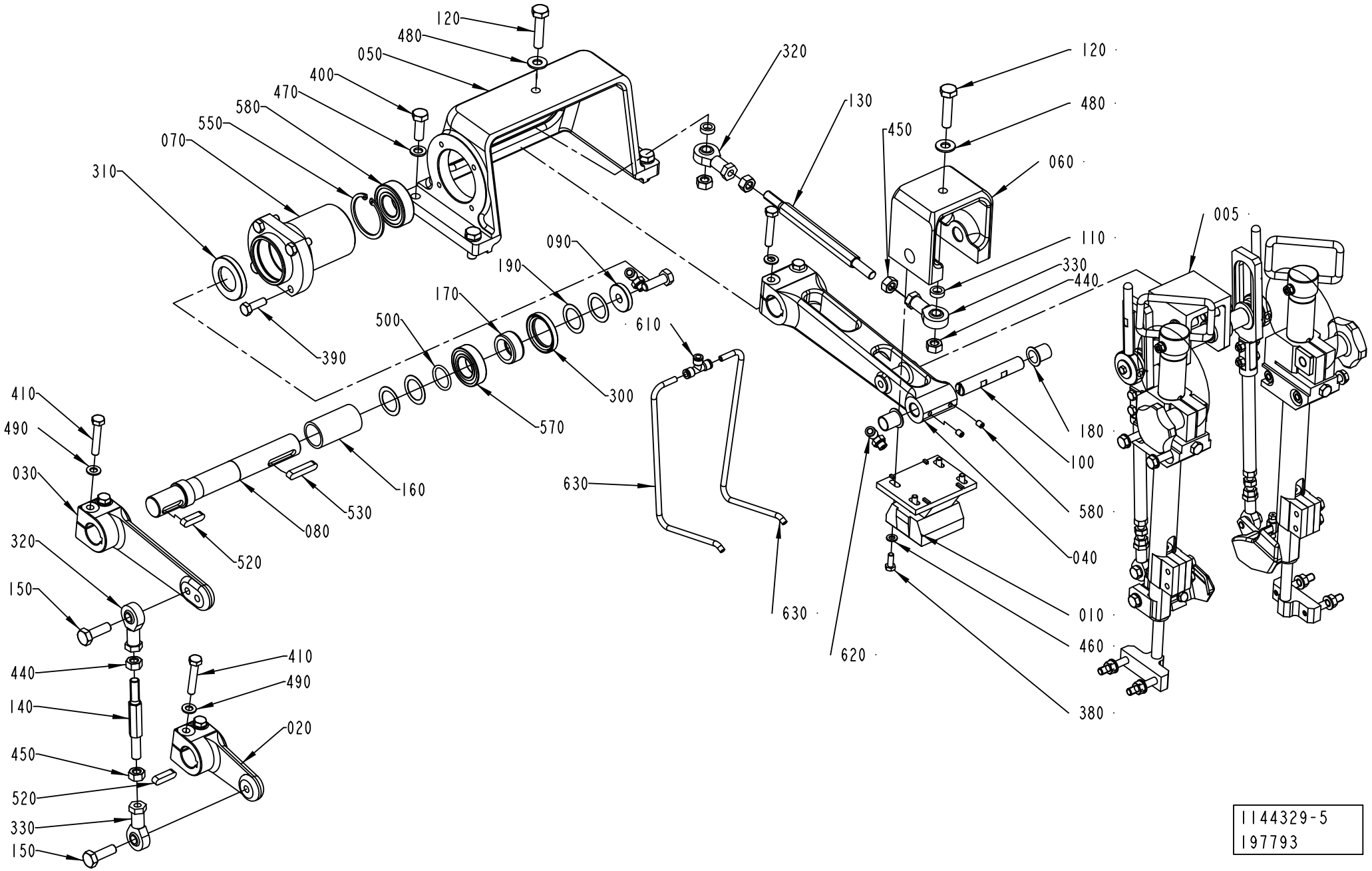

1144329-5
197793

Pos	Part No	UN	Qty	Description	Page No
SEE PREVIOUS LISTS PAGES: 3-149, 3-151.					

Pos	Part No	UN	Qty	Description	Page No

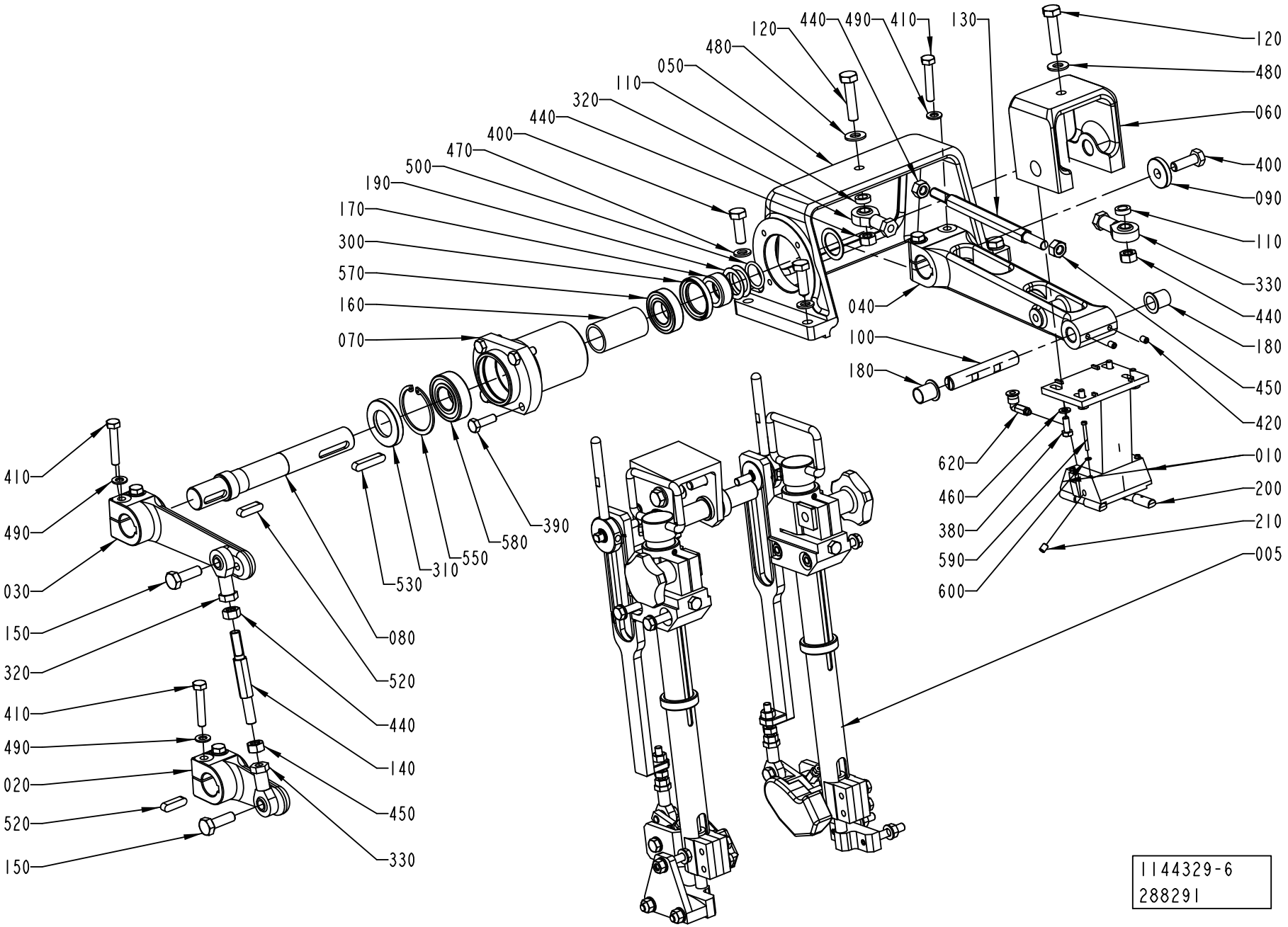
120
440
490
410
130
480
050
110
320
440
400
470
500
190
170
300
570
160
070
410
490
030
150
320
410
490
020
520
150
080
520
440
140
450
330
530
310
550
580
390
040
100
180
120
480
060
400
090
110
330
440
180
450
420
620
460
380
590
600
010
200
210
005
1144329-6
288291

Pos	Part No	UN	Qty	Description	Page No
SEE PREVIOUS LISTS PAGES: 3-149, 3-151.					

Pos	Part No	UN	Qty	Description	Page No

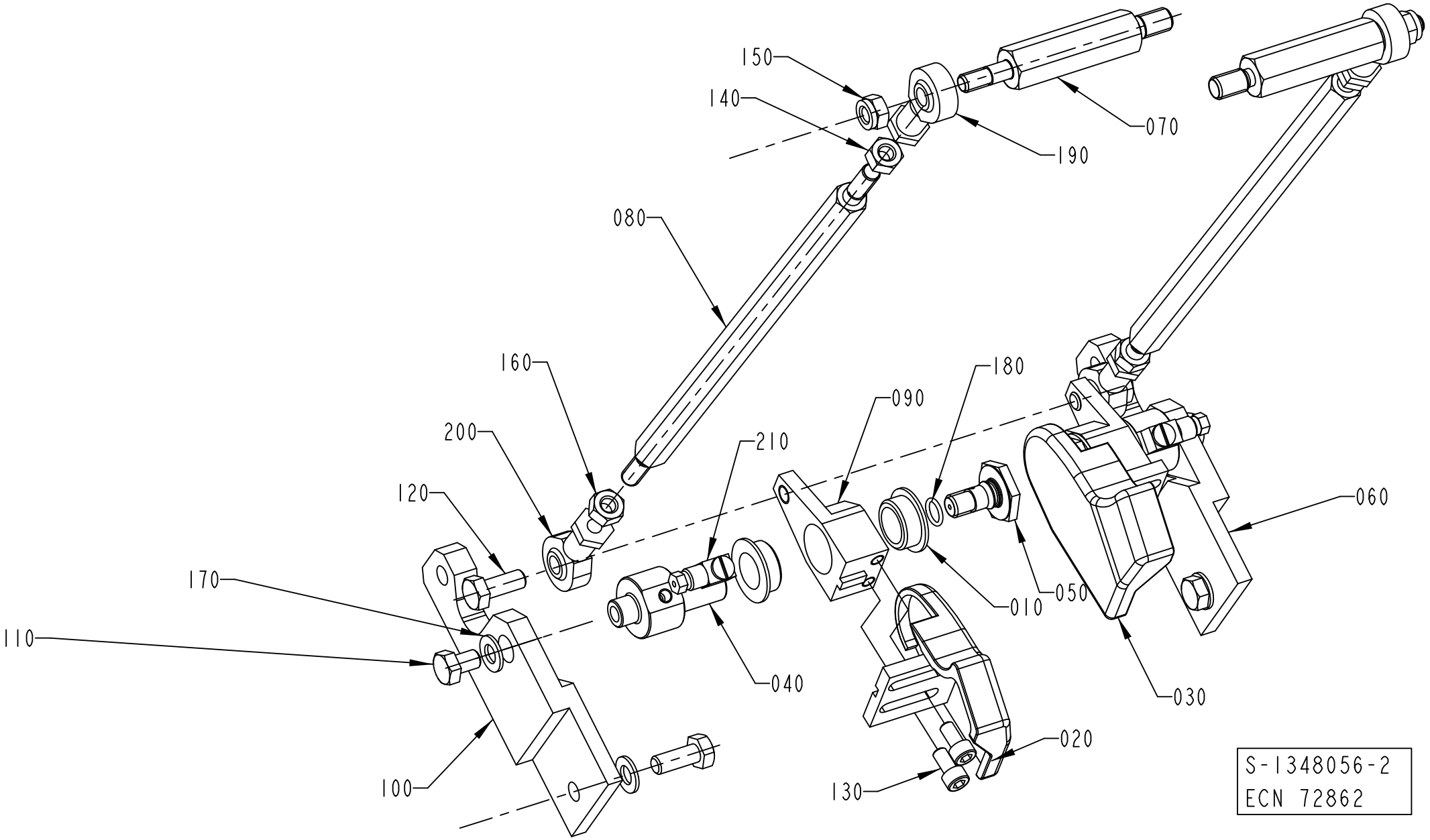
150
140
070
190
080
160
180
090
200
210
120
060
170
010
050
110
040
030
020
100
130
S-1348056-2
ECN 72862

ECM: 339647 - 20080215
Group number: 1348056-0300
Assembly Drawing: 1348056-2_1_AA

This list covers pages from 3-156 to 3-159

Pos	Part No	UN	Qty	Description	Page No
TBA 1000B STDA7 (See drawing on page: 3-156)					
020	1487922-0000		1	FOLDING DEVICE	
030	1487923-0000		1	FOLDING DEVICE	
060	1347600-0000		1	SUPPORT	
070	1499765-0000		2	AXLE LINK	
080	2609368-0000		2	TIE ROD	
090	1350440-0000		2	LEVER	
100	1350441-0000		1	SUPPORT	
TBA 1000SQ, TBA 1000S STDA7, TBA 1000S LIGHTCAP (See drawing on page: 3-156)					
020	1487922-0000		1	FOLDING DEVICE	
030	1487923-0000		1	FOLDING DEVICE	
060	1347600-0000		1	SUPPORT	
070	1499765-0000		2	AXLE LINK	
080	1499103-0000		2	TIE ROD	
090	1350440-0000		2	LEVER	
100	1350441-0000		1	SUPPORT	
TPA 0250SQ (See drawing on page: 3-156)					
020	1296180-0000		1	FOLDING DEVICE	
030	1296181-0000		1	FOLDING DEVICE	
060	1532267-0000		1	SUPPORT	
070	1532268-0000		2	AXLE LINK	
080	1532269-0000		2	TIE ROD	
090	1350440-0000		2	LEVER	
100	1532270-0000		1	SUPPORT	
TPA 0330SQ (See drawing on page: 3-156)					
020	1296180-0000		1	FOLDING DEVICE	
030	1296181-0000		1	FOLDING DEVICE	
060	1532267-0000		1	SUPPORT	
070	1532268-0000		2	AXLE LINK	
080	1532269-0000		2	TIE ROD	
090	1350440-0000		2	LEVER	
100	1532270-0000		1	SUPPORT	
TPA 0500SQ SMILE (See drawing on page: 3-158)					
020	2606277-0000		1	FOLDING DEVICE	
030	2606278-0000		1	FOLDING DEVICE	
060	2529673-0000		1	SUPPORT	
070	1532268-0000		2	AXLE LINK	
080	2527531-0000		2	TIE ROD	
090	2529676-0000		1	LEVER	
100	2529674-0000		1	SUPPORT	
220	2529675-0000		1	LEVER	
TPA 1000SQ (See drawing on page: 3-156)					
020	1296180-0000		1	FOLDING DEVICE	
030	1296181-0000		1	FOLDING DEVICE	
060	1347600-0000		1	SUPPORT	
070	1499765-0000		2	AXLE LINK	
080	1519340-0000		2	TIE ROD	
090	1350440-0000		2	LEVER	
100	1350441-0000		1	SUPPORT	
TPA 1000SQ SMILE (See drawing on page: 3-158)					
020	2529671-0000		1	FOLDING DEVICE	
030	2529672-0000		1	FOLDING DEVICE	
060	2553343-0000		1	SUPPORT	
070	2553346-0000		2	AXLE LINK	
080	2553345-0000		2	TIE ROD	
090	2529676-0000		1	LEVER	
100	2553344-0000		1	SUPPORT	
220	2529675-0000		1	LEVER	
Common Parts					
010	1282708-0000		4	BUSHING	
040	1347495-0000		2	AXLE PIN	
050	1347496-0000		2	SCREW	
110	312105-0447		2	SCREW M6S ISO 4017 M8X12 A480	
120	312105-0451		4	SCREW M6S ISO 4017 M8X20 A480	
130	312115-0366		4	SCREW ISO4762 M6X12 A4 80	
140	312605-0318		2	HEXAGON NUT, M6M M8 A280	
150	312812-0318		2	HEXAGON NUT, NY-LOCK M8 A480	
160	312902-0318		2	NUT HEX. LEFT THREAD, M8 A280	
170	315105-0165		4	WASHER BRB 8,4X16 RFR	
180	315202-0107		2	O-RING 9,1X1,6 MM	
190	90115-0139		2	ROD END, ID=8 MM, M8X1,25	
200	90115-0180		2	ROD END, ID=8 MM, M8X1,25 LH	
210	90134-0068		2	CONNECTION	
230	2868548-0000		1	PIPE	
240	2868547-0000		1	PIPE	

Machine Type | Group Description | Used-In | Group Number | Page No

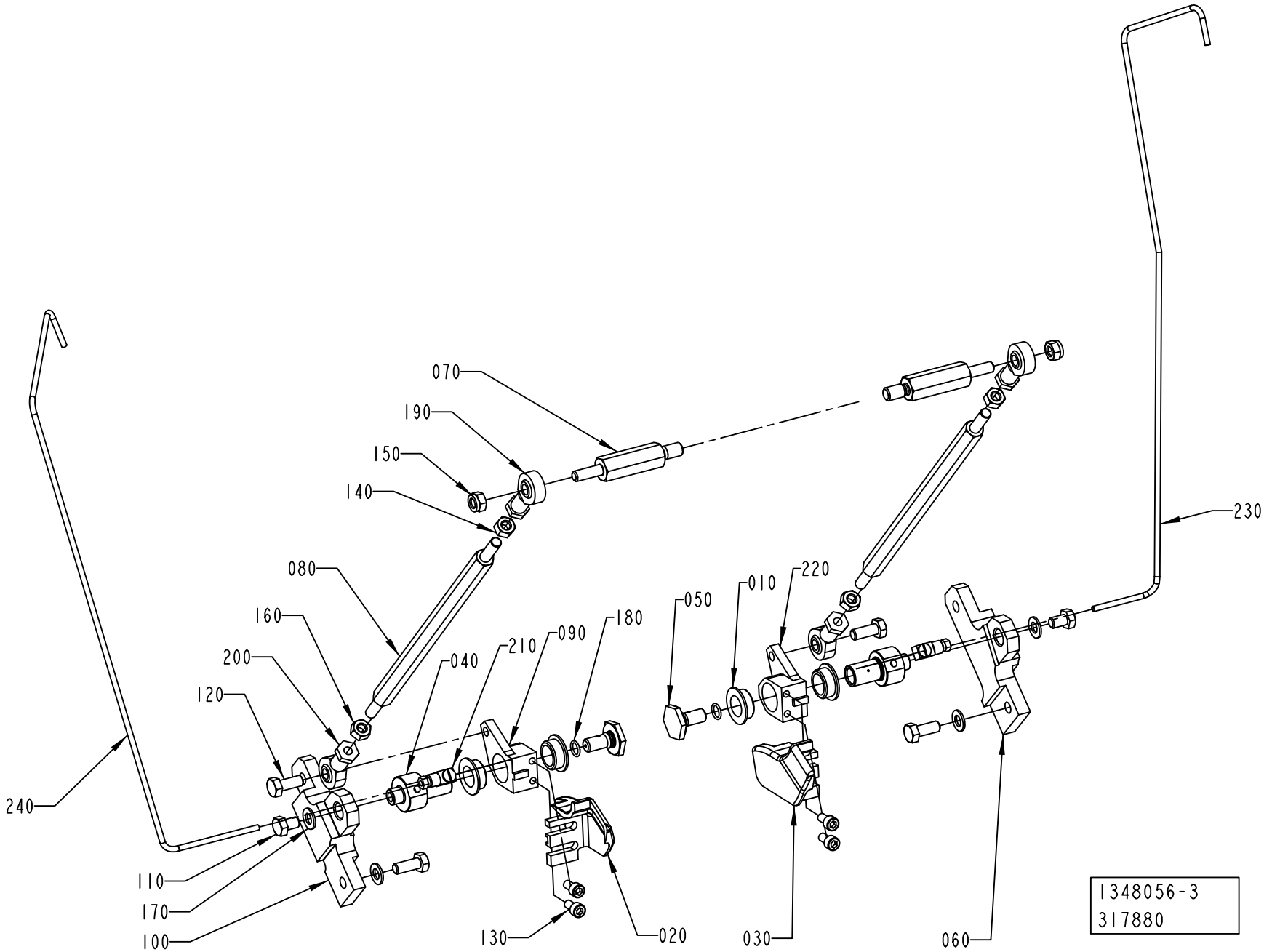
070
190
150
140
080
160
200
120
240
110
170
100
040
210
090
180
130
020
050
010
220
230
030
060
1348056-3
317880

ECM: 339647 - 20080215
Group number: 1348056-0300
Assembly Drawing: 1348056-3_1_AB

This list covers pages from 3-156 to 3-159

Pos	Part No	UN	Qty	Description	Page No
TBA 1000B STDA7 (See drawing on page: 3-156)					
020	1487922-0000		1	FOLDING DEVICE	
030	1487923-0000		1	FOLDING DEVICE	
060	1347600-0000		1	SUPPORT	
070	1499765-0000		2	AXLE LINK	
080	2609368-0000		2	TIE ROD	
090	1350440-0000		2	LEVER	
100	1350441-0000		1	SUPPORT	
TBA 1000SQ, TBA 1000S STDA7, TBA 1000S LIGHTCAP (See drawing on page: 3-156)					
020	1487922-0000		1	FOLDING DEVICE	
030	1487923-0000		1	FOLDING DEVICE	
060	1347600-0000		1	SUPPORT	
070	1499765-0000		2	AXLE LINK	
080	1499103-0000		2	TIE ROD	
090	1350440-0000		2	LEVER	
100	1350441-0000		1	SUPPORT	
TPA 0250SQ (See drawing on page: 3-156)					
020	1296180-0000		1	FOLDING DEVICE	
030	1296181-0000		1	FOLDING DEVICE	
060	1532267-0000		1	SUPPORT	
070	1532268-0000		2	AXLE LINK	
080	1532269-0000		2	TIE ROD	
090	1350440-0000		2	LEVER	
100	1532270-0000		1	SUPPORT	
TPA 0330SQ (See drawing on page: 3-156)					
020	1296180-0000		1	FOLDING DEVICE	
030	1296181-0000		1	FOLDING DEVICE	
060	1532267-0000		1	SUPPORT	
070	1532268-0000		2	AXLE LINK	
080	1532269-0000		2	TIE ROD	
090	1350440-0000		2	LEVER	
100	1532270-0000		1	SUPPORT	
TPA 0500SQ SMILE (See drawing on page: 3-158)					
020	2606277-0000		1	FOLDING DEVICE	
030	2606278-0000		1	FOLDING DEVICE	
060	2529673-0000		1	SUPPORT	
070	1532268-0000		2	AXLE LINK	
080	2527531-0000		2	TIE ROD	
090	2529676-0000		1	LEVER	
100	2529674-0000		1	SUPPORT	
220	2529675-0000		1	LEVER	
TPA 1000SQ (See drawing on page: 3-156)					
020	1296180-0000		1	FOLDING DEVICE	
030	1296181-0000		1	FOLDING DEVICE	
060	1347600-0000		1	SUPPORT	
070	1499765-0000		2	AXLE LINK	
080	1519340-0000		2	TIE ROD	
090	1350440-0000		2	LEVER	
100	1350441-0000		1	SUPPORT	
TPA 1000SQ SMILE (See drawing on page: 3-158)					
020	2529671-0000		1	FOLDING DEVICE	
030	2529672-0000		1	FOLDING DEVICE	
060	2553343-0000		1	SUPPORT	
070	2553346-0000		2	AXLE LINK	
080	2553345-0000		2	TIE ROD	
090	2529676-0000		1	LEVER	
100	2553344-0000		1	SUPPORT	
220	2529675-0000		1	LEVER	
Common Parts					
010	1282708-0000		4	BUSHING	
040	1347495-0000		2	AXLE PIN	
050	1347496-0000		2	SCREW	
110	312105-0447		2	SCREW M6S ISO 4017 M8X12 A480	
120	312105-0451		4	SCREW M6S ISO 4017 M8X20 A480	
130	312115-0366		4	SCREW ISO4762 M6X12 A4 80	
140	312605-0318		2	HEXAGON NUT, M6M M8 A280	
150	312812-0318		2	HEXAGON NUT, NY-LOCK M8 A480	
160	312902-0318		2	NUT HEX. LEFT THREAD, M8 A280	
170	315105-0165		4	WASHER BRB 8,4X16 RFR	
180	315202-0107		2	O-RING 9,1X1,6 MM	
190	90115-0139		2	ROD END, ID=8 MM, M8X1,25	
200	90115-0180		2	ROD END, ID=8 MM, M8X1,25 LH	
210	90134-0068		2	CONNECTION	
230	2868548-0000		1	PIPE	
240	2868547-0000		1	PIPE	

Machine Type | Group Description | Used-In | Group Number | Page No

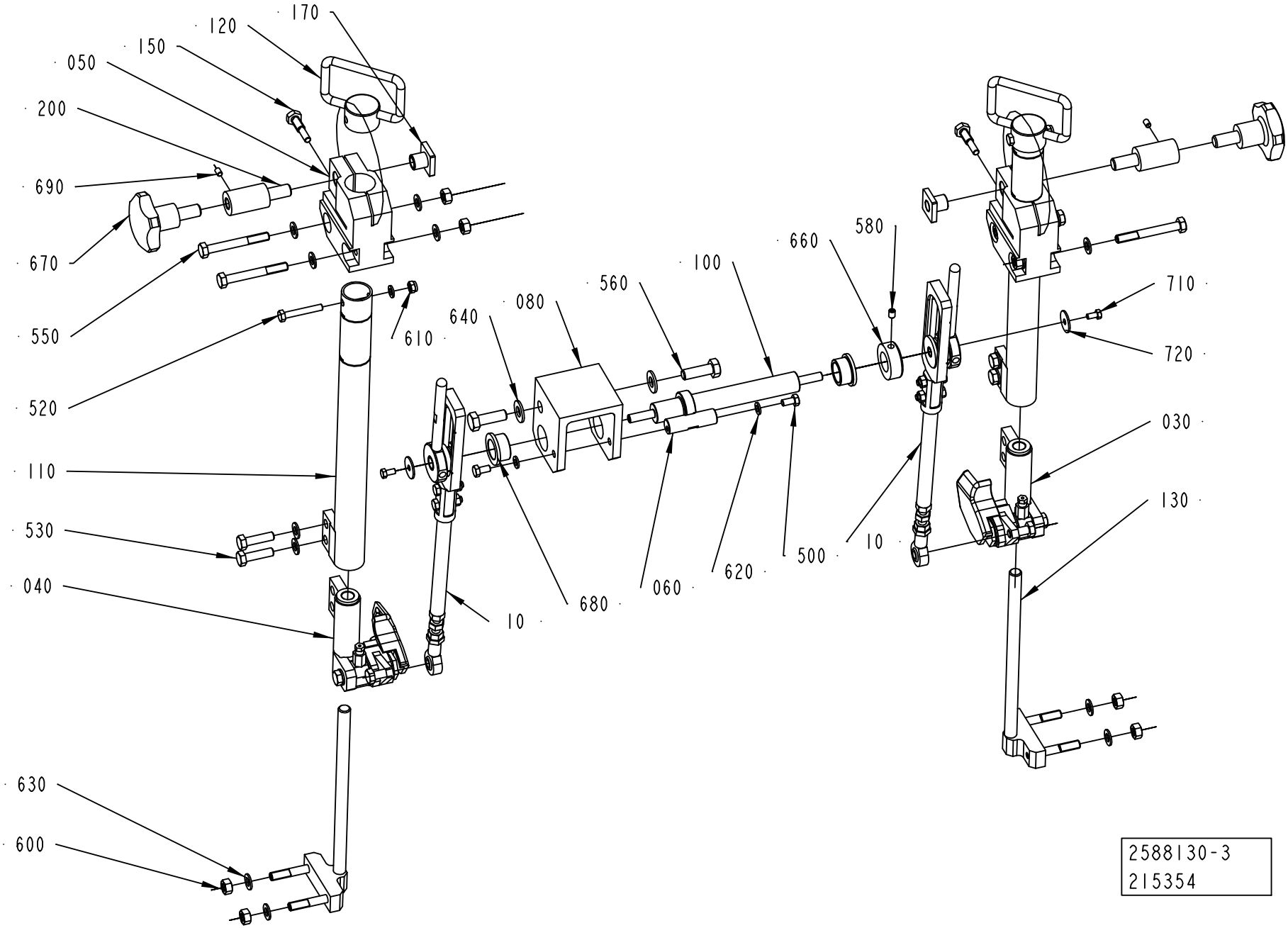
170
120
150
050
200
690
670
550
520
110
530
040
630
600
610
640
080
560
100
660
580
710
720
030
130
10
680
060
620
500
10
2588130-3
215354

ECM: 318855 - 20080103
Group number: 2588130-0100
Assembly Drawing: 2588130-3_1_AB

This list covers pages from 3-160 to 3-163

Pos	Part No	UN	Qty	Description	Page No
TBA 0200SQ, TBA 0250SQ (See drawing on page: 3-160)					
010	2619584-0100		2	STRUT	**3-165, 3-167**
055	2663367-0000		2	NUT	
080	2588134-0000		1	YOKE	
100	2647103-0000		1	SHAFT	
110	2668238-0000		2	PIPE	
140	2663371-0000		2	SCREW	
170	2663367-0000		2	NUT	
200	2739682-0000		2	SPACER SCREW	
300	312105-0366		4	SCREW M6S ISO 4017 M6X12 A480	
320	312105-0378		2	SCREW M6S ISO 4014 M6X40 A480	
337	312105-0464		4	SCREW M6S ISO 4014 M8X65 A480	
340	312105-0495		2	SCREW M6S ISO 4017 M10X30 A480	
380	312318-0362		1	SCREW ISO4029 M6X8 A4	
400	312605-0318		8	HEXAGON NUT, M6M M8 A280	
405	315105-0153		2	WASHER BRB 6,4X12 RFR	
410	315105-0153		8	WASHER BRB 6,4X12 RFR	
420	315105-0165		16	WASHER BRB 8,4X16 RFR	
430	315105-0173		2	WASHER BRB 10,5X22 RFR	
470	315742-0116		2	RETAINING RING 20 SMS 199 RFR	
475	318856-0115		2	KNOB, EXTERNAL THREAD. NO. 8306-0278	
510	312105-0325		2	SCREW M6S ISO 4017 M5X10 A480	
520	315125-0153		2	WASHER TBRSB 6,4X22X4 A4	
530	312105-0455		4	SCREW M6S ISO 4017 M8X30 A480	
690	312318-0323		2	SCREW ISO4029 M5X8 A4	
TBA 0500SQ, TBA 1000SQ (See drawing on page: 3-162)					
010	2619584-0100		2	STRUT	**3-165, 3-167**
080	2851926-0000		1	YOKE	
100	2851927-0000		1	SHAFT	
110	2927707-0000		2	PIPE	
110	2619588-0000		2	PIPE	
140	2619592-0000		1	HOLDER	
150	2663371-0000		2	SCREW	
180	2696851-0000		4	RETAINING RING	
200	2739682-0000		2	SPACER SCREW	
500	312105-0368		2	SCREW M6S ISO 4017 M6X16 A480	
520	312105-0378		2	SCREW M6S ISO 4014 M6X40 A480	
530	312105-0455		4	SCREW M6S ISO 4017 M8X30 A480	
540	312105-0457		1	SCREW M6S ISO 4014 M8X35 A480	
550	312105-0464		4	SCREW M6S ISO 4014 M8X65 A480	
560	312105-0495		2	SCREW M6S ISO 4017 M10X30 A480	
580	312318-0362		5	SCREW ISO4029 M6X8 A4	
600	312605-0318		9	HEXAGON NUT, M6M M8 A280	
610	312812-0316		2	HEXAGON NUT, NY-LOCK M6 A480	
620	315105-0153		4	WASHER BRB 6,4X12 RFR	
630	315105-0165		19	WASHER BRB 8,4X16 RFR	
640	315105-0173		2	WASHER BRB 10,5X22 RFR	
660	315742-0116		1	RETAINING RING 20 SMS 199 RFR	
670	318856-0115		2	KNOB, EXTERNAL THREAD. NO. 8306-0278	
680	321111-0302		2	FLANGE BUSHING, 20X26X15 MM	
690	312318-0323		2	SCREW ISO4029 M5X8 A4	
TPA 0250SQ, TPA 0200SQ (See drawing on page: 3-160)					
010	2619584-0100		2	STRUT	**3-165, 3-167**
080	2588134-0000		1	YOKE	
100	2647103-0000		1	SHAFT	
110	2674257-0000		2	PIPE	
150	2663371-0000		2	SCREW	
170	2663367-0000		2	NUT	
200	2739682-0000		2	SPACER SCREW	
500	312105-0368		2	SCREW M6S ISO 4017 M6X16 A480	
520	312105-0378		2	SCREW M6S ISO 4014 M6X40 A480	
530	312105-0455		4	SCREW M6S ISO 4017 M8X30 A480	
550	312105-0464		4	SCREW M6S ISO 4014 M8X65 A480	
580	312318-0362		5	SCREW ISO4029 M6X8 A4	
600	312605-0318		9	HEXAGON NUT, M6M M8 A280	
610	312812-0316		2	HEXAGON NUT, NY-LOCK M6 A480	
620	315105-0153		4	WASHER BRB 6,4X12 RFR	
630	315105-0165		16	WASHER BRB 8,4X16 RFR	
640	315105-0173		2	WASHER BRB 10,5X22 RFR	
660	315742-0116		1	RETAINING RING 20 SMS 199 RFR	
670	318856-0115		2	KNOB, EXTERNAL THREAD. NO. 8306-0278	
680	321111-0302		2	FLANGE BUSHING, 20X26X15 MM	
690	312318-0323		2	SCREW ISO4029 M5X8 A4	
710	312105-0325		2	SCREW M6S ISO 4017 M5X10 A480	
720	315125-0153		2	WASHER TBRSB 6,4X22X4 A4	
TPA 1000SQ, TPA 0750SQ (See drawing on page: 3-160)					
010	2619584-0100		2	STRUT	**3-165, 3-167**
080	2588134-0000		1	YOKE	
100	2647103-0000		1	SHAFT	
110	2647102-0000		2	PIPE	
150	2663371-0000		2	SCREW	
170	2663367-0000		2	NUT	
200	2739682-0000		2	SPACER SCREW	
500	312105-0368		2	SCREW M6S ISO 4017 M6X16 A480	

Machine Type | Group Description | Used-In | Group Number | Page No

FOLDING FIN DEVICE

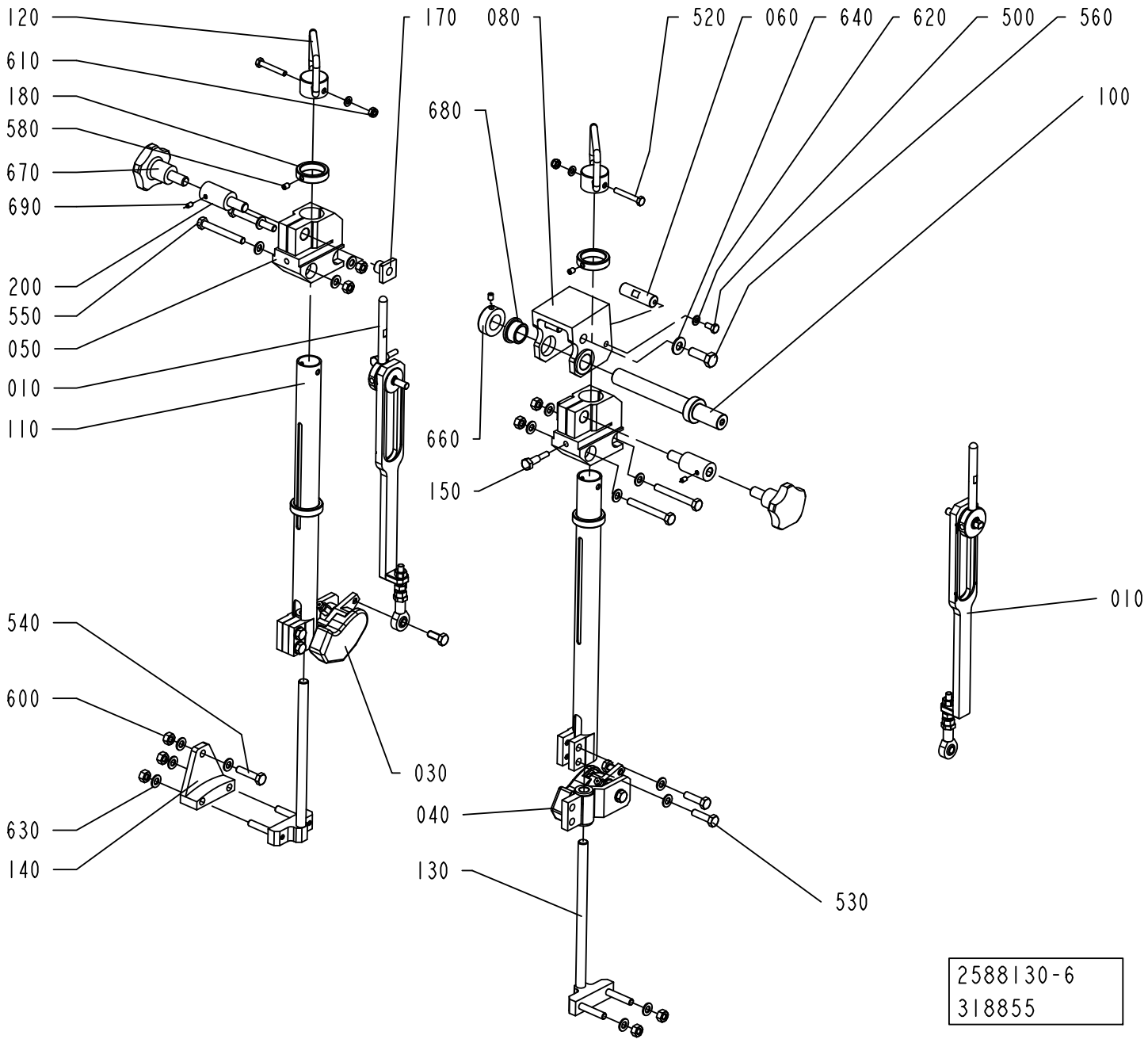

Pos	Part No	UN	Qty	Description	Page No
TPA 1000SQ, TPA 0750SQ (Cont'd) (See drawing on page: 3-160)					
520	312105-0378		2	SCREW M6S ISO 4014 M6X40 A480	
550	312105-0464		4	SCREW M6S ISO 4014 M8X65 A480	
560	312105-0495		2	SCREW M6S ISO 4017 M10X30 A480	
580	312318-0362		5	SCREW ISO4029 M6X8 A4	
600	312605-0318		8	HEXAGON NUT, M6M M8 A280	
610	312812-0316		2	HEXAGON NUT, NY-LOCK M6 A480	
620	315105-0153		8	WASHER BRB 6,4X12 RFR	
630	315105-0165		16	WASHER BRB 8,4X16 RFR	
640	315105-0173		2	WASHER BRB 10,5X22 RFR	
660	315742-0116		1	RETAINING RING 20 SMS 199 RFR	
670	318856-0115		2	KNOB, EXTERNAL THREAD. NO. 8306-0278	
680	321111-0302		2	FLANGE BUSHING, 20X26X15 MM	
690	312318-0323		2	SCREW ISO4029 M5X8 A4	
710	312105-0325		2	SCREW M6S ISO 4017 M5X10 A480	
720	315125-0153		2	WASHER TBRSB 6,4X22X4 A4	
730	312105-0455		4	SCREW M6S ISO 4017 M8X30 A480	
Common Parts					
030	2619597-0100		1	FLAP GUIDE	**3-169**
040	2619598-0100		1	FLAP GUIDE	**3-171**
050	2663369-0000		2	BLOCK	
060	2588127-0000		1	AXLE PIN	
120	2619589-0000		2	HANDLE	
130	2663370-0000		2	SUPPORT	

Pos	Part No	UN	Qty	Description	Page No

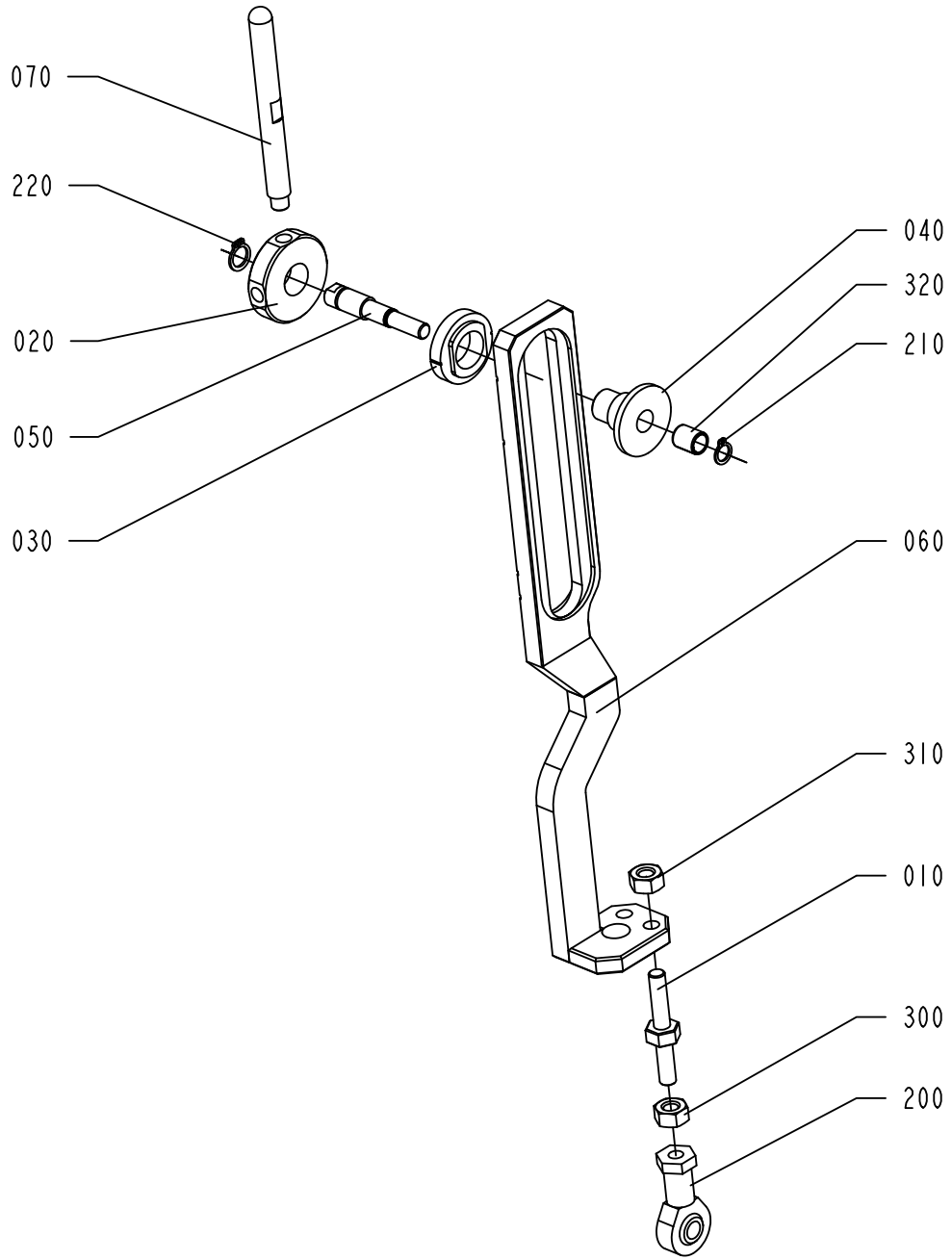
070
220
020
050
030
040
320
210
060
310
010
300
200
2619584-1
ECM 174515

ECM: 291437 - 20070205
Group number: 2619584-0100
Assembly Drawing: 2619584-1_1_AA

This list covers pages from 3-164 to 3-167

Pos	Part No	UN	Qty	Description	Page No
TBA 0200SQ, TBA 0250SQ (See drawing on page: 3-166)					
060	2668236-0000		1	LEVER	
080	2668237-0000		1	SHAFT	
200	90115-0021		1	ROD END, ID=8 MM, M8X1,25 LH	
330	312105-0372		2	SCREW M6S ISO 4017 M6X25 A480	
340	312605-0316		2	HEXAGON NUT, M6M M6 A280	
TBA 0500SQ, TBA 1000SQ (See drawing on page: 3-164)					
050	2619531-0000		1	SHAFT	
060	2851929-0000		1	STRUT	
200	90115-0020		1	ROD END, ID=8 MM, M8X1,25	
210	90141-0015		1	RETAINING RING FOR SHAFT DIN 471 8 SS	
220	90141-0016		1	RETAINING RING FOR SHAFT DIN 471 10 SS	
TPA 0250SQ, TPA 0200SQ (See drawing on page: 3-166)					
060	2674255-0000		1	STRUT	
080	2674256-0000		1	SHAFT	
200	90115-0021		1	ROD END, ID=8 MM, M8X1,25 LH	
330	312105-0372		2	SCREW M6S ISO 4017 M6X25 A480	
340	312605-0316		2	HEXAGON NUT, M6M M6 A280	
TPA 1000SQ, TPA 0750SQ (See drawing on page: 3-166)					
060	2647108-0000		1	STRUT	
080	2647109-0000		1	SHAFT	
200	90115-0021		1	ROD END, ID=8 MM, M8X1,25 LH	
330	312105-0372		2	SCREW M6S ISO 4017 M6X25 A480	
340	312605-0316		2	HEXAGON NUT, M6M M6 A280	
Common Parts					
010	2598880-0000		1	SETTING SCREW	
020	2619528-0000		1	LOCKING CIRCLIP	
030	2619529-0000		1	SLEEVE	
040	2619530-0000		1	SLEEVE	
070	2619596-0000		1	HANDLE	
300	312605-0318		1	HEXAGON NUT, M6M M8 A280	
310	312902-0318		1	NUT HEX. LEFT THREAD, M8 A280	
320	321141-0104		1	BEARING BUSH W/O FLANGE, 8X10X12 MM	

Pos	Part No	UN	Qty	Description	Page No

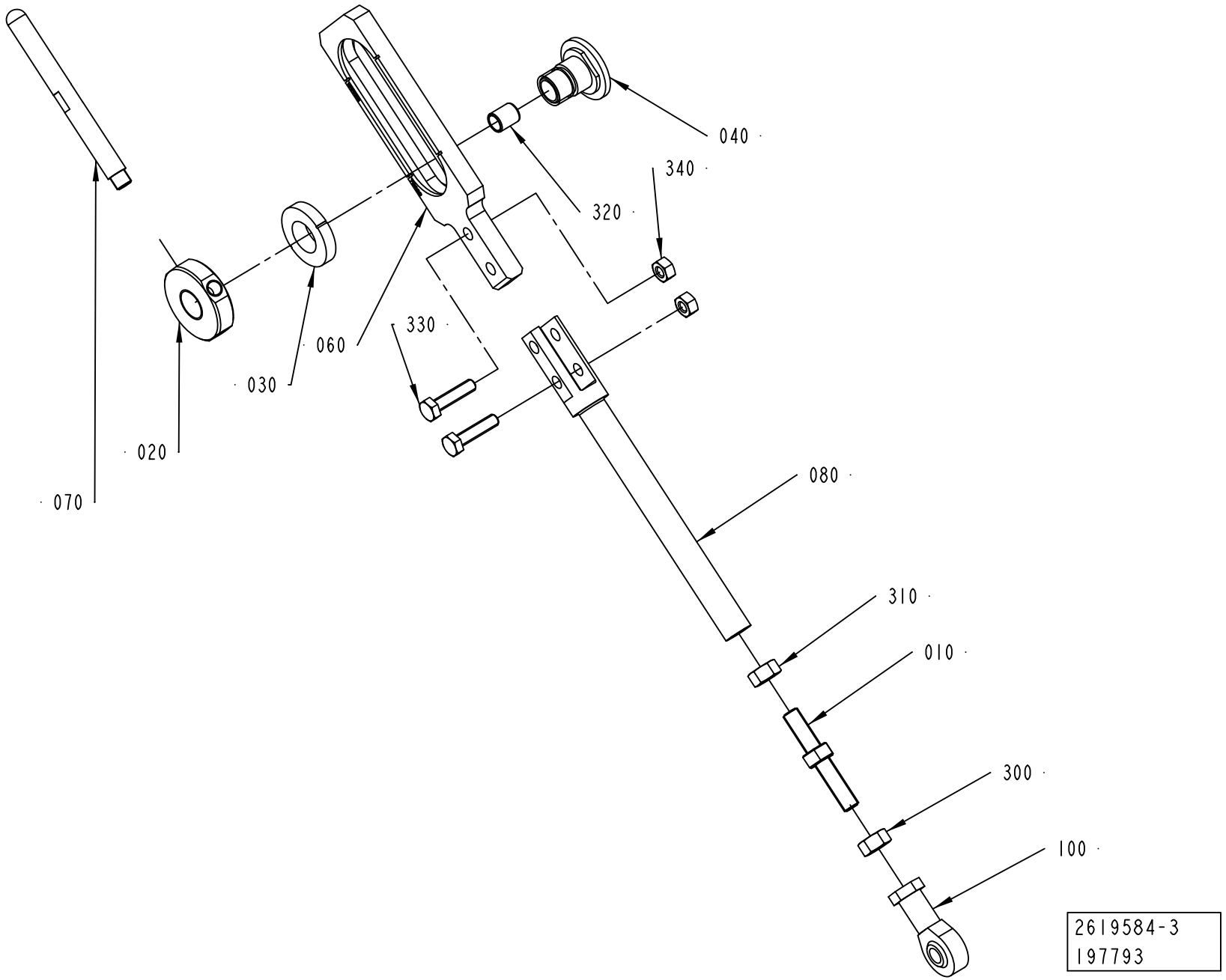
040
340
320
330
060
030
020
070
080
310
010
300
100
2619584-3
197793

ECM: 291437 - 20070205
Group number: 2619584-0100
Assembly Drawing: 2619584-3_1_AA

This list covers pages from 3-164 to 3-167

Pos	Part No	UN	Qty	Description	Page No
TBA 0200SQ, TBA 0250SQ (See drawing on page: 3-166)					
060	2668236-0000		1	LEVER	
080	2668237-0000		1	SHAFT	
200	90115-0021		1	ROD END, ID=8 MM, M8X1,25 LH	
330	312105-0372		2	SCREW M6S ISO 4017 M6X25 A480	
340	312605-0316		2	HEXAGON NUT, M6M M6 A280	
TBA 0500SQ, TBA 1000SQ (See drawing on page: 3-164)					
050	2619531-0000		1	SHAFT	
060	2851929-0000		1	STRUT	
200	90115-0020		1	ROD END, ID=8 MM, M8X1,25	
210	90141-0015		1	RETAINING RING FOR SHAFT DIN 471 8 SS	
220	90141-0016		1	RETAINING RING FOR SHAFT DIN 471 10 SS	
TPA 0250SQ, TPA 0200SQ (See drawing on page: 3-166)					
060	2674255-0000		1	STRUT	
080	2674256-0000		1	SHAFT	
200	90115-0021		1	ROD END, ID=8 MM, M8X1,25 LH	
330	312105-0372		2	SCREW M6S ISO 4017 M6X25 A480	
340	312605-0316		2	HEXAGON NUT, M6M M6 A280	
TPA 1000SQ, TPA 0750SQ (See drawing on page: 3-166)					
060	2647108-0000		1	STRUT	
080	2647109-0000		1	SHAFT	
200	90115-0021		1	ROD END, ID=8 MM, M8X1,25 LH	
330	312105-0372		2	SCREW M6S ISO 4017 M6X25 A480	
340	312605-0316		2	HEXAGON NUT, M6M M6 A280	
Common Parts					
010	2598880-0000		1	SETTING SCREW	
020	2619528-0000		1	LOCKING CIRCLIP	
030	2619529-0000		1	SLEEVE	
040	2619530-0000		1	SLEEVE	
070	2619596-0000		1	HANDLE	
300	312605-0318		1	HEXAGON NUT, M6M M8 A280	
310	312902-0318		1	NUT HEX. LEFT THREAD, M8 A280	
320	321141-0104		1	BEARING BUSH W/O FLANGE, 8X10X12 MM	

Pos	Part No	UN	Qty	Description	Page No

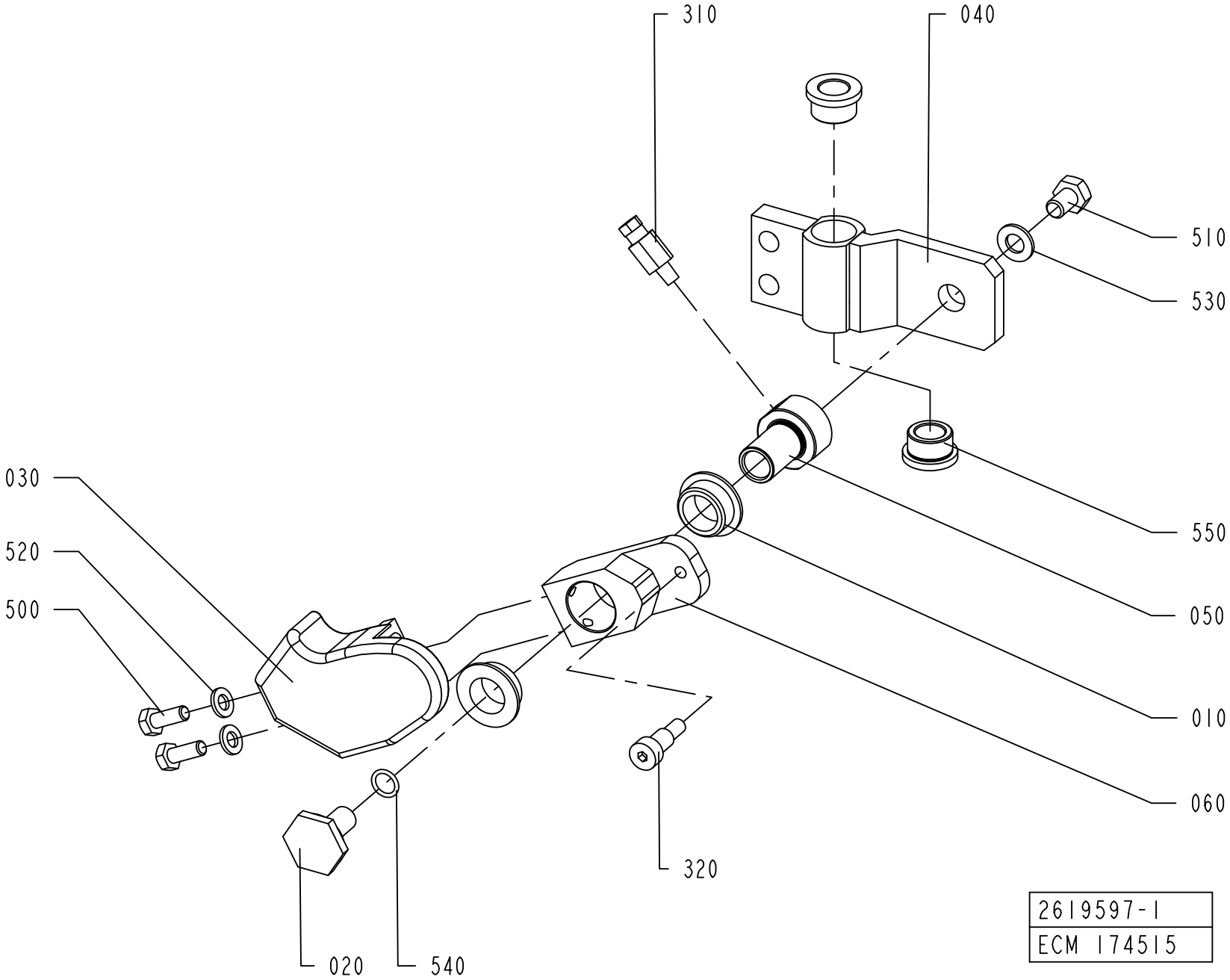
310
040
510
530
030
520
500
550
050
010
060
320
020
540
2619597-1
ECM 174515

ECM: 339659 - 20080215
Group number: 2619597-0100
Assembly Drawing: 2619597-1_1_AA

Pos	Part No	UN	Qty	Description	Page No
TBA 0200SQ, TBA 0250SQ					
030	2746790-0000		1	FOLDING DEVICE	
040	2668245-0000		1	SLIDER	
050	2647105-0000		1	AXLE PIN	
060	1350440-0000		1	LEVER	
310	90134-0065		1	CONNECTION M6 TUBE 2,5 MM	
320	312115-0451		1	SCREW ISO4762 M8X20 A4 80	
510	312105-0451		1	SCREW M6S ISO 4017 M8X20 A480	
TBA 0500SQ, TBA 1000SQ					
030	1487922-0000		1	FOLDING DEVICE	
040	2619591-0000		1	SLIDER	
050	2598890-0000		1	AXLE PIN	
060	1350440-0000		1	LEVER	
310	90134-0065		1	CONNECTION M6 TUBE 2,5 MM	
320	312115-0451		1	SCREW ISO4762 M8X20 A4 80	
510	312105-0447		1	SCREW M6S ISO 4017 M8X12 A480	
TPA 0250SQ, TPA 0200SQ					
030	2698293-0000		1	FOLDING DEVICE	
040	2674258-0000		1	SLIDER	
050	2647105-0000		1	AXLE PIN	
060	1350440-0000		1	LEVER	
310	90134-0058		1	CONNECTION	
320	312115-0451		1	SCREW ISO4762 M8X20 A4 80	
510	312105-0449		1	SCREW M6S ISO 4017 M8X16 A480	
TPA 1000SQ, TPA 0750SQ					
030	2529671-0000		1	FOLDING DEVICE	
040	2647107-0000		1	SLIDER	
050	2647105-0000		1	AXLE PIN	
060	2647104-0000		1	LEVER	
310	90134-0058		1	CONNECTION	
320	312115-0451		1	SCREW ISO4762 M8X20 A4 80	
510	312105-0447		1	SCREW M6S ISO 4017 M8X12 A480	
Common Parts					
010	1282708-0000		2	BUSHING	
020	1347496-0000		1	SCREW	
500	312115-0366		2	SCREW ISO4762 M6X12 A4 80	
520	315101-0153		2	WASHER PLAIN, BRB, 6,4/12 H=1,5	
530	315105-0165		1	WASHER BRB 8,4X16 RFR	
540	315202-0107		1	O-RING 9,1X1,6 MM	
550	321101-0173		2	FLANGE BUSHING, 12X18X12 MM	

Pos	Part No	UN	Qty	Description	Page No

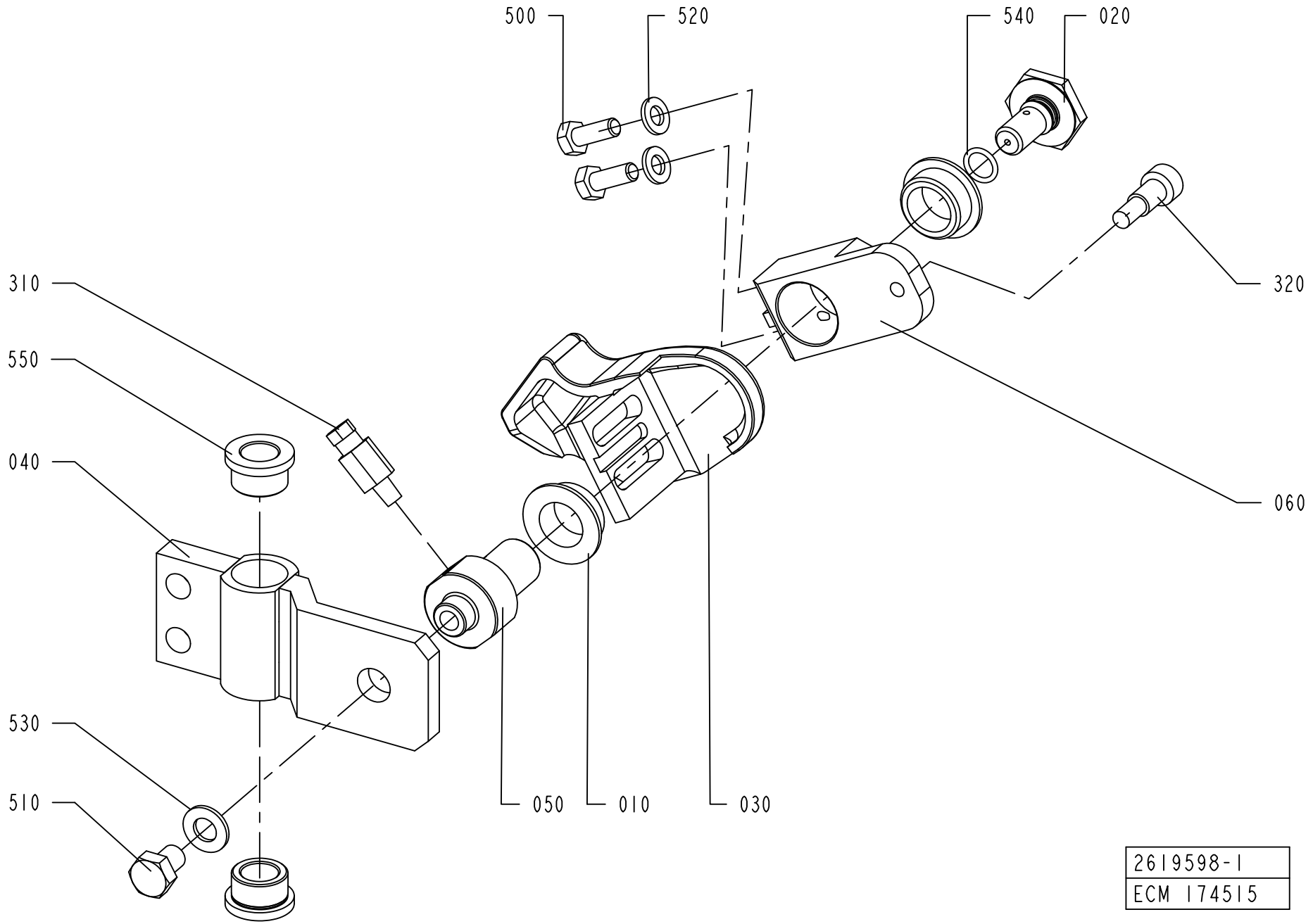

2619598-1
ECM 174515

ECM: 339660 - 20080215
Group number: 2619598-0100
Assembly Drawing: 2619598-1_1_AA

Pos	Part No	UN	Qty	Description	Page No
TBA 0200SQ, TBA 0250SQ					
030	2746791-0000		1	FOLDING DEVICE	
040	2668246-0000		1	SLIDER	
050	2647105-0000		1	AXLE PIN	
060	1350440-0000		1	LEVER	
310	90134-0065		1	CONNECTION M6 TUBE 2,5 MM	
320	312115-0451		1	SCREW ISO4762 M8X20 A4 80	
510	312105-0451		1	SCREW M6S ISO 4017 M8X20 A480	
TBA 0500SQ, TBA 1000SQ					
030	1487923-0000		1	FOLDING DEVICE	
040	2619591-0000		1	SLIDER	
050	2598890-0000		1	AXLE PIN	
060	1350440-0000		1	LEVER	
310	90134-0065		1	CONNECTION M6 TUBE 2,5 MM	
320	312115-0451		1	SCREW ISO4762 M8X20 A4 80	
510	312105-0447		1	SCREW M6S ISO 4017 M8X12 A480	
TPA 0250SQ, TPA 0200SQ					
030	2698294-0000		1	FOLDING DEVICE	
040	2674254-0000		1	SLIDER	
050	2647105-0000		1	AXLE PIN	
060	1350440-0000		1	LEVER	
310	90134-0058		1	CONNECTION	
320	312115-0451		1	SCREW ISO4762 M8X20 A4 80	
510	312105-0449		1	SCREW M6S ISO 4017 M8X16 A480	
TPA 1000SQ, TPA 0750SQ					
030	2529672-0000		1	FOLDING DEVICE	
040	2647106-0000		1	SLIDER	
050	2647105-0000		1	AXLE PIN	
060	2647104-0000		1	LEVER	
310	90134-0058		1	CONNECTION	
320	312115-0451		1	SCREW ISO4762 M8X20 A4 80	
510	312105-0447		1	SCREW M6S ISO 4017 M8X12 A480	
Common Parts					
010	1282708-0000		2	BUSHING	
020	1347496-0000		1	SCREW	
500	312115-0366		2	SCREW ISO4762 M6X12 A4 80	
520	315101-0153		2	WASHER PLAIN, BRB, 6,4/12 H=1,5	
530	315105-0165		1	WASHER BRB 8,4X16 RFR	
540	315202-0107		1	O-RING 9,1X1,6 MM	
550	321101-0173		2	FLANGE BUSHING, 12X18X12 MM	

Pos	Part No	UN	Qty	Description	Page No

Machine Type | Group Description | Used-In | Group Number | Page No

FLAP HEATER VARIANT

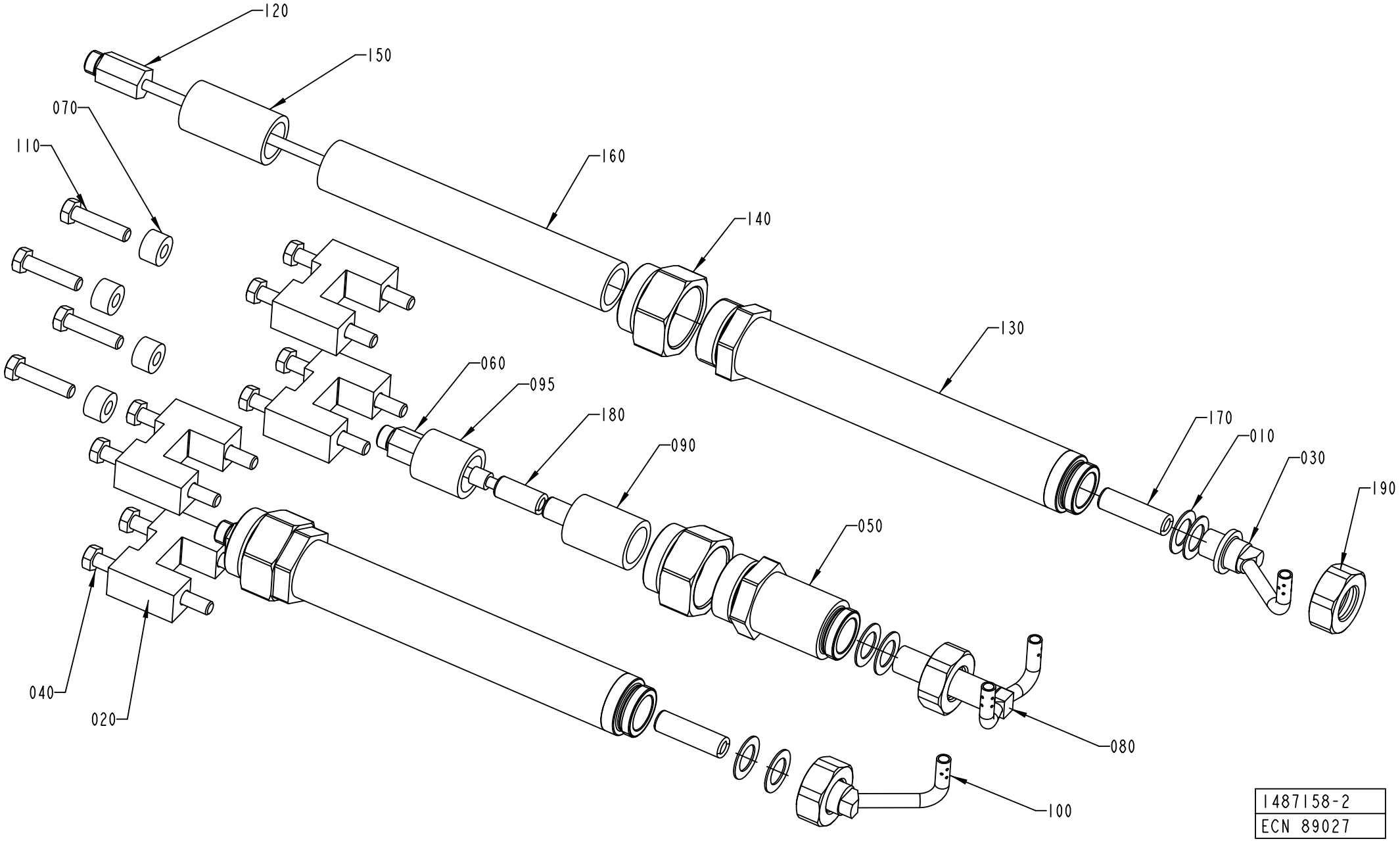

1487158-2
ECN 89027

ECM: 343887 - 20080702
Group number: 1487158-0300
Assembly Drawing: 1487158-2_1_AA

This list covers pages from 3-172 to 3-183

Pos	Part No	UN	Qty	Description	Page No
TBA 1000B NOQC (See drawing on page: 3-172)					
010	263673-0000		6	GASKET	
020	1296153-0000		4	GUIDE	
020	1498163-0000		8	SPACER	
030	1350422-0000		1	NOZZLE	
040	312105-0466		8	SCREW M6S ISO 4014 M8X75 A480	
050	1549389-0000		1	SPACER	
060	1296072-0000		1	EXTENSION	
070	1498163-0000		4	SPACER	
080	1296387-0000		1	NOZZLE	
090	23765-0003		1	INSULATING PIPE	
095	23765-0005		1	INSULATING PIPE	
100	1350421-0000		1	NOZZLE	
110	312109-0457		4	SCREW M6S ISO 4017 M8X35 A480	
120	1285310-0000		2	EXTENSION	
130	2545135-0000		2	SPACER	
140	1549390-0000		3	NUT	
150	23765-0004		2	INSULATING PIPE	
150	23765-0001		2	INSULATING PIPE	
155	23765-0004		2	INSULATING PIPE	
160	23765-0005		2	INSULATING PIPE	
170	252766-0002		2	INSULATING PIPE	
180	252766-0001		2	INSULATING PIPE	
190	1317085-0000		2	NUT	
200	359710-0001		2	WARNING SIGN ISO, HOT SURFACE	
TBA 1000S (See drawing on page: 3-172)					
010	263673-0000		6	GASKET	
020	1348043-0000		8	SPACER	
020	1498163-0000		8	SPACER	
030	1296068-0000		1	NOZZLE	
040	312109-0460		8	SCREW M6S ISO 4017 M8X45 A480	
050	1549389-0000		1	SPACER	
060	1296072-0000		1	EXTENSION	
070	1498163-0000		4	SPACER	
080	1296066-0000		1	NOZZLE	
090	23765-0003		1	INSULATING PIPE	
095	23765-0005		1	INSULATING PIPE	
100	1296067-0000		1	NOZZLE	
110	312109-0457		4	SCREW M6S ISO 4017 M8X35 A480	
120	1285310-0000		2	EXTENSION	
130	2545135-0000		2	SPACER	
140	1549390-0000		3	NUT	
150	23765-0001		2	INSULATING PIPE	
150	23765-0004		2	INSULATING PIPE	
155	23765-0004		2	INSULATING PIPE	
160	23765-0005		2	INSULATING PIPE	
170	252766-0002		2	INSULATING PIPE	
180	252766-0001		2	INSULATING PIPE	
190	1317085-0000		2	NUT	
200	359710-0001		2	WARNING SIGN ISO, HOT SURFACE	
TBA 1000SQ NOQC (See drawing on page: 3-172)					
010	263673-0000		6	GASKET	
020	1285874-0000		8	SPACER	
030	1498147-0000		1	NOZZLE	
040	312109-0457		8	SCREW M6S ISO 4017 M8X35 A480	
050	1549389-0000		1	SPACER	
060	1296072-0000		1	EXTENSION	
070	1285874-0000		4	SPACER	
080	1490039-0000		1	NOZZLE	
090	23765-0003		1	INSULATING PIPE	
095	23765-0005		1	INSULATING PIPE	
100	1498146-0000		1	NOZZLE	
110	312109-0457		4	SCREW M6S ISO 4017 M8X35 A480	
120	1285310-0000		2	EXTENSION	
130	2545135-0000		2	SPACER	
140	1549390-0000		3	NUT	
150	23765-0001		2	INSULATING PIPE	
150	23765-0004		2	INSULATING PIPE	
155	23765-0004		2	INSULATING PIPE	
160	23765-0005		2	INSULATING PIPE	
170	252766-0002		2	INSULATING PIPE	
180	252766-0001		2	INSULATING PIPE	
190	1317085-0000		2	NUT	
200	359710-0001		2	WARNING SIGN ISO, HOT SURFACE	
TBA 1500S (See drawing on page: 3-172)					
010	263673-0000		9	GASKET	
020	1317804-0000		8	SPACER	
030	1317802-0000		1	NOZZLE	
040	312109-0461		8	SCREW M6S ISO 4017 M8X50 A480	
050	2545433-0000		1	SPACER	
060	1285870-0000		1	EXTENSION	
070	2545537-0000		4	SPACER	
080	1317801-0000		1	NOZZLE	
100	1317803-0000		1	NOZZLE	

Machine Type | Group Description | Used-In | Group Number | Page No

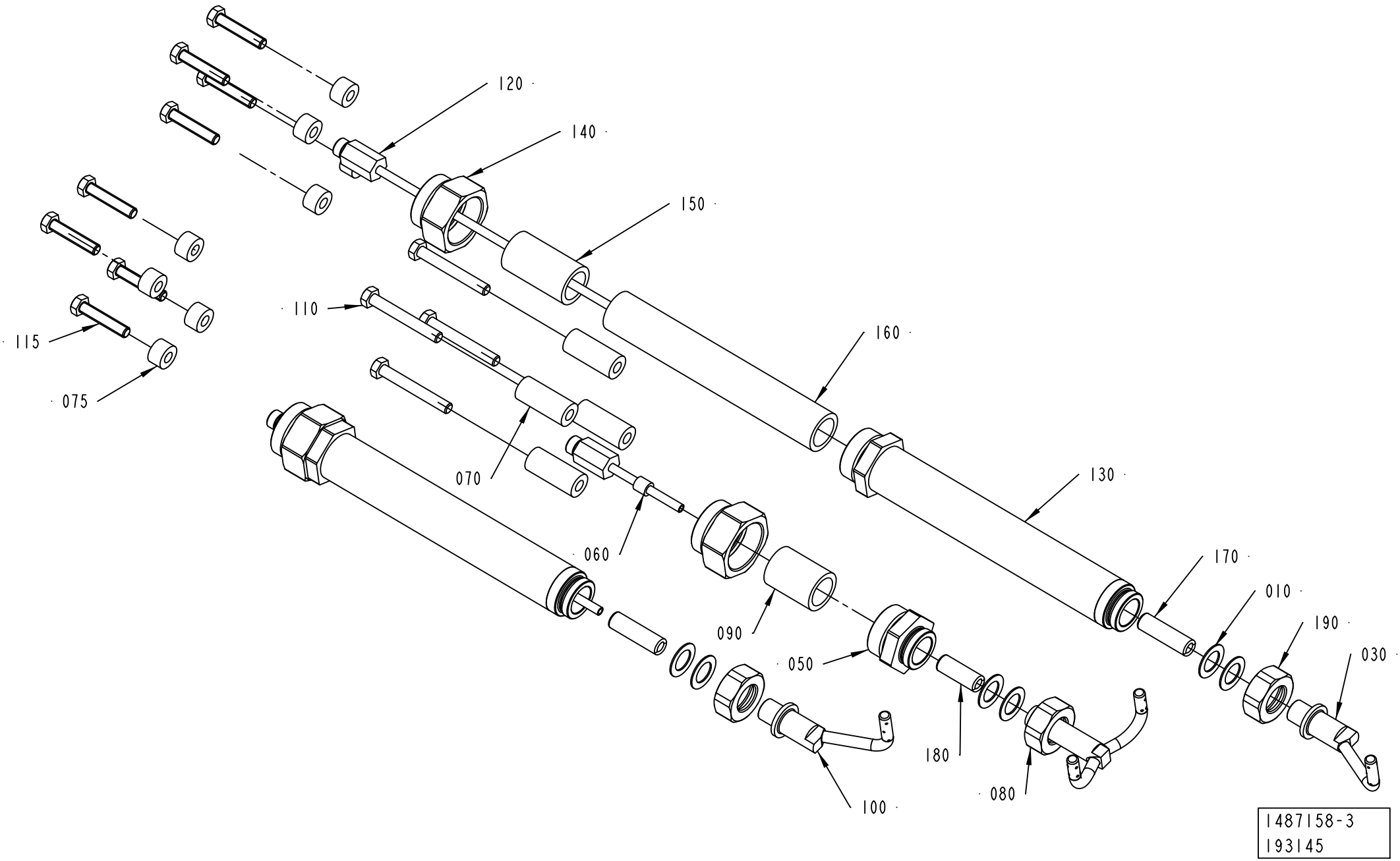
120
140
150
110
115
075
160
070
130
060
170
010
190
090
030
050
180
080
100
1487158-3
193145

Pos	Part No	UN	Qty	Description	Page No
TBA 1500S (Cont'd) (See drawing on page: 3-172)					
110	312109-0463		4	SCREW M6S ISO 4017 M8X60 A480	
120	1285310-0000		2	EXTENSION	
130	2545135-0000		2	SPACER	
140	1549390-0000		3	NUT	
150	23765-0004		2	INSULATING PIPE	
150	23765-0001		2	INSULATING PIPE	
155	23765-0004		2	INSULATING PIPE	
160	23765-0005		2	INSULATING PIPE	
170	252766-0002		2	INSULATING PIPE	
180	252766-0001		2	INSULATING PIPE	
190	1317085-0000		2	NUT	
200	359710-0001		2	WARNING SIGN ISO, HOT SURFACE	
TBA 1890S QC, TBA 2000S QC, TBA 1400B (See drawing on page: 3-174)					
010	263673-0000		9	GASKET	
030	2598500-0000		1	NOZZLE	
040	312105-0464		4	SCREW M6S ISO 4014 M8X65 A480	
050	2545433-0000		1	SPACER	
060	1296072-0000		1	EXTENSION	
070	2618683-0000		4	SPACER	
075	1498163-0000		8	SPACER	
080	2598498-0000		1	NOZZLE	
100	2598499-0000		1	NOZZLE	
110	312105-0464		4	SCREW M6S ISO 4014 M8X65 A480	
115	312109-0459		8	SCREW M6S ISO 4017 M8X40 A480	
120	2598503-0000		2	EXTENSION	
130	2545135-0000		2	SPACER	
140	1549390-0000		3	NUT	
150	23765-0001		2	INSULATING PIPE	
150	23765-0004		2	INSULATING PIPE	
155	23765-0004		2	INSULATING PIPE	
160	23765-0005		2	INSULATING PIPE	
170	252766-0002		2	INSULATING PIPE	
180	252766-0004		1	INSULATING PIPE	
190	1317085-0000		2	NUT	
TPA 0200SQ QC, TPA 0250SQ QC (See drawing on page: 3-172)					
010	263673-0000		6	GASKET	
020	2674242-0000		8	SPACER	
030	1346679-0000		1	NOZZLE	
040	312105-0467		8	SCREW M6S ISO 4014 M8X80 A480	
050	1549389-0000		1	SPACER	
060	1296072-0000		1	EXTENSION	
070	2543240-0000		4	SPACER	
080	2524339-0000		1	NOZZLE	
090	23765-0003		1	INSULATING PIPE	
095	23765-0005		1	INSULATING PIPE	
100	1346678-0000		1	NOZZLE	
110	312109-0457		4	SCREW M6S ISO 4017 M8X35 A480	
120	1285310-0000		2	EXTENSION	
130	2545135-0000		2	SPACER	
140	1549390-0000		3	NUT	
150	23765-0001		2	INSULATING PIPE	
150	23765-0004		2	INSULATING PIPE	
155	23765-0004		2	INSULATING PIPE	
160	23765-0005		2	INSULATING PIPE	
170	252766-0001		2	INSULATING PIPE	
180	252766-0001		1	INSULATING PIPE	
190	1317085-0000		2	NUT	
TPA 0250SQ NOQC (See drawing on page: 3-172)					
010	263673-0000		6	GASKET	
020	1498163-0000		8	SPACER	
020	1558447-0000		8	SPACER	
030	1346679-0000		1	NOZZLE	
040	312105-0455		4	SCREW M6S ISO 4017 M8X30 A480	
050	1549389-0000		1	SPACER	
060	1296072-0000		1	EXTENSION	
070	2543240-0000		4	SPACER	
070	1498163-0000		4	SPACER	
080	2524339-0000		1	NOZZLE	
090	23765-0003		1	INSULATING PIPE	
095	23765-0005		1	INSULATING PIPE	
100	1346678-0000		1	NOZZLE	
110	312109-0457		4	SCREW M6S ISO 4017 M8X35 A480	
120	1346646-0000		2	EXTENSION	
130	1549388-0000		2	SPACER	
140	1549390-0000		3	NUT	
150	23765-0002		2	INSULATING PIPE	
160	23765-0005		4	INSULATING PIPE	
170	252766-0001		2	INSULATING PIPE	
180	252766-0001		1	INSULATING PIPE	
200	359710-0001		2	WARNING SIGN ISO, HOT SURFACE	
TPA 0330SQ (See drawing on page: 3-172)					
010	263673-0000		6	GASKET	
020	1498163-0000		8	SPACER	

FLAP HEATER VARIANT

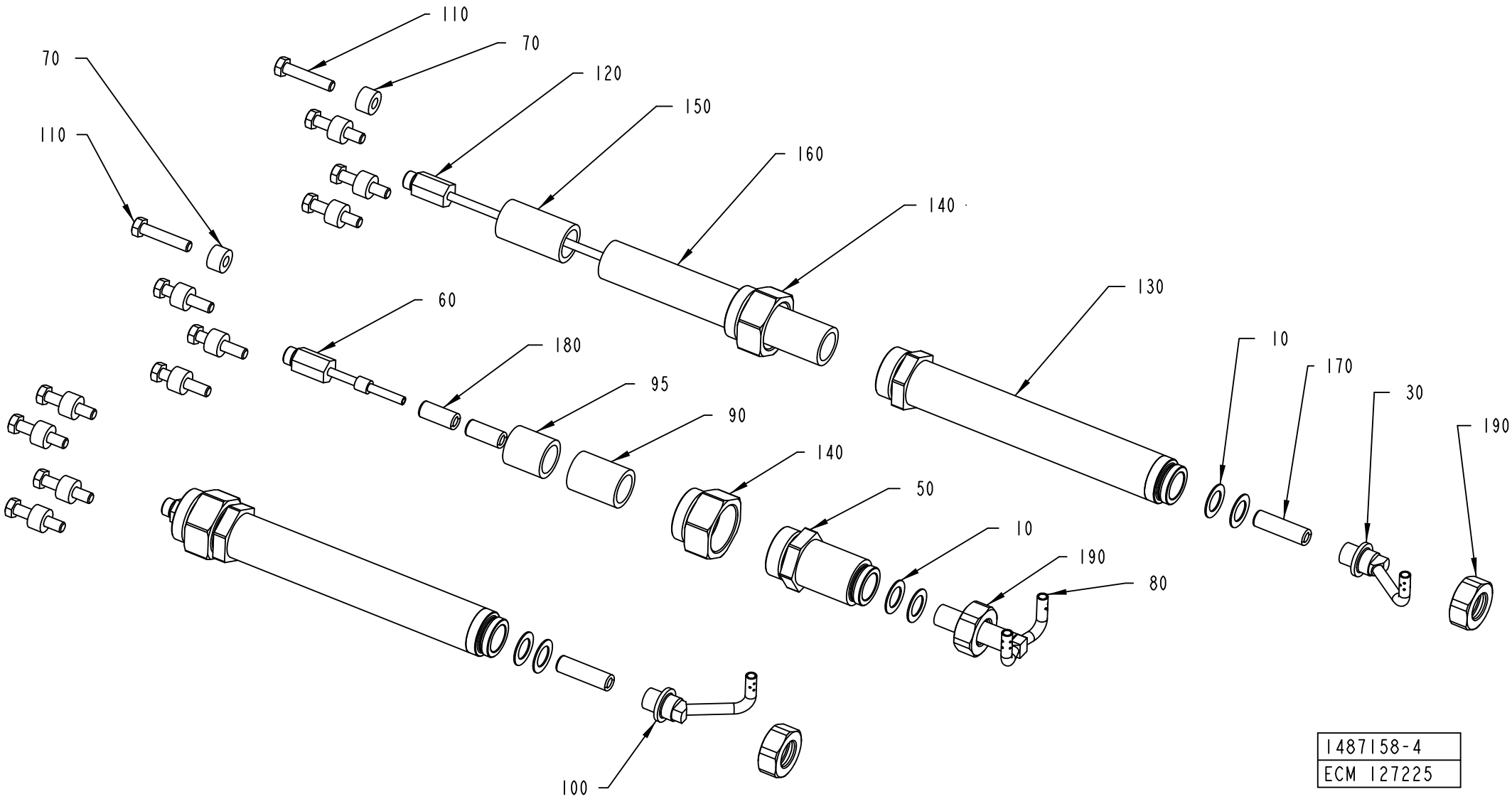

Pos	Part No	UN	Qty	Description	Page No
TPA 0330SQ (Cont'd) (See drawing on page: 3-172)					
030	1532284-0000		1	NOZZLE	
040	312109-0460		8	SCREW M6S ISO 4017 M8X45 A480	
050	1549389-0000		1	SPACER	
060	1296072-0000		1	EXTENSION	
070	1285874-0000		4	SPACER	
070	1498163-0000		4	SPACER	
080	1532285-0000		1	NOZZLE	
090	23765-0003		1	INSULATING PIPE	
095	23765-0005		1	INSULATING PIPE	
100	1532286-0000		1	NOZZLE	
110	312109-0457		4	SCREW M6S ISO 4017 M8X35 A480	
120	1346646-0000		2	EXTENSION	
130	1549388-0000		2	SPACER	
140	1549390-0000		3	NUT	
150	23765-0002		2	INSULATING PIPE	
160	23765-0005		4	INSULATING PIPE	
170	252766-0001		2	INSULATING PIPE	
180	252766-0001		2	INSULATING PIPE	
190	1317085-0000		2	NUT	
200	359710-0001		2	WARNING SIGN ISO, HOT SURFACE	
TPA 0500SQ (See drawing on page: 3-172)					
010	263673-0000		6	GASKET	
020	1285874-0000		8	SPACER	
030	1558328-0000		1	NOZZLE	
040	312109-0457		8	SCREW M6S ISO 4017 M8X35 A480	
050	1549389-0000		1	SPACER	
060	1296072-0000		1	EXTENSION	
070	1285874-0000		4	SPACER	
080	2501612-0000		1	NOZZLE	
090	23765-0003		1	INSULATING PIPE	
095	23765-0005		1	INSULATING PIPE	
100	1558329-0000		1	NOZZLE	
110	312109-0457		4	SCREW M6S ISO 4017 M8X35 A480	
120	1346646-0000		2	EXTENSION	
130	1549388-0000		2	SPACER	
140	1549390-0000		3	NUT	
150	23765-0002		2	INSULATING PIPE	
160	23765-0005		4	INSULATING PIPE	
170	252766-0002		2	INSULATING PIPE	
180	252766-0001		2	INSULATING PIPE	
190	1317085-0000		2	NUT	
200	359710-0001		2	WARNING SIGN ISO, HOT SURFACE	
TPA 1000SQ NOQC (See drawing on page: 3-172)					
010	263673-0000		7	GASKET	
020	1519339-0000		8	SPACER	
030	1549127-0000		1	NOZZLE	
040	312105-0465		8	SCREW M6S ISO 4014 M8X70 A480	
050	2545433-0000		1	SPACER	
060	1285870-0000		1	EXTENSION	
070	1334632-0000		4	SPACER	
080	1519336-0000		1	NOZZLE	
090	23765-0004		1	INSULATING PIPE	
100	1549126-0000		1	NOZZLE	
110	312109-0461		4	SCREW M6S ISO 4017 M8X50 A480	
120	1285310-0000		2	EXTENSION	
130	2545135-0000		2	SPACER	
140	1549390-0000		3	NUT	
150	23765-0004		2	INSULATING PIPE	
150	23765-0001		2	INSULATING PIPE	
155	23765-0004		2	INSULATING PIPE	
160	23765-0005		2	INSULATING PIPE	
170	252766-0002		2	INSULATING PIPE	
180	252766-0002		1	INSULATING PIPE	
190	1317085-0000		2	NUT	
200	359710-0001		2	WARNING SIGN ISO, HOT SURFACE	
TPA 1000SQ QC, TPA 0750SQ QC (See drawing on page: 3-174)					
010	263673-0000		7	GASKET	
020	2522196-0000		8	SPACER	
030	1549127-0000		1	NOZZLE	
040	312109-0460		8	SCREW M6S ISO 4017 M8X45 A480	
050	2545433-0000		1	SPACER	
060	1285870-0000		1	EXTENSION	
070	1334632-0000		4	SPACER	
080	1519336-0000		1	NOZZLE	
090	23765-0004		1	INSULATING PIPE	
100	1549126-0000		1	NOZZLE	
110	312109-0461		4	SCREW M6S ISO 4017 M8X50 A480	
120	1285310-0000		2	EXTENSION	
130	2545135-0000		2	SPACER	
140	1549390-0000		3	NUT	
150	23765-0001		2	INSULATING PIPE	
150	23765-0004		2	INSULATING PIPE	
155	23765-0004		2	INSULATING PIPE	

FLAP HEATER VARIANT

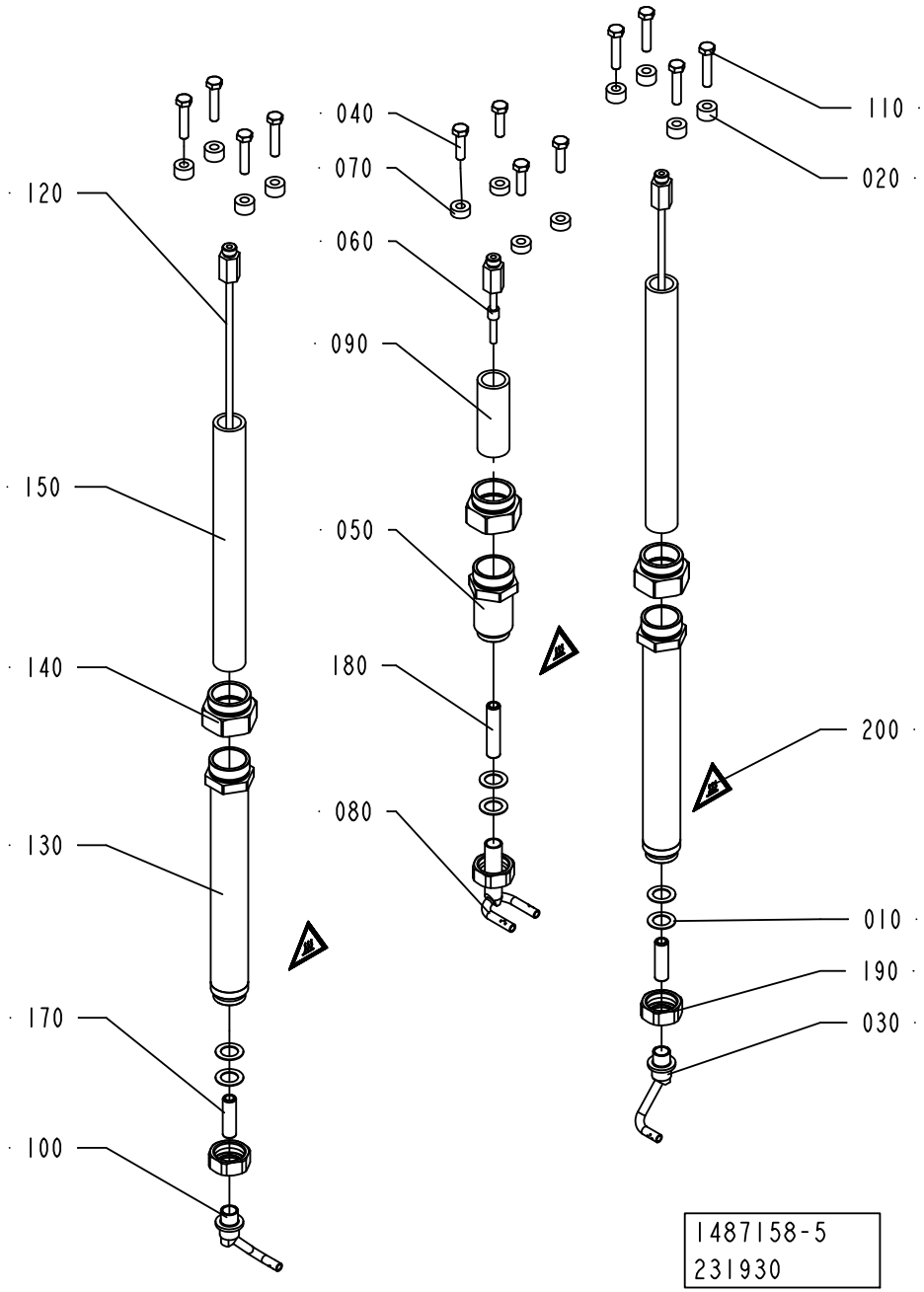

Pos	Part No	UN	Qty	Description	Page No
TPA 1000SQ QC, TPA 0750SQ QC (Cont'd) (See drawing on page: 3-174)					
160	23765-0005		2	INSULATING PIPE	
170	252766-0002		2	INSULATING PIPE	
180	252766-0002		1	INSULATING PIPE	
190	1317085-0000		2	NUT	
200	359710-0001		2	WARNING SIGN ISO, HOT SURFACE	
TBA 0200B NOQC (See drawing on page: 3-172)					
010	263673-0000		6	GASKET	
020	1346642-0000		4	SPACER	
030	1346644-0000		1	NOZZLE	
040	312105-0471		8	SCREW M6S ISO 4014 M8X100 A480	
050	1549389-0000		1	SPACER	
060	1296072-0000		1	EXTENSION	
070	1285874-0000		4	SPACER	
080	1346581-0000		1	NOZZLE	
090	23765-0003		1	INSULATING PIPE	
095	23765-0005		1	INSULATING PIPE	
100	1346643-0000		1	NOZZLE	
110	312109-0457		4	SCREW M6S ISO 4017 M8X35 A480	
120	1346646-0000		2	EXTENSION	
130	1549388-0000		2	SPACER	
140	1549390-0000		3	NUT	
150	23765-0002		2	INSULATING PIPE	
160	23765-0005		4	INSULATING PIPE	
170	252766-0001		2	INSULATING PIPE	
180	252766-0001		2	INSULATING PIPE	
190	1317085-0000		2	NUT	
200	359710-0001		2	WARNING SIGN ISO, HOT SURFACE	
TBA 0200B QC, TBA 0330S QC, TBA 0250B QC (See drawing on page: 3-172)					
010	263673-0000		5	GASKET	
020	1285874-0000		8	SPACER	
030	1346644-0000		1	NOZZLE	
040	312105-0457		4	SCREW M6S ISO 4014 M8X35 A480	
050	1549389-0000		1	SPACER	
060	1296072-0000		1	EXTENSION	
070	2545006-0000		4	SPACER	
080	1346581-0000		1	NOZZLE	
090	23765-0003		1	INSULATING PIPE	
095	23765-0005		1	INSULATING PIPE	
100	1346643-0000		1	NOZZLE	
110	312105-0459		8	SCREW M6S ISO 4014 M8X40 A480	
120	1285310-0000		2	EXTENSION	
130	2545135-0000		2	SPACER	
140	1549390-0000		3	NUT	
150	23765-0001		2	INSULATING PIPE	
150	23765-0004		2	INSULATING PIPE	
155	23765-0004		2	INSULATING PIPE	
160	23765-0005		2	INSULATING PIPE	
170	252766-0002		2	INSULATING PIPE	
180	252766-0001		2	INSULATING PIPE	
190	1317085-0000		2	NUT	
200	359710-0001		2	WARNING SIGN ISO, HOT SURFACE	
TBA 0200M QC, TBA 0250S QC (See drawing on page: 3-172)					
010	263673-0000		6	GASKET	
020	1498163-0000		8	SPACER	
030	1346644-0000		1	NOZZLE	
040	312105-0457		4	SCREW M6S ISO 4014 M8X35 A480	
050	1549389-0000		1	SPACER	
060	1296072-0000		1	EXTENSION	
070	1285874-0000		4	SPACER	
080	2545236-0000		1	NOZZLE	
090	23765-0003		1	INSULATING PIPE	
095	23765-0005		1	INSULATING PIPE	
100	1346643-0000		1	NOZZLE	
110	312105-0459		8	SCREW M6S ISO 4014 M8X40 A480	
120	1285310-0000		2	EXTENSION	
130	2545135-0000		2	SPACER	
140	1549390-0000		3	NUT	
150	23765-0001		2	INSULATING PIPE	
150	23765-0004		2	INSULATING PIPE	
155	23765-0004		2	INSULATING PIPE	
160	23765-0005		2	INSULATING PIPE	
170	252766-0002		2	INSULATING PIPE	
180	252766-0001		1	INSULATING PIPE	
190	1317085-0000		2	NUT	
TBA 0200S (See drawing on page: 3-172)					
010	263673-0000		6	GASKET	
020	1285874-0000		8	SPACER	
030	1346679-0000		1	NOZZLE	
040	312109-0457		8	SCREW M6S ISO 4017 M8X35 A480	
050	1549389-0000		1	SPACER	
060	1296072-0000		1	EXTENSION	
070	1285874-0000		4	SPACER	
080	1346580-0000		1	NOZZLE	

FLAP HEATER VARIANT

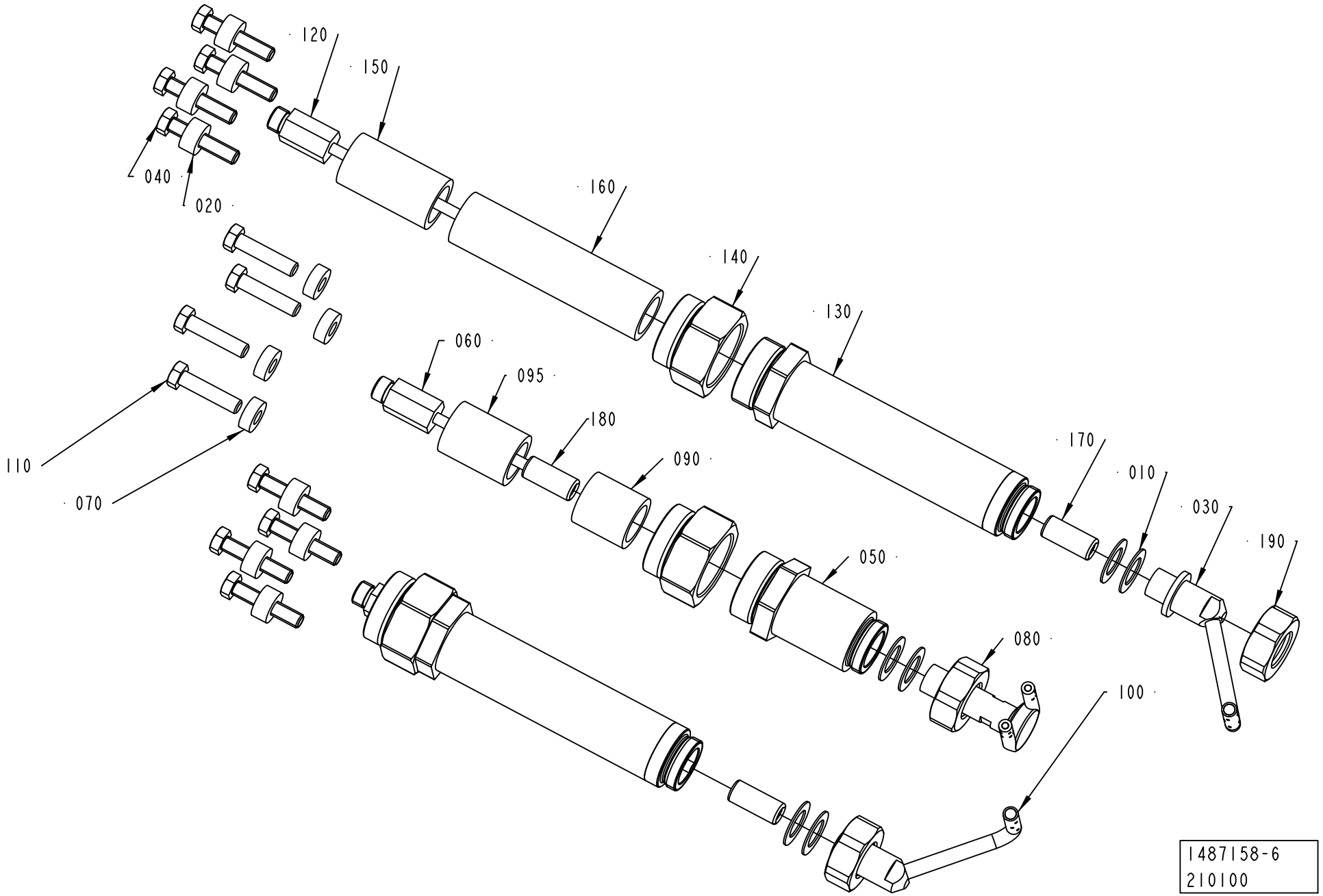

ECM: 343887 - 20080702
Group number: 1487158-0300
Assembly Drawing: 1487158-6_1_AA

This list covers pages from 3-172 to 3-183

Pos	Part No	UN	Qty	Description	Page No
TBA 0200S (Cont'd) (See drawing on page: 3-172)					
090	23765-0003		1	INSULATING PIPE	
095	23765-0005		1	INSULATING PIPE	
100	1346678-0000		1	NOZZLE	
110	312109-0457		4	SCREW M6S ISO 4017 M8X35 A480	
120	1346646-0000		2	EXTENSION	
130	1549388-0000		2	SPACER	
140	1549390-0000		3	NUT	
150	23765-0002		2	INSULATING PIPE	
160	23765-0005		4	INSULATING PIPE	
170	252766-0001		2	INSULATING PIPE	
180	252766-0001		1	INSULATING PIPE	
190	1317085-0000		2	NUT	
200	359710-0001		2	WARNING SIGN ISO, HOT SURFACE	
TBA 0200SQ QC, TBA 0250SQ QC (See drawing on page: 3-180)					
010	263673-0000		6	GASKET	
020	2545006-0000		8	SPACER	
030	2676617-0000		1	NOZZLE	
040	312109-0459		8	SCREW M6S ISO 4017 M8X40 A480	
050	1549389-0000		1	SPACER	
060	1296072-0000		1	EXTENSION	
070	1523497-0000		4	SPACER	
080	2676616-0000		1	NOZZLE	
090	23765-0003		1	INSULATING PIPE	
095	23765-0005		1	INSULATING PIPE	
100	2676615-0000		1	NOZZLE	
110	312109-0457		4	SCREW M6S ISO 4017 M8X35 A480	
120	1346646-0000		2	EXTENSION	
130	1549388-0000		2	SPACER	
140	1549390-0000		3	NUT	
150	23765-0002		2	INSULATING PIPE	
160	23765-0005		4	INSULATING PIPE	
180	252766-0001		1	INSULATING PIPE	
190	1317085-0000		2	NUT	
200	359710-0001		2	WARNING SIGN ISO, HOT SURFACE	
TBA 0250B NOQC (See drawing on page: 3-172)					
010	263673-0000		6	GASKET	
020	1346641-0000		4	SPACER	
030	1346644-0000		1	NOZZLE	
040	312105-0466		8	SCREW M6S ISO 4014 M8X75 A480	
050	1549389-0000		1	SPACER	
060	1296072-0000		1	EXTENSION	
070	1285874-0000		4	SPACER	
080	1346581-0000		1	NOZZLE	
090	23765-0003		1	INSULATING PIPE	
095	23765-0005		1	INSULATING PIPE	
100	1346643-0000		1	NOZZLE	
110	312109-0457		4	SCREW M6S ISO 4017 M8X35 A480	
120	1346646-0000		2	EXTENSION	
130	1549388-0000		2	SPACER	
140	1549390-0000		3	NUT	
150	23765-0002		2	INSULATING PIPE	
160	23765-0005		4	INSULATING PIPE	
170	252766-0001		2	INSULATING PIPE	
180	252766-0001		2	INSULATING PIPE	
190	1317085-0000		2	NUT	
200	359710-0001		2	WARNING SIGN ISO, HOT SURFACE	
TBA 0500B NOQC (See drawing on page: 3-172)					
010	263673-0000		6	GASKET	
020	1296153-0000		4	GUIDE	
030	1350422-0000		1	NOZZLE	
040	312105-0466		8	SCREW M6S ISO 4014 M8X75 A480	
050	1549389-0000		1	SPACER	
060	1296072-0000		1	EXTENSION	
080	1296387-0000		1	NOZZLE	
090	23765-0003		1	INSULATING PIPE	
095	23765-0005		1	INSULATING PIPE	
100	1350421-0000		1	NOZZLE	
110	312109-0457		4	SCREW M6S ISO 4017 M8X35 A480	
120	1346646-0000		2	EXTENSION	
130	1549388-0000		2	SPACER	
140	1549390-0000		3	NUT	
150	23765-0002		2	INSULATING PIPE	
160	23765-0005		4	INSULATING PIPE	
170	252766-0001		2	INSULATING PIPE	
180	252766-0001		2	INSULATING PIPE	
190	1317085-0000		2	NUT	
200	359710-0001		2	WARNING SIGN ISO, HOT SURFACE	
TBA 0500B QC, TBA 1000B QC (See drawing on page: 3-176)					
010	263673-0000		6	GASKET	
030	1350422-0000		1	NOZZLE	
050	1549389-0000		1	SPACER	
060	1296072-0000		1	EXTENSION	
070	1498163-0000		12	SPACER	

Machine Type | Group Description | Used-In | Group Number | Page No

See previous drawings pages: 3-172, 3-174, 3-176, 3-178, 3-180.

ECM: 343887 - 20080702
Group number: 1487158-0300
Assembly Drawing: 1487158-6_1_AA

This list covers pages from 3-172 to 3-183

Pos	Part No	UN	Qty	Description	Page No
TBA 0500B QC, TBA 1000B QC (Cont'd) (See drawing on page: 3-176)					
080	1296387-0000		1	NOZZLE	
090	23765-0004		1	INSULATING PIPE	
090	23765-0003		1	INSULATING PIPE	
095	23765-0005		1	INSULATING PIPE	
100	1350421-0000		1	NOZZLE	
110	312105-0459		12	SCREW M6S ISO 4014 M8X40 A480	
120	1285310-0000		2	EXTENSION	
130	2545135-0000		2	SPACER	
140	1549390-0000		3	NUT	
150	23765-0001		2	INSULATING PIPE	
150	23765-0004		2	INSULATING PIPE	
155	23765-0004		2	INSULATING PIPE	
160	23765-0005		2	INSULATING PIPE	
170	252766-0002		2	INSULATING PIPE	
180	252766-0001		2	INSULATING PIPE	
190	1317085-0000		2	NUT	
200	359710-0001		2	WARNING SIGN ISO, HOT SURFACE	
TBA 0500S (See drawing on page: 3-172)					
010	263673-0000		6	GASKET	
020	1511692-0000		8	SPACER	
030	1499446-0000		1	NOZZLE	
040	312105-0464		8	SCREW M6S ISO 4014 M8X65 A480	
050	1549389-0000		1	SPACER	
060	1296072-0000		1	EXTENSION	
070	1523497-0000		4	SPACER	
080	1499445-0000		1	NOZZLE	
090	23765-0003		1	INSULATING PIPE	
090	23765-0004		1	INSULATING PIPE	
095	23765-0005		1	INSULATING PIPE	
100	1499444-0000		1	NOZZLE	
110	312109-0457		4	SCREW M6S ISO 4017 M8X35 A480	
120	1285310-0000		2	EXTENSION	
130	2545135-0000		2	SPACER	
140	1549390-0000		3	NUT	
150	23765-0001		2	INSULATING PIPE	
150	23765-0004		2	INSULATING PIPE	
155	23765-0004		2	INSULATING PIPE	
160	23765-0005		2	INSULATING PIPE	
170	252766-0002		2	INSULATING PIPE	
180	252766-0001		2	INSULATING PIPE	
190	1317085-0000		2	NUT	
200	359710-0001		2	WARNING SIGN ISO, HOT SURFACE	
TBA 0500SQ, TBA 1000SQ QC (See drawing on page: 3-178)					
010	263673-0000		6	GASKET	
020	1498163-0000		8	SPACER	
030	1498147-0000		1	NOZZLE	
040	312105-0455		4	SCREW M6S ISO 4017 M8X30 A480	
050	1549389-0000		1	SPACER	
060	1296072-0000		1	EXTENSION	
070	1285874-0000		4	SPACER	
080	1490039-0000		1	NOZZLE	
090	2767235-0000		1	INSULATING PIPE	
100	1498146-0000		1	NOZZLE	
110	312105-0459		8	SCREW M6S ISO 4014 M8X40 A480	
120	2517967-0000		2	EXTENSION	
130	2598967-0000		2	SPACER	
140	1549390-0000		3	NUT	
150	2767234-0000		2	INSULATING PIPE	
170	2767244-0000		2	INSULATING PIPE	
180	2767236-0000		1	INSULATING PIPE	
190	1317085-0000		2	NUT	
200	359710-0001		2	WARNING SIGN ISO, HOT SURFACE	

Machine Type | Group Description | Used-In | Group Number | Page No

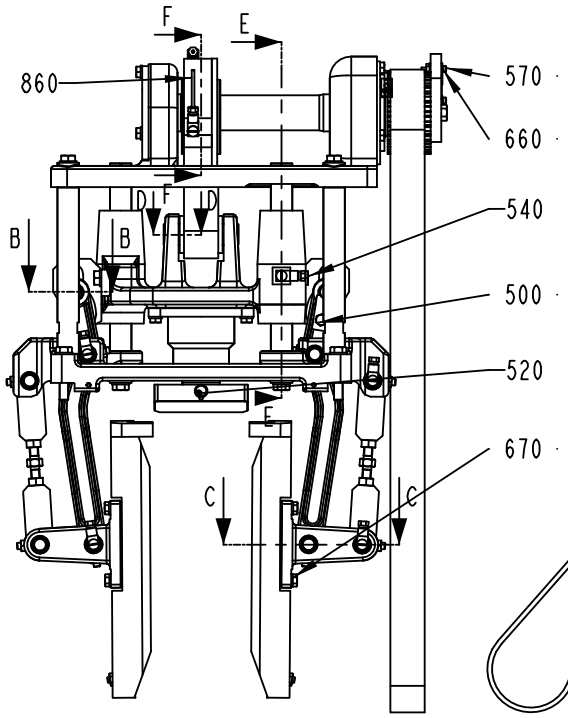

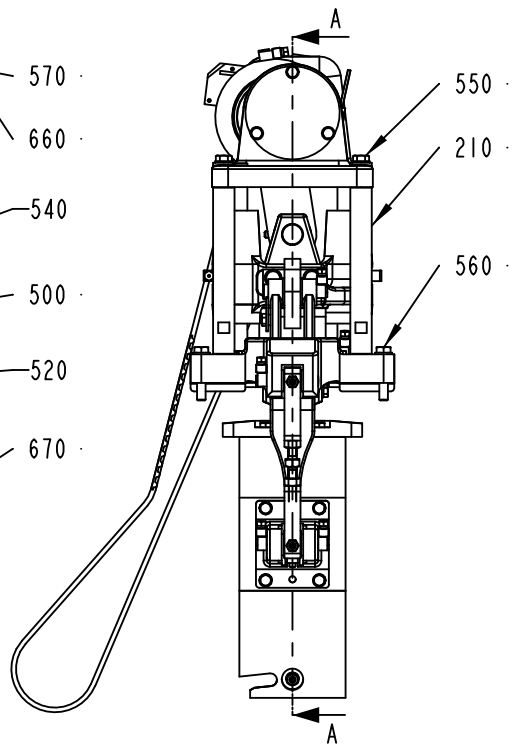

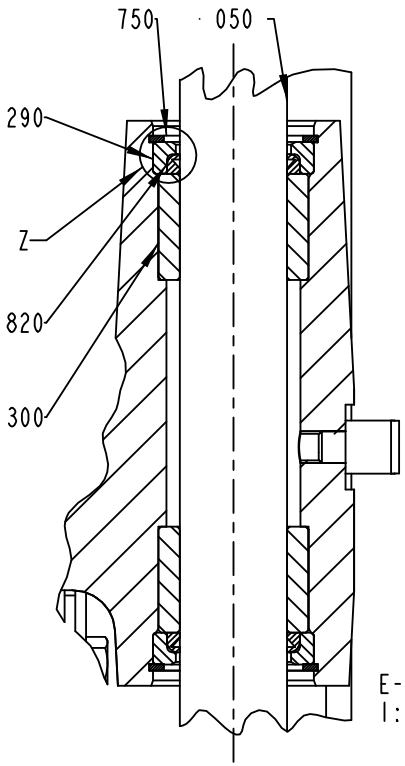

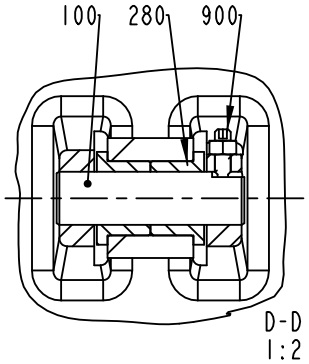

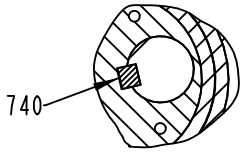

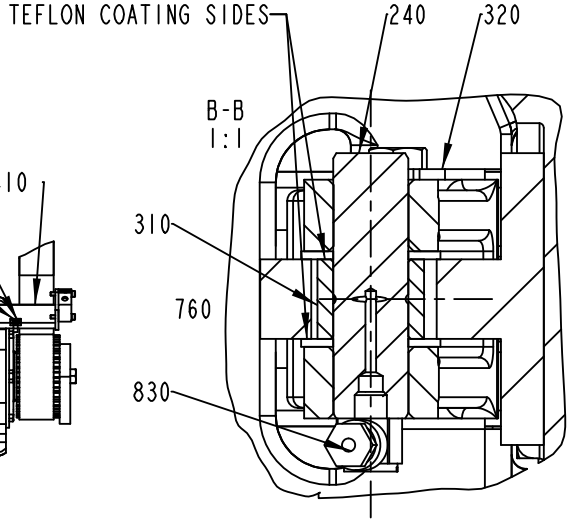

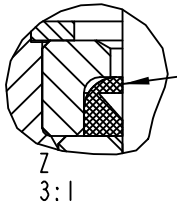

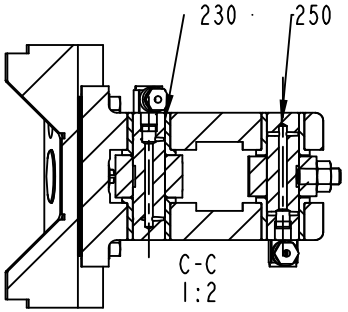

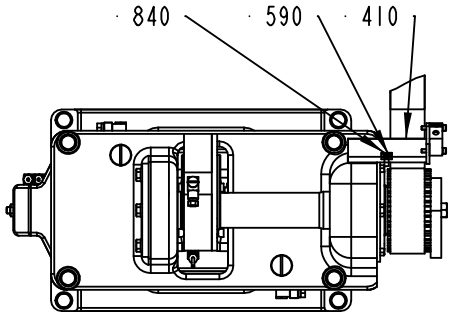

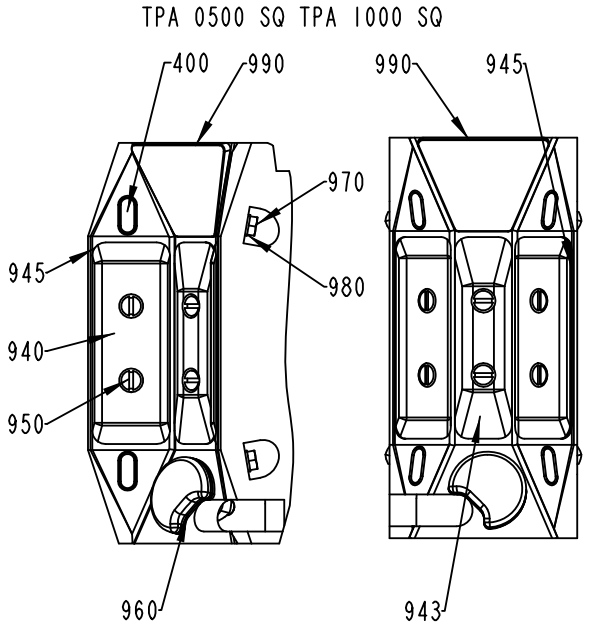

1:2

1144331-4
ECM 210141

ECM: 339620 - 20080702
Group number: 1144331-0300
Assembly Drawing: 1144331-4_1_AH

This list covers pages from 3-184 to 3-195

Pos	Part No	UN	Qty	Description	Page No
TBA 0500S (See drawing on pages: 3-184, 3-186)					
010	1144482-0000		2	SUPPORT	
080	1144492-0000		1	SPRING	
260	1144511-0000		15	SHIM	
350	1349519-0000		1	ACTIVATOR	
360	321133-0375		1	BUSHING, 35X39X30 MM	
450	1144978-0000		2	CAM	
470	1499144-0000		1	PUSHER	
475	1499144-0000		1	PUSHER	
480	1499143-0000		1	PLATE	
530	312105-0370		8	SCREW M6S ISO 4017 M6X20 A480	
580	312115-0370		1	SCREW ISO4762 M6X20 A4 80	
630	312605-0316		9	HEXAGON NUT, M6M M6 A280	
650	315105-0153		4	WASHER BRB 6,4X12 RFR	
670	315105-0153		5	WASHER BRB 6,4X12 RFR	
TBA 0500SQ QC, TBA 1000SQ QC (See drawing on pages: 3-184, 3-186)					
010	1144482-0000		2	SUPPORT	
080	1144492-0000		1	SPRING	
260	1144511-0000		15	SHIM	
350	1349519-0000		1	ACTIVATOR	
360	321133-0375		1	BUSHING, 35X39X30 MM	
450	1144978-0000		2	CAM	
470	2529289-0000		1	PUSHER	
475	2529289-0000		1	PUSHER	
480	1549940-0000		1	PUSHER	
530	312105-0370		8	SCREW M6S ISO 4017 M6X20 A480	
580	312115-0370		1	SCREW ISO4762 M6X20 A4 80	
630	312605-0316		9	HEXAGON NUT, M6M M6 A280	
650	315105-0153		4	WASHER BRB 6,4X12 RFR	
670	315105-0153		5	WASHER BRB 6,4X12 RFR	
TBA 1000B NOQC (See drawing on pages: 3-184, 3-186)					
010	1144482-0000		2	SUPPORT	
080	1144492-0000		1	SPRING	
260	1144511-0000		15	SHIM	
350	1349519-0000		1	ACTIVATOR	
360	321133-0375		1	BUSHING, 35X39X30 MM	
450	1144978-0000		2	CAM	
470	1260701-0000		1	PUSHER	
475	1260701-0000		1	PUSHER	
480	1260702-0000		1	PLATE	
530	312105-0370		8	SCREW M6S ISO 4017 M6X20 A480	
580	312115-0370		1	SCREW ISO4762 M6X20 A4 80	
630	312605-0316		9	HEXAGON NUT, M6M M6 A280	
650	315105-0153		4	WASHER BRB 6,4X12 RFR	
670	315105-0153		5	WASHER BRB 6,4X12 RFR	
TBA 1000S (See drawing on pages: 3-184, 3-186)					
010	1144482-0000		2	SUPPORT	
080	1144492-0000		1	SPRING	
260	1144511-0000		15	SHIM	
350	1349519-0000		1	ACTIVATOR	
360	321133-0375		1	BUSHING, 35X39X30 MM	
450	1144978-0000		2	CAM	
470	1144928-0000		1	PUSHER	
475	1144928-0000		1	PUSHER	
480	1144932-0000		1	PLATE	
530	312105-0370		8	SCREW M6S ISO 4017 M6X20 A480	
580	312115-0370		1	SCREW ISO4762 M6X20 A4 80	
630	312605-0316		9	HEXAGON NUT, M6M M6 A280	
650	315105-0153		4	WASHER BRB 6,4X12 RFR	
670	315105-0153		5	WASHER BRB 6,4X12 RFR	
TBA 1000SQ NOQC (See drawing on pages: 3-184, 3-186)					
010	1144482-0000		2	SUPPORT	
080	1144492-0000		1	SPRING	
260	1144511-0000		15	SHIM	
350	1349519-0000		1	ACTIVATOR	
360	321133-0375		1	BUSHING, 35X39X30 MM	
450	1144978-0000		2	CAM	
470	1490032-0000		1	PUSHER	
475	1490032-0000		1	PUSHER	
480	1549940-0000		1	PUSHER	
530	312105-0370		8	SCREW M6S ISO 4017 M6X20 A480	
580	312115-0370		1	SCREW ISO4762 M6X20 A4 80	
630	312605-0316		9	HEXAGON NUT, M6M M6 A280	
650	315105-0153		4	WASHER BRB 6,4X12 RFR	
670	315105-0153		5	WASHER BRB 6,4X12 RFR	
TBA 1400B (See drawing on pages: 3-184, 3-186)					
010	1144482-0000		2	SUPPORT	
080	2662142-0000		1	SPRING	
260	1144511-0000		15	SHIM	
350	1349519-0000		1	ACTIVATOR	
450	1144978-0000		2	CAM	
470	2771574-0000		1	PUSHER	
475	2771574-0000		1	PUSHER	
480	2660841-0000		1	PUSHER	

Machine Type | Group Description | Used-In | Group Number | Page No

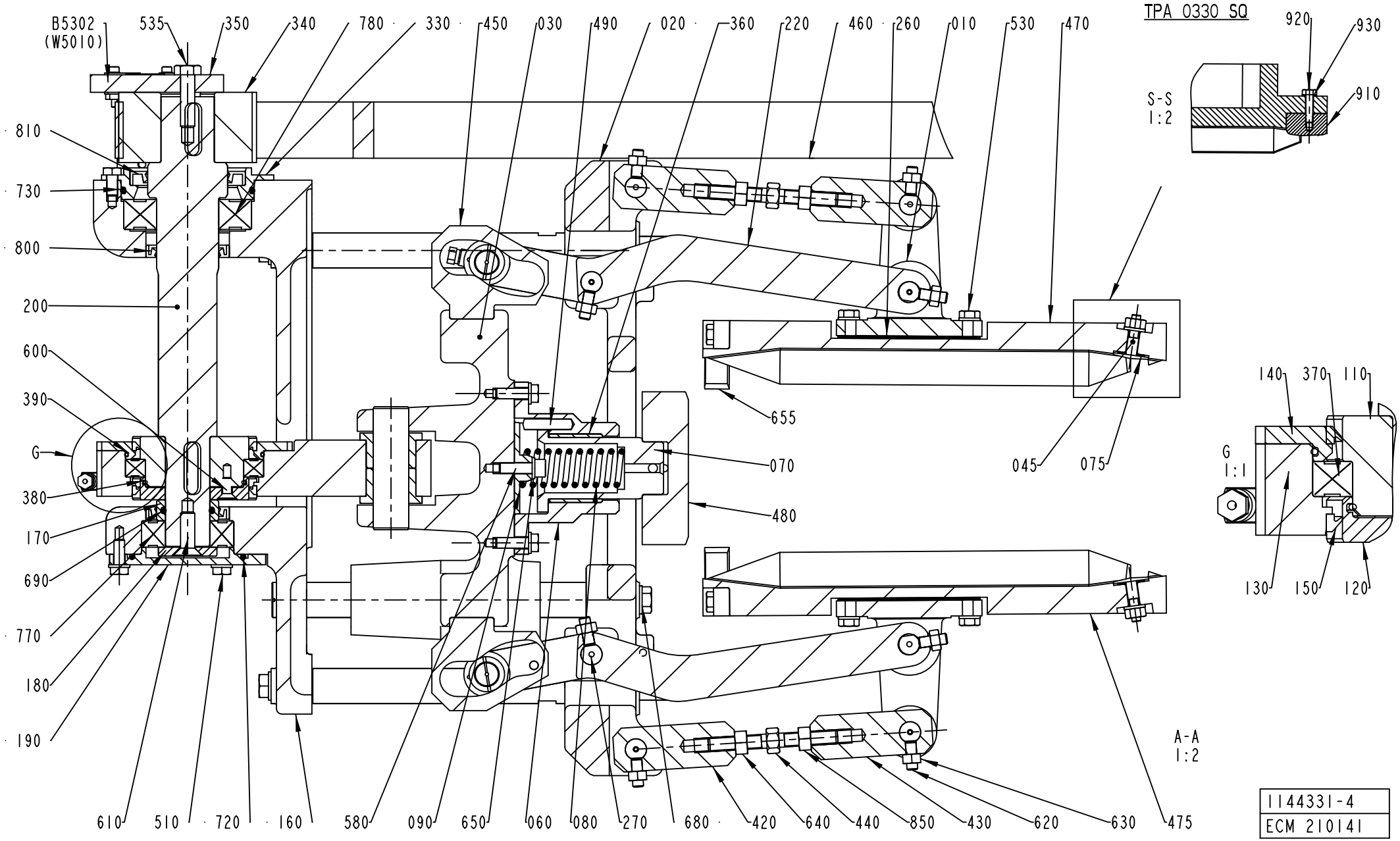

1144331-4
ECM 210141

ECM: 339620 - 20080702
Group number: 1144331-0300
Assembly Drawing: 1144331-4_2_AH

This list covers pages from 3-184 to 3-195

Pos	Part No	UN	Qty	Description	Page No
TBA 1400B (Cont'd) (See drawing on pages: 3-184, 3-186)					
530	312105-0370		8	SCREW M6S ISO 4017 M6X20 A480	
580	312115-0370		5	SCREW ISO4762 M6X20 A4 80	
630	312605-0316		9	HEXAGON NUT, M6M M6 A280	
650	315105-0153		4	WASHER BRB 6,4X12 RFR	
655	2594902-0000		2	CATCH	
670	315105-0153		5	WASHER BRB 6,4X12 RFR	
TBA 1500S (See drawing on pages: 3-184, 3-186)					
010	1144482-0000		2	SUPPORT	
080	1144492-0000		1	SPRING	
260	1144511-0000		15	SHIM	
350	1349519-0000		1	ACTIVATOR	
360	321133-0375		1	BUSHING, 35X39X30 MM	
450	1144978-0000		2	CAM	
470	1317654-0000		1	PUSHER	
475	1317654-0000		1	PUSHER	
480	1317655-0000		1	PLATE	
530	312105-0370		12	SCREW M6S ISO 4017 M6X20 A480	
580	312115-0370		1	SCREW ISO4762 M6X20 A4 80	
630	312605-0316		9	HEXAGON NUT, M6M M6 A280	
650	315105-0153		4	WASHER BRB 6,4X12 RFR	
655	1317787-0000		2	CATCH	
670	315105-0153		5	WASHER BRB 6,4X12 RFR	
TBA 1890S QC, TBA 2000S QC (See drawing on pages: 3-184, 3-186)					
010	1144482-0000		2	SUPPORT	
080	2662142-0000		1	SPRING	
260	1144511-0000		15	SHIM	
350	1349519-0000		1	ACTIVATOR	
360	321133-0375		1	BUSHING, 35X39X30 MM	
450	1144978-0000		2	CAM	
470	2661429-0000		1	PUSHER	
475	2661429-0000		1	PUSHER	
480	2660841-0000		1	PUSHER	
530	312105-0370		8	SCREW M6S ISO 4017 M6X20 A480	
580	312115-0370		5	SCREW ISO4762 M6X20 A4 80	
630	312605-0316		9	HEXAGON NUT, M6M M6 A280	
650	315105-0153		4	WASHER BRB 6,4X12 RFR	
655	2594902-0000		2	CATCH	
670	315105-0153		5	WASHER BRB 6,4X12 RFR	
TPA 0200SQ QC, TPA 0250SQ QC (See drawing on pages: 3-188, 3-190)					
010	2647101-0000		2	SUPPORT	
080	1144492-0000		1	SPRING	
260	2658249-0000		15	SHIM	
350	1349519-0000		1	ACTIVATOR	
360	321133-0375		1	BUSHING, 35X39X30 MM	
450	1144486-0000		2	CAM	
470	2705814-0100		1	PUSHER	**3-197, 3-199**
480	1549849-0000		1	PLATE	
530	312105-0368		8	SCREW M6S ISO 4017 M6X16 A480	
580	312115-0370		1	SCREW ISO4762 M6X20 A4 80	
630	312605-0316		9	HEXAGON NUT, M6M M6 A280	
650	315105-0153		4	WASHER BRB 6,4X12 RFR	
670	315105-0153		5	WASHER BRB 6,4X12 RFR	
1000	2647099-0000		2	GUIDE	
1020	90459-3940		2	LEVER, GN 612-6-M16X1.5-A-NI	
TPA 0250SQ NOQC (See drawing on pages: 3-184, 3-186)					
010	1144482-0000		2	SUPPORT	
080	1144492-0000		1	SPRING	
260	1144511-0000		15	SHIM	
350	1349519-0000		1	ACTIVATOR	
360	321133-0375		1	BUSHING, 35X39X30 MM	
450	1144486-0000		2	CAM	
470	1549847-0000		1	PUSHER	
475	1549848-0000		1	PUSHER	
480	1549849-0000		1	PLATE	
530	312105-0370		8	SCREW M6S ISO 4017 M6X20 A480	
580	312115-0370		1	SCREW ISO4762 M6X20 A4 80	
630	312605-0316		9	HEXAGON NUT, M6M M6 A280	
650	315105-0153		4	WASHER BRB 6,4X12 RFR	
670	315105-0153		5	WASHER BRB 6,4X12 RFR	
TPA 0330SQ (See drawing on pages: 3-184, 3-186)					
010	1144482-0000		2	SUPPORT	
080	1260895-0000		1	SPRING	
260	1144511-0000		15	SHIM	
350	1349519-0000		1	ACTIVATOR	
360	321133-0375		1	BUSHING, 35X39X30 MM	
450	1144486-0000		2	CAM	
470	1532289-0000		1	PUSHER	
475	1532290-0000		1	PUSHER	
480	1532291-0000		1	PLATE	
530	312105-0370		8	SCREW M6S ISO 4017 M6X20 A480	
580	312115-0370		1	SCREW ISO4762 M6X20 A4 80	
630	312605-0316		9	HEXAGON NUT, M6M M6 A280	
650	315105-0153		4	WASHER BRB 6,4X12 RFR	

Machine Type | Group Description | Used-In | Group Number | Page No

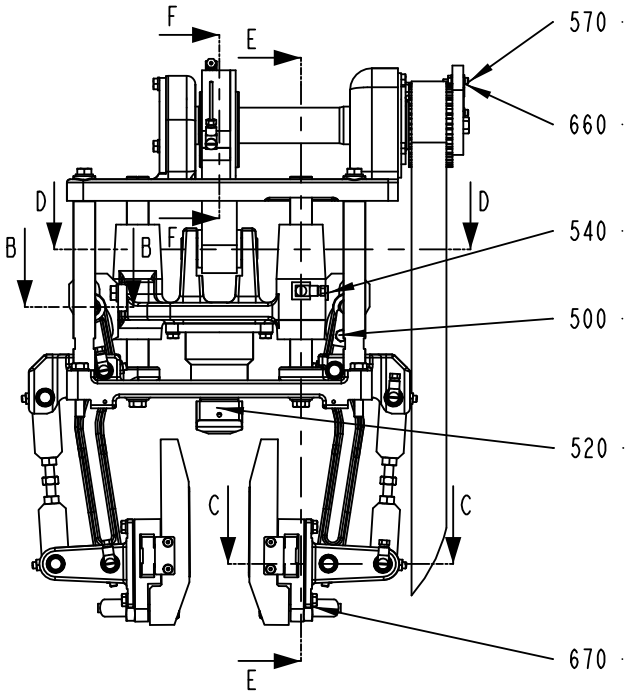

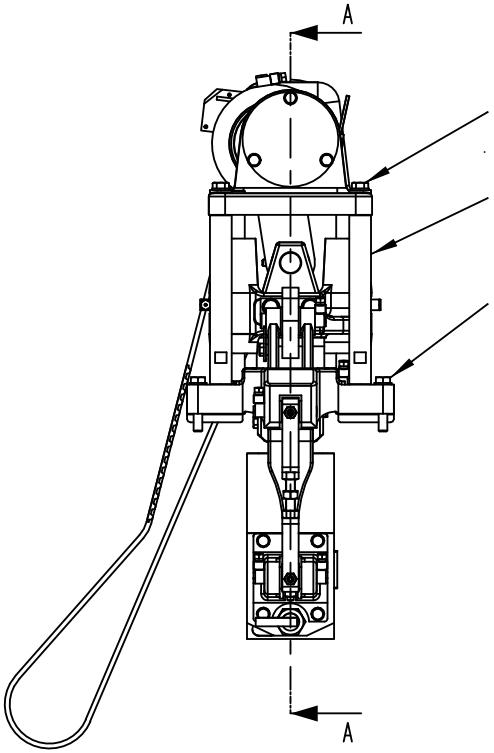

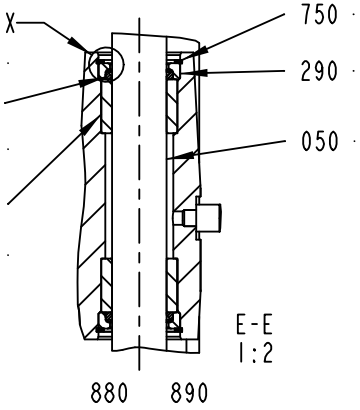

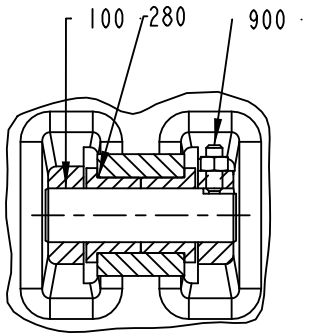

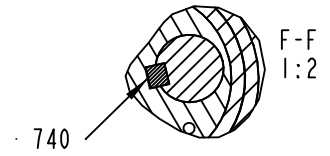

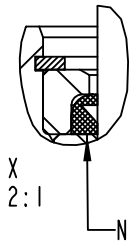

N.B.
THE SEALING LIP MUST BE
ON THE OUTER SIDE!!

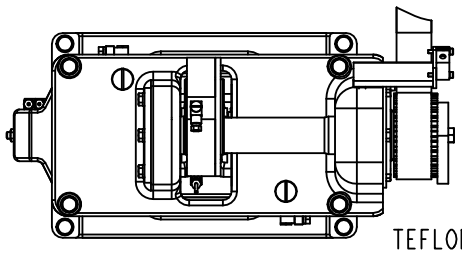

TEFLON COATING SIDES

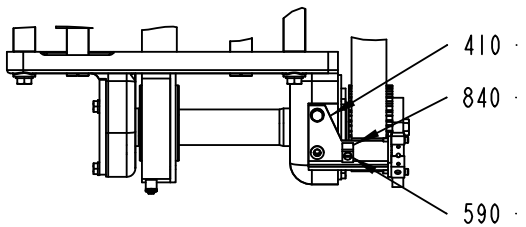

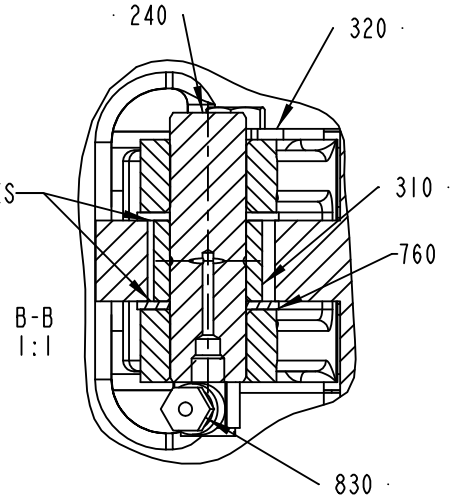

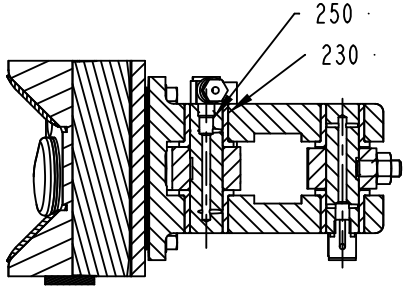

1144331-6
197793

Pos	Part No	UN	Qty	Description	Page No
TPA 0330SQ (Cont'd) (See drawing on pages: 3-184, 3-186)					
670	315105-0153		5	WASHER BRB 6,4X12 RFR	
910	1558821-0000		2	VOLUME BULGE	
920	312105-0293		2	SCREW M6S ISO 4017 M4X16 A470	
930	315105-0136		2	WASHER BRB 4,3X8 RFR	
TPA 0500SQ (See drawing on pages: 3-184, 3-186)					
010	1144482-0000		2	SUPPORT	
045	2541877-0000		2	NAIL	
080	1144492-0000		1	SPRING	
260	1144511-0000		15	SHIM	
350	1349519-0000		1	ACTIVATOR	
360	321133-0375		1	BUSHING, 35X39X30 MM	
400	2635167-0000		8	VOLUME BULGE	
450	1144486-0000		2	CAM	
470	1558178-0000		1	PUSHER	
475	1558047-0000		1	PUSHER	
480	1558184-0000		1	PLATE	
530	312105-0370		8	SCREW M6S ISO 4017 M6X20 A480	
580	312115-0370		1	SCREW ISO4762 M6X20 A4 80	
630	312605-0316		11	HEXAGON NUT, M6M M6 A280	
650	315105-0153		5	WASHER BRB 6,4X12 RFR	
670	315105-0153		7	WASHER BRB 6,4X12 RFR	
940	2602613-0000		4	VOLUME BULGE	
943	2559008-0000		2	VOLUME BULGE	
945	2611875-0000		4	SHIM	
950	312145-0289		12	SCREW ISO 2009 MFS M4X10 A4	
960	2541878-0000		6	WASHER	
970	312105-0287		10	SCREW M6S ISO 4017 M4X8 A470	
980	315105-0136		10	WASHER BRB 4,3X8 RFR	
990	2640075-0000		2	VOLUME BULGE	
TPA 1000SQ NOQC (See drawing on pages: 3-184, 3-186)					
010	1144482-0000		2	SUPPORT	
045	2541877-0000		2	NAIL	
080	1143530-0000		1	SPRING	
260	1144511-0000		15	SHIM	
350	1349519-0000		1	ACTIVATOR	
360	321133-0375		1	BUSHING, 35X39X30 MM	
450	1144486-0000		2	CAM	
470	2698264-0000		1	FLAP	
475	2698265-0000		1	FLAP	
480	1523826-0000		1	PUSHER	
530	312105-0370		8	SCREW M6S ISO 4017 M6X20 A480	
580	312115-0370		1	SCREW ISO4762 M6X20 A4 80	
630	312605-0316		11	HEXAGON NUT, M6M M6 A280	
650	315105-0153		4	WASHER BRB 6,4X12 RFR	
670	315105-0153		7	WASHER BRB 6,4X12 RFR	
940	2698262-0000		4	VOLUME BULGE	
943	2698261-0000		2	VOLUME BULGE	
945	2698260-0000		2	VOLUME SHIM	
950	312145-0289		12	SCREW ISO 2009 MFS M4X10 A4	
960	2541878-0000		6	WASHER	
970	312105-0287		2	SCREW M6S ISO 4017 M4X8 A470	
980	315105-0136		2	WASHER BRB 4,3X8 RFR	
990	2698263-0000		2	VOLUME BULGE	
TPA 1000SQ QC, TPA 0750SQ QC (See drawing on pages: 3-188, 3-190)					
010	2647101-0000		2	SUPPORT	
080	1143530-0000		1	SPRING	
260	2658249-0000		15	SHIM	
350	1349519-0000		1	ACTIVATOR	
360	321133-0375		1	BUSHING, 35X39X30 MM	
450	1144486-0000		2	CAM	
470	2705814-0100		1	PUSHER	**3-197, 3-199**
480	2698300-0000		1	PLATE	
530	312105-0368		8	SCREW M6S ISO 4017 M6X16 A480	
580	312115-0370		1	SCREW ISO4762 M6X20 A4 80	
630	312605-0316		9	HEXAGON NUT, M6M M6 A280	
650	315105-0153		4	WASHER BRB 6,4X12 RFR	
670	315105-0153		5	WASHER BRB 6,4X12 RFR	
1000	2647099-0000		2	GUIDE	
1020	90459-3940		2	LEVER, GN 612-6-M16X1.5-A-NI	
TBA 0200B NOQC (See drawing on pages: 3-184, 3-186)					
010	1144482-0000		2	SUPPORT	
080	1260895-0000		1	SPRING	
260	1144511-0000		15	SHIM	
350	1349519-0000		1	ACTIVATOR	
360	321133-0375		1	BUSHING, 35X39X30 MM	
450	1144978-0000		2	CAM	
470	1334999-0000		1	PUSHER	
475	1334999-0000		1	PUSHER	
480	1350809-0000		1	BLOCK	
530	312105-0370		8	SCREW M6S ISO 4017 M6X20 A480	
580	312115-0370		1	SCREW ISO4762 M6X20 A4 80	
630	312605-0316		9	HEXAGON NUT, M6M M6 A280	
650	315105-0153		4	WASHER BRB 6,4X12 RFR	

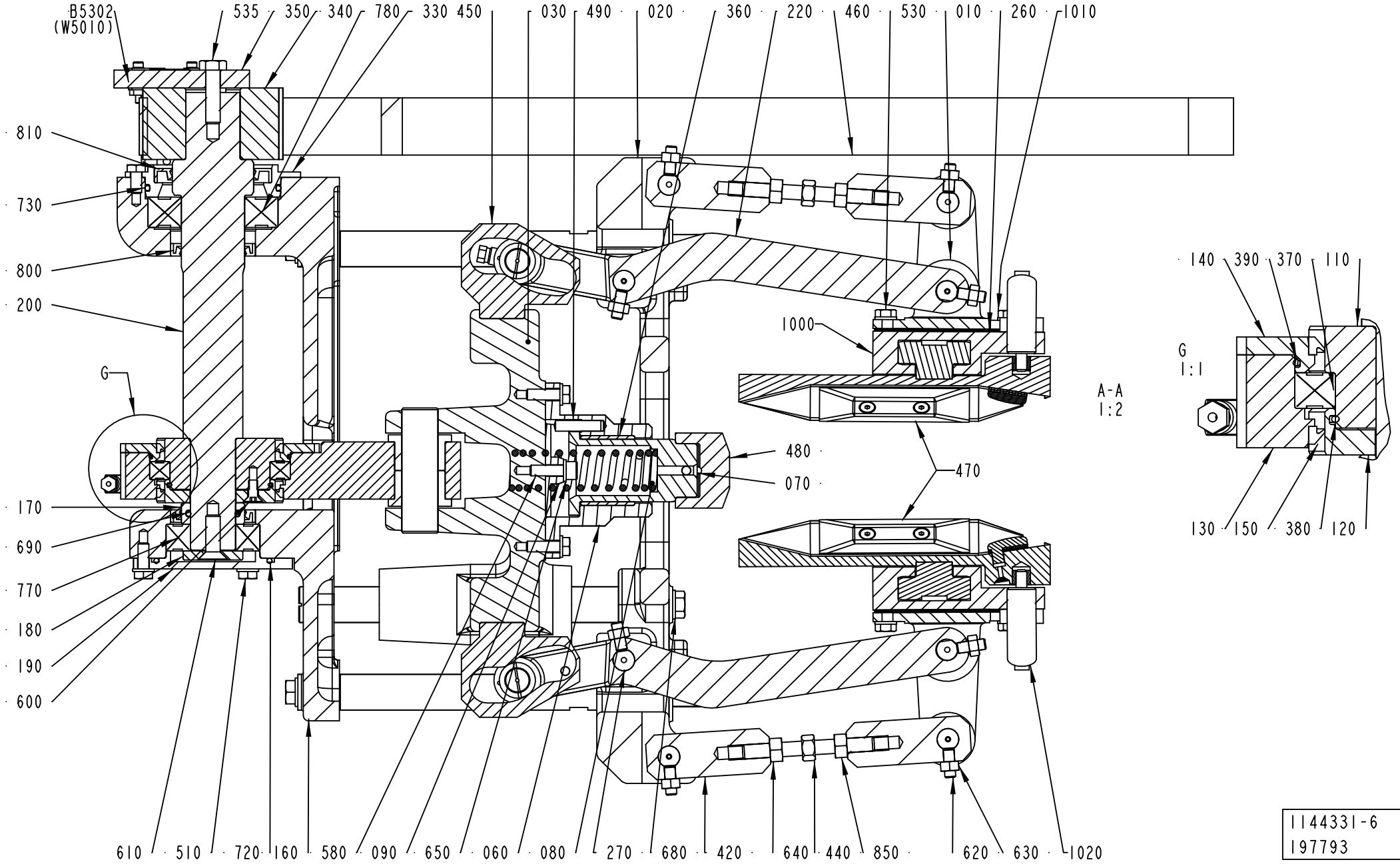

1144331-6
197793

Pos	Part No	UN	Qty	Description	Page No
TBA 0200B NOQC (Cont'd) (See drawing on pages: 3-184, 3-186)					
670	315105-0153		5	WASHER BRB 6,4X12 RFR	
TBA 0200B QC, TBA 0330S QC, TBA 0250B QC (See drawing on pages: 3-184, 3-186)					
010	1144482-0000		2	SUPPORT	
080	1144492-0000		1	SPRING	
260	1144511-0000		15	SHIM	
350	1349519-0000		1	ACTIVATOR	
360	321133-0375		1	BUSHING, 35X39X30 MM	
450	1144978-0000		2	CAM	
470	2605125-0000		1	PUSHER	
475	2605125-0000		1	PUSHER	
480	2651145-0000		1	BLOCK	
530	312105-0370		8	SCREW M6S ISO 4017 M6X20 A480	
580	312115-0370		1	SCREW ISO4762 M6X20 A4 80	
630	312605-0316		9	HEXAGON NUT, M6M M6 A280	
650	315105-0153		4	WASHER BRB 6,4X12 RFR	
670	315105-0153		5	WASHER BRB 6,4X12 RFR	
TBA 0200M, TBA 0250S (See drawing on pages: 3-184, 3-186)					
010	1144482-0000		2	SUPPORT	
080	1144492-0000		1	SPRING	
260	1144511-0000		15	SHIM	
350	1349519-0000		1	ACTIVATOR	
360	321133-0375		1	BUSHING, 35X39X30 MM	
450	1144978-0000		2	CAM	
470	2686876-0000		1	PUSHER	
475	2686876-0000		1	PUSHER	
480	2522197-0000		1	PLATE	
530	312105-0370		8	SCREW M6S ISO 4017 M6X20 A480	
630	312605-0316		9	HEXAGON NUT, M6M M6 A280	
650	315105-0153		4	WASHER BRB 6,4X12 RFR	
670	315105-0153		5	WASHER BRB 6,4X12 RFR	
TBA 0200S (See drawing on pages: 3-184, 3-186)					
010	1144482-0000		2	SUPPORT	
080	1260895-0000		1	SPRING	
260	1144511-0000		15	SHIM	
350	1349519-0000		1	ACTIVATOR	
360	321133-0375		1	BUSHING, 35X39X30 MM	
450	1144978-0000		2	CAM	
470	1260889-0000		1	PUSHER	
475	1260889-0000		1	PUSHER	
480	1260888-0000		1	BLOCK	
530	312105-0370		8	SCREW M6S ISO 4017 M6X20 A480	
580	312115-0370		1	SCREW ISO4762 M6X20 A4 80	
630	312605-0316		9	HEXAGON NUT, M6M M6 A280	
650	315105-0153		4	WASHER BRB 6,4X12 RFR	
670	315105-0153		5	WASHER BRB 6,4X12 RFR	
TBA 0200SQ QC, TBA 0250SQ QC (See drawing on pages: 3-184, 3-186)					
010	1144482-0000		2	SUPPORT	
080	1144492-0000		1	SPRING	
260	1144511-0000		15	SHIM	
350	1349519-0000		1	ACTIVATOR	
360	321133-0375		1	BUSHING, 35X39X30 MM	
450	1144978-0000		2	CAM	
470	2757847-0000		1	PUSHER	
475	2757847-0000		1	PUSHER	
480	2668240-0000		1	BLOCK	
530	312105-0370		8	SCREW M6S ISO 4017 M6X20 A480	
580	312115-0370		1	SCREW ISO4762 M6X20 A4 80	
630	312605-0316		9	HEXAGON NUT, M6M M6 A280	
650	315105-0153		4	WASHER BRB 6,4X12 RFR	
670	315105-0153		5	WASHER BRB 6,4X12 RFR	
TBA 0250B NOQC (See drawing on pages: 3-184, 3-186)					
010	1144482-0000		2	SUPPORT	
080	1260895-0000		1	SPRING	
260	1144511-0000		15	SHIM	
350	1349519-0000		1	ACTIVATOR	
360	321133-0375		1	BUSHING, 35X39X30 MM	
450	1144978-0000		2	CAM	
470	1350810-0000		1	PUSHER	
475	1350810-0000		1	PUSHER	
480	1350809-0000		1	BLOCK	
530	312105-0370		8	SCREW M6S ISO 4017 M6X20 A480	
580	312115-0370		1	SCREW ISO4762 M6X20 A4 80	
630	312605-0316		9	HEXAGON NUT, M6M M6 A280	
650	315105-0153		4	WASHER BRB 6,4X12 RFR	
670	315105-0153		5	WASHER BRB 6,4X12 RFR	
TBA 0500B NOQC (See drawing on pages: 3-184, 3-186)					
010	1144482-0000		2	SUPPORT	
080	1144492-0000		1	SPRING	
260	1144511-0000		15	SHIM	
350	1349519-0000		1	ACTIVATOR	
360	321133-0375		1	BUSHING, 35X39X30 MM	
450	1144978-0000		2	CAM	
470	1539872-0000		1	PUSHER	

See previous drawings pages: 3-184, 3-186, 3-188, 3-190.

ECM: 339620 - 20080702
Group number: 1144331-0300
Assembly Drawing: 1144331-6_2_AA

This list covers pages from 3-184 to 3-195

Pos	Part No	UN	Qty	Description	Page No
TBA 0500B NOQC (Cont'd) (See drawing on pages: 3-184, 3-186)					
475	1539872-0000		1	PUSHER	
480	1260702-0000		1	PLATE	
530	312105-0370		8	SCREW M6S ISO 4017 M6X20 A480	
580	312115-0370		1	SCREW ISO4762 M6X20 A4 80	
630	312605-0316		9	HEXAGON NUT, M6M M6 A280	
650	315105-0153		4	WASHER BRB 6,4X12 RFR	
670	315105-0153		5	WASHER BRB 6,4X12 RFR	
TBA 0500B QC, TBA 1000B QC (See drawing on pages: 3-184, 3-186)					
010	1144482-0000		2	SUPPORT	
080	1144492-0000		1	SPRING	
260	1144511-0000		15	SHIM	
350	1349519-0000		1	ACTIVATOR	
360	321133-0375		1	BUSHING, 35X39X30 MM	
450	1144978-0000		2	CAM	
470	2524512-0000		1	PUSHER	
475	2524512-0000		1	PUSHER	
480	1260702-0000		1	PLATE	
530	312105-0370		8	SCREW M6S ISO 4017 M6X20 A480	
580	312115-0370		1	SCREW ISO4762 M6X20 A4 80	
630	312605-0316		9	HEXAGON NUT, M6M M6 A280	
650	315105-0153		4	WASHER BRB 6,4X12 RFR	
670	315105-0153		5	WASHER BRB 6,4X12 RFR	
Common Parts					
020	1144483-0000		1	PLATE	
030	1144485-0000		1	SUPPORT	
050	1144488-0000		2	COLUMN	
060	1144489-0000		1	FLANGE	
070	1478189-0000		1	SUPPORT	
090	1144493-0000		1	WASHER	
100	1144494-0000		1	AXLE PIN	
110	1144495-0000		1	ECCENTRIC	
120	1144496-0000		1	ECCENTRIC	
130	1346539-0000		1	CONNECTING ROD	
140	1144498-0000		1	FLANGE	
150	90091-0408		2	BEARING SEAL 70X78X5 MM	
160	1144500-0000		1	SUPPORT	
170	1144501-0000		1	SPACER	
180	1144502-0000		1	WASHER	
190	1144503-0000		1	FLANGE	
200	1349516-0000		1	SHAFT	
210	1144505-0000		4	COLUMN	
220	1144506-0000		2	LEVER	
230	90458-1404		16	FLANGE BUSHING, 12X16X16 MM	
240	1144508-0000		2	AXLE PIN	
250	1317362-0000		6	SHAFT	
270	1317363-0000		2	SHAFT	
280	1144514-0000		2	BUSHING	
290	1144515-0000		4	INSERT	
300	1144517-0000		4	BUSHING	
310	2526249-0000		2	ROLLER	
320	1144521-0000		2	CLAMP	
330	1347018-0000		1	PLUG	
340	1349517-0000		1	TOOTHED PULLEY	
370	90214-0229		1	BALL BEARING, 65X85X10 MM	
380	90242-0271		1	O-RING 63,22X1,78 MM	
390	90242-0270		1	O-RING 82,27X1,78 MM	
410	1349518-0000		1	SUPPORT	
420	1144914-0000		2	LEVER	
430	1144915-0000		2	LEVER	
440	1144916-0000		2	ADJUSTING SCREW	
460	1348537-0000		1	TIMING BELT	
490	1498029-0000		1	PIN	
500	312105-0366		7	SCREW M6S ISO 4017 M6X12 A480	
510	312105-0368		3	SCREW M6S ISO 4017 M6X16 A480	
520	312105-0370		3	SCREW M6S ISO 4017 M6X20 A480	
535	312105-0455		1	SCREW M6S ISO 4017 M8X30 A480	
540	312105-0451		4	SCREW M6S ISO 4017 M8X20 A480	
550	312105-0457		6	SCREW M6S ISO 4014 M8X35 A480	
560	312109-0460		4	SCREW M6S ISO 4017 M8X45 A480	
570	312115-0228		2	SCREW ISO4762 M3X16 A4 80	
590	312125-0287		1	SCREW ISO 1207 M4X8 A4	
600	312155-0327		6	SCREW DIN 7991 MF6S M5X12 A4 70	
610	312155-0453		1	SCREW DIN 7991 MF6S M8X25 A4 70	
620	312318-0368		8	SCREW ISO4029 M6X16 A4	
640	312605-0318		2	HEXAGON NUT, M6M M8 A280	
660	315105-0124		2	WASHER BRB 3,2X6 RFR	
680	315105-0165		14	WASHER BRB 8,4X16 RFR	
690	315202-0217		1	O-RING 24,2X3 MM	
700	90166-0143	MM	1000	TUBE 2,5 MM PA TRANSP.	
710	90134-0068		1	CONNECTION	
720	315202-0303		1	O-RING 59,5X3 MM	
730	315202-0305		1	O-RING 69,5X3 MM	
740	315705-0267		2	PARALLEL KEY W. ROUND ENDS 8X7X30 MM	

Machine Type | Group Description | Used-In | Group Number | Page No

See previous drawings pages: 3-184, 3-186, 3-188, 3-190.

Pos	Part No	UN	Qty	Description	Page No
Common Parts (Cont'd)					
750	315753-0122		4	RETAINING RING FOR BORE DIN 472 30 A2	
760	321130-0200		4	THRUST WASHER, 14X26X1,5 MM	
770	321313-0105		1	BALL BEARING, 25X52X15MM	
780	321313-0107		1	BALL BEARING, 35X72X17MM	
790	315105-0156		8	WASHER BRB 6,7X14 RFR	
800	90091-0297		2	RADIAL SEAL 35X47X7 MM DUST LIP	
810	90091-0298		1	RADIAL SEAL 45X65X8 MM DUST LIP	
820	90091-0380		4	SCRAPER, EXCLUDER 20X24,8X3,7 MM	
830	90134-0058		13	CONNECTION	
840	90165-0057		1	PIPE CLIP FOR TUBE D=6 MM	
850	312902-0318		2	NUT HEX. LEFT THREAD, M8 A280	
860	90166-0109	MM	600	TUBE 4 MM PA TRANSP.	
880	352113-0102		5	CABLE TIE, BLACK 188X4,8 MM	
890	352113-0101		8	CABLE TIE, BLACK 92X2,5 MM	
900	312318-0370		1	SCREW ISO4029 M6X20 A4	
B5302	90044-0194		1	PROX.SW. IN5329/IN3002-BPKG(EX90044-104)	

Pos	Part No	UN	Qty	Description	Page No

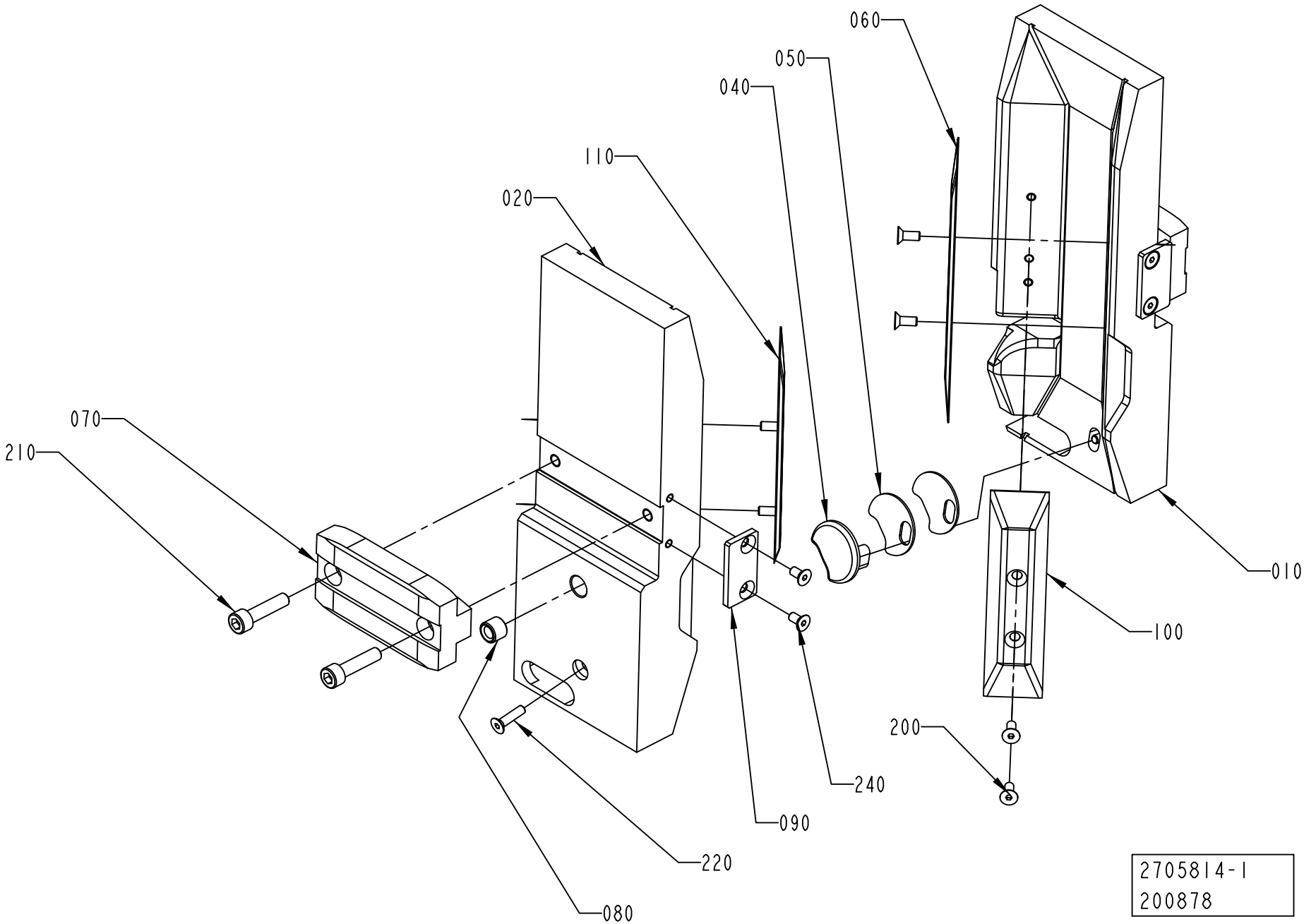
060
050
040
110
020
070
210
010
100
200
240
090
220
080
2705814-1
200878

ECM: 340442 - 20080215
Group number: 2705814-0100
Assembly Drawing: 2705814-1_1_AA

This list covers pages from 3-196 to 3-199

Pos	Part No	UN	Qty	Description	Page No
TPA 0200SQ (See drawing on page: 3-198)					
010	2674272-0000		1	PUSHER	
020	2674273-0000		1	PUSHER	
040	2674269-0000		2	NAIL	
220	312115-0297		2	SCREW ISO4762 M4X25 A4 80	
250	315105-0136		2	WASHER BRB 4,3X8 RFR	
TPA 0250SQ (See drawing on page: 3-198)					
010	2674271-0000		1	PUSHER	
020	2674270-0000		1	PUSHER	
040	2674269-0000		2	NAIL	
220	312105-0295		2	SCREW M6S ISO 4017 M4X20 A470	
250	315105-0136		2	WASHER BRB 4,3X8 RFR	
TPA 0750SQ (See drawing on page: 3-196)					
010	2647094-0000		1	PUSHER	
020	2647093-0000		1	PUSHER	
040	2647097-0000		2	NAIL	
050	2658247-0000		6	WASHER	
060	2647100-0000		4	VOLUME BULGE	
090	2698319-0000		2	BLOCK	
200	312155-0289		8	SCREW DIN 7991 MF6S M4X10 A4 70	
220	312155-0293		2	SCREW DIN 7991 MF6S M4X16 A4 70	
240	312155-0287		4	SCREW DIN 7991 MF6S M4X8 A4 70	
TPA 1000SQ (See drawing on page: 3-196)					
010	2647096-0000		1	PUSHER	
020	2647095-0000		1	PUSHER	
040	2647097-0000		2	NAIL	
050	2658247-0000		6	WASHER	
060	1523467-0000		2	VOLUME BULGE	
090	2698319-0000		2	BLOCK	
100	2658263-0000		1	VOLUME BULGE	
110	2658264-0000		1	VOLUME BULGE	
200	312155-0289		8	SCREW DIN 7991 MF6S M4X10 A4 70	
220	312155-0293		2	SCREW DIN 7991 MF6S M4X16 A4 70	
240	312155-0287		4	SCREW DIN 7991 MF6S M4X8 A4 70	
Common Parts					
070	2647098-0000		2	BLOCK	
080	2647113-0000		2	BUSHING	
210	312115-0372		4	SCREW ISO4762 M6X25 A4 80	

Pos	Part No	UN	Qty	Description	Page No

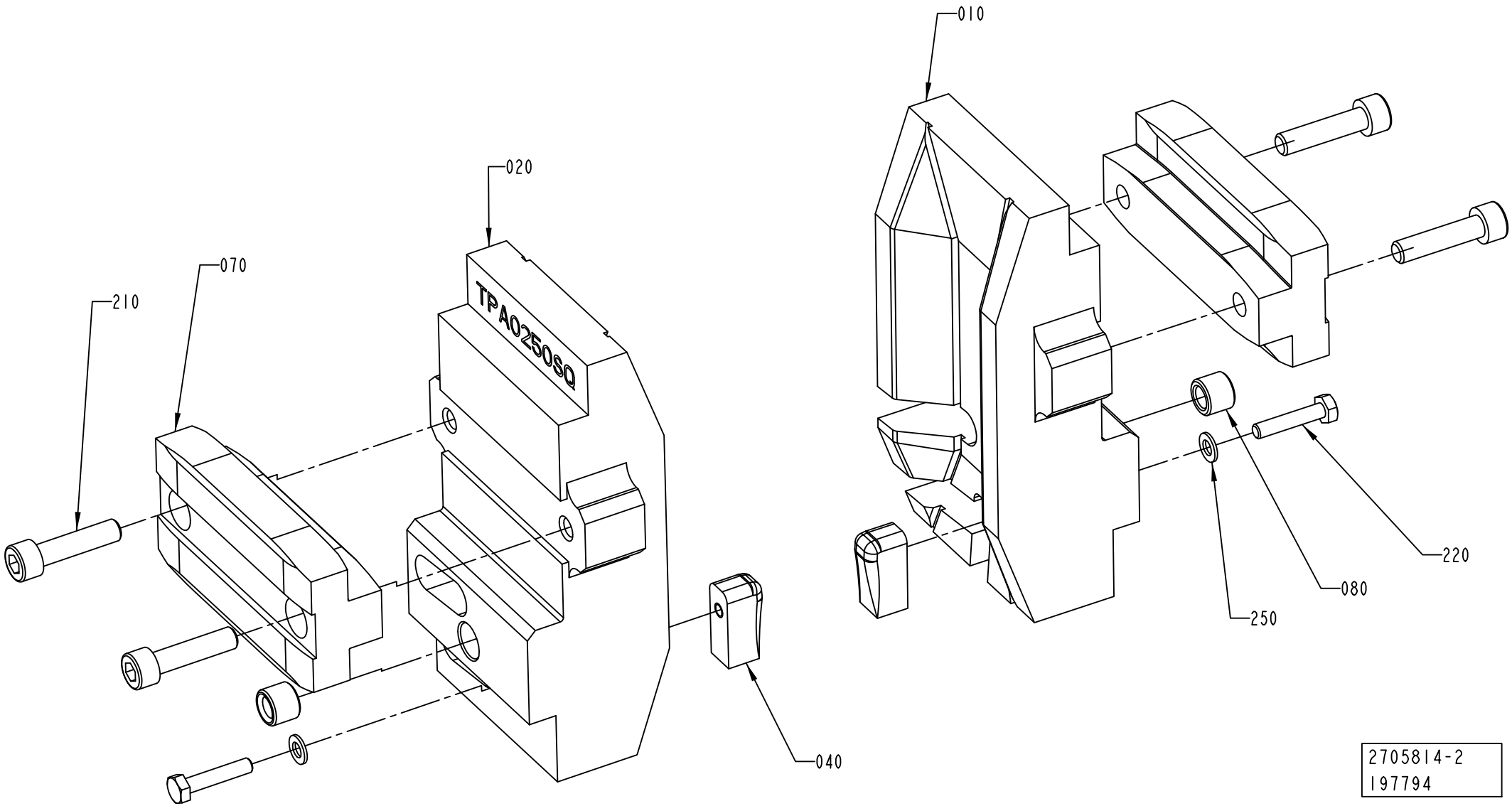

2705814-2
197794

ECM: 340442 - 20080215
Group number: 2705814-0100
Assembly Drawing: 2705814-2_1_AA

This list covers pages from 3-196 to 3-199

Pos	Part No	UN	Qty	Description	Page No
TPA 0200SQ (See drawing on page: 3-198)					
010	2674272-0000		1	PUSHER	
020	2674273-0000		1	PUSHER	
040	2674269-0000		2	NAIL	
220	312115-0297		2	SCREW ISO4762 M4X25 A4 80	
250	315105-0136		2	WASHER BRB 4,3X8 RFR	
TPA 0250SQ (See drawing on page: 3-198)					
010	2674271-0000		1	PUSHER	
020	2674270-0000		1	PUSHER	
040	2674269-0000		2	NAIL	
220	312105-0295		2	SCREW M6S ISO 4017 M4X20 A470	
250	315105-0136		2	WASHER BRB 4,3X8 RFR	
TPA 0750SQ (See drawing on page: 3-196)					
010	2647094-0000		1	PUSHER	
020	2647093-0000		1	PUSHER	
040	2647097-0000		2	NAIL	
050	2658247-0000		6	WASHER	
060	2647100-0000		4	VOLUME BULGE	
090	2698319-0000		2	BLOCK	
200	312155-0289		8	SCREW DIN 7991 MF6S M4X10 A4 70	
220	312155-0293		2	SCREW DIN 7991 MF6S M4X16 A4 70	
240	312155-0287		4	SCREW DIN 7991 MF6S M4X8 A4 70	
TPA 1000SQ (See drawing on page: 3-196)					
010	2647096-0000		1	PUSHER	
020	2647095-0000		1	PUSHER	
040	2647097-0000		2	NAIL	
050	2658247-0000		6	WASHER	
060	1523467-0000		2	VOLUME BULGE	
090	2698319-0000		2	BLOCK	
100	2658263-0000		1	VOLUME BULGE	
110	2658264-0000		1	VOLUME BULGE	
200	312155-0289		8	SCREW DIN 7991 MF6S M4X10 A4 70	
220	312155-0293		2	SCREW DIN 7991 MF6S M4X16 A4 70	
240	312155-0287		4	SCREW DIN 7991 MF6S M4X8 A4 70	
Common Parts					
070	2647098-0000		2	BLOCK	
080	2647113-0000		2	BUSHING	
210	312115-0372		4	SCREW ISO4762 M6X25 A4 80	

Pos	Part No	UN	Qty	Description	Page No

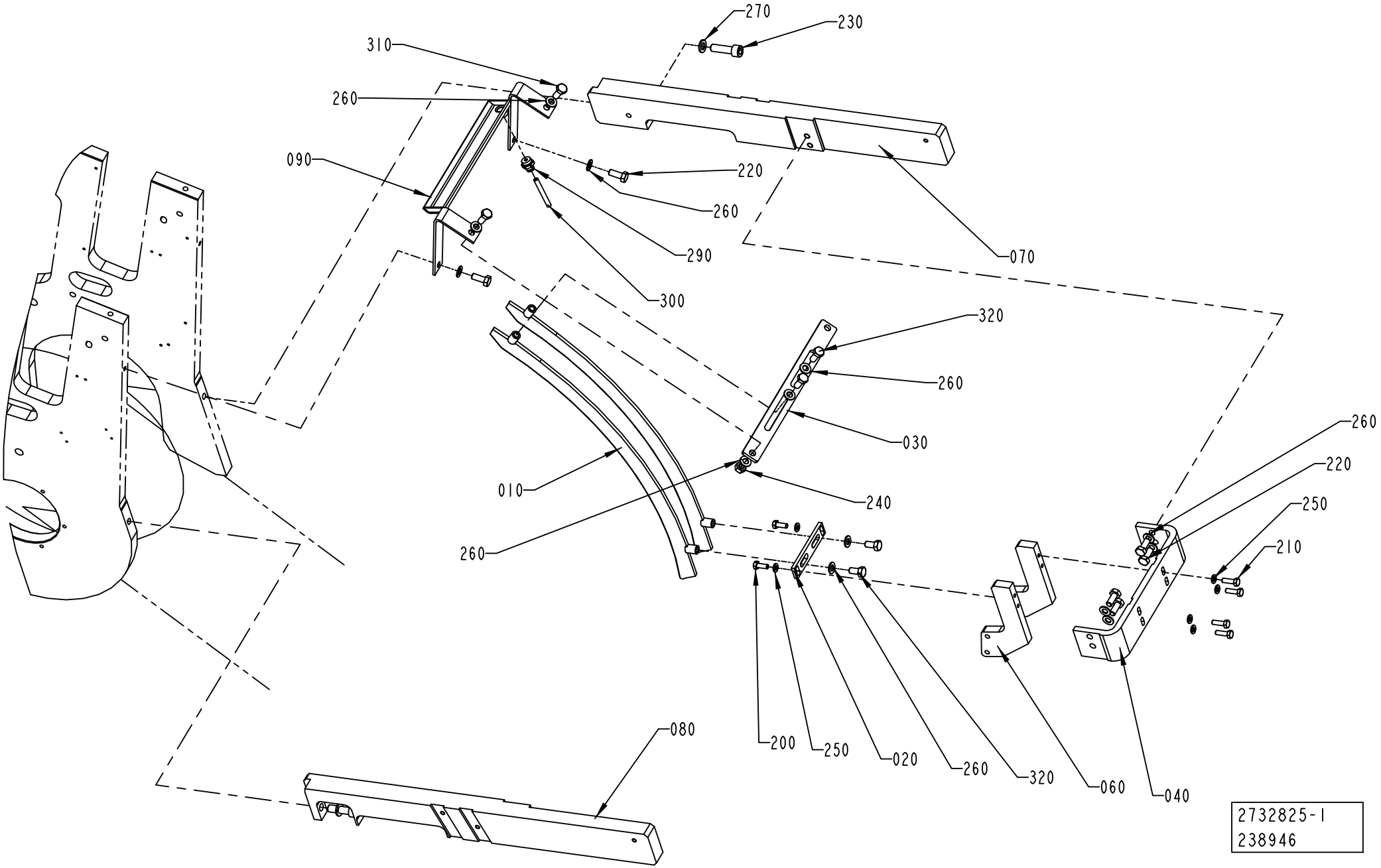
270
230
310
260
090
220
260
290
070
300
320
260
030
260
220
250
210
010
240
260
200
250
020
260
320
060
040
080
2732825-1
238946

ECM: 355076 - 20081001
Group number: 2732825-0100
Assembly Drawing: 2732825-1_1_AA

This list covers pages from 3-200 to 3-203

Pos	Part No	UN	Qty	Description	Page No
TBA 0200M, TBA 0200B, TBA 0200SQ, TBA 0200S, TBA 0250S, TBA 0250B, TBA 0330S, TBA 0500S, TBA 0500SQ, TBA 0500B, TBA 1000B, TBA 1000SQ, TBA 1000S, TPA 0330SQ, TPA 0250SQ, TPA 0200SQ, TBA 0250SQ (See drawing on page: 3-202)					
010	1558941-0000		2	RAIL	
050	1144899-0000		2	SUPPORT	
070	2724937-0000		1	SUPPORTING ARM	
080	2875856-0000		1	SUPPORTING ARM	
090	1478127-0000		1	DRIP PLATE	
220	312105-0451		6	SCREW M6S ISO 4017 M8X20 A480	
240	312605-0318		2	HEXAGON NUT, M6M M8 A280	
260	315105-0165		14	WASHER BRB 8,4X16 RFR	
310	312105-0453		2	SCREW M6S ISO 4017 M8X25 A480	
320	312105-0449		4	SCREW M6S ISO 4017 M8X16 A480	
TBA 1500S, TPA 1000SQ, TBA 1890S, TBA 2000S, TPA 0750SQ, TBA 1400B (See drawing on page: 3-200)					
010	1538963-0000		2	RAIL	
050	1346588-0000		1	DRIP PLATE	
070	2724952-0000		1	SUPPORTING ARM	
080	2715502-0000		1	SUPPORTING ARM	
220	312105-0451		10	SCREW M6S ISO 4017 M8X20 A480	
240	312605-0318		2	HEXAGON NUT, M6M M8 A280	
260	315105-0165		14	WASHER BRB 8,4X16 RFR	
320	312105-0449		2	SCREW M6S ISO 4017 M8X16 A480	
TPA 0500SQ (See drawing on page: 3-202)					
010	1558941-0000		2	RAIL	
050	1144899-0000		2	SUPPORT	
070	2724937-0000		1	SUPPORTING ARM	
080	2875856-0000		1	SUPPORTING ARM	
090	1478127-0000		1	DRIP PLATE	
220	312105-0451		5	SCREW M6S ISO 4017 M8X20 A480	
240	312605-0318		1	HEXAGON NUT, M6M M8 A280	
260	315105-0165		12	WASHER BRB 8,4X16 RFR	
310	312105-0453		2	SCREW M6S ISO 4017 M8X25 A480	
320	312105-0449		4	SCREW M6S ISO 4017 M8X16 A480	
Common Parts					
020	1517567-0000		1	PLATE	
030	1144552-0000		1	PLATE	
040	1517563-0000		1	BRACKET	
060	1517302-0000		2	SUPPORT PLATE	
200	312105-0368		2	SCREW M6S ISO 4017 M6X16 A480	
210	312105-0370		4	SCREW M6S ISO 4017 M6X20 A480	
230	312115-0497		2	SCREW ISO4762 M10X35 A4 80	
250	315105-0153		6	WASHER BRB 6,4X12 RFR	
270	315105-0171		2	WASHER BRB 10X18 RFR	
290	342722-0203		1	STRAIGHT COUPLING	
300	90166-0132	MM	2000	TUBE 6 MM PA,TRANSP.	

Machine Type | Group Description | Used-In | Group Number | Page No

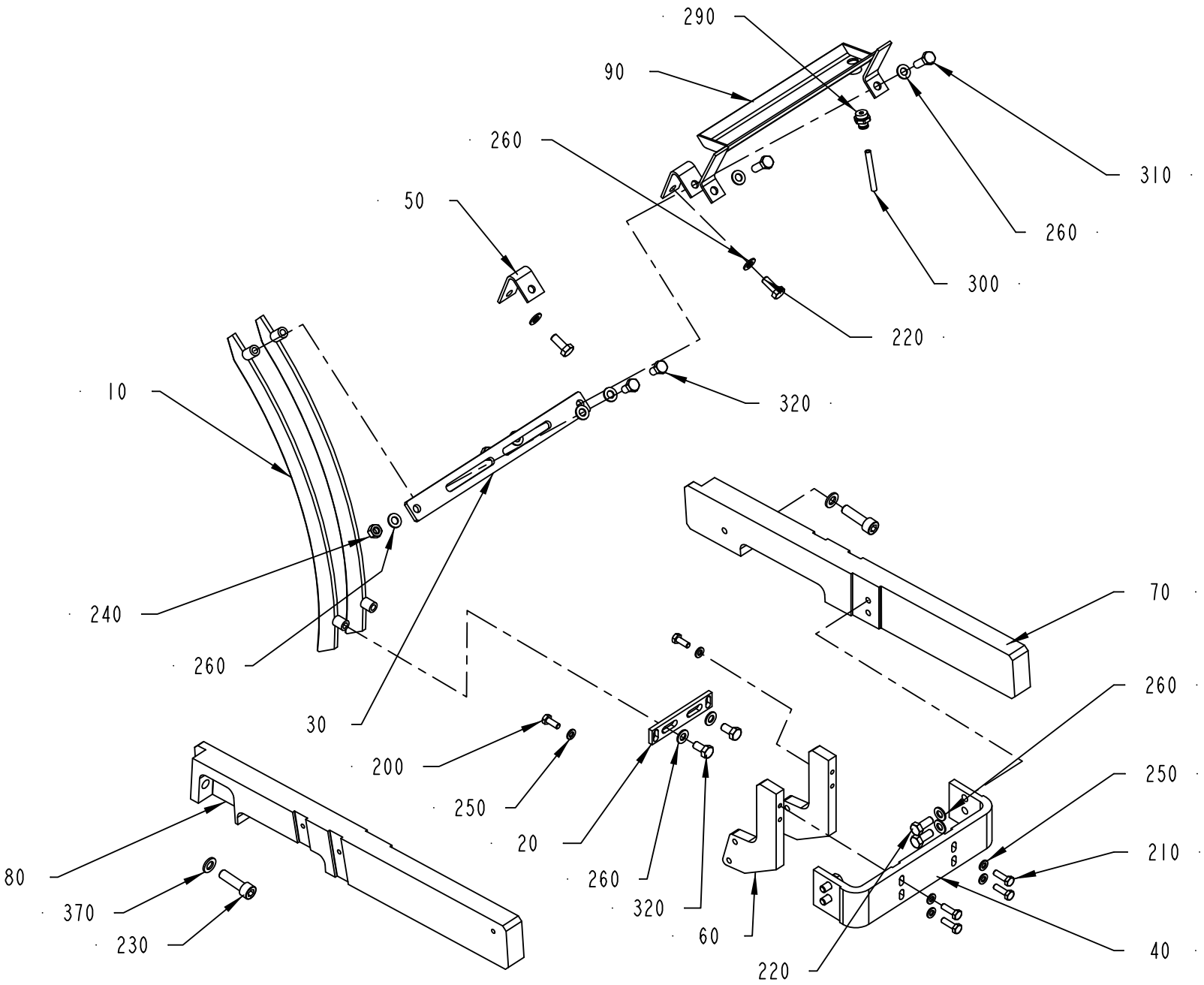

2732825-2
238946

ECM: 355076 - 20081001
Group number: 2732825-0100
Assembly Drawing: 2732825-2_1_AA

This list covers pages from 3-200 to 3-203

Pos	Part No	UN	Qty	Description	Page No
TBA 0200M, TBA 0200B, TBA 0200SQ, TBA 0200S, TBA 0250S, TBA 0250B, TBA 0330S, TBA 0500S, TBA 0500SQ, TBA 0500B, TBA 1000B, TBA 1000SQ, TBA 1000S, TPA 0330SQ, TPA 0250SQ, TPA 0200SQ, TBA 0250SQ (See drawing on page: 3-202)					
010	1558941-0000		2	RAIL	
050	1144899-0000		2	SUPPORT	
070	2724937-0000		1	SUPPORTING ARM	
080	2875856-0000		1	SUPPORTING ARM	
090	1478127-0000		1	DRIP PLATE	
220	312105-0451		6	SCREW M6S ISO 4017 M8X20 A480	
240	312605-0318		2	HEXAGON NUT, M6M M8 A280	
260	315105-0165		14	WASHER BRB 8,4X16 RFR	
310	312105-0453		2	SCREW M6S ISO 4017 M8X25 A480	
320	312105-0449		4	SCREW M6S ISO 4017 M8X16 A480	
TBA 1500S, TPA 1000SQ, TBA 1890S, TBA 2000S, TPA 0750SQ, TBA 1400B (See drawing on page: 3-200)					
010	1538963-0000		2	RAIL	
050	1346588-0000		1	DRIP PLATE	
070	2724952-0000		1	SUPPORTING ARM	
080	2715502-0000		1	SUPPORTING ARM	
220	312105-0451		10	SCREW M6S ISO 4017 M8X20 A480	
240	312605-0318		2	HEXAGON NUT, M6M M8 A280	
260	315105-0165		14	WASHER BRB 8,4X16 RFR	
320	312105-0449		2	SCREW M6S ISO 4017 M8X16 A480	
TPA 0500SQ (See drawing on page: 3-202)					
010	1558941-0000		2	RAIL	
050	1144899-0000		2	SUPPORT	
070	2724937-0000		1	SUPPORTING ARM	
080	2875856-0000		1	SUPPORTING ARM	
090	1478127-0000		1	DRIP PLATE	
220	312105-0451		5	SCREW M6S ISO 4017 M8X20 A480	
240	312605-0318		1	HEXAGON NUT, M6M M8 A280	
260	315105-0165		12	WASHER BRB 8,4X16 RFR	
310	312105-0453		2	SCREW M6S ISO 4017 M8X25 A480	
320	312105-0449		4	SCREW M6S ISO 4017 M8X16 A480	
Common Parts					
020	1517567-0000		1	PLATE	
030	1144552-0000		1	PLATE	
040	1517563-0000		1	BRACKET	
060	1517302-0000		2	SUPPORT PLATE	
200	312105-0368		2	SCREW M6S ISO 4017 M6X16 A480	
210	312105-0370		4	SCREW M6S ISO 4017 M6X20 A480	
230	312115-0497		2	SCREW ISO4762 M10X35 A4 80	
250	315105-0153		6	WASHER BRB 6,4X12 RFR	
270	315105-0171		2	WASHER BRB 10X18 RFR	
290	342722-0203		1	STRAIGHT COUPLING	
300	90166-0132	MM	2000	TUBE 6 MM PA,TRANSP.	

Machine Type | Group Description | Used-In | Group Number | Page No

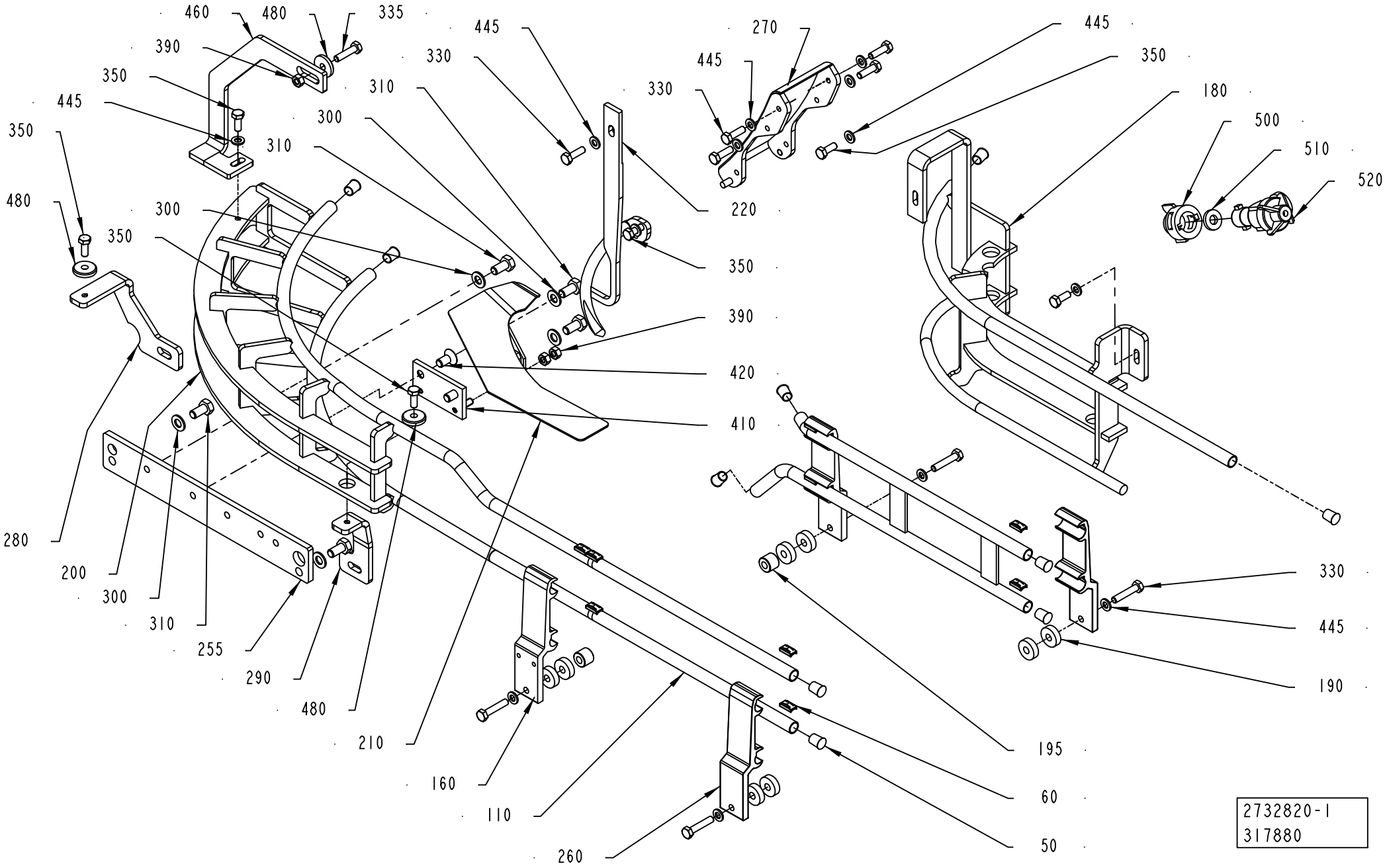
460
480
335
390
350
445
350
480
445
330
310
300
310
300
350
280
200
300
310
255
290
480
210
160
110
260
270
445
330
445
350
180
500
510
520
220
350
390
420
410
330
445
190
195
60
50
2732820-1
317880

ECM: 998084 - 20081002
Group number: 2732820-0100
Assembly Drawing: 2732820-1_1_AB

This list covers pages from 3-204 to 3-215

Pos	Part No	UN	Qty	Description	Page No
TBA 1890S QC, TBA 2000S QC (See drawing on page: 3-208)					
050	484701-0000		18	SHUTTER	
110	2640076-0000		2	RAIL	
120	2639832-0000		1	RAIL	
160	1550743-0100		2	RAIL HOLDER	**3-217**
180	2724940-0000		1	RAIL	
200	2693464-0000		1	RAIL	
210	2652206-0000		1	GUIDE	
220	2724941-0000		1	RAIL	
260	1550743-0100		2	RAIL HOLDER	**3-217**
270	1538970-0000		1	SLIDE	
280	2804292-0000		1	BRACKET	
290	2804293-0000		1	BRACKET	
300	315105-0165		4	WASHER BRB 8,4X16 RFR	
305	2655500-0000		1	WASHER	
310	312105-0449		4	SCREW M6S ISO 4017 M8X16 A480	
315	312105-0451		1	SCREW M6S ISO 4017 M8X20 A480	
350	312105-0368		3	SCREW M6S ISO 4017 M6X16 A480	
390	312605-0316		1	HEXAGON NUT, M6M M6 A280	
400	312105-0370		5	SCREW M6S ISO 4017 M6X20 A480	
445	315105-0153		9	WASHER BRB 6,4X12 RFR	
TPA 0200SQ QC L_OUT, TPA 0250SQ QC L_OUT (See drawing on page: 3-204)					
050	484701-0000		10	SHUTTER	
060	1020146-0000		6	LOCKING BLOCK	
120	1548550-0000		1	RAIL	
160	1285009-0000		2	HOLDER	
180	2724942-0000		1	RAIL	
190	1285253-0000		1	SPACER	
200	2732824-0000		1	RAIL	
220	2724943-0000		1	RAIL	
260	1366777-0101		2	ANGLED RAIL HOLDER TPC21	**3-219**
270	2523480-0000		1	SLIDE	
280	2804306-0000		1	BRACKET	
290	2804307-0000		1	BRACKET	
300	315105-0165		3	WASHER BRB 8,4X16 RFR	
310	312105-0449		3	SCREW M6S ISO 4017 M8X16 A480	
330	312105-0370		2	SCREW M6S ISO 4017 M6X20 A480	
335	312105-0372		1	SCREW M6S ISO 4017 M6X25 A480	
390	312605-0316		2	HEXAGON NUT, M6M M6 A280	
400	312105-0370		9	SCREW M6S ISO 4017 M6X20 A480	
445	315105-0153		14	WASHER BRB 6,4X12 RFR	
460	2693459-0000		1	BRACKET	
480	315125-0153		1	WASHER TBRSB 6,4X22X4 A4	
TPA 0200SQ QC R_OUT, TPA 0250SQ QC R_OUT (See drawing on page: 3-210)					
050	484701-0000		10	SHUTTER	
060	1020146-0000		6	LOCKING BLOCK	
120	2640723-0000		1	RAIL	
160	1285009-0000		2	HOLDER	
180	2926120-0000		1	RAIL	
190	1285253-0000		2	SPACER	
200	2914994-0000		1	RAIL	
220	2926121-0000		1	RAIL	
260	1366777-0101		2	ANGLED RAIL HOLDER TPC21	**3-219**
270	2523480-0000		1	SLIDE	
280	2926124-0000		1	BRACKET	
290	2926123-0000		1	BRACKET	
300	315105-0165		3	WASHER BRB 8,4X16 RFR	
310	312105-0449		3	SCREW M6S ISO 4017 M8X16 A480	
330	312105-0370		2	SCREW M6S ISO 4017 M6X20 A480	
335	312105-0372		1	SCREW M6S ISO 4017 M6X25 A480	
350	312105-0368		4	SCREW M6S ISO 4017 M6X16 A480	
390	312605-0316		2	HEXAGON NUT, M6M M6 A280	
400	312105-0370		9	SCREW M6S ISO 4017 M6X20 A480	
445	315105-0153		14	WASHER BRB 6,4X12 RFR	
460	2926122-0000		1	BRACKET	
480	315125-0153		3	WASHER TBRSB 6,4X22X4 A4	
TPA 0330SQ L_OUT (See drawing on page: 3-204)					
050	484701-0000		10	SHUTTER	
060	1020146-0000		6	LOCKING BLOCK	
110	1279582-0000		2	RAIL	
120	1296079-0000		1	RAIL	
160	1285009-0000		2	HOLDER	
180	2724948-0000		1	RAIL	
190	1285253-0000		3	SPACER	
200	2693461-0000		1	RAIL	
220	2724947-0000		1	RAIL	
260	1366777-0101		2	ANGLED RAIL HOLDER TPC21	**3-219**
270	2523480-0000		1	SLIDE	
280	2804294-0000		1	BRACKET	
290	2804295-0000		1	BRACKET	
300	315105-0165		3	WASHER BRB 8,4X16 RFR	
310	312105-0449		3	SCREW M6S ISO 4017 M8X16 A480	
330	312105-0370		2	SCREW M6S ISO 4017 M6X20 A480	
350	312105-0368		4	SCREW M6S ISO 4017 M6X16 A480	

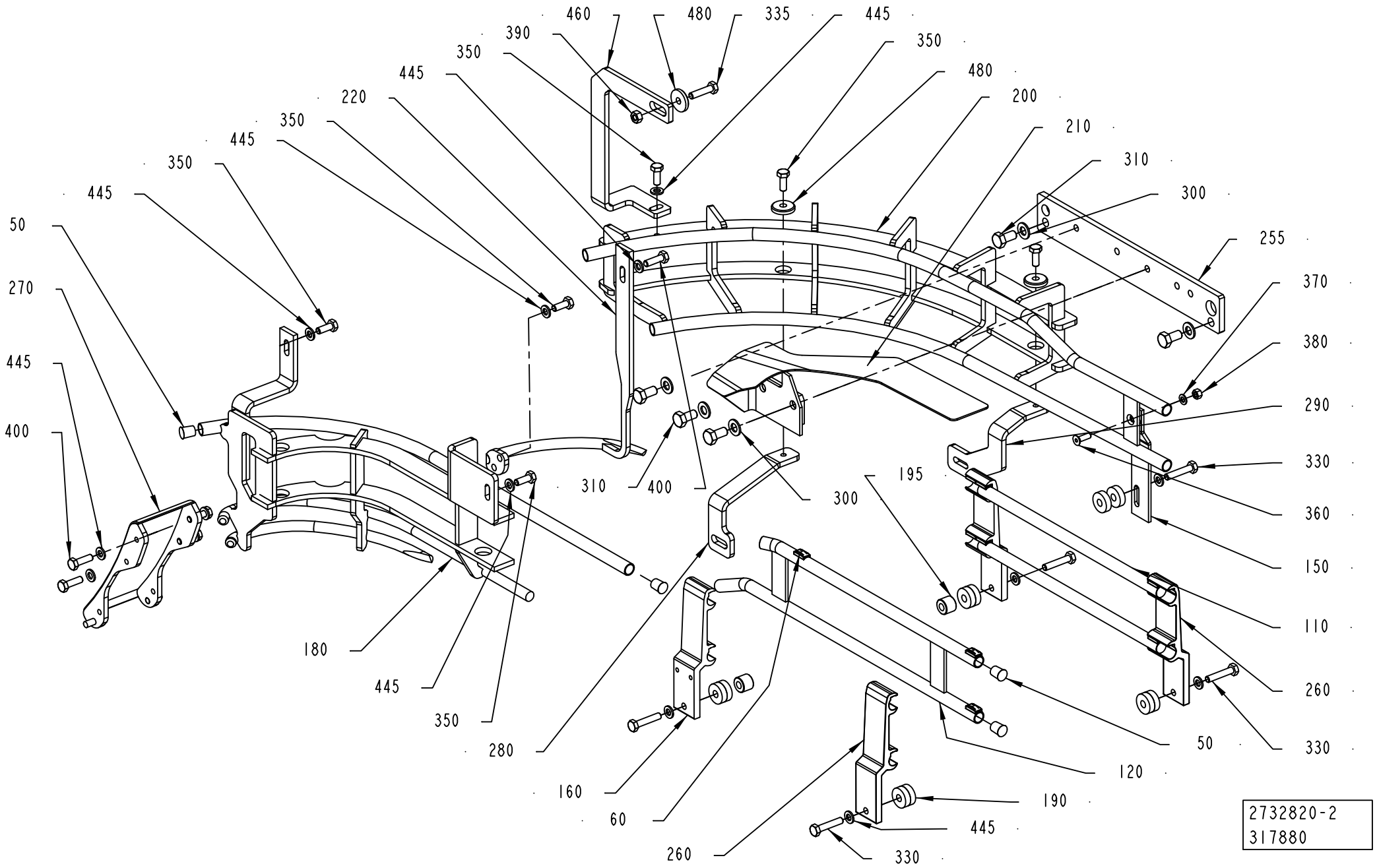
460
480
335
445
390
350
350
480
445
200
220
210
350
310
445
300
350
255
445
50
370
270
380
445
290
400
330
195
310
400
300
360
150
180
110
445
260
350
280
50
330
120
160
190
60
445
260
330
2732820-2
317880

ECM: 998084 - 20081002
Group number: 2732820-0100
Assembly Drawing: 2732820-2_1_AB

This list covers pages from 3-204 to 3-215

Pos	Part No	UN	Qty	Description	Page No
TPA 0330SQ L_OUT (Cont'd) (See drawing on page: 3-204)					
390	312605-0316		1	HEXAGON NUT, M6M M6 A280	
400	312105-0370		9	SCREW M6S ISO 4017 M6X20 A480	
445	315105-0153		13	WASHER BRB 6,4X12 RFR	
460	2724934-0000		1	BRACKET	
TPA 0330SQ R_OUT (See drawing on page: 3-210)					
050	484701-0000		10	SHUTTER	
060	1020146-0000		6	LOCKING BLOCK	
120	2914993-0000		1	RAIL	
160	1285009-0000		2	HOLDER	
180	2912160-0000		1	RAIL	
190	1285253-0000		3	SPACER	
200	2912159-0000		1	RAIL	
220	2912161-0000		1	RAIL	
260	1366777-0101		2	ANGLED RAIL HOLDER TPC21	**3-219**
270	2523480-0000		1	SLIDE	
280	2914990-0000		1	BRACKET	
290	2914991-0000		1	BRACKET	
300	315105-0165		3	WASHER BRB 8,4X16 RFR	
310	312105-0449		3	SCREW M6S ISO 4017 M8X16 A480	
330	312105-0370		2	SCREW M6S ISO 4017 M6X20 A480	
335	312105-0372		1	SCREW M6S ISO 4017 M6X25 A480	
350	312105-0368		4	SCREW M6S ISO 4017 M6X16 A480	
390	312605-0316		1	HEXAGON NUT, M6M M6 A280	
400	312105-0370		9	SCREW M6S ISO 4017 M6X20 A480	
445	315105-0153		13	WASHER BRB 6,4X12 RFR	
460	2912162-0000		1	BRACKET	
480	315125-0153		3	WASHER TBRSB 6,4X22X4 A4	
TPA 0500SQ (See drawing on page: 3-204)					
050	484701-0000		8	SHUTTER	
110	1279582-0000		2	RAIL	
120	1296079-0000		1	RAIL	
160	1334113-0000		2	HOLDER	
180	2724945-0000		1	RAIL	
190	1285253-0000		4	SPACER	
200	2715496-0000		1	RAIL	
220	2724946-0000		1	RAIL	
260	1366777-0101		2	ANGLED RAIL HOLDER TPC21	**3-219**
270	1538970-0000		1	SLIDE	
280	2804299-0000		1	BRACKET	
290	2804300-0000		1	BRACKET	
300	315105-0165		3	WASHER BRB 8,4X16 RFR	
310	312105-0449		3	SCREW M6S ISO 4017 M8X16 A480	
335	312105-0372		3	SCREW M6S ISO 4017 M6X25 A480	
350	312105-0368		3	SCREW M6S ISO 4017 M6X16 A480	
390	312605-0316		2	HEXAGON NUT, M6M M6 A280	
400	312105-0370		6	SCREW M6S ISO 4017 M6X20 A480	
445	315105-0153		14	WASHER BRB 6,4X12 RFR	
460	2715501-0000		1	BRACKET	
480	315125-0153		1	WASHER TBRSB 6,4X22X4 A4	
500	534310-0001		1	NOZZLE	
510	90005-0094		1	GASKET C 19438-EPR	
520	90230-0027		1	NON-RETURN VALVE QJ 8355-1/4"	
	90230-0301		*1*	*DIAPHRAGM*	
	90230-0300		*1*	*STRAINER*	
TPA 1000SQ NOQC (See drawing on page: 3-204)					
050	484701-0000		10	SHUTTER	
060	1020146-0000		6	LOCKING BLOCK	
110	1279582-0000		2	RAIL	
120	1548550-0000		1	RAIL	
160	1334113-0000		2	HOLDER	
180	2715503-0000		1	RAIL	
190	1285253-0000		2	SPACER	
195	1317218-0000		2	SPACER	
200	2687787-0000		1	RAIL	
210	1548348-0000		1	GUIDE	
220	2715504-0000		1	RAIL	
260	1366777-0101		2	ANGLED RAIL HOLDER TPC21	**3-219**
270	1538970-0000		1	SLIDE	
280	2804313-0000		1	BRACKET	
290	2804314-0000		1	BRACKET	
300	315105-0165		3	WASHER BRB 8,4X16 RFR	
310	312105-0449		3	SCREW M6S ISO 4017 M8X16 A480	
330	312105-0374		1	SCREW M6S ISO 4014 M6X30 A480	
335	312105-0372		1	SCREW M6S ISO 4017 M6X25 A480	
350	312105-0368		4	SCREW M6S ISO 4017 M6X16 A480	
390	312605-0316		6	HEXAGON NUT, M6M M6 A280	
400	312105-0370		5	SCREW M6S ISO 4017 M6X20 A480	
410	1548551-0000		1	SPACER	
420	312155-0449		2	SCREW DIN 7991 MF6S M8X16 A4 70	
445	315105-0153		14	WASHER BRB 6,4X12 RFR	
460	2693460-0000		1	BRACKET	
480	315125-0153		1	WASHER TBRSB 6,4X22X4 A4	
500	534310-0001		1	NOZZLE	

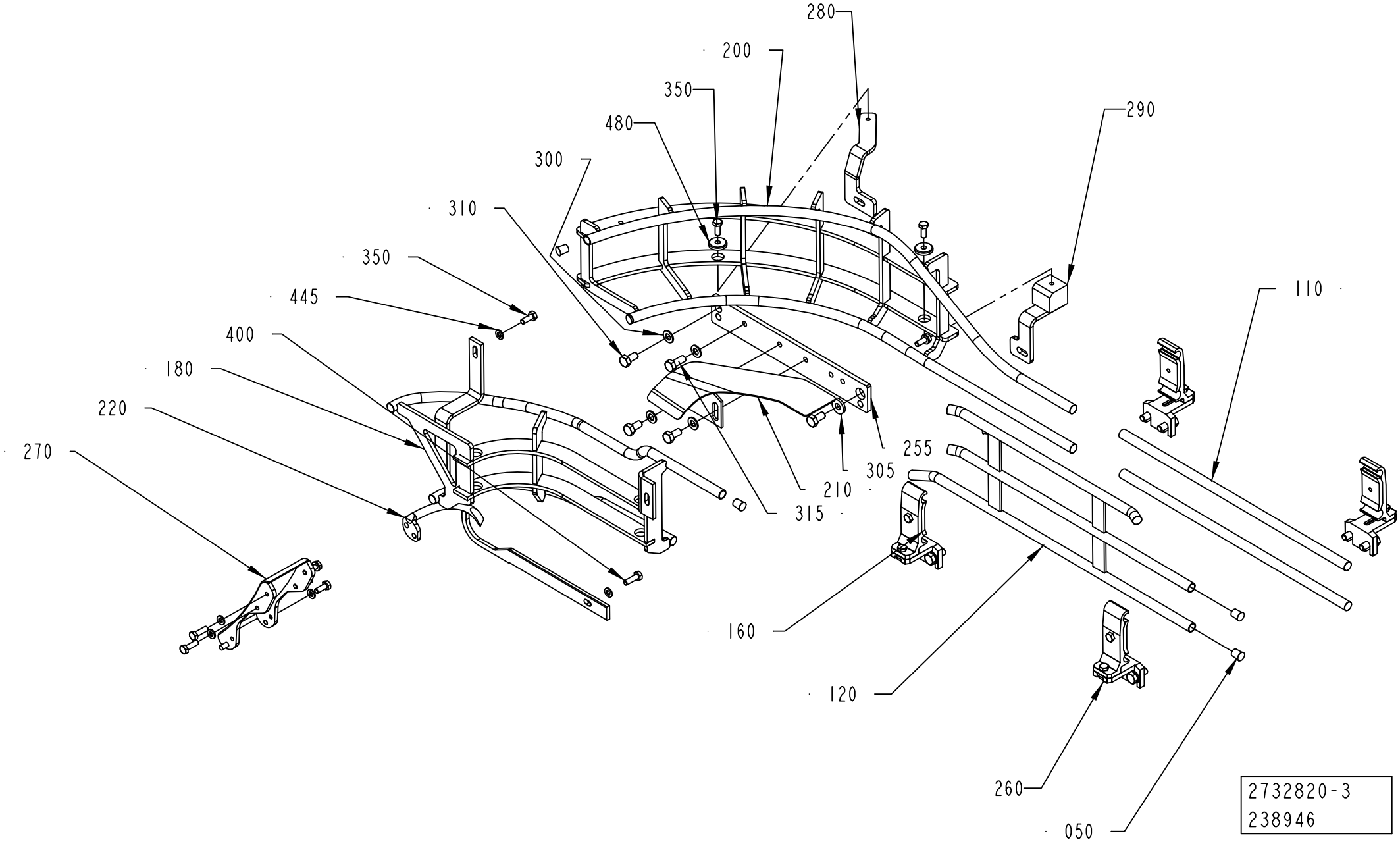
280
200
350
480
290
300
310
350
445
110
400
180
220
270
255
305
210
315
160
120
260
050
2732820-3
238946

Pos	Part No	UN	Qty	Description	Page No
TPA 1000SQ NOQC (Cont'd) (See drawing on page: 3-204)					
510	90005-0094		1	GASKET C 19438-EPR	
520	90230-0027		1	NON-RETURN VALVE QJ 8355-1/4"	
	90230-0301		*1*	*DIAPHRAGM*	
	90230-0300		*1*	*STRAINER*	
TPA 1000SQ QC, TPA 0750SQ QC (See drawing on page: 3-212)					
050	484701-0000		10	SHUTTER	
060	1020146-0000		6	LOCKING BLOCK	
110	1279582-0000		2	RAIL	
120	1548550-0000		1	RAIL	
160	1334113-0000		2	HOLDER	
180	2752754-0000		1	RAIL	
190	1285253-0000		2	SPACER	
195	1317218-0000		2	SPACER	
200	2945065-0000		1	RAIL	
205	2945064-0000		1	FINGER	
210	1548348-0000		1	GUIDE	
220	2715504-0000		1	RAIL	
260	1366777-0101		2	ANGLED RAIL HOLDER TPC21	**3-219**
270	1538970-0000		1	SLIDE	
280	2804309-0000		1	BRACKET	
290	2804310-0000		1	BRACKET	
300	315105-0165		3	WASHER BRB 8,4X16 RFR	
310	312105-0449		3	SCREW M6S ISO 4017 M8X16 A480	
330	312105-0374		1	SCREW M6S ISO 4014 M6X30 A480	
335	312105-0372		2	SCREW M6S ISO 4017 M6X25 A480	
350	312105-0368		4	SCREW M6S ISO 4017 M6X16 A480	
390	312605-0316		6	HEXAGON NUT, M6M M6 A280	
400	312105-0370		5	SCREW M6S ISO 4017 M6X20 A480	
410	1548551-0000		1	SPACER	
420	312155-0449		2	SCREW DIN 7991 MF6S M8X16 A4 70	
445	315105-0153		14	WASHER BRB 6,4X12 RFR	
460	2532864-0000		1	BRACKET	
480	315125-0153		3	WASHER TBRSB 6,4X22X4 A4	
500	534310-0001		1	NOZZLE	
510	90005-0094		1	GASKET C 19438-EPR	
520	90230-0027		1	NON-RETURN VALVE QJ 8355-1/4"	
	90230-0301		*1*	*DIAPHRAGM*	
	90230-0300		*1*	*STRAINER*	
TBA 0200B QC, TBA 0330S QC, TBA 0250B QC (See drawing on page: 3-206)					
050	484701-0000		13	SHUTTER	
060	1020146-0000		10	LOCKING BLOCK	
110	1279582-0000		2	RAIL	
120	2558754-0000		1	RAIL	
160	1285009-0000		2	HOLDER	
180	2752760-0000		1	RAIL	
200	2732826-0000		1	RAIL	
210	2538110-0000		1	RAIL	
220	2732811-0000		1	RAIL	
260	1020142-0002		2	RAIL HOLDER, B55 WIDTH 30 MM	
270	2523480-0000		1	SLIDE	
280	2804308-0000		1	BRACKET	
290	2963362-0000		1	BRACKET	
300	315105-0165		5	WASHER BRB 8,4X16 RFR	
310	312105-0449		5	SCREW M6S ISO 4017 M8X16 A480	
330	312105-0370		2	SCREW M6S ISO 4017 M6X20 A480	
350	312105-0368		4	SCREW M6S ISO 4017 M6X16 A480	
390	312605-0316		1	HEXAGON NUT, M6M M6 A280	
400	312105-0370		5	SCREW M6S ISO 4017 M6X20 A480	
445	315105-0153		13	WASHER BRB 6,4X12 RFR	
460	2732827-0000		1	BRACKET	
TBA 0200M, TBA 0250S (See drawing on page: 3-206)					
050	484701-0000		13	SHUTTER	
060	1020146-0000		10	LOCKING BLOCK	
110	1279582-0000		2	RAIL	
120	2558754-0000		1	RAIL	
160	1285009-0000		2	HOLDER	
180	2732812-0000		1	RAIL	
200	2715495-0000		1	RAIL	
210	2538110-0000		1	RAIL	
220	2732811-0000		1	RAIL	
260	1020142-0002		2	RAIL HOLDER, B55 WIDTH 30 MM	
270	2523480-0000		1	SLIDE	
280	2804303-0000		1	BRACKET	
290	2963366-0000		1	BRACKET	
300	315105-0165		5	WASHER BRB 8,4X16 RFR	
330	312105-0370		2	SCREW M6S ISO 4017 M6X20 A480	
350	312105-0368		4	SCREW M6S ISO 4017 M6X16 A480	
390	312605-0316		1	HEXAGON NUT, M6M M6 A280	
400	312105-0370		5	SCREW M6S ISO 4017 M6X20 A480	
445	315105-0153		13	WASHER BRB 6,4X12 RFR	
460	2732814-0000		1	BRACKET	
TBA 0200S (See drawing on page: 3-206)					
050	484701-0000		14	SHUTTER	

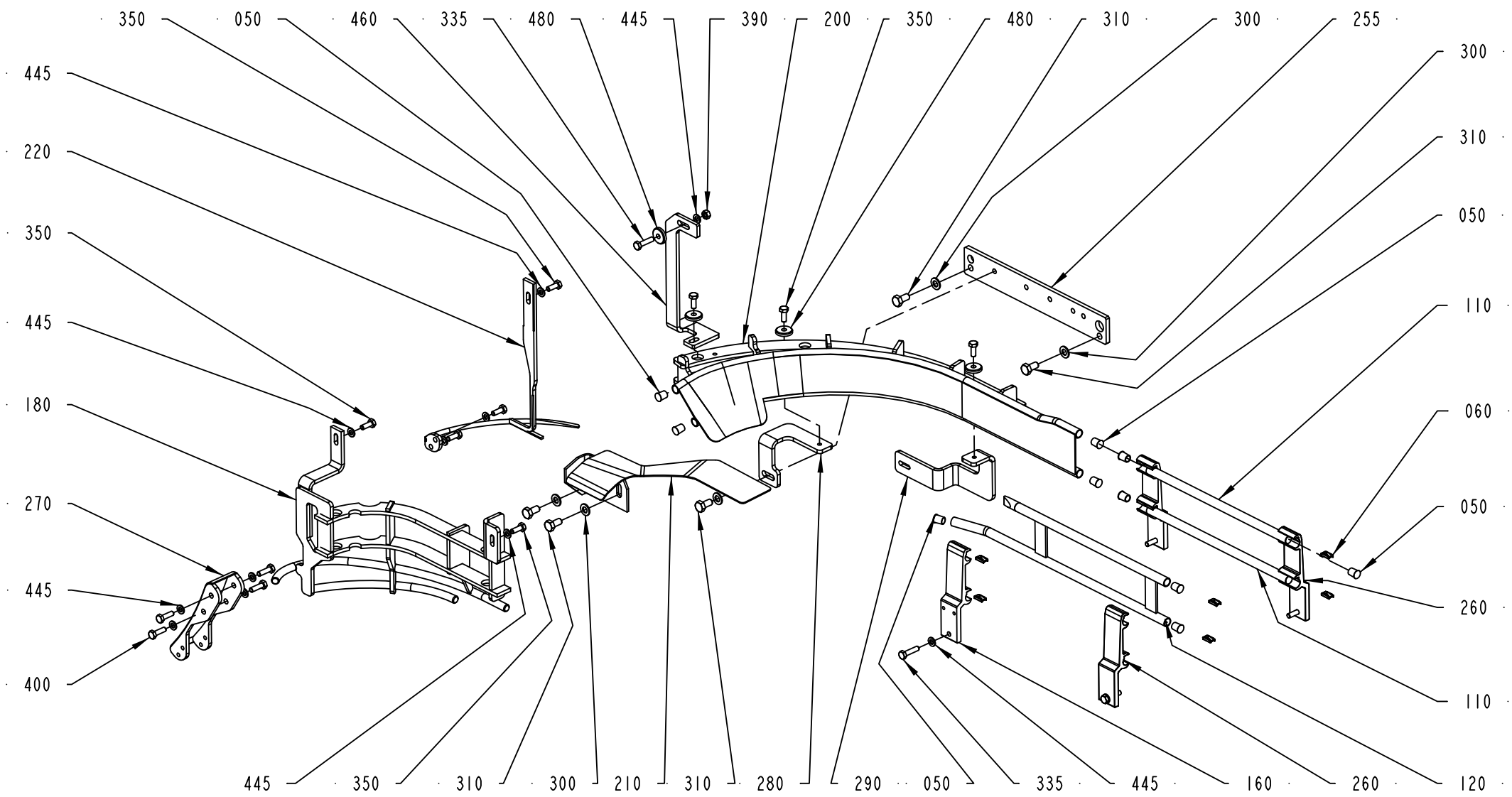

2732820-5
273163

Pos	Part No	UN	Qty	Description	Page No
TBA 0200S (Cont'd) (See drawing on page: 3-206)					
060	1020146-0000		10	LOCKING BLOCK	
110	1279582-0000		2	RAIL	
120	2895557-0000		1	RAIL	
160	1285009-0000		2	HOLDER	
180	2732812-0000		1	RAIL	
200	2715497-0000		1	RAIL	
210	2538110-0000		1	RAIL	
220	2732811-0000		1	RAIL	
260	1020142-0002		2	RAIL HOLDER, B55 WIDTH 30 MM	
270	2523480-0000		1	SLIDE	
280	2804301-0000		1	BRACKET	
290	2804302-0000		1	BRACKET	
300	315105-0165		5	WASHER BRB 8,4X16 RFR	
310	312105-0449		5	SCREW M6S ISO 4017 M8X16 A480	
330	312105-0370		2	SCREW M6S ISO 4017 M6X20 A480	
350	312105-0368		4	SCREW M6S ISO 4017 M6X16 A480	
390	312605-0316		1	HEXAGON NUT, M6M M6 A280	
400	312105-0370		5	SCREW M6S ISO 4017 M6X20 A480	
445	315105-0153		13	WASHER BRB 6,4X12 RFR	
TBA 0200SQ QC, TBA 0250SQ QC (See drawing on page: 3-204)					
050	484701-0000		10	SHUTTER	
060	1020146-0000		6	LOCKING BLOCK	
120	1548550-0000		1	RAIL	
160	1285009-0000		2	HOLDER	
180	2752758-0000		1	RAIL	
190	315105-0153		2	WASHER BRB 6,4X12 RFR	
195	315105-0153		2	WASHER BRB 6,4X12 RFR	
200	2752756-0000		1	RAIL	
220	2752757-0000		1	RAIL	
260	1285009-0000		2	HOLDER	
270	2523480-0000		1	SLIDE	
280	2804311-0000		1	BRACKET	
290	2804312-0000		1	BRACKET	
300	315105-0165		3	WASHER BRB 8,4X16 RFR	
310	312105-0449		3	SCREW M6S ISO 4017 M8X16 A480	
330	312105-0370		2	SCREW M6S ISO 4017 M6X20 A480	
390	312605-0316		1	HEXAGON NUT, M6M M6 A280	
400	312105-0370		5	SCREW M6S ISO 4017 M6X20 A480	
445	315105-0153		13	WASHER BRB 6,4X12 RFR	
460	2752759-0000		1	BRACKET	
TBA 0500B QC, TBA 1000B QC (See drawing on page: 3-206)					
050	484701-0000		14	SHUTTER	
060	1020146-0000		10	LOCKING BLOCK	
110	1279582-0000		2	RAIL	
120	1487684-0000		1	RAIL	
160	1285009-0000		2	HOLDER	
180	2724944-0000		1	RAIL	
190	1285253-0000		8	SPACER	
200	2693463-0000		1	RAIL	
210	2836001-0000		1	GUIDE	
220	2724951-0000		1	RAIL	
260	1020142-0002		2	RAIL HOLDER, B55 WIDTH 30 MM	
270	1538970-0000		1	SLIDE	
280	2804298-0000		1	BRACKET	
290	2963364-0000		1	BRACKET	
300	315105-0165		5	WASHER BRB 8,4X16 RFR	
310	312105-0449		5	SCREW M6S ISO 4017 M8X16 A480	
330	312105-0374		2	SCREW M6S ISO 4014 M6X30 A480	
330	312105-0370		2	SCREW M6S ISO 4017 M6X20 A480	
350	312105-0368		4	SCREW M6S ISO 4017 M6X16 A480	
360	312155-0329		1	SCREW DIN 7991 MF6S M5X16 A4 70	
370	315105-0146		1	WASHER BRB 5,3X10 RFR	
380	312605-0314		1	HEXAGON NUT, M6M M5 A280	
390	312605-0316		1	HEXAGON NUT, M6M M6 A280	
400	312105-0370		5	SCREW M6S ISO 4017 M6X20 A480	
445	315105-0153		14	WASHER BRB 6,4X12 RFR	
460	2732810-0000		1	BRACKET	
TBA 0500S (See drawing on page: 3-206)					
050	484701-0000		10	SHUTTER	
060	1020146-0000		10	LOCKING BLOCK	
110	1279582-0000		2	RAIL	
120	1487684-0000		1	RAIL	
160	1285009-0000		2	HOLDER	
180	2732821-0000		1	RAIL	
200	2732819-0000		1	RAIL	
210	2836001-0000		1	GUIDE	
220	2724951-0000		1	RAIL	
260	1020142-0002		2	RAIL HOLDER, B55 WIDTH 30 MM	
270	1538970-0000		1	SLIDE	
280	2804304-0000		1	BRACKET	
290	2804305-0000		1	BRACKET	
300	315105-0165		5	WASHER BRB 8,4X16 RFR	
310	312105-0449		5	SCREW M6S ISO 4017 M8X16 A480	

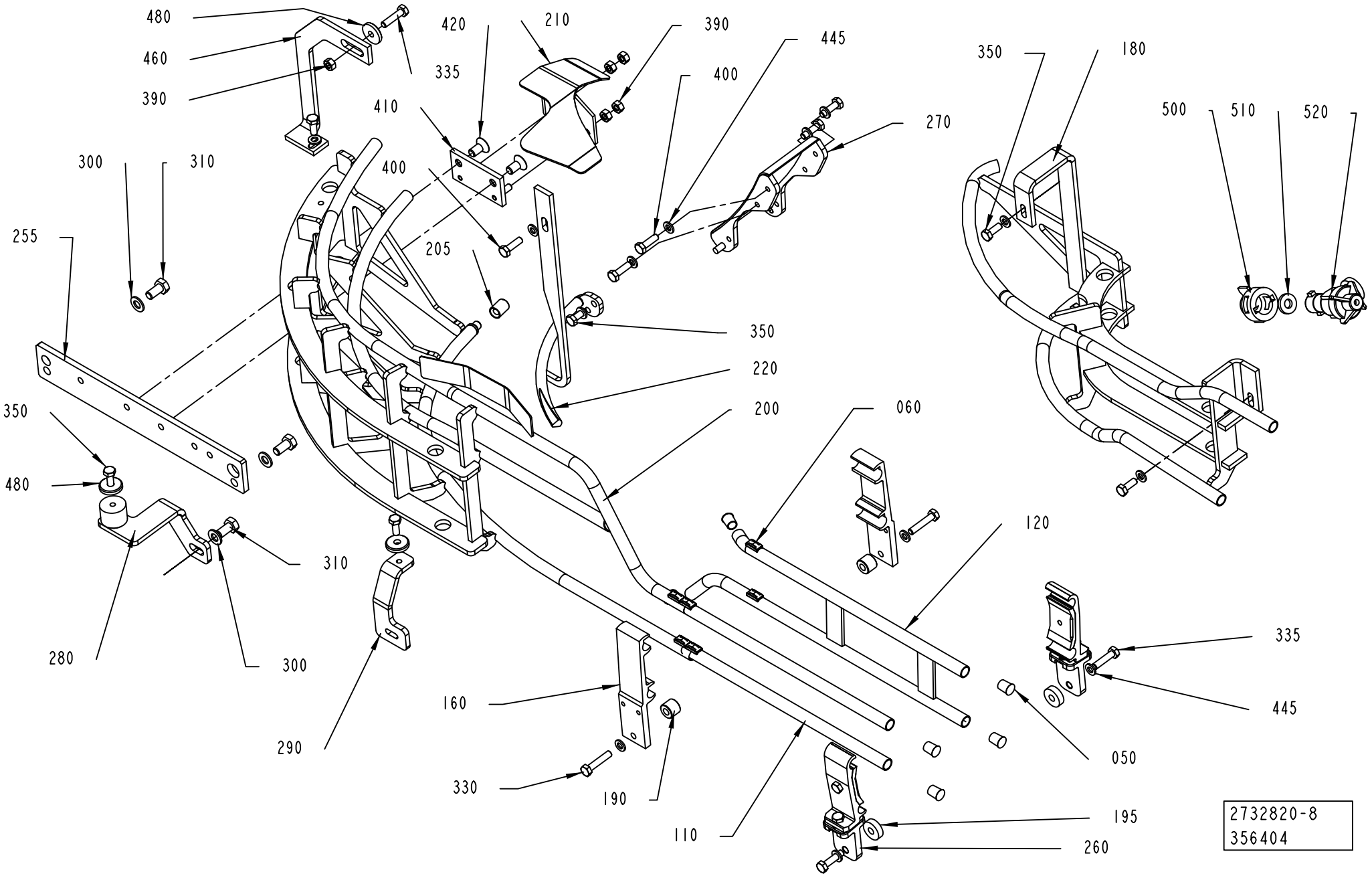
480
460
390
420
210
335
390
445
400
410
270
350
180
500
510
520
300
310
400
255
205
350
220
200
060
350
480
120
310
280
300
290
160
330
190
110
335
445
050
195
260
2732820-8
356404

ECM: 998084 - 20081002
Group number: 2732820-0100
Assembly Drawing: 2732820-8_1_AA

This list covers pages from 3-204 to 3-215

Pos	Part No	UN	Qty	Description	Page No
TBA 0500S (Cont'd) (See drawing on page: 3-206)					
330	312105-0374		2	SCREW M6S ISO 4014 M6X30 A480	
330	312105-0370		2	SCREW M6S ISO 4017 M6X20 A480	
350	312105-0368		4	SCREW M6S ISO 4017 M6X16 A480	
390	312605-0316		1	HEXAGON NUT, M6M M6 A280	
400	312105-0370		9	SCREW M6S ISO 4017 M6X20 A480	
445	315105-0153		13	WASHER BRB 6,4X12 RFR	
460	2732822-0000		1	BRACKET	
TBA 0500SQ QC, TBA 1000SQ QC					
330	312105-0374		2	SCREW M6S ISO 4014 M6X30 A480	
TBA 1000S, TBA 1000B NOQC (See drawing on page: 3-206)					
050	484701-0000		14	SHUTTER	
060	1020146-0000		10	LOCKING BLOCK	
110	1279582-0000		2	RAIL	
120	1487684-0000		1	RAIL	
160	1285009-0000		2	HOLDER	
180	2724944-0000		1	RAIL	
190	1285253-0000		10	SPACER	
200	2693462-0000		1	RAIL	
210	2836001-0000		1	GUIDE	
220	2724951-0000		1	RAIL	
260	1020142-0002		2	RAIL HOLDER, B55 WIDTH 30 MM	
270	1538970-0000		1	SLIDE	
280	2804290-0000		1	BRACKET	
290	2804291-0000		1	BRACKET	
300	315105-0165		5	WASHER BRB 8,4X16 RFR	
310	312105-0449		5	SCREW M6S ISO 4017 M8X16 A480	
330	312105-0374		2	SCREW M6S ISO 4014 M6X30 A480	
350	312105-0368		4	SCREW M6S ISO 4017 M6X16 A480	
360	312155-0329		1	SCREW DIN 7991 MF6S M5X16 A4 70	
370	315105-0146		1	WASHER BRB 5,3X10 RFR	
380	312605-0314		1	HEXAGON NUT, M6M M5 A280	
390	312605-0316		1	HEXAGON NUT, M6M M6 A280	
400	312105-0370		5	SCREW M6S ISO 4017 M6X20 A480	
445	315105-0153		14	WASHER BRB 6,4X12 RFR	
460	2732810-0000		1	BRACKET	
TBA 1000SQ NOQC (See drawing on page: 3-204)					
050	484701-0000		14	SHUTTER	
060	1020146-0000		10	LOCKING BLOCK	
110	1279582-0000		2	RAIL	
120	1296079-0000		1	RAIL	
160	1285009-0000		2	HOLDER	
180	2715500-0000		1	RAIL	
200	2693457-0000		1	RAIL	
210	2836002-0000		1	GUIDE	
220	2715498-0000		1	RAIL	
260	1020142-0002		2	RAIL HOLDER, B55 WIDTH 30 MM	
270	1538970-0000		1	SLIDE	
280	2804288-0000		1	BRACKET	
290	2804289-0000		1	BRACKET	
300	315105-0165		5	WASHER BRB 8,4X16 RFR	
310	312105-0449		5	SCREW M6S ISO 4017 M8X16 A480	
330	312105-0374		2	SCREW M6S ISO 4014 M6X30 A480	
350	312105-0368		4	SCREW M6S ISO 4017 M6X16 A480	
390	312605-0316		1	HEXAGON NUT, M6M M6 A280	
400	312105-0370		5	SCREW M6S ISO 4017 M6X20 A480	
445	315105-0153		13	WASHER BRB 6,4X12 RFR	
460	2732815-0000		1	BRACKET	
TBA 1400B (See drawing on page: 3-208)					
050	484701-0000		18	SHUTTER	
110	2640076-0000		2	RAIL	
120	2639832-0000		1	RAIL	
160	1550743-0100		2	RAIL HOLDER	**3-217**
180	2724940-0000		1	RAIL	
200	2693462-0000		1	RAIL	
210	2652206-0000		1	GUIDE	
220	2724941-0000		1	RAIL	
260	1550743-0100		2	RAIL HOLDER	**3-217**
270	1538970-0000		1	SLIDE	
280	2805214-0000		1	BRACKET	
290	2805215-0000		1	BRACKET	
300	315105-0165		4	WASHER BRB 8,4X16 RFR	
305	2655500-0000		1	WASHER	
310	312105-0449		4	SCREW M6S ISO 4017 M8X16 A480	
315	312105-0451		1	SCREW M6S ISO 4017 M8X20 A480	
330	312105-0374		2	SCREW M6S ISO 4014 M6X30 A480	
350	312105-0368		3	SCREW M6S ISO 4017 M6X16 A480	
390	312605-0316		1	HEXAGON NUT, M6M M6 A280	
400	312105-0370		5	SCREW M6S ISO 4017 M6X20 A480	
445	315105-0153		9	WASHER BRB 6,4X12 RFR	
480	315125-0153		1	WASHER TBRSB 6,4X22X4 A4	
TBA 1500S (See drawing on page: 3-206)					
050	484701-0000		16	SHUTTER	
060	1020146-0000		10	LOCKING BLOCK	

Machine Type | Group Description | Used-In | Group Number | Page No

See previous drawings pages: 3-204, 3-206, 3-208, 3-210, 3-212.

ECM: 998084 - 20081002
Group number: 2732820-0100
Assembly Drawing: 2732820-8_1_AA

This list covers pages from 3-204 to 3-215

Pos	Part No	UN	Qty	Description	Page No
TBA 1500S (Cont'd) (See drawing on page: 3-206)					
110	1279582-0000		2	RAIL	
120	1487684-0000		1	RAIL	
160	1285009-0000		2	HOLDER	
180	2724949-0000		1	RAIL	
190	1317218-0000		5	SPACER	
200	2693462-0000		1	RAIL	
210	2836001-0000		1	GUIDE	
220	2724950-0000		1	RAIL	
260	1020142-0002		2	RAIL HOLDER, B55 WIDTH 30 MM	
270	1538970-0000		1	SLIDE	
280	2804290-0000		1	BRACKET	
290	2804291-0000		1	BRACKET	
300	315105-0165		5	WASHER BRB 8,4X16 RFR	
310	312105-0449		5	SCREW M6S ISO 4017 M8X16 A480	
330	312105-0374		2	SCREW M6S ISO 4014 M6X30 A480	
350	312105-0368		4	SCREW M6S ISO 4017 M6X16 A480	
360	312155-0329		1	SCREW DIN 7991 MF6S M5X16 A4 70	
370	315105-0146		1	WASHER BRB 5,3X10 RFR	
380	312605-0314		1	HEXAGON NUT, M6M M5 A280	
390	312605-0316		1	HEXAGON NUT, M6M M6 A280	
400	312105-0370		5	SCREW M6S ISO 4017 M6X20 A480	
445	315105-0153		14	WASHER BRB 6,4X12 RFR	
460	2724936-0000		1	BRACKET	
Common Parts					
150	1499413-0000		1	HOLDER	
255	1478235-0000		1	PLATE	

Pos	Part No	UN	Qty	Description	Page No

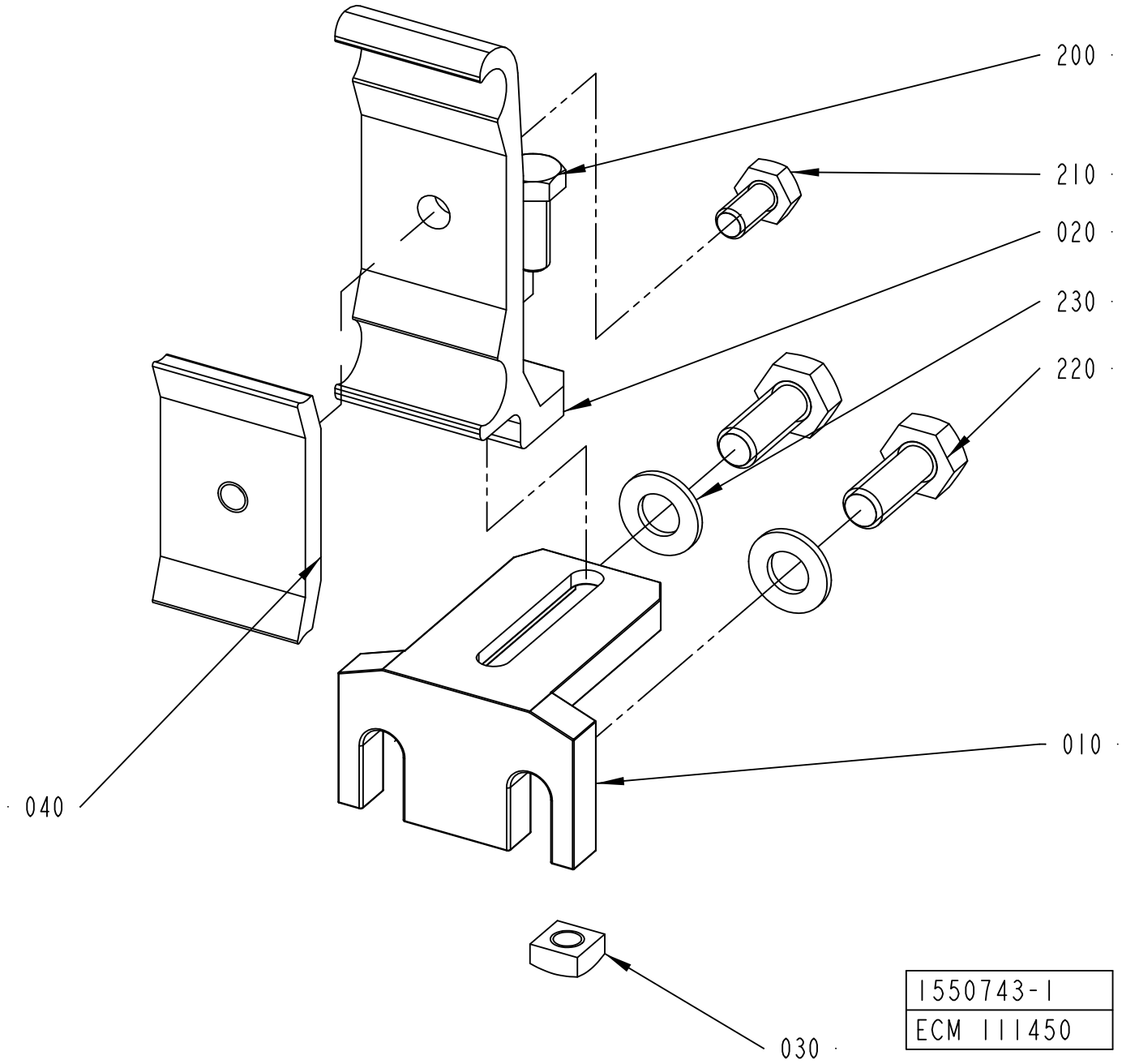
200
210
020
230
220
040
010
030
1550743-1
ECM 111450

ECM: 129860 - 20031113
Group number: 1550743-0100
Assembly Drawing: 1550743-1_1_AB

Pos	Part No	UN	Qty	Description	Page No
-					
010	1550772-0000		1	HOLDER	
020	1550773-0000		1	RAIL HOLDER	
030	1359565-0000		1	NUT	
040	1366727-0000		1	CLAMP	
200	312105-0368		1	SCREW M6S ISO 4017 M6X16 A480	
210	312105-0366		1	SCREW M6S ISO 4017 M6X12 A480	
220	312105-0451		2	SCREW M6S ISO 4017 M8X20 A480	
230	315105-0165		2	WASHER BRB 8,4X16 RFR	

Pos	Part No	UN	Qty	Description	Page No

ANGLED RAIL HOLDER TPC21

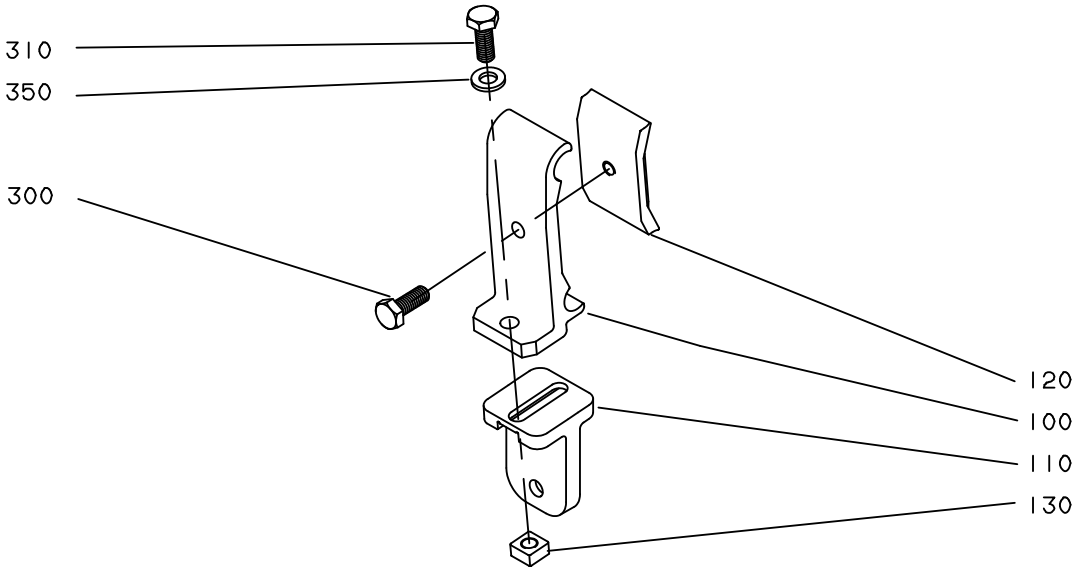

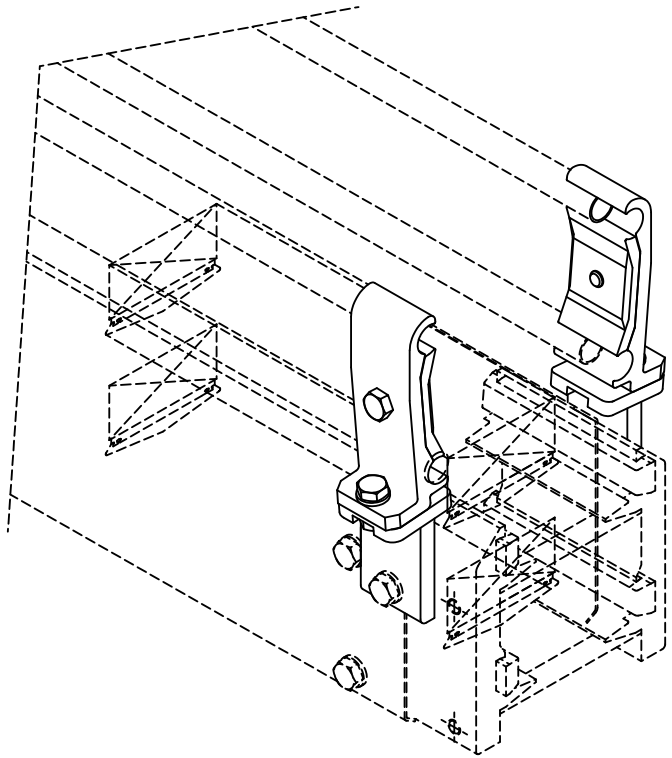

S-1366777-1
ECN 81455

ECM: 189515 - 20041104
Group number: 1366777-0101
Assembly Drawing: 1366777-1_1_AA

Pos	Part No	UN	Qty	Description	Page No
-					
100	1366726-0000		1	HOLDER	
110	1359085-0000		1	T-HOLDER	
120	1366727-0000		1	CLAMP	
130	1359565-0000		1	NUT	
300	312105-0366		1	SCREW M6S ISO 4017 M6X12 A480	
310	312105-0368		1	SCREW M6S ISO 4017 M6X16 A480	
350	315105-0153		1	WASHER BRB 6,4X12 RFR	

Pos	Part No	UN	Qty	Description	Page No

This page is intentionally left blank.

ECM: 998010 - 20070101
Group number: 1361921-0400
Assembly Drawing:

Pos	Part No	UN	Qty	Description	Page No
-					
010	1487038-0300		1	OUTFEED WHEEL	**3-223, 3-225, 3-227, 3-229**
020	1538644-0100		1	OUTFEED BELT	**3-231**

Pos	Part No	UN	Qty	Description	Page No

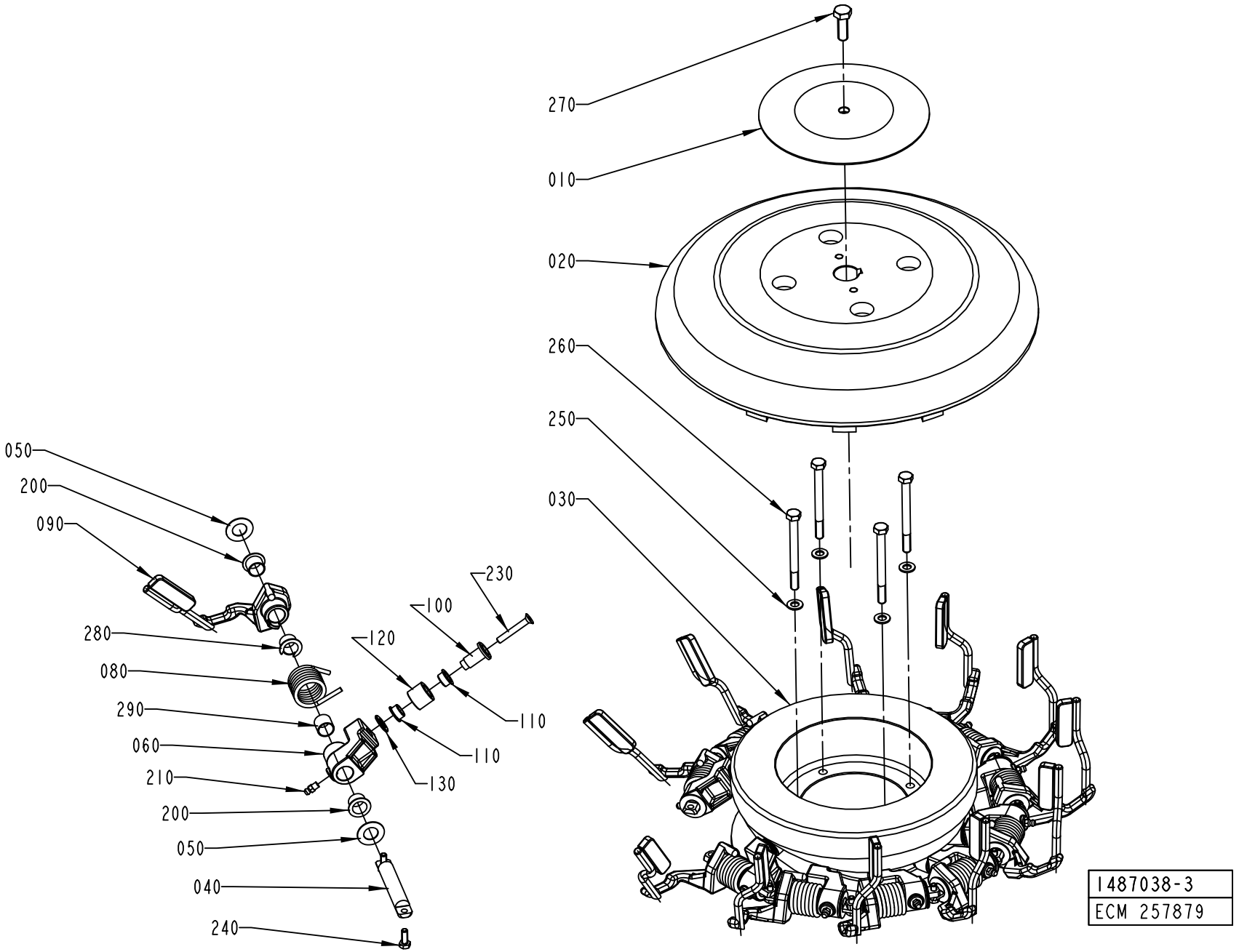
270
010
020
260
250
030
050
200
090
280
080
290
060
210
200
050
040
240
230
100
120
110
110
130
1487038-3
ECM 257879

ECM: 343886 - 20080702
Group number: 1487038-0300
Assembly Drawing: 1487038-3_1_AC

This list covers pages from 3-222 to 3-229

Pos	Part No	UN	Qty	Description	Page No
TPA 0500SQ (See drawing on page: 3-224)					
020	2532580-0000		1	HATCH	
030	2540594-0000		1	CAM	
040	1350543-0000		8	AXLE PIN	
050	1260852-0000		16	WASHER	
060	2556525-0000		8	LEVER	
080	1549615-0000		8	SPRING	
090	2529664-0000		8	CARRIER	
100	1260851-0000		8	AXLE PIN	
110	90240-0316		16	FLANGE BUSHING, 12X14X8 MM	
120	1260853-0000		8	RING	
130	1285254-0000		8	WASHER	
200	90240-0263		16	FLANGE BUSHING, 15X17X12 MM	
210	344502-0021		8	GREASE NIPPLE STRAIGHT M6	
230	312155-0378		8	SCREW DIN 7991 MF6S M6X40 A4 70	
240	312105-0368		16	SCREW M6S ISO 4017 M6X16 A480	
280	2545245-0000		8	BUSHING	
290	90240-0258		8	BUSHING, 15X17X15 MM	
TPA 1000SQ NOQC, TPA 1000SQ QC, TPA 0750SQ QC (See drawing on page: 3-224)					
020	2532580-0000		1	HATCH	
030	2540594-0000		1	CAM	
040	1350543-0000		8	AXLE PIN	
050	1260852-0000		16	WASHER	
060	2556525-0000		8	LEVER	
080	1549615-0000		8	SPRING	
090	2543231-0000		8	CARRIER	
100	1260851-0000		8	AXLE PIN	
110	90240-0316		16	FLANGE BUSHING, 12X14X8 MM	
120	1260853-0000		8	RING	
130	1285254-0000		8	WASHER	
200	90240-0263		16	FLANGE BUSHING, 15X17X12 MM	
210	344502-0021		8	GREASE NIPPLE STRAIGHT M6	
230	312155-0378		8	SCREW DIN 7991 MF6S M6X40 A4 70	
240	312105-0368		16	SCREW M6S ISO 4017 M6X16 A480	
280	2545245-0000		8	BUSHING	
290	90240-0258		8	BUSHING, 15X17X15 MM	
TBA 0200B QC, TBA 0330S QC, TBA 0250B QC (See drawing on page: 3-224)					
020	2532580-0000		1	HATCH	
030	2540593-0000		1	CAM	
040	1350543-0000		8	AXLE PIN	
050	1260852-0000		16	WASHER	
060	2556526-0000		8	LEVER	
080	1349985-0000		8	SPRING	
090	2563274-0000		8	CARRIER	
100	1260851-0000		8	AXLE PIN	
110	90240-0316		16	FLANGE BUSHING, 12X14X8 MM	
120	1260853-0000		8	RING	
130	1285254-0000		8	WASHER	
200	90240-0263		16	FLANGE BUSHING, 15X17X12 MM	
210	344502-0021		8	GREASE NIPPLE STRAIGHT M6	
230	312155-0378		8	SCREW DIN 7991 MF6S M6X40 A4 70	
240	312105-0368		16	SCREW M6S ISO 4017 M6X16 A480	
280	2545245-0000		8	BUSHING	
290	90240-0258		8	BUSHING, 15X17X15 MM	
TBA 0200S, TBA 0200M QC, TBA 0250S QC (See drawing on page: 3-222)					
020	1478925-0000		1	HATCH	
030	2540593-0000		1	CAM	
040	1350543-0000		12	AXLE PIN	
050	1260852-0000		24	WASHER	
060	2556526-0000		12	LEVER	
080	1349985-0000		12	SPRING	
090	2563274-0000		12	CARRIER	
100	1260851-0000		12	AXLE PIN	
110	90240-0316		24	FLANGE BUSHING, 12X14X8 MM	
120	1260853-0000		12	RING	
130	1285254-0000		12	WASHER	
200	90240-0263		24	FLANGE BUSHING, 15X17X12 MM	
210	344502-0021		12	GREASE NIPPLE STRAIGHT M6	
230	312155-0378		12	SCREW DIN 7991 MF6S M6X40 A4 70	
240	312105-0368		12	SCREW M6S ISO 4017 M6X16 A480	
280	2545245-0000		12	BUSHING	
290	90240-0258		12	BUSHING, 15X17X15 MM	
TBA 0200SQ QC, TBA 0250SQ QC (See drawing on page: 3-222)					
020	1478925-0000		1	HATCH	
030	2540594-0000		1	CAM	
040	1350543-0000		12	AXLE PIN	
050	1260852-0000		24	WASHER	
060	2556525-0000		12	LEVER	
080	1549615-0000		12	SPRING	
090	2682222-0000		12	CARRIER	
100	1260851-0000		12	AXLE PIN	
110	90240-0316		24	FLANGE BUSHING, 12X14X8 MM	
120	1260853-0000		12	RING	
130	1285254-0000		12	WASHER	

Machine Type | Group Description | Used-In | Group Number | Page No

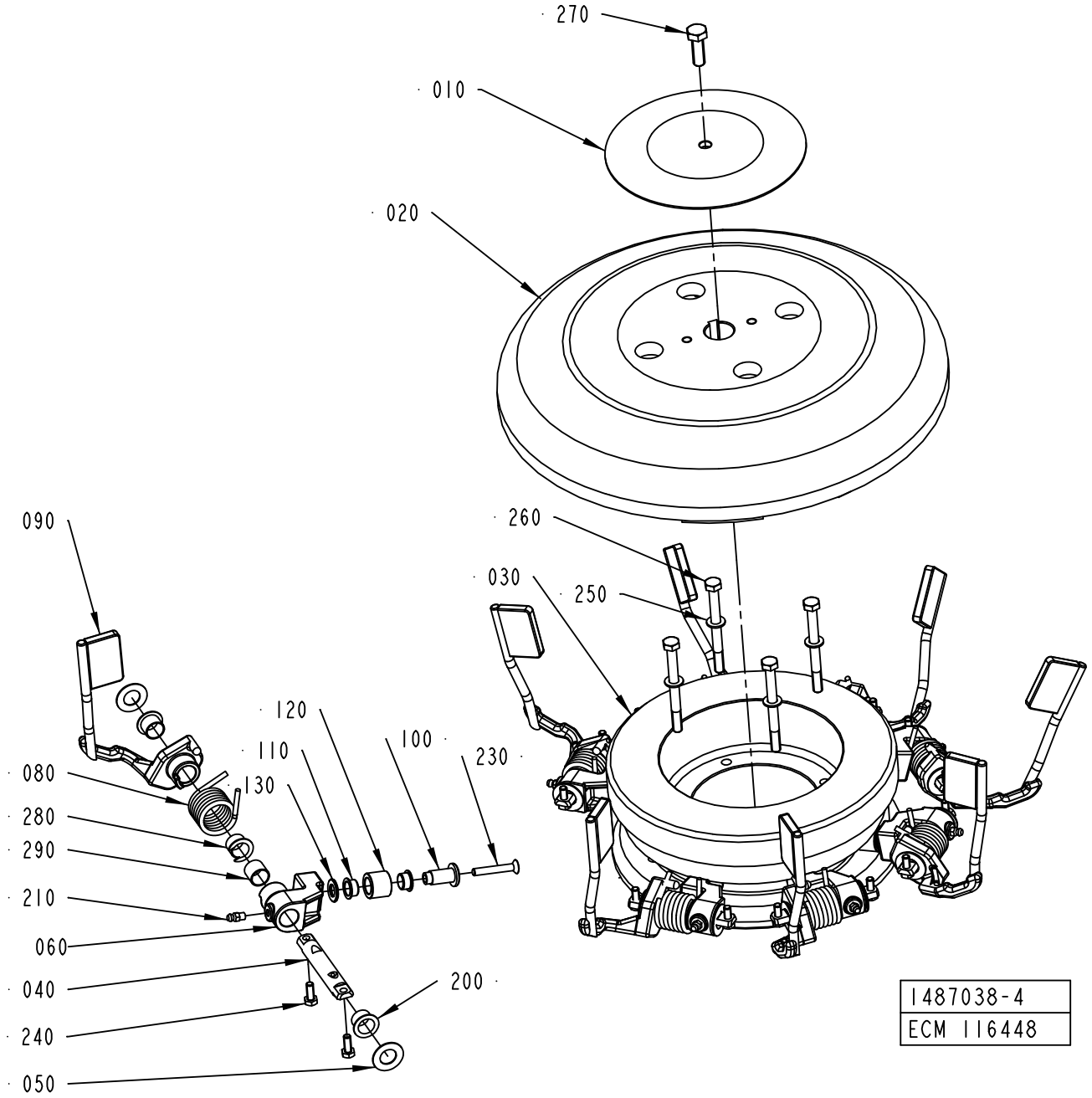
270
010
020
090
260
030
250
120
110
100
230
080
130
280
290
210
060
040
200
240
050
1487038-4
ECM 116448

ECM: 343886 - 20080702
Group number: 1487038-0300
Assembly Drawing: 1487038-4_1_AA

This list covers pages from 3-222 to 3-229

Pos	Part No	UN	Qty	Description	Page No
TBA 0200SQ QC, TBA 0250SQ QC (Cont'd) (See drawing on page: 3-222)					
200	90240-0263		24	FLANGE BUSHING, 15X17X12 MM	
210	344502-0021		12	GREASE NIPPLE STRAIGHT M6	
230	312155-0378		12	SCREW DIN 7991 MF6S M6X40 A4 70	
240	312105-0368		12	SCREW M6S ISO 4017 M6X16 A480	
280	2545245-0000		12	BUSHING	
290	90240-0258		12	BUSHING, 15X17X15 MM	
TBA 0500S, TBA 0500B, TBA 1000B, TBA 1000S (See drawing on page: 3-228)					
020	1484289-0000		1	HATCH	
030	1478228-0000		1	CAM	
040	1348540-0000		8	PIVOT AXLE	
050	1260852-0000		16	WASHER	
060	2734451-0000		8	LEVER	
080	1349985-0000		8	SPRING	
090	2734456-0000		8	CARRIER	
100	1260851-0000		8	AXLE PIN	
110	90240-0316		16	FLANGE BUSHING, 12X14X8 MM	
120	1260853-0000		8	RING	
130	1285254-0000		8	WASHER	
200	90240-0263		32	FLANGE BUSHING, 15X17X12 MM	
210	344502-0021		8	GREASE NIPPLE STRAIGHT M6	
230	312155-0378		8	SCREW DIN 7991 MF6S M6X40 A4 70	
240	312105-0368		16	SCREW M6S ISO 4017 M6X16 A480	
280	2545245-0000		8	BUSHING	
TBA 0500SQ, TBA 1000SQ (See drawing on page: 3-226)					
020	1484289-0000		1	HATCH	
030	1478228-0000		1	CAM	
040	1348540-0000		8	PIVOT AXLE	
050	1260852-0000		16	WASHER	
060	2734450-0000		8	LEVER	
080	1549615-0000		8	SPRING	
090	2734454-0000		8	CARRIER	
100	1260851-0000		8	AXLE PIN	
110	90240-0316		16	FLANGE BUSHING, 12X14X8 MM	
120	1260853-0000		8	RING	
130	1285254-0000		8	WASHER	
200	90240-0263		32	FLANGE BUSHING, 15X17X12 MM	
210	344502-0021		8	GREASE NIPPLE STRAIGHT M6	
230	312155-0378		8	SCREW DIN 7991 MF6S M6X40 A4 70	
240	312105-0368		16	SCREW M6S ISO 4017 M6X16 A480	
280	2545245-0000		8	BUSHING	
TBA 1500S (See drawing on page: 3-228)					
020	1484289-0000		1	HATCH	
030	1478228-0000		1	CAM	
040	1348540-0000		8	PIVOT AXLE	
050	1260852-0000		16	WASHER	
060	2734451-0000		8	LEVER	
080	1349985-0000		8	SPRING	
090	2693454-0000		8	CARRIER	
100	1260851-0000		8	AXLE PIN	
110	90240-0316		16	FLANGE BUSHING, 12X14X8 MM	
120	1260853-0000		8	RING	
130	1285254-0000		8	WASHER	
200	90240-0263		32	FLANGE BUSHING, 15X17X12 MM	
210	344502-0021		8	GREASE NIPPLE STRAIGHT M6	
230	312155-0378		8	SCREW DIN 7991 MF6S M6X40 A4 70	
240	312105-0368		16	SCREW M6S ISO 4017 M6X16 A480	
280	2545245-0000		8	BUSHING	
TBA 1890S QC, TBA 2000S QC, TBA 1400B (See drawing on page: 3-224)					
020	2594911-0000		1	HATCH	
030	2540593-0000		1	CAM	
040	1348540-0000		6	PIVOT AXLE	
050	1260852-0000		12	WASHER	
060	2734451-0000		6	LEVER	
080	1349985-0000		6	SPRING	
090	2664596-0000		6	CARRIER	
100	1260851-0000		6	AXLE PIN	
110	90240-0316		12	FLANGE BUSHING, 12X14X8 MM	
120	1260853-0000		6	RING	
130	1285254-0000		6	WASHER	
200	90240-0263		12	FLANGE BUSHING, 15X17X12 MM	
210	344502-0021		6	GREASE NIPPLE STRAIGHT M6	
230	312155-0378		6	SCREW DIN 7991 MF6S M6X40 A4 70	
240	312105-0368		12	SCREW M6S ISO 4017 M6X16 A480	
280	2545245-0000		6	BUSHING	
290	90240-0258		6	BUSHING, 15X17X15 MM	
TPA 0200SQ QC L_OUT, TPA 0250SQ QC L_OUT (See drawing on page: 3-222)					
020	1478925-0000		1	HATCH	
030	2540594-0000		1	CAM	
040	1350543-0000		12	AXLE PIN	
050	1260852-0000		24	WASHER	
060	2556525-0000		12	LEVER	
080	1549615-0000		12	SPRING	
090	2552018-0000		12	CARRIER	

Machine Type | Group Description | Used-In | Group Number | Page No

OUTFEED WHEEL

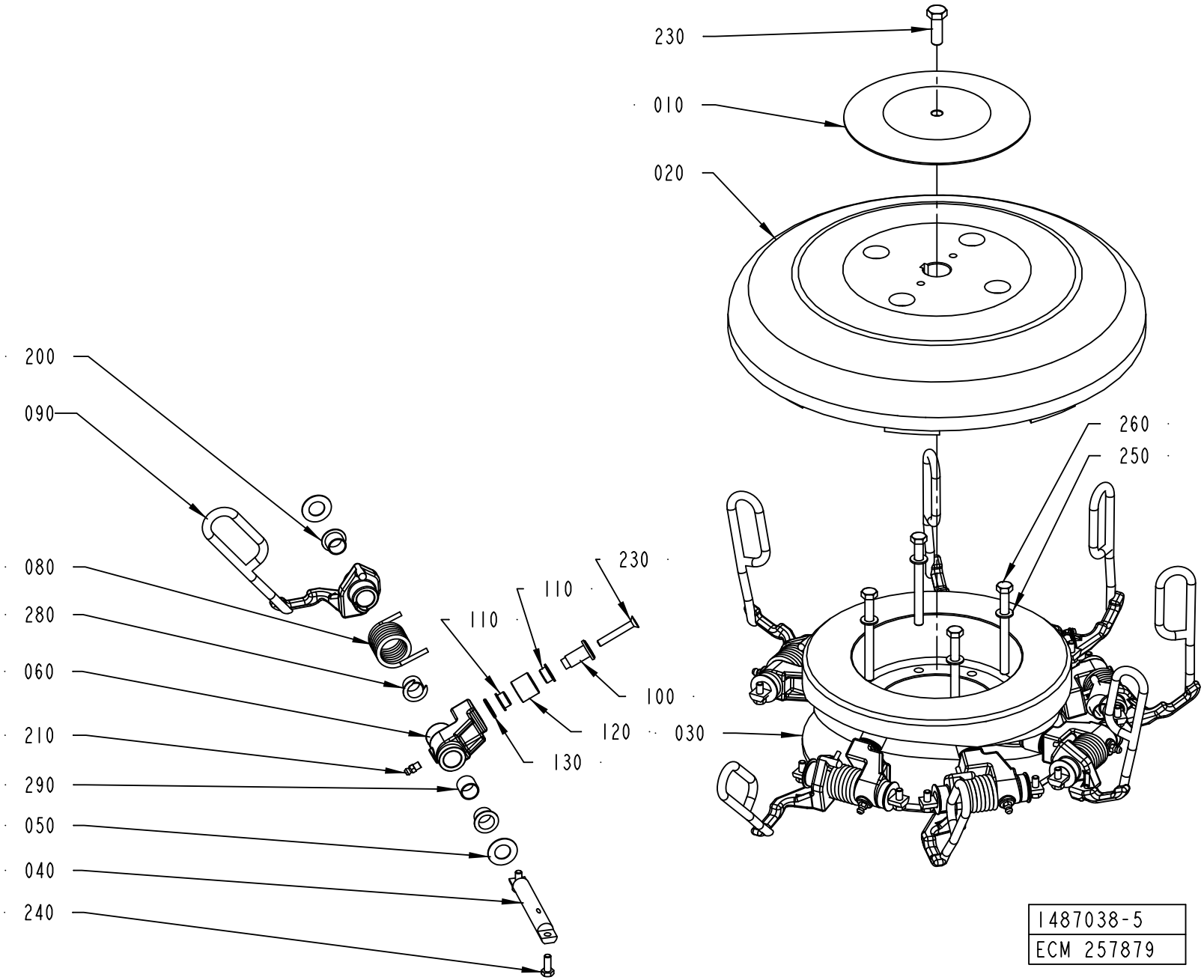

ECM: 343886 - 20080702
Group number: 1487038-0300
Assembly Drawing: 1487038-5_1_AA

This list covers pages from 3-222 to 3-229

Pos	Part No	UN	Qty	Description	Page No
TPA 0200SQ QC L_OUT, TPA 0250SQ QC L_OUT (Cont'd) (See drawing on page: 3-222)					
100	1260851-0000		12	AXLE PIN	
110	90240-0316		24	FLANGE BUSHING, 12X14X8 MM	
120	1260853-0000		12	RING	
130	1285254-0000		12	WASHER	
200	90240-0263		24	FLANGE BUSHING, 15X17X12 MM	
210	344502-0021		12	GREASE NIPPLE STRAIGHT M6	
230	312155-0378		12	SCREW DIN 7991 MF6S M6X40 A4 70	
240	312105-0368		12	SCREW M6S ISO 4017 M6X16 A480	
280	2545245-0000		12	BUSHING	
290	90240-0258		12	BUSHING, 15X17X15 MM	
TPA 0200SQ QC R_OUT, TPA 0250SQ QC R_OUT (See drawing on page: 3-222)					
020	1478925-0000		1	HATCH	
030	2540593-0000		1	CAM	
040	1350543-0000		12	AXLE PIN	
050	1260852-0000		24	WASHER	
060	2556526-0000		12	LEVER	
080	1349985-0000		12	SPRING	
090	2640721-0000		12	CARRIER	
100	1260851-0000		12	AXLE PIN	
110	90240-0316		24	FLANGE BUSHING, 12X14X8 MM	
120	1260853-0000		12	RING	
130	1285254-0000		12	WASHER	
200	90240-0263		24	FLANGE BUSHING, 15X17X12 MM	
210	344502-0021		12	GREASE NIPPLE STRAIGHT M6	
230	312155-0378		12	SCREW DIN 7991 MF6S M6X40 A4 70	
240	312105-0368		12	SCREW M6S ISO 4017 M6X16 A480	
280	2545245-0000		12	BUSHING	
290	90240-0258		12	BUSHING, 15X17X15 MM	
TPA 0330SQ L_OUT (See drawing on page: 3-222)					
020	1478925-0000		1	HATCH	
030	1478228-0000		1	CAM	
040	1350543-0000		12	AXLE PIN	
050	1260852-0000		24	WASHER	
060	2556525-0000		12	LEVER	
080	1549615-0000		12	SPRING	
090	2818564-0000		12	CARRIER	
100	1260851-0000		12	AXLE PIN	
110	90240-0316		24	FLANGE BUSHING, 12X14X8 MM	
120	1260853-0000		12	RING	
130	1285254-0000		12	WASHER	
200	90240-0263		24	FLANGE BUSHING, 15X17X12 MM	
210	344502-0021		12	GREASE NIPPLE STRAIGHT M6	
230	312155-0378		12	SCREW DIN 7991 MF6S M6X40 A4 70	
240	312105-0368		12	SCREW M6S ISO 4017 M6X16 A480	
280	2545245-0000		12	BUSHING	
290	90240-0258		12	BUSHING, 15X17X15 MM	
TPA 0330SQ R_OUT (See drawing on page: 3-222)					
020	1478925-0000		1	HATCH	
030	2540593-0000		1	CAM	
040	1350543-0000		12	AXLE PIN	
050	1260852-0000		24	WASHER	
060	2556526-0000		12	LEVER	
080	1349985-0000		12	SPRING	
090	2914992-0000		12	CARRIER	
100	1260851-0000		12	AXLE PIN	
110	90240-0316		24	FLANGE BUSHING, 12X14X8 MM	
120	1260853-0000		12	RING	
130	1285254-0000		12	WASHER	
200	90240-0263		24	FLANGE BUSHING, 15X17X12 MM	
210	344502-0021		12	GREASE NIPPLE STRAIGHT M6	
230	312155-0378		12	SCREW DIN 7991 MF6S M6X40 A4 70	
240	312105-0368		12	SCREW M6S ISO 4017 M6X16 A480	
280	2545245-0000		12	BUSHING	
290	90240-0258		12	BUSHING, 15X17X15 MM	
Common Parts					
010	1478558-0000		1	WASHER	
250	315105-0165		4	WASHER BRB 8,4X16 RFR	
260	312105-0469		4	SCREW M6S ISO 4014 M8X90 A480	
270	312105-0495		1	SCREW M6S ISO 4017 M10X30 A480	

Machine Type | Group Description | Used-In | Group Number | Page No

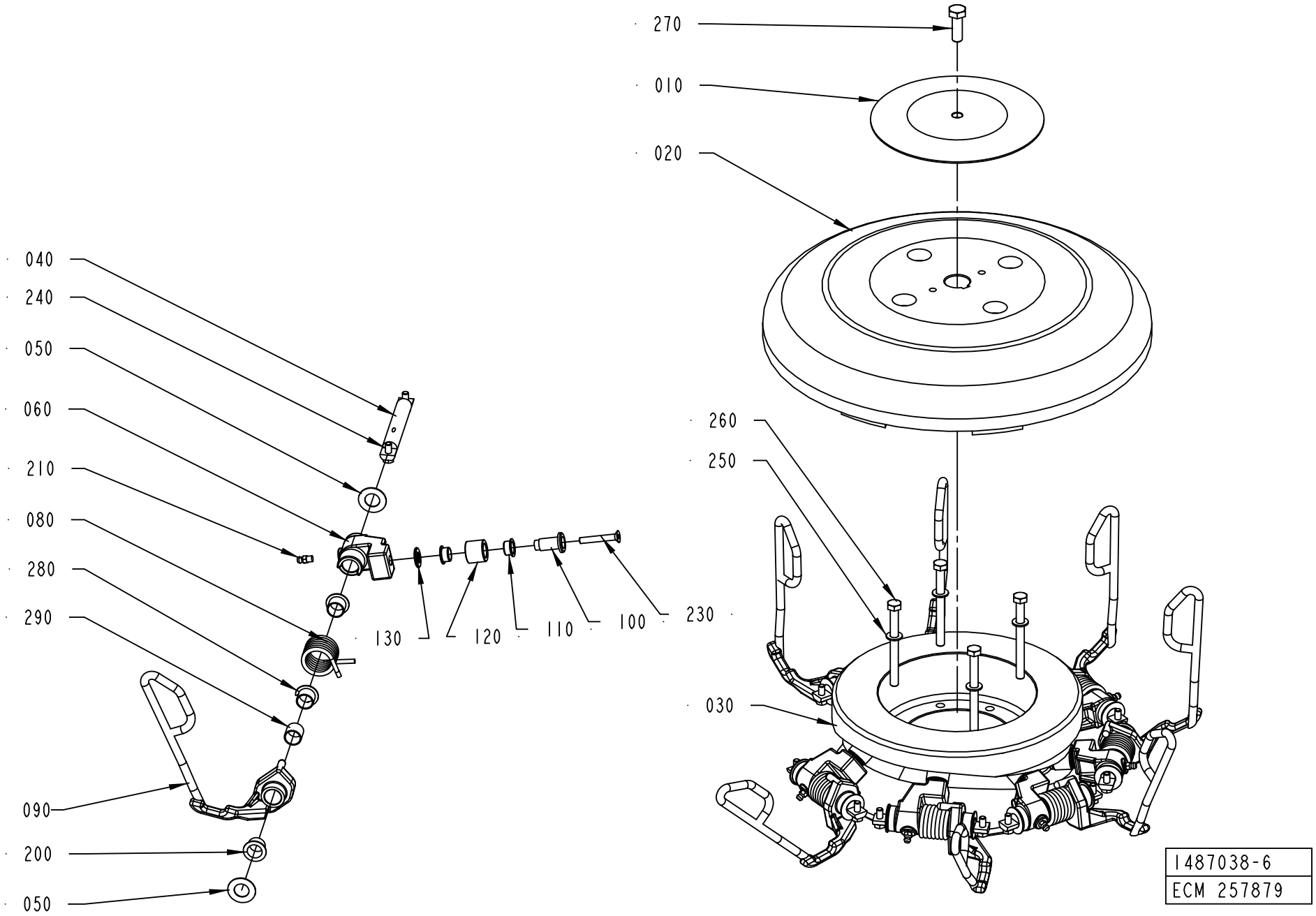
270
010
020
040
240
050
060
210
080
280
290
130
120
110
100
230
260
250
030
090
200
050
1487038-6
ECM 257879

ECM: 343886 - 20080702
Group number: 1487038-0300
Assembly Drawing: 1487038-6_1_AA

This list covers pages from 3-222 to 3-229

Pos	Part No	UN	Qty	Description	Page No
SEE PREVIOUS LISTS PAGES: 3-223, 3-225, 3-227.					

Pos	Part No	UN	Qty	Description	Page No

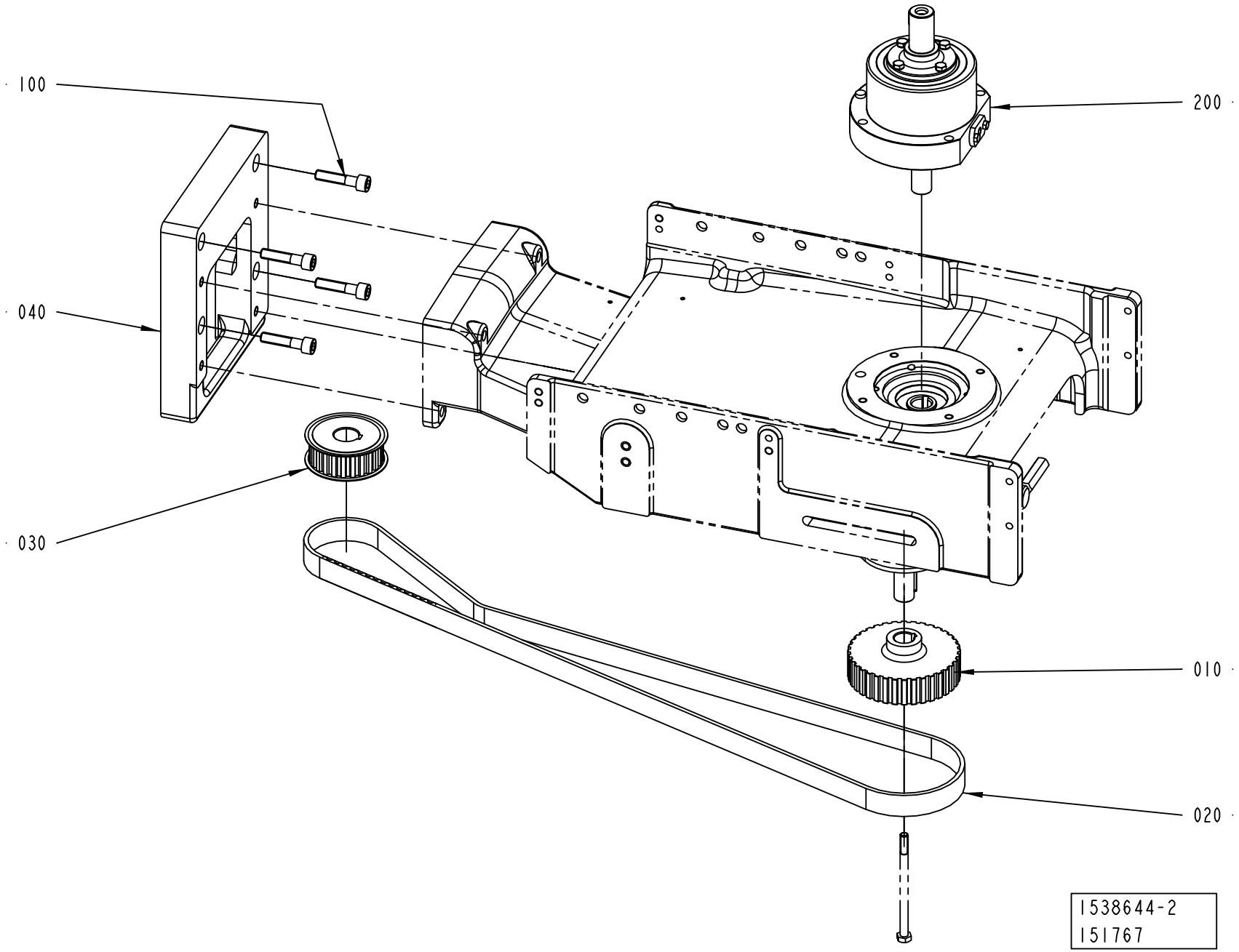
100
200
040
030
010
020
1538644-2
151767

ECM: 295129 - 20070216
Group number: 1538644-0100
Assembly Drawing: 1538644-2_1_AA

Pos	Part No	UN	Qty	Description	Page No
TBA 0200B, TBA 0250B, TBA 0330S, TBA 0500S, TBA 0500SQ, TBA 0500B, TBA 1000B, TBA 1000SQ, TBA 1000S, TPA 0500SQ					
010	1498620-0000		1	PULLEY	
020	1498529-0000		1	TIMING BELT	
TBA 0200M, TBA 0200SQ, TBA 0200S, TBA 0250S, TPA 0330SQ, TPA 0250SQ, TPA 0200SQ, TBA 0250SQ					
010	1499064-0000		1	PULLEY	
020	1499059-0000		1	TIMING BELT	
TBA 1500S, TPA 1000SQ, TPA 0750SQ					
010	1498620-0000		1	PULLEY	
020	1498528-0000		1	TIMING BELT	
040	1349160-0000		1	SPACER	
TBA 1890S, TBA 2000S, TBA 1400B					
010	2588329-0000		1	PULLEY	
020	2616227-0000		1	TIMING BELT	
030	2588328-0000		1	PULLEY	
040	1349160-0000		1	SPACER	
100	312115-0500		4	SCREW ISO4762 M10X45 A4 80	
Common Parts					
200	2697138-0100		1	CLUTCH	**3-233**

Pos	Part No	UN	Qty	Description	Page No

Machine Type | Group Description | Used-In | Group Number | Page No

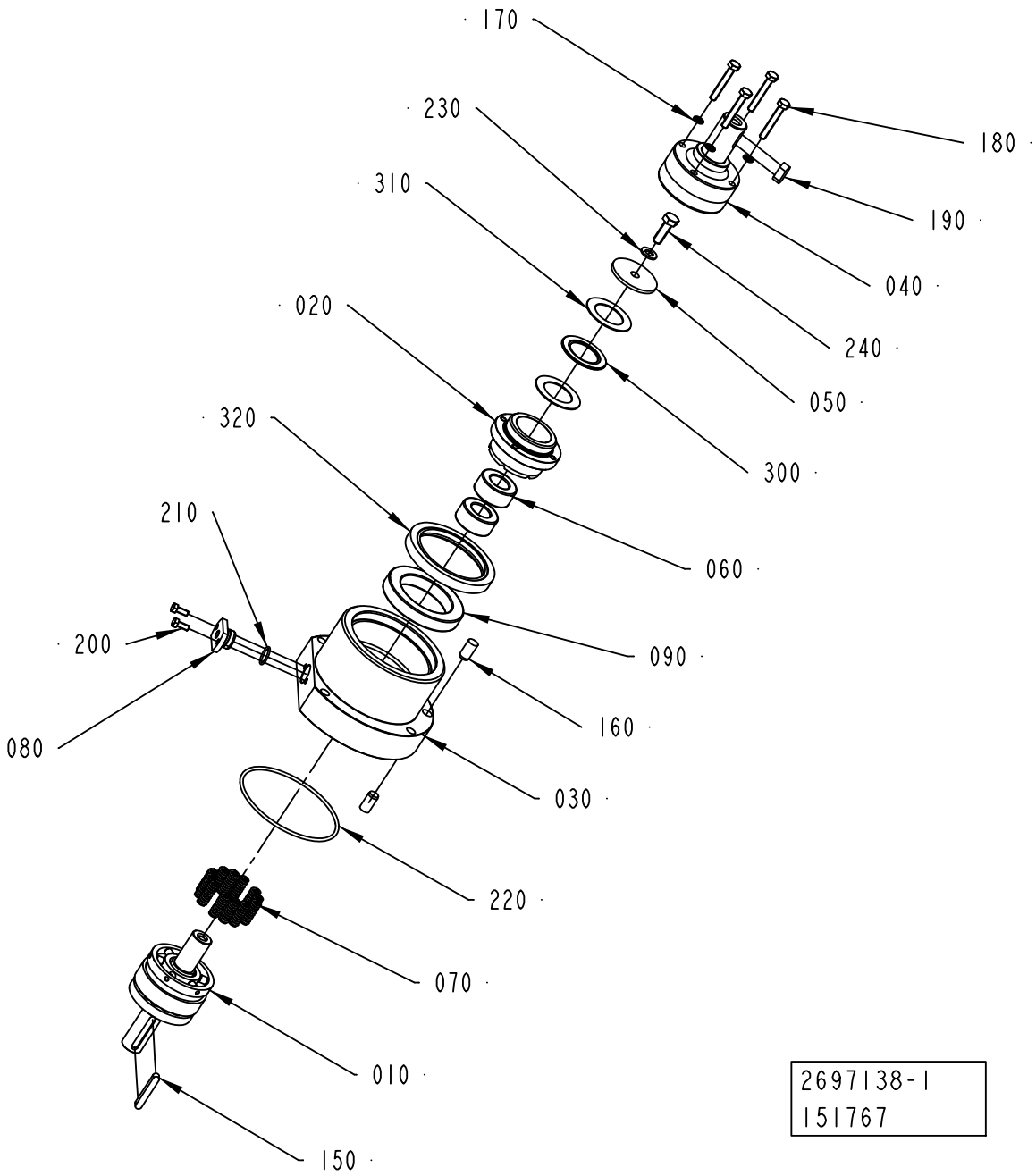
170
230
310
020
320
210
200
080
180
190
040
240
050
300
060
090
160
030
220
070
010
150
2697138-1
151767

ECM: 998350 - 20070102
Group number: 2697138-0100
Assembly Drawing: 2697138-1_1_AA

Pos	Part No	UN	Qty	Description	Page No
START FM TBA 2000S, START FM TBA 1890S, START FM TBA 1400B					
010	1282343-0000		1	BLOCK	
020	1350564-0000		1	CLAMP HUB	
030	1478905-0000		1	FLANGE	
040	1478753-0000		1	SHAFT	
050	1260832-0000		1	WASHER	
060	1484448-0000		2	ROLLER BEARING	
070	1282345-0000		12	SPRING	
080	1282335-0000		1	FLANGE	
090	1484447-0000		1	BALL BEARING	
150	315705-0239		1	PARALLEL KEY W. ROUND ENDS 6X6X40 MM	
160	311103-0454		2	PARALLEL PIN ISO 2338 10M6X20 A1	
170	315211-0103		4	BONDED SEAL SS/NBR90 M6	
180	312109-0378		4	SCREW M6S ISO 4017 M6X40 A480	
190	315705-0263		1	PARALLEL KEY W. ROUND ENDS 8X7X20 MM	
200	312105-0327		2	SCREW M6S ISO 4017 M5X12 A480	
210	315202-0113		1	O-RING 15,1X1,6 MM	
220	315202-0311		1	O-RING 99,5X3 MM	
230	315105-0165		1	WASHER BRB 8,4X16 RFR	
240	312105-0453		1	SCREW M6S ISO 4017 M8X25 A480	
300	90083-0052		1	NEEDLE ROLLER THRUST BEARING, 30X47X2 MM	
310	90083-0053		2	SHAFT LOCATING WASHER, 30X47X1MM	
320	90091-0416		1	RADIAL SEAL 70X90X10 MM DUST LIP	
TBA 1890S, TBA 2000S, TBA 1400B					
010	2644178-0000		1	BLOCK	
020	2644177-0000		1	CLAMP HUB	
030	1478905-0000		1	FLANGE	
040	1478753-0000		1	SHAFT	
050	1260832-0000		1	WASHER	
060	1484448-0000		2	ROLLER BEARING	
070	1282345-0000		12	SPRING	
080	1282335-0000		1	FLANGE	
090	1484447-0000		1	BALL BEARING	
150	315705-0239		1	PARALLEL KEY W. ROUND ENDS 6X6X40 MM	
160	311103-0454		2	PARALLEL PIN ISO 2338 10M6X20 A1	
170	315211-0103		4	BONDED SEAL SS/NBR90 M6	
180	312109-0378		4	SCREW M6S ISO 4017 M6X40 A480	
190	315705-0263		1	PARALLEL KEY W. ROUND ENDS 8X7X20 MM	
200	312105-0327		2	SCREW M6S ISO 4017 M5X12 A480	
210	315202-0113		1	O-RING 15,1X1,6 MM	
220	315202-0311		1	O-RING 99,5X3 MM	
230	315105-0165		1	WASHER BRB 8,4X16 RFR	
240	312105-0453		1	SCREW M6S ISO 4017 M8X25 A480	
300	90083-0052		1	NEEDLE ROLLER THRUST BEARING, 30X47X2 MM	
310	90083-0053		2	SHAFT LOCATING WASHER, 30X47X1MM	
320	90091-0416		1	RADIAL SEAL 70X90X10 MM DUST LIP	

Machine Type | Group Description | Used-In | Group Number | Page No

This page is intentionally left blank.

ECM: 331842 - 20080101
Group number: 2634511-0100
Assembly Drawing:

Pos	Part No	UN	Qty	Description	Page No
DIFFFIN DIFFWHEEL					
010	1517322-0100		1	FIN TYPE	**3-237**
020	1517298-0200		1	INFEED CONVEYOR	**3-255**
030	1524370-0100		1	WHEEL DIFFERENCE	**3-269**
040	2541714-0100		1	DROP CHUTE CRADLE	**3-271, 3-273**
DIFFFIN SAMEWHEEL					
010	1517322-0100		1	FIN TYPE	**3-237**
045	2701063-0100		1	DROP CHUTE VARIANT	**3-275**
080	2530418-0000		1	SPRING	
SAMEFIN DIFFWHEEL					
020	1517298-0200		1	INFEED CONVEYOR	**3-255**
030	1524370-0100		1	WHEEL DIFFERENCE	**3-269**
040	2541714-0100		1	DROP CHUTE CRADLE	**3-271, 3-273**
050	2702374-0100		1	CONVEYOR	**3-277**
SAMEFIN SAMEWHEEL					
045	2701063-0100		1	DROP CHUTE VARIANT	**3-275**
050	2702374-0100		1	CONVEYOR	**3-277**
080	2530418-0000		1	SPRING	
Common Parts					
060	2678844-0200		1	PT FLEX HOLES	**3-279**
090	2939206-0100		1	INDEXING UNIT	**3-391**

Pos	Part No	UN	Qty	Description	Page No

This page is intentionally left blank.

ECM: 357731 - 20081001
Group number: 1517322-0100
Assembly Drawing:

Pos	Part No	UN	Qty	Description	Page No
TBA 0200B START PC23, TBA 0200M START PC23, TBA 0200S START PC23, TBA 0250B START PC23, TBA 0250S START PC23, TBA 0330S START PC23, TBA 0500B START PC23, TBA 0500S START PC23, TBA 1000B START PC23, TBA 1000S START PC23, TBA 1500S START PC23					
010	2963367-0100		1	END UNIT	**3-239, 3-241**
TBA 0200B START TPC21, TBA 0200M START TPC21, TBA 0200S START TPC21, TBA 0250B START TPC21, TBA 0250S START TPC21, TBA 0330S START TPC21, TBA 0500B START TPC21, TBA 0500S START TPC21, TBA 1000B START TPC21, TBA 1000S START TPC21, TBA 1500S START TPC21					
010	1490112-0100		1	OUTFEED CONVEYOR	**3-245, 3-247**
TBA 0200SQ START TPC21, TBA 0250SQ START TPC21, TBA 0500SQ START TPC21, TBA 1000SQ START TPC21, TPA 0200SQ START TPC21, TPA 0250SQ START TPC21, TPA 0330SQ START TPC21, TPA 0500SQ START TPC21, TPA 0750SQ START TPC21, TPA 1000SQ START TPC21, TPA 1000S START TPC21					
010	1490112-0100		1	OUTFEED CONVEYOR	**3-245, 3-247**
030	1512339-0100		1	PHOTOCELL OUTFEED	**3-249, 3-251**
170	2633441-0000		1	BRACKET	
TBA 1400B					
010	2598508-0100		1	INFEED/OUTFEED CONVEYOR	**3-253**
060	312105-0291		6	SCREW M6S ISO 4017 M4X12 A470	
090	312605-0312		1	HEXAGON NUT, M6M M4 A280	
110	315105-0136		7	WASHER BRB 4,3X8 RFR	
130	315105-0153		6	WASHER BRB 6,4X12 RFR	
170	2633441-0000		1	BRACKET	
170	2728241-0000		1	BRACKET	
TBA 1890S, TBA 2000S					
010	2598508-0100		1	INFEED/OUTFEED CONVEYOR	**3-253**
060	312105-0291		6	SCREW M6S ISO 4017 M4X12 A470	
090	312605-0312		1	HEXAGON NUT, M6M M4 A280	
110	315105-0136		7	WASHER BRB 4,3X8 RFR	
130	315105-0153		6	WASHER BRB 6,4X12 RFR	
170	2728241-0000		1	BRACKET	
TPA 1000S START PC23, TPA 1000SQ START PC23, TPA 0750SQ START PC23, TPA 0500SQ START PC23, TPA 0330SQ START PC23, TPA 0250SQ START PC23, TPA 0200SQ START PC23, TBA 1000SQ START PC23, TBA 0500SQ START PC23, TBA 0250SQ START PC23, TBA 0200SQ START PC23					
010	2963367-0100		1	END UNIT	**3-239, 3-241**
030	1512339-0100		1	PHOTOCELL OUTFEED	**3-249, 3-251**
170	2633441-0000		1	BRACKET	

Pos	Part No	UN	Qty	Description	Page No

Machine Type | Group Description | Used-In | Group Number | Page No

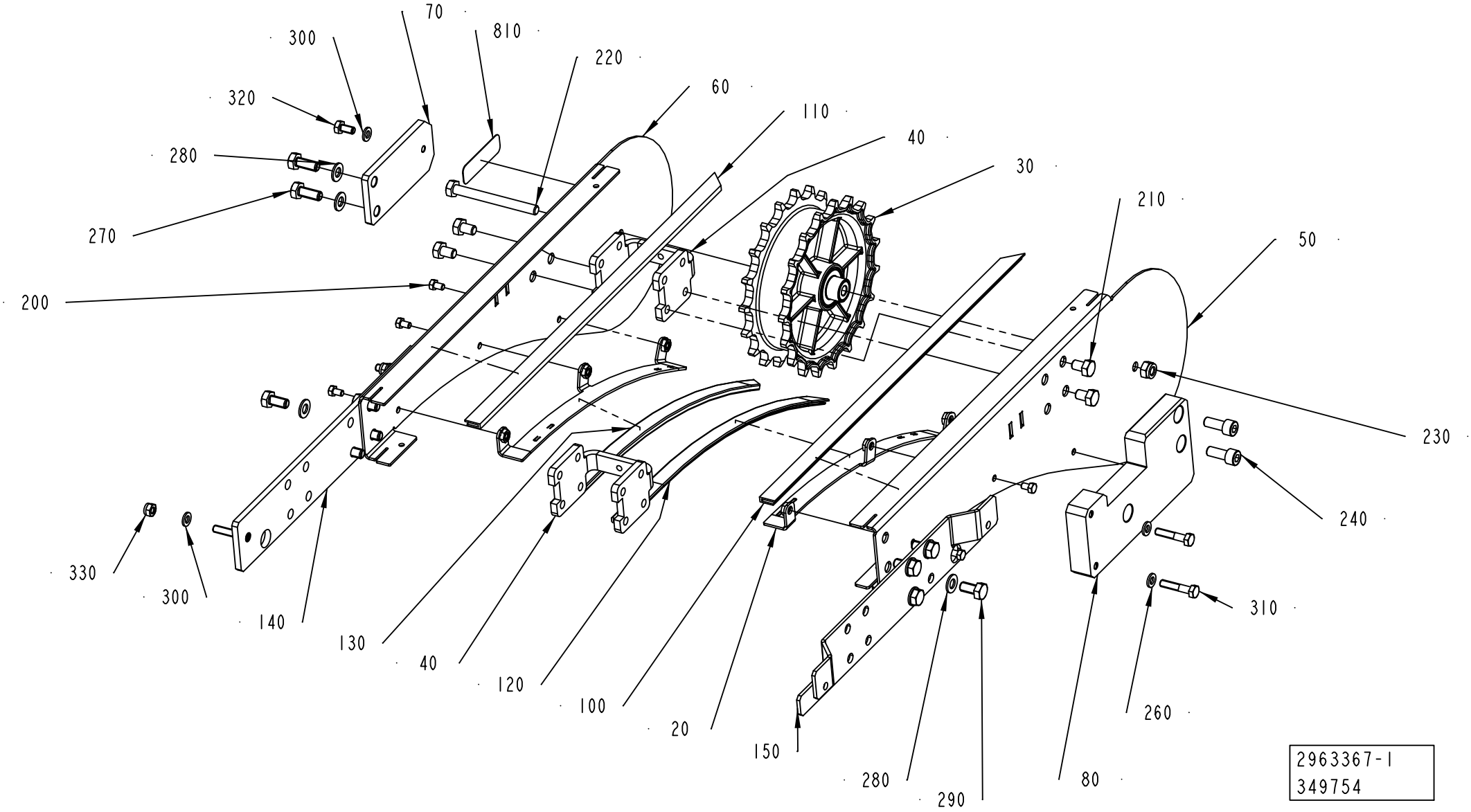
70
300
810
220
320
60
110
280
40
30
270
210
50
200
230
240
330
300
310
140
130
40
120
100
20
260
150
280
290
80
2963367-1
349754

ECM: 355073 - 20081001
Group number: 2963367-0100
Assembly Drawing: 2963367-1_1_AA

This list covers pages from 3-238 to 3-241

Pos	Part No	UN	Qty	Description	Page No
-					
020	2656407-0000		2	SLIDE RAIL	
030	2561244-0200		1	DRIVE WHEEL	**3-243**
040	2561206-0000		2	SPACER	
050	2656686-0000		1	SIDE PLATE	
060	2656687-0000		1	SIDE PLATE	
070	2959220-0000		1	PLATE	
080	2959221-0000		1	SUPPORT	
100	1550595-4153		1	SLIDING STRIP	
110	1550595-4154		1	SLIDING STRIP	
120	1550595-3353		1	SLIDING STRIP	
130	1550595-3354		1	SLIDING STRIP	
140	2959222-0000		1	PLATE	
150	2959223-0000		1	PLATE	
200	312105-0323		6	SCREW M6S ISO 4017 M5X8 A480	
210	312105-0447		4	SCREW M6S ISO 4017 M8X12 A480	
220	312105-0467		1	SCREW M6S ISO 4014 M8X80 A480	
230	312812-0318		1	HEXAGON NUT, NY-LOCK M8 A480	
240	312115-0451		2	SCREW ISO4762 M8X20 A4 80	
260	315106-0153		2	WASHER ISO 7089-6-200 HV A4	
270	312105-0451		2	SCREW M6S ISO 4017 M8X20 A480	
280	315105-0165		10	WASHER BRB 8,4X16 RFR	
290	312105-0449		8	SCREW M6S ISO 4017 M8X16 A480	
300	315105-0153		3	WASHER BRB 6,4X12 RFR	
310	312105-0374		2	SCREW M6S ISO 4014 M6X30 A480	
320	312105-0366		1	SCREW M6S ISO 4017 M6X12 A480	
330	312812-0316		2	HEXAGON NUT, NY-LOCK M6 A480	
810	1086870-0000		1	SIGN	

Pos	Part No	UN	Qty	Description	Page No

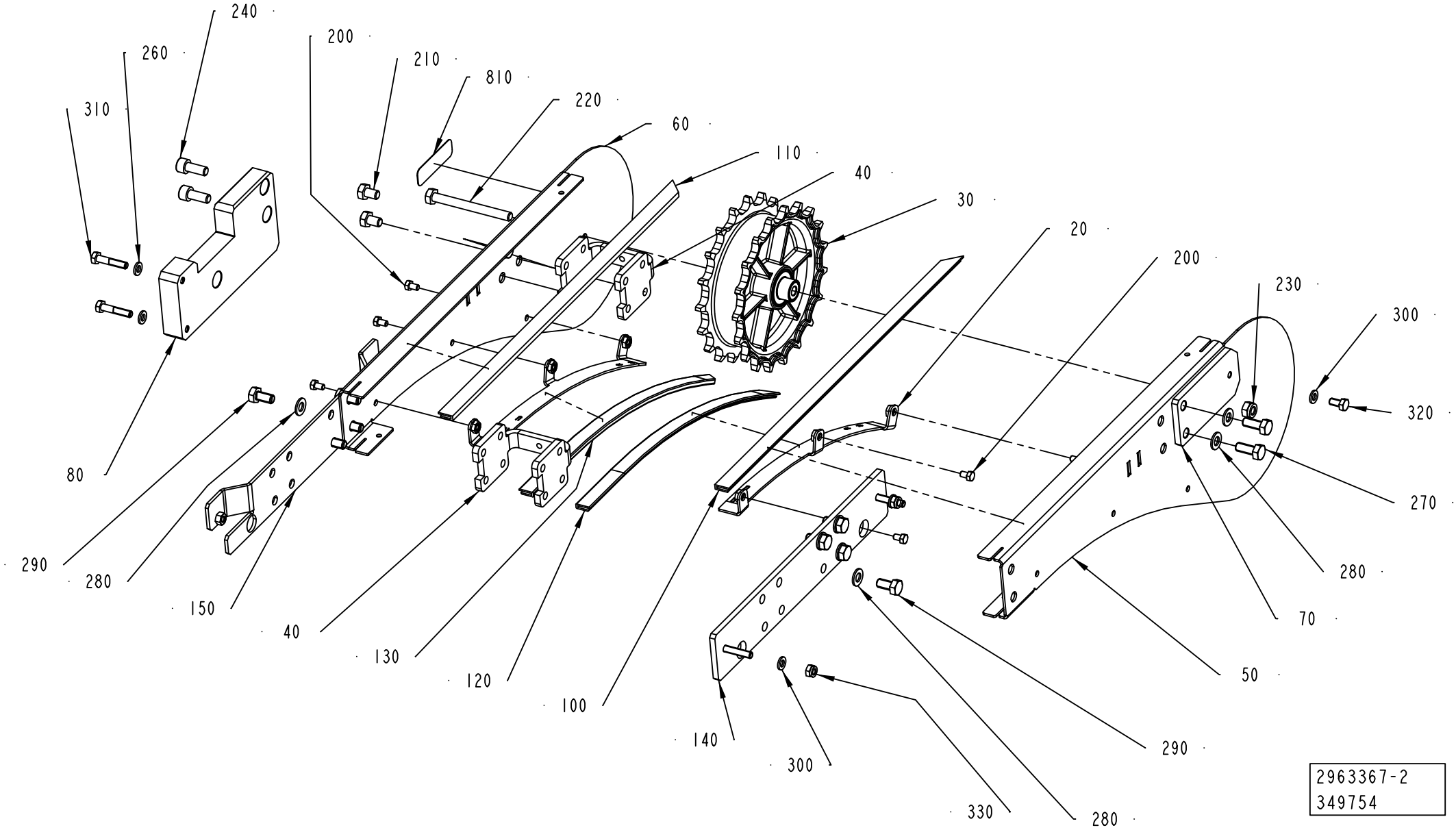
240
260
310
200
210
810
220
60
110
40
30
20
200
230
300
320
270
280
70
50
290
280
150
40
130
120
100
140
300
330
280
290
80
2963367-2
349754

Pos	Part No	UN	Qty	Description	Page No
-					
020	2656407-0000		2	SLIDE RAIL	
030	2561244-0200		1	DRIVE WHEEL	**3-243**
040	2561206-0000		2	SPACER	
050	2656686-0000		1	SIDE PLATE	
060	2656687-0000		1	SIDE PLATE	
070	2959220-0000		1	PLATE	
080	2959221-0000		1	SUPPORT	
100	1550595-4153		1	SLIDING STRIP	
110	1550595-4154		1	SLIDING STRIP	
120	1550595-3353		1	SLIDING STRIP	
130	1550595-3354		1	SLIDING STRIP	
140	2959222-0000		1	PLATE	
150	2959223-0000		1	PLATE	
200	312105-0323		6	SCREW M6S ISO 4017 M5X8 A480	
210	312105-0447		4	SCREW M6S ISO 4017 M8X12 A480	
220	312105-0467		1	SCREW M6S ISO 4014 M8X80 A480	
230	312812-0318		1	HEXAGON NUT, NY-LOCK M8 A480	
240	312115-0451		2	SCREW ISO4762 M8X20 A4 80	
260	315106-0153		2	WASHER ISO 7089-6-200 HV A4	
270	312105-0451		2	SCREW M6S ISO 4017 M8X20 A480	
280	315105-0165		10	WASHER BRB 8,4X16 RFR	
290	312105-0449		8	SCREW M6S ISO 4017 M8X16 A480	
300	315105-0153		3	WASHER BRB 6,4X12 RFR	
310	312105-0374		2	SCREW M6S ISO 4014 M6X30 A480	
320	312105-0366		1	SCREW M6S ISO 4017 M6X12 A480	
330	312812-0316		2	HEXAGON NUT, NY-LOCK M6 A480	
810	1086870-0000		1	SIGN	

Pos	Part No	UN	Qty	Description	Page No

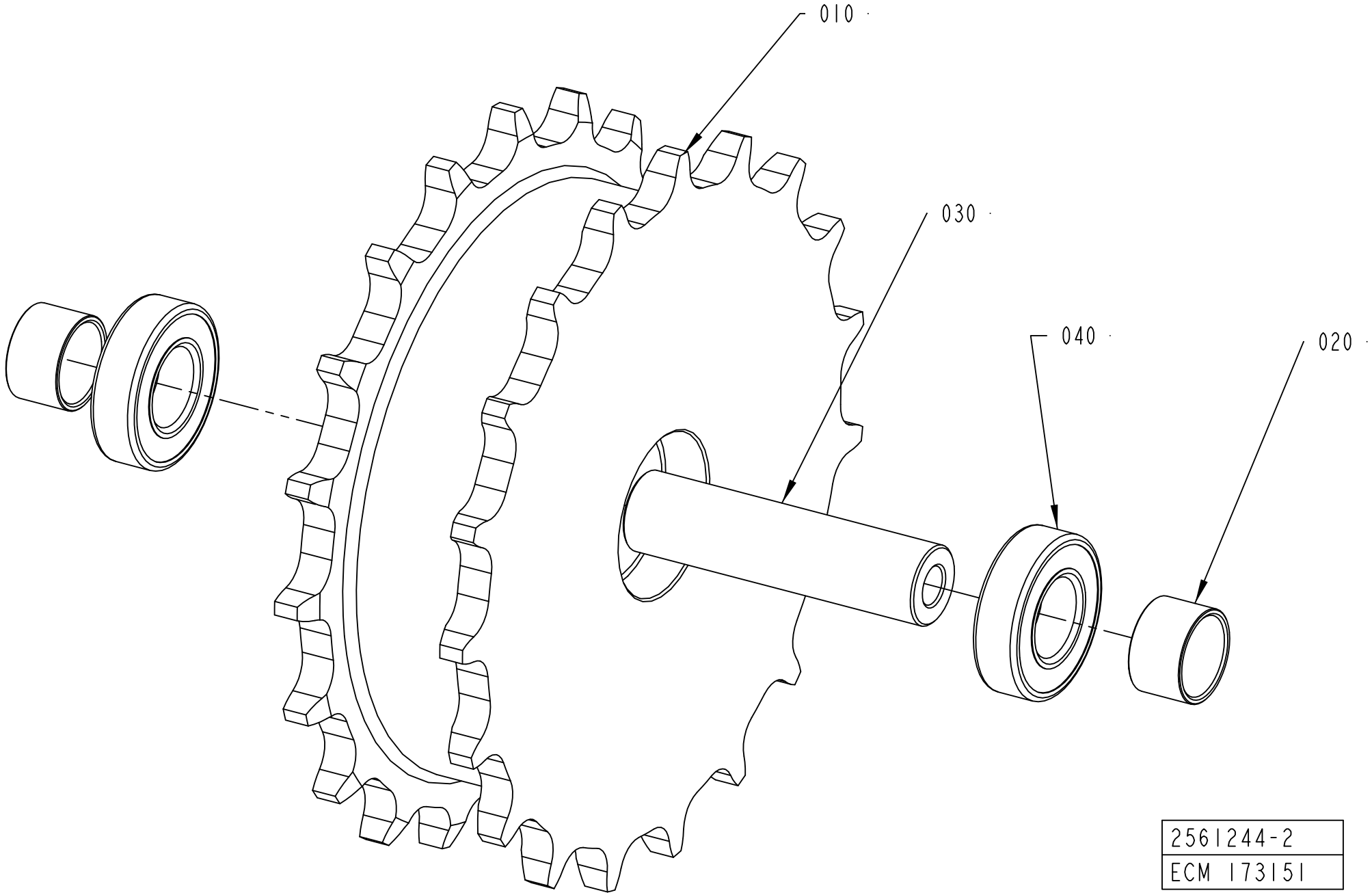
010
030
040
020
2561244-2
ECM 173151

ECM: 306227 - 20070817
Group number: 2561244-0200
Assembly Drawing: 2561244-2_1_AA

Pos	Part No	UN	Qty	Description	Page No
-					
010	2656672-0000		1	SPROCKET	
020	2656673-0000		2	SPACER	
030	2561267-0000		1	SHAFT	
040	1550348-0001		2	BEARING	

Pos	Part No	UN	Qty	Description	Page No

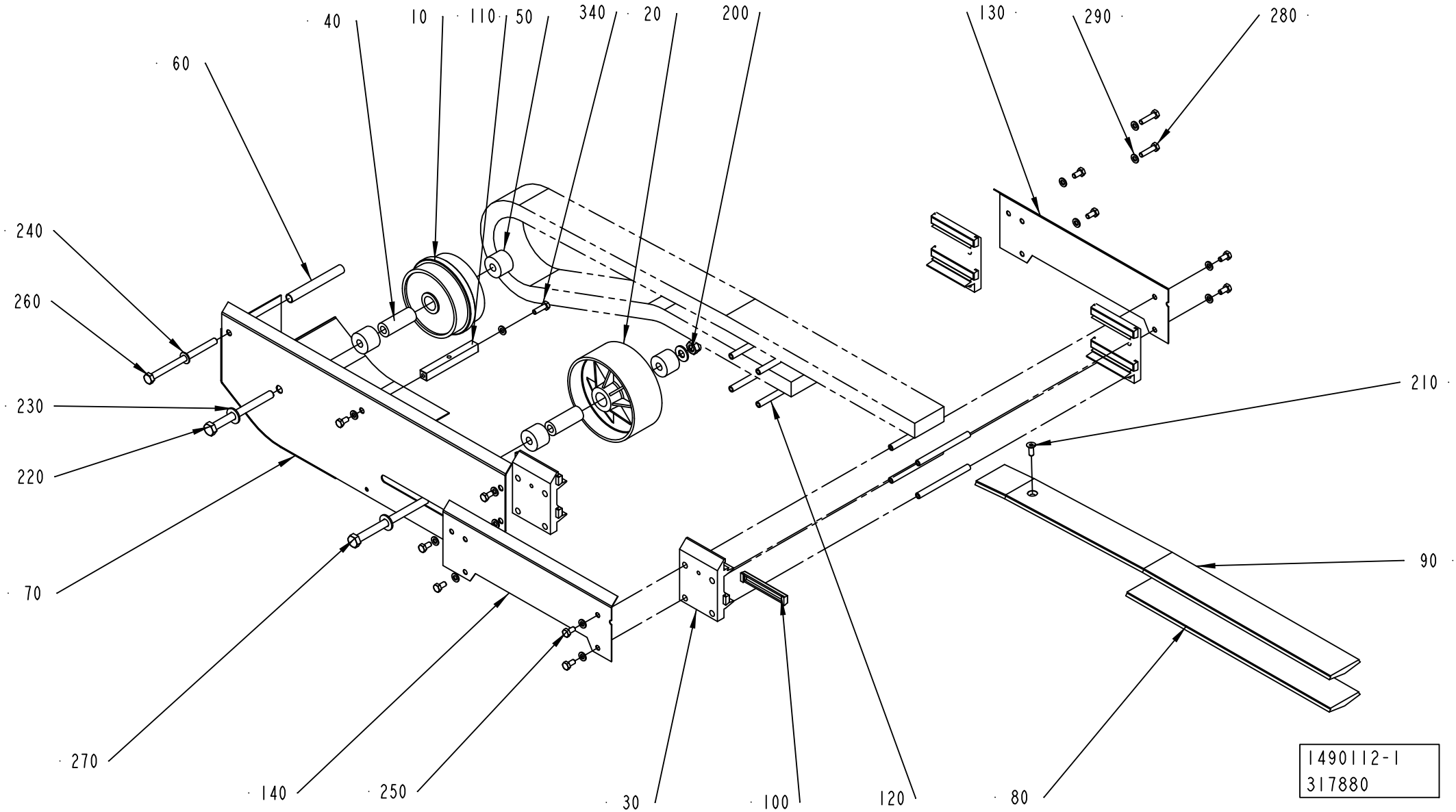
40
10
110
50
340
20
200
130
290
280
60
240
260
230
220
210
70
90
270
140
250
30
100
120
80
1490112-1
317880

ECM: 332968 - 20080104
Group number: 1490112-0100
Assembly Drawing: 1490112-1_1_AB

This list covers pages from 3-244 to 3-247

Pos	Part No	UN	Qty	Description	Page No
TBA 0200M, TBA 0200B, TBA 0200S, TBA 0250S, TBA 0250B, TBA 0330S, TBA 0500S, TBA 0500B, TBA 1000B, TBA 1000S, TBA 1500S (See drawing on page: 3-246)					
010	245039-0000		1	GUIDE WHEEL	
070	1285265-0000		1	PLATE	
090	1279573-0000		1	SLIDE RAIL UPPER	
290	315105-0153		14	WASHER BRB 6,4X12 RFR	
TBA 0200SQ, TPA 1000SQ, TPA 0500SQ, TPA 0750SQ, TBA 0250SQ, TPA 0250SQ L_OUT, TPA 0200SQ L_OUT (See drawing on page: 3-244)					
010	2678417-0000		1	WHEEL	
070	1548354-0000		1	COVER	
090	1548353-0000		1	SLIDE RAIL	
290	315105-0153		14	WASHER BRB 6,4X12 RFR	
TBA 0500SQ, TBA 1000SQ, TPA 0330SQ L_OUT (See drawing on page: 3-244)					
010	2678417-0000		1	WHEEL	
070	1296081-0000		1	PLATE	
090	1279573-0000		1	SLIDE RAIL UPPER	
290	315105-0153		14	WASHER BRB 6,4X12 RFR	
TPA 0250SQ R_OUT, TPA 0200SQ R_OUT (See drawing on page: 3-246)					
010	2678417-0000		1	WHEEL	
070	1285265-0000		1	PLATE	
090	1548353-0000		1	SLIDE RAIL	
290	315105-0153		14	WASHER BRB 6,4X12 RFR	
TPA 0330SQ R_OUT (See drawing on page: 3-246)					
010	2678417-0000		1	WHEEL	
070	1285265-0000		1	PLATE	
090	1279573-0000		1	SLIDE RAIL UPPER	
290	315105-0153		14	WASHER BRB 6,4X12 RFR	
Common Parts					
020	476975-0000		1	WHEEL	
030	457696-0001		4	JOINT PIECE	
040	229207-0000		2	BEARING SLEEVE	
050	1144943-0000		4	SPACER	
060	1285306-0000		1	SPACER	
080	1279587-0000		1	SLIDE RAIL UPPER	
100	466074-0002		8	SLIDER	
110	1285266-0000		1	SPACER	
120	476220-0000		8	SPACER	
130	1279585-0000		1	SUPPORT	
140	1279586-0000		1	SUPPORT	
200	312812-0320		1	HEXAGON NUT, NY-LOCK M10 A480	
210	312155-0368		1	SCREW DIN 7991 MF6S M6X16 A4 70	
220	312105-0513		1	SCREW M6S ISO 4014 M10X110 A480	
230	315105-0173		3	WASHER BRB 10,5X22 RFR	
240	315105-0165		1	WASHER BRB 8,4X16 RFR	
250	312105-0366		11	SCREW M6S ISO 4017 M6X12 A480	
260	312105-0475		1	SCREW M6S ISO 4014 M8X120 A480	
270	312105-0517		1	SCREW M6S ISO 4014 M10X130 A480	
280	312105-0372		2	SCREW M6S ISO 4017 M6X25 A480	
340	312105-0370		1	SCREW M6S ISO 4017 M6X20 A480	

Machine Type	Group Description	Used-In	Group Number	Page No

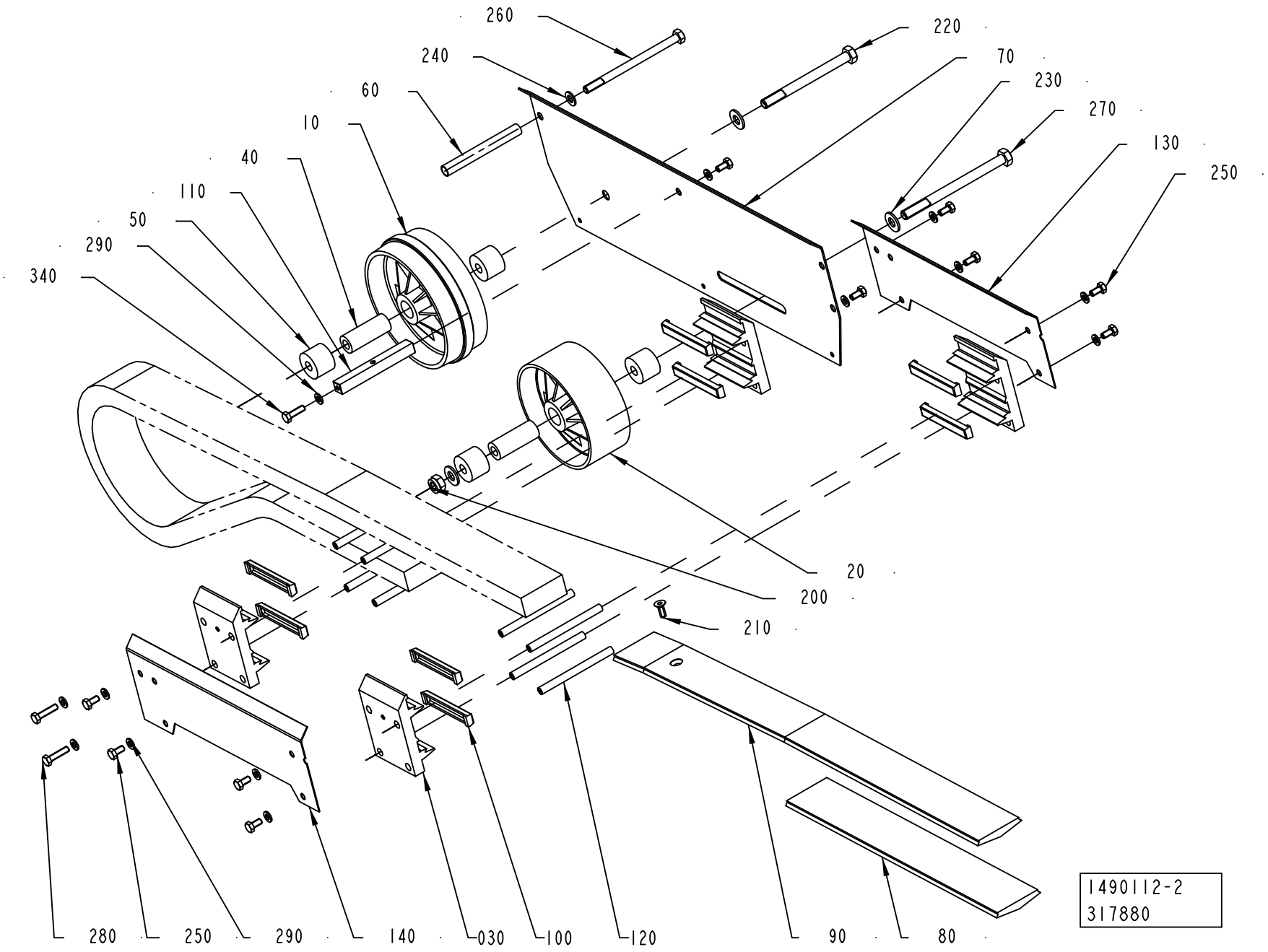
260
240
60
10
40
110
50
290
340
220
70
230
270
130
250
20
200
210
280
250
290
140
030
100
120
90
80
1490112-2
317880

ECM: 332968 - 20080104
Group number: 1490112-0100
Assembly Drawing: 1490112-2_1_AC

This list covers pages from 3-244 to 3-247

Pos	Part No	UN	Qty	Description	Page No
TBA 0200M, TBA 0200B, TBA 0200S, TBA 0250S, TBA 0250B, TBA 0330S, TBA 0500S, TBA 0500B, TBA 1000B, TBA 1000S, TBA 1500S (See drawing on page: 3-246)					
010	245039-0000		1	GUIDE WHEEL	
070	1285265-0000		1	PLATE	
090	1279573-0000		1	SLIDE RAIL UPPER	
290	315105-0153		14	WASHER BRB 6,4X12 RFR	
TBA 0200SQ, TPA 1000SQ, TPA 0500SQ, TPA 0750SQ, TBA 0250SQ, TPA 0250SQ L_OUT, TPA 0200SQ L_OUT (See drawing on page: 3-244)					
010	2678417-0000		1	WHEEL	
070	1548354-0000		1	COVER	
090	1548353-0000		1	SLIDE RAIL	
290	315105-0153		14	WASHER BRB 6,4X12 RFR	
TBA 0500SQ, TBA 1000SQ, TPA 0330SQ L_OUT (See drawing on page: 3-244)					
010	2678417-0000		1	WHEEL	
070	1296081-0000		1	PLATE	
090	1279573-0000		1	SLIDE RAIL UPPER	
290	315105-0153		14	WASHER BRB 6,4X12 RFR	
TPA 0250SQ R_OUT, TPA 0200SQ R_OUT (See drawing on page: 3-246)					
010	2678417-0000		1	WHEEL	
070	1285265-0000		1	PLATE	
090	1548353-0000		1	SLIDE RAIL	
290	315105-0153		14	WASHER BRB 6,4X12 RFR	
TPA 0330SQ R_OUT (See drawing on page: 3-246)					
010	2678417-0000		1	WHEEL	
070	1285265-0000		1	PLATE	
090	1279573-0000		1	SLIDE RAIL UPPER	
290	315105-0153		14	WASHER BRB 6,4X12 RFR	
Common Parts					
020	476975-0000		1	WHEEL	
030	457696-0001		4	JOINT PIECE	
040	229207-0000		2	BEARING SLEEVE	
050	1144943-0000		4	SPACER	
060	1285306-0000		1	SPACER	
080	1279587-0000		1	SLIDE RAIL UPPER	
100	466074-0002		8	SLIDER	
110	1285266-0000		1	SPACER	
120	476220-0000		8	SPACER	
130	1279585-0000		1	SUPPORT	
140	1279586-0000		1	SUPPORT	
200	312812-0320		1	HEXAGON NUT, NY-LOCK M10 A480	
210	312155-0368		1	SCREW DIN 7991 MF6S M6X16 A4 70	
220	312105-0513		1	SCREW M6S ISO 4014 M10X110 A480	
230	315105-0173		3	WASHER BRB 10,5X22 RFR	
240	315105-0165		1	WASHER BRB 8,4X16 RFR	
250	312105-0366		11	SCREW M6S ISO 4017 M6X12 A480	
260	312105-0475		1	SCREW M6S ISO 4014 M8X120 A480	
270	312105-0517		1	SCREW M6S ISO 4014 M10X130 A480	
280	312105-0372		2	SCREW M6S ISO 4017 M6X25 A480	
340	312105-0370		1	SCREW M6S ISO 4017 M6X20 A480	

Machine Type	Group Description	Used-In	Group Number	Page No

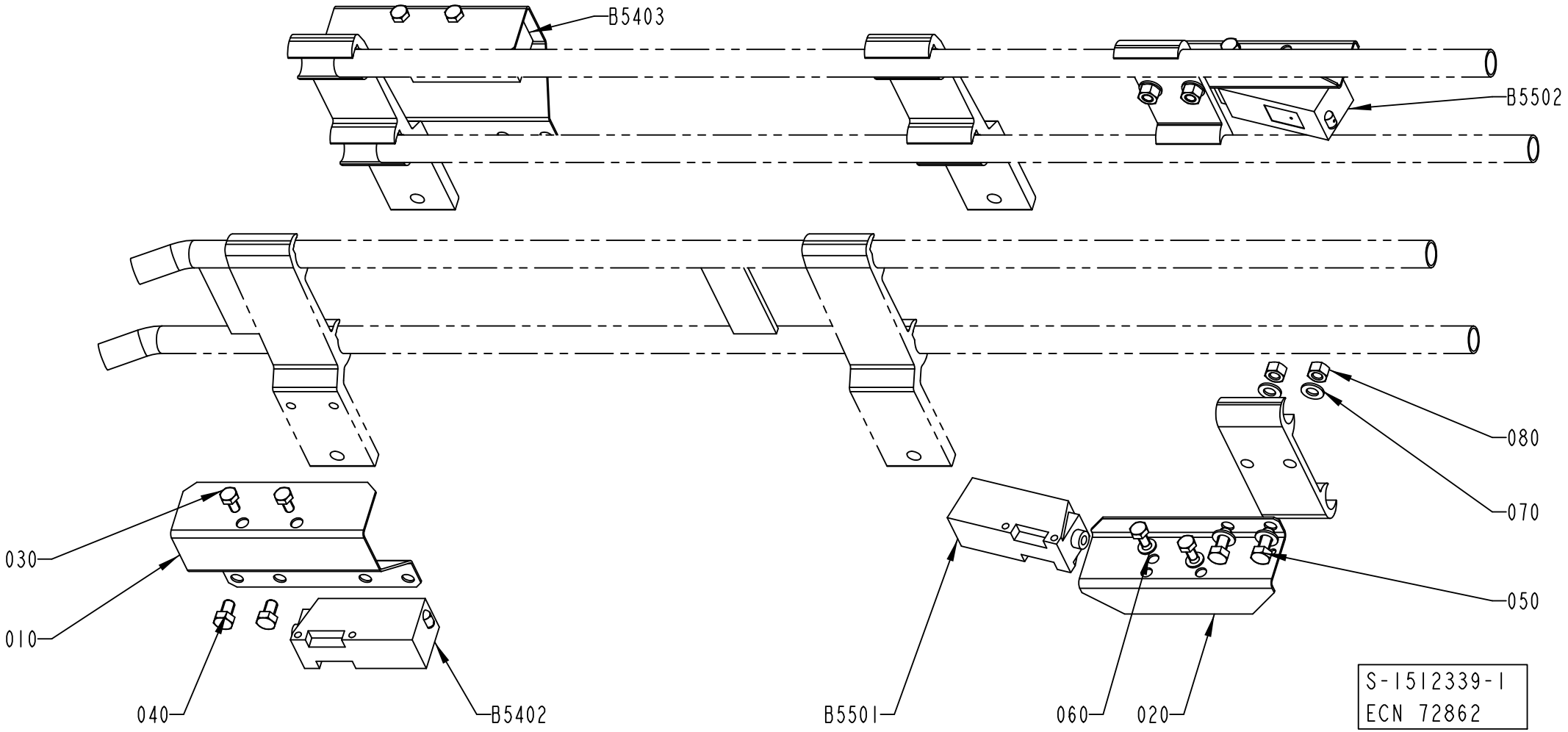
B5403
B5502
030
010
040
B5402
B5501
060
020
080
070
050
S-1512339-1
ECN 72862

Pos	Part No	UN	Qty	Description	Page No
A3/FLEX TBA 1890S, A3/FLEX TBA 2000S, A3/FLEX TBA 1400B, A3/FLEX TGA 1000SQ, A3/FLEX TGA 0500SQ, A3/FLEX TGA 0750SQ (See drawing on page: 3-250)					
010	1285010-0000		2	HOLDER	
020	1086889-0000		2	COVER	
025	1020637-0000		4	HOLDER	
A3/FLEX TBA 0500B, A3/FLEX TBA 1000B, A3/FLEX TBA 1000S, A3/FLEX TBA 1000SQ, A3/FLEX TPA 1000SQ, A3/FLEX TBA 0200S, A3/FLEX TBA 1500S, A3/FLEX TBA 0200B, A3/FLEX TBA 0250B, A3/FLEX TBA 0330S, A3/FLEX TPA 0330SQ, A3/FLEX TPA 0500SQ, A3/FLEX TBA 0200M, A3/FLEX TBA 0250S, A3/FLEX TBA 0500S, A3/FLEX TPA 0250SQ, A3/FLEX TPA 0200SQ, A3/FLEX TPA 0750SQ, A3/FLEX TBA 0200SQ, A3/FLEX TBA 0250SQ, A3/FLEX TBA 0500SQ (See drawing on page: 3-248)					
010	1285010-0000		2	HOLDER	
020	1086889-0000		2	COVER	
025	1020637-0000		2	HOLDER	
Common Parts					
030	312105-0287		8	SCREW M6S ISO 4017 M4X8 A470	
040	312105-0323		4	SCREW M6S ISO 4017 M5X8 A480	
050	312105-0327		4	SCREW M6S ISO 4017 M5X12 A480	
060	315105-0136		4	WASHER BRB 4,3X8 RFR	
070	315105-0146		8	WASHER BRB 5,3X10 RFR	
080	312605-0314		4	HEXAGON NUT, M6M M5 A280	
B5402	90232-0104		1	PH.CELL E3S-CT61-D-5M	
B5403	90232-0103		1	PH.CELL E3S-CT61-L-5M	
B5501	90232-0104		1	PH.CELL E3S-CT61-D-5M	
B5502	90232-0103		1	PH.CELL E3S-CT61-L-5M	

Pos	Part No	UN	Qty	Description	Page No

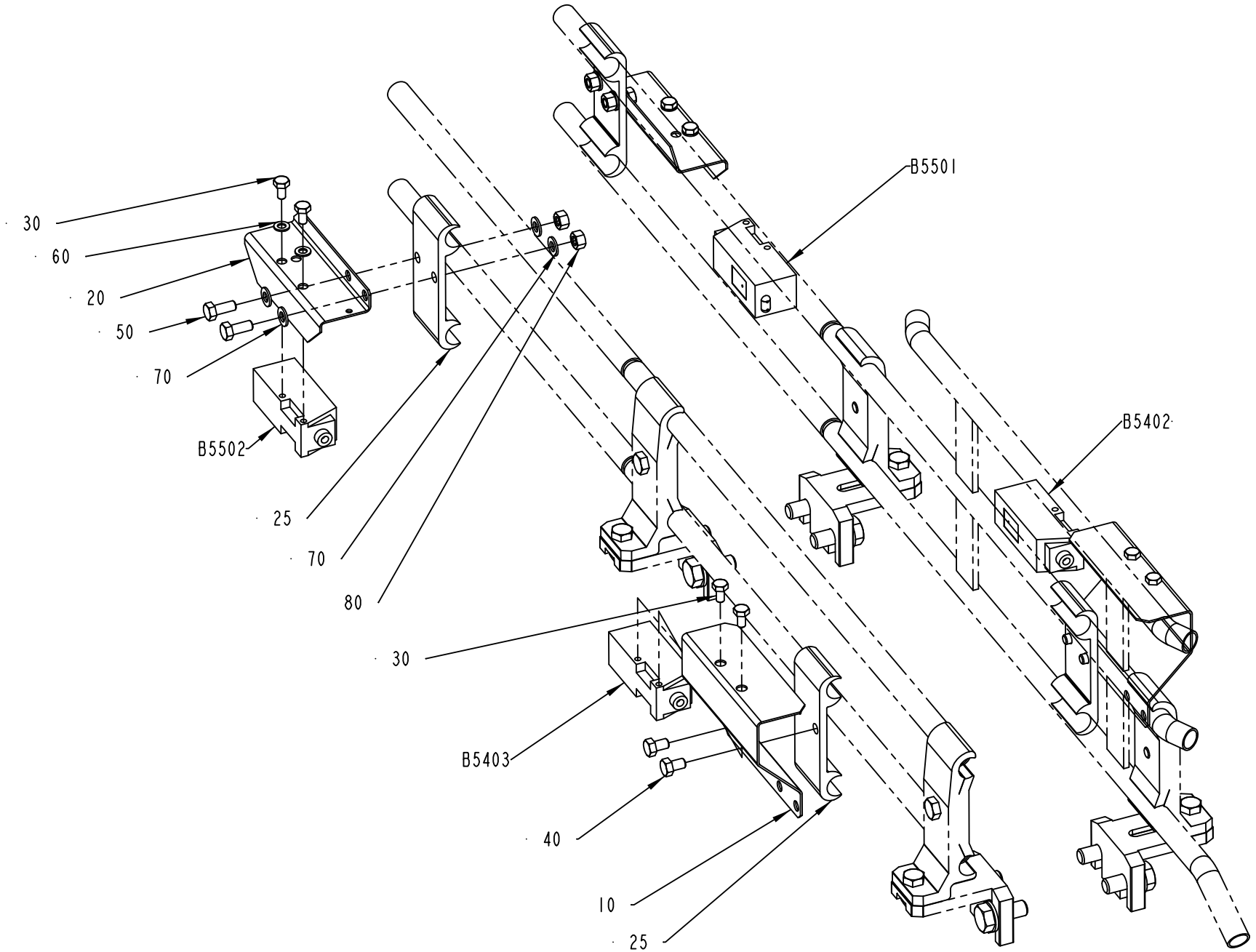

1512339-3
193145

Pos	Part No	UN	Qty	Description	Page No
A3/FLEX TBA 1890S, A3/FLEX TBA 2000S, A3/FLEX TBA 1400B, A3/FLEX TGA 1000SQ, A3/FLEX TGA 0500SQ, A3/FLEX TGA 0750SQ (See drawing on page: 3-250)					
010	1285010-0000		2	HOLDER	
020	1086889-0000		2	COVER	
025	1020637-0000		4	HOLDER	
A3/FLEX TBA 0500B, A3/FLEX TBA 1000B, A3/FLEX TBA 1000S, A3/FLEX TBA 1000SQ, A3/FLEX TPA 1000SQ, A3/FLEX TBA 0200S, A3/FLEX TBA 1500S, A3/FLEX TBA 0200B, A3/FLEX TBA 0250B, A3/FLEX TBA 0330S, A3/FLEX TPA 0330SQ, A3/FLEX TPA 0500SQ, A3/FLEX TBA 0200M, A3/FLEX TBA 0250S, A3/FLEX TBA 0500S, A3/FLEX TPA 0250SQ, A3/FLEX TPA 0200SQ, A3/FLEX TPA 0750SQ, A3/FLEX TBA 0200SQ, A3/FLEX TBA 0250SQ, A3/FLEX TBA 0500SQ (See drawing on page: 3-248)					
010	1285010-0000		2	HOLDER	
020	1086889-0000		2	COVER	
025	1020637-0000		2	HOLDER	
Common Parts					
030	312105-0287		8	SCREW M6S ISO 4017 M4X8 A470	
040	312105-0323		4	SCREW M6S ISO 4017 M5X8 A480	
050	312105-0327		4	SCREW M6S ISO 4017 M5X12 A480	
060	315105-0136		4	WASHER BRB 4,3X8 RFR	
070	315105-0146		8	WASHER BRB 5,3X10 RFR	
080	312605-0314		4	HEXAGON NUT, M6M M5 A280	
B5402	90232-0104		1	PH.CELL E3S-CT61-D-5M	
B5403	90232-0103		1	PH.CELL E3S-CT61-L-5M	
B5501	90232-0104		1	PH.CELL E3S-CT61-D-5M	
B5502	90232-0103		1	PH.CELL E3S-CT61-L-5M	

Pos	Part No	UN	Qty	Description	Page No

INFEED/OUTFEED CONVEYOR

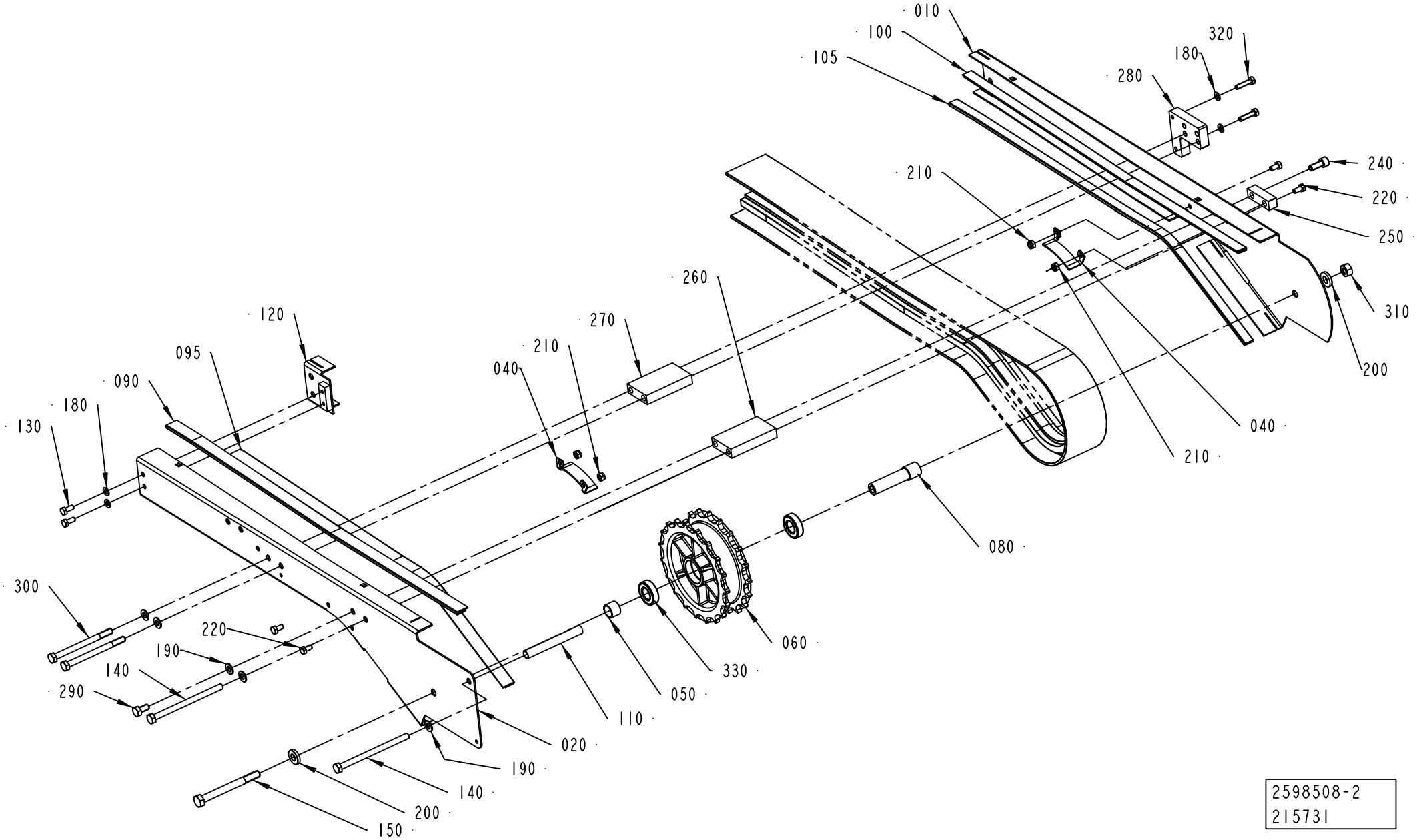

2598508-2
215731

ECM: 316407 - 20080103
Group number: 2598508-0100
Assembly Drawing: 2598508-2_1_AC

Pos	Part No	UN	Qty	Description	Page No
-					
010	2699107-0000		1	SIDE PLATE	
020	2699106-0000		1	SIDE PLATE	
040	2652311-0000		2	PLATE	
050	2699109-0000		1	SPACER	
060	2656672-0000		1	SPROCKET	
080	2699108-0000		1	SHAFT	
090	1550595-6700		1	SLIDING STRIP	
095	1550595-6700		1	SLIDING STRIP	
100	1550595-7110		1	SLIDING STRIP	
105	1550595-7110		1	SLIDING STRIP	
110	2598513-0000		1	SPACER	
120	2598514-0000		1	COVER	
130	312105-0367		2	SCREW M6S ISO 4017 M6X14 A480	
140	312105-0475		2	SCREW M6S ISO 4014 M8X120 A480	
150	312105-0511		1	SCREW M6S ISO 4014 M10X100 A480	
180	315105-0153		4	WASHER BRB 6,4X12 RFR	
190	315105-0165		5	WASHER BRB 8,4X16 RFR	
200	315111-0173		2	WASHER PLAIN, TBRB 10,5/22 H=4	
210	312812-0316		4	HEXAGON NUT, NY-LOCK M6 A480	
220	312105-0366		4	SCREW M6S ISO 4017 M6X12 A480	
240	312115-0451		1	SCREW ISO4762 M8X20 A4 80	
250	2619210-0000		1	SPACER	
260	2619211-0000		1	SPACER	
270	2619212-0000		1	SPACER	
280	2619213-0000		1	SPACER	
290	312105-0449		1	SCREW M6S ISO 4017 M8X16 A480	
300	312105-0471		2	SCREW M6S ISO 4014 M8X100 A480	
310	312605-0320		1	HEXAGON NUT, M6M M10 A280	
320	312105-0372		2	SCREW M6S ISO 4017 M6X25 A480	
330	1550348-0001		2	BEARING	

Pos	Part No	UN	Qty	Description	Page No

This page is intentionally left blank.

ECM: 295137 - 20070216
Group number: 1517298-0200
Assembly Drawing:

Pos	Part No	UN	Qty	Description	Page No
TBA 0200M, TBA 0200B, TBA 0200SQ, TBA 0200S, TBA 0250S, TBA 0250B, TBA 0300S, TBA 0500S, TBA 0500SQ, TBA 0500B, TBA 1000B, TBA 1000SQ, TBA 1000S, TPA 0330SQ, TPA 0250SQ, TPA 0200SQ, TPA 0500SQ, TBA 0250SQ					
010	1517299-0200		1	INFEED CONVEYOR LONG	**3-257**
TBA 1500S, TPA 1000SQ, TPA 0750SQ					
020	1517300-0300		1	INFEED CONVEYOR SHORT	**3-263**
TBA 1890S, TBA 2000S					
030	2678710-0100		1	INFEED CONVEYOR SHORT	**3-265**

Pos	Part No	UN	Qty	Description	Page No

INFEED CONVEYOR LONG

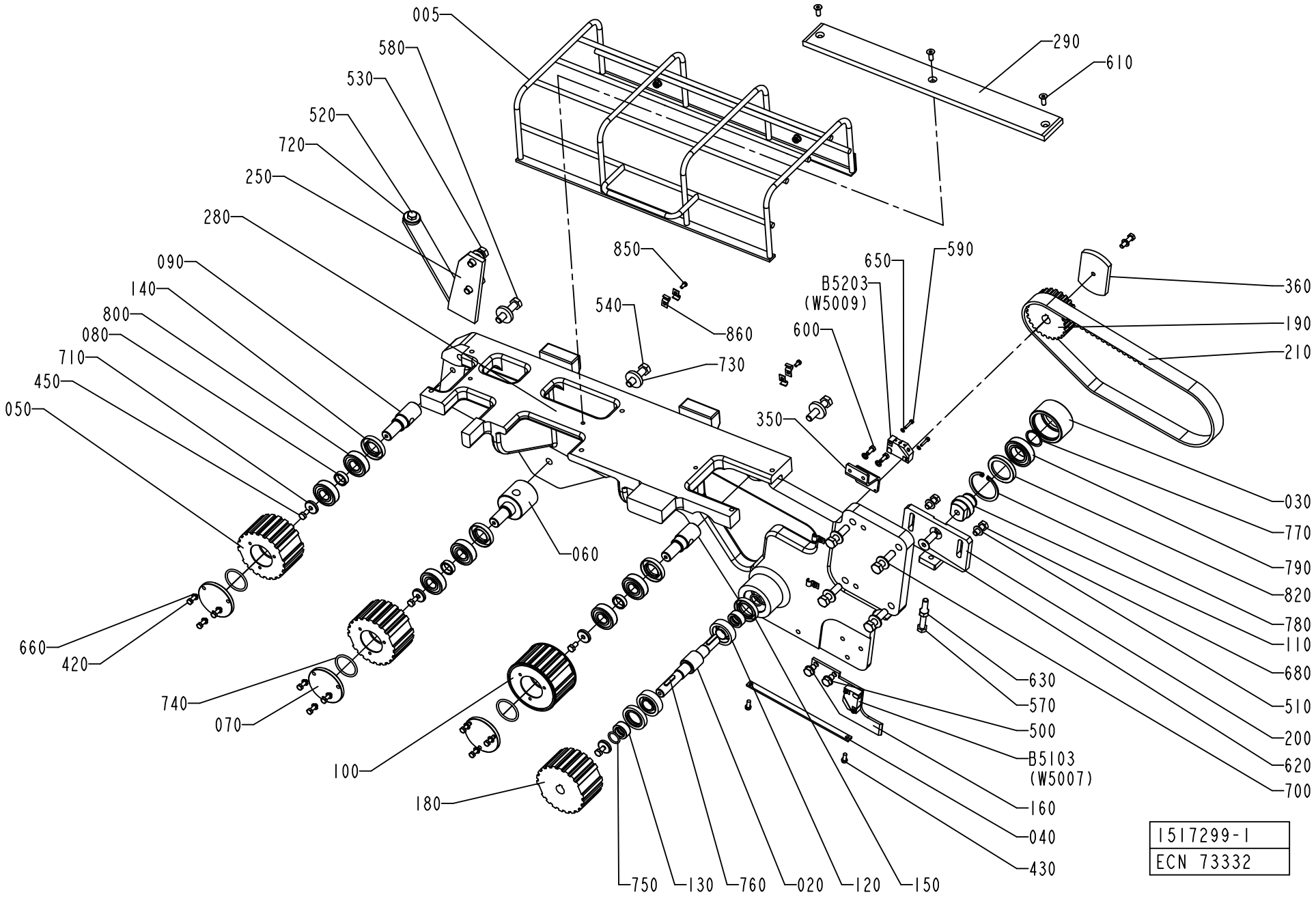

ECM: 272746 - 20080701
Group number: 1517299-0200
Assembly Drawing: 1517299-1_1_AA

Pos	Part No	UN	Qty	Description	Page No
A3/FLEX					
250	2552445-0000		1	SUPPORT	
360	1347410-0000		1	ACTIVATOR	
Common Parts					
005	1144645-0200		1	PROTECTIVE COVER	**3-259, 3-261**
020	1144470-0000		1	SHAFT	
030	2958240-0000		1	ROLLER	
040	1144593-0000		1	PLATE	
050	2952684-0000		2	TOOTHED PULLEY	
060	1144595-0000		1	ECCENTRIC SHAFT	
070	2955104-0000		3	PLUG	
080	1144597-0000		3	SPACER	
090	1484620-0000		2	SHAFT	
100	2952685-0000		1	TOOTHED PULLEY	
110	2958241-0000		1	SHAFT	
120	90214-0219		2	CYL.ROLLER BEARING, 17X40X12 MM	
130	1144625-0000		2	SPACER	
140	90091-0440		3	RADIAL SEAL 22X40X7 MM DUST LIP	
150	1498068-0000		2	SEAL RING	
160	1144760-0000		1	PLATE	
180	1144784-0000		1	TOOTHED PULLEY	
190	1144788-0000		1	TOOTHED PULLEY	
200	1144794-0000		1	SUPPORT	
210	1144841-0000		1	TIMING BELT	
280	1347699-0000		1	PLATE	
290	1260941-0000		1	SLIDE	
350	1279688-0000		1	SUPPORT	
420	312105-0329		9	SCREW M6S ISO 4017 M5X16 A480	
430	312105-0327		2	SCREW M6S ISO 4017 M5X12 A480	
450	312105-0366		4	SCREW M6S ISO 4017 M6X12 A480	
500	312105-0447		2	SCREW M6S ISO 4017 M8X12 A480	
510	312105-0451		2	SCREW M6S ISO 4017 M8X20 A480	
520	312105-0453		1	SCREW M6S ISO 4017 M8X25 A480	
530	312105-0495		2	SCREW M6S ISO 4017 M10X30 A480	
540	312109-0499		5	SCREW M6S ISO 4017 M10X40 A480	
570	312109-0463		1	SCREW M6S ISO 4017 M8X60 A480	
580	312109-0500		2	SCREW M6S ISO 4017 M10X45 A480	
590	312115-0228		4	SCREW ISO4762 M3X16 A4 80	
600	312125-0327		2	SCREW ISO 1207 M5X12 A4	
610	312151-0368		3	SCREW EN 10642 MF6S M6X16 10.9 EL.PL	
620	312155-0495		1	SCREW DIN 7991 MF6S M10X30 A4 70	
630	312605-0318		1	HEXAGON NUT, M6M M8 A280	
650	315105-0124		4	WASHER BRB 3,2X6 RFR	
660	315105-0146		11	WASHER BRB 5,3X10 RFR	
680	315105-0165		4	WASHER BRB 8,4X16 RFR	
700	315105-0173		6	WASHER BRB 10,5X22 RFR	
710	315125-0153		4	WASHER TBRSB 6,4X22X4 A4	
720	315125-0165		1	WASHER TBRSB 8,4X26X5 A4	
730	315125-0173		3	WASHER TBRSB 10,5X28X6 A4	
740	315202-0221		3	O-RING 34,2X3 MM	
750	315202-0267		2	O-RING 16,3X2,4 MM	
760	315705-0202		2	PARALLEL KEY W ROUND ENDS 5X5X25MM	
770	315751-0119		1	RETAINING RING FOR SHAFT DIN 471 25 SS	
780	90141-0019		1	RETAINING RING FOR BORE DIN 472 50 A2	
790	321306-0105		1	BALL BEARING, 25X47X12 MM	
800	321309-0103		6	BALL BEARING, 17X40X12 MM	
810	344502-0021		5	GREASE NIPPLE STRAIGHT M6	
820	90091-0297		1	RADIAL SEAL 35X47X7 MM DUST LIP	
830	90296-0068		1	SHELL ALVANIA GREASE EP 2	
850	312125-0287		4	SCREW ISO 1207 M4X8 A4	
860	90165-0057		6	PIPE CLIP FOR TUBE D=6 MM	
870	312105-0362		1	SCREW M6S ISO 4017 M6X8 A480	
B5103	90044-0194		1	PROX.SW. IN5329/IN3002-BPKG(EX90044-104)	
B5203	90044-0194		1	PROX.SW. IN5329/IN3002-BPKG(EX90044-104)	

Machine Type | Group Description | Used-In | Group Number | Page No

PROTECTIVE COVER

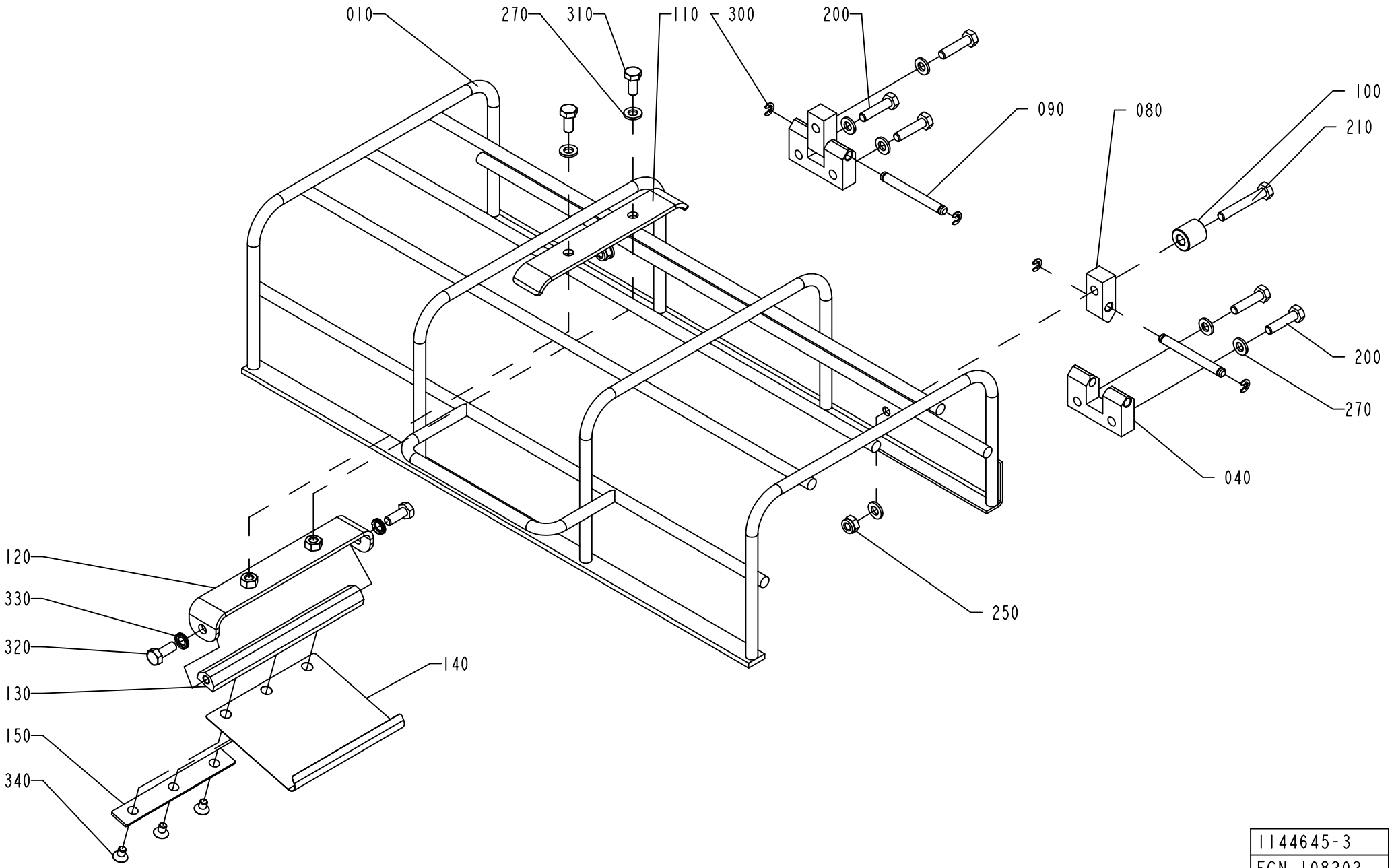

1144645-3
ECN 108202

ECM: 998084 - 20081001
Group number: 1144645-0200
Assembly Drawing: 1144645-3_1_AC

This list covers pages from 3-258 to 3-261

Pos	Part No	UN	Qty	Description	Page No
A3/FLEX TBA 0200S (See drawing on page: 3-258)					
110	1499476-0000		1	HOLDER	
120	2527792-0000		1	SUPPORT	
130	2527793-0000		1	SHAFT	
140	2767621-0000		1	SPRING	
150	2540612-0000		1	PLATE	
270	315105-0153		9	WASHER BRB 6,4X12 RFR	
310	312105-0367		2	SCREW M6S ISO 4017 M6X14 A480	
320	312105-0368		2	SCREW M6S ISO 4017 M6X16 A480	
330	90062-0061		2	LOCK WASHER NORD-LOCK,6,5/10,8, T=2,2	
340	312155-0323		3	SCREW DIN 7991 MF6S M5X8 A4 70	
A3/FLEX TBA 0500B, A3/FLEX TBA 1000B, A3/FLEX TBA 1000SQ, A3/FLEX TBA 0500SQ (See drawing on page: 3-260)					
110	1499476-0000		2	HOLDER	
120	2527792-0000		2	SUPPORT	
130	2527793-0000		2	SHAFT	
140	2530418-0000		2	SPRING	
150	2540612-0000		2	PLATE	
270	315105-0153		11	WASHER BRB 6,4X12 RFR	
310	312105-0367		4	SCREW M6S ISO 4017 M6X14 A480	
320	312105-0368		4	SCREW M6S ISO 4017 M6X16 A480	
330	90062-0061		4	LOCK WASHER NORD-LOCK,6,5/10,8, T=2,2	
340	312155-0323		6	SCREW DIN 7991 MF6S M5X8 A4 70	
A3/FLEX TBA 1000S, A3/FLEX TPA 1000SQ, A3/FLEX TBA 1500S, A3/FLEX TBA 0200B, A3/FLEX TBA 0250B, A3/FLEX TBA 0330S, A3/FLEX TPA 0330SQ, A3/FLEX TPA 0500SQ, A3/FLEX TBA 0200M, A3/FLEX TBA 0250S, A3/FLEX TBA 0500S, A3/FLEX TPA 0250SQ, A3/FLEX TPA 0200SQ, A3/FLEX TPA 0750SQ, A3/FLEX TBA 0200SQ, A3/FLEX TBA 0250SQ (See drawing on page: 3-258)					
110	1499476-0000		1	HOLDER	
120	2527792-0000		1	SUPPORT	
130	2527793-0000		1	SHAFT	
140	2530418-0000		1	SPRING	
150	2540612-0000		1	PLATE	
270	315105-0153		9	WASHER BRB 6,4X12 RFR	
310	312105-0367		2	SCREW M6S ISO 4017 M6X14 A480	
320	312105-0368		2	SCREW M6S ISO 4017 M6X16 A480	
330	90062-0061		2	LOCK WASHER NORD-LOCK,6,5/10,8, T=2,2	
340	312155-0323		3	SCREW DIN 7991 MF6S M5X8 A4 70	
Common Parts					
010	2895564-0000		1	PROTECTION	
040	1144667-0000		2	HINGE	
080	1144668-0000		2	HINGE	
090	1144669-0000		2	PIN	
100	1360149-0000		1	SPACER	
200	312105-0372		5	SCREW M6S ISO 4017 M6X25 A480	
210	312105-0378		1	SCREW M6S ISO 4014 M6X40 A480	
250	312812-0316		2	HEXAGON NUT, NY-LOCK M6 A480	
300	315755-0106		4	RETAINING RING SHAFT DIN 6799 4 A2	

Machine Type | Group Description | Used-In | Group Number | Page No

PROTECTIVE COVER

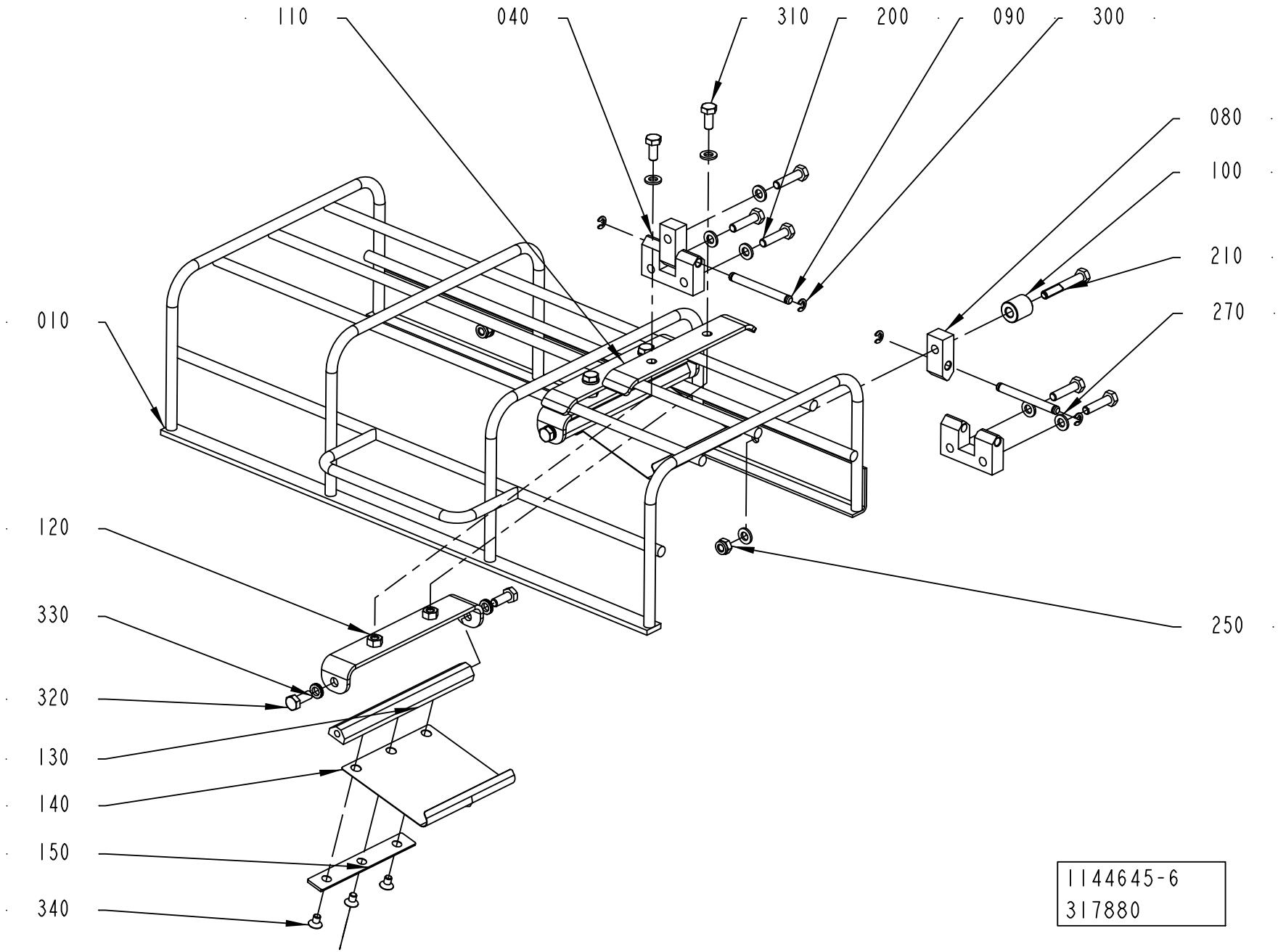

ECM: 998084 - 20081001
Group number: 1144645-0200
Assembly Drawing: 1144645-6_1_AA

This list covers pages from 3-258 to 3-261

Pos	Part No	UN	Qty	Description	Page No
A3/FLEX TBA 0200S (See drawing on page: 3-258)					
110	1499476-0000		1	HOLDER	
120	2527792-0000		1	SUPPORT	
130	2527793-0000		1	SHAFT	
140	2767621-0000		1	SPRING	
150	2540612-0000		1	PLATE	
270	315105-0153		9	WASHER BRB 6,4X12 RFR	
310	312105-0367		2	SCREW M6S ISO 4017 M6X14 A480	
320	312105-0368		2	SCREW M6S ISO 4017 M6X16 A480	
330	90062-0061		2	LOCK WASHER NORD-LOCK,6,5/10,8, T=2,2	
340	312155-0323		3	SCREW DIN 7991 MF6S M5X8 A4 70	
A3/FLEX TBA 0500B, A3/FLEX TBA 1000B, A3/FLEX TBA 1000SQ, A3/FLEX TBA 0500SQ (See drawing on page: 3-260)					
110	1499476-0000		2	HOLDER	
120	2527792-0000		2	SUPPORT	
130	2527793-0000		2	SHAFT	
140	2530418-0000		2	SPRING	
150	2540612-0000		2	PLATE	
270	315105-0153		11	WASHER BRB 6,4X12 RFR	
310	312105-0367		4	SCREW M6S ISO 4017 M6X14 A480	
320	312105-0368		4	SCREW M6S ISO 4017 M6X16 A480	
330	90062-0061		4	LOCK WASHER NORD-LOCK,6,5/10,8, T=2,2	
340	312155-0323		6	SCREW DIN 7991 MF6S M5X8 A4 70	
A3/FLEX TBA 1000S, A3/FLEX TPA 1000SQ, A3/FLEX TBA 1500S, A3/FLEX TBA 0200B, A3/FLEX TBA 0250B, A3/FLEX TBA 0330S, A3/FLEX TPA 0330SQ, A3/FLEX TPA 0500SQ, A3/FLEX TBA 0200M, A3/FLEX TBA 0250S, A3/FLEX TBA 0500S, A3/FLEX TPA 0250SQ, A3/FLEX TPA 0200SQ, A3/FLEX TPA 0750SQ, A3/FLEX TBA 0200SQ, A3/FLEX TBA 0250SQ (See drawing on page: 3-258)					
110	1499476-0000		1	HOLDER	
120	2527792-0000		1	SUPPORT	
130	2527793-0000		1	SHAFT	
140	2530418-0000		1	SPRING	
150	2540612-0000		1	PLATE	
270	315105-0153		9	WASHER BRB 6,4X12 RFR	
310	312105-0367		2	SCREW M6S ISO 4017 M6X14 A480	
320	312105-0368		2	SCREW M6S ISO 4017 M6X16 A480	
330	90062-0061		2	LOCK WASHER NORD-LOCK,6,5/10,8, T=2,2	
340	312155-0323		3	SCREW DIN 7991 MF6S M5X8 A4 70	
Common Parts					
010	2895564-0000		1	PROTECTION	
040	1144667-0000		2	HINGE	
080	1144668-0000		2	HINGE	
090	1144669-0000		2	PIN	
100	1360149-0000		1	SPACER	
200	312105-0372		5	SCREW M6S ISO 4017 M6X25 A480	
210	312105-0378		1	SCREW M6S ISO 4014 M6X40 A480	
250	312812-0316		2	HEXAGON NUT, NY-LOCK M6 A480	
300	315755-0106		4	RETAINING RING SHAFT DIN 6799 4 A2	

Machine Type | Group Description | Used-In | Group Number | Page No

INFEED CONVEYOR SHORT

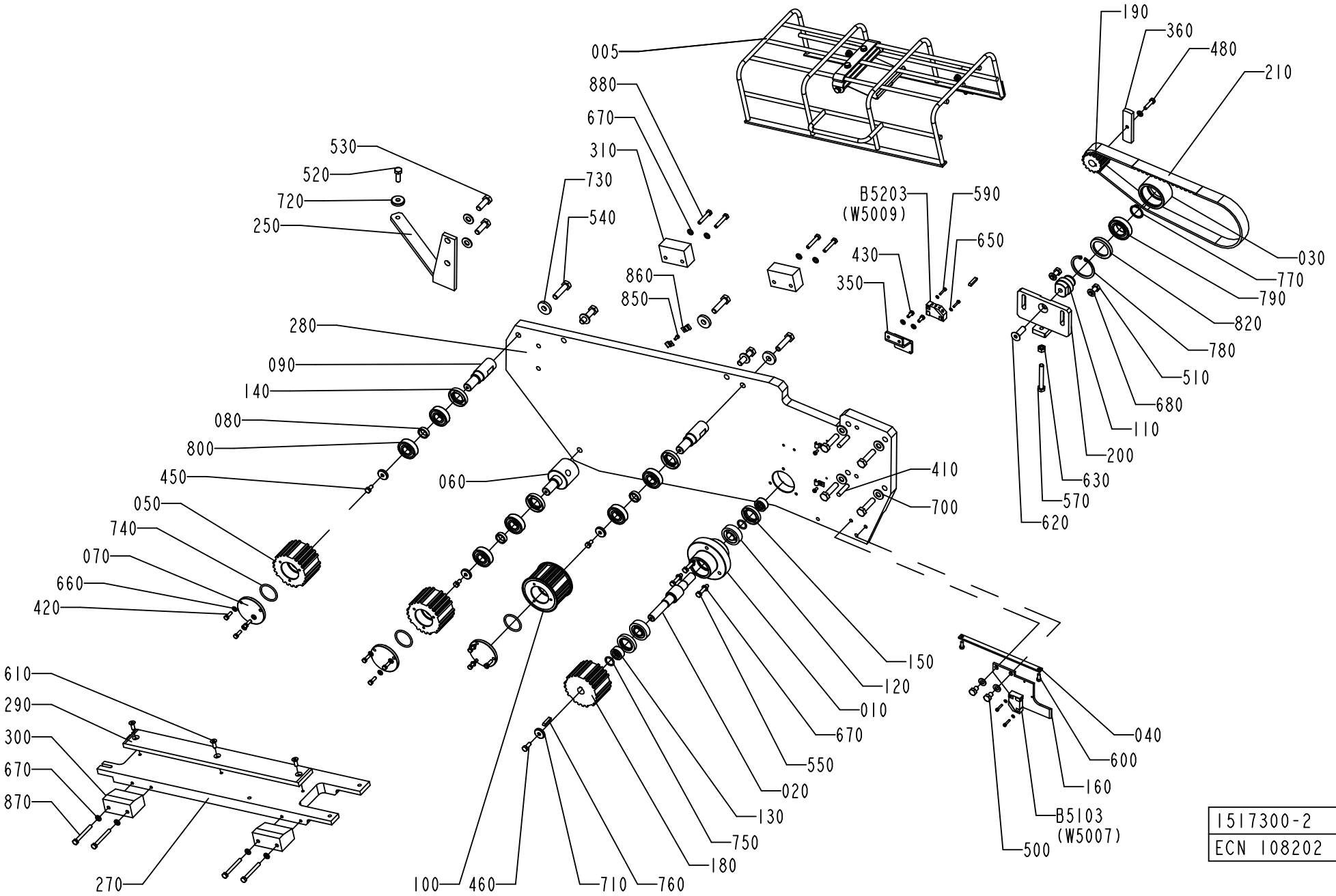

ECM: 348657 - 20080701
Group number: 1517300-0300
Assembly Drawing: 1517300-2_1_AA

Pos	Part No	UN	Qty	Description	Page No
A3/FLEX					
250	2572563-0000		1	SUPPORT	
Common Parts					
005	1144645-0200		1	PROTECTIVE COVER	**3-259, 3-261**
010	2955763-0000		1	BEARING HOUSING	
020	1144470-0000		1	SHAFT	
030	2958240-0000		1	ROLLER	
040	1144593-0000		1	PLATE	
050	2952687-0000		2	TOOTHED PULLEY	
060	1144595-0000		1	ECCENTRIC SHAFT	
070	2955104-0000		3	PLUG	
080	1144597-0000		3	SPACER	
090	1144598-0000		2	SHAFT	
100	2952688-0000		1	TOOTHED PULLEY	
110	2958241-0000		1	SHAFT	
120	90214-0219		2	CYL.ROLLER BEARING, 17X40X12 MM	
130	1144625-0000		2	SPACER	
140	90091-0404		3	RADIAL SEAL 22X40X7 MM DUST LIP	
150	90091-0406		2	RADIAL SEAL 25X40X7 MM DUST LIP	
160	1144760-0000		1	PLATE	
180	927859-0000		1	TOOTHED PULLEY	
190	1282681-0000		1	TOOTHED PULLEY	
200	1144794-0000		1	SUPPORT	
210	1144841-0000		1	TIMING BELT	
270	1348957-0000		1	BRACKET	
280	2547187-0000		1	PLATE	
290	1348963-0000		1	SLIDE	
300	1285956-0000		2	BLOCK	
310	1285955-0000		2	PLATE	
350	1279688-0000		1	SUPPORT	
360	1279689-0000		1	ACTIVATOR	
410	311103-0407		2	PARALLEL PIN ISO 2338 8M6X35 A1	
420	312105-0329		9	SCREW M6S ISO 4017 M5X16 A480	
430	312105-0327		2	SCREW M6S ISO 4017 M5X12 A480	
450	312105-0366		3	SCREW M6S ISO 4017 M6X12 A480	
460	312105-0368		1	SCREW M6S ISO 4017 M6X16 A480	
480	312105-0372		1	SCREW M6S ISO 4017 M6X25 A480	
500	312105-0447		2	SCREW M6S ISO 4017 M8X12 A480	
510	312105-0451		2	SCREW M6S ISO 4017 M8X20 A480	
520	312105-0453		1	SCREW M6S ISO 4017 M8X25 A480	
530	312105-0495		2	SCREW M6S ISO 4017 M10X30 A480	
540	312109-0499		9	SCREW M6S ISO 4017 M10X40 A480	
550	312109-0374		3	SCREW M6S ISO 4017 M6X30 A480	
570	312109-0463		1	SCREW M6S ISO 4017 M8X60 A480	
590	312115-0228		4	SCREW ISO4762 M3X16 A4 80	
600	312125-0327		2	SCREW ISO 1207 M5X12 A4	
610	312151-0368		3	SCREW EN 10642 MF6S M6X16 10.9 EL.PL	
620	312155-0495		1	SCREW DIN 7991 MF6S M10X30 A4 70	
630	312605-0318		1	HEXAGON NUT, M6M M8 A280	
650	315105-0124		4	WASHER BRB 3,2X6 RFR	
660	315105-0146		11	WASHER BRB 5,3X10 RFR	
670	315105-0153		12	WASHER BRB 6,4X12 RFR	
680	315105-0165		4	WASHER BRB 8,4X16 RFR	
700	315105-0173		8	WASHER BRB 10,5X22 RFR	
710	315125-0153		4	WASHER TBRSB 6,4X22X4 A4	
720	315125-0165		1	WASHER TBRSB 8,4X26X5 A4	
730	315125-0173		3	WASHER TBRSB 10,5X28X6 A4	
740	315202-0221		3	O-RING 34,2X3 MM	
750	315202-0267		2	O-RING 16,3X2,4 MM	
760	315705-0202		2	PARALLEL KEY W ROUND ENDS 5X5X25MM	
770	315751-0119		1	RETAINING RING FOR SHAFT DIN 471 25 SS	
780	90141-0019		1	RETAINING RING FOR BORE DIN 472 50 A2	
790	321306-0105		1	BALL BEARING, 25X47X12 MM	
800	321309-0103		6	BALL BEARING, 17X40X12 MM	
810	344502-0021		5	GREASE NIPPLE STRAIGHT M6	
820	90091-0297		1	RADIAL SEAL 35X47X7 MM DUST LIP	
830	90296-0068		1	SHELL ALVANIA GREASE EP 2	
850	312125-0287		4	SCREW ISO 1207 M4X8 A4	
860	90165-0057		6	PIPE CLIP FOR TUBE D=6 MM	
870	312105-0381		4	SCREW M6S ISO 4014 M6X55 A480	
880	312105-0376		4	SCREW M6S ISO 4014 M6X35 A480	
890	312105-0362		1	SCREW M6S ISO 4017 M6X8 A480	
B5103	90044-0194		1	PROX.SW. IN5329/IN3002-BPKG(EX90044-104)	
B5203	90044-0194		1	PROX.SW. IN5329/IN3002-BPKG(EX90044-104)	

Machine Type	Group Description	Used-In	Group Number	Page No

INFEED CONVEYOR SHORT

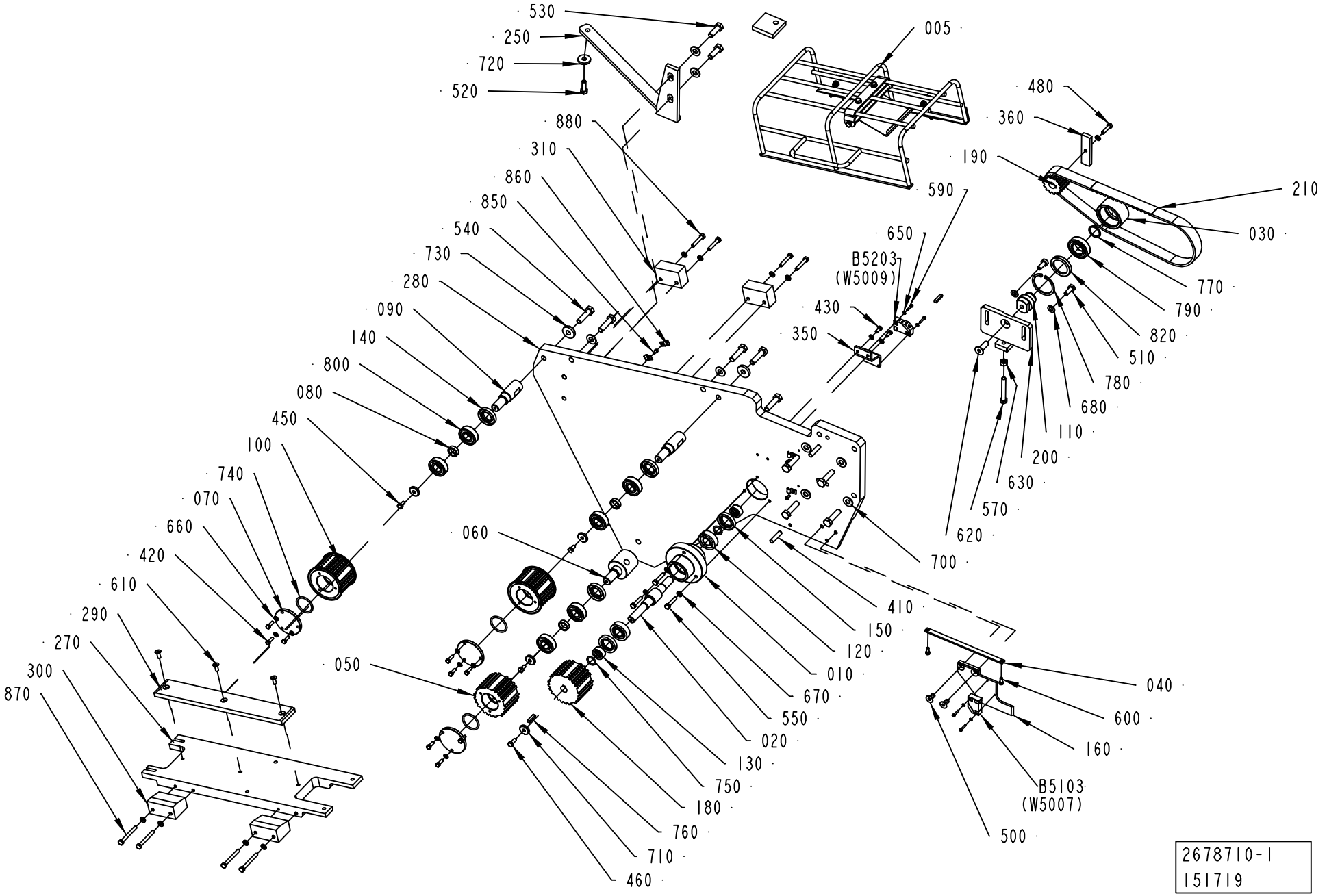

ECM: 348658 - 20080701
Group number: 2678710-0100
Assembly Drawing: 2678710-1_1_AA

Pos	Part No	UN	Qty	Description	Page No
A3/FLEX					
250	2678708-0000		1	SUPPORT	
Common Parts					
005	2678709-0100		1	PROTECTIVE COVER	**3-267**
010	2955763-0000		1	BEARING HOUSING	
020	1144470-0000		1	SHAFT	
030	2958240-0000		1	ROLLER	
040	1144593-0000		1	PLATE	
050	2952687-0000		1	TOOTHED PULLEY	
060	2852228-0000		1	ECCENTRIC SHAFT	
070	2955104-0000		3	PLUG	
080	1144597-0000		3	SPACER	
090	1144598-0000		2	SHAFT	
100	2952688-0000		2	TOOTHED PULLEY	
110	2958241-0000		1	SHAFT	
120	90214-0219		2	CYL.ROLLER BEARING, 17X40X12 MM	
130	1144625-0000		2	SPACER	
140	90091-0440		3	RADIAL SEAL 22X40X7 MM DUST LIP	
150	1498068-0000		2	SEAL RING	
160	2610764-0000		1	PLATE	
180	927859-0000		1	TOOTHED PULLEY	
190	1282681-0000		1	TOOTHED PULLEY	
200	1144794-0000		1	SUPPORT	
210	1144841-0000		1	TIMING BELT	
270	2665197-0000		1	BRACKET	
280	2678753-0000		1	PLATE	
290	2665199-0000		1	SLIDE	
300	1285956-0000		2	BLOCK	
310	1285955-0000		2	PLATE	
350	1279688-0000		1	SUPPORT	
360	1279689-0000		1	ACTIVATOR	
380	2850481-0000		3	SPACER	
410	311103-0407		2	PARALLEL PIN ISO 2338 8M6X35 A1	
420	312105-0329		9	SCREW M6S ISO 4017 M5X16 A480	
430	312105-0327		2	SCREW M6S ISO 4017 M5X12 A480	
450	312105-0366		3	SCREW M6S ISO 4017 M6X12 A480	
460	312105-0368		1	SCREW M6S ISO 4017 M6X16 A480	
480	312105-0372		1	SCREW M6S ISO 4017 M6X25 A480	
500	312155-0449		2	SCREW DIN 7991 MF6S M8X16 A4 70	
510	312105-0451		2	SCREW M6S ISO 4017 M8X20 A480	
520	312105-0495		1	SCREW M6S ISO 4017 M10X30 A480	
530	312105-0495		2	SCREW M6S ISO 4017 M10X30 A480	
540	312109-0499		9	SCREW M6S ISO 4017 M10X40 A480	
550	312109-0374		3	SCREW M6S ISO 4017 M6X30 A480	
570	312109-0463		1	SCREW M6S ISO 4017 M8X60 A480	
590	312115-0228		4	SCREW ISO4762 M3X16 A4 80	
600	312125-0327		2	SCREW ISO 1207 M5X12 A4	
610	312155-0368		3	SCREW DIN 7991 MF6S M6X16 A4 70	
620	312155-0495		1	SCREW DIN 7991 MF6S M10X30 A4 70	
630	312605-0318		1	HEXAGON NUT, M6M M8 A280	
650	315105-0124		4	WASHER BRB 3,2X6 RFR	
660	315105-0146		11	WASHER BRB 5,3X10 RFR	
670	315105-0153		12	WASHER BRB 6,4X12 RFR	
680	315105-0165		2	WASHER BRB 8,4X16 RFR	
700	315105-0173		8	WASHER BRB 10,5X22 RFR	
710	315125-0153		4	WASHER TBRSB 6,4X22X4 A4	
720	315125-0173		1	WASHER TBRSB 10,5X28X6 A4	
730	315125-0173		3	WASHER TBRSB 10,5X28X6 A4	
740	315202-0221		3	O-RING 34,2X3 MM	
750	315202-0267		2	O-RING 16,3X2,4 MM	
760	315705-0202		2	PARALLEL KEY W ROUND ENDS 5X5X25MM	
770	315751-0119		1	RETAINING RING FOR SHAFT DIN 471 25 SS	
780	90141-0019		1	RETAINING RING FOR BORE DIN 472 50 A2	
790	321306-0105		1	BALL BEARING, 25X47X12 MM	
800	321309-0103		6	BALL BEARING, 17X40X12 MM	
810	344502-0021		5	GREASE NIPPLE STRAIGHT M6	
820	90091-0297		1	RADIAL SEAL 35X47X7 MM DUST LIP	
830	90296-0068		1	SHELL ALVANIA GREASE EP 2	
850	312125-0287		4	SCREW ISO 1207 M4X8 A4	
860	90165-0057		6	PIPE CLIP FOR TUBE D=6 MM	
870	312105-0381		4	SCREW M6S ISO 4014 M6X55 A480	
880	312105-0376		4	SCREW M6S ISO 4014 M6X35 A480	
890	312105-0362		1	SCREW M6S ISO 4017 M6X8 A480	
B5103	90044-0194		1	PROX.SW. IN5329/IN3002-BPKG(EX90044-104)	
B5203	90044-0194		1	PROX.SW. IN5329/IN3002-BPKG(EX90044-104)	

Machine Type	Group Description	Used-In	Group Number	Page No

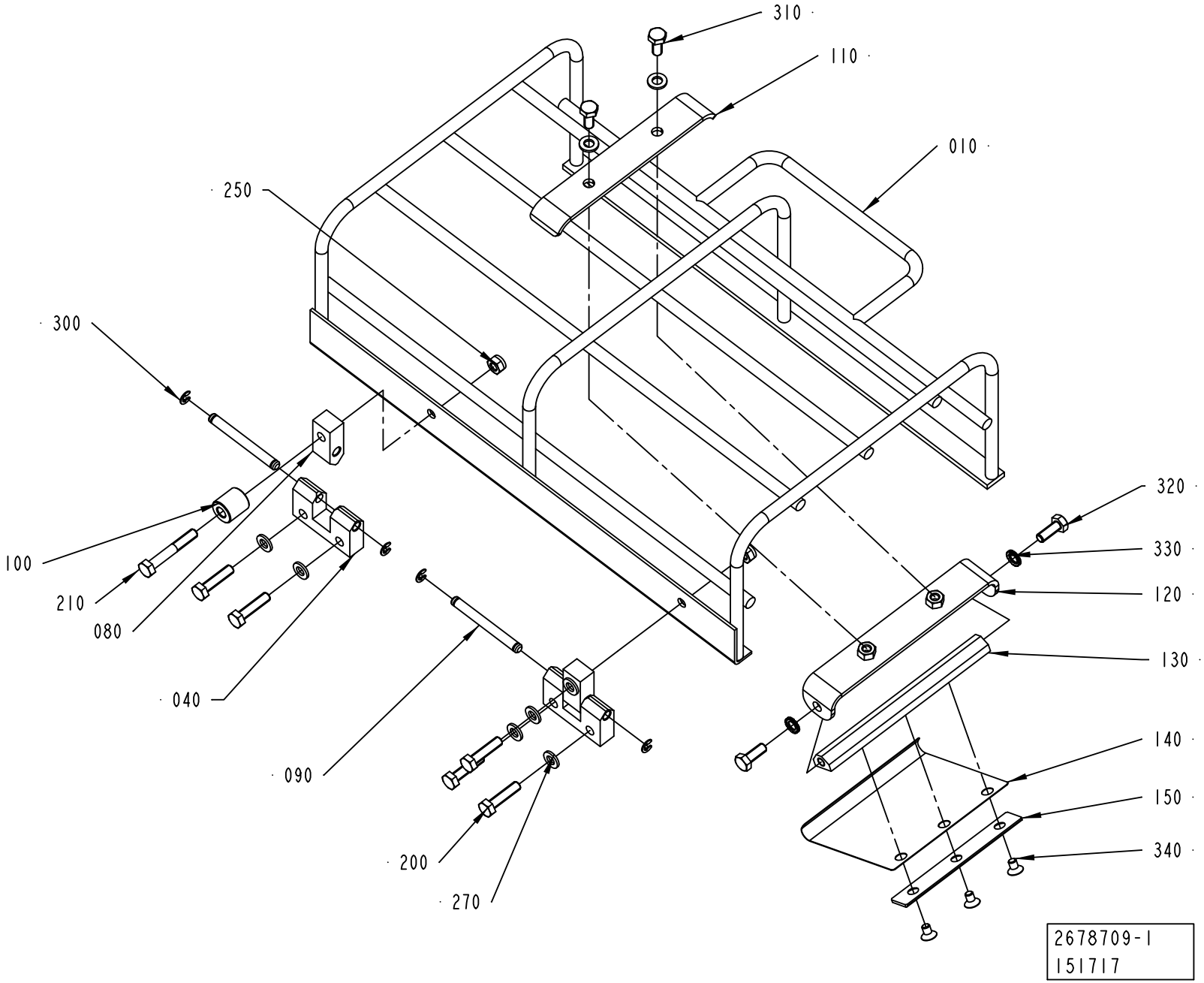
310
110
010
250
300
320
330
120
130
100
210
080
040
140
150
340
090
200
270
2678709-1
151717

ECM: 190930 - 20041104
Group number: 2678709-0100
Assembly Drawing: 2678709-1_1_AA

Pos	Part No	UN	Qty	Description	Page No
-					
010	2665198-0000		1	PROTECTION	
040	1144667-0000		2	HINGE	
080	1144668-0000		2	HINGE	
090	1144669-0000		2	PIN	
100	1360149-0000		1	SPACER	
110	1499476-0000		1	HOLDER	
120	2527792-0000		1	SUPPORT	
130	2527793-0000		1	SHAFT	
140	2530418-0000		1	SPRING	
150	2540612-0000		1	PLATE	
200	312105-0372		5	SCREW M6S ISO 4017 M6X25 A480	
210	312105-0378		1	SCREW M6S ISO 4014 M6X40 A480	
250	312812-0316		2	HEXAGON NUT, NY-LOCK M6 A480	
270	315105-0153		9	WASHER BRB 6,4X12 RFR	
300	315755-0106		4	RETAINING RING SHAFT DIN 6799 4 A2	
310	312105-0367		2	SCREW M6S ISO 4017 M6X14 A480	
320	312105-0368		2	SCREW M6S ISO 4017 M6X16 A480	
330	90062-0061		2	LOCK WASHER NORD-LOCK,6,5/10,8, T=2,2	
340	312155-0323		3	SCREW DIN 7991 MF6S M5X8 A4 70	

Pos	Part No	UN	Qty	Description	Page No

This page is intentionally left blank.

ECM: 316397 - 20080103
Group number: 1524370-0100
Assembly Drawing:

Pos	Part No	UN	Qty	Description	Page No
TBA 0200M, TBA 0200B, TBA 0200SQ, TBA 0200S, TBA 0250S, TBA 0250B, TBA 0300S, TBA 0500S, TBA 0500SQ, TBA 0500B, TBA 1000B, TBA 1000SQ, TBA 1000S, TPA 0330SQ, TPA 0250SQ, TPA 0200SQ, TPA 0500SQ, TBA 0250SQ					
010	1349160-0000		1	SPACER	
Common Parts					
020	312115-0500		4	SCREW ISO4762 M10X45 A4 80	
030	312105-0507		2	SCREW M6S ISO 4014 M10X80 A480	
040	312115-0497		2	SCREW ISO4762 M10X35 A4 80	
050	315105-0173		4	WASHER BRB 10,5X22 RFR	

Pos	Part No	UN	Qty	Description	Page No

DROP CHUTE CRADLE

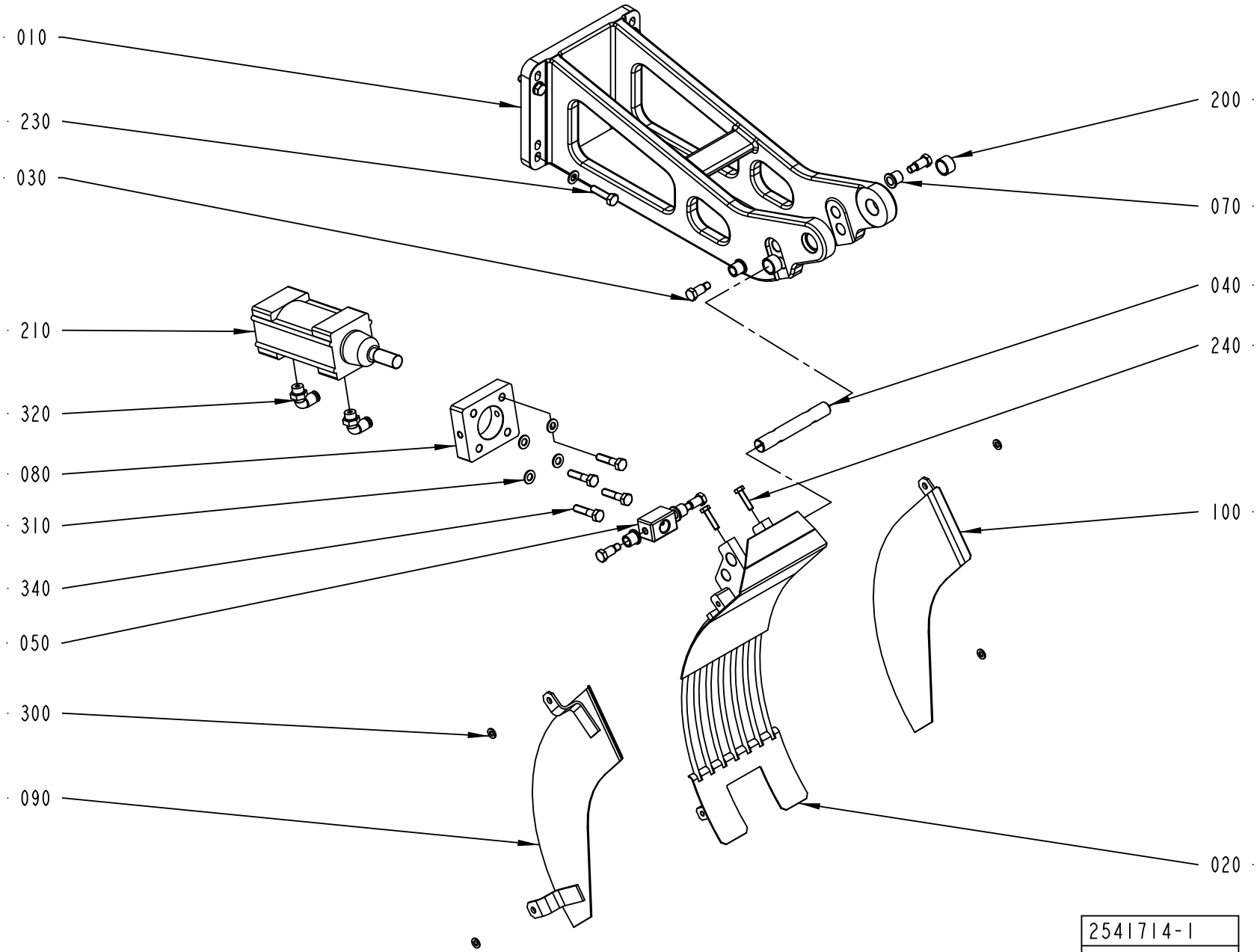

ECM: 363218 - 20081001
Group number: 2541714-0100
Assembly Drawing: 2541714-1_1_AA

This list covers pages from 3-270 to 3-273

Pos	Part No	UN	Qty	Description	Page No
TBA 1400B (See drawing on page: 3-270)					
020	2665204-0000		1	CRADLE	
030	449190-0000		4	SHAFT	
070	1478928-0000		4	BUSHING	
090	2770760-0000		1	PLATE	
100	2770761-0000		1	PLATE	
TBA 1500S (See drawing on page: 3-270)					
020	1348920-0000		1	CRADLE	
030	449190-0000		4	SHAFT	
070	1478928-0000		4	BUSHING	
090	1348854-0000		1	PLATE	
100	1349017-0000		1	PLATE	
300	315105-0153		4	WASHER BRB 6,4X12 RFR	
TBA 1890S QC, TBA 2000S QC (See drawing on page: 3-270)					
020	2665204-0000		1	CRADLE	
030	449190-0000		4	SHAFT	
070	1478928-0000		4	BUSHING	
090	2665205-0000		1	PLATE	
100	2665206-0000		1	PLATE	
TPA 1000SQ NOQC (See drawing on page: 3-270)					
020	2558146-0000		1	CRADLE	
030	449190-0000		4	SHAFT	
070	1478928-0000		4	BUSHING	
TPA 1000SQ QC, TPA 0750SQ QC (See drawing on page: 3-270)					
020	1348920-0000		1	CRADLE	
030	449190-0000		4	SHAFT	
070	1478928-0000		4	BUSHING	
090	1517472-0000		1	SIDE PLATE	
100	1517473-0000		1	SIDE PLATE	
300	315105-0153		4	WASHER BRB 6,4X12 RFR	
TPA 500SQ LIGHTCAP (See drawing on page: 3-270)					
020	2958180-0000		1	CRADLE	
030	449190-0000		4	SHAFT	
070	1478928-0000		4	BUSHING	
090	1285023-0000		1	SIDE PLATE	
100	1285022-0000		1	SIDE PLATE	
300	315105-0153		4	WASHER BRB 6,4X12 RFR	
TBA 0200B QC, TBA 0330S QC, TBA 0250B QC (See drawing on page: 3-270)					
020	2751788-0000		1	CRADLE	
030	449190-0000		4	SHAFT	
070	1478928-0000		4	BUSHING	
090	2650807-0000		1	SIDE PLATE	
100	2650808-0000		1	SIDE PLATE	
300	315105-0153		4	WASHER BRB 6,4X12 RFR	
TBA 0200M, TBA 0200S, TBA 0250S, TBA 0500S, TPA 0330SQ, TBA 0500B NOQC, TBA 1000B NOQC, TBA 1000S NOMOLDEDCAP, TBA 1000S STDA7, TBA 0200B NOQC, TBA 0330S NOQC, TBA 0250B NOQC, TPA 0200SQ QC, TPA 0250SQ QC, TPA 0250SQ NOQC, TBA 1000SQ NOQC, TBA 1000SQ QC, TPA 500SQ NOMOLDEDCAP (See drawing on page: 3-270)					
020	2751788-0000		1	CRADLE	
030	449190-0000		4	SHAFT	
070	1478928-0000		4	BUSHING	
090	1285023-0000		1	SIDE PLATE	
100	1285022-0000		1	SIDE PLATE	
300	315105-0153		4	WASHER BRB 6,4X12 RFR	
TBA 0200SQ, TBA 0250SQ (See drawing on page: 3-272)					
020	2751788-0000		1	CRADLE	
030	449190-0000		4	SHAFT	
070	1478928-0000		4	BUSHING	
090	1285023-0000		1	SIDE PLATE	
100	1285022-0000		1	SIDE PLATE	
TBA 0250B (See drawing on page: 3-270)					
030	449190-0000		4	SHAFT	
070	1478928-0000		4	BUSHING	
TBA 0500B QC (See drawing on page: 3-270)					
020	2751788-0000		1	CRADLE	
030	449190-0000		4	SHAFT	
070	1478928-0000		4	BUSHING	
090	2605993-0000		1	SIDE PLATE	
100	2605994-0000		1	SIDE PLATE	
TBA 0500SQ QC (See drawing on page: 3-270)					
020	2751788-0000		1	CRADLE	
030	449190-0000		4	SHAFT	
070	1478928-0000		4	BUSHING	
090	2854964-0000		1	SIDE PLATE	
100	2854963-0000		1	SIDE PLATE	
300	315105-0153		4	WASHER BRB 6,4X12 RFR	
TBA 1000B QC (See drawing on page: 3-270)					
020	2751788-0000		1	CRADLE	
030	449190-0000		4	SHAFT	
070	1478928-0000		4	BUSHING	
090	1285023-0000		1	SIDE PLATE	
100	1285022-0000		1	SIDE PLATE	
TBA 1000S LIGHTCAP (See drawing on page: 3-270)					
020	2748115-0000		1	CRADLE	

Machine Type | Group Description | Used-In | Group Number | Page No

DROP CHUTE CRADLE

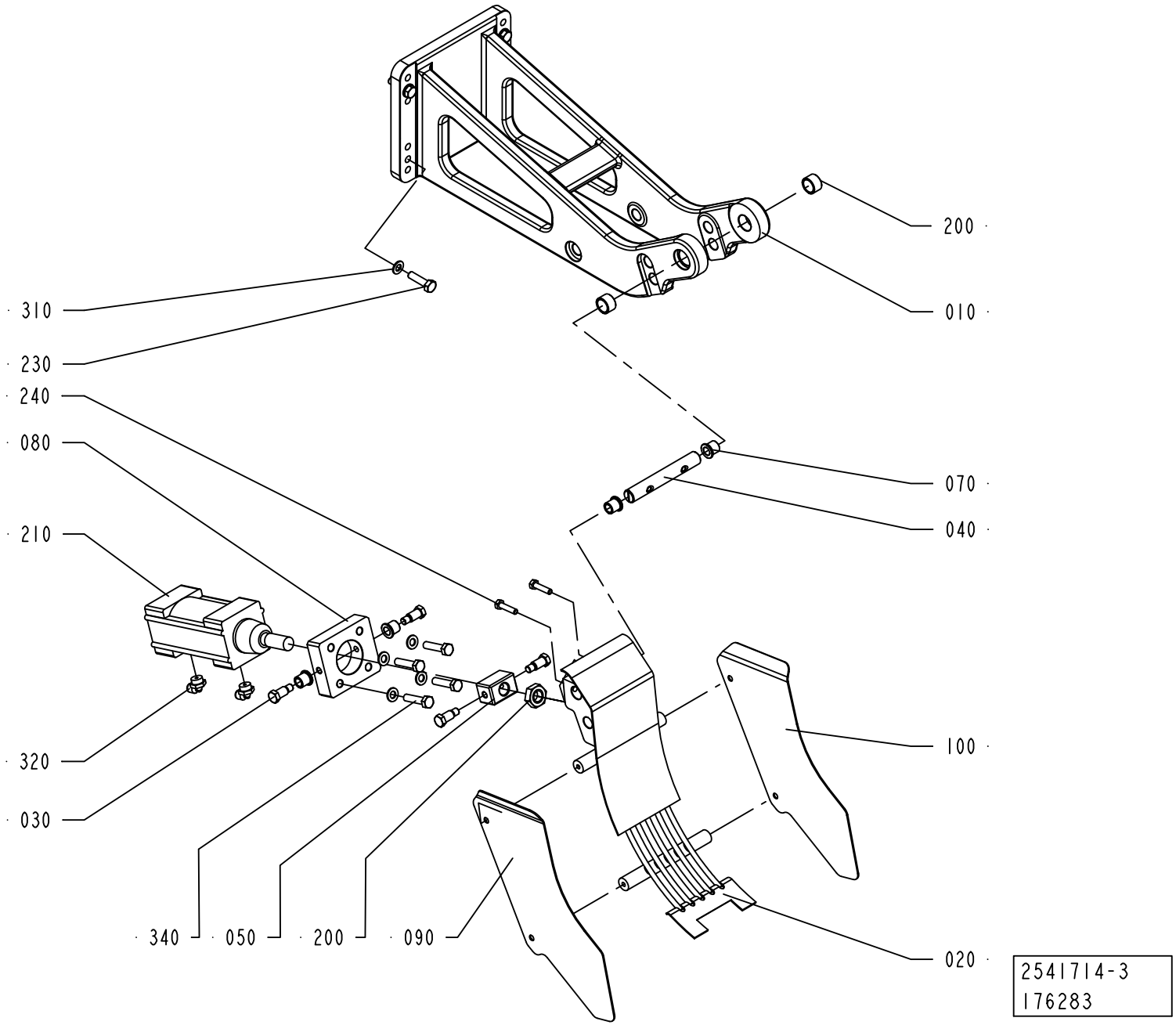

Pos	Part No	UN	Qty	Description	Page No
TBA 1000S LIGHTCAP (Cont'd) (See drawing on page: 3-270)					
030	449190-0000		4	SHAFT	
070	1478928-0000		4	BUSHING	
090	1285023-0000		1	SIDE PLATE	
100	1285022-0000		1	SIDE PLATE	
300	315105-0153		4	WASHER BRB 6,4X12 RFR	
Common Parts					
010	2540823-0000		1	BRACKET	
040	1144579-0000		1	AXLE	
050	1144577-0000		1	BLOCK	
080	2594886-0000		1	PLATE	
200	321116-0234		2	BEARING BUSH W/O FLANGE, 16X20X12 MM	
210	90450-0504		1	DOUBLE ACTING, PROFILE, CYL 50-25	
230	312105-0455		4	SCREW M6S ISO 4017 M8X30 A480	
240	312105-0372		2	SCREW M6S ISO 4017 M6X25 A480	
310	315105-0165		8	WASHER BRB 8,4X16 RFR	
320	90458-2957		2	ELBOW PIPE JOINT, EXT.THREAD, D=6MM-G1/4	
340	312105-0457		4	SCREW M6S ISO 4014 M8X35 A480	

Pos	Part No	UN	Qty	Description	Page No

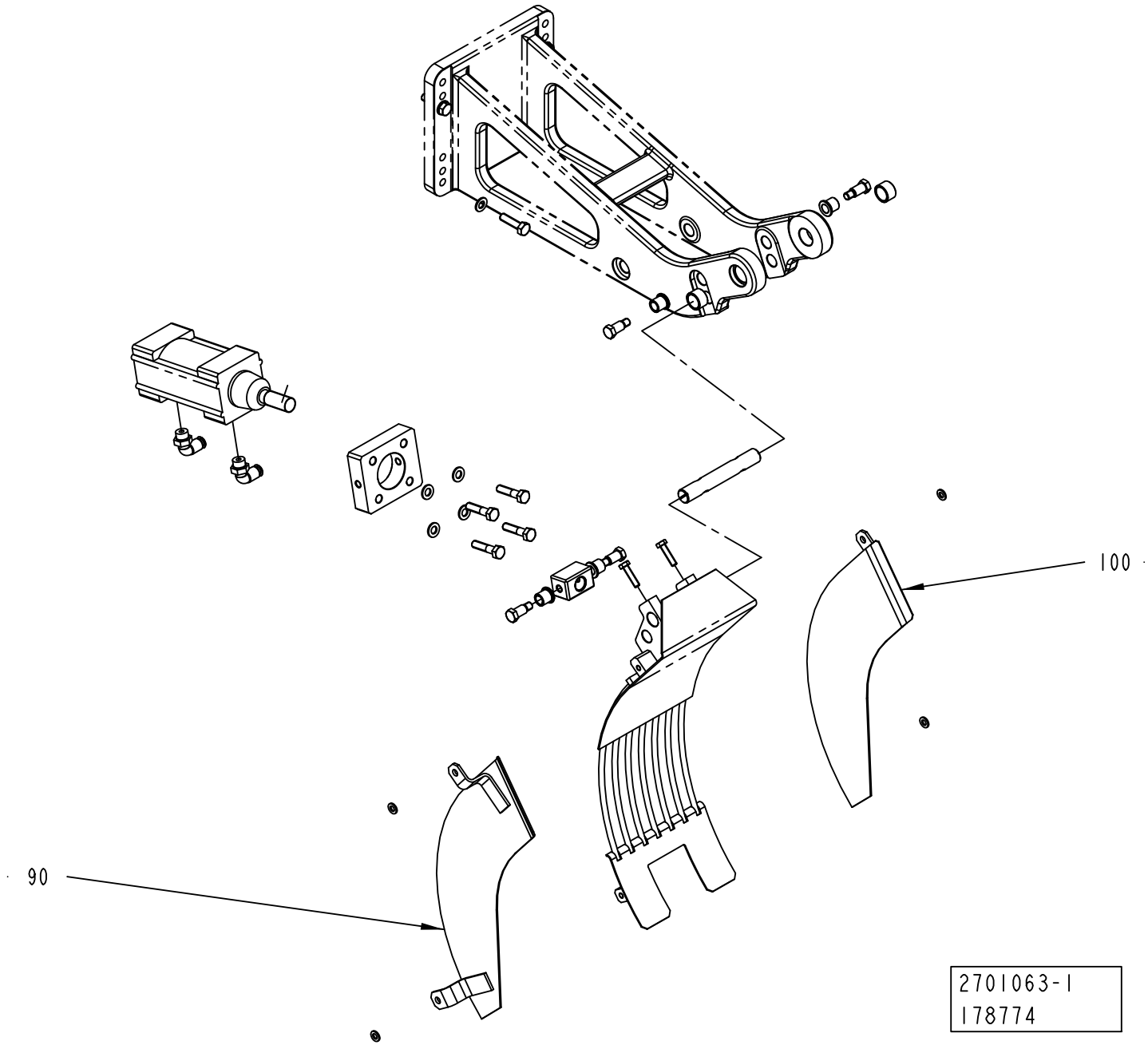
100
90
2701063-1
178774

ECM: 295131 - 20070216
Group number: 2701063-0100
Assembly Drawing: 2701063-1_1_AA

Pos	Part No	UN	Qty	Description	Page No
TBA 0200B QC, TBA 0330S QC, TBA 0250B QC					
090	2650807-0000		1	SIDE PLATE	
100	2650808-0000		1	SIDE PLATE	
TBA 0200M, TBA 0200SQ, TBA 0200S, TBA 0250S, TBA 0500S, TBA 0500SQ, TBA 1000B, TBA 1000SQ, TBA 1000S, TPA 0330SQ, TPA 0250SQ, TPA 0200SQ, TPA 0500SQ, TBA 0500B NOQC, TBA 0200B NOQC, TBA 0330S NOQC, TBA 0250B NOQC, TBA 0250SQ					
090	1285023-0000		1	SIDE PLATE	
100	1285022-0000		1	SIDE PLATE	
TBA 0500B QC					
090	2605993-0000		1	SIDE PLATE	
100	2605994-0000		1	SIDE PLATE	
TBA 1500S					
090	1348854-0000		1	PLATE	
100	1349017-0000		1	PLATE	
TBA 1890S QC, TBA 2000S QC, TBA 1400B					
090	2665205-0000		1	PLATE	
100	2665206-0000		1	PLATE	
TPA 1000SQ NOQC, TPA 1000SQ QC, TPA 0750SQ QC					
090	1517472-0000		1	SIDE PLATE	
100	1517473-0000		1	SIDE PLATE	

Pos	Part No	UN	Qty	Description	Page No

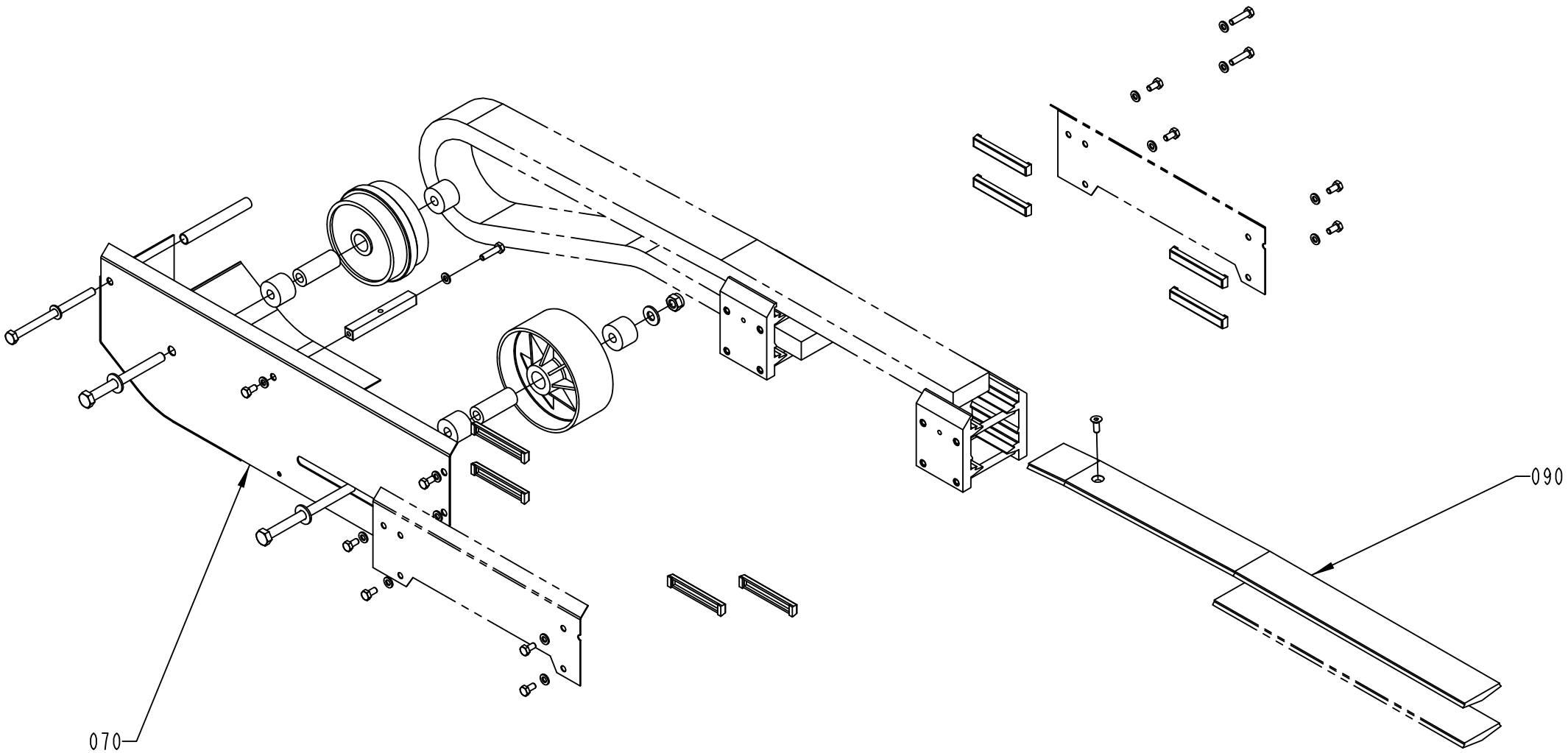
070
090
2702374-1
178774

ECM: 333637 - 20080104
Group number: 2702374-0100
Assembly Drawing: 2702374-1_1_AA

Pos	Part No	UN	Qty	Description	Page No
TBA 0200SQ, TPA 1000SQ, TPA 0500SQ, TPA 0750SQ, TBA 0250SQ, TPA 0200SQ QC L_OUT, TPA 0250SQ QC L_OUT					
070	1548354-0000		1	COVER	
090	1548353-0000		1	SLIDE RAIL	
TBA 0500SQ, TBA 1000SQ, TPA 0330SQ L_OUT					
070	1296081-0000		1	PLATE	
090	1279573-0000		1	SLIDE RAIL UPPER	
TPA 0200SQ QC R_OUT, TPA 0250SQ QC R_OUT, TPA 0330SQ R_OUT					
070	1285265-0000		1	PLATE	

Pos	Part No	UN	Qty	Description	Page No

This page is intentionally left blank.

ECM: 300996 - 20070308
Group number: 2678844-0200
Assembly Drawing:

Pos	Part No	UN	Qty	Description	Page No
PT/FLEX					
000	2678706-0104		1	REBUILDING MANUAL	
010	2642049-0200		1	MECHANICAL REBUILDING	**3-281, 3-283, 3-285**
020	2564076-0100		1	START-UP KIT	**3-383**
030	2587337-0100		1	SETTING TEMPLATE	**3-385**
040	2564075-0100		1	OPENING SPECIFICATION	**3-387**
050	2778380-0100		1	ELECTRICAL CONVERSION	**3-389**

Pos	Part No	UN	Qty	Description	Page No

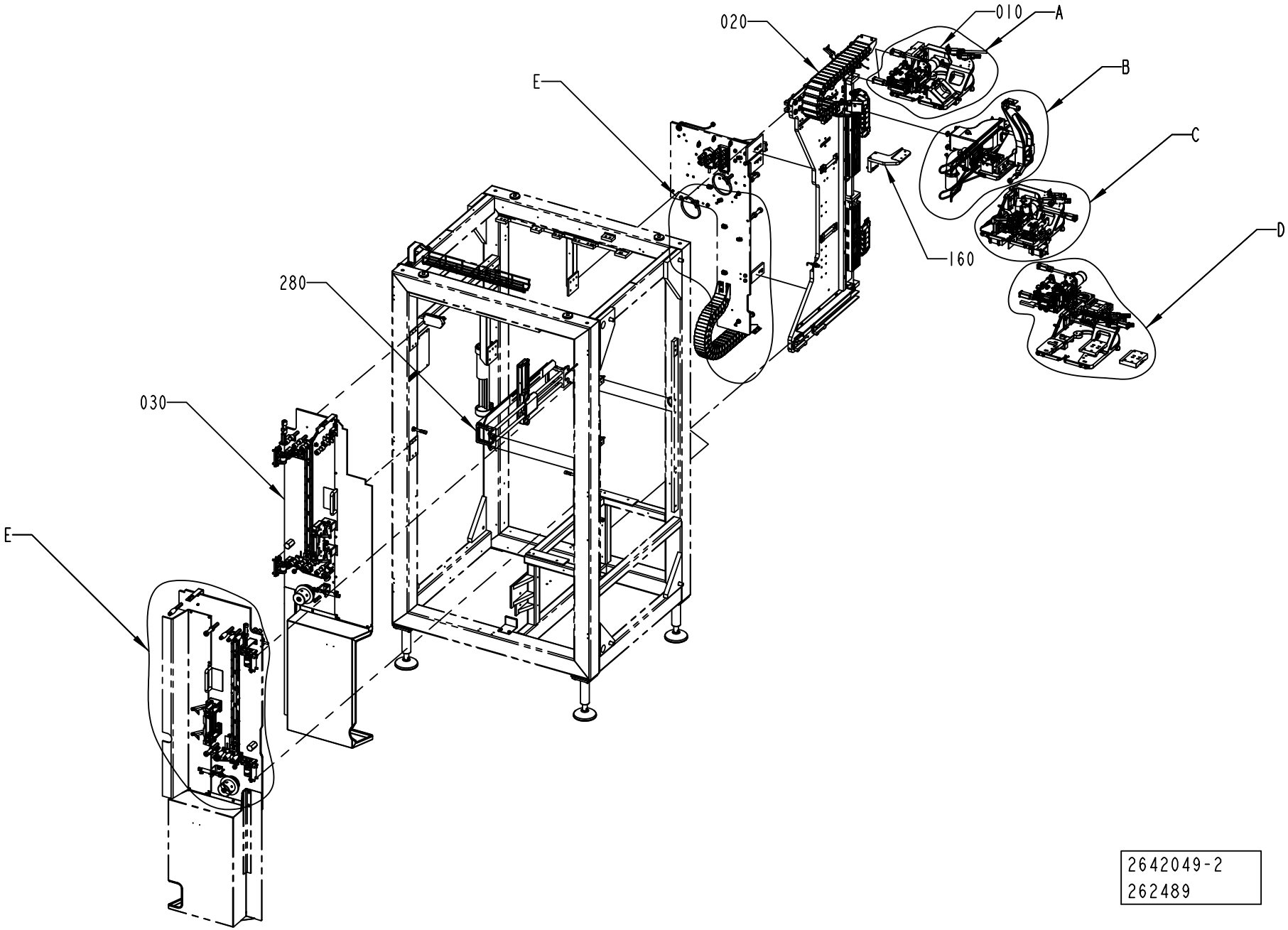
020
010
A
B
C
D
E
160
280
030
E
2642049-2
262489

ECM: 300992 - 20070308
Group number: 2642049-0200
Assembly Drawing: 2642049-2_1_AA

This list covers pages from 3-280 to 3-285

Pos	Part No	UN	Qty	Description	Page No
NO OUTER PATCH					
280	2795034-0100		1	FOLDING DEVICE	**3-287**
310	1548377-0000		1	PAPER GUIDE	
OUTER PATCH					
010	2546302-0200		1	OUTER PATCH APPLICATOR	**3-293**
020	2686489-0100		1	PANEL	**3-317, 3-319**
030	2564046-0200		1	OUTER PATCH MAGAZINE	**3-323, 3-325, 3-327**
270	2693161-0100		1	INSTALLATION MATERIAL	**3-345**
300	2709603-0000		1	BOX	
320	2525378-0000		1	PAPER GUIDE	
Common Parts					
040	2546278-0100		1	PUNCH UNIT	**3-349**
050	2564058-0100		1	TURNING DEVICE	**3-351**
070	2546297-0100		1	OUTER PATCH FEEDER	**3-305**
080	2564059-0100		1	TAB FEEDER	**3-353**
090	2546275-0100		1	TAB FEEDER	**3-355**
100	2546271-0100		1	TAB C'JAW	**3-357**
110	1548368-0000		1	PLATE	
120	2553327-0000		1	PLATE	
130	2546285-0100		1	PATCH C'JAW	**3-359**
140	2511291-0100		1	PATCH FEEDER	**3-361**
150	2564060-0100		1	PATCH FEEDER	**3-363**
160	2773842-0100		1	BAR CODE READER	**3-365, 3-367**
200	2533684-0100		1	SPLICING TABLE	**3-369**
220	2533682-0100		1	BOBBIN HOLDER	**3-371**
230	2564057-0100		1	TAB MAGAZINE	**3-373**
240	2533681-0100		1	BOBBIN HOLDER	**3-375**
250	2533685-0100		1	SPLICING TABLE	**3-377**
260	2564056-0100		1	MAGAZINE	**3-379**
290	2564051-0100		1	PATCH MAGAZINE	**3-381**

Pos	Part No	UN	Qty	Description	Page No

DETAIL A

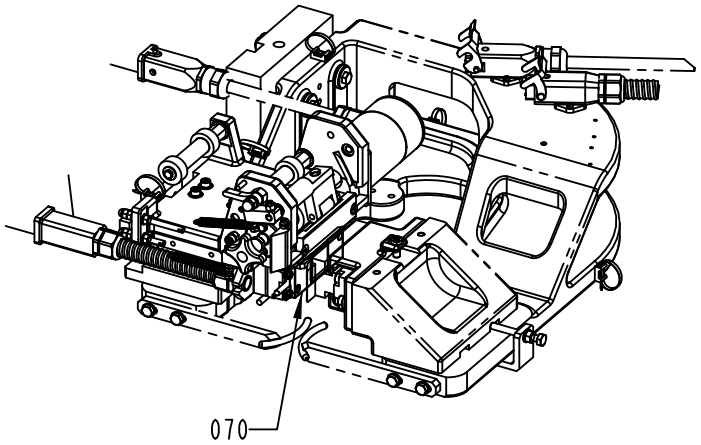

DETAIL B

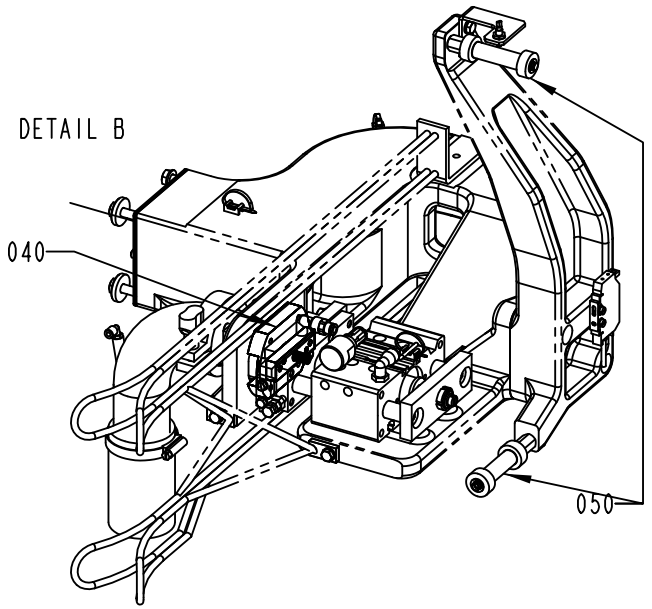

DETAIL D

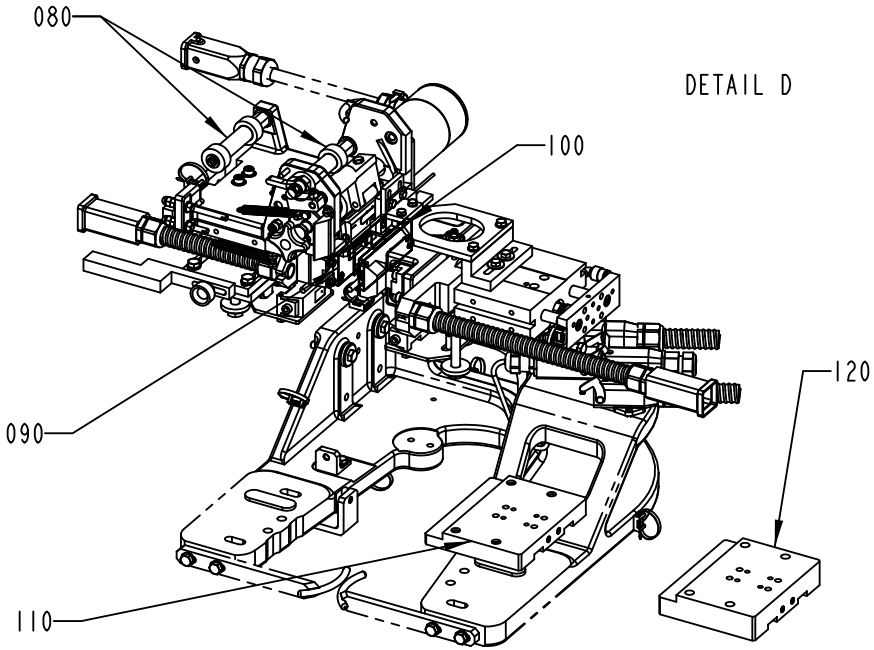

DETAIL C

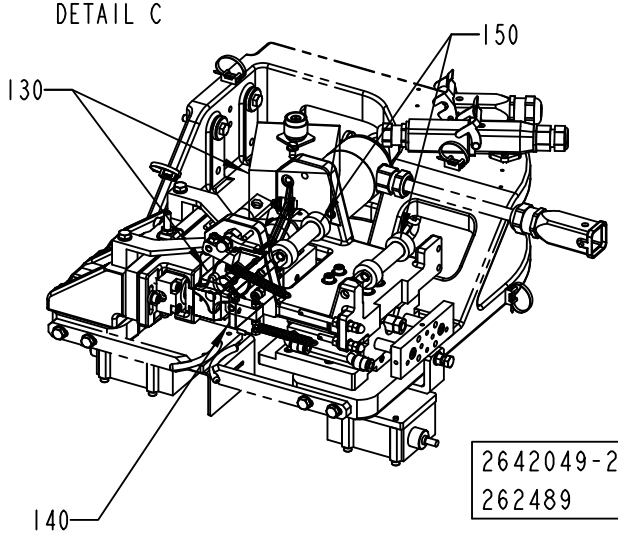

2642049-2
262489

ECM: 300992 - 20070308
Group number: 2642049-0200
Assembly Drawing: 2642049-2_2_AA

This list covers pages from 3-280 to 3-285

Pos	Part No	UN	Qty	Description	Page No
NO OUTER PATCH					
280	2795034-0100		1	FOLDING DEVICE	**3-287**
310	1548377-0000		1	PAPER GUIDE	
OUTER PATCH					
010	2546302-0200		1	OUTER PATCH APPLICATOR	**3-293**
020	2686489-0100		1	PANEL	**3-317, 3-319**
030	2564046-0200		1	OUTER PATCH MAGAZINE	**3-323, 3-325, 3-327**
270	2693161-0100		1	INSTALLATION MATERIAL	**3-345**
300	2709603-0000		1	BOX	
320	2525378-0000		1	PAPER GUIDE	
Common Parts					
040	2546278-0100		1	PUNCH UNIT	**3-349**
050	2564058-0100		1	TURNING DEVICE	**3-351**
070	2546297-0100		1	OUTER PATCH FEEDER	**3-305**
080	2564059-0100		1	TAB FEEDER	**3-353**
090	2546275-0100		1	TAB FEEDER	**3-355**
100	2546271-0100		1	TAB C'JAW	**3-357**
110	1548368-0000		1	PLATE	
120	2553327-0000		1	PLATE	
130	2546285-0100		1	PATCH C'JAW	**3-359**
140	2511291-0100		1	PATCH FEEDER	**3-361**
150	2564060-0100		1	PATCH FEEDER	**3-363**
160	2773842-0100		1	BAR CODE READER	**3-365, 3-367**
200	2533684-0100		1	SPLICING TABLE	**3-369**
220	2533682-0100		1	BOBBIN HOLDER	**3-371**
230	2564057-0100		1	TAB MAGAZINE	**3-373**
240	2533681-0100		1	BOBBIN HOLDER	**3-375**
250	2533685-0100		1	SPLICING TABLE	**3-377**
260	2564056-0100		1	MAGAZINE	**3-379**
290	2564051-0100		1	PATCH MAGAZINE	**3-381**

Pos	Part No	UN	Qty	Description	Page No

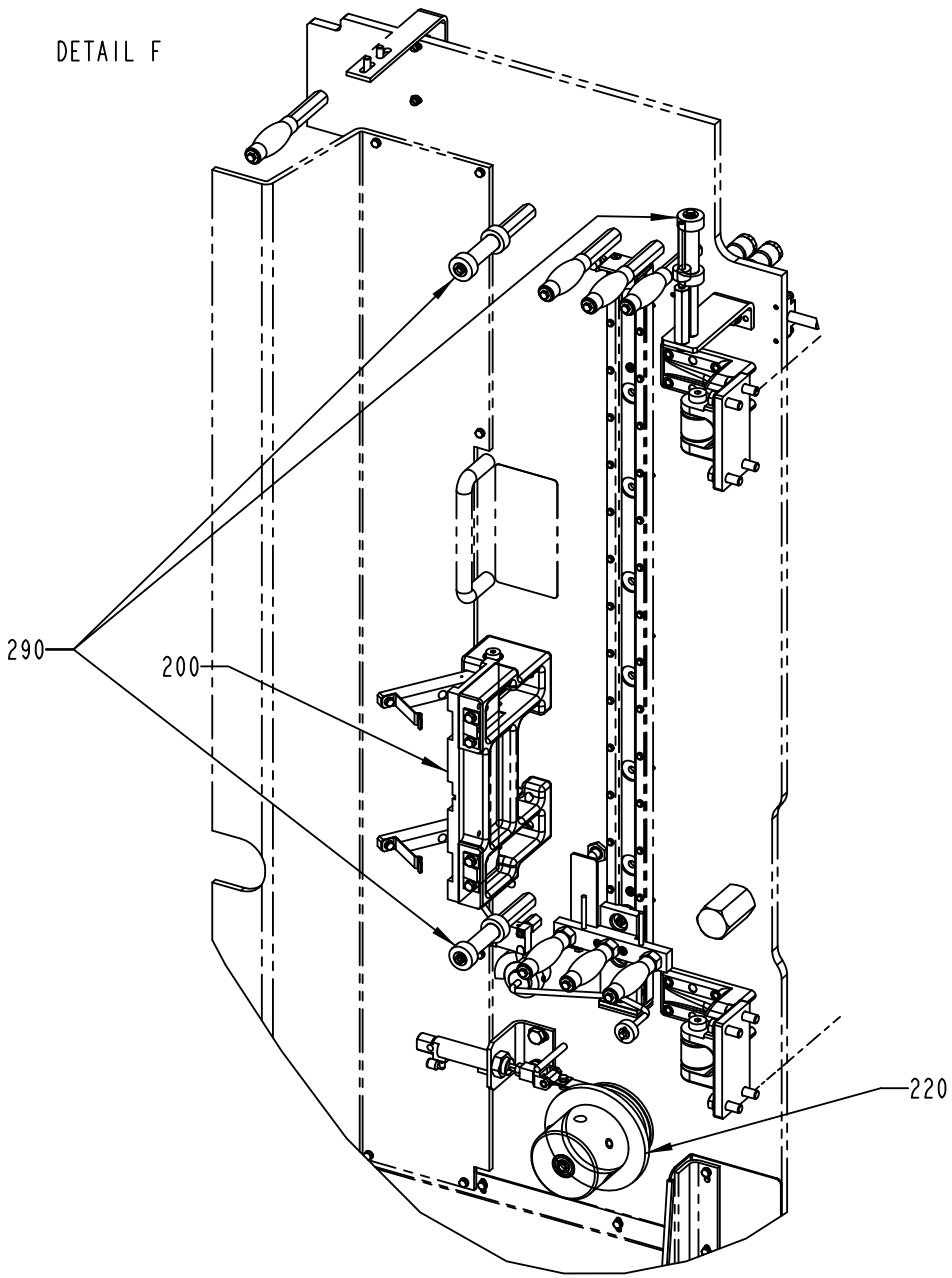
DETAIL F
290
200
220

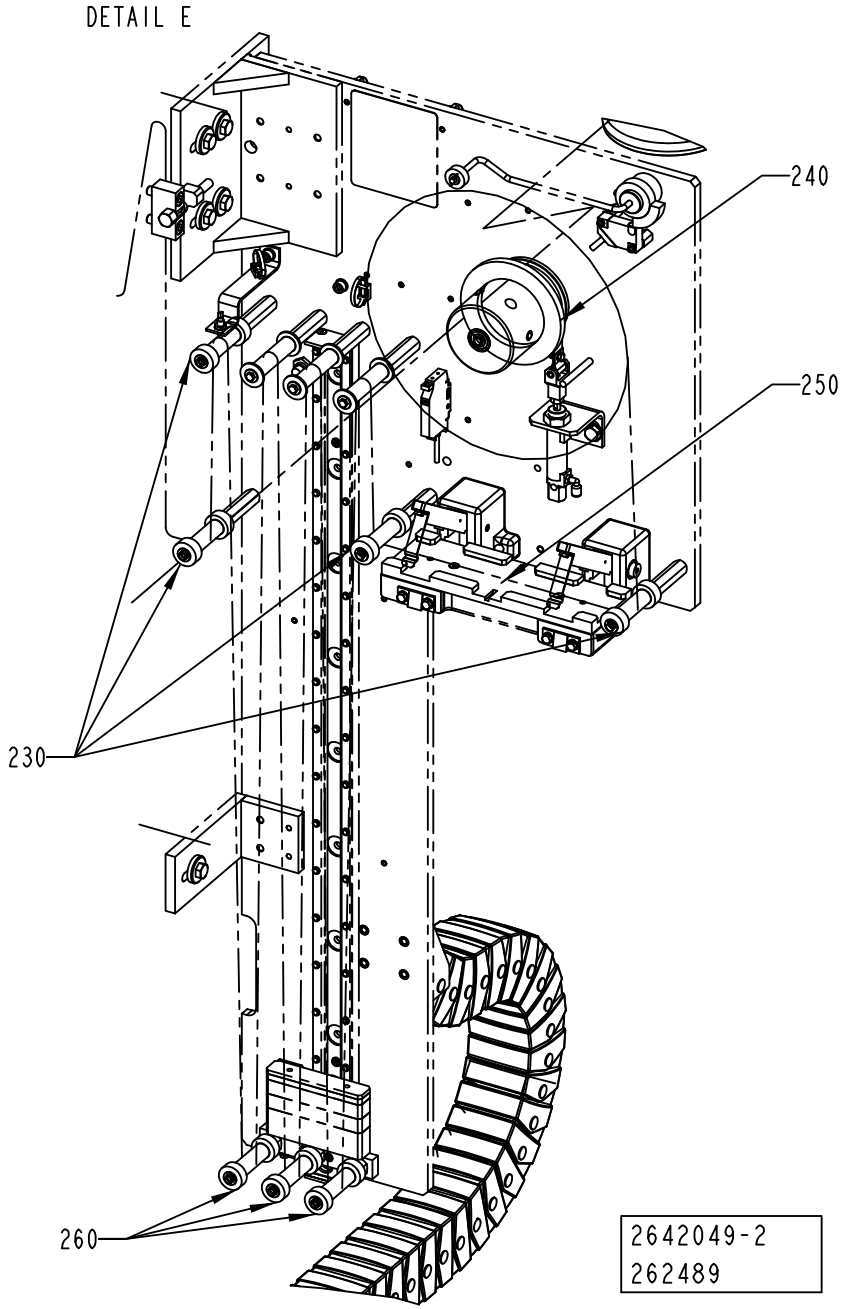
DETAIL E
240
250
230
260
2642049-2
262489

ECM: 300992 - 20070308
Group number: 2642049-0200
Assembly Drawing: 2642049-2_3_AA

This list covers pages from 3-280 to 3-285

Pos	Part No	UN	Qty	Description	Page No
NO OUTER PATCH					
280	2795034-0100		1	FOLDING DEVICE	**3-287**
310	1548377-0000		1	PAPER GUIDE	
OUTER PATCH					
010	2546302-0200		1	OUTER PATCH APPLICATOR	**3-293**
020	2686489-0100		1	PANEL	**3-317, 3-319**
030	2564046-0200		1	OUTER PATCH MAGAZINE	**3-323, 3-325, 3-327**
270	2693161-0100		1	INSTALLATION MATERIAL	**3-345**
300	2709603-0000		1	BOX	
320	2525378-0000		1	PAPER GUIDE	
Common Parts					
040	2546278-0100		1	PUNCH UNIT	**3-349**
050	2564058-0100		1	TURNING DEVICE	**3-351**
070	2546297-0100		1	OUTER PATCH FEEDER	**3-305**
080	2564059-0100		1	TAB FEEDER	**3-353**
090	2546275-0100		1	TAB FEEDER	**3-355**
100	2546271-0100		1	TAB C'JAW	**3-357**
110	1548368-0000		1	PLATE	
120	2553327-0000		1	PLATE	
130	2546285-0100		1	PATCH C'JAW	**3-359**
140	2511291-0100		1	PATCH FEEDER	**3-361**
150	2564060-0100		1	PATCH FEEDER	**3-363**
160	2773842-0100		1	BAR CODE READER	**3-365, 3-367**
200	2533684-0100		1	SPLICING TABLE	**3-369**
220	2533682-0100		1	BOBBIN HOLDER	**3-371**
230	2564057-0100		1	TAB MAGAZINE	**3-373**
240	2533681-0100		1	BOBBIN HOLDER	**3-375**
250	2533685-0100		1	SPLICING TABLE	**3-377**
260	2564056-0100		1	MAGAZINE	**3-379**
290	2564051-0100		1	PATCH MAGAZINE	**3-381**

Pos	Part No	UN	Qty	Description	Page No

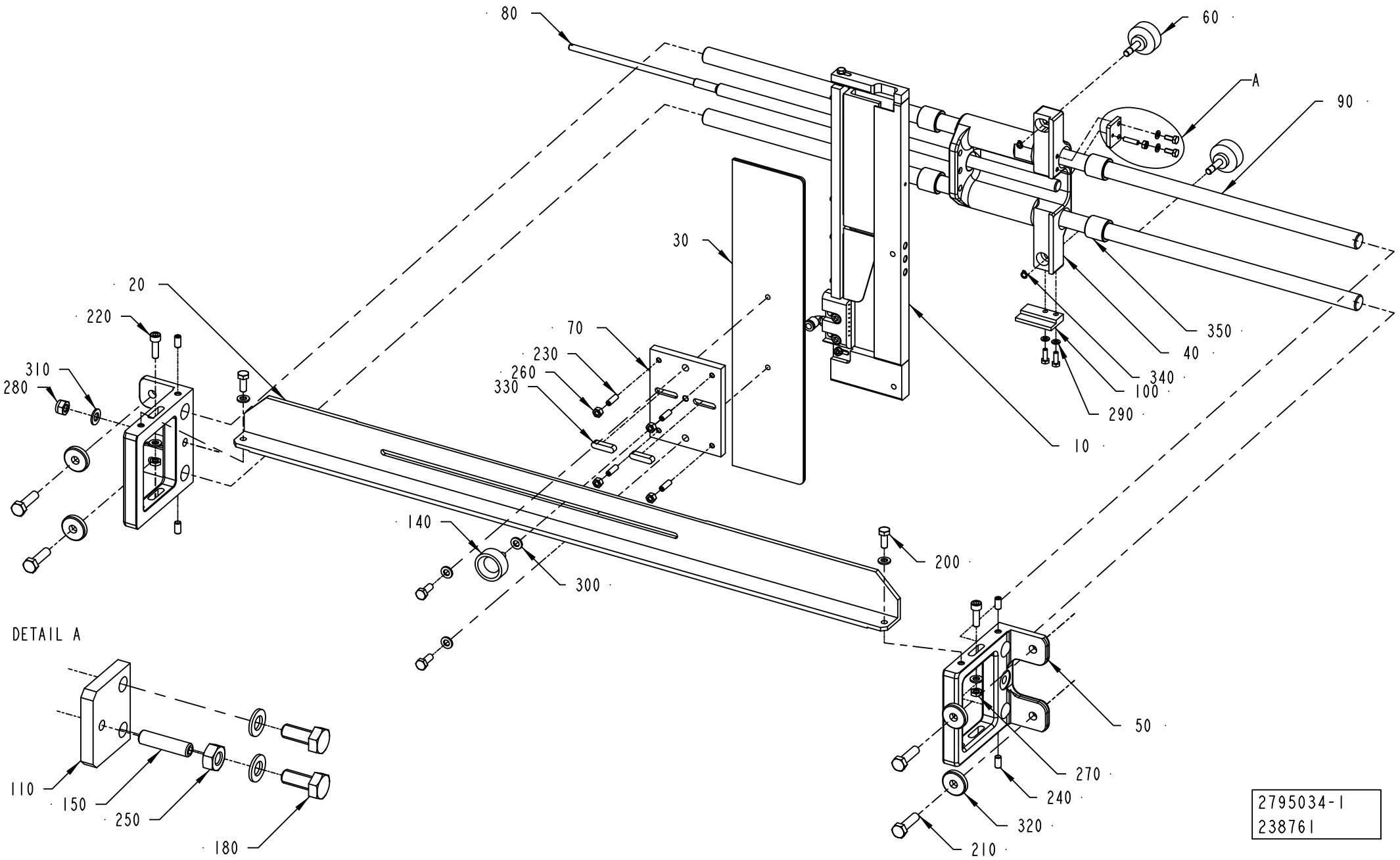
80
60
A
90
30
20
220
70
230
260
330
310
280
350
40
340
100
290
10
140
300
200
DETAIL A
110
150
250
180
50
270
240
320
210
2795034-1
238761

ECM: 238801 - 20060109
Group number: 2795034-0100
Assembly Drawing: 2795034-1_1_AA

Pos	Part No	UN	Qty	Description	Page No
-					
010	2780316-0100		1	FOLDING PART	**3-289, 3-291**
020	2691316-0000		1	ANGLE BRACKET	
030	2691317-0000		1	PLATE	
040	2691320-0000		1	HOUSING	
050	1499216-0000		2	PLATE	
060	1532447-0000		2	HANDLE	
070	2691318-0000		1	PLATE	
080	1538668-0000		1	GUIDE ROD	
090	1538247-0000		2	AXLE PIN	
100	2691321-0000		1	SUPPORT	
110	2691322-0000		1	PLATE	
140	90051-0075		1	KNOB, EXTERNAL THREAD. NO. 8308-1518	
150	90457-0860		1	SCREW ISO4029 M4X16 A4	
180	312105-0289		2	SCREW M6S H4X10 A4 70 ISO4017/DIN933	
190	312105-0291		2	SCREW M6S ISO 4017 M4X12 A470	
200	312105-0368		4	SCREW M6S ISO 4017 M6X16 A480	
210	312105-0455		4	SCREW M6S ISO 4017 M8X30 A480	
220	312115-0370		2	SCREW ISO4762 M6X20 A4 80	
230	312318-0329		4	SCREW ISO4029 M5X16 A4	
240	312318-0366		4	SCREW ISO4029 M6X12 A4	
250	312605-0312		1	HEXAGON NUT, M6M M4 A280	
260	312605-0314		4	HEXAGON NUT, M6M M5 A280	
270	312625-0316		2	HEXAGON THIN NUT, EN 24035 ML6M M6 A4	
280	312812-0318		1	HEXAGON NUT, NY-LOCK M8 A480	
290	315105-0136		4	WASHER BRB 4,3X8 RFR	
300	315105-0153		7	WASHER BRB 6,4X12 RFR	
310	315105-0165		1	WASHER BRB 8,4X16 RFR	
320	315125-0165		4	WASHER TBRSB 8,4X26X5 A4	
330	315705-0234		2	PARALLEL KEY W. ROUND ENDS 6X6X25 MM	
340	315750-0102		2	RETAINING RING SHAFT DIN 471 ST 5	
350	321105-0204		4	BEARING BUSH W/O FLANGE, 16X22X20 MM	

Pos	Part No	UN	Qty	Description	Page No

Machine Type | Group Description | Used-In | Group Number | Page No

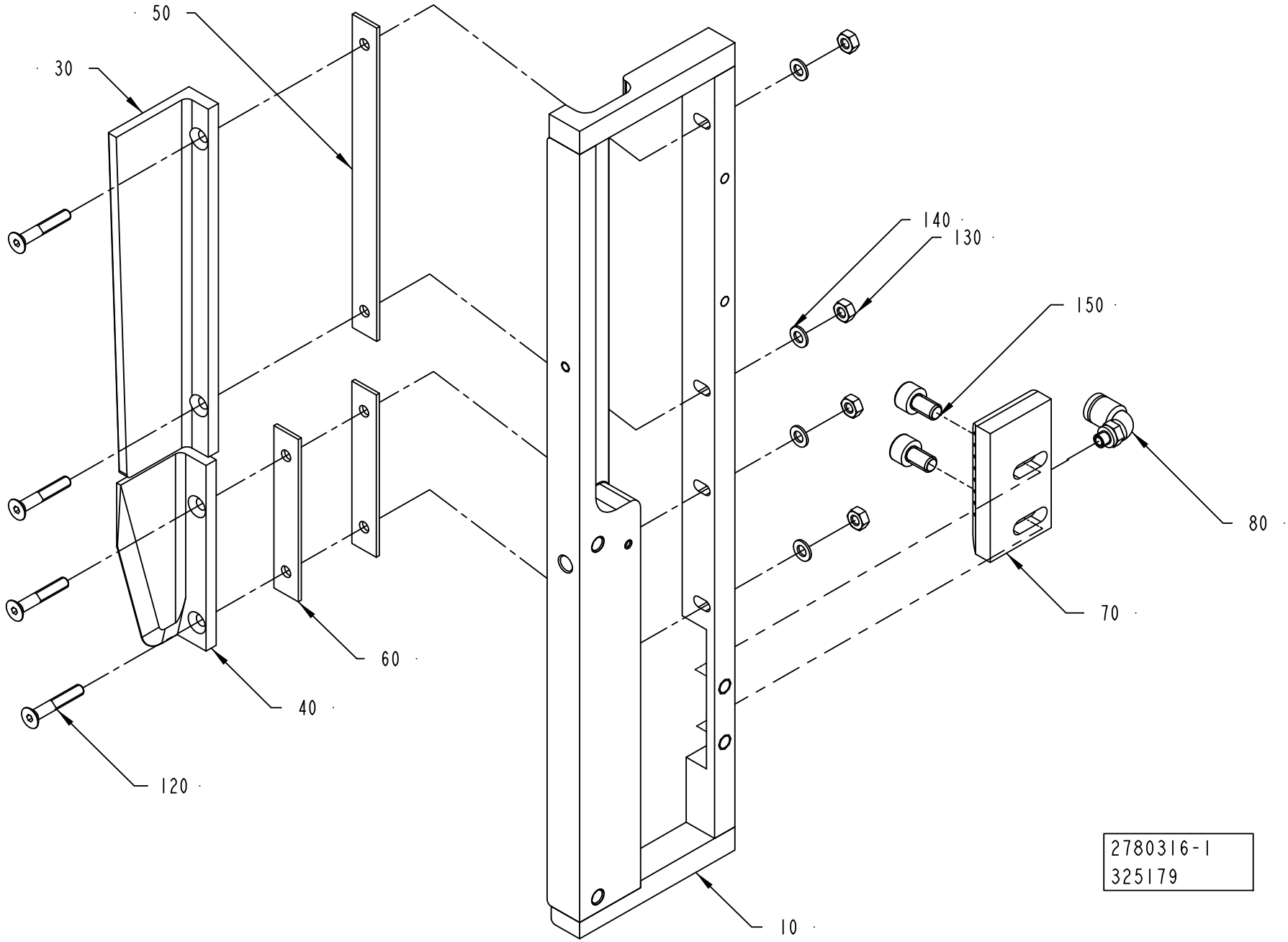
50
30
140
130
150
80
70
60
40
120
10
2780316-1
325179

Pos	Part No	UN	Qty	Description	Page No
TBA 0500S HOLE55, TBA 1000S HOLE90, TBA 1500S HOLE90, TBA 1000SQ HOLE95, TBA 1890S HOLE91, TBA 1890S HOLE95, TBA 2000S HOLE91, TBA 2000S HOLE95 (See drawing on page: 3-288)					
070	2658051-0000		1	AIR NOZZLE	
TBA 1000B HOLE95, TBA 1000S HOLE95, TBA 1500S HOLE95 (See drawing on page: 3-290)					
090	2658049-0000		1	AIR NOZZLE	
095	2674511-0000		2	CAM	
160	312115-0222		2	SCREW ISO4762 M3X8 A4 80	
170	315105-0124		2	WASHER BRB 3,2X6 RFR	
Common Parts					
010	2818326-0000		1	RAIL	
030	929823-0000		1	PAPER GUIDE	
040	2780314-0000		1	PAPER GUIDE	
050	1499227-0000		1	SHIM	
060	1499228-0000		2	SHIM	
080	90457-0922		1	ELBOW PIPE JOINT, EXT.THREAD, D=6MM M5	
120	312155-0297		4	SCREW DIN 7991 MF6S M4X25 A4 70	
130	312605-0312		4	HEXAGON NUT, M6M M4 A280	
140	315105-0136		4	WASHER BRB 4,3X8 RFR	
150	312115-0364		2	SCREW ISO4762 M6X10 A4 80	

Pos	Part No	UN	Qty	Description	Page No

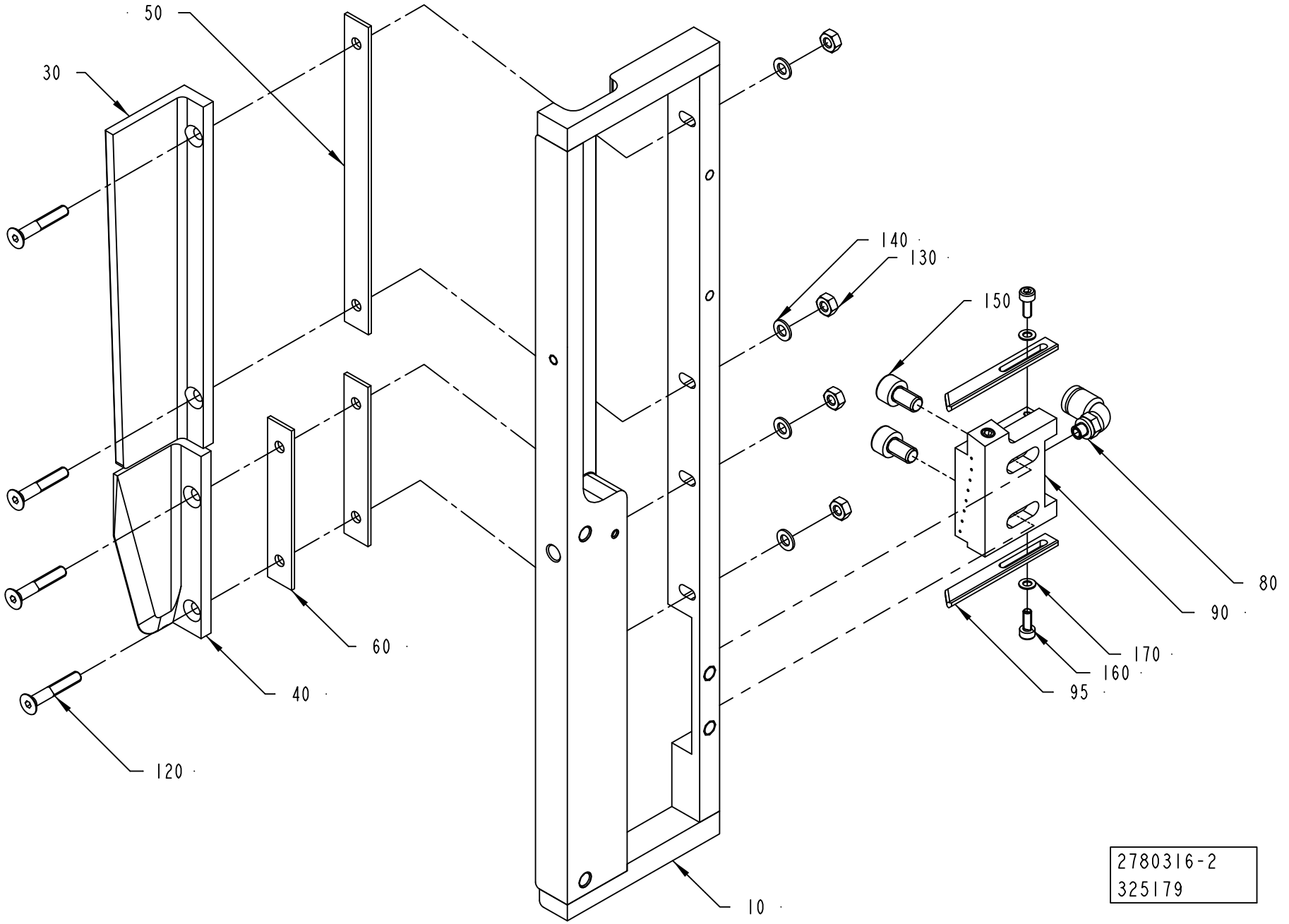
50
30
140
130
150
80
90
170
160
95
60
40
120
10
2780316-2
325179

Pos	Part No	UN	Qty	Description	Page No
TBA 0500S HOLE55, TBA 1000S HOLE90, TBA 1500S HOLE90, TBA 1000SQ HOLE95, TBA 1890S HOLE91, TBA 1890S HOLE95, TBA 2000S HOLE91, TBA 2000S HOLE95 (See drawing on page: 3-288)					
070	2658051-0000		1	AIR NOZZLE	
TBA 1000B HOLE95, TBA 1000S HOLE95, TBA 1500S HOLE95 (See drawing on page: 3-290)					
090	2658049-0000		1	AIR NOZZLE	
095	2674511-0000		2	CAM	
160	312115-0222		2	SCREW ISO4762 M3X8 A4 80	
170	315105-0124		2	WASHER BRB 3,2X6 RFR	
Common Parts					
010	2818326-0000		1	RAIL	
030	929823-0000		1	PAPER GUIDE	
040	2780314-0000		1	PAPER GUIDE	
050	1499227-0000		1	SHIM	
060	1499228-0000		2	SHIM	
080	90457-0922		1	ELBOW PIPE JOINT, EXT.THREAD, D=6MM M5	
120	312155-0297		4	SCREW DIN 7991 MF6S M4X25 A4 70	
130	312605-0312		4	HEXAGON NUT, M6M M4 A280	
140	315105-0136		4	WASHER BRB 4,3X8 RFR	
150	312115-0364		2	SCREW ISO4762 M6X10 A4 80	

Pos	Part No	UN	Qty	Description	Page No

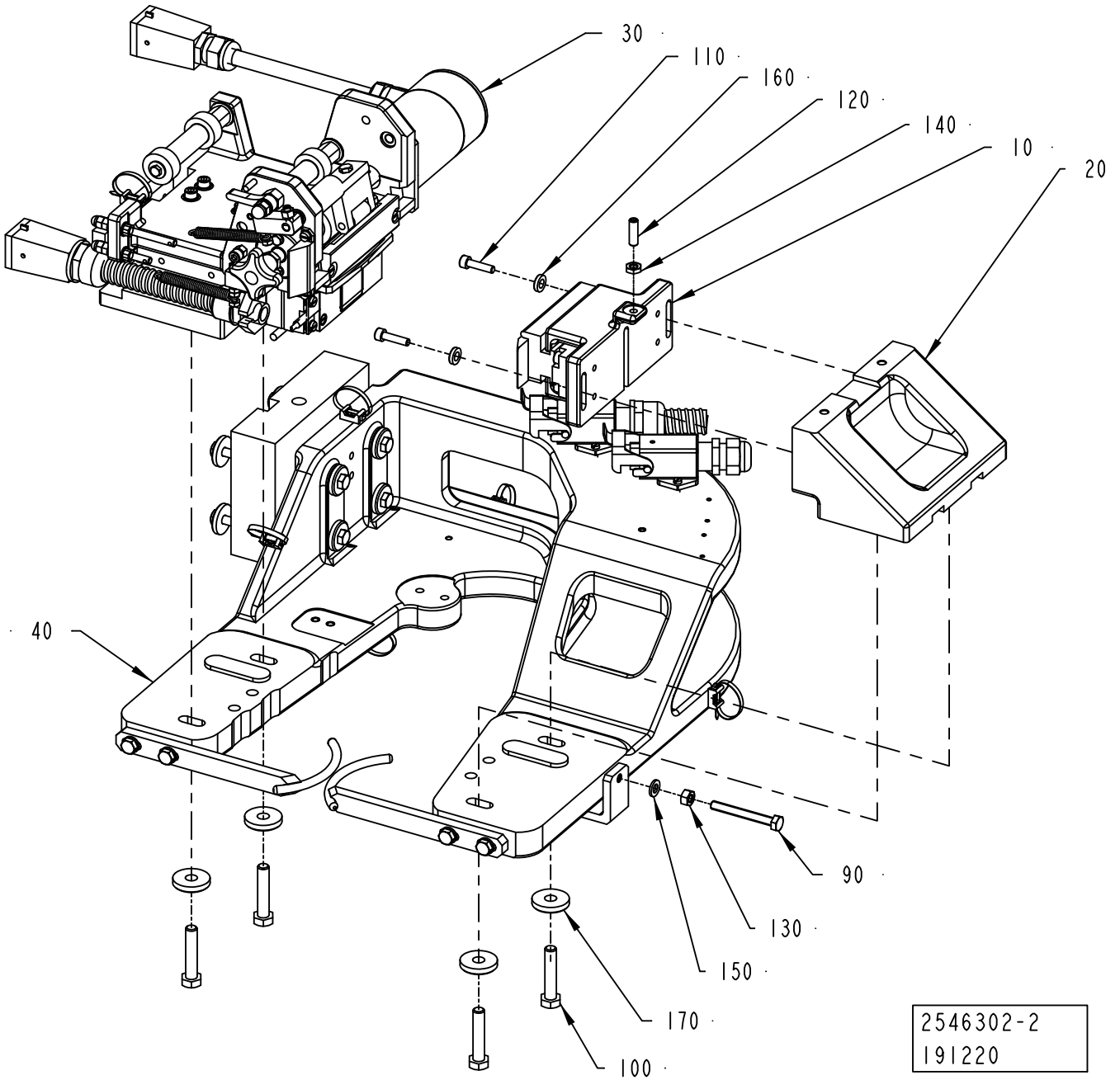
30
110
160
120
140
10
20
40
90
130
150
170
100
2546302-2
191220

ECM: 192445 - 20041214
Group number: 2546302-0200
Assembly Drawing: 2546302-2_1_AB

Pos	Part No	UN	Qty	Description	Page No
-					
010	2546295-0100		1	SEALING UNIT	**3-295**
020	2546296-0100		1	OUTER PATCH C'JAW	**3-299**
030	2546300-0100		1	OUTER PATCH FEEDER	**3-301**
040	2546301-0200		1	MOUNTING BRACKET	**3-315**
090	312109-0380		1	SCREW M6S ISO 4017 M6X50 A480	
100	312109-0459		4	SCREW M6S ISO 4017 M8X40 A480	
110	312115-0331		2	SCREW ISO4762 M5X20 A4 80	
120	312318-0370		1	SCREW ISO4029 M6X20 A4	
130	312605-0316		1	HEXAGON NUT, M6M M6 A280	
140	312625-0316		1	HEXAGON THIN NUT, EN 24035 ML6M M6 A4	
150	315105-0153		1	WASHER BRB 6,4X12 RFR	
160	315115-0153		2	WASHER PLAIN, TBRB 6,4/12 H=3	
170	315125-0165		4	WASHER TBRSB 8,4X26X5 A4	

Pos	Part No	UN	Qty	Description	Page No

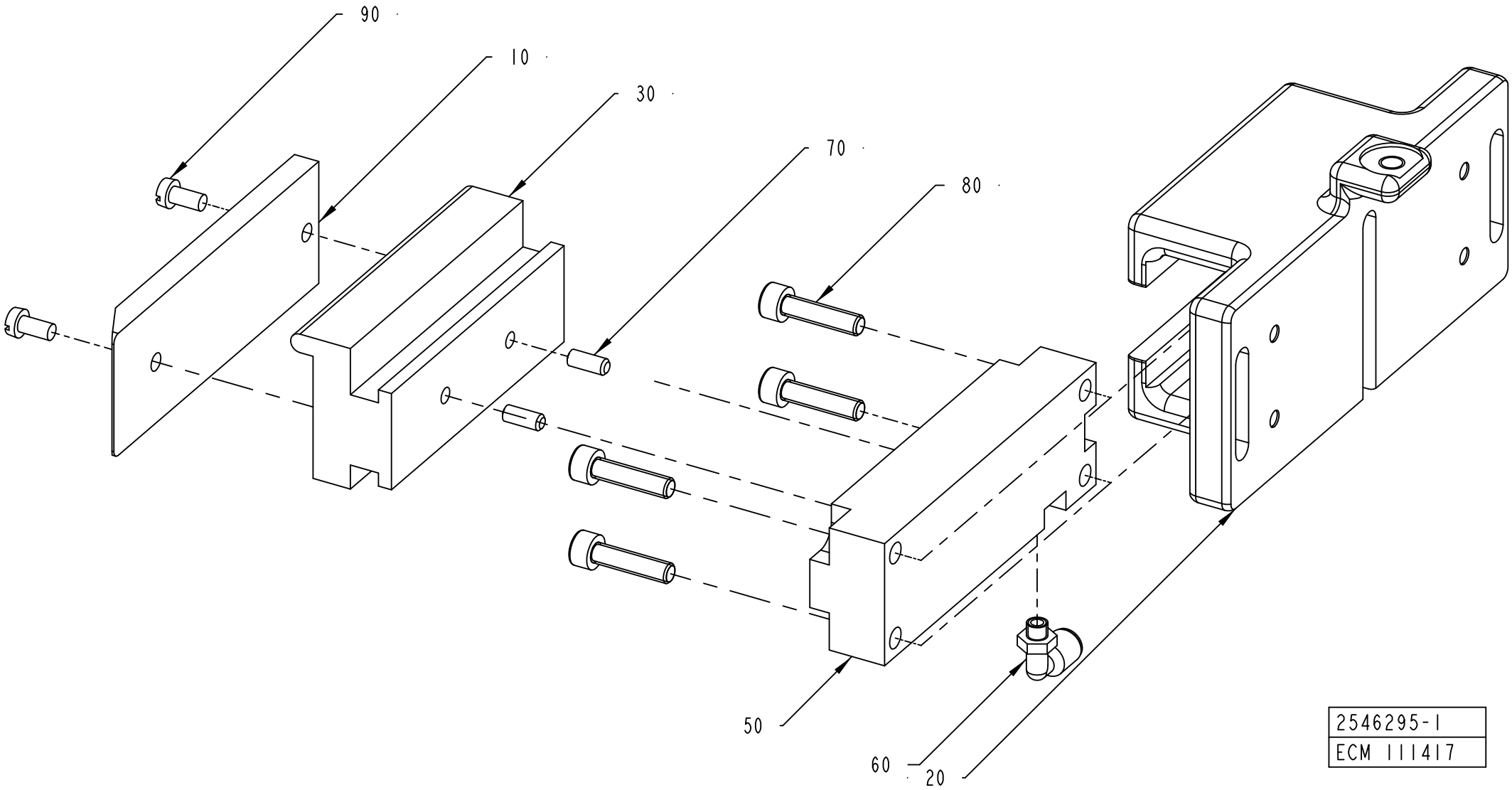
90
10
30
70
80
50
60
20
2546295-1
ECM 111417

ECM: 185956 - 20041005
Group number: 2546295-0100
Assembly Drawing: 2546295-1_1_AA

Pos	Part No	UN	Qty	Description	Page No
-					
010	2546294-0100		1	OUTER PATCH C'JAW	**3-297**
020	1498496-0000		1	GUIDE	
030	1498115-0000		1	BLOCK	
050	90450-0380		1	SINGLE ACTING, PANCAKE EV-20/75-5	
060	90458-2954		1	ELBOW PIPE JOINT, EXT.THREAD, D=4MM M5	
070	311103-0267		2	PARALLEL PIN ISO 2338 4M6X10 A1	
080	312115-0331		4	SCREW ISO4762 M5X20 A4 80	
090	312125-0287		2	SCREW ISO 1207 M4X8 A4	

Pos	Part No	UN	Qty	Description	Page No

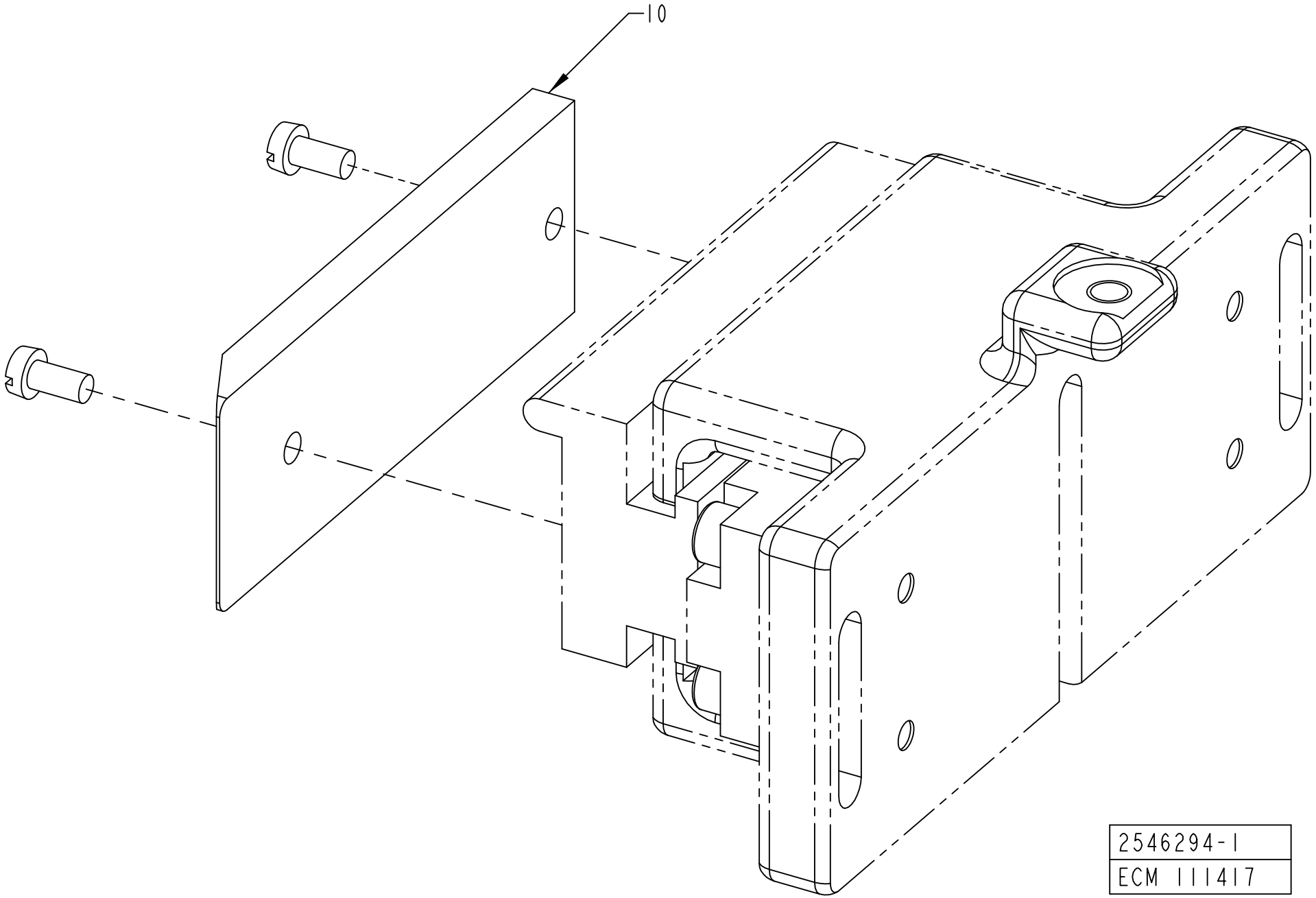
10
2546294-1
ECM 111417

ECM: 343607 - 20080215
Group number: 2546294-0100
Assembly Drawing: 2546294-1_1_AA

Pos	Part No	UN	Qty	Description	Page No
HOLE72, HOLE48					
010	2546303-0000		1	SEALING PLATE	

Pos	Part No	UN	Qty	Description	Page No

Machine Type	Group Description	Used-In	Group Number	Page No

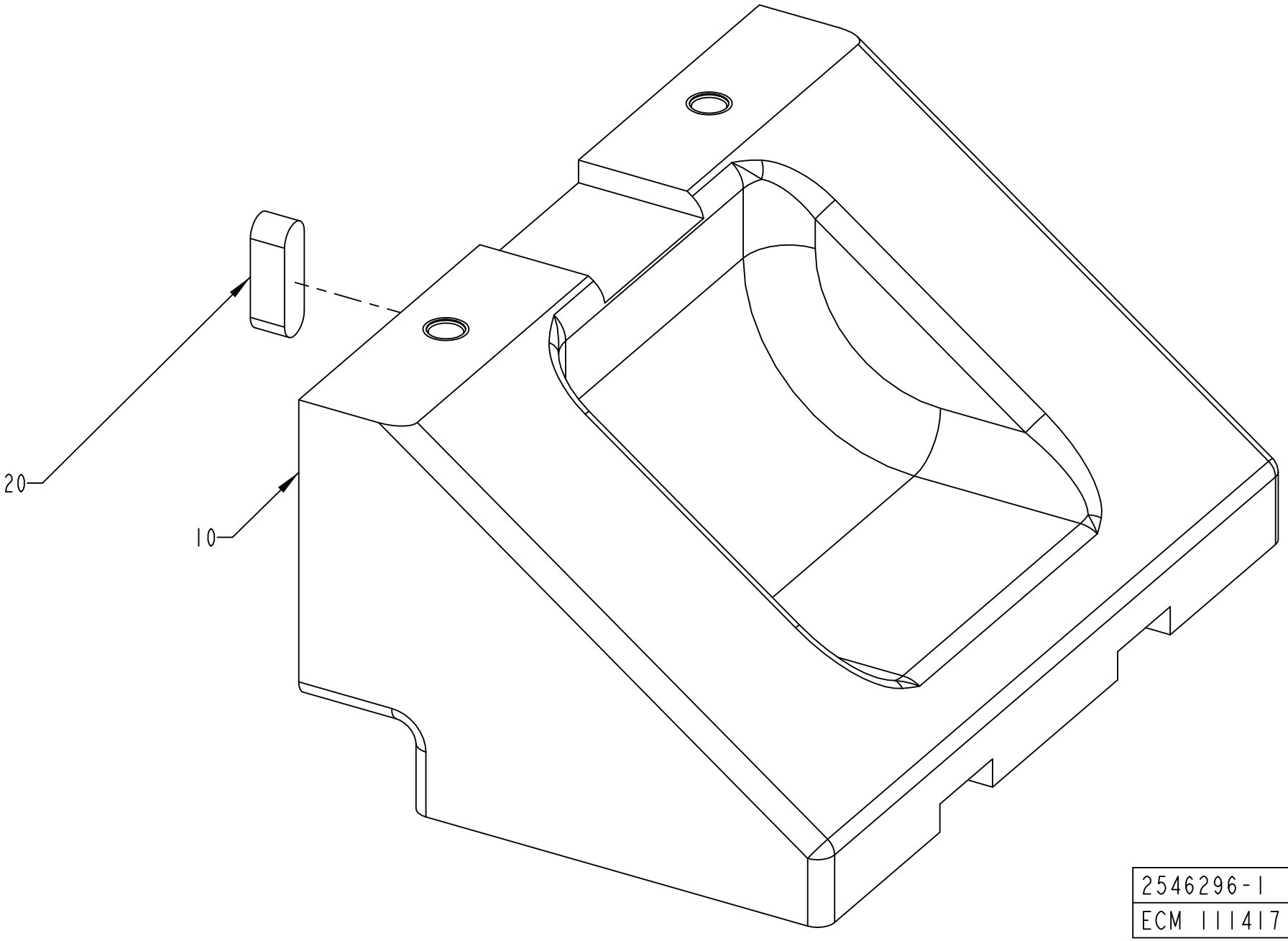
20
10
2546296-1
ECM 111417

ECM: 185957 - 20041005
Group number: 2546296-0100
Assembly Drawing: 2546296-1_1_AA

Pos	Part No	UN	Qty	Description	Page No
-					
010	1498113-0000		1	BRACKET	
020	315705-0232		1	PARALLEL KEY W. ROUND ENDS 6X6X20 MM	

Pos	Part No	UN	Qty	Description	Page No

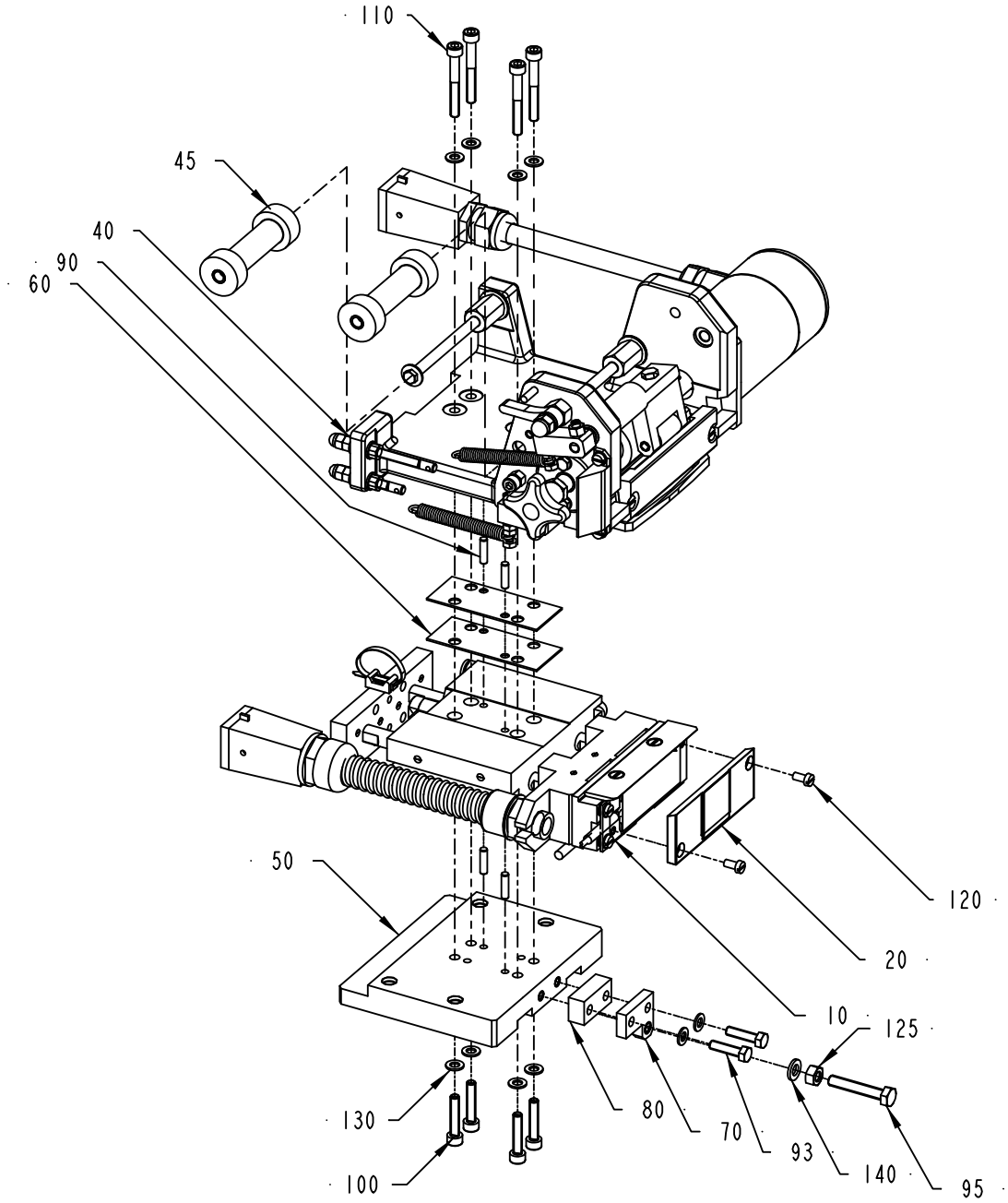

2546300-1
214246

ECM: 215857 - 20050823
Group number: 2546300-0100
Assembly Drawing: 2546300-1_1_AD

Pos	Part No	UN	Qty	Description	Page No
-					
010	2525370-0100		1	SEALING UNIT	**3-303**
020	2546297-0100		1	OUTER PATCH FEEDER	**3-305**
040	2546299-0100		1	OUTER PATCH FEEDER	**3-307**
045	2564061-0100		1	OUTER PATCH FEEDER	**3-313**
050	1548368-0000		1	PLATE	
060	2533680-0000		2	SHIM	
070	2511313-0000		1	BRACKET	
080	2710802-0000		1	SPACER	
090	311101-0270		2	PARALLEL PIN ISO 2338 4H6X16 ST	
093	312105-0331		2	SCREW M6S ISO 4017 M5X20 A480	
095	312109-0376		1	SCREW M6S ISO 4017 M6X35 A480	
100	312115-0333		4	SCREW ISO4762 M5X25 A4 80	
110	312115-0339		4	SCREW ISO4762 M5X40 A4 80	
120	312125-0287		2	SCREW ISO 1207 M4X8 A4	
125	312605-0316		1	HEXAGON NUT, M6M M6 A280	
130	315105-0146		10	WASHER BRB 5,3X10 RFR	
140	315105-0153		1	WASHER BRB 6,4X12 RFR	

Pos	Part No	UN	Qty	Description	Page No

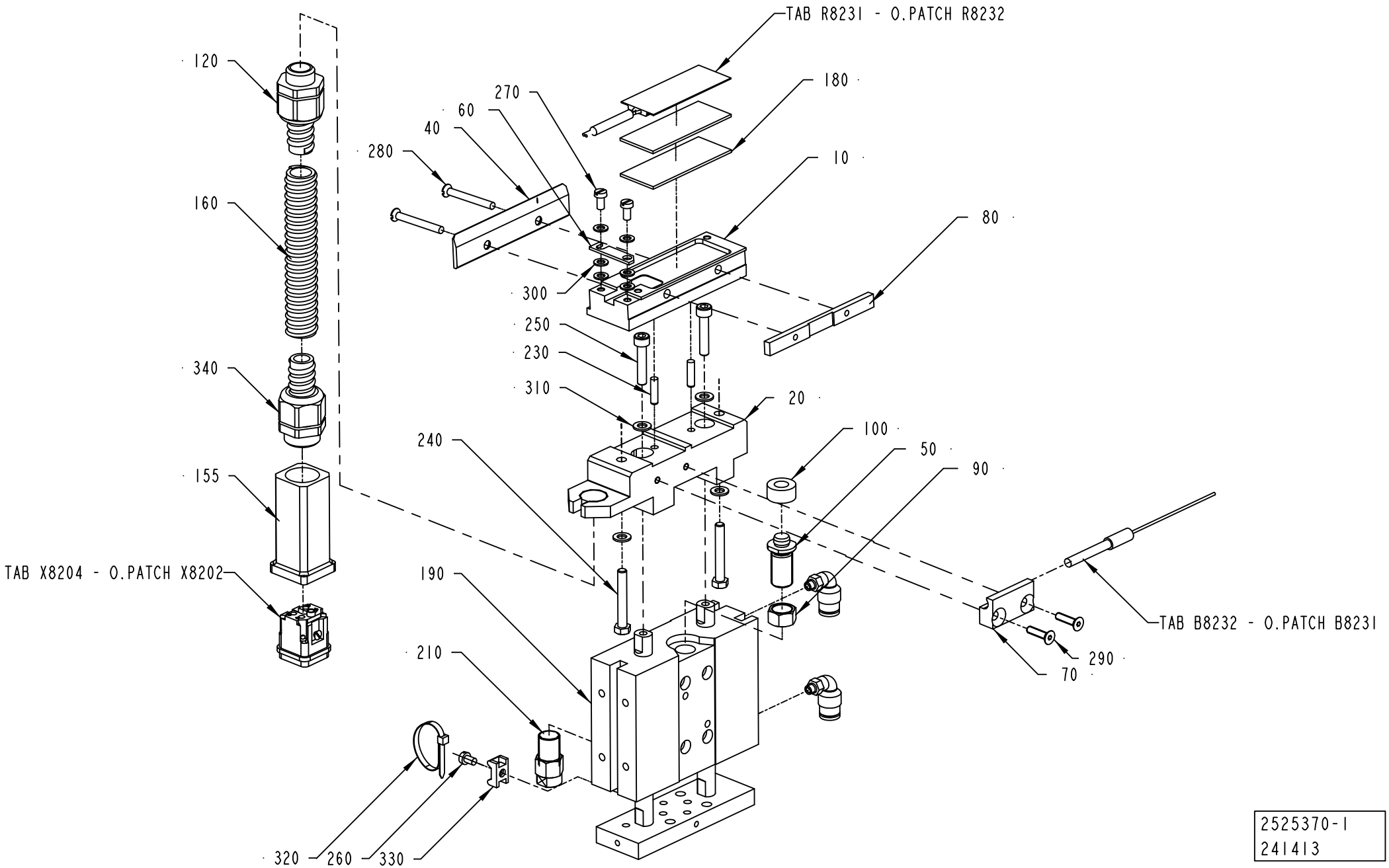
TAB R8231 - O.PATCH R8232
120
270
60
40
280
180
10
160
80
300
250
230
340
310
20
240
100
50
90
155
TAB X8204 - O.PATCH X8202
190
TAB B8232 - O.PATCH B8231
210
290
70
320
260
330
2525370-1
241413

ECM: 245570 - 20060701
Group number: 2525370-0100
Assembly Drawing: 2525370-1_1_AE

Pos	Part No	UN	Qty	Description	Page No
-					
010	1519364-0000		1	INSULATING RAIL	
020	2737447-0000		1	HOLDER	
040	1519379-0000		1	FLAT KNIFE	
050	2512836-0000		1	STOP SCREW	
060	1349916-0000		1	CLAMP	
070	1478479-0000		1	HOLDER	
080	1487264-0000		1	PLATE	
090	2525377-0000		1	NUT	
100	2526700-0000		1	SPRING	
120	90458-0427		1	HOSE GLAND W/O INSERT M16 EXTENDED	
155	90459-3670		1	HOOD HAN 3A 19 20 003 1440	
160	90152-0059	M	1	SPIRAL CONDUIT, 18X12, UL 1211	
180	90411-0018		2	INSULATOR, ALU-SILICATE HM 15643	
190	90457-0197		1	CYLINDER WITH INT. GUIDING BORE 25	
200	90458-2164		2	ELBOW PIPE JOINT, EXT.THREAD,D=6MM M5	
210	90458-2460		1	ADJUSTABLE MECH. STOP, FOR CYL. 2711	
230	311103-0270		2	PARALLEL PIN ISO 2338 4M6X16 A1	
240	312105-0337		2	SCREW M6S ISO 4014 M5X35 A480	
250	312115-0333		2	SCREW ISO4762 M5X25 A4 80	
260	312125-0285		1	SCREW ISO 1207 M4X6 A4	
270	312125-0287		2	SCREW ISO 1207 M4X8 A4	
280	312145-0301		2	SCREW ISO 2009 MFS M4X35 A4	
290	312155-0291		2	SCREW DIN 7991 MF6S M4X12 A4 70	
300	315105-0136		6	WASHER BRB 4,3X8 RFR	
310	315105-0146		4	WASHER BRB 5,3X10 RFR	
320	352113-0101		1	CABLE TIE, BLACK 92X2,5 MM	
330	352113-0205		1	ANCHOR PLATES FOR STRIPS, TYPE TM2S8-C10	
340	90458-0428		1	HOSE GLAND W/O INSERT M20 EXTENDED	
B8231B8232	90326-0060		1	THERMOCOUPLE, CR-AL	
R8231R8232	907136-0000		1	HEATER	
	90411-0018		*1*	*INSULATOR, ALU-SILICATE HM 15643*	
X8202X8204	90459-6821		1	MALE INSERT HAN 4A, 09 20 004 2611	

Pos	Part No	UN	Qty	Description	Page No

Machine Type | Group Description | Used-In | Group Number | Page No

OUTER PATCH FEEDER

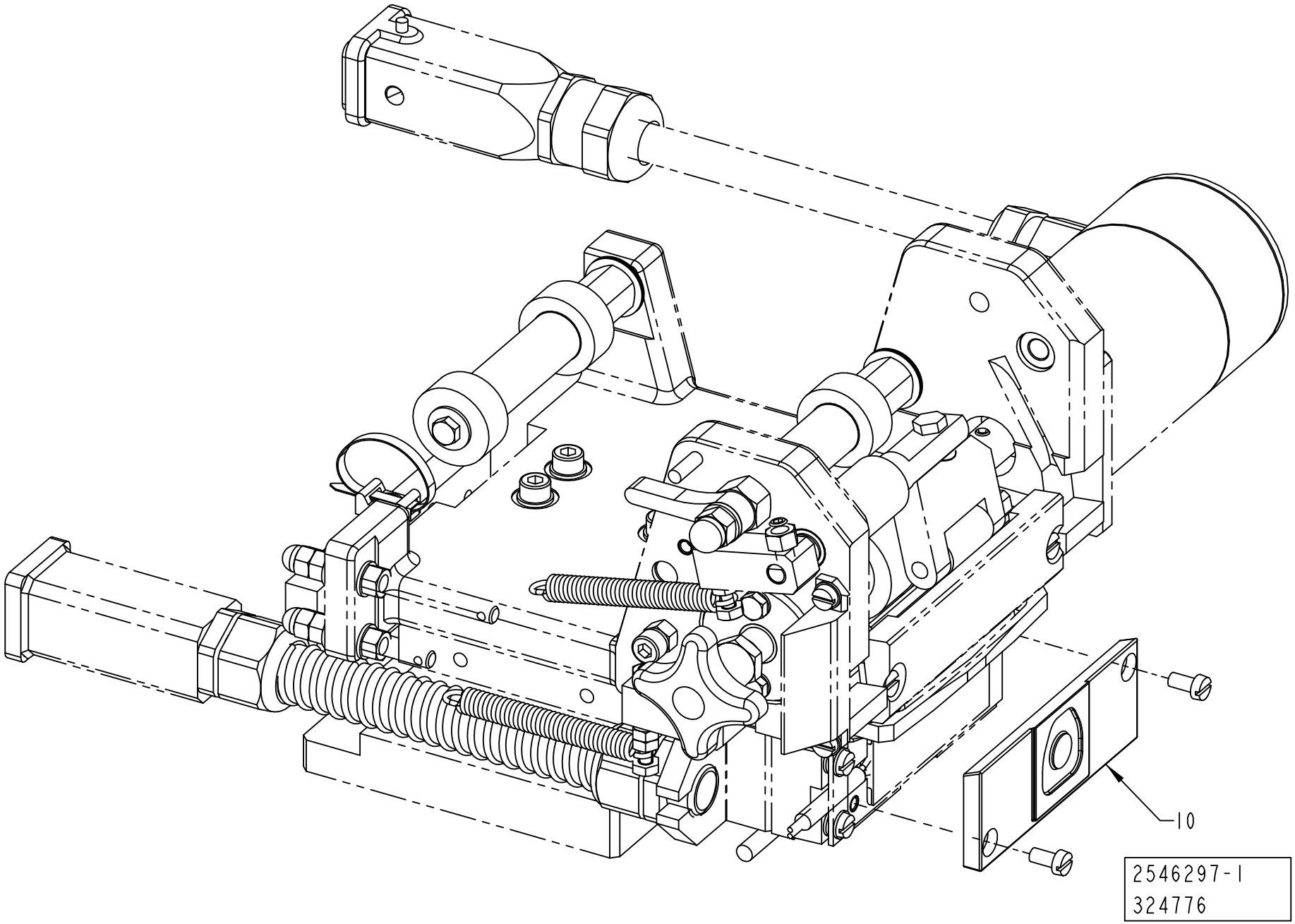

ECM: 327167 - 20080401
Group number: 2546297-0100
Assembly Drawing: 2546297-1_1_AB

Pos	Part No	UN	Qty	Description	Page No
HOLE48					
010	2921650-0000		1	SEALING PLATE	
HOLE72					
010	2921651-0000		1	SEALING PLATE	

Pos	Part No	UN	Qty	Description	Page No

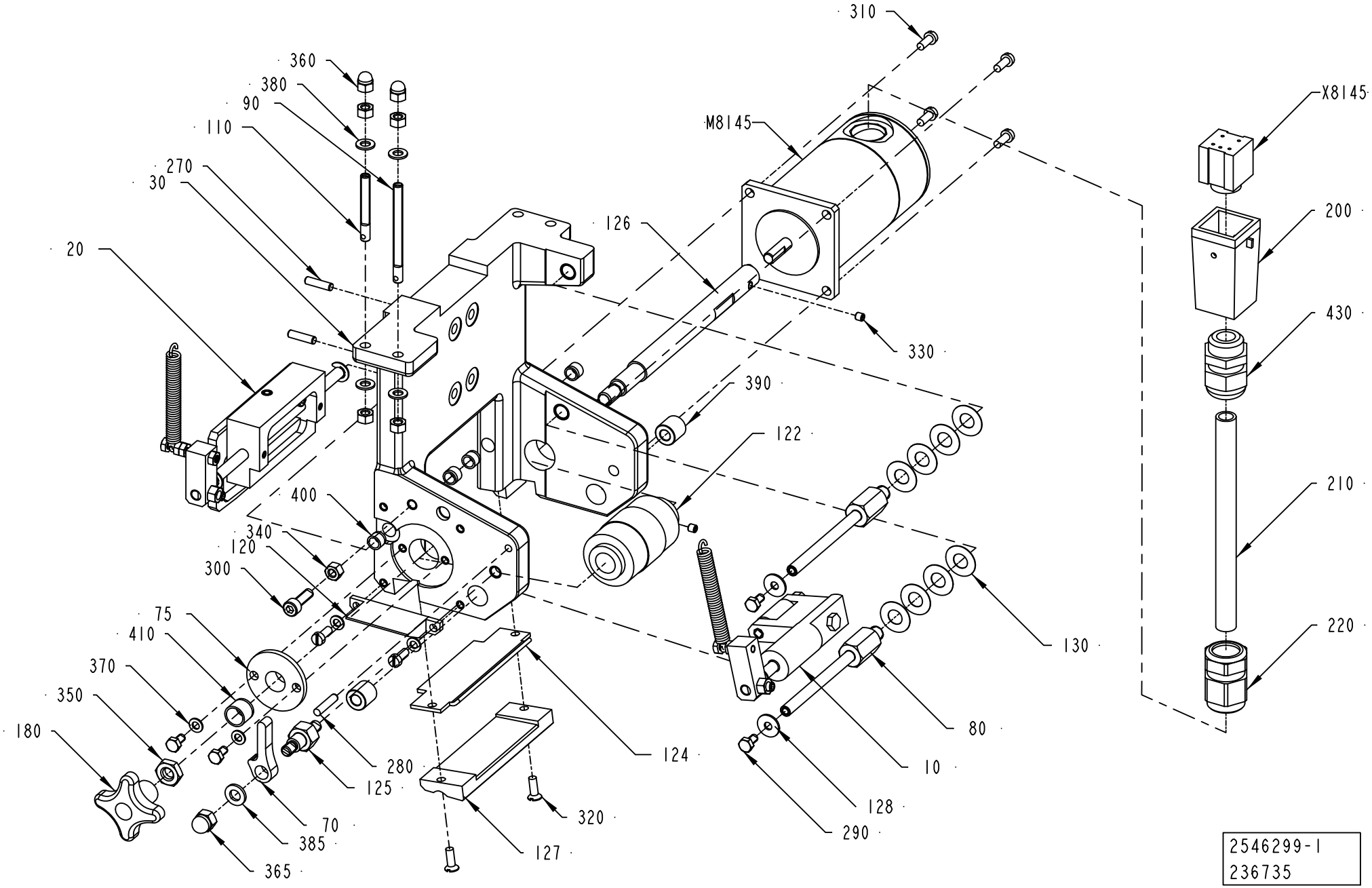
310
360
380
90
110
270
30
20
M8145
126
330
390
122
400
340
120
300
75
410
370
350
180
280
125
70
385
365
124
320
127
130
80
10
128
290
X8145
200
430
210
220
2546299-1
236735

ECM: 244178 - 20060701
Group number: 2546299-0100
Assembly Drawing: 2546299-1_1_AD

Pos	Part No	UN	Qty	Description	Page No
-					
010	1558230-0100		1	COUNTER ROLLER	**3-309**
020	1558231-0100		1	KNIFE	**3-311**
030	1517711-0000		1	BRACKET	
070	1498704-0000		1	LEVER	
075	1140548-0000		1	FLANGED BEARING BUSHING	
080	1519544-0000		2	SHAFT	
090	1519996-0000		1	SHAFT	
110	1538231-0000		1	SHAFT	
120	2546281-0000		1	SLIDE	
122	2559354-0000		1	ROLLER	
124	2636875-0000		1	GUIDE	
125	2587325-0000		1	SHAFT	
126	2564064-0000		1	SHAFT	
127	2564071-0000		1	GUIDE	
128	2033-0005		2	WASHER	
130	2033-0008		8	WASHER	
180	90051-0007		1	STELLAR KNOB, INT. THREAD, NO. 40	
200	90459-7222		1	HOOD 3 A TOP ENTRY, 19 20 003 0420	
210	90220-0107	M	0.5	SCR. CABLE 5X0,75MM2	
220	90458-0438		1	GLAND, EXTENDED WITH INSERT, M20X1,5	
270	311101-0270		2	PARALLEL PIN ISO 2338 4H6X16 ST	
280	311101-0272		1	PARALLEL PIN ISO 2338 4H6X20 ST	
290	312105-0287		4	SCREW M6S ISO 4017 M4X8 A470	
300	312115-0329		1	SCREW ISO4762 M5X16 A4 80	
310	312125-0289		6	SCREW ISO 1207 M4X10 A4	
320	312145-0291		2	SCREW ISO 2009 MFS M4X12 A4	
330	312318-0283		2	SCREW ISO4029 M4X4 A4	
340	312605-0314		5	HEXAGON NUT, M6M M5 A280	
350	312621-0318		1	ROD END,NUT M8	
360	312705-0314		2	NUT HEX. DOMED CAP MHM-6 M5 A280	
365	312705-0316		1	NUT HEX. DOMED CAP MHM-6 M6 A280	
370	315105-0136		4	WASHER BRB 4,3X8 RFR	
380	315105-0146		4	WASHER BRB 5,3X10 RFR	
385	315105-0153		1	WASHER BRB 6,4X12 RFR	
390	321105-0127		2	BEARING BUSH W/O FLANGE, 6X12X12 MM	
400	321120-0101		4	BEARING BUSH W/O FLANGE, 6X8X6 MM	
410	321120-0104		1	BEARING BUSH W/O FLANGE, 10X12X10 MM	
430	90458-0307		1	CABLE GLAND, M20X1,5, NO.5311 1020	
M8145	90458-0523		1	STEPPER MOTOR SM 56.2.18J3 Z(202)	
X8145	90459-6821		1	MALE INSERT HAN 4A, 09 20 004 2611	

Pos	Part No	UN	Qty	Description	Page No

Machine Type | Group Description | Used-In | Group Number | Page No

COUNTER ROLLER

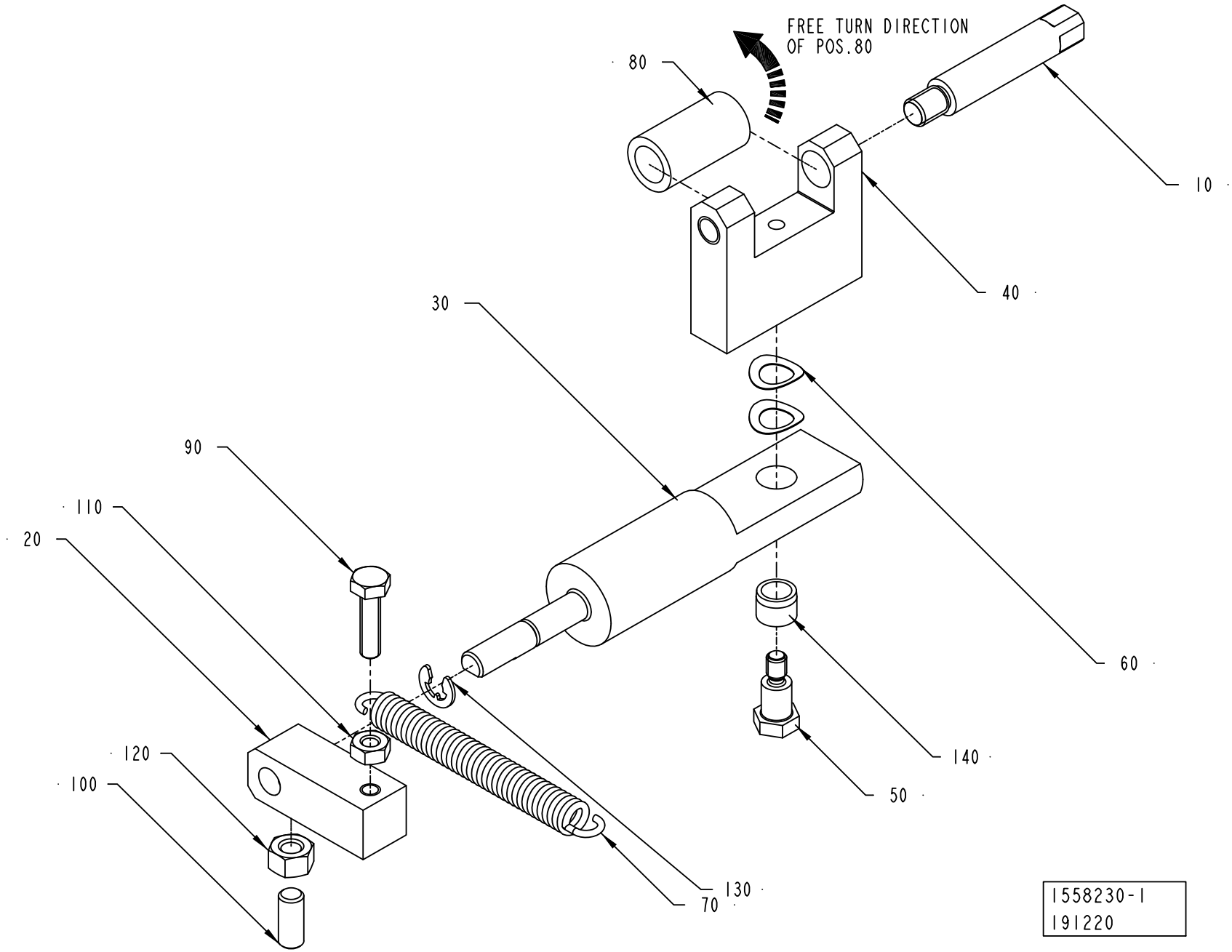

ECM: 337482 - 20080402
Group number: 1558230-0100
Assembly Drawing: 1558230-1_1_AC

Pos	Part No	UN	Qty	Description	Page No
-					
010	905413-0000		1	SHAFT	
020	1519543-0000		1	HOLDER	
030	1523168-0000		1	SHAFT	
040	1523169-0000		1	BRACKET	
050	905415-0000		1	SHAFT	
060	90600-2603		2	SPRING WASHER, CURVED 6,83X10,74X0,17 MM	
070	90600-2604		1	TENS. SP. EO300-055-2500-S,1,4X7,62X63,5	
080	90348-0031		1	FREE-WHEEL COUPLING, 8X12 MM	
090	312105-0293		1	SCREW M6S ISO 4017 M4X16 A470	
100	312318-0327		1	SCREW ISO4029 M5X12 A4	
110	312605-0312		1	HEXAGON NUT, M6M M4 A280	
120	312605-0314		1	HEXAGON NUT, M6M M5 A280	
130	315755-0106		1	RETAINING RING SHAFT DIN 6799 4 A2	
140	321141-0060		1	BEARING BUSH W/O FLANGE, 6X8X6 MM	

Pos	Part No	UN	Qty	Description	Page No

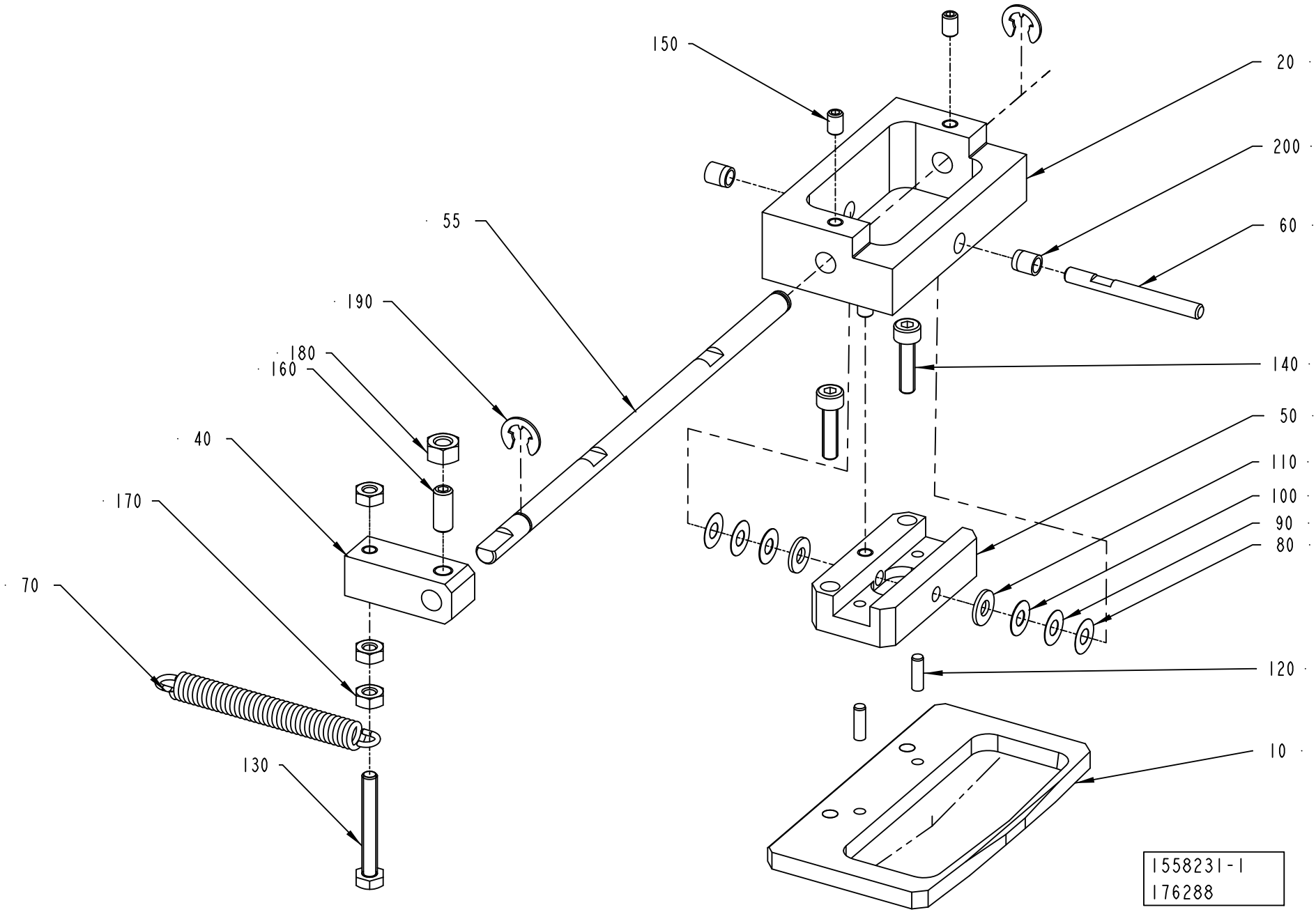
150
20
200
60
55
190
180
160
140
40
50
110
170
100
90
80
70
120
130
10
1558231-1
176288

ECM: 335703 - 20080401
Group number: 1558231-0100
Assembly Drawing: 1558231-1_1_AC

Pos	Part No	UN	Qty	Description	Page No
-					
010	2500097-0000		1	KNIFE SUPPORT	
020	1519365-0000		1	PIVOT PLATE	
040	1519543-0000		1	HOLDER	
050	1523159-0000		1	PIVOT PLATE	
055	2564066-0000		1	SHAFT	
060	1523160-0000		1	PIN	
070	90600-2604		1	TENS. SP. EO300-055-2500-S,1,4X7,62X63,5	
080	1350785-0001		1	SHIM	
090	1350785-0002		1	SHIM	
100	1350785-0003		1	SHIM	
110	1350785-0004		1	SHIM	
120	311103-0233		2	PARALLEL PIN ISO 2338 3M6X10 A1	
130	312105-0299		1	SCREW M6S ISO 4017 M4X30 A470	
140	312115-0293		2	SCREW ISO4762 M4X16 A4 80	
150	312318-0285		3	SCREW ISO4029 M4X6 A4	
160	312318-0327		1	SCREW ISO4029 M5X12 A4	
170	312605-0312		3	HEXAGON NUT, M6M M4 A280	
180	312605-0314		1	HEXAGON NUT, M6M M5 A280	
190	315755-0107		2	RETAINING RING SHAFT DIN 6799 5 A2	
200	321141-0040		2	BEARING BUSH W/O FLANGE, 4X5,5X6 MM	

Pos	Part No	UN	Qty	Description	Page No

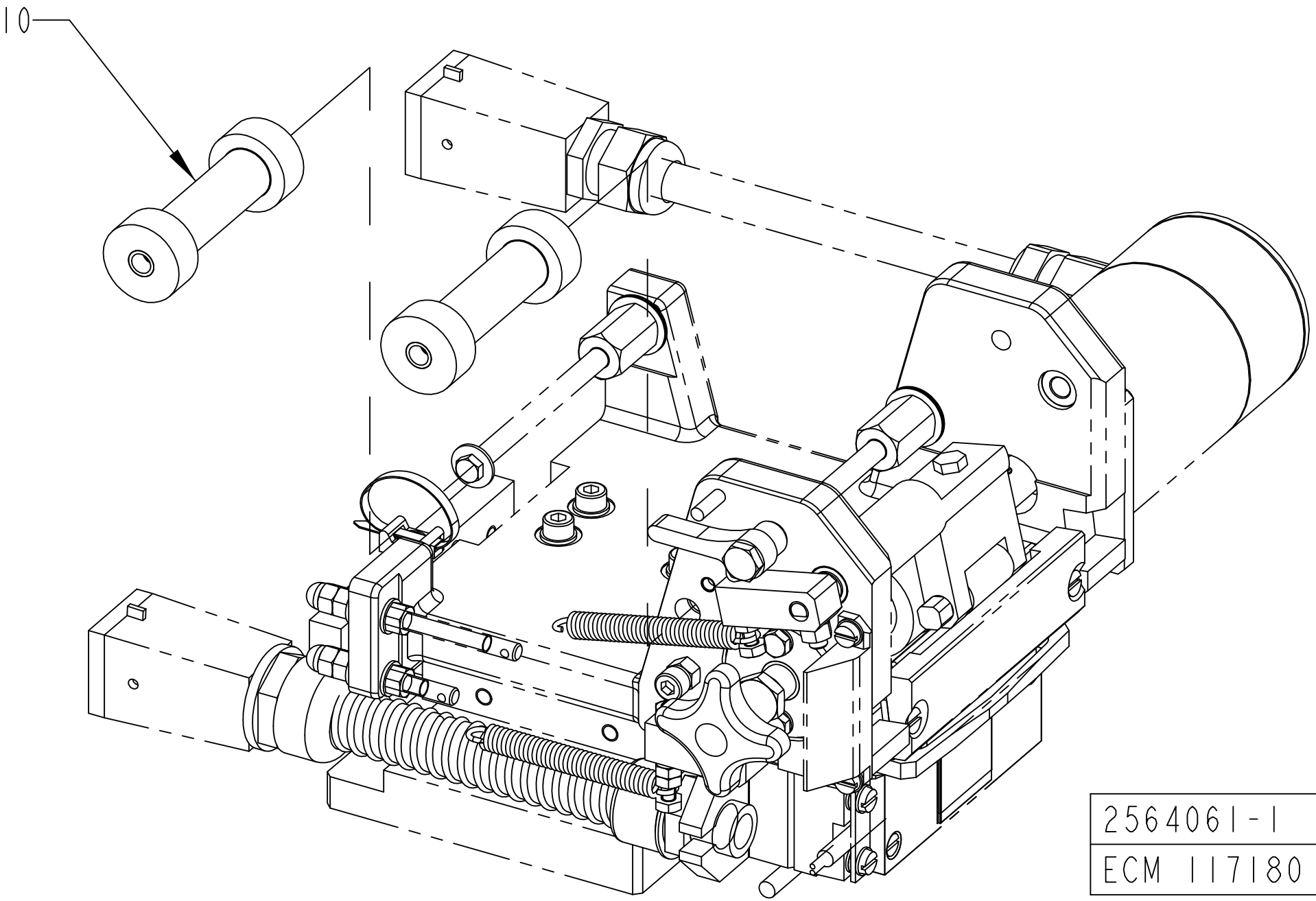
10
2564061-1
ECM 117180

ECM: 187572 - 20041201
Group number: 2564061-0100
Assembly Drawing: 2564061-1_1_AA

Pos	Part No	UN	Qty	Description	Page No
HOLE72, HOLE48					
010	2564044-0004		2	ROLLER	

Pos	Part No	UN	Qty	Description	Page No

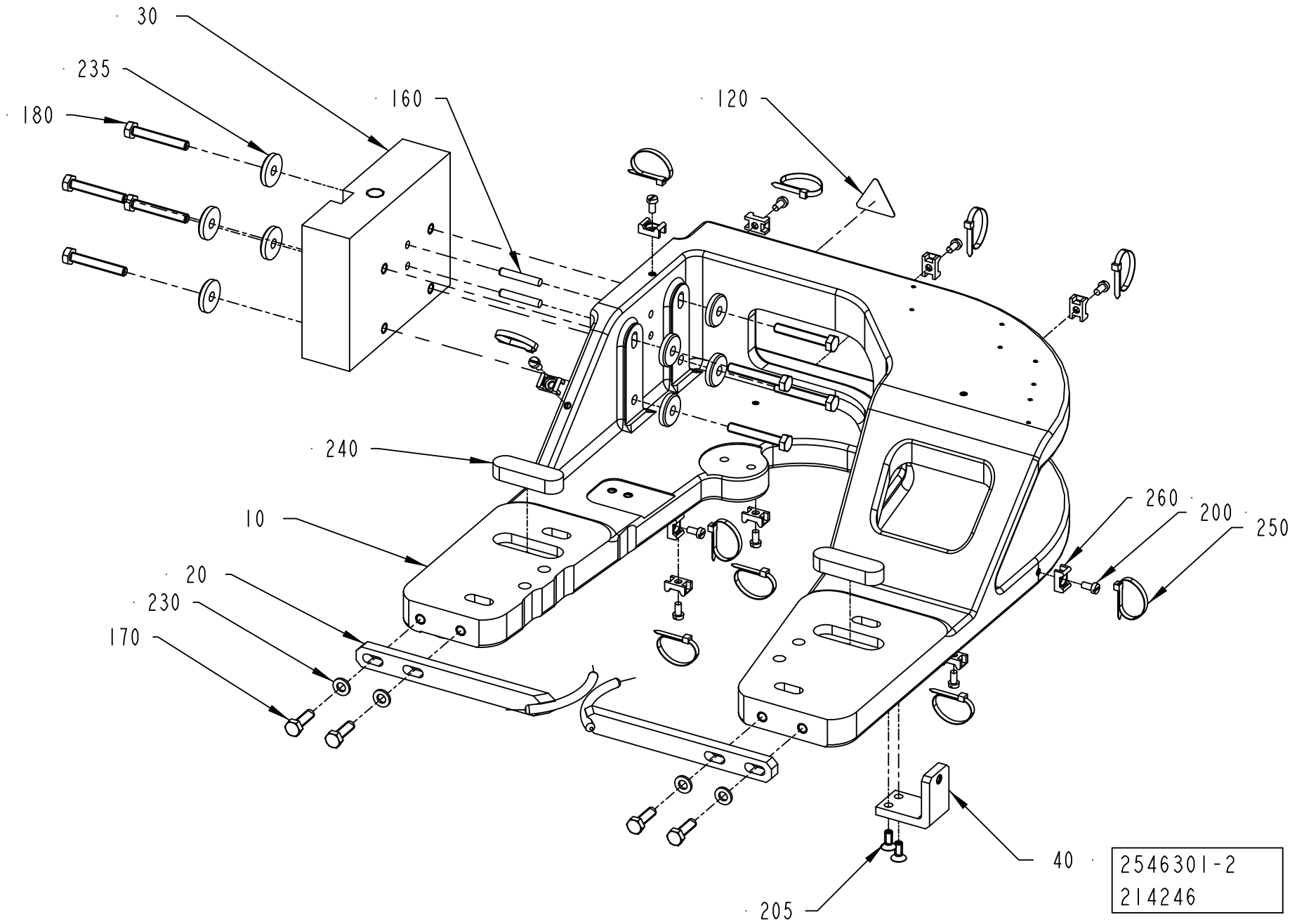
30
235
180
160
120
240
10
20
230
170
260
200
250
40
205
2546301-2
214246

ECM: 215616 - 20050823
Group number: 2546301-0200
Assembly Drawing: 2546301-2_1_AD

Pos	Part No	UN	Qty	Description	Page No
-					
010	2660825-0000		1	BRACKET	
020	1558246-0000		2	PAPER GUIDE	
030	2525381-0000		1	FASTENING BRACKET	
040	2511314-0000		1	BRACKET	
120	90194-0143		1	WARNING SIGN ISO, HOT SURFACE	
160	311103-0314		2	PARALLEL PIN ISO 2338 5M6X30 A1	
170	312105-0370		4	SCREW M6S ISO 4017 M6X20 A480	
180	312109-0378		8	SCREW M6S ISO 4017 M6X40 A480	
200	312125-0287		11	SCREW ISO 1207 M4X8 A4	
205	312155-0327		2	SCREW DIN 7991 MF6S M5X12 A4 70	
210	315105-0124		2	WASHER BRB 3,2X6 RFR	
230	315105-0153		4	WASHER BRB 6,4X12 RFR	
235	315125-0153		8	WASHER TBRSB 6,4X22X4 A4	
240	315701-0396		2	PARALLEL KEY W. ROUND ENDS 16X10X50 MM	
250	352113-0101		11	CABLE TIE, BLACK 92X2,5 MM	
260	352113-0205		11	ANCHOR PLATES FOR STRIPS, TYPE TM2S8-C10	

Pos	Part No	UN	Qty	Description	Page No

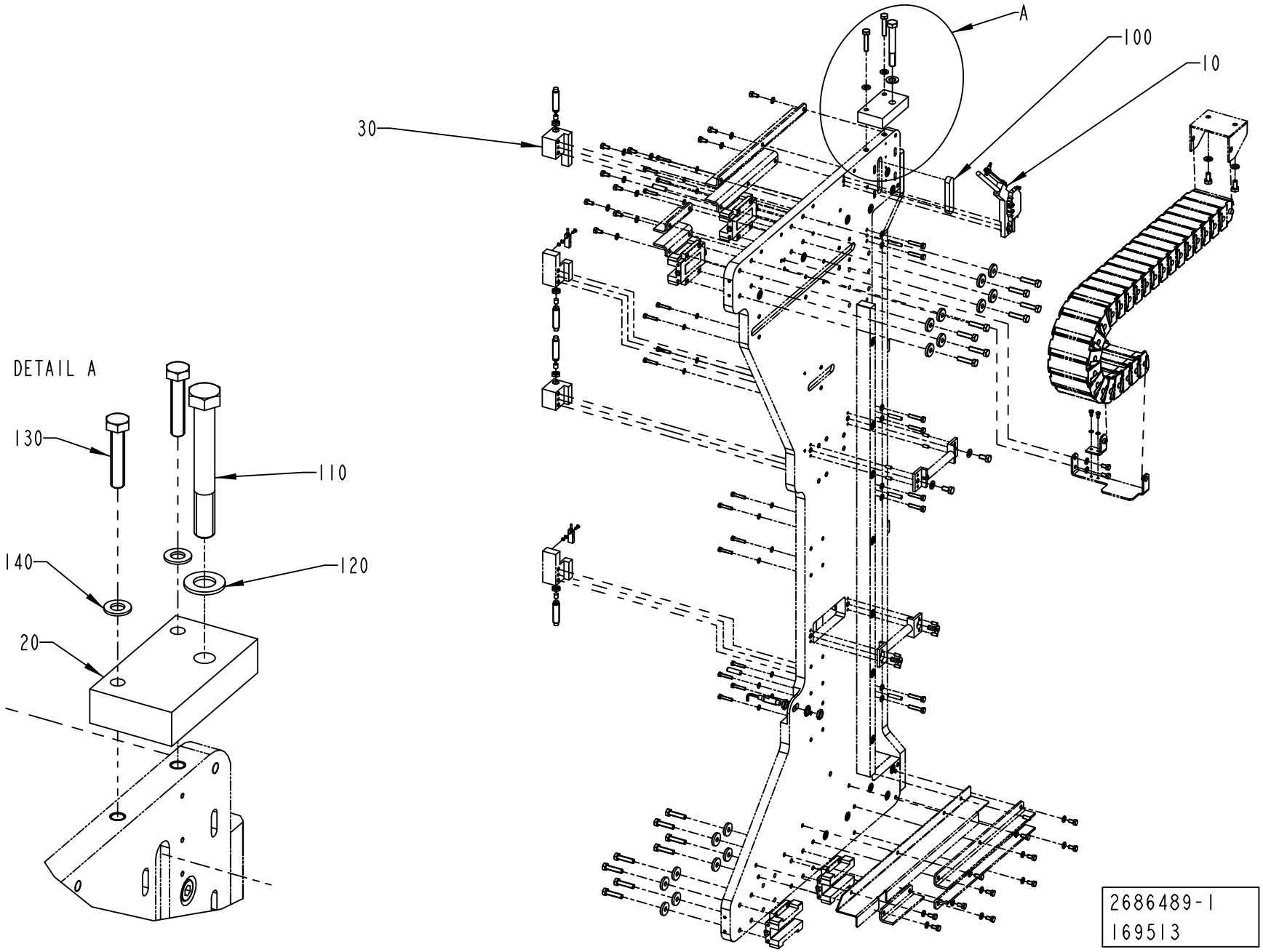
A
100
10
30
DETAIL A
130
110
140
120
20
2686489-1
169513

ECM: 172241 - 20040531
Group number: 2686489-0100
Assembly Drawing: 2686489-1_1_AA

This list covers pages from 3-316 to 3-319

Pos	Part No	UN	Qty	Description	Page No
TPA 0200SQ HOLE72 (See drawing on page: 3-318)					
030	2506560-0000		1	SUPPORT	
TPA 0250SQ HOLE72, TPA 0330SQ HOLE48 (See drawing on page: 3-316)					
030	2506561-0000		1	SUPPORT	
Common Parts					
010	2511307-0100		1	TURNING DEVICE	**3-321**
020	2525382-0000		1	BRACKET	
100	315701-0401		1	PARALLEL KEY W. ROUND ENDS 16X10X80 MM	
110	312105-0550		1	SCREW M6S ISO 4014 M12X90 A480	
120	315105-0178		1	WASHER BRB 13X24 RFR	
130	312109-0459		2	SCREW M6S ISO 4017 M8X40 A480	
140	315105-0165		2	WASHER BRB 8,4X16 RFR	

Pos	Part No	UN	Qty	Description	Page No

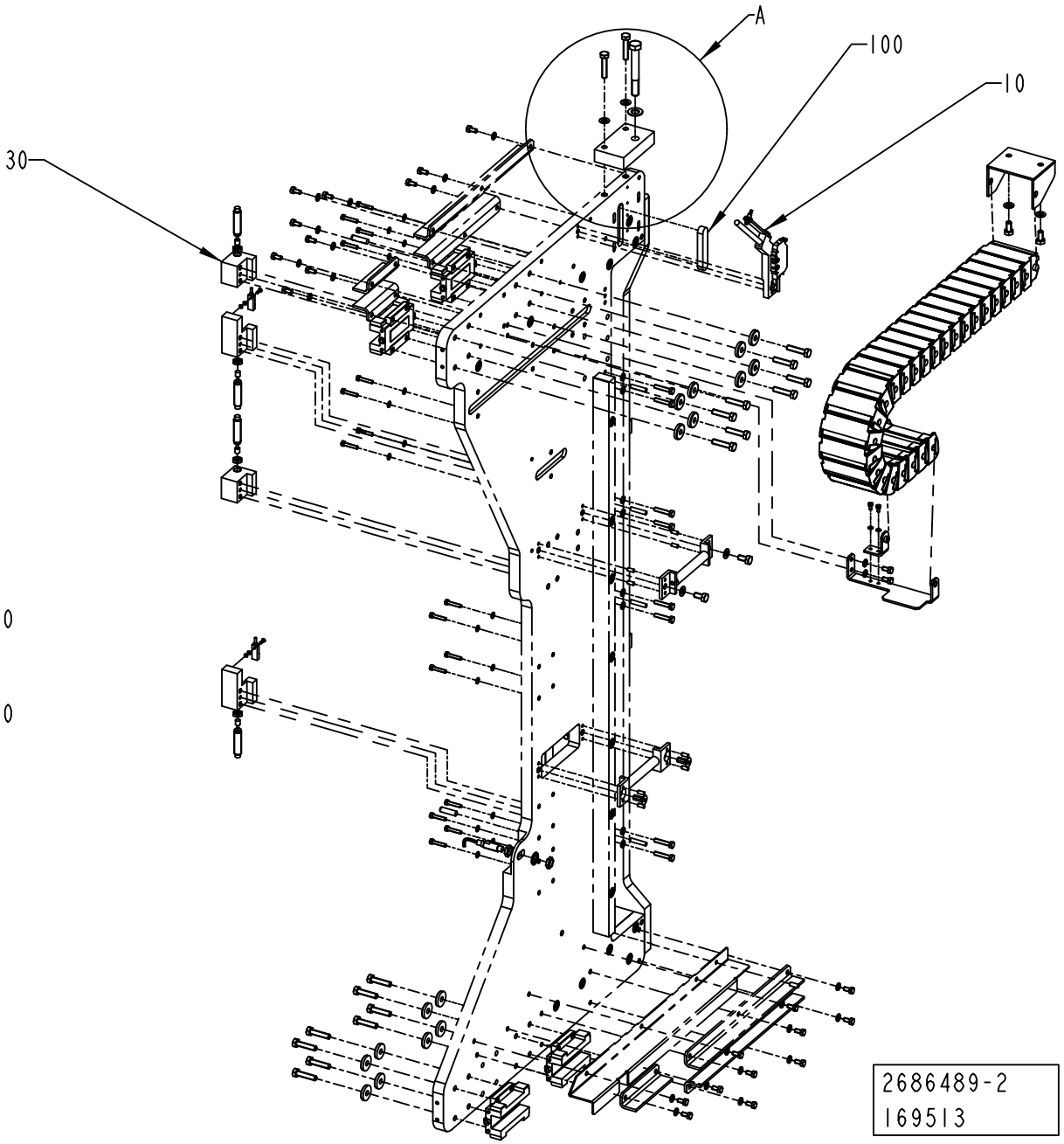
A
100
10
30
DETAIL A
130
110
140
120
20
2686489-2
169513

ECM: 172241 - 20040531
Group number: 2686489-0100
Assembly Drawing: 2686489-2_1_AA

This list covers pages from 3-316 to 3-319

Pos	Part No	UN	Qty	Description	Page No
TPA 0200SQ HOLE72 (See drawing on page: 3-318)					
030	2506560-0000		1	SUPPORT	
TPA 0250SQ HOLE72, TPA 0330SQ HOLE48 (See drawing on page: 3-316)					
030	2506561-0000		1	SUPPORT	
Common Parts					
010	2511307-0100		1	TURNING DEVICE	**3-321**
020	2525382-0000		1	BRACKET	
100	315701-0401		1	PARALLEL KEY W. ROUND ENDS 16X10X80 MM	
110	312105-0550		1	SCREW M6S ISO 4014 M12X90 A480	
120	315105-0178		1	WASHER BRB 13X24 RFR	
130	312109-0459		2	SCREW M6S ISO 4017 M8X40 A480	
140	315105-0165		2	WASHER BRB 8,4X16 RFR	

Pos	Part No	UN	Qty	Description	Page No

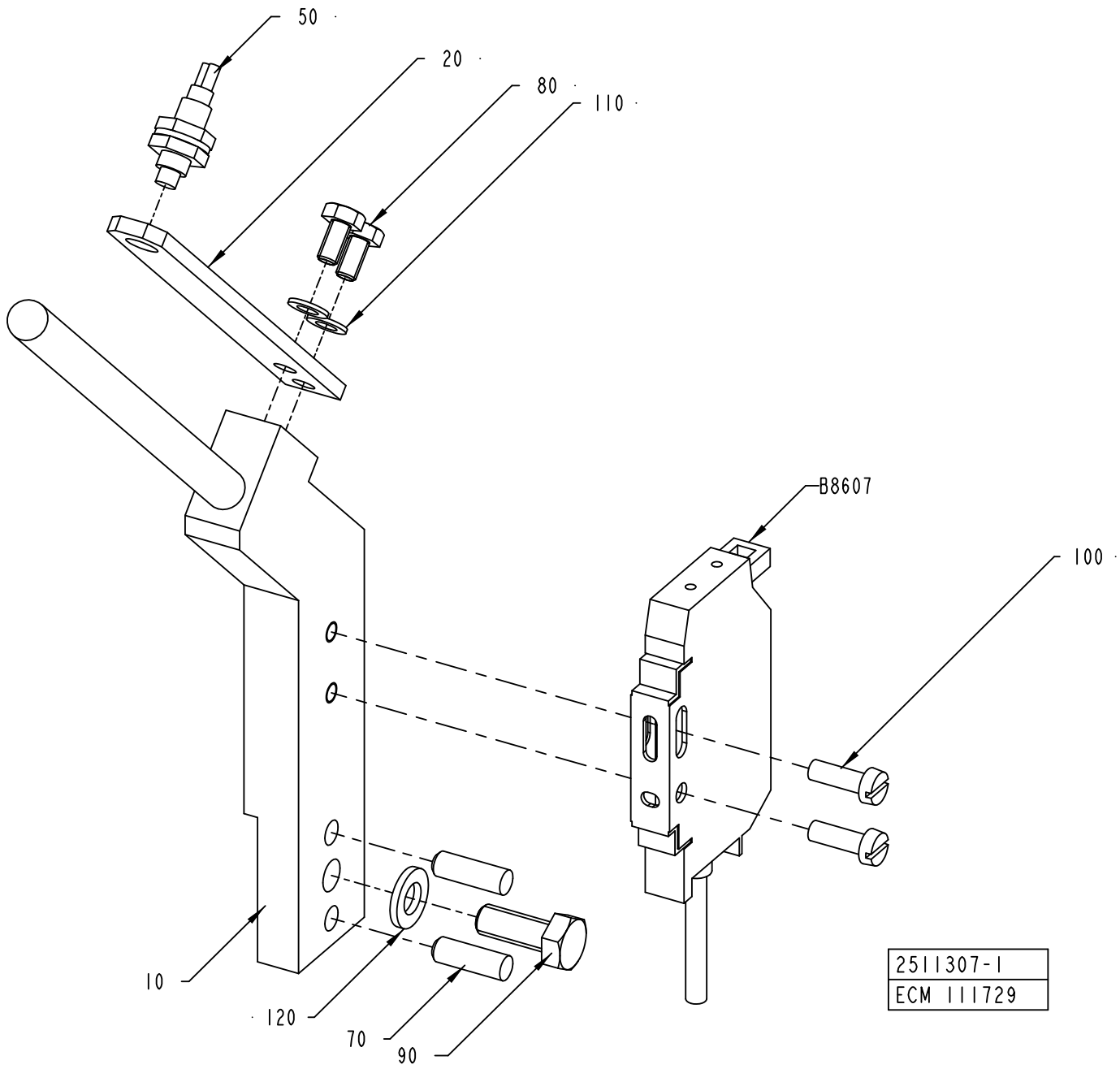
50
20
80
110
B8607
100
10
120
70
90
2511307-1
ECM 111729

ECM: 185812 - 20041005
Group number: 2511307-0100
Assembly Drawing: 2511307-1_1_AA

Pos	Part No	UN	Qty	Description	Page No
-					
010	2503481-0000		1	GUIDE	
020	2503483-0000		1	BRACKET	
050	90232-0325		1	FIBRE E32-DC200	
070	311103-0308		2	PARALLEL PIN ISO 2338 5M6X16 A1	
080	312105-0287		2	SCREW M6S ISO 4017 M4X8 A470	
090	312105-0368		1	SCREW M6S ISO 4017 M6X16 A480	
100	312125-0291		2	SCREW ISO 1207 M4X12 A4	
110	315105-0136		2	WASHER BRB 4,3X8 RFR	
120	315105-0153		1	WASHER BRB 6,4X12 RFR	
B8607	90232-0123		1	PH.CELL WLL170-P135-6011723	

Pos	Part No	UN	Qty	Description	Page No

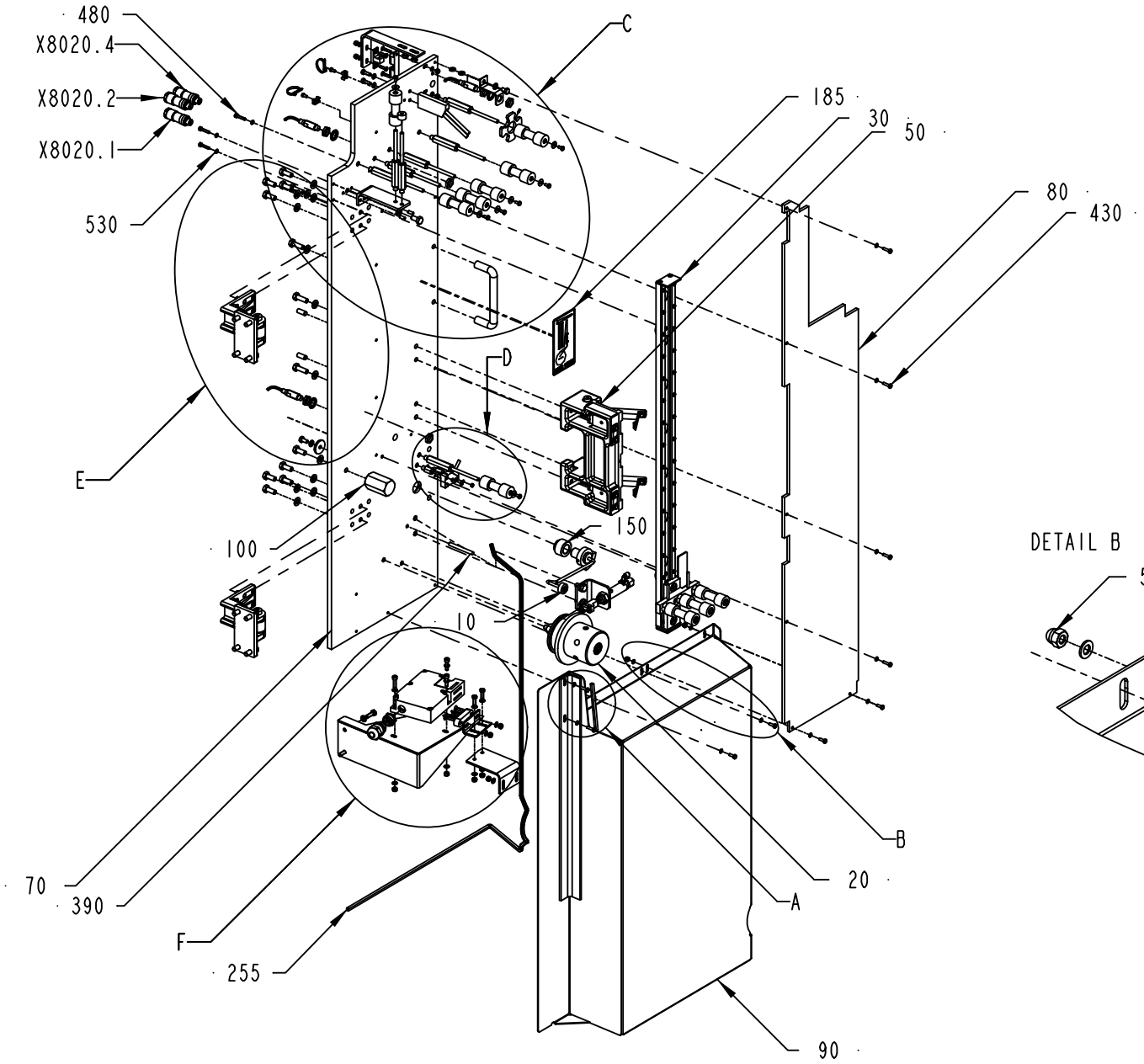

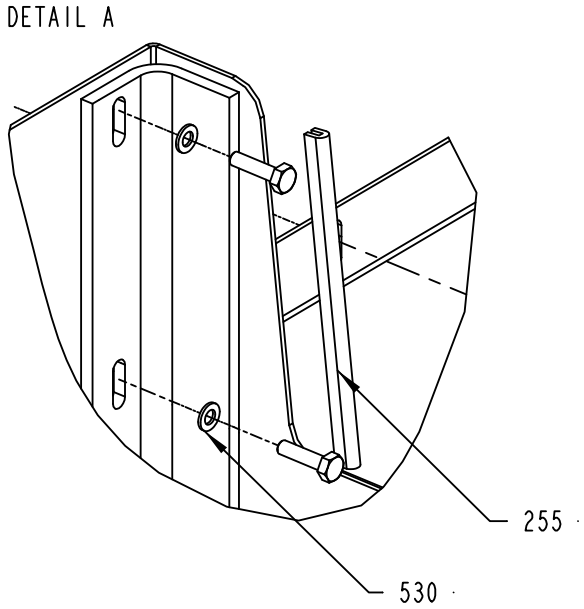

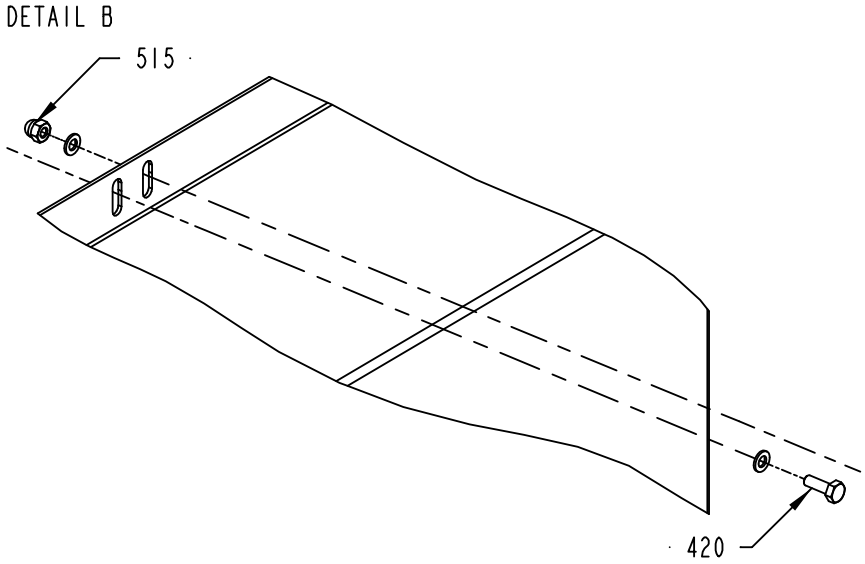

2564046-3
265290

ECM: 265414 - 20061101
Group number: 2564046-0200
Assembly Drawing: 2564046-3_1_AB

This list covers pages from 3-322 to 3-327

Pos	Part No	UN	Qty	Description	Page No
-					
010	1499255-0100		1	DETECTOR	3-329
020	2506566-0100		1	BOBBIN HOLDER	3-331
030	2810497-0100		1	STRIP MAGAZINE	3-335
040	2525358-0100		2	HINGE	3-337
050	2525366-0100		1	SPLICING TABLE	3-339
060	2564053-0100		1	OUTER PATCH MAGAZINE	3-343
070	2810565-0000		1	PANEL DOOR	
080	2553338-0000		1	PROTECTION	
090	2758120-0000		1	PROTECTION	
100	2710797-0000		1	DAMPER AXLE	
110	1499250-0000		2	AXLE PIN	
120	1499251-0002		8	AXLE PIN	
130	1539125-0000		1	BRACKET	
132	2710777-0000		1	PLATE	
135	2033-0005		7	WASHER	
140	1498347-0000		1	WASHER	
145	1346885-0000		1	SUPPORT	
150	1499253-0000		1	BUSHING	
155	2710803-0000		1	PLATE	
160	1523262-0000		1	FLAG	
170	1523263-0001		1	BRACKET	
180	2525373-0000		1	WHEEL	
185	2564073-0000		1	LABEL	
230	90017-0016		1	HANDLE, NO. 14.4012.02.120	
235	90237-0070		1	SNAP-IN BALL LOCK, 69X19 MM	
245	90458-0307		1	CABLE GLAND, M20X1,5, NO.5311 1020	
255	90143-0060	M	1.5	EDGE STRIP 9,5X6,3MM BLACK PVC	
260	90458-0372		1	KEY FOR SAFETY SWITCH AZM-161-B6	
265	90459-0471		1	KEY SAF.SW. AZM161SK 24RKA 024 M16, 24 V	
270	312105-0370		2	SCREW M6S ISO 4017 M6X20 A480	
320	2748696-0000		1	BRACKET	
325	2639394-0000		1	GUIDE FORK	
335	90459-3644		1	REDUCER, M20/M16	
380	311103-0306		2	PARALLEL PIN ISO 2338 5M6X12 A1	
390	311103-0369		1	PARALLEL PIN ISO 2338 6M6X60 A1	
400	311103-0401		2	PARALLEL PIN ISO 2338 8M6X20 A1	
410	312105-0287		7	SCREW M6S ISO 4017 M4X8 A470	
420	312105-0291		4	SCREW M6S ISO 4017 M4X12 A470	
430	312105-0293		6	SCREW M6S ISO 4017 M4X16 A470	
435	312105-0329		4	SCREW M6S ISO 4017 M5X16 A480	
440	312105-0364		1	SCREW M6S ISO 4017 M6X10 A480	
450	312105-0366		1	SCREW M6S ISO 4017 M6X12 A480	
455	312105-0368		2	SCREW M6S ISO 4017 M6X16 A480	
460	312105-0449		1	SCREW M6S ISO 4017 M8X16 A480	
465	312105-0451		9	SCREW M6S ISO 4017 M8X20 A480	
470	312105-0453		4	SCREW M6S ISO 4017 M8X25 A480	
480	312115-0295		3	SCREW ISO4762 M4X20 A4 80	
485	312115-0331		3	SCREW ISO4762 M5X20 A4 80	
490	312125-0287		8	SCREW ISO 1207 M4X8 A4	
495	312155-0293		2	SCREW DIN 7991 MF6S M4X16 A4 70	
496	312155-0295		2	SCREW DIN 7991 MF6S M4X20 A4 70	
497	312155-0331		2	SCREW DIN 7991 MF6S M5X20 A4 70	
500	312318-0220		2	SCREW ISO4029 M3X6 A4	
510	312605-0310		2	HEXAGON NUT, M6M M3 A280	
511	312605-0314		3	HEXAGON NUT, M6M M5 A280	
515	312605-0312		2	HEXAGON NUT, M6M M4 A280	
516	312812-0312		4	HEXAGON NUT, NY-LOCK M4 A480	
517	312812-0314		6	HEXAGON NUT, NY-LOCK M5 A480	
520	315105-0124		2	WASHER BRB 3,2X6 RFR	
530	315105-0136		19	WASHER BRB 4,3X8 RFR	
535	315105-0146		16	WASHER BRB 5,3X10 RFR	
540	315105-0153		6	WASHER BRB 6,4X12 RFR	
550	315105-0165		14	WASHER BRB 8,4X16 RFR	
560	352113-0101		8	CABLE TIE, BLACK 92X2,5 MM	
570	352113-0205		8	ANCHOR PLATES FOR STRIPS, TYPE TM2S8-C10	
B8225	90459-0471		1	KEY SAF.SW. AZM161SK 24RKA 024 M16, 24 V	
B8425	90044-0194		1	PROX.SW. IN5329/IN3002-BPKG(EX90044-104)	
B8426	90458-0675		1	PROX.SENSOR, E2EG-X5MB1-5M	
B8427	90458-0675		1	PROX.SENSOR, E2EG-X5MB1-5M	
B8428	90458-0675		1	PROX.SENSOR, E2EG-X5MB1-5M	
X8020	90459-0838		1	DISTRIBUTION FRAME, ASBV 4 5-66/10M	
X8020.1	90459-0964		1	CONNECTOR MALE 4 PINS,7000-12781-0000000	
X8020.2	90459-0964		1	CONNECTOR MALE 4 PINS,7000-12781-0000000	
X8020.4	90459-0964		1	CONNECTOR MALE 4 PINS,7000-12781-0000000	

Machine Type	Group Description	Used-In	Group Number	Page No

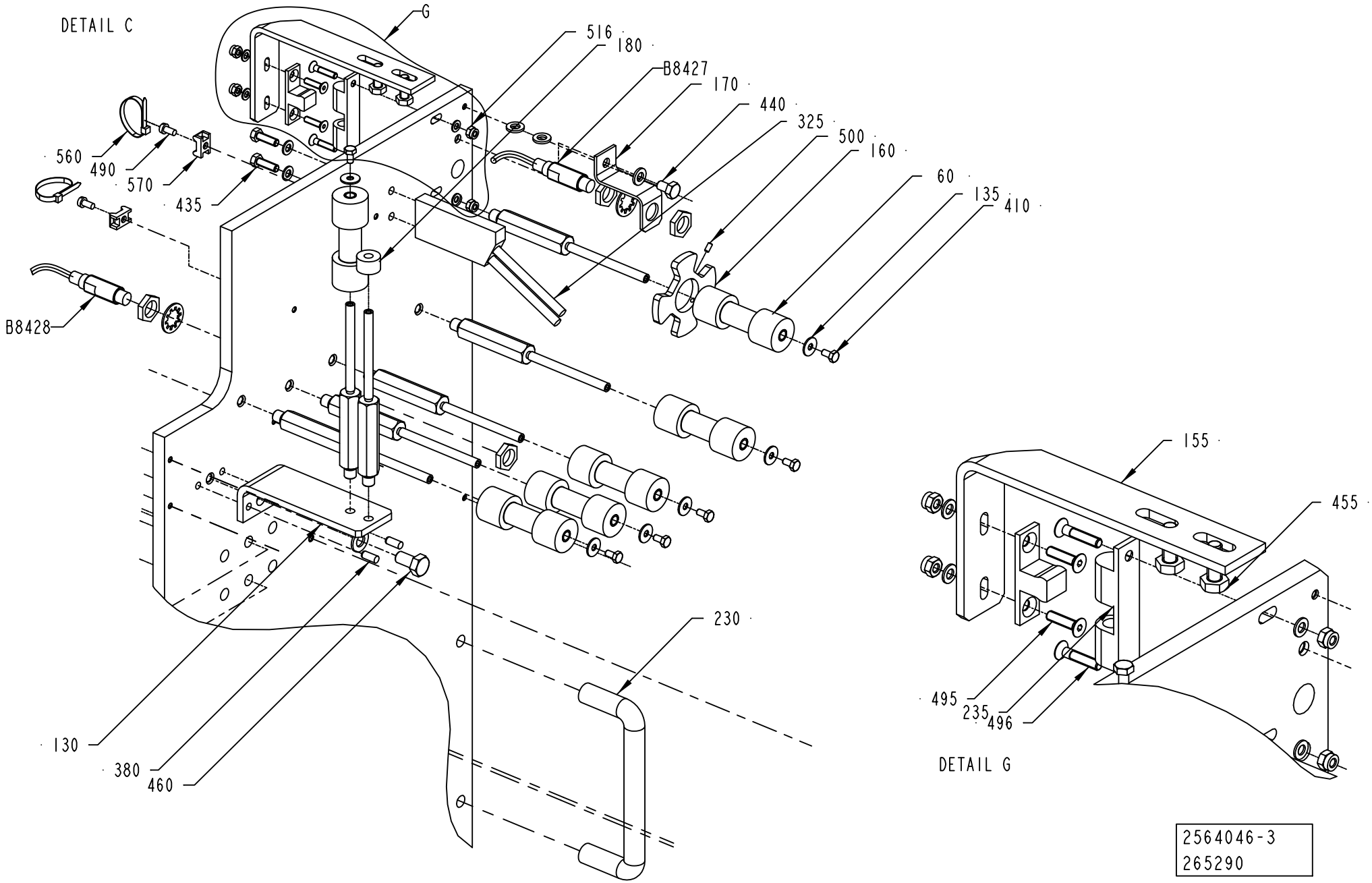

2564046-3
265290

ECM: 265414 - 20061101
Group number: 2564046-0200
Assembly Drawing: 2564046-3_2_AB

This list covers pages from 3-322 to 3-327

Pos	Part No	UN	Qty	Description	Page No
-					
010	1499255-0100		1	DETECTOR	3-329
020	2506566-0100		1	BOBBIN HOLDER	3-331
030	2810497-0100		1	STRIP MAGAZINE	3-335
040	2525358-0100		2	HINGE	3-337
050	2525366-0100		1	SPLICING TABLE	3-339
060	2564053-0100		1	OUTER PATCH MAGAZINE	3-343
070	2810565-0000		1	PANEL DOOR	
080	2553338-0000		1	PROTECTION	
090	2758120-0000		1	PROTECTION	
100	2710797-0000		1	DAMPER AXLE	
110	1499250-0000		2	AXLE PIN	
120	1499251-0002		8	AXLE PIN	
130	1539125-0000		1	BRACKET	
132	2710777-0000		1	PLATE	
135	2033-0005		7	WASHER	
140	1498347-0000		1	WASHER	
145	1346885-0000		1	SUPPORT	
150	1499253-0000		1	BUSHING	
155	2710803-0000		1	PLATE	
160	1523262-0000		1	FLAG	
170	1523263-0001		1	BRACKET	
180	2525373-0000		1	WHEEL	
185	2564073-0000		1	LABEL	
230	90017-0016		1	HANDLE, NO. 14.4012.02.120	
235	90237-0070		1	SNAP-IN BALL LOCK, 69X19 MM	
245	90458-0307		1	CABLE GLAND, M20X1,5, NO.5311 1020	
255	90143-0060	M	1.5	EDGE STRIP 9,5X6,3MM BLACK PVC	
260	90458-0372		1	KEY FOR SAFETY SWITCH AZM-161-B6	
265	90459-0471		1	KEY SAF.SW. AZM161SK 24RKA 024 M16, 24 V	
270	312105-0370		2	SCREW M6S ISO 4017 M6X20 A480	
320	2748696-0000		1	BRACKET	
325	2639394-0000		1	GUIDE FORK	
335	90459-3644		1	REDUCER, M20/M16	
380	311103-0306		2	PARALLEL PIN ISO 2338 5M6X12 A1	
390	311103-0369		1	PARALLEL PIN ISO 2338 6M6X60 A1	
400	311103-0401		2	PARALLEL PIN ISO 2338 8M6X20 A1	
410	312105-0287		7	SCREW M6S ISO 4017 M4X8 A470	
420	312105-0291		4	SCREW M6S ISO 4017 M4X12 A470	
430	312105-0293		6	SCREW M6S ISO 4017 M4X16 A470	
435	312105-0329		4	SCREW M6S ISO 4017 M5X16 A480	
440	312105-0364		1	SCREW M6S ISO 4017 M6X10 A480	
450	312105-0366		1	SCREW M6S ISO 4017 M6X12 A480	
455	312105-0368		2	SCREW M6S ISO 4017 M6X16 A480	
460	312105-0449		1	SCREW M6S ISO 4017 M8X16 A480	
465	312105-0451		9	SCREW M6S ISO 4017 M8X20 A480	
470	312105-0453		4	SCREW M6S ISO 4017 M8X25 A480	
480	312115-0295		3	SCREW ISO4762 M4X20 A4 80	
485	312115-0331		3	SCREW ISO4762 M5X20 A4 80	
490	312125-0287		8	SCREW ISO 1207 M4X8 A4	
495	312155-0293		2	SCREW DIN 7991 MF6S M4X16 A4 70	
496	312155-0295		2	SCREW DIN 7991 MF6S M4X20 A4 70	
497	312155-0331		2	SCREW DIN 7991 MF6S M5X20 A4 70	
500	312318-0220		2	SCREW ISO4029 M3X6 A4	
510	312605-0310		2	HEXAGON NUT, M6M M3 A280	
511	312605-0314		3	HEXAGON NUT, M6M M5 A280	
515	312605-0312		2	HEXAGON NUT, M6M M4 A280	
516	312812-0312		4	HEXAGON NUT, NY-LOCK M4 A480	
517	312812-0314		6	HEXAGON NUT, NY-LOCK M5 A480	
520	315105-0124		2	WASHER BRB 3,2X6 RFR	
530	315105-0136		19	WASHER BRB 4,3X8 RFR	
535	315105-0146		16	WASHER BRB 5,3X10 RFR	
540	315105-0153		6	WASHER BRB 6,4X12 RFR	
550	315105-0165		14	WASHER BRB 8,4X16 RFR	
560	352113-0101		8	CABLE TIE, BLACK 92X2,5 MM	
570	352113-0205		8	ANCHOR PLATES FOR STRIPS, TYPE TM2S8-C10	
B8225	90459-0471		1	KEY SAF.SW. AZM161SK 24RKA 024 M16, 24 V	
B8425	90044-0194		1	PROX.SW. IN5329/IN3002-BPKG(EX90044-104)	
B8426	90458-0675		1	PROX.SENSOR, E2EG-X5MB1-5M	
B8427	90458-0675		1	PROX.SENSOR, E2EG-X5MB1-5M	
B8428	90458-0675		1	PROX.SENSOR, E2EG-X5MB1-5M	
X8020	90459-0838		1	DISTRIBUTION FRAME, ASBV 4 5-66/10M	
X8020.1	90459-0964		1	CONNECTOR MALE 4 PINS,7000-12781-0000000	
X8020.2	90459-0964		1	CONNECTOR MALE 4 PINS,7000-12781-0000000	
X8020.4	90459-0964		1	CONNECTOR MALE 4 PINS,7000-12781-0000000	

Machine Type | Group Description | Used-In | Group Number | Page No

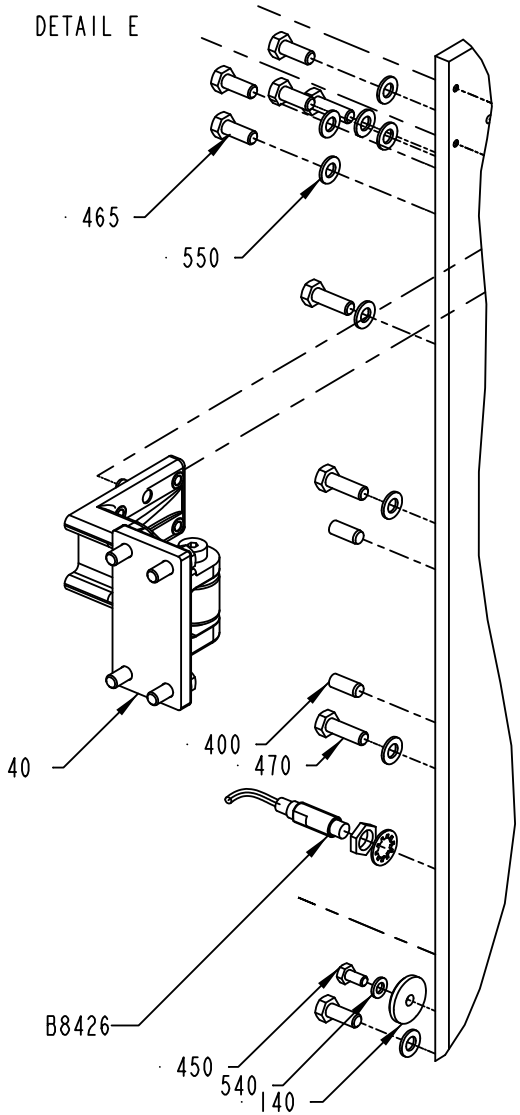
DETAIL E
465
550
40
400
470
B8426
450
540
140

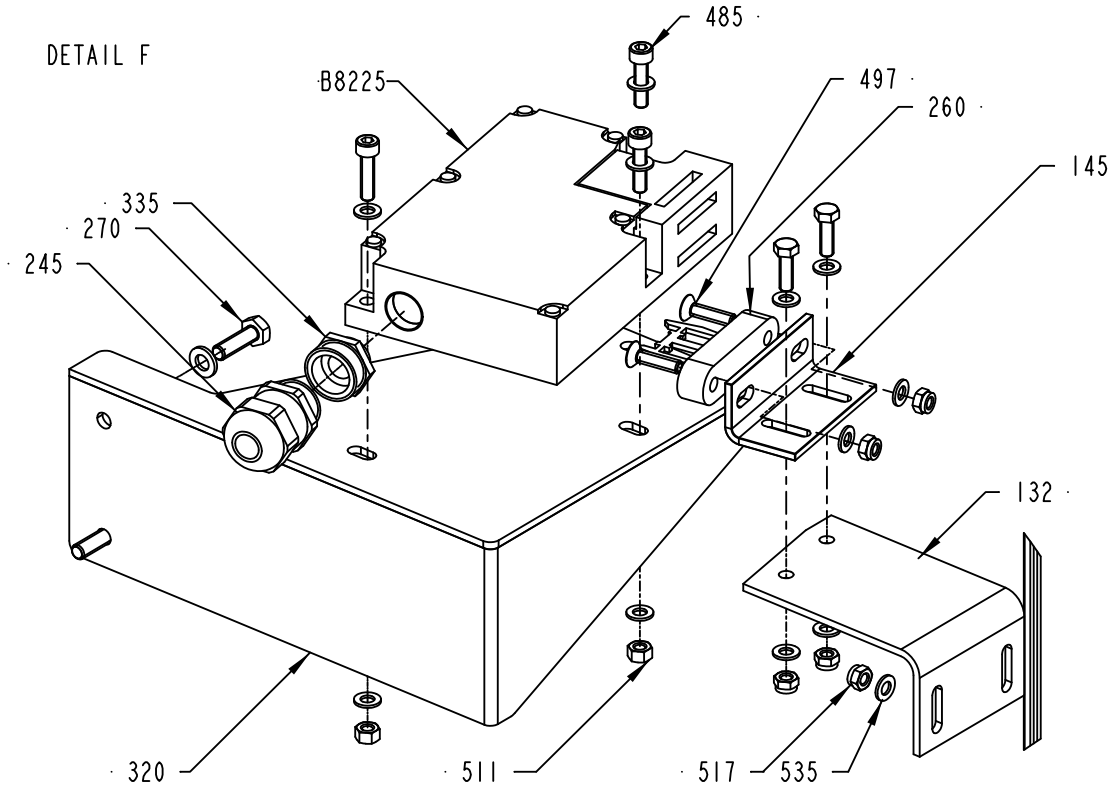
DETAIL F
485
B8225
497
260
145
335
270
245
132
320
511
517
535

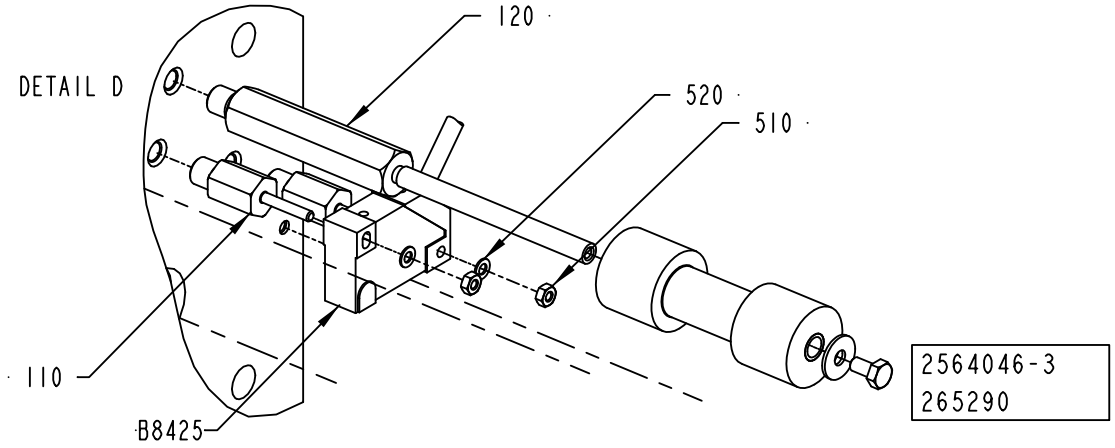
DETAIL D
120
520
510
110
B8425
2564046-3
265290

ECM: 265414 - 20061101
Group number: 2564046-0200
Assembly Drawing: 2564046-3_3_AB

This list covers pages from 3-322 to 3-327

Pos	Part No	UN	Qty	Description	Page No
-					
010	1499255-0100		1	DETECTOR	3-329
020	2506566-0100		1	BOBBIN HOLDER	3-331
030	2810497-0100		1	STRIP MAGAZINE	3-335
040	2525358-0100		2	HINGE	3-337
050	2525366-0100		1	SPLICING TABLE	3-339
060	2564053-0100		1	OUTER PATCH MAGAZINE	3-343
070	2810565-0000		1	PANEL DOOR	
080	2553338-0000		1	PROTECTION	
090	2758120-0000		1	PROTECTION	
100	2710797-0000		1	DAMPER AXLE	
110	1499250-0000		2	AXLE PIN	
120	1499251-0002		8	AXLE PIN	
130	1539125-0000		1	BRACKET	
132	2710777-0000		1	PLATE	
135	2033-0005		7	WASHER	
140	1498347-0000		1	WASHER	
145	1346885-0000		1	SUPPORT	
150	1499253-0000		1	BUSHING	
155	2710803-0000		1	PLATE	
160	1523262-0000		1	FLAG	
170	1523263-0001		1	BRACKET	
180	2525373-0000		1	WHEEL	
185	2564073-0000		1	LABEL	
230	90017-0016		1	HANDLE, NO. 14.4012.02.120	
235	90237-0070		1	SNAP-IN BALL LOCK, 69X19 MM	
245	90458-0307		1	CABLE GLAND, M20X1,5, NO.5311 1020	
255	90143-0060	M	1.5	EDGE STRIP 9,5X6,3MM BLACK PVC	
260	90458-0372		1	KEY FOR SAFETY SWITCH AZM-161-B6	
265	90459-0471		1	KEY SAF.SW. AZM161SK 24RKA 024 M16, 24 V	
270	312105-0370		2	SCREW M6S ISO 4017 M6X20 A480	
320	2748696-0000		1	BRACKET	
325	2639394-0000		1	GUIDE FORK	
335	90459-3644		1	REDUCER, M20/M16	
380	311103-0306		2	PARALLEL PIN ISO 2338 5M6X12 A1	
390	311103-0369		1	PARALLEL PIN ISO 2338 6M6X60 A1	
400	311103-0401		2	PARALLEL PIN ISO 2338 8M6X20 A1	
410	312105-0287		7	SCREW M6S ISO 4017 M4X8 A470	
420	312105-0291		4	SCREW M6S ISO 4017 M4X12 A470	
430	312105-0293		6	SCREW M6S ISO 4017 M4X16 A470	
435	312105-0329		4	SCREW M6S ISO 4017 M5X16 A480	
440	312105-0364		1	SCREW M6S ISO 4017 M6X10 A480	
450	312105-0366		1	SCREW M6S ISO 4017 M6X12 A480	
455	312105-0368		2	SCREW M6S ISO 4017 M6X16 A480	
460	312105-0449		1	SCREW M6S ISO 4017 M8X16 A480	
465	312105-0451		9	SCREW M6S ISO 4017 M8X20 A480	
470	312105-0453		4	SCREW M6S ISO 4017 M8X25 A480	
480	312115-0295		3	SCREW ISO4762 M4X20 A4 80	
485	312115-0331		3	SCREW ISO4762 M5X20 A4 80	
490	312125-0287		8	SCREW ISO 1207 M4X8 A4	
495	312155-0293		2	SCREW DIN 7991 MF6S M4X16 A4 70	
496	312155-0295		2	SCREW DIN 7991 MF6S M4X20 A4 70	
497	312155-0331		2	SCREW DIN 7991 MF6S M5X20 A4 70	
500	312318-0220		2	SCREW ISO4029 M3X6 A4	
510	312605-0310		2	HEXAGON NUT, M6M M3 A280	
511	312605-0314		3	HEXAGON NUT, M6M M5 A280	
515	312605-0312		2	HEXAGON NUT, M6M M4 A280	
516	312812-0312		4	HEXAGON NUT, NY-LOCK M4 A480	
517	312812-0314		6	HEXAGON NUT, NY-LOCK M5 A480	
520	315105-0124		2	WASHER BRB 3,2X6 RFR	
530	315105-0136		19	WASHER BRB 4,3X8 RFR	
535	315105-0146		16	WASHER BRB 5,3X10 RFR	
540	315105-0153		6	WASHER BRB 6,4X12 RFR	
550	315105-0165		14	WASHER BRB 8,4X16 RFR	
560	352113-0101		8	CABLE TIE, BLACK 92X2,5 MM	
570	352113-0205		8	ANCHOR PLATES FOR STRIPS, TYPE TM2S8-C10	
B8225	90459-0471		1	KEY SAF.SW. AZM161SK 24RKA 024 M16, 24 V	
B8425	90044-0194		1	PROX.SW. IN5329/IN3002-BPKG(EX90044-104)	
B8426	90458-0675		1	PROX.SENSOR, E2EG-X5MB1-5M	
B8427	90458-0675		1	PROX.SENSOR, E2EG-X5MB1-5M	
B8428	90458-0675		1	PROX.SENSOR, E2EG-X5MB1-5M	
X8020	90459-0838		1	DISTRIBUTION FRAME, ASBV 4 5-66/10M	
X8020.1	90459-0964		1	CONNECTOR MALE 4 PINS,7000-12781-0000000	
X8020.2	90459-0964		1	CONNECTOR MALE 4 PINS,7000-12781-0000000	
X8020.4	90459-0964		1	CONNECTOR MALE 4 PINS,7000-12781-0000000	

Machine Type	Group Description	Used-In	Group Number	Page No

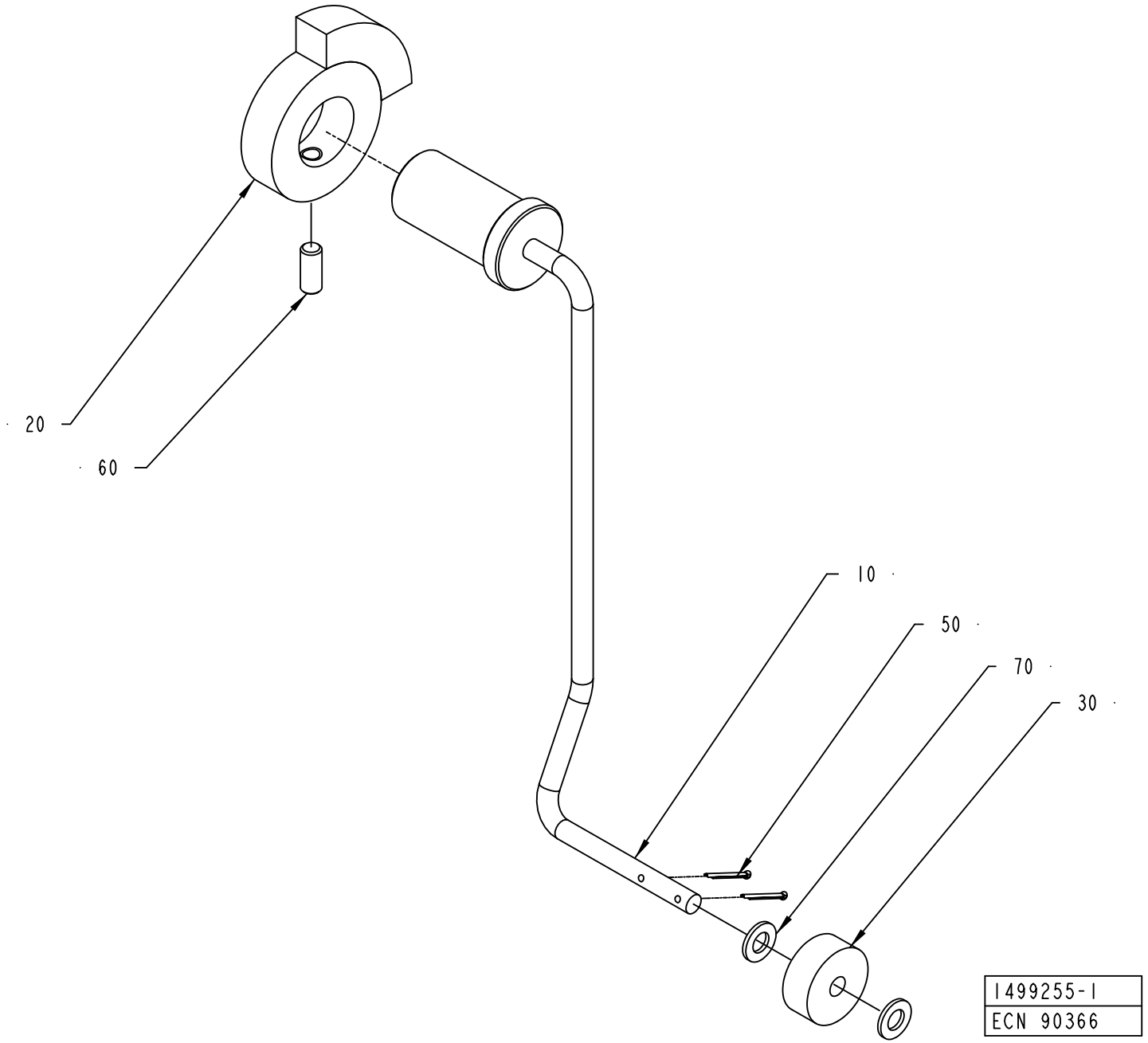
20
60
10
50
70
30
1499255-1
ECN 90366

ECM: 211632 - 20060117
Group number: 1499255-0100
Assembly Drawing: 1499255-1_1_AA

Pos	Part No	UN	Qty	Description	Page No
-					
010	1499252-0000		1	ARM	
020	533972-0000		1	INDICATOR CURVE	
030	234844-0000		1	WHEEL	
050	311411-0138		2	SPLIT PIN SP1,6X12RFR	
060	312318-0327		1	SCREW ISO4029 M5X12 A4	
070	315105-0146		2	WASHER BRB 5,3X10 RFR	

Pos	Part No	UN	Qty	Description	Page No

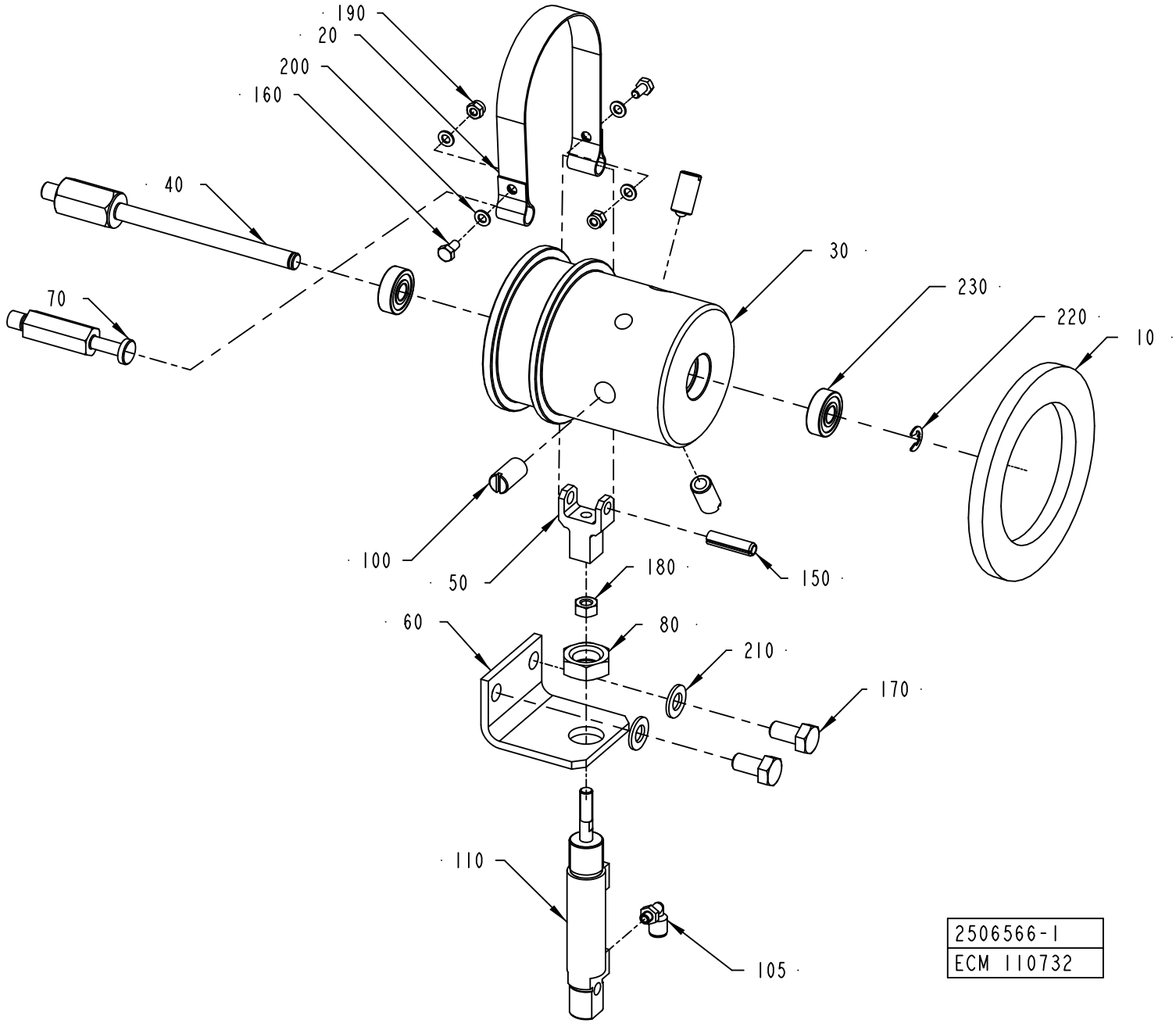
190
20
200
160
40
70
30
230
220
10
100
50
180
150
60
80
210
170
110
105
2506566-1
ECM 110732

ECM: 185777 - 20041005
Group number: 2506566-0100
Assembly Drawing: 2506566-1_1_AA

Pos	Part No	UN	Qty	Description	Page No
-					
010	2553315-0100		1	BOBBIN HOLDER	**3-333**
020	1498303-0000		1	BELT	
030	1498360-0000		1	HUB	
040	2506563-0000		1	SHAFT	
050	2506564-0000		1	GUIDE FORK	
060	2506565-0000		1	BRACKET	
070	2511316-0000		1	PIN	
080	2511317-0000		1	NUT	
100	90287-0106		3	SCREW SPRINGLOAD. SLOTTED HEAD M10X21	
105	90458-2954		1	ELBOW PIPE JOINT, EXT.THREAD, D=4MM M5	
110	90459-0844		1	SINGLE ACTING, MINI-ISO, CYL 12-10	
150	311112-0341		1	SPRING PIN, ISO 8752 6X24-C	
160	312105-0287		2	SCREW M6S ISO 4017 M4X8 A470	
170	312105-0449		2	SCREW M6S ISO 4017 M8X16 A480	
180	312605-0316		1	HEXAGON NUT, M6M M6 A280	
190	312812-0312		2	HEXAGON NUT, NY-LOCK M4 A480	
200	315105-0136		4	WASHER BRB 4,3X8 RFR	
210	315105-0165		2	WASHER BRB 8,4X16 RFR	
220	315755-0108		1	RETAINING RING SHAFT DIN 6799 6 A2	
230	321302-0298		2	BALL BEARING, 8X22X7 MM	

Pos	Part No	UN	Qty	Description	Page No

BOBBIN HOLDER

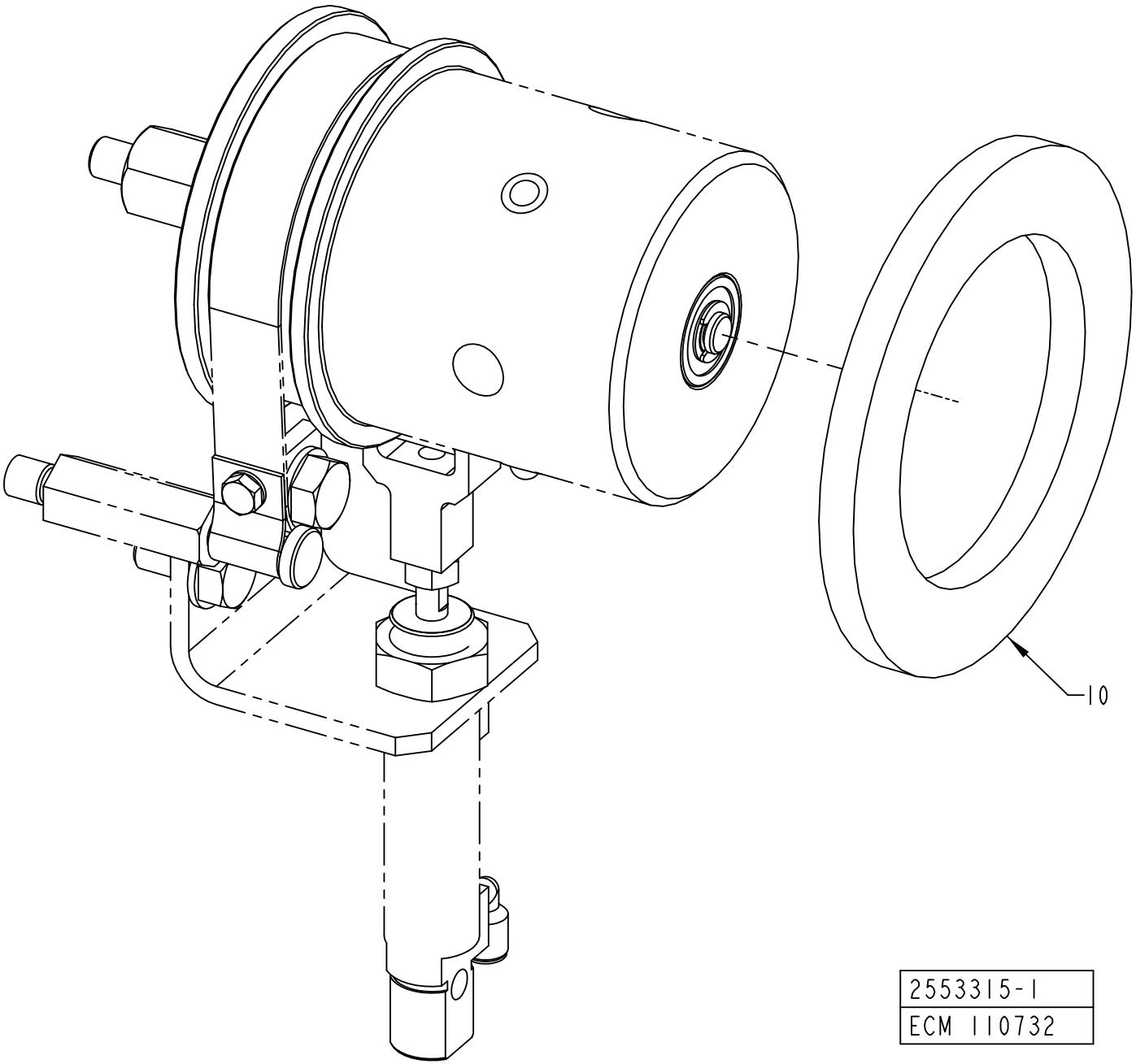

ECM: 111550 - 20021122
Group number: 2553315-0100
Assembly Drawing: 2553315-1_1_AA

Pos	Part No	UN	Qty	Description	Page No	Pos	Part No	UN	Qty	Description	Page No
HOLE72, HOLE48											
010	1347952-0003		1	SPACER							

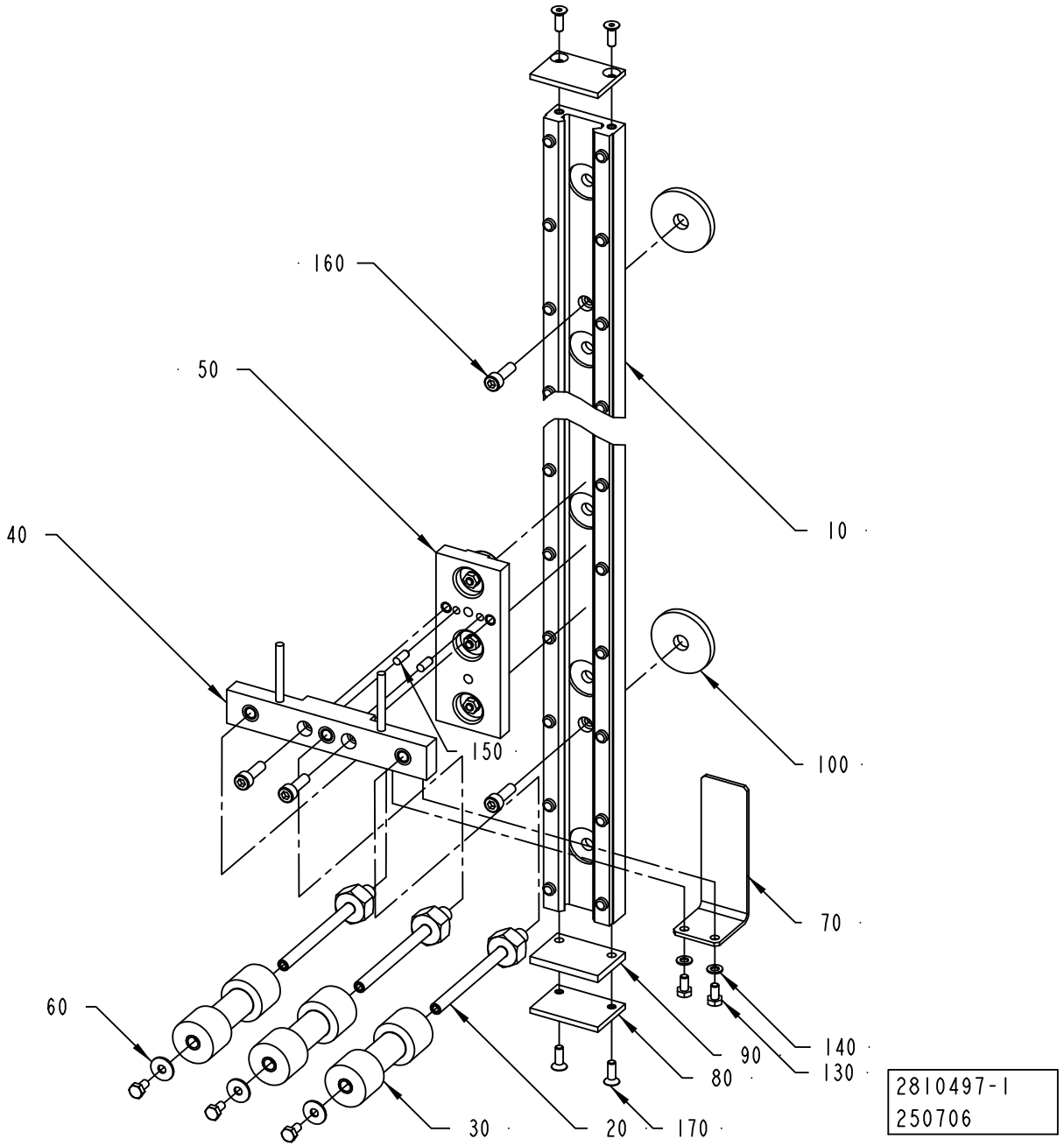
160
50
40
10
150
100
70
60
90
140
80
130
30
20
170
2810497-1
250706

ECM: 251218 - 20060502
Group number: 2810497-0100
Assembly Drawing: 2810497-1_1_AA

Pos	Part No	UN	Qty	Description	Page No
-					
010	2809802-0000		1	GUIDE	
020	2511271-0001		3	SHAFT	
030	2564043-0003		3	ROLLER	
040	2808546-0000		1	BRACKET	
050	2808769-0000		1	SLIDER	
060	2033-0005		3	WASHER	
070	2525371-0000		1	PHOTOCELL BRACKET	
080	2808544-0000		2	STOPPER	
090	2808545-0000		1	DAMPER	
100	2808547-0000		2	SPACER	
130	312105-0287		5	SCREW M6S ISO 4017 M4X8 A470	
140	315105-0136		2	WASHER BRB 4,3X8 RFR	
150	311103-0267		2	PARALLEL PIN ISO 2338 4M6X10 A1	
160	312115-0329		4	SCREW ISO4762 M5X16 A4 80	
170	312155-0291		4	SCREW DIN 7991 MF6S M4X12 A4 70	

Pos	Part No	UN	Qty	Description	Page No

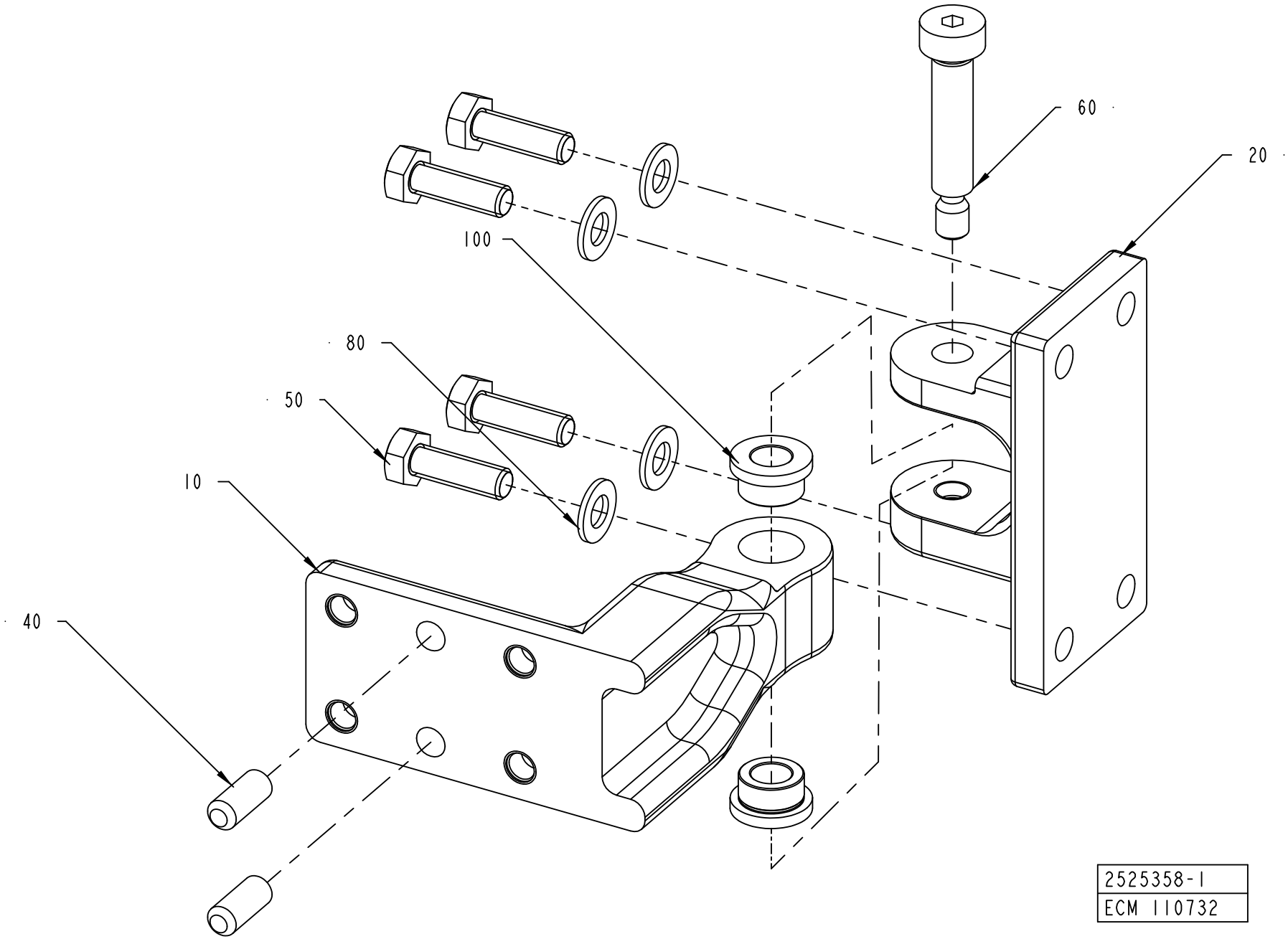
60
20
100
80
50
10
40
2525358-1
ECM 110732

ECM: 185814 - 20041005
Group number: 2525358-0100
Assembly Drawing: 2525358-1_1_AA

Pos	Part No	UN	Qty	Description	Page No
-					
010	2525350-0000		1	BRACKET	
020	2525351-0000		1	HINGE	
040	311103-0401		2	PARALLEL PIN ISO 2338 8M6X20 A1	
050	312105-0453		4	SCREW M6S ISO 4017 M8X25 A480	
060	312180-0499		1	SCREW ISO7379 H10X40	
080	315105-0165		4	WASHER BRB 8,4X16 RFR	
100	321101-0163		2	FLANGE BUSHING, 10X16X10 MM	

Pos	Part No	UN	Qty	Description	Page No

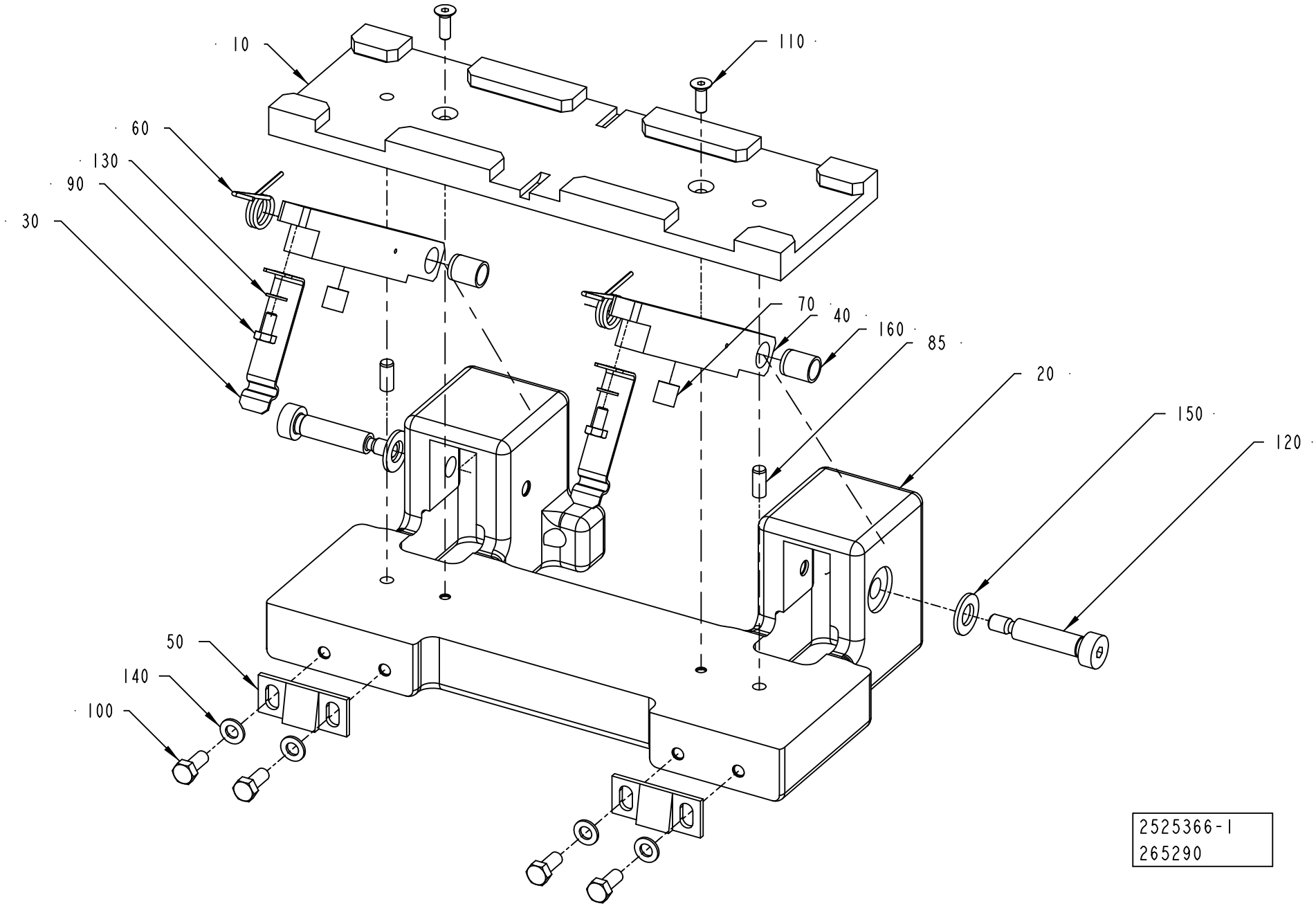
10
110
60
130
90
30
70
40
160
85
20
150
120
50
140
100
2525366-1
265290

ECM: 332771 - 20080401
Group number: 2525366-0100
Assembly Drawing: 2525366-1_1_AB

Pos	Part No	UN	Qty	Description	Page No
-					
010	2533683-0100		1	SPLICING TABLE	**3-341**
020	2525349-0000		1	BRACKET	
030	1519463-0000		2	LOCKING CLAMP	
040	2525360-0000		2	LOCKING FINGER	
050	532022-0000		2	LOCK BAR	
060	544427-0000		2	TURN SPRING	
070	2525368-0000		2	PUSHER	
085	311103-0306		2	PARALLEL PIN ISO 2338 5M6X12 A1	
090	312105-0287		2	SCREW M6S ISO 4017 M4X8 A470	
100	312105-0327		4	SCREW M6S ISO 4017 M5X12 A480	
110	312155-0291		2	SCREW DIN 7991 MF6S M4X12 A4 70	
120	312180-0455		2	SCREW ISO7379 H8X30	
130	315105-0136		2	WASHER BRB 4,3X8 RFR	
140	315105-0146		4	WASHER BRB 5,3X10 RFR	
150	315105-0165		2	WASHER BRB 8,4X16 RFR	
160	321141-0104		2	BEARING BUSH W/O FLANGE, 8X10X12 MM	

Pos	Part No	UN	Qty	Description	Page No

SPLICING TABLE

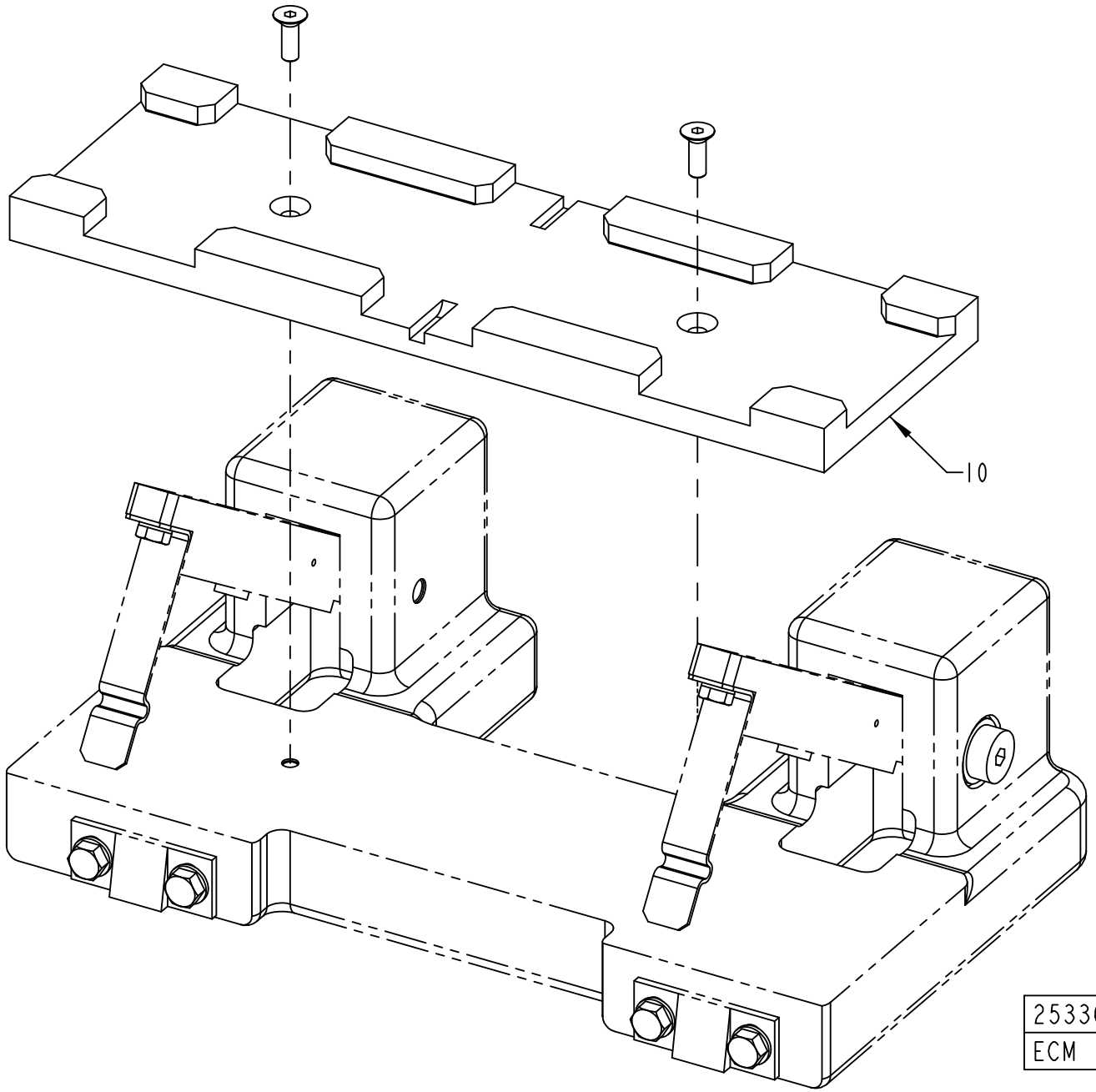

ECM: 188274 - 20041104
Group number: 2533683-0100
Assembly Drawing: 2533683-1_1_AA

Pos	Part No	UN	Qty	Description	Page No
HOLE72, HOLE48					
010	1499296-0002		1	GUIDE	

Pos	Part No	UN	Qty	Description	Page No

OUTER PATCH MAGAZINE

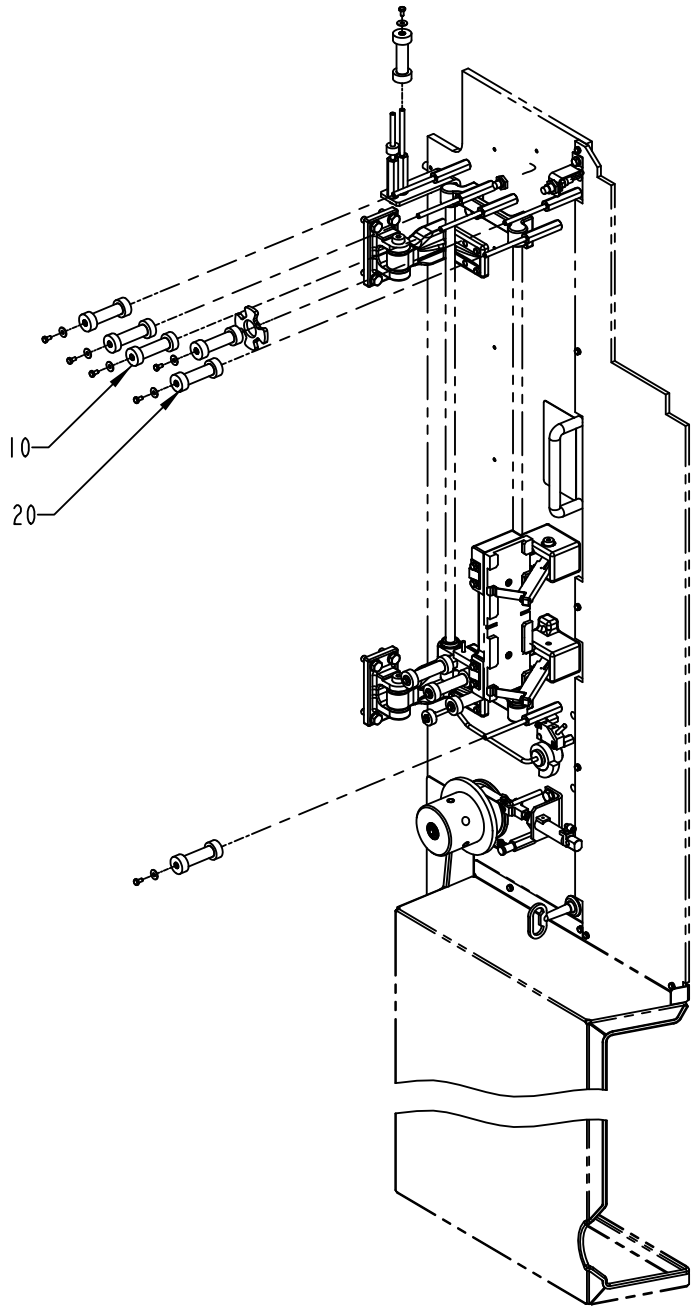

2564053-1
ECM 123507

ECM: 188275 - 20041104
Group number: 2564053-0100
Assembly Drawing: 2564053-1_1_AB

Pos	Part No	UN	Qty	Description	Page No
HOLE72, HOLE48					
010	2564043-0003		2	ROLLER	
020	2564044-0004		5	ROLLER	

Pos	Part No	UN	Qty	Description	Page No

This page is intentionally left blank.

ECM: 134803 - 20040531
Group number: 2693161-0100
Assembly Drawing:

Pos	Part No	UN	Qty	Description	Page No
-					
010	2545239-0100		1	ELECTRIC MATERIALS	**3-347**
020	90166-0081	M	8	TUBE 6 MM PA BLUE	
030	90166-0109	M	9	TUBE 4 MM PA TRANSP.	

Pos	Part No	UN	Qty	Description	Page No

This page is intentionally left blank.

ECM: 298298 - 20070216
Group number: 2545239-0100
Assembly Drawing:

Pos	Part No	UN	Qty	Description	Page No
-					
055	90459-3772		10	END SLEEVE H 0.25/12	
070	352113-0101		40	CABLE TIE, BLACK 92X2,5 MM	
080	352113-0102		30	CABLE TIE, BLACK 188X4,8 MM	
105	353300-0004	MM	500	SHRINKABLE HOSE	
250	359000-0200		2	WIRE MARKING, YELLOW, PA02/3"0"	
260	359000-0201		4	WIRE MARKING, YELLOW, PA02/3"1"	
270	359000-0202		2	WIRE MARKING, YELLOW, PA02/3"2"	
290	359000-0204		2	WIRE MARKING, YELLOW, PA02/3"4"	
300	359000-0205		1	WIRE MARKING, YELLOW, PA02/3"5"	
310	359000-0206		1	WIRE MARKING, YELLOW, PA02/3"6"	
320	359000-0207		1	WIRE MARKING, YELLOW, PA02/3"7"	
330	359000-0208		1	WIRE MARKING, YELLOW, PA02/3"8"	
380	359009-0100		22	CABLE MARKING, YELLOW, PK2/4"0"	
390	359009-0101		2	CABLE MARKING, YELLOW, PK 2/4"1"	
395	359009-0102		12	CABLE MARKING, YELLOW, PK 2/4"2"	
397	359009-0103		10	CABLE MARKING, YELLOW, PK 2/4"3"	
400	359009-0104		2	CABLE MARKING, YELLOW, PK 2/4"4"	
405	359009-0105		12	CABLE MARKING, YELLOW, PK 2/4"5"	
415	359009-0206		10	CABLE MARKING, YELLOW, PK 2/4"G"	
420	359009-0222		10	CABLE MARKING, YELLOW, PK 2/4"W"	

Pos	Part No	UN	Qty	Description	Page No

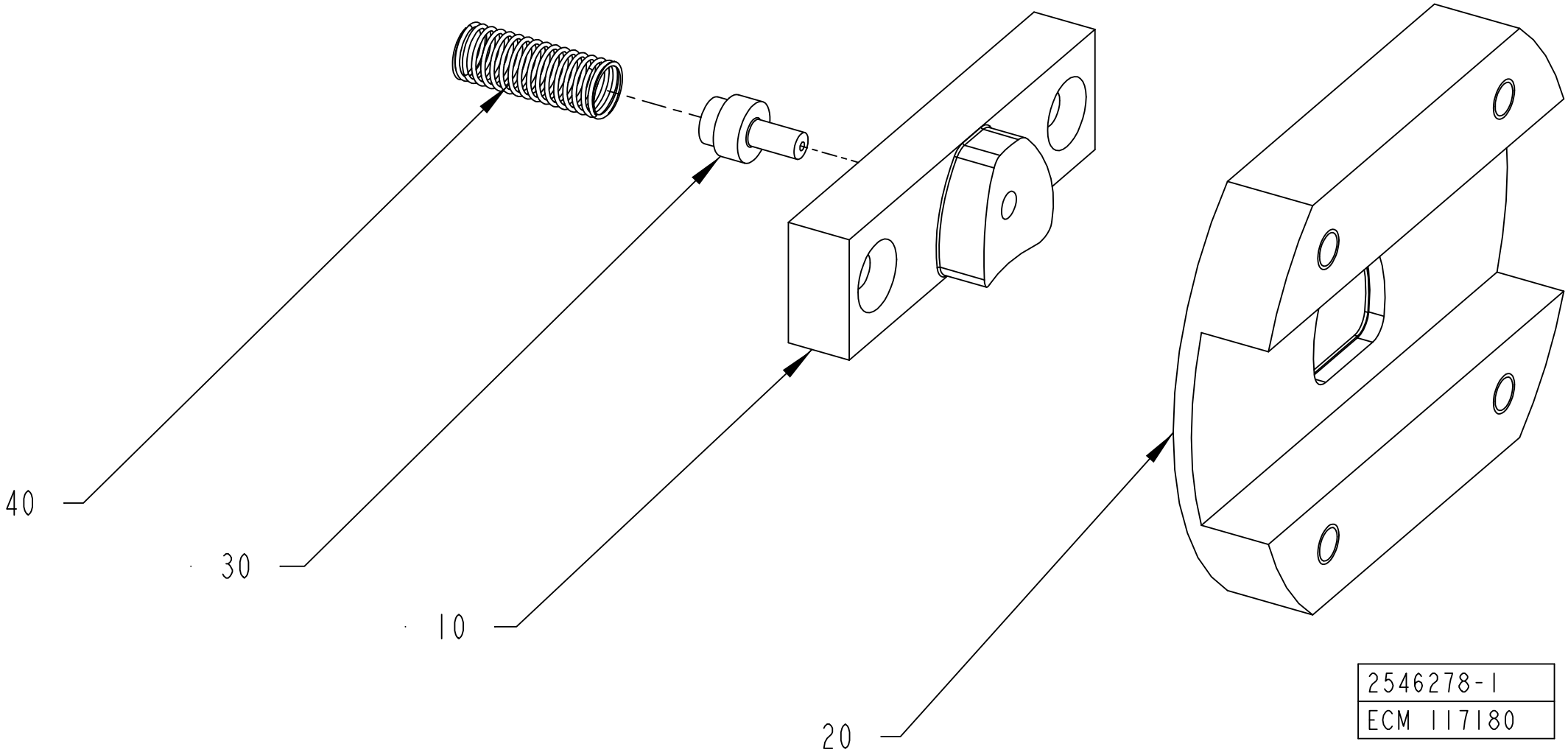
40
30
10
20
2546278-1
ECM 117180

ECM: 355159 - 20080616
Group number: 2546278-0100
Assembly Drawing: 2546278-1_1_AB

Pos	Part No	UN	Qty	Description	Page No
HOLE48					
010	2525290-0000		1	PUNCH	
020	2525289-0000		1	DIE	
030	2501815-0000		1	PIN	
040	90335-0005		1	SPRING	
HOLE55					
010	1145416-0000		1	PUNCH HOLE 55	
020	1145417-0000		1	DIE HOLE 55	
HOLE72					
010	2511644-0000		1	PUNCH	
020	2511639-0000		1	DIE	
030	2501815-0000		1	PIN	
040	90335-0005		1	SPRING	
HOLE90					
010	2603683-0000		1	PUNCH	
020	2603682-0000		1	DIE	
HOLE91					
010	2604554-0000		1	PUNCH	
020	2604555-0000		1	DIE	
HOLE92					
010	2956876-0000		1	PUNCH	
020	2956875-0000		1	DIE	
HOLE95					
010	2657828-0000		1	PUNCH	
020	2657829-0000		1	DIE	

Pos	Part No	UN	Qty	Description	Page No

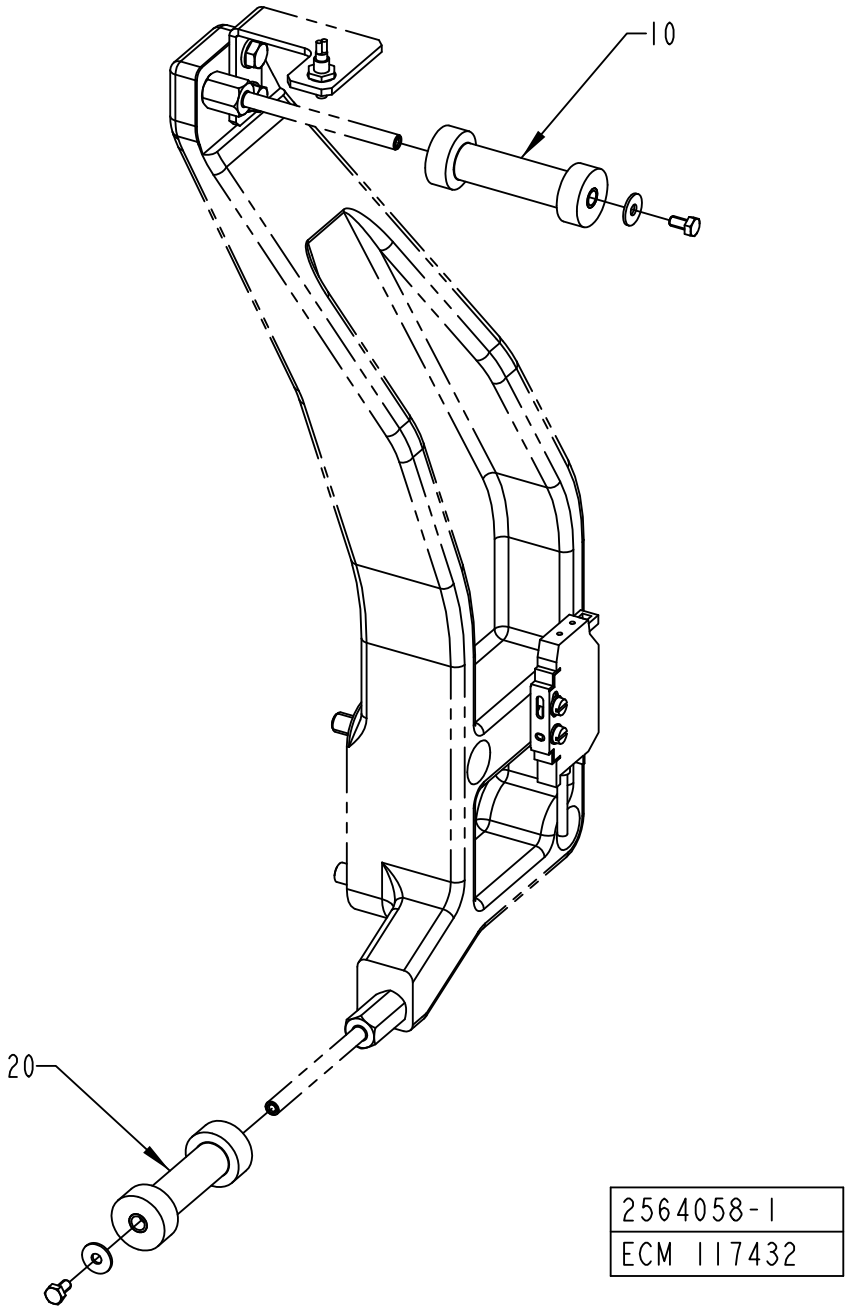
10
20
2564058-1
ECM 117432

ECM: 355161 - 20080616
Group number: 2564058-0100
Assembly Drawing: 2564058-1_1_AA

Pos	Part No	UN	Qty	Description	Page No
HOLE48, HOLE55					
010	2564043-0003		1	ROLLER	
020	2564044-0004		1	ROLLER	
HOLE72, HOLE92					
010	2564043-0002		1	ROLLER	
020	2564044-0002		1	ROLLER	
HOLE90					
010	2564043-0004		1	ROLLER	
020	2564044-0005		1	ROLLER	
HOLE95, HOLE91					
010	2564043-0005		1	ROLLER	
020	2564044-0006		1	ROLLER	

Pos	Part No	UN	Qty	Description	Page No

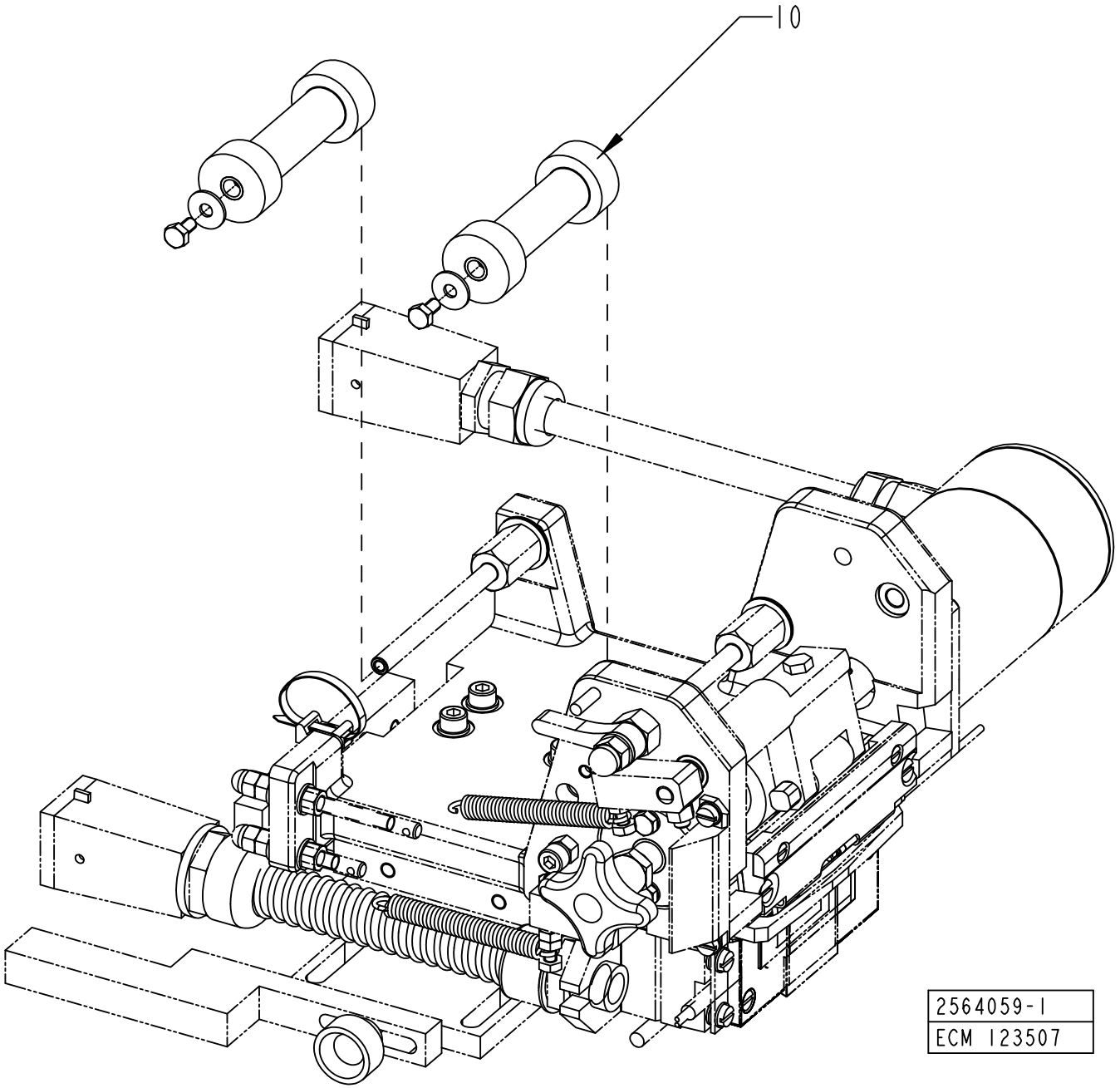
10
2564059-1
ECM 123507

ECM: 355162 - 20080616
Group number: 2564059-0100
Assembly Drawing: 2564059-1_1_AB

Pos	Part No	UN	Qty	Description	Page No
TBA 0250B HOLE95, TBA 0330S HOLE95, TBA 0500S HOLE95, TBA 0200B HOLE95					
010	2564044-0011		2	ROLLER	
TBA 0500S HOLE55, TBA 0200S HOLE92					
010	2564044-0006		2	ROLLER	
TBA 1000B HOLE95, TBA 1000S HOLE95, TBA 1000SQ HOLE95, TBA 1500S HOLE95, TBA 1890S HOLE91, TBA 1890S HOLE95, TBA 2000S HOLE91, TBA 2000S HOLE95					
010	2564044-0012		2	ROLLER	
TBA 1000S HOLE90, TBA 1500S HOLE90					
010	2564044-0008		2	ROLLER	
TPA 0250SQ HOLE72, TPA 0200SQ HOLE72					
010	2564044-0001		2	ROLLER	
TPA 0330SQ HOLE48					
010	2564044-0001		2	ROLLER	

Pos	Part No	UN	Qty	Description	Page No

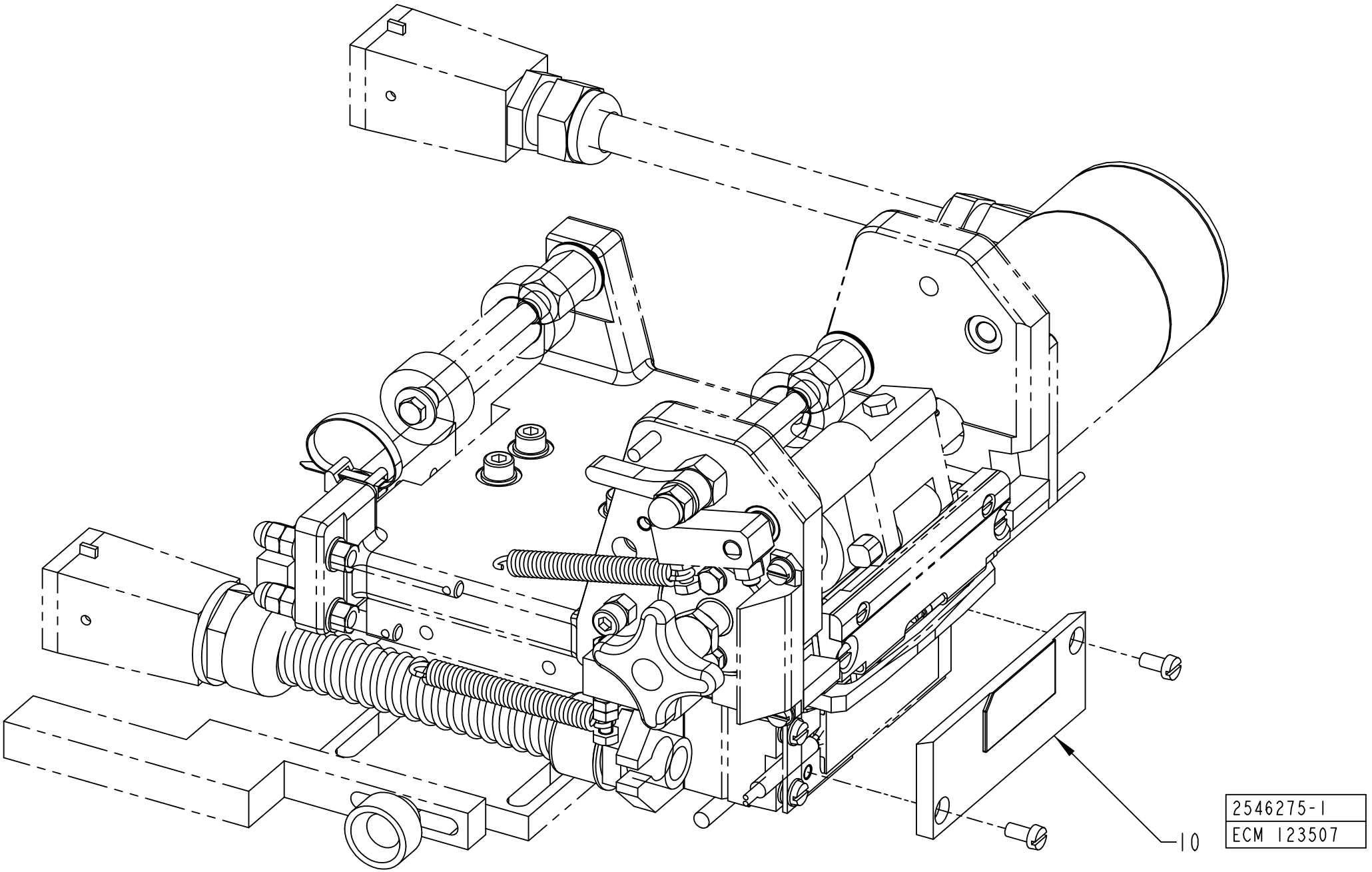
10
2546275-1
ECM 123507

ECM: 355157 - 20080616
Group number: 2546275-0100
Assembly Drawing: 2546275-1_1_AB

Pos	Part No	UN	Qty	Description	Page No
TBA 0200S HOLE92					
010	2927708-0000		1	SEALING PLATE	
TBA 0250B HOLE95, TBA 0330S HOLE95, TBA 0500S HOLE95, TBA 0200B HOLE95					
010	2526551-0000		1	SEALING PLATE	
TBA 0500S HOLE55					
010	2694025-0000		1	SEALING PLATE	
TBA 1000B HOLE95, TBA 1000S HOLE95, TBA 1000SQ HOLE95, TBA 1500S HOLE95, TBA 1890S HOLE95, TBA 2000S HOLE95					
010	2658078-0000		1	SEALING PLATE	
TBA 1000S HOLE90, TBA 1500S HOLE90					
010	2608234-0000		1	SEALING PLATE	
TBA 1890S HOLE91, TBA 2000S HOLE91					
010	2604551-0000		1	SEALING PLATE	
TPA 0250SQ HOLE72, TPA 0200SQ HOLE72					
010	2511640-0000		1	SEALING PLATE	
TPA 0330SQ HOLE48					
010	2511642-0000		1	SEALING PLATE	

Pos	Part No	UN	Qty	Description	Page No

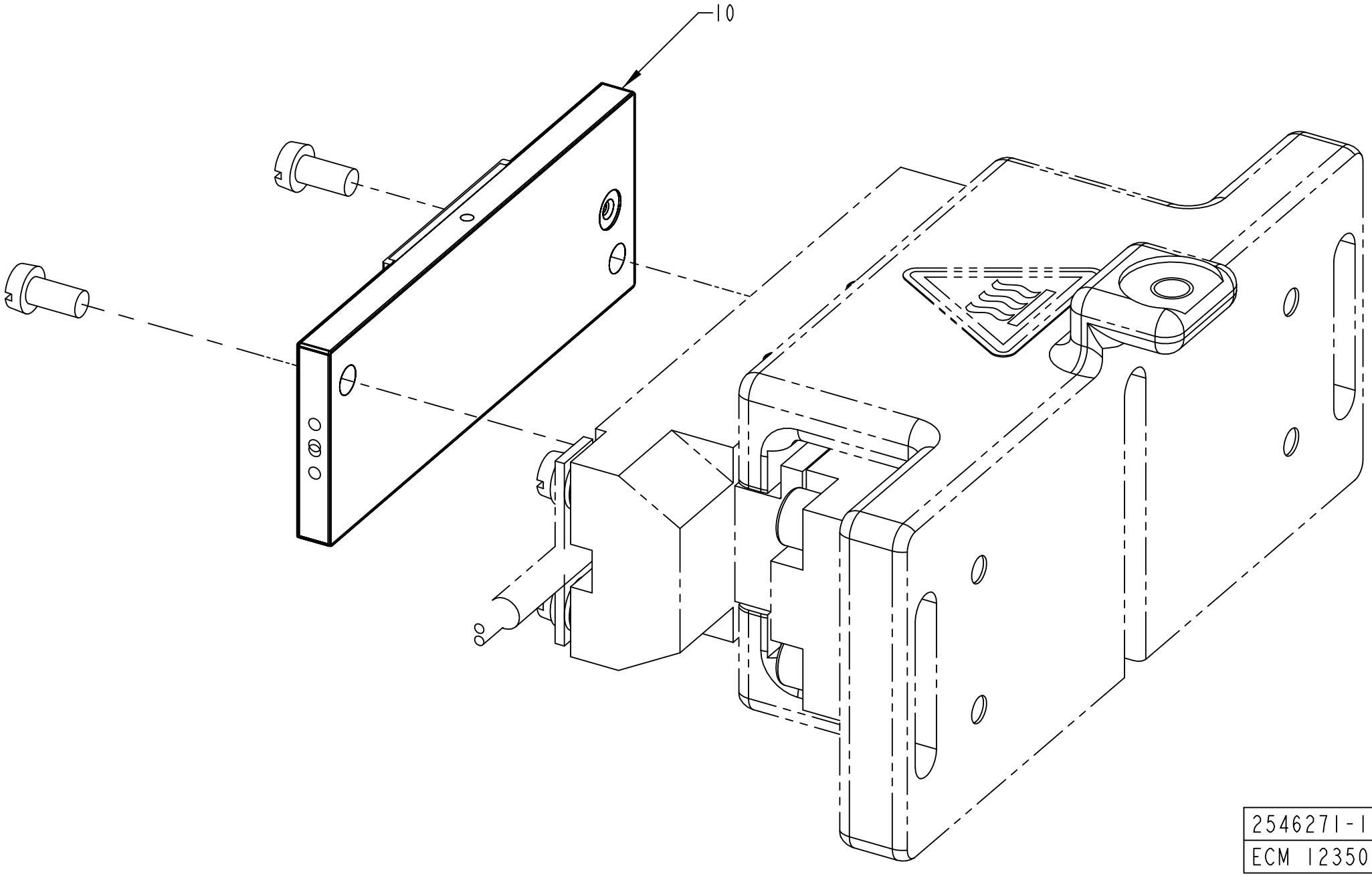

2546271-1
ECM 123507

ECM: 355154 - 20080616
Group number: 2546271-0100
Assembly Drawing: 2546271-1_1_AB

Pos	Part No	UN	Qty	Description	Page No
TBA 0200S HOLE92					
010	2927709-0000		1	SEALING PLATE	
010	*311102-0185*		*1*	*PARALLEL PIN ISO 2338 2M6X6 ST*	
TBA 0500S HOLE55					
010	2579883-0000		1	SEALING PLATE	
TBA 1000B HOLE95, TBA 1000S HOLE95, TBA 1000SQ HOLE95, TBA 1500S HOLE95, TBA 1890S HOLE95, TBA 2000S HOLE95, TBA 0250B HOLE95, TBA 0330S HOLE95, TBA 0500S HOLE95, TBA 0200B HOLE95					
010	2563974-0000		1	SEALING PLATE	
TBA 1000S HOLE90, TBA 1500S HOLE90					
010	2579886-0000		1	SEALING PLATE	
TBA 1890S HOLE91, TBA 2000S HOLE91					
010	2648819-0000		1	SEALING PLATE	
TPA 0250SQ HOLE72, TPA 0200SQ HOLE72					
010	2525292-0000		1	SEALING PLATE	
TPA 0330SQ HOLE48					
010	2511651-0000		1	SEALING PLATE	

Pos	Part No	UN	Qty	Description	Page No

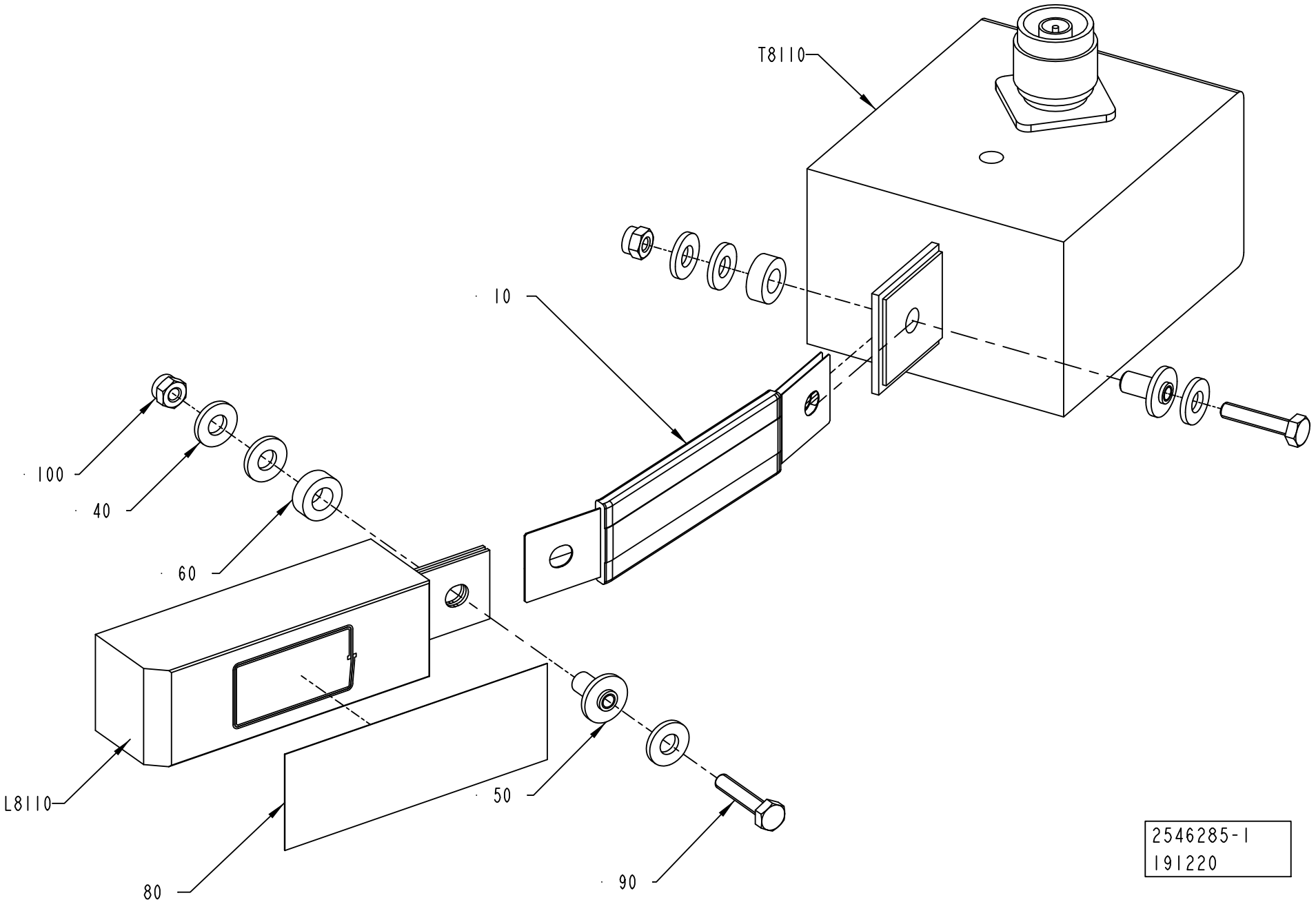
T8110
10
100
40
60
L8110
80
50
90
2546285-1
191220

ECM: 314028 - 20071001
Group number: 2546285-0100
Assembly Drawing: 2546285-1_1_AD

Pos	Part No	UN	Qty	Description	Page No
HOLE48					
L8110	1520196-0000		1	INDUCTOR	
T8110	67379-0216		1	TRANSFORMER	
HOLE55					
L8110	1533362-0000		1	INDUCTOR	
T8110	67379-0224		1	TRANSFORMER	
HOLE72					
L8110	1566708-0000		1	INDUCTOR	
T8110	67379-0224		1	TRANSFORMER	
HOLE90					
L8110	1533364-0000		1	INDUCTOR	
T8110	67379-0224		1	TRANSFORMER	
HOLE91					
L8110	1533361-0000		1	INDUCTOR	
T8110	67379-0216		1	TRANSFORMER	
HOLE95					
L8110	1533360-0000		1	INDUCTOR	
T8110	67379-0216		1	TRANSFORMER	
Common Parts					
010	1140889-0000		1	BUSBAR	
040	28509-0000		6	WASHER	
050	32544-0000		2	INSULATION NUT	
060	32644-0000		2	WASHER	
080	90459-2130	MM	130	TAPE, ADHESIVE SI TAPE MON3154535033CL	
090	312105-0295		2	SCREW M6S ISO 4017 M4X20 A470	
100	312812-0312		2	HEXAGON NUT, NY-LOCK M4 A480	

Pos	Part No	UN	Qty	Description	Page No

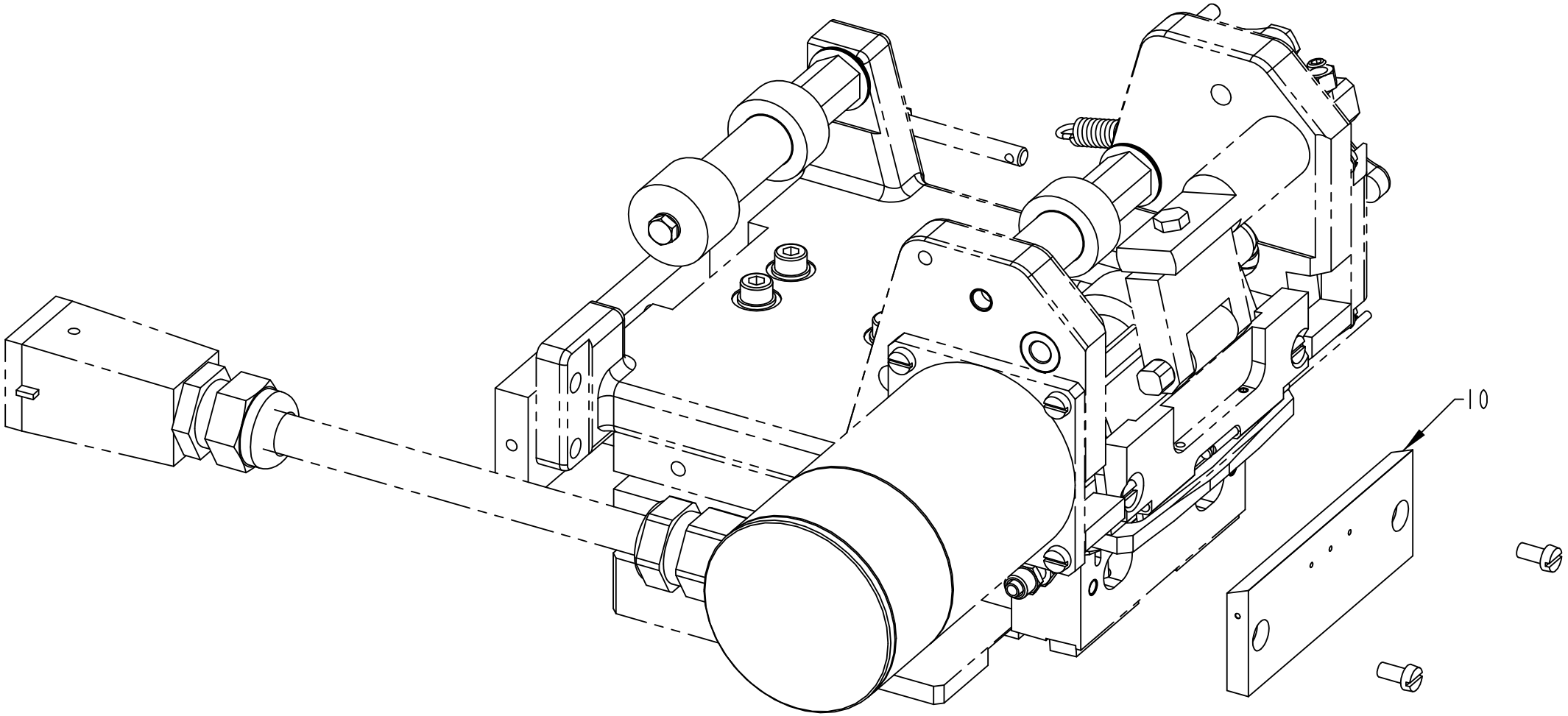

2511291-1
ECM 111416

ECM: 355043 - 20080616
Group number: 2511291-0100
Assembly Drawing: 2511291-1_1_AA

Pos	Part No	UN	Qty	Description	Page No
HOLE55, HOLE90, HOLE95, HOLE91, HOLE92					
010	2533715-0000		1	SEALING PLATE	
HOLE72, HOLE48					
020	2546293-0000		1	SEALING PLATE	

Pos	Part No	UN	Qty	Description	Page No

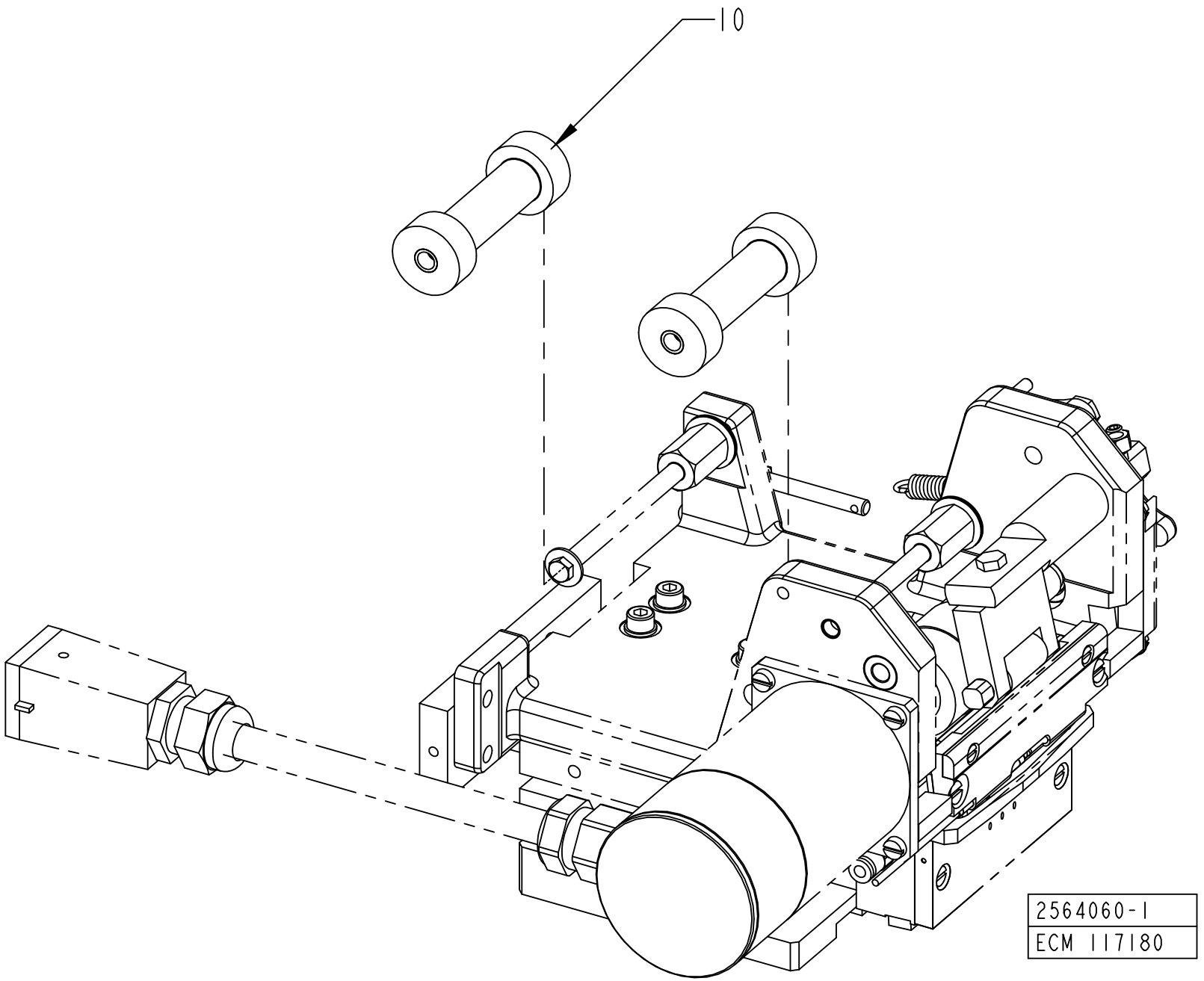
10
2564060-1
ECM 117180

ECM: 355164 - 20080616
Group number: 2564060-0100
Assembly Drawing: 2564060-1_1_AA

Pos	Part No	UN	Qty	Description	Page No
HOLE48, HOLE55					
010	2564044-0004		2	ROLLER	
HOLE72, HOLE92					
010	2564044-0002		2	ROLLER	
HOLE90					
010	2564044-0005		2	ROLLER	
HOLE95, HOLE91					
010	2564044-0006		2	ROLLER	

Pos	Part No	UN	Qty	Description	Page No

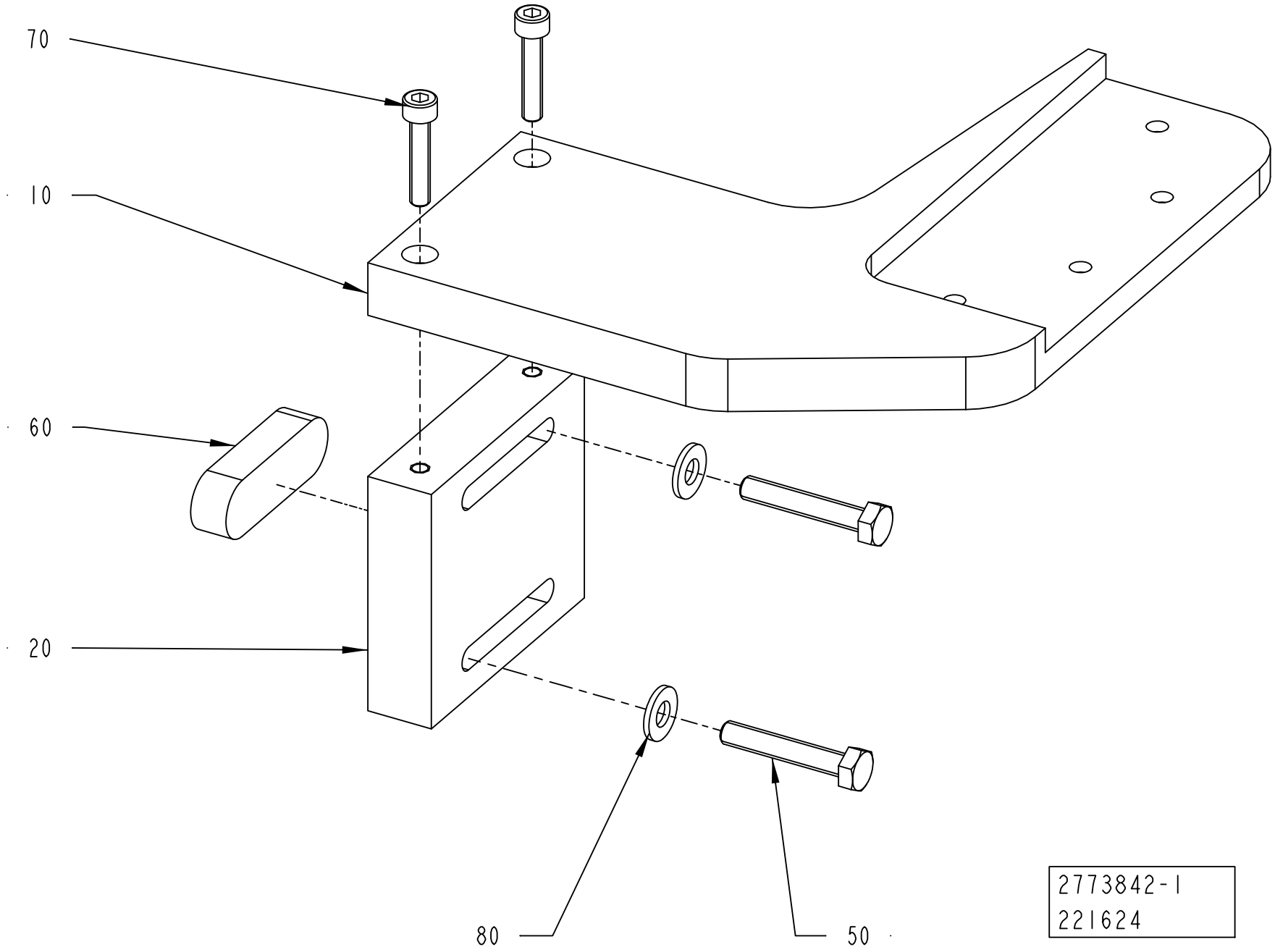
70
10
60
20
80
50
2773842-1
221624

Pos	Part No	UN	Qty	Description	Page No
TBA 0500S HOLE55, TPA 0330SQ HOLE48, TBA 1000S HOLE90, TBA 1500S HOLE90, TBA 1000B HOLE95, TBA 1000S HOLE95, TBA 1000SQ HOLE95, TBA 1500S HOLE95, TBA 1890S HOLE91, TBA 1890S HOLE95, TBA 2000S HOLE91, TBA 2000S HOLE95, TBA 0250B HOLE95, TBA 0330S HOLE95, TBA 0500S HOLE95, TBA 0200B HOLE95, TBA 0200S HOLE92 (See drawing on page: 3-366)					
010	1548376-0000		1	BRACKET	
080	315125-0153		2	WASHER TBRSB 6,4X22X4 A4	
TPA 0250SQ HOLE72, TPA 0200SQ HOLE72 (See drawing on page: 3-364)					
010	2735131-0000		1	BRACKET	
020	2735132-0000		1	SUPPORT	
070	312115-0333		2	SCREW ISO4762 M5X25 A4 80	
080	315105-0156		2	WASHER BRB 6,7X14 RFR	
Common Parts					
050	312109-0376		2	SCREW M6S ISO 4017 M6X35 A480	
060	315701-0396		1	PARALLEL KEY W. ROUND ENDS 16X10X50 MM	

Pos	Part No	UN	Qty	Description	Page No

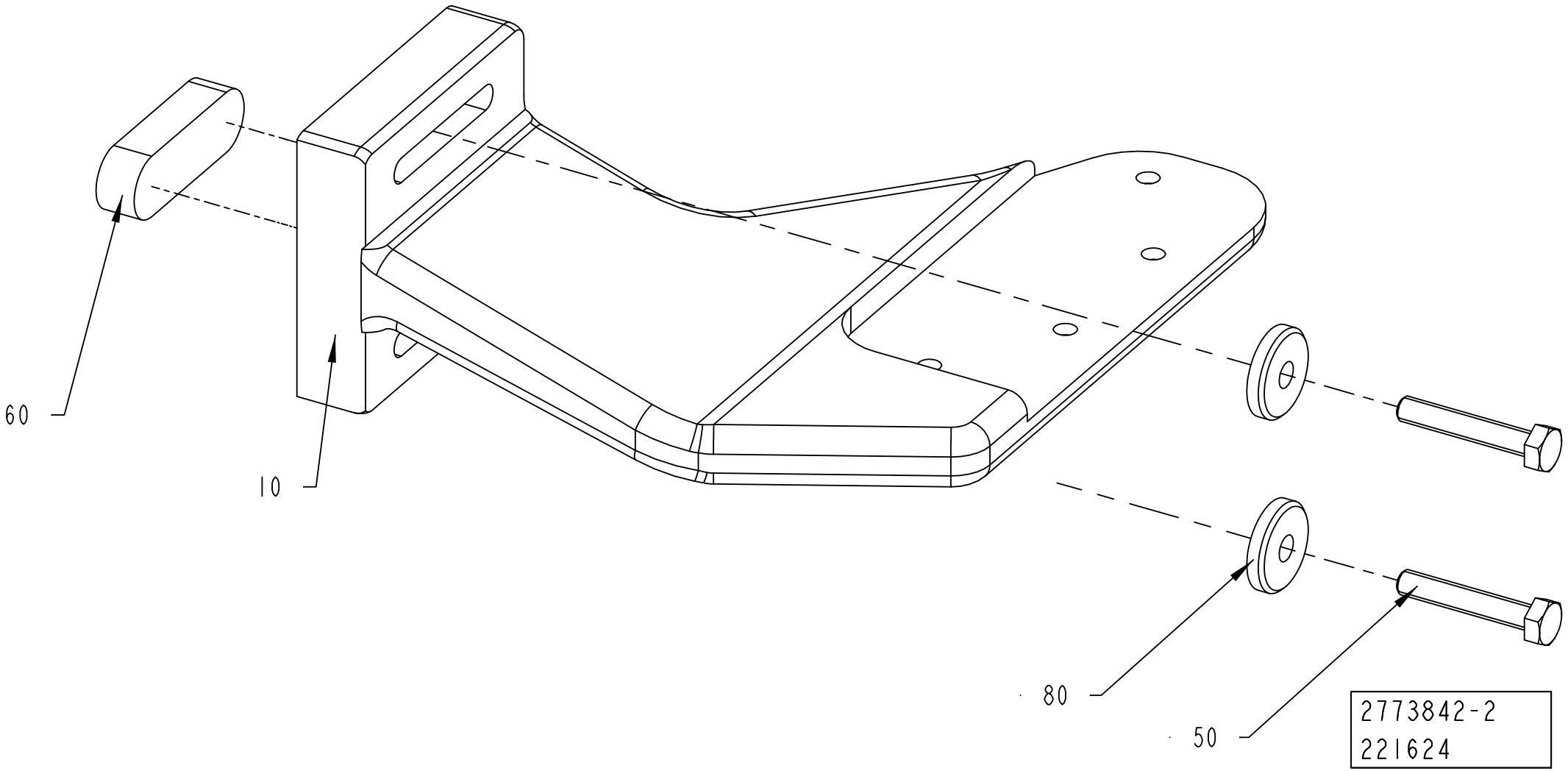
60
10
80
50
2773842-2
221624

Pos	Part No	UN	Qty	Description	Page No
TBA 0500S HOLE55, TPA 0330SQ HOLE48, TBA 1000S HOLE90, TBA 1500S HOLE90, TBA 1000B HOLE95, TBA 1000S HOLE95, TBA 1000SQ HOLE95, TBA 1500S HOLE95, TBA 1890S HOLE91, TBA 1890S HOLE95, TBA 2000S HOLE91, TBA 2000S HOLE95, TBA 0250B HOLE95, TBA 0330S HOLE95, TBA 0500S HOLE95, TBA 0200B HOLE95, TBA 0200S HOLE92 (See drawing on page: 3-366)					
010	1548376-0000		1	BRACKET	
080	315125-0153		2	WASHER TBRSB 6,4X22X4 A4	
TPA 0250SQ HOLE72, TPA 0200SQ HOLE72 (See drawing on page: 3-364)					
010	2735131-0000		1	BRACKET	
020	2735132-0000		1	SUPPORT	
070	312115-0333		2	SCREW ISO4762 M5X25 A4 80	
080	315105-0156		2	WASHER BRB 6,7X14 RFR	
Common Parts					
050	312109-0376		2	SCREW M6S ISO 4017 M6X35 A480	
060	315701-0396		1	PARALLEL KEY W. ROUND ENDS 16X10X50 MM	

Pos	Part No	UN	Qty	Description	Page No

SPLICING TABLE

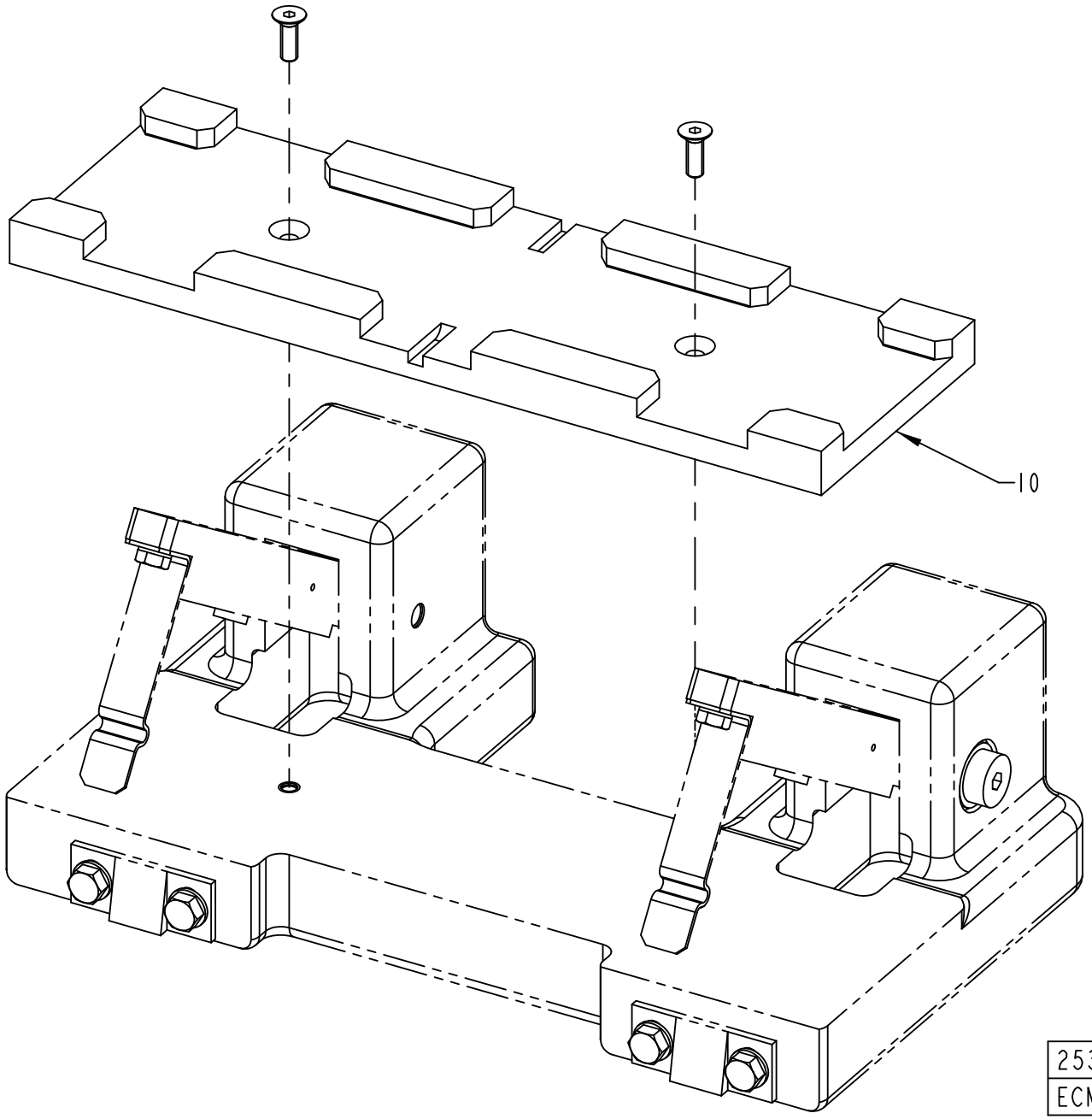

ECM: 355152 - 20080616
Group number: 2533684-0100
Assembly Drawing: 2533684-1_1_AA

Pos	Part No	UN	Qty	Description	Page No
HOLE48, HOLE55					
010	1499296-0002		1	GUIDE	
HOLE72, HOLE92					
010	1499296-0001		1	GUIDE	
HOLE90					
010	1499296-0003		1	GUIDE	
HOLE95, HOLE91					
010	1499296-0004		1	GUIDE	

Pos	Part No	UN	Qty	Description	Page No

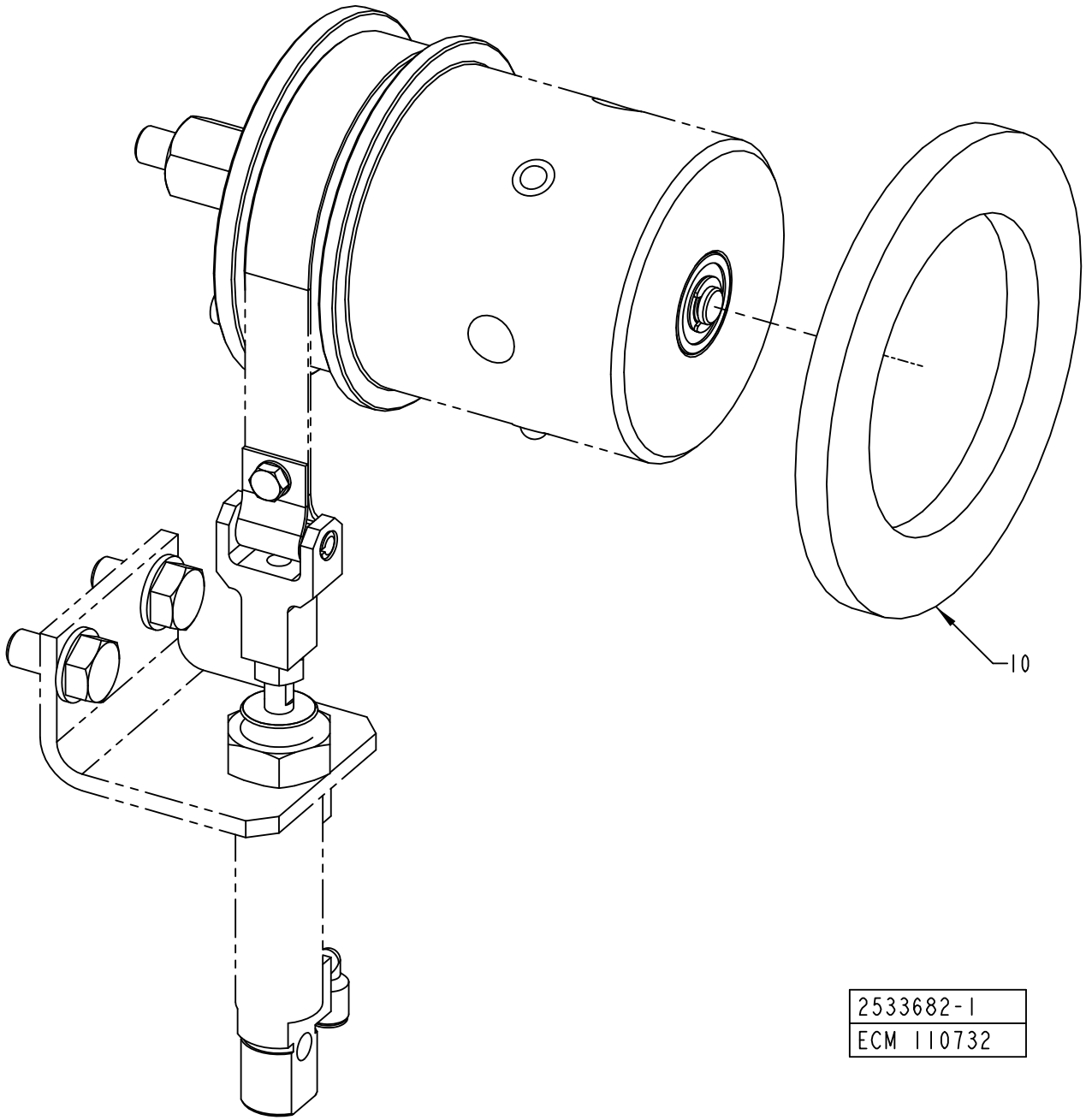
10
2533682-1
ECM 110732

ECM: 355146 - 20080616
Group number: 2533682-0100
Assembly Drawing: 2533682-1_1_AA

Pos	Part No	UN	Qty	Description	Page No
HOLE48, HOLE55					
010	1347952-0003		1	SPACER	
HOLE72, HOLE92					
010	1347952-0002		1	SPACER	
HOLE90					
010	1347952-0004		1	SPACER	
HOLE95, HOLE91					
010	1347952-0006		1	SPACER	

Pos	Part No	UN	Qty	Description	Page No

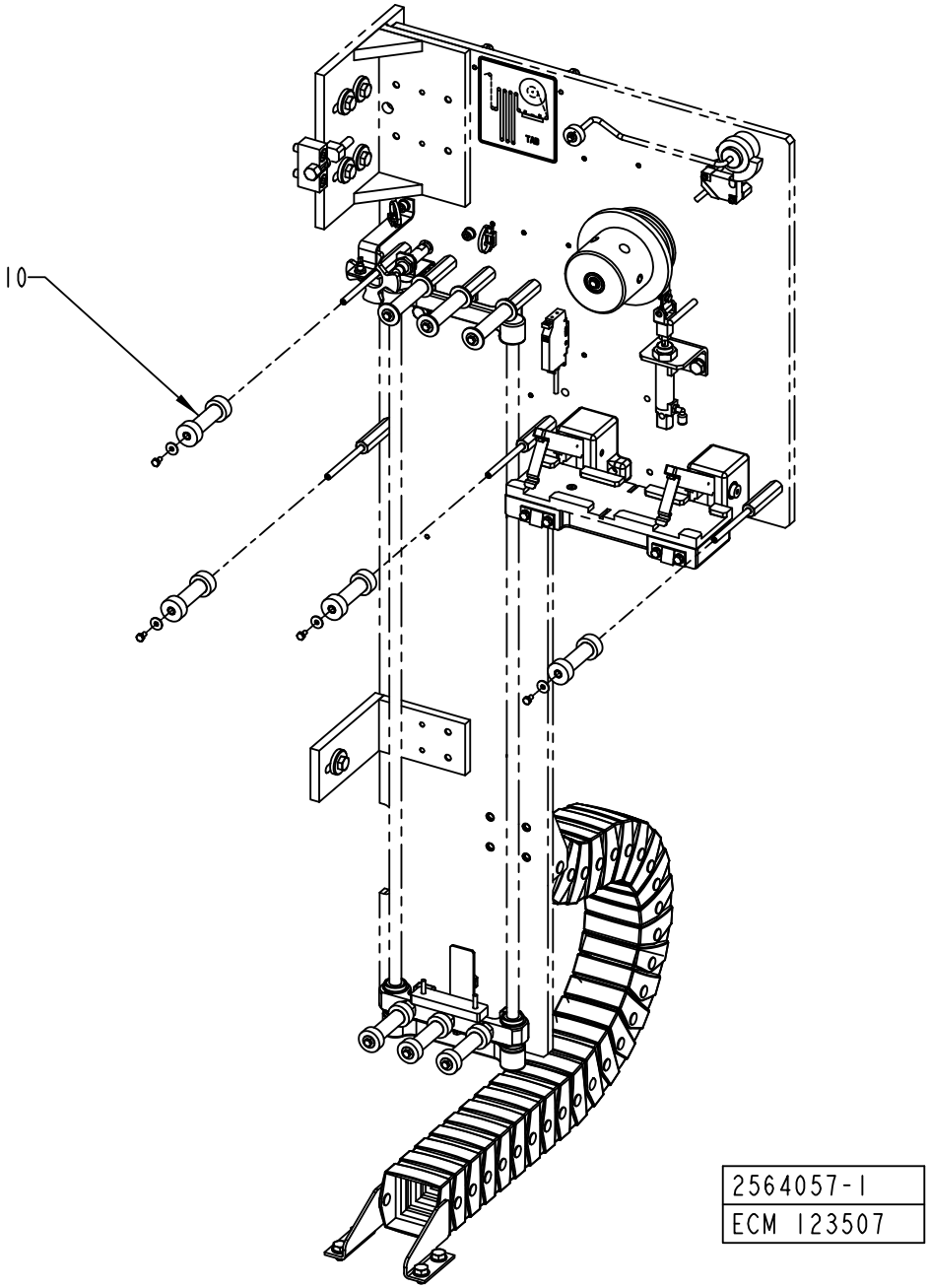
10
2564057-1
ECM 123507

ECM: 355160 - 20080616
Group number: 2564057-0100
Assembly Drawing: 2564057-1_1_AB

Pos	Part No	UN	Qty	Description	Page No
TBA 0250B HOLE95, TBA 0330S HOLE95, TBA 0500S HOLE95, TBA 0200B HOLE95					
010	2564044-0011		4	ROLLER	
TBA 0500S HOLE55, TBA 0200S HOLE92					
010	2564044-0006		4	ROLLER	
TBA 1000B HOLE95, TBA 1000S HOLE95, TBA 1000SQ HOLE95, TBA 1500S HOLE95, TBA 1890S HOLE91, TBA 1890S HOLE95, TBA 2000S HOLE91, TBA 2000S HOLE95					
010	2564044-0012		4	ROLLER	
TBA 1000S HOLE90, TBA 1500S HOLE90					
010	2564044-0008		4	ROLLER	
TPA 0250SQ HOLE72, TPA 0330SQ HOLE48, TPA 0200SQ HOLE72					
010	2564044-0001		4	ROLLER	

Pos	Part No	UN	Qty	Description	Page No

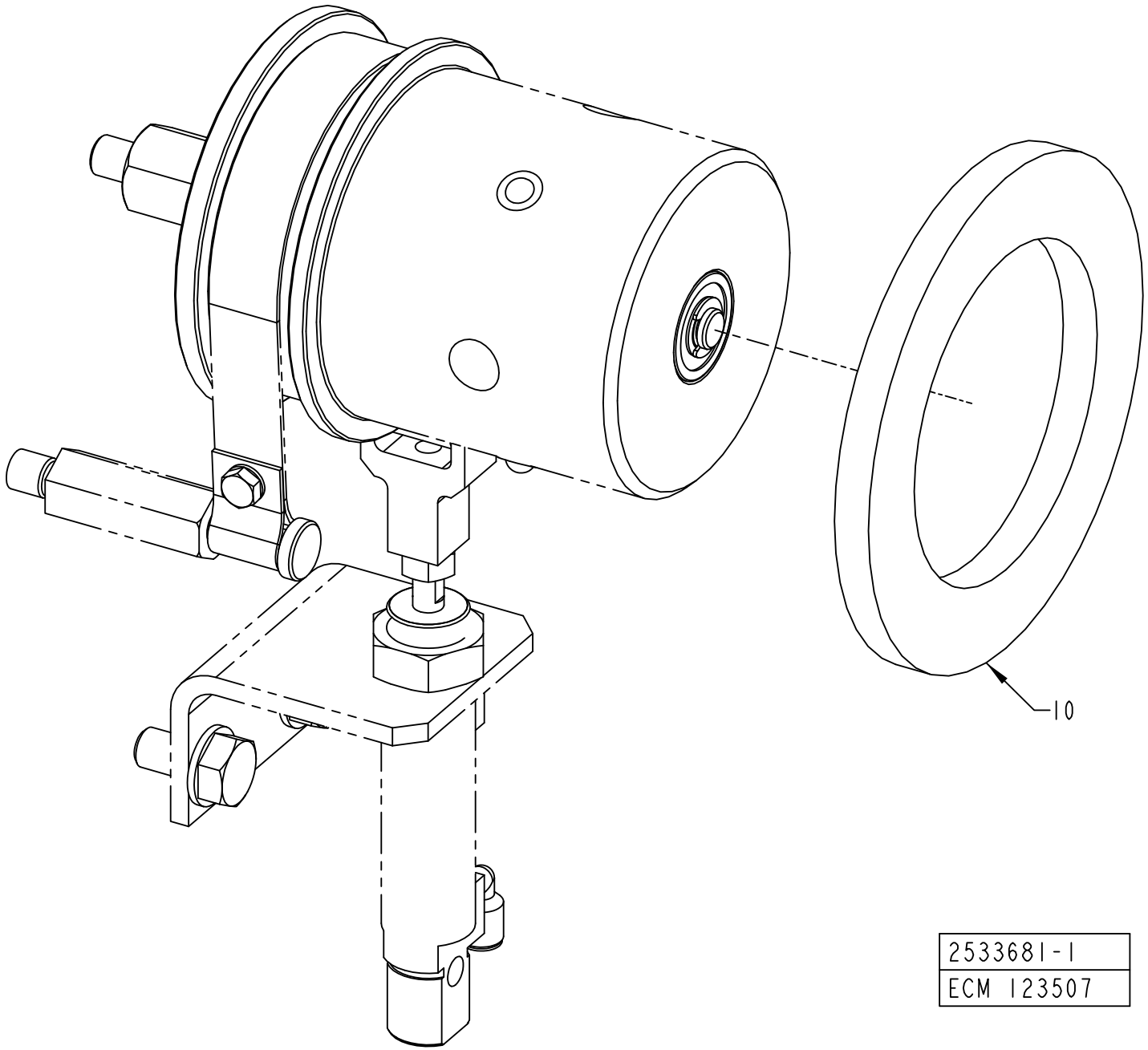
10
2533681-1
ECM 123507

ECM: 355144 - 20080616
Group number: 2533681-0100
Assembly Drawing: 2533681-1_1_AB

Pos	Part No	UN	Qty	Description	Page No
TBA 0250B HOLE95, TBA 0330S HOLE95, TBA 0500S HOLE95, TBA 0200B HOLE95					
010	1347952-0010		1	SPACER	
TBA 0500S HOLE55, TBA 0200S HOLE92					
010	1347952-0006		1	SPACER	
TBA 1000B HOLE95, TBA 1000S HOLE95, TBA 1000SQ HOLE95, TBA 1500S HOLE95, TBA 1890S HOLE91, TBA 1890S HOLE95, TBA 2000S HOLE91, TBA 2000S HOLE95					
010	1347952-0011		1	SPACER	
TBA 1000S HOLE90, TBA 1500S HOLE90					
010	1347952-0008		1	SPACER	
TPA 0250SQ HOLE72, TPA 0330SQ HOLE48, TPA 0200SQ HOLE72					
010	1347952-0016		1	SPACER	

Pos	Part No	UN	Qty	Description	Page No

SPLICING TABLE

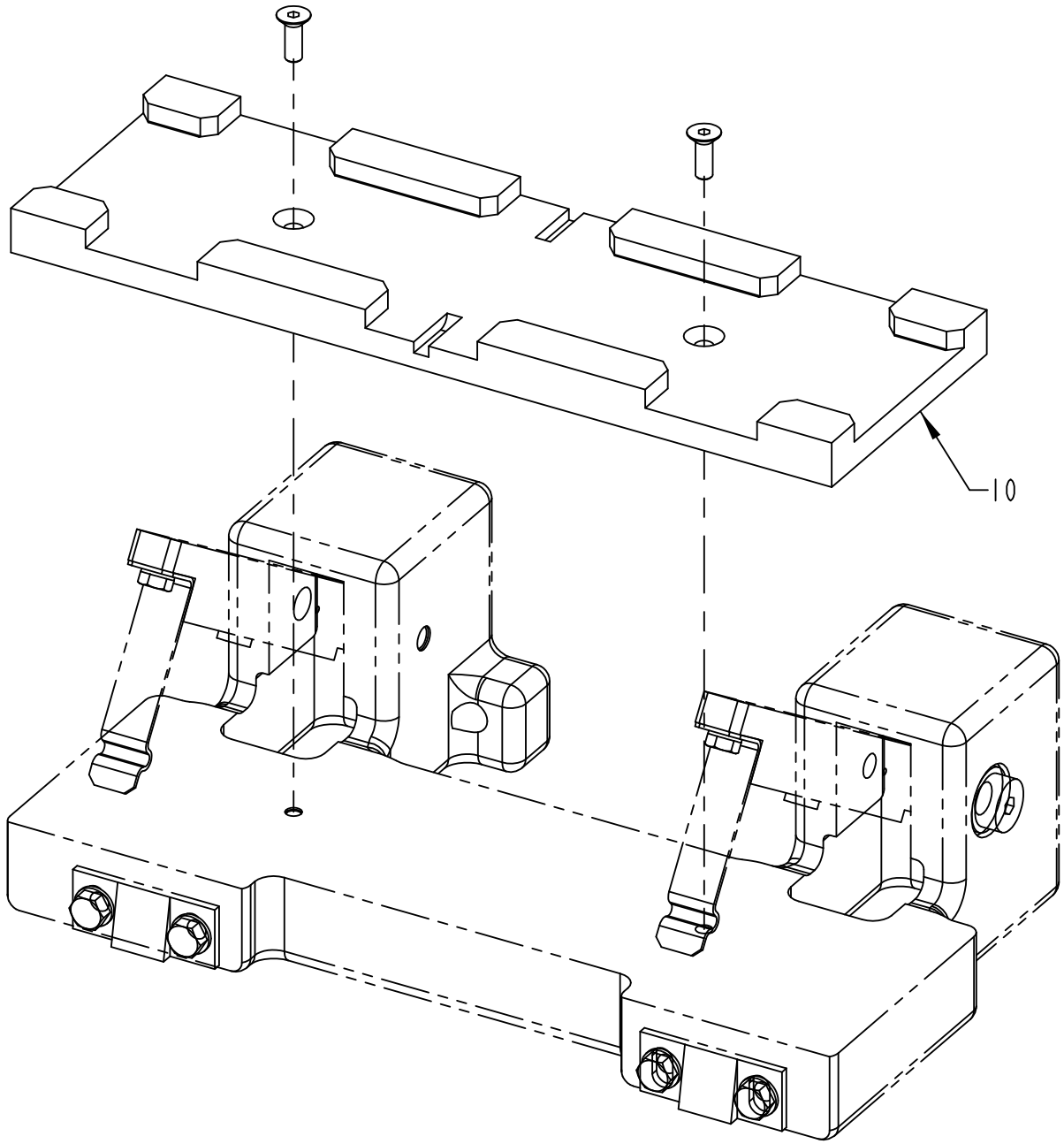

2533685-1
ECM 123507

ECM: 355153 - 20080616
Group number: 2533685-0100
Assembly Drawing: 2533685-1_1_AB

Pos	Part No	UN	Qty	Description	Page No
TBA 0250B HOLE95, TBA 0330S HOLE95, TBA 0500S HOLE95, TBA 0200B HOLE95					
010	1499296-0007		1	GUIDE	
TBA 0500S HOLE55, TBA 0200S HOLE92					
010	1499296-0004		1	GUIDE	
TBA 1000B HOLE95, TBA 1000S HOLE95, TBA 1000SQ HOLE95, TBA 1500S HOLE95, TBA 1890S HOLE91, TBA 1890S HOLE95, TBA 2000S HOLE91, TBA 2000S HOLE95					
010	1499296-0008		1	GUIDE	
TBA 1000S HOLE90, TBA 1500S HOLE90					
010	1499296-0015		1	GUIDE	
TPA 0250SQ HOLE72, TPA 0330SQ HOLE48, TPA 0200SQ HOLE72					
010	1499296-0013		1	GUIDE	

Pos	Part No	UN	Qty	Description	Page No

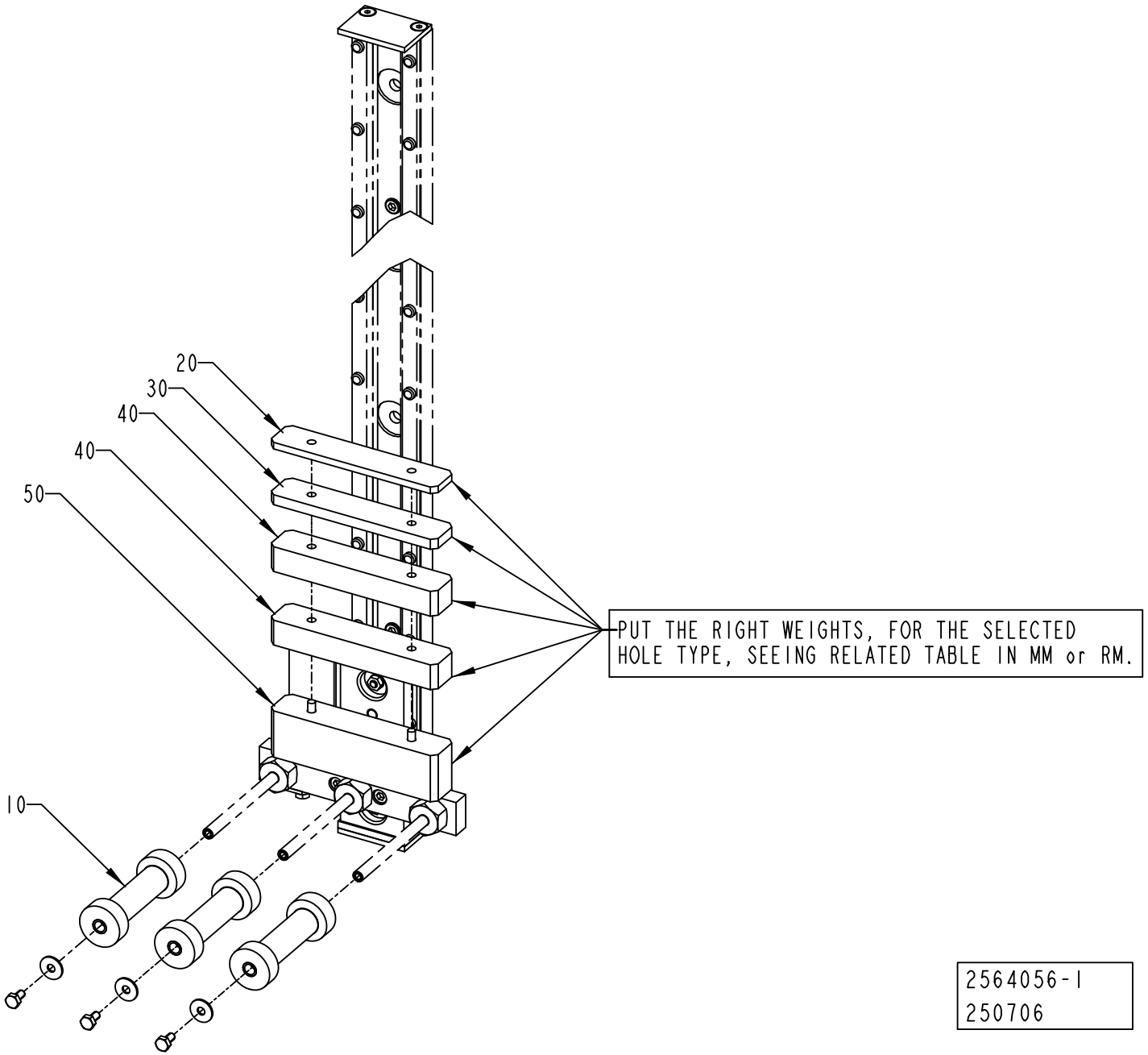

2564056-1
250706

ECM: 266229 - 20061101
Group number: 2564056-0100
Assembly Drawing: 2564056-1_1_AC

Pos	Part No	UN	Qty	Description	Page No
TBA 0250B HOLE95, TBA 0330S HOLE95, TBA 0500S HOLE95, TBA 0200B HOLE95					
010	2564043-0008		3	ROLLER	
TBA 0500S HOLE55					
010	2564043-0005		3	ROLLER	
TBA 1000B HOLE95, TBA 1000S HOLE95, TBA 1000SQ HOLE95, TBA 1500S HOLE95, TBA 1890S HOLE91, TBA 1890S HOLE95, TBA 2000S HOLE91, TBA 2000S HOLE95					
010	2564043-0009		3	ROLLER	
TBA 1000S HOLE90, TBA 1500S HOLE90					
010	2564043-0006		3	ROLLER	
TPA 0250SQ HOLE72, TPA 0330SQ HOLE48, TPA 0200SQ HOLE72					
010	2564043-0001		3	ROLLER	
Common Parts					
020	2608240-0001		1	WEIGHT	
030	2608240-0002		1	WEIGHT	
040	2608240-0003		2	WEIGHT	
050	2608240-0004		1	WEIGHT	

Pos	Part No	UN	Qty	Description	Page No

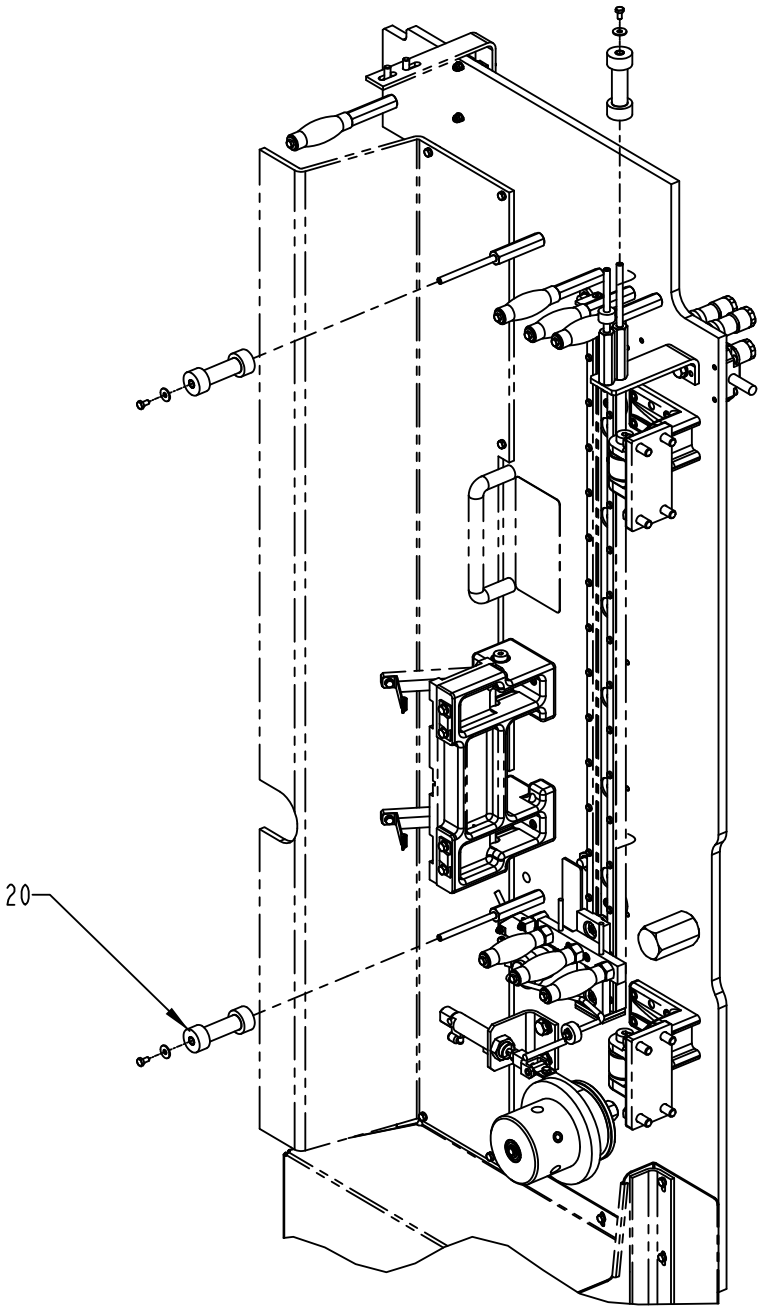

2564051-1
250706

ECM: 266228 - 20061101
Group number: 2564051-0100
Assembly Drawing: 2564051-1_1_AE

Pos	Part No	UN	Qty	Description	Page No
HOLE48, HOLE55					
020	2564044-0004		3	ROLLER	
HOLE72					
020	2564044-0002		3	ROLLER	
HOLE90					
020	2564044-0005		3	ROLLER	
HOLE95, HOLE91					
020	2564044-0006		3	ROLLER	

Pos	Part No	UN	Qty	Description	Page No

This page is intentionally left blank.

ECM: 355171 - 20080616
Group number: 2564076-0100
Assembly Drawing:

Pos	Part No	UN	Qty	Description	Page No
HOLE55, HOLE90, HOLE91, HOLE92, HOLE95					
100	90459-3153		1	ADHESIVE TAPE ALUMINIUM 50MY, WIDTH 16MM	
HOLE72, HOLE48					
120	90144-0069		1	PE TAPE,BLACK ON ALUMINUM 24X24 MM	
Common Parts					
130	2660847-0000		1	TAPE	
200	90600-2609		1	SCOTCH-BRITE WHITE 690	

Pos	Part No	UN	Qty	Description	Page No

This page is intentionally left blank.

ECM: 208180 - 20050822
Group number: 2587337-0100
Assembly Drawing:

Pos	Part No	UN	Qty	Description	Page No
TBA 0500S HOLE55					
010	1490129-0000		1	TEMPLATE	
TBA 1000B HOLE95					
010	2672800-0000		1	TEMPLATE	
TBA 1000S HOLE90					
010	2651573-0000		1	TEMPLATE	
TBA 1000S HOLE95					
010	2672799-0000		1	TEMPLATE	
TBA 1000SQ HOLE95					
010	2672798-0000		1	TEMPLATE	
TBA 1500S HOLE90					
010	2651295-0000		1	TEMPLATE	
TBA 1500S HOLE95					
010	2672797-0000		1	TEMPLATE	
TBA 1890S HOLE91, TBA 2000S HOLE91					
010	2664765-0000		1	TEMPLATE	
TBA 1890S HOLE95, TBA 2000S HOLE95					
010	2664766-0000		1	TEMPLATE	
TPA 0250SQ HOLE72, TPA 0200SQ HOLE72					
020	2715294-0000		1	TEMPLATE	

Pos	Part No	UN	Qty	Description	Page No

This page is intentionally left blank.

ECM: 355169 - 20080616
Group number: 2564075-0100
Assembly Drawing:

Pos	Part No	UN	Qty	Description	Page No
TPA 0200SQ HOLE72					
010	2526546-0000		1	OPENING SPECIFICATION	
TPA 0250SQ HOLE72					
010	2511638-0000		1	OPENING SPECIFICATION	
TPA 0330SQ HOLE48					
010	2514030-0000		1	OPENING SPECIFICATION	
TBA 0200B HOLE95					
010	2696580-0000		1	OPENING SPECIFICATION	
TBA 0200S HOLE92					
010	2927573-0000		1	OPENING SPECIFICATION	
TBA 0250B HOLE95					
010	2697205-0000		1	OPENING SPECIFICATION	
TBA 0330S HOLE95					
010	2695493-0000		1	OPENING SPECIFICATION	
TBA 0500S HOLE55					
010	2514029-0000		1	OPENING SPECIFICATION	
TBA 0500S HOLE95					
010	2514032-0000		1	OPENING SPECIFICATION	
TBA 1000B HOLE95					
010	2658047-0000		1	OPENING SPECIFICATION	
TBA 1000S HOLE90					
010	2579887-0000		1	OPENING SPECIFICATION	
TBA 1000S HOLE95					
010	2658048-0000		1	OPENING SPECIFICATION	
TBA 1000SQ HOLE95					
010	2658046-0000		1	OPENING SPECIFICATION	
TBA 1500S HOLE90					
010	2635555-0000		1	OPENING SPECIFICATION	
TBA 1500S HOLE95					
010	2658045-0000		1	OPENING SPECIFICATION	
TBA 1890S HOLE91					
010	2664768-0000		1	OPENING SPECIFICATION	
TBA 1890S HOLE95					
010	2664767-0000		1	OPENING SPECIFICATION	
TBA 2000S HOLE91					
010	2604557-0000		1	OPENING SPECIFICATION	
TBA 2000S HOLE95					
010	2608239-0000		1	OPENING SPECIFICATION	

Pos	Part No	UN	Qty	Description	Page No

This page is intentionally left blank.

ECM: 221956 - 20051005
Group number: 2778380-0100
Assembly Drawing:

Pos	Part No	UN	Qty	Description	Page No	Pos	Part No	UN	Qty	Description	Page No
-											
0010	2778381-0100		1	ELECTRICAL DOCUMENT							

This page is intentionally left blank.

ECM: 331839 - 20080101
Group number: 2939206-0100
Assembly Drawing:

Pos	Part No	UN	Qty	Description	Page No
TPA 1000SQ QC, TPA 0750SQ QC					
010	2895146-0000		12	SPRING	
020	90459-4580		1	O-RING 165X4 MM	
030	2687110-0000		1	LOCK WASHER	
040	90600-3728		1	WRENCH FOR RING NUT, S 35 KM	

Pos	Part No	UN	Qty	Description	Page No

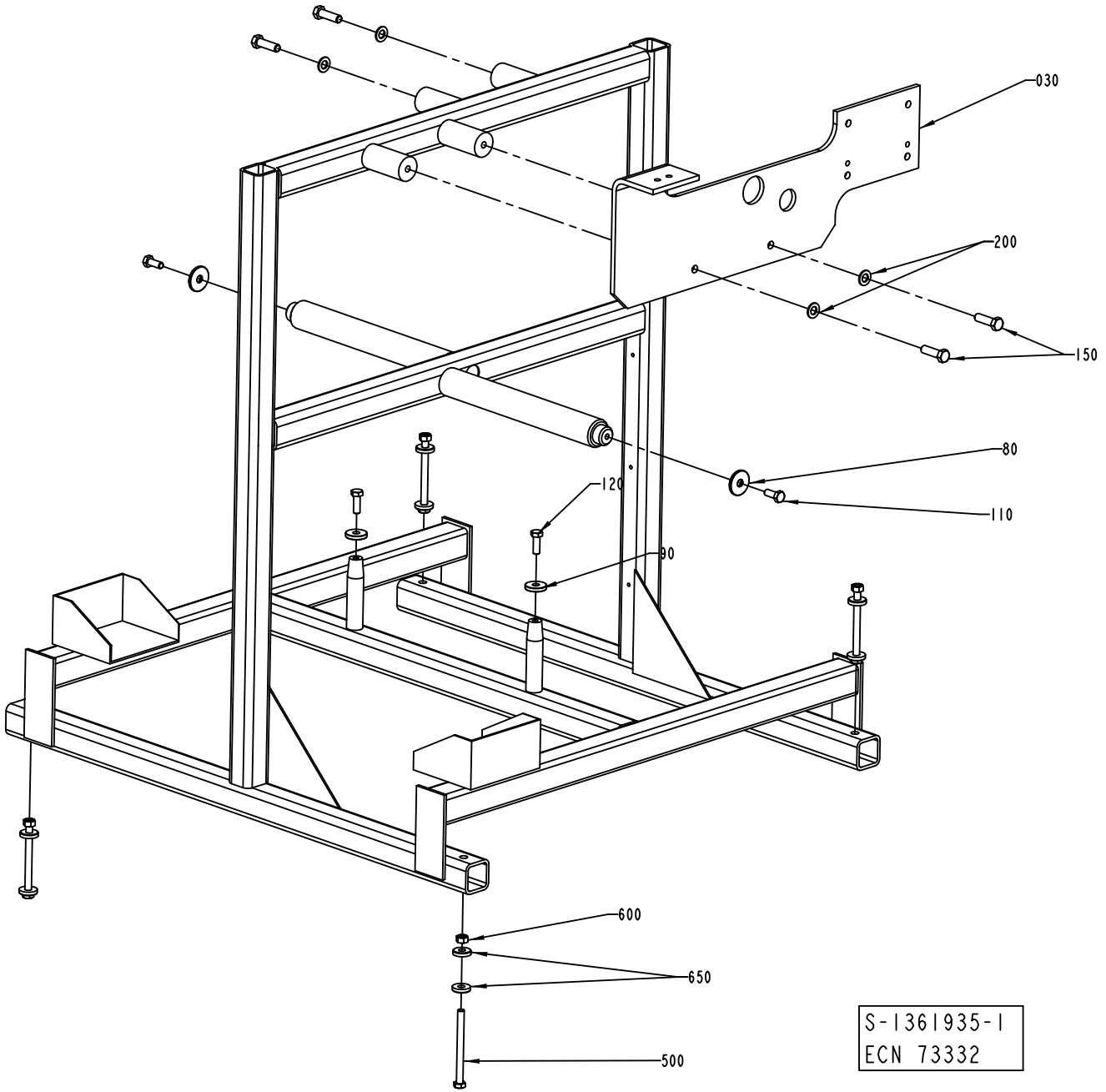
030
200
150
80
110
120
90
600
650
500
S-1361935-1
ECN 73332

ECM: 73332 - 20000411
Group number: 1361935-0100
Assembly Drawing: 1361935-1_1_AB

Pos	Part No	UN	Qty	Description	Page No
-					
020	1361934-0000		1	FRAME	
030	1363780-0000		1	CARRIER	
080	1144620-0000		2	WASHER	
090	1144681-0000		2	WASHER	
110	312105-0493		2	SCREW M6S ISO 4017 M10X25 A480	
120	312105-0495		2	SCREW M6S ISO 4017 M10X30 A480	
150	312105-0540		4	SCREW M6S ISO 4017 M12X40 A480	
200	315105-0178		4	WASHER BRB 13X24 RFR	
500	312101-0515		4	SCREW M6S M10X120 FZB	
600	312601-0320		4	HEXAGON NUT, M10 8 FZB, ISO 4032	
650	315121-0173		8	WASHER PLAIN, TBRSB 10,5/28 H=6	

Pos	Part No	UN	Qty	Description	Page No

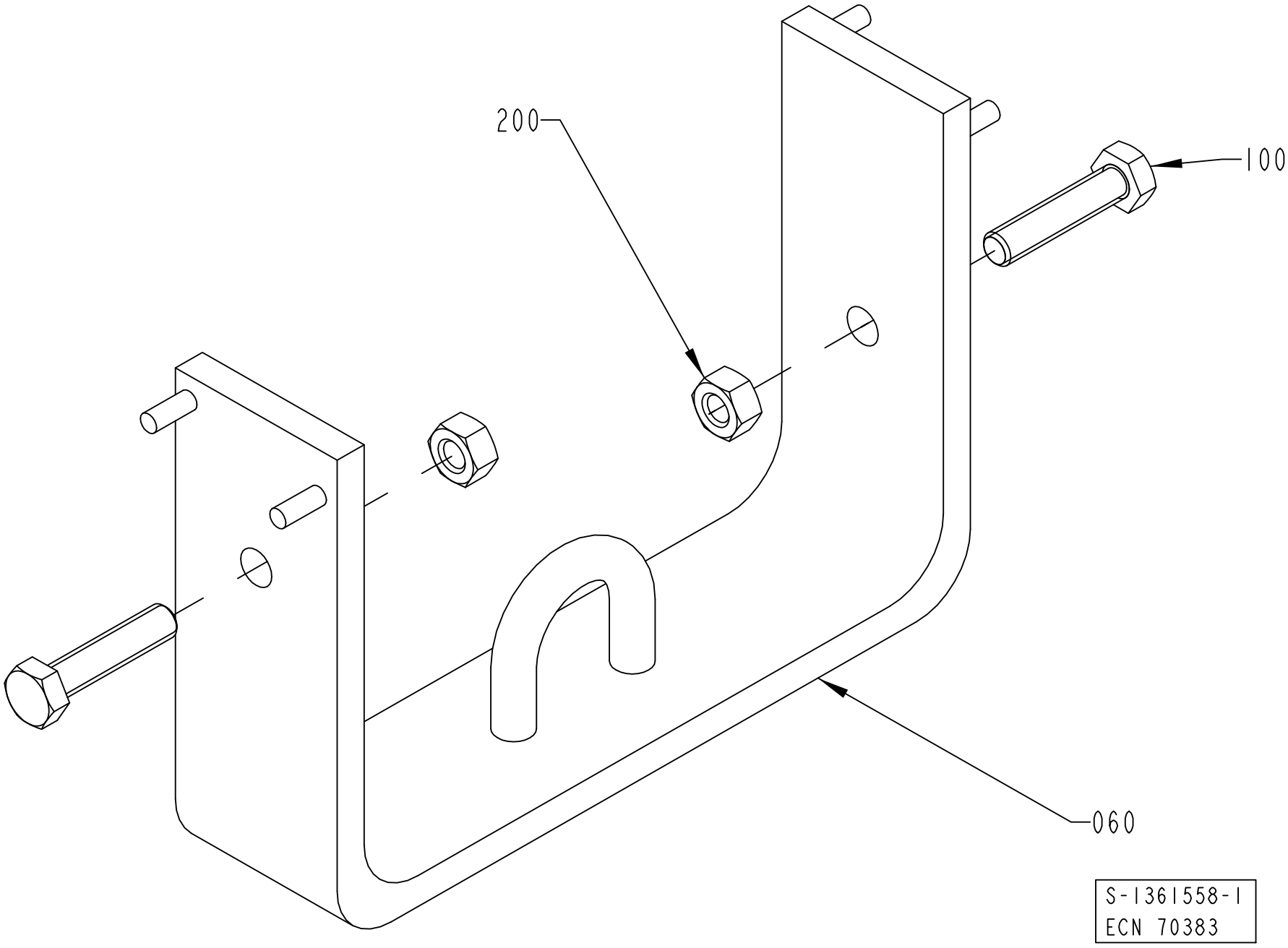
200
100
060
S-1361558-1
ECN 70383

ECM: 73332 - 20000411
Group number: 1361558-0100
Assembly Drawing: 1361558-1_1_AA

Pos	Part No	UN	Qty	Description	Page No
-					
020	1363791-0000		1	BRACKET	
100	312109-0500		2	SCREW M6S ISO 4017 M10X45 A480	
200	312605-0320		2	HEXAGON NUT, M6M M10 A280	

Pos	Part No	UN	Qty	Description	Page No

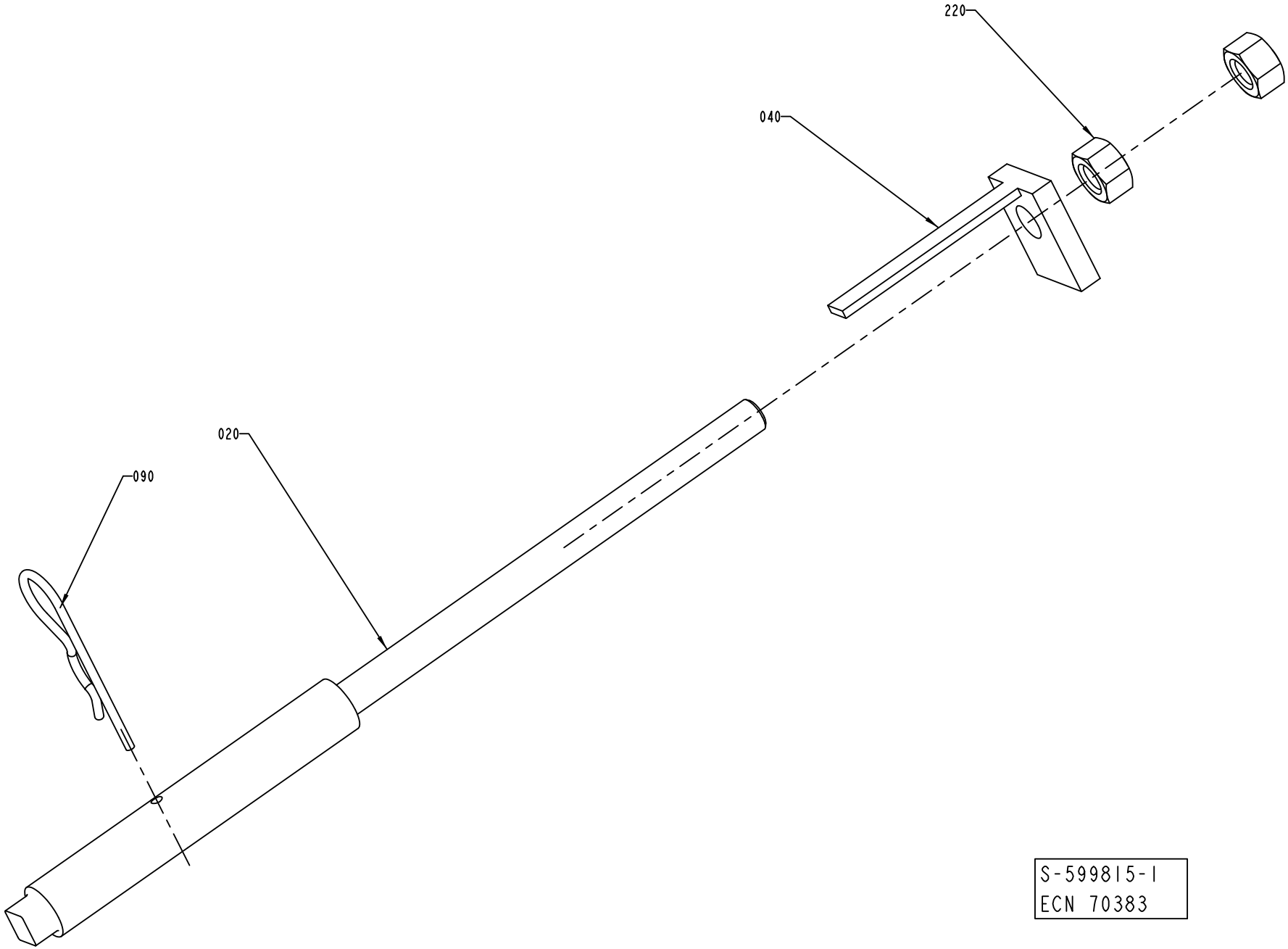
220
040
020
090
S-599815-I
ECN 70383

ECM: 118983 - 20021217
Group number: 599815-0100
Assembly Drawing: 599815-1_1_AA

Pos	Part No	UN	Qty	Description	Page No
-					
020	598095-0000		2	SCREW	
040	598096-0000		2	WASHER	
090	90258-0060		2	COTTER	
220	312605-0322		4	HEXAGON NUT, M6M M12 A280	

Pos	Part No	UN	Qty	Description	Page No

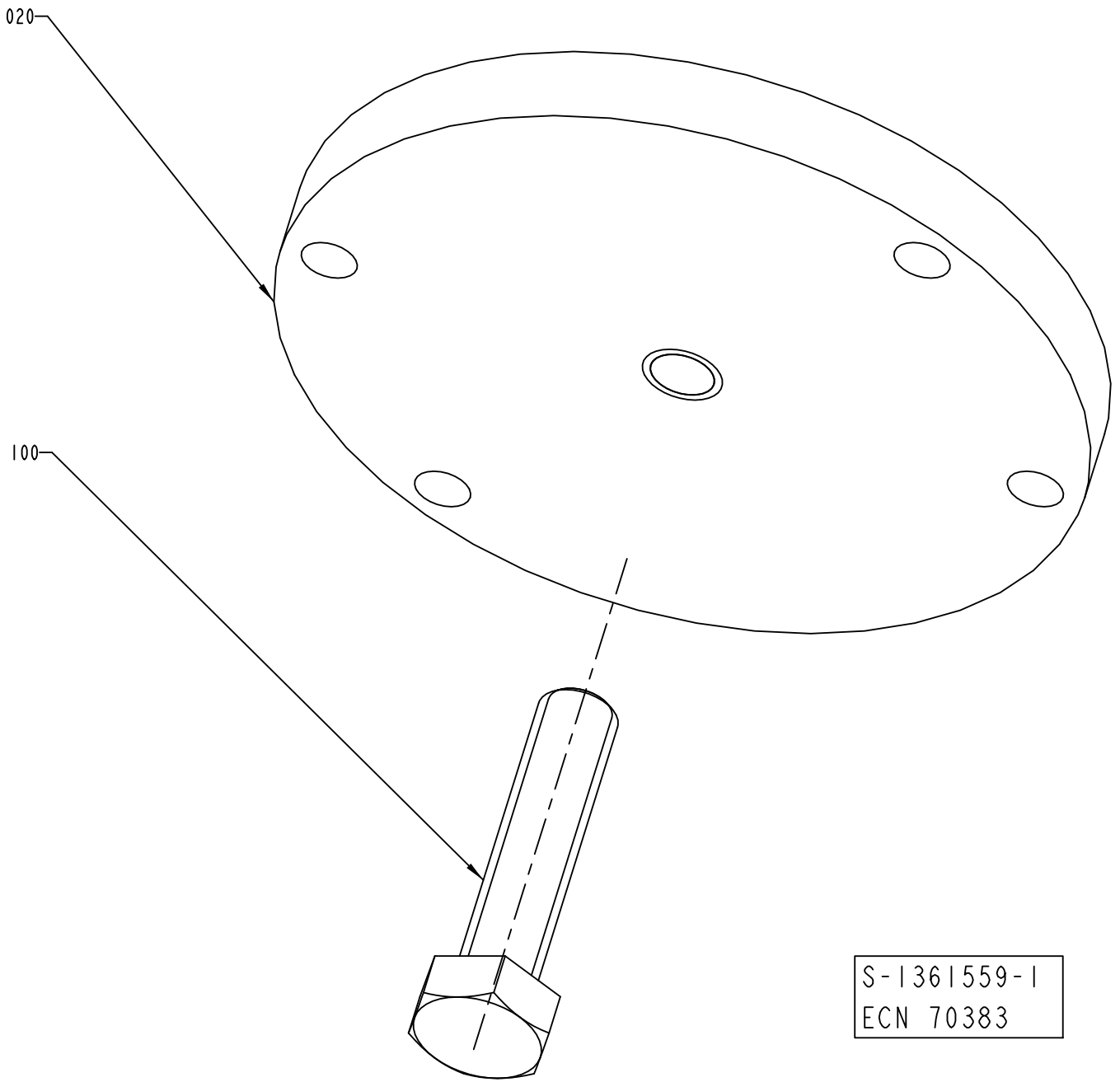
020
100
S-1361559-1
ECN 70383

ECM: 70383 - 19990301
Group number: 1361559-0100
Assembly Drawing: 1361559-1_1_AA

Pos	Part No	UN	Qty	Description	Page No
-					
020	1361547-0000		1	PULLER	
100	312109-0500		1	SCREW M6S ISO 4017 M10X45 A480	

Pos	Part No	UN	Qty	Description	Page No

PAPER REEL HOLDER

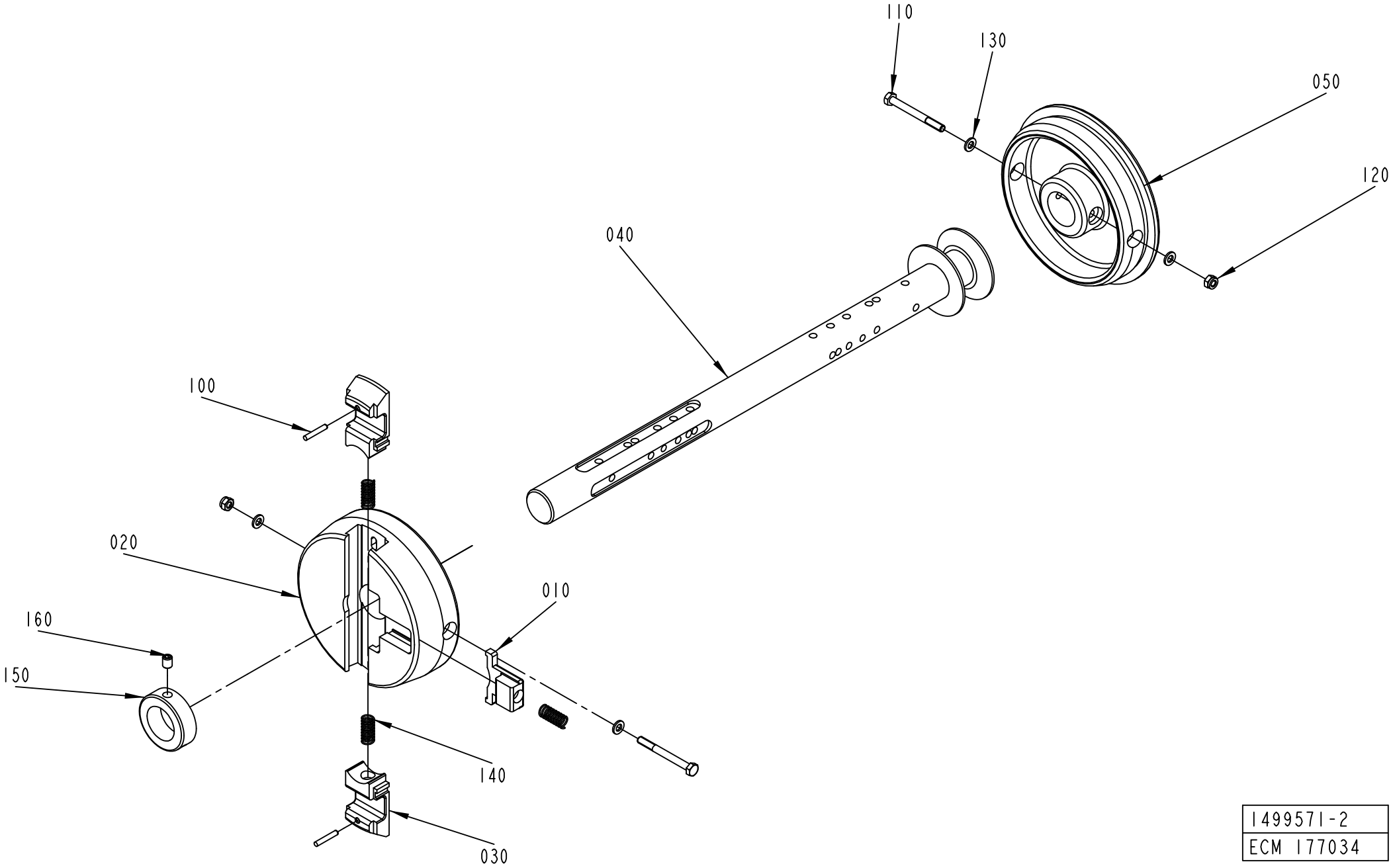

1499571-2
ECM 177034

ECM: 210983 - 20050808
Group number: 1499571-0100
Assembly Drawing: 1499571-2_1_AF

Pos	Part No	UN	Qty	Description	Page No
A3/FLEX					
040	2656299-0000		1	SHAFT	
150	315742-0123		1	RETAINING RING 32 SMS 199 RFR	
160	312318-0445		1	NEW ISO4029 M8X10 A4	
Common Parts					
010	272728-0000		1	BARRIER	
020	1512265-0000		1	SLEEVE	
030	575002-0000		2	PLUNGER	
050	1512266-0000		1	SLEEVE	
100	311103-0274		2	PARALLEL PIN ISO 2338 4M6X25 A1	
110	312105-0382		2	SCREW M6S ISO 4014 M6X60 A480	
120	312812-0316		2	HEXAGON NUT, NY-LOCK M6 A480	
130	315105-0153		4	WASHER BRB 6,4X12 RFR	
140	90335-0025		3	COMP. SPRING 22010, 1X11X26	

Pos	Part No	UN	Qty	Description	Page No

This page is intentionally left blank.

ECM: 295133 - 20070216
Group number: 2641396-0100
Assembly Drawing:

Pos	Part No	UN	Qty	Description	Page No
TBA 0200B, TBA 0200SQ, TBA 0250B, TBA 0330S, TBA 0250SQ					
010	2523766-0007		4	BRACKET	
020	2508205-0007		8	BRACKET	
TBA 0200M, TBA 0250S					
010	2523766-0009		4	BRACKET	
020	2508205-0009		8	BRACKET	
TBA 0200S, TPA 0250SQ, TPA 0200SQ					
010	2523766-0010		4	BRACKET	
020	2508205-0010		8	BRACKET	
TBA 0500B, TBA 1000B, TBA 1500S					
010	2523766-0001		4	BRACKET	
020	2508205-0001		8	BRACKET	
TBA 0500S					
010	2523766-0005		4	BRACKET	
020	2508205-0005		8	BRACKET	
TBA 0500SQ, TBA 1000SQ					
010	2523766-0003		4	BRACKET	
020	2508205-0003		8	BRACKET	
TBA 1000S					
010	2523766-0002		4	BRACKET	
020	2508205-0002		8	BRACKET	
TBA 1890S, TBA 2000S, TBA 1400B					
010	2701881-0000		4	BRACKET	
020	2701847-0000		8	BRACKET	
TPA 0330SQ					
010	2523766-0008		4	BRACKET	
020	2508205-0008		8	BRACKET	
TPA 0500SQ					
010	2523766-0006		4	BRACKET	
020	2508205-0006		8	BRACKET	
TPA 1000SQ, TPA 0750SQ					
010	2523766-0012		4	BRACKET	
020	2508205-0012		8	BRACKET	
Common Parts					
030	2701846-0000		4	FLANGE	
040	2701880-0000		2	FLANGE	

Pos	Part No	UN	Qty	Description	Page No

This page is intentionally left blank.

ECM: 295134 - 20070216
Group number: 2641398-0100
Assembly Drawing:

Pos	Part No	UN	Qty	Description	Page No
TBA 0200B, TBA 0200SQ, TBA 0250B, TBA 0330S, TBA 0500S, TBA 1500S, TPA 0330SQ, TPA 0250SQ, TPA 0200SQ, TPA 1000SQ, TPA 0500SQ, TPA 0750SQ, TBA 0250SQ					
010	1511769-0000		1	ROLLER	
TBA 0200M, TBA 0200S, TBA 0250S, TBA 0500SQ, TBA 0500B, TBA 1000B, TBA 1000SQ, TBA 1000S					
010	1538496-0000		1	ROLLER	

Pos	Part No	UN	Qty	Description	Page No

This page is intentionally left blank.

ECM: 295135 - 20070216
Group number: 2655614-0100
Assembly Drawing:

Pos	Part No	UN	Qty	Description	Page No
TBA 0200B QC, TBA 0330S QC, TBA 0250B QC					
010	67380-0214		1	TRANSFORMER	
TBA 0200M, TBA 0200SQ, TBA 0200S, TBA 0250S, TBA 0500S, TBA 0500SQ, TBA 0500B, TBA 1000B, TBA 1000SQ, TBA 1000S, TBA 1500S, TPA 0330SQ, TPA 0250SQ, TPA 0200SQ, TPA 1000SQ, TPA 0500SQ, TBA 1890S, TBA 2000S, TPA 0750SQ, TBA 0250SQ, TBA 1400B					
010	67380-0207		1	TRANSFORMER	

Pos	Part No	UN	Qty	Description	Page No

This page is intentionally left blank.

ECM: 305331 - 20070701
Group number: 2897156-0100
Assembly Drawing:

Pos	Part No	UN	Qty	Description	Page No
TPA 1000SQ, TBA 1890S, TBA 2000S, TPA 0750SQ, TBA 1400B					
010	2609303-0000		2	WEIGHT	
020	90287-0261		4	SCREW MC6S M5X55 A270	

Pos	Part No	UN	Qty	Description	Page No

Tetra Pak

SPC
Spare Parts Catalogue

This page is intentionally left blank.

ECM: 190482 - 20041102
Group number: 2698249-0100
Assembly Drawing:

Pos	Part No	UN	Qty	Description	Page No
NOQC START FM QC					
020	2636081-0100		1	FLAP HEATER	**4-5**
030	2698251-0000		1	BOX	
QC START FM QC, QC START FM NOQC					
010	2593831-0100		1	VOLUME KIT	**4-33, 4-35**
020	2636081-0100		1	FLAP HEATER	**4-5**
030	2698251-0000		1	BOX	

Pos	Part No	UN	Qty	Description	Page No

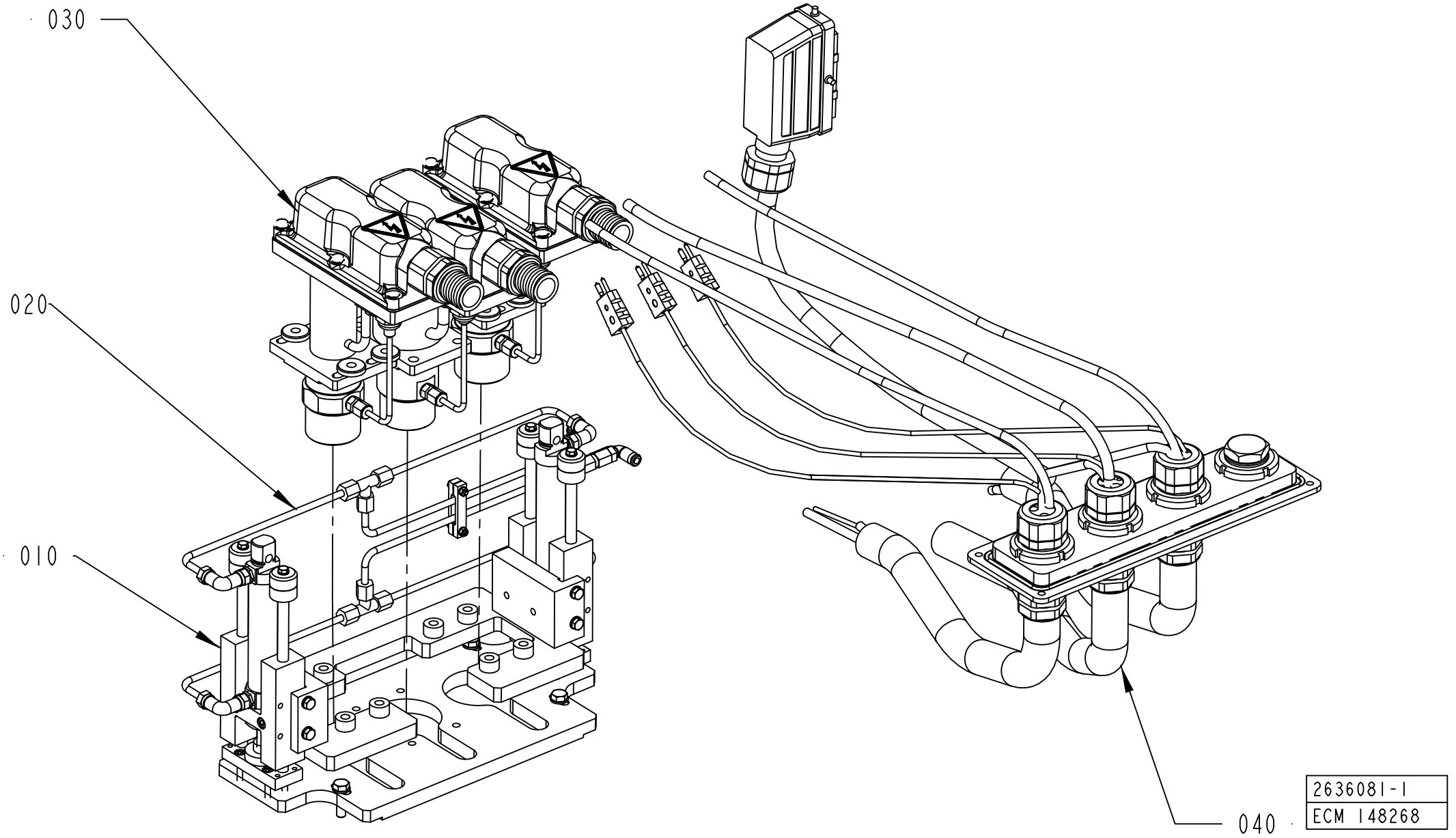
030
020
010
040
2636081-1
ECM 148268

ECM: 273144 - 20061101
Group number: 2636081-0100
Assembly Drawing: 2636081-1_1_AA

Pos	Part No	UN	Qty	Description	Page No
NOQC START FM QC					
010	2544339-0100		1	FRAME	**4-7**
030	2641480-0100		1	HEATING PART	**4-9**
040	2660376-0100		1	CABLE HARNESS	**4-11**
QC START FM NOQC					
010	2535538-0200		1	FRAME	**4-13, 4-15, 4-17, 4-19, 4-21, 4-23, 4-25, 4-27, 4-29**
020	2636082-0100		1	FLAP HEATER	**4-31**
030	2641480-0100		1	HEATING PART	**4-9**
040	2660376-0100		1	CABLE HARNESS	**4-11**
QC START FM QC					
010	2535538-0200		1	FRAME	**4-13, 4-15, 4-17, 4-19, 4-21, 4-23, 4-25, 4-27, 4-29**
030	2641480-0100		1	HEATING PART	**4-9**
040	2660376-0100		1	CABLE HARNESS	**4-11**

Pos	Part No	UN	Qty	Description	Page No

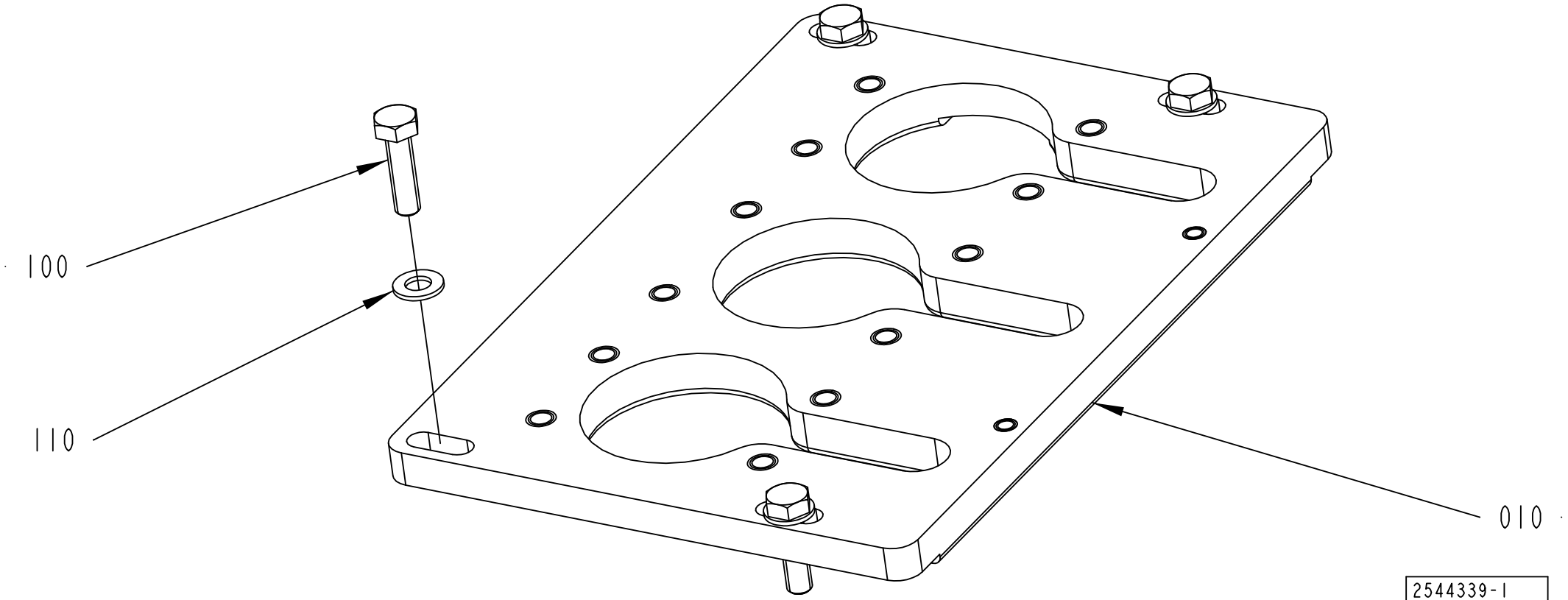

2544339-1
ECM 116811

ECM: 189491 - 20041104
Group number: 2544339-0100
Assembly Drawing: 2544339-1_1_AA

Pos	Part No	UN	Qty	Description	Page No
-					
010	1285291-0000		1	PLATE	
100	315105-0165		4	WASHER BRB 8,4X16 RFR	
110	312105-0453		4	SCREW M6S ISO 4017 M8X25 A480	

Pos	Part No	UN	Qty	Description	Page No

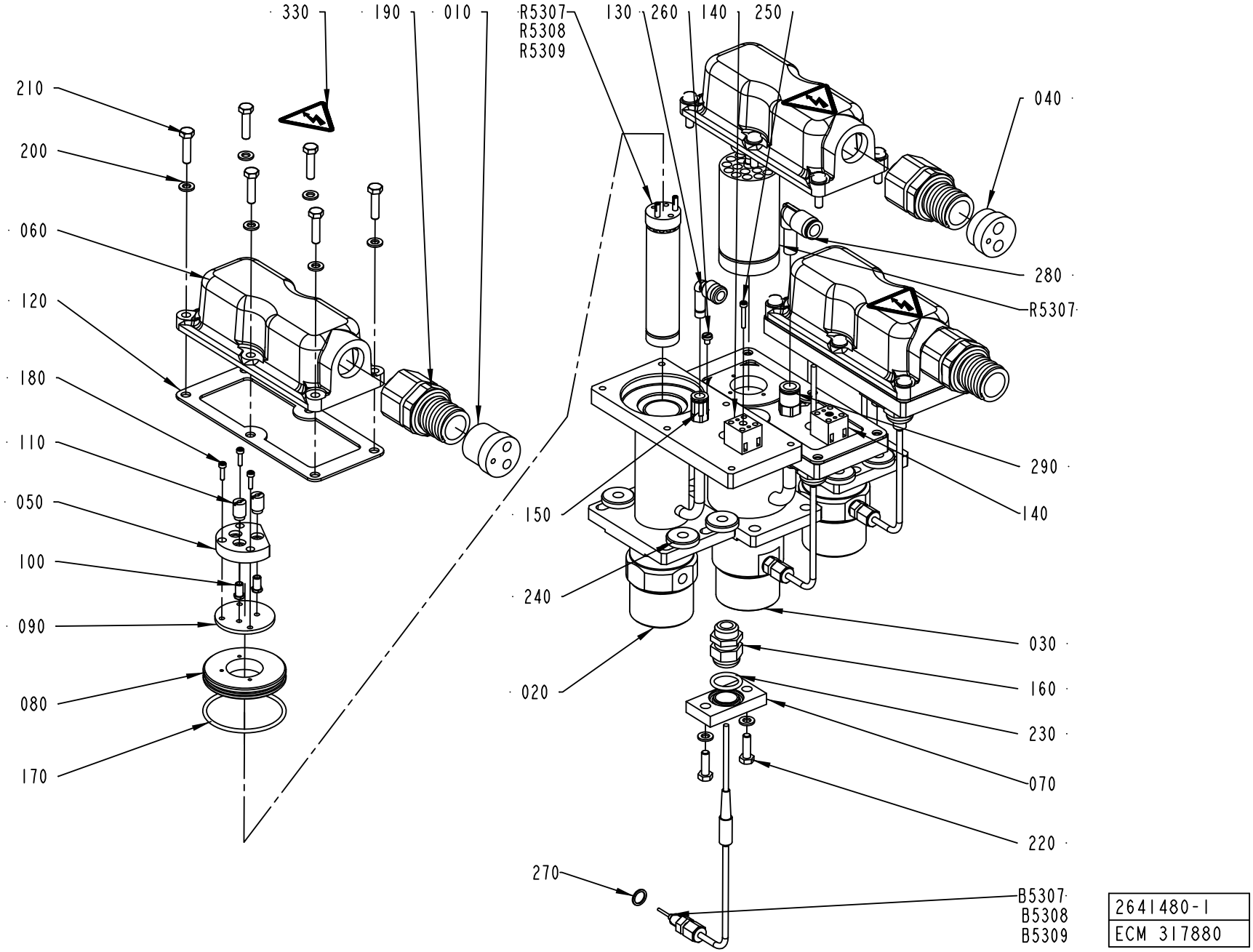
330
190
010
R5307
R5308
R5309
130
260
140
250
210
200
060
120
180
110
050
100
090
080
170
040
280
R5307
290
140
150
240
020
030
160
230
070
220
270
B5307
B5308
B5309
2641480-1
ECM 317880

ECM: 317887 - 20080103
Group number: 2641480-0100
Assembly Drawing: 2641480-1_1_AB

Pos	Part No	UN	Qty	Description	Page No
-					
010	1484379-0000		2	INSERT	
020	1296070-0000		2	HEATING PIPE	
030	1285293-0000		1	HEATING PIPE	
040	1484093-0000		1	INSERT	
050	294464-0000		3	BASE PLATE	
060	1484096-0000		3	COVER	
070	1285311-0000		3	PLATE	
080	1285307-0000		3	SPACER	
090	1285308-0000		3	GASKET	
100	270927-0000		6	SCREW	
110	266739-0000		6	CABLE GLAND	
120	1285312-0000		3	GASKET	
130	90055-0204		2	ELBOW WITH TAILPIECE 8/8 MM LONG	
140	90195-0020		3	TERMINAL BLOCK, BK 2CRN; 0624720000	
150	342722-0204		2	PIPE COUPLING	
160	352103-0106		3	CABLE GLAND, ST 11, PR18,6/PG11	
170	315204-0303		3	O-RING 59,5X3 MM	
180	312115-0226		9	SCREW ISO4762 M3X12 A4 80	
190	353247-0005		3	HOSE GLAND EMC PG21 EXTENDED	
200	315105-0153		24	WASHER BRB 6,4X12 RFR	
210	312105-0372		18	SCREW M6S ISO 4017 M6X25 A480	
220	312105-0370		6	SCREW M6S ISO 4017 M6X20 A480	
230	315204-0215		3	O-RING 19,2X3 MM	
240	315125-0165		8	WASHER TBRSB 8,4X26X5 A4	
250	312115-0230		3	SCREW ISO4762 M3X20 A4 80	
260	312132-0284		3	SLOTTED HEAD, PAN SCREW, MSCS M4X5	
270	315234-0109		3	WASHER,PL.RND.CU.10,3/13,5 H=1,0	
280	90459-1506		1	ELBOW WITH TAILPIECE 10/10 MM	
290	342722-0211		1	STRAIGHT COUPLING D=10-G1/4"	
330	359705-0015		3	WARNING SIGN ISO, RISK OF ELECTRIC SHOCK	
B5307	90459-4053		1	THERMOCOUPLE, 5110082-001	
B5308	90459-4053		1	THERMOCOUPLE, 5110082-001	
B5309	90459-4053		1	THERMOCOUPLE, 5110082-001	
R5307	90459-0707		1	HEATING ELEMENT 1500W/220V	
R5308	90459-0707		1	HEATING ELEMENT 1500W/220V	
R5309	90206-0030		1	HEATING ELEMENT 3000W, 220V	

Pos	Part No	UN	Qty	Description	Page No

Machine Type | Group Description | Used-In | Group Number | Page No

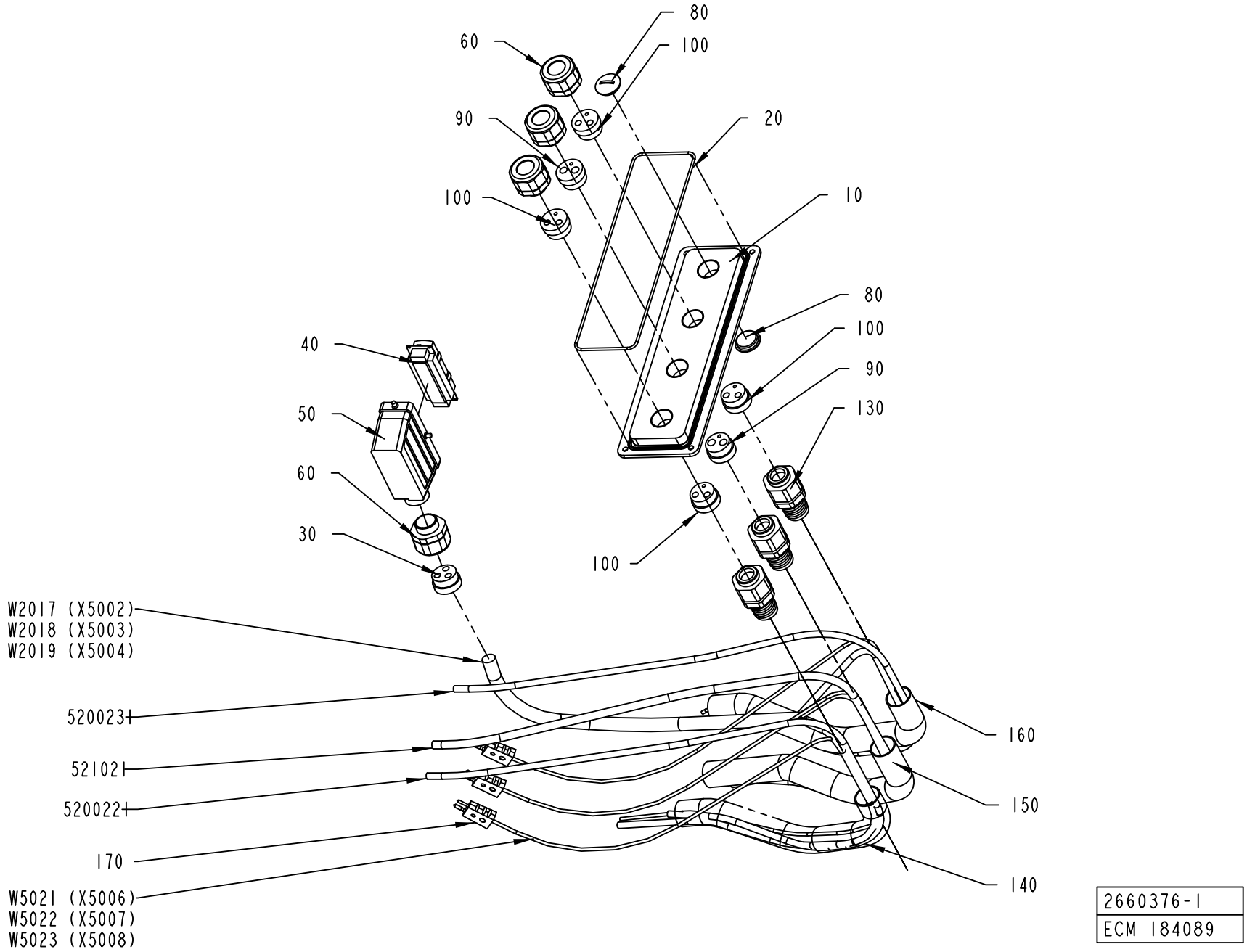

2660376-1
ECM 184089

ECM: 317889 - 20080103
Group number: 2660376-0100
Assembly Drawing: 2660376-1_1_AB

Pos	Part No	UN	Qty	Description	Page No
-					
010	2661082-0000		1	PLATE	
020	90161-0001	MM	800	O-RING MATERIAL 3 MM	
030	2527371-0000		1	INSERT	
040	90110-0150		1	MALE INSERT 121110 0000	
050	90110-0228		1	CABLE HOOD 24-POL 71.350.2428.0	
060	353241-0003		4	GLAND W/O INSERT PG21 EXTENDED	
080	90002-0012		2	BLANK-OFF PLUG, PR 28,3 SKINDICHT-BLK21	
090	1484093-0000		1	INSERT	
100	1484379-0000		2	INSERT	
130	353247-0005		3	HOSE GLAND EMC PG21 EXTENDED	
140	90152-0070	MM	380	METAL HOSE, 32,5X26, UL 2621	
150	90152-0070	MM	380	METAL HOSE, 32,5X26, UL 2621	
160	90152-0070	MM	380	METAL HOSE, 32,5X26, UL 2621	
170	90326-0022		3	PLUG, MALE YELLOW CR-AL	
521021	90166-0216	MM	1300	TUBE 10 MM PUR BLUE	
5200221	90166-0013	MM	1300	TUBE 8 MM PA BLUE	
5200231	90166-0013	MM	1300	TUBE 8 MM PA BLUE	
W2017	351150-0412	MM	2000	CABLE OLFLEX 3X1,5 MM2 LIGHT/GREY	
W2018	351150-0412	MM	2000	CABLE OLFLEX 3X1,5 MM2 LIGHT/GREY	
W2019	351150-0412	MM	2000	CABLE OLFLEX 3X1,5 MM2 LIGHT/GREY	
W5021	90220-0034	MM	2000	THERMOCABLE TEX/SITW-20F-KX 2X0,5MM2	
W5022	90220-0034	MM	2000	THERMOCABLE TEX/SITW-20F-KX 2X0,5MM2	
W5023	90220-0034	MM	2000	THERMOCABLE TEX/SITW-20F-KX 2X0,5MM2	

Pos	Part No	UN	Qty	Description	Page No

Machine Type | Group Description | Used-In | Group Number | Page No

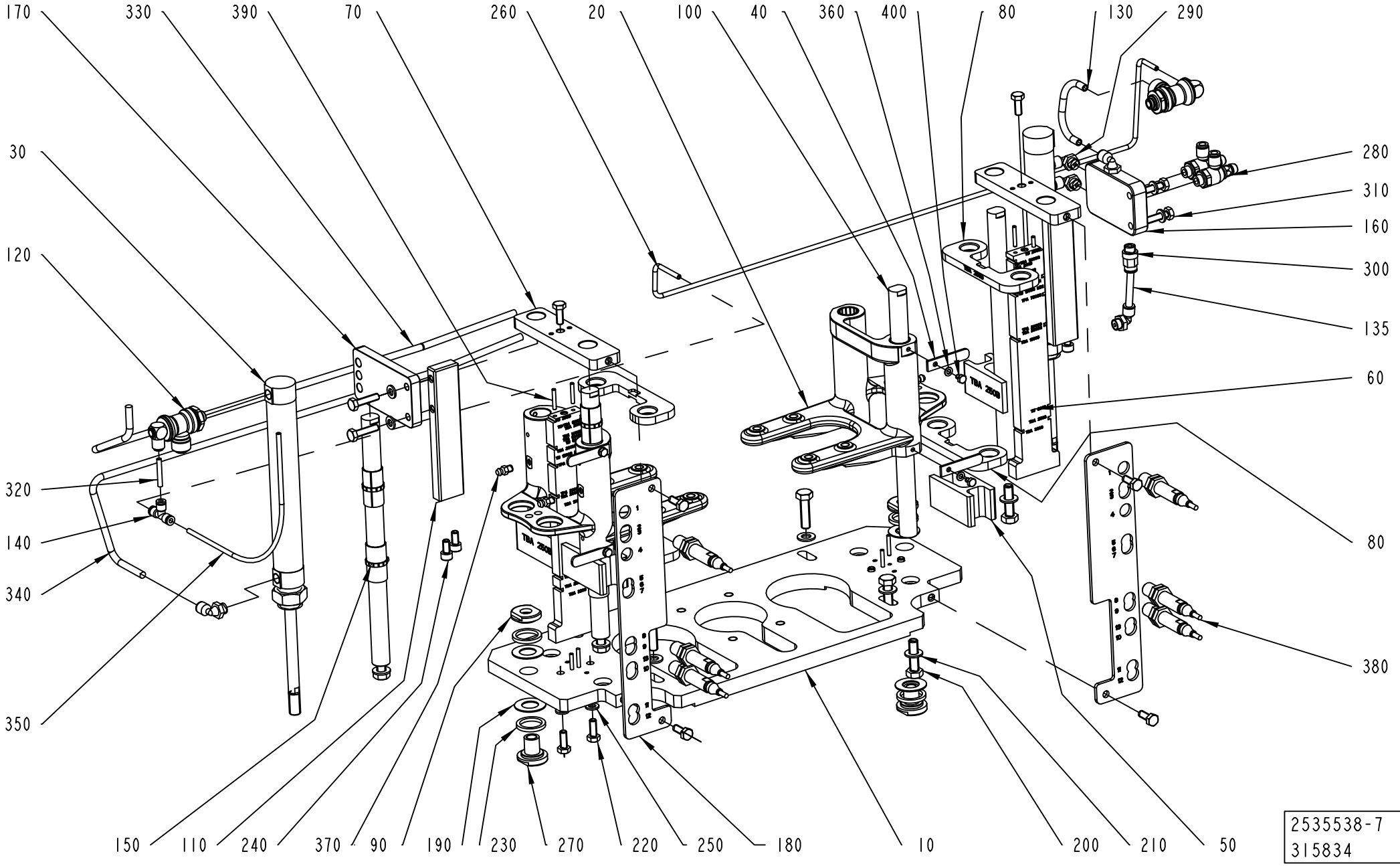
170
330
390
70
260
20
100
40
360
400
80
130
290
30
120
320
140
340
350
280
310
160
300
135
60
80
380
150
110
240
370
90
190
230
270
220
250
180
10
200
210
50
2535538-7
315834

ECM: 316402 - 20080401
Group number: 2535538-0200
Assembly Drawing: 2535538-7_1_AB

This list covers pages from 4-12 to 4-29

Pos	Part No	UN	Qty	Description	Page No
TBA 0200B, TBA 0250B, TBA 0330S (See drawing on page: 4-12)					
050	2756349-0000		4	SPACER	
080	2760089-0000		2	STOP	
180	2940467-0000		2	BRACKET	
360	315105-0136		4	WASHER BRB 4,3X8 RFR	
380	90600-0464		6	INDUCTIVE SWITCH,E2A-M12LS02-WP-B1-TP 5M	
TBA 0200M, TBA 0250S (See drawing on page: 4-20)					
080	2760089-0000		4	STOP	
180	2940467-0000		2	BRACKET	
360	315105-0136		4	WASHER BRB 4,3X8 RFR	
380	90600-0464		4	INDUCTIVE SWITCH,E2A-M12LS02-WP-B1-TP 5M	
TBA 0200SQ, TBA 0250SQ (See drawing on page: 4-26)					
080	2940466-0000		2	SPACER	
180	2940467-0000		2	BRACKET	
360	315105-0136		8	WASHER BRB 4,3X8 RFR	
380	90600-0464		4	INDUCTIVE SWITCH,E2A-M12LS02-WP-B1-TP 5M	
TBA 0500B, TBA 1000B (See drawing on page: 4-18)					
080	2760089-0000		2	STOP	
180	2940467-0000		2	BRACKET	
360	315105-0136		8	WASHER BRB 4,3X8 RFR	
380	90600-0464		4	INDUCTIVE SWITCH,E2A-M12LS02-WP-B1-TP 5M	
410	2830359-0000		4	STOP	
TBA 0500SQ, TBA 1000SQ (See drawing on page: 4-16)					
080	2760089-0000		2	STOP	
180	2940468-0000		2	BRACKET	
360	315105-0136		8	WASHER BRB 4,3X8 RFR	
380	90600-0464		4	INDUCTIVE SWITCH,E2A-M12LS02-WP-B1-TP 5M	
410	2830210-0000		4	STOP	
420	312105-0289		4	SCREW M6S H4X10 A4 70 ISO4017/DIN933	
TBA 1400B (See drawing on page: 4-28)					
080	2760089-0000		2	STOP	
180	2940467-0000		2	BRACKET	
360	315105-0136		8	WASHER BRB 4,3X8 RFR	
380	90600-0464		4	INDUCTIVE SWITCH,E2A-M12LS02-WP-B1-TP 5M	
420	312105-0293		4	SCREW M6S ISO 4017 M4X16 A470	
TBA 1890S, TBA 2000S (See drawing on page: 4-22)					
080	2760089-0000		2	STOP	
180	2940467-0000		2	BRACKET	
360	315105-0136		8	WASHER BRB 4,3X8 RFR	
380	90600-0464		4	INDUCTIVE SWITCH,E2A-M12LS02-WP-B1-TP 5M	
410	2940465-0000		4	SPACER	
420	312105-0293		4	SCREW M6S ISO 4017 M4X16 A470	
TPA 0250SQ, TPA 0200SQ (See drawing on page: 4-14)					
080	2760089-0000		2	STOP	
180	2940467-0000		2	BRACKET	
360	315105-0136		8	WASHER BRB 4,3X8 RFR	
380	90600-0464		4	INDUCTIVE SWITCH,E2A-M12LS02-WP-B1-TP 5M	
TPA 1000SQ, TPA 0750SQ (See drawing on page: 4-24)					
080	2760089-0000		2	STOP	
180	2940467-0000		2	BRACKET	
360	315105-0136		8	WASHER BRB 4,3X8 RFR	
380	90600-0464		4	INDUCTIVE SWITCH,E2A-M12LS02-WP-B1-TP 5M	
Common Parts					
010	2760313-0000		1	PLATE	
020	2829763-0000		2	PLATE	
030	90459-5268		2	DOUBLE ACTING, MINI-ISO, CYL. 25-130	
040	2829385-0000		4	PLATE	
060	2776589-0000		2	PLATE	
070	2760126-0000		2	SPACER	
090	2881047-0000		2	BUSHING	
100	2760121-0000		4	BAR	
110	2760120-0000		2	PLATE	
120	90600-3222		2	PILOTED FUNCTION VALVE G1/8, 7880 06 10	
130	90166-0081	MM	300	TUBE 6 MM PA BLUE	
135	90166-0081	MM	100	TUBE 6 MM PA BLUE	
140	342748-0100		1	T-CONNECTION 4MM	
150	90458-2920		8	BUSHING INSERT, JUM-01-16	
160	2772921-0000		1	PLATE	
170	2773080-0000		1	PLATE	
190	2881048-0000		4	WASHER	
200	312105-0455		8	SCREW M6S ISO 4017 M8X30 A480	
210	315105-0165		8	WASHER BRB 8,4X16 RFR	
220	312105-0368		10	SCREW M6S ISO 4017 M6X16 A480	
230	2881044-0000		4	DAMPER	
240	312115-0366		4	SCREW ISO4762 M6X12 A4 80	
250	315105-0153		8	WASHER BRB 6,4X12 RFR	
260	315400-0016	M	1	TUBE PUN-H-4X0,75-BL	
270	2881046-0000		2	BUSHING	
280	90235-0846		2	THROTTLE CHECK VALVE G1/8", MANUAL, 6	
290	90458-2956		5	ELBOW PIPE JOINT, EXT.THREAD, D=6MM-G1/8	
300	350001-0006		1	PUSH-IN FITTING QS-F-G1/8-6	
310	312105-0372		4	SCREW M6S ISO 4017 M6X25 A480	
320	315400-0016	MM	100	TUBE PUN-H-4X0,75-BL	
330	90166-0081	M	1	TUBE 6 MM PA BLUE	

Machine Type | Group Description | Used-In | Group Number | Page No

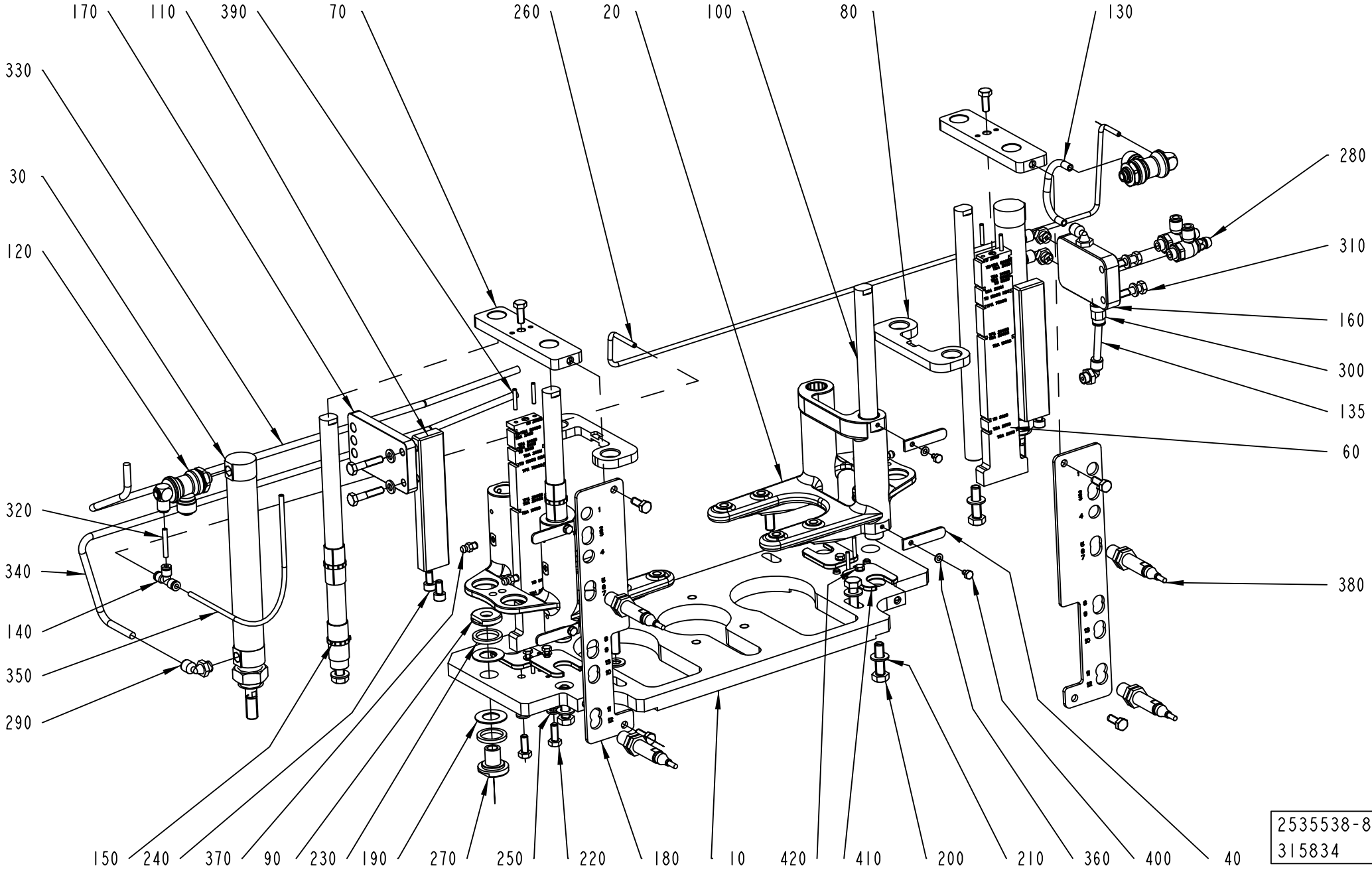
170
110
390
70
260
20
100
80
130
330
30
120
280
310
160
300
135
60
320
340
140
350
290
380
150
240
370
90
230
190
270
250
220
180
10
420
410
200
210
360
400
40
2535538-8
315834

Pos	Part No	UN	Qty	Description	Page No
Common Parts (Cont'd)					
340	90166-0081	M	1	TUBE 6 MM PA BLUE	
350	315400-0016	M	2	TUBE PUN-H-4X0,75-BL	
370	90286-0013		4	GREASE NIPPLE STRAIGHT, H1 M6X1 2346	
390	311103-0238		8	PARALLEL PIN ISO 2338 3M6X20 A1	
400	312105-0285		4	SCREW M6S ISO 4017 M4X6 A470	

Pos	Part No	UN	Qty	Description	Page No

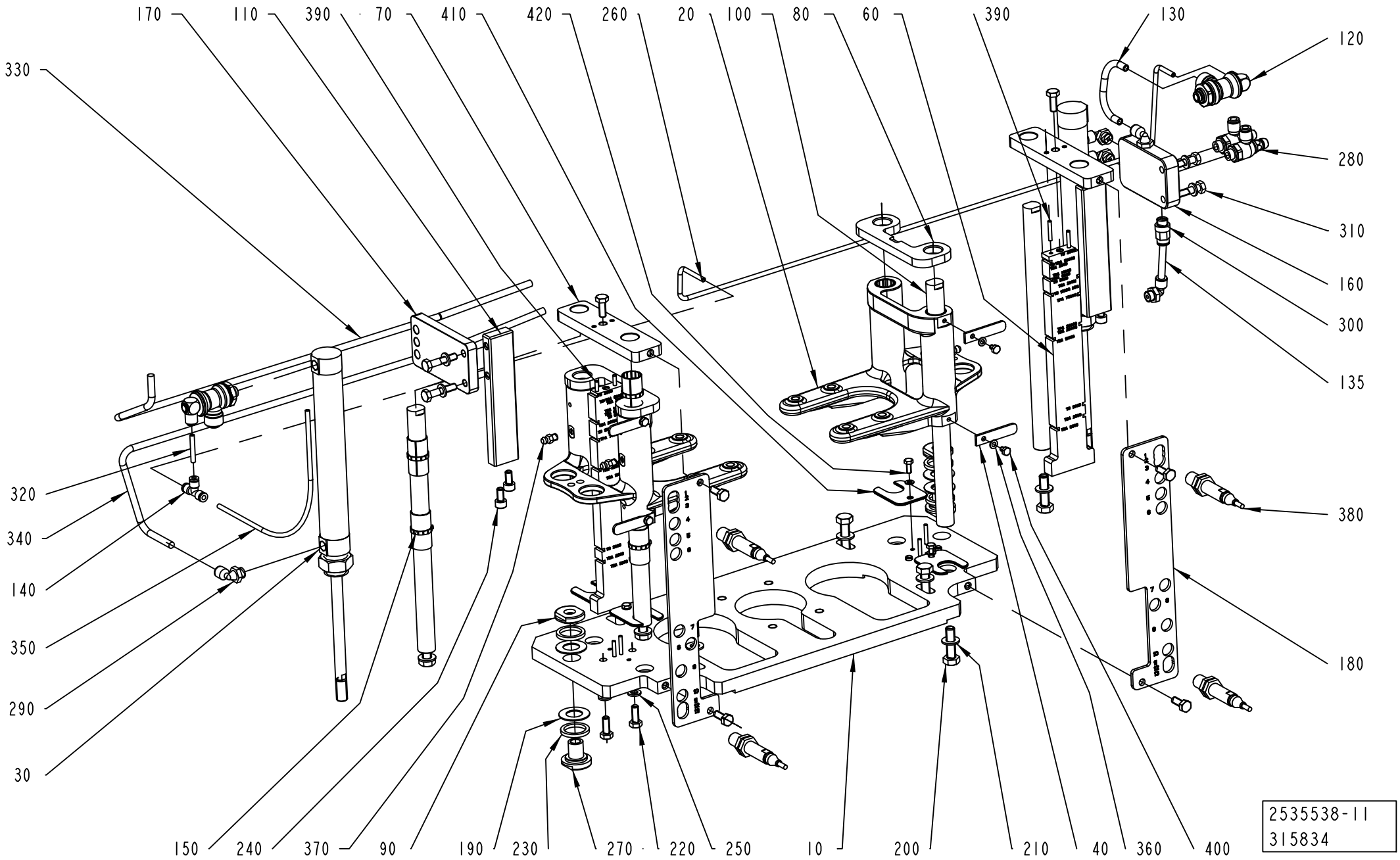
170
110
390
70
410
420
260
20
100
80
60
390
130
120
330
280
310
160
300
135
320
340
140
350
290
30
380
180
150
240
370
90
190
230
270
220
250
10
200
210
40
360
400
2535538-11
315834

Pos	Part No	UN	Qty	Description	Page No
SEE PREVIOUS LISTS PAGES: 4-13, 4-15.					

Pos	Part No	UN	Qty	Description	Page No

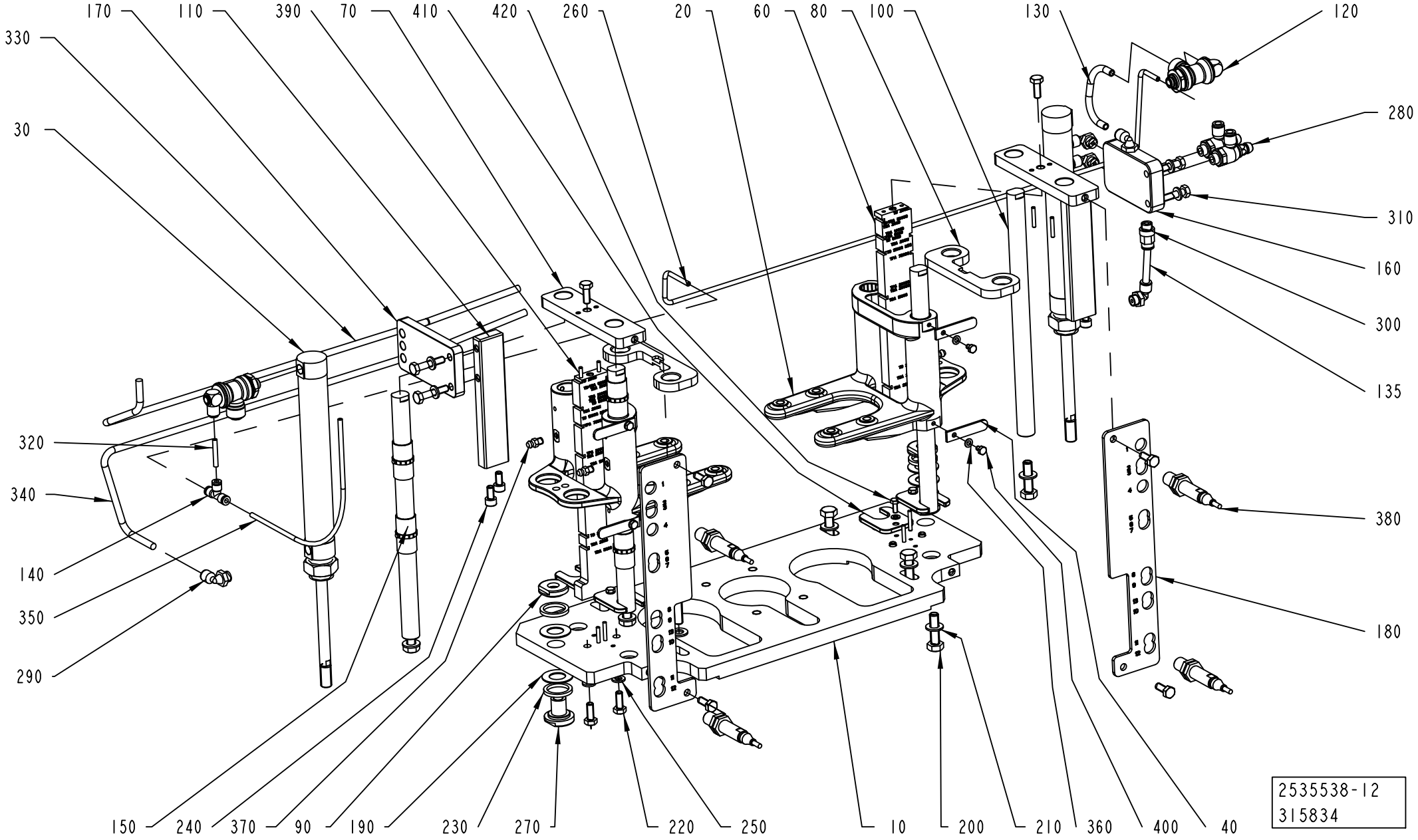
170
110
390
70
410
420
260
20
60
80
100
130
120
330
30
280
310
160
300
135
320
340
140
350
290
380
180
150
240
370
90
190
230
270
220
250
10
200
210
360
400
40
2535538-12
315834

Pos	Part No	UN	Qty	Description	Page No
SEE PREVIOUS LISTS PAGES: 4-13, 4-15.					

Pos	Part No	UN	Qty	Description	Page No

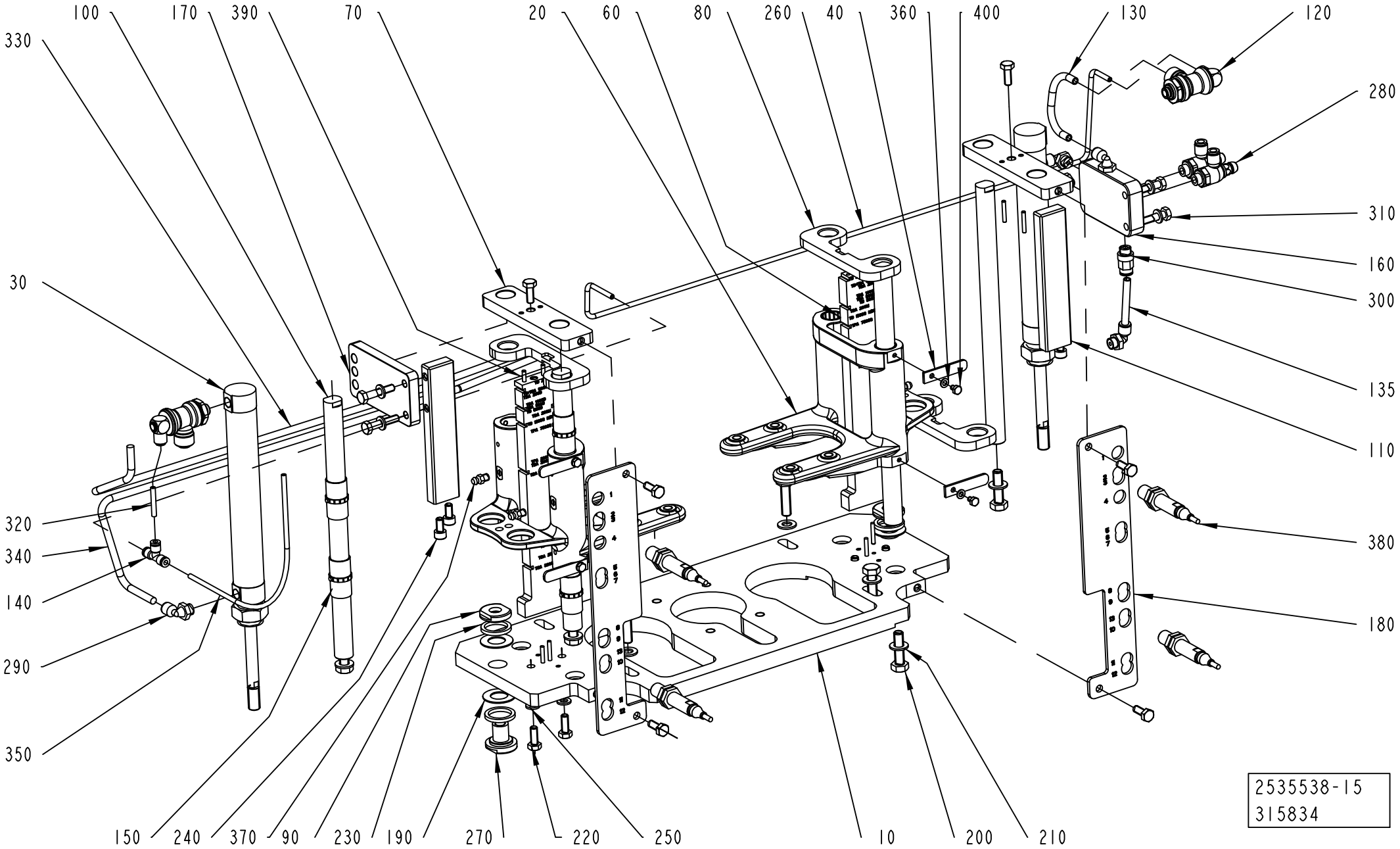
100
170
390
70
20
60
80
260
40
360
400
130
120
330
280
310
30
160
300
135
110
320
380
340
140
180
290
350
150
240
370
90
230
190
270
220
250
10
200
210
2535538-15
315834

Pos	Part No	UN	Qty	Description	Page No
SEE PREVIOUS LISTS PAGES: 4-13, 4-15.					

Pos	Part No	UN	Qty	Description	Page No

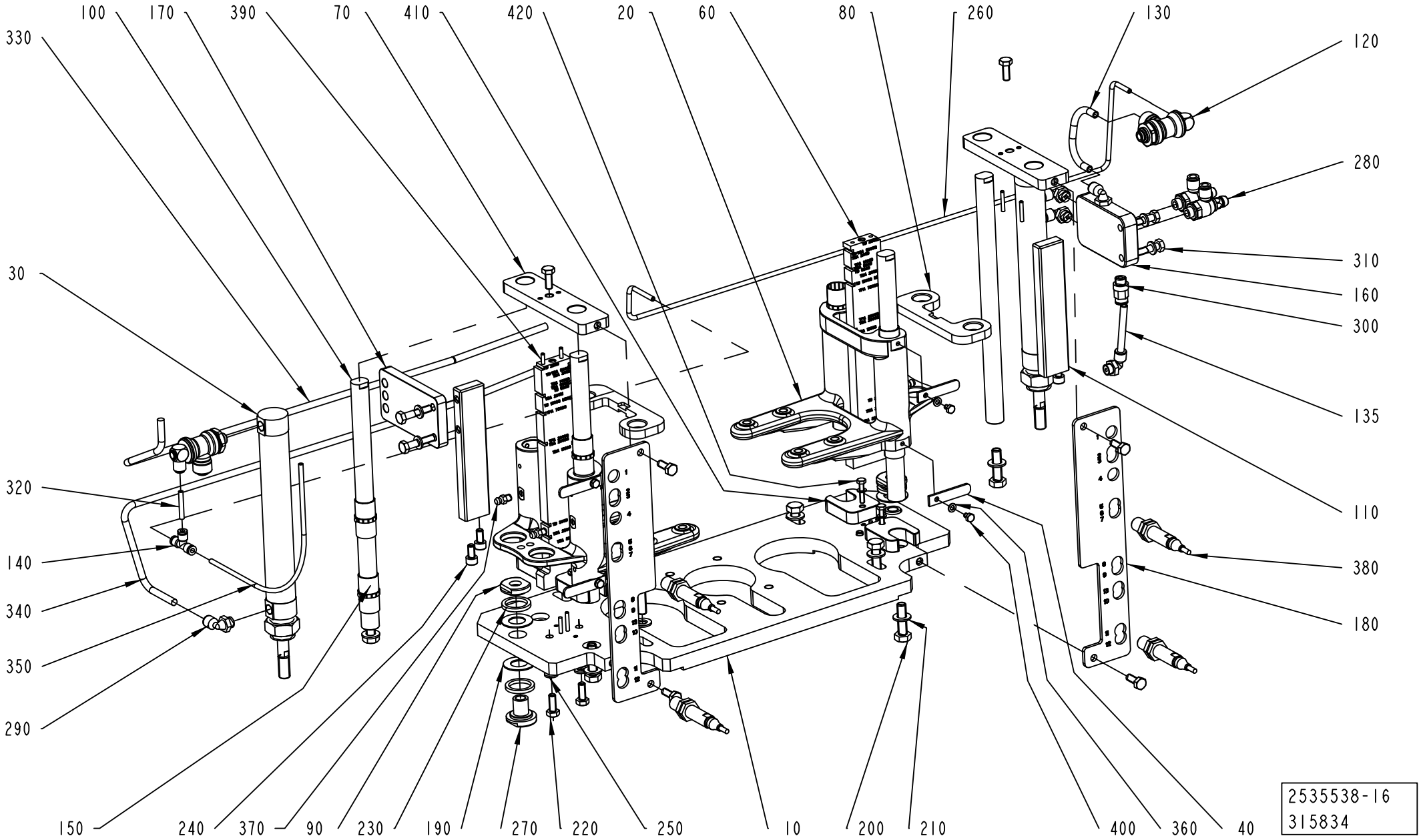
100
170
390
70
410
420
20
60
80
260
130
330
120
280
30
310
160
300
135
320
110
140
380
340
180
350
290
150
240
370
90
230
190
270
220
250
10
200
210
400
360
40
2535538-16
315834

Pos	Part No	UN	Qty	Description	Page No

SEE PREVIOUS LISTS PAGES: 4-13, 4-15.

Pos	Part No	UN	Qty	Description	Page No

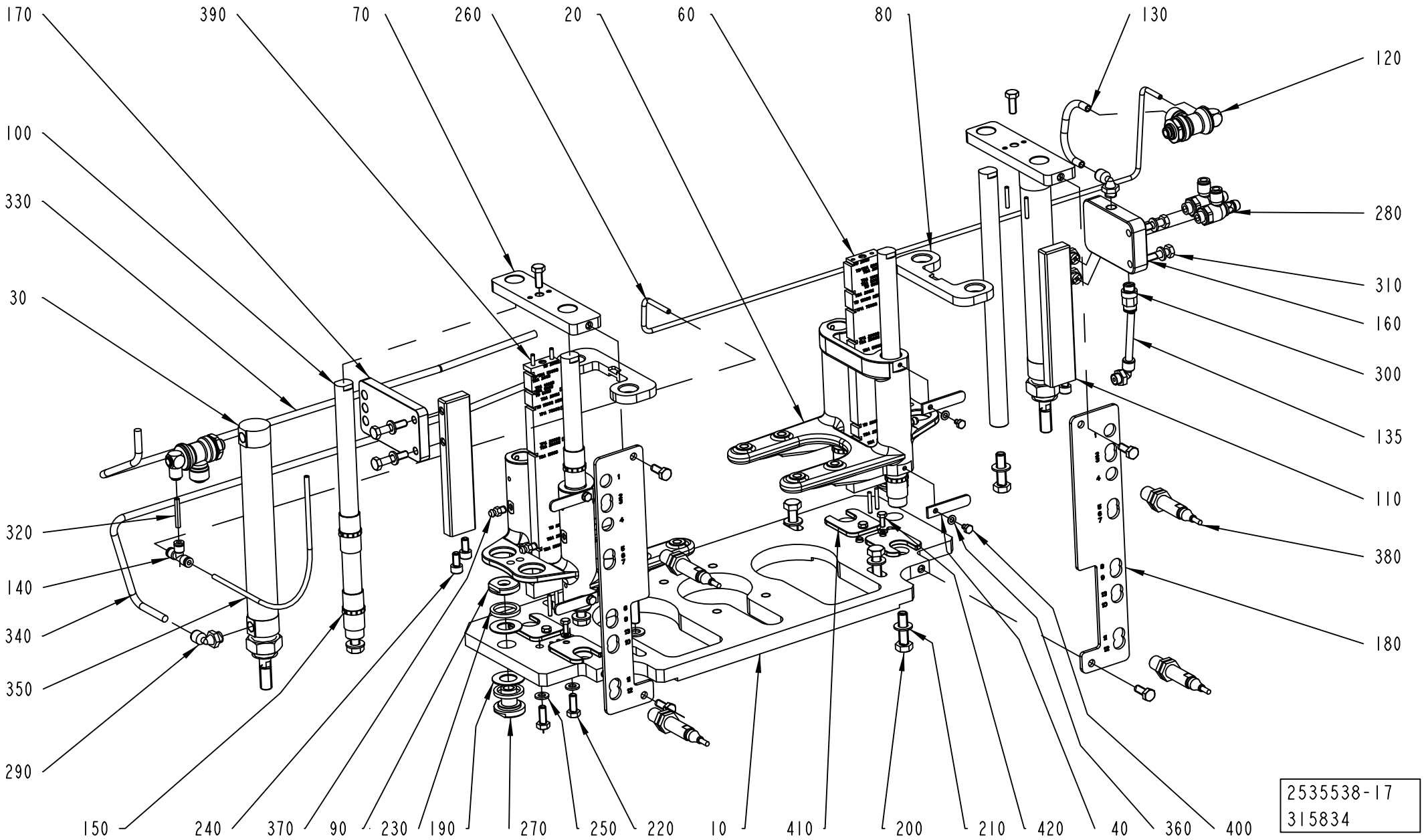
170
390
70
260
20
60
80
130
120
100
330
280
30
310
160
300
135
110
320
380
140
340
180
350
290
150
240
370
90
230
190
270
250
220
10
410
200
210
420
40
360
400
2535538-17
315834

Pos	Part No	UN	Qty	Description	Page No
SEE PREVIOUS LISTS PAGES: 4-13, 4-15.					

Pos	Part No	UN	Qty	Description	Page No

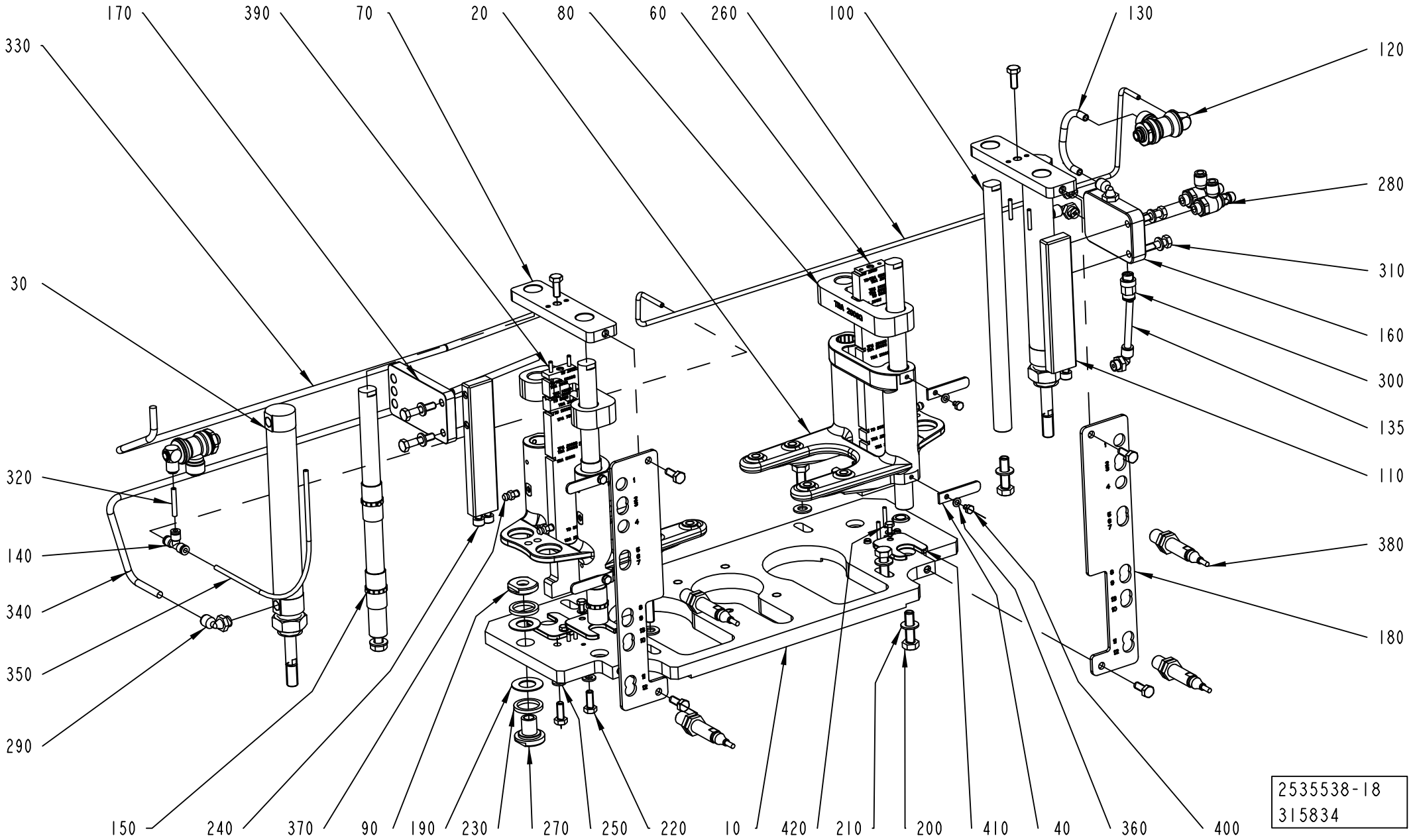
170
390
70
20
80
60
260
100
130
330
120
280
30
310
160
300
135
110
320
380
140
340
180
350
290
150
240
370
90
190
230
270
250
220
10
420
210
200
410
40
360
400
2535538-18
315834

Pos	Part No	UN	Qty	Description	Page No
SEE PREVIOUS LISTS PAGES: 4-13, 4-15.					

Pos	Part No	UN	Qty	Description	Page No

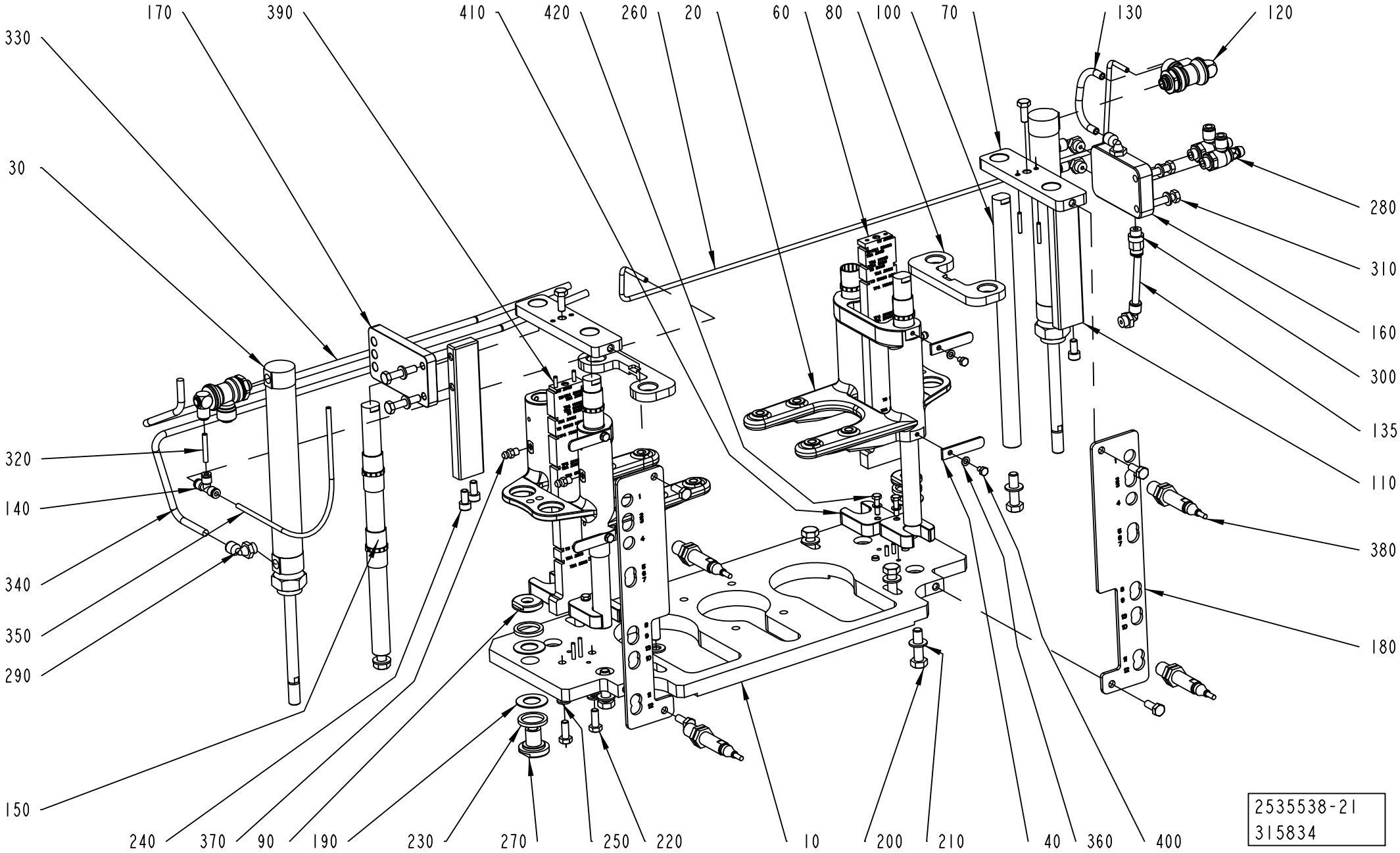
170
390
410
420
260
20
60
80
100
70
130
120
330
30
280
310
160
300
135
110
320
140
340
350
290
380
180
150
240
370
90
190
230
270
250
220
10
200
210
40
360
400
2535538-21
315834

Pos	Part No	UN	Qty	Description	Page No
SEE PREVIOUS LISTS PAGES: 4-13, 4-15.					

Pos	Part No	UN	Qty	Description	Page No

This page is intentionally left blank.

ECM: 317886 - 20080103
Group number: 2636082-0100
Assembly Drawing:

Pos	Part No	UN	Qty	Description	Page No
A3/FLEX TBA 0500B, A3/FLEX TBA 1000B, A3/FLEX TBA 1000S, A3/FLEX TBA 1000SQ, A3/FLEX TPA 1000SQ, A3/FLEX TBA 0200S, A3/FLEX TBA 1500S, A3/FLEX TBA 0200B, A3/FLEX TBA 0250B, A3/FLEX TBA 0330S, A3/FLEX TPA 0330SQ, A3/FLEX TPA 0500SQ, A3/FLEX TBA 0200M, A3/FLEX TBA 0250S, A3/FLEX TBA 0500S, A3/FLEX TPA 0250SQ, A3/FLEX TPA 0200SQ, A3/FLEX TPA 0750SQ, A3/FLEX TBA 0200SQ, A3/FLEX TBA 0250SQ, A3/FLEX TBA 0500SQ					
060	2512829-0000		1	PNEUMATIC DIAGRAM	
060	2527509-0000		1	PNEUMATIC DIAGRAM	
A3/FLEX TBA 1890S, A3/FLEX TBA 2000S, A3/FLEX TBA 1400B					
060	2719737-0000		1	PNEUMATIC DIAGRAM	
060	2719738-0000		1	PNEUMATIC DIAGRAM	
Common Parts					
050	315400-0001	M	4	TUBE PUN-H-6X1-BL	
130	353249-0025		2	INSERT, MULTI HOLE, E152M3X4	
140	353240-0003		2	GLAND W/O INSERT PG13,5 NORMAL	
150	90458-0323		2	NUT, M20X1,5	
160	353240-0005		1	GLAND W/O INSERT PG21 NORMAL	
170	90012-0125		1	GLAND FITTING	
180	90042-0520		1	BASE PLATE ISO SIZE 1	
190	90042-0538		1	PILOT VALVE L=500MM	
200	90042-0215		1	VALVE BODY 5/2 UNISTABLE	
210	90042-0528		1	BLANKING KIT SEALS ISO SIZE 1	
220	342715-0103		4	BLIND PLUG 8 MM	
230	90055-0173		3	ELBOW WITH TAILPIECE 8/6 MM	
240	342748-0103		1	T-CONNECTION 8MM	
250	350006-0003		1	PUSH-IN FITTING QS-F-8H-6	
260	353249-0025		2	INSERT, MULTI HOLE, E152M3X4	
270	315400-0004	M	8	TUBE PUN-H-8X1,25-BL	
280	90458-0322		5	NUT, M16X1,5	
290	90458-1307		5	BLIND PLUG CIRCULAR, M16X1,5 514GFK/216	
300	353021-0301		6	TERMINALS,TRIPLE-LEVEL, DLI 2,5/35 PA	
310	353034-0404		2	BRIDGE CONNECTOR Q10, 13131.0	
320	359011-0817		1	SYMBOL 5-GW (+) 50PC	
330	359011-0818		1	SYMBOL 5-GW (-) 50PC	
340	359011-0810		1	MARKING PLATES 5-FW 151-200	
350	90099-0119		1	NUT, PR 28,3 (PG21)	
360	353249-0311		4	SEALING PIN, 12X25	
370	312105-0451		8	SCREW M6S ISO 4017 M8X20 A480	
380	312105-0453		8	SCREW M6S ISO 4017 M8X25 A480	
390	312105-0455		8	SCREW M6S ISO 4017 M8X30 A480	
400	312109-0457		8	SCREW M6S ISO 4017 M8X35 A480	
410	90166-0118	M	3	TUBE 8 MM PA BLACK	
420	351160-0102	M	5	WIRE AWM 1X0,75 MM2 DARKBLUE	

Machine Type	Group Description	Used-In	Group Number	Page No

This page is intentionally left blank.

ECM: 296626 - 20070216
Group number: 2593831-0100
Assembly Drawing:

This list covers pages from 4-32 to 4-35

Pos	Part No	UN	Qty	Description	Page No
TPA 1000SQ					
010	2705813-0101		2	VOLUME FLAP	
020	2705812-0101		2	VOLUME FLAP	
030	2527703-0125		1	GUIDE	
040	2527704-0125		1	GUIDE	
080	2663373-0000		8	BOTTOM	
100	2705814-0103		1	PUSHER	
110	2658239-0000		8	BOTTOM	
TBA 0200B					
010	2594512-0103		2	VOLUME FLAP	
010	2594512-0105		2	VOLUME FLAP	
020	1548460-0103		2	VOLUME FLAP	
020	1548460-0105		2	VOLUME FLAP	
030	2527703-0103		1	GUIDE	
030	2527703-0104		1	GUIDE	
040	2527704-0103		1	GUIDE	
040	2527704-0104		1	GUIDE	
TBA 0200M					
010	2594512-0106		2	VOLUME FLAP	
020	1548460-0106		2	VOLUME FLAP	
030	2527703-0110		1	GUIDE	
040	2527704-0110		1	GUIDE	
TBA 0200SQ					
010	2594512-0111		2	VOLUME FLAP	
020	1548460-0111		2	VOLUME FLAP	
030	2527703-0128		1	GUIDE	
040	2527704-0128		1	GUIDE	
TBA 0250B					
010	2594512-0103		2	VOLUME FLAP	
010	2594512-0104		2	VOLUME FLAP	
020	1548460-0103		2	VOLUME FLAP	
020	1548460-0104		2	VOLUME FLAP	
030	2527703-0103		1	GUIDE	
030	2527703-0105		1	GUIDE	
040	2527704-0103		1	GUIDE	
040	2527704-0105		1	GUIDE	
TBA 0250S					
010	2594512-0107		2	VOLUME FLAP	
020	1548460-0107		2	VOLUME FLAP	
030	2527703-0111		1	GUIDE	
040	2527704-0111		1	GUIDE	
TBA 0250SQ					
010	2594512-0110		2	VOLUME FLAP	
020	1548460-0110		2	VOLUME FLAP	
030	2527703-0127		1	GUIDE	
040	2527704-0127		1	GUIDE	
TBA 0330S					
010	2594512-0104		2	VOLUME FLAP	
010	2594512-0105		2	VOLUME FLAP	
020	1548460-0104		2	VOLUME FLAP	
020	1548460-0105		2	VOLUME FLAP	
030	2527703-0104		1	GUIDE	
030	2527703-0105		1	GUIDE	
040	2527704-0104		1	GUIDE	
040	2527704-0105		1	GUIDE	
080	2603489-0000		8	BOTTOM	
TBA 0500B					
010	2594512-0101		2	VOLUME FLAP	
020	1548460-0101		2	VOLUME FLAP	
030	2527703-0101		1	GUIDE	
040	2527704-0101		1	GUIDE	
050	1285023-0000		1	SIDE PLATE	
060	1285022-0000		1	SIDE PLATE	
TBA 0500SQ					
010	2594512-0201		2	VOLUME FLAP	
020	1548460-0201		2	VOLUME FLAP	
030	2527703-0129		1	GUIDE	
040	2527704-0129		1	GUIDE	
050	1285023-0000		1	SIDE PLATE	
060	1285022-0000		1	SIDE PLATE	
TBA 1000B					
010	2594512-0102		2	VOLUME FLAP	
020	1548460-0102		2	VOLUME FLAP	
030	2527703-0102		1	GUIDE	
040	2527704-0102		1	GUIDE	
050	2605993-0000		1	SIDE PLATE	
060	2605994-0000		1	SIDE PLATE	
TBA 1000SQ					
010	2594512-0202		2	VOLUME FLAP	
020	1548460-0202		2	VOLUME FLAP	
030	2527703-0130		1	GUIDE	
040	2527704-0130		1	GUIDE	
050	2854963-0000		1	SIDE PLATE	
060	2854964-0000		1	SIDE PLATE	

Machine Type Group Description Used-In Group Number Page No

This page is intentionally left blank.

Pos	Part No	UN	Qty	Description	Page No
TBA 1890S (Cont'd)					
010	2695955-0102		2	VOLUME FLAP	
020	2695955-0102		2	VOLUME FLAP	
030	2527703-0109		1	GUIDE	
040	2527704-0109		1	GUIDE	
080	2616219-0000		8	BOTTOM	
TBA 2000S					
010	2695955-0101		2	VOLUME FLAP	
020	2695955-0101		2	VOLUME FLAP	
030	2527703-0108		1	GUIDE	
040	2527704-0108		1	GUIDE	
080	2616218-0000		8	BOTTOM	
TPA 0200SQ					
010	2594512-0108		2	VOLUME FLAP	
020	1548460-0108		2	VOLUME FLAP	
030	2527703-0120		1	GUIDE	
040	2527704-0120		1	GUIDE	
100	2705814-0102		1	PUSHER	
TPA 0250SQ					
010	2594512-0109		2	VOLUME FLAP	
020	1548460-0109		2	VOLUME FLAP	
030	2527703-0121		1	GUIDE	
040	2527704-0121		1	GUIDE	
100	2705814-0101		1	PUSHER	
TPA 0750SQ					
010	2705813-0102		2	VOLUME FLAP	
020	2705812-0102		2	VOLUME FLAP	
030	2527703-0126		1	GUIDE	
040	2527704-0126		1	GUIDE	
080	2658240-0000		8	BOTTOM	
100	2705814-0104		1	PUSHER	
110	2658240-0000		8	BOTTOM	

Pos	Part No	UN	Qty	Description	Page No

Machine Type | Group Description | Used-In | Group Number | Page No

Tetra Pak

SPC
Spare Parts Catalogue

Part No	Description	Page No
2033-0005	WASHER	3-307, 3-323, 3-325, 3-327, 3-335
2033-0008	WASHER	3-307
2033-0011	WASHER	1-31, 1-33, 1-41, 1-43, 1-45, 1-47, 1-59, 1-61, 1-63, 1-67, 1-69, 1-169, 1-171, 1-177, 1-179, 1-181
12242-0003	GASKET 48X38X5,5	1-119, 1-121
14600-0000	HOOD	1-9, 1-11, 1-13, 1-15
19972-0000	WASHER	2-11, 2-13, 2-15, 2-21, 2-23, 2-25, 2-55, 2-57, 2-59, 2-61, 2-63, 2-69, 2-71, 2-73, 2-75, 2-77, 2-87, 2-89, 2-93, 2-95
22462-0000	SHAFT	2-169, 2-171, 2-215, 2-217, 2-219, 2-221
22463-0000	ROLL	2-169, 2-171, 2-215, 2-217, 2-219, 2-221
23765-0001	INSULATING PIPE	3-173, 3-175, 3-177, 3-179, 3-181, 3-183
23765-0002	INSULATING PIPE	3-173, 3-175, 3-177, 3-179, 3-181, 3-183
23765-0003	INSULATING PIPE	3-173, 3-175, 3-177, 3-179, 3-181, 3-183
23765-0004	INSULATING PIPE	3-173, 3-175, 3-177, 3-179, 3-181, 3-183
23765-0005	INSULATING PIPE	3-173, 3-175, 3-177, 3-179, 3-181, 3-183
24928-0000	LOCKING RUBBER	1-9, 1-11, 1-13, 1-15
26075-0000	VOLUME BULGE	2-55, 2-57, 2-59, 2-61, 2-63, 2-69, 2-71, 2-73, 2-75, 2-77
28509-0000	WASHER	2-133, 2-135, 2-137, 2-145, 2-191, 2-193, 2-195, 3-359
32079-0000	WASHER	2-145
32544-0000	INSULATION NUT	2-133, 2-135, 2-137, 2-145, 2-191, 2-193, 2-195, 3-359
32644-0000	WASHER	3-359
67379-0101	TRANSFORMER	2-145
67379-0105	TRANSFORMER	2-145
67379-0106	TRANSFORMER	2-145
67379-0114	TRANSFORMER	2-145
67379-0206	TRANSFORMER	2-145
67379-0216	TRANSFORMER	3-359
67379-0224	TRANSFORMER	3-359
67379-0249	TRANSFORMER	2-145
67379-0269	TRANSFORMER	2-145
67379-0404	TRANSFORMER	1-107
67379-0405	TRANSFORMER	1-107
67379-0407	TRANSFORMER	1-107
67379-0412	TRANSFORMER	1-107
67379-0414	TRANSFORMER	1-107
67379-0417	TRANSFORMER	1-107
67380-0207	TRANSFORMER	3-407
67380-0214	TRANSFORMER	3-407
90002-0010	BLANK-OFF PLUG, PR 37 SKINDICHT-BLK29	1-165
90002-0012	BLANK-OFF PLUG, PR 28,3 SKINDICHT-BLK21	4-11
90005-0002	WASHER 16/6,7X1,5	2-31, 2-33, 2-43, 2-45
90005-0060	WASHER PLAIN, RBS 6,4/M6)/18,H=1,5	1-179, 1-181
90005-0082	WASHER PLAIN ROUND 4,3(M4)/12,H=1	2-55, 2-57, 2-59, 2-61, 2-63, 2-69, 2-71, 2-73, 2-75, 2-77, 2-87, 2-89, 2-93, 2-95, 2-97, 2-99, 2-101, 2-103, 2-105, 2-109, 2-111, 2-115
90005-0094	GASKET C 19438-EPR	3-205, 3-207, 3-209, 3-211, 3-213, 3-215
90012-0125	GLAND FITTING	4-31
90015-0020	LEAD-IN, TET5-7, E-1458016	2-253, 2-255, 2-257
90017-0016	HANDLE, NO. 14.4012.02.120	3-323, 3-325, 3-327
90028-0020	CONE TUBE 2,5MM	2-11, 2-13, 2-15, 2-21, 2-23, 2-25, 2-55, 2-57, 2-59, 2-61, 2-63, 2-69, 2-71, 2-73, 2-75, 2-77, 2-87, 2-89, 2-93, 2-95, 2-227, 2-229, 2-231, 2-233, 2-267, 3-145, 3-147
90028-0022	CONE TUBE 6 MM	2-251, 2-267
90028-0024	CONE TUBE 4 MM	2-227, 2-229
90028-0025	CONE TUBE 6 MM	2-227, 2-229, 3-145, 3-147
90030-0065	PIPE CONNECTION	2-119, 2-121, 2-123, 2-125, 2-179, 2-181, 2-183, 2-185
90030-0098	ACCESSORIES, FERRULE 8	2-267
90030-0200	CONN. ELBOW, 6-M10X1, EXT.THREAD	3-145, 3-147
90030-0257	CONN. ELBOW, 8-R1/8, EXT.THREAD	2-147, 2-149, 2-203, 2-205
90032-0039	BLOCK 4 WAYS	2-227, 2-229
90032-0040	BLOCK 6 WAYS	3-145, 3-147
90039-0022	TACKLE BLOCK, NO. BV-225/500	1-87
90042-0215	VALVE BODY 5/2 UNISTABLE	1-165, 4-31
90042-0520	BASE PLATE ISO SIZE 1	4-31
90042-0528	BLANKING KIT SEALS ISO SIZE 1	1-165, 4-31
90042-0532	BASE PLATE ISO SIZE 1	1-165
90042-0538	PILOT VALVE L=500MM	4-31
90042-0591	PILOT VALVE, 04938-333-08	1-165
90044-0194	PROX.SW. IN5329/IN3002-BPKG(EX90044-104)	1-113, 1-115, 1-119, 1-121, 3-185, 3-187, 3-189, 3-191, 3-193, 3-195, 3-257, 3-263, 3-265, 3-323, 3-325, 3-327
90044-0310	KEY FOR SAFETY SWITCH AZ 15/16 B1	1-157, 1-159
90051-0007	STELLAR KNOB, INT. THREAD, NO. 40	3-307
90051-0075	KNOB, EXTERNAL THREAD. NO. 8308-1518	3-287
90051-0087	LOCK KNOB, NO. GN 617 A5	1-141, 1-143
90055-0173	ELBOW WITH TAILPIECE 8/6 MM	1-165, 4-31
90055-0204	ELBOW WITH TAILPIECE 8/8 MM LONG	4-9
90062-0061	LOCK WASHER NORD-LOCK,6,5/10,8, T=2,2	2-31, 2-33, 2-43, 2-45, 3-61, 3-63, 3-65, 3-259, 3-261, 3-267
90083-0052	NEEDLE ROLLER THRUST BEARING, 30X47X2 MM	3-233
90083-0053	SHAFT LOCATING WASHER, 30X47X1MM	3-233
90087-0019	PLUG M10X1 STAINLESS	2-227, 2-229, 2-267, 3-145, 3-147
90091-0074	WEAR RING 35X40X5,3 MM	2-131
90091-0297	RADIAL SEAL 35X47X7 MM DUST LIP	3-145, 3-147, 3-149, 3-151, 3-185, 3-187, 3-189, 3-191, 3-193, 3-195, 3-257, 3-263, 3-265
90091-0298	RADIAL SEAL 45X65X8 MM DUST LIP	3-185, 3-187, 3-189, 3-191, 3-193, 3-195
90091-0299	RADIAL SEAL 30X52X7 MM DUST LIP	3-149, 3-151

Part No	Description	Page No
90091-0359	X-SEAL 36,17X2,62 MM	2-131
90091-0360	BACK-UP RING 37,5X1,4 MM	2-131
90091-0361	SCRAPER, EXCLUDER2 30X34,8X3,7 MM	2-159, 2-161, 2-163, 2-165
90091-0362	SCRAPER, EXCLUDER2 18X22,8X3,7 MM	2-131
90091-0364	ROD SEAL, STEPSEAL 18X25,3X3,2 MM	2-131
90091-0366	WEAR RING 18X23X3.9	2-131
90091-0368	WEAR RING 30X45X5,3 MM	2-131
90091-0380	SCRAPER, EXCLUDER 20X24,8X3,7 MM	3-185, 3-187, 3-189, 3-191, 3-193, 3-195
90091-0391	SEAL SLYDRING	2-131
90091-0398	PISTON SEAL GLIDE RING T 20,5X28X3,2 MM	2-131
90091-0404	RADIAL SEAL 22X40X7 MM DUST LIP	3-263
90091-0406	RADIAL SEAL 25X40X7 MM DUST LIP	3-263
90091-0408	BEARING SEAL 70X78X5 MM	3-185, 3-187, 3-189, 3-191, 3-193, 3-195
90091-0416	RADIAL SEAL 70X90X10 MM DUST LIP	3-233
90091-0428	PISTON SEAL GLIDE RING T 27,5X34,5X3,2 M	2-131
90091-0440	RADIAL SEAL 22X40X7 MM DUST LIP	3-257, 3-265
90092-0052	METERING VALVE 10 MM3	2-227, 2-229, 2-267, 3-145, 3-147
90092-0054	METERING VALVE 50 MM3	3-145, 3-147
90099-0007	HEXAGON NUT, M10X1, E 63 137 10	1-141, 1-143
90099-0027	HEXAGON NUT, M14, DIN936	1-113, 1-115
90099-0119	NUT, PR 28,3 (PG21)	4-31
90110-0150	MALE INSERT 121110 0000	4-11
90110-0228	CABLE HOOD 24-POL 71.350.2428.0	4-11
90115-0020	ROD END, ID=8 MM, M8X1,25	3-165, 3-167
90115-0021	ROD END, ID=8 MM, M8X1,25 LH	3-165, 3-167
90115-0134	ROD END, ID=10 MM, M10X1,25	3-107, 3-109, 3-111
90115-0137	ROD END, ID=6 MM, M6X1	3-21, 3-23, 3-25, 3-87, 3-89
90115-0139	ROD END, ID=8 MM, M8X1,25	3-157, 3-159
90115-0180	ROD END, ID=8 MM, M8X1,25 LH	3-157, 3-159
90115-0181	ROD END, ID=10 MM M10X1,5	3-149, 3-151
90115-0182	ROD END, ID=10 MM M10X1,5LH	3-149, 3-151
90134-0030	SLEEVE FOR PLASTIC TUBE	2-227, 2-229, 2-267, 3-145, 3-147
90134-0038	BUSHING/NUT INLET/OUTLET 4 MM	2-227, 2-229
90134-0039	BUSHING VALVE CONNECTION 2,5 MM	2-227, 2-229, 2-267, 3-145, 3-147
90134-0040	BUSHING VALVE CONNECTION 4 MM	3-145, 3-147
90134-0052	PLUG DOSING BLOCK	2-267, 3-145, 3-147
90134-0055	BUSHING/NUT INLET/OUTLET 6 MM	2-227, 2-229, 2-251, 2-267, 3-145, 3-147
90134-0058	CONNECTION	2-5, 2-7, 2-147, 2-149, 2-203, 2-205, 3-169, 3-171, 3-185, 3-187, 3-189, 3-191, 3-193, 3-195
90134-0063	BUSHING/NUT M8X1, D=2,5 MM	2-11, 2-13, 2-15, 2-21, 2-23, 2-25, 2-55, 2-57, 2-59, 2-61, 2-63, 2-69, 2-71, 2-73, 2-75, 2-77, 2-87, 2-89, 2-93, 2-95, 2-231, 2-233
90134-0065	CONNECTION M6 TUBE 2,5 MM	2-227, 2-229, 3-169, 3-171
90134-0068	CONNECTION	2-147, 2-149, 2-203, 2-205, 3-157, 3-159, 3-185, 3-187, 3-189, 3-191, 3-193, 3-195
90141-0015	RETAINING RING FOR SHAFT DIN 471 8 SS	2-131, 3-165, 3-167
90141-0016	RETAINING RING FOR SHAFT DIN 471 10 SS	1-113, 1-115, 1-119, 1-121, 1-141, 1-143, 3-165, 3-167
90141-0019	RETAINING RING FOR BORE DIN 472 50 A2	3-145, 3-147, 3-257, 3-263, 3-265
90141-0029	CIRCLIP	2-169, 2-171, 2-215, 2-217, 2-219, 2-221
90143-0060	EDGE STRIP 9,5X6,3MM BLACK PVC	3-323, 3-325, 3-327
90144-0069	PE TAPE,BLACK ON ALUMINUM 24X24 MM	3-383
90144-0073	TREBOFLON-TAPE W=13MM	1-17
90152-0050	SPIRAL CONDUIT, 20X13, UL 1313	1-157
90152-0059	SPIRAL CONDUIT, 18X12, UL 1211	3-303
90152-0070	METAL HOSE, 32,5X26, UL 2621	4-11
90153-0015	ADHESIVE,LOCTITE IS 496/CYANOLOT 303	2-159, 2-161, 2-163, 2-165
90153-0023	ADHESIVE, SILICON 251470 TUB 90CC(UN1993	1-155
90153-0053	ADHESIVE, LOCTITE 648 TEMP 150`C 50ML	2-119, 2-121, 2-123, 2-125, 2-147, 2-149, 2-179, 2-181, 2-183, 2-185, 2-203, 2-205
90157-0021	LOCKING FLUID LOCTITE 270	2-235, 2-237, 2-239, 2-241, 3-137, 3-139, 3-141
90157-0037	THREAD SEALANT LOCTITE 542	1-107
90161-0001	O-RING MATERIAL 3 MM	4-11
90163-0063	QUICK COUPLING, (M) 5450-6/4	2-251
90165-0056	PIPE CLIP FOR TUBE D=4 MM	2-119, 2-121, 2-123, 2-125, 2-147, 2-149, 2-179, 2-181, 2-183, 2-185, 2-203, 2-205
90165-0057	PIPE CLIP FOR TUBE D=6 MM	3-21, 3-23, 3-25, 3-87, 3-89, 3-145, 3-147, 3-185, 3-187, 3-189, 3-191, 3-193, 3-195, 3-257, 3-263, 3-265
90165-0058	PIPE CLIP FOR TUBE D=2,5 MM	2-119, 2-121, 2-123, 2-125, 2-147, 2-149, 2-179, 2-181, 2-183, 2-185, 2-203, 2-205, 2-227, 2-229
90166-0013	TUBE 8 MM PA BLUE	3-9, 3-11, 3-13, 3-15, 3-17, 4-11
90166-0068	TUBE 12 MM PA BLUE	1-165
90166-0081	TUBE 6 MM PA BLUE	2-253, 2-255, 2-257, 3-345, 4-13, 4-15
90166-0108	TUBE 6 MM PA TRANSP.	2-227, 2-229, 2-267, 3-145, 3-147
90166-0109	TUBE 4 MM PA TRANSP.	2-147, 2-149, 2-203, 2-205, 3-185, 3-187, 3-189, 3-191, 3-193, 3-195, 3-345
90166-0117	HOSE 4/6 PVC BLUE	1-141, 1-143, 1-165
90166-0118	TUBE 8 MM PA BLACK	1-107, 3-27, 3-29, 3-97, 3-99, 3-123, 3-125, 3-127, 4-31
90166-0132	TUBE 6 MM PA,TRANSP.	2-251, 3-201, 3-203
90166-0143	TUBE 2,5 MM PA TRANSP.	2-227, 2-229, 2-267, 3-145, 3-147, 3-185, 3-187, 3-189, 3-191, 3-193, 3-195
90166-0216	TUBE 10 MM PUR BLUE	4-11
90194-0143	WARNING SIGN ISO, HOT SURFACE	3-315
90195-0020	TERMINAL BLOCK, BK 2CRN; 0624720000	4-9
90206-0030	HEATING ELEMENT 3000W, 220V	4-9
90208-0087	CLAMPING ELEMENT WITH SLEEVE, 45X59 MM	3-51, 3-53, 3-129, 3-131
90214-0105	SPHERICAL BALL BEARING, 15X35X14 MM	1-135, 1-137
90214-0138	BALL BEARING, 5X19X6 MM	1-109, 1-111

Part No	Description	Page No
90214-0219	CYL.ROLLER BEARING, 17X40X12 MM	3-257, 3-263, 3-265
90214-0229	BALL BEARING, 65X85X10 MM	3-185, 3-187, 3-189, 3-191, 3-193, 3-195
90214-0303	SEALING RING, 18,6X35X2 MM	1-113, 1-115
90217-0348	GASKET 35,4X46,8X4 MM	1-109, 1-111
90220-0034	THERMOCABLE TEX/SITW-20F-KX 2X0,5MM2	4-11
90220-0107	SCR. CABLE 5X0,75MM2	3-307
90230-0027	NON-RETURN VALVE QJ 8355-1/4"	3-205, 3-207, 3-209, 3-211, 3-213, 3-215
90232-0103	PH.CELL E3S-CT61-L-5M	3-249, 3-251
90232-0104	PH.CELL E3S-CT61-D-5M	3-249, 3-251
90232-0123	PH.CELL WLL170-P135-6011723	3-321
90232-0325	FIBRE E32-DC200	3-321
90235-0731	THROTTLE CHECK VALVE, G1/4", SCO-606-1/4	3-21, 3-23, 3-25, 3-87, 3-89
90235-0846	THROTTLE CHECK VALVE G1/8", MANUAL, 6	1-119, 1-121, 4-13, 4-15
90237-0070	SNAP-IN BALL LOCK, 69X19 MM	3-323, 3-325, 3-327
90239-0489	ROD END, CLEVIS WITH AXLE M6X1,25	1-113, 1-115, 1-119, 1-121
90240-0172	FLANGE BUSHING, 8X12X10 MM	1-31, 1-33, 1-41, 1-43, 1-45, 1-47, 1-59, 1-61, 1-63, 1-67, 1-69, 1-169, 1-171, 1-177, 1-179, 1-181
90240-0180	FLANGE BUSHING 10X14X15MM	1-89, 1-91, 1-93, 1-95, 1-97, 1-99, 2-247, 2-249
90240-0258	BUSHING, 15X17X15 MM	3-223, 3-225, 3-227
90240-0260	FLANGE BUSHING, 8X10X9 MM	2-97, 2-99, 2-101, 2-103, 2-105, 2-109, 2-111, 2-115
90240-0261	FLANGE BUSHING, 12X14X9 MM	2-263, 2-265
90240-0263	FLANGE BUSHING, 15X17X12 MM	3-223, 3-225, 3-227
90240-0289	FLANGE BUSHING, 10X12X6 MM	2-67, 2-81, 2-97, 2-99, 2-101, 2-103, 2-105, 2-109, 2-111, 2-115, 2-263
90240-0316	FLANGE BUSHING, 12X14X8 MM	3-223, 3-225, 3-227
90242-0093	O-RING MATERIAL 1,5 MM	2-159, 2-161, 2-163, 2-165
90242-0126	O-RING 82,27X1,78 MM	1-125, 1-127, 1-129, 1-131, 1-133
90242-0270	O-RING 82,27X1,78 MM	3-185, 3-187, 3-189, 3-191, 3-193, 3-195
90242-0271	O-RING 63,22X1,78 MM	3-185, 3-187, 3-189, 3-191, 3-193, 3-195
90258-0060	COTTER	3-397
90261-0016	PLUG, BLIND, PLASTIC GPN300V2	2-11, 2-13, 2-15, 2-21, 2-23, 2-25
90266-0019	PIPE	2-227, 2-229
90286-0013	GREASE NIPPLE STRAIGHT, H1 M6X1 2346	4-13, 4-15
90287-0106	SCREW SPRINGLOAD. SLOTTED HEAD M10X21	3-331
90287-0112	SCREW SPRINGLOAD. SLOTTED HEAD M8X16	2-5, 2-7
90287-0148	SCREW SPRINGLOAD. SLOTTED HEAD M5X12	2-253, 2-255, 2-257
90287-0261	SCREW MC6S M5X55 A270	3-409
90287-0295	SCREW HEX.SOCK.COUNT.MF6S M3X8 A280	2-159, 2-161, 2-163, 2-165
90287-0322	SCREW M6S M14X40 70	1-87
90287-0347	BOLT	1-87
90296-0068	SHELL ALVANIA GREASE EP 2	3-145, 3-147, 3-257, 3-263, 3-265
90296-0091	LUBRICATION GREASE	1-113, 1-115
90326-0022	PLUG, MALE YELLOW CR-AL	4-11
90326-0060	THERMOCOUPLE, CR-AL	3-303
90328-0026	SILENCER G1/4"	1-17
90335-0005	SPRING	3-349
90335-0024	COMP. SPRING 22250, 1,25X13,75X27	2-253, 2-255, 2-257
90335-0025	COMP. SPRING 22010, 1X11X26	3-401
90335-0036	COMP. SPRING 22450, 1,6X14,1X24	3-21, 3-23, 3-25, 3-87, 3-89
90335-0089	TENSION SPRING 41490, 0,9X10X23	1-109, 1-111
90335-0091	TENSION SPRING 41890, 1,2X13X48,2	1-141, 1-143
90347-0039	DAMPER	1-157, 1-159
90347-0182	SHOCK ABSORBER, YSR-16-20-C	1-145, 1-147
90348-0031	FREE-WHEEL COUPLING, 8X12 MM	3-309
90411-0018	INSULATOR, ALU-SILICATE HM 15643	3-303
90424-0068	AIR NOZZLE, G1/4, MOD. 216 BSP	3-9, 3-11, 3-13, 3-15, 3-17, 3-21, 3-23, 3-25, 3-61, 3-63, 3-65, 3-87, 3-89
90450-0003	SINGLE ACTING, MINI-ISO, CYL 20-25	1-141, 1-143
90450-0380	SINGLE ACTING, PANCAKE EV-20/75-5	3-295
90450-0504	DOUBLE ACTING, PROFILE, CYL 50-25	3-271, 3-273
90450-0756	BRACKET, REAR EYE 32	1-113, 1-115, 1-119, 1-121
90457-0197	CYLINDER WITH INT. GUIDING BORE 25	3-303
90457-0860	SCREW ISO4029 M4X16 A4	3-287
90457-0922	ELBOW PIPE JOINT, EXT.THREAD, D=6MM M5	3-289, 3-291
90458-0058	SCREW M5X60 A280	2-145
90458-0307	CABLE GLAND, M20X1,5, NO.5311 1020	3-307, 3-323, 3-325, 3-327
90458-0322	NUT, M16X1,5	4-31
90458-0323	NUT, M20X1,5	4-31
90458-0353	BUSHING, 8X10X8 MM	2-97, 2-99, 2-101, 2-103, 2-105, 2-109, 2-111, 2-115
90458-0372	KEY FOR SAFETY SWITCH AZM-161-B6	3-323, 3-325, 3-327
90458-0427	HOSE GLAND W/O INSERT M16 EXTENDED	3-303
90458-0428	HOSE GLAND W/O INSERT M20 EXTENDED	3-303
90458-0429	HOSE GLAND W/O INSERT M20 EXTENDED	1-157, 1-159
90458-0438	GLAND, EXTENDED WITH INSERT, M20X1,5	3-307
90458-0523	STEPPER MOTOR SM 56.2.18J3 Z(202)	3-307
90458-0528	DOUBLE ACTING, COMPACT, CYL 32-25	1-113, 1-115, 1-119, 1-121
90458-0601	CONTRAST SCANNER, KT15W-P2110S01	2-253, 2-255, 2-257
90458-0639	VARILIP 20X30X7 MM	1-113, 1-115, 1-135, 1-137
90458-0640	O-RING 88,62X1,78 MM	1-135, 1-137, 1-161
90458-0675	PROX.SENSOR, E2EG-X5MB1-5M	3-323, 3-325, 3-327
90458-1307	BLIND PLUG CIRCULAR, M16X1,5 514GFK/216	4-31
90458-1404	FLANGE BUSHING, 12X16X16 MM	2-261, 3-185, 3-187, 3-189, 3-191, 3-193, 3-195
90458-1704	BALL BEARING, 15X35X11 MM	1-113, 1-115, 1-125, 1-127, 1-129, 1-131, 1-133
90458-2164	ELBOW PIPE JOINT, EXT.THREAD,D=6MM M5	3-303

Part No	Description	Page No
90458-2460	ADJUSTABLE MECH. STOP, FOR CYL. 2711	3-303
90458-2920	BUSHING INSERT, JUM-01-16	4-13, 4-15
90458-2950	BALL BEARING, 5X16X5 MM	1-151
90458-2954	ELBOW PIPE JOINT, EXT.THREAD, D=4MM M5	3-295, 3-331
90458-2956	ELBOW PIPE JOINT, EXT.THREAD, D=6MM-G1/8	1-17, 4-13, 4-15
90458-2957	ELBOW PIPE JOINT, EXT.THREAD, D=6MM-G1/4	3-271, 3-273
90458-2958	ELBOW PIPE JOINT, EXT.THREAD, D=8MM-G1/4	3-61, 3-63, 3-65, 3-87, 3-89
90459-0094	O-RING 133,07X1,78 MM	1-135, 1-137, 1-161
90459-0098	THRUST BALL BEARING, 15X28X9 MM	1-135, 1-137
90459-0471	KEY SAF.SW. AZM161SK 24RKA 024 M16, 24 V	3-323, 3-325, 3-327
90459-0472	KEY SAF.SW. AZ 16 02ZVRK-M20-2152-2254	1-157, 1-159
90459-0707	HEATING ELEMENT 1500W/220V	4-9
90459-0729	HEXAGONAL PROTECTIVE CAP GPN 1000	1-9, 1-11, 1-13, 1-15
90459-0838	DISTRIBUTION FRAME, ASBV 4 5-66/10M	3-323, 3-325, 3-327
90459-0844	SINGLE ACTING, MINI-ISO, CYL 12-10	3-331
90459-0964	CONNECTOR MALE 4 PINS,7000-12781-0000000	3-323, 3-325, 3-327
90459-0969	COMP. SPRING A D22430, 1,6X11,6X58,5	3-135, 3-137, 3-139, 3-141
90459-1314	O-RING 491X3 MM	1-155
90459-1506	ELBOW WITH TAILPIECE 10/10 MM	4-9
90459-1627	O-RING 114,02X1,78 MM	1-125, 1-127, 1-129, 1-131, 1-133
90459-1728	SCREW ISO4029 M6X45 A4	1-113, 1-115
90459-1953	DOUBLE ACTING, MINI-ISO, CYL. 25-10	3-107, 3-109, 3-111
90459-2130	TAPE, ADHESIVE SI TAPE MON3154535033CL	3-359
90459-2145	BACK-UP RING 43,5X1,4 MM	2-131
90459-2146	X-SEAL 42,52X2,62 MM	2-131
90459-2173	SEAL GLYDRING 32,5X40X3,2 MM	2-131
90459-2258	SEAL GLYDRING 25,1X30X2,2 MM	2-169, 2-171, 2-215, 2-217, 2-219, 2-221
90459-2363	O-RING MATERIAL 1,78 MM	2-159, 2-161, 2-163, 2-165
90459-2590	ROD END, CLEVIS WITH AXLE M8	1-141, 1-143
90459-3153	ADHESIVE TAPE ALUMINIUM 50MY, WIDTH 16MM	3-383
90459-3388	SCRAPER, 10X16X4,7 MM	2-147, 2-149, 2-203, 2-205
90459-3644	REDUCER, M20/M16	3-323, 3-325, 3-327
90459-3670	HOOD HAN 3A 19 20 003 1440	3-303
90459-3772	END SLEEVE H 0.25/12	3-347
90459-3940	LEVER, GN 612-6-M16X1.5-A-NI	3-185, 3-187, 3-189, 3-191, 3-193, 3-195
90459-4053	THERMOCOUPLE, 5110082-001	4-9
90459-4179	GASKET 30,5X42X4 MM FDA	1-109, 1-111
90459-4504	ROD END, ID=6MM, M6X1	2-263
90459-4505	ROD END, ID=6MM, M6X1 LH	2-263
90459-4580	O-RING 165X4 MM	3-391
90459-4932	REAR CLEVIS FOOT MOUNTING , CRLBN-20/25	3-107, 3-109, 3-111
90459-5268	DOUBLE ACTING, MINI-ISO, CYL. 25-130	4-13, 4-15
90459-5581	TENSION SPRING 1,2X23X8,5	1-109, 1-111
90459-5968	WEAR RING 19X22X3,2 MM	2-177
90459-6019	PISTON SEAL STEPSEAL 11,5X19X3,2 MM	2-177
90459-6021	PISTON SEAL STEPSEAL 7,2X12X2,2 MM	2-177
90459-6022	PISTON SEAL STEPSEAL 14,5X22X3,2 MM	2-177
90459-6023	PISTON SEAL 13X19X3,2 MM	2-177
90459-6024	PISTON SEAL 16X22X3,2 MM	2-177
90459-6025	PISTON SEAL 6,2X12X3,2 MM	2-177
90459-6026	WEAR RING 16X19X3,2 MM	2-177
90459-6027	WEAR RING 9X12X3,2 MM	2-177
90459-6570	CONNECTOR M12 5-POLES MALE, RSCN5/7	2-253, 2-255, 2-257
90459-6821	MALE INSERT HAN 4A, 09 20 004 2611	3-303, 3-307
90459-7222	HOOD 3 A TOP ENTRY, 19 20 003 0420	3-307
90459-7315	PUSH DYNAMOMETER 20 - 200N, DT120	1-3, 1-5, 1-7
90600-0464	INDUCTIVE SWITCH,E2A-M12LS02-WP-B1-TP 5M	4-13, 4-15
90600-0473	INDUCTIVE SWITCH E2A-S08KS01-WP-B1-TP 5M	1-17
90600-2603	SPRING WASHER, CURVED 6,83X10,74X0,17 MM	3-309
90600-2604	TENS. SP. EO300-055-2500-S,1,4X7,62X63,5	3-309, 3-311
90600-2609	SCOTCH-BRITE WHITE 690	3-383
90600-3222	PILOTED FUNCTION VALVE G1/8, 7880 06 10	4-13, 4-15
90600-3313	BUSHING, 10X14X10 MM	1-71, 1-73, 1-75
90600-3582	SPHERICAL BEARING, GE 6 TGR	2-97, 2-99, 2-101, 2-103
90600-3728	WRENCH FOR RING NUT, S 35 KM	3-391
107426-0000	GUIDE SLEEVE	2-131
229207-0000	BEARING SLEEVE	3-245, 3-247
232979-0000	PRESSURE ROLLER (PAK OF 10)	1-9, 1-11, 1-13, 1-15, 1-89, 1-91, 1-93, 1-95, 1-97, 1-99
234844-0000	WHEEL	3-329
245039-0000	GUIDE WHEEL	3-245, 3-247
252766-0001	INSULATING PIPE	3-173, 3-175, 3-177, 3-179, 3-181, 3-183
252766-0002	INSULATING PIPE	3-173, 3-175, 3-177, 3-179, 3-181, 3-183
252766-0004	INSULATING PIPE	3-173, 3-175, 3-177, 3-179, 3-181, 3-183
255978-0000	FORK	1-9, 1-11, 1-13, 1-15
256628-0000	PIECE	2-5, 2-7
256629-0001	AXLE PIN	2-5, 2-7
257330-0000	PRESSURE ROLLER (10 PCS)	1-9, 1-11, 1-13, 1-15, 1-89, 1-91, 1-93, 1-95, 1-97, 1-99
263311-0000	WASHER	1-107
263655-0006	SHAFT	1-23, 1-25
263655-0007	SHAFT	1-23, 1-25
263655-0009	SHAFT	1-23, 1-25
263655-0015	SHAFT	1-23, 1-25
263655-0018	SHAFT	1-23, 1-25
263673-0000	GASKET	1-89, 1-91, 1-93, 1-95, 1-97, 1-99, 3-173, 3-175, 3-177, 3-179, 3-181, 3-183

Part No	Description	Page No
266739-0000 ..	CABLE GLAND	4-9
269151-0000 ..	SHAFT	1-71, 1-73, 1-75
270927-0000 ..	SCREW	4-9
271860-0000 ..	CLAMP BLOCK	1-157, 1-159
272479-0000 ..	PRESSURE ROLLER (10PCS)	1-9, 1-11, 1-13, 1-15, 1-89, 1-91, 1-93, 1-95, 1-97, 1-99
272728-0000 ..	BARRIER	3-401
273953-0000 ..	SEAL	1-23, 1-25
294464-0000 ..	BASE PLATE	4-9
295377-0001 ..	HOOD	1-9, 1-11, 1-13, 1-15
295377-0003 ..	HOOD	1-9, 1-11, 1-13, 1-15
311101-0270 ..	PARALLEL PIN ISO 2338 4H6X16 ST	3-301, 3-307
311101-0272 ..	PARALLEL PIN ISO 2338 4H6X20 ST	3-307
311103-0232 ..	PARALLEL PIN ISO 2338 3M6X8 A1	2-69, 2-71, 2-73, 2-75, 2-77
311103-0233 ..	PARALLEL PIN ISO 2338 3M6X10 A1	3-311
311103-0234 ..	PARALLEL PIN ISO 2338 3M6X12 A1	2-133, 2-135, 2-137, 2-191, 2-193, 2-195
311103-0236 ..	PARALLEL PIN ISO 2338 3M6X16 A1	1-31, 1-33, 1-41, 1-43, 1-45, 1-47, 2-55, 2-57, 2-59, 2-61, 2-63
311103-0238 ..	PARALLEL PIN ISO 2338 3M6X20 A1	1-71, 1-73, 1-75, 4-13, 4-15
311103-0267 ..	PARALLEL PIN ISO 2338 4M6X10 A1	2-127, 2-129, 2-187, 2-189, 3-295, 3-335
311103-0268 ..	PARALLEL PIN ISO 2338 4M6X12 A1	2-107, 2-113, 2-117, 3-143
311103-0270 ..	PARALLEL PIN ISO 2338 4M6X16 A1	1-145, 1-147, 3-303
311103-0274 ..	PARALLEL PIN ISO 2338 4M6X25 A1	3-401
311103-0276 ..	PARALLEL PIN ISO 2338 4M6X30 A1	1-71, 1-73, 1-75
311103-0306 ..	PARALLEL PIN ISO 2338 5M6X12 A1	1-71, 1-73, 1-75, 2-231, 2-233, 3-323, 3-325, 3-327, 3-339
311103-0308 ..	PARALLEL PIN ISO 2338 5M6X16 A1	2-119, 2-121, 2-123, 2-125, 2-147, 2-149, 2-179, 2-181, 2-183, 2-185, 2-203, 2-205, 3-321
311103-0310 ..	PARALLEL PIN ISO 2338 5M6X20 A1	2-235, 2-237, 2-239, 2-241
311103-0314 ..	PARALLEL PIN ISO 2338 5M6X30 A1	3-315
311103-0353 ..	PARALLEL PIN ISO 2338 6M6X20 A1	1-179, 1-181
311103-0369 ..	PARALLEL PIN ISO 2338 6M6X60 A1	3-323, 3-325, 3-327
311103-0399 ..	PARALLEL PIN ISO 2338 8M6X16 A1	2-235, 2-237, 2-239, 2-241
311103-0400 ..	PARALLEL PIN ISO 2338 8M6X18 A	2-227, 2-229
311103-0401 ..	PARALLEL PIN ISO 2338 8M6X20 A1	1-155, 3-323, 3-325, 3-327, 3-337
311103-0402 ..	PARALLEL PIN ISO 2338 8M6X22 A1	2-235, 2-237, 2-239, 2-241
311103-0407 ..	PARALLEL PIN ISO 2338 8M6X35 A1	3-263, 3-265
311103-0413 ..	PARALLEL PIN ISO 2338 8M6X50 A1	1-157, 1-159
311103-0454 ..	PARALLEL PIN ISO 2338 10M6X20 A1	3-233
311103-1274 ..	PARALLEL PIN ISO 2338 4M6X24 A1	1-23, 1-25
311112-0256 ..	SPRING PIN, ISO 8752 4X20-C	1-135, 1-137, 2-263, 2-265
311112-0258 ..	SPRING PIN, ISO 8752 4X24-C	1-141, 1-143, 2-263
311112-0341 ..	SPRING PIN, ISO 8752 6X24-C	3-331
311411-0138 ..	SPLIT PIN SP1,6X12RFR	3-329
312101-0515 ..	SCREW M6S M10X120 FZB	3-393
312105-0285 ..	SCREW M6S ISO 4017 M4X6 A470	2-97, 2-99, 2-101, 2-103, 4-13, 4-15
312105-0287 ..	SCREW M6S ISO 4017 M4X8 A470	1-17, 1-71, 1-73, 1-75, 1-145, 1-147, 2-31, 2-33, 2-43, 2-45, 2-55, 2-57, 2-59, 2-61, 2-63, 2-69, 2-71, 2-73, 2-75, 2-77, 2-87, 2-89, 2-93, 2-95, 3-21, 3-23, 3-25, 3-87, 3-89, 3-145, 3-147, 3-185, 3-187, 3-189, 3-191, 3-193, 3-195, 3-249, 3-251, 3-307, 3-321, 3-323, 3-325, 3-327, 3-331, 3-335, 3-339
312105-0289 ..	SCREW M6S H4X10 A4 70 ISO4017/DIN933	1-31, 1-33, 1-41, 1-43, 1-45, 1-47, 1-71, 1-73, 1-75, 1-119, 1-121, 3-51, 3-53, 3-287, 4-13, 4-15
312105-0291 ..	SCREW M6S ISO 4017 M4X12 A470	1-119, 1-121, 1-145, 1-147, 2-105, 2-109, 2-111, 2-115, 2-119, 2-121, 2-123, 2-125, 2-147, 2-149, 2-179, 2-181, 2-183, 2-185, 2-203, 2-205, 3-145, 3-147, 3-237, 3-287, 3-323, 3-325, 3-327
312105-0293 ..	SCREW M6S ISO 4017 M4X16 A470	3-185, 3-187, 3-189, 3-191, 3-193, 3-195, 3-309, 3-323, 3-325, 3-327, 4-13, 4-15
312105-0295 ..	SCREW M6S ISO 4017 M4X20 A470	2-145, 3-197, 3-199, 3-359
312105-0299 ..	SCREW M6S ISO 4017 M4X30 A470	3-311
312105-0301 ..	SCREW M6S ISO 4017 M4X35 A470	1-107
312105-0323 ..	SCREW M6S ISO 4017 M5X8 A480	1-103, 1-105, 1-177, 2-169, 2-171, 2-215, 2-217, 2-219, 2-221, 3-239, 3-241, 3-249, 3-251
312105-0325 ..	SCREW M6S ISO 4017 M5X10 A480	1-59, 1-61, 1-63, 1-71, 1-73, 1-75, 1-135, 1-137, 2-31, 2-33, 2-43, 2-45, 2-67, 2-81, 2-97, 2-99, 2-101, 2-103, 2-253, 2-255, 2-257, 3-123, 3-125, 3-127, 3-161, 3-163
312105-0327 ..	SCREW M6S ISO 4017 M5X12 A480	1-31, 1-33, 1-41, 1-43, 1-45, 1-47, 1-59, 1-61, 1-63, 1-71, 1-73, 1-75, 1-113, 1-115, 1-125, 1-127, 1-129, 1-131, 1-133, 1-135, 1-137, 1-175, 2-11, 2-13, 2-15, 2-21, 2-23, 2-25, 2-31, 2-33, 2-43, 2-45, 2-85, 2-87, 2-89, 2-93, 2-95, 2-97, 2-99, 2-101, 2-103, 2-105, 2-107, 2-109, 2-111, 2-113, 2-115, 2-117, 3-233, 3-249, 3-251, 3-257, 3-263, 3-265, 3-339
312105-0328 ..	SCREW M6S ISO 4017 M5X14 A480	2-11, 2-13, 2-15, 2-21, 2-23, 2-25, 2-31, 2-33, 2-43, 2-45, 2-55, 2-57, 2-59, 2-61, 2-63, 2-69, 2-71, 2-73, 2-75, 2-77
312105-0329 ..	SCREW M6S ISO 4017 M5X16 A480	1-31, 1-33, 1-41, 1-43, 1-45, 1-47, 1-59, 1-61, 1-63, 1-67, 1-69, 1-161, 1-179, 1-181, 2-55, 2-57, 2-59, 2-61, 2-63, 2-69, 2-71, 2-73, 2-75, 2-77, 2-235, 2-237, 2-239, 2-241, 3-257, 3-263, 3-265, 3-323, 3-325, 3-327
312105-0331 ..	SCREW M6S ISO 4017 M5X20 A480	1-59, 1-61, 1-63, 1-67, 1-69, 1-135, 1-137, 1-157, 1-159, 1-179, 1-181, 2-31, 2-33, 2-43, 2-45, 2-55, 2-57, 2-59, 2-61, 2-63, 2-69, 2-71, 2-73, 2-75, 2-77, 2-235, 2-237, 2-239, 2-241, 3-301
312105-0337 ..	SCREW M6S ISO 4014 M5X35 A480	3-303
312105-0341 ..	SCREW M6S ISO 4014 M5X50 A480	2-31, 2-33, 2-43, 2-45
312105-0362 ..	SCREW M6S ISO 4017 M6X8 A480	1-71, 1-73, 1-75, 1-107, 2-5, 2-7, 2-147, 2-149, 2-203, 2-205, 3-9, 3-11, 3-13, 3-15, 3-17, 3-257, 3-263, 3-265
312105-0364 ..	SCREW M6S ISO 4017 M6X10 A480	1-71, 1-73, 1-75, 2-31, 2-33, 2-43, 2-45, 3-9, 3-11, 3-13, 3-15, 3-17, 3-37, 3-39, 3-41, 3-69, 3-71, 3-77, 3-79, 3-123, 3-125, 3-127, 3-323, 3-325, 3-327
312105-0366 ..	SCREW M6S ISO 4017 M6X12 A480	1-17, 1-103, 1-105, 1-119, 1-121, 1-125, 1-127, 1-129, 1-131, 1-133, 1-145, 1-147, 1-169, 1-171, 2-11, 2-13, 2-15, 2-21, 2-23, 2-25, 2-159, 2-161, 2-163, 2-165, 2-227, 2-229, 2-231, 2-233, 2-235, 2-237, 2-239, 2-241, 2-261, 3-7, 3-9, 3-11, 3-13, 3-15, 3-17, 3-21, 3-23, 3-25, 3-27, 3-29, 3-69, 3-71, 3-77, 3-79, 3-87, 3-89, 3-97, 3-99, 3-107, 3-109

Part No	Description	Page No
		3-111, 3-161, 3-163, 3-185, 3-187, 3-189, 3-191, 3-193, 3-195, 3-217, 3-219, 3-239, 3-241, 3-245
		3-247, 3-253, 3-257, 3-263, 3-265, 3-323, 3-325, 3-327
312105-0367 ..	SCREW M6S ISO 4017 M6X14 A480	1-141, 1-143, 1-157, 1-159, 2-31, 2-33, 2-43, 2-45, 2-55
		.. 2-57, 2-59, 2-61, 2-63, 2-69, 2-71, 2-73, 2-75, 2-77, 3-61, 3-63, 3-65, 3-253, 3-259, 3-261, 3-267
312105-0368 ..	SCREW M6S ISO 4017 M6X16 A480	1-71, 1-73, 1-75, 1-79, 1-81, 1-83, 1-85, 1-119, 1-121
		1-145, 1-147, 1-155, 1-161, 1-179, 1-181, 2-11, 2-13, 2-15, 2-21, 2-23, 2-25, 2-31, 2-33, 2-43, 2-45
		2-107, 2-113, 2-117, 2-147, 2-149, 2-203, 2-205, 2-235, 2-237, 2-239, 2-241, 2-253, 2-255, 2-257
		2-265, 3-9, 3-11, 3-13, 3-15, 3-17, 3-21, 3-23, 3-25, 3-27, 3-29, 3-51, 3-53, 3-61, 3-63, 3-65, 3-69
		3-71, 3-77, 3-79, 3-87, 3-89, 3-97, 3-99, 3-107, 3-109, 3-111, 3-149, 3-151, 3-161, 3-163, 3-185
		3-187, 3-189, 3-191, 3-193, 3-195, 3-201, 3-203, 3-205, 3-207, 3-209, 3-211, 3-213, 3-215, 3-217
		3-219, 3-223, 3-225, 3-227, 3-259, 3-261, 3-263, 3-265, 3-267, 3-287, 3-321, 3-323, 3-325, 3-327
		4-13, 4-15
312105-0370 ..	SCREW M6S ISO 4017 M6X20 A480	1-17, 1-71, 1-73, 1-75, 1-113, 1-115, 1-119, 1-121, 1-125
		1-127, 1-129, 1-131, 1-133, 1-135, 1-137, 1-141, 1-143, 1-145, 1-147, 1-151, 1-169, 1-171, 1-179
		1-181, 2-87, 2-89, 2-93, 2-95, 2-133, 2-135, 2-137, 2-159, 2-161, 2-163, 2-165, 2-191, 2-193, 2-195
		2-227, 2-229, 2-235, 2-237, 2-239, 2-241, 2-263, 2-265, 3-7, 3-9, 3-11, 3-13, 3-15, 3-17, 3-51, 3-53
		3-61, 3-63, 3-65, 3-69, 3-71, 3-77, 3-79, 3-107, 3-109, 3-111, 3-129, 3-131, 3-145, 3-147, 3-185
		3-187, 3-189, 3-191, 3-193, 3-195, 3-201, 3-203, 3-205, 3-207, 3-209, 3-211, 3-213, 3-215, 3-245
		3-247, 3-315, 3-323, 3-325, 3-327, 4-9
312105-0371 ..	SCREW M6S ISO 4017 M6X22 A480	1-71, 1-73, 1-75, 1-161
312105-0372 ..	SCREW M6S ISO 4017 M6X25 A480	1-23, 1-25, 1-71, 1-73, 1-75, 1-79, 1-81, 1-83, 1-85, 1-125
		1-127, 1-129, 1-131, 1-133, 1-135, 1-137, 2-119, 2-121, 2-123, 2-125, 2-179, 2-181, 2-183, 2-185
		2-263, 2-265, 3-9, 3-11, 3-13, 3-15, 3-17, 3-61, 3-63, 3-65, 3-165, 3-167, 3-205, 3-207, 3-209
		3-211, 3-213, 3-215, 3-245, 3-247, 3-253, 3-259, 3-261, 3-263, 3-265, 3-267, 3-271, 3-273, 4-9
		4-13, 4-15
312105-0374 ..	SCREW M6S ISO 4014 M6X30 A480	1-71, 1-73, 1-75, 3-7, 3-145, 3-147, 3-205, 3-207, 3-209
		3-211, 3-213, 3-215, 3-239, 3-241
312105-0376 ..	SCREW M6S ISO 4014 M6X35 A480	3-9, 3-11, 3-13, 3-15, 3-17, 3-51, 3-53, 3-123, 3-125, 3-127
		3-129, 3-131, 3-263, 3-265
312105-0378 ..	SCREW M6S ISO 4014 M6X40 A480	3-51, 3-53, 3-129, 3-131, 3-161, 3-163, 3-259, 3-261, 3-267
312105-0379 ..	SCREW M6S ISO 4014 M6X45 A480	3-7
312105-0381 ..	SCREW M6S ISO 4014 M6X55 A480	2-251, 3-263, 3-265
312105-0382 ..	SCREW M6S ISO 4014 M6X60 A480	3-7, 3-401
312105-0447 ..	SCREW M6S ISO 4017 M8X12 A480	1-155, 1-161, 2-157, 2-213, 3-157, 3-159, 3-169, 3-171
		3-239, 3-241, 3-257, 3-263
312105-0449 ..	SCREW M6S ISO 4017 M8X16 A480	1-59, 1-61, 1-63, 1-67, 1-69, 1-157, 1-159, 2-253, 2-255
		2-257, 3-21, 3-23, 3-25, 3-87, 3-89, 3-97, 3-99, 3-169, 3-171, 3-201, 3-203, 3-205, 3-207, 3-209
		3-211, 3-213, 3-215, 3-239, 3-241, 3-253, 3-323, 3-325, 3-327, 3-331
312105-0451 ..	SCREW M6S ISO 4017 M8X20 A480	1-23, 1-25, 1-41, 1-43, 1-45, 1-47, 1-59, 1-61, 1-63, 1-67
		1-69, 1-71, 1-73, 1-75, 1-113, 1-115, 1-145, 1-147, 1-157, 1-159, 3-21, 3-23, 3-25, 3-37, 3-39, 3-41
		3-87, 3-89, 3-97, 3-99, 3-157, 3-159, 3-169, 3-171, 3-185, 3-187, 3-189, 3-191, 3-193, 3-195, 3-201
		3-203, 3-205, 3-207, 3-209, 3-211, 3-213, 3-215, 3-217, 3-239, 3-241, 3-257, 3-263, 3-265, 3-323
		3-325, 3-327, 4-31
312105-0452 ..	SCREW M6S ISO 4017 M8X22 A480	1-59, 1-61, 1-63, 1-79, 1-81, 1-83, 1-85, 1-161, 1-169
		1-171, 2-247, 2-249, 3-97, 3-99
312105-0453 ..	SCREW M6S ISO 4017 M8X25 A480	1-59, 1-61, 1-63, 1-113, 1-115, 2-5, 2-7, 3-21, 3-23, 3-25
		3-37, 3-39, 3-41, 3-51, 3-53, 3-87, 3-89, 3-129, 3-131, 3-201, 3-203, 3-233, 3-257, 3-263, 3-323
		3-325, 3-327, 3-337, 4-7, 4-31
312105-0455 ..	SCREW M6S ISO 4017 M8X30 A480	1-9, 1-11, 1-13, 1-15, 1-179, 1-181, 2-227, 2-229, 2-235
		2-237, 2-239, 2-241, 3-37, 3-39, 3-41, 3-97, 3-99, 3-107, 3-109, 3-111, 3-145, 3-147, 3-149, 3-151
		3-161, 3-163, 3-173, 3-175, 3-177, 3-179, 3-181, 3-183, 3-185, 3-187, 3-189, 3-191, 3-193, 3-195
		3-271, 3-273, 3-287, 4-13, 4-15, 4-31
312105-0457 ..	SCREW M6S ISO 4014 M8X35 A480	2-227, 2-229, 2-235, 2-237, 2-239, 2-241, 3-21, 3-23, 3-25
		3-87, 3-89, 3-107, 3-109, 3-111, 3-161, 3-163, 3-173, 3-175, 3-177, 3-179, 3-181, 3-183, 3-185
		3-187, 3-189, 3-191, 3-193, 3-195, 3-271, 3-273
312105-0459 ..	SCREW M6S ISO 4014 M8X40 A480	3-173, 3-175, 3-177, 3-179, 3-181, 3-183
312105-0460 ..	SCREW M6S ISO 4014 M8X45 A480	2-119, 2-121, 2-123, 2-125, 2-147, 2-149, 2-179, 2-181
		2-183, 2-185, 2-203, 2-205, 2-235, 2-237, 2-239, 2-241
312105-0461 ..	SCREW M6S ISO 4014 M8X50 A480	3-37, 3-39, 3-41, 3-107, 3-109, 3-111
312105-0462 ..	SCREW M6S ISO 4014 M8X55 A480	.. 1-23, 1-25, 2-261, 3-37, 3-39, 3-41, 3-107, 3-109, 3-111
312105-0463 ..	SCREW M6S ISO 4014 M8X60 A480	3-37, 3-39, 3-41, 3-97, 3-99, 3-107, 3-109, 3-111
312105-0464 ..	SCREW M6S ISO 4014 M8X65 A480	2-235, 2-237, 2-239, 2-241, 3-27, 3-29, 3-37, 3-39, 3-41
		3-97, 3-99, 3-107, 3-109, 3-111, 3-161, 3-163, 3-173, 3-175, 3-177, 3-179, 3-181, 3-183
312105-0465 ..	SCREW M6S ISO 4014 M8X70 A480	3-27, 3-29, 3-37, 3-39, 3-41, 3-107, 3-109, 3-111, 3-173
		3-175, 3-177, 3-179, 3-181, 3-183
312105-0466 ..	SCREW M6S ISO 4014 M8X75 A480	3-27, 3-29, 3-37, 3-39, 3-41, 3-97, 3-99, 3-107, 3-109
		3-111, 3-173, 3-175, 3-177, 3-179, 3-181, 3-183
312105-0467 ..	SCREW M6S ISO 4014 M8X80 A480	3-27, 3-29, 3-37, 3-39, 3-41, 3-97, 3-99, 3-107, 3-109
		3-111, 3-173, 3-175, 3-177, 3-179, 3-181, 3-183, 3-239, 3-241
312105-0469 ..	SCREW M6S ISO 4014 M8X90 A480	2-157, 2-213, 3-27, 3-29, 3-37, 3-39, 3-41, 3-97, 3-99
		3-107, 3-109, 3-111, 3-223, 3-225, 3-227
312105-0471 ..	SCREW M6S ISO 4014 M8X100 A480	3-173, 3-175, 3-177, 3-179, 3-181, 3-183, 3-253
312105-0475 ..	SCREW M6S ISO 4014 M8X120 A480	3-245, 3-247, 3-253
312105-0489 ..	SCREW M6S ISO 4017 M10X16 A480	3-149, 3-151
312105-0493 ..	SCREW M6S ISO 4017 M10X25 A480	1-31, 1-33, 3-145, 3-147, 3-393
312105-0495 ..	SCREW M6S ISO 4017 M10X30 A480	1-9, 1-11, 1-13, 1-15, 1-23, 1-25, 2-107, 2-113, 2-117
		3-107, 3-109, 3-111, 3-149, 3-151, 3-161, 3-163, 3-223, 3-225, 3-227, 3-257, 3-263, 3-265, 3-393
312105-0506 ..	SCREW M6S ISO 4014 M10X75 A480	1-87
312105-0507 ..	SCREW M6S ISO 4014 M10X80 A480	3-269
312105-0511 ..	SCREW M6S ISO 4014 M10X100 A480	3-253
312105-0513 ..	SCREW M6S ISO 4014 M10X110 A480	3-245, 3-247
312105-0517 ..	SCREW M6S ISO 4014 M10X130 A480	3-245, 3-247
312105-0540 ..	SCREW M6S ISO 4017 M12X40 A480	3-393
312105-0550 ..	SCREW M6S ISO 4014 M12X90 A480	3-317, 3-319

Part No	Description	Page No
312109-0374 ..	SCREW M6S ISO 4017 M6X30 A480	1-59, 1-61, 1-63, 1-145, 1-147, 3-9, 3-11, 3-13, 3-15, 3-17, 3-61, 3-63, 3-65, 3-69, 3-71, 3-77, 3-79, 3-97, 3-99, 3-263, 3-265
312109-0376 ..	SCREW M6S ISO 4017 M6X35 A480	1-145, 1-147, 3-9, 3-11, 3-13, 3-15, 3-17, 3-61, 3-63, 3-65, 3-145, 3-147, 3-301, 3-365, 3-367
312109-0378 ..	SCREW M6S ISO 4017 M6X40 A480	3-233, 3-315
312109-0380 ..	SCREW M6S ISO 4017 M6X50 A480	3-293
312109-0457 ..	SCREW M6S ISO 4017 M8X35 A480	3-37, 3-39, 3-41, 3-107, 3-109, 3-111, 3-173, 3-175, 3-177, 3-179, 3-181, 3-183, 4-31
312109-0459 ..	SCREW M6S ISO 4017 M8X40 A480	1-23, 1-25, 1-41, 1-43, 1-45, 1-47, 3-173, 3-175, 3-177, 3-179, 3-181, 3-183, 3-293, 3-317, 3-319
312109-0460 ..	SCREW M6S ISO 4017 M8X45 A480	1-41, 1-43, 1-45, 1-47, 3-107, 3-109, 3-111, 3-149, 3-151, 3-173, 3-175, 3-177, 3-179, 3-181, 3-183, 3-185, 3-187, 3-189, 3-191, 3-193, 3-195
312109-0461 ..	SCREW M6S ISO 4017 M8X50 A480	1-23, 1-25, 3-37, 3-39, 3-41, 3-173, 3-175, 3-177, 3-179, 3-181, 3-183
312109-0463 ..	SCREW M6S ISO 4017 M8X60 A480	3-145, 3-147, 3-173, 3-175, 3-177, 3-179, 3-181, 3-183, 3-257, 3-263, 3-265
312109-0499 ..	SCREW M6S ISO 4017 M10X40 A480	3-257, 3-263, 3-265
312109-0500 ..	SCREW M6S ISO 4017 M10X45 A480	3-257, 3-395, 3-399
312109-0501 ..	SCREW M6S ISO 4017 M10X50 A480	1-145, 1-147
312115-0222 ..	SCREW ISO4762 M3X8 A4 80	3-289, 3-291
312115-0226 ..	SCREW ISO4762 M3X12 A4 80	4-9
312115-0228 ..	SCREW ISO4762 M3X16 A4 80	3-185, 3-187, 3-189, 3-191, 3-193, 3-195, 3-257, 3-263, 3-265
312115-0230 ..	SCREW ISO4762 M3X20 A4 80	4-9
312115-0285 ..	SCREW ISO4762 M4X6 A4 80	2-119, 2-121, 2-123, 2-125, 2-147, 2-149, 2-179, 2-181, 2-183, 2-185, 2-203, 2-205
312115-0287 ..	SCREW ISO4762 M4X8 A4 80	1-17, 2-55, 2-57, 2-59, 2-61, 2-63, 2-69, 2-71, 2-73, 2-75, 2-77
312115-0289 ..	SCREW ISO4762 M4X10 A4 80	2-55, 2-57, 2-59, 2-61, 2-63, 2-69, 2-71, 2-73, 2-75, 2-77
312115-0291 ..	SCREW ISO4762 M4X12 A4 80	1-141, 1-143, 2-55, 2-57, 2-59, 2-61, 2-63, 2-69, 2-71, 2-73, 2-75, 2-77, 2-227, 2-229, 3-135, 3-137, 3-139, 3-141
312115-0293 ..	SCREW ISO4762 M4X16 A4 80	2-55, 2-57, 2-59, 2-61, 2-63, 2-69, 2-71, 2-73, 2-75, 2-77, 2-227, 2-229, 3-311
312115-0295 ..	SCREW ISO4762 M4X20 A4 80	3-323, 3-325, 3-327
312115-0297 ..	SCREW ISO4762 M4X25 A4 80	2-133, 2-135, 2-137, 2-191, 2-193, 2-195, 3-197, 3-199
312115-0305 ..	SCREW ISO4762 M4X50 A4 80	2-133, 2-135, 2-137, 2-191, 2-193, 2-195
312115-0325 ..	SCREW ISO4762 M5X10 A4 80	1-119, 1-121, 2-159, 2-161, 2-163, 2-165
312115-0327 ..	SCREW ISO4762 M5X12 A4 80	1-119, 1-121, 2-119, 2-121, 2-123, 2-125, 2-133, 2-135, 2-137, 2-159, 2-161, 2-163, 2-165, 2-179, 2-181, 2-183, 2-185, 2-191, 2-193, 2-195, 2-235, 2-237, 2-239, 2-241, 3-123, 3-125, 3-127
312115-0329 ..	SCREW ISO4762 M5X16 A4 80	2-31, 2-33, 2-43, 2-45, 2-133, 2-135, 2-137, 2-159, 2-161, 2-163, 2-165, 2-191, 2-193, 2-195, 3-307, 3-335
312115-0331 ..	SCREW ISO4762 M5X20 A4 80	1-119, 1-121, 1-157, 1-159, 2-55, 2-57, 2-59, 2-61, 2-63, 2-69, 2-71, 2-73, 2-75, 2-77, 2-159, 2-161, 2-163, 2-165, 3-293, 3-295, 3-323, 3-325, 3-327
312115-0333 ..	SCREW ISO4762 M5X25 A4 80	3-123, 3-125, 3-127, 3-301, 3-303, 3-365, 3-367
312115-0339 ..	SCREW ISO4762 M5X40 A4 80	3-301
312115-0364 ..	SCREW ISO4762 M6X10 A4 80	2-235, 2-237, 2-239, 2-241, 3-289, 3-291
312115-0366 ..	SCREW ISO4762 M6X12 A4 80	1-145, 1-147, 2-31, 2-33, 2-43, 2-45, 2-55, 2-57, 2-59, 2-61, 2-63, 2-69, 2-71, 2-73, 2-75, 2-77, 3-157, 3-159, 3-169, 3-171, 4-13, 4-15
312115-0367 ..	SCREW ISO4762 M6X14 A4 80	1-165, 2-11, 2-13, 2-15, 2-21, 2-23, 2-25, 2-31, 2-33, 2-43, 2-45, 2-55, 2-57, 2-59, 2-61, 2-63, 2-69, 2-71, 2-73, 2-75, 2-77
312115-0368 ..	SCREW ISO4762 M6X16 A4 80	1-135, 1-137, 2-31, 2-33, 2-43, 2-45, 2-263, 3-107, 3-109, 3-111
312115-0370 ..	SCREW ISO4762 M6X20 A4 80	1-141, 1-143, 2-31, 2-33, 2-43, 2-45, 2-55, 2-57, 2-59, 2-61, 2-63, 2-69, 2-71, 2-73, 2-75, 2-77, 3-129, 3-131, 3-185, 3-187, 3-189, 3-191, 3-193, 3-195, 3-287
312115-0372 ..	SCREW ISO4762 M6X25 A4 80	2-131, 3-123, 3-125, 3-127, 3-197, 3-199
312115-0374 ..	SCREW ISO4762 M6X30 A4 80	1-141, 1-143, 2-31, 2-33, 2-43, 2-45, 3-107, 3-109, 3-111
312115-0376 ..	SCREW ISO4762 M6X35 A4 80	2-55, 2-57, 2-59, 2-61, 2-63, 2-69, 2-71, 2-73, 2-75, 2-77
312115-0378 ..	SCREW ISO4762 M6X40 A4 80	2-31, 2-33, 2-43, 2-45
312115-0379 ..	SCREW ISO4762 M6X45 A4 80	2-159, 2-161, 2-163, 2-165
312115-0380 ..	SCREW ISO4762 M6X50 A4 80	2-131
312115-0447 ..	SCREW ISO4762 M8X12 A4 80	2-119, 2-121, 2-123, 2-125, 2-179, 2-181, 2-183, 2-185
312115-0449 ..	SCREW ISO4762 M8X16 A4 80	2-97, 2-99, 2-101, 2-103, 3-21, 3-23, 3-25, 3-87, 3-89, 3-107, 3-109, 3-111
312115-0451 ..	SCREW ISO4762 M8X20 A4 80	1-41, 1-43, 1-45, 1-47, 3-169, 3-171, 3-239, 3-241, 3-253
312115-0457 ..	SCREW ISO4762 M8X35 A4 80	2-131
312115-0459 ..	SCREW ISO4762 M8X40 A4 80	2-131
312115-0461 ..	SCREW ISO4762 M8X50 A4 80	2-131
312115-0497 ..	SCREW ISO4762 M10X35 A4 80	3-201, 3-203, 3-269
312115-0500 ..	SCREW ISO4762 M10X45 A4 80	3-231, 3-269
312125-0228 ..	SCREW ISO 1207 M3X16 A4	1-113, 1-115, 1-119, 1-121
312125-0230 ..	SCREW ISO 1207 M3X20 A4	3-149, 3-151
312125-0234 ..	SCREW ISO 1207 M3X30 A4	3-149, 3-151
312125-0285 ..	SCREW ISO 1207 M4X6 A4	1-145, 1-147, 3-303
312125-0287 ..	SCREW ISO 1207 M4X8 A4	3-185, 3-187, 3-189, 3-191, 3-193, 3-195, 3-257, 3-263, 3-265, 3-295, 3-301, 3-303, 3-315, 3-323, 3-325, 3-327
312125-0289 ..	SCREW ISO 1207 M4X10 A4	3-307
312125-0291 ..	SCREW ISO 1207 M4X12 A4	3-321
312125-0295 ..	SCREW ISO 1207 M4X20 A4	2-133, 2-135, 2-137, 2-191, 2-193, 2-195
312125-0327 ..	SCREW ISO 1207 M5X12 A4	3-257, 3-263, 3-265
312132-0284 ..	SLOTTED HEAD, PAN SCREW, MSCS M4X5	4-9
312141-0222 ..	SCREW ISO 2009 MFS M3X8 4.8 EL.PL	2-55, 2-57, 2-59, 2-61, 2-63, 2-69, 2-71, 2-73, 2-75, 2-77
312145-0222 ..	SCREW ISO 2009 MFS M3X8 A4	1-119, 1-121
312145-0224 ..	SCREW ISO 2009 MFS M3X10 A4	1-119, 1-121
312145-0234 ..	SCREW ISO 2009 MFS M3X30 A4	2-159, 2-161, 2-163, 2-165
312145-0236 ..	SCREW ISO 2009 MFS M3X35 A4	2-159, 2-161, 2-163, 2-165

Part No	Description	Page No
312145-0238 ..	SCREW ISO 2009 MFS M3X40 A4	2-159, 2-161, 2-163, 2-165
312145-0287 ..	SCREW ISO 2009 MFS M4X8 A4	2-11, 2-13, 2-15, 2-21, 2-23, 2-25, 2-85, 2-169, 2-171, 2-215, 2-217, 2-219, 2-221
312145-0289 ..	SCREW ISO 2009 MFS M4X10 A4	2-11, 2-13, 2-15, 2-21, 2-23, 2-25, 2-55, 2-57, 2-59, 2-61, 2-63, 2-69, 2-71, 2-73, 2-75, 2-77, 2-85, 2-87, 2-89, 2-93, 2-95, 3-185, 3-187, 3-189, 3-191, 3-193, 3-195
312145-0291 ..	SCREW ISO 2009 MFS M4X12 A4	2-11, 2-13, 2-15, 2-21, 2-23, 2-25, 2-55, 2-57, 2-59, 2-61, 2-63, 2-69, 2-71, 2-73, 2-75, 2-77, 2-97, 2-99, 2-101, 2-103, 2-105, 2-109, 2-111, 2-115, 3-307
312145-0301 ..	SCREW ISO 2009 MFS M4X35 A4	3-303
312145-0323 ..	SCREW ISO 2009 MFS M5X8 A4	2-119, 2-121, 2-123, 2-125, 2-147, 2-149, 2-179, 2-181, 2-183, 2-185, 2-203, 2-205
312151-0368 ..	SCREW EN 10642 MF6S M6X16 10.9 EL.PL	3-257, 3-263
312155-0285 ..	SCREW DIN 7991 MF6S M4X6 A4 70	2-159, 2-161, 2-163, 2-165
312155-0287 ..	SCREW DIN 7991 MF6S M4X8 A4 70	2-55, 2-57, 2-59, 2-61, 2-63, 2-69, 2-71, 2-73, 2-75, 2-77, 2-97, 2-99, 2-101, 2-103, 2-133, 2-135, 2-137, 2-147, 2-149, 2-159, 2-161, 2-163, 2-165, 2-191, 2-193, 2-195, 2-203, 2-205, 3-51, 3-53, 3-129, 3-131, 3-135, 3-197, 3-199
312155-0289 ..	SCREW DIN 7991 MF6S M4X10 A4 70	2-11, 2-13, 2-15, 2-21, 2-23, 2-25, 3-51, 3-53, 3-197, 3-199
312155-0291 ..	SCREW DIN 7991 MF6S M4X12 A4 70	3-303, 3-335, 3-339
312155-0293 ..	SCREW DIN 7991 MF6S M4X16 A4 70	3-197, 3-199, 3-323, 3-325, 3-327
312155-0295 ..	SCREW DIN 7991 MF6S M4X20 A4 70	2-227, 2-229, 3-323, 3-325, 3-327
312155-0297 ..	SCREW DIN 7991 MF6S M4X25 A4 70	3-145, 3-147, 3-289, 3-291
312155-0323 ..	SCREW DIN 7991 MF6S M5X8 A4 70	2-55, 2-57, 2-59, 2-61, 2-63, 2-69, 2-71, 2-73, 2-75, 2-77, 3-61, 3-63, 3-65, 3-259, 3-261, 3-267
312155-0325 ..	SCREW DIN 7991 MF6S M5X10 A4 70	1-135, 1-137, 2-55, 2-57, 2-59, 2-61, 2-63, 2-69, 2-71, 2-73, 2-75, 2-77, 2-133, 2-135, 2-137, 2-191, 2-193, 2-195
312155-0327 ..	SCREW DIN 7991 MF6S M5X12 A4 70	2-55, 2-57, 2-59, 2-61, 2-63, 2-69, 2-71, 2-73, 2-75, 2-77, 3-135, 3-137, 3-139, 3-141, 3-185, 3-187, 3-189, 3-191, 3-193, 3-195, 3-315
312155-0329 ..	SCREW DIN 7991 MF6S M5X16 A4 70	1-157, 1-159, 3-205, 3-207, 3-209, 3-211, 3-213, 3-215
312155-0331 ..	SCREW DIN 7991 MF6S M5X20 A4 70	3-323, 3-325, 3-327
312155-0339 ..	SCREW DIN 7991 MF6S M5X40 A4 70	2-31, 2-33, 2-43, 2-45
312155-0366 ..	SCREW DIN 7991 MF6S M6X12 A4 70	3-107, 3-109, 3-111
312155-0368 ..	SCREW DIN 7991 MF6S M6X16 A4 70	3-245, 3-247, 3-265
312155-0370 ..	SCREW DIN 7991 MF6S M6X20 A4 70	3-51, 3-53, 3-129, 3-131
312155-0376 ..	SCREW DIN 7991 MF6S M6X35 A4 70	3-51, 3-53
312155-0378 ..	SCREW DIN 7991 MF6S M6X40 A4 70	3-51, 3-53, 3-223, 3-225, 3-227
312155-0379 ..	SCREW DIN 7991 MF6S M6X45 A4 70	3-129, 3-131
312155-0380 ..	SCREW DIN 7991 MF6S M6X50 A4 70	3-51, 3-53
312155-0449 ..	SCREW DIN 7991 MF6S M8X16 A4 70	1-71, 1-73, 1-75, 3-97, 3-99, 3-205, 3-207, 3-209, 3-211, 3-213, 3-215, 3-265
312155-0453 ..	SCREW DIN 7991 MF6S M8X25 A4 70	3-185, 3-187, 3-189, 3-191, 3-193, 3-195
312155-0455 ..	SCREW DIN 7991 MF6S M8X30 A4 70	3-107, 3-109, 3-111
312155-0459 ..	SCREW DIN 7991 MF6S M8X40 A4 70	3-37, 3-39, 3-41, 3-107, 3-109, 3-111
312155-0461 ..	SCREW DIN 7991 MF6S M8X50A4 70	3-107, 3-109, 3-111
312155-0495 ..	SCREW DIN 7991 MF6S M10X30 A4 70	3-145, 3-147, 3-257, 3-263, 3-265
312155-0499 ..	SCREW DIN 7991 MF6S M10X40 A4 70	3-51, 3-53, 3-129, 3-131
312155-0540 ..	SCREW DIN 7991 MF6S M12X40 A4 70	3-145, 3-147
312180-0455 ..	SCREW ISO7379 H8X30	3-339
312180-0491 ..	SCREW ISO7379 H10X20	1-141, 1-143
312180-0499 ..	SCREW ISO7379 H10X40	3-337
312318-0220 ..	SCREW ISO4029 M3X6 A4	3-323, 3-325, 3-327
312318-0283 ..	SCREW ISO4029 M4X4 A4	3-307
312318-0284 ..	SCREW ISO4029 M4X5 A4	1-145, 1-147
312318-0285 ..	SCREW ISO4029 M4X6 A4	2-11, 2-13, 2-15, 2-21, 2-23, 2-25, 2-55, 2-57, 2-59, 2-61, 2-63, 2-67, 2-69, 2-71, 2-73, 2-75, 2-77, 2-81, 2-87, 2-89, 2-93, 2-95, 3-311
312318-0287 ..	SCREW ISO4029 M4X8 A4	1-71, 1-73, 1-75, 1-149, 2-97, 2-99, 2-101, 2-103, 2-111, 2-115, 2-231, 2-233
312318-0289 ..	SCREW ISO4029 M4X10 A4	2-5, 2-7
312318-0320 ..	SCREW ISO4029 M5X5 A4	2-55, 2-57, 2-59, 2-61, 2-63, 2-69, 2-71, 2-73, 2-75, 2-77
312318-0323 ..	SCREW ISO4029 M5X8 A4	1-177, 2-55, 2-57, 2-59, 2-61, 2-63, 2-69, 2-71, 2-73, 2-75, 2-77, 2-97, 2-99, 2-101, 2-103, 2-105, 2-109, 2-253, 2-255, 2-257, 3-161, 3-163
312318-0325 ..	SCREW ISO4029 M5X10 A4	2-55, 2-57, 2-59, 2-61, 2-63, 2-69, 2-71, 2-73, 2-75, 2-77, 3-135, 3-137, 3-139, 3-141
312318-0327 ..	SCREW ISO4029 M5X12 A4	3-137, 3-139, 3-141, 3-309, 3-311, 3-329
312318-0329 ..	SCREW ISO4029 M5X16 A4	2-87, 2-89, 2-93, 2-95, 2-133, 2-135, 2-137, 2-191, 2-193, 2-195, 3-137, 3-139, 3-141, 3-287
312318-0331 ..	SCREW ISO4029 M5X20 A4	3-137, 3-139, 3-141
312318-0362 ..	SCREW ISO4029 M6X8 A4	3-145, 3-147, 3-149, 3-151, 3-161, 3-163
312318-0366 ..	SCREW ISO4029 M6X12 A4	1-149, 3-287
312318-0368 ..	SCREW ISO4029 M6X16 A4	3-185, 3-187, 3-189, 3-191, 3-193, 3-195
312318-0370 ..	SCREW ISO4029 M6X20 A4	3-185, 3-187, 3-189, 3-191, 3-193, 3-195, 3-293
312318-0376 ..	SCREW ISO4029 M6X35 A4	1-119, 1-121
312318-0445 ..	NEW ISO4029 M8X10 A4	3-401
312601-0320 ..	HEXAGON NUT, M10 8 FZB, ISO 4032	3-393
312605-0310 ..	HEXAGON NUT, M6M M3 A280	3-323, 3-325, 3-327
312605-0312 ..	HEXAGON NUT, M6M M4 A280	1-71, 1-73, 1-75, 1-107, 1-119, 1-121, 1-145, 1-147, 2-5, 2-7, 2-97, 2-99, 2-101, 2-103, 2-145, 2-235, 2-237, 2-239, 2-241, 2-253, 2-255, 2-257, 3-237, 3-287, 3-289, 3-291, 3-309, 3-311, 3-323, 3-325, 3-327
312605-0314 ..	HEXAGON NUT, M6M M5 A280	1-71, 1-73, 1-75, 1-101, 1-107, 1-161, 2-97, 2-99, 2-101, 2-103, 3-135, 3-137, 3-139, 3-141, 3-205, 3-207, 3-209, 3-211, 3-213, 3-215, 3-249, 3-251, 3-287, 3-307, 3-309, 3-311, 3-323, 3-325, 3-327
312605-0316 ..	HEXAGON NUT, M6M M6 A280	1-71, 1-73, 1-75, 1-107, 1-113, 1-115, 1-119, 1-121, 1-125, 1-127, 1-129, 1-131, 1-133, 1-135, 1-137, 1-145, 1-147, 1-161, 2-31, 2-33, 2-43, 2-45, 2-147, 2-149, 2-203, 2-205, 2-227, 2-229, 2-235, 2-237, 2-239, 2-241, 2-263, 3-9, 3-11, 3-13, 3-15, 3-17

Part No	Description	Page No
		3-21, 3-23, 3-25, 3-61, 3-63, 3-65, 3-69, 3-71, 3-77, 3-79, 3-87, 3-89, 3-165, 3-167, 3-185, 3-187
		3-189, 3-191, 3-193, 3-195, 3-205, 3-207, 3-209, 3-211, 3-213, 3-215, 3-293, 3-301, 3-331
312605-0318 ..	HEXAGON NUT, M6M M8 A280	1-9, 1-11, 1-13, 1-15, 1-71, 1-73, 1-75, 1-161, 1-179, 1-181
		2-31, 2-33, 2-43, 2-45, 2-157, 2-213, 2-247, 2-249, 3-27, 3-29, 3-37, 3-39, 3-41, 3-97, 3-99, 3-107
		3-109, 3-111, 3-157, 3-159, 3-161, 3-163, 3-165, 3-167, 3-185, 3-187, 3-189, 3-191, 3-193, 3-195
		3-201, 3-203, 3-257, 3-263, 3-265
312605-0320 ..	HEXAGON NUT, M6M M10 A280	1-9, 1-11, 1-13, 1-15, 1-87, 1-145, 1-147, 3-145, 3-147, 3-149
		3-151, 3-253, 3-395
312605-0322 ..	HEXAGON NUT, M6M M12 A280	1-113, 1-115, 1-119, 1-121, 3-145, 3-147, 3-397
312607-0318 ..	HEXAGON NUT, EN 24032 M6M M8 A480	2-87, 2-89, 2-93, 2-95
312621-0318 ..	ROD END,NUT M8	3-307
312625-0316 ..	HEXAGON THIN NUT, EN 24035 ML6M M6 A4	1-113, 1-115, 1-119, 1-121, 1-141, 1-143, 3-287, 3-293
312625-0318 ..	HEXAGON THIN NUT, EN 24035 ML6M M8 A4	2-5, 2-7, 2-55, 2-57, 2-59, 2-61, 2-63, 2-69, 2-71
		2-73, 2-75, 2-77, 2-147, 2-149, 2-203, 2-205
312705-0310 ..	NUT HEX. DOMED CAP MHM-6 M3 A2	1-119, 1-121
312705-0312 ..	NUT HEX. DOMED CAP MHM-6 M4 A280	1-119, 1-121
312705-0314 ..	NUT HEX. DOMED CAP MHM-6 M5 A280	2-11, 2-13, 2-15, 2-21, 2-23, 2-25, 2-55, 2-57, 2-59
		2-61, 2-63, 2-69, 2-71, 2-73, 2-75, 2-77, 3-307
312705-0316 ..	NUT HEX. DOMED CAP MHM-6 M6 A280	1-149, 1-169, 1-171, 2-247, 2-249, 3-307
312705-0318 ..	NUT HEX. DOMED CAP MHM-6 M8 A280	1-169, 1-171
312811-0318 ..	NUT HEX.LOCK HELI COIL M8 SS	2-5, 2-7
312812-0312 ..	HEXAGON NUT, NY-LOCK M4 A480	3-9, 3-11, 3-13, 3-15, 3-17, 3-61, 3-63, 3-65, 3-323, 3-325
		3-327, 3-331, 3-359
312812-0314 ..	HEXAGON NUT, NY-LOCK M5 A480	2-97, 2-99, 2-101, 2-103, 3-323, 3-325, 3-327
312812-0316 ..	HEXAGON NUT, NY-LOCK M6 A480	1-145, 1-147, 2-55, 2-57, 2-59, 2-61, 2-63, 2-69, 2-71, 2-73
		2-75, 2-77, 3-161, 3-163, 3-239, 3-241, 3-253, 3-259, 3-261, 3-267, 3-401
312812-0318 ..	HEXAGON NUT, NY-LOCK M8 A480	2-55, 2-57, 2-59, 2-61, 2-63, 2-69, 2-71, 2-73, 2-75, 2-77
		3-157, 3-159, 3-239, 3-241, 3-287
312812-0320 ..	HEXAGON NUT, NY-LOCK M10 A480	3-245, 3-247
312902-0316 ..	NUT HEX. LEFT THREAD, M6 A280	2-263
312902-0318 ..	NUT HEX. LEFT THREAD, M8 A280	3-157, 3-159, 3-165, 3-167, 3-185, 3-187, 3-189, 3-191
		3-193, 3-195
312902-0320 ..	NUT HEX. LEFT THREAD, M10 A280	3-149, 3-151
315101-0153 ..	WASHER PLAIN, BRB, 6,4/12 H=1,5	3-169, 3-171
315101-0182 ..	WASHER PLAIN, BRB, 15/26 H=2	1-87
315103-0153 ..	WASHER, BRB, 6,4/12,H=1,5 NIPL BR	1-125, 1-127, 1-129, 1-131, 1-133, 3-51, 3-53
315105-0124 ..	WASHER BRB 3,2X6 RFR	1-113, 1-115, 1-119, 1-121, 3-149, 3-151, 3-185, 3-187, 3-189, 3-191
		3-193, 3-195, 3-257, 3-263, 3-265, 3-289, 3-291, 3-315, 3-323, 3-325, 3-327
315105-0136 ..	WASHER BRB 4,3X8 RFR	1-17, 1-71, 1-73, 1-75, 1-119, 1-121, 1-141, 1-143, 1-145, 1-147
		2-253, 2-255, 2-257, 3-21, 3-23, 3-25, 3-51, 3-53, 3-87, 3-89, 3-145, 3-147, 3-185, 3-187, 3-189
		3-191, 3-193, 3-195, 3-197, 3-199, 3-237, 3-249, 3-251, 3-287, 3-289, 3-291, 3-303, 3-307, 3-321
		3-323, 3-325, 3-327, 3-331, 3-335, 3-339, 4-13, 4-15
315105-0146 ..	WASHER BRB 5,3X10 RFR	1-101, 1-103, 1-105, 1-107, 1-119, 1-121, 1-135, 1-137, 1-157
		1-159, 1-161, 1-175, 2-11, 2-13, 2-15, 2-21, 2-23, 2-25, 2-31, 2-33, 2-43, 2-45, 2-55, 2-57, 2-59
		2-61, 2-63, 2-67, 2-69, 2-71, 2-73, 2-75, 2-77, 2-81, 2-85, 2-97, 2-99, 2-101, 2-103, 2-105, 2-109
		2-111, 2-115, 2-133, 2-135, 2-137, 2-159, 2-161, 2-163, 2-165, 2-191, 2-193, 2-195, 3-123, 3-125
		3-127, 3-205, 3-207, 3-209, 3-211, 3-213, 3-215, 3-249, 3-251, 3-257, 3-263, 3-265, 3-301, 3-303
		3-307, 3-323, 3-325, 3-327, 3-329, 3-339
315105-0153 ..	WASHER BRB 6,4X12 RFR	1-17, 1-71, 1-73, 1-75, 1-103, 1-105, 1-107, 1-119, 1-121, 1-141
		1-143, 1-145, 1-147, 1-155, 1-161, 1-169, 1-171, 2-5, 2-7, 2-11, 2-13, 2-15, 2-21, 2-23, 2-25, 2-31
		2-33, 2-43, 2-45, 2-55, 2-57, 2-59, 2-61, 2-63, 2-69, 2-71, 2-73, 2-75, 2-77, 2-87, 2-89, 2-93, 2-95
		2-97, 2-99, 2-101, 2-103, 2-119, 2-121, 2-123, 2-125, 2-133, 2-135, 2-137, 2-159, 2-161, 2-163
		2-165, 2-179, 2-181, 2-183, 2-185, 2-191, 2-193, 2-195, 2-227, 2-229, 2-231, 2-233, 2-235, 2-237
		2-239, 2-241, 2-251, 2-263, 2-265, 3-9, 3-11, 3-13, 3-15, 3-17, 3-21, 3-23, 3-25, 3-27, 3-29, 3-37
		3-39, 3-41, 3-51, 3-53, 3-61, 3-63, 3-65, 3-69, 3-71, 3-77, 3-79, 3-87, 3-89, 3-97, 3-99, 3-107
		3-109, 3-111, 3-123, 3-125, 3-127, 3-129, 3-131, 3-145, 3-147, 3-149, 3-151, 3-161, 3-163, 3-185
		3-187, 3-189, 3-191, 3-193, 3-195, 3-201, 3-203, 3-205, 3-207, 3-209, 3-211, 3-213, 3-215, 3-219
		3-237, 3-239, 3-241, 3-245, 3-247, 3-253, 3-259, 3-261, 3-263, 3-265, 3-267, 3-271, 3-273, 3-287
		3-293, 3-301, 3-307, 3-315, 3-321, 3-323, 3-325, 3-327, 3-401, 4-9, 4-13, 4-15
315105-0156 ..	WASHER BRB 6,7X14 RFR	1-145, 1-147, 1-149, 3-185, 3-187, 3-189, 3-191, 3-193, 3-195
		3-365, 3-367
315105-0165 ..	WASHER BRB 8,4X16 RFR	1-41, 1-43, 1-45, 1-47, 1-59, 1-61, 1-63, 1-71, 1-73, 1-75, 1-79
		1-81, 1-83, 1-85, 1-141, 1-143, 1-161, 1-179, 1-181, 2-5, 2-7, 2-119, 2-121, 2-123, 2-125, 2-147
		2-149, 2-157, 2-179, 2-181, 2-183, 2-185, 2-203, 2-205, 2-213, 2-227, 2-229, 2-235, 2-237, 2-239
		2-241, 2-247, 2-249, 2-253, 2-255, 2-257, 2-261, 3-21, 3-23, 3-25, 3-27, 3-29, 3-37, 3-39, 3-41
		3-51, 3-53, 3-87, 3-89, 3-97, 3-99, 3-107, 3-109, 3-111, 3-129, 3-131, 3-135, 3-137, 3-139, 3-141
		3-145, 3-147, 3-149, 3-151, 3-157, 3-159, 3-161, 3-163, 3-169, 3-171, 3-185, 3-187, 3-189, 3-191
		3-193, 3-195, 3-201, 3-203, 3-205, 3-207, 3-209, 3-211, 3-213, 3-215, 3-217, 3-223, 3-225, 3-227
		3-233, 3-239, 3-241, 3-245, 3-247, 3-253, 3-257, 3-263, 3-265, 3-271, 3-273, 3-287, 3-317, 3-319
		3-323, 3-325, 3-327, 3-331, 3-337, 3-339, 4-7, 4-13, 4-15
315105-0171 ..	WASHER BRB 10X18 RFR	3-107, 3-109, 3-111, 3-149, 3-151, 3-201, 3-203
315105-0173 ..	WASHER BRB 10,5X22 RFR	1-9, 1-11, 1-13, 1-15, 2-97, 2-99, 2-101, 2-103, 2-107, 2-113
		2-117, 2-159, 2-161, 2-163, 2-165, 3-21, 3-23, 3-25, 3-87, 3-89, 3-149, 3-151, 3-161, 3-163, 3-245
		3-247, 3-257, 3-263, 3-265, 3-269
315105-0178 ..	WASHER BRB 13X24 RFR	3-145, 3-147, 3-317, 3-319, 3-393
315106-0153 ..	WASHER ISO 7089-6-200 HV A4	3-239, 3-241
315111-0173 ..	WASHER PLAIN, TBRB 10,5/22 H=4	3-253
315115-0153 ..	WASHER PLAIN, TBRB 6,4/12 H=3	1-23, 1-25, 3-7, 3-129, 3-131, 3-293
315115-0165 ..	WASHER PLAIN, TBRB 8,4/16 H=3	1-23, 1-25, 1-41, 1-43, 1-45, 1-47, 1-71, 1-73, 1-75
315121-0173 ..	WASHER PLAIN, TBRSB 10,5/28 H=6	3-393
315125-0153 ..	WASHER TBRSB 6,4X22X4 A4	1-79, 1-81, 1-83, 1-85, 2-247, 2-249, 2-261, 3-161, 3-163, 3-205
		3-207, 3-209, 3-211, 3-213, 3-215, 3-257, 3-263, 3-265, 3-315, 3-365, 3-367
315125-0165 ..	WASHER TBRSB 8,4X26X5 A4	2-253, 2-255, 2-257, 3-257, 3-263, 3-287, 3-293, 4-9
315125-0173 ..	WASHER TBRSB 10,5X28X6 A4	1-23, 1-25, 3-257, 3-263, 3-265

Part No	Description	Page No
315202-0101 ..	O-RING 3,1X1,6 MM	2-127, 2-129, 2-187, 2-189
315202-0104 ..	O-RING 6,1X1,6 MM	2-159, 2-161, 2-163, 2-165
315202-0105 ..	O-RING 7,1X1,6 MM	2-127, 2-129, 2-131, 2-187, 2-189
315202-0107 ..	O-RING 9,1X1,6 MM	3-157, 3-159, 3-169, 3-171
315202-0110 ..	O-RING 12,1X1,6 MM	2-177
315202-0113 ..	O-RING 15,1X1,6 MM	3-233
315202-0116 ..	O-RING 18,1X1,6 MM	2-147, 2-149, 2-203, 2-205
315202-0118 ..	O-RING 22,1X1,6 MM	2-177
315202-0119 ..	O-RING 25,1X1,6 MM	2-177
315202-0208 ..	O-RING 9,3X2,4 MM	2-147, 2-149, 2-203, 2-205
315202-0217 ..	O-RING 24,2X3 MM	3-149, 3-151, 3-185, 3-187, 3-189, 3-191, 3-193, 3-195
315202-0221 ..	O-RING 34,2X3 MM	3-257, 3-263, 3-265
315202-0225 ..	O-RING 44,2X3 MM	3-51, 3-53, 3-129, 3-131
315202-0267 ..	O-RING 16,3X2,4 MM	3-257, 3-263, 3-265
315202-0303 ..	O-RING 59,5X3 MM	3-185, 3-187, 3-189, 3-191, 3-193, 3-195
315202-0305 ..	O-RING 69,5X3 MM	3-145, 3-147, 3-185, 3-187, 3-189, 3-191, 3-193, 3-195
315202-0311 ..	O-RING 99,5X3 MM	3-51, 3-53, 3-129, 3-131, 3-233
315204-0105 ..	O-RING 7,1X1,6 MM	2-159, 2-161, 2-163, 2-165
315204-0215 ..	O-RING 19,2X3 MM	1-9, 1-11, 1-13, 1-15, 1-89, 1-91, 1-93, 1-95, 1-97, 1-99, 4-9
315204-0219 ..	O-RING 29,2X3 MM	1-9, 1-11, 1-13, 1-15, 1-89, 1-91, 1-93, 1-95, 1-97, 1-99
315204-0223 ..	O-RING 39,2X3 MM	1-9, 1-11, 1-13, 1-15, 1-89, 1-91, 1-93, 1-95, 1-97, 1-99
315204-0303 ..	O-RING 59,5X3 MM	4-9
315204-0324 ..	O-RING 164,3X5,7 MM	1-23, 1-25
315205-0713 ..	O-RING 29,87X1,78 MM	1-125, 1-127, 1-129, 1-131, 1-133
315205-0716 ..	O-RING 34,65X1,78 MM	1-113, 1-115, 1-135, 1-137
315205-0802 ..	O-RING 41,0X1,78 MM	1-125, 1-127, 1-129, 1-131, 1-133
315205-0803 ..	O-RING 44,17X1,78 MM	1-135, 1-137
315205-0804 ..	O-RING 47,35X1,78 MM	1-119, 1-121
315205-0805 ..	O-RING 53,7X1,78 MM	1-135, 1-137
315205-0807 ..	O-RING 94,97X1,78 MM	1-135, 1-137
315205-0808 ..	O-RING 7,59X2,62 MM	1-103, 1-105
315211-0103 ..	BONDED SEAL SS/NBR90 M6	1-107, 2-147, 2-149, 2-159, 2-161, 2-163, 2-165, 2-203, 2-205, 3-233
315211-0104 ..	BONDED SEAL SS/NBR90 M8	2-119, 2-121, 2-123, 2-125, 2-179, 2-181, 2-183, 2-185
315234-0109 ..	WASHER,PL.RND.CU.10,3/13,5 H=1,0	4-9
315400-0001 ..	TUBE PUN-H-6X1-BL	3-61, 3-63, 3-65, 3-149, 3-151, 4-31
315400-0004 ..	TUBE PUN-H-8X1,25-BL	4-31
315400-0016 ..	TUBE PUN-H-4X0,75-BL	4-13, 4-15
315402-0156 ..	LOCK WASHER FBB 6,5	3-55, 3-57, 3-59
315701-0396 ..	PARALLEL KEY W. ROUND ENDS 16X10X50 MM	3-315, 3-365, 3-367
315701-0401 ..	PARALLEL KEY W. ROUND ENDS 16X10X80 MM	3-317, 3-319
315705-0164 ..	PARALLEL KEY W. ROUND ENDS 4X4X8 MM	1-71, 1-73, 1-75
315705-0201 ..	PARALLEL KEY W. ROUND ENDS 5X5X20 MM	2-159, 2-161, 2-163, 2-165
315705-0202 ..	PARALLEL KEY W ROUND ENDS 5X5X25MM	3-257, 3-263, 3-265
315705-0232 ..	PARALLEL KEY W. ROUND ENDS 6X6X20 MM	3-299
315705-0234 ..	PARALLEL KEY W. ROUND ENDS 6X6X25 MM	3-287
315705-0239 ..	PARALLEL KEY W. ROUND ENDS 6X6X40 MM	3-233
315705-0263 ..	PARALLEL KEY W. ROUND ENDS 8X7X20 MM	3-233
315705-0267 ..	PARALLEL KEY W. ROUND ENDS 8X7X30 MM	3-149, 3-151, 3-185, 3-187, 3-189, 3-191, 3-193, 3-195
315705-0270 ..	PARALLEL KEY W. ROUND ENDS 8X7X40 MM	3-149, 3-151
315705-0301 ..	PARALLEL KEY W. ROUND ENDS 10X8X40 MM	1-71, 1-73, 1-75
315742-0116 ..	RETAINING RING 20 SMS 199 RFR	3-161, 3-163
315742-0123 ..	RETAINING RING 32 SMS 199 RFR	3-401
315750-0102 ..	RETAINING RING SHAFT DIN 471 ST 5	3-287
315751-0103 ..	RETAINING RING FOR SHAFT DIN 471 6 SS	1-145, 1-147
315751-0112 ..	RETAINING RING FOR SHAFT DIN 471 15 SS	1-125, 1-127, 1-129, 1-131, 1-133, 1-141, 1-143
315751-0119 ..	RETAINING RING FOR SHAFT DIN 471 25 SS	1-141, 1-143, 3-145, 3-147, 3-257, 3-263, 3-265
315753-0122 ..	RETAINING RING FOR BORE DIN 472 30 A2	1-149, 3-185, 3-187, 3-189, 3-191, 3-193, 3-195
315753-0124 ..	RETAINING RING FOR BORE DIN 472 35 A2	1-135, 1-137
315753-0132 ..	RETAINING RING FOR BORE DIN 472 52 A2	3-149, 3-151
315755-0106 ..	RETAINING RING SHAFT DIN 6799 4 A2	3-259, 3-261, 3-267, 3-309
315755-0107 ..	RETAINING RING SHAFT DIN 6799 5 A2	3-311
315755-0108 ..	RETAINING RING SHAFT DIN 6799 6 A2	1-149, 3-331
315755-0109 ..	RETAINING RING SHAFT DIN 6799 7 A2	1-141, 1-143
315755-0113 ..	RETAINING RING SHAFT DIN 6799 15 A2	3-107, 3-109, 3-111
316810-0106 ..	PIPE CLIP FOR TUBE D=8 MM	3-87, 3-89, 3-145, 3-147
318856-0115 ..	KNOB, EXTERNAL THREAD. NO. 8306-0278	3-161, 3-163
321101-0163 ..	FLANGE BUSHING, 10X16X10 MM	2-5, 2-7, 3-337
321101-0173 ..	FLANGE BUSHING, 12X18X12 MM	3-169, 3-171
321105-0127 ..	BEARING BUSH W/O FLANGE, 6X12X12 MM	3-307
321105-0204 ..	BEARING BUSH W/O FLANGE, 16X22X20 MM	3-287
321111-0163 ..	FLANGE BUSHING, 12X18X20 MM	2-263
321111-0302 ..	FLANGE BUSHING, 20X26X15 MM	3-161, 3-163
321116-0234 ..	BEARING BUSH W/O FLANGE, 16X20X12 MM	3-271, 3-273
321120-0101 ..	BEARING BUSH W/O FLANGE, 6X8X6 MM	3-307
321120-0104 ..	BEARING BUSH W/O FLANGE, 10X12X10 MM	3-307
321120-0108 ..	BEARING BUSH W/O FLANGE, 12X14X8 MM	2-235, 2-237, 2-239, 2-241
321130-0200 ..	THRUST WASHER, 14X26X1,5 MM	3-185, 3-187, 3-189, 3-191, 3-193, 3-195
321133-0260 ..	BUSHING, 20X23X20 MM	2-265
321133-0375 ..	BUSHING, 35X39X30 MM	3-185, 3-187, 3-189, 3-191, 3-193, 3-195
321136-0140 ..	BUSHING, 10X12X10 MM	2-55, 2-57, 2-59, 2-61, 2-63, 2-69, 2-71, 2-73, 2-75, 2-77
321138-0183 ..	BUSHING, 12X14X15 MM	3-143
321141-0040 ..	BEARING BUSH W/O FLANGE, 4X5,5X6 MM	3-311

Part No	Description	Page No
321141-0060 ..	BEARING BUSH W/O FLANGE, 6X8X6 MM	3-309
321141-0104 ..	BEARING BUSH W/O FLANGE, 8X10X12 MM	3-165, 3-167, 3-339
321141-0138 ..	BEARING BUSH W/O FLANGE, 10X12X8 MM	1-145, 1-147
321141-0183 ..	BEARING BUSH W/O FLANGE, 12X14X15 MM	1-173
321153-0136 ..	FLANGE BUSHING, 10X12X6 MM	3-107, 3-109, 3-111
321155-0062 ..	FLANGE BUSHING, 6X8X6 MM	2-97, 2-99, 2-101, 2-103
321302-0298 ..	BALL BEARING, 8X22X7 MM	3-331
321306-0105 ..	BALL BEARING, 25X47X12 MM	3-145, 3-147, 3-257, 3-263, 3-265
321308-0205 ..	BALL BEARING, 25X47X12MM	1-141, 1-143, 3-149, 3-151
321309-0103 ..	BALL BEARING, 17X40X12 MM	3-257, 3-263, 3-265
321313-0100 ..	BALL BEARING, 10X30X9 MM	1-149
321313-0105 ..	BALL BEARING, 25X52X15MM	3-149, 3-151, 3-185, 3-187, 3-189, 3-191, 3-193, 3-195
321313-0107 ..	BALL BEARING, 35X72X17MM	3-185, 3-187, 3-189, 3-191, 3-193, 3-195
321316-0206 ..	BALL BEARING, 30X72X19 MM	3-145, 3-147
342703-0208 ..	NUT, PIPES & CONNECTORS,NUT M-8 SS	1-103, 1-105, 2-267
342706-0130 ..	ACCESSORIES, INSERT SLEEVE 6 MM	2-251
342713-0209 ..	PLUG (QUANT.MINIMA= 10PC).	1-165, 2-147, 2-149, 2-159, 2-161, 2-163, 2-165, 2-203, 2-205
342715-0103 ..	BLIND PLUG 8 MM	4-31
342716-0200 ..	REDUCER 4-5	3-61, 3-63, 3-65
342716-0203 ..	REDUCER 6-8	3-61, 3-63, 3-65
342722-0202 ..	PIPE COUPLING 1/8" D=6MM	1-113, 1-115
342722-0203 ..	STRAIGHT COUPLING	3-201, 3-203
342722-0204 ..	PIPE COUPLING	4-9
342722-0211 ..	STRAIGHT COUPLING D=10-G1/4"	4-9
342728-0102 ..	PIPE COUPLING 6 MM	3-61, 3-63, 3-65
342728-0103 ..	PIPE COUPLING 8 MM	3-9, 3-11, 3-13, 3-15, 3-17
342732-0104 ..	ELBOW PIPE JOINT, EXT.THREAD, D=8MM-G1/4	3-9, 3-11, 3-13, 3-15, 3-17, 3-21, 3-23, 3-25, 3-61, 3-63, 3-65
342748-0100 ..	T-CONNECTION 4MM	4-13, 4-15
342748-0102 ..	T-CONNECTION 6MM	3-149, 3-151
342748-0103 ..	T-CONNECTION 8MM	4-31
342748-0109 ..	T-CONNECTION 12MM	1-165
342840-0103 ..	CLAMPING PIECE	1-19, 1-21
342850-0304 ..	GASKET 35,4X49,1X5,2 1"1/2 FDA	1-19, 1-21, 1-89, 1-91, 1-93, 1-95, 1-97, 1-99
342850-0305 ..	GASKET 47,8X62,6X5,2 MM 2" FDA	1-19, 1-21
342850-0306 ..	GASKET 60,3X76,1X5,2 MM 2"1/2 FDA 3-A	1-19, 1-21
342921-0121 ..	STRAIGHT CPLNG,EXT.THREADED 8/6-G1/8INCH	3-37, 3-39, 3-41
342931-0121 ..	ELBOW 90 COUPL.,EXT.THREAD 8/6-G1/8"	1-107, 3-27, 3-29, 3-37, 3-39, 3-41, 3-97, 3-99, 3-123, 3-125, 3-127
342980-0121 ..	BANJO-CONNECTION,RING 8/6-G1/8	2-119, 2-121, 2-123, 2-125, 2-179, 2-181, 2-183, 2-185
342980-0303 ..	BANJO-HOLLOW BOLT COUPL,EXT.THR.01-G1/8	2-119, 2-121, 2-123, 2-125, 2-179, 2-181, 2-183, 2-185
342981-0122 ..	BANJO CONNEC,RING,FOR PLAST.TUBE 8-G1/4"	3-21, 3-23, 3-25, 3-87, 3-89
344502-0021 ..	GREASE NIPPLE STRAIGHT M6	3-145, 3-147, 3-223, 3-225, 3-227, 3-257, 3-263, 3-265
350001-0006 ..	PUSH-IN FITTING QS-F-G1/8-6	4-13, 4-15
350002-0002 ..	PUSH-IN L-FITTING QSL-F-M5-6	3-149, 3-151
350002-0006 ..	PUSH-IN L-FITTING QSL-F-G1/8-6	1-141, 1-143, 3-107, 3-109, 3-111, 3-149, 3-151
350005-0002 ..	PUSH-IN T-FITTING QST-F-6	1-165
350006-0003 ..	PUSH-IN FITTING QS-F-8H-6	4-31
350006-0007 ..	PUSH-IN FITTING QS-F-12H-6	1-165
350015-0001 ..	Y-FITTING QSY-F-6	3-61, 3-63, 3-65
351150-0405 ..	CABLE OLFLEX 5X0,75 MM2 LIGHT/GREY	1-157
351150-0412 ..	CABLE OLFLEX 3X1,5 MM2 LIGHT/GREY	4-11
351160-0102 ..	WIRE AWM 1X0,75 MM2 DARKBLUE	4-31
352103-0106 ..	CABLE GLAND, ST 11, PR18,6/PG11	4-9
352113-0101 ..	CABLE TIE, BLACK 92X2,5 MM	2-147, 2-149, 2-203, 2-205, 3-145, 3-147, 3-185, 3-187, 3-189, 3-191, 3-193, 3-195, 3-303, 3-315, 3-323, 3-325, 3-327, 3-347
352113-0102 ..	CABLE TIE, BLACK 188X4,8 MM	3-27, 3-29, 3-97, 3-99, 3-145, 3-147, 3-185, 3-187, 3-189, 3-191, 3-193, 3-195, 3-347
352113-0205 ..	ANCHOR PLATES FOR STRIPS, TYPE TM2S8-C10	1-145, 1-147, 3-303, 3-315, 3-323, 3-325, 3-327
353021-0301 ..	TERMINALS,TRIPLE-LEVEL, DLI 2,5/35 PA	4-31
353034-0404 ..	BRIDGE CONNECTOR Q10, 13131.0	4-31
353240-0003 ..	GLAND W/O INSERT PG13,5 NORMAL	4-31
353240-0005 ..	GLAND W/O INSERT PG21 NORMAL	4-31
353241-0003 ..	GLAND W/O INSERT PG21 EXTENDED	4-11
353243-0009 ..	HOSE GLAND W/O INSERT PG13,5 EXTENDED	1-157
353247-0005 ..	HOSE GLAND EMC PG21 EXTENDED	4-9, 4-11
353249-0011 ..	INSERT, SINGLE HOLE, EK 153/11	1-157, 1-159
353249-0025 ..	INSERT, MULTI HOLE, E152M3X4	4-31
353249-0311 ..	SEALING PIN, 12X25	4-31
353300-0004 ..	SHRINKABLE HOSE	3-347
359000-0200 ..	WIRE MARKING, YELLOW, PA02/3"0"	3-347
359000-0201 ..	WIRE MARKING, YELLOW, PA02/3"1"	3-347
359000-0202 ..	WIRE MARKING, YELLOW, PA02/3"2"	3-347
359000-0204 ..	WIRE MARKING, YELLOW, PA02/3"4"	3-347
359000-0205 ..	WIRE MARKING, YELLOW, PA02/3"5"	3-347
359000-0206 ..	WIRE MARKING, YELLOW, PA02/3"6"	3-347
359000-0207 ..	WIRE MARKING, YELLOW, PA02/3"7"	3-347
359000-0208 ..	WIRE MARKING, YELLOW, PA02/3"8"	3-347
359009-0100 ..	CABLE MARKING, YELLOW, PK2/4"0"	3-347
359009-0101 ..	CABLE MARKING, YELLOW, PK 2/4"1"	3-347
359009-0102 ..	CABLE MARKING, YELLOW, PK 2/4"2"	3-347
359009-0103 ..	CABLE MARKING, YELLOW, PK 2/4"3"	3-347
359009-0104 ..	CABLE MARKING, YELLOW, PK 2/4"4"	3-347

Part No	Description	Page No
359009-0105	CABLE MARKING, YELLOW, PK 2/4"5"	3-347
359009-0206	CABLE MARKING, YELLOW, PK 2/4"G"	3-347
359009-0222	CABLE MARKING, YELLOW, PK 2/4"W"	3-347
359011-0810	MARKING PLATES 5-FW 151-200	4-31
359011-0817	SYMBOL 5-GW (+) 50PC	4-31
359011-0818	SYMBOL 5-GW (-) 50PC	4-31
359705-0007	WARNING SIGN ISO, HOT SURFACE	1-157, 1-159
359705-0015	WARNING SIGN ISO, RISK OF ELECTRIC SHOCK	4-9
359710-0001	WARNING SIGN ISO, HOT SURFACE	3-173, 3-175, 3-177, 3-179, 3-181, 3-183
434665-0000	HOOD	1-9, 1-11, 1-13, 1-15
441706-0000	WASHER	2-5, 2-7
441737-0000	WASHER	1-157, 1-159
441739-0000	WASHER	1-157, 1-159
449190-0000	SHAFT	3-271, 3-273
456796-0000	ROLLER	1-23, 1-25
457696-0001	JOINT PIECE	3-245, 3-247
466042-0000	SEAL	1-23, 1-25
466046-0000	ROLLER	1-23, 1-25
466074-0002	SLIDER	3-245, 3-247
466089-0000	SEAL	1-23, 1-25
466092-0000	ROLL	1-23, 1-25
476220-0000	SPACER	3-245, 3-247
476975-0000	WHEEL	3-245, 3-247
484701-0000	SHUTTER	3-205, 3-207, 3-209, 3-211, 3-213, 3-215
490901-0000	SEAL	1-23, 1-25
499011-0000	SHAFT	1-9, 1-11, 1-13, 1-15
499387-0000	PRESSURE ROLLER - (10 PCS)	1-9, 1-11, 1-13, 1-15, 1-89, 1-91, 1-93, 1-95, 1-97, 1-99
532022-0000	LOCK BAR	3-339
533972-0000	INDICATOR CURVE	3-329
534310-0001	NOZZLE	3-205, 3-207, 3-209, 3-211, 3-213, 3-215
544427-0000	TURN SPRING	3-339
560122-0000	SUPPORT ROLLER	2-247, 2-249
567743-0000	SEAL	1-23, 1-25
567746-0001	ROLLER (STANDARD SIZE)	1-31, 1-33
569058-0000	SUPPORT ROLLER	2-247, 2-249
573504-0000	ROLLER	1-23, 1-25
574336-0000	SEAL	1-23, 1-25
575002-0000	PLUNGER	3-401
575034-0000	ROUND NUT	1-157, 1-159
578684-0000	SPRING BRACKET	1-141, 1-143
579318-0000	SEAL	1-23, 1-25
583727-0000	SHAFT	1-149
598095-0000	SCREW	3-397
598096-0000	WASHER	3-397
598101-0000	BEARING HOUSING	3-145, 3-147
599815-0100	HOLDING FIXTURE	3-3
751491-0000	ROLL	1-59, 1-61, 1-63
751492-0000	ROLL	1-59, 1-61, 1-63
751502-0000	ROLLER	1-31, 1-33
752126-0000	FORMING ROLLER	1-59, 1-61, 1-63
752127-0000	FORMING ROLLER	1-59, 1-61, 1-63
752128-0000	FORMING ROLLER	1-59, 1-61, 1-63
752156-0000	FLANGE BUSHING	1-41, 1-43, 1-45, 1-47, 1-59, 1-61, 1-63
752186-0001	SHAFT	1-59, 1-61, 1-63
752186-0002	SHAFT	1-59, 1-61, 1-63
752186-0004	SHAFT	1-31, 1-33, 1-59, 1-61, 1-63
752186-0005	SHAFT	1-31, 1-33, 1-59, 1-61, 1-63
752186-0006	SHAFT	1-41, 1-43, 1-45, 1-47, 1-59, 1-61, 1-63
752186-0007	SHAFT	1-41, 1-43, 1-45, 1-47
752186-0008	SHAFT	1-59, 1-61, 1-63
752186-0009	SHAFT	1-59, 1-61, 1-63
752186-0012	SHAFT	1-59, 1-61, 1-63
752186-0013	SHAFT	1-59, 1-61, 1-63
752186-0014	SHAFT	1-31, 1-33
752186-0015	SHAFT	1-31, 1-33, 1-41, 1-43, 1-45, 1-47
752186-0016	SHAFT	1-31, 1-33, 1-179, 1-181
752186-0019	SHAFT	1-59, 1-61, 1-63
752288-0000	SLEEVE	2-177
905413-0000	SHAFT	3-309
905415-0000	SHAFT	3-309
906254-0000	ROLLER	1-141, 1-143
907136-0000	HEATER	3-303
925998-0000	DIAPHRAGM	1-17
926907-0000	SCREW	1-17
926934-0000	SUPPORT	1-17
927044-0000	SPACER	1-17
927203-0000	COVER	1-17
927859-0000	TOOTHED PULLEY	3-263, 3-265
929284-0000	ROLLER	1-23, 1-25
929286-0000	SEAL	1-23, 1-25
929355-0000	ROLLER TPA 330	2-247, 2-249
929372-0000	PISTON	2-131
929823-0000	PAPER GUIDE	3-289, 3-291
950351-0000	SHAFT	2-131

Part No	Description	Page No
978757-0000 ..	ROLLER 180-284ML	2-247, 2-249
978760-0000 ..	ROLLER TBA200SL	2-247, 2-249
979434-0000 ..	FERRULE	1-17
979813-0000 ..	PLUG	1-89, 1-91, 1-93, 1-95, 1-97, 1-99
979931-0000 ..	VOLUME BULGE	2-55, 2-57, 2-59, 2-61, 2-63, 2-69, 2-71, 2-73, 2-75, 2-77
1020142-0002 .	RAIL HOLDER, B55 WIDTH 30 MM	3-205, 3-207, 3-209, 3-211, 3-213, 3-215
1020146-0000 .	LOCKING BLOCK	3-205, 3-207, 3-209, 3-211, 3-213, 3-215
1020637-0000 .	HOLDER	3-249, 3-251
1035828-0000 .	VOLUME BULGE	2-11, 2-13, 2-15, 2-21, 2-23, 2-25
1035831-0000 .	VOLUME SHIM	1-89, 1-91, 1-93, 1-95, 1-97, 1-99, 2-11, 2-13, 2-15, 2-21, 2-23, 2-25
1035871-0000 .	SCREW	2-159, 2-161, 2-163, 2-165
1036278-0000 .	SLEEVE	2-177
1036343-0000 .	SCREW	2-119, 2-121, 2-123, 2-125, 2-179, 2-181, 2-183, 2-185
1036389-0000 .	LID	2-203, 2-205
1036483-0000 .	SEAL	2-3
1036494-0000 .	GUIDE BUSHING	2-159, 2-161, 2-163, 2-165
1036495-0000 .	BUSHING	2-147, 2-149, 2-203, 2-205
1036584-0000 .	WASHER	2-133, 2-135, 2-137, 2-191, 2-193, 2-195
1036585-0000 .	EAR	2-147, 2-149, 2-203, 2-205
1036615-0000 .	SHAFT	2-5, 2-7
1036616-0000 .	WASHER	2-5, 2-7
1036618-0000 .	ROLL	2-5, 2-7
1036620-0000 .	SHAFT	2-5, 2-7
1036622-0000 .	GUIDE ROLLER	1-149
1036623-0000 .	GUIDE ROLLER	1-149
1036664-0000 .	LID	2-147, 2-149
1036673-0000 .	WASHER	1-79, 1-81, 1-83, 1-85, 2-253, 2-255, 2-257
1036674-0000 .	FASTENING PLATE	2-253, 2-255, 2-257
1036954-0000 .	AXLE SUPPORT	1-23, 1-25
1036955-0000 .	AXLE SUPPORT	1-23, 1-25
1037254-0000 .	SHIM	1-89, 1-91, 1-93, 1-95, 1-97, 1-99, 2-3
1037733-0000 .	VOLUME BULGE	2-11, 2-13, 2-15, 2-21, 2-23, 2-25
1037734-0000 .	WEDGE	2-11, 2-13, 2-15, 2-21, 2-23, 2-25, 2-55, 2-57, 2-59, 2-61, 2-63, 2-69, 2-71, 2-73, 2-75, 2-77, 2-85
1037735-0000 .	VOLUME SHIM	1-89, 1-91, 1-93, 1-95, 1-97, 1-99, 2-11, 2-13, 2-15, 2-21, 2-23, 2-25
1037885-0000 .	REAMED BOLT	1-23, 1-25
1038240-0000 .	SPACER	2-131
1038576-0000 .	AXLE SUPPORT	1-23, 1-25
1038637-0000 .	WEDGE	2-11, 2-13, 2-15, 2-21, 2-23, 2-25
1038638-0000 .	VOLUME BULGE	2-11, 2-13, 2-15, 2-21, 2-23, 2-25
1038639-0000 .	VOLUME SHIM	2-11, 2-13, 2-15, 2-21, 2-23, 2-25
1040754-0000 .	VOLUME BULGE	2-11, 2-13, 2-15, 2-21, 2-23, 2-25
1040755-0000 .	VOLUME SHIM	1-89, 1-91, 1-93, 1-95, 1-97, 1-99, 2-11, 2-13, 2-15, 2-21, 2-23, 2-25
1040756-0000 .	WEDGE	2-11, 2-13, 2-15, 2-21, 2-23, 2-25, 2-55, 2-57, 2-59, 2-61, 2-63, 2-69, 2-71, 2-73, 2-75, 2-77
1086870-0000 .	SIGN	3-239, 3-241
1086889-0000 .	COVER	3-249, 3-251
1110083-0002 .	DOLLY	1-89, 1-91, 1-93, 1-95, 1-97, 1-99, 2-159, 2-161, 2-163, 2-165
1110930-0000 .	INDUCTOR	1-89, 1-91, 1-93, 1-95, 1-97, 1-99, 2-133, 2-135, 2-137, 2-191, 2-193, 2-195
1110931-0000 .	INDUCTOR	1-89, 1-91, 1-93, 1-95, 1-97, 1-99, 2-133, 2-135, 2-137, 2-191, 2-193, 2-195
1110932-0000 .	INDUCTOR	1-89, 1-91, 1-93, 1-95, 1-97, 1-99, 2-133, 2-135, 2-137, 2-191, 2-193, 2-195
1110934-0000 .	INDUCTOR	1-89, 1-91, 1-93, 1-95, 1-97, 1-99, 2-133, 2-135, 2-137, 2-191, 2-193, 2-195
1110936-0000 .	INDUCTOR	1-89, 1-91, 1-93, 1-95, 1-97, 1-99, 2-133, 2-135, 2-137, 2-191, 2-193, 2-195
1110937-0000 .	INDUCTOR	1-89, 1-91, 1-93, 1-95, 1-97, 1-99, 2-133, 2-135, 2-137, 2-191, 2-193, 2-195
1110938-0000 .	INDUCTOR	1-89, 1-91, 1-93, 1-95, 1-97, 1-99, 2-133, 2-135, 2-137, 2-191, 2-193, 2-195
1129431-0000 .	WASHER	1-23, 1-25
1140548-0000 .	FLANGED BEARING BUSHING	3-307
1140889-0000 .	BUSBAR	3-359
1143215-0000 .	SPRING	2-31, 2-33, 2-43, 2-45, 2-55, 2-57, 2-59, 2-61, 2-63, 2-69, 2-71, 2-73, 2-75, 2-77
1143216-0000 .	SPRING	2-31, 2-33, 2-43, 2-45, 2-55, 2-57, 2-59, 2-61, 2-63, 2-69, 2-71, 2-73, 2-75, 2-77
1143530-0000 .	SPRING	3-185, 3-187, 3-189, 3-191, 3-193, 3-195
1144264-0000 .	HUB	3-51, 3-53, 3-129, 3-131
1144312-0000 .	AXLE PIN	3-51, 3-53, 3-129, 3-131
1144324-0300 .	FRAMEWORK	3-5
1144329-0300 .	PULL-DOWN DEVICE	3-5
1144331-0300 .	PRESSURE DEVICE	3-5
1144335-0000 .	ROLLER	3-51, 3-53, 3-129, 3-131
1144354-0000 .	WASHER	3-51, 3-53, 3-129, 3-131
1144356-0000 .	COVER	3-51, 3-53, 3-129, 3-131
1144417-0000 .	BUSHING	3-51, 3-53, 3-129, 3-131
1144470-0000 .	SHAFT	3-257, 3-263, 3-265
1144472-0000 .	LEVER	3-149, 3-151
1144473-0000 .	LEVER	3-149, 3-151
1144475-0000 .	BRACKET	3-149, 3-151
1144476-0000 .	BRACKET	3-149, 3-151
1144482-0000 .	SUPPORT	3-185, 3-187, 3-189, 3-191, 3-193, 3-195
1144483-0000 .	PLATE	3-185, 3-187, 3-189, 3-191, 3-193, 3-195
1144485-0000 .	SUPPORT	3-185, 3-187, 3-189, 3-191, 3-193, 3-195
1144486-0000 .	CAM	3-185, 3-187, 3-189, 3-191, 3-193, 3-195
1144488-0000 .	COLUMN	3-185, 3-187, 3-189, 3-191, 3-193, 3-195
1144489-0000 .	FLANGE	3-185, 3-187, 3-189, 3-191, 3-193, 3-195
1144492-0000 .	SPRING	3-185, 3-187, 3-189, 3-191, 3-193, 3-195
1144493-0000 .	WASHER	3-185, 3-187, 3-189, 3-191, 3-193, 3-195
1144494-0000 .	AXLE PIN	3-185, 3-187, 3-189, 3-191, 3-193, 3-195
1144495-0000 .	ECCENTRIC	3-185, 3-187, 3-189, 3-191, 3-193, 3-195

Part No	Description	Page No
1144496-0000	.ECCENTRIC	3-185, 3-187, 3-189, 3-191, 3-193, 3-195
1144498-0000	.FLANGE	3-185, 3-187, 3-189, 3-191, 3-193, 3-195
1144500-0000	.SUPPORT	3-185, 3-187, 3-189, 3-191, 3-193, 3-195
1144501-0000	.SPACER	3-185, 3-187, 3-189, 3-191, 3-193, 3-195
1144502-0000	.WASHER	3-185, 3-187, 3-189, 3-191, 3-193, 3-195
1144503-0000	.FLANGE	3-185, 3-187, 3-189, 3-191, 3-193, 3-195
1144505-0000	.COLUMN	3-185, 3-187, 3-189, 3-191, 3-193, 3-195
1144506-0000	.LEVER	3-185, 3-187, 3-189, 3-191, 3-193, 3-195
1144508-0000	.AXLE PIN	3-185, 3-187, 3-189, 3-191, 3-193, 3-195
1144511-0000	.SHIM	3-185, 3-187, 3-189, 3-191, 3-193, 3-195
1144514-0000	.BUSHING	3-185, 3-187, 3-189, 3-191, 3-193, 3-195
1144515-0000	.INSERT	3-185, 3-187, 3-189, 3-191, 3-193, 3-195
1144517-0000	.BUSHING	3-185, 3-187, 3-189, 3-191, 3-193, 3-195
1144521-0000	.CLAMP	3-185, 3-187, 3-189, 3-191, 3-193, 3-195
1144552-0000	.PLATE	3-201, 3-203
1144555-0000	.STUD SCREW	3-27, 3-29, 3-37, 3-39, 3-41, 3-97, 3-99, 3-107, 3-109, 3-111
1144566-0000	.FLANGE	3-149, 3-151
1144577-0000	.BLOCK	3-271, 3-273
1144579-0000	.AXLE	3-271, 3-273
1144593-0000	.PLATE	3-257, 3-263, 3-265
1144595-0000	.ECCENTRIC SHAFT	3-257, 3-263
1144597-0000	.SPACER	3-257, 3-263, 3-265
1144598-0000	.SHAFT	3-263, 3-265
1144601-0000	.GUIDE STUD	2-31, 2-33, 2-43, 2-45, 2-55, 2-57, 2-59, 2-61, 2-63, 2-69, 2-71, 2-73, 2-75, 2-77
1144618-0000	.FLANGE	3-145, 3-147
1144620-0000	.WASHER	3-145, 3-147, 3-393
1144621-0000	.PLATE	3-9, 3-11, 3-13, 3-15, 3-17, 3-69, 3-71, 3-77, 3-79
1144625-0000	.SPACER	3-257, 3-263, 3-265
1144645-0200	.PROTECTIVE COVER	3-257, 3-263
1144665-0000	.SEAL RING	3-145, 3-147
1144667-0000	.HINGE	3-259, 3-261, 3-267
1144668-0000	.HINGE	3-259, 3-261, 3-267
1144669-0000	.PIN	3-259, 3-261, 3-267
1144678-0000	.SHAFT	3-149, 3-151
1144681-0000	.WASHER	3-149, 3-151, 3-393
1144683-0000	.AXLE PIN	3-149, 3-151
1144684-0000	.SPACER	3-149, 3-151
1144685-0000	.SCREW	3-149, 3-151
1144686-0000	.TIE ROD	3-149, 3-151
1144687-0000	.TIE ROD	3-149, 3-151
1144688-0000	.SCREW	3-149, 3-151
1144719-0000	.RAIL	3-37, 3-39, 3-41
1144760-0000	.PLATE	3-257, 3-263
1144783-0000	.TIMING BELT	3-9, 3-11, 3-13, 3-15, 3-17, 3-61, 3-63, 3-65
1144784-0000	.TOOTHED PULLEY	3-257
1144788-0000	.TOOTHED PULLEY	3-257
1144794-0000	.SUPPORT	3-257, 3-263, 3-265
1144797-0000	.SUPPORT	3-145, 3-147
1144802-0000	.PULLEY	1-109, 1-111
1144839-0000	.BLOCK	3-145, 3-147
1144841-0000	.TIMING BELT	3-257, 3-263, 3-265
1144892-0000	.GUIDE RIGHT	3-27, 3-29, 3-97, 3-99
1144893-0000	.GUIDE LEFT	3-27, 3-29, 3-97, 3-99
1144897-0000	.FOLDING BAR	3-37, 3-39, 3-41
1144898-0000	.FOLDING BAR	3-37, 3-39, 3-41
1144899-0000	.SUPPORT	3-201, 3-203
1144900-0000	.SUPPORT	3-145, 3-147
1144901-0000	.GUIDE	3-21, 3-23, 3-25
1144902-0000	.SUPPORT	3-21, 3-23, 3-25, 3-87, 3-89
1144905-0000	.SUPPORT	3-27, 3-29
1144914-0000	.LEVER	3-185, 3-187, 3-189, 3-191, 3-193, 3-195
1144915-0000	.LEVER	3-185, 3-187, 3-189, 3-191, 3-193, 3-195
1144916-0000	.ADJUSTING SCREW	3-185, 3-187, 3-189, 3-191, 3-193, 3-195
1144918-0000	.PLATE	3-9, 3-11, 3-13, 3-15, 3-17, 3-61, 3-63, 3-65
1144919-0000	.CARRIER	3-9, 3-11, 3-13, 3-15, 3-17, 3-61, 3-63, 3-65
1144924-0000	.BOTTOM	3-51, 3-53
1144926-0000	.FLAP	3-51, 3-53
1144927-0000	.FLAP	3-51, 3-53
1144928-0000	.PUSHER	3-185, 3-187, 3-189, 3-191, 3-193, 3-195
1144932-0000	.PLATE	3-185, 3-187, 3-189, 3-191, 3-193, 3-195
1144933-0000	.BLOCK	3-149, 3-151
1144941-0000	.COVERING PLATE	3-21, 3-23, 3-25, 3-87, 3-89
1144943-0000	.SPACER	3-245, 3-247
1144974-0000	.ADJUSTING PLATE	3-21, 3-23, 3-25, 3-87, 3-89
1144975-0000	.ATTACHMENT PLATE	3-21, 3-23, 3-25, 3-87, 3-89
1144976-0000	.STOP SCREW	3-21, 3-23, 3-25, 3-87, 3-89
1144978-0000	.CAM	3-185, 3-187, 3-189, 3-191, 3-193, 3-195
1144979-0000	.WASHER	3-21, 3-23, 3-25, 3-87, 3-89
1144990-0000	.FOLDING BAR	3-37, 3-39, 3-41
1145416-0000	.PUNCH HOLE 55	3-349
1145417-0000	.DIE HOLE 55	3-349
1195397-0000	.COMPRESSION SPRING	1-17
1254109-0000	.BRACKET	2-253, 2-255, 2-257
1254110-0000	.BRACKET	2-253, 2-255, 2-257

Part No	Description	Page No
1254111-0000	.BRACKET	2-253, 2-255, 2-257
1255389-0000	.BUSHING	2-159, 2-161, 2-163, 2-165
1255390-0000	.BUSHING	2-159, 2-161, 2-163, 2-165
1255457-0000	.CARRIER RULER	2-169, 2-171
1255458-0000	.CARRIER RULER	2-169, 2-171
1255459-0000	.CARRIER RULER	2-169, 2-171
1255460-0000	.CARRIER RULER	2-169, 2-171
1255461-0000	.CARRIER RULER	2-215, 2-217, 2-219, 2-221
1255462-0000	.CARRIER RULER	2-215, 2-217, 2-219, 2-221
1255463-0000	.CARRIER RULER	2-215, 2-217, 2-219, 2-221
1255464-0000	.CARRIER RULER	2-215, 2-217, 2-219, 2-221
1255541-0000	.BUSHING	2-11, 2-13, 2-15, 2-21, 2-23, 2-25
1255916-0000	.BUSHING	2-87, 2-89, 2-93, 2-95
1260328-0000	.SPRING	2-131
1260700-0000	.BLOCK	3-149, 3-151
1260701-0000	.PUSHER	3-185, 3-187, 3-189, 3-191, 3-193, 3-195
1260702-0000	.PLATE	3-185, 3-187, 3-189, 3-191, 3-193, 3-195
1260703-0000	.BOTTOM	3-51, 3-53
1260704-0000	.FLAP	3-51, 3-53, 3-129, 3-131
1260705-0000	.FLAP	3-51, 3-53
1260709-0000	.GUIDE UPPER R	3-27, 3-29
1260710-0000	.GUIDE UPPER L	3-27, 3-29
1260714-0000	.SPACER	3-7
1260824-0000	.SPACER RING	3-149, 3-151
1260832-0000	.WASHER	3-233
1260851-0000	.AXLE PIN	3-223, 3-225, 3-227
1260852-0000	.WASHER	3-223, 3-225, 3-227
1260853-0000	.RING	3-223, 3-225, 3-227
1260885-0000	.FLAP	3-51, 3-53
1260886-0000	.FLAP	3-51, 3-53
1260887-0000	.BLOCK	3-149, 3-151
1260888-0000	.BLOCK	3-185, 3-187, 3-189, 3-191, 3-193, 3-195
1260889-0000	.PUSHER	3-185, 3-187, 3-189, 3-191, 3-193, 3-195
1260895-0000	.SPRING	3-185, 3-187, 3-189, 3-191, 3-193, 3-195
1260931-0000	.SCREW	3-145, 3-147
1260941-0000	.SLIDE	3-257
1260944-0000	.BUSHING	3-149, 3-151
1279409-0000	.PLATE	3-9, 3-11, 3-13, 3-15, 3-17, 3-69, 3-71, 3-77, 3-79
1279559-0000	.ARM	3-51, 3-53, 3-129, 3-131
1279573-0000	.SLIDE RAIL UPPER	3-245, 3-247, 3-277
1279582-0000	.RAIL	3-205, 3-207, 3-209, 3-211, 3-213, 3-215
1279585-0000	.SUPPORT	3-245, 3-247
1279586-0000	.SUPPORT	3-245, 3-247
1279587-0000	.SLIDE RAIL UPPER	3-245, 3-247
1279670-0000	.SPACER	3-7
1279688-0000	.SUPPORT	3-257, 3-263, 3-265
1279689-0000	.ACTIVATOR	3-263, 3-265
1282287-0000	.CARRIER	3-9, 3-11, 3-13, 3-15, 3-17, 3-61, 3-63, 3-65
1282290-0000	.GUIDE	3-9, 3-11, 3-13, 3-15, 3-17, 3-61, 3-63, 3-65
1282291-0000	.GUIDE	3-9, 3-11, 3-13, 3-15, 3-17, 3-61, 3-63, 3-65
1282294-0000	.FOLDING BAR	3-37, 3-39, 3-41
1282295-0000	.FOLDING BAR	3-37, 3-39, 3-41
1282335-0000	.FLANGE	3-233
1282343-0000	.BLOCK	3-233
1282345-0000	.SPRING	3-233
1282681-0000	.TOOTHED PULLEY	3-263, 3-265
1282705-0000	.SUPPORT	3-27, 3-29, 3-97, 3-99
1282708-0000	.BUSHING	3-51, 3-53, 3-129, 3-131, 3-157, 3-159, 3-169, 3-171
1282844-0000	.SUPPORT	3-145, 3-147
1282848-0000	.CARRIER	3-9, 3-11, 3-13, 3-15, 3-17, 3-61, 3-63, 3-65
1285003-0000	.LINK	2-223
1285005-0000	.NUT	2-223
1285006-0000	.SPACER	2-223
1285009-0000	.HOLDER	3-205, 3-207, 3-209, 3-211, 3-213, 3-215
1285010-0000	.HOLDER	3-249, 3-251
1285012-0300	.FOLDING PART	3-5
1285014-0000	.DISTRIBUTOR	3-21, 3-23, 3-25, 3-87, 3-89
1285022-0000	.SIDE PLATE	3-271, 3-273, 3-275, 4-33, 4-35
1285023-0000	.SIDE PLATE	3-271, 3-273, 3-275, 4-33, 4-35
1285253-0000	.SPACER	3-205, 3-207, 3-209, 3-211, 3-213, 3-215
1285254-0000	.WASHER	3-223, 3-225, 3-227
1285265-0000	.PLATE	3-245, 3-247, 3-277
1285266-0000	.SPACER	3-245, 3-247
1285267-0000	.SUPPORT	3-27, 3-29, 3-97, 3-99
1285291-0000	.PLATE	4-7
1285293-0000	.HEATING PIPE	4-9
1285299-0000	.BRACKET	3-21, 3-23, 3-25, 3-87, 3-89
1285306-0000	.SPACER	3-245, 3-247
1285307-0000	.SPACER	4-9
1285308-0000	.GASKET	4-9
1285310-0000	.EXTENSION	3-173, 3-175, 3-177, 3-179, 3-181, 3-183
1285311-0000	.PLATE	4-9
1285312-0000	.GASKET	4-9
1285870-0000	.EXTENSION	3-173, 3-175, 3-177, 3-179, 3-181, 3-183

Part No	Description	Page No
1285874-0000	.SPACER	3-173, 3-175, 3-177, 3-179, 3-181, 3-183
1285955-0000	.PLATE	3-263, 3-265
1285956-0000	.BLOCK	3-263, 3-265
1296066-0000	.NOZZLE	3-173, 3-175, 3-177, 3-179, 3-181, 3-183
1296067-0000	.NOZZLE	3-173, 3-175, 3-177, 3-179, 3-181, 3-183
1296068-0000	.NOZZLE	3-173, 3-175, 3-177, 3-179, 3-181, 3-183
1296070-0000	.HEATING PIPE	4-9
1296072-0000	.EXTENSION	3-173, 3-175, 3-177, 3-179, 3-181, 3-183
1296079-0000	.RAIL	3-205, 3-207, 3-209, 3-211, 3-213, 3-215
1296081-0000	.PLATE	3-245, 3-247, 3-277
1296153-0000	.GUIDE	3-173, 3-175, 3-177, 3-179, 3-181, 3-183
1296180-0000	.FOLDING DEVICE	3-157, 3-159
1296181-0000	.FOLDING DEVICE	3-157, 3-159
1296387-0000	.NOZZLE	3-173, 3-175, 3-177, 3-179, 3-181, 3-183
1296969-0000	.SCREW HOLDER	3-51, 3-53, 3-129, 3-131
1296970-0000	.SCREW BUSHING	3-51, 3-53, 3-129, 3-131
1317042-0000	.RAIL	3-37, 3-39, 3-41
1317043-0000	.SUPPORT	3-37, 3-39, 3-41, 3-107, 3-109, 3-111
1317047-0000	.RAIL	3-37, 3-39, 3-41
1317085-0000	.NUT	3-173, 3-175, 3-177, 3-179, 3-181, 3-183
1317088-0000	.SPACER	3-27, 3-29, 3-37, 3-39, 3-41
1317211-0000	.COVERING PLATE	3-21, 3-23, 3-25, 3-87, 3-89
1317213-0000	.ADJUSTING PLATE	3-21, 3-23, 3-25, 3-87, 3-89
1317216-0000	.FOLDING BAR	3-37, 3-39, 3-41
1317217-0000	.FOLDING BAR	3-37, 3-39, 3-41
1317218-0000	.SPACER	3-7, 3-55, 3-57, 3-59, 3-205, 3-207, 3-209, 3-211, 3-213, 3-215
1317362-0000	.SHAFT	3-185, 3-187, 3-189, 3-191, 3-193, 3-195
1317363-0000	.SHAFT	3-185, 3-187, 3-189, 3-191, 3-193, 3-195
1317438-0000	.FORK	1-9, 1-11, 1-13, 1-15
1317439-0000	.CATCH	2-43, 2-45
1317440-0000	.STOP PIN	2-31, 2-33, 2-43, 2-45
1317475-0000	.BRACKET	1-79, 1-81, 1-83, 1-85
1317554-0000	.FLAP	3-51, 3-53
1317555-0000	.FLAP	3-51, 3-53
1317556-0000	.BOTTOM	3-51, 3-53
1317633-0000	.SPRING	3-21, 3-23, 3-25
1317650-0000	.GUIDE	3-9, 3-11, 3-13, 3-15, 3-17, 3-61, 3-63, 3-65
1317651-0000	.GUIDE	3-9, 3-11, 3-13, 3-15, 3-17, 3-61, 3-63, 3-65
1317652-0000	.FOLDING BAR	3-37, 3-39, 3-41
1317653-0000	.FOLDING BAR	3-37, 3-39, 3-41
1317654-0000	.PUSHER	3-185, 3-187, 3-189, 3-191, 3-193, 3-195
1317655-0000	.PLATE	3-185, 3-187, 3-189, 3-191, 3-193, 3-195
1317656-0000	.INSERT	3-51, 3-53
1317711-0000	.SHAFT	1-149
1317712-0000	.SHAFT	1-149
1317740-0000	.RUBBER SLEEVE	2-31, 2-33, 2-43, 2-45
1317741-0000	.CATCH	2-31, 2-33
1317742-0000	.CANTILEVER	2-31, 2-33, 2-43, 2-45
1317787-0000	.CATCH	3-185, 3-187, 3-189, 3-191, 3-193, 3-195
1317789-0000	.BLOCK	3-149, 3-151
1317801-0000	.NOZZLE	3-173, 3-175, 3-177, 3-179, 3-181, 3-183
1317802-0000	.NOZZLE	3-173, 3-175, 3-177, 3-179, 3-181, 3-183
1317803-0000	.NOZZLE	3-173, 3-175, 3-177, 3-179, 3-181, 3-183
1317804-0000	.SPACER	3-173, 3-175, 3-177, 3-179, 3-181, 3-183
1317805-0000	.BAR	3-9, 3-11, 3-13, 3-15, 3-17, 3-69, 3-71
1317823-0000	.CANTILEVER	2-31, 2-33, 2-43, 2-45
1317824-0000	.CATCH	2-31, 2-33, 2-43, 2-45
1334012-0000	.GUIDE UPPER L	3-27, 3-29
1334013-0000	.GUIDE UPPER R	3-27, 3-29
1334018-0000	.SHIM	3-149, 3-151
1334081-0000	.CURVE	2-235, 2-237, 2-239, 2-241
1334113-0000	.HOLDER	3-205, 3-207, 3-209, 3-211, 3-213, 3-215
1334271-0000	.BAR	3-9, 3-11, 3-13, 3-15, 3-17, 3-77, 3-79
1334328-0000	.SPACER	3-149, 3-151
1334447-0000	.SPACER	3-27, 3-29, 3-97, 3-99
1334480-0000	.SUPPORT	3-21, 3-23, 3-25, 3-87, 3-89
1334523-0000	.SUPPORT	3-27, 3-29, 3-97, 3-99
1334559-0000	.GUIDE UPPER R	3-27, 3-29, 3-97, 3-99
1334560-0000	.GUIDE UPPER L	3-27, 3-29, 3-97, 3-99
1334561-0000	.SLIDE	3-9, 3-11, 3-13, 3-15, 3-17
1334562-0000	.SLIDE	3-9, 3-11, 3-13, 3-15, 3-17
1334632-0000	.SPACER	3-173, 3-175, 3-177, 3-179, 3-181, 3-183
1334633-0200	.VOLUME FLAP CUTTING	2-9
1334634-0200	.VOLUME FLAP PRESSURE	2-9
1334635-0200	.SHOCK ABSORBER	2-9
1334636-0200	.SHOCK ABSORBER	2-9
1334718-0000	.SPACER	3-37, 3-39, 3-41
1334856-0000	.COUNTER ROLLER	1-31, 1-33
1334999-0000	.PUSHER	3-185, 3-187, 3-189, 3-191, 3-193, 3-195
1338793-0000	.BRACKET	2-5, 2-7
1346149-0000	.FOLDING BAR	3-37, 3-39, 3-41
1346150-0000	.FOLDING BAR	3-37, 3-39, 3-41
1346153-0000	.STOP PIN	2-31, 2-33, 2-43, 2-45
1346157-0000	.VOLUME BULGE	2-11, 2-13, 2-15, 2-21, 2-23, 2-25

Part No	Description	Page No
1346158-0000	.VOLUME SHIM	1-89, 1-91, 1-93, 1-95, 1-97, 1-99, 2-11, 2-13, 2-15, 2-21, 2-23, 2-25
1346340-0000	.BRACKET	3-27, 3-29, 3-97, 3-99
1346343-0000	.RAIL	3-37, 3-39, 3-41, 3-107, 3-109, 3-111
1346344-0000	.RAIL	3-37, 3-39, 3-41, 3-107, 3-109, 3-111
1346471-0000	.WEDGE	3-9, 3-11, 3-13, 3-15, 3-17, 3-61, 3-63, 3-65
1346539-0000	.CONNECTING ROD	3-185, 3-187, 3-189, 3-191, 3-193, 3-195
1346580-0000	.NOZZLE	3-173, 3-175, 3-177, 3-179, 3-181, 3-183
1346581-0000	.NOZZLE	3-173, 3-175, 3-177, 3-179, 3-181, 3-183
1346588-0000	.DRIP PLATE	3-201, 3-203
1346641-0000	.SPACER	3-173, 3-175, 3-177, 3-179, 3-181, 3-183
1346642-0000	.SPACER	3-173, 3-175, 3-177, 3-179, 3-181, 3-183
1346643-0000	.NOZZLE	3-173, 3-175, 3-177, 3-179, 3-181, 3-183
1346644-0000	.NOZZLE	3-173, 3-175, 3-177, 3-179, 3-181, 3-183
1346646-0000	.EXTENSION	3-173, 3-175, 3-177, 3-179, 3-181, 3-183
1346678-0000	.NOZZLE	3-173, 3-175, 3-177, 3-179, 3-181, 3-183
1346679-0000	.NOZZLE	3-173, 3-175, 3-177, 3-179, 3-181, 3-183
1346736-0000	.WEDGE	3-9, 3-11, 3-13, 3-15, 3-17, 3-61, 3-63, 3-65
1346885-0000	.SUPPORT	3-323, 3-325, 3-327
1347018-0000	.PLUG	3-185, 3-187, 3-189, 3-191, 3-193, 3-195
1347057-0000	.GUIDE	3-21, 3-23, 3-25, 3-87, 3-89
1347108-0000	.PLATE	3-145, 3-147
1347109-0000	.PLATE	3-145, 3-147
1347410-0000	.ACTIVATOR	3-257
1347495-0000	.AXLE PIN	3-157, 3-159
1347496-0000	.SCREW	3-157, 3-159, 3-169, 3-171
1347526-0000	.BRACKET	2-31, 2-33, 2-43, 2-45
1347600-0000	.SUPPORT	3-157, 3-159
1347699-0000	.PLATE	3-257
1347952-0002	.SPACER	3-371
1347952-0003	.SPACER	3-333, 3-371
1347952-0004	.SPACER	3-371
1347952-0006	.SPACER	3-371, 3-375
1347952-0008	.SPACER	3-375
1347952-0010	.SPACER	3-375
1347952-0011	.SPACER	3-375
1347952-0016	.SPACER	3-375
1348041-0000	.SPACER	3-27, 3-29
1348042-0000	.SPACER	3-37, 3-39, 3-41
1348043-0000	.SPACER	3-173, 3-175, 3-177, 3-179, 3-181, 3-183
1348047-0000	.FORK	1-9, 1-11, 1-13, 1-15
1348048-0000	.FORK	1-9, 1-11, 1-13, 1-15
1348049-0000	.FORK	1-9, 1-11, 1-13, 1-15
1348056-0300	.FOLDING PART	3-149, 3-151
1348132-0000	.SLIDE	3-9, 3-11, 3-13, 3-15, 3-17
1348133-0000	.SLIDE	3-9, 3-11, 3-13, 3-15, 3-17, 3-69, 3-71
1348134-0000	.SLIDE	3-9, 3-11, 3-13, 3-15, 3-17
1348135-0000	.SLIDE	3-9, 3-11, 3-13, 3-15, 3-17, 3-69, 3-71
1348136-0000	.SLIDE	3-9, 3-11, 3-13, 3-15, 3-17, 3-69, 3-71
1348138-0000	.SLIDE	3-9, 3-11, 3-13, 3-15, 3-17
1348139-0000	.SLIDE	3-9, 3-11, 3-13, 3-15, 3-17, 3-77, 3-79
1348140-0000	.SLIDE	3-9, 3-11, 3-13, 3-15, 3-17
1348141-0000	.SLIDE	3-9, 3-11, 3-13, 3-15, 3-17, 3-77, 3-79
1348142-0000	.SLIDE	3-9, 3-11, 3-13, 3-15, 3-17, 3-77, 3-79
1348144-0000	.BAR	3-9, 3-11, 3-13, 3-15, 3-17, 3-69, 3-71
1348145-0000	.BAR	3-9, 3-11, 3-13, 3-15, 3-17
1348146-0000	.BAR	3-9, 3-11, 3-13, 3-15, 3-17
1348147-0000	.BAR	3-9, 3-11, 3-13, 3-15, 3-17, 3-69, 3-71
1348148-0000	.BAR	3-9, 3-11, 3-13, 3-15, 3-17, 3-69, 3-71
1348150-0000	.BAR	3-9, 3-11, 3-13, 3-15, 3-17, 3-77, 3-79
1348151-0000	.BAR	3-9, 3-11, 3-13, 3-15, 3-17
1348152-0000	.BAR	3-9, 3-11, 3-13, 3-15, 3-17
1348153-0000	.BAR	3-9, 3-11, 3-13, 3-15, 3-17, 3-77, 3-79
1348154-0000	.BAR	3-9, 3-11, 3-13, 3-15, 3-17, 3-77, 3-79
1348169-0000	.PLATE	3-9, 3-11, 3-13, 3-15, 3-17, 3-69, 3-71, 3-77, 3-79
1348359-0000	.BRACKET	1-79, 1-81, 1-83, 1-85
1348483-0000	.SPRING RIGHT	2-31, 2-33, 2-43, 2-45, 2-55, 2-57, 2-59, 2-61, 2-63, 2-69, 2-71, 2-73, 2-75, 2-77
1348484-0000	.SPRING LEFT	2-31, 2-33, 2-43, 2-45, 2-55, 2-57, 2-59, 2-61, 2-63, 2-69, 2-71, 2-73, 2-75, 2-77
1348504-0000	.SLEEVE	2-131
1348537-0000	.TIMING BELT	3-185, 3-187, 3-189, 3-191, 3-193, 3-195
1348540-0000	.PIVOT AXLE	3-223, 3-225, 3-227
1348545-0000	.RAIL	2-133, 2-135, 2-137
1348546-0000	.RAIL	2-191, 2-193, 2-195
1348669-0000	.SCREW	2-5, 2-7
1348671-0000	.JOINT LEFT	2-5, 2-7
1348808-0000	.CURVE	2-235, 2-237, 2-239, 2-241
1348809-0000	.CURVE	2-235, 2-237, 2-239, 2-241
1348854-0000	.PLATE	3-271, 3-273, 3-275
1348920-0000	.CRADLE	3-271, 3-273
1348955-0000	.KNIFE	1-89, 1-91, 1-93, 1-95, 1-97, 1-99, 2-223
1348956-0000	.KNIFE	1-89, 1-91, 1-93, 1-95, 1-97, 1-99, 2-223
1348957-0000	.BRACKET	3-263
1348963-0000	.SLIDE	3-263
1348966-0000	.KNIFE	1-89, 1-91, 1-93, 1-95, 1-97, 1-99, 2-223
1349017-0000	.PLATE	3-271, 3-273, 3-275

Part No	Description	Page No
1349087-0000	.DISTRIBUTOR	3-21, 3-23, 3-25, 3-87, 3-89
1349152-0000	.TIMING BELT	3-9, 3-11, 3-13, 3-15, 3-17, 3-61, 3-63, 3-65
1349160-0000	.SPACER	3-231, 3-269
1349208-0000	.VOLUME SHIM	1-89, 1-91, 1-93, 1-95, 1-97, 1-99, 2-11, 2-13, 2-15, 2-21, 2-23, 2-25
1349319-0000	.CANTILEVER	2-31, 2-33, 2-43, 2-45
1349320-0000	.CATCH	2-31, 2-33, 2-43, 2-45
1349516-0000	.SHAFT	3-185, 3-187, 3-189, 3-191, 3-193, 3-195
1349517-0000	.TOOTHED PULLEY	3-185, 3-187, 3-189, 3-191, 3-193, 3-195
1349518-0000	.SUPPORT	3-185, 3-187, 3-189, 3-191, 3-193, 3-195
1349519-0000	.ACTIVATOR	3-185, 3-187, 3-189, 3-191, 3-193, 3-195
1349584-0000	.BUSHING	2-133, 2-135, 2-137, 2-191, 2-193, 2-195
1349595-0000	.SLEEVE	2-131
1349599-0000	.HOLDER	2-133, 2-135, 2-137, 2-191, 2-193, 2-195
1349612-0000	.PISTON	2-131
1349741-0000	.CURVE	2-235, 2-237, 2-239, 2-241
1349744-0000	.VOLUME CAM	2-235, 2-237, 2-239, 2-241
1349851-0000	.ROLL	1-31, 1-33
1349853-0000	.ROLL	1-31, 1-33
1349916-0000	.CLAMP	3-303
1349925-0000	.PLATE	2-159, 2-161, 2-163, 2-165
1349980-0000	.SHAFT	2-133, 2-135, 2-137, 2-191, 2-193, 2-195
1349985-0000	.SPRING	3-223, 3-225, 3-227
1350263-0000	.SPRING RIGHT	2-31, 2-33, 2-43, 2-45, 2-55, 2-57, 2-59, 2-61, 2-63, 2-69, 2-71, 2-73, 2-75, 2-77
1350264-0000	.SPRING LEFT	2-31, 2-33, 2-43, 2-45, 2-55, 2-57, 2-59, 2-61, 2-63, 2-69, 2-71, 2-73, 2-75, 2-77
1350421-0000	.NOZZLE	3-173, 3-175, 3-177, 3-179, 3-181, 3-183
1350422-0000	.NOZZLE	3-173, 3-175, 3-177, 3-179, 3-181, 3-183
1350423-0000	.FOLDING BAR	3-27, 3-29, 3-97, 3-99
1350424-0000	.GUIDE RIGHT	3-27, 3-29, 3-97, 3-99
1350425-0000	.GUIDE LEFT	3-27, 3-29, 3-97, 3-99
1350440-0000	.LEVER	3-157, 3-159, 3-169, 3-171
1350441-0000	.SUPPORT	3-157, 3-159
1350543-0000	.AXLE PIN	3-223, 3-225, 3-227
1350564-0000	.CLAMP HUB	3-233
1350721-0000	.STUD SCREW	3-27, 3-29, 3-37, 3-39, 3-41
1350785-0001	.SHIM	3-311
1350785-0002	.SHIM	3-311
1350785-0003	.SHIM	3-311
1350785-0004	.SHIM	3-311
1350808-0000	.BLOCK	3-149, 3-151
1350809-0000	.BLOCK	3-185, 3-187, 3-189, 3-191, 3-193, 3-195
1350810-0000	.PUSHER	3-185, 3-187, 3-189, 3-191, 3-193, 3-195
1359085-0000	.T-HOLDER	3-219
1359565-0000	.NUT	3-217, 3-219
1360149-0000	.SPACER	3-259, 3-261, 3-267
1360318-0000	.CARRIER RULER	2-169, 2-171
1360319-0000	.CARRIER RULER	2-215, 2-217, 2-219, 2-221
1361547-0000	.PULLER	3-399
1361558-0100	.LIFTING KIT-WHEEL	3-3
1361559-0100	.PULLER	3-3
1361918-0300	.WHEEL	3-5
1361921-0400	.VOLUME KIT OUT FEED	3-5
1361922-0200	.DROP CHUTE VARIANT	3-5
1361923-0200	.INFEED CONVEYOR VARIANT	3-5
1361934-0000	.FRAME	3-393
1361935-0100	.FRAME	3-3
1363768-0000	.BOX	3-3
1363779-0000	.BOX	1-3, 1-5, 1-7
1363780-0000	.CARRIER	3-393
1363790-0000	.BOX	2-3
1363791-0000	.BRACKET	3-395
1366726-0000	.HOLDER	3-219
1366727-0000	.CLAMP	3-217, 3-219
1366777-0101	.ANGLED RAIL HOLDER TPC21	3-205, 3-207, 3-209, 3-211, 3-213, 3-215
1478127-0000	.DRIP PLATE	3-201, 3-203
1478189-0000	.SUPPORT	3-185, 3-187, 3-189, 3-191, 3-193, 3-195
1478214-0000	.SLIDE	3-9, 3-11, 3-13, 3-15, 3-17
1478215-0000	.SLIDE	3-9, 3-11, 3-13, 3-15, 3-17
1478228-0000	.CAM	3-223, 3-225, 3-227
1478235-0000	.PLATE	3-205, 3-207, 3-209, 3-211, 3-213, 3-215
1478359-0000	.ROLLER	1-169, 1-171
1478393-0000	.CATCH	2-31, 2-33, 2-43, 2-45
1478395-0000	.CATCH	2-31, 2-33, 2-43, 2-45
1478396-0000	.STOP	2-31, 2-33, 2-43, 2-45
1478479-0000	.HOLDER	3-303
1478497-0000	.VOLUME CAM	2-235, 2-237, 2-239, 2-241
1478558-0000	.WASHER	3-223, 3-225, 3-227
1478753-0000	.SHAFT	3-233
1478768-0200	.KNIFE	2-9
1478813-0000	.SPACER	1-17
1478814-0000	.SENSOR	1-17
1478905-0000	.FLANGE	3-233
1478925-0000	.HATCH	3-223, 3-225, 3-227
1478926-0000	.GUIDE RIGHT	3-27, 3-29, 3-97, 3-99
1478927-0000	.GUIDE LEFT	3-27, 3-29, 3-97, 3-99

Part No	Description	Page No
1478928-0000	.BUSHING	3-271, 3-273
1484002-0000	.PLATE	2-159, 2-161, 2-163, 2-165
1484003-0000	.PLATE	2-159, 2-161, 2-163, 2-165
1484093-0000	.INSERT	4-9, 4-11
1484096-0000	.COVER	4-9
1484250-0000	.VOLUME CAM	2-235, 2-237, 2-239, 2-241
1484251-0000	.VOLUME CAM	2-235, 2-237, 2-239, 2-241
1484289-0000	.HATCH	3-223, 3-225, 3-227
1484379-0000	.INSERT	4-9, 4-11
1484447-0000	.BALL BEARING	3-233
1484448-0000	.ROLLER BEARING	3-233
1484620-0000	.SHAFT	3-257
1484745-0100	.WEB GUIDE	1-139, 1-163
1484865-0000	.VOLUME FLAP	2-21, 2-23, 2-25
1484866-0000	.VOLUME FLAP	2-11, 2-13, 2-15
1484867-0000	.VOLUME FLAP	2-11, 2-13, 2-15
1484868-0000	.VOLUME FLAP	2-21, 2-23, 2-25
1487038-0300	.OUTFEED WHEEL	3-221
1487158-0300	.FLAP HEATER VARIANT	3-5
1487264-0000	.PLATE	3-303
1487338-0200	.SUPPORT LEVEL DETECTOR	1-3, 1-5, 1-7
1487504-0000	.WASHER	2-235, 2-237, 2-239, 2-241
1487505-0001	.WASHER	2-235, 2-237, 2-239, 2-241
1487505-0002	.WASHER	2-235, 2-237, 2-239, 2-241
1487618-0000	.CUTTING JAW	2-159, 2-161, 2-163, 2-165
1487619-0000	.PLATE	2-159, 2-161, 2-163, 2-165
1487626-0000	.VOLUME BULGE	2-11, 2-13, 2-15, 2-21, 2-23, 2-25, 2-55, 2-57, 2-59, 2-61, 2-63, 2-69, 2-71, 2-73, 2-75, 2-77
1487627-0000	.VOLUME SHIM	1-89, 1-91, 1-93, 1-95, 1-97, 1-99, 2-11, 2-13, 2-15, 2-21, 2-23, 2-25, 2-55, 2-57, 2-59, 2-61, 2-63, 2-69, 2-71, 2-73, 2-75, 2-77
1487628-0000	.WEDGE	2-11, 2-13, 2-15, 2-21, 2-23, 2-25
1487684-0000	.RAIL	3-205, 3-207, 3-209, 3-211, 3-213, 3-215
1487738-0000	.FLAP	3-51, 3-53
1487739-0000	.FLAP	3-51, 3-53, 3-129, 3-131
1487763-0000	.SHAFT	1-141, 1-143
1487821-0000	.SPACER	3-145, 3-147
1487922-0000	.FOLDING DEVICE	3-157, 3-159, 3-169
1487923-0000	.FOLDING DEVICE	3-157, 3-159, 3-171
1487929-0000	.SPACER	3-7
1487946-0000	.SHAFT	2-55, 2-57, 2-59, 2-61, 2-63, 2-69, 2-71, 2-73, 2-75, 2-77
1487948-0000	.BUSHING	2-55, 2-57, 2-59, 2-61, 2-63, 2-69, 2-71, 2-73, 2-75, 2-77
1487954-0000	.CUTTING JAW	2-159, 2-161, 2-163, 2-165
1487955-0000	.HOLDER	2-133, 2-135, 2-137, 2-191, 2-193, 2-195
1490032-0000	.PUSHER	3-185, 3-187, 3-189, 3-191, 3-193, 3-195
1490033-0000	.SLIDE	3-9, 3-11, 3-13, 3-15, 3-17, 3-69, 3-71
1490034-0000	.SLIDE	3-9, 3-11, 3-13, 3-15, 3-17, 3-77, 3-79
1490035-0000	.BAR	3-9, 3-11, 3-13, 3-15, 3-17, 3-69, 3-71
1490036-0000	.BAR	3-9, 3-11, 3-13, 3-15, 3-17, 3-77, 3-79
1490039-0000	.NOZZLE	3-173, 3-175, 3-177, 3-179, 3-181, 3-183
1490112-0100	.OUTFEED CONVEYOR	3-237
1490129-0000	.TEMPLATE	3-385
1490220-0000	.ANGLE BRACKET	1-145, 1-147
1490762-0000	.ROLLER	1-23, 1-25
1490765-0000	.ROLLER	1-31, 1-33
1494664-0000	.AXLE LINK	1-145, 1-147
1498029-0000	.PIN	3-185, 3-187, 3-189, 3-191, 3-193, 3-195
1498068-0000	.SEAL RING	3-257, 3-265
1498113-0000	.BRACKET	3-299
1498115-0000	.BLOCK	3-295
1498130-0000	.PLATE	1-113, 1-115
1498131-0000	.BRACKET	1-113, 1-115
1498132-0000	.SHAFT	1-113, 1-115, 1-119, 1-121
1498134-0000	.PLATE	1-113, 1-115
1498143-0000	.LOCK RING	1-9, 1-11, 1-13, 1-15
1498146-0000	.NOZZLE	3-173, 3-175, 3-177, 3-179, 3-181, 3-183
1498147-0000	.NOZZLE	3-173, 3-175, 3-177, 3-179, 3-181, 3-183
1498161-0000	.SUPPORT	3-27, 3-29, 3-97, 3-99
1498163-0000	.SPACER	3-173, 3-175, 3-177, 3-179, 3-181, 3-183
1498303-0000	.BELT	3-331
1498347-0000	.WASHER	3-323, 3-325, 3-327
1498360-0000	.HUB	3-331
1498496-0000	.GUIDE	3-295
1498526-0000	.REGULATOR BODY	1-17
1498528-0000	.TIMING BELT	3-231
1498529-0000	.TIMING BELT	3-231
1498620-0000	.PULLEY	3-231
1498704-0000	.LEVER	3-307
1498790-0000	.SHAFT	1-113, 1-115
1498827-0000	.FOLDING BAR	3-37, 3-39, 3-41
1498828-0000	.FOLDING BAR	3-37, 3-39, 3-41
1498849-0000	.BUSBAR	2-133, 2-135, 2-137
1498850-0000	.BUSBAR	2-191, 2-193, 2-195
1499059-0000	.TIMING BELT	3-231
1499064-0000	.PULLEY	3-231

Part No	Description	Page No
1499071-0000	.SPACER	3-27, 3-29, 3-37, 3-39, 3-41, 3-97, 3-99
1499072-0000	.SPACER	3-37, 3-39, 3-41
1499094-0000	.SPACER SCREW	3-37, 3-39, 3-41
1499103-0000	.TIE ROD	3-157, 3-159
1499114-0000	.LOCK RING	1-9, 1-11, 1-13, 1-15
1499135-0000	.GUIDE	3-9, 3-11, 3-13, 3-15, 3-17
1499136-0000	.GUIDE	3-9, 3-11, 3-13, 3-15, 3-17
1499139-0000	.BLOCK	3-149, 3-151
1499140-0000	.SPACER	3-7
1499141-0000	.FLAP	3-51, 3-53
1499142-0000	.FLAP	3-51, 3-53
1499143-0000	.PLATE	3-185, 3-187, 3-189, 3-191, 3-193, 3-195
1499144-0000	.PUSHER	3-185, 3-187, 3-189, 3-191, 3-193, 3-195
1499150-0000	.RAIL	3-37, 3-39, 3-41, 3-107, 3-109, 3-111
1499151-0000	.RAIL	3-37, 3-39, 3-41, 3-107, 3-109, 3-111
1499216-0000	.PLATE	3-287
1499227-0000	.SHIM	3-289, 3-291
1499228-0000	.SHIM	3-289, 3-291
1499250-0000	.AXLE PIN	3-323, 3-325, 3-327
1499251-0002	.AXLE PIN	3-323, 3-325, 3-327
1499252-0000	.ARM	3-329
1499253-0000	.BUSHING	3-323, 3-325, 3-327
1499255-0100	.DETECTOR	3-323, 3-325, 3-327
1499296-0001	.GUIDE	3-369
1499296-0002	.GUIDE	3-341, 3-369
1499296-0003	.GUIDE	3-369
1499296-0004	.GUIDE	3-369, 3-377
1499296-0007	.GUIDE	3-377
1499296-0008	.GUIDE	3-377
1499296-0013	.GUIDE	3-377
1499296-0015	.GUIDE	3-377
1499320-0000	.TIE ROD	2-147, 2-149, 2-203, 2-205
1499327-0000	.SHAFT	2-55, 2-57, 2-59, 2-61, 2-63, 2-69, 2-71, 2-73, 2-75, 2-77
1499328-0000	.STOPPER	2-55, 2-57, 2-59, 2-61, 2-63, 2-69, 2-71, 2-73, 2-75, 2-77
1499345-0000	.FLAP HOLDER	2-55, 2-57, 2-59, 2-61, 2-63
1499350-0000	.CAM	2-55, 2-57, 2-59, 2-61, 2-63, 2-69, 2-71, 2-73, 2-75, 2-77
1499351-0200	.ROLLER UNIT	2-227, 2-229
1499355-0000	.ROLLER	2-55, 2-57, 2-59, 2-61, 2-63, 2-69, 2-71, 2-73, 2-75, 2-77
1499356-0000	.CAM	2-55, 2-57, 2-59, 2-61, 2-63, 2-69, 2-71, 2-73, 2-75, 2-77
1499358-0000	.VOLUME FLAP	2-55, 2-57, 2-59, 2-61, 2-63, 2-69, 2-71, 2-73, 2-75, 2-77
1499400-0000	.GUIDE	3-9, 3-11, 3-13, 3-15, 3-17
1499401-0000	.GUIDE	3-9, 3-11, 3-13, 3-15, 3-17
1499402-0000	.SPACER	3-37, 3-39, 3-41
1499411-0000	.COUNTER ROLLER	1-31, 1-33
1499413-0000	.HOLDER	3-205, 3-207, 3-209, 3-211, 3-213, 3-215
1499417-0000	.BAR	3-9, 3-11, 3-13, 3-15, 3-17
1499418-0000	.SLIDE	3-9, 3-11, 3-13, 3-15, 3-17
1499422-0000	.SLIDE	3-9, 3-11, 3-13, 3-15, 3-17
1499423-0000	.BAR	3-9, 3-11, 3-13, 3-15, 3-17
1499426-0000	.GUIDE	3-9, 3-11, 3-13, 3-15, 3-17
1499427-0000	.GUIDE	3-9, 3-11, 3-13, 3-15, 3-17
1499444-0000	.NOZZLE	3-173, 3-175, 3-177, 3-179, 3-181, 3-183
1499445-0000	.NOZZLE	3-173, 3-175, 3-177, 3-179, 3-181, 3-183
1499446-0000	.NOZZLE	3-173, 3-175, 3-177, 3-179, 3-181, 3-183
1499475-0000	.HOLDER	3-9, 3-11, 3-13, 3-15, 3-17, 3-61, 3-63, 3-65
1499476-0000	.HOLDER	3-9, 3-11, 3-13, 3-15, 3-17, 3-61, 3-63, 3-65, 3-259, 3-261, 3-267
1499566-0000	.WASHER	1-145, 1-147
1499571-0100	.PAPER REEL HOLDER	3-3
1499594-0000	.VOLUME CAM	2-235, 2-237, 2-239, 2-241
1499635-0000	.LEVER	3-149, 3-151
1499636-0000	.ROLLER	1-31, 1-33
1499675-0000	.VOLUME BULGE	2-11, 2-13, 2-15, 2-21, 2-23, 2-25
1499678-0000	.ROLLER	2-247, 2-249
1499765-0000	.AXLE LINK	3-157, 3-159
1499901-0000	.VOLUME FLAP	2-11, 2-13, 2-15
1499902-0000	.VOLUME FLAP	2-21, 2-23, 2-25
1511067-0000	.CARRIER RULER	2-169, 2-171
1511188-0000	.CARRIER RULER	2-215, 2-217, 2-219, 2-221
1511250-0000	.VOLUME FLAP	2-11, 2-13, 2-15
1511251-0000	.VOLUME FLAP	2-21, 2-23, 2-25
1511253-0000	.VOLUME SHIM	1-89, 1-91, 1-93, 1-95, 1-97, 1-99, 2-11, 2-13, 2-15, 2-21, 2-23, 2-25
1511254-0000	.BUSHING	2-11, 2-13, 2-15, 2-21, 2-23, 2-25
1511336-0000	.VOLUME SHIM	1-89, 1-91, 1-93, 1-95, 1-97, 1-99
1511337-0000	.VOLUME SHIM	1-89, 1-91, 1-93, 1-95, 1-97, 1-99, 2-55, 2-57, 2-59, 2-61, 2-63, 2-69, 2-71, 2-73, 2-75, 2-77
1511339-0000	.STOP	2-55, 2-57, 2-59, 2-61, 2-63, 2-69, 2-71, 2-73, 2-75, 2-77
1511351-0000	.FOLDING FLAP	2-169, 2-171, 2-215, 2-217, 2-219, 2-221
1511352-0000	.FOLDING FLAP	2-169, 2-171, 2-215, 2-217, 2-219, 2-221
1511492-0000	.SHAFT	1-169, 1-171
1511556-0000	.SET SCREW	2-31, 2-33, 2-43, 2-45
1511558-0000	.BOTTOM	3-51, 3-53, 3-129, 3-131
1511600-0000	.SPACER	1-17
1511692-0000	.SPACER	3-173, 3-175, 3-177, 3-179, 3-181, 3-183
1511697-0000	.FOLDING FLAP	2-169, 2-171, 2-215, 2-217, 2-219, 2-221

Part No	Description	Page No
1511698-0000	.FOLDING FLAP	2-169, 2-171, 2-215, 2-217, 2-219, 2-221
1511699-0000	.FOLDING FLAP	2-169, 2-171, 2-215, 2-217, 2-219, 2-221
1511700-0000	.FOLDING FLAP	2-169, 2-171, 2-215, 2-217, 2-219, 2-221
1511769-0000	.ROLLER	1-113, 1-115, 1-125, 1-127, 1-129, 1-131, 1-133, 3-405
1512146-0000	.AXLE PIN	2-55, 2-57, 2-59, 2-61, 2-63, 2-69, 2-71, 2-73, 2-75, 2-77
1512147-0000	.WASHER	2-55, 2-57, 2-59, 2-61, 2-63, 2-69, 2-71, 2-73, 2-75, 2-77
1512265-0000	.SLEEVE	3-401
1512266-0000	.SLEEVE	3-401
1512267-0000	.ECCENTRIC BUSHING	1-141, 1-143
1512307-0000	.GUIDE	3-9, 3-11, 3-13, 3-15, 3-17
1512308-0000	.GUIDE	3-9, 3-11, 3-13, 3-15, 3-17
1512324-0000	.CURVE	2-235, 2-237, 2-239, 2-241
1512325-0000	.VOLUME CAM	2-235, 2-237, 2-239, 2-241
1512339-0100	.PHOTOCELL OUTFEED	3-237
1512430-0000	.VOLUME SHIM	1-145, 1-147
1512484-0000	.ROLLER	2-247, 2-249
1512526-0000	.STEERING	1-149
1512563-0200	.PRESSURE JAW LEFT	2-9
1512564-0200	.CARRIER CUTTING LEFT	2-9
1512565-0300	.CUTTING JAW LEFT	2-9
1512568-0200	.PRESSURE JAW RIGHT	2-9
1512569-0200	.CARRIER CUTTING RIGHT	2-9
1512570-0300	.CUTTING JAW RIGHT	2-9
1512579-0000	.BRACKET	2-31, 2-33, 2-43, 2-45
1517242-0000	.GUIDE	3-9, 3-11, 3-13, 3-15, 3-17
1517243-0000	.GUIDE	3-9, 3-11, 3-13, 3-15, 3-17
1517298-0200	.INFEED CONVEYOR	3-235
1517299-0200	.INFEED CONVEYOR LONG	3-255
1517300-0300	.INFEED CONVEYOR SHORT	3-255
1517302-0000	.SUPPORT PLATE	3-201, 3-203
1517322-0100	.FIN TYPE	3-235
1517472-0000	.SIDE PLATE	3-271, 3-273, 3-275
1517473-0000	.SIDE PLATE	3-271, 3-273, 3-275
1517474-0000	.GUIDE	3-9, 3-11, 3-13, 3-15, 3-17
1517475-0000	.GUIDE	3-9, 3-11, 3-13, 3-15, 3-17
1517476-0000	.WEDGE	3-9, 3-11, 3-13, 3-15, 3-17, 3-61, 3-63, 3-65
1517477-0000	.PLATE	3-9, 3-11, 3-13, 3-15, 3-17, 3-61, 3-63, 3-65
1517478-0000	.BAR	3-9, 3-11, 3-13, 3-15, 3-17
1517479-0000	.BAR	3-9, 3-11, 3-13, 3-15, 3-17
1517480-0000	.SLIDE	3-9, 3-11, 3-13, 3-15, 3-17
1517481-0000	.SLIDE	3-9, 3-11, 3-13, 3-15, 3-17
1517524-0000	.GUIDE	3-9, 3-11, 3-13, 3-15, 3-17
1517525-0000	.GUIDE	3-9, 3-11, 3-13, 3-15, 3-17
1517526-0000	.GUIDE	3-9, 3-11, 3-13, 3-15, 3-17, 3-69, 3-71
1517527-0000	.GUIDE	3-9, 3-11, 3-13, 3-15, 3-17, 3-77, 3-79
1517563-0000	.BRACKET	3-201, 3-203
1517567-0000	.PLATE	3-201, 3-203
1517711-0000	.BRACKET	3-307
1519089-0000	.GUIDE	3-9, 3-11, 3-13, 3-15, 3-17
1519090-0000	.GUIDE	3-9, 3-11, 3-13, 3-15, 3-17
1519093-0000	.GUIDE	3-9, 3-11, 3-13, 3-15, 3-17
1519094-0000	.GUIDE	3-9, 3-11, 3-13, 3-15, 3-17
1519156-0000	.AIR DISTRIBUTOR	1-119, 1-121
1519158-0000	.LID	1-119, 1-121
1519159-0000	.BUSHING	1-119, 1-121
1519160-0000	.SHAFT	1-119, 1-121
1519163-0000	.ARM	1-119, 1-121
1519166-0000	.BUSHING	1-119, 1-121
1519336-0000	.NOZZLE	3-173, 3-175, 3-177, 3-179, 3-181, 3-183
1519338-0000	.TIMING BELT	3-9, 3-11, 3-13, 3-15, 3-17, 3-61, 3-63, 3-65
1519339-0000	.SPACER	3-173, 3-175, 3-177, 3-179, 3-181, 3-183
1519340-0000	.TIE ROD	3-157, 3-159
1519341-0000	.BLOCK	3-149, 3-151
1519344-0000	.CARRIER	3-9, 3-11, 3-13, 3-15, 3-17, 3-61, 3-63, 3-65
1519345-0000	.GUIDE	3-9, 3-11, 3-13, 3-15, 3-17, 3-61, 3-63, 3-65
1519346-0000	.GUIDE	3-9, 3-11, 3-13, 3-15, 3-17, 3-61, 3-63, 3-65
1519355-0000	.SPACER	3-37, 3-39, 3-41, 3-107, 3-109, 3-111
1519358-0000	.GUIDE	3-27, 3-29
1519359-0000	.GUIDE	3-27, 3-29
1519364-0000	.INSULATING RAIL	3-303
1519365-0000	.PIVOT PLATE	3-311
1519379-0000	.FLAT KNIFE	3-303
1519463-0000	.LOCKING CLAMP	3-339
1519543-0000	.HOLDER	3-309, 3-311
1519544-0000	.SHAFT	3-307
1519578-0000	.MOUNTING BLOCK	1-145, 1-147
1519583-0000	.BRACKET	1-141, 1-143
1519591-0000	.RAIL PIN	1-145, 1-147
1519769-0000	.FOLDING BAR	3-37, 3-39, 3-41
1519770-0000	.FOLDING BAR	3-37, 3-39, 3-41
1519811-0000	.SHAFT	2-107, 2-113, 2-117
1519944-0000	.BRACKET	1-145, 1-147
1519996-0000	.SHAFT	3-307
1520167-0000	.INDUCTOR	1-89, 1-91, 1-93, 1-95, 1-97, 1-99, 2-133, 2-135, 2-137, 2-191, 2-193, 2-195

Part No	Description	Page No
1520196-0000	.INDUCTOR	3-359
1520455-0000	.CUTTING RAIL	2-159, 2-161, 2-163, 2-165
1520493-0000	.CUTTING RAIL	2-159, 2-161, 2-163, 2-165
1520494-0000	.CUTTING RAIL	2-159, 2-161, 2-163, 2-165
1520633-0002	.DOLLY	1-89, 1-91, 1-93, 1-95, 1-97, 1-99, 2-159, 2-161, 2-163, 2-165
1520633-0005	.DOLLY	1-89, 1-91, 1-93, 1-95, 1-97, 1-99, 2-159, 2-161, 2-163, 2-165
1523146-0000	.FOLDING FLAP	2-169, 2-171, 2-215, 2-217, 2-219, 2-221
1523147-0000	.FOLDING FLAP	2-169, 2-171, 2-215, 2-217, 2-219, 2-221
1523148-0000	.CARRIER RULER	2-215, 2-217, 2-219, 2-221
1523159-0000	.PIVOT PLATE	3-311
1523160-0000	.PIN	3-311
1523162-0000	.SCREW	2-147, 2-149, 2-203, 2-205
1523168-0000	.SHAFT	3-309
1523169-0000	.BRACKET	3-309
1523177-0000	.CARRIER RULER	2-169, 2-171
1523262-0000	.FLAG	3-323, 3-325, 3-327
1523263-0001	.BRACKET	3-323, 3-325, 3-327
1523467-0000	.VOLUME BULGE	3-51, 3-53, 3-197, 3-199
1523475-0000	.CANTILEVER	2-31, 2-33, 2-43, 2-45
1523490-0000	.VOLUME BULGE	2-235, 2-237, 2-239, 2-241
1523497-0000	.SPACER	3-173, 3-175, 3-177, 3-179, 3-181, 3-183
1523498-0000	.SPACER	3-27, 3-29
1523826-0000	.PUSHER	3-185, 3-187, 3-189, 3-191, 3-193, 3-195
1523926-0000	.SPACER	3-27, 3-29, 3-37, 3-39, 3-41
1523927-0000	.SPACER SCREW	3-37, 3-39, 3-41
1524035-0000	.VOLUME BULGE	2-11, 2-13, 2-15, 2-21, 2-23, 2-25, 3-51, 3-53
1524151-0000	.ROLLER	1-41, 1-43, 1-45, 1-47
1524156-0000	.ROLLER	1-31, 1-33
1524310-0000	.VOLUME BULGE	2-55, 2-57, 2-59, 2-61, 2-63, 2-69, 2-71, 2-73, 2-75, 2-77
1524370-0100	.WHEEL DIFFERENCE	3-235
1524414-0000	.SEAL	1-23, 1-25
1524416-0000	.ROLLER	1-23, 1-25
1524421-0000	.ROLLER	2-247, 2-249
1524484-0000	.FLAP	3-51, 3-53
1524547-0000	.COUNTER ROLLER	1-31, 1-33
1532231-0000	.CONNECTION	1-119, 1-121
1532254-0000	.SPACER	3-7
1532256-0000	.CARRIER	3-9, 3-11, 3-13, 3-15, 3-17
1532257-0000	.SLIDE	3-9, 3-11, 3-13, 3-15, 3-17
1532258-0000	.SLIDE	3-9, 3-11, 3-13, 3-15, 3-17
1532261-0000	.GUIDE	3-9, 3-11, 3-13, 3-15, 3-17
1532262-0000	.GUIDE	3-9, 3-11, 3-13, 3-15, 3-17
1532263-0000	.GUIDE	3-9, 3-11, 3-13, 3-15, 3-17
1532264-0000	.GUIDE	3-9, 3-11, 3-13, 3-15, 3-17
1532266-0000	.BLOCK	3-149, 3-151
1532267-0000	.SUPPORT	3-157, 3-159
1532268-0000	.AXLE LINK	3-157, 3-159
1532269-0000	.TIE ROD	3-157, 3-159
1532270-0000	.SUPPORT	3-157, 3-159
1532275-0000	.FOLDING BAR	3-37, 3-39, 3-41
1532276-0000	.FOLDING BAR	3-37, 3-39, 3-41
1532280-0000	.RAIL	3-37, 3-39, 3-41
1532281-0000	.RAIL	3-37, 3-39, 3-41
1532284-0000	.NOZZLE	3-173, 3-175, 3-177, 3-179, 3-181, 3-183
1532285-0000	.NOZZLE	3-173, 3-175, 3-177, 3-179, 3-181, 3-183
1532286-0000	.NOZZLE	3-173, 3-175, 3-177, 3-179, 3-181, 3-183
1532287-0000	.VOLUME FLAP	2-11, 2-13, 2-15, 2-21, 2-23, 2-25
1532289-0000	.PUSHER	3-185, 3-187, 3-189, 3-191, 3-193, 3-195
1532290-0000	.PUSHER	3-185, 3-187, 3-189, 3-191, 3-193, 3-195
1532291-0000	.PLATE	3-185, 3-187, 3-189, 3-191, 3-193, 3-195
1532293-0000	.VOLUME SHIM	2-11, 2-13, 2-15, 2-21, 2-23, 2-25
1532297-0000	.FLAP	3-51, 3-53
1532298-0000	.FLAP	3-51, 3-53
1532447-0000	.HANDLE	3-287
1533046-0000	.INDUCTOR	1-89, 1-91, 1-93, 1-95, 1-97, 1-99, 2-133, 2-135, 2-137, 2-191, 2-193, 2-195
1533051-0000	.CUTTING RAIL	2-159, 2-161, 2-163, 2-165
1533360-0000	.INDUCTOR	3-359
1533361-0000	.INDUCTOR	3-359
1533362-0000	.INDUCTOR	3-359
1533364-0000	.INDUCTOR	3-359
1538109-0000	.COMPRESSION SPRING	1-89, 1-91, 1-93, 1-95, 1-97, 1-99, 2-223
1538186-0000	.BRACKET	3-37, 3-39, 3-41
1538231-0000	.SHAFT	3-307
1538247-0000	.AXLE PIN	3-287
1538256-0000	.CARRIER RULER	2-169, 2-171
1538264-0000	.CURVE	2-235, 2-237, 2-239, 2-241
1538265-0000	.VOLUME CAM	2-235, 2-237, 2-239, 2-241
1538348-0000	.CATCH	2-159, 2-161, 2-163, 2-165
1538349-0000	.CATCH	2-131
1538496-0000	.ROLLER	1-113, 1-115, 3-405
1538521-0000	.BUSHING	2-31, 2-33, 2-43, 2-45, 2-97, 2-99, 2-101, 2-103, 2-107, 2-113, 2-117
1538637-0000	.VOLUME SHIM	1-89, 1-91, 1-93, 1-95, 1-97, 1-99, 2-55, 2-57, 2-59, 2-61, 2-63, 2-69, 2-71, 2-73, 2-75, 2-77
1538644-0100	.OUTFEED BELT	3-221

Part No	Description	Page No
1538668-0000	.GUIDE ROD	3-287
1538769-0000	.CARRIER RULER	2-215, 2-217, 2-219, 2-221
1538770-0000	.BOTTOM	3-51, 3-53
1538890-0000	.RAIL	3-37, 3-39, 3-41
1538891-0000	.RAIL	3-37, 3-39, 3-41
1538952-0000	.FORK	1-9, 1-11, 1-13, 1-15
1538953-0000	.SHAFT	1-9, 1-11, 1-13, 1-15
1538963-0000	.RAIL	3-201, 3-203
1538970-0000	.SLIDE	3-205, 3-207, 3-209, 3-211, 3-213, 3-215
1539125-0000	.BRACKET	3-323, 3-325, 3-327
1539172-0000	.CANTILEVER	2-31, 2-33, 2-43, 2-45
1539174-0000	.BUSHING	1-107
1539175-0000	.PLATE	1-107
1539348-0000	.HOLDER	2-31, 2-33, 2-43, 2-45
1539840-0000	.VOLUME BULGE	2-11, 2-13, 2-15, 2-21, 2-23, 2-25
1539841-0000	.VOLUME BULGE	2-11, 2-13, 2-15, 2-21, 2-23, 2-25
1539842-0000	.VOLUME SHIM	2-11, 2-13, 2-15, 2-21, 2-23, 2-25
1539843-0000	.VOLUME SHIM	1-89, 1-91, 1-93, 1-95, 1-97, 1-99, 2-11, 2-13, 2-15, 2-21, 2-23, 2-25
1539871-0000	.SPACER	3-27, 3-29, 3-37, 3-39, 3-41, 3-107, 3-109, 3-111
1539872-0000	.PUSHER	3-185, 3-187, 3-189, 3-191, 3-193, 3-195
1539873-0000	.SPACER	3-37, 3-39, 3-41
1539874-0000	.SLIDE	3-9, 3-11, 3-13, 3-15, 3-17, 3-69, 3-71
1539875-0000	.SLIDE	3-9, 3-11, 3-13, 3-15, 3-17, 3-77, 3-79
1539876-0000	.PLATE	3-9, 3-11, 3-13, 3-15, 3-17, 3-69, 3-71, 3-77, 3-79
1539877-0000	.BAR	3-9, 3-11, 3-13, 3-15, 3-17, 3-69, 3-71
1539878-0000	.BAR	3-9, 3-11, 3-13, 3-15, 3-17, 3-77, 3-79
1539879-0000	.GUIDE	3-9, 3-11, 3-13, 3-15, 3-17
1539880-0000	.GUIDE	3-9, 3-11, 3-13, 3-15, 3-17
1539881-0000	.FOLDING BAR	3-37, 3-39, 3-41
1539882-0000	.FOLDING BAR	3-37, 3-39, 3-41
1539886-0000	.CANTILEVER	2-31, 2-33, 2-43, 2-45
1539887-0000	.CATCH	2-31, 2-33, 2-43, 2-45
1539894-0000	.GUIDE	3-9, 3-11, 3-13, 3-15, 3-17, 3-69, 3-71
1539895-0000	.GUIDE	3-9, 3-11, 3-13, 3-15, 3-17, 3-77, 3-79
1539898-0000	.SPACER	3-27, 3-29, 3-37, 3-39, 3-41, 3-97, 3-99
1539900-0000	.RIGHT UPPER GUIDE	3-27, 3-29, 3-97, 3-99
1539902-0000	.VOLUME SHIM	1-89, 1-91, 1-93, 1-95, 1-97, 1-99, 2-11, 2-13, 2-15, 2-21, 2-23, 2-25
1539903-0000	.VOLUME BULGE	2-11, 2-13, 2-15, 2-21, 2-23, 2-25
1539904-0000	.VOLUME FLAP	2-11, 2-13, 2-15
1539983-0000	.GUIDE	3-9, 3-11, 3-13, 3-15, 3-17
1539984-0000	.GUIDE	3-9, 3-11, 3-13, 3-15, 3-17
1548230-0000	.BODY	1-17
1548348-0000	.GUIDE	3-205, 3-207, 3-209, 3-211, 3-213, 3-215
1548353-0000	.SLIDE RAIL	3-245, 3-247, 3-277
1548354-0000	.COVER	3-245, 3-247, 3-277
1548368-0000	.PLATE	3-281, 3-283, 3-285, 3-301
1548376-0000	.BRACKET	3-365, 3-367
1548377-0000	.PAPER GUIDE	3-281, 3-283, 3-285
1548460-0101	.VOLUME FLAP	4-33, 4-35
1548460-0102	.VOLUME FLAP	4-33, 4-35
1548460-0103	.VOLUME FLAP	4-33, 4-35
1548460-0104	.VOLUME FLAP	4-33, 4-35
1548460-0105	.VOLUME FLAP	4-33, 4-35
1548460-0106	.VOLUME FLAP	4-33, 4-35
1548460-0107	.VOLUME FLAP	4-33, 4-35
1548460-0108	.VOLUME FLAP	4-33, 4-35
1548460-0109	.VOLUME FLAP	4-33, 4-35
1548460-0110	.VOLUME FLAP	4-33, 4-35
1548460-0111	.VOLUME FLAP	4-33, 4-35
1548460-0200	.VOLUME FLAP	2-9
1548460-0201	.VOLUME FLAP	4-33, 4-35
1548460-0202	.VOLUME FLAP	4-33, 4-35
1548531-0000	.ROLLER	1-41, 1-43, 1-45, 1-47
1548540-0000	.ROLLER	1-41, 1-43, 1-45, 1-47
1548541-0000	.ROLLER	1-41, 1-43, 1-45, 1-47
1548550-0000	.RAIL	3-205, 3-207, 3-209, 3-211, 3-213, 3-215
1548551-0000	.SPACER	3-205, 3-207, 3-209, 3-211, 3-213, 3-215
1548612-0000	.COVERING PLATE	3-21, 3-23, 3-25, 3-87, 3-89
1548876-0100	.IH EQUIPMENT	1-3, 1-5, 1-7
1548892-0100	.CALENDER ROLLER	1-109, 1-111
1548940-0000	.SPRING	2-147, 2-149, 2-203, 2-205
1549126-0000	.NOZZLE	3-173, 3-175, 3-177, 3-179, 3-181, 3-183
1549127-0000	.NOZZLE	3-173, 3-175, 3-177, 3-179, 3-181, 3-183
1549312-0000	.INSERT	2-119, 2-121, 2-123, 2-125, 2-147, 2-149, 2-179, 2-181, 2-183, 2-185, 2-203, 2-205
1549388-0000	.SPACER	3-173, 3-175, 3-177, 3-179, 3-181, 3-183
1549389-0000	.SPACER	3-173, 3-175, 3-177, 3-179, 3-181, 3-183
1549390-0000	.NUT	3-173, 3-175, 3-177, 3-179, 3-181, 3-183
1549406-0000	.PACKAGE GUIDE	3-27, 3-29, 3-97, 3-99
1549411-0000	.PACKAGE GUIDE	3-27, 3-29, 3-97, 3-99
1549508-0000	.SPACER SCREW	3-37, 3-39, 3-41
1549512-0000	.SPACER	3-7
1549513-0000	.SLIDE	3-9, 3-11, 3-13, 3-15, 3-17
1549514-0000	.SLIDE	3-9, 3-11, 3-13, 3-15, 3-17
1549515-0000	.BAR	3-9, 3-11, 3-13, 3-15, 3-17

Part No	Description	Page No
1549516-0000	.BAR	3-9, 3-11, 3-13, 3-15, 3-17
1549517-0000	.GUIDE	3-9, 3-11, 3-13, 3-15, 3-17
1549518-0000	.GUIDE	3-9, 3-11, 3-13, 3-15, 3-17
1549522-0000	.GUIDE	3-9, 3-11, 3-13, 3-15, 3-17
1549523-0000	.GUIDE	3-9, 3-11, 3-13, 3-15, 3-17
1549594-0000	.VOLUME SHIM	1-89, 1-91, 1-93, 1-95, 1-97, 1-99, 2-11, 2-13, 2-15, 2-21, 2-23, 2-25, 2-55, 2-57, 2-59, 2-61, 2-63, 2-69, 2-71, 2-73, 2-75, 2-77
1549614-0000	.LEFT UPPER GUIDE	3-27, 3-29, 3-97, 3-99
1549615-0000	.SPRING	3-223, 3-225, 3-227
1549822-0000	.FOLDING FLAP	2-169, 2-171, 2-215, 2-217, 2-219, 2-221
1549823-0000	.FOLDING FLAP	2-169, 2-171, 2-215, 2-217, 2-219, 2-221
1549824-0000	.CARRIER RULER	2-169, 2-171
1549825-0000	.CARRIER RULER	2-215, 2-217, 2-219, 2-221
1549828-0000	.KNIFE	1-89, 1-91, 1-93, 1-95, 1-97, 1-99, 2-223
1549829-0000	.VOLUME BULGE	2-11, 2-13, 2-15, 2-21, 2-23, 2-25, 3-135
1549830-0000	.VOLUME SHIM	1-89, 1-91, 1-93, 1-95, 1-97, 1-99, 2-11, 2-13, 2-15, 2-21, 2-23, 2-25, 3-135
1549831-0000	.WEDGE	2-11, 2-13, 2-15, 2-21, 2-23, 2-25
1549832-0000	.PLUG	2-11, 2-13, 2-15
1549834-0000	.VOLUME BULGE	2-133, 2-135, 2-137, 2-191, 2-193, 2-195
1549836-0000	.VOLUME FLAP	2-11, 2-13, 2-15
1549837-0000	.VOLUME FLAP	2-21, 2-23, 2-25
1549843-0000	.VOLUME CAM	2-235, 2-237, 2-239, 2-241
1549844-0000	.FLAP	3-51, 3-53
1549846-0000	.BLOCK	3-149, 3-151
1549847-0000	.PUSHER	3-185, 3-187, 3-189, 3-191, 3-193, 3-195
1549848-0000	.PUSHER	3-185, 3-187, 3-189, 3-191, 3-193, 3-195
1549849-0000	.PLATE	3-185, 3-187, 3-189, 3-191, 3-193, 3-195
1549852-0000	.SLIDE	3-9, 3-11, 3-13, 3-15, 3-17, 3-69, 3-71
1549853-0000	.SLIDE	3-9, 3-11, 3-13, 3-15, 3-17, 3-77, 3-79
1549854-0000	.BAR	3-9, 3-11, 3-13, 3-15, 3-17, 3-69, 3-71
1549855-0000	.BAR	3-9, 3-11, 3-13, 3-15, 3-17, 3-77, 3-79
1549856-0000	.GUIDE	3-9, 3-11, 3-13, 3-15, 3-17
1549857-0000	.GUIDE	3-9, 3-11, 3-13, 3-15, 3-17
1549940-0000	.PUSHER	3-185, 3-187, 3-189, 3-191, 3-193, 3-195
1549992-0000	.HINGE FLANGE	1-157, 1-159
1549993-0000	.HINGE FLANGE	1-157, 1-159
1549994-0000	.SPACER	1-157, 1-159
1550348-0001	.BEARING	3-243, 3-253
1550595-3353	.SLIDING STRIP	3-239, 3-241
1550595-3354	.SLIDING STRIP	3-239, 3-241
1550595-4153	.SLIDING STRIP	3-239, 3-241
1550595-4154	.SLIDING STRIP	3-239, 3-241
1550595-6700	.SLIDING STRIP	3-253
1550595-7110	.SLIDING STRIP	3-253
1550743-0100	.RAIL HOLDER	3-205, 3-207, 3-209, 3-211, 3-213, 3-215
1550772-0000	.HOLDER	3-217
1550773-0000	.RAIL HOLDER	3-217
1558008-0000	.BLOCK	3-149, 3-151
1558020-0000	.ROD	3-149, 3-151
1558047-0000	.PUSHER	3-185, 3-187, 3-189, 3-191, 3-193, 3-195
1558123-0000	.VOLUME FLAP	2-21, 2-23, 2-25
1558178-0000	.PUSHER	3-185, 3-187, 3-189, 3-191, 3-193, 3-195
1558184-0000	.PLATE	3-185, 3-187, 3-189, 3-191, 3-193, 3-195
1558230-0100	.COUNTER ROLLER	3-307
1558231-0100	.KNIFE	3-307
1558246-0000	.PAPER GUIDE	3-315
1558251-0000	.SHAFT	1-151
1558252-0000	.SCREW	1-151
1558253-0000	.ROLLER	1-151
1558328-0000	.NOZZLE	3-173, 3-175, 3-177, 3-179, 3-181, 3-183
1558329-0000	.NOZZLE	3-173, 3-175, 3-177, 3-179, 3-181, 3-183
1558441-0000	.BRACKET	1-107
1558447-0000	.SPACER	3-173, 3-175, 3-177, 3-179, 3-181, 3-183
1558522-0100	.ADJUSTING ROLLER	1-109, 1-111, 1-153
1558526-0000	.SPACER	3-27, 3-29, 3-97, 3-99
1558527-0000	.SPACER	3-37, 3-39, 3-41
1558700-0000	.CARRIER	3-9, 3-11, 3-13, 3-15, 3-17
1558701-0000	.BUSHING	2-11, 2-13, 2-15, 2-21, 2-23, 2-25
1558713-0000	.SPACER SCREW	3-37, 3-39, 3-41
1558733-0000	.VOLUME BULGE	2-159, 2-161, 2-163, 2-165
1558734-0000	.VOLUME BULGE	2-133, 2-135, 2-137, 2-191, 2-193, 2-195
1558735-0000	.SPACER	3-27, 3-29, 3-37, 3-39, 3-41
1558736-0000	.SPACER	3-27, 3-29
1558737-0000	.HUB	3-129, 3-131
1558748-0000	.FLANGE	1-135, 1-137
1558749-0000	.FLANGE	1-135, 1-137
1558750-0000	.FLANGE	1-135, 1-137
1558751-0000	.FLANGE	1-135, 1-137
1558752-0000	.FLANGE	1-135, 1-137
1558754-0000	.LID	1-135, 1-137
1558755-0000	.FLANGE	1-135, 1-137
1558756-0000	.HOUSING	1-135, 1-137
1558757-0000	.NUT	1-135, 1-137
1558758-0000	.SHAFT	1-135, 1-137

Part No	Description	Page No
1558760-0000	.KNOB	1-135, 1-137
1558761-0000	.SHAFT	1-135, 1-137
1558762-0000	.LID	1-135, 1-137
1558763-0000	.SLIDER	1-135, 1-137
1558764-0000	.FLANGE	1-135, 1-137
1558765-0000	.FLANGE	1-135, 1-137
1558766-0000	.BUSHING	1-135, 1-137
1558768-0000	.WASHER	1-135, 1-137
1558817-0000	.VOLUME BULGE	2-11, 2-13, 2-15, 2-21, 2-23, 2-25
1558819-0000	.RAIL	2-133, 2-135, 2-137
1558820-0000	.RAIL	2-191, 2-193, 2-195
1558821-0000	.VOLUME BULGE	3-185, 3-187, 3-189, 3-191, 3-193, 3-195
1558830-0000	.COOLING PLATE	1-107
1558831-0000	.COOLING PLATE	1-107
1558864-0000	.CARRIER	3-9, 3-11, 3-13, 3-15, 3-17
1558889-0000	.SPACER SCREW	3-37, 3-39, 3-41
1558910-0000	.SPACER	3-27, 3-29, 3-37, 3-39, 3-41, 3-97, 3-99
1558932-0100	.TOP SECTION	3-19
1558934-0000	.GUIDE	3-21, 3-23, 3-25
1558935-0100	.TOP RAIL	3-19
1558940-0200	.FLAP GUIDE	3-19
1558941-0000	.RAIL	3-201, 3-203
1566708-0000	.INDUCTOR	3-359
1566783-0000	.INDUCTOR	1-89, 1-91, 1-93, 1-95, 1-97, 1-99, 2-133, 2-135, 2-137, 2-191, 2-193, 2-195
1566843-0000	.INDUCTOR	1-89, 1-91, 1-93, 1-95, 1-97, 1-99, 2-133, 2-135, 2-137, 2-191, 2-193, 2-195
1566845-0002	.DOLLY	1-89, 1-91, 1-93, 1-95, 1-97, 1-99, 2-159, 2-161, 2-163, 2-165
2500071-0000	.O-RING	1-9, 1-11, 1-13, 1-15
2500078-0000	.BODY	1-17
2500081-0000	.ELBOW PIPE	1-89, 1-91, 1-93, 1-95, 1-97, 1-99
2500082-0000	.MOUNTING PLATE	1-9, 1-11, 1-13, 1-15
2500097-0000	.KNIFE SUPPORT	3-311
2500591-0000	.VOLUME BULGE	2-133, 2-135, 2-137, 2-191, 2-193, 2-195
2501310-0100	.FILLING PIPE	1-3, 1-5, 1-7
2501612-0000	.NOZZLE	3-173, 3-175, 3-177, 3-179, 3-181, 3-183
2501815-0000	.PIN	3-349
2501851-0000	.CURVE	2-235, 2-237, 2-239, 2-241
2503481-0000	.GUIDE	3-321
2503483-0000	.BRACKET	3-321
2503688-0000	.VOLUME BULGE	2-133, 2-135, 2-137, 2-191, 2-193, 2-195
2503689-0000	.VOLUME BULGE	2-159, 2-161, 2-163, 2-165
2503699-0000	.VOLUME BULGE	2-159, 2-161, 2-163, 2-165
2503700-0000	.VOLUME BULGE	2-133, 2-135, 2-137, 2-191, 2-193, 2-195
2506560-0000	.SUPPORT	3-317, 3-319
2506561-0000	.SUPPORT	3-317, 3-319
2506563-0000	.SHAFT	3-331
2506564-0000	.GUIDE FORK	3-331
2506565-0000	.BRACKET	3-331
2506566-0100	.BOBBIN HOLDER	3-323, 3-325, 3-327
2507048-0000	.GASKET	1-9, 1-11, 1-13, 1-15
2507059-0300	.REGULATING VALVE	1-3, 1-5, 1-7
2507076-0000	.FOLDING FLAP	2-169, 2-171, 2-215, 2-217, 2-219, 2-221
2507077-0000	.FOLDING FLAP	2-169, 2-171, 2-215, 2-217, 2-219, 2-221
2507085-0000	.FOLDING FLAP	2-169, 2-171, 2-215, 2-217, 2-219, 2-221
2507086-0000	.FOLDING FLAP	2-169, 2-171, 2-215, 2-217, 2-219, 2-221
2507092-0000	.FOLDING FLAP	2-169, 2-171, 2-215, 2-217, 2-219, 2-221
2507093-0000	.FOLDING FLAP	2-169, 2-171, 2-215, 2-217, 2-219, 2-221
2507096-0000	.FOLDING FLAP	2-169, 2-171, 2-215, 2-217, 2-219, 2-221
2507097-0000	.FOLDING FLAP	2-169, 2-171, 2-215, 2-217, 2-219, 2-221
2508205-0001	.BRACKET	3-403
2508205-0002	.BRACKET	3-403
2508205-0003	.BRACKET	3-403
2508205-0005	.BRACKET	3-403
2508205-0006	.BRACKET	3-403
2508205-0007	.BRACKET	3-403
2508205-0008	.BRACKET	3-403
2508205-0009	.BRACKET	3-403
2508205-0010	.BRACKET	3-403
2508205-0012	.BRACKET	3-403
2508292-0000	.BUSHING	1-71, 1-73, 1-75
2508297-0000	.WASHER	1-71, 1-73, 1-75
2508309-0000	.PLATE	1-71, 1-73, 1-75
2508311-0000	.PLATE	1-71, 1-73, 1-75
2509674-0000	.BRACKET	1-119, 1-121
2509681-0000	.RAIL	1-119, 1-121
2509935-0000	.SPACER	3-37, 3-39, 3-41
2509936-0000	.SPACER SCREW	3-37, 3-39, 3-41
2509937-0000	.SPACER	3-37, 3-39, 3-41
2509938-0000	.BOTTOM	3-51, 3-53
2511271-0001	.SHAFT	3-335
2511291-0100	.PATCH FEEDER	3-281, 3-283, 3-285
2511307-0100	.TURNING DEVICE	3-317, 3-319
2511313-0000	.BRACKET	3-301
2511314-0000	.BRACKET	3-315
2511316-0000	.PIN	3-331

Part No	Description	Page No
2511317-0000	.NUT	3-331
2511638-0000	.OPENING SPECIFICATION	3-387
2511639-0000	.DIE	3-349
2511640-0000	.SEALING PLATE	3-355
2511642-0000	.SEALING PLATE	3-355
2511644-0000	.PUNCH	3-349
2511651-0000	.SEALING PLATE	3-357
2512737-0000	.ROLLER	1-41, 1-43, 1-45, 1-47
2512738-0000	.ROLLER	1-41, 1-43, 1-45, 1-47
2512740-0000	.ROLLER	1-41, 1-43, 1-45, 1-47
2512741-0000	.ROLLER	1-41, 1-43, 1-45, 1-47
2512742-0000	.ROLLER	1-41, 1-43, 1-45, 1-47
2512746-0000	.ROLLER	1-59, 1-61, 1-63
2512748-0000	.ROLLER	1-59, 1-61, 1-63
2512749-0000	.ROLLER	1-59, 1-61, 1-63
2512779-0000	.RING	1-23, 1-25
2512780-0100	.SEAL	1-3, 1-5, 1-7
2512829-0000	.PNEUMATIC DIAGRAM	4-31
2512836-0000	.STOP SCREW	3-303
2512936-0100	.CLEANING CUP	1-3, 1-5, 1-7
2513013-0000	.SHAFT	2-133, 2-135, 2-137, 2-159, 2-161, 2-163, 2-165, 2-191, 2-193, 2-195
2513014-0000	.CUTTING JAW	2-159, 2-161, 2-163, 2-165
2513015-0000	.HOLDER	2-133, 2-135, 2-137, 2-191, 2-193, 2-195
2514029-0000	.OPENING SPECIFICATION	3-387
2514030-0000	.OPENING SPECIFICATION	3-387
2514032-0000	.OPENING SPECIFICATION	3-387
2514045-0000	.CARRIER	2-119, 2-121, 2-123, 2-125
2514047-0000	.CARRIER	2-179, 2-181, 2-183, 2-185
2514048-0200	.CARRIER PRESSURE LEFT	2-9
2514049-0000	.CARRIER	2-119, 2-121, 2-123, 2-125
2514050-0200	.CARRIER PRESSURE RIGHT	2-9
2514051-0000	.CARRIER	2-179, 2-181, 2-183, 2-185
2514514-0000	.INDUCTOR	1-71, 1-73, 1-75
2514521-0000	.ROLLER	1-59, 1-61, 1-63
2514522-0000	.INDUCTOR	1-71, 1-73, 1-75
2517967-0000	.EXTENSION	3-173, 3-175, 3-177, 3-179, 3-181, 3-183
2518035-0000	.FLAP	3-129, 3-131
2518098-0000	.COUNTER ROLLER	1-31, 1-33
2518129-0000	.GUIDE	3-69, 3-71
2518130-0000	.GUIDE	3-77, 3-79
2520160-0000	.CLAMP	3-61, 3-63, 3-65
2520168-0000	.SLIDE	3-137, 3-139, 3-141
2520170-0000	.FLAP	3-137, 3-139, 3-141
2520172-0000	.FOLDING PART	3-107, 3-109, 3-111
2520175-0000	.FOLDING PART	3-107, 3-109, 3-111
2520178-0000	.GUIDE	3-97, 3-99
2520179-0000	.GUIDE	3-97, 3-99
2520470-0000	.CARRIER RULER	2-169, 2-171
2520471-0000	.CARRIER RULER	2-215, 2-217, 2-219, 2-221
2520472-0000	.VOLUME FLAP	2-21, 2-23, 2-25
2520473-0000	.VOLUME BULGE	2-11, 2-13, 2-15, 2-21, 2-23, 2-25
2520474-0000	.VOLUME SHIM	2-11, 2-13, 2-15, 2-21, 2-23, 2-25
2522129-0100	.INFEED CONVEYOR VARIANT	3-5
2522166-0000	.GUIDE	3-69, 3-71
2522167-0000	.GUIDE	3-77, 3-79
2522196-0000	.SPACER	3-173, 3-175, 3-177, 3-179, 3-181, 3-183
2522197-0000	.PLATE	3-185, 3-187, 3-189, 3-191, 3-193, 3-195
2522199-0000	.BLOCK	3-149, 3-151
2522201-0000	.FLAP	3-129, 3-131
2522202-0000	.SPACER	3-7, 3-55, 3-57, 3-59
2522213-0004	.SHAFT	1-41, 1-43, 1-45, 1-47, 1-59, 1-61, 1-63
2522213-0005	.SHAFT	1-59, 1-61, 1-63
2522213-0006	.SHAFT	1-31, 1-33, 1-59, 1-61, 1-63, 1-67, 1-69
2522213-0007	.SHAFT	1-41, 1-43, 1-45, 1-47, 1-67, 1-69
2522213-0008	.SHAFT	1-59, 1-61, 1-63
2522213-0009	.SHAFT	1-59, 1-61, 1-63
2522213-0010	.SHAFT	1-59, 1-61, 1-63
2522213-0015	.SHAFT	1-41, 1-43, 1-45, 1-47, 1-177, 1-179, 1-181
2522213-0016	.SHAFT	1-179, 1-181
2522213-0017	.SHAFT	1-179, 1-181
2522213-0019	.SHAFT	1-59, 1-61, 1-63
2522213-0020	.SHAFT	1-59, 1-61, 1-63
2523268-0000	.SHAFT	1-9, 1-11, 1-13, 1-15, 1-89, 1-91, 1-93, 1-95, 1-97, 1-99
2523480-0000	.SLIDE	3-205, 3-207, 3-209, 3-211, 3-213, 3-215
2523766-0001	.BRACKET	3-403
2523766-0002	.BRACKET	3-403
2523766-0003	.BRACKET	3-403
2523766-0005	.BRACKET	3-403
2523766-0006	.BRACKET	3-403
2523766-0007	.BRACKET	3-403
2523766-0008	.BRACKET	3-403
2523766-0009	.BRACKET	3-403
2523766-0010	.BRACKET	3-403
2523766-0012	.BRACKET	3-403

Part No	Description	Page No
2523811-0100	.WHEEL	3-5
2523812-0100	.FLAP	3-129, 3-131
2524339-0000	.NOZZLE	3-173, 3-175, 3-177, 3-179, 3-181, 3-183
2524388-0000	.VOLUME FLAP	2-11, 2-13, 2-15
2524512-0000	.PUSHER	3-185, 3-187, 3-189, 3-191, 3-193, 3-195
2524600-0100	.PRESSURE ROLLER	1-139, 1-163
2524601-0000	.AXLE PIN	1-141, 1-143
2524602-0000	.HANDLE	1-141, 1-143
2524603-0000	.HOLDER	1-141, 1-143
2524604-0000	.ROCKER ARM	1-141, 1-143
2525289-0000	.DIE	3-349
2525290-0000	.PUNCH	3-349
2525292-0000	.SEALING PLATE	3-357
2525349-0000	.BRACKET	3-339
2525350-0000	.BRACKET	3-337
2525351-0000	.HINGE	3-337
2525358-0100	.HINGE	3-323, 3-325, 3-327
2525360-0000	.LOCKING FINGER	3-339
2525366-0100	.SPLICING TABLE	3-323, 3-325, 3-327
2525368-0000	.PUSHER	3-339
2525370-0100	.SEALING UNIT	3-301
2525371-0000	.PHOTOCELL BRACKET	3-335
2525373-0000	.WHEEL	3-323, 3-325, 3-327
2525377-0000	.NUT	3-303
2525378-0000	.PAPER GUIDE	3-281, 3-283, 3-285
2525381-0000	.FASTENING BRACKET	3-315
2525382-0000	.BRACKET	3-317, 3-319
2526249-0000	.ROLLER	3-185, 3-187, 3-189, 3-191, 3-193, 3-195
2526546-0000	.OPENING SPECIFICATION	3-387
2526551-0000	.SEALING PLATE	3-355
2526563-0000	.HANDLE	3-135, 3-137, 3-139, 3-141
2526567-0000	.CYLINDER	3-135, 3-137, 3-139, 3-141
2526575-0000	.FOLDING BAR	3-97, 3-99
2526578-0000	.GUIDE	3-69, 3-71
2526579-0000	.GUIDE	3-77, 3-79
2526700-0000	.SPRING	3-303
2526810-0000	.HOLDER	2-159, 2-161, 2-163, 2-165
2526811-0000	.HOLDER	2-133, 2-135, 2-137, 2-191, 2-193, 2-195
2526812-0000	.SHAFT	2-133, 2-135, 2-137, 2-159, 2-161, 2-163, 2-165, 2-191, 2-193, 2-195
2526825-0000	.WASHER	1-31, 1-33, 1-41, 1-43, 1-45, 1-47
2526826-0000	.BUSHING	1-31, 1-33, 1-41, 1-43, 1-45, 1-47
2526827-0000	.SHAFT	1-31, 1-33, 1-41, 1-43, 1-45, 1-47
2527371-0000	.INSERT	4-11
2527509-0000	.PNEUMATIC DIAGRAM	4-31
2527529-0000	.GUIDE UPPER L	3-27, 3-29
2527530-0000	.GUIDE UPPER R	3-27, 3-29
2527531-0000	.TIE ROD	3-157, 3-159
2527703-0100	.GUIDE	3-61, 3-63, 3-65
2527703-0101	.GUIDE	4-33, 4-35
2527703-0102	.GUIDE	4-33, 4-35
2527703-0103	.GUIDE	4-33, 4-35
2527703-0104	.GUIDE	4-33, 4-35
2527703-0105	.GUIDE	4-33, 4-35
2527703-0108	.GUIDE	4-33, 4-35
2527703-0109	.GUIDE	4-33, 4-35
2527703-0110	.GUIDE	4-33, 4-35
2527703-0111	.GUIDE	4-33, 4-35
2527703-0120	.GUIDE	4-33, 4-35
2527703-0121	.GUIDE	4-33, 4-35
2527703-0125	.GUIDE	4-33, 4-35
2527703-0126	.GUIDE	4-33, 4-35
2527703-0127	.GUIDE	4-33, 4-35
2527703-0128	.GUIDE	4-33, 4-35
2527703-0129	.GUIDE	4-33, 4-35
2527703-0130	.GUIDE	4-33, 4-35
2527704-0100	.GUIDE	3-61, 3-63, 3-65
2527704-0101	.GUIDE	4-33, 4-35
2527704-0102	.GUIDE	4-33, 4-35
2527704-0103	.GUIDE	4-33, 4-35
2527704-0104	.GUIDE	4-33, 4-35
2527704-0105	.GUIDE	4-33, 4-35
2527704-0108	.GUIDE	4-33, 4-35
2527704-0109	.GUIDE	4-33, 4-35
2527704-0110	.GUIDE	4-33, 4-35
2527704-0111	.GUIDE	4-33, 4-35
2527704-0120	.GUIDE	4-33, 4-35
2527704-0121	.GUIDE	4-33, 4-35
2527704-0125	.GUIDE	4-33, 4-35
2527704-0126	.GUIDE	4-33, 4-35
2527704-0127	.GUIDE	4-33, 4-35
2527704-0128	.GUIDE	4-33, 4-35
2527704-0129	.GUIDE	4-33, 4-35
2527704-0130	.GUIDE	4-33, 4-35
2527725-0000	.CATCH	2-31, 2-33, 2-43, 2-45

Part No	Description	Page No
2527792-0000	.SUPPORT	3-61, 3-63, 3-65, 3-259, 3-261, 3-267
2527793-0000	.SHAFT	3-61, 3-63, 3-65, 3-259, 3-261, 3-267
2528073-0000	.LID	1-135, 1-137
2528096-0000	.RING	1-23, 1-25
2528097-0000	.PLATE	1-23, 1-25
2528112-0000	.BRACKET	1-169, 1-171
2528113-0000	.BRACKET	1-169, 1-171
2528114-0000	.COVER PLATE	1-169, 1-171
2528118-0001	.LOCK PLATE	1-41, 1-43, 1-45, 1-47
2528118-0002	.LOCK PLATE	1-41, 1-43, 1-45, 1-47
2528118-0003	.LOCK PLATE	1-31, 1-33, 1-41, 1-43, 1-45, 1-47
2528118-0004	.LOCK PLATE	1-31, 1-33, 1-41, 1-43, 1-45, 1-47
2528118-0005	.LOCK PLATE	1-31, 1-33, 1-41, 1-43, 1-45, 1-47
2528119-0001	.LOCK PLATE	1-41, 1-43, 1-45, 1-47
2528119-0002	.LOCK PLATE	1-41, 1-43, 1-45, 1-47
2528119-0003	.LOCK PLATE	1-31, 1-33, 1-41, 1-43, 1-45, 1-47
2528119-0004	.LOCK PLATE	1-31, 1-33, 1-41, 1-43, 1-45, 1-47
2528119-0005	.LOCK PLATE	1-31, 1-33, 1-41, 1-43, 1-45, 1-47
2528123-0001	.LOCK PLATE	1-41, 1-43, 1-45, 1-47, 1-59, 1-61, 1-63
2528123-0002	.LOCK PLATE	1-31, 1-33, 1-41, 1-43, 1-45, 1-47, 1-59, 1-61, 1-63
2528123-0003	.LOCK PLATE	1-31, 1-33, 1-41, 1-43, 1-45, 1-47
2528123-0004	.LOCK PLATE	1-31, 1-33, 1-41, 1-43, 1-45, 1-47
2528123-0005	.LOCK PLATE	1-41, 1-43, 1-45, 1-47
2528123-0006	.LOCK PLATE	1-179, 1-181
2528123-0007	.LOCK PLATE	1-59, 1-61, 1-63
2528123-0008	.LOCK PLATE	1-41, 1-43, 1-45, 1-47, 1-59, 1-61, 1-63
2528123-0009	.LOCK PLATE	1-179, 1-181
2528135-0000	.SHAFT	1-109, 1-111
2528136-0000	.SQUEE-GEE ROLLER	1-113, 1-115, 1-125, 1-127, 1-129, 1-131, 1-133
2528144-0000	.FRAME	1-159
2528145-0150	.DOOR	1-153
2529217-0000	.RAIL	3-107, 3-109, 3-111
2529219-0000	.RAIL	3-107, 3-109, 3-111
2529232-0000	.FOLDING BAR	3-107, 3-109, 3-111
2529240-0000	.FOLDING BAR	3-107, 3-109, 3-111
2529277-0000	.BAR	3-69, 3-71
2529278-0000	.BAR	3-77, 3-79
2529279-0000	.PLATE	3-69, 3-71, 3-77, 3-79
2529289-0000	.PUSHER	3-185, 3-187, 3-189, 3-191, 3-193, 3-195
2529416-0000	.SHAFT	1-9, 1-11, 1-13, 1-15, 1-89, 1-91, 1-93, 1-95, 1-97, 1-99
2529417-0000	.SHAFT	1-9, 1-11, 1-13, 1-15, 1-89, 1-91, 1-93, 1-95, 1-97, 1-99
2529418-0000	.SHAFT	1-9, 1-11, 1-13, 1-15, 1-89, 1-91, 1-93, 1-95, 1-97, 1-99
2529419-0000	.SHAFT	1-9, 1-11, 1-13, 1-15, 1-89, 1-91, 1-93, 1-95, 1-97, 1-99
2529420-0000	.SHAFT	1-9, 1-11, 1-13, 1-15, 1-89, 1-91, 1-93, 1-95, 1-97, 1-99
2529547-0100	.PAPER GUIDE	1-139, 1-163
2529549-0000	.PLATE	1-141, 1-143
2529603-0000	.GUIDE	3-9, 3-11, 3-13, 3-15, 3-17
2529604-0000	.GUIDE	3-9, 3-11, 3-13, 3-15, 3-17
2529605-0000	.SLIDE	3-9, 3-11, 3-13, 3-15, 3-17, 3-69, 3-71
2529606-0000	.SLIDE	3-9, 3-11, 3-13, 3-15, 3-17, 3-77, 3-79
2529607-0000	.BAR	3-9, 3-11, 3-13, 3-15, 3-17, 3-77, 3-79
2529608-0000	.BAR	3-9, 3-11, 3-13, 3-15, 3-17, 3-69, 3-71
2529609-0000	.GUIDE	3-9, 3-11, 3-13, 3-15, 3-17
2529610-0000	.GUIDE	3-9, 3-11, 3-13, 3-15, 3-17
2529664-0000	.CARRIER	3-223, 3-225, 3-227
2529671-0000	.FOLDING DEVICE	3-157, 3-159, 3-169
2529672-0000	.FOLDING DEVICE	3-157, 3-159, 3-171
2529673-0000	.SUPPORT	3-157, 3-159
2529674-0000	.SUPPORT	3-157, 3-159
2529675-0000	.LEVER	3-157, 3-159
2529676-0000	.LEVER	3-157, 3-159
2529750-0000	.COVERING PANEL	1-89, 1-91, 1-93, 1-95, 1-97, 1-99
2529785-0000	.KNOB	3-55, 3-57, 3-59, 3-61, 3-63, 3-65
2529786-0000	.KNOB	3-61, 3-63, 3-65
2529909-0000	.FOLDING BAR	3-37, 3-39, 3-41
2529910-0000	.FOLDING BAR	3-37, 3-39, 3-41
2530124-0000	.ROLLER	2-247, 2-249
2530201-0000	.SPACER SCREW	3-37, 3-39, 3-41
2530256-0000	.VOLUME FLAP	2-11, 2-13, 2-15
2530257-0000	.VOLUME FLAP	2-21, 2-23, 2-25
2530292-0000	.BRACKET	2-119, 2-121, 2-123, 2-125, 2-179, 2-181, 2-183, 2-185
2530293-0000	.BRACKET	2-119, 2-121, 2-123, 2-125, 2-179, 2-181, 2-183, 2-185
2530296-0000	.ROLLER	2-119, 2-121, 2-123, 2-125, 2-179, 2-181, 2-183, 2-185
2530313-0000	.BUSHING	2-11, 2-13, 2-15, 2-21, 2-23, 2-25, 2-55, 2-57, 2-59, 2-61, 2-63, 2-69, 2-71, 2-73, 2-75, 2-77
2530418-0000	.SPRING	3-61, 3-63, 3-65, 3-235, 3-259, 3-261, 3-267
2530508-0000	.TIE ROD	2-147, 2-149, 2-203, 2-205
2531038-0000	.FRAME	1-157
2531039-0150	.DOOR	1-153
2531040-0000	.GASKET	1-157, 1-159
2531042-0100	.UPPER SECTION	1-109, 1-111
2531043-0100	.HOUSING	1-153
2531044-0000	.BOX FRAME	1-155
2531060-0000	.BRACKET	1-71, 1-73, 1-75

Part No	Description	Page No
2531114-0000	.CARRIER	2-147, 2-149
2531703-0000	.BUSHING	2-133, 2-135, 2-137, 2-159, 2-161, 2-163, 2-165, 2-191, 2-193, 2-195
2532531-0000	.ROLLER	2-119, 2-121, 2-123, 2-125, 2-179, 2-181, 2-183, 2-185
2532580-0000	.HATCH	3-223, 3-225, 3-227
2532837-0000	.TUBE FLUSHING DEVICE	2-251
2532838-0000	.TUBE FLUSHING DEVICE	2-251
2532864-0000	.BRACKET	3-205, 3-207, 3-209, 3-211, 3-213, 3-215
2532895-0001	.LOCK PLATE	1-59, 1-61, 1-63
2532895-0002	.LOCK PLATE	1-59, 1-61, 1-63
2532895-0003	.LOCK PLATE	1-59, 1-61, 1-63, 1-67, 1-69
2532895-0004	.LOCK PLATE	1-59, 1-61, 1-63, 1-179, 1-181
2532895-0005	.LOCK PLATE	1-67, 1-69
2532895-0006	.LOCK PLATE	1-59, 1-61, 1-63
2532895-0008	.LOCK PLATE	1-179, 1-181
2532895-0009	.LOCK PLATE	1-67, 1-69
2532898-0000	.BRACKET	1-71, 1-73, 1-75
2532899-0000	.BRACKET	1-71, 1-73, 1-75
2532911-0000	.ROLLER	1-109, 1-111
2532912-0001	.LOCK PLATE	1-59, 1-61, 1-63
2532912-0002	.LOCK PLATE	1-59, 1-61, 1-63
2532914-0000	.SPACER	1-41, 1-43, 1-45, 1-47
2532915-0000	.WASHER	1-119, 1-121
2532916-0000	.AIR GUIDE	1-119, 1-121
2532918-0000	.HOLDER	1-119, 1-121
2532919-0000	.PLATE	1-119, 1-121
2532922-0000	.PLATE	1-119, 1-121
2532925-0000	.INDUCTOR	1-71, 1-73, 1-75
2532934-0100	.AIR KNIFE	1-109, 1-111
2532938-0000	.INDUCTOR	1-71, 1-73, 1-75
2532963-0000	.DEFLECTOR	1-155
2532964-0000	.DEFLECTOR	1-155
2532965-0000	.ROLLER	1-41, 1-43, 1-45, 1-47
2532969-0000	.SHAFT	1-113, 1-115
2532979-0000	.SPACER	1-107
2532983-0000	.FLANGE	1-125, 1-127, 1-129, 1-131, 1-133
2532984-0000	.FLANGE	1-125, 1-127, 1-129, 1-131, 1-133
2533680-0000	.SHIM	3-301
2533681-0100	.BOBBIN HOLDER	3-281, 3-283, 3-285
2533682-0100	.BOBBIN HOLDER	3-281, 3-283, 3-285
2533683-0100	.SPLICING TABLE	3-339
2533684-0100	.SPLICING TABLE	3-281, 3-283, 3-285
2533685-0100	.SPLICING TABLE	3-281, 3-283, 3-285
2533715-0000	.SEALING PLATE	3-361
2533736-0000	.SLEEVE	2-235, 2-237, 2-239, 2-241
2533737-0000	.RAIL BRACKET	2-235, 2-237, 2-239, 2-241
2533740-0000	.RAIL BRACKET	2-235, 2-237, 2-239, 2-241
2533741-0000	.RAIL BRACKET	2-235, 2-237, 2-239, 2-241
2533742-0000	.RAIL BRACKET	2-235, 2-237, 2-239, 2-241
2533744-0000	.RAIL BRACKET	2-235, 2-237, 2-239, 2-241
2533745-0000	.RAIL BRACKET	2-235, 2-237, 2-239, 2-241
2533747-0000	.RAIL BRACKET	2-235, 2-237, 2-239, 2-241
2535441-0000	.LEVER	2-263
2535442-0000	.PIVOT PIN	2-263
2535443-0000	.PIVOT PIN	2-235, 2-237, 2-239, 2-241
2535461-0000	.CONNECTING ROD	2-263
2535538-0200	.FRAME	4-5
2536026-0000	.CARRIER	2-203, 2-205
2537128-0100	.DROP CHUTE VARIANT	3-5
2537129-0000	.SPACER	3-55, 3-57, 3-59
2538110-0000	.RAIL	3-205, 3-207, 3-209, 3-211, 3-213, 3-215
2539277-0000	.SHIM	3-129, 3-131
2540593-0000	.CAM	3-223, 3-225, 3-227
2540594-0000	.CAM	3-223, 3-225, 3-227
2540609-0000	.KNOB	3-55, 3-57, 3-59
2540612-0000	.PLATE	3-61, 3-63, 3-65, 3-259, 3-261, 3-267
2540823-0000	.BRACKET	3-271, 3-273
2541125-0000	.SCREW	3-27, 3-29, 3-97, 3-99
2541633-0000	.FLANGE	1-125, 1-127, 1-129, 1-131, 1-133
2541634-0100	.EDGE ROLLER	1-3, 1-5, 1-7
2541635-0100	.SQUEE-GEE ROLLER	1-109, 1-111
2541637-0000	.SHAFT	1-125, 1-127, 1-129, 1-131, 1-133
2541639-0000	.LID	1-125, 1-127, 1-129, 1-131, 1-133
2541640-0000	.FLANGE	1-125, 1-127, 1-129, 1-131, 1-133
2541641-0000	.FLANGE	1-125, 1-127, 1-129, 1-131, 1-133
2541643-0000	.FLANGE	1-113, 1-115
2541647-0000	.LID	1-125, 1-127, 1-129, 1-131, 1-133
2541648-0000	.LID	1-125, 1-127, 1-129, 1-131, 1-133
2541651-0000	.PLATE	1-157, 1-159
2541664-0000	.COVER	1-107
2541681-0000	.WASHER	1-113, 1-115
2541682-0000	.BUSHING	1-113, 1-115
2541714-0100	.DROP CHUTE CRADLE	3-235
2541877-0000	.NAIL	3-185, 3-187, 3-189, 3-191, 3-193, 3-195
2541878-0000	.WASHER	3-185, 3-187, 3-189, 3-191, 3-193, 3-195

Part No	Description	Page No
2543231-0000	.CARRIER	3-223, 3-225, 3-227
2543240-0000	.SPACER	3-173, 3-175, 3-177, 3-179, 3-181, 3-183
2543242-0000	.ANGLE BLOCK	3-9, 3-11, 3-13, 3-15, 3-17, 3-69, 3-71, 3-77, 3-79
2543480-0100	.FOLDING PART	3-5
2543481-0100	.TOP SECTION	3-85
2543482-0100	.TOP RAIL	3-85
2544339-0100	.FRAME	4-5
2544342-0000	.BRACKET	3-107, 3-109, 3-111
2544881-0000	.ROLLER	1-59, 1-61, 1-63
2544882-0000	.COUNTER ROLLER	1-31, 1-33
2544883-0000	.PLATE	1-113, 1-115
2544884-0000	.PLATE	1-113, 1-115
2544885-0000	.ARM	1-113, 1-115
2544886-0000	.ARM	1-113, 1-115
2544897-0000	.BRACKET	1-71, 1-73, 1-75
2544898-0000	.SHAFT	1-71, 1-73, 1-75
2544990-0000	.VOLUME FLAP	2-11, 2-13, 2-15
2544991-0000	.VOLUME FLAP	2-21, 2-23, 2-25
2544992-0000	.VOLUME BULGE	2-11, 2-13, 2-15, 2-21, 2-23, 2-25
2544993-0000	.VOLUME SHIM	2-11, 2-13, 2-15, 2-21, 2-23, 2-25
2544995-0000	.GUIDE	3-9, 3-11, 3-13, 3-15, 3-17
2544996-0000	.GUIDE	3-9, 3-11, 3-13, 3-15, 3-17
2544997-0000	.SLIDE	3-9, 3-11, 3-13, 3-15, 3-17, 3-69, 3-71
2544998-0000	.SLIDE	3-9, 3-11, 3-13, 3-15, 3-17, 3-77, 3-79
2544999-0000	.BAR	3-9, 3-11, 3-13, 3-15, 3-17, 3-77, 3-79
2545000-0000	.BAR	3-9, 3-11, 3-13, 3-15, 3-17, 3-69, 3-71
2545006-0000	.SPACER	3-173, 3-175, 3-177, 3-179, 3-181, 3-183
2545135-0000	.SPACER	3-173, 3-175, 3-177, 3-179, 3-181, 3-183
2545236-0000	.NOZZLE	3-173, 3-175, 3-177, 3-179, 3-181, 3-183
2545239-0100	.ELECTRIC MATERIALS	3-345
2545245-0000	.BUSHING	3-223, 3-225, 3-227
2545433-0000	.SPACER	3-173, 3-175, 3-177, 3-179, 3-181, 3-183
2545537-0000	.SPACER	3-173, 3-175, 3-177, 3-179, 3-181, 3-183
2545545-0000	.INSERT	3-9, 3-11, 3-13, 3-15, 3-17
2546229-0100	.ADAPTION TRANSFORMER	2-127, 2-129, 2-187, 2-189
2546271-0100	.TAB C'JAW	3-281, 3-283, 3-285
2546275-0100	.TAB FEEDER	3-281, 3-283, 3-285
2546278-0100	.PUNCH UNIT	3-281, 3-283, 3-285
2546281-0000	.SLIDE	3-307
2546285-0100	.PATCH C'JAW	3-281, 3-283, 3-285
2546293-0000	.SEALING PLATE	3-361
2546294-0100	.OUTER PATCH C'JAW	3-295
2546295-0100	.SEALING UNIT	3-293
2546296-0100	.OUTER PATCH C'JAW	3-293
2546297-0100	.OUTER PATCH FEEDER	3-281, 3-283, 3-285, 3-301
2546299-0100	.OUTER PATCH FEEDER	3-301
2546300-0100	.OUTER PATCH FEEDER	3-293
2546301-0200	.MOUNTING BRACKET	3-293
2546302-0200	.OUTER PATCH APPLICATOR	3-281, 3-283, 3-285
2546303-0000	.SEALING PLATE	3-297
2546474-0000	.INDUCTOR	1-89, 1-91, 1-93, 1-95, 1-97, 1-99, 2-133, 2-135, 2-137, 2-191, 2-193, 2-195
2546475-0000	.RAIL	2-133, 2-135, 2-137
2546476-0000	.RAIL	2-191, 2-193, 2-195
2547010-0000	.BRACKET	2-11, 2-13, 2-15, 2-21, 2-23, 2-25
2547011-0000	.VOLUME FLAP	2-11, 2-13, 2-15
2547012-0000	.VOLUME FLAP	2-21, 2-23, 2-25
2547187-0000	.PLATE	3-263
2547376-0200	.KNOB	1-71, 1-73, 1-75
2547377-0000	.WASHER	1-71, 1-73, 1-75
2547388-0000	.AXLE PIN	1-71, 1-73, 1-75
2547398-0000	.LID	1-161
2547399-0000	.LID	1-161
2547404-0000	.BRACKET	1-71, 1-73, 1-75
2547405-0000	.BRACKET	1-71, 1-73, 1-75
2547406-0000	.ROLLER	1-113, 1-115, 1-125, 1-127, 1-129, 1-131, 1-133
2547407-0000	.PIPE	1-109, 1-111
2547420-0100	.EDGE ROLLER	1-3, 1-5, 1-7
2547421-0100	.FORMING RING	1-3, 1-5, 1-7
2547422-0200	.UPPER FORMING RING	1-3, 1-5, 1-7
2547588-0000	.SPRING	2-119, 2-121, 2-123, 2-125, 2-179, 2-181, 2-183, 2-185
2547589-0000	.SPRING	2-119, 2-121, 2-123, 2-125, 2-179, 2-181, 2-183, 2-185
2550211-0000	.VOLUME BULGE	3-51, 3-53
2550891-0000	.BENDING ROLLER	1-135, 1-137
2550893-0000	.BENDING ROLLER	1-135, 1-137
2551120-0000	.CARRIER	3-9, 3-11, 3-13, 3-15, 3-17
2552003-0100	.FORMING UNIT	2-3
2552005-0100	.PRESSURE JAW	2-127, 2-129, 2-187, 2-189
2552006-0100	.INDUCTOR LEFT	2-127, 2-129
2552007-0100	.INDUCTOR RIGHT	2-187, 2-189
2552008-0200	.CUTTING JAW	2-157, 2-213
2552009-0100	.FOLDING FLAP LEFT	2-157
2552010-0200	.PISTON	2-157, 2-213
2552011-0100	.FOLDING FLAP RIGHT	2-213
2552018-0000	.CARRIER	3-223, 3-225, 3-227

Part No	Description	Page No
2552022-0000	.GUIDE	3-21, 3-23, 3-25, 3-87, 3-89
2552140-0000	.BRACKET	1-179, 1-181
2552141-0000	.BRACKET	1-179, 1-181
2552142-0000	.BRACKET	1-179, 1-181
2552143-0000	.BRACKET	1-179, 1-181
2552144-0000	.ROLL	1-179, 1-181
2552155-0000	.ROLL	1-179, 1-181
2552158-0000	.SCREW	1-179, 1-181
2552160-0000	.SUPPORT RING	1-59, 1-61, 1-63
2552161-0000	.SUPPORT RING	1-59, 1-61, 1-63
2552176-0001	.LOCK PLATE	1-59, 1-61, 1-63
2552176-0003	.LOCK PLATE	1-59, 1-61, 1-63
2552177-0001	.LOCK PLATE	1-59, 1-61, 1-63
2552177-0003	.LOCK PLATE	1-59, 1-61, 1-63
2552187-0000	.ROLLER	1-59, 1-61, 1-63
2552188-0000	.ROLLER	1-59, 1-61, 1-63
2552205-0000	.ROLLER	1-59, 1-61, 1-63
2552206-0000	.ROLLER	1-59, 1-61, 1-63
2552445-0000	.SUPPORT	3-257
2552655-0000	.ROLLER	1-23, 1-25
2552656-0000	.ROLLER	1-23, 1-25
2553284-0000	.BLOCK	3-21, 3-23, 3-25, 3-87, 3-89
2553315-0100	.BOBBIN HOLDER	3-331
2553327-0000	.PLATE	3-281, 3-283, 3-285
2553338-0000	.PROTECTION	3-323, 3-325, 3-327
2553343-0000	.SUPPORT	3-157, 3-159
2553344-0000	.SUPPORT	3-157, 3-159
2553345-0000	.TIE ROD	3-157, 3-159
2553346-0000	.AXLE LINK	3-157, 3-159
2553347-0000	.FOLDING BAR	3-37, 3-39, 3-41
2553348-0000	.FOLDING BAR	3-37, 3-39, 3-41
2553615-0000	.FLAP	3-137, 3-139, 3-141
2553617-0000	.SLIDE	3-137, 3-139, 3-141
2555082-0000	.SPACER SCREW	3-97, 3-99, 3-107, 3-109, 3-111
2555394-0150	.START-UP KIT	1-3, 1-5, 1-7
2555404-0000	.FLAP	3-51, 3-53
2555613-0000	.BUSHING	1-135, 1-137
2555614-0000	.BRACKET	1-71, 1-73, 1-75
2555615-0000	.BRACKET	1-71, 1-73, 1-75
2555616-0000	.ROLLER	1-71, 1-73, 1-75
2555617-0000	.PIN	1-71, 1-73, 1-75
2555618-0000	.SHAFT	1-71, 1-73, 1-75
2555619-0000	.BRACKET	1-71, 1-73, 1-75
2555620-0000	.COVER	1-71, 1-73, 1-75
2555623-0000	.COVER	1-71, 1-73, 1-75
2555625-0000	.ROLL	1-71, 1-73, 1-75
2555627-0100	.PRESSURE ROLLER	1-3, 1-5, 1-7
2555637-0000	.GUIDE	3-21, 3-23, 3-25, 3-87, 3-89
2556525-0000	.LEVER	3-223, 3-225, 3-227
2556526-0000	.LEVER	3-223, 3-225, 3-227
2556615-0000	..PIPE CONNECTION	2-251
2556893-0100	.TUBE FLUSHING	2-225
2556894-0000	.TUBE FLUSHING DEVICE	2-251
2556895-0000	.TUBE FLUSHING DEVICE	2-251
2557612-0000	.SPRING	2-31, 2-33, 2-43, 2-45
2557613-0000	.SPRING	2-31, 2-33, 2-43, 2-45
2558127-0000	.SPACER	3-107, 3-109, 3-111
2558145-0000	.FLAP	3-51, 3-53
2558146-0000	.CRADLE	3-271, 3-273
2558703-0000	.GUIDE UPPER L	3-97, 3-99
2558704-0000	.GUIDE UPPER R	3-97, 3-99
2558754-0000	.RAIL	3-205, 3-207, 3-209, 3-211, 3-213, 3-215
2558920-0000	.STOP	2-43, 2-45
2558921-0000	.STOP	2-31, 2-33
2558922-0000	.PARAGEMS	2-43, 2-45
2558923-0000	.PARAGEM	2-31, 2-33
2558929-0000	.BAR	2-31, 2-33, 2-43, 2-45
2559008-0000	.VOLUME BULGE	3-185, 3-187, 3-189, 3-191, 3-193, 3-195
2559062-0200	.LOWER FORMING RING	1-3, 1-5, 1-7
2559066-0000	.STUD SCREW	1-107
2559102-0000	.RING	1-23, 1-25
2559103-0000	.PLATE	1-23, 1-25
2559104-0000	.PLATE	1-23, 1-25
2559354-0000	.ROLLER	3-307
2559424-0000	.CUTTING JAW	2-159, 2-161, 2-163, 2-165
2559425-0000	.CLAMP HOLDER	2-133, 2-135, 2-137, 2-191, 2-193, 2-195
2561206-0000	.SPACER	3-239, 3-241
2561244-0200	.DRIVE WHEEL	3-239, 3-241
2561267-0000	.SHAFT	3-243
2562664-0000	.ROLL	1-179, 1-181
2562667-0002	.LOCK PLATE	1-179, 1-181
2562667-0008	.LOCK PLATE	1-59, 1-61, 1-63
2562667-0009	.LOCK PLATE	1-59, 1-61, 1-63
2562684-0000	.ROLL	1-179, 1-181

Part No	Description	Page No
2562692-0000	.BRACKET	1-179, 1-181
2562693-0000	.BRACKET	1-179, 1-181
2562694-0000	.ROLLER	1-179, 1-181
2562695-0000	.ROLLER	1-179, 1-181
2562696-0000	.BRACKET	1-179, 1-181
2562697-0000	.BRACKET	1-179, 1-181
2562704-0000	.BODY	1-17
2562709-0000	.ROLLER	1-23, 1-25
2562710-0000	.RING	1-23, 1-25
2562711-0000	.PLATE	1-23, 1-25
2563183-0000	.GUIDE RAIL	1-145, 1-147
2563274-0000	.CARRIER	3-223, 3-225, 3-227
2563292-0000	.STOP PIN	1-9, 1-11, 1-13, 1-15
2563294-0000	.PRESSURE FLANGE	1-9, 1-11, 1-13, 1-15
2563666-0000	.CANTILEVER	2-31, 2-33, 2-43, 2-45
2563667-0000	.SHAFT	2-31, 2-33, 2-43, 2-45
2563671-0000	.SHAFT	2-31, 2-33, 2-43, 2-45
2563974-0000	.SEALING PLATE	3-357
2564043-0001	.ROLLER	3-379
2564043-0002	.ROLLER	3-351
2564043-0003	.ROLLER	3-335, 3-343, 3-351
2564043-0004	.ROLLER	3-351
2564043-0005	.ROLLER	3-351, 3-379
2564043-0006	.ROLLER	3-379
2564043-0008	.ROLLER	3-379
2564043-0009	.ROLLER	3-379
2564044-0001	.ROLLER	3-353, 3-373
2564044-0002	.ROLLER	3-351, 3-363, 3-381
2564044-0004	.ROLLER	3-313, 3-343, 3-351, 3-363, 3-381
2564044-0005	.ROLLER	3-351, 3-363, 3-381
2564044-0006	.ROLLER	3-351, 3-353, 3-363, 3-373, 3-381
2564044-0008	.ROLLER	3-353, 3-373
2564044-0011	.ROLLER	3-353, 3-373
2564044-0012	.ROLLER	3-353, 3-373
2564046-0200	.OUTER PATCH MAGAZINE	3-281, 3-283, 3-285
2564051-0100	.PATCH MAGAZINE	3-281, 3-283, 3-285
2564053-0100	.OUTER PATCH MAGAZINE	3-323, 3-325, 3-327
2564056-0100	.MAGAZINE	3-281, 3-283, 3-285
2564057-0100	.TAB MAGAZINE	3-281, 3-283, 3-285
2564058-0100	.TURNING DEVICE	3-281, 3-283, 3-285
2564059-0100	.TAB FEEDER	3-281, 3-283, 3-285
2564060-0100	.PATCH FEEDER	3-281, 3-283, 3-285
2564061-0100	.OUTER PATCH FEEDER	3-301
2564064-0000	.SHAFT	3-307
2564066-0000	.SHAFT	3-311
2564071-0000	.GUIDE	3-307
2564073-0000	.LABEL	3-323, 3-325, 3-327
2564075-0100	.OPENING SPECIFICATION	3-279
2564076-0100	.START-UP KIT	3-279
2564347-0000	.FLAP	3-51, 3-53
2564683-0000	.CURVE	2-235, 2-237, 2-239, 2-241
2565424-0000	.ROLLER	1-31, 1-33
2565425-0000	.COUNTER ROLLER	1-31, 1-33
2565430-0000	.SUPPORT RING	1-59, 1-61, 1-63
2565431-0000	.SUPPORT RING	1-59, 1-61, 1-63
2565440-0000	.INDUCTOR	1-71, 1-73, 1-75
2565513-0000	.ROLLER	1-31, 1-33
2566317-0000	.CARRIER RULER	2-215, 2-217, 2-219, 2-221
2566318-0000	.CARRIER RULER	2-169, 2-171
2566319-0000	.FOLDING FLAP	2-169, 2-171, 2-215, 2-217, 2-219, 2-221
2566320-0000	.FOLDING FLAP	2-169, 2-171, 2-215, 2-217, 2-219, 2-221
2566321-0000	.FLAP	3-129, 3-131
2566323-0000	.FLAP	3-129, 3-131
2566327-0000	.CARRIER	2-203, 2-205
2566328-0000	.PLATE	2-147, 2-149, 2-203, 2-205
2566329-0000	.CARRIER	2-147, 2-149
2566330-0000	.SLEEVE	2-177
2566332-0000	.SHAFT	2-55, 2-57, 2-59, 2-61, 2-63, 2-69, 2-71, 2-73, 2-75, 2-77, 2-87, 2-89, 2-93, 2-95
2566333-0000	.HOLDER (STAFFA)	2-55, 2-57, 2-59, 2-61, 2-63, 2-69, 2-71, 2-73, 2-75, 2-77, 2-87, 2-89, 2-93, 2-95
2566336-0000	.BEARING HOUSING	2-131
2566338-0000	.CATCH	2-131
2566339-0000	.CATCH	2-159, 2-161, 2-163, 2-165
2566340-0000	.CARRIER	2-119, 2-121, 2-123, 2-125
2566341-0000	.CARRIER	2-179, 2-181, 2-183, 2-185
2569908-0000	.HOUSING	2-131
2570017-0000	.PRESSURE FLANGE	1-9, 1-11, 1-13, 1-15
2570301-0000	.CUTTING JAW	2-159, 2-161, 2-163, 2-165
2570302-0000	.CLAMP HOLDER	2-133, 2-135, 2-137, 2-191, 2-193, 2-195
2570848-0000	.HOLDER	2-133, 2-135, 2-137, 2-191, 2-193, 2-195
2570849-0000	.BUSHING	2-133, 2-135, 2-137, 2-159, 2-161, 2-163, 2-165, 2-191, 2-193, 2-195
2570850-0000	.CUTTING JAW	2-159, 2-161, 2-163, 2-165
2571843-0000	.CARRIER	2-147, 2-149
2572071-0000	.HOOD	1-9, 1-11, 1-13, 1-15
2572197-0000	.SPACER	2-97, 2-99, 2-101, 2-103, 2-107, 2-113, 2-117

Part No	Description	Page No
2572248-0000	.CARRIER	2-203, 2-205
2572563-0000	.SUPPORT	3-263
2575119-0000	.GUIDE	1-87
2575120-0100	.LIFTING UNIT	1-3, 1-5, 1-7
2575631-0000	.RAIL BRACKET	2-235, 2-237, 2-239, 2-241
2579883-0000	.SEALING PLATE	3-357
2579886-0000	.SEALING PLATE	3-357
2579887-0000	.OPENING SPECIFICATION	3-387
2579988-0000	.CUTTING JAW	2-159, 2-161, 2-163, 2-165
2579989-0000	.HOLDER	2-133, 2-135, 2-137, 2-191, 2-193, 2-195
2579990-0000	.SHAFT	2-133, 2-135, 2-137, 2-159, 2-161, 2-163, 2-165, 2-191, 2-193, 2-195
2579991-0000	.HOLDER	2-133, 2-135, 2-137, 2-191, 2-193, 2-195
2581994-0000	.VOLUME BULGE	2-11, 2-13, 2-15, 2-21, 2-23, 2-25, 2-55, 2-57, 2-59, 2-61, 2-63, 2-69, 2-71, 2-73, 2-75, 2-77
2582002-0000	.VOLUME FLAP	2-21, 2-23, 2-25
2582003-0100	.GUIDE RAIL	1-139, 1-163
2582020-0000	.RAIL BRACKET	2-235, 2-237, 2-239, 2-241
2582616-0000	.PLATE	1-23, 1-25
2582623-0000	.SEAL	1-23, 1-25
2582629-0000	.RING	1-23, 1-25
2582630-0000	.ROLLER	1-23, 1-25
2582651-0000	.AIR GUIDE	1-119, 1-121
2582652-0000	.AIR GUIDE	1-119, 1-121
2582654-0000	.PLATE	1-119, 1-121
2582655-0000	.HOLDER	1-119, 1-121
2582668-0000	.PLATE	1-145, 1-147
2587235-0000	.VOLUME FLAP	2-21, 2-23, 2-25
2587236-0000	.VOLUME FLAP	2-11, 2-13, 2-15
2587325-0000	.SHAFT	3-307
2587337-0100	.SETTING TEMPLATE	3-279
2587464-0000	.CANTILEVER	2-261
2587466-0000	.INDUCTOR	1-89, 1-91, 1-93, 1-95, 1-97, 1-99, 2-133, 2-135, 2-137
2587467-0000	.INDUCTOR	1-89, 1-91, 1-93, 1-95, 1-97, 1-99, 2-191, 2-193, 2-195
2588127-0000	.AXLE PIN	3-161, 3-163
2588130-0100	.FOLDING FIN DEVICE	3-149, 3-151
2588134-0000	.YOKE	3-161, 3-163
2588216-0000	.GUIDE	3-107, 3-109, 3-111
2588217-0000	.GUIDE	3-107, 3-109, 3-111
2588218-0000	.STRUT	3-107, 3-109, 3-111
2588291-0000	.TIE ROD	2-147, 2-149, 2-203, 2-205
2588292-0000	.PLATE	2-159, 2-161, 2-163, 2-165
2588293-0000	.HOLDER	2-133, 2-135, 2-137, 2-191, 2-193, 2-195
2588294-0000	.LID	2-131
2588295-0000	.SLEEVE	2-131
2588296-0000	.PISTON	2-131
2588297-0000	.SHAFT	2-131
2588299-0000	.BUSHING	2-159, 2-161, 2-163, 2-165
2588300-0000	.RAIL BRACKET	2-235, 2-237, 2-239, 2-241
2588301-0000	.CURVE	2-235, 2-237, 2-239, 2-241
2588302-0000	.VOLUME CAM	2-235, 2-237, 2-239, 2-241
2588303-0000	.SCREW	2-159, 2-161, 2-163, 2-165
2588304-0000	.VOLUME FLAP	2-87, 2-89
2588305-0000	.VOLUME FLAP	2-93, 2-95
2588306-0000	.VOLUME FLAP	2-85
2588307-0000	.VOLUME FLAP	2-85
2588327-0000	.INSERT	3-129, 3-131
2588328-0000	.PULLEY	1-109, 1-111, 3-231
2588329-0000	.PULLEY	3-231
2589108-0000	.BENDING ROLLER	1-139
2591790-0000	.BLOCK	3-149, 3-151
2592530-0000	.PLATE	1-101
2593831-0100	.VOLUME KIT	4-3
2594043-0000	.SHOCK ABSORBER	1-17
2594058-0000	.GUIDE	3-123, 3-125, 3-127
2594512-0101	.VOLUME FLAP	4-33, 4-35
2594512-0102	.VOLUME FLAP	4-33, 4-35
2594512-0103	.VOLUME FLAP	4-33, 4-35
2594512-0104	.VOLUME FLAP	4-33, 4-35
2594512-0105	.VOLUME FLAP	4-33, 4-35
2594512-0106	.VOLUME FLAP	4-33, 4-35
2594512-0107	.VOLUME FLAP	4-33, 4-35
2594512-0108	.VOLUME FLAP	4-33, 4-35
2594512-0109	.VOLUME FLAP	4-33, 4-35
2594512-0110	.VOLUME FLAP	4-33, 4-35
2594512-0111	.VOLUME FLAP	4-33, 4-35
2594512-0200	.VOLUME FLAP	2-9
2594512-0201	.VOLUME FLAP	4-33, 4-35
2594512-0202	.VOLUME FLAP	4-33, 4-35
2594596-0000	.BRACKET	1-177
2594601-0000	.RAIL	1-119, 1-121
2594636-0000	.BRACKET	1-71, 1-73, 1-75
2594644-0000	.ROLLER	1-31, 1-33
2594702-0000	.SHAFT	2-105, 2-109, 2-111, 2-115
2594709-0000	.AXLE PIN	2-67, 2-81, 2-111, 2-115

Part No	Description	Page No
2594712-0000	.CARRIER	2-119, 2-121, 2-123, 2-125
2594714-0000	.CARRIER	2-147, 2-149
2594715-0000	.CARRIER	2-179, 2-181, 2-183, 2-185
2594717-0000	.CARRIER	2-203, 2-205
2594886-0000	.PLATE	3-271, 3-273
2594887-0000	.SPACER	2-235, 2-237, 2-239, 2-241
2594888-0000	.VOLUME BULGE	2-87, 2-89, 2-93, 2-95
2594889-0000	.VOLUME BULGE	2-85
2594890-0000	.VOLUME SHIM	1-89, 1-91, 1-93, 1-95, 1-97, 1-99, 2-87, 2-89, 2-93, 2-95
2594891-0000	.VOLUME SHIM	1-89, 1-91, 1-93, 1-95, 1-97, 1-99, 2-85
2594892-0000	.SPRING	2-131
2594893-0000	.WEDGE	2-87, 2-89, 2-93, 2-95
2594896-0000	.SCREW	2-85
2594902-0000	.CATCH	3-185, 3-187, 3-189, 3-191, 3-193, 3-195
2594905-0000	.SLIDE	3-69, 3-71
2594906-0000	.SLIDE	3-77, 3-79
2594911-0000	.HATCH	3-223, 3-225, 3-227
2595704-0000	.FOLDING PART	3-107, 3-109, 3-111
2595705-0000	.FOLDING PART	3-107, 3-109, 3-111
2595706-0000	.BRACKET	3-107, 3-109, 3-111
2595707-0000	.FOLDING PART	3-107, 3-109, 3-111
2595708-0000	.FOLDING PART	3-107, 3-109, 3-111
2595709-0000	.FOLDING PART	3-107, 3-109, 3-111
2597324-0100	.VOLUME FLAP	2-9
2597325-0100	.VOLUME FLAP	2-9
2597329-0100	.CURVE UNIT	2-225
2597531-0000	.5019011FLOAT	1-9, 1-11, 1-13, 1-15
2597768-0000	.BRACKET	3-123, 3-125, 3-127
2597769-0000	.GUIDE	3-123, 3-125, 3-127
2598017-0000	.PRESSURE FLANGE	1-9, 1-11, 1-13, 1-15
2598065-0000	.SUPPORT	2-261
2598067-0000	.SHAFT	2-265
2598485-0000	.CLAMP	3-123, 3-125, 3-127
2598486-0000	.CLAMP	3-123, 3-125, 3-127
2598487-0000	.SLIDE	3-69, 3-71
2598488-0000	.SLIDE	3-77, 3-79
2598491-0000	.FOLDING PART	3-107, 3-109, 3-111
2598492-0000	.FOLDING PART	3-107, 3-109, 3-111
2598493-0000	.BRACKET	3-107, 3-109, 3-111
2598494-0000	.FOLDING PART	3-107, 3-109, 3-111
2598495-0000	.FOLDING PART	3-107, 3-109, 3-111
2598496-0000	.FOLDING PART	3-107, 3-109, 3-111
2598497-0000	.FOLDING PART	3-107, 3-109, 3-111
2598498-0000	.NOZZLE	3-173, 3-175, 3-177, 3-179, 3-181, 3-183
2598499-0000	.NOZZLE	3-173, 3-175, 3-177, 3-179, 3-181, 3-183
2598500-0000	.NOZZLE	3-173, 3-175, 3-177, 3-179, 3-181, 3-183
2598503-0000	.EXTENSION	3-173, 3-175, 3-177, 3-179, 3-181, 3-183
2598508-0100	.INFEED/OUTFEED CONVEYOR	3-237
2598513-0000	.SPACER	3-253
2598514-0000	.COVER	3-253
2598706-0000	.BAR	3-149, 3-151
2598819-0000	.SPACER	3-55, 3-57, 3-59
2598820-0000	.SPACER	3-55, 3-57, 3-59
2598822-0000	.GUIDE PIN	3-107, 3-109, 3-111
2598823-0000	.GUIDE PIN	3-107, 3-109, 3-111
2598880-0000	.SETTING SCREW	3-165, 3-167
2598890-0000	.AXLE PIN	3-169, 3-171
2598967-0000	.SPACER	3-173, 3-175, 3-177, 3-179, 3-181, 3-183
2598986-0000	.RAIL	3-107, 3-109, 3-111
2598987-0000	.RAIL	3-107, 3-109, 3-111
2599044-0000	.BRACKET	3-123, 3-125, 3-127
2599738-0000	.ECCENTRIC	2-235, 2-237, 2-239, 2-241
2599739-0000	.ECCENTRIC	2-235, 2-237, 2-239, 2-241
2599741-0000	.SUPPORT	2-265
2599742-0000	.SHAFT	2-263, 2-265
2599743-0000	.SHAFT	2-265
2599847-0000	.SPACER	3-107, 3-109, 3-111
2601237-0000	.BENDING ROLLER	1-135, 1-137
2601247-0000	.INDUCTOR	1-71, 1-73, 1-75
2601249-0000	.BRACKET	1-71, 1-73, 1-75
2601269-0000	.ROLLER	1-179, 1-181
2601271-0000	.ROLLER	1-179, 1-181
2601272-0000	.ROLLER	1-179, 1-181
2601273-0000	.ROLLER	1-179, 1-181
2601278-0000	.ROLLER	1-59, 1-61, 1-63
2601279-0000	.ROLLER	1-59, 1-61, 1-63
2601285-0000	.ROLLER	1-59, 1-61, 1-63
2601286-0000	.ROLLER	1-59, 1-61, 1-63, 1-169, 1-171
2601289-0000	.INDUCTOR	1-71, 1-73, 1-75
2601308-0000	.ROLLER	1-31, 1-33
2601309-0000	.ROLLER	1-31, 1-33
2601327-0000	.ROLLER	1-31, 1-33
2601328-0000	.ROLLER	1-31, 1-33
2601333-0000	.ROLLER	1-41, 1-43, 1-45, 1-47

Part No	Description	Page No
2601334-0000	.ROLLER	1-41, 1-43, 1-45, 1-47
2601445-0000	.FOLDING PART	3-107, 3-109, 3-111
2601455-0000	.FOLDING PART	3-107, 3-109, 3-111
2601464-0000	.FOLDING PART	3-107, 3-109, 3-111
2601465-0000	.FOLDING PART	3-107, 3-109, 3-111
2601468-0000	.PRESSURE FLANGE	1-9, 1-11, 1-13, 1-15
2601469-0000	.PRESSURE FLANGE	1-9, 1-11, 1-13, 1-15
2601470-0000	.PRESSURE FLANGE	1-9, 1-11, 1-13, 1-15
2601472-0000	.PRESSURE FLANGE	1-9, 1-11, 1-13, 1-15
2601474-0000	.PRESSURE FLANGE	1-9, 1-11, 1-13, 1-15
2602592-0000	.FOLDING PART	3-107, 3-109, 3-111
2602613-0000	.VOLUME BULGE	3-185, 3-187, 3-189, 3-191, 3-193, 3-195
2602614-0000	.BOTTOM	3-51, 3-53
2602655-0000	.ROLLER	2-247, 2-249
2602657-0000	.LOCK PLATE	2-263
2602658-0000	.SHAFT	2-263
2603138-0000	.BRACKET	3-123, 3-125, 3-127
2603140-0000	.GUIDE	3-123, 3-125, 3-127
2603147-0000	.PLATE	3-107, 3-109, 3-111
2603148-0000	.CLAMP	3-123, 3-125, 3-127
2603151-0000	.SHIM	2-147, 2-149, 2-203, 2-205
2603374-0000	.ECCENTRIC	2-231, 2-233
2603376-0000	.AXLE PIN	2-231, 2-233
2603378-0000	.ROLLER	2-231, 2-233
2603488-0000	.FLAP	3-137, 3-139, 3-141
2603489-0000	.BOTTOM	3-137, 3-139, 3-141, 4-33, 4-35
2603490-0000	.SLIDE	3-137, 3-139, 3-141
2603546-0000	.SLIDE PLATE	1-119, 1-121
2603547-0000	.FOLDING PART	3-107, 3-109, 3-111
2603548-0000	.FOLDING PART	3-107, 3-109, 3-111
2603630-0000	.SLIDE PLATE	1-119, 1-121
2603659-0000	.FOLDING PART	3-107, 3-109, 3-111
2603660-0000	.FOLDING PART	3-107, 3-109, 3-111
2603661-0000	.BRACKET	3-107, 3-109, 3-111
2603662-0000	.BRACKET	3-107, 3-109, 3-111
2603663-0000	.SPACER	3-27, 3-29, 3-37, 3-39, 3-41, 3-97, 3-99
2603664-0000	.RAIL	3-107, 3-109, 3-111
2603682-0000	.DIE	3-349
2603683-0000	.PUNCH	3-349
2603823-0000	.BOTTOM PLATE	1-119, 1-121
2603824-0000	.COUNTER PLATE	1-119, 1-121
2603826-0100	.FOLDING PART	3-85
2603827-0100	.FLAP GUIDE	3-85
2604493-0000	.VOLUME FLAP	2-55, 2-57, 2-59, 2-61, 2-63
2604494-0000	.VOLUME FLAP	2-69, 2-71, 2-73, 2-75, 2-77
2604495-0000	.VOLUME FLAP	2-55, 2-57, 2-59, 2-61, 2-63
2604496-0000	.VOLUME FLAP	2-69, 2-71, 2-73, 2-75, 2-77
2604551-0000	.SEALING PLATE	3-355
2604554-0000	.PUNCH	3-349
2604555-0000	.DIE	3-349
2604557-0000	.OPENING SPECIFICATION	3-387
2604564-0000	.CUTTING JAW	2-159, 2-161, 2-163, 2-165
2604565-0000	.HOLDER	2-133, 2-135, 2-137, 2-191, 2-193, 2-195
2605066-0000	.CURVE	2-227, 2-229
2605125-0000	.PUSHER	3-185, 3-187, 3-189, 3-191, 3-193, 3-195
2605166-0000	.VOLUME SHIM	1-89, 1-91, 1-93, 1-95, 1-97, 1-99, 2-55, 2-57, 2-59, 2-61, 2-63, 2-69, 2-71, 2-73, 2-75, 2-77
2605191-0000	.VOLUME FLAP	2-55, 2-57, 2-59, 2-61, 2-63
2605192-0000	.VOLUME FLAP	2-69, 2-71, 2-73, 2-75, 2-77
2605213-0000	.RAIL	3-107, 3-109, 3-111
2605226-0200	.ROLLER UNIT	2-227, 2-229
2605869-0000	.FLAP HOLDER	2-55, 2-57, 2-59, 2-61, 2-63, 2-69, 2-71, 2-73, 2-75, 2-77
2605875-0000	.FOLDING FLAP	2-169, 2-171, 2-215, 2-217, 2-219, 2-221
2605876-0000	.FOLDING FLAP	2-169, 2-171, 2-215, 2-217, 2-219, 2-221
2605993-0000	.SIDE PLATE	3-271, 3-273, 3-275, 4-33, 4-35
2605994-0000	.SIDE PLATE	3-271, 3-273, 3-275, 4-33, 4-35
2606218-0000	.CAM	2-55, 2-57, 2-59, 2-61, 2-63, 2-69, 2-71, 2-73, 2-75, 2-77
2606277-0000	.FOLDING DEVICE	3-157, 3-159
2606278-0000	.FOLDING DEVICE	3-157, 3-159
2606289-0000	.BOTTOM	3-51, 3-53
2606305-0000	.VOLUME FLAP	2-11, 2-13, 2-15
2606306-0000	.VOLUME FLAP	2-21, 2-23, 2-25
2606891-0000	.ECCENTRIC	2-235, 2-237, 2-239, 2-241
2606892-0000	.ECCENTRIC	2-235, 2-237, 2-239, 2-241
2607087-0000	.BOTTOM PLATE	1-119, 1-121
2607089-0000	.PRESSURE ROLLER	1-9, 1-11, 1-13, 1-15, 1-89, 1-91, 1-93, 1-95, 1-97, 1-99
2607440-0000	.SLIDE PLATE	1-119, 1-121
2608234-0000	.SEALING PLATE	3-355
2608239-0000	.OPENING SPECIFICATION	3-387
2608240-0001	.WEIGHT	3-379
2608240-0002	.WEIGHT	3-379
2608240-0003	.WEIGHT	3-379
2608240-0004	.WEIGHT	3-379
2609303-0000	.WEIGHT	3-409

Part No	Description	Page No
2609368-0000	.TIE ROD	3-157, 3-159
2609369-0000	.FOLDING BAR	3-37, 3-39, 3-41
2609370-0000	.FOLDING BAR	3-37, 3-39, 3-41
2609371-0000	.SPACER	3-37, 3-39, 3-41
2609372-0000	.GUIDE	3-87, 3-89
2609923-0000	.WASHER	2-231, 2-233
2609925-0000	.VOLUME BULGE	2-55, 2-57, 2-59, 2-61, 2-63, 2-69, 2-71, 2-73, 2-75, 2-77
2610764-0000	.PLATE	3-265
2610779-0000	.BLOCK	3-149, 3-151
2610793-0000	.BLOCK	2-227, 2-229
2610954-0000	.RAIL	2-133, 2-135, 2-137
2610955-0000	.RAIL	2-191, 2-193, 2-195
2610956-0000	.INDUCTOR	1-89, 1-91, 1-93, 1-95, 1-97, 1-99, 2-133, 2-135, 2-137, 2-191, 2-193, 2-195
2611000-0000	.CUTTING JAW	2-159, 2-161, 2-163, 2-165
2611001-0000	.CLAMP HOLDER	2-133, 2-135, 2-137, 2-191, 2-193, 2-195
2611012-0000	.ROLLER	1-41, 1-43, 1-45, 1-47
2611016-0000	.ROLLER	1-41, 1-43, 1-45, 1-47
2611017-0000	.ROLLER	1-41, 1-43, 1-45, 1-47
2611020-0000	.ROLLER	1-41, 1-43, 1-45, 1-47
2611024-0000	.SPACER	1-41, 1-43, 1-45, 1-47
2611025-0000	.ROLLER	1-59, 1-61, 1-63
2611026-0000	.ROLLER	1-59, 1-61, 1-63
2611027-0000	.ROLLER	1-59, 1-61, 1-63
2611028-0000	.SUPPORT ROLLER	1-59, 1-61, 1-63
2611038-0000	.SUPPORT RING	1-59, 1-61, 1-63
2611039-0000	.ROLLER	1-67, 1-69
2611040-0000	.ROLLER	1-67, 1-69
2611041-0000	.SUPPORT ROLLER	1-67, 1-69
2611044-0000	.PLATE	1-23, 1-25
2611045-0000	.RING	1-23, 1-25
2611046-0000	.PLATE	1-23, 1-25
2611047-0000	.RING	1-23, 1-25
2611053-0000	.INDUCTOR	1-71, 1-73, 1-75
2611064-0001	.ROLLER	1-41, 1-43, 1-45, 1-47
2611065-0001	.ROLLER	1-41, 1-43, 1-45, 1-47
2611066-0000	.ROLLER	1-41, 1-43, 1-45, 1-47
2611067-0000	.ROLLER	1-41, 1-43, 1-45, 1-47
2611068-0000	.ROLLER	1-41, 1-43, 1-45, 1-47
2611069-0001	.ROLLER	1-31, 1-33
2611070-0000	.COUNTER ROLLER	1-31, 1-33
2611655-0000	.CLAMP HOLDER	2-133, 2-135, 2-137, 2-191, 2-193, 2-195
2611710-0000	.CUTTING JAW	2-159, 2-161, 2-163, 2-165
2611875-0000	.SHIM	3-185, 3-187, 3-189, 3-191, 3-193, 3-195
2612738-0000	.BUSHING	2-159, 2-161, 2-163, 2-165
2612745-0000	.BEARING HOUSING	2-131
2612747-0000	.COVER	2-147, 2-149, 2-203, 2-205
2612750-0000	.SPACER	2-235, 2-237, 2-239, 2-241
2613644-0100	.CANTILEVER	2-3
2613645-0100	.CURVE UNIT	2-225
2613647-0100	.VOLUME CURVE PIECE	2-9
2613648-0100	.SUPPORT ROLLER	2-225
2613763-0000	.SLEEVE	2-227, 2-229
2613764-0000	.SLEEVE	2-227, 2-229, 2-235, 2-237, 2-239, 2-241
2613809-0000	.SPACER	2-227, 2-229
2614038-0000	.SPACER	2-265
2614039-0000	.CLAMP	2-261
2614371-0000	.ROLLER BRACKET	2-227, 2-229
2614372-0000	.SLEEVE	2-227, 2-229, 2-235, 2-237, 2-239, 2-241
2614373-0000	.ROLLER BRACKET	2-227, 2-229
2614376-0001	.WASHER	2-227, 2-229, 2-235, 2-237, 2-239, 2-241
2614376-0002	.WASHER	2-227, 2-229, 2-235, 2-237, 2-239, 2-241
2616217-0000	.BOTTOM	3-143
2616218-0000	.BOTTOM	3-143, 4-33, 4-35
2616219-0000	.BOTTOM	3-143, 4-33, 4-35
2616224-0200	.PHOTOCELL UNIT	2-9
2616227-0000	.TIMING BELT	3-231
2616229-0000	.BLOCK	3-149, 3-151
2616231-0000	.ROLLER	1-23, 1-25
2618259-0000	.SPACER	2-227, 2-229, 2-235, 2-237, 2-239, 2-241
2618302-0000	.PIVOT PIN	2-227, 2-229, 2-235, 2-237, 2-239, 2-241
2618377-0000	.ECCENTRIC	2-227, 2-229, 2-235, 2-237, 2-239, 2-241
2618378-0000	.ECCENTRIC	2-227, 2-229, 2-235, 2-237, 2-239, 2-241
2618424-0000	.SUPPORT	3-21, 3-23, 3-25
2618425-0000	.GUIDE	3-21, 3-23, 3-25
2618683-0000	.SPACER	3-173, 3-175, 3-177, 3-179, 3-181, 3-183
2619171-0000	.PLATE	1-101
2619198-0000	.SHAFT	2-247, 2-249
2619199-0000	.ROLLER	2-247, 2-249
2619200-0000	.PLATE	2-247, 2-249
2619210-0000	.SPACER	3-253
2619211-0000	.SPACER	3-253
2619212-0000	.SPACER	3-253
2619213-0000	.SPACER	3-253
2619319-0000	.SHAFT	2-247, 2-249

Part No	Description	Page No
2619384-0000	.HOLDER	3-107, 3-109, 3-111
2619528-0000	.LOCKING CIRCLIP	3-165, 3-167
2619529-0000	.SLEEVE	3-165, 3-167
2619530-0000	.SLEEVE	3-165, 3-167
2619531-0000	.SHAFT	3-165, 3-167
2619574-0000	.SPACER	3-55, 3-57, 3-59
2619584-0100	.STRUT	3-161, 3-163
2619588-0000	.PIPE	3-161, 3-163
2619589-0000	.HANDLE	3-161, 3-163
2619591-0000	.SLIDER	3-169, 3-171
2619592-0000	.HOLDER	3-161, 3-163
2619596-0000	.HANDLE	3-165, 3-167
2619597-0100	.FLAP GUIDE	3-161, 3-163
2619598-0100	.FLAP GUIDE	3-161, 3-163
2619703-0000	.SPACER	3-107, 3-109, 3-111
2619727-0000	.GUIDE	3-77, 3-79
2619728-0000	.GUIDE	3-69, 3-71
2623513-0000	.BUSHING	2-265
2623783-0000	.PLATE	2-247, 2-249
2624543-0000	.SPACER	2-235, 2-237, 2-239, 2-241
2624544-0000	.PIVOT PIN	2-235, 2-237, 2-239, 2-241
2624554-0000	.FOLDING FLAP	2-169, 2-171, 2-215, 2-217, 2-219, 2-221
2624555-0000	.FOLDING FLAP	2-169, 2-171, 2-215, 2-217, 2-219, 2-221
2628598-0000	.SPACER	2-235, 2-237, 2-239, 2-241
2629236-0000	.CAM	2-55, 2-57, 2-59, 2-61, 2-63, 2-69, 2-71, 2-73, 2-75, 2-77
2629237-0000	.CAM	2-55, 2-57, 2-59, 2-61, 2-63, 2-69, 2-71, 2-73, 2-75, 2-77
2629239-0000	.TUBE FLUSHING DEVICE	2-251
2629240-0000	.TUBE FLUSHING DEVICE	2-251
2629303-0000	.COVERING PLATE	3-87, 3-89
2629336-0000	.BOTTOM	3-137, 3-139, 3-141
2629344-0000	.SPACER	3-107, 3-109, 3-111
2632817-0000	.PLATE	2-247, 2-249
2632818-0000	.SHAFT	2-247, 2-249
2633438-0000	.SPACER	2-235, 2-237, 2-239, 2-241
2633441-0000	.BRACKET	3-237
2634509-0100	.VOLUME KIT	3-3
2634511-0100	.MECHANICAL DIFFERENCES	3-5
2634515-0000	.CANTILEVER	2-31, 2-33, 2-43, 2-45
2634524-0000	.PRESSURE FLANGE	1-9, 1-11, 1-13, 1-15
2634926-0000	.SUPPORT ROLLER	1-59, 1-61, 1-63
2634930-0000	.SUPPORT ROLLER	1-179, 1-181
2634931-0000	.BRACKET	1-179, 1-181
2634932-0000	.BRACKET	1-169, 1-171
2634933-0000	.BRACKET	1-169, 1-171
2634934-0000	.SHAFT	1-169, 1-171
2634943-0000	.ROLLER	1-67, 1-69
2634947-0000	.ROLLER	1-41, 1-43, 1-45, 1-47
2634948-0000	.ROLLER	1-41, 1-43, 1-45, 1-47
2634949-0000	.ROLLER	1-41, 1-43, 1-45, 1-47
2634953-0000	.ROLLER	1-41, 1-43, 1-45, 1-47
2634954-0000	.ROLLER	1-41, 1-43, 1-45, 1-47
2634955-0000	.ROLLER	1-41, 1-43, 1-45, 1-47
2634956-0000	.ROLLER	1-41, 1-43, 1-45, 1-47
2634957-0000	.ROLLER	1-41, 1-43, 1-45, 1-47
2634958-0000	.ROLLER	1-41, 1-43, 1-45, 1-47
2634967-0000	.SUPPORT RING	1-59, 1-61, 1-63
2634968-0000	.ROLLER	1-59, 1-61, 1-63
2634969-0000	.ROLLER	1-59, 1-61, 1-63
2634970-0000	.ROLLER	1-59, 1-61, 1-63
2634971-0000	.ROLLER	1-59, 1-61, 1-63
2634972-0000	.SHAFT	1-9, 1-11, 1-13, 1-15
2634983-0000	.ROLLER	1-41, 1-43, 1-45, 1-47
2634984-0000	.ROLLER	1-41, 1-43, 1-45, 1-47
2634985-0000	.ROLLER	1-41, 1-43, 1-45, 1-47
2634987-0000	.SPACER	1-41, 1-43, 1-45, 1-47
2634988-0000	.ROLLER	1-41, 1-43, 1-45, 1-47
2634989-0000	.ROLLER	1-41, 1-43, 1-45, 1-47
2634990-0000	.ROLLER	1-41, 1-43, 1-45, 1-47
2634995-0000	.FLOAT	1-9, 1-11, 1-13, 1-15
2635167-0000	.VOLUME BULGE	3-185, 3-187, 3-189, 3-191, 3-193, 3-195
2635555-0000	.OPENING SPECIFICATION	3-387
2636081-0100	.FLAP HEATER	4-3
2636082-0100	.FLAP HEATER	4-5
2636399-0000	.FLAP	3-137, 3-139, 3-141
2636400-0000	.BOTTOM	3-137, 3-139, 3-141
2636401-0000	.SLIDE	3-137, 3-139, 3-141
2636875-0000	.GUIDE	3-307
2637665-0000	.GUIDE	3-9, 3-11, 3-13, 3-15, 3-17, 3-69, 3-71
2637666-0000	.GUIDE	3-9, 3-11, 3-13, 3-15, 3-17, 3-77, 3-79
2638077-0000	.SHAFT	1-9, 1-11, 1-13, 1-15
2638180-0000	.INSERT	3-129, 3-131
2639127-0000	.FOLDING BAR	3-37, 3-39, 3-41
2639128-0000	.FOLDING BAR	3-37, 3-39, 3-41
2639393-0000	.SPACER	3-37, 3-39, 3-41

Part No	Description	Page No
2639394-0000	.GUIDE FORK	3-323, 3-325, 3-327
2639832-0000	.RAIL	3-205, 3-207, 3-209, 3-211, 3-213, 3-215
2639866-0000	.VOLUME FLAP	2-55, 2-57, 2-59, 2-61, 2-63
2639867-0000	.VOLUME FLAP	2-69, 2-71, 2-73, 2-75, 2-77
2640075-0000	.VOLUME BULGE	3-185, 3-187, 3-189, 3-191, 3-193, 3-195
2640076-0000	.RAIL	3-205, 3-207, 3-209, 3-211, 3-213, 3-215
2640138-0000	.VOLUME BULGE	2-55, 2-57, 2-59, 2-61, 2-63, 2-69, 2-71, 2-73, 2-75, 2-77
2640139-0000	.VOLUME SHIM	1-89, 1-91, 1-93, 1-95, 1-97, 1-99, 2-55, 2-57, 2-59, 2-61, 2-63, 2-69, 2-71, 2-73, 2-75, 2-77
2640353-0000	.BRACKET	1-67, 1-69
2640354-0000	.ROLLER	1-67, 1-69
2640721-0000	.CARRIER	3-223, 3-225, 3-227
2640723-0000	.RAIL	3-205, 3-207, 3-209, 3-211, 3-213, 3-215
2640991-0000	.SLIDE	1-71, 1-73, 1-75
2640992-0000	.SLIDE	1-71, 1-73, 1-75
2640993-0000	.PLATE	1-71, 1-73, 1-75
2641000-0000	.SHAFT	1-71, 1-73, 1-75
2641225-0000	.INSERT	2-119, 2-121, 2-123, 2-125, 2-147, 2-149, 2-179, 2-181, 2-183, 2-185, 2-203, 2-205
2641271-0000	.SEAL	1-23, 1-25
2641282-0000	.COUNTER ROLLER	1-31, 1-33
2641285-0000	.ROLLER	1-41, 1-43, 1-45, 1-47
2641286-0000	.ROLLER	1-41, 1-43, 1-45, 1-47
2641287-0000	.ROLLER	1-41, 1-43, 1-45, 1-47
2641288-0000	.ROLLER	1-41, 1-43, 1-45, 1-47
2641289-0000	.ROLLER	1-41, 1-43, 1-45, 1-47
2641290-0000	.ROLLER	1-41, 1-43, 1-45, 1-47
2641317-0000	.PIPE	1-103, 1-105
2641319-0000	.BRACKET	1-103, 1-105
2641396-0100	.BENDING ROLLER	3-3
2641398-0100	.SQUEE-GEE ROLLER	3-3
2641480-0100	.HEATING PART	4-5
2642049-0200	.MECHANICAL REBUILDING	3-279
2642097-0000	.PLATE	2-247, 2-249
2642177-0000	.GUIDE UPPER	3-97, 3-99
2642178-0000	.GUIDE UPPER	3-97, 3-99
2642988-0100	.PLATE	1-3, 1-5, 1-7
2644177-0000	.CLAMP HUB	3-233
2644178-0000	.BLOCK	3-233
2644368-0000	.BRACKET	3-107, 3-109, 3-111
2644397-0000	.HOLDER	2-133, 2-135, 2-137, 2-191, 2-193, 2-195
2645568-0000	.CUTTING JAW	2-159, 2-161, 2-163, 2-165
2646344-0000	.PLATE	2-247, 2-249
2646345-0000	.SHAFT	2-247, 2-249
2647082-0000	.GUIDE	3-77, 3-79
2647083-0000	.GUIDE	3-69, 3-71
2647084-0000	.BAR	3-69, 3-71
2647085-0000	.BAR	3-77, 3-79
2647086-0000	.GUIDE	3-77, 3-79
2647087-0000	.GUIDE	3-69, 3-71
2647088-0000	.BAR	3-69, 3-71
2647089-0000	.BAR	3-77, 3-79
2647090-0000	.SLIDE	3-69, 3-71
2647091-0000	.SLIDE	3-77, 3-79
2647092-0000	.ANGLE BLOCK	3-69, 3-71, 3-77, 3-79
2647093-0000	.PUSHER	3-197, 3-199
2647094-0000	.PUSHER	3-197, 3-199
2647095-0000	.PUSHER	3-197, 3-199
2647096-0000	.PUSHER	3-197, 3-199
2647097-0000	.NAIL	3-197, 3-199
2647098-0000	.BLOCK	3-197, 3-199
2647099-0000	.GUIDE	3-185, 3-187, 3-189, 3-191, 3-193, 3-195
2647100-0000	.VOLUME BULGE	3-197, 3-199
2647101-0000	.SUPPORT	3-185, 3-187, 3-189, 3-191, 3-193, 3-195
2647102-0000	.PIPE	3-161, 3-163
2647103-0000	.SHAFT	3-161, 3-163
2647104-0000	.LEVER	3-169, 3-171
2647105-0000	.AXLE PIN	3-169, 3-171
2647106-0000	.SLIDER	3-171
2647107-0000	.SLIDER	3-169
2647108-0000	.STRUT	3-165, 3-167
2647109-0000	.SHAFT	3-165, 3-167
2647110-0000	.BLOCK	3-149, 3-151
2647111-0000	.SUPPORT	3-87, 3-89
2647112-0000	.GUIDE	3-87, 3-89
2647113-0000	.BUSHING	3-197, 3-199
2647114-0000	.INSERT	2-119, 2-121, 2-123, 2-125, 2-147, 2-149, 2-179, 2-181, 2-183, 2-185, 2-203, 2-205
2647115-0000	.CARRIER	2-119, 2-121, 2-123, 2-125
2647116-0000	.CARRIER	2-147, 2-149
2647117-0000	.CARRIER	2-179, 2-181, 2-183, 2-185
2647118-0000	.CARRIER	2-203, 2-205
2647119-0000	.GUIDE	3-97, 3-99
2647120-0000	.GUIDE	3-97, 3-99
2647121-0000	.FOLDING PART	3-107, 3-109, 3-111
2647122-0000	.FOLDING PART	3-107, 3-109, 3-111

Part No	Description	Page No
2647126-0000	.BRACKET	3-107, 3-109, 3-111
2647127-0000	.FOLDING PART	3-107, 3-109, 3-111
2647128-0000	.FOLDING PART	3-107, 3-109, 3-111
2647129-0000	.FOLDING PART	3-107, 3-109, 3-111
2647130-0000	.FOLDING PART	3-107, 3-109, 3-111
2647131-0000	.GUIDE	3-123, 3-125, 3-127
2648819-0000	.SEALING PLATE	3-357
2648846-0000	.SHAFT	2-247, 2-249
2648847-0000	.PLATE	2-247, 2-249
2649130-0000	.GUIDE RAIL	3-107, 3-109, 3-111
2649131-0000	.GUIDE RAIL	3-107, 3-109, 3-111
2649132-0000	.GUIDE RAIL	3-107, 3-109, 3-111
2649133-0000	.GUIDE RAIL	3-107, 3-109, 3-111
2649134-0000	.BRACKET	3-107, 3-109, 3-111
2649139-0000	.SPACER	3-107, 3-109, 3-111
2649441-0000	.SHAFT	2-247, 2-249
2649442-0000	.PLATE	2-247, 2-249
2649443-0000	.CAM	2-55, 2-57, 2-59, 2-61, 2-63, 2-69, 2-71, 2-73, 2-75, 2-77
2649660-0000	.SHAFT	2-97, 2-99, 2-101, 2-103, 2-107, 2-113, 2-117
2649664-0000	.CARRIER RULER	2-169, 2-171
2649674-0000	.CUTTING JAW	2-159, 2-161, 2-163, 2-165
2649675-0000	.RAIL	2-133, 2-135, 2-137
2649676-0000	.RAIL	2-191, 2-193, 2-195
2649677-0000	.DAMPER	2-107, 2-113, 2-117
2650807-0000	.SIDE PLATE	3-271, 3-273, 3-275
2650808-0000	.SIDE PLATE	3-271, 3-273, 3-275
2650812-0000	.SHAFT	2-247, 2-249
2650817-0000	.SPRING	3-143
2651145-0000	.BLOCK	3-185, 3-187, 3-189, 3-191, 3-193, 3-195
2651146-0000	.FLAP	3-129, 3-131
2651295-0000	.TEMPLATE	3-385
2651573-0000	.TEMPLATE	3-385
2651695-0000	.COVER PLATE	1-169, 1-171
2651707-0000	.PRESSURE FLANGE	1-9, 1-11, 1-13, 1-15
2651789-0000	.ROLLER	1-179, 1-181
2651790-0000	.ROLLER	1-179, 1-181
2652191-0000	.KNOB	3-55, 3-57, 3-59, 3-61, 3-63, 3-65
2652206-0000	.GUIDE	3-205, 3-207, 3-209, 3-211, 3-213, 3-215
2652311-0000	.PLATE	3-253
2652888-0000	.SHAFT	3-143
2652889-0000	.SCREW	3-143
2652892-0000	.PLATE	2-247, 2-249
2652896-0000	.SHAFT	2-31, 2-33, 2-43, 2-45, 2-55, 2-57, 2-59, 2-61, 2-63, 2-69, 2-71, 2-73, 2-75, 2-77
2654290-0000	.VOLUME SHIM	1-89, 1-91, 1-93, 1-95, 1-97, 1-99, 2-55, 2-57, 2-59, 2-61, 2-63, 2-69, 2-71, 2-73, 2-75, 2-77
2655095-0000	.BRACKET	2-253, 2-255, 2-257
2655096-0000	.SLIDE	2-253, 2-255, 2-257
2655097-0000	.KNOB	2-253, 2-255, 2-257
2655098-0000	.SHAFT	2-253, 2-255, 2-257
2655500-0000	.WASHER	3-205, 3-207, 3-209, 3-211, 3-213, 3-215
2655614-0100	.TRANSFORMER	3-3
2656299-0000	.SHAFT	3-401
2656407-0000	.SLIDE RAIL	3-239, 3-241
2656672-0000	.SPROCKET	3-243, 3-253
2656673-0000	.SPACER	3-243
2656686-0000	.SIDE PLATE	3-239, 3-241
2656687-0000	.SIDE PLATE	3-239, 3-241
2656899-0000	.BRACKET	1-79, 1-81, 1-83, 1-85
2657828-0000	.PUNCH	3-349
2657829-0000	.DIE	3-349
2657860-0000	.BRACKET	1-67, 1-69
2657873-0100	.LONGITUDINAL SEALING	1-3, 1-5, 1-7
2657886-0000	.COUNTER PLATE	1-119, 1-121
2657887-0000	.HORN	1-109, 1-111
2657888-0000	.HORN	1-109, 1-111
2657902-0000	.PRESSURE FLANGE	1-9, 1-11, 1-13, 1-15
2657923-0000	.COUNTER ROLLER	1-31, 1-33
2657925-0000	.ROLLER	1-177
2657932-0000	.BAR	3-69, 3-71
2657933-0000	.BAR	3-77, 3-79
2657934-0000	.SLIDE	3-77, 3-79
2657935-0000	.SLIDE	3-69, 3-71
2657936-0000	.GUIDE	3-77, 3-79
2657937-0000	.GUIDE	3-69, 3-71
2658045-0000	.OPENING SPECIFICATION	3-387
2658046-0000	.OPENING SPECIFICATION	3-387
2658047-0000	.OPENING SPECIFICATION	3-387
2658048-0000	.OPENING SPECIFICATION	3-387
2658049-0000	.AIR NOZZLE	3-289, 3-291
2658051-0000	.AIR NOZZLE	3-289, 3-291
2658078-0000	.SEALING PLATE	3-355
2658237-0100	.FLAP	3-129, 3-131
2658238-0000	.FLAP	3-135
2658239-0000	.BOTTOM	3-135, 4-33, 4-35

Part No	Description	Page No
2658240-0000	.BOTTOM	3-135, 3-137, 3-139, 3-141, 4-33, 4-35
2658241-0000	.SLIDE	3-135, 3-137, 3-139, 3-141
2658242-0000	.FLAP	3-137, 3-139, 3-141
2658247-0000	.WASHER	3-197, 3-199
2658249-0000	.SHIM	3-185, 3-187, 3-189, 3-191, 3-193, 3-195
2658251-0000	.SPACER	2-235, 2-237, 2-239, 2-241
2658252-0000	.RAIL BRACKET	2-235, 2-237, 2-239, 2-241
2658253-0000	.CURVE	2-235, 2-237, 2-239, 2-241
2658256-0000	.FLAP HOLDER	2-69, 2-71, 2-73, 2-75, 2-77
2658257-0000	.FLAP HOLDER	2-55, 2-57, 2-59, 2-61, 2-63
2658258-0000	.SHAFT	2-55, 2-57, 2-59, 2-61, 2-63, 2-69, 2-71, 2-73, 2-75, 2-77
2658263-0000	.VOLUME BULGE	3-197, 3-199
2658264-0000	.VOLUME BULGE	3-197, 3-199
2658265-0000	.CUTTING JAW	2-159, 2-161, 2-163, 2-165
2658298-0000	.TUBE FLUSHING DEVICE	2-251
2658299-0000	.TUBE FLUSHING DEVICE	2-251
2658390-0100	.BOTTOM	3-129, 3-131
2659361-0000	.BRACKET	1-177
2660285-0000	.CARRIER RULER	2-215, 2-217, 2-219, 2-221
2660286-0000	.BEARING HOUSING	2-159, 2-161, 2-163, 2-165
2660289-0000	.VOLUME FLAP	2-105, 2-109, 2-111, 2-115
2660290-0000	.FOLDING FLAP	2-169, 2-171, 2-215, 2-217, 2-219, 2-221
2660291-0000	.FOLDING FLAP	2-169, 2-171, 2-215, 2-217, 2-219, 2-221
2660292-0000	.VOLUME BULGE	2-105, 2-109, 2-111, 2-115
2660293-0000	.VOLUME SHIM	1-89, 1-91, 1-93, 1-95, 1-97, 1-99, 2-105, 2-109, 2-111, 2-115
2660294-0000	.PLATE	2-169, 2-171, 2-215, 2-217, 2-219, 2-221
2660295-0000	.ROLLER	2-97, 2-99, 2-101, 2-103, 2-105, 2-109, 2-111, 2-115
2660296-0000	.BUSHING	2-97, 2-99, 2-101, 2-103, 2-105, 2-109, 2-111, 2-115
2660308-0000	.FLAP	2-111, 2-115
2660309-0000	.FLAP	2-111, 2-115
2660376-0100	.CABLE HARNESS	4-5
2660379-0000	.VOLUME FLAP	2-55, 2-57, 2-59, 2-61, 2-63
2660380-0000	.VOLUME FLAP	2-69, 2-71, 2-73, 2-75, 2-77
2660381-0000	.VOLUME FLAP	2-81
2660382-0000	.VOLUME FLAP	2-81
2660383-0000	.VOLUME FLAP	2-67
2660384-0000	.VOLUME FLAP	2-67
2660390-0000	.VOLUME SHIM	1-89, 1-91, 1-93, 1-95, 1-97, 1-99, 2-67, 2-81
2660391-0000	.SCREW	2-55, 2-57, 2-59, 2-61, 2-63, 2-69, 2-71, 2-73, 2-75, 2-77
2660392-0000	.VOLUME BULGE	2-55, 2-57, 2-59, 2-61, 2-63, 2-69, 2-71, 2-73, 2-75, 2-77
2660393-0000	.VOLUME SHIM	1-89, 1-91, 1-93, 1-95, 1-97, 1-99, 2-55, 2-57, 2-59, 2-61, 2-63, 2-69, 2-71, 2-73, 2-75, 2-77
2660395-0000	.VOLUME BULGE	2-67, 2-81
2660397-0000	.WEDGE	2-55, 2-57, 2-59, 2-61, 2-63, 2-69, 2-71, 2-73, 2-75, 2-77
2660398-0000	.WEDGE	2-67, 2-81
2660399-0000	.ROLLER	2-67, 2-81
2660400-0000	.STOP	2-55, 2-57, 2-59, 2-61, 2-63, 2-69, 2-71, 2-73, 2-75, 2-77, 2-87, 2-89, 2-93, 2-95
2660401-0000	.CATCH	2-55, 2-57, 2-59, 2-61, 2-63, 2-69, 2-71, 2-73, 2-75, 2-77, 2-87, 2-89, 2-93, 2-95
2660404-0000	.HOLDER	2-133, 2-135, 2-137, 2-191, 2-193, 2-195
2660476-0100	.LUBRICATION PIPE FITTING	2-3
2660549-0000	.BRACKET	3-123, 3-125, 3-127
2660550-0000	.GUIDE	3-123, 3-125, 3-127
2660552-0000	.BRACKET	3-123, 3-125, 3-127
2660555-0000	.GUIDE	3-123, 3-125, 3-127
2660825-0000	.BRACKET	3-315
2660841-0000	.PUSHER	3-185, 3-187, 3-189, 3-191, 3-193, 3-195
2660847-0000	.TAPE	3-383
2661082-0000	.PLATE	4-11
2661153-0000	.SPACER	3-55, 3-57, 3-59
2661429-0000	.PUSHER	3-185, 3-187, 3-189, 3-191, 3-193, 3-195
2661450-0000	.VOLUME FLAP	2-69, 2-71, 2-73, 2-75, 2-77
2661451-0000	.VOLUME FLAP	2-55, 2-57, 2-59, 2-61, 2-63
2662142-0000	.SPRING	3-185, 3-187, 3-189, 3-191, 3-193, 3-195
2662165-0000	.SPRING	2-31, 2-33, 2-43, 2-45
2662166-0000	.SPRING	2-31, 2-33, 2-43, 2-45
2662167-0000	.BUSHING	2-31, 2-33, 2-43, 2-45, 2-55, 2-57, 2-59, 2-61, 2-63, 2-69, 2-71, 2-73, 2-75, 2-77
2662168-0000	.VOLUME BULGE	2-55, 2-57, 2-59, 2-61, 2-63, 2-69, 2-71, 2-73, 2-75, 2-77
2662169-0000	.VOLUME SHIM	1-89, 1-91, 1-93, 1-95, 1-97, 1-99, 2-55, 2-57, 2-59, 2-61, 2-63, 2-69, 2-71, 2-73, 2-75, 2-77
2662431-0000	.CAM	2-55, 2-57, 2-59, 2-61, 2-63, 2-69, 2-71, 2-73, 2-75, 2-77
2662639-0000	.ROLLER	1-109, 1-111
2662640-0000	.VOLUME CAM	2-235, 2-237, 2-239, 2-241
2662641-0000	.VOLUME CAM	2-235, 2-237, 2-239, 2-241
2663360-0000	.SPRING	2-55, 2-57, 2-59, 2-61, 2-63, 2-69, 2-71, 2-73, 2-75, 2-77
2663361-0000	.SPRING	2-55, 2-57, 2-59, 2-61, 2-63, 2-69, 2-71, 2-73, 2-75, 2-77
2663367-0000	.NUT	3-161, 3-163
2663369-0000	.BLOCK	3-161, 3-163
2663370-0000	.SUPPORT	3-161, 3-163
2663371-0000	.SCREW	3-161, 3-163
2663372-0000	.SCREW	2-55, 2-57, 2-59, 2-61, 2-63, 2-69, 2-71, 2-73, 2-75, 2-77
2663373-0000	.BOTTOM	3-137, 3-139, 3-141, 4-33, 4-35
2663375-0000	.WASHER	2-31, 2-33, 2-43, 2-45, 2-55, 2-57, 2-59, 2-61, 2-63, 2-69, 2-71, 2-73, 2-75, 2-77
2663376-0000	.WASHER	2-31, 2-33, 2-43, 2-45, 2-55, 2-57, 2-59, 2-61, 2-63, 2-69, 2-71, 2-73, 2-75, 2-77
2663377-0000	.INDUCTOR	1-89, 1-91, 1-93, 1-95, 1-97, 1-99, 2-191, 2-193, 2-195

Part No	Description	Page No
2663378-0000	.INDUCTOR	1-89, 1-91, 1-93, 1-95, 1-97, 1-99, 2-133, 2-135, 2-137
2664035-0000	.SPACER SCREW	3-107, 3-109, 3-111
2664200-0000	.GUIDE	3-69, 3-71
2664201-0000	.GUIDE	3-77, 3-79
2664280-0000	.HOLDER	2-133, 2-135, 2-137, 2-191, 2-193, 2-195
2664596-0000	.CARRIER	3-223, 3-225, 3-227
2664761-0000	.KNIFE	1-89, 1-91, 1-93, 1-95, 1-97, 1-99, 2-223
2664762-0000	.CUTTING JAW	2-159, 2-161, 2-163, 2-165
2664765-0000	.TEMPLATE	3-385
2664766-0000	.TEMPLATE	3-385
2664767-0000	.OPENING SPECIFICATION	3-387
2664768-0000	.OPENING SPECIFICATION	3-387
2664779-0000	.PLATE	2-247, 2-249
2664780-0000	.PLATE	2-247, 2-249
2665188-0000	.CUTTING JAW	2-159, 2-161, 2-163, 2-165
2665197-0000	.BRACKET	3-265
2665198-0000	.PROTECTION	3-267
2665199-0000	.SLIDE	3-265
2665200-0000	.GUIDE	3-61, 3-63, 3-65
2665201-0000	.GUIDE	3-61, 3-63, 3-65
2665202-0000	.GUIDE	3-69, 3-71
2665203-0000	.GUIDE	3-77, 3-79
2665204-0000	.CRADLE	3-271, 3-273
2665205-0000	.PLATE	3-271, 3-273, 3-275
2665206-0000	.PLATE	3-271, 3-273, 3-275
2665624-0000	.BENDING ROLLER	1-163
2665720-0000	.SUPPORT	2-263
2665721-0000	.SHAFT	2-263
2665722-0000	.SUPPORT	2-263
2668220-0000	.BOTTOM	3-137, 3-139, 3-141
2668221-0000	.FLAP	3-137, 3-139, 3-141
2668222-0000	.SLIDE	3-137, 3-139, 3-141
2668223-0000	.FLAP	3-129, 3-131
2668224-0000	.GUIDE	3-69, 3-71
2668225-0000	.GUIDE	3-69, 3-71
2668226-0000	.BAR	3-69, 3-71
2668227-0000	.SLIDE	3-69, 3-71
2668228-0000	.GUIDE	3-77, 3-79
2668229-0000	.GUIDE	3-77, 3-79
2668230-0000	.BAR	3-77, 3-79
2668231-0000	.SLIDE	3-77, 3-79
2668232-0000	.BAR	3-69, 3-71
2668233-0000	.SLIDE	3-69, 3-71
2668234-0000	.BAR	3-77, 3-79
2668235-0000	.SLIDE	3-77, 3-79
2668236-0000	.LEVER	3-165, 3-167
2668237-0000	.SHAFT	3-165, 3-167
2668238-0000	.PIPE	3-161, 3-163
2668239-0000	.BLOCK	3-149, 3-151
2668240-0000	.BLOCK	3-185, 3-187, 3-189, 3-191, 3-193, 3-195
2668242-0000	.BLOCK	3-87, 3-89
2668243-0000	.GUIDE	3-87, 3-89
2668244-0000	.HOLDER	3-61, 3-63, 3-65
2668245-0000	.SLIDER	3-169
2668246-0000	.SLIDER	3-171
2668247-0000	.GUIDE	3-123, 3-125, 3-127
2668248-0000	.FOLDING PART	3-107, 3-109, 3-111
2668249-0000	.GUIDE RAIL	3-107, 3-109, 3-111
2668250-0000	.GUIDE RAIL	3-107, 3-109, 3-111
2668251-0000	.FOLDING PART	3-107, 3-109, 3-111
2668252-0000	.GUIDE RAIL	3-107, 3-109, 3-111
2668253-0000	.GUIDE RAIL	3-107, 3-109, 3-111
2668254-0000	.BRACKET	3-107, 3-109, 3-111
2668312-0000	.FLAP HOLDER	2-55, 2-57, 2-59, 2-61, 2-63, 2-69, 2-71, 2-73, 2-75, 2-77
2668313-0000	.FOLDING FLAP	2-169, 2-171, 2-215, 2-217, 2-219, 2-221
2668314-0000	.FOLDING FLAP	2-169, 2-171, 2-215, 2-217, 2-219, 2-221
2668315-0000	.SHAFT	2-55, 2-57, 2-59, 2-61, 2-63, 2-69, 2-71, 2-73, 2-75, 2-77
2668318-0000	.HOLDER	2-133, 2-135, 2-137, 2-191, 2-193, 2-195
2668319-0000	.CUTTING JAW	2-159, 2-161, 2-163, 2-165
2668565-0000	.NOZZLE	1-103, 1-105
2668569-0000	.PLUG	1-103, 1-105
2671730-0100	.AIR NOZZLE	1-3, 1-5, 1-7
2672745-0000	.VOLUME SHIM	1-89, 1-91, 1-93, 1-95, 1-97, 1-99, 2-85
2672746-0000	.VOLUME BULGE	2-85
2672797-0000	.TEMPLATE	3-385
2672798-0000	.TEMPLATE	3-385
2672799-0000	.TEMPLATE	3-385
2672800-0000	.TEMPLATE	3-385
2672950-0000	.ROLLER	1-41, 1-43, 1-45, 1-47
2672951-0000	.ROLLER	1-41, 1-43, 1-45, 1-47
2672952-0000	.ROLLER	1-41, 1-43, 1-45, 1-47
2672953-0000	.ROLLER	1-41, 1-43, 1-45, 1-47
2672954-0000	.ROLLER	1-41, 1-43, 1-45, 1-47
2672955-0000	.ROLLER	1-41, 1-43, 1-45, 1-47

Part No	Description	Page No
2672962-0000	.CONNECTING PIPE	1-109, 1-111
2672970-0000	.ROLLER	1-59, 1-61, 1-63
2672978-0000	.ROLLER	1-41, 1-43, 1-45, 1-47
2672979-0000	.ROLLER	1-41, 1-43, 1-45, 1-47
2672980-0000	.ROLLER	1-41, 1-43, 1-45, 1-47
2672981-0000	.ROLLER	1-41, 1-43, 1-45, 1-47
2672984-0000	.INDUCTOR	1-71, 1-73, 1-75
2672985-0000	.ROLLER	1-59, 1-61, 1-63
2672986-0000	.ROLLER	1-59, 1-61, 1-63
2672994-0000	.HOOD	1-9, 1-11, 1-13, 1-15
2673015-0000	.FORK	1-9, 1-11, 1-13, 1-15
2673016-0000	.FORK	1-9, 1-11, 1-13, 1-15
2673021-0000	.SHAFT	1-9, 1-11, 1-13, 1-15
2673022-0000	.SHAFT	1-9, 1-11, 1-13, 1-15
2673023-0000	.LOWER FORMING RING	1-31, 1-33
2674188-0100	.EDGE ROLLER	1-3, 1-5, 1-7
2674238-0000	.BOTTOM	3-135
2674239-0000	.SLIDE	3-135, 3-137, 3-139, 3-141
2674241-0000	.BOTTOM	3-137, 3-139, 3-141
2674242-0000	.SPACER	3-173, 3-175, 3-177, 3-179, 3-181, 3-183
2674244-0000	.GUIDE	3-77, 3-79
2674245-0000	.GUIDE	3-77, 3-79
2674246-0000	.BAR	3-77, 3-79
2674247-0000	.SLIDE	3-77, 3-79
2674248-0000	.PLATE	3-69, 3-71, 3-77, 3-79
2674249-0000	.GUIDE	3-69, 3-71
2674250-0000	.GUIDE	3-69, 3-71
2674251-0000	.BAR	3-69, 3-71
2674252-0000	.SLIDE	3-69, 3-71
2674253-0000	.BLOCK	3-149, 3-151
2674254-0000	.SLIDER	3-171
2674255-0000	.STRUT	3-165, 3-167
2674256-0000	.SHAFT	3-165, 3-167
2674257-0000	.PIPE	3-161, 3-163
2674258-0000	.SLIDER	3-169
2674259-0000	.GUIDE	3-123, 3-125, 3-127
2674260-0000	.FOLDING PART	3-107, 3-109, 3-111
2674261-0000	.FOLDING PART	3-107, 3-109, 3-111
2674262-0000	.FOLDING PART	3-107, 3-109, 3-111
2674263-0000	.FOLDING PART	3-107, 3-109, 3-111
2674264-0000	.FOLDING PART	3-107, 3-109, 3-111
2674265-0000	.FOLDING PART	3-107, 3-109, 3-111
2674266-0000	.SPACER	3-107, 3-109, 3-111
2674267-0000	.SPACER	3-107, 3-109, 3-111
2674268-0000	.SPACER	3-107, 3-109, 3-111
2674269-0000	.NAIL	3-197, 3-199
2674270-0000	.PUSHER	3-197, 3-199
2674271-0000	.PUSHER	3-197, 3-199
2674272-0000	.PUSHER	3-197, 3-199
2674273-0000	.PUSHER	3-197, 3-199
2674323-0000	.PLATE	2-247, 2-249
2674325-0000	.CAM	2-55, 2-57, 2-59, 2-61, 2-63, 2-69, 2-71, 2-73, 2-75, 2-77
2674326-0000	.CAM	2-55, 2-57, 2-59, 2-61, 2-63, 2-69, 2-71, 2-73, 2-75, 2-77
2674327-0000	.SHAFT	2-55, 2-57, 2-59, 2-61, 2-63, 2-69, 2-71, 2-73, 2-75, 2-77
2674328-0000	.VOLUME SHIM	1-89, 1-91, 1-93, 1-95, 1-97, 1-99, 2-55, 2-57, 2-59, 2-61, 2-63, 2-69, 2-71, 2-73, 2-75, 2-77
2674329-0000	.VOLUME BULGE	2-55, 2-57, 2-59, 2-61, 2-63, 2-69, 2-71, 2-73, 2-75, 2-77
2674331-0000	.VOLUME FLAP	2-69, 2-71, 2-73, 2-75, 2-77
2674332-0000	.VOLUME FLAP	2-55, 2-57, 2-59, 2-61, 2-63
2674333-0000	.VOLUME FLAP	2-69, 2-71, 2-73, 2-75, 2-77
2674334-0000	.VOLUME FLAP	2-55, 2-57, 2-59, 2-61, 2-63
2674335-0000	.HOLDER	2-133, 2-135, 2-137, 2-191, 2-193, 2-195
2674336-0000	.CUTTING JAW	2-159, 2-161, 2-163, 2-165
2674511-0000	.CAM	3-289, 3-291
2675322-0000	.SLIDE	3-77, 3-79
2675323-0000	.SLIDE	3-69, 3-71
2676615-0000	.NOZZLE	3-173, 3-175, 3-177, 3-179, 3-181, 3-183
2676616-0000	.NOZZLE	3-173, 3-175, 3-177, 3-179, 3-181, 3-183
2676617-0000	.NOZZLE	3-173, 3-175, 3-177, 3-179, 3-181, 3-183
2676815-0000	.FOLDING BAR	3-97, 3-99
2676816-0000	.FOLDING BAR	3-97, 3-99
2676933-0000	.BUSHING	2-55, 2-57, 2-59, 2-61, 2-63, 2-69, 2-71, 2-73, 2-75, 2-77
2676934-0000	.STOP	2-55, 2-57, 2-59, 2-61, 2-63, 2-69, 2-71, 2-73, 2-75, 2-77
2677383-0000	.ROLLER	2-247, 2-249
2677899-0000	.WASHER	2-253, 2-255, 2-257
2678417-0000	.WHEEL	3-245, 3-247
2678621-0000	.GUIDE	3-77, 3-79
2678622-0000	.GUIDE	3-69, 3-71
2678706-0104	.REBUILDING MANUAL	3-279
2678708-0000	.SUPPORT	3-265
2678709-0100	.PROTECTIVE COVER	3-265
2678710-0100	.INFEED CONVEYOR SHORT	3-255
2678713-0000	.CAM	2-55, 2-57, 2-59, 2-61, 2-63, 2-69, 2-71, 2-73, 2-75, 2-77
2678714-0000	.CAM	2-55, 2-57, 2-59, 2-61, 2-63, 2-69, 2-71, 2-73, 2-75, 2-77

Part No	Description	Page No
2678717-0000	.VOLUME SHIM	1-89, 1-91, 1-93, 1-95, 1-97, 1-99, 2-55, 2-57, 2-59, 2-61, 2-63, 2-69, 2-71, 2-73 ..... 2-75, 2-77
2678753-0000	.PLATE	3-265
2678838-0000	.VOLUME BULGE	2-55, 2-57, 2-59, 2-61, 2-63, 2-69, 2-71, 2-73, 2-75, 2-77
2678839-0000	.VOLUME SHIM	1-89, 1-91, 1-93, 1-95, 1-97, 1-99, 2-55, 2-57, 2-59, 2-61, 2-63, 2-69, 2-71, 2-73 ..... 2-75, 2-77
2678840-0000	.VOLUME BULGE	2-55, 2-57, 2-59, 2-61, 2-63, 2-69, 2-71, 2-73, 2-75, 2-77
2678844-0200	.PT FLEX HOLES	3-235
2679598-0000	.SPLASH PLATE	1-109, 1-111
2679599-0000	.CHUTE	1-109, 1-111
2679735-0000	.SPRING	2-31, 2-33, 2-43, 2-45
2679736-0000	.SPRING	2-31, 2-33, 2-43, 2-45
2679884-0000	.BRACKET	2-253, 2-255, 2-257
2679885-0000	.SLIDE	2-253, 2-255, 2-257
2679886-0000	.KNOB	2-253, 2-255, 2-257
2679952-0000	.VOLUME BULGE	2-159, 2-161, 2-163, 2-165
2679953-0000	.VOLUME BULGE	2-133, 2-135, 2-137, 2-191, 2-193, 2-195
2680193-0000	.ROLLER	1-59, 1-61, 1-63
2680195-0000	.ROLLER	1-41, 1-43, 1-45, 1-47
2680196-0000	.ROLLER	1-41, 1-43, 1-45, 1-47
2680197-0000	.ROLLER	1-41, 1-43, 1-45, 1-47
2680198-0000	.ROLLER	1-41, 1-43, 1-45, 1-47
2680201-0000	.ROLLER	1-41, 1-43, 1-45, 1-47
2680332-0000	.SHIM	1-89, 1-91, 1-93, 1-95, 1-97, 1-99
2681244-0000	.PLATE	2-247, 2-249
2681259-0000	.RAIL	1-145, 1-147
2681260-0000	.RAIL	1-145, 1-147
2681261-0000	.SHAFT	1-141, 1-143
2681262-0000	.BRACKET	1-141, 1-143
2681263-0000	.BUSHING	1-141, 1-143
2681266-0000	.WASHER	1-141, 1-143
2681267-0000	.PLATE	1-145, 1-147
2681535-0000	.SHAFT	1-145, 1-147
2681617-0000	.GEAR WHEEL	2-263, 2-265
2681618-0000	.WORM WHEEL	2-263
2681619-0000	.WORM GEAR	2-263
2682167-0000	.ROLLER	1-59, 1-61, 1-63
2682168-0000	.ROLLER	1-59, 1-61, 1-63
2682169-0000	.ROLLER	1-59, 1-61, 1-63
2682170-0000	.ROLLER	1-59, 1-61, 1-63
2682172-0000	.FLAP	2-105, 2-109
2682173-0000	.FLAP	2-105, 2-109
2682174-0000	.WASHER	2-105, 2-109, 2-111, 2-115
2682187-0000	.VOLUME FLAP	2-105, 2-109, 2-111, 2-115
2682188-0000	.FLAP	2-111, 2-115
2682189-0000	.FLAP	2-111, 2-115
2682190-0000	.FLAP	2-105, 2-109
2682191-0000	.FLAP	2-105, 2-109
2682198-0000	.ARM	2-7
2682199-0000	.ARM	2-5
2682222-0000	.CARRIER	3-223, 3-225, 3-227
2685285-0000	.BRACKET	1-9, 1-11, 1-13, 1-15
2685311-0000	.CONNECTING PIPE	1-109, 1-111
2685408-0000	.TEMPLATE	1-3, 1-5, 1-7
2685631-0000	.ROLLER	1-59, 1-61, 1-63
2685632-0000	.ROLLER	1-59, 1-61, 1-63
2685633-0000	.ROLLER	1-59, 1-61, 1-63
2686144-0000	.SHAFT	2-133, 2-135, 2-137, 2-159, 2-161, 2-163, 2-165, 2-191, 2-193, 2-195
2686489-0100	.PANEL	3-281, 3-283, 3-285
2686861-0000	.ROLLER	1-31, 1-33
2686876-0000	.PUSHER	3-185, 3-187, 3-189, 3-191, 3-193, 3-195
2687110-0000	.LOCK WASHER	3-391
2687787-0000	.RAIL	3-205, 3-207, 3-209, 3-211, 3-213, 3-215
2688917-0000	.ROLLER	2-247, 2-249
2689138-0000	.MOUNTING BLOCK	1-145, 1-147
2689172-0000	.SPACER	1-41, 1-43, 1-45, 1-47
2689173-0000	.MOUNTING BLOCK	1-145, 1-147
2690377-0000	.BRACKET	1-173
2691316-0000	.ANGLE BRACKET	3-287
2691317-0000	.PLATE	3-287
2691318-0000	.PLATE	3-287
2691320-0000	.HOUSING	3-287
2691321-0000	.SUPPORT	3-287
2691322-0000	.PLATE	3-287
2691421-0000	.SHIM	2-263
2691695-0100	.BOX 5 - SUPERSTRUCTURE	1-3, 1-5, 1-7
2693161-0100	.INSTALLATION MATERIAL	3-281, 3-283, 3-285
2693197-0000	.INSERT	3-129, 3-131
2693199-0000	.PLATE	1-145, 1-147
2693200-0000	.SCREW	3-129, 3-131
2693454-0000	.CARRIER	3-223, 3-225, 3-227
2693457-0000	.RAIL	3-205, 3-207, 3-209, 3-211, 3-213, 3-215
2693459-0000	.BRACKET	3-205, 3-207, 3-209, 3-211, 3-213, 3-215
2693460-0000	.BRACKET	3-205, 3-207, 3-209, 3-211, 3-213, 3-215

Part No	Description	Page No
2693461-0000	.RAIL	3-205, 3-207, 3-209, 3-211, 3-213, 3-215
2693462-0000	.RAIL	3-205, 3-207, 3-209, 3-211, 3-213, 3-215
2693463-0000	.RAIL	3-205, 3-207, 3-209, 3-211, 3-213, 3-215
2693464-0000	.RAIL	3-205, 3-207, 3-209, 3-211, 3-213, 3-215
2693622-0000	.SPACER	1-17
2694025-0000	.SEALING PLATE	3-355
2694095-0000	.BRACKET	2-253, 2-255, 2-257
2694714-0000	.GUIDE	1-71, 1-73, 1-75
2694715-0000	.SUPPORT	1-71, 1-73, 1-75
2694716-0000	.PLATE	1-71, 1-73, 1-75
2695408-0000	.HOLDER	2-233
2695409-0000	.HOLDER	2-231
2695493-0000	.OPENING SPECIFICATION	3-387
2695800-0000	.INDUCTOR	1-71, 1-73, 1-75
2695955-0100	.VOLUME FLAP	2-83, 2-91
2695955-0101	.VOLUME FLAP	4-33, 4-35
2695955-0102	.VOLUME FLAP	4-33, 4-35
2696156-0100	.VOLUME FLAP	2-91
2696182-0100	.VOLUME FLAP	2-83
2696411-0000	.SPACER	1-41, 1-43, 1-45, 1-47
2696412-0000	.SPACER	1-41, 1-43, 1-45, 1-47
2696580-0000	.OPENING SPECIFICATION	3-387
2696806-0000	.ROLLER	2-247, 2-249
2696851-0000	.RETAINING RING	3-161, 3-163
2697138-0100	.CLUTCH	3-231
2697205-0000	.OPENING SPECIFICATION	3-387
2697307-0000	.CURVE	2-235, 2-237, 2-239, 2-241
2698011-0000	.BUSBAR	2-133, 2-135, 2-137
2698012-0000	.BUSBAR	2-191, 2-193, 2-195
2698251-0000	.BOX	4-3
2698260-0000	.VOLUME SHIM	3-185, 3-187, 3-189, 3-191, 3-193, 3-195
2698261-0000	.VOLUME BULGE	3-185, 3-187, 3-189, 3-191, 3-193, 3-195
2698262-0000	.VOLUME BULGE	3-185, 3-187, 3-189, 3-191, 3-193, 3-195
2698263-0000	.VOLUME BULGE	3-185, 3-187, 3-189, 3-191, 3-193, 3-195
2698264-0000	.FLAP	3-185, 3-187, 3-189, 3-191, 3-193, 3-195
2698265-0000	.FLAP	3-185, 3-187, 3-189, 3-191, 3-193, 3-195
2698293-0000	.FOLDING DEVICE	3-169
2698294-0000	.FOLDING DEVICE	3-171
2698299-0000	.BRACKET	3-97, 3-99
2698300-0000	.PLATE	3-185, 3-187, 3-189, 3-191, 3-193, 3-195
2698319-0000	.BLOCK	3-197, 3-199
2698625-0000	.SHAFT	2-247, 2-249
2698626-0000	.PLATE	2-247, 2-249
2698631-0000	.VOLUME BULGE	2-133, 2-135, 2-137, 2-159, 2-161, 2-163, 2-165, 2-191, 2-193, 2-195
2698638-0100	.VOLUME FLAP CUTTING RIGHT	2-9
2698639-0100	.VOLUME FLAP PRESSURE RIGHT	2-9
2699106-0000	.SIDE PLATE	3-253
2699107-0000	.SIDE PLATE	3-253
2699108-0000	.SHAFT	3-253
2699109-0000	.SPACER	3-253
2700151-0000	.LID	2-131
2700546-0000	.FRONT RING	1-31, 1-33
2701063-0100	.DROP CHUTE VARIANT	3-235
2701846-0000	.FLANGE	3-403
2701847-0000	.BRACKET	3-403
2701880-0000	.FLANGE	3-403
2701881-0000	.BRACKET	3-403
2701978-0100	.LID ADAPTER	1-109, 1-111
2702068-0000	.BOX	1-109, 1-111
2702374-0100	.CONVEYOR	3-235
2703095-0000	.ROCKER ARM	1-141, 1-143
2703096-0000	.SUPPORT	1-141, 1-143
2705812-0100	.VOLUME FLAP	2-69, 2-71, 2-73, 2-75, 2-77
2705812-0101	.VOLUME FLAP	4-33, 4-35
2705812-0102	.VOLUME FLAP	4-33, 4-35
2705813-0100	.VOLUME FLAP	2-55, 2-57, 2-59, 2-61, 2-63
2705813-0101	.VOLUME FLAP	4-33, 4-35
2705813-0102	.VOLUME FLAP	4-33, 4-35
2705814-0100	.PUSHER	3-185, 3-187, 3-189, 3-191, 3-193, 3-195
2705814-0101	.PUSHER	4-33, 4-35
2705814-0102	.PUSHER	4-33, 4-35
2705814-0103	.PUSHER	4-33, 4-35
2705814-0104	.PUSHER	4-33, 4-35
2707506-0000	.SHAFT	1-173
2708322-0000	.RAIL	3-107, 3-109, 3-111
2708323-0000	.RAIL	3-107, 3-109, 3-111
2709213-0000	.FLANGE	1-125, 1-127, 1-129, 1-131, 1-133
2709214-0000	.FLANGE	1-125, 1-127, 1-129, 1-131, 1-133
2709302-0000	.ROLLER	1-59, 1-61, 1-63
2709603-0000	.BOX	3-281, 3-283, 3-285
2709785-0000	.ROLLER	1-31, 1-33
2710777-0000	.PLATE	3-323, 3-325, 3-327
2710797-0000	.DAMPER AXLE	3-323, 3-325, 3-327
2710802-0000	.SPACER	3-301

Part No	Description	Page No
2710803-0000	.PLATE	3-323, 3-325, 3-327
2711289-0000	.SUPPORT	2-265
2715294-0000	.TEMPLATE	3-385
2715295-0000	.BRACKET	2-253, 2-255, 2-257
2715296-0000	.BRACKET	2-253, 2-255, 2-257
2715297-0000	.BOW CLAMP	2-253, 2-255, 2-257
2715298-0000	.BRACKET	1-79, 1-81, 1-83, 1-85
2715299-0000	.BRACKET	1-79, 1-81, 1-83, 1-85
2715302-0000	.BRACKET	2-253, 2-255, 2-257
2715495-0000	.RAIL	3-205, 3-207, 3-209, 3-211, 3-213, 3-215
2715496-0000	.RAIL	3-205, 3-207, 3-209, 3-211, 3-213, 3-215
2715497-0000	.RAIL	3-205, 3-207, 3-209, 3-211, 3-213, 3-215
2715498-0000	.RAIL	3-205, 3-207, 3-209, 3-211, 3-213, 3-215
2715500-0000	.RAIL	3-205, 3-207, 3-209, 3-211, 3-213, 3-215
2715501-0000	.BRACKET	3-205, 3-207, 3-209, 3-211, 3-213, 3-215
2715502-0000	.SUPPORTING ARM	3-201, 3-203
2715503-0000	.RAIL	3-205, 3-207, 3-209, 3-211, 3-213, 3-215
2715504-0000	.RAIL	3-205, 3-207, 3-209, 3-211, 3-213, 3-215
2715567-0000	.BRACKET	1-177
2715569-0000	.BRACKET	1-9, 1-11, 1-13, 1-15
2715570-0000	.ROLLER	1-177
2715649-0004	.SPACER	1-177
2715649-0005	.SPACER	1-177
2715649-0008	.SPACER	1-177
2715650-0002	.SCREW	1-177
2715650-0003	.SCREW	1-177
2715650-0005	.SCREW	1-177
2715650-0006	.SCREW	1-177
2715652-0000	.FORK	1-9, 1-11, 1-13, 1-15
2716441-0000	.BOTTOM PLATE	1-119, 1-121
2716442-0000	.PLATE	1-119, 1-121
2718901-0000	.SEAL	1-23, 1-25
2719081-0000	.BRACKET	2-253, 2-255, 2-257
2719737-0000	.PNEUMATIC DIAGRAM	4-31
2719738-0000	.PNEUMATIC DIAGRAM	4-31
2720717-0000	.ROLLER	1-41, 1-43, 1-45, 1-47
2720846-0000	.COUNTER ROLLER	1-31, 1-33
2721423-0000	.FORMING RING	1-31, 1-33
2721434-0000	.SHAFT	1-109, 1-111
2724927-0000	.BRACKET	2-253, 2-255, 2-257
2724928-0000	.SLIDE	2-253, 2-255, 2-257
2724929-0000	.KNOB	2-253, 2-255, 2-257
2724930-0000	.SCREW	2-253, 2-255, 2-257
2724932-0000	.NUT	2-253, 2-255, 2-257
2724934-0000	.BRACKET	3-205, 3-207, 3-209, 3-211, 3-213, 3-215
2724936-0000	.BRACKET	3-205, 3-207, 3-209, 3-211, 3-213, 3-215
2724937-0000	.SUPPORTING ARM	3-201, 3-203
2724940-0000	.RAIL	3-205, 3-207, 3-209, 3-211, 3-213, 3-215
2724941-0000	.RAIL	3-205, 3-207, 3-209, 3-211, 3-213, 3-215
2724942-0000	.RAIL	3-205, 3-207, 3-209, 3-211, 3-213, 3-215
2724943-0000	.RAIL	3-205, 3-207, 3-209, 3-211, 3-213, 3-215
2724944-0000	.RAIL	3-205, 3-207, 3-209, 3-211, 3-213, 3-215
2724945-0000	.RAIL	3-205, 3-207, 3-209, 3-211, 3-213, 3-215
2724946-0000	.RAIL	3-205, 3-207, 3-209, 3-211, 3-213, 3-215
2724947-0000	.RAIL	3-205, 3-207, 3-209, 3-211, 3-213, 3-215
2724948-0000	.RAIL	3-205, 3-207, 3-209, 3-211, 3-213, 3-215
2724949-0000	.RAIL	3-205, 3-207, 3-209, 3-211, 3-213, 3-215
2724950-0000	.RAIL	3-205, 3-207, 3-209, 3-211, 3-213, 3-215
2724951-0000	.RAIL	3-205, 3-207, 3-209, 3-211, 3-213, 3-215
2724952-0000	.SUPPORTING ARM	3-201, 3-203
2725392-0000	.STOP	2-55, 2-57, 2-59, 2-61, 2-63, 2-69, 2-71, 2-73, 2-75, 2-77
2725393-0000	.STOPPER	2-55, 2-57, 2-59, 2-61, 2-63, 2-69, 2-71, 2-73, 2-75, 2-77
2725394-0000	.FLAP HOLDER	2-55, 2-57, 2-59, 2-61, 2-63, 2-69, 2-71, 2-73, 2-75, 2-77
2725526-0000	.SCREW	1-71, 1-73, 1-75
2725530-0000	.ROLLER	1-59, 1-61, 1-63
2725531-0000	.ROLLER	1-59, 1-61, 1-63
2725532-0000	.ROLLER	1-59, 1-61, 1-63
2725826-0000	.CLAMP	3-61, 3-63, 3-65
2725827-0000	.SPACER	3-61, 3-63, 3-65
2727659-0000	.PROTECTION PLATE	3-145, 3-147
2727703-0000	.GASKET	2-253, 2-255, 2-257
2728205-0100	.KIT	1-109, 1-111
2728241-0000	.BRACKET	3-237
2728883-0000	.OLDING FLAP	2-169, 2-171, 2-215, 2-217, 2-219, 2-221
2728884-0000	.OLDING FLAP	2-169, 2-171, 2-215, 2-217, 2-219, 2-221
2731260-0100	.KIT	1-109, 1-111
2731428-0000	.NUT	1-31, 1-33, 1-41, 1-43, 1-45, 1-47
2731438-0000	.FILLING PIPE	1-9, 1-11, 1-13, 1-15
2731442-0000	.ROLLER	1-59, 1-61, 1-63
2731446-0000	.SUPPORT ROLLER	1-59, 1-61, 1-63
2731503-0000	.LOWER FORMING RING	1-31, 1-33
2731506-0000	.LOWER FORMING RING	1-31, 1-33
2732810-0000	.BRACKET	3-205, 3-207, 3-209, 3-211, 3-213, 3-215
2732811-0000	.RAIL	3-205, 3-207, 3-209, 3-211, 3-213, 3-215

Part No	Description	Page No
2732812-0000	.RAIL	3-205, 3-207, 3-209, 3-211, 3-213, 3-215
2732814-0000	.BRACKET	3-205, 3-207, 3-209, 3-211, 3-213, 3-215
2732815-0000	.BRACKET	3-205, 3-207, 3-209, 3-211, 3-213, 3-215
2732819-0000	.RAIL	3-205, 3-207, 3-209, 3-211, 3-213, 3-215
2732820-0100	.RAIL OUT FEED	3-5
2732821-0000	.RAIL	3-205, 3-207, 3-209, 3-211, 3-213, 3-215
2732822-0000	.BRACKET	3-205, 3-207, 3-209, 3-211, 3-213, 3-215
2732824-0000	.RAIL	3-205, 3-207, 3-209, 3-211, 3-213, 3-215
2732825-0100	.RAIL	3-5
2732826-0000	.RAIL	3-205, 3-207, 3-209, 3-211, 3-213, 3-215
2732827-0000	.BRACKET	3-205, 3-207, 3-209, 3-211, 3-213, 3-215
2734450-0000	.LEVER	3-223, 3-225, 3-227
2734451-0000	.LEVER	3-223, 3-225, 3-227
2734454-0000	.CARRIER	3-223, 3-225, 3-227
2734456-0000	.CARRIER	3-223, 3-225, 3-227
2735125-0000	.GUIDE UPPER	3-97, 3-99
2735126-0000	.GUIDE UPPER	3-97, 3-99
2735127-0000	.RAIL	3-107, 3-109, 3-111
2735128-0000	.RAIL	3-107, 3-109, 3-111
2735131-0000	.BRACKET	3-365, 3-367
2735132-0000	.SUPPORT	3-365, 3-367
2735473-0000	.BRACKET	2-253, 2-255, 2-257
2735474-0000	.SLIDE	2-253, 2-255, 2-257
2736138-0000	.CARRIER RULER	2-169, 2-171
2736139-0000	.CARRIER RULER	2-215, 2-217, 2-219, 2-221
2736628-0000	.LOWER FORMING RING	1-31, 1-33
2736629-0000	.LOWER FORMING RING	1-31, 1-33
2736630-0000	.LOWER FORMING RING	1-31, 1-33
2736631-0000	.UPPER FORMING RING	1-41, 1-43, 1-45, 1-47
2736632-0000	.UPPER FORMING RING	1-41, 1-43, 1-45, 1-47
2736633-0000	.UPPER FORMING RING	1-41, 1-43, 1-45, 1-47
2736634-0000	.UPPER FORMING RING	1-41, 1-43, 1-45, 1-47
2736635-0000	.UPPER FORMING RING	1-41, 1-43, 1-45, 1-47
2736636-0000	.UPPER FORMING RING	1-41, 1-43, 1-45, 1-47
2736676-0000	.UPPER FORMING RING	1-41, 1-43, 1-45, 1-47
2736677-0000	.UPPER FORMING RING	1-41, 1-43, 1-45, 1-47
2736697-0000	.UPPER FORMING RING	1-41, 1-43, 1-45, 1-47
2736705-0000	.LOWER FORMING RING	1-31, 1-33
2736719-0000	.PLATE	1-175
2737034-0000	.TIE ROD	2-147, 2-149, 2-203, 2-205
2737447-0000	.HOLDER	3-303
2737771-0000	.PLUNGER	2-177
2737772-0000	.PLUNGER	2-177
2737773-0000	.PLUNGER	2-177
2738040-0100	.SPLICE DETECTOR	1-3, 1-5, 1-7
2739682-0000	.SPACER SCREW	3-161, 3-163
2743397-0000	.SHIM	1-89, 1-91, 1-93, 1-95, 1-97, 1-99
2746136-0000	.SPRING	2-55, 2-57, 2-59, 2-61, 2-63, 2-69, 2-71, 2-73, 2-75, 2-77
2746137-0000	.SPRING	2-55, 2-57, 2-59, 2-61, 2-63, 2-69, 2-71, 2-73, 2-75, 2-77
2746790-0000	.FOLDING DEVICE	3-169
2746791-0000	.FOLDING DEVICE	3-171
2747138-0000	.VOLUME FLAP	2-55, 2-57, 2-59, 2-61, 2-63, 2-69, 2-71, 2-73, 2-75, 2-77
2747139-0000	.CAM	2-227, 2-229
2747142-0000	.VOLUME FLAP	2-55, 2-57, 2-59, 2-61, 2-63, 2-69, 2-71, 2-73, 2-75, 2-77
2748115-0000	.CRADLE	3-271, 3-273
2748696-0000	.BRACKET	3-323, 3-325, 3-327
2750544-0000	.SPACER	3-97, 3-99
2751478-0000	.ROLLER	1-41, 1-43, 1-45, 1-47
2751479-0000	.ROLLER	1-41, 1-43, 1-45, 1-47
2751480-0000	.ROLLER	1-41, 1-43, 1-45, 1-47
2751481-0000	.ROLLER	1-41, 1-43, 1-45, 1-47
2751482-0000	.ROLLER	1-41, 1-43, 1-45, 1-47
2751483-0000	.ROLLER	1-41, 1-43, 1-45, 1-47
2751788-0000	.CRADLE	3-271, 3-273
2752533-0000	.SPACER	3-97, 3-99
2752534-0000	.SPACER	3-107, 3-109, 3-111
2752647-0000	.GUIDE	3-69, 3-71
2752648-0000	.GUIDE	3-77, 3-79
2752754-0000	.RAIL	3-205, 3-207, 3-209, 3-211, 3-213, 3-215
2752756-0000	.RAIL	3-205, 3-207, 3-209, 3-211, 3-213, 3-215
2752757-0000	.RAIL	3-205, 3-207, 3-209, 3-211, 3-213, 3-215
2752758-0000	.RAIL	3-205, 3-207, 3-209, 3-211, 3-213, 3-215
2752759-0000	.BRACKET	3-205, 3-207, 3-209, 3-211, 3-213, 3-215
2752760-0000	.RAIL	3-205, 3-207, 3-209, 3-211, 3-213, 3-215
2756349-0000	.SPACER	4-13, 4-15
2757847-0000	.PUSHER	3-185, 3-187, 3-189, 3-191, 3-193, 3-195
2758120-0000	.PROTECTION	3-323, 3-325, 3-327
2759322-0000	.ROLLER	1-41, 1-43, 1-45, 1-47
2759323-0000	.ROLLER	1-41, 1-43, 1-45, 1-47
2759331-0000	.SHAFT	2-55, 2-57, 2-59, 2-61, 2-63, 2-69, 2-71, 2-73, 2-75, 2-77
2760089-0000	.STOP	4-13, 4-15
2760120-0000	.PLATE	4-13, 4-15
2760121-0000	.BAR	4-13, 4-15
2760126-0000	.SPACER	4-13, 4-15

Part No	Description	Page No
2760313-0000	.PLATE	4-13, 4-15
2761017-0000	.SUPPORT RING	1-59, 1-61, 1-63
2761018-0000	.ROLLER	1-59, 1-61, 1-63
2761019-0000	.ROLLER	1-59, 1-61, 1-63
2761020-0000	.ROLLER	1-59, 1-61, 1-63
2761021-0000	.ROLLER	1-59, 1-61, 1-63
2761022-0000	.LOCK PLATE	1-59, 1-61, 1-63
2761023-0100	.ARM FOLDING FLAP	2-3
2761024-0100	.ARM FOLDING FLAP	2-3
2763979-0000	.SHIM	1-113, 1-115
2764009-0000	.BRACKET	1-177
2764013-0000	.UPPER FORMING RING	1-41, 1-43, 1-45, 1-47
2764014-0000	.UPPER FORMING RING	1-41, 1-43, 1-45, 1-47
2764015-0000	.UPPER FORMING RING	1-41, 1-43, 1-45, 1-47
2764016-0000	.UPPER FORMING RING	1-41, 1-43, 1-45, 1-47
2764017-0000	.UPPER FORMING RING	1-41, 1-43, 1-45, 1-47
2764018-0000	.UPPER FORMING RING	1-41, 1-43, 1-45, 1-47
2764019-0000	.UPPER FORMING RING	1-41, 1-43, 1-45, 1-47
2764020-0000	.UPPER FORMING RING	1-41, 1-43, 1-45, 1-47
2764021-0000	.UPPER FORMING RING	1-41, 1-43, 1-45, 1-47
2764022-0000	.UPPER FORMING RING	1-41, 1-43, 1-45, 1-47
2764023-0000	.LOWER FORMING RING	1-31, 1-33
2764024-0000	.LOWER FORMING RING	1-31, 1-33
2764025-0000	.LOWER FORMING RING	1-31, 1-33
2764026-0000	.LOWER FORMING RING	1-31, 1-33
2764027-0000	.LOWER FORMING RING	1-31, 1-33
2764028-0000	.LOWER FORMING RING	1-31, 1-33
2764029-0000	.LOWER FORMING RING	1-31, 1-33
2764030-0000	.LOWER FORMING RING	1-31, 1-33
2764031-0000	.LOWER FORMING RING	1-31, 1-33
2764032-0000	.SHAFT	1-31, 1-33
2764033-0000	.SHAFT	1-31, 1-33
2764034-0000	.SHAFT	1-41, 1-43, 1-45, 1-47
2764035-0000	.SHAFT	1-41, 1-43, 1-45, 1-47
2764036-0000	.KNOB	1-31, 1-33, 1-41, 1-43, 1-45, 1-47
2764043-0000	.VOLUME FLAP	2-93, 2-95
2764044-0000	.VOLUME FLAP	2-87, 2-89
2764045-0000	.WEDGE	2-87, 2-89, 2-93, 2-95
2764046-0000	.VOLUME BULGE	2-87, 2-89, 2-93, 2-95
2764047-0000	.VOLUME SHIM	2-87, 2-89, 2-93, 2-95
2764048-0000	.SPACER	2-235, 2-237, 2-239, 2-241
2764049-0000	.VOLUME CAM	2-235, 2-237, 2-239, 2-241
2764050-0000	.VOLUME CAM	2-235, 2-237, 2-239, 2-241
2766751-0000	.RAIL	2-133, 2-135, 2-137
2766752-0000	.RAIL	2-191, 2-193, 2-195
2767105-0000	.PROTECTION PLATE	3-145, 3-147
2767234-0000	.INSULATING PIPE	3-173, 3-175, 3-177, 3-179, 3-181, 3-183
2767235-0000	.INSULATING PIPE	3-173, 3-175, 3-177, 3-179, 3-181, 3-183
2767236-0000	.INSULATING PIPE	3-173, 3-175, 3-177, 3-179, 3-181, 3-183
2767244-0000	.INSULATING PIPE	3-173, 3-175, 3-177, 3-179, 3-181, 3-183
2767478-0001	.ROLLER	1-89, 1-91, 1-93, 1-95, 1-97, 1-99, 2-247, 2-249
2767478-0002	.ROLLER	1-89, 1-91, 1-93, 1-95, 1-97, 1-99, 2-247, 2-249
2767478-0003	.ROLLER	1-89, 1-91, 1-93, 1-95, 1-97, 1-99
2767478-0004	.ROLLER	1-89, 1-91, 1-93, 1-95, 1-97, 1-99
2767621-0000	.SPRING	3-259, 3-261
2767760-0000	.INDUCTOR	1-89, 1-91, 1-93, 1-95, 1-97, 1-99, 2-133, 2-135, 2-137, 2-191, 2-193, 2-195
2768908-0000	.STOPPER	2-55, 2-57, 2-59, 2-61, 2-63, 2-69, 2-71, 2-73, 2-75, 2-77
2768909-0000	.STOP	2-55, 2-57, 2-59, 2-61, 2-63, 2-69, 2-71, 2-73, 2-75, 2-77
2768910-0000	.FLAP HOLDER	2-55, 2-57, 2-59, 2-61, 2-63, 2-69, 2-71, 2-73, 2-75, 2-77
2769340-0000	.CAM	2-227, 2-229
2769546-0000	.SPACER	2-227, 2-229
2769843-0000	.BLOCK	3-149, 3-151
2769844-0000	.GRUB SCREW	3-149, 3-151
2770494-0000	.FILLING PIPE	1-9, 1-11, 1-13, 1-15
2770760-0000	.PLATE	3-271, 3-273
2770761-0000	.PLATE	3-271, 3-273
2771122-0000	.SPRING	2-55, 2-57, 2-59, 2-61, 2-63, 2-69, 2-71, 2-73, 2-75, 2-77
2771123-0000	.SPRING	2-55, 2-57, 2-59, 2-61, 2-63, 2-69, 2-71, 2-73, 2-75, 2-77
2771438-0000	.GUIDE	3-69, 3-71
2771439-0000	.PLATE	3-69, 3-71, 3-77, 3-79
2771440-0000	.SLIDE	3-69, 3-71
2771441-0000	.CURVE	2-235, 2-237, 2-239, 2-241
2771442-0000	.GUIDE	3-77, 3-79
2771443-0000	.SLIDE	3-77, 3-79
2771494-0000	.BOTTOM	3-143
2771550-0000	.CAM	2-227, 2-229
2771551-0000	.CAM	2-227, 2-229
2771574-0000	.PUSHER	3-185, 3-187, 3-189, 3-191, 3-193, 3-195
2772885-0000	.FOLDING PART	3-107, 3-109, 3-111
2772887-0000	.FOLDING PART	3-107, 3-109, 3-111
2772890-0000	.FOLDING PART	3-107, 3-109, 3-111
2772891-0000	.BRACKET	3-107, 3-109, 3-111
2772892-0000	.RAIL	3-107, 3-109, 3-111
2772921-0000	.PLATE	4-13, 4-15

Part No	Description	Page No
2773080-0000	.PLATE	4-13, 4-15
2773842-0100	.BAR CODE READER	3-281, 3-283, 3-285
2773929-0000	.STOPPER	2-55, 2-57, 2-59, 2-61, 2-63, 2-69, 2-71, 2-73, 2-75, 2-77
2774452-0000	.SPACER	2-235, 2-237, 2-239, 2-241
2774468-0100	.REBUILD. KIT VALVE PANEL	1-163
2774493-0000	.COMPRESSION SPRING	1-89, 1-91, 1-93, 1-95, 1-97, 1-99, 2-223
2774547-0000	.BEARING HOUSING	2-159, 2-161, 2-163, 2-165
2774548-0000	.BEARING HOUSING	2-159, 2-161, 2-163, 2-165
2775283-0000	.BEARING HOUSING	2-159, 2-161, 2-163, 2-165
2775284-0000	.BEARING HOUSING	2-159, 2-161, 2-163, 2-165
2775285-0000	.BEARING HOUSING	2-159, 2-161, 2-163, 2-165
2775286-0000	.BEARING HOUSING	2-159, 2-161, 2-163, 2-165
2775287-0000	.BEARING HOUSING	2-159, 2-161, 2-163, 2-165
2775288-0000	.BEARING HOUSING	2-159, 2-161, 2-163, 2-165
2775290-0000	.BEARING HOUSING	2-159, 2-161, 2-163, 2-165
2775292-0000	.BEARING HOUSING	2-159, 2-161, 2-163, 2-165
2775293-0000	.BEARING HOUSING	2-159, 2-161, 2-163, 2-165
2775359-0000	.FOLDING PART	3-107, 3-109, 3-111
2775360-0000	.FOLDING PART	3-107, 3-109, 3-111
2775361-0000	.RAIL	3-107, 3-109, 3-111
2776216-0000	.FOLDING PART	3-107, 3-109, 3-111
2776217-0000	.SPACER	3-107, 3-109, 3-111
2776589-0000	.PLATE	4-13, 4-15
2776825-0000	.BAR	3-77, 3-79
2776826-0000	.BAR	3-69, 3-71
2778380-0100	.ELECTRICAL CONVERSION	3-279
2778381-0100	.ELECTRICAL DOCUMENT	3-389
2779738-0000	.GUIDE	3-61, 3-63, 3-65
2779739-0000	.GUIDE	3-61, 3-63, 3-65
2780314-0000	.PAPER GUIDE	3-289, 3-291
2780316-0100	.FOLDING PART	3-287
2790429-0000	.SHUTTER	1-17
2790430-0000	.SHUTTER	1-17
2790431-0000	.SHUTTER	1-17
2790432-0000	.SHUTTER	1-17
2790433-0000	.BODY	1-17
2793319-0000	.PLATE	1-175
2793320-0100	.TEMPLATE	1-3, 1-5, 1-7
2793321-0000	.PLATE	1-175
2793322-0000	.PLATE	1-175
2793323-0000	.PLATE	1-175
2793324-0000	.PLATE	1-175
2793325-0000	.PLATE	1-175
2793326-0000	.PLATE	1-175
2793327-0000	.PLATE	1-175
2793328-0000	.PLATE	1-175
2793329-0000	.PLATE	1-175
2793331-0000	.PLATE	1-175
2793351-0000	.UPPER FORMING RING	1-41, 1-43, 1-45, 1-47
2794783-0100	.SIMULATOR	1-109, 1-111
2794784-0001	.SIMULATION FOR TBA1890S VCK AND UK	1-167
2795023-0000	.BRACKET	2-253, 2-255, 2-257
2795034-0100	.FOLDING DEVICE	3-281, 3-283, 3-285
2796652-0000	.BOTTOM	3-137, 3-139, 3-141
2797439-0000	.FASTENING PLATE	1-79, 1-81, 1-83, 1-85, 2-253, 2-255, 2-257
2797465-0000	.SLIDE	2-253, 2-255, 2-257
2800296-0000	.BRACKET	2-253, 2-255, 2-257
2802612-0000	.BOTTOM	3-51, 3-53, 3-129, 3-131
2803220-0000	.BRACKET	1-179, 1-181
2803221-0000	.BRACKET	1-179, 1-181
2803986-0000	.STOP PIN	1-9, 1-11, 1-13, 1-15
2803987-0000	.STOP PIN	1-9, 1-11, 1-13, 1-15
2804288-0000	.BRACKET	3-205, 3-207, 3-209, 3-211, 3-213, 3-215
2804289-0000	.BRACKET	3-205, 3-207, 3-209, 3-211, 3-213, 3-215
2804290-0000	.BRACKET	3-205, 3-207, 3-209, 3-211, 3-213, 3-215
2804291-0000	.BRACKET	3-205, 3-207, 3-209, 3-211, 3-213, 3-215
2804292-0000	.BRACKET	3-205, 3-207, 3-209, 3-211, 3-213, 3-215
2804293-0000	.BRACKET	3-205, 3-207, 3-209, 3-211, 3-213, 3-215
2804294-0000	.BRACKET	3-205, 3-207, 3-209, 3-211, 3-213, 3-215
2804295-0000	.BRACKET	3-205, 3-207, 3-209, 3-211, 3-213, 3-215
2804298-0000	.BRACKET	3-205, 3-207, 3-209, 3-211, 3-213, 3-215
2804299-0000	.BRACKET	3-205, 3-207, 3-209, 3-211, 3-213, 3-215
2804300-0000	.BRACKET	3-205, 3-207, 3-209, 3-211, 3-213, 3-215
2804301-0000	.BRACKET	3-205, 3-207, 3-209, 3-211, 3-213, 3-215
2804302-0000	.BRACKET	3-205, 3-207, 3-209, 3-211, 3-213, 3-215
2804303-0000	.BRACKET	3-205, 3-207, 3-209, 3-211, 3-213, 3-215
2804304-0000	.BRACKET	3-205, 3-207, 3-209, 3-211, 3-213, 3-215
2804305-0000	.BRACKET	3-205, 3-207, 3-209, 3-211, 3-213, 3-215
2804306-0000	.BRACKET	3-205, 3-207, 3-209, 3-211, 3-213, 3-215
2804307-0000	.BRACKET	3-205, 3-207, 3-209, 3-211, 3-213, 3-215
2804308-0000	.BRACKET	3-205, 3-207, 3-209, 3-211, 3-213, 3-215
2804309-0000	.BRACKET	3-205, 3-207, 3-209, 3-211, 3-213, 3-215
2804310-0000	.BRACKET	3-205, 3-207, 3-209, 3-211, 3-213, 3-215
2804311-0000	.BRACKET	3-205, 3-207, 3-209, 3-211, 3-213, 3-215

Part No	Description	Page No
2804312-0000	.BRACKET	3-205, 3-207, 3-209, 3-211, 3-213, 3-215
2804313-0000	.BRACKET	3-205, 3-207, 3-209, 3-211, 3-213, 3-215
2804314-0000	.BRACKET	3-205, 3-207, 3-209, 3-211, 3-213, 3-215
2804857-0000	.SPACER SCREW	3-107, 3-109, 3-111
2805214-0000	.BRACKET	3-205, 3-207, 3-209, 3-211, 3-213, 3-215
2805215-0000	.BRACKET	3-205, 3-207, 3-209, 3-211, 3-213, 3-215
2808544-0000	.STOPPER	3-335
2808545-0000	.DAMPER	3-335
2808546-0000	.BRACKET	3-335
2808547-0000	.SPACER	3-335
2808769-0000	.SLIDER	3-335
2809802-0000	.GUIDE	3-335
2809845-0000	.STOP PIN	1-9, 1-11, 1-13, 1-15
2809846-0000	.STOP PIN	1-9, 1-11, 1-13, 1-15
2809847-0000	.STOP PIN	1-9, 1-11, 1-13, 1-15
2809849-0000	.STOP PIN	1-9, 1-11, 1-13, 1-15
2809850-0000	.PRESSURE FLANGE	1-9, 1-11, 1-13, 1-15
2809851-0000	.PRESSURE FLANGE	1-9, 1-11, 1-13, 1-15
2810497-0100	.STRIP MAGAZINE	3-323, 3-325, 3-327
2810565-0000	.PANEL DOOR	3-323, 3-325, 3-327
2811775-0000	.SEAL	1-89, 1-91, 1-93, 1-95, 1-97, 1-99
2812890-0000	.FLAP HOLDER	2-55, 2-57, 2-59, 2-61, 2-63, 2-69, 2-71, 2-73, 2-75, 2-77
2812891-0000	.HOLDER	2-133, 2-135, 2-137, 2-191, 2-193, 2-195
2817789-0000	.SHAFT	2-55, 2-57, 2-59, 2-61, 2-63, 2-69, 2-71, 2-73, 2-75, 2-77
2818326-0000	.RAIL	3-289, 3-291
2818564-0000	.CARRIER	3-223, 3-225, 3-227
2825375-0000	.VOLUME FLAP	2-55, 2-57, 2-59, 2-61, 2-63
2825376-0000	.VOLUME FLAP	2-69, 2-71, 2-73, 2-75, 2-77
2825377-0000	.CANTILEVER	2-55, 2-57, 2-59, 2-61, 2-63, 2-69, 2-71, 2-73, 2-75, 2-77
2825378-0000	.STOPPER	2-55, 2-57, 2-59, 2-61, 2-63, 2-69, 2-71, 2-73, 2-75, 2-77
2825379-0000	.HOLDER	2-159, 2-161, 2-163, 2-165
2826389-0000	.SPRING	1-9, 1-11, 1-13, 1-15
2826390-0000	.SPRING	1-9, 1-11, 1-13, 1-15
2826391-0000	.SPRING	1-9, 1-11, 1-13, 1-15
2826392-0000	.SPRING	1-9, 1-11, 1-13, 1-15
2826393-0000	.SPRING	1-9, 1-11, 1-13, 1-15
2826395-0000	.SPRING	1-9, 1-11, 1-13, 1-15
2826396-0000	.SPRING	1-9, 1-11, 1-13, 1-15
2826397-0000	.SPRING	1-9, 1-11, 1-13, 1-15
2826410-0000	.ROLLER	1-177
2826452-0000	.FLOAT	1-9, 1-11, 1-13, 1-15
2826453-0000	.FLOAT	1-9, 1-11, 1-13, 1-15
2826454-0000	.FLOAT	1-9, 1-11, 1-13, 1-15
2826455-0000	.FLOAT	1-9, 1-11, 1-13, 1-15
2826456-0000	.FLOAT	1-9, 1-11, 1-13, 1-15
2826457-0000	.FLOAT	1-9, 1-11, 1-13, 1-15
2826458-0000	.PRESSURE FLANGE	1-9, 1-11, 1-13, 1-15
2826463-0000	.FILLING PIPE	1-9, 1-11, 1-13, 1-15
2826464-0000	.FILLING PIPE	1-9, 1-11, 1-13, 1-15
2826465-0000	.FILLING PIPE	1-9, 1-11, 1-13, 1-15
2826467-0000	.FILLING PIPE	1-9, 1-11, 1-13, 1-15
2826470-0000	.FILLING PIPE	1-9, 1-11, 1-13, 1-15
2826471-0000	.FILLING PIPE	1-9, 1-11, 1-13, 1-15
2826472-0000	.FILLING PIPE	1-9, 1-11, 1-13, 1-15
2826473-0000	.FILLING PIPE	1-9, 1-11, 1-13, 1-15
2826474-0000	.FILLING PIPE	1-9, 1-11, 1-13, 1-15
2826478-0000	.FILLING PIPE	1-9, 1-11, 1-13, 1-15
2826479-0000	.FILLING PIPE	1-9, 1-11, 1-13, 1-15
2826596-0000	.STOPPER	2-55, 2-57, 2-59, 2-61, 2-63, 2-69, 2-71, 2-73, 2-75, 2-77
2827055-0000	.VOLUME SHIM	1-89, 1-91, 1-93, 1-95, 1-97, 1-99, 2-55, 2-57, 2-59, 2-61, 2-63, 2-69, 2-71, 2-73, 2-75, 2-77
2829261-0000	.BUSHING	2-55, 2-57, 2-59, 2-61, 2-63, 2-69, 2-71, 2-73, 2-75, 2-77
2829385-0000	.PLATE	4-13, 4-15
2829763-0000	.PLATE	4-13, 4-15
2830210-0000	.STOP	4-13, 4-15
2830359-0000	.STOP	4-13, 4-15
2831674-0000	.ROLLER	1-145, 1-147
2831675-0000	.BRACKET	1-149
2831676-0000	.BRACKET	1-149
2831678-0000	.SUPPORT	1-151
2832350-0000	.STOP	2-55, 2-57, 2-59, 2-61, 2-63, 2-69, 2-71, 2-73, 2-75, 2-77
2832351-0000	.STOP	2-55, 2-57, 2-59, 2-61, 2-63, 2-69, 2-71, 2-73, 2-75, 2-77
2832553-0000	.FILLING PIPE	1-9, 1-11, 1-13, 1-15
2832554-0000	.FILLING PIPE	1-9, 1-11, 1-13, 1-15
2832555-0000	.FILLING PIPE	1-9, 1-11, 1-13, 1-15
2832620-0000	.CLEANING CUP	1-19, 1-21
2833035-0000	.CLEANING CUP	1-19, 1-21
2833036-0000	.CLEANING CUP	1-19, 1-21
2833085-0000	.ROLLER	1-31, 1-33
2833086-0000	.ROLLER	1-31, 1-33
2833088-0000	.ROLLER	1-41, 1-43, 1-45, 1-47
2833212-0000	.ROLLER	1-41, 1-43, 1-45, 1-47
2833215-0000	.ROLLER	1-31, 1-33
2834330-0000	.VOLUME CAM	2-235, 2-237, 2-239, 2-241

Part No	Description	Page No
2834331-0000	.VOLUME CAM	2-235, 2-237, 2-239, 2-241
2836001-0000	.GUIDE	3-205, 3-207, 3-209, 3-211, 3-213, 3-215
2836002-0000	.GUIDE	3-205, 3-207, 3-209, 3-211, 3-213, 3-215
2837065-0000	.BOTTOM	3-51, 3-53
2838224-0000	.SHIM	1-89, 1-91, 1-93, 1-95, 1-97, 1-99
2838228-0000	.SHIM	1-89, 1-91, 1-93, 1-95, 1-97, 1-99
2838351-0000	.STOPPER	2-55, 2-57, 2-59, 2-61, 2-63, 2-69, 2-71, 2-73, 2-75, 2-77
2838479-0000	.FLAP HOLDER	2-55, 2-57, 2-59, 2-61, 2-63, 2-69, 2-71, 2-73, 2-75, 2-77
2838629-0000	.STOPPER	2-55, 2-57, 2-59, 2-61, 2-63, 2-69, 2-71, 2-73, 2-75, 2-77
2839175-0000	.VOLUME FLAP	2-55, 2-57, 2-59, 2-61, 2-63, 2-69, 2-71, 2-73, 2-75, 2-77
2839410-0000	.STOPPER	2-55, 2-57, 2-59, 2-61, 2-63, 2-69, 2-71, 2-73, 2-75, 2-77
2839411-0000	.FLAP HOLDER	2-55, 2-57, 2-59, 2-61, 2-63, 2-69, 2-71, 2-73, 2-75, 2-77
2839678-0000	.FLAP HOLDER	2-55, 2-57, 2-59, 2-61, 2-63, 2-69, 2-71, 2-73, 2-75, 2-77
2839679-0000	.STOPPER	2-55, 2-57, 2-59, 2-61, 2-63, 2-69, 2-71, 2-73, 2-75, 2-77
2839822-0000	.STOP	2-55, 2-57, 2-59, 2-61, 2-63, 2-69, 2-71, 2-73, 2-75, 2-77
2841895-0000	.INDUCTOR	2-133, 2-135, 2-137, 2-191, 2-193, 2-195
2843006-0000	.STOP	2-55, 2-57, 2-59, 2-61, 2-63, 2-69, 2-71, 2-73, 2-75, 2-77
2843780-0000	.PLATE	2-169, 2-171, 2-215, 2-217, 2-219, 2-221
2843850-0000	.FOLDING FLAP	2-169, 2-171, 2-215, 2-217, 2-219, 2-221
2843851-0000	.FOLDING FLAP	2-169, 2-171, 2-215, 2-217, 2-219, 2-221
2843899-0000	.SHIM	1-89, 1-91, 1-93, 1-95, 1-97, 1-99
2843903-0000	.SHIM	1-89, 1-91, 1-93, 1-95, 1-97, 1-99
2844043-0000	.SLIDE	1-101
2844044-0000	.SLIDE	1-101
2844045-0000	.SLIDE	1-101
2844046-0000	.SLIDE	1-101
2844047-0000	.SLIDE	1-101
2844776-0000	.VOLUME BULGE	2-55, 2-57, 2-59, 2-61, 2-63, 2-69, 2-71, 2-73, 2-75, 2-77
2844777-0000	.VOLUME SHIM	2-55, 2-57, 2-59, 2-61, 2-63, 2-69, 2-71, 2-73, 2-75, 2-77
2846185-0000	.ROLLER	2-55, 2-57, 2-59, 2-61, 2-63, 2-69, 2-71, 2-73, 2-75, 2-77
2846309-0000	.BRACKET	1-9, 1-11, 1-13, 1-15
2846311-0000	.FORK	1-9, 1-11, 1-13, 1-15
2846670-0000	.STOPPER	2-55, 2-57, 2-59, 2-61, 2-63, 2-69, 2-71, 2-73, 2-75, 2-77
2846997-0000	.VOLUME BULGE	2-55, 2-57, 2-59, 2-61, 2-63, 2-69, 2-71, 2-73, 2-75, 2-77
2848490-0000	.GUIDE	3-77, 3-79
2848491-0000	.GUIDE	3-69, 3-71
2848492-0000	.GUIDE	3-77, 3-79
2848493-0000	.GUIDE	3-69, 3-71
2849961-0000	.GUIDE	3-107, 3-109, 3-111
2849962-0000	.GUIDE	3-107, 3-109, 3-111
2850478-0000	.SPACER	2-235, 2-237, 2-239, 2-241
2850479-0000	.RAIL BRACKET	2-235, 2-237, 2-239, 2-241
2850480-0000	.CURVE	2-235, 2-237, 2-239, 2-241
2850481-0000	.SPACER	3-265
2851583-0000	.ROLLER	1-41, 1-43, 1-45, 1-47
2851586-0000	.ROLLER	1-41, 1-43, 1-45, 1-47
2851645-0000	.SPACER	3-107, 3-109, 3-111
2851646-0000	.SPACER	3-107, 3-109, 3-111
2851926-0000	.YOKE	3-161, 3-163
2851927-0000	.SHAFT	3-161, 3-163
2851929-0000	.STRUT	3-165, 3-167
2852009-0000	.BRACKET	3-97, 3-99
2852228-0000	.ECCENTRIC SHAFT	3-265
2854052-0000	.RAIL BRACKET	2-235, 2-237, 2-239, 2-241
2854053-0000	.RAIL BRACKET	2-235, 2-237, 2-239, 2-241
2854056-0000	.BRACKET	2-235, 2-237, 2-239, 2-241
2854963-0000	.SIDE PLATE	3-271, 3-273, 4-33, 4-35
2854964-0000	.SIDE PLATE	3-271, 3-273, 4-33, 4-35
2859597-0000	.SPACER	2-55, 2-57, 2-59, 2-61, 2-63, 2-69, 2-71, 2-73, 2-75, 2-77
2860106-0000	.SLIDE	3-69, 3-71
2860107-0000	.SLIDE	3-77, 3-79
2861573-0000	.BRACKET	2-253, 2-255, 2-257
2862307-0000	.LEVER	2-97, 2-99, 2-101, 2-103
2862308-0000	.DAMPER	2-97, 2-99, 2-101, 2-103
2862739-0000	.INSULATING PLATE	1-71, 1-73, 1-75
2862740-0000	.INSULATING PLATE	1-71, 1-73, 1-75
2862741-0000	.INSULATING PLATE	1-71, 1-73, 1-75
2862742-0000	.INSULATING PLATE	1-71, 1-73, 1-75
2862743-0000	.INSULATING PLATE	1-71, 1-73, 1-75
2862744-0000	.INSULATING PLATE	1-71, 1-73, 1-75
2862745-0000	.INSULATING PLATE	1-71, 1-73, 1-75
2862746-0000	.INSULATING PLATE	1-71, 1-73, 1-75
2862748-0000	.INSULATING PLATE	1-71, 1-73, 1-75
2862749-0000	.FLAP	3-137, 3-139, 3-141
2862750-0000	.FLAP	3-135
2863174-0000	.BUSBAR	1-109, 1-111
2866740-0000	.SHAFT	2-97, 2-99, 2-101, 2-103
2866755-0000	.FILLING PIPE	1-9, 1-11, 1-13, 1-15
2867643-0000	.BRACKET	2-235, 2-237, 2-239, 2-241
2868547-0000	.PIPE	3-157, 3-159
2868548-0000	.PIPE	3-157, 3-159
2868844-0000	.AXLE PIN	2-97, 2-99, 2-101, 2-103, 2-105, 2-109
2871119-0000	.VOLUME FLAP	2-55, 2-57, 2-59, 2-61, 2-63, 2-69, 2-71, 2-73, 2-75, 2-77
2872373-0000	.PLATE	1-23, 1-25

Part No	Description	Page No
2872375-0000	.NOZZLE	1-103, 1-105
2874715-0000	.STUD SCREW	1-77
2874716-0000	.BODY	1-77
2874717-0000	.KNOB	1-77
2874750-0000	.GLASS PANE	1-157, 1-159
2874952-0000	.BRACKET	1-79, 1-81, 1-83, 1-85
2875856-0000	.SUPPORTING ARM	3-201, 3-203
2876334-0000	.HOLDER	3-107, 3-109, 3-111
2876664-0000	.COUNTER ROLLER	1-31, 1-33
2878048-0000	.SHIM	1-89, 1-91, 1-93, 1-95, 1-97, 1-99
2878583-0000	.PLATE	2-253, 2-255, 2-257
2881044-0000	.DAMPER	4-13, 4-15
2881046-0000	.BUSHING	4-13, 4-15
2881047-0000	.BUSHING	4-13, 4-15
2881048-0000	.WASHER	4-13, 4-15
2881463-0000	.LOCKING DEVICE	1-9, 1-11, 1-13, 1-15
2885029-0000	.ROLLER	1-169, 1-171
2885429-0000	.FILLING PIPE	1-9, 1-11, 1-13, 1-15
2886173-0000	.LOCKING RING	1-9, 1-11, 1-13, 1-15
2887700-0000	.STOP PIN	1-9, 1-11, 1-13, 1-15
2887790-0000	.SHAFT	1-71, 1-73, 1-75
2888153-0000	.BRACKET	1-79, 1-81, 1-83, 1-85
2889461-0000	.ROLLER	1-59, 1-61, 1-63
2889462-0000	.PLATE	1-59, 1-61, 1-63
2889463-0000	.LOCK PLATE	1-59, 1-61, 1-63
2889464-0000	.SHAFT	1-59, 1-61, 1-63
2894434-0000	.SPRING	1-9, 1-11, 1-13, 1-15
2895146-0000	.SPRING	3-391
2895457-0000	.ROLLER	1-41, 1-43, 1-45, 1-47
2895458-0000	.ROLLER	1-41, 1-43, 1-45, 1-47
2895459-0000	.ROLLER	1-41, 1-43, 1-45, 1-47
2895460-0000	.ROLLER	1-41, 1-43, 1-45, 1-47
2895461-0000	.ROLLER	1-41, 1-43, 1-45, 1-47
2895462-0000	.ROLLER	1-41, 1-43, 1-45, 1-47
2895463-0000	.ROLLER	1-41, 1-43, 1-45, 1-47
2895557-0000	.RAIL	3-205, 3-207, 3-209, 3-211, 3-213, 3-215
2895561-0000	.SPACER	3-107, 3-109, 3-111
2895564-0000	.PROTECTION	3-259, 3-261
2896790-0000	.CAM	2-235, 2-237, 2-239, 2-241
2896791-0000	.CAM	2-235, 2-237, 2-239, 2-241
2897150-0000	.INSULATING PLATE	1-71, 1-73, 1-75
2897152-0000	.INDUCTOR	1-71, 1-73, 1-75
2897156-0100	.WEIGHT	3-3
2901228-0000	.ROLLER	1-59, 1-61, 1-63
2901229-0000	.ROLLER	1-59, 1-61, 1-63
2901291-0000	.ROLLER	1-59, 1-61, 1-63
2907974-0000	.FRAME	1-59, 1-61, 1-63
2907975-0000	.BRACKET	1-59, 1-61, 1-63
2909185-0000	.VOLUME BULGE	2-97, 2-99, 2-101, 2-103
2909850-0000	.SPACER SCREW	2-97, 2-99, 2-101, 2-103
2909851-0000	.VOLUME BULGE	2-105, 2-109, 2-111, 2-115
2909852-0000	.SHIM	1-89, 1-91, 1-93, 1-95, 1-97, 1-99, 2-105, 2-109, 2-111, 2-115
2909853-0000	.SHIM	1-89, 1-91, 1-93, 1-95, 1-97, 1-99, 2-97, 2-99, 2-101, 2-103
2912159-0000	.RAIL	3-205, 3-207, 3-209, 3-211, 3-213, 3-215
2912160-0000	.RAIL	3-205, 3-207, 3-209, 3-211, 3-213, 3-215
2912161-0000	.RAIL	3-205, 3-207, 3-209, 3-211, 3-213, 3-215
2912162-0000	.BRACKET	3-205, 3-207, 3-209, 3-211, 3-213, 3-215
2913271-0000	.RAIL	1-145, 1-147
2913272-0000	.RAIL	1-145, 1-147
2914990-0000	.BRACKET	3-205, 3-207, 3-209, 3-211, 3-213, 3-215
2914991-0000	.BRACKET	3-205, 3-207, 3-209, 3-211, 3-213, 3-215
2914992-0000	.CARRIER	3-223, 3-225, 3-227
2914993-0000	.RAIL	3-205, 3-207, 3-209, 3-211, 3-213, 3-215
2914994-0000	.RAIL	3-205, 3-207, 3-209, 3-211, 3-213, 3-215
2917412-0001	.FLAP HOLDER	2-99
2917412-0002	.FLAP HOLDER	2-101
2917412-0003	.FLAP HOLDER	2-103
2917412-0004	.FLAP HOLDER	2-97
2917413-0000	.FRAME	2-97, 2-99, 2-101, 2-103
2917414-0000	.FLAP	2-101, 2-103
2917415-0000	.FLAP	2-101, 2-103
2917416-0000	.FLAP	2-97, 2-99
2917417-0000	.FLAP	2-97, 2-99
2917418-0000	.PIN	2-97, 2-99, 2-101, 2-103
2917419-0000	.PIN	2-97, 2-99, 2-101, 2-103
2921650-0000	.SEALING PLATE	3-305
2921651-0000	.SEALING PLATE	3-305
2922489-0000	.PIN	2-97, 2-99, 2-101, 2-103
2922524-0000	.SCREW	2-97, 2-99, 2-101, 2-103
2922536-0000	.SPRING	2-97, 2-99, 2-101, 2-103, 2-107, 2-113, 2-117
2922537-0000	.SPRING	2-97, 2-99, 2-101, 2-103, 2-107, 2-113, 2-117
2922539-0100	.VOLUME FLAP PRESSURE RIGHT	2-9
2922540-0100	.VOLUME FLAP CUTTING RIGHT	2-9
2926120-0000	.RAIL	3-205, 3-207, 3-209, 3-211, 3-213, 3-215

Part No	Description	Page No
2926121-0000	.RAIL	3-205, 3-207, 3-209, 3-211, 3-213, 3-215
2926122-0000	.BRACKET	3-205, 3-207, 3-209, 3-211, 3-213, 3-215
2926123-0000	.BRACKET	3-205, 3-207, 3-209, 3-211, 3-213, 3-215
2926124-0000	.BRACKET	3-205, 3-207, 3-209, 3-211, 3-213, 3-215
2927281-0000	.SLEEVE	2-235, 2-237, 2-239, 2-241
2927573-0000	.OPENING SPECIFICATION	3-387
2927707-0000	.PIPE	3-161, 3-163
2927708-0000	.SEALING PLATE	3-355
2927709-0000	.SEALING PLATE	3-357
2928230-0100	.VOLUME FLAP CUTTING LEFT	2-9
2928231-0100	.VOLUME FLAP PRESSURE LEFT	2-9
2928232-0100	.VOLUME FLAP CUTTING LEFT	2-9
2928233-0100	.VOLUME FLAP PRESSURE LEFT	2-9
2928234-0002	.HOLDER	2-113
2928234-0003	.HOLDER	2-117
2928234-0004	.HOLDER	2-107
2928236-0100	.SHOCK ABSORBER	2-111
2928237-0100	.SHOCK ABSORBER	2-115
2928238-0100	.SHOCK ABSORBER	2-105, 2-109
2928239-0000	.HOLDER	2-97, 2-99, 2-101, 2-103, 2-105, 2-109, 2-111, 2-115
2931911-0000	.BEARING COVER	1-113, 1-115
2936481-0000	.ARM	1-113, 1-115
2936482-0000	.ARM	1-113, 1-115
2939206-0100	.INDEXING UNIT	3-235
2940465-0000	.SPACER	4-13, 4-15
2940466-0000	.SPACER	4-13, 4-15
2940467-0000	.BRACKET	4-13, 4-15
2940468-0000	.BRACKET	4-13, 4-15
2940946-0000	.BRACKET	1-71, 1-73, 1-75
2945064-0000	.FINGER	1-89, 1-91, 1-93, 1-95, 1-97, 1-99, 3-205, 3-207, 3-209, 3-211, 3-213, 3-215
2945065-0000	.RAIL	3-205, 3-207, 3-209, 3-211, 3-213, 3-215
2946883-0000	.SPACER	1-41, 1-43, 1-45, 1-47
2951498-0000	.ROLLER	1-135, 1-137
2951499-0000	.SQUEE-GEE ROLLER	1-113, 1-115, 1-125, 1-127, 1-129, 1-131, 1-133
2951500-0000	.PLATE	1-119, 1-121
2951504-0000	.PLATE	1-119, 1-121
2952684-0000	.TOOTHED PULLEY	3-257
2952685-0000	.TOOTHED PULLEY	3-257
2952687-0000	.TOOTHED PULLEY	3-263, 3-265
2952688-0000	.TOOTHED PULLEY	3-263, 3-265
2955104-0000	.PLUG	3-257, 3-263, 3-265
2955763-0000	.BEARING HOUSING	3-263, 3-265
2956875-0000	.DIE	3-349
2956876-0000	.PUNCH	3-349
2958180-0000	.CRADLE	3-271, 3-273
2958240-0000	.ROLLER	3-257, 3-263, 3-265
2958241-0000	.SHAFT	3-257, 3-263, 3-265
2958720-0000	.BOTTOM	3-51, 3-53
2959220-0000	.PLATE	3-239, 3-241
2959221-0000	.SUPPORT	3-239, 3-241
2959222-0000	.PLATE	3-239, 3-241
2959223-0000	.PLATE	3-239, 3-241
2959397-0002	.ROLLER	2-247, 2-249
2959681-0000	.SPRING	1-9, 1-11, 1-13, 1-15
2959682-0000	.HOOD	1-9, 1-11, 1-13, 1-15
2960448-0000	.LOWER FILLING TUBE	1-9, 1-11, 1-13, 1-15
2960455-0000	.CLEANING CUP	1-19, 1-21
2960579-0000	.FILLING PIPE	1-9, 1-11, 1-13, 1-15
2963360-0000	.ROLLER	3-145, 3-147
2963361-0000	.SHAFT	3-145, 3-147
2963362-0000	.BRACKET	3-205, 3-207, 3-209, 3-211, 3-213, 3-215
2963364-0000	.BRACKET	3-205, 3-207, 3-209, 3-211, 3-213, 3-215
2963366-0000	.BRACKET	3-205, 3-207, 3-209, 3-211, 3-213, 3-215
2963367-0100	.END UNIT	3-237
2968252-0000	.PLATE	1-23, 1-25
2969719-0000	.RAIL	2-133, 2-135, 2-137
2969720-0000	.RAIL	2-191, 2-193, 2-195
2969721-0000	.VOLUME BULGE	2-133, 2-135, 2-137, 2-191, 2-193, 2-195
2976352-0000	.BRACKET	1-71, 1-73, 1-75
2976353-0000	.BRACKET	1-71, 1-73, 1-75
2977498-0000	.CLEANING CUP	1-19, 1-21
2978582-0000	.INDUCTOR	2-133, 2-135, 2-137
2978583-0000	.INDUCTOR	2-191, 2-193, 2-195
2982665-0000	.VOLUME FLAP	2-11, 2-13, 2-15, 2-21, 2-23, 2-25
2982668-0000	.VOLUME FLAP	2-11, 2-13, 2-15, 2-21, 2-23, 2-25
2986657-0100	.CONTROL UNIT	2-3
2986658-0100	.CENTERING UNIT	2-3
2993134-0000	.AXLE PIN	2-11, 2-13, 2-15, 2-21, 2-23, 2-25, 2-87, 2-89, 2-93, 2-95
2993135-0000	.ROLLER	2-11, 2-13, 2-15, 2-21, 2-23, 2-25, 2-55, 2-57, 2-59, 2-61, 2-63, 2-69, 2-71, 2-73, 2-75, 2-77, 2-87, 2-89, 2-93, 2-95
2993136-0000	.ROLLER	2-11, 2-13, 2-15, 2-21, 2-23, 2-25
3004968-0000	.FLANGE	1-9, 1-11, 1-13, 1-15
3004969-0000	.PIPE	1-9, 1-11, 1-13, 1-15

Tetra Pak

SPC
Spare Parts Catalogue

Pos	Part No	Description	Page No
B			
B1321	90600-0473	INDUCTIVE SWITCH E2A-S08KS01-WP-B1-TP 5M	1-17
B1322	1478814-0000	SENSOR	1-17
B1405	90044-0194	PROX.SW. IN5329/IN3002-BPKG(EX90044-104)	1-119, 1-121
B1502	90044-0194	PROX.SW. IN5329/IN3002-BPKG(EX90044-104)	1-113, 1-115
B1504	90459-0472	KEY SAF.SW. AZ 16 02ZVRK-M20-2152-2254	1-159
B1509	90459-0472	KEY SAF.SW. AZ 16 02ZVRK-M20-2152-2254	1-157
B5103	90044-0194	PROX.SW. IN5329/IN3002-BPKG(EX90044-104)	3-257, 3-263, 3-265
B5203	90044-0194	PROX.SW. IN5329/IN3002-BPKG(EX90044-104)	3-257, 3-263, 3-265
B5302	90044-0194	PROX.SW. IN5329/IN3002-BPKG(EX90044-104)	3-185, 3-187, 3-189, 3-191, 3-193, 3-195
B5307	90459-4053	THERMOCOUPLE, 5110082-001	4-9
B5308	90459-4053	THERMOCOUPLE, 5110082-001	4-9
B5309	90459-4053	THERMOCOUPLE, 5110082-001	4-9
B5402	90232-0104	PH.CELL E3S-CT61-D-5M	3-249, 3-251
B5403	90232-0103	PH.CELL E3S-CT61-L-5M	3-249, 3-251
B5501	90232-0104	PH.CELL E3S-CT61-D-5M	3-249, 3-251
B5502	90232-0103	PH.CELL E3S-CT61-L-5M	3-249, 3-251
B8225	90459-0471	KEY SAF.SW. AZM161SK 24RKA 024 M16, 24 V	3-323, 3-325, 3-327
B8231B8232	90326-0060	THERMOCOUPLE, CR-AL	3-303
B8425	90044-0194	PROX.SW. IN5329/IN3002-BPKG(EX90044-104)	3-323, 3-325, 3-327
B8426	90458-0675	PROX.SENSOR, E2EG-X5MB1-5M	3-323, 3-325, 3-327
B8427	90458-0675	PROX.SENSOR, E2EG-X5MB1-5M	3-323, 3-325, 3-327
B8428	90458-0675	PROX.SENSOR, E2EG-X5MB1-5M	3-323, 3-325, 3-327
B8607	90232-0123	PH.CELL WLL170-P135-6011723	3-321
B43011	90458-0601	CONTRAST SCANNER, KT15W-P2110S01	2-253, 2-255, 2-257
B43012	90458-0601	CONTRAST SCANNER, KT15W-P2110S01	2-253, 2-255, 2-257
F			
FF010	2743397-0000	SHIM	1-89, 1-91, 1-93, 1-95, 1-97, 1-99
FF010	2838224-0000	SHIM	1-89, 1-91, 1-93, 1-95, 1-97, 1-99
FF010	2843899-0000	SHIM	1-89, 1-91, 1-93, 1-95, 1-97, 1-99
FF020	2680332-0000	SHIM	1-89, 1-91, 1-93, 1-95, 1-97, 1-99
FF030	263673-0000	GASKET	1-89, 1-91, 1-93, 1-95, 1-97, 1-99
FF040	2838228-0000	SHIM	1-89, 1-91, 1-93, 1-95, 1-97, 1-99
FF040	2843903-0000	SHIM	1-89, 1-91, 1-93, 1-95, 1-97, 1-99
FF040	2878048-0000	SHIM	1-89, 1-91, 1-93, 1-95, 1-97, 1-99
FF050	2945064-0000	FINGER	1-89, 1-91, 1-93, 1-95, 1-97, 1-99
J			
JS010	1110083-0002	DOLLY	1-89, 1-91, 1-93, 1-95, 1-97, 1-99
JS010	1520633-0002	DOLLY	1-89, 1-91, 1-93, 1-95, 1-97, 1-99
JS010	1520633-0005	DOLLY	1-89, 1-91, 1-93, 1-95, 1-97, 1-99
JS010	1566845-0002	DOLLY	1-89, 1-91, 1-93, 1-95, 1-97, 1-99
JS020	1110930-0000	INDUCTOR	1-89, 1-91, 1-93, 1-95, 1-97, 1-99
JS020	1110931-0000	INDUCTOR	1-89, 1-91, 1-93, 1-95, 1-97, 1-99
JS020	1110932-0000	INDUCTOR	1-89, 1-91, 1-93, 1-95, 1-97, 1-99
JS020	1110934-0000	INDUCTOR	1-89, 1-91, 1-93, 1-95, 1-97, 1-99
JS020	1110936-0000	INDUCTOR	1-89, 1-91, 1-93, 1-95, 1-97, 1-99
JS020	1110937-0000	INDUCTOR	1-89, 1-91, 1-93, 1-95, 1-97, 1-99
JS020	1110938-0000	INDUCTOR	1-89, 1-91, 1-93, 1-95, 1-97, 1-99
JS020	1520167-0000	INDUCTOR	1-89, 1-91, 1-93, 1-95, 1-97, 1-99
JS020	1533046-0000	INDUCTOR	1-89, 1-91, 1-93, 1-95, 1-97, 1-99
JS020	1566783-0000	INDUCTOR	1-89, 1-91, 1-93, 1-95, 1-97, 1-99
JS020	1566843-0000	INDUCTOR	1-89, 1-91, 1-93, 1-95, 1-97, 1-99
JS020	2546474-0000	INDUCTOR	1-89, 1-91, 1-93, 1-95, 1-97, 1-99
JS020	2587466-0000	INDUCTOR	1-89, 1-91, 1-93, 1-95, 1-97, 1-99
JS020	2587467-0000	INDUCTOR	1-89, 1-91, 1-93, 1-95, 1-97, 1-99
JS020	2610956-0000	INDUCTOR	1-89, 1-91, 1-93, 1-95, 1-97, 1-99
JS020	2663377-0000	INDUCTOR	1-89, 1-91, 1-93, 1-95, 1-97, 1-99
JS020	2663378-0000	INDUCTOR	1-89, 1-91, 1-93, 1-95, 1-97, 1-99
JS020	2767760-0000	INDUCTOR	1-89, 1-91, 1-93, 1-95, 1-97, 1-99
JS030	1035831-0000	VOLUME SHIM	1-89, 1-91, 1-93, 1-95, 1-97, 1-99
JS030	1037735-0000	VOLUME SHIM	1-89, 1-91, 1-93, 1-95, 1-97, 1-99
JS030	1040755-0000	VOLUME SHIM	1-89, 1-91, 1-93, 1-95, 1-97, 1-99
JS030	1346158-0000	VOLUME SHIM	1-89, 1-91, 1-93, 1-95, 1-97, 1-99
JS030	1349208-0000	VOLUME SHIM	1-89, 1-91, 1-93, 1-95, 1-97, 1-99
JS030	1487627-0000	VOLUME SHIM	1-89, 1-91, 1-93, 1-95, 1-97, 1-99
JS030	1511253-0000	VOLUME SHIM	1-89, 1-91, 1-93, 1-95, 1-97, 1-99
JS030	1511336-0000	VOLUME SHIM	1-89, 1-91, 1-93, 1-95, 1-97, 1-99
JS030	1511337-0000	VOLUME SHIM	1-89, 1-91, 1-93, 1-95, 1-97, 1-99
JS030	1538637-0000	VOLUME SHIM	1-89, 1-91, 1-93, 1-95, 1-97, 1-99
JS030	1539902-0000	VOLUME SHIM	1-89, 1-91, 1-93, 1-95, 1-97, 1-99
JS030	1549594-0000	VOLUME SHIM	1-89, 1-91, 1-93, 1-95, 1-97, 1-99
JS030	1549830-0000	VOLUME SHIM	1-89, 1-91, 1-93, 1-95, 1-97, 1-99
JS030	2594891-0000	VOLUME SHIM	1-89, 1-91, 1-93, 1-95, 1-97, 1-99
JS030	2605166-0000	VOLUME SHIM	1-89, 1-91, 1-93, 1-95, 1-97, 1-99
JS030	2640139-0000	VOLUME SHIM	1-89, 1-91, 1-93, 1-95, 1-97, 1-99
JS030	2654290-0000	VOLUME SHIM	1-89, 1-91, 1-93, 1-95, 1-97, 1-99
JS030	2660293-0000	VOLUME SHIM	1-89, 1-91, 1-93, 1-95, 1-97, 1-99
JS030	2660393-0000	VOLUME SHIM	1-89, 1-91, 1-93, 1-95, 1-97, 1-99
JS030	2662169-0000	VOLUME SHIM	1-89, 1-91, 1-93, 1-95, 1-97, 1-99
JS030	2674328-0000	VOLUME SHIM	1-89, 1-91, 1-93, 1-95, 1-97, 1-99
JS030	2678717-0000	VOLUME SHIM	1-89, 1-91, 1-93, 1-95, 1-97, 1-99
JS030	2678839-0000	VOLUME SHIM	1-89, 1-91, 1-93, 1-95, 1-97, 1-99

Pos	Part No	Description	Page No
J			
JS030	2827055-0000	VOLUME SHIM	1-89, 1-91, 1-93, 1-95, 1-97, 1-99
JS030	2909852-0000	SHIM	1-89, 1-91, 1-93, 1-95, 1-97, 1-99
JS030	2909853-0000	SHIM	1-89, 1-91, 1-93, 1-95, 1-97, 1-99
JS035	1539843-0000	VOLUME SHIM	1-89, 1-91, 1-93, 1-95, 1-97, 1-99
JS035	2594890-0000	VOLUME SHIM	1-89, 1-91, 1-93, 1-95, 1-97, 1-99
JS035	2660390-0000	VOLUME SHIM	1-89, 1-91, 1-93, 1-95, 1-97, 1-99
JS035	2672745-0000	VOLUME SHIM	1-89, 1-91, 1-93, 1-95, 1-97, 1-99
JS040	1348955-0000	KNIFE	1-89, 1-91, 1-93, 1-95, 1-97, 1-99
JS040	1348956-0000	KNIFE	1-89, 1-91, 1-93, 1-95, 1-97, 1-99
JS040	1348966-0000	KNIFE	1-89, 1-91, 1-93, 1-95, 1-97, 1-99
JS040	1549828-0000	KNIFE	1-89, 1-91, 1-93, 1-95, 1-97, 1-99
JS040	2664761-0000	KNIFE	1-89, 1-91, 1-93, 1-95, 1-97, 1-99
JS050	1037254-0000	SHIM	1-89, 1-91, 1-93, 1-95, 1-97, 1-99
JS060	1538109-0000	COMPRESSION SPRING	1-89, 1-91, 1-93, 1-95, 1-97, 1-99
JS060	2774493-0000	COMPRESSION SPRING	1-89, 1-91, 1-93, 1-95, 1-97, 1-99
JS100	2767478-0001	ROLLER	1-89, 1-91, 1-93, 1-95, 1-97, 1-99
JS100	2767478-0002	ROLLER	1-89, 1-91, 1-93, 1-95, 1-97, 1-99
JS100	2767478-0003	ROLLER	1-89, 1-91, 1-93, 1-95, 1-97, 1-99
JS100	2767478-0004	ROLLER	1-89, 1-91, 1-93, 1-95, 1-97, 1-99
L			
L4309	1110930-0000	INDUCTOR	2-133, 2-135, 2-137, 2-191, 2-193, 2-195
L4309	1110931-0000	INDUCTOR	2-133, 2-135, 2-137, 2-191, 2-193, 2-195
L4309	1110932-0000	INDUCTOR	2-133, 2-135, 2-137, 2-191, 2-193, 2-195
L4309	1110934-0000	INDUCTOR	2-133, 2-135, 2-137, 2-191, 2-193, 2-195
L4309	1110936-0000	INDUCTOR	2-133, 2-135, 2-137, 2-191, 2-193, 2-195
L4309	1110937-0000	INDUCTOR	2-133, 2-135, 2-137, 2-191, 2-193, 2-195
L4309	1110938-0000	INDUCTOR	2-133, 2-135, 2-137, 2-191, 2-193, 2-195
L4309	1520167-0000	INDUCTOR	2-133, 2-135, 2-137, 2-191, 2-193, 2-195
L4309	1533046-0000	INDUCTOR	2-133, 2-135, 2-137, 2-191, 2-193, 2-195
L4309	1566783-0000	INDUCTOR	2-133, 2-135, 2-137, 2-191, 2-193, 2-195
L4309	1566843-0000	INDUCTOR	2-133, 2-135, 2-137, 2-191, 2-193, 2-195
L4309	2546474-0000	INDUCTOR	2-133, 2-135, 2-137, 2-191, 2-193, 2-195
L4309	2587466-0000	INDUCTOR	2-133, 2-135, 2-137
L4309	2587467-0000	INDUCTOR	2-191, 2-193, 2-195
L4309	2610956-0000	INDUCTOR	2-133, 2-135, 2-137, 2-191, 2-193, 2-195
L4309	2663377-0000	INDUCTOR	2-191, 2-193, 2-195
L4309	2663378-0000	INDUCTOR	2-133, 2-135, 2-137
L4309	2767760-0000	INDUCTOR	2-133, 2-135, 2-137, 2-191, 2-193, 2-195
L4309	2841895-0000	INDUCTOR	2-133, 2-135, 2-137, 2-191, 2-193, 2-195
L4309	2978582-0000	INDUCTOR	2-133, 2-135, 2-137
L4309	2978583-0000	INDUCTOR	2-191, 2-193, 2-195
L8110	1520196-0000	INDUCTOR	3-359
L8110	1533360-0000	INDUCTOR	3-359
L8110	1533361-0000	INDUCTOR	3-359
L8110	1533362-0000	INDUCTOR	3-359
L8110	1533364-0000	INDUCTOR	3-359
L8110	1566708-0000	INDUCTOR	3-359
M			
M8145	90458-0523	STEPPER MOTOR SM 56.2.18J3 Z(202)	3-307
R			
R5307	90459-0707	HEATING ELEMENT 1500W/220V	4-9
R5308	90459-0707	HEATING ELEMENT 1500W/220V	4-9
R5309	90206-0030	HEATING ELEMENT 3000W, 220V	4-9
R8231R8232	907136-0000	HEATER	3-303
S			
SU010	232979-0000	PRESSURE ROLLER (PAK OF 10)	1-89, 1-91, 1-93, 1-95, 1-97, 1-99
SU010	257330-0000	PRESSURE ROLLER (10 PCS)	1-89, 1-91, 1-93, 1-95, 1-97, 1-99
SU010	272479-0000	PRESSURE ROLLER (10PCS)	1-89, 1-91, 1-93, 1-95, 1-97, 1-99
SU010	499387-0000	PRESSURE ROLLER - (10 PCS)	1-89, 1-91, 1-93, 1-95, 1-97, 1-99
SU010	2607089-0000	PRESSURE ROLLER	1-89, 1-91, 1-93, 1-95, 1-97, 1-99
SU020	2523268-0000	SHAFT	1-89, 1-91, 1-93, 1-95, 1-97, 1-99
SU020	2529416-0000	SHAFT	1-89, 1-91, 1-93, 1-95, 1-97, 1-99
SU020	2529417-0000	SHAFT	1-89, 1-91, 1-93, 1-95, 1-97, 1-99
SU020	2529418-0000	SHAFT	1-89, 1-91, 1-93, 1-95, 1-97, 1-99
SU020	2529419-0000	SHAFT	1-89, 1-91, 1-93, 1-95, 1-97, 1-99
SU020	2529420-0000	SHAFT	1-89, 1-91, 1-93, 1-95, 1-97, 1-99
SU030	315204-0215	O-RING 19,2X3 MM	1-89, 1-91, 1-93, 1-95, 1-97, 1-99
SU030	315204-0219	O-RING 29,2X3 MM	1-89, 1-91, 1-93, 1-95, 1-97, 1-99
SU030	315204-0223	O-RING 39,2X3 MM	1-89, 1-91, 1-93, 1-95, 1-97, 1-99
SU040	2500081-0000	ELBOW PIPE	1-89, 1-91, 1-93, 1-95, 1-97, 1-99
SU050	2529750-0000	COVERING PANEL	1-89, 1-91, 1-93, 1-95, 1-97, 1-99
SU060	979813-0000	PLUG	1-89, 1-91, 1-93, 1-95, 1-97, 1-99
SU070	342850-0304	GASKET 35,4X49,1X5,2 1"1/2 FDA	1-89, 1-91, 1-93, 1-95, 1-97, 1-99
SU080	2811775-0000	SEAL	1-89, 1-91, 1-93, 1-95, 1-97, 1-99
T			
T1402	67379-0404	TRANSFORMER	1-107
T1402	67379-0405	TRANSFORMER	1-107
T1402	67379-0407	TRANSFORMER	1-107
T1402	67379-0412	TRANSFORMER	1-107
T1402	67379-0414	TRANSFORMER	1-107
T1402	67379-0417	TRANSFORMER	1-107
T8110	67379-0216	TRANSFORMER	3-359

Pos	Part No	Description	Page No
T			
T8110	67379-0224	TRANSFORMER	3-359
W			
W1067	351150-0405	CABLE OLFLEX 5X0,75 MM2 LIGHT/GREY	1-157
W2017	351150-0412	CABLE OLFLEX 3X1,5 MM2 LIGHT/GREY	4-11
W2018	351150-0412	CABLE OLFLEX 3X1,5 MM2 LIGHT/GREY	4-11
W2019	351150-0412	CABLE OLFLEX 3X1,5 MM2 LIGHT/GREY	4-11
W5021	90220-0034	THERMOCABLE TEX/SITW-20F-KX 2X0,5MM2	4-11
W5022	90220-0034	THERMOCABLE TEX/SITW-20F-KX 2X0,5MM2	4-11
W5023	90220-0034	THERMOCABLE TEX/SITW-20F-KX 2X0,5MM2	4-11
X			
X8020	90459-0838	DISTRIBUTION FRAME, ASBV 4 5-66/10M	3-323, 3-325, 3-327
X8020.1	90459-0964	CONNECTOR MALE 4 PINS,7000-12781-0000000	3-323, 3-325, 3-327
X8020.2	90459-0964	CONNECTOR MALE 4 PINS,7000-12781-0000000	3-323, 3-325, 3-327
X8020.4	90459-0964	CONNECTOR MALE 4 PINS,7000-12781-0000000	3-323, 3-325, 3-327
X8145	90459-6821	MALE INSERT HAN 4A, 09 20 004 2611	3-307
X8202X8204	90459-6821	MALE INSERT HAN 4A, 09 20 004 2611	3-303
Y			
Y7402	90042-0591	PILOT VALVE, 04938-333-08	1-165

Pos	Part No	Description	Page No

Pos	Part No	Description	Page No	Pos	Part No	Description	Page No

Tetra Pak

SPC binder labels. 40 mm Full width *Note! This page is generated* **automatically.**
using the **variable definitions** *made in the* **front page** *file!!*

VCK Tetra Pak A3/Flex
648597-0100
Issue: 2009-06 Doc No: SPC-81868-0115

SPC binder labels. 30 mm Half width *Note! This page is generated* **automatically.**
using the **variable definitions** *made in the* **front page** *file!!*

VCK Tetra Pak A3/Flex
648597-0100
Issue: 2009-06 Doc No: SPC-81868-0115

VCK Tetra Pak A3/Flex
648597-0100
Issue: 2009-06 Doc No: SPC-81868-0115

VCK Tetra Pak A3/Flex
648597-0100
Issue: 2009-06 Doc No: SPC-81868-0115

VCK Tetra Pak A3/Flex
648597-0100
Issue: 2009-06 Doc No: SPC-81868-0115

VCK Tetra Pak A3/Flex
648597-0100
Issue: 2009-06 Doc No: SPC-81868-0115

VCK Tetra Pak A3/Flex
648597-0100
Issue: 2009-06 Doc No: SPC-81868-0115

VCK Tetra Pak A3/Flex
648597-0100
Issue: 2009-06 Doc No: SPC-81868-0115

VCK Tetra Pak A3/Flex
648597-0100
Issue: 2009-06 Doc No: SPC-81868-0115

VCK Tetra Pak A3/Flex
648597-0100
Issue: 2009-06 Doc No: SPC-81868-0115

VCK Tetra Pak A3/Flex
648597-0100
Issue: 2009-06 Doc No: SPC-81868-0115

VCK Tetra Pak A3/Flex
648597-0100
Issue: 2009-06 Doc No: SPC-81868-0115

VCK Tetra Pak A3/Flex
648597-0100
Issue: 2009-06 Doc No: SPC-81868-0115

VCK Tetra Pak A3/Flex
648597-0100
Issue: 2009-06 Doc No: SPC-81868-0115