EM

Electrical Manual

Tetra Pak A3/Flex

648575-0150

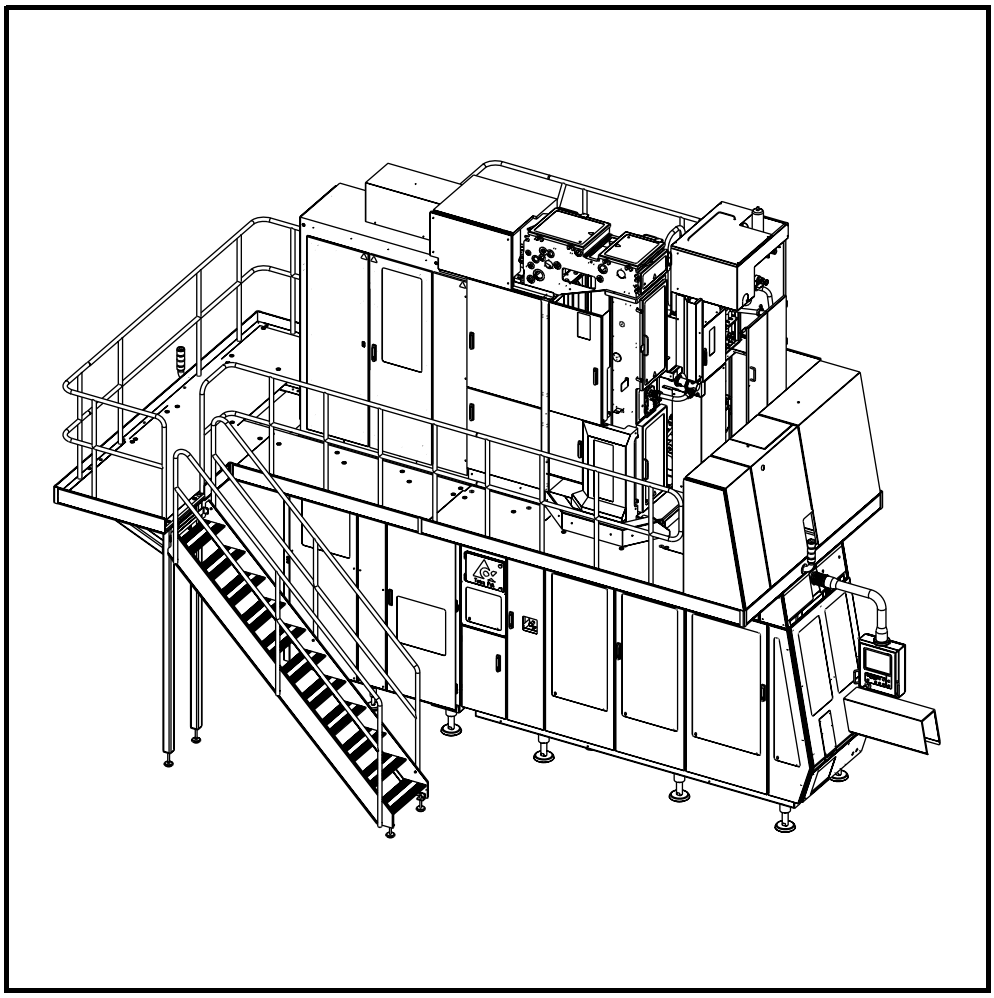

TechPub_2614345_0103 - EM_2851302_0105fro.fm

WARNING

Read and follow all safety precautions before working on or near this equipment.

Read all safety precautions throughout this manual and on safety signs attached to this equipment. Failure to follow all safety precautions could result in death or serious injury.

Tetra Pak

Doc. No. EM-2851302-0105

Copyright © 2008 Tetra Pak Group

All rights reserved. No part of this document may be reproduced or copied in any form or by any means without written permission from Tetra Pak Packaging Solutions.

Tetra Pak and all Tetra Pak products are trademarks belonging to the Tetra Pak Group.

The content of this manual is in accordance with the design and construction of the machine or equipment at the time of publishing. Tetra Pak reserves the right to introduce design modifications without prior notice.

This document was produced by:

Tetra Pak Packaging Solutions
Via Delfini, 1
41100 Modena
Italy

Additional copies can be ordered from Tetra Pak Parts or the nearest Tetra Pak office. When ordering additional copies, always provide the document number. This can be found in the machine specification document. It is also printed on the front cover and in the footer on each page of the manual.

Doc. No. EM-2851302-0105

Issue 2008-01

TechPub_2614345_0103 - EM_2851302_0105fro.fm

This manual is valid for:

Series No./ Machine No. Sign.

EM
Electrical Manual

Tetra Pak A3/Flex
648575-0150

TechPub_2614345_0103 - EM_2851302_0105fro.fm

A list of all optional equipment, optional kits, and rebuilding kits that this manual is valid for is found on the next page.

Doc. No. EM-2851302-0105

Issue 2008-01

Tetra Pak

Tetra Pak Packaging Solutions

i Introduction

ii Safety Precautions

1 Electrical Systems Description

2 Document List

3 Position Summary

4 Circuit Diagrams

5 Line Summary

6 Cabinet Terminal Summary

7 Terminal Strip Overview

8 Cable Connection List

9 Mains Connections

10 Drawing Remarks

11 Engineering Change Description

12 Component Location

13 Advanced Signal Exchange

14 Other Information

Valid for:

Tetra Pak A3/Flex
648575-0150

El. ECM No.: 320181

Valid from Series No.:

21211/00290

TechPub_2614345_0103 - EM_2851302_0105fro.fm

Update Log for Doc. No. EM-2851302-0105

This table shows all changes made to this manual, such as kits installed and pages added or removed.

Date	Installed Kit	Added Pages (Doc. No.)	Removed Pages	Signature

TechPub_2614345_0103 - EM_2851302_0105fro.fm

Date	Installed Kit	Added Pages (Doc. No.)	Removed Pages	Signature

TechPub_2614345_0103 - EM_2851302_0105fro.fm

i Introduction

TechPub_2614345_0105 - EM_2851302_0105int.fm

About the Introduction Chapter

This chapter contains basic information about this manual and the related Tetra Pak equipment.

TechPub_2614345_0105 - EM_2851302_0105int.fm

Abbreviations and Terminology . . . . . i - 5
Manual Information . . . . . i - 6
Delivered Manuals . . . . . i - 6
Page Layout . . . . . i - 7
Page Numbering. . . . . i - 8
Typographical Conventions . . . . . i - 8
Symbols . . . . . i - 8
Machine Introduction . . . . . i - 9
Intended Use of the Equipment . . . . . i - 9
Manufacturer . . . . . i - 9
Support and Feedback . . . . . i - 9
Identification . . . . . i - 10
CE Classification . . . . . i - 10
Machine Plate . . . . . i - 10
Orientation . . . . . i - 11
Hygiene. . . . . i - 12
Packaging Material. . . . . i - 12
Steam Barrier in the Product Valve . . . . . i - 12
How to Use This EM . . . . . i - 13
Numbering System for Components . . . . . i - 15
Location Designation . . . . . i - 15
Function Designation . . . . . i - 15
Running Number . . . . . i - 15
Optional Equipment . . . . . i - 16
How to Trace an Electrical Component . . . . . i - 17
Example 1: How to Trace a Line . . . . . i - 17
Example 2: How to Trace a Contactor . . . . . i - 19

TechPub_2614345_0105 - EM_2851302_0105int.fm

Example 3: How to Trace a Terminal in the Electrical Cabinet . . . . . i - 20

Example 4: How to Trace a Terminal Outside the Electrical Cabinet . . . . . i - 21

Example 5: How to Find Electrical Components Using the SPC. . . . . i - 22

TechPub_2614345_0105 - EM_2851302_0105int.fm

Abbreviations and Terminology

Abbreviation/ Terminology	Meaning	Translation
CE	Communautés Européennes/European Communities	
EM	Electrical Manual	
IM	Installation Manual	
MM	Maintenance Manual	
OM	Operation Manual	
SDS	Safety Data Sheet	
SPC	Spare Parts Catalogue	
TPMS	Tetra Pak Maintenance System	

TechPub_2614345_0105 - EM_2851302_0105int.fm

Manual Information

Tetra Pak recommends reading all delivered manuals carefully. Make sure that the delivered manuals are available to personnel who operate or maintain the equipment.

It is important to keep this manual for the lifetime of the equipment and to pass the manual on to any subsequent holder or user.

Tetra Pak will not be held responsible for any damage to the equipment caused by not following the instructions given in this manual.

Delivered Manuals

Manuals delivered with this equipment:

- CM
  The Conversion Manual provides technicians with information on converting the equipment between different production modes.
- EM
  The Electrical Manual provides technicians with information about the equipment's electrical system.
- IM
  The Installation Manual provides technicians with information required to safely install the equipment.
- MM
  The Maintenance Manual provides technicians with information on maintaining the equipment.
- OM
  The Operation Manual manual provides the operator with information on handling and operating the equipment before, during, and after production.
- SPC
  The Spare Parts Catalogue provides the information necessary to order spare parts from Tetra Pak
- TeM
  The Technical Manual
  - provides technicians with information required to safely install the equipment
  - provides technicians with information on maintaining the equipment
  - provides technicians with information about the machine's/ equipment's electrical system
  - provides the information necessary to order spare parts from Tetra Pak.

TechPub_2614345_0105 - EM_2851302_0105int.fm

Page Layout

Every main page in a manual contains a header and a footer. The page header contains the chapter name (1) and the section name (2). The page footer contains the page number (3), and the document number (4). See also the Page Numbering section.

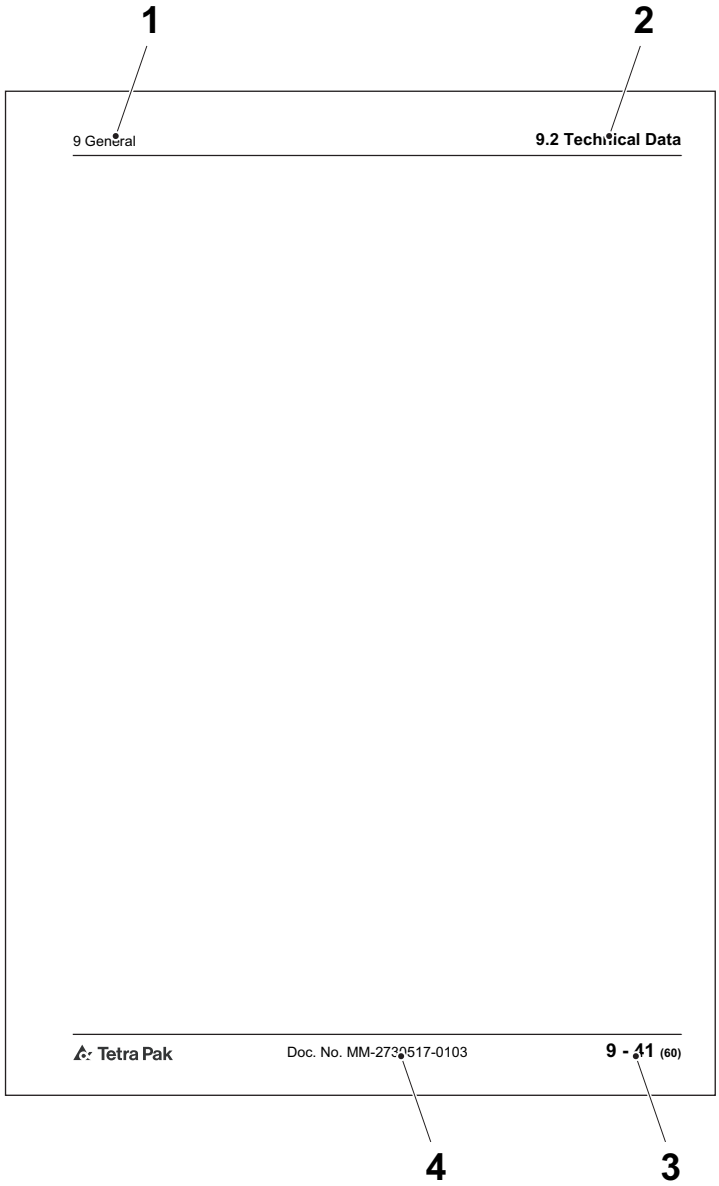

1 Chapter name
2 Section name
3 Page number
4 Document number

TechPub_2614345_0105 - EM_2851302_0105int.fm

Page Numbering

A page number has three parts:

- chapter number (1)
- consecutive page number (2) within the chapter
- total number of pages (3) in the chapter.

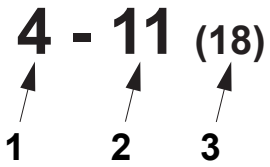

1 Chapter number
2 Consecutive page number
3 Total number of pages

Typographical Conventions

Controls on the operator panel, emergency stop devices, and program steps are printed in CAPITAL LETTERS.

Cross-references are underlined.

Symbols

Symbols used in illustrations.

	A pointer arrow indicates the position of an object.
	A zoom arrow indicates that an object view is enlarged. The arrow points towards the enlarged view of the object.
	A rotation movement arrow indicates rotational movement of an object. The arrow points in the direction of rotation.
	A straight movement arrow indicates movement of an object. The arrow points in the direction of movement.

TechPub_2614345_0105 - EM_2851302_0105int.fm

Machine Introduction

Intended Use of the Equipment

The intended use of this Tetra Pak equipment is to...

All other use is prohibited. Tetra Pak will not be held responsible for injury or damage if the equipment is used for any other purpose.

Manufacturer

This Tetra Pak equipment has been manufactured by

Tetra Pak Packaging Solutions
Via Delfini, 1
41100 Modena
Italy

Support and Feedback

If you encounter problems when operating this equipment or have other inquiries, comments, or suggestions for improvement, contact Tetra Pak.

TechPub_2614345_0105 - EM_2851302_0105int.fm

Identification

CE Classification

This equipment complies with the basic health and safety regulations of the European Economic Area (EEA).

Machine Plate

The illustration below shows an example of the machine plate and its location on the equipment. The machine plate carries data needed when contacting Tetra Pak concerning this specific equipment.

Make sure that the equipment data in the front pages of this manual corresponds to the machine plate data and the machine specification.

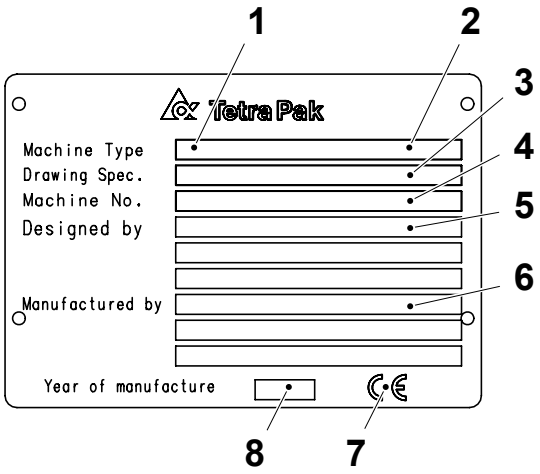

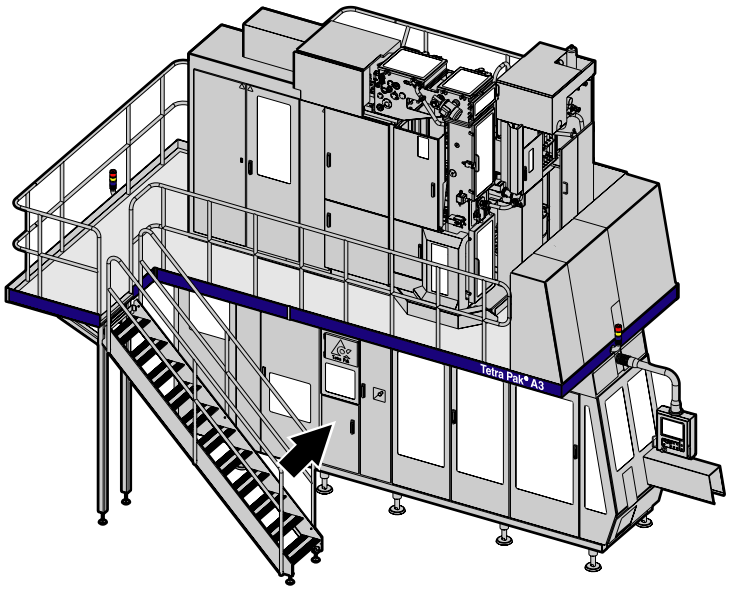

1 Machine type
2 Volume
3 Drawing specifications
4 Machine serial number
5 Designed by
6 Manufacturer
7 CE mark
8 Year of manufacture

TechPub_2614345_0105 - EM_2851302_0105int.fm

Orientation

The illustration below shows the orientation of the equipment. This orientation information will be used throughout this manual. The arrows indicate the flow of material.

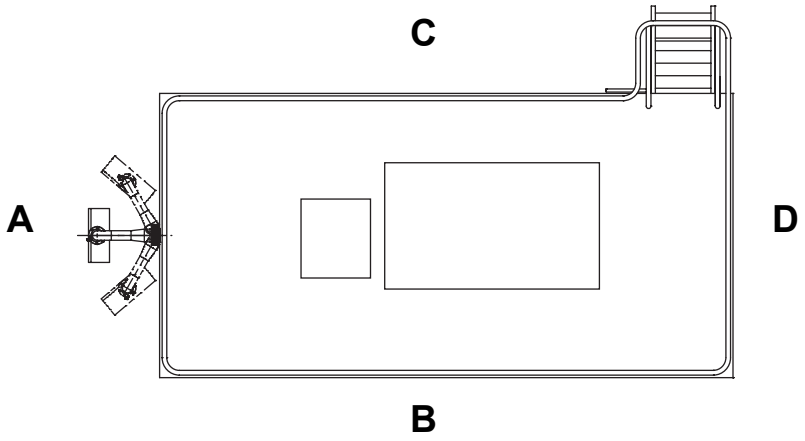

A Front
B Right-hand side
C Left-hand side
D Back

TechPub_2614345_0105 - EM_2851302_0105int.fm

Hygiene

Packaging Material

Avoid microbiological contamination of the packaging material:

- Always protect your packaging material against contamination.
- Always keep the doors to the filling room (area) closed. To prevent contamination via air streams, never open a window when the machine is in production.
- Never clean the floors or the machine in the filling room (area) when the machine is in production.
- Compressed air used for cleaning purposes is to be used only for cleaning filters and should only be used outside of the filling room (area) or in the final folder compartment of the filling machine.
- Prepare the splicing of the packaging material as late as possible.
- Disinfect your hands before touching anything that may come into contact with the product. Use code H disinfectant. See the Technical Data chapter of the Maintenance Manual.
- Keep your hands clean.
- Always wear some type of hair protection (cap or hairnet) and clean clothes (preferably white).
- Do not wear a watch, ring, necklace, earrings, or any other exposed jewellery.

Steam Barrier in the Product Valve

The filling machine’s product valve employs a steam barrier to separate the product supply line from the filling machine. The steam barrier allows the machine and the product supply line to be independently sterilised to commercial sterility conditions.

- Never disengage the steam barrier, and never interrupt the steam supply when the filling machine or the product supply line is being brought to the pre-sterilization phase, or when the machine is already in the production phase.
- If any maintenance activity requires disengagement of the steam barrier or the interruption of the steam supply to the machine, make sure that the product supply line is idle and empty of product.

TechPub_2614345_0105 - EM_2851302_0105int.fm

How to Use This EM

Chapters in this EM.

Chapter	Name	Drawing No.
i	Introduction	
ii	Safety Precautions	
1	Electrical Systems Description	
2	Document List	xxxxxxx-0001
3	Position Summary	xxxxxxx-0002
4	Circuit Diagrams	xxxxxxx-0003
5	Line Summary	xxxxxxx-0004
6	Cabinet Terminal Summary	xxxxxxx-0005
7	Terminal Strip Overview	xxxxxxx-0006
8	Cable Connection List	xxxxxxx-0007
9	Mains Connection	xxxxxxx-0008
10	Drawing Remarks	xxxxxxx-0098
11	Engineering Change Description	xxxxxxx-0099
12	Component Location	
13	Advanced Signal Exchange	
14	Other Information, for exemple -Bills of Material -Fuse Panel Labels	

The Document List chapter is a table of contents for the chapters 3 to 9, listing all drawings included.

In the Circuit Diagrams, the first pages are reserved for distribution terminals and the last pages can be used for pre-connected cables. Pre-connected cables are connected to spare terminals and are reserved for future use.

The diagrams in the Mains Connection chapter shows how the machine should be connected to the local supply, the dimensions of the connection cable, and the connection of the matching transformer, when used.

The Drawing Remarks chapter lists the drawing remarks indicated with a number in the drawing.

(Cont'd)

TechPub_2614345_0105 - EM_2851302_0105int.fm

(Cont'd)

The documents and drawings are identified by drawing number (1), version code (2), and page number (3). The page number is the consecutive numbering of the pages that belong to the main number and is used as a reference in the diagrams.

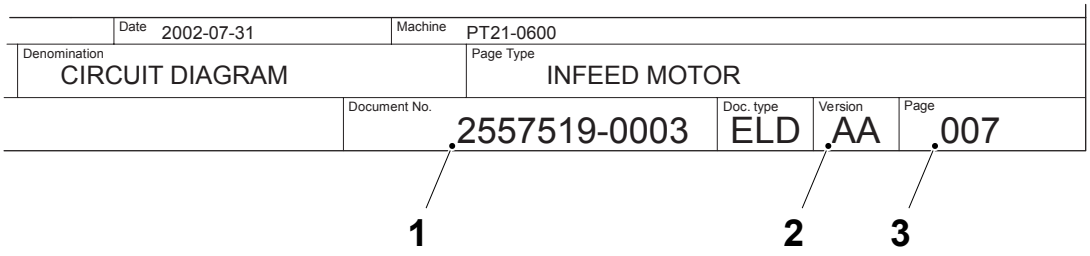

1 Drawing number
2 Version code
3 Page number

TechPub_2614345_0105 - EM_2851302_0105int.fm

Numbering System for Components

Components are identidfied by the a location designation (1), a function designation (2), and a running number (3).

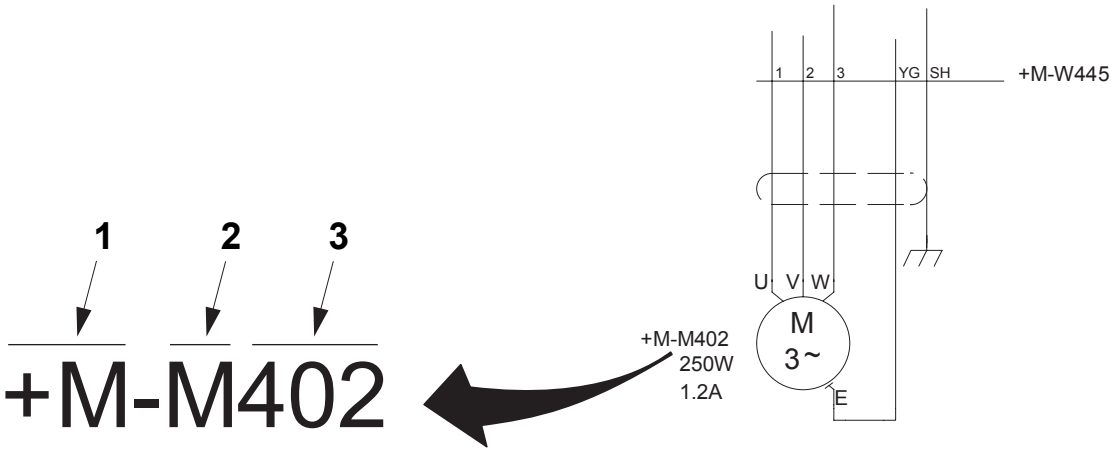

1 Location designation
2 Function designation
3 Running number

Location Designation

The location designation shows the location of the component:

- +M indicates that the component is fitted on the machine, outside the electrical cabinet.
- +C indicates that the component is fitted on the electrical cabinet, on the TPOP, or on the process panel.

Note! The location +C is considered the default and is omitted on all Circuit diagram pages.

Function Designation

The function designation is indicated in accordance with international standards.
Examples: Code P for components that present information, such as an alarm lamp, a clock, or a volt meter. Code M for components that provide mechanical energy such as an actuator, or an electric motor.

Running Number

The electrical components are numbered in a consecutive non-logical order.

TechPub_2614345_0105 - EM_2851302_0105int.fm

Optional Equipment

An optional equipment designation indicates that the component belongs to specific optional equipment. The designation numbers for this equipment are explained in the Drawing Remarks chapter.

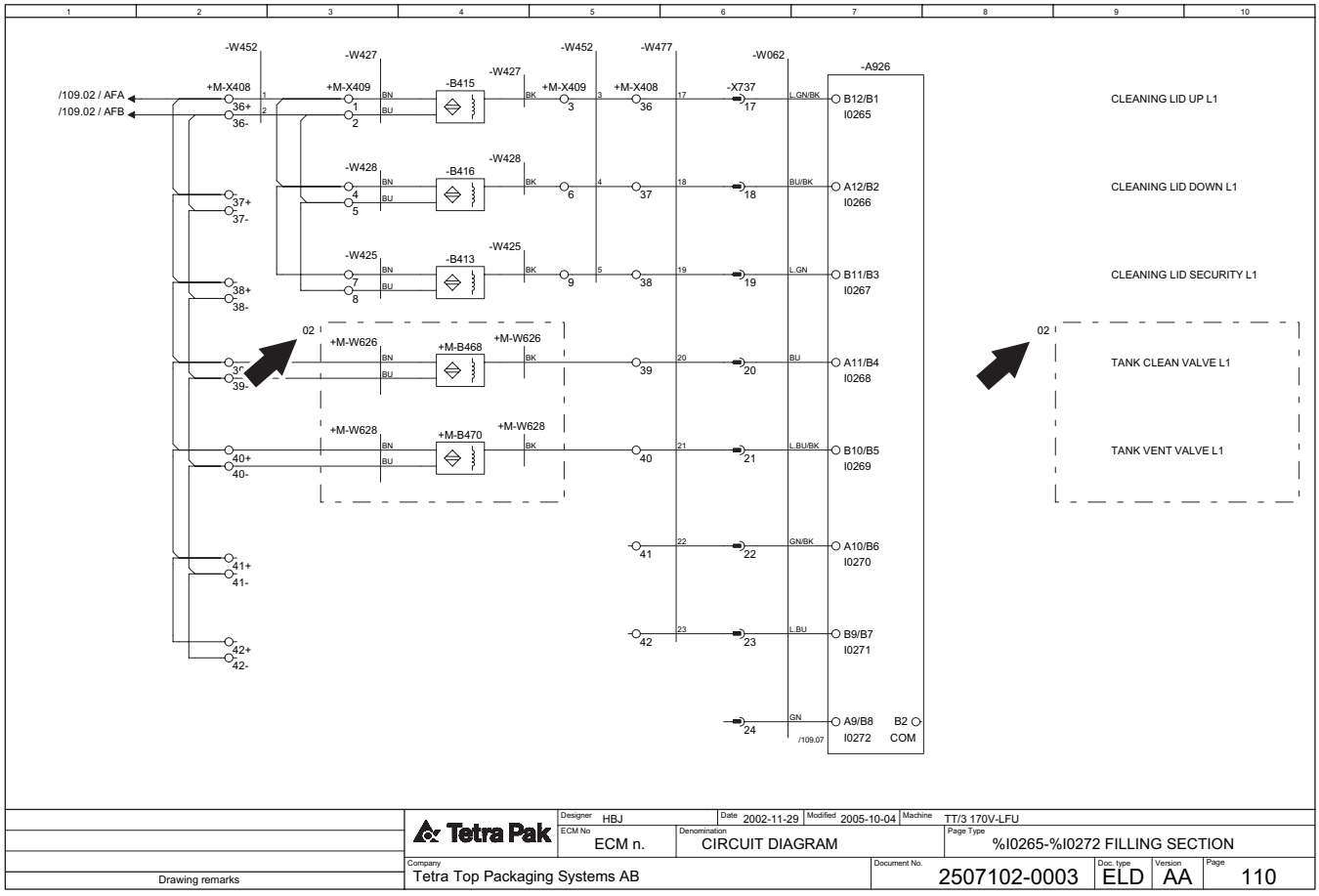

	Tetra Pak	Designer HBJ	Date 2002-11-29	Modified 2005-10-04	Machine TT/3 170V-LFU	
		ECM No ECM n.	Denomination CIRCUIT DIAGRAM		Page Type %I0265-%I0272 FILLING SECTION	
Drawing remarks		Company Tetra Top Packaging Systems AB		Document No. 2507102-0003	Doc. type ELD	Version AA	Page 110

TechPub_2614345_0105 - EM_2851302_0105int.fm

How to Trace an Electrical Component

Start tracing an electrical component by finding the correct list with page and column references to the Circuit Diagram.

Example 1 on pages i-17 to i-18 illustrates how to trace a Line. Use the Line Summary.

Example 2 on page i-19 illustrates how to trace a contactor. Find page references in the Position Summary. The procedure is identical when tracing sensors or other components. For cables, find the page references in the Cable Connection List. The number of spare cores is shown in the cable connection list.

Examples 3 and 4 on pages i-20 to i-21 illustrate how to trace a terminal. Find page references for terminals *in* the electrical cabinet in the Cabinet Terminal Summary, and page references for terminals *outside* the electrical cabinet in the Terminal Strip Overview.

Example 5 on page i-22 illustrates how to locate a component in the Spare Parts Catalogue, SPC.

TechPub_2614345_0105 - EM_2851302_0105int.fm

Example 1: How to Trace a Line

Supply Voltage and Line Connection Order

The supply voltage in the electrical cabinet has power voltage and control voltage designations.

- Power voltage: lines with designations ending with 01 to 09, for example, L03 and L09
- Control voltage: lines with designations ending with 10 to 99, for example, L12 and L12

The line connection order is shown in the Line Summary.

(Cont'd)

(Cont'd)

How to Trace a Line

The illustration below shows how to trace line connection L20 from the component terminal -K905:A2 to -K906:A2.

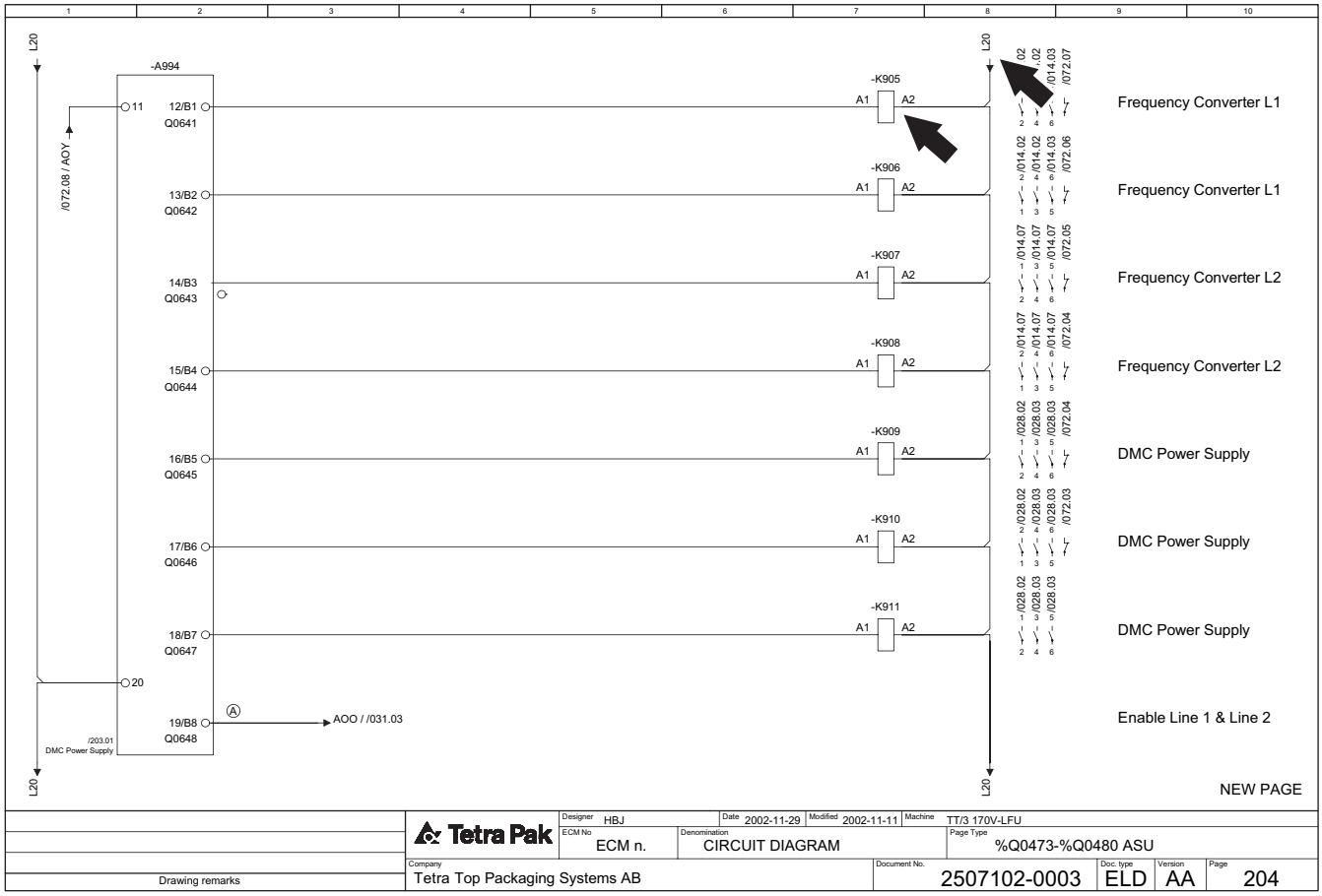

Line summary of 2507102-0003

Line	From	Page.Col.	To	Page.Col.	Area/Color	Opt.	Lin
L13	+C-XL013:25	001 .8	+C-K087:8	068 .6	0,75/ L.BU		
L13	+C-K087:8	068 .6	+C-K088:8	068 .6	0,75/ L.BU		
L13	+C-K088:8	068 .6	+C-K053.1:7	076 .6	0,75/ L.BU		
L20	+C-XL020:1	002 .1	+C-K905:A2	204 .7	0,75/ L.BU		
L20	+C-K905:A2	204 .7	+C-K906:A2	204 .7	0,75/ L.BU		
L20	+C-K906:A2	204 .7	+C-K907:A2	204 .7	0,75/ L.BU		
L20	+C-XL020:2	002 .1	+C-G090:28	014 .2	0,75 / BU		

TechPub_2614345_0105 - EM_2851302_0105int.fm

Example 2: How to Trace a Contactor

The illustration below shows how to trace contactor -K109 to page 188, column 6 in the Circuit diagram.

Related contacts are traced with a cross reference to page 010, column 06, and to page 069, column 02.

Note! For master and slave components, such as coils and contacts, only the master is reported in the Position Summary. The slave shows the page and column references of the master.

Position summary of 2507102-0003

Component	Page .Col.	Opt.
+C-G012	012 .5	
+C-G013	012 .8	
+C-G090	014 .2	
+C-G091	014 .6	
+C-G100	016 .2	
+C-G101	016 .7	

Component	Page .Col.	Opt.
+C-K108	074 .7	
+C-K109	188 .6	
+C-K111	188 .6	
+C-K112	188 .6	
+C-K001	149 .7	
+OHP-K002		

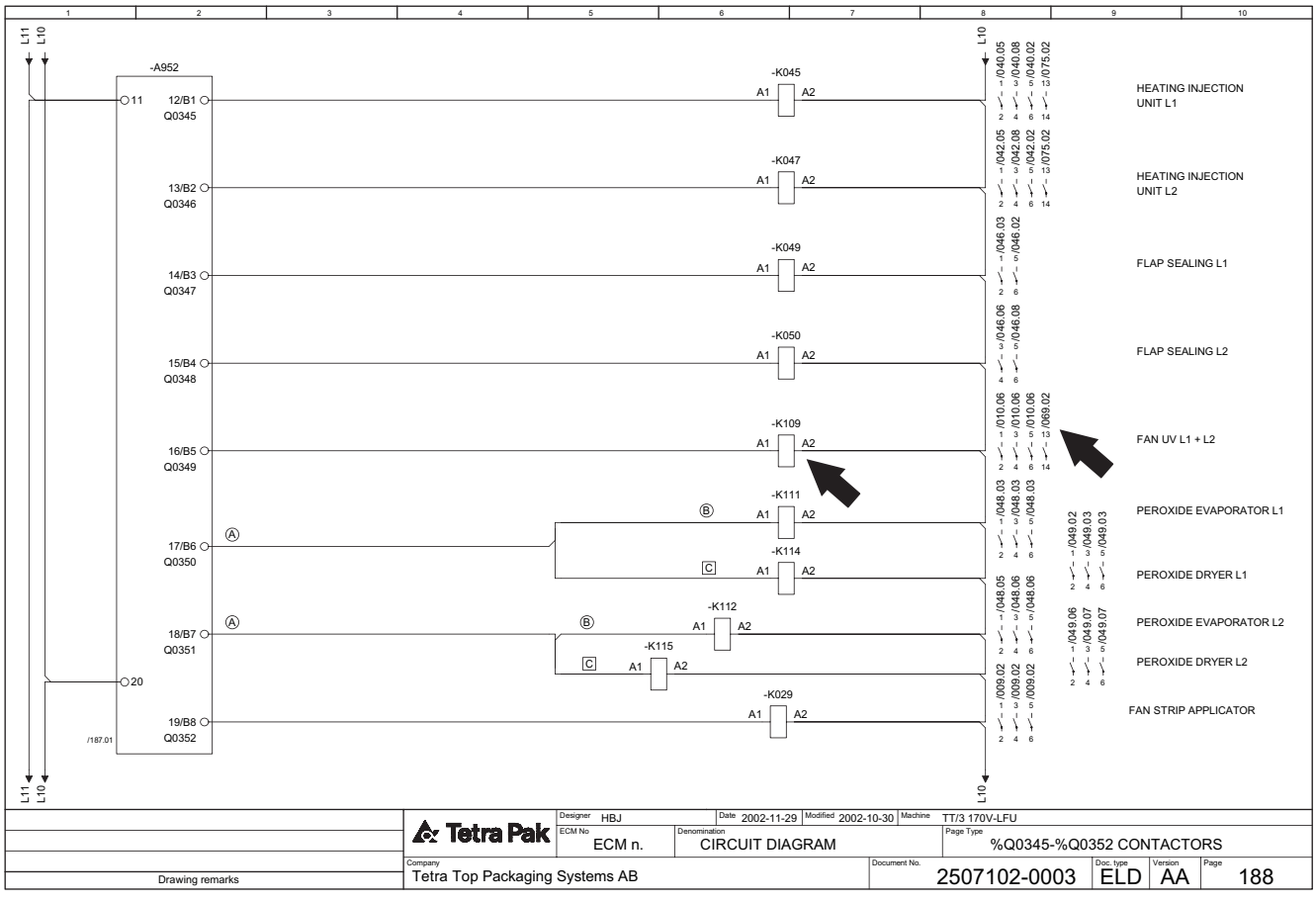

TechPub_2614345_0105 - EM_2851302_0105int.fm

Example 3: How to Trace a Terminal in the Electrical Cabinet

The Cabinet Terminal Summary refers to the page and column where the relevant terminal is to be found.

The illustration below shows how to trace terminal +C-X004:76 to page 38, column 8 in the Circuit diagram.

Cabinet terminal summary of 2507102-0003

Terminal	Page .Col.	Opt.
+C-X004:75	038 .7	
+C-X004:76	038 .8	
+C-X004:77		
+C-X004:78		
+C-X004:79	039 .2	
+C-X004:80	039 .3	
+C-X004:81	039 .4	
+C-X004:82	039 .6	

Terminal	Page .Col.	Opt.
+C-X004:103	042 .8	
+C-X004:104	042 .9	
+C-X004:105	043 .5	
+C-X004:106	043 .6	
+C-X004:107	043 .8	
+C-X004:108	043 .9	
+C-X004:109		
+C-X004:110	046 .2	

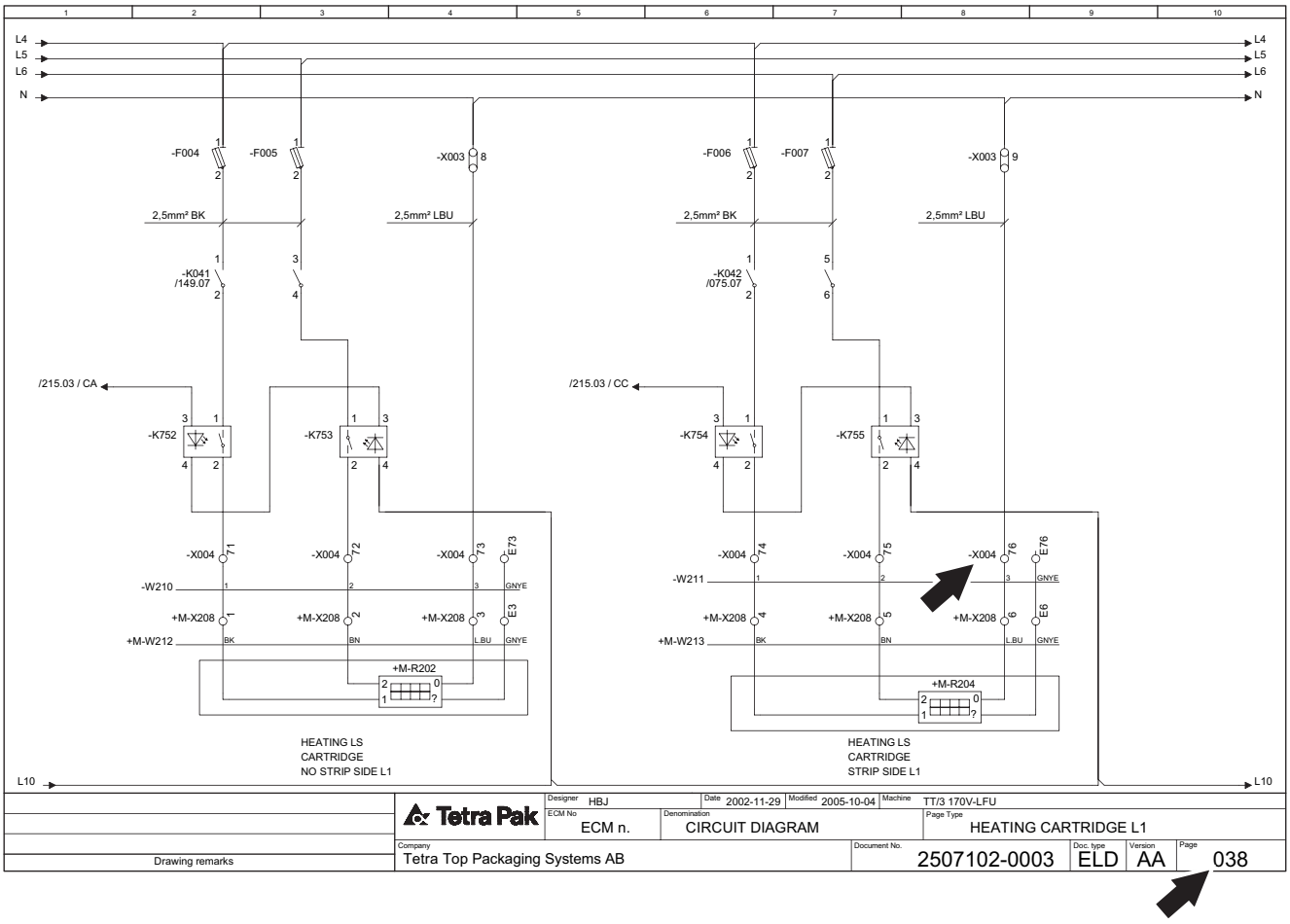

TechPub_2614345_0105 - EM_2851302_0105int.fm

Example 4: How to Trace a Terminal Outside the Electrical Cabinet

The Terminal Strip Overview refer to the page and column where the relevant terminal is to be found.

The illustration below shows how to trace terminal +M-X208:4 to page 038, column 6 in the Circuit diagram. Note the connected component, +M-R204:1.

Terminal strip of 2507102-0003

+M-X208

From	Cable	Terminal	External Jumper	Cable	To	Page.Col.	Option	Function text
+C-X004:71	-W210:1	1		-W212:BK	+M-R202:1	038 .2		
+C-X004:72	-W210:2	2		-W212:BN	+M-R202:2	038 .3		
+C-X004:73	-W210:3	3		-W212:L.BU	+M-R202:0	038 .4		
+C-X004:E73	-W210:GNYE	E3		-W212:GNYE	+M-R202:?	038 .4		
+C-X004:74	-W211:1	4		-W213:BK	+M-R204:1	038 .6		
+C-X004:75	-W211:2	5		-W213:BN	+M-R204:2	038 .7		
+C-X004:76	-W211:3	6		-W213:L.BU	+M-R204:0	038 .8		
+C-X004:E76	-W211:GNYE	E6		-W213:GNYE	+M-R204:?	038 .9		

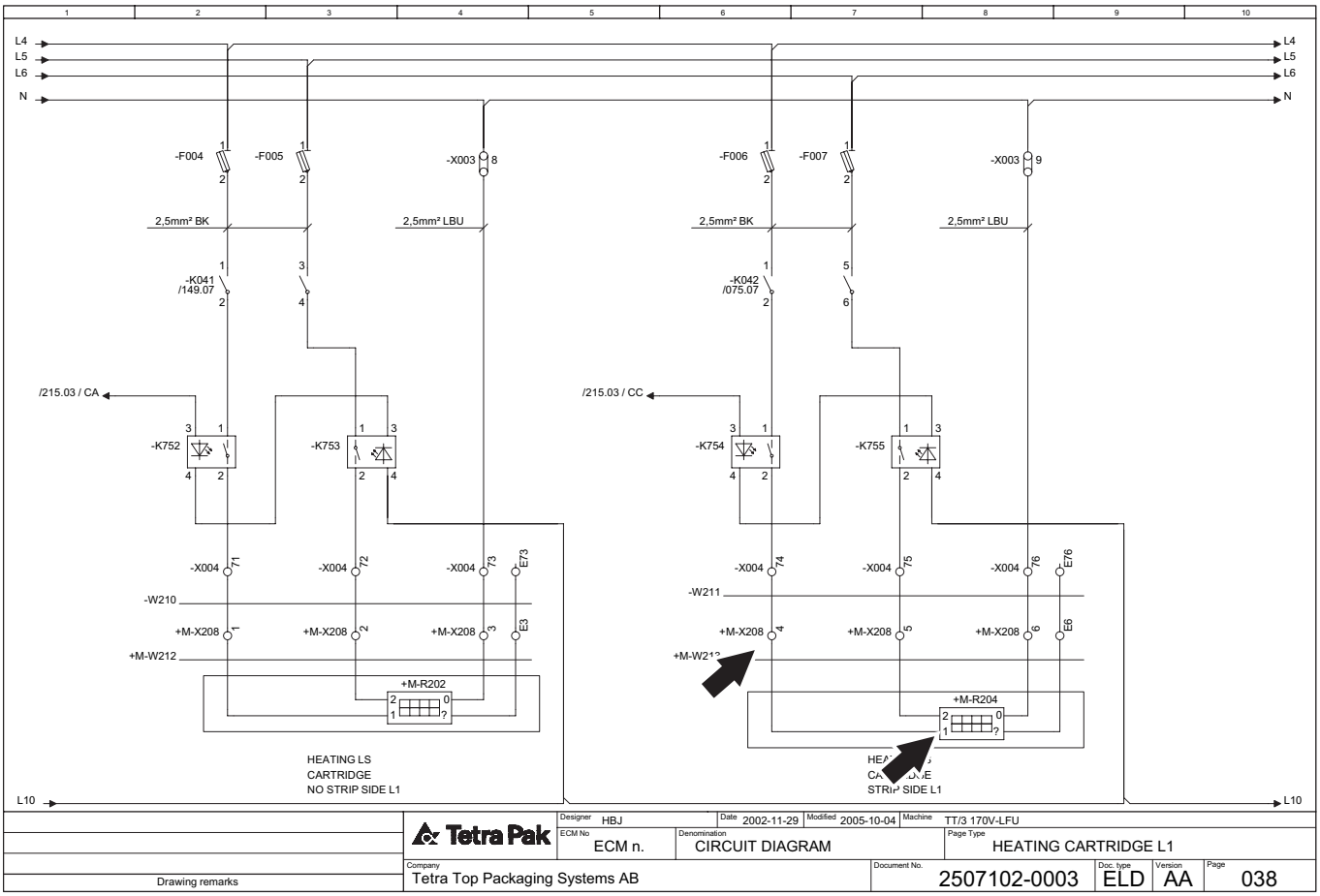

TechPub_2614345_0105 - EM_2851302_0105int.fm

Example 5: How to Find Electrical Components Using the SPC

The Reference Designation Parts Index in the Spare Parts Catalogue, SPC, is used to locate electrical parts. For SPCs without an Electrical Parts Index, see the Component Location chapter in this manual.

The illustration below shows how to find component B8405 in the SPC. The Reference Designation Parts Index refers to page 213. In the drawing on page 212, the position number is the same as the reference designation for the component.

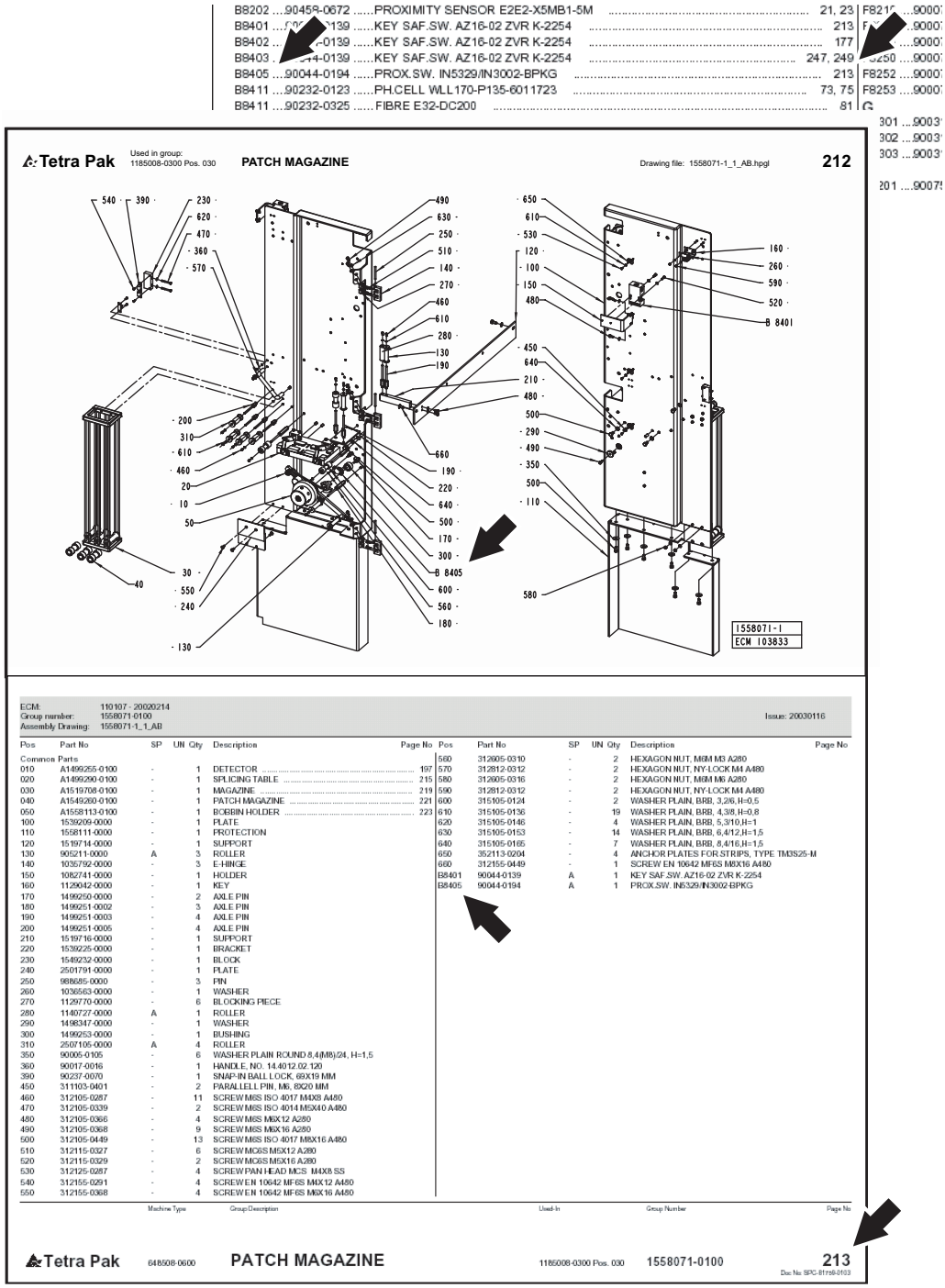

B8202 ....90458-0672 .....PROXIMITY SENSOR E2E2-X5MB1-5M 21, 23
B8401 ....[illegible]0139 .....KEY SAF.SW. AZ16-02 ZVR K-2254 213
B8402 ....[illegible]-0139 .....KEY SAF.SW. AZ16-02 ZVR K-2254 177
B8403 ....[illegible]4-0139 .....KEY SAF.SW. AZ16-02 ZVR K-2254 ..... 247, 249
B8405 ....90044-0194 .....PROX.SW. IN5329/IN3002-BPKG 213
B8411 ....90232-0123 .....PH.CELL WLL170-P135-6011723 ..... 73, 75
B8411 ....90232-0325 .....FIBRE E32-DC200 81

F8210 ....9000[illegible]
F8[illegible] ....9000[illegible]
F8250 ....9000[illegible]
F8252 ....9000[illegible]
F8253 ....9000[illegible]
G
301 ....9003[illegible]
302 ....9003[illegible]
303 ....9003[illegible]
201 ....9007[illegible]

Tetra Pak — Used in group: 1185008-0300 Pos. 030 — PATCH MAGAZINE — Drawing file: 1558071-1_1_AB.hpgl — 212

1558071-1
ECM 103833

ECM: 110107 - 20020214
Group number: 1558071-0100
Assembly Drawing: 1558071-1_1_AB
Issue: 20030116

Pos	Part No	SP	UN	Qty	Description	Page No
Common Parts						
010	A1499255-0100	-		1	DETECTOR	197
020	A1499290-0100	-		1	SPLICING TABLE	215
030	A1519708-0100	-		1	MAGAZINE	219
040	A1549260-0100	-		1	PATCH MAGAZINE	221
050	A1558113-0100	-		1	BOBBIN HOLDER	223
100	1539209-0000	-		1	PLATE	
110	1558111-0000	-		1	PROTECTION	
120	1519714-0000	-		1	SUPPORT	
130	905211-0000	A		3	ROLLER	
140	1035792-0000	-		3	E-HINGE	
150	1082741-0000	-		1	HOLDER	
160	1129042-0000	-		1	KEY	
170	1499250-0000	-		2	AXLE PIN	
180	1499251-0002	-		3	AXLE PIN	
190	1499251-0003	-		4	AXLE PIN	
200	1499251-0005	-		4	AXLE PIN	
210	1519716-0000	-		1	SUPPORT	
220	1539225-0000	-		1	BRACKET	
230	1549232-0000	-		1	BLOCK	
240	2501791-0000	-		1	PLATE	
250	986685-0000	-		3	PIN	
260	1035563-0000	-		1	WASHER	
270	1129770-0000	-		6	BLOCKING PIECE	
280	1140727-0000	A		1	ROLLER	
290	1498347-0000	-		1	WASHER	
300	1499253-0000	-		1	BUSHING	
310	2507105-0000	A		4	ROLLER	
350	90005-0105	-		6	WASHER PLAIN ROUND 8,4(M8)/24, H=1,5	
360	90017-0016	-		1	HANDLE, NO. 14.4012.02.120	
390	90237-0070	-		1	SNAP-IN BALL LOCK, 69X19 MM	
450	311103-0401	-		2	PARALLELL PIN, M6, 8X20 MM	
460	312105-0287	-		11	SCREW M6S ISO 4017 M4X8 A480	
470	312105-0339	-		2	SCREW M6S ISO 4014 M5X40 A480	
480	312105-0366	-		4	SCREW M6S M6X12 A280	
490	312105-0368	-		9	SCREW M6S M6X16 A280	
500	312105-0449	-		13	SCREW M6S ISO 4017 M8X16 A480	
510	312115-0327	-		6	SCREW MC6S M5X12 A280	
520	312115-0329	-		2	SCREW MC6S M5X16 A280	
530	312125-0287	-		4	SCREW PAN HEAD MC5 M4X8 SS	
540	312155-0291	-		4	SCREW EN 10642 MF6S M4X12 A480	
550	312155-0368	-		4	SCREW EN 10642 MF6S M6X16 A480	
560	312605-0310	-		2	HEXAGON NUT, M6M M3 A280	
570	312812-0312	-		2	HEXAGON NUT, NY-LOCK M4 A480	
580	312605-0316	-		2	HEXAGON NUT, M6M M6 A280	
590	312812-0312	-		2	HEXAGON NUT, NY-LOCK M4 A480	
600	315105-0124	-		2	WASHER PLAIN, BRB, 3,2/6, H=0,5	
610	315105-0136	-		19	WASHER PLAIN, BRB, 4,3/8, H=0,8	
620	315105-0146	-		4	WASHER PLAIN, BRB, 5,3/10,H=1	
630	315105-0153	-		14	WASHER PLAIN, BRB, 6,4/12,H=1,5	
640	315105-0165	-		7	WASHER PLAIN, BRB, 8,4/16,H=1,5	
650	352113-0204	-		4	ANCHOR PLATES FOR STRIPS, TYPE TM3S25-M	
660	312155-0449	-		1	SCREW EN 10642 MF6S M6X16 A480	
B8401	90044-0139	A		1	KEY SAF.SW. AZ16-02 ZVR K-2254	
B8405	90044-0194	A		1	PROX.SW. IN5329/IN3002-BPKG	

Machine Type | Group Description | Used-In | Group Number | Page No

Tetra Pak — 648508-0600 — PATCH MAGAZINE — 1185008-0300 Pos. 030 — 1558071-0100 — 213

TechPub_2614345_0105 - EM_2851302_0105int.fm

ii Safety Precautions

TechPub_2614345_0103 - EM_2851302_0105sp.fm

Read the Safety Precautions

WARNING

Read and follow all safety precautions before working on or near this equipment.

Read all safety precautions throughout this manual and on safety signs attached to this equipment. Failure to follow all safety precautions could result in death or serious injury.

Definitions

Energy Isolating Device. A mechanical device that physically prevents transmission or release of energy.

Power Supply Disconnector. The energy isolating device for the electrical power supply to the equipment.

Lockout. The use of a device, such as a padlock, to make sure that an energy isolating device, such as a power supply disconnector, cannot be operated.

Lockout Procedure. A procedure to put each necessary energy isolating device in its safe position to prevent the energising of the equipment, such as when a maintenance procedure should be carried out.

TechPub_2614345_0103 - EM_2851302_0105sp.fm

Safety Messages Description . . . . . ii - 5
Personnel Requirements . . . . . ii - 6
Skilled Person . . . . . ii - 6
Instructed Person. . . . . ii - 6
Safety Signs . . . . . ii - 7
Locations of Safety Signs . . . . . ii - 9
HI Equipment (OE) . . . . . ii - 18
Safety Devices . . . . . ii - 20
Emergency Stop. . . . . ii - 20
EMERGENCY STOP Push-Buttons . . . . . ii - 21
Safeguards . . . . . ii - 22
Warning Lamp . . . . . ii - 24
Audible Alarm. . . . . ii - 24
Personal Protection. . . . . ii - 25
Noise Hazard . . . . . ii - 25
Entanglement Hazard . . . . . ii - 25
Hazardous Materials . . . . . ii - 26
Hydrogen Peroxide (H_2O_2) . . . . . ii - 27
Emergency Procedures. . . . . ii - 27
Personal Protective Equipment . . . . . ii - 28
Handling . . . . . ii - 29
Storage . . . . . ii - 30
Disposal . . . . . ii - 31
Caustic Soda/Sodium Hydroxide (NaOH) . . . . . ii - 32
Emergency Procedures. . . . . ii - 32
Handling and Storage of Caustic Soda/Sodium Hydroxide . . . . . ii - 32
Disposal of Caustic Soda/Sodium Hydroxide. . . ii - 32
Nitric Acid (HNO3) . . . . . ii - 33

TechPub_2614345_0103 - EM_2851302_0105sp.fm

Emergency Procedures . . . . . ii - 33
Handling and Storage of Nitric Acid . . . . . ii - 34
Disposal of Nitric Acid . . . . . ii - 34
Nitrogen (N2) . . . . . ii - 35
Emergency Procedures . . . . . ii - 35
Handling and Storage of Nitrogen Gas . . . . . ii - 35
Disposal of Nitrogen Gas . . . . . ii - 35
Cooling Media R134a . . . . . ii - 36
Emergency Procedures . . . . . ii - 36
Handling and Storage of Cooling Media R134a. . ii - 36
Disposal of Cooling Media R134a. . . . . ii - 36
Supply Systems . . . . . ii - 37
Electrical Cabinet . . . . . ii - 37
Socket Outlet . . . . . ii - 38
Power Supply . . . . . ii - 39
Air Supply . . . . . ii - 40
Steam Supply. . . . . ii - 41
Water Supply . . . . . ii - 42
Equipment for Lifting and Moving Loads . . . . ii - 43

TechPub_2614345_0103 - EM_2851302_0105sp.fm

Safety Messages Description

A safety message is always accompanied by a safety alert symbol and a signal word.



This is the **safety alert symbol**. It is used to alert about potential personal injury hazards. To avoid hazards, obey all safety messages that follow this symbol.

The following safety alert symbols and **signal words** are used in this manual to inform the user of hazards.



DANGER

Danger indicates an imminently hazardous situation which, if not avoided, **will** result in **death or serious injury**.



WARNING

Warning indicates a potentially hazardous situation which, if not avoided, **could** result in **death or serious injury**.



CAUTION

Caution indicates a potentially hazardous situation which, if not avoided, **may** result in **minor or moderate injury**. It may also be used to alert against unsafe practices.

CAUTION

Caution without the safety alert symbol indicates a potentially hazardous situation which, if not avoided, **may** result in **property damage**.

TechPub_2614345_0103 - EM_2851302_0105sp.fm

Personnel Requirements

Note! Personnel includes all persons working on or near this equipment.

Only skilled or instructed personnel are allowed to work with this equipment.

Skilled Person

A skilled person must have relevant education and experience to enable him or her to identify hazards, analyse risks, and avoid hazards which electricity, machinery, chemicals, other energies, and supply systems on this equipment can create.

Skilled persons must meet local regulations, such as certifications and qualifications for working with electricity, mechanical systems, and so on.

Instructed Person

An instructed person must be adequately advised or supervised by a skilled person. The skilled person enables the instructed person to identify hazards, analyse risks, and avoid hazards which electricity, machinery, chemicals, other energies, and supply systems on this equipment can create.

TechPub_2614345_0103 - EM_2851302_0105sp.fm

Safety Signs

WARNING

Damaged or missing safety signs increase the risk of death or serious injury.

Replace all missing or damaged safety signs immediately.

There are two types of safety sign

- ISO signs are used worldwide
- ANSI signs are used in the United States only.

The table shows all safety signs that are located on this equipment.

Note! The position numbers (Pos.) in the table refer to the positions in the illustration(s) in the Locations of Safety Signs section.

Pos.	ISO sign	ANSI sign
1		
	Moving part can crush and cut. Do not operate with guard removed. Follow lockout procedure before maintenance.	
2		
	Hazardous voltage. Will shock, burn, or cause death. Follow lockout procedure before maintenance.	
3		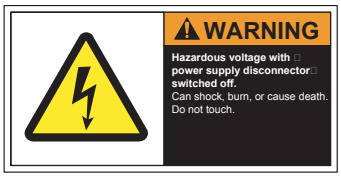
	Hazardous voltage with power supply disconnector switched off. Can shock, burn, or cause death. Do not touch.	

TechPub_2614345_0103 - EM_2851302_0105sp.fm

Pos.	ISO sign	ANSI sign
4		
	Chemical burn hazard. Wear personal protective equipment.	
5	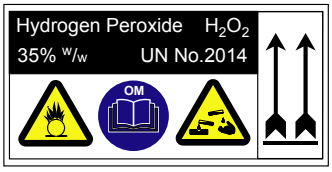	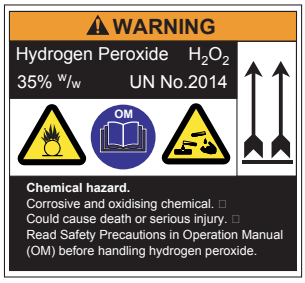
	Chemical hazard. Corrosive and oxidising chemical. Could cause death or serious injury. Read Safety Precautions in Operation Manual (OM) before handling hydrogen peroxide.	
6		
	Risk of eye injury. Wear eye protection.	
7		
	Hot surface. Do not touch. Follow lockout procedure before maintenance.	
8		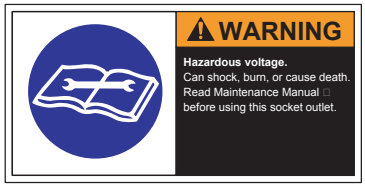
	Hazardous voltage. Can shock, burn, or cause death. Read Maintenance Manual before using this socket outlet.	

TechPub_2614345_0103 - EM_2851302_0105sp.fm

Locations of Safety Signs

Note! Make sure that each safety sign is undamaged and in its correct position after installation and maintenance. Replace all missing or damaged safety signs immediately.

The illustration shows where the safety signs are located. The position numbers refer to the table in the Safety Signs section.

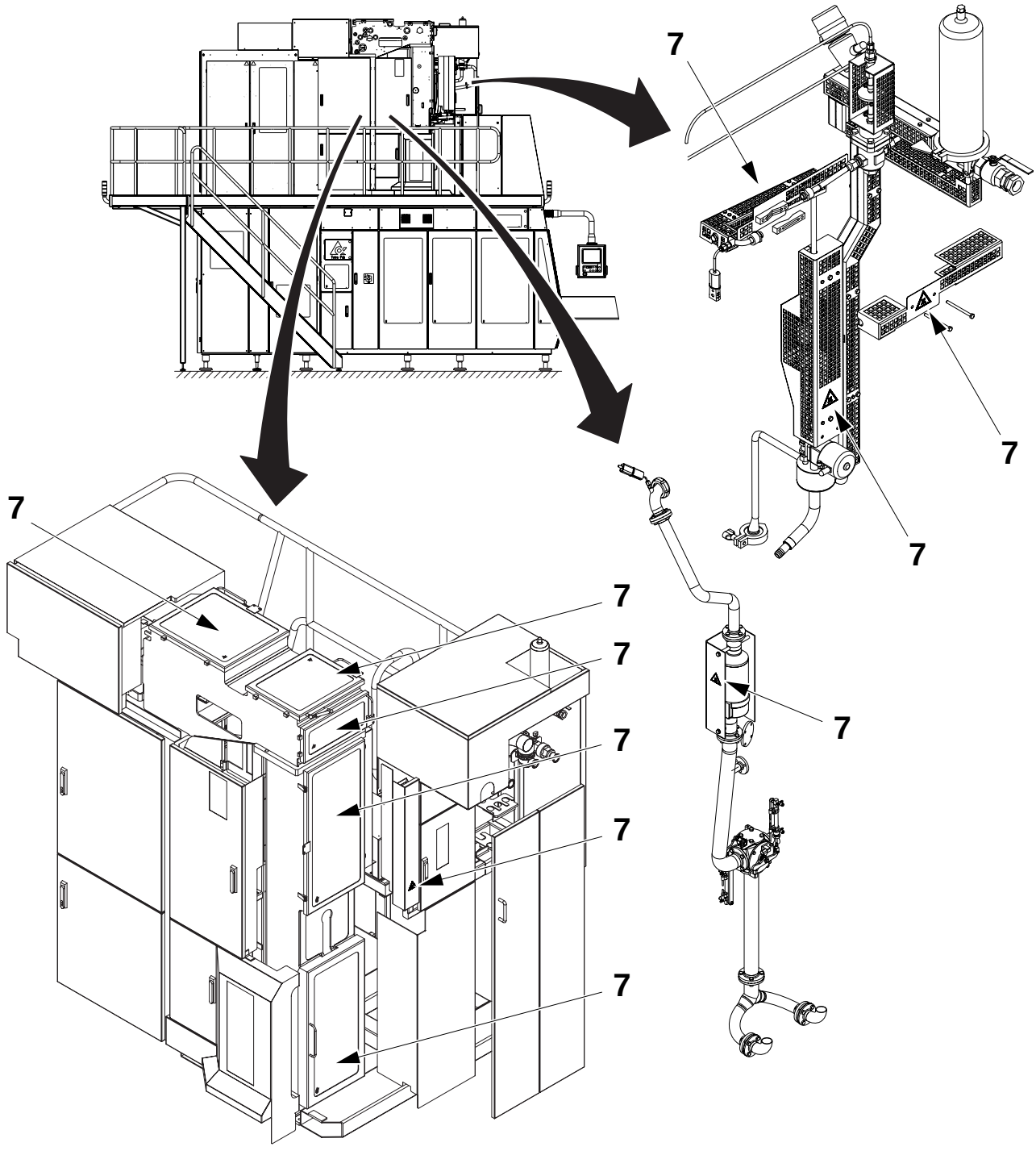

(Cont'd)

TechPub_2614345_0103 - EM_2851302_0105sp.fm

(Cont'd)

The illustration shows where the safety signs are located. The position numbers refer to the table in the Safety Signs section.

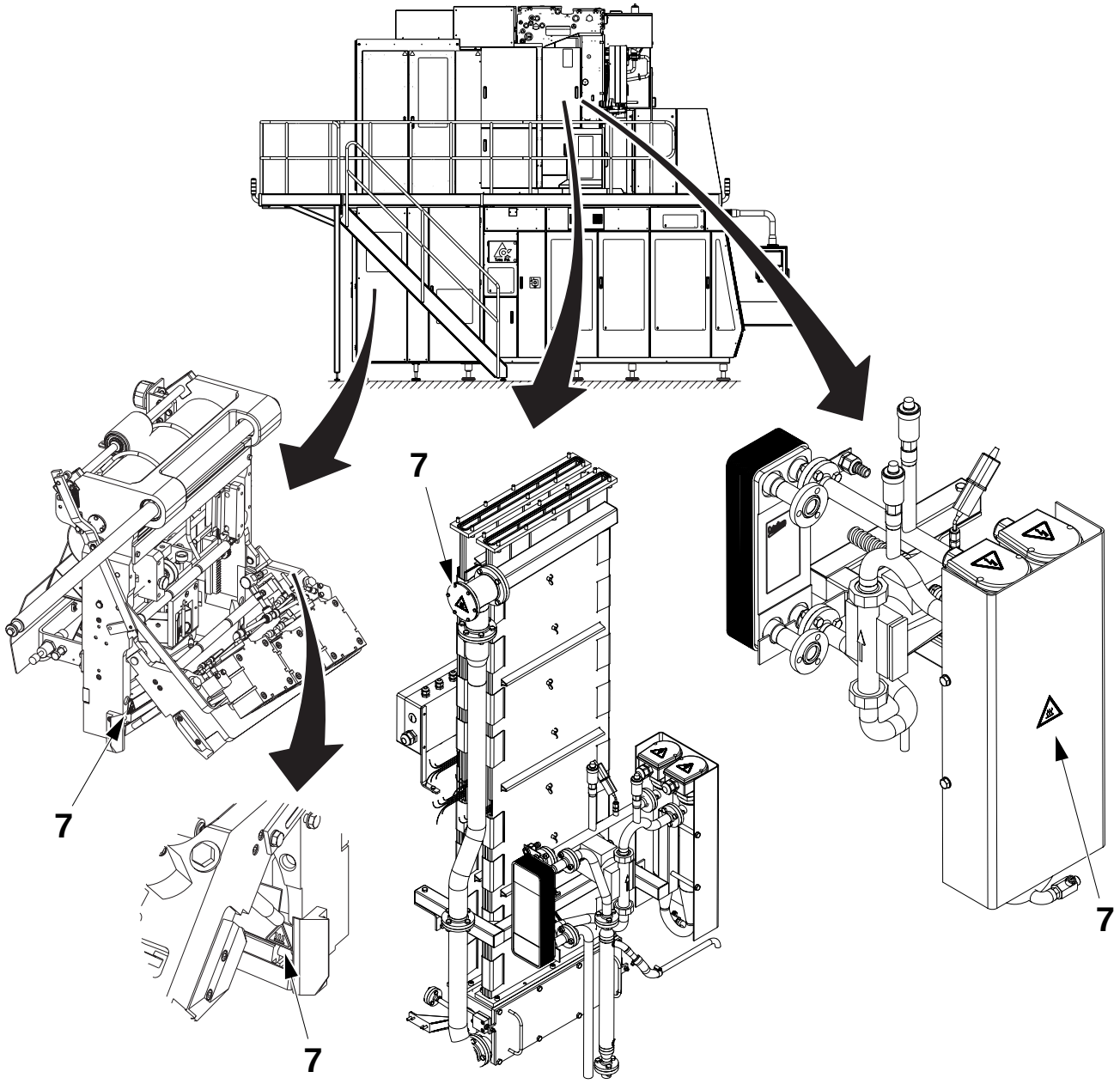

(Cont'd)

TechPub_2614345_0103 - EM_2851302_0105sp.fm

(Cont'd)

The illustration shows where the safety signs are located. The position numbers refer to the table in the Safety Signs section.

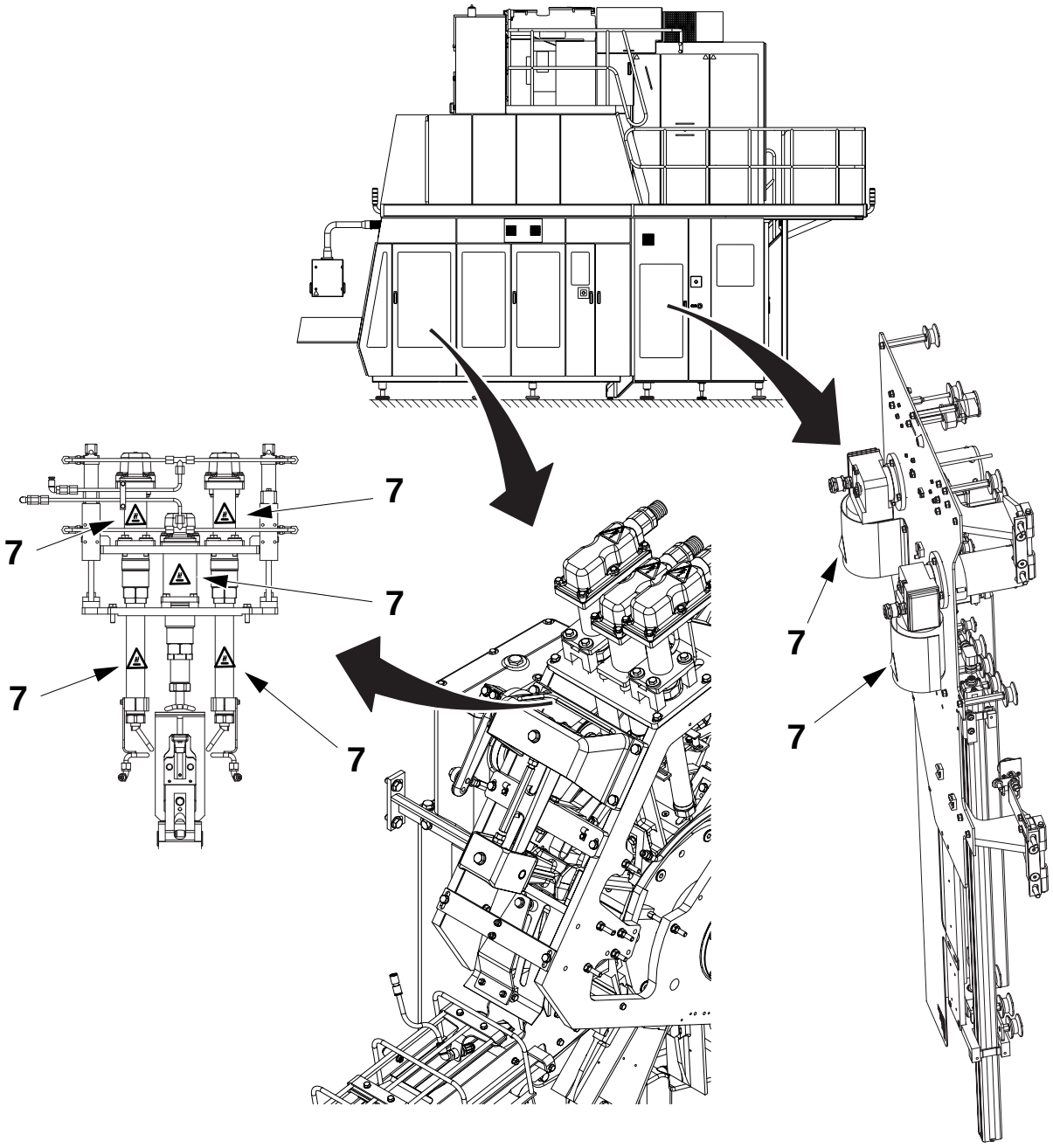

(Cont'd)

TechPub_2614345_0103 - EM_2851302_0105sp.fm

(Cont'd)

The illustration shows where the safety signs are located. The position numbers refer to the table in the Safety Signs section.

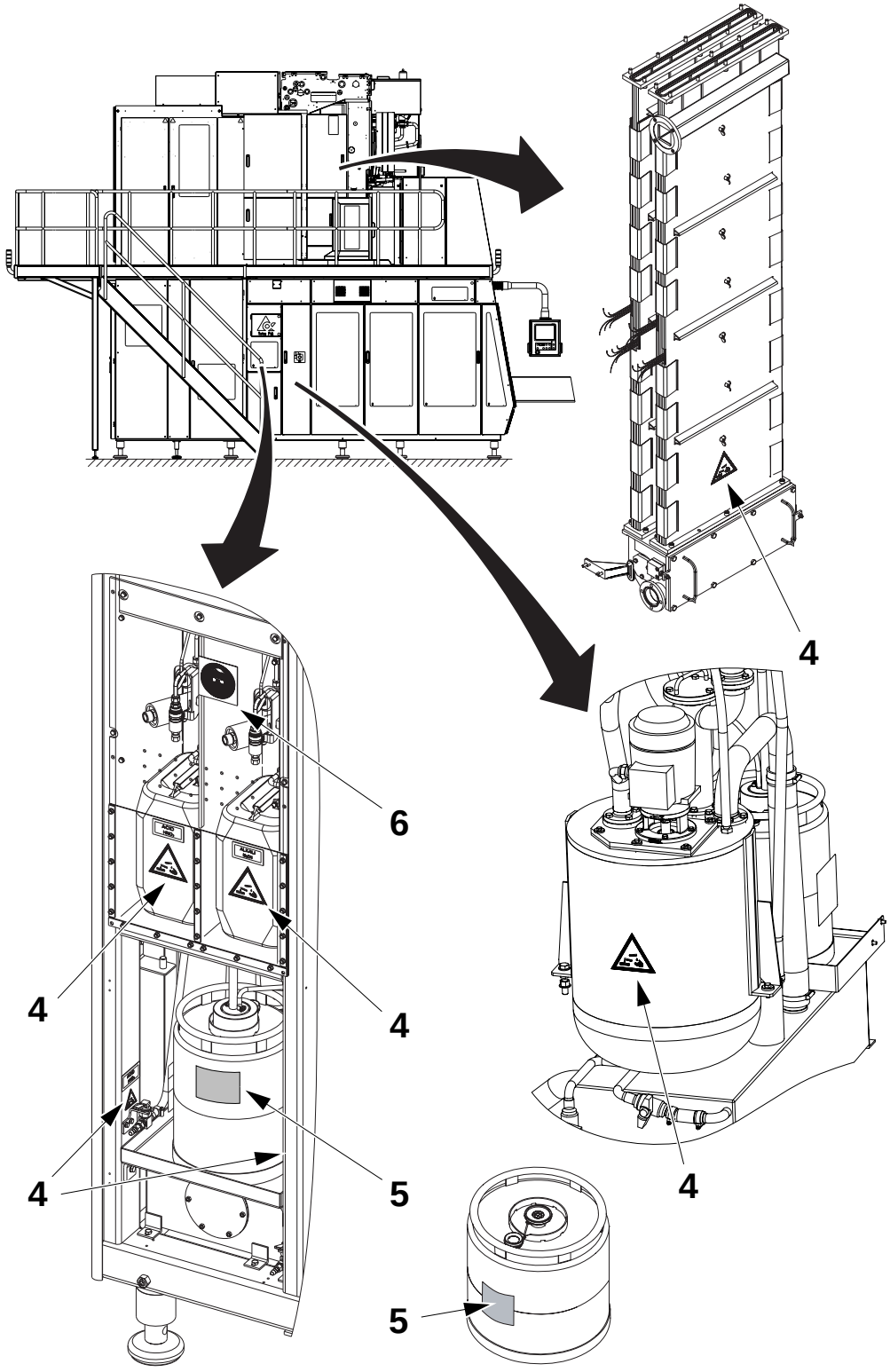

(Cont'd)

TechPub_2614345_0103 - EM_2851302_0105sp.fm

(Cont'd)

The illustration shows where the safety signs are located. The position numbers refer to the table in the Safety Signs section.

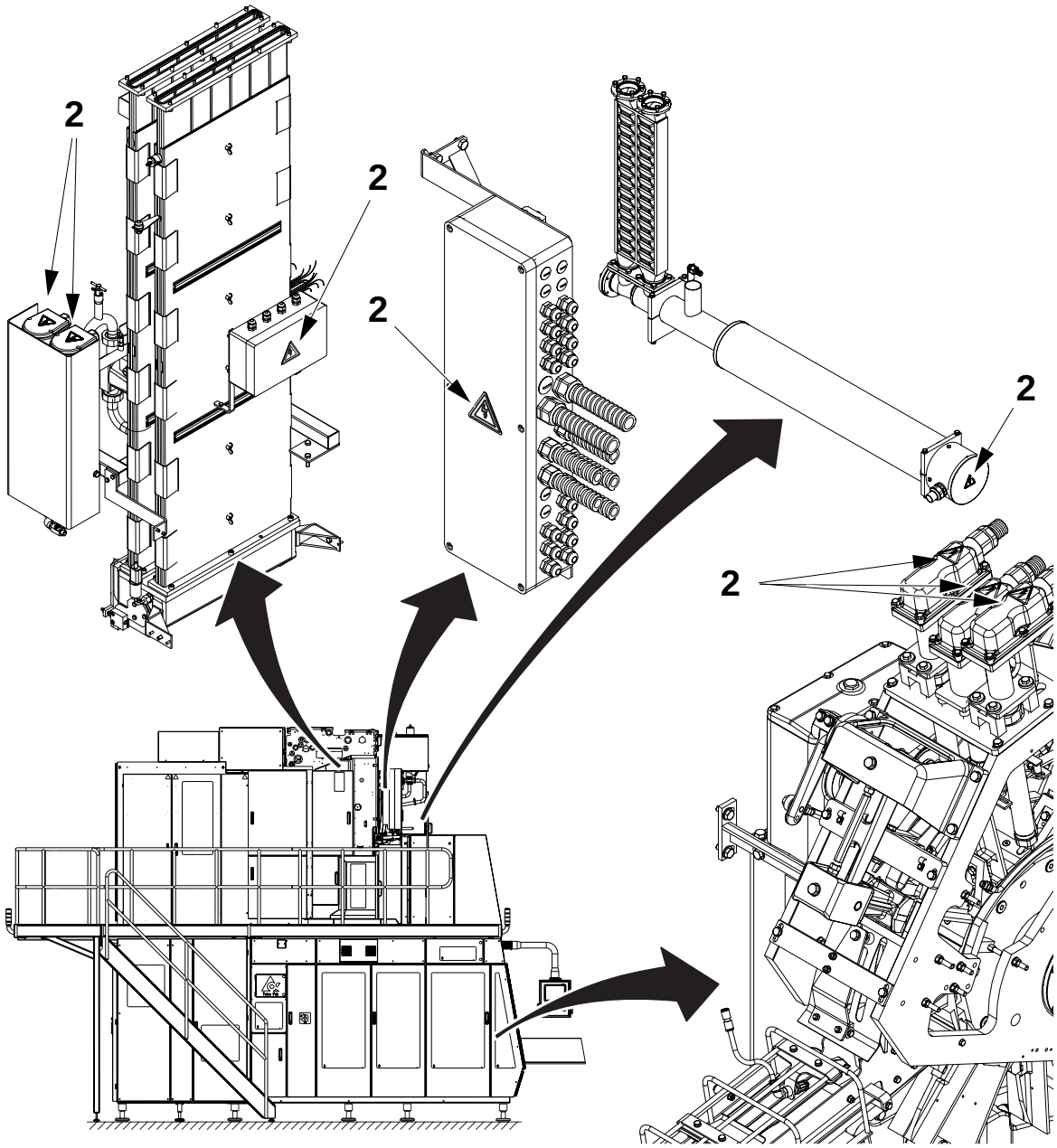

(Cont'd)

TechPub_2614345_0103 - EM_2851302_0105sp.fm

(Cont'd)

The illustration shows where the safety signs are located. The position numbers refer to the table in the Safety Signs section.

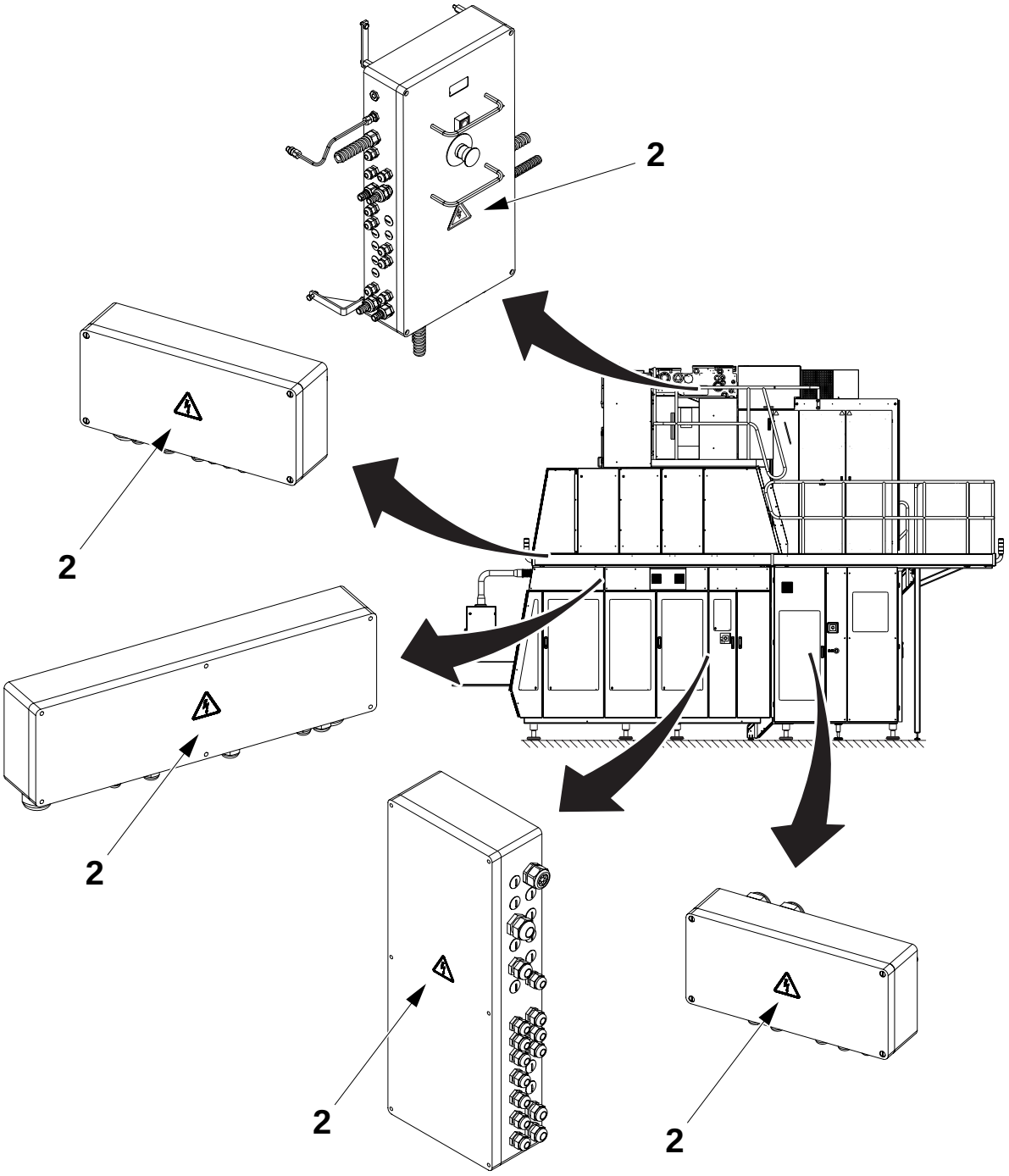

(Cont'd)

TechPub_2614345_0103 - EM_2851302_0105sp.fm

(Cont'd)

The illustration shows where the safety signs are located. The position numbers refer to the table in the Safety Signs section.

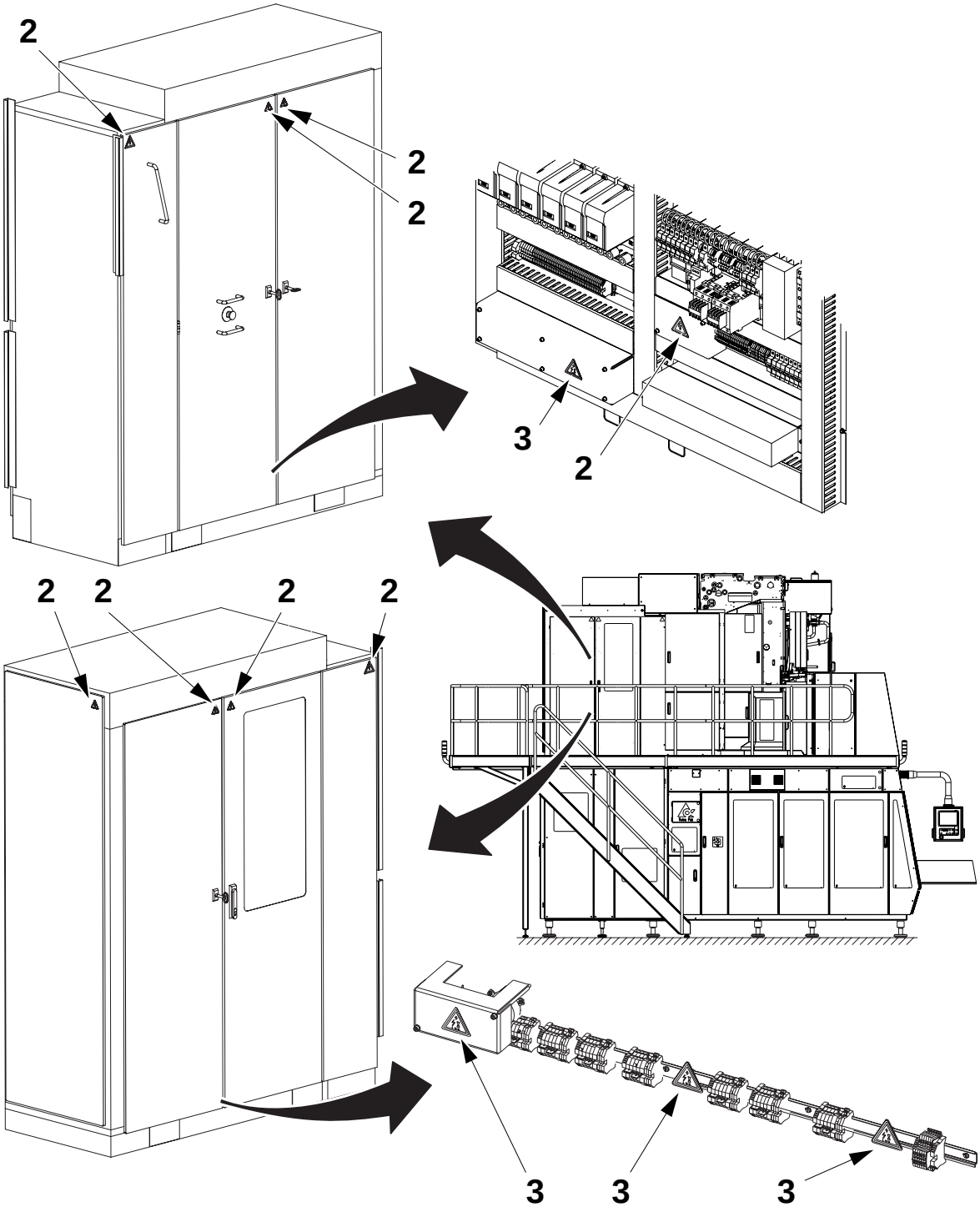

(Cont'd)

TechPub_2614345_0103 - EM_2851302_0105sp.fm

(Cont'd)

The illustration shows where the safety signs are located. The position numbers refer to the table in the Safety Signs section.

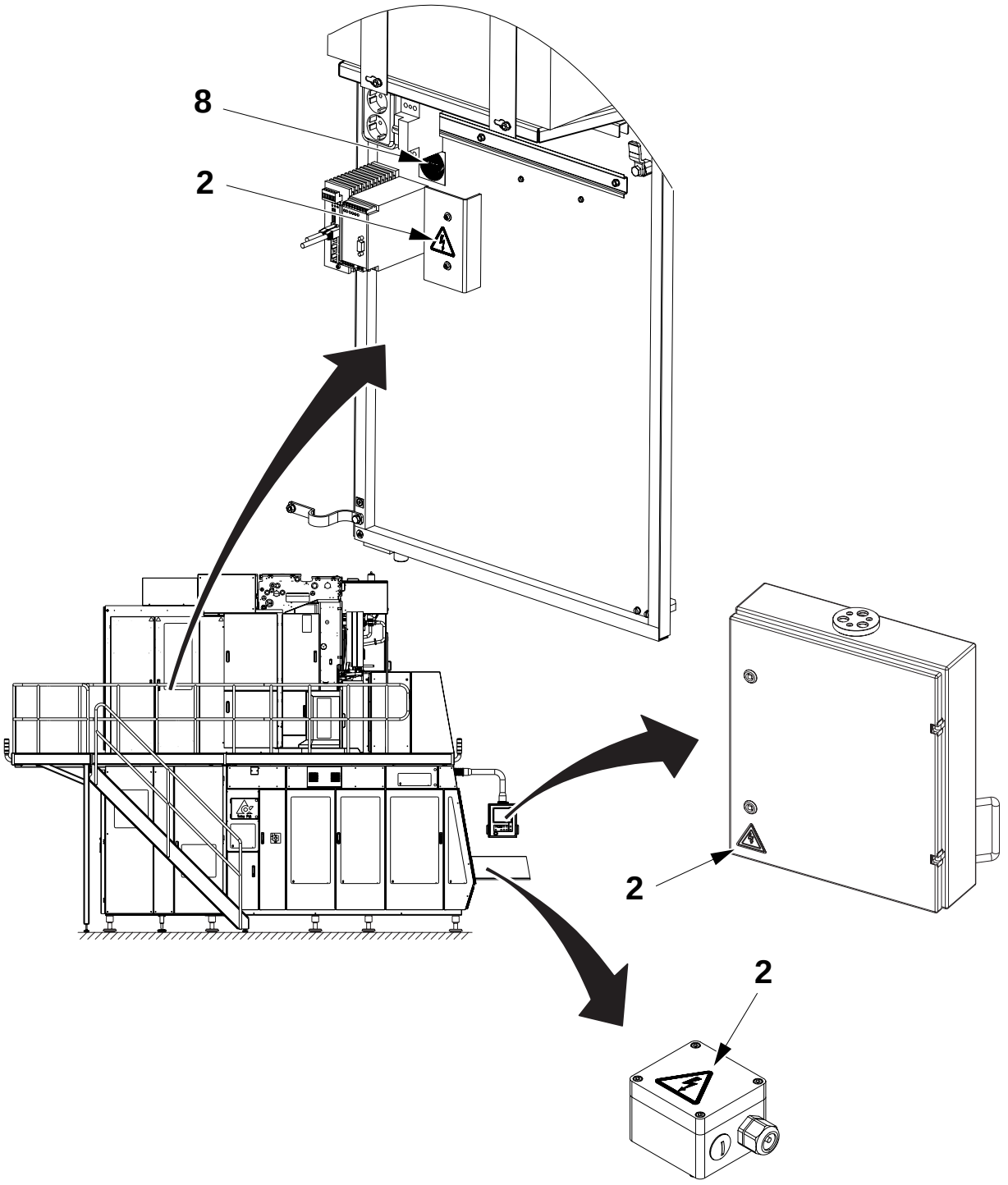

TechPub_2614345_0103 - EM_2851302_0105sp.fm

(Cont'd)

(Cont'd)

The illustration shows where the safety signs are located. The position numbers refer to the table in the Safety Signs section.

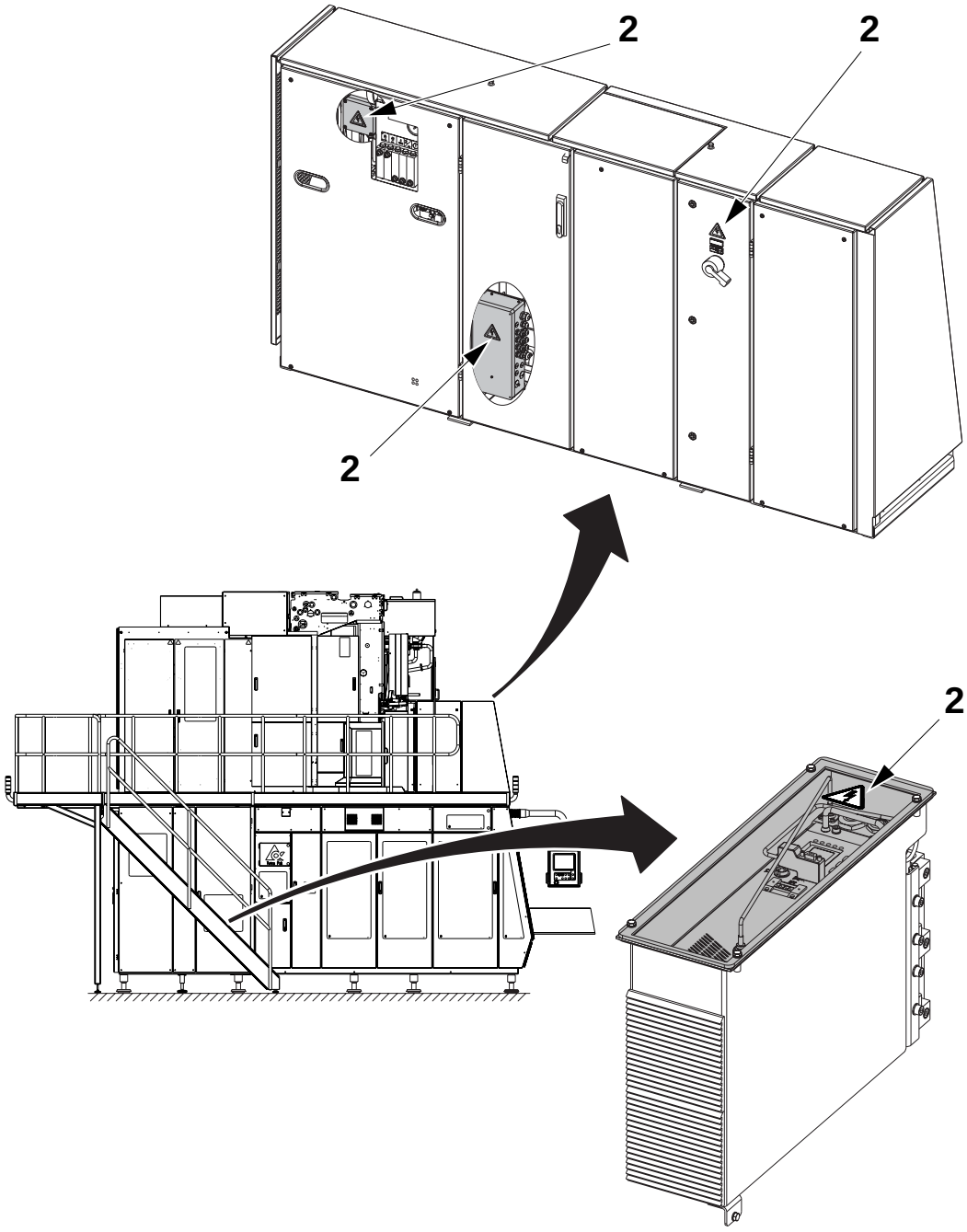

(Cont'd)

TechPub_2614345_0103 - EM_2851302_0105sp.fm

(Cont'd)

HI Equipment (OE)

The illustration shows where the safety signs are located. The position numbers refer to the table in the Safety Signs section.

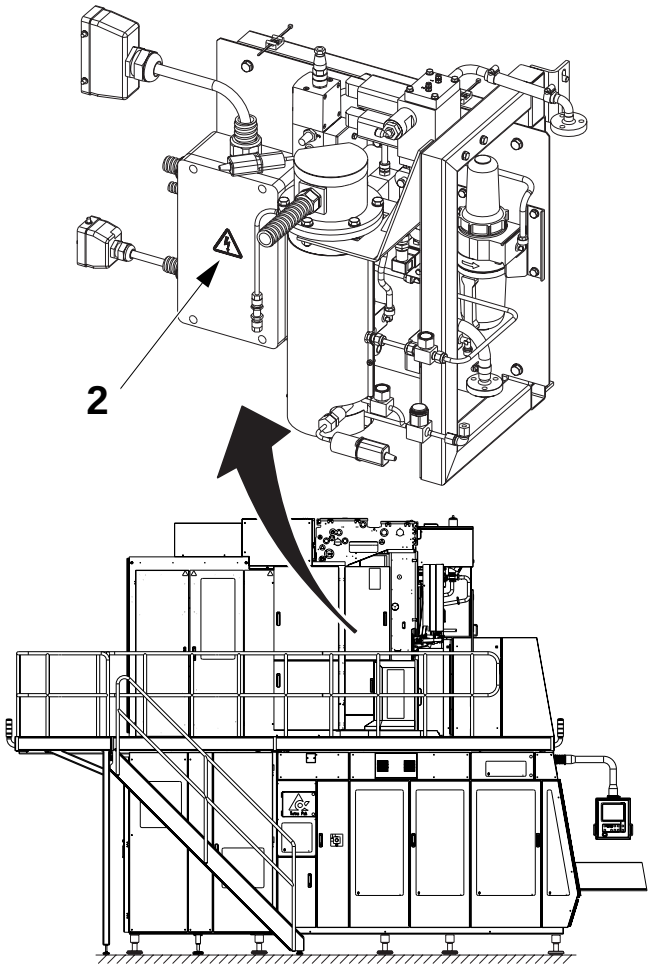

(Cont'd)

TechPub_2614345_0103 - EM_2851302_0105sp.fm

(Cont'd)

The illustration shows where the safety signs are located. The position numbers refer to the table in the Safety Signs section.

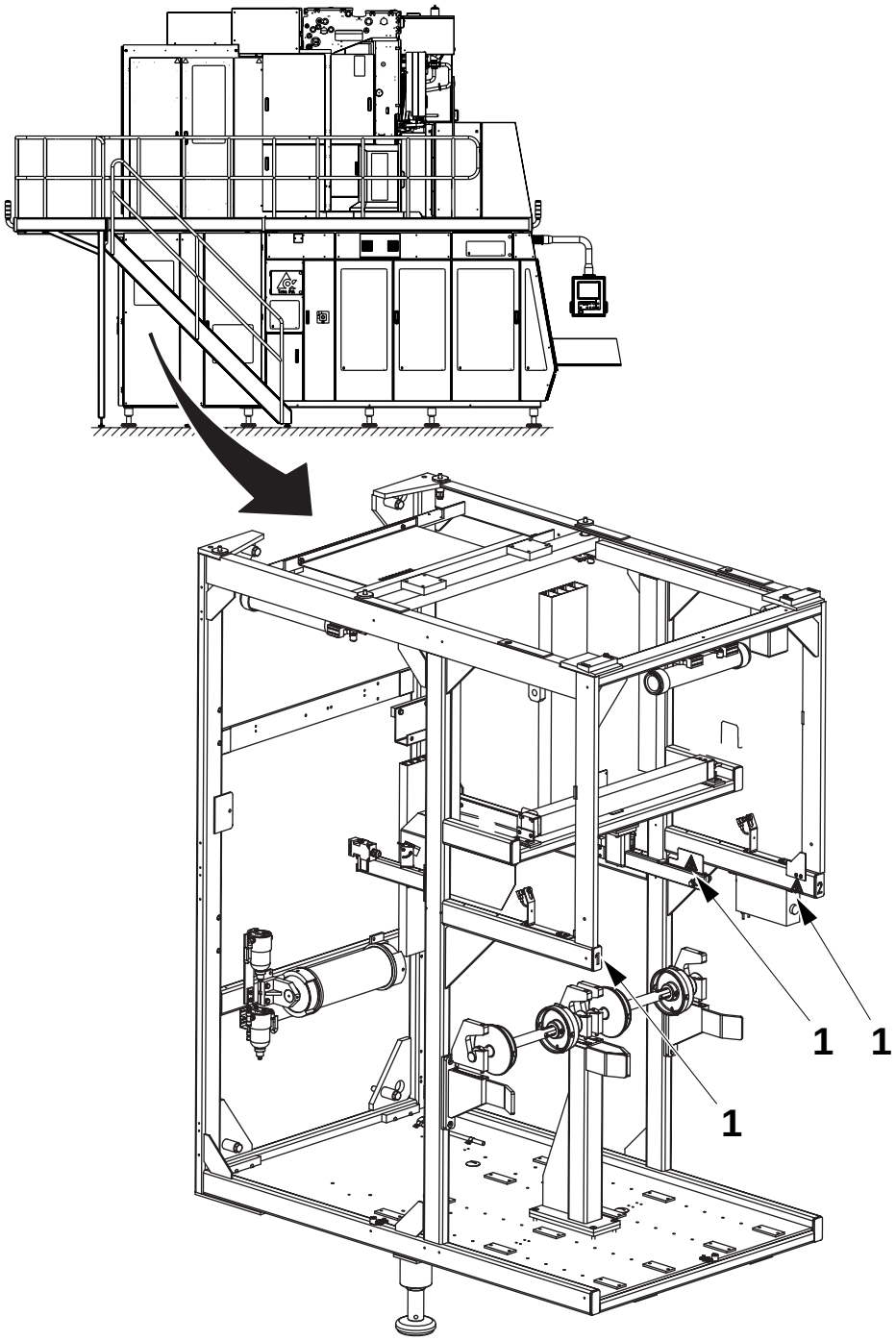

TechPub_2614345_0103 - EM_2851302_0105sp.fm

Safety Devices

WARNING
Unshielded hazards.
Never inch or run this equipment if any safety device is inoperative.

Change inoperative components of the safety system immediately.

WARNING
Hazardous Voltage.
Activating a safety device, such as pressing an EMERGENCY STOP push-button or opening a door, does not disconnect the power supply from this equipment.

Emergency Stop

Emergency stop devices are used to stop this equipment immediately in an emergency. Learn the positions of all emergency stop devices and how to use them.

Instructions for a normal production stop are included in the Stop chapter of the Operation Manual.

TechPub_2614345_0103 - EM_2851302_0105sp.fm

EMERGENCY STOP Push-Buttons

Push one of the EMERGENCY STOP push-buttons to stop this equipment immediately.

The illustration shows an EMERGENCY STOP push-button. The location of each EMERGENCY STOP push-button is shown by an arrow.

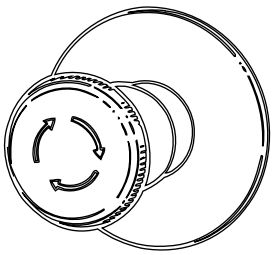

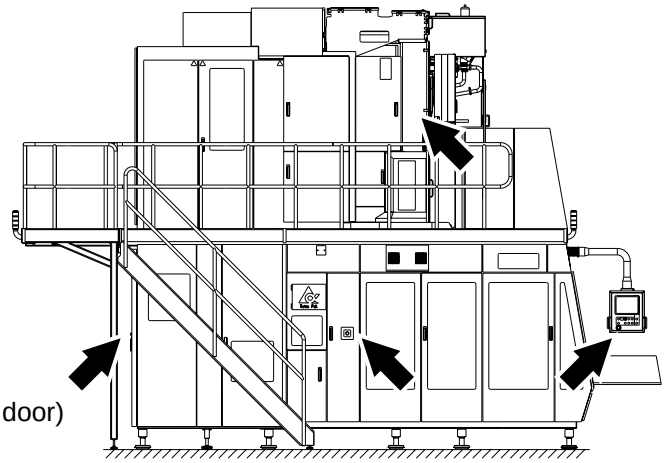

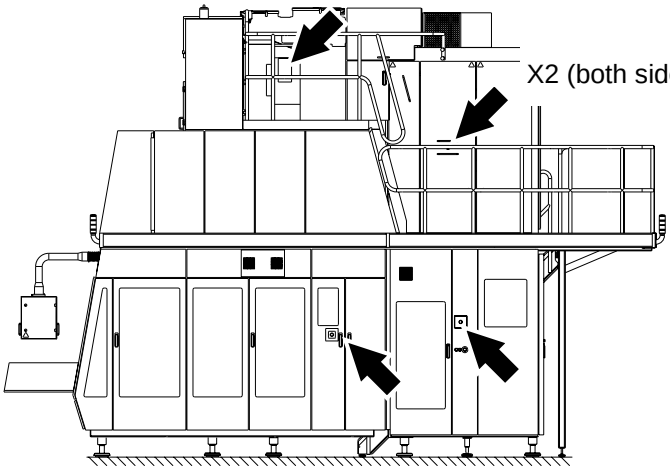

TechPub_2614345_0103 - EM_2851302_0105sp.fm

Safeguards

WARNING
Moving machinery.
Never defeat or bypass the interlocking devices.

All movable guards, such as doors and covers, leading to hazardous areas are fitted with interlocking devices, usually electric safety switches. These devices are part of the safety system and must never be defeated, bypassed, or otherwise made inoperative.

CAUTION
Burn hazard.
Parts of this equipment protected by safeguards may be thermally hot after operation.

After installation and maintenance, and before this equipment is inched or run, check that all safeguards are in place and that they operate correctly.

CAUTION
Risk of damage to the equipment.
Never stop this equipment by opening a movable guard.

(Cont'd)

TechPub_2614345_0103 - EM_2851302_0105sp.fm

(Cont'd)

The location of each movable guard is shown by an arrow.

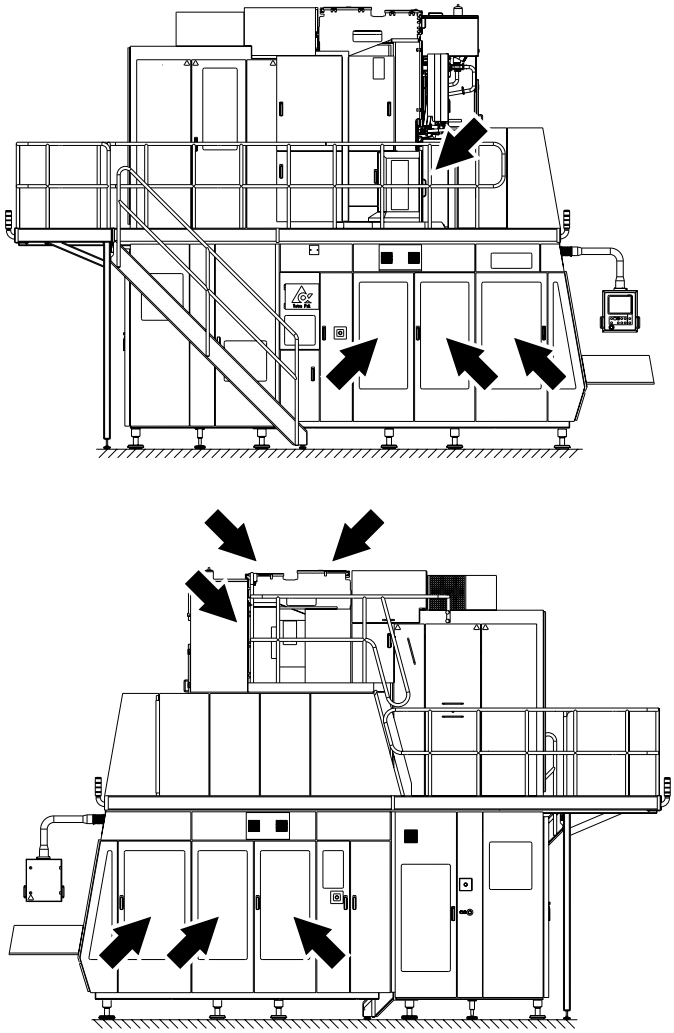

TechPub_2614345_0103 - EM_2851302_0105sp.fm

Warning Lamp

A warning lamp is a column of warning lights:

- A red light (1) indicates a hazardous condition. This is an emergency situation that requires immediate action
- A yellow light (2) indicates an abnormal condition. This is an impending critical condition calling for action by the operator
- A blue light (3) indicates that operator action is required.

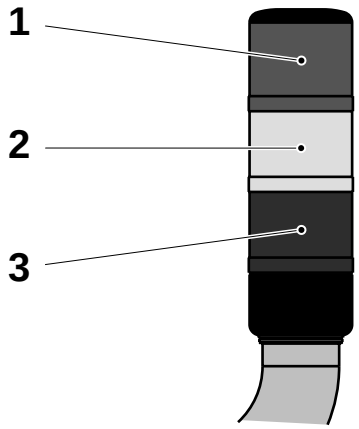

1 Red light
2 Yellow light
3 Blue light

A warning light flashes when operator action is required. The light stops flashing and remains lit when the alarm is acknowledged. After the fault is corrected or the operator takes the appropriate action, the warning light goes off.

Audible Alarm

The audible alarm produces a warning signal every time this equipment is about to start. The warning signal sounds for approximately three seconds prior to starting to alert personnel.

TechPub_2614345_0103 - EM_2851302_0105sp.fm

Personal Protection

This section applies to all personnel at all times when this equipment is in operation. For special personal protection required when handling hazardous materials, see the Hazardous Materials section.

Noise Hazard

WARNING
Hazardous noise.
Risk of impaired hearing.
Wear hearing protection whenever this equipment is in operation.

CAUTION
Hazardous noise.
Risk of impaired hearing.
Hearing protection is recommended whenever this equipment is in operation.

Entanglement Hazard

WARNING
Risk of entanglement.
Do not wear jewellery or loose clothing when working on or near this equipment. Long hair may not be loose.

TechPub_2614345_0103 - EM_2851302_0105sp.fm

Hazardous Materials

WARNING

Contact with chemicals can cause death, serious injury and illness.

Always follow the chemical manufacturer's instructions when handling chemicals.

Make sure that:

- the showers work
- an eyewash device, movable or wall-mounted, is available and operational
- additional washing facilities are nearby.

Note! Learn the locations of all washing facilities in order to act immediately in case of an accident.





TechPub_2614345_0103 - EM_2851302_0105sp.fm

Hydrogen Peroxide (H_2O_2)

WARNING
Corrosive chemical.
Wear personal protective equipment.

In both liquid and gas states, hydrogen peroxide may cause irritation or damage if it comes into contact with skin, mucous membranes, eyes, or clothes. Call for medical attention immediately if there is an accident.

Liquid hydrogen peroxide in concentrations of less than 1% is generally considered harmless to humans.

Consult the instructions on the label of the tank or container.

Emergency Procedures

If there is an accident involving hydrogen peroxide, rinse the affected area as soon as possible with large amounts of water.

If hydrogen peroxide is swallowed

- do not attempt to cause vomiting
- drink large amounts of lukewarm water to dilute the peroxide
- call for medical attention immediately.

If splashes or vapour from hydrogen peroxide come in contact with the eyes

- wash the eyes thoroughly with lukewarm water for 15 minutes (keep eyelids wide apart)
- call for medical attention immediately.

If hydrogen peroxide comes into contact with skin or clothes

- rinse immediately with plenty of water
- call for medical attention immediately if skin burns appear
- thoroughly wash the clothes before wearing them again.

If irritation or pain is experienced due to having inhaled hydrogen peroxide vapour

- leave the affected area and get some fresh air
- call for medical attention if the symptoms get worse.

TechPub_2614345_0103 - EM_2851302_0105sp.fm

Personal Protective Equipment

The personal protective equipment for hydrogen peroxide is

- safety goggles (TP No 90303-11)
- protective gloves made of neoprene (TP No.90303-12)
- apron (TP No. 90303-13)
- shoes made of PVC, PE plastic, or rubber.

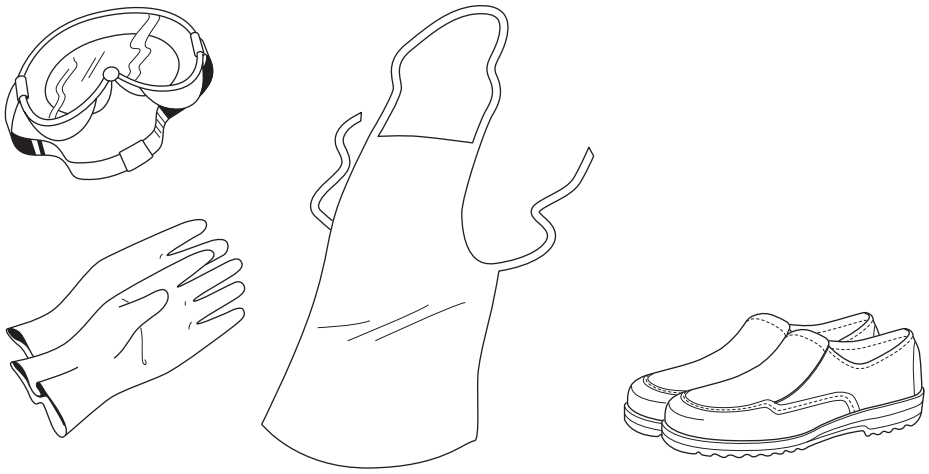

TechPub_2614345_0103 - EM_2851302_0105sp.fm

Handling

WARNING
Sudden and violent chemical reaction.
Avoid any contamination of hydrogen peroxide.

Hydrogen peroxide reacts suddenly and violently with many compounds or if it is contaminated. The reaction is a violent decomposition liberating oxygen and heat, with a big increase in volume due to the oxygen produced by the peroxide decomposition.

Never pour surplus hydrogen peroxide back into the original container if it contains fresh hydrogen peroxide. There is a risk of explosion when hydrogen peroxide is in a closed container.

Ensure that equipment used for handling and diluting hydrogen peroxide is clean before it comes in contact with hydrogen peroxide. Pumps or other equipment used for handling hydrogen peroxide must be used for this purpose only and must be manufactured from appropriate materials, such as stainless steel 316 L, glass, polyethylene, or teflon. After use, make sure that all peroxide residue is rinsed away.

If hydrogen peroxide is spilled, dilute it with large amounts of water and flush it into a drain.



WARNING
Self-ignition.
Never wipe up hydrogen peroxide with materials such as rags or paper as these may self-ignite several hours after contact.
If there is a fire, spray with large quantities of water.

TechPub_2614345_0103 - EM_2851302_0105sp.fm

Storage

DANGER

Containers will explode if not properly ventilated.

Keep the container upright and fitted with its proper ventilation cap. If there is a fire, cool all containers by spraying them with large quantities of water.

Hydrogen peroxide decomposes much faster with increasing temperature. There is a risk of explosion at high temperatures, since the ventilation cap cannot release the gases produced quickly enough.

Hydrogen peroxide must be stored in the original container delivered by the supplier. Keep the container upright and fitted with its proper ventilation cap, which allows oxygen to escape. Otherwise, there can be an explosion if decomposition of the peroxide occurs violently.

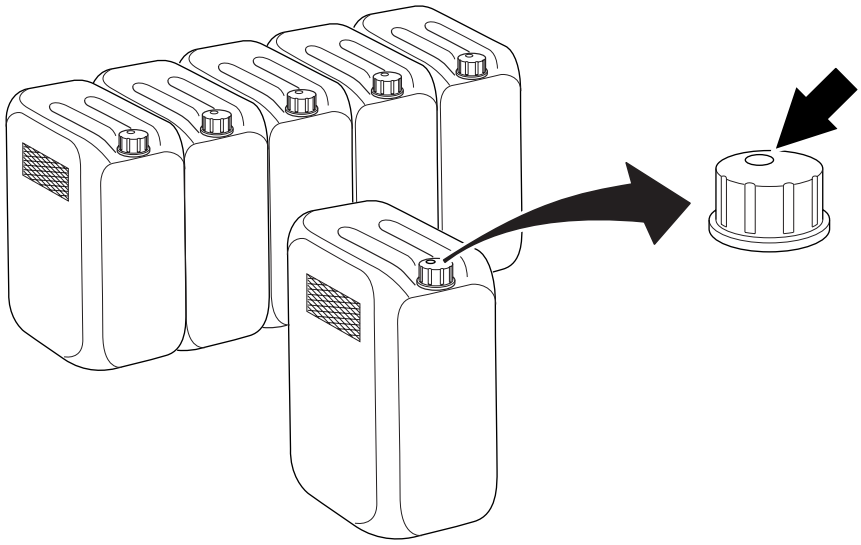

Make sure that the container is always properly closed.

(Cont'd)

TechPub_2614345_0103 - EM_2851302_0105sp.fm

(Cont'd)

Commercial food-grade hydrogen peroxide has been stabilised to inhibit the catalytic decomposition effects of metals and other impurities, but it can decompose into oxygen and water if it is exposed to heat or contaminated.

Make sure that the area used for storage of hydrogen peroxide is:

- cool, clean, and well ventilated
- shielded from direct sunlight
- kept free from combustible materials.

Disposal

Hydrogen peroxide should be sent to an approved facility for destruction. Some countries allow it to be diluted with water to a concentration of less than 1% and poured into the drain.

TechPub_2614345_0103 - EM_2851302_0105sp.fm

Caustic Soda/Sodium Hydroxide (NaOH)

WARNING

Corrosive chemical.

Caustic soda/sodium hydroxide is highly corrosive in all forms and can cause serious burns on contact with skin and eyes. Always wear personal protective equipment.

Emergency Procedures

Caustic soda/sodium hydroxide is highly corrosive in all forms and can cause burns if it comes into contact with skin or eyes. Call for medical attention immediately if there is an accident.

In the case of an accidental release of caustic soda:

- leave the affected area immediately
- never attempt to rescue victims of exposure without the proper personal protective equipment
- in case of contact to eyes or skin, rinse the exposed areas with water for a minimum of 15 minutes. Remove contaminated clothing. Call for immediate medical attention.
- in case of ingestion, do not induce vomiting. Drink large quantities of water or milk (if available). Call for immediate medical attention.
- secure the affected area and carefully dilute with water or neutralise the spillage with a weak acid such as acetic, hydrochloric or sulphuric. Soak up the spillage with an appropriate absorbent.

Handling and Storage of Caustic Soda/Sodium Hydroxide

When handling caustic soda/sodium hydroxide, make sure that:

- the containers are stored in a cool dry place away from direct sunlight or sources of heat
- the areas used for the storage and handling of this material are adequately ventilated
- the containers are kept tightly closed
- the containers are transported carefully
- never store caustic soda/sodium hydroxide together with hydrogen peroxide.

Disposal of Caustic Soda/Sodium Hydroxide

Caustic soda/sodium hydroxide should be sent to an approved facility for destruction. Never allow caustic soda/sodium hydroxide to be disposed of into the drain.

TechPub_2614345_0103 - EM_2851302_0105sp.fm

Nitric Acid (HNO_3)

WARNING

Corrosive chemical.

Nitric acid in both liquid and vapour form can cause irritation or damage if it comes into contact with skin, mucous membranes, eyes, or clothes. Always wear personal protective equipment.

WARNING

Powerful oxidizing chemical.

Nitric acid is a powerful oxidizing chemical and reacts violently with organic materials such as wood, cloth, paper etc. Nitric acid releases toxic fumes when it comes into contact with metals and plastics.

Emergency Procedures

Nitric acid in both liquid and vapour form can cause irritation or damage if it comes into contact with skin, mucous membranes, eyes, or clothes. Call for medical attention immediately if there is an accident.

In the case of an accidental release of nitric acid:

- leave the affected area immediately
- never attempt to rescue victims of exposure without the proper personal protective equipment
- remove victims to fresh air and if necessary administer expired air resuscitation and/or cardiopulmonary resuscitation. Call for immediate medical attention
- in case of contact to eyes or skin, rinse the exposed areas with water for a minimum of 15 minutes. Remove contaminated clothing. Call for immediate medical attention
- in case of ingestion, do not induce vomiting. Call for immediate medical attention
- secure the affected area and carefully cover with sodium bicarbonate, lime or soda ash to neutralise the spillage.

(Cont'd)

TechPub_2614345_0103 - EM_2851302_0105sp.fm

(Cont'd)

Handling and Storage of Nitric Acid

When handling nitric acid, make sure that:

- appropriate breathing apparatus is used when handling and opening the containers
- the containers are stored in a cool dry place away from direct sunlight or sources of heat
- the areas used for the storage and handling of this material are adequately ventilated
- the containers are kept tightly closed
- the containers are transported carefully
- never store nitric acid together with organic or combustible material.

Disposal of Nitric Acid

Nitric acid should be sent to an approved facility for destruction. Never allow nitric acid to be disposed of into the drain.

TechPub_2614345_0103 - EM_2851302_0105sp.fm

Nitrogen (N_2)

WARNING

High pressure gas.

Nitrogen gas in high concentration can cause rapid suffocation. Make sure that the areas for storing and using this gas are adequately ventilated.

WARNING

Extremely cold high pressure gas.

Rapidly expanding nitrogen gas can cause frostbite injuries. Always wear personal protective equipment.

Emergency Procedures

Nitrogen gas in high concentrations can cause an oxygen deficient environment. Rapidly expanding nitrogen gas can cause frostbite injuries.

In the case of an accidental release of this gas:

- leave the affected area immediately
- never attempt to rescue victims of exposure to this gas without the proper personal protective equipment
- remove victims to fresh air and if necessary administer expired air resuscitation and/or cardiopulmonary resuscitation. Call for immediate medical attention
- in case of contact with eyes or skin, soak the exposed areas with luke warm water, not hot or cold. Call for immediate medical attention.
- allow the gas to dissipate, use auxiliary ventilation if available.

Handling and Storage of Nitrogen Gas

When handling nitrogen gas cylinders, make sure that:

- the areas used for the storage and handling of this gas are adequately ventilated (min. 19.5% oxygen)
- the cylinders are transported with the valves closed and with the valve protection caps securely in place
- the gas cylinders are connected only to connections marked for this gas
- the cylinder valves are opened slowly

Disposal of Nitrogen Gas

When returning nitrogen gas cylinders, make sure that:

- the cylinder valves are closed and the valve protection caps are securely in place
- there is still some gas in the cylinder.

TechPub_2614345_0103 - EM_2851302_0105sp.fm

Cooling Media R134a

WARNING

Refrigerant gas.

High concentration of cooling media R134a vapour can cause dizziness, headache, confusion and unconsciousness. In liquid form R134a can cause frostbite injuries on contact with skin. Always wear personal protective equipment.

Emergency Procedures

Inhaling large quantities of cooling media R134a vapour can cause dizziness, headache, confusion and unconsciousness. In liquid form cooling media R134a can cause frostbite injuries on contact with skin.

In the case of an accidental release of this refrigerant:

- leave the affected area immediately
- remove victims to fresh air and if necessary administer expired air resuscitation and/or cardiopulmonary resuscitation. Call for immediate medical attention
- in case of contact with eyes or skin, soak the exposed areas with luke warm water, not hot or cold. Call for immediate medical attention
- allow the vapour to dissipate, use auxiliary ventilation if available.

Handling and Storage of Cooling Media R134a

When handling cooling media R134a, make sure that:

- the cylinders are stored in a cool dry place away from direct sunlight or sources of heat
- the areas used for the storage and handling of this refrigerant are adequately ventilated
- the cylinders are transported carefully
- the cylinder valves are opened slowly.

Disposal of Cooling Media R134a

Cooling media R134a should whenever possible be reprocessed or recycled. Contact the manufacturer or supplier for information on authorised refrigerant reclamation and recycling programs.

TechPub_2614345_0103 - EM_2851302_0105sp.fm

Supply Systems

Electrical Cabinet

DANGER

Hazardous voltage.
Will shock, burn, or cause death.
The power supply disconnector must be switched off and secured with a lock before maintenance inside the electrical cabinet.

Note! The key to the lock must be removed by the technician and retained in his/her possession until all work is completed.

Make sure that the electrical cabinet doors are closed after working inside the electrical cabinet. Doors with lock must be locked.

The location of each electrical cabinet is shown by an arrow.

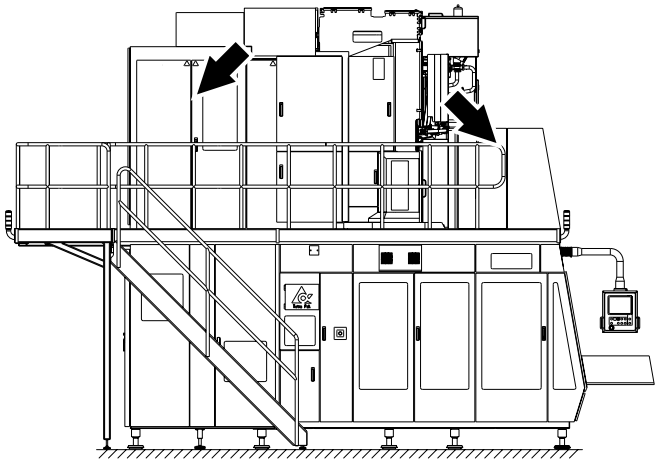

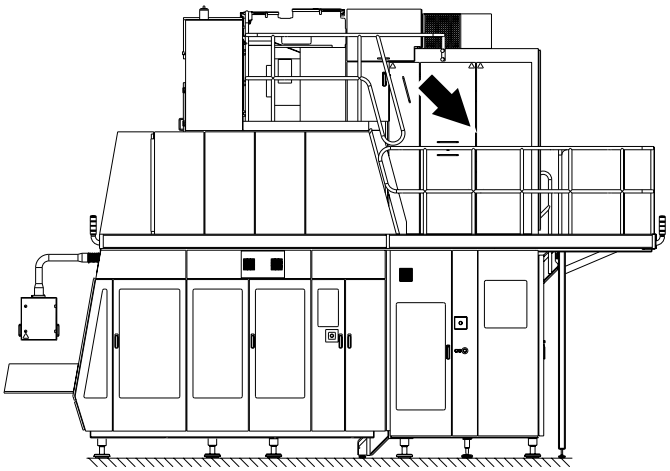

TechPub_2614345_0103 - EM_2851302_0105sp.fm

Socket Outlet

WARNING
Hazardous voltage.
Can shock, burn, or cause death.
Read the Maintenance Manual before using this socket outlet.

The illustrations show the socket outlet (1) and the residual current device (2). Their locations in the electrical cabinet (3) are shown by the arrow.

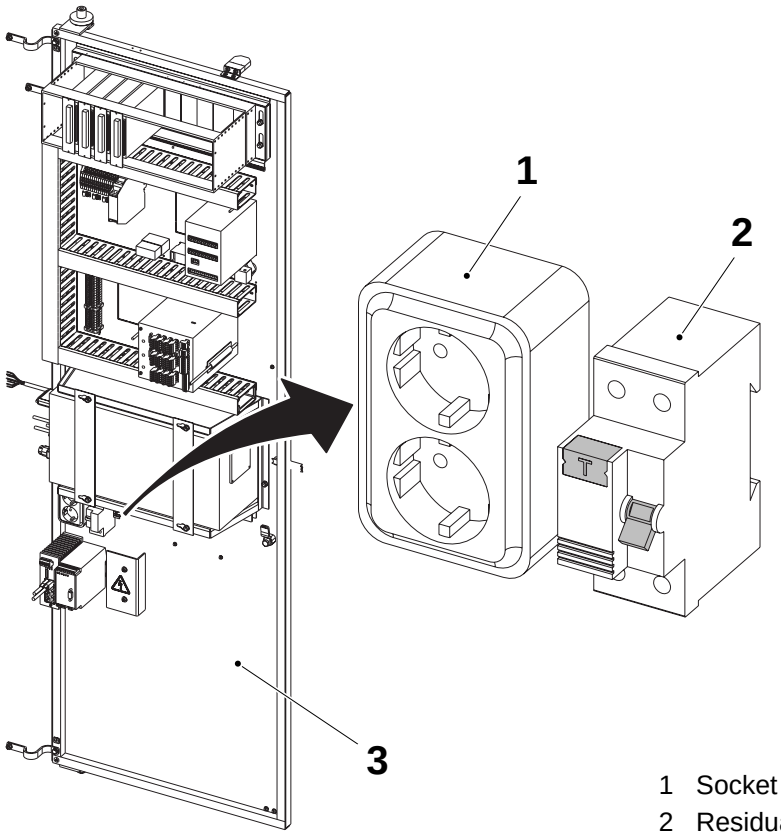

1 Socket outlet
2 Residual current device
3 Electrical cabinet

TechPub_2614345_0103 - EM_2851302_0105sp.fm

Power Supply

DANGER

Hazardous voltage and moving machinery.
The power supply disconnector must be switched off and secured with a lock before any maintenance.

Note! The key to the lock must be removed by the technician and retained in his/her possession until all work is completed.

Certain maintenance procedures may require the power supply systems to be on. These exceptions are clearly stated in the Maintenance Manual.

The illustration shows the power supply disconnector. The arrow shows its location on this equipment.

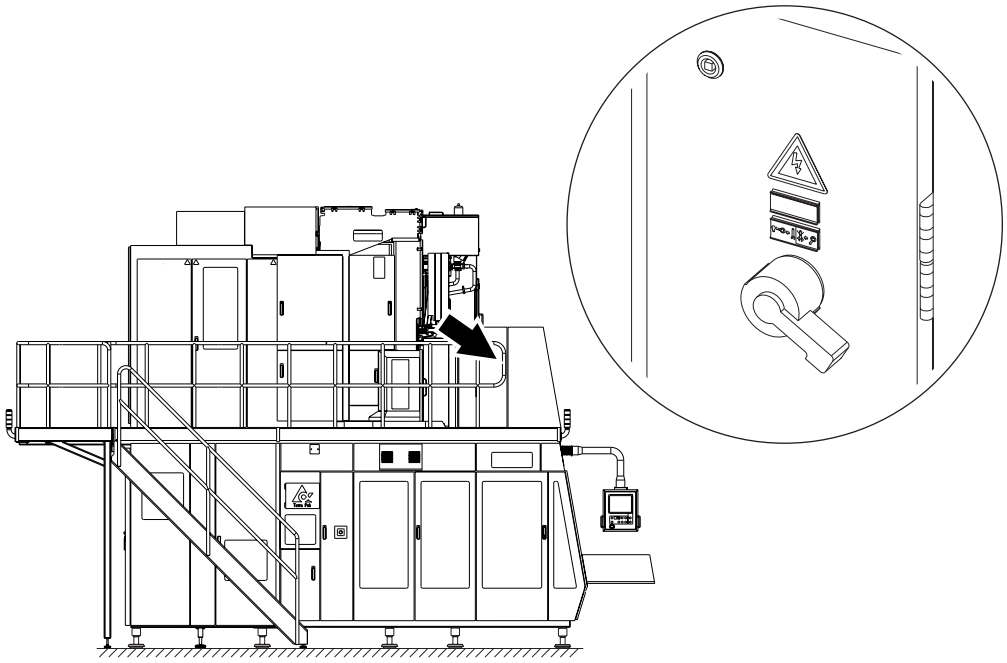

TechPub_2614345_0103 - EM_2851302_0105sp.fm

Air Supply

WARNING

Compressed air and moving machinery.
Close the main air valve and secure it with a lock before any maintenance.

Note! The key to the lock must be removed by the technician and retained in his/her possession until all work is completed.

Certain maintenance procedures may require the air supply systems to be on. These exceptions are clearly stated in the Maintenance Manual.

The illustrations show the main air valve (1) and the lock (2). The arrow shows their location on this equipment.

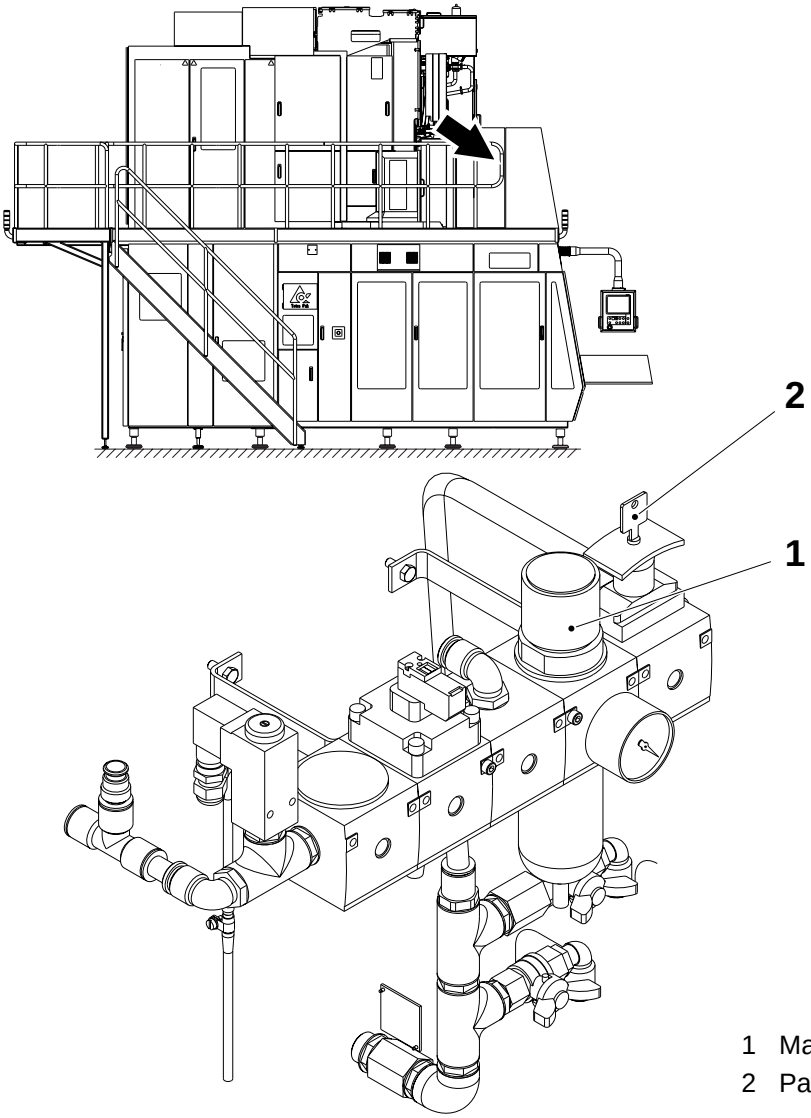

1 Main air valve
2 Padlock

TechPub_2614345_0103 - EM_2851302_0105sp.fm

Steam Supply

WARNING

Hot steam can cause scalds.

Pressurised steam can be discharged unexpectedly.
Close the steam supply valve and secure it with a lock, depressurize and vent all steam safely before any maintenance on parts with steam, such as pipes and valves.

Note! The key to the lock must be removed by the technician and retained in his/her possession until all work is completed.

Certain maintenance procedures may require the steam supply systems to be on. These exceptions are clearly stated in the Maintenance Manual.

The illustration shows the steam supply valve (1) and its location.

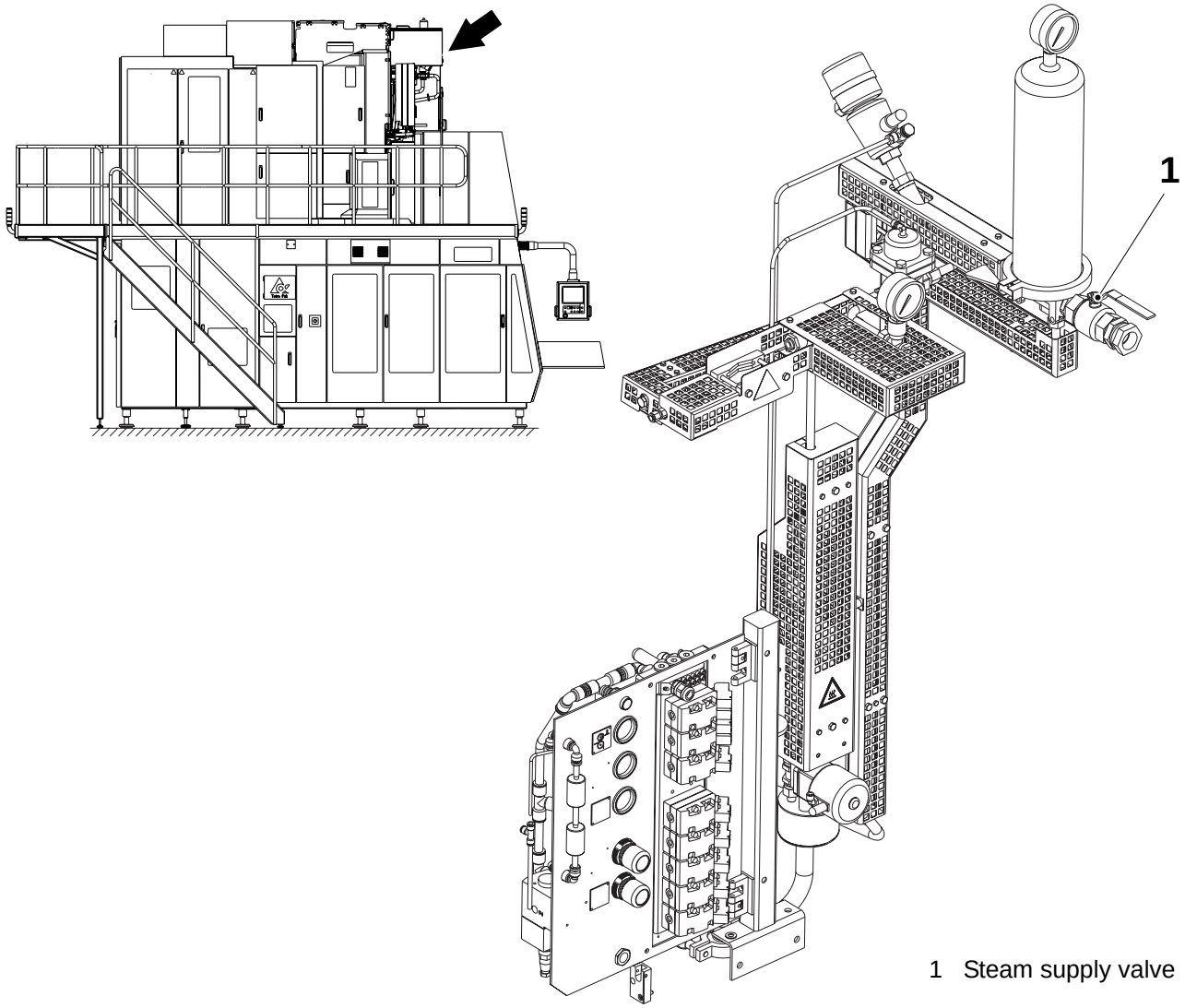

1 Steam supply valve

TechPub_2614345_0103 - EM_2851302_0105sp.fm

Water Supply

WARNING

Water under pressure.

Close the water supply valves before any maintenance.

Certain maintenance procedures may require water supply systems to be on. These exceptions are clearly stated in the Maintenance Manual.

The illustration shows the water supply valves (1) and (2) and their location.

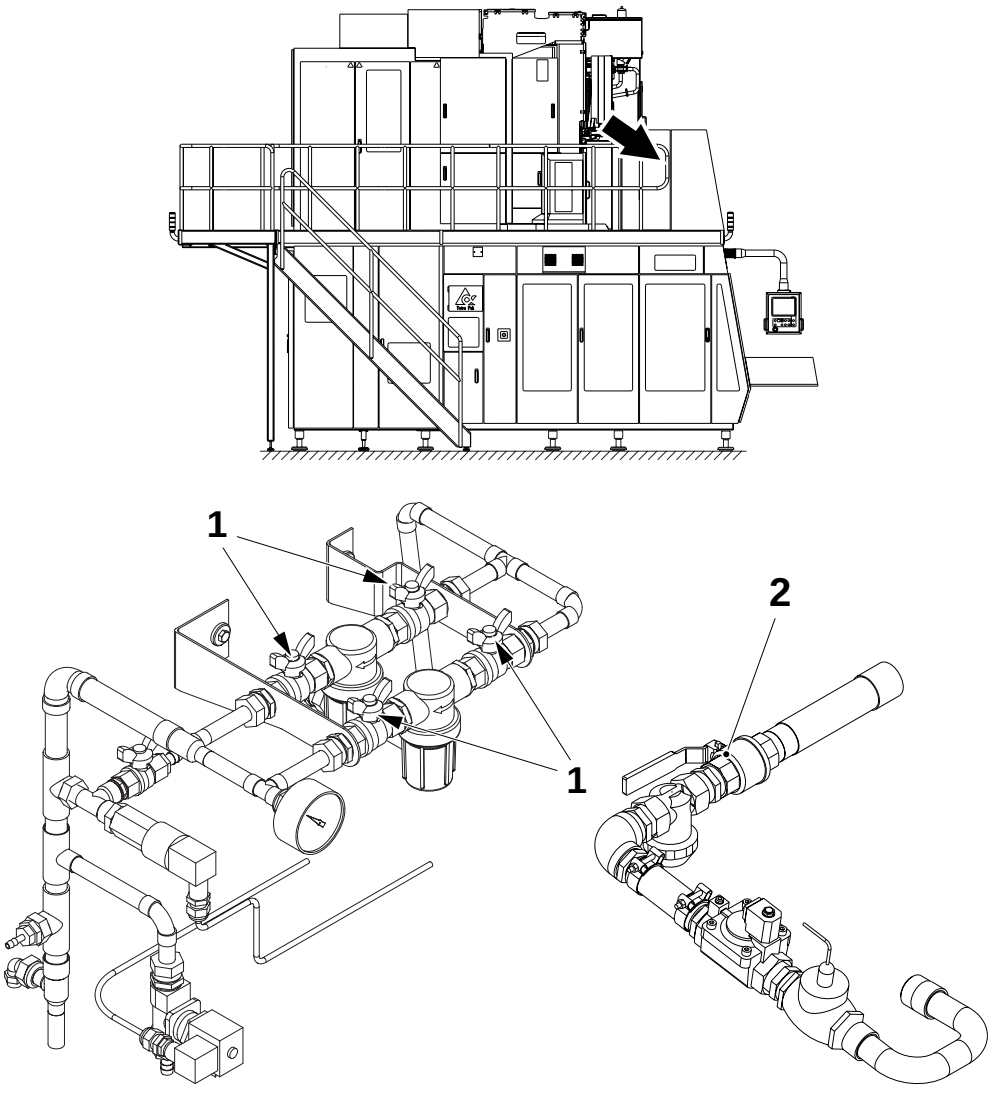

1 Water supply valve
2 Hot water supply valve

TechPub_2614345_0103 - EM_2851302_0105sp.fm

Equipment for Lifting and Moving Loads

WARNING

Risk of crushing injury.

Make sure that the capacity of the lifting equipment is adequate and that the equipment itself is in proper working order.

If lifting tackle must be joined to make up the necessary lengths, make sure that the joints are secure and have the same lifting capacity as the rest of the lifting tackle.

Always engage safety clips fitted to lifting hooks to prevent the lifting tackle from slipping off.

Use ropes or poles to steady and manoeuvre suspended loads. Do **not** use hands or feet.

Make sure that the route and destination are free from obstacles before moving a suspended load. It must always be possible to quickly and safely lower the load to the floor in an emergency.

When depositing loads, keep lifting tackle in place until the stability of the load has been substantiated.

TechPub_2614345_0103 - EM_2851302_0105sp.fm

This page intentionally left blank

TechPub_2614345_0103 - EM_2851302_0105sp.fm

1 Electrical Systems Description

TechPub_2614345_v3_DRAFT_Release01_EM2851302_05en.fm

Description

This chapter contains a description of the electrical system in the machine or equipment.

TechPub_2614345_v3_DRAFT_Release01_EM2851302_05en.fm

1.1 Electrical System Description . . . . . 1 - 5

Automatic Splicing Unit / Automatic Strip Splicing Unit . . . . . 1 - 6

Paper Web Control . . . . . 1 - 7

Longitudinal Sealing . . . . . 1 - 9

Transversal Sealing . . . . . 1 - 10

Filling System . . . . . 1 - 11

Design Correction System . . . . . 1 - 12

Jaw System / Final Folder . . . . . 1 - 13

Steering Forming Ring . . . . . 1 - 14

1.2 Safety System . . . . . 1 - 15

Safety System - Description . . . . . 1 - 15

Safety System - Circuits . . . . . 1 - 16

TechPub_2614345_v3_DRAFT_Release01_EM2851302_05en.fm

This page intentionally left blank

TechPub_2614345_v3_DRAFT_Release01_EM2851302_05en.fm

1.1 Electrical System Description

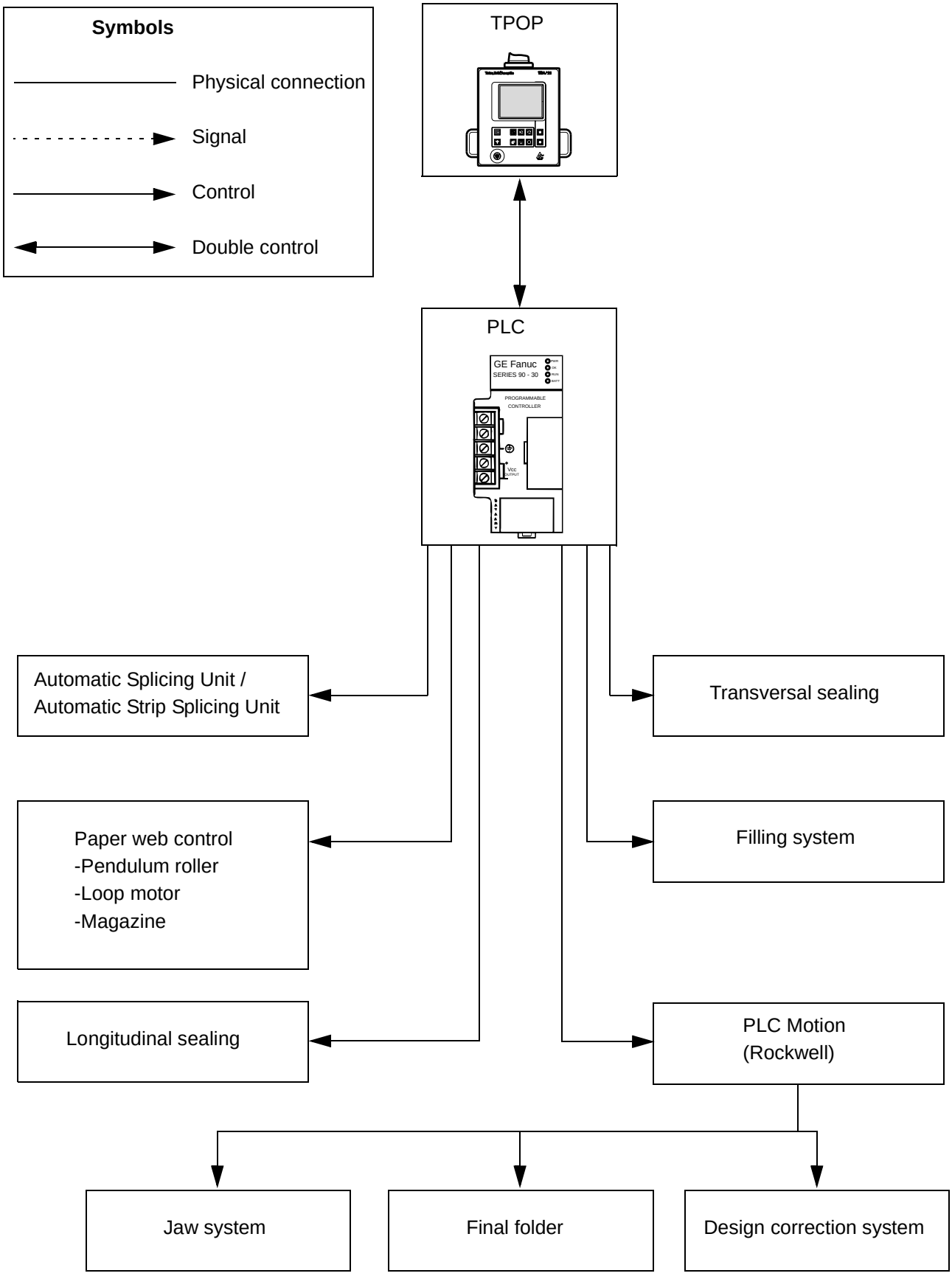

TechPub_2614345_v3_DRAFT_Release01_EM2851302_05en.fm

Automatic Splicing Unit / Automatic Strip Splicing Unit

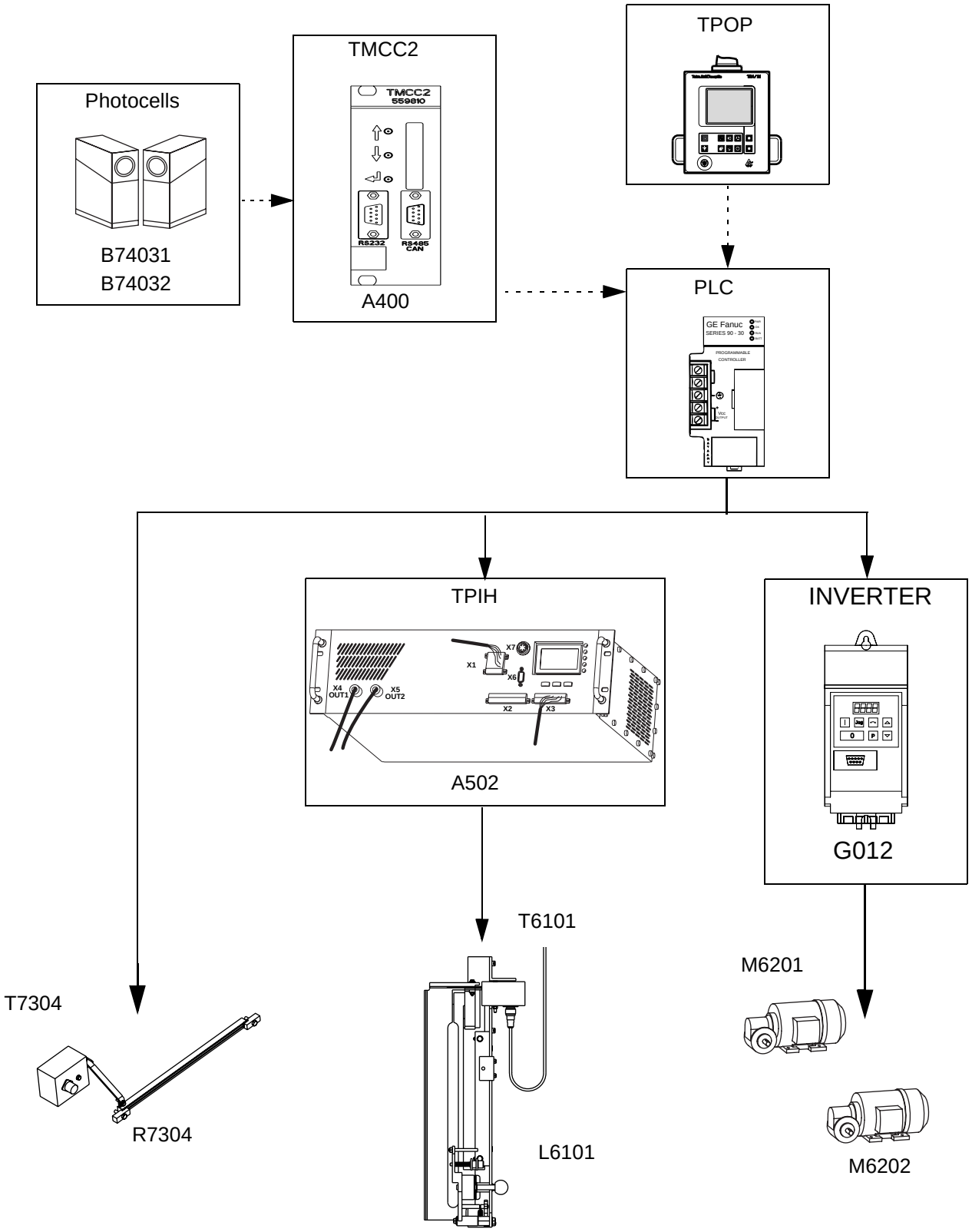

TechPub_2614345_v3_DRAFT_Release01_EM2851302_05en.fm

Paper Web Control

Pendulum Roller: Superstructure

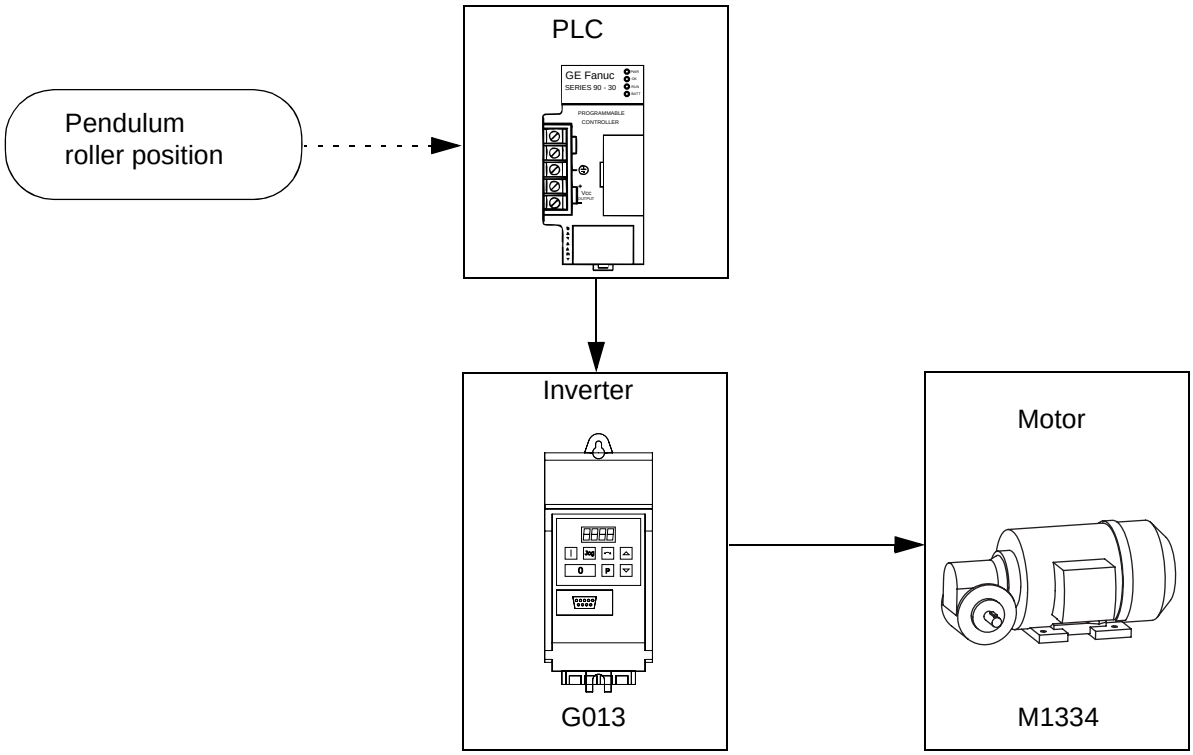

Loop Motor: Automatic Splicing Unit

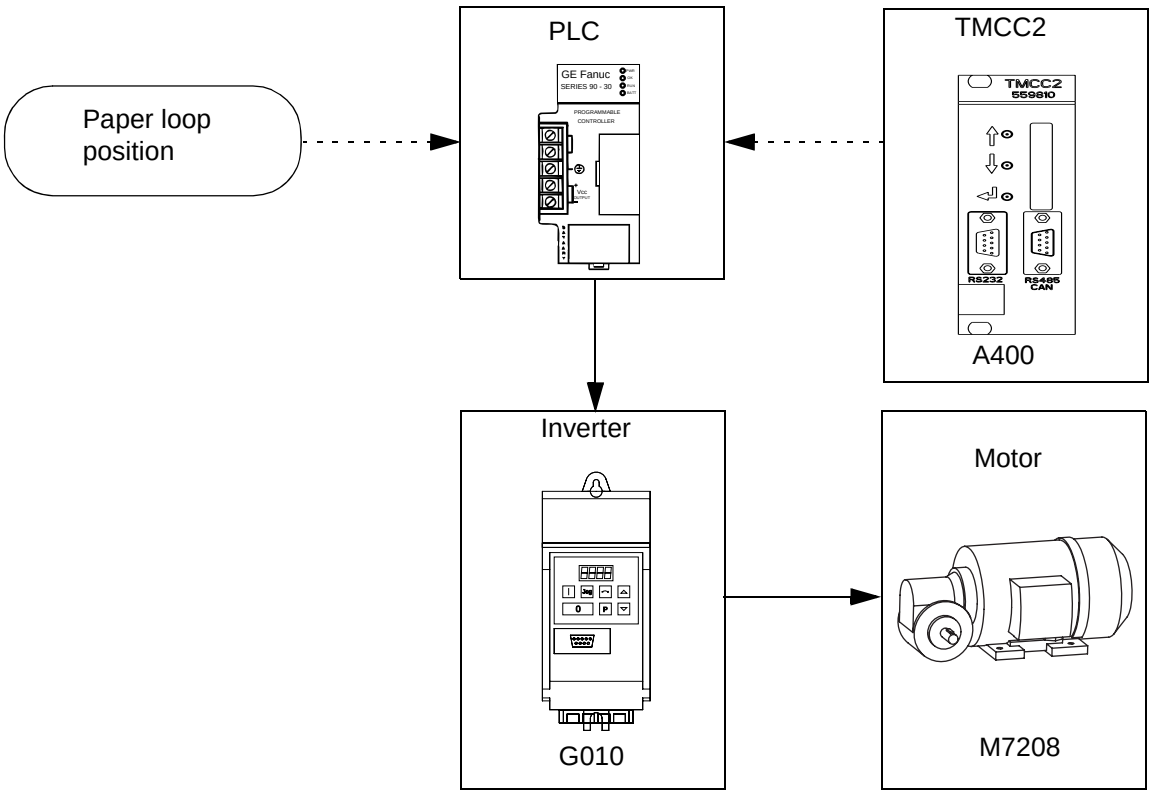

(Cont'd)

TechPub_2614345_v3_DRAFT_Release01_EM2851302_05en.fm

(Cont'd)

Magazine: Automatic Splicing Unit

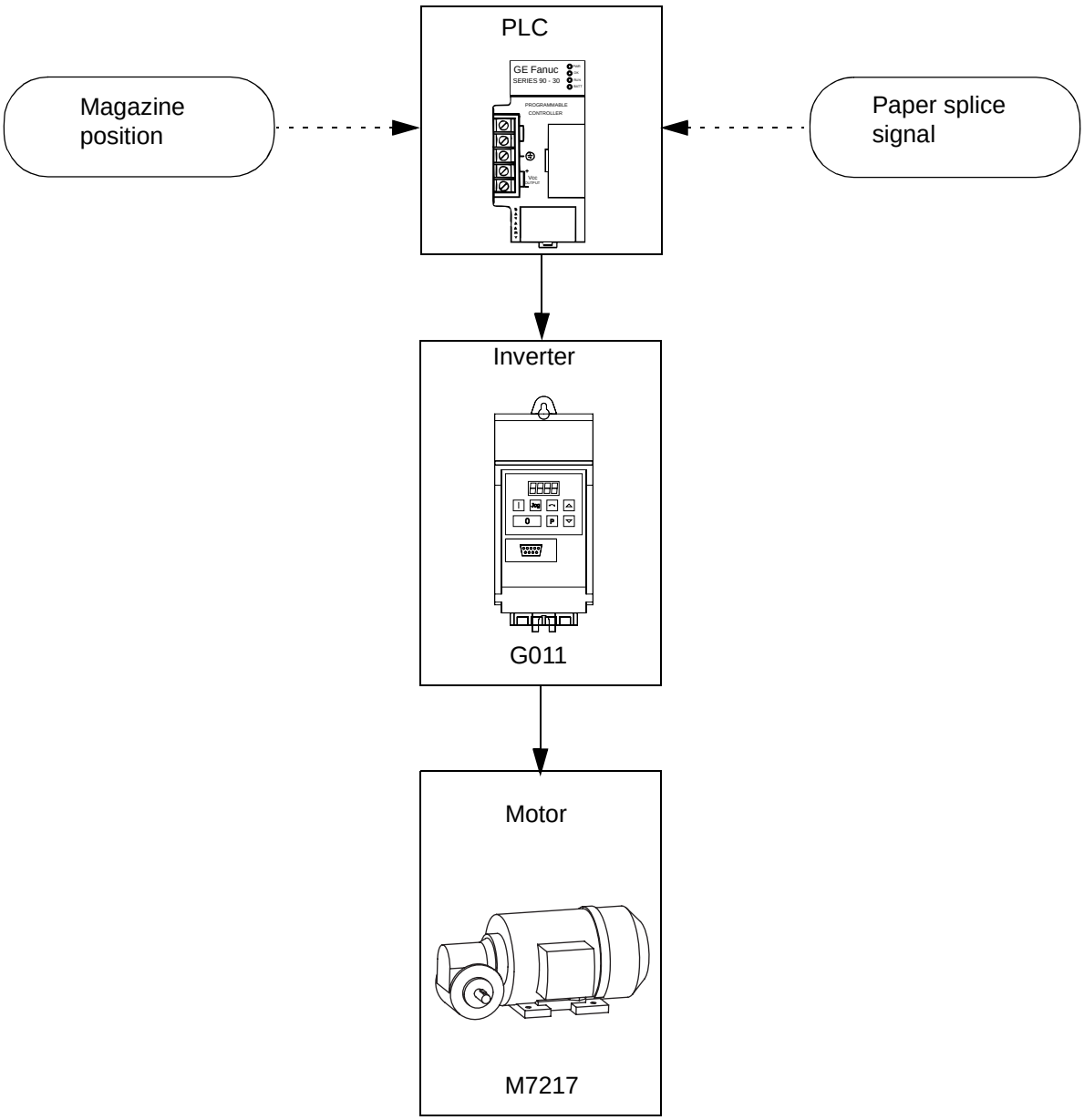

TechPub_2614345_v3_DRAFT_Release01_EM2851302_05en.fm

Longitudinal Sealing

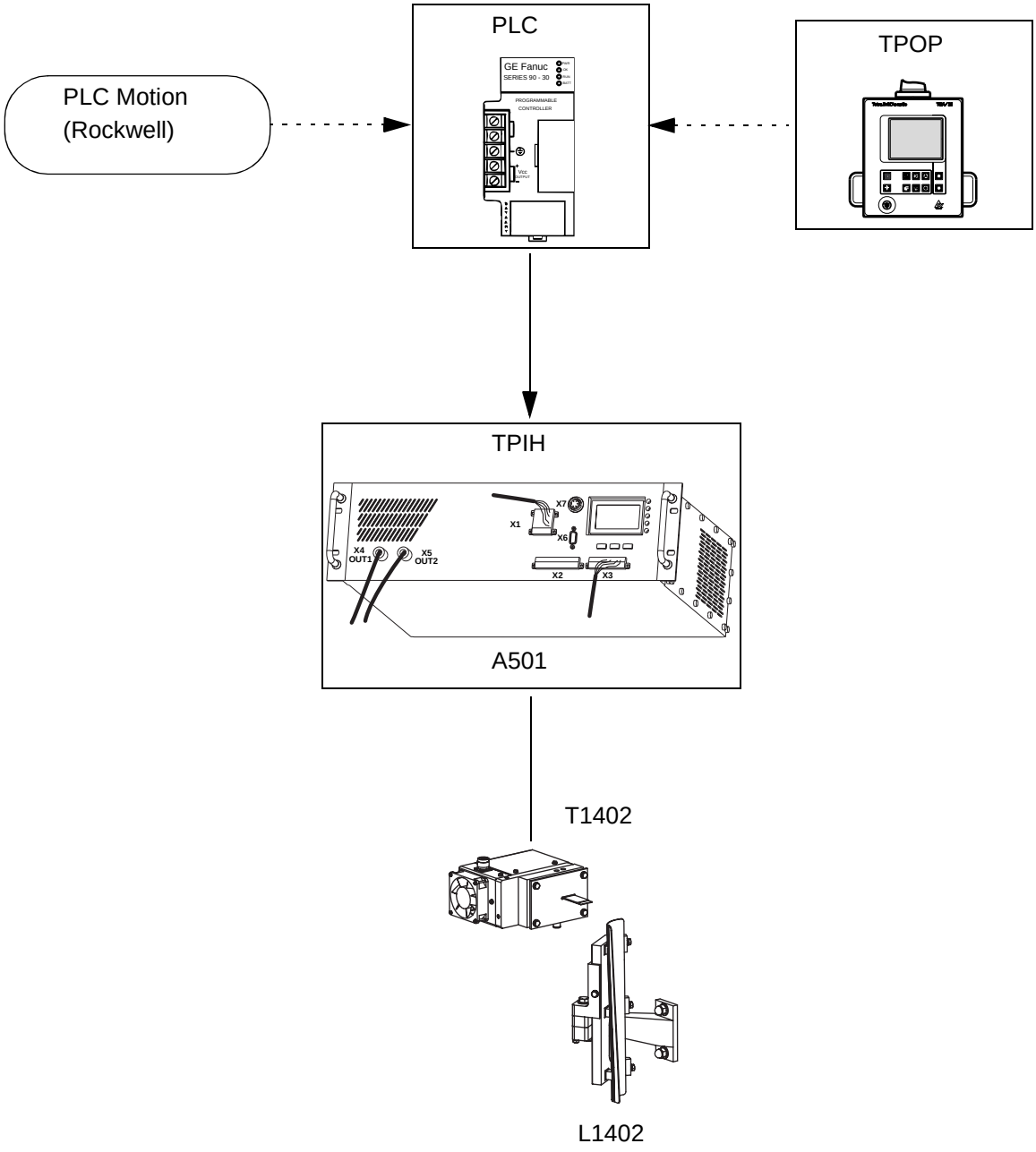

TechPub_2614345_v3_DRAFT_Release01_EM2851302_05en.fm

Transversal Sealing

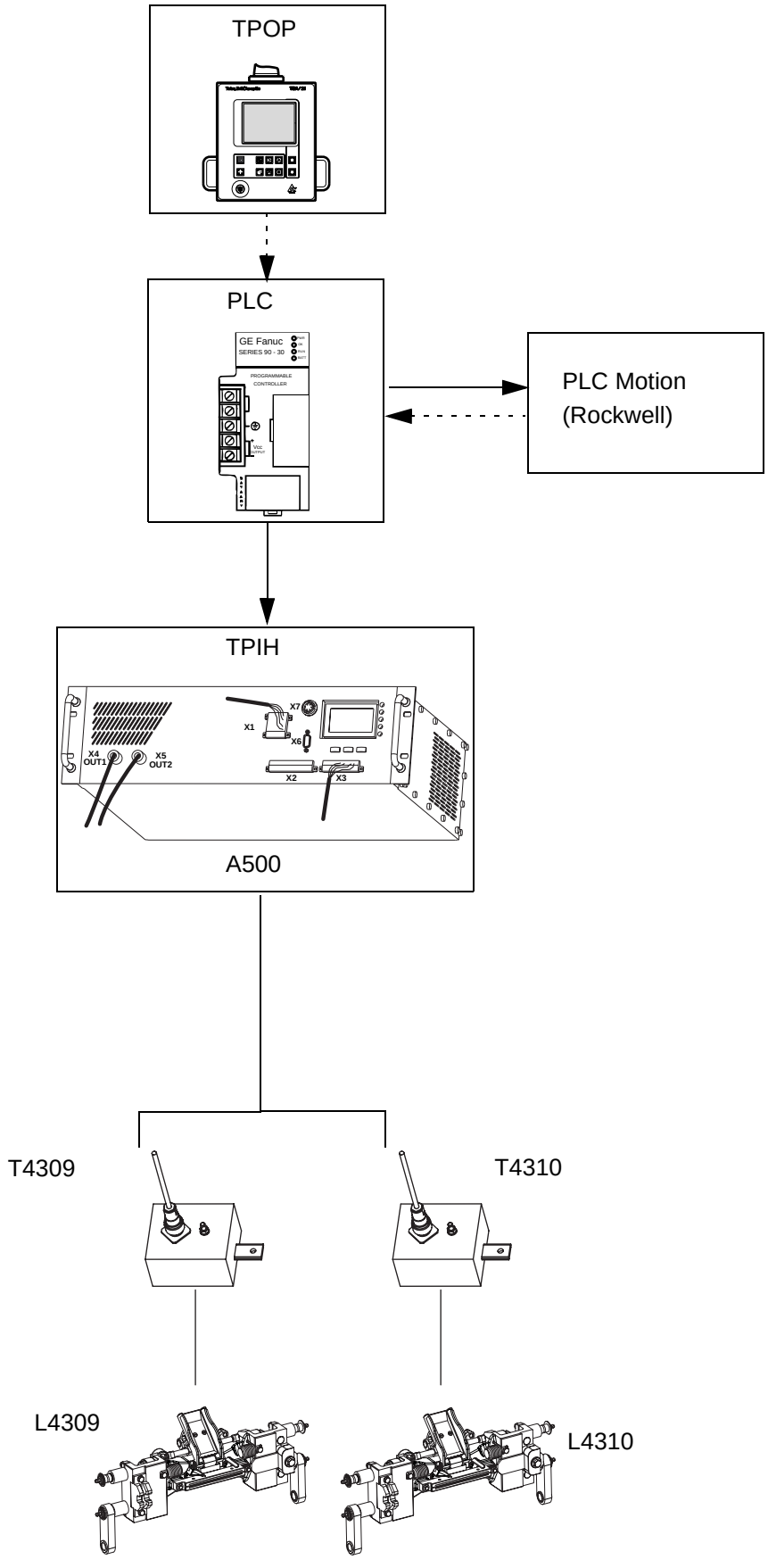

TechPub_2614345_v3_DRAFT_Release01_EM2851302_05en.fm

Filling System

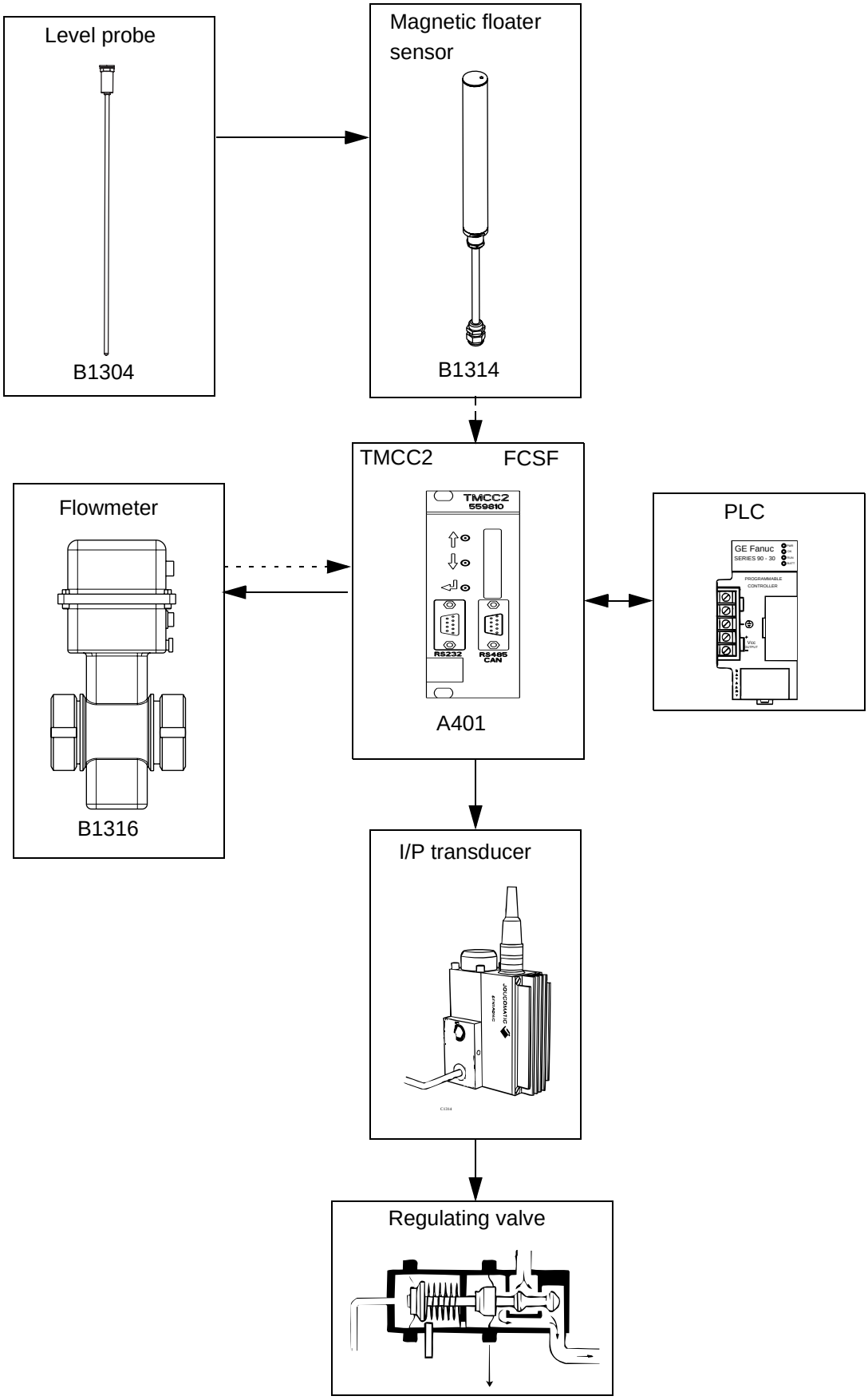

TechPub_2614345_v3_DRAFT_Release01_EM2851302_05en.fm

Design Correction System

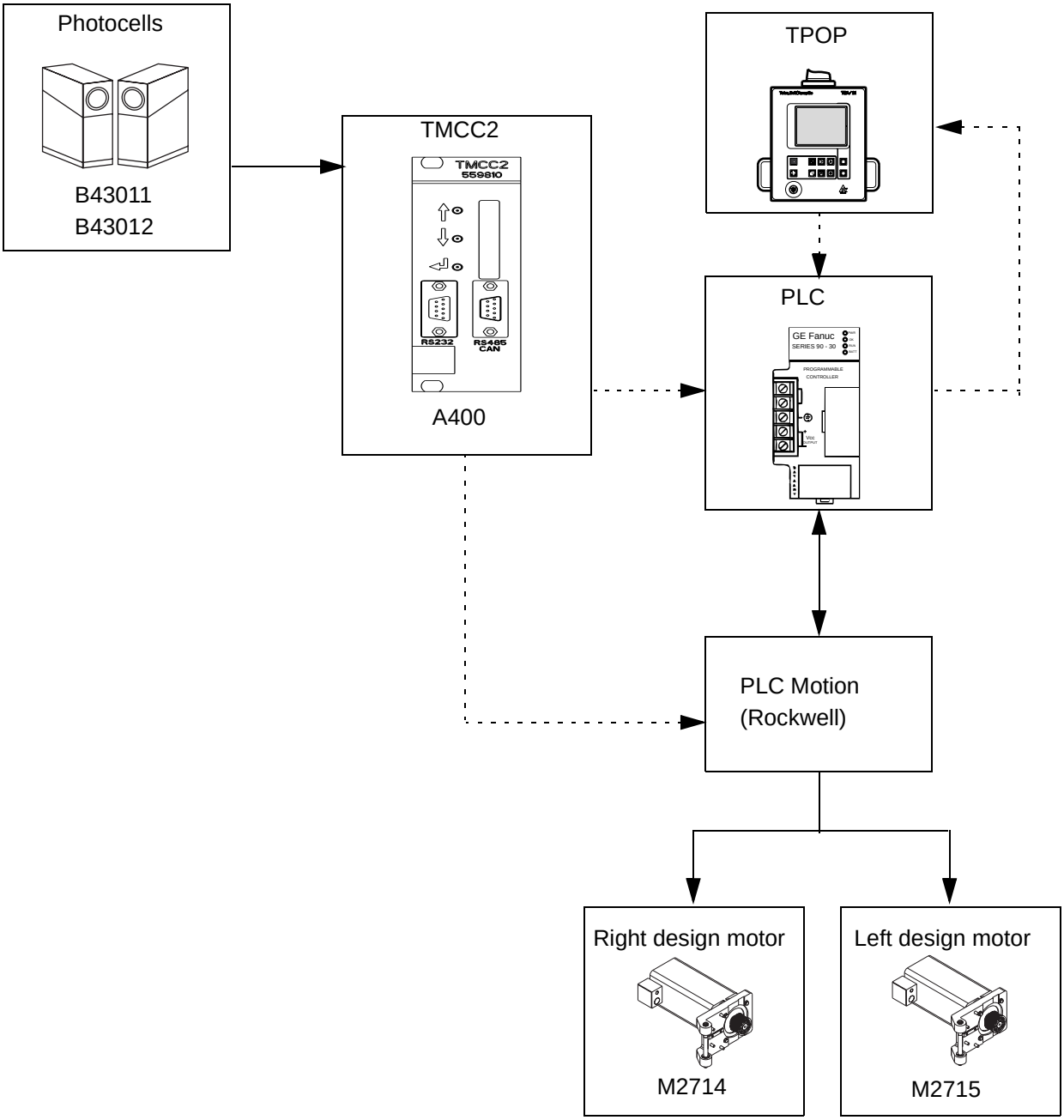

TechPub_2614345_v3_DRAFT_Release01_EM2851302_05en.fm

Jaw System / Final Folder

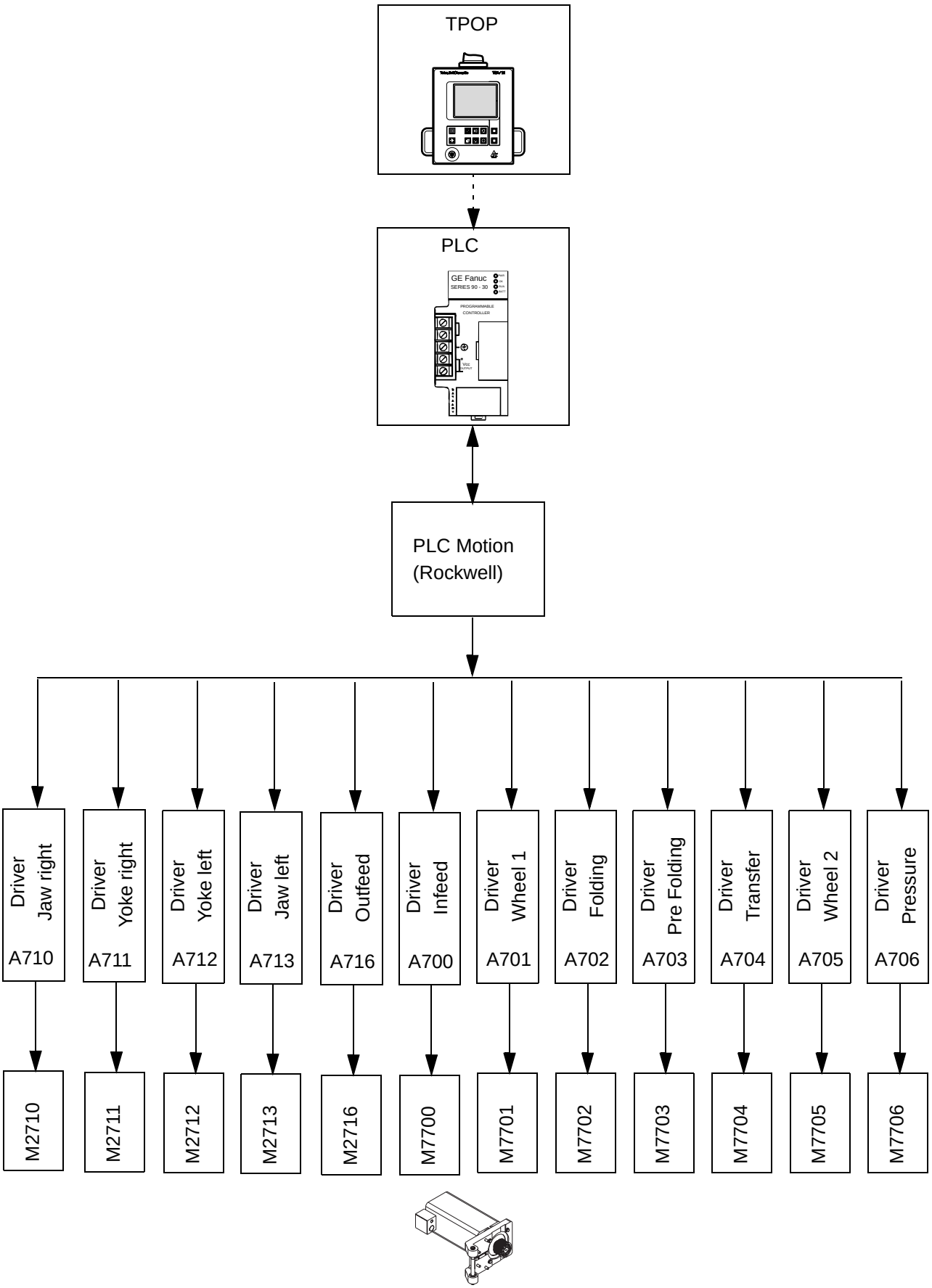

TechPub_2614345_v3_DRAFT_Release01_EM2851302_05en.fm

Steering Forming Ring

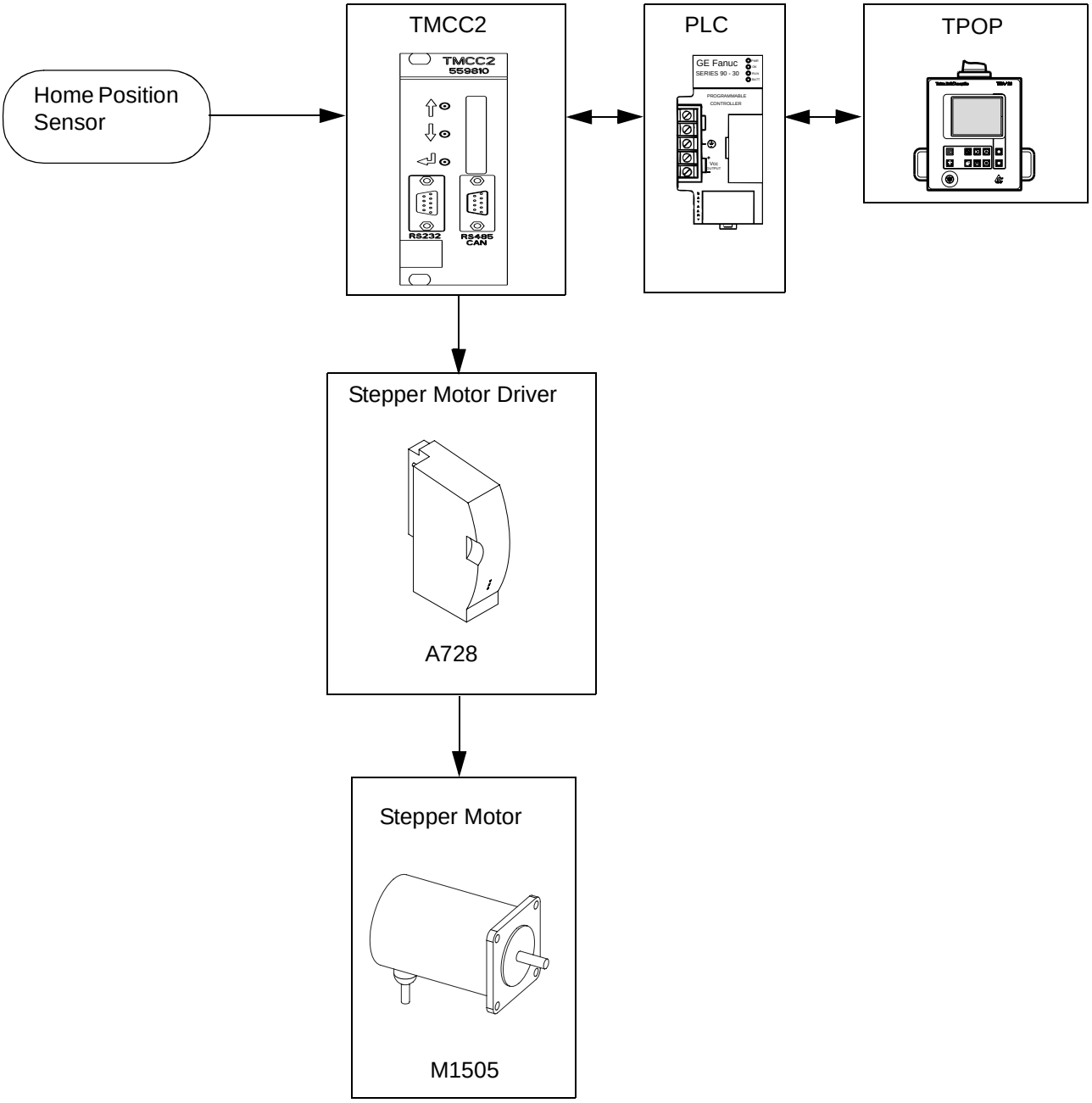

TechPub_2614345_v3_DRAFT_Release01_EM2851302_05en.fm

1.2 Safety System

Safety System - Description

In case of a safety relay alarm in the TPOP, one or more LEDs in the safety relays are off.

The relay with one or more LEDs off, is activated.

Relay	Alarm
A600	Emergency stop push buttons
A601	Time delay servo drive emergency stop
A602	Jaw system and Final folder doors guards
A604	ASU doors
A605	Aseptic chamber, Drying chamber doors safety monitor
A606	Aseptic chamber, Drying chamber doors safety monitor
A607	SA internal door safety monitor

TechPub_2614345_v3_DRAFT_Release01_EM2851302_05en.fm

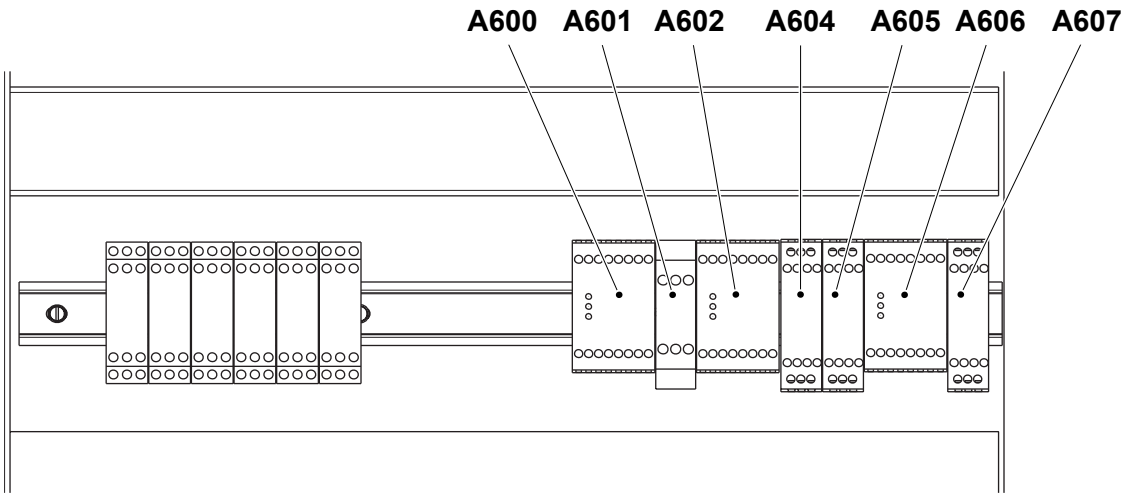

A600: Emergency stop
A601: Safety relay delayed
A602: Doors guard safety
A604: ASU doors
A605: Aseptic chamber, Drying chamber doors safety monitor
A606: Aseptic chamber, Drying chamber doors safety monitor
A607: SA internal door safety monitor

Safety System - Circuits

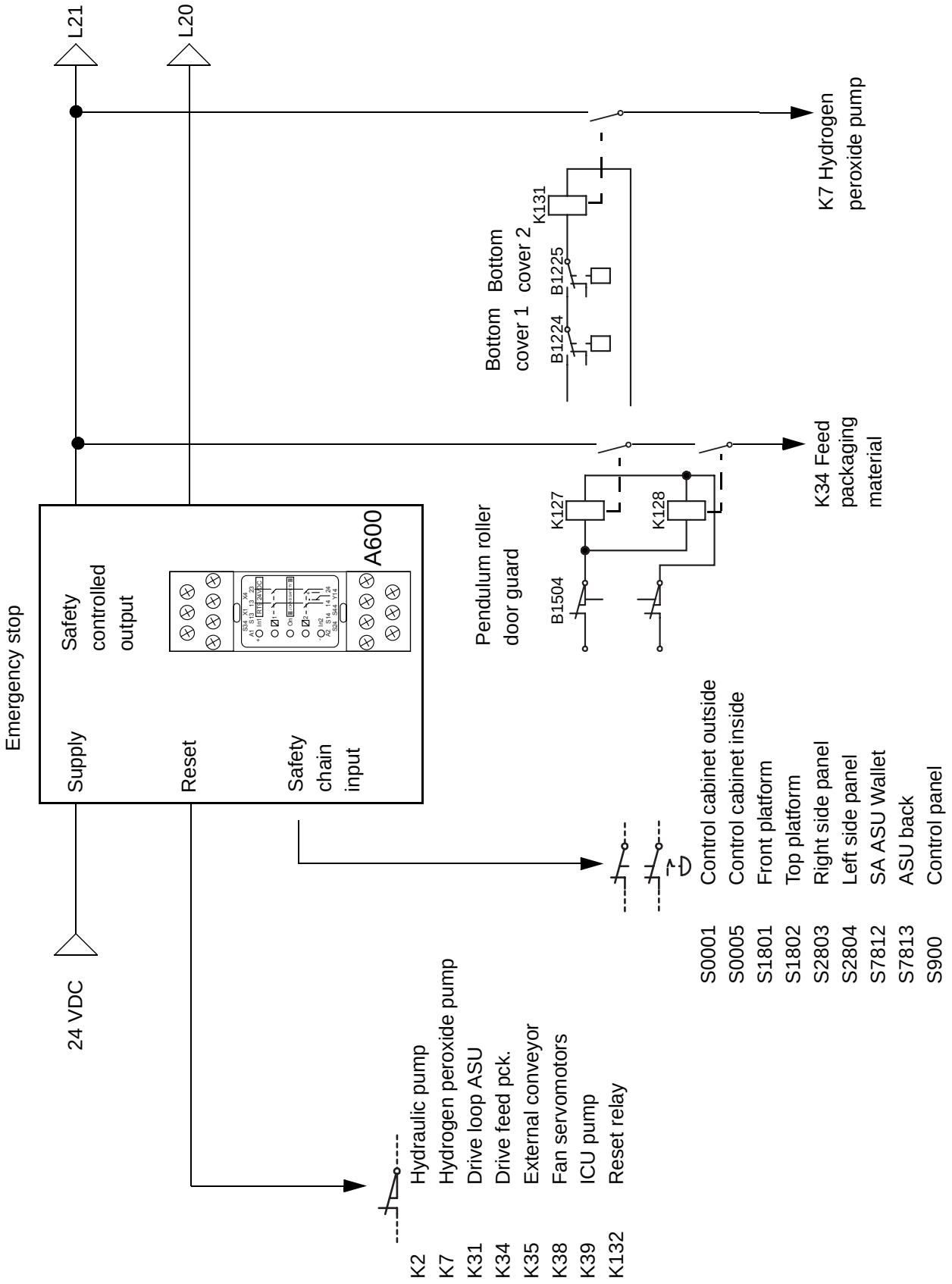

TechPub_2614345_v3_DRAFT_Release01_EM2851302_05en.fm

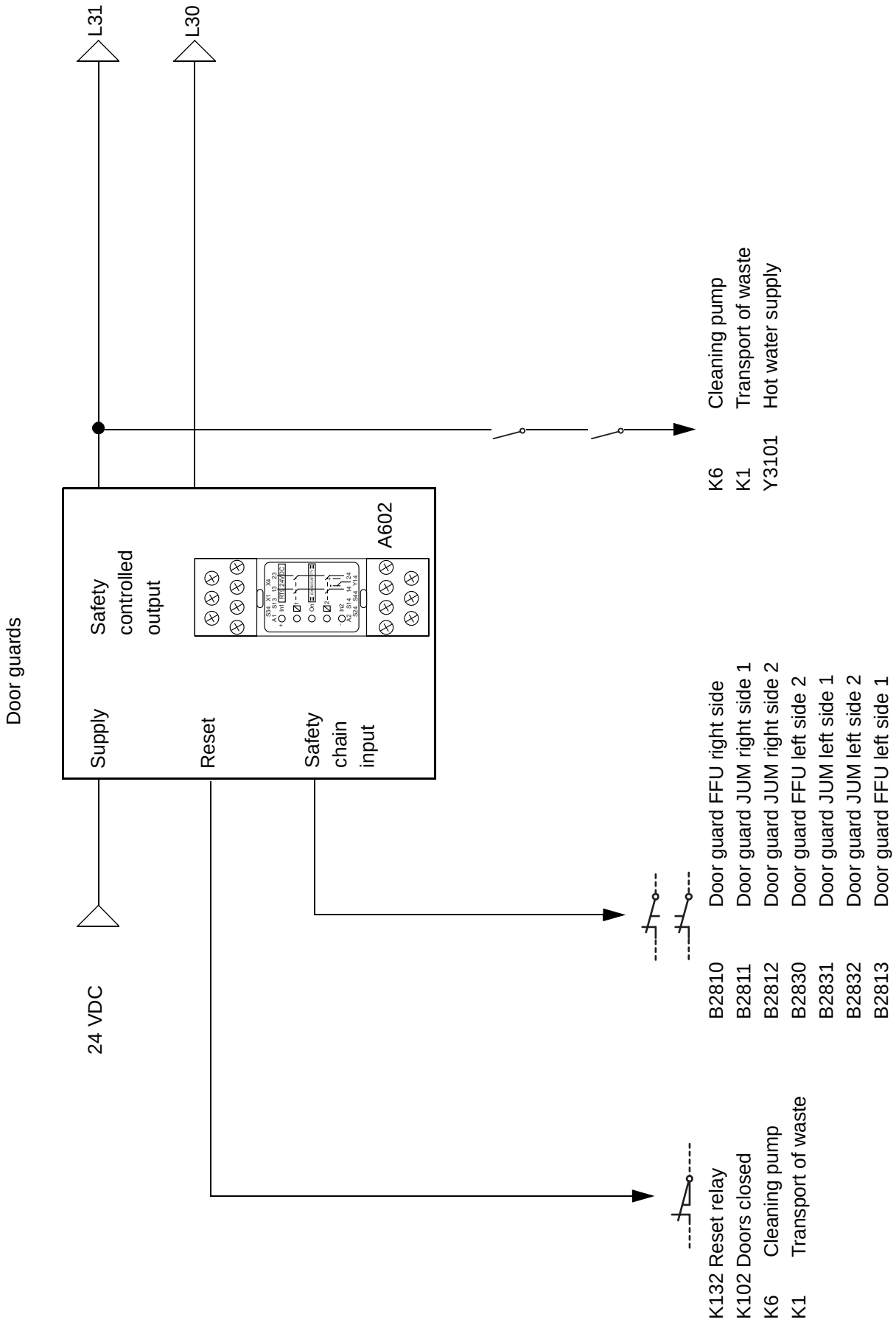

TechPub_2614345_v3_DRAFT_Release01_EM2851302_05en.fm

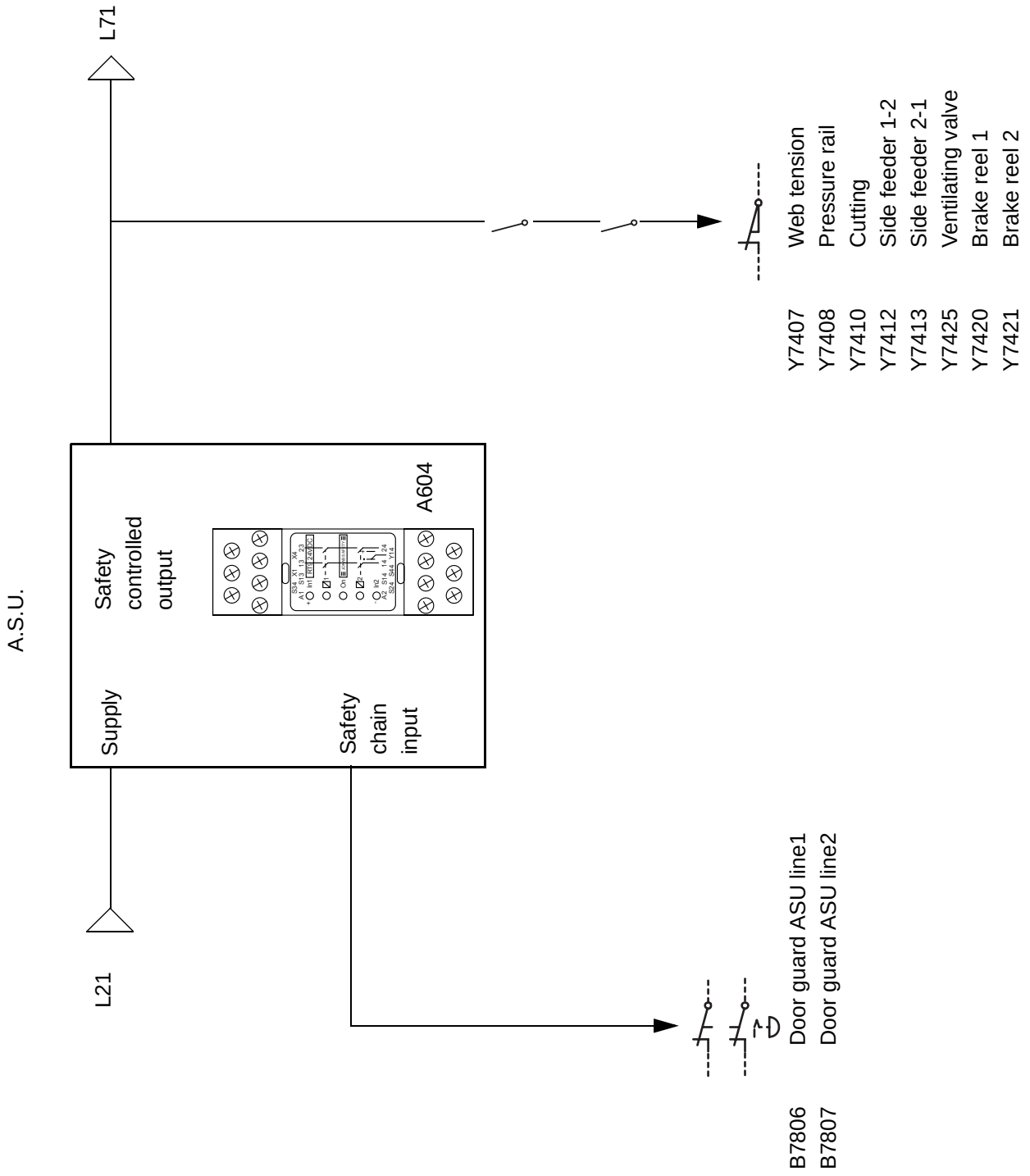

TechPub_2614345_v3_DRAFT_Release01_EM2851302_05en.fm

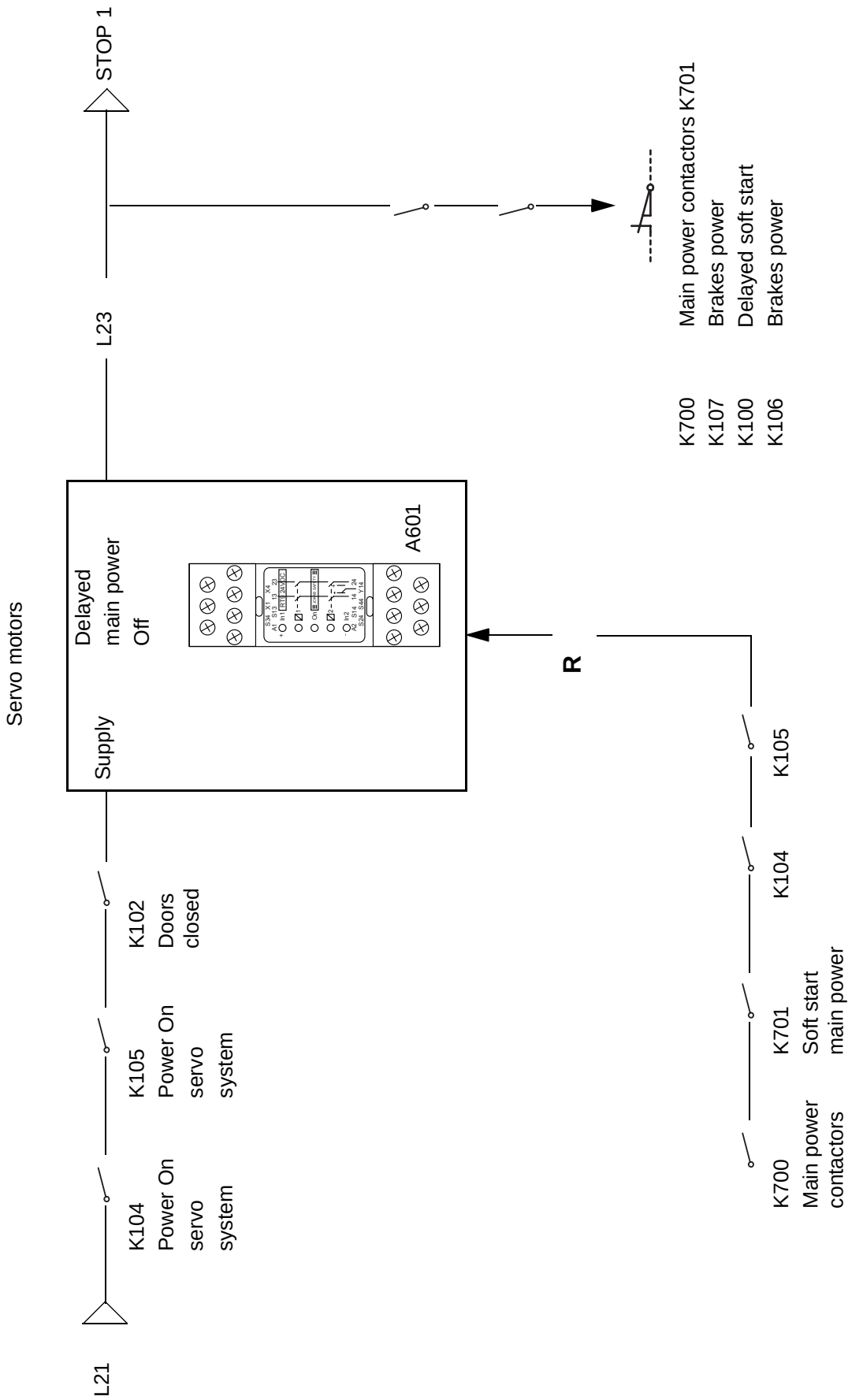

TechPub_2614345_v3_DRAFT_Release01_EM2851302_05en.fm

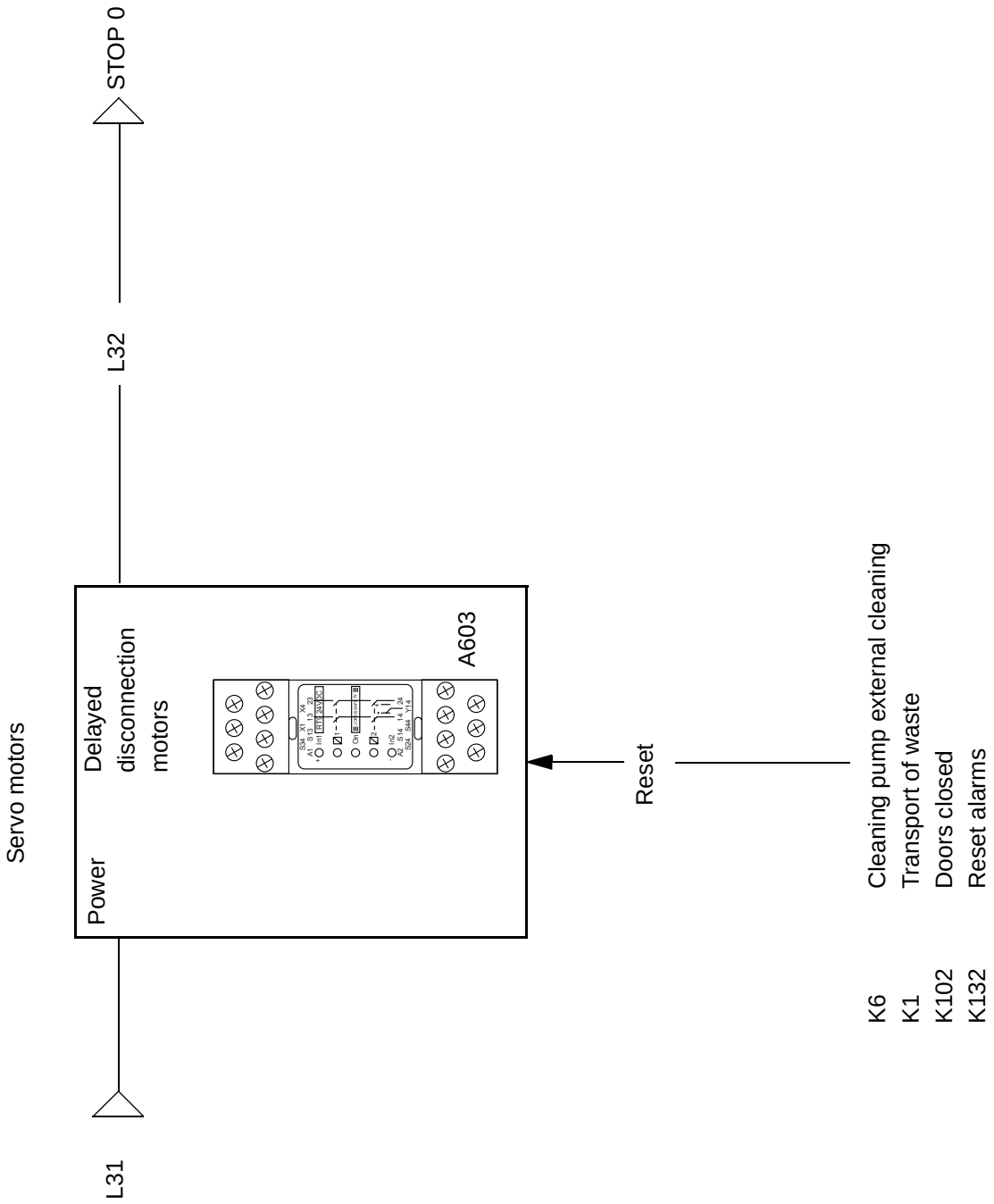

TechPub_2614345_v3_DRAFT_Release01_EM2851302_05en.fm

2 Document List

TechPub_2614345_v3_DRAFT_Release02_EM2851302_05en.fm

Description

This chapter is a table of contents that includes the drawing specification for each electrical document valid for the equipment

TechPub_2614345_v3_DRAFT_Release02_EM2851302_05en.fm

This drawing must not without the consent of Tetra Pak be copied, transmitted or disclosed to any third party.

RELEASED

Documents list

Drawing No	Page	Denomination	Page type	Version
2845987-0001	001	DOCUMENTS LIST	DOCUMENTS LIST	AE
2845987-0001	002	DOCUMENTS LIST	DOCUMENTS LIST	AE
2845987-0001	003	DOCUMENTS LIST	DOCUMENTS LIST	AE
2845987-0001	004	DOCUMENTS LIST	DOCUMENTS LIST	AE
2845987-0001	005	DOCUMENTS LIST	DOCUMENTS LIST	AE
2845987-0001	006	DOCUMENTS LIST	DOCUMENTS LIST	AE
2845987-0001	007	DOCUMENTS LIST	DOCUMENTS LIST	AE
2845987-0001	008	DOCUMENTS LIST	DOCUMENTS LIST	AE
2845987-0001	009	DOCUMENTS LIST	DOCUMENTS LIST	AE
2845987-0001	010	DOCUMENTS LIST	DOCUMENTS LIST	AE
2845987-0002	001	POSITION SUMMARY	POSITION SUMMARY	AE
2845987-0002	002	POSITION SUMMARY	POSITION SUMMARY	AE
2845987-0002	003	POSITION SUMMARY	POSITION SUMMARY	AE
2845987-0002	004	POSITION SUMMARY	POSITION SUMMARY	AE
2845987-0002	005	POSITION SUMMARY	POSITION SUMMARY	AE
2845987-0002	006	POSITION SUMMARY	POSITION SUMMARY	AE
2845987-0002	007	POSITION SUMMARY	POSITION SUMMARY	AE
2845987-0003	001	CIRCUIT DIAGRAM	DISTRIBUTION TERMINALS	AE
2845987-0003	002	CIRCUIT DIAGRAM	DISTRIBUTION TERMINALS	AE
2845987-0003	003	CIRCUIT DIAGRAM	DISTRIBUTION TERMINALS	AE
2845987-0003	005	CIRCUIT DIAGRAM	CIRCUIT DIAGRAM	AE
2845987-0003	006	CIRCUIT DIAGRAM	HEATERS	AE
2845987-0003	007	CIRCUIT DIAGRAM	HEATERS	AE
2845987-0003	008	CIRCUIT DIAGRAM	ELEMENTS	AE
2845987-0003	009	CIRCUIT DIAGRAM	ELEMENTS	AE
2845987-0003	010	CIRCUIT DIAGRAM	ELEMENTS	AE
2845987-0003	011	CIRCUIT DIAGRAM	IH-GENERATORS	AE
2845987-0003	012	CIRCUIT DIAGRAM	IH-GENERATORS	AE
2845987-0003	014	CIRCUIT DIAGRAM	ASU MOTORS	AE
2845987-0003	016	CIRCUIT DIAGRAM	ASSU STRIP BOBBIN MOTORS	AE
2845987-0003	017	CIRCUIT DIAGRAM	FEED PACKAGING MOTORS	AE
2845987-0003	018	CIRCUIT DIAGRAM	ICU PUMP	AE
2845987-0003	019	CIRCUIT DIAGRAM	ASU EQUIPMENT	AE
2845987-0003	020	CIRCUIT DIAGRAM	DRIVE MOTOR BRAKE	AE
2845987-0003	021	CIRCUIT DIAGRAM	YOKE LEFT SERVOMOTOR	AE
2845987-0003	022	CIRCUIT DIAGRAM	YOKE RIGHT SERVOMOTOR	AE
2845987-0003	023	CIRCUIT DIAGRAM	JAW LEFT SERVOMOTOR	AE
2845987-0003	024	CIRCUIT DIAGRAM	JAW RIGHT SERVOMOTOR	AE
2845987-0003	027	CIRCUIT DIAGRAM	FINAL FOLDER SERVOMOTOR	AE
2845987-0003	028	CIRCUIT DIAGRAM	LEFT DESIGN SERVOMOTOR	AE
2845987-0003	029	CIRCUIT DIAGRAM	RIGHT DESIGN SERVOMOTOR	AE
2845987-0003	030	CIRCUIT DIAGRAM	OPTICAL RING	AE
2845987-0003	031	CIRCUIT DIAGRAM	CONNECTED CABLE SERVOMOTOR	AE
2845987-0003	032	CIRCUIT DIAGRAM	MOTORS	AE
2845987-0003	033	CIRCUIT DIAGRAM	MOTORS	AE
2845987-0003	034	CIRCUIT DIAGRAM	DC MOTORS	AE

Tetra Pak

Designer LUP
ECM No 320174
Date 23/11/2007
Denomination DOCUMENTS LIST
Machine Tetra Pak A3/Flex 0150
Page Type DOCUMENTS LIST
Document No. 2845987-0001
Doc. type ELD
Version AE
Page 001
Company Tetra Pak (Italy)
Drawing remarks

This drawing must not without the consent of Tetra Pak be copied, transmitted or disclosed to any third party.

RELEASED

Documents list

Drawing No	Page	Denomination	Page type	Version
2845987-0003	035	CIRCUIT DIAGRAM	24V POWER SUPPLY	AE
2845987-0003	036	CIRCUIT DIAGRAM	FAN SERVO MOTOR	AE
2845987-0003	037	CIRCUIT DIAGRAM	LIGHT FIXTURES	AE
2845987-0003	038	CIRCUIT DIAGRAM	ELECTRICAL CABINET COOLING	AE
2845987-0003	039	CIRCUIT DIAGRAM	RECORDER	AE
2845987-0003	040	CIRCUIT DIAGRAM	RECORDER	AE
2845987-0003	041	CIRCUIT DIAGRAM	CONDUCTIVITY METER	AE
2845987-0003	042	CIRCUIT DIAGRAM	HONEYWELL RECORDER	AE
2845987-0003	043	CIRCUIT DIAGRAM	HONEYWELL RECORDER	AE
2845987-0003	044	CIRCUIT DIAGRAM	FILLER - TGA INTERFACE	AE
2845987-0003	046	CIRCUIT DIAGRAM	LEVEL RELAYS	AE
2845987-0003	047	CIRCUIT DIAGRAM	LEVEL RELAYS	AE
2845987-0003	049	CIRCUIT DIAGRAM	LEVEL RELAYS	AE
2845987-0003	050	CIRCUIT DIAGRAM	DESIGN CORRECTION	AE
2845987-0003	051	CIRCUIT DIAGRAM	FILLING SYSTEM	AE
2845987-0003	052	CIRCUIT DIAGRAM	TMCC SEALING MONITORING LS-SA	AE
2845987-0003	053	CIRCUIT DIAGRAM	TMCC SEALING MONITORING TS-LR	AE
2845987-0003	055	CIRCUIT DIAGRAM	KNIVES and CATCHERS	AE
2845987-0003	056	CIRCUIT DIAGRAM	CIRCUIT DIAGRAM	AE
2845987-0003	057	CIRCUIT DIAGRAM	DAIRY COMMUNICATION	AE
2845987-0003	058	CIRCUIT DIAGRAM	EXTERNAL COMMUNICATION	AE
2845987-0003	059	CIRCUIT DIAGRAM	TPOP COMMUNICATION	AE
2845987-0003	060	CIRCUIT DIAGRAM	TPOP COMMUNICATION	AE
2845987-0003	061	CIRCUIT DIAGRAM	DOORS ASEPTIC CHAMBER	AE
2845987-0003	062	CIRCUIT DIAGRAM	EMERGENCY STOP SAFETY	AE
2845987-0003	063	CIRCUIT DIAGRAM	DELAYED MAIN POWER OFF	AE
2845987-0003	064	CIRCUIT DIAGRAM	DOORS GUARD SAFETY	AE
2845987-0003	066	CIRCUIT DIAGRAM	ASU DOORS SAFETY GUARD	AE
2845987-0003	067	CIRCUIT DIAGRAM	DOORS GUARD ASEPTIC CHAMBER	AE
2845987-0003	068	CIRCUIT DIAGRAM	DOORS GUARD ASEPTIC CHAMBER	AE
2845987-0003	069	CIRCUIT DIAGRAM	SA INTERNAL DOOR SAFETY GUARD	AE
2845987-0003	080	CIRCUIT DIAGRAM	GE FANUC PLC POWER SUPPLY	AE
2845987-0003	081	CIRCUIT DIAGRAM	ROCKWELL PLC POWER SUPPLY	AE
2845987-0003	082	CIRCUIT DIAGRAM	ROCKWELL PLC DIGITAL INPUT	AE
2845987-0003	083	CIRCUIT DIAGRAM	ROCKWELL PLC DIGITAL INPUT	AE
2845987-0003	084	CIRCUIT DIAGRAM	ROCKWELL PLC DIGITAL INPUT	AE
2845987-0003	085	CIRCUIT DIAGRAM	ROCKWELL PLC DIGITAL INPUT	AE
2845987-0003	086	CIRCUIT DIAGRAM	ROCKWELL PLC DIGITAL OUPUT	AE
2845987-0003	087	CIRCUIT DIAGRAM	ROCKWELL PLC DIGITAL OUPUT	AE
2845987-0003	099	CIRCUIT DIAGRAM	GE FANUC DEVICE NET INTERFACE	AE
2845987-0003	100	CIRCUIT DIAGRAM	PLC ANALOG OUTPUT	AE
2845987-0003	101	CIRCUIT DIAGRAM	PLC ANALOG OUTPUT	AE
2845987-0003	102	CIRCUIT DIAGRAM	PLC ANALOG OUTPUT	AE
2845987-0003	103	CIRCUIT DIAGRAM	PLC ANALOG OUTPUT	AE
2845987-0003	104	CIRCUIT DIAGRAM	PLC ANALOG INPUT	AE
2845987-0003	105	CIRCUIT DIAGRAM	PLC ANALOG INPUT	AE

Machine: Tetra Pak A3/Flex 0150
Page Type: DOCUMENTS LIST
Document No.: 2845987-0001
Doc. type: ELD
Version: AE
Page: 002
Date: 23/11/2007
Denomination: DOCUMENTS LIST
Designer: LUP
ECM No: 320174
Company: Tetra Pak (Italy)
Drawing remarks

This drawing must not without the consent of Tetra Pak be copied, transmitted or disclosed to any third party.

RELEASED

Documents list

Drawing No	Page	Denomination	Page type	Version
2845987-0003	106	CIRCUIT DIAGRAM	PLC ANALOG VOLTAGE IN	AE
2845987-0003	107	CIRCUIT DIAGRAM	PLC ANALOG VOLTAGE IN	AE
2845987-0003	110	CIRCUIT DIAGRAM	PLC THERMOCOUPLE INPUT	AE
2845987-0003	111	CIRCUIT DIAGRAM	PLC THERMOCOUPLE INPUT	AE
2845987-0003	112	CIRCUIT DIAGRAM	PLC THERMOCOUPLE INPUT	AE
2845987-0003	115	CIRCUIT DIAGRAM	PLC-IN	AE
2845987-0003	116	CIRCUIT DIAGRAM	PLC-IN	AE
2845987-0003	117	CIRCUIT DIAGRAM	PLC-IN	AE
2845987-0003	118	CIRCUIT DIAGRAM	PLC-IN	AE
2845987-0003	119	CIRCUIT DIAGRAM	PLC-IN	AE
2845987-0003	120	CIRCUIT DIAGRAM	PLC-IN	AE
2845987-0003	125	CIRCUIT DIAGRAM	PLC-IN	AE
2845987-0003	126	CIRCUIT DIAGRAM	PLC-IN	AE
2845987-0003	127	CIRCUIT DIAGRAM	PLC-IN	AE
2845987-0003	128	CIRCUIT DIAGRAM	PLC-IN	AE
2845987-0003	129	CIRCUIT DIAGRAM	PLC-IN	AE
2845987-0003	130	CIRCUIT DIAGRAM	PLC-IN	AE
2845987-0003	131	CIRCUIT DIAGRAM	PLC-IN	AE
2845987-0003	132	CIRCUIT DIAGRAM	PLC-IN	AE
2845987-0003	133	CIRCUIT DIAGRAM	PLC-IN	AE
2845987-0003	134	CIRCUIT DIAGRAM	PLC-IN	AE
2845987-0003	135	CIRCUIT DIAGRAM	PLC-IN	AE
2845987-0003	136	CIRCUIT DIAGRAM	PLC-IN	AE
2845987-0003	137	CIRCUIT DIAGRAM	PLC-IN	AE
2845987-0003	138	CIRCUIT DIAGRAM	PLC-IN	AE
2845987-0003	139	CIRCUIT DIAGRAM	PLC-IN	AE
2845987-0003	140	CIRCUIT DIAGRAM	PLC-IN	AE
2845987-0003	141	CIRCUIT DIAGRAM	PLC-IN	AE
2845987-0003	142	CIRCUIT DIAGRAM	PLC-IN	AE
2845987-0003	143	CIRCUIT DIAGRAM	PLC-IN	AE
2845987-0003	144	CIRCUIT DIAGRAM	PLC-IN	AE
2845987-0003	145	CIRCUIT DIAGRAM	PLC-IN	AE
2845987-0003	146	CIRCUIT DIAGRAM	PLC-IN	AE
2845987-0003	147	CIRCUIT DIAGRAM	PLC-IN	AE
2845987-0003	148	CIRCUIT DIAGRAM	PLC-IN	AE
2845987-0003	149	CIRCUIT DIAGRAM	PLC-IN	AE
2845987-0003	150	CIRCUIT DIAGRAM	PLC-IN	AE
2845987-0003	151	CIRCUIT DIAGRAM	PLC-IN	AE
2845987-0003	152	CIRCUIT DIAGRAM	PLC-IN	AE
2845987-0003	153	CIRCUIT DIAGRAM	PLC-IN	AE
2845987-0003	154	CIRCUIT DIAGRAM	PLC-IN	AE
2845987-0003	155	CIRCUIT DIAGRAM	PLC-IN	AE
2845987-0003	156	CIRCUIT DIAGRAM	PLC-IN	AE
2845987-0003	175	CIRCUIT DIAGRAM	PLC-OUT	AE
2845987-0003	176	CIRCUIT DIAGRAM	PLC-OUT	AE
2845987-0003	177	CIRCUIT DIAGRAM	PLC-OUT	AE

Machine: Tetra Pak A3/Flex 0150
Page Type: DOCUMENTS LIST
Document No.: 2845987-0001
Doc. type: ELD
Version: AE
Page: 003

Designer: LUP
ECM No: 320174
Denomination: DOCUMENTS LIST
Date: 23/11/2007

Tetra Pak

Company: Tetra Pak (Italy)

Drawing remarks

This drawing must not without the consent of Tetra Pak be copied, transmitted or disclosed to any third party.

RELEASED

Documents list

Drawing No	Page	Denomination	Page type	Version
2845987-0003	178	CIRCUIT DIAGRAM	PLC-OUT	AE
2845987-0003	179	CIRCUIT DIAGRAM	PLC-OUT	AE
2845987-0003	180	CIRCUIT DIAGRAM	PLC - OUT	AE
2845987-0003	181	CIRCUIT DIAGRAM	PLC - OUT	AE
2845987-0003	182	CIRCUIT DIAGRAM	PLC - OUT	AE
2845987-0003	183	CIRCUIT DIAGRAM	PLC - OUT	AE
2845987-0003	184	CIRCUIT DIAGRAM	PLC - OUT	AE
2845987-0003	187	CIRCUIT DIAGRAM	PLC - OUT	AE
2845987-0003	188	CIRCUIT DIAGRAM	PLC - OUT	AE
2845987-0003	189	CIRCUIT DIAGRAM	PLC - OUT	AE
2845987-0003	190	CIRCUIT DIAGRAM	PLC - OUT	AE
2845987-0003	191	CIRCUIT DIAGRAM	PLC - OUT	AE
2845987-0003	192	CIRCUIT DIAGRAM	PLC - OUT	AE
2845987-0003	193	CIRCUIT DIAGRAM	PLC - OUT	AE
2845987-0003	194	CIRCUIT DIAGRAM	PLC - OUT	AE
2845987-0003	195	CIRCUIT DIAGRAM	PLC - OUT	AE
2845987-0003	196	CIRCUIT DIAGRAM	PLC - OUT	AE
2845987-0003	197	CIRCUIT DIAGRAM	PLC - OUT	AE
2845987-0003	198	CIRCUIT DIAGRAM	PLC - OUT	AE
2845987-0003	199	CIRCUIT DIAGRAM	FDA SPRAY VALVE	AE
2845987-0003	200	CIRCUIT DIAGRAM	PLC - OUT	AE
2845987-0003	201	CIRCUIT DIAGRAM	PLC - OUT	AE
2845987-0003	202	CIRCUIT DIAGRAM	PLC - OUT	AE
2845987-0003	203	CIRCUIT DIAGRAM	PLC - OUT	AE
2845987-0003	204	CIRCUIT DIAGRAM	PLC - OUT	AE
2845987-0003	205	CIRCUIT DIAGRAM	PLC - OUT	AE
2845987-0003	206	CIRCUIT DIAGRAM	PLC - OUT	AE
2845987-0003	207	CIRCUIT DIAGRAM	PLC - OUT	AE
2845987-0003	208	CIRCUIT DIAGRAM	PLC - OUT	AE
2845987-0003	209	CIRCUIT DIAGRAM	PLC - OUT	AE
2845987-0003	210	CIRCUIT DIAGRAM	PLC - OUT	AE
2845987-0003	211	CIRCUIT DIAGRAM	PLC - OUT	AE
2845987-0003	214	CIRCUIT DIAGRAM	PLC - OUT	AE
2845987-0003	215	CIRCUIT DIAGRAM	PLC - OUT	AE
2845987-0003	230	CIRCUIT DIAGRAM	PRECONNECTED CABLES	AE
2845987-0003	231	CIRCUIT DIAGRAM	PRECONNECTED CABLES	AE
2845987-0003	232	CIRCUIT DIAGRAM	PRECONNECTED CABLES	AE
2845987-0003	233	CIRCUIT DIAGRAM	PRECONNECTED CABLES	AE
2845987-0003	234	CIRCUIT DIAGRAM	PRECONNECTED CABLES	AE
2845987-0003	235	CIRCUIT DIAGRAM	PRECONNECTED CABLES	AE
2845987-0003	236	CIRCUIT DIAGRAM	PRECONNECTED CABLES	AE
2845987-0003	237	CIRCUIT DIAGRAM	PRECONNECTED CABLES	AE
2845987-0003	241	CIRCUIT DIAGRAM	CIRCUIT DIAGRAM	AE
2845987-0003	243	CIRCUIT DIAGRAM	INFEED SERVO MOTOR (Rack 1 Top)	AE
2845987-0003	244	CIRCUIT DIAGRAM	WHEEL 1 SERVO MOTOR (Rack 1 Top)	AE
2845987-0003	245	CIRCUIT DIAGRAM	FOLDING SERVO MOTOR (Rack 1 Top)	AE

Tetra Pak

Designer LUP
ECM No 320174
Date 23/11/2007
Denomination DOCUMENTS LIST
Machine Tetra Pak A3/Flex 0150
Page Type DOCUMENTS LIST
Document No. 2845987-0001
Doc. type ELD
Version AE
Page 004
Company Tetra Pak (Italy)
Drawing remarks

This drawing must not without the consent of Tetra Pak be copied, transmitted or disclosed to any third party.

RELEASED

Documents list

Drawing No	Page	Denomination	Page type	Version
2845987-0003	246	CIRCUIT DIAGRAM	PRE-FOLDING SERVO MOTOR (Rack 1 Top)	AE
2845987-0003	247	CIRCUIT DIAGRAM	TRANSFER SERVO MOTOR (Rack 2 Bottom)	AE
2845987-0003	248	CIRCUIT DIAGRAM	WHEEL 2 SERVO MOTOR (Rack 2 Bottom)	AE
2845987-0003	249	CIRCUIT DIAGRAM	PRESSURE SERVO MOTOR (Rack 2 Bottom)	AE
2845987-0003	250	CIRCUIT DIAGRAM	COOLING UNIT & LIGHT FIXTURES	AE
2845987-0003	251	CIRCUIT DIAGRAM	BELT BRAKE	AE
2845987-0003	252	CIRCUIT DIAGRAM	FAN SERVO MOTORS	AE
2845987-0003	253	CIRCUIT DIAGRAM	STEPPER MOTOR SFR	AE
2845987-0003	254	CIRCUIT DIAGRAM	TMCC TUBE STEERING	AE
2845987-0003	255	CIRCUIT DIAGRAM	TO FILLER DIGITAL INPUT	AE
2845987-0003	256	CIRCUIT DIAGRAM	CIRCUIT DIAGRAM	AE
2845987-0003	257	CIRCUIT DIAGRAM	HEATER POSITIONING MOTOR	AE
2845987-0004	001	LINE SUMMARY	LINE SUMMARY	AE
2845987-0004	002	LINE SUMMARY	LINE SUMMARY	AE
2845987-0004	003	LINE SUMMARY	LINE SUMMARY	AE
2845987-0004	004	LINE SUMMARY	LINE SUMMARY	AE
2845987-0004	005	LINE SUMMARY	LINE SUMMARY	AE
2845987-0004	006	LINE SUMMARY	LINE SUMMARY	AE
2845987-0004	007	LINE SUMMARY	LINE SUMMARY	AE
2845987-0004	008	LINE SUMMARY	LINE SUMMARY	AE
2845987-0004	009	LINE SUMMARY	LINE SUMMARY	AE
2845987-0004	010	LINE SUMMARY	LINE SUMMARY	AE
2845987-0004	011	LINE SUMMARY	LINE SUMMARY	AE
2845987-0004	012	LINE SUMMARY	LINE SUMMARY	AE
2845987-0004	013	LINE SUMMARY	LINE SUMMARY	AE
2845987-0004	014	LINE SUMMARY	LINE SUMMARY	AE
2845987-0004	015	LINE SUMMARY	LINE SUMMARY	AE
2845987-0004	016	LINE SUMMARY	LINE SUMMARY	AE
2845987-0005	001	CABINET TERMINAL SUMMARY	CABINET TERMINAL SUMMARY	AE
2845987-0005	002	CABINET TERMINAL SUMMARY	CABINET TERMINAL SUMMARY	AE
2845987-0005	003	CABINET TERMINAL SUMMARY	CABINET TERMINAL SUMMARY	AE
2845987-0005	004	CABINET TERMINAL SUMMARY	CABINET TERMINAL SUMMARY	AE
2845987-0005	005	CABINET TERMINAL SUMMARY	CABINET TERMINAL SUMMARY	AE
2845987-0005	006	CABINET TERMINAL SUMMARY	CABINET TERMINAL SUMMARY	AE
2845987-0005	007	CABINET TERMINAL SUMMARY	CABINET TERMINAL SUMMARY	AE
2845987-0005	008	CABINET TERMINAL SUMMARY	CABINET TERMINAL SUMMARY	AE
2845987-0005	009	CABINET TERMINAL SUMMARY	CABINET TERMINAL SUMMARY	AE
2845987-0005	010	CABINET TERMINAL SUMMARY	CABINET TERMINAL SUMMARY	AE
2845987-0005	011	CABINET TERMINAL SUMMARY	CABINET TERMINAL SUMMARY	AE
2845987-0005	012	CABINET TERMINAL SUMMARY	CABINET TERMINAL SUMMARY	AE
2845987-0005	013	CABINET TERMINAL SUMMARY	CABINET TERMINAL SUMMARY	AE
2845987-0006	001	TERMINAL STRIP OVERVIEW	TERMINAL STRIP OVERVIEW	AE
2845987-0006	002	TERMINAL STRIP OVERVIEW	TERMINAL STRIP OVERVIEW	AE
2845987-0006	003	TERMINAL STRIP OVERVIEW	TERMINAL STRIP OVERVIEW	AE
2845987-0006	004	TERMINAL STRIP OVERVIEW	TERMINAL STRIP OVERVIEW	AE
2845987-0006	005	TERMINAL STRIP OVERVIEW	TERMINAL STRIP OVERVIEW	AE

Tetra Pak

Company: Tetra Pak (Italy)

Designer: LUP | ECM No: 320174 | Date: 23/11/2007 | Denomination: DOCUMENTS LIST

Machine: Tetra Pak A3/Flex 0150 | Page Type: DOCUMENTS LIST | Document No.: 2845987-0001 | Doc. type: ELD | Version: AE | Page: 005

Drawing remarks

This drawing must not without the consent of Tetra Pak be copied, transmitted or disclosed to any third party.

RELEASED

Documents list

Drawing No	Page	Denomination	Page type	Version
2845987-0006	006	TERMINAL STRIP OVERVIEW	TERMINAL STRIP OVERVIEW	AE
2845987-0006	007	TERMINAL STRIP OVERVIEW	TERMINAL STRIP OVERVIEW	AE
2845987-0006	008	TERMINAL STRIP OVERVIEW	TERMINAL STRIP OVERVIEW	AE
2845987-0006	009	TERMINAL STRIP OVERVIEW	TERMINAL STRIP OVERVIEW	AE
2845987-0006	010	TERMINAL STRIP OVERVIEW	TERMINAL STRIP OVERVIEW	AE
2845987-0006	011	TERMINAL STRIP OVERVIEW	TERMINAL STRIP OVERVIEW	AE
2845987-0006	012	TERMINAL STRIP OVERVIEW	TERMINAL STRIP OVERVIEW	AE
2845987-0006	013	TERMINAL STRIP OVERVIEW	TERMINAL STRIP OVERVIEW	AE
2845987-0006	014	TERMINAL STRIP OVERVIEW	TERMINAL STRIP OVERVIEW	AE
2845987-0006	015	TERMINAL STRIP OVERVIEW	TERMINAL STRIP OVERVIEW	AE
2845987-0006	016	TERMINAL STRIP OVERVIEW	TERMINAL STRIP OVERVIEW	AE
2845987-0006	017	TERMINAL STRIP OVERVIEW	TERMINAL STRIP OVERVIEW	AE
2845987-0006	018	TERMINAL STRIP OVERVIEW	TERMINAL STRIP OVERVIEW	AE
2845987-0006	019	TERMINAL STRIP OVERVIEW	TERMINAL STRIP OVERVIEW	AE
2845987-0006	020	TERMINAL STRIP OVERVIEW	TERMINAL STRIP OVERVIEW	AE
2845987-0006	021	TERMINAL STRIP OVERVIEW	TERMINAL STRIP OVERVIEW	AE
2845987-0006	022	TERMINAL STRIP OVERVIEW	TERMINAL STRIP OVERVIEW	AE
2845987-0006	023	TERMINAL STRIP OVERVIEW	TERMINAL STRIP OVERVIEW	AE
2845987-0006	024	TERMINAL STRIP OVERVIEW	TERMINAL STRIP OVERVIEW	AE
2845987-0006	025	TERMINAL STRIP OVERVIEW	TERMINAL STRIP OVERVIEW	AE
2845987-0006	026	TERMINAL STRIP OVERVIEW	TERMINAL STRIP OVERVIEW	AE
2845987-0006	027	TERMINAL STRIP OVERVIEW	TERMINAL STRIP OVERVIEW	AE
2845987-0006	028	TERMINAL STRIP OVERVIEW	TERMINAL STRIP OVERVIEW	AE
2845987-0006	029	TERMINAL STRIP OVERVIEW	TERMINAL STRIP OVERVIEW	AE
2845987-0006	030	TERMINAL STRIP OVERVIEW	TERMINAL STRIP OVERVIEW	AE
2845987-0006	031	TERMINAL STRIP OVERVIEW	TERMINAL STRIP OVERVIEW	AE
2845987-0006	032	TERMINAL STRIP OVERVIEW	TERMINAL STRIP OVERVIEW	AE
2845987-0006	033	TERMINAL STRIP OVERVIEW	TERMINAL STRIP OVERVIEW	AE
2845987-0006	034	TERMINAL STRIP OVERVIEW	TERMINAL STRIP OVERVIEW	AE
2845987-0006	035	TERMINAL STRIP OVERVIEW	TERMINAL STRIP OVERVIEW	AE
2845987-0006	036	TERMINAL STRIP OVERVIEW	TERMINAL STRIP OVERVIEW	AE
2845987-0006	037	TERMINAL STRIP OVERVIEW	TERMINAL STRIP OVERVIEW	AE
2845987-0006	038	TERMINAL STRIP OVERVIEW	TERMINAL STRIP OVERVIEW	AE
2845987-0006	039	TERMINAL STRIP OVERVIEW	TERMINAL STRIP OVERVIEW	AE
2845987-0006	040	TERMINAL STRIP OVERVIEW	TERMINAL STRIP OVERVIEW	AE
2845987-0006	041	TERMINAL STRIP OVERVIEW	TERMINAL STRIP OVERVIEW	AE
2845987-0006	042	TERMINAL STRIP OVERVIEW	TERMINAL STRIP OVERVIEW	AE
2845987-0006	043	TERMINAL STRIP OVERVIEW	TERMINAL STRIP OVERVIEW	AE
2845987-0006	044	TERMINAL STRIP OVERVIEW	TERMINAL STRIP OVERVIEW	AE
2845987-0006	045	TERMINAL STRIP OVERVIEW	TERMINAL STRIP OVERVIEW	AE
2845987-0006	046	TERMINAL STRIP OVERVIEW	TERMINAL STRIP OVERVIEW	AE
2845987-0006	047	TERMINAL STRIP OVERVIEW	TERMINAL STRIP OVERVIEW	AE
2845987-0006	048	TERMINAL STRIP OVERVIEW	TERMINAL STRIP OVERVIEW	AE
2845987-0006	049	TERMINAL STRIP OVERVIEW	TERMINAL STRIP OVERVIEW	AE
2845987-0006	050	TERMINAL STRIP OVERVIEW	TERMINAL STRIP OVERVIEW	AE
2845987-0006	051	TERMINAL STRIP OVERVIEW	TERMINAL STRIP OVERVIEW	AE

Tetra Pak

Designer LUP
ECM No 320174
Date 23/11/2007
Denomination DOCUMENTS LIST
Machine Tetra Pak A3/Flex 0150
Page Type DOCUMENTS LIST
Document No. 2845987-0001
Doc. type ELD
Version AE
Page 006
Company Tetra Pak (Italy)
Drawing remarks

This drawing must not without the consent of Tetra Pak be copied, transmitted or disclosed to any third party.

RELEASED

Documents list

Drawing No	Page	Denomination	Page type	Version
2845987-0006	052	TERMINAL STRIP OVERVIEW	TERMINAL STRIP OVERVIEW	AE
2845987-0006	053	TERMINAL STRIP OVERVIEW	TERMINAL STRIP OVERVIEW	AE
2845987-0006	054	TERMINAL STRIP OVERVIEW	TERMINAL STRIP OVERVIEW	AE
2845987-0006	055	TERMINAL STRIP OVERVIEW	TERMINAL STRIP OVERVIEW	AE
2845987-0006	056	TERMINAL STRIP OVERVIEW	TERMINAL STRIP OVERVIEW	AE
2845987-0006	057	TERMINAL STRIP OVERVIEW	TERMINAL STRIP OVERVIEW	AE
2845987-0006	058	TERMINAL STRIP OVERVIEW	TERMINAL STRIP OVERVIEW	AE
2845987-0006	059	TERMINAL STRIP OVERVIEW	TERMINAL STRIP OVERVIEW	AE
2845987-0006	060	TERMINAL STRIP OVERVIEW	TERMINAL STRIP OVERVIEW	AE
2845987-0006	061	TERMINAL STRIP OVERVIEW	TERMINAL STRIP OVERVIEW	AE
2845987-0006	062	TERMINAL STRIP OVERVIEW	TERMINAL STRIP OVERVIEW	AE
2845987-0006	063	TERMINAL STRIP OVERVIEW	TERMINAL STRIP OVERVIEW	AE
2845987-0006	064	TERMINAL STRIP OVERVIEW	TERMINAL STRIP OVERVIEW	AE
2845987-0006	065	TERMINAL STRIP OVERVIEW	TERMINAL STRIP OVERVIEW	AE
2845987-0006	066	TERMINAL STRIP OVERVIEW	TERMINAL STRIP OVERVIEW	AE
2845987-0006	067	TERMINAL STRIP OVERVIEW	TERMINAL STRIP OVERVIEW	AE
2845987-0006	068	TERMINAL STRIP OVERVIEW	TERMINAL STRIP OVERVIEW	AE
2845987-0006	069	TERMINAL STRIP OVERVIEW	TERMINAL STRIP OVERVIEW	AE
2845987-0006	070	TERMINAL STRIP OVERVIEW	TERMINAL STRIP OVERVIEW	AE
2845987-0006	071	TERMINAL STRIP OVERVIEW	TERMINAL STRIP OVERVIEW	AE
2845987-0006	072	TERMINAL STRIP OVERVIEW	TERMINAL STRIP OVERVIEW	AE
2845987-0006	073	TERMINAL STRIP OVERVIEW	TERMINAL STRIP OVERVIEW	AE
2845987-0006	074	TERMINAL STRIP OVERVIEW	TERMINAL STRIP OVERVIEW	AE
2845987-0006	075	TERMINAL STRIP OVERVIEW	TERMINAL STRIP OVERVIEW	AE
2845987-0006	076	TERMINAL STRIP OVERVIEW	TERMINAL STRIP OVERVIEW	AE
2845987-0006	077	TERMINAL STRIP OVERVIEW	TERMINAL STRIP OVERVIEW	AE
2845987-0006	078	TERMINAL STRIP OVERVIEW	TERMINAL STRIP OVERVIEW	AE
2845987-0006	079	TERMINAL STRIP OVERVIEW	TERMINAL STRIP OVERVIEW	AE
2845987-0006	080	TERMINAL STRIP OVERVIEW	TERMINAL STRIP OVERVIEW	AE
2845987-0006	081	TERMINAL STRIP OVERVIEW	TERMINAL STRIP OVERVIEW	AE
2845987-0006	082	TERMINAL STRIP OVERVIEW	TERMINAL STRIP OVERVIEW	AE
2845987-0006	083	TERMINAL STRIP OVERVIEW	TERMINAL STRIP OVERVIEW	AE
2845987-0006	084	TERMINAL STRIP OVERVIEW	TERMINAL STRIP OVERVIEW	AE
2845987-0006	085	TERMINAL STRIP OVERVIEW	TERMINAL STRIP OVERVIEW	AE
2845987-0006	086	TERMINAL STRIP OVERVIEW	TERMINAL STRIP OVERVIEW	AE
2845987-0006	087	TERMINAL STRIP OVERVIEW	TERMINAL STRIP OVERVIEW	AE
2845987-0006	088	TERMINAL STRIP OVERVIEW	TERMINAL STRIP OVERVIEW	AE
2845987-0006	089	TERMINAL STRIP OVERVIEW	TERMINAL STRIP OVERVIEW	AE
2845987-0006	090	TERMINAL STRIP OVERVIEW	TERMINAL STRIP OVERVIEW	AE
2845987-0006	091	TERMINAL STRIP OVERVIEW	TERMINAL STRIP OVERVIEW	AE
2845987-0006	092	TERMINAL STRIP OVERVIEW	TERMINAL STRIP OVERVIEW	AE
2845987-0006	093	TERMINAL STRIP OVERVIEW	TERMINAL STRIP OVERVIEW	AE
2845987-0006	094	TERMINAL STRIP OVERVIEW	TERMINAL STRIP OVERVIEW	AE
2845987-0006	095	TERMINAL STRIP OVERVIEW	TERMINAL STRIP OVERVIEW	AE
2845987-0006	096	TERMINAL STRIP OVERVIEW	TERMINAL STRIP OVERVIEW	AE
2845987-0006	097	TERMINAL STRIP OVERVIEW	TERMINAL STRIP OVERVIEW	AE

Tetra Pak

Designer LUP | Date 23/11/2007 | Machine Tetra Pak A3/Flex 0150

ECM No 320174 | Denomination DOCUMENTS LIST | Page Type DOCUMENTS LIST | Document No. 2845987-0001 | Doc. type ELD | Version AE | Page 007

Company Tetra Pak (Italy)

Drawing remarks

This drawing must not without the consent of Tetra Pak be copied, transmitted or disclosed to any third party.

RELEASED

Documents list

Drawing No	Page	Denomination	Page type	Version
2845987-0006	098	TERMINAL STRIP OVERVIEW	TERMINAL STRIP OVERVIEW	AE
2845987-0006	099	TERMINAL STRIP OVERVIEW	TERMINAL STRIP OVERVIEW	AE
2845987-0006	100	TERMINAL STRIP OVERVIEW	TERMINAL STRIP OVERVIEW	AE
2845987-0006	101	TERMINAL STRIP OVERVIEW	TERMINAL STRIP OVERVIEW	AE
2845987-0006	102	TERMINAL STRIP OVERVIEW	TERMINAL STRIP OVERVIEW	AE
2845987-0006	103	TERMINAL STRIP OVERVIEW	TERMINAL STRIP OVERVIEW	AE
2845987-0006	104	TERMINAL STRIP OVERVIEW	TERMINAL STRIP OVERVIEW	AE
2845987-0006	105	TERMINAL STRIP OVERVIEW	TERMINAL STRIP OVERVIEW	AE
2845987-0006	106	TERMINAL STRIP OVERVIEW	TERMINAL STRIP OVERVIEW	AE
2845987-0006	107	TERMINAL STRIP OVERVIEW	TERMINAL STRIP OVERVIEW	AE
2845987-0006	108	TERMINAL STRIP OVERVIEW	TERMINAL STRIP OVERVIEW	AE
2845987-0006	109	TERMINAL STRIP OVERVIEW	TERMINAL STRIP OVERVIEW	AE
2845987-0006	110	TERMINAL STRIP OVERVIEW	TERMINAL STRIP OVERVIEW	AE
2845987-0006	111	TERMINAL STRIP OVERVIEW	TERMINAL STRIP OVERVIEW	AE
2845987-0006	112	TERMINAL STRIP OVERVIEW	TERMINAL STRIP OVERVIEW	AE
2845987-0006	113	TERMINAL STRIP OVERVIEW	TERMINAL STRIP OVERVIEW	AE
2845987-0006	114	TERMINAL STRIP OVERVIEW	TERMINAL STRIP OVERVIEW	AE
2845987-0006	115	TERMINAL STRIP OVERVIEW	TERMINAL STRIP OVERVIEW	AE
2845987-0006	116	TERMINAL STRIP OVERVIEW	TERMINAL STRIP OVERVIEW	AE
2845987-0006	117	TERMINAL STRIP OVERVIEW	TERMINAL STRIP OVERVIEW	AE
2845987-0006	118	TERMINAL STRIP OVERVIEW	TERMINAL STRIP OVERVIEW	AE
2845987-0006	119	TERMINAL STRIP OVERVIEW	TERMINAL STRIP OVERVIEW	AE
2845987-0006	120	TERMINAL STRIP OVERVIEW	TERMINAL STRIP OVERVIEW	AE
2845987-0006	121	TERMINAL STRIP OVERVIEW	TERMINAL STRIP OVERVIEW	AE
2845987-0006	122	TERMINAL STRIP OVERVIEW	TERMINAL STRIP OVERVIEW	AE
2845987-0006	123	TERMINAL STRIP OVERVIEW	TERMINAL STRIP OVERVIEW	AE
2845987-0006	124	TERMINAL STRIP OVERVIEW	TERMINAL STRIP OVERVIEW	AE
2845987-0006	125	TERMINAL STRIP OVERVIEW	TERMINAL STRIP OVERVIEW	AE
2845987-0006	126	TERMINAL STRIP OVERVIEW	TERMINAL STRIP OVERVIEW	AE
2845987-0006	127	TERMINAL STRIP OVERVIEW	TERMINAL STRIP OVERVIEW	AE
2845987-0006	128	TERMINAL STRIP OVERVIEW	TERMINAL STRIP OVERVIEW	AE
2845987-0006	129	TERMINAL STRIP OVERVIEW	TERMINAL STRIP OVERVIEW	AE
2845987-0006	130	TERMINAL STRIP OVERVIEW	TERMINAL STRIP OVERVIEW	AE
2845987-0006	131	TERMINAL STRIP OVERVIEW	TERMINAL STRIP OVERVIEW	AE
2845987-0006	132	TERMINAL STRIP OVERVIEW	TERMINAL STRIP OVERVIEW	AE
2845987-0006	133	TERMINAL STRIP OVERVIEW	TERMINAL STRIP OVERVIEW	AE
2845987-0006	134	TERMINAL STRIP OVERVIEW	TERMINAL STRIP OVERVIEW	AE
2845987-0006	135	TERMINAL STRIP OVERVIEW	TERMINAL STRIP OVERVIEW	AE
2845987-0006	136	TERMINAL STRIP OVERVIEW	TERMINAL STRIP OVERVIEW	AE
2845987-0006	137	TERMINAL STRIP OVERVIEW	TERMINAL STRIP OVERVIEW	AE
2845987-0006	138	TERMINAL STRIP OVERVIEW	TERMINAL STRIP OVERVIEW	AE
2845987-0006	139	TERMINAL STRIP OVERVIEW	TERMINAL STRIP OVERVIEW	AE
2845987-0006	140	TERMINAL STRIP OVERVIEW	TERMINAL STRIP OVERVIEW	AE
2845987-0006	141	TERMINAL STRIP OVERVIEW	TERMINAL STRIP OVERVIEW	AE
2845987-0006	142	TERMINAL STRIP OVERVIEW	TERMINAL STRIP OVERVIEW	AE
2845987-0006	143	TERMINAL STRIP OVERVIEW	TERMINAL STRIP OVERVIEW	AE

Tetra Pak

Designer LUP | Date 23/11/2007 | Machine Tetra Pak A3/Flex 0150

ECM No 320174 | Denomination DOCUMENTS LIST | Page Type DOCUMENTS LIST | Document No. 2845987-0001 | Doc. type ELD | Version AE | Page 008

Company Tetra Pak (Italy)

Drawing remarks

This drawing must not without the consent of Tetra Pak be copied, transmitted or disclosed to any third party.

RELEASED

Documents list

Drawing No	Page	Denomination	Page type	Version
2845987-0006	144	TERMINAL STRIP OVERVIEW	TERMINAL STRIP OVERVIEW	AE
2845987-0006	145	TERMINAL STRIP OVERVIEW	TERMINAL STRIP OVERVIEW	AE
2845987-0006	146	TERMINAL STRIP OVERVIEW	TERMINAL STRIP OVERVIEW	AE
2845987-0006	147	TERMINAL STRIP OVERVIEW	TERMINAL STRIP OVERVIEW	AE
2845987-0006	148	TERMINAL STRIP OVERVIEW	TERMINAL STRIP OVERVIEW	AE
2845987-0006	149	TERMINAL STRIP OVERVIEW	TERMINAL STRIP OVERVIEW	AE
2845987-0006	150	TERMINAL STRIP OVERVIEW	TERMINAL STRIP OVERVIEW	AE
2845987-0006	151	TERMINAL STRIP OVERVIEW	TERMINAL STRIP OVERVIEW	AE
2845987-0006	152	TERMINAL STRIP OVERVIEW	TERMINAL STRIP OVERVIEW	AE
2845987-0007	001	CABLE CONNECTION LIST	CABLE CONNECTION LIST	AE
2845987-0007	002	CABLE CONNECTION LIST	CABLE CONNECTION LIST	AE
2845987-0007	003	CABLE CONNECTION LIST	CABLE CONNECTION LIST	AE
2845987-0007	004	CABLE CONNECTION LIST	CABLE CONNECTION LIST	AE
2845987-0007	005	CABLE CONNECTION LIST	CABLE CONNECTION LIST	AE
2845987-0007	006	CABLE CONNECTION LIST	CABLE CONNECTION LIST	AE
2845987-0007	007	CABLE CONNECTION LIST	CABLE CONNECTION LIST	AE
2845987-0007	008	CABLE CONNECTION LIST	CABLE CONNECTION LIST	AE
2845987-0007	009	CABLE CONNECTION LIST	CABLE CONNECTION LIST	AE
2845987-0007	010	CABLE CONNECTION LIST	CABLE CONNECTION LIST	AE
2845987-0007	011	CABLE CONNECTION LIST	CABLE CONNECTION LIST	AE
2845987-0007	012	CABLE CONNECTION LIST	CABLE CONNECTION LIST	AE
2845987-0007	013	CABLE CONNECTION LIST	CABLE CONNECTION LIST	AE
2845987-0007	014	CABLE CONNECTION LIST	CABLE CONNECTION LIST	AE
2845987-0007	015	CABLE CONNECTION LIST	CABLE CONNECTION LIST	AE
2845987-0007	016	CABLE CONNECTION LIST	CABLE CONNECTION LIST	AE
2845987-0007	017	CABLE CONNECTION LIST	CABLE CONNECTION LIST	AE
2845987-0007	018	CABLE CONNECTION LIST	CABLE CONNECTION LIST	AE
2845987-0007	019	CABLE CONNECTION LIST	CABLE CONNECTION LIST	AE
2845987-0007	020	CABLE CONNECTION LIST	CABLE CONNECTION LIST	AE
2845987-0007	021	CABLE CONNECTION LIST	CABLE CONNECTION LIST	AE
2845987-0007	022	CABLE CONNECTION LIST	CABLE CONNECTION LIST	AE
2845987-0007	023	CABLE CONNECTION LIST	CABLE CONNECTION LIST	AE
2845987-0007	024	CABLE CONNECTION LIST	CABLE CONNECTION LIST	AE
2845987-0007	025	CABLE CONNECTION LIST	CABLE CONNECTION LIST	AE
2845987-0007	026	CABLE CONNECTION LIST	CABLE CONNECTION LIST	AE
2845987-0007	027	CABLE CONNECTION LIST	CABLE CONNECTION LIST	AE
2845987-0007	028	CABLE CONNECTION LIST	CABLE CONNECTION LIST	AE
2845987-0007	029	CABLE CONNECTION LIST	CABLE CONNECTION LIST	AE
2845987-0007	030	CABLE CONNECTION LIST	CABLE CONNECTION LIST	AE
2845987-0007	031	CABLE CONNECTION LIST	CABLE CONNECTION LIST	AE
2845987-0007	032	CABLE CONNECTION LIST	CABLE CONNECTION LIST	AE
2845987-0007	033	CABLE CONNECTION LIST	CABLE CONNECTION LIST	AE
2845987-0007	034	CABLE CONNECTION LIST	CABLE CONNECTION LIST	AE
2845987-0007	035	CABLE CONNECTION LIST	CABLE CONNECTION LIST	AE
2845987-0007	036	CABLE CONNECTION LIST	CABLE CONNECTION LIST	AE
2845987-0007	037	CABLE CONNECTION LIST	CABLE CONNECTION LIST	AE

Machine: Tetra Pak A3/Flex 0150
Page Type: DOCUMENTS LIST
Document No.: 2845987-0001
Doc. type: ELD
Version: AE
Page: 009

Designer: LUP
ECM No: 320174
Date: 23/11/2007
Denomination: DOCUMENTS LIST

Company: Tetra Pak (Italy)

Drawing remarks

This drawing must not without the consent of Tetra Pak be copied, transmitted or disclosed to any third party.

RELEASED

Documents list

Drawing No	Page	Denomination	Page type	Version
2845987-0007	038	CABLE CONNECTION LIST	CABLE CONNECTION LIST	AE
2845987-0007	039	CABLE CONNECTION LIST	CABLE CONNECTION LIST	AE
2845987-0007	040	CABLE CONNECTION LIST	CABLE CONNECTION LIST	AE
2845987-0007	041	CABLE CONNECTION LIST	CABLE CONNECTION LIST	AE
2845987-0007	042	CABLE CONNECTION LIST	CABLE CONNECTION LIST	AE
2845987-0007	043	CABLE CONNECTION LIST	CABLE CONNECTION LIST	AE
2845987-0007	044	CABLE CONNECTION LIST	CABLE CONNECTION LIST	AE
2845987-0007	045	CABLE CONNECTION LIST	CABLE CONNECTION LIST	AE
2845987-0007	046	CABLE CONNECTION LIST	CABLE CONNECTION LIST	AE
2845987-0007	047	CABLE CONNECTION LIST	CABLE CONNECTION LIST	AE
2845987-0007	048	CABLE CONNECTION LIST	CABLE CONNECTION LIST	AE
2845987-0007	049	CABLE CONNECTION LIST	CABLE CONNECTION LIST	AE
2845987-0007	050	CABLE CONNECTION LIST	CABLE CONNECTION LIST	AE
2845987-0008	001	MAINS CONNECTION	MAINS CONNECTION	AE
2845987-0008	002	MAINS CONNECTION	MAINS CONNECTION A3/FLEX	AE
2845987-0008	003	MAINS CONNECTION	MAINS CONNECTION A3/FLEX + DIMC	AE

Tetra Pak

Designer LUP
ECM No 320174
Date 23/11/2007
Denomination DOCUMENTS LIST
Machine Tetra Pak A3/Flex 0150
Page Type DOCUMENTS LIST
Document No. 2845987-0001
Doc. type ELD
Version AE
Page 010
Company Tetra Pak (Italy)
Drawing remarks

3 Position Summary

Description

This chapter is a list of all electrical components that are shown in the electrical drawings, with page references to the drawings where they are located.

This drawing must not without the consent of Tetra Pak be copied, transmitted or disclosed to any third party.

Position summary of 2845987-0003

Component	Page .Col.	Opt.
+C-A005	038 .8	
+C-A101	099 .2	
+C-A102	100 .1	
+C-A103	102 .1	
+C-A104	104 .7	
+C-A105	106 .7	
+C-A106	110 .7	
+C-A107	111 .7	
+C-A108	112 .7	
+C-A109	116 .7	
+C-A110	118 .7	
+C-A111	119 .7	
+C-A114	125 .7	
+C-A115	128 .7	
+C-A116	130 .7	
+C-A117	132 .7	
+C-A118	134 .7	
+C-A119	136 .7	
+C-A120	138 .7	
+C-A121	140 .7	
+C-A122	142 .7	
+C-A123	144 .7	
+C-A124	146 .7	
+C-A125	148 .7	
+C-A126	150 .7	
+C-A127	151 .7	
+C-A128	154 .7	
+C-A129	155 .7	ARL

Component	Page .Col.	Opt.
+C-A130	176 .1	
+C-A131	178 .1	
+C-A132	180 .1	
+C-A133	182 .1	
+C-A134	184 .1	
+C-A136	188 .1	
+C-A137	190 .1	
+C-A138	192 .1	
+C-A139	194 .1	
+C-A140	196 .1	
+C-A141	198 .1	
+C-A142	201 .1	
+C-A143	202 .1	
+C-A144	205 .1	
+C-A145	207 .1	
+C-A146	209 .1	
+C-A147	211 .1	
+C-A149	214 .1	ARL
+C-A160	080 .1	
+C-A161	080 .3	
+C-A162	080 .5	
+C-A163	080 .7	
+C-A164	080 .7	
+C-A200	126 .4	DIMC
+C-A300	046 .6	
+C-A301	046 .6	
+C-A302	046 .6	
+C-A303	047 .6	

Component	Page .Col.	Opt.
+C-A304	047 .6	
+C-A308	049 .6	H.I.
+C-A400	050 .2	
+C-A401	051 .7	
+C-A402	052 .5	
+C-A403	053 .6	
+C-A420	053 .2	
+C-A450	059 .4	
+C-A451	059 .2	
+C-A452	060 .5	
+C-A500	011 .2	
+C-A501	011 .6	
+C-A502	012 .2	
+C-A600	062 .7	
+C-A601	063 .6	
+C-A602	064 .7	
+C-A604	066 .6	
+C-A605	067 .8	
+C-A606	068 .7	
+C-A607	069 .6	
+C-A710	024 .1	
+C-A711	022 .1	
+C-A712	021 .2	
+C-A713	023 .1	
+C-A714	029 .1	
+C-A715	028 .1	
+C-A716	027 .1	
+C-A726	253 .4	TGA

Component	Page .Col.	Opt.
+C-A901	081 .4	
+C-A902	081 .4	
+C-A903	081 .3	
+C-A904	082 .7	
+C-A905	086 .1	
+C-B001	110 .2	
+C-B002	120 .2	
+C-B003	120 .4	
+C-B004	120 .5	
+C-B005	120 .6	
+C-B006	038 .8	
+C-B007	038 .9	
+C-C1712	038 .3	
+C-C1713	038 .5	
+C-D100	080 .1	
+C-D900	081 .4	
+C-E001	037 .1	
+C-E002	037 .2	
+C-E900	036 .10	
+C-E901	036 .9	
+C-F021	006 .7	
+C-F026	010 .2	
+C-F027	010 .6	
+C-F031	014 .3	
+C-F032	014 .8	
+C-F033	016 .3	
+C-F034	017 .3	
+C-F035	017 .7	

Drawing remarks

Tetra Pak

Designer LUP	Date 23/11/2007	Machine Tetra Pak A3/Flex 0150	
ECM No 320174	Denomination POSITION SUMMARY	Page Type POSITION SUMMARY	
Company Tetra Pak (Italy)	Document No. 2845987-0002	Doc. type ELD	Version AE	Page 001

This drawing must not without the consent of Tetra Pak be copied, transmitted or disclosed to any third party.

Position summary of 2845987-0003

Component	Page .Col.	Opt.
+C-F036	019 .3	
+C-F037	019 .7	
+C-F038	036 .1	
+C-F039	018 .3	
+C-F041	252 .1	TGA
+C-F042	008 .3	H.I.
+C-F045	010 .9	TGA
+C-F046	010 .4	
+C-F050	035 .2	
+C-F051	005 .9	
+C-F052	035 .9	
+C-F053	037 .1	
+C-F054	037 .10	
+C-F055	038 .5	
+C-F059	035 .9	
+C-F060	035 .1	
+C-F061	035 .2	
+C-F062	035 .2	
+C-F063	035 .3	
+C-F064	035 .4	
+C-F066	035 .4	
+C-F067	035 .5	
+C-F700	021 .4	
+C-F701	027 .4	
+C-F020	006 .3	
+C-F021	006 .7	
+C-F022	007 .4	
+C-F023	007 .7	

Component	Page .Col.	Opt.
+C-F024	009 .2	
+C-F025	009 .7	
+C-F028	011 .2	
+C-F029	011 .6	
+C-F030	012 .2	
+C-G001	035 .1	
+C-G002	035 .3	
+C-G003	035 .5	
+C-G010	014 .2	
+C-G011	014 .7	
+C-G012	016 .3	
+C-G013	017 .2	
+C-G014	017 .7	
+C-G015	018 .3	
+C-G100	080 .1	
+C-G101	080 .3	
+C-G102	080 .5	
+C-G103	080 .7	
+C-G104	080 .7	
+C-G108	080 .1	
+C-G900	081 .3	
+C-G910	081 .6	
+C-H901	208 .5	
+C-H905	208 .5	
+C-H907	208 .5	
+C-H908	208 .5	
+C-H911	208 .5	
+C-H912	208 .5	

Component	Page .Col.	Opt.
+C-K001	177 .5	
+C-K002	175 .5	
+C-K003	179 .5	
+C-K004	179 .5	
+C-K005	179 .5	
+C-K006	177 .5	
+C-K007	175 .5	
+C-K008	179 .5	
+C-K009	179 .5	
+C-K020	179 .5	
+C-K021	179 .5	
+C-K022	180 .5	
+C-K023	180 .5	
+C-K024	180 .5	
+C-K025	180 .5	
+C-K026	180 .5	
+C-K028	184 .4	
+C-K029	183 .4	
+C-K030	183 .4	
+C-K031	175 .5	
+C-K034	175 .5	
+C-K035	175 .5	
+C-K036	180 .5	
+C-K037	176 .5	
+C-K039	176 .5	
+C-K042	210 .4	H.I.
+C-K045	181 .5	TGA
+C-K104	177 .5	

Component	Page .Col.	Opt.
+C-K105	177 .5	
+C-K106	063 .3	
+C-K107	063 .3	
+C-K108	188 .5	
+C-K110	178 .5	
+C-K111	178 .5	
+C-K112	178 .5	
+C-K113	178 .5	
+C-K114	178 .5	
+C-K115	178 .5	
+C-K117	184 .4	USA
+C-K120	189 .5	USA
+C-K121	189 .5	USA
+C-K122	189 .5	USA
+C-K123	189 .5	USA
+C-K124	189 .5	USA
+C-K125	188 .5	
+C-K126	188 .5	
+C-K129	061 .8	
+C-K131	061 .8	
+C-K132	188 .5	
+C-K133	188 .5	
+C-K134	087 .5	
+C-K135	087 .5	
+C-K136	188 .5	
+C-K137	176 .5	
+C-K138	176 .5	
+C-K139	176 .5	

Drawing remarks

Tetra Pak

Designer LUP | Date 23/11/2007 | Machine Tetra Pak A3/Flex 0150

ECM No 320174 | Denomination POSITION SUMMARY | Page Type POSITION SUMMARY

Company Tetra Pak (Italy) | Document No. 2845987-0002 | Doc. type ELD | Version AE | Page 002

This drawing must not without the consent of Tetra Pak be copied, transmitted or disclosed to any third party.

Position summary of 2845987-0003

Component	Page .Col.	Opt.
+C-K143	144 .4	
+C-K144	198 .5	
+C-K200	006 .3	
+C-K201	006 .4	
+C-K202	007 .2	
+C-K203	007 .3	
+C-K204	007 .6	
+C-K205	007 .7	
+C-K206	009 .6	
+C-K207	009 .7	
+C-K208	019 .7	
+C-K209	010 .1	
+C-K210	010 .3	
+C-K211	010 .6	
+C-K212	010 .8	TGA
+C-K213	009 .2	
+C-K214	009 .3	
+C-K215	008 .2	H.I.
+C-K220	055 .2	
+C-K221	055 .2	
+C-K222	055 .2	
+C-K223	055 .2	
+C-K224	055 .2	
+C-K225	055 .2	
+C-K300	126 .2	DIMC
+C-K301	126 .2	DIMC
+C-K700	063 .3	
+C-K701	063 .3	

Component	Page .Col.	Opt.
+C-M002	038 .3	
+C-M003	038 .5	
+C-M004	033 .9	
+C-M720	250 .2	TGA
+C-P001	039 .5	
+C-P003	041 .4	
+C-P004	189 .5	
+C-P005	189 .5	
+C-P900	042 .5	USA
+C-P901	043 .5	USA
+C-Q001	032 .2	
+C-Q002	032 .4	
+C-Q003	032 .6	
+C-Q004	032 .9	
+C-Q005	038 .1	
+C-Q006	033 .2	
+C-Q007	033 .4	
+C-Q008	033 .7	
+C-Q009	033 .9	
+C-Q700	021 .2	
+C-Q701	027 .1	
+C-R101	099 .2	
+C-R102	257 .6	TGA
+C-R717	012 .4	
+C-R903	081 .4	
+C-R4306	055 .3	
+C-R4307	055 .3	
+C-R4308	055 .3	

Component	Page .Col.	Opt.
+C-R4309	055 .3	
+C-R4311	055 .3	
+C-R4312	055 .3	
+C-R5000	011 .5	
+C-S001	149 .6	
+C-S003	130 .4	
+C-S004	130 .4	
+C-S005	149 .6	
+C-S900	150 .4	
+C-S901	127 .3	
+C-S902	127 .3	
+C-S903	127 .3	
+C-S904	127 .3	
+C-S905	127 .3	
+C-S906	127 .3	
+C-S907	127 .3	
+C-S908	128 .5	
+C-S911	128 .3	
+C-S912	128 .3	
+C-T6101	012 .2	
+C-V710	020 .3	
+C-V711	020 .3	
+C-V712	020 .3	
+C-V713	020 .3	
+C-V714	020 .7	
+C-V715	020 .7	
+C-Z004	005 .6	
+C-Z006	041 .4	

Component	Page .Col.	Opt.
+C-Z010	014 .3	
+C-Z011	014 .8	
+C-Z012	016 .3	
+C-Z013	017 .3	
+C-Z014	017 .7	
+C-Z015	018 .3	
+C-Z100	014 .3	
+C-Z101	014 .4	
+C-Z102	099 .3	
+C-Z110	014 .8	
+C-Z111	014 .9	
+C-Z120	016 .3	
+C-Z121	016 .4	
+C-Z130	017 .3	
+C-Z131	017 .4	
+C-Z140	017 .7	
+C-Z141	017 .8	
+C-Z150	018 .3	
+C-Z151	018 .5	
+C-Z700	021 .2	
+C-Z701	027 .1	
+C-Z709	020 .5	
+C-Z710	020 .5	
+C-Z711	020 .5	
+C-Z712	021 .8	
+C-Z713	020 .5	
+C-Z714	020 .10	
+C-Z715	020 .10	

Drawing remarks

Tetra Pak

Designer LUP	Date 23/11/2007	Machine Tetra Pak A3/Flex 0150	
ECM No 320174	Denomination POSITION SUMMARY	Page Type POSITION SUMMARY	
Company Tetra Pak (Italy)	Document No. 2845987-0002	Doc. type ELD	Version AE	Page 003

This drawing must not without the consent of Tetra Pak be copied, transmitted or disclosed to any third party.

Position summary of 2845987-0003

Component	Page .Col.	Opt.
+C-Z716	027 .8	
+C-Z761	247 .4	TGA
+C-Z900	081 .3	
+C-Z903	081 .5	
+C-Z904	081 .2	
+C-Z910	081 .6	
+C-Z700.1	021 .4	
+C-Z701.1	027 .4	
+M-A404	254 .6	TGA
+M-A700	243 .1	TGA
+M-A701	244 .8	TGA
+M-A702	245 .8	TGA
+M-A703	246 .1	TGA
+M-A704	247 .8	TGA
+M-A705	248 .8	TGA
+M-A706	249 .8	TGA
+M-A728	253 .7	TGA
+M-A951	060 .1	
+M-A4500	059 .7	
+M-A4501	059 .8	
+M-A7901	207 .5	
+M-B001	038 .8	
+M-B720	255 .4	TGA
+M-B760	255 .3	TGA
+M-B770	255 .5	TGA
+M-B1101	133 .4	
+M-B1102	105 .4	
+M-B1103	104 .2	

Component	Page .Col.	Opt.
+M-B1104	046 .2	
+M-B1105	111 .2	
+M-B1106	110 .2	
+M-B1109	110 .2	
+M-B1111	132 .4	
+M-B1204	110 .2	
+M-B1205	112 .2	
+M-B1206	112 .2	
+M-B1207	110 .2	
+M-B1209	110 .2	
+M-B1210	106 .3	
+M-B1212	111 .2	
+M-B1220	046 .2	
+M-B1221	104 .2	
+M-B1222	110 .2	
+M-B1224	061 .3	
+M-B1225	061 .6	
+M-B1230	046 .2	
+M-B1235	104 .2	DIMC
+M-B1240	134 .5	
+M-B1241	134 .5	
+M-B1242	134 .5	
+M-B1243	133 .4	
+M-B1244	133 .4	
+M-B1301	135 .4	
+M-B1302	135 .4	
+M-B1303	135 .4	
+M-B1305	136 .5	

Component	Page .Col.	Opt.
+M-B1306	136 .5	
+M-B1307	136 .5	
+M-B1310	111 .2	
+M-B1314	051 .2	H.G.
+M-B1315	041 .4	
+M-B1316	051 .2	
+M-B1321	134 .5	
+M-B1322	047 .2	
+M-B1403	115 .5	
+M-B1404	134 .5	
+M-B1405	133 .4	
+M-B1420	053 .1	
+M-B1502	134 .5	
+M-B1503	112 .2	
+M-B1504	067 .3	
+M-B1505	061 .4	
+M-B1506	061 .6	
+M-B1508	067 .3	
+M-B1509	067 .5	H.G.
+M-B1511	107 .1	H.G.
+M-B1525	254 .3	TGA
+M-B1600	126 .2	DIMC
+M-B1601	126 .5	DIMC
+M-B1801	132 .4	
+M-B1802	144 .5	
+M-B1803	144 .5	
+M-B1806	152 .4	
+M-B1807	152 .4	

Component	Page .Col.	Opt.
+M-B1810	104 .3	
+M-B1816	136 .5	
+M-B1823	120 .4	
+M-B2102	137 .3	
+M-B2110	053 .8	
+M-B2111	053 .8	
+M-B2116	105 .2	DIMC
+M-B2201	137 .3	
+M-B2310	139 .3	
+M-B2320	139 .3	
+M-B2330	139 .3	
+M-B2401	139 .3	
+M-B2403	053 .2	
+M-B2404	053 .2	
+M-B2410	139 .4	
+M-B2501	137 .4	
+M-B2510	110 .2	
+M-B2520	047 .2	
+M-B2540	137 .4	
+M-B2810	150 .3	
+M-B2811	150 .4	
+M-B2812	150 .4	
+M-B2813	150 .4	TGA
+M-B2830	151 .4	
+M-B2831	151 .4	
+M-B2832	151 .4	
+M-B3102	137 .3	
+M-B3105	137 .4	

Drawing remarks

Tetra Pak

Designer LUP	Date 23/11/2007	Machine Tetra Pak A3/Flex 0150	
ECM No 320174	Denomination POSITION SUMMARY	Page Type POSITION SUMMARY	
Company Tetra Pak (Italy)	Document No. 2845987-0002	Doc. type ELD	Version AE	Page 004

This drawing must not without the consent of Tetra Pak be copied, transmitted or disclosed to any third party.

Position summary of 2845987-0003

Component	Page .Col.	Opt.
+M-B4315	138 .5	
+M-B4316	138 .5	
+M-B5104	061 .5	
+M-B5203	115 .5	
+M-B5302	115 .5	
+M-B5307	111 .2	
+M-B5308	111 .2	
+M-B5309	111 .2	
+M-B5310	111 .2	TGA
+M-B5314	115 .5	
+M-B5401	147 .5	
+M-B5402	147 .4	
+M-B5403	147 .4	
+M-B5501	148 .4	
+M-B5502	148 .4	
+M-B5503	144 .4	
+M-B5504	147 .4	
+M-B5505	147 .4	
+M-B5506	156 .4	
+M-B5507	155 .4	
+M-B5508	156 .4	
+M-B5509	156 .4	
+M-B5516	141 .4	DIMC
+M-B5601	148 .4	
+M-B5602	148 .4	
+M-B5710	141 .4	DIMC
+M-B6105	115 .5	
+M-B6107	141 .4	

Component	Page .Col.	Opt.
+M-B6201	141 .4	
+M-B6202	141 .4	
+M-B6203	141 .4	
+M-B6204	141 .4	
+M-B6205	106 .3	
+M-B6208	141 .4	
+M-B6209	069 .4	
+M-B7210	142 .5	
+M-B7211	142 .5	
+M-B7304	112 .2	
+M-B7400	137 .3	H.G.
+M-B7401	143 .4	
+M-B7411	142 .5	
+M-B7412	142 .5	
+M-B7414	142 .5	
+M-B7430	155 .4	ARL
+M-B7431	155 .4	ARL
+M-B7432	155 .4	ARL
+M-B7433	155 .4	ARL
+M-B7501	143 .4	
+M-B7512	142 .5	
+M-B7801	202 .4	
+M-B7806	151 .4	
+M-B7807	151 .4	
+M-B9104	145 .4	H.I.
+M-B9106	111 .2	H.I.
+M-B9107	145 .4	H.I.
+M-B9108	145 .4	H.I.

Component	Page .Col.	Opt.
+M-B9109	145 .4	H.I.
+M-B9110	145 .4	H.I.
+M-B9111	145 .4	H.I.
+M-B9113	049 .2	H.I.
+M-B9117	105 .3	H.I.
+M-B9118	145 .4	H.I.
+M-B9121	112 .2	H.I.
+M-B9122	112 .2	H.I.
+M-B43011	050 .7	
+M-B43012	050 .7	
+M-B72232	142 .5	
+M-B72234	142 .5	
+M-B74031	050 .7	
+M-B74032	050 .7	
+M-C1314	051 .2	
+M-C1315	102 .6	
+M-C9115	102 .6	H.I.
+M-E721	250 .6	TGA
+M-E2001	037 .7	
+M-E2002	037 .6	
+M-E2003	037 .9	
+M-E7702	037 .4	
+M-E7705	037 .3	
+M-F720	250 .1	TGA
+M-F721	250 .6	TGA
+M-F722	250 .8	TGA
+M-F760	243 .4	TGA
+M-F761	247 .4	TGA

Component	Page .Col.	Opt.
+M-G5430	251 .3	
+M-H2801	056 .4	
+M-H2802	056 .4	
+M-H7703	189 .5	
+M-H7802	189 .5	
+M-H7901	207 .5	
+M-K040	256 .5	TGA
+M-K041	256 .5	TGA
+M-K720	256 .5	TGA
+M-K721	256 .5	TGA
+M-K750	256 .5	TGA
+M-K751	256 .5	TGA
+M-K2010	058 .7	
+M-K2011	058 .7	
+M-K2012	058 .7	
+M-K2013	058 .7	
+M-K2014	058 .7	
+M-K2015	058 .7	
+M-K2016	058 .7	
+M-K2017	058 .2	
+M-K2018	058 .2	
+M-K7000	180 .5	
+M-K7001	180 .5	
+M-L1402	011 .6	
+M-L4309	011 .1	
+M-L4310	011 .3	
+M-L6101	012 .1	
+M-M001	038 .1	

Drawing remarks

Tetra Pak

Designer LUP	Date 23/11/2007	Machine Tetra Pak A3/Flex 0150	
ECM No 320174	Denomination POSITION SUMMARY	Page Type POSITION SUMMARY	
Company Tetra Pak (Italy)	Document No. 2845987-0002	Doc. type ELD	Version AE	Page 005

This drawing must not without the consent of Tetra Pak be copied, transmitted or disclosed to any third party.

Position summary of 2845987-0003

Component	Page .Col.	Opt.
+M-M1101	033 .7	
+M-M1213	033 .4	
+M-M1240	018 .8	DIMC
+M-M1501	017 .4	
+M-M1505	253 .1	TGA
+M-M1506	257 .4	TGA
+M-M1801	018 .5	
+M-M1802	034 .3	
+M-M1803	034 .5	
+M-M2301	032 .4	
+M-M2501	032 .6	
+M-M2540	032 .9	
+M-M2710	024 .2	
+M-M2711	022 .2	
+M-M2712	021 .2	
+M-M2713	023 .2	
+M-M2714	029 .2	
+M-M2715	028 .2	
+M-M2716	027 .1	
+M-M3102	033 .2	
+M-M4106	036 .3	
+M-M4107	036 .3	
+M-M4108	036 .3	
+M-M4109	036 .3	
+M-M4115	252 .5	TGA
+M-M4116	252 .5	TGA
+M-M4117	252 .5	TGA
+M-M4118	252 .5	TGA

Component	Page .Col.	Opt.
+M-M4119	252 .5	TGA
+M-M5406	017 .9	
+M-M5430	251 .3	
+M-M5503	032 .2	
+M-M6201	016 .7	
+M-M6202	016 .9	
+M-M7208	014 .4	
+M-M7217	014 .9	
+M-M7700	243 .2	TGA
+M-M7701	244 .2	TGA
+M-M7702	245 .2	TGA
+M-M7703	246 .2	TGA
+M-M7704	247 .2	TGA
+M-M7705	248 .2	TGA
+M-M7706	249 .2	TGA
+M-Q040	251 .3	TGA
+M-Q100	005 .3	
+M-Q750	243 .1	TGA
+M-Q751	247 .1	TGA
+M-R1105	009 .7	
+M-R1204	007 .2	
+M-R1205	007 .3	
+M-R1206	007 .6	
+M-R1207	007 .7	
+M-R1208	006 .7	
+M-R1209	006 .3	
+M-R1503	009 .2	
+M-R5307	010 .2	

Component	Page .Col.	Opt.
+M-R5308	010 .4	
+M-R5309	010 .6	
+M-R5310	010 .9	TGA
+M-R6203	019 .2	
+M-R6204	019 .4	
+M-R7304	019 .8	
+M-R9120	008 .3	H.I.
+M-S890	150 .4	
+M-S1003	128 .2	
+M-S1801	149 .4	
+M-S1802	149 .2	
+M-S2803	149 .4	
+M-S2804	149 .4	
+M-S5430	251 .3	
+M-S6206	143 .4	
+M-S7303	143 .4	
+M-S7402	143 .4	
+M-S7403	143 .4	
+M-S7430	155 .4	ARL
+M-S7431	155 .4	ARL
+M-S7701	143 .4	
+M-S7812	150 .4	
+M-S7813	149 .4	
+M-S7901	143 .4	
+M-T1402	011 .6	
+M-T4309	011 .2	
+M-T4310	011 .3	
+M-T6203	019 .3	

Component	Page .Col.	Opt.
+M-Y1104	198 .5	
+M-Y1107	195 .5	
+M-Y1108	195 .5	
+M-Y1111	195 .5	
+M-Y1112	196 .5	
+M-Y1210	201 .5	
+M-Y1220	206 .5	
+M-Y1221	206 .5	
+M-Y1222	198 .5	
+M-Y1223	198 .5	
+M-Y1230	198 .5	
+M-Y1231	199 .5	
+M-Y1232	199 .5	
+M-Y1233	199 .5	
+M-Y1241	195 .5	
+M-Y1242	195 .5	
+M-Y1303	194 .5	
+M-Y1312	194 .5	
+M-Y1318	195 .5	
+M-Y1323	194 .5	
+M-Y1332	197 .4	
+M-Y1333	197 .4	
+M-Y1401	195 .5	
+M-Y1501	196 .5	
+M-Y1502	194 .5	
+M-Y1503	194 .5	
+M-Y1801	198 .5	
+M-Y1802	198 .5	

Drawing remarks

Tetra Pak

Designer LUP	Date 23/11/2007	Machine Tetra Pak A3/Flex 0150	
ECM No 320174	Denomination POSITION SUMMARY	Page Type POSITION SUMMARY	
Company Tetra Pak (Italy)	Document No. 2845987-0002	Doc. type ELD	Version AE	Page 006

This drawing must not without the consent of Tetra Pak be copied, transmitted or disclosed to any third party.

Position summary of 2845987-0003

Component	Page .Col.	Opt.
+M-Y1803	197 .4	
+M-Y1804	205 .5	
+M-Y1805	205 .5	
+M-Y1808	205 .5	
+M-Y1809	205 .5	
+M-Y1810	194 .5	
+M-Y2104	205 .5	
+M-Y2106	201 .5	
+M-Y2108	201 .5	
+M-Y2115	201 .5	
+M-Y2201	175 .5	
+M-Y2401	206 .5	
+M-Y2810	056 .5	
+M-Y2812	056 .5	
+M-Y2830	056 .5	
+M-Y2831	056 .5	
+M-Y3101	177 .5	
+M-Y3103	200 .5	
+M-Y3105	206 .5	
+M-Y3109	200 .5	
+M-Y3111	200 .5	
+M-Y3112	200 .5	
+M-Y4306	055 .6	
+M-Y4307	055 .6	
+M-Y4308	055 .6	
+M-Y4309	055 .6	
+M-Y4311	055 .6	
+M-Y4312	055 .6	

Component	Page .Col.	Opt.
+M-Y5200	204 .5	
+M-Y5205	204 .5	TGA
+M-Y5210	204 .5	
+M-Y5215	204 .5	TGA
+M-Y5315	204 .5	
+M-Y5501	182 .5	
+M-Y5502	182 .5	
+M-Y5503	177 .5	
+M-Y5504	204 .5	
+M-Y5505	204 .5	
+M-Y5506	204 .5	DIMC
+M-Y5700	201 .5	DIMC
+M-Y6201	202 .6	
+M-Y6203	202 .6	
+M-Y6205	202 .6	
+M-Y7303	202 .6	
+M-Y7315	202 .6	
+M-Y7400	175 .5	H.G.
+M-Y7402	214 .5	H.G.
+M-Y7407	203 .5	
+M-Y7408	203 .5	
+M-Y7410	203 .5	
+M-Y7412	203 .5	
+M-Y7413	203 .5	
+M-Y7414	202 .6	
+M-Y7415	202 .6	
+M-Y7420	203 .5	
+M-Y7421	203 .5	

Component	Page .Col.	Opt.
+M-Y7425	203 .5	
+M-Y7430	214 .5	ARL
+M-Y7431	214 .5	ARL
+M-Y7432	214 .5	ARL
+M-Y7433	214 .5	ARL
+M-Y7434	214 .5	ARL
+M-Y9101	207 .5	H.I.
+M-Y9103	207 .5	H.I.
+M-Y9105	196 .5	H.I.
+M-Y9106	196 .5	H.I.
+M-Y9112	207 .5	H.I.
+M-Y9114	207 .5	H.I.
+M-Z001	005 .5	
+M-Z002	005 .5	
+M-Z725	253 .2	TGA
+M-Z750	243 .1	TGA
+M-Z751	247 .1	TGA
+M-Z760	243 .4	TGA
+M-Z770	243 .8	TGA
+M-Z771	247 .8	TGA

Component	Page .Col.	Opt.

Drawing remarks

Tetra Pak

Designer LUP	Date 23/11/2007	Machine Tetra Pak A3/Flex 0150	
ECM No 320174	Denomination POSITION SUMMARY	Page Type POSITION SUMMARY	
Company Tetra Pak (Italy)	Document No. 2845987-0002	Doc. type ELD	Version AE	Page 007

This page intentionally left blank

4 Circuit Diagrams

TechPub_2614345_v3_DRAFT_Release04_EM2851302_05en.fm

Description

This chapter contains all component drawings, such as programmable logic controller (PLC) modules, terminals, and cables.

TechPub_2614345_v3_DRAFT_Release04_EM2851302_05en.fm

RELEASED

This drawing must not without the consent of Tetra Pak be copied, transmitted or disclosed to any third party.

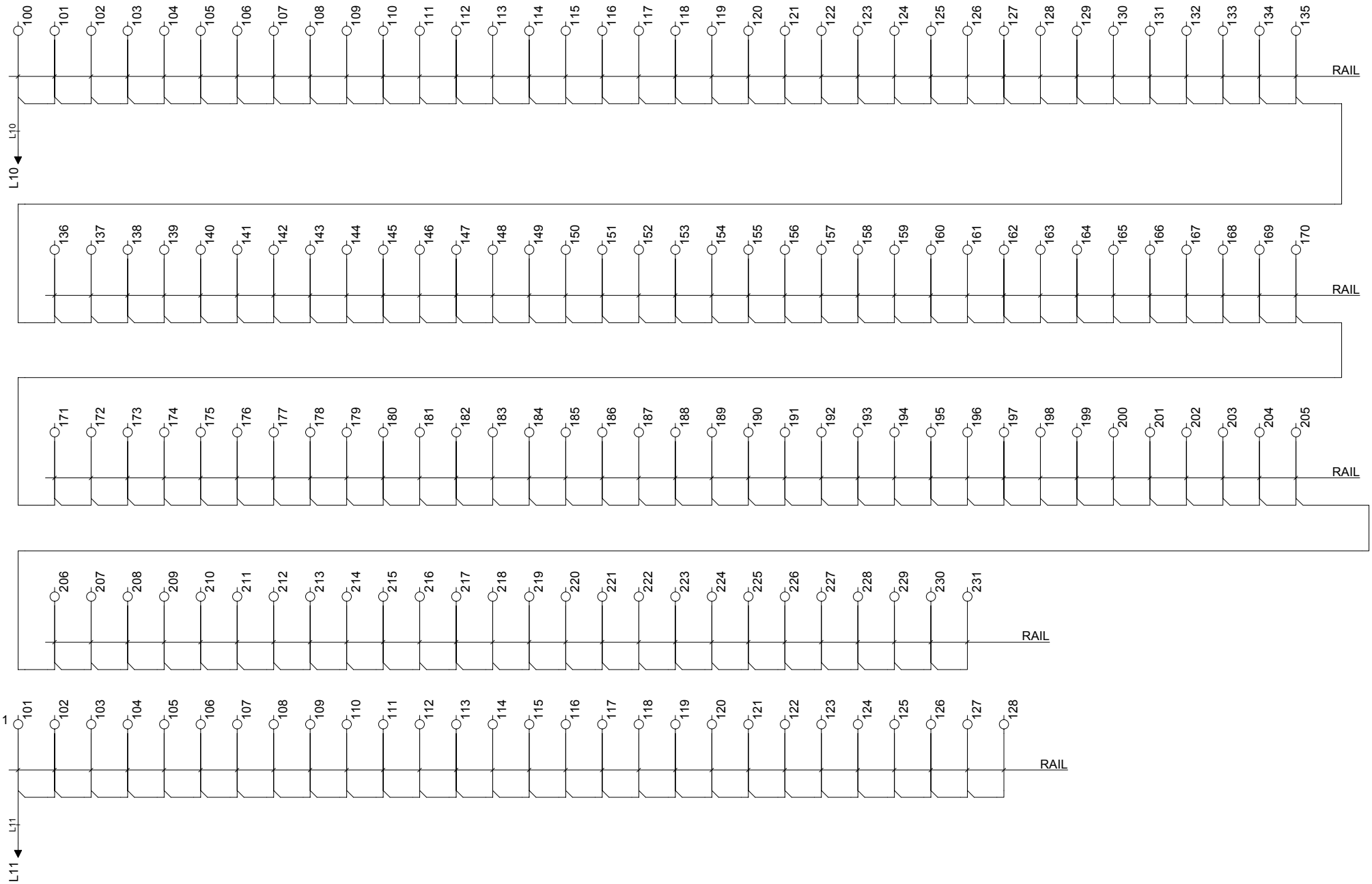

Drawing remarks	Tetra Pak	Designer LUP	Date 23/11/2007	Machine Tetra Pak A3/Flex 0150	
		ECM No 320174	Denomination CIRCUIT DIAGRAM	Page Type DISTRIBUTION TERMINALS	
	Company Tetra Pak (Italy)	Document No. 2845987-0003	Doc. type ELD	Version AE	Page 001

RELEASED

This drawing must not without the consent of Tetra Pak be copied, transmitted or disclosed to any third party.

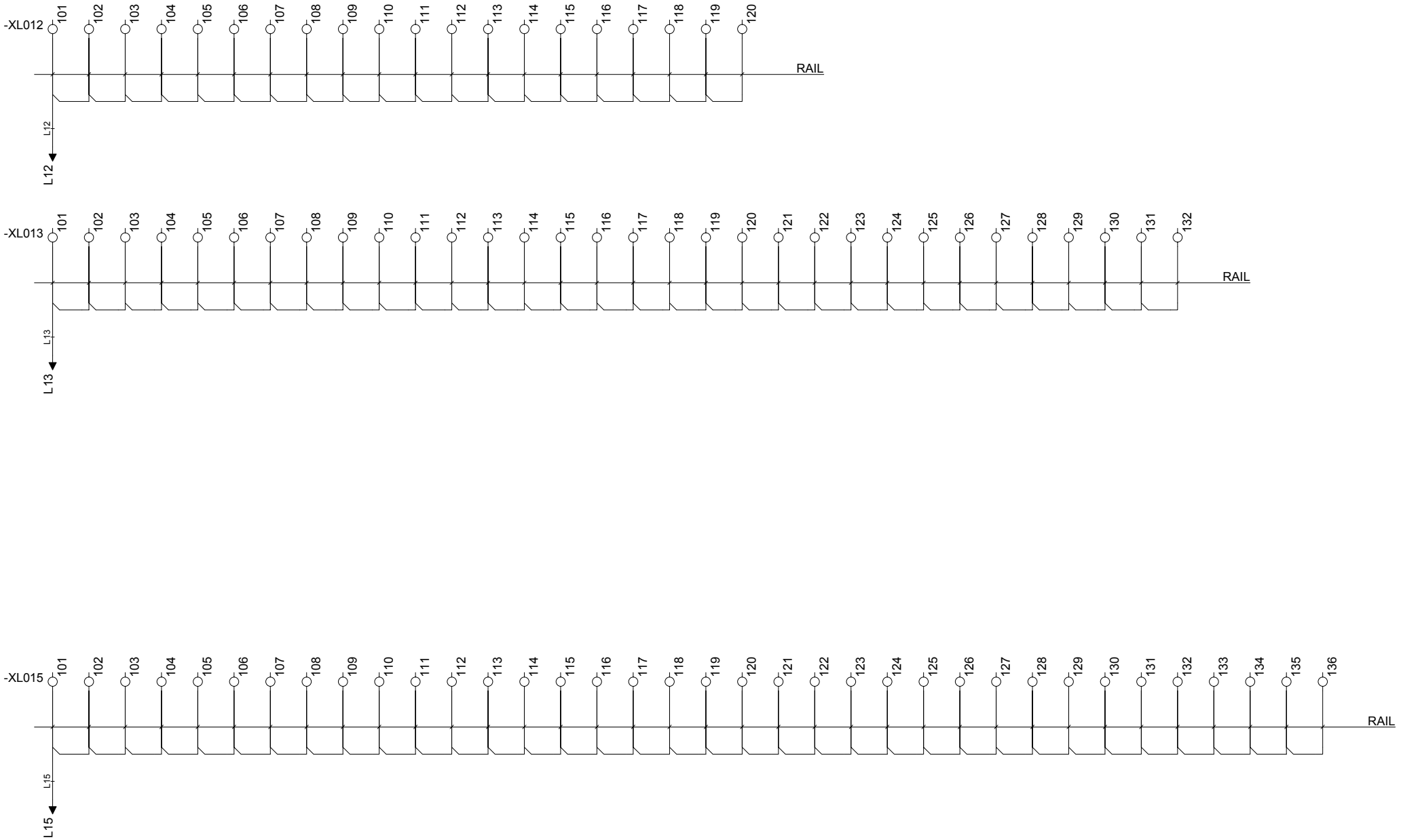

Drawing remarks	Tetra Pak	Designer LUP	Date 23/11/2007	Machine Tetra Pak A3/Flex 0150	
		ECM No 320174	Denomination CIRCUIT DIAGRAM	Page Type DISTRIBUTION TERMINALS	
		Company Tetra Pak (Italy)	Document No. 2845987-0003	Doc. type ELD	Version AE	Page 002

RELEASED

This drawing must not without the consent of Tetra Pak be copied, transmitted or disclosed to any third party.

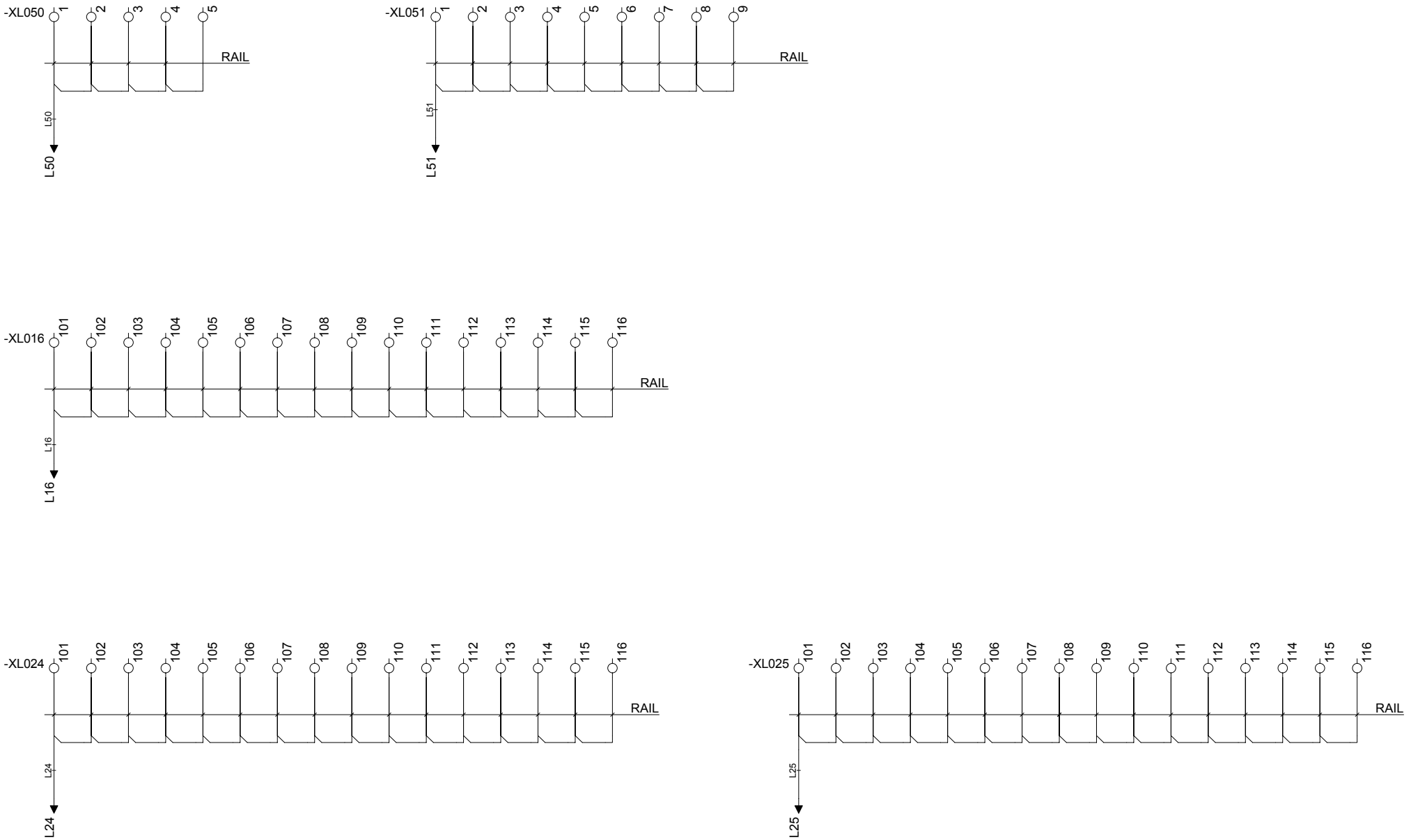

Drawing remarks	Tetra Pak	Designer LUP	Date 23/11/2007	Machine Tetra Pak A3/Flex 0150			
		ECM No 320174	Denomination CIRCUIT DIAGRAM	Page Type DISTRIBUTION TERMINALS			
		Company Tetra Pak (Italy)	Document No. 2845987-0003	Doc. type ELD	Version AE	Page 003	

RELEASED

This drawing must not without the consent of Tetra Pak be copied, transmitted or disclosed to any third party.

MAINS 400/230V
FOR CONNECTION
SEE DRAWING:
MAINS CONNECTION
61661

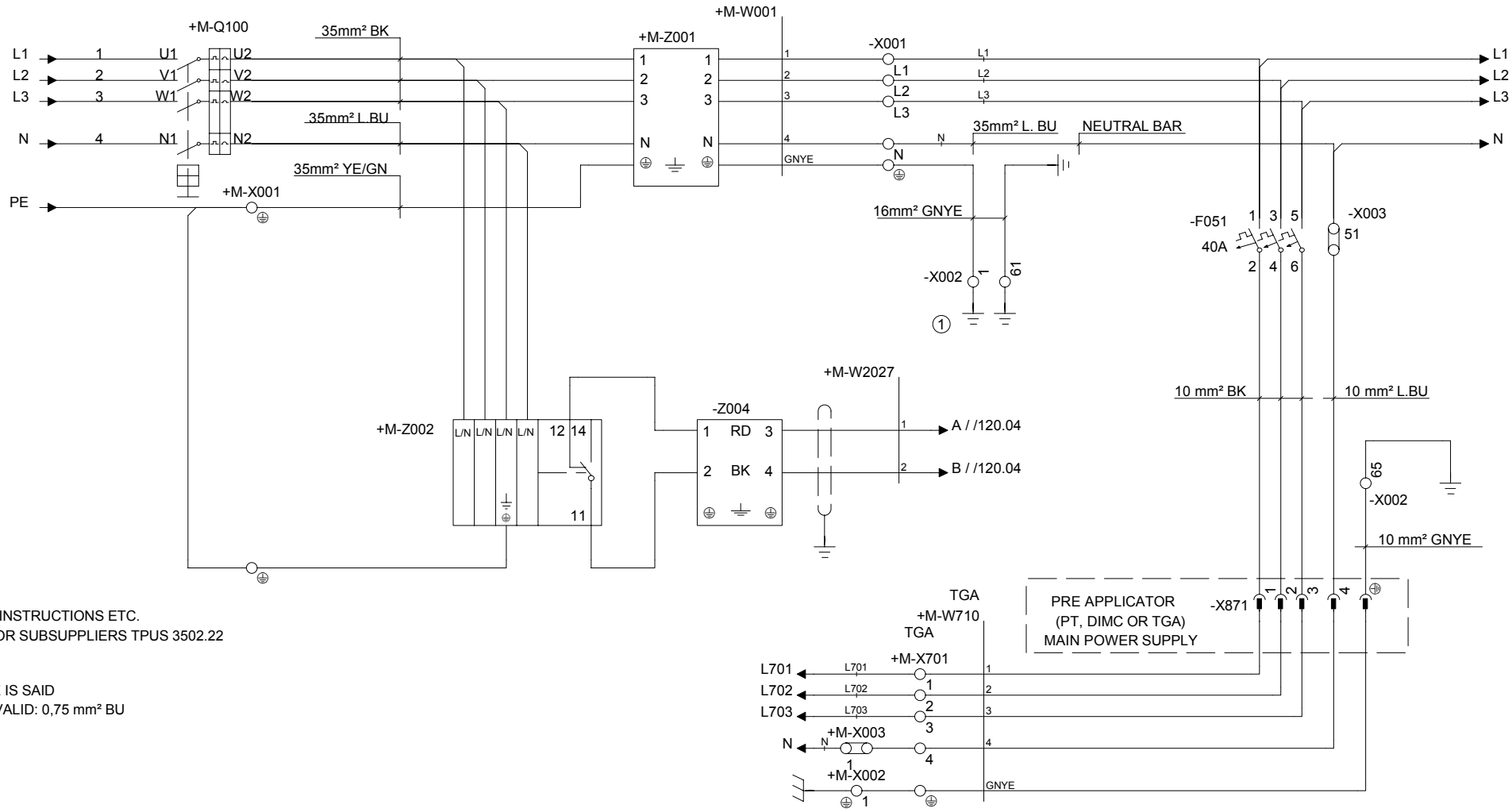

FOR TYPE OF WIRING, INSTRUCTIONS ETC.
SEE SPECIFICATION FOR SUBSUPPLIERS TPUS 3502.22

WHERE NOTHING ELSE IS SAID
OR LINE SUMMARY IS VALID: 0,75 mm² BU

Drawing remarks	Tetra Pak	Designer LUP	Date 23/11/2007	Machine Tetra Pak A3/Flex 0150	
		ECM No 320174	Denomination CIRCUIT DIAGRAM	Page Type CIRCUIT DIAGRAM	
	Company Tetra Pak (Italy)	Document No. 2845987-0003	Doc. type ELD	Version AE	Page 005

RELEASED

This drawing must not without the consent of Tetra Pak be copied, transmitted or disclosed to any third party.

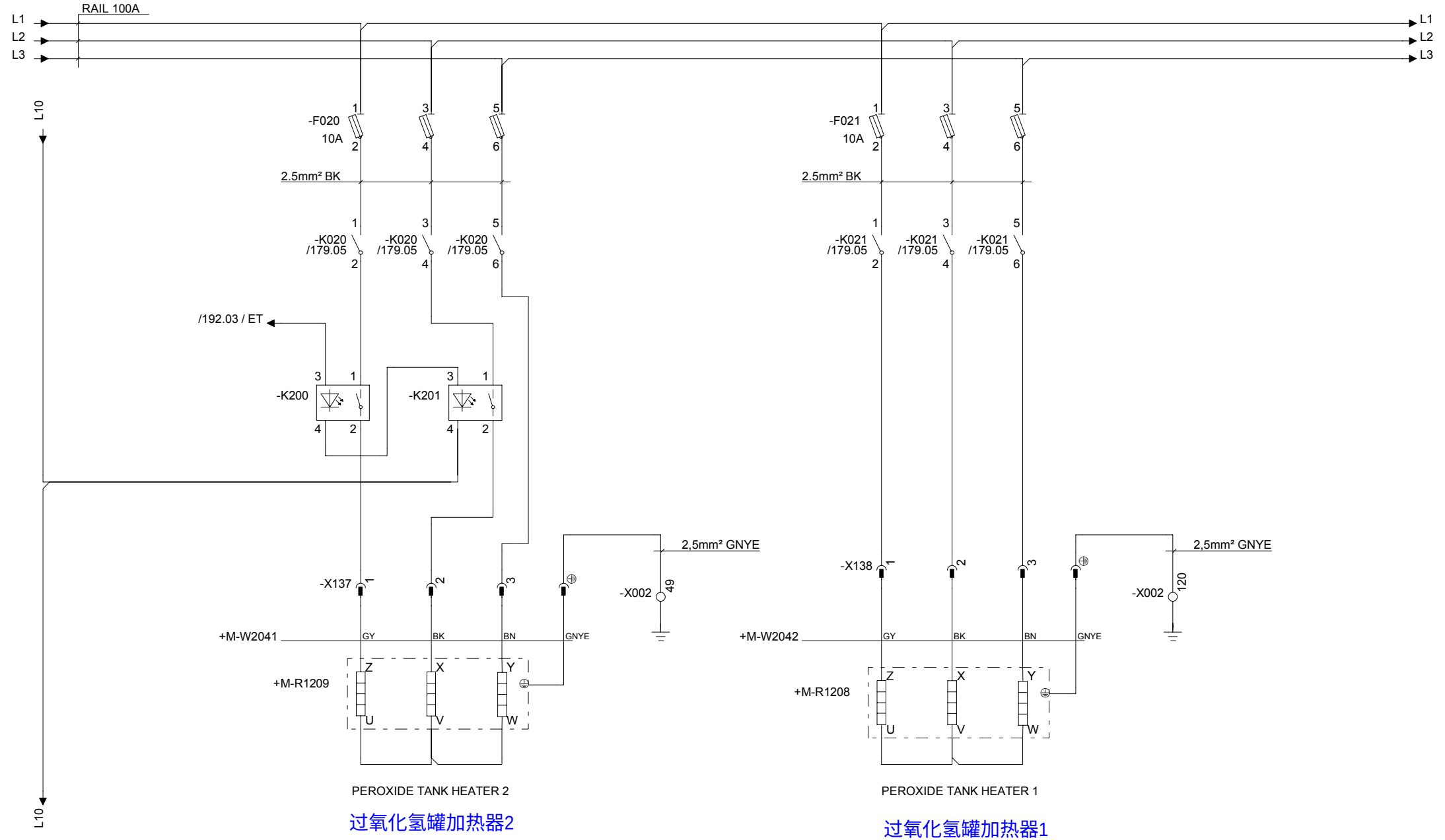

Drawing remarks	Tetra Pak	Designer LUP	Date 23/11/2007	Machine Tetra Pak A3/Flex 0150	
		ECM No 320174	Denomination CIRCUIT DIAGRAM	Page Type HEATERS	
		Company Tetra Pak (Italy)	Document No. 2845987-0003	Doc. type ELD	Version AE	Page 006

RELEASED

This drawing must not without the consent of Tetra Pak be copied, transmitted or disclosed to any third party.

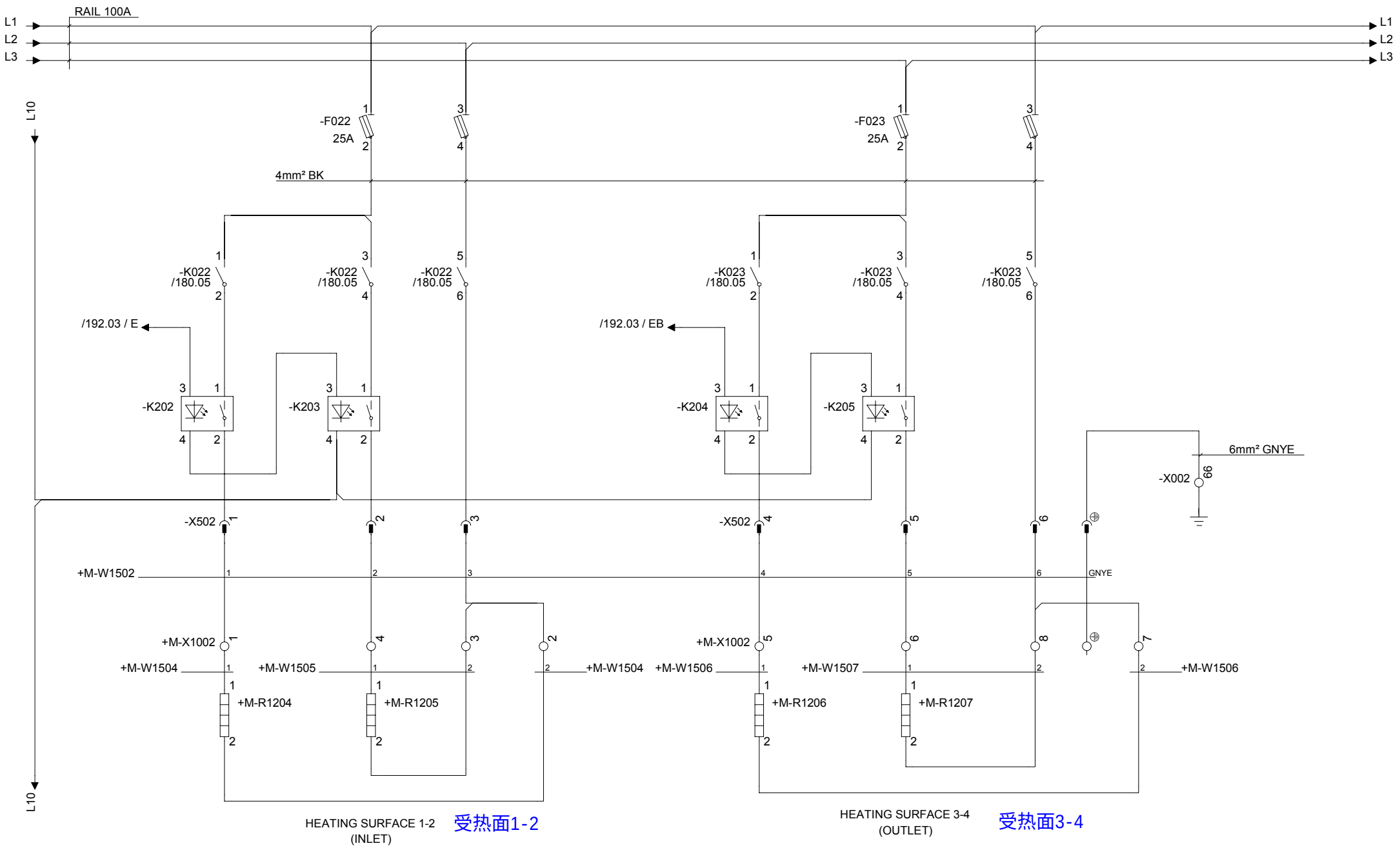

Drawing remarks	Tetra Pak	Designer LUP	Date 23/11/2007	Machine Tetra Pak A3/Flex 0150	
		ECM No 320174	Denomination CIRCUIT DIAGRAM	Page Type HEATERS	
		Company Tetra Pak (Italy)	Document No. 2845987-0003	Doc. type ELD	Version AE	Page 007

RELEASED

This drawing must not without the consent of Tetra Pak be copied, transmitted or disclosed to any third party.

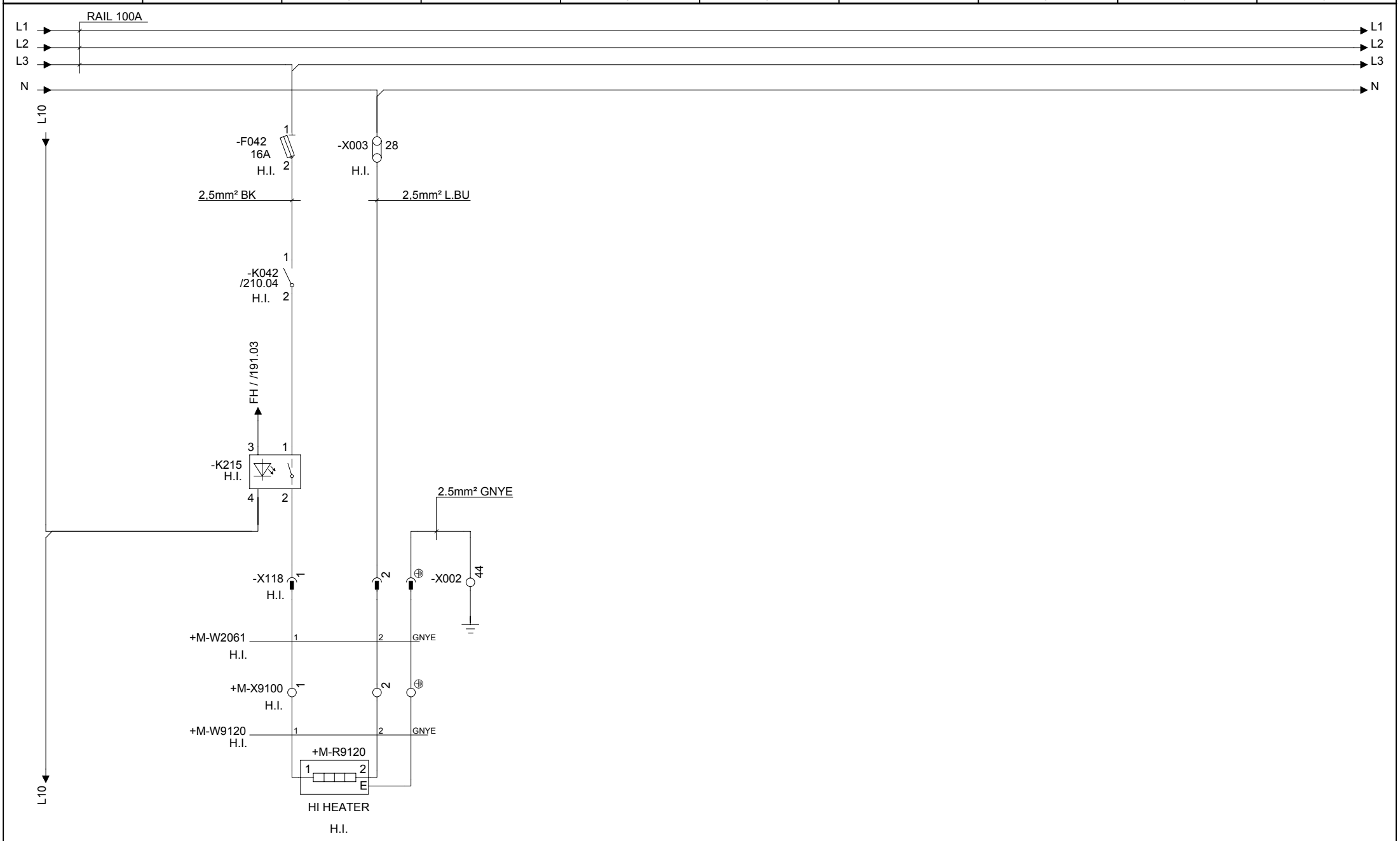

Drawing remarks	Tetra Pak	Designer LUP	Date 23/11/2007	Machine Tetra Pak A3/Flex 0150	
		ECM No 320174	Denomination CIRCUIT DIAGRAM	Page Type ELEMENTS	
		Company Tetra Pak (Italy)	Document No. 2845987-0003	Doc. type ELD	Version AE	Page 008

RELEASED

This drawing must not without the consent of Tetra Pak be copied, transmitted or disclosed to any third party.

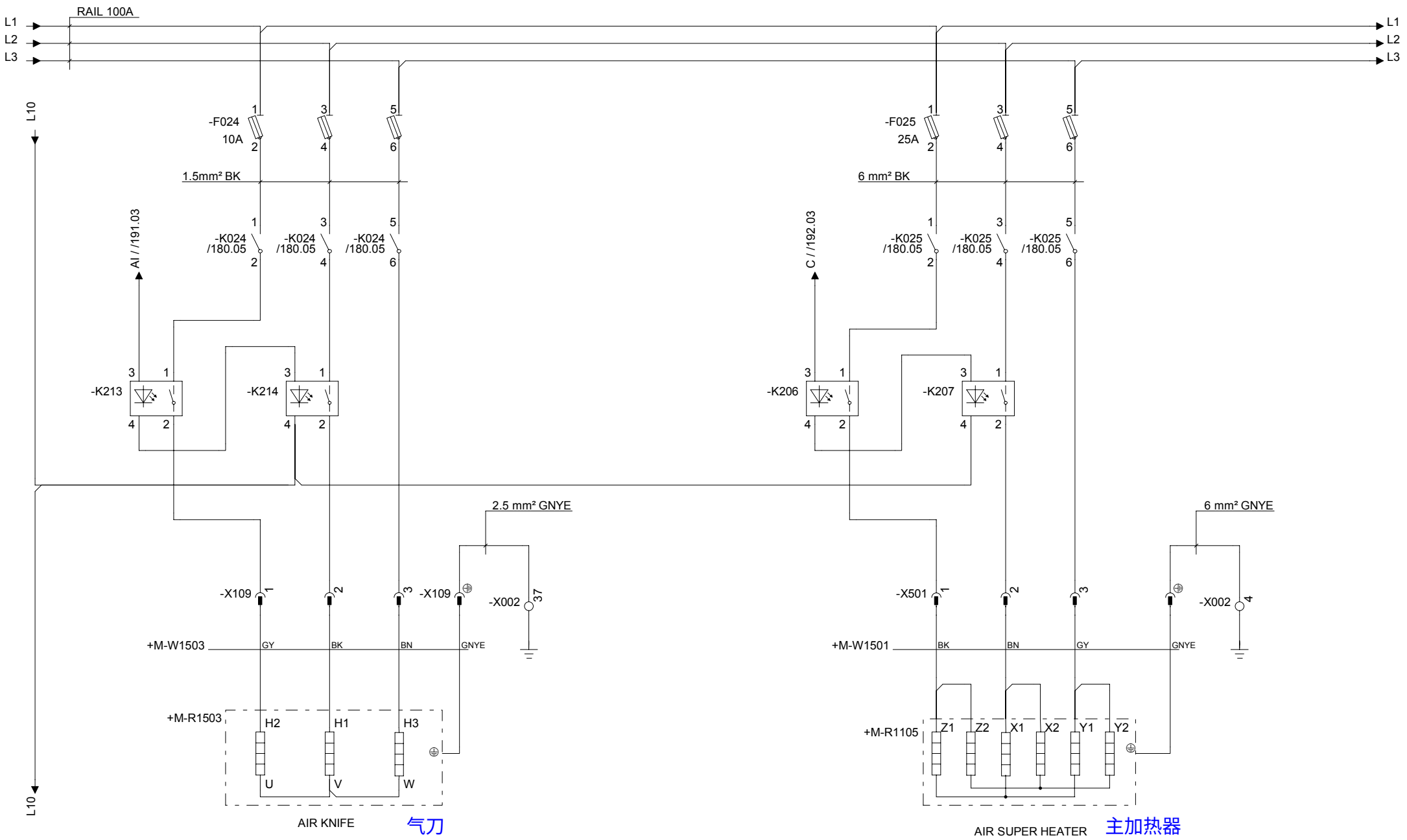

Drawing remarks	Tetra Pak	Designer LUP	Date 23/11/2007	Machine Tetra Pak A3/Flex 0150	
		ECM No 320174	Denomination CIRCUIT DIAGRAM	Page Type ELEMENTS	
		Company Tetra Pak (Italy)	Document No. 2845987-0003	Doc. type ELD	Version AE	Page 009

RELEASED

This drawing must not without the consent of Tetra Pak be copied, transmitted or disclosed to any third party.

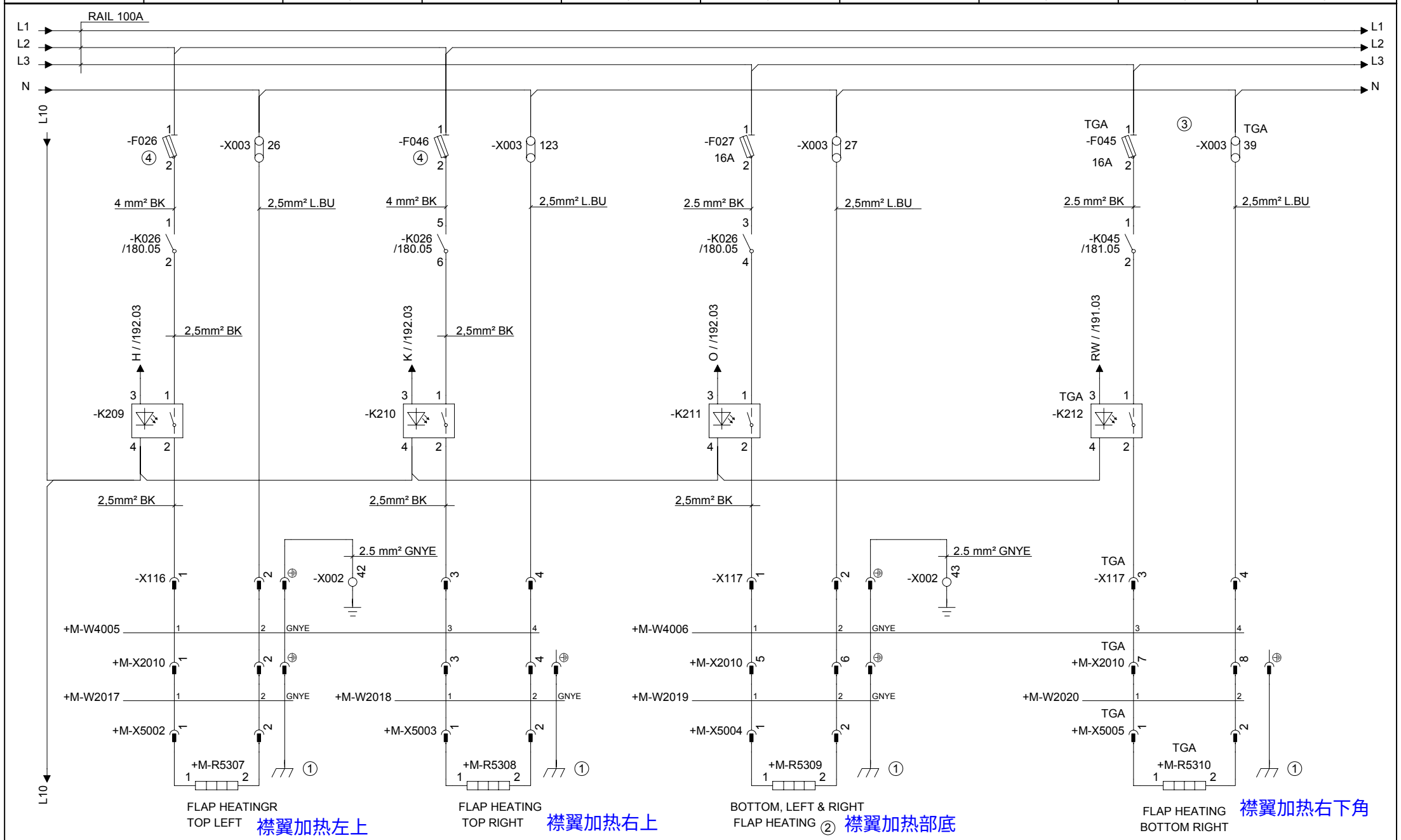

Drawing remarks	Tetra Pak	Designer LUP	Date 23/11/2007	Machine Tetra Pak A3/Flex 0150	
		ECM No 320174	Denomination CIRCUIT DIAGRAM	Page Type ELEMENTS	
	Company Tetra Pak (Italy)	Document No. 2845987-0003	Doc. type ELD	Version AE	Page 010

RELEASED

This drawing must not without the consent of Tetra Pak be copied, transmitted or disclosed to any third party.

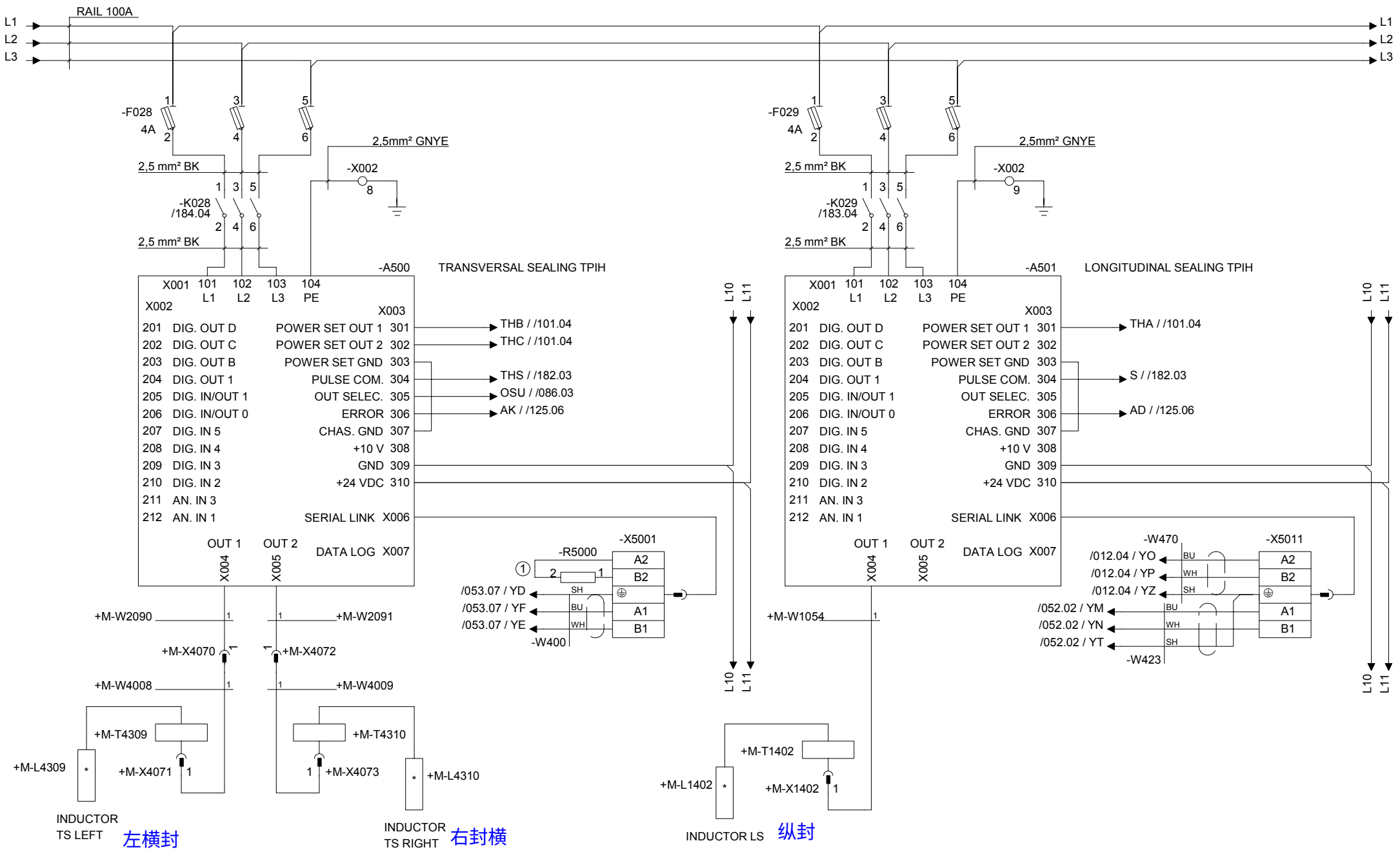

Drawing remarks	Tetra Pak	Designer LUP	Date 23/11/2007	Machine Tetra Pak A3/Flex 0150	
		ECM No 320174	Denomination CIRCUIT DIAGRAM	Page Type IH-GENERATORS	
		Company Tetra Pak (Italy)	Document No. 2845987-0003	Doc. type ELD	Version AE	Page 011

RELEASED

This drawing must not without the consent of Tetra Pak be copied, transmitted or disclosed to any third party.

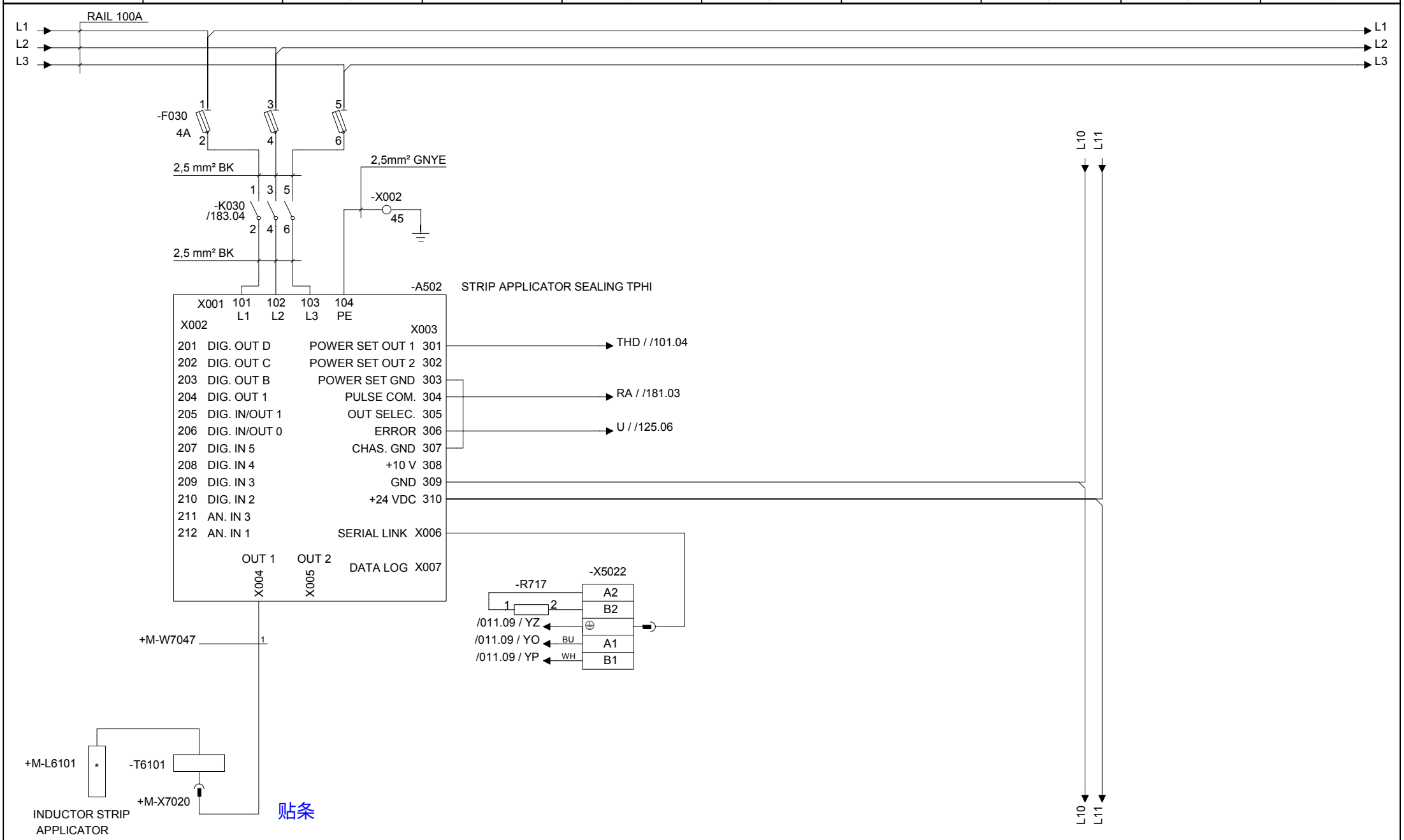

Drawing remarks	Tetra Pak	Designer LUP	Date 23/11/2007	Machine Tetra Pak A3/Flex 0150	
		ECM No 320174	Denomination CIRCUIT DIAGRAM	Page Type IH-GENERATORS	
		Company Tetra Pak (Italy)	Document No. 2845987-0003	Doc. type ELD	Version AE	Page 012

RELEASED

This drawing must not without the consent of Tetra Pak be copied, transmitted or disclosed to any third party.

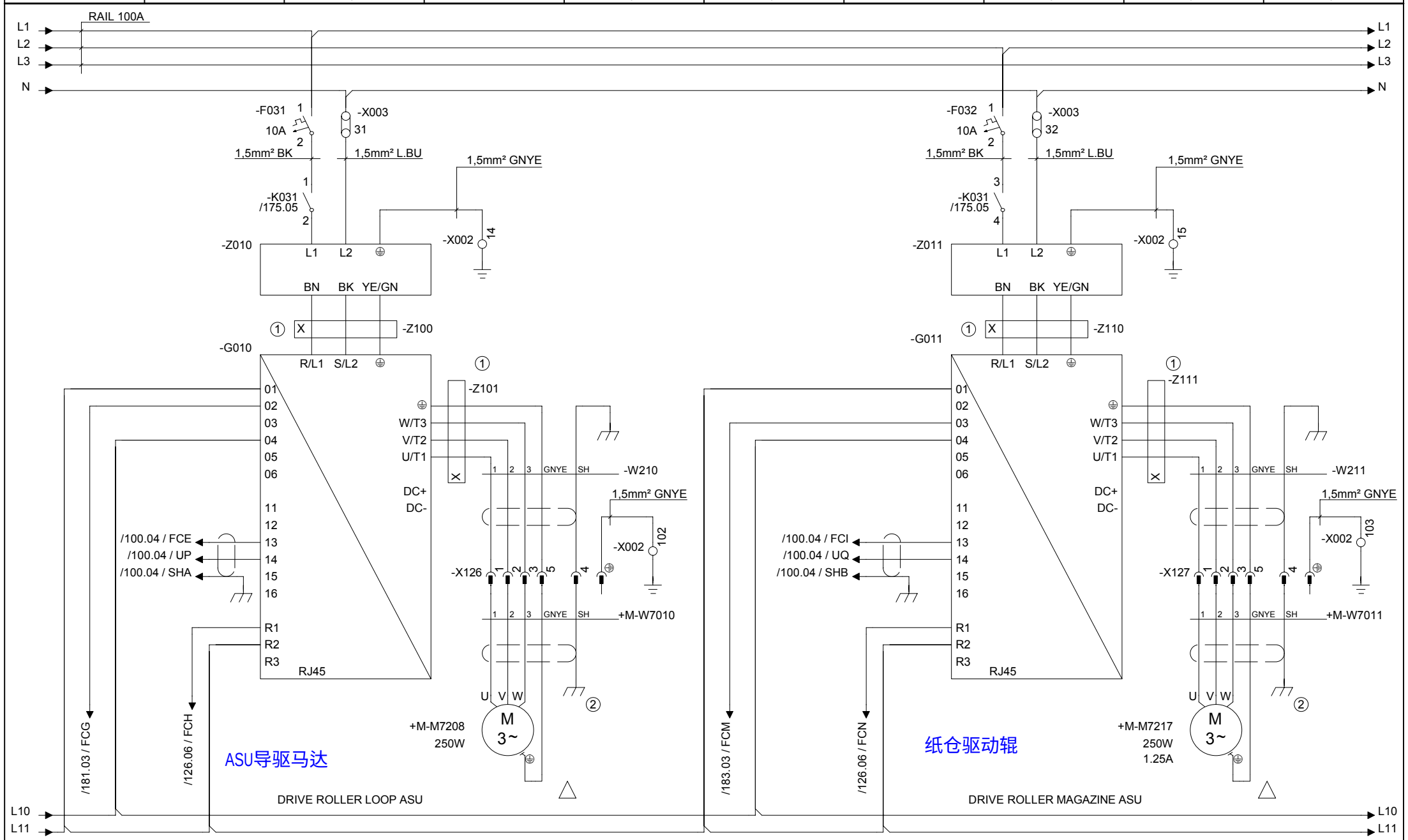

Drawing remarks	Tetra Pak	Designer LUP	Date 23/11/2007	Machine Tetra Pak A3/Flex 0150	
		ECM No 320174	Denomination CIRCUIT DIAGRAM	Page Type ASU MOTORS	
		Company Tetra Pak (Italy)	Document No. 2845987-0003	Doc. type ELD	Version AE	Page 014

RELEASED

This drawing must not without the consent of Tetra Pak be copied, transmitted or disclosed to any third party.

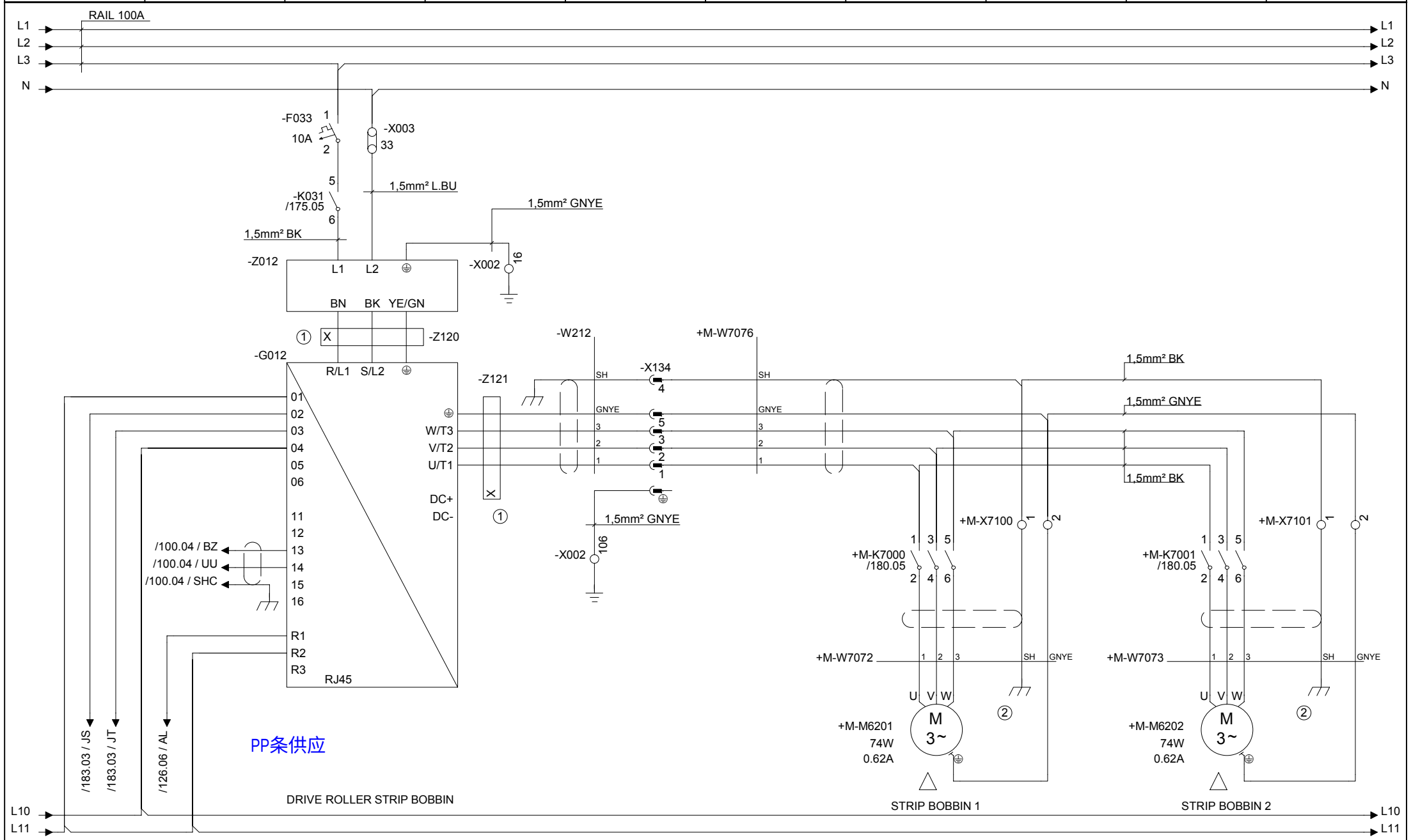

Drawing remarks	Tetra Pak	Designer: LUP	Date: 23/11/2007	Machine: Tetra Pak A3/Flex 0150	
		ECM No: 320174	Denomination: CIRCUIT DIAGRAM	Page Type: ASSU STRIP BOBBIN MOTORS	
		Company: Tetra Pak (Italy)	Document No.: 2845987-0003	Doc. type: ELD	Version: AE	Page: 016

RELEASED

This drawing must not without the consent of Tetra Pak be copied, transmitted or disclosed to any third party.

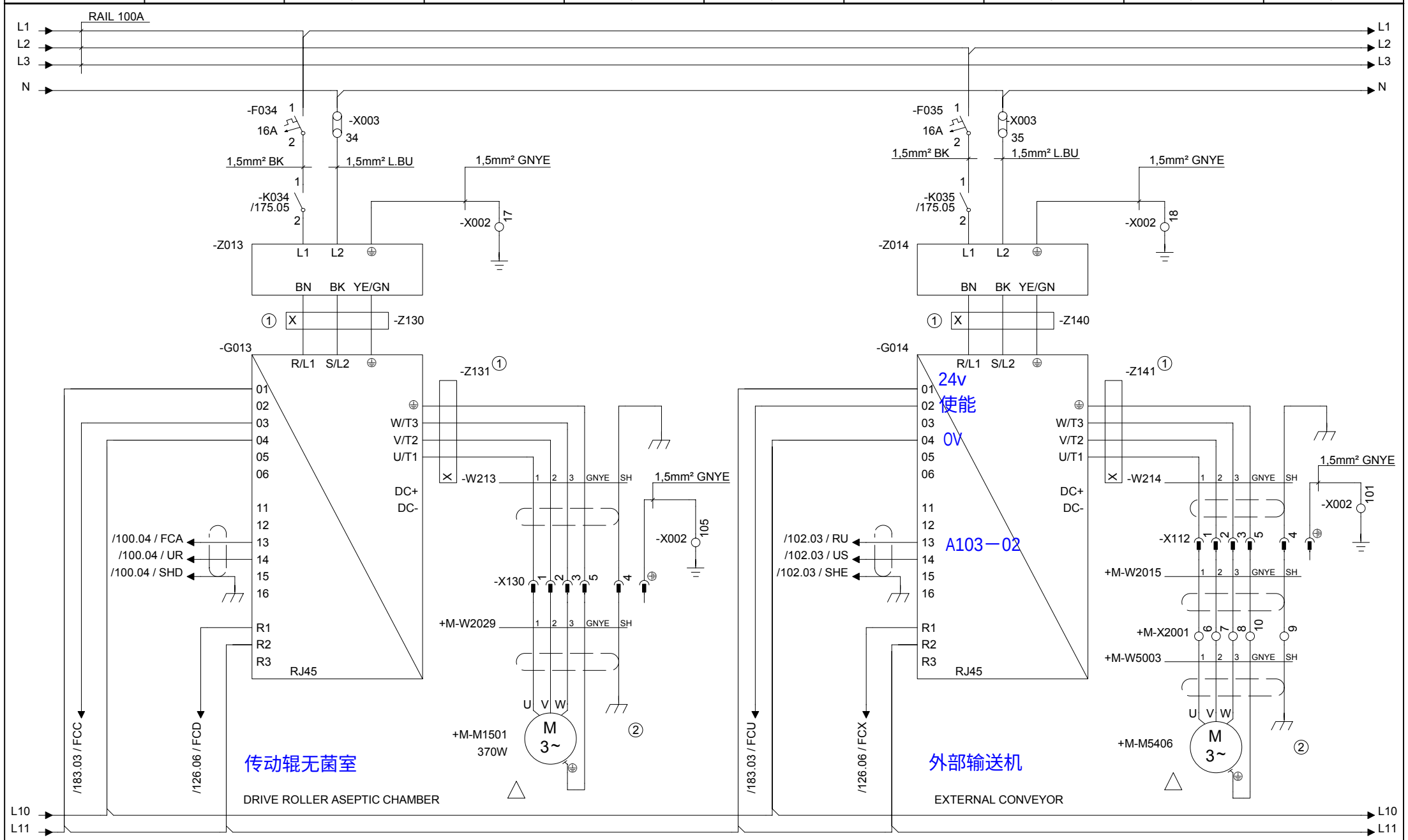

Drawing remarks	Tetra Pak	Designer LUP	Date 23/11/2007	Machine Tetra Pak A3/Flex 0150	
		ECM No 320174	Denomination CIRCUIT DIAGRAM	Page Type FEED PACKAGING MOTORS	
		Company Tetra Pak (Italy)	Document No. 2845987-0003	Doc. type ELD	Version AE	Page 017

RELEASED

This drawing must not without the consent of Tetra Pak be copied, transmitted or disclosed to any third party.

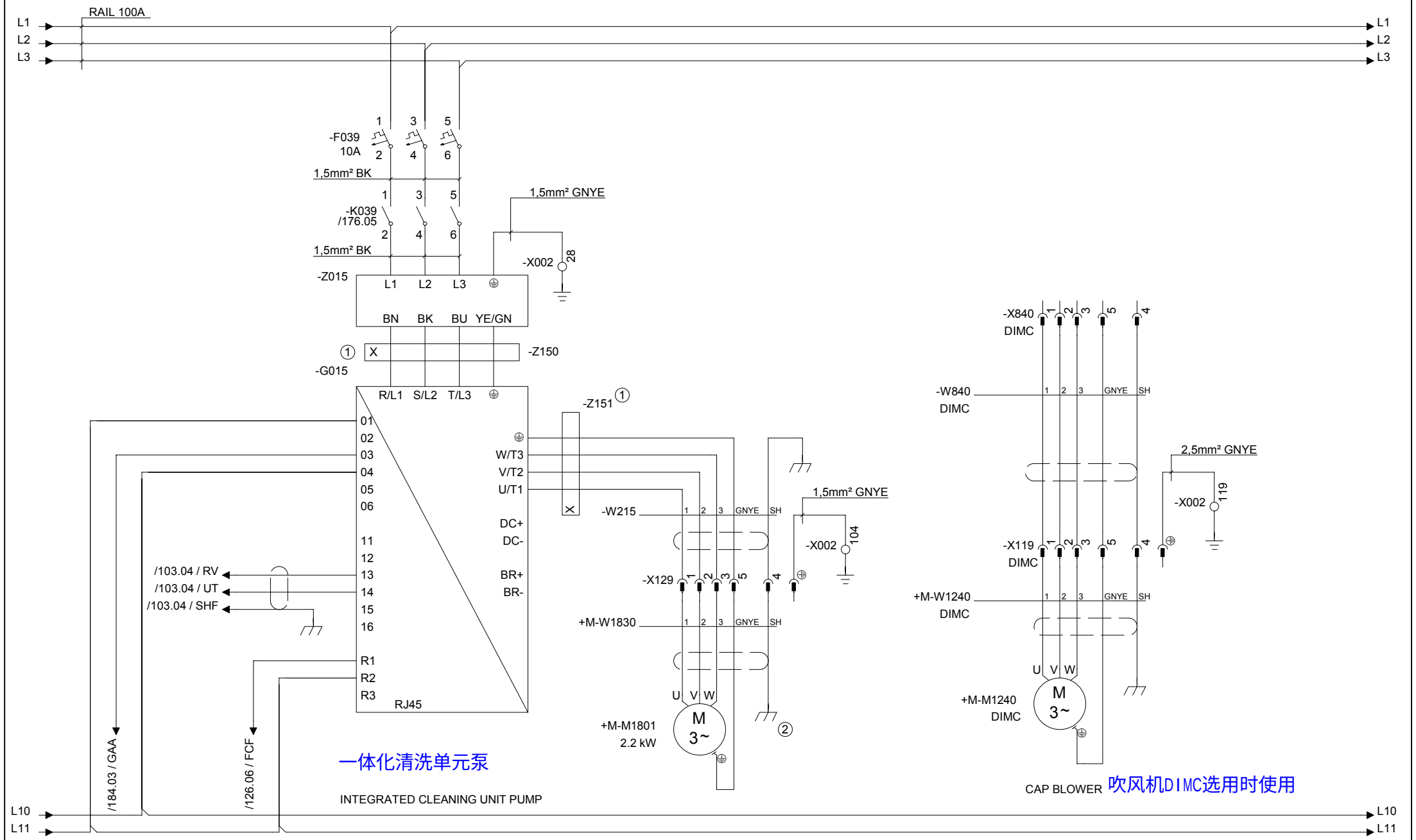

一体化清洗单元泵

INTEGRATED CLEANING UNIT PUMP

CAP BLOWER 吹风机DIMC选用时使用

Drawing remarks	Tetra Pak	Designer LUP	Date 23/11/2007	Machine Tetra Pak A3/Flex 0150	
		ECM No 320174	Denomination CIRCUIT DIAGRAM	Page Type ICU PUMP	
		Company Tetra Pak (Italy)	Document No. 2845987-0003	Doc. type ELD	Version AE	Page 018

RELEASED

This drawing must not without the consent of Tetra Pak be copied, transmitted or disclosed to any third party.

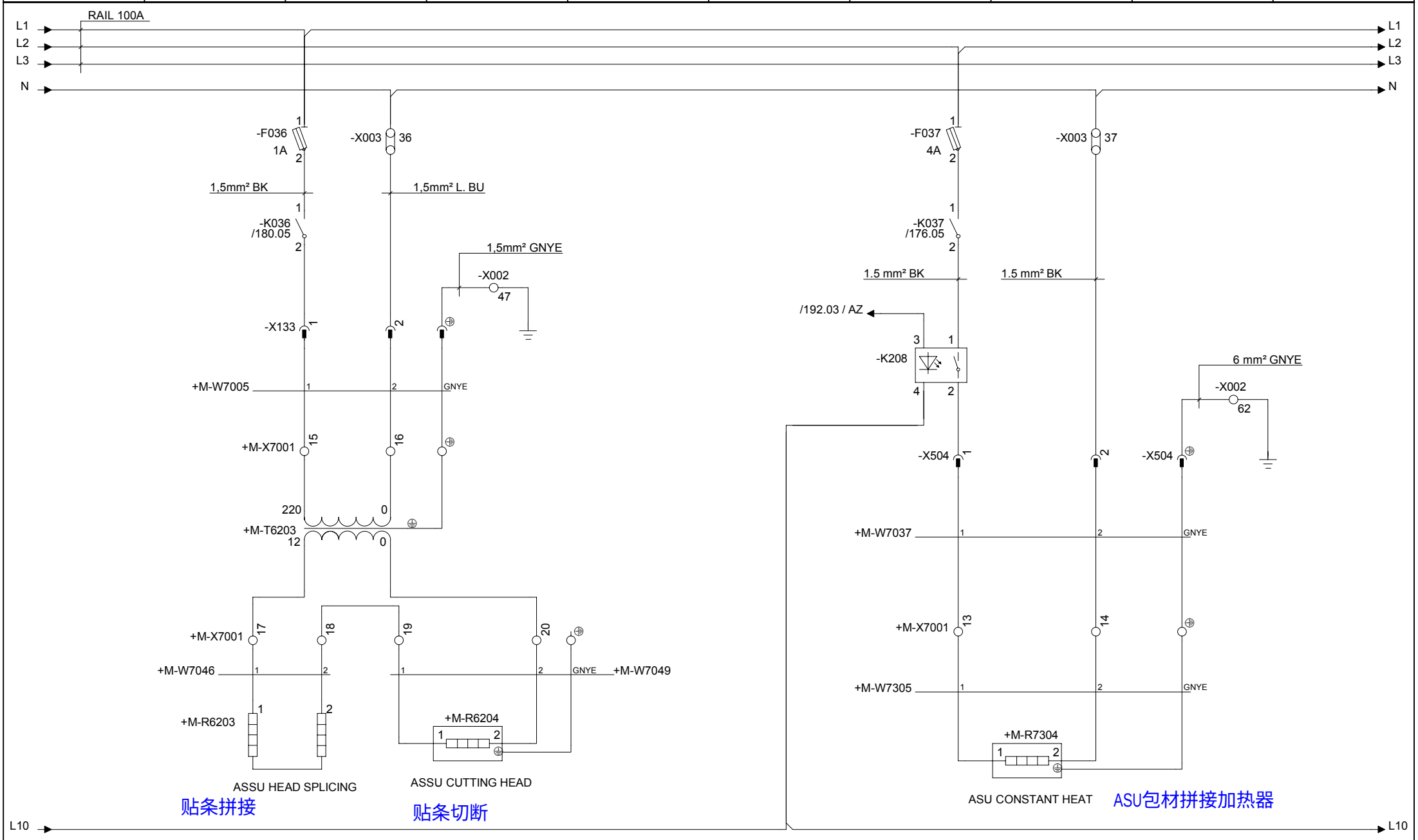

Drawing remarks	Tetra Pak	Designer LUP	Date 23/11/2007	Machine Tetra Pak A3/Flex 0150	
		ECM No 320174	Denomination CIRCUIT DIAGRAM	Page Type ASU EQUIPMENT	
		Company Tetra Pak (Italy)	Document No. 2845987-0003	Doc. type ELD	Version AE	Page 019

RELEASED

This drawing must not without the consent of Tetra Pak be copied, transmitted or disclosed to any third party.

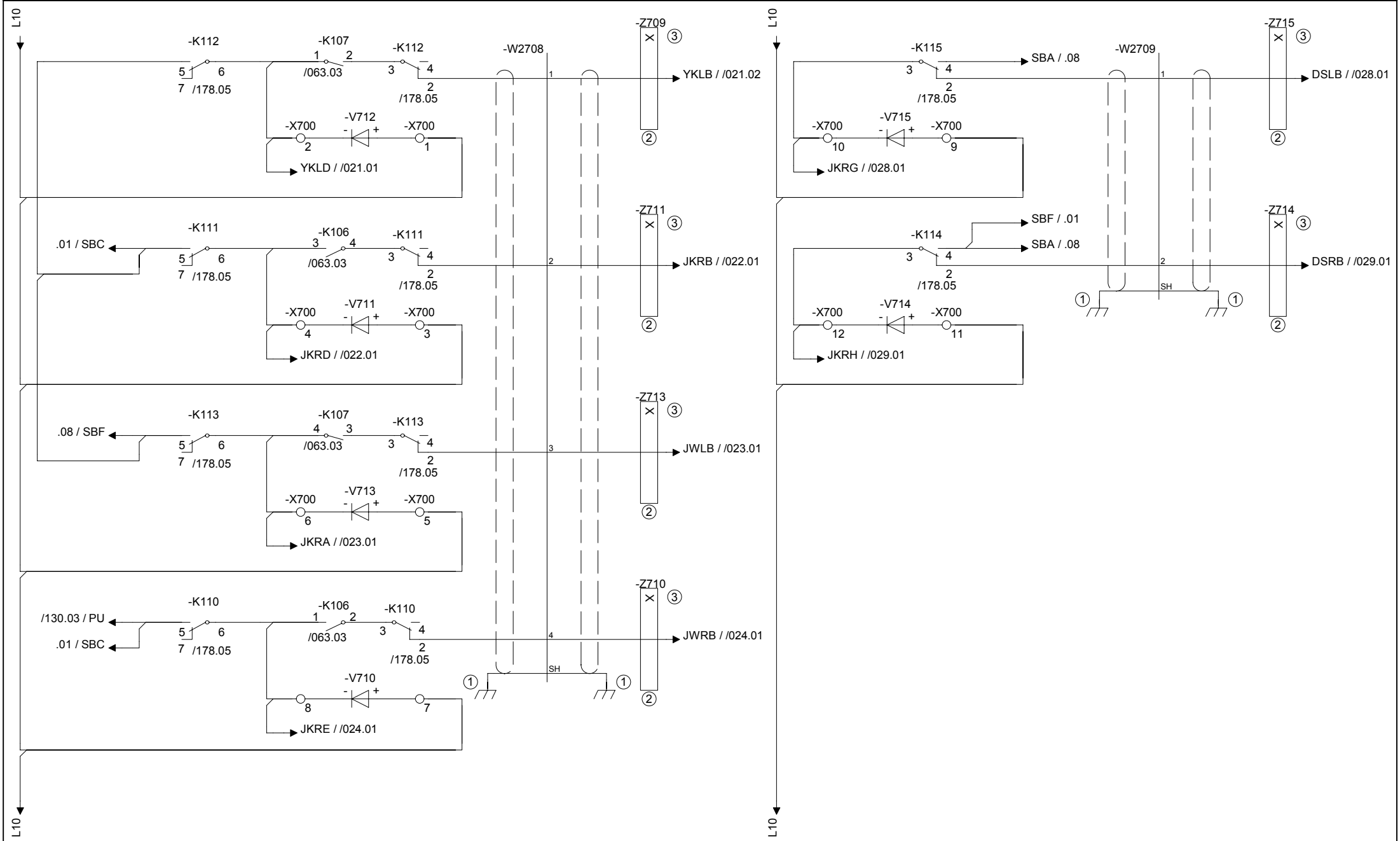

Drawing remarks	Tetra Pak	Designer LUP	Date 23/11/2007	Machine Tetra Pak A3/Flex 0150	
		ECM No 320174	Denomination CIRCUIT DIAGRAM	Page Type DRIVE MOTOR BRAKE	
		Company Tetra Pak (Italy)	Document No. 2845987-0003	Doc. type ELD	Version AE	Page 020

RELEASED

This drawing must not without the consent of Tetra Pak be copied, transmitted or disclosed to any third party.

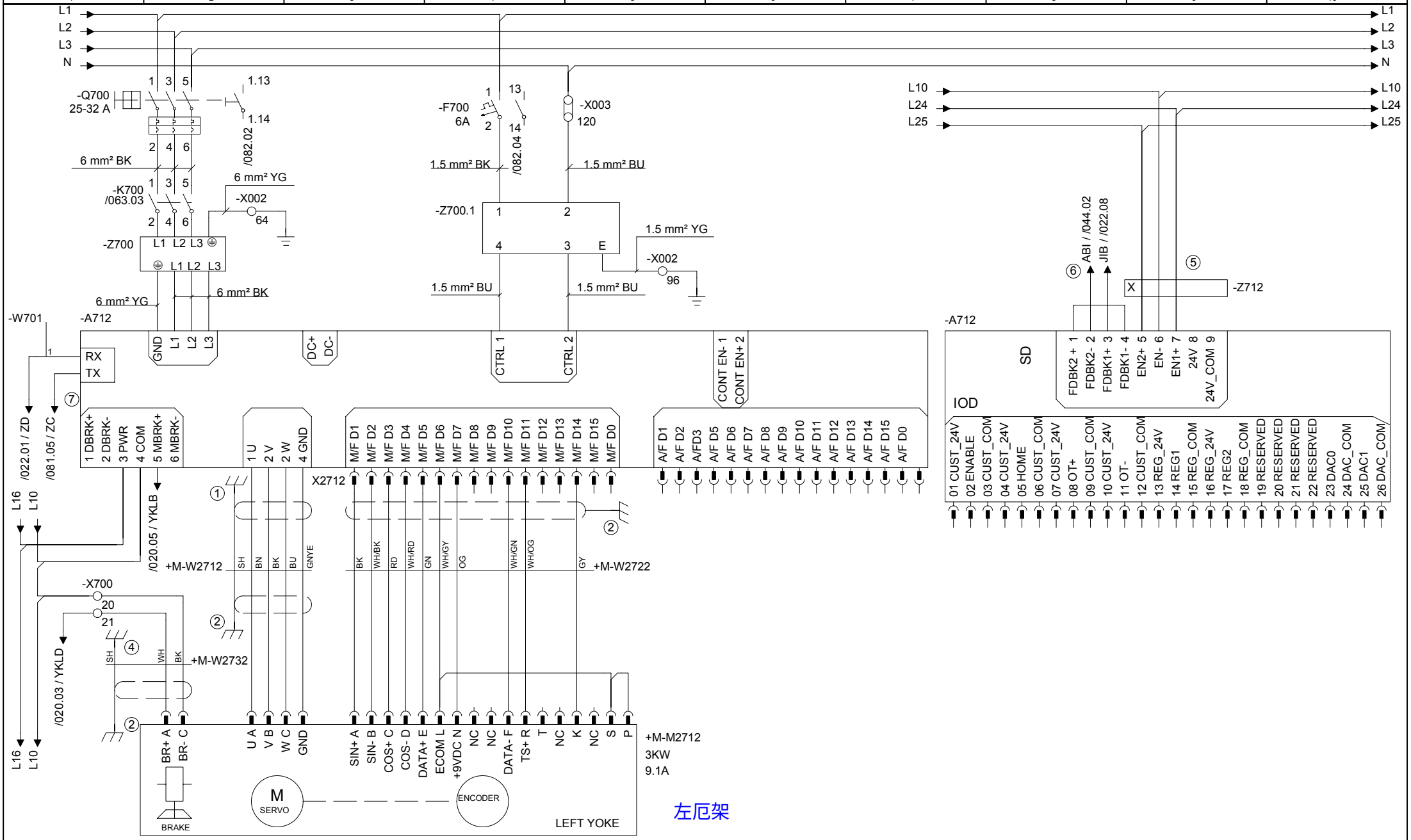

Drawing remarks	Tetra Pak	Designer LUP	Date 23/11/2007	Machine Tetra Pak A3/Flex 0150	
		ECM No 320174	Denomination CIRCUIT DIAGRAM	Page Type YOKE LEFT SERVOMOTOR	
		Company Tetra Pak (Italy)	Document No. 2845987-0003	Doc. type ELD	Version AE	Page 021

RELEASED

This drawing must not without the consent of Tetra Pak
be copied, transmitted or disclosed to any third party.

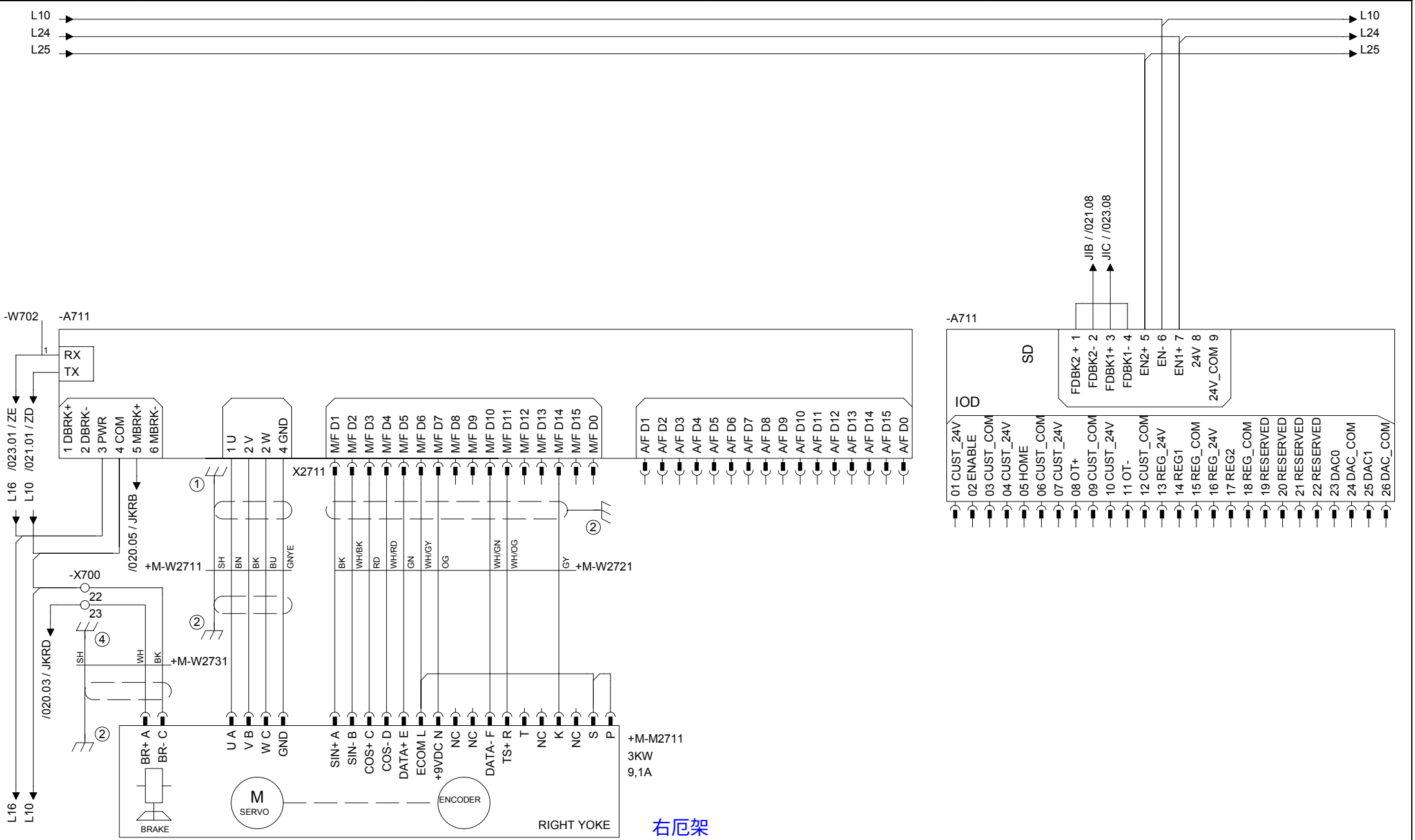

Drawing remarks	Tetra Pak	Designer LUP	Date 23/11/2007	Machine Tetra Pak A3/Flex 0150	
		ECM No 320174	Denomination CIRCUIT DIAGRAM	Page Type YOKE RIGHT SERVOMOTOR	
		Company Tetra Pak (Italy)	Document No. 2845987-0003	Doc. type ELD	Version AE	Page 022

RELEASED

This drawing must not without the consent of Tetra Pak be copied, transmitted or disclosed to any third party.

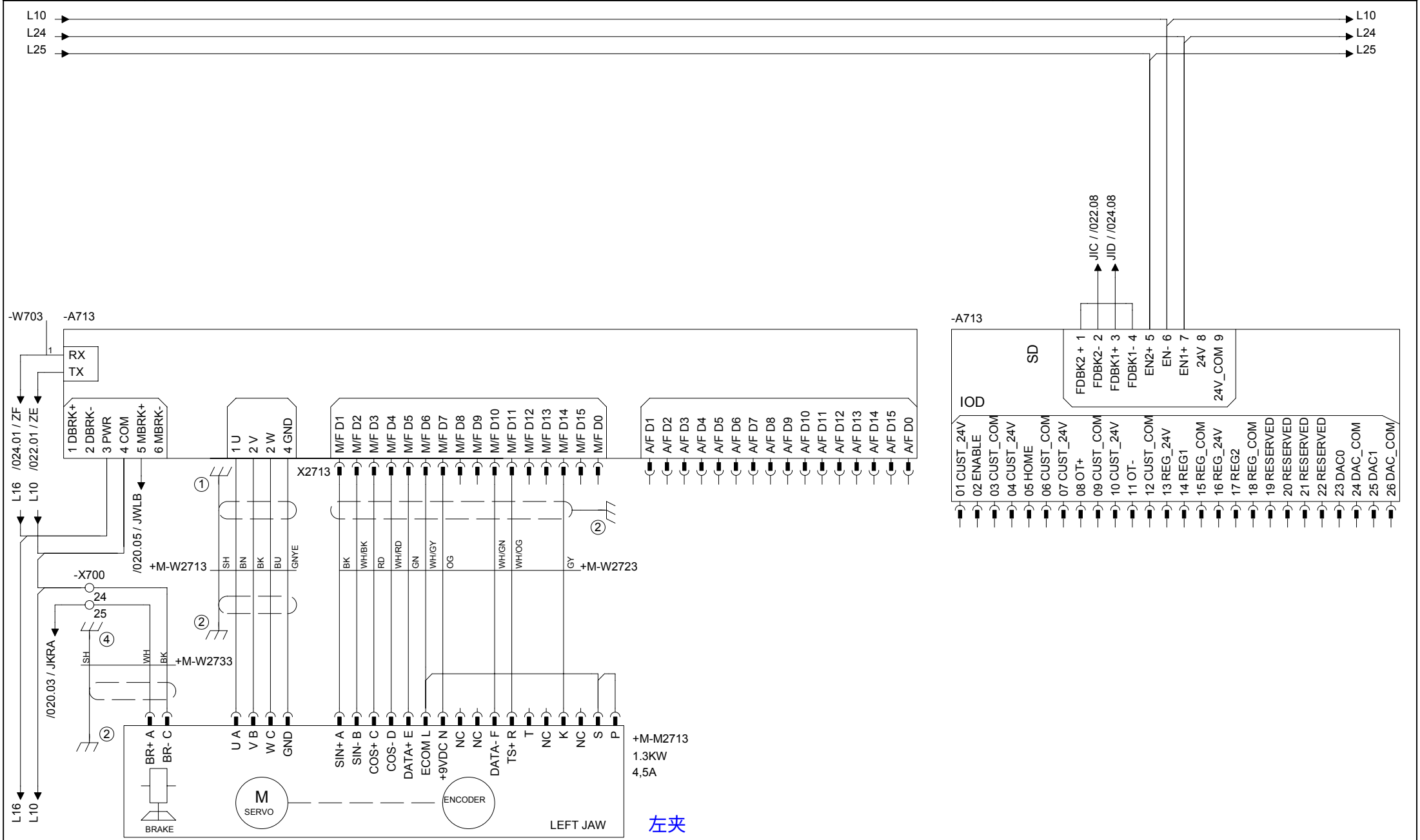

Drawing remarks

Tetra Pak

Designer LUP	Date 23/11/2007	Machine Tetra Pak A3/Flex 0150	
ECM No 320174	Denomination CIRCUIT DIAGRAM	Page Type JAW LEFT SERVOMOTOR	
Company Tetra Pak (Italy)	Document No. 2845987-0003	Doc. type ELD	Version AE	Page 023

RELEASED

This drawing must not without the consent of Tetra Pak be copied, transmitted or disclosed to any third party.

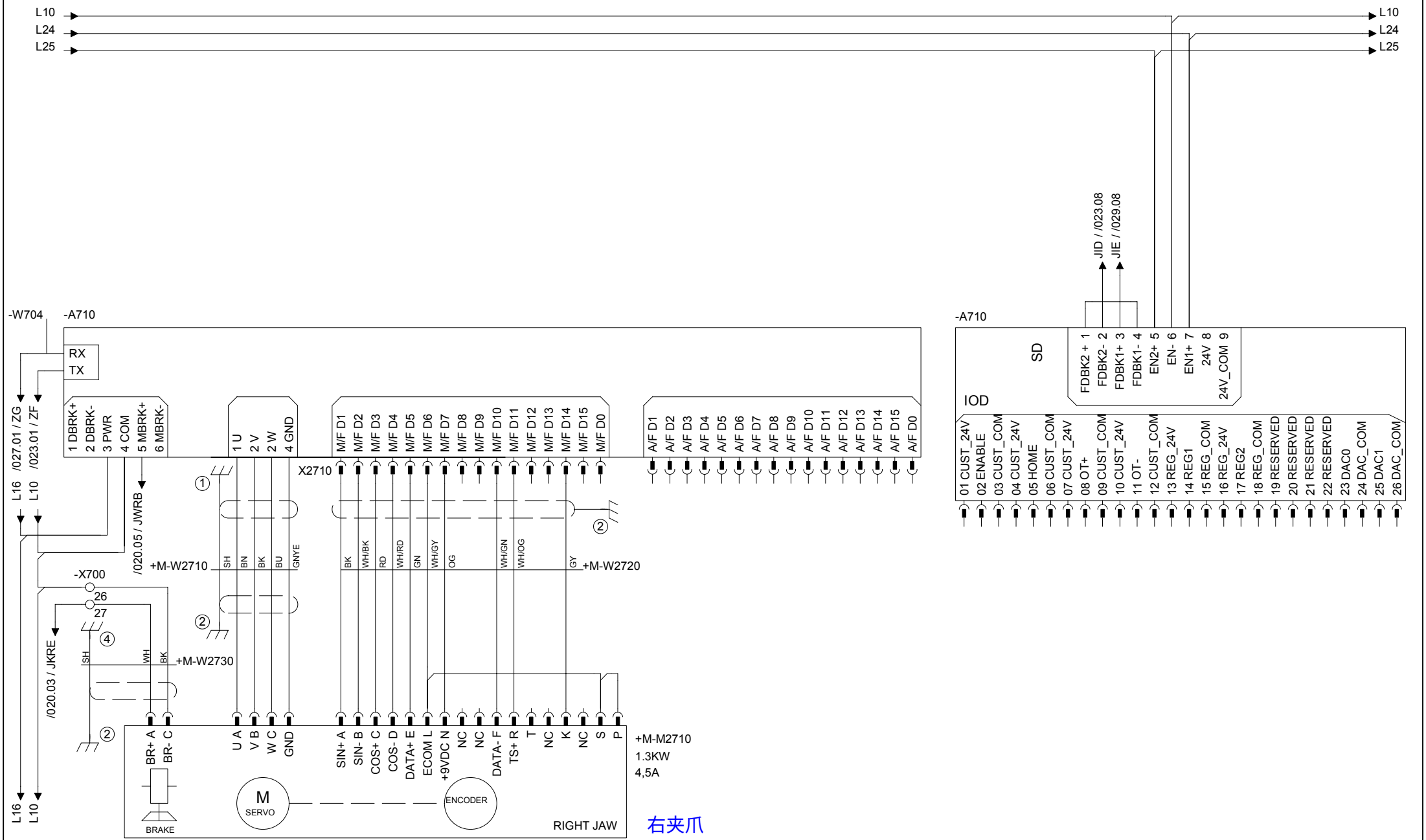

Drawing remarks	Tetra Pak	Designer LUP	Date 23/11/2007	Machine Tetra Pak A3/Flex 0150	
		ECM No 320174	Denomination CIRCUIT DIAGRAM	Page Type JAW RIGHT SERVOMOTOR	
		Company Tetra Pak (Italy)	Document No. 2845987-0003	Doc. type ELD	Version AE	Page 024

RELEASED

This drawing must not without the consent of Tetra Pak
be copied, transmitted or disclosed to any third party.

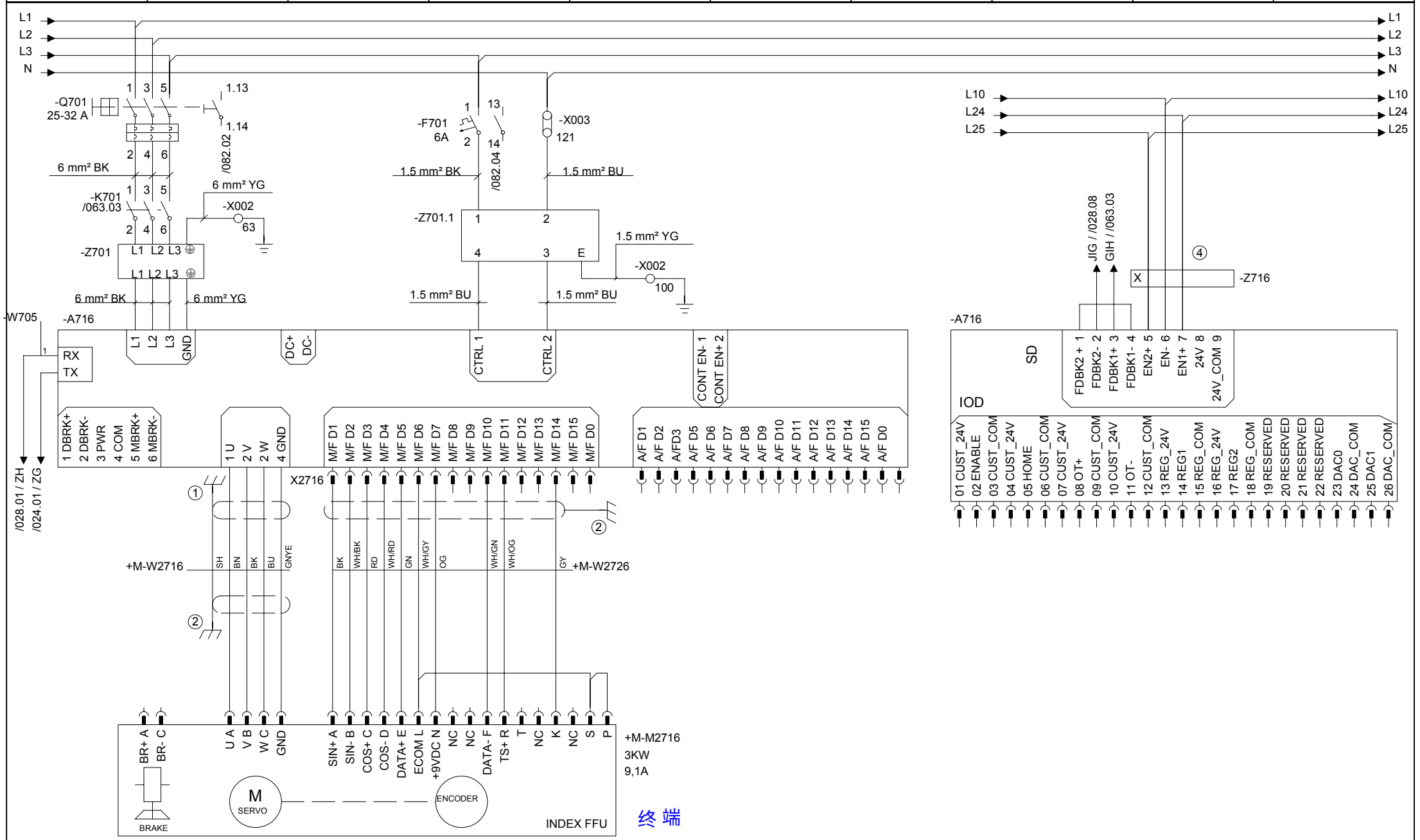

Drawing remarks	Tetra Pak	Designer LUP	Date 23/11/2007	Machine Tetra Pak A3/Flex 0150	
		ECM No 320174	Denomination CIRCUIT DIAGRAM	Page Type FINAL FOLDER SERVOMOTOR ⑤	
		Company Tetra Pak (Italy)	Document No. 2845987-0003	Doc. type ELD	Version AE	Page 027

RELEASED

This drawing must not without the consent of Tetra Pak
be copied, transmitted or disclosed to any third party.

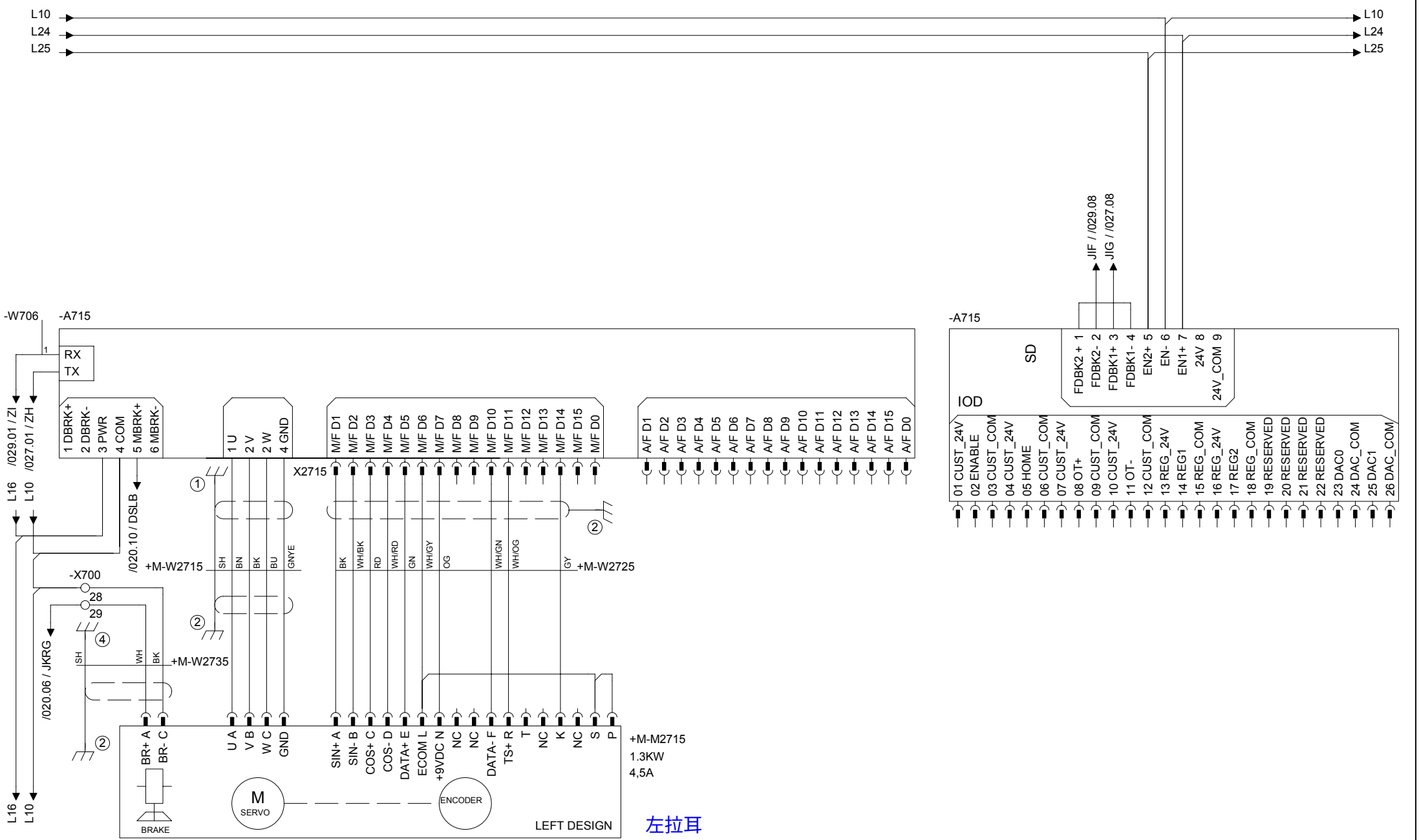

Drawing remarks	Tetra Pak	Designer LUP	Date 23/11/2007	Machine Tetra Pak A3/Flex 0150	
		ECM No 320174	Denomination CIRCUIT DIAGRAM	Page Type LEFT DESIGN SERVOMOTOR	
		Company Tetra Pak (Italy)	Document No. 2845987-0003	Doc. type ELD	Version AE	Page 028

RELEASED

This drawing must not without the consent of Tetra Pak be copied, transmitted or disclosed to any third party.

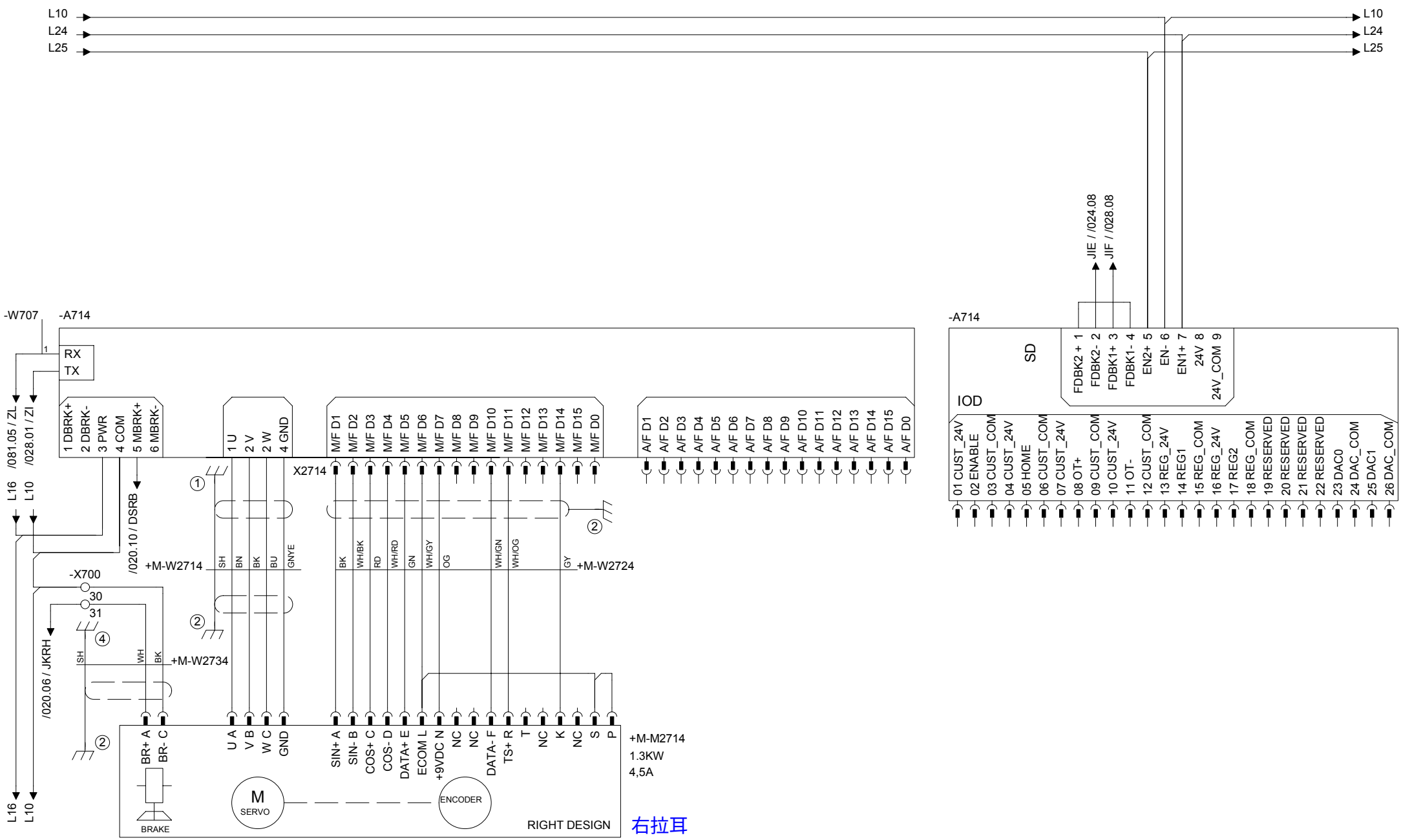

Drawing remarks

Tetra Pak

Designer LUP	Date 23/11/2007	Machine Tetra Pak A3/Flex 0150	
ECM No 320174	Denomination CIRCUIT DIAGRAM	Page Type RIGHT DESIGN SERVOMOTOR	
Company Tetra Pak (Italy)	Document No. 2845987-0003	Doc. type ELD	Version AE	Page 029

This drawing must not without the consent of Tetra Pak be copied, transmitted or disclosed to any third party.

OPTICAL RING TGA

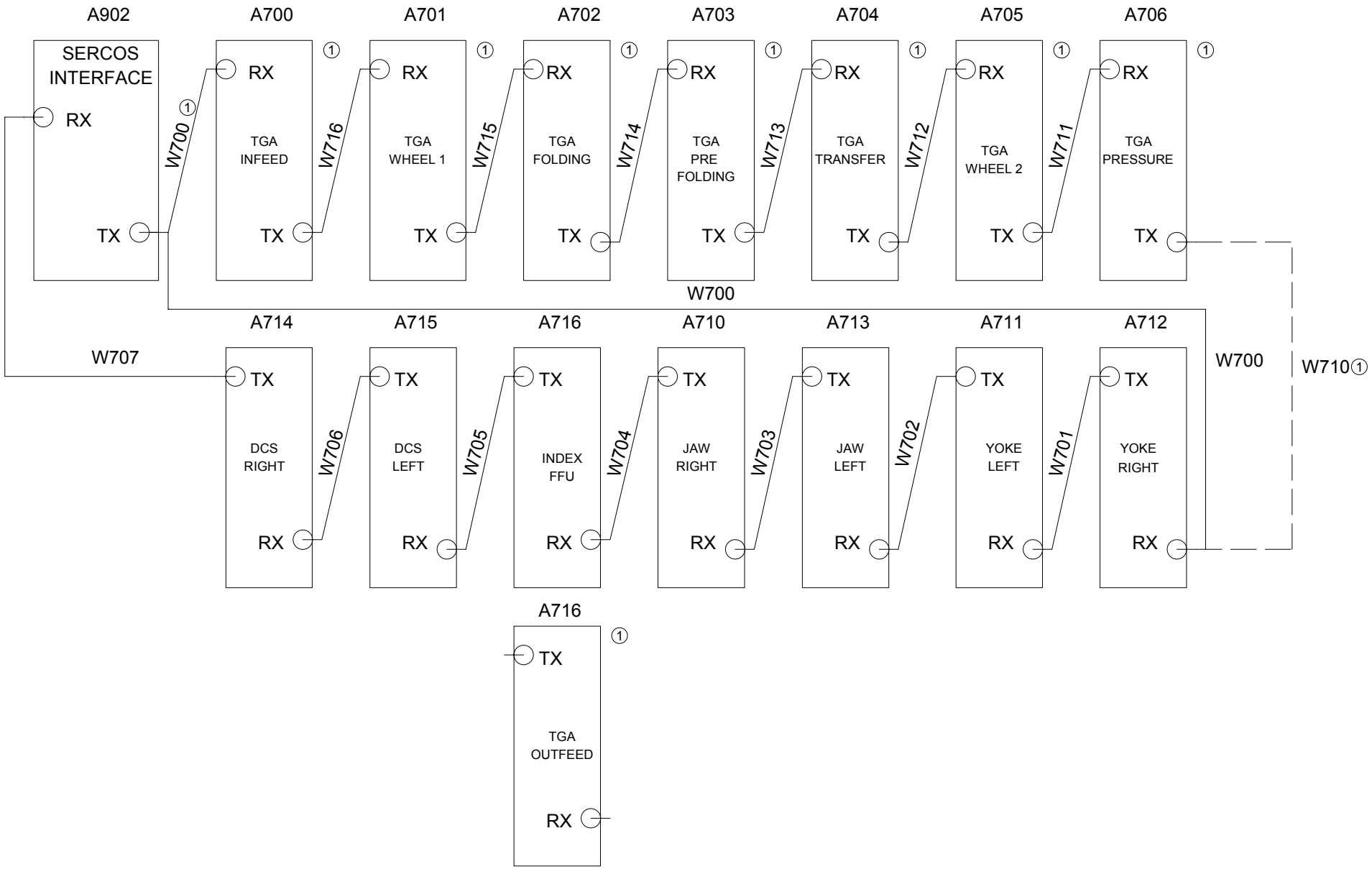

Drawing remarks	Tetra Pak	Designer LUP	Date 23/11/2007	Machine Tetra Pak A3/Flex 0150	
		ECM No 320174	Denomination CIRCUIT DIAGRAM	Page Type OPTICAL RING	
		Company Tetra Pak (Italy)	Document No. 2845987-0003	Doc. type ELD	Version AE	Page 030

This drawing must not without the consent of Tetra Pak
be copied, transmitted or disclosed to any third party.

1	2	3	4	5	6	7	8	9	10

辅助电机反馈

辅助反馈（AF）连接器

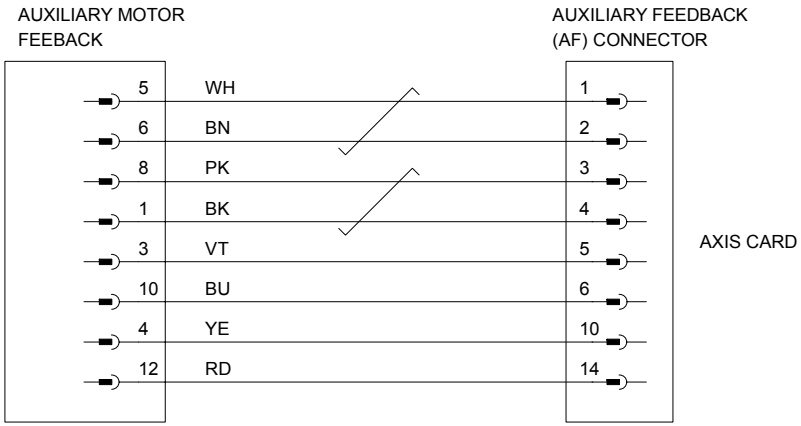

Drawing remarks

Tetra Pak

Designer LUP	Date 23/11/2007	Machine Tetra Pak A3/Flex 0150	
ECM No 320174	Denomination CIRCUIT DIAGRAM	Page Type CONNECTED CABLE SERVOMOTOR	
Company Tetra Pak (Italy)	Document No. 2845987-0003	Doc. type ELD	Version AE	Page 031

RELEASED

This drawing must not without the consent of Tetra Pak
be copied, transmitted or disclosed to any third party.

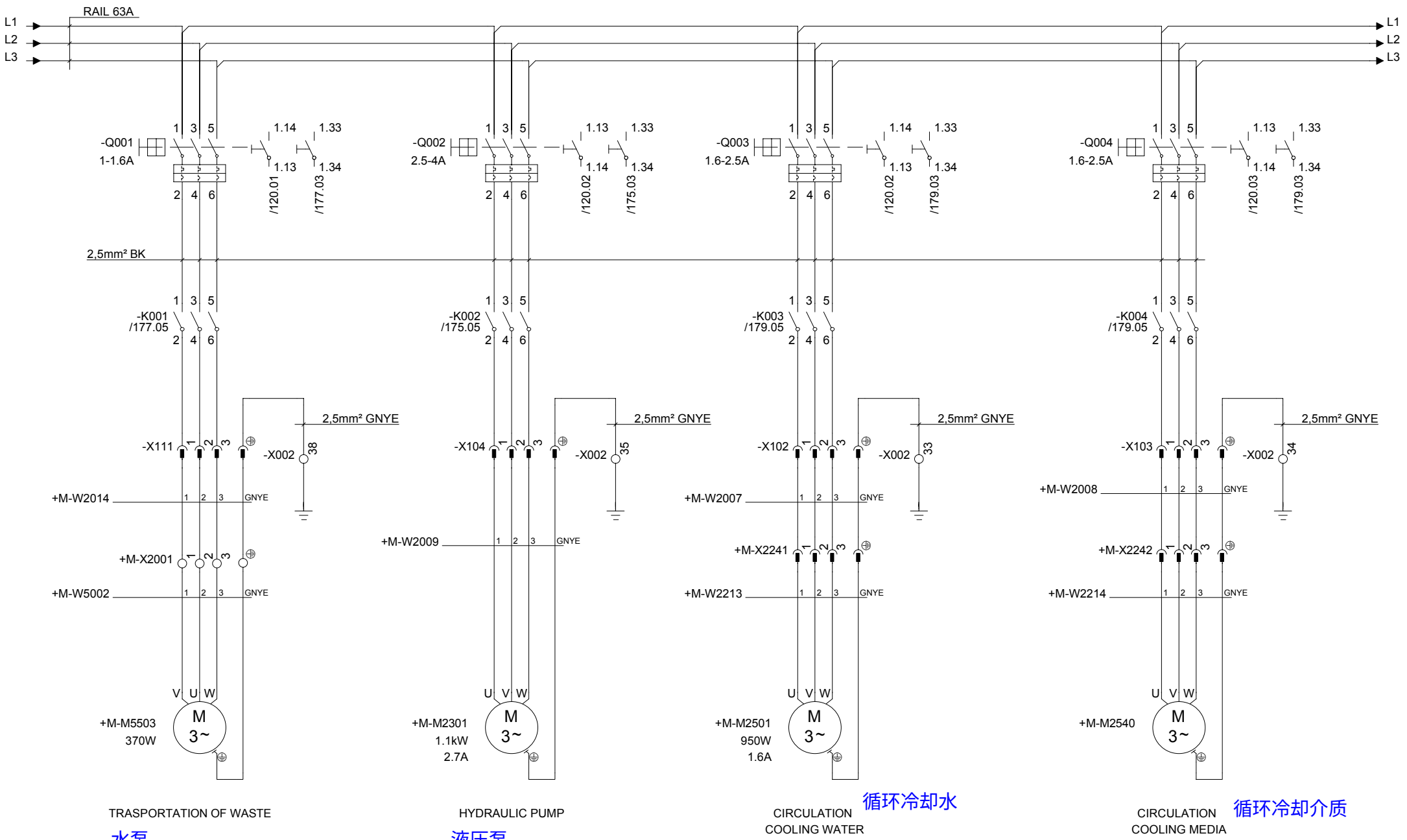

TRASPORTATION OF WASTE

水泵

HYDRAULIC PUMP

液压泵

CIRCULATION
COOLING WATER

循环冷却水

CIRCULATION
COOLING MEDIA

循环冷却介质

Drawing remarks	Tetra Pak	Designer LUP	Date 23/11/2007	Machine Tetra Pak A3/Flex 0150	
		ECM No 320174	Denomination CIRCUIT DIAGRAM	Page Type MOTORS	
		Company Tetra Pak (Italy)	Document No. 2845987-0003	Doc. type ELD	Version AE	Page 032

RELEASED

This drawing must not without the consent of Tetra Pak be copied, transmitted or disclosed to any third party.

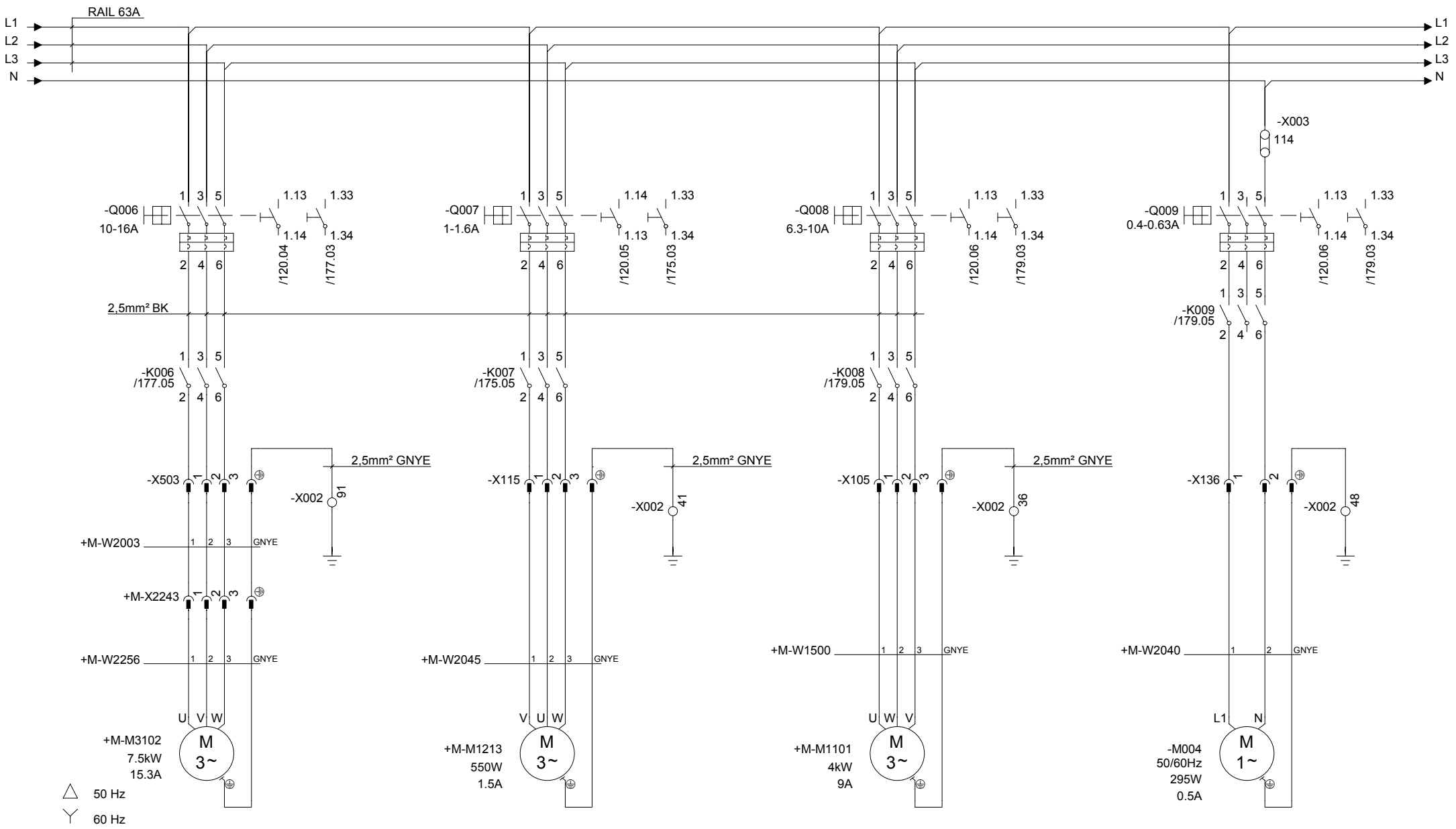

CLEANING PUMP-EXTERNAL CLEANING

清洗泵-外部清洗

HYDROGEN PEROXIDE PUMP

过氧化氢泵

COMPRESSOR

水环压缩机

Drawing remarks	Tetra Pak	Designer LUP	Date 23/11/2007	Machine Tetra Pak A3/Flex 0150	
		ECM No 320174	Denomination CIRCUIT DIAGRAM	Page Type MOTORS	
		Company Tetra Pak (Italy)	Document No. 2845987-0003	Doc. type ELD	Version AE	Page 033

This drawing must not without the consent of Tetra Pak be copied, transmitted or disclosed to any third party.

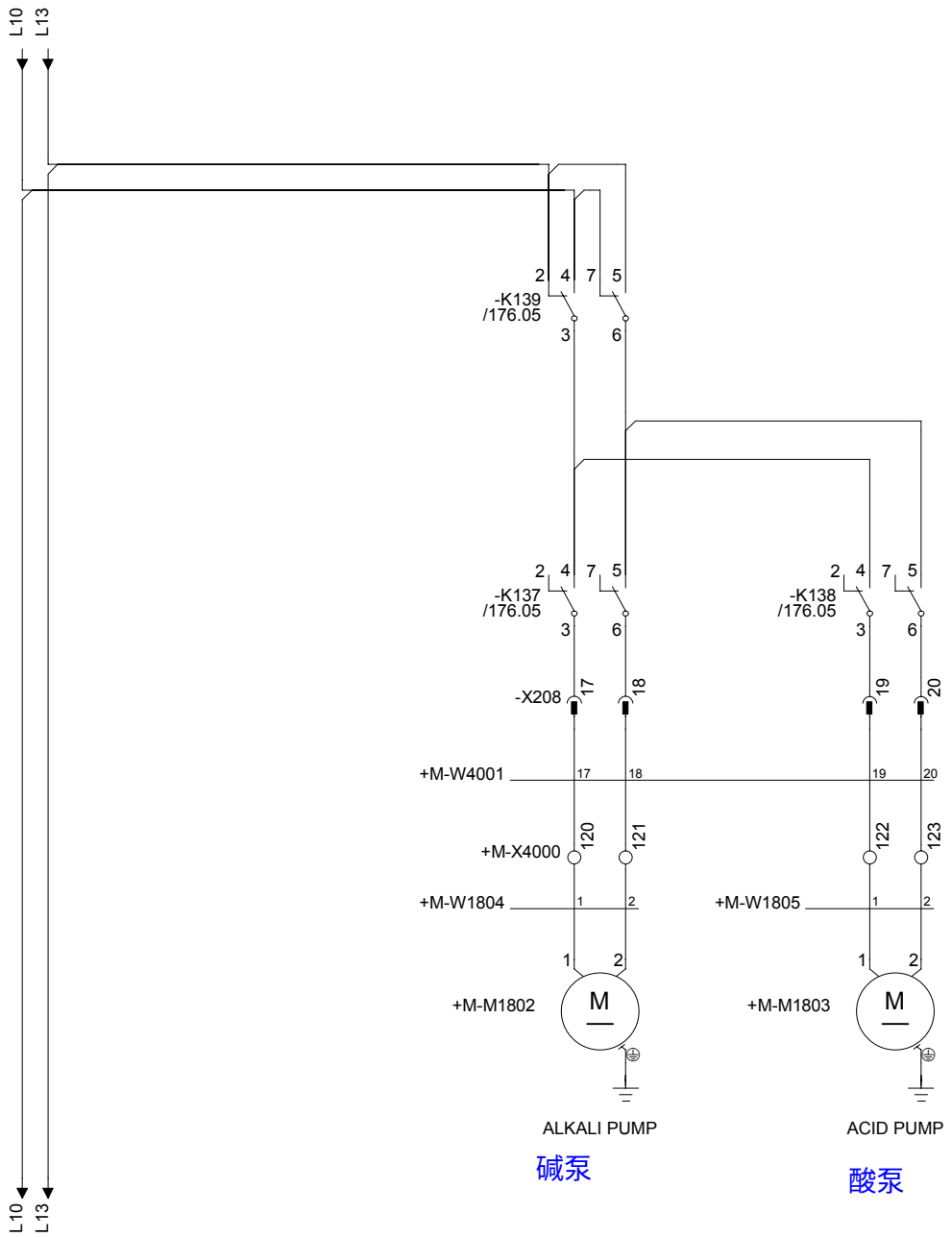

Drawing remarks	Tetra Pak	Designer LUP	Date 23/11/2007	Machine Tetra Pak A3/Flex 0150	
		ECM No 320174	Denomination CIRCUIT DIAGRAM	Page Type DC MOTORS	
		Company Tetra Pak (Italy)	Document No. 2845987-0003	Doc. type ELD	Version AE	Page 034

RELEASED

This drawing must not without the consent of Tetra Pak be copied, transmitted or disclosed to any third party.

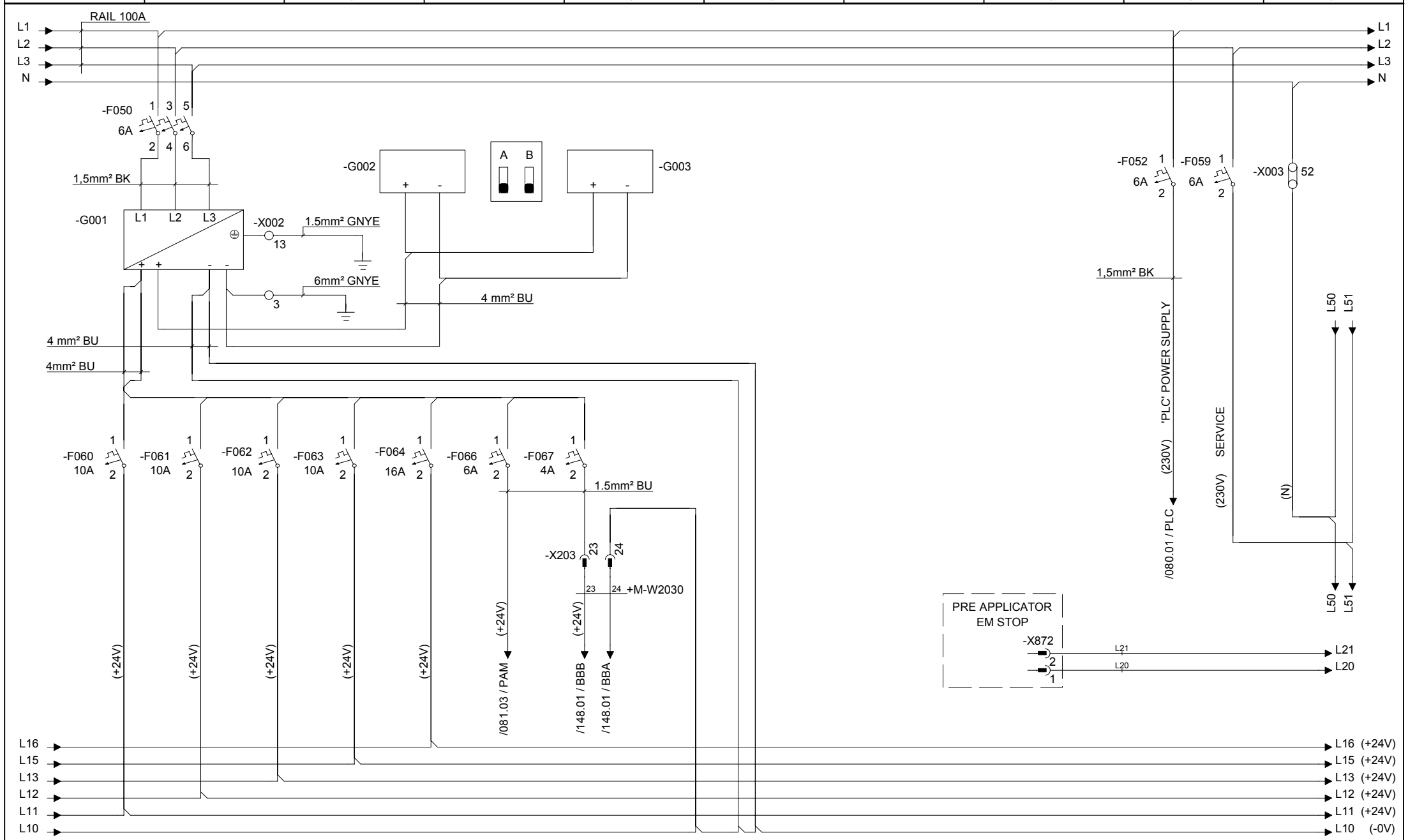

Drawing remarks	Tetra Pak	Designer LUP	Date 23/11/2007	Machine Tetra Pak A3/Flex 0150	
		ECM No 320174	Denomination CIRCUIT DIAGRAM	Page Type 24V POWER SUPPLY	
	Company Tetra Pak (Italy)	Document No. 2845987-0003	Doc. type ELD	Version AE	Page 035

This drawing must not without the consent of Tetra Pak be copied, transmitted or disclosed to any third party.

RAIL 100A

L1
L2
L3
N

-F038 1
1A
2

1,5mm² BK

FAN SERVOMOTOR SIDE LEFT

风扇伺服电机左侧

+M-M4106

+M-W2071
-X113 1 1 +M-X4057 1

+M-W2071
+M-X4057 2 2 -X113 2

-X003 38

1,5mm² L.BU

-E901 ①
FEEDER BLOCK

-E900 ①
FEEDER BLOCK

+M-M4107

GNYE -X113 -X002 39

1,5mm² GNYE

FAN SERVOMOTOR SIDE RIGHT

风扇伺服电机右侧

+M-M4108

+M-W2072
-X114 1 1 +M-X4053 1

+M-W2072
+M-X4053 2 2 -X114 2

+M-M4109

+M-X4053 GNYE -X114 40

1,5mm² GNYE

Drawing remarks	Tetra Pak	Designer LUP	Date 23/11/2007	Machine Tetra Pak A3/Flex 0150	
		ECM No 320174	Denomination CIRCUIT DIAGRAM	Page Type FAN SERVO MOTOR	
	Company Tetra Pak (Italy)	Document No. 2845987-0003	Doc. type ELD	Version AE	Page 036

RELEASED

This drawing must not without the consent of Tetra Pak be copied, transmitted or disclosed to any third party.

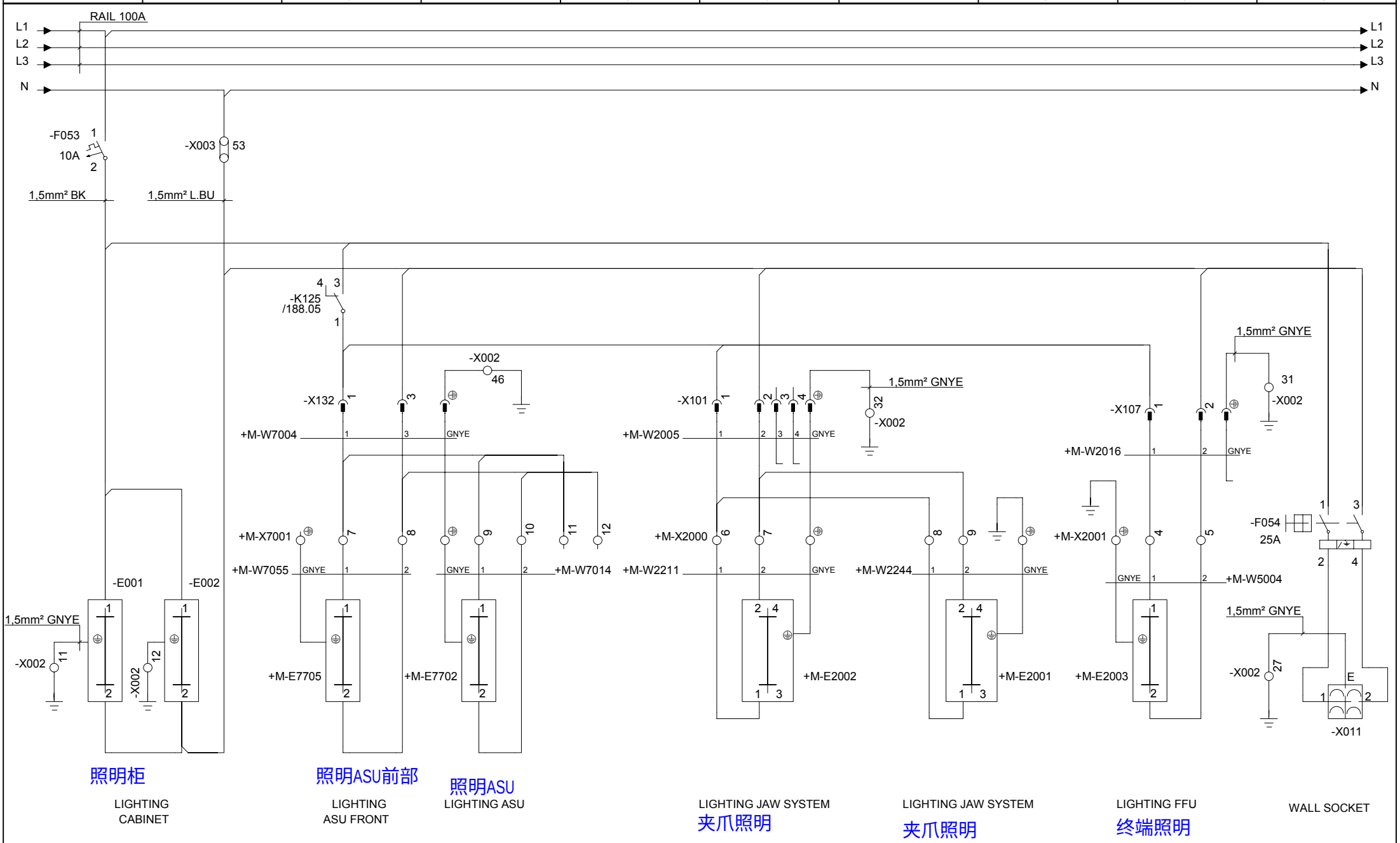

Drawing remarks	Tetra Pak	Designer LUP	Date 23/11/2007	Machine Tetra Pak A3/Flex 0150	
		ECM No 320174	Denomination CIRCUIT DIAGRAM	Page Type LIGHT FIXTURES	
		Company Tetra Pak (Italy)	Document No. 2845987-0003	Doc. type ELD	Version AE	Page 037

RELEASED

This drawing must not without the consent of Tetra Pak be copied, transmitted or disclosed to any third party.

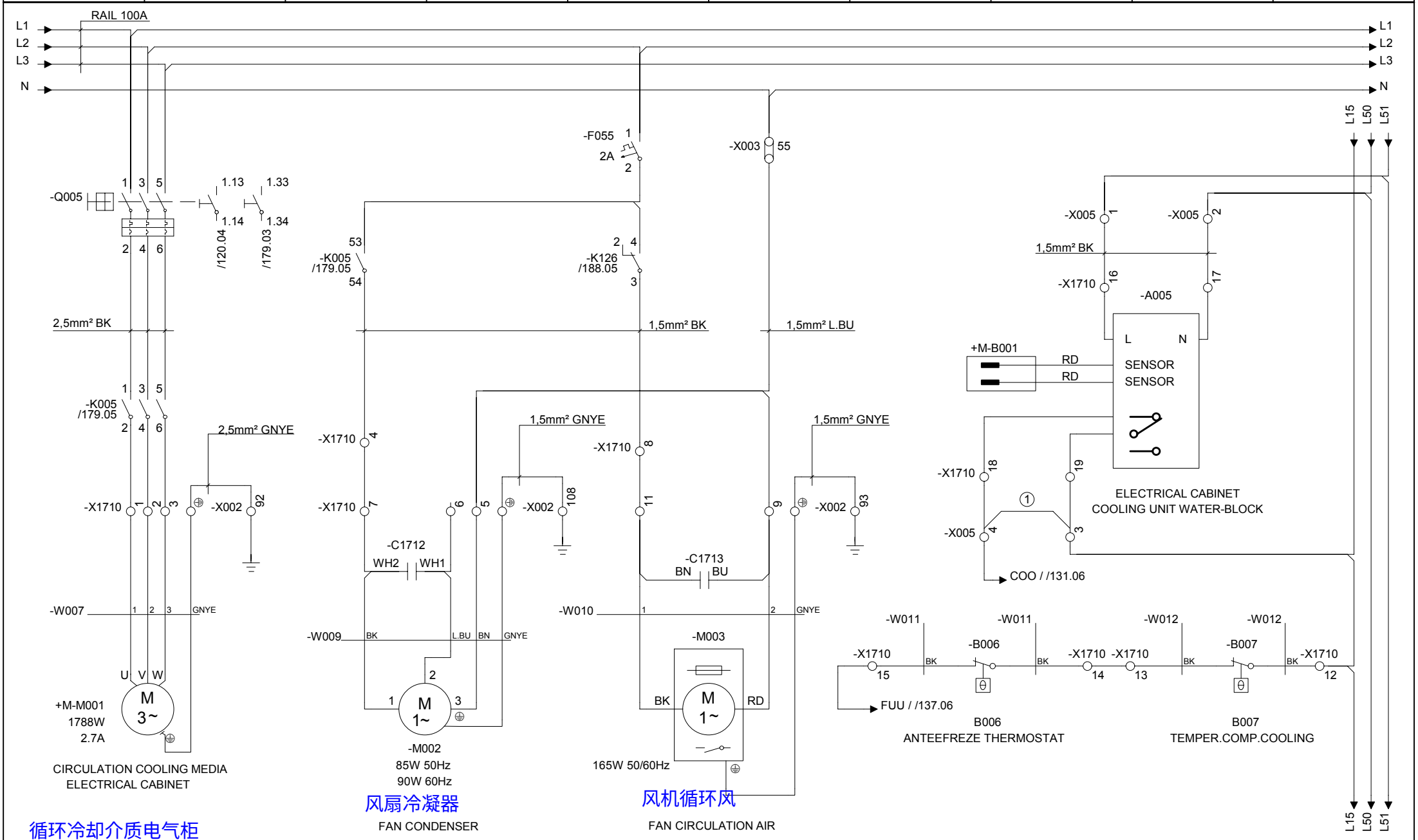

Drawing remarks	Tetra Pak	Designer LUP	Date 23/11/2007	Machine Tetra Pak A3/Flex 0150	
		ECM No 320174	Denomination CIRCUIT DIAGRAM	Page Type ELECTRICAL CABINET COOLING	
		Company Tetra Pak (Italy)	Document No. 2845987-0003	Doc. type ELD	Version AE	Page 038

RELEASED

This drawing must not without the consent of Tetra Pak
be copied, transmitted or disclosed to any third party.

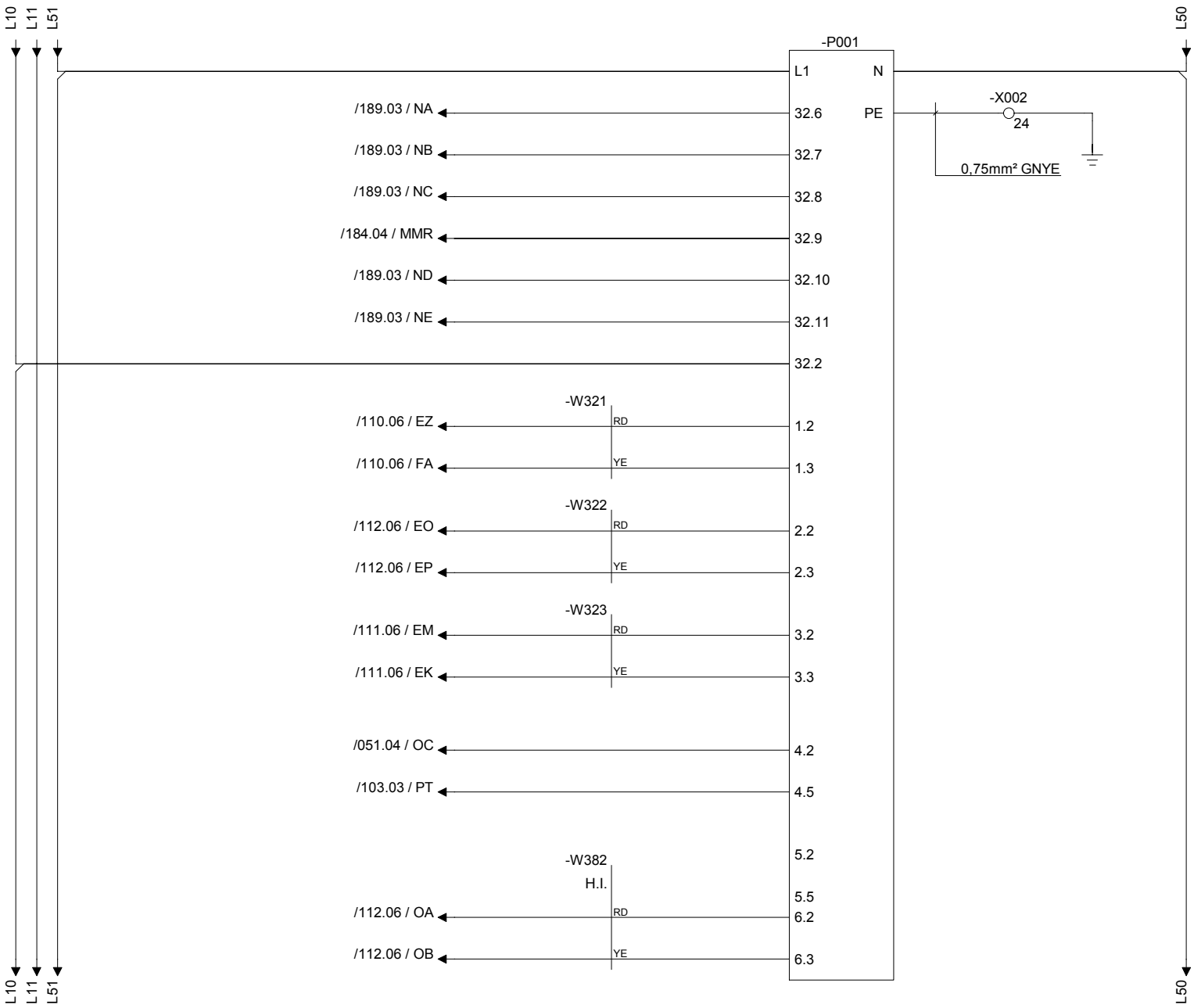

P001 MACHINE RECORDER 机器记录器

DIG.6 CIP RECORDER START

DIG.5 PRODUCTION RECORDING START

DIG.4 FILLING MACHINE IN PRODUCTION

DIG.3 MAIN MOTOR RUNNING

DIG.2 STERILE PARAMETERS 2

DIG.1 STERILE PARAMETERS 1

ANALOG CH. 1 H202 TEMPEMPERATURE

ANALOG CH. 2 AIR KNIFE

ANALOG CH. 3 STERILE AIR TEMP.

ANALOG CH. 4 H2O2 CONCENTRATION

USED IN A3 SPEED

ANALOG CH. 6 HI AIR TEMPERATURE

Drawing remarks

Tetra Pak

Designer LUP	Date 23/11/2007	Machine Tetra Pak A3/Flex 0150	
ECM No 320174	Denomination CIRCUIT DIAGRAM	Page Type RECORDER	
Company Tetra Pak (Italy)	Document No. 2845987-0003	Doc. type ELD	Version AE	Page 039

This drawing must not without the consent of Tetra Pak
be copied, transmitted or disclosed to any third party.

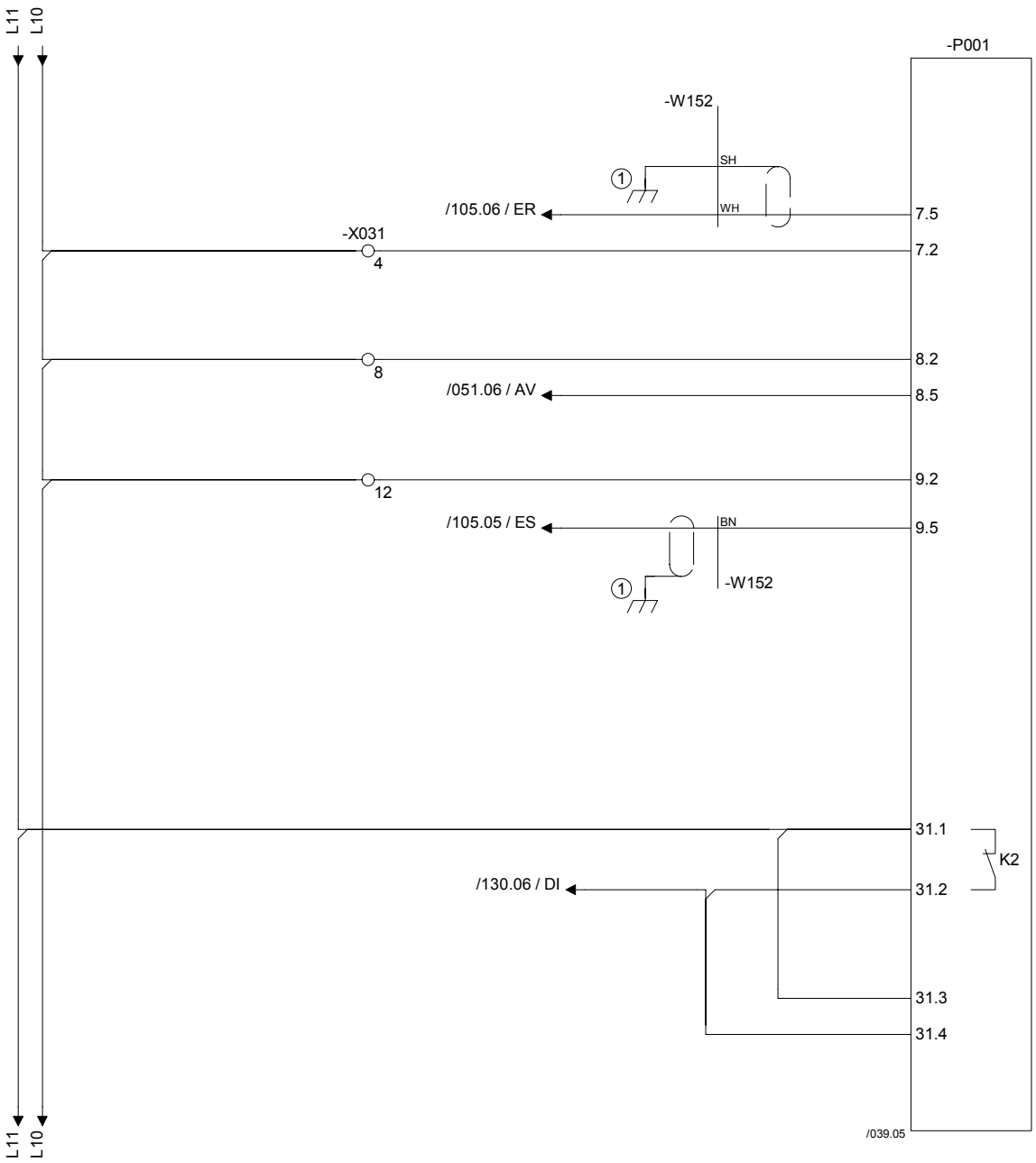

P001 MACHINE RECORDER 机器记录器

Drawing remarks	Tetra Pak	Designer LUP	Date 23/11/2007	Machine Tetra Pak A3/Flex 0150	
		ECM No 320174	Denomination CIRCUIT DIAGRAM	Page Type RECORDER	
		Company Tetra Pak (Italy)	Document No. 2845987-0003	Doc. type ELD	Version AE	Page 040

RELEASED

This drawing must not without the consent of Tetra Pak
be copied, transmitted or disclosed to any third party.

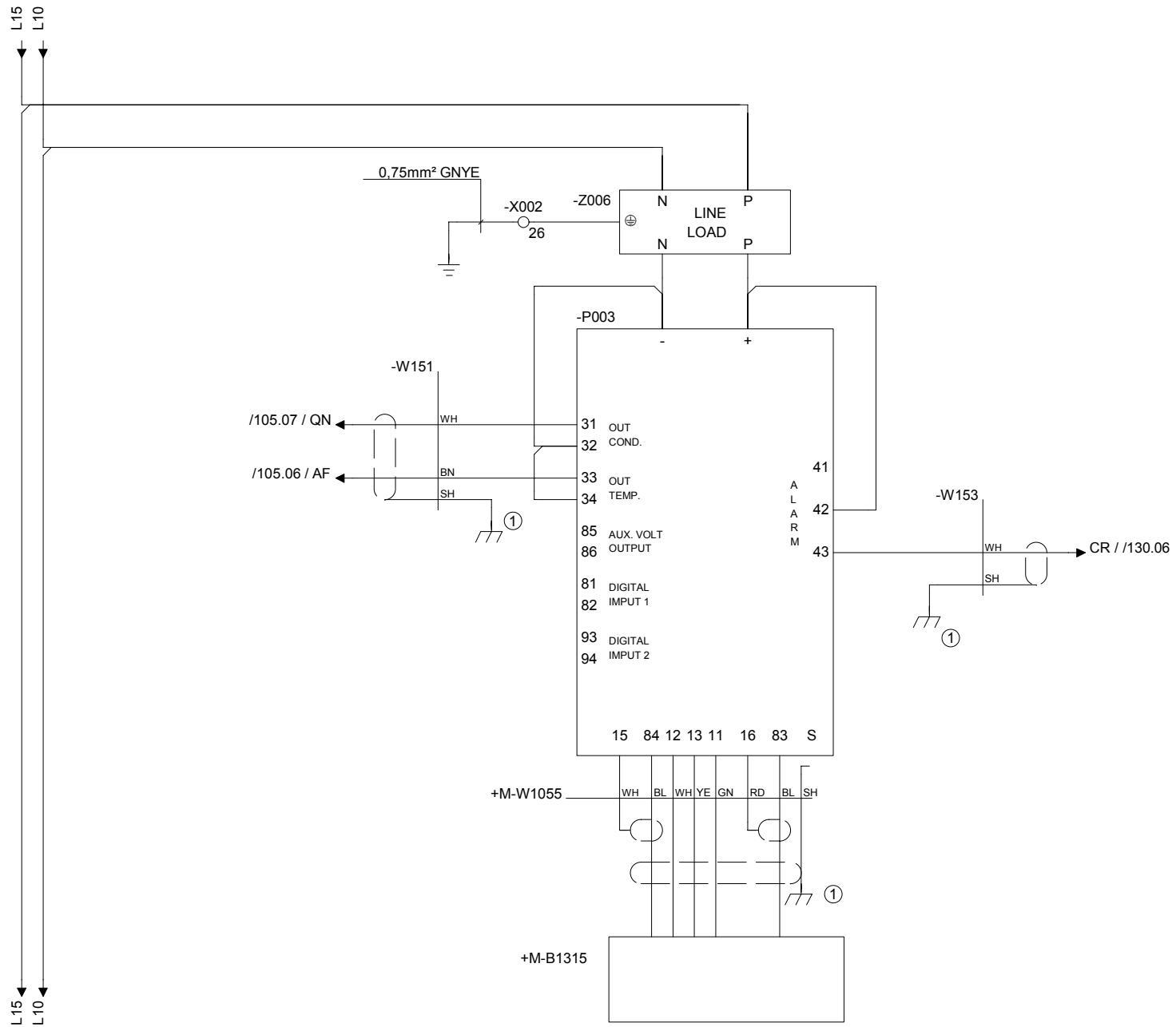

P003 CIP CONDUCTIVITY METER

CIP电导率仪

B1315 CIP CONDUCTIVITY SENSOR

CIP电导传感器

Drawing remarks	Tetra Pak	Designer LUP	Date 23/11/2007	Machine Tetra Pak A3/Flex 0150			
		ECM No 320174	Denomination CIRCUIT DIAGRAM	Page Type CONDUCTIVITY METER			
		Company Tetra Pak (Italy)	Document No. 2845987-0003	Doc. type ELD	Version AE	Page 041	

RELEASED

This drawing must not without the consent of Tetra Pak
be copied, transmitted or disclosed to any third party.

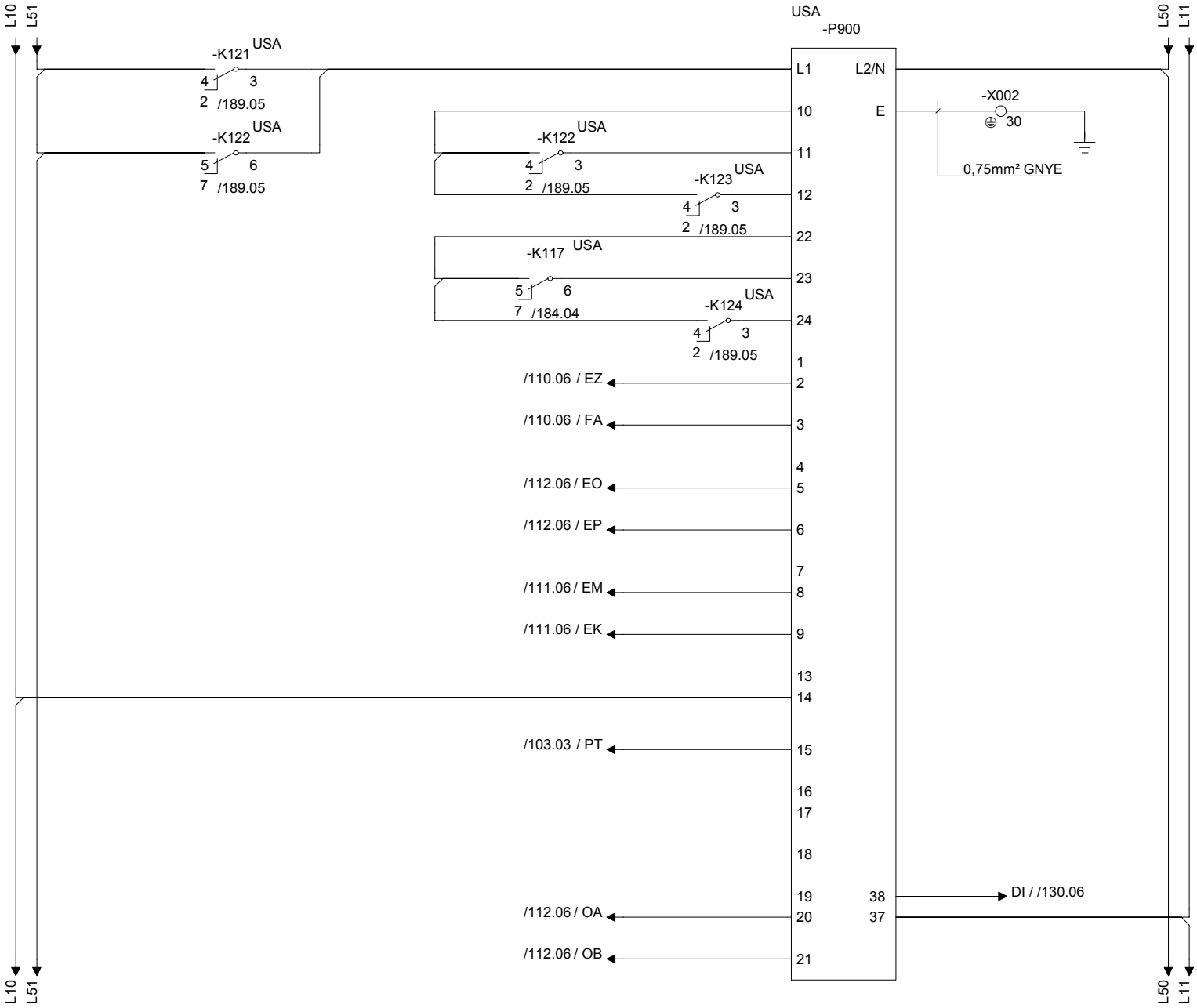

P900 PRODUCTION RECORDER 生产记录仪

DIG.1 STERILE PARAMETER 1

D1G.2 STERILE PARAMETER 2

DIG.3 MAIN MOTOR RUNNING

DIG.4 FILLING MACHINE IN PRODUCTION

ANALOG CHANNEL 1: H202 TEMPERATURE

ANALOG CHANNEL 2: AIR KNIFE

ANALOG CHANNEL 3: STERILE AIR TEMPERATURE

ANALOG CHANNEL 4: H2O2 CONCENTRATION

USED IN A3 SPEED

RECORDER IN ALARM

ANALOG CHANNEL 6: HI AIR TEMPERATURE

Drawing remarks

Tetra Pak

Designer LUP	Date 23/11/2007	Machine Tetra Pak A3/Flex 0150		
ECM No 320174	Denomination CIRCUIT DIAGRAM	Page Type HONEYWELL RECORDER		
Company Tetra Pak (Italy)	Document No. 2845987-0003	Doc. type ELD	Version AE	Page 042

RELEASED

This drawing must not without the consent of Tetra Pak be copied, transmitted or disclosed to any third party.

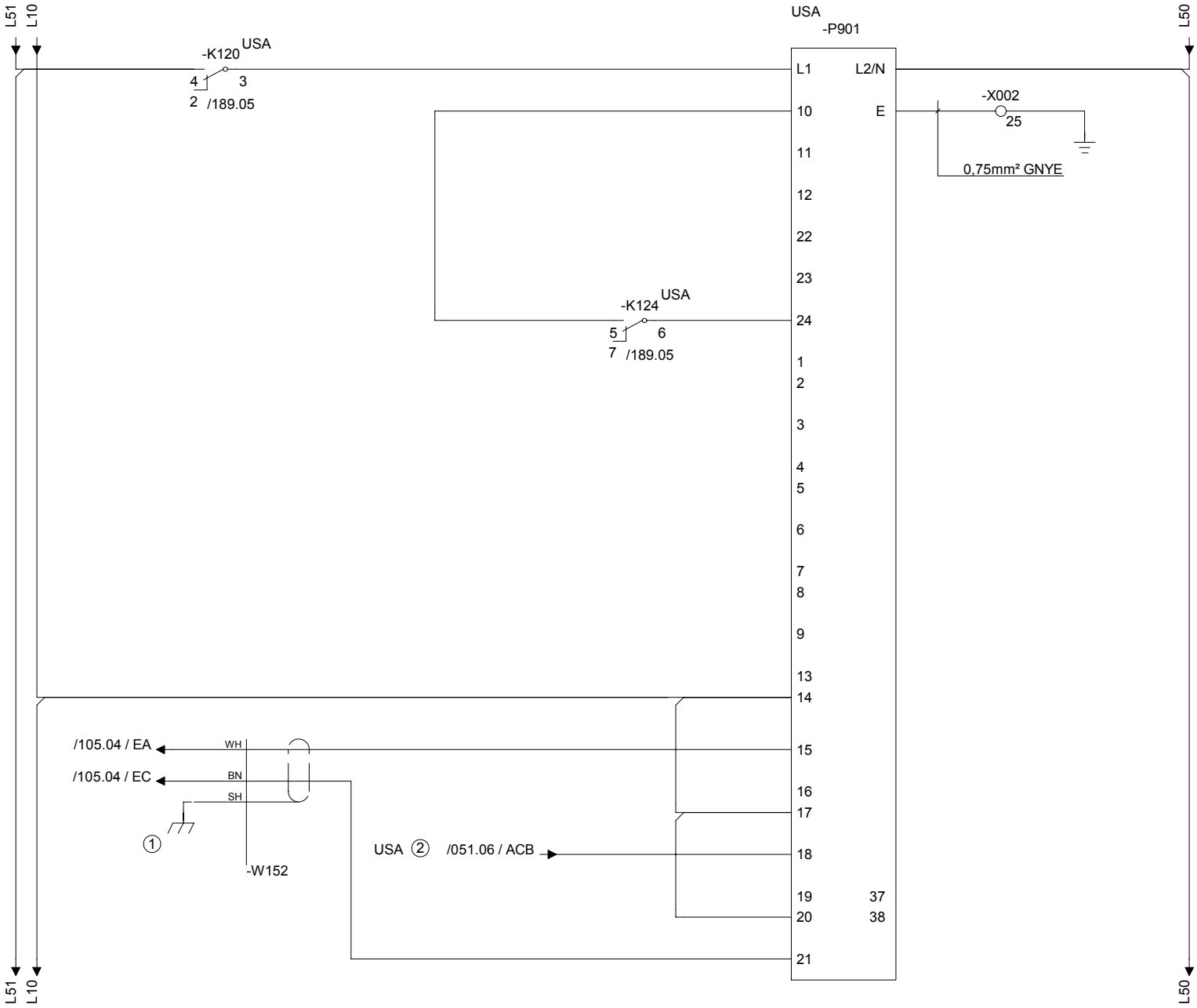

P901 CIP RECORDER CIP记录器

DIG.1

DIG.2

DIG.3

DIG.4 CIP / PRODUCTION

ANALOG CH.1

ANALOG CH2

ANALOG CH 3

ANALOG CH 4 CIP CONDUCTIVITY

ANALOG CH.5 FLOW

ANALOG CH. 6 CIP TEMPERATURE

Drawing remarks

Tetra Pak

Designer LUP	Date 23/11/2007	Machine Tetra Pak A3/Flex 0150		
ECM No 320174	Denomination CIRCUIT DIAGRAM	Page Type HONEYWELL RECORDER		
Company Tetra Pak (Italy)	Document No. 2845987-0003	Doc. type ELD	Version AE	Page 043

RELEASED

This drawing must not without the consent of Tetra Pak
be copied, transmitted or disclosed to any third party.

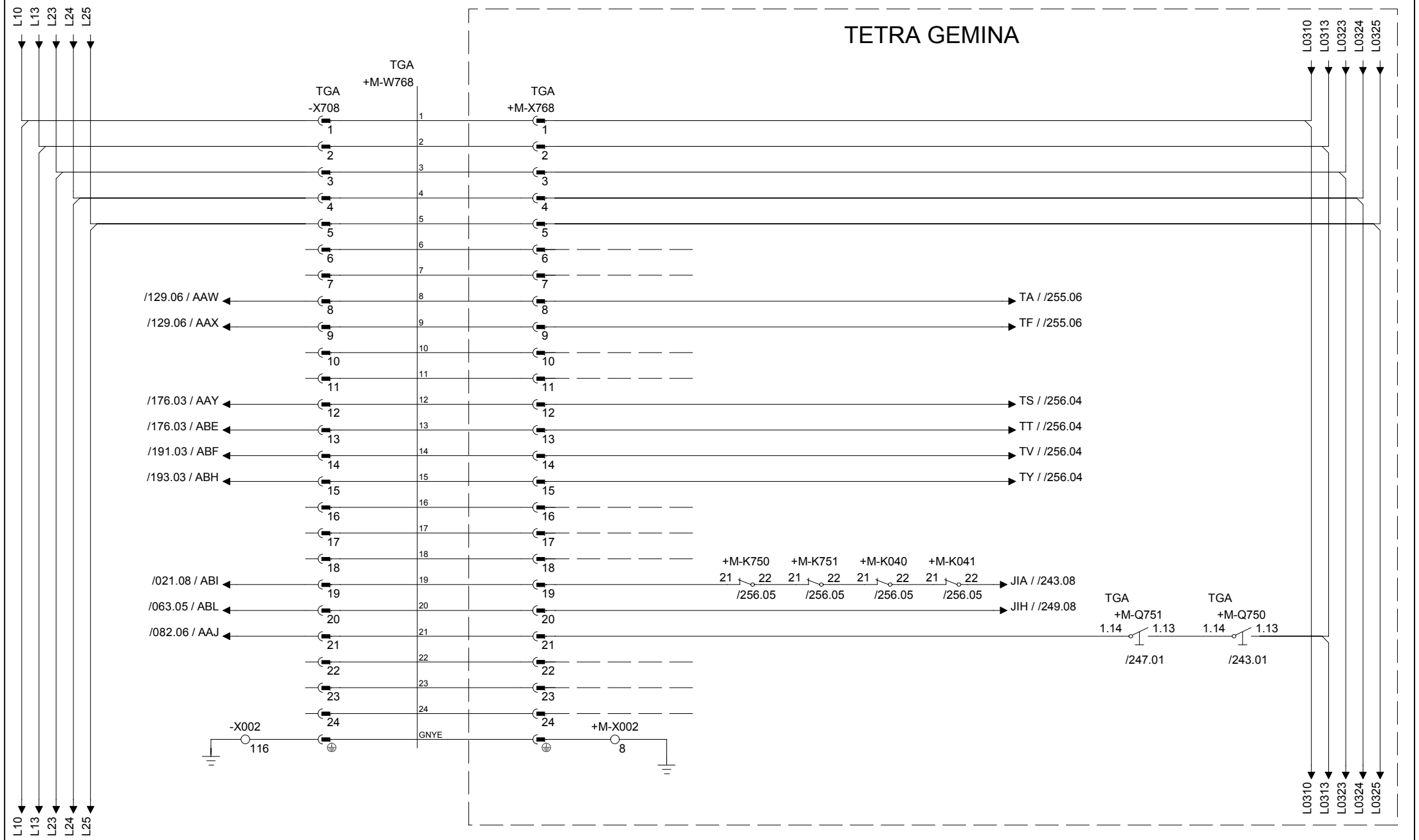

Drawing remarks	Tetra Pak	Designer LUP	Date 23/11/2007	Machine Tetra Pak A3/Flex 0150	
		ECM No 320174	Denomination CIRCUIT DIAGRAM	Page Type FILLER - TGA INTERFACE	
		Company Tetra Pak (Italy)	Document No. 2845987-0003	Doc. type ELD	Version AE	Page 044

This drawing must not without the consent of Tetra Pak
be copied, transmitted or disclosed to any third party.

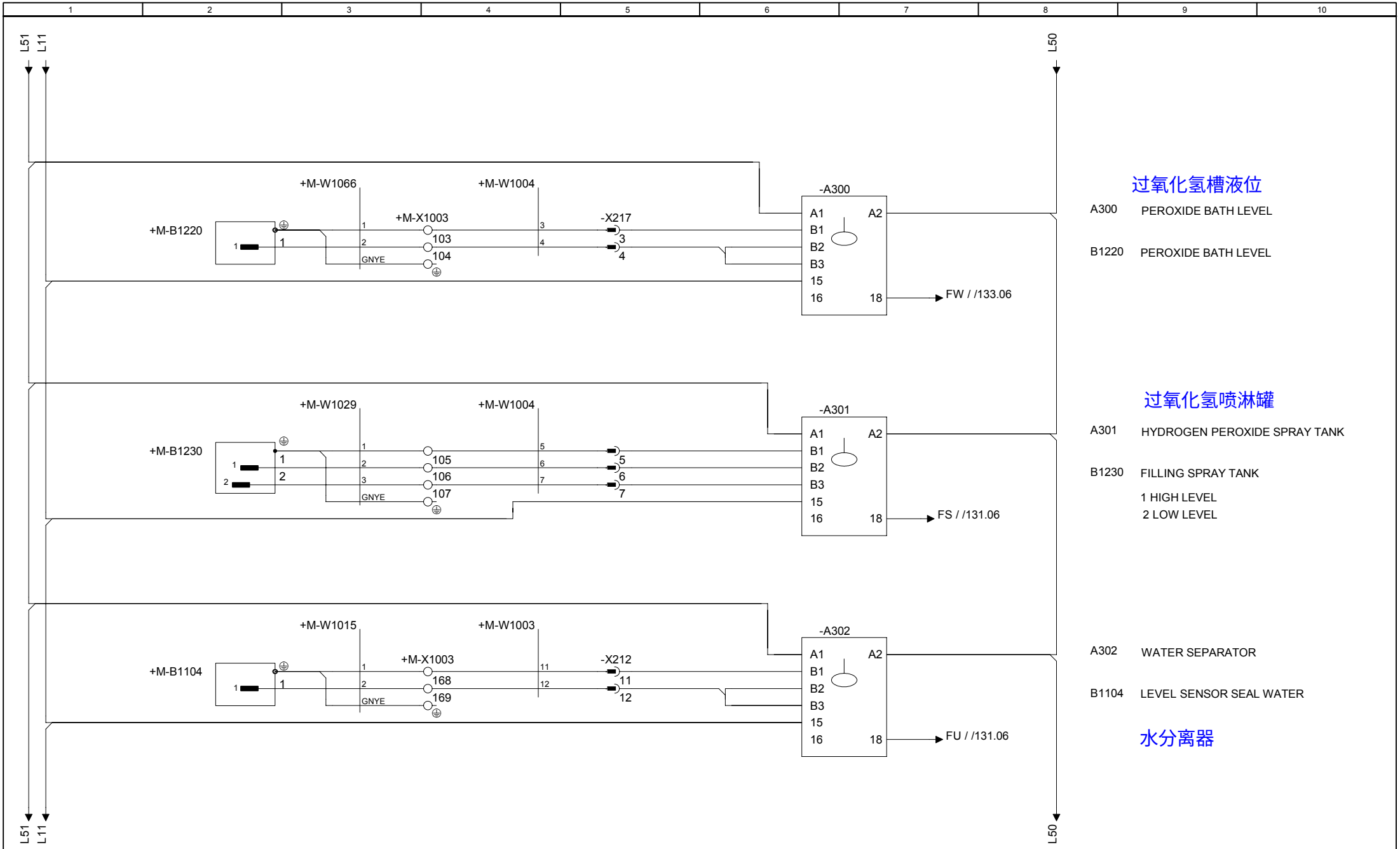

Drawing remarks

Tetra Pak

Designer LUP	Date 23/11/2007	Machine Tetra Pak A3/Flex 0150	
ECM No 320174	Denomination CIRCUIT DIAGRAM	Page Type LEVEL RELAYS	
Company Tetra Pak (Italy)	Document No. 2845987-0003	Doc. type ELD	Version AE	Page 046

RELEASED

This drawing must not without the consent of Tetra Pak
be copied, transmitted or disclosed to any third party.

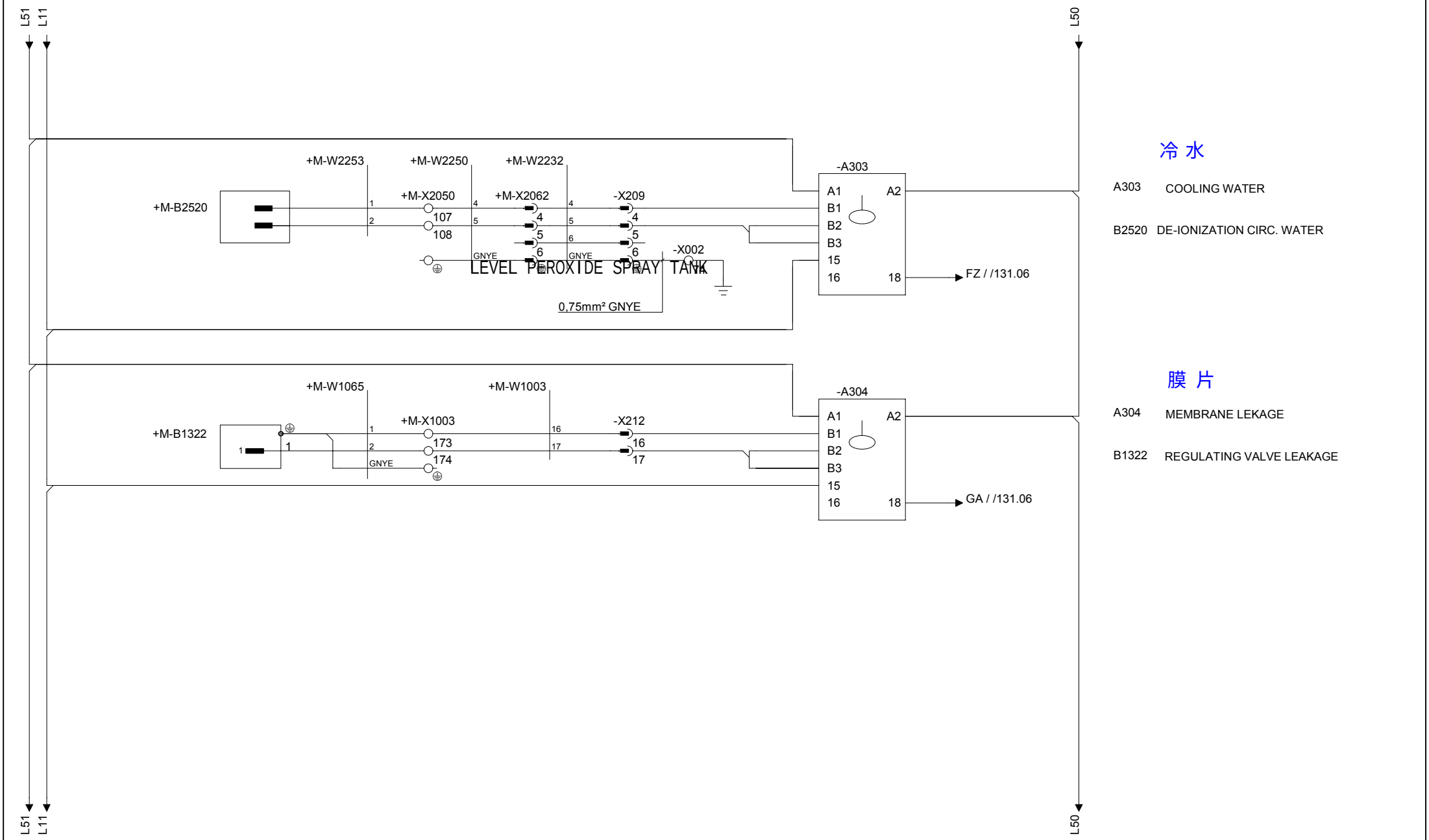

Drawing remarks	Tetra Pak	Designer LUP	Date 23/11/2007	Machine Tetra Pak A3/Flex 0150	
		ECM No 320174	Denomination CIRCUIT DIAGRAM	Page Type LEVEL RELAYS	
	Company Tetra Pak (Italy)	Document No. 2845987-0003	Doc. type ELD	Version AE	Page 047

RELEASED

This drawing must not without the consent of Tetra Pak be copied, transmitted or disclosed to any third party.

1 2 3 4 5 6 7 8 9 10

L51 L11

L50

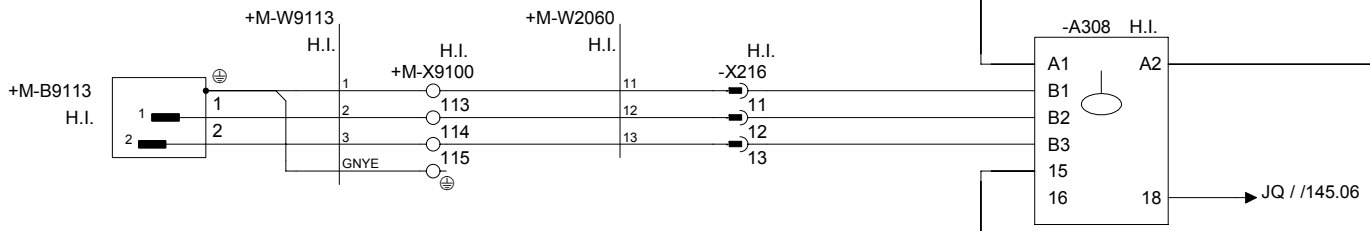

过氧化氢喷淋罐液位

A308 LEVEL PEROXIDE SPRAY TANK

B9113 LEVEL SENSOR
PEROXIDE SPRAY TANK

1 HIGH LEVEL
2 LOW LEVEL

L51 L11

L50

Drawing remarks	Tetra Pak	Designer LUP	Date 23/11/2007	Machine Tetra Pak A3/Flex 0150	
		ECM No 320174	Denomination CIRCUIT DIAGRAM	Page Type LEVEL RELAYS	
		Company Tetra Pak (Italy)	Document No. 2845987-0003	Doc. type ELD	Version AE	Page 049

RELEASED

This drawing must not without the consent of Tetra Pak be copied, transmitted or disclosed to any third party.

1 2 3 4 5 6 7 8 9 10

L10 L11

-A400

-X031
1 (24V)
2 (0V)

ANALOG IN
3
4
DIG IN/OUT
ANALOG OUT
5
6
TIMER
7
8
DIG IN
9
10
11
12
13
14
15
16
DIG OUT
17
18
19
20
21
22
23
24
25
26
27
28
29
30
31
32

.05 / ABP
.05 / ABQ
/191.03 / JU
.05 / ABS
.05 / ABR
GP / /115.06
ISV / /082.06
HC / /125.06
AW / /125.06

+M-W4016 +M-W4014

-X405 +M-X4054 +M-B43011

BN WH YE GN SH
RD BU YE GY

.02 / ABS

A SIGN GRND

TMCC DESIGN CORRECTION
A400

B43011 DESIGN CORRECTION PHOTOCELL BAR CODE 3

图案校正

+M-W4017 +M-W4015

-X406 +M-X4055 +M-B43012

.02 / ABR

B43012 DESIGN CORRECTION PHOTOCELL BAR CODE 4

120 312230-0150 4 SCREW HEX.HEAD WOOD T6S 10X160 SS

+M-W7040

-X401 +M-X74031 +M-B74031

BN BU GY BK WH

.02 / ABP

B74031 ASU BAR CODE 3

ASU图案校正

+M-W7041

-X402 +M-X74032 +M-B74032

.02 / ABQ

B74032 ASU BAR CODE 4

L10 L11

Drawing remarks

Tetra Pak

Designer LUP	Date 23/11/2007	Machine Tetra Pak A3/Flex 0150		
ECM No 320174	Denomination CIRCUIT DIAGRAM	Page Type DESIGN CORRECTION		
Company Tetra Pak (Italy)	Document No. 2845987-0003	Doc. type ELD	Version AE	Page 050

RELEASED

This drawing must not without the consent of Tetra Pak be copied, transmitted or disclosed to any third party.

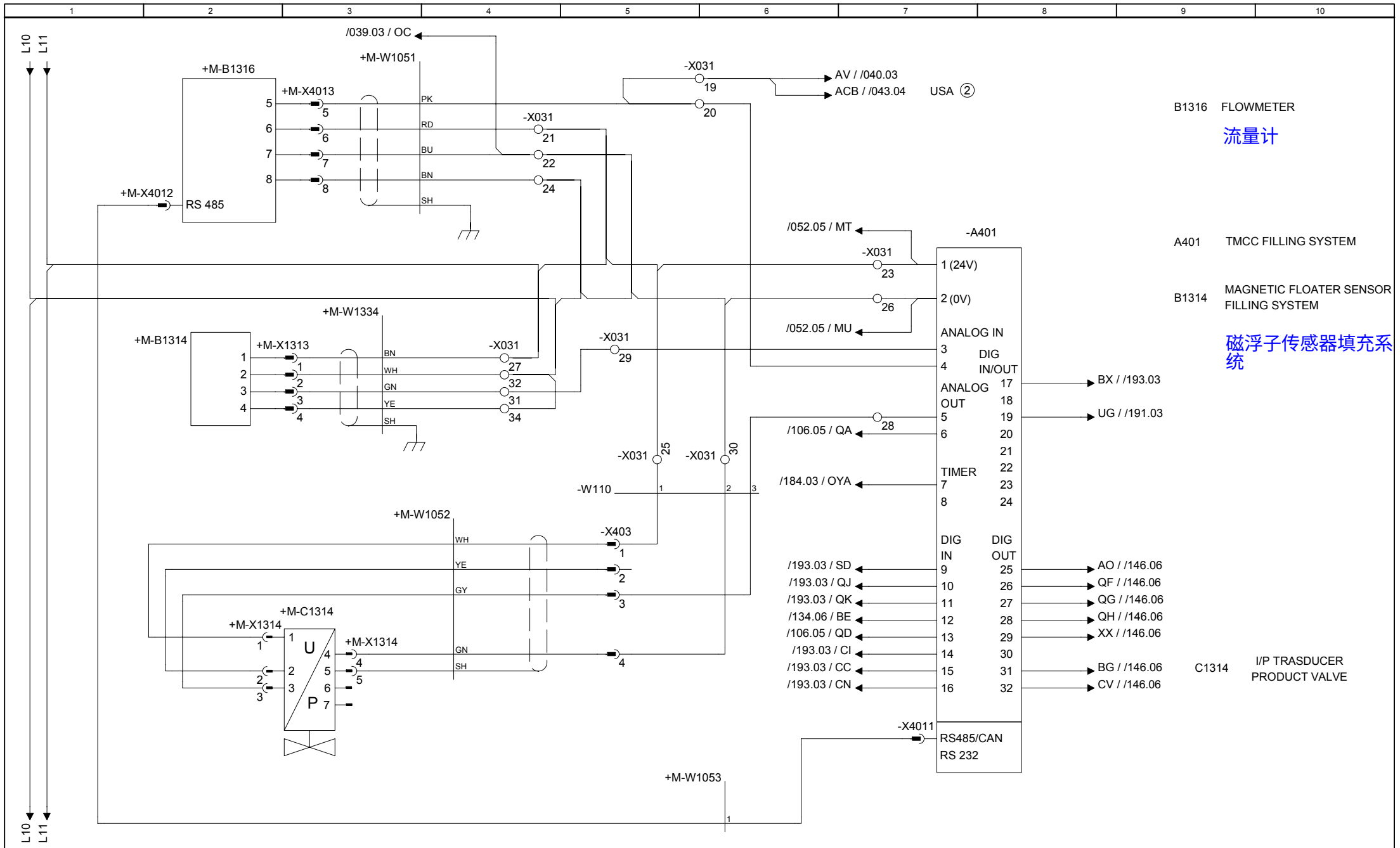

Drawing remarks	Tetra Pak	Designer LUP	Date 23/11/2007	Machine Tetra Pak A3/Flex 0150	
		ECM No 320174	Denomination CIRCUIT DIAGRAM	Page Type FILLING SYSTEM	
		Company Tetra Pak (Italy)	Document No. 2845987-0003	Doc. type ELD	Version AE	Page 051

This drawing must not without the consent of Tetra Pak
be copied, transmitted or disclosed to any third party.

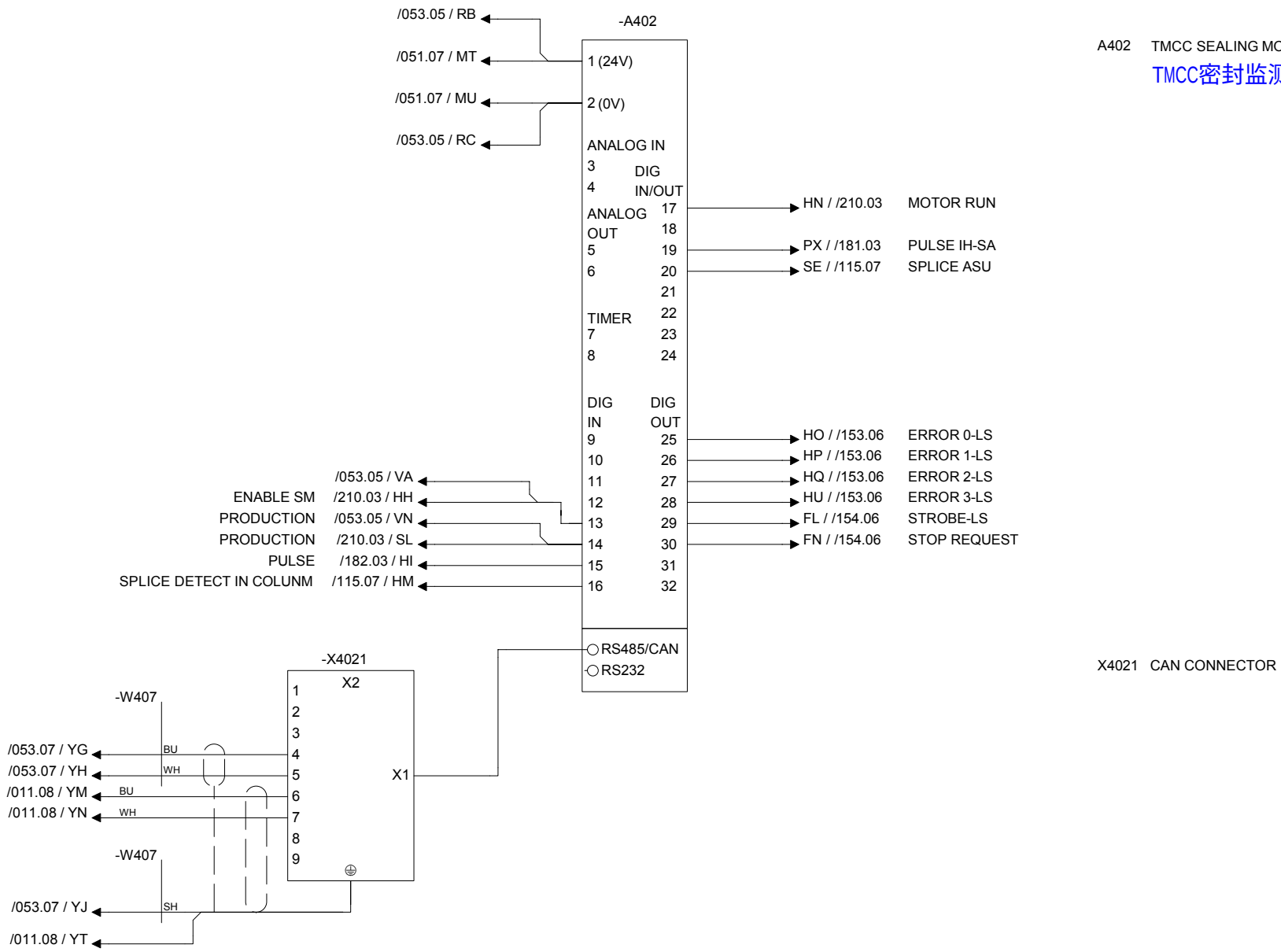

A402 TMCC SEALING MONITORING LS

TMCC密封监测系统

X4021 CAN CONNECTOR

Drawing remarks	Tetra Pak	Designer LUP	Date 23/11/2007	Machine Tetra Pak A3/Flex 0150	
		ECM No 320174	Denomination CIRCUIT DIAGRAM	Page Type TMCC SEALING MONITORING LS-SA	
	Company Tetra Pak (Italy)	Document No. 2845987-0003	Doc. type ELD	Version AE	Page 052

RELEASED

This drawing must not without the consent of Tetra Pak be copied, transmitted or disclosed to any third party.

B2404	HYDRAULIC PRESSURE LEFT
B2403	HYDRAULICPRESSURE RIGHT
A420	PRODUCT TEMPERATURE
A403	TMCC SEALING MONITORING TS-LR
B2111	COOLING FLOW LEFT
B2110	COOLING FLOW RIGHT
X4031	CAN CONNECTOR

TMCC密封监测TS-LR

L10 L11

+M-W2271 +M-B2404 +M-W2271 -X031 BN WH GN YE SH -X031 39 40 38

+M-W2270 +M-B2403 +M-W2270 35 36 37 -X002 29

-A403

1 (24V) 2 (0V) ANALOG IN 3 4 DIG IN/OUT ANALOG OUT 17 18 5 19 6 20 21 TIMER 22 7 23 8 24 DIG IN DIG OUT 9 25 10 26 11 27 12 28 13 29 14 30 15 31 16 32 RS485/CAN RS232

.02 / SN
/052.05 / RB
/052.05 / RC
.02 / SO

+M-W2050 +M-W2258 +M-W2111 +M-W2111 +M-B2111 -X222 22 +M-X2244 22 +M-X2003 135 WH 1 2 WH +M-X2003 136 PV / /120.03

+M-W2110 +M-W2110 +M-B2110 20 20 20 20 129 WH 1 2 WH 130 PW / /105.01

-W150 WH

HV / /153.06 ERROR 0-TS
HZ / /153.06 ERROR 1-TS
HR / /153.06 ERROR 2-TS
HS / /153.06 ERROR 3-TS
FM / /154.06 STROBE-TS
FP / /154.06 STOP REQUEST

ENABLE SM /052.04 / VA
PRODUCTION /052.04 / VN
PULSE /182.03 / VD
SIDE SELECT /086.03 / VF

+M-W1420 +M-B1420 1 2 WH GN YE BN SH -A420 1 2 3 4 12 11 .05 / SN .05 / SO L+ L- 0,75mm² GNYE -X031

-X4031 X2 1 2 3 4 5 6 7 8 9 X1

/011.04 / YF BU
/011.04 / YE WH
/052.02 / YG BU
/052.02 / YH WH
/011.04 / YD
/052.02 / YJ

L10 L11

Drawing remarks

Tetra Pak

Designer LUP	Date 23/11/2007	Machine Tetra Pak A3/Flex 0150			
ECM No 320174	Denomination CIRCUIT DIAGRAM	Page Type TMCC SEALING MONITORING TS-LR			
Company Tetra Pak (Italy)	Document No. 2845987-0003	Doc. type ELD	Version AE	Page 053	

RELEASED

This drawing must not without the consent of Tetra Pak be copied, transmitted or disclosed to any third party.

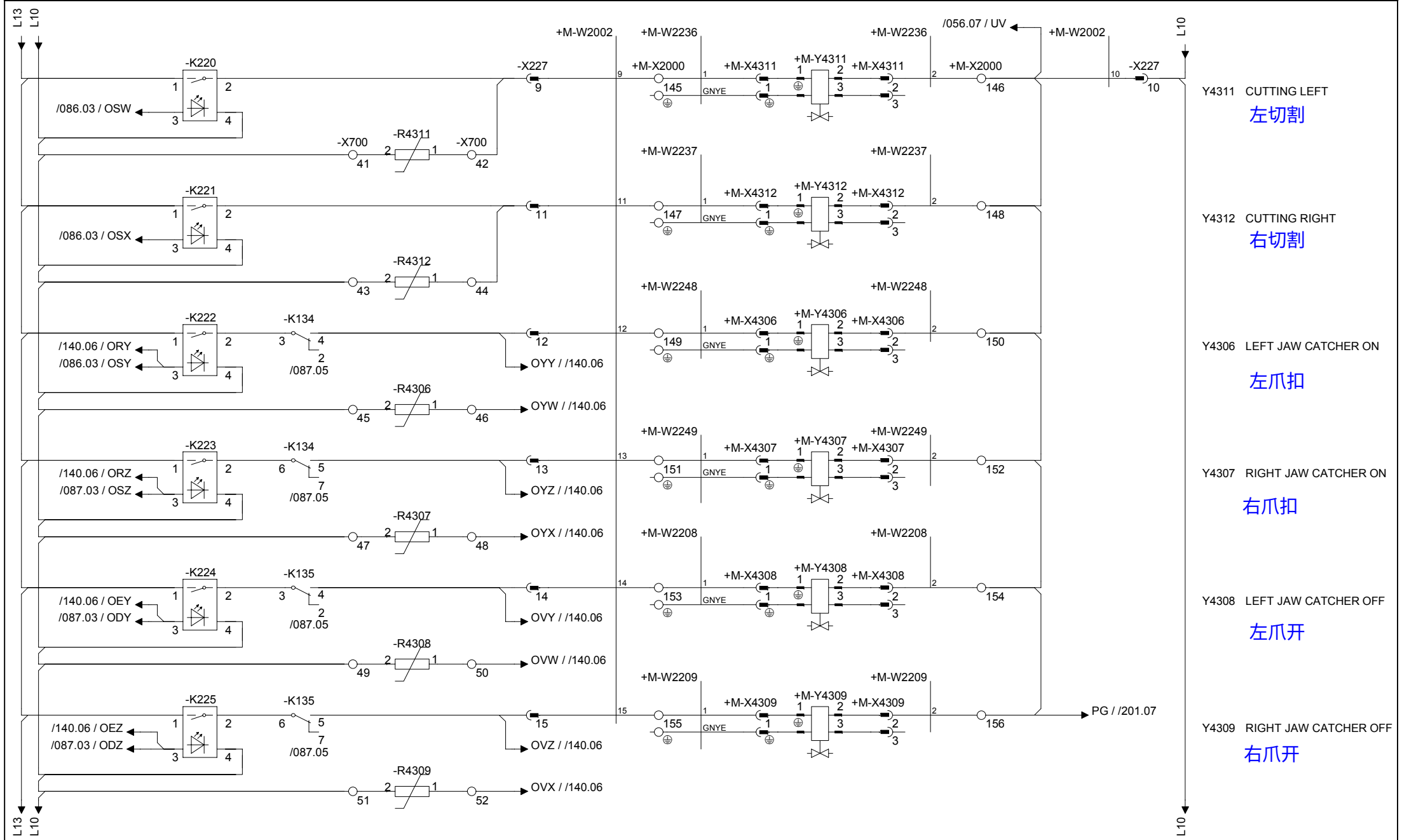

Drawing remarks	Tetra Pak	Designer: LUP	Date: 23/11/2007	Machine: Tetra Pak A3/Flex 0150	
		ECM No: 320174	Denomination: CIRCUIT DIAGRAM	Page Type: KNIVES and CATCHERS	
		Company: Tetra Pak (Italy)	Document No.: 2845987-0003	Doc. type: ELD	Version: AE	Page: 055

RELEASED

This drawing must not without the consent of Tetra Pak be copied, transmitted or disclosed to any third party.

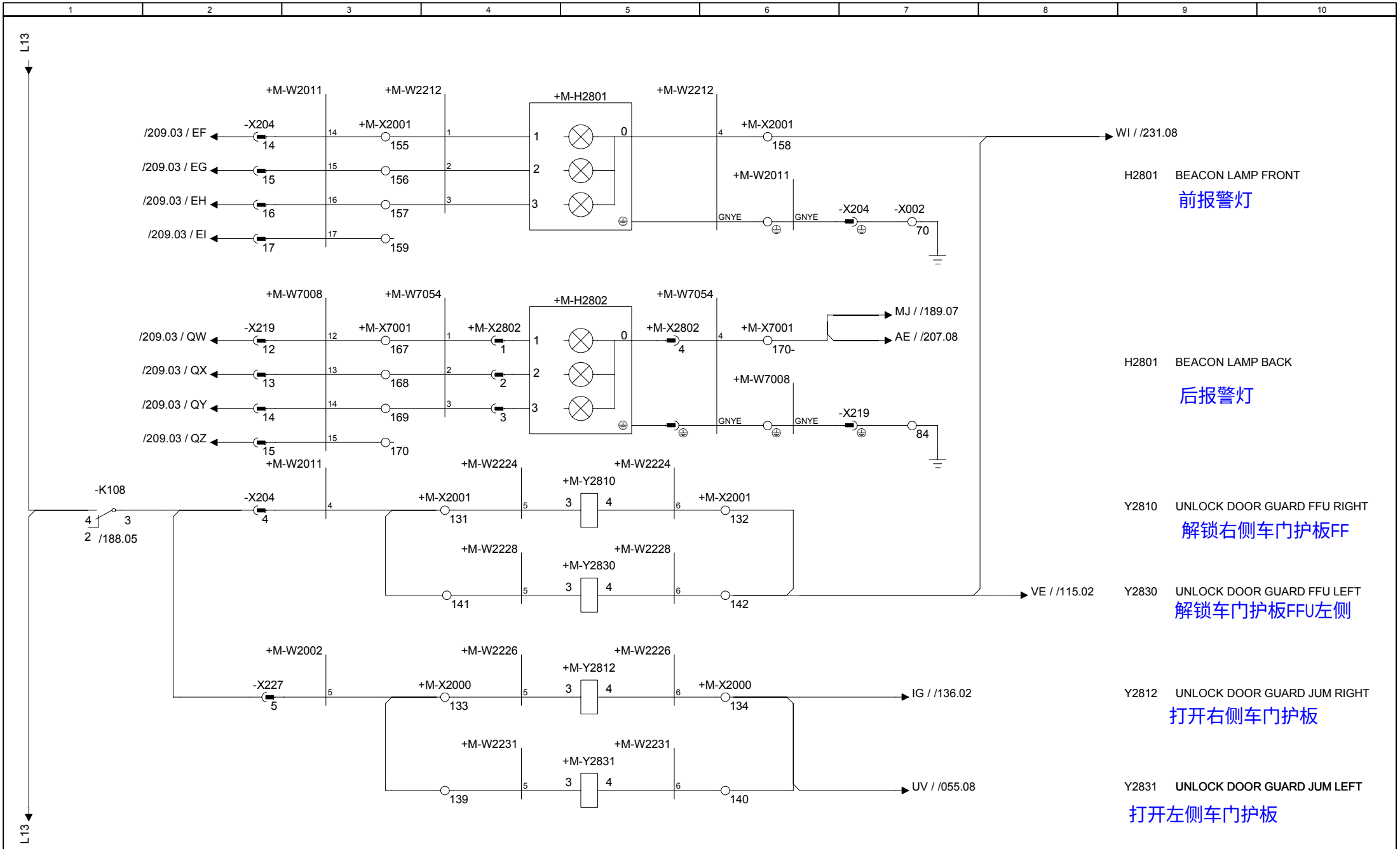

Drawing remarks	Tetra Pak	Designer LUP	Date 23/11/2007	Machine Tetra Pak A3/Flex 0150			
		ECM No 320174	Denomination CIRCUIT DIAGRAM	Page Type CIRCUIT DIAGRAM			
	Company Tetra Pak (Italy)		Document No. 2845987-0003	Doc. type ELD	Version AE	Page 056	

This drawing must not without the consent of Tetra Pak
be copied, transmitted or disclosed to any third party.

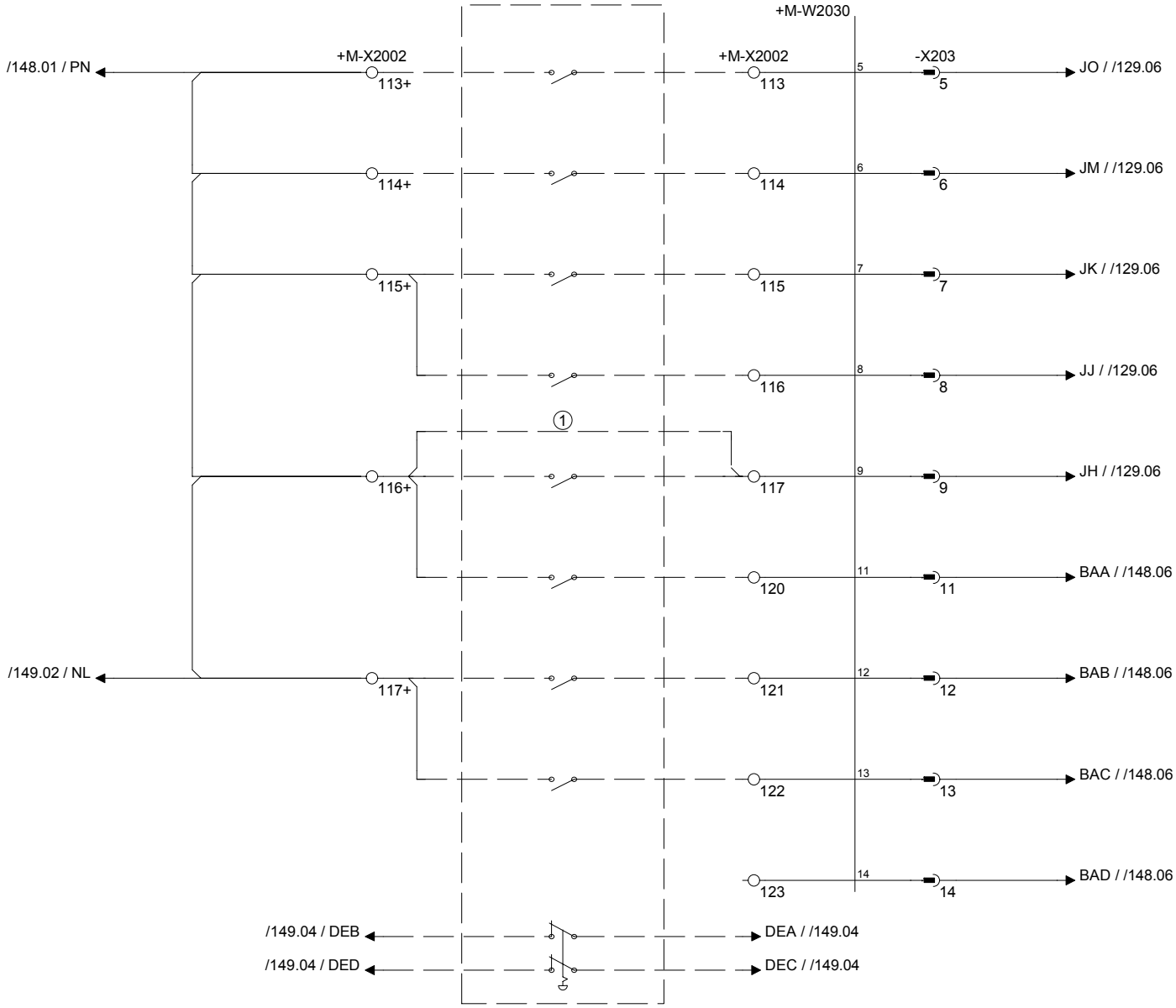

SPARE

SPARE

PRODUCT PLANT NOT STERILE
(OPTION ADV. SIG. EXC.)
产品植物不无菌

PRODUCT PLANT STERILE
(OPTION ADV. SIG. EXC.)
产品植物无菌

DAIRY READY PROD.
乳制品。

RESERVED FOR EXTERNAL
DATE UNIT
保留给外部用户日期单位

RESERVED FOR EXT.
DATE UNIT ALARM
预留给分机。日期单位报警

DE READY
DE 准备就绪

SPARE USED IN A3/SPEED
A3高速使用

Drawing remarks

Tetra Pak

Designer LUP	Date 23/11/2007	Machine Tetra Pak A3/Flex 0150	
ECM No 320174	Denomination CIRCUIT DIAGRAM	Page Type DAIRY COMMUNICATION	
Company Tetra Pak (Italy)	Document No. 2845987-0003	Doc. type ELD	Version AE	Page 057

This drawing must not without the consent of Tetra Pak
be copied, transmitted or disclosed to any third party.

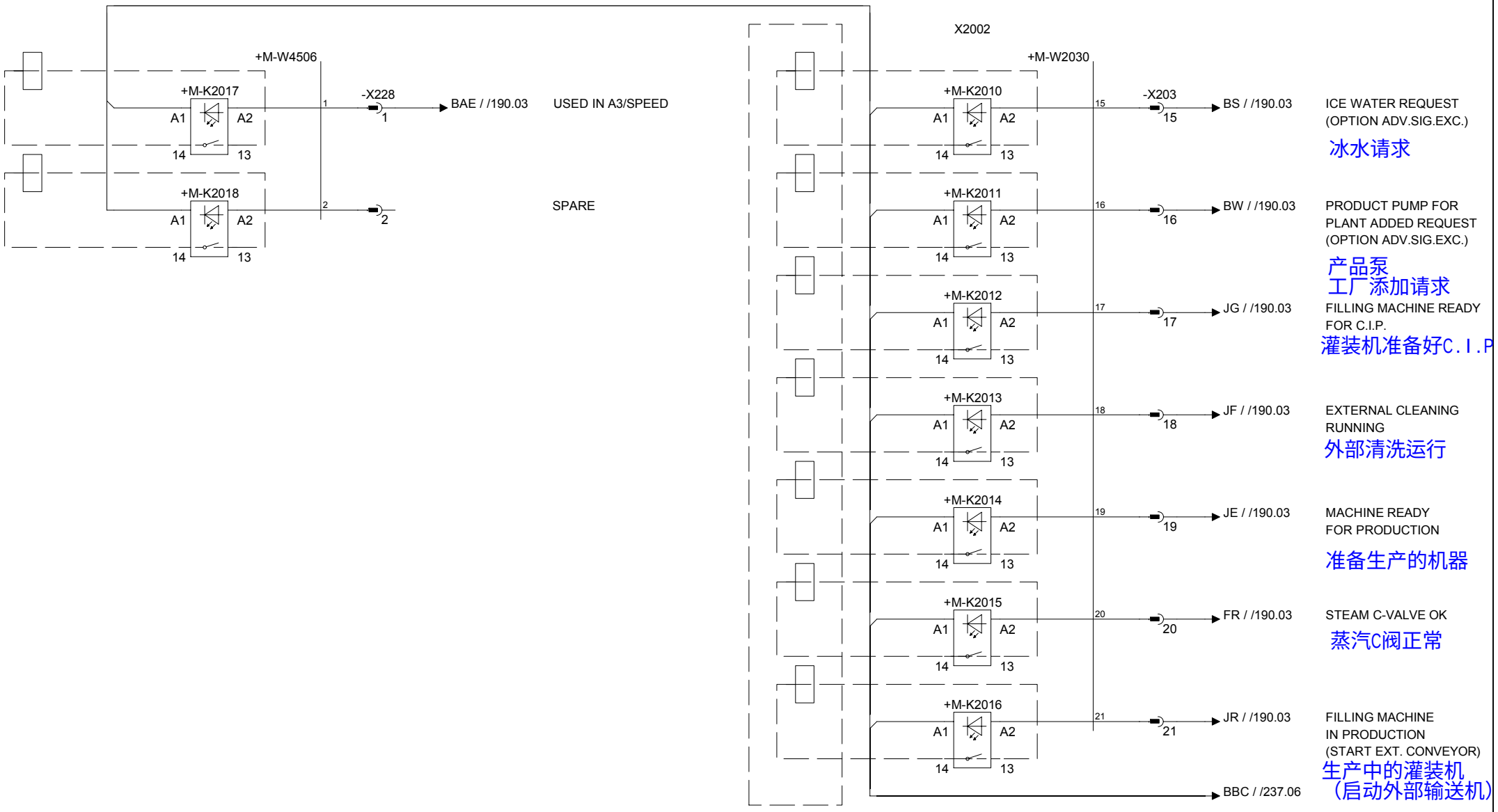

Drawing remarks	Tetra Pak	Designer LUP	Date 23/11/2007	Machine Tetra Pak A3/Flex 0150	
		ECM No 320174	Denomination CIRCUIT DIAGRAM	Page Type EXTERNAL COMMUNICATION	
		Company Tetra Pak (Italy)	Document No. 2845987-0003	Doc. type ELD	Version AE	Page 058

RELEASED

This drawing must not without the consent of Tetra Pak be copied, transmitted or disclosed to any third party.

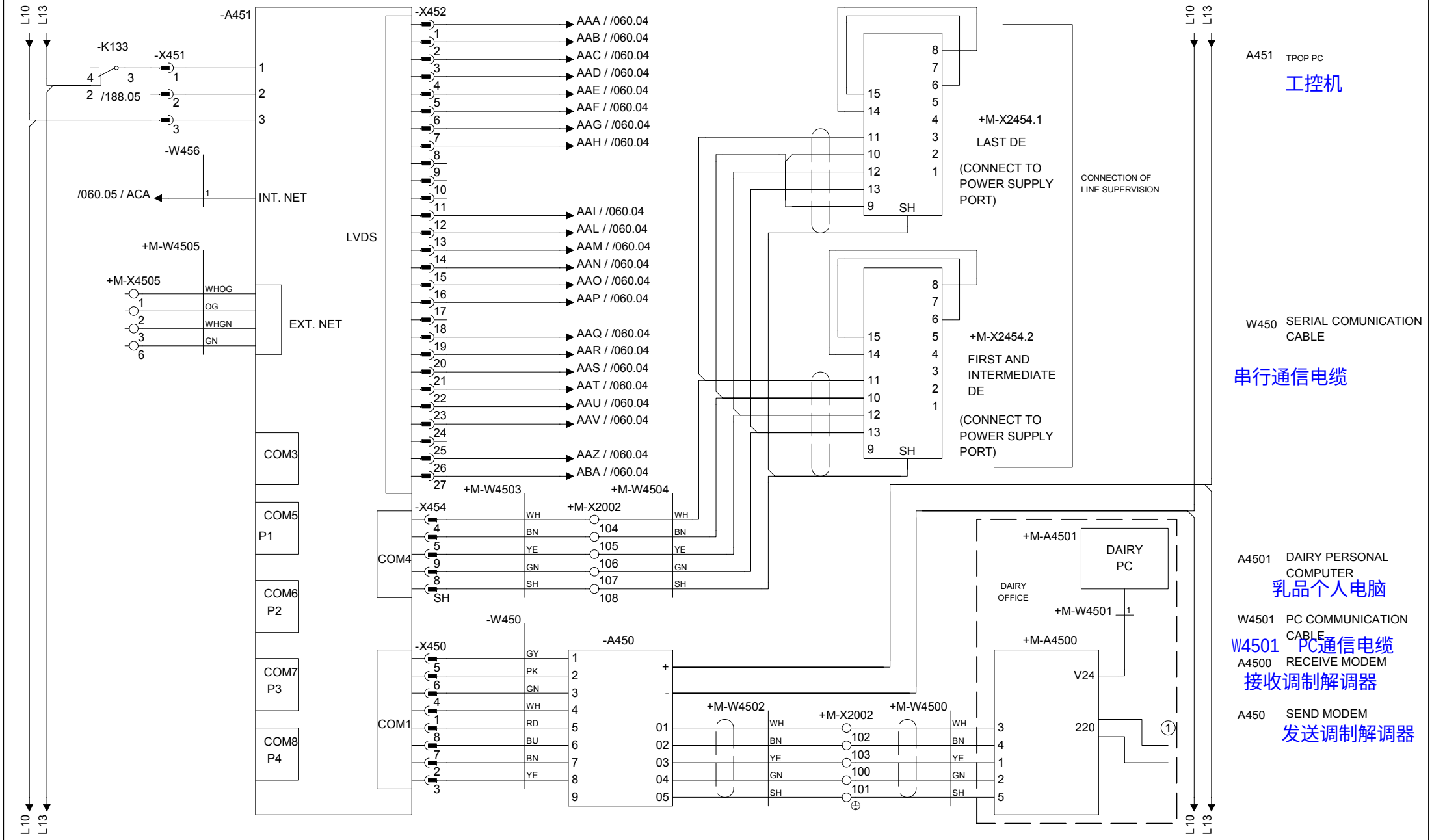

A451 TPOP PC
工控机

W450 SERIAL COMUNICATION CABLE
串行通信电缆

A4501 DAIRY PERSONAL COMPUTER
乳品个人电脑

W4501 PC COMMUNICATION CABLE
W4501 PC通信电缆

A4500 RECEIVE MODEM
接收调制解调器

A450 SEND MODEM
发送调制解调器

Drawing remarks	Tetra Pak	Designer LUP	Date 23/11/2007	Machine Tetra Pak A3/Flex 0150	
		ECM No 320174	Denomination CIRCUIT DIAGRAM	Page Type TPOP COMMUNICATION	
	Company Tetra Pak (Italy)	Document No. 2845987-0003	Doc. type ELD	Version AE	Page 059

RELEASED

This drawing must not without the consent of Tetra Pak be copied, transmitted or disclosed to any third party.

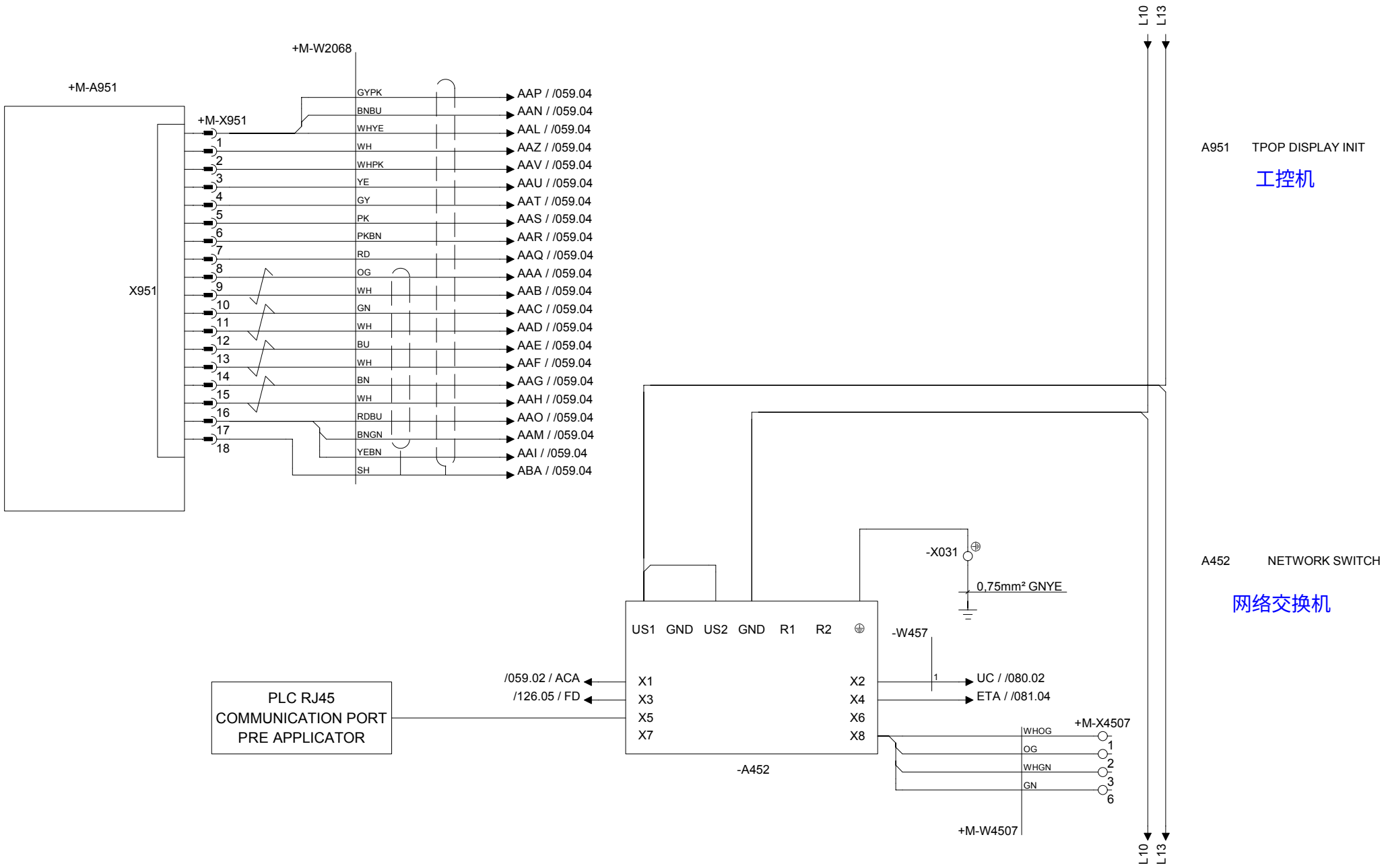

Drawing remarks	Tetra Pak	Designer LUP	Date 23/11/2007	Machine Tetra Pak A3/Flex 0150	
		ECM No 320174	Denomination CIRCUIT DIAGRAM	Page Type TPOP COMMUNICATION	
	Company Tetra Pak (Italy)	Document No. 2845987-0003	Doc. type ELD	Version AE	Page 060

RELEASED

This drawing must not without the consent of Tetra Pak be copied, transmitted or disclosed to any third party.

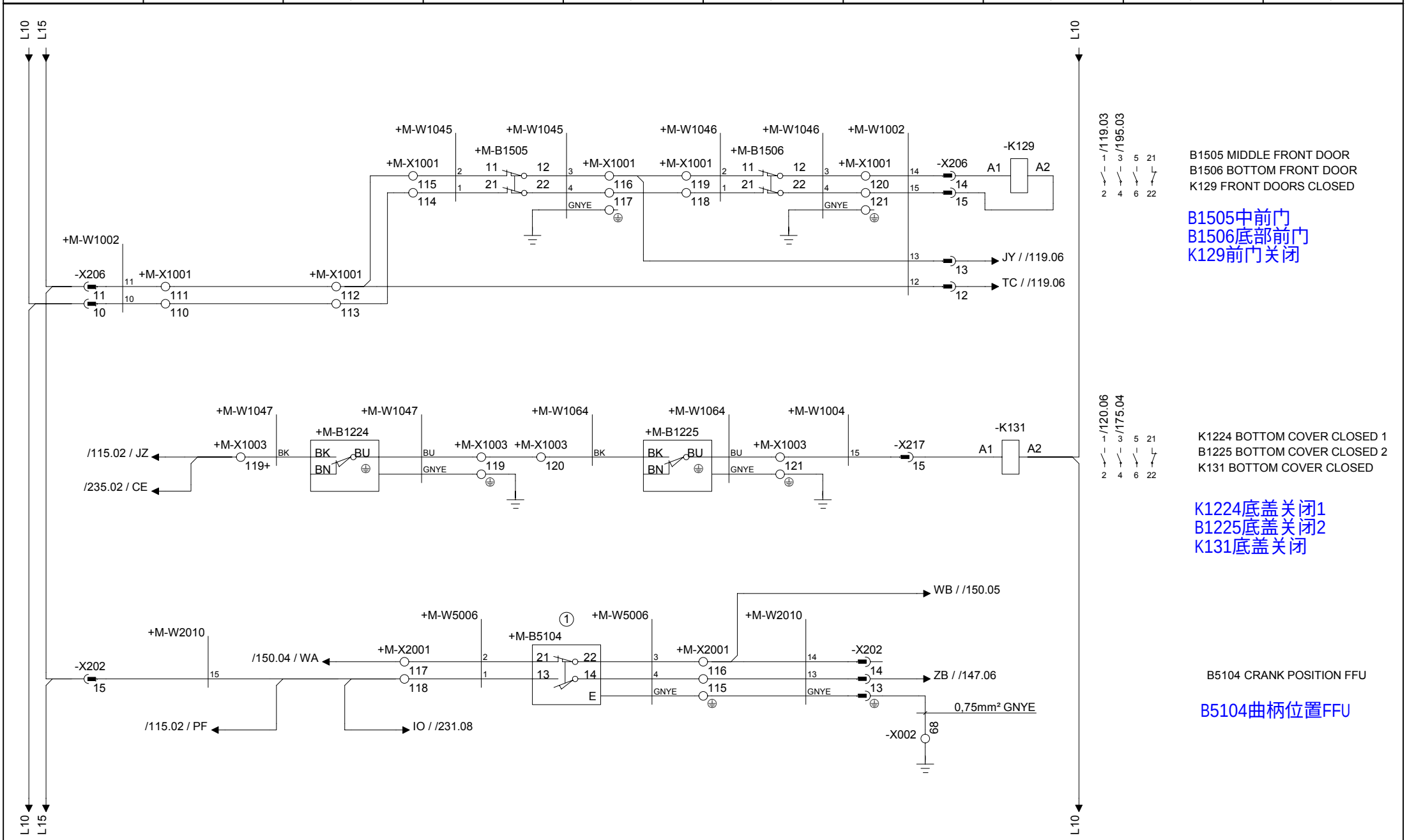

Drawing remarks	Tetra Pak	Designer LUP	Date 23/11/2007	Machine Tetra Pak A3/Flex 0150	
		ECM No 320174	Denomination CIRCUIT DIAGRAM	Page Type DOORS ASEPTIC CHAMBER	
	Company Tetra Pak (Italy)	Document No. 2845987-0003	Doc. type ELD	Version AE	Page 061

RELEASED

This drawing must not without the consent of Tetra Pak be copied, transmitted or disclosed to any third party.

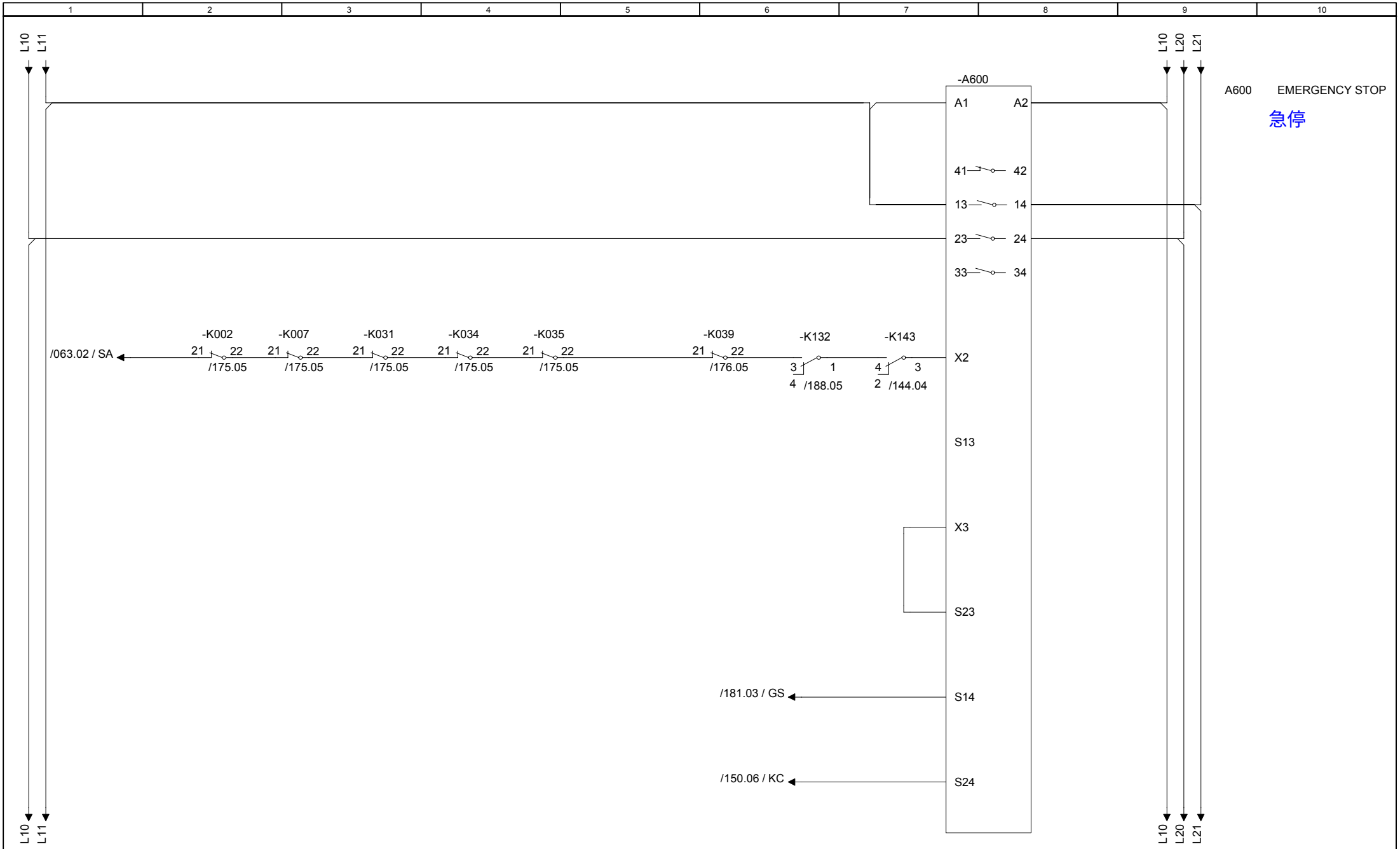

Drawing remarks	Tetra Pak	Designer LUP	Date 23/11/2007	Machine Tetra Pak A3/Flex 0150	
		ECM No 320174	Denomination CIRCUIT DIAGRAM	Page Type EMERGENCY STOP SAFETY	
	Company Tetra Pak (Italy)	Document No. 2845987-0003	Doc. type ELD	Version AE	Page 062

RELEASED

This drawing must not without the consent of Tetra Pak be copied, transmitted or disclosed to any third party.

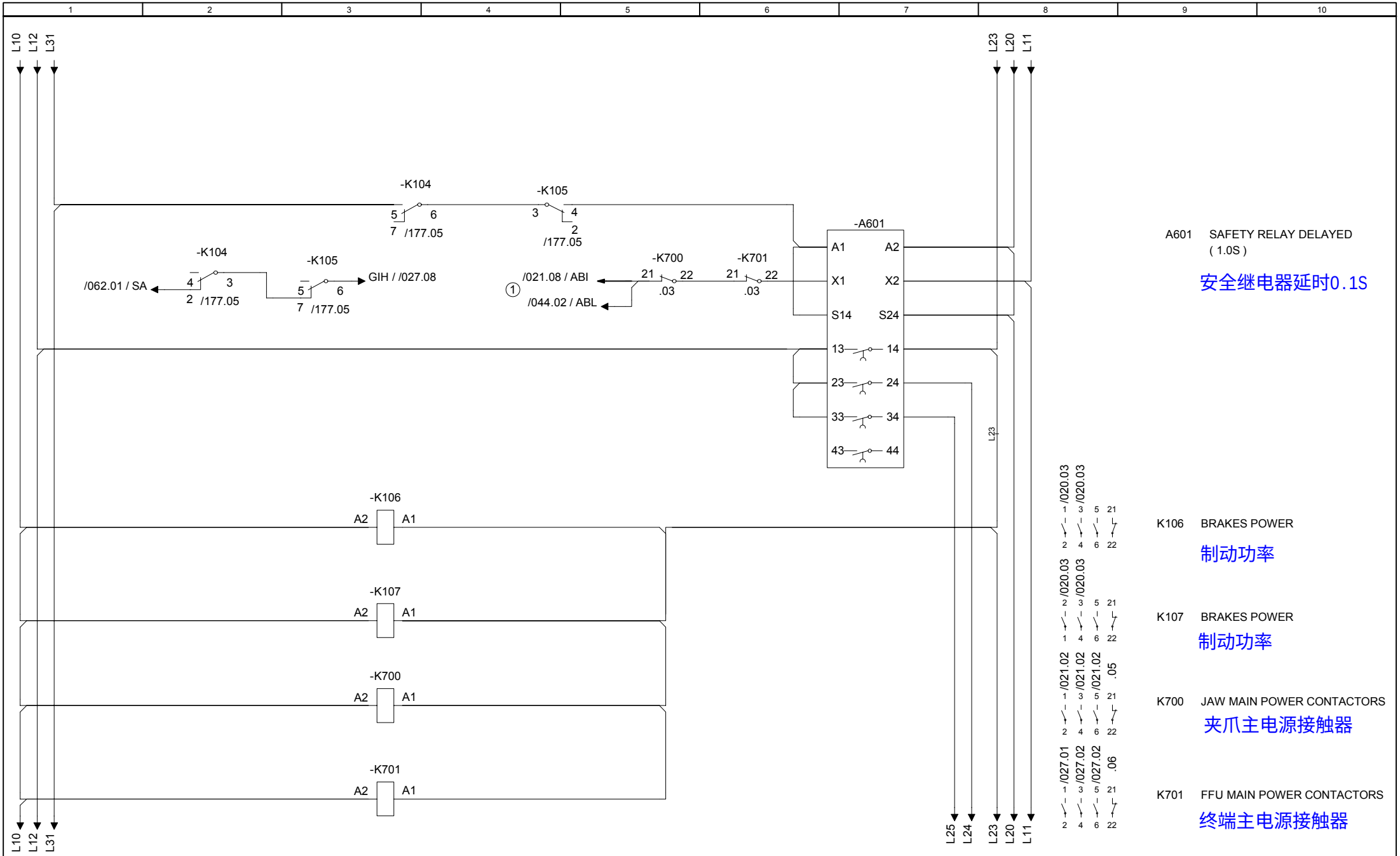

Drawing remarks	Tetra Pak	Designer LUP	Date 23/11/2007	Machine Tetra Pak A3/Flex 0150
		ECM No 320174	Denomination CIRCUIT DIAGRAM	Page Type DELAYED MAIN POWER OFF
	Company Tetra Pak (Italy)	Document No. 2845987-0003	Doc. type ELD	Version AE / Page 063

RELEASED

This drawing must not without the consent of Tetra Pak be copied, transmitted or disclosed to any third party.

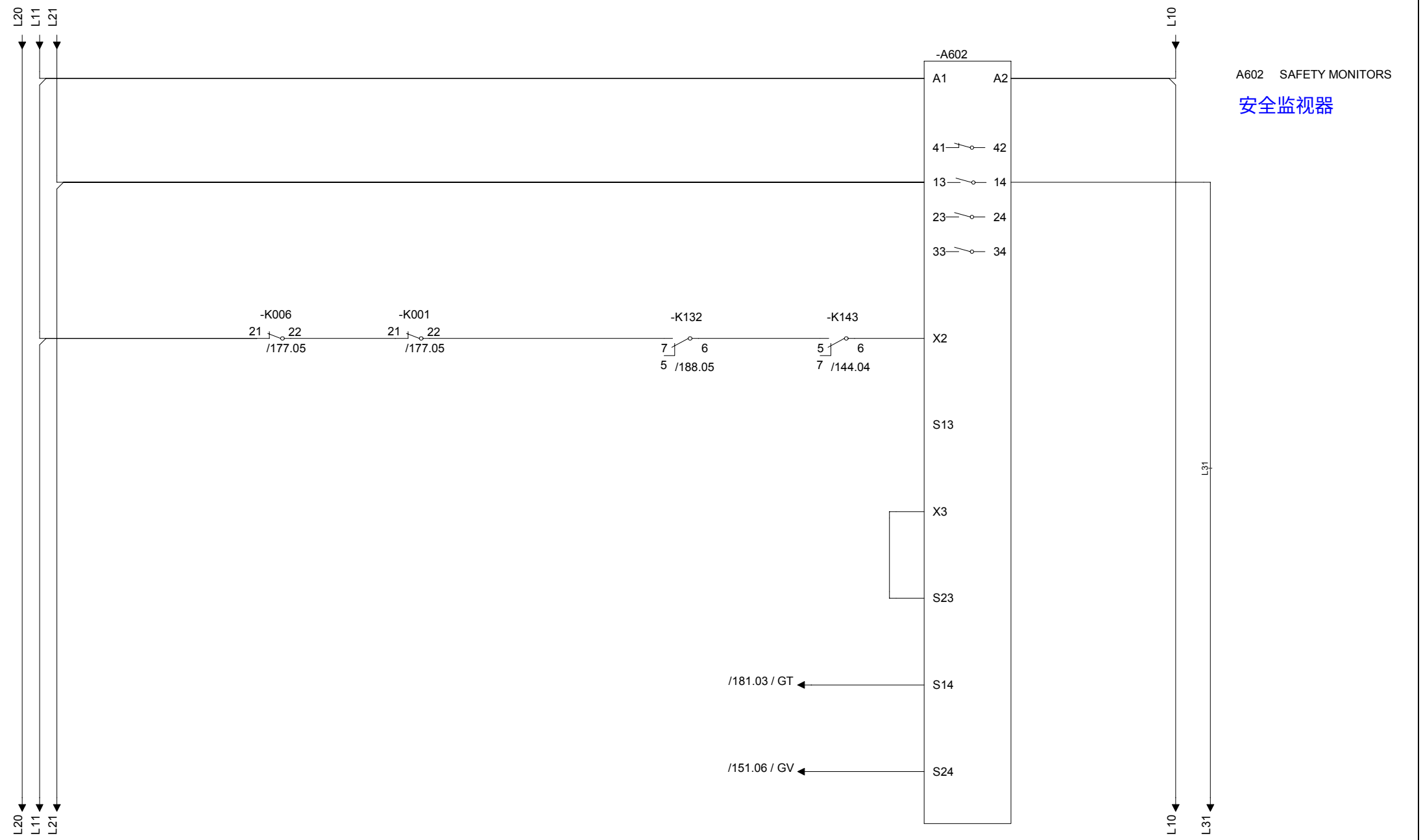

Drawing remarks	Tetra Pak	Designer LUP	Date 23/11/2007	Machine Tetra Pak A3/Flex 0150	
		ECM No 320174	Denomination CIRCUIT DIAGRAM	Page Type DOORS GUARD SAFETY	
	Company Tetra Pak (Italy)	Document No. 2845987-0003	Doc. type ELD	Version AE	Page 064

RELEASED

This drawing must not without the consent of Tetra Pak be copied, transmitted or disclosed to any third party.

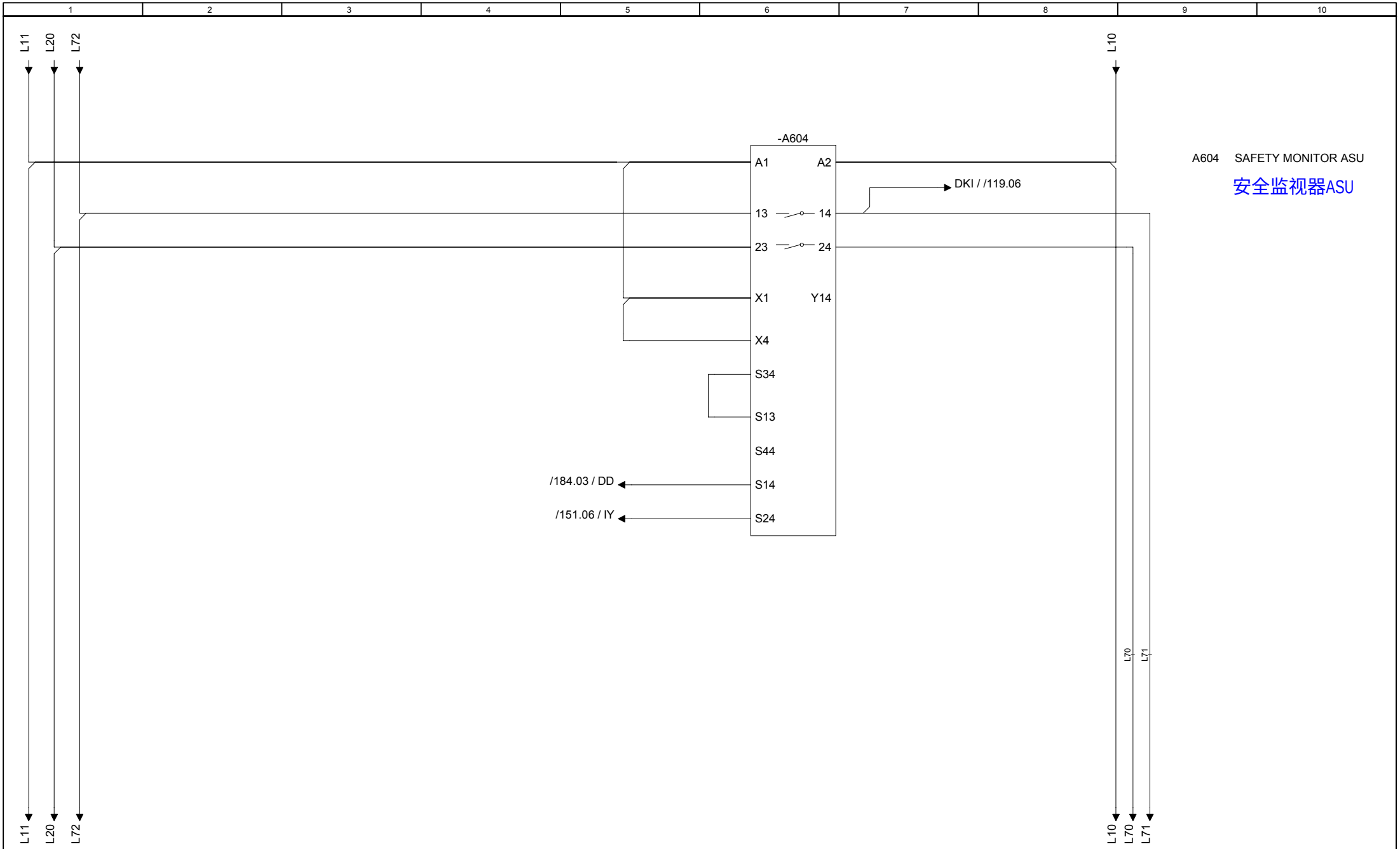

Drawing remarks	Tetra Pak	Designer LUP	Date 23/11/2007	Machine Tetra Pak A3/Flex 0150	
		ECM No 320174	Denomination CIRCUIT DIAGRAM	Page Type ASU DOORS SAFETY GUARD	
	Company Tetra Pak (Italy)	Document No. 2845987-0003	Doc. type ELD	Version AE	Page 066

RELEASED

This drawing must not without the consent of Tetra Pak be copied, transmitted or disclosed to any third party.

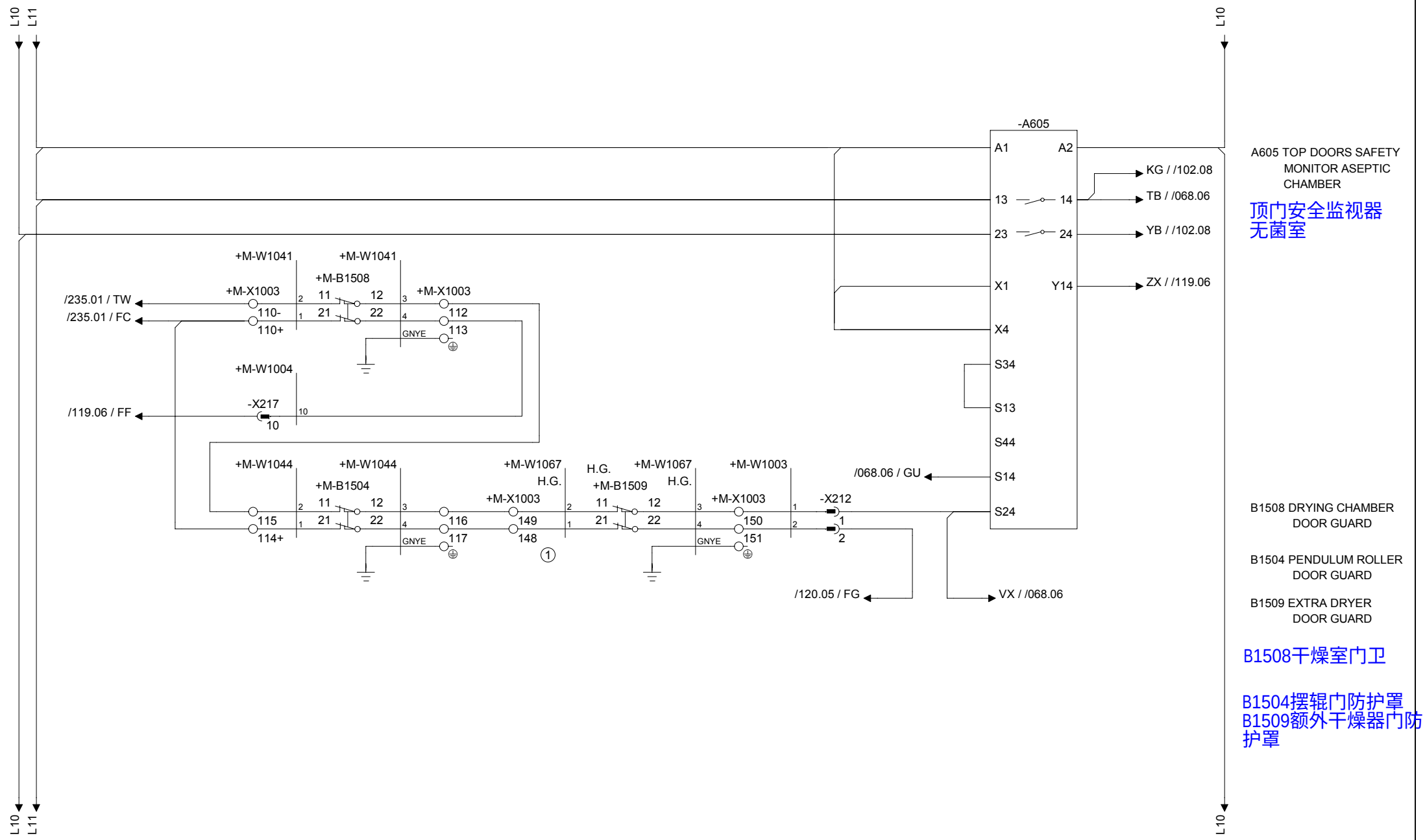

Drawing remarks	Tetra Pak	Designer LUP	Date 23/11/2007	Machine Tetra Pak A3/Flex 0150	
		ECM No 320174	Denomination CIRCUIT DIAGRAM	Page Type DOORS GUARD ASEPTIC CHAMBER	
	Company Tetra Pak (Italy)	Document No. 2845987-0003	Doc. type ELD	Version AE	Page 067

RELEASED

This drawing must not without the consent of Tetra Pak
be copied, transmitted or disclosed to any third party.

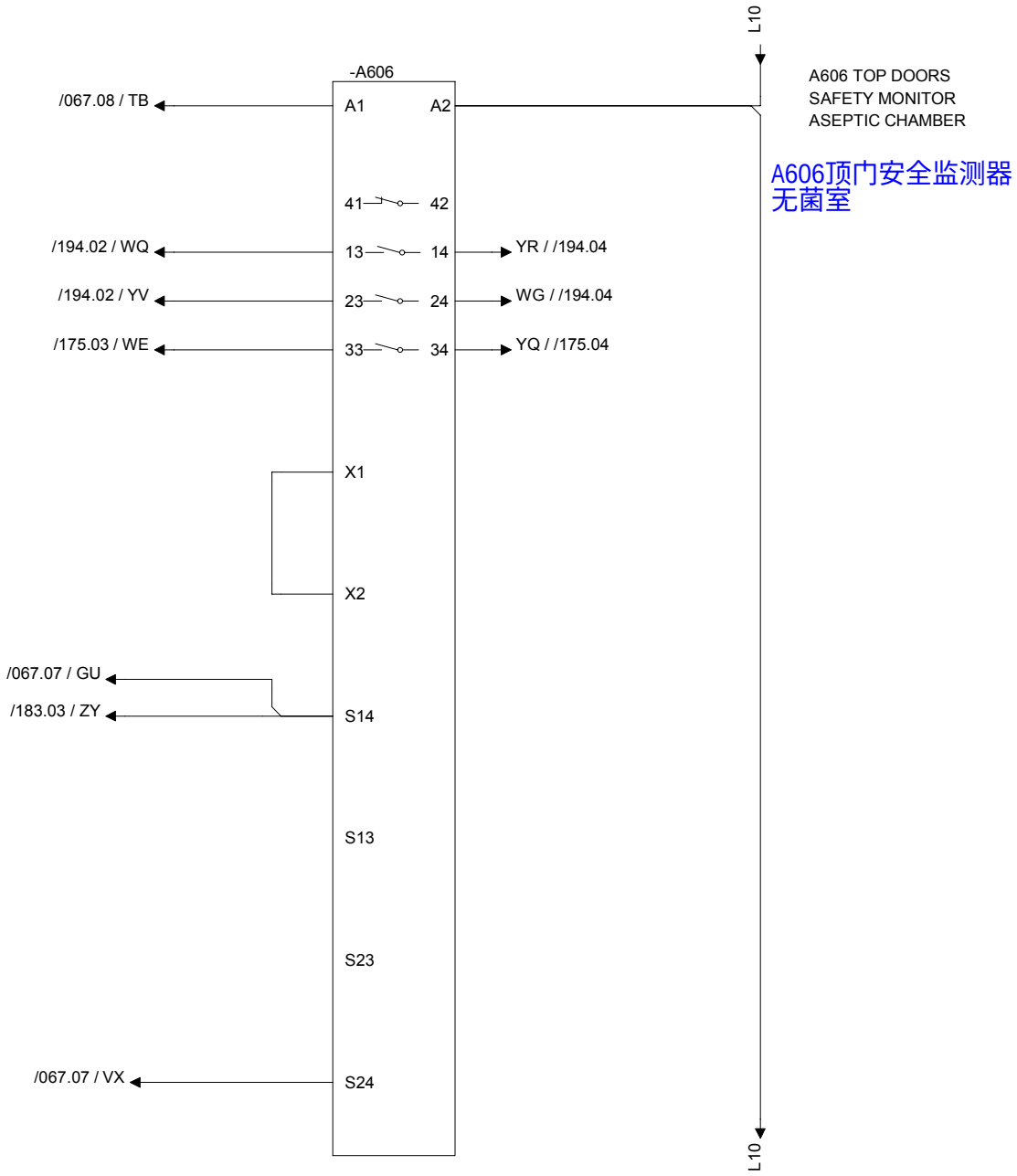

Drawing remarks	Tetra Pak	Designer LUP	Date 23/11/2007	Machine Tetra Pak A3/Flex 0150
		ECM No 320174	Denomination CIRCUIT DIAGRAM	Page Type DOORS GUARD ASEPTIC CHAMBER
	Company Tetra Pak (Italy)	Document No. 2845987-0003	Doc. type ELD	Version AE / Page 068

RELEASED

This drawing must not without the consent of Tetra Pak be copied, transmitted or disclosed to any third party.

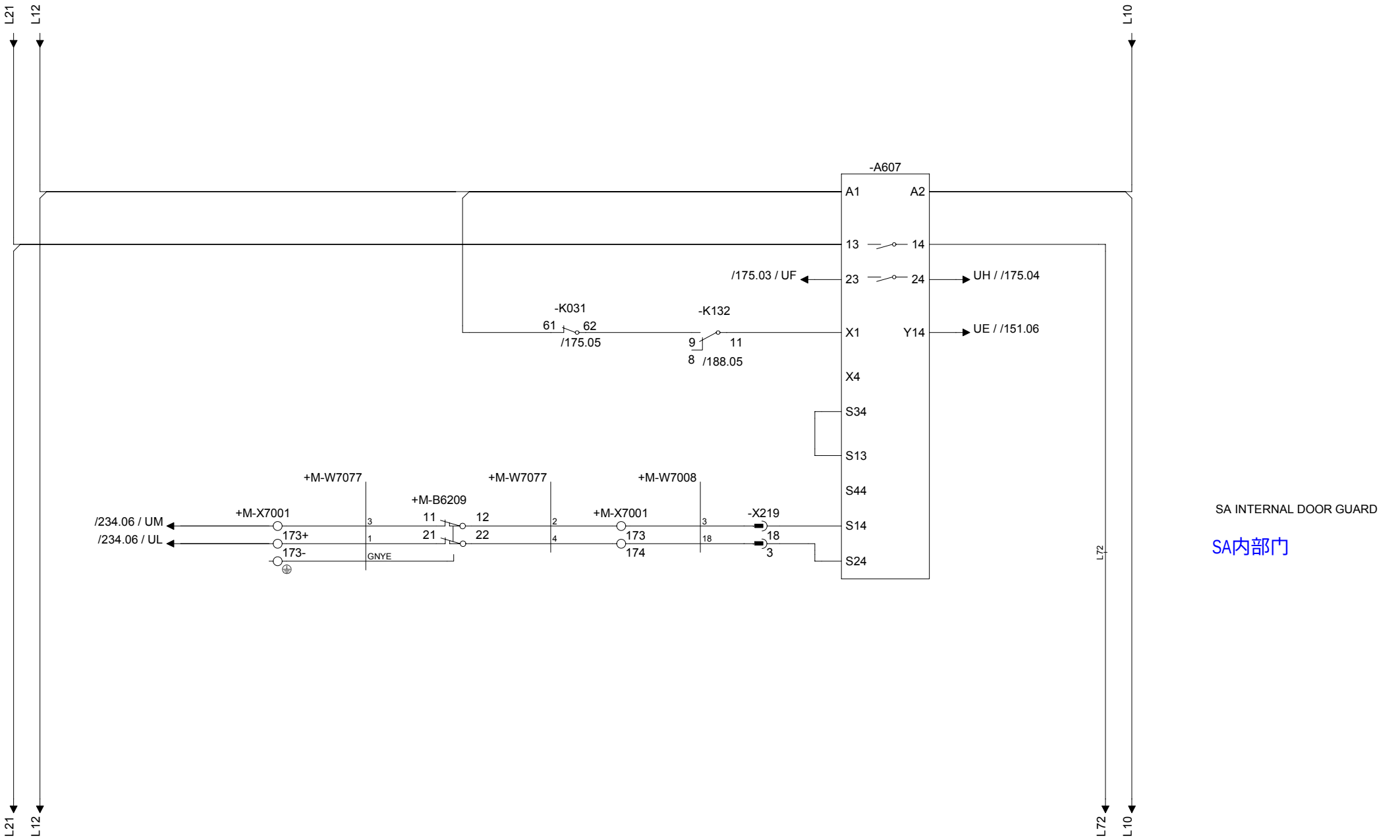

Drawing remarks	Tetra Pak	Designer LUP	Date 23/11/2007	Machine Tetra Pak A3/Flex 0150	
		ECM No 320174	Denomination CIRCUIT DIAGRAM	Page Type SA INTERNAL DOOR SAFETY GUARD	
	Company Tetra Pak (Italy)	Document No. 2845987-0003	Doc. type ELD	Version AE	Page 069

This drawing must not without the consent of Tetra Pak be copied, transmitted or disclosed to any third party.

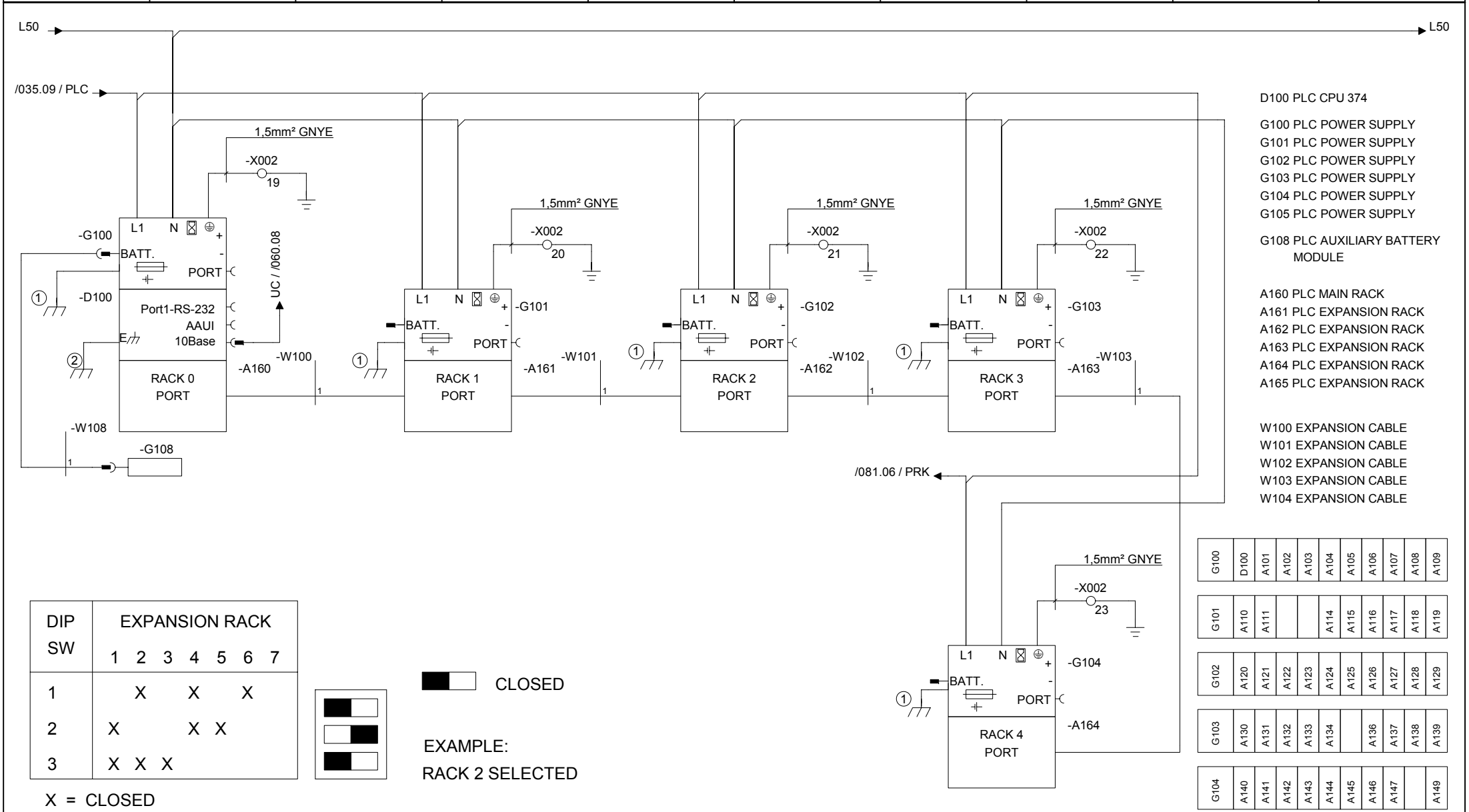

D100 PLC CPU 374

G100 PLC POWER SUPPLY
G101 PLC POWER SUPPLY
G102 PLC POWER SUPPLY
G103 PLC POWER SUPPLY
G104 PLC POWER SUPPLY
G105 PLC POWER SUPPLY

G108 PLC AUXILIARY BATTERY MODULE

A160 PLC MAIN RACK
A161 PLC EXPANSION RACK
A162 PLC EXPANSION RACK
A163 PLC EXPANSION RACK
A164 PLC EXPANSION RACK
A165 PLC EXPANSION RACK

W100 EXPANSION CABLE
W101 EXPANSION CABLE
W102 EXPANSION CABLE
W103 EXPANSION CABLE
W104 EXPANSION CABLE

G100	D100	A101	A102	A103	A104	A105	A106	A107	A108	A109
G101	A110	A111			A114	A115	A116	A117	A118	A119
G102	A120	A121	A122	A123	A124	A125	A126	A127	A128	A129
G103	A130	A131	A132	A133	A134		A136	A137	A138	A139
G104	A140	A141	A142	A143	A144	A145	A146	A147		A149

DIP SW	EXPANSION RACK 1	2	3	4	5	6	7
1		X		X		X	
2	X			X	X		
3	X	X	X				

X = CLOSED

CLOSED

EXAMPLE:
RACK 2 SELECTED

Drawing remarks	Tetra Pak	Designer LUP	Date 23/11/2007	Machine Tetra Pak A3/Flex 0150
		ECM No 320174	Denomination CIRCUIT DIAGRAM	Page Type GE FANUC PLC POWER SUPPLY
		Company Tetra Pak (Italy)	Document No. 2845987-0003	Doc. type ELD / Version AE / Page 080

RELEASED

This drawing must not without the consent of Tetra Pak be copied, transmitted or disclosed to any third party.

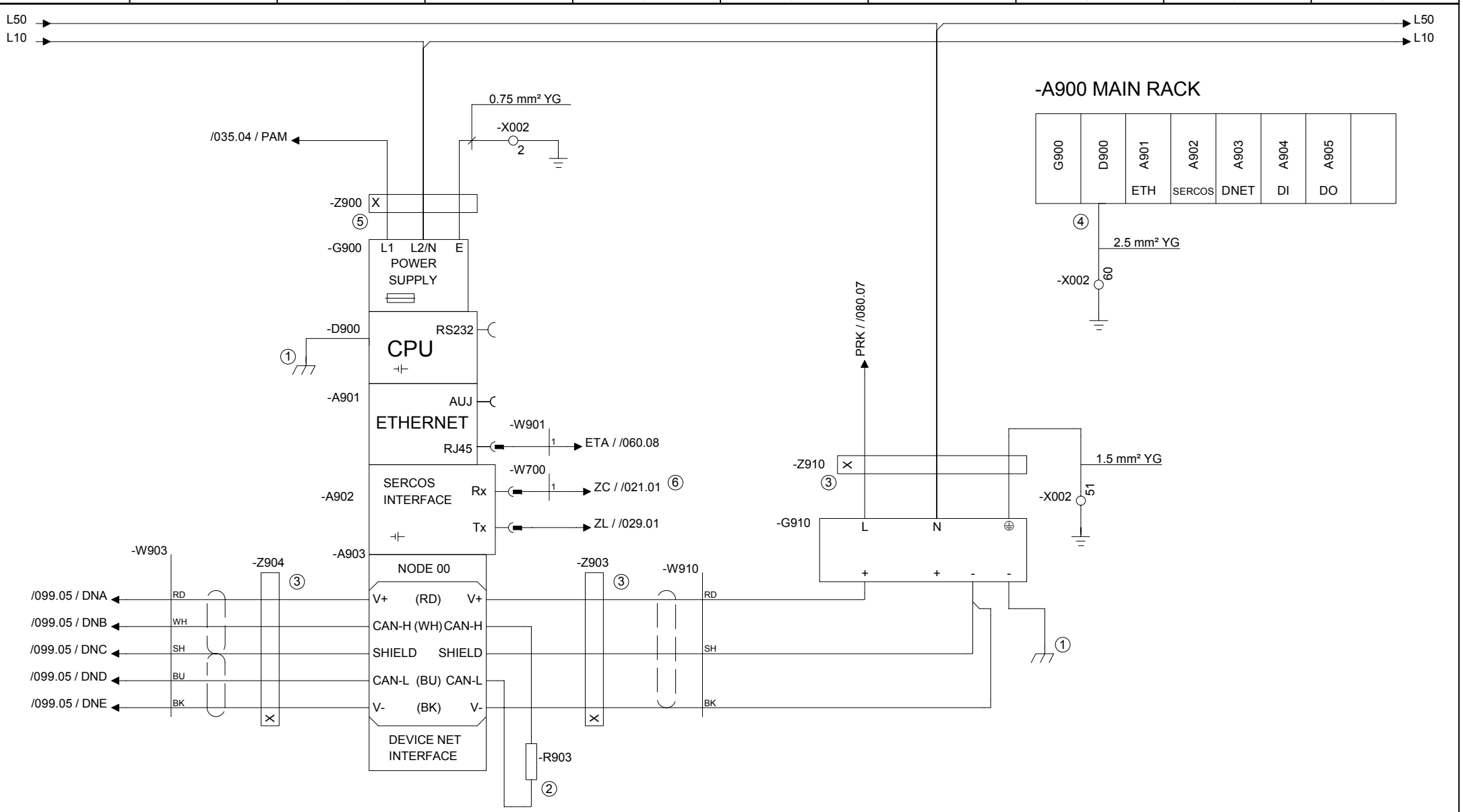

Drawing remarks	Tetra Pak	Designer LUP	Date 23/11/2007	Machine Tetra Pak A3/Flex 0150	
		ECM No 320174	Denomination CIRCUIT DIAGRAM	Page Type ROCKWELL PLC POWER SUPPLY	
		Company Tetra Pak (Italy)	Document No. 2845987-0003	Doc. type ELD	Version AE	Page 081

RELEASED

This drawing must not without the consent of Tetra Pak be copied, transmitted or disclosed to any third party.

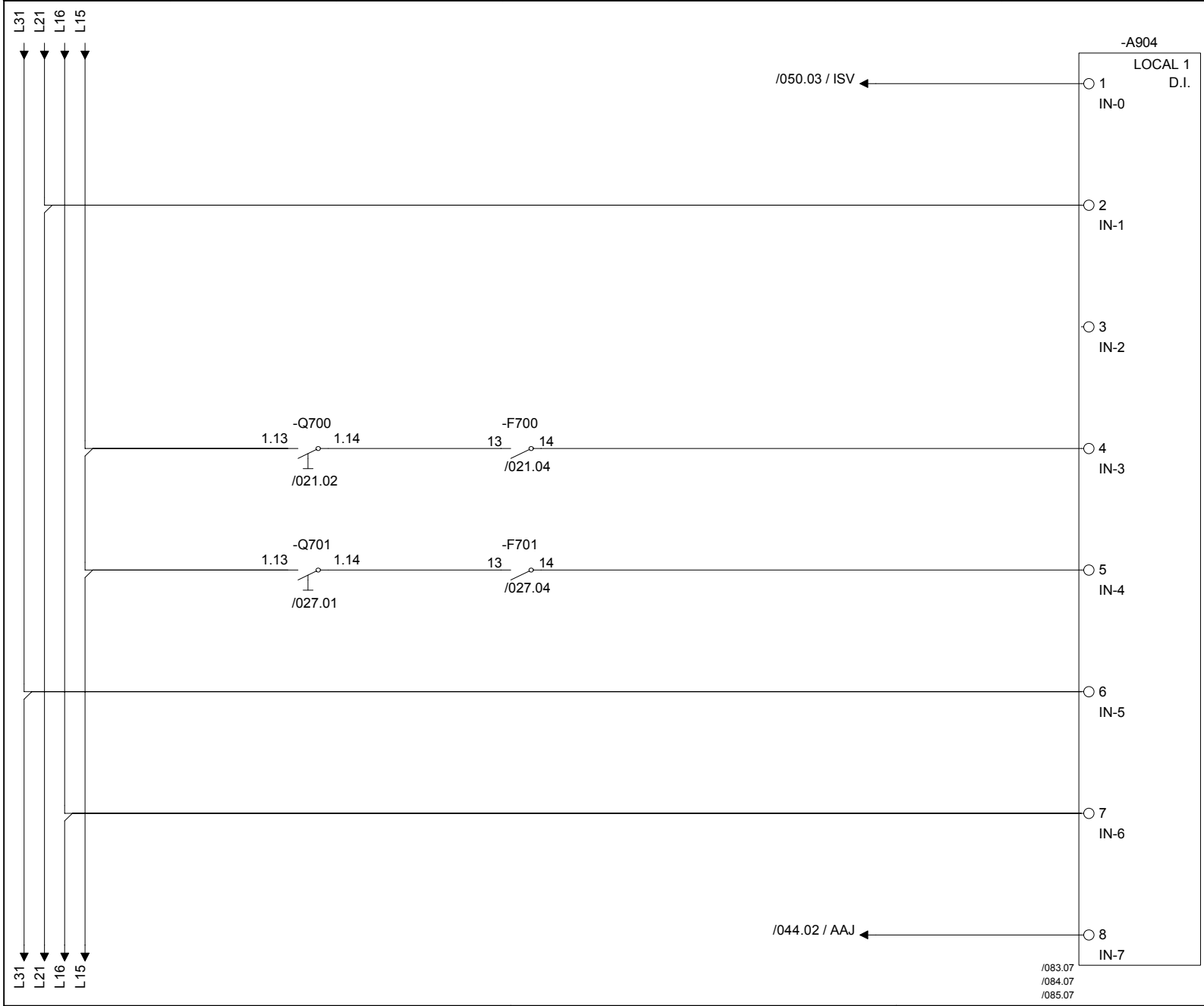

BAR CODE SIGNAL DCS

条码信号DCS

NO GENERAL EMERGENCY STOP

无一般紧急停止

SPARE

JAW OVERLOAD PROTECTION
MAIN / AUXILIARY POWER
SERVO-MOTORS

钳口过载保护主/辅助电源伺服电机

FFU OVERLOAD PROTECTION
MAIN / AUXILIARY POWER
SERVO-MOTORS

FFU过载保护主/辅助电源伺服电机

MACHINE BODY
SAFETY MONITOR

机身安全监视器

BRAKE POWER
SUPPLY MONITORING

制动电源监控

TGA FFU OVERLOAD PROTECTION
MAIN POWER SERVO MOTORS

TGA FFU过载保护主电源伺服电机

Drawing remarks	Tetra Pak	Designer LUP	Date 23/11/2007	Machine Tetra Pak A3/Flex 0150	
		ECM No 320174	Denomination CIRCUIT DIAGRAM	Page Type ROCKWELL PLC DIGITAL INPUT	
	Company Tetra Pak (Italy)	Document No. 2845987-0003	Doc. type ELD	Version AE	Page 082

RELEASED

This drawing must not without the consent of Tetra Pak be copied, transmitted or disclosed to any third party.

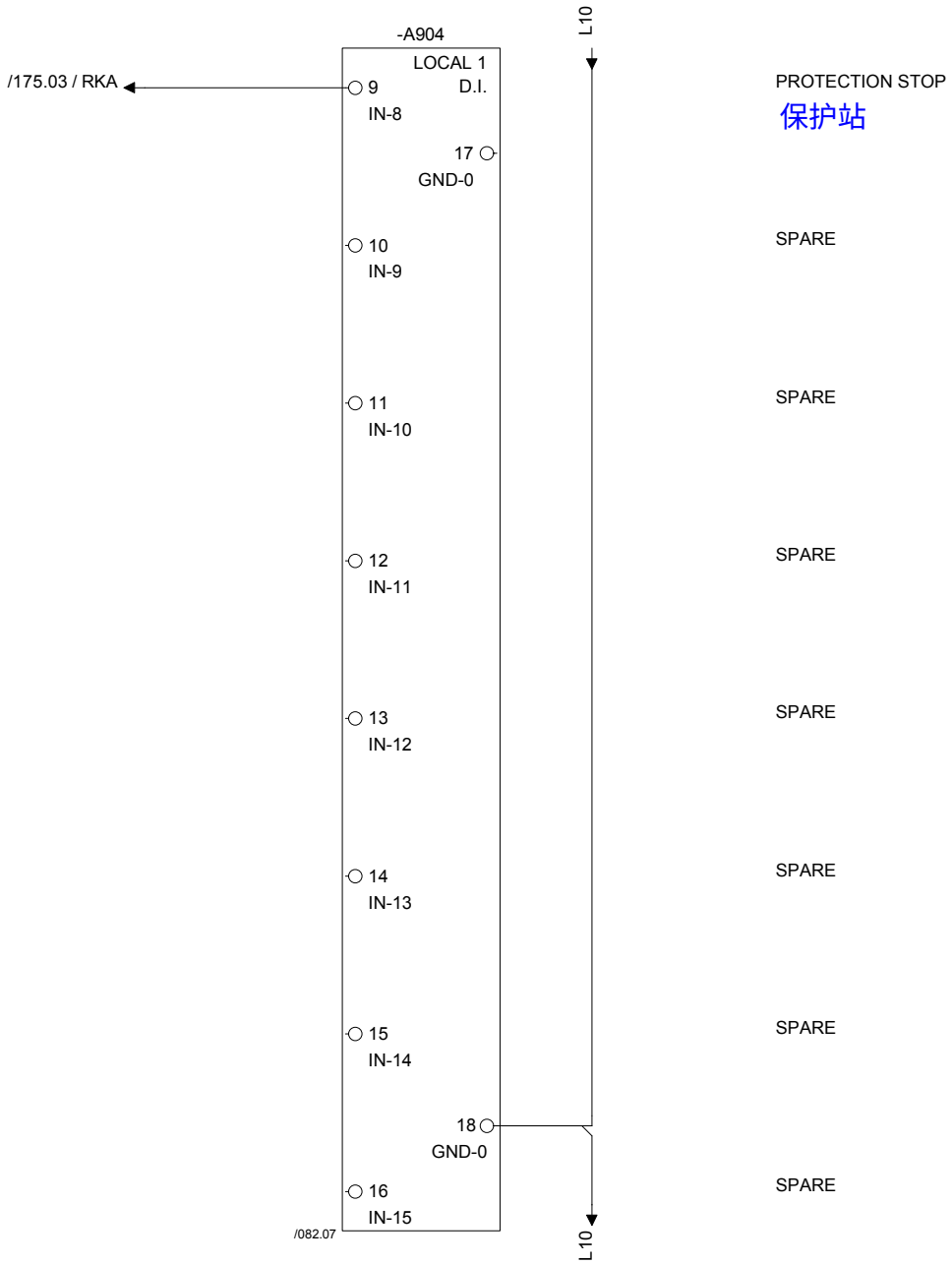

Drawing remarks	Tetra Pak	Designer LUP	Date 23/11/2007	Machine Tetra Pak A3/Flex 0150	
		ECM No 320174	Denomination CIRCUIT DIAGRAM	Page Type ROCKWELL PLC DIGITAL INPUT	
		Company Tetra Pak (Italy)	Document No. 2845987-0003	Doc. type ELD	Version AE	Page 083

RELEASED

This drawing must not without the consent of Tetra Pak be copied, transmitted or disclosed to any third party.

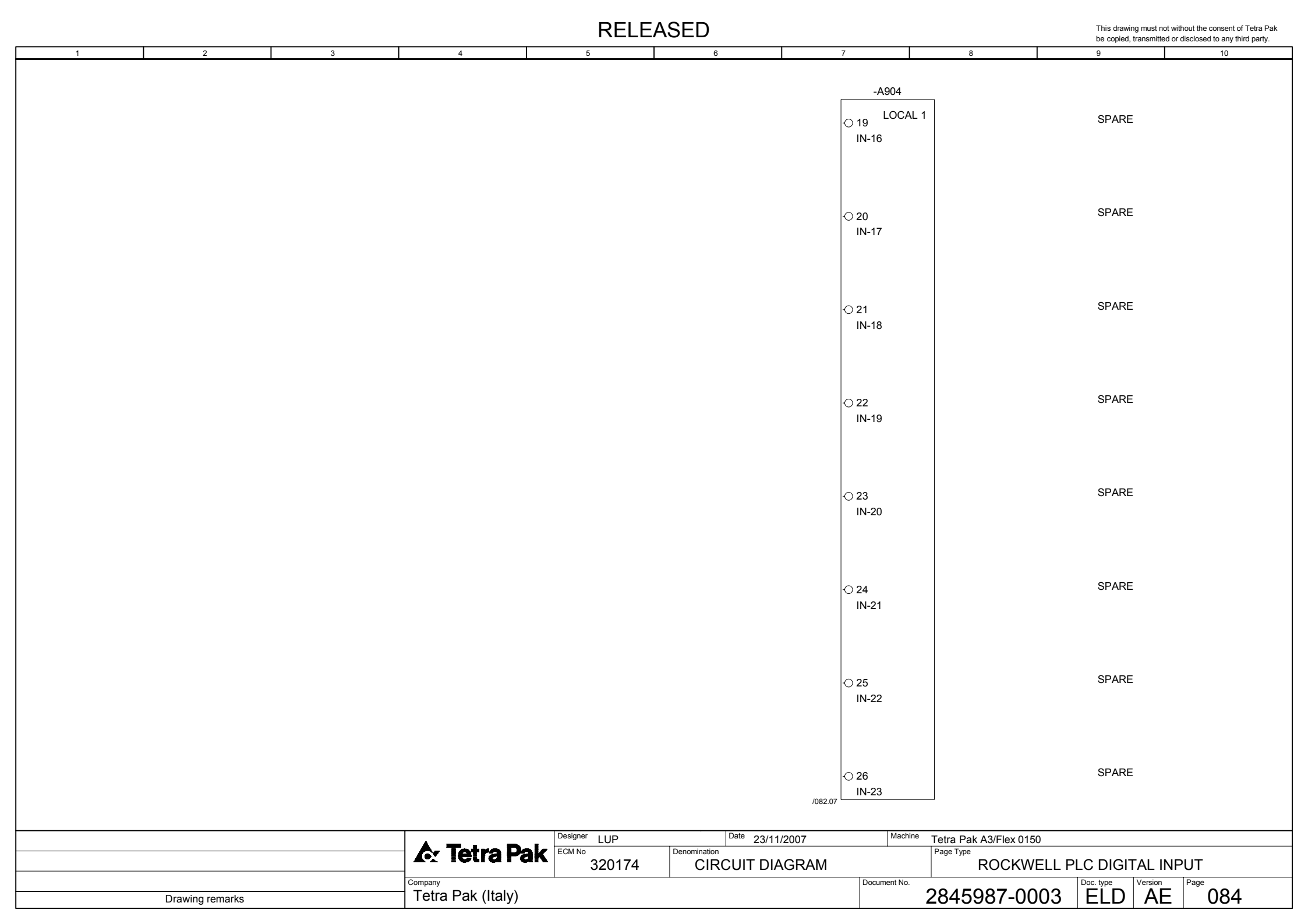

Drawing remarks	Tetra Pak	Designer LUP	Date 23/11/2007	Machine Tetra Pak A3/Flex 0150
		ECM No 320174	Denomination CIRCUIT DIAGRAM	Page Type ROCKWELL PLC DIGITAL INPUT
		Company Tetra Pak (Italy)	Document No. 2845987-0003	Doc. type ELD / Version AE / Page 084

RELEASED

This drawing must not without the consent of Tetra Pak be copied, transmitted or disclosed to any third party.

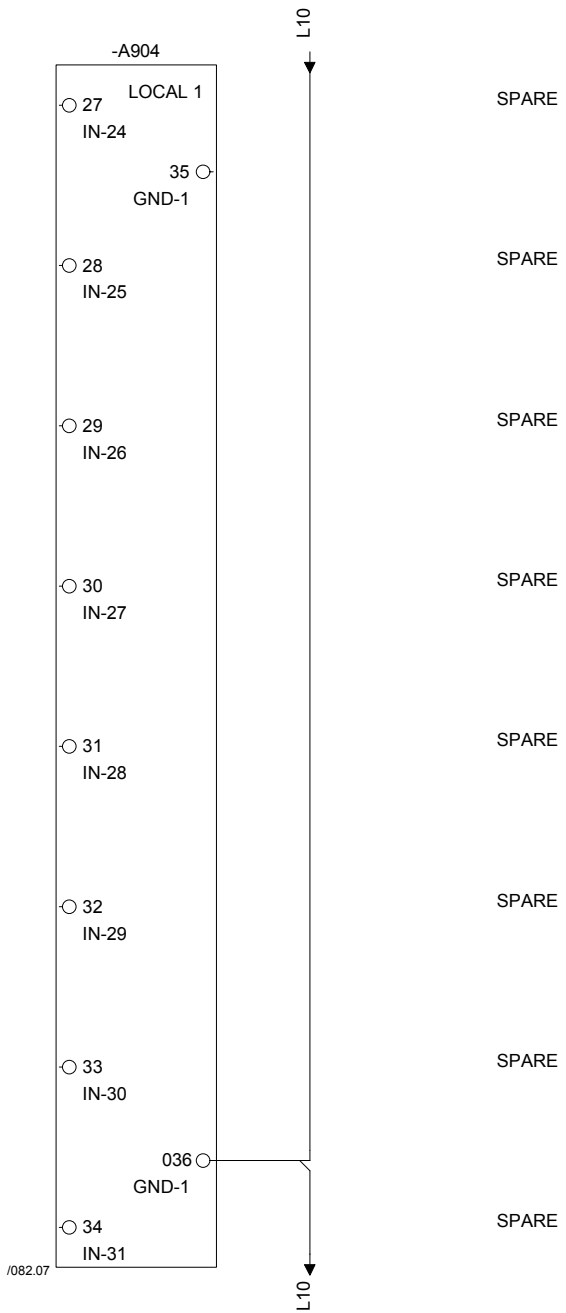

Drawing remarks	Tetra Pak	Designer LUP	Date 23/11/2007	Machine Tetra Pak A3/Flex 0150	
		ECM No 320174	Denomination CIRCUIT DIAGRAM	Page Type ROCKWELL PLC DIGITAL INPUT	
	Company Tetra Pak (Italy)	Document No. 2845987-0003	Doc. type ELD	Version AE	Page 085

This drawing must not without the consent of Tetra Pak be copied, transmitted or disclosed to any third party.

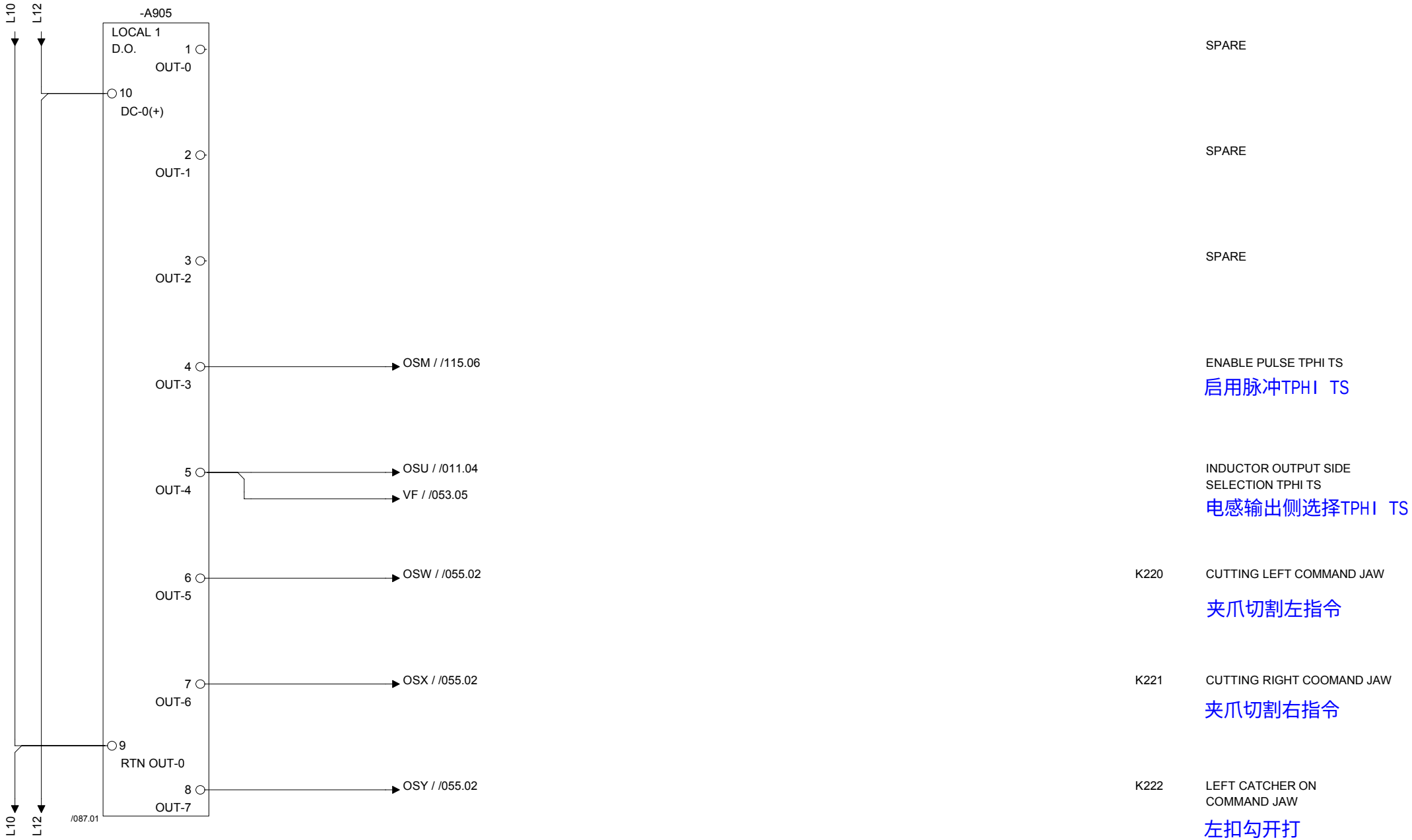

SPARE

SPARE

SPARE

ENABLE PULSE TPHI TS

启用脉冲TPHI TS

INDUCTOR OUTPUT SIDE SELECTION TPHI TS

电感输出侧选择TPHI TS

K220 CUTTING LEFT COMMAND JAW

夹爪切割左指令

K221 CUTTING RIGHT COOMAND JAW

夹爪切割右指令

K222 LEFT CATCHER ON COMMAND JAW

左扣勾开打

Drawing remarks

Tetra Pak

Designer LUP	Date 23/11/2007	Machine Tetra Pak A3/Flex 0150	
ECM No 320174	Denomination CIRCUIT DIAGRAM	Page Type ROCKWELL PLC DIGITAL OUPUT	
Company Tetra Pak (Italy)	Document No. 2845987-0003	Doc. type ELD	Version AE	Page 086

RELEASED

This drawing must not without the consent of Tetra Pak be copied, transmitted or disclosed to any third party.

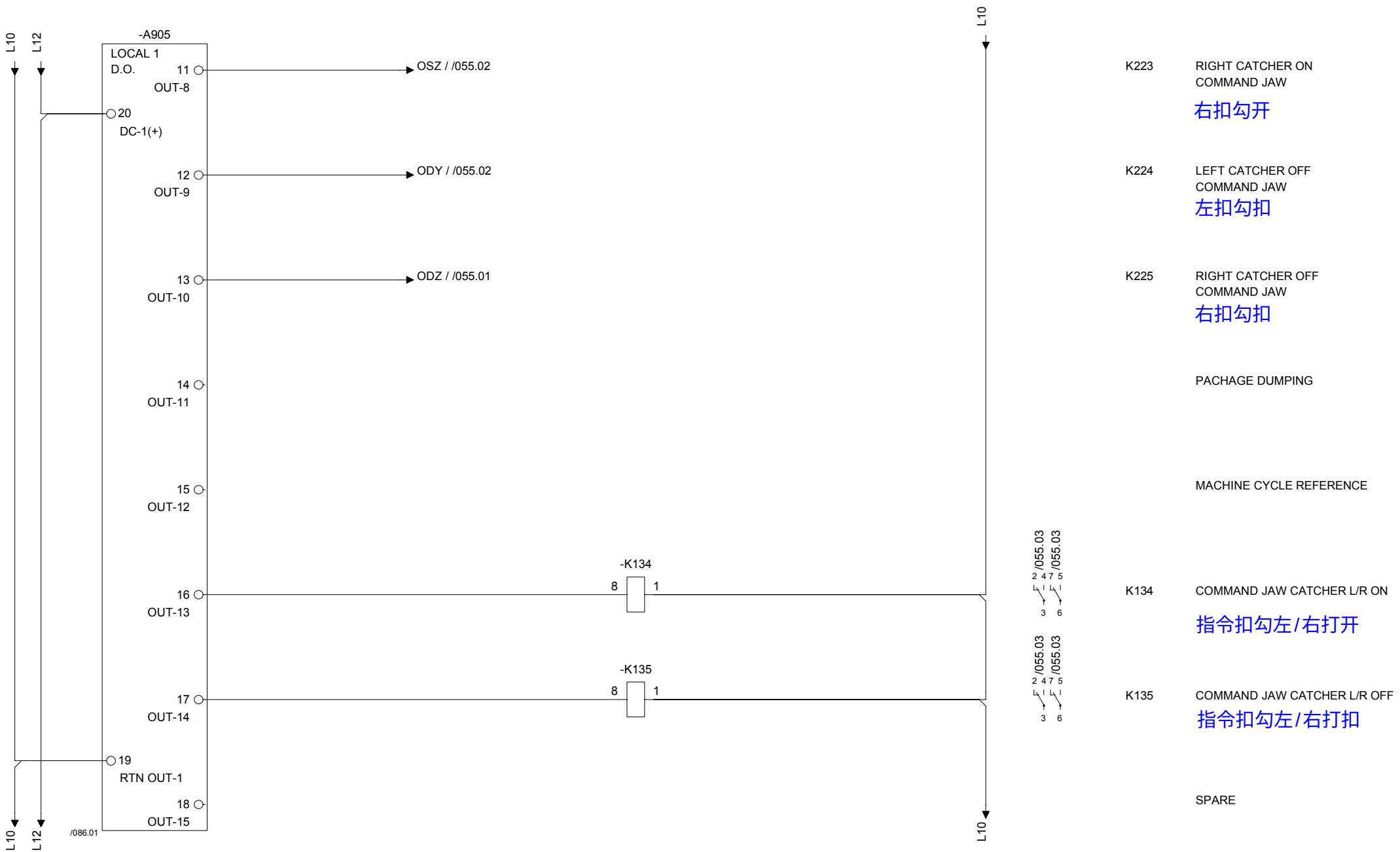

Drawing remarks	Tetra Pak	Designer LUP	Date 23/11/2007	Machine Tetra Pak A3/Flex 0150	
		ECM No 320174	Denomination CIRCUIT DIAGRAM	Page Type ROCKWELL PLC DIGITAL OUPUT	
		Company Tetra Pak (Italy)	Document No. 2845987-0003	Doc. type ELD	Version AE	Page 087

RELEASED

This drawing must not without the consent of Tetra Pak be copied, transmitted or disclosed to any third party.

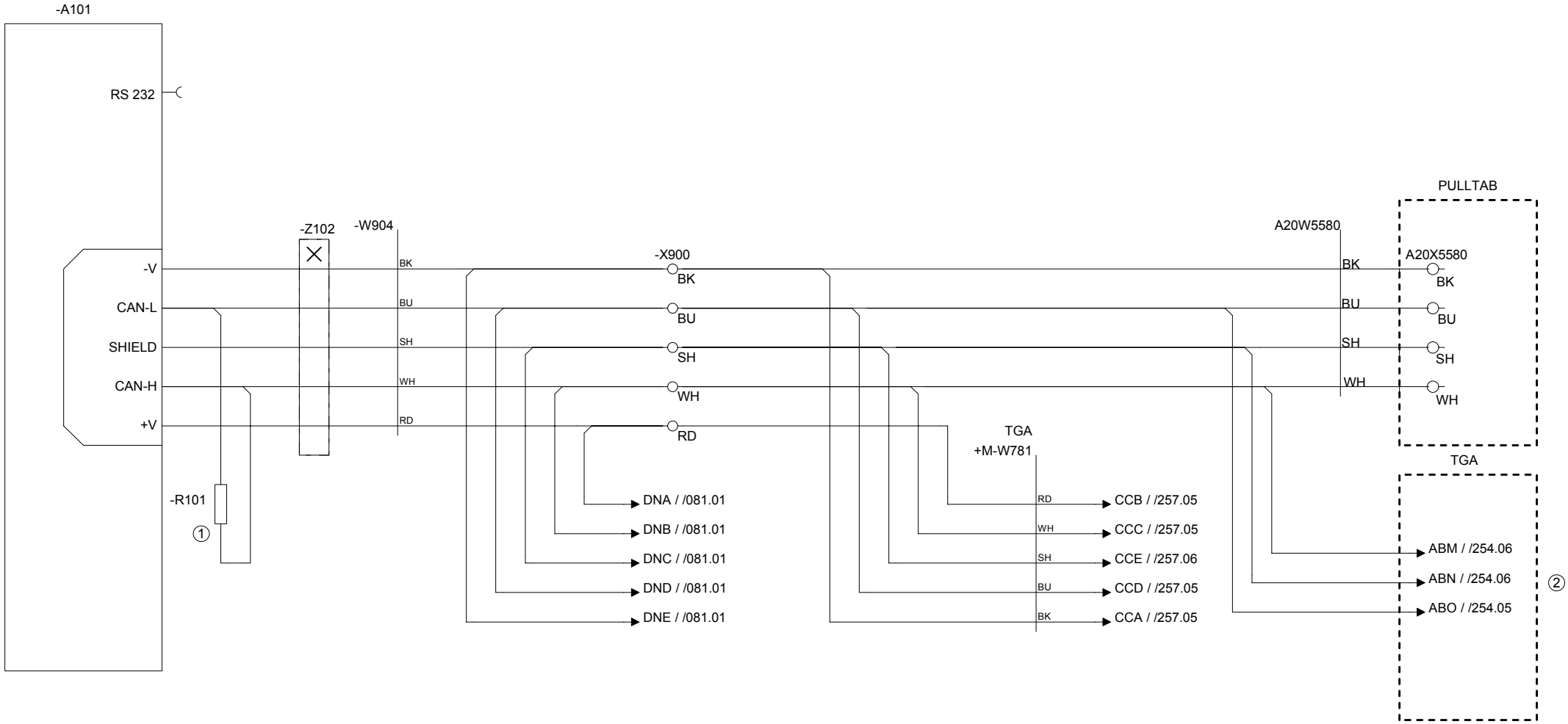

Drawing remarks	Tetra Pak	Designer LUP	Date 23/11/2007	Machine Tetra Pak A3/Flex 0150	
		ECM No 320174	Denomination CIRCUIT DIAGRAM	Page Type GE FANUC DEVICE NET INTERFACE	
	Company Tetra Pak (Italy)	Document No. 2845987-0003	Doc. type ELD	Version AE	Page 099

This drawing must not without the consent of Tetra Pak be copied, transmitted or disclosed to any third party.

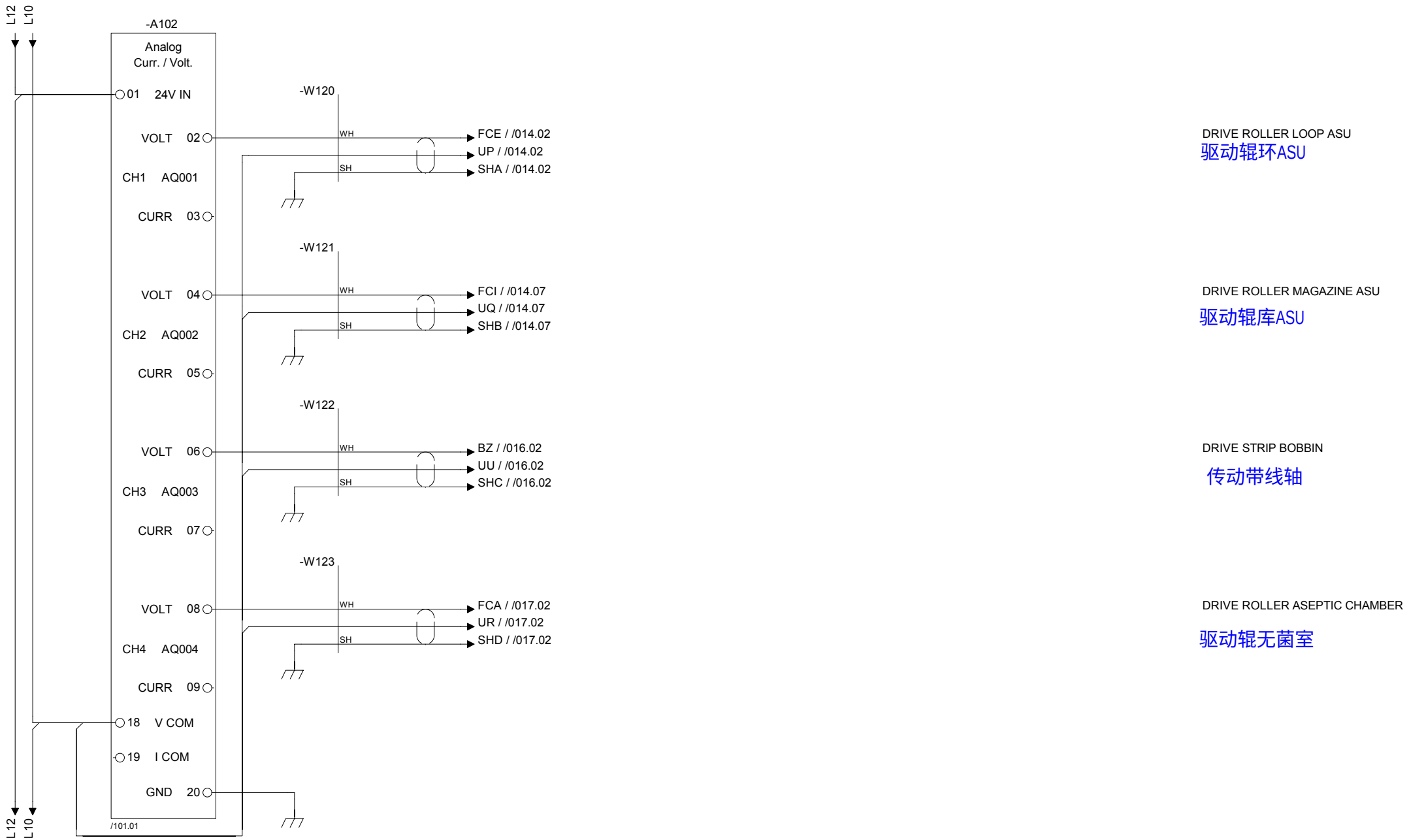

Drawing remarks

Tetra Pak

Designer LUP	Date 23/11/2007	Machine Tetra Pak A3/Flex 0150		
ECM No 320174	Denomination CIRCUIT DIAGRAM	Page Type PLC ANALOG OUTPUT		
Company Tetra Pak (Italy)	Document No. 2845987-0003	Doc. type ELD	Version AE	Page 100

This drawing must not without the consent of Tetra Pak be copied, transmitted or disclosed to any third party.

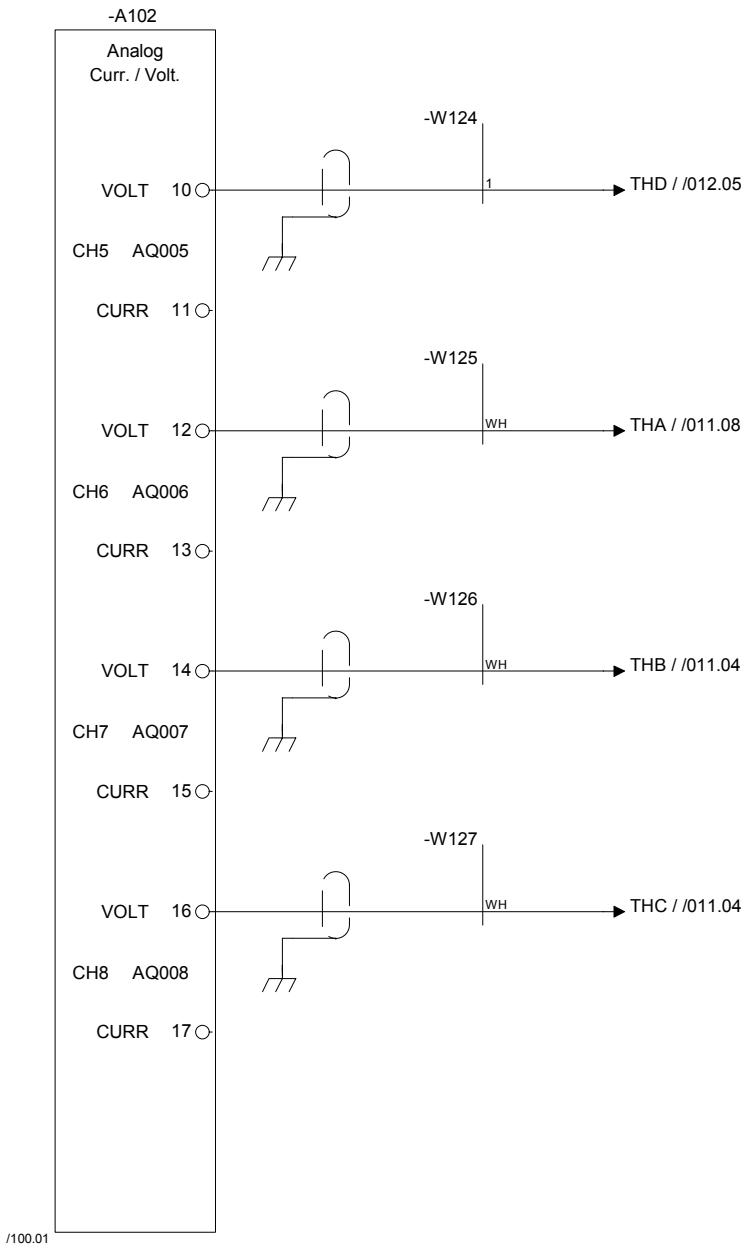

SEALING POWER TPIH - SA

密封功率TPIH-SA

SEALING POWER TPIH - LS

密封功率TPIH-LS

SEALING POWER TPIH - TS_LEFT

密封功率TPIH-左TS

SEALING POWER TPIH - TS_RIGHT

密封功率TPIH-t R

Drawing remarks	Tetra Pak	Designer LUP	Date 23/11/2007	Machine Tetra Pak A3/Flex 0150			
		ECM No 320174	Denomination CIRCUIT DIAGRAM	Page Type PLC ANALOG OUTPUT			
		Company Tetra Pak (Italy)	Document No. 2845987-0003	Doc. type ELD	Version AE	Page 101	

RELEASED

This drawing must not without the consent of Tetra Pak be copied, transmitted or disclosed to any third party.

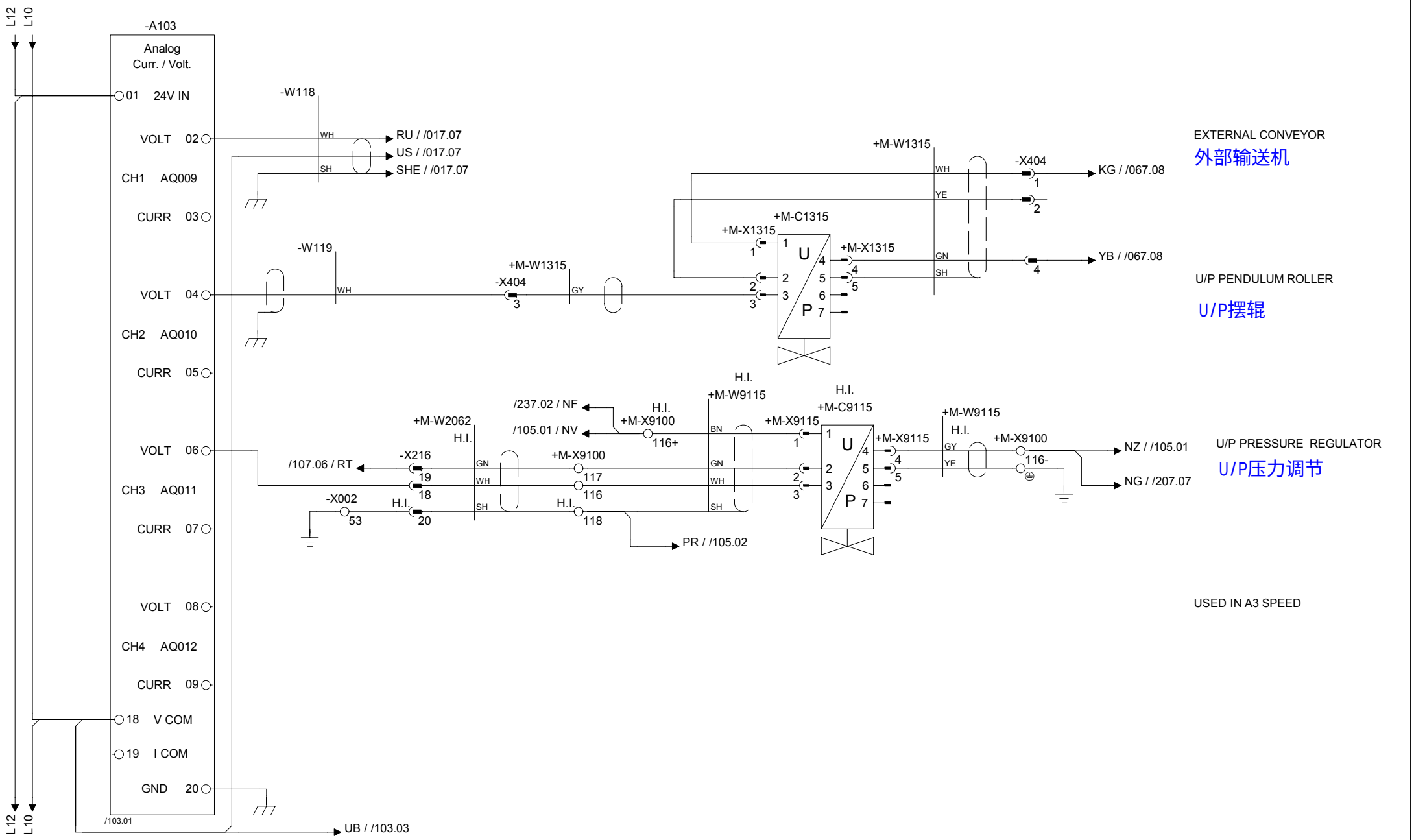

Drawing remarks	Tetra Pak	Designer LUP	Date 23/11/2007	Machine Tetra Pak A3/Flex 0150	
		ECM No 320174	Denomination CIRCUIT DIAGRAM	Page Type PLC ANALOG OUTPUT	
		Company Tetra Pak (Italy)	Document No. 2845987-0003	Doc. type ELD	Version AE	Page 102

This drawing must not without the consent of Tetra Pak
be copied, transmitted or disclosed to any third party.

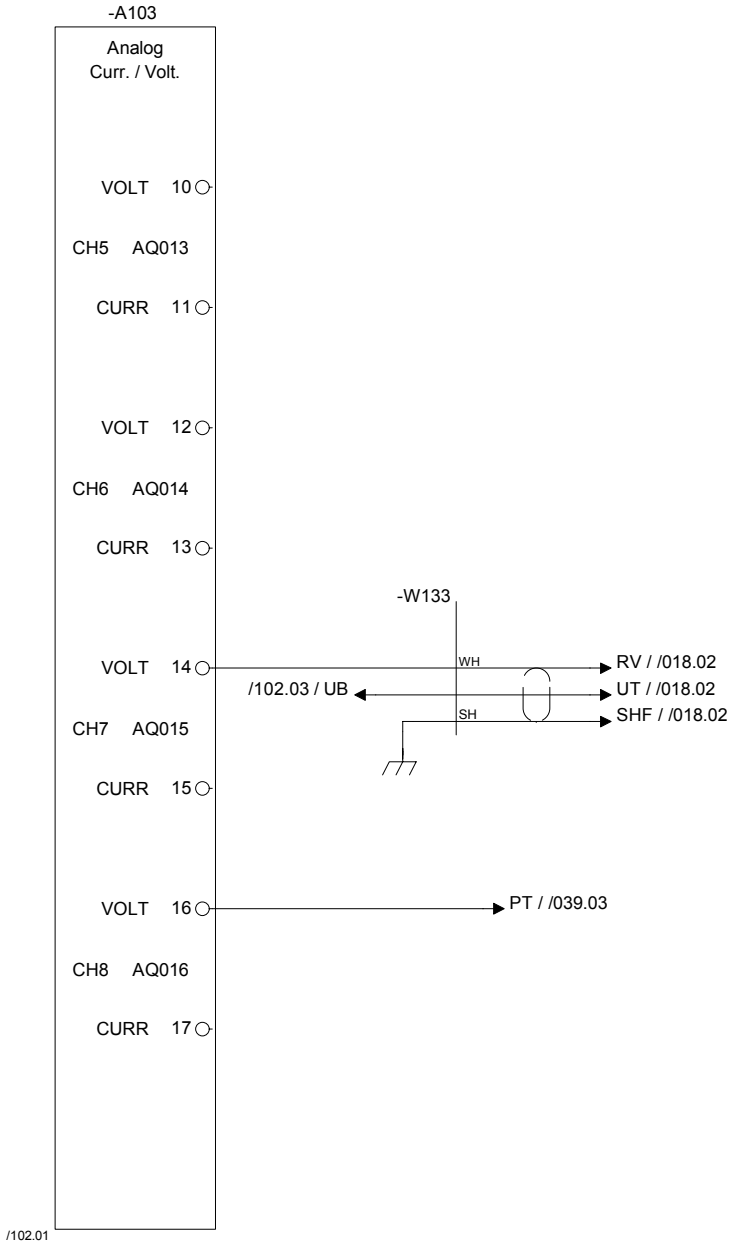

USED IN A3 SPEED

ICU PUMP

ICU泵

H2O2 CONCENTRATION
FOR RECORDER

过氧化氢浓度记录仪

Drawing remarks

Tetra Pak

Designer LUP	Date 23/11/2007	Machine Tetra Pak A3/Flex 0150	
ECM No 320174	Denomination CIRCUIT DIAGRAM	Page Type PLC ANALOG OUTPUT	
Company Tetra Pak (Italy)	Document No. 2845987-0003	Doc. type ELD	Version AE	Page 103

RELEASED

This drawing must not without the consent of Tetra Pak be copied, transmitted or disclosed to any third party.

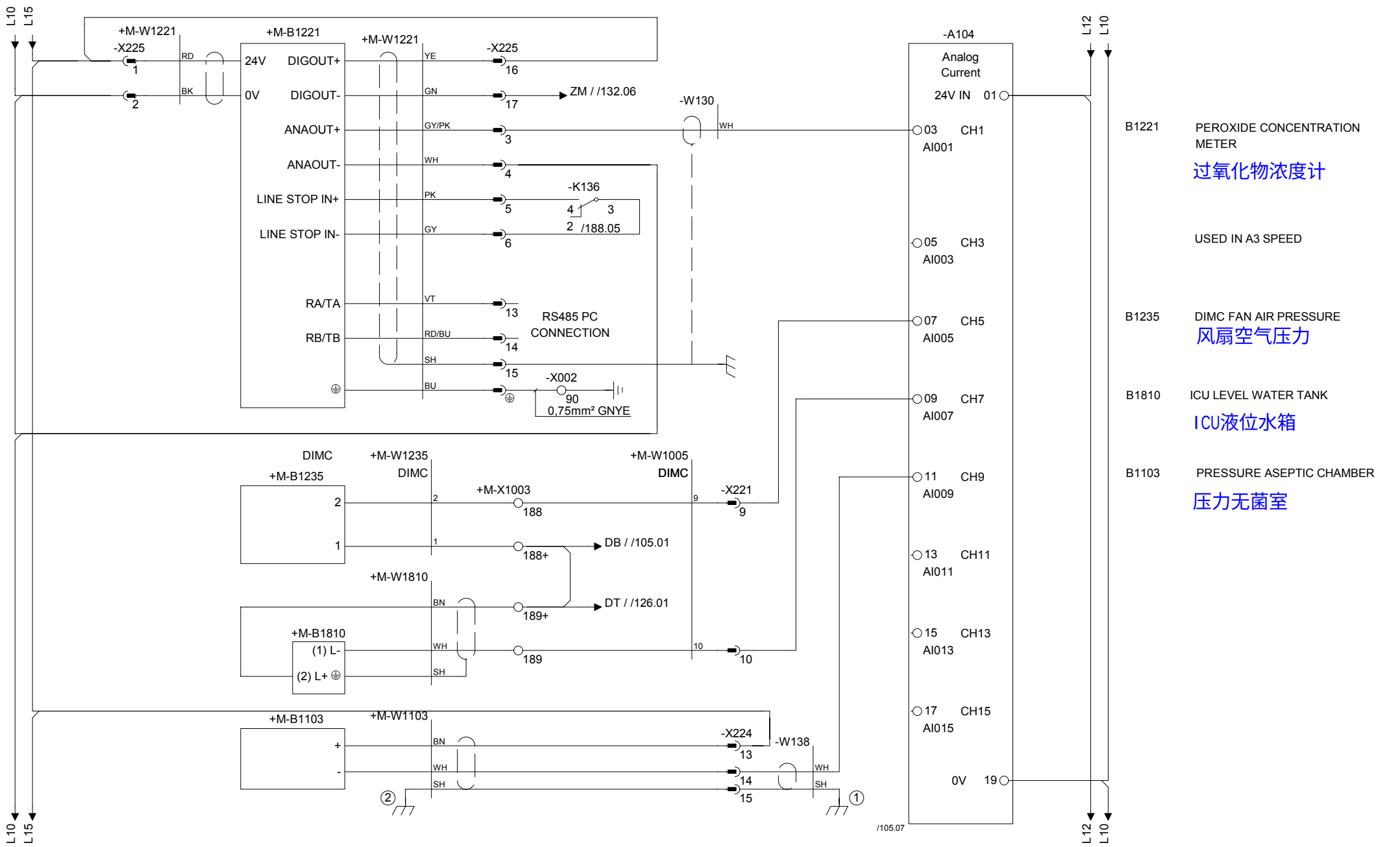

Drawing remarks	Tetra Pak	Designer LUP	Date 23/11/2007	Machine Tetra Pak A3/Flex 0150	
		ECM No 320174	Denomination CIRCUIT DIAGRAM	Page Type PLC ANALOG INPUT	
		Company Tetra Pak (Italy)	Document No. 2845987-0003	Doc. type ELD	Version AE	Page 104

RELEASED

This drawing must not without the consent of Tetra Pak be copied, transmitted or disclosed to any third party.

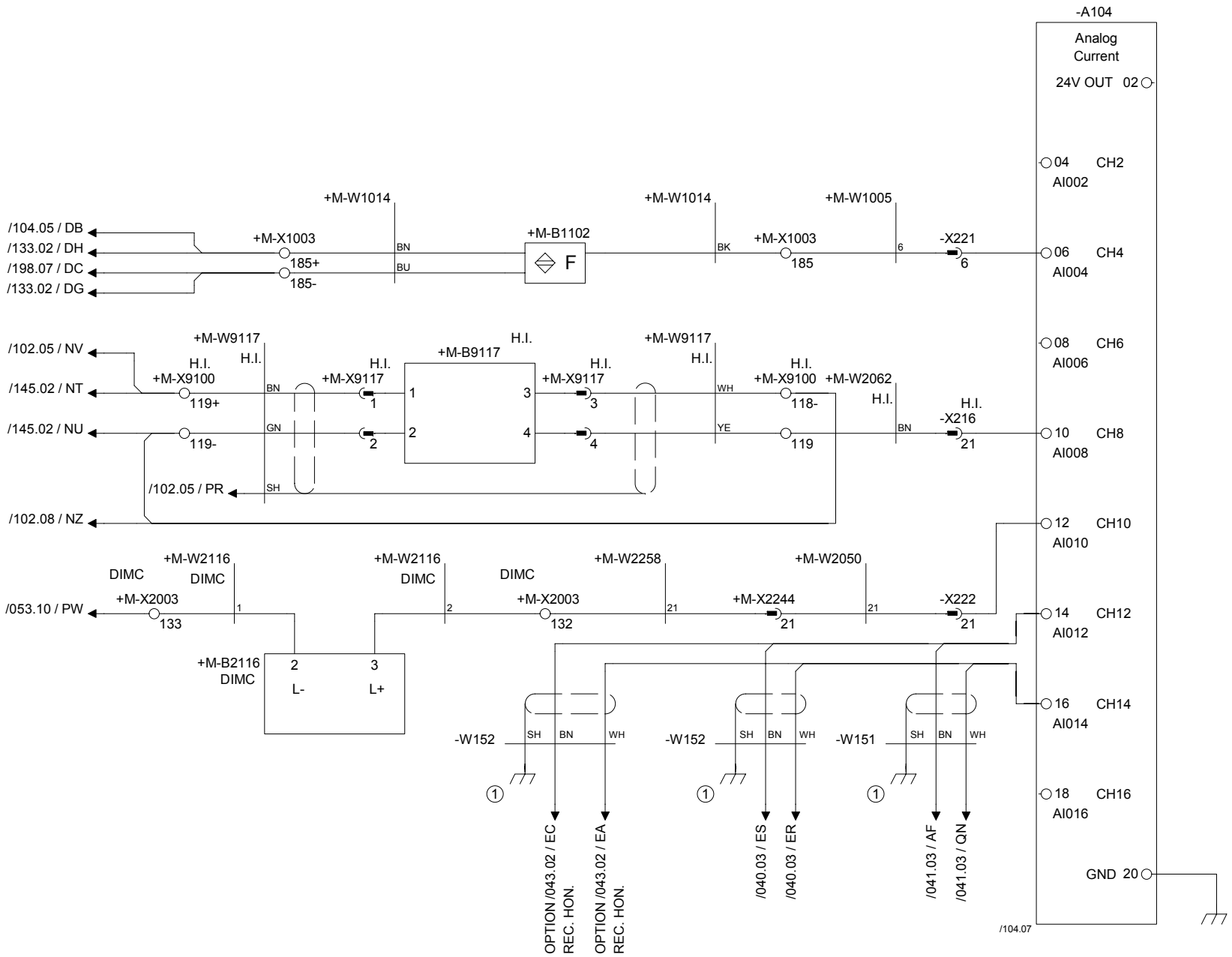

USED IN A3 SPEED

B1102 SEPARATOR AIR FLOW
分离器气流

RESERVED FOR CONTRONIC CONDUCTIVITY METER (P003)
预留用于控制电导率仪（P003）

B9117 FLOW SENSOR
流量传感器

B2116 CONDUCTIVITY METER (PEROXIDE DILUTION KIT)
电导率计（过氧化氢稀释套件）

CIP TEMPERATURE
CIP温度

CIP CONDUCTIVITY
CIP电导率

Drawing remarks	Tetra Pak	Designer LUP	Date 23/11/2007	Machine Tetra Pak A3/Flex 0150	
		ECM No 320174	Denomination CIRCUIT DIAGRAM	Page Type PLC ANALOG INPUT	
	Company Tetra Pak (Italy)	Document No. 2845987-0003	Doc. type ELD	Version AE	Page 105

RELEASED

This drawing must not without the consent of Tetra Pak be copied, transmitted or disclosed to any third party.

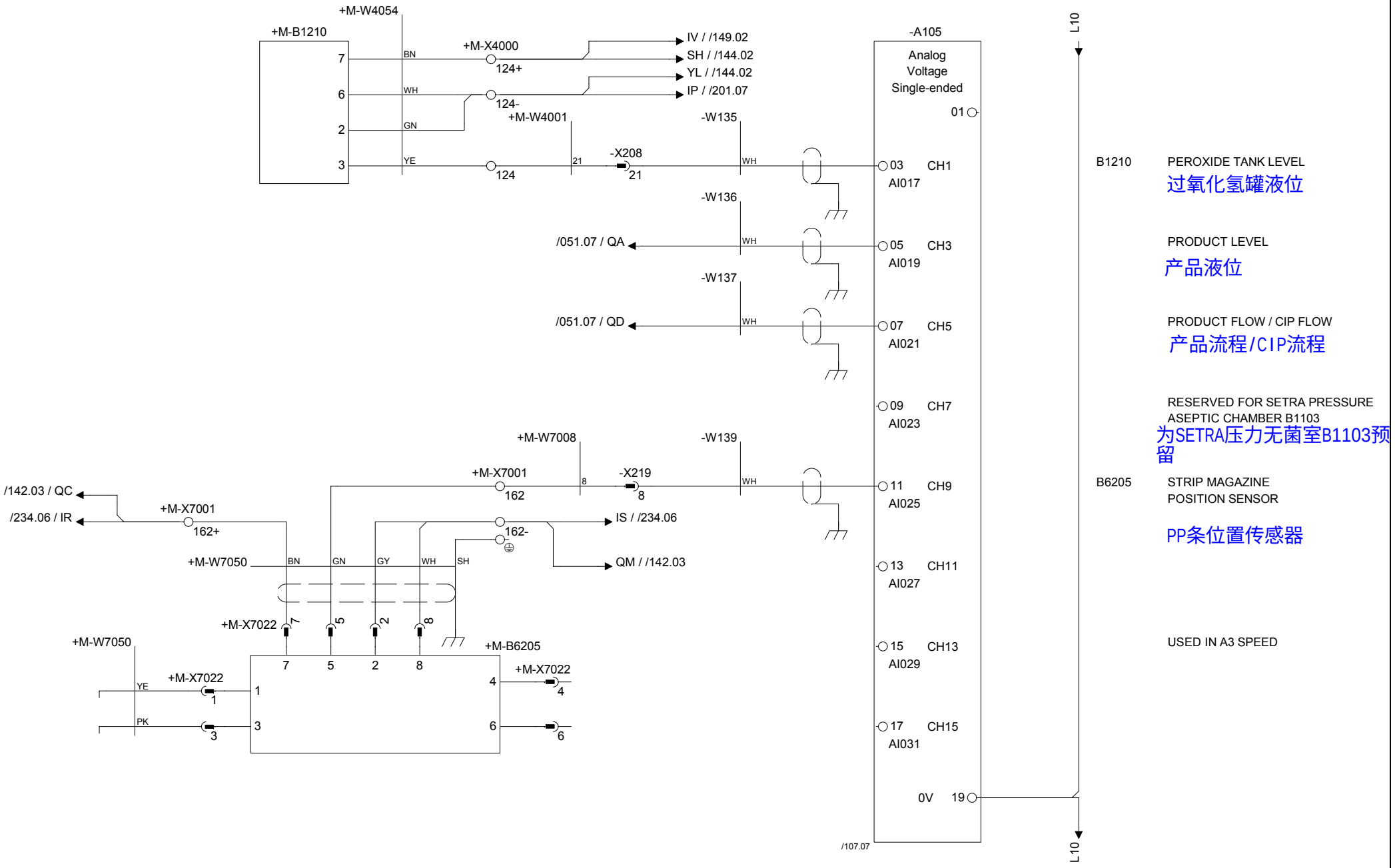

Drawing remarks	Tetra Pak	Designer LUP	Date 23/11/2007	Machine Tetra Pak A3/Flex 0150	
		ECM No 320174	Denomination CIRCUIT DIAGRAM	Page Type PLC ANALOG VOLTAGE IN	
		Company Tetra Pak (Italy)	Document No. 2845987-0003	Doc. type ELD	Version AE	Page 106

This drawing must not without the consent of Tetra Pak
be copied, transmitted or disclosed to any third party.

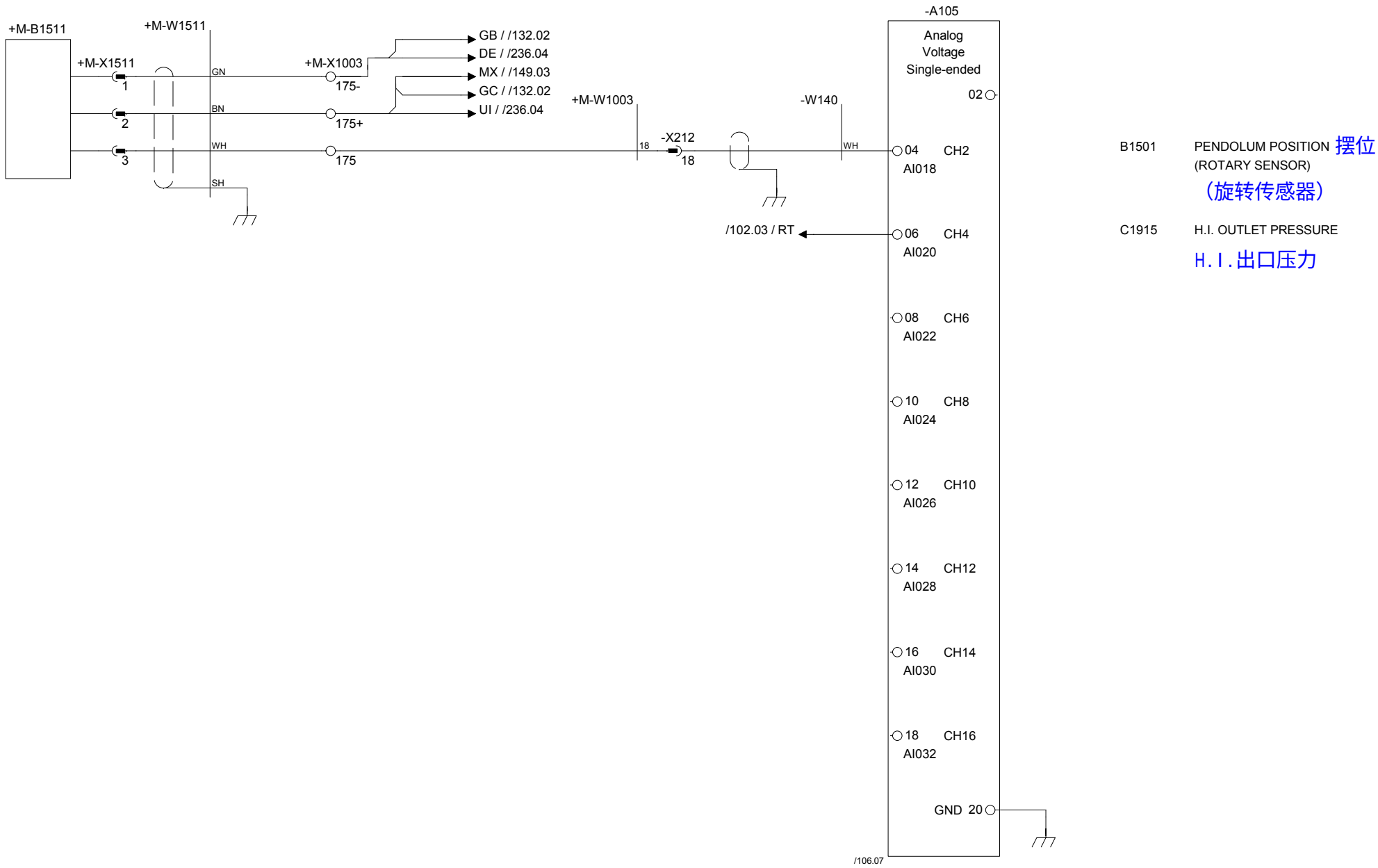

B1501 PENDOLUM POSITION 摆位
(ROTARY SENSOR)
（旋转传感器）

C1915 H.I. OUTLET PRESSURE
H.I.出口压力

Drawing remarks	Tetra Pak	Designer LUP	Date 23/11/2007	Machine Tetra Pak A3/Flex 0150	
		ECM No 320174	Denomination CIRCUIT DIAGRAM	Page Type PLC ANALOG VOLTAGE IN	
	Company Tetra Pak (Italy)	Document No. 2845987-0003	Doc. type ELD	Version AE	Page 107

This drawing must not without the consent of Tetra Pak
be copied, transmitted or disclosed to any third party.

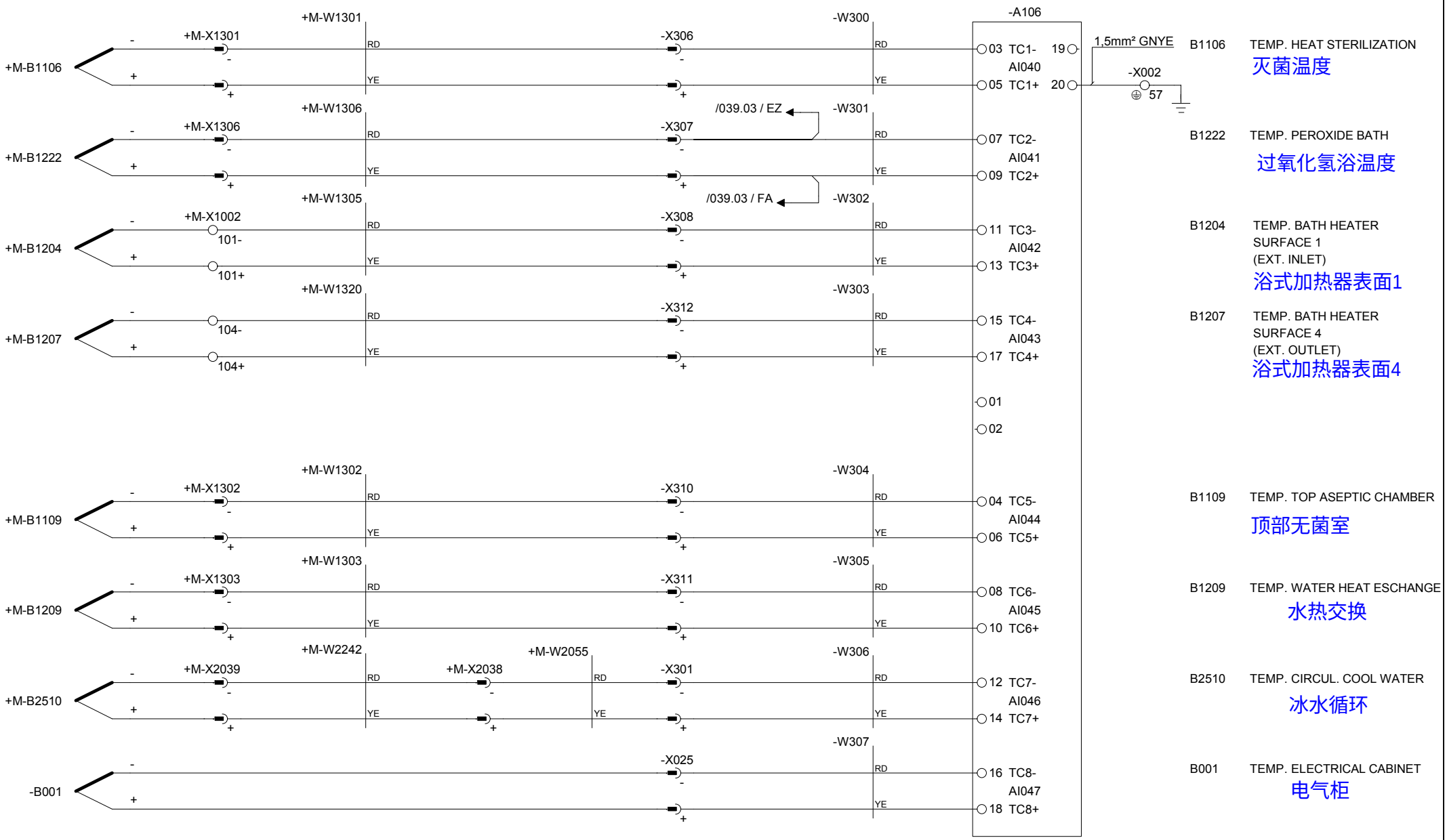

Drawing remarks	Tetra Pak	Designer LUP	Date 23/11/2007	Machine Tetra Pak A3/Flex 0150			
		ECM No 320174	Denomination CIRCUIT DIAGRAM	Page Type PLC THERMOCOUPLE INPUT			
		Company Tetra Pak (Italy)	Document No. 2845987-0003	Doc. type ELD	Version AE	Page 110	

This drawing must not without the consent of Tetra Pak
be copied, transmitted or disclosed to any third party.

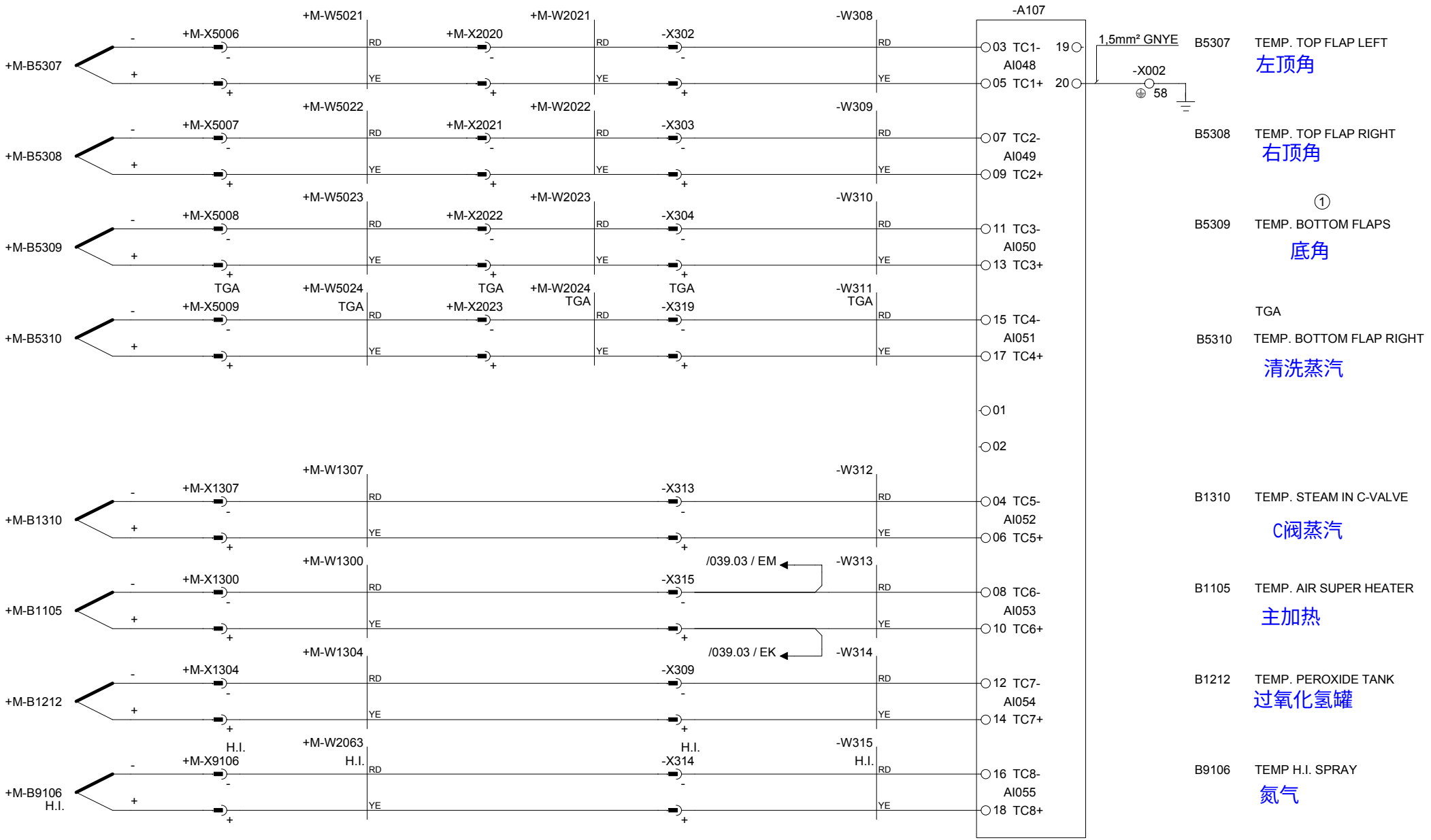

Drawing remarks	Tetra Pak	Designer LUP	Date 23/11/2007	Machine Tetra Pak A3/Flex 0150			
		ECM No 320174	Denomination CIRCUIT DIAGRAM	Page Type PLC THERMOCOUPLE INPUT			
	Company Tetra Pak (Italy)		Document No. 2845987-0003	Doc. type ELD	Version AE	Page 111	

RELEASED

This drawing must not without the consent of Tetra Pak be copied, transmitted or disclosed to any third party.

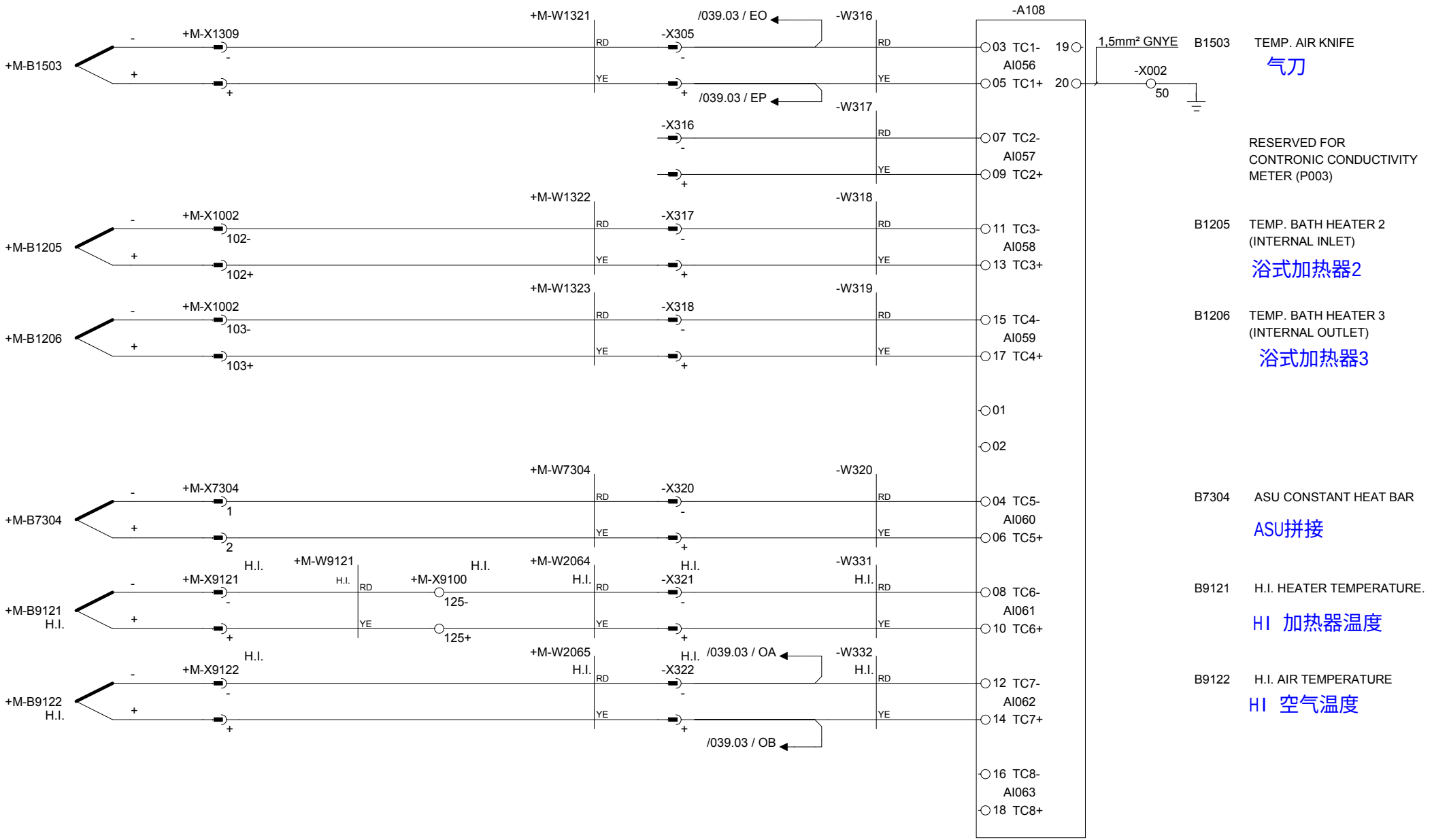

Drawing remarks	Tetra Pak	Designer LUP	Date 23/11/2007	Machine Tetra Pak A3/Flex 0150	
		ECM No 320174	Denomination CIRCUIT DIAGRAM	Page Type PLC THERMOCOUPLE INPUT	
	Company Tetra Pak (Italy)	Document No. 2845987-0003	Doc. type ELD	Version AE	Page 112

This drawing must not without the consent of Tetra Pak be copied, transmitted or disclosed to any third party.

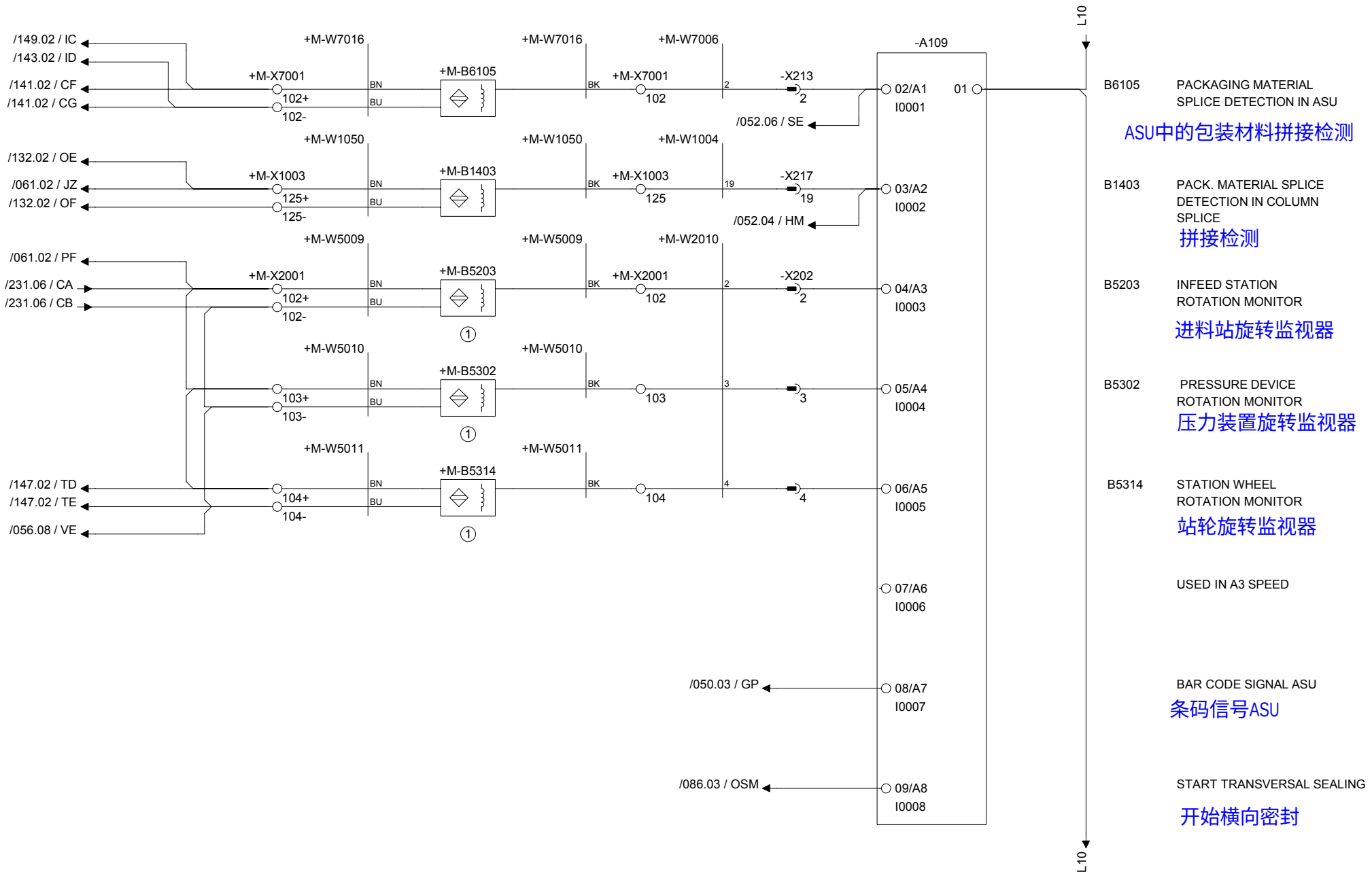

Drawing remarks	Tetra Pak	Designer LUP	Date 23/11/2007	Machine Tetra Pak A3/Flex 0150	
		ECM No 320174	Denomination CIRCUIT DIAGRAM	Page Type PLC-IN	
	Company Tetra Pak (Italy)	Document No. 2845987-0003	Doc. type ELD	Version AE	Page 115

This drawing must not without the consent of Tetra Pak be copied, transmitted or disclosed to any third party.

1	2	3	4	5	6	7	8	9	10

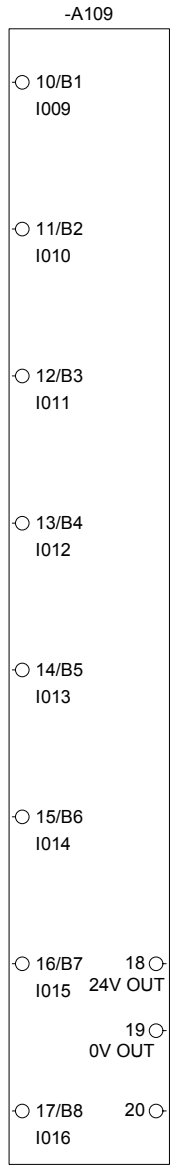

USED IN A3/SPEED

USED IN A3/SPEED

USED IN A3/SPEED

USED IN A3/SPEED

USED INA3/SPEED

USED IN A3/SPEED

USED IN A3/SPEED

USED IN A3/SPEED

Drawing remarks

Tetra Pak

Designer LUP	Date 23/11/2007	Machine Tetra Pak A3/Flex 0150		
ECM No 320174	Denomination CIRCUIT DIAGRAM	Page Type PLC-IN		
Company Tetra Pak (Italy)	Document No. 2845987-0003	Doc. type ELD	Version AE	Page 116

This drawing must not without the consent of Tetra Pak
be copied, transmitted or disclosed to any third party.

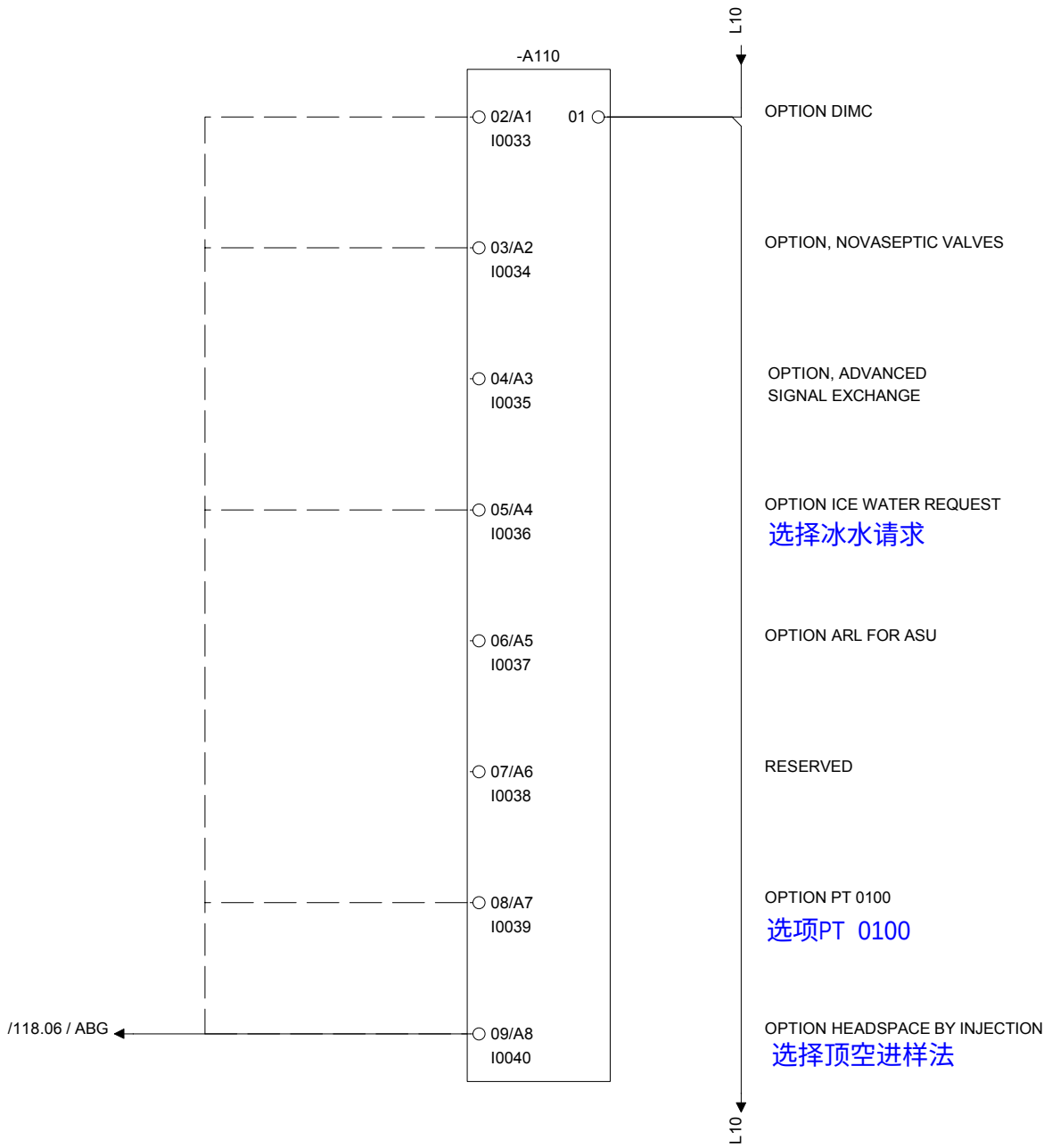

Drawing remarks

Tetra Pak

Designer LUP	Date 23/11/2007	Machine Tetra Pak A3/Flex 0150	
ECM No 320174	Denomination CIRCUIT DIAGRAM	Page Type PLC-IN	
Company Tetra Pak (Italy)	Document No. 2845987-0003	Doc. type ELD	Version AE	Page 117

RELEASED

This drawing must not without the consent of Tetra Pak
be copied, transmitted or disclosed to any third party.

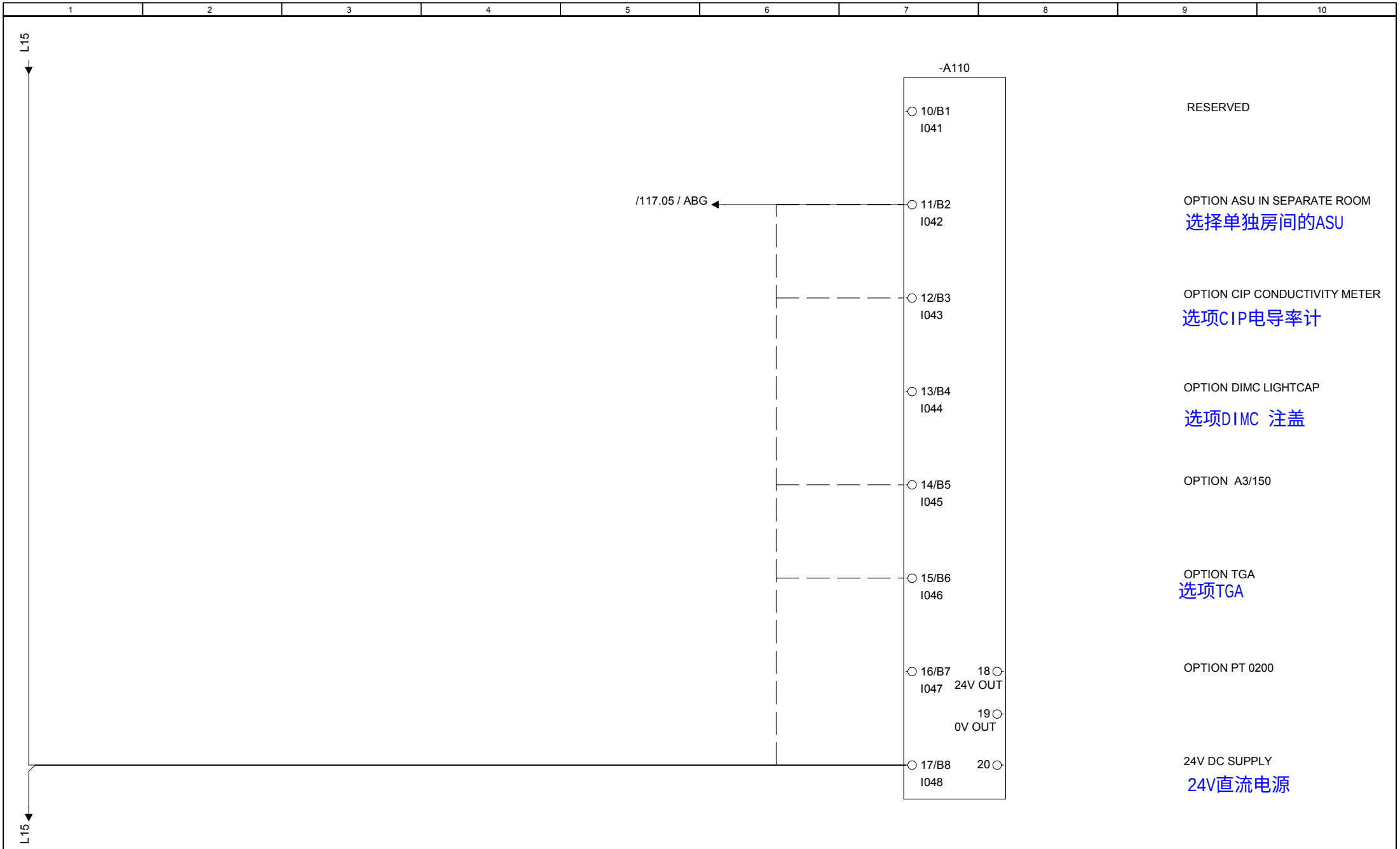

Drawing remarks	Tetra Pak	Designer LUP	Date 23/11/2007	Machine Tetra Pak A3/Flex 0150			
		ECM No 320174	Denomination CIRCUIT DIAGRAM	Page Type PLC-IN			
	Company Tetra Pak (Italy)		Document No. 2845987-0003	Doc. type ELD	Version AE	Page 118	

RELEASED

This drawing must not without the consent of Tetra Pak be copied, transmitted or disclosed to any third party.

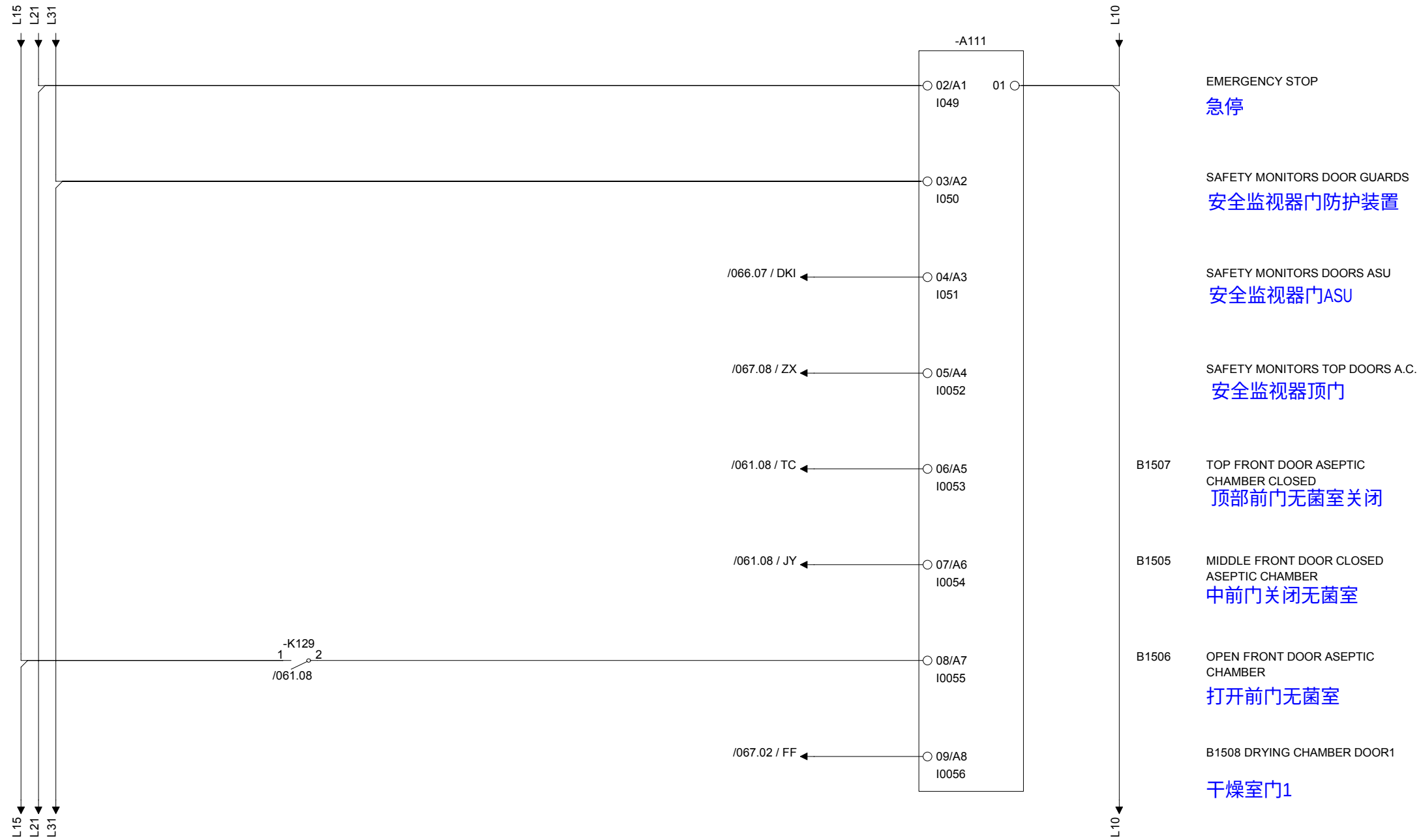

Drawing remarks	Tetra Pak	Designer LUP	Date 23/11/2007	Machine Tetra Pak A3/Flex 0150			
		ECM No 320174	Denomination CIRCUIT DIAGRAM	Page Type PLC-IN			
	Company Tetra Pak (Italy)		Document No. 2845987-0003	Doc. type ELD	Version AE	Page 119	

This drawing must not without the consent of Tetra Pak be copied, transmitted or disclosed to any third party.

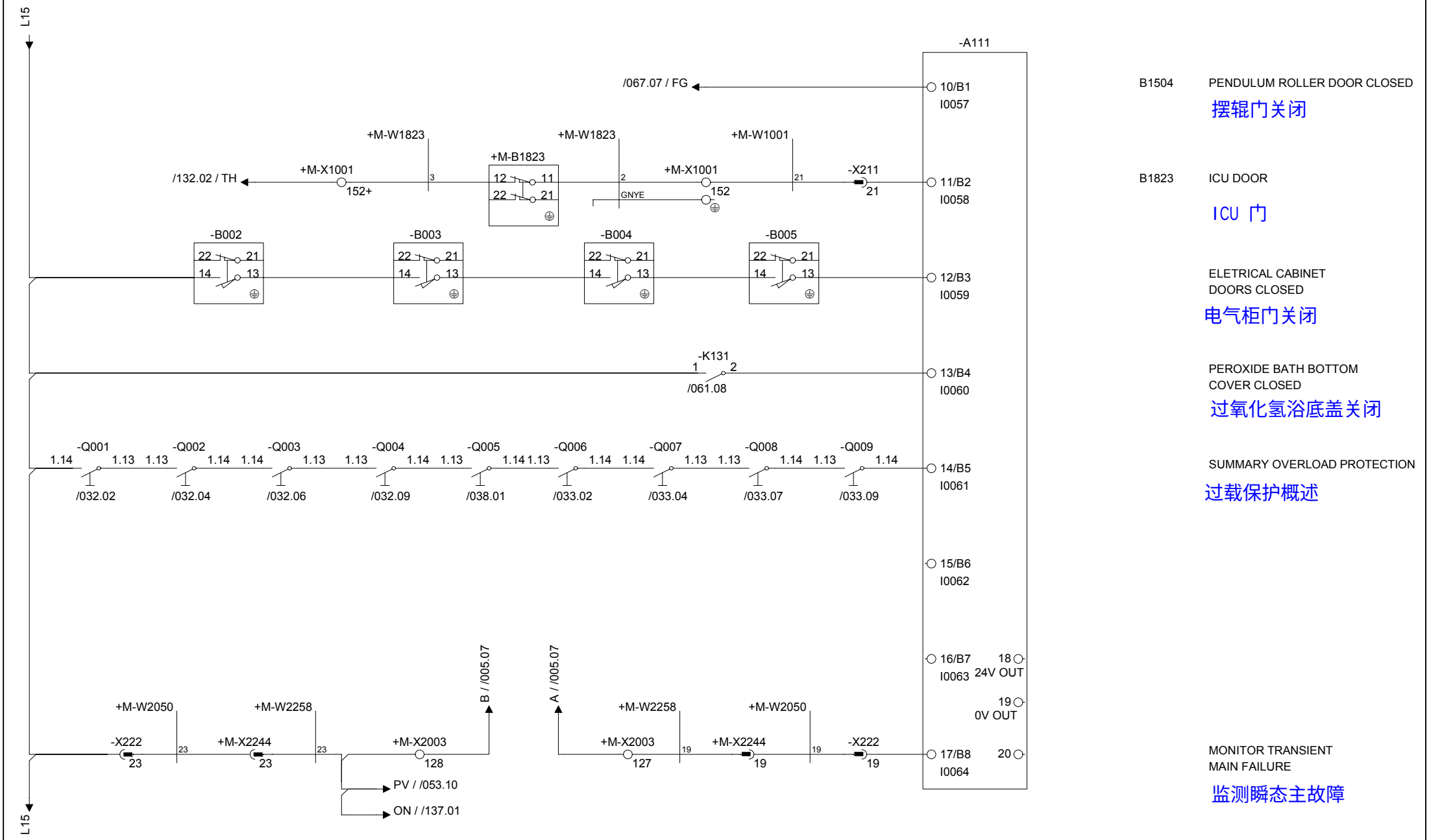

B1504 PENDULUM ROLLER DOOR CLOSED
摆辊门关闭

B1823 ICU DOOR
ICU 门

ELETRICAL CABINET DOORS CLOSED
电气柜门关闭

PEROXIDE BATH BOTTOM COVER CLOSED
过氧化氢浴底盖关闭

SUMMARY OVERLOAD PROTECTION
过载保护概述

MONITOR TRANSIENT MAIN FAILURE
监测瞬态主故障

Drawing remarks	Tetra Pak	Designer LUP	Date 23/11/2007	Machine Tetra Pak A3/Flex 0150	
		ECM No 320174	Denomination CIRCUIT DIAGRAM	Page Type PLC-IN	
	Company Tetra Pak (Italy)	Document No. 2845987-0003	Doc. type ELD	Version AE	Page 120

This drawing must not without the consent of Tetra Pak
be copied, transmitted or disclosed to any third party.



Drawing remarks

Tetra Pak

Designer LUP	Date 23/11/2007	Machine Tetra Pak A3/Flex 0150	
ECM No 320174	Denomination CIRCUIT DIAGRAM	Page Type PLC-IN	
Company Tetra Pak (Italy)	Document No. 2845987-0003	Doc. type ELD	Version AE	Page 125

RELEASED

This drawing must not without the consent of Tetra Pak be copied, transmitted or disclosed to any third party.

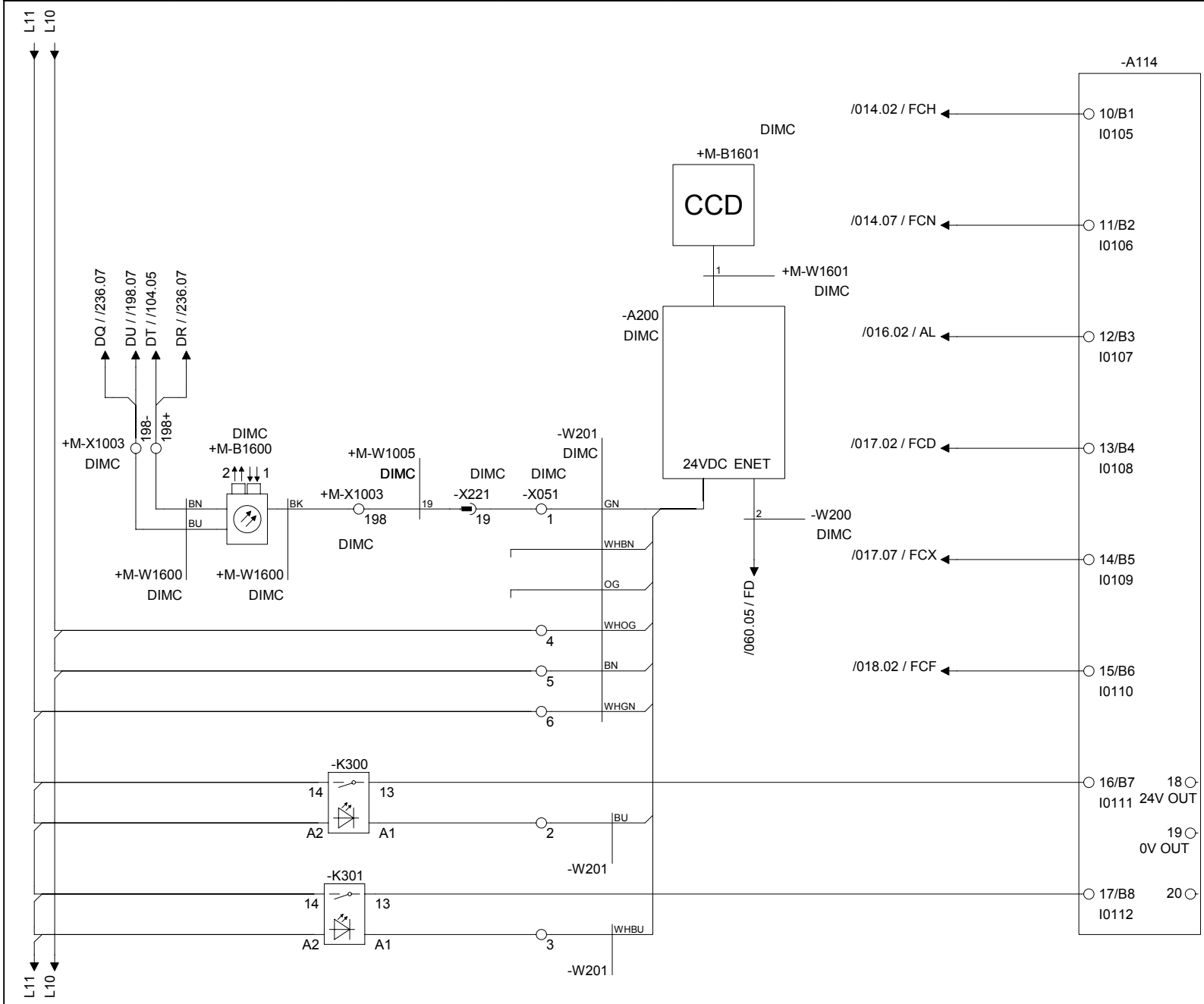

NO FAULT LOOP ASU DRIVE ROLLER
无故障环路ASU驱动辊

B1601 VISION SYSTEM CAMERA
视觉系统摄像机

NO FAULT MAGAZINE ASU DRIVE ROLLER

A200 VISION SYSTEM PROCESSOR UNIT
视觉系统处理机单元

NO FAULT STRIP BOBBIN DRIVE
无故障条筒传动

NO FAULT ASEPTIC CHAMBER DRIVE ROLLER
无故障无菌腔室传动滚筒

NO FAULT EXTERNAL CONVEYOR DRIVE
无故障外接传动装置

NO FAULT ICU PUMP
无故障泵ICU

K300 DUMPING FOR CAP FAILURE
倾销封盖失效

K301 SHORT STOP FOR CAP FAILURE
盖子失灵，暂停一下

Drawing remarks

Tetra Pak

Designer LUP	Date 23/11/2007	Machine Tetra Pak A3/Flex 0150			
ECM No 320174	Denomination CIRCUIT DIAGRAM	Page Type PLC-IN			
Company Tetra Pak (Italy)	Document No. 2845987-0003	Doc. type ELD	Version AE	Page 126	

RELEASED

This drawing must not without the consent of Tetra Pak be copied, transmitted or disclosed to any third party.

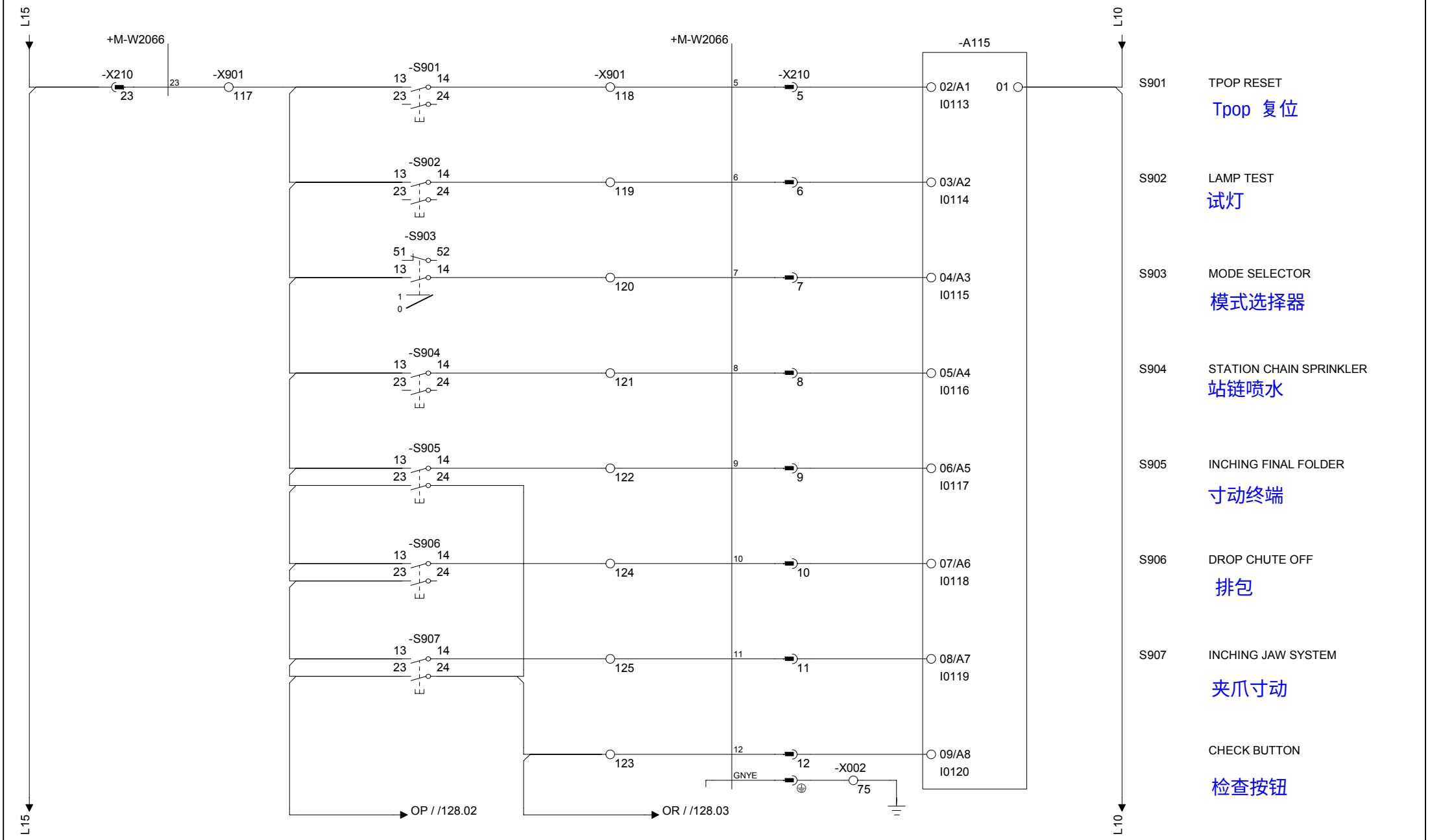

Drawing remarks	Tetra Pak	Designer LUP	Date 23/11/2007	Machine Tetra Pak A3/Flex 0150
		ECM No 320174	Denomination CIRCUIT DIAGRAM	Page Type PLC-IN
	Company Tetra Pak (Italy)	Document No. 2845987-0003	Doc. type ELD	Version AE	Page 127

RELEASED

This drawing must not without the consent of Tetra Pak
be copied, transmitted or disclosed to any third party.

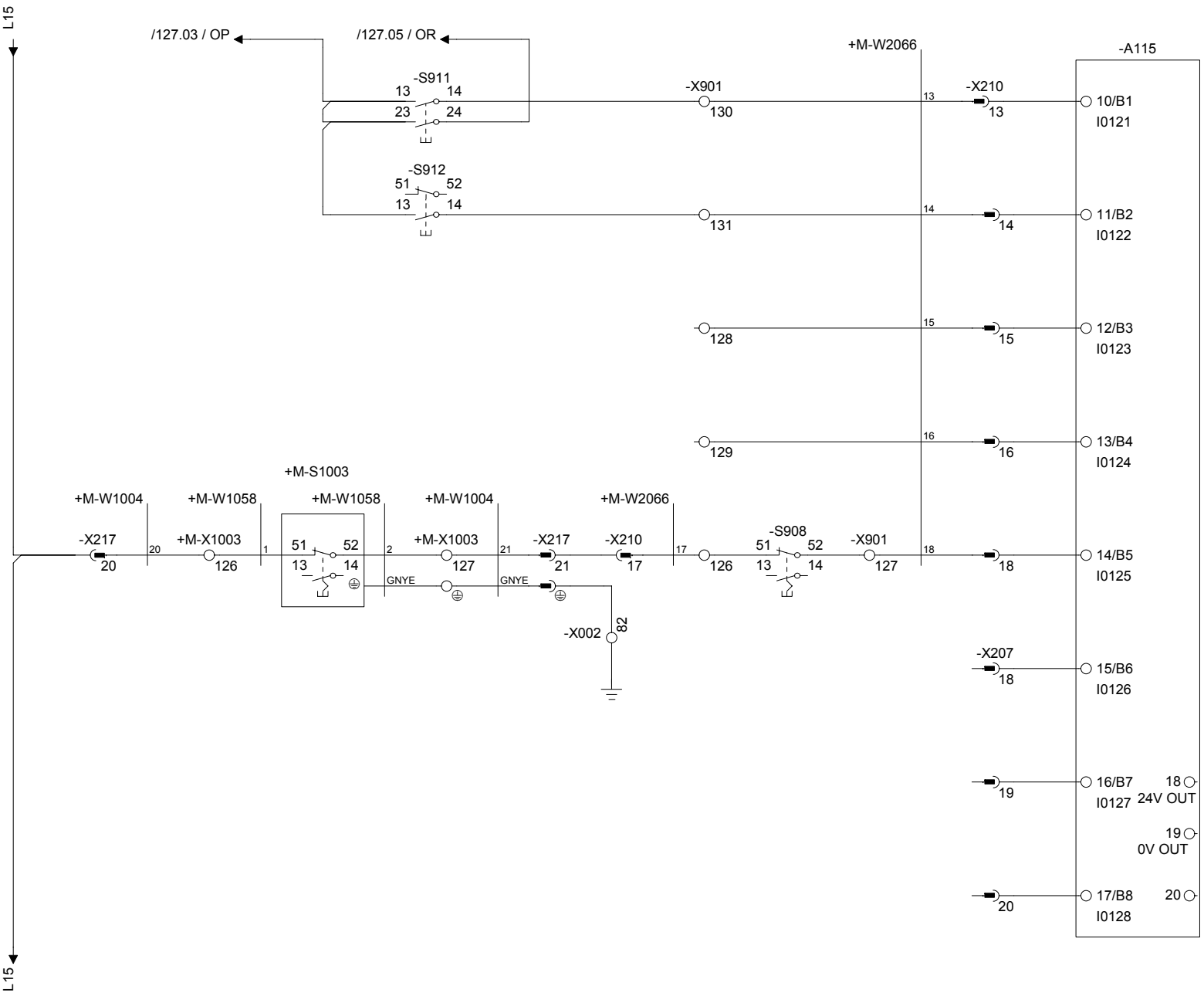

S911 STEP UP

程序升

S912 STEP DOWN

程序降

SPARE

SPARE

短停

SHORT STOP
S1003 TOP PLATFORM
S908 CONTROL PANEL

SPARE FROM TPOP

SPARE FROM TPOP

SPARE FROM TPOP

Drawing remarks	Tetra Pak	Designer LUP	Date 23/11/2007	Machine Tetra Pak A3/Flex 0150	
		ECM No 320174	Denomination CIRCUIT DIAGRAM	Page Type PLC-IN	
	Company Tetra Pak (Italy)	Document No. 2845987-0003	Doc. type ELD	Version AE	Page 128

This drawing must not without the consent of Tetra Pak
be copied, transmitted or disclosed to any third party.

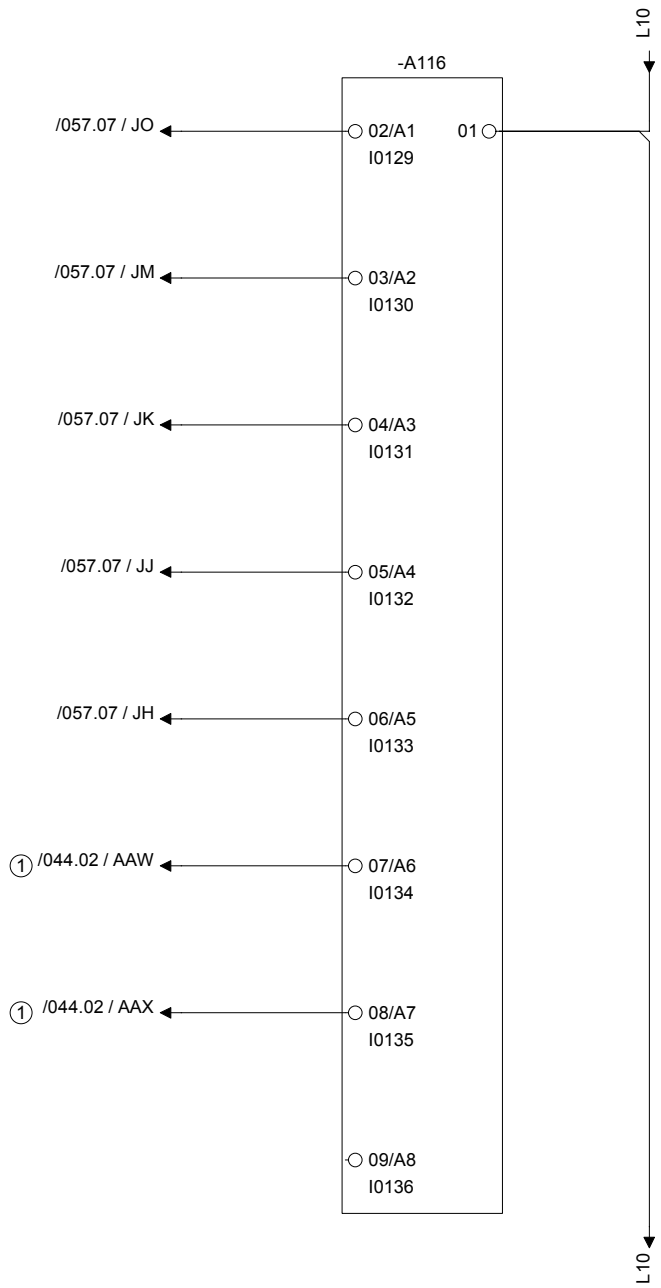

Drawing remarks	Tetra Pak	Designer LUP	Date 23/11/2007	Machine Tetra Pak A3/Flex 0150			
		ECM No 320174	Denomination CIRCUIT DIAGRAM	Page Type PLC-IN			
	Company Tetra Pak (Italy)		Document No. 2845987-0003	Doc. type ELD	Version AE	Page 129	

RELEASED

This drawing must not without the consent of Tetra Pak be copied, transmitted or disclosed to any third party.

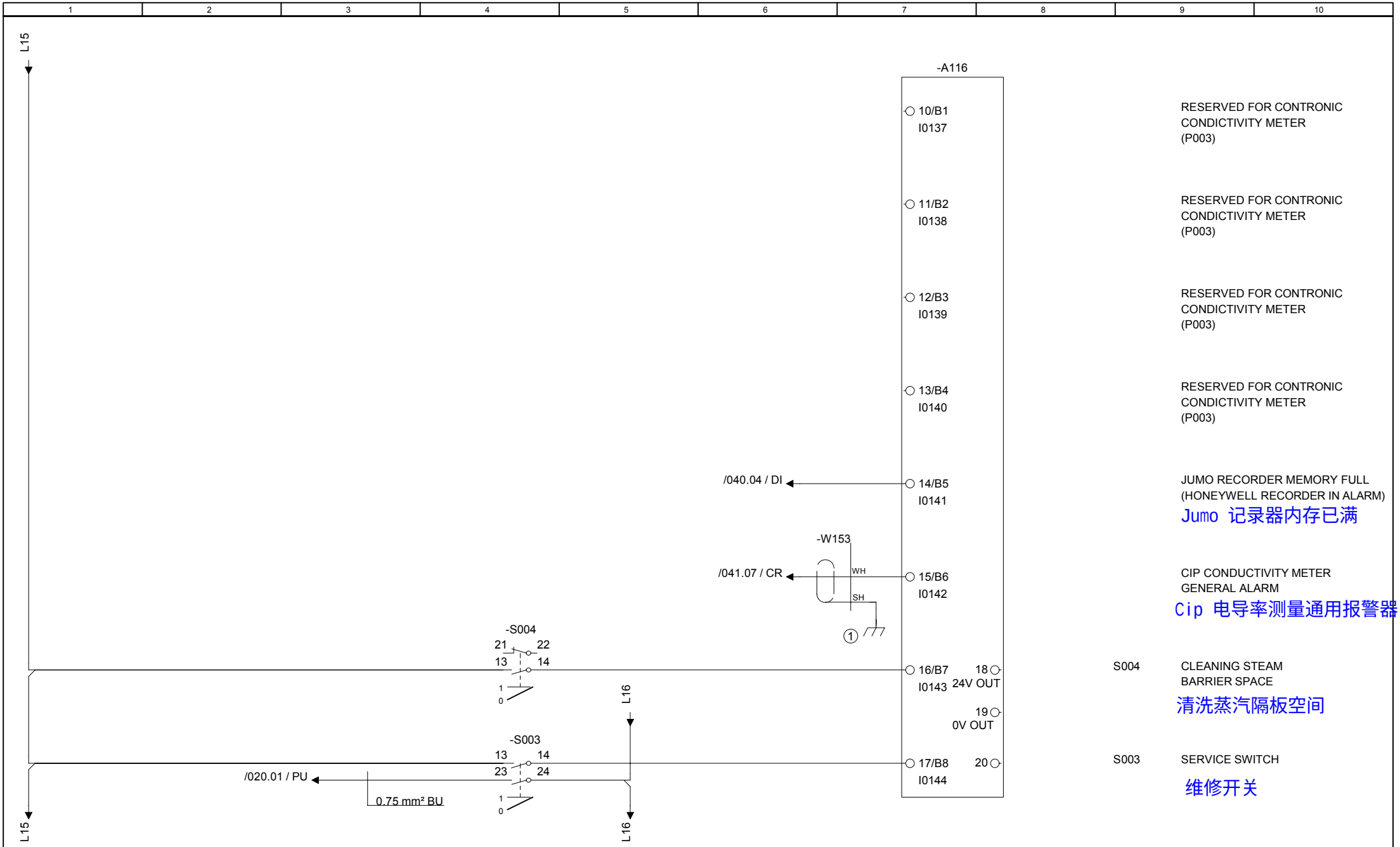

Drawing remarks	Tetra Pak	Designer LUP	Date 23/11/2007	Machine Tetra Pak A3/Flex 0150	
		ECM No 320174	Denomination CIRCUIT DIAGRAM	Page Type PLC-IN	
	Company Tetra Pak (Italy)	Document No. 2845987-0003	Doc. type ELD	Version AE	Page 130

This drawing must not without the consent of Tetra Pak
be copied, transmitted or disclosed to any third party.

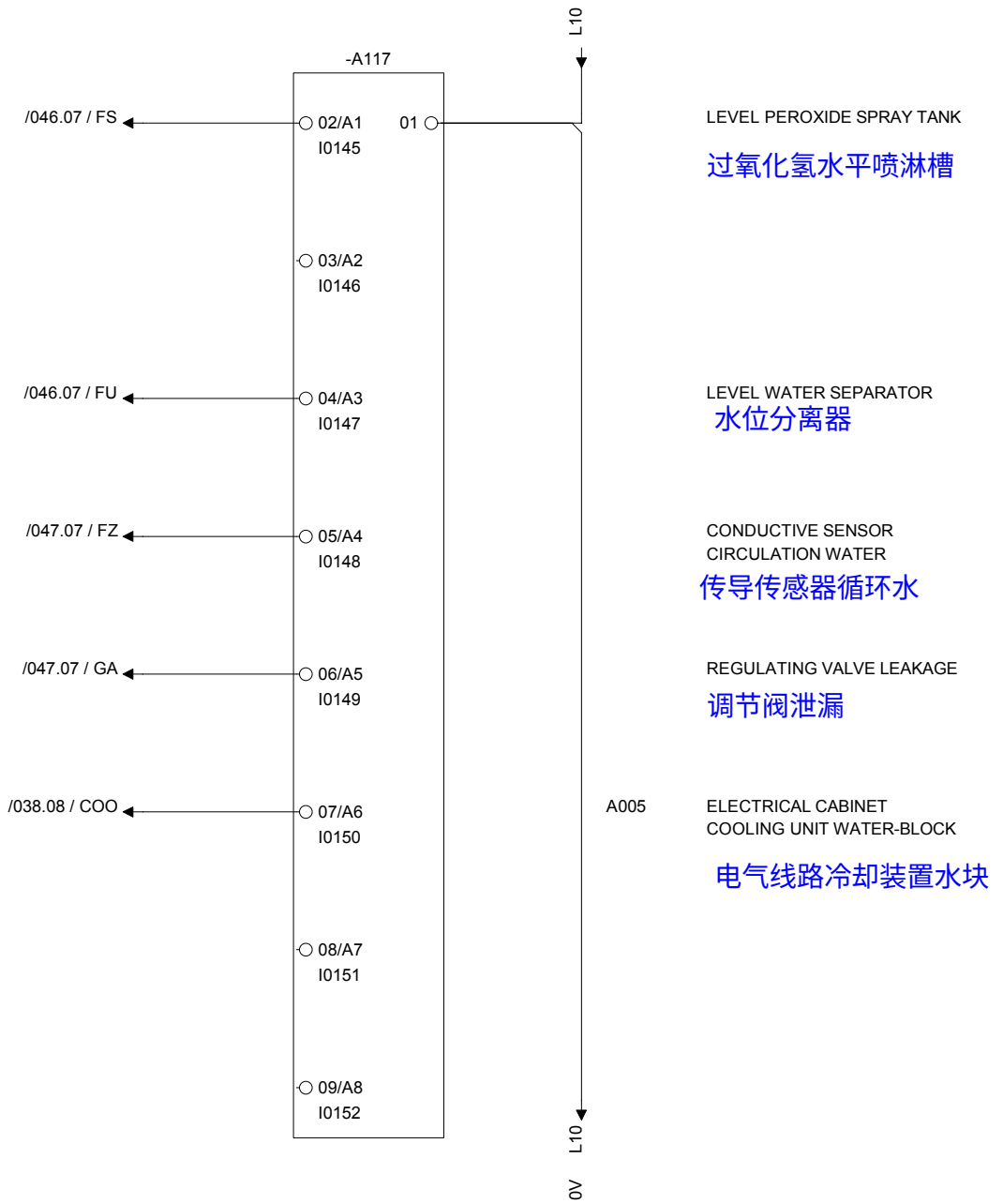

Drawing remarks

Tetra Pak

Designer LUP	Date 23/11/2007	Machine Tetra Pak A3/Flex 0150	
ECM No 320174	Denomination CIRCUIT DIAGRAM	Page Type PLC-IN	
Company Tetra Pak (Italy)	Document No. 2845987-0003	Doc. type ELD	Version AE	Page 131

This drawing must not without the consent of Tetra Pak
be copied, transmitted or disclosed to any third party.

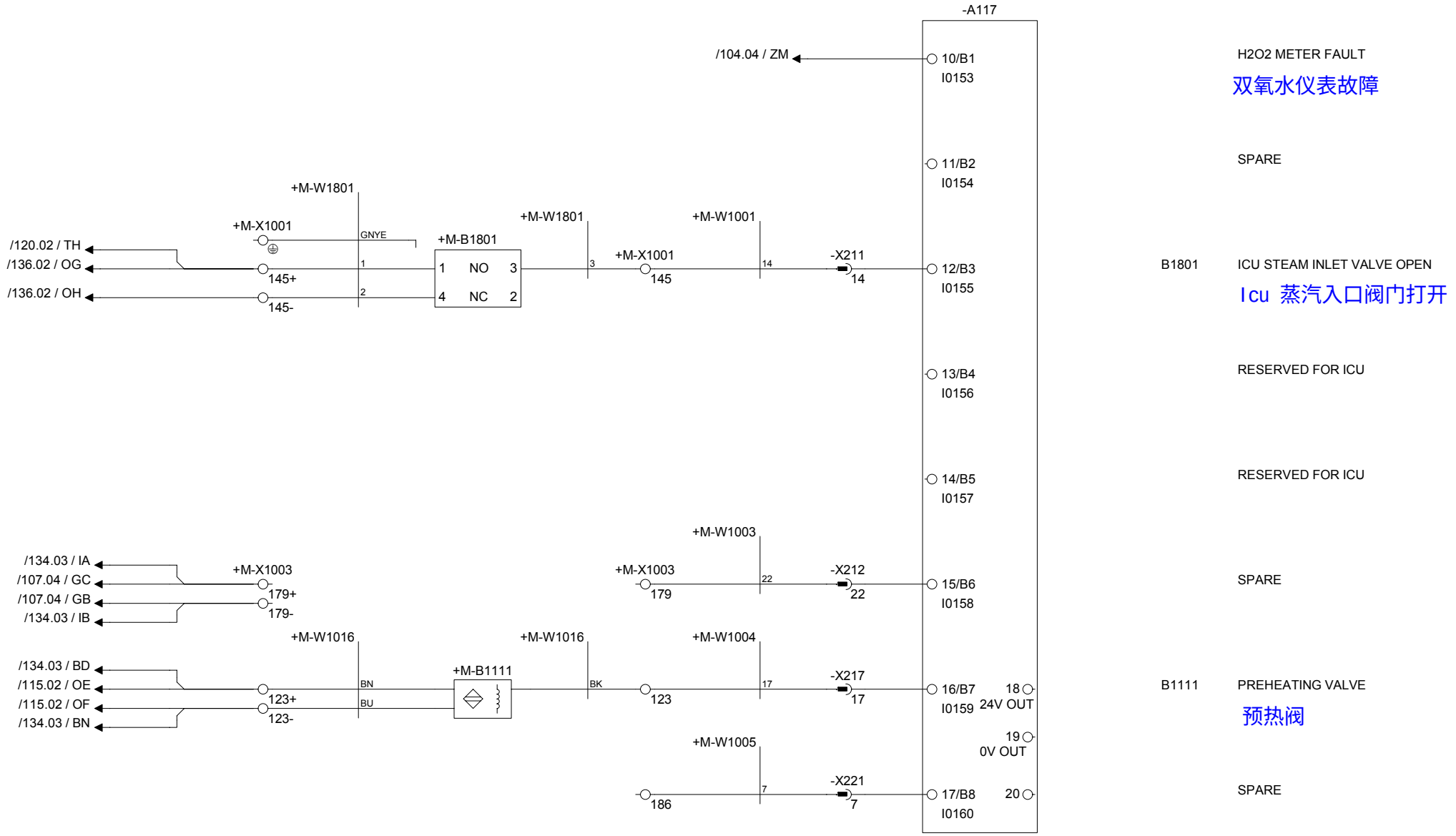

Drawing remarks	Tetra Pak	Designer LUP	Date 23/11/2007	Machine Tetra Pak A3/Flex 0150	
		ECM No 320174	Denomination CIRCUIT DIAGRAM	Page Type PLC-IN	
	Company Tetra Pak (Italy)	Document No. 2845987-0003	Doc. type ELD	Version AE	Page 132

This drawing must not without the consent of Tetra Pak
be copied, transmitted or disclosed to any third party.

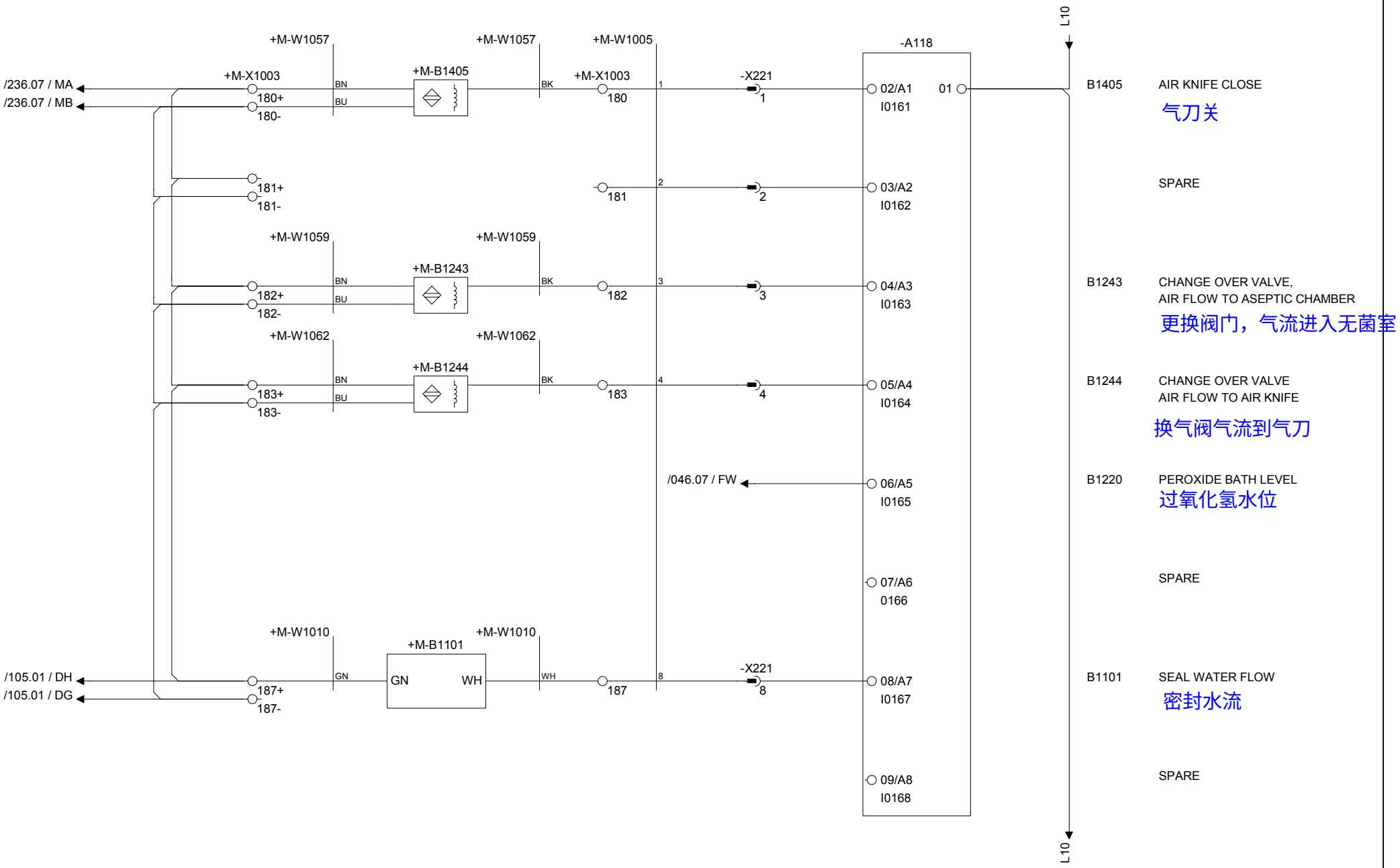

Drawing remarks	Tetra Pak	Designer LUP	Date 23/11/2007	Machine Tetra Pak A3/Flex 0150	
		ECM No 320174	Denomination CIRCUIT DIAGRAM	Page Type PLC-IN	
	Company Tetra Pak (Italy)	Document No. 2845987-0003	Doc. type ELD	Version AE	Page 133

This drawing must not without the consent of Tetra Pak be copied, transmitted or disclosed to any third party.

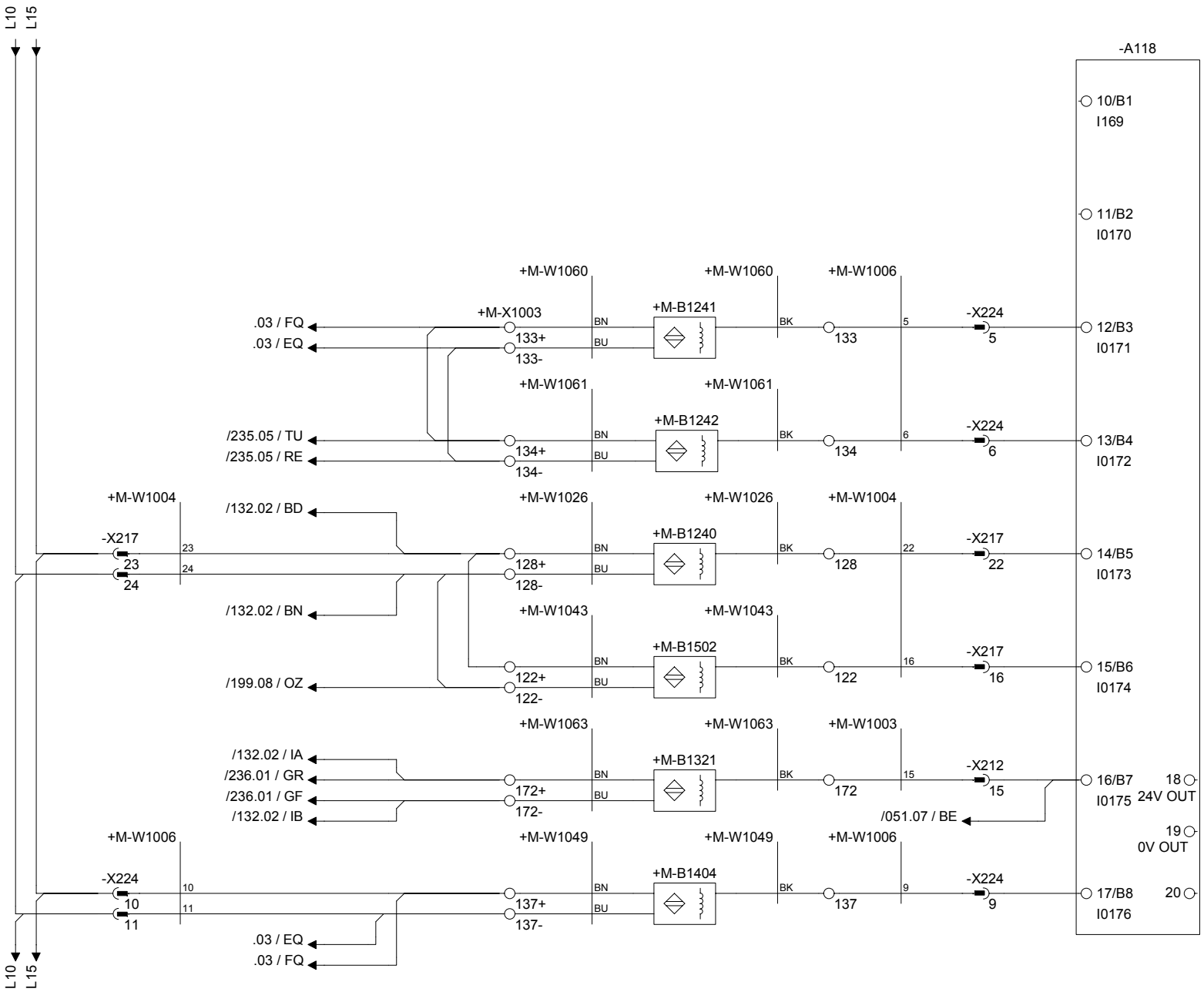

Drawing remarks	Tetra Pak	Designer LUP	Date 23/11/2007	Machine Tetra Pak A3/Flex 0150	
		ECM No 320174	Denomination CIRCUIT DIAGRAM	Page Type PLC-IN	
	Company Tetra Pak (Italy)	Document No. 2845987-0003	Doc. type ELD	Version AE	Page 134

RELEASED

This drawing must not without the consent of Tetra Pak be copied, transmitted or disclosed to any third party.

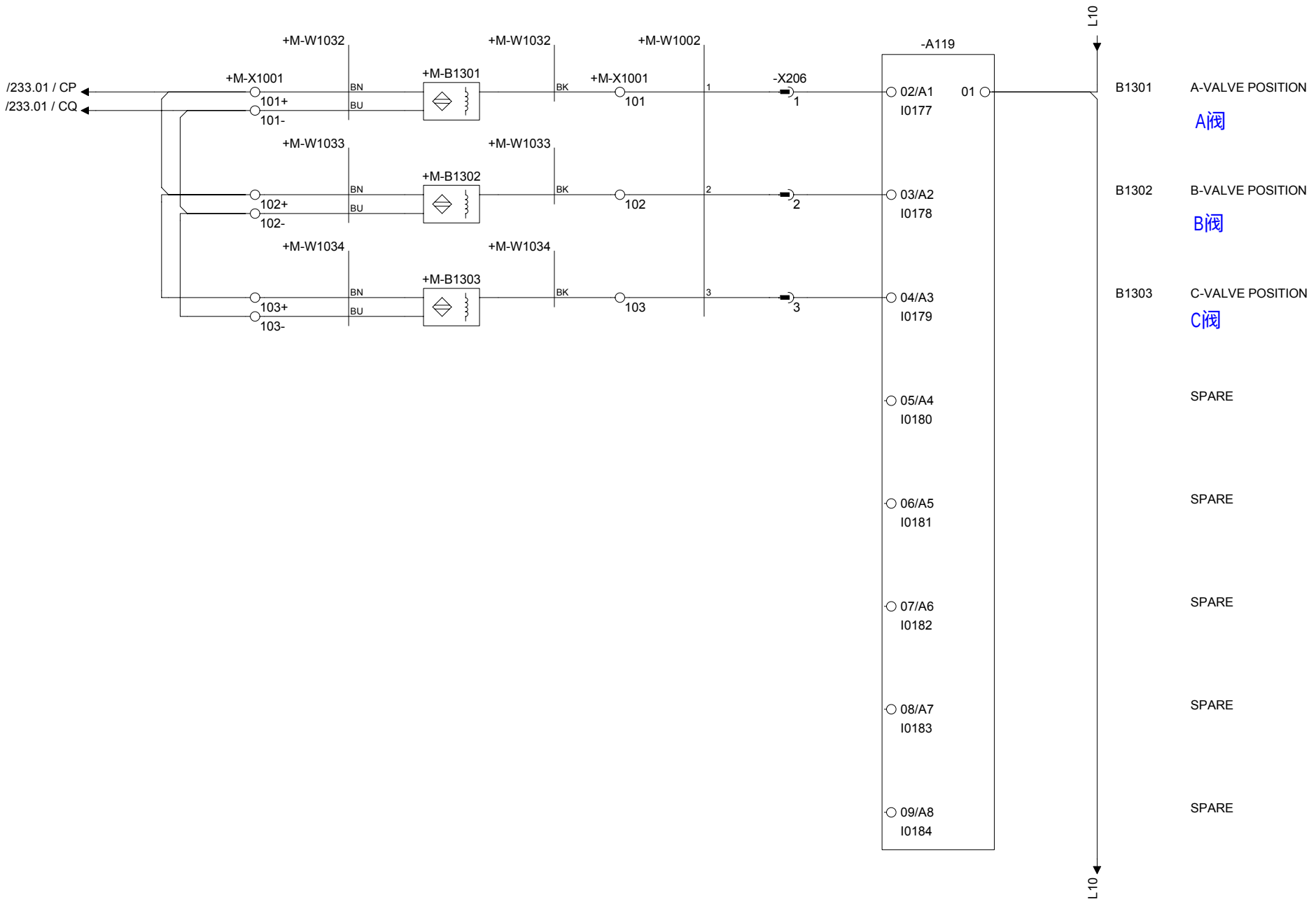

Drawing remarks	Tetra Pak	Designer LUP	Date 23/11/2007	Machine Tetra Pak A3/Flex 0150	
		ECM No 320174	Denomination CIRCUIT DIAGRAM	Page Type PLC-IN	
	Company Tetra Pak (Italy)	Document No. 2845987-0003	Doc. type ELD	Version AE	Page 135

RELEASED

This drawing must not without the consent of Tetra Pak be copied, transmitted or disclosed to any third party.

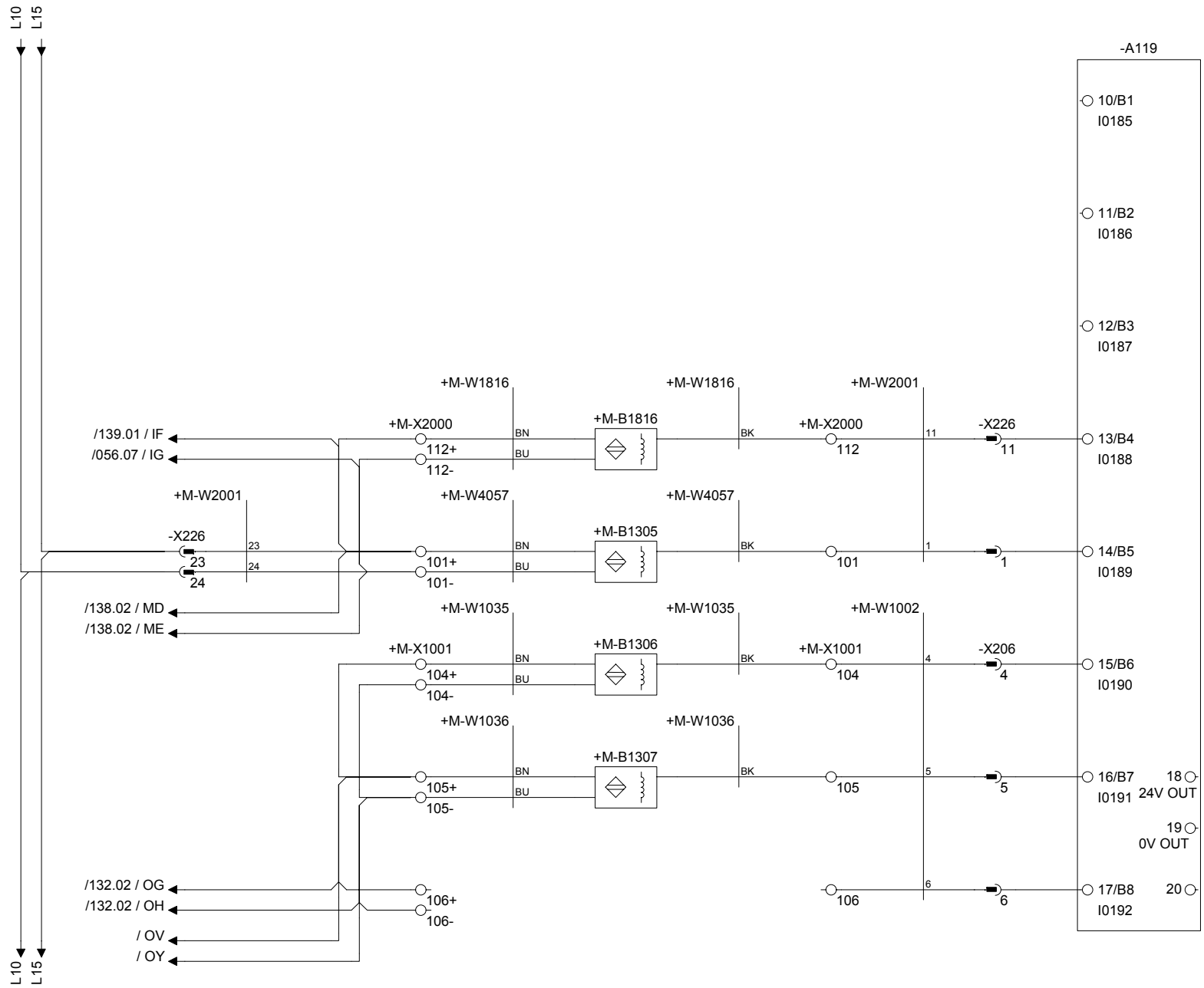

SPARE

SPARE

SPARE

B1816 ICU DRAIN VALVE

ICU排水阀

B1305 CLEANING SLEEVE POSITION

清洗管位置

B1306 CLEANING PIPE INFEED CONNECTOR

清洁管道进料接头

B1307 STERILE AIR PIPE CONNECTED

已连接的无菌空气管

SPARE

Drawing remarks	Tetra Pak	Designer LUP	Date 23/11/2007	Machine Tetra Pak A3/Flex 0150	
		ECM No 320174	Denomination CIRCUIT DIAGRAM	Page Type PLC-IN	
		Company Tetra Pak (Italy)	Document No. 2845987-0003	Doc. type ELD	Version AE	Page 136

RELEASED

This drawing must not without the consent of Tetra Pak be copied, transmitted or disclosed to any third party.

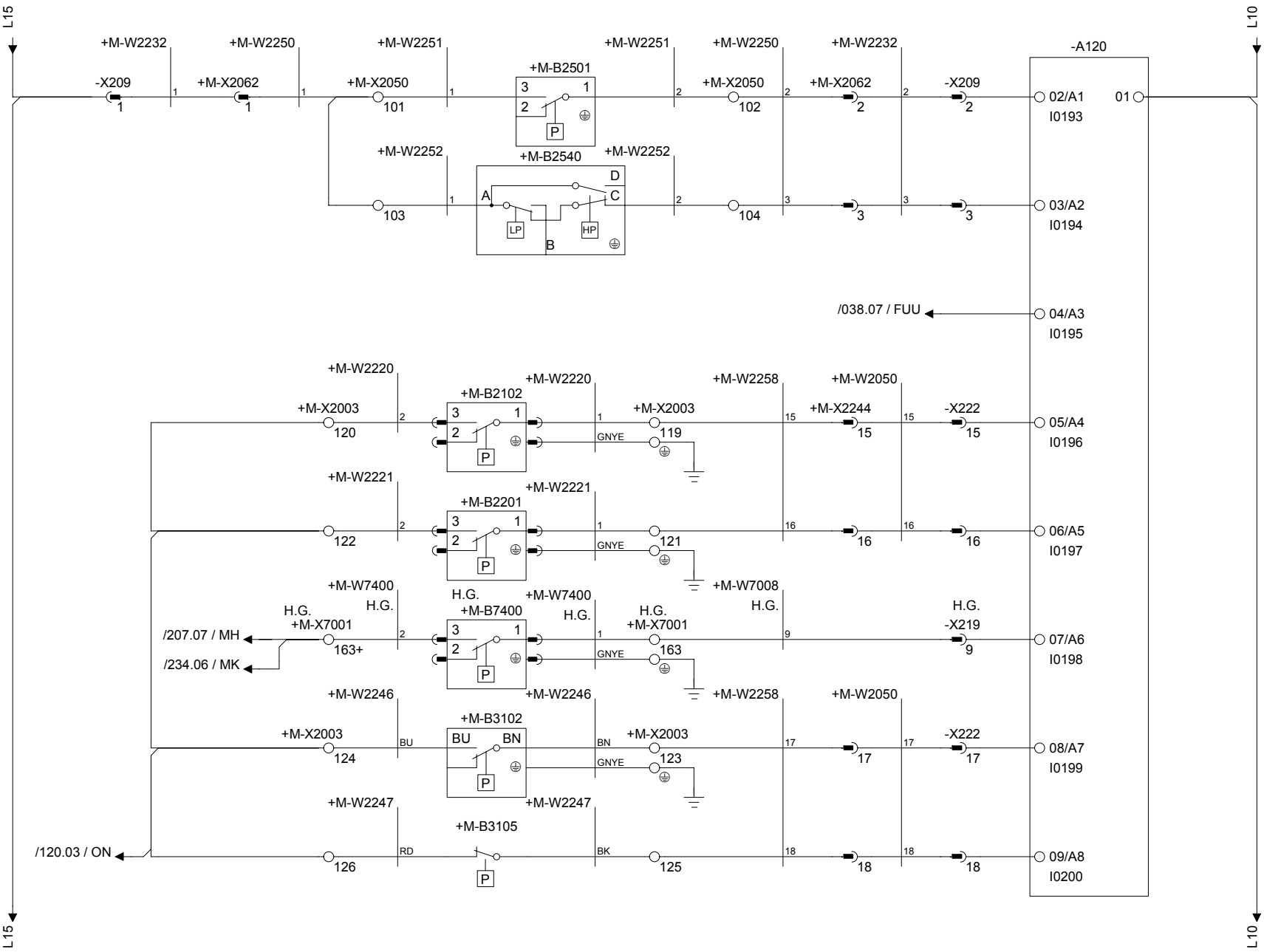

Drawing remarks	Tetra Pak	Designer LUP	Date 23/11/2007	Machine Tetra Pak A3/Flex 0150	
		ECM No 320174	Denomination CIRCUIT DIAGRAM	Page Type PLC-IN	
	Company Tetra Pak (Italy)	Document No. 2845987-0003	Doc. type ELD	Version AE	Page 137

RELEASED

This drawing must not without the consent of Tetra Pak be copied, transmitted or disclosed to any third party.

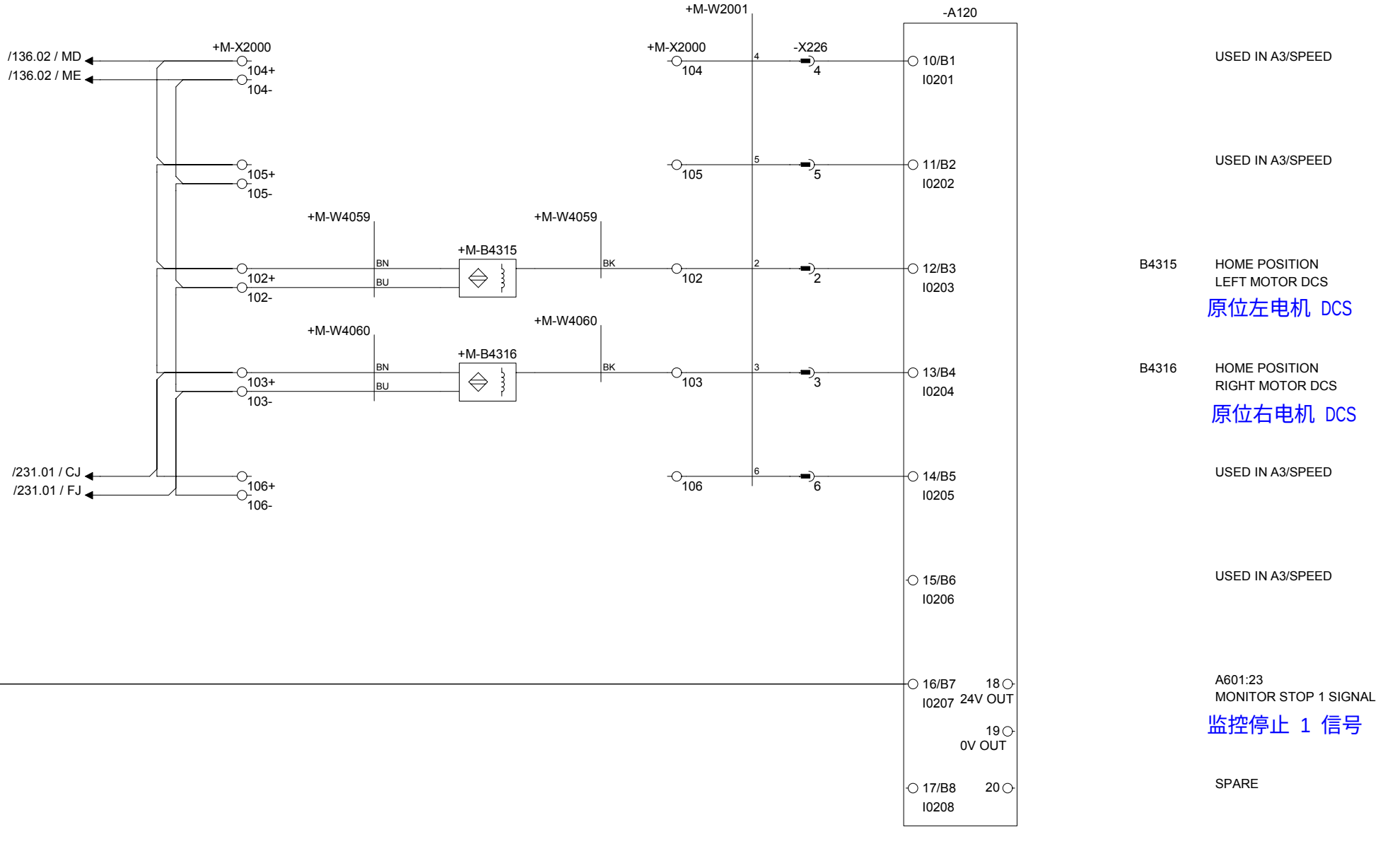

Drawing remarks	Tetra Pak	Designer LUP	Date 23/11/2007	Machine Tetra Pak A3/Flex 0150	
		ECM No 320174	Denomination CIRCUIT DIAGRAM	Page Type PLC-IN	
	Company Tetra Pak (Italy)	Document No. 2845987-0003	Doc. type ELD	Version AE	Page 138

RELEASED

This drawing must not without the consent of Tetra Pak be copied, transmitted or disclosed to any third party.

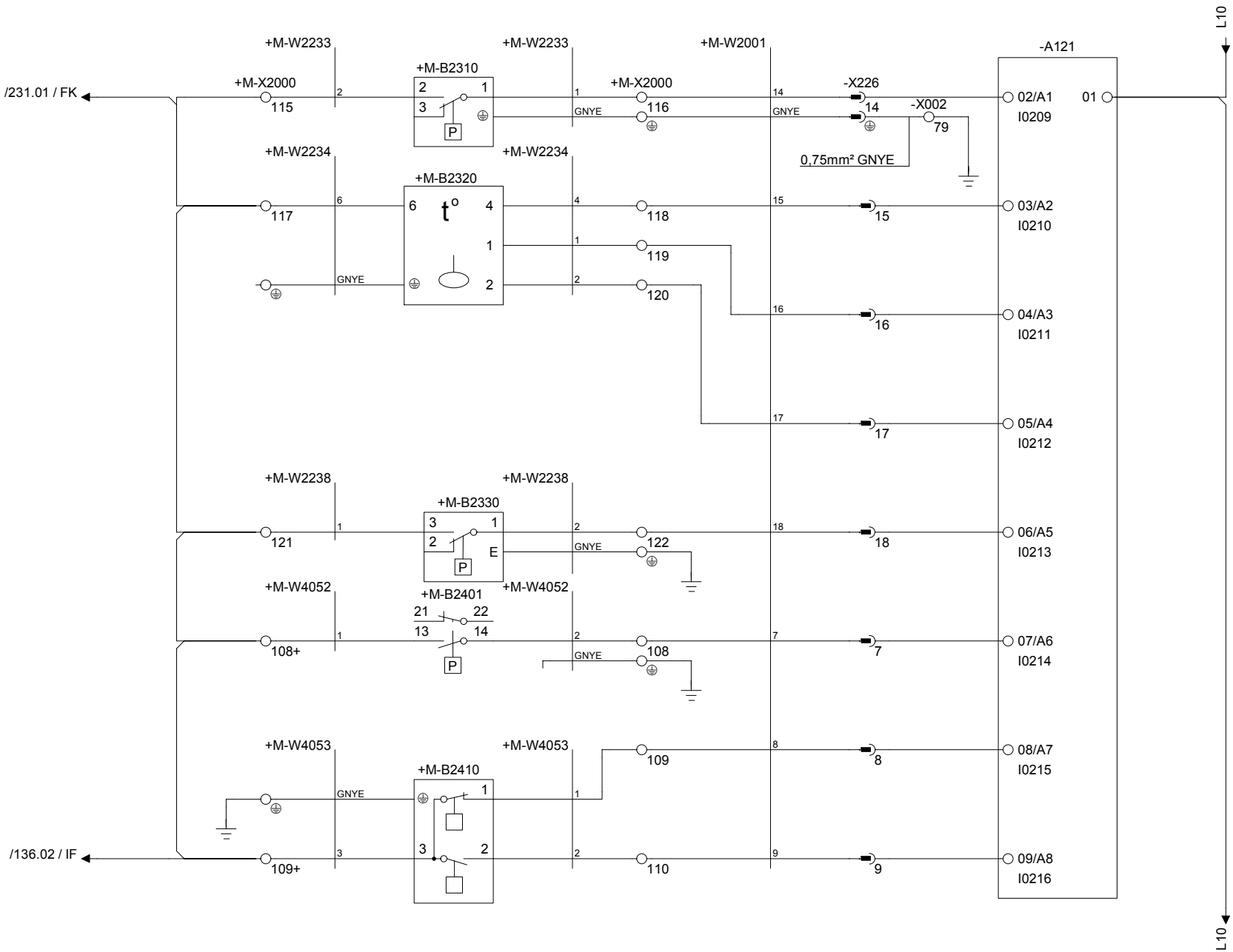

Drawing remarks	Tetra Pak	Designer LUP	Date 23/11/2007	Machine Tetra Pak A3/Flex 0150	
		ECM No 320174	Denomination CIRCUIT DIAGRAM	Page Type PLC-IN	
	Company Tetra Pak (Italy)	Document No. 2845987-0003	Doc. type ELD	Version AE	Page 139

This drawing must not without the consent of Tetra Pak
be copied, transmitted or disclosed to any third party.

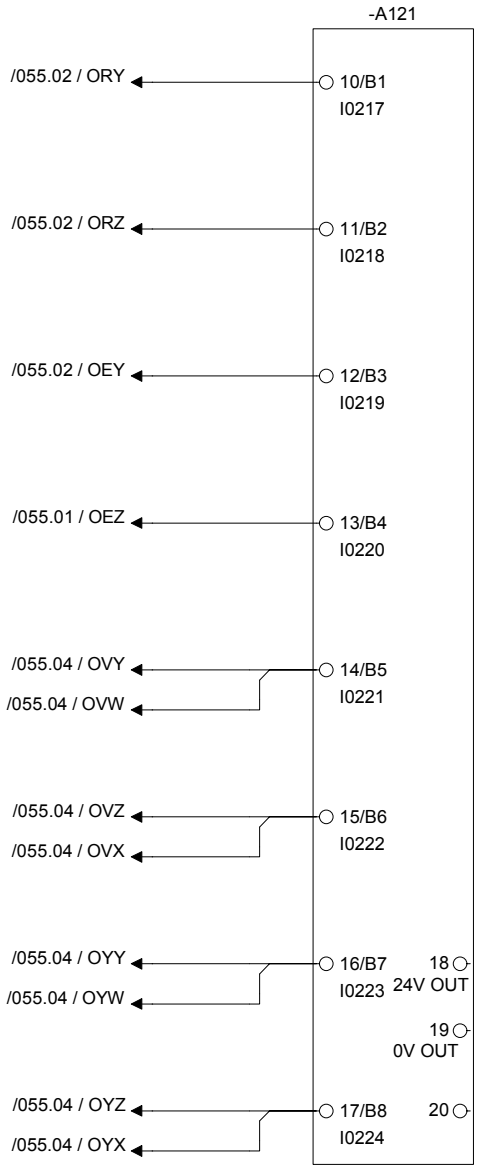

Drawing remarks

Tetra Pak

Designer LUP	Date 23/11/2007	Machine Tetra Pak A3/Flex 0150	
ECM No 320174	Denomination CIRCUIT DIAGRAM	Page Type PLC-IN	
Company Tetra Pak (Italy)	Document No. 2845987-0003	Doc. type ELD	Version AE	Page 140

RELEASED

This drawing must not without the consent of Tetra Pak be copied, transmitted or disclosed to any third party.

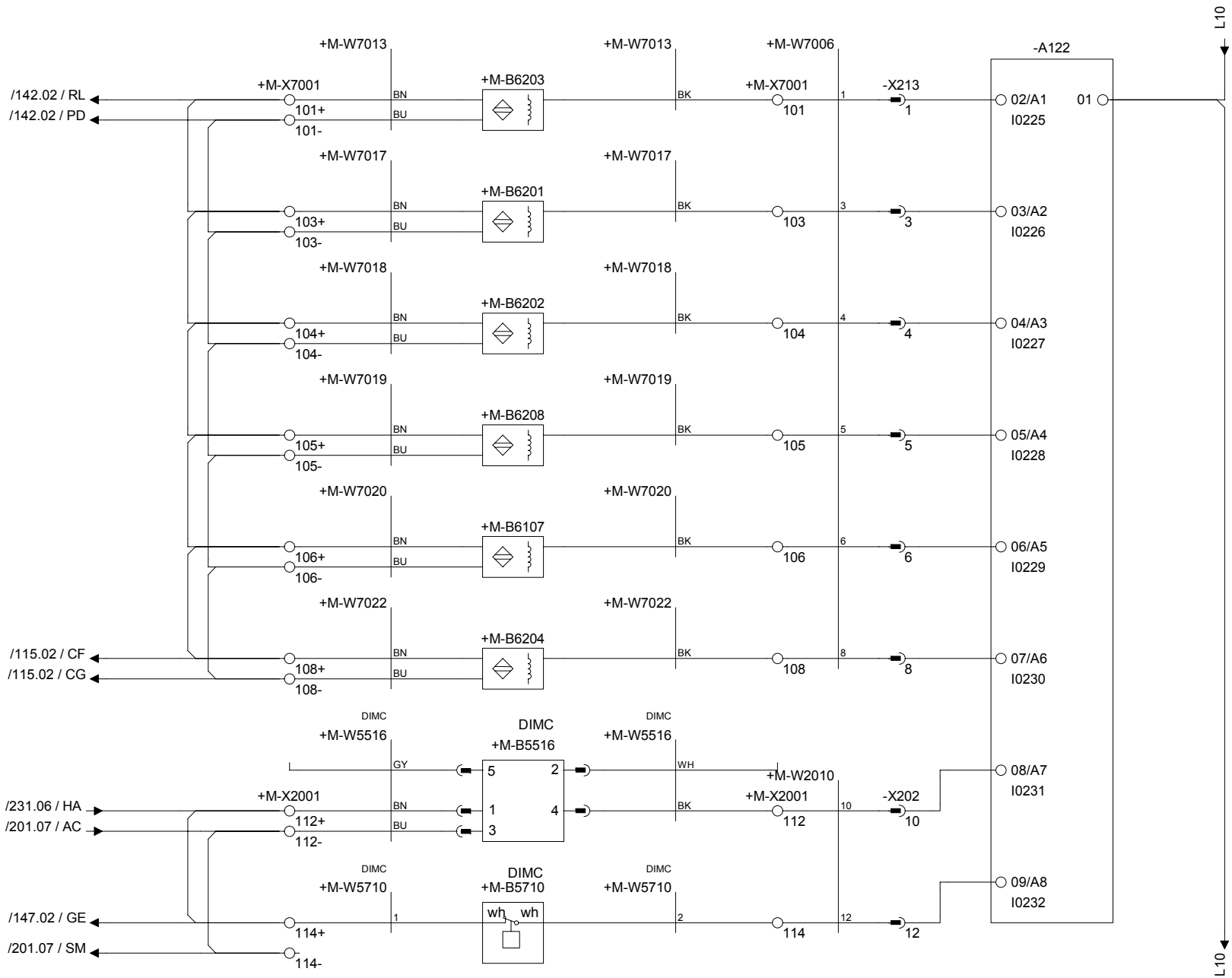

Drawing remarks	Tetra Pak	Designer LUP	Date 23/11/2007	Machine Tetra Pak A3/Flex 0150	
		ECM No 320174	Denomination CIRCUIT DIAGRAM	Page Type PLC-IN	
	Company Tetra Pak (Italy)	Document No. 2845987-0003	Doc. type ELD	Version AE	Page 141

This drawing must not without the consent of Tetra Pak be copied, transmitted or disclosed to any third party.

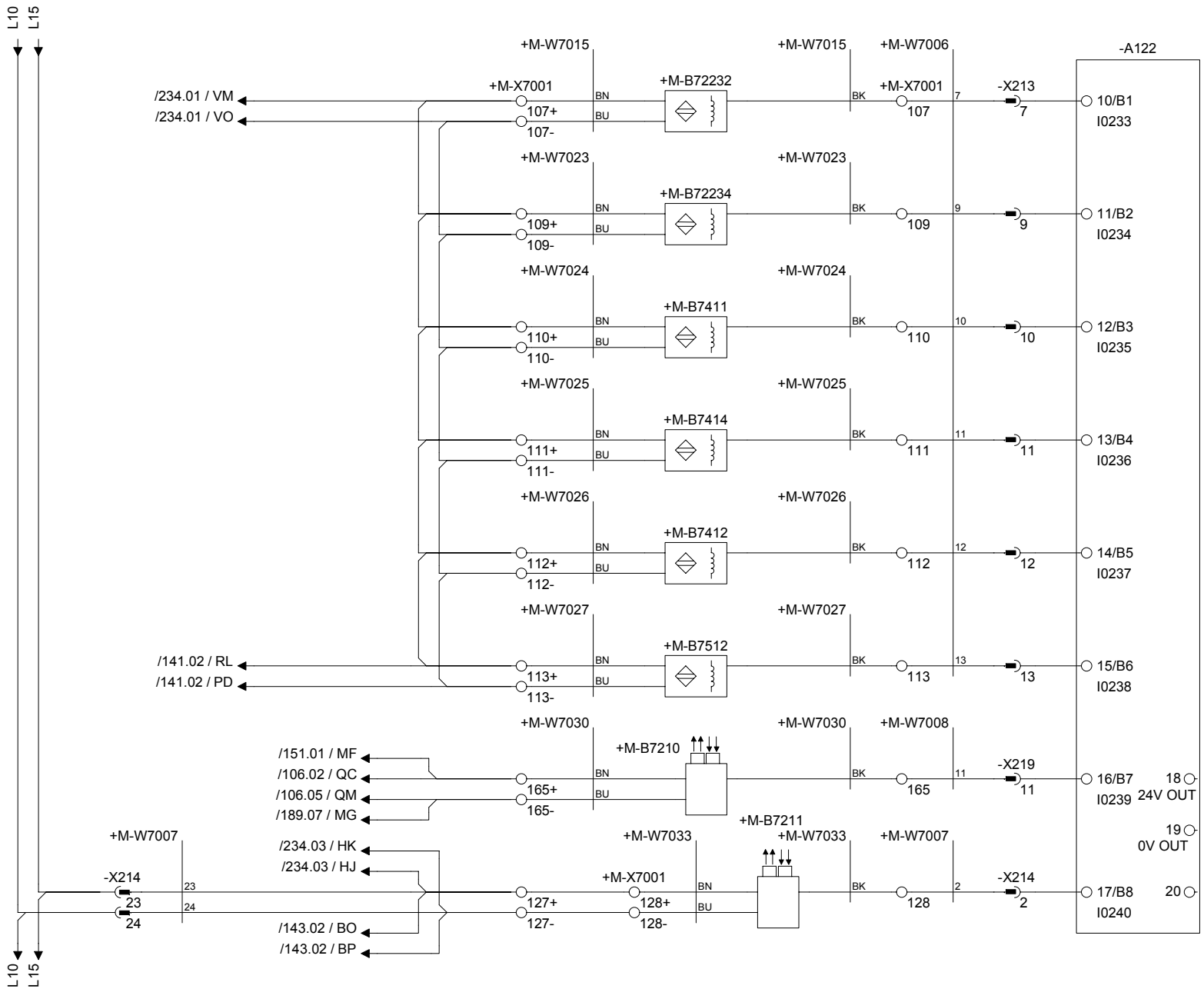

B72232 MAGAZINE FULL
纸库满

B72234 MAGAZINE EMPTY
纸库空

B7411 SPLICE TABLE 1 IN POSITION
接纸台就位

B7414 SPLICE TABLE 2 IN POSITION
接纸台2就位

B7412 SIDE FEEDER POSITION 1
侧进料器位置 1

B7512 SIDE FEEDER POSITION 2
侧进料器位置 2

B7210 LOOP EMPTY
循环空

B7211 ADJUSTMENT LOOP
调整循环

Drawing remarks

Tetra Pak

Designer LUP	Date 23/11/2007	Machine Tetra Pak A3/Flex 0150	
ECM No 320174	Denomination CIRCUIT DIAGRAM	Page Type PLC-IN	
Company Tetra Pak (Italy)	Document No. 2845987-0003	Doc. type ELD	Version AE	Page 142

RELEASED

This drawing must not without the consent of Tetra Pak be copied, transmitted or disclosed to any third party.

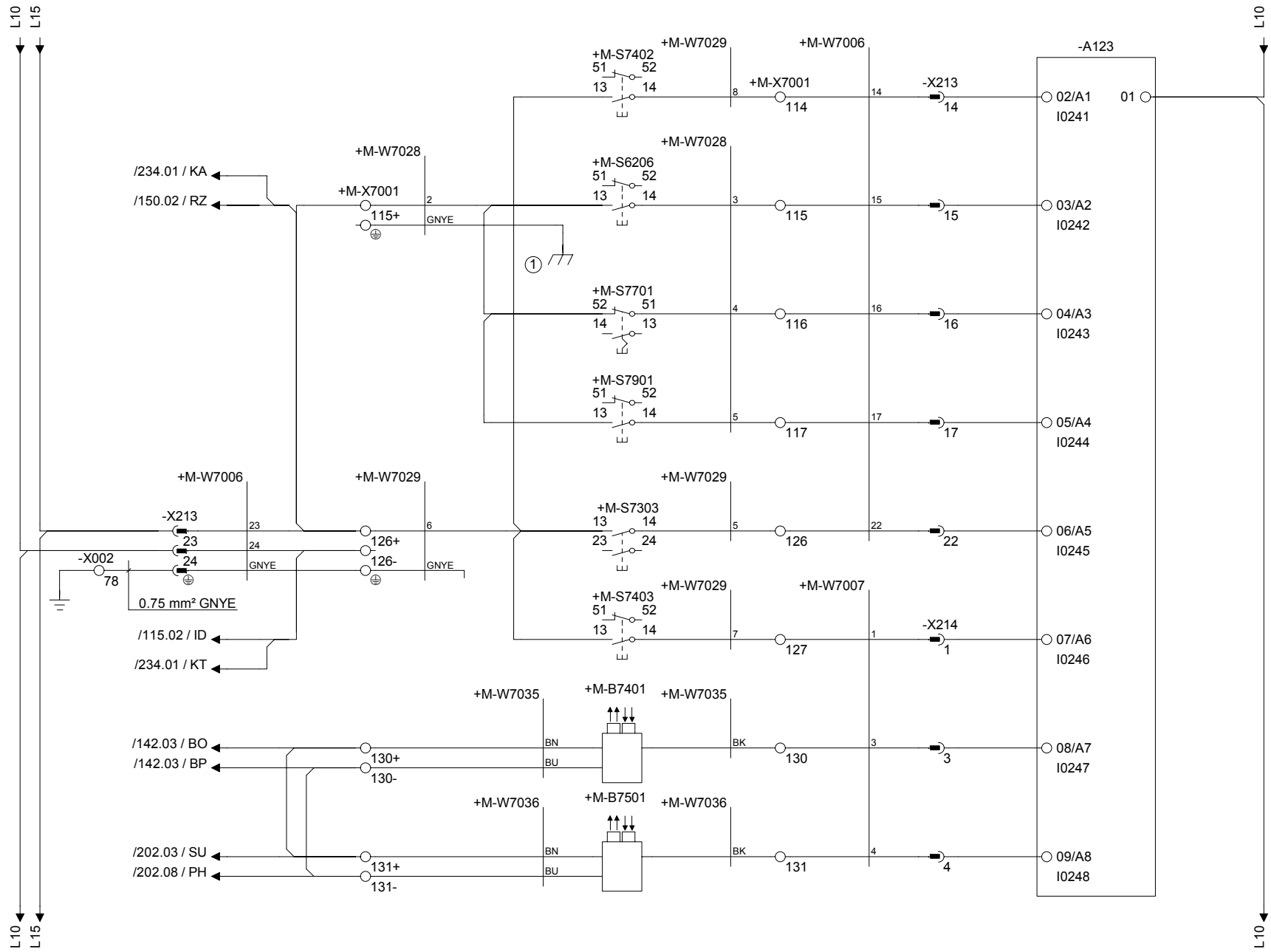

S7402	MANUAL START ASU 手动启动 ASU
S6206	MANUAL START ASSU 手动启动ASSU
S7701	SHORT STOP ASSU 短停ASSU
S7901	ALARM RESET LAMP TEST (ASU SEPARATE ROOM) 报警复位灯测试
S7303	MATERIAL LOCK 材料锁
S7403	CUTTING TABLE MOVEMENT 切割台移动
B7401	MATERIAL REEL 1 EMPTY 材料卷轴 1 空
B7501	MATERIAL REEL 2 EMPTY 材料卷轴 2 空

Drawing remarks

Tetra Pak

Designer LUP	Date 23/11/2007	Machine Tetra Pak A3/Flex 0150			
ECM No 320174	Denomination CIRCUIT DIAGRAM	Page Type PLC-IN			
Company Tetra Pak (Italy)	Document No. 2845987-0003	Doc. type ELD	Version AE	Page 143	

RELEASED

This drawing must not without the consent of Tetra Pak be copied, transmitted or disclosed to any third party.

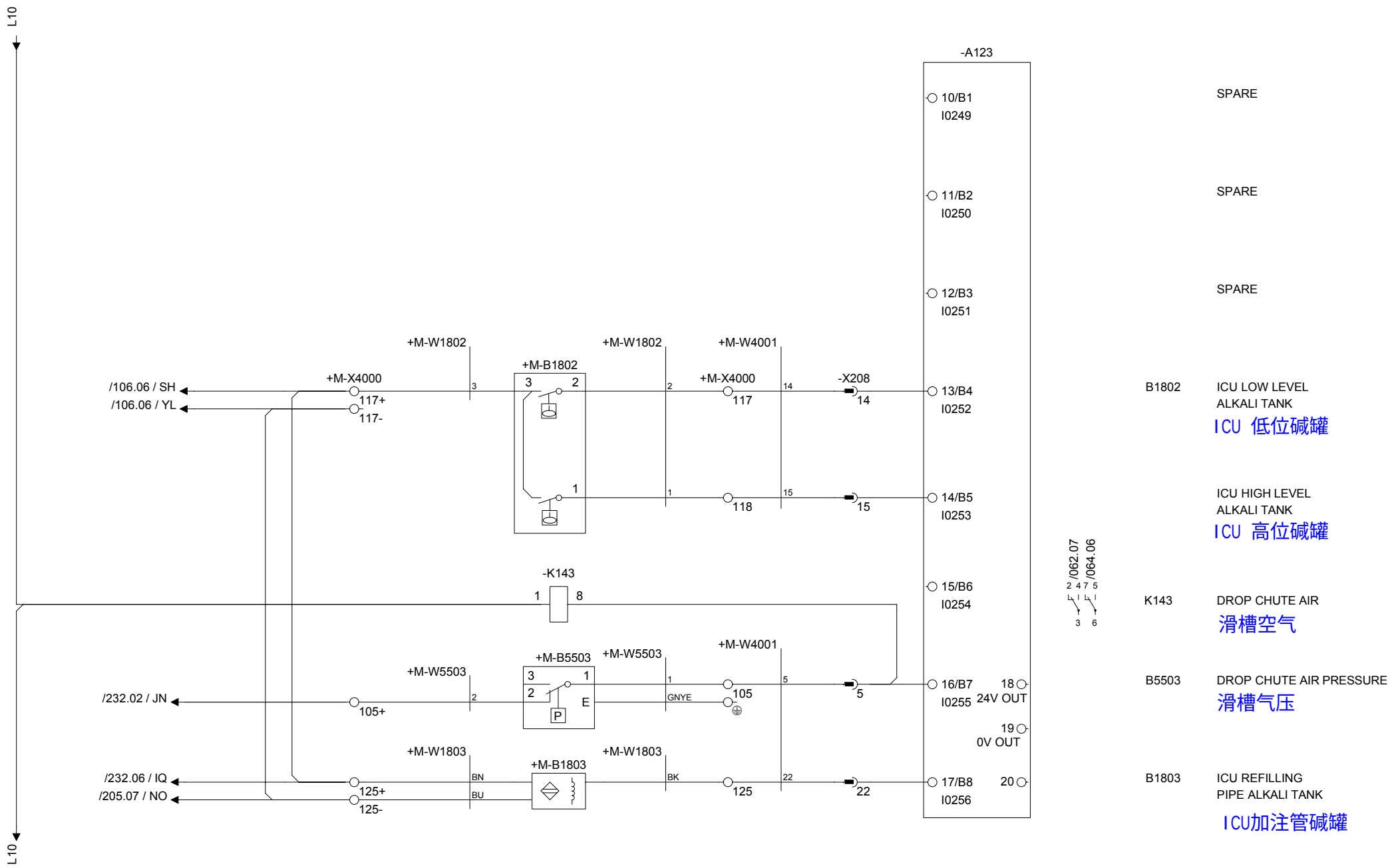

Drawing remarks	Tetra Pak	Designer LUP	Date 23/11/2007	Machine Tetra Pak A3/Flex 0150	
		ECM No 320174	Denomination CIRCUIT DIAGRAM	Page Type PLC-IN	
	Company Tetra Pak (Italy)	Document No. 2845987-0003	Doc. type ELD	Version AE	Page 144

RELEASED

This drawing must not without the consent of Tetra Pak be copied, transmitted or disclosed to any third party.

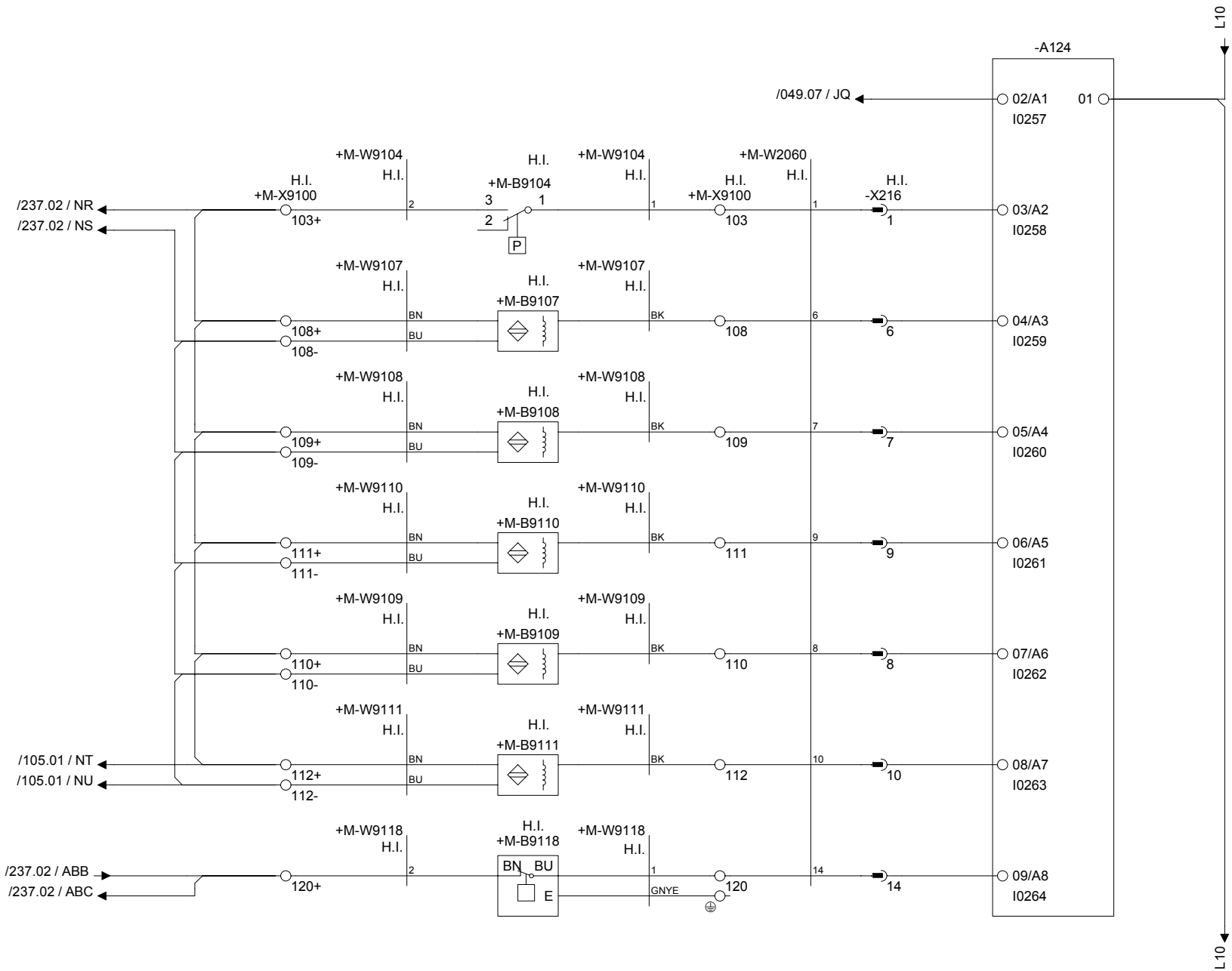

Drawing remarks	Tetra Pak	Designer LUP	Date 23/11/2007	Machine Tetra Pak A3/Flex 0150	
		ECM No 320174	Denomination CIRCUIT DIAGRAM	Page Type PLC-IN	
	Company Tetra Pak (Italy)	Document No. 2845987-0003	Doc. type ELD	Version AE	Page 145

This drawing must not without the consent of Tetra Pak
be copied, transmitted or disclosed to any third party.

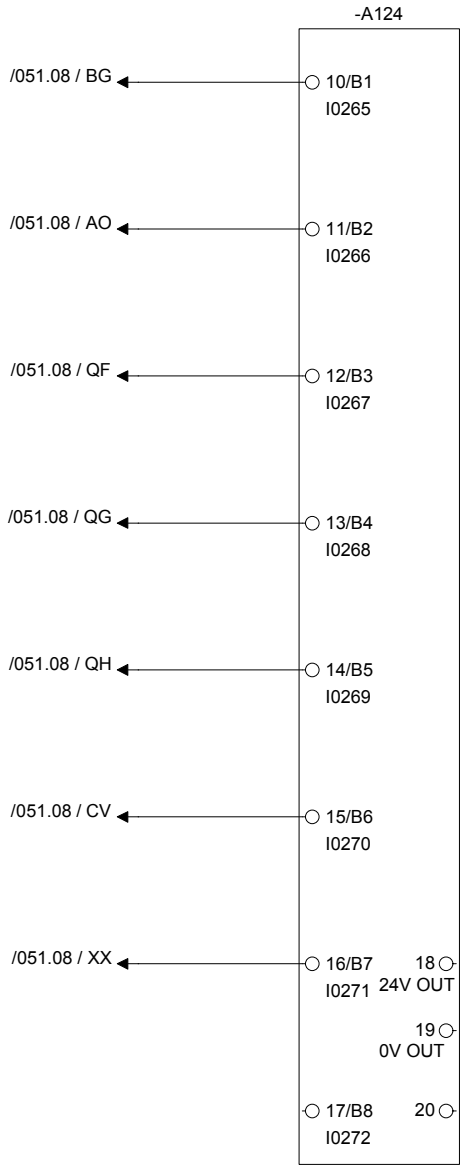

SPARE

TMCC FILLING, HIGH LEVEL PRODUCT IN TUBE

TMCC灌注 管中的高水平产品

TMCC FILLING, LOW LEVEL PRODUCT IN TUBE

TMCC 填充，管内低含量产品

TMCC FILLING, FILLING OK

TMCC灌装，灌装OK

TMCC FILLING, ENABLED

TMCC 填充，已启用

TMCC FILLING, DATA REQUEST

TMCC 填充，数据请求

TMCC FILLING, VIRTUAL LEVEL

Tmcc 填充，虚拟水平

SPARE

Drawing remarks

Tetra Pak

Designer LUP	Date 23/11/2007	Machine Tetra Pak A3/Flex 0150	
ECM No 320174	Denomination CIRCUIT DIAGRAM	Page Type PLC-IN	
Company Tetra Pak (Italy)	Document No. 2845987-0003	Doc. type ELD	Version AE	Page 146

This drawing must not without the consent of Tetra Pak be copied, transmitted or disclosed to any third party.

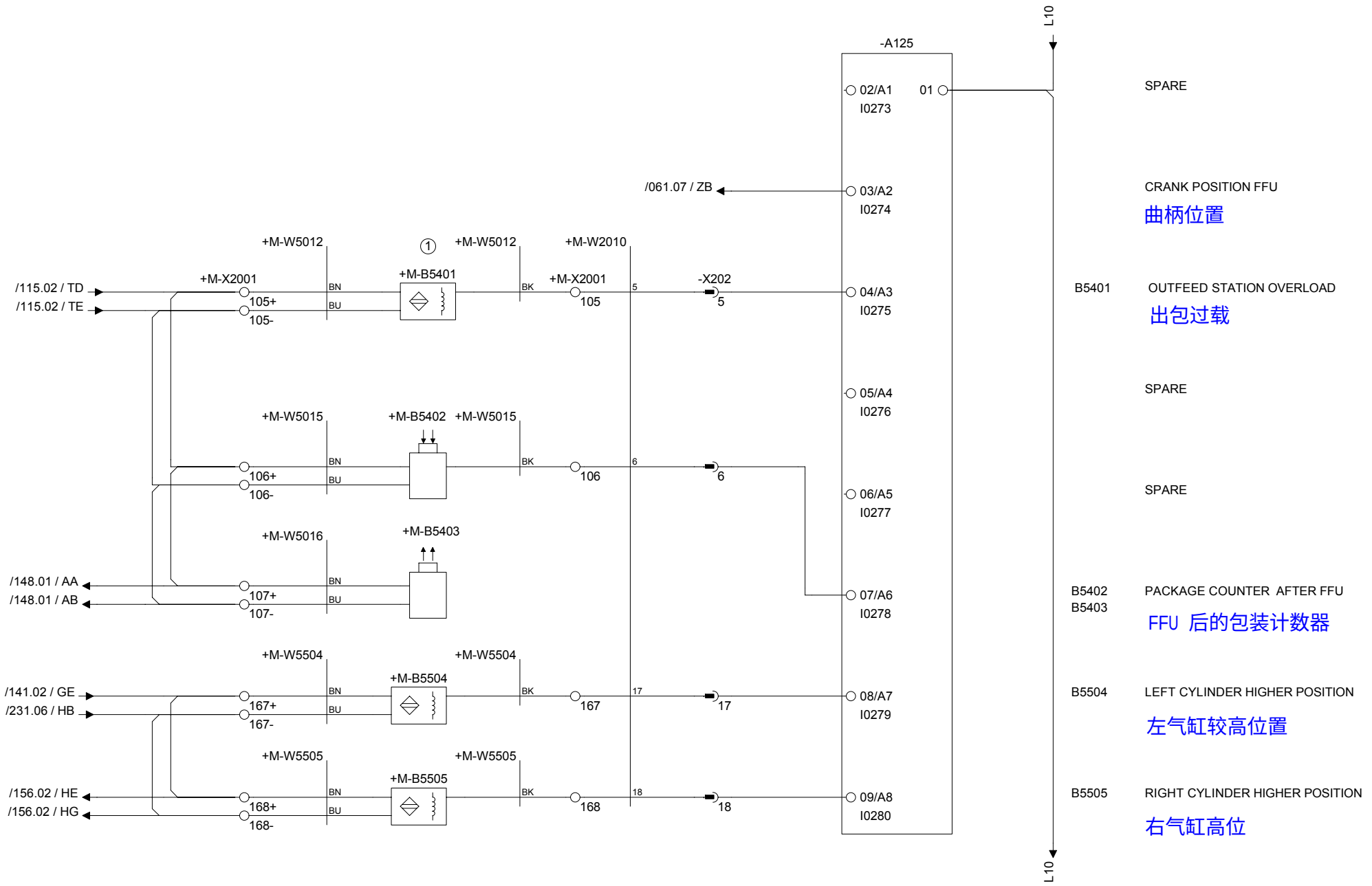

Drawing remarks	Tetra Pak	Designer LUP	Date 23/11/2007	Machine Tetra Pak A3/Flex 0150	
		ECM No 320174	Denomination CIRCUIT DIAGRAM	Page Type PLC-IN	
	Company Tetra Pak (Italy)	Document No. 2845987-0003	Doc. type ELD	Version AE	Page 147

This drawing must not without the consent of Tetra Pak be copied, transmitted or disclosed to any third party.

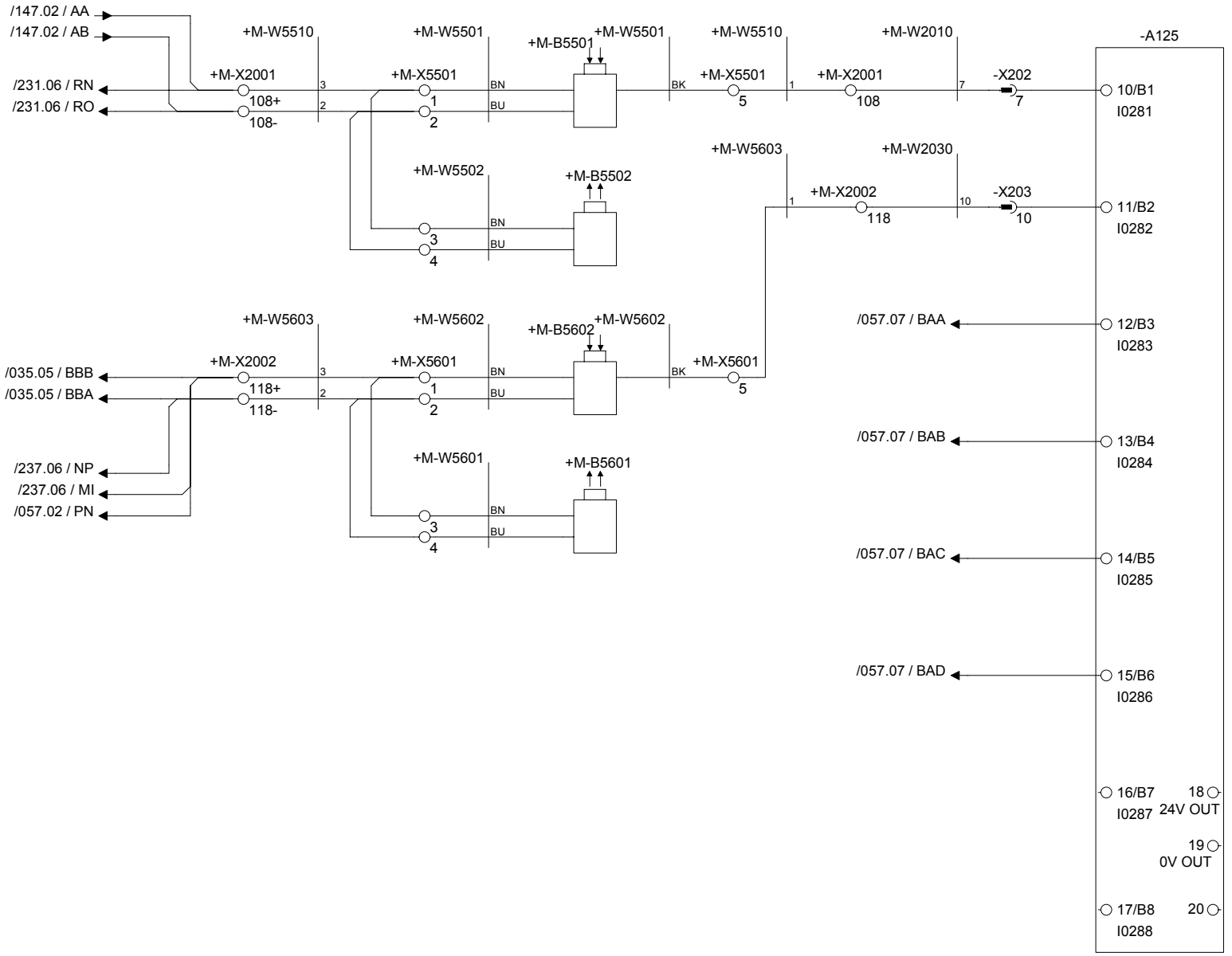

B5501 EXTERNAL CONVEYOR
B5502 CONGEST.GUARD
外部传送带拥塞保护

B5602 PACKAGE COUNTER
B5601 LAST POINT D.E.
包裹柜台最后一点 D.E

EXTERNAL DATE UNIT READY
外部日期装置就绪

EXT. DATE UNIT
ALARM SUPPLY LOW
分机。 日期单位警报供应不足

DE READY
DE准备

USED IN A3/SPEED

SPARE

SPARE

Drawing remarks	Tetra Pak	Designer LUP	Date 23/11/2007	Machine Tetra Pak A3/Flex 0150	
		ECM No 320174	Denomination CIRCUIT DIAGRAM	Page Type PLC-IN	
	Company Tetra Pak (Italy)	Document No. 2845987-0003	Doc. type ELD	Version AE	Page 148

RELEASED

This drawing must not without the consent of Tetra Pak be copied, transmitted or disclosed to any third party.

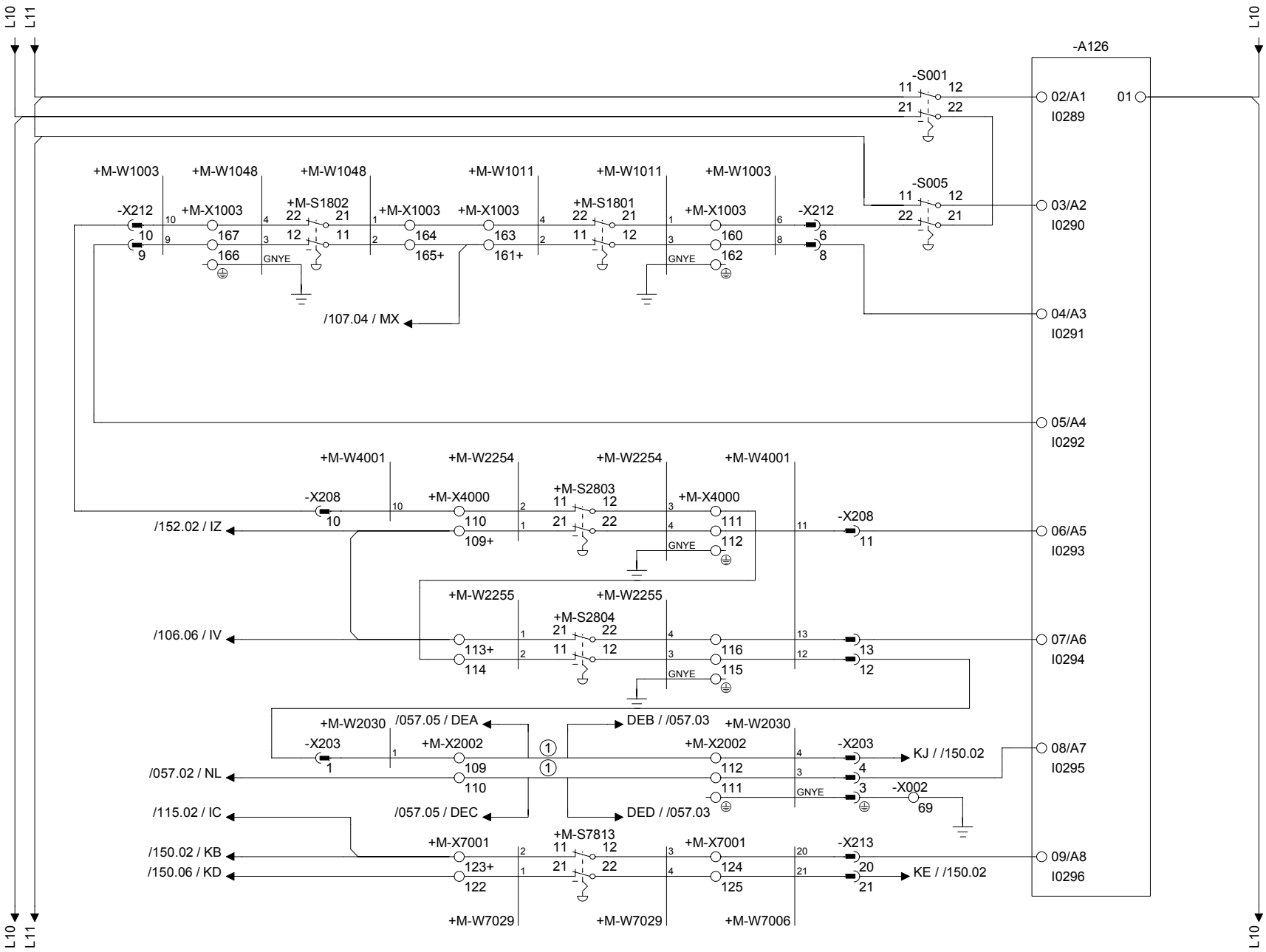

S001	EMERGENGY STOP CONTR. CAB. OUTSIDE 紧急停止电柜外部
S005	EMERGENCY STOP CONTROL CAB. INSIDE 紧急停止电柜。 里面
S1801	EMEGENCY STOP FRONT PLATFORM 紧急停止前平台
S1802	EMERGENCY STOP TOP PLATFORM 紧急停止顶部平台
S2803	EMERGENCY STOP RIGHT SIDE PANEL 紧急停止右侧面板
S2804	EMERGENCY STOP LEFT SIDE PANEL 紧急停止左侧面板
	EMERGENCY STOP DE EQUIPMENT 紧急停止DE设备
S7813	EMERGENCY STOP ASU INTERNAL 紧急停止 ASU 内部

Drawing remarks

Tetra Pak

Designer LUP	Date 23/11/2007	Machine Tetra Pak A3/Flex 0150	
ECM No 320174	Denomination CIRCUIT DIAGRAM	Page Type PLC-IN	
Company Tetra Pak (Italy)	Document No. 2845987-0003	Doc. type ELD	Version AE	Page 149

RELEASED

This drawing must not without the consent of Tetra Pak be copied, transmitted or disclosed to any third party.

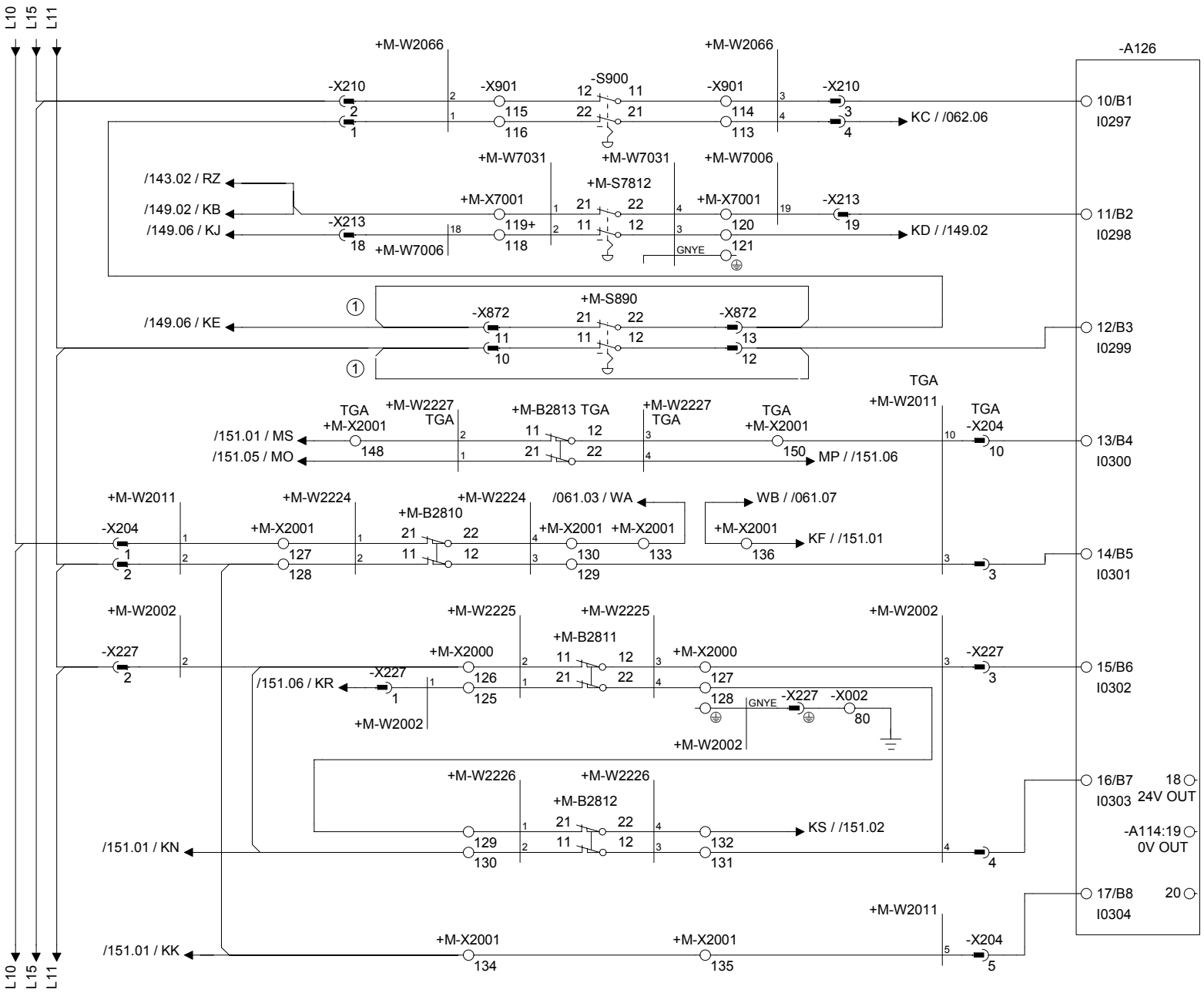

S900 EMERGENCY STOP CONTROL PANEL
急停控制面板

S7812 EMERGENCY STOP SA ASU WALLET
ASU，SA 急停

S890 EMERGENCY STOP (OPTION DIMC)
紧急停止

B2813 FFU LEFT SIDE DOOR 1
FFU 左侧门 1

B2810 FFU RIGHT SIDE DOOR 2
FFU 右侧门 2

B2811 JUM RIGHT SIDE DOOR 1
JUM 右侧门 1

B2812 JUM RIGHT SIDE DOOR 2
JUM 右侧门 2

SPARE

Drawing remarks

Tetra Pak	Designer LUP	Date 23/11/2007	Machine Tetra Pak A3/Flex 0150		
	ECM No 320174	Denomination CIRCUIT DIAGRAM	Page Type PLC-IN		
Company Tetra Pak (Italy)	Document No. 2845987-0003	Doc. type ELD	Version AE	Page 150	

RELEASED

This drawing must not without the consent of Tetra Pak be copied, transmitted or disclosed to any third party.

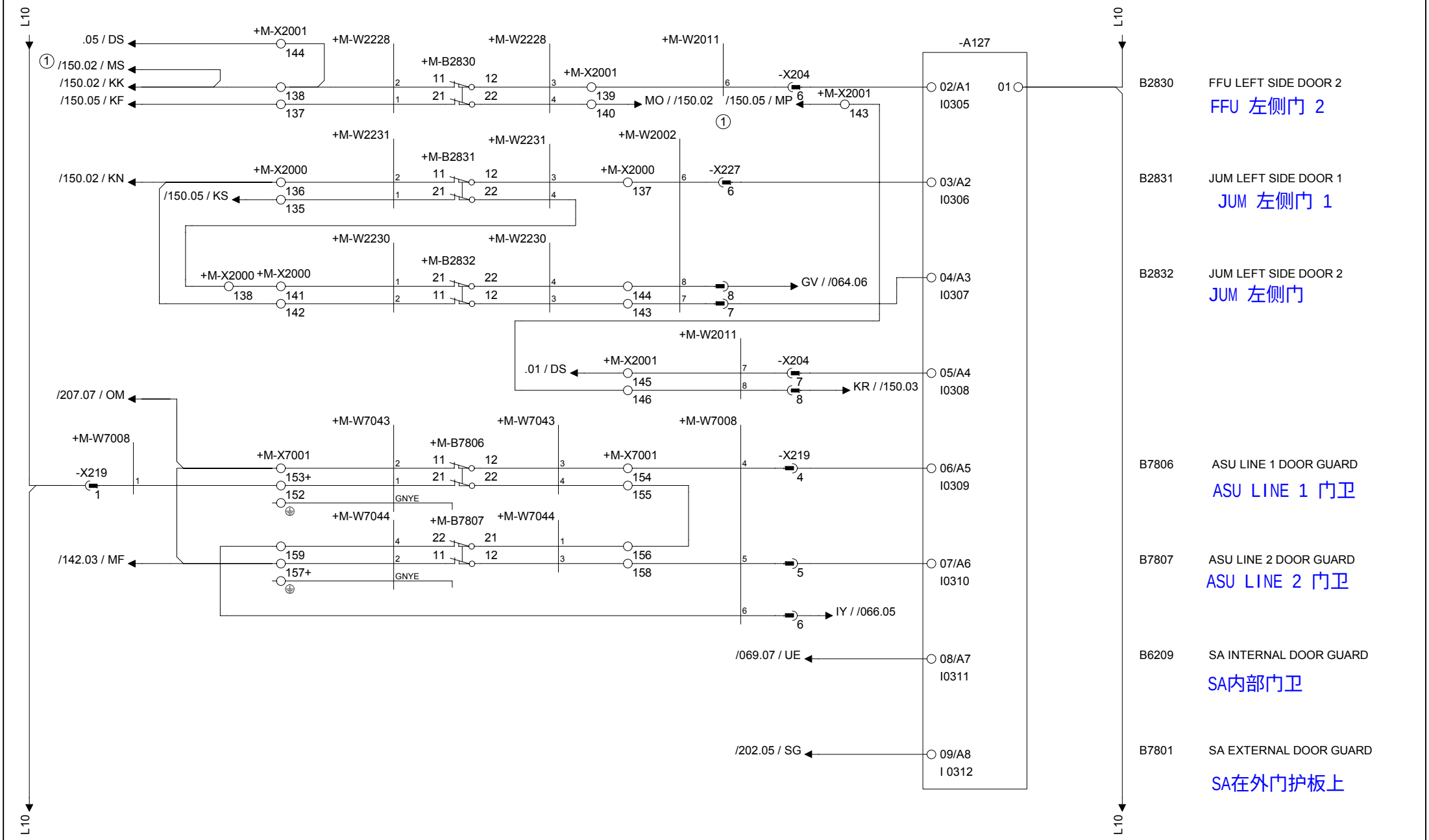

Drawing remarks	Tetra Pak	Designer LUP	Date 23/11/2007	Machine Tetra Pak A3/Flex 0150	
		ECM No 320174	Denomination CIRCUIT DIAGRAM	Page Type PLC-IN	
	Company Tetra Pak (Italy)	Document No. 2845987-0003	Doc. type ELD	Version AE	Page 151

This drawing must not without the consent of Tetra Pak be copied, transmitted or disclosed to any third party.

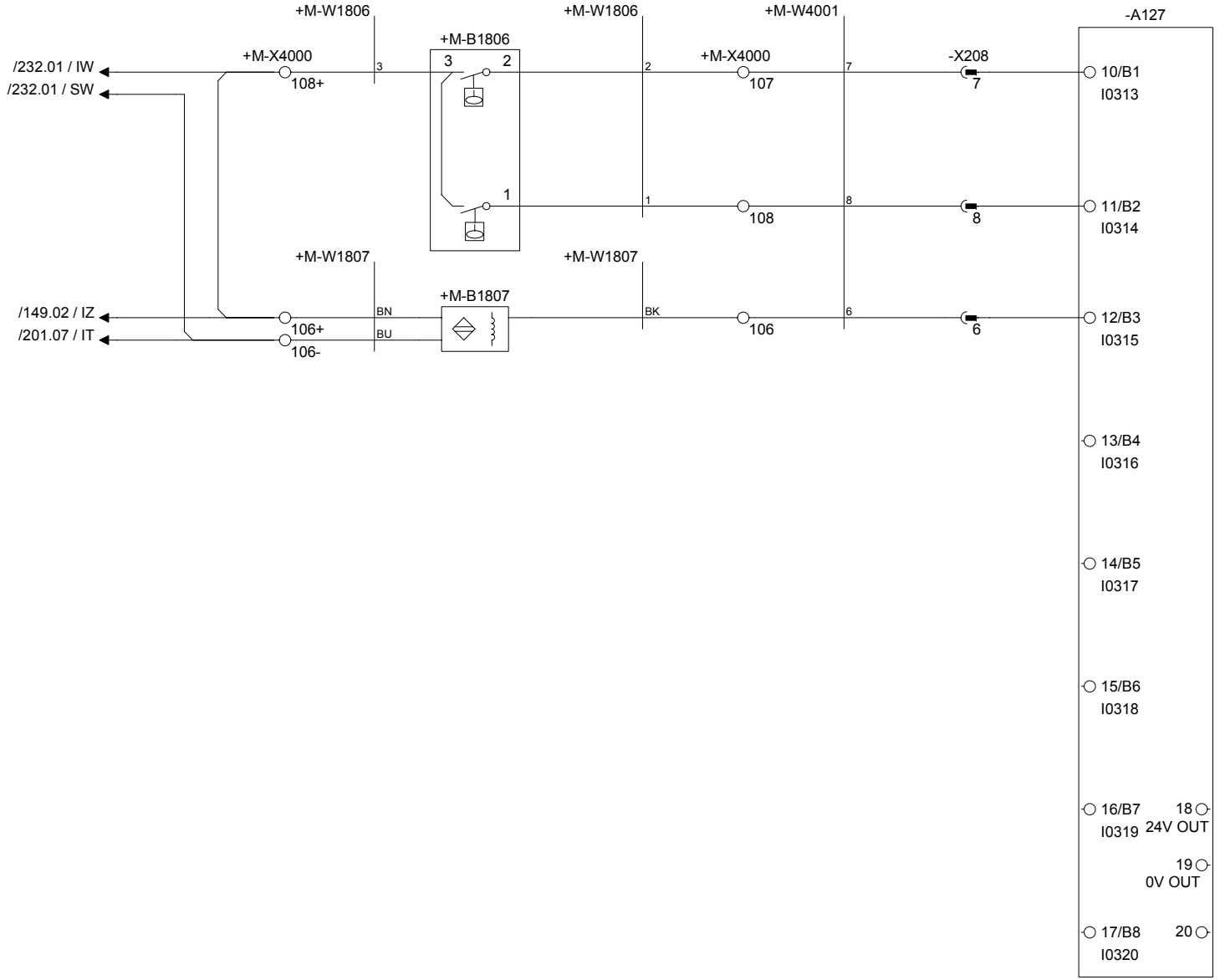

B1806 ICU LOW LEVEL ACID TANK

ICU 低位液罐

ICU HIGH LEVEL ACID TANK

ICU 高位酸液罐

B1807 ICU REFILLING PIPE ACID TANK

ICU 加注管酸罐

Drawing remarks	Tetra Pak	Designer LUP	Date 23/11/2007	Machine Tetra Pak A3/Flex 0150	
		ECM No 320174	Denomination CIRCUIT DIAGRAM	Page Type PLC-IN	
	Company Tetra Pak (Italy)	Document No. 2845987-0003	Doc. type ELD	Version AE	Page 152

This drawing must not without the consent of Tetra Pak
be copied, transmitted or disclosed to any third party.

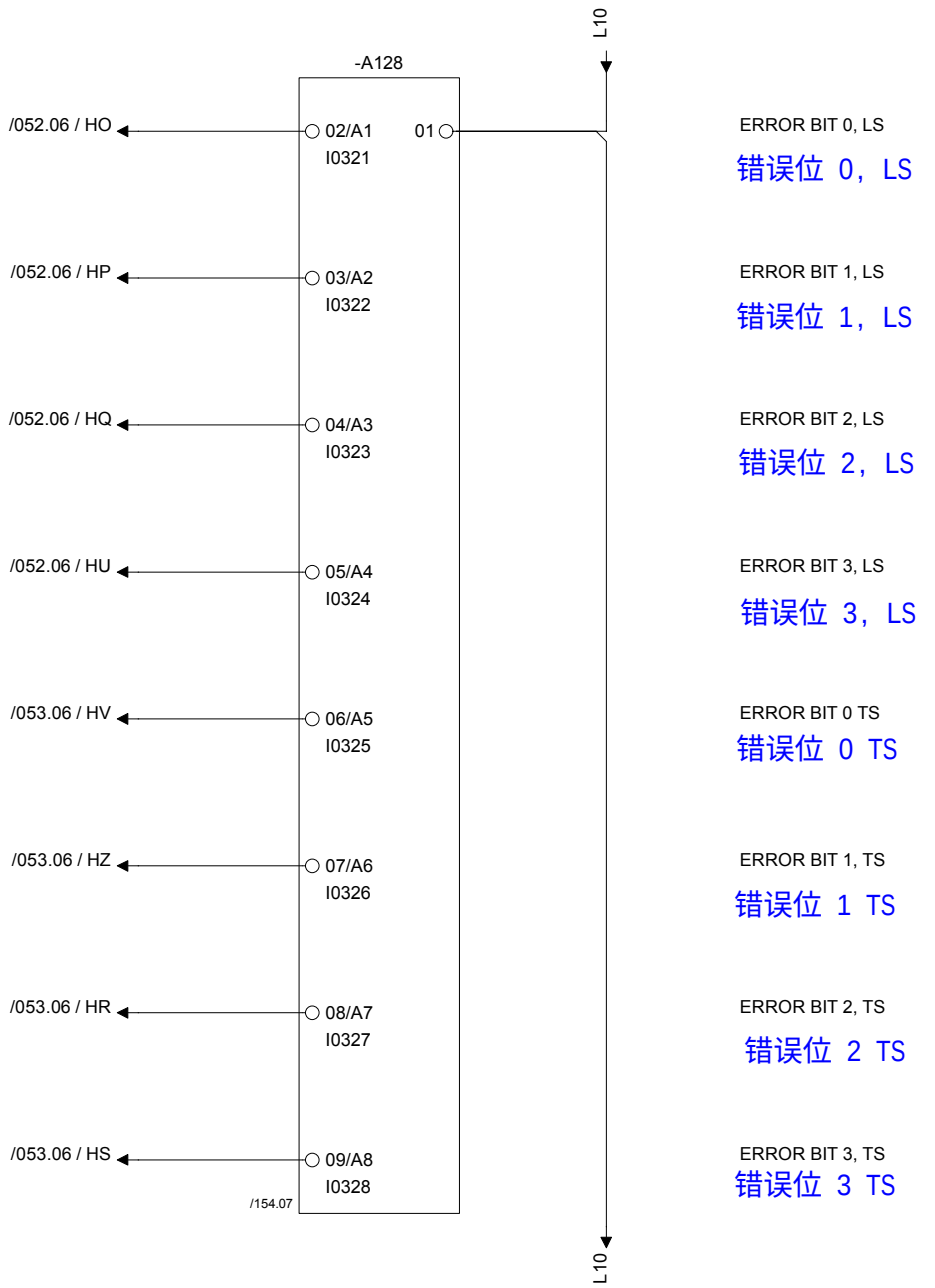

Drawing remarks

Tetra Pak

Designer LUP	Date 23/11/2007	Machine Tetra Pak A3/Flex 0150	
ECM No 320174	Denomination CIRCUIT DIAGRAM	Page Type PLC-IN	
Company Tetra Pak (Italy)	Document No. 2845987-0003	Doc. type ELD	Version AE	Page 153

This drawing must not without the consent of Tetra Pak
be copied, transmitted or disclosed to any third party.

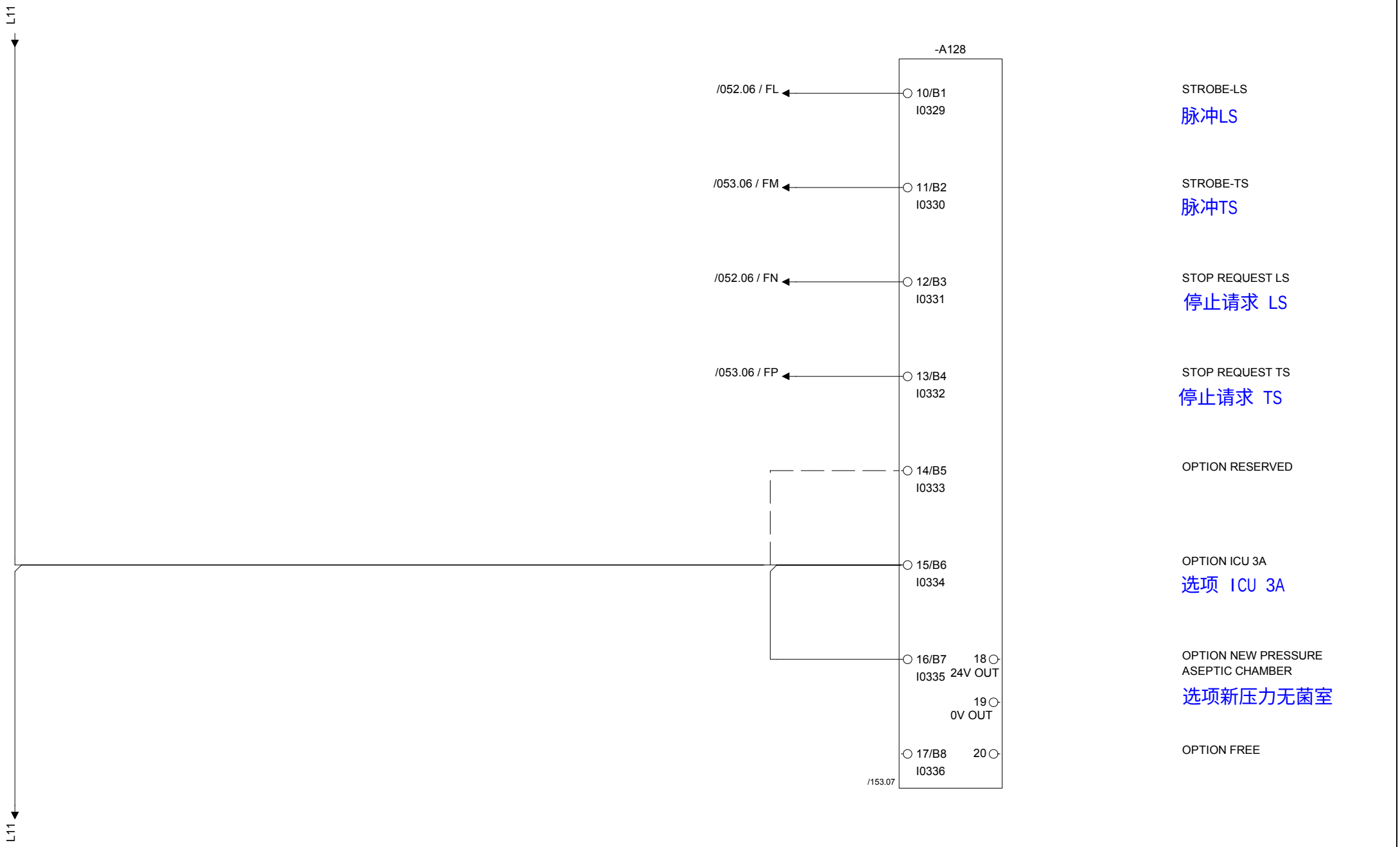

Drawing remarks	Tetra Pak	Designer LUP	Date 23/11/2007	Machine Tetra Pak A3/Flex 0150
		ECM No 320174	Denomination CIRCUIT DIAGRAM	Page Type PLC-IN
		Company Tetra Pak (Italy)	Document No. 2845987-0003	Doc. type ELD / Version AE / Page 154

RELEASED

This drawing must not without the consent of Tetra Pak be copied, transmitted or disclosed to any third party.

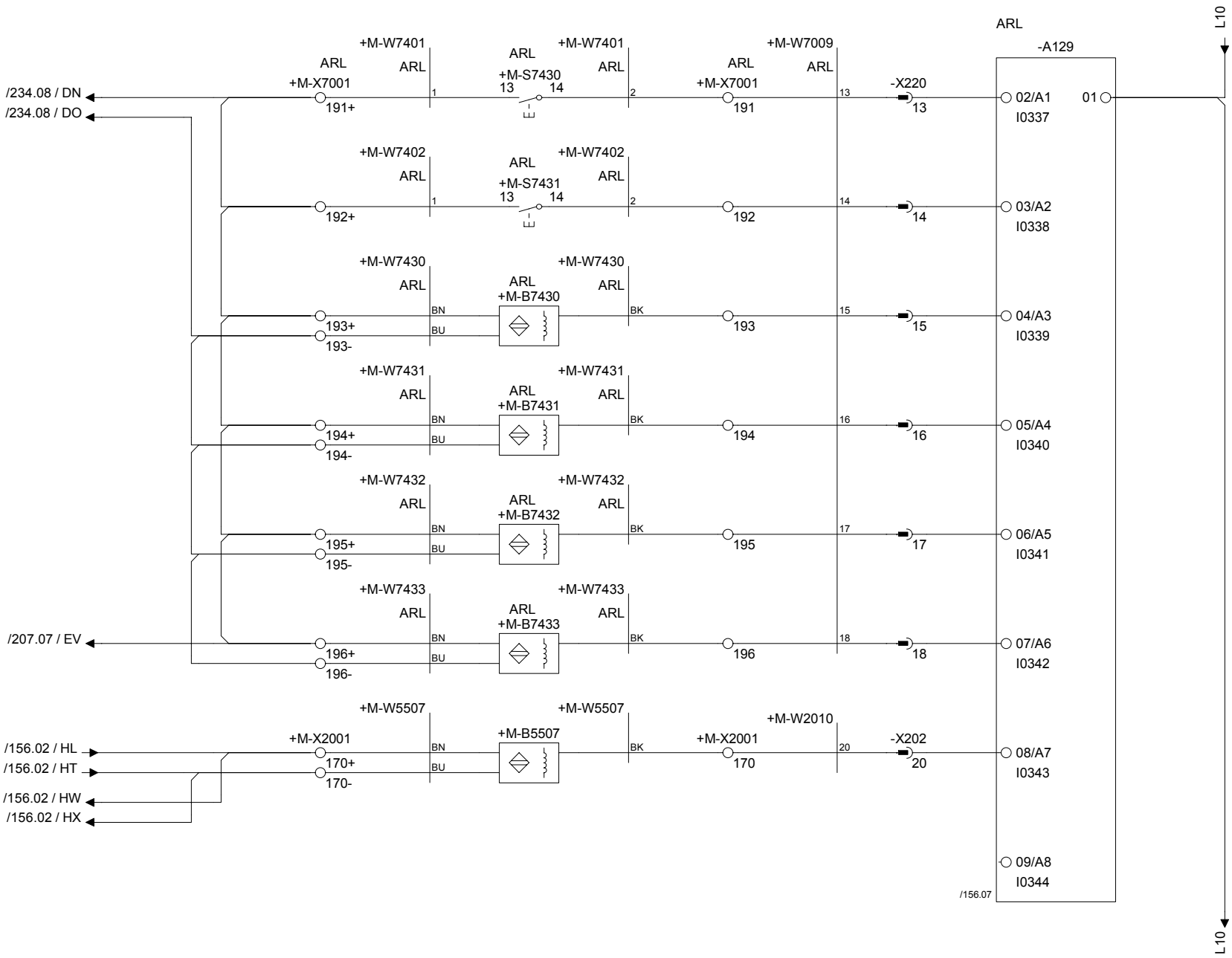

Drawing remarks	Tetra Pak	Designer LUP	Date 23/11/2007	Machine Tetra Pak A3/Flex 0150	
		ECM No 320174	Denomination CIRCUIT DIAGRAM	Page Type PLC-IN	
	Company Tetra Pak (Italy)	Document No. 2845987-0003	Doc. type ELD	Version AE	Page 155

This drawing must not without the consent of Tetra Pak be copied, transmitted or disclosed to any third party.

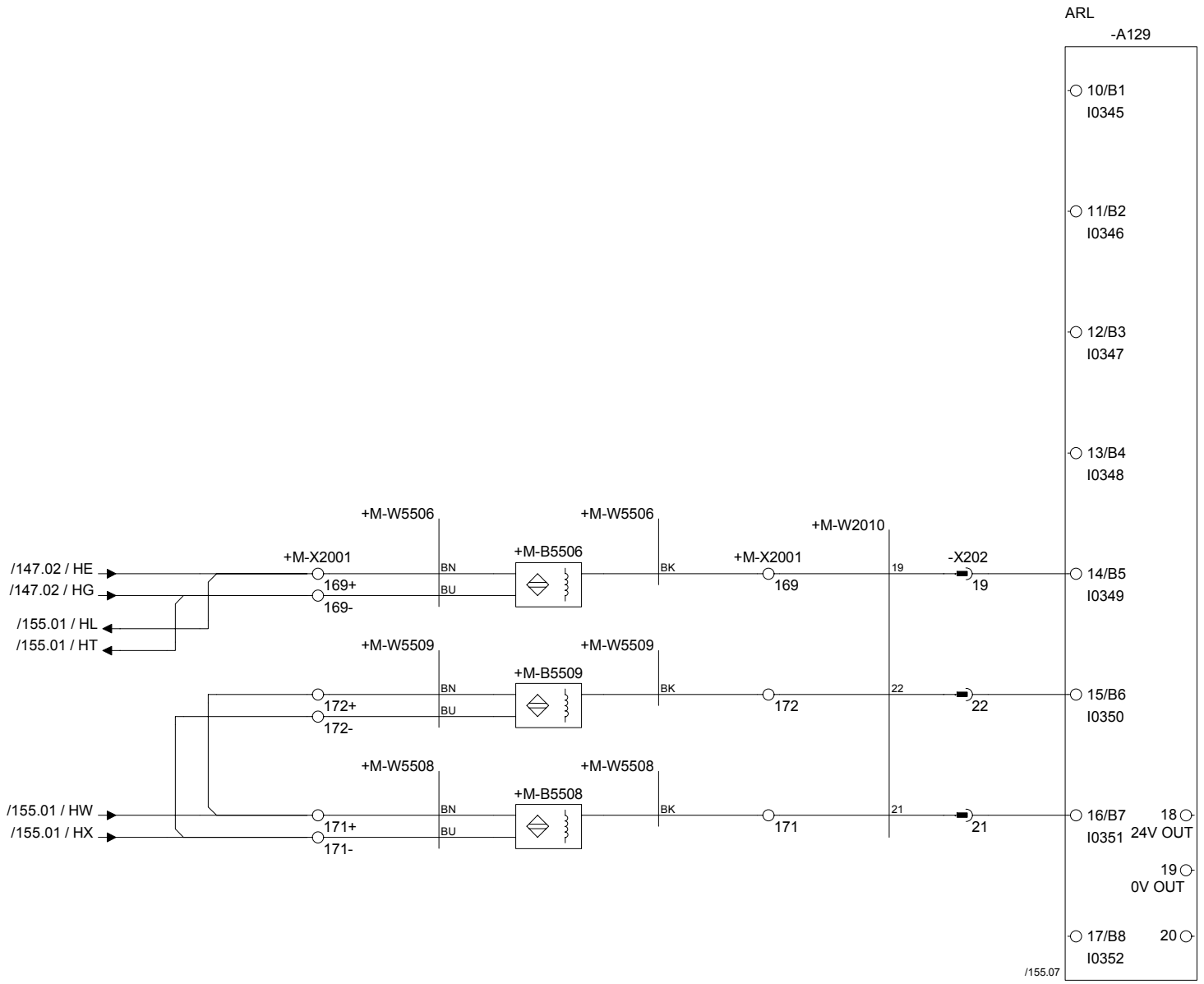

B5506 LEFT CYLINDER MEDIUM POSITION
左气缸中位

B5509 RIGHT CYLINDER LOWER POSITION
右气缸下部位置

B5508 LEFT CYLINDER LOWER POSITION
左气缸下部位置

Drawing remarks

Tetra Pak

Designer LUP	Date 23/11/2007	Machine Tetra Pak A3/Flex 0150		
ECM No 320174	Denomination CIRCUIT DIAGRAM	Page Type PLC-IN		
Company Tetra Pak (Italy)	Document No. 2845987-0003	Doc. type ELD	Version AE	Page 156

RELEASED

This drawing must not without the consent of Tetra Pak
be copied, transmitted or disclosed to any third party.

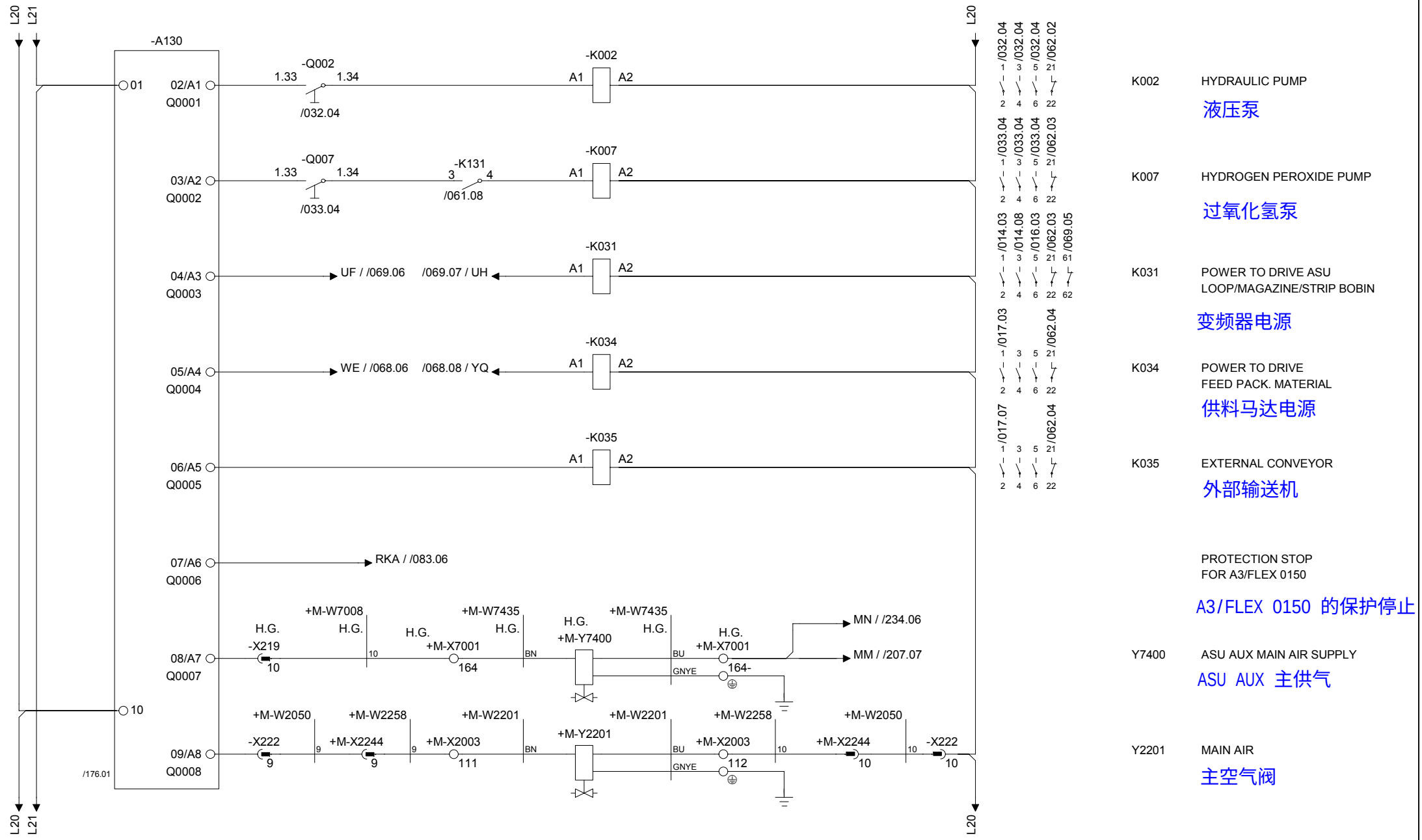

Drawing remarks	Tetra Pak	Designer LUP	Date 23/11/2007	Machine Tetra Pak A3/Flex 0150	
		ECM No 320174	Denomination CIRCUIT DIAGRAM	Page Type PLC-OUT	
		Company Tetra Pak (Italy)	Document No. 2845987-0003	Doc. type ELD	Version AE	Page 175

RELEASED

This drawing must not without the consent of Tetra Pak be copied, transmitted or disclosed to any third party.

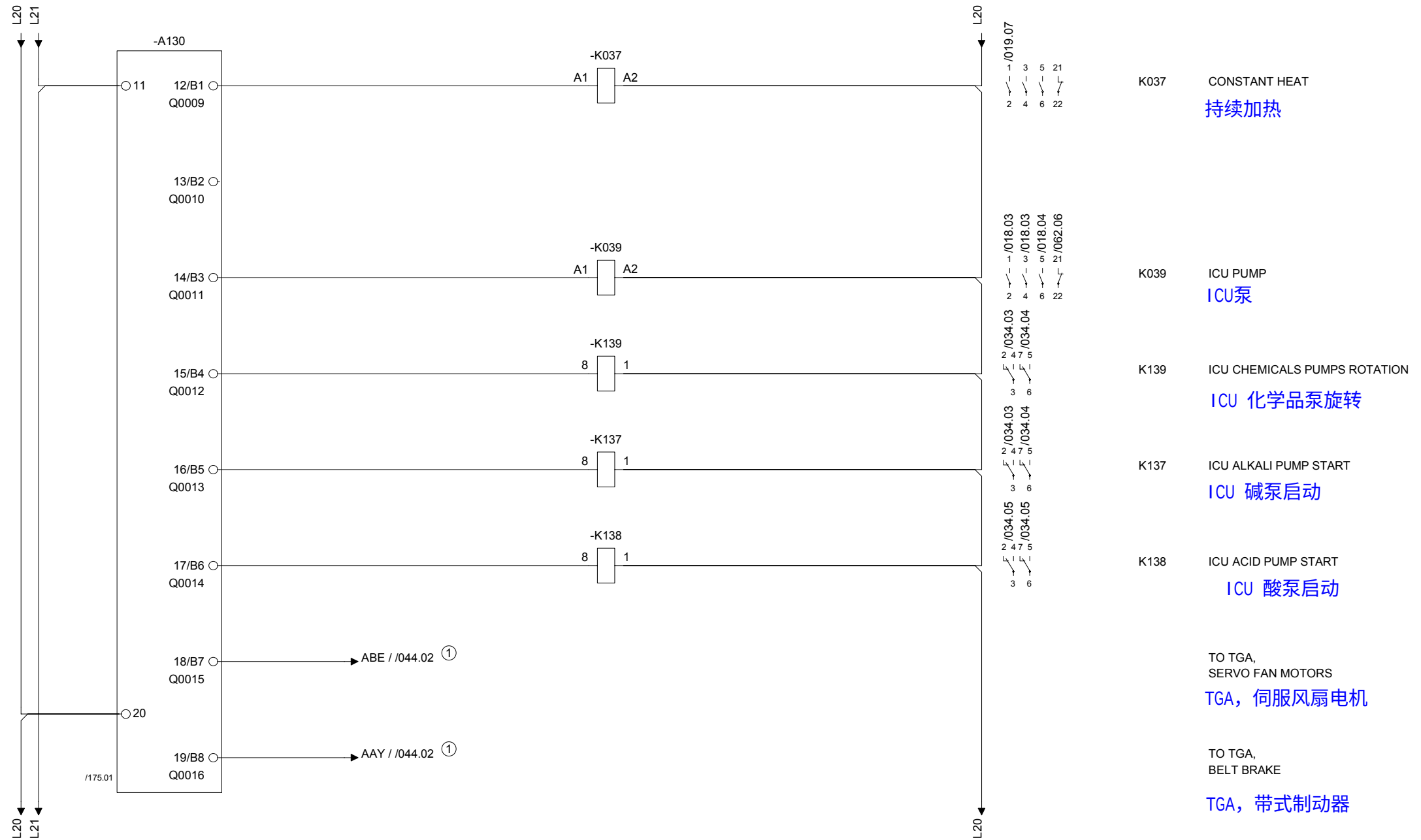

Drawing remarks	Tetra Pak	Designer LUP	Date 23/11/2007	Machine Tetra Pak A3/Flex 0150			
		ECM No 320174	Denomination CIRCUIT DIAGRAM	Page Type PLC-OUT			
		Company Tetra Pak (Italy)	Document No. 2845987-0003	Doc. type ELD	Version AE	Page 176	

RELEASED

This drawing must not without the consent of Tetra Pak be copied, transmitted or disclosed to any third party.

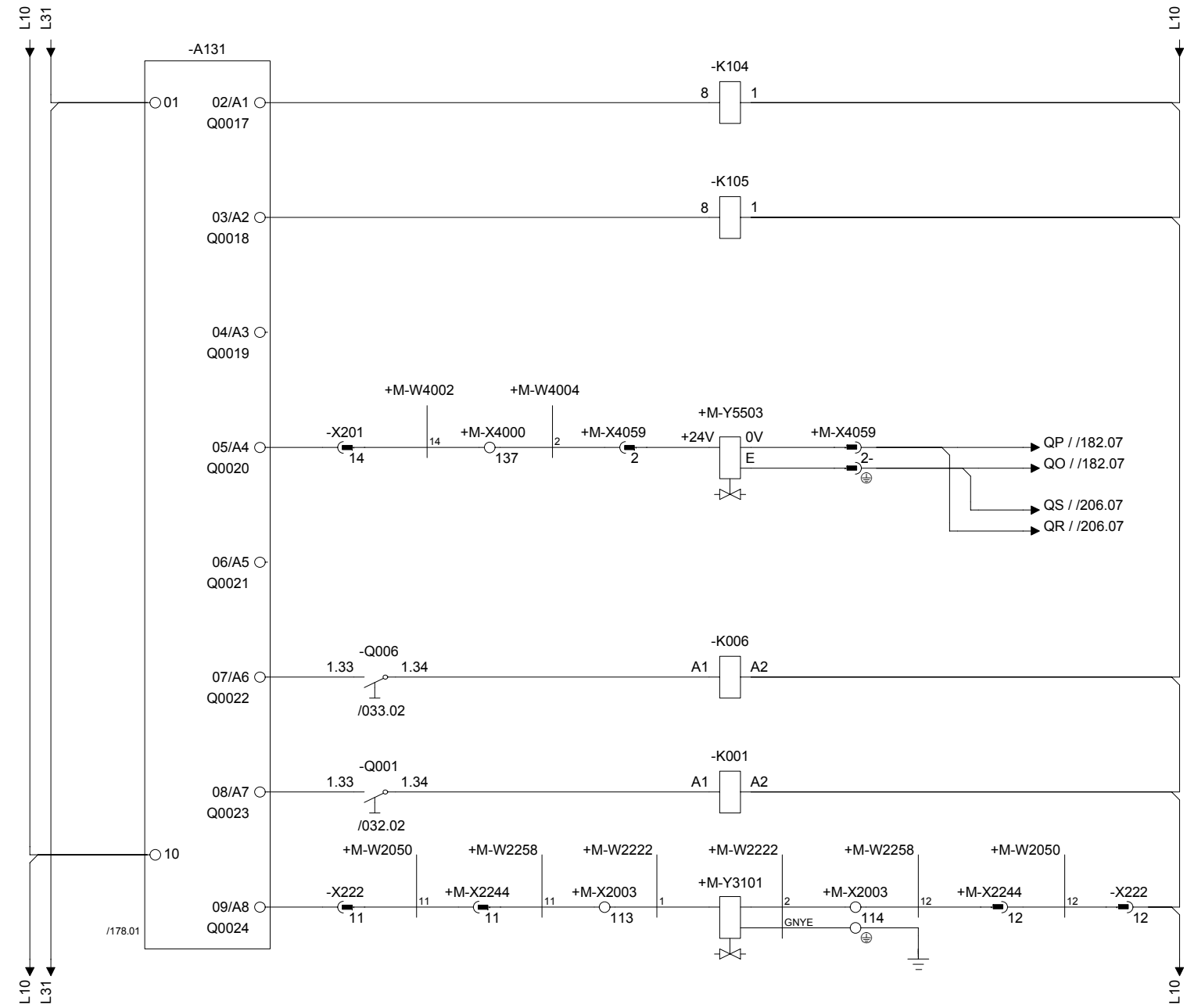

Drawing remarks	Tetra Pak	Designer LUP	Date 23/11/2007	Machine Tetra Pak A3/Flex 0150	
		ECM No 320174	Denomination CIRCUIT DIAGRAM	Page Type PLC-OUT	
	Company Tetra Pak (Italy)	Document No. 2845987-0003	Doc. type ELD	Version AE	Page 177

RELEASED

This drawing must not without the consent of Tetra Pak be copied, transmitted or disclosed to any third party.

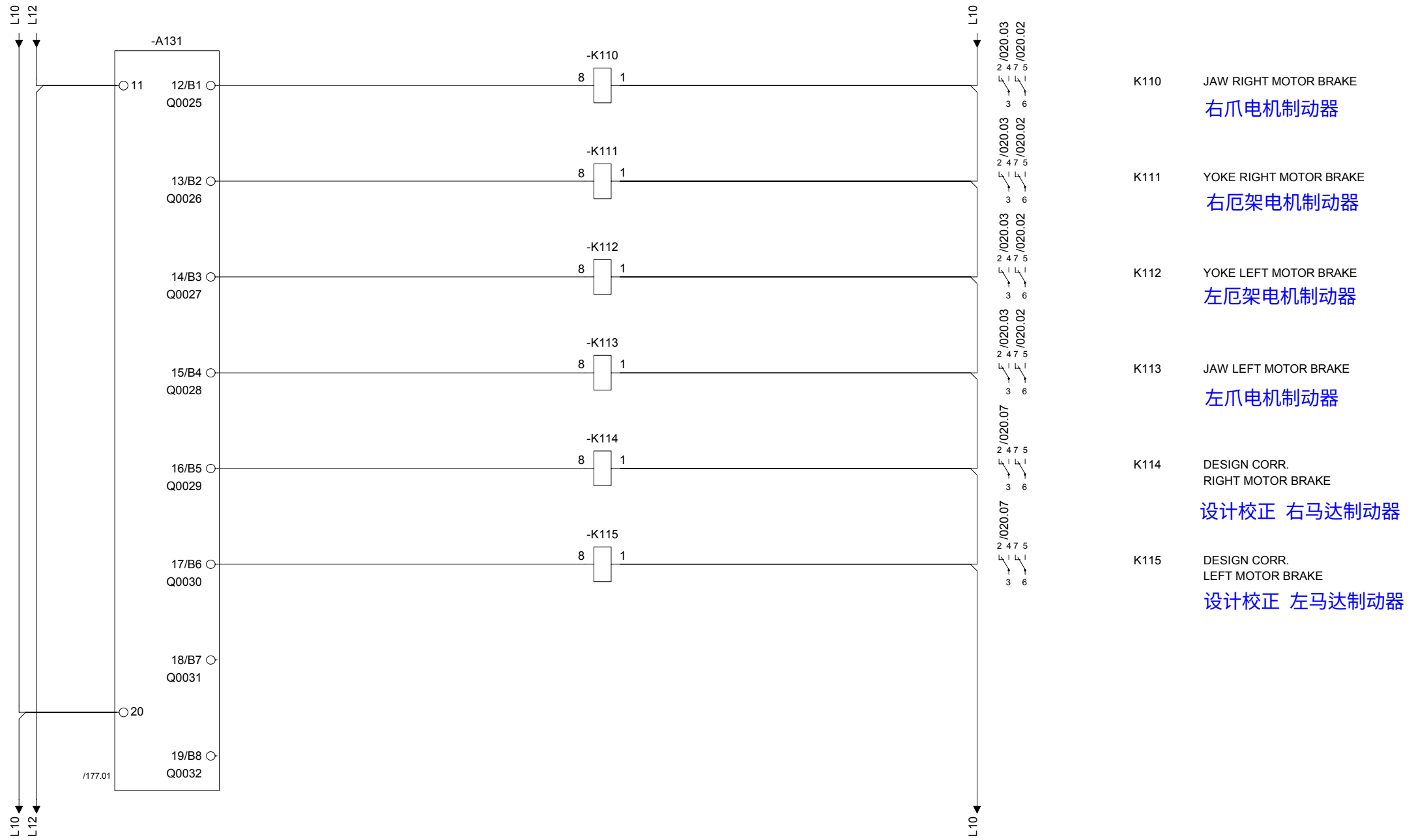

Drawing remarks	Tetra Pak	Designer LUP	Date 23/11/2007	Machine Tetra Pak A3/Flex 0150			
		ECM No 320174	Denomination CIRCUIT DIAGRAM	Page Type PLC-OUT			
		Company Tetra Pak (Italy)	Document No. 2845987-0003	Doc. type ELD	Version AE	Page 178	

RELEASED

This drawing must not without the consent of Tetra Pak be copied, transmitted or disclosed to any third party.

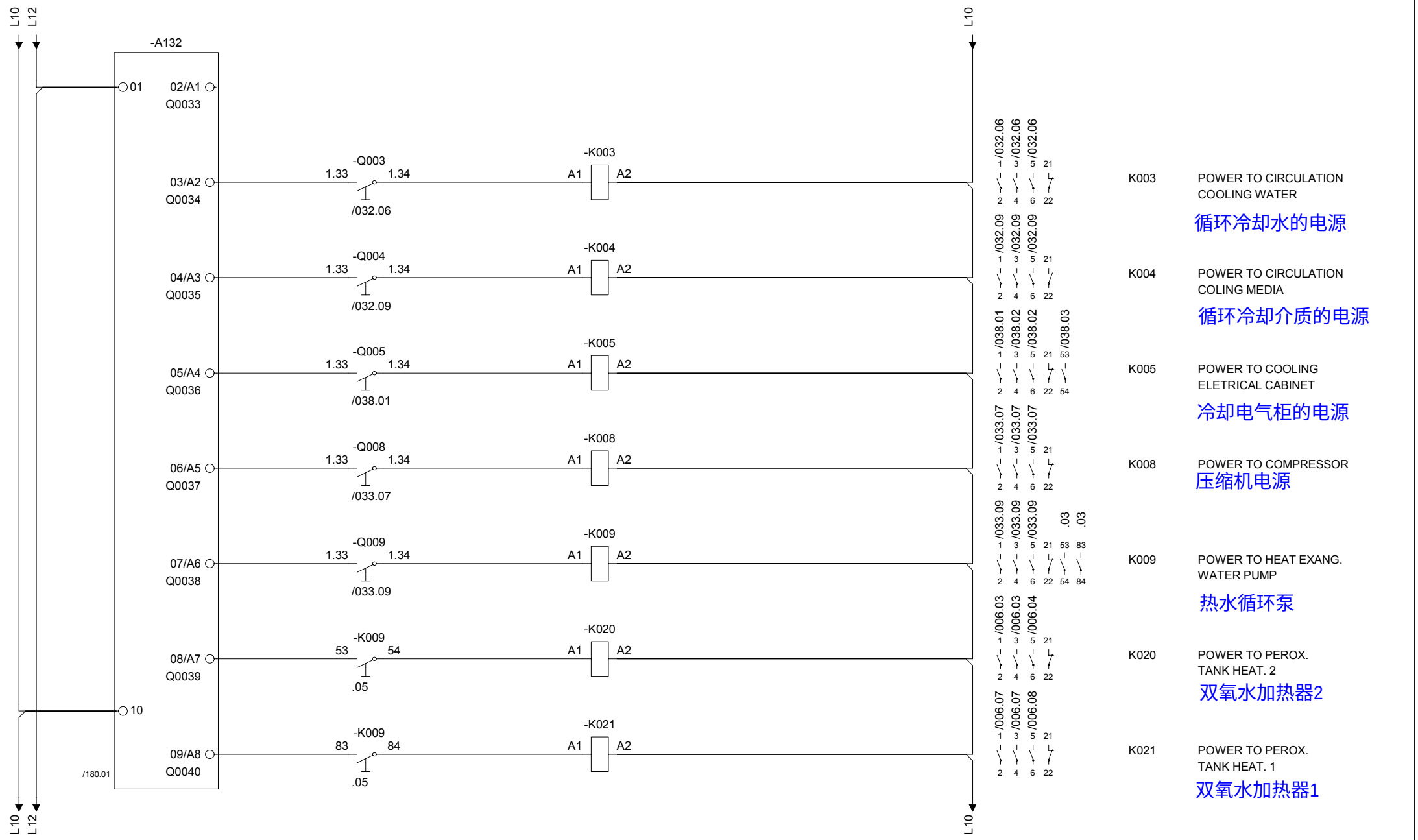

Drawing remarks	Tetra Pak	Designer LUP	Date 23/11/2007	Machine Tetra Pak A3/Flex 0150			
		ECM No 320174	Denomination CIRCUIT DIAGRAM	Page Type PLC-OUT			
	Company Tetra Pak (Italy)		Document No. 2845987-0003	Doc. type ELD	Version AE	Page 179	

RELEASED

This drawing must not without the consent of Tetra Pak
be copied, transmitted or disclosed to any third party.

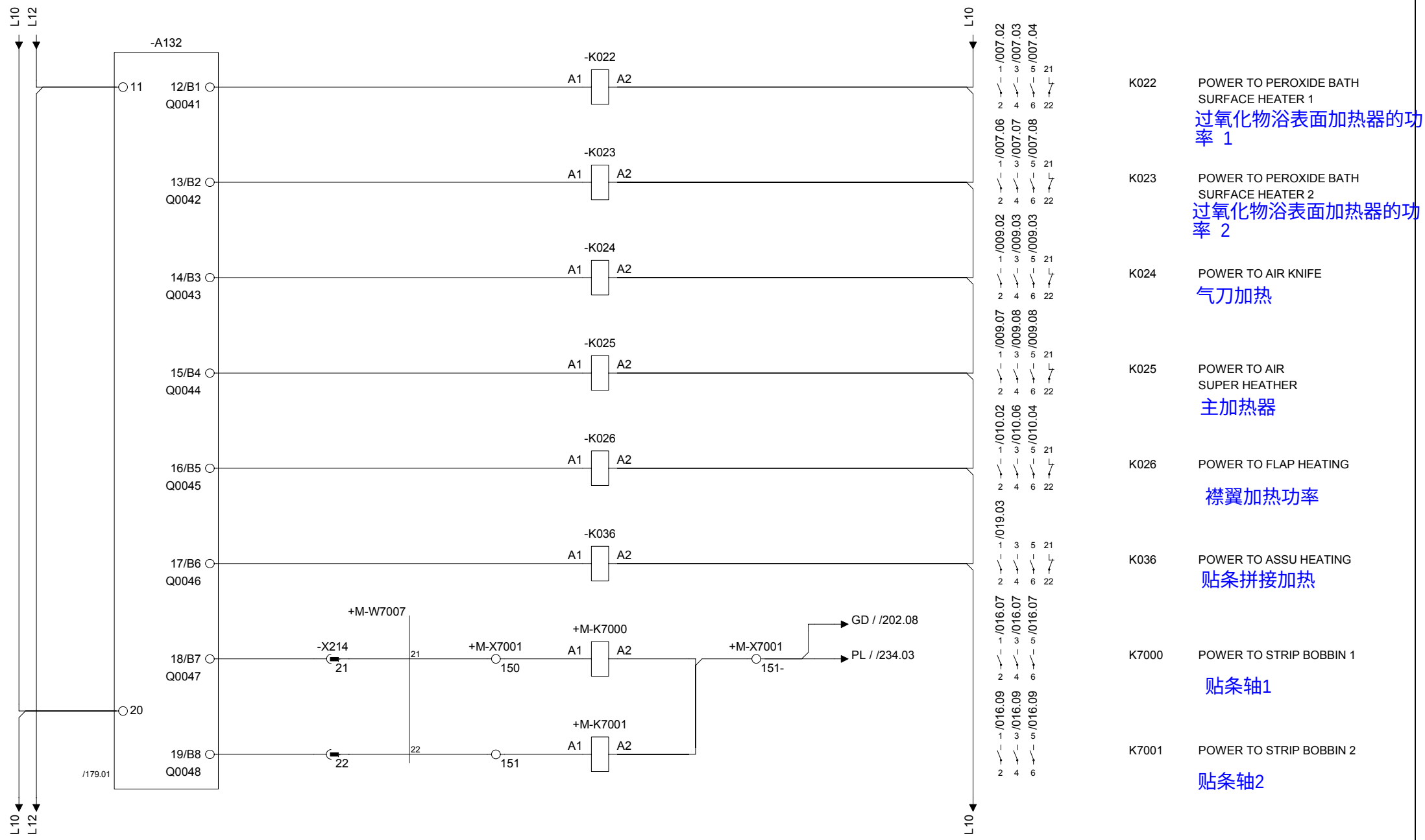

K022	POWER TO PEROXIDE BATH SURFACE HEATER 1 过氧化物浴表面加热器的功率 1
K023	POWER TO PEROXIDE BATH SURFACE HEATER 2 过氧化物浴表面加热器的功率 2
K024	POWER TO AIR KNIFE 气刀加热
K025	POWER TO AIR SUPER HEATHER 主加热器
K026	POWER TO FLAP HEATING 襟翼加热功率
K036	POWER TO ASSU HEATING 贴条拼接加热
K7000	POWER TO STRIP BOBBIN 1 贴条轴1
K7001	POWER TO STRIP BOBBIN 2 贴条轴2

Drawing remarks

Tetra Pak

Designer LUP	Date 23/11/2007	Machine Tetra Pak A3/Flex 0150	
ECM No 320174	Denomination CIRCUIT DIAGRAM	Page Type PLC - OUT	
Company Tetra Pak (Italy)	Document No. 2845987-0003	Doc. type ELD	Version AE	Page 180

RELEASED

This drawing must not without the consent of Tetra Pak be copied, transmitted or disclosed to any third party.

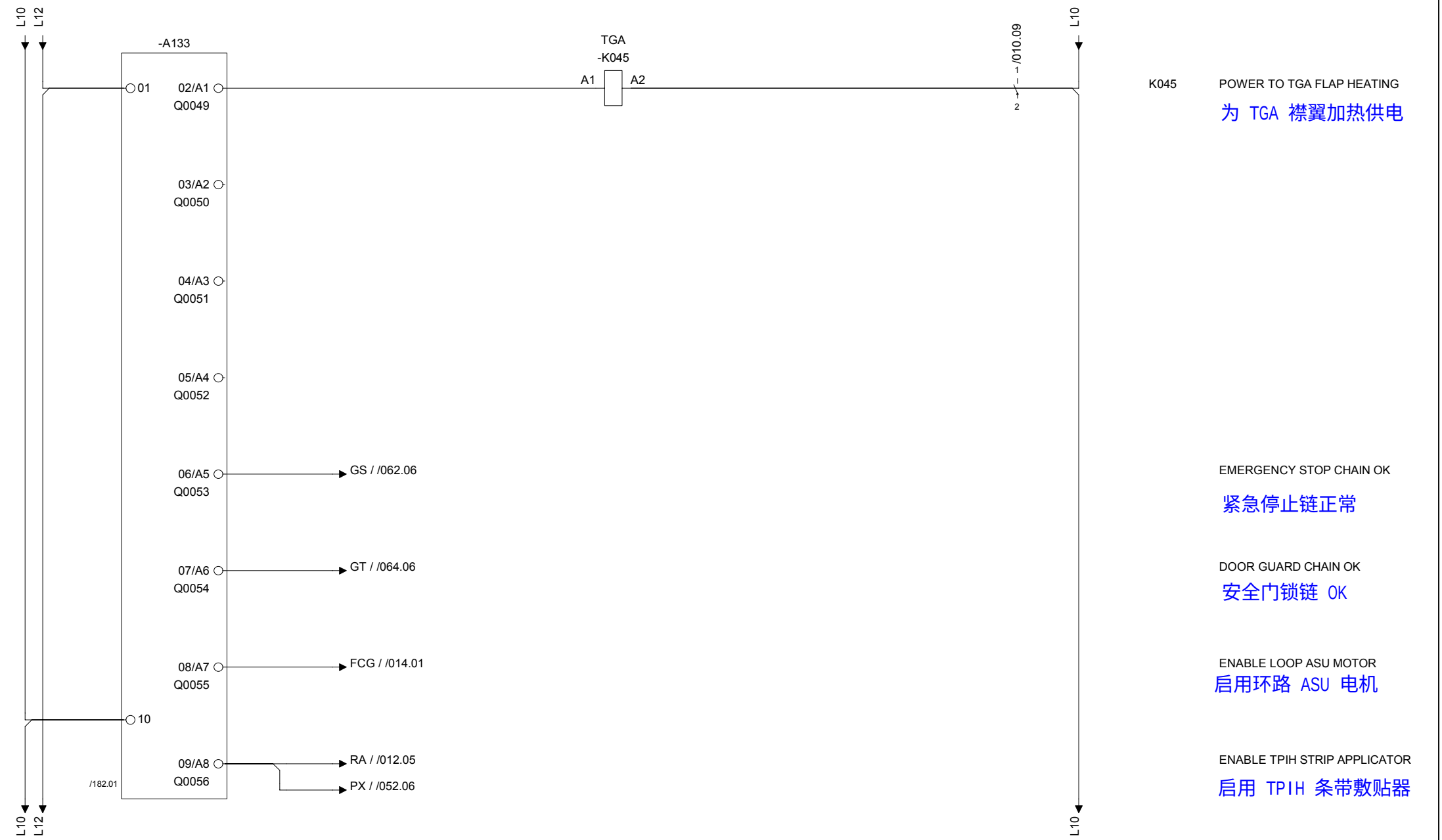

Drawing remarks	Tetra Pak	Designer LUP	Date 23/11/2007	Machine Tetra Pak A3/Flex 0150	
		ECM No 320174	Denomination CIRCUIT DIAGRAM	Page Type PLC - OUT	
		Company Tetra Pak (Italy)	Document No. 2845987-0003	Doc. type ELD	Version AE	Page 181

RELEASED

This drawing must not without the consent of Tetra Pak be copied, transmitted or disclosed to any third party.

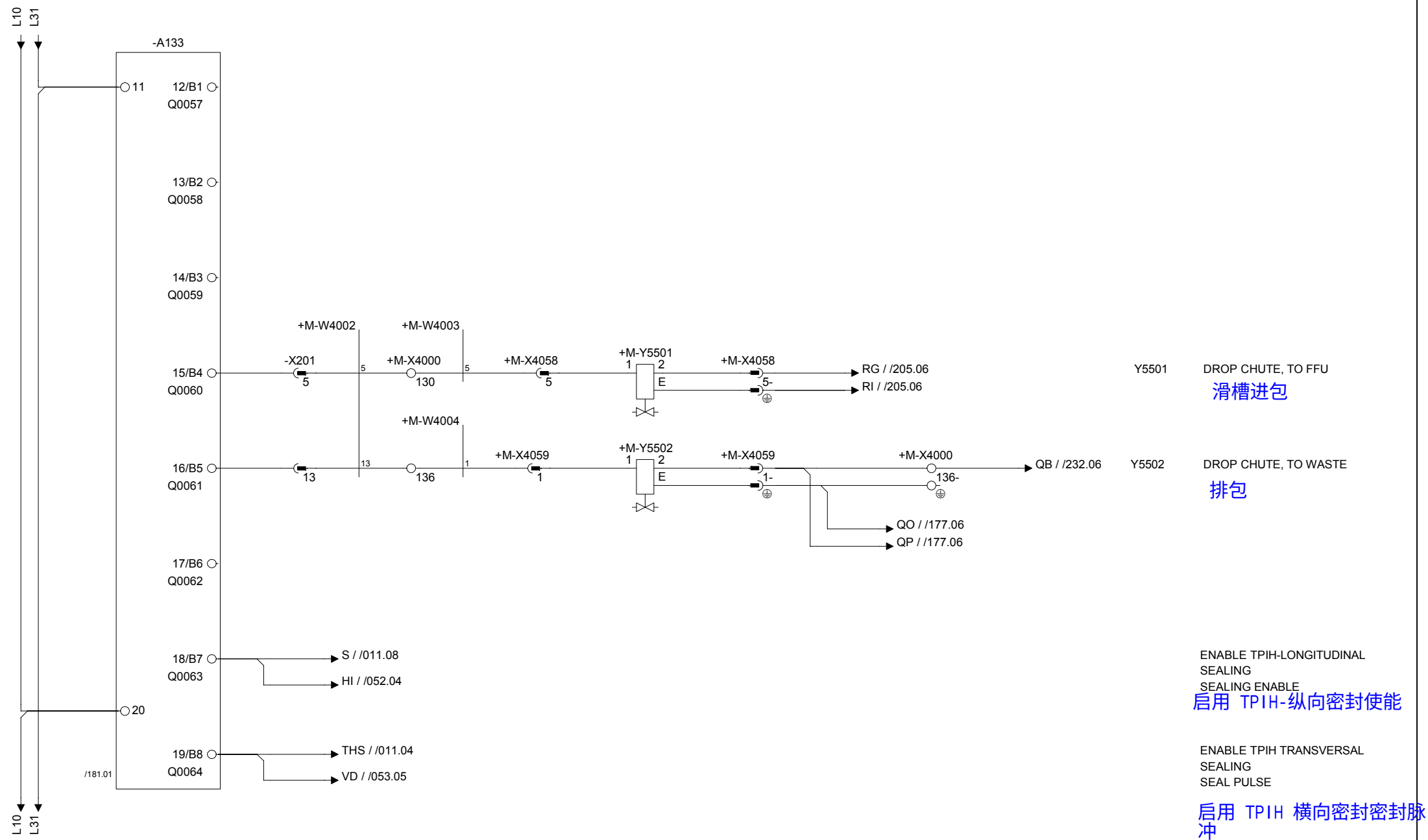

Drawing remarks	Tetra Pak	Designer LUP	Date 23/11/2007	Machine Tetra Pak A3/Flex 0150	
		ECM No 320174	Denomination CIRCUIT DIAGRAM	Page Type PLC - OUT	
		Company Tetra Pak (Italy)	Document No. 2845987-0003	Doc. type ELD	Version AE	Page 182

RELEASED

This drawing must not without the consent of Tetra Pak be copied, transmitted or disclosed to any third party.

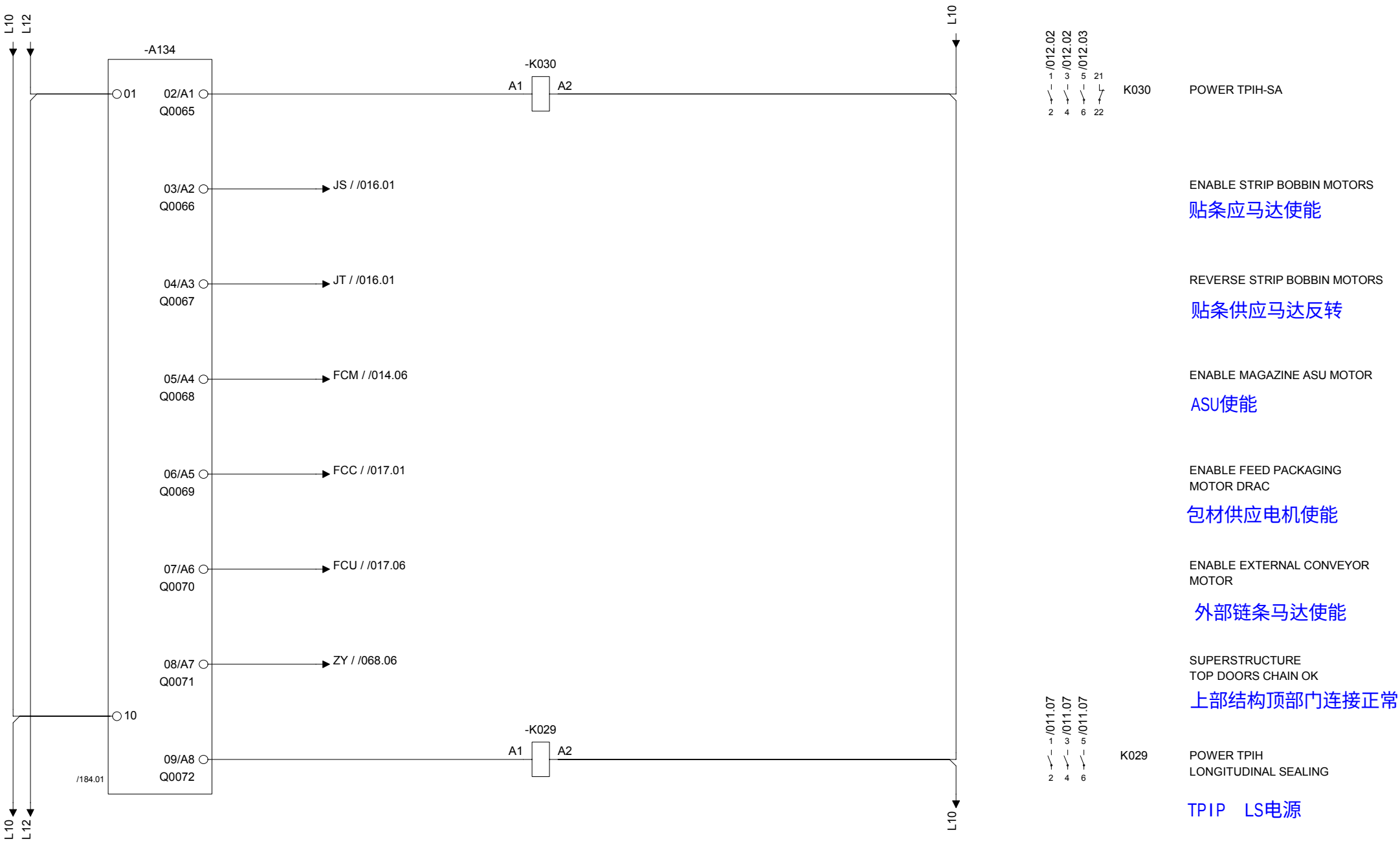

Drawing remarks

Tetra Pak

Designer LUP	Date 23/11/2007	Machine Tetra Pak A3/Flex 0150		
ECM No 320174	Denomination CIRCUIT DIAGRAM	Page Type PLC - OUT		
Company Tetra Pak (Italy)	Document No. 2845987-0003	Doc. type ELD	Version AE	Page 183

RELEASED

This drawing must not without the consent of Tetra Pak
be copied, transmitted or disclosed to any third party.

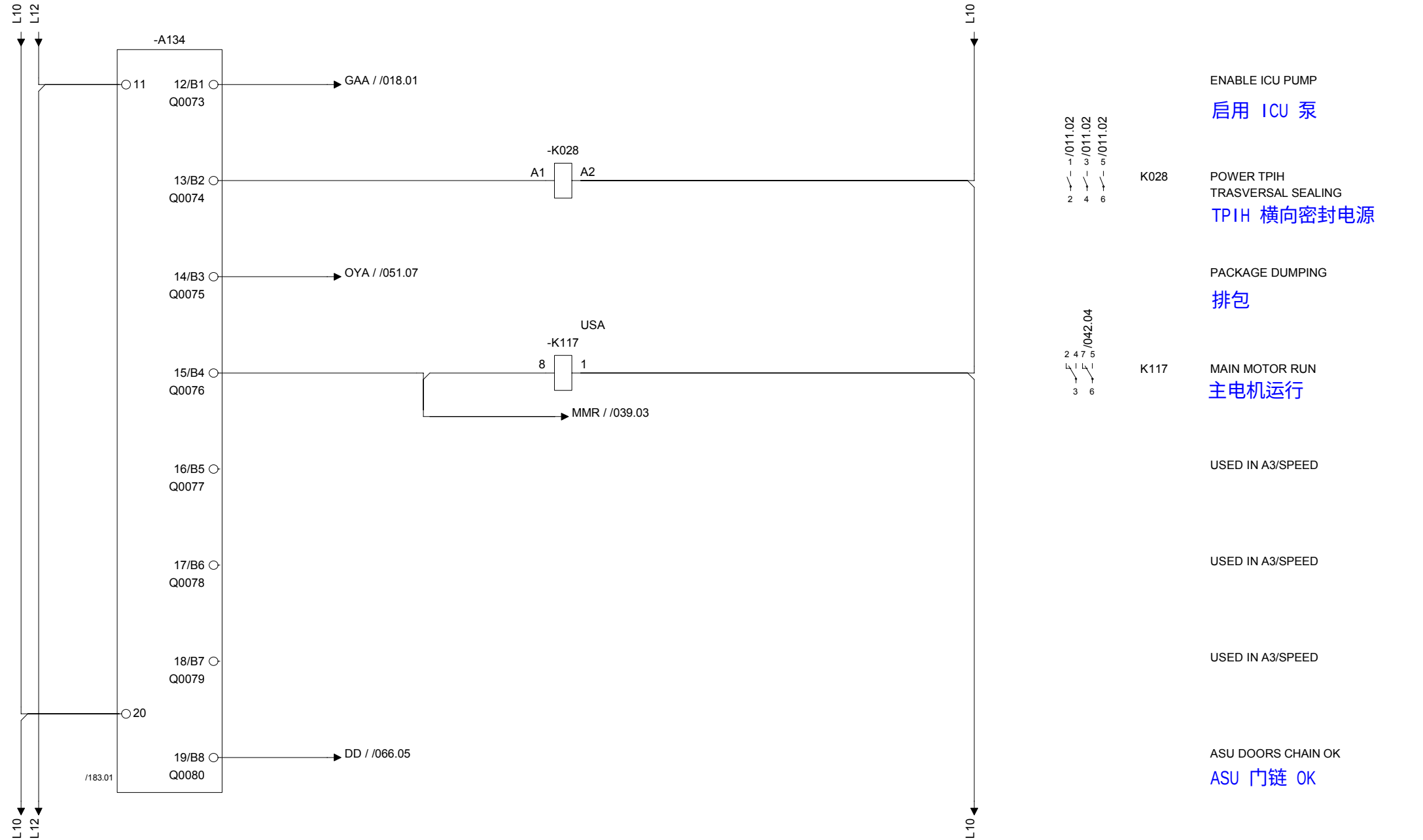

Drawing remarks	Tetra Pak	Designer LUP	Date 23/11/2007	Machine Tetra Pak A3/Flex 0150			
		ECM No 320174	Denomination CIRCUIT DIAGRAM	Page Type PLC - OUT			
	Company Tetra Pak (Italy)		Document No. 2845987-0003	Doc. type ELD	Version AE	Page 184	

RELEASED

This drawing must not without the consent of Tetra Pak be copied, transmitted or disclosed to any third party.

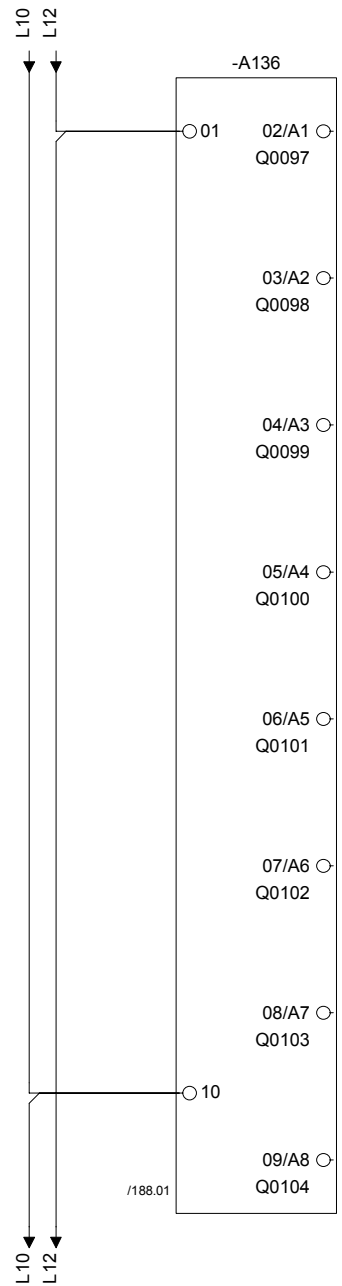

SPARE

SPARE

SPARE

SPARE

SPARE

SPARE

SPARE

SPARE

Drawing remarks

Tetra Pak

Designer LUP	Date 23/11/2007	Machine Tetra Pak A3/Flex 0150	
ECM No 320174	Denomination CIRCUIT DIAGRAM	Page Type PLC - OUT	
Company Tetra Pak (Italy)	Document No. 2845987-0003	Doc. type ELD	Version AE	Page 187

RELEASED

This drawing must not without the consent of Tetra Pak be copied, transmitted or disclosed to any third party.

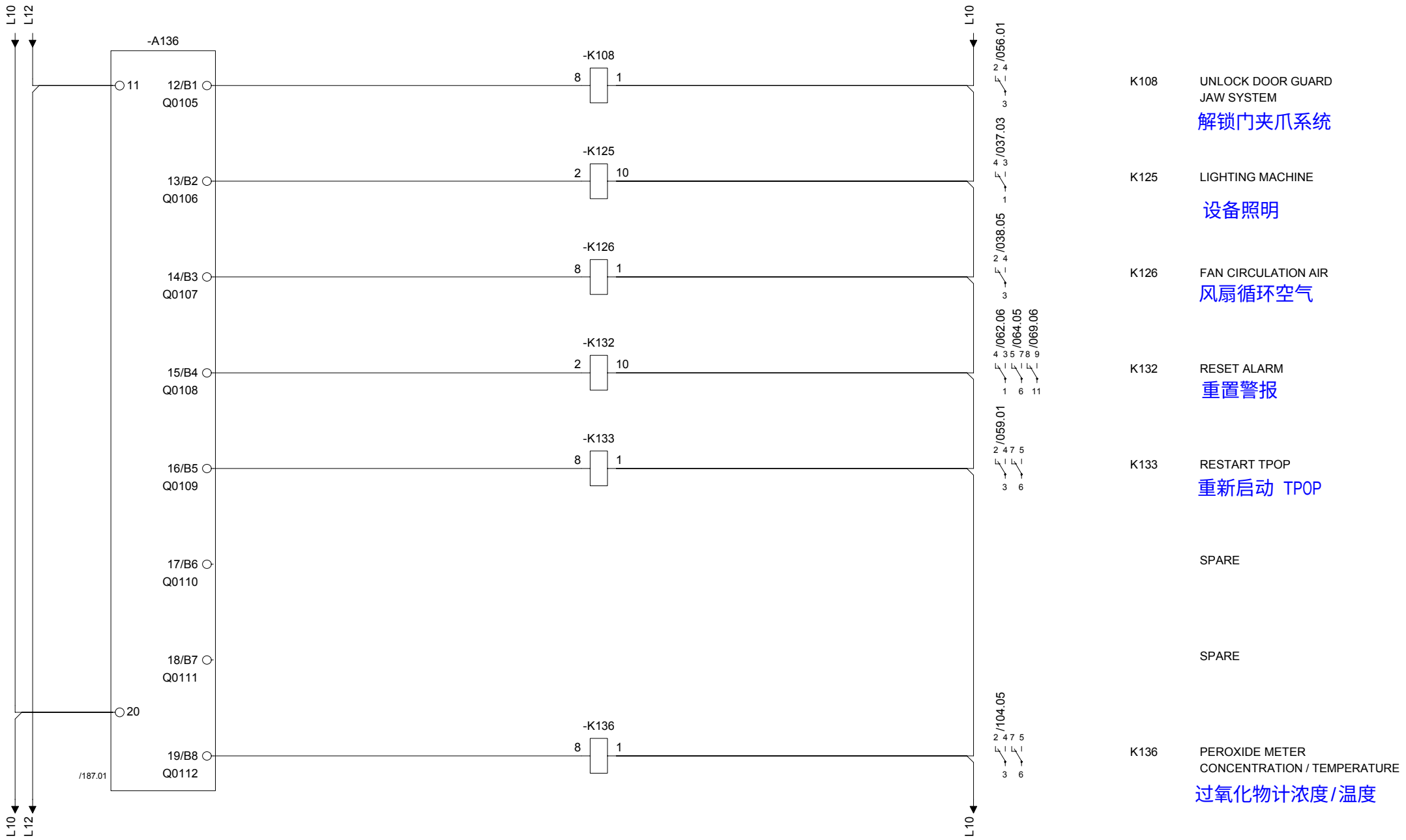

Drawing remarks	Tetra Pak	Designer LUP	Date 23/11/2007	Machine Tetra Pak A3/Flex 0150	
		ECM No 320174	Denomination CIRCUIT DIAGRAM	Page Type PLC - OUT	
		Company Tetra Pak (Italy)	Document No. 2845987-0003	Doc. type ELD	Version AE	Page 188

RELEASED

This drawing must not without the consent of Tetra Pak be copied, transmitted or disclosed to any third party.

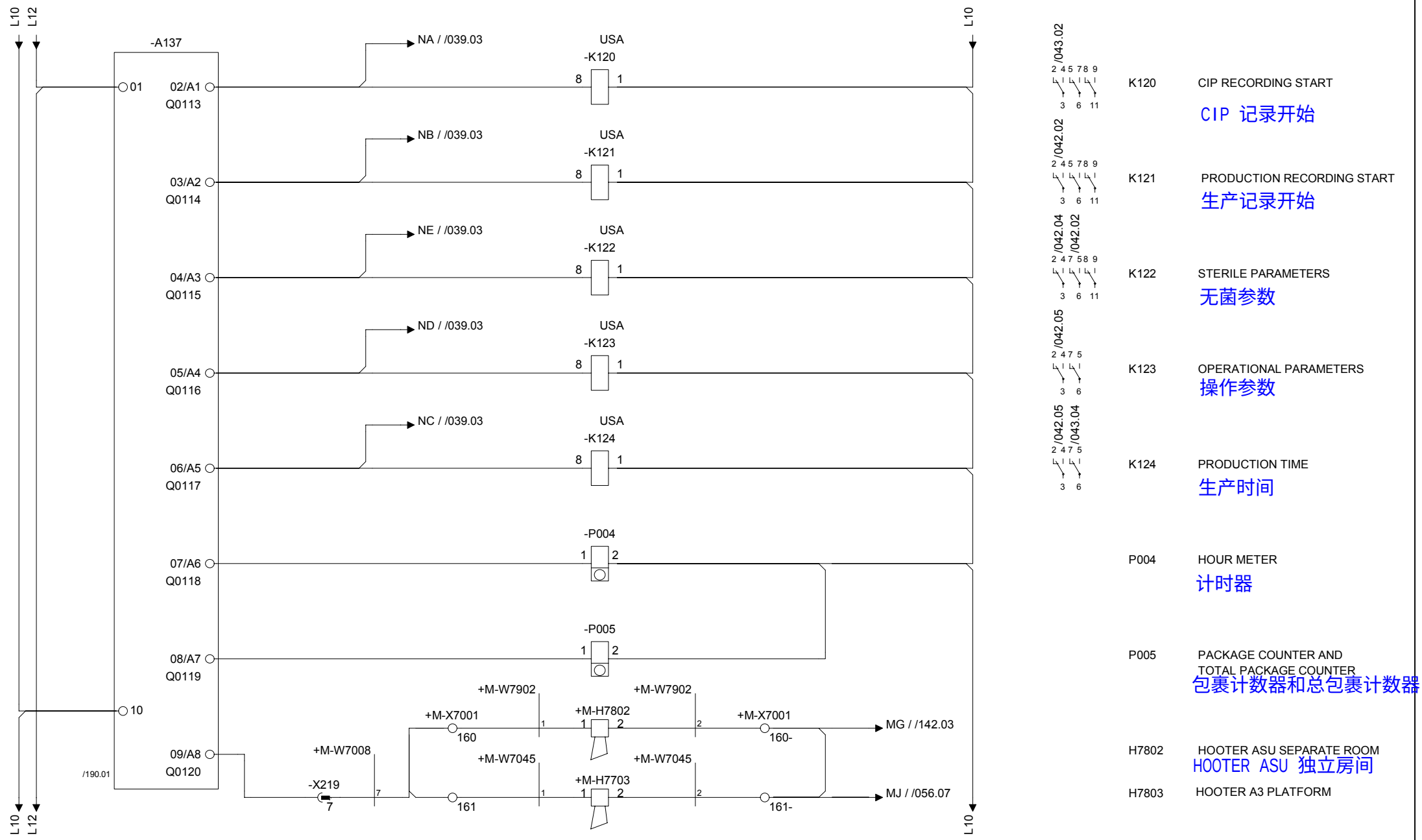

Drawing remarks	Tetra Pak	Designer: LUP	Date: 23/11/2007	Machine: Tetra Pak A3/Flex 0150	
		ECM No: 320174	Denomination: CIRCUIT DIAGRAM	Page Type: PLC - OUT	
	Company: Tetra Pak (Italy)	Document No.: 2845987-0003	Doc. type: ELD	Version: AE	Page: 189

This drawing must not without the consent of Tetra Pak be copied, transmitted or disclosed to any third party.

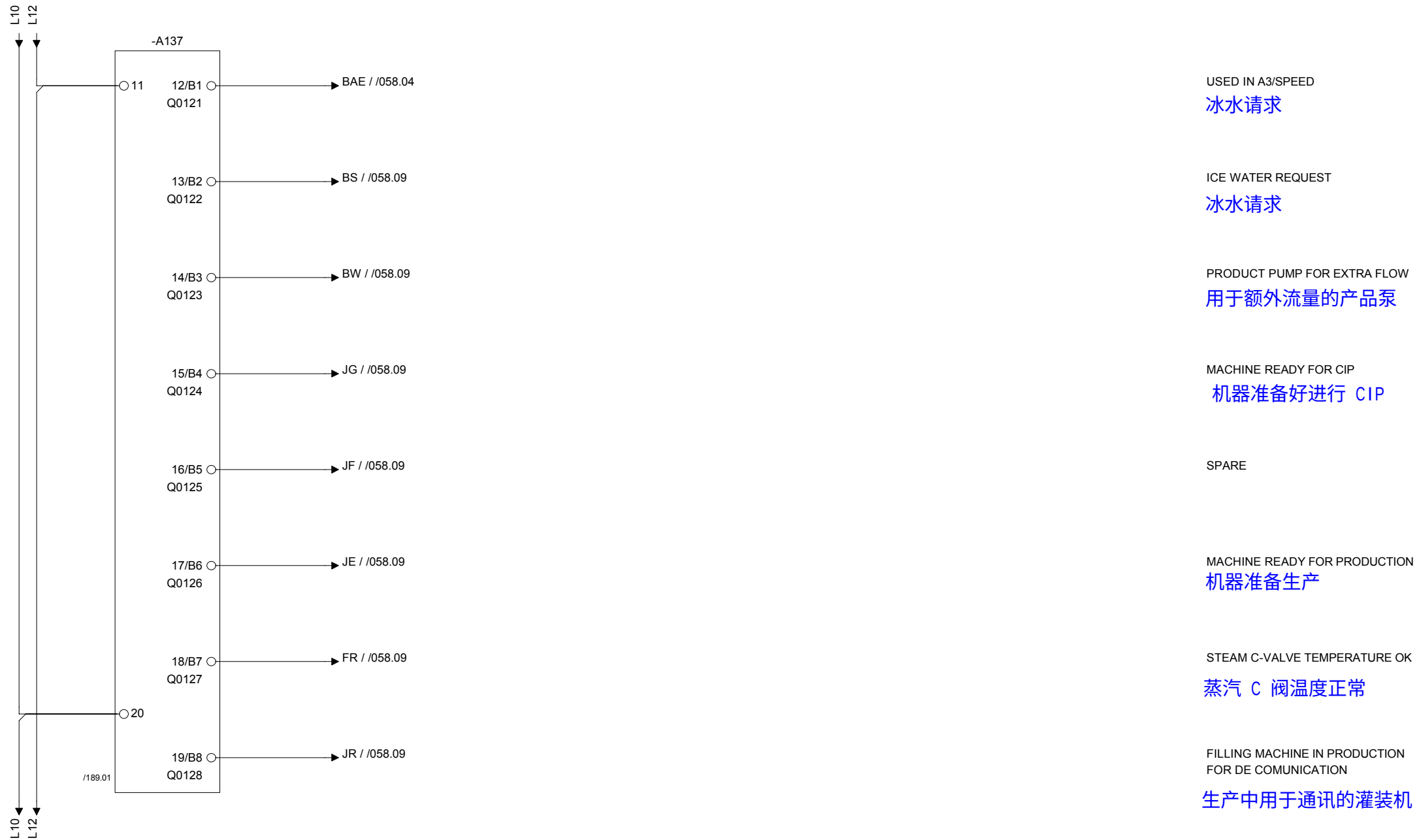

Drawing remarks

Tetra Pak

Designer	Date	Machine
LUP	23/11/2007	Tetra Pak A3/Flex 0150

ECM No	Denomination	Page Type
320174	CIRCUIT DIAGRAM	PLC - OUT

Company	Document No.	Doc. type	Version	Page
Tetra Pak (Italy)	2845987-0003	ELD	AE	190

This drawing must not without the consent of Tetra Pak
be copied, transmitted or disclosed to any third party.

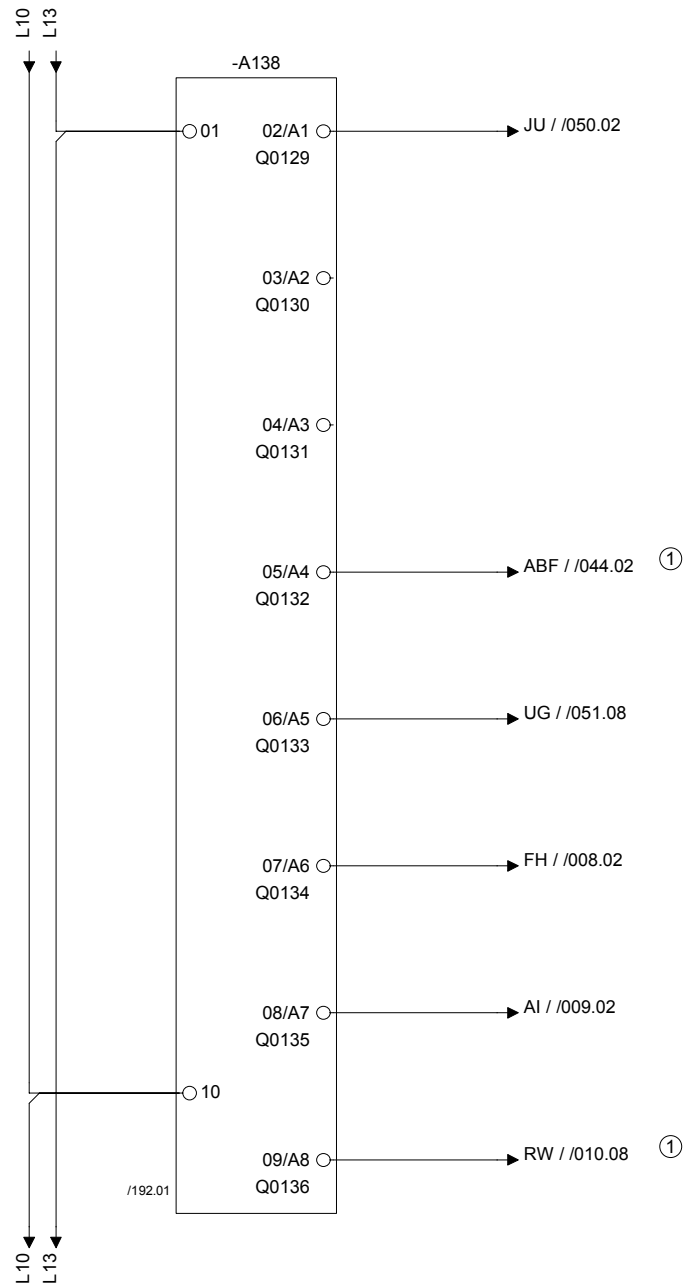

PHOTOCELLS ENABLE
图案校正使能

TO TGA,
LIGHTING MACHINE
电柜照明

TMCC FILLING CLEANING DRAIN
TMCC填料清洗排水管

K215 HI HEATER COMMAND
HI 加热器命令

K213
K214 COMMAND AIR KNIFE
气刀加热

K212 COMMAND FLAP
HEATING BOTTOM RIGHT
左顶角加热

Drawing remarks

Tetra Pak

Designer LUP	Date 23/11/2007	Machine Tetra Pak A3/Flex 0150		
ECM No 320174	Denomination CIRCUIT DIAGRAM	Page Type PLC - OUT		
Company Tetra Pak (Italy)	Document No. 2845987-0003	Doc. type ELD	Version AE	Page 191

RELEASED

This drawing must not without the consent of Tetra Pak be copied, transmitted or disclosed to any third party.

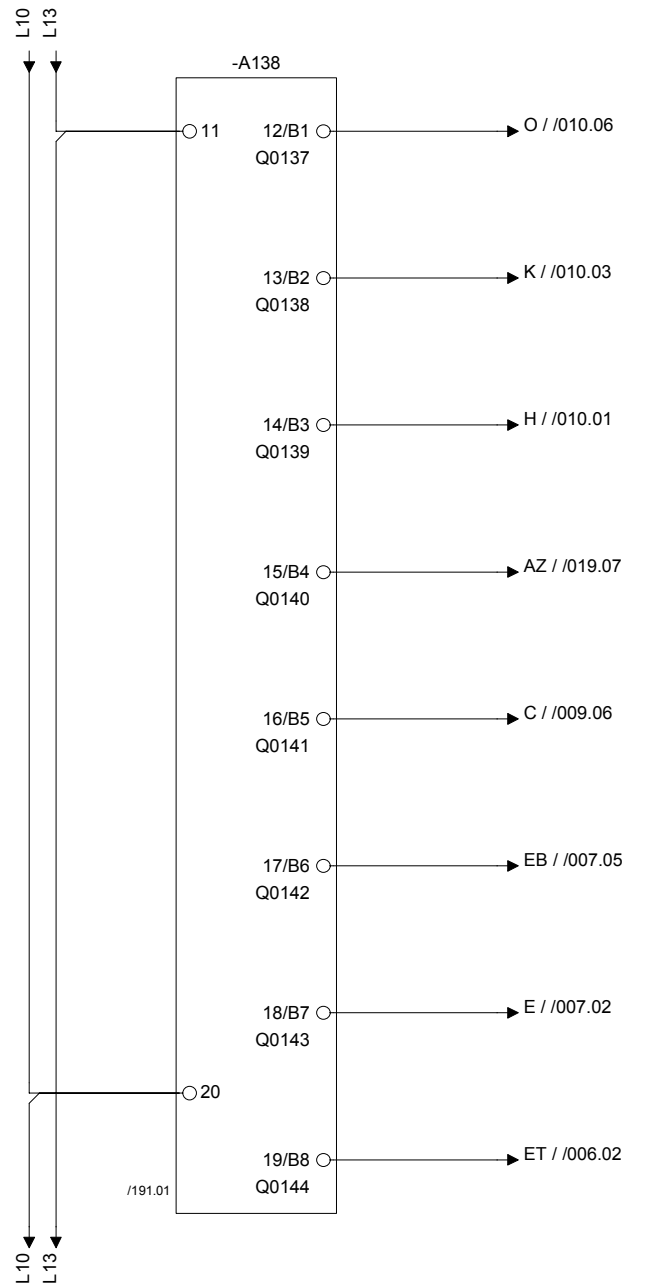

K211 COMMAND FLAP HEATING BOTTOM
底角加热

K210 COMMAND FLAP HEATING TOP RIGHT
右顶角加热

K209 COMMAND FLAP HEATING TOP LEFT
折角加热左上角

K208 COMMAND CONSTANT HEAT BAR
接纸台加热

K206 K207 COMMAND AIR SUPER HEATER
主加热

K204 K205 COMMAND PEROXIDE BATH SURFACE HEATER 2
双氧水槽表面加热2

K202 K203 COMMAND PEROXIDE BATH SURFACE HEATER 1
双氧水槽表面加热2

K200 K201 COMMAND PEROXIDE TANK HEATER
双氧水罐加热

Drawing remarks

Tetra Pak

Designer LUP	Date 23/11/2007	Machine Tetra Pak A3/Flex 0150		
ECM No 320174	Denomination CIRCUIT DIAGRAM	Page Type PLC - OUT		
Company Tetra Pak (Italy)	Document No. 2845987-0003	Doc. type ELD	Version AE	Page 192

RELEASED

This drawing must not without the consent of Tetra Pak be copied, transmitted or disclosed to any third party.

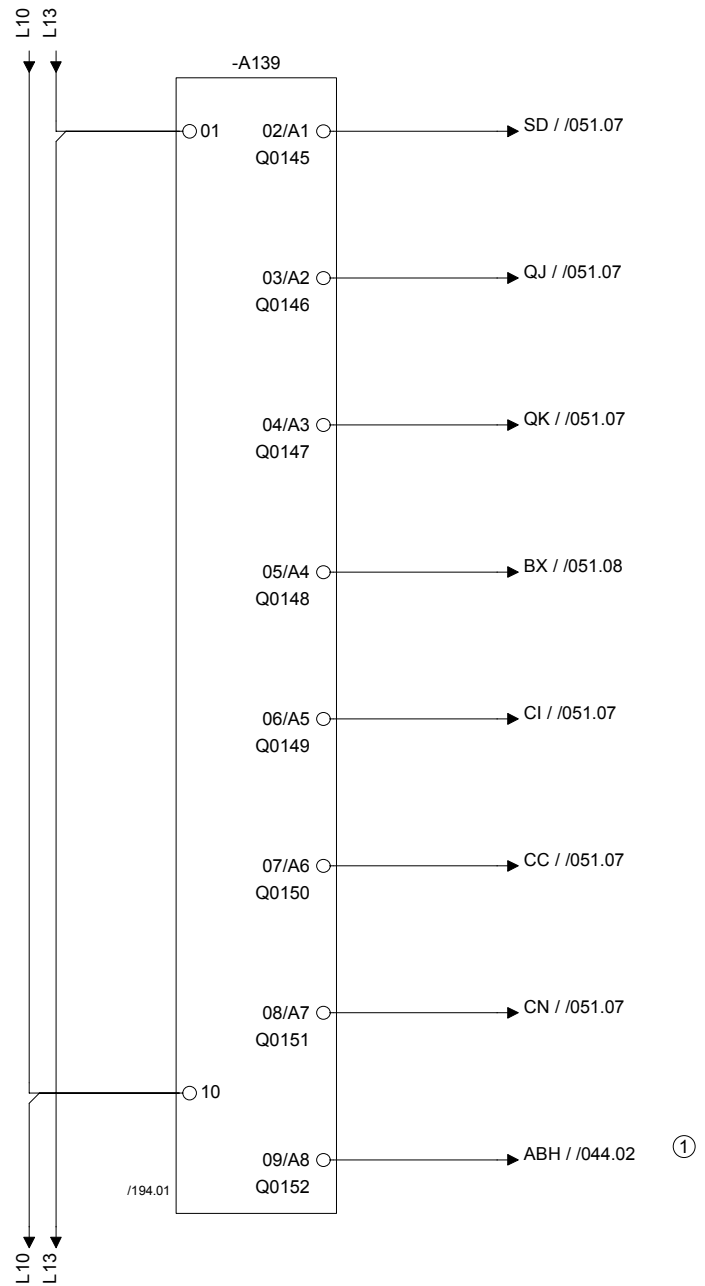

TMCC FILLING. STERILIZATION

MCC 填充。 消毒

TMCC FILLING, PRODUCTION

TMCC 灌装、生产

TMCC FILLING, CLEANING

TMCC 填充、清洗

TMCC FILLING SHORT STOP

TMCC 灌装短停

TMCC FILLING, DATA ENABLE

TMCC 填充，数据启用

TMCC FILLING, DATA CLOCK

TMCC 填充，数据时钟

TMCC FILLING, DATA

TMCC 填充、数据

TO TGA,
POWER TO COOLER EL. CABINET

电柜空调

Drawing remarks

Tetra Pak

Designer LUP	Date 23/11/2007	Machine Tetra Pak A3/Flex 0150		
ECM No 320174	Denomination CIRCUIT DIAGRAM	Page Type PLC - OUT		
Company Tetra Pak (Italy)	Document No. 2845987-0003	Doc. type ELD	Version AE	Page 193

RELEASED

This drawing must not without the consent of Tetra Pak be copied, transmitted or disclosed to any third party.

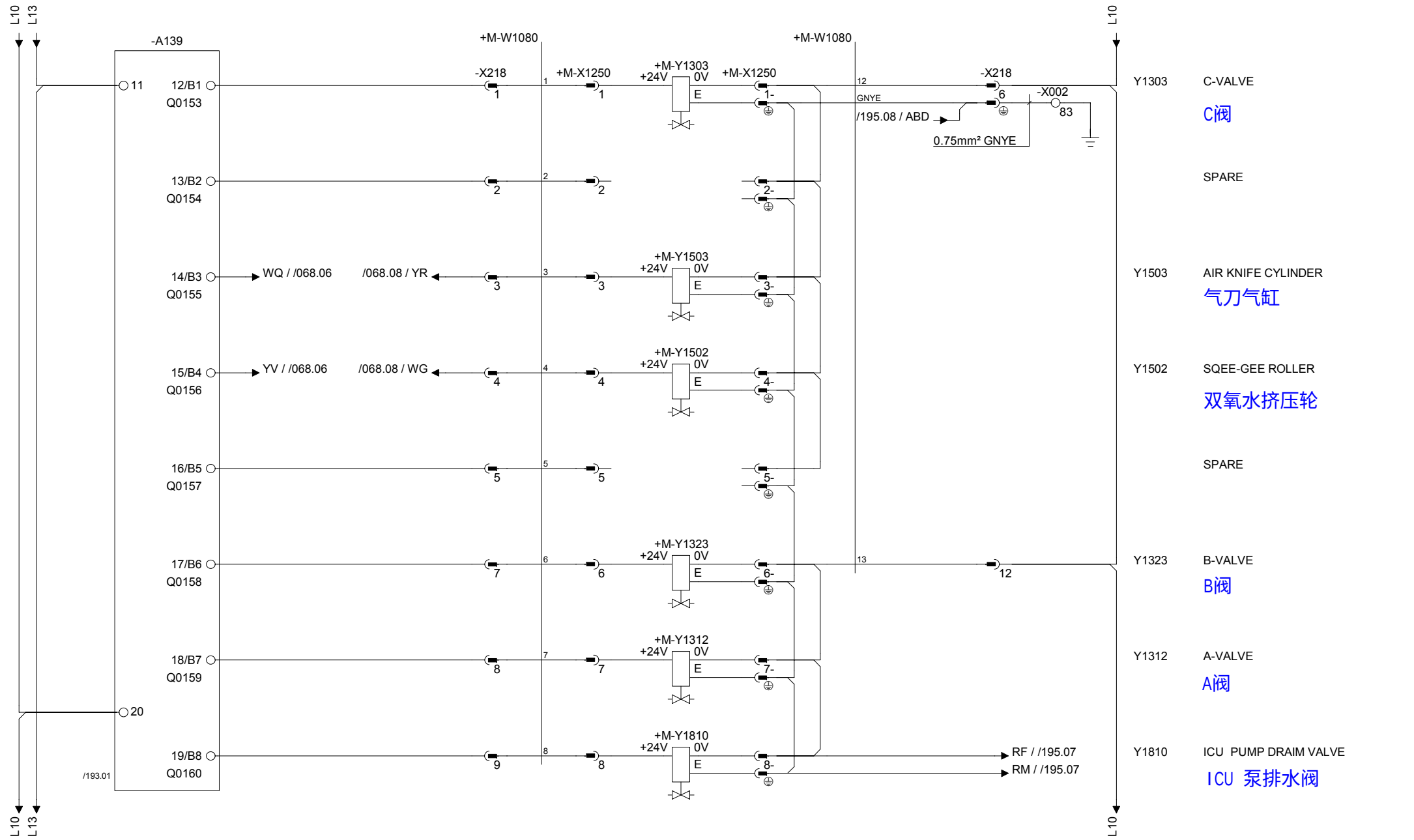

Drawing remarks	Tetra Pak	Designer LUP	Date 23/11/2007	Machine Tetra Pak A3/Flex 0150			
		ECM No 320174	Denomination CIRCUIT DIAGRAM	Page Type PLC - OUT			
	Company Tetra Pak (Italy)		Document No. 2845987-0003	Doc. type ELD	Version AE	Page 194	

RELEASED

This drawing must not without the consent of Tetra Pak be copied, transmitted or disclosed to any third party.

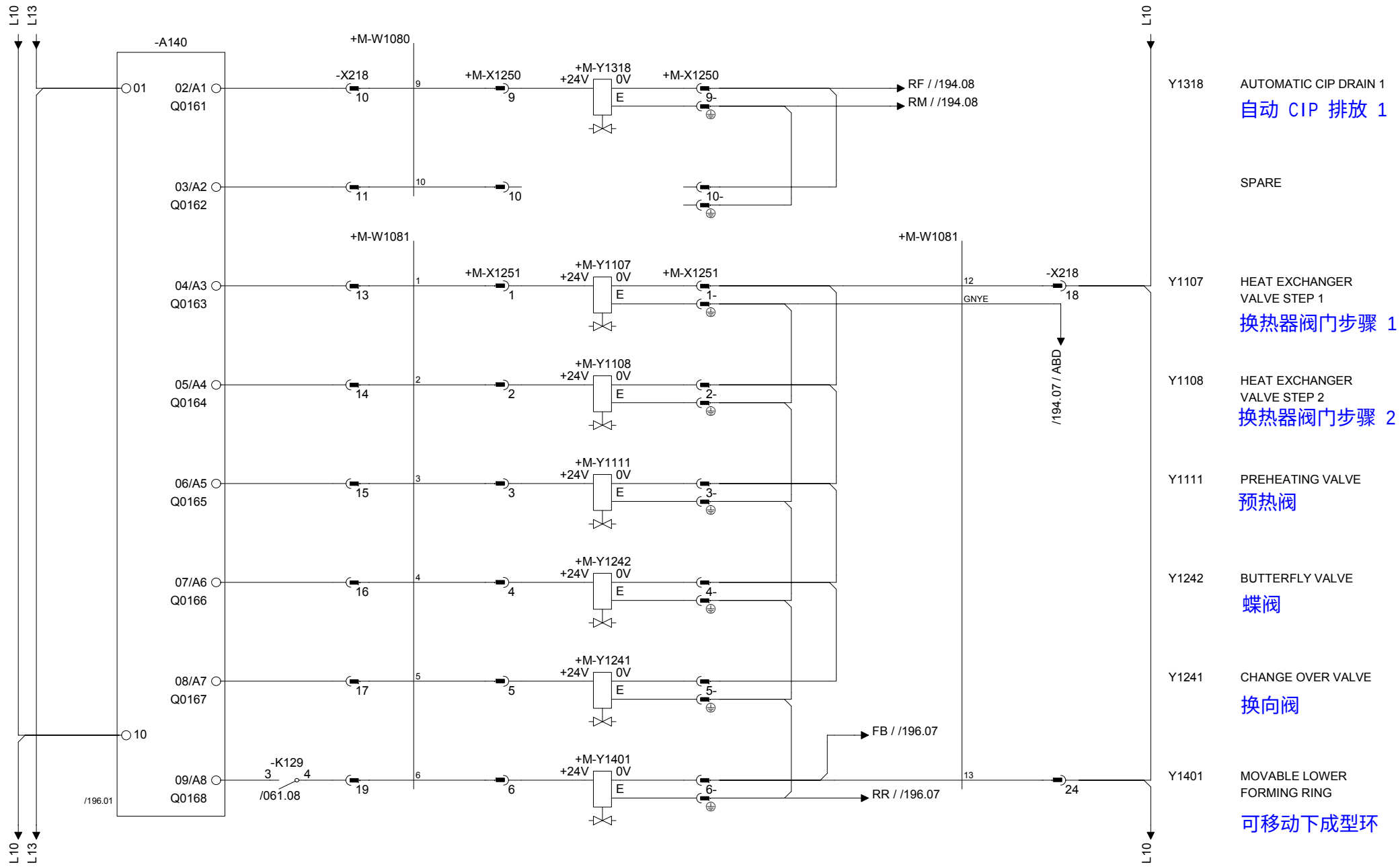

Drawing remarks	Tetra Pak	Designer LUP	Date 23/11/2007	Machine Tetra Pak A3/Flex 0150	
		ECM No 320174	Denomination CIRCUIT DIAGRAM	Page Type PLC - OUT	
		Company Tetra Pak (Italy)	Document No. 2845987-0003	Doc. type ELD	Version AE	Page 195

RELEASED

This drawing must not without the consent of Tetra Pak be copied, transmitted or disclosed to any third party.

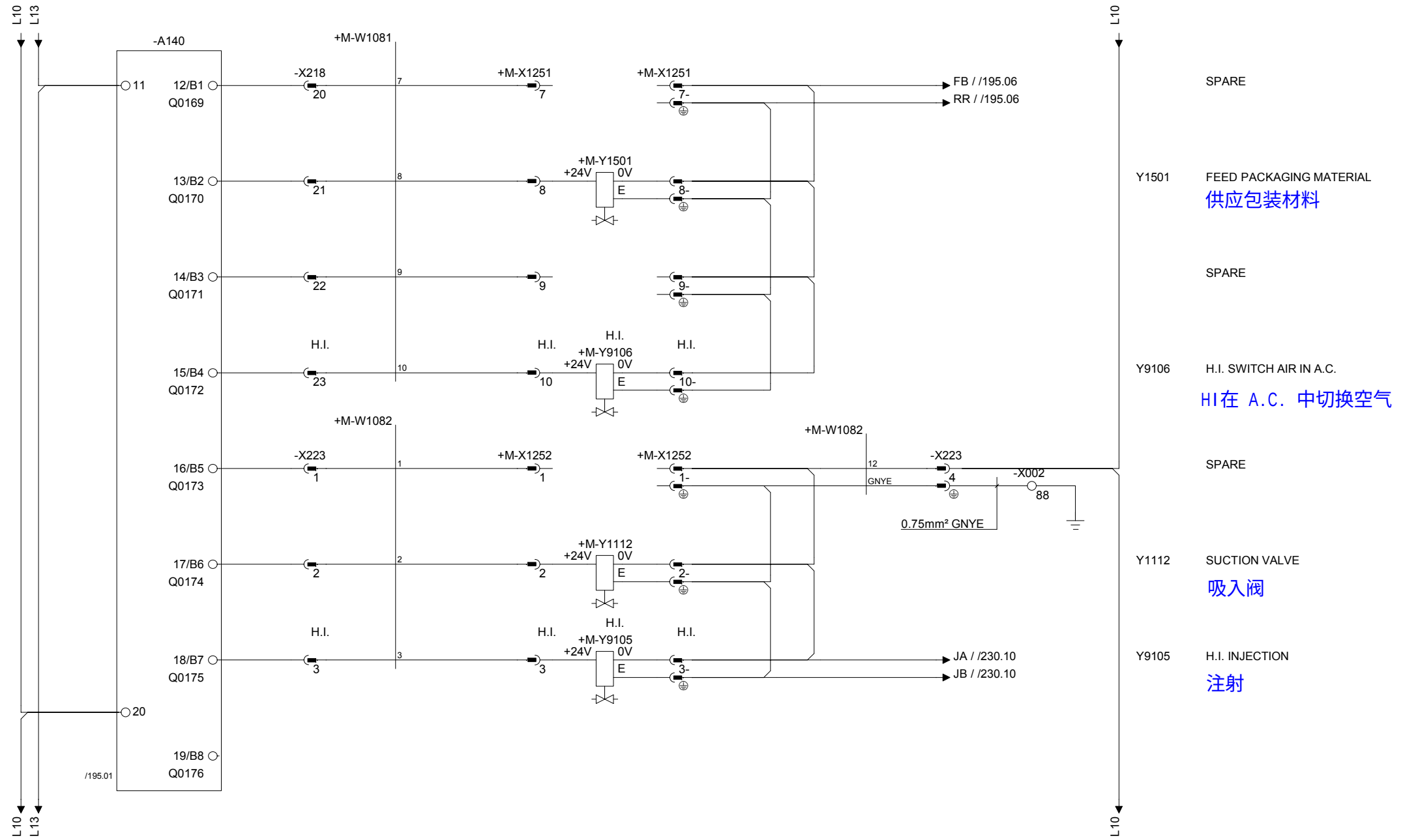

Drawing remarks	Tetra Pak	Designer LUP	Date 23/11/2007	Machine Tetra Pak A3/Flex 0150			
		ECM No 320174	Denomination CIRCUIT DIAGRAM	Page Type PLC - OUT			
	Company Tetra Pak (Italy)	Document No. 2845987-0003	Doc. type ELD	Version AE	Page 196		

RELEASED

This drawing must not without the consent of Tetra Pak be copied, transmitted or disclosed to any third party.

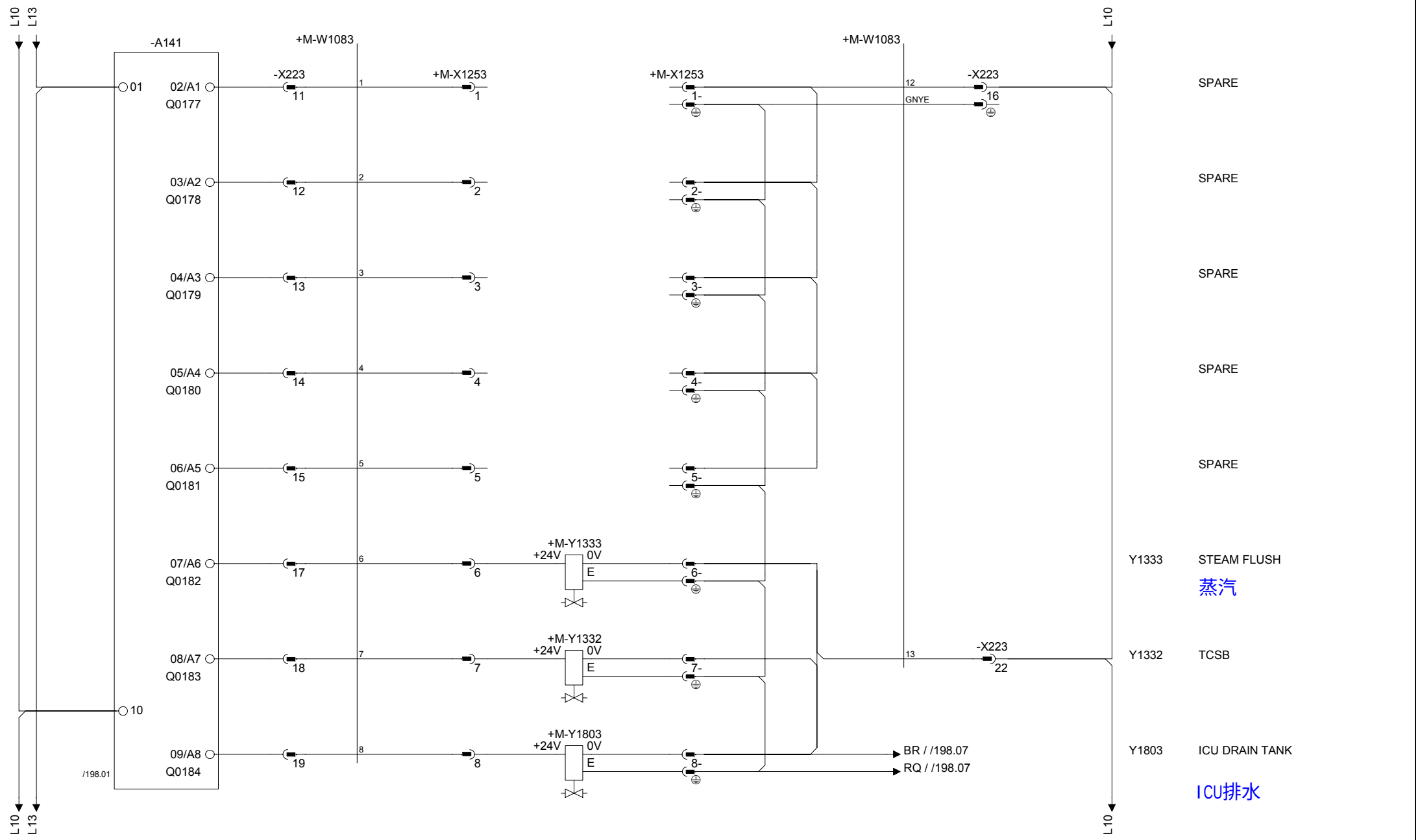

Drawing remarks	Tetra Pak	Designer LUP	Date 23/11/2007	Machine Tetra Pak A3/Flex 0150	
		ECM No 320174	Denomination CIRCUIT DIAGRAM	Page Type PLC - OUT	
		Company Tetra Pak (Italy)	Document No. 2845987-0003	Doc. type ELD	Version AE	Page 197

RELEASED

This drawing must not without the consent of Tetra Pak be copied, transmitted or disclosed to any third party.

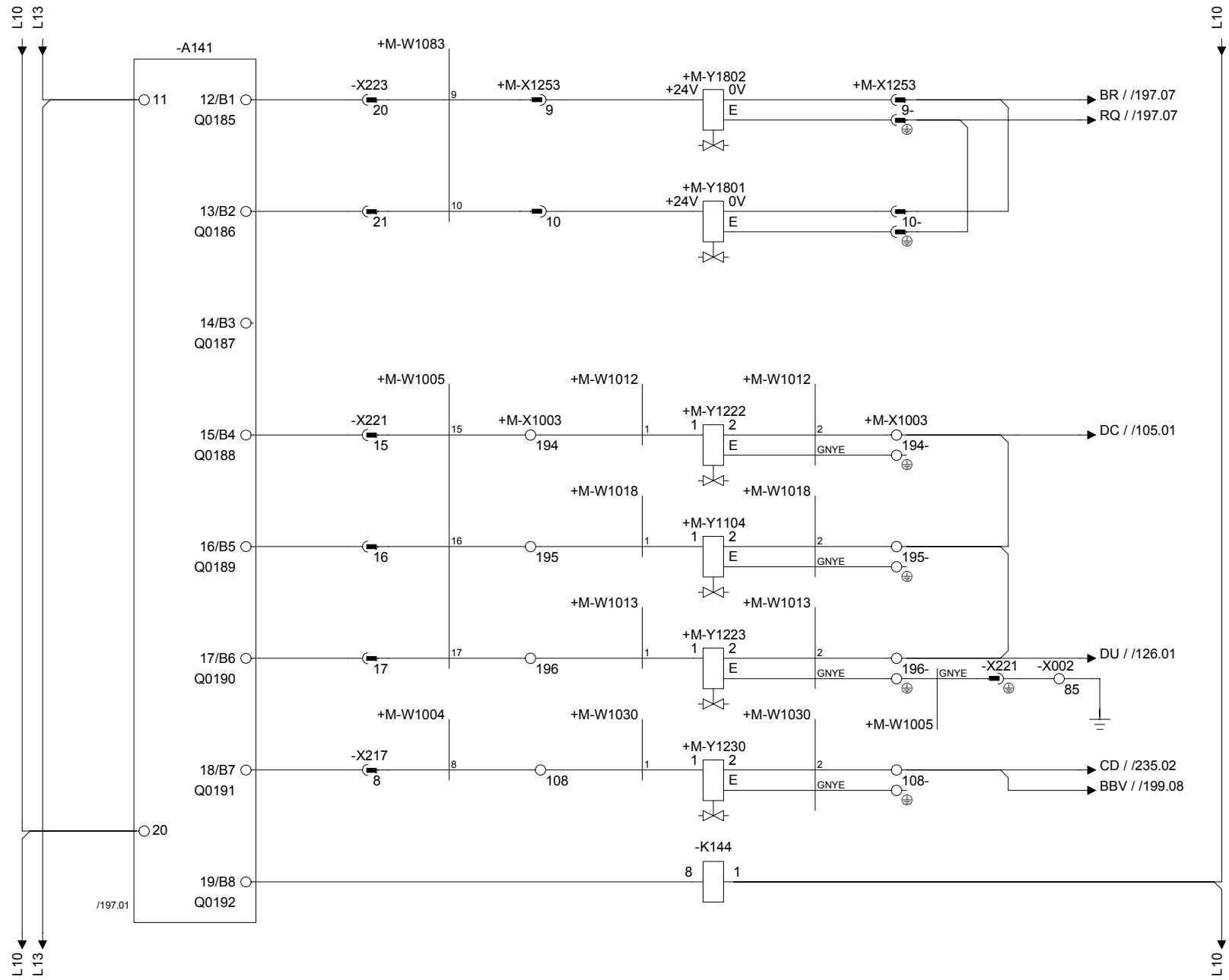

Y1802	ICU WATER INLET ICU进水口
Y1801	ICU STEAM INLET ICU进气口
Y1222	DRAIN PEROXIDE COOLER 排放双氧水冷却器
Y1104	SEAL WATER 密封水
Y1223	FILL PEROXIDE COOLER 加注双氧水冷却器
Y1230	FILLING SPRAY TANK 加注喷雾箱
K144	SPRAYING 喷涂

Drawing remarks

Tetra Pak

Designer	LUP	Date	23/11/2007	Machine	Tetra Pak A3/Flex 0150
ECM No	320174	Denomination	CIRCUIT DIAGRAM	Page Type	PLC - OUT
Company	Tetra Pak (Italy)	Document No.	2845987-0003	Doc. type	ELD
				Version	AE
				Page	198

RELEASED

This drawing must not without the consent of Tetra Pak be copied, transmitted or disclosed to any third party.

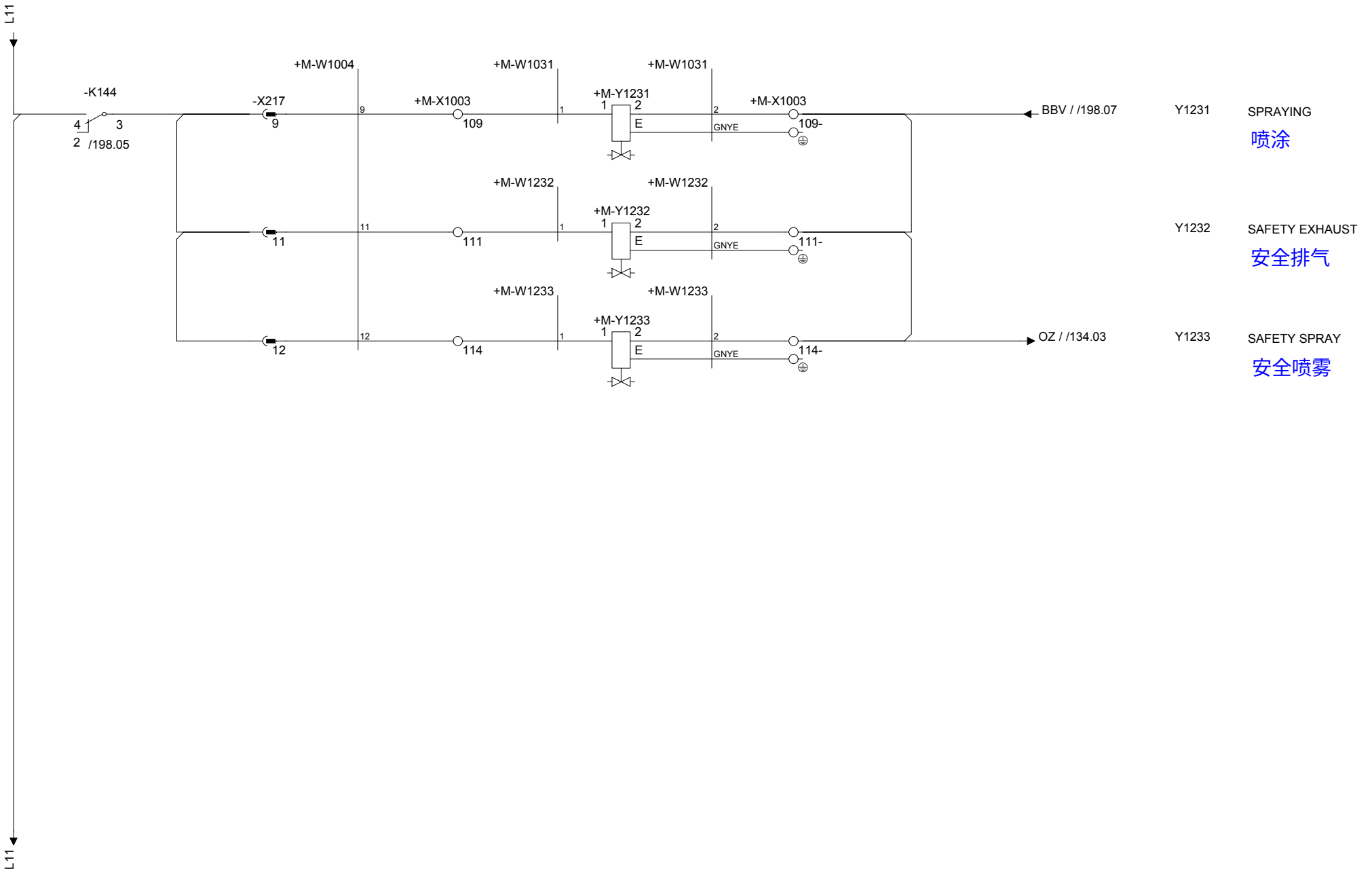

Drawing remarks	Tetra Pak	Designer LUP	Date 23/11/2007	Machine Tetra Pak A3/Flex 0150			
		ECM No 320174	Denomination CIRCUIT DIAGRAM	Page Type FDA SPRAY VALVE			
	Company Tetra Pak (Italy)		Document No. 2845987-0003	Doc. type ELD	Version AE	Page 199	

RELEASED

This drawing must not without the consent of Tetra Pak be copied, transmitted or disclosed to any third party.

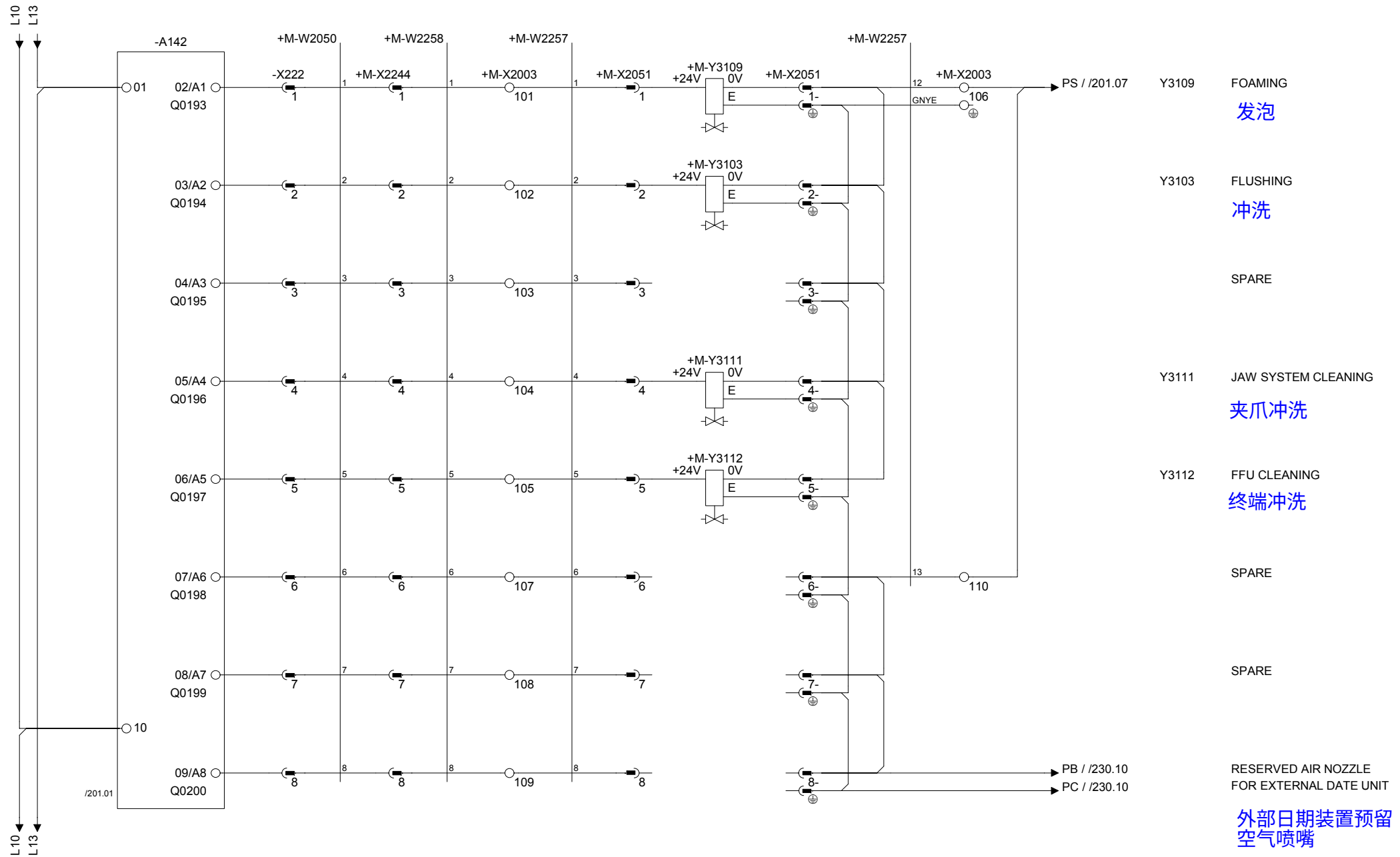

Drawing remarks	Tetra Pak	Designer LUP	Date 23/11/2007	Machine Tetra Pak A3/Flex 0150	
		ECM No 320174	Denomination CIRCUIT DIAGRAM	Page Type PLC - OUT	
		Company Tetra Pak (Italy)	Document No. 2845987-0003	Doc. type ELD	Version AE	Page 200

RELEASED

This drawing must not without the consent of Tetra Pak be copied, transmitted or disclosed to any third party.

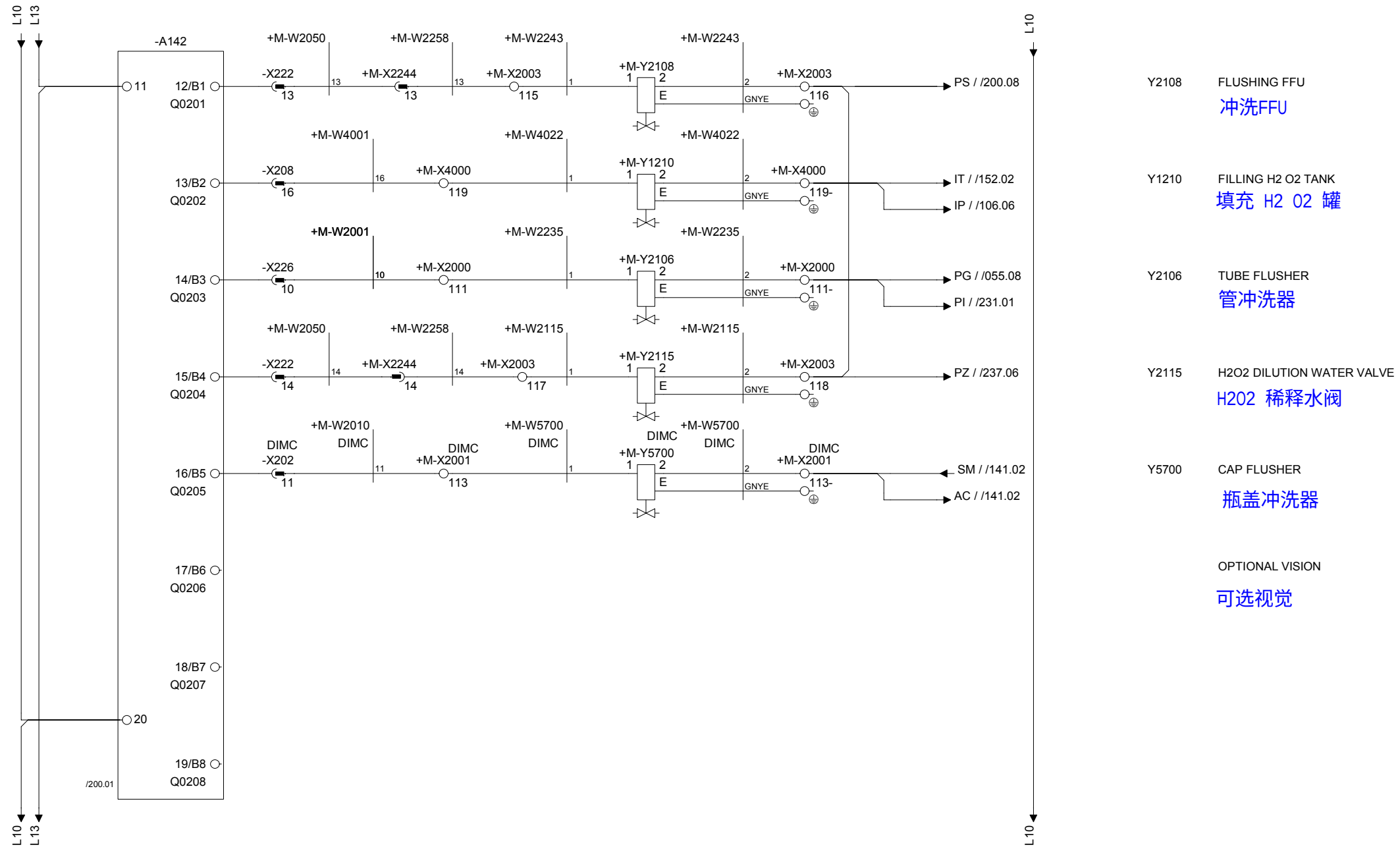

Y2108 FLUSHING FFU
冲洗FFU

Y1210 FILLING H2 O2 TANK
填充 H2 O2 罐

Y2106 TUBE FLUSHER
管冲洗器

Y2115 H2O2 DILUTION WATER VALVE
H2O2 稀释水阀

Y5700 CAP FLUSHER
瓶盖冲洗器

OPTIONAL VISION
可选视觉

Drawing remarks	Tetra Pak	Designer LUP	Date 23/11/2007	Machine Tetra Pak A3/Flex 0150	
		ECM No 320174	Denomination CIRCUIT DIAGRAM	Page Type PLC - OUT	
		Company Tetra Pak (Italy)	Document No. 2845987-0003	Doc. type ELD	Version AE	Page 201

RELEASED

This drawing must not without the consent of Tetra Pak be copied, transmitted or disclosed to any third party.

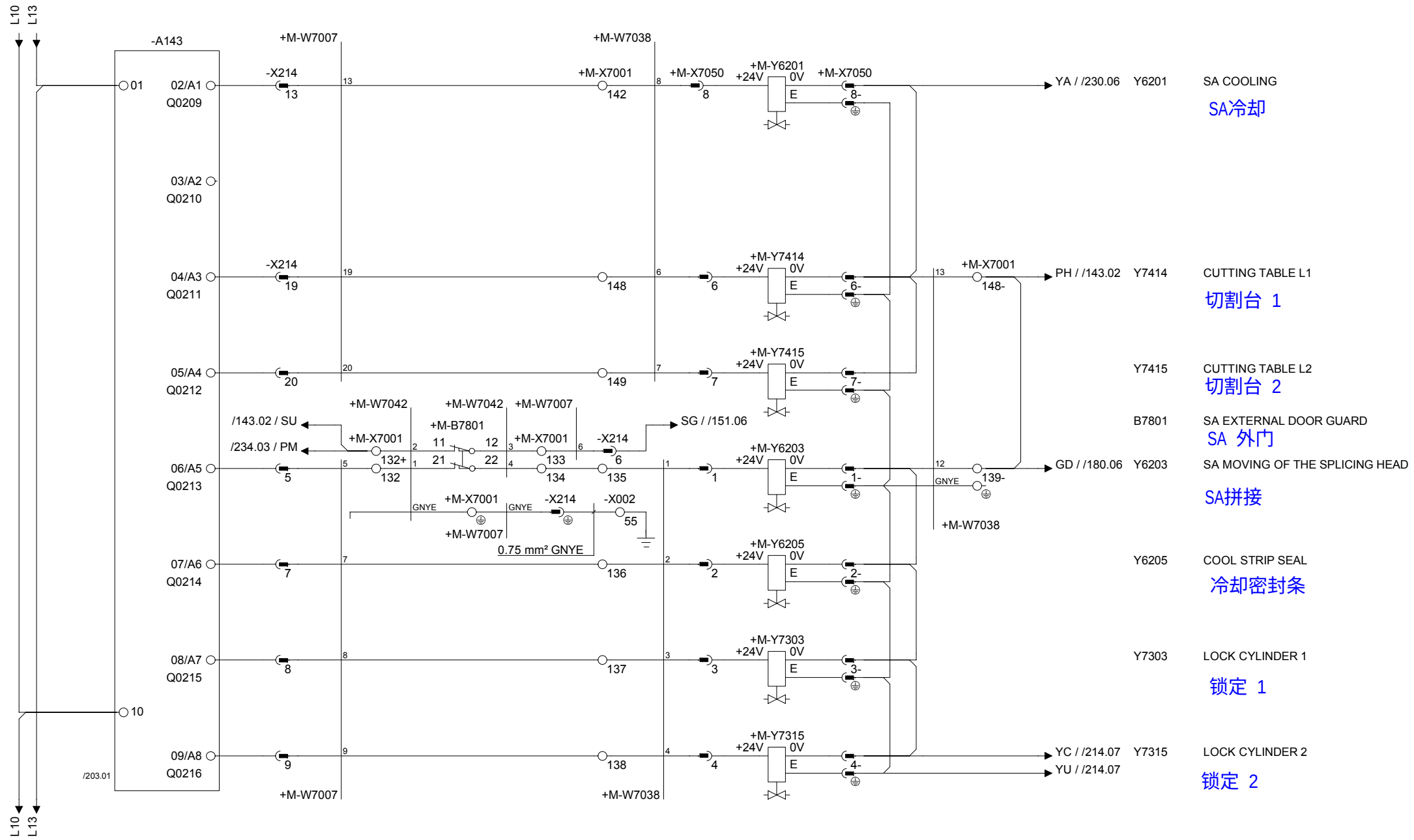

Drawing remarks	Tetra Pak	Designer LUP	Date 23/11/2007	Machine Tetra Pak A3/Flex 0150			
		ECM No 320174	Denomination CIRCUIT DIAGRAM	Page Type PLC - OUT			
		Company Tetra Pak (Italy)	Document No. 2845987-0003	Doc. type ELD	Version AE	Page 202	

RELEASED

This drawing must not without the consent of Tetra Pak be copied, transmitted or disclosed to any third party.

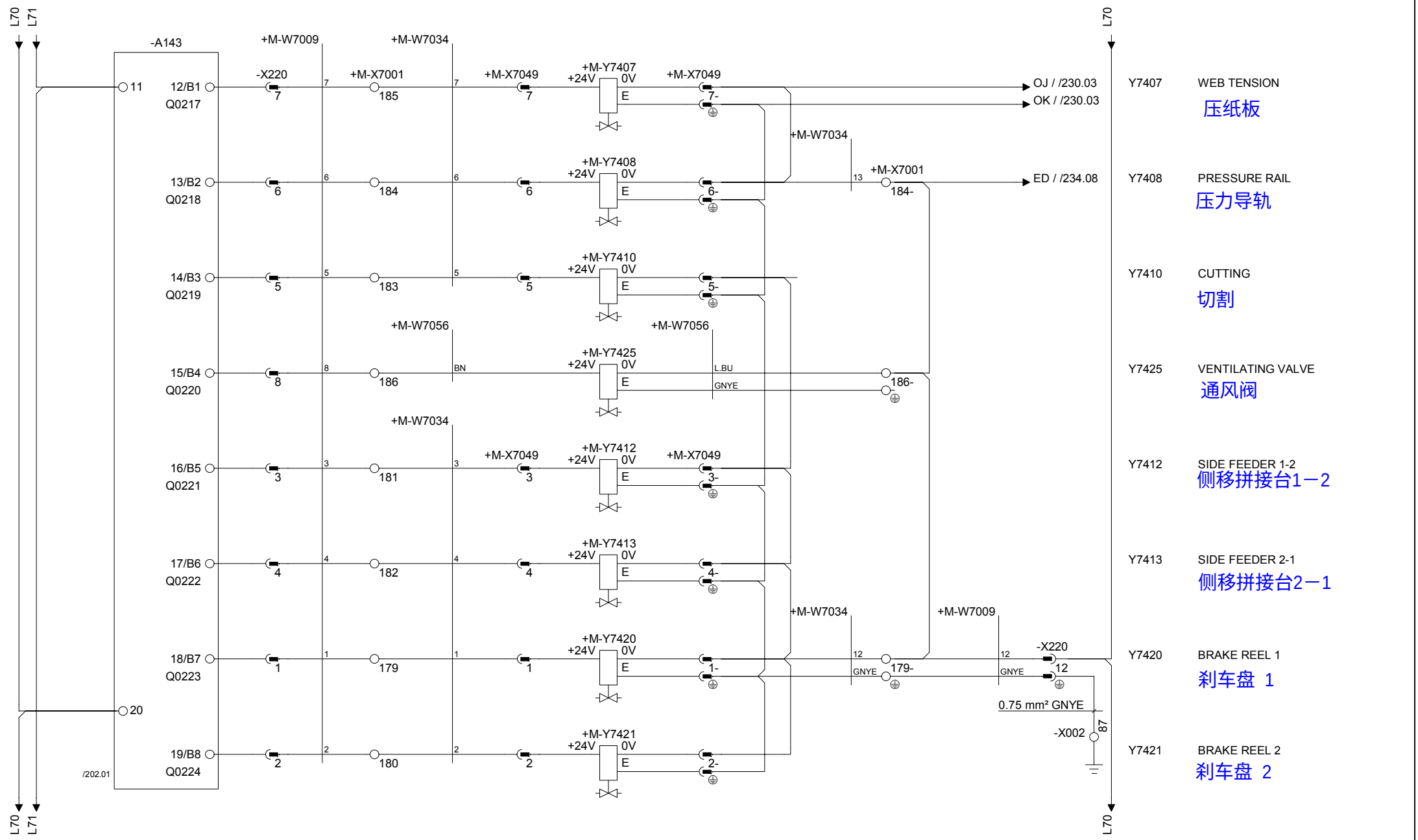

Drawing remarks	Tetra Pak	Designer LUP	Date 23/11/2007	Machine Tetra Pak A3/Flex 0150	
		ECM No 320174	Denomination CIRCUIT DIAGRAM	Page Type PLC - OUT	
		Company Tetra Pak (Italy)	Document No. 2845987-0003	Doc. type ELD	Version AE	Page 203

RELEASED

This drawing must not without the consent of Tetra Pak be copied, transmitted or disclosed to any third party.

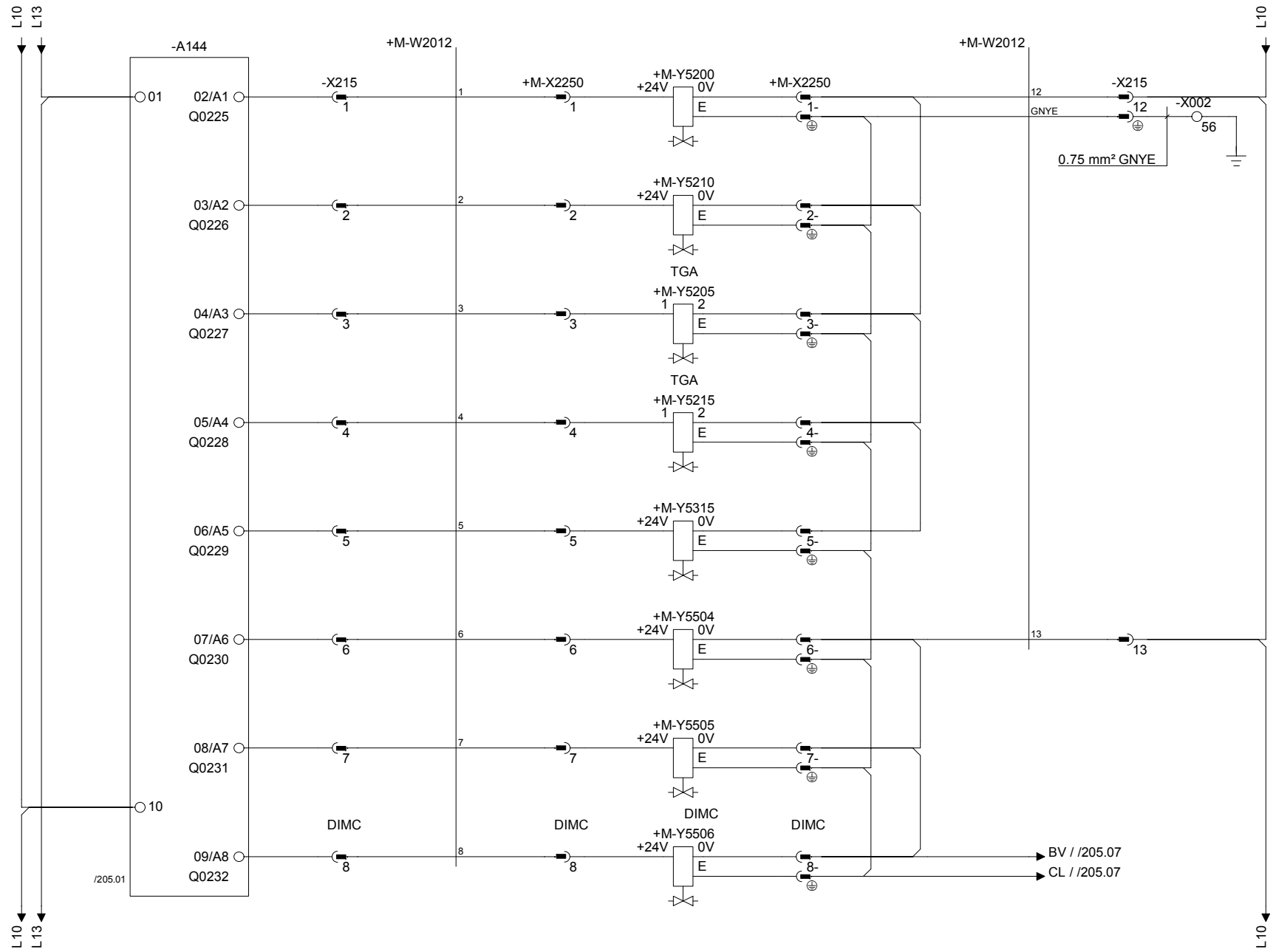

① Y5200 TOP FLAP HEATING AIR FFU
顶部襟翼加热空气 FFU

② Y5210 BOTTOM FLAP HEATING AIR, FFU
底部襟翼加热空气，FFU

Y2505 BOTTOM RIGHT FLAP HEATING AIR, FFU
右下襟翼加热空气，FFU

Y5215 BOTTOM LEFT FLAP HEATIING AIR, FFU
左下襟翼加热空气，FFU

Y5315 PREBLOWING FFU
预吹FFU

Y5504 OUTFEED OF WASTE IN FRONT
前排废物

Y5505 FLAP HEATER CYLINDER
襟翼加热器气缸

Y5506 CUP BLOWING

Drawing remarks

Tetra Pak

Designer LUP	Date 23/11/2007	Machine Tetra Pak A3/Flex 0150	
ECM No 320174	Denomination CIRCUIT DIAGRAM	Page Type PLC - OUT	
Company Tetra Pak (Italy)	Document No. 2845987-0003	Doc. type ELD	Version AE	Page 204

RELEASED

This drawing must not without the consent of Tetra Pak be copied, transmitted or disclosed to any third party.

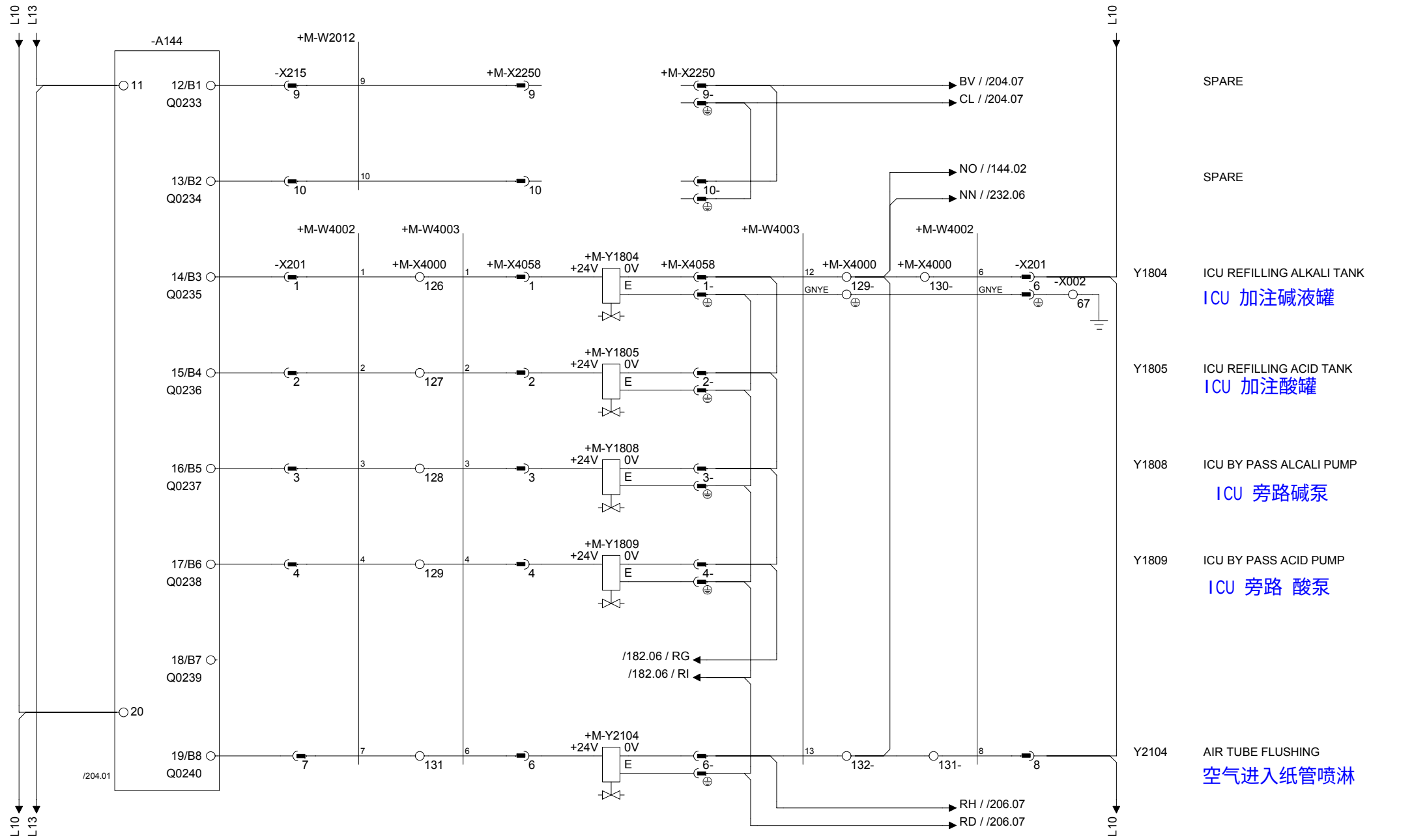

Drawing remarks	Tetra Pak	Designer LUP	Date 23/11/2007	Machine Tetra Pak A3/Flex 0150
		ECM No 320174	Denomination CIRCUIT DIAGRAM	Page Type PLC - OUT
	Company Tetra Pak (Italy)	Document No. 2845987-0003	Doc. type ELD	Version AE	Page 205

This drawing must not without the consent of Tetra Pak
be copied, transmitted or disclosed to any third party.

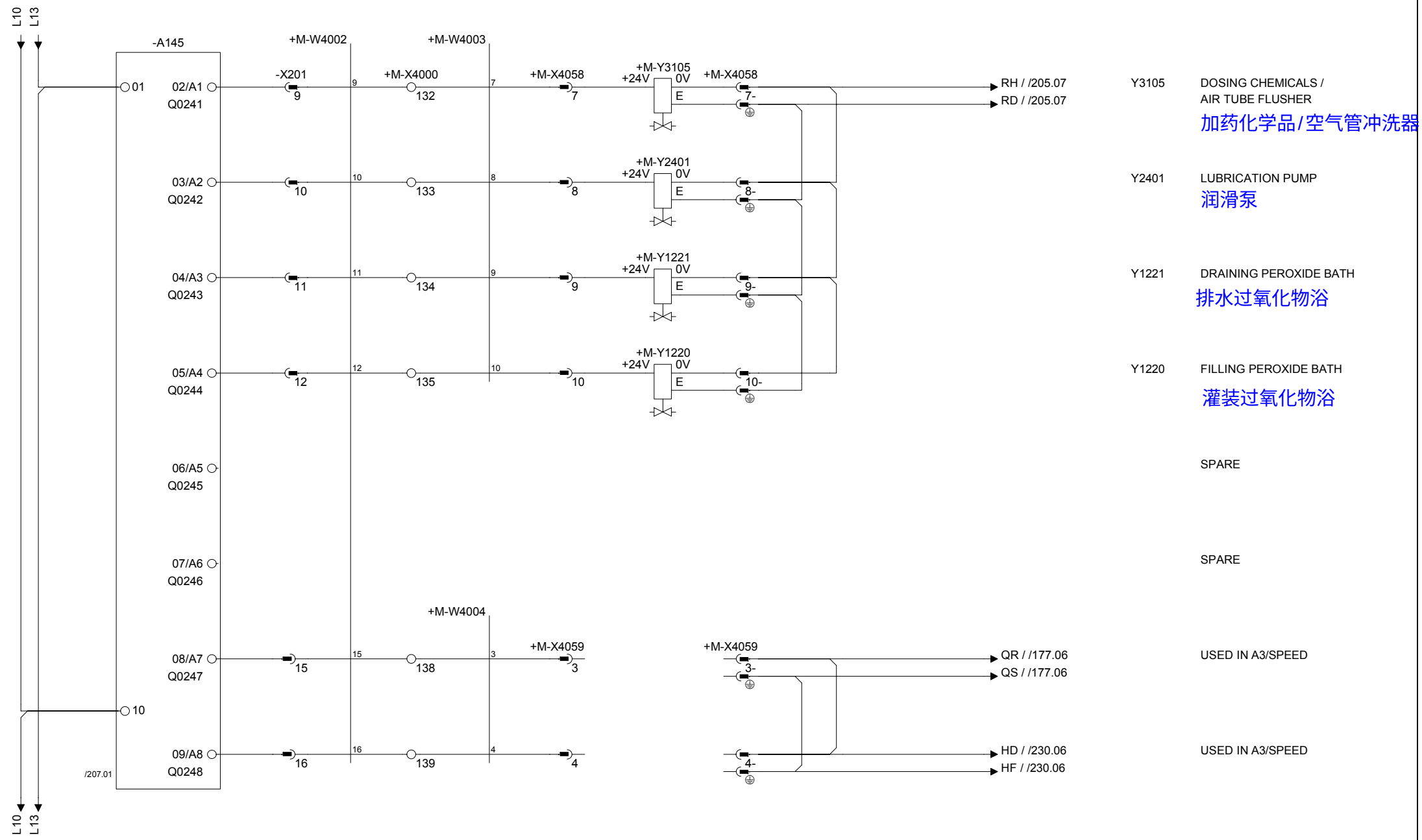

Drawing remarks	Tetra Pak	Designer LUP	Date 23/11/2007	Machine Tetra Pak A3/Flex 0150	
		ECM No 320174	Denomination CIRCUIT DIAGRAM	Page Type PLC - OUT	
	Company Tetra Pak (Italy)	Document No. 2845987-0003	Doc. type ELD	Version AE	Page 206

RELEASED

This drawing must not without the consent of Tetra Pak be copied, transmitted or disclosed to any third party.

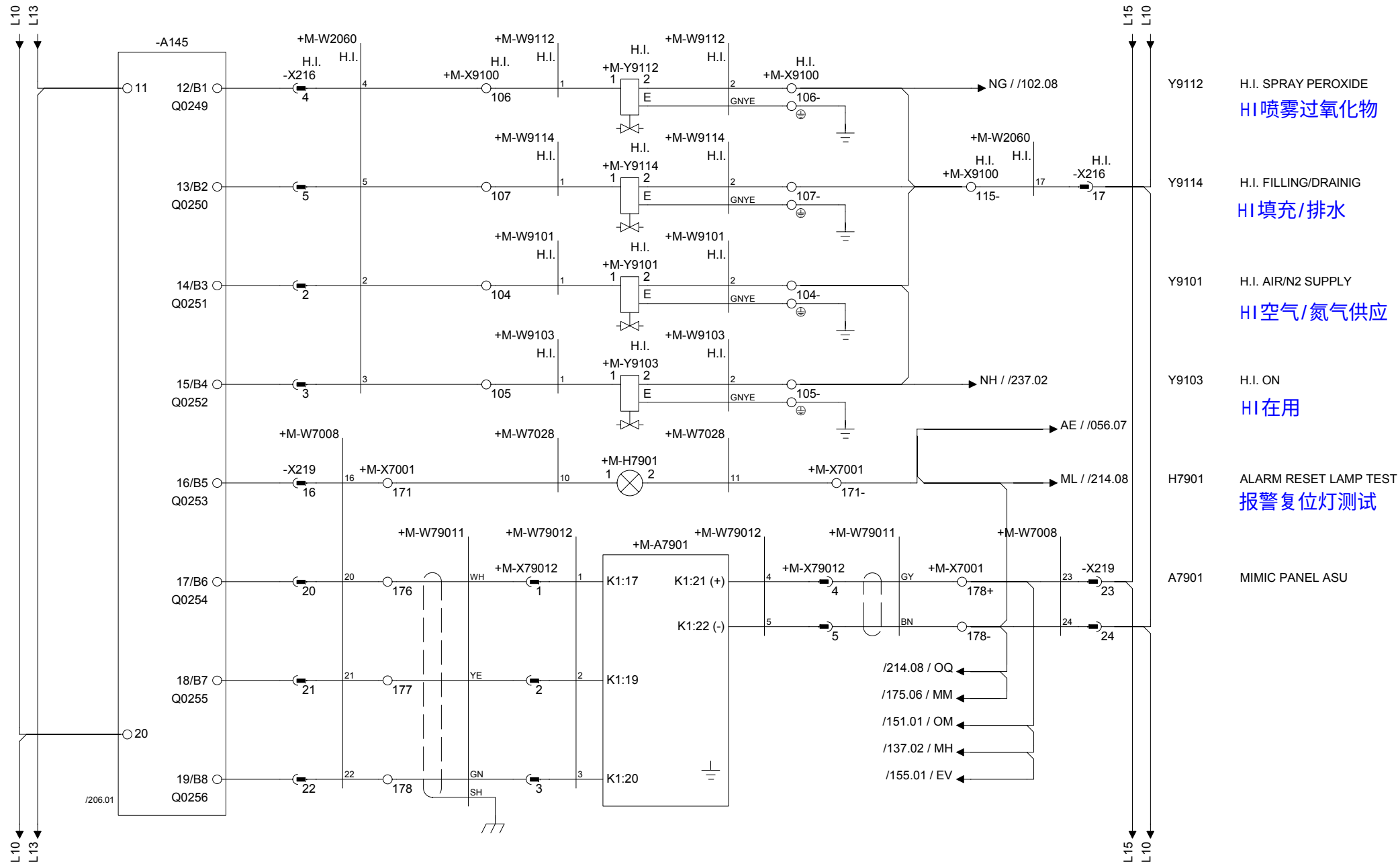

Drawing remarks	Tetra Pak	Designer LUP	Date 23/11/2007	Machine Tetra Pak A3/Flex 0150	
		ECM No 320174	Denomination CIRCUIT DIAGRAM	Page Type PLC - OUT	
		Company Tetra Pak (Italy)	Document No. 2845987-0003	Doc. type ELD	Version AE	Page 207

RELEASED

This drawing must not without the consent of Tetra Pak be copied, transmitted or disclosed to any third party.

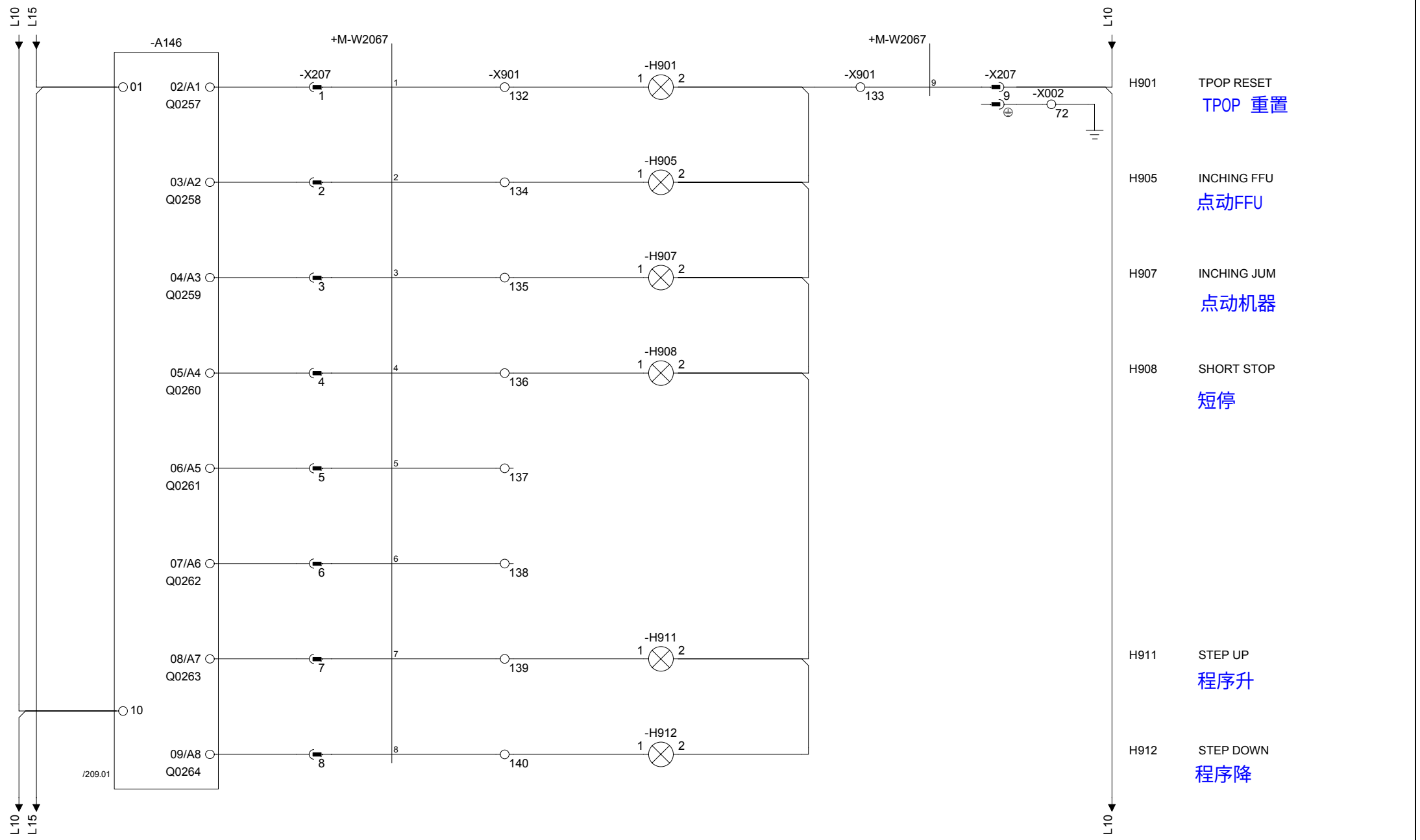

Drawing remarks	Tetra Pak	Designer LUP	Date 23/11/2007	Machine Tetra Pak A3/Flex 0150	
		ECM No 320174	Denomination CIRCUIT DIAGRAM	Page Type PLC - OUT	
	Company Tetra Pak (Italy)	Document No. 2845987-0003	Doc. type ELD	Version AE	Page 208

This drawing must not without the consent of Tetra Pak be copied, transmitted or disclosed to any third party.

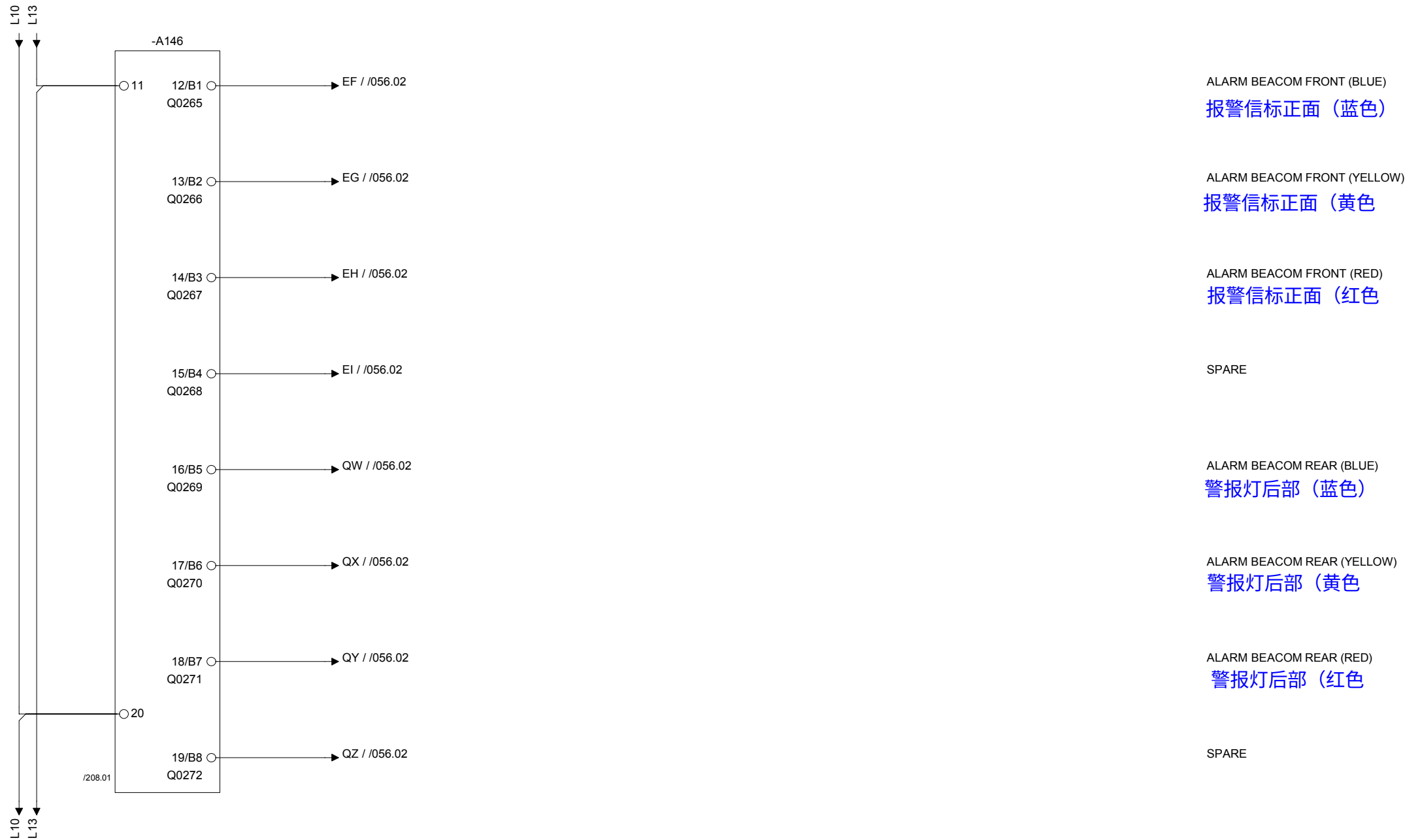

Drawing remarks

Tetra Pak

Designer LUP	Date 23/11/2007	Machine Tetra Pak A3/Flex 0150	
ECM No 320174	Denomination CIRCUIT DIAGRAM	Page Type PLC - OUT	
Company Tetra Pak (Italy)	Document No. 2845987-0003	Doc. type ELD	Version AE	Page 209

RELEASED

This drawing must not without the consent of Tetra Pak be copied, transmitted or disclosed to any third party.

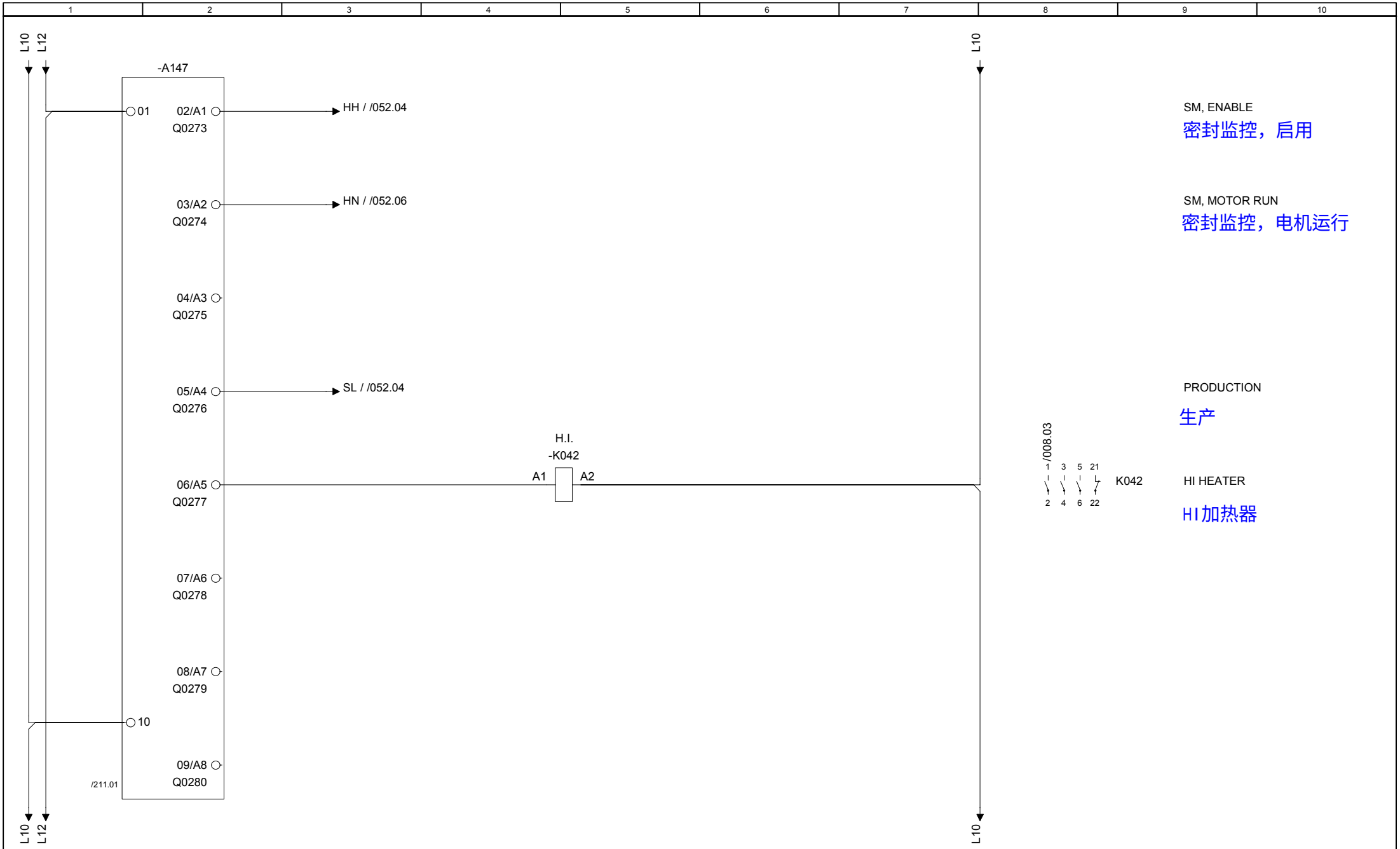

Drawing remarks	Tetra Pak	Designer LUP	Date 23/11/2007	Machine Tetra Pak A3/Flex 0150	
		ECM No 320174	Denomination CIRCUIT DIAGRAM	Page Type PLC - OUT	
		Company Tetra Pak (Italy)	Document No. 2845987-0003	Doc. type ELD	Version AE	Page 210

RELEASED

This drawing must not without the consent of Tetra Pak be copied, transmitted or disclosed to any third party.

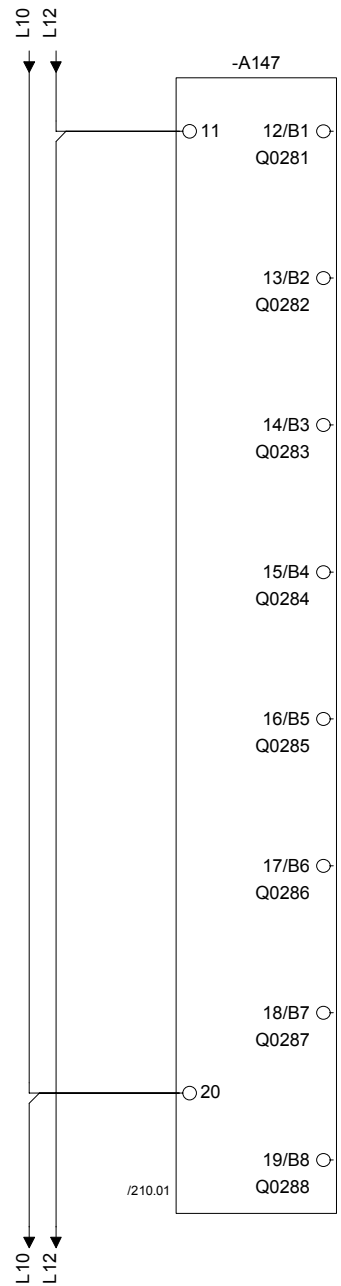

Drawing remarks

Tetra Pak

Designer LUP	Date 23/11/2007	Machine Tetra Pak A3/Flex 0150		
ECM No 320174	Denomination CIRCUIT DIAGRAM	Page Type PLC - OUT		
Company Tetra Pak (Italy)	Document No. 2845987-0003	Doc. type ELD	Version AE	Page 211

This drawing must not without the consent of Tetra Pak be copied, transmitted or disclosed to any third party.

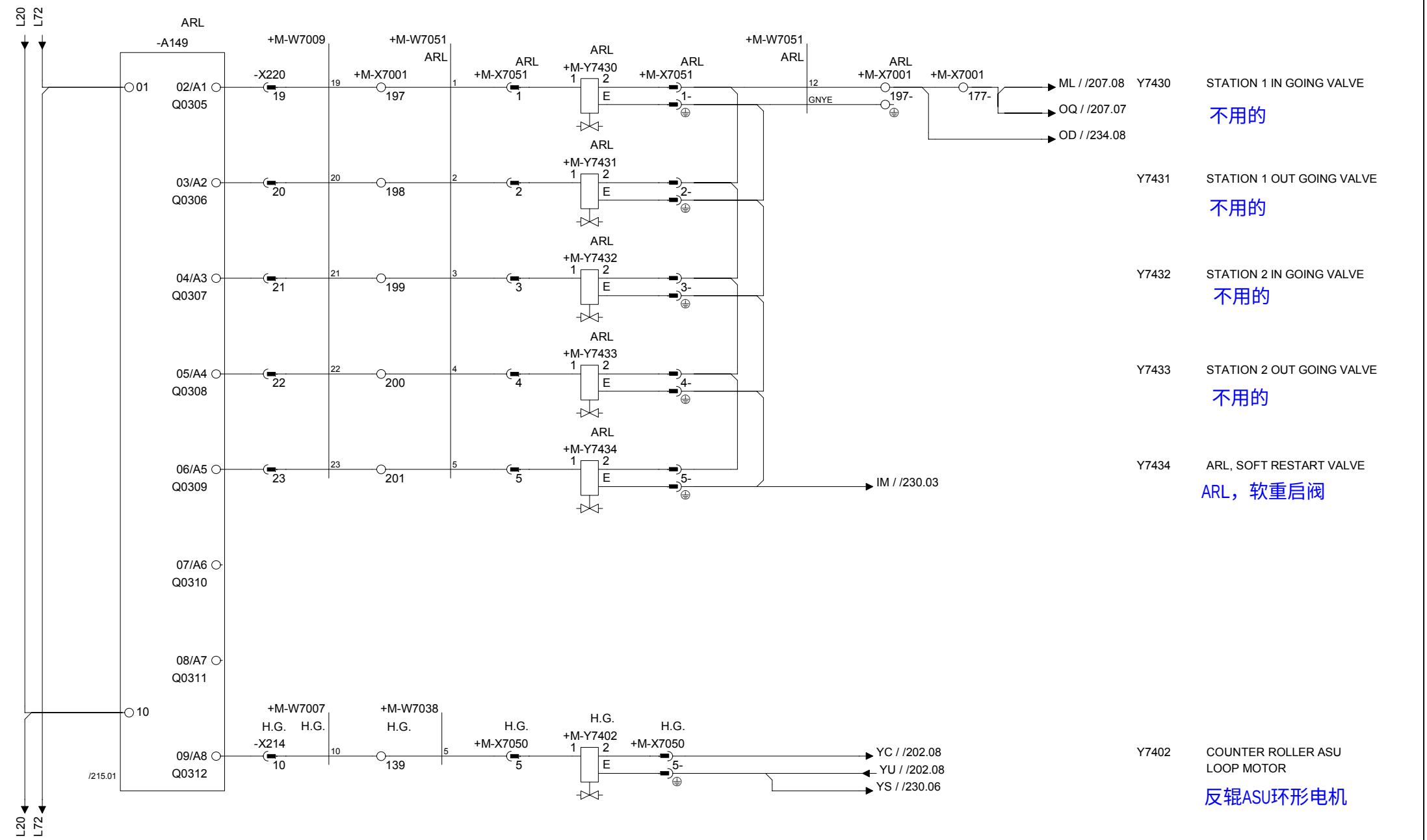

Y7430	STATION 1 IN GOING VALVE
	不用的
Y7431	STATION 1 OUT GOING VALVE
	不用的
Y7432	STATION 2 IN GOING VALVE
	不用的
Y7433	STATION 2 OUT GOING VALVE
	不用的
Y7434	ARL, SOFT RESTART VALVE
	ARL，软重启阀
Y7402	COUNTER ROLLER ASU LOOP MOTOR
	反辊ASU环形电机

Drawing remarks

Tetra Pak

Designer LUP	Date 23/11/2007	Machine Tetra Pak A3/Flex 0150			
ECM No 320174	Denomination CIRCUIT DIAGRAM	Page Type PLC - OUT			
Company Tetra Pak (Italy)	Document No. 2845987-0003	Doc. type ELD	Version AE	Page 214	

This drawing must not without the consent of Tetra Pak be copied, transmitted or disclosed to any third party.

1	2	3	4	5	6	7	8	9	10

ARL

-A149

11		12/B1 Q0313
		13/B2 Q0314
		14/B3 Q0315
		15/B4 Q0316
		16/B5 Q0317
		17/B6 Q0318
		18/B7 Q0319
20		
		19/B8 Q0320

/214.01

Drawing remarks

Tetra Pak

Designer LUP	Date 23/11/2007	Machine Tetra Pak A3/Flex 0150	
ECM No 320174	Denomination CIRCUIT DIAGRAM	Page Type PLC - OUT	
Company Tetra Pak (Italy)	Document No. 2845987-0003	Doc. type ELD	Version AE	Page 215

This drawing must not without the consent of Tetra Pak be copied, transmitted or disclosed to any third party.

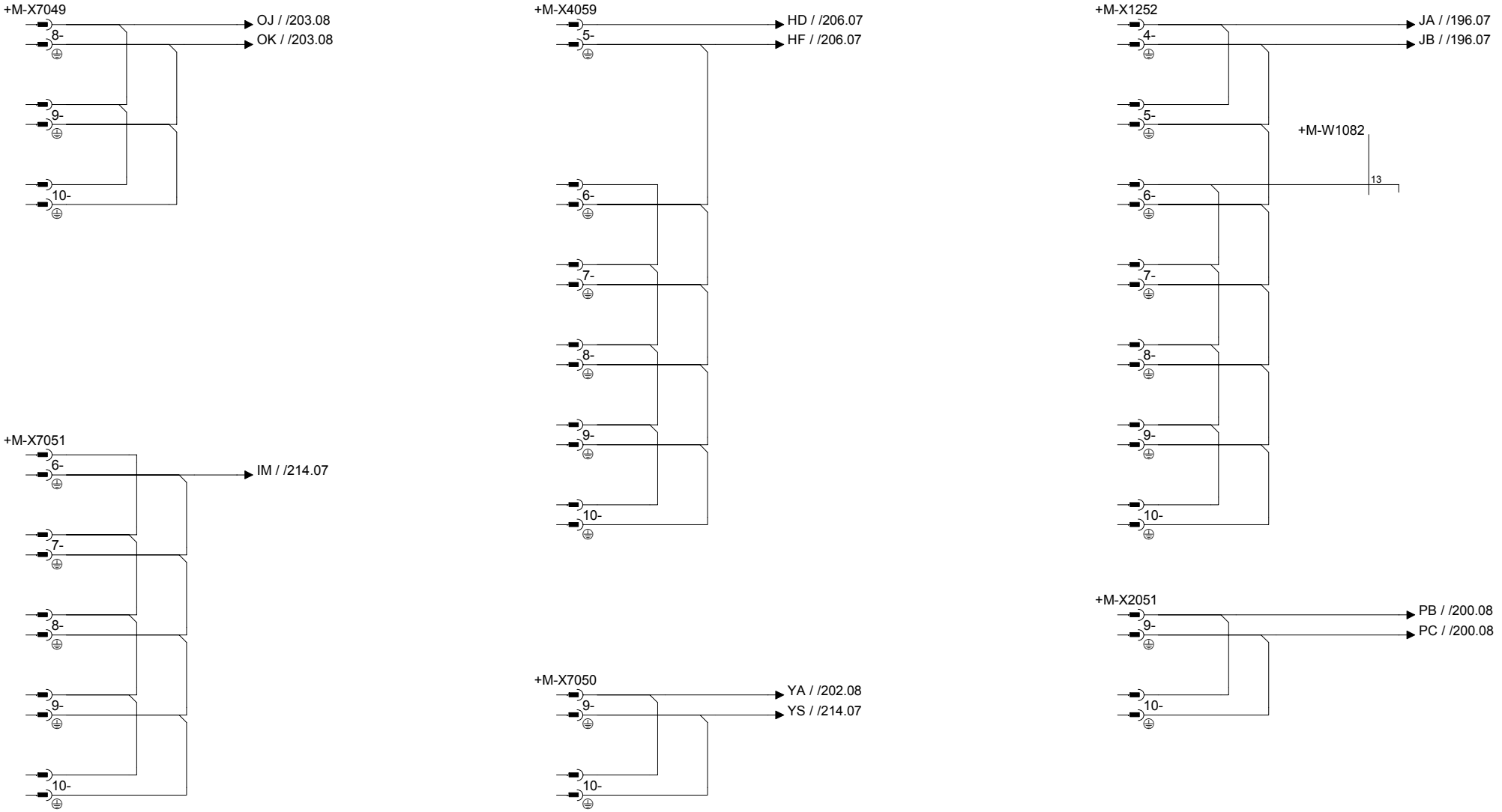

Drawing remarks	Tetra Pak	Designer LUP	Date 23/11/2007	Machine Tetra Pak A3/Flex 0150	
		ECM No 320174	Denomination CIRCUIT DIAGRAM	Page Type PRECONNECTED CABLES	
	Company Tetra Pak (Italy)	Document No. 2845987-0003	Doc. type ELD	Version AE	Page 230

RELEASED

This drawing must not without the consent of Tetra Pak be copied, transmitted or disclosed to any third party.

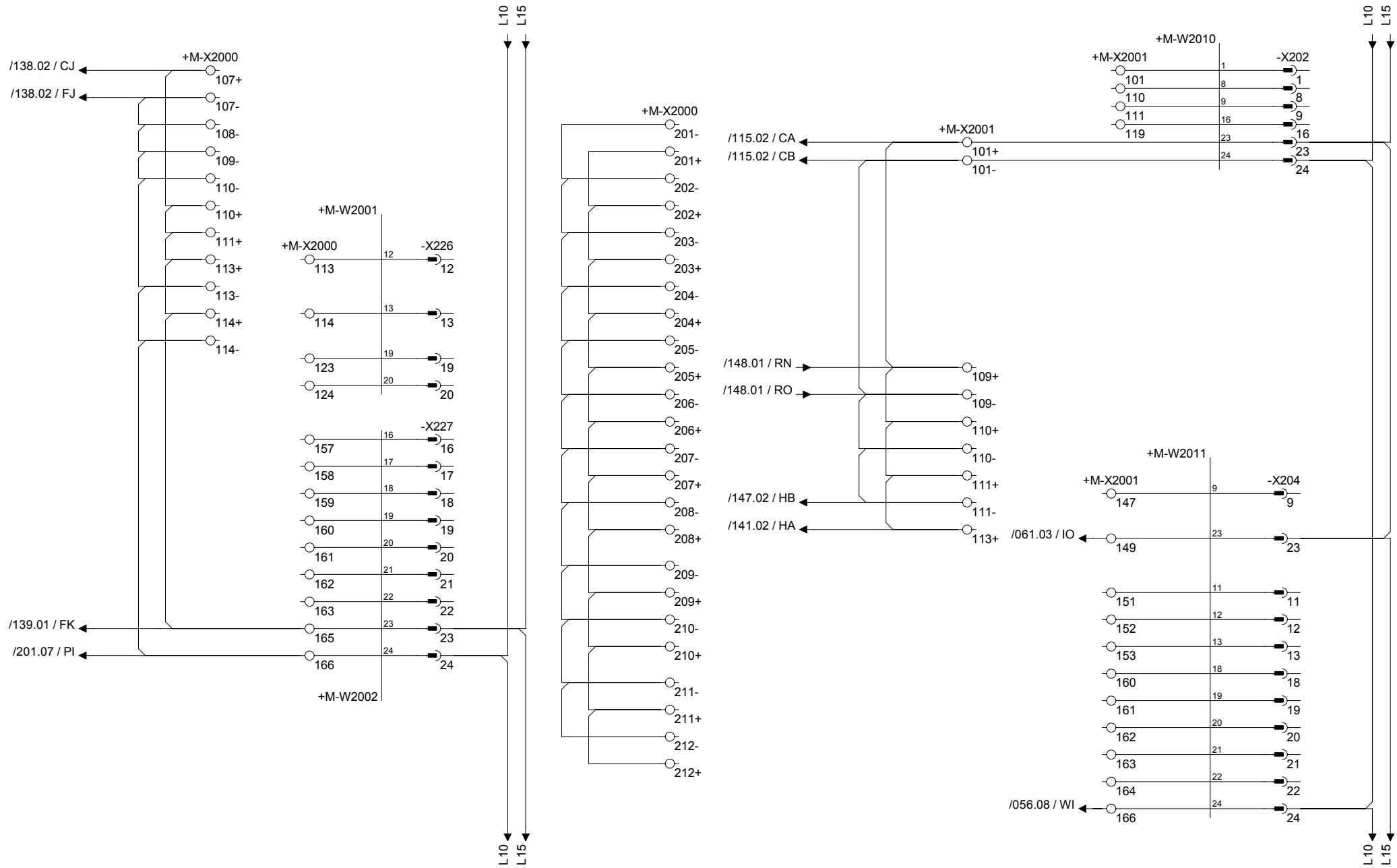

Drawing remarks	Tetra Pak	Designer LUP	Date 23/11/2007	Machine Tetra Pak A3/Flex 0150	
		ECM No 320174	Denomination CIRCUIT DIAGRAM	Page Type PRECONNECTED CABLES	
	Company Tetra Pak (Italy)	Document No. 2845987-0003	Doc. type ELD	Version AE	Page 231

RELEASED

This drawing must not without the consent of Tetra Pak be copied, transmitted or disclosed to any third party.

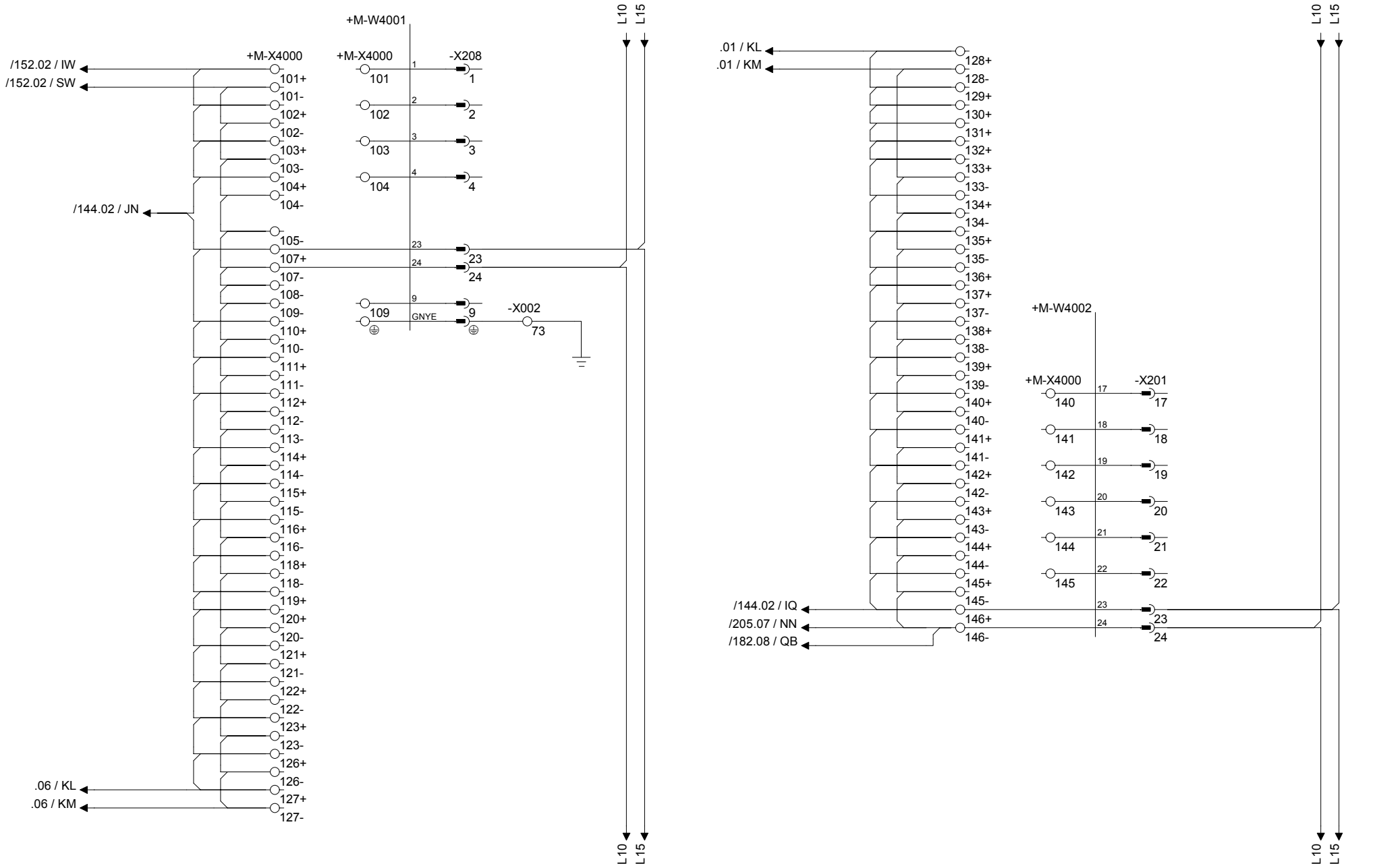

Drawing remarks	Tetra Pak	Designer LUP	Date 23/11/2007	Machine Tetra Pak A3/Flex 0150	
		ECM No 320174	Denomination CIRCUIT DIAGRAM	Page Type PRECONNECTED CABLES	
		Company Tetra Pak (Italy)	Document No. 2845987-0003	Doc. type ELD	Version AE	Page 232

RELEASED

This drawing must not without the consent of Tetra Pak be copied, transmitted or disclosed to any third party.

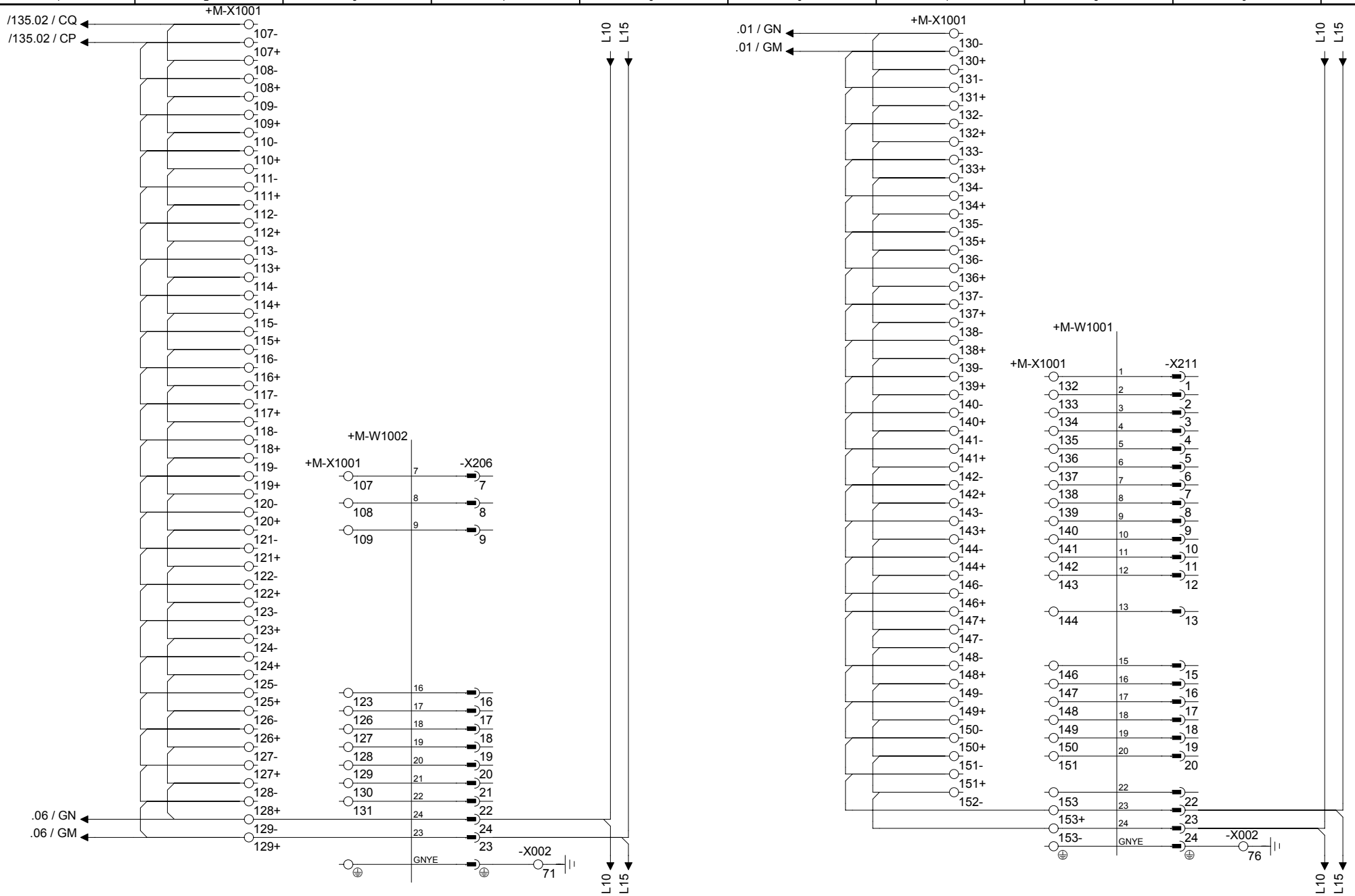

	Tetra Pak	Designer LUP	Date 23/11/2007	Machine Tetra Pak A3/Flex 0150	
		ECM No 320174	Denomination CIRCUIT DIAGRAM	Page Type PRECONNECTED CABLES	
Drawing remarks		Company Tetra Pak (Italy)	Document No. 2845987-0003	Doc. type ELD	Version AE	Page 233

RELEASED

This drawing must not without the consent of Tetra Pak be copied, transmitted or disclosed to any third party.

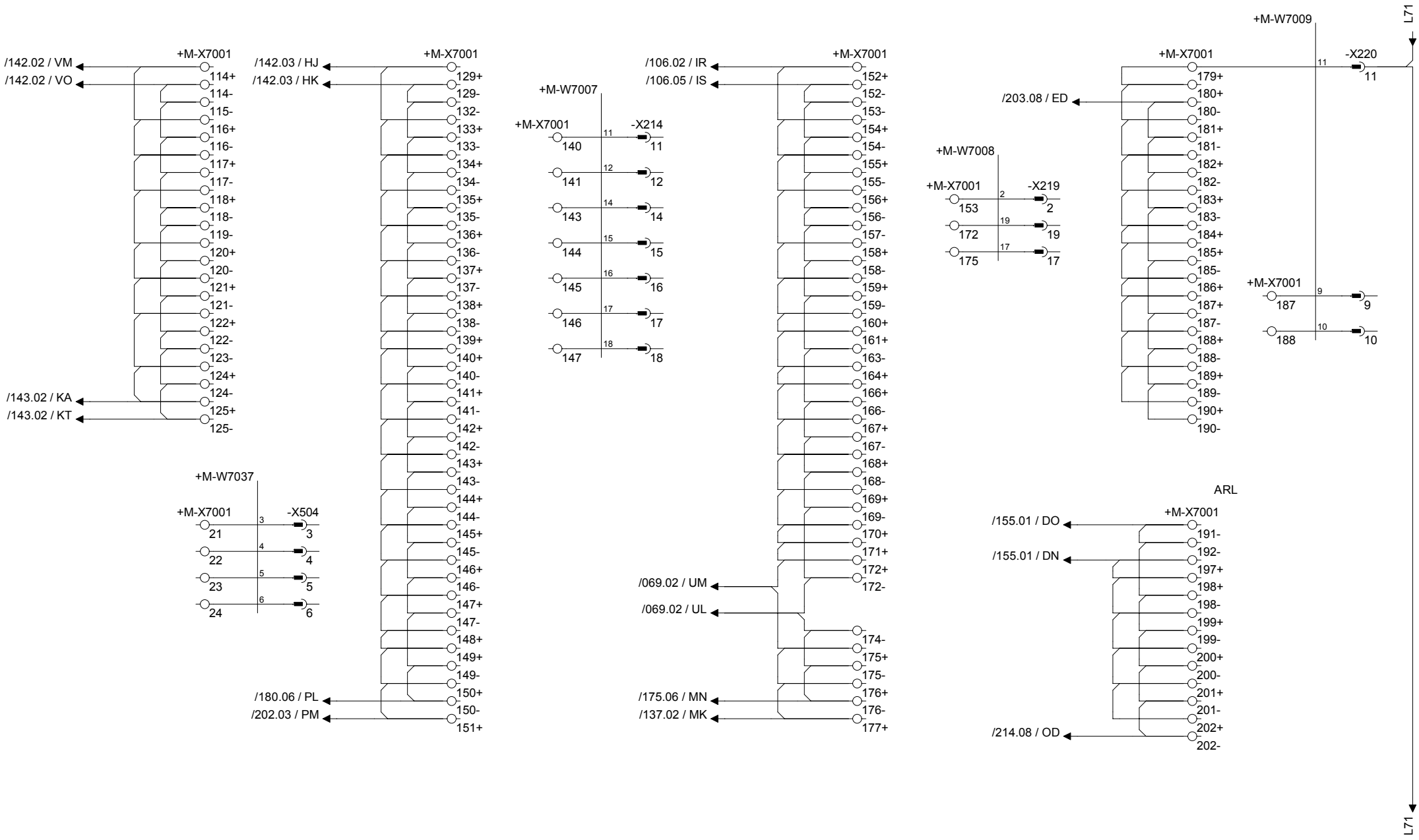

Drawing remarks	Tetra Pak	Designer LUP	Date 23/11/2007	Machine Tetra Pak A3/Flex 0150			
		ECM No 320174	Denomination CIRCUIT DIAGRAM	Page Type PRECONNECTED CABLES			
	Company Tetra Pak (Italy)		Document No. 2845987-0003	Doc. type ELD	Version AE	Page 234	

This drawing must not without the consent of Tetra Pak
be copied, transmitted or disclosed to any third party.

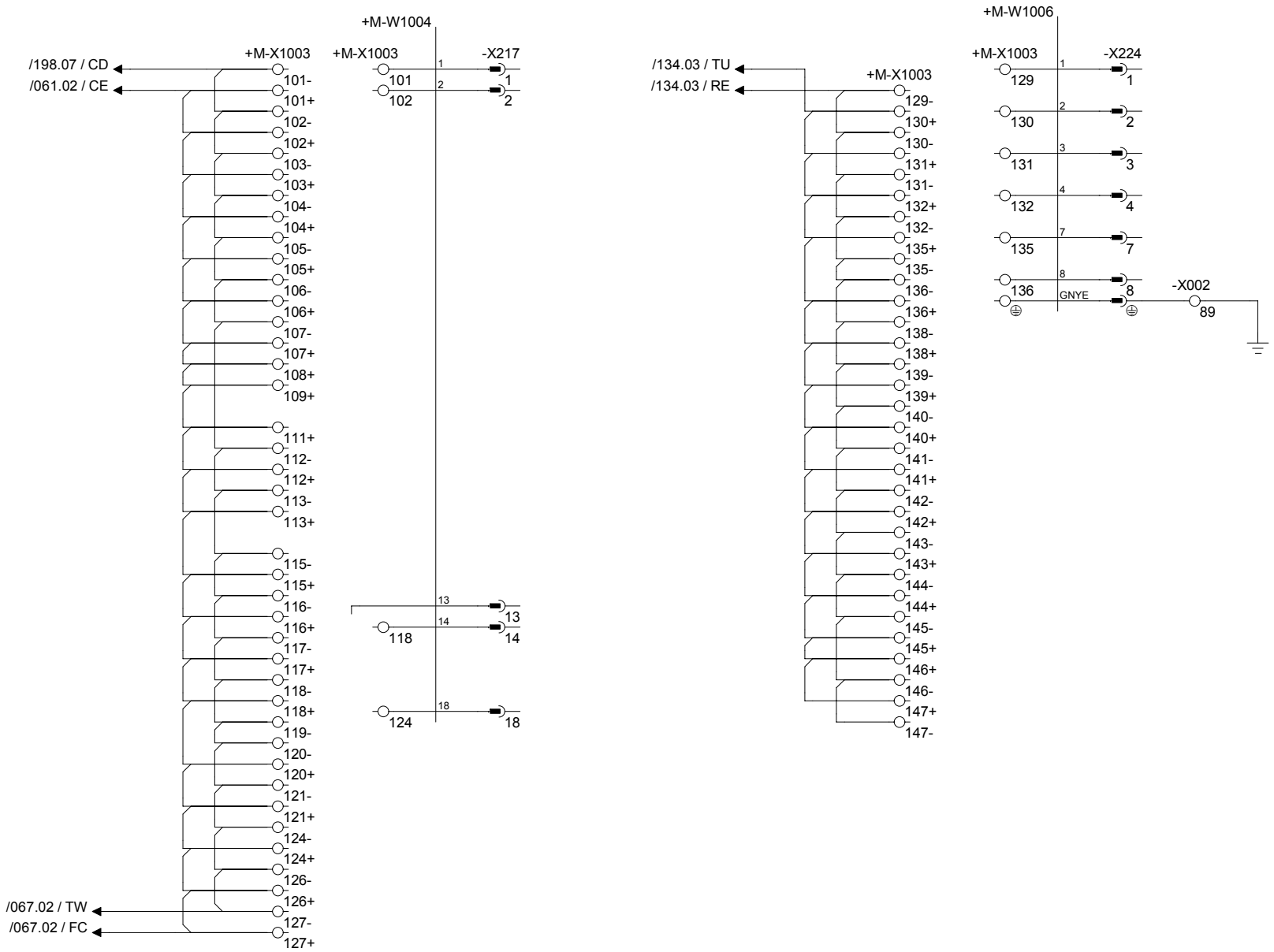

Drawing remarks	Tetra Pak	Designer LUP	Date 23/11/2007	Machine Tetra Pak A3/Flex 0150	
		ECM No 320174	Denomination CIRCUIT DIAGRAM	Page Type PRECONNECTED CABLES	
		Company Tetra Pak (Italy)	Document No. 2845987-0003	Doc. type ELD	Version AE	Page 235

RELEASED

This drawing must not without the consent of Tetra Pak be copied, transmitted or disclosed to any third party.

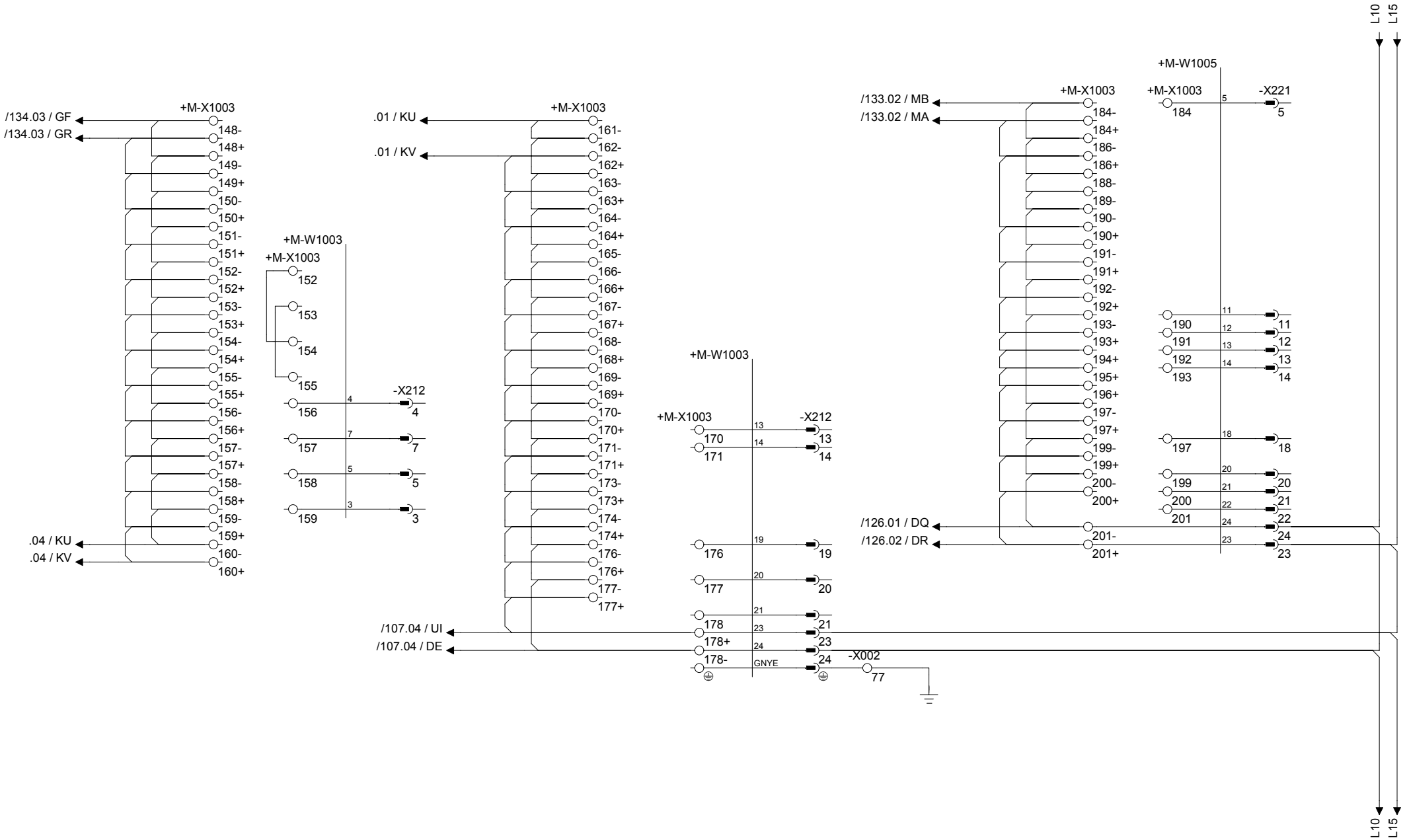

Drawing remarks	Tetra Pak	Designer LUP	Date 23/11/2007	Machine Tetra Pak A3/Flex 0150	
		ECM No 320174	Denomination CIRCUIT DIAGRAM	Page Type PRECONNECTED CABLES	
	Company Tetra Pak (Italy)	Document No. 2845987-0003	Doc. type ELD	Version AE	Page 236

RELEASED

This drawing must not without the consent of Tetra Pak be copied, transmitted or disclosed to any third party.

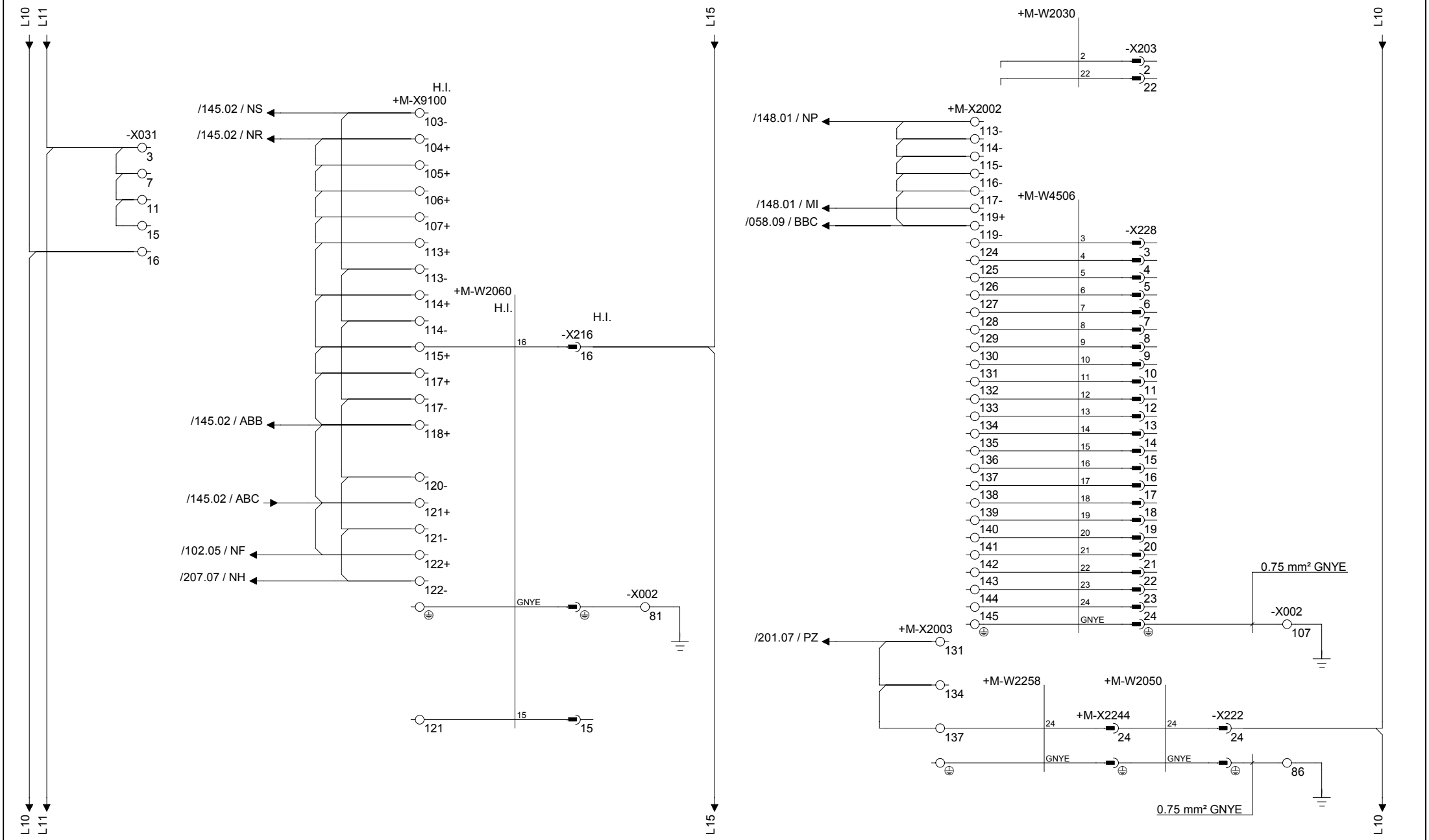

Drawing remarks	Tetra Pak	Designer LUP	Date 23/11/2007	Machine Tetra Pak A3/Flex 0150	
		ECM No 320174	Denomination CIRCUIT DIAGRAM	Page Type PRECONNECTED CABLES	
	Company Tetra Pak (Italy)	Document No. 2845987-0003	Doc. type ELD	Version AE	Page 237

This drawing must not without the consent of Tetra Pak be copied, transmitted or disclosed to any third party.

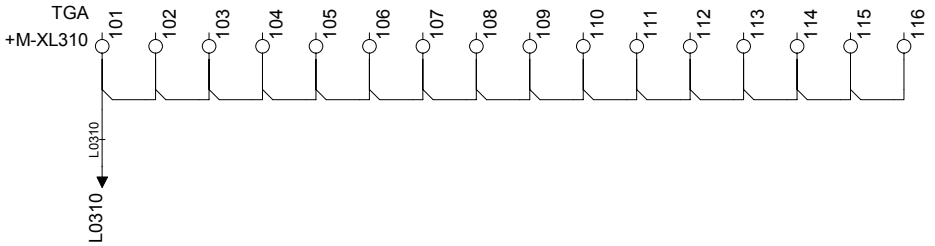

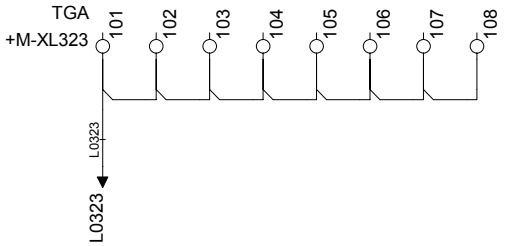

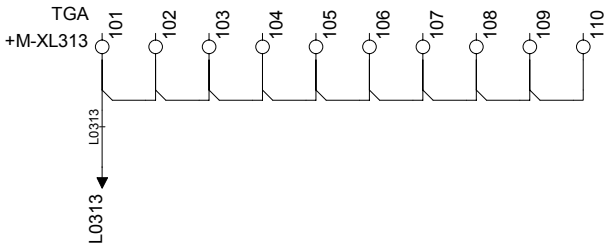

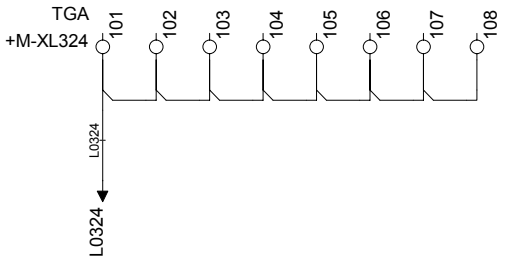

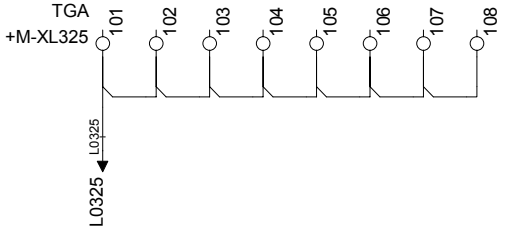

Drawing remarks	Tetra Pak	Designer LUP	Date 23/11/2007	Machine Tetra Pak A3/Flex 0150			
		ECM No 320174	Denomination CIRCUIT DIAGRAM	Page Type CIRCUIT DIAGRAM			
	Company Tetra Pak (Italy)		Document No. 2845987-0003	Doc. type ELD	Version AE	Page 241	

RELEASED

This drawing must not without the consent of Tetra Pak be copied, transmitted or disclosed to any third party.

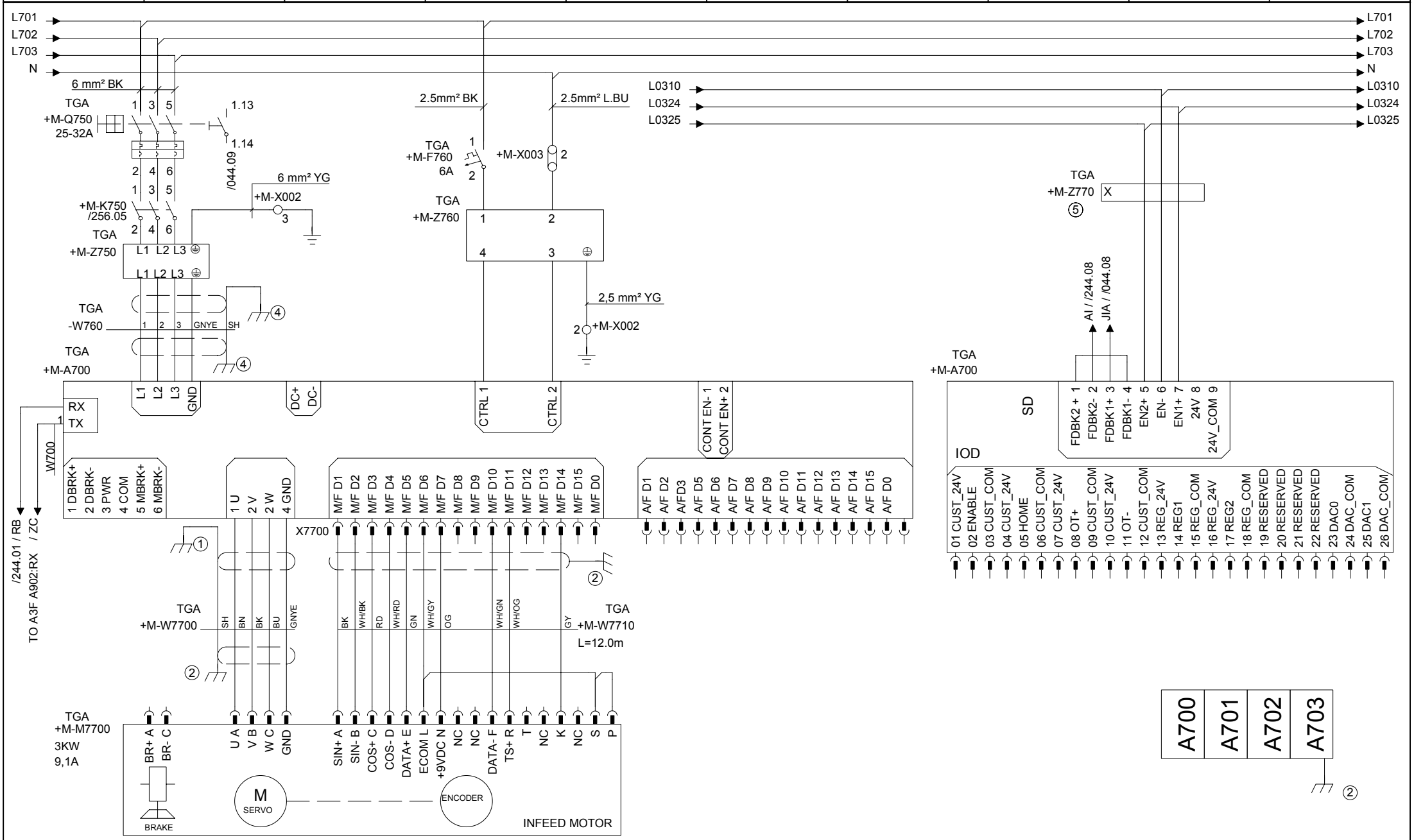

Drawing remarks	Tetra Pak	Designer LUP	Date 23/11/2007	Machine Tetra Pak A3/Flex 0150	
		ECM No 320174	Denomination CIRCUIT DIAGRAM	Page Type INFEED SERVO MOTOR (Rack 1 Top)	
		Company Tetra Pak (Italy)	Document No. 2845987-0003	Doc. type ELD	Version AE	Page 243

RELEASED

This drawing must not without the consent of Tetra Pak
be copied, transmitted or disclosed to any third party.

1 2 3 4 5 6 7 8 9 10

L0310
L0324
L0325

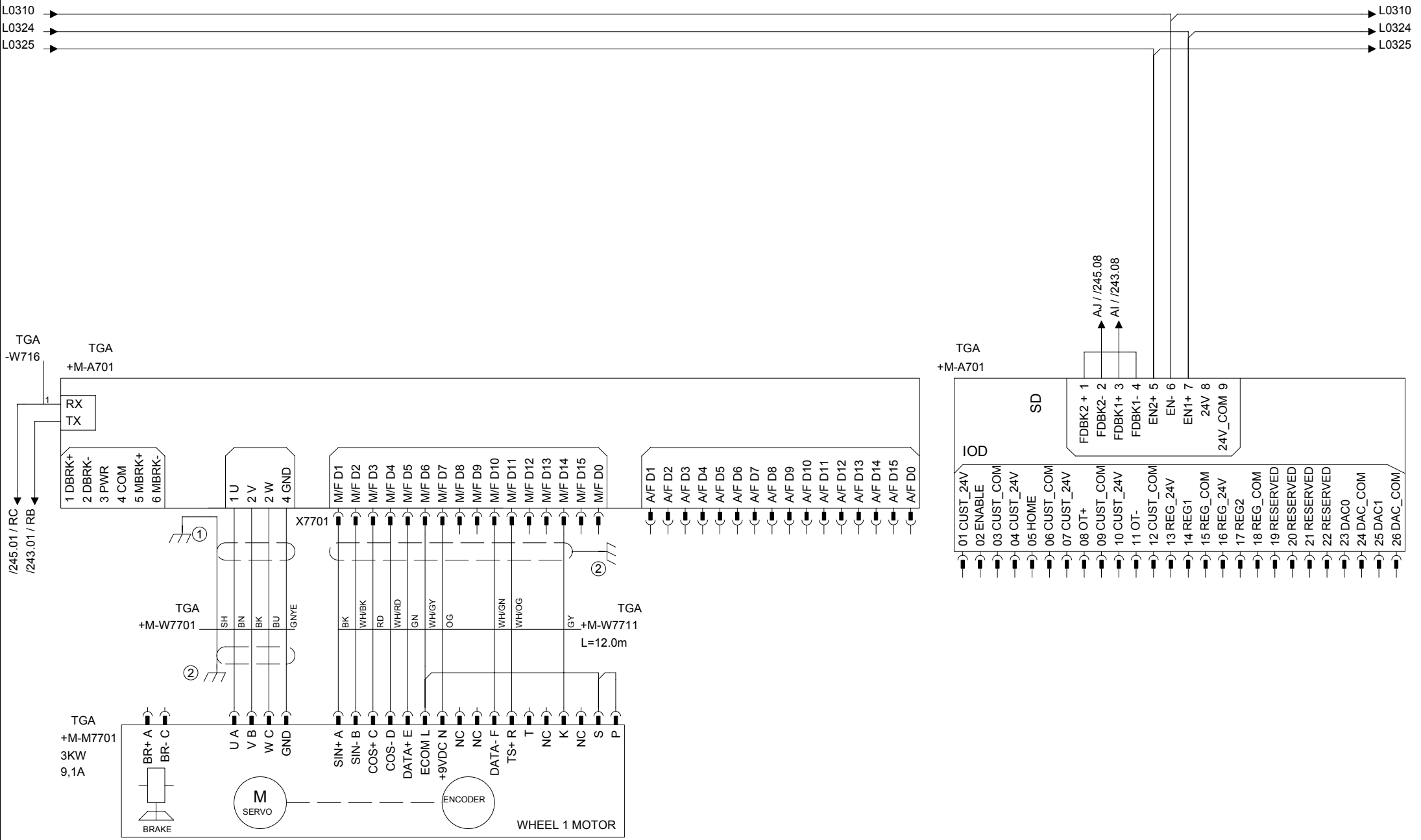

Drawing remarks

Tetra Pak

Designer LUP	Date 23/11/2007	Machine Tetra Pak A3/Flex 0150		
ECM No 320174	Denomination CIRCUIT DIAGRAM	Page Type WHEEL 1 SERVO MOTOR (Rack 1 Top)		
Company Tetra Pak (Italy)	Document No. 2845987-0003	Doc. type ELD	Version AE	Page 244

RELEASED

This drawing must not without the consent of Tetra Pak be copied, transmitted or disclosed to any third party.

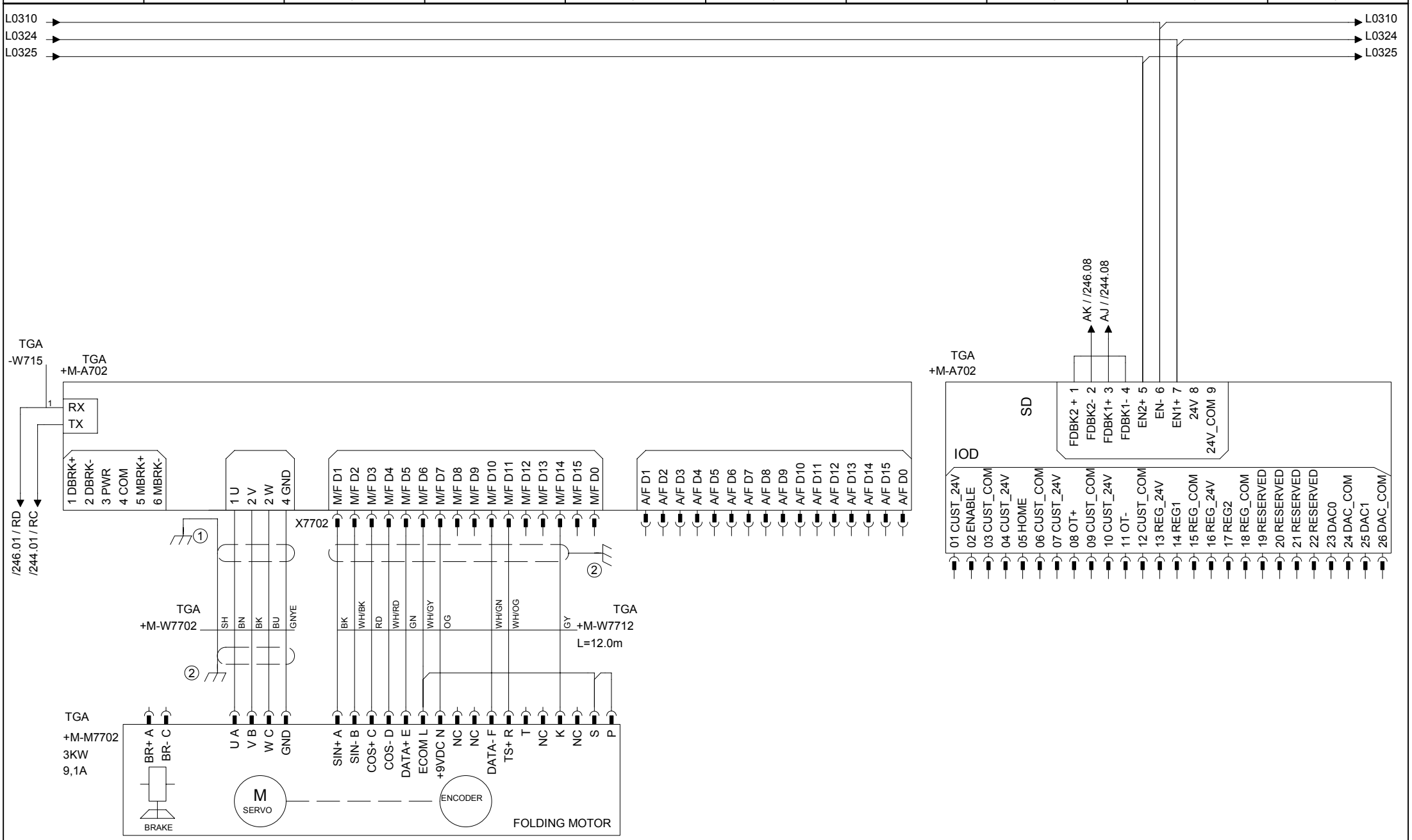

Drawing remarks

Tetra Pak

Designer LUP	Date 23/11/2007	Machine Tetra Pak A3/Flex 0150	
ECM No 320174	Denomination CIRCUIT DIAGRAM	Page Type FOLDING SERVO MOTOR (Rack 1 Top)	
Company Tetra Pak (Italy)	Document No. 2845987-0003	Doc. type ELD	Version AE	Page 245

RELEASED

This drawing must not without the consent of Tetra Pak be copied, transmitted or disclosed to any third party.

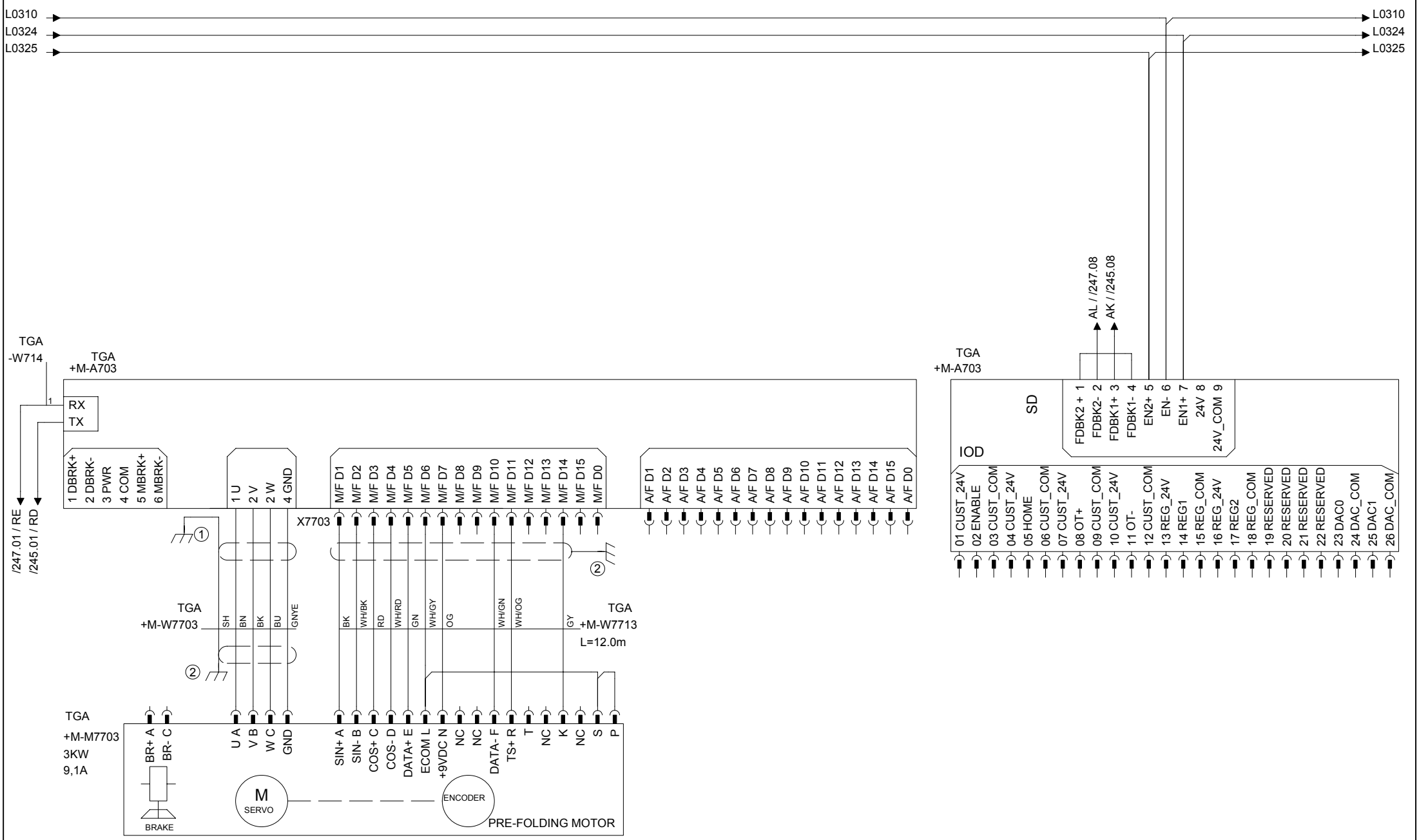

Drawing remarks

Tetra Pak

Designer LUP	Date 23/11/2007	Machine Tetra Pak A3/Flex 0150	
ECM No 320174	Denomination CIRCUIT DIAGRAM	Page Type PRE-FOLDING SERVO MOTOR (Rack 1 Top)	
Company Tetra Pak (Italy)	Document No. 2845987-0003	Doc. type ELD	Version AE	Page 246

RELEASED

This drawing must not without the consent of Tetra Pak be copied, transmitted or disclosed to any third party.

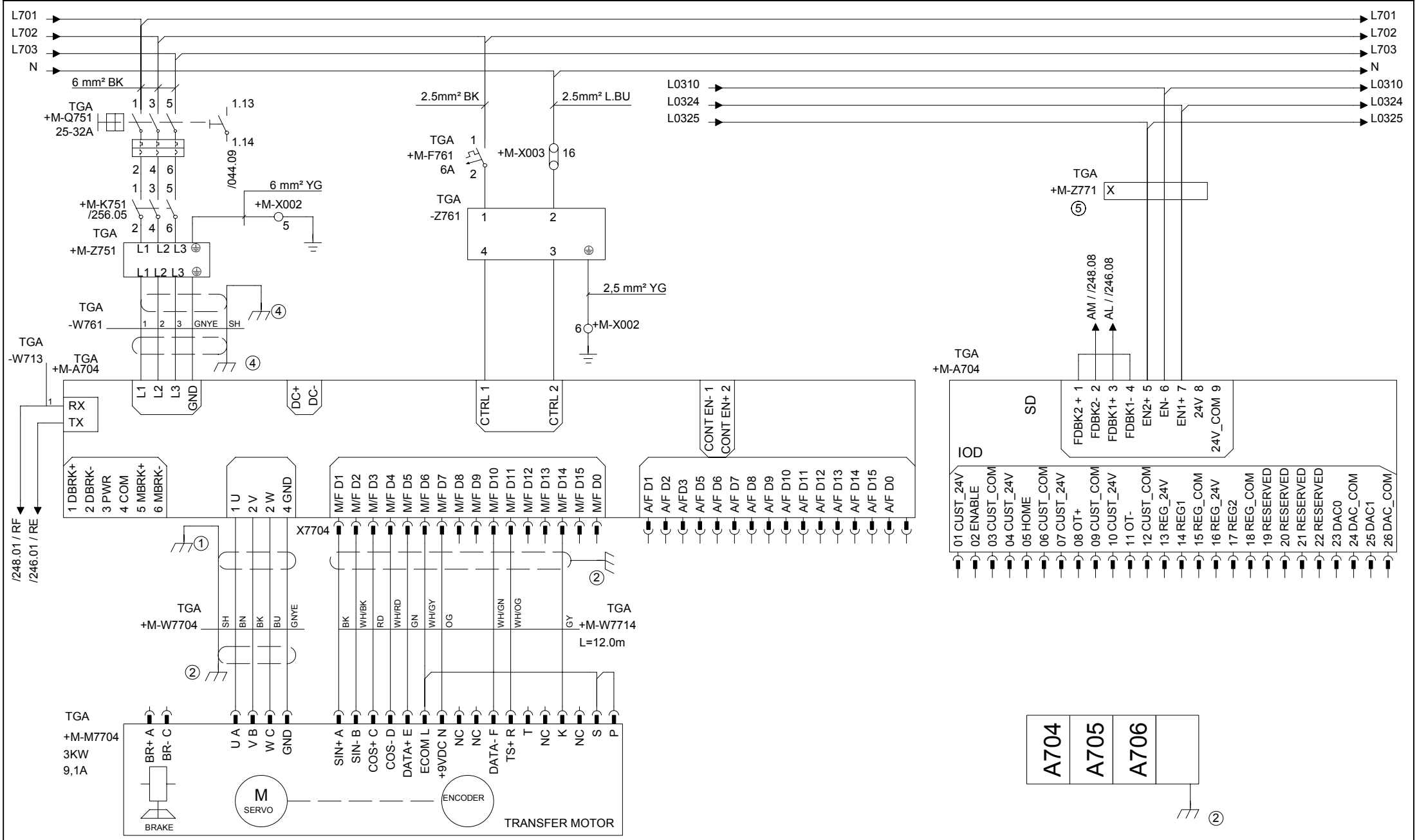

Drawing remarks	Tetra Pak	Designer LUP	Date 23/11/2007	Machine Tetra Pak A3/Flex 0150	
		ECM No 320174	Denomination CIRCUIT DIAGRAM	Page Type TRANSFER SERVO MOTOR (Rack 2 Bottom)	
		Company Tetra Pak (Italy)	Document No. 2845987-0003	Doc. type ELD	Version AE	Page 247

RELEASED

This drawing must not without the consent of Tetra Pak be copied, transmitted or disclosed to any third party.

L0310
L0324
L0325

TGA -W712

TGA +M-A705

RX
TX

1 DBRK+
2 DBRK-
3 PWR
4 COM
5 MBRK+
6 MBRK-

/249.01 / RH
/247.01 / RF

1 U
2 V
2 W
4 GND

M/F D1 M/F D2 M/F D3 M/F D4 M/F D5 M/F D6 M/F D7 M/F D8 M/F D9 M/F D10 M/F D11 M/F D12 M/F D13 M/F D14 M/F D15 M/F D0

A/F D1 A/F D2 A/F D3 A/F D4 A/F D5 A/F D6 A/F D7 A/F D8 A/F D9 A/F D10 A/F D11 A/F D12 A/F D13 A/F D14 A/F D15 A/F D0

X7705

TGA +M-W7705

SH BN BK BU GNYE

BK WH/BK RD WH/RD GN WH/GY OG WH/GN WH/OG GY

TGA +M-W7715
L=12.0m

TGA +M-M7705
3KW
9,1A

BR+ A
BR- C

U A
V B
W C
GND

SIN+ A
SIN- B
COS+ C
COS- D
DATA+ E
ECOM L
+9VDC N
NC
NC
DATA- F
TS+ R
T
NC
K
NC
S
P

M
SERVO

BRAKE

ENCODER

WHEEL 2 MOTOR

AN / /249.08
AM / /247.08

TGA +M-A705

SD

FDBK2 + 1
FDBK2- 2
FDBK1+ 3
FDBK1- 4
EN2+ 5
EN- 6
EN1+ 7
24V 8
24V_COM 9

IOD

01 CUST_24V
02 ENABLE
03 CUST_COM
04 CUST_24V
05 HOME
06 CUST_COM
07 CUST_24V
08 OT+
09 CUST_COM
10 CUST_24V
11 OT-
12 CUST_COM
13 REG_24V
14 REG1
15 REG_COM
16 REG_24V
17 REG2
18 REG_COM
19 RESERVED
20 RESERVED
21 RESERVED
22 RESERVED
23 DAC0
24 DAC_COM
25 DAC1
26 DAC_COM

Drawing remarks

Tetra Pak

Designer LUP	Date 23/11/2007	Machine Tetra Pak A3/Flex 0150	
ECM No 320174	Denomination CIRCUIT DIAGRAM	Page Type WHEEL 2 SERVO MOTOR (Rack 2 Bottom)	
Company Tetra Pak (Italy)	Document No. 2845987-0003	Doc. type ELD	Version AE	Page 248

RELEASED

This drawing must not without the consent of Tetra Pak
be copied, transmitted or disclosed to any third party.

1 2 3 4 5 6 7 8 9 10

L0310
L0324
L0325

L0310
L0324
L0325

TGA
-W711

TGA
+M-A706

RX
TX

1 DBRK+
2 DBRK-
3 PWR
4 COM
5 MBRK+
6 MBRK-

1 U
2 V
2 W
4 GND

M/F D1 M/F D2 M/F D3 M/F D4 M/F D5 M/F D6 M/F D7 M/F D8 M/F D9 M/F D10 M/F D11 M/F D12 M/F D13 M/F D14 M/F D15 M/F D0

A/F D1 A/F D2 A/F D3 A/F D4 A/F D5 A/F D6 A/F D7 A/F D8 A/F D9 A/F D10 A/F D11 A/F D12 A/F D13 A/F D14 A/F D15 A/F D0

FROM A3 FLEX A712:TX / RAA
/248.01 / RH

X7706

TGA
+M-W7706

SH BN BK BU GNYE

BK WH/BK RD WH/RD GN WH/GY OG WH/GN WH/OG GY

TGA
+M-W7716
L=12.0m

TGA
+M-M7706
3KW
9,1A

BR+ A
BR- C

U A
V B
W C
GND

SIN+ A
SIN- B
COS+ C
COS- D
DATA+ E
ECOM L
+9VDC N
NC
NC
DATA- F
TS+ R
T
NC
K
NC
S
P

M
SERVO

BRAKE

ENCODER

PRESSURE MOTOR

JIH / /044.08
AN / /248.08

TGA
+M-A706

SD

FDBK2 + 1
FDBK2- 2
FDBK1+ 3
FDBK1- 4
EN2+ 5
EN- 6
EN1+ 7
24V 8
24V_COM 9

IOD

01 CUST_24V
02 ENABLE
03 CUST_COM
04 CUST_24V
05 HOME
06 CUST_COM
07 CUST_24V
08 OT+
09 CUST_COM
10 CUST_24V
11 OT-
12 CUST_COM
13 REG_24V
14 REG1
15 REG_COM
16 REG_24V
17 REG2
18 REG_COM
19 RESERVED
20 RESERVED
21 RESERVED
22 RESERVED
23 DAC0
24 DAC_COM
25 DAC1
26 DAC_COM

Drawing remarks

Tetra Pak

Designer LUP	Date 23/11/2007	Machine Tetra Pak A3/Flex 0150	
ECM No 320174	Denomination CIRCUIT DIAGRAM	Page Type PRESSURE SERVO MOTOR (Rack 2 Bottom)	
Company Tetra Pak (Italy)	Document No. 2845987-0003	Doc. type ELD	Version AE	Page 249

RELEASED

This drawing must not without the consent of Tetra Pak be copied, transmitted or disclosed to any third party.

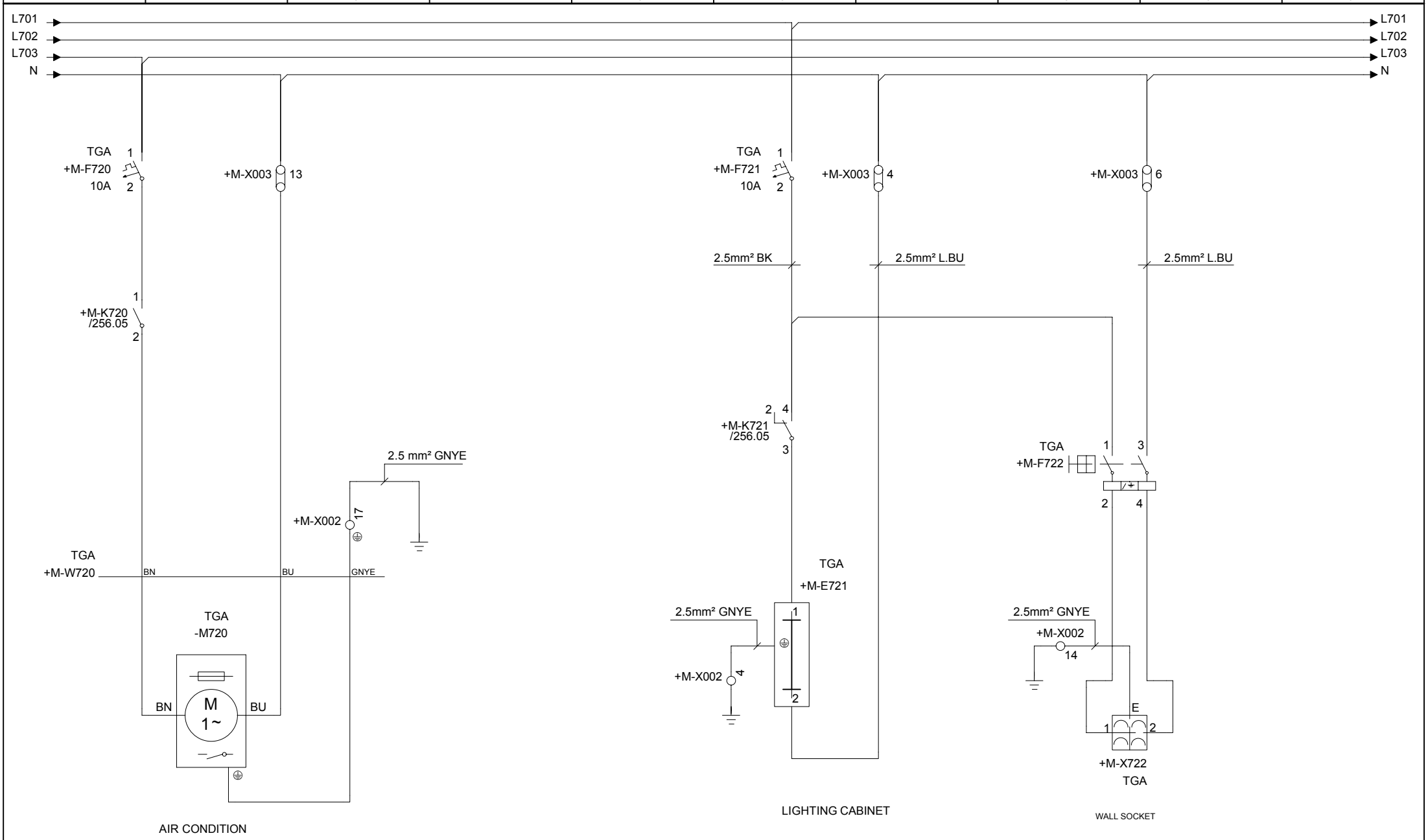

Drawing remarks	Tetra Pak	Designer LUP	Date 23/11/2007	Machine Tetra Pak A3/Flex 0150	
		ECM No 320174	Denomination CIRCUIT DIAGRAM	Page Type COOLING UNIT & LIGHT FIXTURES	
		Company Tetra Pak (Italy)	Document No. 2845987-0003	Doc. type ELD	Version AE	Page 250

RELEASED

This drawing must not without the consent of Tetra Pak be copied, transmitted or disclosed to any third party.

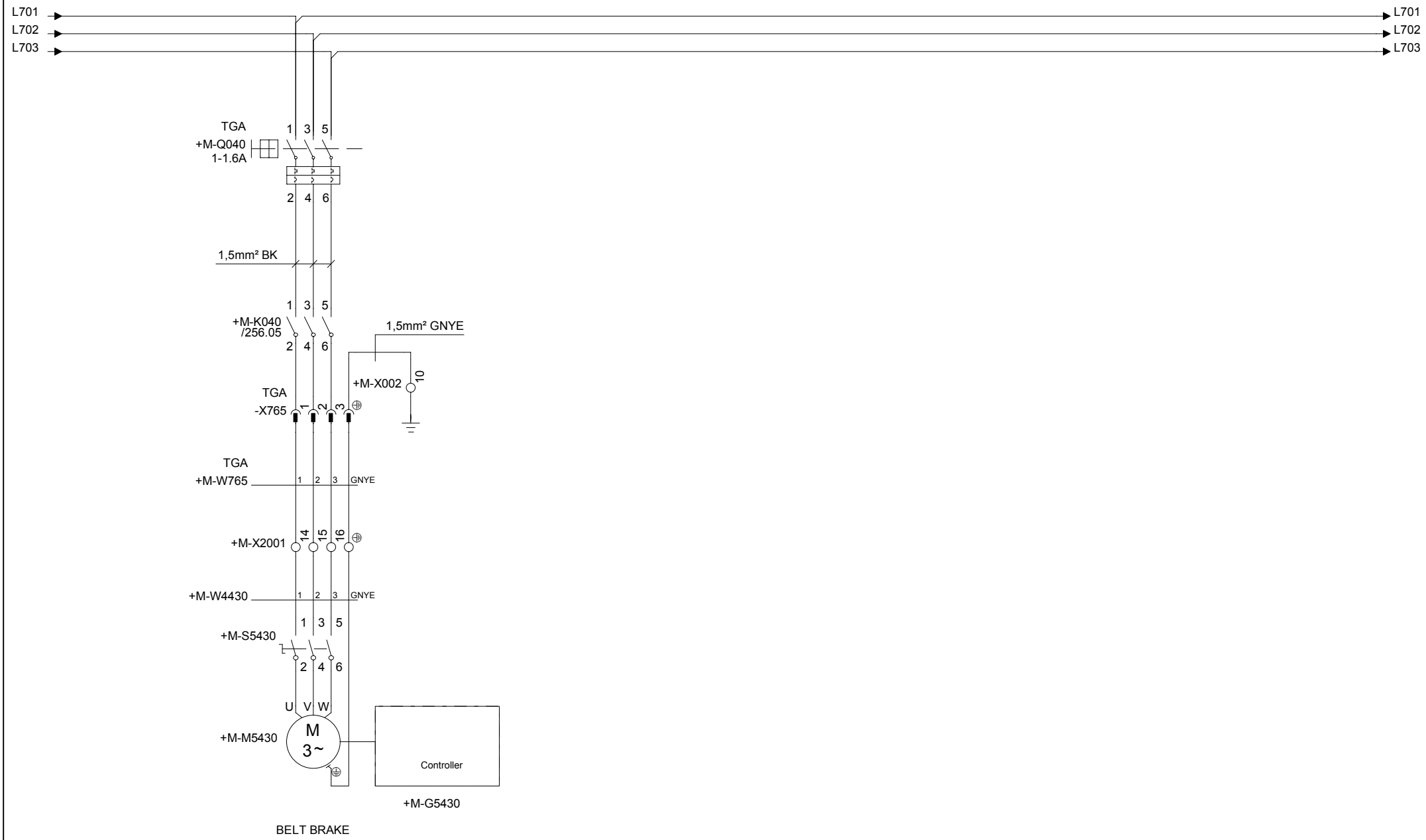

Drawing remarks	Tetra Pak	Designer LUP	Date 23/11/2007	Machine Tetra Pak A3/Flex 0150	
		ECM No 320174	Denomination CIRCUIT DIAGRAM	Page Type BELT BRAKE	
		Company Tetra Pak (Italy)	Document No. 2845987-0003	Doc. type ELD	Version AE	Page 251

RELEASED

This drawing must not without the consent of Tetra Pak be copied, transmitted or disclosed to any third party.

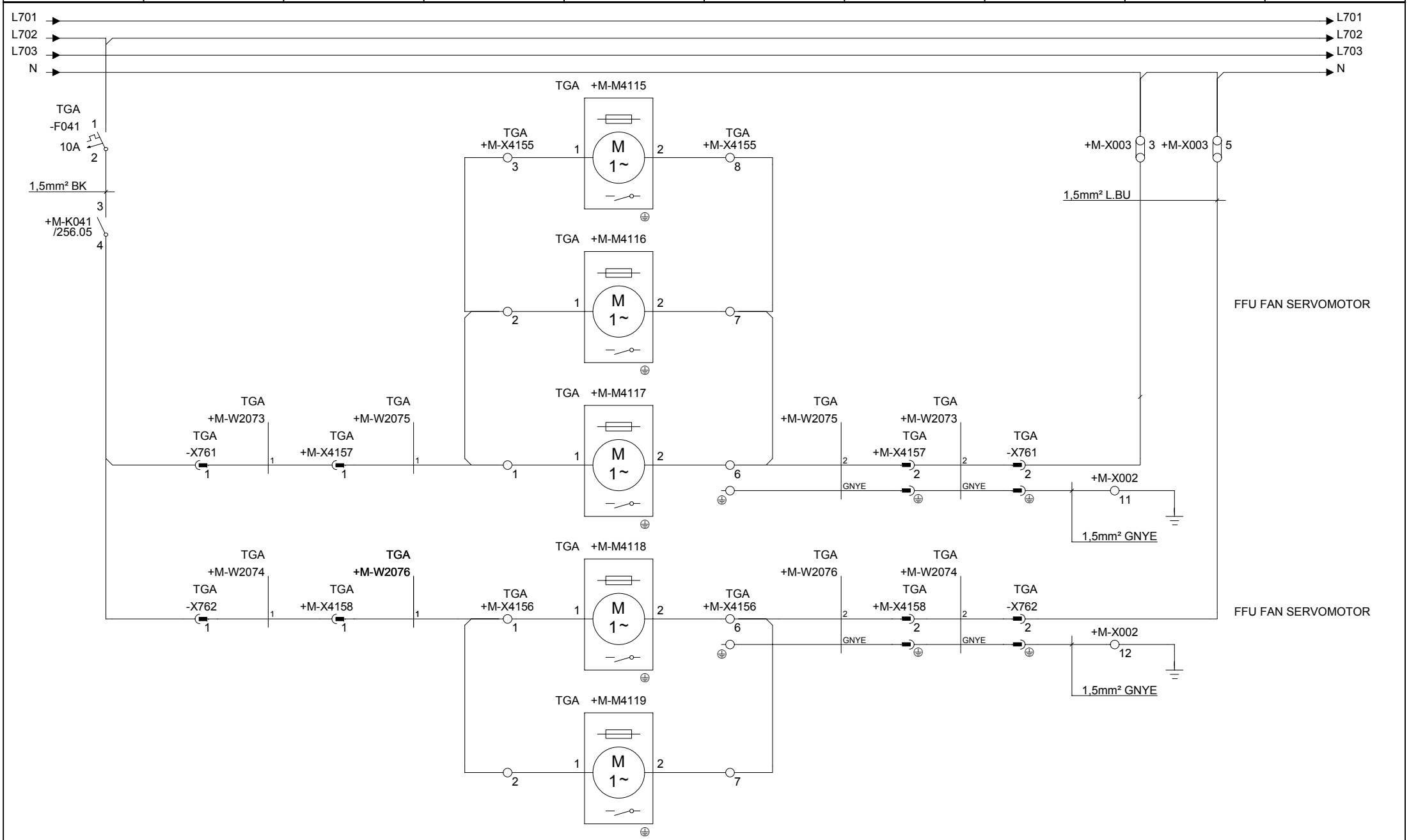

Drawing remarks	Tetra Pak	Designer LUP	Date 23/11/2007	Machine Tetra Pak A3/Flex 0150	
		ECM No 320174	Denomination CIRCUIT DIAGRAM	Page Type FAN SERVO MOTORS	
	Company Tetra Pak (Italy)	Document No. 2845987-0003	Doc. type ELD	Version AE	Page 252

RELEASED

This drawing must not without the consent of Tetra Pak be copied, transmitted or disclosed to any third party.

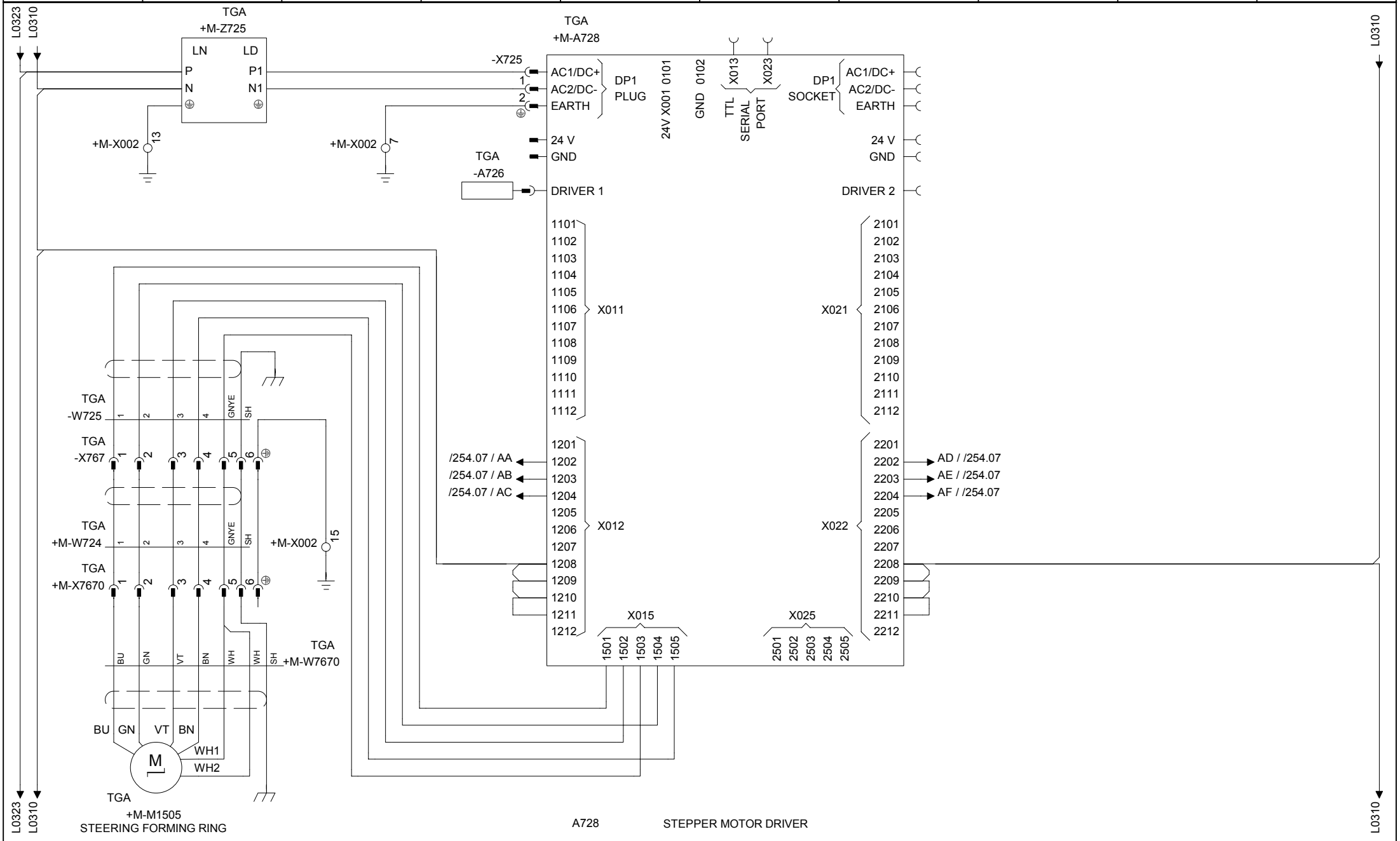

Drawing remarks	Tetra Pak	Designer LUP	Date 23/11/2007	Machine Tetra Pak A3/Flex 0150	
		ECM No 320174	Denomination CIRCUIT DIAGRAM	Page Type STEPPER MOTOR SFR	
		Company Tetra Pak (Italy)	Document No. 2845987-0003	Doc. type ELD	Version AE	Page 253

RELEASED

This drawing must not without the consent of Tetra Pak be copied, transmitted or disclosed to any third party.

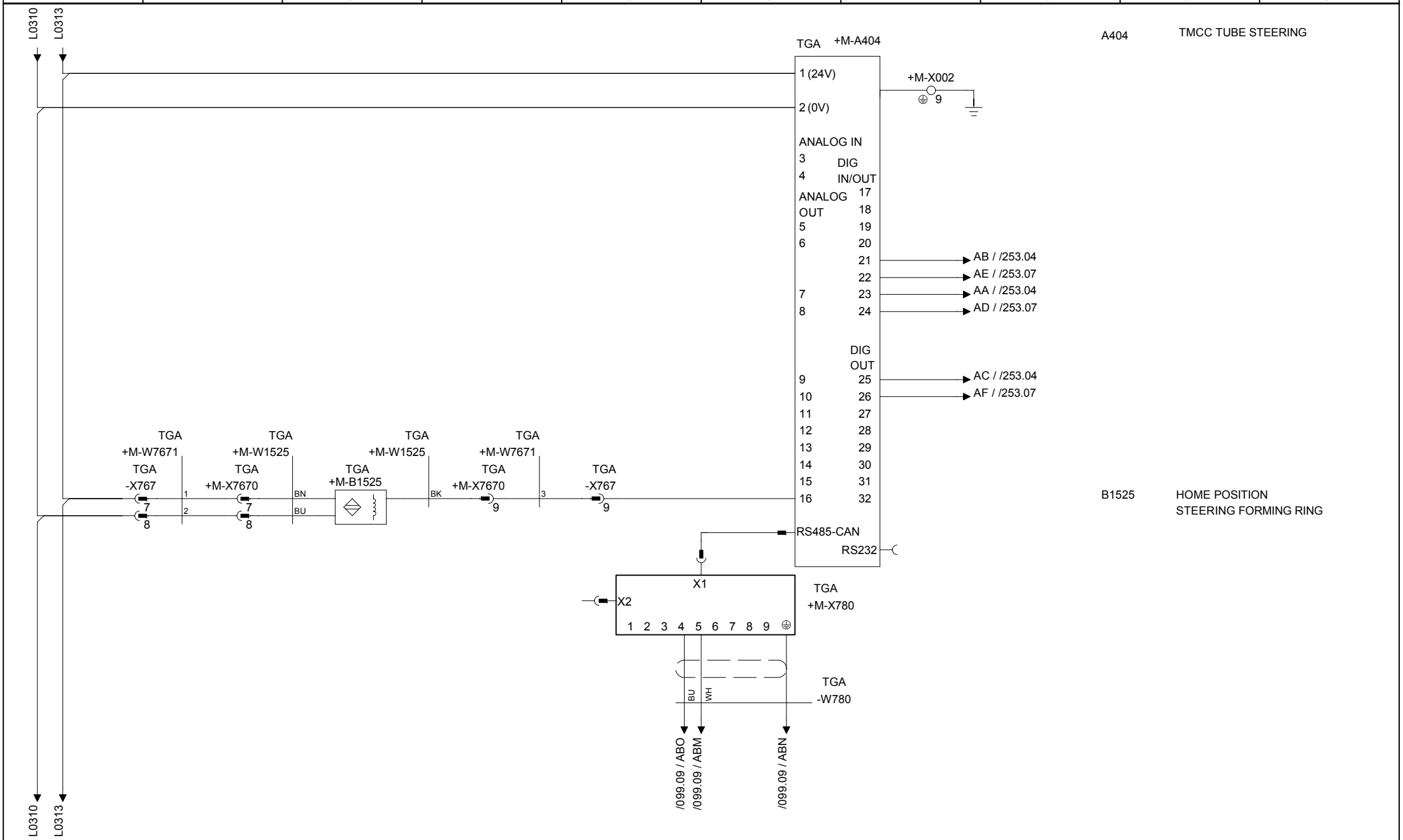

Drawing remarks	Tetra Pak	Designer LUP	Date 23/11/2007	Machine Tetra Pak A3/Flex 0150	
		ECM No 320174	Denomination CIRCUIT DIAGRAM	Page Type TMCC TUBE STEERING	
		Company Tetra Pak (Italy)	Document No. 2845987-0003	Doc. type ELD	Version AE	Page 254

RELEASED

This drawing must not without the consent of Tetra Pak be copied, transmitted or disclosed to any third party.

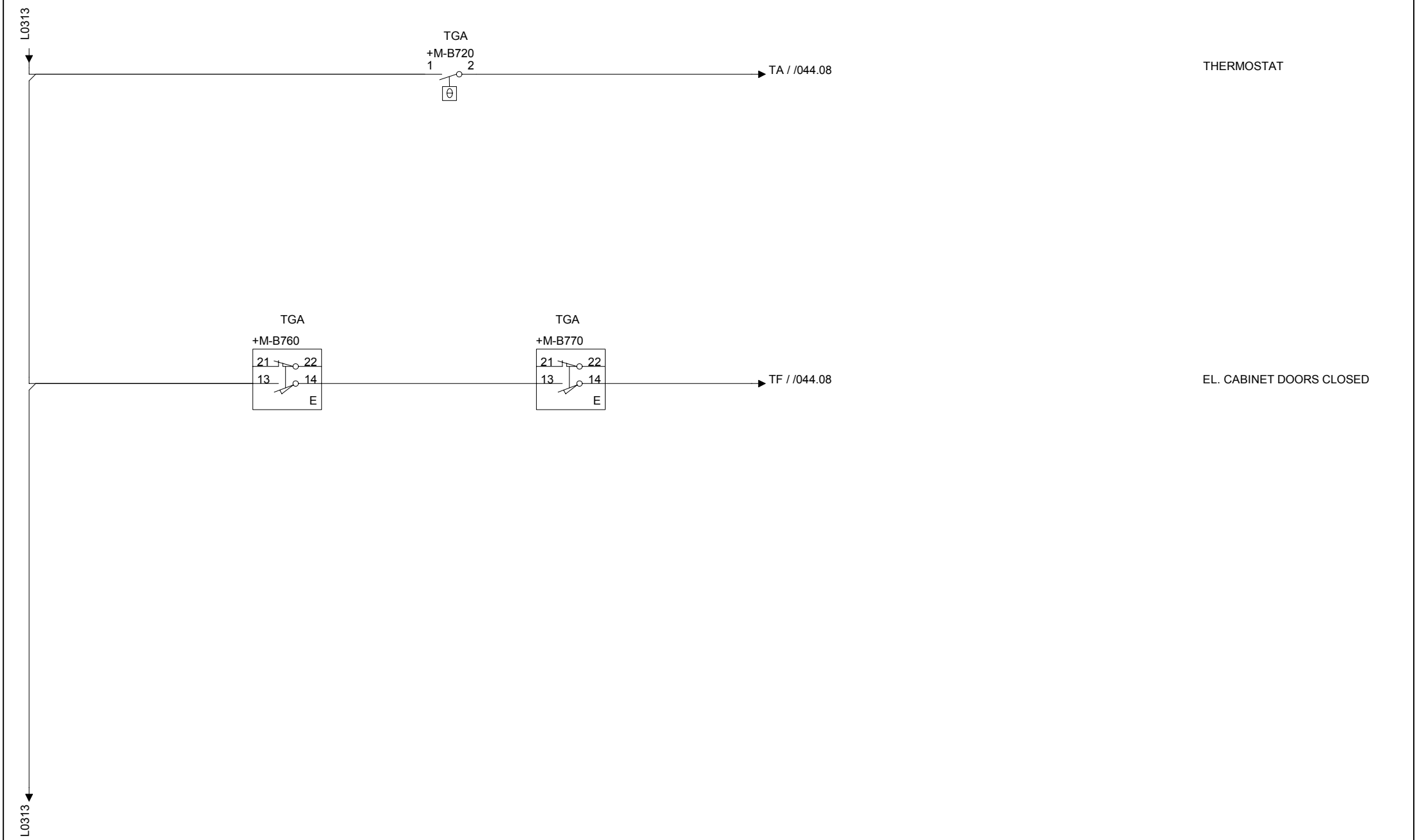

Drawing remarks	Tetra Pak	Designer LUP	Date 23/11/2007	Machine Tetra Pak A3/Flex 0150	
		ECM No 320174	Denomination CIRCUIT DIAGRAM	Page Type TO FILLER DIGITAL INPUT	
	Company Tetra Pak (Italy)	Document No. 2845987-0003	Doc. type ELD	Version AE	Page 255

RELEASED

This drawing must not without the consent of Tetra Pak
be copied, transmitted or disclosed to any third party.

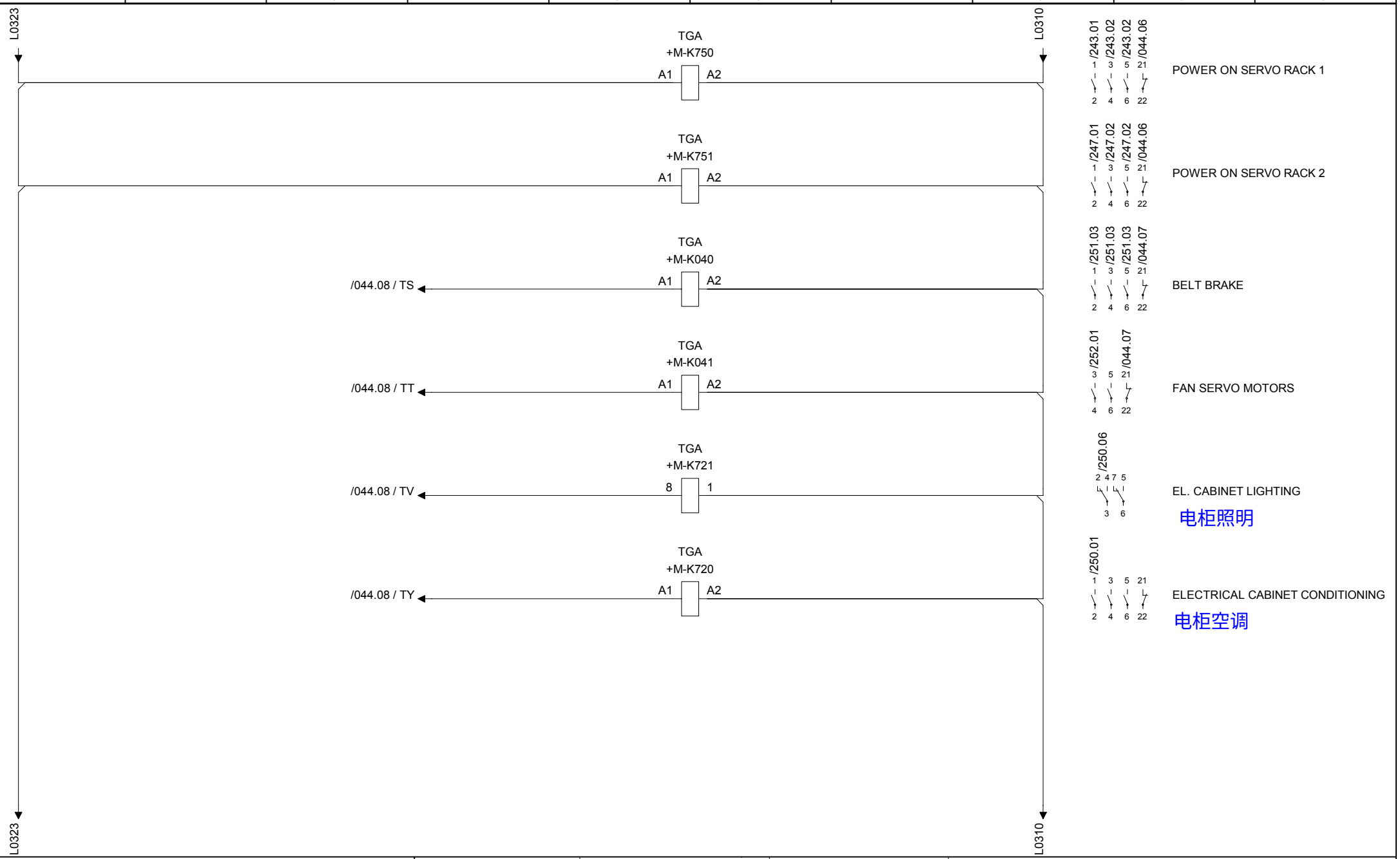

Drawing remarks	Tetra Pak	Designer LUP	Date 23/11/2007	Machine Tetra Pak A3/Flex 0150	
		ECM No 320174	Denomination CIRCUIT DIAGRAM	Page Type CIRCUIT DIAGRAM	
	Company Tetra Pak (Italy)	Document No. 2845987-0003	Doc. type ELD	Version AE	Page 256

This drawing must not without the consent of Tetra Pak be copied, transmitted or disclosed to any third party.

M1506 HEATER POSITIONING

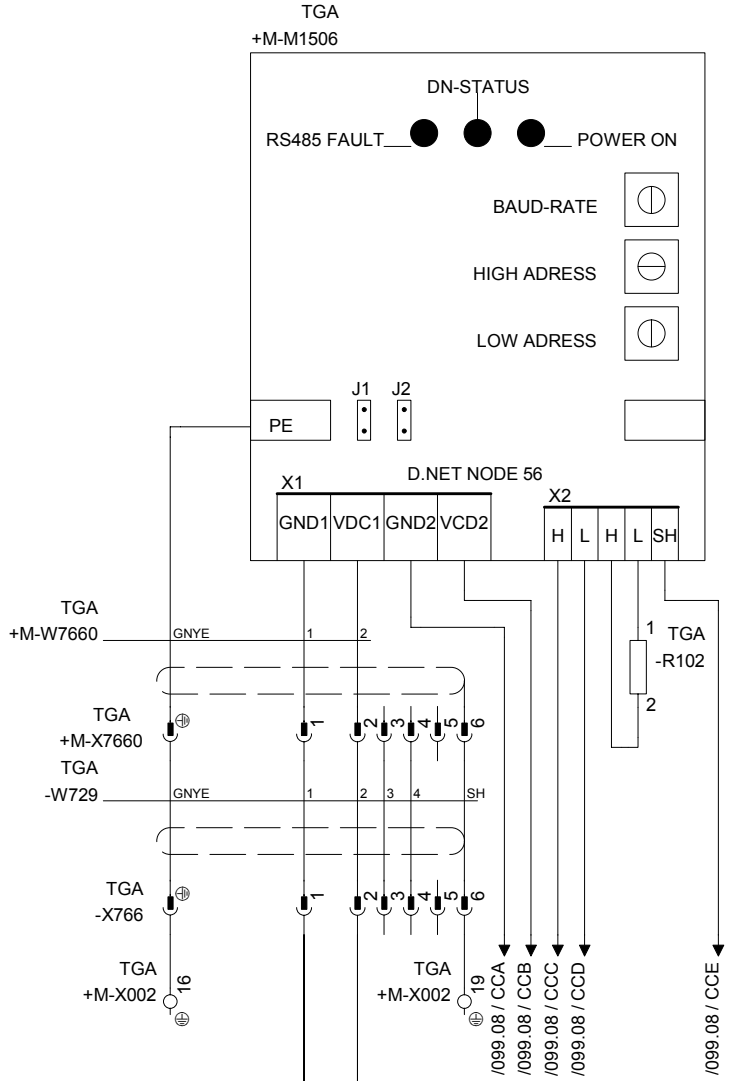

SETTING DESCRIPTION	VALUE
BAUD-RATE	2
HIGH ADRESS	5
LOW ADRESS	6

GND1, VDC1 : 24VDC MOTOR
GND2, VDC2 : 24VDC BUSADAPTER
J1 : CONN. GND1, GND2
J2 : CONN. VDC1, VDC2

L0310 → L0310
L0323 → L0323

Drawing remarks

Tetra Pak

Designer LUP	Date 23/11/2007	Machine Tetra Pak A3/Flex 0150	
ECM No 320174	Denomination CIRCUIT DIAGRAM	Page Type HEATER POSITIONING MOTOR	
Company Tetra Pak (Italy)	Document No. 2845987-0003	Doc. type ELD	Version AE	Page 257

This page intentionally left blank

5 Line Summary

TechPub_2614345_v3_DRAFT_Release05_EM2851302_05en.fm

Description

All connections inside the electrical cabinet are listed in this chapter.

TechPub_2614345_v3_DRAFT_Release05_EM2851302_05en.fm

This drawing must not without the consent of Tetra Pak
be copied, transmitted or disclosed to any third party.

Line summary of 2845987-0003

Line	From	Page.Col.	Opt.	Area/Color
L1				
	+C-X001:L1	005 .7		16 BK
	+C-Q001:1	032 .2		
	+C-Q002:1	032 .4		
	+C-Q003:1	032 .6		
	+C-Q004:1	032 .9		
	+C-Q005:1	038 .1		
	+C-Q006:1	033 .2		
	+C-Q007:1	033 .4		
	+C-Q008:1	033 .7		
L1				
	+C-Q004:1	032 .9		6 BK
	+C-Q009:1	033 .9		
L1				
	+C-X001:L1	005 .7		10 BK
	+C-F028 :1	011 .2		
	+C-F025 :1	009 .7		
	+C-F024 :1	009 .2		
	+C-F021 :1	006 .7		
	+C-F020 :1	006 .3		
L1				
	+C-X001:L1	005 .7		10 BK
	+C-F029 :1	011 .6		
	+C-F030 :1	012 .2		
	+C-F022 :1	007 .3		
	+C-F023 :3	007 .8		
	+C-F036:1	019 .3		

Line	From	Page.Col.	Opt.	Area/Color
L1				
	+C-X001:L1	005 .7		10 BK
	+C-F031:1	014 .3		
	+C-F034:1	017 .3		
	+C-F052:1	035 .9		
	+C-F053:1	037 .1		
L1				
	+C-F034:1	017 .3		10 BK
	+C-F039:1	018 .3		
	+C-F050:1	035 .2		
L1				
	+C-X001:L1	005 .7		10 BK
	+C-F051:1	005 .9		
L1				
	+C-F052:1	035 .9		6 BK
	+C-F700:1	021 .4		
L1				
	+C-X001:L1	005 .7		6 BK
	+C-Q700:1	021 .2		
	+C-Q701:1	027 .1		
L2				
	+C-X001:L2	005 .7		16 BK
	+C-Q001:3	032 .2		
	+C-Q002:3	032 .4		
	+C-Q003:3	032 .6		
	+C-Q004:3	032 .9		
	+C-Q005:3	038 .1		

Line	From	Page.Col.	Opt.	Area/Color
	+C-Q005:3	038 .1		
	+C-Q006:3	033 .2		
	+C-Q007:3	033 .4		
	+C-Q008:3	033 .7		
L2				
	+C-X001:L2	005 .7		10 BK
	+C-F028 :3	011 .2		
	+C-F025 :3	009 .8		
	+C-F024 :3	009 .3		
	+C-F021:3	006 .7		
	+C-F020 :3	006 .3		
L2				
	+C-X001:L2	005 .7		10 BK
	+C-F029 :3	011 .7		
	+C-F030 :3	012 .2		
	+C-F022 :3	007 .4		
	+C-F026:1	010 .2		
	+C-F037:1	019 .7		
	+C-F046:1	010 .4		
L2				
	+C-X001:L2	005 .7		10 BK
	+C-F032:1	014 .8		
	+C-F035:1	017 .7		
	+C-F055:1	038 .5		
	+C-F059:1	035 .9		
L2				
	+C-F035:1	017 .7		
	+C-F039:3	018 .3		

Drawing remarks

Tetra Pak

Designer	Date	Machine
LUP	23/11/2007	Tetra Pak A3/Flex 0150

ECM No	Denomination	Page Type
320174	LINE SUMMARY	LINE SUMMARY

Company	Document No.	Doc. type	Version	Page
Tetra Pak (Italy)	2845987-0004	ELD	AE	001

This drawing must not without the consent of Tetra Pak be copied, transmitted or disclosed to any third party.

Line summary of 2845987-0003

Line	From	Page.Col.	Opt.	Area/Color
	+C-F039:3	018 .3		
	+C-F050:3	035 .2		
L2				
	+C-X001:L2	005 .7		10 BK
	+C-F051:3	005 .9		
L2				
	+C-X001:L2	005 .7		10 BK
	+C-Q700:3	**021 .2**		
	+C-Q701:3	027 .1		
L3				
	+C-X001:L3	005 .7		16 BK
	+C-Q001:5	**032 .2**		
	+C-Q002:5	**032 .4**		
	+C-Q003:5	**032 .6**		
	+C-Q004:5	**032 .9**		
	+C-Q005:5	**038 .1**		
	+C-Q006:5	**033 .2**		
	+C-Q007:5	**033 .4**		
	+C-Q008:5	033 .7		
L3				
	+C-X001:L3	005 .7		10 BK
	+C-F028 :5	**011 .3**		
	+C-F025 :5	**009 .8**		
	+C-F024 :5	**009 .3**		
	+C-F021 :5	**006 .8**		
	+C-F020 :5	006 .4		
L3				

Line	From	Page.Col.	Opt.	Area/Color
	+C-X001:L3	005 .7		10 BK
	+C-F029 :5	**011 .7**		
	+C-F030 :5	**012 .3**		
	+C-F023 :1	**007 .7**		
	+C-F027:1	**010 .6**		
	+C-F042:1	**008 .3**	H.I.	
	+C-F045:1	010 .9	TGA	
L3				
	+C-X001:L3	005 .7		10 BK
	+C-F033:1	**016 .3**		
	+C-F038:1	**036 .1**		
	+C-E900:	**036 .10**		
	+C-E901:	036 .9		
L3				
	+C-F038:1	036 .1		4 BU
	+C-F039:5	**018 .4**		
	+C-F050:5	035 .2		
L3				
	+C-E900:	036 .10		6 BK
	+C-F701:1	027 .4		
L3				
	+C-X001:L3	005 .7		10 BK
	+C-F051:5	005 .9		
L3				
	+C-X001:L3	005 .7		10 BK
	+C-Q700:5	**021 .2**		
	+C-Q701:5	027 .1		
L10				

Line	From	Page.Col.	Opt.	Area/Color
	+C-XL010:100	001 .1		4 BU
	+C-G001:-	035 .1		
L10				
	+C-XL010:101	001 .1		0.75 BU
	+C-A102:18	**100 .1**		
	+C-G010:14	**014 .2**		
	+C-G011:14	**014 .7**		
	+C-G012:14	016 .3		
L10				
	+C-XL010:102	001 .2		0.75 BU
	+C-A103:18	102 .1		
L10				
	+C-G012:14	016 .3		
	+C-G013:14	017 .2		
L10				
	+C-A103:18	102 .1		
	+C-G014:14	**017 .7**		
	+C-G015:14	018 .3		
L10				
	+C-XL010:103	001 .2		0.75 BU
	+C-P001:32.2	**039 .5**		
	+C-P900:14	**042 .5**	USA	
	+C-A104:19	**104 .8**		
	+C-A105:19	106 .8		
L10				
	+C-XL010:104	001 .2		0.75 BU
	+C-P901:20	043 .5	USA	

Drawing remarks

Tetra Pak

Designer	Date	Machine
LUP	23/11/2007	Tetra Pak A3/Flex 0150

ECM No	Denomination	Page Type
320174	LINE SUMMARY	LINE SUMMARY

Company	Document No.	Doc. type	Version	Page
Tetra Pak (Italy)	2845987-0004	ELD	AE	002

This drawing must not without the consent of Tetra Pak
be copied, transmitted or disclosed to any third party.

1 2 3 4 5 6 7 8 9 10

Line summary of 2845987-0003

Line	From	Page.Col.	Opt.	Area/Color
	+C-P901:20	043 .5	USA	
	+C-P901:17	**043 .5**	**USA**	
	+C-P901:14	043 .5	USA	
L10				
	+C-XL010:105	001 .2		0.75 BU
	+C-X225:4	104 .4		
L10				
	+C-XL010:106	001 .3		0.75 BU
	+C-X708:1	044 .3	TGA	
L10				
	+C-XL010:107	001 .3		0.75 BU
	+C-A110:01	**117 .8**		
	+C-A111:01	119 .8		
L10				
	+C-XL010:108	001 .3		0.75 BU
	+C-A109:01	115 .8		
L10				
	+C-XL010:109	001 .3		4 BU
	+C-XL010:110	001 .3		
L10				
	+C-XL010:111	001 .4		0.75 BU
	+C-A114:01	**125 .8**		
	+C-A115:01	127 .8		
L10				
	+C-XL010:112	001 .4		0.75 BU
	+C-A116:01	**129 .8**		
	+C-A117:01	131 .8		
L10				

Line	From	Page.Col.	Opt.	Area/Color
	+C-XL010:113	001 .4		0.75 BU
	+C-A118:01	**133 .8**		
	+C-A119:01	135 .8		
L10				
	+C-XL010:114	001 .4		0.75 BU
	+C-A120:01	**137 .8**		
	+C-A121:01	139 .8		
L10				
	+C-XL010:115	001 .5		0.75 BU
	+C-A122:01	**141 .8**		
	+C-A123:01	143 .8		
L10				
	+C-XL010:116	001 .5		0.75 BU
	+C-A124:01	**145 .8**		
	+C-A125:01	147 .8		
L10				
	+C-XL010:117	001 .5		0.75 BU
	+C-A126:01	**149 .8**		
	+C-A127:01	**151 .8**		
	+C-A128:01	**153 .8**		
	+C-A129:01	155 .8	ARL	
L10				
	+C-XL010:119	001 .6		4 BU
	+C-XL010:120	001 .6		
L10				
	+C-XL010:121	001 .6		0.75 BU
	+C-A131:10	177 .1		

Line	From	Page.Col.	Opt.	Area/Color
	+C-A131:10	177 .1		
	+C-A131:20	178 .1		
L10				
	+C-XL010:122	001 .6		0.75 BU
	+C-A132:10	**179 .1**		
	+C-A132:20	180 .1		
L10				
	+C-XL010:123	001 .7		0.75 BU
	+C-A133:10	**181 .1**		
	+C-A133:20	182 .1		
L10				
	+C-XL010:125	001 .7		0.75 BU
	+C-A136:10	**187 .1**		
	+C-A136:20	188 .1		
L10				
	+C-XL010:126	001 .7		
	+C-A137:10	**189 .1**		
	+C-A137:20	190 .1		
L10				
	+C-XL010:127	001 .8		0.75 BU
	+C-A142:10	**200 .1**		
	+C-A142:20	201 .1		
L10				
	+C-XL010:128	001 .8		0.75 BU
	+C-A138:10	**191 .1**		
	+C-A138:20	192 .1		

Drawing remarks

Tetra Pak

Designer LUP	Date 23/11/2007	Machine Tetra Pak A3/Flex 0150	
ECM No 320174	Denomination LINE SUMMARY	Page Type LINE SUMMARY	
Company Tetra Pak (Italy)	Document No. 2845987-0004	Doc. type ELD	Version AE	Page 003

This drawing must not without the consent of Tetra Pak be copied, transmitted or disclosed to any third party.

Line summary of 2845987-0003

Line	From	Page.Col.	Opt.	Area/Color
L10				
	+C-XL010:129	001 .8		4 BU
	+C-XL010:130	001 .8		
L10				
	+C-XL010:131	001 .9		0.75 BU
	+C-A141:10	**197 .1**		
	+C-A141:20	198 .1		
L10				
	+C-XL010:132	001 .9		4 BU
	+C-G001:-	035 .1		
L10				
	+C-XL010:133	001 .9		0.75 BU
	+C-A143:10	202 .1		
L10				
	+C-XL010:134	001 .9		0.75 BU
	+C-A144:10	**204 .1**		
	+C-A144:20	205 .1		
L10				
	+C-XL010:135	001 .10		0.75 BU
	+C-A145:10	**206 .1**		
	+C-A145:20	207 .1		
L10				
	+C-XL010:136	001 .1		0.75 BU
	+C-A146:10	**208 .1**		
	+C-A146:20	**209 .1**		
	+C-A147:10	**210 .1**		
	+C-A147:20	211 .1		

Line	From	Page.Col.	Opt.	Area/Color
L10				
	+C-XL010:137	001 .2		0.75 BU
	+C-A139:10	**193 .1**		
	+C-A139:20	194 .1		
L10				
	+C-XL010:138	001 .2		0.75 BU
	+C-A140:10	**195 .1**		
	+C-A140:20	196 .1		
L10				
	+C-XL010:139	001 .2		0.75 BU
	+C-A450:-	**059 .5**		
	+C-A452:GND	060 .6		
L10				
	+C-XL010:140	001 .2		0.75 BU
	+C-A600:23	**062 .7**		
	+C-A600:A2	**062 .7**		
	+C-A602:A2	**064 .7**		
	+C-A604:A2	**066 .6**		
	+C-A605:A2	**067 .8**		
	+C-A605:23	**067 .8**		
	+C-A606:A2	**068 .7**		
	+C-A607:A2	**069 .6**		
	+C-K108:1	188 .5		
L10				
	+C-XL010:141	001 .3		0.75 BU
	+C-A710:4 COM	024 .1		
L10				

Line	From	Page.Col.	Opt.	Area/Color
	+C-XL010:142	001 .3		0.75 BU
	+C-A710:6	024 .8		
L10				
	+C-XL010:144	001 .3		0.75 BU
	+C-A711:4 COM	022 .1		
L10				
	+C-XL010:145	001 .3		0.75 BU
	+C-A711:6	022 .8		
L10				
	+C-XL010:147	001 .4		0.75 BU
	+C-A712:6	021 .8		
L10				
	+C-XL010:148	001 .4		0.75 BU
	+C-K001:A2	**177 .5**		
	+C-K006:A2	**177 .5**		
	+C-K104:1	**177 .5**		
	+C-K105:1	**177 .5**		
	+C-X222:12	177 .7		
L10				
	+C-XL010:149	001 .4		0.75 BU
	+C-A712:4 COM	021 .2		
L10				
	+C-XL010:151	001 .5		0.75 BU
	+C-A713:4 COM	023 .1		
L10				
	+C-XL010:152	001 .5		0.75 BU
	+C-A713:6	023 .8		

Drawing remarks

Tetra Pak

Designer	Date	Machine
LUP	23/11/2007	Tetra Pak A3/Flex 0150

ECM No	Denomination	Page Type
320174	LINE SUMMARY	LINE SUMMARY

Company	Document No.	Doc. type	Version	Page
Tetra Pak (Italy)	2845987-0004	ELD	AE	004

This drawing must not without the consent of Tetra Pak be copied, transmitted or disclosed to any third party.

Line summary of 2845987-0003

Line	From	Page.Col.	Opt.	Area/Color
L10				
	+C-XL010:154	001 .6		0.75 BU
	+C-A714:4 COM	029 .1		
L10				
	+C-XL010:155	001 .6		0.75 BU
	+C-A714:6	029 .8		
L10				
	+C-XL010:157	001 .6		0.75 BU
	+C-A715:4 COM	028 .1		
L10				
	+C-XL010:158	001 .7		0.75 BU
	+C-A715:6	028 .8		
L10				
	+C-XL010:159	001 .7		0.75 BU
	+C-X051:5	126 .4	DIMC	
	+C-X051:4	126 .4	DIMC	
L10				
	+C-XL010:160	001 .7		0.75 BU
	+C-G010:04	014 .2		
	+C-G011:04	014 .7		
	+C-G012:04	016 .3		
	+C-G013:04	017 .2		
	+C-G014:04	017 .7		
	+C-G015:04	018 .3		
L10				
	+C-XL010:161	001 .7		0.75 BU
	+C-K139:4	034 .3		

Line	From	Page.Col.	Opt.	Area/Color
	+C-K139:4	034 .3		
	+C-K139:7	034 .4		
L10				
	+C-XL010:163	001 .8		0.75 BU
	+C-A716:6	027 .8		
L10				
	+C-XL010:164	001 .8		0.75 BU
	+C-X405:2	050 .5		
L10				
	+C-XL010:165	001 .8		0.75 BU
	+C-X406:2	050 .5		
L10				
	+C-XL010:166	001 .9		0.75 BU
	+C-K003:A2	179 .5		
	+C-K004:A2	179 .5		
	+C-K005:A2	179 .5		
	+C-K008:A2	179 .5		
	+C-K009:A2	179 .5		
L10				
	+C-XL010:167	001 .9		0.75 BU
	+C-K021:A2	179 .5		
	+C-K022:A2	180 .5		
	+C-K023:A2	180 .5		
	+C-K024:A2	180 .5		
	+C-K025:A2	180 .5		
	+C-K020:A2	179 .5		
L10				

Line	From	Page.Col.	Opt.	Area/Color
	+C-XL010:168	001 .9		0.75 BU
	+C-K026:A2	180 .5		
	+C-K028:A2	184 .4		
	+C-K029:A2	183 .4		
	+C-K030:A2	183 .4		
	+C-K036:A2	180 .5		
	+C-K042:A2	210 .4	H.I.	
L10				
	+C-XL010:169	001 .9		0.75 BU
	+C-A904:036	085 .8		
L10				
	+C-XL010:170	001 .10		0.75 BU
	+C-K106:A2	063 .3		
	+C-K107:A2	063 .3		
	+C-K110:1	178 .5		
	+C-K111:1	178 .5		
L10				
	+C-XL010:171	001 .1		0.75 BU
	+C-K112:1	178 .5		
	+C-K113:1	178 .5		
	+C-K114:1	178 .5		
	+C-K115:1	178 .5		
	+C-K120:1	189 .5	USA	
	+C-K121:1	189 .5	USA	
	+C-K122:1	189 .5	USA	
	+C-K123:1	189 .5	USA	
	+C-K124:1	189 .5	USA	
	+C-K125:10	188 .5		

Drawing remarks

Tetra Pak

Designer	Date	Machine
LUP	23/11/2007	Tetra Pak A3/Flex 0150

ECM No	Denomination	Page Type
320174	LINE SUMMARY	LINE SUMMARY

Company	Document No.	Doc. type	Version	Page
Tetra Pak (Italy)	2845987-0004	ELD	AE	005

This drawing must not without the consent of Tetra Pak
be copied, transmitted or disclosed to any third party.

Line summary of 2845987-0003

Line	From	Page.Col.	Opt.	Area/Color
	+C-K125:10	188 .5		
	+C-K126:1	188 .5		
	+C-K131:A2	061 .8		
L10				
	+C-XL010:172	001 .2		0.75 BU
	+C-A904:18	083 .8		
L10				
	+C-XL010:173	001 .2		0.75 BU
	+C-K132:10	188 .5		
	+C-K133:1	188 .5		
	+C-K134:1	087 .5		
	+C-K135:1	087 .5		
	+C-K136:1	188 .5		
	+C-K117:1	184 .4	USA	
	+C-K143:1	144 .4		
	+C-K144:1	198 .5		
L10				
	+C-XL010:174	001 .2		0.75 BU
	+C-K201:4	006 .4		
	+C-K203:4	007 .3		
	+C-K205:4	007 .7		
	+C-K207:4	009 .7		
L10				
	+C-XL010:175	001 .2		0.75 BU
	+C-K208:4	019 .7		
	+C-K209:4	010 .1		
	+C-K210:4	010 .3		
	+C-K211:4	010 .6		

Line	From	Page.Col.	Opt.	Area/Color
	+C-K211:4	010 .6		
	+C-K214:4	009 .3		
	+C-K215:4	008 .2	H.I.	
	+C-K212:4	010 .8	TGA	
L10				
	+C-XL010:176	001 .3		0.75 BU
	+C-K220:4	055 .2		
	+C-K221:4	055 .2		
	+C-K222:4	055 .2		
	+C-K223:4	055 .2		
	+C-K224:4	055 .2		
	+C-K225:4	055 .2		
L10				
	+C-XL010:177	001 .3		0.75 BU
	+C-A905:9	086 .1		
L10				
	+C-XL010:178	001 .3		0.75 BU
	+C-A905:19	087 .1		
L10				
	+C-XL010:179	001 .3		0.75 BU
	+C-K700:A2	063 .3		
	+C-K701:A2	063 .3		
	+C-X204:1	150 .1		
L10				
	+C-XL010:180	001 .3		0.75 BU
	+C-Z006:N	041 .4		
L10				

Line	From	Page.Col.	Opt.	Area/Color
	+C-XL010:181	001 .4		0.75 BU
	+C-A134:10	183 .1		
	+C-A134:20	184 .1		
L10				
	+C-XL010:182	001 .4		0.75 BU
	+C-X031:2	050 .2		
	+C-X031:4	040 .2		
	+C-X031:8	040 .2		
	+C-X031:12	040 .2		
	+C-X031:16	237 .1		
	+C-X031:22	051 .4		
	+C-X031:24	051 .4		
	+C-X031:26	051 .7		
	+C-X031:30	051 .6		
	+C-X031:32	051 .4		
	+C-X031:34	051 .4		
	+C-X031:36	053 .1		
	+C-X031:40	053 .1		
L10				
	+C-XL010:183	001 .4		0.75 BU
	+C-A420:11	053 .3		
	+C-P004:2	189 .5		
	+C-P005:2	189 .5		
L10				
	+C-XL010:184	001 .4		0.75 BU
	+C-X208:24	232 .4		

Drawing remarks

Tetra Pak

Designer LUP	Date 23/11/2007	Machine Tetra Pak A3/Flex 0150	
ECM No 320174	Denomination LINE SUMMARY	Page Type LINE SUMMARY	
Company Tetra Pak (Italy)	Document No. 2845987-0004	Doc. type ELD	Version AE	Page 006

This drawing must not without the consent of Tetra Pak be copied, transmitted or disclosed to any third party.

Line summary of 2845987-0003

Line	From	Page.Col.	Opt.	Area/Color
L10				
	+C-XL010:185	001 .5		0.75 BU
	+C-X202:24	231 .10		
L10				
	+C-XL010:186	001 .5		0.75 BU
	+C-X204:24	231 .9		
L10				
	+C-XL010:187	001 .5		0.75 BU
	+C-X227:10	**055 .9**		
	+C-X221:24	236 .9		
L10				
	+C-XL010:188	001 .5		0.75 BU
	+C-X206:24	**233 .4**		
	+C-X224:11	134 .1		
L10				
	+C-XL010:189	001 .6		0.75 BU
	+C-X207:9	**208 .8**		
	+C-X225:2	104 .1		
L10				
	+C-XL010:190	001 .6		0.75 BU
	+C-X211:24	233 .9		
L10				
	+C-XL010:191	001 .6		0.75 BU
	+C-X206:10	**061 .1**		
	+C-X212:24	**236 .6**		
	+C-X213:24	**143 .2**		
	+C-X214:24	142 .1		

Line	From	Page.Col.	Opt.	Area/Color
L10				
	+C-XL010:192	001 .6		0.75 BU
	+C-X227:24	**231 .4**		
	+C-X226:24	136 .2		
L10				
	+C-XL010:193	001 .7		0.75 BU
	+C-X217:24	134 .1		
L10				
	+C-XL010:194	001 .7		0.75 BU
	+C-X218:6	**194 .8**		
	+C-X218:12	**194 .8**		
	+C-X218:18	**195 .8**		
	+C-X218:24	195 .8		
L10				
	+C-XL010:195	001 .7		0.75 BU
	+C-X219:24	**207 .8**		
	+C-X216:17	207 .8	H.I.	
L10				
	+C-XL010:196	001 .7		0.75 BU
	+C-X222:24	**237 .9**		
	+C-X223:16	**197 .7**		
	+C-X223:22	**197 .8**		
	+C-X223:4	196 .7		
L10				
	+C-XL010:197	001 .8		0.75 BU
	+C-X451:3	059 .2		
L10				

Line	From	Page.Col.	Opt.	Area/Color
	+C-XL010:198	001 .8		0.75 BU
	+C-X700:30	**029 .1**		
	+C-X700:28	**028 .1**		
	+C-X700:26	**024 .1**		
	+C-X700:24	**023 .1**		
	+C-X700:22	**022 .1**		
	+C-X700:20	**021 .1**		
	+C-X700:11	**020 .7**		
	+C-X700:9	**020 .7**		
	+C-X700:7	**020 .3**		
	+C-X700:5	**020 .3**		
	+C-X700:3	**020 .3**		
	+C-X700:1	020 .3		
L10				
	+C-XL010:199	001 .8		0.75 BU
	+C-G900:L2/N	081 .3		
L10				
	+C-XL010:200	001 .8		0.75 BU
	+C-K045:A2	181 .5	TGA	
L10				
	+C-XL010:205	001 .10		0.75 BU
	+C-X219:1	**151 .1**		
	+C-S001:21	149 .6		
L10				
	+C-XL010:207	001 .2		0.75 BU
	+C-A500:309	011 .2		

Drawing remarks

Tetra Pak

Designer	Date	Machine
LUP	23/11/2007	Tetra Pak A3/Flex 0150

ECM No	Denomination	Page Type
320174	LINE SUMMARY	LINE SUMMARY

Company	Document No.	Doc. type	Version	Page
Tetra Pak (Italy)	2845987-0004	ELD	AE	007

This drawing must not without the consent of Tetra Pak be copied, transmitted or disclosed to any third party.

Line summary of 2845987-0003

Line	From	Page.Col.	Opt.	Area/Color
L10				
	+C-XL010:208	001 .2		0.75 BU
	+C-A501:309	011 .6		
L10				
	+C-XL010:209	001 .2		0.75 BU
	+C-X203:24	035 .5		
L10				
	+C-XL010:210	001 .2		0.75 BU
	+C-X215:12	**204 .8**		
	+C-X215:13	204 .8		
L10				
	+C-XL010:211	001 .3		0.75 BU
	+C-X201:6	**205 .8**		
	+C-X201:8	**205 .8**		
	+C-X201:24	232 .9		
L10				
	+C-XL010:212	001 .3		0.75 BU
	+C-X401:2	050 .5		
L10				
	+C-XL010:213	001 .3		0.75 BU
	+C-X402:2	050 .5		
L10				
	+C-XL010:214	001 .3		0.75 BU
	+C-X700:41	**055 .3**		
	+C-X700:43	**055 .3**		
	+C-X700:45	**055 .3**		
	+C-X700:47	055 .3		

Line	From	Page.Col.	Opt.	Area/Color
	+C-X700:47	055 .3		
	+C-X700:49	**055 .3**		
	+C-X700:51	055 .3		
L10				
	+C-XL010:215	001 .3		0.75 BU
	+C-A502:309	012 .2		
L11				
	+C-XL011:101	001 .1		2.5 BU
	+C-F060:2	035 .1		
L11				
	+C-XL011:102	001 .1		0.75 BU
	+C-A301:15	**046 .6**		
	+C-A302:15	**046 .6**		
	+C-A303:15	**047 .6**		
	+C-A304:15	**047 .6**		
	+C-A308:15	**049 .6**	H.I.	
	+C-A300:15	046 .6		
L11				
	+C-XL011:103	001 .2		0.75 BU
	+C-A600:13	**062 .7**		
	+C-A600:A1	**062 .7**		
	+C-A601:X2	**063 .6**		
	+C-A602:A1	064 .7		
L11				
	+C-XL011:104	001 .2		0.75 BU
	+C-A604:A1	**066 .6**		
	+C-A604:X1	**066 .6**		
	+C-A604:X4	066 .6		

Line	From	Page.Col.	Opt.	Area/Color
	+C-A604:X4	066 .6		
	+C-A605:A1	**067 .8**		
	+C-A605:X1	**067 .8**		
	+C-A605:X4	**067 .8**		
	+C-A605:13	067 .8		
L11				
	+C-XL011:105	001 .2		0.75 BU
	+C-X031:1	**050 .2**		
	+C-X031:21	**051 .4**		
	+C-X031:23	**051 .7**		
	+C-X031:25	**051 .5**		
	+C-X031:27	**051 .4**		
	+C-X031:35	**053 .1**		
	+C-X031:39	053 .1		
L11				
	+C-XL011:106	001 .2		0.75 BU
	+C-K006:21	064 .2		
L11				
	+C-XL011:107	001 .3		0.75 BU
	+C-A500:310	011 .2		
L11				
	+C-XL011:108	001 .3		0.75 BU
	+C-A501:310	011 .6		
L11				
	+C-XL011:109	001 .3		0.75 BU
	+C-G010:01	**014 .2**		
	+C-G011:01	**014 .7**		
	+C-G012:01	016 .3		

Drawing remarks

Tetra Pak

Designer LUP	Date 23/11/2007	Machine Tetra Pak A3/Flex 0150	
ECM No 320174	Denomination LINE SUMMARY	Page Type LINE SUMMARY	
Company Tetra Pak (Italy)	Document No. 2845987-0004	Doc. type ELD	Version AE	Page 008

This drawing must not without the consent of Tetra Pak be copied, transmitted or disclosed to any third party.

Line summary of 2845987-0003

Line	From	Page.Col.	Opt.	Area/Color
	+C-G012:01	016 .3		
	+C-G013:01	**017 .2**		
	+C-G014:01	**017 .7**		
	+C-G015:01	018 .3		
L11				
	+C-XL011:110	001 .3		0.75 BU
	+C-X401:1	050 .5		
L11				
	+C-XL011:111	001 .3		0.75 BU
	+C-X402:1	050 .5		
L11				
	+C-XL011:112	001 .4		0.75 BU
	+C-X405:1	050 .5		
L11				
	+C-XL011:113	001 .4		0.75 BU
	+C-X406:1	050 .5		
L11				
	+C-XL011:114	001 .4		0.75 BU
	+C-S005:11	**149 .6**		
	+C-X872:10	150 .3		
L11				
	+C-XL011:115	001 .4		0.75 BU
	+C-X204:2	**150 .1**		
	+C-S001:11	**149 .6**		
	+C-X227:2	150 .1		
L11				
	+C-XL011:116	001 .5		0.75 BU
	+C-P001:31.1	040 .5		

Line	From	Page.Col.	Opt.	Area/Color
	+C-P001:31.1	040 .5		
	+C-P001:31.3	**040 .5**		
	+C-P900:37	042 .5	USA	
L11				
	+C-XL011:118	001 .5		0.75 BU
	+C-K300:14	**126 .2**	**DIMC**	
	+C-K301:14	**126 .2**	**DIMC**	
	+C-K301:A2	**126 .2**	**DIMC**	
	+C-K300:A2	**126 .2**	**DIMC**	
	+C-X051:6	126 .4	DIMC	
L11				
	+C-XL011:119	001 .5		0.75 BU
	+C-G010:R2	**014 .2**		
	+C-G011:R2	**014 .7**		
	+C-G012:R2	**016 .3**		
	+C-G013:R2	**017 .2**		
	+C-G014:R2	**017 .7**		
	+C-G015:R2	018 .3		
L11				
	+C-XL011:120	001 .6		0.75 BU
	+C-A502:310	012 .2		
L11				
	+C-XL011:121	001 .6		0.75 BU
	+C-A128:15/B6	**154 .7**		
	+C-A128:16/B7	154 .7		
L12				
	+C-XL012:101	002 .1		2.5 BU
	+C-F061:2	035 .2		

Line	From	Page.Col.	Opt.	Area/Color
L12				
	+C-XL012:102	002 .1		0.75 BU
	+C-A102:01	100 .1		
L12				
	+C-XL012:103	002 .2		0.75 BU
	+C-A103:01	102 .1		
L12				
	+C-XL012:104	002 .2		0.75 BU
	+C-A104:01	104 .8		
L12				
	+C-XL012:105	002 .2		0.75 BU
	+C-A131:11	**178 .1**		
	+C-A132:01	**179 .1**		
	+C-A132:11	180 .1		
L12				
	+C-XL012:106	002 .2		0.75 BU
	+C-A133:01	181 .1		
L12				
	+C-XL012:108	002 .3		0.75 BU
	+C-A136:01	**187 .1**		
	+C-A136:11	188 .1		
L12				
	+C-XL012:109	002 .3		0.75 BU
	+C-A134:01	**183 .1**		
	+C-A134:11	184 .1		

Drawing remarks

Tetra Pak

Designer LUP	Date 23/11/2007	Machine Tetra Pak A3/Flex 0150	
ECM No 320174	Denomination LINE SUMMARY	Page Type LINE SUMMARY	
Company Tetra Pak (Italy)	Document No. 2845987-0004	Doc. type ELD	Version AE	Page 009

This drawing must not without the consent of Tetra Pak be copied, transmitted or disclosed to any third party.

Line summary of 2845987-0003

Line	From	Page.Col.	Opt.	Area/Color
L12				
	+C-XL012:110	002 .3		0.75 BU
	+C-A601:13	**063 .6**		
	+C-A601:23	**063 .6**		
	+C-A601:33	063 .6		
L12				
	+C-XL012:112	002 .4		0.75 BU
	+C-A147:01	**210 .1**		
	+C-A147:11	211 .1		
L12				
	+C-XL012:113	002 .4		0.75 BU
	+C-A137:01	**189 .1**		
	+C-A137:11	190 .1		
L12				
	+C-XL012:114	002 .4		0.75 BU
	+C-A905:10	086 .1		
L12				
	+C-XL012:115	002 .5		0.75 BU
	+C-A905:20	087 .1		
L12				
	+C-XL012:116	002 .5		0.75 BU
	+C-A607:A1	**069 .6**		0.75 BU
	+C-K031:61	069 .5		
L13				
	+C-XL013:101	002 .1		2.5 BU
	+C-F062:2	035 .2		
L13				
	+C-XL013:102	002 .1		0.75 BU
	+C-A138:01	**191 .1**		
	+C-A138:11	192 .1		
L13				
	+C-XL013:103	002 .2		0.75 BU
	+C-A139:01	**193 .1**		
	+C-A139:11	194 .1		
L13				
	+C-XL013:104	002 .2		0.75 BU
	+C-A140:01	**195 .1**		
	+C-A140:11	196 .1		
L13				
	+C-XL013:105	002 .2		0.75 BU
	+C-X708:2	044 .3	TGA	
L13				
	+C-XL013:106	002 .2		0.75 BU
	+C-A142:01	**200 .1**		
	+C-A142:11	201 .1		
L13				
	+C-XL013:107	002 .3		0.75 BU
	+C-A143:01	202 .1		
L13				
	+C-XL013:108	002 .3		0.75 BU
	+C-A144:01	**204 .1**		
	+C-A144:11	205 .1		
L13				
	+C-XL013:110	002 .3		0.75 BU
	+C-A450:+	**059 .5**		
	+C-A452:US1	**060 .5**		
	+C-A452:US2	060 .6		
L13				
	+C-XL013:111	002 .4		0.75 BU
	+C-K108:4	**056 .1**		
	+C-K133:2	**059 .1**		
	+C-K139:2	**034 .3**		
	+C-K139:5	034 .4		
L13				
	+C-XL013:112	002 .4		0.75 BU
	+C-K220:1	055 .2		
L13				
	+C-XL013:113	002 .4		0.75 BU
	+C-K221:1	055 .2		
L13				
	+C-XL013:114	002 .4		0.75 BU
	+C-K222:1	055 .2		
L13				
	+C-XL013:115	002 .5		0.75 BU
	+C-K223:1	055 .2		
L13				
	+C-XL013:116	002 .5		0.75 BU
	+C-K224:1	055 .2		
L13				
	+C-XL013:117	002 .5		0.75 BU
	+C-K225:1	055 .2		

Drawing remarks

Tetra Pak

Designer LUP	Date 23/11/2007	Machine Tetra Pak A3/Flex 0150	
ECM No 320174	Denomination LINE SUMMARY	Page Type LINE SUMMARY	
Company Tetra Pak (Italy)	Document No. 2845987-0004	Doc. type ELD	Version AE	Page 010

This drawing must not without the consent of Tetra Pak
be copied, transmitted or disclosed to any third party.

Line summary of 2845987-0003

Line	From	Page.Col.	Opt.	Area/Color
L13				
	+C-XL013:118	002 .5		0.75 BU
	+C-A146:11	**209 .1**		
	+C-A145:11	**207 .1**		
	+C-A145:01	206 .1		
L13				
	+C-XL013:119	002 .6		0.75 BU
	+C-A141:01	**197 .1**		
	+C-A141:11	198 .1		
L15				
	+C-XL015:101	002 .1		2.5 BU
	+C-F063:2	035 .3		
L15				
	+C-XL015:102	002 .1		0.75 BU
	+C-X1710:12	038 .10		
L15				
	+C-XL015:103	002 .2		0.75 BU
	+C-K129:1	**119 .3**		
	+C-K131:1	120 .6		
L15				
	+C-XL015:105	002 .2		0.75 BU
	+C-Z006:P	041 .4		
L15				
	+C-XL015:106	002 .2		0.75 BU
	+C-Q001:1.14	120 .1		
L15				
	+C-XL015:107	002 .3		
	+C-S003:13	**130 .4**		
	+C-S004:13	130 .4		
L15				
	+C-XL015:108	002 .3		0.75 BU
	+C-B002:14	120 .2		
L15				
	+C-XL015:109	002 .3		0.75 BU
	+C-X201:23	232 .9		
L15				
	+C-XL015:110	002 .3		0.75 BU
	+C-X202:15	**061 .1**		
	+C-X202:23	231 .10		
L15				
	+C-XL015:111	002 .4		0.75 BU
	+C-A146:01	208 .1		
L15				
	+C-XL015:112	002 .4		0.75 BU
	+C-X204:23	**231 .9**		
	+C-X209:1	137 .1		
L15				
	+C-XL015:113	002 .4		0.75 BU
	+C-X206:23	**233 .4**		
	+C-X224:10	**134 .1**		
	+C-X224:13	**104 .6**		
	+C-X211:23	233 .9		
L15				
	+C-XL015:114	002 .4		0.75 BU
	+C-X208:23	232 .4		
L15				
	+C-XL015:115	002 .5		0.75 BU
	+C-X210:23	127 .1		
L15				
	+C-XL015:116	002 .5		0.75 BU
	+C-X210:2	150 .3		
L15				
	+C-XL015:117	002 .5		0.75 BU
	+C-X206:11	**061 .1**		
	+C-X212:23	236 .6		
L15				
	+C-XL015:118	002 .5		0.75 BU
	+C-X213:23	143 .2		
L15				
	+C-XL015:119	002 .6		0.75 BU
	+C-X214:23	142 .1		
L15				
	+C-XL015:120	002 .6		0.75 BU
	+C-X227:23	**231 .4**		
	+C-X226:23	**136 .2**		
	+C-X225:1	**104 .1**		
	+C-X225:16	104 .4		
L15				
	+C-XL015:121	002 .6		0.75 BU
	+C-X216:16	**237 .5**	H.I.	
	+C-X217:20	128 .1		

Drawing remarks

Tetra Pak

Designer LUP	Date 23/11/2007	Machine Tetra Pak A3/Flex 0150	
ECM No 320174	Denomination LINE SUMMARY	Page Type LINE SUMMARY	
Company Tetra Pak (Italy)	Document No. 2845987-0004	Doc. type ELD	Version AE	Page 011

This drawing must not without the consent of Tetra Pak be copied, transmitted or disclosed to any third party.

Line summary of 2845987-0003

Line	From	Page.Col.	Opt.	Area/Color
	+C-X217:20	128 .1		
	+C-X217:23	134 .1		
L15				
	+C-XL015:122	002 .6		0.75 BU
	+C-X219:23	207 .8		
	+C-X222:23	120 .1		
	+C-X221:23	236 .9		
L15				
	+C-XL015:124	002 .7		0.75 BU
	+C-A110:I048	118 .7		
L15				
	+C-XL015:125	002 .7		0.75 BU
	+C-Q700:1.13	082 .2		
	+C-Q701:1.13	082 .2		
L15				
	+C-XL015:126	002 .7		0.75 BU
	+C-X005:3	038 .8		
L16				
	+C-F064:2	035 .4		2.5 BU
	+C-XL016:101	003 .1		
L16				
	+C-XL016:102	003 .1		0.75 BU
	+C-S003:24	130 .4		
L16				
	+C-XL016:103	003 .2		0.75 BU
	+C-A710:3 PWR	024 .1		
L16				

Line	From	Page.Col.	Opt.	Area/Color
	+C-XL016:104	003 .2		0.75 BU
	+C-A711:3 PWR	022 .1		
L16				
	+C-XL016:105	003 .2		0.75 BU
	+C-A712:3 PWR	021 .2		
L16				
	+C-XL016:106	003 .2		0.75 BU
	+C-A713:3 PWR	023 .1		
L16				
	+C-XL016:107	003 .3		0.75 BU
	+C-A714:3 PWR	029 .1		
L16				
	+C-XL016:108	003 .3		0.75 BU
	+C-A715:3 PWR	028 .1		
L16				
	+C-XL016:116	003 .5		0.75 BU
	+C-A904:7	082 .7		
L20				
	+C-K137:1	176 .5		0.75 BU
	+C-K138:1	176 .5		
	+C-K139:1	176 .5		
	+C-K039:A2	176 .5		
	+C-X872:1	035 .8		
	+C-K037:A2	176 .5		
	+C-K035:A2	175 .5		
	+C-K034:A2	175 .5		
	+C-K031:A2	175 .5		
	+C-K007:A2	175 .5		

Line	From	Page.Col.	Opt.	Area/Color
	+C-K007:A2	175 .5		
	+C-K002:A2	175 .5		
	+C-A601:A2	063 .6		
	+C-A601:S24	063 .6		
	+C-A604:23	066 .6		
	+C-A600:24	062 .7		
	+C-X222:10	175 .7		
	+C-A130:10	175 .1		
	+C-A130:20	176 .1		
	+C-A149:10	214 .1	ARL	
L21				
	+C-X872:2	035 .8		0.75 BU
	+C-A607:13	069 .6		
	+C-A602:13	064 .7		
	+C-A600:14	062 .7		
L21				
	+C-A130:01	175 .1		
	+C-A130:11	176 .1		
	+C-A111:I0049	119 .7		
	+C-A904:2	082 .7		
L23				
	+C-A601:14	063 .6		0.75 BU
	+C-A120:I0207	138 .7		
	+C-K106:A1	063 .3		
	+C-K107:A1	063 .3		
	+C-K700:A1	063 .3		
	+C-K701:A1	063 .3		
	+C-X708:3	044 .3	TGA	

Drawing remarks

Tetra Pak

Designer	Date	Machine
LUP	23/11/2007	Tetra Pak A3/Flex 0150

ECM No	Denomination	Page Type
320174	LINE SUMMARY	LINE SUMMARY

Company	Document No.	Doc. type	Version	Page
Tetra Pak (Italy)	2845987-0004	ELD	AE	012

This drawing must not without the consent of Tetra Pak be copied, transmitted or disclosed to any third party.

Line summary of 2845987-0003

Line	From	Page.Col.	Opt.	Area/Color
L24				
	+C-A601:24	063 .6		0.75 BU
	+C-XL024:101	003 .1		
L24				
	+C-XL024:102	003 .1		0.75 BU
	+C-X708:4	044 .3	TGA	
L24				
	+C-XL024:110	003 .3		0.75 BU
	+C-A710:7	024 .8		
L24				
	+C-XL024:111	003 .4		0.75 BU
	+C-A711:7	022 .8		
L24				
	+C-XL024:112	003 .4		0.75 BU
	+C-A712:7	021 .8		
L24				
	+C-XL024:113	003 .4		0.75 BU
	+C-A713:7	023 .8		
L24				
	+C-XL024:114	003 .4		0.75 BU
	+C-A714:7	029 .8		
L24				
	+C-XL024:115	003 .5		0.75 BU
	+C-A715:7	028 .8		
L24				
	+C-XL024:116	003 .5		0.75 BU
	+C-A716:7	027 .8		

Line	From	Page.Col.	Opt.	Area/Color
L25				
	+C-A601:34	063 .6		0.75 BU
	+C-XL025:101	003 .6		
L25				
	+C-XL025:102	003 .6		0.75 BU
	+C-X708:5	044 .3	TGA	
L25				
	+C-XL025:110	003 .8		0.75 BU
	+C-A710:5	024 .8		
L25				
	+C-XL025:111	003 .9		0.75 BU
	+C-A711:5	022 .8		
L25				
	+C-XL025:112	003 .9		0.75 BU
	+C-A712:5	021 .8		
L25				
	+C-XL025:113	003 .9		0.75 BU
	+C-A713:5	023 .8		
L25				
	+C-XL025:114	003 .9		0.75 BU
	+C-A714:5	029 .8		
L25				
	+C-XL025:115	003 .10		0.75 BU
	+C-A715:5	028 .8		
L25				
	+C-XL025:116	003 .10		0.75 BU
	+C-A716:5	027 .8		

Line	From	Page.Col.	Opt.	Area/Color
L31				
	+C-A904:6	082 .7		0.75 BU
	+C-K104:5	063 .3		
	+C-A602:14	064 .7		
	+C-A131:01	177 .1		
	+C-A133:11	182 .1		
	+C-A111:I0050	119 .7		
L50				
	+C-XL050:2	003 .1		1.5 L.BU
	+C-A301:A2	046 .6		
	+C-A302:A2	046 .6		
	+C-A303:A2	047 .6		
	+C-A304:A2	047 .6		
	+C-A308:A2	049 .6	H.I.	
	+C-A300:A2	046 .6		
L50				
	+C-XL050:3	003 .2		1.5 L.BU
	+C-G100:N	080 .1		
	+C-G101:N	080 .3		
	+C-G102:N	080 .5		
	+C-G103:N	080 .7		
	+C-G104:N	080 .7		
	+C-G910:N	081 .6		
L50				
	+C-XL050:4	003 .2		1.5 L.BU
	+C-P001:N	039 .5		
	+C-P900:L2/N	042 .5	USA	

Drawing remarks

Tetra Pak

Designer LUP	Date 23/11/2007	Machine Tetra Pak A3/Flex 0150	
ECM No 320174	Denomination LINE SUMMARY	Page Type LINE SUMMARY	
Company Tetra Pak (Italy)	Document No. 2845987-0004	Doc. type ELD	Version AE	Page 013

This drawing must not without the consent of Tetra Pak be copied, transmitted or disclosed to any third party.

Line summary of 2845987-0003

Line	From	Page.Col.	Opt.	Area/Color
	+C-P900:L2/N	042 .5	USA	
	+C-P901:L2/N	043 .5	USA	
L50				
	+C-XL050:5	003 .2		1.5 L.BU
	+C-X005:2	038 .9		
L51				
	+C-XL051:1	003 .4		1.5 BK
	+C-F059:2	035 .9		
L51				
	+C-XL051:2	003 .4		1.5 BK
	+C-A301:A1	**046 .6**		
	+C-A302:A1	**046 .6**		
	+C-A303:A1	**047 .6**		
	+C-A304:A1	**047 .6**		
	+C-A308:A1	**049 .6**	H.I.	
	+C-A300:A1	046 .6		
L51				
	+C-XL051:3	003 .4		1.5 BK
	+C-X005:1	038 .8		
L51				
	+C-XL051:5	003 .5		1.5 BK
	+C-K120:4	043 .2	USA	
L51				
	+C-XL051:6	003 .5		1.5 BK
	+C-P001:L1	039 .5		
L51				
	+C-XL051:7	003 .5		1.5 BK
	+C-K121:4	042 .2	USA	

Line	From	Page.Col.	Opt.	Area/Color
L51				
	+C-XL051:8	003 .5		1.5 BK
	+C-K122:5	042 .2	USA	
L70				
	+C-X220:12	203 .8		0.75 BU
	+C-A604:24	**066 .6**		
	+C-A143:20	203 .1		
L71				
	+C-A111:I0051	119 .7		0.75 BU
	+C-A604:14	**066 .6**		
	+C-A143:11	**203 .1**		
	+C-X220:11	234 .10		
L72				
	+C-A604:13	066 .6		0.75 BU
	+C-A607:14	**069 .6**		
	+C-A149:01	214 .1	ARL	
L0310				
	+M-XL310:101	241 .1	TGA	0.75 BU
	+M-X768:1	044 .4	TGA	
L0310				
	+M-XL310:102	241 .2	TGA	0.75 BU
	+M-A700:6	243 .8	TGA	
L0310				
	+M-XL310:103	241 .2	TGA	0.75 BU
	+M-A701:6	244 .8	TGA	
L0310				

Line	From	Page.Col.	Opt.	Area/Color
	+M-XL310:104	241 .2	TGA	0.75 BU
	+M-A702:6	245 .8	TGA	
L0310				
	+M-XL310:105	241 .2	TGA	0.75 BU
	+M-A703:6	246 .8	TGA	
L0310				
	+M-XL310:106	241 .3	TGA	0.75 BU
	+M-A704:6	247 .8	TGA	
L0310				
	+M-XL310:107	241 .3	TGA	0.75 BU
	+M-A705:6	248 .8	TGA	
L0310				
	+M-XL310:108	241 .3	TGA	0.75 BU
	+M-A706:6	249 .8	TGA	
L0310				
	+M-XL310:110	241 .4	TGA	2.5 BU
	+M-Z725:N	253 .2	TGA	
L0310				
	+M-XL310:111	241 .4	TGA	0.75 BU
	+M-A404:2	254 .6	TGA	
L0310				
	+M-XL310:112	241 .4	TGA	0.75 BU
	+C-X767:8	254 .1	TGA	
L0310				
	+M-XL310:113	241 .4	TGA	0.75 BU
	+M-K750:A2	**256 .5**	**TGA**	
	+M-K751:A2	**256 .5**	**TGA**	
	+M-K040:A2	256 .5	TGA	

Drawing remarks

Tetra Pak

Designer	Date	Machine
LUP	23/11/2007	Tetra Pak A3/Flex 0150

ECM No	Denomination	Page Type
320174	LINE SUMMARY	LINE SUMMARY

Company	Document No.	Doc. type	Version	Page
Tetra Pak (Italy)	2845987-0004	ELD	AE	014

This drawing must not without the consent of Tetra Pak be copied, transmitted or disclosed to any third party.

Line summary of 2845987-0003

Line	From	Page.Col.	Opt.	Area/Color
	+M-K040:A2	256 .5	TGA	
	+M-K041:A2	256 .5	TGA	
	+M-K720:A2	256 .5	TGA	
	+M-K721:1	256 .5	TGA	
L0310				
	+M-XL310:114	241 .5	TGA	0.75 BU
	+M-A728:1208	253 .7	TGA	
	+M-A728:1209	253 .7	TGA	
	+M-A728:1210	253 .7	TGA	
	+M-A728:1211	253 .7	TGA	
L0310				
	+M-XL310:115	241 .5	TGA	0.75 BU
	+M-A728:2208	253 .7	TGA	
	+M-A728:2209	253 .7	TGA	
	+M-A728:2210	253 .7	TGA	
	+M-A728:2211	253 .7	TGA	
L0310				
	+M-XL310:116	241 .5	TGA	0.75 BU
	+C-X766:1	257 .4	TGA	
L0313				
	+M-XL313:101	241 .1	TGA	0.75 BU
	+M-X768:2	044 .4	TGA	
L0313				
	+M-XL313:102	241 .2	TGA	0.75 BU
	+M-B720:1	255 .4	TGA	
L0313				
	+M-XL313:103	241 .2	TGA	0.75 BU
	+M-B760:13	255 .3	TGA	
L0313				
	+M-XL313:106	241 .3	TGA	0.75 BU
	+M-Q750:1.13	044 .9	TGA	
L0313				
	+M-XL313:107	241 .3	TGA	0.75 BU
	+M-A404:1	254 .6	TGA	
L0313				
	+M-XL313:108	241 .3	TGA	0.75 BU
	+C-X767:7	254 .1	TGA	
L0323				
	+M-XL323:101	241 .6	TGA	0.75 BU
	+M-X768:3	044 .4	TGA	
L0323				
	+M-XL323:102	241 .6	TGA	0.75 BU
	+M-K750:A1	256 .5	TGA	
	+M-K751:A1	256 .5	TGA	
L0323				
	+M-XL323:103	241 .7	TGA	0.75 BU
	+C-X766:2	257 .4	TGA	
L0323				
	+M-XL323:104	241 .7	TGA	2.5 BU
	+M-Z725:P	253 .2	TGA	
L0324				
	+M-XL324:101	241 .6	TGA	0.75 BU
	+M-X768:4	044 .4	TGA	
L0324				
	+M-XL324:102	241 .6	TGA	0.75 BU
	+M-A700:7	243 .8	TGA	
L0324				
	+M-XL324:103	241 .7	TGA	0.75 BU
	+M-A701:7	244 .8	TGA	
L0324				
	+M-XL324:104	241 .7	TGA	0.75 BU
	+M-A702:7	245 .8	TGA	
L0324				
	+M-XL324:105	241 .7	TGA	0.75 BU
	+M-A703:7	246 .8	TGA	
L0324				
	+M-XL324:106	241 .7	TGA	0.75 BU
	+M-A704:7	247 .8	TGA	
L0324				
	+M-XL324:107	241 .8	TGA	0.75 BU
	+M-A705:7	248 .8	TGA	
L0324				
	+M-XL324:108	241 .8	TGA	0.75 BU
	+M-A706:7	249 .8	TGA	
L0325				
	+M-XL325:101	241 .6	TGA	0.75 BU
	+M-X768:5	044 .4	TGA	
L0325				
	+M-XL325:102	241 .6	TGA	0.75 BU
	+M-A700:5	243 .8	TGA	

Drawing remarks

Tetra Pak

Designer LUP	Date 23/11/2007	Machine Tetra Pak A3/Flex 0150	
ECM No 320174	Denomination LINE SUMMARY	Page Type LINE SUMMARY	
Company Tetra Pak (Italy)	Document No. 2845987-0004	Doc. type ELD	Version AE	Page 015

This drawing must not without the consent of Tetra Pak be copied, transmitted or disclosed to any third party.

Line summary of 2845987-0003

Line	From	Page.Col.	Opt.	Area/Color
L0325				
	+M-XL325:103	241 .7	TGA	0.75 BU
	+M-A701:5	244 .8	TGA	
L0325				
	+M-XL325:104	241 .7	TGA	0.75 BU
	+M-A702:5	245 .8	TGA	
L0325				
	+M-XL325:105	241 .7	TGA	0.75 BU
	+M-A703:5	246 .8	TGA	
L0325				
	+M-XL325:106	241 .7	TGA	0.75 BU
	+M-A704:5	247 .8	TGA	
L0325				
	+M-XL325:107	241 .8	TGA	0.75 BU
	+M-A705:5	248 .8	TGA	
L0325				
	+M-XL325:108	241 .8	TGA	0.75 BU
	+M-A706:5	249 .8	TGA	
L701				
	+M-X701:1	005 .7	TGA	10 BK
	+M-Q750:1	243 .1	TGA	
	+M-Q751:1	247 .1	TGA	
	+M-Q040:1	251 .3	TGA	
	+M-F760:1	243 .4	TGA	
	+M-F721:1	250 .6	TGA	
L702				
	+M-X701:2	005 .7	TGA	10 BK
	+M-Q750:3	243 .1	TGA	
	+M-Q751:3	247 .1	TGA	
	+M-Q040:3	251 .3	TGA	
	+M-F761:1	247 .4	TGA	
	+C-F041:1	252 .1	TGA	
L703				
	+M-X701:3	005 .7	TGA	10 BK
	+M-Q750:5	243 .1	TGA	
	+M-Q751:5	247 .1	TGA	
	+M-Q040:5	251 .3	TGA	
	+M-F720:1	250 .1	TGA	

Line	From	Page.Col.	Opt.	Area/Color

Drawing remarks

Tetra Pak

Designer LUP	Date 23/11/2007	Machine Tetra Pak A3/Flex 0150	
ECM No 320174	Denomination LINE SUMMARY	Page Type LINE SUMMARY	
Company Tetra Pak (Italy)	Document No. 2845987-0004	Doc. type ELD	Version AE	Page 016

6 Cabinet Terminal Summary

TechPub_2614345_v3_DRAFT_Release06_EM2851302_05en.fm

Description

All terminals inside the electrical cabinet are listed in this chapter. The field *Opt.* specifies if the terminal is reserved for an option.

TechPub_2614345_v3_DRAFT_Release06_EM2851302_05en.fm

This drawing must not without the consent of Tetra Pak be copied, transmitted or disclosed to any third party.

Cabinet terminal summary of 2845987-0003

Terminal	Page .Col.	Opt.
+C-X001:L1	005 .7	
+C-X001:L2	005 .7	
+C-X001:L3	005 .7	
+C-X001:N	005 .7	
+C-X001:⏚	005 .7	
+C-X001:⏚		
+C-X002:1	005 .7	
+C-X002:2	081 .4	
+C-X002:3	035 .2	
+C-X002:4	009 .9	
+C-X002:6		
+C-X002:8	011 .3	
+C-X002:9	011 .8	
+C-X002:10		
+C-X002:11	037 .1	
+C-X002:12	037 .2	
+C-X002:13	035 .2	
+C-X002:14	014 .4	
+C-X002:15	014 .9	
+C-X002:16	016 .4	
+C-X002:17	017 .4	
+C-X002:18	017 .9	
+C-X002:19	080 .2	
+C-X002:20	080 .4	
+C-X002:21	080 .6	
+C-X002:22	080 .8	
+C-X002:23	080 .8	
+C-X002:24	039 .6	

Terminal	Page .Col.	Opt.
+C-X002:25	043 .6	
+C-X002:26	041 .4	
+C-X002:27	037 .10	
+C-X002:28	018 .4	
+C-X002:29	053 .4	
+C-X002:30	042 .6	
+C-X002:31	037 .10	
+C-X002:32	037 .7	
+C-X002:33	032 .7	
+C-X002:34	032 .10	
+C-X002:35	032 .5	
+C-X002:36	033 .7	
+C-X002:37	009 .4	
+C-X002:38	032 .3	
+C-X002:39	036 .6	
+C-X002:40	036 .6	
+C-X002:41	033 .5	
+C-X002:42	010 .3	
+C-X002:43	010 .7	
+C-X002:44	008 .4	
+C-X002:45	012 .3	
+C-X002:46	037 .4	
+C-X002:47	019 .4	
+C-X002:48	033 .10	
+C-X002:49	006 .5	
+C-X002:50	112 .9	
+C-X002:51	081 .8	
+C-X002:52		

Terminal	Page .Col.	Opt.
+C-X002:53	102 .3	
+C-X002:54		
+C-X002:55	202 .5	
+C-X002:56	204 .8	
+C-X002:57	110 .8	
+C-X002:58	111 .8	
+C-X002:59		
+C-X002:60	081 .8	
+C-X002:61	005 .7	
+C-X002:62	019 .9	
+C-X002:63	027 .2	
+C-X002:64	021 .2	
+C-X002:65	005 .9	
+C-X002:66	007 .9	
+C-X002:67	205 .8	
+C-X002:68	061 .7	
+C-X002:69	149 .6	
+C-X002:70	056 .7	
+C-X002:71	233 .4	
+C-X002:72	208 .8	
+C-X002:73	232 .4	
+C-X002:74	047 .5	
+C-X002:75	127 .6	
+C-X002:76	233 .9	
+C-X002:77	236 .7	
+C-X002:78	143 .1	
+C-X002:79	139 .7	
+C-X002:80	150 .6	

Terminal	Page .Col.	Opt.
+C-X002:81	237 .5	
+C-X002:82	128 .4	
+C-X002:83	194 .8	
+C-X002:84	056 .7	
+C-X002:85	198 .7	
+C-X002:86	237 .10	
+C-X002:87	203 .8	
+C-X002:88	196 .8	
+C-X002:89	235 .8	
+C-X002:90	104 .5	
+C-X002:91	033 .3	
+C-X002:92	038 .2	
+C-X002:93	038 .7	
+C-X002:96	021 .5	
+C-X002:97		
+C-X002:98		
+C-X002:99		
+C-X002:100	027 .5	
+C-X002:101	017 .10	
+C-X002:102	014 .5	
+C-X002:103	014 .10	
+C-X002:104	018 .6	
+C-X002:105	017 .5	
+C-X002:106	016 .5	
+C-X002:107	237 .10	
+C-X002:108	038 .4	
+C-X002:109		
+C-X002:110		

Drawing remarks

Tetra Pak

Designer LUP	Date 23/11/2007	Machine Tetra Pak A3/Flex 0150	
ECM No 320174	Denomination CABINET TERMINAL SUMMARY	Page Type CABINET TERMINAL SUMMARY	
Company Tetra Pak (Italy)	Document No. 2845987-0005	Doc. type ELD	Version AE	Page 001

This drawing must not without the consent of Tetra Pak be copied, transmitted or disclosed to any third party.

Cabinet terminal summary of 2845987-0003

Terminal	Page .Col.	Opt.
+C-X002:111		
+C-X002:112		
+C-X002:113		
+C-X002:114		
+C-X002:115		
+C-X002:116	044 .2	
+C-X002:117		
+C-X002:118		
+C-X002:119	018 .9	
+C-X002:120	006 .9	
+C-X003:26	010 .2	
+C-X003:27	010 .6	
+C-X003:28	008 .3	H.I.
+C-X003:31	014 .3	
+C-X003:32	014 .8	
+C-X003:33	016 .3	
+C-X003:34	017 .3	
+C-X003:35	017 .8	
+C-X003:36	019 .3	
+C-X003:37	019 .8	
+C-X003:38	036 .6	
+C-X003:39	010 .9	TGA
+C-X003:51	005 .9	
+C-X003:52	035 .10	
+C-X003:53	037 .2	
+C-X003:55	038 .6	
+C-X003:56		
+C-X003:114	033 .9	

Terminal	Page .Col.	Opt.
+C-X003:120	021 .5	
+C-X003:121	027 .4	
+C-X003:123	010 .4	
+C-X003:124		
+C-X005:1	038 .8	
+C-X005:2	038 .9	
+C-X005:3	038 .8	
+C-X005:4	038 .7	
+C-X025:+	110 .5	
+C-X025:-	110 .5	
+C-X031:1	050 .2	
+C-X031:2	050 .2	
+C-X031:3	237 .1	
+C-X031:4	040 .2	
+C-X031:5		
+C-X031:6		
+C-X031:7	237 .1	
+C-X031:8	040 .2	
+C-X031:9		
+C-X031:10		
+C-X031:11	237 .1	
+C-X031:12	040 .2	
+C-X031:13		
+C-X031:14		
+C-X031:15	237 .1	
+C-X031:16	237 .1	
+C-X031:17		
+C-X031:18		

Terminal	Page .Col.	Opt.
+C-X031:19	051 .6	
+C-X031:20	051 .6	
+C-X031:21	051 .4	
+C-X031:22	051 .4	
+C-X031:23	051 .7	
+C-X031:24	051 .4	
+C-X031:25	051 .5	
+C-X031:26	051 .7	
+C-X031:27	051 .4	
+C-X031:28	051 .7	
+C-X031:29	051 .5	
+C-X031:30	051 .6	
+C-X031:31	051 .4	
+C-X031:32	051 .4	
+C-X031:33		
+C-X031:34	051 .4	
+C-X031:35	053 .1	
+C-X031:36	053 .1	
+C-X031:37	053 .4	
+C-X031:38	053 .4	
+C-X031:39	053 .1	
+C-X031:40	053 .1	
+C-X031:⏚	053 .4	
+C-X031:⏚	053 .4	
+C-X031:⏚	053 .4	
+C-X031:⏚	060 .8	
+C-X031:⏚		
+C-X031:⏚		

Terminal	Page .Col.	Opt.
+C-X051:1	126 .4	DIMC
+C-X051:2	126 .4	DIMC
+C-X051:3	126 .4	DIMC
+C-X051:4	126 .4	DIMC
+C-X051:5	126 .4	DIMC
+C-X051:6	126 .4	DIMC
+C-X101:1	037 .6	
+C-X101:2	037 .6	
+C-X101:3	037 .6	
+C-X101:4	037 .6	
+C-X101:5		
+C-X101:6		
+C-X101:⏚	037 .6	
+C-X102:1	032 .6	
+C-X102:2	032 .6	
+C-X102:3	032 .6	
+C-X102:4		
+C-X102:5		
+C-X102:6		
+C-X102:⏚	032 .7	
+C-X103:1	032 .9	
+C-X103:2	032 .9	
+C-X103:3	032 .9	
+C-X103:4		
+C-X103:5		
+C-X103:6		
+C-X103:⏚	032 .9	
+C-X104:1	032 .4	

Drawing remarks

Tetra Pak

Designer LUP	Date 23/11/2007	Machine Tetra Pak A3/Flex 0150	
ECM No 320174	Denomination CABINET TERMINAL SUMMARY	Page Type CABINET TERMINAL SUMMARY	
Company Tetra Pak (Italy)	Document No. 2845987-0005	Doc. type ELD	Version AE	Page 002

This drawing must not without the consent of Tetra Pak be copied, transmitted or disclosed to any third party.

Cabinet terminal summary of 2845987-0003

Terminal	Page .Col.	Opt.
+C-X104:2	032 .4	
+C-X104:3	032 .4	
+C-X104:4		
+C-X104:5		
+C-X104:6		
+C-X104:⏚	032 .4	
+C-X105:1	033 .7	
+C-X105:2	033 .7	
+C-X105:3	033 .7	
+C-X105:4		
+C-X105:5		
+C-X105:6		
+C-X105:⏚	033 .7	
+C-X106:3		
+C-X106:4		
+C-X106:5		
+C-X106:6		
+C-X107:1	037 .9	
+C-X107:2	037 .9	
+C-X107:3		
+C-X107:4		
+C-X107:5		
+C-X107:6		
+C-X107:⏚	037 .9	
+C-X109:1	009 .2	
+C-X109:2	009 .3	
+C-X109:3	009 .3	
+C-X109:4		

Terminal	Page .Col.	Opt.
+C-X109:5		
+C-X109:6		
+C-X109:⏚	009 .4	
+C-X111:1	032 .2	
+C-X111:2	032 .2	
+C-X111:3	032 .2	
+C-X111:4		
+C-X111:5		
+C-X111:6		
+C-X111:⏚	032 .2	
+C-X112:1	017 .9	
+C-X112:2	017 .9	
+C-X112:3	017 .9	
+C-X112:4	017 .10	
+C-X112:5	017 .9	
+C-X112:6		
+C-X112:⏚	017 .10	
+C-X113:1	036 .2	
+C-X113:2	036 .5	
+C-X113:3		
+C-X113:4		
+C-X113:5		
+C-X113:6		
+C-X113:⏚	036 .5	
+C-X114:1	036 .2	
+C-X114:2	036 .5	
+C-X114:3		
+C-X114:4		

Terminal	Page .Col.	Opt.
+C-X114:5		
+C-X114:6		
+C-X114:⏚	036 .5	
+C-X115:1	033 .4	
+C-X115:2	033 .4	
+C-X115:3	033 .4	
+C-X115:4		
+C-X115:5		
+C-X115:6		
+C-X115:⏚	033 .5	
+C-X116:1	010 .2	
+C-X116:2	010 .2	
+C-X116:3	010 .4	
+C-X116:4	010 .4	
+C-X116:5		
+C-X116:6		
+C-X116:⏚	010 .3	
+C-X117:1	010 .6	
+C-X117:2	010 .6	
+C-X117:3	010 .9	TGA
+C-X117:4	010 .9	TGA
+C-X117:5		
+C-X117:6		
+C-X117:⏚	010 .7	
+C-X118:1	008 .3	H.I.
+C-X118:2	008 .3	H.I.
+C-X118:3		
+C-X118:4		

Terminal	Page .Col.	Opt.
+C-X118:5		
+C-X118:6		
+C-X118:⏚	008 .3	H.I.
+C-X119:1	018 .8	DIMC
+C-X119:2	018 .8	DIMC
+C-X119:3	018 .8	DIMC
+C-X119:4	018 .9	DIMC
+C-X119:5	018 .8	DIMC
+C-X119:6		
+C-X119:⏚	018 .9	
+C-X126:1	014 .4	
+C-X126:2	014 .4	
+C-X126:3	014 .4	
+C-X126:4	014 .5	
+C-X126:5	014 .4	
+C-X126:6		
+C-X126:⏚	014 .5	
+C-X127:1	014 .9	
+C-X127:2	014 .9	
+C-X127:3	014 .9	
+C-X127:4	014 .10	
+C-X127:5	014 .9	
+C-X127:6		
+C-X127:⏚	014 .10	
+C-X129:1	018 .5	
+C-X129:2	018 .5	
+C-X129:3	018 .6	
+C-X129:4	018 .6	

Drawing remarks

Tetra Pak

Designer LUP	Date 23/11/2007	Machine Tetra Pak A3/Flex 0150	
ECM No 320174	Denomination CABINET TERMINAL SUMMARY	Page Type CABINET TERMINAL SUMMARY	
Company Tetra Pak (Italy)	Document No. 2845987-0005	Doc. type ELD	Version AE	Page 003

This drawing must not without the consent of Tetra Pak be copied, transmitted or disclosed to any third party.

Cabinet terminal summary of 2845987-0003

Terminal	Page .Col.	Opt.
+C-X129:5	018 .6	
+C-X129:6		
+C-X129:⏚	018 .6	
+C-X130:1	017 .4	
+C-X130:2	017 .4	
+C-X130:3	017 .5	
+C-X130:4	017 .5	
+C-X130:5	017 .5	
+C-X130:6		
+C-X130:⏚	017 .5	
+C-X132:1	037 .3	
+C-X132:2		
+C-X132:3	037 .3	
+C-X132:4		
+C-X132:5		
+C-X132:6		
+C-X132:⏚	037 .4	
+C-X133:1	019 .3	
+C-X133:2	019 .3	
+C-X133:3		
+C-X133:4		
+C-X133:5		
+C-X133:6		
+C-X133:⏚	019 .4	
+C-X134:1	016 .5	
+C-X134:2	016 .5	
+C-X134:3	016 .5	
+C-X134:4	016 .5	

Terminal	Page .Col.	Opt.
+C-X134:5	016 .5	
+C-X134:6		
+C-X134:⏚	016 .5	
+C-X136:1	033 .9	
+C-X136:2	033 .9	
+C-X136:3		
+C-X136:4		
+C-X136:5		
+C-X136:6		
+C-X136:⏚	033 .9	
+C-X137:1	006 .3	
+C-X137:2	006 .3	
+C-X137:3	006 .4	
+C-X137:4		
+C-X137:5		
+C-X137:6		
+C-X137:⏚	006 .4	
+C-X138:1	006 .7	
+C-X138:2	006 .7	
+C-X138:3	006 .8	
+C-X138:4		
+C-X138:5		
+C-X138:6		
+C-X138:⏚	006 .8	
+C-X160:1		
+C-X161:1		
+C-X162:1		
+C-X201:1	205 .3	

Terminal	Page .Col.	Opt.
+C-X201:2	205 .3	
+C-X201:3	205 .3	
+C-X201:4	205 .3	
+C-X201:5	182 .3	
+C-X201:6	205 .8	
+C-X201:7	205 .3	
+C-X201:8	205 .8	
+C-X201:9	206 .3	
+C-X201:10	206 .3	
+C-X201:11	206 .3	
+C-X201:12	206 .3	
+C-X201:13	182 .3	
+C-X201:14	177 .3	
+C-X201:15	206 .3	
+C-X201:16	206 .3	
+C-X201:17	232 .9	
+C-X201:18	232 .9	
+C-X201:19	232 .9	
+C-X201:20	232 .9	
+C-X201:21	232 .9	
+C-X201:22	232 .9	
+C-X201:23	232 .9	
+C-X201:24	232 .9	
+C-X201:⏚	205 .8	
+C-X202:1	231 .10	
+C-X202:2	115 .6	
+C-X202:3	115 .6	
+C-X202:4	115 .6	

Terminal	Page .Col.	Opt.
+C-X202:5	147 .6	
+C-X202:6	147 .6	
+C-X202:7	148 .6	
+C-X202:8	231 .10	
+C-X202:9	231 .10	
+C-X202:10	141 .6	DIMC
+C-X202:11	201 .2	DIMC
+C-X202:12	141 .6	DIMC
+C-X202:13	061 .7	
+C-X202:14	061 .7	
+C-X202:15	061 .1	
+C-X202:16	231 .10	
+C-X202:17	147 .6	
+C-X202:18	147 .6	
+C-X202:19	156 .6	
+C-X202:20	155 .6	
+C-X202:21	156 .6	
+C-X202:22	156 .6	
+C-X202:23	231 .10	
+C-X202:24	231 .10	
+C-X202:⏚	061 .7	
+C-X203:1	149 .3	
+C-X203:2	237 .8	
+C-X203:3	149 .6	
+C-X203:4	149 .6	
+C-X203:5	057 .6	
+C-X203:6	057 .6	
+C-X203:7	057 .6	

Drawing remarks

Tetra Pak

Designer LUP	Date 23/11/2007	Machine Tetra Pak A3/Flex 0150	
ECM No 320174	Denomination CABINET TERMINAL SUMMARY	Page Type CABINET TERMINAL SUMMARY	
Company Tetra Pak (Italy)	Document No. 2845987-0005	Doc. type ELD	Version AE	Page 004

This drawing must not without the consent of Tetra Pak be copied, transmitted or disclosed to any third party.

Cabinet terminal summary of 2845987-0003

Terminal	Page .Col.	Opt.
+C-X203:8	057 .6	
+C-X203:9	057 .6	
+C-X203:10	148 .6	
+C-X203:11	057 .6	
+C-X203:12	057 .6	
+C-X203:13	057 .6	
+C-X203:14	057 .6	
+C-X203:15	058 .8	
+C-X203:16	058 .8	
+C-X203:17	058 .8	
+C-X203:18	058 .8	
+C-X203:19	058 .8	
+C-X203:20	058 .8	
+C-X203:21	058 .8	
+C-X203:22	237 .8	
+C-X203:23	035 .5	
+C-X203:24	035 .5	
+C-X203:⏚	149 .6	
+C-X204:1	150 .1	
+C-X204:2	150 .1	
+C-X204:3	150 .6	
+C-X204:4	056 .2	
+C-X204:5	150 .6	
+C-X204:6	151 .6	
+C-X204:7	151 .6	
+C-X204:8	151 .6	
+C-X204:9	231 .9	
+C-X204:10	150 .6	TGA

Terminal	Page .Col.	Opt.
+C-X204:11	231 .9	
+C-X204:12	231 .9	
+C-X204:13	231 .9	
+C-X204:14	056 .2	
+C-X204:15	056 .2	
+C-X204:16	056 .2	
+C-X204:17	056 .2	
+C-X204:18	231 .9	
+C-X204:19	231 .9	
+C-X204:20	231 .9	
+C-X204:21	231 .9	
+C-X204:22	231 .9	
+C-X204:23	231 .9	
+C-X204:24	231 .9	
+C-X204:⏚	056 .7	
+C-X206:1	135 .6	
+C-X206:2	135 .6	
+C-X206:3	135 .6	
+C-X206:4	136 .6	
+C-X206:5	136 .6	
+C-X206:6	136 .6	
+C-X206:7	233 .4	
+C-X206:8	233 .4	
+C-X206:9	233 .4	
+C-X206:10	061 .1	
+C-X206:11	061 .1	
+C-X206:12	061 .7	
+C-X206:13	061 .7	

Terminal	Page .Col.	Opt.
+C-X206:14	061 .7	
+C-X206:15	061 .7	
+C-X206:16	233 .4	
+C-X206:17	233 .4	
+C-X206:18	233 .4	
+C-X206:19	233 .4	
+C-X206:20	233 .4	
+C-X206:21	233 .4	
+C-X206:22	233 .4	
+C-X206:23	233 .4	
+C-X206:24	233 .4	
+C-X206:⏚	233 .4	
+C-X207:1	208 .3	
+C-X207:2	208 .3	
+C-X207:3	208 .3	
+C-X207:4	208 .3	
+C-X207:5	208 .3	
+C-X207:6	208 .3	
+C-X207:7	208 .3	
+C-X207:8	208 .3	
+C-X207:9	208 .8	
+C-X207:10		
+C-X207:11		
+C-X207:12		
+C-X207:13		
+C-X207:14		
+C-X207:15		
+C-X207:16		

Terminal	Page .Col.	Opt.
+C-X207:17		
+C-X207:18	128 .6	
+C-X207:19	128 .6	
+C-X207:20	128 .6	
+C-X207:21		
+C-X207:22		
+C-X207:23		
+C-X207:24		
+C-X207:⏚	208 .8	
+C-X208:1	232 .4	
+C-X208:2	232 .4	
+C-X208:3	232 .4	
+C-X208:4	232 .4	
+C-X208:5	144 .6	
+C-X208:6	152 .6	
+C-X208:7	152 .6	
+C-X208:8	152 .6	
+C-X208:9	232 .4	
+C-X208:10	149 .3	
+C-X208:11	149 .6	
+C-X208:12	149 .6	
+C-X208:13	149 .6	
+C-X208:14	144 .6	
+C-X208:15	144 .6	
+C-X208:16	201 .2	
+C-X208:17	034 .3	
+C-X208:18	034 .4	
+C-X208:19	034 .5	

Drawing remarks

Tetra Pak

Designer LUP	Date 23/11/2007	Machine Tetra Pak A3/Flex 0150	
ECM No 320174	Denomination CABINET TERMINAL SUMMARY	Page Type CABINET TERMINAL SUMMARY	
Company Tetra Pak (Italy)	Document No. 2845987-0005	Doc. type ELD	Version AE	Page 005

This drawing must not without the consent of Tetra Pak be copied, transmitted or disclosed to any third party.

Cabinet terminal summary of 2845987-0003

Terminal	Page .Col.	Opt.
+C-X208:20	034 .5	
+C-X208:21	106 .5	
+C-X208:22	144 .6	
+C-X208:23	232 .4	
+C-X208:24	232 .4	
+C-X208:⏚	232 .4	
+C-X209:1	137 .1	
+C-X209:2	137 .7	
+C-X209:3	137 .7	
+C-X209:4	047 .5	
+C-X209:5	047 .5	
+C-X209:6	047 .5	
+C-X209:7		
+C-X209:8		
+C-X209:9		
+C-X209:10		
+C-X209:11		
+C-X209:12		
+C-X209:13		
+C-X209:14		
+C-X209:15		
+C-X209:16		
+C-X209:17		
+C-X209:18		
+C-X209:19		
+C-X209:20		
+C-X209:21		
+C-X209:22		

Terminal	Page .Col.	Opt.
+C-X209:23		
+C-X209:24		
+C-X209:⏚	047 .5	
+C-X210:1	150 .3	
+C-X210:2	150 .3	
+C-X210:3	150 .6	
+C-X210:4	150 .6	
+C-X210:5	127 .6	
+C-X210:6	127 .6	
+C-X210:7	127 .6	
+C-X210:8	127 .6	
+C-X210:9	127 .6	
+C-X210:10	127 .6	
+C-X210:11	127 .6	
+C-X210:12	127 .6	
+C-X210:13	128 .6	
+C-X210:14	128 .6	
+C-X210:15	128 .6	
+C-X210:16	128 .6	
+C-X210:17	128 .4	
+C-X210:18	128 .6	
+C-X210:19		
+C-X210:20		
+C-X210:21		
+C-X210:22		
+C-X210:23	127 .1	
+C-X210:24		
+C-X210:⏚	127 .6	

Terminal	Page .Col.	Opt.
+C-X211:1	233 .9	
+C-X211:2	233 .9	
+C-X211:3	233 .9	
+C-X211:4	233 .9	
+C-X211:5	233 .9	
+C-X211:6	233 .9	
+C-X211:7	233 .9	
+C-X211:8	233 .9	
+C-X211:9	233 .9	
+C-X211:10	233 .9	
+C-X211:11	233 .9	
+C-X211:12	233 .9	
+C-X211:13	233 .9	
+C-X211:14	132 .6	
+C-X211:15	233 .9	
+C-X211:16	233 .9	
+C-X211:17	233 .9	
+C-X211:18	233 .9	
+C-X211:19	233 .9	
+C-X211:20	233 .9	
+C-X211:21	120 .7	
+C-X211:22	233 .9	
+C-X211:23	233 .9	
+C-X211:24	233 .9	
+C-X211:⏚	233 .9	
+C-X212:1	067 .6	
+C-X212:2	067 .6	
+C-X212:3	236 .3	

Terminal	Page .Col.	Opt.
+C-X212:4	236 .3	
+C-X212:5	236 .3	
+C-X212:6	149 .6	
+C-X212:7	236 .3	
+C-X212:8	149 .6	
+C-X212:9	149 .1	
+C-X212:10	149 .1	
+C-X212:11	046 .5	
+C-X212:12	046 .5	
+C-X212:13	236 .6	
+C-X212:14	236 .6	
+C-X212:15	134 .6	
+C-X212:16	047 .5	
+C-X212:17	047 .5	
+C-X212:18	107 .6	
+C-X212:19	236 .6	
+C-X212:20	236 .6	
+C-X212:21	236 .6	
+C-X212:22	132 .6	
+C-X212:23	236 .6	
+C-X212:24	236 .6	
+C-X212:⏚	236 .6	
+C-X213:1	141 .6	
+C-X213:2	115 .6	
+C-X213:3	141 .6	
+C-X213:4	141 .6	
+C-X213:5	141 .6	
+C-X213:6	141 .6	

Drawing remarks

Tetra Pak

Designer LUP	Date 23/11/2007	Machine Tetra Pak A3/Flex 0150	
ECM No 320174	Denomination CABINET TERMINAL SUMMARY	Page Type CABINET TERMINAL SUMMARY	
Company Tetra Pak (Italy)	Document No. 2845987-0005	Doc. type ELD	Version AE	Page 006

This drawing must not without the consent of Tetra Pak be copied, transmitted or disclosed to any third party.

Cabinet terminal summary of 2845987-0003

Terminal	Page .Col.	Opt.
+C-X213:7	142 .7	
+C-X213:8	141 .6	
+C-X213:9	142 .7	
+C-X213:10	142 .7	
+C-X213:11	142 .7	
+C-X213:12	142 .7	
+C-X213:13	142 .7	
+C-X213:14	143 .6	
+C-X213:15	143 .6	
+C-X213:16	143 .6	
+C-X213:17	143 .6	
+C-X213:18	150 .3	
+C-X213:19	150 .6	
+C-X213:20	149 .6	
+C-X213:21	149 .6	
+C-X213:22	143 .6	
+C-X213:23	143 .2	
+C-X213:24	143 .2	
+C-X213:⏚	143 .2	
+C-X214:1	143 .6	
+C-X214:2	142 .7	
+C-X214:3	143 .6	
+C-X214:4	143 .6	
+C-X214:5	202 .3	
+C-X214:6	202 .5	
+C-X214:7	202 .3	
+C-X214:8	202 .3	
+C-X214:9	202 .3	

Terminal	Page .Col.	Opt.
+C-X214:10	214 .2	H.G.
+C-X214:11	234 .5	
+C-X214:12	234 .5	
+C-X214:13	202 .3	
+C-X214:14	234 .5	
+C-X214:15	234 .5	
+C-X214:16	234 .5	
+C-X214:17	234 .5	
+C-X214:18	234 .5	
+C-X214:19	202 .3	
+C-X214:20	202 .3	
+C-X214:21	180 .3	
+C-X214:22	180 .3	
+C-X214:23	142 .1	
+C-X214:24	142 .1	
+C-X214:⏚	202 .4	
+C-X215:1	204 .3	
+C-X215:2	204 .3	
+C-X215:3	204 .3	
+C-X215:4	204 .3	
+C-X215:5	204 .3	
+C-X215:6	204 .3	
+C-X215:7	204 .3	
+C-X215:8	204 .3	DIMC
+C-X215:9	205 .3	
+C-X215:10	205 .3	
+C-X215:11		
+C-X215:12	204 .8	

Terminal	Page .Col.	Opt.
+C-X215:13	204 .8	
+C-X215:14		
+C-X215:15		
+C-X215:16		
+C-X215:17		
+C-X215:18		
+C-X215:19		
+C-X215:20		
+C-X215:21		
+C-X215:22		
+C-X215:23		
+C-X215:24		
+C-X215:⏚	204 .8	
+C-X216:1	145 .6	H.I.
+C-X216:2	207 .3	H.I.
+C-X216:3	207 .3	H.I.
+C-X216:4	207 .3	H.I.
+C-X216:5	207 .3	H.I.
+C-X216:6	145 .6	H.I.
+C-X216:7	145 .6	H.I.
+C-X216:8	145 .6	H.I.
+C-X216:9	145 .6	H.I.
+C-X216:10	145 .6	H.I.
+C-X216:11	049 .5	H.I.
+C-X216:12	049 .5	H.I.
+C-X216:13	049 .5	H.I.
+C-X216:14	145 .6	
+C-X216:15	237 .5	

Terminal	Page .Col.	Opt.
+C-X216:16	237 .5	H.I.
+C-X216:17	207 .8	H.I.
+C-X216:18	102 .3	H.I.
+C-X216:19	102 .3	H.I.
+C-X216:20	102 .3	H.I.
+C-X216:21	105 .6	H.I.
+C-X216:22		
+C-X216:23		
+C-X216:24		
+C-X216:⏚	237 .5	H.I.
+C-X217:1	235 .4	
+C-X217:2	235 .4	
+C-X217:3	046 .5	
+C-X217:4	046 .5	
+C-X217:5	046 .5	
+C-X217:6	046 .5	
+C-X217:7	046 .5	
+C-X217:8	198 .3	
+C-X217:9	199 .3	
+C-X217:10	067 .2	
+C-X217:11	199 .3	
+C-X217:12	199 .3	
+C-X217:13	235 .4	
+C-X217:14	235 .4	
+C-X217:15	061 .7	
+C-X217:16	134 .6	
+C-X217:17	132 .6	
+C-X217:18	235 .4	

Drawing remarks

Tetra Pak

Designer: LUP	Date: 23/11/2007	Machine: Tetra Pak A3/Flex 0150	
ECM No: 320174	Denomination: CABINET TERMINAL SUMMARY	Page Type: CABINET TERMINAL SUMMARY	
Company: Tetra Pak (Italy)	Document No.: 2845987-0005	Doc. type: ELD	Version: AE	Page: 007

This drawing must not without the consent of Tetra Pak
be copied, transmitted or disclosed to any third party.

Cabinet terminal summary of 2845987-0003

Terminal	Page .Col.	Opt.
+C-X217:19	115 .6	
+C-X217:20	128 .1	
+C-X217:21	128 .4	
+C-X217:22	134 .6	
+C-X217:23	134 .1	
+C-X217:24	134 .1	
+C-X217:⏚	128 .4	
+C-X218:1	194 .4	
+C-X218:2	194 .4	
+C-X218:3	194 .4	
+C-X218:4	194 .4	
+C-X218:5	194 .4	
+C-X218:6	194 .8	
+C-X218:7	194 .4	
+C-X218:8	194 .4	
+C-X218:9	194 .4	
+C-X218:10	195 .3	
+C-X218:11	195 .3	
+C-X218:12	194 .8	
+C-X218:13	195 .3	
+C-X218:14	195 .3	
+C-X218:15	195 .3	
+C-X218:16	195 .3	
+C-X218:17	195 .3	
+C-X218:18	195 .8	
+C-X218:19	195 .3	
+C-X218:20	196 .3	
+C-X218:21	196 .3	

Terminal	Page .Col.	Opt.
+C-X218:22	196 .3	
+C-X218:23	196 .3	H.I.
+C-X218:24	195 .8	
+C-X218:⏚	194 .8	
+C-X219:1	151 .1	
+C-X219:2	234 .8	
+C-X219:3	069 .6	
+C-X219:4	151 .6	
+C-X219:5	151 .6	
+C-X219:6	151 .6	
+C-X219:7	189 .3	
+C-X219:8	106 .5	
+C-X219:9	137 .7	H.G.
+C-X219:10	175 .2	H.G.
+C-X219:11	142 .7	
+C-X219:12	056 .2	
+C-X219:13	056 .2	
+C-X219:14	056 .2	
+C-X219:15	056 .2	
+C-X219:16	207 .3	
+C-X219:17	234 .8	
+C-X219:18	069 .6	
+C-X219:19	234 .8	
+C-X219:20	207 .3	
+C-X219:21	207 .3	
+C-X219:22	207 .3	
+C-X219:23	207 .8	
+C-X219:24	207 .8	

Terminal	Page .Col.	Opt.
+C-X219:⏚	056 .7	
+C-X220:1	203 .2	
+C-X220:2	203 .2	
+C-X220:3	203 .2	
+C-X220:4	203 .2	
+C-X220:5	203 .2	
+C-X220:6	203 .2	
+C-X220:7	203 .2	
+C-X220:8	203 .2	
+C-X220:9	234 .10	
+C-X220:10	234 .10	
+C-X220:11	234 .10	
+C-X220:12	203 .8	
+C-X220:13	155 .6	
+C-X220:14	155 .6	
+C-X220:15	155 .6	
+C-X220:16	155 .6	
+C-X220:17	155 .6	
+C-X220:18	155 .6	
+C-X220:19	214 .2	
+C-X220:20	214 .2	
+C-X220:21	214 .2	
+C-X220:22	214 .2	
+C-X220:23	214 .2	
+C-X220:24		
+C-X220:⏚	203 .8	
+C-X221:1	133 .6	
+C-X221:2	133 .6	

Terminal	Page .Col.	Opt.
+C-X221:3	133 .6	
+C-X221:4	133 .6	
+C-X221:5	236 .9	
+C-X221:6	105 .6	
+C-X221:7	132 .6	
+C-X221:8	133 .6	
+C-X221:9	104 .6	DIMC
+C-X221:10	104 .6	
+C-X221:11	236 .9	
+C-X221:12	236 .9	
+C-X221:13	236 .9	
+C-X221:14	236 .9	
+C-X221:15	198 .3	
+C-X221:16	198 .3	
+C-X221:17	198 .3	
+C-X221:18	236 .9	
+C-X221:19	126 .3	DIMC
+C-X221:20	236 .9	
+C-X221:21	236 .9	
+C-X221:22	236 .9	
+C-X221:23	236 .9	
+C-X221:24	236 .9	
+C-X221:⏚	198 .7	
+C-X222:1	200 .3	
+C-X222:2	200 .3	
+C-X222:3	200 .3	
+C-X222:4	200 .3	
+C-X222:5	200 .3	

Drawing remarks

Tetra Pak

Designer LUP	Date 23/11/2007	Machine Tetra Pak A3/Flex 0150	
ECM No 320174	Denomination CABINET TERMINAL SUMMARY	Page Type CABINET TERMINAL SUMMARY	
Company Tetra Pak (Italy)	Document No. 2845987-0005	Doc. type ELD	Version AE	Page 008

This drawing must not without the consent of Tetra Pak be copied, transmitted or disclosed to any third party.

Cabinet terminal summary of 2845987-0003

Terminal	Page .Col.	Opt.
+C-X222:6	200 .3	
+C-X222:7	200 .3	
+C-X222:8	200 .3	
+C-X222:9	175 .2	
+C-X222:10	175 .7	
+C-X222:11	177 .3	
+C-X222:12	177 .7	
+C-X222:13	201 .2	
+C-X222:14	201 .2	
+C-X222:15	137 .7	
+C-X222:16	137 .7	
+C-X222:17	137 .7	
+C-X222:18	137 .7	
+C-X222:19	120 .7	
+C-X222:20	053 .7	
+C-X222:21	105 .6	
+C-X222:22	053 .7	
+C-X222:23	120 .1	
+C-X222:24	237 .9	
+C-X222:⏚	237 .9	
+C-X223:1	196 .3	
+C-X223:2	196 .3	
+C-X223:3	196 .3	H.I.
+C-X223:4	196 .7	
+C-X223:5		
+C-X223:6		
+C-X223:7		
+C-X223:8		

Terminal	Page .Col.	Opt.
+C-X223:9		
+C-X223:10		
+C-X223:11	197 .3	
+C-X223:12	197 .3	
+C-X223:13	197 .3	
+C-X223:14	197 .3	
+C-X223:15	197 .3	
+C-X223:16	197 .7	
+C-X223:17	197 .3	
+C-X223:18	197 .3	
+C-X223:19	197 .3	
+C-X223:20	198 .3	
+C-X223:21	198 .3	
+C-X223:22	197 .8	
+C-X223:23		
+C-X223:24		
+C-X223:⏚	196 .7	
+C-X223:⏚	197 .7	
+C-X224:1	235 .7	
+C-X224:2	235 .7	
+C-X224:3	235 .7	
+C-X224:4	235 .7	
+C-X224:5	134 .6	
+C-X224:6	134 .6	
+C-X224:7	235 .7	
+C-X224:8	235 .7	
+C-X224:9	134 .6	
+C-X224:10	134 .1	

Terminal	Page .Col.	Opt.
+C-X224:11	134 .1	
+C-X224:12		
+C-X224:13	104 .6	
+C-X224:14	104 .6	
+C-X224:15	104 .6	
+C-X224:16		
+C-X224:17		
+C-X224:18		
+C-X224:19		
+C-X224:20		
+C-X224:21		
+C-X224:22		
+C-X224:23		
+C-X224:24		
+C-X224:⏚	235 .7	
+C-X225:1	104 .1	
+C-X225:2	104 .1	
+C-X225:3	104 .4	
+C-X225:4	104 .4	
+C-X225:5	104 .4	
+C-X225:6	104 .4	
+C-X225:7		
+C-X225:8		
+C-X225:9		
+C-X225:10		
+C-X225:11		
+C-X225:12		
+C-X225:13	104 .4	

Terminal	Page .Col.	Opt.
+C-X225:14	104 .4	
+C-X225:15	104 .4	
+C-X225:16	104 .4	
+C-X225:17	104 .4	
+C-X225:18		
+C-X225:19		
+C-X225:20		
+C-X225:21		
+C-X225:22		
+C-X225:23		
+C-X225:24		
+C-X225:⏚	104 .4	
+C-X226:1	136 .6	
+C-X226:2	138 .6	
+C-X226:3	138 .6	
+C-X226:4	138 .6	
+C-X226:5	138 .6	
+C-X226:6	138 .6	
+C-X226:7	139 .6	
+C-X226:8	139 .6	
+C-X226:9	139 .6	
+C-X226:10	201 .2	
+C-X226:11	136 .6	
+C-X226:12	231 .4	
+C-X226:13	231 .4	
+C-X226:14	139 .6	
+C-X226:15	139 .6	
+C-X226:16	139 .6	

Drawing remarks

Tetra Pak

Designer LUP	Date 23/11/2007	Machine Tetra Pak A3/Flex 0150	
ECM No 320174	Denomination CABINET TERMINAL SUMMARY	Page Type CABINET TERMINAL SUMMARY	
Company Tetra Pak (Italy)	Document No. 2845987-0005	Doc. type ELD	Version AE	Page 009

This drawing must not without the consent of Tetra Pak
be copied, transmitted or disclosed to any third party.

Cabinet terminal summary of 2845987-0003

Terminal	Page .Col.	Opt.
+C-X226:17	139 .6	
+C-X226:18	139 .6	
+C-X226:19	231 .4	
+C-X226:20	231 .4	
+C-X226:21		
+C-X226:22		
+C-X226:23	136 .2	
+C-X226:24	136 .2	
+C-X226:⏚	139 .6	
+C-X227:1	150 .3	
+C-X227:2	150 .1	
+C-X227:3	150 .6	
+C-X227:4	150 .6	
+C-X227:5	056 .2	
+C-X227:6	151 .6	
+C-X227:7	151 .6	
+C-X227:8	151 .6	
+C-X227:9	055 .4	
+C-X227:10	055 .9	
+C-X227:11	055 .4	
+C-X227:12	055 .4	
+C-X227:13	055 .4	
+C-X227:14	055 .4	
+C-X227:15	055 .4	
+C-X227:16	231 .4	
+C-X227:17	231 .4	
+C-X227:18	231 .4	
+C-X227:19	231 .4	

Terminal	Page .Col.	Opt.
+C-X227:20	231 .4	
+C-X227:21	231 .4	
+C-X227:22	231 .4	
+C-X227:23	231 .4	
+C-X227:24	231 .4	
+C-X227:⏚	150 .5	
+C-X228:1	058 .3	
+C-X228:2	058 .3	
+C-X228:3	237 .8	
+C-X228:4	237 .8	
+C-X228:5	237 .8	
+C-X228:6	237 .8	
+C-X228:7	237 .8	
+C-X228:8	237 .8	
+C-X228:9	237 .8	
+C-X228:10	237 .8	
+C-X228:11	237 .8	
+C-X228:12	237 .8	
+C-X228:13	237 .8	
+C-X228:14	237 .8	
+C-X228:15	237 .8	
+C-X228:16	237 .8	
+C-X228:17	237 .8	
+C-X228:18	237 .8	
+C-X228:19	237 .8	
+C-X228:20	237 .8	
+C-X228:21	237 .8	
+C-X228:22	237 .8	

Terminal	Page .Col.	Opt.
+C-X228:23	237 .8	
+C-X228:24	237 .8	
+C-X228:⏚	237 .8	
+C-X301:+	110 .5	
+C-X301:-	110 .5	
+C-X302:+	111 .5	
+C-X302:-	111 .5	
+C-X303:+	111 .5	
+C-X303:-	111 .5	
+C-X304:+	111 .5	
+C-X304:-	111 .5	
+C-X305:+	112 .5	
+C-X305:-	112 .5	
+C-X306:+	110 .5	
+C-X306:-	110 .5	
+C-X307:+	110 .5	
+C-X307:-	110 .5	
+C-X308:+	110 .5	
+C-X308:-	110 .5	
+C-X309:+	111 .5	
+C-X309:-	111 .5	
+C-X310:+	110 .5	
+C-X310:-	110 .5	
+C-X311:+	110 .5	
+C-X311:-	110 .5	
+C-X312:+	110 .5	
+C-X312:-	110 .5	
+C-X313:+	111 .5	

Terminal	Page .Col.	Opt.
+C-X313:-	111 .5	
+C-X314:+	111 .5	H.I.
+C-X314:-	111 .5	H.I.
+C-X315:+	111 .5	
+C-X315:-	111 .5	
+C-X316:+	112 .5	
+C-X316:-	112 .5	
+C-X317:+	112 .5	
+C-X317:-	112 .5	
+C-X318:+	112 .5	
+C-X318:-	112 .5	
+C-X319:+	111 .5	TGA
+C-X319:-	111 .5	TGA
+C-X320:+	112 .5	
+C-X320:-	112 .5	
+C-X321:+	112 .5	H.I.
+C-X321:-	112 .5	H.I.
+C-X322:+	112 .5	H.I.
+C-X322:-	112 .5	H.I.
+C-X401:1	050 .5	
+C-X401:2	050 .5	
+C-X401:3	050 .5	
+C-X401:4	050 .5	
+C-X401:5		
+C-X401:6		
+C-X402:1	050 .5	
+C-X402:2	050 .5	
+C-X402:3	050 .5	

Drawing remarks

Tetra Pak

Designer	Date	Machine
LUP	23/11/2007	Tetra Pak A3/Flex 0150

ECM No	Denomination	Page Type
320174	CABINET TERMINAL SUMMARY	CABINET TERMINAL SUMMARY

Company	Document No.	Doc. type	Version	Page
Tetra Pak (Italy)	2845987-0005	ELD	AE	010

This drawing must not without the consent of Tetra Pak be copied, transmitted or disclosed to any third party.

Cabinet terminal summary of 2845987-0003

Terminal	Page .Col.	Opt.
+C-X402:4	050 .5	
+C-X402:5		
+C-X402:6		
+C-X403:1	051 .5	
+C-X403:2	051 .5	
+C-X403:3	051 .5	
+C-X403:4	051 .5	
+C-X403:5		
+C-X403:6		
+C-X404:1	102 .8	
+C-X404:2	102 .8	
+C-X404:3	102 .4	
+C-X404:4	102 .8	
+C-X404:5		
+C-X404:6		
+C-X405:1	050 .5	
+C-X405:2	050 .5	
+C-X405:3	050 .5	
+C-X405:4	050 .5	
+C-X405:5	050 .5	
+C-X405:6		
+C-X406:1	050 .5	
+C-X406:2	050 .5	
+C-X406:3	050 .5	
+C-X406:4	050 .5	
+C-X406:5	050 .5	
+C-X406:6		
+C-X406:⏚		

Terminal	Page .Col.	Opt.
+C-X450:1	059 .3	
+C-X450:2	059 .3	
+C-X450:3	059 .3	
+C-X450:4	059 .3	
+C-X450:5	059 .3	
+C-X450:6	059 .3	
+C-X450:7	059 .3	
+C-X450:8	059 .3	
+C-X451:1	059 .2	
+C-X451:2	059 .2	
+C-X451:3	059 .2	
+C-X452:1	059 .3	
+C-X452:2	059 .3	
+C-X452:3	059 .3	
+C-X452:4	059 .3	
+C-X452:5	059 .3	
+C-X452:6	059 .3	
+C-X452:7	059 .3	
+C-X452:8	059 .3	
+C-X452:9	059 .3	
+C-X452:10	059 .3	
+C-X452:11	059 .3	
+C-X452:12	059 .3	
+C-X452:13	059 .3	
+C-X452:14	059 .3	
+C-X452:15	059 .3	
+C-X452:16	059 .3	
+C-X452:17	059 .3	

Terminal	Page .Col.	Opt.
+C-X452:18	059 .3	
+C-X452:19	059 .3	
+C-X452:20	059 .3	
+C-X452:21	059 .3	
+C-X452:22	059 .3	
+C-X452:23	059 .3	
+C-X452:24	059 .3	
+C-X452:25	059 .3	
+C-X452:26	059 .3	
+C-X452:27	059 .3	
+C-X454:4	059 .3	
+C-X454:5	059 .3	
+C-X454:8	059 .3	
+C-X454:9	059 .3	
+C-X454:SH	059 .3	
+C-X501:1	009 .7	
+C-X501:2	009 .8	
+C-X501:3	009 .8	
+C-X501:4		
+C-X501:5		
+C-X501:6		
+C-X501:⏚	009 .9	
+C-X502:1	007 .2	
+C-X502:2	007 .3	
+C-X502:3	007 .4	
+C-X502:4	007 .6	
+C-X502:5	007 .7	
+C-X502:6	007 .8	

Terminal	Page .Col.	Opt.
+C-X502:⏚	007 .8	
+C-X503:1	033 .2	
+C-X503:2	033 .2	
+C-X503:3	033 .2	
+C-X503:4		
+C-X503:5		
+C-X503:6		
+C-X503:⏚	033 .2	
+C-X504:1	019 .7	
+C-X504:2	019 .8	
+C-X504:3	234 .3	
+C-X504:4	234 .3	
+C-X504:5	234 .3	
+C-X504:6	234 .3	
+C-X504:⏚	019 .9	
+C-X700:1	020 .3	
+C-X700:2	020 .3	
+C-X700:3	020 .3	
+C-X700:4	020 .3	
+C-X700:5	020 .3	
+C-X700:6	020 .3	
+C-X700:7	020 .3	
+C-X700:8	020 .3	
+C-X700:9	020 .7	
+C-X700:10	020 .6	
+C-X700:11	020 .7	
+C-X700:12	020 .6	
+C-X700:20	021 .1	

Drawing remarks

Tetra Pak

Designer LUP	Date 23/11/2007	Machine Tetra Pak A3/Flex 0150	
ECM No 320174	Denomination CABINET TERMINAL SUMMARY	Page Type CABINET TERMINAL SUMMARY	
Company Tetra Pak (Italy)	Document No. 2845987-0005	Doc. type ELD	Version AE	Page 011

This drawing must not without the consent of Tetra Pak be copied, transmitted or disclosed to any third party.

Cabinet terminal summary of 2845987-0003

Terminal	Page .Col.	Opt.
+C-X700:21	021 .1	
+C-X700:22	022 .1	
+C-X700:23	022 .1	
+C-X700:24	023 .1	
+C-X700:25	023 .1	
+C-X700:26	024 .1	
+C-X700:27	024 .1	
+C-X700:28	028 .1	
+C-X700:29	028 .1	
+C-X700:30	029 .1	
+C-X700:31	029 .1	
+C-X700:41	055 .3	
+C-X700:42	055 .4	
+C-X700:43	055 .3	
+C-X700:44	055 .4	
+C-X700:45	055 .3	
+C-X700:46	055 .4	
+C-X700:47	055 .3	
+C-X700:48	055 .4	
+C-X700:49	055 .3	
+C-X700:50	055 .4	
+C-X700:51	055 .3	
+C-X700:52	055 .4	
+C-X708:1	044 .3	TGA
+C-X708:2	044 .3	TGA
+C-X708:3	044 .3	TGA
+C-X708:4	044 .3	TGA
+C-X708:5	044 .3	TGA

Terminal	Page .Col.	Opt.
+C-X708:6	044 .3	TGA
+C-X708:7	044 .3	TGA
+C-X708:8	044 .3	TGA
+C-X708:9	044 .3	TGA
+C-X708:10	044 .3	TGA
+C-X708:11	044 .3	TGA
+C-X708:12	044 .3	TGA
+C-X708:13	044 .3	TGA
+C-X708:14	044 .3	TGA
+C-X708:15	044 .3	TGA
+C-X708:16	044 .3	TGA
+C-X708:17	044 .3	TGA
+C-X708:18	044 .3	TGA
+C-X708:19	044 .3	TGA
+C-X708:20	044 .3	TGA
+C-X708:21	044 .3	TGA
+C-X708:22	044 .3	TGA
+C-X708:23	044 .3	TGA
+C-X708:24	044 .3	TGA
+C-X708:⏚	044 .3	TGA
+C-X725:1	253 .4	
+C-X725:2	253 .4	
+C-X725:⏚	253 .4	
+C-X761:1	252 .2	TGA
+C-X761:2	252 .8	TGA
+C-X761:3		
+C-X761:4		
+C-X761:⏚	252 .8	TGA

Terminal	Page .Col.	Opt.
+C-X762:1	252 .2	TGA
+C-X762:2	252 .8	TGA
+C-X762:3		
+C-X762:4		
+C-X762:⏚	252 .8	TGA
+C-X765:1	251 .3	TGA
+C-X765:2	251 .3	TGA
+C-X765:3	251 .3	TGA
+C-X765:4		
+C-X765:5		
+C-X765:6		
+C-X765:⏚	251 .3	TGA
+C-X766:1	257 .4	TGA
+C-X766:2	257 .4	TGA
+C-X766:3	257 .4	TGA
+C-X766:4	257 .4	TGA
+C-X766:5	257 .5	TGA
+C-X766:6	257 .5	TGA
+C-X766:⏚	257 .3	TGA
+C-X767:1	253 .1	TGA
+C-X767:2	253 .1	TGA
+C-X767:3	253 .2	TGA
+C-X767:4	253 .2	TGA
+C-X767:5	253 .2	TGA
+C-X767:6	253 .2	TGA
+C-X767:7	254 .1	TGA
+C-X767:8	254 .1	TGA
+C-X767:9	254 .5	TGA

Terminal	Page .Col.	Opt.
+C-X767:10		
+C-X767:11		
+C-X767:12		
+C-X767:13		
+C-X767:14		
+C-X767:15		
+C-X767:16		
+C-X767:17		
+C-X767:18		
+C-X767:19		
+C-X767:20		
+C-X767:21		
+C-X767:22		
+C-X767:23		
+C-X767:24		
+C-X767:⏚	253 .2	TGA
+C-X840:1	018 .8	DIMC
+C-X840:2	018 .8	DIMC
+C-X840:3	018 .8	DIMC
+C-X840:4	018 .9	DIMC
+C-X840:5	018 .8	DIMC
+C-X871:1	005 .9	
+C-X871:2	005 .9	
+C-X871:3	005 .9	
+C-X871:4	005 .9	
+C-X871:5		
+C-X871:6		
+C-X871:⏚	005 .9	

Drawing remarks

Tetra Pak

Designer	LUP	Date	23/11/2007	Machine	Tetra Pak A3/Flex 0150
ECM No	320174	Denomination	CABINET TERMINAL SUMMARY	Page Type	CABINET TERMINAL SUMMARY
Company	Tetra Pak (Italy)	Document No.	2845987-0005	Doc. type	ELD
				Version	AE
				Page	012

This drawing must not without the consent of Tetra Pak be copied, transmitted or disclosed to any third party.

Cabinet terminal summary of 2845987-0003

Terminal	Page .Col.	Opt.
+C-X872:1	035 .8	
+C-X872:2	035 .8	
+C-X872:3		
+C-X872:4		
+C-X872:5		
+C-X872:6		
+C-X872:7		
+C-X872:8		
+C-X872:9		
+C-X872:10	150 .3	
+C-X872:11	150 .3	
+C-X872:12	150 .5	
+C-X872:13	150 .5	
+C-X872:14		
+C-X872:15		
+C-X872:16		
+C-X872:17		
+C-X872:18		
+C-X872:19		
+C-X872:20		
+C-X872:21		
+C-X872:22		
+C-X872:23		
+C-X872:24		
+C-X872:⏚		
+C-X900:BK	099 .5	
+C-X900:BU	099 .5	
+C-X900:RD	099 .5	

Terminal	Page .Col.	Opt.
+C-X900:SH	099 .5	
+C-X900:WH	099 .5	
+C-X901:101		
+C-X901:102		
+C-X901:103		
+C-X901:104		
+C-X901:105		
+C-X901:106		
+C-X901:107		
+C-X901:108		
+C-X901:109		
+C-X901:110		
+C-X901:111		
+C-X901:112		
+C-X901:113	150 .5	
+C-X901:114	150 .5	
+C-X901:115	150 .4	
+C-X901:116	150 .4	
+C-X901:117	127 .2	
+C-X901:118	127 .5	
+C-X901:119	127 .5	
+C-X901:120	127 .5	
+C-X901:121	127 .5	
+C-X901:122	127 .5	
+C-X901:123	127 .5	
+C-X901:124	127 .5	
+C-X901:125	127 .5	
+C-X901:126	128 .5	

Terminal	Page .Col.	Opt.
+C-X901:127	128 .6	
+C-X901:128	128 .5	
+C-X901:129	128 .5	
+C-X901:130	128 .5	
+C-X901:131	128 .5	
+C-X901:132	208 .4	
+C-X901:133	208 .7	
+C-X901:134	208 .4	
+C-X901:135	208 .4	
+C-X901:136	208 .4	
+C-X901:137	208 .4	
+C-X901:138	208 .4	
+C-X901:139	208 .4	
+C-X901:140	208 .4	
+C-X901:141		
+C-X901:142		
+C-X901:143		
+C-X901:144		
+C-X901:145		
+C-X901:146		
+C-X901:147		
+C-X901:148		
+C-X1710:1	038 .1	
+C-X1710:2	038 .2	
+C-X1710:3	038 .2	
+C-X1710:4	038 .3	
+C-X1710:5	038 .4	
+C-X1710:6	038 .4	

Terminal	Page .Col.	Opt.
+C-X1710:7	038 .3	
+C-X1710:8	038 .5	
+C-X1710:9	038 .6	
+C-X1710:11	038 .5	
+C-X1710:12	038 .10	
+C-X1710:13	038 .8	
+C-X1710:14	038 .8	
+C-X1710:15	038 .7	
+C-X1710:16	038 .8	
+C-X1710:17	038 .9	
+C-X1710:18	038 .7	
+C-X1710:19	038 .8	
+C-X1710:⏚	038 .2	
+C-X1710:⏚	038 .4	
+C-X1710:⏚	038 .6	
+C-X4011:	051 .7	

Drawing remarks

Tetra Pak

Designer LUP	Date 23/11/2007	Machine Tetra Pak A3/Flex 0150	
ECM No 320174	Denomination CABINET TERMINAL SUMMARY	Page Type CABINET TERMINAL SUMMARY	
Company Tetra Pak (Italy)	Document No. 2845987-0005	Doc. type ELD	Version AE	Page 013

This page intentionally left blank

7 Terminal Strip Overview

TechPub_2614345_v3_DRAFT_Release07_EM2851302_05en.fm

Description

All terminals used in the equipment except for those in the electrical cabinet are listed in this chapter.

TechPub_2614345_v3_DRAFT_Release07_EM2851302_05en.fm

RELEASED

This drawing must not without the consent of Tetra Pak be copied, transmitted or disclosed to any third party.

1 2 3 4 5 6 7 8 9 10

Terminal strip of 2845987-0003

+M-X001

From	Cable	Internal Jumper	Terminal	External Jumper	Cable	To	Page.Col.	Option	Function text
			⏚			+M-Z001:⏚	005 .3		
			⏚			+M-Z002:⏚	005 .3		

Drawing remarks

Tetra Pak

Designer LUP	Date 23/11/2007	Machine Tetra Pak A3/Flex 0150	
ECM No 320174	Denomination TERMINAL STRIP OVERVIEW	Page Type TERMINAL STRIP OVERVIEW	
Company Tetra Pak (Italy)	Document No. 2845987-0006	Doc. type ELD	Version AE / Page 001

This drawing must not without the consent of Tetra Pak be copied, transmitted or disclosed to any third party.

1 2 3 4 5 6 7 8 9 10

Terminal strip of 2845987-0003

+M-X002

From	Cable	Internal Jumper	Terminal	External Jumper	Cable	To	Page.Col.	Option	Function text
GND:			1			+M-X701:⏚	005 .6		
PE:			2			+M-Z760:⏚	243 .5		
PE:			3			+M-Z750:⏚	243 .2		
PE:			4			+M-E721:⏚	250 .6		LIGHTING CABINET
PE:			5			+M-Z751:⏚	247 .2		
PE:			6			+C-Z761:⏚	247 .5		
PE:			7			+C-X725:⏚	253 .3		
PE:			8			+M-X768:⏚	044 .5		
GND:			9				254 .7		
GND:			10			+C-X765:⏚	251 .3		
PE:			11			+C-X761:⏚	252 .8		
PE:			12			+C-X762:⏚	252 .8		
PE:			13			+M-Z725:⏚	253 .2		
PE:			14			+M-X722:E	250 .8		WALL SOCKET
PE:			15			+C-X767:⏚	253 .3		
			16			+C-X766:⏚	257 .3	TGA	
PE:			17		+M-W720 :GNYE	+C-M720:⏚	250 .3		AIR CONDITION
			18						
			19			+C-X766:6	257 .5	TGA	
			20						

Drawing remarks

Tetra Pak

Designer LUP	Date 23/11/2007	Machine Tetra Pak A3/Flex 0150	
ECM No 320174	Denomination TERMINAL STRIP OVERVIEW	Page Type TERMINAL STRIP OVERVIEW	
Company Tetra Pak (Italy)	Document No. 2845987-0006	Doc. type ELD	Version AE	Page 002

RELEASED

This drawing must not without the consent of Tetra Pak be copied, transmitted or disclosed to any third party.

Terminal strip of 2845987-0003

+M-X003

From	Cable	Internal Jumper	Terminal	External Jumper	Cable	To	Page.Col.	Option	Function text
+M-Q100:N1			1			+M-X701:4	005 .6		
+C-X003:55			2			+M-Z760:2	243 .4		
			3			+C-X761:2	252 .9		
			4			+M-E721:2	250 .7		LIGHTING CABINET
			5			+C-X762:2	252 .9		
			6			+M-F722:3	250 .9		
			7						
			8						
			9						
			10						
			11						
			12						
			13		+M-W720 :BU	+C-M720:BU	250 .2		AIR CONDITION
			14						
			15						
			16			+C-Z761:2	247 .4		

Drawing remarks

Tetra Pak

Designer LUP	Date 23/11/2007	Machine Tetra Pak A3/Flex 0150	
ECM No 320174	Denomination TERMINAL STRIP OVERVIEW	Page Type TERMINAL STRIP OVERVIEW	
Company Tetra Pak (Italy)	Document No. 2845987-0006	Doc. type ELD	Version AE	Page 003

This drawing must not without the consent of Tetra Pak
be copied, transmitted or disclosed to any third party.

1 2 3 4 5 6 7 8 9 10

Terminal strip of 2845987-0003

+M-X701

From	Cable	Internal Jumper	Terminal	External Jumper	Cable	To	Page.Col.	Option	Function text
+M-Q750:1			1		+M-W710 :1	+C-X871:1	005 .7	TGA	
+M-Q750:3			2		+M-W710 :2	+C-X871:2	005 .7	TGA	
+M-Q750:5			3		+M-W710 :3	+C-X871:3	005 .7	TGA	
+M-X003:1			4		+M-W710 :4	+C-X871:4	005 .7	TGA	
+M-X002:1			⏚		+M-W710 :GNYE	+C-X871:⏚	005 .7	TGA	

Drawing remarks

Tetra Pak

Designer LUP	Date 23/11/2007	Machine Tetra Pak A3/Flex 0150	
ECM No 320174	Denomination TERMINAL STRIP OVERVIEW	Page Type TERMINAL STRIP OVERVIEW	
Company Tetra Pak (Italy)	Document No. 2845987-0006	Doc. type ELD	Version AE	Page 004

This drawing must not without the consent of Tetra Pak be copied, transmitted or disclosed to any third party.

1 2 3 4 5 6 7 8 9 10

Terminal strip of 2845987-0003

+M-X768

From	Cable	Internal Jumper	Terminal	External Jumper	Cable	To	Page.Col.	Option	Function text
+C-X708:1	+M-W768 :1		1			+M-K750:A2	044 .4	TGA	POWER ON SERVO RACK 1
+C-X767:8									
+C-X708:2	+M-W768 :2		2			+M-Q750:1.13	044 .4	TGA	
+M-XL313:101									
+C-X708:3	+M-W768 :3		3			+M-XL323:101	044 .4	TGA	
						+M-Z725:P			
+C-X708:4	+M-W768 :4		4			+M-A706:7	044 .4	TGA	
+C-X708:5	+M-W768 :5		5			+M-A706:5	044 .4	TGA	
+C-X708:6	+M-W768 :6		6				044 .4	TGA	
+C-X708:7	+M-W768 :7		7				044 .4	TGA	
+C-X708:8	+M-W768 :8		8			+M-B720:2	044 .4	TGA	THERMOSTAT
+C-X708:9	+M-W768 :9		9			+M-B770:14	044 .4	TGA	EL. CABINET DOORS CLOSED
+C-X708:10	+M-W768 :10		10				044 .4	TGA	
+C-X708:11	+M-W768 :11		11				044 .4	TGA	
+C-X708:12	+M-W768 :12		12			+M-K040:A1	044 .4	TGA	BELT BRAKE
+C-X708:13	+M-W768 :13		13			+M-K041:A1	044 .4	TGA	FAN SERVO MOTORS
+C-X708:14	+M-W768 :14		14			+M-K721:8	044 .4	TGA	EL. CABINET LIGHTING
+C-X708:15	+M-W768 :15		15			+M-K720:A1	044 .4	TGA	ELECTRICAL CABINET CONDITIONING
+C-X708:16	+M-W768 :16		16				044 .4	TGA	
+C-X708:17	+M-W768 :17		17				044 .4	TGA	
+C-X708:18	+M-W768 :18		18				044 .4	TGA	
+C-X708:19	+M-W768 :19		19			+M-K750:21	044 .4	TGA	POWER ON SERVO RACK 1
+C-X708:20	+M-W768 :20		20			+M-A706:2	044 .4	TGA	
+C-X708:21	+M-W768 :21		21			+M-Q751:1.14	044 .4	TGA	
+C-X708:22	+M-W768 :22		22				044 .4	TGA	
+C-X708:23	+M-W768 :23		23				044 .4	TGA	
+C-X708:24	+M-W768 :24		24				044 .4	TGA	
+C-X708:⏚	+M-W768 :GNYE		⏚			+M-X002:8	044 .4	TGA	

Drawing remarks

Tetra Pak

Designer LUP	Date 23/11/2007	Machine Tetra Pak A3/Flex 0150	
ECM No 320174	Denomination TERMINAL STRIP OVERVIEW	Page Type TERMINAL STRIP OVERVIEW	
Company Tetra Pak (Italy)	Document No. 2845987-0006	Doc. type ELD	Version AE	Page 005

This drawing must not without the consent of Tetra Pak be copied, transmitted or disclosed to any third party.

1 2 3 4 5 6 7 8 9 10

Terminal strip of 2845987-0003

+M-X951

From	Cable	Internal Jumper	Terminal	External Jumper	Cable	To	Page.Col.	Option	Function text
+C-X452:13	+M-W2068 :WHYE		1			+M-A951:	060 .3		TPOP DISPLAY INIT
+C-X452:17	+M-W2068 :GYPK								
+C-X452:15	+M-W2068 :BNBU								
+C-X452:26	+M-W2068 :WH		2			+M-A951:	060 .3		TPOP DISPLAY INIT
+C-X452:24	+M-W2068 :WHPK		3			+M-A951:	060 .3		TPOP DISPLAY INIT
+C-X452:23	+M-W2068 :YE		4			+M-A951:	060 .3		TPOP DISPLAY INIT
+C-X452:22	+M-W2068 :GY		5			+M-A951:	060 .3		TPOP DISPLAY INIT
+C-X452:21	+M-W2068 :PK		6			+M-A951:	060 .3		TPOP DISPLAY INIT
+C-X452:20	+M-W2068 :PKBN		7			+M-A951:	060 .3		TPOP DISPLAY INIT
+C-X452:19	+M-W2068 :RD		8			+M-A951:	060 .3		TPOP DISPLAY INIT
+C-X452:1	+M-W2068 :OG		9			+M-A951:	060 .3		TPOP DISPLAY INIT
+C-X452:2	+M-W2068 :WH		10			+M-A951:	060 .3		TPOP DISPLAY INIT
+C-X452:3	+M-W2068 :GN		11			+M-A951:	060 .3		TPOP DISPLAY INIT
+C-X452:4	+M-W2068 :WH		12			+M-A951:	060 .3		TPOP DISPLAY INIT
+C-X452:5	+M-W2068 :BU		13			+M-A951:	060 .3		TPOP DISPLAY INIT
+C-X452:6	+M-W2068 :WH		14			+M-A951:	060 .3		TPOP DISPLAY INIT
+C-X452:7	+M-W2068 :BN		15			+M-A951:	060 .3		TPOP DISPLAY INIT
+C-X452:8	+M-W2068 :WH		16			+M-A951:	060 .3		TPOP DISPLAY INIT
+C-X452:16	+M-W2068 :RDBU		17			+M-A951:	060 .3		TPOP DISPLAY INIT
+C-X452:12	+M-W2068 :YEBN								
+C-X452:14	+M-W2068 :BNGN								
+C-X452:27	+M-W2068 :SH		18			+M-A951:	060 .3		TPOP DISPLAY INIT

Drawing remarks

Tetra Pak

Designer LUP	Date 23/11/2007	Machine Tetra Pak A3/Flex 0150	
ECM No 320174	Denomination TERMINAL STRIP OVERVIEW	Page Type TERMINAL STRIP OVERVIEW	
Company Tetra Pak (Italy)	Document No. 2845987-0006	Doc. type ELD	Version AE	Page 006

This drawing must not without the consent of Tetra Pak be copied, transmitted or disclosed to any third party.

Terminal strip of 2845987-0003

+M-X1001

From	Cable	Internal Jumper	Terminal	External Jumper	Cable	To	Page.Col.	Option	Function text
			⏚						
			⏚		+M-W1046 :GNYE	PE:	061 .7		
			⏚						
			⏚		+M-W1045 :GNYE	PE:	061 .5		
			⏚						
+C-X206:1	+M-W1002 :1		101		+M-W1032 :BK	+M-B1301:	135 .5		A-VALVE POSITION
			101+		+M-W1032 :BN	+M-B1301:	135 .3		A-VALVE POSITION
			101-		+M-W1032 :BU	+M-B1301:	135 .3		A-VALVE POSITION
+C-X206:2	+M-W1002 :2		102		+M-W1033 :BK	+M-B1302:	135 .5		B-VALVE POSITION
			102+		+M-W1033 :BN	+M-B1302:	135 .3		B-VALVE POSITION
			102-		+M-W1033 :BU	+M-B1302:	135 .3		B-VALVE POSITION
+C-X206:3	+M-W1002 :3		103		+M-W1034 :BK	+M-B1303:	135 .5		C-VALVE POSITION
			103+		+M-W1034 :BN	+M-B1303:	135 .3		C-VALVE POSITION
			103-		+M-W1034 :BU	+M-B1303:	135 .3		C-VALVE POSITION
+C-X206:4	+M-W1002 :4		104		+M-W1035 :BK	+M-B1306:	136 .6		CLEANING PIPE INFEED CONNECTOR
			104+		+M-W1035 :BN	+M-B1306:	136 .3		CLEANING PIPE INFEED CONNECTOR
			104-		+M-W1035 :BU	+M-B1306:	136 .3		CLEANING PIPE INFEED CONNECTOR
+C-X206:5	+M-W1002 :5		105		+M-W1036 :BK	+M-B1307:	136 .6		STERILE AIR PIPE CONNECTED
			105+		+M-W1036 :BN	+M-B1307:	136 .3		STERILE AIR PIPE CONNECTED
			105-		+M-W1036 :BU	+M-B1307:	136 .3		STERILE AIR PIPE CONNECTED
+C-X206:6	+M-W1002 :6		106				136 .6		
			106+				136 .3		
			106-				136 .3		
+C-X206:7	+M-W1002 :7		107				233 .3		
			107+				233 .2		
			107-				233 .2		
+C-X206:8	+M-W1002 :8		108				233 .3		
			108+				233 .2		
			108-				233 .2		
+C-X206:9	+M-W1002 :9		109				233 .3		

Drawing remarks

Tetra Pak

Designer LUP	Date 23/11/2007	Machine Tetra Pak A3/Flex 0150	
ECM No 320174	Denomination TERMINAL STRIP OVERVIEW	Page Type TERMINAL STRIP OVERVIEW	
Company Tetra Pak (Italy)	Document No. 2845987-0006	Doc. type ELD	Version AE	Page 007

This drawing must not without the consent of Tetra Pak be copied, transmitted or disclosed to any third party.

1 2 3 4 5 6 7 8 9 10

Terminal strip of 2845987-0003

+M-X1001

From	Cable	Internal Jumper	Terminal	External Jumper	Cable	To	Page.Col.	Option	Function text
			109+				233 .2		
			109-				233 .2		
+C-X206:10	+M-W1002 :10		110				061 .2		
			110+				233 .2		
			110-				233 .2		
+C-X206:11	+M-W1002 :11		111				061 .2		
			111+				233 .2		
			111-				233 .2		
+C-X206:12	+M-W1002 :12		112				061 .3		
			112+				233 .2		
			112-				233 .2		
			113				061 .3		
			113+				233 .2		
			113-				233 .2		
			114		+M-W1045 :1	+M-B1505:21	061 .3		MIDDLE FRONT DOOR
			114+				233 .2		
			114-				233 .2		
			115		+M-W1045 :2	+M-B1505:11	061 .3		MIDDLE FRONT DOOR
			115+				233 .2		
			115-				233 .2		
+C-X206:13	+M-W1002 :13		116		+M-W1045 :3	+M-B1505:12	061 .5		MIDDLE FRONT DOOR
			116+				233 .2		
			116-				233 .2		
			117		+M-W1045 :4	+M-B1505:22	061 .5		MIDDLE FRONT DOOR
			117+				233 .2		
			117-				233 .2		
			118		+M-W1046 :1	+M-B1506:21	061 .5		BOTTOM FRONT DOOR
			118+				233 .2		
			118-				233 .2		
			119		+M-W1046 :2	+M-B1506:11	061 .5		BOTTOM FRONT DOOR

Drawing remarks

Tetra Pak

Designer LUP	Date 23/11/2007	Machine Tetra Pak A3/Flex 0150	
ECM No 320174	Denomination TERMINAL STRIP OVERVIEW	Page Type TERMINAL STRIP OVERVIEW	
Company Tetra Pak (Italy)	Document No. 2845987-0006	Doc. type ELD	Version AE	Page 008

This drawing must not without the consent of Tetra Pak be copied, transmitted or disclosed to any third party.

1 2 3 4 5 6 7 8 9 10

Terminal strip of 2845987-0003

+M-X1001

From	Cable	Internal Jumper	Terminal	External Jumper	Cable	To	Page.Col.	Option	Function text
			119+				233 .2		
			119-				233 .2		
+C-X206:14	+M-W1002 :14		120		+M-W1046 :3	+M-B1506:12	061 .7		BOTTOM FRONT DOOR
			120+				233 .2		
			120-				233 .2		
+C-X206:15	+M-W1002 :15		121		+M-W1046 :4	+M-B1506:22	061 .7		BOTTOM FRONT DOOR
			121+				233 .2		
			121-				233 .2		
			122						
			122+				233 .2		
			122-				233 .2		
+C-X206:16	+M-W1002 :16		123				233 .3		
			123+				233 .2		
			123-				233 .2		
			124						
			124+				233 .2		
			124-				233 .2		
			125						
			125+				233 .2		
			125-				233 .2		
+C-X206:17	+M-W1002 :17		126				233 .3		
			126+				233 .2		
			126-				233 .2		
+C-X206:18	+M-W1002 :18		127				233 .3		
			127+				233 .2		
			127-				233 .2		
+C-X206:19	+M-W1002 :19		128				233 .3		
			128+				233 .2		
			128-				233 .2		
+C-X206:20	+M-W1002 :20		129				233 .3		

Drawing remarks

Tetra Pak

Designer LUP	Date 23/11/2007	Machine Tetra Pak A3/Flex 0150	
ECM No 320174	Denomination TERMINAL STRIP OVERVIEW	Page Type TERMINAL STRIP OVERVIEW	
Company Tetra Pak (Italy)	Document No. 2845987-0006	Doc. type ELD	Version AE / Page 009

This drawing must not without the consent of Tetra Pak be copied, transmitted or disclosed to any third party.

Terminal strip of 2845987-0003

+M-X1001

From	Cable	Internal Jumper	Terminal	External Jumper	Cable	To	Page.Col.	Option	Function text
+C-X206:23	+M-W1002 :23		129+				233 .2		
+C-X206:24	+M-W1002 :24		129-				233 .2		
+C-X206:21	+M-W1002 :21		130				233 .3		
			130+				233 .7		
			130-				233 .7		
+C-X206:22	+M-W1002 :22		131				233 .3		
			131+				233 .7		
			131-				233 .7		
			⏚						
			⏚						
			⏚						
			⏚						
			⏚				120 .5		
+C-X206:⏚	+M-W1002 :GNYE		⏚				233 .3		
			⏚						
			⏚						
			⏚						
+C-X211:1	+M-W1001 :1		132				233 .8		
			132+				233 .7		
			132-				233 .7		
+C-X211:2	+M-W1001 :2		133				233 .8		
			133+				233 .7		
			133-				233 .7		
+C-X211:3	+M-W1001 :3		134				233 .8		
			134+				233 .7		
			134-				233 .7		
+C-X211:4	+M-W1001 :4		135				233 .8		
			135+				233 .7		
			135-				233 .7		
+C-X211:5	+M-W1001 :5		136				233 .8		

Drawing remarks

Tetra Pak

Designer LUP	Date 23/11/2007	Machine Tetra Pak A3/Flex 0150	
ECM No 320174	Denomination TERMINAL STRIP OVERVIEW	Page Type TERMINAL STRIP OVERVIEW	
Company Tetra Pak (Italy)	Document No. 2845987-0006	Doc. type ELD	Version AE / Page 010

This drawing must not without the consent of Tetra Pak
be copied, transmitted or disclosed to any third party.

1 2 3 4 5 6 7 8 9 10

Terminal strip of 2845987-0003

+M-X1001

From	Cable	Internal Jumper	Terminal	External Jumper	Cable	To	Page.Col.	Option	Function text
			136+				233 .7		
			136-				233 .7		
+C-X211:6	+M-W1001 :6		137				233 .8		
			137+				233 .7		
			137-				233 .7		
+C-X211:7	+M-W1001 :7		138				233 .8		
			138+				233 .7		
			138-				233 .7		
+C-X211:8	+M-W1001 :8		139				233 .8		
			139+				233 .7		
			139-				233 .7		
+C-X211:9	+M-W1001 :9		140				233 .8		
			140+				233 .7		
			140-				233 .7		
+C-X211:10	+M-W1001 :10		141				233 .8		
			141+				233 .7		
			141-				233 .7		
+C-X211:11	+M-W1001 :11		142				233 .8		
			142+				233 .7		
			142-				233 .7		
+C-X211:12	+M-W1001 :12		143				233 .8		
			143+				233 .7		
			143-				233 .7		
+C-X211:13	+M-W1001 :13		144				233 .8		
			144+				233 .7		
			144-				233 .7		
+C-X211:14	+M-W1001 :14		145		+M-W1801 :3	+M-B1801:3	132 .5		ICU STEAM INLET VALVE OPEN
			145+		+M-W1801 :1	+M-B1801:1	132 .3		ICU STEAM INLET VALVE OPEN
			145-		+M-W1801 :2	+M-B1801:4	132 .3		ICU STEAM INLET VALVE OPEN
+C-X211:15	+M-W1001 :15		146				233 .8		

Drawing remarks

Tetra Pak

Designer LUP	Date 23/11/2007	Machine Tetra Pak A3/Flex 0150	
ECM No 320174	Denomination TERMINAL STRIP OVERVIEW	Page Type TERMINAL STRIP OVERVIEW	
Company Tetra Pak (Italy)	Document No. 2845987-0006	Doc. type ELD	Version AE	Page 011

This drawing must not without the consent of Tetra Pak
be copied, transmitted or disclosed to any third party.

1 2 3 4 5 6 7 8 9 10

Terminal strip of 2845987-0003

+M-X1001

From	Cable	Internal Jumper	Terminal	External Jumper	Cable	To	Page.Col.	Option	Function text
			146+				233 .7		
			146-				233 .7		
+C-X211:16	+M-W1001 :16		147				233 .8		
			147+				233 .7		
			147-				233 .7		
+C-X211:17	+M-W1001 :17		148				233 .8		
			148+				233 .7		
			148-				233 .7		
+C-X211:18	+M-W1001 :18		149				233 .8		
			149+				233 .7		
			149-				233 .7		
+C-X211:19	+M-W1001 :19		150				233 .8		
			150+				233 .7		
			150-				233 .7		
+C-X211:20	+M-W1001 :20		151				233 .8		
			151+				233 .7		
			151-				233 .7		
+C-X211:21	+M-W1001 :21		152		+M-W1823 :2	+M-B1823:11	120 .5		ICU DOOR
			152+		+M-W1823 :3	+M-B1823:12	120 .3		ICU DOOR
			152-				233 .7		
+C-X211:22	+M-W1001 :22		153				233 .8		
+C-X211:23	+M-W1001 :23		153+				233 .8		
+C-X211:24	+M-W1001 :24		153-				233 .8		
+C-X211:⏚	+M-W1001 :GNYE		⏚				233 .8		
			⏚				132 .3		
			⏚						
			⏚						

Drawing remarks

Tetra Pak

Designer	Date	Machine
LUP	23/11/2007	Tetra Pak A3/Flex 0150

ECM No	Denomination	Page Type
320174	TERMINAL STRIP OVERVIEW	TERMINAL STRIP OVERVIEW

Company	Document No.	Doc. type	Version	Page
Tetra Pak (Italy)	2845987-0006	ELD	AE	012

This drawing must not without the consent of Tetra Pak be copied, transmitted or disclosed to any third party.

1	2	3	4	5	6	7	8	9	10

Terminal strip of 2845987-0003

+M-X1002

From	Cable	Internal Jumper	Terminal	External Jumper	Cable	To	Page.Col.	Option	Function text
			⏚						
+C-X502:1	+M-W1502 :1		1		+M-W1504 :1	+M-R1204:1	007 .2		HEATING SURFACE 1-2
+C-X502:3	+M-W1502 :3		2		+M-W1504 :2	+M-R1204:2	007 .4		HEATING SURFACE 1-2
			3		+M-W1505 :2	+M-R1205:2	007 .4		HEATING SURFACE 1-2
+C-X502:2	+M-W1502 :2		4		+M-W1505 :1	+M-R1205:1	007 .3		HEATING SURFACE 1-2
+C-X502:⏚	+M-W1502 :GNYE		⏚				007 .8		
+C-X502:4	+M-W1502 :4		5		+M-W1506 :1	+M-R1206:1	007 .6		HEATING SURFACE 3-4
+C-X502:5	+M-W1502 :5		6		+M-W1507 :1	+M-R1207:1	007 .7		HEATING SURFACE 3-4
			7		+M-W1506 :2	+M-R1206:2	007 .9		HEATING SURFACE 3-4
+C-X502:6	+M-W1502 :6		8		+M-W1507 :2	+M-R1207:2	007 .8		HEATING SURFACE 3-4
			⏚						
+C-X308:+	+M-W1305 :YE		101+			+M-B1204:+	110 .2		TEMP.BATH HEAT SURF.1(EXT. INLET)
+C-X308:-	+M-W1305 :RD		101-			+M-B1204:-	110 .2		TEMP.BATH HEAT SURF.1(EXT. INLET)
+C-X317:+	+M-W1322 :YE		102+			+M-B1205:+	112 .2		TEMP.BATH HEAT 2(INT.INLET)
+C-X317:-	+M-W1322 :RD		102-			+M-B1205:-	112 .2		TEMP.BATH HEAT 2(INT.INLET)
+C-X318:+	+M-W1323 :YE		103+			+M-B1206:+	112 .2		TEMP. BATH HEAT 3(INT.OUTLET)
+C-X318:-	+M-W1323 :RD		103-			+M-B1206:-	112 .2		TEMP. BATH HEAT 3(INT.OUTLET)
+C-X312:+	+M-W1320 :YE		104+			+M-B1207:+	110 .2		TEMP.BATH HEAT SURF.4(EXT.OUTLET)
+C-X312:-	+M-W1320 :RD		104-			+M-B1207:-	110 .2		TEMP.BATH HEAT SURF.4(EXT.OUTLET)
			⏚						

Drawing remarks

Tetra Pak

Designer	Date	Machine
LUP	23/11/2007	Tetra Pak A3/Flex 0150

ECM No	Denomination	Page Type
320174	TERMINAL STRIP OVERVIEW	TERMINAL STRIP OVERVIEW

Company	Document No.	Doc. type	Version	Page
Tetra Pak (Italy)	2845987-0006	ELD	AE	013

This drawing must not without the consent of Tetra Pak be copied, transmitted or disclosed to any third party.

1 2 3 4 5 6 7 8 9 10

Terminal strip of 2845987-0003

+M-X1003

From	Cable	Internal Jumper	Terminal	External Jumper	Cable	To	Page.Col.	Option	Function text
			⏚		+M-W1066 :GNYE	+M-B1220:⏚	046 .4		PEROXIDE BATH LEVEL
			⏚		+M-W1029 :GNYE	+M-B1230:⏚	046 .4		FILLING SPRAY TANK
			⏚		+M-W1030 :GNYE	+M-Y1230:E	198 .6		FILLING SPRAY TANK
			⏚		+M-W1031 :GNYE	+M-Y1231:E	199 .6		SPRAYING
			⏚		+M-W1044 :GNYE	PE:	067 .4		
PE:			⏚		+M-W1047 :GNYE	+M-B1224:⏚	061 .4		BOTTOM COVER CLOSED 1
+C-X217:1	+M-W1004 :1		101				235 .3		
			• 101+				235 .2		
			• 101-				235 .2		
+C-X217:2	+M-W1004 :2		102				235 .3		
			• 102+				235 .2		
			• 102-				235 .2		
+C-X217:3	+M-W1004 :3		103		+M-W1066 :1	+M-B1220:⏚	046 .4		PEROXIDE BATH LEVEL
			• 103+				235 .2		
			• 103-				235 .2		
+C-X217:4	+M-W1004 :4		104		+M-W1066 :2	+M-B1220:1	046 .4		PEROXIDE BATH LEVEL
			• 104+				235 .2		
			• 104-				235 .2		
+C-X217:5	+M-W1004 :5		105		+M-W1029 :1	+M-B1230:⏚	046 .4		FILLING SPRAY TANK
			• 105+				235 .2		
			• 105-				235 .2		
+C-X217:6	+M-W1004 :6		106		+M-W1029 :2	+M-B1230:1	046 .4		FILLING SPRAY TANK
			• 106+				235 .2		
			• 106-				235 .2		
+C-X217:7	+M-W1004 :7		107		+M-W1029 :3	+M-B1230:2	046 .4		FILLING SPRAY TANK
			• 107+				235 .2		
			• 107-				235 .2		
+C-X217:8	+M-W1004 :8		108		+M-W1030 :1	+M-Y1230:1	198 .4		FILLING SPRAY TANK
			• 108+				235 .2		
			• 108-		+M-W1030 :2	+M-Y1230:2	198 .6		FILLING SPRAY TANK

Drawing remarks

Tetra Pak

Designer LUP	Date 23/11/2007	Machine Tetra Pak A3/Flex 0150	
ECM No 320174	Denomination TERMINAL STRIP OVERVIEW	Page Type TERMINAL STRIP OVERVIEW	
Company Tetra Pak (Italy)	Document No. 2845987-0006	Doc. type ELD	Version AE	Page 014

This drawing must not without the consent of Tetra Pak
be copied, transmitted or disclosed to any third party.

1 2 3 4 5 6 7 8 9 10

Terminal strip of 2845987-0003

+M-X1003

From	Cable	Internal Jumper	Terminal	External Jumper	Cable	To	Page.Col.	Option	Function text
+C-X217:9	+M-W1004 :9		109		+M-W1031 :1	+M-Y1231:1	199 .4		SPRAYING
			109+				235 .2		
			109-		+M-W1031 :2	+M-Y1231:2	199 .6		SPRAYING
			110						
			110+		+M-W1041 :1	+M-B1508:21	067 .2		DRYING CHAMBER DOOR GUARD
			110-		+M-W1041 :2	+M-B1508:11	067 .2		DRYING CHAMBER DOOR GUARD
+C-X217:11	+M-W1004 :11		111		+M-W1232 :1	+M-Y1232:1	199 .4		SAFETY EXHAUST
			111+				235 .2		
			111-		+M-W1232 :2	+M-Y1232:2	199 .6		SAFETY EXHAUST
			112		+M-W1041 :3	+M-B1508:12	067 .4		DRYING CHAMBER DOOR GUARD
			112+				235 .2		
			112-				235 .2		
+C-X217:10	+M-W1004 :10		113		+M-W1041 :4	+M-B1508:22	067 .4		DRYING CHAMBER DOOR GUARD
			113+				235 .2		
			113-				235 .2		
+C-X217:12	+M-W1004 :12		114		+M-W1233 :1	+M-Y1233:1	199 .4		SAFETY SPRAY
			114+		+M-W1044 :1	+M-B1504:21	067 .2		PENDULUM ROLLER DOOR GUARD
			114-		+M-W1233 :2	+M-Y1233:2	199 .6		SAFETY SPRAY
			115		+M-W1044 :2	+M-B1504:11	067 .2		PENDULUM ROLLER DOOR GUARD
			115+				235 .2		
			115-				235 .2		
			116		+M-W1044 :3	+M-B1504:12	067 .4		PENDULUM ROLLER DOOR GUARD
			116+				235 .2		
			116-				235 .2		
			117		+M-W1044 :4	+M-B1504:22	067 .4		PENDULUM ROLLER DOOR GUARD
			117+				235 .2		
			117-				235 .2		
+C-X217:14	+M-W1004 :14		118				235 .3		
			118+				235 .2		
			118-				235 .2		

Drawing remarks

Tetra Pak

Designer LUP	Date 23/11/2007	Machine Tetra Pak A3/Flex 0150	
ECM No 320174	Denomination TERMINAL STRIP OVERVIEW	Page Type TERMINAL STRIP OVERVIEW	
Company Tetra Pak (Italy)	Document No. 2845987-0006	Doc. type ELD	Version AE	Page 015

This drawing must not without the consent of Tetra Pak be copied, transmitted or disclosed to any third party.

Terminal strip of 2845987-0003

+M-X1003

From	Cable	Internal Jumper	Terminal	External Jumper	Cable	To	Page.Col.	Option	Function text
			119		+M-W1047 :BU	+M-B1224:BU	061 .4		BOTTOM COVER CLOSED 1
			119+		+M-W1047 :BK	+M-B1224:BK	061 .2		BOTTOM COVER CLOSED 1
			119-				235 .2		
			120		+M-W1064 :BK	+M-B1225:BK	061 .4		BOTTOM COVER CLOSED 2
			120+				235 .2		
			120-				235 .2		
+C-X217:15	+M-W1004 :15		121		+M-W1064 :BU	+M-B1225:BU	061 .6		BOTTOM COVER CLOSED 2
			121+				235 .2		
			121-				235 .2		
+C-X217:16	+M-W1004 :16		122		+M-W1043 :BK	+M-B1502:	134 .6		MOVABLE SQUEZE ROLLER
			122+		+M-W1043 :BN	+M-B1502:	134 .4		MOVABLE SQUEZE ROLLER
			122-		+M-W1043 :BU	+M-B1502:	134 .4		MOVABLE SQUEZE ROLLER
+C-X217:17	+M-W1004 :17		123		+M-W1016 :BK	+M-B1111:	132 .5		PREHEATING VALVE
			123+		+M-W1016 :BN	+M-B1111:	132 .3		PREHEATING VALVE
			123-		+M-W1016 :BU	+M-B1111:	132 .3		PREHEATING VALVE
+C-X217:18	+M-W1004 :18		124				235 .3		
			124+				235 .2		
			124-				235 .2		
+C-X217:19	+M-W1004 :19		125		+M-W1050 :BK	+M-B1403:	115 .5		PACK. MATERIAL SPLICE DETECTION IN COL
			125+		+M-W1050 :BN	+M-B1403:	115 .3		PACK. MATERIAL SPLICE DETECTION IN COL
			125-		+M-W1050 :BU	+M-B1403:	115 .3		PACK. MATERIAL SPLICE DETECTION IN COL
+C-X217:20	+M-W1004 :20		126		+M-W1058 :1	+M-S1003:51	128 .2		TOP PLATFORM
			126+				235 .2		
			126-				235 .2		
+C-X217:21	+M-W1004 :21		127		+M-W1058 :2	+M-S1003:52	128 .3		TOP PLATFORM
			127+				235 .2		
			127-				235 .2		
+C-X217:22	+M-W1004 :22		128		+M-W1026 :BK	+M-B1240:	134 .6		LOWER FORMING RING UP
+C-X217:23	+M-W1004 :23		128+		+M-W1026 :BN	+M-B1240:	134 .4		LOWER FORMING RING UP
+C-X217:24	+M-W1004 :24		128-		+M-W1026 :BU	+M-B1240:	134 .4		LOWER FORMING RING UP

Drawing remarks

Tetra Pak

Designer: LUP	Date: 23/11/2007	Machine: Tetra Pak A3/Flex 0150	
ECM No: 320174	Denomination: TERMINAL STRIP OVERVIEW	Page Type: TERMINAL STRIP OVERVIEW	
Company: Tetra Pak (Italy)	Document No.: 2845987-0006	Doc. type: ELD	Version: AE	Page: 016

This drawing must not without the consent of Tetra Pak be copied, transmitted or disclosed to any third party.

Terminal strip of 2845987-0003

+M-X1003

From	Cable	Internal Jumper	Terminal	External Jumper	Cable	To	Page.Col.	Option	Function text
PE:			⏚		+M-W1064 :GNYE	+M-B1225:⏚	061 .6		BOTTOM COVER CLOSED 2
+C-X217:⏚	+M-W1004 :GNYE		⏚		+M-W1058 :GNYE	+M-S1003:⏚	128 .3		TOP PLATFORM
+C-X224:⏚	+M-W1006 :GNYE		⏚				235 .7		
			⏚		+M-W1041 :GNYE	PE:	067 .4		
			⏚		+M-W1232 :GNYE	+M-Y1232:E	199 .6		SAFETY EXHAUST
+C-X224:1	+M-W1006 :1		129				235 .7	H.I.	
			129+						
			• 129-				235 .6		
+C-X224:2	+M-W1006 :2		130				235 .7		
			• 130+				235 .6		
			• 130-				235 .6		
+C-X224:3	+M-W1006 :3		131				235 .7		
			• 131+				235 .6		
			• 131-				235 .6		
+C-X224:4	+M-W1006 :4		132				235 .7		
			• 132+				235 .6		
			• 132-				235 .6		
+C-X224:5	+M-W1006 :5		133		+M-W1060 :BK	+M-B1241:	134 .6		NEW BUTT. VALVE (RESTRICTION ON)
			• 133+		+M-W1060 :BN	+M-B1241:	134 .4		NEW BUTT. VALVE (RESTRICTION ON)
			• 133-		+M-W1060 :BU	+M-B1241:	134 .4		NEW BUTT. VALVE (RESTRICTION ON)
+C-X224:6	+M-W1006 :6		134		+M-W1061 :BK	+M-B1242:	134 .6		NEW BUTT. VALVE (RESTRICTION OFF)
			• 134+		+M-W1061 :BN	+M-B1242:	134 .4		NEW BUTT. VALVE (RESTRICTION OFF)
			• 134-		+M-W1061 :BU	+M-B1242:	134 .4		NEW BUTT. VALVE (RESTRICTION OFF)
+C-X224:7	+M-W1006 :7		135				235 .7		
			• 135+				235 .6		
			• 135-				235 .6		
+C-X224:8	+M-W1006 :8		136				235 .7		
			• 136+				235 .6		
			• 136-				235 .6		
+C-X224:9	+M-W1006 :9		137		+M-W1049 :BK	+M-B1404:	134 .6		ROTATION GUARD COLUMN

Drawing remarks

Tetra Pak

Designer LUP	Date 23/11/2007	Machine Tetra Pak A3/Flex 0150	
ECM No 320174	Denomination TERMINAL STRIP OVERVIEW	Page Type TERMINAL STRIP OVERVIEW	
Company Tetra Pak (Italy)	Document No. 2845987-0006	Doc. type ELD	Version AE	Page 017

This drawing must not without the consent of Tetra Pak be copied, transmitted or disclosed to any third party.

1 2 3 4 5 6 7 8 9 10

Terminal strip of 2845987-0003

+M-X1003

From	Cable	Internal Jumper	Terminal	External Jumper	Cable	To	Page.Col.	Option	Function text
+C-X224:10	+M-W1006 :10		137+		+M-W1049 :BN	+M-B1404:	134 .4		ROTATION GUARD COLUMN
+C-X224:11	+M-W1006 :11		137-		+M-W1049 :BU	+M-B1404:	134 .4		ROTATION GUARD COLUMN
			138						
			138+				235 .6		
			138-				235 .6		
			139						
			139+				235 .6		
			139-				235 .6		
			140						
			140+				235 .6		
			140-				235 .6		
			141						
			141+				235 .6		
			141-				235 .6		
			142						
			142+				235 .6		
			142-				235 .6		
			143						
			143+				235 .6		
			143-				235 .6		
			144						
			144+				235 .6		
			144-				235 .6		
			145						
			145+				235 .6		
			145-				235 .6		
			146						
			146+				235 .6		
			146-				235 .6		
			147						

Drawing remarks

Tetra Pak

Designer LUP	Date 23/11/2007	Machine Tetra Pak A3/Flex 0150	
ECM No 320174	Denomination TERMINAL STRIP OVERVIEW	Page Type TERMINAL STRIP OVERVIEW	
Company Tetra Pak (Italy)	Document No. 2845987-0006	Doc. type ELD	Version AE	Page 018

This drawing must not without the consent of Tetra Pak be copied, transmitted or disclosed to any third party.

Terminal strip of 2845987-0003

+M-X1003

From	Cable	Internal Jumper	Terminal	External Jumper	Cable	To	Page.Col.	Option	Function text
			147+				235 .6		
			147-				235 .6		
			⏚		+M-W1233 :GNYE	+M-Y1233:E	199 .6		SAFETY SPRAY
			⏚						
			⏚						
			⏚		+M-W1067 :GNYE	PE:	067 .6		
			⏚		+M-W1011 :GNYE	PE:	149 .5		
			⏚		+M-W1048 :GNYE	PE:	149 .2		
			⏚		+M-W1015 :GNYE	+M-B1104:⏚	046 .4		LEVEL SENSOR SEAL WATER
			⏚		+M-W1065 :GNYE	+M-B1322:⏚	047 .3		REGULATING VALVE LEAKAGE
			148		+M-W1067 :1	+M-B1509:21	067 .4		EXTRA DRYER DOOR GUARD
			148+				236 .2		
			148-				236 .2		
			149		+M-W1067 :2	+M-B1509:11	067 .4		EXTRA DRYER DOOR GUARD
			149+				236 .2		
			149-				236 .2		
+C-X212:1	+M-W1003 :1		150		+M-W1067 :3	+M-B1509:12	067 .6		EXTRA DRYER DOOR GUARD
			150+				236 .2		
			150-				236 .2		
+C-X212:2	+M-W1003 :2		151		+M-W1067 :4	+M-B1509:22	067 .6		EXTRA DRYER DOOR GUARD
			151+				236 .2		
			151-				236 .2		
			152				236 .3		
			152+				236 .2		
			152-				236 .2		
			153				236 .3		
			153+				236 .2		
			153-				236 .2		
			154				236 .3		
			154+				236 .2		

Drawing remarks

Tetra Pak

Designer LUP	Date 23/11/2007	Machine Tetra Pak A3/Flex 0150	
ECM No 320174	Denomination TERMINAL STRIP OVERVIEW	Page Type TERMINAL STRIP OVERVIEW	
Company Tetra Pak (Italy)	Document No. 2845987-0006	Doc. type ELD	Version AE	Page 019

This drawing must not without the consent of Tetra Pak
be copied, transmitted or disclosed to any third party.

1 2 3 4 5 6 7 8 9 10

Terminal strip of 2845987-0003

+M-X1003

From	Cable	Internal Jumper	Terminal	External Jumper	Cable	To	Page.Col.	Option	Function text
			154-				236 .2		
			155				236 .3		
			155+				236 .2		
			155-				236 .2		
+C-X212:4	+M-W1003 :4		156				236 .3		
			156+				236 .2		
			156-				236 .2		
+C-X212:7	+M-W1003 :7		157				236 .3		
			157+				236 .2		
			157-				236 .2		
+C-X212:5	+M-W1003 :5		158				236 .3		
			158+				236 .2		
			158-				236 .2		
+C-X212:3	+M-W1003 :3		159				236 .3		
			159+				236 .2		
			159-				236 .2		
+C-X212:6	+M-W1003 :6		160		+M-W1011 :1	+M-S1801:21	149 .5		EMEGENCY STOP FRONT PLATFORM
			160+				236 .2		
			160-				236 .2		
			161						
			161+		+M-W1011 :2	+M-S1801:11	149 .4		EMEGENCY STOP FRONT PLATFORM
			161-				236 .5		
+C-X212:8	+M-W1003 :8		162		+M-W1011 :3	+M-S1801:12	149 .5		EMEGENCY STOP FRONT PLATFORM
			162+				236 .5		
			162-				236 .5		
			163		+M-W1011 :4	+M-S1801:22	149 .4		EMEGENCY STOP FRONT PLATFORM
			163+				236 .5		
			163-				236 .5		
			164		+M-W1048 :1	+M-S1802:21	149 .3		EMERGENCY STOP TOP PLATFORM
			164+				236 .5		

Drawing remarks

Tetra Pak

Designer	Date	Machine
LUP	23/11/2007	Tetra Pak A3/Flex 0150

ECM No	Denomination	Page Type
320174	TERMINAL STRIP OVERVIEW	TERMINAL STRIP OVERVIEW

Company	Document No.	Doc. type	Version	Page
Tetra Pak (Italy)	2845987-0006	ELD	AE	020

This drawing must not without the consent of Tetra Pak be copied, transmitted or disclosed to any third party.

1 2 3 4 5 6 7 8 9 10

Terminal strip of 2845987-0003

+M-X1003

From	Cable	Internal Jumper	Terminal	External Jumper	Cable	To	Page.Col.	Option	Function text
			• 164-				236 .5		
			165						
			• 165+		+M-W1048 :2	+M-S1802:11	149 .3		EMERGENCY STOP TOP PLATFORM
			• 165-				236 .5		
+C-X212:9	+M-W1003 :9		166		+M-W1048 :3	+M-S1802:12	149 .2		EMERGENCY STOP TOP PLATFORM
			• 166+				236 .5		
			• 166-				236 .5		
+C-X212:10	+M-W1003 :10		167		+M-W1048 :4	+M-S1802:22	149 .2		EMERGENCY STOP TOP PLATFORM
			• 167+				236 .5		
			• 167-				236 .5		
+C-X212:11	+M-W1003 :11		168		+M-W1015 :1	+M-B1104:⏚	046 .4		LEVEL SENSOR SEAL WATER
			• 168+				236 .5		
			• 168-				236 .5		
+C-X212:12	+M-W1003 :12		169		+M-W1015 :2	+M-B1104:1	046 .4		LEVEL SENSOR SEAL WATER
			• 169+				236 .5		
			• 169-				236 .5		
+C-X212:13	+M-W1003 :13		170				236 .6		
			• 170+				236 .5		
			• 170-				236 .5		
+C-X212:14	+M-W1003 :14		171				236 .6		
			• 171+				236 .5		
			• 171-				236 .5		
+C-X212:15	+M-W1003 :15		172		+M-W1063 :BK	+M-B1321:	134 .6		REGULATING VALVE POSITION
			• 172+		+M-W1063 :BN	+M-B1321:	134 .4		REGULATING VALVE POSITION
			• 172-		+M-W1063 :BU	+M-B1321:	134 .4		REGULATING VALVE POSITION
+C-X212:16	+M-W1003 :16		173		+M-W1065 :1	+M-B1322:⏚	047 .3		REGULATING VALVE LEAKAGE
			• 173+				236 .5		
			• 173-				236 .5		
+C-X212:17	+M-W1003 :17		174		+M-W1065 :2	+M-B1322:1	047 .3		REGULATING VALVE LEAKAGE
			• 174+				236 .5		

Drawing remarks

Tetra Pak

Designer LUP	Date 23/11/2007	Machine Tetra Pak A3/Flex 0150	
ECM No 320174	Denomination TERMINAL STRIP OVERVIEW	Page Type TERMINAL STRIP OVERVIEW	
Company Tetra Pak (Italy)	Document No. 2845987-0006	Doc. type ELD	Version AE	Page 021

This drawing must not without the consent of Tetra Pak be copied, transmitted or disclosed to any third party.

Terminal strip of 2845987-0003

+M-X1003

From	Cable	Internal Jumper	Terminal	External Jumper	Cable	To	Page.Col.	Option	Function text
			174-				236 .5		
+C-X212:18	+M-W1003 :18		175		+M-W1511 :WH	+M-X1511:3	107 .3		
			175+		+M-W1511 :BN	+M-X1511:2	107 .3		
			175-		+M-W1511 :GN	+M-X1511:1	107 .3		
+C-X212:19	+M-W1003 :19		176				236 .6		
			176+				236 .5		
			176-				236 .5		
+C-X212:20	+M-W1003 :20		177				236 .6		
			177+				236 .5		
			177-				236 .5		
+C-X212:21	+M-W1003 :21		178				236 .6		
+C-X212:23	+M-W1003 :23		178+				236 .6		
+C-X212:24	+M-W1003 :24		178-				236 .6		
+C-X212:22	+M-W1003 :22		179				132 .5		
			179+				132 .3		
			179-				132 .3		
+C-X212:⏚	+M-W1003 :GNYE		⏚				236 .6		
			⏚						
			⏚						
			⏚		+M-W1012 :GNYE	+M-Y1222:E	198 .6		DRAIN PEROXIDE COOLER
			⏚		+M-W1018 :GNYE	+M-Y1104:E	198 .6		SEAL WATER
+C-X221:⏚	+M-W1005 :GNYE		⏚		+M-W1013 :GNYE	+M-Y1223:E	198 .6		FILL PEROXIDE COOLER
+C-X221:1	+M-W1005 :1		180		+M-W1057 :BK	+M-B1405:	133 .5		AIR KNIFE CLOSE
			180+		+M-W1057 :BN	+M-B1405:	133 .3		AIR KNIFE CLOSE
			180-		+M-W1057 :BU	+M-B1405:	133 .3		AIR KNIFE CLOSE
+C-X221:2	+M-W1005 :2		181				133 .5		
			181+				133 .3		
			181-				133 .3		
+C-X221:3	+M-W1005 :3		182		+M-W1059 :BK	+M-B1243:	133 .5		CH.OVER VAL., AIR FLOW TO AS.CHAM.
			182+		+M-W1059 :BN	+M-B1243:	133 .3		CH.OVER VAL., AIR FLOW TO AS.CHAM.

Drawing remarks

Tetra Pak

Designer LUP	Date 23/11/2007	Machine Tetra Pak A3/Flex 0150	
ECM No 320174	Denomination TERMINAL STRIP OVERVIEW	Page Type TERMINAL STRIP OVERVIEW	
Company Tetra Pak (Italy)	Document No. 2845987-0006	Doc. type ELD	Version AE	Page 022

This drawing must not without the consent of Tetra Pak
be copied, transmitted or disclosed to any third party.

1 2 3 4 5 6 7 8 9 10

Terminal strip of 2845987-0003

+M-X1003

From	Cable	Internal Jumper	Terminal	External Jumper	Cable	To	Page.Col.	Option	Function text
			• 182-		+M-W1059 :BU	+M-B1243:	133 .3		CH.OVER VAL., AIR FLOW TO AS.CHAM.
+C-X221:4	+M-W1005 :4		183		+M-W1062 :BK	+M-B1244:	133 .5		CH.OVER VAL.AIR FLOW TO AIR KNIFE
			• 183+		+M-W1062 :BN	+M-B1244:	133 .3		CH.OVER VAL.AIR FLOW TO AIR KNIFE
			• 183-		+M-W1062 :BU	+M-B1244:	133 .3		CH.OVER VAL.AIR FLOW TO AIR KNIFE
+C-X221:5	+M-W1005 :5		184				236 .9		
			• 184+				236 .8		
			• 184-				236 .8		
+C-X221:6	+M-W1005 :6		185		+M-W1014 :BK	+M-B1102:	105 .5		SEPARATOR AIR FLOW
			• 185+		+M-W1014 :BN	+M-B1102:	105 .2		SEPARATOR AIR FLOW
			• 185-		+M-W1014 :BU	+M-B1102:	105 .2		SEPARATOR AIR FLOW
+C-X221:7	+M-W1005 :7		186				132 .5		
			• 186+				236 .8		
			• 186-				236 .8		
+C-X221:8	+M-W1005 :8		187		+M-W1010 :WH	+M-B1101:WH	133 .5		SEAL WATER FLOW
			• 187+		+M-W1010 :GN	+M-B1101:GN	133 .3		SEAL WATER FLOW
			• 187-				133 .3		
+C-X221:9	+M-W1005 :9		188		+M-W1235 :2	+M-B1235:2	104 .4		DIMC FAN AIR PRESSURE
			• 188+		+M-W1235 :1	+M-B1235:1	104 .4		DIMC FAN AIR PRESSURE
			• 188-				236 .8		
+C-X221:10	+M-W1005 :10		189		+M-W1810 :WH	+M-B1810:(1) L-	104 .4		ICU LEVEL WATER TANK
			• 189+		+M-W1810 :BN	+M-B1810:(2) L+	104 .4		ICU LEVEL WATER TANK
			• 189-				236 .8		
+C-X221:11	+M-W1005 :11		190				236 .9		
			• 190+				236 .8		
			• 190-				236 .8		
+C-X221:12	+M-W1005 :12		191				236 .9		
			• 191+				236 .8		
			• 191-				236 .8		
+C-X221:13	+M-W1005 :13		192				236 .9		
			• 192+				236 .8		

Drawing remarks

Tetra Pak

Designer LUP	Date 23/11/2007	Machine Tetra Pak A3/Flex 0150	
ECM No 320174	Denomination TERMINAL STRIP OVERVIEW	Page Type TERMINAL STRIP OVERVIEW	
Company Tetra Pak (Italy)	Document No. 2845987-0006	Doc. type ELD	Version AE	Page 023

This drawing must not without the consent of Tetra Pak be copied, transmitted or disclosed to any third party.

1 2 3 4 5 6 7 8 9 10

Terminal strip of 2845987-0003

+M-X1003

From	Cable	Internal Jumper	Terminal	External Jumper	Cable	To	Page.Col.	Option	Function text
			• 192-				236 .8		
+C-X221:14	+M-W1005 :14		193				236 .9		
			• 193+				236 .8		
			• 193-				236 .8		
+C-X221:15	+M-W1005 :15		194		+M-W1012 :1	+M-Y1222:1	198 .4		DRAIN PEROXIDE COOLER
			• 194+				236 .8		
			• 194-		+M-W1012 :2	+M-Y1222:2	198 .6		DRAIN PEROXIDE COOLER
+C-X221:16	+M-W1005 :16		195		+M-W1018 :1	+M-Y1104:1	198 .4		SEAL WATER
			• 195+				236 .8		
			• 195-		+M-W1018 :2	+M-Y1104:2	198 .6		SEAL WATER
+C-X221:17	+M-W1005 :17		196		+M-W1013 :1	+M-Y1223:1	198 .4		FILL PEROXIDE COOLER
			• 196+				236 .8		
			• 196-		+M-W1013 :2	+M-Y1223:2	198 .6		FILL PEROXIDE COOLER
+C-X221:18	+M-W1005 :18		197				236 .9		
			• 197+				236 .8		
			• 197-				236 .8		
+C-X221:19	+M-W1005 :19		198		+M-W1600 :BK	+M-B1600:	126 .3	DIMC	
			• 198+		+M-W1600 :BN	+M-B1600:	126 .1	DIMC	
			• 198-		+M-W1600 :BU	+M-B1600:	126 .1	DIMC	
+C-X221:20	+M-W1005 :20		199				236 .9		
			• 199+				236 .8		
			• 199-				236 .8		
+C-X221:21	+M-W1005 :21		200				236 .9		
			• 200+				236 .8		
			• 200-				236 .8		
+C-X221:22	+M-W1005 :22		201				236 .9		
+C-X221:23	+M-W1005 :23		• 201+				236 .8		
+C-X221:24	+M-W1005 :24		• 201-				236 .8		
			⏚						

Drawing remarks

Tetra Pak

Designer LUP	Date 23/11/2007	Machine Tetra Pak A3/Flex 0150	
ECM No 320174	Denomination TERMINAL STRIP OVERVIEW	Page Type TERMINAL STRIP OVERVIEW	
Company Tetra Pak (Italy)	Document No. 2845987-0006	Doc. type ELD	Version AE	Page 024

This drawing must not without the consent of Tetra Pak
be copied, transmitted or disclosed to any third party.

1 2 3 4 5 6 7 8 9 10

Terminal strip of 2845987-0003

+M-X1250

From	Cable	Internal Jumper	Terminal	External Jumper	Cable	To	Page.Col.	Option	Function text
+C-X218:1	+M-W1080 :1		1			+M-Y1303:+24V	194 .5		C-VALVE
+C-X218:6	+M-W1080 :12		1-			+M-Y1303:0V	194 .6		C-VALVE
+C-X218:⏚	+M-W1080 :GNYE		⏚			+M-Y1303:E	194 .6		C-VALVE
+C-X218:2	+M-W1080 :2		2				194 .5		
			2-				194 .6		
			⏚				194 .6		
+C-X218:3	+M-W1080 :3		3			+M-Y1503:+24V	194 .5		AIR KNIFE CYLINDER
			3-			+M-Y1503:0V	194 .6		AIR KNIFE CYLINDER
			⏚			+M-Y1503:E	194 .6		AIR KNIFE CYLINDER
+C-X218:4	+M-W1080 :4		4			+M-Y1502:+24V	194 .5		SQEE-GEE ROLLER
			4-			+M-Y1502:0V	194 .6		SQEE-GEE ROLLER
			⏚			+M-Y1502:E	194 .6		SQEE-GEE ROLLER
+C-X218:5	+M-W1080 :5		5				194 .5		
			5-				194 .6		
			⏚				194 .6		
+C-X218:7	+M-W1080 :6		6			+M-Y1323:+24V	194 .5		B-VALVE
+C-X218:12	+M-W1080 :13		6-			+M-Y1323:0V	194 .6		B-VALVE
			⏚			+M-Y1323:E	194 .6		B-VALVE
+C-X218:8	+M-W1080 :7		7			+M-Y1312:+24V	194 .5		A-VALVE
			7-			+M-Y1312:0V	194 .6		A-VALVE
			⏚			+M-Y1312:E	194 .6		A-VALVE
+C-X218:9	+M-W1080 :8		8			+M-Y1810:+24V	194 .5		ICU PUMP DRAIM VALVE
			8-			+M-Y1810:0V	194 .6		ICU PUMP DRAIM VALVE
			⏚			+M-Y1810:E	194 .6		ICU PUMP DRAIM VALVE
+C-X218:10	+M-W1080 :9		9			+M-Y1318:+24V	195 .4		AUTOMATIC CIP DRAIN 1
			9-			+M-Y1318:0V	195 .5		AUTOMATIC CIP DRAIN 1
			⏚			+M-Y1318:E	195 .5		AUTOMATIC CIP DRAIN 1
+C-X218:11	+M-W1080 :10		10				195 .4		
			10-				195 .5		
			⏚				195 .5		

Drawing remarks

Tetra Pak

Designer LUP	Date 23/11/2007	Machine Tetra Pak A3/Flex 0150	
ECM No 320174	Denomination TERMINAL STRIP OVERVIEW	Page Type TERMINAL STRIP OVERVIEW	
Company Tetra Pak (Italy)	Document No. 2845987-0006	Doc. type ELD	Version AE	Page 025

This drawing must not without the consent of Tetra Pak be copied, transmitted or disclosed to any third party.

1 2 3 4 5 6 7 8 9 10

Terminal strip of 2845987-0003

+M-X1251

From	Cable	Internal Jumper	Terminal	External Jumper	Cable	To	Page.Col.	Option	Function text
+C-X218:13	+M-W1081 :1		1			+M-Y1107:+24V	195 .4		HEAT EXCHANGER VALVE STEP 1
+C-X218:18	+M-W1081 :12		1-			+M-Y1107:0V	195 .5		HEAT EXCHANGER VALVE STEP 1
+C-X218:⏚	+M-W1081 :GNYE		⏚			+M-Y1107:E	195 .5		HEAT EXCHANGER VALVE STEP 1
+C-X218:14	+M-W1081 :2		2			+M-Y1108:+24V	195 .4		HEAT EXCHANGER VALVE STEP 2
			2-			+M-Y1108:0V	195 .5		HEAT EXCHANGER VALVE STEP 2
			⏚			+M-Y1108:E	195 .5		HEAT EXCHANGER VALVE STEP 2
+C-X218:15	+M-W1081 :3		3			+M-Y1111:+24V	195 .4		PREHEATING VALVE
			3-			+M-Y1111:0V	195 .5		PREHEATING VALVE
			⏚			+M-Y1111:E	195 .5		PREHEATING VALVE
+C-X218:16	+M-W1081 :4		4			+M-Y1242:+24V	195 .4		BUTTERFLY VALVE
			4-			+M-Y1242:0V	195 .5		BUTTERFLY VALVE
			⏚			+M-Y1242:E	195 .5		BUTTERFLY VALVE
+C-X218:17	+M-W1081 :5		5			+M-Y1241:+24V	195 .4		CHANGE OVER VALVE
			5-			+M-Y1241:0V	195 .5		CHANGE OVER VALVE
			⏚			+M-Y1241:E	195 .5		CHANGE OVER VALVE
+C-X218:19	+M-W1081 :6		6			+M-Y1401:+24V	195 .4		MOVABLE LOWER FORMIN RING
+C-X218:24	+M-W1081 :13		6-			+M-Y1401:0V	195 .5		MOVABLE LOWER FORMIN RING
			⏚			+M-Y1401:E	195 .5		MOVABLE LOWER FORMIN RING
+C-X218:20	+M-W1081 :7		7				196 .4		
			7-				196 .5		
			⏚				196 .5		
+C-X218:21	+M-W1081 :8		8			+M-Y1501:+24V	196 .4		FEED PACKAGING MATERIAL
			8-			+M-Y1501:0V	196 .5		FEED PACKAGING MATERIAL
			⏚			+M-Y1501:E	196 .5		FEED PACKAGING MATERIAL
+C-X218:22	+M-W1081 :9		9				196 .4		
			9-				196 .5		
			⏚				196 .5		
+C-X218:23	+M-W1081 :10		10			+M-Y9106:+24V	196 .4	H.I.	H.I. SWITCH AIR IN A.C.
			10-			+M-Y9106:0V	196 .5	H.I.	H.I. SWITCH AIR IN A.C.
			⏚			+M-Y9106:E	196 .5	H.I.	H.I. SWITCH AIR IN A.C.

Drawing remarks

Tetra Pak

Designer LUP	Date 23/11/2007	Machine Tetra Pak A3/Flex 0150	
ECM No 320174	Denomination TERMINAL STRIP OVERVIEW	Page Type TERMINAL STRIP OVERVIEW	
Company Tetra Pak (Italy)	Document No. 2845987-0006	Doc. type ELD	Version AE	Page 026

This drawing must not without the consent of Tetra Pak
be copied, transmitted or disclosed to any third party.

1 2 3 4 5 6 7 8 9 10

Terminal strip of 2845987-0003

+M-X1252

From	Cable	Internal Jumper	Terminal	External Jumper	Cable	To	Page.Col.	Option	Function text
+C-X223:1	+M-W1082 :1		1				196 .4		
+C-X223:4	+M-W1082 :12		1-				196 .5		
+C-X223:⏚	+M-W1082 :GNYE		⏚				196 .5		
+C-X223:2	+M-W1082 :2		2			+M-Y1112:+24V	196 .4		SUCTION VALVE
			2-			+M-Y1112:0V	196 .5		SUCTION VALVE
			⏚			+M-Y1112:E	196 .5		SUCTION VALVE
+C-X223:3	+M-W1082 :3		3			+M-Y9105:+24V	196 .4	H.I.	H.I. INJECTION
			3-			+M-Y9105:0V	196 .5	H.I.	H.I. INJECTION
			⏚			+M-Y9105:E	196 .5	H.I.	H.I. INJECTION
			4						
			4-				230 .8		
			⏚				230 .8		
			5						
			5-				230 .8		
			⏚				230 .8		
			6						
			6-				230 .8		
			⏚				230 .8		
			7						
			7-				230 .8		
			⏚				230 .8		
			8						
			8-				230 .8		
			⏚				230 .8		
			9						
			9-				230 .8		
			⏚				230 .8		
			10						
			10-				230 .8		
			⏚				230 .8		

Drawing remarks

Tetra Pak

Designer LUP	Date 23/11/2007	Machine Tetra Pak A3/Flex 0150	
ECM No 320174	Denomination TERMINAL STRIP OVERVIEW	Page Type TERMINAL STRIP OVERVIEW	
Company Tetra Pak (Italy)	Document No. 2845987-0006	Doc. type ELD	Version AE	Page 027

This drawing must not without the consent of Tetra Pak
be copied, transmitted or disclosed to any third party.

Terminal strip of 2845987-0003

+M-X1253

From	Cable	Internal Jumper	Terminal	External Jumper	Cable	To	Page.Col.	Option	Function text
+C-X223:11	+M-W1083 :1		1				197 .4		
+C-X223:16	+M-W1083 :12		1-				197 .5		
+C-X223:⏚	+M-W1083 :GNYE		⏚				197 .5		
+C-X223:12	+M-W1083 :2		2				197 .4		
			2-				197 .5		
			⏚				197 .5		
+C-X223:13	+M-W1083 :3		3				197 .4		
			3-				197 .5		
			⏚				197 .5		
+C-X223:14	+M-W1083 :4		4				197 .4		
			4-				197 .5		
			⏚				197 .5		
+C-X223:15	+M-W1083 :5		5				197 .4		
			5-				197 .5		
			⏚				197 .5		
+C-X223:17	+M-W1083 :6		6			+M-Y1333:+24V	197 .4		STEAM FLUSH
+C-X223:22	+M-W1083 :13		6-			+M-Y1333:0V	197 .5		STEAM FLUSH
			⏚			+M-Y1333:E	197 .5		STEAM FLUSH
+C-X223:18	+M-W1083 :7		7			+M-Y1332:+24V	197 .4		TCSB
			7-			+M-Y1332:0V	197 .5		TCSB
			⏚			+M-Y1332:E	197 .5		TCSB
+C-X223:19	+M-W1083 :8		8			+M-Y1803:+24V	197 .4		ICU DRAIN TANK
			8-			+M-Y1803:0V	197 .5		ICU DRAIN TANK
			⏚			+M-Y1803:E	197 .5		ICU DRAIN TANK
+C-X223:20	+M-W1083 :9		9			+M-Y1802:+24V	198 .4		ICU WATER INLET
			9-			+M-Y1802:0V	198 .6		ICU WATER INLET
			⏚			+M-Y1802:E	198 .6		ICU WATER INLET
+C-X223:21	+M-W1083 :10		10			+M-Y1801:+24V	198 .4		ICU STEAM INLET
			10-			+M-Y1801:0V	198 .6		ICU STEAM INLET
			⏚			+M-Y1801:E	198 .6		ICU STEAM INLET

Drawing remarks

Tetra Pak

Designer LUP	Date 23/11/2007	Machine Tetra Pak A3/Flex 0150			
ECM No 320174	Denomination TERMINAL STRIP OVERVIEW	Page Type TERMINAL STRIP OVERVIEW			
Company Tetra Pak (Italy)	Document No. 2845987-0006	Doc. type ELD	Version AE	Page 028	

This drawing must not without the consent of Tetra Pak be copied, transmitted or disclosed to any third party.

1 2 3 4 5 6 7 8 9 10

Terminal strip of 2845987-0003

+M-X1300

From	Cable	Internal Jumper	Terminal	External Jumper	Cable	To	Page.Col.	Option	Function text
+C-X315:+	+M-W1300 :YE		+			+M-B1105:+	111 .2		TEMP. AIR SUPER HEATER
+C-X315:-	+M-W1300 :RD		-			+M-B1105:-	111 .2		TEMP. AIR SUPER HEATER

Drawing remarks

Tetra Pak

Designer LUP	Date 23/11/2007	Machine Tetra Pak A3/Flex 0150		
ECM No 320174	Denomination TERMINAL STRIP OVERVIEW	Page Type TERMINAL STRIP OVERVIEW		
Company Tetra Pak (Italy)	Document No. 2845987-0006	Doc. type ELD	Version AE	Page 029

This drawing must not without the consent of Tetra Pak be copied, transmitted or disclosed to any third party.

1 2 3 4 5 6 7 8 9 10

Terminal strip of 2845987-0003

+M-X1301

From	Cable	Internal Jumper	Terminal	External Jumper	Cable	To	Page.Col.	Option	Function text
+C-X306:+	+M-W1301 :YE		+			+M-B1106:+	110 .2		TEMP. HEAT STERILIZATION
+C-X306:-	+M-W1301 :RD		-			+M-B1106:-	110 .2		TEMP. HEAT STERILIZATION

Drawing remarks

Tetra Pak

Designer LUP	Date 23/11/2007	Machine Tetra Pak A3/Flex 0150		
ECM No 320174	Denomination TERMINAL STRIP OVERVIEW	Page Type TERMINAL STRIP OVERVIEW		
Company Tetra Pak (Italy)	Document No. 2845987-0006	Doc. type ELD	Version AE	Page 030

RELEASED

This drawing must not without the consent of Tetra Pak be copied, transmitted or disclosed to any third party.

1 2 3 4 5 6 7 8 9 10

Terminal strip of 2845987-0003

+M-X1302

From	Cable	Internal Jumper	Terminal	External Jumper	Cable	To	Page.Col.	Option	Function text
+C-X310:+	+M-W1302 :YE		+			+M-B1109:+	110 .2		TEMP. TOP ASEPTIC CHAMBER
+C-X310:-	+M-W1302 :RD		-			+M-B1109:-	110 .2		TEMP. TOP ASEPTIC CHAMBER

Drawing remarks

Tetra Pak

Designer LUP	Date 23/11/2007	Machine Tetra Pak A3/Flex 0150	
ECM No 320174	Denomination TERMINAL STRIP OVERVIEW	Page Type TERMINAL STRIP OVERVIEW	
Company Tetra Pak (Italy)	Document No. 2845987-0006	Doc. type ELD	Version AE	Page 031

This drawing must not without the consent of Tetra Pak be copied, transmitted or disclosed to any third party.

1 2 3 4 5 6 7 8 9 10

Terminal strip of 2845987-0003

+M-X1303

From	Cable	Internal Jumper	Terminal	External Jumper	Cable	To	Page.Col.	Option	Function text
+C-X311:+	+M-W1303 :YE		+			+M-B1209:+	110 .2		TEMP. WATER HEAT ESCHANGE
+C-X311:-	+M-W1303 :RD		-			+M-B1209:-	110 .2		TEMP. WATER HEAT ESCHANGE

Drawing remarks

Tetra Pak

Designer LUP	Date 23/11/2007	Machine Tetra Pak A3/Flex 0150	
ECM No 320174	Denomination TERMINAL STRIP OVERVIEW	Page Type TERMINAL STRIP OVERVIEW	
Company Tetra Pak (Italy)	Document No. 2845987-0006	Doc. type ELD	Version AE / Page 032

This drawing must not without the consent of Tetra Pak be copied, transmitted or disclosed to any third party.

1 2 3 4 5 6 7 8 9 10

Terminal strip of 2845987-0003

+M-X1304

From	Cable	Internal Jumper	Terminal	External Jumper	Cable	To	Page.Col.	Option	Function text
+C-X309:+	+M-W1304 :YE		+			+M-B1212:+	111 .2		TEMP. PEROXIDE TANK
+C-X309:-	+M-W1304 :RD		-			+M-B1212:-	111 .2		TEMP. PEROXIDE TANK

Drawing remarks

Tetra Pak

Designer LUP	Date 23/11/2007	Machine Tetra Pak A3/Flex 0150	
ECM No 320174	Denomination TERMINAL STRIP OVERVIEW	Page Type TERMINAL STRIP OVERVIEW	
Company Tetra Pak (Italy)	Document No. 2845987-0006	Doc. type ELD	Version AE	Page 033

This drawing must not without the consent of Tetra Pak be copied, transmitted or disclosed to any third party.

1 2 3 4 5 6 7 8 9 10

Terminal strip of 2845987-0003

+M-X1306

From	Cable	Internal Jumper	Terminal	External Jumper	Cable	To	Page.Col.	Option	Function text
+C-X307:+	+M-W1306 :YE		+			+M-B1222:+	110 .2		TEMP. PEROXIDE BATH
+C-X307:-	+M-W1306 :RD		-			+M-B1222:-	110 .2		TEMP. PEROXIDE BATH

Drawing remarks

Tetra Pak

Designer LUP	Date 23/11/2007	Machine Tetra Pak A3/Flex 0150	
ECM No 320174	Denomination TERMINAL STRIP OVERVIEW	Page Type TERMINAL STRIP OVERVIEW	
Company Tetra Pak (Italy)	Document No. 2845987-0006	Doc. type ELD	Version AE	Page 034

This drawing must not without the consent of Tetra Pak be copied, transmitted or disclosed to any third party.

1 2 3 4 5 6 7 8 9 10

Terminal strip of 2845987-0003

+M-X1307

From	Cable	Internal Jumper	Terminal	External Jumper	Cable	To	Page.Col.	Option	Function text
+C-X313:+	+M-W1307 :YE		+			+M-B1310:+	111 .2		TEMP. STEAM IN C-VALVE
+C-X313:-	+M-W1307 :RD		-			+M-B1310:-	111 .2		TEMP. STEAM IN C-VALVE

Drawing remarks

Tetra Pak

Designer LUP	Date 23/11/2007	Machine Tetra Pak A3/Flex 0150	
ECM No 320174	Denomination TERMINAL STRIP OVERVIEW	Page Type TERMINAL STRIP OVERVIEW	
Company Tetra Pak (Italy)	Document No. 2845987-0006	Doc. type ELD	Version AE	Page 035

This drawing must not without the consent of Tetra Pak be copied, transmitted or disclosed to any third party.

1 2 3 4 5 6 7 8 9 10

Terminal strip of 2845987-0003

+M-X1309

From	Cable	Internal Jumper	Terminal	External Jumper	Cable	To	Page.Col.	Option	Function text
+C-X305:+	+M-W1321 :YE		+			+M-B1503:+	112 .2		TEMP. AIR KNIFE
+C-X305:-	+M-W1321 :RD		-			+M-B1503:-	112 .2		TEMP. AIR KNIFE

Drawing remarks

Tetra Pak

Designer LUP	Date 23/11/2007	Machine Tetra Pak A3/Flex 0150		
ECM No 320174	Denomination TERMINAL STRIP OVERVIEW	Page Type TERMINAL STRIP OVERVIEW		
Company Tetra Pak (Italy)	Document No. 2845987-0006	Doc. type ELD	Version AE	Page 036

This drawing must not without the consent of Tetra Pak
be copied, transmitted or disclosed to any third party.

1 2 3 4 5 6 7 8 9 10

Terminal strip of 2845987-0003

+M-X1313

From	Cable	Internal Jumper	Terminal	External Jumper	Cable	To	Page.Col.	Option	Function text
+C-X031:27	+M-W1334 :BN		1			+M-B1314:1	051 .3		MAGNETIC FLOATER SENSOR FILLING SYSTEM
+C-X031:32	+M-W1334 :WH		2			+M-B1314:2	051 .3		MAGNETIC FLOATER SENSOR FILLING SYSTEM
+C-X031:31	+M-W1334 :GN		3			+M-B1314:3	051 .3		MAGNETIC FLOATER SENSOR FILLING SYSTEM
+C-X031:34	+M-W1334 :YE		4			+M-B1314:4	051 .3		MAGNETIC FLOATER SENSOR FILLING SYSTEM

Drawing remarks

Tetra Pak

Designer LUP	Date 23/11/2007	Machine Tetra Pak A3/Flex 0150	
ECM No 320174	Denomination TERMINAL STRIP OVERVIEW	Page Type TERMINAL STRIP OVERVIEW	
Company Tetra Pak (Italy)	Document No. 2845987-0006	Doc. type ELD	Version AE	Page 037

This drawing must not without the consent of Tetra Pak
be copied, transmitted or disclosed to any third party.

1 2 3 4 5 6 7 8 9 10

Terminal strip of 2845987-0003

+M-X1314

From	Cable	Internal Jumper	Terminal	External Jumper	Cable	To	Page.Col.	Option	Function text
+C-X403:1	+M-W1052 :WH		1				051 .2		
+C-X403:2	+M-W1052 :YE		2				051 .2		
+C-X403:3	+M-W1052 :GY		3				051 .2		
+C-X403:4	+M-W1052 :GN		4				051 .3		
			5				051 .3		
			6						
			7						
			8						

Drawing remarks

Tetra Pak

Designer LUP	Date 23/11/2007	Machine Tetra Pak A3/Flex 0150	
ECM No 320174	Denomination TERMINAL STRIP OVERVIEW	Page Type TERMINAL STRIP OVERVIEW	
Company Tetra Pak (Italy)	Document No. 2845987-0006	Doc. type ELD	Version AE	Page 038

This drawing must not without the consent of Tetra Pak
be copied, transmitted or disclosed to any third party.

1 | 2 | 3 | 4 | 5 | 6 | 7 | 8 | 9 | 10

Terminal strip of 2845987-0003

+M-X1315

From	Cable	Internal Jumper	Terminal	External Jumper	Cable	To	Page.Col.	Option	Function text
+C-X404:1	+M-W1315 :WH		1				102 .6		
+C-X404:2	+M-W1315 :YE		2				102 .6		
+C-X404:3	+M-W1315 :GY		3				102 .6		
+C-X404:4	+M-W1315 :GN		4				102 .7		
			5				102 .7		
			6						
			7						

Drawing remarks

Tetra Pak

Designer LUP	Date 23/11/2007	Machine Tetra Pak A3/Flex 0150	
ECM No 320174	Denomination TERMINAL STRIP OVERVIEW	Page Type TERMINAL STRIP OVERVIEW	
Company Tetra Pak (Italy)	Document No. 2845987-0006	Doc. type ELD	Version AE	Page 039

This drawing must not without the consent of Tetra Pak
be copied, transmitted or disclosed to any third party.

1 | 2 | 3 | 4 | 5 | 6 | 7 | 8 | 9 | 10

Terminal strip of 2845987-0003

+M-X1402

From	Cable	Internal Jumper	Terminal	External Jumper	Cable	To	Page.Col.	Option	Function text
+C-A501:X004	+M-W1054 :1		1				011 .6		

Drawing remarks

Tetra Pak

Designer LUP	Date 23/11/2007	Machine Tetra Pak A3/Flex 0150	
ECM No 320174	Denomination TERMINAL STRIP OVERVIEW	Page Type TERMINAL STRIP OVERVIEW	
Company Tetra Pak (Italy)	Document No. 2845987-0006	Doc. type ELD	Version AE	Page 040

This drawing must not without the consent of Tetra Pak be copied, transmitted or disclosed to any third party.

1 2 3 4 5 6 7 8 9 10

Terminal strip of 2845987-0003

+M-X1511

From	Cable	Internal Jumper	Terminal	External Jumper	Cable	To	Page.Col.	Option	Function text
+M-X1003:175-	+M-W1511 :GN		1			+M-B1511:	107 .2		PENDULUM POSITION (ROTARY SENSOR)
+M-X1003:175+	+M-W1511 :BN		2			+M-B1511:	107 .2		PENDULUM POSITION (ROTARY SENSOR)
+M-X1003:175	+M-W1511 :WH		3			+M-B1511:	107 .2		PENDULUM POSITION (ROTARY SENSOR)

Drawing remarks

Tetra Pak

Designer LUP	Date 23/11/2007	Machine Tetra Pak A3/Flex 0150	
ECM No 320174	Denomination TERMINAL STRIP OVERVIEW	Page Type TERMINAL STRIP OVERVIEW	
Company Tetra Pak (Italy)	Document No. 2845987-0006	Doc. type ELD	Version AE	Page 041

RELEASED

This drawing must not without the consent of Tetra Pak be copied, transmitted or disclosed to any third party.

Terminal strip of 2845987-0003

+M-X1602

From	Cable	Internal Jumper	Terminal	External Jumper	Cable	To	Page.Col.	Option	Function text
			1						
			2						
			3						
			4						
			⏚						

Drawing remarks	Tetra Pak	Designer LUP	Date 23/11/2007	Machine Tetra Pak A3/Flex 0150	
		ECM No 320174	Denomination TERMINAL STRIP OVERVIEW	Page Type TERMINAL STRIP OVERVIEW	
		Company Tetra Pak (Italy)	Document No. 2845987-0006	Doc. type ELD	Version AE	Page 042

This drawing must not without the consent of Tetra Pak be copied, transmitted or disclosed to any third party.

1 2 3 4 5 6 7 8 9 10

Terminal strip of 2845987-0003

+M-X2000

From	Cable	Internal Jumper	Terminal	External Jumper	Cable	To	Page.Col.	Option	Function text
			1						
			2						
			3						
			4						
			5						
+C-X101:1	+M-W2005 :1		6		+M-W2211 :1	+M-E2002:1	037 .6		LIGHTING JAW SYSTEM
+C-X101:2	+M-W2005 :2		7		+M-W2211 :2	+M-E2002:2	037 .6		LIGHTING JAW SYSTEM
			8		+M-W2244 :1	+M-E2001:1	037 .7		LIGHTING JAW SYSTEM
			9		+M-W2244 :2	+M-E2001:2	037 .7		LIGHTING JAW SYSTEM
			10						
			11						
+C-X226:1	+M-W2001 :1		101		+M-W4057 :BK	+M-B1305:	136 .6		CLEANING SLEEVE POSITION
+C-X226:23	+M-W2001 :23		101+		+M-W4057 :BN	+M-B1305:	136 .3		CLEANING SLEEVE POSITION
+C-X226:24	+M-W2001 :24		101-		+M-W4057 :BU	+M-B1305:	136 .3		CLEANING SLEEVE POSITION
+C-X226:2	+M-W2001 :2		102		+M-W4059 :BK	+M-B4315:	138 .6		HOME POSITION LEFT MOTOR DCS
			102+		+M-W4059 :BN	+M-B4315:	138 .3		HOME POSITION LEFT MOTOR DCS
			102-		+M-W4059 :BU	+M-B4315:	138 .3		HOME POSITION LEFT MOTOR DCS
+C-X226:3	+M-W2001 :3		103		+M-W4060 :BK	+M-B4316:	138 .6		HOME POSITION RIGHT MOTOR DCS
			103+		+M-W4060 :BN	+M-B4316:	138 .3		HOME POSITION RIGHT MOTOR DCS
			103-		+M-W4060 :BU	+M-B4316:	138 .3		HOME POSITION RIGHT MOTOR DCS
+C-X226:4	+M-W2001 :4		104				138 .6		
			104+				138 .3		
			104-				138 .3		
+C-X226:5	+M-W2001 :5		105				138 .6		
			105+				138 .3		
			105-				138 .3		
+C-X226:6	+M-W2001 :6		106				138 .6		
			106+				138 .3		
			106-				138 .3		
			107						

Drawing remarks

Tetra Pak

Designer LUP	Date 23/11/2007	Machine Tetra Pak A3/Flex 0150	
ECM No 320174	Denomination TERMINAL STRIP OVERVIEW	Page Type TERMINAL STRIP OVERVIEW	
Company Tetra Pak (Italy)	Document No. 2845987-0006	Doc. type ELD	Version AE	Page 043

This drawing must not without the consent of Tetra Pak be copied, transmitted or disclosed to any third party.

Terminal strip of 2845987-0003

+M-X2000

From	Cable	Internal Jumper	Terminal	External Jumper	Cable	To	Page.Col.	Option	Function text
			107+				231 .2		
			107-				231 .2		
+C-X226:7	+M-W2001 :7		108		+M-W4052 :2	+M-B2401:14	139 .5		LUBRICATION PRESSURE
			108+		+M-W4052 :1	+M-B2401:13	139 .2		LUBRICATION PRESSURE
			108-				231 .2		
+C-X226:8	+M-W2001 :8		109		+M-W4053 :1	+M-B2410:1	139 .5		NO LUBRICATION OIL TANK HIGH/LOW LEVEL
			109+		+M-W4053 :3	+M-B2410:3	139 .2		NO LUBRICATION OIL TANK HIGH/LOW LEVEL
			109-				231 .2		
+C-X226:9	+M-W2001 :9		110		+M-W4053 :2	+M-B2410:2	139 .5		NO LUBRICATION OIL TANK HIGH/LOW LEVEL
			110+				231 .2		
			110-				231 .2		
+C-X226:10	+M-W2001 :10		111		+M-W2235 :1	+M-Y2106:1	201 .4		TUBE FLUSHER
			111+				231 .2		
			111-		+M-W2235 :2	+M-Y2106:2	201 .6		TUBE FLUSHER
+C-X226:11	+M-W2001 :11		112		+M-W1816 :BK	+M-B1816:	136 .6		ICU DRAIN VALVE
			112+		+M-W1816 :BN	+M-B1816:	136 .3		ICU DRAIN VALVE
			112-		+M-W1816 :BU	+M-B1816:	136 .3		ICU DRAIN VALVE
+C-X226:12	+M-W2001 :12		113				231 .3		
			113+				231 .2		
			113-				231 .2		
+C-X226:13	+M-W2001 :13		114				231 .3		
			114+				231 .2		
			114-				231 .2		
			115		+M-W2233 :2	+M-B2310:2	139 .2		HIDRAULIC OIL FILTRATION
+C-X226:14	+M-W2001 :14		116		+M-W2233 :1	+M-B2310:1	139 .5		HIDRAULIC OIL FILTRATION
			117		+M-W2234 :6	+M-B2320:6	139 .2		HIDRAULIC OIL TEMPERATURE
+C-X226:15	+M-W2001 :15		118		+M-W2234 :4	+M-B2320:4	139 .5		HIDRAULIC OIL TEMPERATURE
+C-X226:16	+M-W2001 :16		119		+M-W2234 :1	+M-B2320:1	139 .5		HIDRAULIC OIL TEMPERATURE
+C-X226:17	+M-W2001 :17		120		+M-W2234 :2	+M-B2320:2	139 .5		HIDRAULIC OIL TEMPERATURE
			121		+M-W2238 :1	+M-B2330:3	139 .2		HIDRAULIC OIL PRESSURE

Drawing remarks

Tetra Pak

Designer: LUP	Date: 23/11/2007	Machine: Tetra Pak A3/Flex 0150	
ECM No: 320174	Denomination: TERMINAL STRIP OVERVIEW	Page Type: TERMINAL STRIP OVERVIEW	
Company: Tetra Pak (Italy)	Document No.: 2845987-0006	Doc. type: ELD	Version: AE	Page: 044

This drawing must not without the consent of Tetra Pak
be copied, transmitted or disclosed to any third party.

Terminal strip of 2845987-0003

+M-X2000

From	Cable	Internal Jumper	Terminal	External Jumper	Cable	To	Page.Col.	Option	Function text
+C-X226:18	+M-W2001 :18		122		+M-W2238 :2	+M-B2330:1	139 .5		HIDRAULIC OIL PRESSURE
+C-X226:19	+M-W2001 :19		123				231 .3		
+C-X226:20	+M-W2001 :20		124				231 .3		
+C-X227:1	+M-W2002 :1		125		+M-W2225 :1	+M-B2811:21	150 .3		JUM RIGHT SIDE DOOR 1
+C-X227:2	+M-W2002 :2		126		+M-W2225 :2	+M-B2811:11	150 .3		JUM RIGHT SIDE DOOR 1
+C-X227:3	+M-W2002 :3		127		+M-W2225 :3	+M-B2811:12	150 .5		JUM RIGHT SIDE DOOR 1
			128		+M-W2225 :4	+M-B2811:22	150 .5		JUM RIGHT SIDE DOOR 1
			129		+M-W2226 :1	+M-B2812:21	150 .3		JUM RIGHT SIDE DOOR 2
			130		+M-W2226 :2	+M-B2812:11	150 .3		JUM RIGHT SIDE DOOR 2
+C-X227:4	+M-W2002 :4		131		+M-W2226 :3	+M-B2812:12	150 .5		JUM RIGHT SIDE DOOR 2
			132		+M-W2226 :4	+M-B2812:22	150 .5		JUM RIGHT SIDE DOOR 2
+C-X227:5	+M-W2002 :5		133		+M-W2226 :5	+M-Y2812:3	056 .4		UNLOCK DOOR GUARD JUM RIGHT
			134		+M-W2226 :6	+M-Y2812:4	056 .6		UNLOCK DOOR GUARD JUM RIGHT
			135		+M-W2231 :1	+M-B2831:21	151 .2		JUM LEFT SIDE DOOR 1
			136		+M-W2231 :2	+M-B2831:11	151 .2		JUM LEFT SIDE DOOR 1
+C-X227:6	+M-W2002 :6		137		+M-W2231 :3	+M-B2831:12	151 .5		JUM LEFT SIDE DOOR 1
			138		+M-W2231 :4	+M-B2831:22	151 .2		JUM LEFT SIDE DOOR 1
			139		+M-W2231 :5	+M-Y2831:3	056 .4		UNLOCK DOOR GUARD JUM LEFT
			140		+M-W2231 :6	+M-Y2831:4	056 .6		UNLOCK DOOR GUARD JUM LEFT
			141		+M-W2230 :1	+M-B2832:21	151 .2		JUM LEFT SIDE DOOR 2
			142		+M-W2230 :2	+M-B2832:11	151 .2		JUM LEFT SIDE DOOR 2
+C-X227:7	+M-W2002 :7		143		+M-W2230 :3	+M-B2832:12	151 .5		JUM LEFT SIDE DOOR 2
+C-X227:8	+M-W2002 :8		144		+M-W2230 :4	+M-B2832:22	151 .5		JUM LEFT SIDE DOOR 2
+C-X227:9	+M-W2002 :9		145		+M-W2236 :1	+M-X4311:1	055 .5		
+C-X227:10	+M-W2002 :10		146		+M-W2236 :2	+M-X4311:2	055 .8		
+C-X227:11	+M-W2002 :11		147		+M-W2237 :1	+M-X4312:1	055 .5		
			148		+M-W2237 :2	+M-X4312:2	055 .8		
+C-X227:12	+M-W2002 :12		149		+M-W2248 :1	+M-X4306:1	055 .5		
			150		+M-W2248 :2	+M-X4306:2	055 .8		
+C-X227:13	+M-W2002 :13		151		+M-W2249 :1	+M-X4307:1	055 .5		

Drawing remarks

Tetra Pak

Designer: LUP	Date: 23/11/2007	Machine: Tetra Pak A3/Flex 0150	
ECM No: 320174	Denomination: TERMINAL STRIP OVERVIEW	Page Type: TERMINAL STRIP OVERVIEW	
Company: Tetra Pak (Italy)	Document No.: 2845987-0006	Doc. type: ELD	Version: AE	Page: 045

This drawing must not without the consent of Tetra Pak be copied, transmitted or disclosed to any third party.

1 2 3 4 5 6 7 8 9 10

Terminal strip of 2845987-0003

+M-X2000

From	Cable	Internal Jumper	Terminal	External Jumper	Cable	To	Page.Col.	Option	Function text
			152		+M-W2249 :2	+M-X4307:2	055 .8		
+C-X227:14	+M-W2002 :14		153		+M-W2208 :1	+M-X4308:1	055 .5		
			154		+M-W2208 :2	+M-X4308:2	055 .8		
+C-X227:15	+M-W2002 :15		155		+M-W2209 :1	+M-X4309:1	055 .5		
			156		+M-W2209 :2	+M-X4309:2	055 .8		
+C-X227:16	+M-W2002 :16		157				231 .3		
+C-X227:17	+M-W2002 :17		158				231 .3		
+C-X227:18	+M-W2002 :18		159				231 .3		
+C-X227:19	+M-W2002 :19		160				231 .3		
+C-X227:20	+M-W2002 :20		161				231 .3		
+C-X227:21	+M-W2002 :21		162				231 .3		
+C-X227:22	+M-W2002 :22		163				231 .3		
			164						
+C-X227:23	+M-W2002 :23		165				231 .3		
+C-X227:24	+M-W2002 :24		166				231 .3		
			201						
			201+				231 .5		
			201-				231 .5		
			202						
			202+				231 .5		
			202-				231 .5		
			203						
			203+				231 .5		
			203-				231 .5		
			204						
			204+				231 .5		
			204-				231 .5		
			205						
			205+				231 .5		
			205-				231 .5		

Drawing remarks

Tetra Pak

Designer LUP	Date 23/11/2007	Machine Tetra Pak A3/Flex 0150	
ECM No 320174	Denomination TERMINAL STRIP OVERVIEW	Page Type TERMINAL STRIP OVERVIEW	
Company Tetra Pak (Italy)	Document No. 2845987-0006	Doc. type ELD	Version AE	Page 046

This drawing must not without the consent of Tetra Pak be copied, transmitted or disclosed to any third party.

1 2 3 4 5 6 7 8 9 10

Terminal strip of 2845987-0003

+M-X2000

From	Cable	Internal Jumper	Terminal	External Jumper	Cable	To	Page.Col.	Option	Function text
			206						
			• 206+				231 .5		
			• 206-				231 .5		
			207						
			• 207+				231 .5		
			• 207-				231 .5		
			208						
			• 208+				231 .5		
			• 208-				231 .5		
			209						
			• 209+				231 .5		
			• 209-				231 .5		
			210						
			• 210+				231 .5		
			• 210-				231 .5		
			211						
			• 211+				231 .5		
			• 211-				231 .5		
			212						
			• 212+				231 .5		
			• 212-				231 .5		
			⏚						
+C-X101:⏚	+M-W2005 :GNYE		⏚		+M-W2211 :GNYE	+M-E2002:⏚	037 .6		LIGHTING JAW SYSTEM
PE:			⏚		+M-W2244 :GNYE	+M-E2001:⏚	037 .8		LIGHTING JAW SYSTEM
			⏚						
PE:			⏚				139 .5		
PE:			⏚		+M-W4053 :GNYE	+M-B2410: ⏚	139 .2		NO LUBRICATION OIL TANK HIGH/LOW LEVEL
			⏚		+M-W2235 :GNYE	+M-Y2106:E	201 .6		TUBE FLUSHER
+C-X226:⏚	+M-W2001 :GNYE		⏚		+M-W2233 :GNYE	+M-B2310:⏚	139 .5		HIDRAULIC OIL FILTRATION
			⏚		+M-W2234 :GNYE	+M-B2320:⏚	139 .2		HIDRAULIC OIL TEMPERATURE

Drawing remarks

Tetra Pak

Designer LUP	Date 23/11/2007	Machine Tetra Pak A3/Flex 0150		
ECM No 320174	Denomination TERMINAL STRIP OVERVIEW	Page Type TERMINAL STRIP OVERVIEW		
Company Tetra Pak (Italy)	Document No. 2845987-0006	Doc. type ELD	Version AE	Page 047

This drawing must not without the consent of Tetra Pak be copied, transmitted or disclosed to any third party.

1 2 3 4 5 6 7 8 9 10

Terminal strip of 2845987-0003

+M-X2000

From	Cable	Internal Jumper	Terminal	External Jumper	Cable	To	Page.Col.	Option	Function text
PE:			⏚		+M-W2238 :GNYE	+M-B2330:E	139 .5		HIDRAULIC OIL PRESSURE
+C-X227:⏚	+M-W2002 :GNYE		⏚				150 .5		
			⏚						
			⏚						
			⏚						
			⏚		+M-W2236 :GNYE	+M-X4311:⏚	055 .5		
			⏚		+M-W2237 :GNYE	+M-X4312:⏚	055 .5		
			⏚		+M-W2248 :GNYE	+M-X4306:⏚	055 .5		
			⏚		+M-W2249 :GNYE	+M-X4307:⏚	055 .5		
			⏚		+M-W2208 :GNYE	+M-X4308:⏚	055 .5		
			⏚		+M-W2209 :GNYE	+M-X4309:⏚	055 .5		
			⏚						
			⏚						

Drawing remarks

Tetra Pak

Designer LUP	Date 23/11/2007	Machine Tetra Pak A3/Flex 0150	
ECM No 320174	Denomination TERMINAL STRIP OVERVIEW	Page Type TERMINAL STRIP OVERVIEW	
Company Tetra Pak (Italy)	Document No. 2845987-0006	Doc. type ELD	Version AE	Page 048

This drawing must not without the consent of Tetra Pak
be copied, transmitted or disclosed to any third party.

1 2 3 4 5 6 7 8 9 10

Terminal strip of 2845987-0003

+M-X2001

From	Cable	Internal Jumper	Terminal	External Jumper	Cable	To	Page.Col.	Option	Function text
+C-X111:1	+M-W2014 :1		1		+M-W5002 :1	+M-M5503:V	032 .2		TRASPORTATION OF WASTE
+C-X111:2	+M-W2014 :2		2		+M-W5002 :2	+M-M5503:U	032 .2		TRASPORTATION OF WASTE
+C-X111:3	+M-W2014 :3		3		+M-W5002 :3	+M-M5503:W	032 .2		TRASPORTATION OF WASTE
+C-X107:1	+M-W2016 :1		4		+M-W5004 :1	+M-E2003:1	037 .9		LIGHTING FFU
+C-X107:2	+M-W2016 :2		5		+M-W5004 :2	+M-E2003:2	037 .9		LIGHTING FFU
+C-X112:1	+M-W2015 :1		6		+M-W5003 :1	+M-M5406:U	017 .9		EXTERNAL CONVEYOR
+C-X112:2	+M-W2015 :2		7		+M-W5003 :2	+M-M5406:V	017 .9		EXTERNAL CONVEYOR
+C-X112:3	+M-W2015 :3		8		+M-W5003 :3	+M-M5406:W	017 .9		EXTERNAL CONVEYOR
+C-X112:4	+M-W2015 :SH		9		+M-W5003 :SH	GND:	017 .10		
+C-X112:5	+M-W2015 :GNYE		10		+M-W5003 :GNYE	+M-M5406:⏚	017 .9		EXTERNAL CONVEYOR
			11						
			12						
			13						
+C-X765:1	+M-W765 :1		14		+M-W4430 :1	+M-S5430:1	251 .3		BELT BRAKE
+C-X765:2	+M-W765 :2		15		+M-W4430 :2	+M-S5430:3	251 .3		BELT BRAKE
+C-X765:3	+M-W765 :3		16		+M-W4430 :3	+M-S5430:5	251 .3		BELT BRAKE
			17						
+C-X202:1	+M-W2010 :1		101				231 .8		
+C-X202:23	+M-W2010 :23		•101+				231 .7		
+C-X202:24	+M-W2010 :24		•101-				231 .7		
+C-X202:2	+M-W2010 :2		102		+M-W5009 :BK	+M-B5203:	115 .5		INFEED STATION SLIDING MONITOR
			•102+		+M-W5009 :BN	+M-B5203:	115 .3		INFEED STATION SLIDING MONITOR
			•102-		+M-W5009 :BU	+M-B5203:	115 .3		INFEED STATION SLIDING MONITOR
+C-X202:3	+M-W2010 :3		103		+M-W5010 :BK	+M-B5302:	115 .5		PRESSURE DEVICE ROTATION MONITOR
			•103+		+M-W5010 :BN	+M-B5302:	115 .3		PRESSURE DEVICE ROTATION MONITOR
			•103-		+M-W5010 :BU	+M-B5302:	115 .3		PRESSURE DEVICE ROTATION MONITOR
+C-X202:4	+M-W2010 :4		104		+M-W5011 :BK	+M-B5314:	115 .5		STATION WHEEL ROTATION MONITOR
			•104+		+M-W5011 :BN	+M-B5314:	115 .3		STATION WHEEL ROTATION MONITOR
			•104-		+M-W5011 :BU	+M-B5314:	115 .3		STATION WHEEL ROTATION MONITOR
+C-X202:5	+M-W2010 :5		105		+M-W5012 :BK	+M-B5401:	147 .5		OUTFEED STATION OVERLOAD

Drawing remarks

Tetra Pak

Designer LUP	Date 23/11/2007	Machine Tetra Pak A3/Flex 0150	
ECM No 320174	Denomination TERMINAL STRIP OVERVIEW	Page Type TERMINAL STRIP OVERVIEW	
Company Tetra Pak (Italy)	Document No. 2845987-0006	Doc. type ELD	Version AE	Page 049

This drawing must not without the consent of Tetra Pak be copied, transmitted or disclosed to any third party.

Terminal strip of 2845987-0003

+M-X2001

From	Cable	Internal Jumper	Terminal	External Jumper	Cable	To	Page.Col.	Option	Function text
			105+		+M-W5012 :BN	+M-B5401:	147 .3		OUTFEED STATION OVERLOAD
			105-		+M-W5012 :BU	+M-B5401:	147 .3		OUTFEED STATION OVERLOAD
+C-X202:6	+M-W2010 :6		106		+M-W5015 :BK	+M-B5402:	147 .5		PACKAGE COUNTER AFTER FFU
			106+		+M-W5015 :BN	+M-B5402:	147 .3		PACKAGE COUNTER AFTER FFU
			106-		+M-W5015 :BU	+M-B5402:	147 .3		PACKAGE COUNTER AFTER FFU
			107						
			107+		+M-W5016 :BN	+M-B5403:	147 .3		PACKAGE COUNTER AFTER FFU
			107-		+M-W5016 :BU	+M-B5403:	147 .3		PACKAGE COUNTER AFTER FFU
+C-X202:7	+M-W2010 :7		108		+M-W5510 :1	+M-X5501:5	148 .6		
			108+		+M-W5510 :3	+M-X5501:1	148 .2		
			108-		+M-W5510 :2	+M-X5501:2	148 .2		
			109						
			109+				231 .7		
			109-				231 .7		
+C-X202:8	+M-W2010 :8		110				231 .8		
			110+				231 .7		
			110-				231 .7		
+C-X202:9	+M-W2010 :9		111				231 .8		
			111+				231 .7		
			111-				231 .7		
+C-X202:10	+M-W2010 :10		112		+M-W5516 :BK	+M-B5516:4	141 .6	DIMC	CAP BLOWING AIR FLOW
			112+		+M-W5516 :BN	+M-B5516:1	141 .3	DIMC	CAP BLOWING AIR FLOW
			112-		+M-W5516 :BU	+M-B5516:3	141 .3	DIMC	CAP BLOWING AIR FLOW
+C-X202:11	+M-W2010 :11		113		+M-W5700 :1	+M-Y5700:1	201 .4	DIMC	CAP FLUSHER
			113+				231 .7		
			113-		+M-W5700 :2	+M-Y5700:2	201 .6	DIMC	CAP FLUSHER
+C-X202:12	+M-W2010 :12		114		+M-W5710 :2	+M-B5710:wh	141 .6	DIMC	CAP FLUSHING WATER FLOW
			114+		+M-W5710 :1	+M-B5710:wh	141 .3	DIMC	CAP FLUSHING WATER FLOW
			114-				141 .3	DIMC	
+C-X202:13	+M-W2010 :13		115		+M-W5006 :4	+M-B5104:14	061 .6		CRANK POSITION FFU

Drawing remarks

Tetra Pak

Designer LUP	Date 23/11/2007	Machine Tetra Pak A3/Flex 0150	
ECM No 320174	Denomination TERMINAL STRIP OVERVIEW	Page Type TERMINAL STRIP OVERVIEW	
Company Tetra Pak (Italy)	Document No. 2845987-0006	Doc. type ELD	Version AE	Page 050

This drawing must not without the consent of Tetra Pak be copied, transmitted or disclosed to any third party.

1 2 3 4 5 6 7 8 9 10

Terminal strip of 2845987-0003

+M-X2001

From	Cable	Internal Jumper	Terminal	External Jumper	Cable	To	Page.Col.	Option	Function text
+C-X202:14	+M-W2010 :14		116		+M-W5006 :3	+M-B5104:22	061 .6		CRANK POSITION FFU
			117		+M-W5006 :2	+M-B5104:21	061 .3		CRANK POSITION FFU
+C-X202:15	+M-W2010 :15		118		+M-W5006 :1	+M-B5104:13	061 .3		CRANK POSITION FFU
+C-X202:16	+M-W2010 :16		119				231 .8		
			120						
			121						
			122						
			123						
			124						
			125						
			126						
+C-X204:1	+M-W2011 :1		127		+M-W2224 :1	+M-B2810:21	150 .2		FFU RIGHT SIDE DOOR 2
+C-X204:2	+M-W2011 :2		128		+M-W2224 :2	+M-B2810:11	150 .2		FFU RIGHT SIDE DOOR 2
+C-X204:3	+M-W2011 :3		129		+M-W2224 :3	+M-B2810:12	150 .4		FFU RIGHT SIDE DOOR 2
			130		+M-W2224 :4	+M-B2810:22	150 .4		FFU RIGHT SIDE DOOR 2
+C-X204:4	+M-W2011 :4		131		+M-W2224 :5	+M-Y2810:3	056 .4		UNLOCK DOOR GUARD FFU RIGHT
			132		+M-W2224 :6	+M-Y2810:4	056 .6		UNLOCK DOOR GUARD FFU RIGHT
			133				150 .4		
			134				150 .3		
+C-X204:5	+M-W2011 :5		135				150 .5		
			136				150 .5		
			137		+M-W2228 :1	+M-B2830:21	151 .2		FFU LEFT SIDE DOOR 2
			138		+M-W2228 :2	+M-B2830:11	151 .2		FFU LEFT SIDE DOOR 2
+C-X204:6	+M-W2011 :6		139		+M-W2228 :3	+M-B2830:12	151 .5		FFU LEFT SIDE DOOR 2
+M-B2813:21	+M-W2227 :1		140		+M-W2228 :4	+M-B2830:22	151 .5		FFU LEFT SIDE DOOR 2
			141		+M-W2228 :5	+M-Y2830:3	056 .4		UNLOCK DOOR GUARD FFU LEFT
			142		+M-W2228 :6	+M-Y2830:4	056 .6		UNLOCK DOOR GUARD FFU LEFT
			143		+M-W2227 :4	+M-B2813:22	151 .6		FFU LEFT SIDE DOOR 1
			144				151 .2		
+C-X204:7	+M-W2011 :7		145				151 .5		

Drawing remarks

Tetra Pak

Designer LUP	Date 23/11/2007	Machine Tetra Pak A3/Flex 0150	
ECM No 320174	Denomination TERMINAL STRIP OVERVIEW	Page Type TERMINAL STRIP OVERVIEW	
Company Tetra Pak (Italy)	Document No. 2845987-0006	Doc. type ELD	Version AE	Page 051

This drawing must not without the consent of Tetra Pak be copied, transmitted or disclosed to any third party.

1 2 3 4 5 6 7 8 9 10

Terminal strip of 2845987-0003

+M-X2001

From	Cable	Internal Jumper	Terminal	External Jumper	Cable	To	Page.Col.	Option	Function text
+C-X204:8	+M-W2011 :8		146				151 .5		
+C-X204:9	+M-W2011 :9		147				231 .8		
			148		+M-W2227 :2	+M-B2813:11	150 .3	TGA	FFU LEFT SIDE DOOR 1
+C-X204:23	+M-W2011 :23		149				231 .8		
+C-X204:10	+M-W2011 :10		150		+M-W2227 :3	+M-B2813:12	150 .5	TGA	FFU LEFT SIDE DOOR 1
+C-X204:11	+M-W2011 :11		151				231 .8		
+C-X204:12	+M-W2011 :12		152				231 .8		
+C-X204:13	+M-W2011 :13		153				231 .8		
			154						
+C-X204:14	+M-W2011 :14		155		+M-W2212 :1	+M-H2801:1	056 .3		BEACON LAMP FRONT
+C-X204:15	+M-W2011 :15		156		+M-W2212 :2	+M-H2801:2	056 .3		BEACON LAMP FRONT
+C-X204:16	+M-W2011 :16		157		+M-W2212 :3	+M-H2801:3	056 .3		BEACON LAMP FRONT
			158		+M-W2212 :4	+M-H2801:0	056 .6		BEACON LAMP FRONT
+C-X204:17	+M-W2011 :17		159				056 .3		
+C-X204:18	+M-W2011 :18		160				231 .8		
+C-X204:19	+M-W2011 :19		161				231 .8		
+C-X204:20	+M-W2011 :20		162				231 .8		
+C-X204:21	+M-W2011 :21		163				231 .8		
+C-X204:22	+M-W2011 :22		164				231 .8		
			165						
+C-X204:24	+M-W2011 :24		166				231 .8		
+C-X202:17	+M-W2010 :17		167		+M-W5504 :BK	+M-B5504:	147 .5		LEFT CYLINDER HIGHER POSITION
			167+		+M-W5504 :BN	+M-B5504:	147 .3		LEFT CYLINDER HIGHER POSITION
			167-		+M-W5504 :BU	+M-B5504:	147 .3		LEFT CYLINDER HIGHER POSITION
+C-X202:18	+M-W2010 :18		168		+M-W5505 :BK	+M-B5505:	147 .5		RIGHT CYLINDER HIGHER POSITION
			168+		+M-W5505 :BN	+M-B5505:	147 .3		RIGHT CYLINDER HIGHER POSITION
			168-		+M-W5505 :BU	+M-B5505:	147 .3		RIGHT CYLINDER HIGHER POSITION
+C-X202:19	+M-W2010 :19		169		+M-W5506 :BK	+M-B5506:	156 .5		LEFT CYLINDER MEDIUM POSITION
			169+		+M-W5506 :BN	+M-B5506:	156 .3		LEFT CYLINDER MEDIUM POSITION
			169-		+M-W5506 :BU	+M-B5506:	156 .3		LEFT CYLINDER MEDIUM POSITION

Drawing remarks

Tetra Pak

Designer LUP	Date 23/11/2007	Machine Tetra Pak A3/Flex 0150	
ECM No 320174	Denomination TERMINAL STRIP OVERVIEW	Page Type TERMINAL STRIP OVERVIEW	
Company Tetra Pak (Italy)	Document No. 2845987-0006	Doc. type ELD	Version AE	Page 052

This drawing must not without the consent of Tetra Pak be copied, transmitted or disclosed to any third party.

1 2 3 4 5 6 7 8 9 10

Terminal strip of 2845987-0003

+M-X2001

From	Cable	Internal Jumper	Terminal	External Jumper	Cable	To	Page.Col.	Option	Function text
+C-X202:20	+M-W2010 :20		170		+M-W5507 :BK	+M-B5507:	155 .5		RIGHT CYLINDER MEDIUM POSITION
			170+		+M-W5507 :BN	+M-B5507:	155 .3		RIGHT CYLINDER MEDIUM POSITION
			170-		+M-W5507 :BU	+M-B5507:	155 .3		RIGHT CYLINDER MEDIUM POSITION
+C-X202:21	+M-W2010 :21		171		+M-W5508 :BK	+M-B5508:	156 .5		LEFT CYLINDER LOWER POSITION
			171+		+M-W5508 :BN	+M-B5508:	156 .3		LEFT CYLINDER LOWER POSITION
			171-		+M-W5508 :BU	+M-B5508:	156 .3		LEFT CYLINDER LOWER POSITION
+C-X202:22	+M-W2010 :22		172		+M-W5509 :BK	+M-B5509:	156 .5		RIGHT CYLINDER LOWER POSITION
			172+		+M-W5509 :BN	+M-B5509:	156 .3		RIGHT CYLINDER LOWER POSITION
			172-		+M-W5509 :BU	+M-B5509:	156 .3		RIGHT CYLINDER LOWER POSITION
+C-X111:⏚	+M-W2014 :GNYE		⏚		+M-W5002 :GNYE	+M-M5503:⏚	032 .2		TRASPORTATION OF WASTE
+C-X202:⏚	+M-W2010 :GNYE		⏚		+M-W5006 :GNYE	+M-B5104:E	061 .6		CRANK POSITION FFU
			⏚		+M-W5700 :GNYE	+M-Y5700:E	201 .6	DIMC	CAP FLUSHER
PE:			⏚		+M-W5004 :GNYE	+M-E2003:⏚	037 .8		LIGHTING FFU
+C-X204:⏚	+M-W2011 :GNYE		⏚		+M-W2212 :GNYE	+M-H2801:⏚	056 .6		BEACON LAMP FRONT
+C-X765:⏚	+M-W765 :GNYE		⏚		+M-W4430 :GNYE	+M-M5430:⏚	251 .3		BELT BRAKE
			⏚						
			⏚						
			⏚						
			⏚						
			⏚						

Drawing remarks

Tetra Pak

Designer LUP	Date 23/11/2007	Machine Tetra Pak A3/Flex 0150	
ECM No 320174	Denomination TERMINAL STRIP OVERVIEW	Page Type TERMINAL STRIP OVERVIEW	
Company Tetra Pak (Italy)	Document No. 2845987-0006	Doc. type ELD	Version AE	Page 053

This drawing must not without the consent of Tetra Pak be copied, transmitted or disclosed to any third party.

Terminal strip of 2845987-0003

+M-X2002

From	Cable	Internal Jumper	Terminal	External Jumper	Cable	To	Page.Col.	Option	Function text
+C-A450:05	+M-W4502 :SH		⏚		+M-W4500 :SH	+M-A4500:5	059 .6		RECEIVE MODEM
+C-A450:03	+M-W4502 :YE		100		+M-W4500 :YE	+M-A4500:1	059 .6		RECEIVE MODEM
+C-A450:04	+M-W4502 :GN		101		+M-W4500 :GN	+M-A4500:2	059 .6		RECEIVE MODEM
+C-A450:01	+M-W4502 :WH		102		+M-W4500 :WH	+M-A4500:3	059 .6		RECEIVE MODEM
+C-A450:02	+M-W4502 :BN		103		+M-W4500 :BN	+M-A4500:4	059 .6		RECEIVE MODEM
+C-X454:4	+M-W4503 :WH		104		+M-W4504 :WH	+M-X2454.2:11	059 .5		
+C-X454:5	+M-W4503 :BN		105		+M-W4504 :BN	+M-X2454.2:10	059 .5		
+C-X454:9	+M-W4503 :YE		106		+M-W4504 :YE	+M-X2454.2:12	059 .5		
+C-X454:8	+M-W4503 :GN		107		+M-W4504 :GN	+M-X2454.2:13	059 .5		
+C-X454:SH	+M-W4503 :SH		108		+M-W4504 :SH	+M-X2454.2:SH	059 .5		
+C-X203:1	+M-W2030 :1		109				149 .3		
			110				149 .3		
+C-X203:3	+M-W2030 :3		111				149 .5		
+C-X203:4	+M-W2030 :4		112				149 .5		
+C-X203:5	+M-W2030 :5		113				057 .5		
			113+				057 .3		
			113-				237 .7		
+C-X203:6	+M-W2030 :6		114				057 .5		
			114+				057 .3		
			114-				237 .7		
+C-X203:7	+M-W2030 :7		115				057 .5		
			115+				057 .3		
			115-				237 .7		
+C-X203:8	+M-W2030 :8		116				057 .5		
			116+				057 .3		
			116-				237 .7		
+C-X203:9	+M-W2030 :9		117				057 .5		
			117+				057 .3		
			117-				237 .7		
+C-X203:10	+M-W2030 :10		118		+M-W5603 :1	+M-X5601:5	148 .6		

Drawing remarks

Tetra Pak

Designer LUP	Date 23/11/2007	Machine Tetra Pak A3/Flex 0150	
ECM No 320174	Denomination TERMINAL STRIP OVERVIEW	Page Type TERMINAL STRIP OVERVIEW	
Company Tetra Pak (Italy)	Document No. 2845987-0006	Doc. type ELD	Version AE	Page 054

This drawing must not without the consent of Tetra Pak be copied, transmitted or disclosed to any third party.

1 2 3 4 5 6 7 8 9 10

Terminal strip of 2845987-0003

+M-X2002

From	Cable	Internal Jumper	Terminal	External Jumper	Cable	To	Page.Col.	Option	Function text
+C-X203:23	+M-W2030 :23		118+		+M-W5603 :3	+M-X5601:1	148 .2		
+C-X203:24	+M-W2030 :24		118-		+M-W5603 :2	+M-X5601:2	148 .2		
			119						
			119+				237 .7		
			119-			+M-K2018:A1	237 .7		SPARE
						+M-K2017:A1			STEAM C-VALVE OK
						+M-K2010:A1			ICE WATER REQUEST
						+M-K2011:A1			PRODUCT PUMP FOR PLANT ADDED REQ.
						+M-K2012:A1			FILLING MACHINE READY FOR C.I.P.
						+M-K2013:A1			EXTERNAL CLEANING RUNNING
						+M-K2014:A1			MACHINE READY FOR PRODUCTION
						+M-K2015:A1			STEAM C-VALVE OK
						+M-K2016:A1			FILLING MACHINE IN PRODUCTION
+C-X203:11	+M-W2030 :11		120				057 .5		
+C-X203:12	+M-W2030 :12		121				057 .5		
+C-X203:13	+M-W2030 :13		122				057 .5		
+C-X203:14	+M-W2030 :14		123				057 .5		
+C-X228:3	+M-W4506 :3		124				237 .7		
+C-X228:4	+M-W4506 :4		125				237 .7		
+C-X228:5	+M-W4506 :5		126				237 .7		
+C-X228:6	+M-W4506 :6		127				237 .7		
+C-X228:7	+M-W4506 :7		128				237 .7		
+C-X228:8	+M-W4506 :8		129				237 .7		
+C-X228:9	+M-W4506 :9		130				237 .7		
+C-X228:10	+M-W4506 :10		131				237 .7		
+C-X228:11	+M-W4506 :11		132				237 .7		
+C-X228:12	+M-W4506 :12		133				237 .7		
+C-X228:13	+M-W4506 :13		134				237 .7		
+C-X228:14	+M-W4506 :14		135				237 .7		
+C-X228:15	+M-W4506 :15		136				237 .7		

Drawing remarks

Tetra Pak

Designer LUP	Date 23/11/2007	Machine Tetra Pak A3/Flex 0150	
ECM No 320174	Denomination TERMINAL STRIP OVERVIEW	Page Type TERMINAL STRIP OVERVIEW	
Company Tetra Pak (Italy)	Document No. 2845987-0006	Doc. type ELD	Version AE	Page 055

This drawing must not without the consent of Tetra Pak be copied, transmitted or disclosed to any third party.

1 2 3 4 5 6 7 8 9 10

Terminal strip of 2845987-0003

+M-X2002

From	Cable	Internal Jumper	Terminal	External Jumper	Cable	To	Page.Col.	Option	Function text
+C-X228:16	+M-W4506 :16		137				237 .7		
+C-X228:17	+M-W4506 :17		138				237 .7		
+C-X228:18	+M-W4506 :18		139				237 .7		
+C-X228:19	+M-W4506 :19		140				237 .7		
+C-X228:20	+M-W4506 :20		141				237 .7		
+C-X228:21	+M-W4506 :21		142				237 .7		
+C-X228:22	+M-W4506 :22		143				237 .7		
+C-X228:23	+M-W4506 :23		144				237 .7		
+C-X228:24	+M-W4506 :24		145				237 .7		
+C-X228:⏚	+M-W4506 :GNYE		⏚				237 .7		
+C-X203:⏚	+M-W2030 :GNYE		⏚				149 .5		
			⏚						
			⏚						
			⏚						
			⏚						
			⏚						
			⏚						

Drawing remarks

Tetra Pak

Designer LUP	Date 23/11/2007	Machine Tetra Pak A3/Flex 0150		
ECM No 320174	Denomination TERMINAL STRIP OVERVIEW	Page Type TERMINAL STRIP OVERVIEW		
Company Tetra Pak (Italy)	Document No. 2845987-0006	Doc. type ELD	Version AE	Page 056

This drawing must not without the consent of Tetra Pak
be copied, transmitted or disclosed to any third party.

1 2 3 4 5 6 7 8 9 10

Terminal strip of 2845987-0003

+M-X2003

From	Cable	Internal Jumper	Terminal	External Jumper	Cable	To	Page.Col.	Option	Function text
+M-X2244:1	+M-W2258 :1		101		+M-W2257 :1	+M-X2051:1	200 .4		
+M-X2244:2	+M-W2258 :2		102		+M-W2257 :2	+M-X2051:2	200 .4		
+M-X2244:3	+M-W2258 :3		103		+M-W2257 :3	+M-X2051:3	200 .4		
+M-X2244:4	+M-W2258 :4		104		+M-W2257 :4	+M-X2051:4	200 .4		
+M-X2244:5	+M-W2258 :5		105		+M-W2257 :5	+M-X2051:5	200 .4		
			106		+M-W2257 :12	+M-X2051:1-	200 .7		
+M-X2244:6	+M-W2258 :6		107		+M-W2257 :6	+M-X2051:6	200 .4		
+M-X2244:7	+M-W2258 :7		108		+M-W2257 :7	+M-X2051:7	200 .4		
+M-X2244:8	+M-W2258 :8		109		+M-W2257 :8	+M-X2051:8	200 .4		
			110		+M-W2257 :13	+M-X2051:6-	200 .7		
			⏚		+M-W2257 :GNYE	+M-X2051:⏚	200 .7		
+M-X2244:9	+M-W2258 :9		111		+M-W2201 :BN	+M-Y2201:	175 .4		MAIN AIR
+M-X2244:10	+M-W2258 :10		112		+M-W2201 :BU	+M-Y2201:	175 .6		MAIN AIR
PE:			⏚		+M-W2201 :GNYE	+M-Y2201:	175 .6		MAIN AIR
+M-X2244:11	+M-W2258 :11		113		+M-W2222 :1	+M-Y3101:	177 .4		HOT WATER SUPPLY
+M-X2244:12	+M-W2258 :12		114		+M-W2222 :2	+M-Y3101:	177 .6		HOT WATER SUPPLY
PE:			⏚		+M-W2222 :GNYE	+M-Y3101:	177 .6		HOT WATER SUPPLY
+M-X2244:13	+M-W2258 :13		115		+M-W2243 :1	+M-Y2108:1	201 .4		FLUSHING FFU
			116		+M-W2243 :2	+M-Y2108:2	201 .6		FLUSHING FFU
			⏚		+M-W2243 :GNYE	+M-Y2108:E	201 .6		FLUSHING FFU
+M-X2244:14	+M-W2258 :14		117		+M-W2115 :1	+M-Y2115:1	201 .4		H2O2 DILUTION WATER VALVE
			118		+M-W2115 :2	+M-Y2115:2	201 .6		H2O2 DILUTION WATER VALVE
			⏚		+M-W2115 :GNYE	+M-Y2115:E	201 .6		H2O2 DILUTION WATER VALVE
+M-X2244:15	+M-W2258 :15		119		+M-W2220 :1	+M-B2102:1	137 .5		COLD WATER PRESSURE
			120		+M-W2220 :2	+M-B2102:3	137 .3		COLD WATER PRESSURE
PE:			⏚		+M-W2220 :GNYE	+M-B2102:⏚	137 .5		COLD WATER PRESSURE
+M-X2244:16	+M-W2258 :16		121		+M-W2221 :1	+M-B2201:1	137 .5		MAIN AIR PRESSURE
			122		+M-W2221 :2	+M-B2201:3	137 .3		MAIN AIR PRESSURE
PE:			⏚		+M-W2221 :GNYE	+M-B2201:⏚	137 .5		MAIN AIR PRESSURE
+M-X2244:17	+M-W2258 :17		123		+M-W2246 :BN	+M-B3102:BN	137 .5		PUMPING WATER

Drawing remarks

Tetra Pak

Designer LUP	Date 23/11/2007	Machine Tetra Pak A3/Flex 0150	
ECM No 320174	Denomination TERMINAL STRIP OVERVIEW	Page Type TERMINAL STRIP OVERVIEW	
Company Tetra Pak (Italy)	Document No. 2845987-0006	Doc. type ELD	Version AE	Page 057

This drawing must not without the consent of Tetra Pak be copied, transmitted or disclosed to any third party.

1 2 3 4 5 6 7 8 9 10

Terminal strip of 2845987-0003

+M-X2003

From	Cable	Internal Jumper	Terminal	External Jumper	Cable	To	Page.Col.	Option	Function text
			124		+M-W2246 :BU	+M-B3102:BU	137 .3		PUMPING WATER
PE:			⏚		+M-W2246 :GNYE	+M-B3102:⏚	137 .5		PUMPING WATER
+M-X2244:18	+M-W2258 :18		125		+M-W2247 :BK	+M-B3105:	137 .5		DOSING CHEMICALS
			126		+M-W2247 :RD	+M-B3105:	137 .3		DOSING CHEMICALS
			⏚						
+M-X2244:19	+M-W2258 :19		127		+M-W2027 :1	+C-Z004:3	120 .5		
			128		+M-W2027 :2	+C-Z004:4	120 .3		
+M-X2244:20	+M-W2258 :20		129		+M-W2110 :WH	+M-B2110:1	053 .8		COOLING FLOW RIGHT
			130		+M-W2110 :WH	+M-B2110:2	053 .9		COOLING FLOW RIGHT
			⏚						
			131				237 .7		
+M-X2244:21	+M-W2258 :21		132		+M-W2116 :2	+M-B2116:3	105 .4	DIMC	CONDUCTIVITY METER
			⏚						
			133		+M-W2116 :1	+M-B2116:2	105 .2	DIMC	CONDUCTIVITY METER
			134				237 .7		
			⏚						
+M-X2244:22	+M-W2258 :22		135		+M-W2111 :WH	+M-B2111:1	053 .8		COOLING FLOW LEFT
+M-X2244:23	+M-W2258 :23		136		+M-W2111 :WH	+M-B2111:2	053 .9		COOLING FLOW LEFT
			⏚						
+M-X2244:24	+M-W2258 :24		137				237 .7		
			138						
			⏚						
			139						
			140						
+M-X2244:⏚	+M-W2258 :GNYE		⏚				237 .7		

Drawing remarks

Tetra Pak

Designer LUP	Date 23/11/2007	Machine Tetra Pak A3/Flex 0150		
ECM No 320174	Denomination TERMINAL STRIP OVERVIEW	Page Type TERMINAL STRIP OVERVIEW		
Company Tetra Pak (Italy)	Document No. 2845987-0006	Doc. type ELD	Version AE	Page 058

This drawing must not without the consent of Tetra Pak
be copied, transmitted or disclosed to any third party.

1 2 3 4 5 6 7 8 9 10

Terminal strip of 2845987-0003

+M-X2010

From	Cable	Internal Jumper	Terminal	External Jumper	Cable	To	Page.Col.	Option	Function text
+C-X116:1	+M-W4005 :1		1		+M-W2017 :1	+M-X5002:1	010 .2		
+C-X116:2	+M-W4005 :2		2		+M-W2017 :2	+M-X5002:2	010 .2		
+C-X116:3	+M-W4005 :3		3		+M-W2018 :1	+M-X5003:1	010 .4		
+C-X116:4	+M-W4005 :4		4		+M-W2018 :2	+M-X5003:2	010 .4		
+C-X117:1	+M-W4006 :1		5		+M-W2019 :1	+M-X5004:1	010 .6		
+C-X117:2	+M-W4006 :2		6		+M-W2019 :2	+M-X5004:2	010 .6		
+C-X116:⏚	+M-W4005 :GNYE		⏚		+M-W2017 :GNYE	GND:	010 .3		
+C-X117:⏚	+M-W4006 :GNYE		⏚		+M-W2019 :GNYE	GND:	010 .7		
			⏚		+M-W2018 :GNYE	GND:	010 .4		
+C-X117:3	+M-W4006 :3		7		+M-W2020 :1	+M-X5005:1	010 .9	TGA	
+C-X117:4	+M-W4006 :4		8		+M-W2020 :2	+M-X5005:2	010 .9	TGA	
			⏚			GND:	010 .10	TGA	

Drawing remarks

Tetra Pak

Designer LUP	Date 23/11/2007	Machine Tetra Pak A3/Flex 0150	
ECM No 320174	Denomination TERMINAL STRIP OVERVIEW	Page Type TERMINAL STRIP OVERVIEW	
Company Tetra Pak (Italy)	Document No. 2845987-0006	Doc. type ELD	Version AE	Page 059

This drawing must not without the consent of Tetra Pak
be copied, transmitted or disclosed to any third party.

1 2 3 4 5 6 7 8 9 10

Terminal strip of 2845987-0003

+M-X2020

From	Cable	Internal Jumper	Terminal	External Jumper	Cable	To	Page.Col.	Option	Function text
+C-X302:+	+M-W2021 :YE		+		+M-W5021 :YE	+M-X5006:+	111 .4		TEMP. TOP FLAP LEFT
+C-X302:-	+M-W2021 :RD		-		+M-W5021 :RD	+M-X5006:-	111 .4		TEMP. TOP FLAP LEFT

Drawing remarks

Tetra Pak

Designer LUP	Date 23/11/2007	Machine Tetra Pak A3/Flex 0150	
ECM No 320174	Denomination TERMINAL STRIP OVERVIEW	Page Type TERMINAL STRIP OVERVIEW	
Company Tetra Pak (Italy)	Document No. 2845987-0006	Doc. type ELD	Version AE	Page 060

This drawing must not without the consent of Tetra Pak
be copied, transmitted or disclosed to any third party.

1 2 3 4 5 6 7 8 9 10

Terminal strip of 2845987-0003

+M-X2021

From	Cable	Internal Jumper	Terminal	External Jumper	Cable	To	Page.Col.	Option	Function text
+C-X303:+	+M-W2022 :YE		+		+M-W5022 :YE	+M-X5007:+	111 .4		TEMP. TOP FLAP RIGHT
+C-X303:-	+M-W2022 :RD		-		+M-W5022 :RD	+M-X5007:-	111 .4		TEMP. TOP FLAP RIGHT

Drawing remarks

Tetra Pak

Designer LUP	Date 23/11/2007	Machine Tetra Pak A3/Flex 0150	
ECM No 320174	Denomination TERMINAL STRIP OVERVIEW	Page Type TERMINAL STRIP OVERVIEW	
Company Tetra Pak (Italy)	Document No. 2845987-0006	Doc. type ELD	Version AE	Page 061

This drawing must not without the consent of Tetra Pak
be copied, transmitted or disclosed to any third party.

1 2 3 4 5 6 7 8 9 10

Terminal strip of 2845987-0003

+M-X2022

From	Cable	Internal Jumper	Terminal	External Jumper	Cable	To	Page.Col.	Option	Function text
+C-X304:+	+M-W2023 :YE		+		+M-W5023 :YE	+M-X5008:+	111 .4		TEMP. BOTTOM FLAPS
+C-X304:-	+M-W2023 :RD		-		+M-W5023 :RD	+M-X5008:-	111 .4		TEMP. BOTTOM FLAPS

Drawing remarks

Tetra Pak

Designer LUP	Date 23/11/2007	Machine Tetra Pak A3/Flex 0150	
ECM No 320174	Denomination TERMINAL STRIP OVERVIEW	Page Type TERMINAL STRIP OVERVIEW	
Company Tetra Pak (Italy)	Document No. 2845987-0006	Doc. type ELD	Version AE	Page 062

This drawing must not without the consent of Tetra Pak be copied, transmitted or disclosed to any third party.

1 2 3 4 5 6 7 8 9 10

Terminal strip of 2845987-0003

+M-X2023

From	Cable	Internal Jumper	Terminal	External Jumper	Cable	To	Page.Col.	Option	Function text
+M-X5009:+	+M-W5024 :YE		+		+M-W2024 :YE	+C-X319:+	111 .4	TGA	TEMP. BOTTOM FLAP RIGHT
+M-X5009:-	+M-W5024 :RD		-		+M-W2024 :RD	+C-X319:-	111 .4	TGA	TEMP. BOTTOM FLAP RIGHT

Drawing remarks

Tetra Pak

Designer LUP	Date 23/11/2007	Machine Tetra Pak A3/Flex 0150	
ECM No 320174	Denomination TERMINAL STRIP OVERVIEW	Page Type TERMINAL STRIP OVERVIEW	
Company Tetra Pak (Italy)	Document No. 2845987-0006	Doc. type ELD	Version AE	Page 063

This drawing must not without the consent of Tetra Pak be copied, transmitted or disclosed to any third party.

1 2 3 4 5 6 7 8 9 10

Terminal strip of 2845987-0003

+M-X2038

From	Cable	Internal Jumper	Terminal	External Jumper	Cable	To	Page.Col.	Option	Function text
+C-X301:+	+M-W2055 :YE		+		+M-W2242 :YE	+M-X2039:+	110 .4		TEMP. CIRCUL. COOL WATER
+C-X301:-	+M-W2055 :RD		-		+M-W2242 :RD	+M-X2039:-	110 .4		TEMP. CIRCUL. COOL WATER

Drawing remarks

Tetra Pak

Designer LUP	Date 23/11/2007	Machine Tetra Pak A3/Flex 0150	
ECM No 320174	Denomination TERMINAL STRIP OVERVIEW	Page Type TERMINAL STRIP OVERVIEW	
Company Tetra Pak (Italy)	Document No. 2845987-0006	Doc. type ELD	Version AE	Page 064

This drawing must not without the consent of Tetra Pak be copied, transmitted or disclosed to any third party.

1 2 3 4 5 6 7 8 9 10

Terminal strip of 2845987-0003

+M-X2039

From	Cable	Internal Jumper	Terminal	External Jumper	Cable	To	Page.Col.	Option	Function text
+M-X2038:+	+M-W2242 :YE		+			+M-B2510:+	110 .2		TEMP. CIRCUL. COOL WATER
+M-X2038:-	+M-W2242 :RD		-			+M-B2510:-	110 .2		TEMP. CIRCUL. COOL WATER

Drawing remarks

Tetra Pak

Designer LUP	Date 23/11/2007	Machine Tetra Pak A3/Flex 0150		
ECM No 320174	Denomination TERMINAL STRIP OVERVIEW	Page Type TERMINAL STRIP OVERVIEW		
Company Tetra Pak (Italy)	Document No. 2845987-0006	Doc. type ELD	Version AE	Page 065

This drawing must not without the consent of Tetra Pak
be copied, transmitted or disclosed to any third party.

1 2 3 4 5 6 7 8 9 10

Terminal strip of 2845987-0003

+M-X2050

From	Cable	Internal Jumper	Terminal	External Jumper	Cable	To	Page.Col.	Option	Function text
+M-X2062:1	+M-W2250 :1		101		+M-W2251 :1	+M-B2501:3	137 .3		CIRC. COOLING WATER PRESSURE
+M-X2062:2	+M-W2250 :2		102		+M-W2251 :2	+M-B2501:1	137 .5		CIRC. COOLING WATER PRESSURE
			103		+M-W2252 :1	+M-B2540:A	137 .3		CIRC. COOLING MEDIA LOW PRESSURE
+M-X2062:3	+M-W2250 :3		104		+M-W2252 :2	+M-B2540:C	137 .5		CIRC. COOLING MEDIA LOW PRESSURE
			105						
			106						
+M-X2062:4	+M-W2250 :4		107		+M-W2253 :1	+M-B2520:	047 .3		DE-IONIZATION CIRC. WATER
+M-X2062:5	+M-W2250 :5		108		+M-W2253 :2	+M-B2520:	047 .3		DE-IONIZATION CIRC. WATER
+M-X2062:⏚	+M-W2250 :GNYE		⏚				047 .3		

Drawing remarks

Tetra Pak

Designer LUP	Date 23/11/2007	Machine Tetra Pak A3/Flex 0150	
ECM No 320174	Denomination TERMINAL STRIP OVERVIEW	Page Type TERMINAL STRIP OVERVIEW	
Company Tetra Pak (Italy)	Document No. 2845987-0006	Doc. type ELD	Version AE	Page 066

This drawing must not without the consent of Tetra Pak
be copied, transmitted or disclosed to any third party.

1 | 2 | 3 | 4 | 5 | 6 | 7 | 8 | 9 | 10

Terminal strip of 2845987-0003

+M-X2051

From	Cable	Internal Jumper	Terminal	External Jumper	Cable	To	Page.Col.	Option	Function text
+M-X2003:101	+M-W2257 :1		1			+M-Y3109:+24V	200 .5		FOAMING
+M-X2003:106	+M-W2257 :12		1-			+M-Y3109:0V	200 .6		FOAMING
+M-X2003:⏚	+M-W2257 :GNYE		⏚			+M-Y3109:E	200 .6		FOAMING
+M-X2003:102	+M-W2257 :2		2			+M-Y3103:+24V	200 .5		FLUSHING
			2-			+M-Y3103:0V	200 .6		FLUSHING
			⏚			+M-Y3103:E	200 .6		FLUSHING
+M-X2003:103	+M-W2257 :3		3				200 .5		
			3-				200 .6		
			⏚				200 .6		
+M-X2003:104	+M-W2257 :4		4			+M-Y3111:+24V	200 .5		JAW SYSTEM CLEANING
			4-			+M-Y3111:0V	200 .6		JAW SYSTEM CLEANING
			⏚			+M-Y3111:E	200 .6		JAW SYSTEM CLEANING
+M-X2003:105	+M-W2257 :5		5			+M-Y3112:+24V	200 .5		FFU CLEANING
			5-			+M-Y3112:0V	200 .6		FFU CLEANING
			⏚			+M-Y3112:E	200 .6		FFU CLEANING
+M-X2003:107	+M-W2257 :6		6				200 .5		
+M-X2003:110	+M-W2257 :13		6-				200 .6		
			⏚				200 .6		
+M-X2003:108	+M-W2257 :7		7				200 .5		
			7-				200 .6		
			⏚				200 .6		
+M-X2003:109	+M-W2257 :8		8				200 .5		
			8-				200 .6		
			⏚				200 .6		
			9						
			9-				230 .8		
			⏚				230 .8		
			10						
			10-				230 .8		
			⏚				230 .8		

Drawing remarks

Tetra Pak

Designer LUP	Date 23/11/2007	Machine Tetra Pak A3/Flex 0150	
ECM No 320174	Denomination TERMINAL STRIP OVERVIEW	Page Type TERMINAL STRIP OVERVIEW	
Company Tetra Pak (Italy)	Document No. 2845987-0006	Doc. type ELD	Version AE	Page 067

This drawing must not without the consent of Tetra Pak
be copied, transmitted or disclosed to any third party.

1 2 3 4 5 6 7 8 9 10

Terminal strip of 2845987-0003

+M-X2062

From	Cable	Internal Jumper	Terminal	External Jumper	Cable	To	Page.Col.	Option	Function text
+C-X209:1	+M-W2232 :1		1		+M-W2250 :1	+M-X2050:101	137 .2		
+C-X209:2	+M-W2232 :2		2		+M-W2250 :2	+M-X2050:102	137 .6		
+C-X209:3	+M-W2232 :3		3		+M-W2250 :3	+M-X2050:104	137 .6		
+C-X209:4	+M-W2232 :4		4		+M-W2250 :4	+M-X2050:107	047 .4		
+C-X209:5	+M-W2232 :5		5		+M-W2250 :5	+M-X2050:108	047 .4		
+C-X209:6	+M-W2232 :6		6				047 .4		
+C-X209:⏚	+M-W2232 :GNYE		⏚		+M-W2250 :GNYE	+M-X2050:⏚	047 .4		

Drawing remarks

Tetra Pak

Designer LUP	Date 23/11/2007	Machine Tetra Pak A3/Flex 0150		
ECM No 320174	Denomination TERMINAL STRIP OVERVIEW	Page Type TERMINAL STRIP OVERVIEW		
Company Tetra Pak (Italy)	Document No. 2845987-0006	Doc. type ELD	Version AE	Page 068

This drawing must not without the consent of Tetra Pak be copied, transmitted or disclosed to any third party.

1 2 3 4 5 6 7 8 9 10

Terminal strip of 2845987-0003

+M-X2241

From	Cable	Internal Jumper	Terminal	External Jumper	Cable	To	Page.Col.	Option	Function text
+C-X102:1	+M-W2007 :1		1		+M-W2213 :1	+M-M2501:U	032 .6		CIRCULATION COOLING WATER
+C-X102:2	+M-W2007 :2		2		+M-W2213 :2	+M-M2501:V	032 .6		CIRCULATION COOLING WATER
+C-X102:3	+M-W2007 :3		3		+M-W2213 :3	+M-M2501:W	032 .6		CIRCULATION COOLING WATER
			4						
			5						
			6						
+C-X102:⏚	+M-W2007 :GNYE		⏚		+M-W2213 :GNYE	+M-M2501:⏚	032 .7		CIRCULATION COOLING WATER

Drawing remarks

Tetra Pak

Designer LUP	Date 23/11/2007	Machine Tetra Pak A3/Flex 0150	
ECM No 320174	Denomination TERMINAL STRIP OVERVIEW	Page Type TERMINAL STRIP OVERVIEW	
Company Tetra Pak (Italy)	Document No. 2845987-0006	Doc. type ELD	Version AE / Page 069

This drawing must not without the consent of Tetra Pak
be copied, transmitted or disclosed to any third party.

1 2 3 4 5 6 7 8 9 10

Terminal strip of 2845987-0003
+M-X2242

From	Cable	Internal Jumper	Terminal	External Jumper	Cable	To	Page.Col.	Option	Function text
+C-X103:1	+M-W2008 :1		1		+M-W2214 :1	+M-M2540:U	032 .9		CIRCULATION COOLING MEDIA
+C-X103:2	+M-W2008 :2		2		+M-W2214 :2	+M-M2540:V	032 .9		CIRCULATION COOLING MEDIA
+C-X103:3	+M-W2008 :3		3		+M-W2214 :3	+M-M2540:W	032 .9		CIRCULATION COOLING MEDIA
			4						
			5						
			6						
+C-X103:⏚	+M-W2008 :GNYE		⏚		+M-W2214 :GNYE	+M-M2540:⏚	032 .9		CIRCULATION COOLING MEDIA

Drawing remarks

Tetra Pak

Designer LUP	Date 23/11/2007	Machine Tetra Pak A3/Flex 0150	
ECM No 320174	Denomination TERMINAL STRIP OVERVIEW	Page Type TERMINAL STRIP OVERVIEW	
Company Tetra Pak (Italy)	Document No. 2845987-0006	Doc. type ELD	Version AE	Page 070

RELEASED

This drawing must not without the consent of Tetra Pak be copied, transmitted or disclosed to any third party.

Terminal strip of 2845987-0003

+M-X2243

From	Cable	Internal Jumper	Terminal	External Jumper	Cable	To	Page.Col.	Option	Function text
+C-X503:1	+M-W2003 :1		1		+M-W2256 :1	+M-M3102:U	033 .2		CLEANING PUMP-EXTERNAL CLEANING
+C-X503:2	+M-W2003 :2		2		+M-W2256 :2	+M-M3102:V	033 .2		CLEANING PUMP-EXTERNAL CLEANING
+C-X503:3	+M-W2003 :3		3		+M-W2256 :3	+M-M3102:W	033 .2		CLEANING PUMP-EXTERNAL CLEANING
			4						
			5						
			6						
+C-X503:⏚	+M-W2003 :GNYE		⏚		+M-W2256 :GNYE	+M-M3102:⏚	033 .2		CLEANING PUMP-EXTERNAL CLEANING

Drawing remarks

Tetra Pak

Designer LUP	Date 23/11/2007	Machine Tetra Pak A3/Flex 0150	
ECM No 320174	Denomination TERMINAL STRIP OVERVIEW	Page Type TERMINAL STRIP OVERVIEW	
Company Tetra Pak (Italy)	Document No. 2845987-0006	Doc. type ELD	Version AE	Page 071

This drawing must not without the consent of Tetra Pak be copied, transmitted or disclosed to any third party.

1 2 3 4 5 6 7 8 9 10

Terminal strip of 2845987-0003

+M-X2244

From	Cable	Internal Jumper	Terminal	External Jumper	Cable	To	Page.Col.	Option	Function text
+C-X222:1	+M-W2050 :1		1		+M-W2258 :1	+M-X2003:101	200 .3		
+C-X222:2	+M-W2050 :2		2		+M-W2258 :2	+M-X2003:102	200 .3		
+C-X222:3	+M-W2050 :3		3		+M-W2258 :3	+M-X2003:103	200 .3		
+C-X222:4	+M-W2050 :4		4		+M-W2258 :4	+M-X2003:104	200 .3		
+C-X222:5	+M-W2050 :5		5		+M-W2258 :5	+M-X2003:105	200 .3		
+C-X222:6	+M-W2050 :6		6		+M-W2258 :6	+M-X2003:107	200 .3		
+C-X222:7	+M-W2050 :7		7		+M-W2258 :7	+M-X2003:108	200 .3		
+C-X222:8	+M-W2050 :8		8		+M-W2258 :8	+M-X2003:109	200 .3		
+C-X222:9	+M-W2050 :9		9		+M-W2258 :9	+M-X2003:111	175 .3		
+C-X222:10	+M-W2050 :10		10		+M-W2258 :10	+M-X2003:112	175 .7		
+C-X222:11	+M-W2050 :11		11		+M-W2258 :11	+M-X2003:113	177 .3		
+C-X222:12	+M-W2050 :12		12		+M-W2258 :12	+M-X2003:114	177 .6		
+C-X222:13	+M-W2050 :13		13		+M-W2258 :13	+M-X2003:115	201 .3		
+C-X222:14	+M-W2050 :14		14		+M-W2258 :14	+M-X2003:117	201 .3		
+C-X222:15	+M-W2050 :15		15		+M-W2258 :15	+M-X2003:119	137 .6		
+C-X222:16	+M-W2050 :16		16		+M-W2258 :16	+M-X2003:121	137 .6		
+C-X222:17	+M-W2050 :17		17		+M-W2258 :17	+M-X2003:123	137 .6		
+C-X222:18	+M-W2050 :18		18		+M-W2258 :18	+M-X2003:125	137 .6		
+C-X222:19	+M-W2050 :19		19		+M-W2258 :19	+M-X2003:127	120 .6		
+C-X222:20	+M-W2050 :20		20		+M-W2258 :20	+M-X2003:129	053 .7		
+C-X222:21	+M-W2050 :21		21		+M-W2258 :21	+M-X2003:132	105 .5		
+C-X222:22	+M-W2050 :22		22		+M-W2258 :22	+M-X2003:135	053 .7		
+C-X222:23	+M-W2050 :23		23		+M-W2258 :23	+M-X2003:136	120 .2		
+C-X222:24	+M-W2050 :24		24		+M-W2258 :24	+M-X2003:137	237 .8		
+C-X222:⏚	+M-W2050 :GNYE		⏚		+M-W2258 :GNYE	+M-X2003:⏚	237 .8		

Drawing remarks

Tetra Pak

Designer LUP	Date 23/11/2007	Machine Tetra Pak A3/Flex 0150	
ECM No 320174	Denomination TERMINAL STRIP OVERVIEW	Page Type TERMINAL STRIP OVERVIEW	
Company Tetra Pak (Italy)	Document No. 2845987-0006	Doc. type ELD	Version AE	Page 072

This drawing must not without the consent of Tetra Pak
be copied, transmitted or disclosed to any third party.

1 2 3 4 5 6 7 8 9 10

Terminal strip of 2845987-0003

+M-X2250

From	Cable	Internal Jumper	Terminal	External Jumper	Cable	To	Page.Col.	Option	Function text
+C-X215:1	+M-W2012 :1		1			+M-Y5200:+24V	204 .4		TOP FLAP HEATING AIR FFU
+C-X215:12	+M-W2012 :12		1-			+M-Y5200:0V	204 .6		TOP FLAP HEATING AIR FFU
+C-X215:⏚	+M-W2012 :GNYE		⏚			+M-Y5200:E	204 .6		TOP FLAP HEATING AIR FFU
+C-X215:2	+M-W2012 :2		2			+M-Y5210:+24V	204 .4		BOTTOM FLAP HEATING AIR, FFU
			2-			+M-Y5210:0V	204 .6		BOTTOM FLAP HEATING AIR, FFU
			⏚			+M-Y5210:E	204 .6		BOTTOM FLAP HEATING AIR, FFU
+C-X215:3	+M-W2012 :3		3			+M-Y5205:1	204 .4		BOTTOM RIGHTFLAP HEATING AIR, FFU
			3-			+M-Y5205:2	204 .6		BOTTOM RIGHTFLAP HEATING AIR, FFU
			⏚			+M-Y5205:E	204 .6		BOTTOM RIGHTFLAP HEATING AIR, FFU
+C-X215:4	+M-W2012 :4		4			+M-Y5215:1	204 .4		BOTTOM LEFTFLAP HEATING AIR, FFU
			4-			+M-Y5215:2	204 .6		BOTTOM LEFTFLAP HEATING AIR, FFU
			⏚			+M-Y5215:E	204 .6		BOTTOM LEFTFLAP HEATING AIR, FFU
+C-X215:5	+M-W2012 :5		5			+M-Y5315:+24V	204 .4		PREBLOWING FFU
			5-			+M-Y5315:0V	204 .6		PREBLOWING FFU
			⏚			+M-Y5315:E	204 .6		PREBLOWING FFU
+C-X215:6	+M-W2012 :6		6			+M-Y5504:+24V	204 .4		OUTFEED OF WASTE IN FRONT
+C-X215:13	+M-W2012 :13		6-			+M-Y5504:0V	204 .6		OUTFEED OF WASTE IN FRONT
			⏚			+M-Y5504:E	204 .6		OUTFEED OF WASTE IN FRONT
+C-X215:7	+M-W2012 :7		7			+M-Y5505:+24V	204 .4		FLAP HEATER CYLINDER
			7-			+M-Y5505:0V	204 .6		FLAP HEATER CYLINDER
			⏚			+M-Y5505:E	204 .6		FLAP HEATER CYLINDER
+C-X215:8	+M-W2012 :8		8			+M-Y5506:+24V	204 .4	DIMC	CUP BLOWING
			8-			+M-Y5506:0V	204 .6	DIMC	CUP BLOWING
			⏚			+M-Y5506:E	204 .6	DIMC	CUP BLOWING
+C-X215:9	+M-W2012 :9		9				205 .4		
			9-				205 .5		
			⏚				205 .5		
+C-X215:10	+M-W2012 :10		10				205 .4		
			10-				205 .5		
			⏚				205 .5		

Drawing remarks

Tetra Pak

Designer LUP	Date 23/11/2007	Machine Tetra Pak A3/Flex 0150	
ECM No 320174	Denomination TERMINAL STRIP OVERVIEW	Page Type TERMINAL STRIP OVERVIEW	
Company Tetra Pak (Italy)	Document No. 2845987-0006	Doc. type ELD	Version AE	Page 073

This drawing must not without the consent of Tetra Pak be copied, transmitted or disclosed to any third party.

1 2 3 4 5 6 7 8 9 10

Terminal strip of 2845987-0003

+M-X2802

From	Cable	Internal Jumper	Terminal	External Jumper	Cable	To	Page.Col.	Option	Function text
+M-X7001:167	+M-W7054 :1		1			+M-H2802:1	056 .4		BEACON LAMP BACK
+M-X7001:168	+M-W7054 :2		2			+M-H2802:2	056 .4		BEACON LAMP BACK
+M-X7001:169	+M-W7054 :3		3			+M-H2802:3	056 .4		BEACON LAMP BACK
+M-X7001:170-	+M-W7054 :4		4			+M-H2802:0	056 .5		BEACON LAMP BACK
+M-X7001:⏚	+M-W7054 :GNYE		⏚			+M-H2802:⏚	056 .5		BEACON LAMP BACK

Drawing remarks

Tetra Pak

Designer LUP	Date 23/11/2007	Machine Tetra Pak A3/Flex 0150	
ECM No 320174	Denomination TERMINAL STRIP OVERVIEW	Page Type TERMINAL STRIP OVERVIEW	
Company Tetra Pak (Italy)	Document No. 2845987-0006	Doc. type ELD	Version AE	Page 074

RELEASED

This drawing must not without the consent of Tetra Pak be copied, transmitted or disclosed to any third party.

Terminal strip of 2845987-0003

+M-X4000

From	Cable	Internal Jumper	Terminal	External Jumper	Cable	To	Page.Col.	Option	Function text
+C-X201:⏚	+M-W4002 :GNYE		⏚		+M-W4003 :GNYE	+M-X4058:⏚	205 .6		
			⏚		+M-W5503 :GNYE	+M-B5503:E	144 .6		DROP CHUTE AIR PRESSURE
+C-X208:⏚	+M-W4001 :GNYE		⏚				232 .3		
			⏚			+M-X4059:⏚	182 .7		
			⏚		+M-W2254 :GNYE	PE:	149 .5		
			⏚		+M-W2255 :GNYE	PE:	149 .5		
			⏚		+M-W4022 :GNYE	+M-Y1210:E	201 .6		FILLING H2O2 TANK
			⏚						
+C-X208:1	+M-W4001 :1		101				232 .3		
			• 101+				232 .3		
			• 101-				232 .3		
+C-X208:2	+M-W4001 :2		102				232 .3		
			• 102+				232 .3		
			• 102-				232 .3		
+C-X208:3	+M-W4001 :3		103				232 .3		
			• 103+				232 .3		
			• 103-				232 .3		
+C-X208:4	+M-W4001 :4		104				232 .3		
			• 104+				232 .3		
			• 104-				232 .3		
+C-X208:5	+M-W4001 :5		105		+M-W5503 :1	+M-B5503:1	144 .6		DROP CHUTE AIR PRESSURE
			• 105+		+M-W5503 :2	+M-B5503:2	144 .3		DROP CHUTE AIR PRESSURE
			• 105-				232 .3		
+C-X208:6	+M-W4001 :6		106		+M-W1807 :BK	+M-B1807:	152 .5		ICU REFILLING PIPE ACID TANK
			• 106+		+M-W1807 :BN	+M-B1807:	152 .3		ICU REFILLING PIPE ACID TANK
			• 106-		+M-W1807 :BU	+M-B1807:	152 .3		ICU REFILLING PIPE ACID TANK
+C-X208:7	+M-W4001 :7		107		+M-W1806 :2	+M-B1806:2	152 .5		ICU LEVEL ACID TANK
+C-X208:23	+M-W4001 :23		• 107+				232 .3		
+C-X208:24	+M-W4001 :24		• 107-				232 .3		
+C-X208:8	+M-W4001 :8		108		+M-W1806 :1	+M-B1806:1	152 .5		ICU LEVEL ACID TANK

Drawing remarks

Tetra Pak

Designer LUP	Date 23/11/2007	Machine Tetra Pak A3/Flex 0150	
ECM No 320174	Denomination TERMINAL STRIP OVERVIEW	Page Type TERMINAL STRIP OVERVIEW	
Company Tetra Pak (Italy)	Document No. 2845987-0006	Doc. type ELD	Version AE	Page 075

This drawing must not without the consent of Tetra Pak be copied, transmitted or disclosed to any third party.

Terminal strip of 2845987-0003

+M-X4000

From	Cable	Internal Jumper	Terminal	External Jumper	Cable	To	Page.Col.	Option	Function text
			108+		+M-W1806 :3	+M-B1806:3	152 .3		ICU LEVEL ACID TANK
			108-				232 .3		
+C-X208:9	+M-W4001 :9		109				232 .3		
			109+		+M-W2254 :1	+M-S2803:21	149 .3		EMERGENCY STOP RIGHT SIDE PANEL
			109-				232 .3		
+C-X208:10	+M-W4001 :10		110		+M-W2254 :2	+M-S2803:11	149 .3		EMERGENCY STOP RIGHT SIDE PANEL
			110+				232 .3		
			110-				232 .3		
			111		+M-W2254 :3	+M-S2803:12	149 .5		EMERGENCY STOP RIGHT SIDE PANEL
			111+				232 .3		
			111-				232 .3		
+C-X208:11	+M-W4001 :11		112		+M-W2254 :4	+M-S2803:22	149 .5		EMERGENCY STOP RIGHT SIDE PANEL
			112+				232 .3		
			112-				232 .3		
			113						
			113+		+M-W2255 :1	+M-S2804:21	149 .3		EMERGENCY STOP LEFT SIDE PANEL
			113-				232 .3		
			114		+M-W2255 :2	+M-S2804:11	149 .3		EMERGENCY STOP LEFT SIDE PANEL
			114+				232 .3		
			114-				232 .3		
+C-X208:12	+M-W4001 :12		115		+M-W2255 :3	+M-S2804:12	149 .5		EMERGENCY STOP LEFT SIDE PANEL
			115+				232 .3		
			115-				232 .3		
+C-X208:13	+M-W4001 :13		116		+M-W2255 :4	+M-S2804:22	149 .5		EMERGENCY STOP LEFT SIDE PANEL
			116+				232 .3		
			116-				232 .3		
+C-X208:14	+M-W4001 :14		117		+M-W1802 :2	+M-B1802:2	144 .6		ICU LEVEL ALKALI TANK
			117+		+M-W1802 :3	+M-B1802:3	144 .3		ICU LEVEL ALKALI TANK
			117-				144 .3		
+C-X208:15	+M-W4001 :15		118		+M-W1802 :1	+M-B1802:1	144 .6		ICU LEVEL ALKALI TANK

Drawing remarks

Tetra Pak

Designer LUP	Date 23/11/2007	Machine Tetra Pak A3/Flex 0150	
ECM No 320174	Denomination TERMINAL STRIP OVERVIEW	Page Type TERMINAL STRIP OVERVIEW	
Company Tetra Pak (Italy)	Document No. 2845987-0006	Doc. type ELD	Version AE	Page 076

This drawing must not without the consent of Tetra Pak be copied, transmitted or disclosed to any third party.

Terminal strip of 2845987-0003

+M-X4000

From	Cable	Internal Jumper	Terminal	External Jumper	Cable	To	Page.Col.	Option	Function text
			118+				232 .3		
			118-				232 .3		
+C-X208:16	+M-W4001 :16		119		+M-W4022 :1	+M-Y1210:1	201 .4		FILLING H2O2 TANK
			119+				232 .3		
			119-		+M-W4022 :2	+M-Y1210:2	201 .6		FILLING H2O2 TANK
+C-X208:17	+M-W4001 :17		120		+M-W1804 :1	+M-M1802:1	034 .3		ALKALI PUMP
			120+				232 .3		
			120-				232 .3		
+C-X208:18	+M-W4001 :18		121		+M-W1804 :2	+M-M1802:2	034 .4		ALKALI PUMP
			121+				232 .3		
			121-				232 .3		
+C-X208:19	+M-W4001 :19		122		+M-W1805 :1	+M-M1803:1	034 .5		ACID PUMP
			122+				232 .3		
			122-				232 .3		
+C-X208:20	+M-W4001 :20		123		+M-W1805 :2	+M-M1803:2	034 .5		ACID PUMP
			123+				232 .3		
			123-				232 .3		
+C-X208:21	+M-W4001 :21		124		+M-W4054 :YE	+M-B1210:3	106 .4		PEROXIDE TANK LEVEL
			124+		+M-W4054 :BN	+M-B1210:7	106 .4		PEROXIDE TANK LEVEL
			124-		+M-W4054 :WH	+M-B1210:6	106 .4		PEROXIDE TANK LEVEL
					+M-W4054 :GN	+M-B1210:2			PEROXIDE TANK LEVEL
+C-X208:22	+M-W4001 :22		125		+M-W1803 :BK	+M-B1803:	144 .6		ICU REFILLING PIPE ALKALI TANK
			125+		+M-W1803 :BN	+M-B1803:	144 .3		ICU REFILLING PIPE ALKALI TANK
			125-		+M-W1803 :BU	+M-B1803:	144 .3		ICU REFILLING PIPE ALKALI TANK
+C-X201:1	+M-W4002 :1		126		+M-W4003 :1	+M-X4058:1	205 .3		
			126+				232 .3		
			126-				232 .3		
+C-X201:2	+M-W4002 :2		127		+M-W4003 :2	+M-X4058:2	205 .3		
			127+				232 .3		
			127-				232 .3		

Drawing remarks

Tetra Pak

Designer LUP	Date 23/11/2007	Machine Tetra Pak A3/Flex 0150	
ECM No 320174	Denomination TERMINAL STRIP OVERVIEW	Page Type TERMINAL STRIP OVERVIEW	
Company Tetra Pak (Italy)	Document No. 2845987-0006	Doc. type ELD	Version AE	Page 077

This drawing must not without the consent of Tetra Pak be copied, transmitted or disclosed to any third party.

Terminal strip of 2845987-0003

+M-X4000

From	Cable	Internal Jumper	Terminal	External Jumper	Cable	To	Page.Col.	Option	Function text
+C-X201:3	+M-W4002 :3		128		+M-W4003 :3	+M-X4058:3	205 .3		
			• 128+				232 .7		
			• 128-				232 .7		
+C-X201:4	+M-W4002 :4		129		+M-W4003 :4	+M-X4058:4	205 .3		
			• 129+				232 .7		
			• 129-		+M-W4003 :12	+M-X4058:1-	205 .6		
+C-X201:5	+M-W4002 :5		130		+M-W4003 :5	+M-X4058:5	182 .3		
			• 130+				232 .7		
+C-X201:6	+M-W4002 :6		• 130-				205 .7		
+C-X201:7	+M-W4002 :7		131		+M-W4003 :6	+M-X4058:6	205 .3		
			• 131+				232 .7		
+C-X201:8	+M-W4002 :8		• 131-				205 .7		
+C-X201:9	+M-W4002 :9		132		+M-W4003 :7	+M-X4058:7	206 .3		
			• 132+				232 .7		
			• 132-		+M-W4003 :13	+M-X4058:6-	205 .6		
+C-X201:10	+M-W4002 :10		133		+M-W4003 :8	+M-X4058:8	206 .3		
			• 133+				232 .7		
			• 133-				232 .7		
+C-X201:11	+M-W4002 :11		134		+M-W4003 :9	+M-X4058:9	206 .3		
			• 134+				232 .7		
			• 134-				232 .7		
+C-X201:12	+M-W4002 :12		135		+M-W4003 :10	+M-X4058:10	206 .3		
			• 135+				232 .7		
			• 135-				232 .7		
+C-X201:13	+M-W4002 :13		136		+M-W4004 :1	+M-X4059:1	182 .3		
			• 136+				232 .7		
			• 136-			+M-X4059:1-	182 .7		
+C-X201:14	+M-W4002 :14		137		+M-W4004 :2	+M-X4059:2	177 .3		
			• 137+				232 .7		
			• 137-				232 .7		

Drawing remarks

Tetra Pak

Designer LUP	Date 23/11/2007	Machine Tetra Pak A3/Flex 0150	
ECM No 320174	Denomination TERMINAL STRIP OVERVIEW	Page Type TERMINAL STRIP OVERVIEW	
Company Tetra Pak (Italy)	Document No. 2845987-0006	Doc. type ELD	Version AE	Page 078

This drawing must not without the consent of Tetra Pak be copied, transmitted or disclosed to any third party.

1 2 3 4 5 6 7 8 9 10

Terminal strip of 2845987-0003

+M-X4000

From	Cable	Internal Jumper	Terminal	External Jumper	Cable	To	Page.Col.	Option	Function text
+C-X201:15	+M-W4002 :15		138		+M-W4004 :3	+M-X4059:3	206 .3		
			138+				232 .7		
			138-				232 .7		
+C-X201:16	+M-W4002 :16		139		+M-W4004 :4	+M-X4059:4	206 .3		
			139+				232 .7		
			139-				232 .7		
+C-X201:17	+M-W4002 :17		140				232 .8		
			140+				232 .7		
			140-				232 .7		
+C-X201:18	+M-W4002 :18		141				232 .8		
			141+				232 .7		
			141-				232 .7		
+C-X201:19	+M-W4002 :19		142				232 .8		
			142+				232 .7		
			142-				232 .7		
+C-X201:20	+M-W4002 :20		143				232 .8		
			143+				232 .7		
			143-				232 .7		
+C-X201:21	+M-W4002 :21		144				232 .8		
			144+				232 .7		
			144-				232 .7		
+C-X201:22	+M-W4002 :22		145				232 .8		
			145+				232 .7		
			145-				232 .7		
			146						
+C-X201:23	+M-W4002 :23		146+				232 .7		
+C-X201:24	+M-W4002 :24		146-				232 .7		

Drawing remarks

Tetra Pak

Designer LUP	Date 23/11/2007	Machine Tetra Pak A3/Flex 0150	
ECM No 320174	Denomination TERMINAL STRIP OVERVIEW	Page Type TERMINAL STRIP OVERVIEW	
Company Tetra Pak (Italy)	Document No. 2845987-0006	Doc. type ELD	Version AE	Page 079

RELEASED

This drawing must not without the consent of Tetra Pak be copied, transmitted or disclosed to any third party.

Terminal strip of 2845987-0003

+M-X4012

From	Cable	Internal Jumper	Terminal	External Jumper	Cable	To	Page.Col.	Option	Function text
+C-X4011:	+M-W1053 :1					+M-B1316:RS 485	051 .2		FLOWMETER

Drawing remarks	Tetra Pak	Designer LUP	Date 23/11/2007	Machine Tetra Pak A3/Flex 0150						
		ECM No 320174	Denomination TERMINAL STRIP OVERVIEW	Page Type TERMINAL STRIP OVERVIEW						
		Company Tetra Pak (Italy)	Document No. 2845987-0006	Doc. type ELD	Version AE	Page 080				

This drawing must not without the consent of Tetra Pak be copied, transmitted or disclosed to any third party.

1 2 3 4 5 6 7 8 9 10

Terminal strip of 2845987-0003

+M-X4013

From	Cable	Internal Jumper	Terminal	External Jumper	Cable	To	Page.Col.	Option	Function text
			1						
			2						
			3						
			4						
+C-X031:20	+M-W1051 :PK		5			+M-B1316:5	051 .3		FLOWMETER
+C-X031:21	+M-W1051 :RD		6			+M-B1316:6	051 .3		FLOWMETER
+C-X031:22	+M-W1051 :BU		7			+M-B1316:7	051 .3		FLOWMETER
+C-X031:24	+M-W1051 :BN		8			+M-B1316:8	051 .3		FLOWMETER

Drawing remarks

Tetra Pak

Designer LUP	Date 23/11/2007	Machine Tetra Pak A3/Flex 0150	
ECM No 320174	Denomination TERMINAL STRIP OVERVIEW	Page Type TERMINAL STRIP OVERVIEW	
Company Tetra Pak (Italy)	Document No. 2845987-0006	Doc. type ELD	Version AE	Page 081

This drawing must not without the consent of Tetra Pak
be copied, transmitted or disclosed to any third party.

1 2 3 4 5 6 7 8 9 10

Terminal strip of 2845987-0003

+M-X4053

From	Cable	Internal Jumper	Terminal	External Jumper	Cable	To	Page.Col.	Option	Function text
+C-X114:1	+M-W2072 :1		1				036 .3		
+C-X114:2	+M-W2072 :2		2				036 .4		
			3						
			4						
			5						
			6						
+C-X114:⏚	+M-W2072 :GNYE		⏚				036 .4		

Drawing remarks

Tetra Pak

Designer LUP	Date 23/11/2007	Machine Tetra Pak A3/Flex 0150	
ECM No 320174	Denomination TERMINAL STRIP OVERVIEW	Page Type TERMINAL STRIP OVERVIEW	
Company Tetra Pak (Italy)	Document No. 2845987-0006	Doc. type ELD	Version AE	Page 082

RELEASED

This drawing must not without the consent of Tetra Pak be copied, transmitted or disclosed to any third party.

Terminal strip of 2845987-0003

+M-X4054

From	Cable	Internal Jumper	Terminal	External Jumper	Cable	To	Page.Col.	Option	Function text
+C-X405:1	+M-W4016 :BN		1		+M-W4014 :RD	+M-B43011:	050 .7		DESIGN CORR. PHOT.BAR CODE 3
+C-X405:2	+M-W4016 :WH		2		+M-W4014 :BU	+M-B43011:	050 .7		DESIGN CORR. PHOT.BAR CODE 3
+C-X405:3	+M-W4016 :YE		3		+M-W4014 :YE	+M-B43011:	050 .7		DESIGN CORR. PHOT.BAR CODE 3
+C-X405:4	+M-W4016 :GN		4		+M-W4014 :GY	+M-B43011:	050 .7		DESIGN CORR. PHOT.BAR CODE 3
+C-X405:5	+M-W4016 :SH		5			+M-B43011:	050 .7		DESIGN CORR. PHOT.BAR CODE 3

Drawing remarks

Tetra Pak

Designer LUP	Date 23/11/2007	Machine Tetra Pak A3/Flex 0150	
ECM No 320174	Denomination TERMINAL STRIP OVERVIEW	Page Type TERMINAL STRIP OVERVIEW	
Company Tetra Pak (Italy)	Document No. 2845987-0006	Doc. type ELD	Version AE	Page 083

This drawing must not without the consent of Tetra Pak
be copied, transmitted or disclosed to any third party.

1 2 3 4 5 6 7 8 9 10

Terminal strip of 2845987-0003

+M-X4055

From	Cable	Internal Jumper	Terminal	External Jumper	Cable	To	Page.Col.	Option	Function text
+C-X406:1	+M-W4017 :BN		1		+M-W4015 :RD	+M-B43012:	050 .7		DESIGN CORR. PHOT.BAR CODE 4
+C-X406:2	+M-W4017 :WH		2		+M-W4015 :BU	+M-B43012:	050 .7		DESIGN CORR. PHOT.BAR CODE 4
+C-X406:3	+M-W4017 :YE		3		+M-W4015 :YE	+M-B43012:	050 .7		DESIGN CORR. PHOT.BAR CODE 4
+C-X406:4	+M-W4017 :GN		4		+M-W4015 :GY	+M-B43012:	050 .7		DESIGN CORR. PHOT.BAR CODE 4
+C-X406:5	+M-W4017 :SH		5			+M-B43012:	050 .7		DESIGN CORR. PHOT.BAR CODE 4

Drawing remarks

Tetra Pak

Designer LUP	Date 23/11/2007	Machine Tetra Pak A3/Flex 0150	
ECM No 320174	Denomination TERMINAL STRIP OVERVIEW	Page Type TERMINAL STRIP OVERVIEW	
Company Tetra Pak (Italy)	Document No. 2845987-0006	Doc. type ELD	Version AE	Page 084

RELEASED

This drawing must not without the consent of Tetra Pak be copied, transmitted or disclosed to any third party.

Terminal strip of 2845987-0003

+M-X4057

From	Cable	Internal Jumper	Terminal	External Jumper	Cable	To	Page.Col.	Option	Function text
+C-X113:1	+M-W2071 :1		1				036 .3		
+C-X113:2	+M-W2071 :2		2				036 .4		
			3						
			4						
			5						
			6						
+C-X113:⏚	+M-W2071 :GNYE		⏚				036 .4		

Drawing remarks

Tetra Pak

Designer LUP	Date 23/11/2007	Machine Tetra Pak A3/Flex 0150	
ECM No 320174	Denomination TERMINAL STRIP OVERVIEW	Page Type TERMINAL STRIP OVERVIEW	
Company Tetra Pak (Italy)	Document No. 2845987-0006	Doc. type ELD	Version AE	Page 085

This drawing must not without the consent of Tetra Pak
be copied, transmitted or disclosed to any third party.

1 2 3 4 5 6 7 8 9 10

Terminal strip of 2845987-0003
+M-X4058

From	Cable	Internal Jumper	Terminal	External Jumper	Cable	To	Page.Col.	Option	Function text
+M-X4000:126	+M-W4003 :1		1			+M-Y1804:+24V	205 .4		ICU REFILLING ALKALI TANK
+M-X4000:129-	+M-W4003 :12		1-			+M-Y1804:0V	205 .5		ICU REFILLING ALKALI TANK
+M-X4000:⏚	+M-W4003 :GNYE		⏚			+M-Y1804:E	205 .5		ICU REFILLING ALKALI TANK
+M-X4000:127	+M-W4003 :2		2			+M-Y1805:+24V	205 .4		ICU REFILLING ACID TANK
			2-			+M-Y1805:0V	205 .5		ICU REFILLING ACID TANK
			⏚			+M-Y1805:E	205 .5		ICU REFILLING ACID TANK
+M-X4000:128	+M-W4003 :3		3			+M-Y1808:+24V	205 .4		ICU BY PASS ALKALI TANK
			3-			+M-Y1808:0V	205 .5		ICU BY PASS ALKALI TANK
			⏚			+M-Y1808:E	205 .5		ICU BY PASS ALKALI TANK
+M-X4000:129	+M-W4003 :4		4			+M-Y1809:+24V	205 .4		ICU BY PASS ACID PUMP
			4-			+M-Y1809:0V	205 .5		ICU BY PASS ACID PUMP
			⏚			+M-Y1809:E	205 .5		ICU BY PASS ACID PUMP
+M-X4000:130	+M-W4003 :5		5			+M-Y5501:1	182 .4		DROP CHUTE, TO FFU
			5-			+M-Y5501:2	182 .6		DROP CHUTE, TO FFU
			⏚			+M-Y5501:E	182 .6		DROP CHUTE, TO FFU
+M-X4000:131	+M-W4003 :6		6			+M-Y2104:+24V	205 .4		AIR TUBE FLUSHING
+M-X4000:132-	+M-W4003 :13		6-			+M-Y2104:0V	205 .5		AIR TUBE FLUSHING
			⏚			+M-Y2104:E	205 .5		AIR TUBE FLUSHING
+M-X4000:132	+M-W4003 :7		7			+M-Y3105:+24V	206 .5		DOSING CHEMICALS/AIR TUBE FLUSH.
			7-			+M-Y3105:0V	206 .6		DOSING CHEMICALS/AIR TUBE FLUSH.
			⏚			+M-Y3105:E	206 .6		DOSING CHEMICALS/AIR TUBE FLUSH.
+M-X4000:133	+M-W4003 :8		8			+M-Y2401:+24V	206 .5		LUBRICATION PUMP
			8-			+M-Y2401:0V	206 .6		LUBRICATION PUMP
			⏚			+M-Y2401:E	206 .6		LUBRICATION PUMP
+M-X4000:134	+M-W4003 :9		9			+M-Y1221:+24V	206 .5		DRAINING PEROXIDE BATH
			9-			+M-Y1221:0V	206 .6		DRAINING PEROXIDE BATH
			⏚			+M-Y1221:E	206 .6		DRAINING PEROXIDE BATH
+M-X4000:135	+M-W4003 :10		10			+M-Y1220:+24V	206 .5		FILLING PEROXIDE BATH
			10-			+M-Y1220:0V	206 .6		FILLING PEROXIDE BATH
			⏚			+M-Y1220:E	206 .6		FILLING PEROXIDE BATH

Drawing remarks

Tetra Pak

Designer LUP | Date 23/11/2007 | Machine Tetra Pak A3/Flex 0150

ECM No 320174 | Denomination TERMINAL STRIP OVERVIEW | Page Type TERMINAL STRIP OVERVIEW

Company Tetra Pak (Italy) | Document No. 2845987-0006 | Doc. type ELD | Version AE | Page 086

This drawing must not without the consent of Tetra Pak be copied, transmitted or disclosed to any third party.

1 2 3 4 5 6 7 8 9 10

Terminal strip of 2845987-0003

+M-X4059

From	Cable	Internal Jumper	Terminal	External Jumper	Cable	To	Page.Col.	Option	Function text
+M-X4000:136	+M-W4004 :1		1			+M-Y5502:1	182 .4		DROP CHUTE, TO WASTE
+M-X4000:136-			1-			+M-Y5502:2	182 .6		DROP CHUTE, TO WASTE
+M-X4000:⏚			⏚			+M-Y5502:E	182 .6		DROP CHUTE, TO WASTE
+M-X4000:137	+M-W4004 :2		2			+M-Y5503:+24V	177 .4		FFU, DROP CHUTE VENDING VALVE
			2-			+M-Y5503:0V	177 .6		FFU, DROP CHUTE VENDING VALVE
			⏚			+M-Y5503:E	177 .6		FFU, DROP CHUTE VENDING VALVE
+M-X4000:138	+M-W4004 :3		3				206 .5		
			3-				206 .6		
			⏚				206 .6		
+M-X4000:139	+M-W4004 :4		4				206 .5		
			4-				206 .6		
			⏚				206 .6		
			5						
			5-				230 .5		
			⏚				230 .5		
			6						
			6-				230 .5		
			⏚				230 .5		
			7						
			7-				230 .5		
			⏚				230 .5		
			8						
			8-				230 .5		
			⏚				230 .5		
			9						
			9-				230 .5		
			⏚				230 .5		
			10						
			10-				230 .5		
			⏚				230 .5		

Drawing remarks

Tetra Pak

Designer LUP	Date 23/11/2007	Machine Tetra Pak A3/Flex 0150	
ECM No 320174	Denomination TERMINAL STRIP OVERVIEW	Page Type TERMINAL STRIP OVERVIEW	
Company Tetra Pak (Italy)	Document No. 2845987-0006	Doc. type ELD	Version AE	Page 087

This drawing must not without the consent of Tetra Pak be copied, transmitted or disclosed to any third party.

1 2 3 4 5 6 7 8 9 10

Terminal strip of 2845987-0003

+M-X4070

From	Cable	Internal Jumper	Terminal	External Jumper	Cable	To	Page.Col.	Option	Function text
+C-A500:X004	+M-W2090 :1		1		+M-W4008 :1	+M-X4071:1	011 .2		

Drawing remarks

Tetra Pak

Designer LUP	Date 23/11/2007	Machine Tetra Pak A3/Flex 0150		
ECM No 320174	Denomination TERMINAL STRIP OVERVIEW	Page Type TERMINAL STRIP OVERVIEW		
Company Tetra Pak (Italy)	Document No. 2845987-0006	Doc. type ELD	Version AE	Page 088

This drawing must not without the consent of Tetra Pak
be copied, transmitted or disclosed to any third party.

1 | 2 | 3 | 4 | 5 | 6 | 7 | 8 | 9 | 10

Terminal strip of 2845987-0003

+M-X4071

From	Cable	Internal Jumper	Terminal	External Jumper	Cable	To	Page.Col.	Option	Function text
			1		+M-W4008 :1	+M-X4070:1	011 .2		

Drawing remarks	Tetra Pak	Designer LUP	Date 23/11/2007	Machine Tetra Pak A3/Flex 0150	
		ECM No 320174	Denomination TERMINAL STRIP OVERVIEW	Page Type TERMINAL STRIP OVERVIEW	
		Company Tetra Pak (Italy)	Document No. 2845987-0006	Doc. type ELD	Version AE	Page 089

RELEASED

This drawing must not without the consent of Tetra Pak be copied, transmitted or disclosed to any third party.

Terminal strip of 2845987-0003

+M-X4072

From	Cable	Internal Jumper	Terminal	External Jumper	Cable	To	Page.Col.	Option	Function text
+C-A500:X005	+M-W2091 :1		1		+M-W4009 :1	+M-X4073:1	011 .3		

Drawing remarks

Tetra Pak

Designer LUP	Date 23/11/2007	Machine Tetra Pak A3/Flex 0150			
ECM No 320174	Denomination TERMINAL STRIP OVERVIEW	Page Type TERMINAL STRIP OVERVIEW			
Company Tetra Pak (Italy)	Document No. 2845987-0006	Doc. type ELD	Version AE	Page 090	

RELEASED

This drawing must not without the consent of Tetra Pak be copied, transmitted or disclosed to any third party.

1 2 3 4 5 6 7 8 9 10

Terminal strip of 2845987-0003

+M-X4073

From	Cable	Internal Jumper	Terminal	External Jumper	Cable	To	Page.Col.	Option	Function text
			1		+M-W4009 :1	+M-X4072:1	011 .3		

Drawing remarks

Tetra Pak

Designer LUP	Date 23/11/2007	Machine Tetra Pak A3/Flex 0150		
ECM No 320174	Denomination TERMINAL STRIP OVERVIEW	Page Type TERMINAL STRIP OVERVIEW		
Company Tetra Pak (Italy)	Document No. 2845987-0006	Doc. type ELD	Version AE	Page 091

RELEASED

This drawing must not without the consent of Tetra Pak be copied, transmitted or disclosed to any third party.

Terminal strip of 2845987-0003

+M-X4155

From	Cable	Internal Jumper	Terminal	External Jumper	Cable	To	Page.Col.	Option	Function text
+M-X4157:1	+M-W2075 :1		1			+M-M4117:1	252 .4	TGA	
			2			+M-M4116:1	252 .4	TGA	FFU FAN SERVOMOTOR
			3			+M-M4115:1	252 .4	TGA	FFU FAN SERVOMOTOR
			4						
			5						
			6			+M-M4117:2	252 .6	TGA	
					+M-W2075 :2	+M-X4157:2			
			7			+M-M4116:2	252 .6	TGA	FFU FAN SERVOMOTOR
			8			+M-M4115:2	252 .6	TGA	FFU FAN SERVOMOTOR
+M-X4157:⏚	+M-W2075 :GNYE		⏚				252 .6	TGA	

Drawing remarks

Tetra Pak

Designer LUP	Date 23/11/2007	Machine Tetra Pak A3/Flex 0150		
ECM No 320174	Denomination TERMINAL STRIP OVERVIEW	Page Type TERMINAL STRIP OVERVIEW		
Company Tetra Pak (Italy)	Document No. 2845987-0006	Doc. type ELD	Version AE	Page 092

This drawing must not without the consent of Tetra Pak
be copied, transmitted or disclosed to any third party.

1 2 3 4 5 6 7 8 9 10

Terminal strip of 2845987-0003

+M-X4156

From	Cable	Internal Jumper	Terminal	External Jumper	Cable	To	Page.Col.	Option	Function text
+M-X4158:1	+M-W2076 :1		1			+M-M4118:1	252 .4	TGA	FFU FAN SERVOMOTOR
			2			+M-M4119:1	252 .4	TGA	
			3						
			4						
			5						
			6			+M-M4118:2	252 .6	TGA	FFU FAN SERVOMOTOR
					+M-W2076 :2	+M-X4158:2			
			7			+M-M4119:2	252 .6	TGA	
			8						
+M-X4158:⏚	+M-W2076 :GNYE		⏚				252 .6	TGA	

Drawing remarks	Tetra Pak	Designer LUP	Date 23/11/2007	Machine Tetra Pak A3/Flex 0150	
		ECM No 320174	Denomination TERMINAL STRIP OVERVIEW	Page Type TERMINAL STRIP OVERVIEW	
		Company Tetra Pak (Italy)	Document No. 2845987-0006	Doc. type ELD	Version AE	Page 093

RELEASED

This drawing must not without the consent of Tetra Pak be copied, transmitted or disclosed to any third party.

1 2 3 4 5 6 7 8 9 10

Terminal strip of 2845987-0003

+M-X4157

From	Cable	Internal Jumper	Terminal	External Jumper	Cable	To	Page.Col.	Option	Function text
+C-X761:1	+M-W2073 :1		1		+M-W2075 :1	+M-X4155:1	252 .3	TGA	
+C-X761:2	+M-W2073 :2		2		+M-W2075 :2	+M-X4155:6	252 .7	TGA	
+C-X761:⏚	+M-W2073 :GNYE		⏚		+M-W2075 :GNYE	+M-X4155:⏚	252 .7	TGA	

Drawing remarks

Tetra Pak

Designer LUP	Date 23/11/2007	Machine Tetra Pak A3/Flex 0150	
ECM No 320174	Denomination TERMINAL STRIP OVERVIEW	Page Type TERMINAL STRIP OVERVIEW	
Company Tetra Pak (Italy)	Document No. 2845987-0006	Doc. type ELD	Version AE	Page 094

This drawing must not without the consent of Tetra Pak
be copied, transmitted or disclosed to any third party.

1 2 3 4 5 6 7 8 9 10

Terminal strip of 2845987-0003

+M-X4158

From	Cable	Internal Jumper	Terminal	External Jumper	Cable	To	Page.Col.	Option	Function text
+C-X762:1	+M-W2074 :1		1		+M-W2076 :1	+M-X4156:1	252 .3	TGA	
+C-X762:2	+M-W2074 :2		2		+M-W2076 :2	+M-X4156:6	252 .7	TGA	
+C-X762:⏚	+M-W2074 :GNYE		⏚		+M-W2076 :GNYE	+M-X4156:⏚	252 .7	TGA	

Drawing remarks

Tetra Pak

Designer LUP	Date 23/11/2007	Machine Tetra Pak A3/Flex 0150	
ECM No 320174	Denomination TERMINAL STRIP OVERVIEW	Page Type TERMINAL STRIP OVERVIEW	
Company Tetra Pak (Italy)	Document No. 2845987-0006	Doc. type ELD	Version AE	Page 095

This drawing must not without the consent of Tetra Pak be copied, transmitted or disclosed to any third party.

1 2 3 4 5 6 7 8 9 10

Terminal strip of 2845987-0003

+M-X4306

From	Cable	Internal Jumper	Terminal	External Jumper	Cable	To	Page.Col.	Option	Function text
+M-X2000:149	+M-W2248 :1		1			+M-Y4306:1	055 .6		LEFT JAW CATCHER ON
+M-X2000:150	+M-W2248 :2		2			+M-Y4306:2	055 .7		LEFT JAW CATCHER ON
			3			+M-Y4306:3	055 .7		LEFT JAW CATCHER ON
+M-X2000:⏚	+M-W2248 :GNYE		⏚			+M-Y4306:⏚	055 .6		LEFT JAW CATCHER ON

Drawing remarks

Tetra Pak

Designer LUP	Date 23/11/2007	Machine Tetra Pak A3/Flex 0150		
ECM No 320174	Denomination TERMINAL STRIP OVERVIEW	Page Type TERMINAL STRIP OVERVIEW		
Company Tetra Pak (Italy)	Document No. 2845987-0006	Doc. type ELD	Version AE	Page 096

This drawing must not without the consent of Tetra Pak be copied, transmitted or disclosed to any third party.

1 2 3 4 5 6 7 8 9 10

Terminal strip of 2845987-0003

+M-X4307

From	Cable	Internal Jumper	Terminal	External Jumper	Cable	To	Page.Col.	Option	Function text
+M-X2000:151	+M-W2249 :1		1			+M-Y4307:1	055 .6		RIGHT JAW CATCHER ON
+M-X2000:152	+M-W2249 :2		2			+M-Y4307:2	055 .7		RIGHT JAW CATCHER ON
			3			+M-Y4307:3	055 .7		RIGHT JAW CATCHER ON
+M-X2000:⏚	+M-W2249 :GNYE		⏚			+M-Y4307:⏚	055 .6		RIGHT JAW CATCHER ON

Drawing remarks

Tetra Pak

Designer LUP	Date 23/11/2007	Machine Tetra Pak A3/Flex 0150	
ECM No 320174	Denomination TERMINAL STRIP OVERVIEW	Page Type TERMINAL STRIP OVERVIEW	
Company Tetra Pak (Italy)	Document No. 2845987-0006	Doc. type ELD	Version AE	Page 097

This drawing must not without the consent of Tetra Pak
be copied, transmitted or disclosed to any third party.

1 2 3 4 5 6 7 8 9 10

Terminal strip of 2845987-0003

+M-X4308

From	Cable	Internal Jumper	Terminal	External Jumper	Cable	To	Page.Col.	Option	Function text
+M-X2000:153	+M-W2208 :1		1			+M-Y4308:1	055 .6		LEFT JAW CATCHER OFF
+M-X2000:154	+M-W2208 :2		2			+M-Y4308:2	055 .7		LEFT JAW CATCHER OFF
			3			+M-Y4308:3	055 .7		LEFT JAW CATCHER OFF
+M-X2000:⏚	+M-W2208 :GNYE		⏚			+M-Y4308:⏚	055 .6		LEFT JAW CATCHER OFF

Drawing remarks

Tetra Pak

Designer LUP	Date 23/11/2007	Machine Tetra Pak A3/Flex 0150	
ECM No 320174	Denomination TERMINAL STRIP OVERVIEW	Page Type TERMINAL STRIP OVERVIEW	
Company Tetra Pak (Italy)	Document No. 2845987-0006	Doc. type ELD	Version AE	Page 098

This drawing must not without the consent of Tetra Pak be copied, transmitted or disclosed to any third party.

1 2 3 4 5 6 7 8 9 10

Terminal strip of 2845987-0003

+M-X4309

From	Cable	Internal Jumper	Terminal	External Jumper	Cable	To	Page.Col.	Option	Function text
+M-X2000:155	+M-W2209 :1		1			+M-Y4309:1	055 .6		RIGHT JAW CATCHER OFF
+M-X2000:156	+M-W2209 :2		2			+M-Y4309:2	055 .7		RIGHT JAW CATCHER OFF
			3			+M-Y4309:3	055 .7		RIGHT JAW CATCHER OFF
+M-X2000:⏚	+M-W2209 :GNYE		⏚			+M-Y4309:⏚	055 .6		RIGHT JAW CATCHER OFF

Drawing remarks

Tetra Pak

Designer LUP	Date 23/11/2007	Machine Tetra Pak A3/Flex 0150	
ECM No 320174	Denomination TERMINAL STRIP OVERVIEW	Page Type TERMINAL STRIP OVERVIEW	
Company Tetra Pak (Italy)	Document No. 2845987-0006	Doc. type ELD	Version AE	Page 099

This drawing must not without the consent of Tetra Pak be copied, transmitted or disclosed to any third party.

1 2 3 4 5 6 7 8 9 10

Terminal strip of 2845987-0003

+M-X4311

From	Cable	Internal Jumper	Terminal	External Jumper	Cable	To	Page.Col.	Option	Function text
+M-X2000:145	+M-W2236 :1		1			+M-Y4311:1	055 .6		CUTTING LEFT
+M-X2000:146	+M-W2236 :2		2			+M-Y4311:2	055 .7		CUTTING LEFT
			3			+M-Y4311:3	055 .7		CUTTING LEFT
+M-X2000:⏚	+M-W2236 :GNYE		⏚			+M-Y4311:⏚	055 .6		CUTTING LEFT

Drawing remarks

Tetra Pak

Designer LUP	Date 23/11/2007	Machine Tetra Pak A3/Flex 0150			
ECM No 320174	Denomination TERMINAL STRIP OVERVIEW	Page Type TERMINAL STRIP OVERVIEW			
Company Tetra Pak (Italy)	Document No. 2845987-0006	Doc. type ELD	Version AE	Page 100	

This drawing must not without the consent of Tetra Pak be copied, transmitted or disclosed to any third party.

1 2 3 4 5 6 7 8 9 10

Terminal strip of 2845987-0003

+M-X4312

From	Cable	Internal Jumper	Terminal	External Jumper	Cable	To	Page.Col.	Option	Function text
+M-X2000:147	+M-W2237 :1		1			+M-Y4312:1	055 .6		CUTTING RIGHT
+M-X2000:148	+M-W2237 :2		2			+M-Y4312:2	055 .7		CUTTING RIGHT
			3			+M-Y4312:3	055 .7		CUTTING RIGHT
+M-X2000:⏚	+M-W2237 :GNYE		⏚			+M-Y4312:⏚	055 .6		CUTTING RIGHT

Drawing remarks

Tetra Pak

Designer LUP	Date 23/11/2007	Machine Tetra Pak A3/Flex 0150	
ECM No 320174	Denomination TERMINAL STRIP OVERVIEW	Page Type TERMINAL STRIP OVERVIEW	
Company Tetra Pak (Italy)	Document No. 2845987-0006	Doc. type ELD	Version AE	Page 101

This drawing must not without the consent of Tetra Pak
be copied, transmitted or disclosed to any third party.

1 | 2 | 3 | 4 | 5 | 6 | 7 | 8 | 9 | 10

Terminal strip of 2845987-0003

+M-X4505

From	Cable	Internal Jumper	Terminal	External Jumper	Cable	To	Page.Col.	Option	Function text
+C-A451:EXT. NET	+M-W4505 :WHOG		1				059 .1		
+C-A451:EXT. NET	+M-W4505 :OG		2				059 .1		
+C-A451:EXT. NET	+M-W4505 :WHGN		3				059 .1		
+C-A451:EXT. NET	+M-W4505 :GN		6				059 .1		

Drawing remarks

Tetra Pak

Designer LUP	Date 23/11/2007	Machine Tetra Pak A3/Flex 0150	
ECM No 320174	Denomination TERMINAL STRIP OVERVIEW	Page Type TERMINAL STRIP OVERVIEW	
Company Tetra Pak (Italy)	Document No. 2845987-0006	Doc. type ELD	Version AE	Page 102

This drawing must not without the consent of Tetra Pak
be copied, transmitted or disclosed to any third party.

1 2 3 4 5 6 7 8 9 10

Terminal strip of 2845987-0003

+M-X4507

From	Cable	Internal Jumper	Terminal	External Jumper	Cable	To	Page.Col.	Option	Function text
+C-A452:X8	+M-W4507 :WHOG		1				060 .9		
+C-A452:X8	+M-W4507 :OG		2				060 .9		
+C-A452:X8	+M-W4507 :WHGN		3				060 .9		
+C-A452:X8	+M-W4507 :GN		6				060 .9		

Drawing remarks

Tetra Pak

Designer LUP	Date 23/11/2007	Machine Tetra Pak A3/Flex 0150			
ECM No 320174	Denomination TERMINAL STRIP OVERVIEW	Page Type TERMINAL STRIP OVERVIEW			
Company Tetra Pak (Italy)	Document No. 2845987-0006	Doc. type ELD	Version AE	Page 103	

This drawing must not without the consent of Tetra Pak
be copied, transmitted or disclosed to any third party.

1 2 3 4 5 6 7 8 9 10

Terminal strip of 2845987-0003

+M-X5002

From	Cable	Internal Jumper	Terminal	External Jumper	Cable	To	Page.Col.	Option	Function text
+M-X2010:1	+M-W2017 :1		1			+M-R5307:1	010 .2		FLAP HEATINGR TOP LEFT
+M-X2010:2	+M-W2017 :2		2			+M-R5307:2	010 .2		FLAP HEATINGR TOP LEFT

Drawing remarks

Tetra Pak

Designer LUP	Date 23/11/2007	Machine Tetra Pak A3/Flex 0150	
ECM No 320174	Denomination TERMINAL STRIP OVERVIEW	Page Type TERMINAL STRIP OVERVIEW	
Company Tetra Pak (Italy)	Document No. 2845987-0006	Doc. type ELD	Version AE	Page 104

This drawing must not without the consent of Tetra Pak
be copied, transmitted or disclosed to any third party.

1 2 3 4 5 6 7 8 9 10

Terminal strip of 2845987-0003

+M-X5003

From	Cable	Internal Jumper	Terminal	External Jumper	Cable	To	Page.Col.	Option	Function text
+M-X2010:3	+M-W2018 :1		1			+M-R5308:1	010 .4		FLAP HEATING TOP RIGHT
+M-X2010:4	+M-W2018 :2		2			+M-R5308:2	010 .4		FLAP HEATING TOP RIGHT

Drawing remarks

Tetra Pak

Designer LUP	Date 23/11/2007	Machine Tetra Pak A3/Flex 0150	
ECM No 320174	Denomination TERMINAL STRIP OVERVIEW	Page Type TERMINAL STRIP OVERVIEW	
Company Tetra Pak (Italy)	Document No. 2845987-0006	Doc. type ELD	Version AE	Page 105

This drawing must not without the consent of Tetra Pak
be copied, transmitted or disclosed to any third party.

1 | 2 | 3 | 4 | 5 | 6 | 7 | 8 | 9 | 10

Terminal strip of 2845987-0003

+M-X5004

From	Cable	Internal Jumper	Terminal	External Jumper	Cable	To	Page.Col.	Option	Function text
+M-X2010:5	+M-W2019 :1		1			+M-R5309:1	010 .6		BOTTOM, LEFT & RIGHT FLAP HEATING
+M-X2010:6	+M-W2019 :2		2			+M-R5309:2	010 .6		BOTTOM, LEFT & RIGHT FLAP HEATING

Drawing remarks

Tetra Pak

Designer LUP	Date 23/11/2007	Machine Tetra Pak A3/Flex 0150	
ECM No 320174	Denomination TERMINAL STRIP OVERVIEW	Page Type TERMINAL STRIP OVERVIEW	
Company Tetra Pak (Italy)	Document No. 2845987-0006	Doc. type ELD	Version AE	Page 106

This drawing must not without the consent of Tetra Pak
be copied, transmitted or disclosed to any third party.

1 2 3 4 5 6 7 8 9 10

Terminal strip of 2845987-0003

+M-X5005

From	Cable	Internal Jumper	Terminal	External Jumper	Cable	To	Page.Col.	Option	Function text
+M-X2010:7	+M-W2020 :1		1			+M-R5310:1	010 .9	TGA	FLAP HEATINGBOTTOM RIGHT
+M-X2010:8	+M-W2020 :2		2			+M-R5310:2	010 .9	TGA	FLAP HEATINGBOTTOM RIGHT

Drawing remarks

Tetra Pak

Designer LUP	Date 23/11/2007	Machine Tetra Pak A3/Flex 0150	
ECM No 320174	Denomination TERMINAL STRIP OVERVIEW	Page Type TERMINAL STRIP OVERVIEW	
Company Tetra Pak (Italy)	Document No. 2845987-0006	Doc. type ELD	Version AE	Page 107

This drawing must not without the consent of Tetra Pak be copied, transmitted or disclosed to any third party.

1 2 3 4 5 6 7 8 9 10

Terminal strip of 2845987-0003

+M-X5006

From	Cable	Internal Jumper	Terminal	External Jumper	Cable	To	Page.Col.	Option	Function text
+M-X2020:+	+M-W5021 :YE		+			+M-B5307:+	111 .2		TEMP. TOP FLAP LEFT
+M-X2020:-	+M-W5021 :RD		-			+M-B5307:-	111 .2		TEMP. TOP FLAP LEFT

Drawing remarks

Tetra Pak

Designer LUP	Date 23/11/2007	Machine Tetra Pak A3/Flex 0150	
ECM No 320174	Denomination TERMINAL STRIP OVERVIEW	Page Type TERMINAL STRIP OVERVIEW	
Company Tetra Pak (Italy)	Document No. 2845987-0006	Doc. type ELD	Version AE	Page 108

This drawing must not without the consent of Tetra Pak
be copied, transmitted or disclosed to any third party.

1 2 3 4 5 6 7 8 9 10

Terminal strip of 2845987-0003

+M-X5007

From	Cable	Internal Jumper	Terminal	External Jumper	Cable	To	Page.Col.	Option	Function text
+M-X2021:+	+M-W5022 :YE		+			+M-B5308:+	111 .2		TEMP. TOP FLAP RIGHT
+M-X2021:-	+M-W5022 :RD		-			+M-B5308:-	111 .2		TEMP. TOP FLAP RIGHT

Drawing remarks

Tetra Pak

Designer LUP	Date 23/11/2007	Machine Tetra Pak A3/Flex 0150	
ECM No 320174	Denomination TERMINAL STRIP OVERVIEW	Page Type TERMINAL STRIP OVERVIEW	
Company Tetra Pak (Italy)	Document No. 2845987-0006	Doc. type ELD	Version AE	Page 109

This drawing must not without the consent of Tetra Pak
be copied, transmitted or disclosed to any third party.

1 2 3 4 5 6 7 8 9 10

Terminal strip of 2845987-0003

+M-X5008

From	Cable	Internal Jumper	Terminal	External Jumper	Cable	To	Page.Col.	Option	Function text
+M-X2022:+	+M-W5023 :YE		+			+M-B5309:+	111 .2		TEMP. BOTTOM FLAPS
+M-X2022:-	+M-W5023 :RD		-			+M-B5309:-	111 .2		TEMP. BOTTOM FLAPS

Drawing remarks

Tetra Pak

Designer LUP	Date 23/11/2007	Machine Tetra Pak A3/Flex 0150	
ECM No 320174	Denomination TERMINAL STRIP OVERVIEW	Page Type TERMINAL STRIP OVERVIEW	
Company Tetra Pak (Italy)	Document No. 2845987-0006	Doc. type ELD	Version AE	Page 110

This drawing must not without the consent of Tetra Pak
be copied, transmitted or disclosed to any third party.

1 2 3 4 5 6 7 8 9 10

Terminal strip of 2845987-0003

+M-X5009

From	Cable	Internal Jumper	Terminal	External Jumper	Cable	To	Page.Col.	Option	Function text
+M-X2023:+	+M-W5024 :YE		+			+M-B5310:+	111 .2	TGA	TEMP. BOTTOM FLAP RIGHT
+M-X2023:-	+M-W5024 :RD		-			+M-B5310:-	111 .2	TGA	TEMP. BOTTOM FLAP RIGHT

Drawing remarks

Tetra Pak

Designer LUP	Date 23/11/2007	Machine Tetra Pak A3/Flex 0150	
ECM No 320174	Denomination TERMINAL STRIP OVERVIEW	Page Type TERMINAL STRIP OVERVIEW	
Company Tetra Pak (Italy)	Document No. 2845987-0006	Doc. type ELD	Version AE	Page 111

This drawing must not without the consent of Tetra Pak
be copied, transmitted or disclosed to any third party.

1 2 3 4 5 6 7 8 9 10

Terminal strip of 2845987-0003

+M-X5501

From	Cable	Internal Jumper	Terminal	External Jumper	Cable	To	Page.Col.	Option	Function text
+M-X2001:108+	+M-W5510 :3		1		+M-W5501 :BN	+M-B5501:	148 .3		EXTERNAL CONVEYOR CONGEST.GUARD
+M-X2001:108-	+M-W5510 :2		2		+M-W5501 :BU	+M-B5501:	148 .3		EXTERNAL CONVEYOR CONGEST.GUARD
			3		+M-W5502 :BN	+M-B5502:	148 .3		EXTERNAL CONVEYOR CONGEST.GUARD
			4		+M-W5502 :BU	+M-B5502:	148 .3		EXTERNAL CONVEYOR CONGEST.GUARD
+M-X2001:108	+M-W5510 :1		5		+M-W5501 :BK	+M-B5501:	148 .5		EXTERNAL CONVEYOR CONGEST.GUARD

Drawing remarks

Tetra Pak

Designer LUP	Date 23/11/2007	Machine Tetra Pak A3/Flex 0150	
ECM No 320174	Denomination TERMINAL STRIP OVERVIEW	Page Type TERMINAL STRIP OVERVIEW	
Company Tetra Pak (Italy)	Document No. 2845987-0006	Doc. type ELD	Version AE	Page 112

This drawing must not without the consent of Tetra Pak
be copied, transmitted or disclosed to any third party.

1 2 3 4 5 6 7 8 9 10

Terminal strip of 2845987-0003

+M-X5601

From	Cable	Internal Jumper	Terminal	External Jumper	Cable	To	Page.Col.	Option	Function text
+M-X2002:118+	+M-W5603 :3		1		+M-W5602 :BN	+M-B5602:	148 .3		PACKAGE COUNTER LAST POINT DE.
+M-X2002:118-	+M-W5603 :2		2		+M-W5602 :BU	+M-B5602:	148 .3		PACKAGE COUNTER LAST POINT DE.
			3		+M-W5601 :BN	+M-B5601:	148 .3		PACKAGE COUNTER LAST POINT DE.
			4		+M-W5601 :BU	+M-B5601:	148 .3		PACKAGE COUNTER LAST POINT DE.
+M-X2002:118	+M-W5603 :1		5		+M-W5602 :BK	+M-B5602:	148 .5		PACKAGE COUNTER LAST POINT DE.
			6						
			7						
			8						
			⏚						

Drawing remarks

Tetra Pak

Designer LUP	Date 23/11/2007	Machine Tetra Pak A3/Flex 0150	
ECM No 320174	Denomination TERMINAL STRIP OVERVIEW	Page Type TERMINAL STRIP OVERVIEW	
Company Tetra Pak (Italy)	Document No. 2845987-0006	Doc. type ELD	Version AE	Page 113

This drawing must not without the consent of Tetra Pak be copied, transmitted or disclosed to any third party.

Terminal strip of 2845987-0003

+M-X7001

From	Cable	Internal Jumper	Terminal	External Jumper	Cable	To	Page.Col.	Option	Function text
			1						
			2						
			3						
			⏚						
			4						
			5						
			⏚						
			6						
+C-X132:1	+M-W7004 :1		7		+M-W7055 :1	+M-E7705:1	037 .3		LIGHTING ASU FRONT
+C-X132:3	+M-W7004 :3		8		+M-W7055 :2	+M-E7705:2	037 .3		LIGHTING ASU FRONT
			⏚		+M-W7055 :GNYE	+M-E7705:⏚	037 .3		LIGHTING ASU FRONT
			9		+M-W7014 :1	+M-E7702:1	037 .4		LIGHTING ASU
			10		+M-W7014 :2	+M-E7702:2	037 .4		LIGHTING ASU
+C-X132:⏚	+M-W7004 :GNYE		⏚		+M-W7014 :GNYE	+M-E7702:⏚	037 .4		LIGHTING ASU
			11				037 .5		
			12				037 .5		
			⏚						
+C-X504:1	+M-W7037 :1		13		+M-W7305 :1	+M-R7304:1	019 .7		ASU CONSTANT HEAT
+C-X504:2	+M-W7037 :2		14		+M-W7305 :2	+M-R7304:2	019 .8		ASU CONSTANT HEAT
+C-X504:⏚	+M-W7037 :GNYE		⏚		+M-W7305 :GNYE	+M-R7304:⏚	019 .9		ASU CONSTANT HEAT
+C-X133:1	+M-W7005 :1		15			+M-T6203:220	019 .3		
+C-X133:2	+M-W7005 :2		16			+M-T6203:0	019 .3		
+C-X133:⏚	+M-W7005 :GNYE		⏚			+M-T6203:⏚	019 .4		
+M-T6203:12			17		+M-W7046 :1	+M-R6203:1	019 .2		ASSU HEAD SPLICING
			18		+M-W7046 :2	+M-R6203:2	019 .3		ASSU HEAD SPLICING
			⏚						
			19		+M-W7049 :1	+M-R6204:1	019 .3		ASSU CUTTING HEAD
+M-T6203:0			20		+M-W7049 :2	+M-R6204:2	019 .4		ASSU CUTTING HEAD
			⏚		+M-W7049 :GNYE	+M-R6204:⏚	019 .5		ASSU CUTTING HEAD
+C-X504:3	+M-W7037 :3		21				234 .2		

Drawing remarks

Tetra Pak

Designer LUP	Date 23/11/2007	Machine Tetra Pak A3/Flex 0150	
ECM No 320174	Denomination TERMINAL STRIP OVERVIEW	Page Type TERMINAL STRIP OVERVIEW	
Company Tetra Pak (Italy)	Document No. 2845987-0006	Doc. type ELD	Version AE	Page 114

This drawing must not without the consent of Tetra Pak be copied, transmitted or disclosed to any third party.

1 2 3 4 5 6 7 8 9 10

Terminal strip of 2845987-0003

+M-X7001

From	Cable	Internal Jumper	Terminal	External Jumper	Cable	To	Page.Col.	Option	Function text
+C-X504:4	+M-W7037 :4		22				234 .2		
+C-X504:5	+M-W7037 :5		23				234 .2		
+C-X504:6	+M-W7037 :6		24				234 .2		
			⏚						
			⏚						
+C-X213:1	+M-W7006 :1		101		+M-W7013 :BK	+M-B6203:	141 .6		SA PRESSURE ROLLER
			• 101+		+M-W7013 :BN	+M-B6203:	141 .3		SA PRESSURE ROLLER
			• 101-		+M-W7013 :BU	+M-B6203:	141 .3		SA PRESSURE ROLLER
+C-X213:2	+M-W7006 :2		102		+M-W7016 :BK	+M-B6105:	115 .5		PACK.MAT. SPLICE DETECTION IN ASU
			• 102+		+M-W7016 :BN	+M-B6105:	115 .3		PACK.MAT. SPLICE DETECTION IN ASU
			• 102-		+M-W7016 :BU	+M-B6105:	115 .3		PACK.MAT. SPLICE DETECTION IN ASU
+C-X213:3	+M-W7006 :3		103		+M-W7017 :BK	+M-B6201:	141 .6		INDICATE STRIP END BOBBIN 1
			• 103+		+M-W7017 :BN	+M-B6201:	141 .3		INDICATE STRIP END BOBBIN 1
			• 103-		+M-W7017 :BU	+M-B6201:	141 .3		INDICATE STRIP END BOBBIN 1
+C-X213:4	+M-W7006 :4		104		+M-W7018 :BK	+M-B6202:	141 .6		INDICATE STRIP END BOBBIN 2
			• 104+		+M-W7018 :BN	+M-B6202:	141 .3		INDICATE STRIP END BOBBIN 2
			• 104-		+M-W7018 :BU	+M-B6202:	141 .3		INDICATE STRIP END BOBBIN 2
+C-X213:5	+M-W7006 :5		105		+M-W7019 :BK	+M-B6208:	141 .6		ROTATION MONITOR STRIP
			• 105+		+M-W7019 :BN	+M-B6208:	141 .3		ROTATION MONITOR STRIP
			• 105-		+M-W7019 :BU	+M-B6208:	141 .3		ROTATION MONITOR STRIP
+C-X213:6	+M-W7006 :6		106		+M-W7020 :BK	+M-B6107:	141 .6		ROTATION MONITOR PAPER IN SA
			• 106+		+M-W7020 :BN	+M-B6107:	141 .3		ROTATION MONITOR PAPER IN SA
			• 106-		+M-W7020 :BU	+M-B6107:	141 .3		ROTATION MONITOR PAPER IN SA
+C-X213:7	+M-W7006 :7		107		+M-W7015 :BK	+M-B72232:	142 .6		MAGAZINE FULL
			• 107+		+M-W7015 :BN	+M-B72232:	142 .4		MAGAZINE FULL
			• 107-		+M-W7015 :BU	+M-B72232:	142 .4		MAGAZINE FULL
+C-X213:8	+M-W7006 :8		108		+M-W7022 :BK	+M-B6204:	141 .6		STRIP SPLICE NOT PREPARED
			• 108+		+M-W7022 :BN	+M-B6204:	141 .3		STRIP SPLICE NOT PREPARED
			• 108-		+M-W7022 :BU	+M-B6204:	141 .3		STRIP SPLICE NOT PREPARED
+C-X213:9	+M-W7006 :9		109		+M-W7023 :BK	+M-B72234:	142 .6		MAGAZINE EMPTY

Drawing remarks

Tetra Pak

Designer LUP	Date 23/11/2007	Machine Tetra Pak A3/Flex 0150	
ECM No 320174	Denomination TERMINAL STRIP OVERVIEW	Page Type TERMINAL STRIP OVERVIEW	
Company Tetra Pak (Italy)	Document No. 2845987-0006	Doc. type ELD	Version AE	Page 115

This drawing must not without the consent of Tetra Pak be copied, transmitted or disclosed to any third party.

1 2 3 4 5 6 7 8 9 10

Terminal strip of 2845987-0003

+M-X7001

From	Cable	Internal Jumper	Terminal	External Jumper	Cable	To	Page.Col.	Option	Function text
			109+		+M-W7023 :BN	+M-B72234:	142 .4		MAGAZINE EMPTY
			109-		+M-W7023 :BU	+M-B72234:	142 .4		MAGAZINE EMPTY
+C-X213:10	+M-W7006 :10		110		+M-W7024 :BK	+M-B7411:	142 .6		SPLICE TABLE 1 IN POSITION
			110+		+M-W7024 :BN	+M-B7411:	142 .4		SPLICE TABLE 1 IN POSITION
			110-		+M-W7024 :BU	+M-B7411:	142 .4		SPLICE TABLE 1 IN POSITION
+C-X213:11	+M-W7006 :11		111		+M-W7025 :BK	+M-B7414:	142 .6		SPLICE TABLE 2 IN POSITION
			111+		+M-W7025 :BN	+M-B7414:	142 .4		SPLICE TABLE 2 IN POSITION
			111-		+M-W7025 :BU	+M-B7414:	142 .4		SPLICE TABLE 2 IN POSITION
+C-X213:12	+M-W7006 :12		112		+M-W7026 :BK	+M-B7412:	142 .6		SIDE FEEDER POSITION 1
			112+		+M-W7026 :BN	+M-B7412:	142 .4		SIDE FEEDER POSITION 1
			112-		+M-W7026 :BU	+M-B7412:	142 .4		SIDE FEEDER POSITION 1
+C-X213:13	+M-W7006 :13		113		+M-W7027 :BK	+M-B7512:	142 .6		SIDE FEEDER POSITION 2
			113+		+M-W7027 :BN	+M-B7512:	142 .4		SIDE FEEDER POSITION 2
			113-		+M-W7027 :BU	+M-B7512:	142 .4		SIDE FEEDER POSITION 2
+C-X213:14	+M-W7006 :14		114		+M-W7029 :8	+M-S7402:14	143 .5		MANUAL START ASU
			114+				234 .2		
			114-				234 .2		
+C-X213:15	+M-W7006 :15		115		+M-W7028 :3	+M-S6206:14	143 .5		MANUAL START ASSU
			115+		+M-W7028 :2	+M-S6206:13	143 .3		MANUAL START ASSU
			115-				234 .2		
+C-X213:16	+M-W7006 :16		116		+M-W7028 :4	+M-S7701:51	143 .5		SHORT STOP ASSU
			116+				234 .2		
			116-				234 .2		
+C-X213:17	+M-W7006 :17		117		+M-W7028 :5	+M-S7901:14	143 .5		ALARM RESET LAMP TEST
			117+				234 .2		
			117-				234 .2		
+C-X213:18	+M-W7006 :18		118		+M-W7031 :2	+M-S7812:11	150 .4		EMERGENCY STOP SA ASU WALLET
			118+				234 .2		
			118-				234 .2		
			119						

Drawing remarks

Tetra Pak

Designer LUP	Date 23/11/2007	Machine Tetra Pak A3/Flex 0150	
ECM No 320174	Denomination TERMINAL STRIP OVERVIEW	Page Type TERMINAL STRIP OVERVIEW	
Company Tetra Pak (Italy)	Document No. 2845987-0006	Doc. type ELD	Version AE	Page 116

This drawing must not without the consent of Tetra Pak be copied, transmitted or disclosed to any third party.

1 2 3 4 5 6 7 8 9 10

Terminal strip of 2845987-0003

+M-X7001

From	Cable	Internal Jumper	Terminal	External Jumper	Cable	To	Page.Col.	Option	Function text
			119+		+M-W7031 :1	+M-S7812:21	150 .4		EMERGENCY STOP SA ASU WALLET
			119-				234 .2		
+C-X213:19	+M-W7006 :19		120		+M-W7031 :4	+M-S7812:22	150 .5		EMERGENCY STOP SA ASU WALLET
			120+				234 .2		
			120-				234 .2		
			121		+M-W7031 :3	+M-S7812:12	150 .5		EMERGENCY STOP SA ASU WALLET
			121+				234 .2		
			121-				234 .2		
			122		+M-W7029 :1	+M-S7813:21	149 .3		EMERGENCY STOP ASU INTERNAL
			122+				234 .2		
			122-				234 .2		
			123						
			123+		+M-W7029 :2	+M-S7813:11	149 .3		EMERGENCY STOP ASU INTERNAL
			123-				234 .2		
+C-X213:20	+M-W7006 :20		124		+M-W7029 :3	+M-S7813:12	149 .5		EMERGENCY STOP ASU INTERNAL
			124+				234 .2		
			124-				234 .2		
+C-X213:21	+M-W7006 :21		125		+M-W7029 :4	+M-S7813:22	149 .5		EMERGENCY STOP ASU INTERNAL
			125+				234 .2		
			125-				234 .2		
+C-X213:22	+M-W7006 :22		126		+M-W7029 :5	+M-S7303:14	143 .5		MATERIAL LOCK
+C-X213:23	+M-W7006 :23		126+		+M-W7029 :6	+M-S7303:13	143 .3		MATERIAL LOCK
+C-X213:24	+M-W7006 :24		126-				143 .3		
+C-X213:⏚	+M-W7006 :GNYE		⏚				143 .3		
			⏚		+M-W7028 :GNYE	GND:	143 .3		
			⏚				150 .5		
			⏚						
			⏚						
			⏚						
+C-X214:1	+M-W7007 :1		127		+M-W7029 :7	+M-S7403:14	143 .5		CUTTING TABLE MOVEMENT

Drawing remarks

Tetra Pak

Designer	Date	Machine
LUP	23/11/2007	Tetra Pak A3/Flex 0150

ECM No	Denomination	Page Type
320174	TERMINAL STRIP OVERVIEW	TERMINAL STRIP OVERVIEW

Company	Document No.	Doc. type	Version	Page
Tetra Pak (Italy)	2845987-0006	ELD	AE	117

This drawing must not without the consent of Tetra Pak be copied, transmitted or disclosed to any third party.

1 2 3 4 5 6 7 8 9 10

Terminal strip of 2845987-0003

+M-X7001

From	Cable	Internal Jumper	Terminal	External Jumper	Cable	To	Page.Col.	Option	Function text
+C-X214:23	+M-W7007 :23		127+				142 .4		
+C-X214:24	+M-W7007 :24		127-				142 .4		
+C-X214:2	+M-W7007 :2		128		+M-W7033 :BK	+M-B7211:	142 .6		ADJUSTMENT LOOP
			128+		+M-W7033 :BN	+M-B7211:	142 .4		ADJUSTMENT LOOP
			128-		+M-W7033 :BU	+M-B7211:	142 .4		ADJUSTMENT LOOP
			129						
			129+				234 .4		
			129-				234 .4		
+C-X214:3	+M-W7007 :3		130		+M-W7035 :BK	+M-B7401:	143 .5		MATERIAL REEL 1 EMPTY
			130+		+M-W7035 :BN	+M-B7401:	143 .3		MATERIAL REEL 1 EMPTY
			130-		+M-W7035 :BU	+M-B7401:	143 .3		MATERIAL REEL 1 EMPTY
+C-X214:4	+M-W7007 :4		131		+M-W7036 :BK	+M-B7501:	143 .5		MATERIAL REEL 2 EMPTY
			131+		+M-W7036 :BN	+M-B7501:	143 .3		MATERIAL REEL 2 EMPTY
			131-		+M-W7036 :BU	+M-B7501:	143 .3		MATERIAL REEL 2 EMPTY
+C-X214:5	+M-W7007 :5		132		+M-W7042 :1	+M-B7801:21	202 .3		MECH. GUARD 17
			132+		+M-W7042 :2	+M-B7801:11	202 .3		MECH. GUARD 17
			132-				234 .4		
+C-X214:6	+M-W7007 :6		133		+M-W7042 :3	+M-B7801:12	202 .4		MECH. GUARD 17
			133+				234 .4		
			133-				234 .4		
			134		+M-W7042 :4	+M-B7801:22	202 .4		MECH. GUARD 17
			134+				234 .4		
			134-				234 .4		
			135		+M-W7038 :1	+M-X7050:1	202 .5		
			135+				234 .4		
			135-				234 .4		
+C-X214:7	+M-W7007 :7		136		+M-W7038 :2	+M-X7050:2	202 .5		
			136+				234 .4		
			136-				234 .4		
+C-X214:8	+M-W7007 :8		137		+M-W7038 :3	+M-X7050:3	202 .5		

Drawing remarks

Tetra Pak

Designer LUP	Date 23/11/2007	Machine Tetra Pak A3/Flex 0150	
ECM No 320174	Denomination TERMINAL STRIP OVERVIEW	Page Type TERMINAL STRIP OVERVIEW	
Company Tetra Pak (Italy)	Document No. 2845987-0006	Doc. type ELD	Version AE	Page 118

This drawing must not without the consent of Tetra Pak be copied, transmitted or disclosed to any third party.

1 2 3 4 5 6 7 8 9 10

Terminal strip of 2845987-0003

+M-X7001

From	Cable	Internal Jumper	Terminal	External Jumper	Cable	To	Page.Col.	Option	Function text
			• 137+				234 .4		
			• 137-				234 .4		
+C-X214:9	+M-W7007 :9		138		+M-W7038 :4	+M-X7050:4	202 .5		
			• 138+				234 .4		
			• 138-				234 .4		
+C-X214:10	+M-W7007 :10		139		+M-W7038 :5	+M-X7050:5	214 .3	H.G.	
			• 139+				234 .4		
			• 139-		+M-W7038 :12	+M-X7050:1-	202 .7		
+C-X214:11	+M-W7007 :11		140				234 .4		
			• 140+				234 .4		
			• 140-				234 .4		
+C-X214:12	+M-W7007 :12		141				234 .4		
			• 141+				234 .4		
			• 141-				234 .4		
+C-X214:13	+M-W7007 :13		142		+M-W7038 :8	+M-X7050:8	202 .5		
			• 142+				234 .4		
			• 142-				234 .4		
+C-X214:14	+M-W7007 :14		143				234 .4		
			• 143+				234 .4		
			• 143-				234 .4		
+C-X214:15	+M-W7007 :15		144				234 .4		
			• 144+				234 .4		
			• 144-				234 .4		
+C-X214:16	+M-W7007 :16		145				234 .4		
			• 145+				234 .4		
			• 145-				234 .4		
+C-X214:17	+M-W7007 :17		146				234 .4		
			• 146+				234 .4		
			• 146-				234 .4		
+C-X214:18	+M-W7007 :18		147				234 .4		

Drawing remarks

Tetra Pak

Designer LUP	Date 23/11/2007	Machine Tetra Pak A3/Flex 0150	
ECM No 320174	Denomination TERMINAL STRIP OVERVIEW	Page Type TERMINAL STRIP OVERVIEW	
Company Tetra Pak (Italy)	Document No. 2845987-0006	Doc. type ELD	Version AE	Page 119

This drawing must not without the consent of Tetra Pak be copied, transmitted or disclosed to any third party.

1 2 3 4 5 6 7 8 9 10

Terminal strip of 2845987-0003

+M-X7001

From	Cable	Internal Jumper	Terminal	External Jumper	Cable	To	Page.Col.	Option	Function text
			147+				234 .4		
			147-				234 .4		
+C-X214:19	+M-W7007 :19		148		+M-W7038 :6	+M-X7050:6	202 .5		
			148+				234 .4		
			148-		+M-W7038 :13	+M-X7050:6-	202 .7		
+C-X214:20	+M-W7007 :20		149		+M-W7038 :7	+M-X7050:7	202 .5		
			149+				234 .4		
			149-				234 .4		
+C-X214:21	+M-W7007 :21		150			+M-K7000:A1	180 .4		POWER TO STRIP BOBBIN 1
			150+				234 .4		
			150-				234 .4		
+C-X214:22	+M-W7007 :22		151			+M-K7001:A1	180 .4		POWER TO STRIP BOBBIN 2
			151+				234 .4		
			151-			+M-K7001:A2	180 .6		POWER TO STRIP BOBBIN 2
+C-X214:⏚	+M-W7007 :GNYE		⏚				202 .4		
			⏚		+M-W7038 :GNYE	+M-X7050:⏚	202 .7		
PE:			⏚		+M-W7400 :GNYE	+M-B7400:⏚	137 .5	H.G.	ASU AUX MAIN AIR PRESSURE SENSOR
			⏚		+M-W7050 :SH	GND:	106 .4		
			⏚				151 .2		
			⏚				151 .2		
+C-X219:1	+M-W7008 :1		152		+M-W7043 :1	+M-B7806:21	151 .2		ASU LINE 1 DOOR GUARD
			152+				234 .7		
			152-				234 .7		
+C-X219:2	+M-W7008 :2		153				234 .7		
			153+		+M-W7043 :2	+M-B7806:11	151 .2		ASU LINE 1 DOOR GUARD
			153-				234 .7		
+C-X219:4	+M-W7008 :4		154		+M-W7043 :3	+M-B7806:12	151 .5		ASU LINE 1 DOOR GUARD
			154+				234 .7		
			154-				234 .7		
			155		+M-W7043 :4	+M-B7806:22	151 .5		ASU LINE 1 DOOR GUARD

Drawing remarks

Tetra Pak

Designer LUP	Date 23/11/2007	Machine Tetra Pak A3/Flex 0150	
ECM No 320174	Denomination TERMINAL STRIP OVERVIEW	Page Type TERMINAL STRIP OVERVIEW	
Company Tetra Pak (Italy)	Document No. 2845987-0006	Doc. type ELD	Version AE	Page 120

This drawing must not without the consent of Tetra Pak be copied, transmitted or disclosed to any third party.

1 2 3 4 5 6 7 8 9 10

Terminal strip of 2845987-0003

+M-X7001

From	Cable	Internal Jumper	Terminal	External Jumper	Cable	To	Page.Col.	Option	Function text
			155+				234 .7		
			155-				234 .7		
			156		+M-W7044 :1	+M-B7807:21	151 .5		ASU LINE 2 DOOR GUARD
			156+				234 .7		
			156-				234 .7		
			157						
			157+		+M-W7044 :2	+M-B7807:11	151 .2		ASU LINE 2 DOOR GUARD
			157-				234 .7		
+C-X219:5	+M-W7008 :5		158		+M-W7044 :3	+M-B7807:12	151 .5		ASU LINE 2 DOOR GUARD
			158+				234 .7		
			158-				234 .7		
+C-X219:6	+M-W7008 :6		159		+M-W7044 :4	+M-B7807:22	151 .2		ASU LINE 2 DOOR GUARD
			159+				234 .7		
			159-				234 .7		
+C-X219:7	+M-W7008 :7		160		+M-W7902 :1	+M-H7802:1	189 .4		HOOTER ASU SEPARATE ROOM
			160+				234 .7		
			160-		+M-W7902 :2	+M-H7802:2	189 .6		HOOTER ASU SEPARATE ROOM
			161		+M-W7045 :1	+M-H7703:1	189 .4		HOOTER A3 PLATFORM
			161+				234 .7		
			161-		+M-W7045 :2	+M-H7703:2	189 .6		HOOTER A3 PLATFORM
+C-X219:8	+M-W7008 :8		162		+M-W7050 :GN	+M-X7022:5	106 .4		STRIP MAGAZINE POSITION SENSOR
			162+		+M-W7050 :BN	+M-X7022:7	106 .2		STRIP MAGAZINE POSITION SENSOR
			162-		+M-W7050 :GY	+M-X7022:2	106 .4		STRIP MAGAZINE POSITION SENSOR
					+M-W7050 :WH	+M-X7022:8			STRIP MAGAZINE POSITION SENSOR
+C-X219:9	+M-W7008 :9		163		+M-W7400 :1	+M-B7400:1	137 .5	H.G.	ASU AUX MAIN AIR PRESSURE SENSOR
			163+		+M-W7400 :2	+M-B7400:3	137 .3	H.G.	ASU AUX MAIN AIR PRESSURE SENSOR
			163-				234 .7		
+C-X219:10	+M-W7008 :10		164		+M-W7435 :BN	+M-Y7400:	175 .4	H.G.	ASU AUX MAIN AIR SUPPLY
			164+				234 .7		
			164-		+M-W7435 :BU	+M-Y7400:	175 .6	H.G.	ASU AUX MAIN AIR SUPPLY

Drawing remarks

Tetra Pak

Designer LUP	Date 23/11/2007	Machine Tetra Pak A3/Flex 0150	
ECM No 320174	Denomination TERMINAL STRIP OVERVIEW	Page Type TERMINAL STRIP OVERVIEW	
Company Tetra Pak (Italy)	Document No. 2845987-0006	Doc. type ELD	Version AE	Page 121

This drawing must not without the consent of Tetra Pak be copied, transmitted or disclosed to any third party.

Terminal strip of 2845987-0003

+M-X7001

From	Cable	Internal Jumper	Terminal	External Jumper	Cable	To	Page.Col.	Option	Function text
+C-X219:11	+M-W7008 :11		165		+M-W7030 :BK	+M-B7210:	142 .6		LOOP EMPTY
			165+		+M-W7030 :BN	+M-B7210:	142 .4		LOOP EMPTY
			165-		+M-W7030 :BU	+M-B7210:	142 .4		LOOP EMPTY
			166						
			166+				234 .7		
			166-				234 .7		
+C-X219:12	+M-W7008 :12		167		+M-W7054 :1	+M-X2802:1	056 .3		
			167+				234 .7		
			167-				234 .7		
+C-X219:13	+M-W7008 :13		168		+M-W7054 :2	+M-X2802:2	056 .3		
			168+				234 .7		
			168-				234 .7		
+C-X219:14	+M-W7008 :14		169		+M-W7054 :3	+M-X2802:3	056 .3		
			169+				234 .7		
			169-				234 .7		
+C-X219:15	+M-W7008 :15		170				056 .3		
			170+				234 .7		
			170-		+M-W7054 :4	+M-X2802:4	056 .6		
+C-X219:16	+M-W7008 :16		171		+M-W7028 :10	+M-H7901:1	207 .3		ALARM RESET LAMP TEST
			171+				234 .7		
			171-		+M-W7028 :11	+M-H7901:2	207 .6		ALARM RESET LAMP TEST
+C-X219:19	+M-W7008 :19		172				234 .7		
			172+				234 .7		
			172-				234 .7		
+C-X219:18	+M-W7008 :3		173		+M-W7077 :2	+M-B6209:12	069 .5		SA INTERNAL DOOR GUARD
			173+		+M-W7077 :3	+M-B6209:11	069 .3		SA INTERNAL DOOR GUARD
			173-		+M-W7077 :1	+M-B6209:21	069 .3		SA INTERNAL DOOR GUARD
+C-X219:3	+M-W7008 :18		174		+M-W7077 :4	+M-B6209:22	069 .5		SA INTERNAL DOOR GUARD
			174+						
			174-				234 .7		

Drawing remarks

Tetra Pak

Designer LUP	Date 23/11/2007	Machine Tetra Pak A3/Flex 0150	
ECM No 320174	Denomination TERMINAL STRIP OVERVIEW	Page Type TERMINAL STRIP OVERVIEW	
Company Tetra Pak (Italy)	Document No. 2845987-0006	Doc. type ELD	Version AE	Page 122

This drawing must not without the consent of Tetra Pak be copied, transmitted or disclosed to any third party.

1 2 3 4 5 6 7 8 9 10

Terminal strip of 2845987-0003

+M-X7001

From	Cable	Internal Jumper	Terminal	External Jumper	Cable	To	Page.Col.	Option	Function text
+C-X219:17	+M-W7008 :17		175				234 .7		
			175+				234 .7		
			175-				234 .7		
+C-X219:20	+M-W7008 :20		176		+M-W79011 :WH	+M-X79012:1	207 .3		
			176+				234 .7		
			176-				234 .7		
+C-X219:21	+M-W7008 :21		177		+M-W79011 :YE	+M-X79012:2	207 .3		
			177+				234 .7		
			177-				214 .7		
+C-X219:22	+M-W7008 :22		178		+M-W79011 :GN	+M-X79012:3	207 .3		
+C-X219:23	+M-W7008 :23		178+		+M-W79011 :GY	+M-X79012:4	207 .7		
+C-X219:24	+M-W7008 :24		178-		+M-W79011 :BN	+M-X79012:5	207 .7		
+C-X219:⏚	+M-W7008 :GNYE		⏚		+M-W7054 :GNYE	+M-X2802:⏚	056 .6		
+C-X220:1	+M-W7009 :1		179		+M-W7034 :1	+M-X7049:1	203 .3		
+C-X220:11	+M-W7009 :11		179+				234 .9		
+C-X220:12	+M-W7009 :12		179-		+M-W7034 :12	+M-X7049:1-	203 .7		
+C-X220:2	+M-W7009 :2		180		+M-W7034 :2	+M-X7049:2	203 .3		
			180+				234 .9		
			180-				234 .9		
+C-X220:3	+M-W7009 :3		181		+M-W7034 :3	+M-X7049:3	203 .3		
			181+				234 .9		
			181-				234 .9		
+C-X220:4	+M-W7009 :4		182		+M-W7034 :4	+M-X7049:4	203 .3		
			182+				234 .9		
			182-				234 .9		
+C-X220:5	+M-W7009 :5		183		+M-W7034 :5	+M-X7049:5	203 .3		
			183+				234 .9		
			183-				234 .9		
+C-X220:6	+M-W7009 :6		184		+M-W7034 :6	+M-X7049:6	203 .3		
			184+				234 .9		

Drawing remarks

Tetra Pak

Designer LUP	Date 23/11/2007	Machine Tetra Pak A3/Flex 0150	
ECM No 320174	Denomination TERMINAL STRIP OVERVIEW	Page Type TERMINAL STRIP OVERVIEW	
Company Tetra Pak (Italy)	Document No. 2845987-0006	Doc. type ELD	Version AE	Page 123

This drawing must not without the consent of Tetra Pak
be copied, transmitted or disclosed to any third party.

1 2 3 4 5 6 7 8 9 10

Terminal strip of 2845987-0003

+M-X7001

From	Cable	Internal Jumper	Terminal	External Jumper	Cable	To	Page.Col.	Option	Function text
			184-		+M-W7034 :13	+M-X7049:6-	203 .7		
+C-X220:7	+M-W7009 :7		185		+M-W7034 :7	+M-X7049:7	203 .3		
			185+				234 .9		
			185-				234 .9		
+C-X220:8	+M-W7009 :8		186		+M-W7056 :BN	+M-Y7425:+24V	203 .3		VENTILATING VALVE
			186+				234 .9		
			186-		+M-W7056 :L.BU	+M-Y7425:0V	203 .7		VENTILATING VALVE
+C-X220:9	+M-W7009 :9		187				234 .9		
			187+				234 .9		
			187-				234 .9		
+C-X220:10	+M-W7009 :10		188				234 .9		
			188+				234 .9		
			188-				234 .9		
			189						
			189+				234 .9		
			189-				234 .9		
			190						
			190+				234 .9		
			190-				234 .9		
+C-X220:⏚	+M-W7009 :GNYE		⏚		+M-W7034 :GNYE	+M-X7049:⏚	203 .7		
			⏚		+M-W7056 :GNYE	+M-Y7425:E	203 .7		VENTILATING VALVE
PE:			⏚		+M-W7435 :GNYE	+M-Y7400:	175 .6	H.G.	ASU AUX MAIN AIR SUPPLY
			⏚						
+C-X220:13	+M-W7009 :13		191		+M-W7401 :2	+M-S7430:14	155 .5	ARL	COMMAND FOR STATION 1 MOVEMENT
			191+		+M-W7401 :1	+M-S7430:13	155 .3	ARL	COMMAND FOR STATION 1 MOVEMENT
			191-				234 .9	ARL	
+C-X220:14	+M-W7009 :14		192		+M-W7402 :2	+M-S7431:14	155 .5	ARL	COMMAND FOR STATION 2 MOVEMENT
			192+		+M-W7402 :1	+M-S7431:13	155 .3	ARL	COMMAND FOR STATION 2 MOVEMENT
			192-				234 .9	ARL	
+C-X220:15	+M-W7009 :15		193		+M-W7430 :BK	+M-B7430:	155 .5	ARL	STATION 1 IN

Drawing remarks

Tetra Pak

Designer LUP	Date 23/11/2007	Machine Tetra Pak A3/Flex 0150	
ECM No 320174	Denomination TERMINAL STRIP OVERVIEW	Page Type TERMINAL STRIP OVERVIEW	
Company Tetra Pak (Italy)	Document No. 2845987-0006	Doc. type ELD	Version AE	Page 124

This drawing must not without the consent of Tetra Pak be copied, transmitted or disclosed to any third party.

1 2 3 4 5 6 7 8 9 10

Terminal strip of 2845987-0003

+M-X7001

From	Cable	Internal Jumper	Terminal	External Jumper	Cable	To	Page.Col.	Option	Function text
			193+		+M-W7430 :BN	+M-B7430:	155 .3	ARL	STATION 1 IN
			193-		+M-W7430 :BU	+M-B7430:	155 .3	ARL	STATION 1 IN
+C-X220:16	+M-W7009 :16		194		+M-W7431 :BK	+M-B7431:	155 .5	ARL	STATION 1 OUT
			194+		+M-W7431 :BN	+M-B7431:	155 .3	ARL	STATION 1 OUT
			194-		+M-W7431 :BU	+M-B7431:	155 .3	ARL	STATION 1 OUT
+C-X220:17	+M-W7009 :17		195		+M-W7432 :BK	+M-B7432:	155 .5	ARL	STATION 2 IN
			195+		+M-W7432 :BN	+M-B7432:	155 .3	ARL	STATION 2 IN
			195-		+M-W7432 :BU	+M-B7432:	155 .3	ARL	STATION 2 IN
+C-X220:18	+M-W7009 :18		196		+M-W7433 :BK	+M-B7433:	155 .5	ARL	STATION 2 OUT
			196+		+M-W7433 :BN	+M-B7433:	155 .3	ARL	STATION 2 OUT
			196-		+M-W7433 :BU	+M-B7433:	155 .3	ARL	STATION 2 OUT
+C-X220:19	+M-W7009 :19		197		+M-W7051 :1	+M-X7051:1	214 .3		
			197+				234 .9	ARL	
			197-		+M-W7051 :12	+M-X7051:1-	214 .7	ARL	
+C-X220:20	+M-W7009 :20		198		+M-W7051 :2	+M-X7051:2	214 .3		
			198+				234 .9	ARL	
			198-				234 .9	ARL	
+C-X220:21	+M-W7009 :21		199		+M-W7051 :3	+M-X7051:3	214 .3		
			199+				234 .9	ARL	
			199-				234 .9	ARL	
+C-X220:22	+M-W7009 :22		200		+M-W7051 :4	+M-X7051:4	214 .3		
			200+				234 .9	ARL	
			200-				234 .9	ARL	
+C-X220:23	+M-W7009 :23		201		+M-W7051 :5	+M-X7051:5	214 .3		
			201+				234 .9	ARL	
			201-				234 .9	ARL	
			202						
			202+				234 .9	ARL	
			202-				234 .9	ARL	
			⏚		+M-W7051 :GNYE	+M-X7051:⏚	214 .7	ARL	

Drawing remarks

Tetra Pak

Designer LUP	Date 23/11/2007	Machine Tetra Pak A3/Flex 0150	
ECM No 320174	Denomination TERMINAL STRIP OVERVIEW	Page Type TERMINAL STRIP OVERVIEW	
Company Tetra Pak (Italy)	Document No. 2845987-0006	Doc. type ELD	Version AE	Page 125

This drawing must not without the consent of Tetra Pak be copied, transmitted or disclosed to any third party.

1 2 3 4 5 6 7 8 9 10

Terminal strip of 2845987-0003

+M-X7001

From	Cable	Internal Jumper	Terminal	External Jumper	Cable	To	Page.Col.	Option	Function text
			⏚				069 .3		
			⏚						
			⏚						

	Designer LUP	Date 23/11/2007	Machine Tetra Pak A3/Flex 0150		
Tetra Pak	ECM No 320174	Denomination TERMINAL STRIP OVERVIEW	Page Type TERMINAL STRIP OVERVIEW		
Drawing remarks	Company Tetra Pak (Italy)	Document No. 2845987-0006	Doc. type ELD	Version AE	Page 126

This drawing must not without the consent of Tetra Pak
be copied, transmitted or disclosed to any third party.

1 2 3 4 5 6 7 8 9 10

Terminal strip of 2845987-0003

+M-X7020

From	Cable	Internal Jumper	Terminal	External Jumper	Cable	To	Page.Col.	Option	Function text
					+M-W7047 :1	+C-A502:X004	012 .2		STRIP APPLICATOR SEALING TPHI

Drawing remarks

Tetra Pak

Designer LUP	Date 23/11/2007	Machine Tetra Pak A3/Flex 0150	
ECM No 320174	Denomination TERMINAL STRIP OVERVIEW	Page Type TERMINAL STRIP OVERVIEW	
Company Tetra Pak (Italy)	Document No. 2845987-0006	Doc. type ELD	Version AE	Page 127

This drawing must not without the consent of Tetra Pak
be copied, transmitted or disclosed to any third party.

1 2 3 4 5 6 7 8 9 10

Terminal strip of 2845987-0003

+M-X7022

From	Cable	Internal Jumper	Terminal	External Jumper	Cable	To	Page.Col.	Option	Function text
			1			+M-B6205:1	106 .2		STRIP MAGAZINE POSITION SENSOR
+M-X7001:162-	+M-W7050 :GY		2			+M-B6205:2	106 .4		STRIP MAGAZINE POSITION SENSOR
			3			+M-B6205:3	106 .2		STRIP MAGAZINE POSITION SENSOR
			4			+M-B6205:4	106 .5		STRIP MAGAZINE POSITION SENSOR
+M-X7001:162	+M-W7050 :GN		5			+M-B6205:5	106 .3		STRIP MAGAZINE POSITION SENSOR
			6			+M-B6205:6	106 .5		STRIP MAGAZINE POSITION SENSOR
+M-X7001:162+	+M-W7050 :BN		7			+M-B6205:7	106 .3		STRIP MAGAZINE POSITION SENSOR
+M-X7001:162-	+M-W7050 :WH		8			+M-B6205:8	106 .4		STRIP MAGAZINE POSITION SENSOR

Drawing remarks

Tetra Pak

Designer LUP	Date 23/11/2007	Machine Tetra Pak A3/Flex 0150	
ECM No 320174	Denomination TERMINAL STRIP OVERVIEW	Page Type TERMINAL STRIP OVERVIEW	
Company Tetra Pak (Italy)	Document No. 2845987-0006	Doc. type ELD	Version AE	Page 128

This drawing must not without the consent of Tetra Pak
be copied, transmitted or disclosed to any third party.

1 | 2 | 3 | 4 | 5 | 6 | 7 | 8 | 9 | 10

Terminal strip of 2845987-0003

+M-X7049

From	Cable	Internal Jumper	Terminal	External Jumper	Cable	To	Page.Col.	Option	Function text
+M-X7001:179	+M-W7034 :1		1			+M-Y7420:+24V	203 .4		BRAKE REEL 1
+M-X7001:179-	+M-W7034 :12		1-			+M-Y7420:0V	203 .6		BRAKE REEL 1
+M-X7001:⏚	+M-W7034 :GNYE		⏚			+M-Y7420:E	203 .6		BRAKE REEL 1
+M-X7001:180	+M-W7034 :2		2			+M-Y7421:+24V	203 .4		BRAKE REEL 2
			2-			+M-Y7421:0V	203 .6		BRAKE REEL 2
			⏚			+M-Y7421:E	203 .6		BRAKE REEL 2
+M-X7001:181	+M-W7034 :3		3			+M-Y7412:+24V	203 .4		SIDE FEEDER 1-2
			3-			+M-Y7412:0V	203 .6		SIDE FEEDER 1-2
			⏚			+M-Y7412:E	203 .6		SIDE FEEDER 1-2
+M-X7001:182	+M-W7034 :4		4			+M-Y7413:+24V	203 .4		SIDE FEEDER 2-1
			4-			+M-Y7413:0V	203 .6		SIDE FEEDER 2-1
			⏚			+M-Y7413:E	203 .6		SIDE FEEDER 2-1
+M-X7001:183	+M-W7034 :5		5			+M-Y7410:+24V	203 .4		CUTTING
			5-			+M-Y7410:0V	203 .6		CUTTING
			⏚			+M-Y7410:E	203 .6		CUTTING
+M-X7001:184	+M-W7034 :6		6			+M-Y7408:+24V	203 .4		PRESSURE RAIL
+M-X7001:184-	+M-W7034 :13		6-			+M-Y7408:0V	203 .6		PRESSURE RAIL
			⏚			+M-Y7408:E	203 .6		PRESSURE RAIL
+M-X7001:185	+M-W7034 :7		7			+M-Y7407:+24V	203 .4		WEB TENSION
			7-			+M-Y7407:0V	203 .6		WEB TENSION
			⏚			+M-Y7407:E	203 .6		WEB TENSION
			8						
			8-				230 .1		
			⏚				230 .1		
			9						
			9-				230 .1		
			⏚				230 .1		
			10						
			10-				230 .1		
			⏚				230 .1		

Drawing remarks

Tetra Pak

Designer LUP	Date 23/11/2007	Machine Tetra Pak A3/Flex 0150	
ECM No 320174	Denomination TERMINAL STRIP OVERVIEW	Page Type TERMINAL STRIP OVERVIEW	
Company Tetra Pak (Italy)	Document No. 2845987-0006	Doc. type ELD	Version AE	Page 129

This drawing must not without the consent of Tetra Pak be copied, transmitted or disclosed to any third party.

1 2 3 4 5 6 7 8 9 10

Terminal strip of 2845987-0003

+M-X7050

From	Cable	Internal Jumper	Terminal	External Jumper	Cable	To	Page.Col.	Option	Function text
+M-X7001:135	+M-W7038 :1		1			+M-Y6203:+24V	202 .6		MOVING OF THE SPLICING HEAD
+M-X7001:139-	+M-W7038 :12		1-			+M-Y6203:0V	202 .6		MOVING OF THE SPLICING HEAD
+M-X7001:⏚	+M-W7038 :GNYE		⏚			+M-Y6203:E	202 .6		MOVING OF THE SPLICING HEAD
+M-X7001:136	+M-W7038 :2		2			+M-Y6205:+24V	202 .6		COOL STRIP SEAL
			2-			+M-Y6205:0V	202 .6		COOL STRIP SEAL
			⏚			+M-Y6205:E	202 .6		COOL STRIP SEAL
+M-X7001:137	+M-W7038 :3		3			+M-Y7303:+24V	202 .6		LOCK CYLINDER 1
			3-			+M-Y7303:0V	202 .6		LOCK CYLINDER 1
			⏚			+M-Y7303:E	202 .6		LOCK CYLINDER 1
+M-X7001:138	+M-W7038 :4		4			+M-Y7315:+24V	202 .6		LOCK CYLINDER 2
			4-			+M-Y7315:0V	202 .6		LOCK CYLINDER 2
			⏚			+M-Y7315:E	202 .6		LOCK CYLINDER 2
+M-X7001:139	+M-W7038 :5		5			+M-Y7402:1	214 .4	H.G.	COUNTER ROLLER ASU LOOP MOTOR
			5-			+M-Y7402:2	214 .5	H.G.	COUNTER ROLLER ASU LOOP MOTOR
			⏚			+M-Y7402:E	214 .5	H.G.	COUNTER ROLLER ASU LOOP MOTOR
+M-X7001:148	+M-W7038 :6		6			+M-Y7414:+24V	202 .6		CUTTING TABLE L1
+M-X7001:148-	+M-W7038 :13		6-			+M-Y7414:0V	202 .6		CUTTING TABLE L1
			⏚			+M-Y7414:E	202 .6		CUTTING TABLE L1
+M-X7001:149	+M-W7038 :7		7			+M-Y7415:+24V	202 .6		CUTTING TABLE L2
			7-			+M-Y7415:0V	202 .6		CUTTING TABLE L2
			⏚			+M-Y7415:E	202 .6		CUTTING TABLE L2
+M-X7001:142	+M-W7038 :8		8			+M-Y6201:+24V	202 .5		SA COOLING
			8-			+M-Y6201:0V	202 .6		SA COOLING
			⏚			+M-Y6201:E	202 .6		SA COOLING
			9						
			9-				230 .5		
			⏚				230 .5		
			10						
			10-				230 .5		
			⏚				230 .5		

Drawing remarks

Tetra Pak

Designer LUP	Date 23/11/2007	Machine Tetra Pak A3/Flex 0150	
ECM No 320174	Denomination TERMINAL STRIP OVERVIEW	Page Type TERMINAL STRIP OVERVIEW	
Company Tetra Pak (Italy)	Document No. 2845987-0006	Doc. type ELD	Version AE	Page 130

This drawing must not without the consent of Tetra Pak
be copied, transmitted or disclosed to any third party.

1 | 2 | 3 | 4 | 5 | 6 | 7 | 8 | 9 | 10

Terminal strip of 2845987-0003

+M-X7051

From	Cable	Internal Jumper	Terminal	External Jumper	Cable	To	Page.Col.	Option	Function text
+M-X7001:197	+M-W7051 :1		1			+M-Y7430:1	214 .4	ARL	STATION 1 IN GOING VALVE
+M-X7001:197-	+M-W7051 :12		1-			+M-Y7430:2	214 .5	ARL	STATION 1 IN GOING VALVE
+M-X7001:⏚	+M-W7051 :GNYE		⏚			+M-Y7430:E	214 .5	ARL	STATION 1 IN GOING VALVE
+M-X7001:198	+M-W7051 :2		2			+M-Y7431:1	214 .4	ARL	STATION 1 OUT GOING VALVE
			2-			+M-Y7431:2	214 .5	ARL	STATION 1 OUT GOING VALVE
			⏚			+M-Y7431:E	214 .5	ARL	STATION 1 OUT GOING VALVE
+M-X7001:199	+M-W7051 :3		3			+M-Y7432:1	214 .4	ARL	STATION 2 IN GOING VALVE
			3-			+M-Y7432:2	214 .5	ARL	STATION 2 IN GOING VALVE
			⏚			+M-Y7432:E	214 .5	ARL	STATION 2 IN GOING VALVE
+M-X7001:200	+M-W7051 :4		4			+M-Y7433:1	214 .4	ARL	COUNTER ROLLER ASU LOOP MOTOR
			4-			+M-Y7433:2	214 .5	ARL	COUNTER ROLLER ASU LOOP MOTOR
			⏚			+M-Y7433:E	214 .5	ARL	COUNTER ROLLER ASU LOOP MOTOR
+M-X7001:201	+M-W7051 :5		5			+M-Y7434:1	214 .4	ARL	ARL, SOFT RESTART VALVE
			5-			+M-Y7434:2	214 .5	ARL	ARL, SOFT RESTART VALVE
			⏚			+M-Y7434:E	214 .5	ARL	ARL, SOFT RESTART VALVE
			6						
			6-				230 .1	ARL	
			⏚				230 .1	ARL	
			7						
			7-				230 .1	ARL	
			⏚				230 .1	ARL	
			8						
			8-				230 .1	ARL	
			⏚				230 .1	ARL	
			9						
			9-				230 .1	ARL	
			⏚				230 .1	ARL	
			10						
			10-				230 .1	ARL	
			⏚				230 .1	ARL	

Drawing remarks

Tetra Pak

Designer LUP	Date 23/11/2007	Machine Tetra Pak A3/Flex 0150	
ECM No 320174	Denomination TERMINAL STRIP OVERVIEW	Page Type TERMINAL STRIP OVERVIEW	
Company Tetra Pak (Italy)	Document No. 2845987-0006	Doc. type ELD	Version AE	Page 131

This drawing must not without the consent of Tetra Pak be copied, transmitted or disclosed to any third party.

1 2 3 4 5 6 7 8 9 10

Terminal strip of 2845987-0003

+M-X7100

From	Cable	Internal Jumper	Terminal	External Jumper	Cable	To	Page.Col.	Option	Function text
+C-X134:4	+M-W7076 :SH		1		:SH	+M-X7101:1	016 .8		
					+M-W7072 :SH	GND:			
+C-X134:5	+M-W7076 :GNYE		2			+M-X7101:2	016 .8		
					+M-W7072 :GNYE	+M-M6201:⏚			STRIP BOBBIN 1

Drawing remarks

Tetra Pak

Designer LUP	Date 23/11/2007	Machine Tetra Pak A3/Flex 0150		
ECM No 320174	Denomination TERMINAL STRIP OVERVIEW	Page Type TERMINAL STRIP OVERVIEW		
Company Tetra Pak (Italy)	Document No. 2845987-0006	Doc. type ELD	Version AE	Page 132

This drawing must not without the consent of Tetra Pak be copied, transmitted or disclosed to any third party.

1 2 3 4 5 6 7 8 9 10

Terminal strip of 2845987-0003

+M-X7101

From	Cable	Internal Jumper	Terminal	External Jumper	Cable	To	Page.Col.	Option	Function text
+M-X7100:1	:SH		1		+M-W7073 :SH	GND:	016 .10		
+M-X7100:2			2		+M-W7073 :GNYE	+M-M6202:⏚	016 .10		STRIP BOBBIN 2

Drawing remarks

Tetra Pak

Designer LUP	Date 23/11/2007	Machine Tetra Pak A3/Flex 0150		
ECM No 320174	Denomination TERMINAL STRIP OVERVIEW	Page Type TERMINAL STRIP OVERVIEW		
Company Tetra Pak (Italy)	Document No. 2845987-0006	Doc. type ELD	Version AE	Page 133

This drawing must not without the consent of Tetra Pak
be copied, transmitted or disclosed to any third party.

1 2 3 4 5 6 7 8 9 10

Terminal strip of 2845987-0003

+M-X7304

From	Cable	Internal Jumper	Terminal	External Jumper	Cable	To	Page.Col.	Option	Function text
+C-X320:-	+M-W7304 :RD		1			+M-B7304:-	112 .2		ASU CONSTANT HEAT BAR
+C-X320:+	+M-W7304 :YE		2			+M-B7304:+	112 .2		ASU CONSTANT HEAT BAR

Drawing remarks

Tetra Pak

Designer LUP	Date 23/11/2007	Machine Tetra Pak A3/Flex 0150	
ECM No 320174	Denomination TERMINAL STRIP OVERVIEW	Page Type TERMINAL STRIP OVERVIEW	
Company Tetra Pak (Italy)	Document No. 2845987-0006	Doc. type ELD	Version AE	Page 134

This drawing must not without the consent of Tetra Pak
be copied, transmitted or disclosed to any third party.

1 2 3 4 5 6 7 8 9 10

Terminal strip of 2845987-0003

+M-X7660

From	Cable	Internal Jumper	Terminal	External Jumper	Cable	To	Page.Col.	Option	Function text
+C-X766:1	+C-W729 :1		1		+M-W7660 :1	+M-M1506:GND1	257 .4	TGA	HEATER POSITIONING
+C-X766:2	+C-W729 :2		2		+M-W7660 :2	+M-M1506:VDC1	257 .4	TGA	HEATER POSITIONING
+C-X766:3	+C-W729 :3		3				257 .4	TGA	
+C-X766:4	+C-W729 :4		4				257 .4	TGA	
			5				257 .5	TGA	
+C-X766:6	+C-W729 :SH		6				257 .5	TGA	
+C-X766:⏚	+C-W729 :GNYE		⏚		+M-W7660 :GNYE	+M-M1506:PE	257 .3	TGA	HEATER POSITIONING

Drawing remarks

Tetra Pak

Designer LUP	Date 23/11/2007	Machine Tetra Pak A3/Flex 0150	
ECM No 320174	Denomination TERMINAL STRIP OVERVIEW	Page Type TERMINAL STRIP OVERVIEW	
Company Tetra Pak (Italy)	Document No. 2845987-0006	Doc. type ELD	Version AE	Page 135

This drawing must not without the consent of Tetra Pak
be copied, transmitted or disclosed to any third party.

1 2 3 4 5 6 7 8 9 10

Terminal strip of 2845987-0003

+M-X7670

From	Cable	Internal Jumper	Terminal	External Jumper	Cable	To	Page.Col.	Option	Function text
+C-X767:1	+M-W724 :1		1		+M-W7670 :BU	+M-M1505:BU	253 .1	TGA	STEERING FORMING RING
+C-X767:2	+M-W724 :2		2		+M-W7670 :GN	+M-M1505:GN	253 .1	TGA	STEERING FORMING RING
+C-X767:3	+M-W724 :3		3		+M-W7670 :VT	+M-M1505:VT	253 .2	TGA	STEERING FORMING RING
+C-X767:4	+M-W724 :4		4		+M-W7670 :BN	+M-M1505:BN	253 .2	TGA	STEERING FORMING RING
+C-X767:5	+M-W724 :GNYE		5		+M-W7670 :WH	+M-M1505:WH1	253 .2	TGA	STEERING FORMING RING
					+M-W7670 :WH	+M-M1505:WH2			STEERING FORMING RING
+C-X767:6	+M-W724 :SH		6		+M-W7670 :SH	GND:	253 .2	TGA	
+C-X767:7	+M-W7671 :1		7		+M-W1525 :BN	+M-B1525:	254 .2	TGA	HOME POSITION STEERING FORMING RING
+C-X767:8	+M-W7671 :2		8		+M-W1525 :BU	+M-B1525:	254 .2	TGA	HOME POSITION STEERING FORMING RING
+C-X767:9	+M-W7671 :3		9		+M-W1525 :BK	+M-B1525:	254 .4	TGA	HOME POSITION STEERING FORMING RING
			10						
			11						
			12						
			13						
			14						
			15						
			16						
			17						
			18						
			19						
			20						
			21						
			22						
			23						
			24						
+C-X767:⏚			⏚				253 .2	TGA	

Drawing remarks

Tetra Pak

Designer LUP	Date 23/11/2007	Machine Tetra Pak A3/Flex 0150	
ECM No 320174	Denomination TERMINAL STRIP OVERVIEW	Page Type TERMINAL STRIP OVERVIEW	
Company Tetra Pak (Italy)	Document No. 2845987-0006	Doc. type ELD	Version AE	Page 136

This drawing must not without the consent of Tetra Pak be copied, transmitted or disclosed to any third party.

1 2 3 4 5 6 7 8 9 10

Terminal strip of 2845987-0003

+M-X9100

From	Cable	Internal Jumper	Terminal	External Jumper	Cable	To	Page.Col.	Option	Function text
+C-X118:1	+M-W2061 :1		1		+M-W9120 :1	+M-R9120:1	008 .3	H.I.	HI HEATER
+C-X118:2	+M-W2061 :2		2		+M-W9120 :2	+M-R9120:2	008 .3	H.I.	HI HEATER
+C-X118:⏚	+M-W2061 :GNYE		⏚		+M-W9120 :GNYE	+M-R9120:E	008 .3	H.I.	HI HEATER
PE:			⏚		+M-W9114 :GNYE	+M-Y9114:E	207 .6	H.I.	H.I. FILLING/DRAINIG
PE:			⏚		+M-W9101 :GNYE	+M-Y9101:E	207 .6	H.I.	H.I. AIR/N2 SUPPLY
PE:			⏚		+M-W9103 :GNYE	+M-Y9103:E	207 .6	H.I.	H.I. ON
PE:			⏚		+M-W9112 :GNYE	+M-Y9112:E	207 .6	H.I.	H.I. SPRAY PEROXIDE
+C-X216:1	+M-W2060 :1		103		+M-W9104 :1	+M-B9104:1	145 .5	H.I.	H.I. PRESSURE GUARD
			• 103+		+M-W9104 :2	+M-B9104:3	145 .3	H.I.	H.I. PRESSURE GUARD
			• 103-				237 .3	H.I.	
+C-X216:2	+M-W2060 :2		104		+M-W9101 :1	+M-Y9101:1	207 .4	H.I.	H.I. AIR/N2 SUPPLY
			• 104+				237 .3	H.I.	
			• 104-		+M-W9101 :2	+M-Y9101:2	207 .6	H.I.	H.I. AIR/N2 SUPPLY
+C-X216:3	+M-W2060 :3		105		+M-W9103 :1	+M-Y9103:1	207 .4	H.I.	H.I. ON
			• 105+				237 .3	H.I.	
			• 105-		+M-W9103 :2	+M-Y9103:2	207 .6	H.I.	H.I. ON
+C-X216:4	+M-W2060 :4		106		+M-W9112 :1	+M-Y9112:1	207 .4	H.I.	H.I. SPRAY PEROXIDE
			• 106+				237 .3	H.I.	
			• 106-		+M-W9112 :2	+M-Y9112:2	207 .6	H.I.	H.I. SPRAY PEROXIDE
+C-X216:5	+M-W2060 :5		107		+M-W9114 :1	+M-Y9114:1	207 .4	H.I.	H.I. FILLING/DRAINIG
			• 107+				237 .3	H.I.	
			• 107-		+M-W9114 :2	+M-Y9114:2	207 .6	H.I.	H.I. FILLING/DRAINIG
+C-X216:6	+M-W2060 :6		108		+M-W9107 :BK	+M-B9107:	145 .5	H.I.	NO H.I.
			• 108+		+M-W9107 :BN	+M-B9107:	145 .3	H.I.	NO H.I.
			• 108-		+M-W9107 :BU	+M-B9107:	145 .3	H.I.	NO H.I.
+C-X216:7	+M-W2060 :7		109		+M-W9108 :BK	+M-B9108:	145 .5	H.I.	SPRAY NOZZLE PIPE IN POSITION
			• 109+		+M-W9108 :BN	+M-B9108:	145 .3	H.I.	SPRAY NOZZLE PIPE IN POSITION
			• 109-		+M-W9108 :BU	+M-B9108:	145 .3	H.I.	SPRAY NOZZLE PIPE IN POSITION
+C-X216:8	+M-W2060 :8		110		+M-W9109 :BK	+M-B9109:	145 .5	H.I.	PIPE IN CLEANING POSITION
			• 110+		+M-W9109 :BN	+M-B9109:	145 .3	H.I.	PIPE IN CLEANING POSITION

Drawing remarks

Tetra Pak

Designer LUP	Date 23/11/2007	Machine Tetra Pak A3/Flex 0150	
ECM No 320174	Denomination TERMINAL STRIP OVERVIEW	Page Type TERMINAL STRIP OVERVIEW	
Company Tetra Pak (Italy)	Document No. 2845987-0006	Doc. type ELD	Version AE	Page 137

This drawing must not without the consent of Tetra Pak
be copied, transmitted or disclosed to any third party.

1 2 3 4 5 6 7 8 9 10

Terminal strip of 2845987-0003

+M-X9100

From	Cable	Internal Jumper	Terminal	External Jumper	Cable	To	Page.Col.	Option	Function text
			• 110-		+M-W9109 :BU	+M-B9109:	145 .3	H.I.	PIPE IN CLEANING POSITION
+C-X216:9	+M-W2060 :9		111		+M-W9110 :BK	+M-B9110:	145 .5	H.I.	PIPE IN PRODUCTION POSITION
			• 111+		+M-W9110 :BN	+M-B9110:	145 .3	H.I.	PIPE IN PRODUCTION POSITION
			• 111-		+M-W9110 :BU	+M-B9110:	145 .3	H.I.	PIPE IN PRODUCTION POSITION
+C-X216:10	+M-W2060 :10		112		+M-W9111 :BK	+M-B9111:	145 .5	H.I.	CIP PLUG POSITION
			• 112+		+M-W9111 :BN	+M-B9111:	145 .3	H.I.	CIP PLUG POSITION
			• 112-		+M-W9111 :BU	+M-B9111:	145 .3	H.I.	CIP PLUG POSITION
+C-X216:11	+M-W2060 :11		113		+M-W9113 :1	+M-B9113:⏚	049 .3	H.I.	LEVEL SENSOR PEROXIDE SPRAY TANK
			• 113+				237 .3	H.I.	
			• 113-				237 .3	H.I.	
+C-X216:12	+M-W2060 :12		114		+M-W9113 :2	+M-B9113:1	049 .3	H.I.	LEVEL SENSOR PEROXIDE SPRAY TANK
			• 114+				237 .3	H.I.	
			• 114-				237 .3	H.I.	
+C-X216:13	+M-W2060 :13		115		+M-W9113 :3	+M-B9113:2	049 .3	H.I.	LEVEL SENSOR PEROXIDE SPRAY TANK
+C-X216:16	+M-W2060 :16		• 115+				237 .3	H.I.	
+C-X216:17	+M-W2060 :17		• 115-				207 .7	H.I.	
+C-X216:18	+M-W2062 :WH		116		+M-W9115 :WH	+M-X9115:3	102 .5	H.I.	U/P PRESSURE REGULATOR
			• 116+		+M-W9115 :BN	+M-X9115:1	102 .5	H.I.	U/P PRESSURE REGULATOR
			• 116-		+M-W9115 :GY	+M-X9115:4	102 .8	H.I.	U/P PRESSURE REGULATOR
+C-X216:19	+M-W2062 :GN		117		+M-W9115 :GN	+M-X9115:2	102 .5	H.I.	U/P PRESSURE REGULATOR
			• 117+				237 .3	H.I.	
			• 117-				237 .3	H.I.	
+C-X216:20	+M-W2062 :SH		118				102 .5	H.I.	
			• 118+				237 .3	H.I.	
			• 118-		+M-W9117 :WH	+M-X9117:3	105 .5	H.I.	FLOW SENSOR
+C-X216:21	+M-W2062 :BN		119		+M-W9117 :YE	+M-X9117:4	105 .5	H.I.	FLOW SENSOR
			• 119+		+M-W9117 :BN	+M-X9117:1	105 .2	H.I.	FLOW SENSOR
			• 119-		+M-W9117 :GN	+M-X9117:2	105 .2	H.I.	FLOW SENSOR
+C-X216:14	+M-W2060 :14		120		+M-W9118 :1	+M-B9118:BU	145 .5		H.I. FLOW SWITCH
			• 120+		+M-W9118 :2	+M-B9118:BN	145 .3		H.I. FLOW SWITCH

Drawing remarks

Tetra Pak

Designer LUP	Date 23/11/2007	Machine Tetra Pak A3/Flex 0150	
ECM No 320174	Denomination TERMINAL STRIP OVERVIEW	Page Type TERMINAL STRIP OVERVIEW	
Company Tetra Pak (Italy)	Document No. 2845987-0006	Doc. type ELD	Version AE	Page 138

This drawing must not without the consent of Tetra Pak be copied, transmitted or disclosed to any third party.

1 2 3 4 5 6 7 8 9 10

Terminal strip of 2845987-0003

+M-X9100

From	Cable	Internal Jumper	Terminal	External Jumper	Cable	To	Page.Col.	Option	Function text
			120-				237 .3	H.I.	
+C-X216:15	+M-W2060 :15		121				237 .3		
			121+				237 .3	H.I.	
			121-				237 .3	H.I.	
			122						
			122+				237 .3	H.I.	
			122-				237 .3	H.I.	
			125						
+C-X321:+	+M-W2064 :YE		125+		+M-W9121 :YE	+M-X9121:+	112 .4	H.I.	H.I. HEATER TEMPERATURE.
+C-X321:-	+M-W2064 :RD		125-		+M-W9121 :RD	+M-X9121:-	112 .4	H.I.	H.I. HEATER TEMPERATURE.
PE:			⏚		+M-W9115 :YE	+M-X9115:5	102 .8	H.I.	U/P PRESSURE REGULATOR
			⏚		+M-W9113 :GNYE	+M-B9113:⏚	049 .3	H.I.	LEVEL SENSOR PEROXIDE SPRAY TANK
+C-X216:⏚	+M-W2060 :GNYE		⏚				237 .3	H.I.	
			⏚		+M-W9118 :GNYE	+M-B9118:E	145 .5		H.I. FLOW SWITCH

Drawing remarks

Tetra Pak

Designer LUP	Date 23/11/2007	Machine Tetra Pak A3/Flex 0150	
ECM No 320174	Denomination TERMINAL STRIP OVERVIEW	Page Type TERMINAL STRIP OVERVIEW	
Company Tetra Pak (Italy)	Document No. 2845987-0006	Doc. type ELD	Version AE	Page 139

This drawing must not without the consent of Tetra Pak
be copied, transmitted or disclosed to any third party.

1 2 3 4 5 6 7 8 9 10

Terminal strip of 2845987-0003

+M-X9106

From	Cable	Internal Jumper	Terminal	External Jumper	Cable	To	Page.Col.	Option	Function text
+C-X314:+	+M-W2063 :YE		+			+M-B9106:+	111 .2	H.I.	TEMP H.I. SPRAY
+C-X314:-	+M-W2063 :RD		-			+M-B9106:-	111 .2	H.I.	TEMP H.I. SPRAY

Drawing remarks

Tetra Pak

Designer LUP	Date 23/11/2007	Machine Tetra Pak A3/Flex 0150	
ECM No 320174	Denomination TERMINAL STRIP OVERVIEW	Page Type TERMINAL STRIP OVERVIEW	
Company Tetra Pak (Italy)	Document No. 2845987-0006	Doc. type ELD	Version AE	Page 140

This drawing must not without the consent of Tetra Pak
be copied, transmitted or disclosed to any third party.

1 2 3 4 5 6 7 8 9 10

Terminal strip of 2845987-0003

+M-X9115

From	Cable	Internal Jumper	Terminal	External Jumper	Cable	To	Page.Col.	Option	Function text
+M-X9100:116+	+M-W9115 :BN		1				102 .6		
+M-X9100:117	+M-W9115 :GN		2				102 .6		
+M-X9100:116	+M-W9115 :WH		3				102 .6		
+M-X9100:116-	+M-W9115 :GY		4				102 .7		
+M-X9100:⏚	+M-W9115 :YE		5				102 .7		
			6						
			7						

Drawing remarks

Tetra Pak

Designer LUP	Date 23/11/2007	Machine Tetra Pak A3/Flex 0150	
ECM No 320174	Denomination TERMINAL STRIP OVERVIEW	Page Type TERMINAL STRIP OVERVIEW	
Company Tetra Pak (Italy)	Document No. 2845987-0006	Doc. type ELD	Version AE	Page 141

This drawing must not without the consent of Tetra Pak be copied, transmitted or disclosed to any third party.

1 2 3 4 5 6 7 8 9 10

Terminal strip of 2845987-0003

+M-X9117

From	Cable	Internal Jumper	Terminal	External Jumper	Cable	To	Page.Col.	Option	Function text
+M-X9100:119+	+M-W9117 :BN		1			+M-B9117:1	105 .3	H.I.	FLOW SENSOR
+M-X9100:119-	+M-W9117 :GN		2			+M-B9117:2	105 .3	H.I.	FLOW SENSOR
+M-X9100:118-	+M-W9117 :WH		3			+M-B9117:3	105 .4	H.I.	FLOW SENSOR
+M-X9100:119	+M-W9117 :YE		4			+M-B9117:4	105 .4	H.I.	FLOW SENSOR

Drawing remarks

Tetra Pak

Designer LUP	Date 23/11/2007	Machine Tetra Pak A3/Flex 0150	
ECM No 320174	Denomination TERMINAL STRIP OVERVIEW	Page Type TERMINAL STRIP OVERVIEW	
Company Tetra Pak (Italy)	Document No. 2845987-0006	Doc. type ELD	Version AE	Page 142

This drawing must not without the consent of Tetra Pak be copied, transmitted or disclosed to any third party.

1 2 3 4 5 6 7 8 9 10

Terminal strip of 2845987-0003

+M-X9121

From	Cable	Internal Jumper	Terminal	External Jumper	Cable	To	Page.Col.	Option	Function text
+M-X9100:125+	+M-W9121 :YE		+			+M-B9121:+	112 .2	H.I.	H.I. HEATER TEMPERATURE.
+M-X9100:125-	+M-W9121 :RD		-			+M-B9121:-	112 .2	H.I.	H.I. HEATER TEMPERATURE.

Drawing remarks

Tetra Pak

Designer LUP	Date 23/11/2007	Machine Tetra Pak A3/Flex 0150	
ECM No 320174	Denomination TERMINAL STRIP OVERVIEW	Page Type TERMINAL STRIP OVERVIEW	
Company Tetra Pak (Italy)	Document No. 2845987-0006	Doc. type ELD	Version AE / Page 143

This drawing must not without the consent of Tetra Pak
be copied, transmitted or disclosed to any third party.

1 2 3 4 5 6 7 8 9 10

Terminal strip of 2845987-0003

+M-X9122

From	Cable	Internal Jumper	Terminal	External Jumper	Cable	To	Page.Col.	Option	Function text
+C-X322:+	+M-W2065 :YE		+			+M-B9122:+	112 .2	H.I.	H.I. AIR TEMPERATURE
+C-X322:-	+M-W2065 :RD		-			+M-B9122:-	112 .2	H.I.	H.I. AIR TEMPERATURE

Drawing remarks

Tetra Pak

Designer LUP	Date 23/11/2007	Machine Tetra Pak A3/Flex 0150	
ECM No 320174	Denomination TERMINAL STRIP OVERVIEW	Page Type TERMINAL STRIP OVERVIEW	
Company Tetra Pak (Italy)	Document No. 2845987-0006	Doc. type ELD	Version AE	Page 144

This drawing must not without the consent of Tetra Pak
be copied, transmitted or disclosed to any third party.

1 2 3 4 5 6 7 8 9 10

Terminal strip of 2845987-0003

+M-X74031

From	Cable	Internal Jumper	Terminal	External Jumper	Cable	To	Page.Col.	Option	Function text
+C-X401:1	+M-W7040 :BN		1			+M-B74031:	050 .7		ASU BAR CODE 3
			2			+M-B74031:	050 .7		ASU BAR CODE 3
+C-X401:2	+M-W7040 :BU		3			+M-B74031:	050 .7		ASU BAR CODE 3
+C-X401:4	+M-W7040 :BK		4			+M-B74031:	050 .7		ASU BAR CODE 3
+C-X401:3	+M-W7040 :GY		5			+M-B74031:	050 .7		ASU BAR CODE 3

Drawing remarks

Tetra Pak

Designer LUP	Date 23/11/2007	Machine Tetra Pak A3/Flex 0150	
ECM No 320174	Denomination TERMINAL STRIP OVERVIEW	Page Type TERMINAL STRIP OVERVIEW	
Company Tetra Pak (Italy)	Document No. 2845987-0006	Doc. type ELD	Version AE	Page 145

This drawing must not without the consent of Tetra Pak be copied, transmitted or disclosed to any third party.

Terminal strip of 2845987-0003

+M-X74032

From	Cable	Internal Jumper	Terminal	External Jumper	Cable	To	Page.Col.	Option	Function text
+C-X402:1	+M-W7041 :BN		1			+M-B74032:	050 .7		ASU BAR CODE 4
			2			+M-B74032:	050 .7		ASU BAR CODE 4
+C-X402:2	+M-W7041 :BU		3			+M-B74032:	050 .7		ASU BAR CODE 4
+C-X402:4	+M-W7041 :BK		4			+M-B74032:	050 .7		ASU BAR CODE 4
+C-X402:3	+M-W7041 :GY		5			+M-B74032:	050 .7		ASU BAR CODE 4

Drawing remarks

Tetra Pak

Designer LUP	Date 23/11/2007	Machine Tetra Pak A3/Flex 0150	
ECM No 320174	Denomination TERMINAL STRIP OVERVIEW	Page Type TERMINAL STRIP OVERVIEW	
Company Tetra Pak (Italy)	Document No. 2845987-0006	Doc. type ELD	Version AE	Page 146

This drawing must not without the consent of Tetra Pak
be copied, transmitted or disclosed to any third party.

1 2 3 4 5 6 7 8 9 10

Terminal strip of 2845987-0003
+M-X79012

From	Cable	Internal Jumper	Terminal	External Jumper	Cable	To	Page.Col.	Option	Function text
+M-X7001:176	+M-W79011 :WH		1		+M-W79012 :1	+M-A7901:K1:17	207 .4		MIMIC PANEL ASU
+M-X7001:177	+M-W79011 :YE		2		+M-W79012 :2	+M-A7901:K1:19	207 .4		MIMIC PANEL ASU
+M-X7001:178	+M-W79011 :GN		3		+M-W79012 :3	+M-A7901:K1:20	207 .4		MIMIC PANEL ASU
+M-X7001:178+	+M-W79011 :GY		4		+M-W79012 :4	+M-A7901:K1:21 (+)	207 .6		MIMIC PANEL ASU
+M-X7001:178-	+M-W79011 :BN		5		+M-W79012 :5	+M-A7901:K1:22 (-)	207 .6		MIMIC PANEL ASU

Drawing remarks

Tetra Pak

Designer LUP	Date 23/11/2007	Machine Tetra Pak A3/Flex 0150	
ECM No 320174	Denomination TERMINAL STRIP OVERVIEW	Page Type TERMINAL STRIP OVERVIEW	
Company Tetra Pak (Italy)	Document No. 2845987-0006	Doc. type ELD	Version AE	Page 147

This drawing must not without the consent of Tetra Pak be copied, transmitted or disclosed to any third party.

1 2 3 4 5 6 7 8 9 10

Terminal strip of 2845987-0003

+M-XL310

From	Cable	Internal Jumper	Terminal	External Jumper	Cable	To	Page.Col.	Option	Function text
+M-A700:6			101				241 .1	TGA	
			102				241 .2	TGA	
			103				241 .2	TGA	
			104				241 .2	TGA	
			105				241 .2	TGA	
			106				241 .3	TGA	
			107				241 .3	TGA	
			108				241 .3	TGA	
			109				241 .3	TGA	
			110				241 .4	TGA	
			111				241 .4	TGA	
			112				241 .4	TGA	
			113				241 .4	TGA	
			114				241 .5	TGA	
			115				241 .5	TGA	
			116				241 .5	TGA	

Drawing remarks

Tetra Pak

Designer LUP	Date 23/11/2007	Machine Tetra Pak A3/Flex 0150	
ECM No 320174	Denomination TERMINAL STRIP OVERVIEW	Page Type TERMINAL STRIP OVERVIEW	
Company Tetra Pak (Italy)	Document No. 2845987-0006	Doc. type ELD	Version AE	Page 148

This drawing must not without the consent of Tetra Pak be copied, transmitted or disclosed to any third party.

1 2 3 4 5 6 7 8 9 10

Terminal strip of 2845987-0003

+M-XL313

From	Cable	Internal Jumper	Terminal	External Jumper	Cable	To	Page.Col.	Option	Function text
			101			+M-X768:2	241 .1	TGA	
			102				241 .2	TGA	
			103				241 .2	TGA	
			104				241 .2	TGA	
			105				241 .2	TGA	
			106				241 .3	TGA	
			107				241 .3	TGA	
			108				241 .3	TGA	
			109				241 .3	TGA	
			110				241 .4	TGA	

Drawing remarks

Tetra Pak

Designer LUP	Date 23/11/2007	Machine Tetra Pak A3/Flex 0150	
ECM No 320174	Denomination TERMINAL STRIP OVERVIEW	Page Type TERMINAL STRIP OVERVIEW	
Company Tetra Pak (Italy)	Document No. 2845987-0006	Doc. type ELD	Version AE	Page 149

This drawing must not without the consent of Tetra Pak be copied, transmitted or disclosed to any third party.

1 2 3 4 5 6 7 8 9 10

Terminal strip of 2845987-0003

+M-XL323

From	Cable	Internal Jumper	Terminal	External Jumper	Cable	To	Page.Col.	Option	Function text
			101			+M-X768:3	241 .6	TGA	
			102				241 .6	TGA	
			103				241 .7	TGA	
			104				241 .7	TGA	
			105				241 .7	TGA	
			106				241 .7	TGA	
			107				241 .8	TGA	
			108				241 .8	TGA	

Drawing remarks

Tetra Pak

Designer LUP	Date 23/11/2007	Machine Tetra Pak A3/Flex 0150	
ECM No 320174	Denomination TERMINAL STRIP OVERVIEW	Page Type TERMINAL STRIP OVERVIEW	
Company Tetra Pak (Italy)	Document No. 2845987-0006	Doc. type ELD	Version AE	Page 150

This drawing must not without the consent of Tetra Pak be copied, transmitted or disclosed to any third party.

1 2 3 4 5 6 7 8 9 10

Terminal strip of 2845987-0003

+M-XL324

From	Cable	Internal Jumper	Terminal	External Jumper	Cable	To	Page.Col.	Option	Function text
			101			+M-A700:7	241 .6	TGA	
			102				241 .6	TGA	
			103				241 .7	TGA	
			104				241 .7	TGA	
			105				241 .7	TGA	
			106				241 .7	TGA	
			107				241 .8	TGA	
			108				241 .8	TGA	

Drawing remarks

Tetra Pak

Designer LUP	Date 23/11/2007	Machine Tetra Pak A3/Flex 0150	
ECM No 320174	Denomination TERMINAL STRIP OVERVIEW	Page Type TERMINAL STRIP OVERVIEW	
Company Tetra Pak (Italy)	Document No. 2845987-0006	Doc. type ELD	Version AE	Page 151

This drawing must not without the consent of Tetra Pak be copied, transmitted or disclosed to any third party.

1 2 3 4 5 6 7 8 9 10

Terminal strip of 2845987-0003

+M-XL325

From	Cable	Internal Jumper	Terminal	External Jumper	Cable	To	Page.Col.	Option	Function text
			101			+M-A700:5	241 .6	TGA	
			102				241 .6	TGA	
			103				241 .7	TGA	
			104				241 .7	TGA	
			105				241 .7	TGA	
			106				241 .7	TGA	
			107				241 .8	TGA	
			108				241 .8	TGA	

Drawing remarks

Tetra Pak

Designer LUP	Date 23/11/2007	Machine Tetra Pak A3/Flex 0150	
ECM No 320174	Denomination TERMINAL STRIP OVERVIEW	Page Type TERMINAL STRIP OVERVIEW	
Company Tetra Pak (Italy)	Document No. 2845987-0006	Doc. type ELD	Version AE	Page 152

8 Cable Connection List

TechPub_2614345_v3_DRAFT_Release08_EM2851302_05en.fm

Description

All cable connections used in the equipment are listed in this chapter.

TechPub_2614345_v3_DRAFT_Release08_EM2851302_05en.fm

This drawing must not without the consent of Tetra Pak be copied, transmitted or disclosed to any third party.

Cable Connection List of 2845987-0003

From	Cable	To	Page.Col.	Option
	+C-W007			
+C-X1710:1	1	+M-M001:U	+C/038.01	
+C-X1710:2	2	+M-M001:V	+C/038.01	
+C-X1710:3	3	+M-M001:W	+C/038.01	
+C-X1710:⏚	GNYE	+M-M001:⏚	+C/038.01	
	+C-W009			
+C-C1712:WH2	BK	+C-M002:1	+C/038.04	
+C-C1712:WH1	L.BU	+C-M002:2	+C/038.04	
+C-X1710:5	BN	+C-M002:3	+C/038.04	
+C-X1710:⏚	GNYE	+C-M002:⏚	+C/038.04	
	+C-W010			
+C-X1710:11	1	+C-M003:BK	+C/038.05	
+C-X1710:9	2	+C-M003:RD	+C/038.05	
+C-X1710:⏚	GNYE	+C-M003:⏚	+C/038.05	
	+C-W011			
+C-X1710:15	BK	+C-B006:	+C/038.07	
+C-X1710:14	BK	+C-B006:	+C/038.08	
	+C-W012			
+C-X1710:13	BK	+C-B007:	+C/038.09	
+C-X1710:12	BK	+C-B007:	+C/038.10	
	+C-W100			
+C-A160:	1	+C-A161:	+C/080.03	
	+C-W101			
+C-A161:	1	+C-A162:	+C/080.05	
	+C-W102			
+C-A162:	1	+C-A163:	+C/080.06	

From	Cable	To	Page.Col.	Option
	+C-W103			
+C-A163:	1	+C-A164:	+C/080.08	
	+C-W108			
+C-J165:	1	+C-J164:	+C/080.01	
	+C-W110			
+C-X403:1	1	+C-X031:25	+C/051.05	
+C-X403:4	2	+C-X031:30	+C/051.05	
+C-X403:3	3	+C-X031:28	+C/051.05	
	+C-W118			
+C-G014:13	WH	+C-A103:02	+C/102.03	
+C-G014:14		+C-A103:18	+C/102.03	
GND:	SH	GND:	+C/102.03	
	+C-W119			
+C-X404:3	WH	+C-A103:04	+C/102.03	
	BN			
	SH	GND:	+C/102.03	
	+C-W120			
+C-G010:13	WH	+C-A102:02	+C/100.03	
+C-G010:14		+C-A102:18	+C/100.03	
GND:	SH	GND:	+C/100.03	
	+C-W121			
+C-G011:13	WH	+C-A102:04	+C/100.03	
+C-G011:14		+C-A102:18	+C/100.03	
GND:	SH	GND:	+C/100.03	
	+C-W122			
+C-G012:13	WH	+C-A102:06	+C/100.03	

Drawing remarks

Tetra Pak

Designer: LUP	Date: 23/11/2007	Machine: Tetra Pak A3/Flex 0150	
ECM No: 320174	Denomination: CABLE CONNECTION LIST	Page Type: CABLE CONNECTION LIST	
Company: Tetra Pak (Italy)	Document No.: 2845987-0007	Doc. type: ELD	Version: AE	Page: 001

This drawing must not without the consent of Tetra Pak be copied, transmitted or disclosed to any third party.

Cable Connection List of 2845987-0003

From	Cable	To	Page.Col.	Option
+C-G012:14		+C-A102:18	+C/100.03	
GND:	SH	GND:	+C/100.03	
	+C-W123			
+C-G013:13	WH	+C-A102:08	+C/100.03	
+C-G013:14		+C-A102:18	+C/100.03	
GND:	SH	GND:	+C/100.03	
	+C-W124			
+C-A502:301	1	+C-A102:10	+C/101.03	
	BN			
GND:	SH		+C/101.03	
	+C-W125			
+C-A501:301	WH	+C-A102:12	+C/101.03	
	BN			
GND:	SH		+C/101.03	
	+C-W126			
+C-A500:301	WH	+C-A102:14	+C/101.03	
	BN			
GND:	SH		+C/101.03	
	+C-W127			
+C-A500:302	WH	+C-A102:16	+C/101.03	
	BN			
GND:	SH		+C/101.03	
	+C-W130			
+C-X225:3	WH	+C-A104:03	+C/104.06	
	BN			
	SH			
	+C-W133			

From	Cable	To	Page.Col.	Option
+C-G015:13	WH	+C-A103:14	+C/103.03	
+C-G015:14		+C-A103:18	+C/103.03	
GND:	SH	GND:	+C/103.03	
	+C-W135			
+C-X208:21	WH	+C-A105:03	+C/106.06	
	BN			
GND:	SH		+C/106.07	
	+C-W136			
+C-A401:6	WH	+C-A105:05	+C/106.06	
	BN			
GND:	SH		+C/106.07	
	+C-W137			
+C-A401:13	WH	+C-A105:07	+C/106.06	
	BN			
GND:	SH		+C/106.07	
	+C-W138			
+C-X224:14	WH	+C-A104:11	+C/104.06	
	BN			
+C-X224:15	SH	GND:	+C/104.06	
	+C-W139			
+C-X219:8	WH	+C-A105:11	+C/106.06	
	BN			
GND:	SH		+C/106.07	
	+C-W140			
+C-X212:18	WH	+C-A105:04	+C/107.07	
	BN			
GND:	SH		+C/107.06	

Drawing remarks

Tetra Pak

Designer: LUP	Date: 23/11/2007	Machine: Tetra Pak A3/Flex 0150	
ECM No: 320174	Denomination: CABLE CONNECTION LIST	Page Type: CABLE CONNECTION LIST	
Company: Tetra Pak (Italy)	Document No.: 2845987-0007	Doc. type: ELD	Version: AE	Page: 002

This drawing must not without the consent of Tetra Pak be copied, transmitted or disclosed to any third party.

Cable Connection List of 2845987-0003

From	Cable	To	Page.Col.	Option
	+C-W150			
+C-A420:12	WH	+C-A403:9	+C/053.05	
	BN			
GND:	SH		+C/053.05	
	+C-W151			
+C-A104:16	WH	+C-P003:31	+C/041.03	
+C-A104:14	BN	+C-P003:33	+C/041.03	
	SH	GND:	+C/041.03	
	+C-W152			
+C-A104:16	WH	+C-P001:7.5	+C/040.04	
+C-A104:14	BN	+C-P001:9.5	+C/040.04	
	SH	GND:	+C/040.04	
	+C-W153			
+C-P003:43	WH	+C-A116:15/B6	+C/041.06	
	BN			
GND:	SH		+C/041.06	
	+C-W200			
+C-A452:X3	2	+C-A200:	+C/126.05	DIMC
	+C-W201			
+C-X051:1	GN	+C-A200:	+C/126.04	DIMC
+C-X051:3	WHBU	+C-A200:	+C/126.04	
+C-X051:2	BU	+C-A200:	+C/126.04	
+C-X051:6	WHGN	+C-A200:	+C/126.04	DIMC
+C-X051:5	BN	+C-A200:	+C/126.04	DIMC
+C-X051:4	WHOG	+C-A200:	+C/126.04	DIMC
	OG	+C-A200:	+C/126.04	DIMC
	WHBN	+C-A200:	+C/126.04	DIMC
	+C-W210			

From	Cable	To	Page.Col.	Option
+C-X126:1	1	+C-G010:U/T1	+C/014.05	
+C-X126:2	2	+C-G010:V/T2	+C/014.05	
+C-X126:3	3	+C-G010:W/T3	+C/014.05	
+C-X126:5	GNYE	+C-G010:⏚	+C/014.05	
+C-X126:4	SH	GND:	+C/014.05	
	+C-W211			
+C-X127:1	1	+C-G011:U/T1	+C/014.10	
+C-X127:2	2	+C-G011:V/T2	+C/014.10	
+C-X127:3	3	+C-G011:W/T3	+C/014.10	
+C-X127:5	GNYE	+C-G011:⏚	+C/014.10	
+C-X127:4	SH	GND:	+C/014.10	
	+C-W212			
+C-X134:1	1	+C-G012:U/T1	+C/016.05	
+C-X134:2	2	+C-G012:V/T2	+C/016.05	
+C-X134:3	3	+C-G012:W/T3	+C/016.05	
+C-X134:5	GNYE	+C-G012:⏚	+C/016.05	
+C-X134:4	SH	GND:	+C/016.05	
	+C-W213			
+C-X130:1	1	+C-G013:U/T1	+C/017.05	
+C-X130:2	2	+C-G013:V/T2	+C/017.05	
+C-X130:3	3	+C-G013:W/T3	+C/017.05	
+C-X130:5	GNYE	+C-G013:⏚	+C/017.05	
+C-X130:4	SH	GND:	+C/017.05	
	+C-W214			
+C-X112:1	1	+C-G014:U/T1	+C/017.10	
+C-X112:2	2	+C-G014:V/T2	+C/017.10	
+C-X112:3	3	+C-G014:W/T3	+C/017.10	
+C-X112:5	GNYE	+C-G014:⏚	+C/017.10	
+C-X112:4	SH	GND:	+C/017.10	

Drawing remarks

Tetra Pak

Designer LUP	Date 23/11/2007	Machine Tetra Pak A3/Flex 0150	
ECM No 320174	Denomination CABLE CONNECTION LIST	Page Type CABLE CONNECTION LIST	
Company Tetra Pak (Italy)	Document No. 2845987-0007	Doc. type ELD	Version AE	Page 003

This drawing must not without the consent of Tetra Pak be copied, transmitted or disclosed to any third party.

Cable Connection List of 2845987-0003

From	Cable	To	Page.Col.	Option
	+C-W215			
+C-X129:1	1	+C-G015:U/T1	+C/018.06	
+C-X129:2	2	+C-G015:V/T2	+C/018.06	
+C-X129:3	3	+C-G015:W/T3	+C/018.06	
+C-X129:5	GNYE	+C-G015:⏚	+C/018.06	
+C-X129:4	SH	GND:	+C/018.06	
	+C-W300			
+C-X306:-	RD	+C-A106:03	+C/110.07	
+C-X306:+	YE	+C-A106:05	+C/110.07	
	+C-W301			
+C-X307:-	RD	+C-A106:07	+C/110.07	
+C-X307:+	YE	+C-A106:09	+C/110.07	
	+C-W302			
+C-X308:-	RD	+C-A106:11	+C/110.07	
+C-X308:+	YE	+C-A106:13	+C/110.07	
	+C-W303			
+C-X312:-	RD	+C-A106:15	+C/110.07	
+C-X312:+	YE	+C-A106:17	+C/110.07	
	+C-W304			
+C-X310:-	RD	+C-A106:04	+C/110.07	
+C-X310:+	YE	+C-A106:06	+C/110.07	
	+C-W305			
+C-X311:-	RD	+C-A106:08	+C/110.07	
+C-X311:+	YE	+C-A106:10	+C/110.07	
	+C-W306			
+C-X301:-	RD	+C-A106:12	+C/110.07	
+C-X301:+	YE	+C-A106:14	+C/110.07	
	+C-W307			
+C-X025:-	RD	+C-A106:16	+C/110.07	
+C-X025:+	YE	+C-A106:18	+C/110.07	
	+C-W308			
+C-X302:-	RD	+C-A107:03	+C/111.07	
+C-X302:+	YE	+C-A107:05	+C/111.07	
	+C-W309			
+C-X303:-	RD	+C-A107:07	+C/111.07	
+C-X303:+	YE	+C-A107:09	+C/111.07	
	+C-W310			
+C-X304:-	RD	+C-A107:11	+C/111.07	
+C-X304:+	YE	+C-A107:13	+C/111.07	
	+C-W311			
+C-X319:-	RD	+C-A107:15	+C/111.07	TGA
+C-X319:+	YE	+C-A107:17	+C/111.07	TGA
	+C-W312			
+C-X313:-	RD	+C-A107:04	+C/111.07	
+C-X313:+	YE	+C-A107:06	+C/111.07	
	+C-W313			
+C-X315:-	RD	+C-A107:08	+C/111.07	
+C-X315:+	YE	+C-A107:10	+C/111.07	
	+C-W314			
+C-X309:-	RD	+C-A107:12	+C/111.07	
+C-X309:+	YE	+C-A107:14	+C/111.07	

Drawing remarks

Tetra Pak

Designer LUP	Date 23/11/2007	Machine Tetra Pak A3/Flex 0150	
ECM No 320174	Denomination CABLE CONNECTION LIST	Page Type CABLE CONNECTION LIST	
Company Tetra Pak (Italy)	Document No. 2845987-0007	Doc. type ELD	Version AE	Page 004

This drawing must not without the consent of Tetra Pak be copied, transmitted or disclosed to any third party.

Cable Connection List of 2845987-0003

From	Cable	To	Page.Col.	Option
	+C-W315			
+C-X314:-	RD	+C-A107:16	+C/111.07	H.I.
+C-X314:+	YE	+C-A107:18	+C/111.07	H.I.
	+C-W316			
+C-X305:-	RD	+C-A108:03	+C/112.07	
+C-X305:+	YE	+C-A108:05	+C/112.07	
	+C-W317			
+C-X316:-	RD	+C-A108:07	+C/112.07	
+C-X316:+	YE	+C-A108:09	+C/112.07	
	+C-W318			
+C-X317:-	RD	+C-A108:11	+C/112.07	
+C-X317:+	YE	+C-A108:13	+C/112.07	
	+C-W319			
+C-X318:-	RD	+C-A108:15	+C/112.07	
+C-X318:+	YE	+C-A108:17	+C/112.07	
	+C-W320			
+C-X320:-	RD	+C-A108:04	+C/112.07	
+C-X320:+	YE	+C-A108:06	+C/112.07	
	+C-W321			
+C-X307:-	RD	+C-P001:1.2	+C/039.04	
+C-X307:+	YE	+C-P001:1.3	+C/039.04	
	+C-W322			
+C-X305:-	RD	+C-P001:2.2	+C/039.04	
+C-X305:+	YE	+C-P001:2.3	+C/039.04	
	+C-W323			

From	Cable	To	Page.Col.	Option
+C-X315:-	RD	+C-P001:3.2	+C/039.04	
+C-X315:+	YE	+C-P001:3.3	+C/039.04	
	+C-W331			
+C-X321:-	RD	+C-A108:08	+C/112.07	H.I.
+C-X321:+	YE	+C-A108:10	+C/112.07	H.I.
	+C-W332			
+C-X322:-	RD	+C-A108:12	+C/112.07	H.I.
+C-X322:+	YE	+C-A108:14	+C/112.07	H.I.
	+C-W382			
+C-X322:-	RD	+C-P001:6.2	+C/039.04	H.I.
+C-X322:+	YE	+C-P001:6.3	+C/039.04	
	+C-W400			
+C-X5001:B1	WH	+C-X4031:5	+C/011.05	
+C-X5001:A1	BU	+C-X4031:4	+C/011.05	
	SH	+C-X4031:⏚	+C/011.05	
	+C-W407			
+C-X4021:5	WH	+C-X4031:7	+C/052.03	
+C-X4021:4	BU	+C-X4031:6	+C/052.03	
+C-X4021:⏚	SH	+C-X4031:⏚	+C/052.03	
	+C-W423			
+C-X5011:A1	BU	+C-X4021:6	+C/011.09	
+C-X5011:B1	WH	+C-X4021:7	+C/011.09	
	SH	+C-X4021:⏚	+C/011.09	
	+C-W450			
+C-X450:3	YE	+C-A450:8	+C/059.04	
+C-X450:2	BN	+C-A450:7	+C/059.04	
+C-X450:7	BU	+C-A450:6	+C/059.04	

Drawing remarks

Tetra Pak

Designer: LUP	Date: 23/11/2007	Machine: Tetra Pak A3/Flex 0150	
ECM No: 320174	Denomination: CABLE CONNECTION LIST	Page Type: CABLE CONNECTION LIST	
Company: Tetra Pak (Italy)	Document No.: 2845987-0007	Doc. type: ELD	Version: AE	Page: 005

This drawing must not without the consent of Tetra Pak be copied, transmitted or disclosed to any third party.

Cable Connection List of 2845987-0003

From	Cable	To	Page.Col.	Option
+C-X450:8	RD	+C-A450:5	+C/059.04	
+C-X450:1	WH	+C-A450:4	+C/059.04	
+C-X450:4	GN	+C-A450:3	+C/059.04	
+C-X450:6	PK	+C-A450:2	+C/059.04	
+C-X450:5	GY	+C-A450:1	+C/059.04	
	+C-W456			
+C-A451:INT. NET	1	+C-A452:X1	+C/059.02	
	+C-W457			
+C-A452:X2	1	+C-J166:	+C/060.07	
	+C-W470			
+C-X5011:A2	BU	+C-X5022:A1	+C/011.09	
+C-X5011:B2	WH	+C-X5022:B1	+C/011.09	
	SH		+C/011.09	
	+C-W700			
+C-A712:TX	1	+C-A902:Rx	+C/081.04	
	+C-W701			
+C-A712:RX	1	+C-A711:TX	+C/021.01	
	+C-W702			
+C-A711:RX	1	+C-A713:TX	+C/022.01	
	+C-W703			
+C-A713:RX	1	+C-A710:TX	+C/023.01	
	+C-W704			
+C-A710:RX		+C-A716:TX	+C/024.01	
	+C-W705			
+C-A716:RX	1	+C-A715:TX	+C/027.01	

From	Cable	To	Page.Col.	Option
	+C-W706			
+C-A715:RX	1	+C-A714:TX	+C/028.01	
	+C-W707			
+C-A714:RX	1	+C-A902:Tx	+C/029.01	
	+C-W711			
+M-A706:RX	1		+C/249.01	TGA
	+C-W712			
+M-A705:RX	1	+M-A706:TX	+C/248.01	TGA
	+C-W713			
+M-A704:RX	1	+M-A705:TX	+C/247.01	TGA
	+C-W714			
+M-A703:RX	1	+M-A704:TX	+C/246.01	TGA
	+C-W715			
+M-A702:RX	1	+M-A703:TX	+C/245.01	TGA
	+C-W716			
+M-A701:RX	1	+M-A702:TX	+C/244.01	TGA
	+C-W725			
+C-X767:1	1	+M-A728:1501	+C/253.01	
+C-X767:2	2	+M-A728:1504	+C/253.01	
+C-X767:3	3	+M-A728:1502	+C/253.01	
+C-X767:4	4	+M-A728:1505	+C/253.01	
+C-X767:5	GNYE	+M-A728:1503	+C/253.01	
+C-X767:6	SH	GND:	+C/253.01	

Drawing remarks

Tetra Pak

Designer	Date	Machine
LUP	23/11/2007	Tetra Pak A3/Flex 0150

ECM No	Denomination	Page Type
320174	CABLE CONNECTION LIST	CABLE CONNECTION LIST

Company	Document No.	Doc. type	Version	Page
Tetra Pak (Italy)	2845987-0007	ELD	AE	006

This drawing must not without the consent of Tetra Pak be copied, transmitted or disclosed to any third party.

Cable Connection List of 2845987-0003

From	Cable	To	Page.Col.	Option
	+C-W729			
+M-X7660:⏚	GNYE	+C-X766:⏚	+C/257.03	TGA
+M-X7660:1	1	+C-X766:1	+C/257.03	TGA
+M-X7660:2	2	+C-X766:2	+C/257.03	TGA
+M-X7660:3	3	+C-X766:3	+C/257.03	TGA
+M-X7660:4	4	+C-X766:4	+C/257.03	TGA
+M-X7660:6	SH	+C-X766:6	+C/257.03	TGA
	+C-W760			
+M-Z750:L1	1	+M-A700:L1	+C/243.01	TGA
+M-Z750:L2	2	+M-A700:L2	+C/243.01	TGA
+M-Z750:L3	3	+M-A700:L3	+C/243.01	TGA
+M-Z750:⏚	GNYE	+M-A700:GND	+C/243.01	TGA
GND:	SH	GND:	+C/243.01	TGA
	+C-W761			
+M-Z751:L1	1	+M-A704:L1	+C/247.01	TGA
+M-Z751:L2	2	+M-A704:L2	+C/247.01	TGA
+M-Z751:L3	3	+M-A704:L3	+C/247.01	TGA
+M-Z751:⏚	GNYE	+M-A704:GND	+C/247.01	TGA
GND:	SH	GND:	+C/247.01	TGA
	+C-W780			
	RD			
+C-X900:BU	BU	+M-X780:4	+C/254.06	TGA
+C-X900:WH	WH	+M-X780:5	+C/254.06	TGA
	BK			
	DRAIN			
+C-X900:SH		+M-X780:⏚	+C/254.06	TGA
	+C-W840			
+C-X840:1	1	+C-X119:1	+C/018.09	DIMC
+C-X840:2	2	+C-X119:2	+C/018.09	DIMC
+C-X840:3	3	+C-X119:3	+C/018.09	DIMC
+C-X840:5	GNYE	+C-X119:5	+C/018.09	DIMC
+C-X840:4	SH	+C-X119:4	+C/018.09	DIMC
	+C-W901			
+C-A452:X4	1	+C-J163:	+C/081.04	
	+C-W903			
+C-X900:RD	RD	+C-A903:V+	+C/081.02	
+C-X900:BU	BU	+C-A903:CAN-L	+C/081.02	
+C-X900:WH	WH	+C-A903:CAN-H	+C/081.02	
+C-X900:BK	BK	+C-A903:V-	+C/081.02	
+C-X900:SH	SH	+C-A903:SHIELD	+C/081.02	
	+C-W904			
+C-X900:RD	RD	+C-A101:+V	+C/099.03	
+C-X900:BU	BU	+C-A101:CAN-L	+C/099.03	
+C-X900:WH	WH	+C-A101:CAN-H	+C/099.03	
+C-X900:BK	BK	+C-A101:-V	+C/099.03	
+C-X900:SH	SH	+C-A101:SHIELD	+C/099.03	
	+C-W910			
+C-A903:V+	RD	+C-G910:+	+C/081.05	
+C-A903:SHIELD	SH	+C-G910:-	+C/081.05	
+C-A903:V-	BK	+C-G910:-	+C/081.05	
	+C-W2708			
+C-K112:2	1	+C-A712:5 MBRK+	+C/020.04	
+C-K111:2	2	+C-A711:5 MBRK+	+C/020.04	
+C-K113:2	3	+C-A713:5 MBRK+	+C/020.04	
+C-K110:2	4	+C-A710:5 MBRK+	+C/020.04	
	GNYE			
GND:	SH	GND:	+C/020.04	

Drawing remarks

Tetra Pak

Designer LUP	Date 23/11/2007	Machine Tetra Pak A3/Flex 0150	
ECM No 320174	Denomination CABLE CONNECTION LIST	Page Type CABLE CONNECTION LIST	
Company Tetra Pak (Italy)	Document No. 2845987-0007	Doc. type ELD	Version AE	Page 007

This drawing must not without the consent of Tetra Pak be copied, transmitted or disclosed to any third party.

Cable Connection List of 2845987-0003

From	Cable	To	Page.Col.	Option
	+C-W2709			
+C-K115:2	1	+C-A715:5 MBRK+	+C/020.09	
+C-K114:2	2	+C-A714:5 MBRK+	+C/020.09	
	3			
	4			
	GNYE			
GND:	SH	GND:	+C/020.09	
	+M-W001			
+C-X001:L1	1	+M-Z001:1	+C/005.06	
+C-X001:L2	2	+M-Z001:2	+C/005.06	
+C-X001:L3	3	+M-Z001:3	+C/005.06	
+C-X001:N	4	+M-Z001:N	+C/005.06	
+C-X001:⏚	GNYE	+M-Z001:⏚	+C/005.06	
	+M-W710			
+M-X701:1	1	+C-X871:1	+C/005.07	TGA
+M-X701:2	2	+C-X871:2	+C/005.07	TGA
+M-X701:3	3	+C-X871:3	+C/005.07	TGA
+M-X701:4	4	+C-X871:4	+C/005.07	TGA
+M-X701:⏚	GNYE	+C-X871:⏚	+C/005.07	TGA
	+M-W720			
+M-K720:2	BN	+C-M720:BN	+C/250.01	TGA
+M-X003:13	BU	+C-M720:BU	+C/250.01	TGA
+M-X002:17	GNYE	+C-M720:⏚	+C/250.01	TGA
	+M-W724			
+C-X767:1	1	+M-X7670:1	+C/253.01	TGA
+C-X767:2	2	+M-X7670:2	+C/253.01	TGA
+C-X767:3	3	+M-X7670:3	+C/253.01	TGA
+C-X767:4	4	+M-X7670:4	+C/253.01	TGA
+C-X767:5	GNYE	+M-X7670:5	+C/253.01	TGA

From	Cable	To	Page.Col.	Option
+C-X767:6	SH	+M-X7670:6	+C/253.01	TGA
	+M-W729			
	1			
	2			
	3			
	4			
	GNYE			
	SH			
	+M-W765			
+C-X765:1	1	+M-X2001:14	+C/251.02	TGA
+C-X765:2	2	+M-X2001:15	+C/251.02	TGA
+C-X765:3	3	+M-X2001:16	+C/251.02	TGA
+C-X765:⏚	GNYE	+M-X2001:⏚	+C/251.02	TGA
	+M-W768			
+C-X708:1	1	+M-X768:1	+C/044.03	TGA
+C-X708:2	2	+M-X768:2	+C/044.03	TGA
+C-X708:3	3	+M-X768:3	+C/044.03	TGA
+C-X708:4	4	+M-X768:4	+C/044.03	TGA
+C-X708:5	5	+M-X768:5	+C/044.03	TGA
+C-X708:6	6	+M-X768:6	+C/044.03	TGA
+C-X708:7	7	+M-X768:7	+C/044.03	TGA
+C-X708:8	8	+M-X768:8	+C/044.03	TGA
+C-X708:9	9	+M-X768:9	+C/044.03	TGA
+C-X708:10	10	+M-X768:10	+C/044.03	TGA
+C-X708:11	11	+M-X768:11	+C/044.03	TGA
+C-X708:12	12	+M-X768:12	+C/044.03	TGA
+C-X708:13	13	+M-X768:13	+C/044.03	TGA
+C-X708:14	14	+M-X768:14	+C/044.03	TGA
+C-X708:15	15	+M-X768:15	+C/044.03	TGA
+C-X708:16	16	+M-X768:16	+C/044.03	TGA
+C-X708:17	17	+M-X768:17	+C/044.03	TGA

Drawing remarks

Tetra Pak

Designer: LUP	Date: 23/11/2007	Machine: Tetra Pak A3/Flex 0150	
ECM No: 320174	Denomination: CABLE CONNECTION LIST	Page Type: CABLE CONNECTION LIST	
Company: Tetra Pak (Italy)	Document No.: 2845987-0007	Doc. type: ELD	Version: AE	Page: 008

This drawing must not without the consent of Tetra Pak be copied, transmitted or disclosed to any third party.

Cable Connection List of 2845987-0003

From	Cable	To	Page.Col.	Option
+C-X708:18	18	+M-X768:18	+C/044.03	TGA
+C-X708:19	19	+M-X768:19	+C/044.03	TGA
+C-X708:20	20	+M-X768:20	+C/044.03	TGA
+C-X708:21	21	+M-X768:21	+C/044.03	TGA
+C-X708:22	22	+M-X768:22	+C/044.03	TGA
+C-X708:23	23	+M-X768:23	+C/044.03	TGA
+C-X708:24	24	+M-X768:24	+C/044.03	TGA
+C-X708:⏚	GNYE	+M-X768:⏚	+C/044.03	TGA
+M-W781				
+C-X900:RD	RD	+M-M1506:VCD2	+C/099.07	TGA
+C-X900:BU	BU	+M-M1506:L	+C/099.07	TGA
+C-X900:WH	WH	+M-M1506:H	+C/099.07	TGA
+C-X900:BK	BK	+M-M1506:GND2	+C/099.07	TGA
+C-X900:SH	SH	+M-M1506:SH	+C/099.07	TGA
+M-W1001				
+M-X1001:132	1	+C-X211:1	+C/233.08	
+M-X1001:133	2	+C-X211:2	+C/233.08	
+M-X1001:134	3	+C-X211:3	+C/233.08	
+M-X1001:135	4	+C-X211:4	+C/233.08	
+M-X1001:136	5	+C-X211:5	+C/233.08	
+M-X1001:137	6	+C-X211:6	+C/233.08	
+M-X1001:138	7	+C-X211:7	+C/233.08	
+M-X1001:139	8	+C-X211:8	+C/233.08	
+M-X1001:140	9	+C-X211:9	+C/233.08	
+M-X1001:141	10	+C-X211:10	+C/233.08	
+M-X1001:142	11	+C-X211:11	+C/233.08	
+M-X1001:143	12	+C-X211:12	+C/233.08	
+M-X1001:144	13	+C-X211:13	+C/233.08	
+M-X1001:145	14	+C-X211:14	+C/132.06	
+M-X1001:146	15	+C-X211:15	+C/233.08	
+M-X1001:147	16	+C-X211:16	+C/233.08	
+M-X1001:148	17	+C-X211:17	+C/233.08	

From	Cable	To	Page.Col.	Option
+M-X1001:149	18	+C-X211:18	+C/233.08	
+M-X1001:150	19	+C-X211:19	+C/233.08	
+M-X1001:151	20	+C-X211:20	+C/233.08	
+M-X1001:152	21	+C-X211:21	+C/120.06	
+M-X1001:153	22	+C-X211:22	+C/233.08	
+M-X1001:153+	23	+C-X211:23	+C/233.08	
+M-X1001:153-	24	+C-X211:24	+C/233.08	
+M-X1001:⏚	GNYE	+C-X211:⏚	+C/233.08	
+M-W1002				
+C-X206:1	1	+M-X1001:101	+C/135.06	
+C-X206:2	2	+M-X1001:102	+C/135.06	
+C-X206:3	3	+M-X1001:103	+C/135.06	
+C-X206:4	4	+M-X1001:104	+C/136.06	
+C-X206:5	5	+M-X1001:105	+C/136.06	
+C-X206:6	6	+M-X1001:106	+C/136.06	
+C-X206:7	7	+M-X1001:107	+C/233.03	
+C-X206:8	8	+M-X1001:108	+C/233.03	
+C-X206:9	9	+M-X1001:109	+C/233.03	
+C-X206:10	10	+M-X1001:110	+C/061.01	
+C-X206:11	11	+M-X1001:111	+C/061.01	
+C-X206:12	12	+M-X1001:112	+C/061.07	
+C-X206:13	13	+M-X1001:116	+C/061.07	
+C-X206:14	14	+M-X1001:120	+C/061.07	
+C-X206:15	15	+M-X1001:121	+C/061.07	
+C-X206:16	16	+M-X1001:123	+C/233.03	
+C-X206:17	17	+M-X1001:126	+C/233.03	
+C-X206:18	18	+M-X1001:127	+C/233.03	
+C-X206:19	19	+M-X1001:128	+C/233.03	
+C-X206:20	20	+M-X1001:129	+C/233.03	
+C-X206:21	21	+M-X1001:130	+C/233.03	
+C-X206:22	22	+M-X1001:131	+C/233.03	
+C-X206:23	23	+M-X1001:129+	+C/233.03	
+C-X206:24	24	+M-X1001:129-	+C/233.03	

Drawing remarks

Tetra Pak

Designer: LUP	Date: 23/11/2007	Machine: Tetra Pak A3/Flex 0150	
ECM No: 320174	Denomination: CABLE CONNECTION LIST	Page Type: CABLE CONNECTION LIST	
Company: Tetra Pak (Italy)	Document No.: 2845987-0007	Doc. type: ELD	Version: AE	Page: 009

This drawing must not without the consent of Tetra Pak be copied, transmitted or disclosed to any third party.

Cable Connection List of 2845987-0003

From	Cable	To	Page.Col.	Option
+C-X206:⏚	GNYE	+M-X1001:⏚	+C/233.03	
+M-W1003				
+M-X1003:150	1	+C-X212:1	+C/067.06	
+M-X1003:151	2	+C-X212:2	+C/067.06	
+M-X1003:159	3	+C-X212:3	+C/236.03	
+M-X1003:156	4	+C-X212:4	+C/236.03	
+M-X1003:158	5	+C-X212:5	+C/236.03	
+M-X1003:160	6	+C-X212:6	+C/149.05	
+M-X1003:157	7	+C-X212:7	+C/236.03	
+M-X1003:162	8	+C-X212:8	+C/149.05	
+M-X1003:166	9	+C-X212:9	+C/149.02	
+M-X1003:167	10	+C-X212:10	+C/149.02	
+M-X1003:168	11	+C-X212:11	+C/046.04	
+M-X1003:169	12	+C-X212:12	+C/046.04	
+M-X1003:170	13	+C-X212:13	+C/236.06	
+M-X1003:171	14	+C-X212:14	+C/236.06	
+M-X1003:172	15	+C-X212:15	+C/134.06	
+M-X1003:173	16	+C-X212:16	+C/047.04	
+M-X1003:174	17	+C-X212:17	+C/047.04	
+M-X1003:175	18	+C-X212:18	+C/107.05	
+M-X1003:176	19	+C-X212:19	+C/236.06	
+M-X1003:177	20	+C-X212:20	+C/236.06	
+M-X1003:178	21	+C-X212:21	+C/236.06	
+M-X1003:179	22	+C-X212:22	+C/132.06	
+M-X1003:178+	23	+C-X212:23	+C/236.06	
+M-X1003:178-	24	+C-X212:24	+C/236.06	
+M-X1003:⏚	GNYE	+C-X212:⏚	+C/236.06	
+M-W1004				
+M-X1003:101	1	+C-X217:1	+C/235.03	
+M-X1003:102	2	+C-X217:2	+C/235.03	
+M-X1003:103	3	+C-X217:3	+C/046.04	
+M-X1003:104	4	+C-X217:4	+C/046.04	

From	Cable	To	Page.Col.	Option
+M-X1003:105	5	+C-X217:5	+C/046.04	
+M-X1003:106	6	+C-X217:6	+C/046.04	
+M-X1003:107	7	+C-X217:7	+C/046.04	
+M-X1003:108	8	+C-X217:8	+C/198.03	
+M-X1003:109	9	+C-X217:9	+C/199.03	
+M-X1003:113	10	+C-X217:10	+C/067.03	
+M-X1003:111	11	+C-X217:11	+C/199.03	
+M-X1003:114	12	+C-X217:12	+C/199.03	
	13	+C-X217:13	+C/235.03	
+M-X1003:118	14	+C-X217:14	+C/235.03	
+M-X1003:121	15	+C-X217:15	+C/061.07	
+M-X1003:122	16	+C-X217:16	+C/134.06	
+M-X1003:123	17	+C-X217:17	+C/132.06	
+M-X1003:124	18	+C-X217:18	+C/235.03	
+M-X1003:125	19	+C-X217:19	+C/115.06	
+M-X1003:126	20	+C-X217:20	+C/128.01	
+M-X1003:127	21	+C-X217:21	+C/128.04	
+M-X1003:128	22	+C-X217:22	+C/134.06	
+M-X1003:128+	23	+C-X217:23	+C/134.02	
+M-X1003:128-	24	+C-X217:24	+C/134.02	
+M-X1003:⏚	GNYE	+C-X217:⏚	+C/128.04	
+M-W1005				
+M-X1003:180	1	+C-X221:1	+C/133.06	
+M-X1003:181	2	+C-X221:2	+C/133.06	
+M-X1003:182	3	+C-X221:3	+C/133.06	
+M-X1003:183	4	+C-X221:4	+C/133.06	
+M-X1003:184	5	+C-X221:5	+C/236.09	
+M-X1003:185	6	+C-X221:6	+C/105.06	
+M-X1003:186	7	+C-X221:7	+C/132.06	
+M-X1003:187	8	+C-X221:8	+C/133.06	
+M-X1003:188	9	+C-X221:9	+C/104.05	DIMC
+M-X1003:189	10	+C-X221:10	+C/104.05	
+M-X1003:190	11	+C-X221:11	+C/236.09	

Drawing remarks

Tetra Pak

Designer: LUP	Date: 23/11/2007	Machine: Tetra Pak A3/Flex 0150	
ECM No: 320174	Denomination: CABLE CONNECTION LIST	Page Type: CABLE CONNECTION LIST	
Company: Tetra Pak (Italy)	Document No.: 2845987-0007	Doc. type: ELD	Version: AE	Page: 010

This drawing must not without the consent of Tetra Pak be copied, transmitted or disclosed to any third party.

Cable Connection List of 2845987-0003

From	Cable	To	Page.Col.	Option
+M-X1003:191	12	+C-X221:12	+C/236.09	
+M-X1003:192	13	+C-X221:13	+C/236.09	
+M-X1003:193	14	+C-X221:14	+C/236.09	
+M-X1003:194	15	+C-X221:15	+C/198.03	
+M-X1003:195	16	+C-X221:16	+C/198.03	
+M-X1003:196	17	+C-X221:17	+C/198.03	
+M-X1003:197	18	+C-X221:18	+C/236.09	
+M-X1003:198	19	+C-X221:19	+C/126.03	DIMC
+M-X1003:199	20	+C-X221:20	+C/236.09	
+M-X1003:200	21	+C-X221:21	+C/236.09	
+M-X1003:201	22	+C-X221:22	+C/236.09	
+M-X1003:201+	23	+C-X221:23	+C/236.09	
+M-X1003:201-	24	+C-X221:24	+C/236.09	
+M-X1003:⏚	GNYE	+C-X221:⏚	+C/198.06	
	+M-W1006			
+C-X224:1	1	+M-X1003:129	+C/235.07	
+C-X224:2	2	+M-X1003:130	+C/235.07	
+C-X224:3	3	+M-X1003:131	+C/235.07	
+C-X224:4	4	+M-X1003:132	+C/235.07	
+C-X224:5	5	+M-X1003:133	+C/134.06	
+C-X224:6	6	+M-X1003:134	+C/134.06	
+C-X224:7	7	+M-X1003:135	+C/235.07	
+C-X224:8	8	+M-X1003:136	+C/235.07	
+C-X224:9	9	+M-X1003:137	+C/134.06	
+C-X224:10	10	+M-X1003:137+	+C/134.02	
+C-X224:11	11	+M-X1003:137-	+C/134.02	
+C-X224:⏚	GNYE	+M-X1003:⏚	+C/235.07	
	+M-W1010			
+M-X1003:187+	GN	+M-B1101:GN	+C/133.03	
+M-X1003:187	WH	+M-B1101:WH	+C/133.05	
	+M-W1011			

From	Cable	To	Page.Col.	Option
+M-X1003:160	1	+M-S1801:21	+C/149.05	
+M-X1003:161+	2	+M-S1801:11	+C/149.04	
+M-X1003:162	3	+M-S1801:12	+C/149.05	
+M-X1003:163	4	+M-S1801:22	+C/149.04	
+M-X1003:⏚	GNYE	PE:	+C/149.05	
	+M-W1012			
+M-X1003:194	1	+M-Y1222:1	+C/198.04	
+M-X1003:194-	2	+M-Y1222:2	+C/198.05	
+M-X1003:⏚	GNYE	+M-Y1222:E	+C/198.05	
	+M-W1013			
+M-X1003:196	1	+M-Y1223:1	+C/198.04	
+M-X1003:196-	2	+M-Y1223:2	+C/198.05	
+M-X1003:⏚	GNYE	+M-Y1223:E	+C/198.05	
	+M-W1014			
+M-X1003:185+	BN	+M-B1102:	+C/105.03	
+M-X1003:185-	BU	+M-B1102:	+C/105.03	
+M-X1003:185	BK	+M-B1102:	+C/105.05	
	+M-W1015			
+M-X1003:168	1	+M-B1104:⏚	+C/046.03	
+M-X1003:169	2	+M-B1104:1	+C/046.03	
+M-X1003:⏚	GNYE	+M-B1104:⏚	+C/046.03	
	+M-W1016			
+M-X1003:123+	BN	+M-B1111:	+C/132.03	
+M-X1003:123-	BU	+M-B1111:	+C/132.03	
+M-X1003:123	BK	+M-B1111:	+C/132.05	
	+M-W1018			
+M-X1003:195	1	+M-Y1104:1	+C/198.04	
+M-X1003:195-	2	+M-Y1104:2	+C/198.05	

Drawing remarks

Tetra Pak

Designer: LUP	Date: 23/11/2007	Machine: Tetra Pak A3/Flex 0150	
ECM No: 320174	Denomination: CABLE CONNECTION LIST	Page Type: CABLE CONNECTION LIST	
Company: Tetra Pak (Italy)	Document No.: 2845987-0007	Doc. type: ELD	Version: AE	Page: 011

This drawing must not without the consent of Tetra Pak be copied, transmitted or disclosed to any third party.

Cable Connection List of 2845987-0003

From	Cable	To	Page.Col.	Option
+M-X1003:⏚	GNYE	+M-Y1104:E	+C/198.05	
+M-W1026				
+M-X1003:128+	BN	+M-B1240:	+C/134.04	
+M-X1003:128-	BU	+M-B1240:	+C/134.04	
+M-X1003:128	BK	+M-B1240:	+C/134.05	
+M-W1029				
+M-X1003:105	1	+M-B1230:⏚	+C/046.03	
+M-X1003:106	2	+M-B1230:1	+C/046.03	
+M-X1003:107	3	+M-B1230:2	+C/046.03	
+M-X1003:⏚	GNYE	+M-B1230:⏚	+C/046.03	
+M-W1030				
+M-X1003:108	1	+M-Y1230:1	+C/198.04	
+M-X1003:108-	2	+M-Y1230:2	+C/198.05	
+M-X1003:⏚	GNYE	+M-Y1230:E	+C/198.05	
+M-W1031				
+M-X1003:109	1	+M-Y1231:1	+C/199.04	
+M-X1003:109-	2	+M-Y1231:2	+C/199.06	
+M-X1003:⏚	GNYE	+M-Y1231:E	+C/199.06	
	SH			
+M-W1032				
+M-X1001:101+	BN	+M-B1301:	+C/135.03	
+M-X1001:101-	BU	+M-B1301:	+C/135.03	
+M-X1001:101	BK	+M-B1301:	+C/135.05	
+M-W1033				
+M-X1001:102+	BN	+M-B1302:	+C/135.03	
+M-X1001:102-	BU	+M-B1302:	+C/135.03	
+M-X1001:102	BK	+M-B1302:	+C/135.05	
+M-W1034				

From	Cable	To	Page.Col.	Option
+M-X1001:103+	BN	+M-B1303:	+C/135.03	
+M-X1001:103-	BU	+M-B1303:	+C/135.03	
+M-X1001:103	BK	+M-B1303:	+C/135.05	
+M-W1035				
+M-X1001:104+	BN	+M-B1306:	+C/136.04	
+M-X1001:104-	BU	+M-B1306:	+C/136.04	
+M-X1001:104	BK	+M-B1306:	+C/136.05	
+M-W1036				
+M-X1001:105+	BN	+M-B1307:	+C/136.04	
+M-X1001:105-	BU	+M-B1307:	+C/136.04	
+M-X1001:105	BK	+M-B1307:	+C/136.05	
+M-W1041				
+M-X1003:110+	1	+M-B1508:21	+C/067.03	
+M-X1003:110-	2	+M-B1508:11	+C/067.03	
+M-X1003:112	3	+M-B1508:12	+C/067.03	
+M-X1003:113	4	+M-B1508:22	+C/067.03	
+M-X1003:⏚	GNYE	PE:	+C/067.03	
+M-W1043				
+M-X1003:122+	BN	+M-B1502:	+C/134.04	
+M-X1003:122-	BU	+M-B1502:	+C/134.04	
+M-X1003:122	BK	+M-B1502:	+C/134.05	
+M-W1044				
+M-X1003:114+	1	+M-B1504:21	+C/067.03	
+M-X1003:115	2	+M-B1504:11	+C/067.03	
+M-X1003:116	3	+M-B1504:12	+C/067.03	
+M-X1003:117	4	+M-B1504:22	+C/067.03	
+M-X1003:⏚	GNYE	PE:	+C/067.03	

Drawing remarks

Tetra Pak

Designer LUP	Date 23/11/2007	Machine Tetra Pak A3/Flex 0150	
ECM No 320174	Denomination CABLE CONNECTION LIST	Page Type CABLE CONNECTION LIST	
Company Tetra Pak (Italy)	Document No. 2845987-0007	Doc. type ELD	Version AE	Page 012

This drawing must not without the consent of Tetra Pak be copied, transmitted or disclosed to any third party.

Cable Connection List of 2845987-0003

From	Cable	To	Page.Col.	Option
	+M-W1045			
+M-X1001:114	1	+M-B1505:21	+C/061.04	
+M-X1001:115	2	+M-B1505:11	+C/061.04	
+M-X1001:116	3	+M-B1505:12	+C/061.05	
+M-X1001:117	4	+M-B1505:22	+C/061.05	
+M-X1001:⏚	GNYE	PE:	+C/061.05	
	+M-W1046			
+M-X1001:118	1	+M-B1506:21	+C/061.06	
+M-X1001:119	2	+M-B1506:11	+C/061.06	
+M-X1001:120	3	+M-B1506:12	+C/061.06	
+M-X1001:121	4	+M-B1506:22	+C/061.06	
+M-X1001:⏚	GNYE	PE:	+C/061.06	
	+M-W1047			
	BN			
+M-X1003:119	BU	+M-B1224:BU	+C/061.03	
+M-X1003:119+	BK	+M-B1224:BK	+C/061.02	
+M-X1003:⏚	GNYE	+M-B1224:⏚	+C/061.03	
	+M-W1048			
+M-X1003:164	1	+M-S1802:21	+C/149.03	
+M-X1003:165+	2	+M-S1802:11	+C/149.03	
+M-X1003:166	3	+M-S1802:12	+C/149.02	
+M-X1003:167	4	+M-S1802:22	+C/149.02	
+M-X1003:⏚	GNYE	PE:	+C/149.02	
	+M-W1049			
+M-X1003:137+	BN	+M-B1404:	+C/134.04	
+M-X1003:137-	BU	+M-B1404:	+C/134.04	
+M-X1003:137	BK	+M-B1404:	+C/134.05	
	+M-W1050			
+M-X1003:125+	BN	+M-B1403:	+C/115.04	
+M-X1003:125-	BU	+M-B1403:	+C/115.04	
+M-X1003:125	BK	+M-B1403:	+C/115.05	
	+M-W1051			
+M-X4013:8	BN	+C-X031:24	+C/051.03	
+M-X4013:6	RD	+C-X031:21	+C/051.03	
GND:	SH		+C/051.03	
+M-X4013:7	BU	+C-X031:22	+C/051.03	
+M-X4013:5	PK	+C-X031:20	+C/051.03	
	+M-W1052			
+M-X1314:3	GY	+C-X403:3	+C/051.04	
+M-X1314:1	WH	+C-X403:1	+C/051.04	
+M-X1314:2	YE	+C-X403:2	+C/051.04	
+M-X1314:4	GN	+C-X403:4	+C/051.04	
	BN			
+M-X1314:5	SH		+C/051.04	
	+M-W1053			
+M-X4012:	1	+C-X4011:	+C/051.06	
	+M-W1054			
+M-X1402:1	1	+C-A501:X004	+C/011.07	
	+M-W1055			
+C-P003:12	WH	+M-B1315:	+C/041.04	
+C-P003:84	BL	+M-B1315:	+C/041.04	
+C-P003:15	WH		+C/041.04	
+C-P003:13	YE	+M-B1315:	+C/041.04	
+C-P003:11	GN	+M-B1315:	+C/041.04	
+C-P003:16	RD		+C/041.04	
+C-P003:83	BL	+M-B1315:	+C/041.04	
	SH	GND:	+C/041.04	

Drawing remarks

Tetra Pak

Designer LUP	Date 23/11/2007	Machine Tetra Pak A3/Flex 0150	
ECM No 320174	Denomination CABLE CONNECTION LIST	Page Type CABLE CONNECTION LIST	
Company Tetra Pak (Italy)	Document No. 2845987-0007	Doc. type ELD	Version AE	Page 013

This drawing must not without the consent of Tetra Pak be copied, transmitted or disclosed to any third party.

Cable Connection List of 2845987-0003

From	Cable	To	Page.Col.	Option
	+M-W1057			
+M-X1003:180+	BN	+M-B1405:	+C/133.03	
+M-X1003:180-	BU	+M-B1405:	+C/133.03	
+M-X1003:180	BK	+M-B1405:	+C/133.05	
	+M-W1058			
+M-X1003:126	1	+M-S1003:51	+C/128.02	
+M-X1003:127	2	+M-S1003:52	+C/128.03	
+M-X1003:⏚	GNYE	+M-S1003:⏚	+C/128.03	
	+M-W1059			
+M-X1003:182+	BN	+M-B1243:	+C/133.03	
+M-X1003:182-	BU	+M-B1243:	+C/133.03	
+M-X1003:182	BK	+M-B1243:	+C/133.05	
	+M-W1060			
+M-X1003:133+	BN	+M-B1241:	+C/134.04	
+M-X1003:133-	BU	+M-B1241:	+C/134.04	
+M-X1003:133	BK	+M-B1241:	+C/134.05	
	+M-W1061			
+M-X1003:134+	BN	+M-B1242:	+C/134.04	
+M-X1003:134-	BU	+M-B1242:	+C/134.04	
+M-X1003:134	BK	+M-B1242:	+C/134.05	
	+M-W1062			
+M-X1003:183+	BN	+M-B1244:	+C/133.03	
+M-X1003:183-	BU	+M-B1244:	+C/133.03	
+M-X1003:183	BK	+M-B1244:	+C/133.05	
	+M-W1063			
+M-X1003:172+	BN	+M-B1321:	+C/134.04	
+M-X1003:172-	BU	+M-B1321:	+C/134.04	

From	Cable	To	Page.Col.	Option
+M-X1003:172	BK	+M-B1321:	+C/134.05	
	+M-W1064			
	BN			
+M-X1003:121	BU	+M-B1225:BU	+C/061.06	
+M-X1003:120	BK	+M-B1225:BK	+C/061.05	
+M-X1003:⏚	GNYE	+M-B1225:⏚	+C/061.06	
	+M-W1065			
+M-X1003:173	1	+M-B1322:⏚	+C/047.03	
+M-X1003:174	2	+M-B1322:1	+C/047.03	
+M-X1003:⏚	GNYE	+M-B1322:⏚	+C/047.03	
	+M-W1066			
+M-X1003:103	1	+M-B1220:⏚	+C/046.03	
+M-X1003:104	2	+M-B1220:1	+C/046.03	
+M-X1003:⏚	GNYE	+M-B1220:⏚	+C/046.03	
	+M-W1067			
+M-X1003:148	1	+M-B1509:21	+C/067.05	H.G.
+M-X1003:149	2	+M-B1509:11	+C/067.05	H.G.
+M-X1003:150	3	+M-B1509:12	+C/067.05	H.G.
+M-X1003:151	4	+M-B1509:22	+C/067.05	H.G.
+M-X1003:⏚	GNYE	PE:	+C/067.05	H.G.
	+M-W1080			
+C-X218:1	1	+M-X1250:1	+C/194.04	
+C-X218:2	2	+M-X1250:2	+C/194.04	
+C-X218:3	3	+M-X1250:3	+C/194.04	
+C-X218:4	4	+M-X1250:4	+C/194.04	
+C-X218:5	5	+M-X1250:5	+C/194.04	
+C-X218:7	6	+M-X1250:6	+C/194.04	
+C-X218:8	7	+M-X1250:7	+C/194.04	
+C-X218:9	8	+M-X1250:8	+C/194.04	

Drawing remarks

Tetra Pak

Designer: LUP	Date: 23/11/2007	Machine: Tetra Pak A3/Flex 0150	
ECM No: 320174	Denomination: CABLE CONNECTION LIST	Page Type: CABLE CONNECTION LIST	
Company: Tetra Pak (Italy)	Document No.: 2845987-0007	Doc. type: ELD	Version: AE	Page: 014

This drawing must not without the consent of Tetra Pak be copied, transmitted or disclosed to any third party.

Cable Connection List of 2845987-0003

From	Cable	To	Page.Col.	Option
+C-X218:10	9	+M-X1250:9	+C/195.03	
+C-X218:11	10	+M-X1250:10	+C/195.03	
	11			
+C-X218:6	12	+M-X1250:1-	+C/194.07	
+C-X218:12	13	+M-X1250:6-	+C/194.07	
+C-X218:⏚	GNYE	+M-X1250:⏚	+C/194.07	
+M-W1081				
+C-X218:13	1	+M-X1251:1	+C/195.03	
+C-X218:14	2	+M-X1251:2	+C/195.03	
+C-X218:15	3	+M-X1251:3	+C/195.03	
+C-X218:16	4	+M-X1251:4	+C/195.03	
+C-X218:17	5	+M-X1251:5	+C/195.03	
+C-X218:19	6	+M-X1251:6	+C/195.03	
+C-X218:20	7	+M-X1251:7	+C/196.03	
+C-X218:21	8	+M-X1251:8	+C/196.03	
+C-X218:22	9	+M-X1251:9	+C/196.03	
+C-X218:23	10	+M-X1251:10	+C/196.03	
	11			
+C-X218:18	12	+M-X1251:1-	+C/195.07	
+C-X218:24	13	+M-X1251:6-	+C/195.07	
+C-X218:⏚	GNYE	+M-X1251:⏚	+C/195.07	
+M-W1082				
+C-X223:1	1	+M-X1252:1	+C/196.03	
+C-X223:2	2	+M-X1252:2	+C/196.03	
+C-X223:3	3	+M-X1252:3	+C/196.03	
	4			
	5			
	6			
	7			
	8			
	9			
	10			

From	Cable	To	Page.Col.	Option
	11			
+C-X223:4	12	+M-X1252:1-	+C/196.07	
+M-X1252:6-	13		+C/230.10	
+C-X223:⏚	GNYE	+M-X1252:⏚	+C/196.07	
+M-W1083				
+C-X223:11	1	+M-X1253:1	+C/197.03	
+C-X223:12	2	+M-X1253:2	+C/197.03	
+C-X223:13	3	+M-X1253:3	+C/197.03	
+C-X223:14	4	+M-X1253:4	+C/197.03	
+C-X223:15	5	+M-X1253:5	+C/197.03	
+C-X223:17	6	+M-X1253:6	+C/197.03	
+C-X223:18	7	+M-X1253:7	+C/197.03	
+C-X223:19	8	+M-X1253:8	+C/197.03	
+C-X223:20	9	+M-X1253:9	+C/198.03	
+C-X223:21	10	+M-X1253:10	+C/198.03	
	11			
+C-X223:16	12	+M-X1253:1-	+C/197.07	
+C-X223:22	13	+M-X1253:6-	+C/197.07	
+C-X223:⏚	GNYE	+M-X1253:⏚	+C/197.07	
+M-W1103				
+C-X224:14	WH	+M-B1103:-	+C/104.04	
+C-X224:13	BN	+M-B1103:+	+C/104.04	
+C-X224:15	SH	GND:	+C/104.04	
+M-W1221				
	SH	+C-X225:15	+C/104.04	
+C-X225:2	BK	+M-B1221:0V	+C/104.02	
+C-X225:1	RD	+M-B1221:24V	+C/104.02	
+C-X225:⏚	BU	+M-B1221:⏚	+C/104.04	
+C-X225:14	RD/BU	+M-B1221:RB/TB	+C/104.04	
+C-X225:13	VT	+M-B1221:RA/TA	+C/104.04	
+C-X225:6	GY	+M-B1221:LINE ST	+C/104.04	

Drawing remarks

Tetra Pak

Designer LUP	Date 23/11/2007	Machine Tetra Pak A3/Flex 0150	
ECM No 320174	Denomination CABLE CONNECTION LIST	Page Type CABLE CONNECTION LIST	
Company Tetra Pak (Italy)	Document No. 2845987-0007	Doc. type ELD	Version AE	Page 015

This drawing must not without the consent of Tetra Pak be copied, transmitted or disclosed to any third party.

Cable Connection List of 2845987-0003

From	Cable	To	Page.Col.	Option
+C-X225:5	PK	+M-B1221:LINE ST	+C/104.04	
+C-X225:4	WH	+M-B1221:ANAOUT-	+C/104.04	
+C-X225:3	GY/PK	+M-B1221:ANAOUT+	+C/104.04	
+C-X225:17	GN	+M-B1221:DIGOUT-	+C/104.04	
+C-X225:16	YE	+M-B1221:DIGOUT+	+C/104.04	
+M-W1232				
+M-X1003:111	1	+M-Y1232:1	+C/199.04	
+M-X1003:111-	2	+M-Y1232:2	+C/199.06	
+M-X1003:⏚	GNYE	+M-Y1232:E	+C/199.06	
	SH			
+M-W1233				
+M-X1003:114	1	+M-Y1233:1	+C/199.04	
+M-X1003:114-	2	+M-Y1233:2	+C/199.06	
+M-X1003:⏚	GNYE	+M-Y1233:E	+C/199.06	
	SH			
+M-W1235				
+M-X1003:188+	1	+M-B1235:1	+C/104.04	
+M-X1003:188	2	+M-B1235:2	+C/104.04	
	GNYE			
+M-W1240				
+C-X119:1	1	+M-M1240:U	+C/018.09	DIMC
+C-X119:2	2	+M-M1240:V	+C/018.09	DIMC
+C-X119:3	3	+M-M1240:W	+C/018.09	DIMC
+C-X119:5	GNYE	+M-M1240:⏚	+C/018.09	DIMC
+C-X119:4	SH	GND:	+C/018.09	DIMC
+M-W1300				
+M-X1300:-	RD	+C-X315:-	+C/111.03	
+M-X1300:+	YE	+C-X315:+	+C/111.03	
+M-W1301				

From	Cable	To	Page.Col.	Option
+M-X1301:-	RD	+C-X306:-	+C/110.03	
+M-X1301:+	YE	+C-X306:+	+C/110.03	
+M-W1302				
+M-X1302:-	RD	+C-X310:-	+C/110.03	
+M-X1302:+	YE	+C-X310:+	+C/110.03	
+M-W1303				
+M-X1303:-	RD	+C-X311:-	+C/110.03	
+M-X1303:+	YE	+C-X311:+	+C/110.03	
+M-W1304				
+M-X1304:-	RD	+C-X309:-	+C/111.03	
+M-X1304:+	YE	+C-X309:+	+C/111.03	
+M-W1305				
+M-X1002:101-	RD	+C-X308:-	+C/110.03	
+M-X1002:101+	YE	+C-X308:+	+C/110.03	
+M-W1306				
+M-X1306:-	RD	+C-X307:-	+C/110.03	
+M-X1306:+	YE	+C-X307:+	+C/110.03	
+M-W1307				
+M-X1307:-	RD	+C-X313:-	+C/111.03	
+M-X1307:+	YE	+C-X313:+	+C/111.03	
+M-W1315				
+C-X404:3	GY	+M-X1315:3	+C/102.05	
+C-X404:1	WH	+M-X1315:1	+C/102.07	
+C-X404:2	YE	+M-X1315:2	+C/102.07	
+C-X404:4	GN	+M-X1315:4	+C/102.07	
	BN			

Drawing remarks

Tetra Pak

Designer LUP	Date 23/11/2007	Machine Tetra Pak A3/Flex 0150	
ECM No 320174	Denomination CABLE CONNECTION LIST	Page Type CABLE CONNECTION LIST	
Company Tetra Pak (Italy)	Document No. 2845987-0007	Doc. type ELD	Version AE	Page 016

This drawing must not without the consent of Tetra Pak be copied, transmitted or disclosed to any third party.

Cable Connection List of 2845987-0003

From	Cable	To	Page.Col.	Option
+M-X1315:5	SH		+C/102.07	
	+M-W1320			
+M-X1002:104-	RD	+C-X312:-	+C/110.03	
+M-X1002:104+	YE	+C-X312:+	+C/110.03	
	+M-W1321			
+M-X1309:-	RD	+C-X305:-	+C/112.05	
+M-X1309:+	YE	+C-X305:+	+C/112.05	
	+M-W1322			
+M-X1002:102-	RD	+C-X317:-	+C/112.05	
+M-X1002:102+	YE	+C-X317:+	+C/112.05	
	+M-W1323			
+M-X1002:103-	RD	+C-X318:-	+C/112.05	
+M-X1002:103+	YE	+C-X318:+	+C/112.05	
	+M-W1334			
+M-X1313:1	BN	+C-X031:27	+C/051.03	
+M-X1313:2	WH	+C-X031:32	+C/051.03	
+M-X1313:4	YE	+C-X031:34	+C/051.03	
+M-X1313:3	GN	+C-X031:31	+C/051.03	
GND:	SH		+C/051.03	
	+M-W1420			
+M-B1420:2	BN	+C-A420:4	+C/053.02	
+M-B1420:1	WH	+C-A420:1	+C/053.02	
+M-B1420:2	YE	+C-A420:3	+C/053.02	
+M-B1420:1	GN	+C-A420:2	+C/053.02	
GND:	SH		+C/053.02	
	+M-W1500			
+C-X105:1	1	+M-M1101:U	+C/033.06	

From	Cable	To	Page.Col.	Option
+C-X105:2	2	+M-M1101:W	+C/033.06	
+C-X105:3	3	+M-M1101:V	+C/033.06	
+C-X105:⏚	GNYE	+M-M1101:⏚	+C/033.06	
	+M-W1501			
+C-X501:1	BK	+M-R1105:Z1	+C/009.07	
+C-X501:3	GY	+M-R1105:Y1	+C/009.07	
+C-X501:2	BN	+M-R1105:X1	+C/009.07	
+C-X501:⏚	GNYE	+M-R1105:⏚	+C/009.07	
	+M-W1502			
+C-X502:1	1	+M-X1002:1	+C/007.02	
+C-X502:2	2	+M-X1002:4	+C/007.02	
+C-X502:3	3	+M-X1002:2	+C/007.02	
+C-X502:4	4	+M-X1002:5	+C/007.02	
+C-X502:5	5	+M-X1002:6	+C/007.02	
+C-X502:6	6	+M-X1002:8	+C/007.02	
+C-X502:⏚	GNYE	+M-X1002:⏚	+C/007.02	
	+M-W1503			
+C-X109:1	GY	+M-R1503:H2	+C/009.02	
+C-X109:3	BN	+M-R1503:H3	+C/009.02	
+C-X109:2	BK	+M-R1503:H1	+C/009.02	
+C-X109:⏚	GNYE	+M-R1503:⏚	+C/009.02	
	+M-W1504			
+M-X1002:1	1	+M-R1204:1	+C/007.02	
+M-X1002:2	2	+M-R1204:2	+C/007.05	
	+M-W1505			
+M-X1002:4	1	+M-R1205:1	+C/007.03	
+M-X1002:3	2	+M-R1205:2	+C/007.03	

Drawing remarks

Tetra Pak

Designer LUP	Date 23/11/2007	Machine Tetra Pak A3/Flex 0150	
ECM No 320174	Denomination CABLE CONNECTION LIST	Page Type CABLE CONNECTION LIST	
Company Tetra Pak (Italy)	Document No. 2845987-0007	Doc. type ELD	Version AE	Page 017

This drawing must not without the consent of Tetra Pak be copied, transmitted or disclosed to any third party.

Cable Connection List of 2845987-0003

From	Cable	To	Page.Col.	Option
	+M-W1506			
+M-X1002:5	1	+M-R1206:1	+C/007.06	
+M-X1002:7	2	+M-R1206:2	+C/007.09	
	+M-W1507			
+M-X1002:6	1	+M-R1207:1	+C/007.07	
+M-X1002:8	2	+M-R1207:2	+C/007.07	
	+M-W1511			
+M-X1511:3	WH	+M-X1003:175	+C/107.03	
+M-X1511:2	BN	+M-X1003:175+	+C/107.03	
+M-X1511:1	GN	+M-X1003:175-	+C/107.03	
GND:	SH		+C/107.03	
	+M-W1525			
+M-X7670:7	BN	+M-B1525:	+C/254.03	TGA
+M-X7670:8	BU	+M-B1525:	+C/254.03	TGA
+M-X7670:9	BK	+M-B1525:	+C/254.04	TGA
	+M-W1600			
+M-X1003:198+	BN	+M-B1600:	+C/126.02	DIMC
+M-X1003:198-	BU	+M-B1600:	+C/126.02	DIMC
+M-X1003:198	BK	+M-B1600:	+C/126.02	DIMC
	+M-W1601			
+M-B1601:	1	+C-A200:	+C/126.05	DIMC
	+M-W1602			
	1			
	2			
	GNYE			
	+M-W1603			
	1			
	2			
	GNYE			
	+M-W1801			
+M-X1001:145+	1	+M-B1801:1	+C/132.03	
+M-X1001:145-	2	+M-B1801:4	+C/132.03	
+M-X1001:145	3	+M-B1801:3	+C/132.05	
+M-X1001:⏚	GNYE		+C/132.03	
	+M-W1802			
+M-X4000:118	1	+M-B1802:1	+C/144.05	
+M-X4000:117	2	+M-B1802:2	+C/144.05	
+M-X4000:117+	3	+M-B1802:3	+C/144.04	
	GNYE			
	+M-W1803			
+M-X4000:125+	BN	+M-B1803:	+C/144.04	
+M-X4000:125-	BU	+M-B1803:	+C/144.04	
+M-X4000:125	BK	+M-B1803:	+C/144.05	
	+M-W1804			
+M-X4000:120	1	+M-M1802:1	+C/034.03	
+M-X4000:121	2	+M-M1802:2	+C/034.03	
	GNYE			
	+M-W1805			
+M-X4000:122	1	+M-M1803:1	+C/034.04	
+M-X4000:123	2	+M-M1803:2	+C/034.04	
	GNYE			
	+M-W1806			
+M-X4000:108	1	+M-B1806:1	+C/152.05	
+M-X4000:107	2	+M-B1806:2	+C/152.05	

Drawing remarks

Tetra Pak

Designer LUP	Date 23/11/2007	Machine Tetra Pak A3/Flex 0150	
ECM No 320174	Denomination CABLE CONNECTION LIST	Page Type CABLE CONNECTION LIST	
Company Tetra Pak (Italy)	Document No. 2845987-0007	Doc. type ELD	Version AE	Page 018

This drawing must not without the consent of Tetra Pak be copied, transmitted or disclosed to any third party.

Cable Connection List of 2845987-0003

From	Cable	To	Page.Col.	Option
+M-X4000:108+	3	+M-B1806:3	+C/152.03	
	GNYE			
	+M-W1807			
+M-X4000:106+	BN	+M-B1807:	+C/152.03	
+M-X4000:106-	BU	+M-B1807:	+C/152.03	
+M-X4000:106	BK	+M-B1807:	+C/152.05	
	+M-W1810			
+M-X1003:189	WH	+M-B1810:(1) L-	+C/104.04	
+M-X1003:189+	BN	+M-B1810:(2) L+	+C/104.04	
+M-W1810:	SH	+M-B1810:⏚	+C/104.04	
	+M-W1816			
+M-X2000:112+	BN	+M-B1816:	+C/136.04	
+M-X2000:112-	BU	+M-B1816:	+C/136.04	
+M-X2000:112	BK	+M-B1816:	+C/136.05	
	+M-W1823			
	1			
+M-X1001:152	2	+M-B1823:11	+C/120.05	
+M-X1001:152+	3	+M-B1823:12	+C/120.03	
	4			
	GNYE	+M-X1001:⏚	+C/120.05	
	+M-W1830			
+C-X129:1	1	+M-M1801:U	+C/018.06	
+C-X129:2	2	+M-M1801:V	+C/018.06	
+C-X129:3	3	+M-M1801:W	+C/018.06	
+C-X129:5	GNYE	+M-M1801:⏚	+C/018.06	
+C-X129:4	SH	GND:	+C/018.06	
	+M-W2001			
+C-X226:1	1	+M-X2000:101	+C/136.06	

From	Cable	To	Page.Col.	Option
+C-X226:2	2	+M-X2000:102	+C/138.06	
+C-X226:3	3	+M-X2000:103	+C/138.06	
+C-X226:4	4	+M-X2000:104	+C/138.06	
+C-X226:5	5	+M-X2000:105	+C/138.06	
+C-X226:6	6	+M-X2000:106	+C/138.06	
+C-X226:7	7	+M-X2000:108	+C/139.06	
+C-X226:8	8	+M-X2000:109	+C/139.06	
+C-X226:9	9	+M-X2000:110	+C/139.06	
+C-X226:10	10	+M-X2000:111	+C/201.03	
+C-X226:11	11	+M-X2000:112	+C/136.06	
+C-X226:12	12	+M-X2000:113	+C/231.03	
+C-X226:13	13	+M-X2000:114	+C/231.03	
+C-X226:14	14	+M-X2000:116	+C/139.06	
+C-X226:15	15	+M-X2000:118	+C/139.06	
+C-X226:16	16	+M-X2000:119	+C/139.06	
+C-X226:17	17	+M-X2000:120	+C/139.06	
+C-X226:18	18	+M-X2000:122	+C/139.06	
+C-X226:19	19	+M-X2000:123	+C/231.03	
+C-X226:20	20	+M-X2000:124	+C/231.03	
	21			
	22			
+C-X226:23	23	+M-X2000:101+	+C/136.02	
+C-X226:24	24	+M-X2000:101-	+C/136.02	
+C-X226:⏚	GNYE	+M-X2000:⏚	+C/139.06	
	+M-W2002			
+C-X227:1	1	+M-X2000:125	+C/150.03	
+C-X227:2	2	+M-X2000:126	+C/150.02	
+C-X227:3	3	+M-X2000:127	+C/150.06	
+C-X227:4	4	+M-X2000:131	+C/150.06	
+C-X227:5	5	+M-X2000:133	+C/056.03	
+C-X227:6	6	+M-X2000:137	+C/151.05	
+C-X227:7	7	+M-X2000:143	+C/151.05	
+C-X227:8	8	+M-X2000:144	+C/151.05	

Drawing remarks

Tetra Pak

Designer: LUP	Date: 23/11/2007	Machine: Tetra Pak A3/Flex 0150	
ECM No: 320174	Denomination: CABLE CONNECTION LIST	Page Type: CABLE CONNECTION LIST	
Company: Tetra Pak (Italy)	Document No.: 2845987-0007	Doc. type: ELD	Version: AE	Page: 019

This drawing must not without the consent of Tetra Pak be copied, transmitted or disclosed to any third party.

Cable Connection List of 2845987-0003

From	Cable	To	Page.Col.	Option
+C-X227:9	9	+M-X2000:145	+C/055.05	
+C-X227:10	10	+M-X2000:146	+C/055.08	
+C-X227:11	11	+M-X2000:147	+C/055.05	
+C-X227:12	12	+M-X2000:149	+C/055.05	
+C-X227:13	13	+M-X2000:151	+C/055.05	
+C-X227:14	14	+M-X2000:153	+C/055.05	
+C-X227:15	15	+M-X2000:155	+C/055.05	
+C-X227:16	16	+M-X2000:157	+C/231.03	
+C-X227:17	17	+M-X2000:158	+C/231.03	
+C-X227:18	18	+M-X2000:159	+C/231.03	
+C-X227:19	19	+M-X2000:160	+C/231.03	
+C-X227:20	20	+M-X2000:161	+C/231.03	
+C-X227:21	21	+M-X2000:162	+C/231.03	
+C-X227:22	22	+M-X2000:163	+C/231.03	
+C-X227:23	23	+M-X2000:165	+C/231.03	
+C-X227:24	24	+M-X2000:166	+C/231.03	
+C-X227:⏚	GNYE	+M-X2000:⏚	+C/150.05	
+M-W2003				
+C-X503:1	1	+M-X2243:1	+C/033.02	
+C-X503:2	2	+M-X2243:2	+C/033.02	
+C-X503:3	3	+M-X2243:3	+C/033.02	
+C-X503:⏚	GNYE	+M-X2243:⏚	+C/033.02	
+M-W2005				
+C-X101:1	1	+M-X2000:6	+C/037.05	
+C-X101:2	2	+M-X2000:7	+C/037.05	
+C-X101:3	3		+C/037.05	
+C-X101:4	4		+C/037.05	
	5			
	6			
+C-X101:⏚	GNYE	+M-X2000:⏚	+C/037.05	
+M-W2007				

From	Cable	To	Page.Col.	Option
+C-X102:1	1	+M-X2241:1	+C/032.06	
+C-X102:2	2	+M-X2241:2	+C/032.06	
+C-X102:3	3	+M-X2241:3	+C/032.06	
+C-X102:⏚	GNYE	+M-X2241:⏚	+C/032.06	
+M-W2008				
+C-X103:1	1	+M-X2242:1	+C/032.08	
+C-X103:2	2	+M-X2242:2	+C/032.08	
+C-X103:3	3	+M-X2242:3	+C/032.08	
+C-X103:⏚	GNYE	+M-X2242:⏚	+C/032.08	
+M-W2009				
+C-X104:1	1	+M-M2301:U	+C/032.04	
+C-X104:2	2	+M-M2301:V	+C/032.04	
+C-X104:3	3	+M-M2301:W	+C/032.04	
+C-X104:⏚	GNYE	+M-M2301:⏚	+C/032.04	
+M-W2010				
+C-X202:1	1	+M-X2001:101	+C/231.09	
+C-X202:2	2	+M-X2001:102	+C/115.06	
+C-X202:3	3	+M-X2001:103	+C/115.06	
+C-X202:4	4	+M-X2001:104	+C/115.06	
+C-X202:5	5	+M-X2001:105	+C/147.06	
+C-X202:6	6	+M-X2001:106	+C/147.06	
+C-X202:7	7	+M-X2001:108	+C/148.06	
+C-X202:8	8	+M-X2001:110	+C/231.09	
+C-X202:9	9	+M-X2001:111	+C/231.09	
+C-X202:10	10	+M-X2001:112	+C/141.06	DIMC
+C-X202:11	11	+M-X2001:113	+C/201.03	DIMC
+C-X202:12	12	+M-X2001:114	+C/141.06	DIMC
+C-X202:13	13	+M-X2001:115	+C/061.06	
+C-X202:14	14	+M-X2001:116	+C/061.06	
+C-X202:15	15	+M-X2001:118	+C/061.02	
+C-X202:16	16	+M-X2001:119	+C/231.09	

Drawing remarks

Tetra Pak

Designer: LUP	Date: 23/11/2007	Machine: Tetra Pak A3/Flex 0150	
ECM No: 320174	Denomination: CABLE CONNECTION LIST	Page Type: CABLE CONNECTION LIST	
Company: Tetra Pak (Italy)	Document No.: 2845987-0007	Doc. type: ELD	Version: AE	Page: 020

This drawing must not without the consent of Tetra Pak be copied, transmitted or disclosed to any third party.

Cable Connection List of 2845987-0003

From	Cable	To	Page.Col.	Option
+C-X202:17	17	+M-X2001:167	+C/147.06	
+C-X202:18	18	+M-X2001:168	+C/147.06	
+C-X202:19	19	+M-X2001:169	+C/156.06	
+C-X202:20	20	+M-X2001:170	+C/155.06	
+C-X202:21	21	+M-X2001:171	+C/156.06	
+C-X202:22	22	+M-X2001:172	+C/156.06	
+C-X202:23	23	+M-X2001:101+	+C/231.09	
+C-X202:24	24	+M-X2001:101-	+C/231.09	
+C-X202:⏚	GNYE	+M-X2001:⏚	+C/061.06	
+M-W2011				
+C-X204:1	1	+M-X2001:127	+C/150.02	
+C-X204:2	2	+M-X2001:128	+C/150.02	
+C-X204:3	3	+M-X2001:129	+C/150.06	
+C-X204:4	4	+M-X2001:131	+C/056.03	
+C-X204:5	5	+M-X2001:135	+C/150.06	
+C-X204:6	6	+M-X2001:139	+C/151.06	
+C-X204:7	7	+M-X2001:145	+C/151.06	
+C-X204:8	8	+M-X2001:146	+C/151.06	
+C-X204:9	9	+M-X2001:147	+C/231.09	
+C-X204:10	10	+M-X2001:150	+C/150.06	
+C-X204:11	11	+M-X2001:151	+C/231.09	
+C-X204:12	12	+M-X2001:152	+C/231.09	
+C-X204:13	13	+M-X2001:153	+C/231.09	
+C-X204:14	14	+M-X2001:155	+C/056.03	
+C-X204:15	15	+M-X2001:156	+C/056.03	
+C-X204:16	16	+M-X2001:157	+C/056.03	
+C-X204:17	17	+M-X2001:159	+C/056.03	
+C-X204:18	18	+M-X2001:160	+C/231.09	
+C-X204:19	19	+M-X2001:161	+C/231.09	
+C-X204:20	20	+M-X2001:162	+C/231.09	
+C-X204:21	21	+M-X2001:163	+C/231.09	
+C-X204:22	22	+M-X2001:164	+C/231.09	
+C-X204:23	23	+M-X2001:149	+C/231.09	

From	Cable	To	Page.Col.	Option
+C-X204:24	24	+M-X2001:166	+C/231.09	
+C-X204:⏚	GNYE	+M-X2001:⏚	+C/056.06	
+M-W2012				
+C-X215:1	1	+M-X2250:1	+C/204.03	
+C-X215:2	2	+M-X2250:2	+C/204.03	
+C-X215:3	3	+M-X2250:3	+C/204.03	
+C-X215:4	4	+M-X2250:4	+C/204.03	
+C-X215:5	5	+M-X2250:5	+C/204.03	
+C-X215:6	6	+M-X2250:6	+C/204.03	
+C-X215:7	7	+M-X2250:7	+C/204.03	
+C-X215:8	8	+M-X2250:8	+C/204.03	DIMC
+C-X215:9	9	+M-X2250:9	+C/205.03	
+C-X215:10	10	+M-X2250:10	+C/205.03	
	11			
+C-X215:12	12	+M-X2250:1-	+C/204.07	
+C-X215:13	13	+M-X2250:6-	+C/204.07	
+C-X215:⏚	GNYE	+M-X2250:⏚	+C/204.07	
+M-W2014				
+C-X111:1	1	+M-X2001:1	+C/032.01	
+C-X111:2	2	+M-X2001:2	+C/032.01	
+C-X111:3	3	+M-X2001:3	+C/032.01	
+C-X111:⏚	GNYE	+M-X2001:⏚	+C/032.01	
+M-W2015				
+C-X112:1	1	+M-X2001:6	+C/017.10	
+C-X112:2	2	+M-X2001:7	+C/017.10	
+C-X112:3	3	+M-X2001:8	+C/017.10	
+C-X112:5	GNYE	+M-X2001:10	+C/017.10	
+C-X112:4	SH	+M-X2001:9	+C/017.10	
+M-W2016				
+C-X107:1	1	+M-X2001:4	+C/037.09	

Drawing remarks

Tetra Pak

Designer: LUP	Date: 23/11/2007	Machine: Tetra Pak A3/Flex 0150	
ECM No: 320174	Denomination: CABLE CONNECTION LIST	Page Type: CABLE CONNECTION LIST	
Company: Tetra Pak (Italy)	Document No.: 2845987-0007	Doc. type: ELD	Version: AE	Page: 021

This drawing must not without the consent of Tetra Pak be copied, transmitted or disclosed to any third party.

Cable Connection List of 2845987-0003

From	Cable	To	Page.Col.	Option
+C-X107:2	2	+M-X2001:5	+C/037.09	
+C-X107:⏚	GNYE		+C/037.09	
	+M-W2017			
+M-X2010:1	1	+M-X5002:1	+C/010.01	
+M-X2010:2	2	+M-X5002:2	+C/010.01	
+M-X2010:⏚	GNYE	GND:	+C/010.01	
	+M-W2018			
+M-X2010:3	1	+M-X5003:1	+C/010.03	
+M-X2010:4	2	+M-X5003:2	+C/010.03	
+M-X2010:⏚	GNYE	GND:	+C/010.03	
	+M-W2019			
+M-X2010:5	1	+M-X5004:1	+C/010.05	
+M-X2010:6	2	+M-X5004:2	+C/010.05	
+M-X2010:⏚	GNYE	GND:	+C/010.05	
	+M-W2020			
+M-X2010:7	1	+M-X5005:1	+C/010.08	
+M-X2010:8	2	+M-X5005:2	+C/010.08	
	GNYE			
	+M-W2021			
+M-X2020:-	RD	+C-X302:-	+C/111.05	
+M-X2020:+	YE	+C-X302:+	+C/111.05	
	+M-W2022			
+M-X2021:-	RD	+C-X303:-	+C/111.05	
+M-X2021:+	YE	+C-X303:+	+C/111.05	
	+M-W2023			
+M-X2022:-	RD	+C-X304:-	+C/111.05	
+M-X2022:+	YE	+C-X304:+	+C/111.05	

From	Cable	To	Page.Col.	Option
	+M-W2024			
+M-X2023:-	RD	+C-X319:-	+C/111.05	TGA
+M-X2023:+	YE	+C-X319:+	+C/111.05	TGA
	+M-W2027			
+M-X2003:127	1	+C-Z004:3	+C/005.07	
+M-X2003:128	2	+C-Z004:4	+C/005.07	
	GNYE			
+M-W2027:	SH	PE:	+C/005.06	
	+M-W2029			
+C-X130:1	1	+M-M1501:U	+C/017.05	
+C-X130:2	2	+M-M1501:V	+C/017.05	
+C-X130:3	3	+M-M1501:W	+C/017.05	
+C-X130:5	GNYE	+M-M1501:⏚	+C/017.05	
+C-X130:4	SH	GND:	+C/017.05	
	+M-W2030			
+C-X203:1	1	+M-X2002:109	+C/149.03	
+C-X203:2	2		+C/237.08	
+C-X203:3	3	+M-X2002:111	+C/149.06	
+C-X203:4	4	+M-X2002:112	+C/149.06	
+C-X203:5	5	+M-X2002:113	+C/057.06	
+C-X203:6	6	+M-X2002:114	+C/057.06	
+C-X203:7	7	+M-X2002:115	+C/057.06	
+C-X203:8	8	+M-X2002:116	+C/057.06	
+C-X203:9	9	+M-X2002:117	+C/057.06	
+C-X203:10	10	+M-X2002:118	+C/148.06	
+C-X203:11	11	+M-X2002:120	+C/057.06	
+C-X203:12	12	+M-X2002:121	+C/057.06	
+C-X203:13	13	+M-X2002:122	+C/057.06	
+C-X203:14	14	+M-X2002:123	+C/057.06	
+C-X203:15	15	+M-K2010:A2	+C/058.08	

Drawing remarks

Tetra Pak

Designer LUP	Date 23/11/2007	Machine Tetra Pak A3/Flex 0150	
ECM No 320174	Denomination CABLE CONNECTION LIST	Page Type CABLE CONNECTION LIST	
Company Tetra Pak (Italy)	Document No. 2845987-0007	Doc. type ELD	Version AE	Page 022

This drawing must not without the consent of Tetra Pak be copied, transmitted or disclosed to any third party.

Cable Connection List of 2845987-0003

From	Cable	To	Page.Col.	Option
+C-X203:16	16	+M-K2011:A2	+C/058.08	
+C-X203:17	17	+M-K2012:A2	+C/058.08	
+C-X203:18	18	+M-K2013:A2	+C/058.08	
+C-X203:19	19	+M-K2014:A2	+C/058.08	
+C-X203:20	20	+M-K2015:A2	+C/058.08	
+C-X203:21	21	+M-K2016:A2	+C/058.08	
+C-X203:22	22		+C/237.08	
+C-X203:23	23	+M-X2002:118+	+C/035.05	
+C-X203:24	24	+M-X2002:118-	+C/035.05	
+C-X203:⏚	GNYE	+M-X2002:⏚	+C/149.06	
+M-W2040				
+C-X136:1	1	+C-M004:L1	+C/033.09	
+C-X136:2	2	+C-M004:N	+C/033.09	
+C-X136:⏚	GNYE	+C-M004:⏚	+C/033.09	
+M-W2041				
+C-X137:2	BK	+M-R1209:X	+C/006.02	
+C-X137:1	GY	+M-R1209:Z	+C/006.02	
+C-X137:3	BN	+M-R1209:Y	+C/006.02	
+C-X137:⏚	GNYE	+M-R1209:⏚	+C/006.02	
+M-W2042				
+C-X138:2	BK	+M-R1208:X	+C/006.06	
+C-X138:1	GY	+M-R1208:Z	+C/006.06	
+C-X138:3	BN	+M-R1208:Y	+C/006.06	
+C-X138:⏚	GNYE	+M-R1208:⏚	+C/006.06	
+M-W2045				
+C-X115:1	1	+M-M1213:V	+C/033.04	
+C-X115:2	2	+M-M1213:U	+C/033.04	
+C-X115:3	3	+M-M1213:W	+C/033.04	
+C-X115:⏚	GNYE	+M-M1213:⏚	+C/033.04	
+M-W2050				

From	Cable	To	Page.Col.	Option
+C-X222:1	1	+M-X2244:1	+C/200.03	
+C-X222:2	2	+M-X2244:2	+C/200.03	
+C-X222:3	3	+M-X2244:3	+C/200.03	
+C-X222:4	4	+M-X2244:4	+C/200.03	
+C-X222:5	5	+M-X2244:5	+C/200.03	
+C-X222:6	6	+M-X2244:6	+C/200.03	
+C-X222:7	7	+M-X2244:7	+C/200.03	
+C-X222:8	8	+M-X2244:8	+C/200.03	
+C-X222:9	9	+M-X2244:9	+C/175.03	
+C-X222:10	10	+M-X2244:10	+C/175.07	
+C-X222:11	11	+M-X2244:11	+C/177.03	
+C-X222:12	12	+M-X2244:12	+C/177.07	
+C-X222:13	13	+M-X2244:13	+C/201.03	
+C-X222:14	14	+M-X2244:14	+C/201.03	
+C-X222:15	15	+M-X2244:15	+C/137.06	
+C-X222:16	16	+M-X2244:16	+C/137.06	
+C-X222:17	17	+M-X2244:17	+C/137.06	
+C-X222:18	18	+M-X2244:18	+C/137.06	
+C-X222:19	19	+M-X2244:19	+C/120.06	
+C-X222:20	20	+M-X2244:20	+C/053.07	
+C-X222:21	21	+M-X2244:21	+C/105.06	
+C-X222:22	22	+M-X2244:22	+C/053.07	
+C-X222:23	23	+M-X2244:23	+C/120.02	
+C-X222:24	24	+M-X2244:24	+C/237.09	
+C-X222:⏚	GNYE	+M-X2244:⏚	+C/237.09	
+M-W2055				
+M-X2038:-	RD	+C-X301:-	+C/110.05	
+M-X2038:+	YE	+C-X301:+	+C/110.05	
+M-W2060				
+M-X9100:103	1	+C-X216:1	+C/145.06	H.I.
+M-X9100:104	2	+C-X216:2	+C/207.03	H.I.

Drawing remarks

Tetra Pak

Designer	Date	Machine
LUP	23/11/2007	Tetra Pak A3/Flex 0150

ECM No	Denomination	Page Type
320174	CABLE CONNECTION LIST	CABLE CONNECTION LIST

Company	Document No.	Doc. type	Version	Page
Tetra Pak (Italy)	2845987-0007	ELD	AE	023

RELEASED

This drawing must not without the consent of Tetra Pak be copied, transmitted or disclosed to any third party.

Cable Connection List of 2845987-0003

From	Cable	To	Page.Col.	Option
+M-X9100:105	3	+C-X216:3	+C/207.03	H.I.
+M-X9100:106	4	+C-X216:4	+C/207.03	H.I.
+M-X9100:107	5	+C-X216:5	+C/207.03	H.I.
+M-X9100:108	6	+C-X216:6	+C/145.06	H.I.
+M-X9100:109	7	+C-X216:7	+C/145.06	H.I.
+M-X9100:110	8	+C-X216:8	+C/145.06	H.I.
+M-X9100:111	9	+C-X216:9	+C/145.06	H.I.
+M-X9100:112	10	+C-X216:10	+C/145.06	H.I.
+M-X9100:113	11	+C-X216:11	+C/049.04	
+M-X9100:114	12	+C-X216:12	+C/049.04	
+M-X9100:115	13	+C-X216:13	+C/049.04	
+M-X9100:120	14	+C-X216:14	+C/145.06	H.I.
+M-X9100:121	15	+C-X216:15	+C/237.04	
+M-X9100:115+	16	+C-X216:16	+C/237.04	
+M-X9100:115-	17	+C-X216:17	+C/207.08	H.I.
+M-X9100:⏚	GNYE	+C-X216:⏚	+C/237.04	
+M-W2061				
+C-X118:1	1	+M-X9100:1	+C/008.02	
+C-X118:2	2	+M-X9100:2	+C/008.02	
+C-X118:⏚	GNYE	+M-X9100:⏚	+C/008.02	
+M-W2062				
+C-X216:18	WH	+M-X9100:116	+C/102.04	H.I.
+C-X216:19	GN	+M-X9100:117	+C/102.04	H.I.
+C-X216:21	BN	+M-X9100:119	+C/105.06	
	GNYE			
+C-X216:20	SH	+M-X9100:118	+C/102.04	H.I.
+M-W2063				
+M-X9106:-	RD	+C-X314:-	+C/111.03	H.I.
+M-X9106:+	YE	+C-X314:+	+C/111.03	H.I.
+M-W2064				

From	Cable	To	Page.Col.	Option
+M-X9100:125-	RD	+C-X321:-	+C/112.05	H.I.
+M-X9100:125+	YE	+C-X321:+	+C/112.05	H.I.
+M-W2065				
+M-X9122:-	RD	+C-X322:-	+C/112.05	H.I.
+M-X9122:+	YE	+C-X322:+	+C/112.05	H.I.
+M-W2066				
+C-X210:1	1	+C-X901:116	+C/150.03	
+C-X210:2	2	+C-X901:115	+C/150.03	
+C-X210:3	3	+C-X901:114	+C/150.05	
+C-X210:4	4	+C-X901:113	+C/150.05	
+C-X210:5	5	+C-X901:118	+C/127.06	
+C-X210:6	6	+C-X901:119	+C/127.06	
+C-X210:7	7	+C-X901:120	+C/127.06	
+C-X210:8	8	+C-X901:121	+C/127.06	
+C-X210:9	9	+C-X901:122	+C/127.06	
+C-X210:10	10	+C-X901:124	+C/127.06	
+C-X210:11	11	+C-X901:125	+C/127.06	
+C-X210:12	12	+C-X901:123	+C/127.06	
+C-X210:13	13	+C-X901:130	+C/128.06	
+C-X210:14	14	+C-X901:131	+C/128.06	
+C-X210:15	15	+C-X901:128	+C/128.06	
+C-X210:16	16	+C-X901:129	+C/128.06	
+C-X210:17	17	+C-X901:126	+C/128.05	
+C-X210:18	18	+C-X901:127	+C/128.06	
	19			
	20			
	21			
	22			
+C-X210:23	23	+C-X901:117	+C/127.02	
	24			
	GNYE	+C-X210:⏚	+C/127.06	

Drawing remarks

Tetra Pak

Designer LUP	Date 23/11/2007	Machine Tetra Pak A3/Flex 0150	
ECM No 320174	Denomination CABLE CONNECTION LIST	Page Type CABLE CONNECTION LIST	
Company Tetra Pak (Italy)	Document No. 2845987-0007	Doc. type ELD	Version AE	Page 024

This drawing must not without the consent of Tetra Pak be copied, transmitted or disclosed to any third party.

Cable Connection List of 2845987-0003

From	Cable	To	Page.Col.	Option
	+M-W2067			
+C-X207:1	1	+C-X901:132	+C/208.03	
+C-X207:2	2	+C-X901:134	+C/208.03	
+C-X207:3	3	+C-X901:135	+C/208.03	
+C-X207:4	4	+C-X901:136	+C/208.03	
+C-X207:5	5	+C-X901:137	+C/208.03	
+C-X207:6	6	+C-X901:138	+C/208.03	
+C-X207:7	7	+C-X901:139	+C/208.03	
+C-X207:8	8	+C-X901:140	+C/208.03	
+C-X207:9	9	+C-X901:133	+C/208.07	
	10			
	11			
	12			
	13			
	14			
	15			
	16			
	17			
	18			
	19			
	20			
	21			
	22			
	23			
	24			
	GNYE			
	+M-W2068			
+C-X452:1	OG	+M-X951:9	+C/060.03	
+C-X452:2	WH	+M-X951:10	+C/060.03	
+C-X452:3	GN	+M-X951:11	+C/060.03	
+C-X452:4	WH	+M-X951:12	+C/060.03	
+C-X452:5	BU	+M-X951:13	+C/060.03	

From	Cable	To	Page.Col.	Option
+C-X452:6	WH	+M-X951:14	+C/060.03	
+C-X452:7	BN	+M-X951:15	+C/060.03	
+C-X452:8	WH	+M-X951:16	+C/060.03	
+C-X452:12	YEBN	+M-X951:17	+C/060.03	
+C-X452:13	WHYE	+M-X951:1	+C/060.03	
+C-X452:14	BNGN	+M-X951:17	+C/060.03	
+C-X452:15	BNBU	+M-X951:1	+C/060.03	
+C-X452:16	RDBU	+M-X951:17	+C/060.03	
+C-X452:17	GYPK	+M-X951:1	+C/060.03	
+C-X452:19	RD	+M-X951:8	+C/060.03	
+C-X452:20	PKBN	+M-X951:7	+C/060.03	
+C-X452:21	PK	+M-X951:6	+C/060.03	
+C-X452:22	GY	+M-X951:5	+C/060.03	
+C-X452:23	YE	+M-X951:4	+C/060.03	
+C-X452:24	WHPK	+M-X951:3	+C/060.03	
+C-X452:26	WH	+M-X951:2	+C/060.03	
+C-X452:27	SH	+M-X951:18	+C/060.03	
	+M-W2071			
+C-X113:1	1	+M-X4057:1	+C/036.02	
+C-X113:2	2	+M-X4057:2	+C/036.05	
+C-X113:⏚	GNYE	+M-X4057:⏚	+C/036.05	
	+M-W2072			
+C-X114:1	1	+M-X4053:1	+C/036.02	
+C-X114:2	2	+M-X4053:2	+C/036.05	
+C-X114:⏚	GNYE	+M-X4053:⏚	+C/036.05	
	+M-W2073			
+C-X761:1	1	+M-X4157:1	+C/252.02	TGA
+C-X761:2	2	+M-X4157:2	+C/252.07	TGA
+C-X761:⏚	GNYE	+M-X4157:⏚	+C/252.07	TGA

Drawing remarks

Tetra Pak

Designer: LUP	Date: 23/11/2007	Machine: Tetra Pak A3/Flex 0150	
ECM No: 320174	Denomination: CABLE CONNECTION LIST	Page Type: CABLE CONNECTION LIST	
Company: Tetra Pak (Italy)	Document No.: 2845987-0007	Doc. type: ELD	Version: AE	Page: 025

This drawing must not without the consent of Tetra Pak be copied, transmitted or disclosed to any third party.

Cable Connection List of 2845987-0003

From	Cable	To	Page.Col.	Option
	+M-W2074			
+C-X762:1	1	+M-X4158:1	+C/252.02	TGA
+C-X762:2	2	+M-X4158:2	+C/252.07	TGA
+C-X762:⏚	GNYE	+M-X4158:⏚	+C/252.07	TGA
	+M-W2075			
+M-X4157:1	1	+M-X4155:1	+C/252.03	
+M-X4157:2	2	+M-X4155:6	+C/252.06	
+M-X4157:⏚	GNYE	+M-X4155:⏚	+C/252.06	
	+M-W2076			
+M-X4158:1	1	+M-X4156:1	+C/252.03	
+M-X4158:2	2	+M-X4156:6	+C/252.06	
+M-X4158:⏚	GNYE	+M-X4156:⏚	+C/252.06	
	+M-W2090			
+M-X4070:1	1	+C-A500:X004	+C/011.02	
	+M-W2091			
+M-X4072:1	1	+C-A500:X005	+C/011.03	
	+M-W2110			
+M-X2003:129	WH	+M-B2110:1	+C/053.08	
+M-X2003:130	WH	+M-B2110:2	+C/053.09	
	+M-W2111			
+M-X2003:135	WH	+M-B2111:1	+C/053.08	
+M-X2003:136	WH	+M-B2111:2	+C/053.09	
	+M-W2115			
+M-X2003:117	1	+M-Y2115:1	+C/201.04	
+M-X2003:118	2	+M-Y2115:2	+C/201.06	
+M-X2003:⏚	GNYE	+M-Y2115:E	+C/201.06	

From	Cable	To	Page.Col.	Option
	+M-W2116			
+M-X2003:133	1	+M-B2116:2	+C/105.02	DIMC
+M-X2003:132	2	+M-B2116:3	+C/105.03	DIMC
	GNYE			
	+M-W2201			
+M-X2003:111	BN	+M-Y2201:	+C/175.04	
+M-X2003:112	BU	+M-Y2201:	+C/175.05	
+M-X2003:⏚	GNYE	+M-Y2201:	+C/175.05	
	+M-W2208			
+M-X2000:153	1	+M-X4308:1	+C/055.06	
+M-X2000:154	2	+M-X4308:2	+C/055.07	
	3			
+M-X2000:⏚	GNYE	+M-X4308:⏚	+C/055.06	
	+M-W2209			
+M-X2000:155	1	+M-X4309:1	+C/055.06	
+M-X2000:156	2	+M-X4309:2	+C/055.07	
	3			
+M-X2000:⏚	GNYE	+M-X4309:⏚	+C/055.06	
	+M-W2211			
+M-X2000:6	1	+M-E2002:1	+C/037.05	
+M-X2000:7	2	+M-E2002:2	+C/037.05	
+M-X2000:⏚	GNYE	+M-E2002:⏚	+C/037.05	
	+M-W2212			
+M-X2001:155	1	+M-H2801:1	+C/056.04	
+M-X2001:156	2	+M-H2801:2	+C/056.04	
+M-X2001:157	3	+M-H2801:3	+C/056.04	
+M-X2001:158	4	+M-H2801:0	+C/056.06	
+M-X2001:⏚	GNYE	+M-H2801:⏚	+C/056.06	

Drawing remarks

Tetra Pak

Designer LUP	Date 23/11/2007	Machine Tetra Pak A3/Flex 0150	
ECM No 320174	Denomination CABLE CONNECTION LIST	Page Type CABLE CONNECTION LIST	
Company Tetra Pak (Italy)	Document No. 2845987-0007	Doc. type ELD	Version AE	Page 026

This drawing must not without the consent of Tetra Pak be copied, transmitted or disclosed to any third party.

Cable Connection List of 2845987-0003

From	Cable	To	Page.Col.	Option
	+M-W2213			
+M-X2241:1	1	+M-M2501:U	+C/032.06	
+M-X2241:2	2	+M-M2501:V	+C/032.06	
+M-X2241:3	3	+M-M2501:W	+C/032.06	
+M-X2241:⏚	GNYE	+M-M2501:⏚	+C/032.06	
	+M-W2214			
+M-X2242:1	1	+M-M2540:U	+C/032.08	
+M-X2242:2	2	+M-M2540:V	+C/032.08	
+M-X2242:3	3	+M-M2540:W	+C/032.08	
+M-X2242:⏚	GNYE	+M-M2540:⏚	+C/032.08	
	+M-W2220			
+M-X2003:119	1	+M-B2102:1	+C/137.04	
+M-X2003:120	2	+M-B2102:3	+C/137.03	
+M-X2003:⏚	GNYE	+M-B2102:⏚	+C/137.04	
	+M-W2221			
+M-X2003:121	1	+M-B2201:1	+C/137.04	
+M-X2003:122	2	+M-B2201:3	+C/137.03	
+M-X2003:⏚	GNYE	+M-B2201:⏚	+C/137.04	
	+M-W2222			
+M-X2003:113	1	+M-Y3101:	+C/177.04	
+M-X2003:114	2	+M-Y3101:	+C/177.05	
+M-X2003:⏚	GNYE	+M-Y3101:	+C/177.05	
	+M-W2224			
+M-X2001:127	1	+M-B2810:21	+C/150.03	
+M-X2001:128	2	+M-B2810:11	+C/150.03	
+M-X2001:129	3	+M-B2810:12	+C/150.04	
+M-X2001:130	4	+M-B2810:22	+C/150.04	
+M-X2001:131	5	+M-Y2810:3	+C/056.04	

From	Cable	To	Page.Col.	Option
+M-X2001:132	6	+M-Y2810:4	+C/056.05	
	GNYE			
	+M-W2225			
+M-X2000:125	1	+M-B2811:21	+C/150.04	
+M-X2000:126	2	+M-B2811:11	+C/150.04	
+M-X2000:127	3	+M-B2811:12	+C/150.04	
+M-X2000:128	4	+M-B2811:22	+C/150.04	
	GNYE			
	+M-W2226			
+M-X2000:129	1	+M-B2812:21	+C/150.04	
+M-X2000:130	2	+M-B2812:11	+C/150.04	
+M-X2000:131	3	+M-B2812:12	+C/150.04	
+M-X2000:132	4	+M-B2812:22	+C/150.04	
+M-X2000:133	5	+M-Y2812:3	+C/056.04	
+M-X2000:134	6	+M-Y2812:4	+C/056.05	
	GNYE			
	+M-W2227			
+M-X2001:140	1	+M-B2813:21	+C/150.03	TGA
+M-X2001:148	2	+M-B2813:11	+C/150.03	TGA
+M-X2001:150	3	+M-B2813:12	+C/150.04	TGA
+M-X2001:143	4	+M-B2813:22	+C/150.04	TGA
	5			
	6			
	GNYE			
	+M-W2228			
+M-X2001:137	1	+M-B2830:21	+C/151.03	
+M-X2001:138	2	+M-B2830:11	+C/151.03	
+M-X2001:139	3	+M-B2830:12	+C/151.04	
+M-X2001:140	4	+M-B2830:22	+C/151.04	
+M-X2001:141	5	+M-Y2830:3	+C/056.04	

Drawing remarks

Tetra Pak

Designer LUP	Date 23/11/2007	Machine Tetra Pak A3/Flex 0150	
ECM No 320174	Denomination CABLE CONNECTION LIST	Page Type CABLE CONNECTION LIST	
Company Tetra Pak (Italy)	Document No. 2845987-0007	Doc. type ELD	Version AE	Page 027

This drawing must not without the consent of Tetra Pak be copied, transmitted or disclosed to any third party.

Cable Connection List of 2845987-0003

From	Cable	To	Page.Col.	Option
+M-X2001:142	6	+M-Y2830:4	+C/056.05	
	GNYE			
	+M-W2230			
+M-X2000:141	1	+M-B2832:21	+C/151.03	
+M-X2000:142	2	+M-B2832:11	+C/151.03	
+M-X2000:143	3	+M-B2832:12	+C/151.04	
+M-X2000:144	4	+M-B2832:22	+C/151.04	
	GNYE			
	+M-W2231			
+M-X2000:135	1	+M-B2831:21	+C/151.03	
+M-X2000:136	2	+M-B2831:11	+C/151.03	
+M-X2000:137	3	+M-B2831:12	+C/151.04	
+M-X2000:138	4	+M-B2831:22	+C/151.04	
+M-X2000:139	5	+M-Y2831:3	+C/056.04	
+M-X2000:140	6	+M-Y2831:4	+C/056.05	
	GNYE			
	+M-W2232			
+M-X2062:1	1	+C-X209:1	+C/137.02	
+M-X2062:2	2	+C-X209:2	+C/137.06	
+M-X2062:3	3	+C-X209:3	+C/137.06	
+M-X2062:4	4	+C-X209:4	+C/047.04	
+M-X2062:5	5	+C-X209:5	+C/047.04	
+M-X2062:6	6	+C-X209:6	+C/047.04	
+M-X2062:⏚	GNYE	+C-X209:⏚	+C/047.04	
	+M-W2233			
+M-X2000:116	1	+M-B2310:1	+C/139.04	
+M-X2000:115	2	+M-B2310:2	+C/139.03	
+M-X2000:⏚	GNYE	+M-B2310:⏚	+C/139.04	
	+M-W2234			

From	Cable	To	Page.Col.	Option
+M-X2000:119	1	+M-B2320:1	+C/139.04	
+M-X2000:120	2	+M-B2320:2	+C/139.04	
	3			
+M-X2000:118	4	+M-B2320:4	+C/139.04	
	5			
+M-X2000:117	6	+M-B2320:6	+C/139.03	
+M-X2000:⏚	GNYE	+M-B2320:⏚	+C/139.03	
	+M-W2235			
+M-X2000:111	1	+M-Y2106:1	+C/201.04	
+M-X2000:111-	2	+M-Y2106:2	+C/201.06	
+M-X2000:⏚	GNYE	+M-Y2106:E	+C/201.06	
	+M-W2236			
+M-X2000:145	1	+M-X4311:1	+C/055.06	
+M-X2000:146	2	+M-X4311:2	+C/055.07	
	3			
+M-X2000:⏚	GNYE	+M-X4311:⏚	+C/055.06	
	+M-W2237			
+M-X2000:147	1	+M-X4312:1	+C/055.06	
+M-X2000:148	2	+M-X4312:2	+C/055.07	
	3			
+M-X2000:⏚	GNYE	+M-X4312:⏚	+C/055.06	
	+M-W2238			
+M-X2000:121	1	+M-B2330:3	+C/139.03	
+M-X2000:122	2	+M-B2330:1	+C/139.04	
+M-X2000:⏚	GNYE	+M-B2330:E	+C/139.04	
	+M-W2242			
+M-X2039:-	RD	+M-X2038:-	+C/110.03	
+M-X2039:+	YE	+M-X2038:+	+C/110.03	

Drawing remarks

Tetra Pak

Designer LUP	Date 23/11/2007	Machine Tetra Pak A3/Flex 0150	
ECM No 320174	Denomination CABLE CONNECTION LIST	Page Type CABLE CONNECTION LIST	
Company Tetra Pak (Italy)	Document No. 2845987-0007	Doc. type ELD	Version AE	Page 028

This drawing must not without the consent of Tetra Pak be copied, transmitted or disclosed to any third party.

Cable Connection List of 2845987-0003

From	Cable	To	Page.Col.	Option
	+M-W2243			
+M-X2003:115	1	+M-Y2108:1	+C/201.04	
+M-X2003:116	2	+M-Y2108:2	+C/201.06	
+M-X2003:⏚	GNYE	+M-Y2108:E	+C/201.06	
	+M-W2244			
+M-X2000:8	1	+M-E2001:1	+C/037.07	
+M-X2000:9	2	+M-E2001:2	+C/037.07	
+M-X2000:⏚	GNYE	+M-E2001:⏚	+C/037.07	
	+M-W2246			
+M-X2003:123	BN	+M-B3102:BN	+C/137.04	
+M-X2003:124	BU	+M-B3102:BU	+C/137.03	
+M-X2003:⏚	GNYE	+M-B3102:⏚	+C/137.04	
	+M-W2247			
+M-X2003:126	RD	+M-B3105:	+C/137.03	
+M-X2003:125	BK	+M-B3105:	+C/137.04	
	+M-W2248			
+M-X2000:149	1	+M-X4306:1	+C/055.06	
+M-X2000:150	2	+M-X4306:2	+C/055.07	
	3			
+M-X2000:⏚	GNYE	+M-X4306:⏚	+C/055.06	
	+M-W2249			
+M-X2000:151	1	+M-X4307:1	+C/055.06	
+M-X2000:152	2	+M-X4307:2	+C/055.07	
	3			
+M-X2000:⏚	GNYE	+M-X4307:⏚	+C/055.06	
	+M-W2250			
+M-X2050:101	1	+M-X2062:1	+C/137.02	
+M-X2050:102	2	+M-X2062:2	+C/137.05	
+M-X2050:104	3	+M-X2062:3	+C/137.05	
+M-X2050:107	4	+M-X2062:4	+C/047.04	
+M-X2050:108	5	+M-X2062:5	+C/047.04	
	6			
+M-X2050:⏚	GNYE	+M-X2062:⏚	+C/047.04	
	+M-W2251			
+M-X2050:101	1	+M-B2501:3	+C/137.03	
+M-X2050:102	2	+M-B2501:1	+C/137.05	
	GNYE			
	+M-W2252			
+M-X2050:103	1	+M-B2540:A	+C/137.03	
+M-X2050:104	2	+M-B2540:C	+C/137.05	
	GNYE			
	+M-W2253			
+M-X2050:107	1	+M-B2520:	+C/047.03	
+M-X2050:108	2	+M-B2520:	+C/047.03	
	+M-W2254			
+M-X4000:109+	1	+M-S2803:21	+C/149.04	
+M-X4000:110	2	+M-S2803:11	+C/149.04	
+M-X4000:111	3	+M-S2803:12	+C/149.05	
+M-X4000:112	4	+M-S2803:22	+C/149.05	
+M-X4000:⏚	GNYE	PE:	+C/149.05	
	+M-W2255			
+M-X4000:113+	1	+M-S2804:21	+C/149.04	
+M-X4000:114	2	+M-S2804:11	+C/149.04	
+M-X4000:115	3	+M-S2804:12	+C/149.05	
+M-X4000:116	4	+M-S2804:22	+C/149.05	
+M-X4000:⏚	GNYE	PE:	+C/149.05	

Drawing remarks

Tetra Pak

Designer LUP	Date 23/11/2007	Machine Tetra Pak A3/Flex 0150	
ECM No 320174	Denomination CABLE CONNECTION LIST	Page Type CABLE CONNECTION LIST	
Company Tetra Pak (Italy)	Document No. 2845987-0007	Doc. type ELD	Version AE	Page 029

This drawing must not without the consent of Tetra Pak be copied, transmitted or disclosed to any third party.

Cable Connection List of 2845987-0003

From	Cable	To	Page.Col.	Option
	+M-W2256			
+M-X2243:1	1	+M-M3102:U	+C/033.02	
+M-X2243:2	2	+M-M3102:V	+C/033.02	
+M-X2243:⏚	GNYE	+M-M3102:⏚	+C/033.02	
+M-X2243:3	3	+M-M3102:W	+C/033.02	
	+M-W2257			
+M-X2003:101	1	+M-X2051:1	+C/200.04	
+M-X2003:102	2	+M-X2051:2	+C/200.04	
+M-X2003:103	3	+M-X2051:3	+C/200.04	
+M-X2003:104	4	+M-X2051:4	+C/200.04	
+M-X2003:105	5	+M-X2051:5	+C/200.04	
+M-X2003:107	6	+M-X2051:6	+C/200.04	
+M-X2003:108	7	+M-X2051:7	+C/200.04	
+M-X2003:109	8	+M-X2051:8	+C/200.04	
	9			
	10			
	11			
+M-X2003:106	12	+M-X2051:1-	+C/200.07	
+M-X2003:110	13	+M-X2051:6-	+C/200.07	
+M-X2003:⏚	GNYE	+M-X2051:⏚	+C/200.07	
	+M-W2258			
+M-X2244:1	1	+M-X2003:101	+C/200.04	
+M-X2244:2	2	+M-X2003:102	+C/200.04	
+M-X2244:3	3	+M-X2003:103	+C/200.04	
+M-X2244:4	4	+M-X2003:104	+C/200.04	
+M-X2244:5	5	+M-X2003:105	+C/200.04	
+M-X2244:6	6	+M-X2003:107	+C/200.04	
+M-X2244:7	7	+M-X2003:108	+C/200.04	
+M-X2244:8	8	+M-X2003:109	+C/200.04	
+M-X2244:9	9	+M-X2003:111	+C/175.03	
+M-X2244:10	10	+M-X2003:112	+C/175.06	

From	Cable	To	Page.Col.	Option
+M-X2244:11	11	+M-X2003:113	+C/177.04	
+M-X2244:12	12	+M-X2003:114	+C/177.06	
+M-X2244:13	13	+M-X2003:115	+C/201.04	
+M-X2244:14	14	+M-X2003:117	+C/201.04	
+M-X2244:15	15	+M-X2003:119	+C/137.05	
+M-X2244:16	16	+M-X2003:121	+C/137.05	
+M-X2244:17	17	+M-X2003:123	+C/137.05	
+M-X2244:18	18	+M-X2003:125	+C/137.05	
+M-X2244:19	19	+M-X2003:127	+C/120.05	
+M-X2244:20	20	+M-X2003:129	+C/053.07	
+M-X2244:21	21	+M-X2003:132	+C/105.05	
+M-X2244:22	22	+M-X2003:135	+C/053.07	
+M-X2244:23	23	+M-X2003:136	+C/120.03	
+M-X2244:24	24	+M-X2003:137	+C/237.08	
+M-X2244:⏚	GNYE	+M-X2003:⏚	+C/237.08	
	+M-W2270			
+C-X031:37	GN	+M-B2403:2	+C/053.03	
+C-X031:35	BN	+M-B2403:1	+C/053.02	
+C-X031:⏚	YE	+M-B2403:E	+C/053.03	
	WH	+M-B2403:3	+C/053.02	
+C-X031:36	SH	GND:	+C/053.03	
	+M-W2271			
+C-X031:38	GN	+M-B2404:2	+C/053.04	
+C-X031:39	BN	+M-B2404:1	+C/053.02	
+C-X031:⏚	YE	+M-B2404:E	+C/053.04	
	WH	+M-B2404:3	+C/053.02	
+C-X031:40	SH	GND:	+C/053.04	
	+M-W2710			
+C-A710:1 U	BN	+M-M2710:U A	+C/024.02	
+C-A710:2 V	BK	+M-M2710:V B	+C/024.02	
+C-A710:2 W	BU	+M-M2710: W C	+C/024.02	

Drawing remarks

Tetra Pak

Designer LUP	Date 23/11/2007	Machine Tetra Pak A3/Flex 0150	
ECM No 320174	Denomination CABLE CONNECTION LIST	Page Type CABLE CONNECTION LIST	
Company Tetra Pak (Italy)	Document No. 2845987-0007	Doc. type ELD	Version AE	Page 030

This drawing must not without the consent of Tetra Pak be copied, transmitted or disclosed to any third party.

Cable Connection List of 2845987-0003

From	Cable	To	Page.Col.	Option
+C-A710:4 GND	GNYE	+M-M2710:GND	+C/024.02	
PE:	SH	PE:	+C/024.02	
+M-W2711				
+C-A711:1 U	BN	+M-M2711:U A	+C/022.02	
+C-A711:2 V	BK	+M-M2711:V B	+C/022.02	
+C-A711:2 W	BU	+M-M2711: W C	+C/022.02	
+C-A711:4 GND	GNYE	+M-M2711:GND	+C/022.02	
GND:	SH	GND:	+C/022.02	
+M-W2712				
+C-A712:1 U	BN	+M-M2712:U A	+C/021.02	
+C-A712:2 V	BK	+M-M2712:V B	+C/021.02	
+C-A712:2 W	BU	+M-M2712: W C	+C/021.02	
+C-A712:4 GND	GNYE	+M-M2712:GND	+C/021.02	
GND:	SH	GND:	+C/021.02	
+M-W2713				
+C-A713:1 U	BN	+M-M2713:U A	+C/023.02	
+C-A713:2 V	BK	+M-M2713:V B	+C/023.02	
+C-A713:2 W	BU	+M-M2713: W C	+C/023.02	
+C-A713:4 GND	GNYE	+M-M2713:GND	+C/023.02	
PE:	SH	PE:	+C/023.02	
+M-W2714				
+C-A714:1 U	BN	+M-M2714:U A	+C/029.02	
+C-A714:2 V	BK	+M-M2714:V B	+C/029.02	
+C-A714:2 W	BU	+M-M2714: W C	+C/029.02	
+C-A714:4 GND	GNYE	+M-M2714:GND	+C/029.02	
PE:	SH	PE:	+C/029.02	
+M-W2715				
+C-A715:1 U	BN	+M-M2715:U A	+C/028.02	
+C-A715:2 V	BK	+M-M2715:V B	+C/028.02	

From	Cable	To	Page.Col.	Option
+C-A715:2 W	BU	+M-M2715: W C	+C/028.02	
+C-A715:4 GND	GNYE	+M-M2715:GND	+C/028.02	
PE:	SH	PE:	+C/028.02	
+M-W2716				
+C-A716:1 U	BN	+M-M2716:U A	+C/027.02	
+C-A716:2 V	BK	+M-M2716:V B	+C/027.02	
+C-A716:2 W	BU	+M-M2716: W C	+C/027.02	
+C-A716:4 GND	GNYE	+M-M2716:GND	+C/027.02	
GND:	SH	GND:	+C/027.02	
+M-W2720				
+M-M2710:SIN+ A	BK	+C-A710:M/F D1	+C/024.03	
+M-M2710:SIN- B	WH/BK	+C-A710:M/F D2	+C/024.03	
+M-M2710:COS+ C	RD	+C-A710:M/F D3	+C/024.03	
+M-M2710:COS- D	WH/RD	+C-A710:M/F D4	+C/024.03	
+M-M2710:DATA+ E	GN	+C-A710:M/F D5	+C/024.03	
+M-M2710:DATA- F	WH/GN	+C-A710:M/F D10	+C/024.03	
+M-M2710:K	GY	+C-A710:M/F D14	+C/024.03	
+M-M2710:ECOM L	WH/GY	+C-A710:M/F D6	+C/024.03	
+M-M2710:+9VDC N	OG	+C-A710:M/F D7	+C/024.03	
+M-M2710:TS+ R	WH/OG	+C-A710:M/F D11	+C/024.03	
+M-W2720:	SH	PE:	+C/024.05	
+M-W2721				
+M-M2711:SIN+ A	BK	+C-A711:M/F D1	+C/022.03	
+M-M2711:SIN- B	WH/BK	+C-A711:M/F D2	+C/022.03	
+M-M2711:COS+ C	RD	+C-A711:M/F D3	+C/022.03	
+M-M2711:COS- D	WH/RD	+C-A711:M/F D4	+C/022.03	
+M-M2711:DATA+ E	GN	+C-A711:M/F D5	+C/022.03	
+M-M2711:DATA- F	WH/GN	+C-A711:M/F D10	+C/022.03	
+M-M2711:K	GY	+C-A711:M/F D14	+C/022.03	
+M-M2711:ECOM L	WH/GY	+C-A711:M/F D6	+C/022.03	
+M-M2711:+9VDC N	OG	+C-A711:M/F D7	+C/022.03	

Drawing remarks

Tetra Pak

Designer: LUP	Date: 23/11/2007	Machine: Tetra Pak A3/Flex 0150	
ECM No: 320174	Denomination: CABLE CONNECTION LIST	Page Type: CABLE CONNECTION LIST	
Company: Tetra Pak (Italy)	Document No.: 2845987-0007	Doc. type: ELD	Version: AE	Page: 031

This drawing must not without the consent of Tetra Pak be copied, transmitted or disclosed to any third party.

Cable Connection List of 2845987-0003

From	Cable	To	Page.Col.	Option
+M-M2711:TS+ R	WH/OG	+C-A711:M/F D11	+C/022.03	
+M-W2721:	SH	PE:	+C/022.05	
+M-W2722				
+M-M2712:SIN+ A	BK	+C-A712:M/F D1	+C/021.03	
+M-M2712:SIN- B	WH/BK	+C-A712:M/F D2	+C/021.03	
+M-M2712:COS+ C	RD	+C-A712:M/F D3	+C/021.03	
+M-M2712:COS- D	WH/RD	+C-A712:M/F D4	+C/021.03	
+M-M2712:DATA+ E	GN	+C-A712:M/F D5	+C/021.03	
+M-M2712:DATA- F	WH/GN	+C-A712:M/F D10	+C/021.03	
+M-M2712:K	GY	+C-A712:M/F D14	+C/021.03	
+M-M2712:ECOM L	WH/GY	+C-A712:M/F D6	+C/021.03	
+M-M2712:+9VDC N	OG	+C-A712:M/F D7	+C/021.03	
+M-M2712:TS+ R	WH/OG	+C-A712:M/F D11	+C/021.03	
+M-W2722:	SH	PE:	+C/021.05	
+M-W2723				
+C-A713:M/F D1	BK	+M-M2713:SIN+ A	+C/023.03	
+C-A713:M/F D2	WH/BK	+M-M2713:SIN- B	+C/023.03	
+C-A713:M/F D3	RD	+M-M2713:COS+ C	+C/023.03	
+C-A713:M/F D4	WH/RD	+M-M2713:COS- D	+C/023.03	
+C-A713:M/F D5	GN	+M-M2713:DATA+ E	+C/023.03	
+C-A713:M/F D10	WH/GN	+M-M2713:DATA- F	+C/023.03	
+C-A713:M/F D14	GY	+M-M2713:K	+C/023.03	
+C-A713:M/F D6	WH/GY	+M-M2713:ECOM L	+C/023.03	
+C-A713:M/F D7	OG	+M-M2713:+9VDC N	+C/023.03	
+C-A713:M/F D11	WH/OG	+M-M2713:TS+ R	+C/023.03	
	SH			
+M-W2724				
+M-M2714:SIN+ A	BK	+C-A714:M/F D1	+C/029.03	
+M-M2714:SIN- B	WH/BK	+C-A714:M/F D2	+C/029.03	
+M-M2714:COS+ C	RD	+C-A714:M/F D3	+C/029.03	
+M-M2714:COS- D	WH/RD	+C-A714:M/F D4	+C/029.03	

From	Cable	To	Page.Col.	Option
+M-M2714:DATA+ E	GN	+C-A714:M/F D5	+C/029.03	
+M-M2714:DATA- F	WH/GN	+C-A714:M/F D10	+C/029.03	
+M-M2714:K	GY	+C-A714:M/F D14	+C/029.03	
+M-M2714:ECOM L	WH/GY	+C-A714:M/F D6	+C/029.03	
+M-M2714:+9VDC N	OG	+C-A714:M/F D7	+C/029.03	
+M-M2714:TS+ R	WH/OG	+C-A714:M/F D11	+C/029.03	
+M-W2724:	SH	PE:	+C/029.05	
+M-W2725				
+M-M2715:SIN+ A	BK	+C-A715:M/F D1	+C/028.03	
+M-M2715:SIN- B	WH/BK	+C-A715:M/F D2	+C/028.03	
+M-M2715:COS+ C	RD	+C-A715:M/F D3	+C/028.03	
+M-M2715:COS- D	WH/RD	+C-A715:M/F D4	+C/028.03	
+M-M2715:DATA+ E	GN	+C-A715:M/F D5	+C/028.03	
+M-M2715:DATA- F	WH/GN	+C-A715:M/F D10	+C/028.03	
+M-M2715:K	GY	+C-A715:M/F D14	+C/028.03	
+M-M2715:ECOM L	WH/GY	+C-A715:M/F D6	+C/028.03	
+M-M2715:+9VDC N	OG	+C-A715:M/F D7	+C/028.03	
+M-M2715:TS+ R	WH/OG	+C-A715:M/F D11	+C/028.03	
+M-W2725:	SH	PE:	+C/028.05	
+M-W2726				
+M-M2716:SIN+ A	BK	+C-A716:M/F D1	+C/027.05	
+M-M2716:SIN- B	WH/BK	+C-A716:M/F D2	+C/027.05	
+M-M2716:COS+ C	RD	+C-A716:M/F D3	+C/027.05	
+M-M2716:COS- D	WH/RD	+C-A716:M/F D4	+C/027.05	
+M-M2716:DATA+ E	GN	+C-A716:M/F D5	+C/027.05	
+M-M2716:DATA- F	WH/GN	+C-A716:M/F D10	+C/027.05	
+M-M2716:K	GY	+C-A716:M/F D14	+C/027.05	
+M-M2716:ECOM L	WH/GY	+C-A716:M/F D6	+C/027.05	
+M-M2716:+9VDC N	OG	+C-A716:M/F D7	+C/027.05	
+M-M2716:TS+ R	WH/OG	+C-A716:M/F D11	+C/027.05	
+M-W2726:	SH	PE:	+C/027.04	

Drawing remarks

Tetra Pak

Designer: LUP	Date: 23/11/2007	Machine: Tetra Pak A3/Flex 0150	
ECM No: 320174	Denomination: CABLE CONNECTION LIST	Page Type: CABLE CONNECTION LIST	
Company: Tetra Pak (Italy)	Document No.: 2845987-0007	Doc. type: ELD	Version: AE	Page: 032

This drawing must not without the consent of Tetra Pak be copied, transmitted or disclosed to any third party.

Cable Connection List of 2845987-0003

From	Cable	To	Page.Col.	Option
+M-W2730				
+C-X700:26	BK	+M-M2710:BR- C	+C/024.01	
+C-X700:27	WH	+M-M2710:BR+ A	+C/024.01	
GND:	SH	GND:	+C/024.01	
+M-W2731				
+C-X700:22	BK	+M-M2711:BR- C	+C/022.01	
+C-X700:23	WH	+M-M2711:BR+ A	+C/022.01	
GND:	SH	GND:	+C/022.01	
+M-W2732				
+C-X700:20	BK	+M-M2712:BR- C	+C/021.01	
+C-X700:21	WH	+M-M2712:BR+ A	+C/021.01	
GND:	SH	GND:	+C/021.01	
+M-W2733				
+C-X700:24	BK	+M-M2713:BR- C	+C/023.01	
+C-X700:25	WH	+M-M2713:BR+ A	+C/023.01	
GND:	SH	GND:	+C/023.01	
+M-W2734				
+C-X700:30	BK	+M-M2714:BR- C	+C/029.01	
+C-X700:31	WH	+M-M2714:BR+ A	+C/029.01	
GND:	SH	GND:	+C/029.01	
+M-W2735				
+C-X700:28	BK	+M-M2715:BR- C	+C/028.01	
+C-X700:29	WH	+M-M2715:BR+ A	+C/028.01	
GND:	SH	GND:	+C/028.01	
+M-W4001				
+C-X208:1	1	+M-X4000:101	+C/232.04	
+C-X208:2	2	+M-X4000:102	+C/232.04	

From	Cable	To	Page.Col.	Option
+C-X208:3	3	+M-X4000:103	+C/232.04	
+C-X208:4	4	+M-X4000:104	+C/232.04	
+C-X208:5	5	+M-X4000:105	+C/144.06	
+C-X208:6	6	+M-X4000:106	+C/152.06	
+C-X208:7	7	+M-X4000:107	+C/152.06	
+C-X208:8	8	+M-X4000:108	+C/152.06	
+C-X208:9	9	+M-X4000:109	+C/232.04	
+C-X208:10	10	+M-X4000:110	+C/149.03	
+C-X208:11	11	+M-X4000:112	+C/149.06	
+C-X208:12	12	+M-X4000:115	+C/149.06	
+C-X208:13	13	+M-X4000:116	+C/149.06	
+C-X208:14	14	+M-X4000:117	+C/144.06	
+C-X208:15	15	+M-X4000:118	+C/144.06	
+C-X208:16	16	+M-X4000:119	+C/201.03	
+C-X208:17	17	+M-X4000:120	+C/034.03	
+C-X208:18	18	+M-X4000:121	+C/034.03	
+C-X208:19	19	+M-X4000:122	+C/034.03	
+C-X208:20	20	+M-X4000:123	+C/034.03	
+C-X208:21	21	+M-X4000:124	+C/106.05	
+C-X208:22	22	+M-X4000:125	+C/144.06	
+C-X208:23	23	+M-X4000:107+	+C/232.04	
+C-X208:24	24	+M-X4000:107-	+C/232.04	
+C-X208:⏚	GNYE	+M-X4000:⏚	+C/232.04	
+M-W4002				
+C-X201:1	1	+M-X4000:126	+C/205.03	
+C-X201:2	2	+M-X4000:127	+C/205.03	
+C-X201:3	3	+M-X4000:128	+C/205.03	
+C-X201:4	4	+M-X4000:129	+C/205.03	
+C-X201:5	5	+M-X4000:130	+C/182.03	
+C-X201:6	6	+M-X4000:130-	+C/205.07	
+C-X201:7	7	+M-X4000:131	+C/205.03	
+C-X201:8	8	+M-X4000:131-	+C/205.07	
+C-X201:9	9	+M-X4000:132	+C/206.03	

Drawing remarks

Tetra Pak

Designer: LUP	Date: 23/11/2007	Machine: Tetra Pak A3/Flex 0150	
ECM No: 320174	Denomination: CABLE CONNECTION LIST	Page Type: CABLE CONNECTION LIST	
Company: Tetra Pak (Italy)	Document No.: 2845987-0007	Doc. type: ELD	Version: AE	Page: 033

This drawing must not without the consent of Tetra Pak be copied, transmitted or disclosed to any third party.

Cable Connection List of 2845987-0003

From	Cable	To	Page.Col.	Option
+C-X201:10	10	+M-X4000:133	+C/206.03	
+C-X201:11	11	+M-X4000:134	+C/206.03	
+C-X201:12	12	+M-X4000:135	+C/206.03	
+C-X201:13	13	+M-X4000:136	+C/182.03	
+C-X201:14	14	+M-X4000:137	+C/177.03	
+C-X201:15	15	+M-X4000:138	+C/206.03	
+C-X201:16	16	+M-X4000:139	+C/206.03	
+C-X201:17	17	+M-X4000:140	+C/232.08	
+C-X201:18	18	+M-X4000:141	+C/232.08	
+C-X201:19	19	+M-X4000:142	+C/232.08	
+C-X201:20	20	+M-X4000:143	+C/232.08	
+C-X201:21	21	+M-X4000:144	+C/232.08	
+C-X201:22	22	+M-X4000:145	+C/232.08	
+C-X201:23	23	+M-X4000:146+	+C/232.08	
+C-X201:24	24	+M-X4000:146-	+C/232.08	
+C-X201:⏚	GNYE	+M-X4000:⏚	+C/205.07	
+M-W4003				
+M-X4000:126	1	+M-X4058:1	+C/205.04	
+M-X4000:127	2	+M-X4058:2	+C/205.04	
+M-X4000:128	3	+M-X4058:3	+C/205.04	
+M-X4000:129	4	+M-X4058:4	+C/205.04	
+M-X4000:130	5	+M-X4058:5	+C/182.04	
+M-X4000:131	6	+M-X4058:6	+C/205.04	
+M-X4000:132	7	+M-X4058:7	+C/206.04	
+M-X4000:133	8	+M-X4058:8	+C/206.04	
+M-X4000:134	9	+M-X4058:9	+C/206.04	
+M-X4000:135	10	+M-X4058:10	+C/206.04	
	11			
+M-X4000:129-	12	+M-X4058:1-	+C/205.06	
+M-X4000:132-	13	+M-X4058:6-	+C/205.06	
+M-X4000:⏚	GNYE	+M-X4058:⏚	+C/205.06	
+M-W4004				

From	Cable	To	Page.Col.	Option
+M-X4000:136	1	+M-X4059:1	+C/182.04	
+M-X4000:137	2	+M-X4059:2	+C/177.04	
+M-X4000:138	3	+M-X4059:3	+C/206.04	
+M-X4000:139	4	+M-X4059:4	+C/206.04	
	5			
	6			
	7			
	8			
	9			
	10			
	11			
	12			
	13			
	GNYE			
+M-W4005				
+C-X116:1	1	+M-X2010:1	+C/010.01	
+C-X116:2	2	+M-X2010:2	+C/010.01	
+C-X116:3	3	+M-X2010:3	+C/010.01	
+C-X116:4	4	+M-X2010:4	+C/010.01	
+C-X116:⏚	GNYE	+M-X2010:⏚	+C/010.01	
+M-W4006				
+C-X117:1	1	+M-X2010:5	+C/010.05	
+C-X117:2	2	+M-X2010:6	+C/010.05	
+C-X117:3	3	+M-X2010:7	+C/010.05	
+C-X117:4	4	+M-X2010:8	+C/010.05	
+C-X117:⏚	GNYE	+M-X2010:⏚	+C/010.05	
+M-W4008				
+M-X4071:1	1	+M-X4070:1	+C/011.02	
+M-W4009				
+M-X4072:1	1	+M-X4073:1	+C/011.03	

Drawing remarks

Tetra Pak

Designer: LUP	Date: 23/11/2007	Machine: Tetra Pak A3/Flex 0150	
ECM No: 320174	Denomination: CABLE CONNECTION LIST	Page Type: CABLE CONNECTION LIST	
Company: Tetra Pak (Italy)	Document No.: 2845987-0007	Doc. type: ELD	Version: AE	Page: 034

This drawing must not without the consent of Tetra Pak be copied, transmitted or disclosed to any third party.

Cable Connection List of 2845987-0003

From	Cable	To	Page.Col.	Option
	+M-W4014			
+M-X4054:1	RD	+M-B43011:	+C/050.07	
	WH			
+M-X4054:2	BU	+M-B43011:	+C/050.07	
+M-X4054:4	GY	+M-B43011:	+C/050.07	
+M-X4054:3	YE	+M-B43011:	+C/050.07	
	+M-W4015			
+M-X4055:1	RD	+M-B43012:	+C/050.07	
	WH			
+M-X4055:2	BU	+M-B43012:	+C/050.07	
+M-X4055:4	GY	+M-B43012:	+C/050.07	
+M-X4055:3	YE	+M-B43012:	+C/050.07	
	+M-W4016			
	GY			
+C-X405:2	WH	+M-X4054:2	+C/050.06	
+C-X405:3	YE	+M-X4054:3	+C/050.06	
+C-X405:4	GN	+M-X4054:4	+C/050.06	
+C-X405:1	BN	+M-X4054:1	+C/050.06	
+C-X405:5	SH	+M-X4054:5	+C/050.06	
	+M-W4017			
	GY			
+C-X406:2	WH	+M-X4055:2	+C/050.06	
+C-X406:3	YE	+M-X4055:3	+C/050.06	
+C-X406:4	GN	+M-X4055:4	+C/050.06	
+C-X406:1	BN	+M-X4055:1	+C/050.06	
+C-X406:5	SH	+M-X4055:5	+C/050.06	
	+M-W4022			
+M-X4000:119	1	+M-Y1210:1	+C/201.04	
+M-X4000:119-	2	+M-Y1210:2	+C/201.06	

From	Cable	To	Page.Col.	Option
+M-X4000:⏚	GNYE	+M-Y1210:E	+C/201.06	
	+M-W4052			
+M-X2000:108+	1	+M-B2401:13	+C/139.03	
+M-X2000:108	2	+M-B2401:14	+C/139.04	
	GNYE	+M-X2000:⏚	+C/139.04	
	+M-W4053			
+M-X2000:109	1	+M-B2410:1	+C/139.04	
+M-X2000:110	2	+M-B2410:2	+C/139.04	
+M-X2000:109+	3	+M-B2410:3	+C/139.03	
+M-X2000:⏚	GNYE	+M-B2410: ⏚	+C/139.03	
	+M-W4054			
	GY			
+M-X4000:124-	WH	+M-B1210:6	+C/106.04	
+M-X4000:124	YE	+M-B1210:3	+C/106.04	
+M-X4000:124-	GN	+M-B1210:2	+C/106.04	
+M-X4000:124+	BN	+M-B1210:7	+C/106.04	
	SH			
	+M-W4057			
+M-X2000:101+	BN	+M-B1305:	+C/136.04	
+M-X2000:101-	BU	+M-B1305:	+C/136.04	
+M-X2000:101	BK	+M-B1305:	+C/136.05	
	+M-W4059			
+M-X2000:102+	BN	+M-B4315:	+C/138.04	
+M-X2000:102-	BU	+M-B4315:	+C/138.04	
+M-X2000:102	BK	+M-B4315:	+C/138.05	
	+M-W4060			
+M-X2000:103+	BN	+M-B4316:	+C/138.04	
+M-X2000:103-	BU	+M-B4316:	+C/138.04	

Drawing remarks

Tetra Pak

Designer: LUP	Date: 23/11/2007	Machine: Tetra Pak A3/Flex 0150	
ECM No: 320174	Denomination: CABLE CONNECTION LIST	Page Type: CABLE CONNECTION LIST	
Company: Tetra Pak (Italy)	Document No.: 2845987-0007	Doc. type: ELD	Version: AE	Page: 035

This drawing must not without the consent of Tetra Pak be copied, transmitted or disclosed to any third party.

Cable Connection List of 2845987-0003

From	Cable	To	Page.Col.	Option
+M-X2000:103	BK	+M-B4316:	+C/138.05	
	+M-W4430			
+M-X2001:14	1	+M-S5430:1	+C/251.02	
+M-X2001:15	2	+M-S5430:3	+C/251.02	
+M-X2001:16	3	+M-S5430:5	+C/251.02	
+M-X2001:⏚	GNYE	+M-M5430:⏚	+C/251.02	
	+M-W4500			
+M-X2002:103	BN	+M-A4500:4	+C/059.07	
+M-X2002:102	WH	+M-A4500:3	+C/059.07	
+M-X2002:100	YE	+M-A4500:1	+C/059.07	
+M-X2002:101	GN	+M-A4500:2	+C/059.07	
+M-X2002:⏚	SH	+M-A4500:5	+C/059.07	
	+M-W4501			
+M-A4500:V24	1	+M-A4501:	+C/059.08	
	+M-W4502			
+M-X2002:103	BN	+C-A450:02	+C/059.06	
+M-X2002:102	WH	+C-A450:01	+C/059.06	
+M-X2002:100	YE	+C-A450:03	+C/059.06	
+M-X2002:101	GN	+C-A450:04	+C/059.06	
+M-X2002:⏚	SH	+C-A450:05	+C/059.06	
	+M-W4503			
+C-X454:SH	SH	+M-X2002:108	+C/059.04	
+C-X454:8	GN	+M-X2002:107	+C/059.04	
+C-X454:9	YE	+M-X2002:106	+C/059.04	
+C-X454:5	BN	+M-X2002:105	+C/059.04	
+C-X454:4	WH	+M-X2002:104	+C/059.04	
	+M-W4504			
+M-X2002:104	WH	+M-X2454.2:11	+C/059.05	

From	Cable	To	Page.Col.	Option
+M-X2002:105	BN	+M-X2454.2:10	+C/059.05	
+M-X2002:106	YE	+M-X2454.2:12	+C/059.05	
+M-X2002:107	GN	+M-X2454.2:13	+C/059.05	
+M-X2002:108	SH	+M-X2454.2:SH	+C/059.05	
	+M-W4505			
+M-X4505:6	GN	+C-A451:EXT. NET	+C/059.02	
+M-X4505:3	WHGN	+C-A451:EXT. NET	+C/059.02	
+M-X4505:2	OG	+C-A451:EXT. NET	+C/059.02	
+M-X4505:1	WHOG	+C-A451:EXT. NET	+C/059.02	
	+M-W4506			
+C-X228:1	1	+M-K2017:A2	+C/058.03	
+C-X228:2	2	+M-K2018:A2	+C/058.03	
+C-X228:3	3	+M-X2002:124	+C/237.08	
+C-X228:4	4	+M-X2002:125	+C/237.08	
+C-X228:5	5	+M-X2002:126	+C/237.08	
+C-X228:6	6	+M-X2002:127	+C/237.08	
+C-X228:7	7	+M-X2002:128	+C/237.08	
+C-X228:8	8	+M-X2002:129	+C/237.08	
+C-X228:9	9	+M-X2002:130	+C/237.08	
+C-X228:10	10	+M-X2002:131	+C/237.08	
+C-X228:11	11	+M-X2002:132	+C/237.08	
+C-X228:12	12	+M-X2002:133	+C/237.08	
+C-X228:13	13	+M-X2002:134	+C/237.08	
+C-X228:14	14	+M-X2002:135	+C/237.08	
+C-X228:15	15	+M-X2002:136	+C/237.08	
+C-X228:16	16	+M-X2002:137	+C/237.08	
+C-X228:17	17	+M-X2002:138	+C/237.08	
+C-X228:18	18	+M-X2002:139	+C/237.08	
+C-X228:19	19	+M-X2002:140	+C/237.08	
+C-X228:20	20	+M-X2002:141	+C/237.08	
+C-X228:21	21	+M-X2002:142	+C/237.08	
+C-X228:22	22	+M-X2002:143	+C/237.08	

Drawing remarks

Tetra Pak

Designer: LUP	Date: 23/11/2007	Machine: Tetra Pak A3/Flex 0150	
ECM No: 320174	Denomination: CABLE CONNECTION LIST	Page Type: CABLE CONNECTION LIST	
Company: Tetra Pak (Italy)	Document No.: 2845987-0007	Doc. type: ELD	Version: AE	Page: 036

This drawing must not without the consent of Tetra Pak be copied, transmitted or disclosed to any third party.

Cable Connection List of 2845987-0003

From	Cable	To	Page.Col.	Option
+C-X228:23	23	+M-X2002:144	+C/237.08	
+C-X228:24	24	+M-X2002:145	+C/237.08	
+C-X228:⏚	GNYE	+M-X2002:⏚	+C/237.08	
	+M-W4507			
+M-X4507:1	WHOG	+C-A452:X8	+C/060.08	
+M-X4507:2	OG	+C-A452:X8	+C/060.08	
+M-X4507:3	WHGN	+C-A452:X8	+C/060.08	
+M-X4507:6	GN	+C-A452:X8	+C/060.08	
	+M-W5002			
+M-X2001:1	1	+M-M5503:V	+C/032.01	
+M-X2001:2	2	+M-M5503:U	+C/032.01	
+M-X2001:3	3	+M-M5503:W	+C/032.01	
+M-X2001:⏚	GNYE	+M-M5503:⏚	+C/032.01	
	+M-W5003			
+M-X2001:6	1	+M-M5406:U	+C/017.10	
+M-X2001:7	2	+M-M5406:V	+C/017.10	
+M-X2001:8	3	+M-M5406:W	+C/017.10	
+M-X2001:10	GNYE	+M-M5406:⏚	+C/017.10	
+M-X2001:9	SH	GND:	+C/017.10	
	+M-W5004			
+M-X2001:4	1	+M-E2003:1	+C/037.09	
+M-X2001:5	2	+M-E2003:2	+C/037.09	
+M-X2001:⏚	GNYE	+M-E2003:⏚	+C/037.09	
	+M-W5006			
+M-X2001:118	1	+M-B5104:13	+C/061.04	
+M-X2001:117	2	+M-B5104:21	+C/061.04	
+M-X2001:116	3	+M-B5104:22	+C/061.05	
+M-X2001:115	4	+M-B5104:14	+C/061.05	
+M-X2001:⏚	GNYE	+M-B5104:E	+C/061.05	

From	Cable	To	Page.Col.	Option
	+M-W5009			
+M-X2001:102+	BN	+M-B5203:	+C/115.04	
+M-X2001:102-	BU	+M-B5203:	+C/115.04	
+M-X2001:102	BK	+M-B5203:	+C/115.05	
	+M-W5010			
+M-X2001:103+	BN	+M-B5302:	+C/115.04	
+M-X2001:103-	BU	+M-B5302:	+C/115.04	
+M-X2001:103	BK	+M-B5302:	+C/115.05	
	+M-W5011			
+M-X2001:104+	BN	+M-B5314:	+C/115.04	
+M-X2001:104-	BU	+M-B5314:	+C/115.04	
+M-X2001:104	BK	+M-B5314:	+C/115.05	
	+M-W5012			
+M-X2001:105+	BN	+M-B5401:	+C/147.04	
+M-X2001:105-	BU	+M-B5401:	+C/147.04	
+M-X2001:105	BK	+M-B5401:	+C/147.05	
	+M-W5015			
+M-X2001:106+	BN	+M-B5402:	+C/147.04	
+M-X2001:106-	BU	+M-B5402:	+C/147.04	
+M-X2001:106	BK	+M-B5402:	+C/147.05	
	+M-W5016			
+M-X2001:107+	BN	+M-B5403:	+C/147.04	
+M-X2001:107-	BU	+M-B5403:	+C/147.04	
	+M-W5021			
+M-X5006:-	RD	+M-X2020:-	+C/111.03	
+M-X5006:+	YE	+M-X2020:+	+C/111.03	

Drawing remarks

Tetra Pak

Designer LUP	Date 23/11/2007	Machine Tetra Pak A3/Flex 0150	
ECM No 320174	Denomination CABLE CONNECTION LIST	Page Type CABLE CONNECTION LIST	
Company Tetra Pak (Italy)	Document No. 2845987-0007	Doc. type ELD	Version AE	Page 037

This drawing must not without the consent of Tetra Pak be copied, transmitted or disclosed to any third party.

Cable Connection List of 2845987-0003

From	Cable	To	Page.Col.	Option
	+M-W5022			
+M-X5007:-	RD	+M-X2021:-	+C/111.03	
+M-X5007:+	YE	+M-X2021:+	+C/111.03	
	+M-W5023			
+M-X5008:-	RD	+M-X2022:-	+C/111.03	
+M-X5008:+	YE	+M-X2022:+	+C/111.03	
	+M-W5024			
+M-X5009:-	RD	+M-X2023:-	+C/111.03	TGA
+M-X5009:+	YE	+M-X2023:+	+C/111.03	TGA
	+M-W5501			
+M-X5501:1	BN	+M-B5501:	+C/148.03	
+M-X5501:2	BU	+M-B5501:	+C/148.03	
+M-X5501:5	BK	+M-B5501:	+C/148.05	
	+M-W5502			
+M-X5501:3	BN	+M-B5502:	+C/148.03	
+M-X5501:4	BU	+M-B5502:	+C/148.03	
	+M-W5503			
+M-X4000:105	1	+M-B5503:1	+C/144.05	
+M-X4000:105+	2	+M-B5503:2	+C/144.04	
+M-X4000:⏚	GNYE	+M-B5503:E	+C/144.05	
	+M-W5504			
+M-X2001:167+	BN	+M-B5504:	+C/147.04	
+M-X2001:167-	BU	+M-B5504:	+C/147.04	
+M-X2001:167	BK	+M-B5504:	+C/147.05	
	+M-W5505			
+M-X2001:168+	BN	+M-B5505:	+C/147.04	
+M-X2001:168-	BU	+M-B5505:	+C/147.04	
+M-X2001:168	BK	+M-B5505:	+C/147.05	
	+M-W5506			
+M-X2001:169+	BN	+M-B5506:	+C/156.03	
+M-X2001:169-	BU	+M-B5506:	+C/156.03	
+M-X2001:169	BK	+M-B5506:	+C/156.05	
	+M-W5507			
+M-X2001:170+	BN	+M-B5507:	+C/155.03	
+M-X2001:170-	BU	+M-B5507:	+C/155.03	
+M-X2001:170	BK	+M-B5507:	+C/155.05	
	+M-W5508			
+M-X2001:171+	BN	+M-B5508:	+C/156.03	
+M-X2001:171-	BU	+M-B5508:	+C/156.03	
+M-X2001:171	BK	+M-B5508:	+C/156.05	
	+M-W5509			
+M-X2001:172+	BN	+M-B5509:	+C/156.03	
+M-X2001:172-	BU	+M-B5509:	+C/156.03	
+M-X2001:172	BK	+M-B5509:	+C/156.05	
	+M-W5510			
+M-X2001:108	1	+M-X5501:5	+C/148.05	
+M-X2001:108-	2	+M-X5501:2	+C/148.03	
+M-X2001:108+	3	+M-X5501:1	+C/148.03	
	+M-W5516			
+M-X2001:112+	BN	+M-B5516:1	+C/141.03	DIMC
+M-X2001:112-	BU	+M-B5516:3	+C/141.03	DIMC
	GY	+M-B5516:5	+C/141.03	DIMC
+M-X2001:112	BK	+M-B5516:4	+C/141.05	DIMC
+M-B5516:2	WH		+C/141.05	DIMC

Drawing remarks

Tetra Pak

Designer: LUP	Date: 23/11/2007	Machine: Tetra Pak A3/Flex 0150	
ECM No: 320174	Denomination: CABLE CONNECTION LIST	Page Type: CABLE CONNECTION LIST	
Company: Tetra Pak (Italy)	Document No.: 2845987-0007	Doc. type: ELD	Version: AE	Page: 038

This drawing must not without the consent of Tetra Pak be copied, transmitted or disclosed to any third party.

Cable Connection List of 2845987-0003

From	Cable	To	Page.Col.	Option
+M-W5601				
+M-X5601:3	BN	+M-B5601:	+C/148.03	
+M-X5601:4	BU	+M-B5601:	+C/148.03	
+M-W5602				
+M-X5601:1	BN	+M-B5602:	+C/148.03	
+M-X5601:2	BU	+M-B5602:	+C/148.03	
+M-X5601:5	BK	+M-B5602:	+C/148.05	
+M-W5603				
+M-X2002:118	1	+M-X5601:5	+C/148.05	
+M-X2002:118-	2	+M-X5601:2	+C/148.03	
+M-X2002:118+	3	+M-X5601:1	+C/148.03	
+M-W5700				
+M-X2001:113	1	+M-Y5700:1	+C/201.04	DIMC
+M-X2001:113-	2	+M-Y5700:2	+C/201.06	DIMC
+M-X2001:⏚	GNYE	+M-Y5700:E	+C/201.06	DIMC
+M-W5710				
+M-X2001:114+	1	+M-B5710:wh	+C/141.03	DIMC
+M-X2001:114	2	+M-B5710:wh	+C/141.05	DIMC
	GNYE			
+M-W7004				
+C-X132:1	1	+M-X7001:7	+C/037.03	
	2			
+C-X132:3	3	+M-X7001:8	+C/037.03	
+C-X132:⏚	GNYE	+M-X7001:⏚	+C/037.03	
+M-W7005				
+C-X133:1	1	+M-X7001:15	+C/019.02	
+C-X133:2	2	+M-X7001:16	+C/019.02	
+C-X133:⏚	GNYE	+M-X7001:⏚	+C/019.02	
+M-W7006				
+M-X7001:101	1	+C-X213:1	+C/141.06	
+M-X7001:102	2	+C-X213:2	+C/115.06	
+M-X7001:103	3	+C-X213:3	+C/141.06	
+M-X7001:104	4	+C-X213:4	+C/141.06	
+M-X7001:105	5	+C-X213:5	+C/141.06	
+M-X7001:106	6	+C-X213:6	+C/141.06	
+M-X7001:107	7	+C-X213:7	+C/142.06	
+M-X7001:108	8	+C-X213:8	+C/141.06	
+M-X7001:109	9	+C-X213:9	+C/142.06	
+M-X7001:110	10	+C-X213:10	+C/142.06	
+M-X7001:111	11	+C-X213:11	+C/142.06	
+M-X7001:112	12	+C-X213:12	+C/142.06	
+M-X7001:113	13	+C-X213:13	+C/142.06	
+M-X7001:114	14	+C-X213:14	+C/143.06	
+M-X7001:115	15	+C-X213:15	+C/143.06	
+M-X7001:116	16	+C-X213:16	+C/143.06	
+M-X7001:117	17	+C-X213:17	+C/143.06	
+M-X7001:118	18	+C-X213:18	+C/150.03	
+M-X7001:120	19	+C-X213:19	+C/150.05	
+M-X7001:124	20	+C-X213:20	+C/149.06	
+M-X7001:125	21	+C-X213:21	+C/149.06	
+M-X7001:126	22	+C-X213:22	+C/143.06	
+M-X7001:126+	23	+C-X213:23	+C/143.02	
+M-X7001:126-	24	+C-X213:24	+C/143.02	
+M-X7001:⏚	GNYE	+C-X213:⏚	+C/143.02	
+M-W7007				
+C-X214:1	1	+M-X7001:127	+C/143.06	
+C-X214:2	2	+M-X7001:128	+C/142.06	
+C-X214:3	3	+M-X7001:130	+C/143.06	
+C-X214:4	4	+M-X7001:131	+C/143.06	

Drawing remarks

Tetra Pak

Designer: LUP	Date: 23/11/2007	Machine: Tetra Pak A3/Flex 0150	
ECM No: 320174	Denomination: CABLE CONNECTION LIST	Page Type: CABLE CONNECTION LIST	
Company: Tetra Pak (Italy)	Document No.: 2845987-0007	Doc. type: ELD	Version: AE	Page: 039

This drawing must not without the consent of Tetra Pak be copied, transmitted or disclosed to any third party.

Cable Connection List of 2845987-0003

From	Cable	To	Page.Col.	Option
+C-X214:5	5	+M-X7001:132	+C/202.03	
+C-X214:6	6	+M-X7001:133	+C/202.05	
+C-X214:7	7	+M-X7001:136	+C/202.03	
+C-X214:8	8	+M-X7001:137	+C/202.03	
+C-X214:9	9	+M-X7001:138	+C/202.03	
+C-X214:10	10	+M-X7001:139	+C/214.03	H.G.
+C-X214:11	11	+M-X7001:140	+C/234.05	
+C-X214:12	12	+M-X7001:141	+C/234.05	
+C-X214:13	13	+M-X7001:142	+C/202.03	
+C-X214:14	14	+M-X7001:143	+C/234.05	
+C-X214:15	15	+M-X7001:144	+C/234.05	
+C-X214:16	16	+M-X7001:145	+C/234.05	
+C-X214:17	17	+M-X7001:146	+C/234.05	
+C-X214:18	18	+M-X7001:147	+C/234.05	
+C-X214:19	19	+M-X7001:148	+C/202.03	
+C-X214:20	20	+M-X7001:149	+C/202.03	
+C-X214:21	21	+M-X7001:150	+C/180.03	
+C-X214:22	22	+M-X7001:151	+C/180.03	
+C-X214:23	23	+M-X7001:127+	+C/142.02	
+C-X214:24	24	+M-X7001:127-	+C/142.02	
+C-X214:⏚	GNYE	+M-X7001:⏚	+C/202.04	
+M-W7008				
+C-X219:1	1	+M-X7001:152	+C/151.01	
+C-X219:2	2	+M-X7001:153	+C/234.08	
+C-X219:18	3	+M-X7001:173	+C/069.06	
+C-X219:4	4	+M-X7001:154	+C/151.06	
+C-X219:5	5	+M-X7001:158	+C/151.06	
+C-X219:6	6	+M-X7001:159	+C/151.06	
+C-X219:7	7	+M-X7001:160	+C/189.03	
+C-X219:8	8	+M-X7001:162	+C/106.05	
+C-X219:9	9	+M-X7001:163	+C/137.05	
+C-X219:10	10	+M-X7001:164	+C/175.03	H.G.
+C-X219:11	11	+M-X7001:165	+C/142.06	

From	Cable	To	Page.Col.	Option
+C-X219:12	12	+M-X7001:167	+C/056.03	
+C-X219:13	13	+M-X7001:168	+C/056.03	
+C-X219:14	14	+M-X7001:169	+C/056.03	
+C-X219:15	15	+M-X7001:170	+C/056.03	
+C-X219:16	16	+M-X7001:171	+C/207.03	
+C-X219:17	17	+M-X7001:175	+C/234.08	
+C-X219:3	18	+M-X7001:174	+C/069.06	
+C-X219:19	19	+M-X7001:172	+C/234.08	
+C-X219:20	20	+M-X7001:176	+C/207.03	
+C-X219:21	21	+M-X7001:177	+C/207.03	
+C-X219:22	22	+M-X7001:178	+C/207.03	
+C-X219:23	23	+M-X7001:178+	+C/207.08	
+C-X219:24	24	+M-X7001:178-	+C/207.08	
+C-X219:⏚	GNYE	+M-X7001:⏚	+C/056.06	
+M-W7009				
+M-X7001:179	1	+C-X220:1	+C/203.03	
+M-X7001:180	2	+C-X220:2	+C/203.03	
+M-X7001:181	3	+C-X220:3	+C/203.03	
+M-X7001:182	4	+C-X220:4	+C/203.03	
+M-X7001:183	5	+C-X220:5	+C/203.03	
+M-X7001:184	6	+C-X220:6	+C/203.03	
+M-X7001:185	7	+C-X220:7	+C/203.03	
+M-X7001:186	8	+C-X220:8	+C/203.03	
+M-X7001:187	9	+C-X220:9	+C/234.10	
+M-X7001:188	10	+C-X220:10	+C/234.10	
+M-X7001:179+	11	+C-X220:11	+C/234.10	
+M-X7001:179-	12	+C-X220:12	+C/203.08	
+M-X7001:191	13	+C-X220:13	+C/155.06	ARL
+M-X7001:192	14	+C-X220:14	+C/155.06	ARL
+M-X7001:193	15	+C-X220:15	+C/155.06	ARL
+M-X7001:194	16	+C-X220:16	+C/155.06	ARL
+M-X7001:195	17	+C-X220:17	+C/155.06	ARL
+M-X7001:196	18	+C-X220:18	+C/155.06	ARL

Drawing remarks

Tetra Pak

Designer LUP	Date 23/11/2007	Machine Tetra Pak A3/Flex 0150	
ECM No 320174	Denomination CABLE CONNECTION LIST	Page Type CABLE CONNECTION LIST	
Company Tetra Pak (Italy)	Document No. 2845987-0007	Doc. type ELD	Version AE	Page 040

This drawing must not without the consent of Tetra Pak be copied, transmitted or disclosed to any third party.

Cable Connection List of 2845987-0003

From	Cable	To	Page.Col.	Option
+M-X7001:197	19	+C-X220:19	+C/214.03	
+M-X7001:198	20	+C-X220:20	+C/214.03	
+M-X7001:199	21	+C-X220:21	+C/214.03	
+M-X7001:200	22	+C-X220:22	+C/214.03	
+M-X7001:201	23	+C-X220:23	+C/214.03	
	24			
+M-X7001:⏚	GNYE	+C-X220:⏚	+C/203.08	
+M-W7010				
+C-X126:1	1	+M-M7208:U	+C/014.05	
+C-X126:2	2	+M-M7208:V	+C/014.05	
+C-X126:3	3	+M-M7208:W	+C/014.05	
+C-X126:5	GNYE	+M-M7208:⏚	+C/014.05	
+C-X126:4	SH	GND:	+C/014.05	
+M-W7011				
+C-X127:1	1	+M-M7217:U	+C/014.10	
+C-X127:2	2	+M-M7217:V	+C/014.10	
+C-X127:3	3	+M-M7217:W	+C/014.10	
+C-X127:5	GNYE	+M-M7217:⏚	+C/014.10	
+C-X127:4	SH	GND:	+C/014.10	
+M-W7013				
+M-X7001:101+	BN	+M-B6203:	+C/141.03	
+M-X7001:101-	BU	+M-B6203:	+C/141.03	
+M-X7001:101	BK	+M-B6203:	+C/141.05	
+M-W7014				
+M-X7001:9	1	+M-E7702:1	+C/037.04	
+M-X7001:10	2	+M-E7702:2	+C/037.04	
+M-X7001:⏚	GNYE	+M-E7702:⏚	+C/037.04	
+M-W7015				
+M-X7001:107+	BN	+M-B72232:	+C/142.04	

From	Cable	To	Page.Col.	Option
+M-X7001:107-	BU	+M-B72232:	+C/142.04	
+M-X7001:107	BK	+M-B72232:	+C/142.06	
+M-W7016				
+M-X7001:102+	BN	+M-B6105:	+C/115.04	
+M-X7001:102-	BU	+M-B6105:	+C/115.04	
+M-X7001:102	BK	+M-B6105:	+C/115.05	
+M-W7017				
+M-X7001:103+	BN	+M-B6201:	+C/141.03	
+M-X7001:103-	BU	+M-B6201:	+C/141.03	
+M-X7001:103	BK	+M-B6201:	+C/141.05	
+M-W7018				
+M-X7001:104+	BN	+M-B6202:	+C/141.03	
+M-X7001:104-	BU	+M-B6202:	+C/141.03	
+M-X7001:104	BK	+M-B6202:	+C/141.05	
+M-W7019				
+M-X7001:105+	BN	+M-B6208:	+C/141.03	
+M-X7001:105-	BU	+M-B6208:	+C/141.03	
+M-X7001:105	BK	+M-B6208:	+C/141.05	
+M-W7020				
+M-X7001:106+	BN	+M-B6107:	+C/141.03	
+M-X7001:106-	BU	+M-B6107:	+C/141.03	
+M-X7001:106	BK	+M-B6107:	+C/141.05	
+M-W7022				
+M-X7001:108+	BN	+M-B6204:	+C/141.03	
+M-X7001:108-	BU	+M-B6204:	+C/141.03	
+M-X7001:108	BK	+M-B6204:	+C/141.05	

Drawing remarks

Tetra Pak

Designer: LUP	Date: 23/11/2007	Machine: Tetra Pak A3/Flex 0150	
ECM No: 320174	Denomination: CABLE CONNECTION LIST	Page Type: CABLE CONNECTION LIST	
Company: Tetra Pak (Italy)	Document No.: 2845987-0007	Doc. type: ELD	Version: AE	Page: 041

This drawing must not without the consent of Tetra Pak be copied, transmitted or disclosed to any third party.

Cable Connection List of 2845987-0003

From	Cable	To	Page.Col.	Option
	+M-W7023			
+M-X7001:109+	BN	+M-B72234:	+C/142.04	
+M-X7001:109-	BU	+M-B72234:	+C/142.04	
+M-X7001:109	BK	+M-B72234:	+C/142.06	
	+M-W7024			
+M-X7001:110+	BN	+M-B7411:	+C/142.04	
+M-X7001:110-	BU	+M-B7411:	+C/142.04	
+M-X7001:110	BK	+M-B7411:	+C/142.06	
	+M-W7025			
+M-X7001:111+	BN	+M-B7414:	+C/142.04	
+M-X7001:111-	BU	+M-B7414:	+C/142.04	
+M-X7001:111	BK	+M-B7414:	+C/142.06	
	+M-W7026			
+M-X7001:112+	BN	+M-B7412:	+C/142.04	
+M-X7001:112-	BU	+M-B7412:	+C/142.04	
+M-X7001:112	BK	+M-B7412:	+C/142.06	
	+M-W7027			
+M-X7001:113+	BN	+M-B7512:	+C/142.04	
+M-X7001:113-	BU	+M-B7512:	+C/142.04	
+M-X7001:113	BK	+M-B7512:	+C/142.06	
	+M-W7028			
	1			
+M-X7001:115+	2	+M-S6206:13	+C/143.03	
+M-X7001:115	3	+M-S6206:14	+C/143.05	
+M-X7001:116	4	+M-S7701:51	+C/143.05	
+M-X7001:117	5	+M-S7901:14	+C/143.05	
	6			
	7			
	8			
	9			
+M-X7001:171	10	+M-H7901:1	+C/207.04	
+M-X7001:171-	11	+M-H7901:2	+C/207.06	
+M-X7001:⏚	GNYE	GND:	+C/143.03	
	+M-W7029			
+M-X7001:122	1	+M-S7813:21	+C/149.04	
+M-X7001:123+	2	+M-S7813:11	+C/149.04	
+M-X7001:124	3	+M-S7813:12	+C/149.05	
+M-X7001:125	4	+M-S7813:22	+C/149.05	
+M-X7001:126	5	+M-S7303:14	+C/143.05	
+M-X7001:126+	6	+M-S7303:13	+C/143.03	
+M-X7001:127	7	+M-S7403:14	+C/143.05	
+M-X7001:114	8	+M-S7402:14	+C/143.05	
	9			
	10			
	11			
+M-X7001:⏚	GNYE		+C/143.03	
	+M-W7030			
+M-X7001:165+	BN	+M-B7210:	+C/142.04	
+M-X7001:165-	BU	+M-B7210:	+C/142.04	
+M-X7001:165	BK	+M-B7210:	+C/142.06	
	+M-W7031			
+M-X7001:119+	1	+M-S7812:21	+C/150.04	
+M-X7001:118	2	+M-S7812:11	+C/150.04	
+M-X7001:121	3	+M-S7812:12	+C/150.05	
+M-X7001:120	4	+M-S7812:22	+C/150.05	
	GNYE	+M-X7001:⏚	+C/150.05	
	+M-W7033			
+M-X7001:128+	BN	+M-B7211:	+C/142.05	

Drawing remarks

Tetra Pak

Designer: LUP	Date: 23/11/2007	Machine: Tetra Pak A3/Flex 0150	
ECM No: 320174	Denomination: CABLE CONNECTION LIST	Page Type: CABLE CONNECTION LIST	
Company: Tetra Pak (Italy)	Document No.: 2845987-0007	Doc. type: ELD	Version: AE	Page: 042

This drawing must not without the consent of Tetra Pak be copied, transmitted or disclosed to any third party.

Cable Connection List of 2845987-0003

From	Cable	To	Page.Col.	Option
+M-X7001:128-	BU	+M-B7211:	+C/142.05	
+M-X7001:128	BK	+M-B7211:	+C/142.06	
+M-W7034				
+M-X7001:179	1	+M-X7049:1	+C/203.04	
+M-X7001:180	2	+M-X7049:2	+C/203.04	
+M-X7001:181	3	+M-X7049:3	+C/203.04	
+M-X7001:182	4	+M-X7049:4	+C/203.04	
+M-X7001:183	5	+M-X7049:5	+C/203.04	
+M-X7001:184	6	+M-X7049:6	+C/203.04	
+M-X7001:185	7	+M-X7049:7	+C/203.04	
	8			
	9			
	10			
	11			
+M-X7001:179-	12	+M-X7049:1-	+C/203.07	
+M-X7001:184-	13	+M-X7049:6-	+C/203.07	
+M-X7001:⏚	GNYE	+M-X7049:⏚	+C/203.07	
+M-W7035				
+M-X7001:130+	BN	+M-B7401:	+C/143.04	
+M-X7001:130-	BU	+M-B7401:	+C/143.04	
+M-X7001:130	BK	+M-B7401:	+C/143.05	
+M-W7036				
+M-X7001:131+	BN	+M-B7501:	+C/143.04	
+M-X7001:131-	BU	+M-B7501:	+C/143.04	
+M-X7001:131	BK	+M-B7501:	+C/143.05	
+M-W7037				
+C-X504:1	1	+M-X7001:13	+C/019.07	
+C-X504:2	2	+M-X7001:14	+C/019.07	
+C-X504:3	3	+M-X7001:21	+C/234.02	
+C-X504:4	4	+M-X7001:22	+C/234.02	

From	Cable	To	Page.Col.	Option
+C-X504:5	5	+M-X7001:23	+C/234.02	
+C-X504:6	6	+M-X7001:24	+C/234.02	
+C-X504:⏚	GNYE	+M-X7001:⏚	+C/019.07	
+M-W7038				
+M-X7001:135	1	+M-X7050:1	+C/202.05	
+M-X7001:136	2	+M-X7050:2	+C/202.05	
+M-X7001:137	3	+M-X7050:3	+C/202.05	
+M-X7001:138	4	+M-X7050:4	+C/202.05	
+M-X7001:139	5	+M-X7050:5	+C/214.04	H.G.
+M-X7001:148	6	+M-X7050:6	+C/202.05	
+M-X7001:149	7	+M-X7050:7	+C/202.05	
+M-X7001:142	8	+M-X7050:8	+C/202.05	
	9			
	10			
	11			
+M-X7001:139-	12	+M-X7050:1-	+C/202.07	
+M-X7001:148-	13	+M-X7050:6-	+C/202.07	
+M-X7001:⏚	GNYE	+M-X7050:⏚	+C/202.07	
+M-W7040				
+C-X401:1	BN	+M-X74031:1	+C/050.06	
	WH	+M-X74031:2	+C/050.06	
+C-X401:2	BU	+M-X74031:3	+C/050.06	
+C-X401:4	BK	+M-X74031:4	+C/050.06	
+C-X401:3	GY	+M-X74031:5	+C/050.06	
+M-W7041				
+C-X402:1	BN	+M-X74032:1	+C/050.06	
	WH	+M-X74032:2	+C/050.06	
+C-X402:2	BU	+M-X74032:3	+C/050.06	
+C-X402:4	BK	+M-X74032:4	+C/050.06	
+C-X402:3	GY	+M-X74032:5	+C/050.06	

Drawing remarks

Tetra Pak

Designer LUP	Date 23/11/2007	Machine Tetra Pak A3/Flex 0150	
ECM No 320174	Denomination CABLE CONNECTION LIST	Page Type CABLE CONNECTION LIST	
Company Tetra Pak (Italy)	Document No. 2845987-0007	Doc. type ELD	Version AE	Page 043

This drawing must not without the consent of Tetra Pak be copied, transmitted or disclosed to any third party.

Cable Connection List of 2845987-0003

From	Cable	To	Page.Col.	Option
+M-W7042				
+M-X7001:132	1	+M-B7801:21	+C/202.03	
+M-X7001:132+	2	+M-B7801:11	+C/202.03	
+M-X7001:133	3	+M-B7801:12	+C/202.04	
+M-X7001:134	4	+M-B7801:22	+C/202.04	
	GNYE	+M-X7001:⏚	+C/202.03	
+M-W7043				
+M-X7001:152	1	+M-B7806:21	+C/151.03	
+M-X7001:153+	2	+M-B7806:11	+C/151.03	
+M-X7001:154	3	+M-B7806:12	+C/151.04	
+M-X7001:155	4	+M-B7806:22	+C/151.04	
+M-X7001:⏚	GNYE		+C/151.03	
+M-W7044				
+M-X7001:156	1	+M-B7807:21	+C/151.04	
+M-X7001:157+	2	+M-B7807:11	+C/151.03	
+M-X7001:158	3	+M-B7807:12	+C/151.04	
+M-X7001:159	4	+M-B7807:22	+C/151.03	
+M-X7001:⏚	GNYE		+C/151.03	
+M-W7045				
+M-X7001:161	1	+M-H7703:1	+C/189.04	
+M-X7001:161-	2	+M-H7703:2	+C/189.05	
+M-W7046				
+M-X7001:17	1	+M-R6203:1	+C/019.02	
+M-X7001:18	2	+M-R6203:2	+C/019.02	
+M-W7047				
+M-X7020:	1	+C-A502:X004	+C/012.02	
+M-W7049				

From	Cable	To	Page.Col.	Option
+M-X7001:19	1	+M-R6204:1	+C/019.03	
+M-X7001:20	2	+M-R6204:2	+C/019.03	
+M-X7001:⏚	GNYE	+M-R6204:⏚	+C/019.03	
+M-W7050				
+M-X7001:162-	WH	+M-X7022:8	+C/106.03	
+M-X7001:162+	BN	+M-X7022:7	+C/106.03	
+M-X7022:1	YE		+C/106.02	
+M-X7001:162	GN	+M-X7022:5	+C/106.03	
+M-X7001:162-	GY	+M-X7022:2	+C/106.03	
+M-X7022:3	PK		+C/106.02	
+M-X7001:⏚	SH	GND:	+C/106.03	
	SH			
	SH			
	SH			
+M-W7051				
+M-X7001:197	1	+M-X7051:1	+C/214.04	ARL
+M-X7001:198	2	+M-X7051:2	+C/214.04	ARL
+M-X7001:199	3	+M-X7051:3	+C/214.04	ARL
+M-X7001:200	4	+M-X7051:4	+C/214.04	ARL
+M-X7001:201	5	+M-X7051:5	+C/214.04	ARL
	6			
	7			
	8			
	9			
	10			
	11			
+M-X7001:197-	12	+M-X7051:1-	+C/214.06	ARL
	13			
+M-X7001:⏚	GNYE	+M-X7051:⏚	+C/214.06	ARL
+M-W7054				
+M-X7001:167	1	+M-X2802:1	+C/056.04	

Drawing remarks

Tetra Pak

Designer LUP	Date 23/11/2007	Machine Tetra Pak A3/Flex 0150	
ECM No 320174	Denomination CABLE CONNECTION LIST	Page Type CABLE CONNECTION LIST	
Company Tetra Pak (Italy)	Document No. 2845987-0007	Doc. type ELD	Version AE	Page 044

This drawing must not without the consent of Tetra Pak be copied, transmitted or disclosed to any third party.

Cable Connection List of 2845987-0003

From	Cable	To	Page.Col.	Option
+M-X7001:168	2	+M-X2802:2	+C/056.04	
+M-X7001:169	3	+M-X2802:3	+C/056.04	
+M-X7001:170-	4	+M-X2802:4	+C/056.06	
+M-X7001:⏚	GNYE	+M-X2802:⏚	+C/056.06	
+M-W7055				
+M-X7001:7	1	+M-E7705:1	+C/037.03	
+M-X7001:8	2	+M-E7705:2	+C/037.03	
+M-X7001:⏚	GNYE	+M-E7705:⏚	+C/037.03	
+M-W7056				
+M-X7001:186	BN	+M-Y7425:+24V	+C/203.04	
+M-X7001:186-	L.BU	+M-Y7425:0V	+C/203.06	
+M-X7001:⏚	GNYE	+M-Y7425:E	+C/203.06	
+M-W7072				
+M-K7000:2	1	+M-M6201:U	+C/016.07	
+M-K7000:4	2	+M-M6201:V	+C/016.07	
+M-K7000:6	3	+M-M6201:W	+C/016.07	
+M-X7100:2	GNYE	+M-M6201:⏚	+C/016.07	
+M-X7100:1	SH	GND:	+C/016.07	
+M-W7073				
+M-K7001:2	1	+M-M6202:U	+C/016.09	
+M-K7001:4	2	+M-M6202:V	+C/016.09	
+M-K7001:6	3	+M-M6202:W	+C/016.09	
+M-X7101:2	GNYE	+M-M6202:⏚	+C/016.09	
+M-X7101:1	SH	GND:	+C/016.09	
+M-W7076				
+C-X134:1	1	+M-K7000:1	+C/016.06	
+C-X134:2	2	+M-K7000:3	+C/016.06	
+C-X134:3	3	+M-K7000:5	+C/016.06	
+C-X134:5	GNYE	+M-X7100:2	+C/016.06	

From	Cable	To	Page.Col.	Option
+C-X134:4	SH	+M-X7100:1	+C/016.06	
+M-W7077				
+M-X7001:173-	1	+M-B6209:21	+C/069.03	
+M-X7001:173	2	+M-B6209:12	+C/069.04	
+M-X7001:173+	3	+M-B6209:11	+C/069.03	
+M-X7001:174	4	+M-B6209:22	+C/069.04	
+M-X7001:⏚	GNYE		+C/069.03	
+M-W7304				
+M-X7304:1	RD	+C-X320:-	+C/112.05	
+M-X7304:2	YE	+C-X320:+	+C/112.05	
+M-W7305				
+M-X7001:13	1	+M-R7304:1	+C/019.07	
+M-X7001:14	2	+M-R7304:2	+C/019.07	
+M-X7001:⏚	GNYE	+M-R7304:⏚	+C/019.07	
+M-W7400				
+M-X7001:163	1	+M-B7400:1	+C/137.04	H.G.
+M-X7001:163+	2	+M-B7400:3	+C/137.03	H.G.
+M-X7001:⏚	GNYE	+M-B7400:⏚	+C/137.04	H.G.
+M-W7401				
+M-X7001:191+	1	+M-S7430:13	+C/155.03	ARL
+M-X7001:191	2	+M-S7430:14	+C/155.05	ARL
+M-W7402				
+M-X7001:192+	1	+M-S7431:13	+C/155.03	ARL
+M-X7001:192	2	+M-S7431:14	+C/155.05	ARL
+M-W7430				
+M-X7001:193+	BN	+M-B7430:	+C/155.03	ARL
+M-X7001:193-	BU	+M-B7430:	+C/155.03	ARL

Drawing remarks

Tetra Pak

Designer: LUP	Date: 23/11/2007	Machine: Tetra Pak A3/Flex 0150	
ECM No: 320174	Denomination: CABLE CONNECTION LIST	Page Type: CABLE CONNECTION LIST	
Company: Tetra Pak (Italy)	Document No.: 2845987-0007	Doc. type: ELD	Version: AE	Page: 045

This drawing must not without the consent of Tetra Pak be copied, transmitted or disclosed to any third party.

Cable Connection List of 2845987-0003

From	Cable	To	Page.Col.	Option
+M-X7001:193	BK	+M-B7430:	+C/155.05	ARL
+M-W7431				
+M-X7001:194+	BN	+M-B7431:	+C/155.03	ARL
+M-X7001:194-	BU	+M-B7431:	+C/155.03	ARL
+M-X7001:194	BK	+M-B7431:	+C/155.05	ARL
+M-W7432				
+M-X7001:195+	BN	+M-B7432:	+C/155.03	ARL
+M-X7001:195-	BU	+M-B7432:	+C/155.03	ARL
+M-X7001:195	BK	+M-B7432:	+C/155.05	ARL
+M-W7433				
+M-X7001:196+	BN	+M-B7433:	+C/155.03	ARL
+M-X7001:196-	BU	+M-B7433:	+C/155.03	ARL
+M-X7001:196	BK	+M-B7433:	+C/155.05	ARL
+M-W7435				
+M-X7001:164	BN	+M-Y7400:	+C/175.04	H.G.
+M-X7001:164-	BU	+M-Y7400:	+C/175.05	H.G.
+M-X7001:⏚	GNYE	+M-Y7400:	+C/175.05	H.G.
+M-W7660				
+M-X7660:⏚	GNYE	+M-M1506:PE	+C/257.03	TGA
+M-X7660:1	1	+M-M1506:GND1	+C/257.03	TGA
+M-X7660:2	2	+M-M1506:VDC1	+C/257.03	TGA
+M-X7660:6			+C/257.05	
+M-W7670				
+M-X7670:4	BN	+M-M1505:BN	+C/253.02	TGA
+M-X7670:2	GN	+M-M1505:GN	+C/253.02	TGA
+M-X7670:3	VT	+M-M1505:VT	+C/253.02	TGA
+M-X7670:1	BU	+M-M1505:BU	+C/253.02	TGA
+M-X7670:5	WH	+M-M1505:WH1	+C/253.02	TGA

From	Cable	To	Page.Col.	Option
+M-X7670:5	WH	+M-M1505:WH2	+C/253.02	TGA
+M-X7670:6	SH	GND:	+C/253.02	TGA
+M-W7671				
+C-X767:7	1	+M-X7670:7	+C/254.02	TGA
+C-X767:8	2	+M-X7670:8	+C/254.02	TGA
+C-X767:9	3	+M-X7670:9	+C/254.04	TGA
	GNYE			
+M-W7700				
+M-A700:1 U	BN	+M-M7700:U A	+C/243.02	TGA
+M-A700:2 V	BK	+M-M7700:V B	+C/243.02	TGA
+M-A700:2 W	BU	+M-M7700: W C	+C/243.02	TGA
+M-A700:4 GND	GNYE	+M-M7700:GND	+C/243.02	TGA
GND:	SH	GND:	+C/243.02	TGA
+M-W7701				
+M-A701:1 U	BN	+M-M7701:U A	+C/244.02	TGA
+M-A701:2 V	BK	+M-M7701:V B	+C/244.02	TGA
+M-A701:2 W	BU	+M-M7701: W C	+C/244.02	TGA
+M-A701:4 GND	GNYE	+M-M7701:GND	+C/244.02	TGA
GND:	SH	GND:	+C/244.02	TGA
+M-W7702				
+M-A702:1 U	BN	+M-M7702:U A	+C/245.02	TGA
+M-A702:2 V	BK	+M-M7702:V B	+C/245.02	TGA
+M-A702:2 W	BU	+M-M7702: W C	+C/245.02	TGA
+M-A702:4 GND	GNYE	+M-M7702:GND	+C/245.02	TGA
GND:	SH	GND:	+C/245.02	TGA
+M-W7703				
+M-A703:1 U	BN	+M-M7703:U A	+C/246.02	TGA
+M-A703:2 V	BK	+M-M7703:V B	+C/246.02	TGA
+M-A703:2 W	BU	+M-M7703: W C	+C/246.02	TGA

Drawing remarks

Tetra Pak

Designer LUP	Date 23/11/2007	Machine Tetra Pak A3/Flex 0150	
ECM No 320174	Denomination CABLE CONNECTION LIST	Page Type CABLE CONNECTION LIST	
Company Tetra Pak (Italy)	Document No. 2845987-0007	Doc. type ELD	Version AE	Page 046

This drawing must not without the consent of Tetra Pak be copied, transmitted or disclosed to any third party.

Cable Connection List of 2845987-0003

From	Cable	To	Page.Col.	Option
+M-A703:4 GND	GNYE	+M-M7703:GND	+C/246.02	TGA
GND:	SH	GND:	+C/246.02	TGA
+M-W7704				
+M-A704:1 U	BN	+M-M7704:U A	+C/247.02	TGA
+M-A704:2 V	BK	+M-M7704:V B	+C/247.02	TGA
+M-A704:2 W	BU	+M-M7704: W C	+C/247.02	TGA
+M-A704:4 GND	GNYE	+M-M7704:GND	+C/247.02	TGA
GND:	SH	GND:	+C/247.02	TGA
+M-W7705				
+M-A705:1 U	BN	+M-M7705:U A	+C/248.02	TGA
+M-A705:2 V	BK	+M-M7705:V B	+C/248.02	TGA
+M-A705:2 W	BU	+M-M7705: W C	+C/248.02	TGA
+M-A705:4 GND	GNYE	+M-M7705:GND	+C/248.02	TGA
GND:	SH	GND:	+C/248.02	TGA
+M-W7706				
+M-A706:1 U	BN	+M-M7706:U A	+C/249.02	TGA
+M-A706:2 V	BK	+M-M7706:V B	+C/249.02	TGA
+M-A706:2 W	BU	+M-M7706: W C	+C/249.02	TGA
+M-A706:4 GND	GNYE	+M-M7706:GND	+C/249.02	TGA
GND:	SH	GND:	+C/249.02	TGA
+M-W7710				
+M-M7700:SIN+ A	BK	+M-A700:M/F D1	+C/243.03	TGA
+M-M7700:SIN- B	WH/BK	+M-A700:M/F D2	+C/243.03	TGA
+M-M7700:COS+ C	RD	+M-A700:M/F D3	+C/243.03	TGA
+M-M7700:COS- D	WH/RD	+M-A700:M/F D4	+C/243.03	TGA
+M-M7700:DATA+ E	GN	+M-A700:M/F D5	+C/243.03	TGA
+M-M7700:DATA- F	WH/GN	+M-A700:M/F D10	+C/243.03	TGA
+M-M7700:K	GY	+M-A700:M/F D14	+C/243.03	TGA
+M-M7700:ECOM L	WH/GY	+M-A700:M/F D6	+C/243.03	TGA
+M-M7700:+9VDC N	OG	+M-A700:M/F D7	+C/243.03	TGA

From	Cable	To	Page.Col.	Option
+M-M7700:TS+ R	WH/OG	+M-A700:M/F D11	+C/243.03	TGA
+M-W7710:		PE:	+C/243.05	
+M-W7711				
+M-M7701:SIN+ A	BK	+M-A701:M/F D1	+C/244.03	TGA
+M-M7701:SIN- B	WH/BK	+M-A701:M/F D2	+C/244.03	TGA
+M-M7701:COS+ C	RD	+M-A701:M/F D3	+C/244.03	TGA
+M-M7701:COS- D	WH/RD	+M-A701:M/F D4	+C/244.03	TGA
+M-M7701:DATA+ E	GN	+M-A701:M/F D5	+C/244.03	TGA
+M-M7701:DATA- F	WH/GN	+M-A701:M/F D10	+C/244.03	TGA
+M-M7701:K	GY	+M-A701:M/F D14	+C/244.03	TGA
+M-M7701:ECOM L	WH/GY	+M-A701:M/F D6	+C/244.03	TGA
+M-M7701:+9VDC N	OG	+M-A701:M/F D7	+C/244.03	TGA
+M-M7701:TS+ R	WH/OG	+M-A701:M/F D11	+C/244.03	TGA
+M-W7711:	SH	PE:	+C/244.05	
+M-W7712				
+M-M7702:SIN+ A	BK	+M-A702:M/F D1	+C/245.03	TGA
+M-M7702:SIN- B	WH/BK	+M-A702:M/F D2	+C/245.03	TGA
+M-M7702:COS+ C	RD	+M-A702:M/F D3	+C/245.03	TGA
+M-M7702:COS- D	WH/RD	+M-A702:M/F D4	+C/245.03	TGA
+M-M7702:DATA+ E	GN	+M-A702:M/F D5	+C/245.03	TGA
+M-M7702:DATA- F	WH/GN	+M-A702:M/F D10	+C/245.03	TGA
+M-M7702:K	GY	+M-A702:M/F D14	+C/245.03	TGA
+M-M7702:ECOM L	WH/GY	+M-A702:M/F D6	+C/245.03	TGA
+M-M7702:+9VDC N	OG	+M-A702:M/F D7	+C/245.03	TGA
+M-M7702:TS+ R	WH/OG	+M-A702:M/F D11	+C/245.03	TGA
+M-W7712:	SH	PE:	+C/245.05	
+M-W7713				
+M-M7703:SIN+ A	BK	+M-A703:M/F D1	+C/246.03	TGA
+M-M7703:SIN- B	WH/BK	+M-A703:M/F D2	+C/246.03	TGA
+M-M7703:COS+ C	RD	+M-A703:M/F D3	+C/246.03	TGA
+M-M7703:COS- D	WH/RD	+M-A703:M/F D4	+C/246.03	TGA

Drawing remarks

Tetra Pak

Designer: LUP	Date: 23/11/2007	Machine: Tetra Pak A3/Flex 0150	
ECM No: 320174	Denomination: CABLE CONNECTION LIST	Page Type: CABLE CONNECTION LIST	
Company: Tetra Pak (Italy)	Document No.: 2845987-0007	Doc. type: ELD	Version: AE	Page: 047

RELEASED

This drawing must not without the consent of Tetra Pak be copied, transmitted or disclosed to any third party.

Cable Connection List of 2845987-0003

From	Cable	To	Page.Col.	Option
+M-M7703:DATA+ E	GN	+M-A703:M/F D5	+C/246.03	TGA
+M-M7703:DATA- F	WH/GN	+M-A703:M/F D10	+C/246.03	TGA
+M-M7703:K	GY	+M-A703:M/F D14	+C/246.03	TGA
+M-M7703:ECOM L	WH/GY	+M-A703:M/F D6	+C/246.03	TGA
+M-M7703:+9VDC N	OG	+M-A703:M/F D7	+C/246.03	TGA
+M-M7703:TS+ R	WH/OG	+M-A703:M/F D11	+C/246.03	TGA
+M-W7713:		PE:	+C/246.05	
+M-W7714				
+M-M7704:SIN+ A	BK	+M-A704:M/F D1	+C/247.03	TGA
+M-M7704:SIN- B	WH/BK	+M-A704:M/F D2	+C/247.03	TGA
+M-M7704:COS+ C	RD	+M-A704:M/F D3	+C/247.03	TGA
+M-M7704:COS- D	WH/RD	+M-A704:M/F D4	+C/247.03	TGA
+M-M7704:DATA+ E	GN	+M-A704:M/F D5	+C/247.03	TGA
+M-M7704:DATA- F	WH/GN	+M-A704:M/F D10	+C/247.03	TGA
+M-M7704:K	GY	+M-A704:M/F D14	+C/247.03	TGA
+M-M7704:ECOM L	WH/GY	+M-A704:M/F D6	+C/247.03	TGA
+M-M7704:+9VDC N	OG	+M-A704:M/F D7	+C/247.03	TGA
+M-M7704:TS+ R	WH/OG	+M-A704:M/F D11	+C/247.03	TGA
+M-W7714:		PE:	+C/247.05	
+M-W7715				
+M-M7705:SIN+ A	BK	+M-A705:M/F D1	+C/248.03	TGA
+M-M7705:SIN- B	WH/BK	+M-A705:M/F D2	+C/248.03	TGA
+M-M7705:COS+ C	RD	+M-A705:M/F D3	+C/248.03	TGA
+M-M7705:COS- D	WH/RD	+M-A705:M/F D4	+C/248.03	TGA
+M-M7705:DATA+ E	GN	+M-A705:M/F D5	+C/248.03	TGA
+M-M7705:DATA- F	WH/GN	+M-A705:M/F D10	+C/248.03	TGA
+M-M7705:K	GY	+M-A705:M/F D14	+C/248.03	TGA
+M-M7705:ECOM L	WH/GY	+M-A705:M/F D6	+C/248.03	TGA
+M-M7705:+9VDC N	OG	+M-A705:M/F D7	+C/248.03	TGA
+M-M7705:TS+ R	WH/OG	+M-A705:M/F D11	+C/248.03	TGA
+M-W7715:		PE:	+C/248.05	
+M-W7716				

From	Cable	To	Page.Col.	Option
+M-M7706:SIN+ A	BK	+M-A706:M/F D1	+C/249.03	TGA
+M-M7706:SIN- B	WH/BK	+M-A706:M/F D2	+C/249.03	TGA
+M-M7706:COS+ C	RD	+M-A706:M/F D3	+C/249.03	TGA
+M-M7706:COS- D	WH/RD	+M-A706:M/F D4	+C/249.03	TGA
+M-M7706:DATA+ E	GN	+M-A706:M/F D5	+C/249.03	TGA
+M-M7706:DATA- F	WH/GN	+M-A706:M/F D10	+C/249.03	TGA
+M-M7706:K	GY	+M-A706:M/F D14	+C/249.03	TGA
+M-M7706:ECOM L	WH/GY	+M-A706:M/F D6	+C/249.03	TGA
+M-M7706:+9VDC N	OG	+M-A706:M/F D7	+C/249.03	TGA
+M-M7706:TS+ R	WH/OG	+M-A706:M/F D11	+C/249.03	TGA
+M-W7716:	SH	PE:	+C/249.05	
+M-W7902				
+M-X7001:160	1	+M-H7802:1	+C/189.04	
+M-X7001:160-	2	+M-H7802:2	+C/189.05	
+M-W9101				
+M-X9100:104	1	+M-Y9101:1	+C/207.04	H.I.
+M-X9100:104-	2	+M-Y9101:2	+C/207.06	H.I.
+M-X9100:⏚	GNYE	+M-Y9101:E	+C/207.06	H.I.
+M-W9103				
+M-X9100:105	1	+M-Y9103:1	+C/207.04	H.I.
+M-X9100:105-	2	+M-Y9103:2	+C/207.06	H.I.
+M-X9100:⏚	GNYE	+M-Y9103:E	+C/207.06	H.I.
+M-W9104				
+M-X9100:103	1	+M-B9104:1	+C/145.05	H.I.
+M-X9100:103+	2	+M-B9104:3	+C/145.03	H.I.
+M-W9107				
+M-X9100:108+	BN	+M-B9107:	+C/145.03	H.I.
+M-X9100:108-	BU	+M-B9107:	+C/145.03	H.I.

Drawing remarks

Tetra Pak

Designer: LUP	Date: 23/11/2007	Machine: Tetra Pak A3/Flex 0150	
ECM No: 320174	Denomination: CABLE CONNECTION LIST	Page Type: CABLE CONNECTION LIST	
Company: Tetra Pak (Italy)	Document No.: 2845987-0007	Doc. type: ELD	Version: AE	Page: 048

This drawing must not without the consent of Tetra Pak be copied, transmitted or disclosed to any third party.

Cable Connection List of 2845987-0003

From	Cable	To	Page.Col.	Option
+M-X9100:108	BK	+M-B9107:	+C/145.05	H.I.
+M-W9108				
+M-X9100:109+	BN	+M-B9108:	+C/145.03	H.I.
+M-X9100:109-	BU	+M-B9108:	+C/145.03	H.I.
+M-X9100:109	BK	+M-B9108:	+C/145.05	H.I.
+M-W9109				
+M-X9100:110+	BN	+M-B9109:	+C/145.03	H.I.
+M-X9100:110-	BU	+M-B9109:	+C/145.03	H.I.
+M-X9100:110	BK	+M-B9109:	+C/145.05	H.I.
+M-W9110				
+M-X9100:111+	BN	+M-B9110:	+C/145.03	H.I.
+M-X9100:111-	BU	+M-B9110:	+C/145.03	H.I.
+M-X9100:111	BK	+M-B9110:	+C/145.05	H.I.
+M-W9111				
+M-X9100:112+	BN	+M-B9111:	+C/145.03	H.I.
+M-X9100:112-	BU	+M-B9111:	+C/145.03	H.I.
+M-X9100:112	BK	+M-B9111:	+C/145.05	H.I.
+M-W9112				
+M-X9100:106	1	+M-Y9112:1	+C/207.04	H.I.
+M-X9100:106-	2	+M-Y9112:2	+C/207.06	H.I.
+M-X9100:⏚	GNYE	+M-Y9112:E	+C/207.06	H.I.
+M-W9113				
+M-X9100:113	1	+M-B9113:⏚	+C/049.03	
+M-X9100:114	2	+M-B9113:1	+C/049.03	
+M-X9100:115	3	+M-B9113:2	+C/049.03	
+M-X9100:⏚	GNYE	+M-B9113:⏚	+C/049.03	
+M-W9114				

From	Cable	To	Page.Col.	Option
+M-X9100:107	1	+M-Y9114:1	+C/207.04	H.I.
+M-X9100:107-	2	+M-Y9114:2	+C/207.06	H.I.
+M-X9100:⏚	GNYE	+M-Y9114:E	+C/207.06	H.I.
+M-W9115				
+M-X9100:116-	GY	+M-X9115:4	+C/102.07	H.I.
+M-X9100:116	WH	+M-X9115:3	+C/102.06	H.I.
+M-X9100:⏚	YE	+M-X9115:5	+C/102.07	H.I.
+M-X9100:117	GN	+M-X9115:2	+C/102.06	H.I.
+M-X9100:116+	BN	+M-X9115:1	+C/102.06	H.I.
+M-X9100:118	SH		+C/102.06	H.I.
+M-W9117				
+M-X9100:119+	BN	+M-X9117:1	+C/105.02	
+M-X9100:118-	WH	+M-X9117:3	+C/105.05	
+M-X9100:119	YE	+M-X9117:4	+C/105.05	
+M-X9100:119-	GN	+M-X9117:2	+C/105.02	
+M-X9100:118	SH		+C/105.02	
+M-W9118				
+M-X9100:120	1	+M-B9118:BU	+C/145.05	H.I.
+M-X9100:120+	2	+M-B9118:BN	+C/145.03	H.I.
+M-X9100:⏚	GNYE	+M-B9118:E	+C/145.05	H.I.
+M-W9120				
+M-X9100:1	1	+M-R9120:1	+C/008.02	
+M-X9100:2	2	+M-R9120:2	+C/008.02	
+M-X9100:⏚	GNYE	+M-R9120:E	+C/008.02	
+M-W9121				
+M-X9121:-	RD	+M-X9100:125-	+C/112.03	H.I.
+M-X9121:+	YE	+M-X9100:125+	+C/112.03	H.I.

Drawing remarks

Tetra Pak

Designer: LUP	Date: 23/11/2007	Machine: Tetra Pak A3/Flex 0150	
ECM No: 320174	Denomination: CABLE CONNECTION LIST	Page Type: CABLE CONNECTION LIST	
Company: Tetra Pak (Italy)	Document No.: 2845987-0007	Doc. type: ELD	Version: AE	Page: 049

This drawing must not without the consent of Tetra Pak be copied, transmitted or disclosed to any third party.

Cable Connection List of 2845987-0003

From	Cable	To	Page.Col.	Option
	+M-W79011			
+M-X7001:176	WH	+M-X79012:1	+C/207.04	
+M-X7001:178-	BN	+M-X79012:5	+C/207.07	
+M-X7001:178+	GY	+M-X79012:4	+C/207.07	
	PK			
+M-X7001:177	YE	+M-X79012:2	+C/207.04	
+M-X7001:178	GN	+M-X79012:3	+C/207.04	
GND:	SH		+C/207.04	
	SH			
	SH			
	SH			
	+M-W79012			
+M-X79012:1	1	+M-A7901:K1:17	+C/207.04	
+M-X79012:2	2	+M-A7901:K1:19	+C/207.04	
+M-X79012:3	3	+M-A7901:K1:20	+C/207.04	
+M-X79012:4	4	+M-A7901:K1:21 (	+C/207.06	
+M-X79012:5	5	+M-A7901:K1:22 (	+C/207.06	

From	Cable	To	Page.Col.	Option

Drawing remarks

Tetra Pak

Designer: LUP	Date: 23/11/2007	Machine: Tetra Pak A3/Flex 0150	
ECM No: 320174	Denomination: CABLE CONNECTION LIST	Page Type: CABLE CONNECTION LIST	
Company: Tetra Pak (Italy)	Document No.: 2845987-0007	Doc. type: ELD	Version: AE	Page: 050

9 Mains Connections

TechPub_2614345_v3_DRAFT_Release09_EM2851302_05en.fm

Description

The drawings that show the connection from the mains power to the electrical cabinet are included in this chapter.

TechPub_2614345_v3_DRAFT_Release09_EM2851302_05en.fm

This drawing must not without the consent of Tetra Pak
be copied, transmitted or disclosed to any third party.

1 2 3 4 5 6 7 8 9 10

MAIN VOLTAGE 200-600V EXCEPT 400/230V

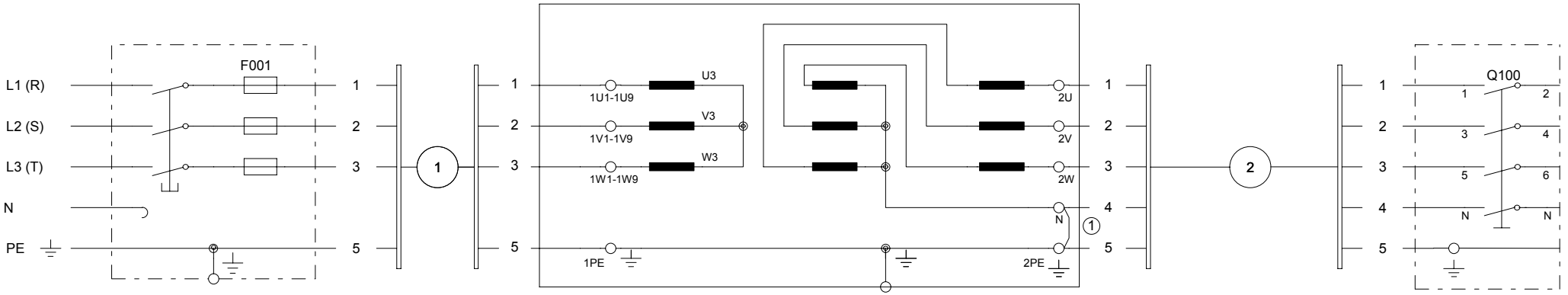

MAINS CUSTOMER'S FUSE BOX

MATCHING TRANSFORMER CONNECTION
ACCORDING TO DIAGRAM 2565627-0008:002

FILLING MACHINE CONNECTION
ACCORDING TO DIAGRAM "MAINS"

MAIN VOLTAGE 400/230V

CABLE AREA	Q100		FUSE
	⊐	I >	
5 X 50 / 35 mm²	100 A	600 A	160 A

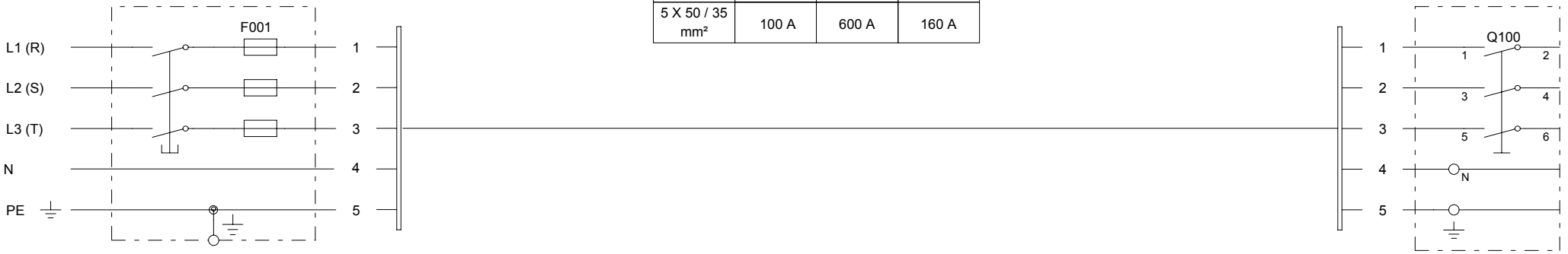

MAINS CUSTOMER'S FUSE BOX

ATTENTION: THIS IS A RECOMMANDATION TO ACHIEVE SELECTIVITY;
THE DIMENSIONING OF THE MAIN CABLE AND PROTECTIVE GROUNDING
HAS TO BE CARRIED OUT ACCORDING TO CURRENT LOCAL REGULATIONS.

CAUTION THE PROTECTIVE EARTH CONNECTION MUST BE DONE

ACCORDING TO THE LOCAL RULES

FILLING MACHINE CONNECTION
ACCORDING TO DIAGRAM "MAINS"

Drawing remarks

Tetra Pak

Designer	Date	Machine
LUP	23/11/2007	Tetra Pak A3/Flex 0150

ECM No	Denomination	Page Type
320174	MAINS CONNECTION	MAINS CONNECTION

Company	Document No.	Doc. type	Version	Page
Tetra Pak (Italy)	2845987-0008	ELD	AE	001

RELEASED

This drawing must not without the consent of Tetra Pak be copied, transmitted or disclosed to any third party.

MAIN VOLTAGE	FUSES (SLOW) (1) F001	AREA TO CU CABLES NO. 1	AREA TO CU CABLES NO. 2	SETTING VALUE Q100	CONNECTIONS ON MATCHING TRANSFORMER			
V	A	mm²	mm²	A	MAINS		TAP	CONNECT
600/347 3x600	100	3x16/16	4x25/16	63/400	PHASE PHASE PHASE N GROUND	L1 L2 L3 N PE	1U9 1V9 1W9 N ⏚	1U3 - U4 1V3 - V4 1W3 - W4
550/318 3x550	125	3x16/16	4x25/16	63/400	PHASE PHASE PHASE N GROUND	L1 L2 L3 N PE	1U8 1V8 1W8 N ⏚	1U3 - U4 1V3 - V4 1W3 - W4
500/289 3x500	125	3x25/16	4x25/16	63/400	PHASE PHASE PHASE N GROUND	L1 L2 L3 N PE	1U7 1V7 1W7 N ⏚	1U3 - U4 1V3 - V4 1W3 - W4
480/277 3x480	125	3x25/16	4x25/16	63/400	PHASE PHASE PHASE N GROUND	L1 L2 L3 N PE	1U6 1V6 1W6 N ⏚	1U3 - U4 1V3 - V4 1W3 - W4
440/254 3x440	160	3x25/16	4x25/16	63/400	PHASE PHASE PHASE N GROUND	L1 L2 L3 N PE	1U5 1V5 1W5 N ⏚	1U2 - U4 1V2 - V4 1W2 - W4
415/240 3x415	160	3x25/16	4x25/16	63/400	PHASE PHASE PHASE N GROUND	L1 L2 L3 N PE	1U5 1V5 1W5 N ⏚	1U1 - U4 1V1 - V4 1W1 - W4
3x400 [3×380]	160	3x25/16	4x25/16	63/400	PHASE PHASE PHASE N GROUND	L1 L2 L3 N PE	1U4 1V4 1W4 N ⏚	1U1 - U4 1V1 - V4 1W1 - W4
240/140 3x240	250	3x70/35	4x25/16	63/400	PHASE PHASE PHASE N GROUND	L1 L2 L3 N PE	1U3 1V3 1W3 N ⏚	U3 - U4 V3 - V4 W3 - W4	1U3-1U6 1V3-1V6 1W3-1W6
220/127 3x220	315	3x70/35	4x25/16	63/400	PHASE PHASE PHASE N GROUND	L1 L2 L3 N PE	1U2 1V2 1W2 N ⏚	U3 - U4 V3 - V4 W3 - W4	1U2-1U5 1V2-1V5 1W2-1W5
200/115 3x200	315	3x95/50	4x25/16	63/400	PHASE PHASE PHASE N GROUND	L1 L2 L3 N PE	1U1 1V1 1W1 N ⏚	U3 - U4 V3 - V4 W3 - W4	1U1-1U4 1V1-1V4 1W1-1W4

MATCHING TRANSFORMER
90245-0024

Y/Z II-WIRED

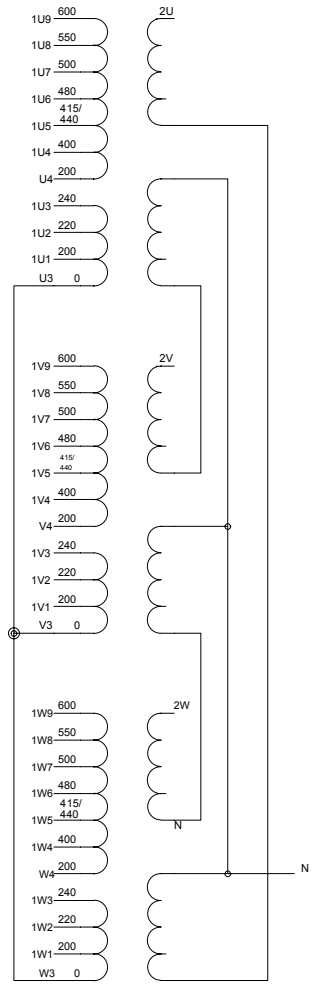

1. RECOMMENDED MAIN FUSE TO ACHIEVE SELECTIVITY

Drawing remarks

Tetra Pak

Designer	Date	Machine
LUP	23/11/2007	Tetra Pak A3/Flex 0150

ECM No	Denomination	Page Type
320174	MAINS CONNECTION	MAINS CONNECTION A3/FLEX

Company	Document No.	Doc. type	Version	Page
Tetra Pak (Italy)	2845987-0008	ELD	AE	002

RELEASED

This drawing must not without the consent of Tetra Pak be copied, transmitted or disclosed to any third party.

MAIN VOLTAGE	FUSES (SLOW) ① F001	AREA TO CU CABLES NO. 1	AREA TO CU CABLES NO. 2	SETTING VALUE Q100	CONNECTIONS ON MATCHING TRANSFORMER			
V	A	mm²	mm²	A	MAINS		TAP	CONNECT
600/347 3x600	125	3x25/16	4x70/35	100/400	PHASE PHASE PHASE N GROUND	L1 L2 L3 N PE	1U9 1V9 1W9 N ⏚	1U3 - U4 1V3 - V4 1W3 - W4
550/318 3x550	125	3x35/16	4x70/35	100/400	PHASE PHASE PHASE N GROUND	L1 L2 L3 N PE	1U8 1V8 1W8 N ⏚	1U3 - U4 1V3 - V4 1W3 - W4
500/289 3x500	125	3x35/16	4x70/35	100/400	PHASE PHASE PHASE N GROUND	L1 L2 L3 N PE	1U7 1V7 1W7 N ⏚	1U3 - U4 1V3 - V4 1W3 - W4
480/277 3x480	160	3x50/25	4x70/35	100/400	PHASE PHASE PHASE N GROUND	L1 L2 L3 N PE	1U6 1V6 1W6 N ⏚	1U3 - U4 1V3 - V4 1W3 - W4
440/254 3x440	160	3x50/25	4x70/35	100/400	PHASE PHASE PHASE N GROUND	L1 L2 L3 N PE	1U5 1V5 1W5 N ⏚	1U2 - U4 1V2 - V4 1W2 - W4
415/240 3x415	160	3x50/25	4x70/35	100/400	PHASE PHASE PHASE N GROUND	L1 L2 L3 N PE	1U5 1V5 1W5 N ⏚	1U1 - U4 1V1 - V4 1W1 - W4
3x400 [3×380]	160	3x70/35	4x70/35	100/400	PHASE PHASE PHASE N GROUND	L1 L2 L3 N PE	1U4 1V4 1W4 N ⏚	1U1 - U4 1V1 - V4 1W1 - W4
240/140 3x240	315	3x120/70	4x70/35	100/400	PHASE PHASE PHASE N GROUND	L1 L2 L3 N PE	1U3 1V3 1W3 N ⏚	U3 - U4 1U3-1U6 V3 - V4 1V3-1V6 W3 - W4 1W3-1W6
220/127 3x220	315	3x150/70	4x70/35	100/400	PHASE PHASE PHASE N GROUND	L1 L2 L3 N PE	1U2 1V2 1W2 N ⏚	U3 - U4 1U2-1U5 V3 - V4 1V2-1V5 W3 - W4 1W2-1W5
200/115 3x200	315	3x150/70	4x70/35	100/400	PHASE PHASE PHASE N GROUND	L1 L2 L3 N PE	1U1 1V1 1W1 N ⏚	U3 - U4 1U1-1U4 V3 - V4 1V1-1V4 W3 - W4 1W1-1W4

MATCHING TRANSFORMER
90245-0024

Y/Z II-WIRED

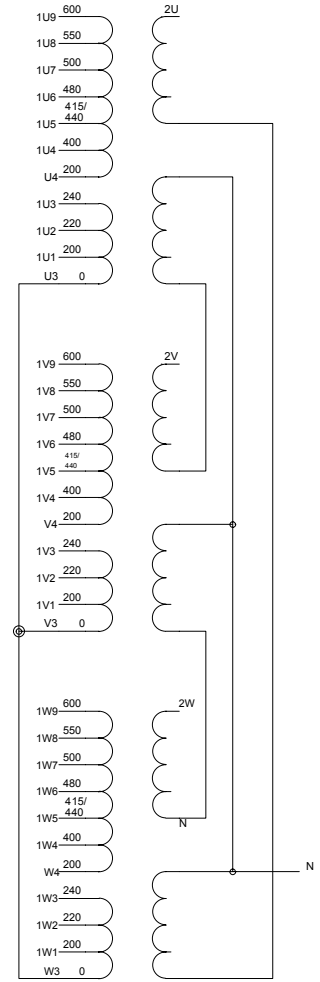

1. RECOMMENDED MAIN FUSE TO ACHIEVE SELECTIVITY

Drawing remarks

Tetra Pak

Designer	Date	Machine
LUP	23/11/2007	Tetra Pak A3/Flex 0150

ECM No	Denomination	Page Type
320174	MAINS CONNECTION	MAINS CONNECTION A3/FLEX + DIMC

Company	Document No.	Doc. type	Version	Page
Tetra Pak (Italy)	2845987-0008	ELD	AE	003

This page intentionally left blank

10 Drawing Remarks

TechPub_2614345_v3_DRAFT_Release10_EM2851302_05en.fm

Description

The following pages contain the drawing remarks referenced in chapter 4 Circuit Diagrams.

TechPub_2614345_v3_DRAFT_Release10_EM2851302_05en.fm

Tetra Pak

Drawing remarks

Drawing No.	Page	Note	Remark
2845987-0003	005	1	FRAME
	010	1	GND CONNECTED TO CHASSIS.
		2	WHEN VARIANT TGA IS VALID, FLAP HEATER ONLY BOTTOM LEFT.
		3	WHEN VARIANT TGA IS VALID, THE COMPONENTS MARKED “TGA” MUST BE CONNECTED.
		4	IF THE VARIANT “TGA” IS VALID THE ELECTRIC CHARACTERISTIC OF FUSE F026 AND F046 IS 16A OTHERWISE BE LEFT 10A.
	011	1	WILL BE REMOVED WHEN THE PT IS INSTALLED.
	014	1	ONE TURN.
		2	CONNECTED TO CABLE GLAND.
	016	1	ONE TURN.
		2	CONNECTED TO CABLE GLAND.
	017	1	ONE TURN.
		2	CONNECTED TO CABLE GLAND.
	018	1	ONE TURN.
		2	CONNECTED TO CABLE GLAND.
	020	1	CONNECTED TO CABLE CLAMP.
		2	PLACE THE FERRITE CLOSED TO THE KINETIX COMPONENT.
		3	TWO TURNS.
	021	1	SHIELD MUST BE GROUNDED THE DRIVER SIDE.
		2	CONNECTED TO CABLE GLAND.
		4	CONNECTED TO SCREEN CLAMPING SAGGLE.
		5	TWO TURNS.
		6	WHEN THE VARIANT TGA IS VALID, CONNECT IN TO THE SAME NAME VISIBLE IN SHEET.44
		7	WHEN THE VARIANT TGA IS VALID, SEE THE PAGE OPTICAL RING FOR NEW CONNECTION.
	022	1	SHIELD MUST BE GROUNDED ON THE DRIVER SIDE.
		2	CONNECTED TO CABLE GLAND.
		4	CONNECTED TO SCREE CLAMPING SAGGLE.
	023	1	SHIELD MUST BE GROUNDED ON THE DRIVER SIDE.
		2	CONNECTED TO CABLE GLAND.
		4	CONNECTED TO SCREE CLAMPING SAGGLE.
	024	1	SHIELD MUST BE GROUNDED ON THE DRIVER SIDE.
		2	CONNECTED TO CABLE GLAND.
		4	CONNECTED TO SCREE CLAMPING SAGGLE.
	027	1	SHIELD MUST BE GROUNDED ON THE DRIVER SIDE.
		2	CONNECTED TO CABLE GLAND.
		4	TWO TURNS.
		5	IF THE VARIANT IS VALID, THE PAGE IS IDENTIFIED AS OUTFEED FFU TGA.
	028	1	SHIELD MUST BE GROUNDED ON THE DRIVER SIDE.
		2	CONNECTED TO CABLE GLAND.
		4	CONNECTED TO SCREE CLAMPING SAGGLE.
	029	1	SHIELD MUST BE GROUNDED ON THE DRIVER SIDE.
		2	CONNECTED TO CABLE GLAND.
		4	CONNECTED TO SCREE CLAMPING SAGGLE.
	030	1	ONLY VALID FOR TGA VARIANT.

Tetra Pak Carton Ambient S.p.A.

Issued by/Date: LuP / 2007-11-23 Approved/Date: FVN / 2007-11-23 ECM 320174

Drawing remarks

Identity	Document type	Version	Page
2845987-0098	ELD	AE	1(3)

TechPub_2614345_v3_DRAFT_Release10_EM2851302_05en.fm

This drawing must not without the consent of Tetra Pak be copied, transmitted or disclosed to any third party.

Tetra Pak

Drawing remarks

Drawing No.	Page	Note	Remark
	036	1	MOUNTED ONLY WHITOUT OPTION VISION SYSTEM.
	038	1	WIRING ONLY WHEN WATER-BLOCK IS MOUNTED.
	040	1	GND CONNECTED TO CHASSIS.
	041	1	GND CONNECTED TO CHASSIS.
	043	1	GND CONNECTED TO CHASSIS.
		2	THE CONNECTION REFERENCE (ACB) ONLY VALID FOR “USA VARIANT”.
	044	1	THIS PAGE EXIST ONLY IF THE VARIANT TGA IS VALID.
	051	2	THE CONNECTION REFERENCE (ACB) ONLY VALID FOR “USA VARIANT”.
	057	1	TO BE REMOVED WHEN THE SIGNAL FROM DAIRY IS AVAILABLE.
	059	1	220V SUPPLY FROM THE DAIRY.
	061	1	WHEN THE VARIANT TGA IS VALID, DISCONNECT THE SENSOR AND ITS CABLE AT TERMINAL STRIP +M-X2001, ANDCONNECT WITH BRIDGE BETWEEN M.X2001:116 AND 117.
	063	1	IF THE VARIANT TGA IS VALID CONNECT ONLY INTERR. POINT “ABL”, IF NOT CONNECT ONLY “ABI”.
	067	1	IF THE OPTIONAL EQUIPMENT H.G. IS NOT INSTALLED PLEASE, MAKE A BRIDGE BETWEEN X1003:149 AND X1003:150 AND X1003:148 AND X1003:151.
	080	1	CONNECTED TO THE RACK SCREW FIXING.
		2	GND CONNECTED TO CHASSIS.
	081	1	GND CONNECTED TO CHASSIS.
		2	TO DISCONNECT WHEN THE PT IS INSTALLED OR WHEN THE TGA VARIANT IS VALID.
		3	ONE TURN.
		4	CONNECT TO PLC RACK FRAME.
		5	TWO TURNS.
		6	WHEN THE VARIANT TGA IS VALID SEE PAGE OPTICAL RING TGA, FOR NEW CONNECTION.
	099	1	TO DISCONNECT WHEN THE PT IS INSTALLED.
		2	TO CONNECT WHEN THE TGA VARIANT IS VALID.
	104	1	GND CONNECTED TO CHASSIS.
		2	CONNECTED TO CABLE GLAND.
	105	1	GND CONNECTED TO CHASSIS.
	111	1	WHEN VARIANT TGA IS VALID, FLAP HEATER COMMENT CHANGES AS FOLLOW: “BOTTOM LEFT”.
	115	1	IF THE VARIANT TGA IS VALID, DISCONNECT THE SENSOR AND ITS CABLE TO TERMINAL STRIP +M-2001.
	129	1	CONNECT ONLY IF THE VARIANT TGA IS VALID.
	130	1	GND CONNECTED TO CHASSIS.
	143	1	GND CONNECTED TO CHASSIS.
	147	1	DISCONNECT THE SENSOR AND ITS CABLE WHEN THE VARIANT TGA IS VALID.
	149	1	TO BE REMOVED WHEN THE SIGNAL FROM DAIRY IS AVAILABLE.
	150	1	REMOVE THE BRIDGE WHEN THE DIMC IS INSTALLED.
	151	1	ADD THESE INTERR. POINTS WHEN THE VARIANT TGA IS VALID.

Tetra Pak Carton Ambient S.p.A.

Issued by/Date: LuP / 2007-11-23 Approved/Date: FVN / 2007-11-23 ECM 320174

Drawing remarks

Identity	Document type	Version	Page
2845987-0098	ELD	AE	2(3)

This drawing must not without the consent of Tetra Pak be copied, transmitted or disclosed to any third party.

TechPub_2614345_v3_DRAFT_Release10_EM2851302_05en.fm

Tetra Pak

Drawing remarks

Drawing No.	Page	Note	Remark
	176	1	THIS CONNECTIONS EXISTS ONLY IF THE VARIANT TGA IS VALID.
	191	1	THIS CONNECTION EXIST ONLY IF THE VARIANT TGA IS VALID.
	193	1	THIS CONNECTION EXIST ONLY IF THE VARIANT TGA IS VALID.
	204	1	IF THE VARIANT TGA IS VALID THE COMMENT CHANGES AS FOLLOW: “TOP RIGHT FLAP HEATING AIR FFU”.
		2	IF THE VARIANT TGA IS VALID THE COMMENT CHANGES AS FOLLOW: “TOP LEFT FLAP HEATING AIR FFU”.
	243	1	SHIELD MUST BE GROUNDED THE DRIVER SIDE.
		2	CONNECTED TO CABLE GLAND.
		5	TWO TURNS.
	244	1	SHIELD MUST BE GROUNDED THE DRIVER SIDE.
		2	CONNECTED TO CABLE GLAND.
	245	1	SHIELD MUST BE GROUNDED THE DRIVER SIDE.
		2	CONNECTED TO CABLE GLAND.
	246	1	SHIELD MUST BE GROUNDED THE DRIVER SIDE.
		2	CONNECTED TO CABLE GLAND.
	247	1	SHIELD MUST BE GROUNDED THE DRIVER SIDE.
		2	CONNECTED TO CABLE GLAND.
		5	TWO TURNS.
	248	1	SHIELD MUST BE GROUNDED THE DRIVER SIDE.
		2	CONNECTED TO CABLE GLAND.
	249	1	SHIELD MUST BE GROUNDED THE DRIVER SIDE.
		2	CONNECTED TO CABLE GLAND.
2797408-0008	1	1	MAKE THE BRIDGE USING A CONN. AREA NOT SMALLER THEN 16mm².

TechPub_2614345_v3_DRAFT_Release10_EM2851302_05en.fm

This drawing must not without the consent of Tetra Pak be copied, transmitted or disclosed to any third party.

Tetra Pak Carton Ambient S.p.A.

Issued by/Date: LuP / 2007-11-23 Approved/Date: FVN / 2007-11-23 ECM 320174

Drawing remarks

Identity	Document type	Version	Page
2845987-0098	ELD	AE	3(3)

This page intentionally left blank

TechPub_2614345_v3_DRAFT_Release10_EM2851302_05en.fm

11 Engineering Change Description

TechPub_2614345_v3_DRAFT_Release11_EM2851302_05en.fm

Description

This chapter describes the changes introduced with the ECM.

TechPub_2614345_v3_DRAFT_Release11_EM2851302_05en.fm

ECM No.	Drawing No.	Alteration
272609		DOCUMENTATION INTRODUCED.
291222		ELECTRICAL MANUAL IS RELEASED. FOR CHANGES ON LISTS SEE APPENDIX.
	2845987-0001:AB	DOCUMENT LIST: CHANGED ACCORDING TO UPDATE NEW AB VERSION.
	2845987-0002:AB	POSITION SUMMARY: CHANGED ACCORDING TO UPDATE CIRCUIT DIAGRAM.
	2845987-0003:AB	SH. 018 – ELECTRICAL CHARACTERISTIC OF M1801 IS CHANGED. SH. 061 – CHANGED INFORMATION INSIDE THE BALLOON OF THE COMPONENT B5104. SH. 104 – COMPONENT B1810 IS INTRODUCED. CABLE W1810 IS INTRODUCED. TERMINALS X1003:189/189+ AND X221:10 ARE INTRODUCED. SH. 117 – INSERTED THE DESCRIPTION “OPTION ARL FOR ASU” CHANGED THE DESCRIPTION “OPTION PT”. SH. 118 – INSERTED THE DESCRIPTION “OPTION DIMC LIGHTCAP” INSERTED THE DESCRIPTION “OPTION PT 0200”. SH. 132 – COMPONENT B1810 IS ELIMINATED. CABLE W1810 IS ELIMINATED. TERMINALS X1001:146/146+ AND 147 IS SPARE. TERMINALS X211:15/16 IS NOW SPARE. CABLE W1001 :15/16 IS NOW SPARE. SH. 134 – COMPONENT B1812 IS ELIMINATED. CABLE W1810 IS ELIMINATED. TERMINALS X1003:190/190+/190- IS NOW SPARE. SH. 141 – COMPONENT B5516 IS INTRODUCED. COMPONENT B5710 IS INTRODUCED. CABLE W5516 IS INTRODUCED. CABLE W5710 IS INTRODUCED. TERMINALS X2001:112/112+/112-114/114+/114- ARE INTRODUCED. TERMINALS X202 10/12 ARE INTRODUCED. SH. 154 – INSERTED THE DESCRIPTION “OPTION ICU 3A”. SH.194 – FUNCTION TEXT “ICU BUTTERFLY VALVE” IS CHANGED TO “ICU PUMP DRAIN VALVE”.
	2845987-0004:AB	LINE SUMMARY: CHANGED ACCORDING TO UPDATE CIRCUIT DIAGRAM.
	2845987-0005:AB	CABINET TERMINAL SUMMARY: CHANGED ACCORDING TO UPDATE CIRCUIT DIAGRAM.
	2845987-0006:AB	TERMINAL STRIP OVERVIEW: CHANGED ACCORDING TO UPDATE CIRCUIT DIAGRAM.
	2845987-0007:AB	CABLE CONNECTION LIST: CHANGED ACCORDING TO UPDATE CIRCUIT DIAGRAM.

This drawing must not without the consent of Tetra Pak be copied, transmitted or disclosed to any third party.

ECM No.	Drawing No.	Alteration
	2845987-0008:AB	MAINS CONNECTION: CHANGED ACCORDING TO UPDATE CIRCUIT DIAGRAM.
	2845987-0098:AB	DRAWING REMARKS: INTRODUCED WITH VERSION AB.
	2845987-0099:AB	EC DESCRIPTION: CHANGED ACCORDING TO UPDATE NEW AB VERSION.
304680		ELECTRICAL MANUAL IS RELEASED. FOR CHANGES ON LISTS SEE APPENDIX.
	2845987-0001:AC	DOCUMENT LIST: CHANGED ACCORDING TO UPDATE NEW AC VERSION.
	2845987-0002:AC	POSITION SUMMARY: CHANGED ACCORDING TO UPDATE CIRCUIT DIAGRAM.
	2845987-0003:AC	SH. 030 – THE CONNECTION REFERENCE REGARDING A902/A712/A711/A713/A710/A716/A715/A714/ A700/A706 ARE CHANGED.
	2845987-0003:AC	SH. 040 – THE CONNECTION REFERENCE (ACB) IS VALID ONLY FOR “USA VARIANT” OTHERWISE CONSIDER THE CONNECTION REFERENCE (AV).
	2845987-0003:AC	SH. 044 – THE CONNECTION REFERENCE (TL) IS ERASED.
	2845987-0003:AC	SH. 051 – THE CONNECTION REFERENCE (AV) IS CONNECTED ONLY IF IT IS NOT “USA VARIANT”.
	2845987-0003:AC	SH. 053 – THE CONNECTION REFERENCE (VF) IS CHANGED.
	2845987-0003:AC	SH. 080 – THE COMPONENT G105 IS ERASED. THE CABLE W165 IS ERASED. THE EARTH TERMINAL X002:50 IS BECAME SPARE.
	2845987-0003:AC	SH. 086 – THE CONNECTION REFERENCE (VF) IS ADDED.
	2845987-0003:AC	SH. 104 – THE COMPONENT B1103 IS INTRODUCED. THE CABLE W1103 AND W138 ARE INTRODUCED. THE TERMINALS X224:13/14/15 ARE INTRODUCED.
	2845987-0003:AC	SH. 106 – THE COMPONENT B1103 IS ERASED. THE TERMINALS X1003:124/124+ AND 124- ARE BECAME SPARE. THE TERMINALS X217:18 IS BECAME SPARE. THE CABLE W1004:18 IS BECAME SPARE.
	2845987-0003:AC	SH. 112 – THE EARTH TERMINAL X002:50 IS ADDED.
	2845987-0003:AC	SH. 115 – THE CONNECTION REFERENCE (TL) IS ERASED.
	2845987-0003:AC	SH. 137 – THE CONNECTION REFERENCE X222 IS ADDED. THE CONNECTION REFERENCE X2003 IS ADDED.

This drawing must not without the consent of Tetra Pak be copied, transmitted or disclosed to any third party.

ECM No.	Drawing No.	Alteration
	2845987-0003:AC	SH. 147 – THE CONNECTION REFERENCE X202 IS ADDED. THE CONNECTION REFERENCE X2001 IS ADDED.
	2845987-0003:AC	SH. 210 – THE CONNECTION REFERENCE (VF) IS ERASED.
	2845987-0003:AC	SH. 235 – THE TERMINAL X217:18 IS BECAME SPARE. THE CABLE W1004:18 IS BECAME SPARE. THE TERMINALS X1003:124/124+ AND 124- ARE BECAME SPARE.
	2845987-0004:AC	LINE SUMMARY: CHANGED ACCORDING TO UPDATE CIRCUIT DIAGRAM.
	2845987-0005:AC	CABINET TERMINAL SUMMARY: CHANGED ACCORDING TO UPDATE CIRCUIT DIAGRAM.
	2845987-0006:AC	TERMINAL STRIP OVERVIEW: CHANGED ACCORDING TO UPDATE CIRCUIT DIAGRAM.
	2845987-0007:AC	CABLE CONNECTION LIST: CHANGED ACCORDING TO UPDATE CIRCUIT DIAGRAM.
	2845987-0008:AC	MAINS CONNECTION: CHANGED ACCORDING TO UPDATE CIRCUIT DIAGRAM.
309110		ELECTRICAL MANUAL IS RELEASED. FOR CHANGES ON LISTS SEE APPENDIX.
	2845987-0001:AD	DOCUMENT LIST: CHANGED ACCORDING TO UPDATE NEW AD VERSION.
	2845987-0002:AD	POSITION SUMMARY: CHANGED ACCORDING TO UPDATE CIRCUIT DIAGRAM.
	2845987-0003:AD	**SH.005** MOVED F051/ X871 FROM PAG.035 TO PAG.005. **SH.011** THE CABLES W503/W504 AND W501 ARE ERASED. THE CONNECTED X160/X161 AND X162 ARE ERASED. **SH.012** THE CABLES W502 IS ERASED. THE CONNECTED X163 IS ERASED. **SH.020** THE COMPONENT Z709/Z 711/Z713/Z 710/ Z 715/Z 714 ARE INTRODUCED. THE CABLES W2708 AND W2709 ARE INTRODUCED. **SH.021** THE SYMBOL A712 AND +M-M.2712 ARE CHANGED +M-W2722 IS TOOH AWAY FROM PAG.031 TO PAG.021 AND RENAMED. **SH.022** THE SYMBOL A711 AND +M-M.2711 ARE CHANGED +M-W2721 IS TOOH AWAY FROM PAG.031 TO PAG.022 AND RENAMED. **SH.023** THE SYMBOL A713 AND +M-M.2713 ARE CHANGED +M-W2723 IS TOOH AWAY FROM PAG.031 TO PAG.023 AND RENAMED. **SH.024** THE SYMBOL A710 AND +M-M.2710 ARE CHANGED +M-W2720 IS TOOH AWAY FROM PAG.031 TO PAG.024 AND RENAMED.

This drawing must not without the consent of Tetra Pak be copied, transmitted or disclosed to any third party.

ECM No.	Drawing No.	Alteration
		SH.027 THE SYMBOL A716 AND +M-M.2716 ARE CHANGED +M-W2726 IS TOOH AWAY FROM PAG.031 TO PAG.027 AND RENAMED.
		SH.028 THE SYMBOL A715 AND +M-M.2715 ARE CHANGED +M-W2725 IS TOOH AWAY FROM PAG.031 TO PAG.028 AND RENAMED.
		SH.029 THE SYMBOL A714 AND +M-M.2714 ARE CHANGED +M-W2724 IS TOOH AWAY FROM PAG.031 TO PAG.029 AND RENAMED.
		SH.030 THE GRAFIC REPRESENTATION OF THE COMPONTES FROM A701 TO A706 IS CHANDED.
		SH.031 THE FEEDBACK CABLES IS TOOK AWAY FROM THIS PAG THE PAG 21/22/23/24/27/28/ AND 29.
		SH.043 CONNECTION OF K124:5 TO P901:10 IS MODIFIED WITH PIN 22 OF P901.
		SH.044 IN THE PAGE IS MOVED THE CONNECTION REFERENCE FROM EM “TGA” TO THIS PAGE.
		SH.051 THE CONNCTION REFERENCE (ACB) ONLY VALID FOR “USA “VARIANT.
		SH.055 ADDED VARISTOR R4311/4312/4306/4307/4308/4309 AND 6 TERMINAL BLOCK ABOUT THE X700.
		SH.099 THE CONNECTION REFERENCE (ABM/ABN/ABO) ARE ADDED.
		SH.110 TERMINAL X002:57IS INTRODUCE.
		SH.111 TERMINAL X002:58IS INTRODUCE.
		SH.241 THE PAGE IS ADDED FOR VARIANT “TGA”
		SH.243 THE PAGE IS ADDED FOR VARIANT “TGA”
		SH.244 THE PAGE IS ADDED FOR VARIANT “TGA”
		SH.245 THE PAGE IS ADDED FOR VARIANT “TGA”
		SH.246 THE PAGE IS ADDED FOR VARIANT “TGA”
		SH.247 THE PAGE IS ADDED FOR VARIANT “TGA”
		SH.248 THE PAGE IS ADDED FOR VARIANT “TGA”
		SH.249 THE PAGE IS ADDED FOR VARIANT “TGA”
		SH.250 THE PAGE IS ADDED FOR VARIANT “TGA”
		SH.251 THE PAGE IS ADDED FOR VARIANT “TGA”
		SH.252 THE PAGE IS ADDED FOR VARIANT “TGA”
		SH.253 THE PAGE IS ADDED FOR VARIANT “TGA”
		SH.254 THE PAGE IS ADDED FOR VARIANT “TGA”
		SH.255 THE PAGE IS ADDED FOR VARIANT “TGA”
		SH.256 THE PAGE IS ADDED FOR VARIANT “TGA”
	2845987-0004:AD	LINE SUMMARY: CHANGED ACCORDING TO UPDATE CIRCUIT DIAGRAM.
	2845987-0005:AD	CABINET TERMINAL SUMMARY: CHANGED ACCORDING TO UPDATE CIRCUIT DIAGRAM.
	2845987-0006:AD	TERMINAL STRIP OVERVIEW: CHANGED ACCORDING TO UPDATE CIRCUIT DIAGRAM.
	2845987-0007:AD	CABLE CONNECTION LIST: CHANGED ACCORDING TO UPDATE CIRCUIT DIAGRAM.

This drawing must not without the consent of Tetra Pak be copied, transmitted or disclosed to any third party.

ECM No.	Drawing No.	Alteration
	2845987-0008:AD	MAINS CONNECTION: CHANGED ACCORDING TO UPDATE CIRCUIT DIAGRAM.
	2845987-0098:AD	DRAWING REMARKS: INTRODUCED WITH VERSION AD.
	2845987-0099:AD	EC DESCRIPTION: CHANGED ACCORDING TO UPDATE NEW AD VERSION.
320174		ELECTRICAL MANUAL IS RELEASED. FOR CHANGES ON LISTS SEE APPENDIX.
	2845987-0001:AE	DOCUMENT LIST: CHANGED ACCORDING TO UPDATE NEW AE VERSION.
	2845987-0002:AE	POSITION SUMMARY: CHANGED ACCORDING TO UPDATE CIRCUIT DIAGRAM.
	2845987-0003:AE	SH.044 – INTERRUPTION POINT (AAJ) IS ADDED. AUX. CONTACTS +M-Q750 AND +M-Q751 ARE ADDED. SH.082 - INTERRUPTION POINT (AAJ) IS CONNECTED WITH A 904:IN-7. SH.099 - INTERRUPTION POINT (CCA, CCB, CCC, CCD, CCE) ARE ADDED. SH.243 - AUX. CONTACT IS ADDED. SH.247 - AUX. CONTACT IS ADDED. SH.252 - CABLES +M-W2075 AND +M-W2076 ARE INTRODUCED. TERMINAL +M-X4155:E AND +M-X4156:E ARE INTRODUCED. SH.253 – NAME OF THA PAGE IS MODIFIED. CABLES -W730 AND +M-W729 ARE DELETED. CONNECTORS –X766 AND +M-X7660 ARE DELETED. SH.254 – NAME OF THA PAGE IS MODIFIED. SH.257 – PAGE IS INTRODUCED.
	2845987-0004:AE	LINE SUMMARY: CHANGED ACCORDING TO UPDATE CIRCUIT DIAGRAM.
	2845987-0005:AE	CABINET TERMINAL SUMMARY: CHANGED ACCORDING TO UPDATE CIRCUIT DIAGRAM.
	2845987-0006:AE	TERMINAL STRIP OVERVIEW: CHANGED ACCORDING TO UPDATE CIRCUIT DIAGRAM.
	2845987-0007:AE	CABLE CONNECTION LIST: CHANGED ACCORDING TO UPDATE CIRCUIT DIAGRAM.
	2845987-0008:AE	MAINS CONNECTION: CHANGED ACCORDING TO UPDATE CIRCUIT DIAGRAM.
	2845987-0098:AE	DRAWING REMARKS: INTRODUCED WITH VERSION AE.
	2845987-0099:AE	EC DESCRIPTION: CHANGED ACCORDING TO UPDATE NEW AE VERSION.

This drawing must not without the consent of Tetra Pak be copied, transmitted or disclosed to any third party.

This page intentionally left blank

12 Component Location

TechPub_2614345_v3_DRAFT_Release12_EM2851302_05en.fm

Description

This chapter is the list of the component locate on the machine.

TechPub_2614345_v3_DRAFT_Release12_EM2851302_05en.fm

12.1 Components on the machine . . . . . 12 - 5

TechPub_2614345_v3_DRAFT_Release12_EM2851302_05en.fm

This page intentionally left blank

TechPub_2614345_v3_DRAFT_Release12_EM2851302_05en.fm

12.1 Components on the machine

Comp.	Description	Drawing No.	Part n°	Option
A7417	Inductor SA	4-2569862-	3	
A951	TPOP display unit	4-2569862-	4	
B1101	Seal water flow	4-2569862-	5	
B1102	Separator air flow	4-2569862-	5	
B1103	Pressure aseptic chamber	4-2569862-	5	
B1104	Level sensor seal water	4-2569862-	5	
B1105	Temperature air super heater	4-2569862-	5	
B1106	Temperature heat sterilisation	4-2569862-	5	
B1109	Temperature top aseptic chamber	4-2569862-	5	
B1111	Preheating valve	4-2569862-	5	
B1204	Temperature bath heater surface 1 (external inlet)	4-2569862-	5	
B1205	Temperature bath heater 2 (internal inlet)	4-2569862-	5	
B1206	Temperature bath heater 3 (internal outlet)	4-2569862-	5	
B1207	Temperature bath heater surface 4 (external outlet)	4-2569862-	5	
B1209	Temperature water heat exchange	4-2569862-	2	
B1210	Peroxide tank level	4-2569862-	6	
B1212	Temperature peroxide tank	4-2569862-	6	
B1220	Peroxide bath level	4-2569862-	2	
B1221	Peroxide concentration	4-2569862-	6	
B1222	Temperature peroxide bath	4-2569862-	2	
B1224	Bottom cover closed 1	4-2569862-	5	
B1225	Bottom cover closed 2	4-2569862-	2	
B1230	Filling spray tank	4-2569862-	5	
B1240	Lower forming ring up	4-2569862-	2	
B1241	New butterfly valve (restriction on)	4-2569862-	2	
B1242	New butterfly valve (restriction off)	4-2569862-	2	
B1243	Change over valve, air flow to aseptic chamber	4-2569862-	2	
B1244	Change over valve, air flow to air knife	4-2569862-	2	
B1301	A-valve position	4-2569862-	1	
B1302	B-valve position	4-2569862-	1	
B1303	C-valve position	4-2569862-	1	
B1305	Cleaning sleeve position	4-2569862-	4	
B1306	Cleaning pipe infeed connector	4-2569862-	5	
B1307	Air pipe connected	4-2569862-	5	
B1310	Temperature steam in C-valve	4-2569862-	1	
B1314	Magnetic floater sensor filling system	4-2569862-	6	
B1315	Conductivity sensor	4-2569862-	1	
B1316	Flow meter	4-2569862-	1	
B1321	Regulating valve position	4-2569862-	1	
B1322	Regulating valve leakage	4-2569862-	1	
B1331	Novaseptic valve 1 open	4-2569862-	1	

TechPub_2614345_v3_DRAFT_Release12_EM2851302_05en.fm

Comp.	Description	Drawing No.	Part n°	Option
B1332	Novaseptic valve 1 closed	4-2569862-	1	
B1333	Novaseptic valve 2 open	4-2569862-	1	
B1334	Novaseptic valve 3 open	4-2569862-	1	
B1335	Novaseptic valve 4 open	4-2569862-	1	
B1336	Novaseptic valve 4 closed	4-2569862-	1	
B1337	Novaseptic valve 5 closed	4-2569862-	1	
B1403	Packaging material splice detection in column	4-2569862-	5	
B1404	Rotation guard column	4-2569862-	2	
B1405	Air knife closed	4-2569862-	5	
B1501	Pendulum roller	4-2569862-	5	
B1502	Movable squee-gee roller	4-2569862-	5	
B1503	Temperature air knife	4-2569862-	2	
B1504	Pendulum roller door guard	4-2569862-	5	
B1505	Middle front door aseptic chamber closed	4-2569862-	5	
B1506	Bottom front door aseptic chamber open	4-2569862-	2	
B1507	Top front door aseptic chamber closed	4-2569862-	5	
B1508	Drying chamber door guard	4-2569862-	5	
B1700	Preset sensor 1 jaw right (low)	4-2569862-	1	
B1701	Preset sensor 2 jaw right (high)	4-2569862-	1	
B1710	Preset sensor 1 yoke right (low)	4-2569862-	1	
B1711	Preset sensor 2 yoke right (high)	4-2569862-	1	
B1720	Preset sensor 1 yoke left (low)	4-2569862-	2	
B1721	Preset sensor 2 yoke left (high)	4-2569862-	2	
B1730	Preset sensor 1 jaw left (low)	4-2569862-	2	
B1731	Preset sensor 2 jaw left (high)	4-2569862-	2	
B1801	ICU steam inlet valve open	4-2569862-	1	
B1802	ICU level alkali tank	4-2569862-	4	
B1803	ICU refilling pipe alkali tank	4-2569862-	4	
B1810	ICU level water tank	4-2569862-	1	
B1815	ICU drain valve 2	4-2569862-	1	
B1816	ICU drain vacub 1	4-2569862-	1	
B1820	Temperature ICU	4-2569862-	1	
B2102	Cold water pressure	4-2569862-	1	
B2110	Cooling flow right	4-2569862-	1	
B2111	Cooling flow left	4-2569862-	1	
B2201	Main air pressure	4-2569862-	1	
B2310	Hydraulic oil filtration	4-2569862-	4	
B2320	Hydraulic oil temperature	4-2569862-	6	
B2330	Hydraulic oil pressure	4-2569862-	4	
B2401	Lubrication pressure	4-2569862-	4	
B2403	Hydraulic pressure right	4-2569862-	4	
B2404	Hydraulic pressure left	4-2569862-	4	
B2410	No lubrication (oil tank high level)	4-2569862-	4	

TechPub_2614345_v3_DRAFT_Release12_EM2851302_05en.fm

Comp.	Description	Drawing No.	Part n°	Option
B2501	Circulation cooling water pressure	4-2569862-	1	
B2510	Temperature circulation cool water	4-2569862-	1	
B2520	Conductive sensor de-ionisation of circulation water	4-2569862-	1	
B2540	Circulation cooling media low / high pressure	4-2569862-	1	
B2810	FFU right side door 2	4-2569862-	6	
B2811	JUM right side door 1	4-2569862-	6	
B2812	JUM right side door 2	4-2569862-	6	
B2830	FFU left side door 2	4-2569862-	4	
B2831	JUM left side door 2	4-2569862-	4	
B2832	JUM left side door 1	4-2569862-	4	
B3102	Pumping water	4-2569862-	1	
B3105	Dosing chemicals	4-2569862-	1	
B43011	Design correction photocell bar code 3	4-2569862-	4	
B43012	Design correction photocell bar code 4	4-2569862-	4	
B4315	Home position left motor DCS	4-2569862-	4	
B4316	Home position right motor DCS	4-2569862-	6	
B5103	Home position FFU	4-2569862-	4	
B5104	Crank position FFU	4-2569862-	4	
B5203	Infeed station rotation monitor	4-2569862-	6	
B5302	Pressure device rotation monitor	4-2569862-	6	
B5307	Temperature top flap left	4-2569862-	4	
B5308	Temperature top flap right	4-2569862-	6	
B5309	Temperature bottom flaps	4-2569862-	4	
B5314	Station wheel rotation monitor	4-2569862-	6	
B5401	Outfeed station overload	4-2569862-	6	
B5402	Package counter after FFU - receiver	4-2569862-	4	
B5403	Package counter after FFU - sender	4-2569862-	6	
B5501	Congestion guard external conveyor - receiver	4-2569862-		
B5502	Congestion guard external conveyor - sender	4-2569862-		
B5601	Package counter last point DE 1	4-2569862-		
B5602	Package counter last point DE 1	4-2569862-		
B6105	Packaging material splice detection in ASU	4-2569862-	3	
B6107	Rotation monitor paper in SA	4-2569862-	7	
B6201	Indicate strip end bobbin 1	4-2569862-	7	
B6202	Indicate strip end bobbin 2	4-2569862-	7	
B6203	SA pressure roller	4-2569862-	7	
B6204	Strip bobbin 2 running	4-2569862-	7	
B6205	Strip magazine position sensor	4-2569862-	7	
B6208	Rotation monitor strip	4-2569862-	7	
B6209	SA internal door guard	4-2569862-	7	
B7210	Loop empty	4-2569862-	7	
B7211	Adjustment loop	4-2569862-	7	
B72232	Magazine full	4-2569862-	3	

TechPub_2614345_v3_DRAFT_Release12_EM2851302_05en.fm

Comp.	Description	Drawing No.	Part n°	Option
B72234	Magazine empty	4-2569862-	3	
B7401	Material reel 1 empty	4-2569862-	7	
B74031	ASU bar code 3	4-2569862-	8	
B74032	ASU bar code 4	4-2569862-	8	
B7411	Splice table 1 in position	4-2569862-	8	
B7412	Side feeder position 1	4-2569862-	8	
B7414	Splice table 2 in position	4-2569862-	8	
B7501	Material reel 2 empty	4-2569862-	3	
B7512	Side feeder position 2	4-2569862-	8	
B7801	SA external door guard	4-2569862-	7	
B7806	Door guard 22 ASU line 1	4-2569862-	8	
B7807	Door guard 23 ASU line 2	4-2569862-	8	
B9104	HI pressure guard	4-2569862-		HI
B9106	Temperature HI spray	4-2569862-		HI
B9107	No HI	4-2569862-		HI
B9108	HI spray nozzle pipe in position	4-2569862-		HI
B9109	HI pipe in cleaning position	4-2569862-		HI
B9110	HI pipe in production position	4-2569862-		HI
B9113	HI level sensor peroxide spray tank	4-2569862-		HI
C1314	I/P transducer	4-2569862-	1	
C1315	I/P pendulum roller	4-2569862-	2	
E2001	Jaw system	4-2569862-	4	
E2002	Jaw system	4-2569862-	4	
E2003	FFU	4-2569862-	4	
E7702	Lighting ASU	4-2569862-	8	
E7705	Lighting ASU front	4-2569862-	7	
H2801	Beacon lamp front	4-2569862-	4	
H2802	Beacon lamp back	4-2569862-	8	
H7703	Hooter A3 platform	4-2569862-	8	
H7802	Hooter	4-2569862-		AS room
H7901	Alarm reset lamp test	4-2569862-		AS room
K2000	External date unit	4-2569862-	1	
K2001	External date unit alarm	4-2569862-	1	
K2002	DE 1 ready	4-2569862-	1	
K2003	Spare external communication	4-2569862-	1	
K2010	Ice water request	4-2569862-	1	
K2011	Product pump for plant added request	4-2569862-	1	
K2012	Filling machine ready for CIP	4-2569862-	1	
K2013	CIP communication out 2	4-2569862-	1	

TechPub_2614345_v3_DRAFT_Release12_EM2851302_05en.fm

Comp.	Description	Drawing No.	Part n°	Option
K2014	Machine ready for production	4-2569862-	1	
K2015	Steam C-valve ok	4-2569862-	1	
K2016	Filling machine in production	4-2569862-	1	
K7000	Power to strip bobbin 1	4-2569862-	3	
K7001	Power to strip bobbin 2	4-2569862-	3	
L1402	Inductor LS	4-2569862-	2	
L4309	Inductor TS left	4-2569862-	4	
L4310	Inductor TS right	4-2569862-	6	
L6101	Inductor SA	4-2569862-	7	
M1101	Compressor	4-2569862-	5	
M1206	Peroxide heat exchanger, water circulation pump	4-2569862-	2	
M1213	Hydrogen peroxide pump	4-2569862-	6	
M1501	Feed packaging material	4-2569862-	2	
M1801	ICU pump	4-2569862-	1	
M1802	Alkali pump	4-2569862-	4	
M1803	Acid pump	4-2569862-	4	
M2301	Hydraulic pump	4-2569862-	4	
M2501	Circulation cooling water	4-2569862-	1	
M2540	Circulation cooling media	4-2569862-	1	
M2710	Jaw right	4-2569862-	6	
M2711	Yoke right servomotor	4-2569862-	6	
M2712	Yoke left servomotor	4-2569862-	4	
M2713	Jaw left servomotor	4-2569862-	4	
M2714	Right design correction servomotor	4-2569862-	6	
M2715	Left design correction servomotor	4-2569862-	4	
M2716	Final folder servomotor	4-2569862-	6	
M3102	Cleaning pump, external cleaning	4-2569862-	1	
M4106	Fan servomotor side left	4-2569862-	6	
M4107	Fan servomotor side left	4-2569862-	6	
M4108	Fan servomotor side right	4-2569862-	4	
M4109	Fan servomotor side right	4-2569862-	4	
M5503	Transportation of waste	4-2569862-	4	
M6201	Strip bobbin 1	4-2569862-	7	
M6202	Strip bobbin 2	4-2569862-	7	
M7208	Drive roller loop ASU	4-2569862-	7	
M7217	Drive roller magazine ASU	4-2569862-	7	
Q100	Main switch	4-2569862-	1	
R1105	Air super heater	4-2569862-	1	
R1204	Heating surface 1-2	4-2569862-	5	

TechPub_2614345_v3_DRAFT_Release12_EM2851302_05en.fm

Comp.	Description	Drawing No.	Part n°	Option
R1205	Heating surface 1-2	4-2569862-	5	
R1206	Heating surface 3-4	4-2569862-	5	
R1207	Heating surface 3-4	4-2569862-	5	
R1208	Peroxide tank heater 1	4-2569862-	2	
R1209	Peroxide tank heater 2	4-2569862-	2	
R1503	Air knife	4-2569862-	2	
R5307	Top left flap heating	4-2569862-	4	
R5308	Top right flap heating	4-2569862-	4	
R5309	Bottom left and right flap heating	4-2569862-	4	
R7304	ASU constant heat bar	4-2569862-	8	
S1003	Top platform	4-2569862-	5	
S1801	Emergency stop front platform	4-2569862-	1	
S1802	Emergency stop top platform	4-2569862-	5	
S2803	Emergency stop right side panel	4-2569862-	6	
S2804	Emergency stop left side panel	4-2569862-	4	
S6206	Manual start ASSU	4-2569862-	7	
S7303	Material lock	4-2569862-	8	
S7402	Manual start ASU	4-2569862-	8	
S7403	Cutting table movement	4-2569862-	8	
S7701	Short stop ASSU	4-2569862-	7	
S7812	Emergency stop SA / ASU wallet	4-2569862-	7	
S7813	Emergency stop ASU back	4-2569862-	8	
T1402	Transformer	4-2569862-	2	
T4309	Transformer	4-2569862-	4	
T4310	Transformer	4-2569862-	6	
T6101	Transformer	4-2569862-	7	
T6203	Transformer	4-2569862-	3	
X001	Terminal	4-2569862-	1	
X1001	Terminal	4-2569862-	5	
X1002	Terminal	4-2569862-	2	
X1003	Terminal	4-2569862-	5	
X1250	Terminal	4-2569862-	2	
X1251	Terminal	4-2569862-	2	
X1252	Terminal	4-2569862-	2	
X1253	Terminal	4-2569862-	1	
X2000	Terminal	4-2569862-	6	
X2001	Terminal	4-2569862-	6	
X2002	Terminal	4-2569862-	1	
X2003	Terminal	4-2569862-	1	
X2010	Terminal	4-2569862-	4	

TechPub_2614345_v3_DRAFT_Release12_EM2851302_05en.fm

Comp.	Description	Drawing No.	Part n°	Option
X2020	Terminal	4-2569862-	4	
X2021	Terminal	4-2569862-	4	
X2022	Terminal	4-2569862-	4	
X2038	Terminal	4-2569862-	4	
X2050	Terminal	4-2569862-	1	
X2051	Terminal	4-2569862-	1	
X2062	Terminal	4-2569862-	4	
X2241	Terminal	4-2569862-	4	
X2242	Terminal	4-2569862-	4	
X2243	Terminal	4-2569862-	4	
X2244	Terminal	4-2569862-	4	
X4000	Terminal	4-2569862-	6	
X4070	Terminal	4-2569862-	4	
X4071	Terminal	4-2569862-	4	
X4072	Terminal	4-2569862-	6	
X4306	Terminal	4-2569862-	6	
X4307	Terminal	4-2569862-	6	
X4311	Terminal	4-2569862-	6	
X4312	Terminal	4-2569862-	6	
X7001	Terminal	4-2569862-	3	
Y1104	Seal water	4-2569862-	5	
Y1107	Heat exchanger valve step 1	4-2569862-	2	
Y1108	Heat exchanger valve step 2	4-2569862-	2	
Y1111	Preheating valve	4-2569862-	2	
Y1112	Suction valve	4-2569862-	2	
Y1210	Filling H2O2 tank	4-2569862-	4	
Y1220	Filling peroxide bath	4-2569862-	6	
Y1221	Draining peroxide bath	4-2569862-	6	
Y1222	Drain peroxide cooler	4-2569862-	2	
Y1223	Fill peroxide cooler	4-2569862-	2	
Y1230	Filling spray tank	4-2569862-	2	
Y1231	Spraying	4-2569862-	2	
Y1241	Change over valve	4-2569862-	2	
Y1242	Butterfly valve	4-2569862-	2	
Y1303	C-valve	4-2569862-	2	
Y1311	Novaseptic valve 1	4-2569862-	1	
Y1312	A-valve	4-2569862-	2	
Y1318	Automatic CIP drain 1	4-2569862-	2	
Y1319	Automatic CIP drain 2	4-2569862-	4	
Y1320	Novaseptic valve 2	4-2569862-	1	
Y1323	B-valve	4-2569862-	2	
Y1324	Novaseptic valve 3	4-2569862-	1	

TechPub_2614345_v3_DRAFT_Release12_EM2851302_05en.fm

Comp.	Description	Drawing No.	Part n°	Option
Y1325	Novaseptic valve 4	4-2569862-	1	
Y1326	Novaseptic valve 5	4-2569862-	1	
Y1332	TCSB	4-2569862-	1	
Y1333	Steam flush	4-2569862-	1	
Y1401	Movable lower forming ring	4-2569862-	2	
Y1501	Feed packaging material	4-2569862-	2	
Y1502	Squee-gee roller	4-2569862-	2	
Y1503	Air knife cylinder	4-2569862-	2	
Y1801	ICU steam inlet	4-2569862-	1	
Y1802	ICU water inlet	4-2569862-	1	
Y1803	ICU drain tank	4-2569862-	1	
Y1804	ICU refilling alkali tank	4-2569862-	6	
Y1805	ICU refilling acid tank	4-2569862-	6	
Y1808	ICU by-pass alkali pump	4-2569862-	6	
Y1809	ICU by-pass acid pump	4-2569862-	6	
Y2104	Air tube flushing	4-2569862-	6	
Y2106	Tube flusher	4-2569862-	6	
Y2108	Flushing FFU	4-2569862-	1	
Y2201	Main air	4-2569862-	1	
Y2401	Lubrication pump	4-2569862-	6	
Y2810	Unlock door guard FFU right	4-2569862-	6	
Y2812	Unlock door guard JUM right	4-2569862-	6	
Y2830	Unlock door guard FFU left	4-2569862-	4	
Y2831	Unlock door guard JUM left	4-2569862-	4	
Y3101	Hot water supply	4-2569862-	1	
Y3103	Flushing	4-2569862-	1	
Y3105	Dosing chemicals / air tubeflushing	4-2569862-	6	
Y3109	Foaming	4-2569862-	1	
Y3111	Jaw system cleaning	4-2569862-	1	
Y3112	FFU cleaning	4-2569862-	1	
Y4306	Left jaw catcher on	4-2569862-	6	
Y4307	Right jaw catcher on	4-2569862-	6	
Y4308	Left jaw catcher off	4-2569862-	6	
Y4309	Right jaw catcher off	4-2569862-	6	
Y4311	Cutting left	4-2569862-	6	
Y4312	Cutting right	4-2569862-	6	
Y5200	Top flap heating air, FFU	4-2569862-	4	
Y5210	Bottom flap heating air, FFU	4-2569862-	4	
Y5315	Preblowing, FFU	4-2569862-	4	
Y5501	Drop chute, FFU	4-2569862-	6	
Y5504	Outfeed of waste in front	4-2569862-	4	
Y5505	Flap heater cylinder	4-2569862-	4	
Y6201	SA cooling	4-2569862-	3	

TechPub_2614345_v3_DRAFT_Release12_EM2851302_05en.fm

Comp.	Description	Drawing No.	Part n°	Option
Y6203	Moving of the splicing head	4-2569862-	3	
Y6205	Cool strip seal	4-2569862-	3	
Y7303	Lock cylinder 1	4-2569862-	3	
Y7315	Lock cylinder 2	4-2569862-	3	
Y7407	Web tension	4-2569862-	3	
Y7408	Pressure rail	4-2569862-	3	
Y7410	Cutting	4-2569862-	3	
Y7412	Side feeder 1-2	4-2569862-	3	
Y7413	Side feeder 2-1	4-2569862-	3	
Y7414	Cutting table L1	4-2569862-	3	
Y7415	Cutting table L2	4-2569862-	3	
Y7420	Brake reel 1	4-2569862-	3	
Y7421	Brake reel 2	4-2569862-	3	
Y7425	Ventilating valve	4-2569862-	3	
Y9101	Air / N2 supply	4-2569862-		HI
Y9102	HI by-pass	4-2569862-		HI
Y9103	HI on / off	4-2569862-		HI
Y9105	HI injection	4-2569862-	2	HI
Y9112	HI spray peroxide	4-2569862-		HI
Z001	Main filter	4-2569862-	1	
Z002	Monitor transient main failure	4-2569862-	1	

TechPub_2614345_v3_DRAFT_Release12_EM2851302_05en.fm

This page intentionally left blank

TechPub_2614345_v3_DRAFT_Release12_EM2851302_05en.fm

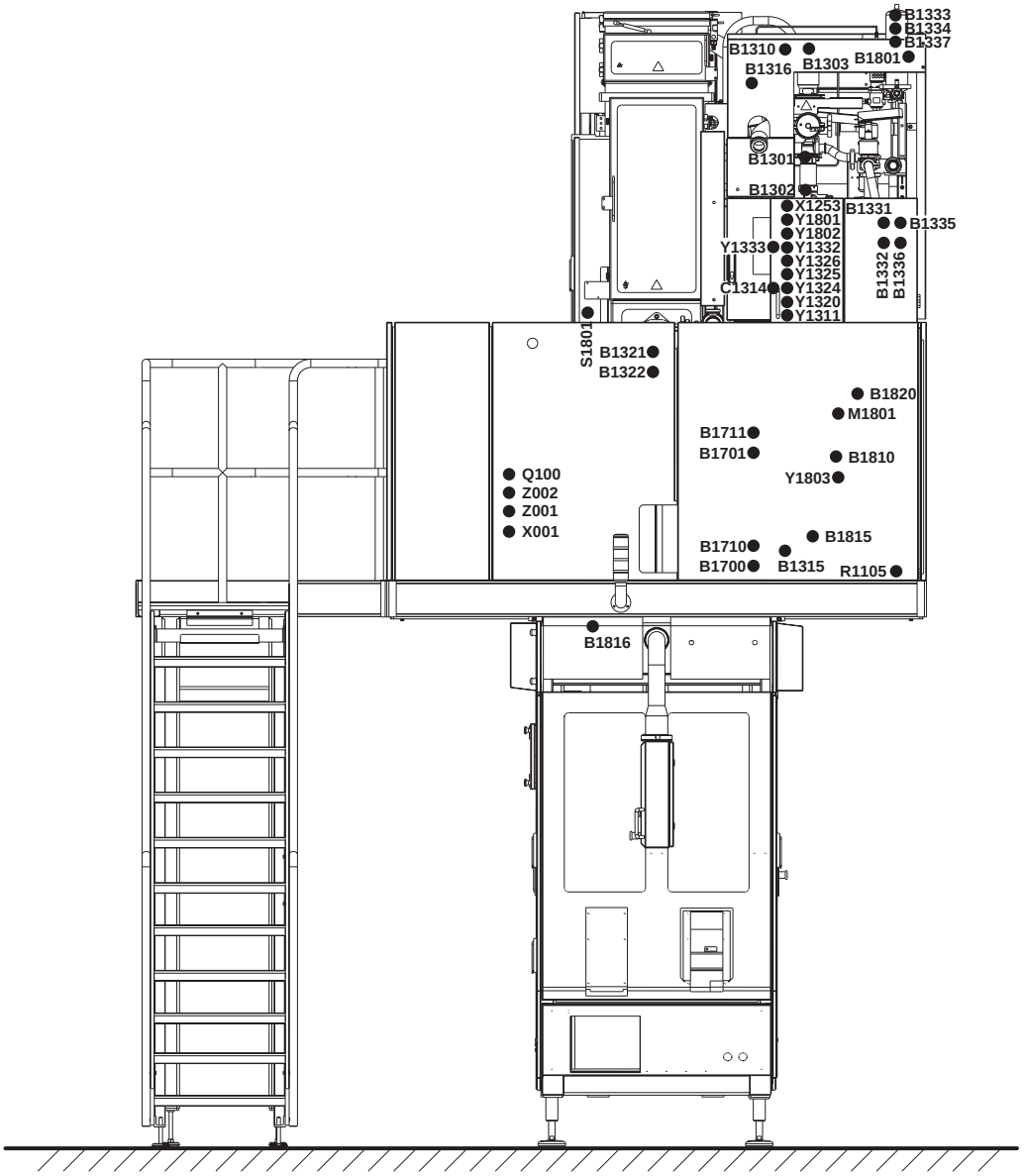

Component location on the machine

Designer: VAO	Date: 030531	Mach.: A3/Flex	4-2569862-0000 001 1(2)
Approval: MMI	Date: 030531		ECM 127605 Version 01

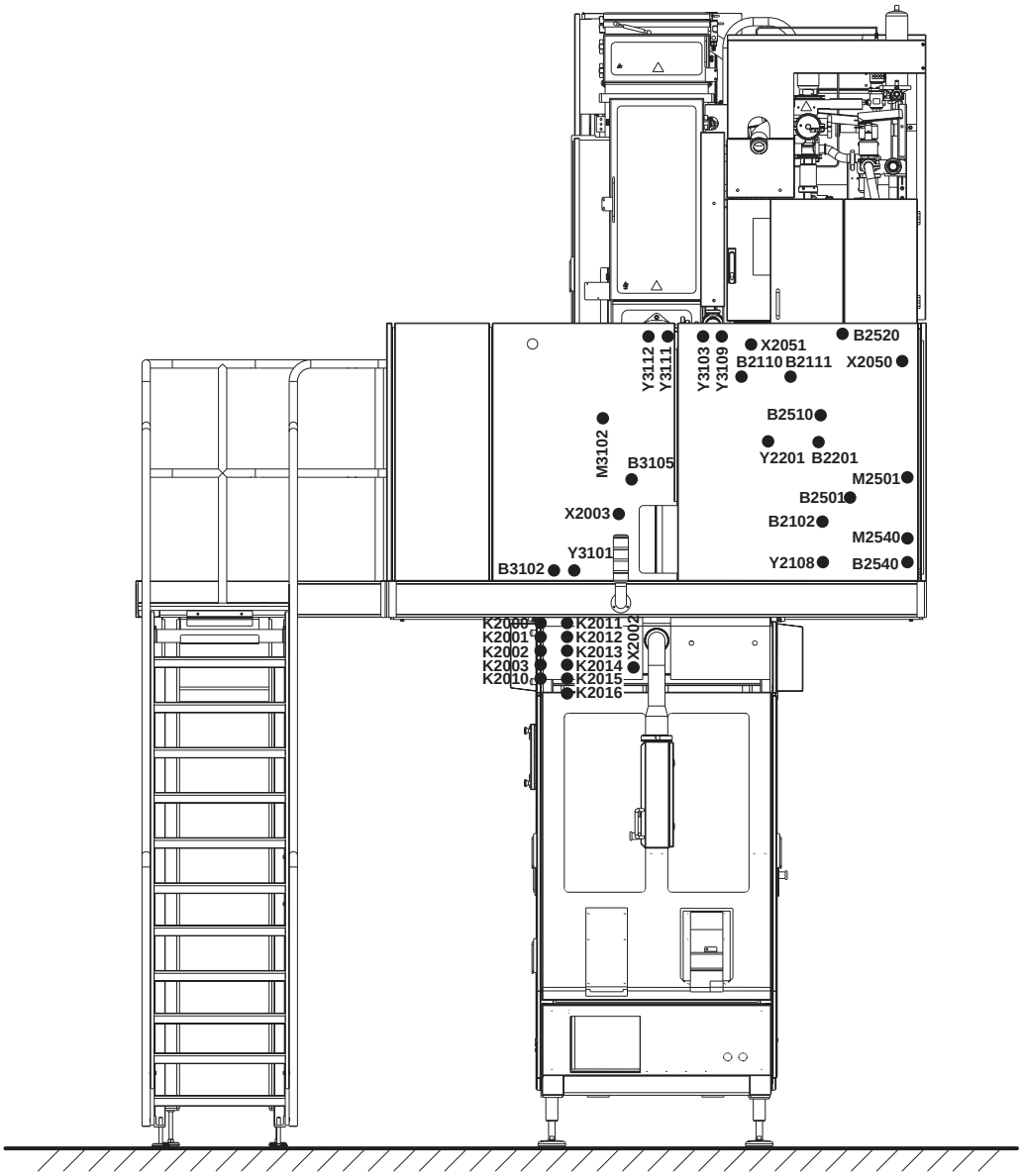

Component location on the machine

Designer: VAO	Date: 030531	Mach.: A3/Flex	4-2569862-0000 001 2(2)
Approval: MMI	Date: 030531		ECM 127605 Version 01

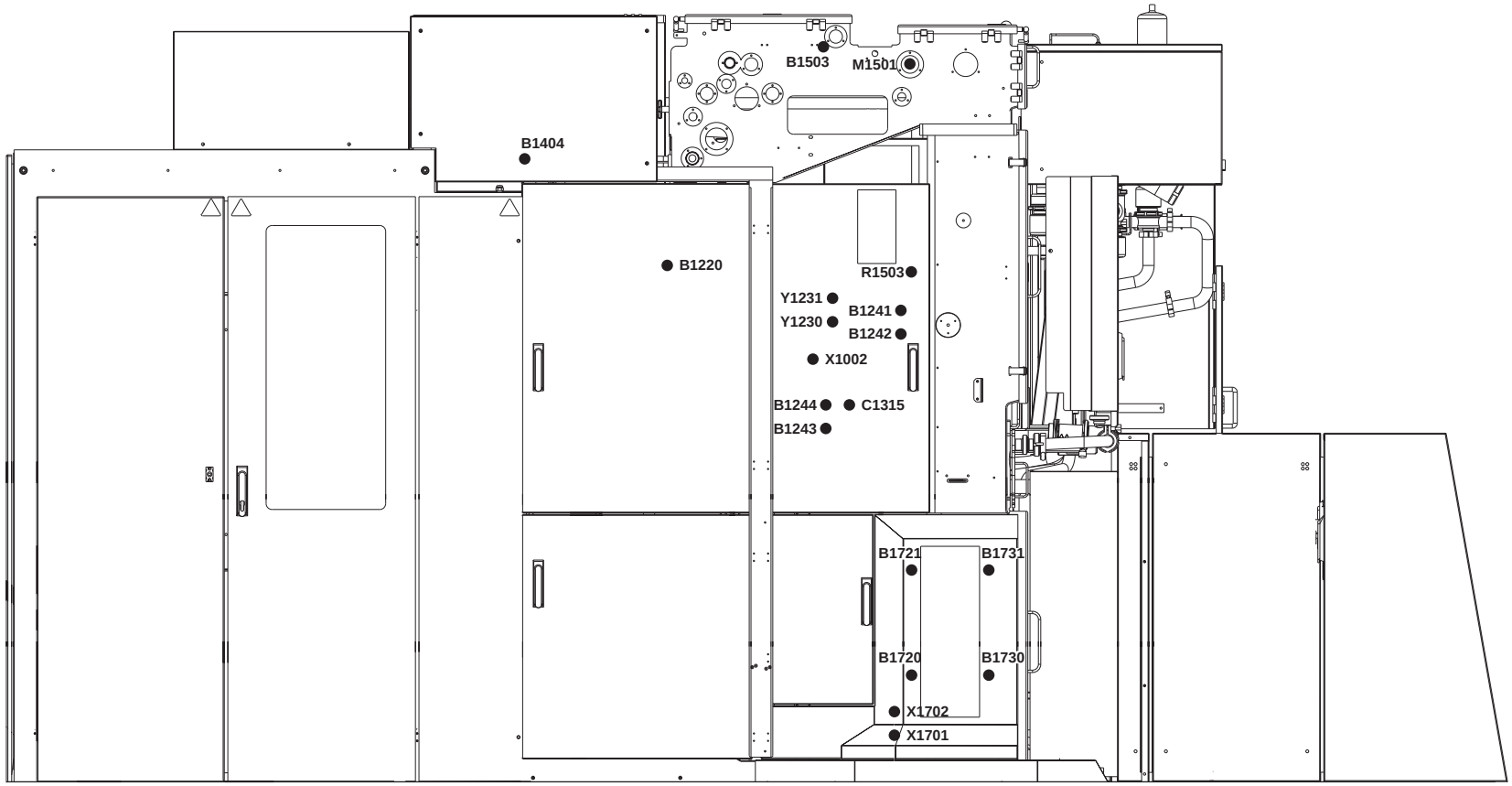

Component location on the machine

Designer: VAO Date: 030531

Approval: MMI Date: 030531

Mach.: A3/Flex

4-2569862-0000 002 1(2)

ECM 127605 Version 01

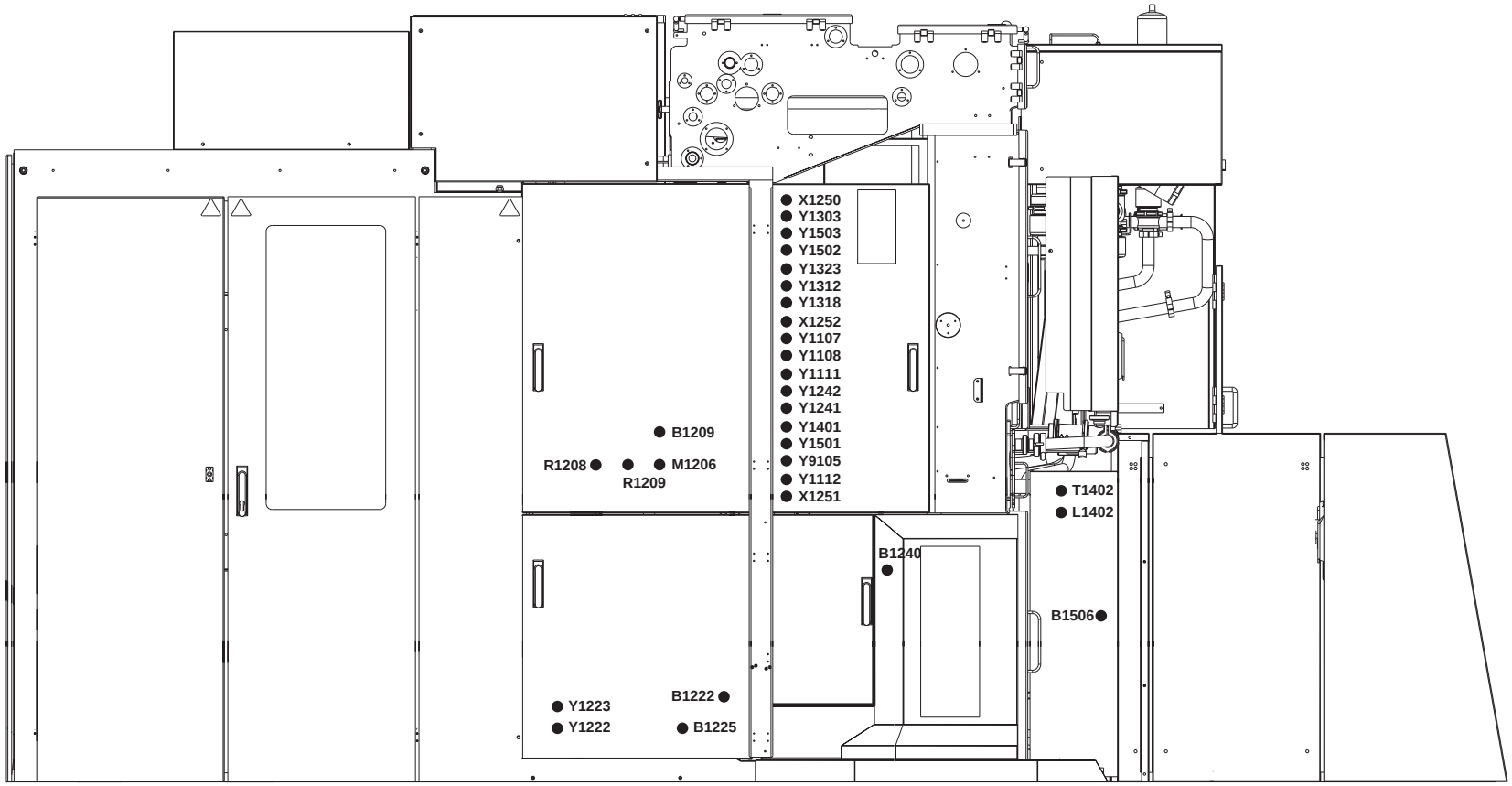

Component location on the machine

Designer: VAO Date: 030531 Mach.: A3/Flex 4-2569862-0000 002 2(2)

Approval: MMI Date: 030531 ECM 127605 Version 01

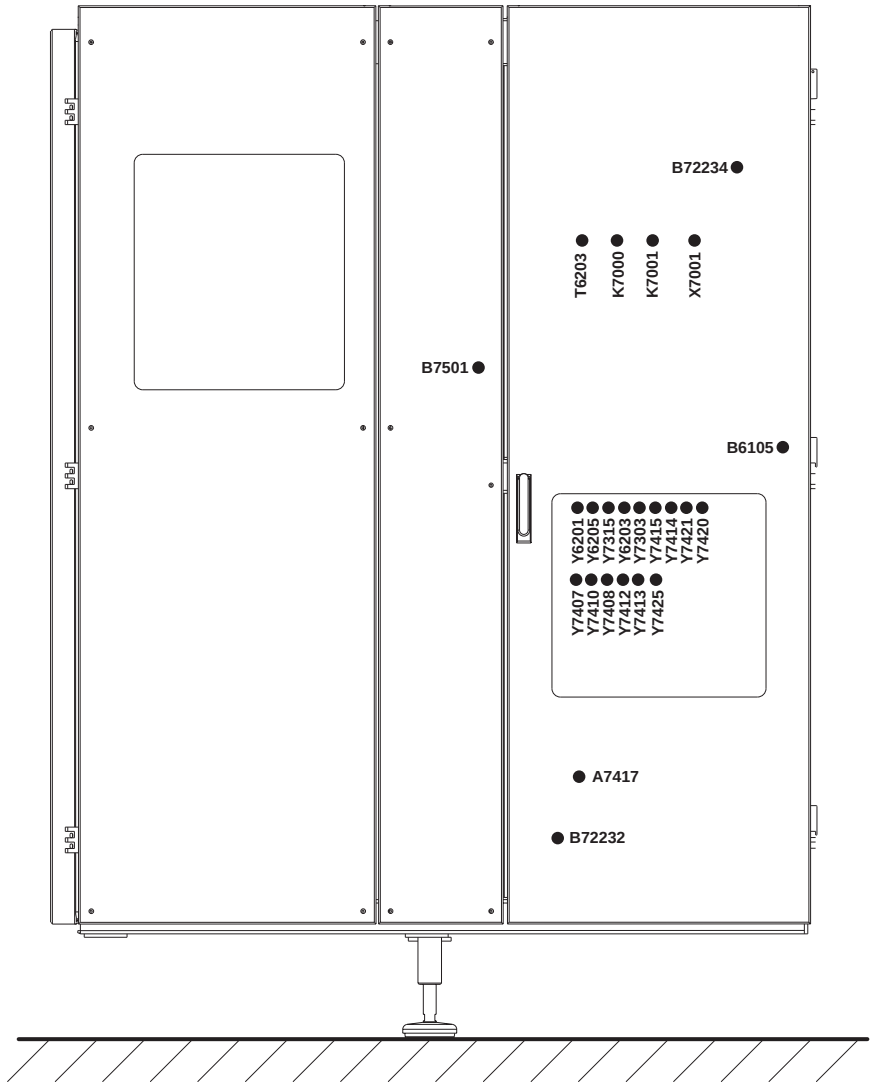

Component location on the machine

Designer: VAO Date: 030531 Mach.: A3/Flex 4-2569862-0000 003

Approval: MMI Date: 030531 ECM 127605 Version 01

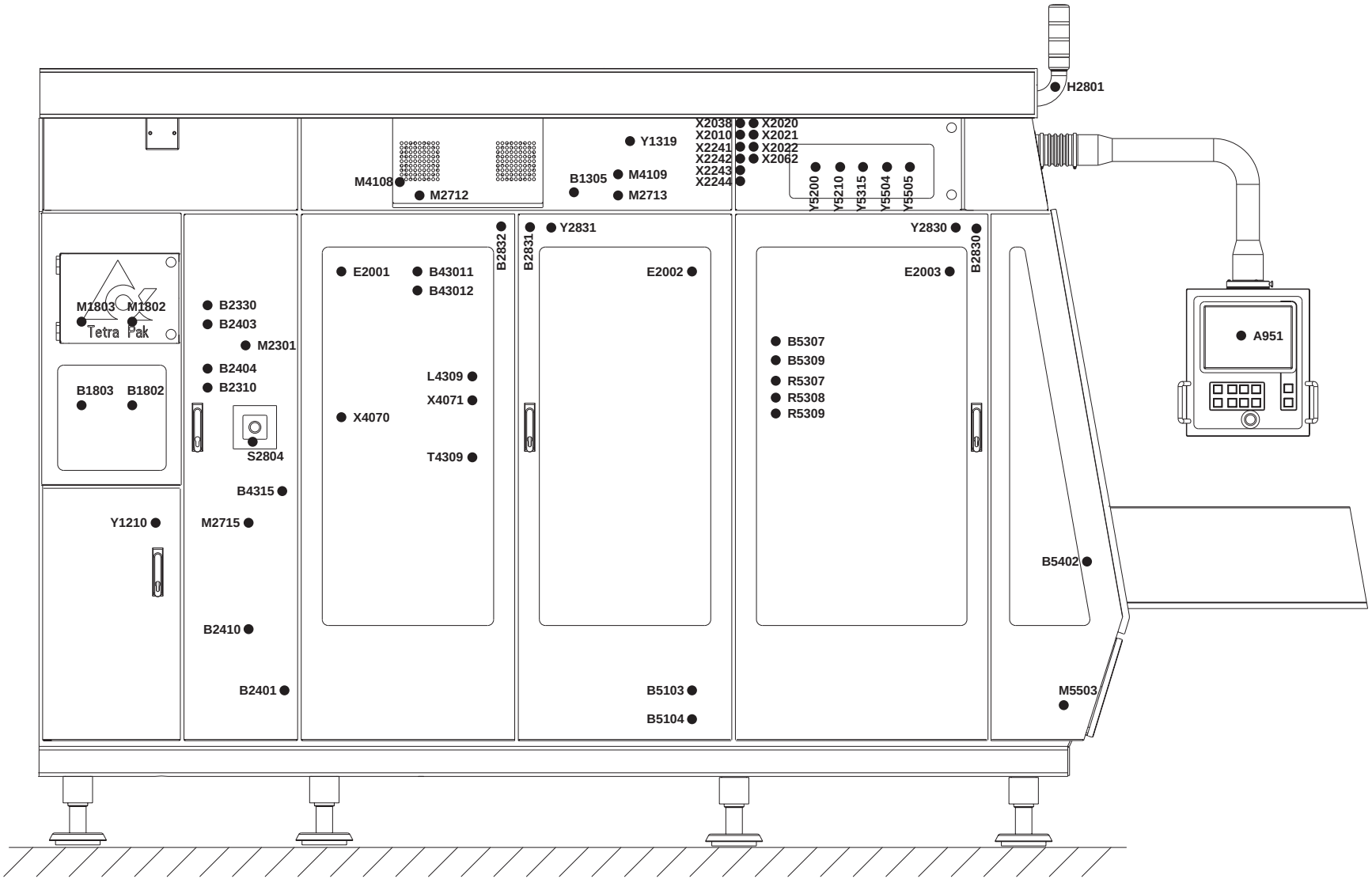

Component location on the machine

Designer: VAO Date: 030531 Mach.: A3/Flex 4-2569862-0000 004

Approval: MMI Date: 030531 ECM 127605 Version 01

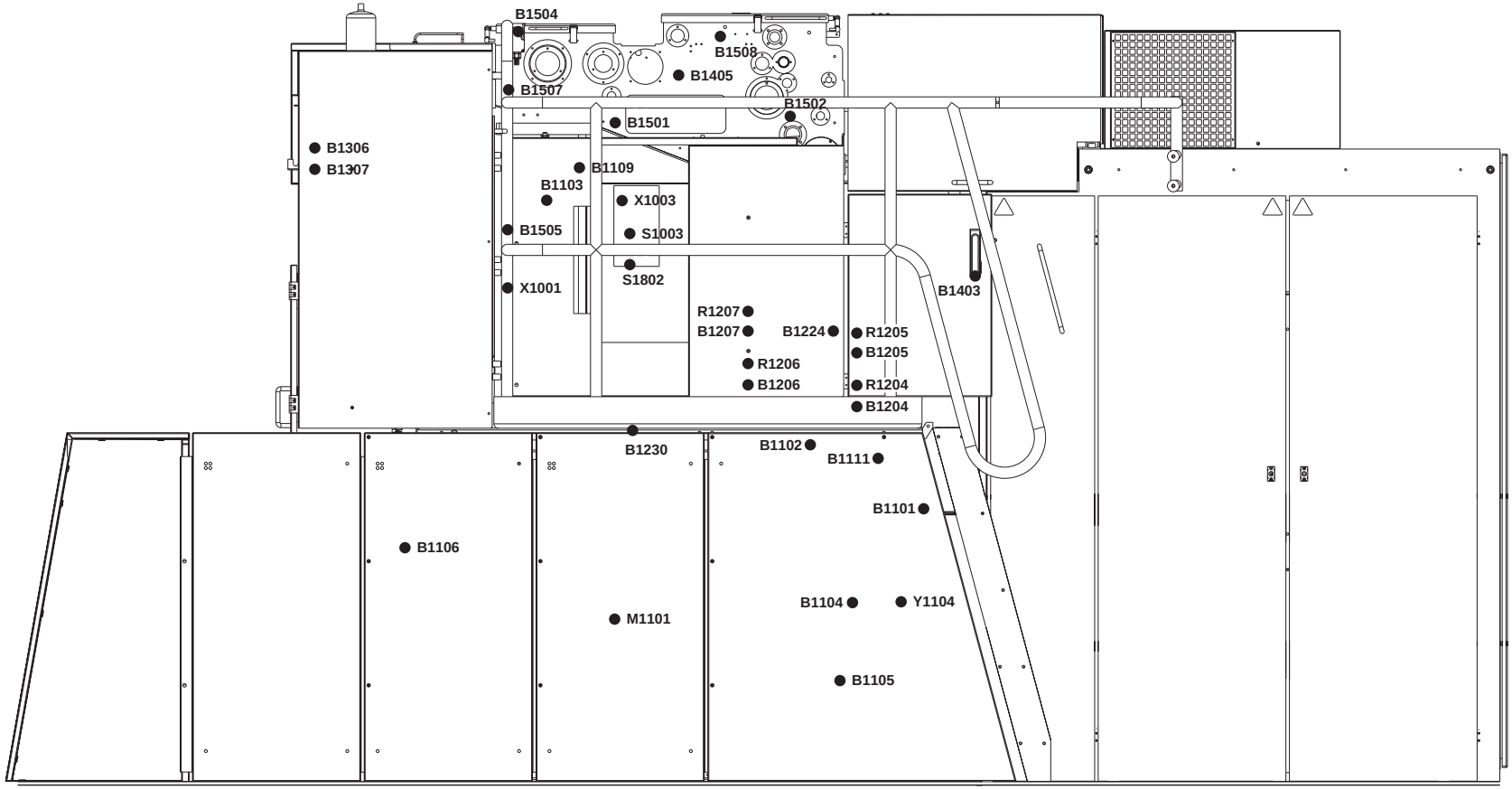

Component location on the machine

Designer: VAO Date: 030531 Mach.: A3/Flex 4-2569862-0000 005

Approval: MMI Date: 030531 ECM 127605 Version 01

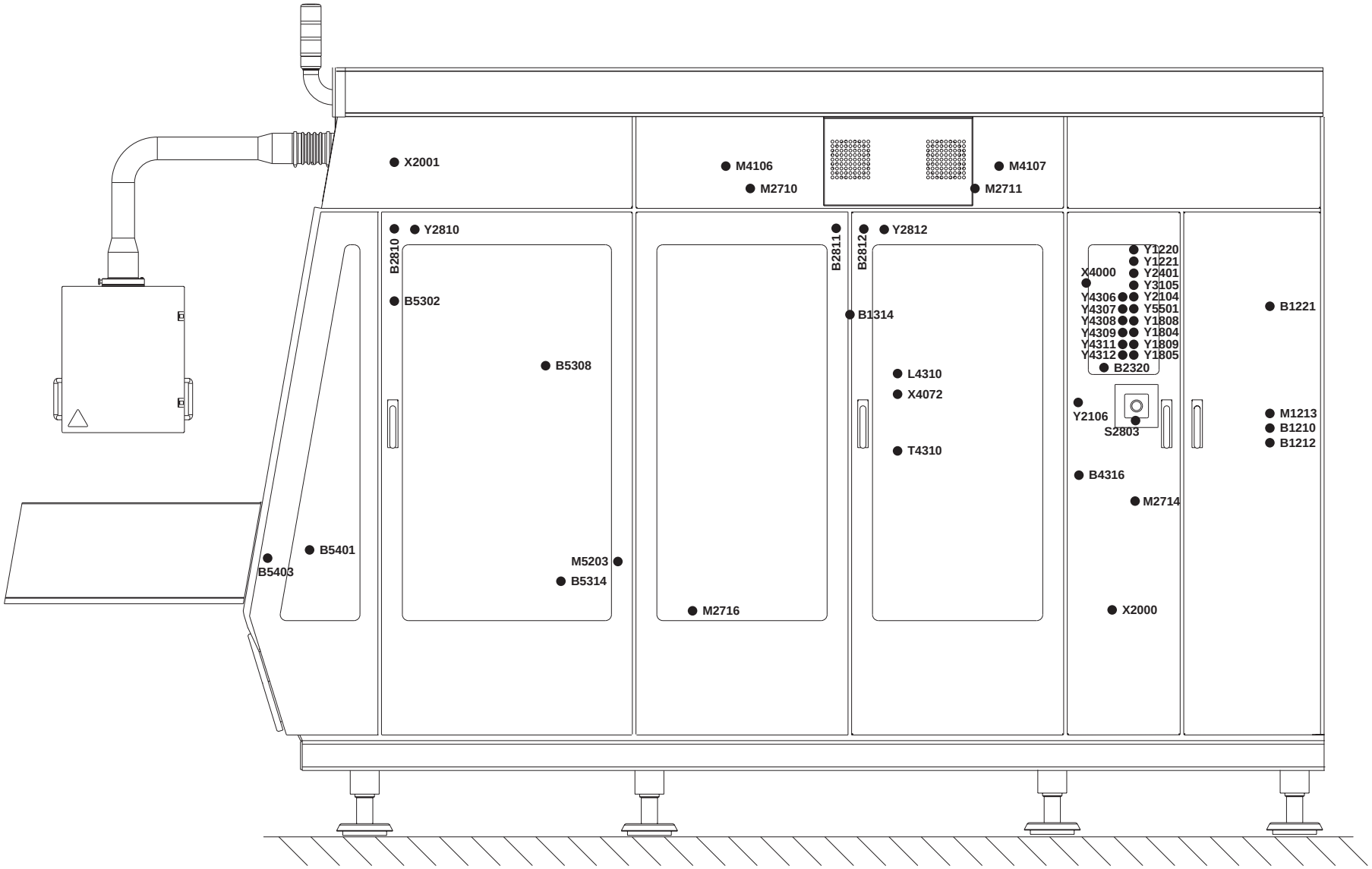

Component location on the machine

Designer: VAO Date: 030531 Mach.: A3/Flex 4-2569862-0000 006

Approval: MMI Date: 030531 ECM 127605 Version 01

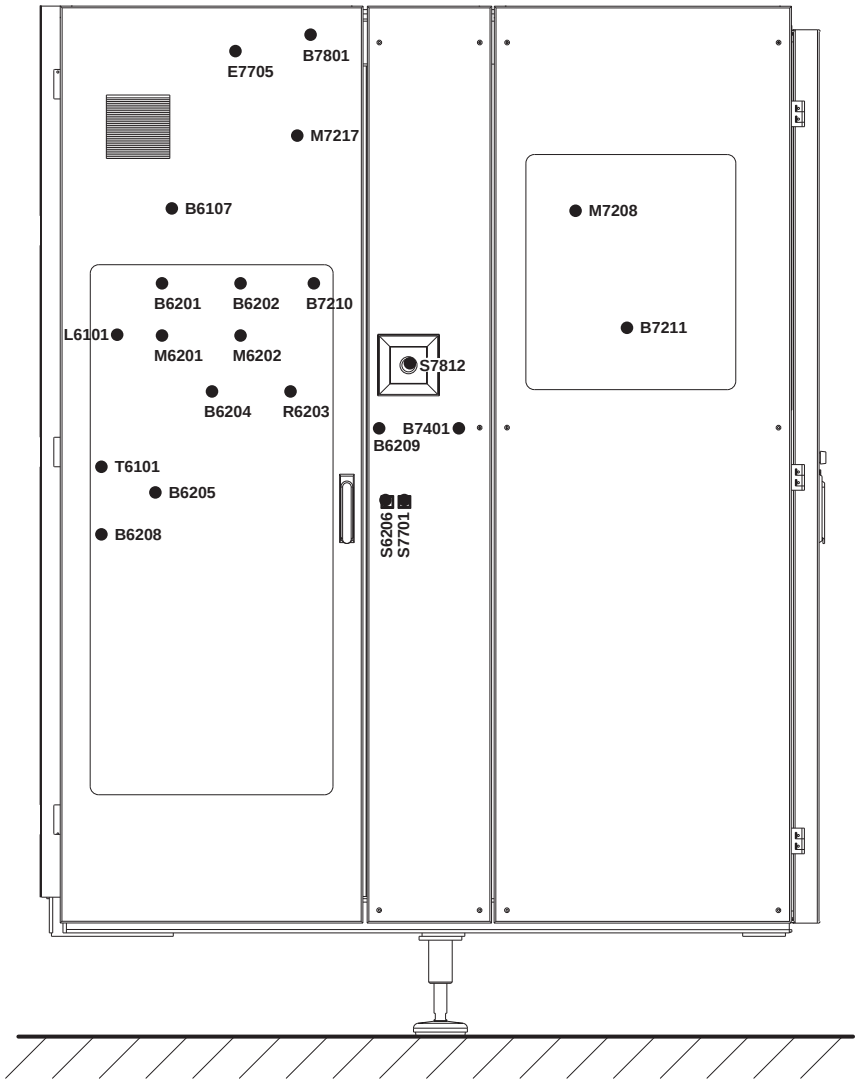

Component location on the machine

Designer: VAO Date: 030531 Mach.: A3/Flex 4-2569862-0000 007

Approval: MMI Date: 030531 ECM 127605 Version 01

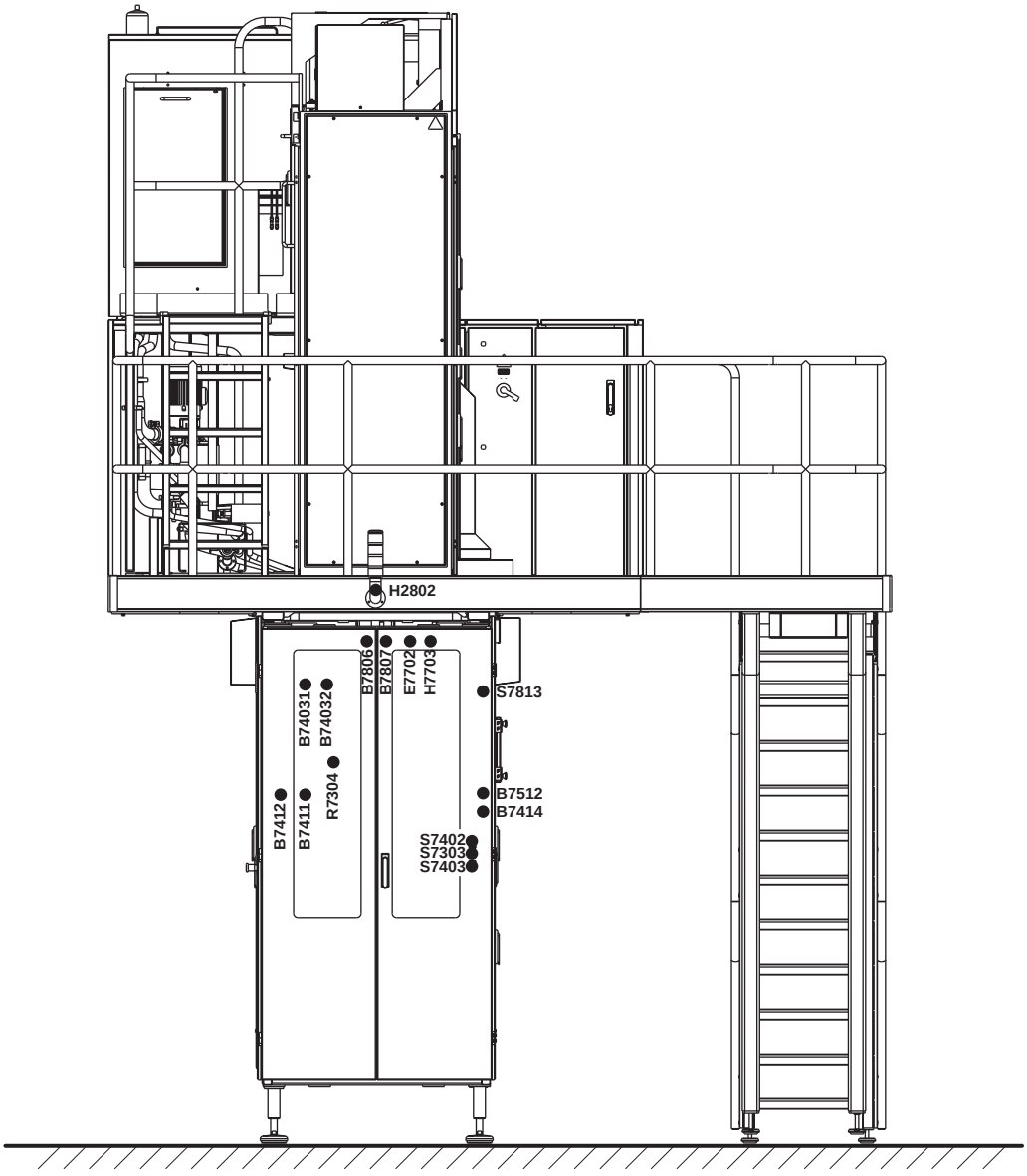

Component location on the machine

Designer: VAO	Date: 030531	Mach.: A3/Flex	4-2569862-0000 008
Approval: MMI	Date: 030531		ECM 127605 Version 01

13 Advanced Signal Exchange

TechPub_2614345_v3_DRAFT_Release13_EM2851302_05en.fm

Description

This chapter is a description of the advanced signal exchange function.

TechPub_2614345_v3_DRAFT_Release13_EM2851302_05en.fm

13.1 Advanced Signal Exchange . . . . . 13 - 5

Product pipe sterile . . . . . 13 - 5
Product pipe not sterile . . . . . 13 - 5
Ice water request . . . . . 13 - 5
Power product pump . . . . . 13 - 5
CIP running . . . . . 13 - 5
A3 sterile . . . . . 13 - 5
Start external waste conveyor . . . . . 13 - 5

TechPub_2614345_v3_DRAFT_Release13_EM2851302_05en.fm

This page intentionally left blank

TechPub_2614345_v3_DRAFT_Release13_EM2851302_05en.fm

13.1 Advanced Signal Exchange

The Advanced Signal Exchange ensures a higher protection for the product and reduces operator's mistakes. The ASE is used during CIP. The cleaning is forced after the production and before continuing the preparation phase.

During **Production**, if the product pipe is getting not sterile, the machine should stop. This is because it takes a lot of time to clean and sterilise the product pipe again. In the meantime it's very easy to perform a cleaning and step up the machine again.

ASE implies either a sensor to check the position of the C-valve, to protect the product pipe with the steam barrier.

ASE implies a PT100 mounted on the product pipe to check the product's temperature at C-valve, even if the machine is switched off (e.g. for maintenance).

With ASE we have five additional signals:

- Ice water request
- Power product pump
- A3 sterile
- CIP running
- Start external waste conveyor.

Product pipe sterile

From steriliser to machine, to check the condition of the external device.

Product pipe not sterile

From steriliser to machine, to check the condition of the external device (inverted signal to prevent a cable damage).

Ice water request

To provide ice water if it's needed. Also a pump is started.

Power product pump

It's used in case of several filling machines installed in the same plant if the customer runs without sterile tank. It increases the product flow.

CIP running

It's used to protect the product. When a main cleaning is running, the steriliser is not allowed to start working until the CIP has finished. It's necessary only if there is no signal exchange between steriliser and CIP.

A3 sterile

It's used for JUMO recorder and for PLMS.

Start external waste conveyor

It's used to start the movement of the external conveyor, which removes the waste from the bottom of the machine. The other name of the signal is **Filling machine in Production**.

TechPub_2614345_v3_DRAFT_Release13_EM2851302_05en.fm

This page intentionally left blank

TechPub_2614345_v3_DRAFT_Release13_EM2851302_05en.fm

14 Other Information

TechPub_2614345_v3_DRAFT_Release14_EM2851302_05en.fm

Description

This chapter is used for Bills of Material, Fuse Panel Labels, and so on.

TechPub_2614345_v3_DRAFT_Release14_EM2851302_05en.fm

14.1 Bills of Material . . . . . 14 - 5
14.2 Fuse Panel Label . . . . . 14 - 7

TechPub_2614345_v3_DRAFT_Release14_EM2851302_05en.fm

This page intentionally left blank

TechPub_2614345_v3_DRAFT_Release14_EM2851302_05en.fm

14.1 Bills of Material

This chapter included the lists of the documents and programs.

TechPub_2614345_v3_DRAFT_Release14_EM2851302_05en.fm

This page intentionally left blank

TechPub_2614345_v3_DRAFT_Release14_EM2851302_05en.fm

ECM	P998784(L998772)	P297901(L297105)	P322556(L309111)
Release date	2006.11.02	2007.02.05	2007.07.01

Chg	Position	Sp	SH	Description	As	Size	Identity	DTp	Prt	Vs	Unit	Column quantity All
C	0010			ELECTRICAL DOCUMENT	X		2565623-0250				PC	1

**********This is the Last Page**********

ECM	P998776(L998772)	P291231(L291227)	P225074(L304681)	P313961(L309111)	P334656(L320181)
Release date	2006.11.02	2007.02.08	2007.04.12	2007.07.01	2008.01.01

Chg	Position	Sp	SH	Description	As	Size	Identity	DTp	Prt	Vs	Unit	Column quantity All
I	0010			DOCUMENT LIST			2845987-0001	ELD	000	AE		x
I	0020			POSITION SUMMARY			2845987-0002	ELD	000	AE		x
I	0030			CIRCUIT DIAGRAM			2845987-0003	ELD	000	AE		x
I	0040			LINE SUMMARY			2845987-0004	ELD	000	AE		x
I	0050			CABINET TERMINAL SUMMARY			2845987-0005	ELD	000	AE		x
I	0060			TERMINAL STRIP OVERVIEW			2845987-0006	ELD	000	AE		x
I	0070			CABLE CONNECTION LIST			2845987-0007	ELD	000	AE		x
I	0080			MAINS CONNECTION			2845987-0008	ELD	000	AE		x
I	0098			DRAWING REMARKS			2845987-0098	ELD	000	AE		x
I	0099			ENGINEERING CHANGE DESCRIPTION			2845987-0099	ELD	000	AE		x

**********This is the Last Page**********

14.2 Fuse Panel Label

This chapter shown the location and the setting of the fuses.

TechPub_2614345_v3_DRAFT_Release14_EM2851302_05en.fm

This page intentionally left blank

TechPub_2614345_v3_DRAFT_Release14_EM2851302_05en.fm

Q001	Q002	Q003	Q004	Q005	Q006	Q007	Q008	Q009
Q001:1	Q002:1	Q003:1	Q004:1	Q005:1	Q006:1	Q007:1	Q008:1	Q009:1
1.1A	2.9A	1.6A	2.1A	2.7A	15.0A	1.4A	8.9A	0.7A
TRANSPORT OF WASTE	HYDRAULIC OIL PUMP	CIRCULATION COOLING WATER	CIRCULATION COOLING MEDIA	CIRCULATION COOLING MEDIA EL. CAB.	CLEANING PUMP	H2O2 PUMP	COMPRESSOR	WATER PUMP HEAT EXCHANGER
K001	K002	K003	K004	K005	K006	K007	K008	K009
				K005:1	K006:1		K008:1	K009:1
4KW	4KW	4KW	4KW	4KW	7.5KW	4KW	7.5KW	4KW

Q700	Q701
Q700:1	Q701:1
32A	32A
JAW SERVO POWER SUPPLY	FFU SERVO POWER SUPPLY
K700	K701
15KW	15KW

	H2O2 TANK HEATING 2	H2O2 TANK HEATING 1	AIR KNIFE	AIR SUPERHEATER	TP1H TS	TP1H LS	TP1H SA	HEATING SURFACE 1-2	HEATING SURFACE 3-4	FFU ELEMENT TOP LEFT	FFU ELEMENT BOTTOM	SA SPLICE	CONSTANT HEAT BAR	H1	FFU ELEMENT TOP RIGHT
L1	F020 90233-0028	F021 90233-0028	F024 90233-0028	F025 90233-0029	F028 90459-1254	F029 90459-1254	F030 90459-1254	F022 90233-0029	F023 90233-0029	F026 90233-0028	F027 90233-0027	F036 90459-5687	F037 90233-0062	F042 90233-0027	F046 90233-0028
L2	F020 90233-0028	F021 90233-0028	F024 90233-0028	F025 90233-0029	F028 90459-1254	F029 90459-1254	F030 90459-1254	F022 90233-0029	F023 90233-0029				L2 CONSTANT HEAT BAR		
L3	F020 90233-0028	F021 90233-0028	F024 90233-0028	F025 90233-0029	F028 90459-1254	F029 90459-1254	F030 90459-1254		L1 SURFACE 3-4					L3 H1	

	DR LOOP ASU	DR MAGAZINE ASU	STRIP BOBBIN MOTORS	DR ASEPTIC CHAMBER	EXTERNAL CONVEYOR	FAN SERVO	230V L51, L52	FANS COOLING UNIT EL. CAB.	LIGHTS	ICU PUMP	24V POWER SUPPLY	POWER TO PRE-APPLICATOR	JAW CONTROL POWER SUPPLY	FFU CONTROL POWER SUPPLY
L1	F031 351416-0100	F032 351416-0100	F033 351416-0100	F034 351416-0160	F035 351416-0160	F038 351416-0010	F052 351416-0060	F055 351416-0020	FEEDER BLOCK 90459-6856	F053 354000-0100	F059 351416-0060	FEEDER BLOCK 90459-6856	F039 351418-0100	F050 351418-0060	F051 351418-0400	F700:1 90459-5813	F700 351416-0060	F701:1 90459-5813	F701 351416-0060
L2																			
L3																			

	H2O2 TANK HEAT.2	H2O2 TANK HEAT.1	AIR KNIFE	AIR SUPERHEATER	TP1H TS	TP1H LS	TP1H SA	SURFACE 1-2 HEATING	SURFACE 3-4 HEATING	FFU ELEMENT BOTTOM	FFU ELEMENT TOP	SA SPLICE	CONSTANT HEAT BAR	H1	DR LOOP ASU	DR MAGAZINE ASU	STRIP BOBBIN MOTORS	DR ASEPTIC CHAMBER	EXTERNAL CONVEYOR	ICU PUMP
	K020 90459-5441	K021 90459-5441	K024 90459-5440	K025 90459-5441	K028 90459-5441	K029 90459-5441	K030 90459-5441	K022 90459-5441	K023 90459-5441	K026 90459-5441	K036 90459-5440	K037 90459-5440	K042 90459-5440	K031 90459-5440	K031:1 60459-6852	K034 90459-5440	K035 90459-5440	K039 90459-5440		

	L11	L12	L13	L15	L16		
	F060 354000-0100	F061 354000-0100	F062 354000-0100	F063 354000-0100	F064 351416-0160	F066 351416-0060	F067 354000-0040
	24 VOLTS	24 VOLTS	24 VOLTS	24 VOLTS	24 VOLTS		

CLR

1 this page
1 total

THIS DOCUMENT IS TO BE TREATED AS AN INVENTORY AND THE FOLLOWING PROCEDURES SHALL BE FOLLOWED:

REDUCED TO: A4 ☒ REDUCED TO: A3 ☐

PLASTICIZED ACCORDING TO DS 202.36

Release Level: released		ECM No: 292869	Pro/INTRALINK Revision Drawing 1.3 Model 1.3
Marked according to standard B 2103.10 Method/Size NO/-		Unless otherwise stated SHARP EDGES BROKEN; Scale 1:1	Surface Roughness
Material: ---		Surface Treatment: ---	
Designer: MVI	Date: 2007-03-16	Denomination: FUSE PANEL LABEL ---	
Company: Tetra Pak Packaging Solutions SpA			
Tetra Pak	Drawing No: 2851036	Document Type: DRA	Version: AB / Page: 1(1)

This drawing must not without the consent of Tetra Pak be copied, transmitted or disclosed to any third party.

Pro/ENGINEER - A3

Q001	Q002	Q003	Q004	Q005	Q006	Q007	Q008	Q009
Q001:1	Q002:1	Q003:1	Q004:1	Q005:1	Q006:1	Q007:1	Q008:1	Q009:1
1.1A	2.9A	1.6A	2.1A	2.7A	15.0A	1.4A	8.9A	0.7A
TRANSPORT OF WASTE	HYDRAULIC OIL PUMP	CIRCULATION COOLING WATER	CIRCULATION COOLING MEDIA	CIRCULATION COOLING MEDIA EL. CAB.	CLEANING PUMP	H2O2 PUMP	COMPRESSOR	WATER PUMP HEAT EXCHANGER
K001	K002	K003	K004	K005	K006	K007	K008	K009
				K005:1	K006:1		K008:1	K009:1
4KW	4KW	4KW	4KW	4KW	7.5KW	4KW	7.5KW	4KW

Q700	Q701
Q700:1	Q701:1
32A	32A
JAW SERVO POWER SUPPLY	FFU SERVO POWER SUPPLY
K700	K701
15KW	15KW

	H2O2 TANK HEATING 2	H2O2 TANK HEATING 1	AIR KNIFE	AIR SUPERHEATER	TP1H TS	TP1H LS	TP1H SA	HEATING SURFACE 1-2	HEATING SURFACE 3-4	FFU ELEMENT TOP LEFT	FFU ELEMENT BOTTOM LEFT	SA SPLICE	CONSTANT HEAT BAR	HI	FFU ELEMENT TOP RIGHT	FFU ELEMENT BOTTOM RIGHT
L1	F020 90233-0028	F021 90233-0028	F024 90233-0028	F025 90233-0029	F028 90459-1254	F029 90459-1254	F030 90459-1254	F022 90233-0029	F023 90233-0029	F026 90233-0027	F027 90233-0027	F036 90459-5687	F037 90233-0062	F042 90233-0027	F046 90233-0027	F045 90233-0027
L2	F020 90233-0028	F021 90233-0028	F024 90233-0028	F025 90233-0029	F028 90459-1254	F029 90459-1254	F030 90459-1254	F022 90233-0029	F023 90233-0029							
L3	F020 90233-0028	F021 90233-0028	F024 90233-0028	F025 90233-0029	F028 90459-1254	F029 90459-1254	F030 90459-1254									

	DR LOOP ASU	DR MAGAZINE ASU	STRIP BOBBIN MOTORS	DR ASEPTIC CHAMBER	EXTERNAL CONVEYOR	FAN SERVO	230V L51, L52	FANS COOLING UNIT EL. CAB.	FEEDER BLOCK 90459-6856	LIGHTS	FEEDER BLOCK 90459-6856	ICU PUMP	24V POWER SUPPLY	POWER TO PRE-APPLICATOR	JAW CONTROL POWER SUPPLY	FFU CONTROL POWER SUPPLY
L1	F031 351416-0100	F032 351416-0100	F033 351416-0100	F034 351416-0160	F035 351416-0160	F038 351416-0010	F052 351416-0060	F055 351416-0020		F053 354000-0100	F059 351416-0060	F039 351418-0100	F050 351418-0060	F051 351418-0400	F700:1 90459-5813	F701:1 90459-5813
L2															F700 351416-0060	F701 351416-0060
L3																

	H2O2 TANK HEAT.2	H2O2 TANK HEAT.1	AIR KNIFE	AIR SUPERHEATER	TP1H TS	TP1H LS	TP1H SA	SURFACE 1-2 HEATING	SURFACE 3-4 HEATING	FFU ELEMENT BOTTOM	FFU ELEMENT TOP	SA SPLICE	CONSTANT HEAT BAR	HI	DR LOOP ASU DR MAGAZINE ASU STRIP BOBBIN MOTORS	DR ASEPTIC CHAMBER	EXTERNAL CONVEYOR	ICU PUMP	FFU ELEMENT BOTTOM RIGHT
K020	90459-5441																		
K021	90459-5441																		
K024	90459-5440																		
K025	90459-5441																		
K028	90459-5441																		
K029	90459-5441																		
K030	90459-5441																		
K022	90459-5441																		
K023	90459-5441																		
K026	90459-5441																		
K036	90459-5440																		
K037	90459-5440																		
K042	90459-5440																		
K031	90459-5440																		
K031:1	60459-6852																		
K034	90459-5440																		
K035	90459-5440																		
K039	90459-5440																		
K045	90459-5441																		

	L11	L12	L13	L15	L16
	F060 354000-0100	F061 354000-0100	F062 354000-0100	F063 354000-0100	F064 351416-0160	F066 351416-0060	F067 354000-0040
24 VOLTS							

CLR

1 this page
1 total

THIS DOCUMENT IS TO BE TREATED AS AN INVENTORY AND THE FOLLOWING PROCEDURES SHALL BE FOLLOWED:

REDUCED TO: A4 ☒ REDUCED TO: A3 ☐

PLASTICIZED ACCORDING TO DS 202.36

Release Level: released		ECM No: 292869	Pro/INTRALINK Revision Drawing 1.2 Model 1.4
Marked according to standard B 2103.10		Unless otherwise stated: SHARP EDGES BROKEN	Surface Roughness
Method/Size: NO/-		Scale: 1:1	
Material: ---		Surface Treatment: ---	
Designer: MVI	Date: 2007-03-16	Denomination: FUSE PANEL LABEL	
Company: Tetra Pak Packaging Solutions SpA		---	

Tetra Pak	Drawing No	Document Type	Version	Page
	2878363	DRA	AB	1(1)

This drawing must not without the consent of Tetra Pak be copied, transmitted or disclosed to any third party.

Pro/ENGINEER - A3

Tetra Pak

***Note!** This page is generated **automatically**.*
*using the **variable definitions** made in the **front page** file!*

Tetra Pak A3/Flex
648575-0150
Issue 2008-01 Doc. No. EM-2851302-0105

Tetra Pak A3/Flex
648575-0150
Issue 2008-01 Doc. No. EM-2851302-0105

Tetra Pak A3/Flex 1(2)
648575-0150
Issue 2008-01 Doc. No. EM-2851302-0105

Tetra Pak A3/Flex 1(2)
648575-0150
Issue 2008-01 Doc. No. EM-2851302-0105

Tetra Pak A3/Flex
648575-0150
Issue 2008-01 Doc. No. EM-2851302-0105

Tetra Pak A3/Flex 1(2)
648575-0150
Issue 2008-01 Doc. No. EM-2851302-0105

Tetra Pak A3/Flex
648575-0150
Issue 2008-01 Doc. No. EM-2851302-0105

Tetra Pak A3/Flex 1(2)
648575-0150
Issue 2008-01 Doc. No. EM-2851302-0105

Tetra Pak A3/Flex
648575-0150
Issue 2008-01 Doc. No. EM-2851302-0105

Tetra Pak A3/Flex 2(2)
648575-0150
Issue 2008-01 Doc. No. EM-2851302-0105

Tetra Pak A3/Flex
648575-0150
Issue 2008-01 Doc. No. EM-2851302-0105

Tetra Pak A3/Flex 2(2)
648575-0150
Issue 2008-01 Doc. No. EM-2851302-0105

Tetra Pak A3/Flex
648575-0150
Issue 2008-01 Doc. No. EM-2851302-0105

Tetra Pak A3/Flex 2(2)
648575-0150
Issue 2008-01 Doc. No. EM-2851302-0105

Tetra Pak A3/Flex
648575-0150
Issue 2008-01 Doc. No. EM-2851302-0105

Tetra Pak A3/Flex 2(2)
648575-0150
Issue 2008-01 Doc. No. EM-2851302-0105

40 mm Full width ***Note!*** *This page is generated* ***automatically****.*
using the ***variable definitions*** *made in the* ***front page*** *file!*

Tetra Pak A3/Flex
648575-0150

Issue 2008-01 Doc. No. EM-2851302-0105

Tetra Pak A3/Flex 1(2)
648575-0150

Issue 2008-01 Doc. No. EM-2851302-0105

Tetra Pak A3/Flex
648575-0150

Issue 2008-01 Doc. No. EM-2851302-0105

Tetra Pak A3/Flex 1(2)
648575-0150

Issue 2008-01 Doc. No. EM-2851302-0105

Tetra Pak A3/Flex
648575-0150

Issue 2008-01 Doc. No. EM-2851302-0105

Tetra Pak A3/Flex 1(2)
648575-0150

Issue 2008-01 Doc. No. EM-2851302-0105

Tetra Pak A3/Flex
648575-0150

Issue 2008-01 Doc. No. EM-2851302-0105

Tetra Pak A3/Flex 2(2)
648575-0150

Issue 2008-01 Doc. No. EM-2851302-0105

Tetra Pak A3/Flex
648575-0150

Issue 2008-01 Doc. No. EM-2851302-0105

Tetra Pak A3/Flex 2(2)
648575-0150

Issue 2008-01 Doc. No. EM-2851302-0105

Tetra Pak A3/Flex
648575-0150

Issue 2008-01 Doc. No. EM-2851302-0105

Tetra Pak A3/Flex 2(2)
648575-0150

Issue 2008-01 Doc. No. EM-2851302-0105