MM

Maintenance Manual

Tetra Pak A3/Flex

648575-0200

TechPub_2614345_0106 - MM_2819200_0104_fro.fm

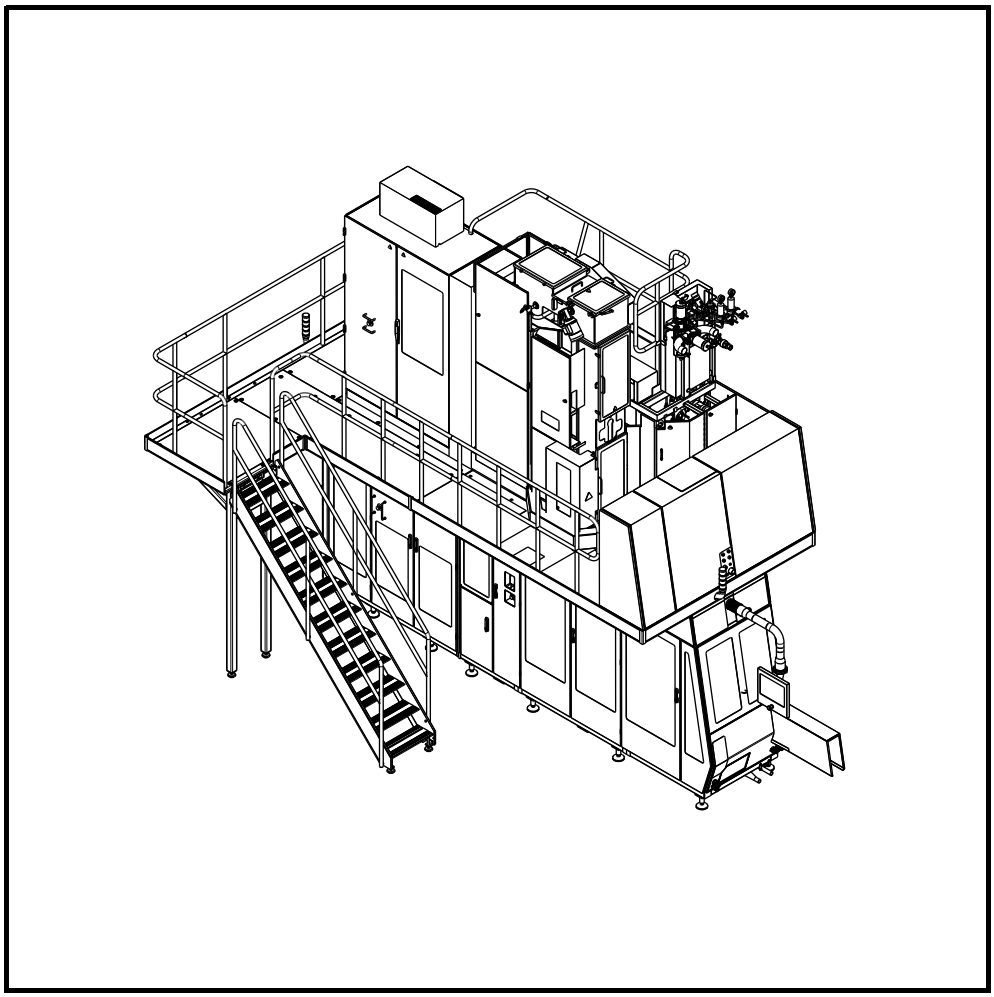

WARNING

Read and follow all safety precaution instructions throughout this manual and on safety signs attached to this equipment.

Failure to follow all safety precaution instructions could result in death or serious injury.

Tetra Pak

Doc. No. MM-2819200-0104

Copyright © 2009 Tetra Pak Group

All rights reserved. No part of this document may be reproduced or copied in any form or by any means without written permission from Tetra Pak Packaging Solutions.

Tetra Pak and all Tetra Pak products are trademarks belonging to the Tetra Pak Group.

The content of this manual is in accordance with the design and construction of the machine or equipment at the time of publishing. Tetra Pak reserves the right to introduce design modifications without prior notice.

The English version of this document is the original language version.

This document was produced by:

Tetra Pak Packaging Solutions
Via Delfini 1
41100 Modena
Italy

Additional copies can be ordered from Tetra Pak. When ordering additional copies, always provide the document number.

Doc. No. MM-2819200-0104

Issue 2009-03

TechPub_2614345_0106 - MM_2819200_0104_fro.fm

This manual is valid for:

Series No./ Machine No. Sign.

MM

Maintenance Manual

Tetra Pak A3/Flex
648575-0200

i Introduction

ii Safety Precautions

1 Superstructure

2 Machine Body

3 Drive Unit

4 Jaw System

5 Final Folder

6 Service Unit

8 Automatic Splicing Unit

9 Electrical System

10 General

iii Index

TechPub_2614345_0106 - MM_2819200_0104_fro.fm

Machine or equipment configurations that this manual is valid for are described on the next page.

Doc. No. MM-2819200-0104

Issue 2009-03

Tetra Pak

Tetra Pak Packaging Solutions

Valid for:

Name	Drawing Specification and Development Step	Additional Information
Tetra Pak A3/Flex	648575-0200	Optional Equipment: HI - Headspace by Injection 2636960-0200 Stair on RH Side 2564231-0100

TechPub_2614345_0106 - MM_2819200_0104_fro.fm

Update Log for Doc. No. MM-2819200-0104

This table shows all changes made to this manual, including installed rebuilding kits, added or removed pages. Page numbering on added pages begins with UP.

Date	Installed Kit	Added Pages (Doc. No.)	Removed Pages	Signature

TechPub_2614345_0106 - MM_2819200_0104_fro.fm

Date	Installed Kit	Added Pages (Doc. No.)	Removed Pages	Signature

TechPub_2614345_0106 - MM_2819200_0104_fro.fm

i Introduction

TechPub_2614345_0106 - MM_2819200_0104_intro.fm

About the Introduction Chapter

This chapter contains basic information about this manual and the related Tetra Pak equipment.

TechPub_2614345_0106 - MM_2819200_0104_intro.fm

Abbreviations and Terminology . . . . . i - 5
Manual Information . . . . . i - 7
Delivered Manuals . . . . . i - 7
Page Layout . . . . . i - 8
Page Numbering. . . . . i - 9
Typographical Conventions . . . . . i - 9
Symbols . . . . . i - 9
Machine Introduction . . . . . i - 10
Intended Use of the Equipment . . . . . i - 10
Manufacturer . . . . . i - 10
Support and Feedback . . . . . i - 10
Identification . . . . . i - 11
CE Classification . . . . . i - 11
Machine Plate . . . . . i - 11
Orientation . . . . . i - 12
Hygiene. . . . . i - 13
Packaging Material. . . . . i - 13
Steam Barrier in the Product Valve . . . . . i - 13
How to Use This MM . . . . . i - 14
Procedures . . . . . i - 14
Procedure Start Table . . . . . i - 14
TPMS . . . . . i - 15
Planned Maintenance Program . . . . . i - 15
Checklists and Spare Parts Recommendations . . i - 15

TechPub_2614345_0106 - MM_2819200_0104_intro.fm

This page intentionally left blank

TechPub_2614345_0106 - MM_2819200_0104_intro.fm

Abbreviations and Terminology

Abbreviation/ Terminology	Meaning	Translation
ASU	Automatic Splicing Unit	
B	Base (package shape)	
CIP	Cleaning In Place	
DE	Distribution Equipment	
DIMC	Direct Injection Moulded Concept	
ECM	Engineering Change Management	
EM	Electrical Manual	
HI	Headspace by gas Injection	
HMI	Human Machine Interface	
ICU	Integrated Cleaning Unit	
IPC	Industrial Personal Computer	
IH	Induction Heating	
LED	Light Emitting Diode	
LC30	Line Controller 30	
LH	Left Hand	
LS	Longitudinal Seal(ing)	
MB	Master Batch	
min	Minimum	
max	Maximum	
MKC	Mandatory Kit Corrective	
MKS	Mandatory Kit Human and Product Safety	
MM	Maintenance Manual	
N.A.	Not Available	
OK	Optional Kit	
OE	Optional Equipment	
OM	Operation Manual	
PE	Polyethylene	
PM	Packaging Material	
PT	PullTab	
RH	Right Hand	
RK	Rebuilding Kit	
RM	Rebuilding Manual	
S	Slim (package shape)	
SA	Strip Applicator	
SPC	Spare Parts Catalogue	
Sq	Square (package shape)	
TBA	Tetra Brik Aseptic	
TMCC	Tetra Pak Multi-purpose Compact Controller	
TPOP	Tetra Pak Operator Panel	
TS	Transversal Sealing	
UK	Upgrade Kit	

TechPub_2614345_0106 - MM_2819200_0104_intro.fm

VMN	Variable Matching Network	

TechPub_2614345_0106 - MM_2819200_0104_intro.fm

Manual Information

Tetra Pak recommends reading all delivered manuals carefully. Make sure that the delivered manuals are available to personnel who operate or maintain the equipment.

It is important to keep this manual for the lifetime of the equipment and to pass the manual on to any subsequent holder or user.

Tetra Pak will not be held responsible for any damage to the equipment caused by not following the instructions given in this manual.

Delivered Manuals

Manuals delivered with this equipment:

- Conversion Manual (CM) provides technicians with information on converting the equipment between different production modes.
- Electrical Manual (EM) provides technicians with information about the equipment's electrical system.
- Installation Manual (IM) provides technicians with information required to safely install the equipment.
- Maintenance Manual (MM) provides technicians with information on maintaining the equipment.
- Operation Manual (OM) provides the operator with information on handling and operating the equipment before, during, and after production.
- Spare Parts Catalogue (SPC) provides the information necessary to order spare parts from Tetra Pak
- Technical Manual (TeM) provides technicians with:
  - information required to safely install the equipment
  - information on maintaining the equipment
  - information about the machine's/equipment's electrical system
  - information necessary to order spare parts from Tetra Pak.

TechPub_2614345_0106 - MM_2819200_0104_intro.fm

Page Layout

Every main page in a manual contains a header and a footer. The page header contains the chapter name (1) and the section name (2). The page footer contains the page number (3), and the document number (4). See also the Page Numbering section.

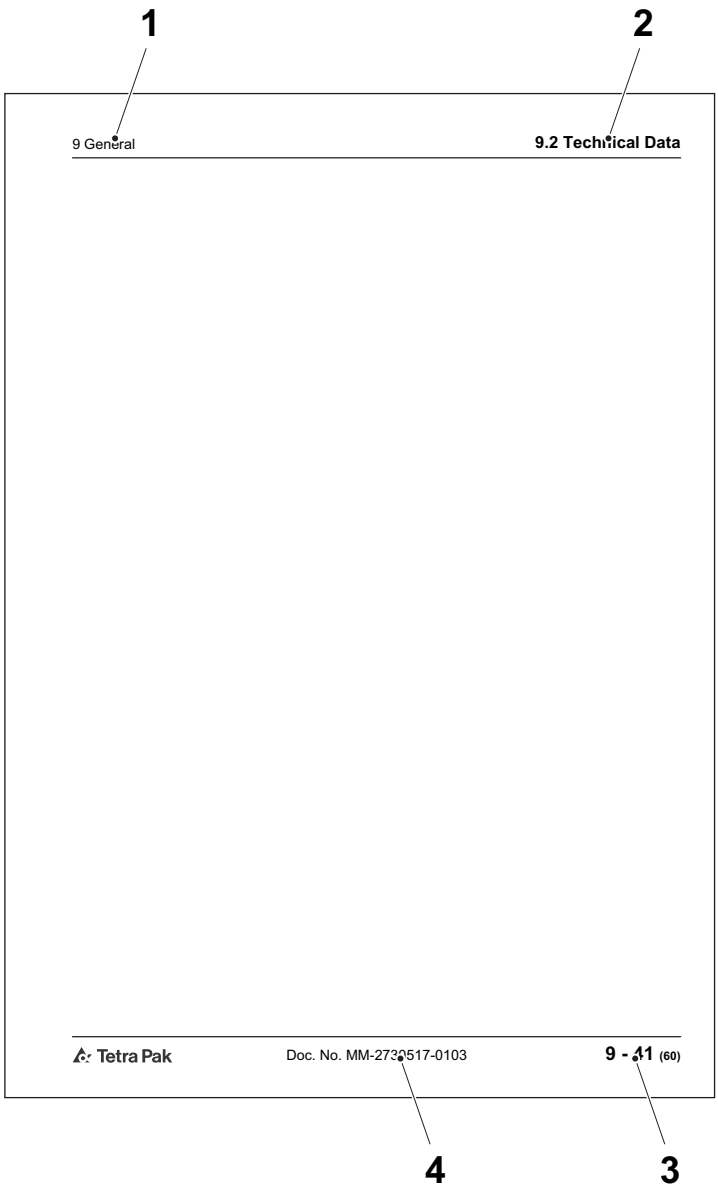

1 Chapter name
2 Section name
3 Page number
4 Document number

TechPub_2614345_0106 - MM_2819200_0104_intro.fm

Page Numbering

A page number has three parts:

- chapter number (1)
- consecutive page number (2) within the chapter
- total number of pages (3) in the chapter.

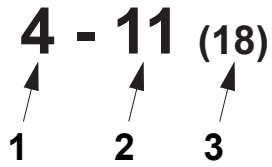

1 Chapter number
2 Consecutive page number
3 Total number of pages

Typographical Conventions

Controls on the operator panel, emergency stop devices, and program steps are printed in CAPITAL LETTERS.

Menu names, button names and other text displayed in software are printed in `courier`.

Cross-references are underlined.

Symbols

Symbols used in illustrations.

	A pointer arrow indicates the position of an object.
	A zoom arrow indicates that an object view is enlarged. The arrow points towards the enlarged view of the object.
	A rotation movement arrow indicates rotational movement of an object. The arrow points in the direction of rotation.
	A straight movement arrow indicates movement of an object. The arrow points in the direction of movement.

TechPub_2614345_0106 - MM_2819200_0104_intro.fm

Machine Introduction

Intended Use of the Equipment

The intended use of this Tetra Pak equipment is to pack liquid food products.

All other use is prohibited. Tetra Pak will not be held responsible for injury or damage if the equipment is used for any other purpose.

Manufacturer

This Tetra Pak equipment has been manufactured by

Tetra Pak Packaging Solutions
Via Delfini 1
41100 Modena
Italy

Support and Feedback

If you encounter problems when operating this equipment or have other inquiries, comments, or suggestions for improvement, contact Tetra Pak.

TechPub_2614345_0106 - MM_2819200_0104_intro.fm

Identification

CE Classification

This equipment complies with the basic health and safety regulations of the European Economic Area (EEA).

Machine Plate

The illustration below shows an example of the machine plate and its location on the equipment. The machine plate carries data needed when contacting Tetra Pak concerning this specific equipment.

Make sure that the equipment data in the front pages of this manual corresponds to the machine plate data and the machine specification.

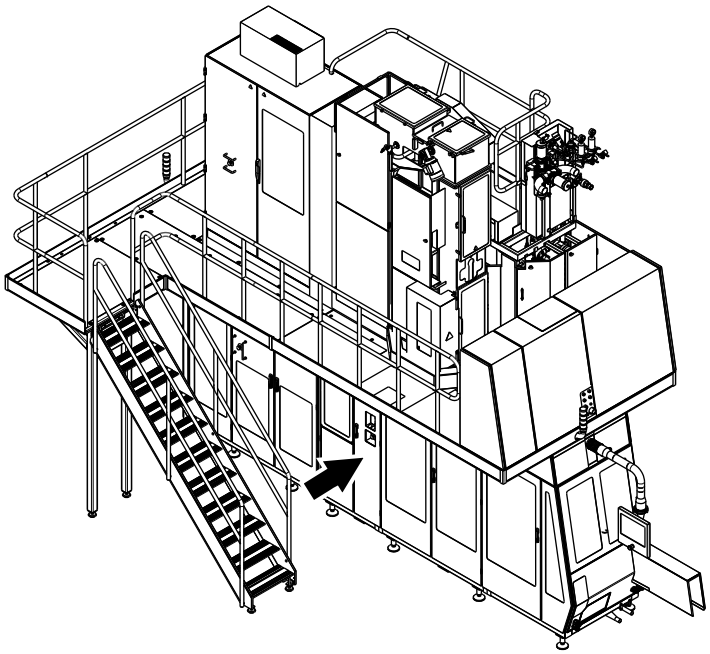

TechPub_2614345_0106 - MM_2819200_0104_intro.fm

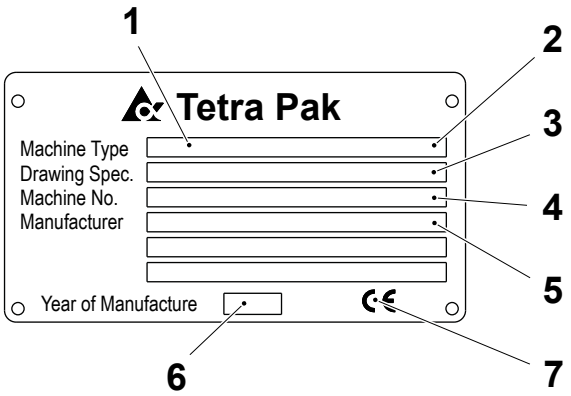

1 Machine type
2 Volume
3 Drawing specifications
4 Machine serial number
5 Manufactured by
6 Year of manufacture
7 CE mark

Orientation

The illustration below shows the orientation of the equipment. This orientation information will be used throughout this manual. The arrows indicate the flow of material.

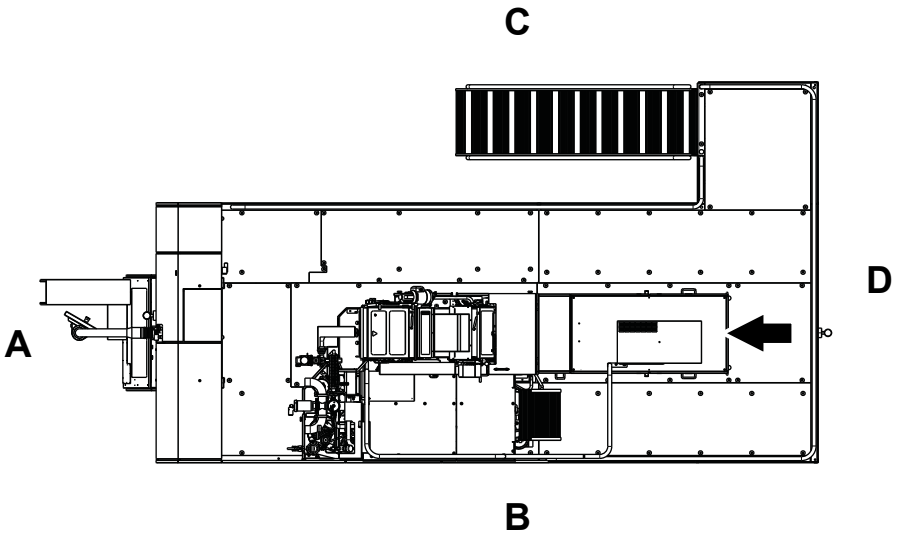

A Front
B Right-hand side
C Left-hand side
D Back

TechPub_2614345_0106 - MM_2819200_0104_intro.fm

Hygiene

Packaging Material

Avoid microbiological contamination of the packaging material:

- Always protect your packaging material against contamination.
- Always keep the doors to the filling room (area) closed. To prevent contamination via air streams, never open a window when the machine is in production.
- Never clean the floors or the machine in the filling room (area) when the machine is in production.
- Compressed air used for cleaning purposes is to be used only for cleaning filters and should only be used outside of the filling room (area) or in the final folder compartment of the filling machine.
- Prepare the splicing of the packaging material as late as possible.
- Disinfect your hands before touching anything that may come into contact with the product. Use code H disinfectant. See the Technical Data chapter of the Maintenance Manual.
- Keep your hands clean.
- Always wear some type of hair protection (cap or hairnet) and clean clothes (preferably white).
- Do not wear a watch, ring, necklace, earrings, or any other exposed jewellery.

Steam Barrier in the Product Valve

The filling machine’s product valve employs a steam barrier to separate the product supply line from the filling machine. The steam barrier allows the machine and the product supply line to be independently sterilised to commercial sterility conditions.

- Never disengage the steam barrier, and never interrupt the steam supply when the filling machine or the product supply line is being brought to the pre-sterilization phase, or when the machine is already in the production phase.
- If any maintenance activity requires disengagement of the steam barrier or the interruption of the steam supply to the machine, make sure that the product supply line is idle and empty of product.

TechPub_2614345_0106 - MM_2819200_0104_intro.fm

How to Use This MM

Procedures

The name of the chapters and sections in the MM correspond to the groups in the structure of the equipment. Procedures correspond to a chapter or a section:

- The dashes indicate that it is a procedure heading. The example below shows a heading for Procedure number 3 in Section 1.5.
- The text after the second dash tells what type of procedure it is. Check, Change and Set are common procedure types.

1.5-3 Outfeed Servo - Change Bearings

Maintenance procedures in this manual are connected to the Tetra Pak Maintenance System, TPMS. See the TPMS section.

Procedure Start Table

Procedures in this manual begin with a table providing information needed to begin the procedure.

- Machine Status (1) shows actuator status, program step, and any other machine status necessary to begin the procedure.
- Special Equipment (2) shows a list of personal protective equipment and special tools that are not normally carried by a service technician, but are needed in the procedure.
- Consumables (3) shows items, such as lubricants, that are required to perform the procedure. Consumables do not include replacement parts.
- SPC Reference (4) shows the assembly number, found in the index of the SPC.

1	Machine Status	Power supply disconnector OFF Air valve OFF Water valve OFF
2	Special Equipment	Hook spanner TP No. 777170-0105 Dial indicator
3	Consumables	Grease code F
4	SPC Reference	2501234-0100

1 Machine Status
2 Special Equipment
3 Consumables
4 SPC Reference

TechPub_2614345_0106 - MM_2819200_0104_intro.fm

TPMS

To ensure uninterrupted production, all machines and equipment must be maintained on a regular basis.

Tetra Pak has developed a planned maintenance system to keep pace with the ongoing development of new and existing machines and equipment from Tetra Pak, and to meet the demands set by customers for higher efficiency and better economy.

Planned Maintenance Program

The Tetra Pak planned maintenance system reduces unplanned downtime and maintenance time for complete production lines, as well as for individual machines and equipment.

With the Tetra Pak planned maintenance system, preventive maintenance can be performed before production is affected. The system is continually updated based on experience with Tetra Pak machines and equipment worldwide.

The Tetra Pak planned maintenance system maintains records of when maintenance is performed, when parts are changed, whether alterations are made, and so on. These records, combined with usage statistics, enable reliable predictions of the service life of all machine and equipment parts.

Checklists and Spare Parts Recommendations

Customers using the Tetra Pak planned maintenance system receive checklists from their local Tetra Pak office whenever planned maintenance is due. These checklists are individualised for each customer, according to the type of machine, equipment usage, and maintenance occasion. In addition, the system recommends spare parts, rotation units, tools, and templates according to the statistics collected.

Note! Contact the local Tetra Pak office for additional information about the Tetra Pak Maintenance System and its planned maintenance program.

TechPub_2614345_0106 - MM_2819200_0104_intro.fm

This page intentionally left blank

TechPub_2614345_0106 - MM_2819200_0104_intro.fm

ii Safety Precautions

TechPub_2614345_0106 - MM_2819200_0104_sp.fm

Safety Precaution Instructions

WARNING

Read all safety precaution instructions throughout this manual and on safety signs attached to this equipment.
Failure to follow all safety precaution instructions could result in death or serious injury.

Definition of Lockout Procedure

A lockout procedure is a procedure to put each necessary energy isolating device in its safe position to prevent the energisation of the equipment, such as when a maintenance procedure should be carried out.

A lockout is the use of a device, for example, a padlock, to make sure that an energy isolating device cannot be operated.

An energy isolating device is a mechanical device that physically prevents transmission or release of energy, such as a power supply disconnector.

TechPub_2614345_0106 - MM_2819200_0104_sp.fm

Safety Messages Description . . . . . ii - 5

Personnel Requirements . . . . . ii - 6

Skilled Person . . . . . ii - 6

Instructed Person. . . . . ii - 6

Safety Signs . . . . . ii - 7

Locations of Safety Signs . . . . . ii - 9

HI Equipment (OE) . . . . . ii - 17

Protective Devices. . . . . ii - 18

Emergency Stop . . . . . ii - 18

Emergency Stop Push-Buttons . . . . . ii - 19

Safeguards . . . . . ii - 20

Warning Lamp . . . . . ii - 22

Audible Alarm . . . . . ii - 22

Personal Protection. . . . . ii - 23

Noise Hazard . . . . . ii - 23

Entanglement Hazard . . . . . ii - 23

Hazardous Substances . . . . . ii - 24

Disposal of Chemical Substances . . . . . ii - 25

Hydrogen Peroxide (H_2O_2) . . . . . ii - 26

Emergency Procedures. . . . . ii - 26

Personal Protective Equipment . . . . . ii - 27

Handling of Hydrogen Peroxide . . . . . ii - 28

Storage of Hydrogen Peroxide . . . . . ii - 29

Disposal of Hydrogen Peroxide . . . . . ii - 30

Supply Systems . . . . . ii - 31

Power Supply . . . . . ii - 31

Residual Voltage . . . . . ii - 31

Electrical Cabinet. . . . . ii - 32

TechPub_2614345_0106 - MM_2819200_0104_sp.fm

Socket Outlet . . . . . ii - 33
Air Supply . . . . . ii - 36
Steam Supply. . . . . ii - 37
Water Supply . . . . . ii - 38
Equipment for Lifting and Moving Loads . . . . ii - 39

TechPub_2614345_0106 - MM_2819200_0104_sp.fm

Safety Messages Description

A safety message is always accompanied by a safety alert symbol and a signal word.

The safety alert symbol is used to alert about potential personal injury hazards. To avoid hazards, obey all safety messages that follow this symbol.

The following safety alert symbols and signal words are used in this manual to inform the user of hazards.

DANGER	Danger indicates an imminently hazardous situation which, if not avoided, will result in death or serious injury.
WARNING	Warning indicates a potentially hazardous situation which, if not avoided, **could** result in **death or serious injury**.
CAUTION	Caution indicates a potentially hazardous situation which, if not avoided, **may** result in **minor or moderate injury.** It may also be used to alert against unsafe practices.
CAUTION	Caution without the safety alert symbol indicates a potentially hazardous situation which, if not avoided, **may** result in **property damage**.

TechPub_2614345_0106 - MM_2819200_0104_sp.fm

Personnel Requirements

Note! Personnel includes all persons working on or near this equipment.

Only skilled or instructed persons are allowed to work with this equipment.

Skilled Person

A skilled person must have relevant education and experience to enable him or her to identify hazards, analyse risks, and avoid hazards which electricity, machinery, chemicals, other energies, and supply systems on this equipment can create.

Skilled persons must meet local regulations, such as certifications and qualifications for working with these energies and systems.

Instructed Person

An instructed person must be adequately advised or supervised by a skilled person. The skilled person enables the instructed person to identify hazards, analyse risks, and avoid hazards which electricity, machinery, chemicals, other energies, and supply systems on this equipment can create.

TechPub_2614345_0106 - MM_2819200_0104_sp.fm

Safety Signs

WARNING

Damaged or missing safety signs increase the risk of death or serious injury.

Replace all missing or damaged safety signs immediately.

Safety signs are attached to the equipment. The table below lists all the signs that are used, and illustrations show their locations on the equipment. Each position number refers to two variants of a safety sign in the table, but only one is used on the equipment.

- Make sure that each safety sign is legible and in its correct position after installation and maintenance.
- Replace all missing or damaged safety signs immediately.

Pos.	ISO sign	ANSI sign
1		
	Hot surface. Do not touch. Follow lockout procedure before maintenance.	
2		
	Chemical burn hazard. Wear personal protective equipment.	
3	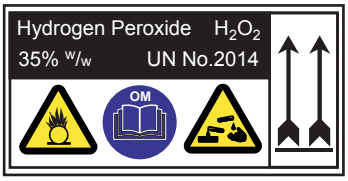	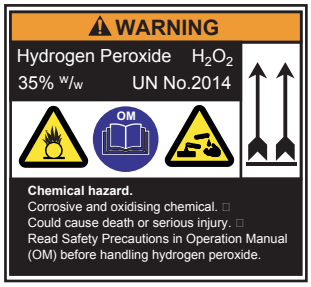
	Chemical hazard. Corrosive and oxidising chemical. Could cause death or serious injury. Read Safety Precautions in Operation Manual (OM) before handling hydrogen peroxide.	

TechPub_2614345_0106 - MM_2819200_0104_sp.fm

Pos.	ISO sign	ANSI sign
4		
	Risk of eye injury. Wear eye protection.	
5		
	Hazardous voltage. Will shock, burn, or cause death. Follow lockout procedure before maintenance.	
6		
	Hazardous voltage. Can shock, burn, or cause death. Read Maintenance Manual (MM) before using this socket outlet.	
7		
	Hazardous rotating shafts and belts. Can crush and cut. Keep hands clear while the machine is operating.	
8		
	Moving parts can crush and cut. Do not operate with guard removed. Follow lockout procedure before maintenance.	

TechPub_2614345_0106 - MM_2819200_0104_sp.fm

Locations of Safety Signs

The illustration shows where the safety signs are located. The position numbers refer to the table in the Safety Signs section.

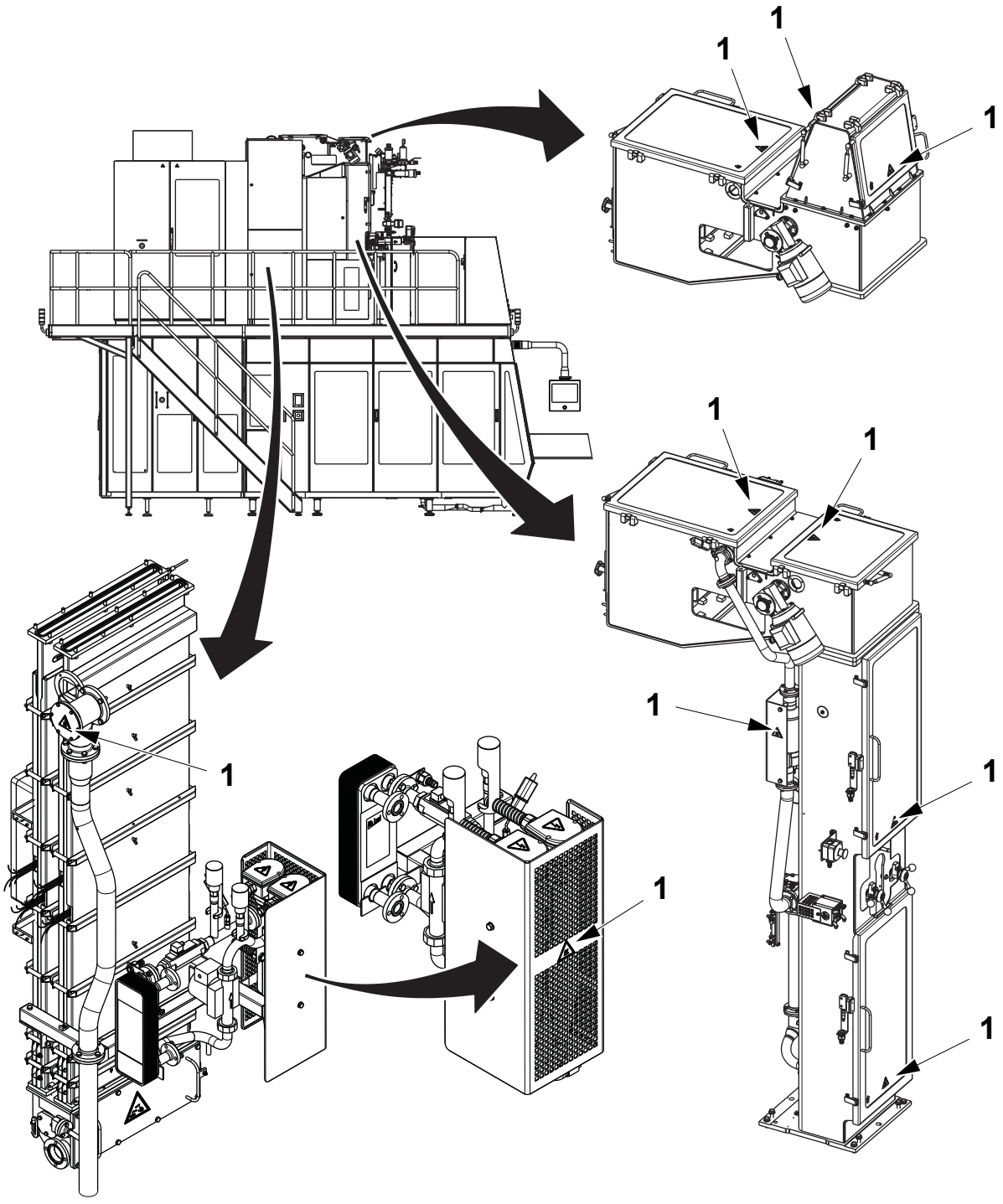

(Cont'd)

TechPub_2614345_0106 - MM_2819200_0104_sp.fm

(Cont'd)

The illustration shows where the safety signs are located. The position numbers refer to the table in the Safety Signs section.

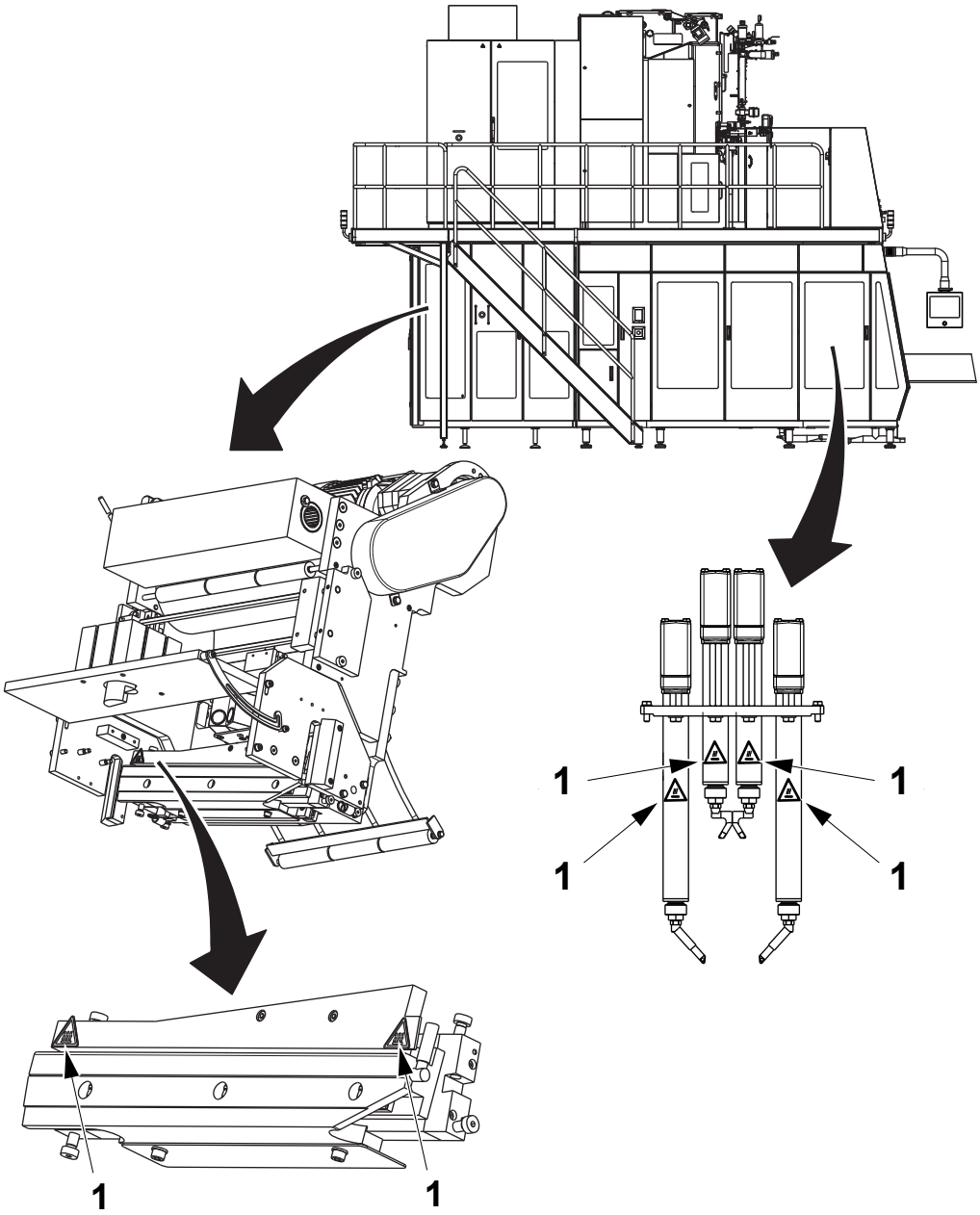

TechPub_2614345_0106 - MM_2819200_0104_sp.fm

(Cont'd)

(Cont'd)

The illustration shows where the safety signs are located. The position numbers refer to the table in the Safety Signs section.

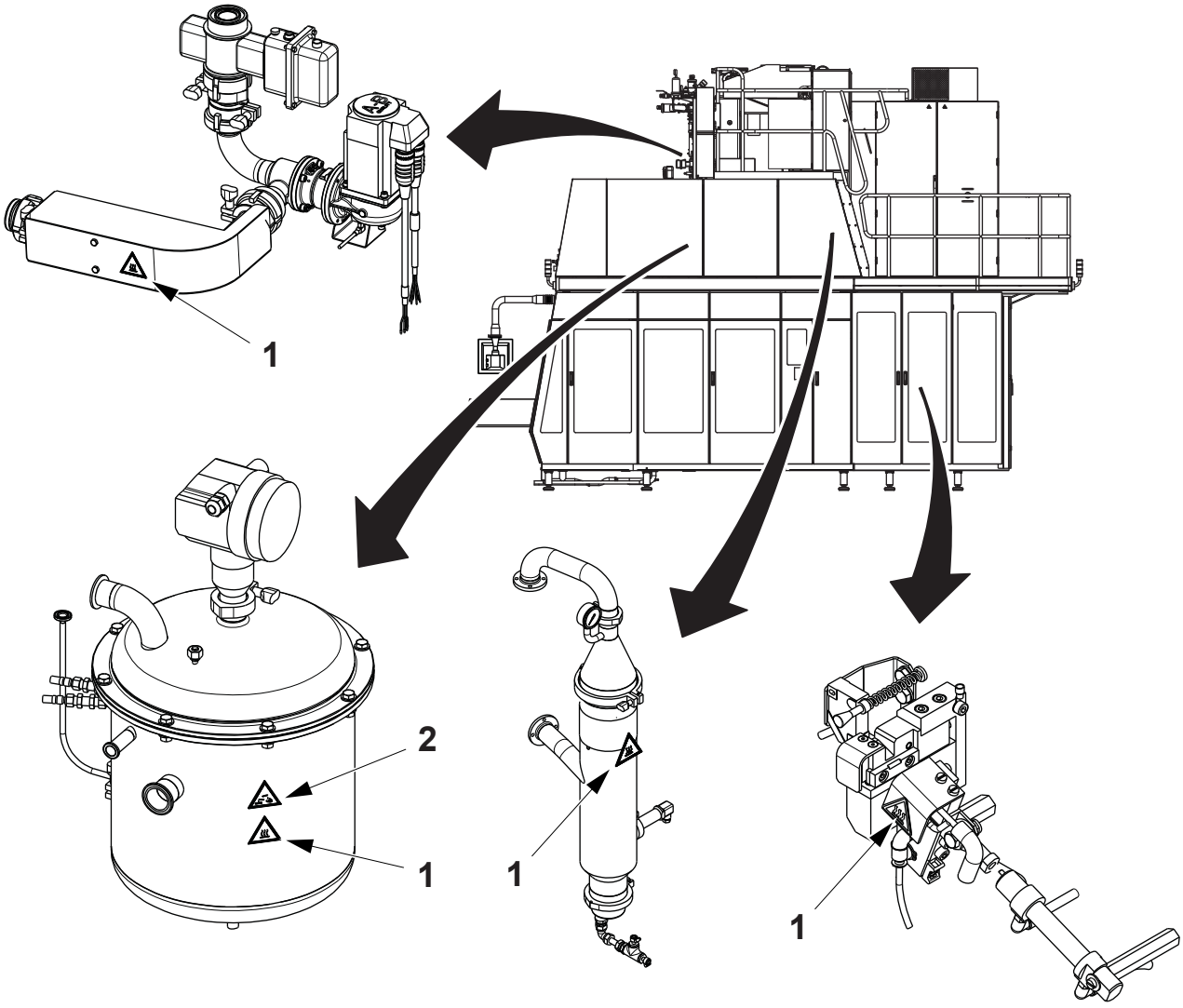

(Cont'd)

TechPub_2614345_0106 - MM_2819200_0104_sp.fm

(Cont'd)

The illustration shows where the safety signs are located. The position numbers refer to the table in the Safety Signs section.

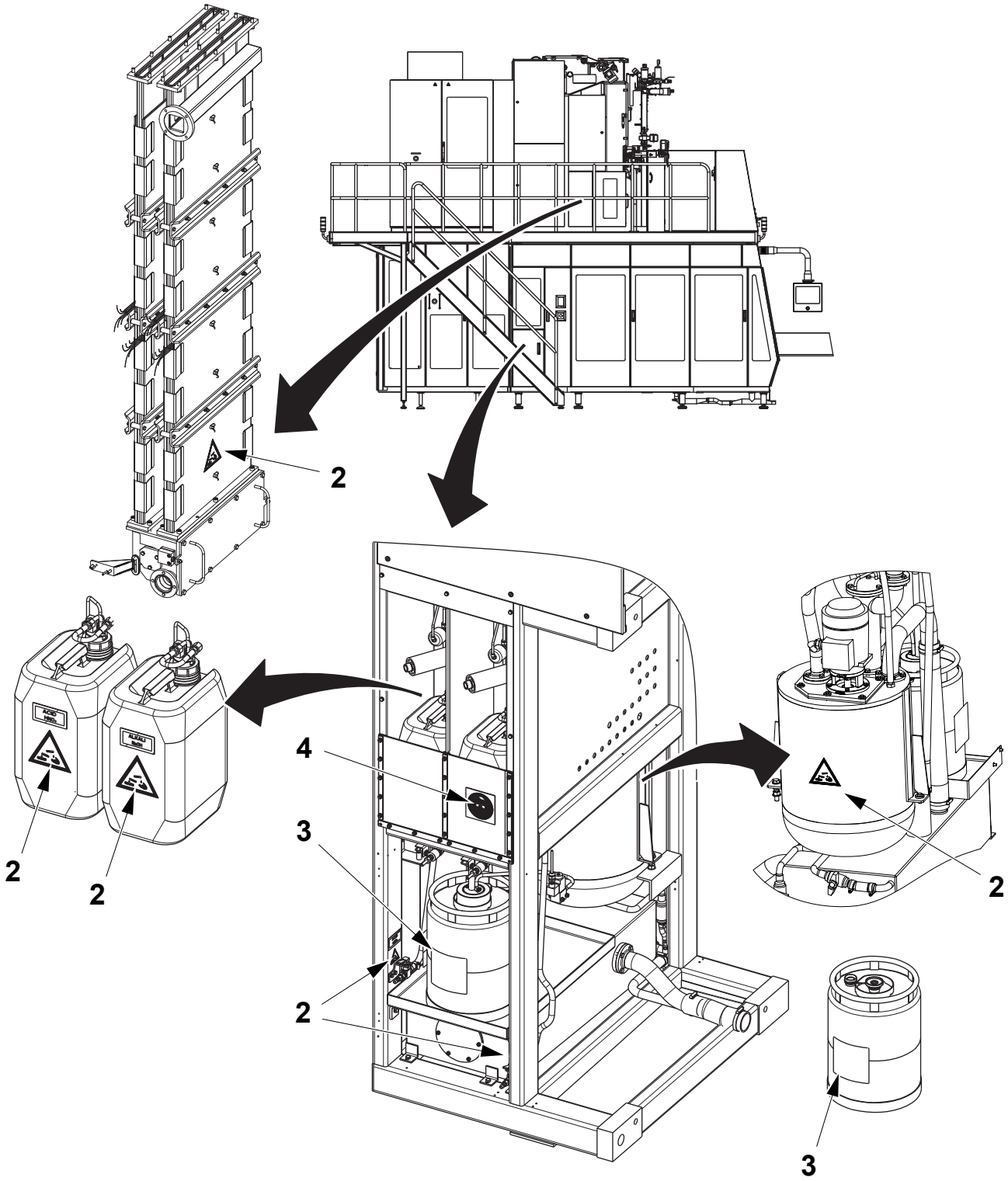

(Cont'd)

TechPub_2614345_0106 - MM_2819200_0104_sp.fm

(Cont'd)

The illustration shows where the safety signs are located. The position numbers refer to the table in the Safety Signs section.

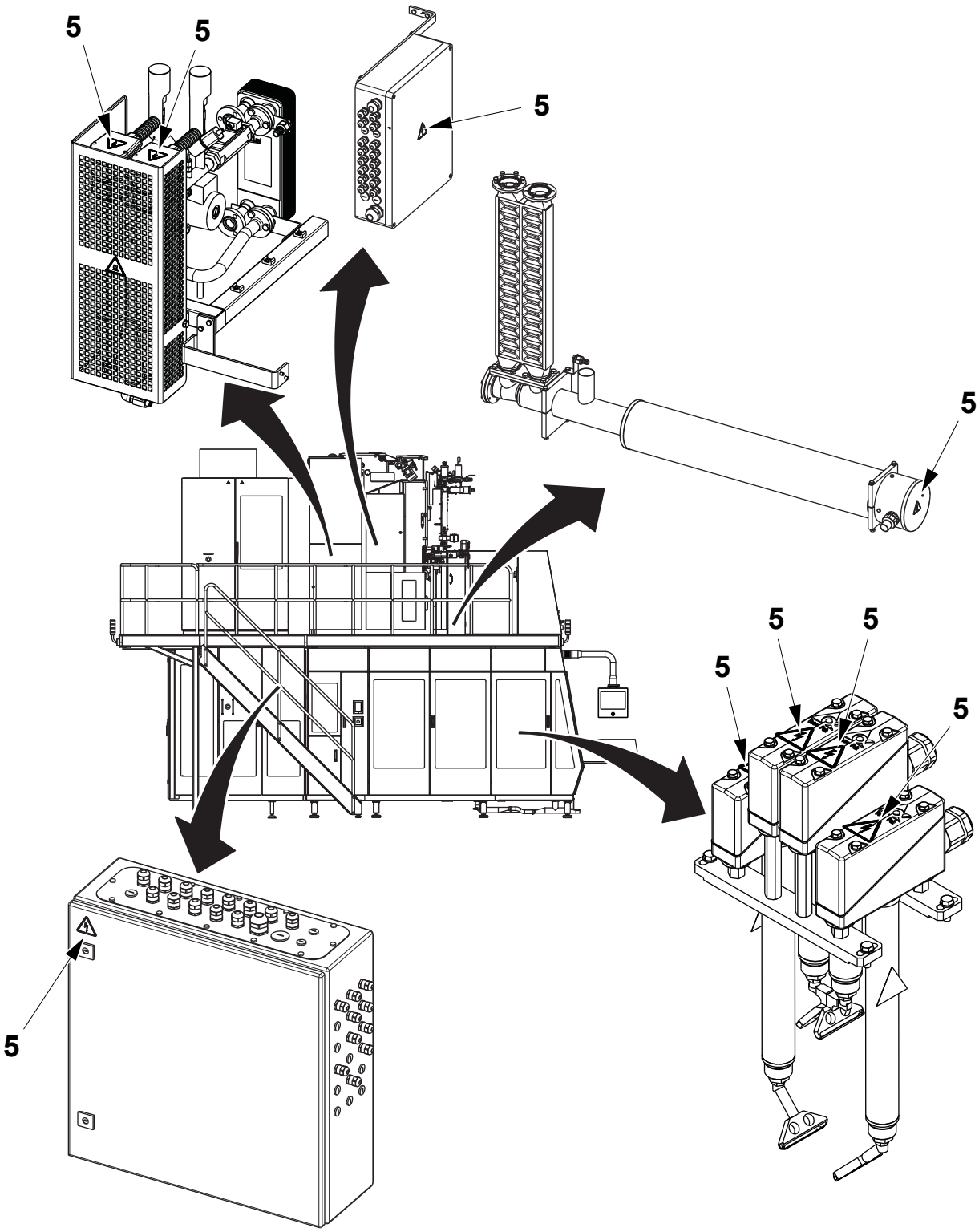

(Cont'd)

TechPub_2614345_0106 - MM_2819200_0104_sp.fm

(Cont'd)

The illustration shows where the safety signs are located. The position numbers refer to the table in the Safety Signs section.

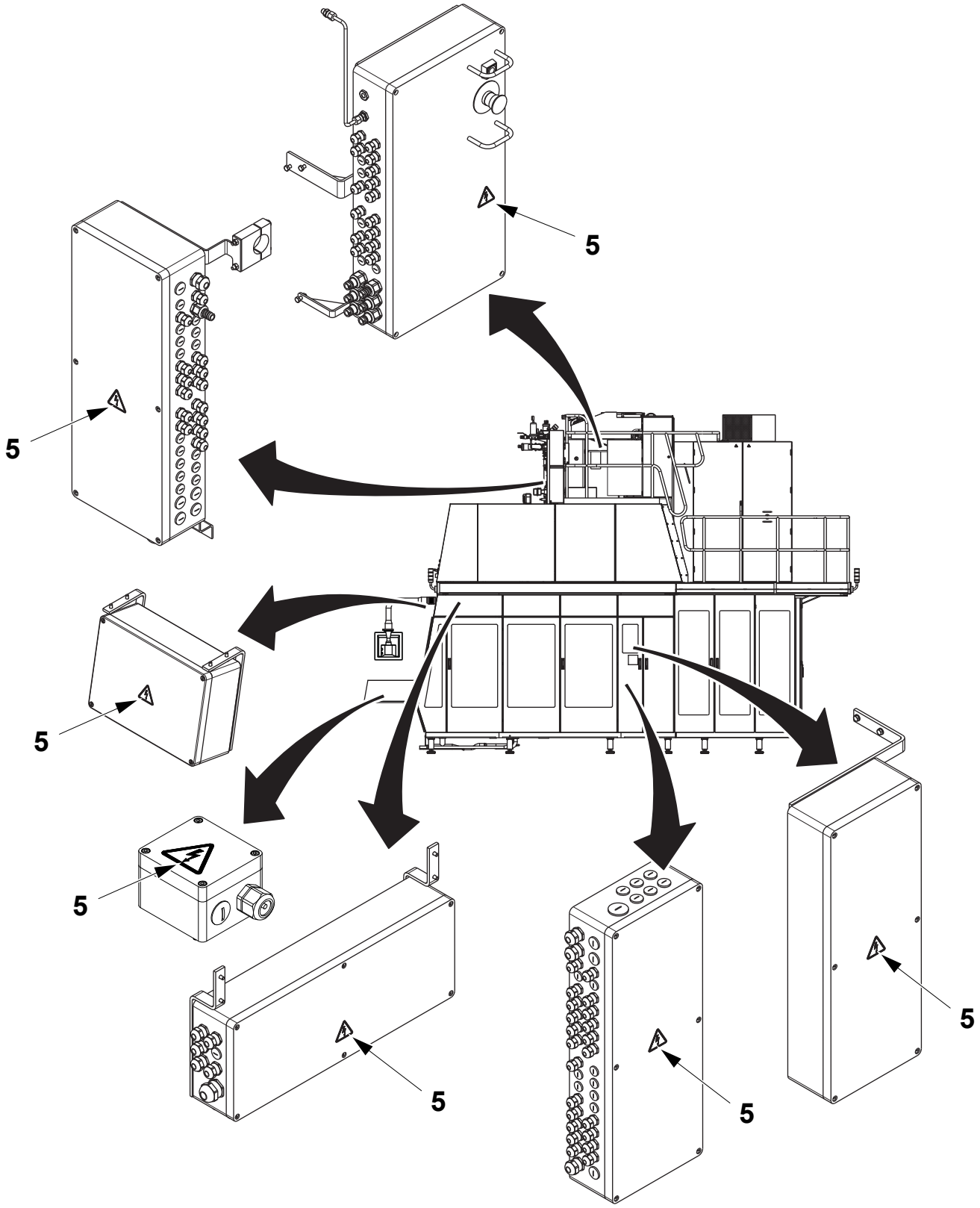

TechPub_2614345_0106 - MM_2819200_0104_sp.fm

(Cont'd)

(Cont'd)

The illustration shows where the safety signs are located. The position numbers refer to the table in the Safety Signs section.

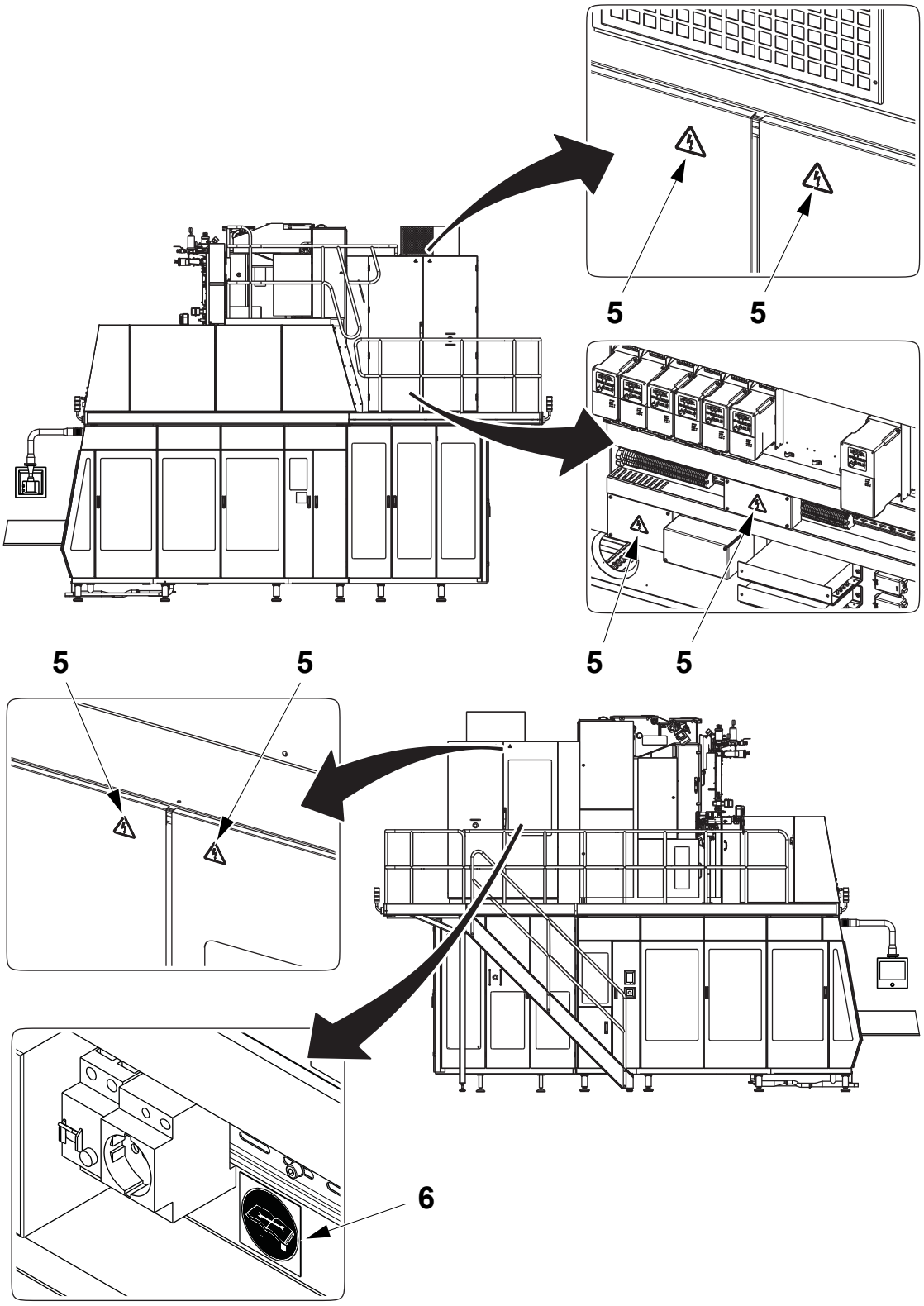

(Cont'd)

TechPub_2614345_0106 - MM_2819200_0104_sp.fm

(Cont'd)

The illustration shows where the safety signs are located. The position numbers refer to the table in the Safety Signs section.

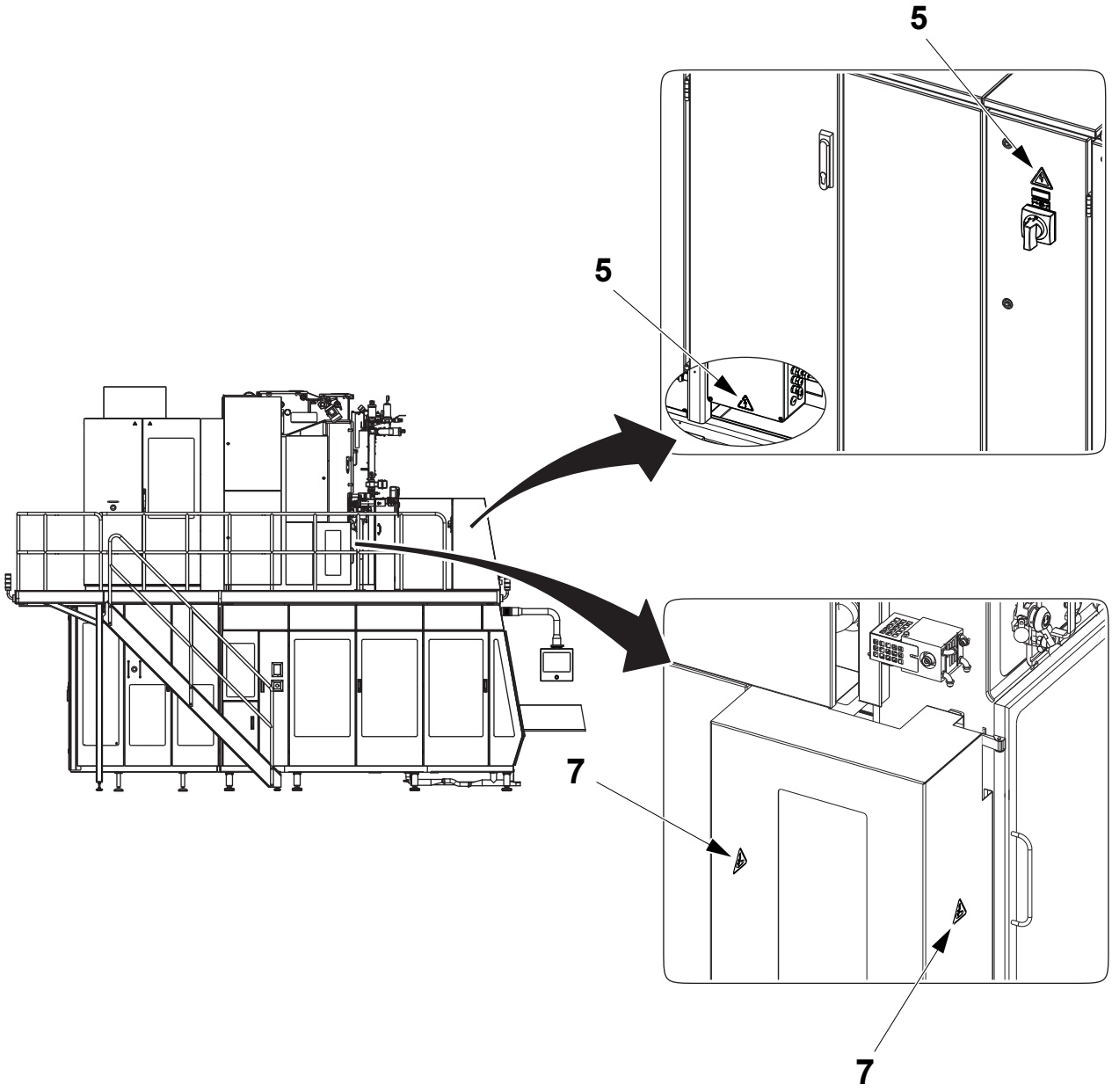

TechPub_2614345_0106 - MM_2819200_0104_sp.fm

(Cont'd)

(Cont'd)

HI Equipment (OE)

The illustration shows where the safety signs are located. The position numbers refer to the table in the Safety Signs section.

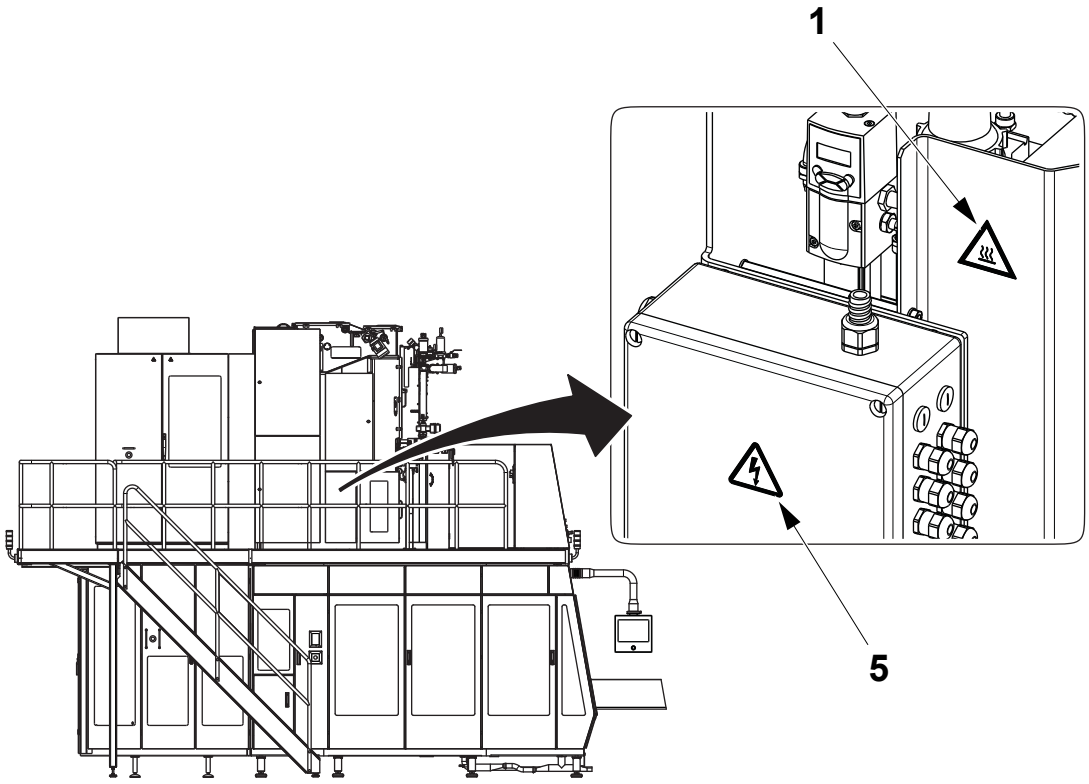

TechPub_2614345_0106 - MM_2819200_0104_sp.fm

Protective Devices

WARNING

Hazardous zones.

Hazardous zones are safeguarded and provided with protective devices. Do not inch or run this equipment if any protective device is inoperative.

Change inoperative components of the safety system immediately.

WARNING

Hazardous voltage.

Hazardous voltage remains on this equipment after activating an EMERGENCY STOP or an interlocking device.

Emergency Stop

Emergency stop devices are used to stop this equipment immediately in an hazardous situation. Learn the positions of all emergency stop devices and how to use them.

Instructions for a normal production stop are included in the Stop chapter of the Operation Manual.

TechPub_2614345_0106 - MM_2819200_0104_sp.fm

Emergency Stop Push-Buttons

Push one of the EMERGENCY STOP push-buttons to stop this equipment immediately.

The location of each EMERGENCY STOP push-button is shown by an arrow.

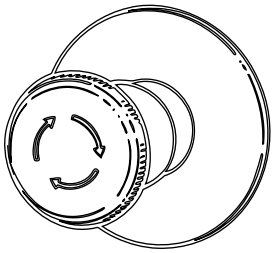

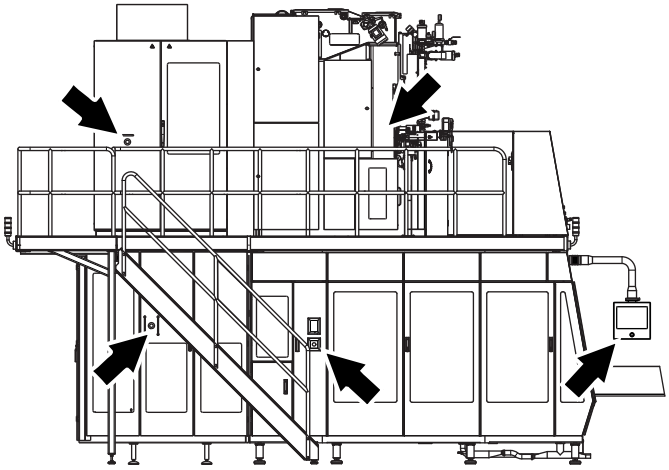

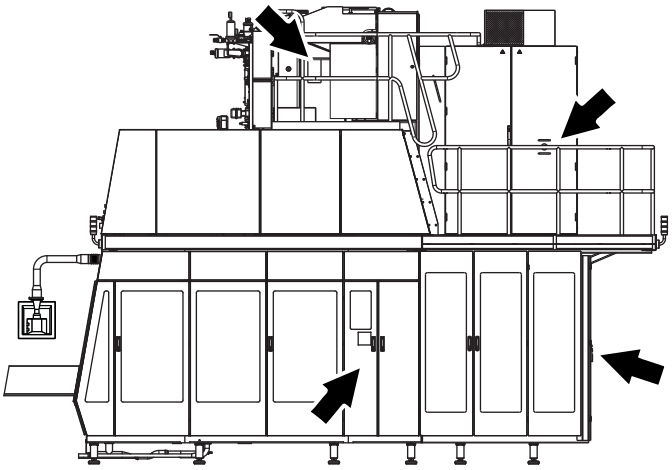

(behind door)

TechPub_2614345_0106 - MM_2819200_0104_sp.fm

Safeguards

WARNING
Moving machinery.
Never defeat or bypass the interlocking devices.

Movable guards, for example, doors and covers leading to hazardous zones, are fitted with interlocking devices where required. These devices are usually electric safety switches that are parts of the safety system and must never be defeated, bypassed, or otherwise made inoperative.

CAUTION
Burn hazard.
Parts of this equipment may be hot after operation.

After installation and maintenance, and before this equipment is inched or run, check that all safeguards are in place and that they operate correctly.

CAUTION
Equipment damage.
Never stop this equipment by opening an interlocking guard.

(Cont'd)

TechPub_2614345_0106 - MM_2819200_0104_sp.fm

(Cont'd)

The location of each interlocking guard is shown by an arrow.

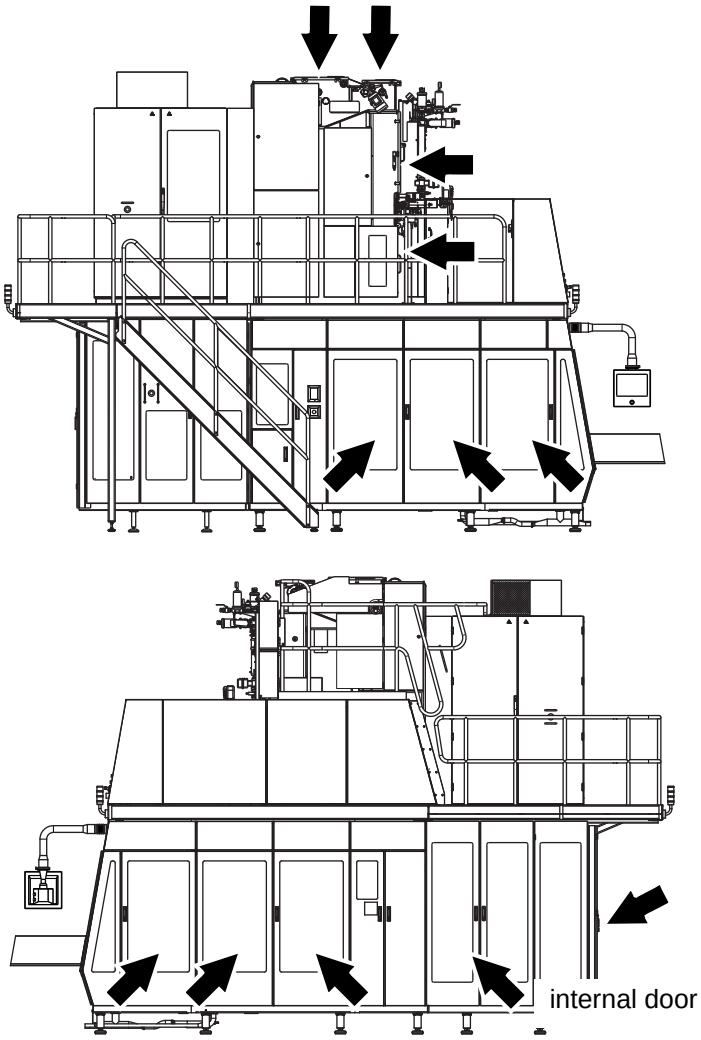

TechPub_2614345_0106 - MM_2819200_0104_sp.fm

Warning Lamp

A warning lamp is a column of warning lights:

- A red light (1) indicates a hazardous condition. This is a situation that requires immediate action.
- A yellow light (2) indicates an abnormal or impending critical condition. This is a condition calling for action by the operator.
- A blue light (3) indicates that operator action is required.

Audible Alarm

The audible alarm produces a warning signal every time this equipment is about to start. The warning signal sounds for approximately three seconds prior to starting to alert personnel.

The hooter (4) of the warning signal is placed on the top of the warning lamp.

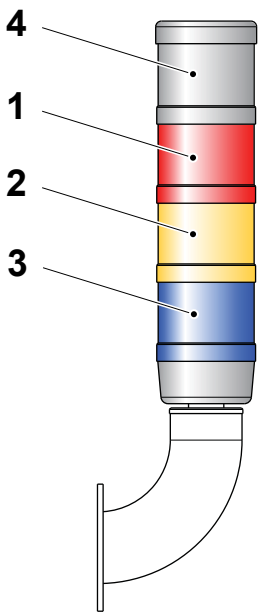

1 Red light
2 Yellow light
3 Blue light
4 Hooter

TechPub_2614345_0106 - MM_2819200_0104_sp.fm

Personal Protection

This section applies to all personnel at all times when this equipment is in operation. For special personal protection required when handling hazardous substances, see the Hazardous Substances section.

Noise Hazard

CAUTION

Hazardous noise.

Risk of impaired hearing. Hearing protection is recommended whenever this equipment is in operation.

Entanglement Hazard

WARNING

Risk of entanglement.

Do not wear jewellery or loose clothing when working on or near this equipment. Long hair may not be loose.

TechPub_2614345_0106 - MM_2819200_0104_sp.fm

Hazardous Substances

WARNING

Contact with chemicals can cause death, serious injury, or illness.
Always read and follow the instructions in the safety data sheet supplied by the manufacturer or local supplier, when handling chemicals.

Make sure that

- the safety data sheet is available
- the showers work
- an eyewash device, movable or wall-mounted, is available and operational
- additional washing facilities are nearby

Note! Learn the locations of all washing facilities in order to act immediately in case of an accident



TechPub_2614345_0106 - MM_2819200_0104_sp.fm

Disposal of Chemical Substances

Always read and follow the disposal instructions in the safety data sheet supplied by the manufacturer or local supplier.

It is strongly recommended that used chemical containers are

- disposed of according to the instructions immediately after use
- not used as disposal containers for other chemicals in order to avoid uncontrolled chemical reactions within the container

TechPub_2614345_0106 - MM_2819200_0104_sp.fm

Hydrogen Peroxide (H_2O_2)

WARNING

Corrosive chemical.

Wear personal protective equipment.

In both liquid and gas states, hydrogen peroxide may cause irritation or damage if it comes into contact with skin, mucous membranes, eyes, or clothes. Call for medical attention immediately if there is an accident.

Liquid hydrogen peroxide in concentrations of less than 1% is generally considered harmless to humans.

Consult the instructions on the label of the tank or container.

Emergency Procedures

If there is an accident involving hydrogen peroxide, rinse the affected area as soon as possible with large amounts of water.

If hydrogen peroxide is swallowed

- do not attempt to cause vomiting
- drink large amounts of lukewarm water to dilute the peroxide
- call for medical attention immediately

If splashes or vapour from hydrogen peroxide come in contact with the eyes

- wash the eyes thoroughly with lukewarm water for 15 minutes (keep eyelids wide apart)
- call for medical attention immediately

If hydrogen peroxide comes into contact with skin or clothes

- rinse immediately with plenty of water
- call for medical attention immediately if skin burns appear
- thoroughly wash the clothes before wearing them again

If irritation or pain is experienced due to having **inhaled** hydrogen peroxide vapour

- leave the affected area and get some fresh air
- call for medical attention if the symptoms get worse

TechPub_2614345_0106 - MM_2819200_0104_sp.fm

Personal Protective Equipment

The personal protective equipment for hydrogen peroxide is

- protective goggles (TP No. 90303-11)
- protective gloves made of neoprene (TP No. 90303-12)
- protective apron (TP No. 90303-13)
- protective shoes made of PVC, PE plastic, or rubber

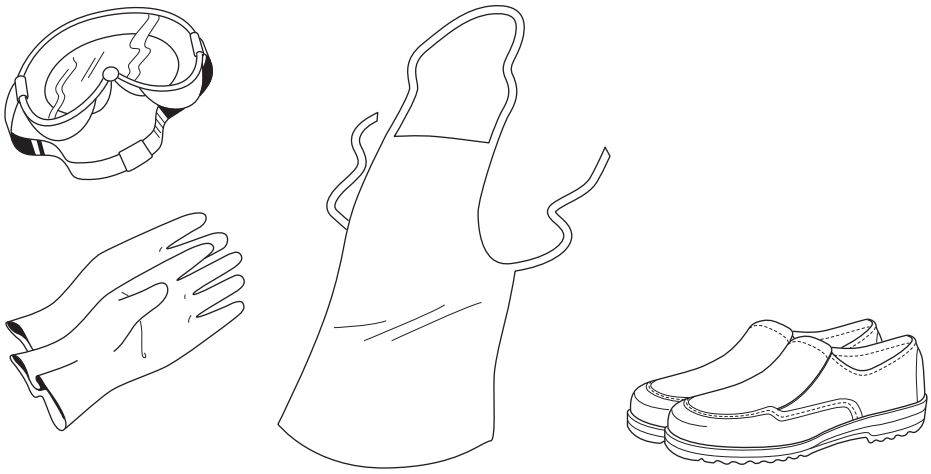

TechPub_2614345_0106 - MM_2819200_0104_sp.fm

Handling of Hydrogen Peroxide

WARNING

Sudden and violent chemical reaction.

Avoid any contamination of hydrogen peroxide.

Hydrogen peroxide reacts suddenly and violently with many compounds or if it is contaminated. The reaction is a violent decomposition liberating oxygen and heat, with a big increase in volume due to the oxygen produced by the peroxide decomposition.

Never pour surplus hydrogen peroxide back into the original container if it contains fresh hydrogen peroxide. There is a risk of explosion when hydrogen peroxide is in a closed container.

Ensure that equipment used for handling and diluting hydrogen peroxide is clean before it comes in contact with hydrogen peroxide. Pumps or other equipment used for handling hydrogen peroxide must be **used for this purpose only** and must be manufactured from appropriate materials, such as stainless steel 316 L, glass, polyethylene, or teflon. After use, make sure that all peroxide residue is rinsed away.

If hydrogen peroxide is spilled, dilute it with large amounts of water. Dispose of the diluted hydrogen peroxide according to local regulations.

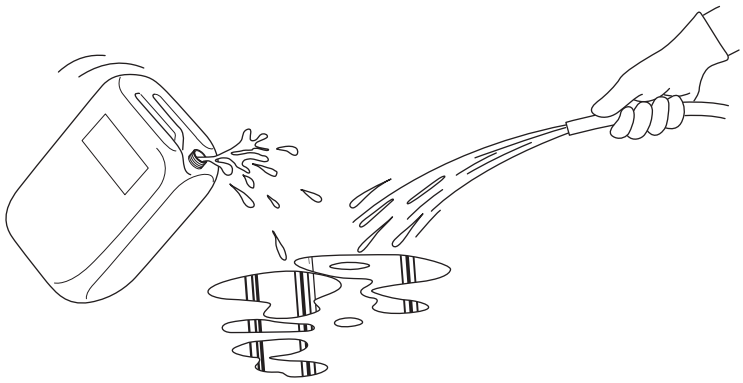

WARNING

Self-ignition.

Never wipe up hydrogen peroxide with materials such as rags or paper as these may self-ignite several hours after contact. If there is a fire, spray with large quantities of water.

TechPub_2614345_0106 - MM_2819200_0104_sp.fm

Storage of Hydrogen Peroxide

DANGER

Containers may explode if not properly ventilated.
Keep the container upright and fitted with its proper ventilation cap. If there is a fire, cool all containers by spraying them with large quantities of water.

Hydrogen peroxide decomposes much faster with increasing temperature. There is a risk of explosion at high temperatures, since the ventilation cap cannot release the gases produced quickly enough.

Hydrogen peroxide **must** be stored in the **original container** delivered by the supplier. Keep the container upright and fitted with its proper ventilation cap, which allows oxygen to escape. Otherwise, there can be an explosion if decomposition of the peroxide occurs violently.

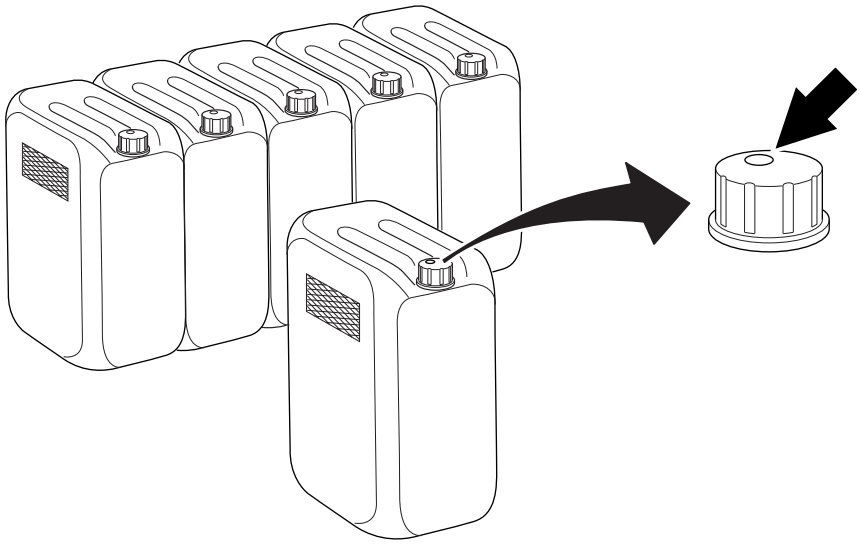

Make sure that the container is always properly closed.

(Cont'd)

TechPub_2614345_0106 - MM_2819200_0104_sp.fm

(Cont'd)

Commercial food-grade hydrogen peroxide has been stabilized to inhibit the catalytic decomposition effects of metals and other impurities, but it can decompose into oxygen and water if it is exposed to heat or contaminated.

Make sure that the area used for storage of hydrogen peroxide is

- cool, clean, and well ventilated
- shielded from direct sunlight
- kept free from combustible materials

Disposal of Hydrogen Peroxide

Always read and follow the disposal instructions in the safety data sheet supplied by the manufacturer or local supplier.

TechPub_2614345_0106 - MM_2819200_0104_sp.fm

Supply Systems

Power Supply

DANGER

Hazardous voltage and moving machinery.
The power supply disconnector must be turned off and secured with a lock before any maintenance.

Note! The key to the lock must be removed by the technician and retained in his/her possession until all work is completed.

Certain maintenance procedures may require power supply systems to be on. These exceptions are clearly stated in the Maintenance Manual.

The illustrations show the power supply disconnector and its location.

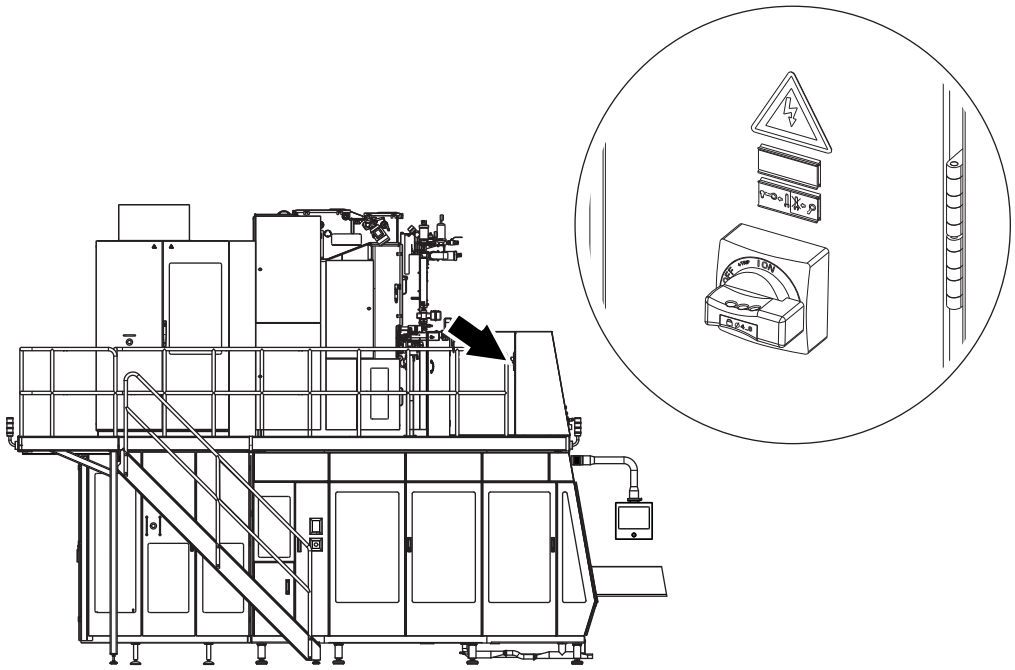

Residual Voltage

DANGER

Hazardous voltage.
Do not touch any terminals immediately after the power supply disconnector is turned off. Ensure that no residual voltage remains on the capacitors before touching. Wait five minutes. Failure to observe this information will cause death or serious injury.

After the power supply disconnector is turned off, residual voltage remains in the capacitor circuits.

TechPub_2614345_0106 - MM_2819200_0104_sp.fm

Electrical Cabinet

DANGER

Hazardous voltage.
Will shock, burn, or cause death. The power supply disconnector must be turned off and secured with a lock before maintenance inside the electrical cabinet.

Note! The key to the lock must be removed by the technician and retained in his/her possession until all work is completed.

Make sure that the electrical cabinet doors are closed after working inside the electrical cabinet. Doors with lock must be locked.

The location of each electrical cabinet is shown by an arrow.

TechPub_2614345_0106 - MM_2819200_0104_sp.fm

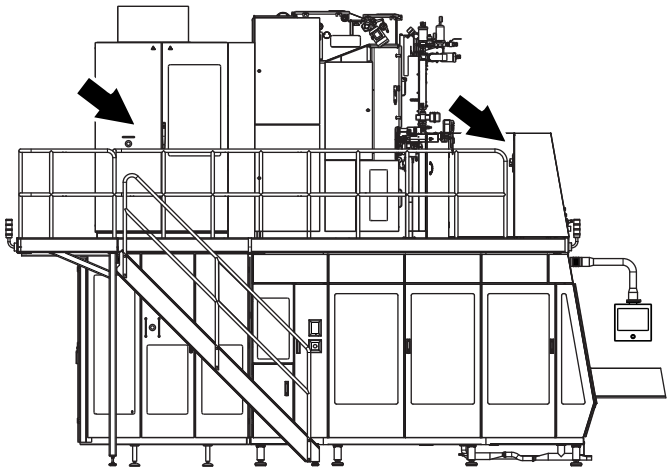

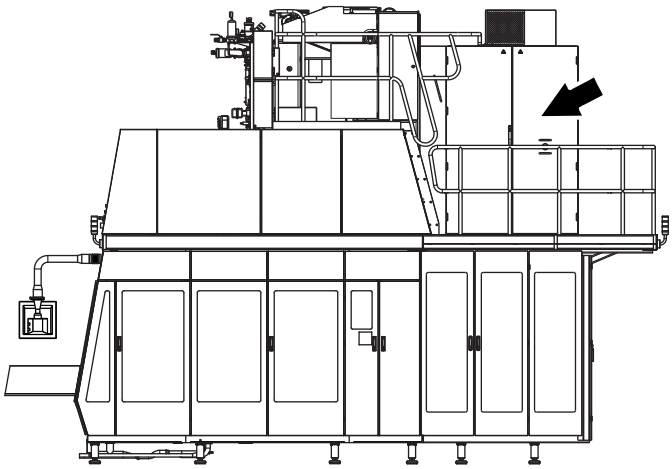

TechPub_2614345_0106 - MM_2819200_0104_sp.fm

Socket Outlet

WARNING

Hazardous voltage.

Can shock, burn, or cause death. Read the Maintenance Manual before using this socket outlet.

The socket outlet (1) is connected to a residual current device (2) to protect users against electrical shock if there is an earth fault in the connected equipment. The residual current device shall be tested each time before the socket outlet is being used. See the MM for test procedure.

The illustrations show the socket outlet, the residual current device, and their location.

Note! Valid for machines with T-order: 21208/00001 to 21208/00020.

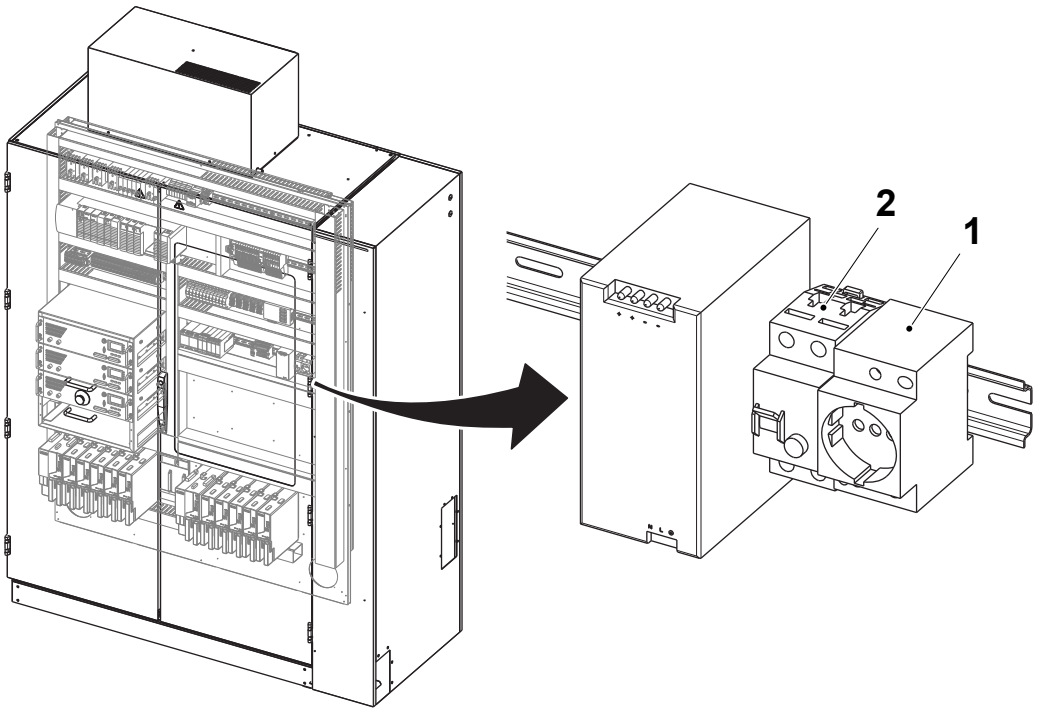

1 Socket outlet
2 Residual current device

(Cont'd)

TechPub_2614345_0106 - MM_2819200_0104_sp.fm

(Cont'd)

Note! Valid for machines with T-order: 21208/00021 and above.

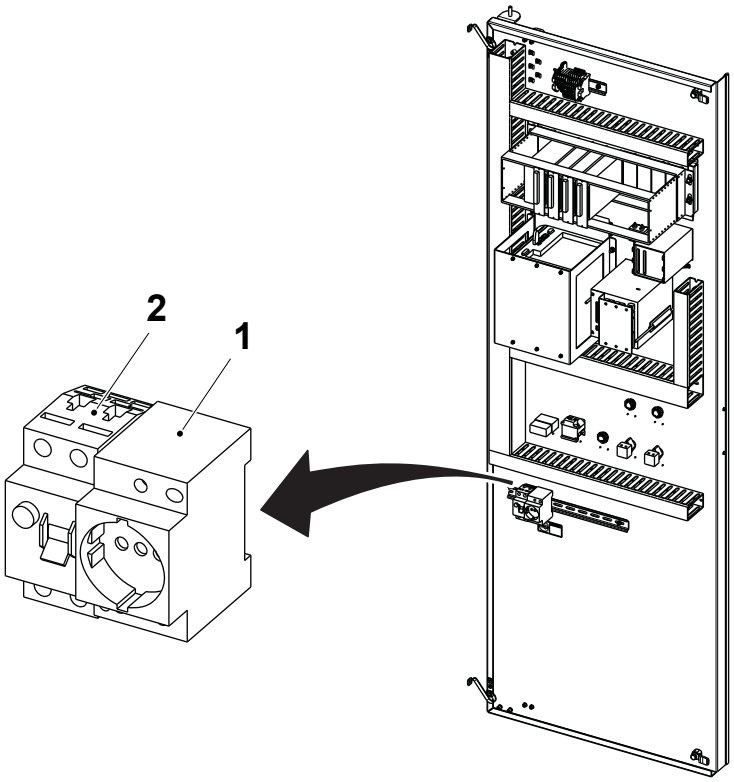

1 Socket outlet
2 Residual current device

TechPub_2614345_0106 - MM_2819200_0104_sp.fm

Air Supply

WARNING

Compressed air and moving machinery.
Switch the main air off before any maintenance.

Certain maintenance procedures may require air supply systems to be on. These exceptions are clearly stated in the Maintenance Manual.

The illustrations show the main air switch (1), the main air regulator (2) and their location in the filling machine.

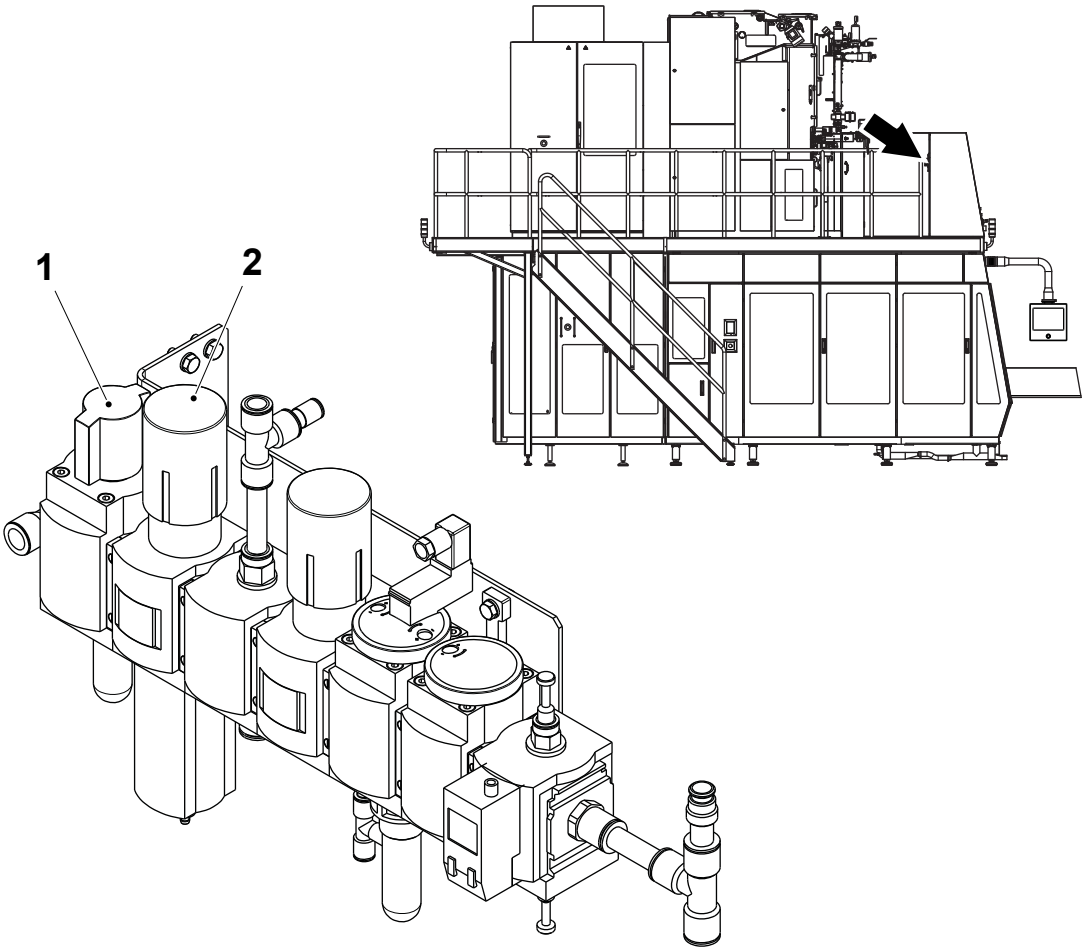

1 Main air switch
2 Main air regulator

TechPub_2614345_0106 - MM_2819200_0104_sp.fm

Steam Supply

WARNING

Hot steam can cause scalds.

Pressurized steam can be discharged unexpectedly. Close the steam supply valve and lock it, depressurize and vent all steam safely before any maintenance on parts with steam, such as pipes and valves.

Note! The key to the lock must be removed by the technician and retained in his/her possession until all work is completed.

Certain maintenance procedures may require steam supply systems to be on. These exceptions are clearly stated in the Maintenance Manual.

The steam supply system is separated in two different supply: the valve (1) is for the steam barrier in the product valve, the valve (2) is for the cleaning system only.

The illustrations show the steam supply valves (1) and (2) with the padlocks (3) and their location.

TechPub_2614345_0106 - MM_2819200_0104_sp.fm

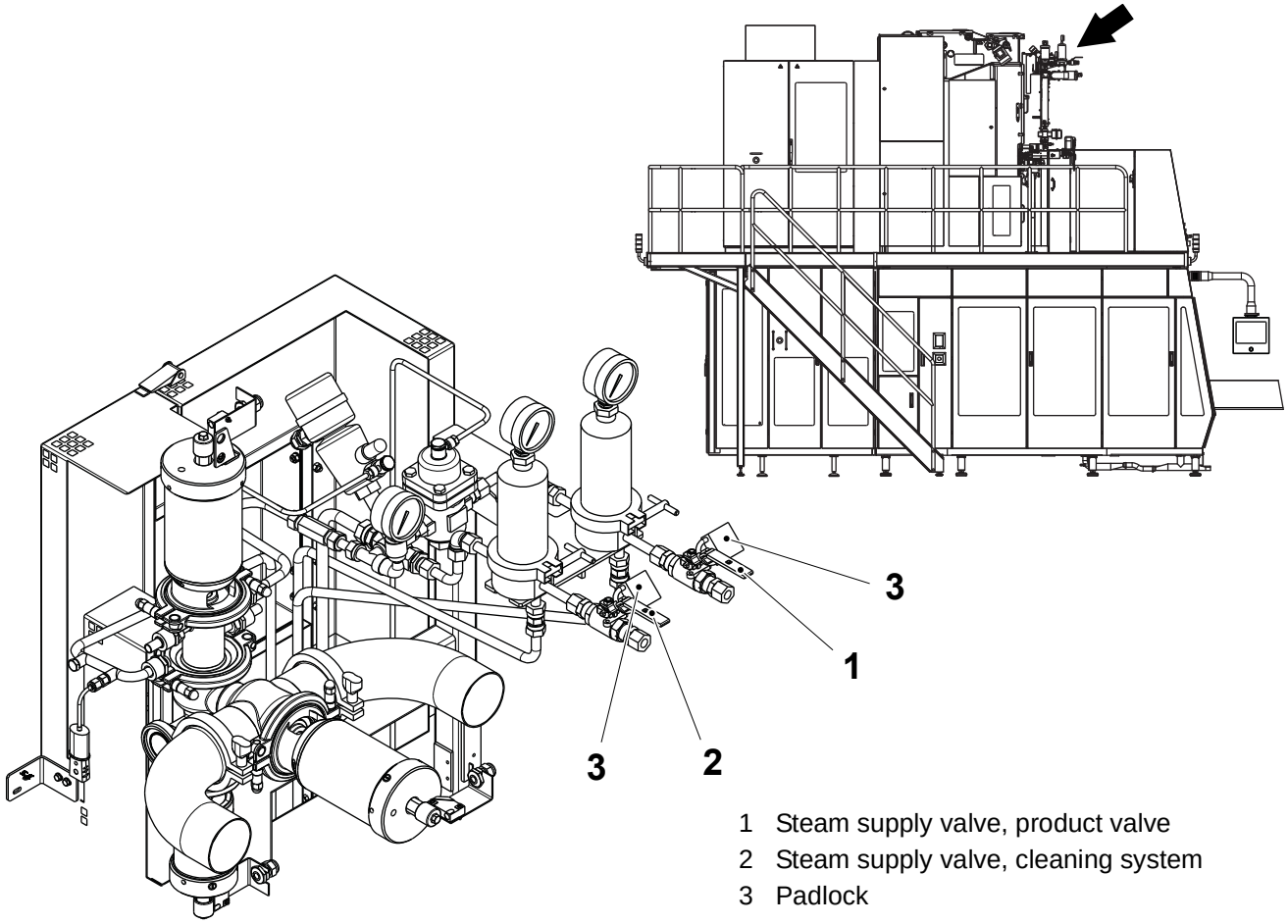

1 Steam supply valve, product valve
2 Steam supply valve, cleaning system
3 Padlock

Water Supply

CAUTION

Water under pressure.

Close the water supply valves before any maintenance.

Certain maintenance procedures may require water supply systems to be on. These exceptions are clearly stated in the Maintenance Manual.

The illustrations show the water supply valves (1) and (2), and their location.

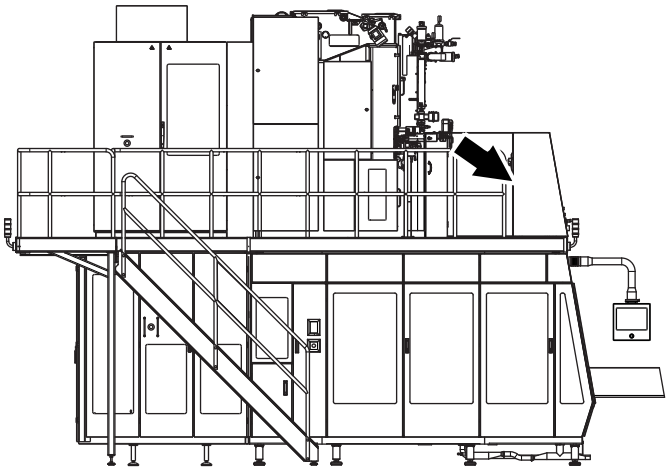

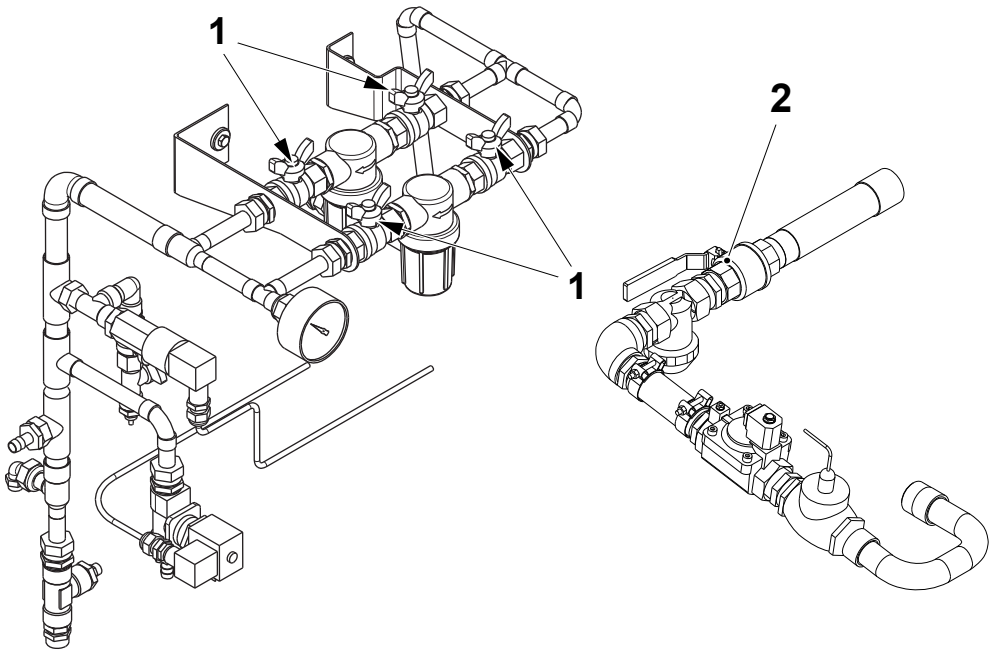

1 Water supply valve
2 Hot water supply valve

TechPub_2614345_0106 - MM_2819200_0104_sp.fm

Equipment for Lifting and Moving Loads

WARNING

Risk of crushing injury.

Make sure that the capacity of the lifting equipment is adequate and that the equipment itself is in proper working order.

If lifting tackle must be joined to make up the necessary lengths, make sure that the joints are secure and have the same lifting capacity as the rest of the lifting tackle.

Always engage safety clips fitted to lifting hooks to prevent the lifting tackle from slipping off.

Use ropes or poles to steady and manoeuvre suspended loads. Do **not** use hands or feet.

Make sure that the route and destination are free from obstacles before moving a suspended load. It must always be possible to quickly and safely lower the load to the floor in an emergency.

When depositing loads, keep lifting tackle in place until the stability of the load has been substantiated.

TechPub_2614345_0106 - MM_2819200_0104_sp.fm

This page intentionally left blank

TechPub_2614345_0106 - MM_2819200_0104_sp.fm

1 Superstructure

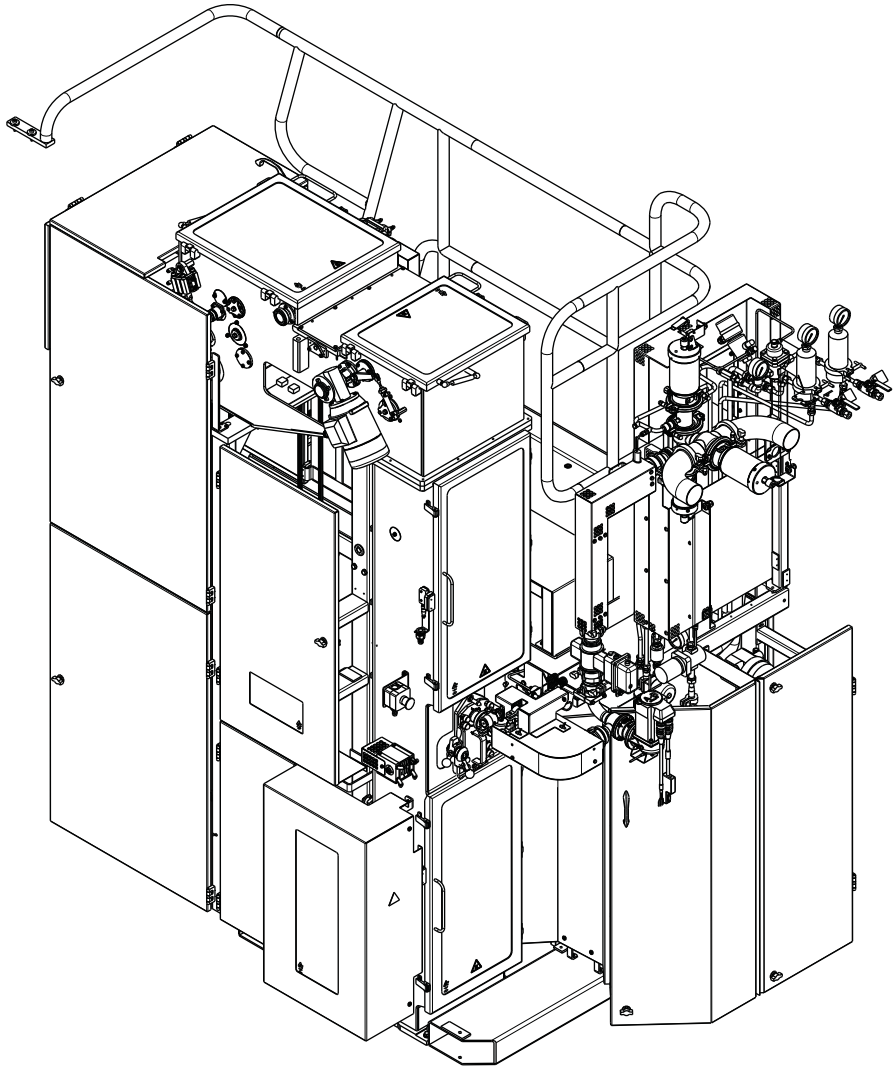

Superstructure - Description

SPC Reference	648555-0200

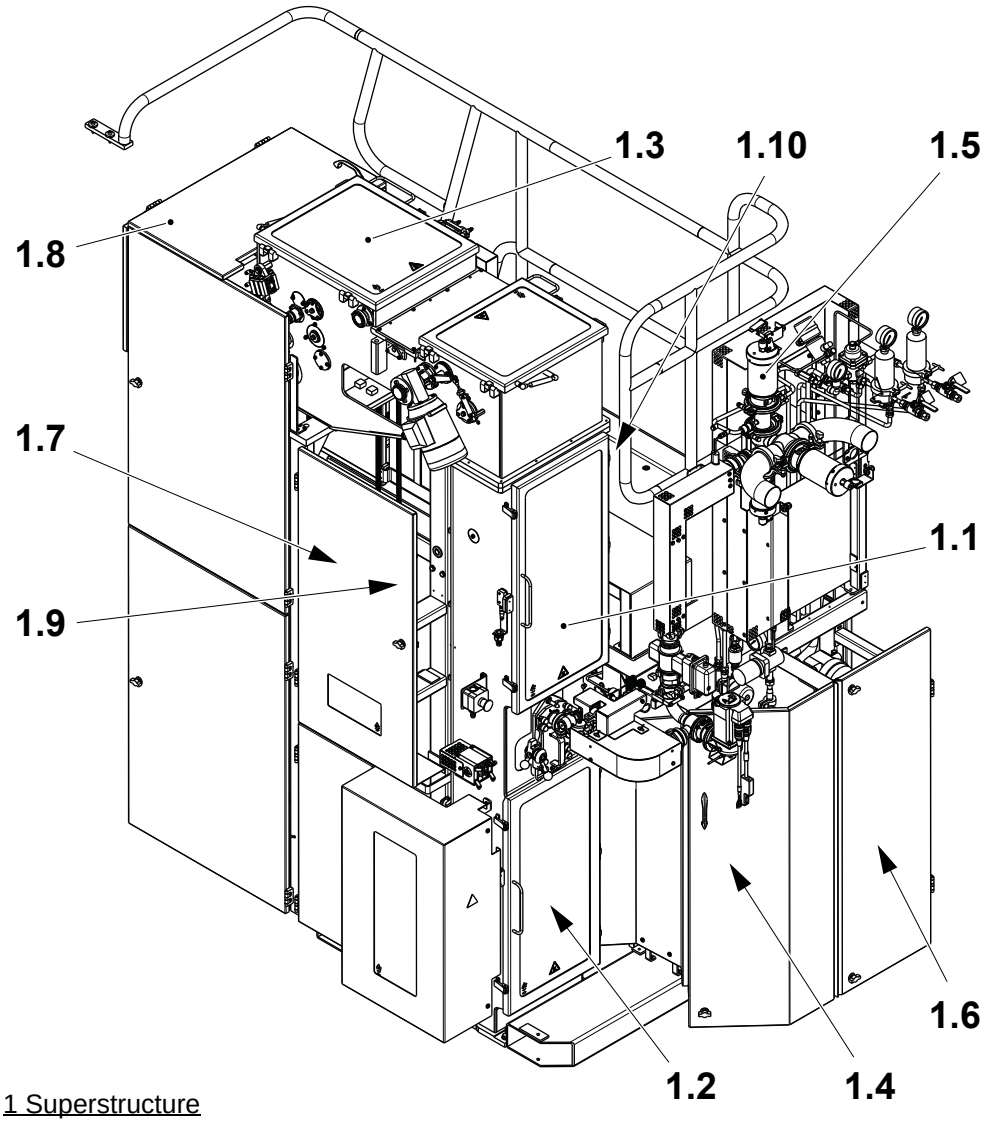

1 Superstructure
1.1 Aseptic Chamber
1.2 Forming Section
1.3 Drying Chamber
1.4 Sterile Air System
1.5 Filling System
1.6 Cleaning System
1.7 Hydrogen Peroxide
1.8 Frame Section, Upper
1.9 Pneumatic System
1.10 Connection Box

1 Superstructure . . . . . 1 - 11
1-1 Superstructure - Setting Sequence, Type I . . . . . 1 - 11
1-2 Superstructure - Setting Sequence, Type II . . . . 1 - 12
1-3 Superstructure - Settings, Type III . . . . . 1 - 12
1.1 Aseptic Chamber . . . . . 1 - 13
1.1.1 Support Rail . . . . . 1 - 13
1.1.1-1 Support Rail - Check . . . . . 1 - 13
1.2 Forming Section . . . . . 1 - 15
1.2-1 Forming Section - Check Forming Rings . . . . . 1 - 15
1.2-2 Forming Section - Change Forming Ring Bushings and Ball Bearings . . . . . 1 - 19
1.2-3 Forming Section - Forming Ring Positioning . . 1 - 21
1.2.1 Lower Forming Ring . . . . . 1 - 24
1.2.1-1 Lower Forming Ring - Set Clearance . . . . . 1 - 24
1.2.1-2 Lower Forming Ring - Set Position . . . . . 1 - 25
1.2.1-3 Lower Forming Ring - Set Overlap . . . . . 1 - 30
1.2.1-4 Lower Forming Ring - Set Cylinder . . . . . 1 - 33
1.2.1-5 Lower Forming Ring - Check Pressure Roller . . 1 - 34
1.2.2 Upper Forming Ring . . . . . 1 - 35
1.2.2-1 Upper Forming Ring - Set Clearance . . . . . 1 - 35
1.2.3 Forming Ring . . . . . 1 - 36
1.2.3-1 Forming Ring - Set Clearance . . . . . 1 - 36
1.2.4 Edge Roller . . . . . 1 - 39
1.2.4-1 Edge Roller - Set . . . . . 1 - 39
1.2.5 Longitudinal Sealing . . . . . 1 - 42
1.2.5-1 Longitudinal Sealing - Check . . . . . 1 - 42
1.2.5-2 Longitudinal Sealing - Change Rollers . . . . . 1 - 43
1.2.5-3 Longitudinal Sealing - Set . . . . . 1 - 44
1.2.5-4 Longitudinal Sealing - Set VMN Mode . . . . . 1 - 61
1.2.6 Seal . . . . . 1 - 64
1.2.6-1 Seal - Check . . . . . 1 - 64

1.2.6-2 Seal - Change . . . . . 1 - 66
1.2.6-3 Seal - Set . . . . . 1 - 67

1.3 Drying Chamber . . . . . 1 - 68

1.3-1 Drying Chamber - Check Rollers . . . . . 1 - 68
1.3-2 Drying Chamber - Grease Roller Ball Bearings 1 - 71
1.3-3 Drying Chamber - Leakage Detection . . . . . 1 - 73
1.3-4 Drying Chamber - Check Overpressure . . . . . 1 - 81
1.3-5 Drying Chamber - Set Overpressure . . . . . 1 - 83

1.3.1 Frame Housing . . . . . 1 - 86

1.3.1-1 Frame Housing - Check Seal and Gasket . . . . . 1 - 86
1.3.1-2 Frame Housing - Change Seal and Gasket . . . . 1 - 88

1.3.2 Bending Roller . . . . . 1 - 89

1.3.2-1 Bending Roller - Change . . . . . 1 - 89

1.3.3 Drive Roller . . . . . 1 - 90

1.3.3-1 Drive Roller - Check . . . . . 1 - 90
1.3.3-2 Drive Roller - Change . . . . . 1 - 92

1.3.4 Calender Roller . . . . . 1 - 94

1.3.4-1 Calender Roller - Check . . . . . 1 - 94
1.3.4-2 Calender Roller - Change . . . . . 1 - 96
1.3.4-3 Calender Roller - Set Distance . . . . . 1 - 100
1.3.4-4 Calender Roller - Set Proximity Switch . . . . . 1 - 101

1.3.5 Crank . . . . . 1 - 103

1.3.5-1 Crank - Check Chain . . . . . 1 - 103

1.3.6 Bending Roller . . . . . 1 - 106

1.3.6-1 Bending Roller - Change . . . . . 1 - 106

1.3.7 Air Knife . . . . . 1 - 109

1.3.7-1 Air Knife - Check and Clean . . . . . 1 - 109
1.3.7-2 Air knife - Set . . . . . 1 - 111
1.3.7-3 Air Knife - Set Proximity Sensor . . . . . 1 - 115
1.3.7-4 Air Knife - Change Slide Plates . . . . . 1 - 116

1.3.8 Pendulum Roller . . . . . 1 - 118

1.3.8-1 Pendulum Roller - Check . . . . . 1 - 118
1.3.8-2 Pendulum Roller - Change Bearings . . . . . 1 - 121

1.3.8-3 Pendulum Roller - Set I/P Transducer . . . . . 1 - 122
1.3.8-4 Pendulum Roller - Set Position . . . . . 1 - 126
1.3.8-5 Pendulum Roller - Set Cylinder . . . . . 1 - 127
1.3.8-6 Pendulum Roller - Change Bushings . . . . . 1 - 129

1.3.9 Valve . . . . . 1 - 131

1.3.9-1 Valve - Check . . . . . 1 - 131

1.3.10 Squee-gee Roller . . . . . 1 - 132

1.3.10-1 Squee-gee Roller - Change . . . . . 1 - 132

1.3.11 Bending Roller . . . . . 1 - 135

1.3.11-1 Bending - Change Roller . . . . . 1 - 135

1.3.12 Pendulum Counter Roller . . . . . 1 - 137

1.3.12-1 Pendulum Counter Roller - Set Pressure . . . . . 1 - 137
1.3.12-2 Pendulum Counter Roller - Set Distance . . . . . 1 - 138
1.3.12-3 Pendulum Counter Roller - Change Rollers . . . 1 - 139

1.3.13 Blowing System (OE). . . . . 1 - 141

1.3.13-1 Blowing System - Check . . . . . 1 - 141
1.3.13-2 Blowing System - Clean Nozzles . . . . . 1 - 142
1.3.13-3 Blowing System - Set Nozzles . . . . . 1 - 145
1.3.13-4 Blowing System - Change Gaskets . . . . . 1 - 147
1.3.13-5 Blowing System - Change Seals . . . . . 1 - 149

1.4 Sterile Air System . . . . . 1 - 153

1.4-1 Sterile Air System - Check for Leaks . . . . . 1 - 153

1.4.1 Pipe Work Air . . . . . 1 - 155

1.4.1-1 Pipe Work Air - Check Spray Nozzle . . . . . 1 - 155
1.4.1-2 Pipe Work Air - Clean Spray Nozzle and Balls 1 - 159
1.4.1-3 Pipe Work Air - Check Change Over Valve . . . 1 - 163
1.4.1-4 Pipe Work Air - Overhaul Change Over Valve 1 - 165

1.4.2 Compressor Unit . . . . . 1 - 170

1.4.2-1 Compressor Unit - Check Pressure . . . . . 1 - 170
1.4.2-2 Compressor Unit - Change Gaskets . . . . . 1 - 172
1.4.2-3 Compressor Unit - Clean Impeller . . . . . 1 - 175

1.4.3 Separator . . . . . 1 - 179

1.4.3-1 Separator - Clean Filter and Floater . . . . . 1 - 179

1.4.3-2 Separator - Change Valve and Valve Seat .... 1 - 183
1.4.3-3 Separator - Set Float Unit ..... 1 - 185
1.4.3-4 Separator - Check Pressure Gauge ..... 1 - 187
1.4.4 Heat Exchanger Valve ..... 1 - 188
1.4.4-1 Heat Exchanger Valve - Overhaul ..... 1 - 188
1.4.4-2 Heat Exchanger Valve - Set ..... 1 - 192
1.4.5 Air Super Heater ..... 1 - 195
1.4.5-1 Air Super Heater - Check ..... 1 - 195
1.4.5-2 Air Super Heater - Check Heat Exchanger ... 1 - 197
1.4.6 Air Valve ..... 1 - 203
1.4.6-1 Air Valve - Set ..... 1 - 203
1.4.6-2 Air Valve - Overhaul ..... 1 - 207
1.4.6-3 Air Valve - Set Proximity Switch ..... 1 - 211
1.4.7 Scrubber ..... 1 - 213
1.4.7-1 Scrubber - Set Pressure Regulator ..... 1 - 213
1.4.7-2 Scrubber - Clean Filters ..... 1 - 214
1.4.8 Sterile Air Pipe ..... 1 - 217
1.4.8-1 Sterile Air Pipe - Set Nozzle ..... 1 - 217
1.4.8-2 Sterile Air Pipe - Overhaul ..... 1 - 220
1.5 Filling System ..... 1 - 224
1.5-1 Filling System - Description ..... 1 - 224
1.5.1 Filling Pipe ..... 1 - 228
1.5.1-1 Filling Pipe - Check ..... 1 - 228
1.5.1-2 Filling Pipe - Remove ..... 1 - 229
1.5.1-3 Filling Pipe - Fit ..... 1 - 233
1.5.1-4 Filling Pipe - Set Position ..... 1 - 238
1.5.1-5 Filling Pipe - Set Pressure Roller ..... 1 - 243
1.5.1-6 Filling Pipe - Set Level Detector Position .... 1 - 246
1.5.1-7 Filling Pipe - Check Level Detector Function . 1 - 252
1.5.1-8 Filling Pipe - Change Locking Pins ..... 1 - 254
1.5.2 Product Valve ..... 1 - 256
1.5.2-1 Product Valve - Remove Cylinders ..... 1 - 256
1.5.2-2 Product Valve - Change Seals and Membranes 1 - 259

1.5.2-3 Product Valve - Change O-Rings . . . . . 1 - 264
1.5.2-4 Product Valve - Set Proximity Switches . . . . . 1 - 271
1.5.2-5 Product Valve - Empty Tube . . . . . 1 - 272

1.5.3 Product Lines . . . . . 1 - 273

1.5.3-1 Product Lines - Overhaul Regulating Valve . . . 1 - 273
1.5.3-2 Product Lines - Set Regulating Valve Proximity Switch . . . . . 1 - 279
1.5.3-3 Product Lines - Check Flow Meter Gaskets . . 1 - 280
1.5.3-4 Product Lines - Change Flow Meter . . . . . 1 - 281
1.5.3-5 Product Lines - Move Regulating Valve . . . . . 1 - 283

1.5.4 Steam System. . . . . 1 - 286

1.5.4-1 Steam System - Clean Steam Trap . . . . . 1 - 286
1.5.4-2 Steam System - Clean Filter . . . . . 1 - 288
1.5.4-3 Steam System - Check Membrane . . . . . 1 - 293
1.5.4-4 Steam System - Change Pressure Regulator . . 1 - 295
1.5.4-5 Steam System - Set Pressure Regulator . . . . . 1 - 297
1.5.4-6 Steam System - Set Steam Regulator . . . . . 1 - 300

1.6 Cleaning System . . . . . 1 - 301

1.6.1 Flow Switch . . . . . 1 - 301

1.6.1-1 Flow Switch - Check Gaskets . . . . . 1 - 301
1.6.1-2 Flow Switch - Set . . . . . 1 - 302
1.6.1-3 Flow Switch - Change Sensor Gasket . . . . . 1 - 303

1.6.2 Cleaning Cup . . . . . 1 - 304

1.6.2-1 Cleaning Cup - Check Gaskets . . . . . 1 - 304
1.6.2-2 Cleaning Cup - Set Sensor . . . . . 1 - 305

1.6.3 ICU . . . . . 1 - 306

1.6.3-1 ICU - Check Leakages . . . . . 1 - 306
1.6.3-2 ICU - Check Pump . . . . . 1 - 308

1.6.4 Pipe Work . . . . . 1 - 310

1.6.4-1 Pipe Work - Check . . . . . 1 - 310
1.6.4-2 Pipe Work - Check Conductivity Sensor . . . . . 1 - 312

1.7 Hydrogen Peroxide . . . . . 1 - 314

1.7-1 Hydrogen Peroxide - Check Leaks . . . . . 1 - 314

1.7.1 Heating Unit . . . . . 1 - 316

1.7.1-1 Heating Unit - Change Heating Elements . . . . 1 - 316
1.7.1-2 Heating Unit - Change Heat Exchanger . . . . . 1 - 318
1.7.1-3 Heating Unit - Drain U-bend . . . . . 1 - 320
1.7.1-4 Heating Unit - Check Pump . . . . . 1 - 322
1.7.1-5 Heating Unit - Change Venting Valve . . . . . 1 - 323
1.7.1-6 Heating Unit - Check Venting Valve Floater . . 1 - 327
1.7.1-7 Heating Unit - Check Flow Switch . . . . . 1 - 331

1.7.2 Pressure Unit . . . . . 1 - 332

1.7.2-1 Pressure Unit - Check Leaks . . . . . 1 - 332
1.7.2-2 Pressure Unit - Fill . . . . . 1 - 334
1.7.2-3 Pressure Unit - Set Pressure . . . . . 1 - 337

1.7.3 Bath . . . . . 1 - 339

1.7.3-1 Bath - Check Roller . . . . . 1 - 339
1.7.3-2 Bath - Change Roller Bushings . . . . . 1 - 342
1.7.3-3 Bath - Change Heating Elements . . . . . 1 - 349
1.7.3-4 Bath - Set Bottom Cover Sensor . . . . . 1 - 352

1.7.4 Spray System. . . . . 1 - 353

1.7.4-1 Spray System - Check . . . . . 1 - 353
1.7.4-2 Spray System - Clean Peroxide Filter . . . . . 1 - 354
1.7.4-3 Spray System - Set Pressure . . . . . 1 - 356
1.7.4-4 Spray System - Clean Filter . . . . . 1 - 357

1.8 Frame Section, Upper . . . . . 1 - 359

1.8.1 Bending Roller. . . . . 1 - 359

1.8.1-1 Bending Roller - Overhaul . . . . . 1 - 359
1.8.1-2 Bending Roller - Check Splice Detector . . . . . 1 - 363
1.8.1-3 Bending Roller - Set Splice Detector . . . . . 1 - 366
1.8.1-4 Bending Roller - Set Paper Guide Position . . . 1 - 368
1.8.1-5 Bending Roller - Check Paper Guide . . . . . 1 - 373
1.8.1-6 Bending Roller - Set Web Width . . . . . 1 - 382
1.8.1-7 Bending Roller - Set Paper Guide Pressure . . . 1 - 385
1.8.1-8 Bending Roller - Check Proximity Switch . . . 1 - 386
1.8.1-9 Bending Roller - Set Proximity Switch . . . . . 1 - 387

1.9 Pneumatic System . . . . . 1 - 388

1.9-1 Pneumatic System - Check . . . . . 1 - 388

1.10 Connection Box . . . . . 1 - 389

1.10-1 Connection Box - Check Pressure Sensor . . . . 1 - 389

This page intentionally left blank

1 Superstructure

SPC Reference	648555-0200

1-1 Superstructure - Setting Sequence, Type I

Type I settings must be performed in sequence and according to the flowchart below. These settings are performed before the first start-up or commissioning of the filling machine.

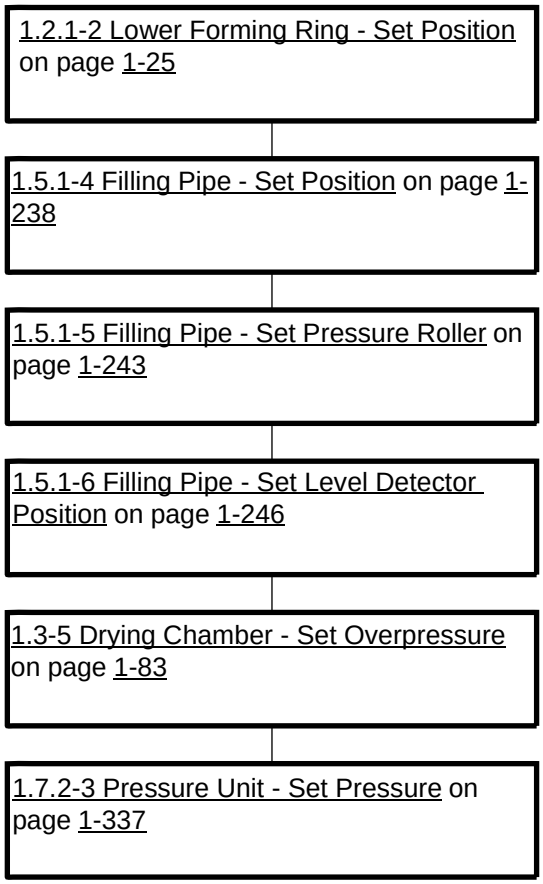

1-2 Superstructure - Setting Sequence, Type II

Type II settings must be performed in sequence and according to the flowchart below. These settings are specifically related to the setting and correction of the packaging material tracking and to the fine tuning of the longitudinal sealing.

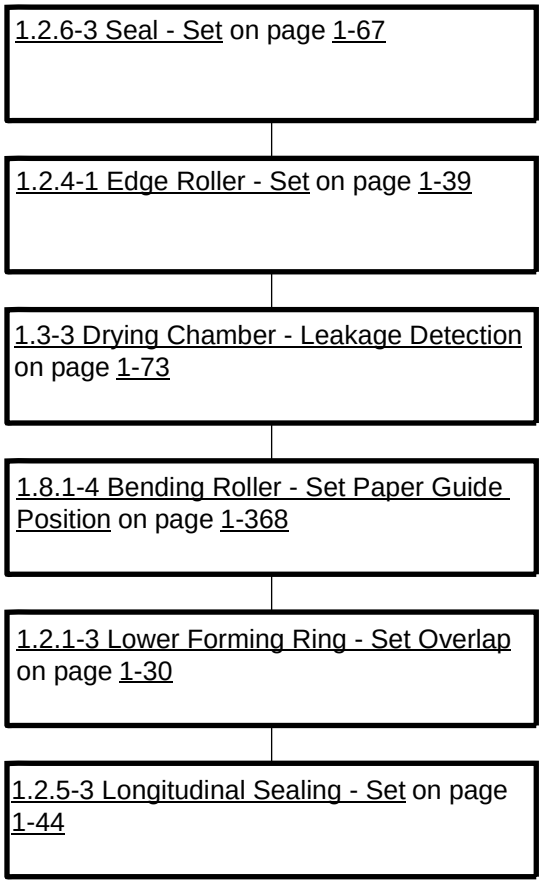

1-3 Superstructure - Settings, Type III

Type III settings include all of the remaining superstructure setting procedures. These settings can be performed independently and have no affect on any of the other superstructure settings.

1.1 Aseptic Chamber

SPC Reference	2539440-0200

1.1.1 Support Rail

1.1.1-1 Support Rail - Check

Machine Status	Mains Power OFF Air OFF Steam ON Water OFF
SPC Reference	2512930-0300

CAUTION
Risk of damage to the equipment.
Do not remove any part of this assembly, doing so will lead to serious machine misalignment. Contact the nearest Tetra Pak service station for further information.

(Cont'd)

(Cont'd)

Check the lower forming ring rail for wear or damage. Check that:

- the rails (1) and rollers (2) are not worn
- the rollers (2) turn easily
- there is no play between the rollers (2) and the rail (1)
- the springs (3) are easily compressed.

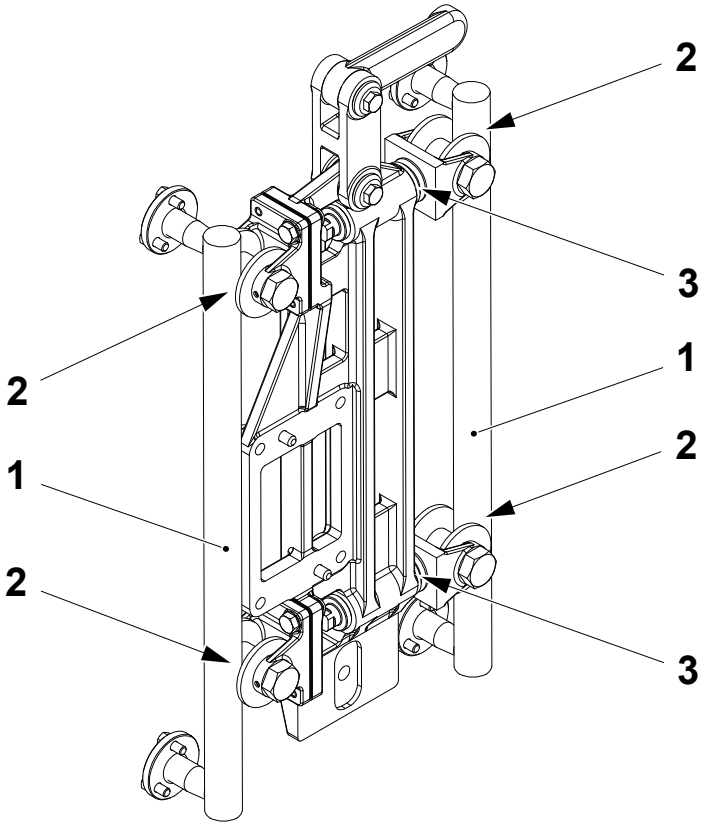

1 Rail
2 Roller
3 Spring

1.2 Forming Section

SPC Reference	2544850-0200

1.2-1 Forming Section - Check Forming Rings

Machine Status	Mains Power OFF Air OFF Steam ON Water OFF
SPC Reference	2544850-0200

Note! Valid for volumes with four forming rings and edge rollers.

Check that the surface of the rollers (1) are not damaged and that the rollers (1) rotate freely in the forming section, see the next page.

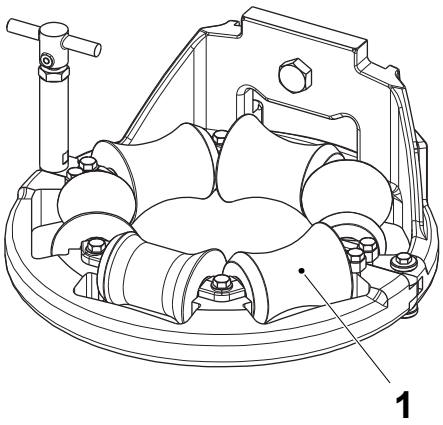

Lower forming ring is shown as example

1 Roller

(Cont'd)

(Cont'd)

The forming section consists of:

- edge roller assembly (2)
- edge roller assembly (3)
- forming ring assembly (4)
- upper forming ring assembly (5)
- lower forming ring assembly (6)
- seal assembly (7).

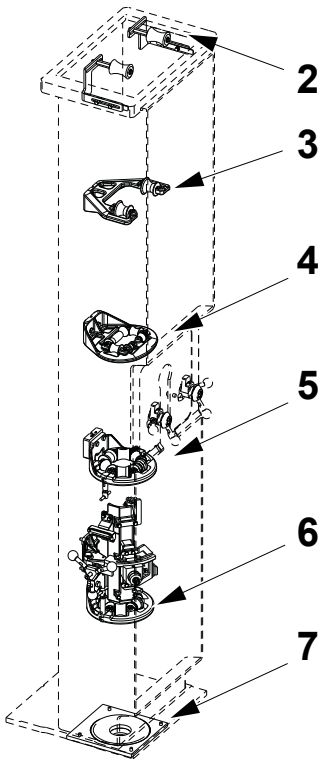

2 Edge rollers
3 Edge rollers
4 Forming ring
5 Upper forming ring
6 Lower forming ring
7 Seal

(Cont'd)

(Cont'd)

Note! Valid for volumes with three forming rings and edge rollers.

Check that the surface of the rollers (1) are not damaged and that rollers (1) rotate freely in the:

- edge roller assembly (2)
- forming ring assembly (4)
- upper forming ring assembly (5)
- lower forming ring assembly (6)
- seal assembly (7).

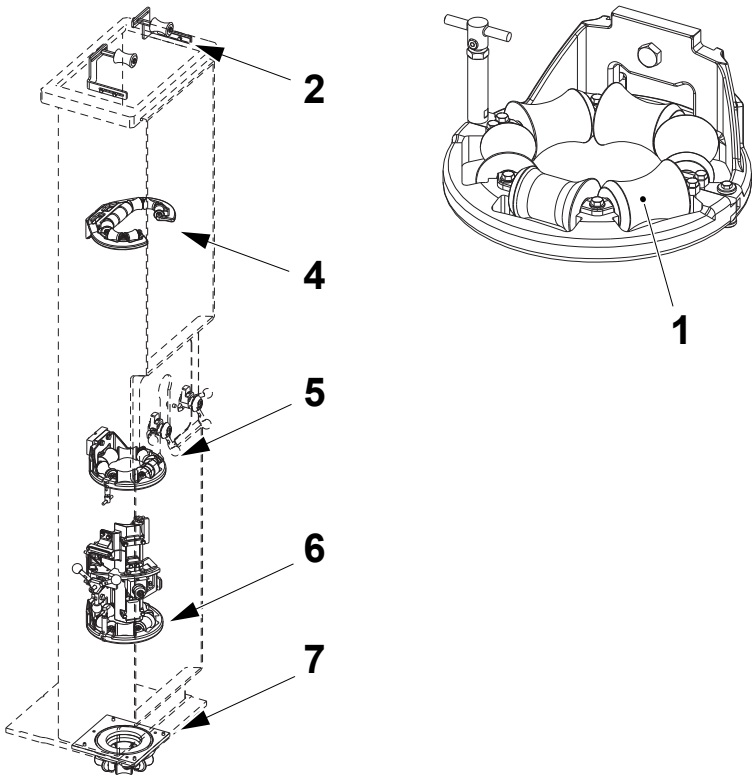

1 Roller
2 Edge roller
4 Forming ring
5 Upper forming ring
6 Lower forming ring
7 Seal

(Cont'd)

(Cont'd)

If necessary, clean the rollers (1) or change them, see 1.2-2 Forming Section - Change Forming Ring Bushings and Ball Bearings.

Check on the upper and lower forming rings that the screw (8) securing the knob (9) is tight. If necessary, tighten the screw.

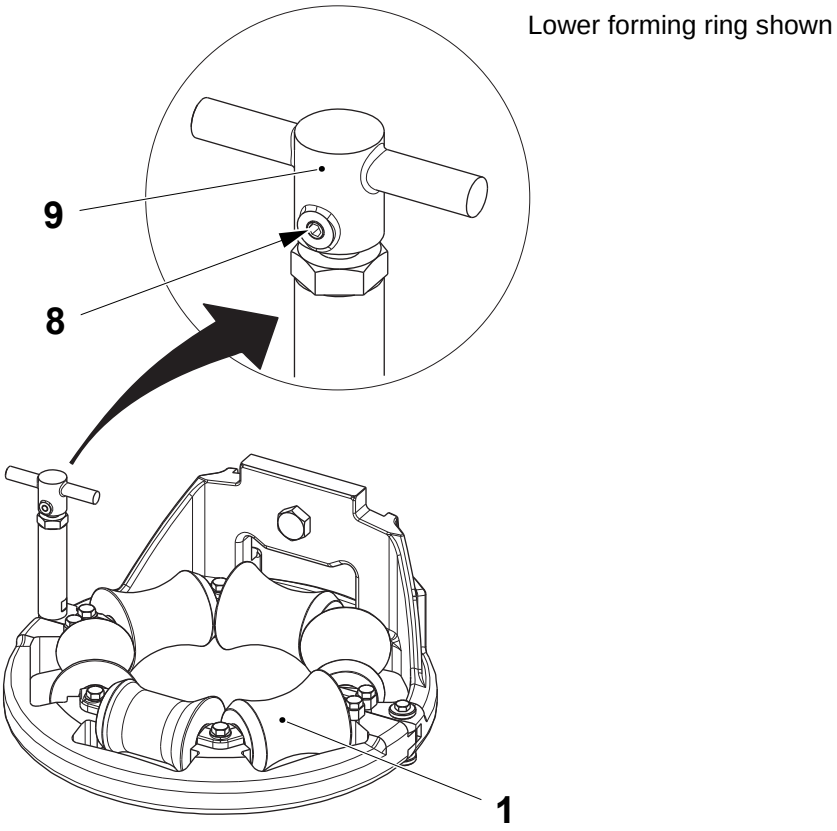

1 Roller
8 Screw
9 Knob

1.2-2 Forming Section - Change Forming Ring Bushings and Ball Bearings

Machine Status	Mains Power OFF Air OFF Steam ON Water OFF
SPC Reference	2544850-0200

Rollers with Bushings

Note! This procedure is valid for all forming section rollers with bushings.

Note! Make sure that the lock plates (2) and the washers (4) are fitted into their original positions.

a) Remove the screws (1) and the lock plates (2).

b) Remove the roller (3) and the washers (4).

c) Change the bushing (5) and the shaft (6) if necessary.

d) Assemble in the reverse order.

Check the play between the rollers (3). If necessary, see 1.2.1-1 Lower Forming Ring - Set Clearance. If the edge roller bushings have been changed, see 1.2.4-1 Edge Roller - Set.

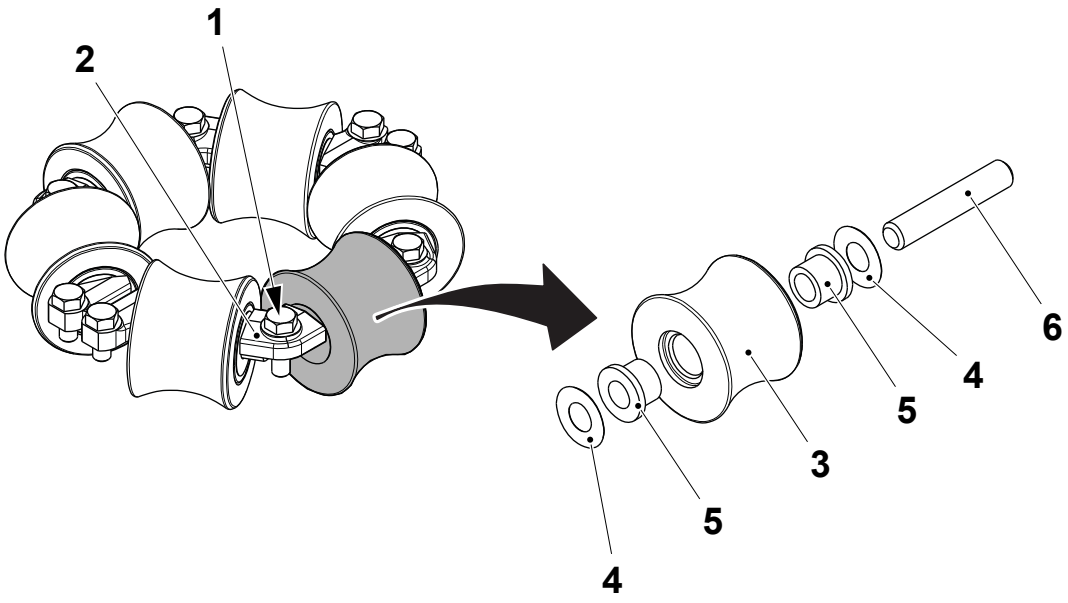

1 Screw
2 Lock plate
3 Roller
4 Washer
5 Bushing
6 Shaft

(Cont'd)

(Cont'd)

Rollers with Ball Bearings

Note! This procedure is valid for all forming section rollers with ball bearings.

Note! Make sure that the lock plates (2) and the washers (4) are fitted into their original positions.

a) Remove the screws (1) and the lock plates (2).

b) Remove the roller (3) and the washers (4).

c) Change the ball bearings (5) and the shaft (6) if necessary.

d) Assemble in the reverse order.

Check the play between the rollers (3). If necessary, see 1.2.1-1 Lower Forming Ring - Set Clearance. If the edge roller bushings have been changed, see 1.2.4-1 Edge Roller - Set.

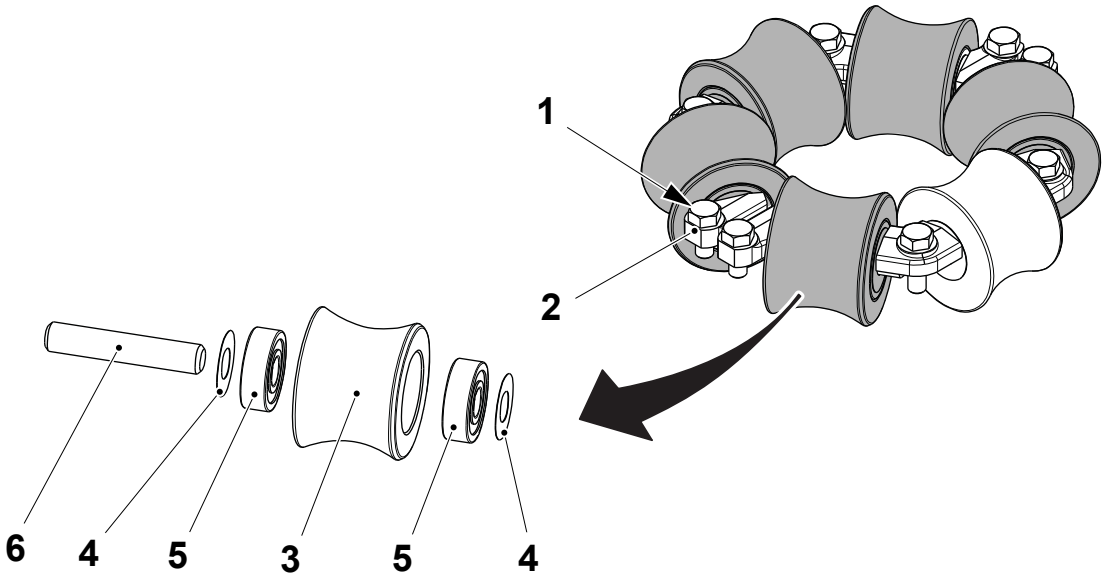

1 Screw
2 Lock plate
3 Roller
4 Washer
5 Ball bearing
6 Shaft

1.2-3 Forming Section - Forming Ring Positioning

Machine Status	Mains Power OFF Air OFF Steam ON Water OFF
SPC Reference	2544850-0200

Use the table to set the forming rings in the correct position. The distances are measured from the centre of the roller axles on each forming ring and based on the lower forming ring being in its upper position.

(Cont'd)

(Cont'd)

Machines with Three Forming Rings and Edge Rollers

	Dimension ±5.0 (mm)		
Package	**A**	**B**	**C**
TBA 1000 B - TBA 500 B - TBA 1500 S	530.0	855.0	533.0
TBA 1000 Sq - TBA 500 Sq	540.0	792.0	587.0
TBA 1000 S	552.0	835.0	534.0
TPA 1000 Sq - TPA 750 Sq	541.0	726.5	506.0
TBA 1000 B FlexiCap	552.0	886.0	483.0

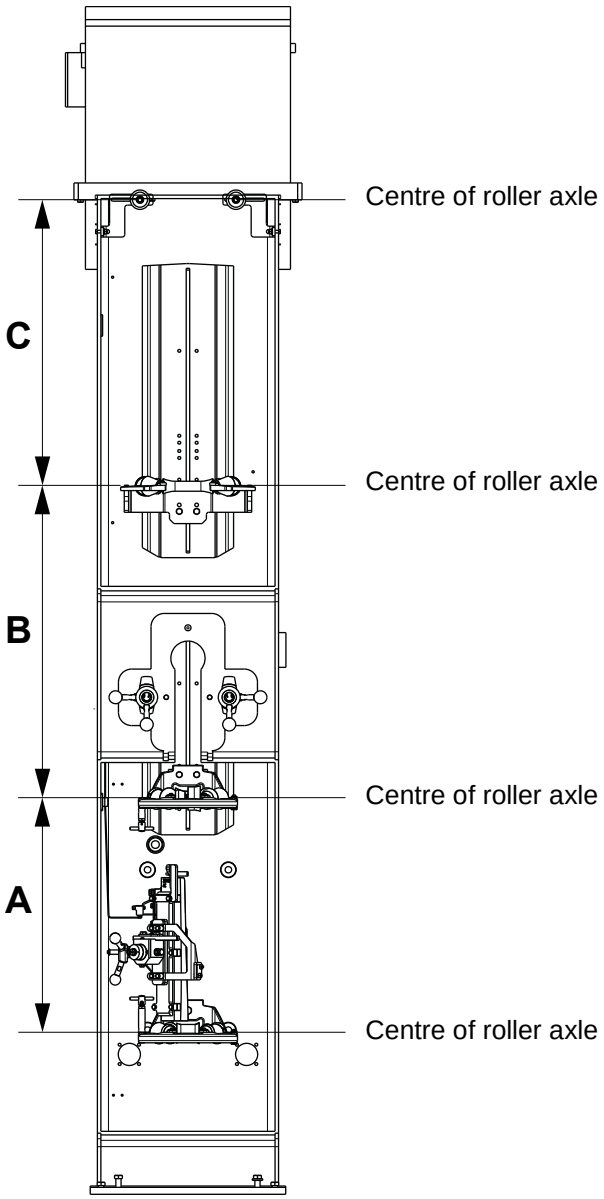

(Cont'd)

(Cont'd)

Machines with Upper Drying Chamber Section

	Dimension ±5.0 (mm)			
Package	**A**	**B**	**C**	**D**
TBA 2000 S	475.0	652.0	632.0	614.5

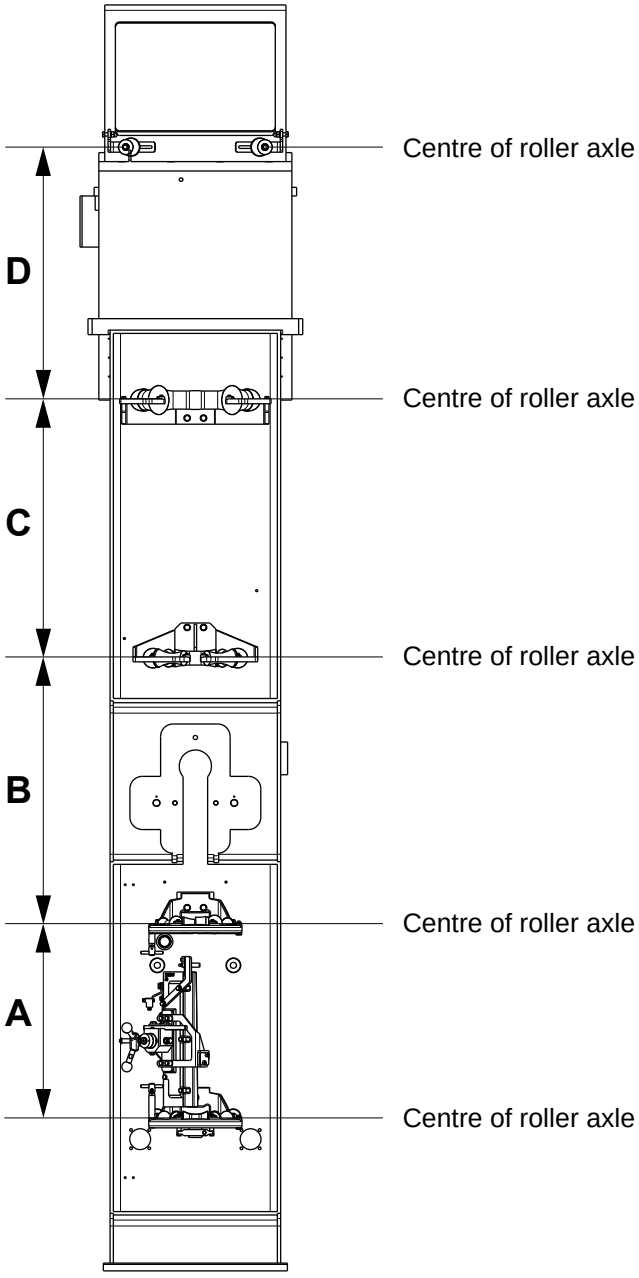

1.2.1 Lower Forming Ring

1.2.1-1 Lower Forming Ring - Set Clearance

Machine Status	Mains Power OFF Air OFF Steam ON Water OFF
SPC Reference	2912699-0100

Note! Always follow the setting order: 1-2, 2-3, 3-4, 1-2, 2-3, 3-4, as indicated in the illustration.

Make sure that the filling pipe is removed from the machine. Set the distance **A** between the rollers by adding or removing the shimming washers (1).

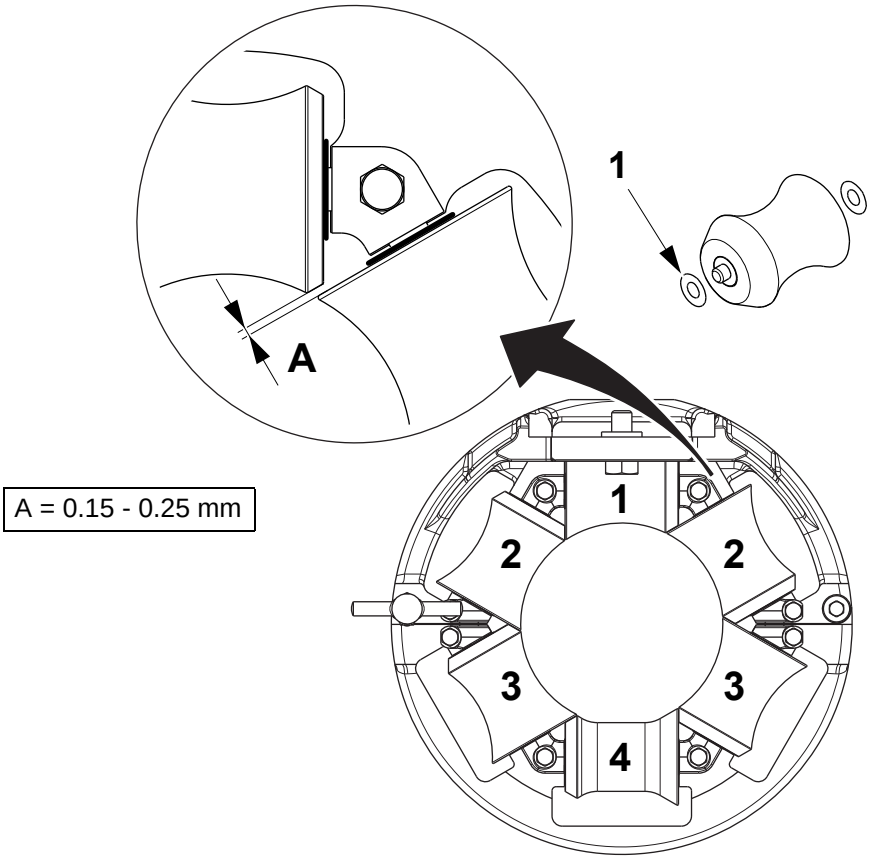

A = 0.15 - 0.25 mm

1 Shimming washer

1.2.1-2 Lower Forming Ring - Set Position

Machine Status	Mains Power ON Air ON Steam ON Water ON
Special Equipment	Setting Template (4) See 10.2 Templates and Tools
SPC Reference	2559062-0300

Setting with Template

This setting procedure must performed in accordance with the instructions described in 1 Superstructure. The filling pipe should be installed on the machine.

(Cont'd)

(Cont'd)

a) Step up the machine to PREPARATION.
b) Remove the screws (1).
c) Remove the brackets (2) and the roller (3).
d) Fit the template (4) and secure it into position with the screws (1).

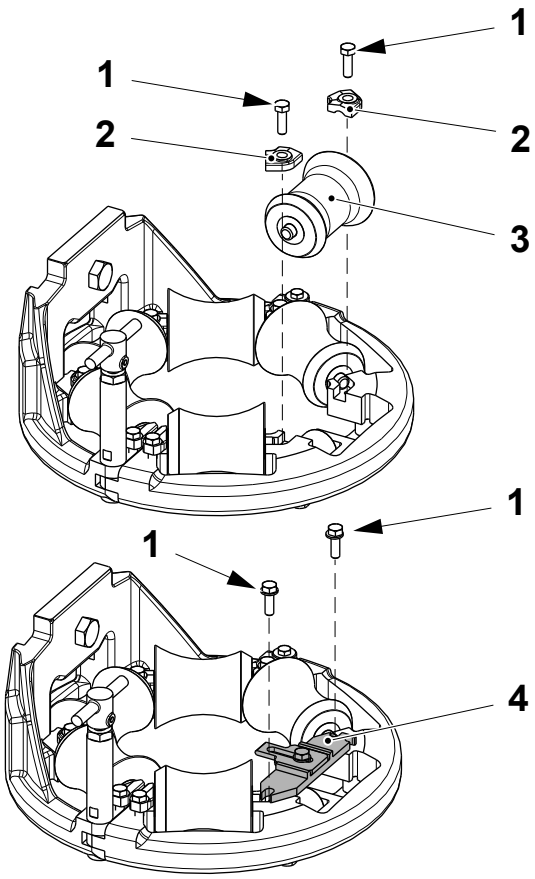

1 Screw
2 Bracket
3 Roller
4 Template

(Cont'd)

(Cont'd)

e) Loosen the screw (5) and move the plate (6) between the roller (7) and the fork (8).

f) Loosen the nut (9).

g) Turn the piston rod (10) until the roller (7) touches the plate (6).

h) Tighten the nut (9).

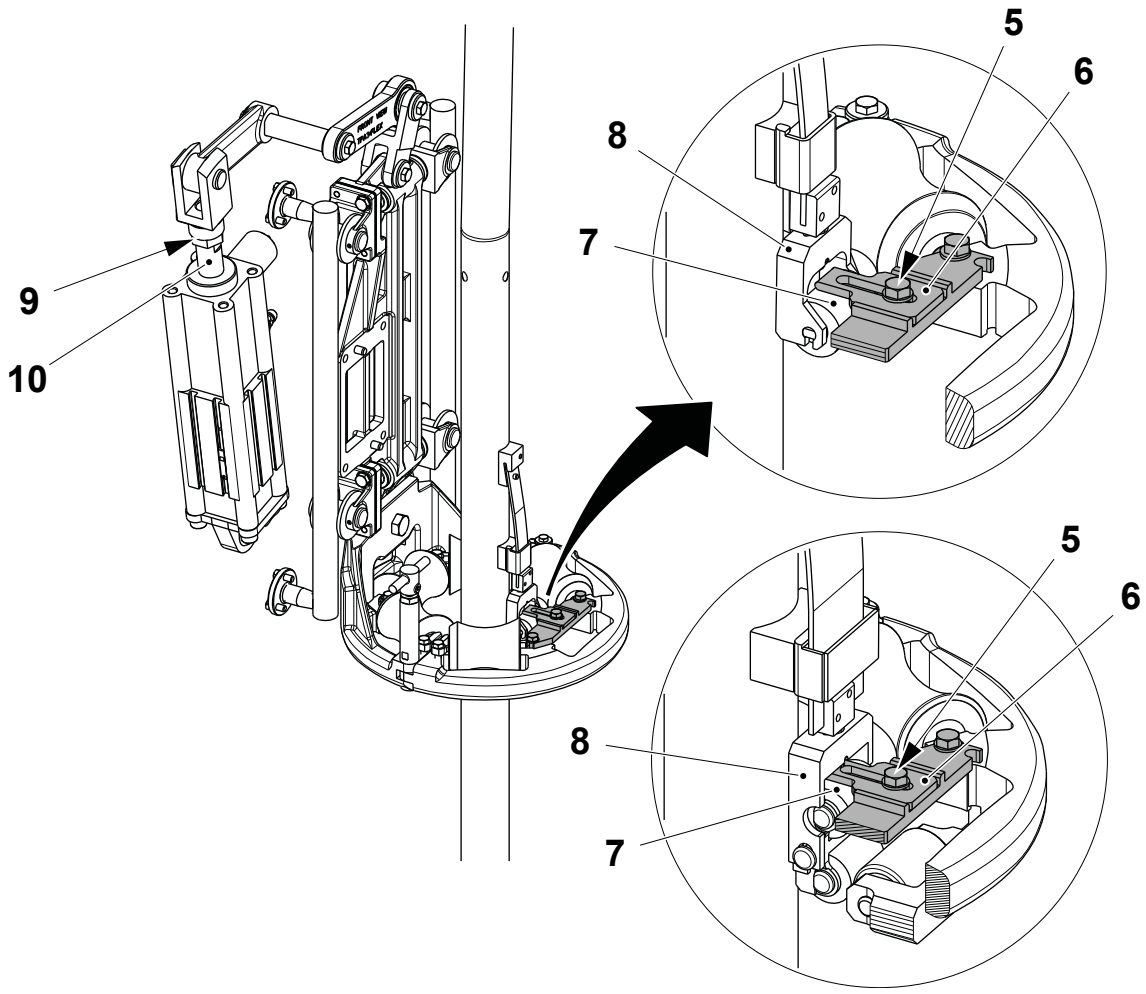

5 Screw
6 Plate
7 Roller
8 Fork
9 Nut
10 Piston rod

(Cont'd)

(Cont'd)

i) Remove the template and fit the roller (3).

j) Set the lower forming ring movement, see 1.2.1-4 Lower Forming Ring - Set Cylinder.

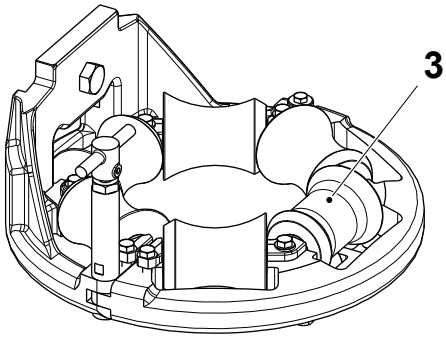

3 Roller

(Cont'd)

(Cont'd)

Setting without Template

a) Step up the machine to PREPARATION.

b) Loosen the nut (1).

c) Turn the piston rod (2) to set the distance **A** between the pressure roller (3) and the counter roller (4).

d) Tighten the nut (1).

Package	A ±0.5 (mm)
TBA 500 Sq - TBA 1000 Sq	2.0
TBA 1000 B FlexiCap	3.0
TBA 500 B - TBA 1000 B	6.0
TBA 1000 S	2.0
TBA 1500 S	3.0
TPA 750 Sq - TPA 1000 Sq	5.0
TBA 2000 S	3.0

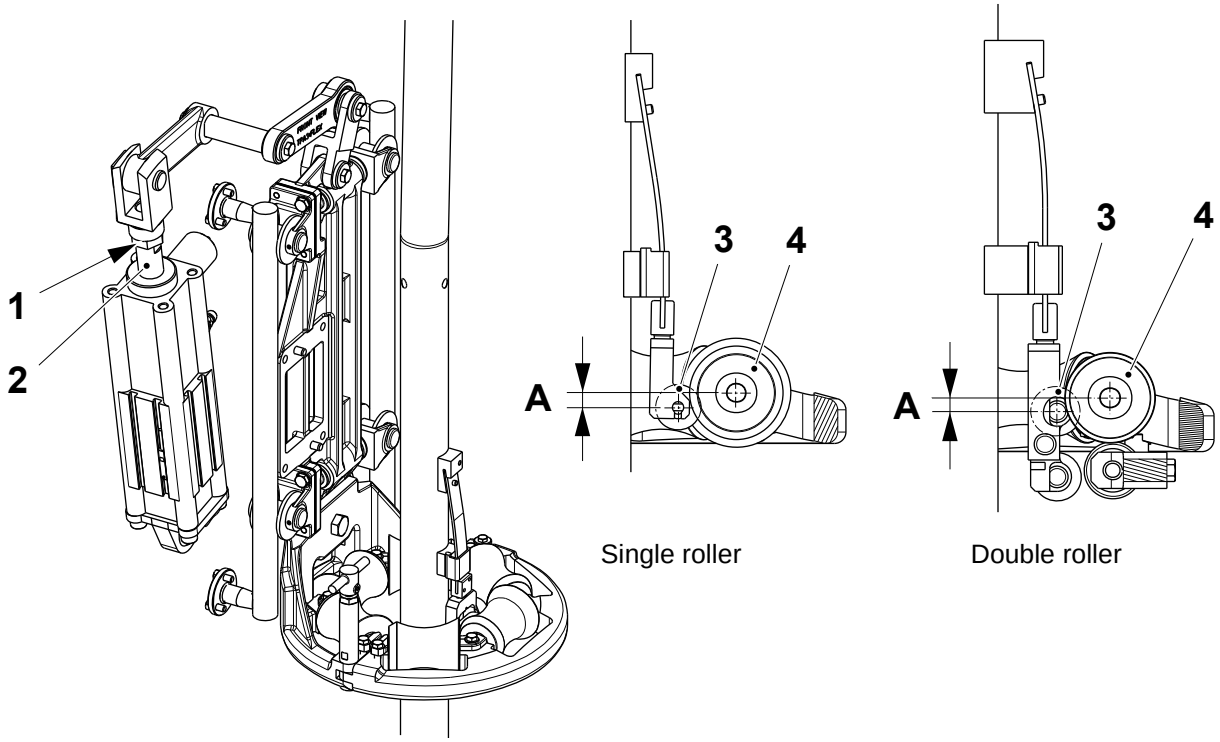

Single roller

Double roller

1 Nut
2 Piston rod
3 Pressure roller
4 Counter roller

1.2.1-3 Lower Forming Ring - Set Overlap

Machine Status	Mains Power OFF Air OFF Steam ON Water OFF
SPC Reference	2559062-0300

Pick out two packages and measure the LS overlap **A**, see the table below.

Note! The table below shows the **nominal** overlap value. If the width of the packaging material used differs from the nominal value, the overlap must be increased or decreased to produce the correct tube diameter. The width of the packaging material web can vary from the nominal width by ±1.0 mm.

Package	**Nominal packaging material width (mm)**	**Nominal overlap A (mm)**
TBA 1000 Sq TBA 500 Sq	292.0	6.0
TBA 500 B TBA 1000 B	322.0	8.0
TBA 1000 S	305.0	8.0
TBA 1500 S	322.0	8.0
TPA 750 Sq TPA 1000 Sq	260.0	7.0
TBA 2000 S	384.0	8.0

(Cont'd)

(Cont'd)

Lower Forming Ring Plus, Minus and Standard Rollers

Package	Roller (1) TP No.			Roller (2) TP No.			Roller (3) TP No.		
	Standard	Plus	Minus	Standard	Plus	Minus	Standard	Plus	Minus
TBA 500 Sq TBA 1000 Sq	1490763	1490765	2925746	1490763	1490765	2925746	1490763	1490765	2925746
TBA 500 B TBA 1000 B	1349851	1349853	1349852	1349853	2931183	1349851	1349853	2931183	1349851
TBA 1000 B FlexiCap	1349851	1349853	1349852	1349851	1349853	1349852	1349851	1349853	1349852
TBA 1000 S	567746-1	567746-2	567746-3	567746-1	567746-2	567746-3	567746-1	567746-2	567746-3
TBA 1500 S	1349851	1349853	1349852	1349851	1349853	1349852	1349851	1349853	1349852
TPA 750 Sq TPA 1000 Sq	2833215	N/A	N/A	2833086	2909849	2909847	2833085	2909848	2909846
TBA 2000 S	2565513	2601311	2601310	2565513	2601311	2601310	2565513	2601311	2601310

1 Roller
2 Roller
3 Roller

(Cont'd)

(Cont'd)

Set the overlap by changing rollers in the lower forming ring. See the table on the previous page for a guide to the plus, minus and standard rollers. Always fit trimming rollers symmetrically in respect to the pressure roller (4). Never fit plus and minus trimming rollers together.

Set the overlap **A** by changing the rollers in the lower forming ring.

- to INCREASE the overlap **A**, change up to three of the standard rollers for minus trimming rollers
- to DECREASE the overlap **A**, change up to three standard rollers for plus trimming rollers.

Note! The tolerance of the overlap **A** is ±1.0 mm.

After the forming ring has been set it will function correctly with all packaging material widths within the given limits.

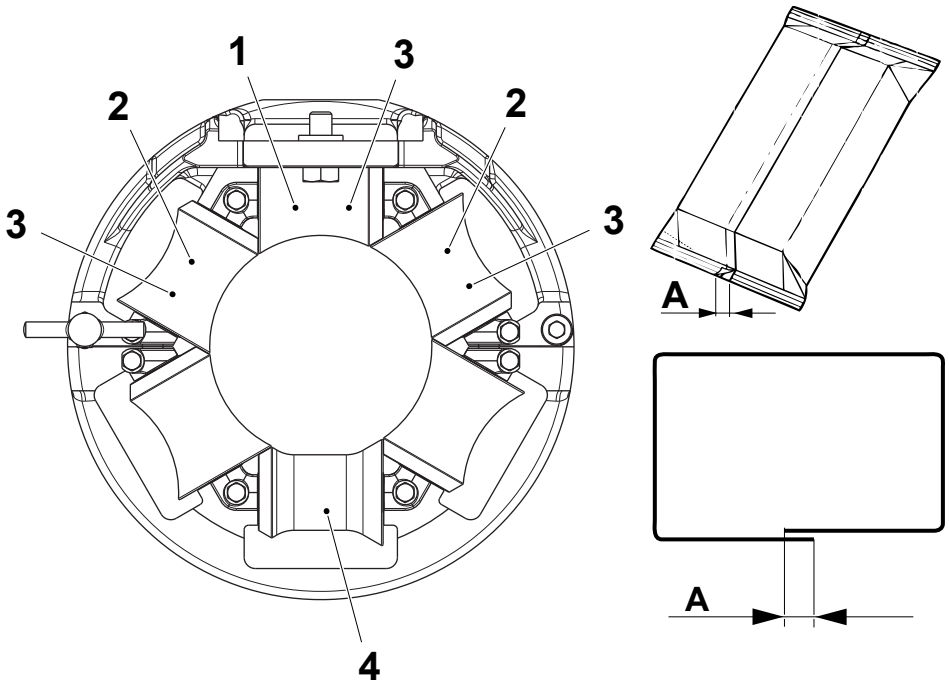

1 Where to put one trimming roller
2 Where to put two trimming rollers
3 Where to put three trimming rollers
4 Pressure roller

(Cont'd)

1.2.1-4 Lower Forming Ring - Set Cylinder

Machine Status	Mains Power OFF Air OFF Steam ON Water OFF
SPC Reference	2559062-0300

Adjust the cylinder restrictor valves (1) as described below to set the correct speed of movement for the lower forming ring.

a) Close the restrictor valves (1) on both the plus (+) and minus (-) sides.

b) On the minus (-) side, open the restrictor valve (1) **6** turns.

c) On the plus (+) side, open the restrictor valve (1) **5** turns.

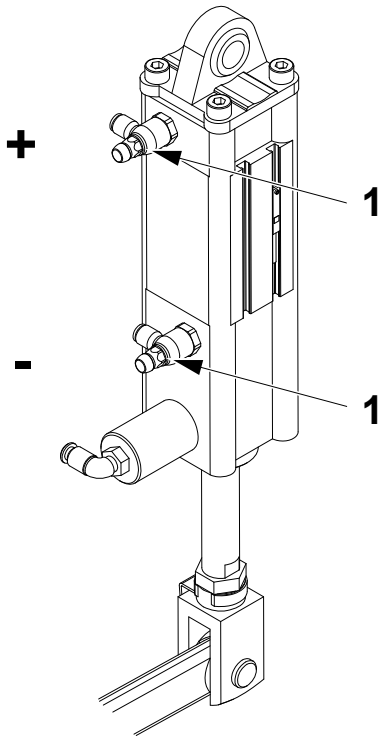

1 Restrictor valve

1.2.1-5 Lower Forming Ring - Check Pressure Roller

Machine Status	Mains Power OFF Air OFF Steam ON Water OFF
SPC Reference	2559062-0300

Check the roller (1) and the flange bushings (2) for wear and damage. Proceed as follows:

a) Remove the screws (3) and separate the bracket (4) from the lower forming ring (5).

b) Loosen the screw (6).

c) Pull out the shaft (7).

d) Remove the roller (1) and the flange bushings (2). Change if necessary.

e) Assemble in the reverse order.

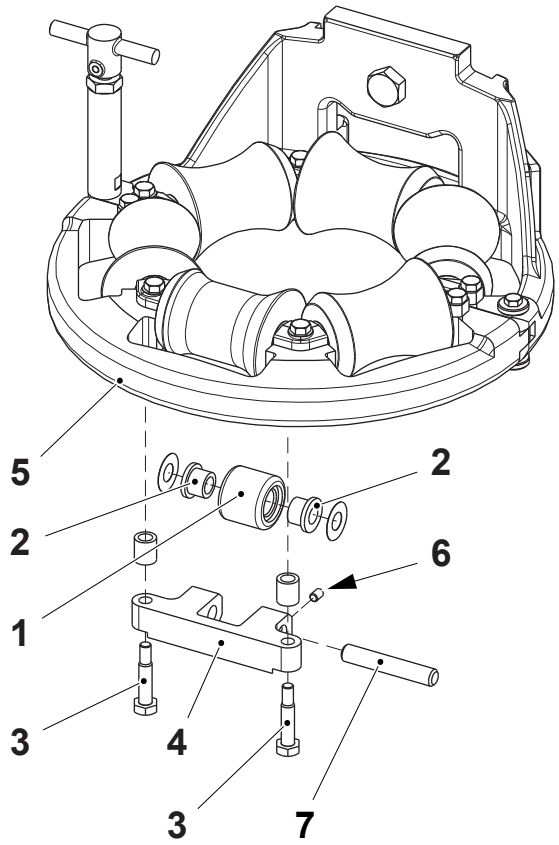

1 Roller
2 Flange bushing
3 Screw
4 Bracket
5 Lower forming ring
6 Screw
7 Shaft

1.2.2 Upper Forming Ring

1.2.2-1 Upper Forming Ring - Set Clearance

Machine Status	Mains Power OFF Air OFF Steam ON Water OFF
SPC Reference	291700-0100

Note! Always follow the setting order: 1-2, 2-3, 3-4, 1-5, 5-6, 6-7, 4-7 as indicated in the illustration.

Make sure that the filling pipe is removed from the filling machine. Set the distance **A** between the rollers by adding or removing the shimming washers (1).

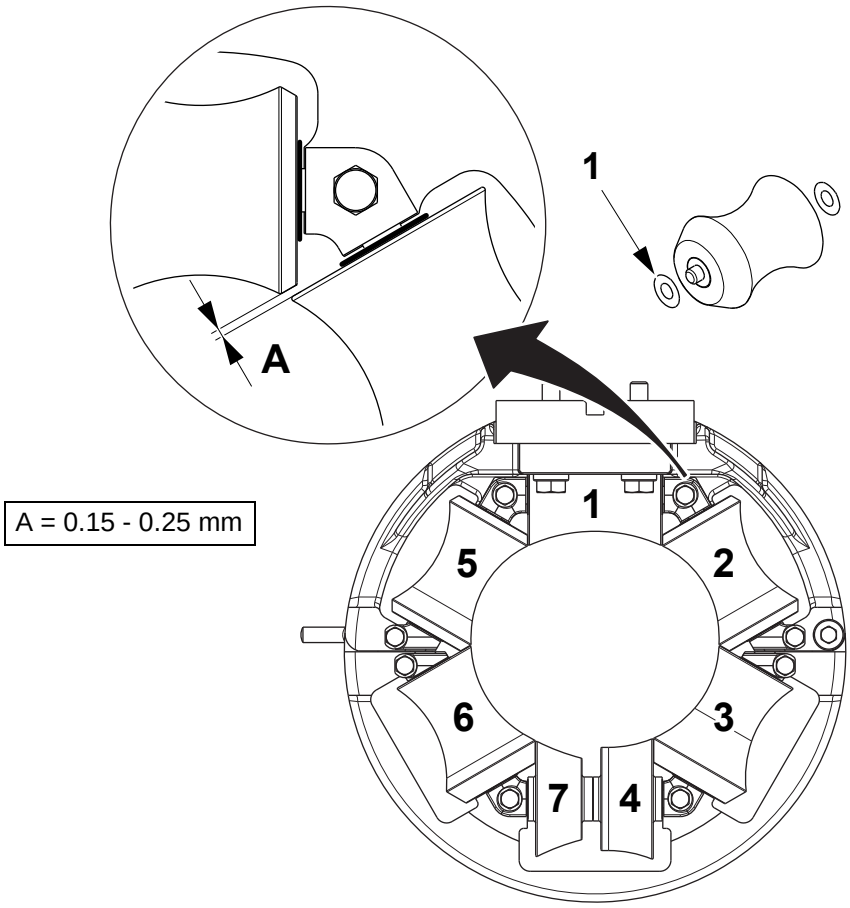

1 Shimming washer

1.2.3 Forming Ring

1.2.3-1 Forming Ring - Set Clearance

Machine Status	Mains Power OFF Air OFF Steam ON Water OFF
SPC Reference	2912702-0100

Note! Valid for TBA 1000 Sq, TBA 500 Sq, TPA 1000 Sq and TPA 750 Sq.

Note! Always set the rollers in the following order: 1-2, 2-3, 3-4, 1-2, 2-3, 3-4 as indicated in the illustration.

Make sure that the filling pipe is removed from the filling machine. Set the distance **A** between the rollers by adding or removing the shimming washers (1).

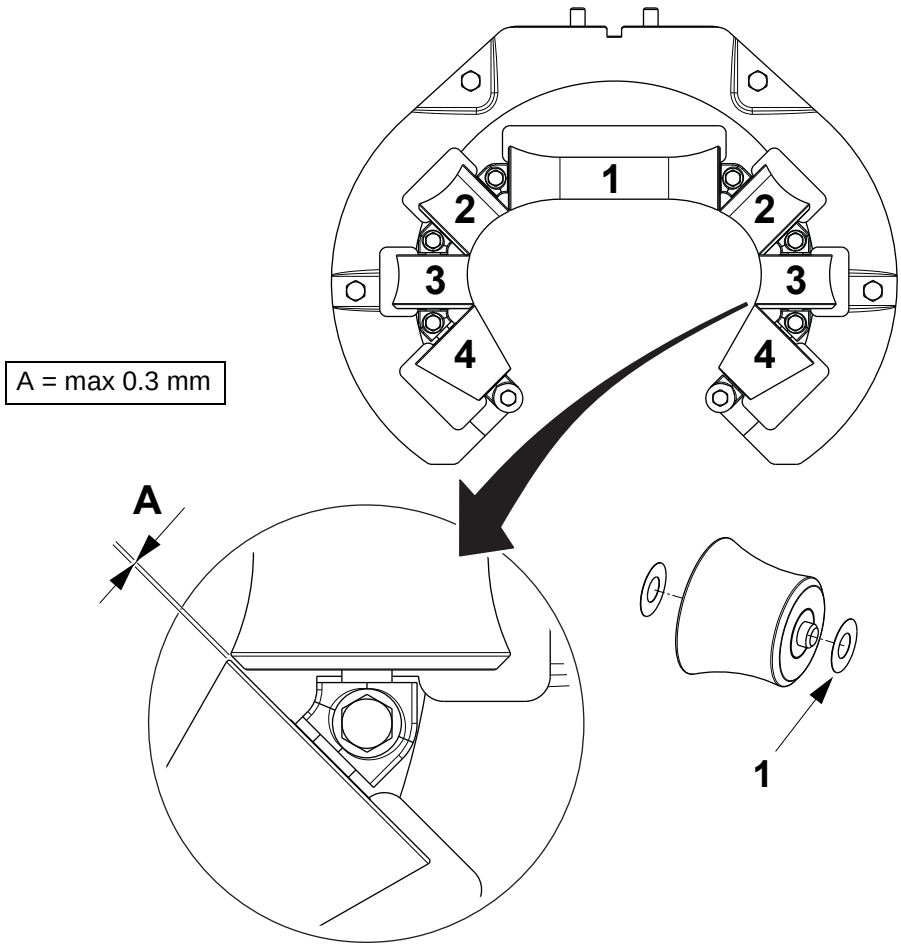

1 Shimming washer

(Cont'd)

(Cont'd)

Note! Valid for TBA 500 B, TBA 1000 B, TBA 1000 B FlexiCap, TBA 1000 S and TBA 1500 S.

Note! Always set the rollers in the following order: 1-2, 2-3, 3-4, 1-2, 2-3, 3-4 as indicated in the illustration.

Make sure that the filling pipe is removed from the filling machine. Set the distance **A** between the rollers by adding or removing the shimming washers (1).

A = 0.15 to 0.25 mm

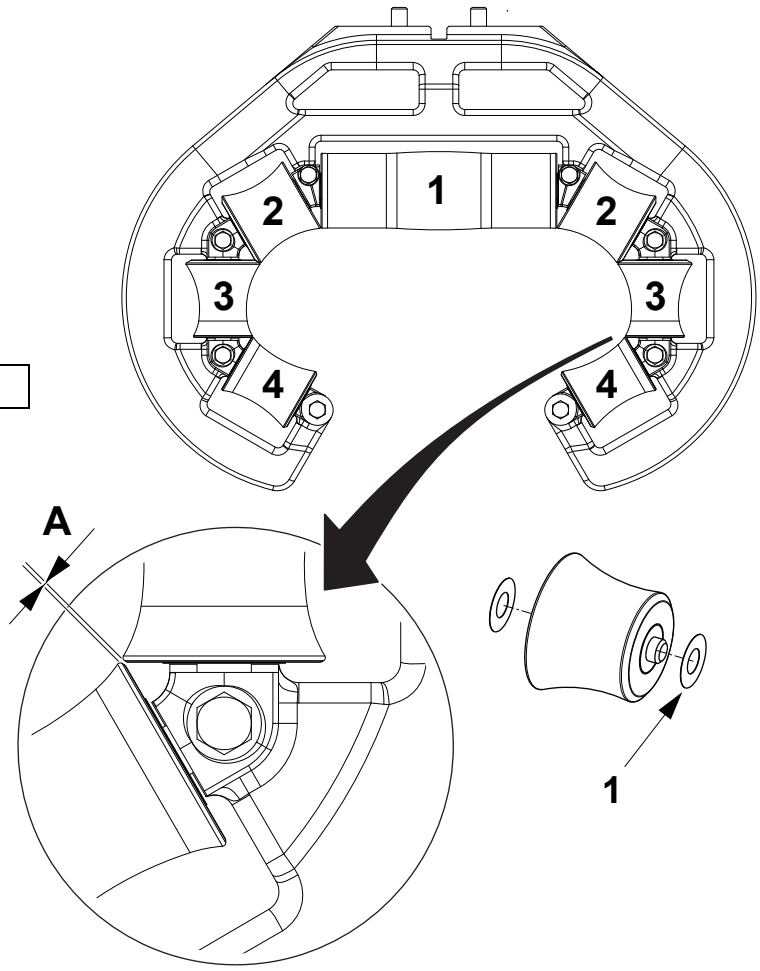

1 Shimming washer

(Cont'd)

(Cont'd)

Note! Valid TBA 2000 S only.

Note! Always follow the clearance setting order; 1-2, 2-3, 3-4, 1-2, 2-3, 3-4 as indicated in the illustration.

Make sure that the filling pipe is removed from the filling machine. Set the distance **A** between the rollers by adding or removing the shimming washers (1).

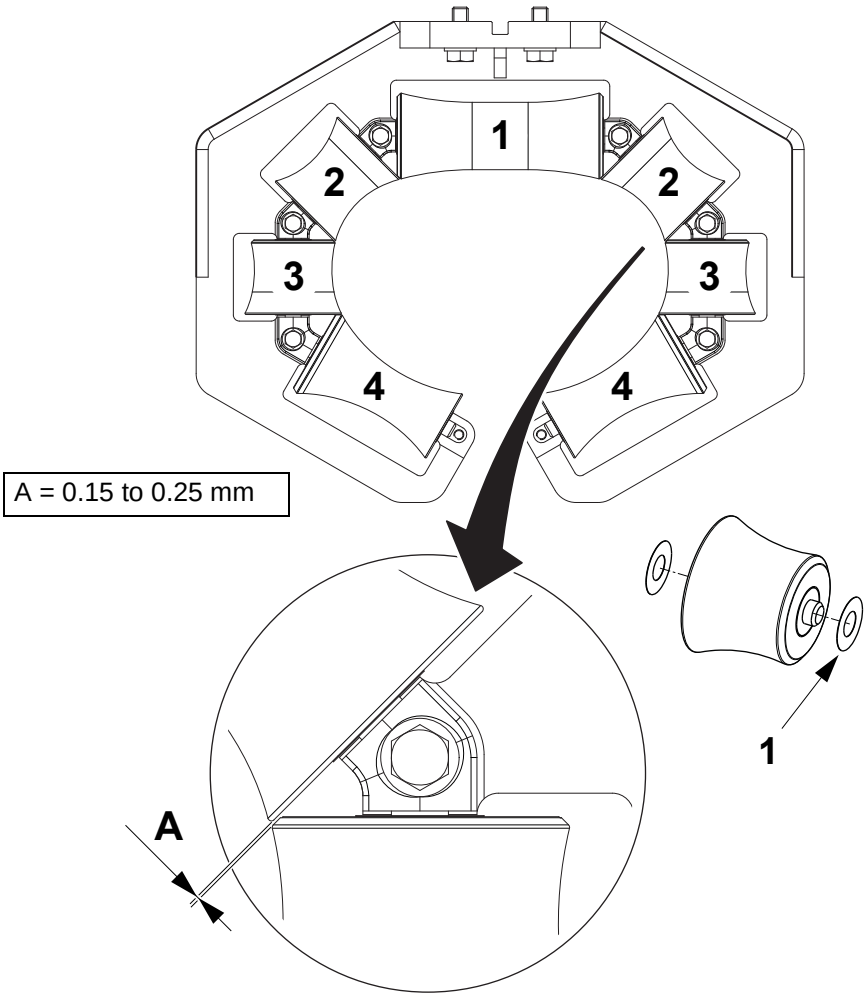

1 Shimming washer

1.2.4 Edge Roller

1.2.4-1 Edge Roller - Set

Machine Status	Mains Power OFF Air OFF Steam ON Water OFF
SPC Reference	2912703-0100

Note! Valid for all packages except TBA 2000 S.

a) Loosen the screws (1) and adjust the two roller assemblies until the rollers (2) are positioned centrally in relation to the edge of the packaging material.

b) Tighten the screws (1).

c) Loosen the screws (3) and adjust the rollers (2) until they are in contact with the packaging material. Fine adjust the rollers (2) until the correct packaging material movement is achieved.

d) Tighten the screws (3).

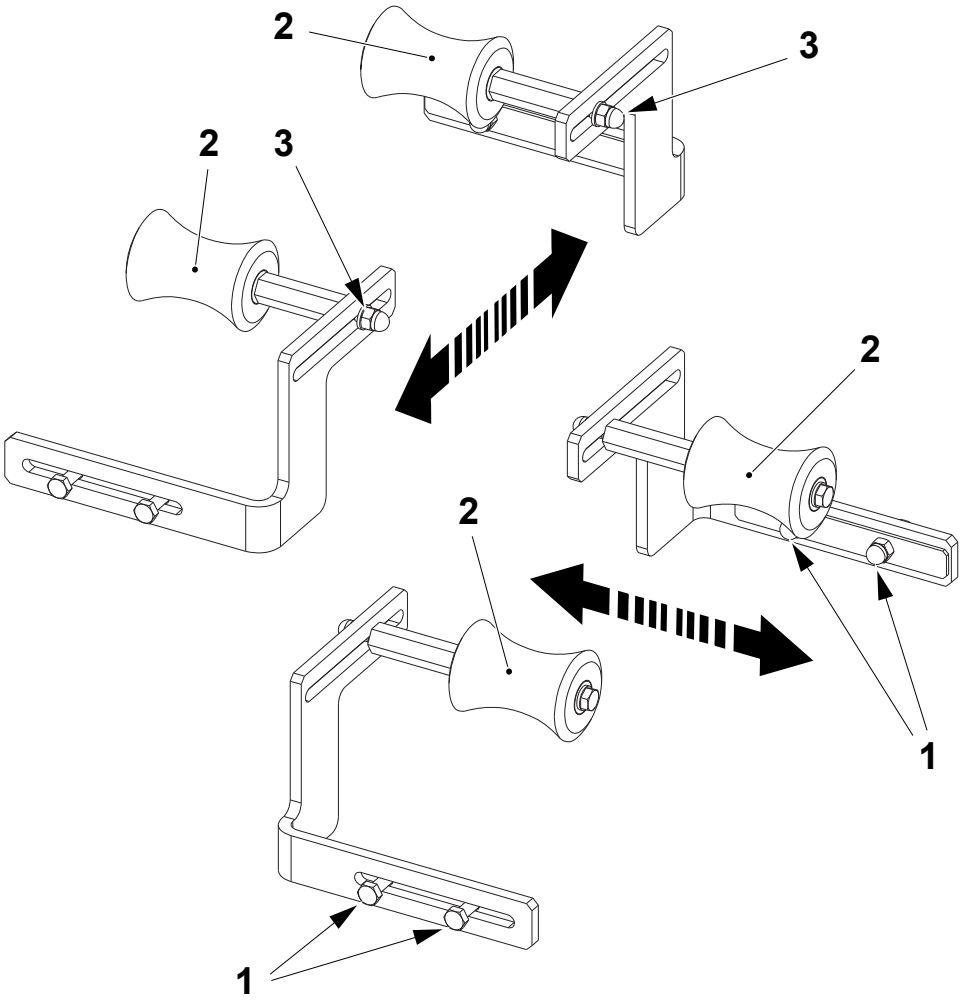

1 Screw
2 Roller
3 Screw

(Cont'd)

(Cont'd)

Note! Valid for TBA 2000 S only.

Note! Do not change the basic setting unless really needed. After adjustment, make sure the upper support rollers have not moved out of vertical alignment.

Basic Setting

a) On both sides of the drying chamber, remove the nuts (1) and the two edge roller assemblies (2).

b) Loosen the nut (3) and move the roller (4) to set the distance **A**.

c) Fit the two edge roller assemblies (2) loosely to the drying chamber with the nuts (1).

d) Slide the edge roller assemblies (2) as indicated in the illustration to set the distance **B** between the surface of the roller (4) and the edge of the drying chamber housing (5).

e) Tighten the nuts (1).

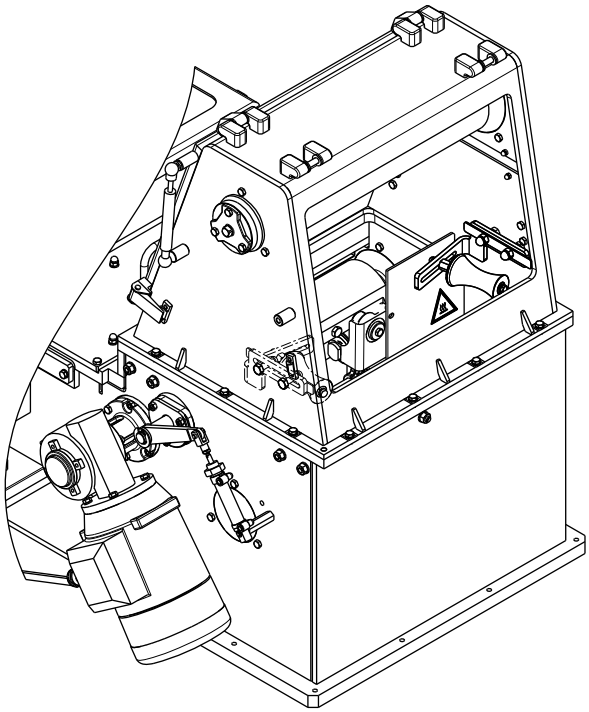

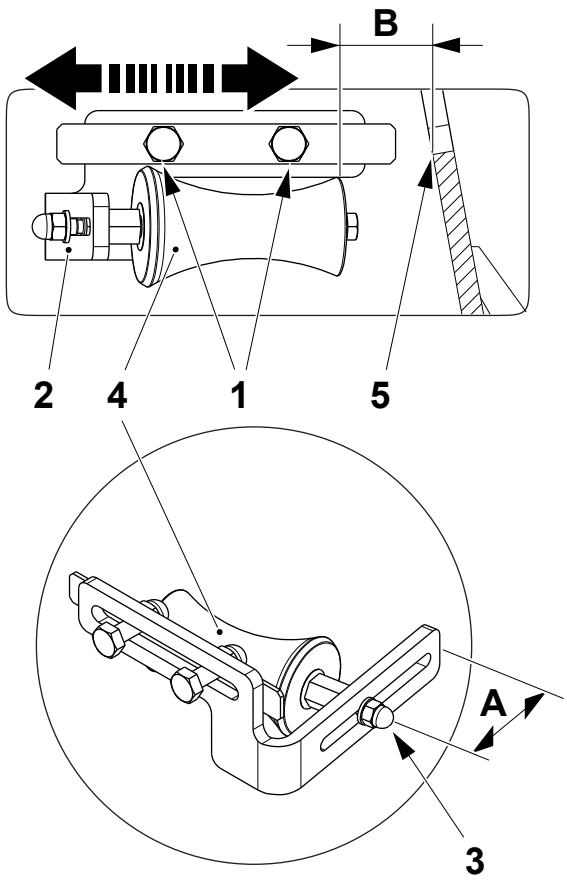

A =65.0 ±1.0 mm
B = 20.0 ±1.0 mm

1 Nut
2 Roller assembly
3 Nut
4 Roller
5 Drying chamber housing

(Cont'd)

(Cont'd)

Fine Setting

Set the edge roller assembly so that the packaging material web (1) is in contact with the central surface of the rollers (2), as shown below.

Adjust the position of the rollers (2) by loosening the nuts (3) and (4).

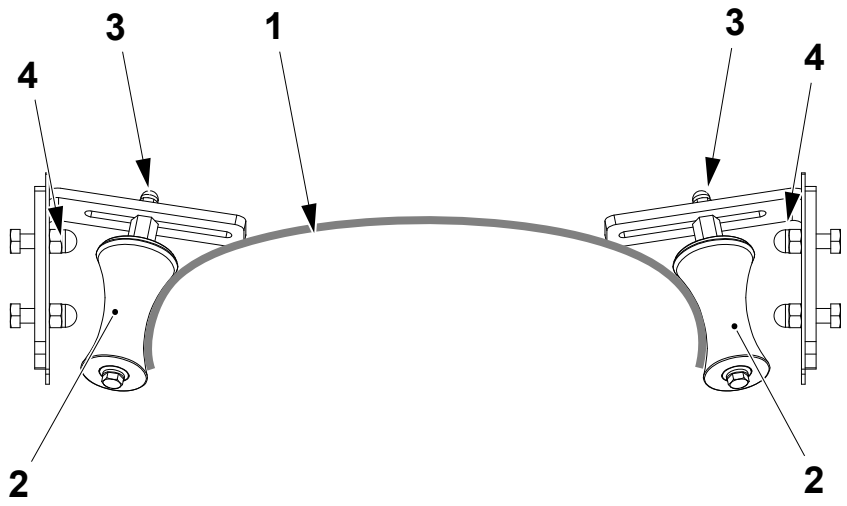

1 Packaging material web
2 Roller
3 Nut
4 Nut

1.2.5 Longitudinal Sealing

1.2.5-1 Longitudinal Sealing - Check

Machine Status	Mains Power OFF Air OFF Steam ON Water OFF
SPC Reference	2657873-0200

Check that:

- the rollers (1) are not worn or damaged. Change if necessary, see 1.2.5-2 Longitudinal Sealing - Change Rollers
- the bushings (2) are not damaged. Change if necessary
- the induction plate (3) is clean. If necessary, remove all residues and clean the induction plate (3)
- the busbar (4) is not damaged.

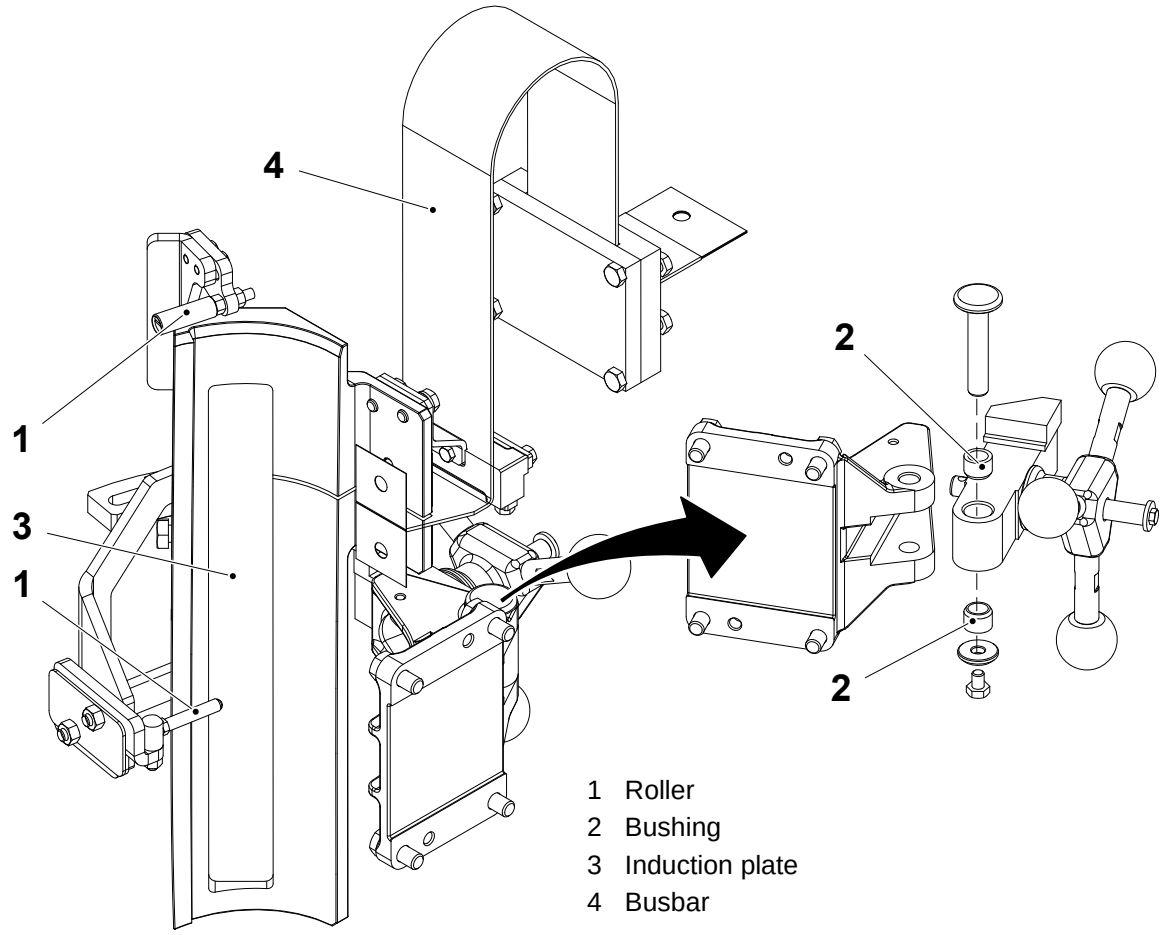

1 Roller
2 Bushing
3 Induction plate
4 Busbar

1.2.5-2 Longitudinal Sealing - Change Rollers

Machine Status	Mains Power OFF Air OFF Steam ON Water OFF
SPC Reference	2657873-0200

a) Remove the nuts (1) and the shafts (2).

b) Remove and change the rollers (3).

c) Assemble in the reverse order.

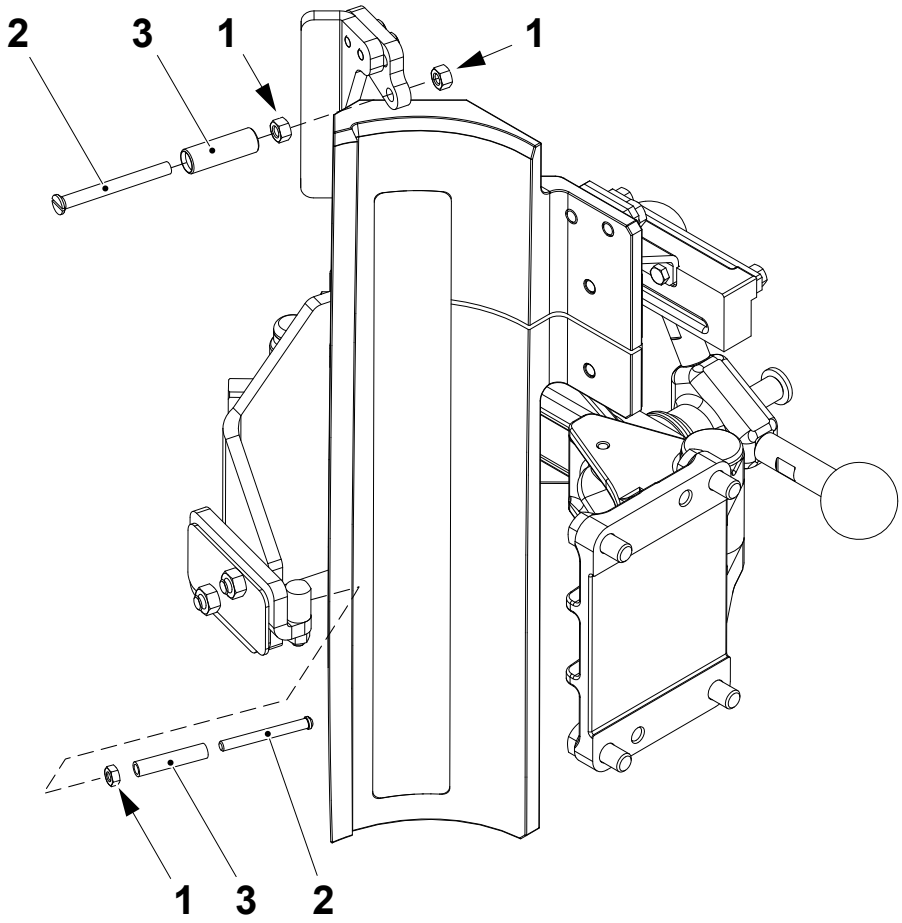

1 Nut
2 Shaft
3 Roller

1.2.5-3 Longitudinal Sealing - Set

Machine Status	Mains Power OFF Air OFF Steam ON Water OFF
SPC Reference	2657873-0200

Note! Use the flow chart on page 1-55 to make sure that the inductor has been set correctly. Make sure that the packaging material is threaded correctly.

Inductor Alignment - Basic Setting

a) Loosen the screws (1).

b) Align the inductor (2) to the edge of the paper web (3) and move the support (4) along the guide (5) to set distance **A**.

c) Tighten the screws (1).

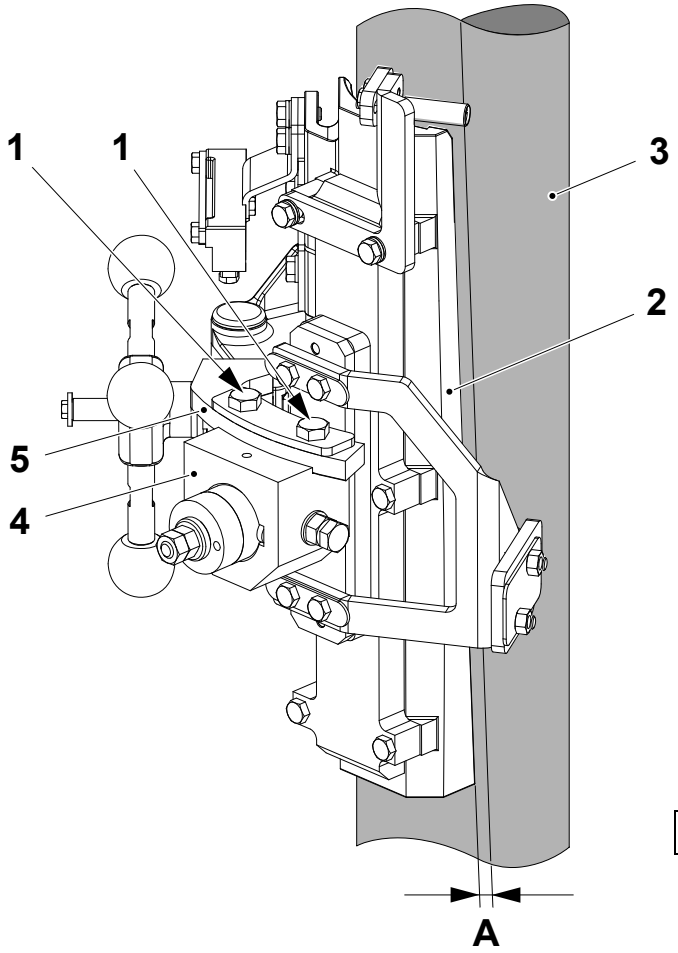

1 Screw
2 Inductor
3 Packaging material web
4 Support
5 Guide

A = 1.5 ±0.5 mm

(Cont'd)

(Cont'd)

d) Check distances **B** and **C** are correct. If not, continue below.

e) Loosen the nut (6) and move the inductor (7) until it is in a parallel position in relation to the tube; the same distance **B** is required at the top as at the bottom of the inductor (7), see arrows.

f) Tighten the nut (6).

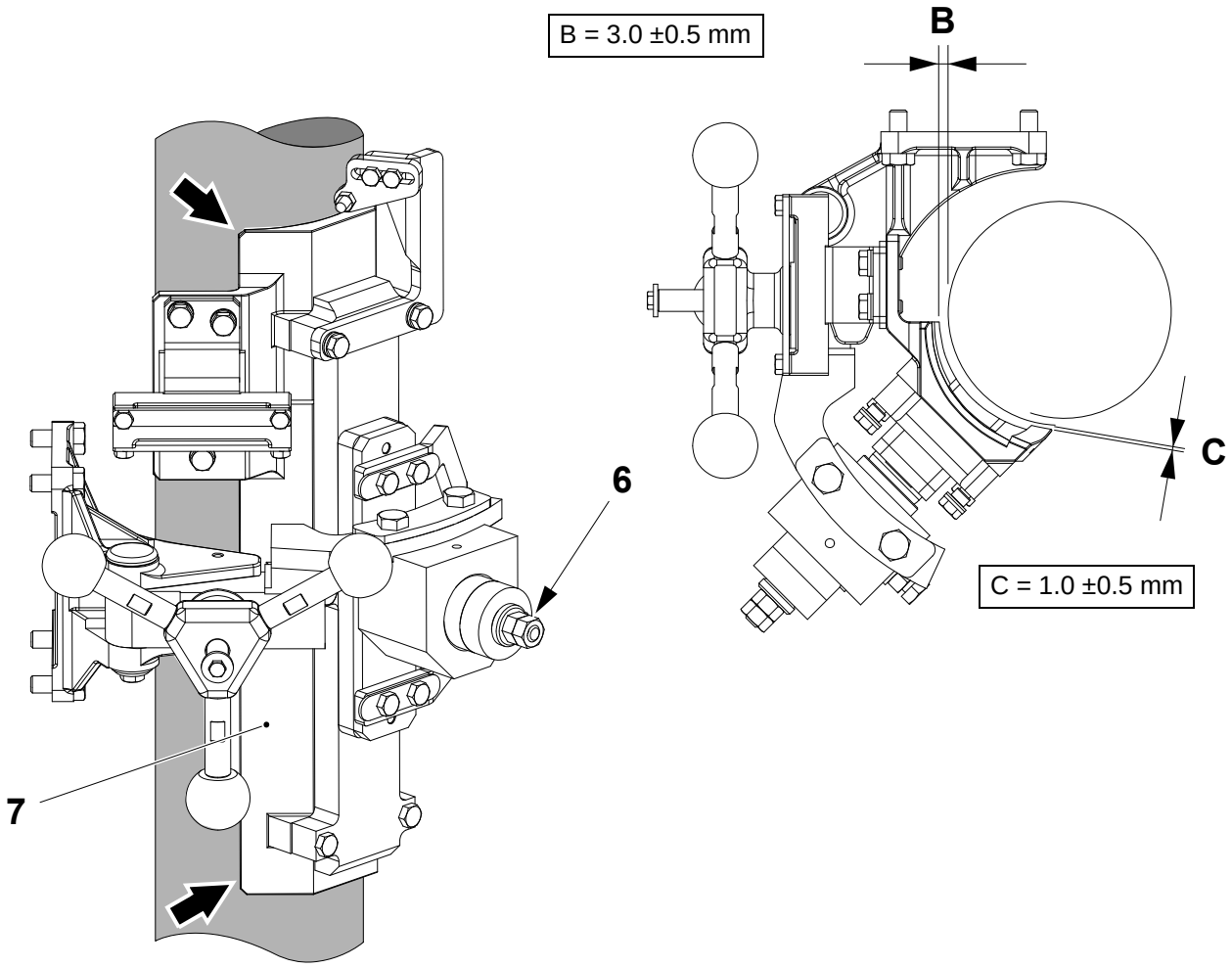

6 Nut
7 Inductor

(Cont'd)

(Cont'd)

g) Loosen the nut (8).

h) Move the slide (9) forward or backwards to set the distance **C**.

i) Tighten the nut (8).

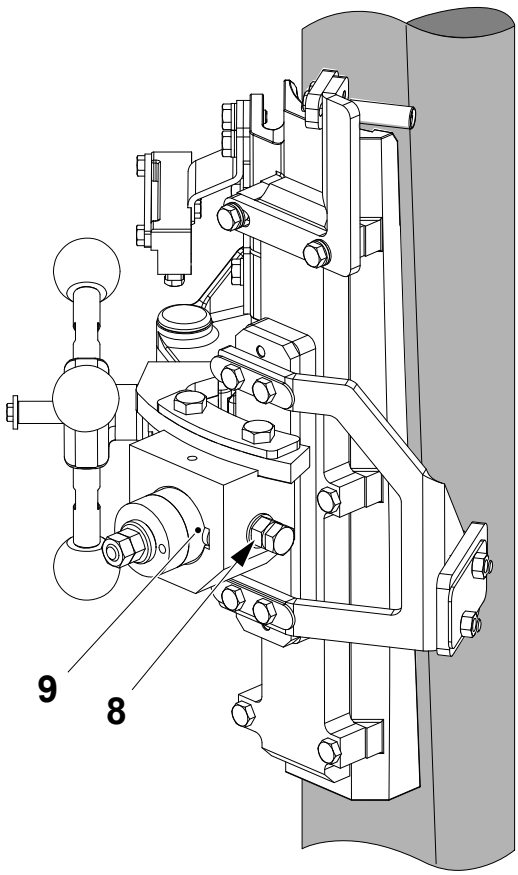

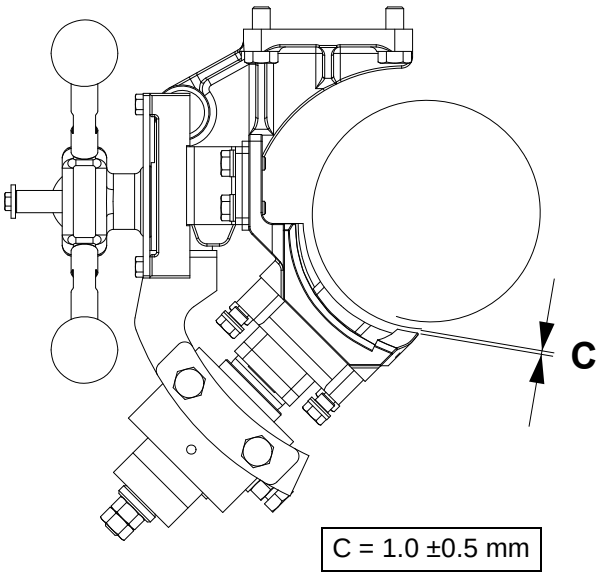

C = 1.0 ±0.5 mm

8 Nut
9 Slide

(Cont'd)

(Cont'd)

j) Adjust the finger (10) to set the distance **D** between inside surface of the packaging material web (11) and the side of the finger (10). The finger should be approximately parallel to the end of the inductor.

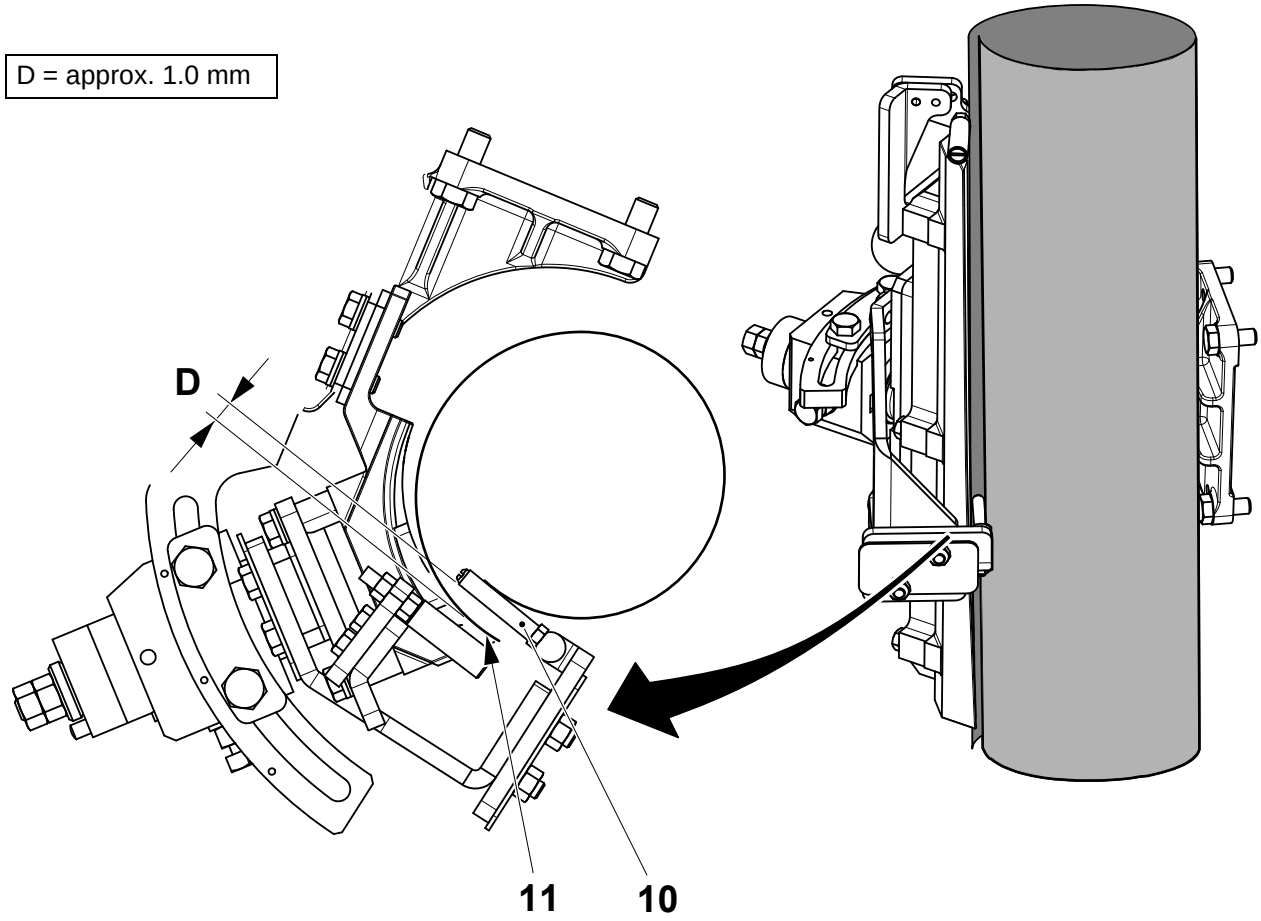

10 Finger
11 Packaging material web

(Cont'd)

(Cont'd)

Note! It is important that the LS strip is applied correctly to the packaging and the packaging material is aligned correctly before adjustments are made to the LS inductor.

Inductor Alignment - Fine Setting

To fine set the inductor alignment proceed as follows.

a) Adjust the finger (1) so that it does not touch the packaging material web (2).

b) Disable the VMN automatic mode, see 1.2.5-4 Longitudinal Sealing - Set VMN Mode.

c) Step up the machine to TUBE SEALING.

d) Take the last 10 sealed packages wasted during TUBE SEALING and check that the LS sealing is correct as described in the OM sections, Crease Lines, LS Overlap and LS Strip Application. If not, check the basic position of the LS inductor again, see Inductor Alignment - Basic Setting.

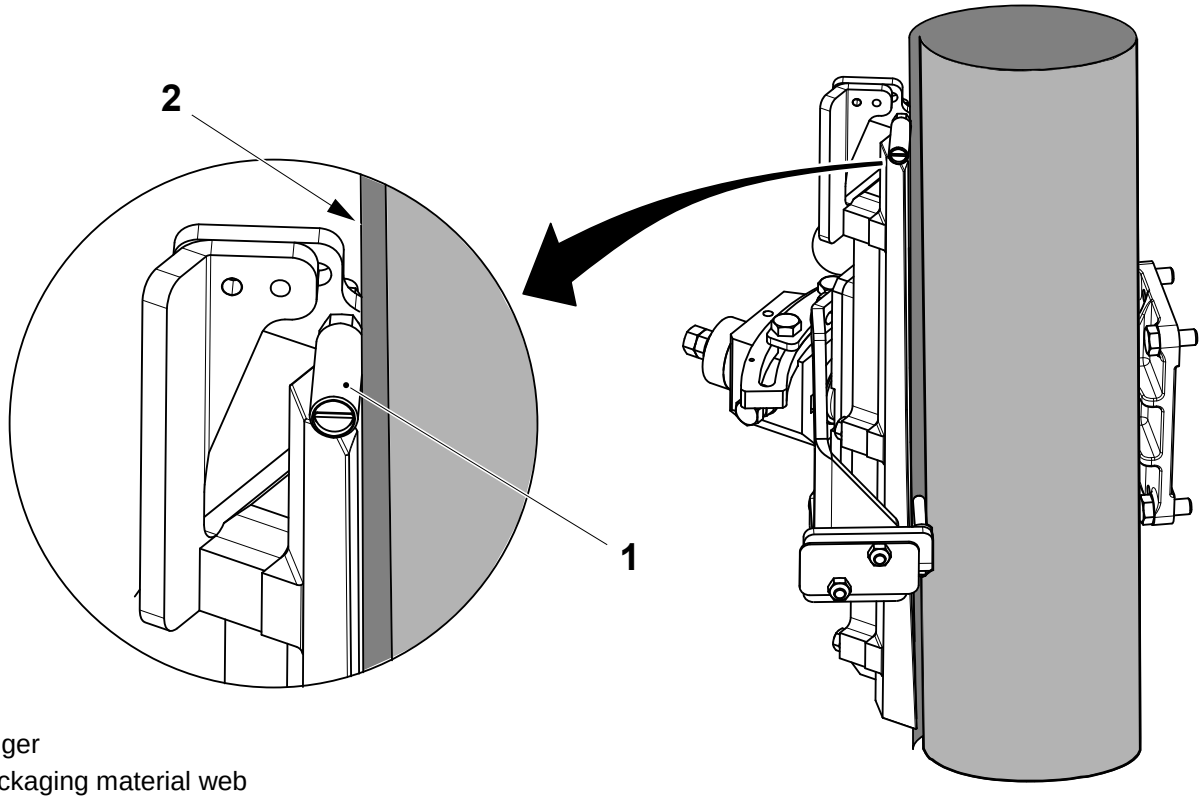

1 Finger
2 Packaging material web

(Cont'd)

(Cont'd)

Note! The performance of the inductor is different when the machine is hot than when it is cold. There is also a difference when the machine is running with a product and when no product is being used. The inductor should be set when the best position for PRODUCTION with product has been found.

This must be done as follows:

e) Step the machine up to HEAT STERILISATION.

f) At the electrical cabinet, connect a PC to the RS 232 connection of TMCC2 A01K5220 (Sealing Monitoring).

g) Set up the PC to set up RS232 communications, see 9.8-2 TMCC2 Controller - Set Communication.

h) Follow the instructions in 9.8-1 TMCC2 Controller - Description, TMCC2 card A01K5220 (Sealing Monitoring) to read the LS sealing data.

(Cont'd)

(Cont'd)

Note! Running the machine in STERILISED INCHING produces and wastes packages at production speed but without product. This allows the electrical parameters of the LS to be checked.

i) When the machine has stepped up to SIGNAL TO STERILIZER and the TPOP icon is flashing, the JAW INCHING button starts to flash.

j) Press and hold the JAW INCHING button to run the machine in STERILISED INCHING. While this is being done a second person should check and record the electrical parameters. The limits for the parameters are given in the following table.

Phase angle (Degrees) (Ph)	**Impedance (Ohms) (Z)**
0 ±20	50 ±10

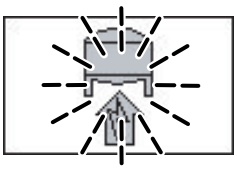



(Cont'd)

(Cont'd)

k) Release the JAW INCHING button.

l) Adjust the finger (1) so that it contacts the packaging material web (2) but does not visibly move the packaging material web (2) out of its path.

m) Press and hold the JAW INCHING button and check the electrical parameters.

- if the parameters are **different** from those recorded in step j) and also **incorrect**, remove the finger (1) and continue with item n)
- if the parameters are **different** from those recorded in step j), but **correct**, remove the finger (1) and continue with item u)
- if the parameters are the **same** as those recorded in step j) and also **incorrect** continue with item n)
- if the parameters are the **same** as those recorded in step j) but **correct**, continue with item u).

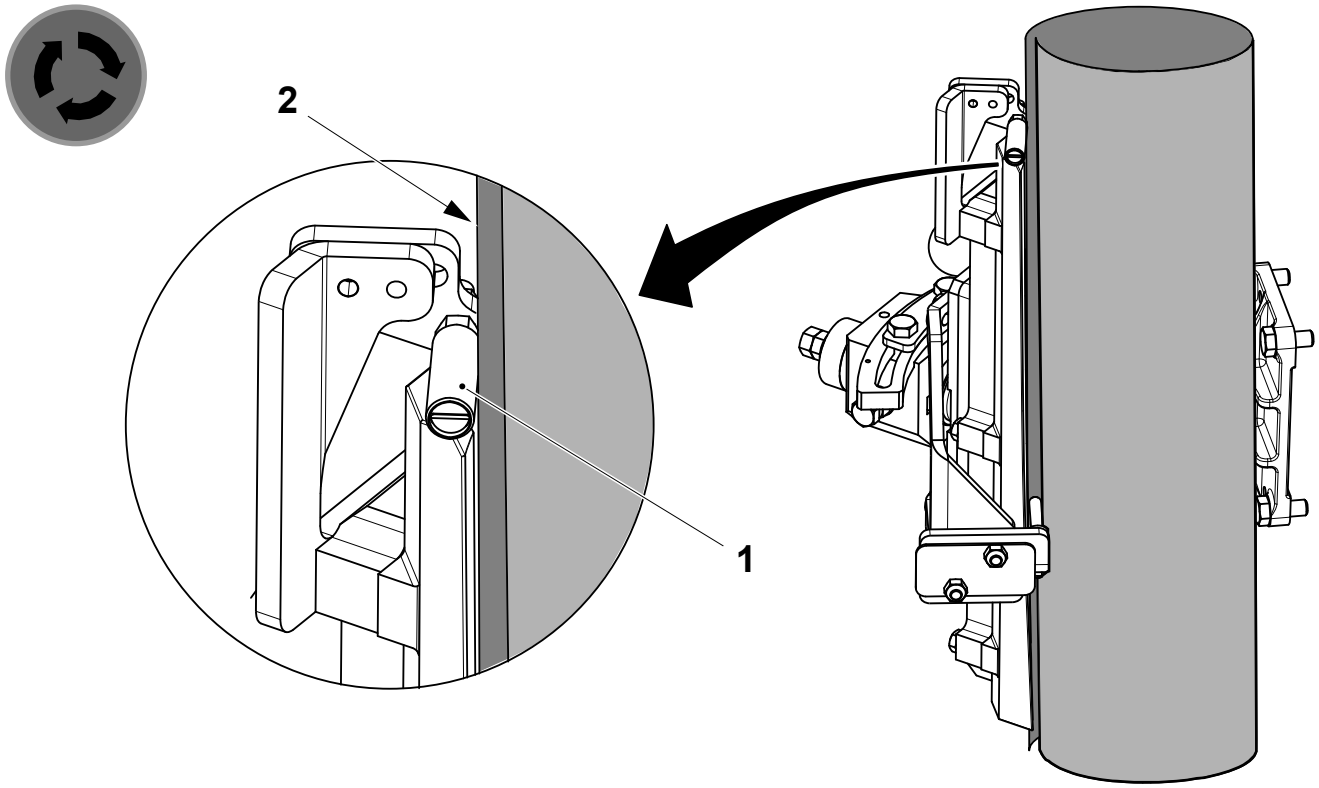

1 Finger
2 Packaging material web

(Cont'd)

(Cont'd)

n) Step the machine down to STEP ZERO.

o) Loosen the nut (3) and move the inductor (4) nearer toward or further away from the packaging material web (2) making sure that it remains parallel to the packaging material web (2).

p) Tighten the nut (3).

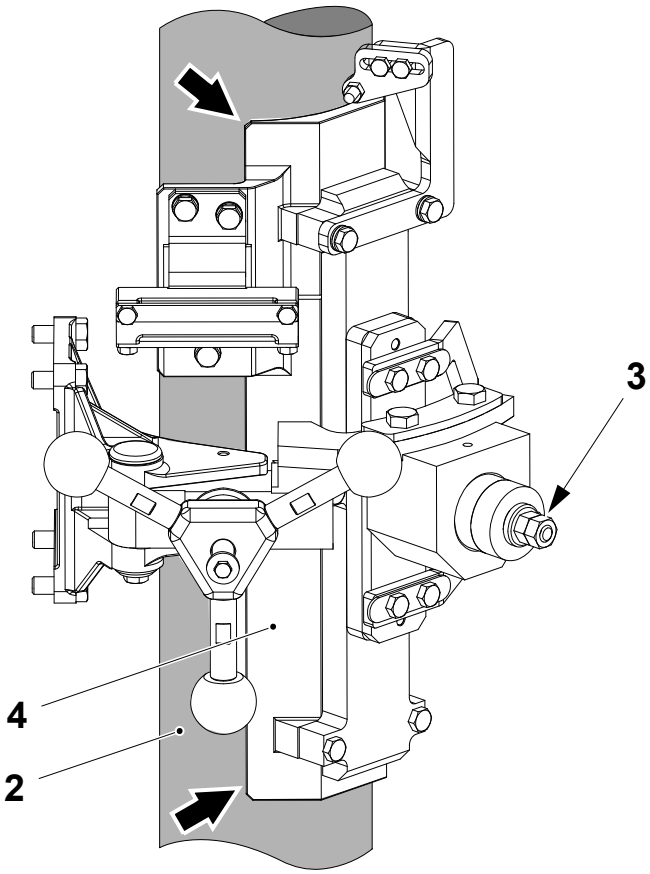

2 Packaging material web
3 Nut
4 Inductor

(Cont'd)

(Cont'd)

q) Loosen the nut (5).

r) Move the slide (6) nearer toward or further away from the packaging material web (2). This changes the distance **C**, see page 1-45.

s) Tighten the nut (5).

t) Step up the machine to HEAT STERILISATION and repeat step m).

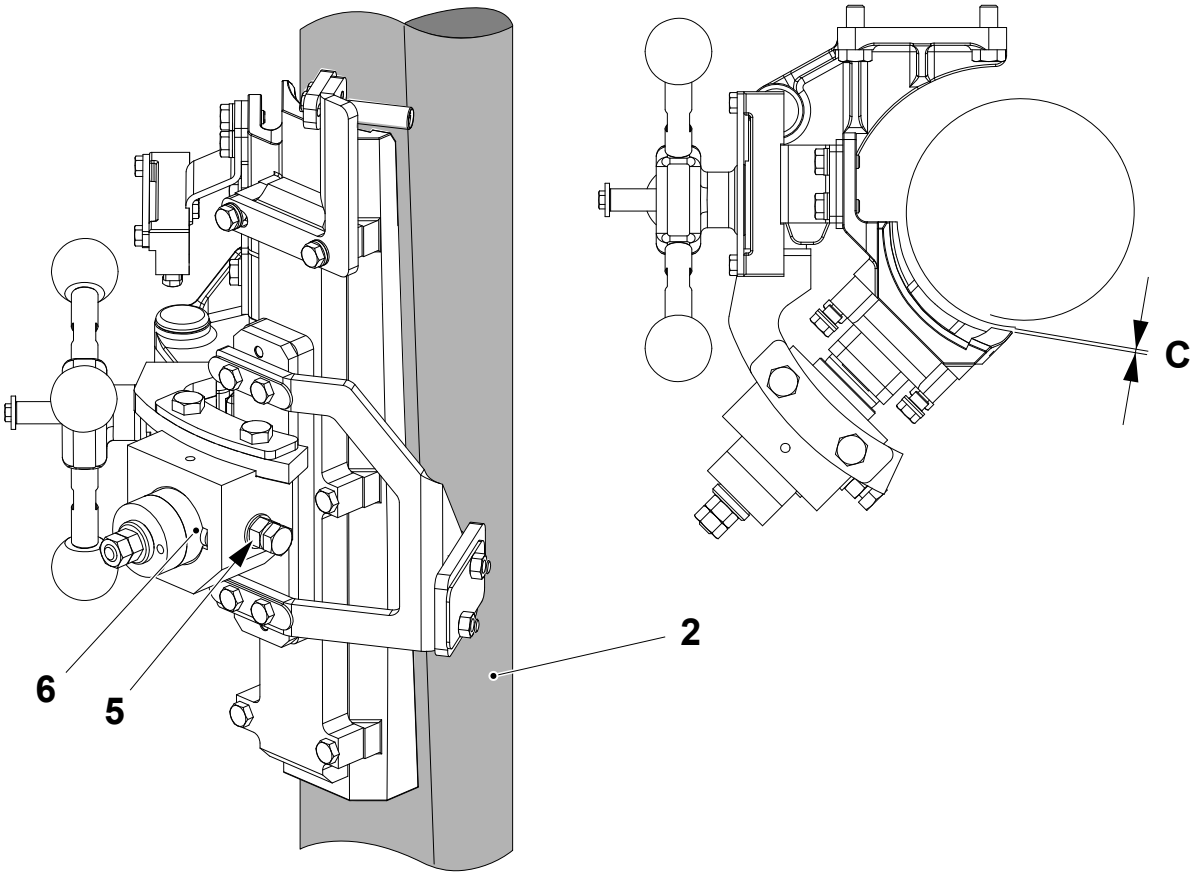

2 Packaging material web
5 Nut
6 Slide

(Cont'd)

(Cont'd)

Note! Using water as a product will allow the machine to be stepped up again without having to perform CIP.

u) Step the machine up to PRODUCTION and run the machine with water as a product.

v) Check the electrical parameters.

- if the result is **incorrect**, step the machine down to STEP ZERO and repeat steps o) to s), u) and v)
- if the parameters are **correct**, continue with step w).

w) Run the machine in PRODUCTION with a normal product.

x) Check the electrical parameters.

- if the parameters are **correct**, fix the inductor in position, see Inductor Fixing.
- If the results are **incorrect**, step the machine down to STEP ZERO and perform CIP. Repeat steps o) to s), w) and x) until the parameters are **correct** and then fix the inductor in position, see Inductor Fixing.

y) Enable the VMN automatic mode, see 1.2.5-4 Longitudinal Sealing - Set VMN Mode.

(Cont'd)

(Cont'd)

LS Inductor Setting Sequence

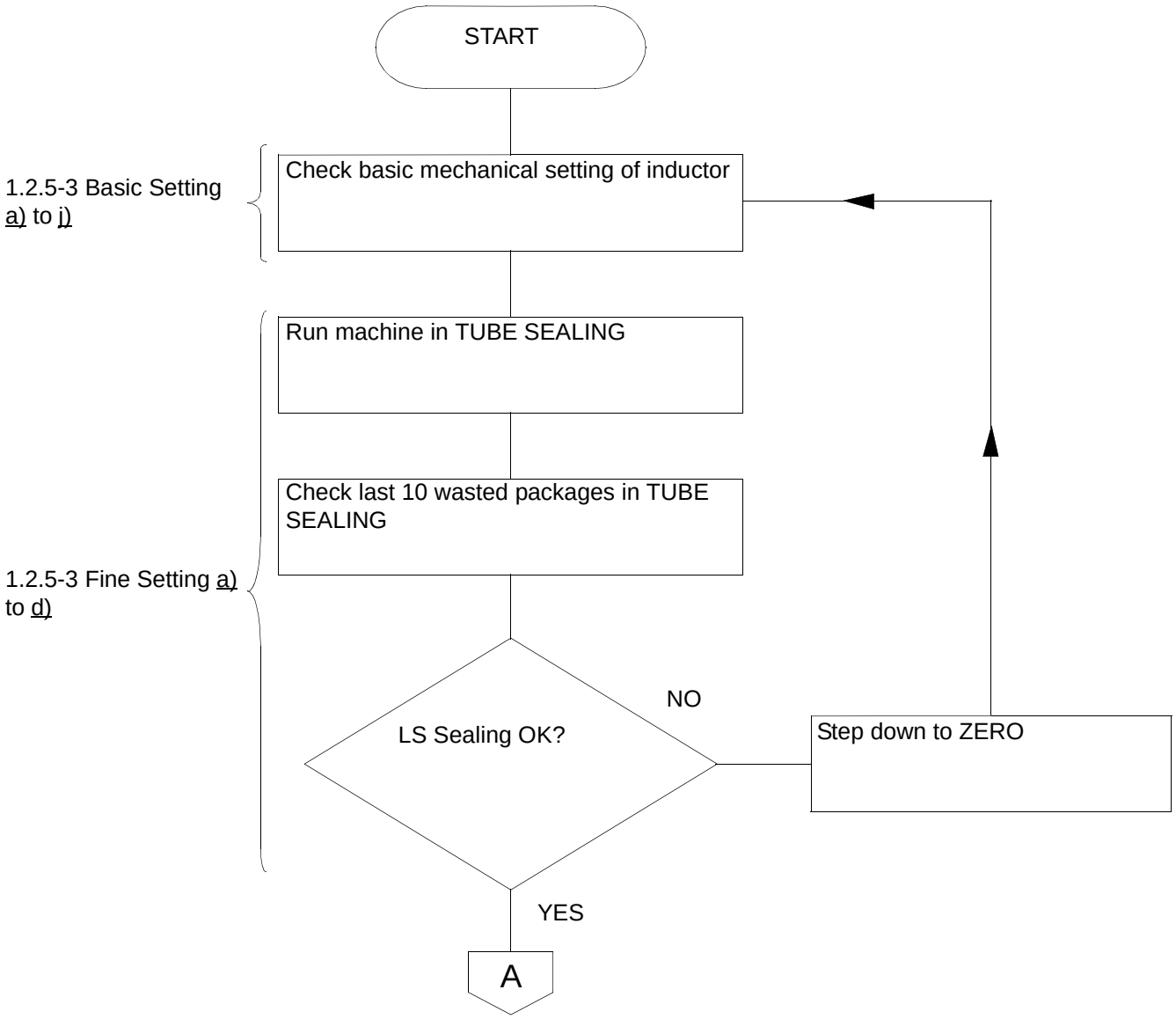

(Cont'd)

(Cont'd)

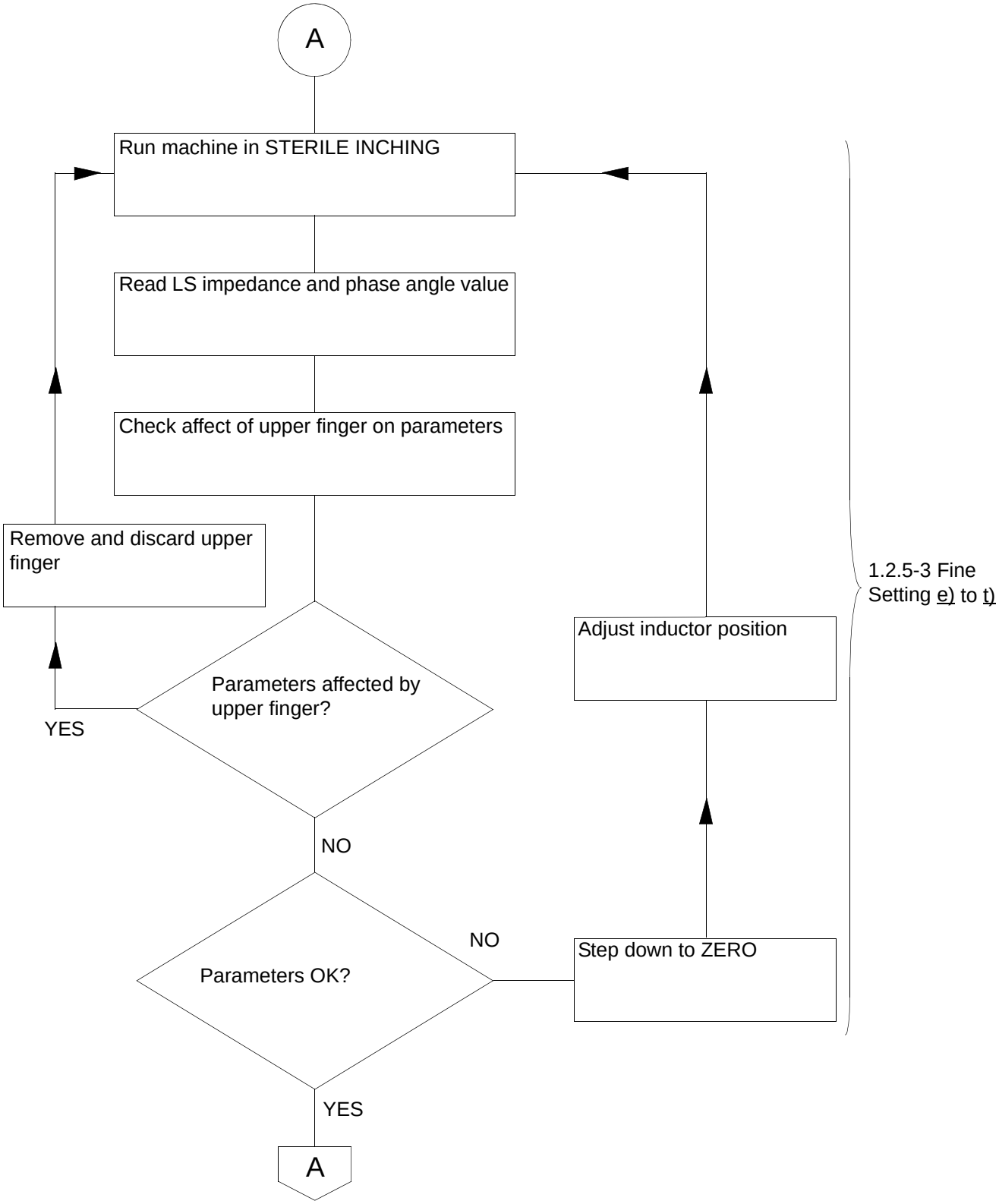
A
Run machine in STERILE INCHING
Read LS impedance and phase angle value
Check affect of upper finger on parameters
Remove and discard upper finger
Parameters affected by upper finger?
YES
NO
Parameters OK?
NO
Step down to ZERO
Adjust inductor position
YES
A
1.2.5-3 Fine Setting e) to t)

(Cont'd)

(Cont'd)

1.2.5-3 Fine Setting u) and v)

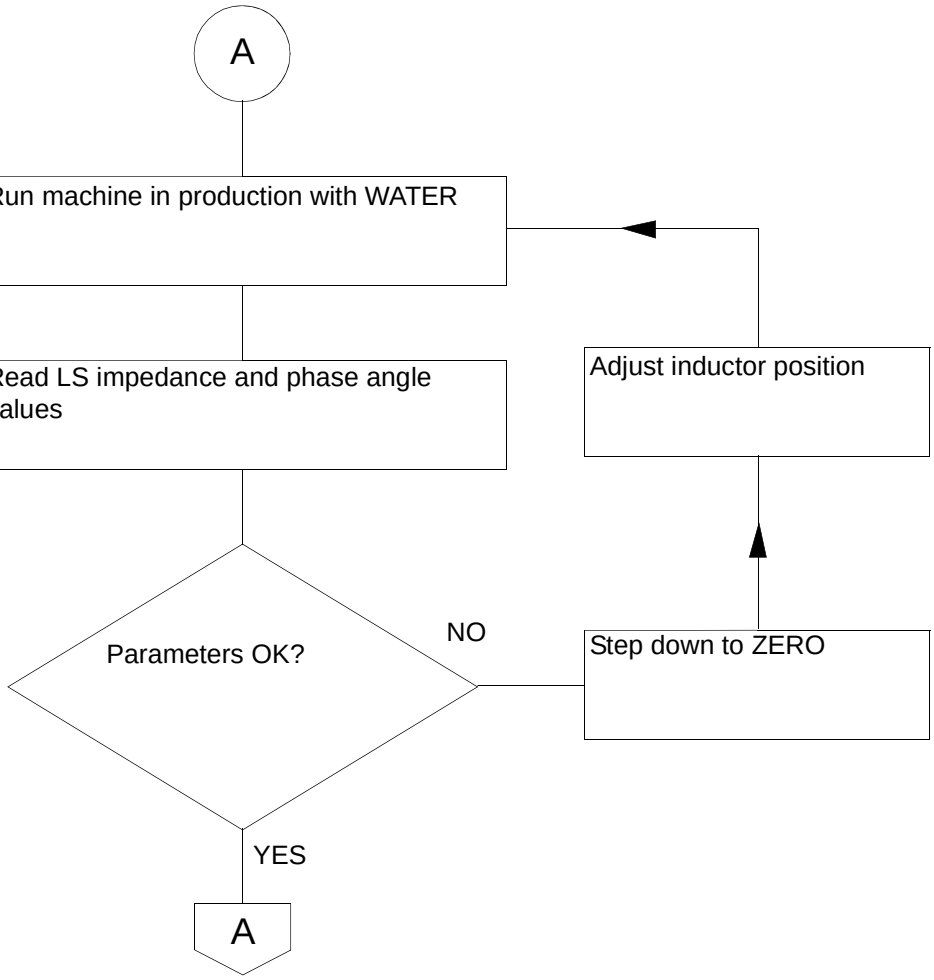

(Cont'd)

(Cont'd)

1.2.5-3 Fine Setting w) and x)

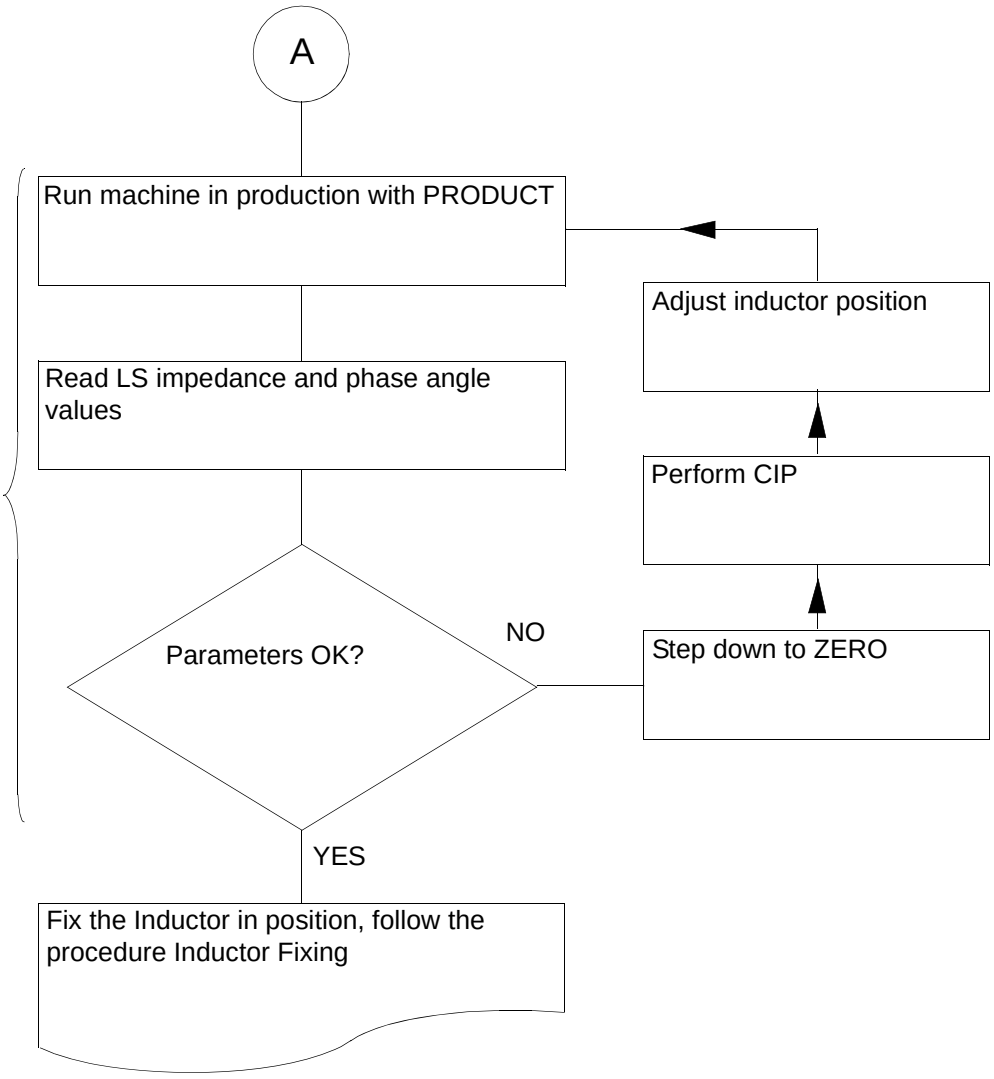

(Cont'd)

(Cont'd)

Inductor Fixing

a) Drill the plates (1) and (2) and pin with the parallel pins (3).

b) Drill the guide (4) and the support (5) and pin with the parallel pin (6).

c) Drill the slides (7) and (8) and pin with the parallel pin (9).

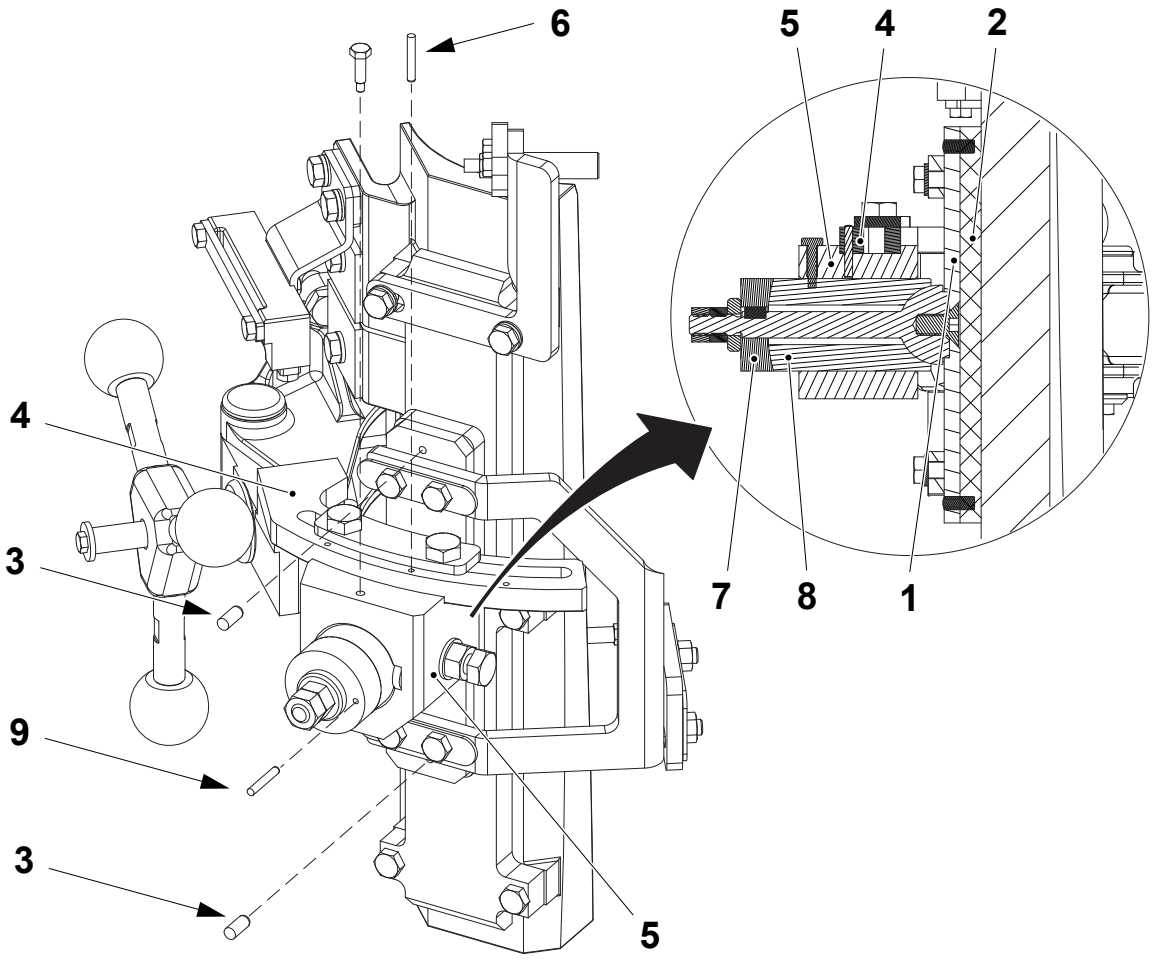

1 Plate
2 Plate
3 Parallel pin
4 Guide
5 Support
6 Parallel pin
7 Slide
8 Slide
9 Parallel pin

(Cont'd)

(Cont'd)

CAUTION

Risk of damage to the equipment.

Be careful to not damage the thread when drilling through the threaded hole (10). The depth of the drilled hole must not exceed 4.0 mm.

d) Drill the slide (8) through the threaded hole (10) by means of a drill bit Ø3 mm and fit the screw (11).

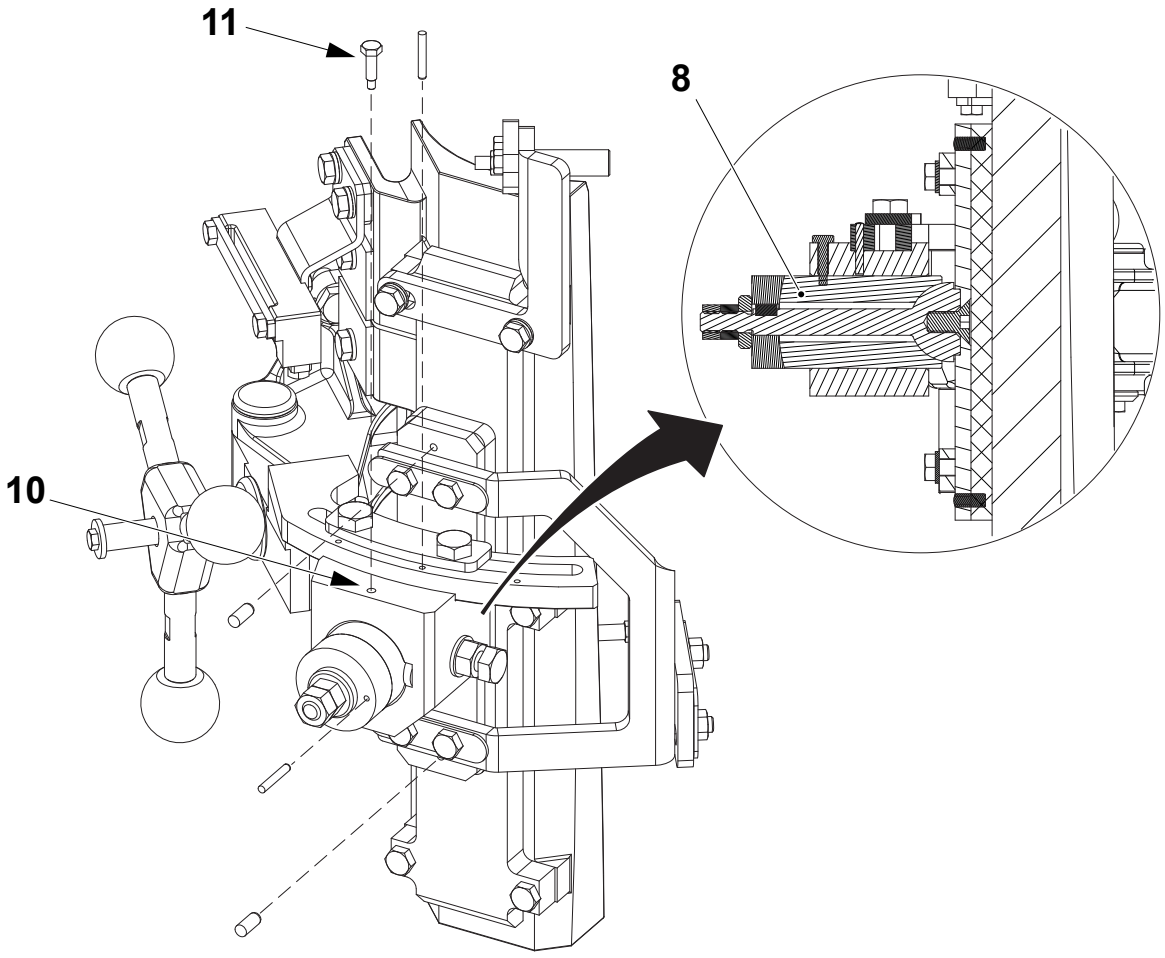

8 Slide
10 Threaded hole
11 Screw

1.2.5-4 Longitudinal Sealing - Set VMN Mode

Machine Status	STEP ZERO
SPC Reference	2657873-0100

The VMN (Variable Matching Network) has two working modes:

- Automatic mode: the LS generator is allowed to self-adjust the capacitance configuration within a limited range from the default configuration
- Fixed (or manual) mode: the generator keeps the default configuration and the system works as a standard transformer.

Before performing manual basic settings on the LS inductor the VMN has to be set to fixed mode; when the LS quality is good and the electrical parameters (phase and impedance) within acceptable limits the VMN could be set to automatic mode.

(Cont'd)

(Cont'd)

Disable VMN Automatic Mode

a) Touch the MAINTENANCE CONTROL button (1) and enter the password required, see 9.6.3-2 HMI - User Management Log On.

b) Touch the TUBE FORMING UNIT button (2).

c) Touch the DISABLE VMN button (3). The ON/OFF button are displayed.

d) Touch the ON button (4) and the OK button (5) to switch to the fixed mode. A green dot appears close to the disable VMN button (3).

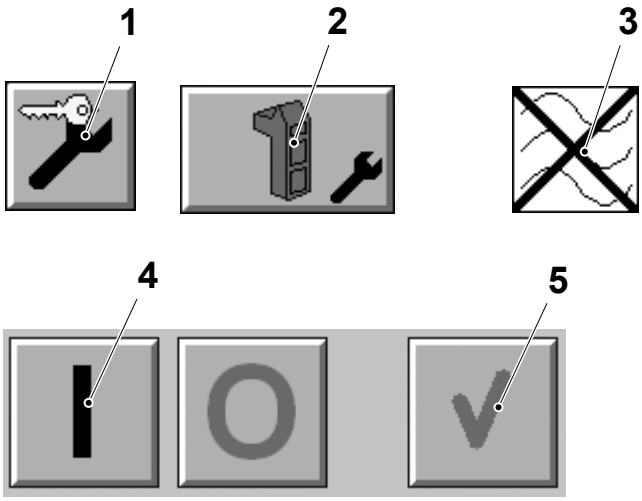

1 Maintenance control button
2 Tube forming unit button
3 Disable VMN button
4 ON button
5 OK button

(Cont'd)

(Cont'd)

Enable VMN Automatic Mode

Note! When the VMN automatic mode is disabled a green dot appears next to the DISABLE VMN button (3).

a) Touch the MAINTENANCE CONTROL button (1) and enter the password required, see 9.6.3-2 HMI - User Management Log On.

b) Touch the TUBE FORMING UNIT button (2).

c) Touch the DISABLE VMN button (3). The ON/OFF button are displayed.

d) Touch the OFF button (4) and the OK button (5) to restore to the automatic mode.

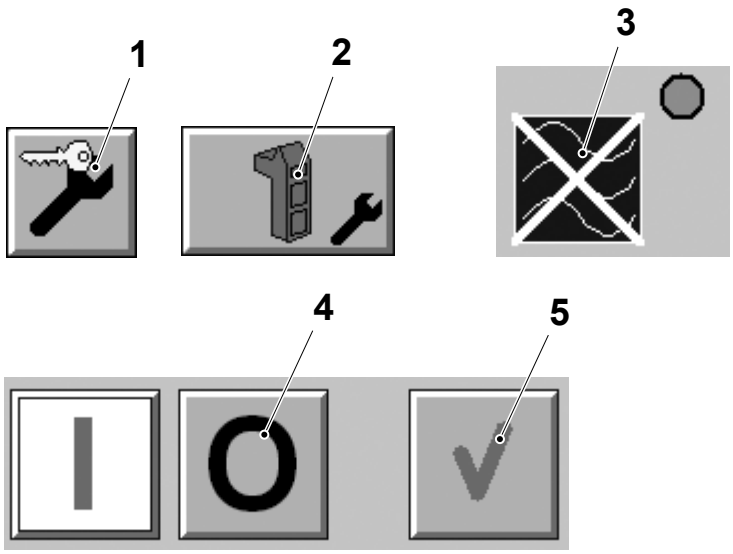

1 Maintenance control button
2 Tube forming unit button
3 Disable VMN button
4 OFF button
5 OK button

1.2.6 Seal

1.2.6-1 Seal - Check

Machine Status	Mains Power OFF Air OFF Steam ON Water OFF
SPC Reference	2512780-0100

Check that:

- the seal (1) is not worn or damaged. Change the seal (1) if the thickness is less than distance **A**.

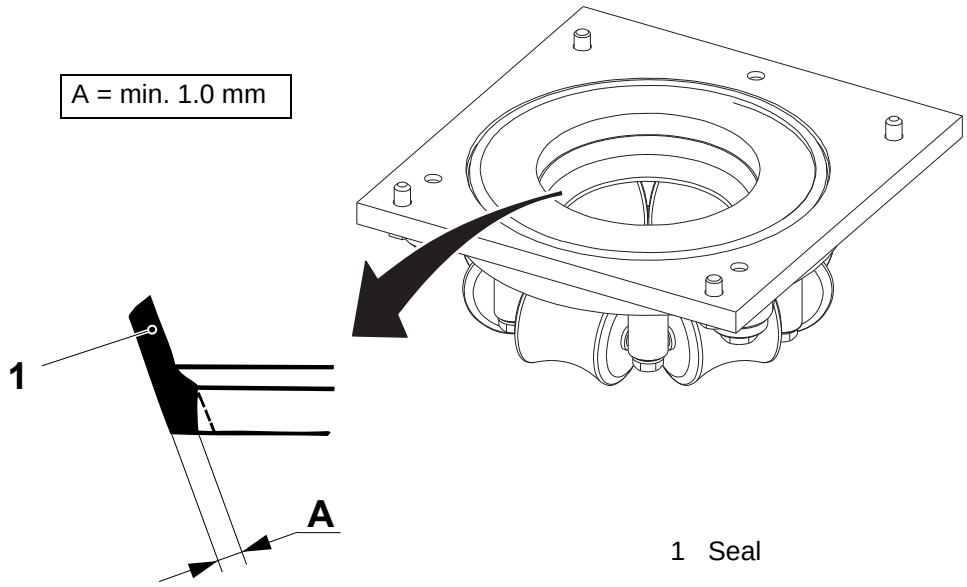

1 Seal

(Cont'd)

(Cont'd)

- the O-ring (2) is not damaged, change if necessary
- the front and rear rollers are in contact with the packaging material with the same pressure
- all rollers in the seal unit rotate freely and are intact, clean or change the rollers if necessary.

Overhaul the seal unit if necessary, see 1.2.6-2 Seal - Change.

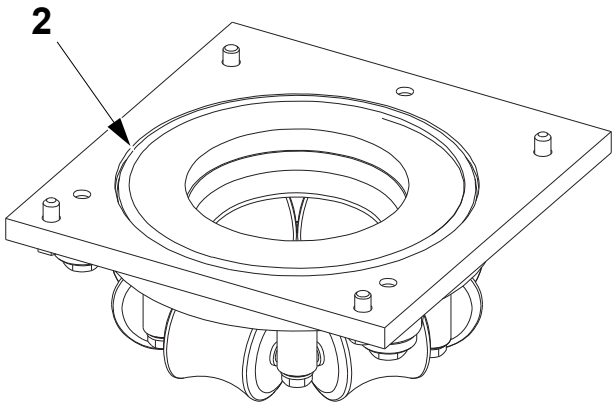

2 O-ring
3 Cap slide

1.2.6-2 Seal - Change

Machine Status	Mains Power OFF Air OFF Steam ON Water OFF
SPC Reference	2512780-0100

Note! Make sure that the O-ring (6) and seal (5) are correctly fitted.

a) Remove the filling pipe from the filling machine.

b) Remove the screws (1) and the seal assembly.

c) Remove the screws (2) and separate the ring (3) together with the rollers from the plate (4).

d) Change the seal (5) and the O-ring (6).

e) Assemble in the reverse order.

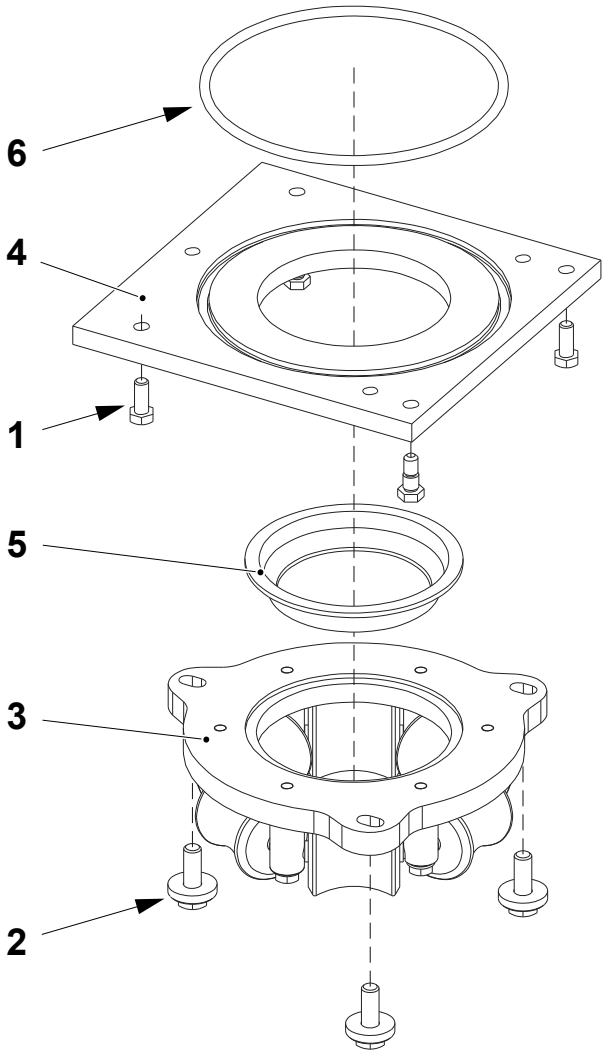

1 Screw
2 Screw
3 Ring
4 Plate
5 Seal
6 O-Ring

1.2.6-3 Seal - Set

Machine Status	PRODUCTION
SPC Reference	2512780-0100

Loosen the screws (1) and while the machine is running, let the seal assembly (2) self-adjust with the position of the packaging material tube. Tighten the screws (1).

Drill the hole Ø 4.00 mm (3) in the position indicated in the illustration and fit the pin (4) to fix the position of the seal.

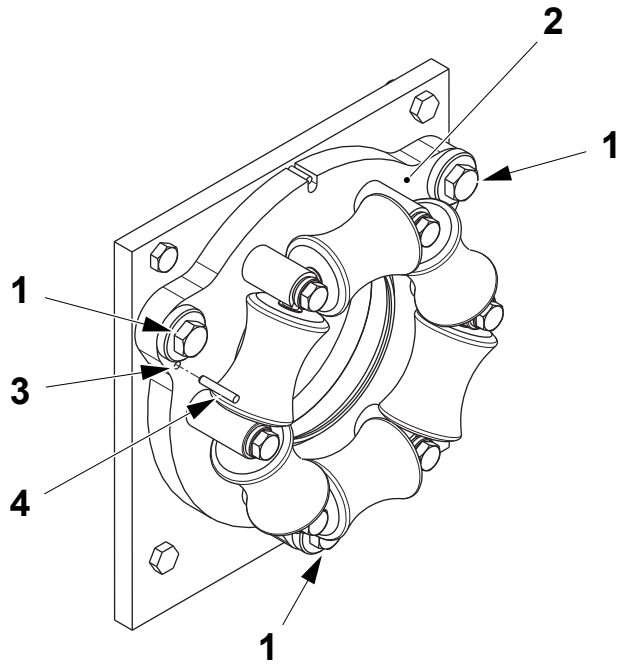

1 Screw
2 Seal assembly
3 Hole
4 Pin

1.3 Drying Chamber

SPC Reference	2539450-0300

1.3-1 Drying Chamber - Check Rollers

Machine Status	Mains Power OFF Air OFF Steam ON Water OFF
SPC Reference	2539450-0300

WARNING
Hydrogen Peroxide.
Follow the Safety Precautions.

(Cont'd)

(Cont'd)

Check the following rollers for wear or damage:

- the bending roller (1). Change if necessary, see 1.3.11-1 Bending - Change Roller
- the calender roller (2). Change if necessary, see 1.3.4-2 Calender Roller - Change
- the squee-gee roller (3). Change if necessary, see 1.3.10-1 Squee-gee Roller - Change

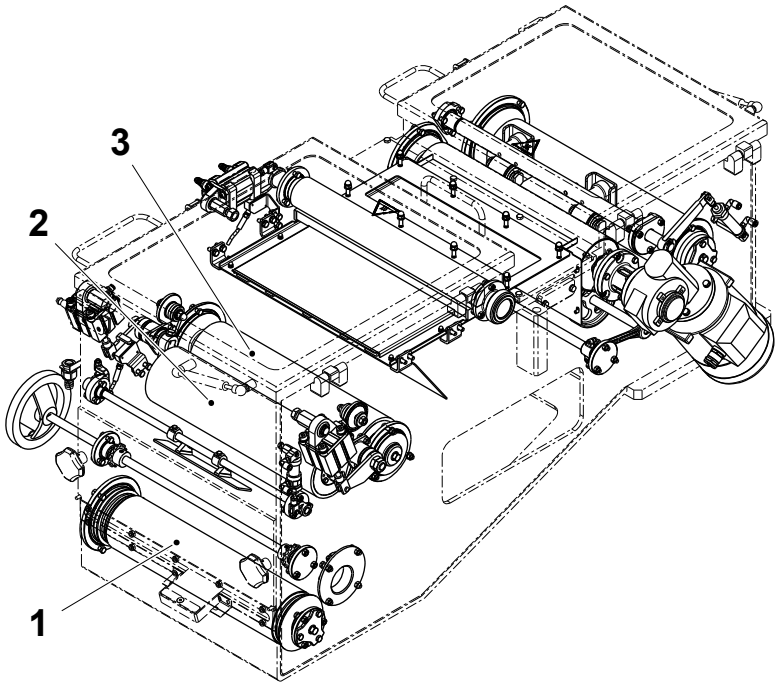

1 Bending roller
2 Calender roller
3 Squee-gee roller

(Cont'd)

(Cont'd)

- the bending roller (4). Change if necessary, see 1.3.2-1 Bending Roller - Change
- the drive roller (5). Change if necessary, see 1.3.3-2 Drive Roller - Change
- the pendulum roller (6). See 1.3.8-1 Pendulum Roller - Check.
- the bending roller (7). Change if necessary, see 1.3.6-1 Bending Roller - Change

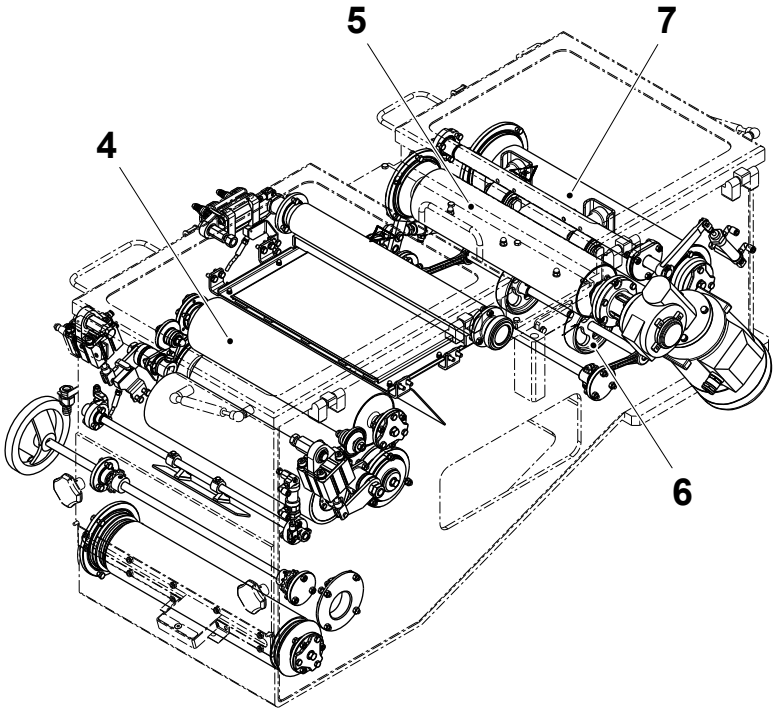

4 Bending roller
5 Drive roller
6 Pendulum roller
7 Adjusting roller

1.3-2 Drying Chamber - Grease Roller Ball Bearings

Machine Status	Mains Power OFF Air OFF Steam ON Water OFF
Consumables	PTFE Grease TP No. 90296-0091
SPC Reference	2539450-0300

WARNING
Hydrogen Peroxide.
Follow the Safety Precautions.

Grease the ball bearings of the following rollers:

- the bending roller (1)
- the squee-gee roller (2)
- the bending roller (3).

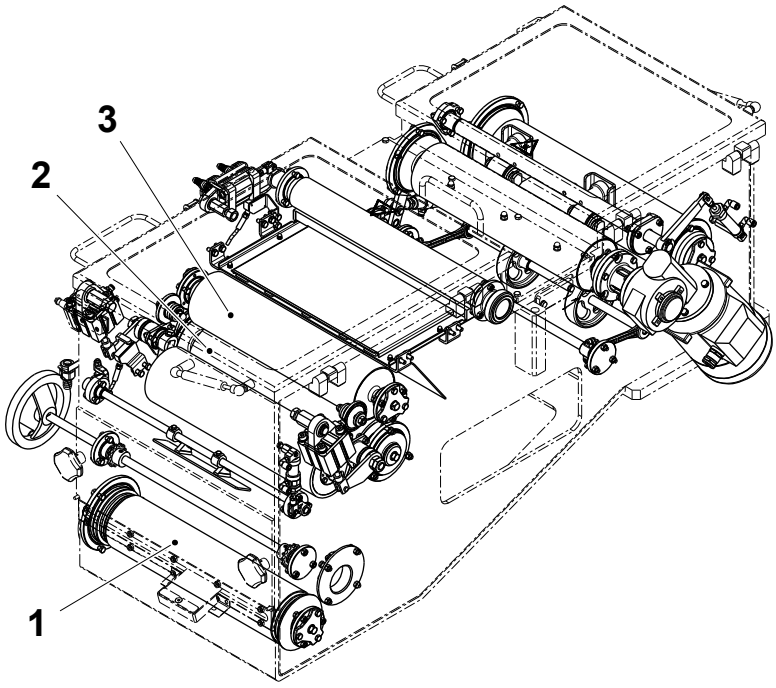

1 Bending roller
2 Squee-gee roller
3 Bending roller

(Cont'd)

(Cont'd)

Proceed as follows:

a) Remove the screws (4) and the lid (5).

b) Grease the ball bearing (6).

c) Assemble in the reverse order.

d) Repeat on the other side of the roller.

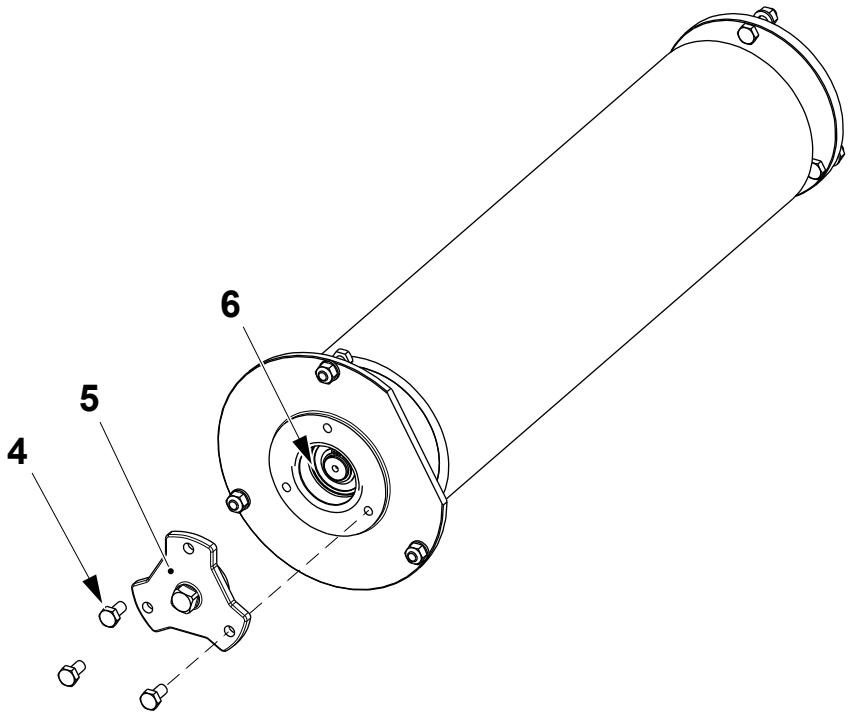

4 Screw
5 Lid
6 Ball bearing

1.3-3 Drying Chamber - Leakage Detection

Machine Status	PRODUCTION
Special Equipment	Leak Finding Equipment TP No. 533014-0100
SPC Reference	2539450-0300

WARNING
Hydrogen Peroxide.
Follow the Safety Precautions.

a) Operate the machine in PRODUCTION and perform a SHORT STOP.

b) Step down the machine to ZERO with the packaging material tube filled with product. If possible let the machine cool down.

c) Check the overlap, see 1.2.1-3 Lower Forming Ring - Set Overlap.

(Cont'd)

(Cont'd)

d) Remove the door damper (1) and fit the pressure gauge hose (2) to the threaded hole.

e) Remove the thermocouple (3) and fit the pressure gauge hose (4) to the threaded hole.

f) Connect the hose (5) from the equipment for finding leakages to a compressed air line.

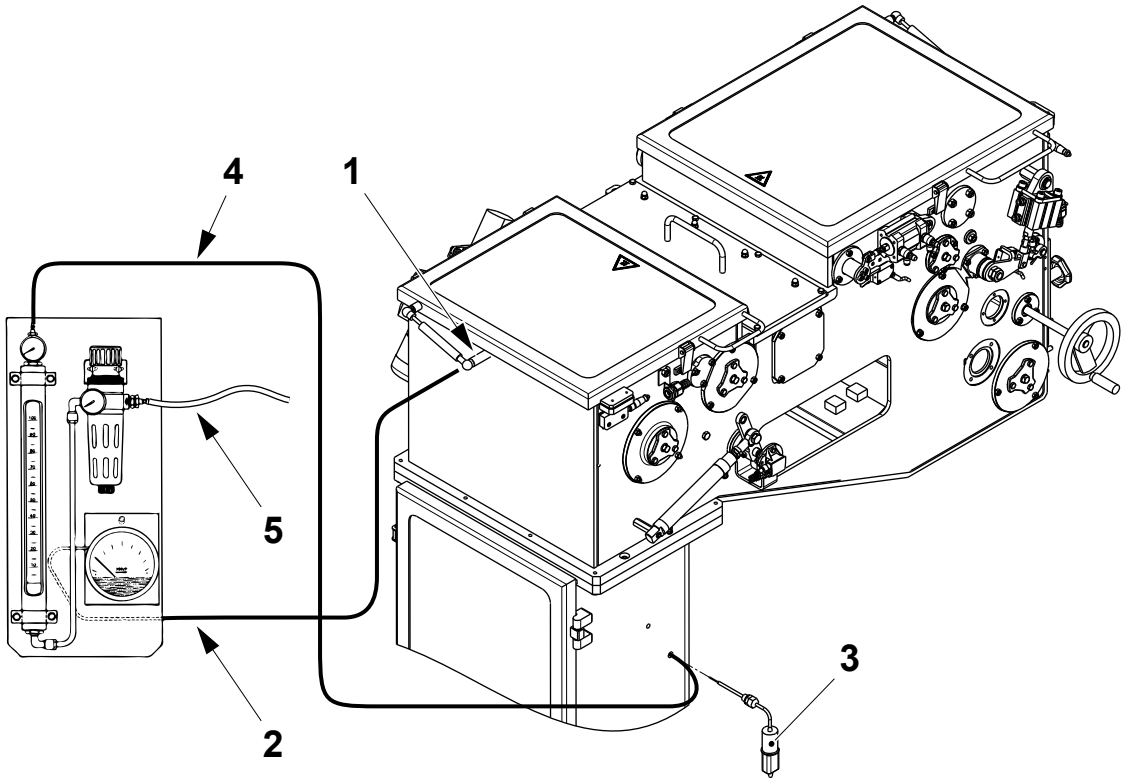

1 Damper
2 Hose
3 Thermocouple
4 Hose
5 Hose
6 Screw

(Cont'd)

(Cont'd)

CAUTION
Risk of damage to the equipment.
High pressure in the aseptic chamber may damage the pressure sensor (8). Disconnect the hose (7) before operating the leak finding equipment.

g) Disconnect the hose (7) marked with the plus sign from the pressure sensor (8) in the connection box U70X3000 (9).

h) Bend the end of the hose (7) and clench it by a strip.

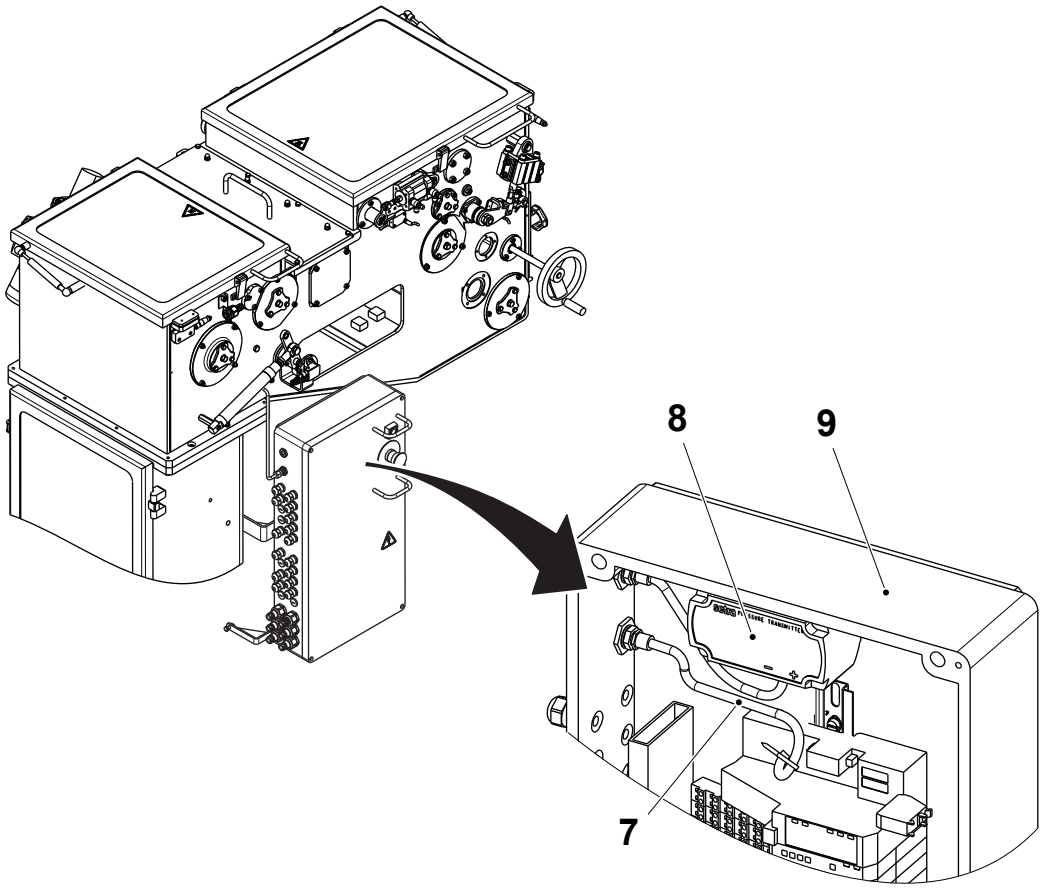

7 Hose
8 Pressure sensor
9 Connection box U70X3000

(Cont'd)

(Cont'd)

Note! Clamp the drainage hose from the electrical cabinet cooler(s).

i) Check that all connections and screws in the drying chamber are tight.

j) Check the door locks, the door hinges and the micro switch, so that the sealing is properly tight and no leaks occur.

k) Check the drying chamber seals. See also 1.2.6-1 Seal - Check and 1.3.1-1 Frame Housing - Check Seal and Gasket.

(Cont'd)

(Cont'd)

l) Close the valves (10), (11) and (12) in the dilution tank.

m) Slowly open the pressure regulator (14) until 200 Pa (20 mm WC) is reached on the pressure gauge (13).

n) Read the flow F% on the flow meter (15) and the pressure P2 on the pressure gauge (16).

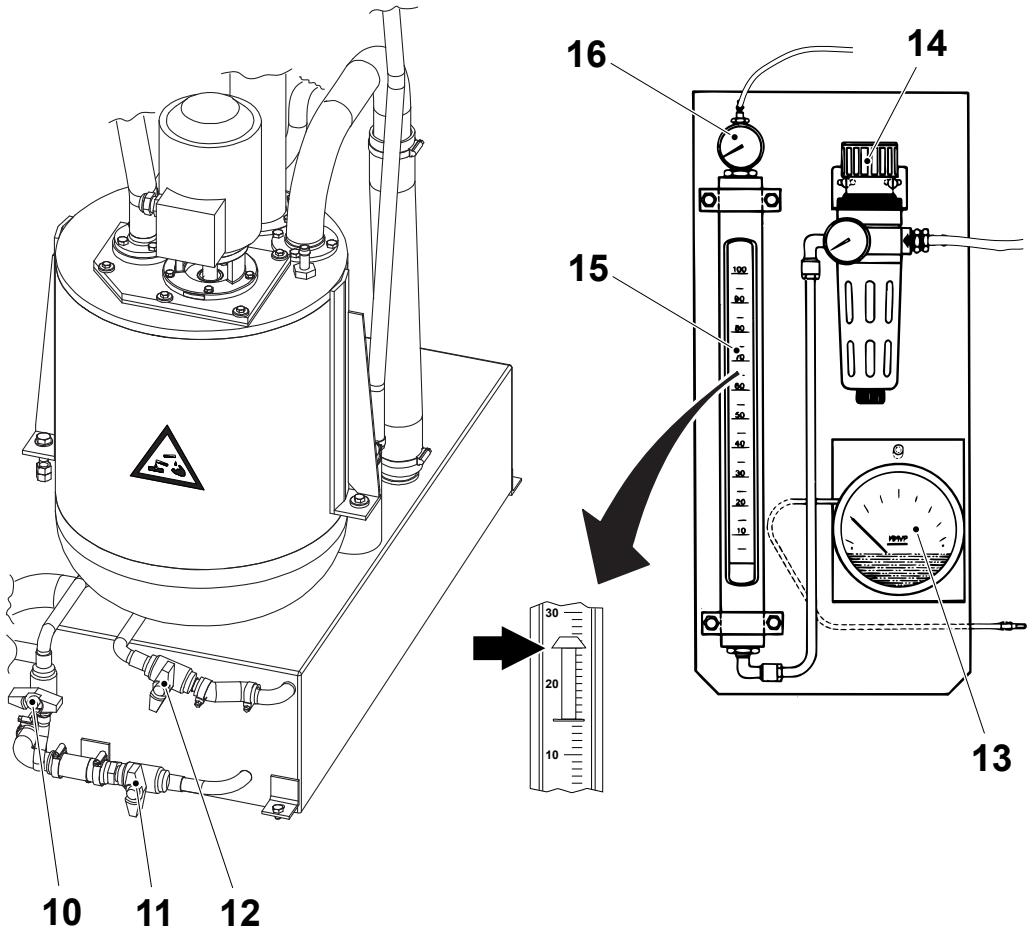

10 Valve
11 Valve
12 Valve
13 Pressure gauge
14 Pressure regulator
15 Flowmeter
16 Pressure gauge

(Cont'd)

(Cont'd)

o) Enter the values on the diagram and read the leakage Q. The maximum leakage allowed is 3m3/h.

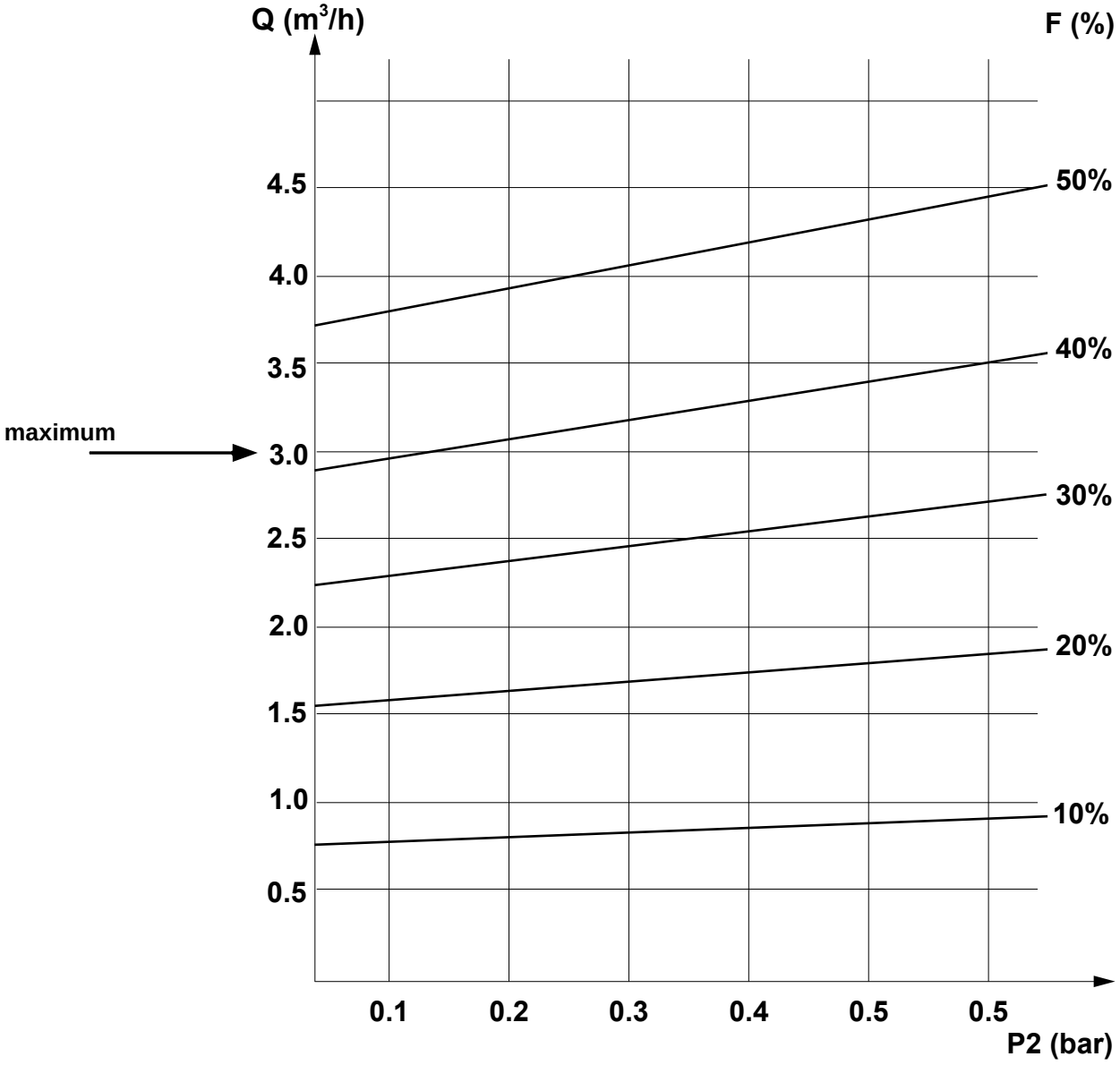

(Cont'd)

p) If the maximum allowed leakage is exceeded, check tightness at the following points:
   - the safety lids in the hydrogen peroxide tank
   - the door seals of the drying chamber
   - the plug holes in the drying chamber
   - the chain seals in the drier
   - the bath entry seal; change if necessary; see 1.3.1-2 Frame Housing - Change Seal and Gasket
   - the seal in the pillar; see 1.2.6-1 Seal - Check.

q) If not, disconnect the equipment for finding leaks.

(Cont'd)

(Cont'd)

r) Connect the hose (7) marked with the plus sign to the pressure sensor (8).

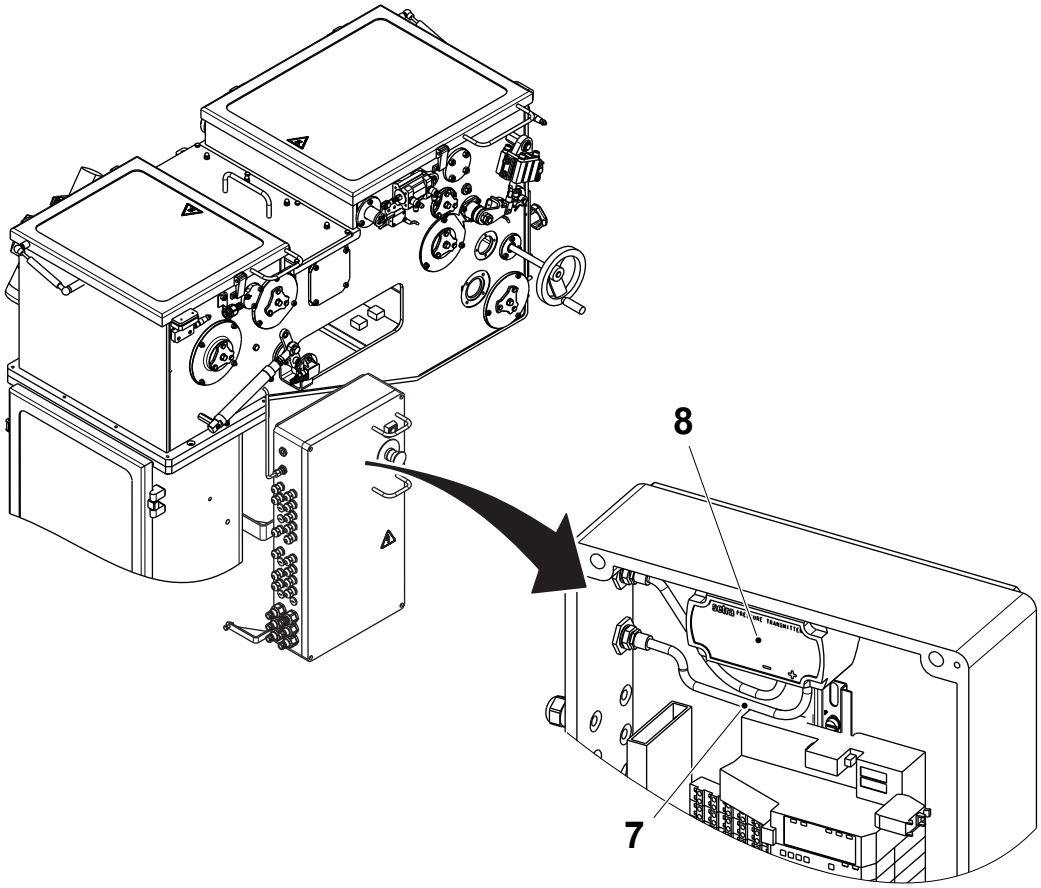

7 Hose
8 Pressure sensor

1.3-4 Drying Chamber - Check Overpressure

Machine Status	PRODUCTION
SPC Reference	2539450-0300

WARNING
Hydrogen Peroxide.
Follow the Safety Precautions.

a) Check the environmental seal, see 1.2.6-1 Seal - Check.

b) Touch the PRODUCTION CONTROL button (1) on the filling machine TPOP screen.

c) Touch the STERILE AIR SYSTEM button (2).

d) Touch the ASEPTIC CHAMBER AIR PRESSURE icon (3) to display the ASEPTIC CHAMBER AIR PRESSURE monitor (4).

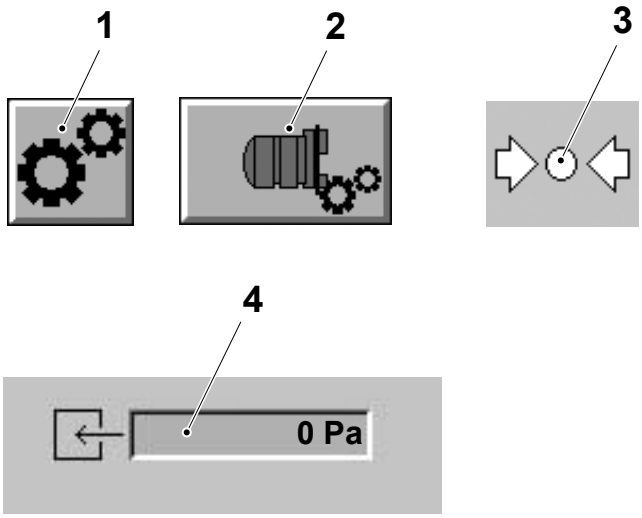

1 Production control button
2 Sterile air system button
3 Aseptic chamber air pressure icon
4 Aseptic chamber air pressure monitor

(Cont'd)

(Cont'd)

Note! If the correct overpressure in the drying chamber (5) cannot be obtained, check with the equipment for tracing leakage, see 1.3-3 Drying Chamber - Leakage Detection.

e) Check that the pressure on the TPOP for the drying chamber (5) is as follows:
   - When the machine is in NORMAL STOP and DRYING the overpressure should be 200 ±50 Pa. For setting instructions, see 1.3-5 Drying Chamber - Set Overpressure
   - When the machine is in PRODUCTION the overpressure should be 250 ±50 Pa. For setting instructions, see 1.3-5 Drying Chamber - Set Overpressure

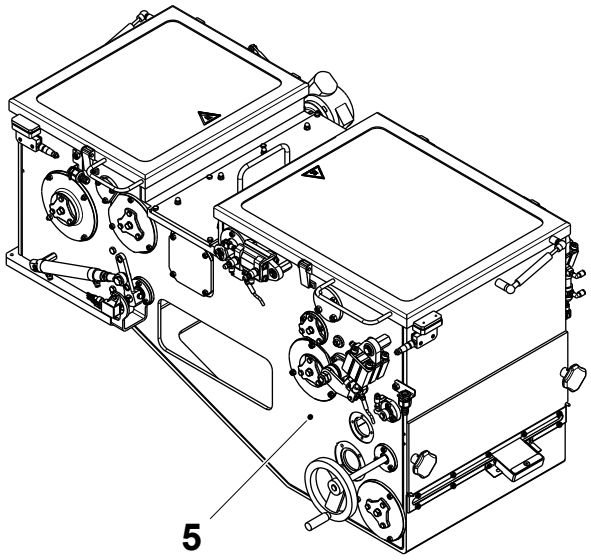

5 Drying Chamber

1.3-5 Drying Chamber - Set Overpressure

Machine Status	NORMAL STOP
SPC Reference	2539450-0300

WARNING
Hydrogen Peroxide.
Follow the Safety Precautions.

a) Touch the PRODUCTION CONTROL button (1) on the filling machine TPOP screen.

b) Touch the STERILE AIR SYSTEM button (2).

c) Touch the ASEPTIC CHAMBER AIR PRESSURE icon (3) to display the ASEPTIC CHAMBER AIR PRESSURE monitor (4).

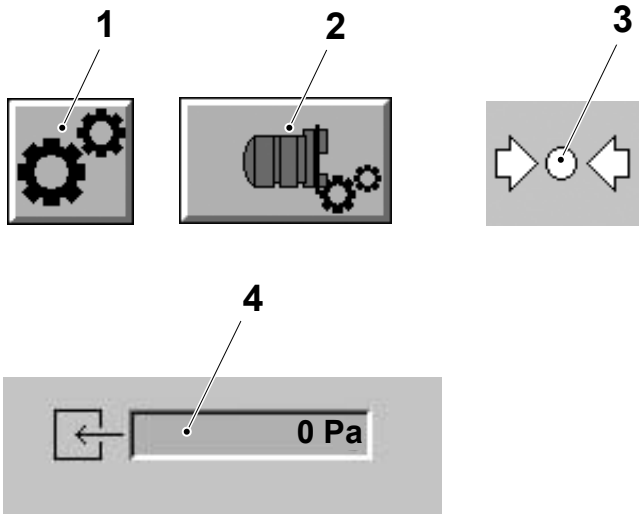

1 Production control button
2 Sterile air system button
3 Aseptic chamber air pressure icon
4 Aseptic chamber air pressure monitor

(Cont'd)

(Cont'd)

Note! If the correct overpressure cannot be obtained, check with the leak tracing equipment, see 1.3-3 Drying Chamber - Leakage Detection.

d) The pressure of the drying chamber should be as follows:
   - When the machine is in NORMAL STOP and DRYING the overpressure should be 200 ±50 Pa.
   - When the machine is in PRODUCTION the overpressure should be 250 ±50 Pa.

(Cont'd)

(Cont'd)

To set the overpressure perform the following:

a) Loosen the screw (5).

b) Adjust the angle of the shaft (6) by means of the stop screw (7).
   - If the pressure is too high, the valve (8) should be open more.
   - If the pressure is too low, the valve (8) should be closed more.

c) Tighten the screw (5).

d) Check that the cylinder (9) can still close the valve (8) completely.

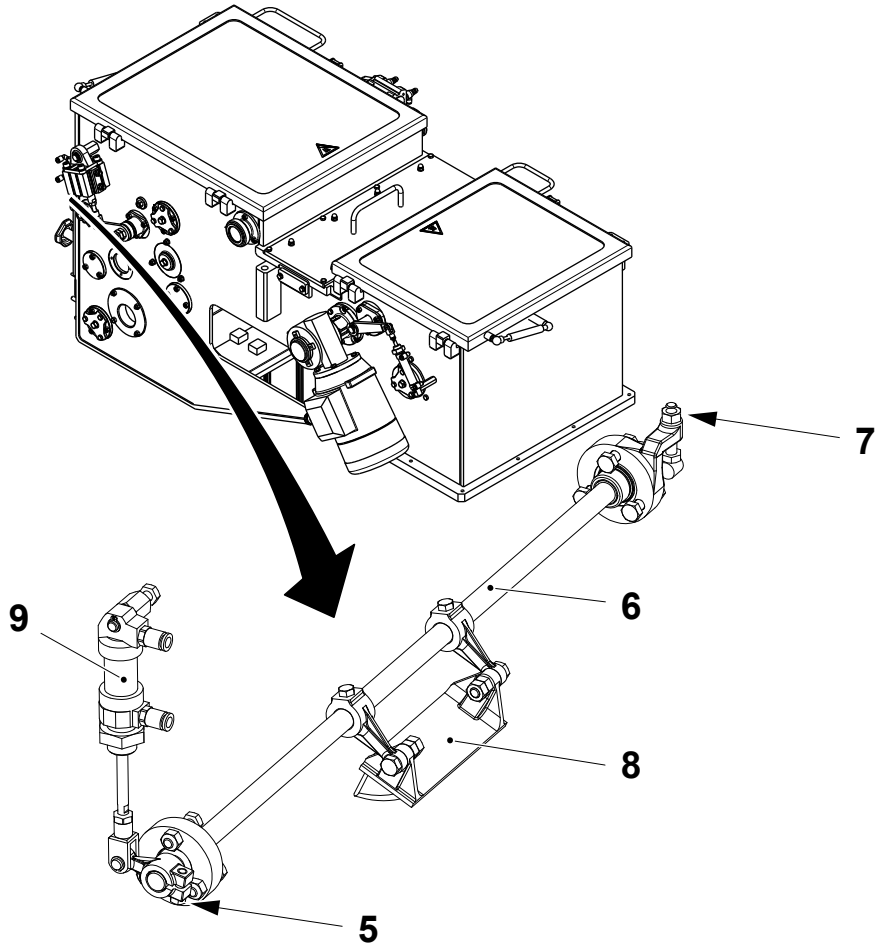

5 Screw
6 Shaft
7 Stop screw
8 Valve
9 Cylinder

1.3.1 Frame Housing

1.3.1-1 Frame Housing - Check Seal and Gasket

Machine Status	Mains Power OFF Air OFF Steam ON Water OFF
SPC Reference	2531047-0100

WARNING
Hydrogen Peroxide.
Follow the Safety Precautions.

(Cont'd)

(Cont'd)

Check the following parts for wear or damage:

- the seal (1). Change it if necessary, see 1.3.1-2 Frame Housing - Change Seal and Gasket
- the gasket (2). Change it if necessary, see 1.3.1-2 Frame Housing - Change Seal and Gasket
- the lid (3). Make sure that the lid (3) is securely fitted against the pillar by the two handles (4). Make sure that there is no packaging material residue. Clean if necessary.

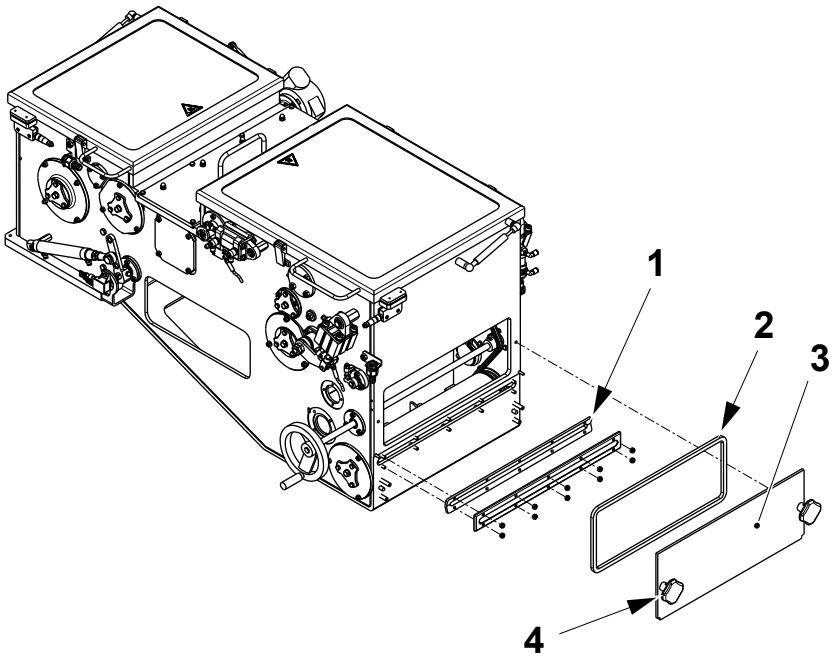

1 Seal
2 Gasket
3 Lid
4 Handle

1.3.1-2 Frame Housing - Change Seal and Gasket

Machine Status	Mains Power OFF Air OFF Steam ON Water OFF
SPC Reference	2531047-0100

WARNING

Hydrogen Peroxide.
Follow the Safety Precautions.

a) Remove the lid (1) by the handles (2).

b) Change the gasket (3).

c) Remove the cover (4).

d) Change the seal (5).

e) Assemble in the reverse order.

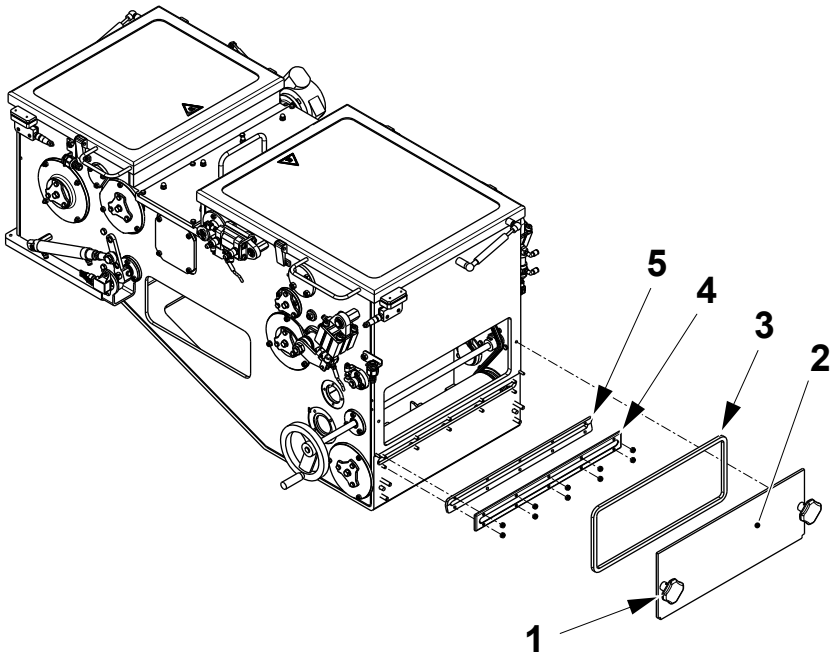

1 Lid
2 Handle
3 Gasket
4 Cover
5 Seal

1.3.2 Bending Roller

1.3.2-1 Bending Roller - Change

Machine Status	Mains Power OFF Air OFF Steam ON Water OFF
SPC Reference	1548736-0100

a) Remove the three nuts (1) and the lid (2).

b) Change the O-ring (3) if necessary.

c) Remove the retaining ring (4) and the ball bearing (5).

d) Remove the screws (6) and the flange (7).

e) Change the O-ring (8) if necessary.

f) Repeat the procedure at the opposite side and change the bending roller (9).

g) Assemble in the reverse order.

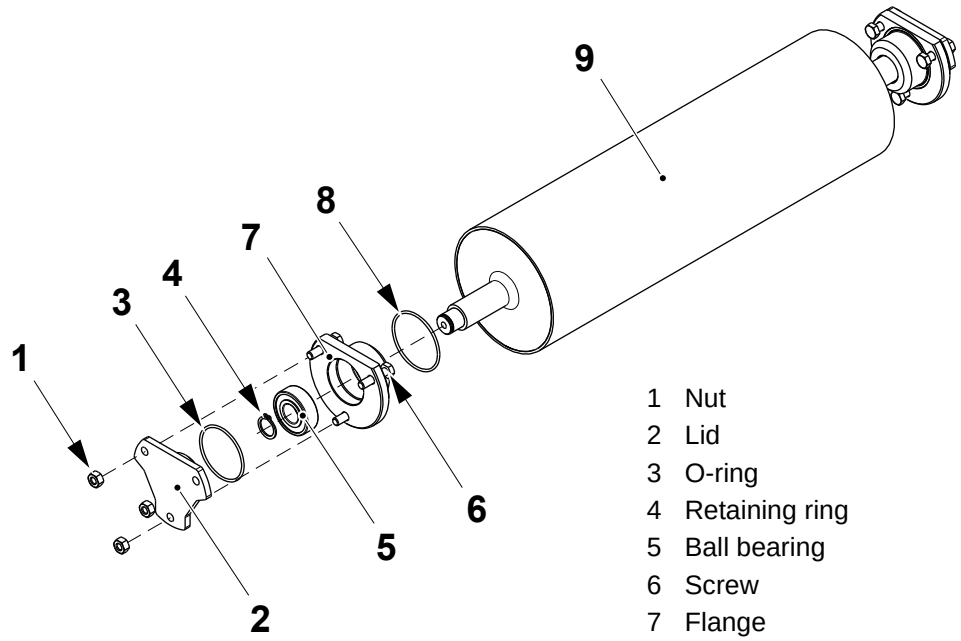

1 Nut
2 Lid
3 O-ring
4 Retaining ring
5 Ball bearing
6 Screw
7 Flange
8 O-ring
9 Roller

1.3.3 Drive Roller

1.3.3-1 Drive Roller - Check

Machine Status	Mains Power OFF Air OFF Steam ON Water OFF
SPC Reference	1548753-0200

Check the following parts for visual wear or damage:

- the drive motor (1) and gear (2) for abnormal noises
- the bending roller (3), check the rubber surface of the bending roller (3) for any marks. Also check for excessive play in the ball bearings by turning the bending roller (3) back and forwards.

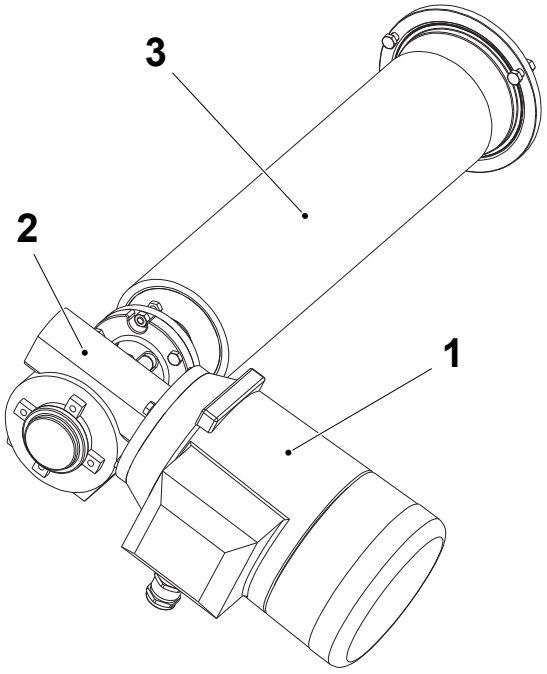

1 Drive motor
2 Gear
3 Bending roller

(Cont'd)

(Cont'd)

If the packaging material is slipping on the roller surface, remove the roller see 1.3.3-2 Drive Roller - Change and remove any layers of peroxide residue with a fine sand paper. Change damaged or worn parts if necessary.

Checking During PRODUCTION

Check that there are no drops of hydrogen peroxide on the packaging material after it has passed the calender rollers. If necessary see 1.3.4-3 Calender Roller - Set Distance or 1.3.4-2 Calender Roller - Change.

1.3.3-2 Drive Roller - Change

Machine Status	Mains Power OFF Air OFF Steam ON Water OFF
SPC Reference	1548753-0200

a) Remove the screws (1) and the nuts (2) from the flange (3). Pull out the complete roller assembly (4).

b) Check the O-ring (5) for damage and change if necessary.

c) Remove the screws (6), the lid (7) and the O-ring (8).

d) Check the O-ring (8) for damage and change if necessary.

e) Remove the retaining ring (9) and the ball bearing (10). Change the ball bearing (10).

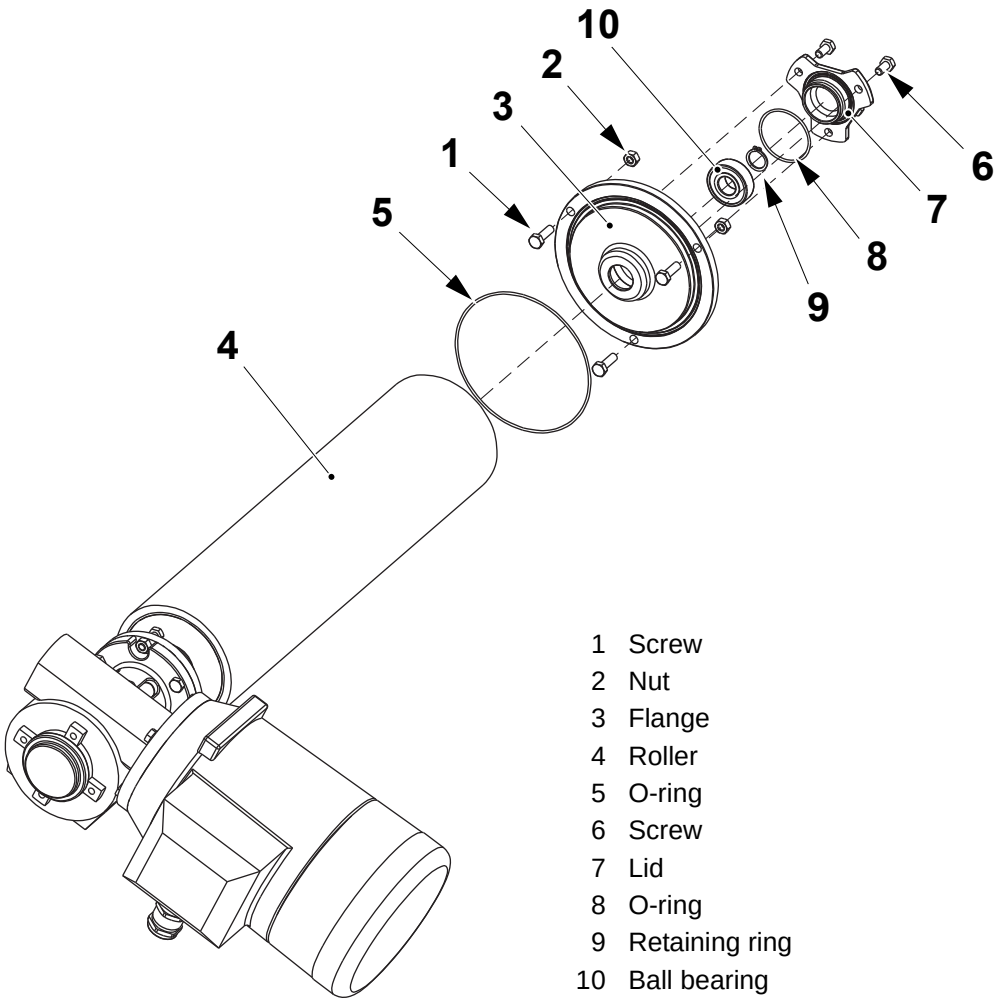

1 Screw
2 Nut
3 Flange
4 Roller
5 O-ring
6 Screw
7 Lid
8 O-ring
9 Retaining ring
10 Ball bearing

(Cont'd)

(Cont'd)

WARNING
Risk of crushing.
The motor (12) is heavy. Use caution when removing the motor (12).

f) Remove the screws (11) and the motor (12).
g) Remove the ball bearing (13) and the varilip (14).
h) Change the ball bearing (13) and change the varilip (14) if necessary.
i) Remove the nuts (15), the screws (16), the flange (17) and the O-ring (18).
j) Check the O-ring (18) for damage and change if necessary.
k) Check the bushing (19) and change if necessary.
l) Assemble in the reverse order.

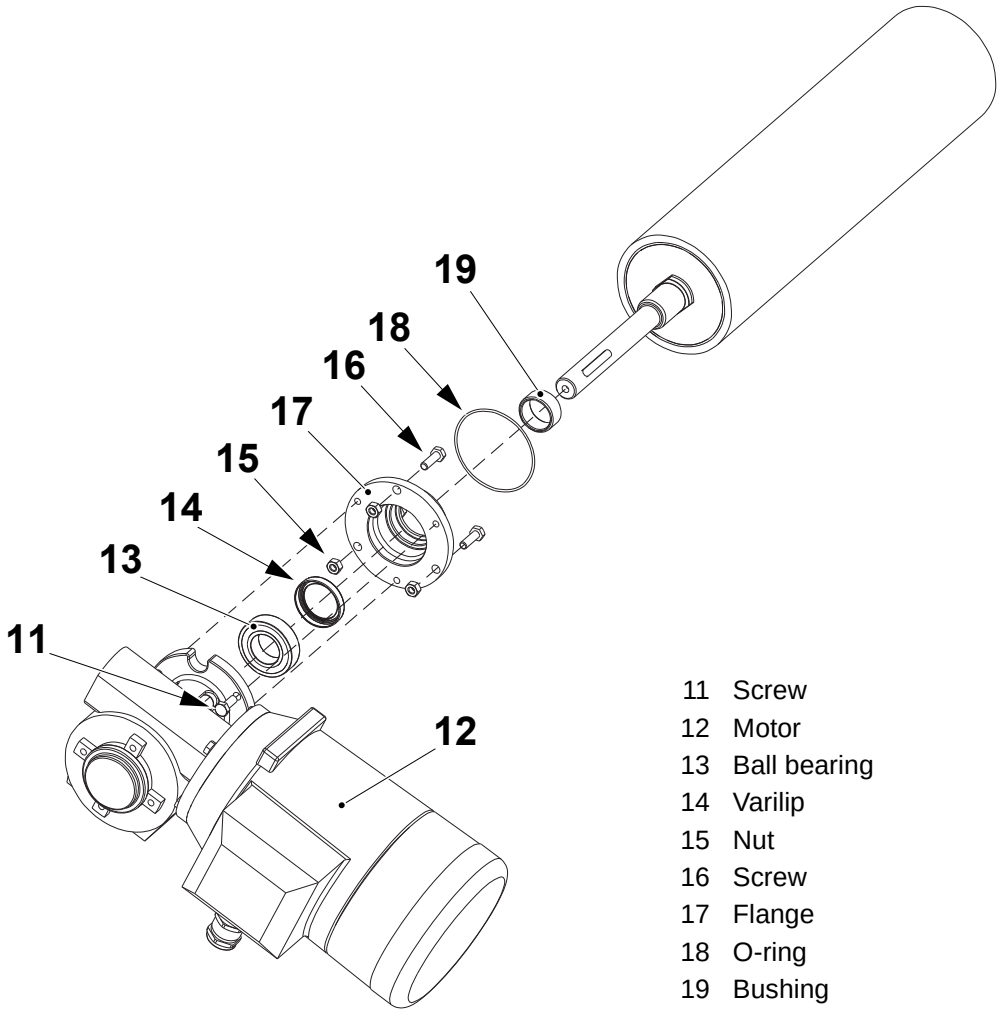

11 Screw
12 Motor
13 Ball bearing
14 Varilip
15 Nut
16 Screw
17 Flange
18 O-ring
19 Bushing

1.3.4 Calender Roller

1.3.4-1 Calender Roller - Check

Machine Status	Mains Power ON Air OFF Steam ON Water OFF
SPC Reference	1548892-0200

WARNING
Hydrogen Peroxide.
Follow the Safety Precautions.

(Cont'd)

(Cont'd)

Check that:

- the calender roller (1) is not worn or damaged. Make sure that the roller rotates freely and that the surface is undamaged, change if necessary
- the radial play of the ball bearings (2) is not excessive. If excessive, change them, see 1.3.4-2 Calender Roller - Change
- the ball bearings (2) are correctly greased
- the two pneumatic cylinders (3) move easily
- the proximity switch (4) functions correctly. Adjust if necessary, see 1.3.4-4 Calender Roller - Set Proximity Switch.

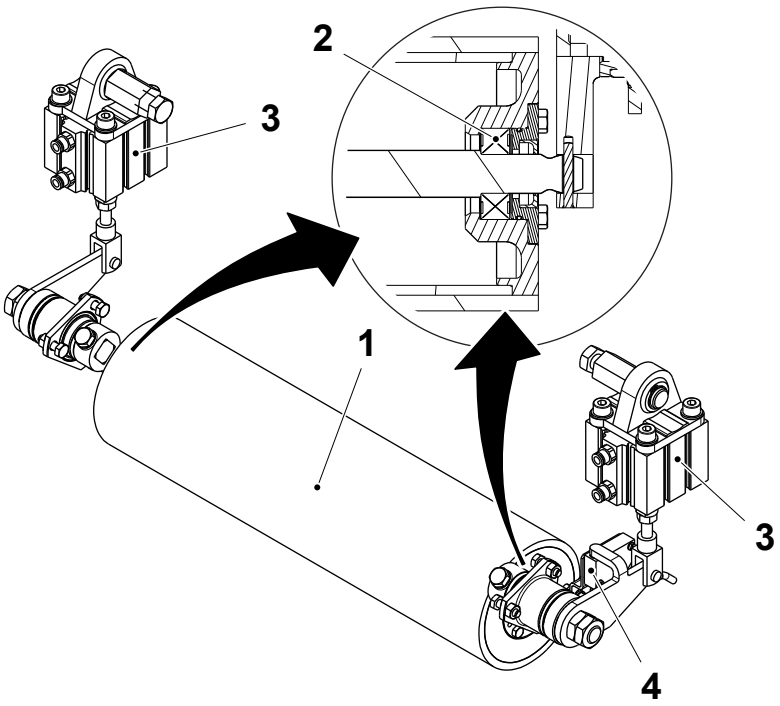

1 Roller
2 Ball bearing
3 Pneumatic cylinder
4 Proximity switch

1.3.4-2 Calender Roller - Change

Machine Status	Mains Power OFF Air OFF Steam ON Water OFF
SPC Reference	1548892-0200

WARNING
Hydrogen Peroxide.
Follow the Safety Precautions.

(Cont'd)

(Cont'd)

a) On both sides, disconnect the rod ends (1) of the cylinders (2).
b) Loosen the screws (3) until the arms (4) are free from the shafts (5).
c) On one side, loosen the screws (6) and move aside the flange (7).
d) Slip off the roller (8) from the shafts (5).

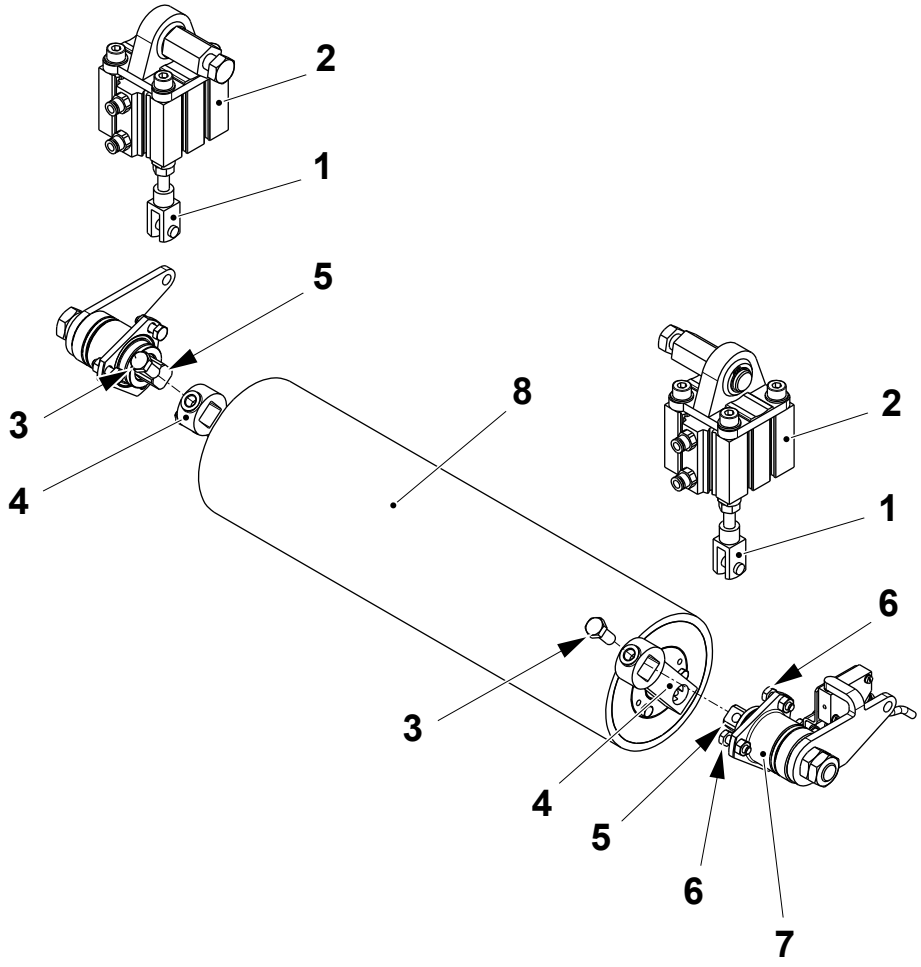

1 Rod end
2 Cylinder
3 Screw
4 Arm
5 Shaft
6 Screw
7 Flange
8 Roller

(Cont'd)

(Cont'd)

Note! The levers (10) are not symmetrical, mark the position of the levers (10) to facilitate the re-assembly of the components.

e) On both sides, remove the screws (6) and the flanges (7).

f) For both the flanges (7), remove the nuts (9), the lever (10) and the shaft (5).

g) Check the bushing (11), the seals (12) and the O-ring (13) for wear or damage. Change if necessary.

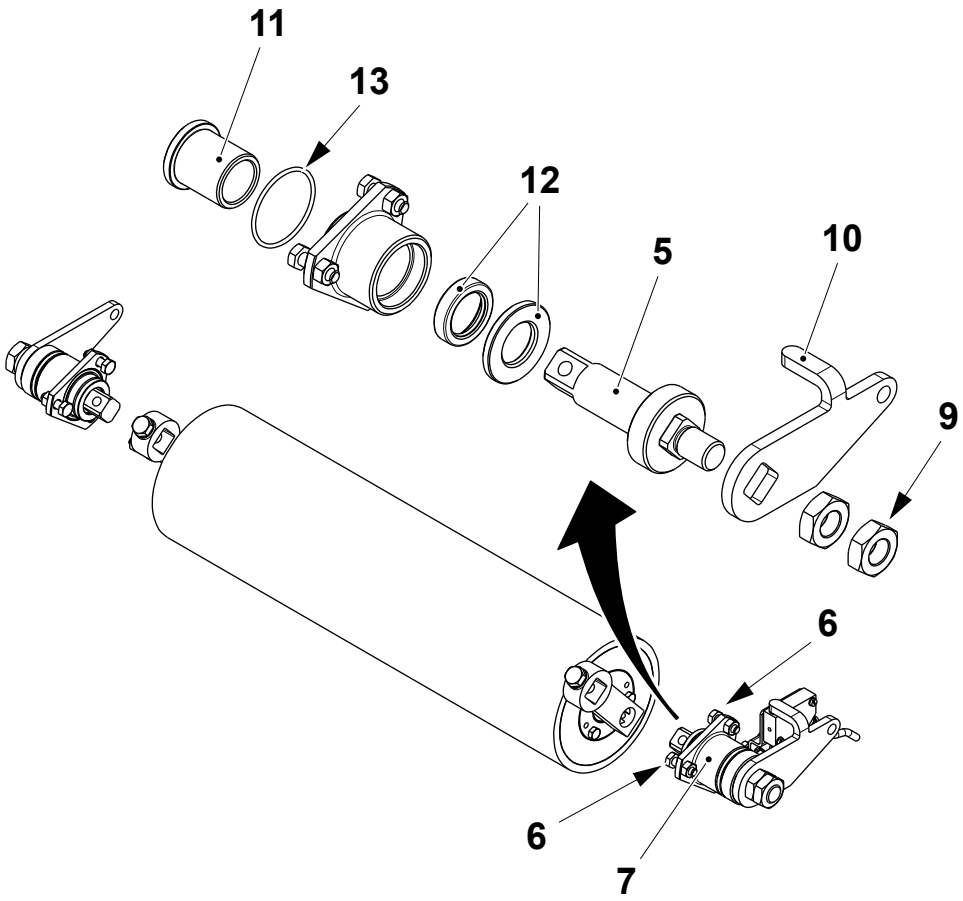

5 Shaft
6 Screw
7 Flange
9 Nut
10 Lever
11 Bushing
12 Seal
13 O-ring

(Cont'd)

(Cont'd)

h) On both ends of the roller (8), remove the arm (4).

i) Slip off the shaft (14).

j) On both ends remove the screws (15) and the flange (16).

k) Remove the sealing ring (17), the ball bearing (18) and the O-ring (19).

l) Check the roller (8), the sealing ring (17), the ball bearing (18) and the O-ring (19) for wear or damage. Change if necessary.

m) Assemble in the reverse order.

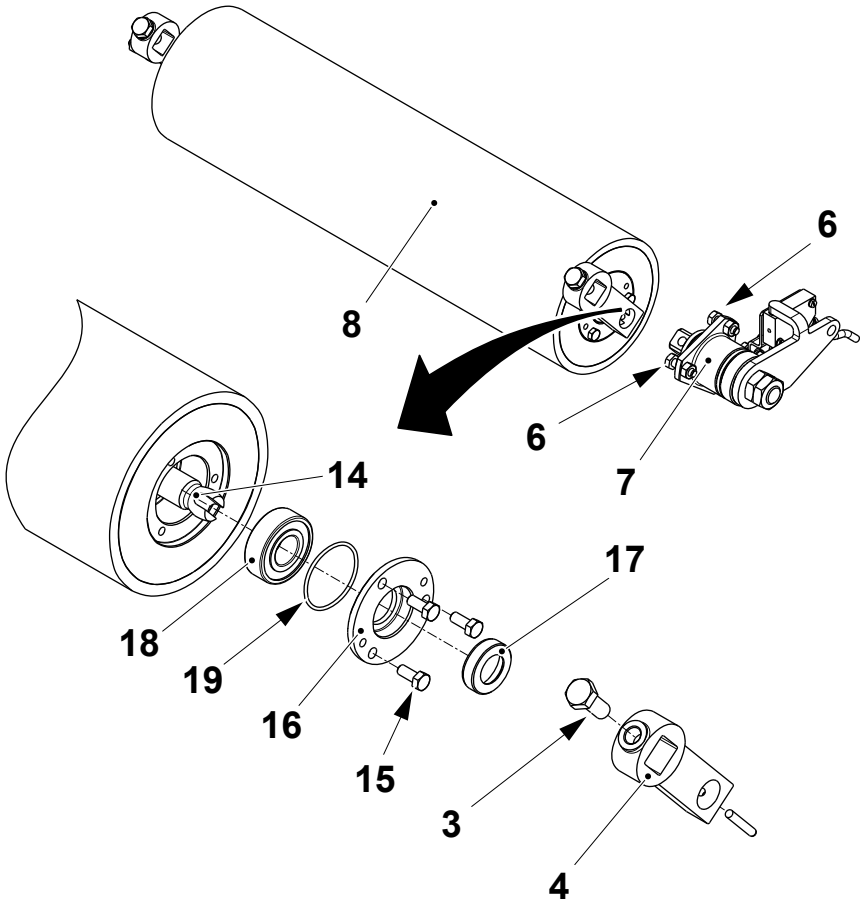

4 Arm
8 Roller
14 Shaft
15 Screw
16 Flange
17 Sealing ring
18 Ball bearing
19 O-ring

(Cont'd)

1.3.4-3 Calender Roller - Set Distance

Machine Status	PREPARATION
SPC Reference	1548892-0200

CAUTION
Risk of damage to the equipment.
The squee-gee roller (3) is made of rubber and can be easily damaged.

Check that the piston rods (1) of the pneumatic cylinders (2) are fully retracted.

Adjust the piston rods (1) on both cylinders until the distance **A**, between the squee-gee roller (3) and the calender roller (4) is obtained.

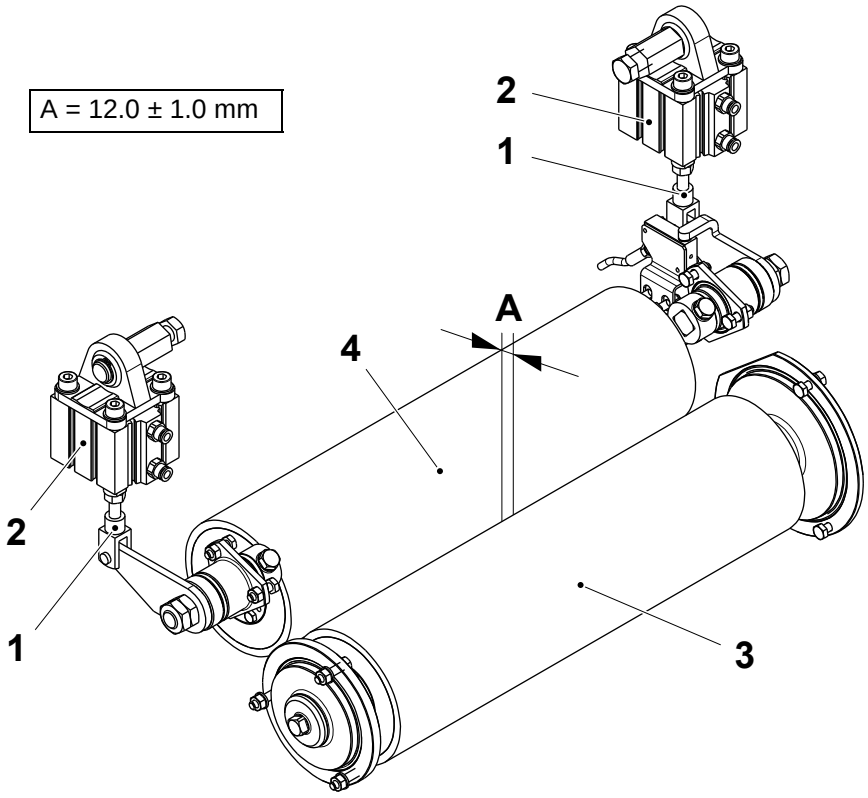

1 Cylinder
2 Piston rod
3 Squee-gee roller
4 Calender roller

1.3.4-4 Calender Roller - Set Proximity Switch

Machine Status	ZERO
SPC Reference	1548892-0200

Note! Valid for machines with T-order: 21208/00001 to 21208/00010. For all other machines follow the procedure on the next page.

a) Set the distance between the calender roller and the squee-gee roller, see 1.3.4-3 Calender Roller - Set Distance.

b) Make sure that the two pneumatic cylinders (1) are fully extended.

c) Loosen the screws (2) and adjust the bracket (3) until the proximity switch (4) LED goes ON.

d) Tighten the screws (2).

e) Make sure that the proximity switch (4) LED goes ON when the two cylinders (1) are fully extended.

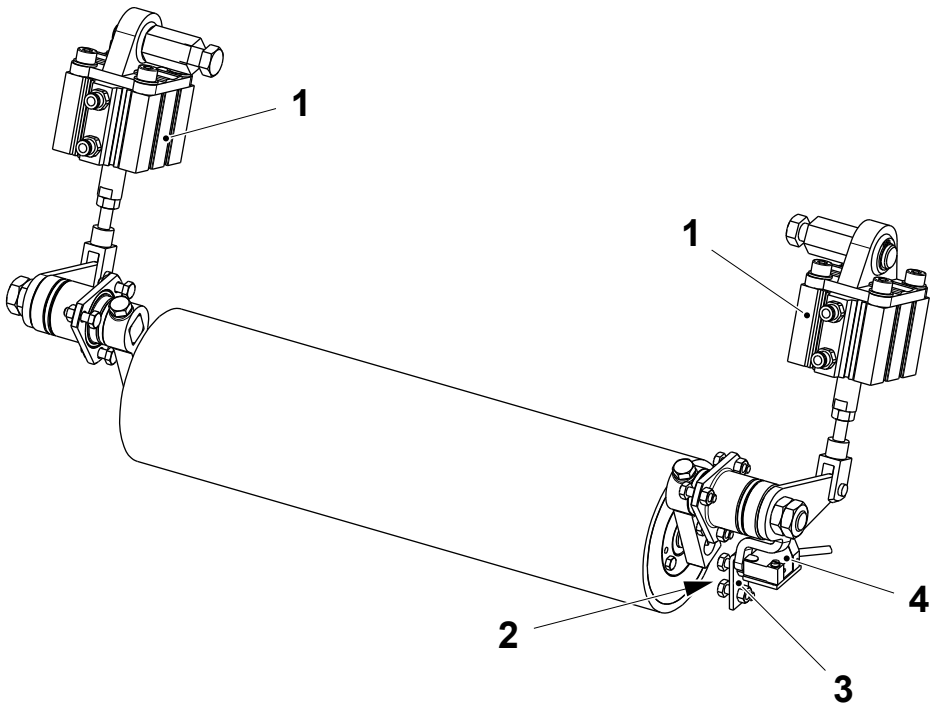

1 Cylinder
2 Screw
3 Bracket
4 Proximity switch

(Cont'd)

(Cont'd)

Note! Valid for machines with T-order: 21208/00011 and above.

Set the distance between the calender roller and the squee-gee roller, see 1.3.4-3 Calender Roller - Set Distance.

Check the distance **A** between the proximity sensor (1) and the plate (2) when the piston rod (3) is fully extended. If necessary, set the distance **A** by loosening the screws (4) and adjusting the position of the bracket (5).

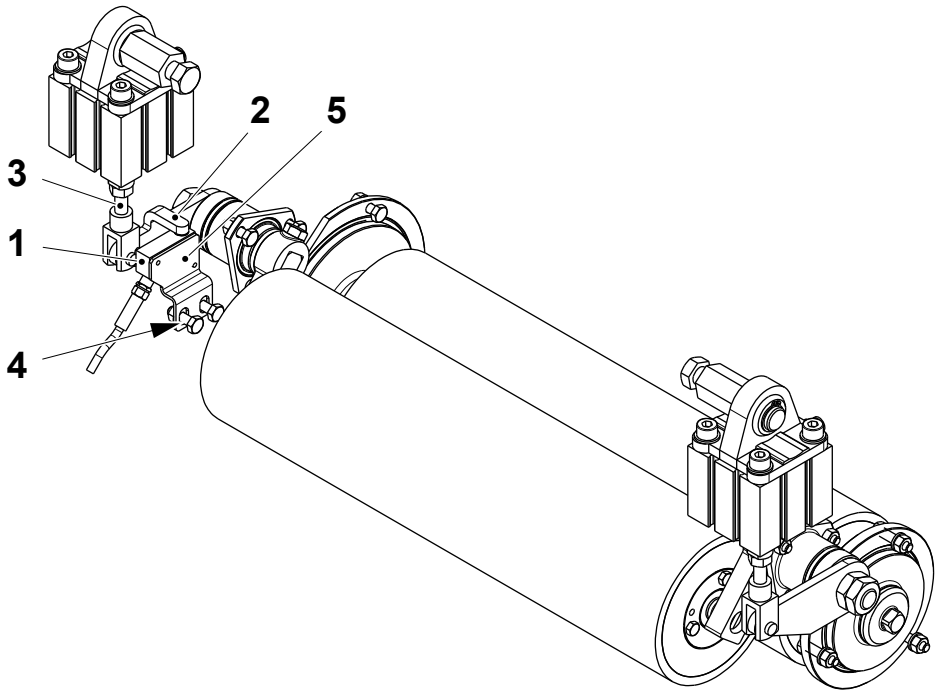

1 Proximity sensor
2 Plate
3 Piston rod
4 Screw
5 Bracket

1.3.5 Crank

1.3.5-1 Crank - Check Chain

Machine Status	Mains Power OFF Air OFF Steam ON Water OFF
SPC Reference	1549573-0200

WARNING

Risk of pinching or crushing injury.

Take care when cranking the packaging material carrier (1) with the handle (2).

Crank the packaging material carrier (1) with the handle (2) until it reaches the highest position. Check the following parts for visual wear or damage:

- the packaging material carrier (1). Check that the teeth in the packaging material carrier (1) are not damaged and that the packaging material carrier is not bent. Change if necessary

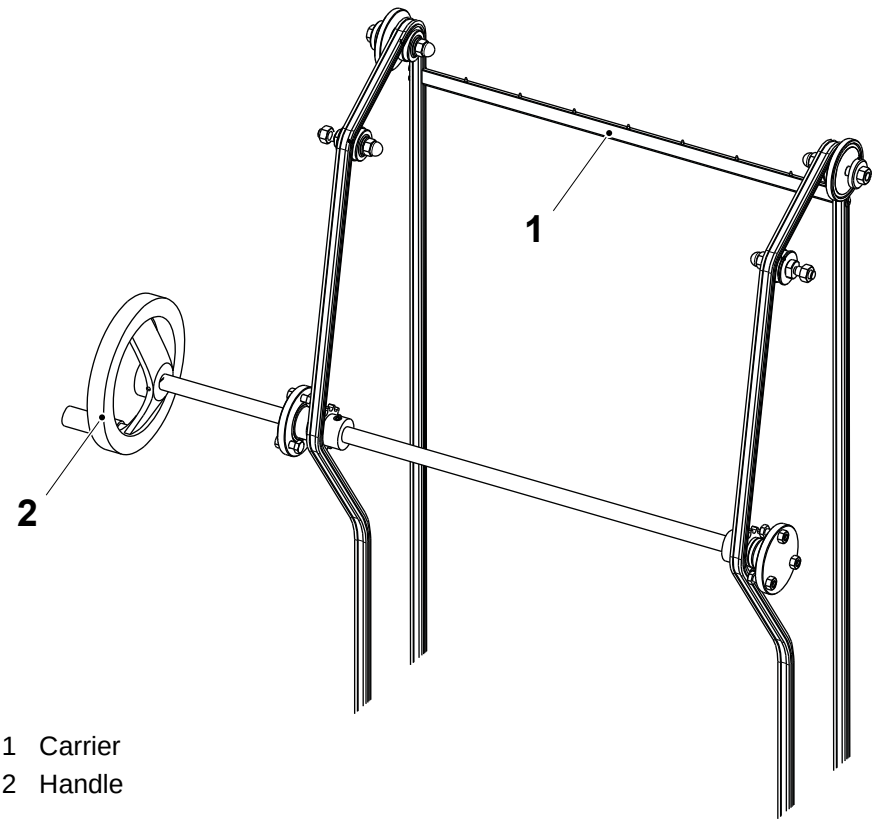

1 Carrier
2 Handle

(Cont'd)

(Cont'd)

- the chains (3). Crank the chains (3) and make sure that they move freely. If the chains are too loose, tighten them by loosening the nuts (4) and raising the wheels (5)

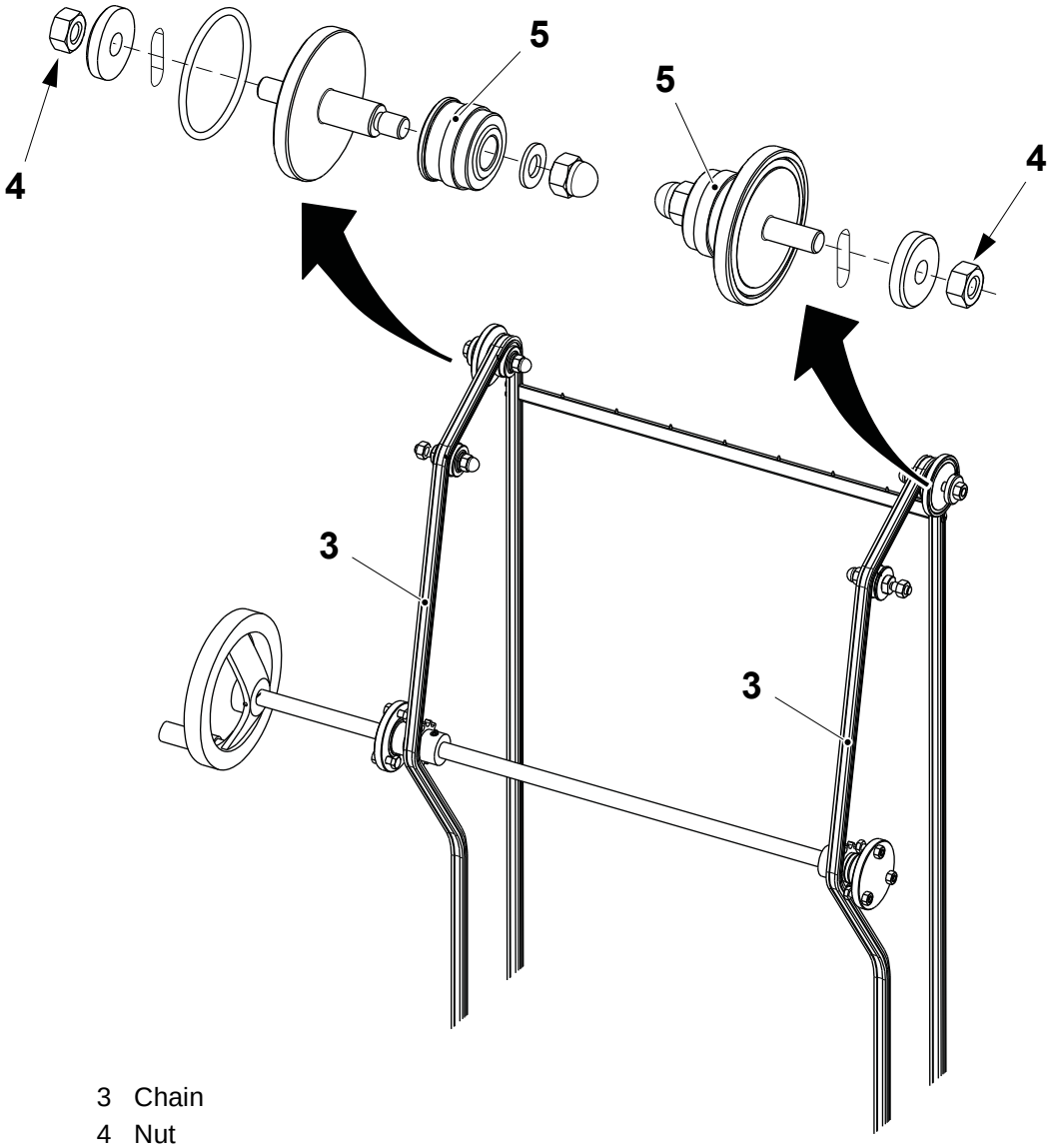

3 Chain
4 Nut
5 Wheel

(Cont'd)

(Cont'd)

- the wheels (5) and the bushings (6). Make sure that the radial play is not excessive
- the shaft (7)
- the O-rings (8) and (9). Change if necessary
- the sprocket (10).

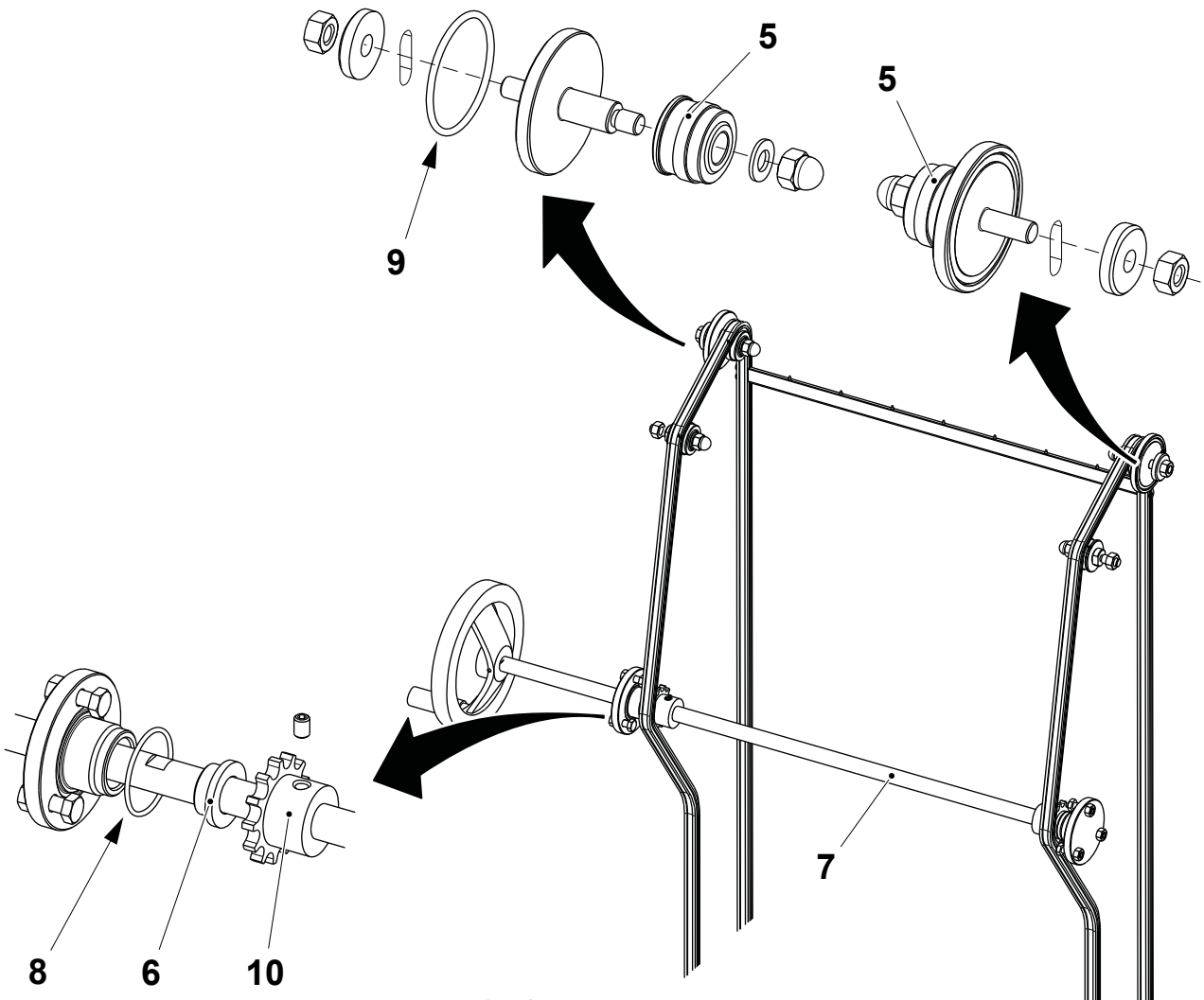

5 Wheel
6 Bushing
7 Shaft
8 O-ring
9 O-ring
10 Sprocket

1.3.6 Bending Roller

1.3.6-1 Bending Roller - Change

Machine Status	Mains Power OFF Air OFF Steam ON Water OFF
SPC Reference	2763999-0100

WARNING
Hydrogen peroxide.
Follow the Safety Precautions.

(Cont'd)

(Cont'd)

a) Loosen the nuts (1) and remove the screw (2).
b) Remove the flange (3) and the spacer (4).
c) Change the O-ring (5).
d) Remove the screw (6) and the nuts (7).
e) Slip off the bending roller (5) from drying chamber.

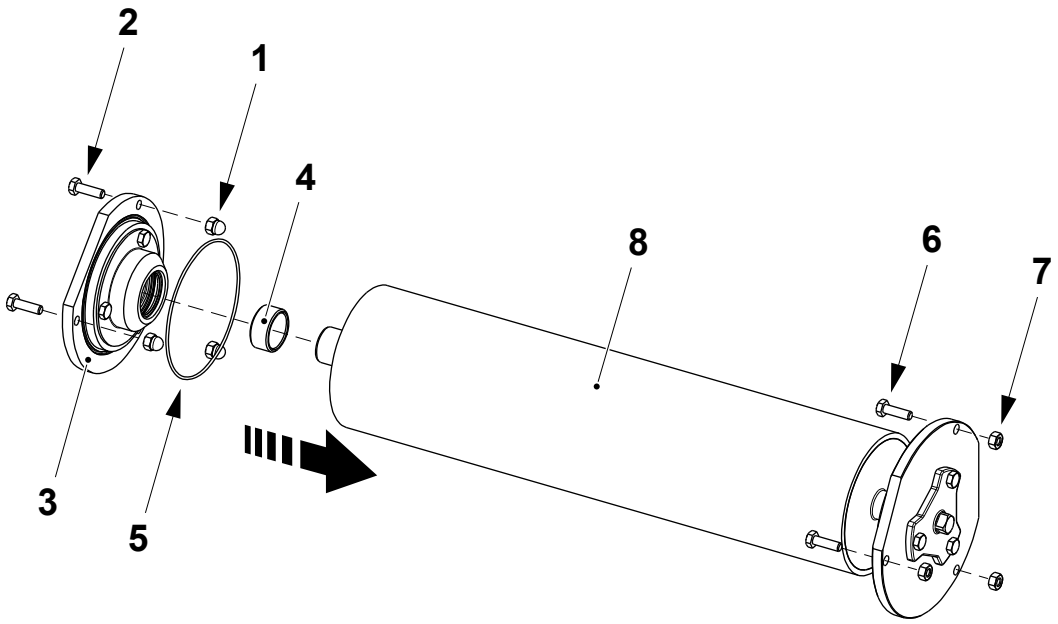

1 Nut
2 Screw
3 Flange
4 Spacer
5 O-ring
6 Screw
7 Nut
8 Bending roller

(Cont'd)

(Cont'd)

f) Remove the screw (9), the lid (10) and change the O-ring (11).

g) Remove the retaining rings (12) and the ball bearing (13) from the flange (14). Change the ball bearing (13) if necessary.

h) Change the O-ring (15).

i) Remove and change the roller (16).

j) Remove the screws (17) and separate the flanges (18) and (19).

k) Change the O-ring (20).

l) Remove the retaining ring (21), the ball bearing (22) and the seal (23). Change the ball bearing (22) if necessary.

m) Assemble in the reverse order.

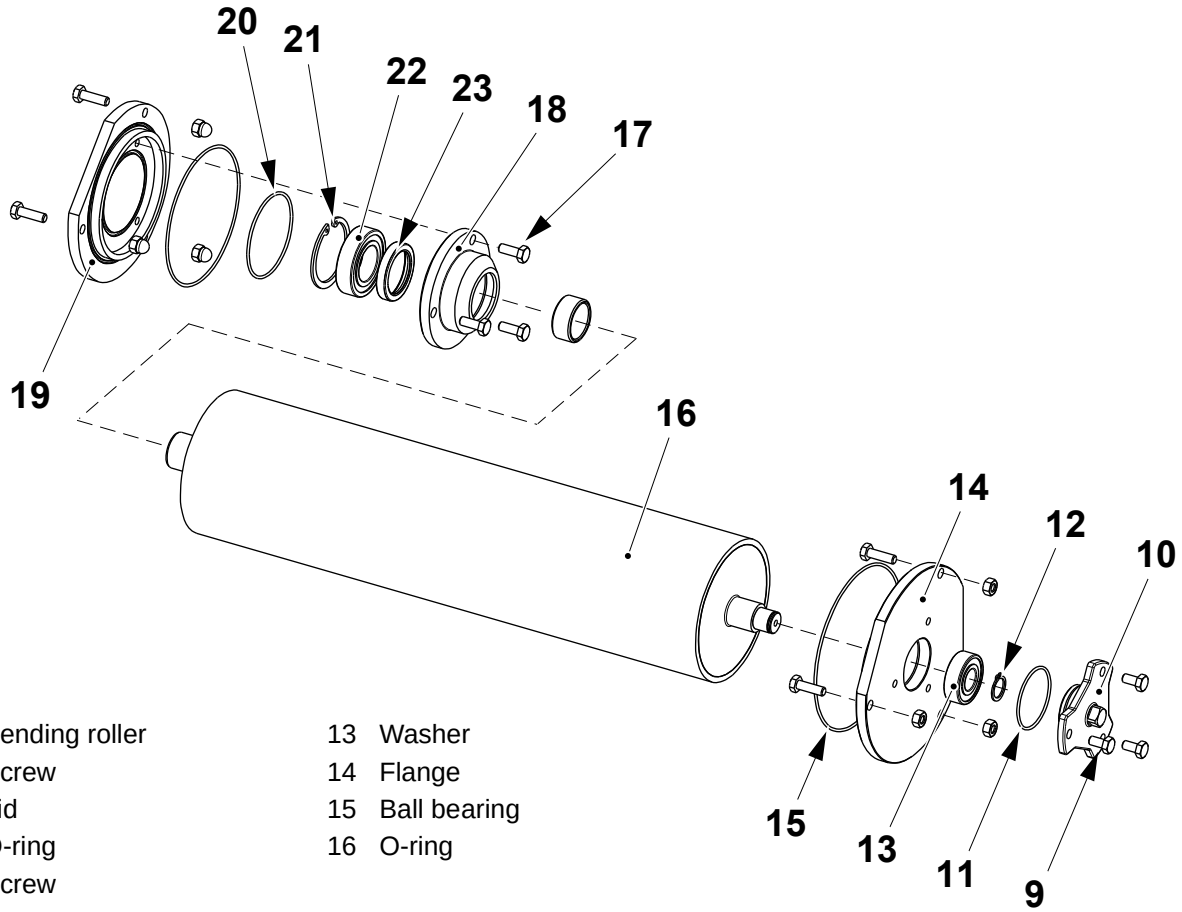

5 Bending roller
9 Screw
10 Lid
11 O-ring
12 Screw
13 Washer
14 Flange
15 Ball bearing
16 O-ring

1.3.7 Air Knife

1.3.7-1 Air Knife - Check and Clean

Machine Status	Mains Power OFF Air OFF Steam ON Water OFF
Consumables	Soapy Water Sandpaper
SPC Reference	2532934-0200

WARNING
Hydrogen Peroxide.
Follow the Safety Precautions.

WARNING
Burn hazard.
The air guides and other adjacent parts may be hot. Wear heat-resistant protective gloves.

(Cont'd)

(Cont'd)

a) Check that the bushings (1) and the steering rail (2) are intact.

b) Check that the air guides (3) are straight and parallel.

c) Check the slide plates (4) are not worn or damaged. If necessary, change the slide plates (4), see 1.3.7-4 Air Knife - Change Slide Plates.

d) Clean the air guides (3) with soapy water and the steering rail (2) with sandpaper.

e) Change if necessary and set, see 1.3.7-2 Air knife - Set.

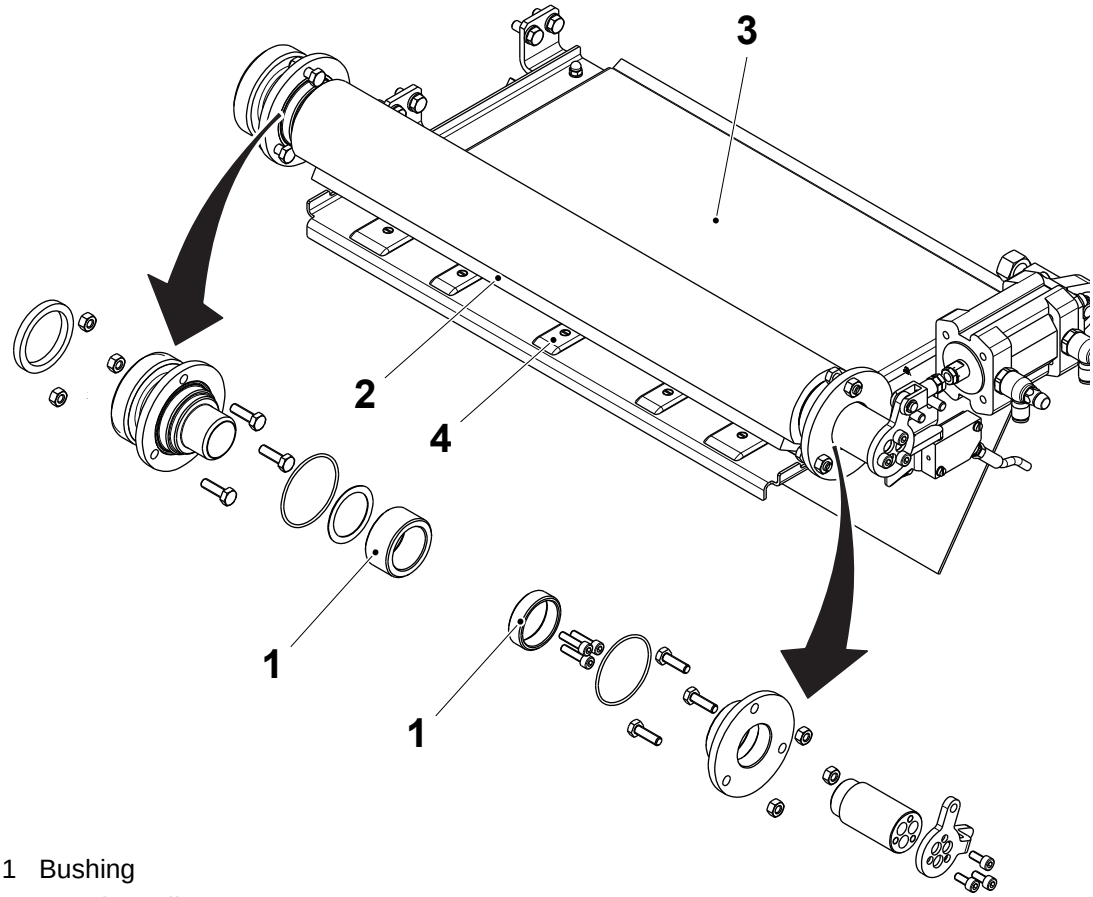

1 Bushing
2 Steering rail
3 Air guide
4 Slide plate

1.3.7-2 Air knife - Set

Machine Status	Mains Power OFF Air ON Steam ON Water OFF
SPC Reference	2532934-0200

WARNING

Burn hazard.

The air guides and other adjacent parts may be hot. Wear heat-resistant protective gloves.

WARNING

Risk of entanglement.

The air guides may move.

a) Turn OFF the air to the air knife by means of the valve Y1501 on the pneumatic panel.

b) Raise the upper air guide (1).

c) Loosen the screws (2) on both sides of the air knife.

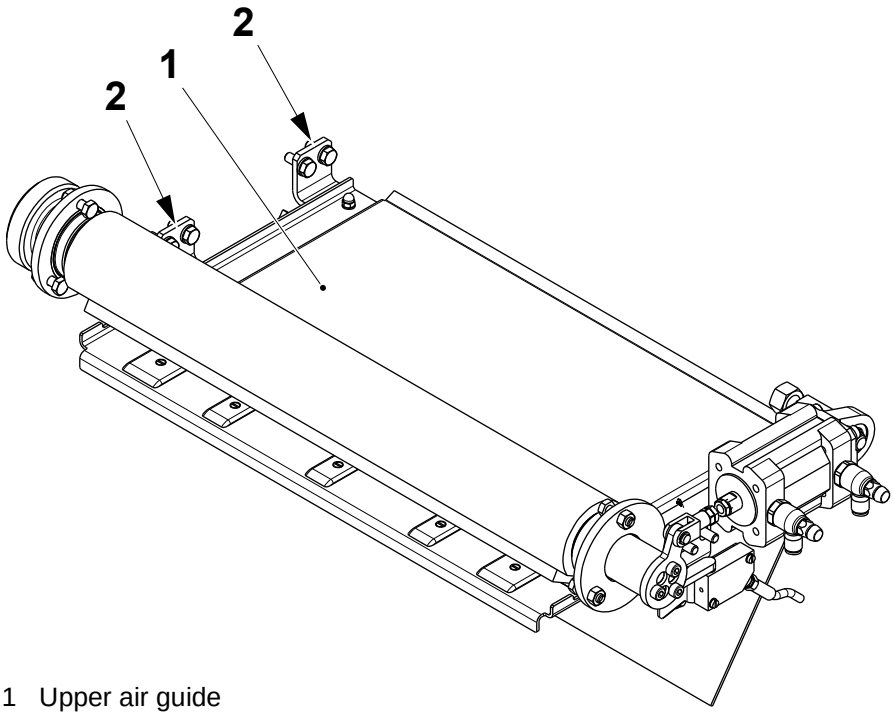

1 Upper air guide
2 Screw

(Cont'd)

(Cont'd)

d) Using a thin wire (3) with weights at each end and a spirit level set the distance **A** between the wire (3) and the lower air guide (4). Fix the lower air guide (4) in a horizontal position.

e) Tighten the screws (2) on both sides of the air knife.

f) Adjust the upper air guide (1) into a horizontal position and unscrew the nut (5) half a turn.

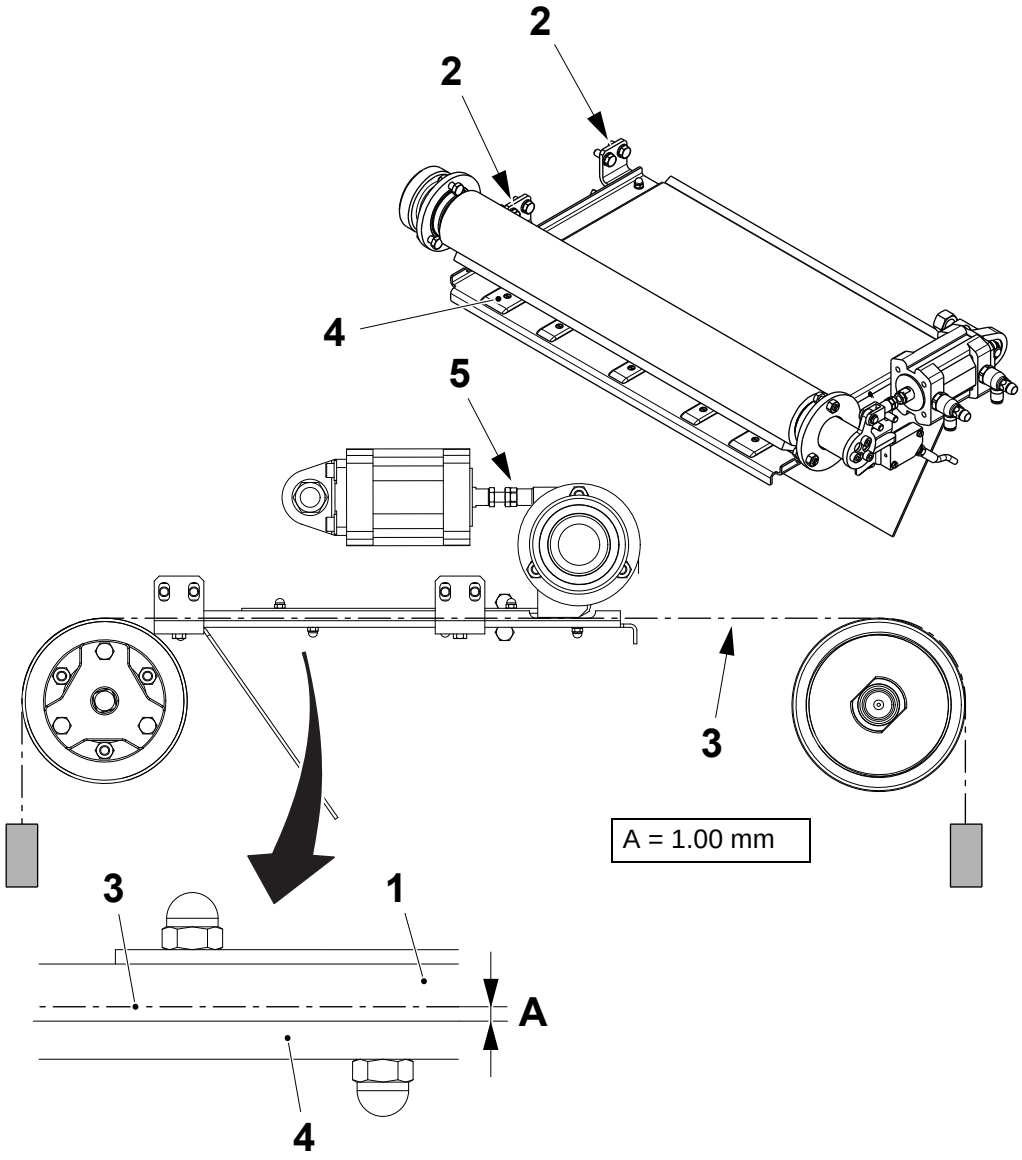

1 Upper air guide
2 Screw
3 Wire
4 Lower air guide
5 Nut

(Cont'd)

(Cont'd)

Note! To prevent the upper air guide from contacting the upper door of the drying chamber when the air guide is in its open position, perform the following setting.

g) Lift the upper air guide (1) to its open position and adjust the piston rod (6) to set the distance **B** between the upper air guide (1) and the lower air guide (4).

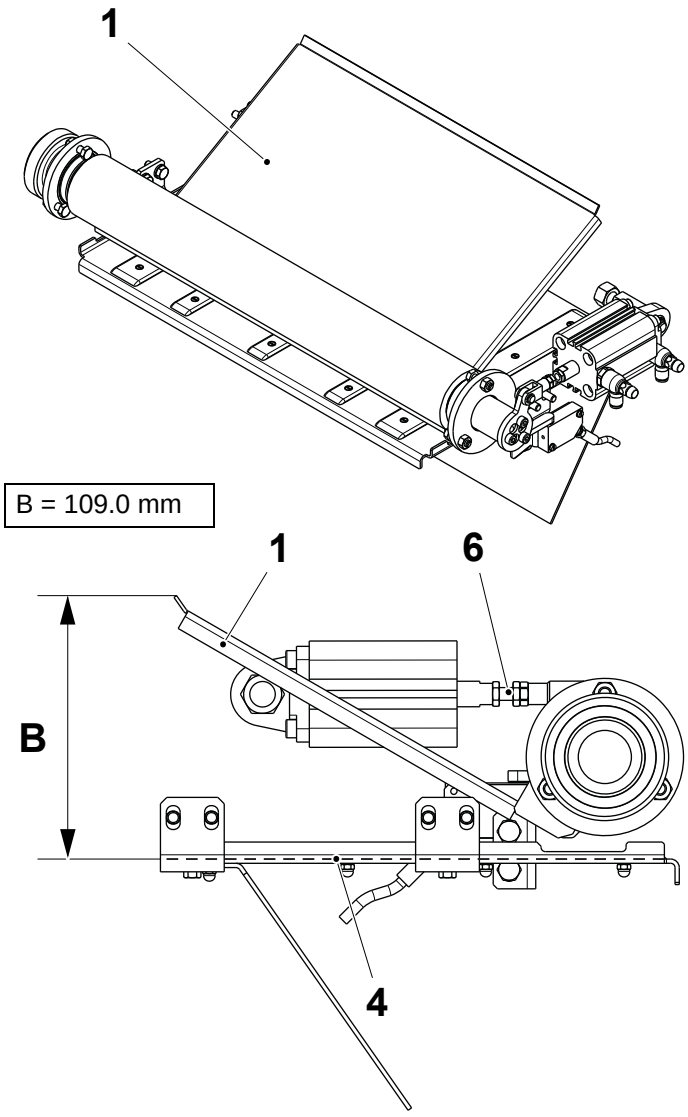

1 Upper air guide
4 Lower air guide
6 Piston rod

(Cont'd)

(Cont'd)

h) Set the distance **C** between the steering rail (7) and the slider plate (8) by means of the screws (9).

Note! The gap between the steering rail (7) and the slider plate (8) should be aligned to the gap between the air guides (1) and (4).

i) Set the proximity switch (10), see 1.3.7-3 Air Knife - Set Proximity Sensor.

Package	Distance C
TBA 2000 S	3.5 ±0.1 mm
All other packages	2.5 ±0.1 mm

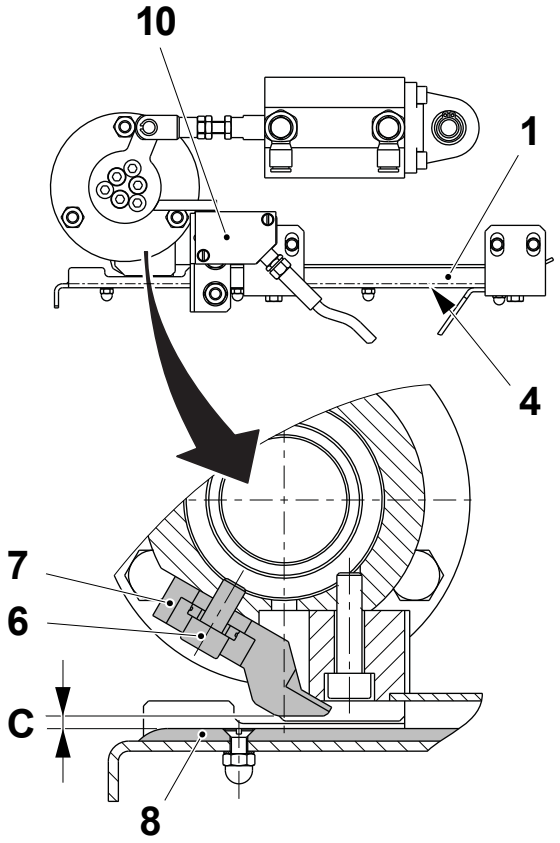

1 Air guide
4 Air guide
7 Rail
8 Slider plate
9 Screw
10 Proximity switch

1.3.7-3 Air Knife - Set Proximity Sensor

Machine Status	Mains Power OFF Air OFF Steam ON Water OFF
SPC Reference	2532934-0200

Check the distance **A** between the proximity sensor (1) and the plate (2) when the piston rod (3) is fully retracted. If necessary, set the distance **A** by the screws (4).

Note! Make sure that the extra stroke of the piston rod (3) when it is fully retracted is max. 2 mm.

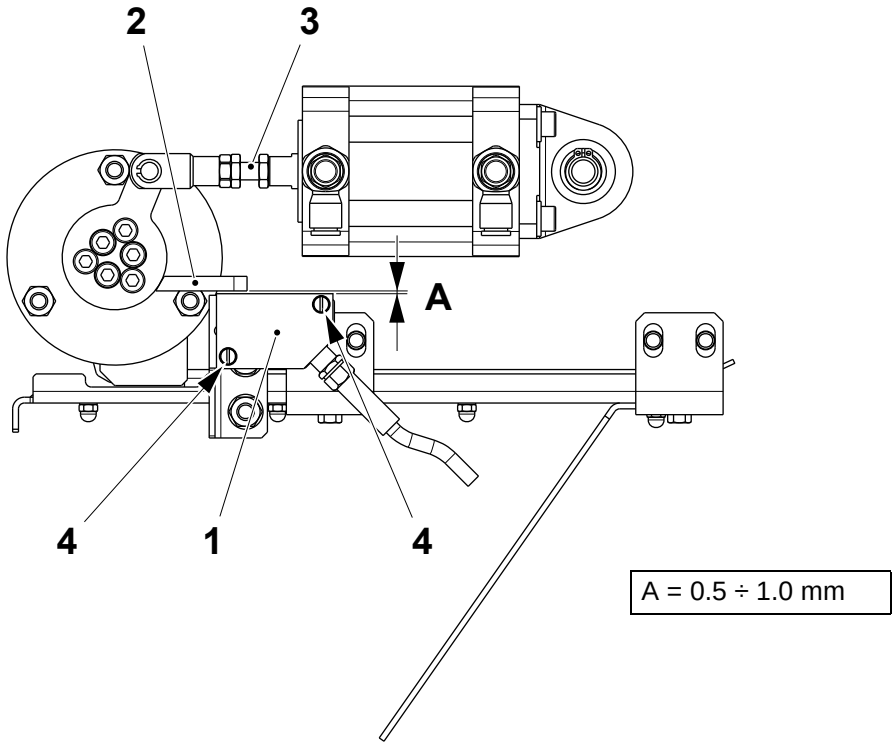

1 Proximity sensor
2 Plate
3 Piston rod
4 Screw

1.3.7-4 Air Knife - Change Slide Plates

Machine Status	Mains Power OFF Air OFF Steam ON Water OFF
SPC Reference	2532934-0200

WARNING
Hydrogen Peroxide.
Follow the Safety Precautions.

WARNING
Burn hazard.
The air guides and other adjacent parts may be hot. Wear heat-resistant protective gloves.

a) Cut the packaging material and raise the upper air guide (1).

b) Remove the screws (2) and extract the bottom plate (3).

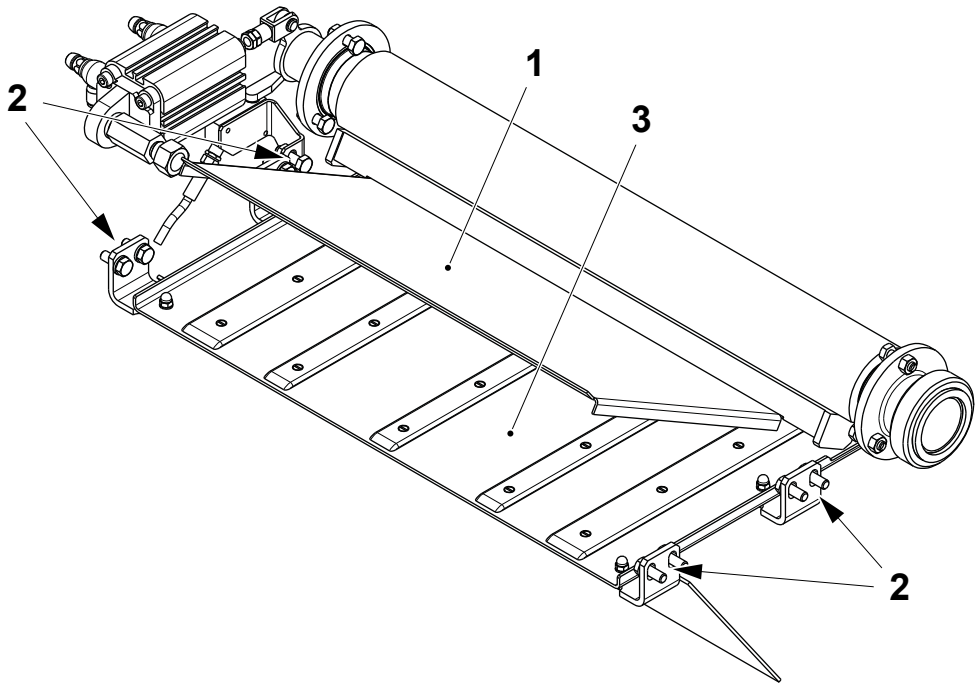

1 Upper air guide
2 Screw
3 Bottom Plate

(Cont'd)

(Cont'd)

c) On the work bench, remove the screws (4), the nuts (5) and change the slide plate (6).

d) Repeat the procedure on the other slide plates.

e) Assemble in the reverse order.

f) Set the bottom plate, see 1.3.7-2 Air knife - Set.

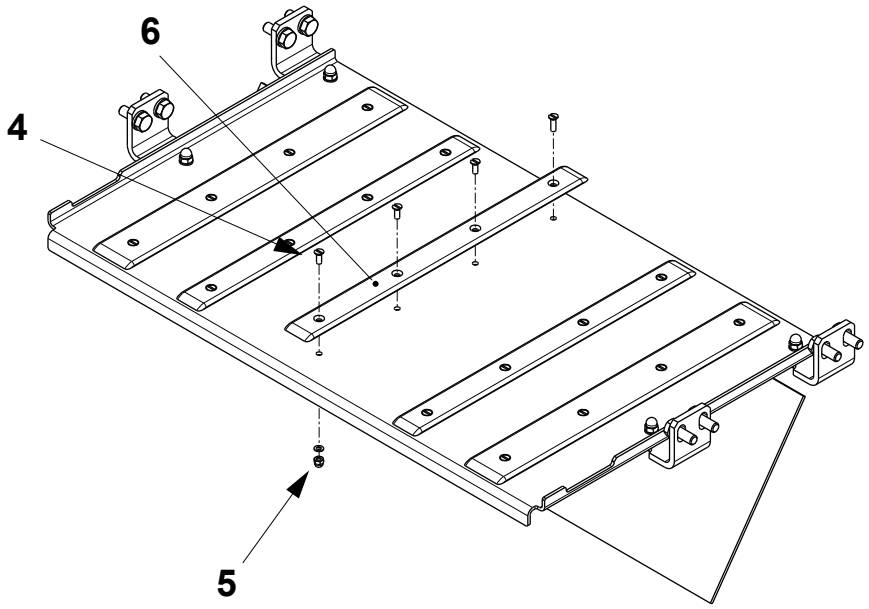

4 Screw
5 Nut
6 Slide plate

1.3.8 Pendulum Roller

1.3.8-1 Pendulum Roller - Check

Machine Status	Mains Power ON Air OFF Steam ON Water OFF
SPC Reference	2539445-0300

CAUTION

Risk of personal injury.

Moving parts can crush or cut.

Note! Valid for machines with T-order: 21208/00001 to 21208/00017.

(Cont'd)

(Cont'd)

Check that:

- the surface of the two wheels (1) are not worn or damaged
- the radial play in the bearings (2) are not excessive. Change them if necessary, see 1.3.8-2 Pendulum Roller - Change Bearings.
- the shaft (3) rotates easily.

Check during PRODUCTION

Turn ON the main air supply and make sure that the pneumatic cylinder (4) moves easily. Check for air leaks.

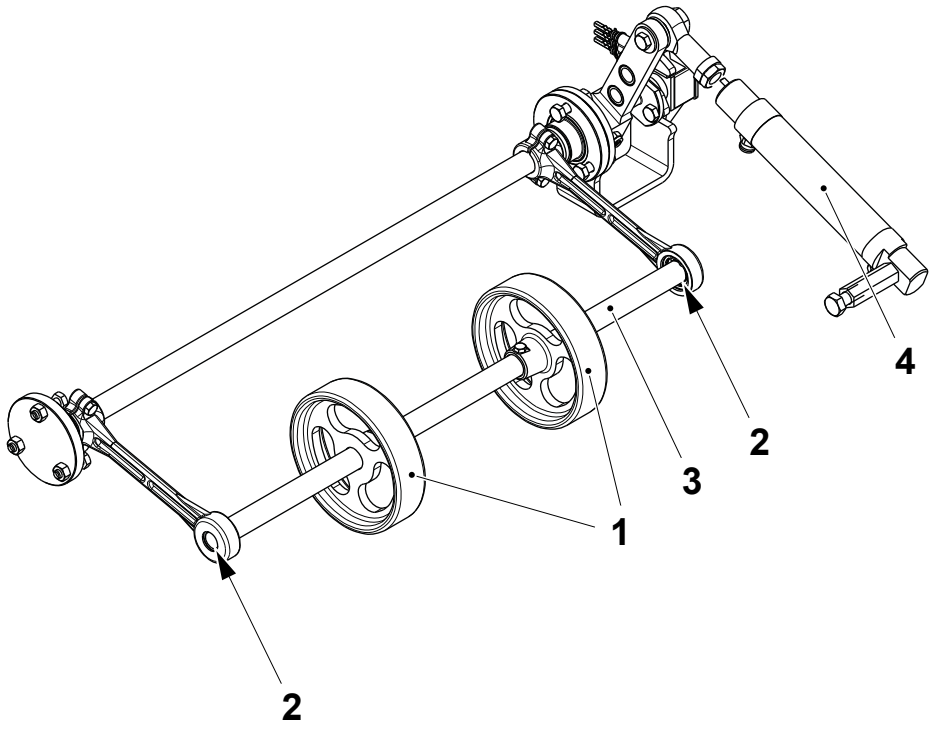

1 Wheel
2 Bearing
3 Shaft
4 Pneumatic cylinder

(Cont'd)

(Cont'd)

Note! Valid for machines with T-order: 21208/00018 and above.

Check that:

- the surface of the two wheels (1) are not worn or damaged
- the radial play in the bushings (2) are not excessive. Change them if necessary, see 1.3.8-6 Pendulum Roller - Change Bushings.
- the shaft (3) rotates easily.

Check during PRODUCTION

Turn ON the main air supply and make sure that the pneumatic cylinder (4) moves easily. Check for air leaks.

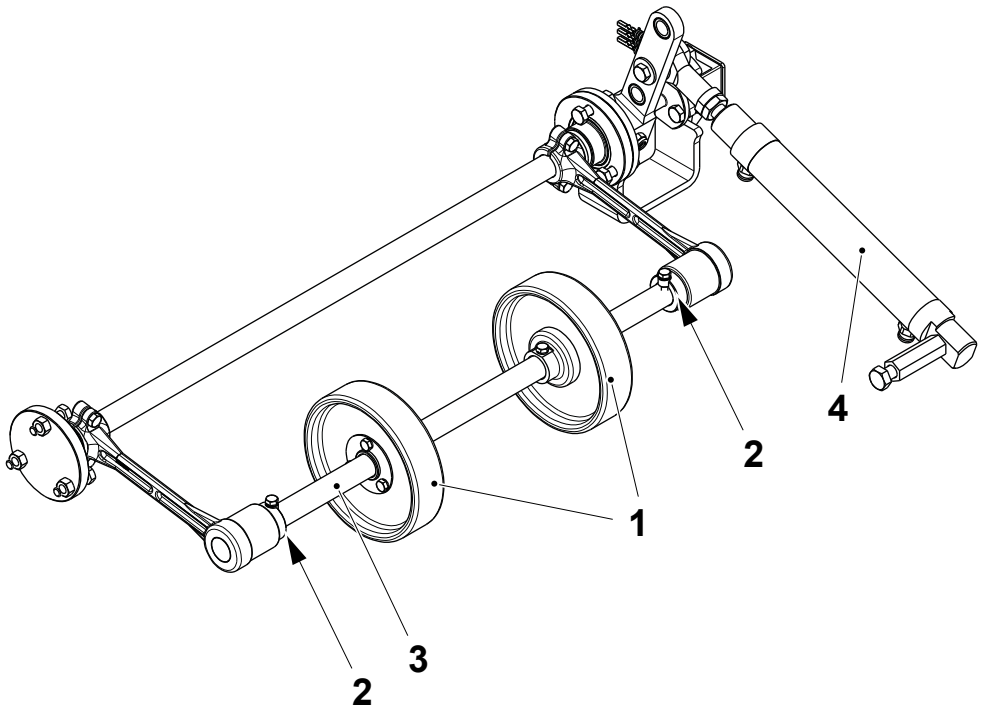

1 Wheel
2 Bushing
3 Shaft
4 Pneumatic cylinder

1.3.8-2 Pendulum Roller - Change Bearings

Machine Status	Mains Power ON Air OFF Steam ON Water OFF
SPC Reference	2539445-0300

Note! Valid for machines with T-order: 21208/00001 to 21208/00017.

a) On both levers (1), remove the screws (2).

b) Remove the levers (1) together with the shaft (3) and the wheels (4).

c) On both levers (1) remove the retaining rings (5).

d) Change the ball bearings (6).

e) Assemble in the reverse order.

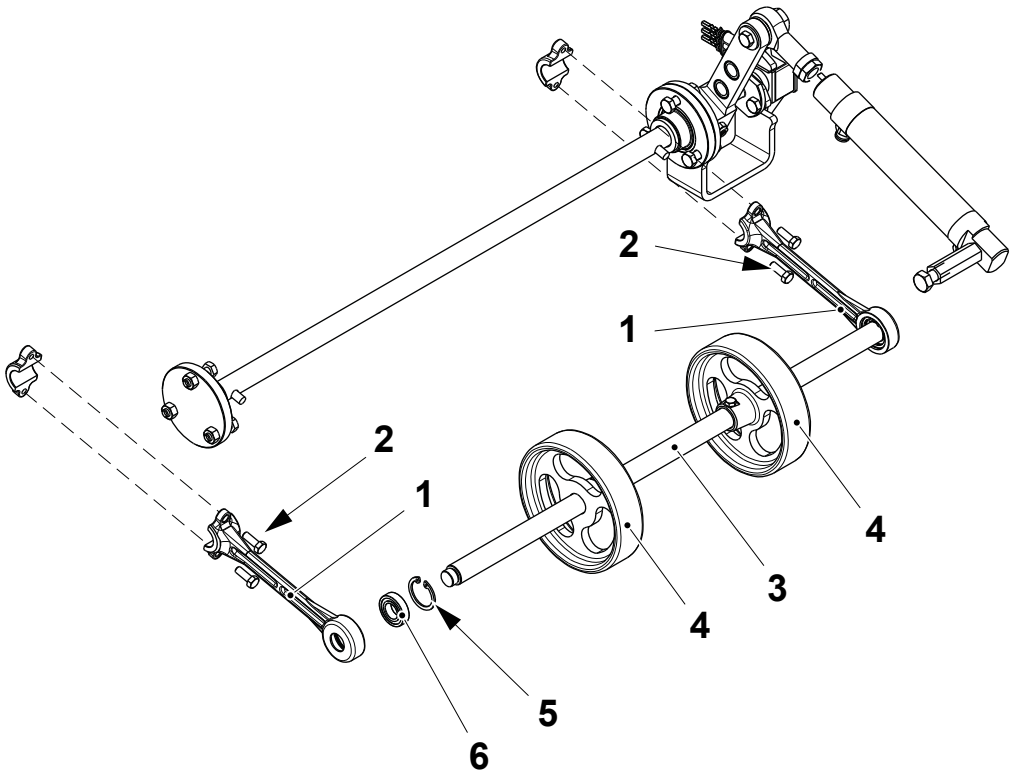

1 Lever
2 Screw
3 Shaft
4 Wheel
5 Retaining ring
6 Ball bearing

1.3.8-3 Pendulum Roller - Set I/P Transducer

Machine Status	PREPARATION
SPC Reference	2914523-0100

CAUTION
Risk of damage to the equipment.
Be careful not to damage the trimmers with the screw driver.

a) Remove the rubber cover (1) to display the three trimmers Z, S and G.

b) Turn the gain trimmer G (2) fully anti-clockwise.

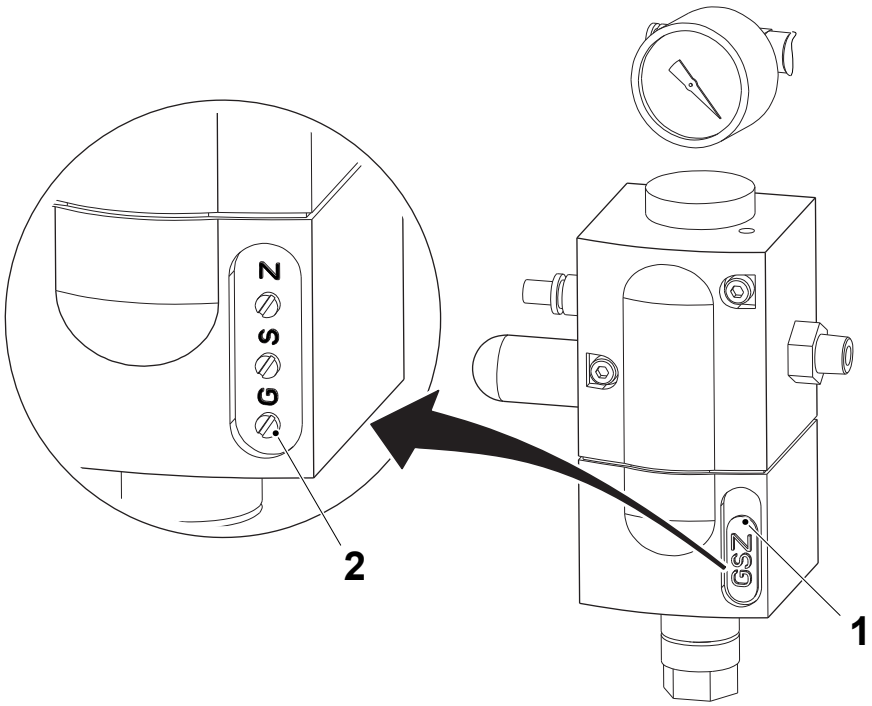

1 Rubber cover
2 Gain trimmer G

(Cont'd)

(Cont'd)

c) On the TPOP, touch the PRODUCTION CONTROL button (3).

d) Touch the TUBE FORMING UNIT button (4).

e) Touch the PENDULUM ROLLER icon (5).

f) Set the value to 0 bar by the arrows buttons (6) or the keyboard button (7).

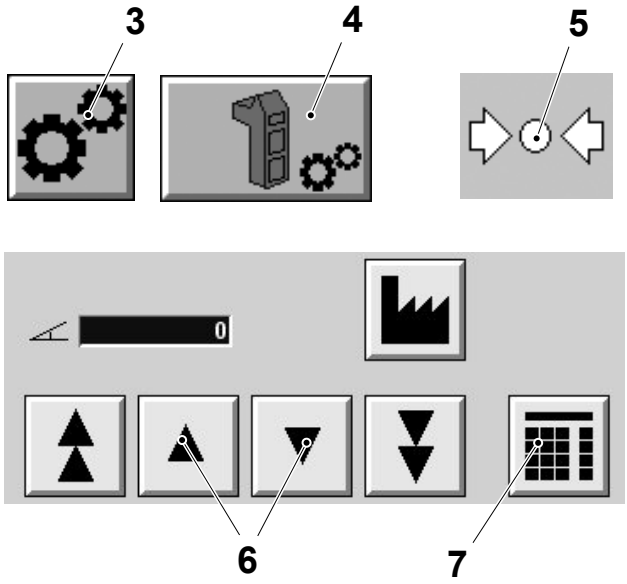

3 Production control button
4 Tube forming unit button
5 Pendulum roller icon
6 Arrow button
7 Keyboard button

(Cont'd)

(Cont'd)

g) Set the pressure for the pendulum roller on the pressure gauge (8) to 0.1 bar by means of the trimmer Z (9).

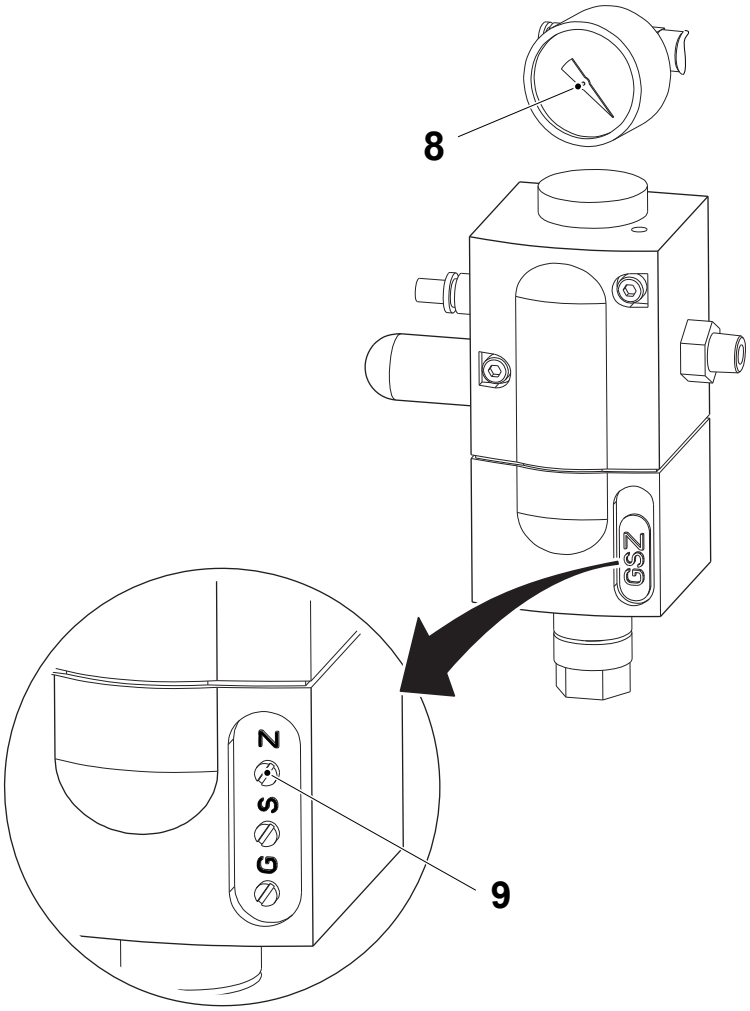

8 Pressure gauge
9 Trimmer Z

(Cont'd)

(Cont'd)

h) Set the value to 6 bar by the arrows buttons (6) or the keyboard button (7).

i) Make sure that the pressure on the pressure gauge (8) is 6 bar. If necessary, adjust by using the trimmer S (10).

j) Touch the `EXIT` button (11).

k) Fit back the rubber cover (1).

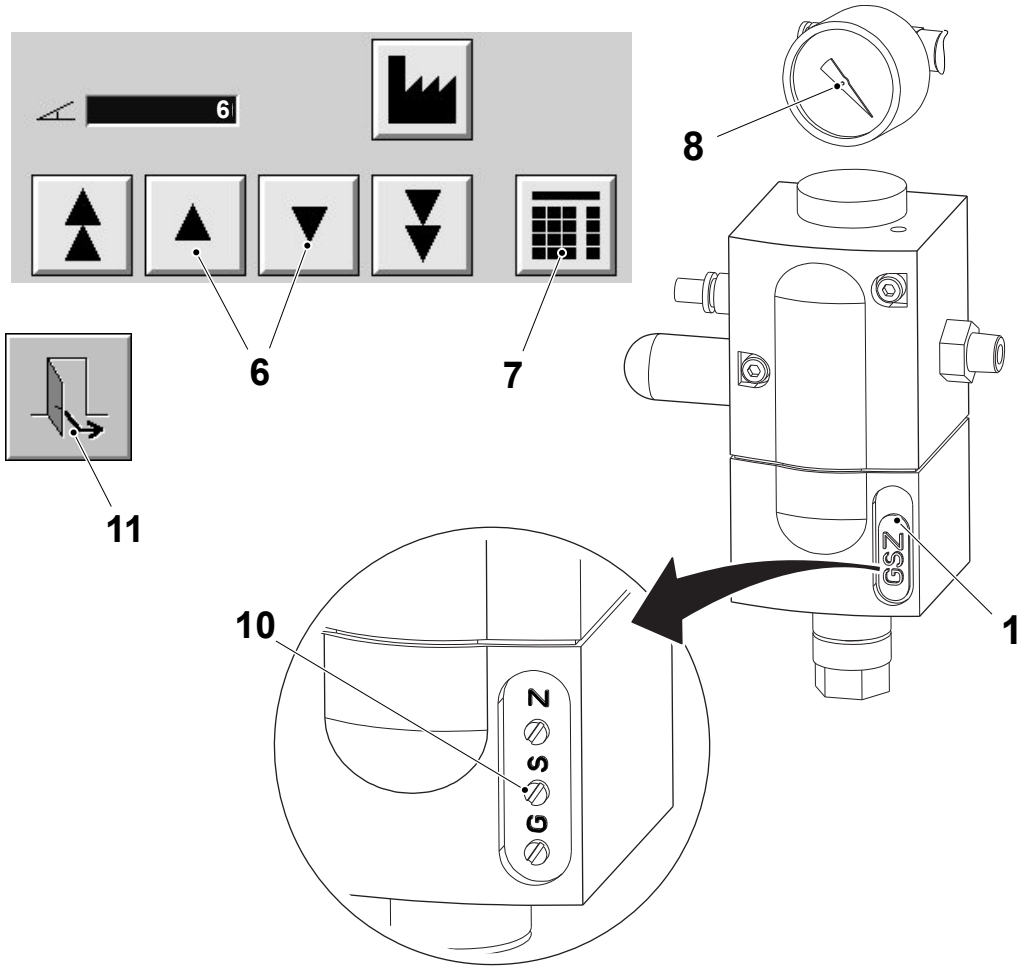

1 Rubber cover
6 Arrow button
7 Keyboard button
8 Pressure gauge
10 Trimmer S
11 Exit button

1.3.8-4 Pendulum Roller - Set Position

Machine Status	Mains Power OFF Air OFF Steam ON Water OFF
SPC Reference	2539445-0300

Set Lever Position

Note! The position of the ball joint (1) on the lever (2) changes according to the volume to be produced.

a) Loosen the screw (3) and remove the shaft (4).

b) With the piston rod (5) fully retracted, connect the ball joint (1) to the lever (2) by inserting the shaft (4) in the position required by the volume, see the table in the next page.

c) Tighten the screw (3).

Package	Position
TBA 2000 S	A
TBA 500 B - TBA 1000 B - TBA 500 S - TBA 1000 Sq TBA 1500 S - TPA 500 Sq - TPA 1000 Sq - TBA 1000 S	B

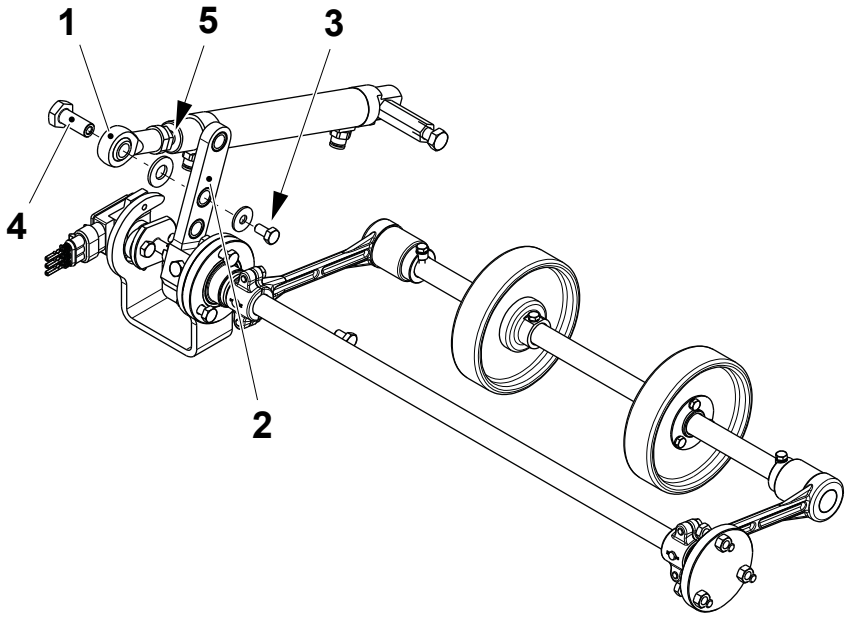

1 Ball joint
2 Lever
3 Screw
4 Shaft
5 Piston rod

(Cont'd)

(Cont'd)

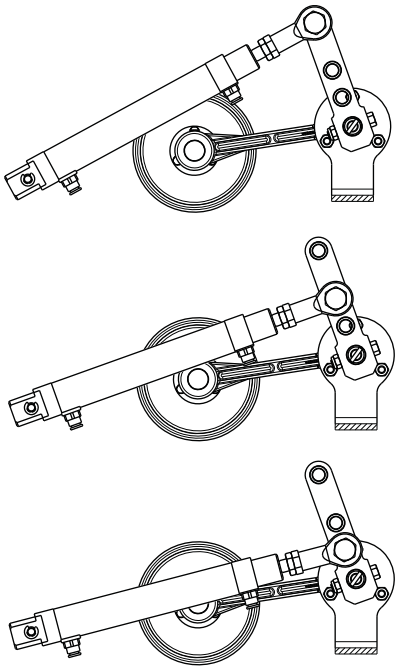

1.3.8-5 Pendulum Roller - Set Cylinder

Machine Status	Mains Power OFF Air OFF Steam ON Water OFF
SPC Reference	2539445-0300

a) Loosen the screw (1) and remove the shaft (2).

b) Move the cylinder (3) from the lever (4).

c) Pull out completely the piston rod (5).

d) Set the distance **A** between the ball joint (6) and the cylinder by adjusting the nut (7).

e) Connect the cylinder (3) to the lever (4) by inserting the shaft (2) and the screw (1).

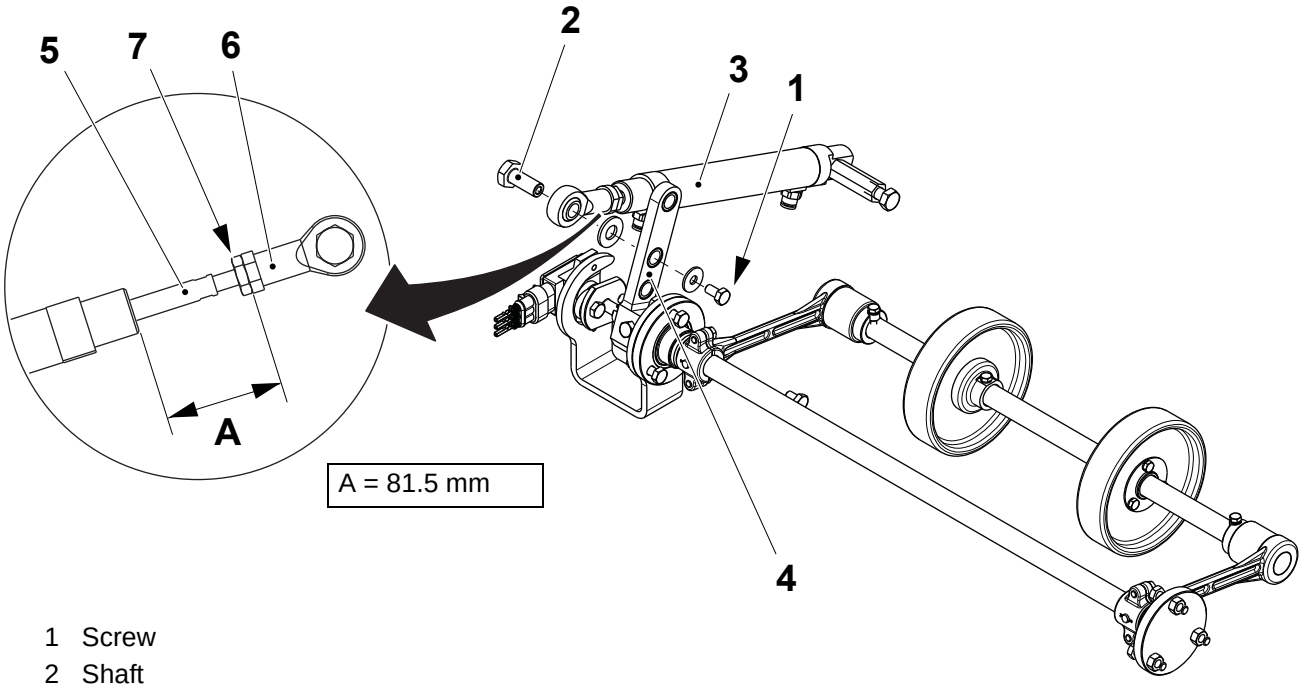

1 Screw
2 Shaft
3 Cylinder
4 Lever
5 Piston rod
6 Ball joint
7 Nut

1.3.8-6 Pendulum Roller - Change Bushings

Machine Status	Mains Power ON Air OFF Steam ON Water OFF
Consumables	PTFE Grease TP No. 90296-00091
SPC Reference	2539445-0300

Note! Valid for machines with T-order: 21208/00018 and above.

a) On both levers (1), remove the screws (2) and bring the shaft and wheels assembly (3) on the work bench.

b) On both sides remove the bearing sleeve (4) and change the bushing (5).

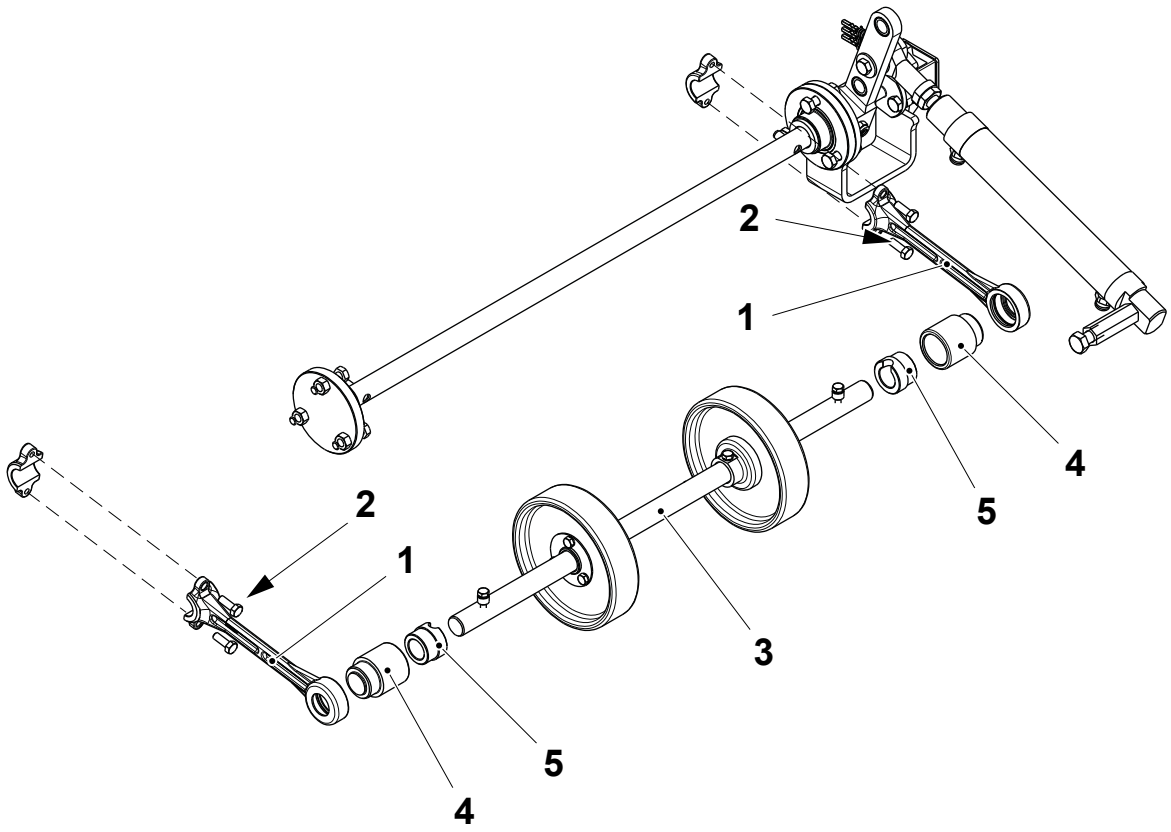

1 Lever
2 Screw
3 Shaft and wheels assembly
4 Bearing sleeve
5 Bushing

(Cont'd)

(Cont'd)

Note! Apply a thin layer of food-grade lubricating grease TP No. 90296-00091 to the bushing (5) and the bearing sleeve (4).

c) Assemble in the reverse order paying attention that the screw (6) on the shaft is fitted into the slot of the bushing (5).

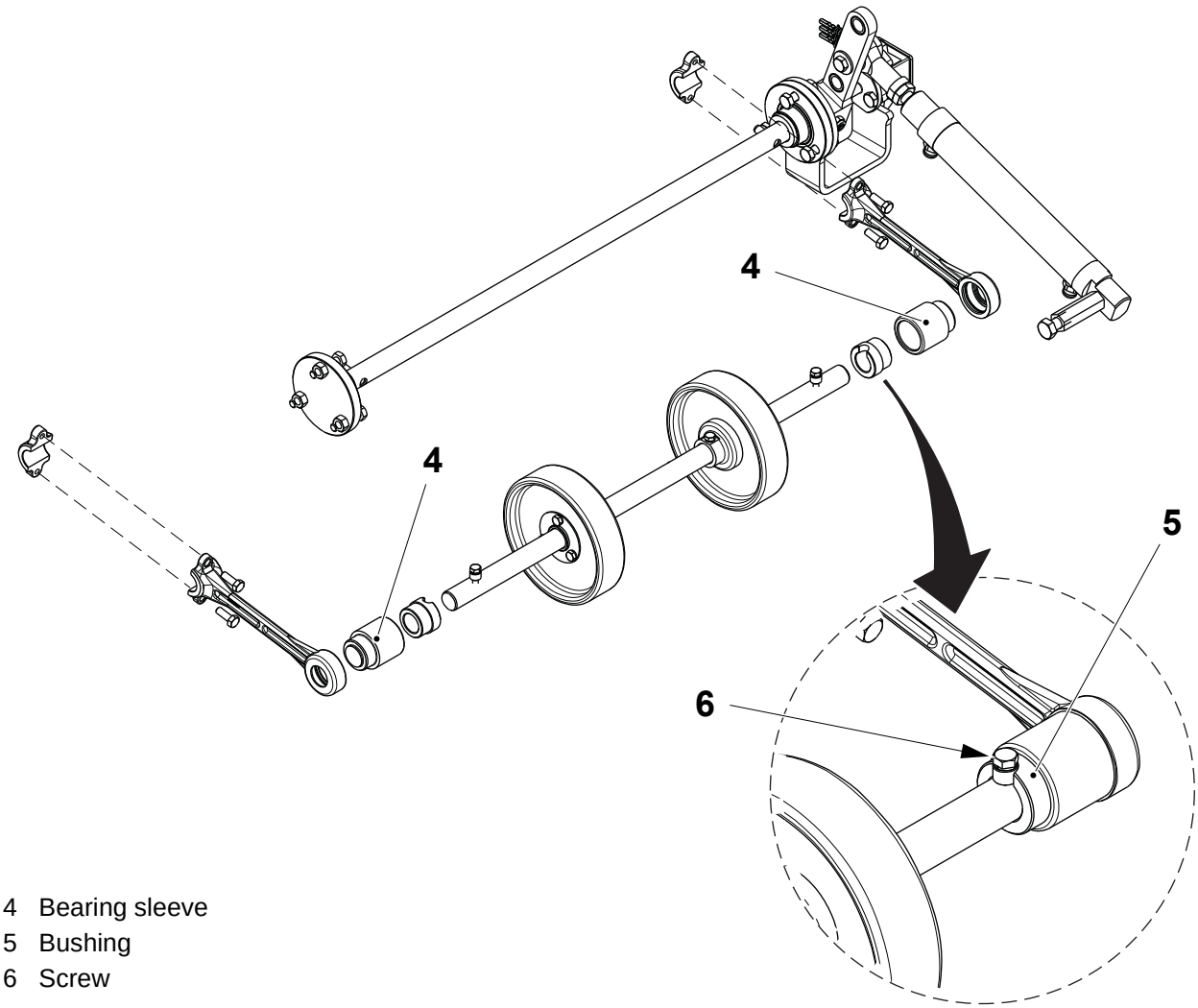

4 Bearing sleeve
5 Bushing
6 Screw

1.3.9 Valve

1.3.9-1 Valve - Check

Machine Status	Mains Power OFF Air OFF Steam OFF Water OFF
SPC Reference	2550890-0100

a) Remove the cover (1).

b) Check that the valve (2) moves freely.

c) Check that the valve (2) seals correctly when closed.

d) Fit the cover (1).

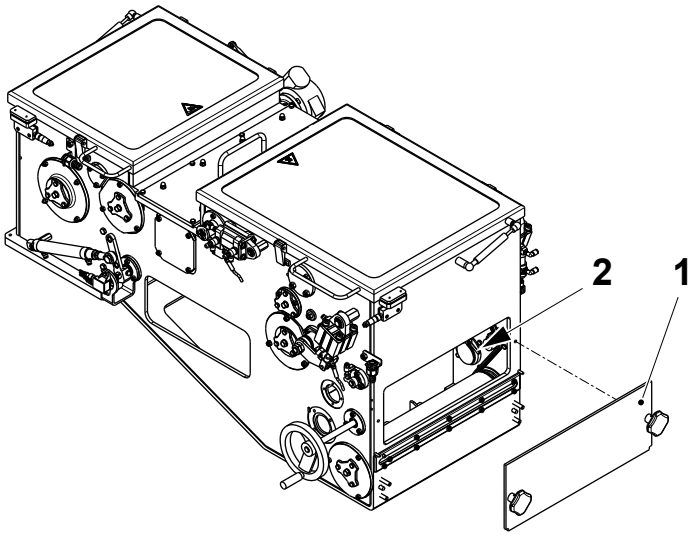

1 Cover
2 Valve

1.3.10 Squee-gee Roller

1.3.10-1 Squee-gee Roller - Change

Machine Status	Mains Power OFF Air OFF Steam ON Water OFF
SPC Reference	2758064-0100

WARNING
Hydrogen Peroxide.
Follow the Safety Precautions.

(Cont'd)

(Cont'd)

a) Remove the three screws (1), the lid (2) and the O-ring (3).
b) Remove the lock ring (4).
c) Remove the bearing (5) and the seal (6).
d) Remove the screws and nuts (7) and the flange (8).
e) Check the O-rings (3), (9) and the seal (6). Change the parts if necessary.

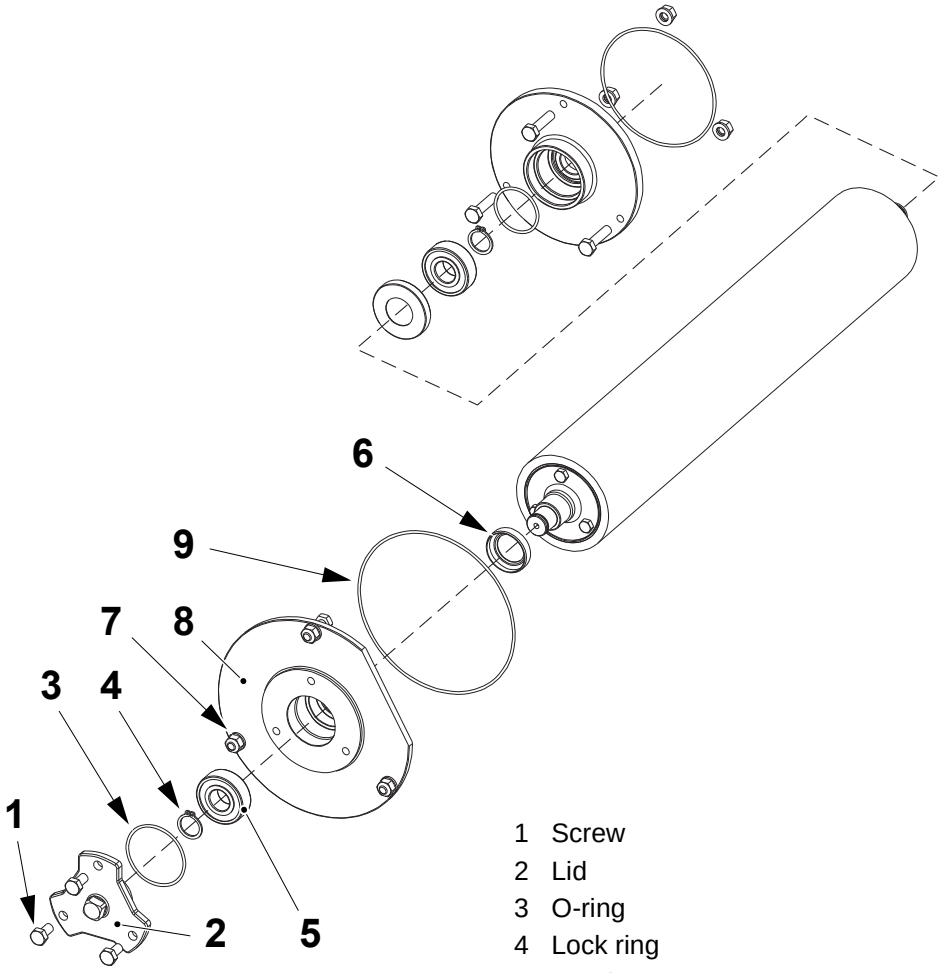

1 Screw
2 Lid
3 O-ring
4 Lock ring
5 Bearing
6 Seal
7 Screw and nut
8 Flange
9 O-ring

(Cont'd)

(Cont'd)

f) Remove the roller (10).

g) Remove the lock ring (11), the bearing (12), the seal (13) and the O-rings (14).

h) Remove the screws and nuts (15) and the flange (16).

i) Check the O-rings (17), (14) the seal (13) and the bearing (12). Change the parts if necessary.

j) Change the roller (10).

k) Assemble in the reverse order.

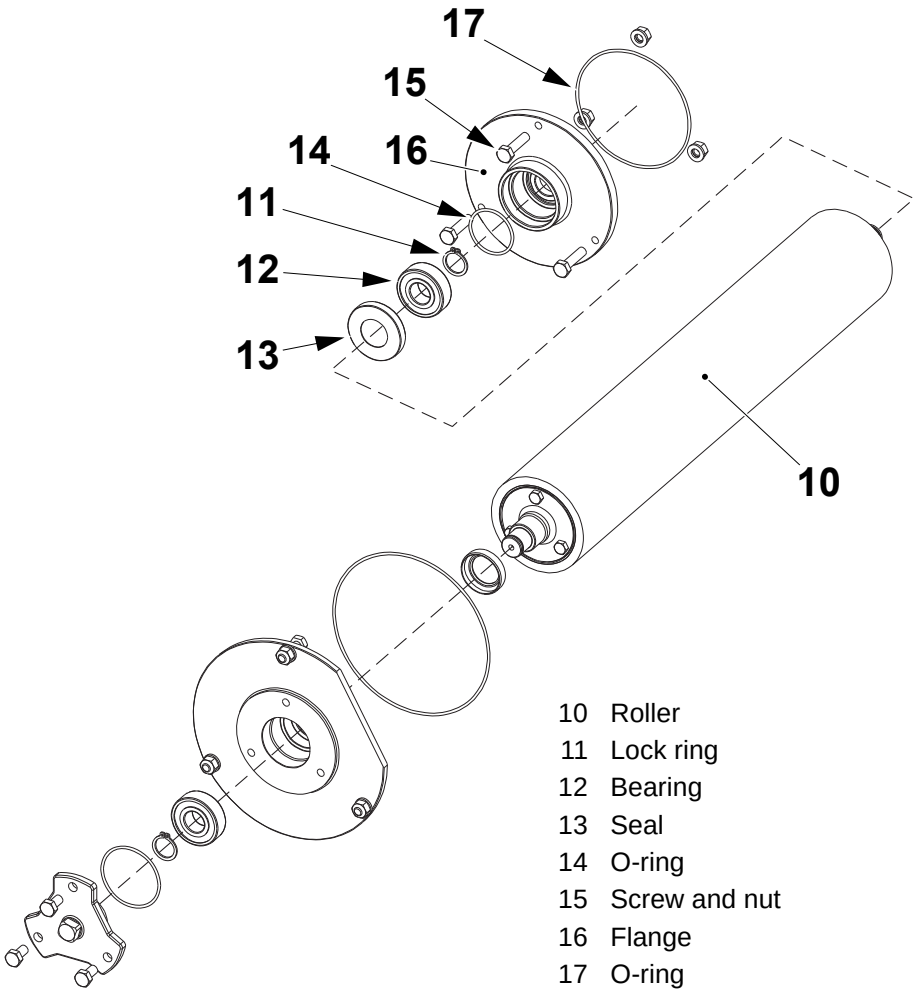

10 Roller
11 Lock ring
12 Bearing
13 Seal
14 O-ring
15 Screw and nut
16 Flange
17 O-ring

1.3.11 Bending Roller

1.3.11-1 Bending - Change Roller

Machine Status	Mains Power OFF Air OFF Steam ON Water OFF
SPC Reference	2745337-0100

a) Remove the screws (1), the cover (2) and change the O-ring (3).

b) Remove the screw (4) the nuts (5) and the flange (6).

c) Change the bearing (7), the seal (8) and the O-ring (9).

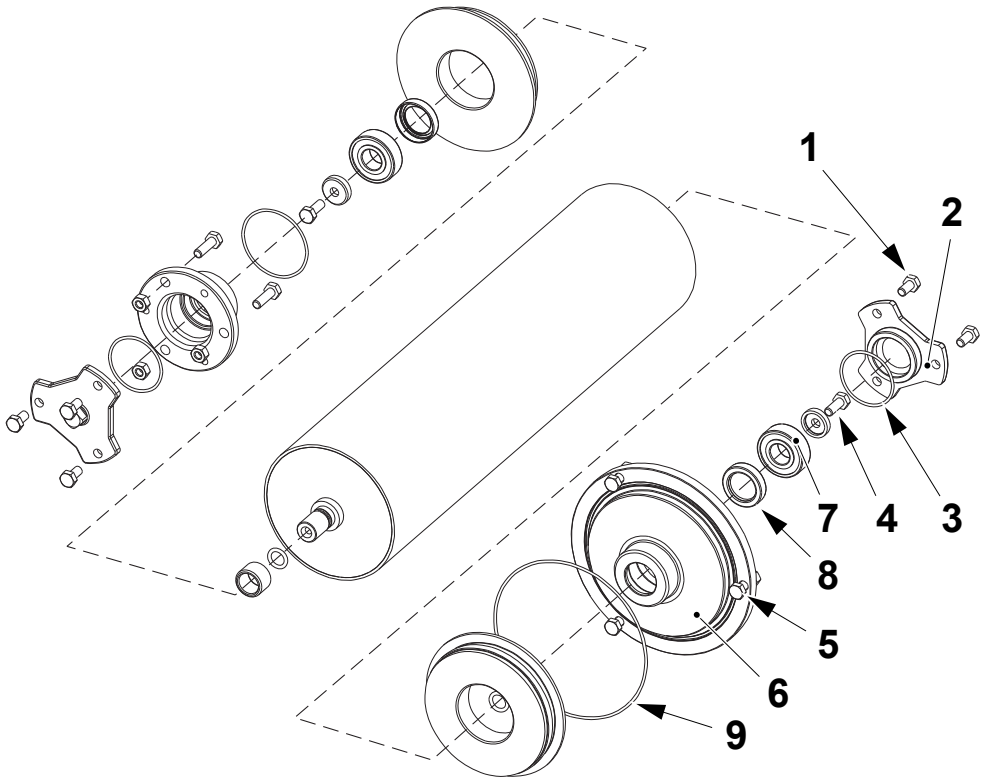

1 Screw
2 Cover
3 O-ring
4 Screw
5 Nut
6 Flange
7 Bearing
8 Seal
9 O-ring

(Cont'd)

(Cont'd)

d) Remove the screws (10), the lid (11) and change the O-ring (12).

e) Remove the screw (13) the nuts (14) and the flange (15).

f) Change the bearing (16), the seal (17) and the O-ring (18).

g) Remove the wheels (19) and the bending roller (20).

h) On both ends of the bending roller (20), remove the bushings (21) and the O-rings (22).

i) Change the bending roller (20) and the O-rings (22).

j) Assemble in the reverse order.

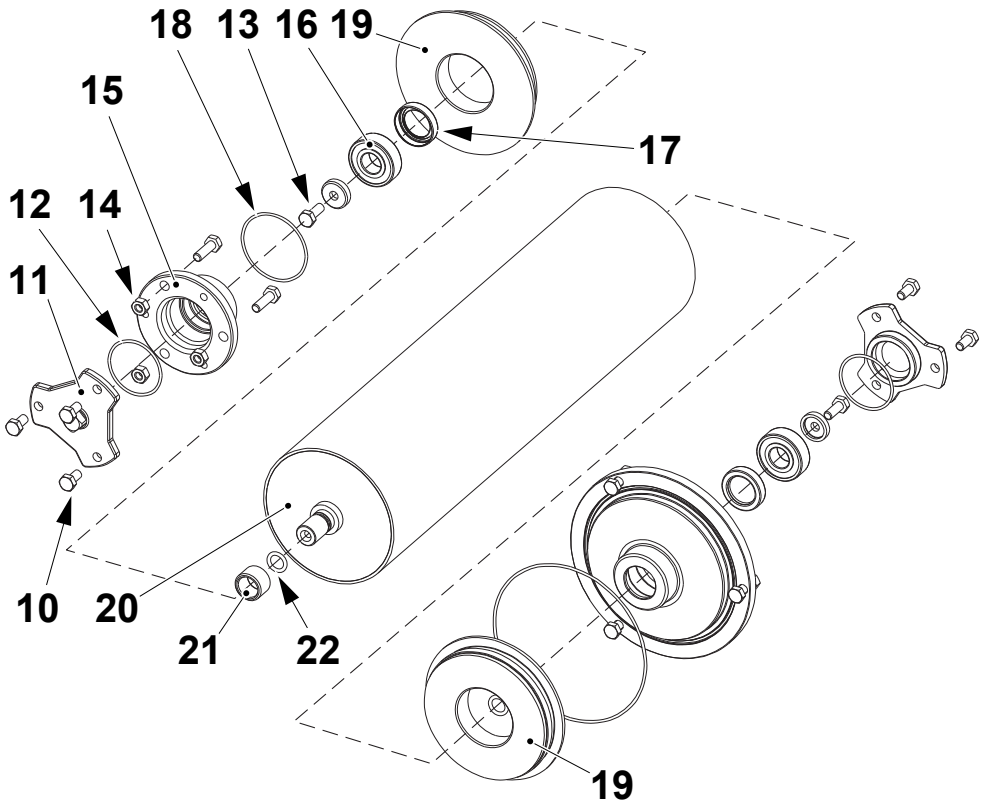

10 Screw
11 Lid
12 O-ring
13 Screw
14 Nut
15 Flange
16 Bearing
17 Seal
18 O-ring
19 Wheel
20 Bending roller
21 Bushing
22 O-ring

1.3.12 Pendulum Counter Roller

1.3.12-1 Pendulum Counter Roller - Set Pressure

Machine Status	Mains Power OFF Air OFF Steam ON Water OFF
SPC Reference	2826414-0100

Set the pressure for the pressure roller cylinder (1) between 2.0 and 2.5 bar by the pressure regulator (2) located on the superstructure air panel.

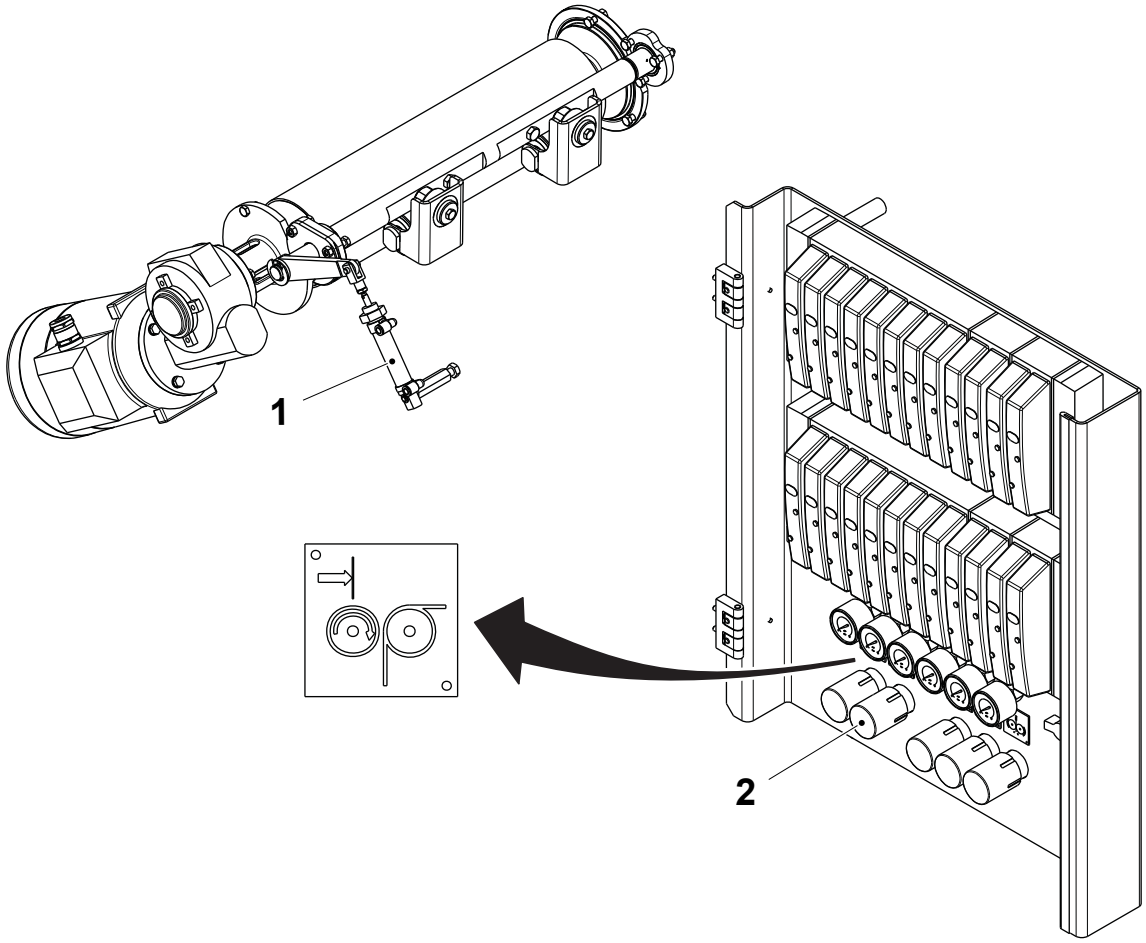

1 Cylinder
2 Pressure regulator

1.3.12-2 Pendulum Counter Roller - Set Distance

Machine Status	Mains Power OFF Air OFF Steam ON Water OFF
SPC Reference	2826414-0100

Check that both the counter rollers (1) are in contact with the drive roller (2). If the counter rollers (1) are misaligned, add or remove shims (3) until they touch simultaneously the drive roller (2).

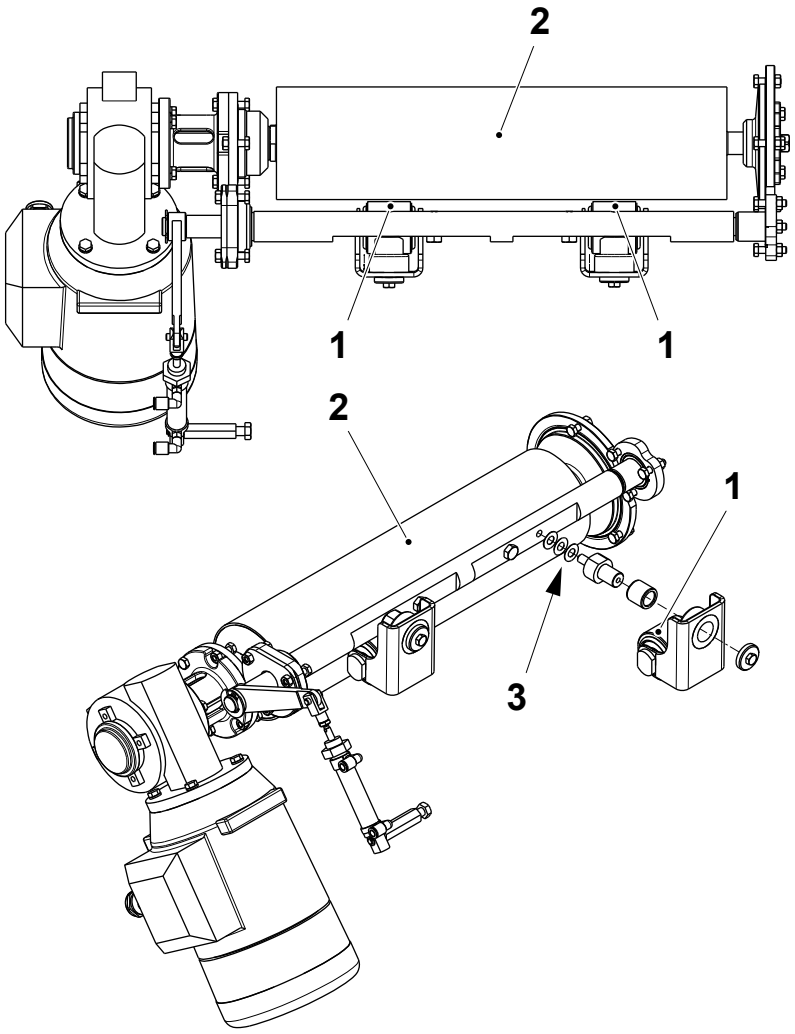

1 Counter roller
2 Drive roller
3 Shim

1.3.12-3 Pendulum Counter Roller - Change Rollers

Machine Status	Mains Power OFF Air OFF Steam ON Water OFF
SPC Reference	2826414-0100

CAUTION
Risk of damage to the equipment.
Remove and insert gently the shaft (4) through the roller (5) without forcing.

a) Remove the roller assembly by the screw (1).
b) Change the bushing (2) if necessary.
c) Remove the nut (3), the shaft (4) and change the roller (5).
d) Assemble in the reverse order.

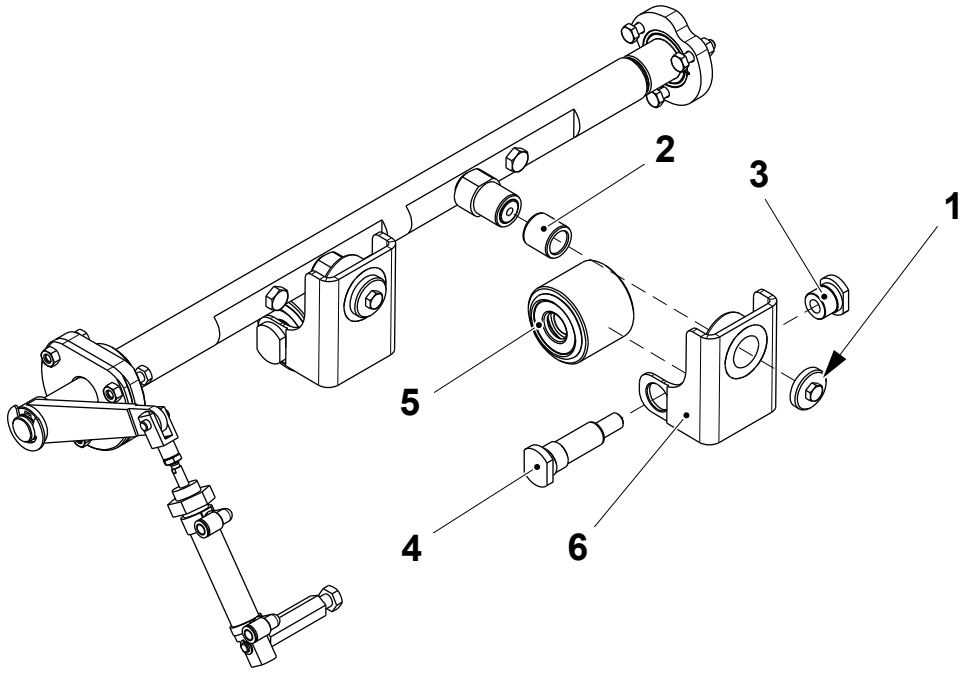

1 Screw
2 Bushing
3 Nut
4 Shaft
5 Roller

(Cont'd)

(Cont'd)

Note! When assembling, push the shaft (4) against the worked surface of the bracket (6) so that the milling of the shaft (4) mates the milling (7) on the bracket (6), see picture below.

e) Repeat on the other counter roller.

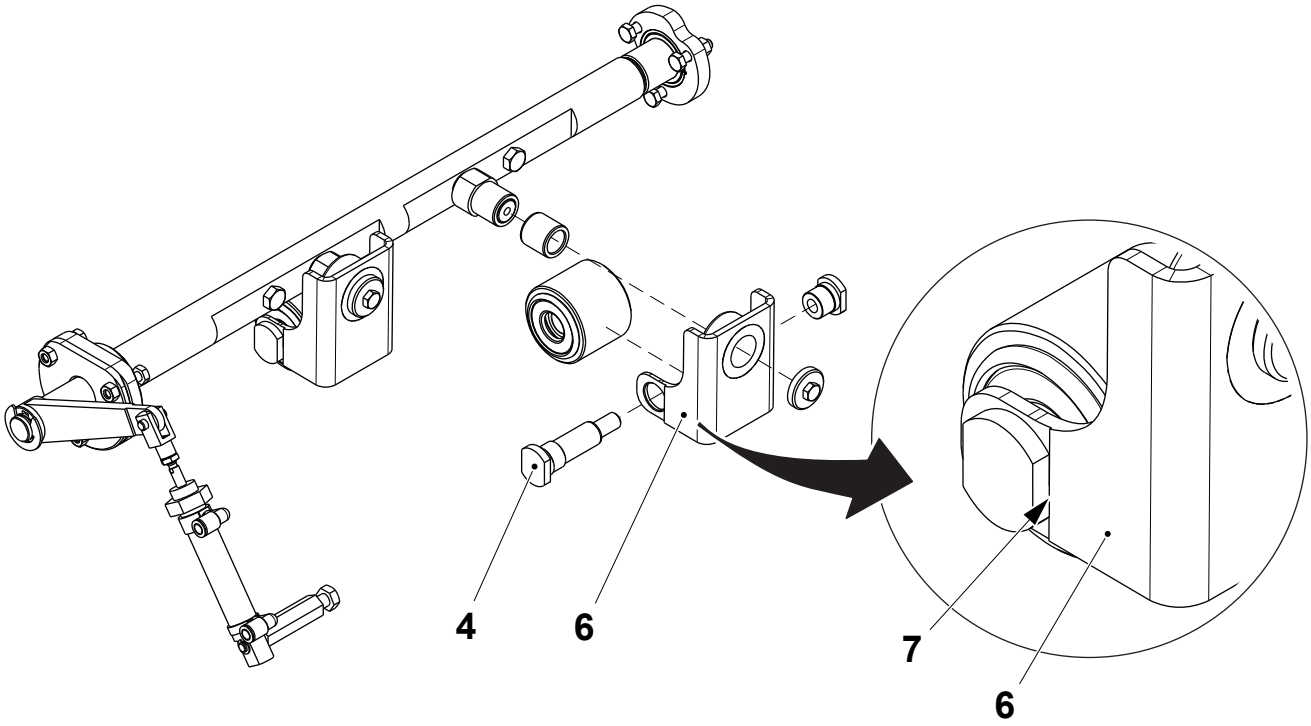

4 Shaft
6 Bracket
7 Milling

1.3.13 Blowing System (OE)

1.3.13-1 Blowing System - Check

Machine Status	Mains Power ON Air ON Steam ON Water ON
SPC Reference	2528101-0200

WARNING

Burn hazard.

The blowing system nozzles and other adjacent parts may be hot. Wear personal protective clothing.

Check:

- that during PRODUCTION the blower motor is running - look at the blowing system frequency converter A840 in the DIMC electrical cabinet. When the blower motor is running the frequency converter display should indicate 30 Hz or 60 Hz.
- that circuit breaker F840 in the DIMC electrical cabinet has not been activated, see the EM for further details.
- that the holes in the nozzles (1) are not blocked. If necessary clean the nozzles, see 1.3.13-2 Blowing System - Clean Nozzles on page 1-142.

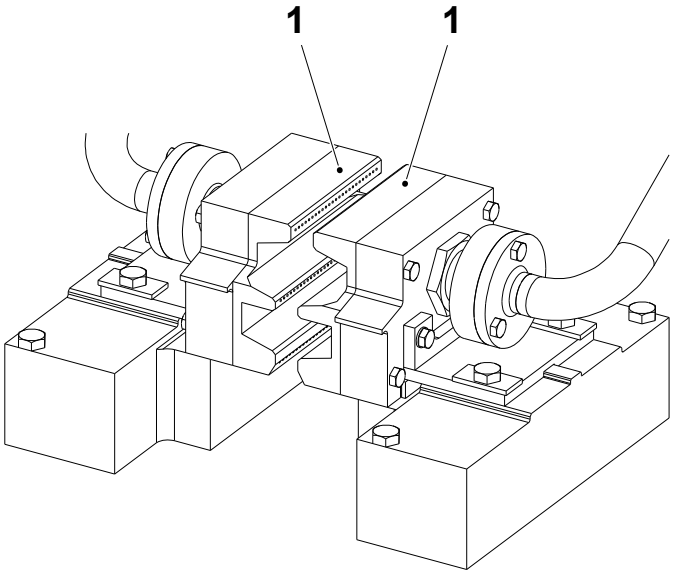

1 Nozzle

1.3.13-2 Blowing System - Clean Nozzles

Machine Status	Mains Power OFF Air OFF Steam ON Water OFF
SPC Reference	2528101-0200

WARNING

Burn hazard.

The blowing system nozzles and other adjacent parts may be hot. Wear personal protective clothing.

CAUTION

Risk of damage to the equipment.

Be careful not to drop any screws or equipment into the peroxide bath.

(Cont'd)

(Cont'd)

a) On both sides of the drying chamber remove the clevis pins (1) from the pneumatic cylinders (2).

b) Lift up the calender roller (3) and secure it in this position.

c) Remove the four screws (4) and the outer nozzle (5).

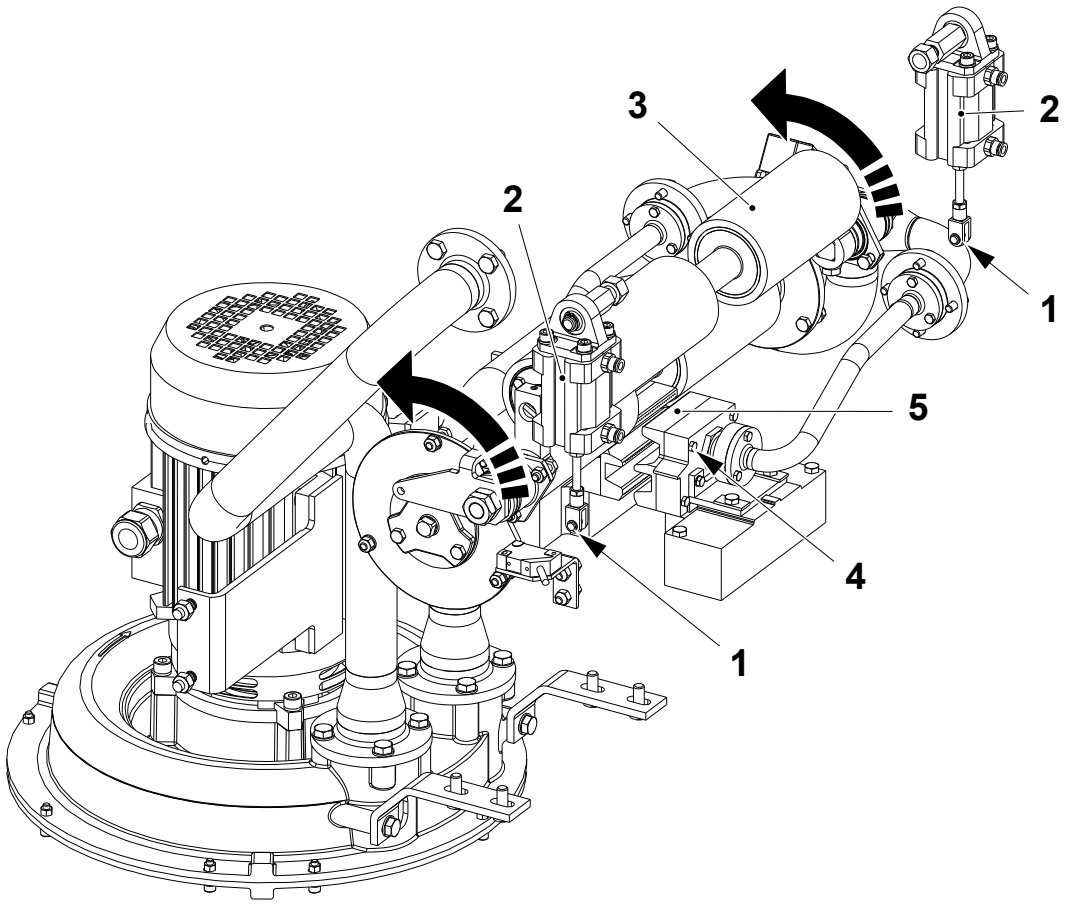

1 Clevis pin
2 Pneumatic cylinder
3 Calender roller
4 Screw
5 Outer nozzle

(Cont'd)

(Cont'd)

WARNING

Acids.

Follow the Safety Precautions. Only use the acids listed below, do not use detergents.

d) Remove the four screws (6) and the inner nozzle (7).

e) Clean the nozzles (5) and (7) with one of the four acid solutions listed below. All the solutions must have an ambient temperature during limescale removal.

- acetic acid (CH_3COOH), 20%
- nitric acid (HNO_3), 5-10%
- citric acid ($C_6H_8O_7$), 20%
- phosphoric acid (H_3PO_4), 5-10%

f) After limescale removal flush with water and then perform a final rinse with softened or distilled water.

g) Assemble in the reverse order. If necessary set the nozzles, see 1.3.13-3 Blowing System - Set Nozzles on page 1-145.

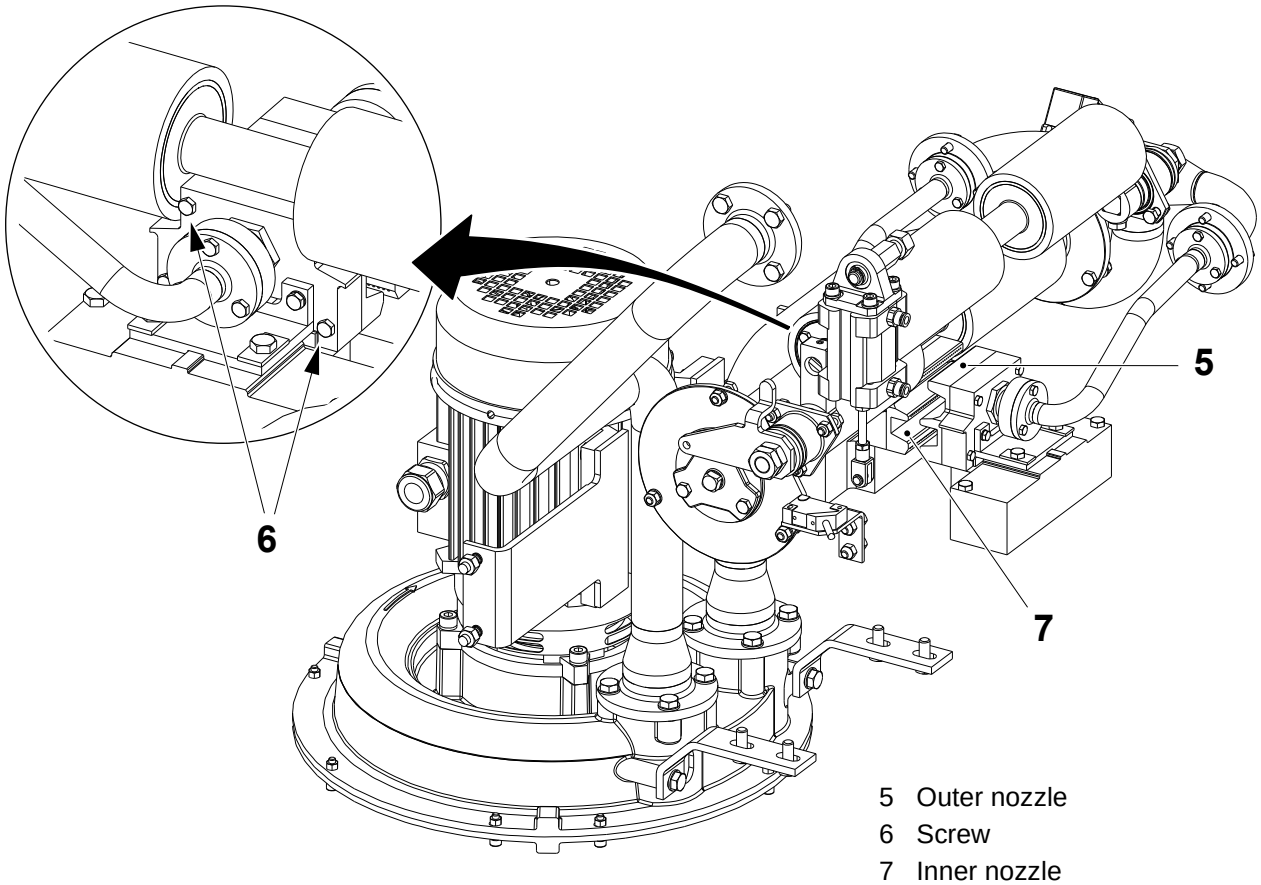

5 Outer nozzle
6 Screw
7 Inner nozzle

1.3.13-3 Blowing System - Set Nozzles

Machine Status	Mains Power OFF Air OFF Steam ON Water OFF
SPC Reference	2528101-0200

WARNING

Burn hazard.

The blowing system nozzles and other adjacent parts may be hot. Wear personal protective clothing.

a) Loosen the screws (1) and move sideways the inner nozzle (2) and outer nozzle (3) until they are centred with the squee-gee roller (4) and do not touch the surfaces (5).

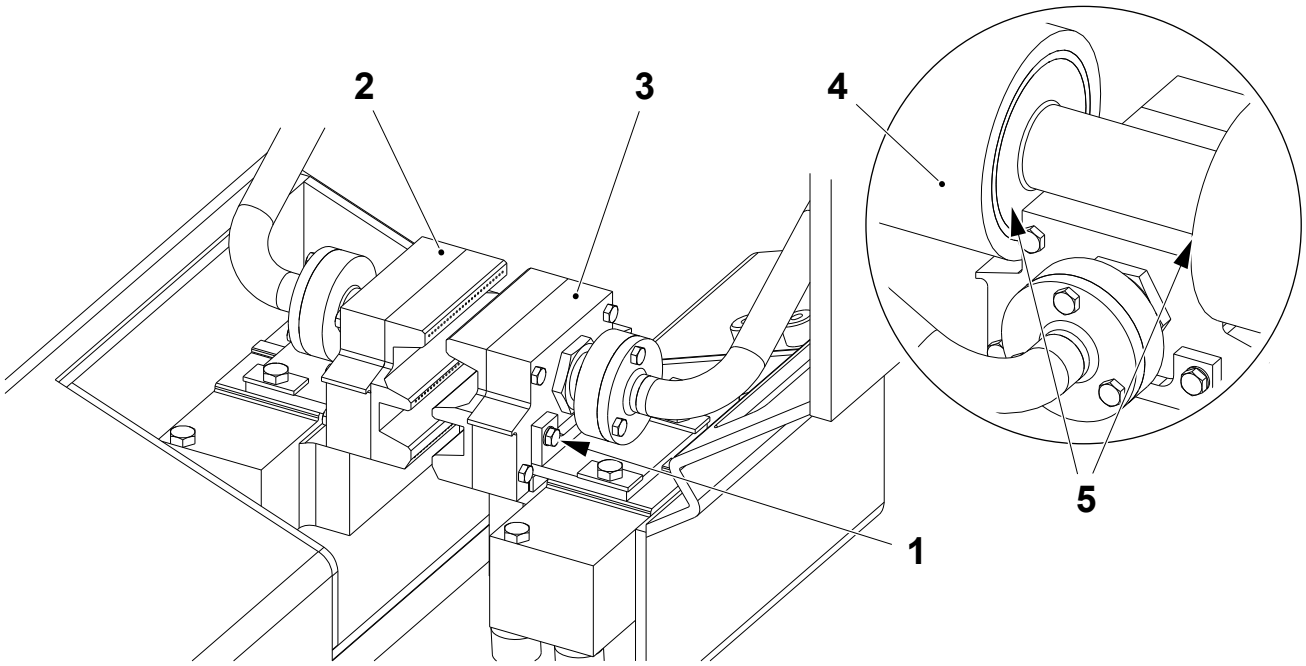

1 Screw
2 Inner nozzle
3 Outer nozzle
4 Squee-gee roller
5 Surface

(Cont'd)

(Cont'd)

b) Loosen the screws (6) and align the inner nozzle (2) with the edge of the peroxide bath (7).

c) Tighten the screws (6).

d) Loosen the screws (8) and set the distance **A** between the inner nozzle (2) and the outer nozzle (3).

e) Tighten the screws (8).

Check during PRODUCTION that the nozzles do not touch or scratch the packaging material.

Opening Type	Distance A (mm)
FlexiCap	12.0 ±1
LightCap	16 ±1

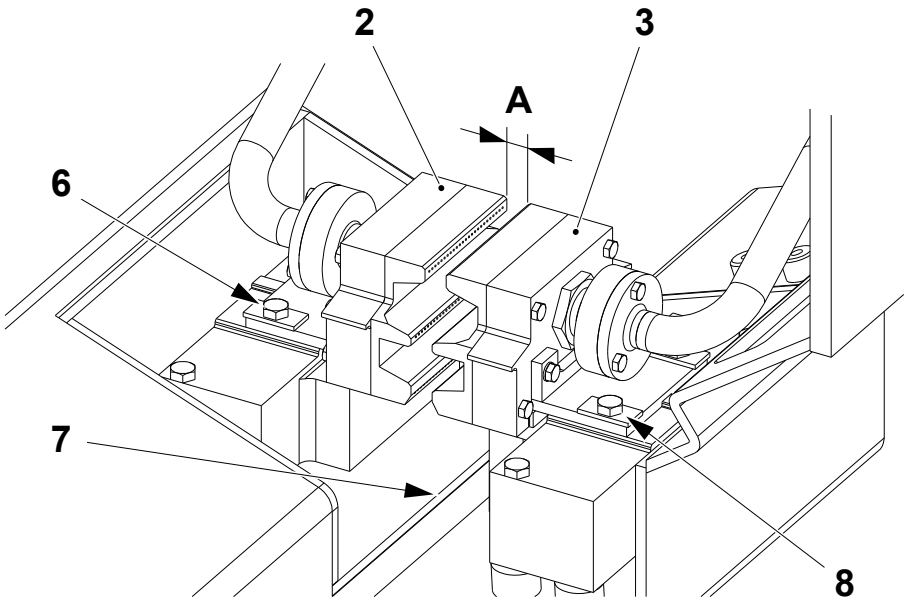

2 Inner nozzle
3 Outer nozzle
6 Screw
7 Peroxide bath edge
8 Screw

1.3.13-4 Blowing System - Change Gaskets

Machine Status	Mains Power OFF Air OFF Steam ON Water OFF
SPC Reference	2528101-0200

WARNING

Burn hazard.

The blowing system pipes and other adjacent parts may be hot. Wear personal protective clothing.

a) Remove the screws (1), the screws (2) and the pipe (3).

b) Change the gaskets (4).

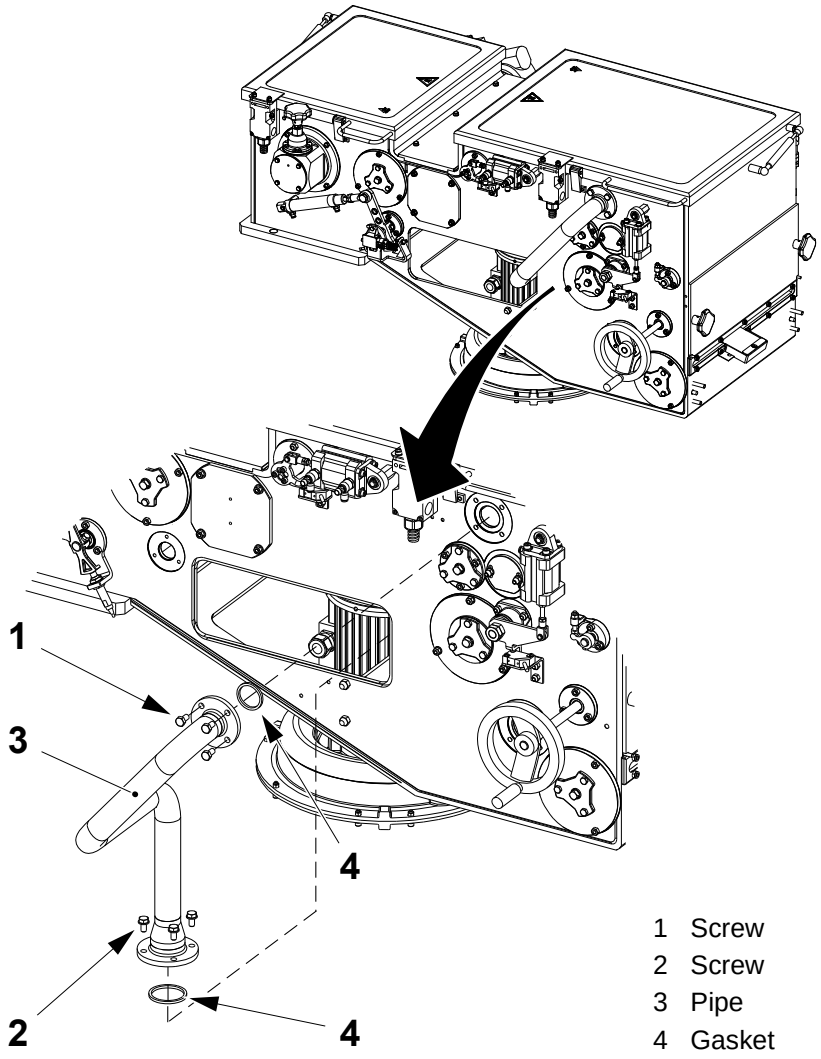

1 Screw
2 Screw
3 Pipe
4 Gasket

(Cont'd)

(Cont'd)

c) Remove the screws (5), the screws (6) and the pipe (7).

Note! Remember to fit the short screws in their correct positions when assembling the pipes.

d) Change the gaskets (8)

e) Assemble in the reverse order.

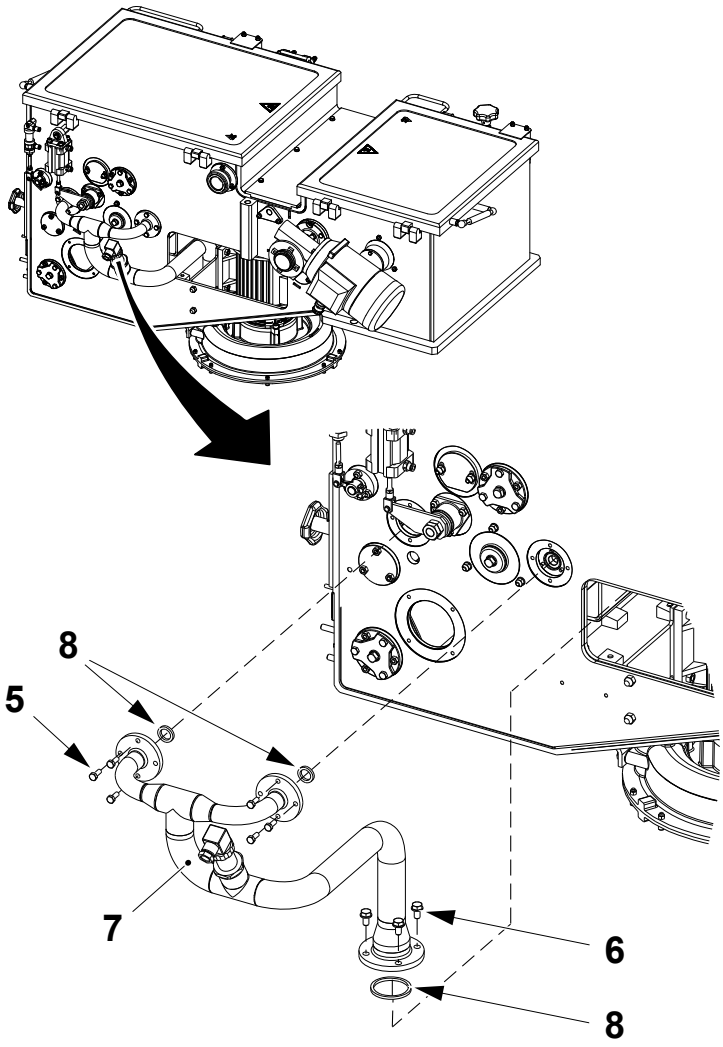

5 Screw
6 Screw
7 Pipe
8 Gasket

1.3.13-5 Blowing System - Change Seals

Machine Status	Mains Power OFF Air OFF Steam ON Water OFF
Special Equipment	Adjustable Hook Spanner (with two pins)
SPC Reference	2528101-0200

WARNING

Burn hazard.

The blowing system pipes and other adjacent parts may be hot. Wear personal protective clothing.

a) Remove the screws (1) and the cover (2).

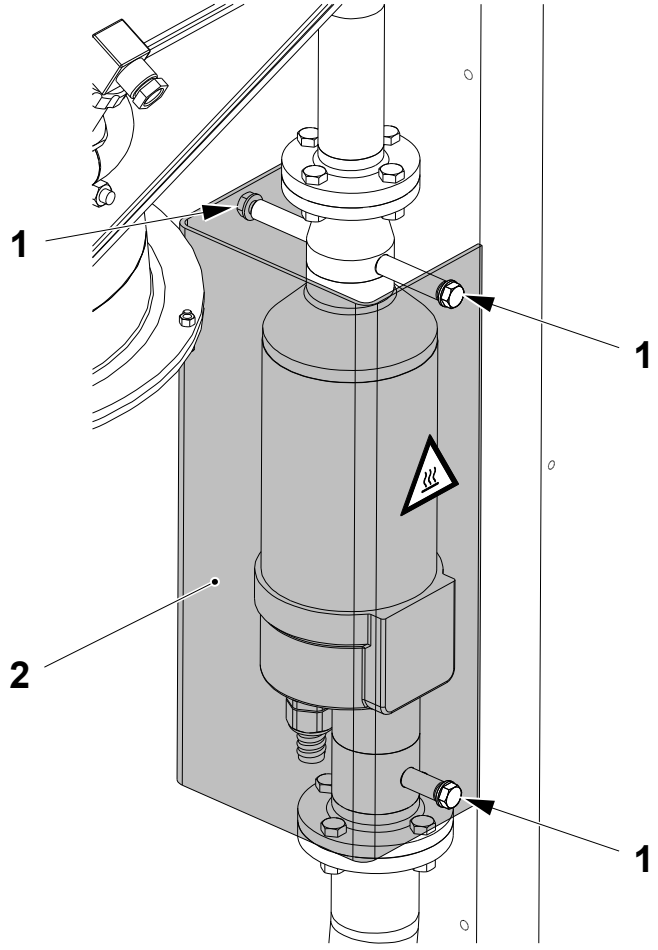

1 Screw
2 Cover

(Cont'd)

(Cont'd)

WARNING

Risk of personal injury.

The lid (4) and the impeller (7) weigh approx. 13 Kg. Use caution when removing these components.

b) Remove the screws (3) the lid (4) and the O-ring (5).

c) Remove the stop screw (6), the impeller (7) and the key (8).

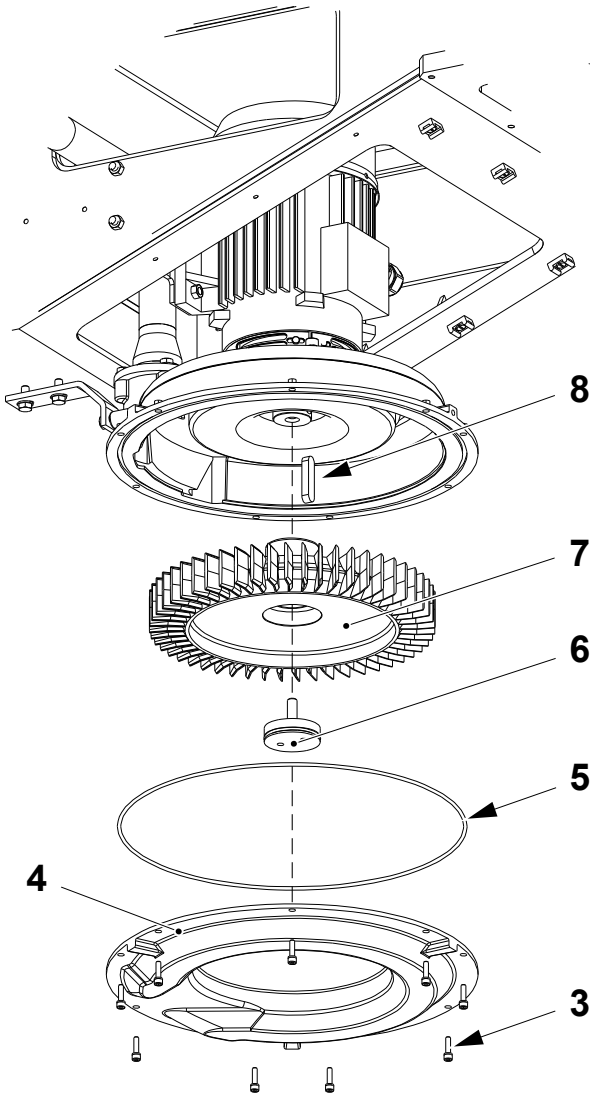

3 Screw
4 Lid
5 O-ring
6 Stop screw
7 Impeller
8 Key

(Cont'd)

(Cont'd)

WARNING

Risk of personal injury.

The pump body (11) weighs approx. 8.2 Kg. Use caution when removing this component.

Note! When assembling, remember to fit the short screws in their correct position when fitting the two pipes (10) to the pump body (11).

d) Remove the eight screws (9) securing the two pipes (10) to the pump body (11).

e) Remove the two screws (12) securing the pump body (11) to the brackets (13).

f) Remove the four screws (14) and the pump body (11).

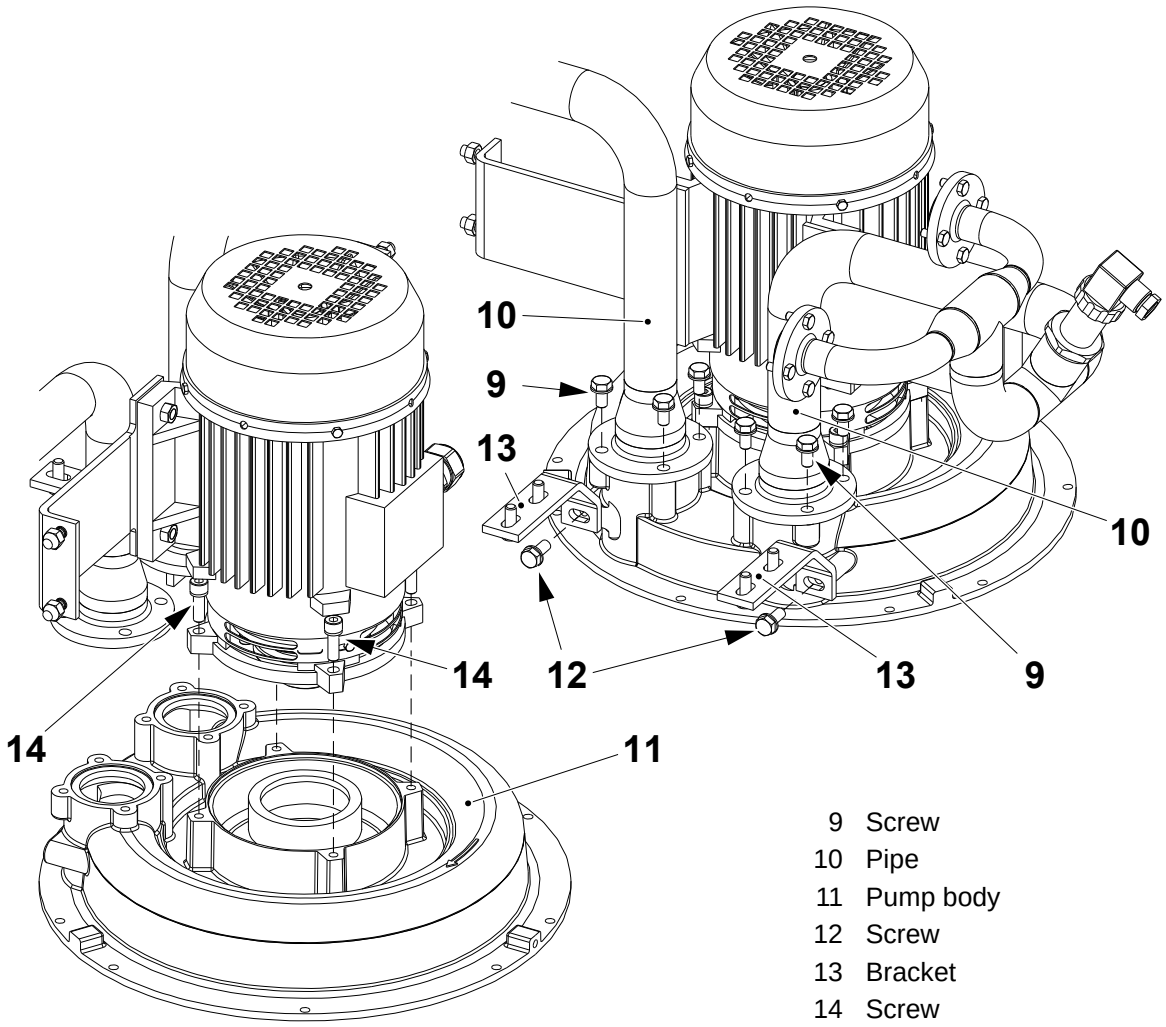

9 Screw
10 Pipe
11 Pump body
12 Screw
13 Bracket
14 Screw

(Cont'd)

(Cont'd)

g) Remove the three screws (15) and the bearing flange (16).
h) Change the O-ring (5), the seals (17) and the O-ring (18).
i) Assemble in the reverse order.

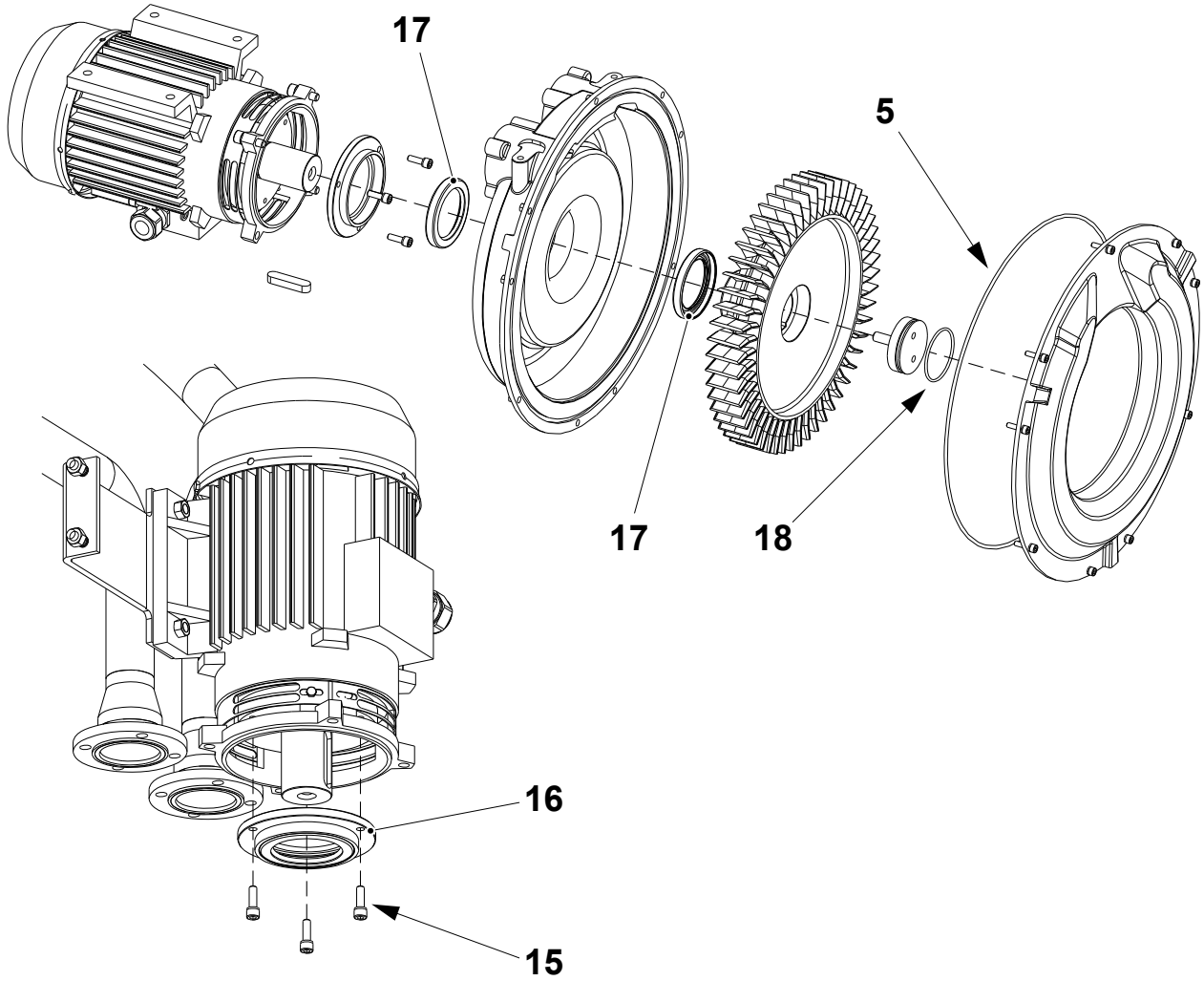

5 O-ring
15 Screw
16 Bearing flange
17 Seal
18 O-ring

1.4 Sterile Air System

SPC Reference	2528076-0200

1.4-1 Sterile Air System - Check for Leaks

Machine Status	Mains Power ON Air ON Steam ON Water ON
SPC Reference	2528076-0200

WARNING
Hydrogen Peroxide.
Follow the Safety Precautions.

Check the connections for air leaks at the following points:

- the spray generator (1)
- the compressor unit (2)
- the air superheater (3)
- the heat exchanger (4)

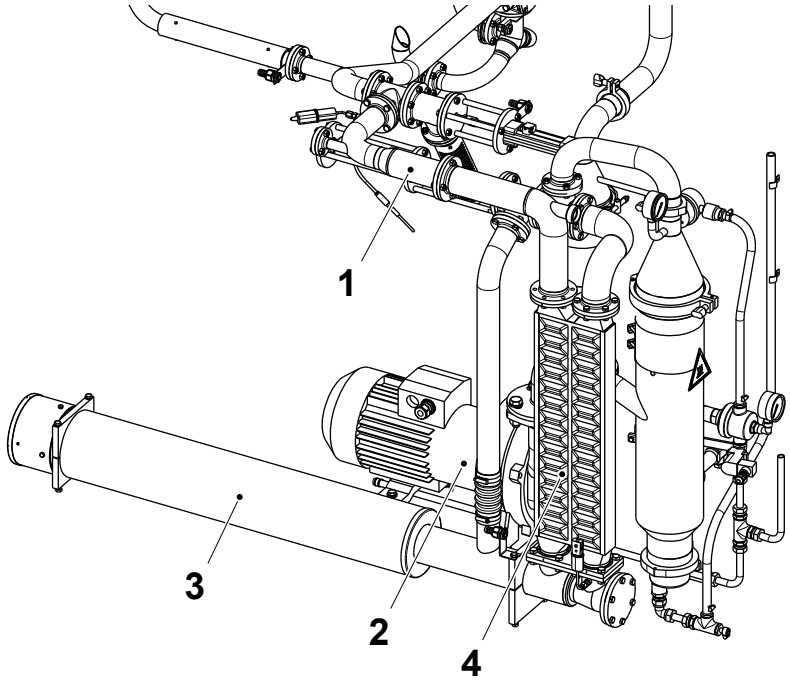

1 Spray generator
2 Compressor unit
3 Air superheater
4 Heat exchanger

(Cont'd)

(Cont'd)

- the separator (5)
- the scrubber (6)
- the heat exchanger valve (7)
- the air preheating valve (8)
- the change over valve (9)
- the air knife heater (10).

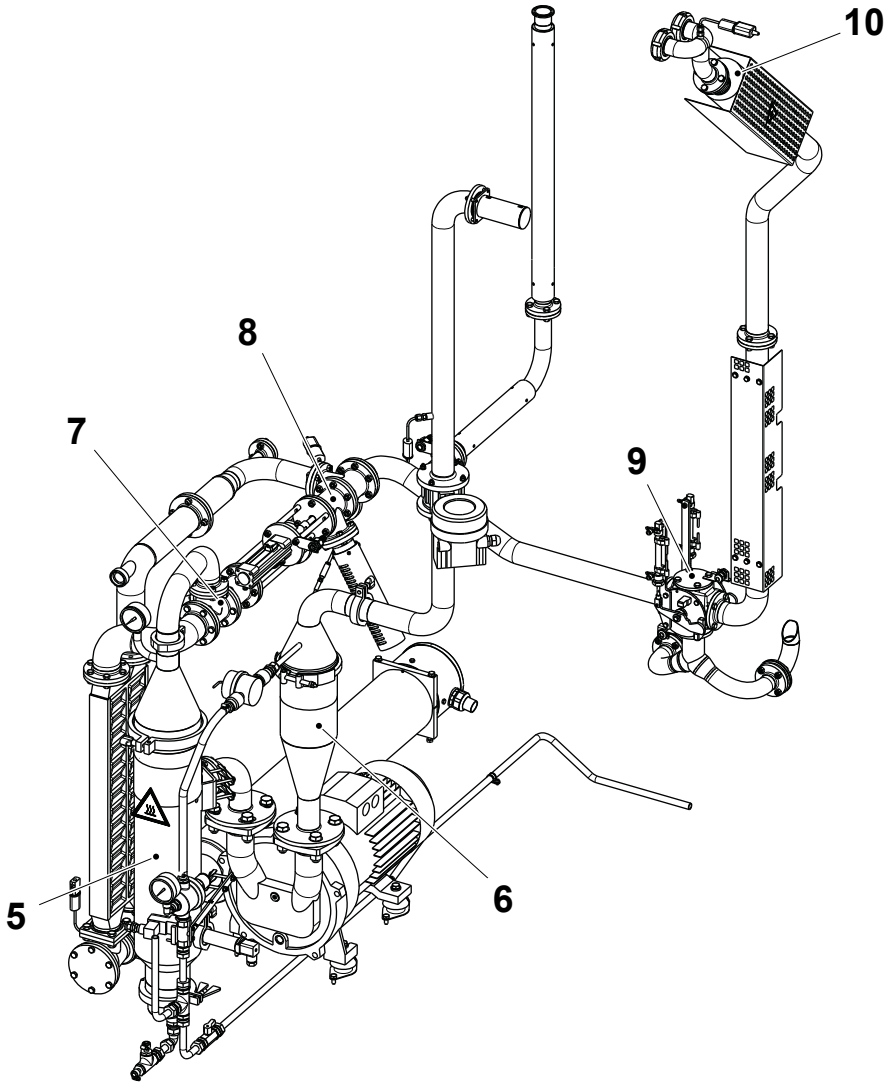

5 Separator
6 Scrubber
7 Heat exchanger valve
8 Air preheating valve
9 Change over valve
10 Air knife heater

1.4.1 Pipe Work Air

1.4.1-1 Pipe Work Air - Check Spray Nozzle

Machine Status	Mains Power OFF Air OFF Steam OFF Water OFF
SPC Reference	1558511-0300

WARNING
Burn hazard.
Follow the Safety Precautions.

WARNING
Hydrogen Peroxide.
Follow the Safety Precautions.

CAUTION
Risk of serious production fault.
Never close the steam valve when the dairy product line is still in use by other machines. The steam in the product valve forms an aseptic barrier between the machine and the remaining dairy product line. Closing the steam valve will remove this barrier.

(Cont'd)

(Cont'd)

a) Remove the pipes from the connections (1).

b) Remove the spray nozzle group (2) by means of the nut (3).

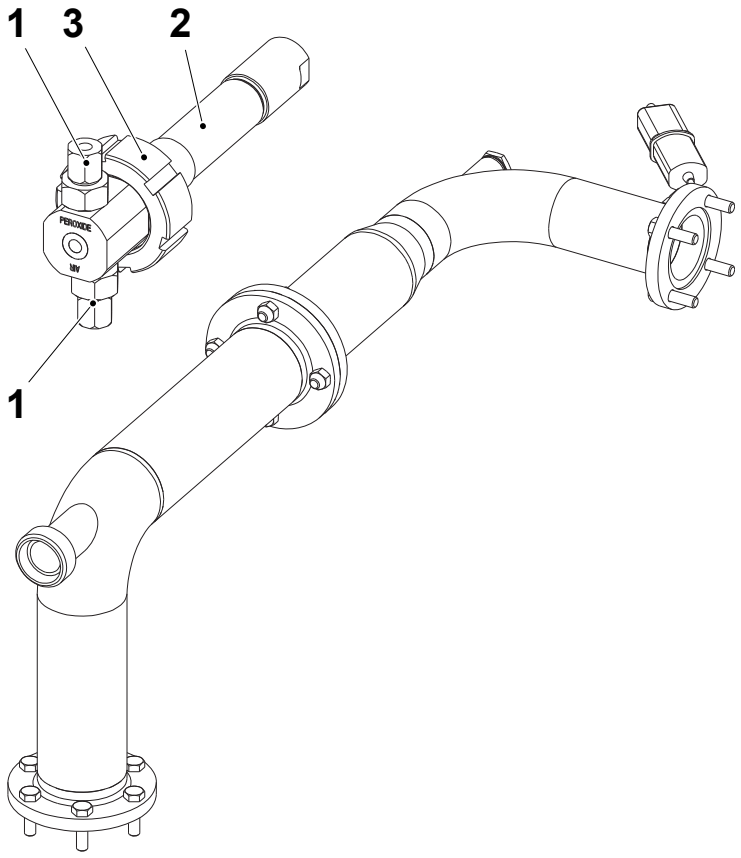

1 Connection
2 Nozzle group
3 Nut

(Cont'd)

(Cont'd)

c) Remove the nut (4).

d) Disassemble the nozzle (5) from the dome (6), the spacer (7) and the nut (4).

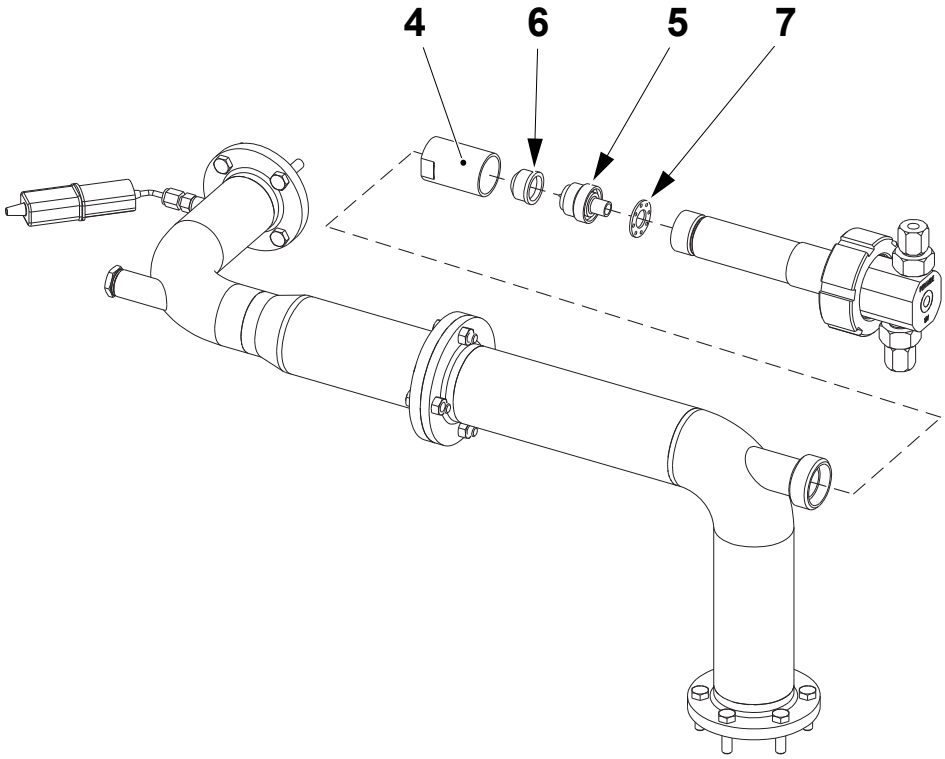

4 Nut
5 Nozzle
6 Dome
7 Spacer

(Cont'd)

(Cont'd)

Note! If the connections (1) have been removed from the spray nozzle body (9), use Teflon tape on the joints when assembling to avoid leakage.

e) Remove the external pipe (8) and the nut (3).

f) Check all the parts for wear or damage and clean them if necessary with compressed air, see 1.4.1-2 Pipe Work Air - Clean Spray Nozzle and Balls.

g) Assemble in the reverse order.

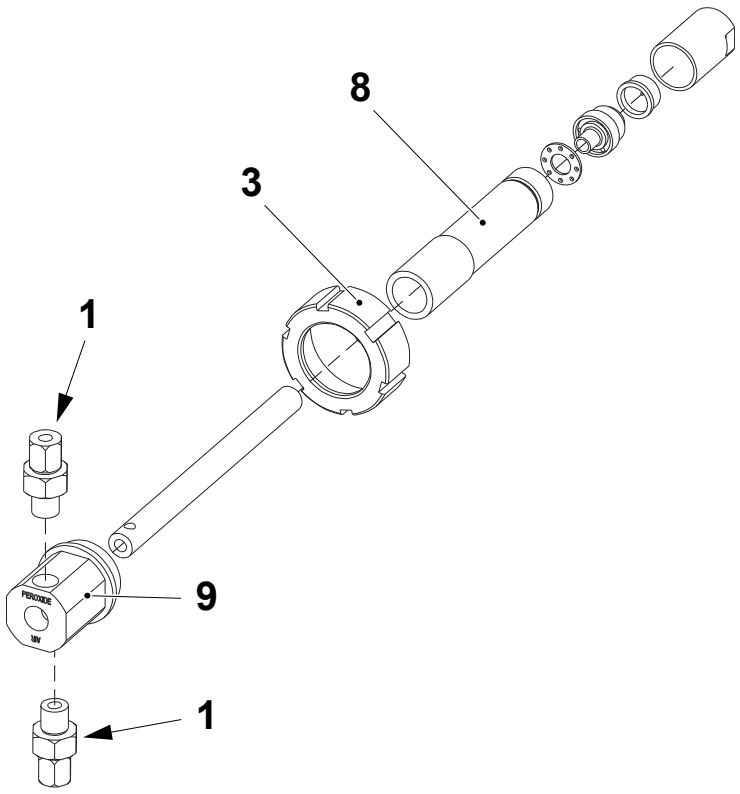

1 Connection
3 Nut
8 External pipe
9 Spray nozzle body

1.4.1-2 Pipe Work Air - Clean Spray Nozzle and Balls

Machine Status	Mains Power OFF Air OFF Steam OFF Water OFF
Consumables	De-liming Acid, See List
SPC Reference	1558511-0300

WARNING
Burn hazard.
Follow the Safety Precautions.

WARNING
Hydrogen Peroxide.
Follow the Safety Precautions.

CAUTION
Risk of serious production fault.
Never close the steam valve when the dairy product line is still in use by other machines. The steam in the product valve forms an aseptic barrier between the machine and the remaining dairy product line. Closing the steam valve will remove this barrier.

(Cont'd)

(Cont'd)

a) Disconnect the electrical connection from the thermocouple (1).

b) Remove the H_2O_2 pipe and the compressed air pipe from the connections (2) and (3).

c) Remove the ten screws (4) and remove the spray generator (5).

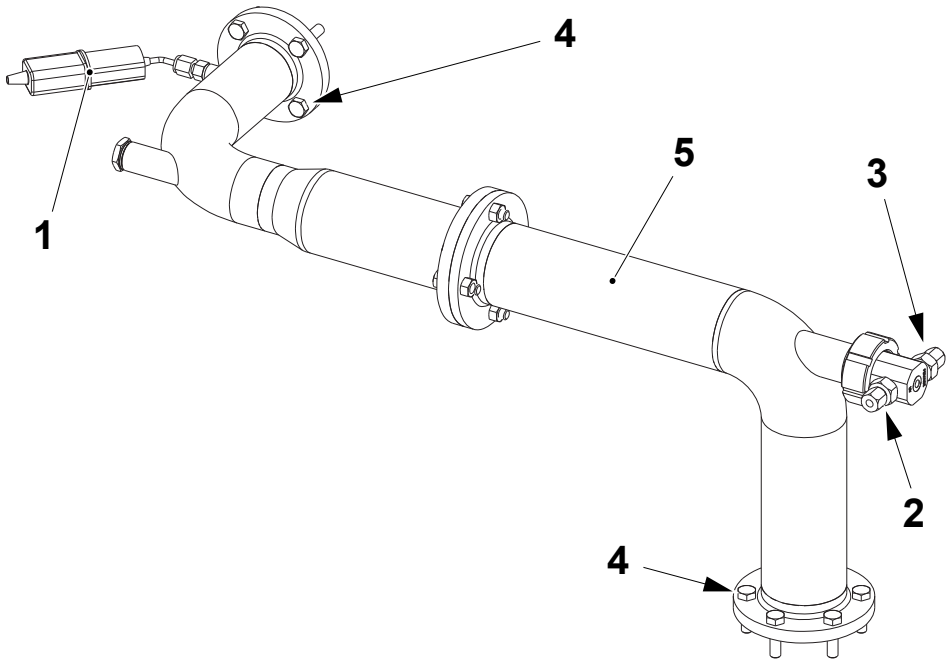

1 Thermocouple
2 Connection
3 Connection
4 Screw
5 Spray generator

(Cont'd)

(Cont'd)

d) Remove the spray nozzle group (6) by means of the nut (7).

e) Remove the nut (8).

f) Disassemble the nozzle (9) from the dome (10), the spacer (11) and the nut (8).

g) Clean all the parts with compressed air. If necessary, use a needle to clean the spacer (11), the nozzle (9) and the dome (10).

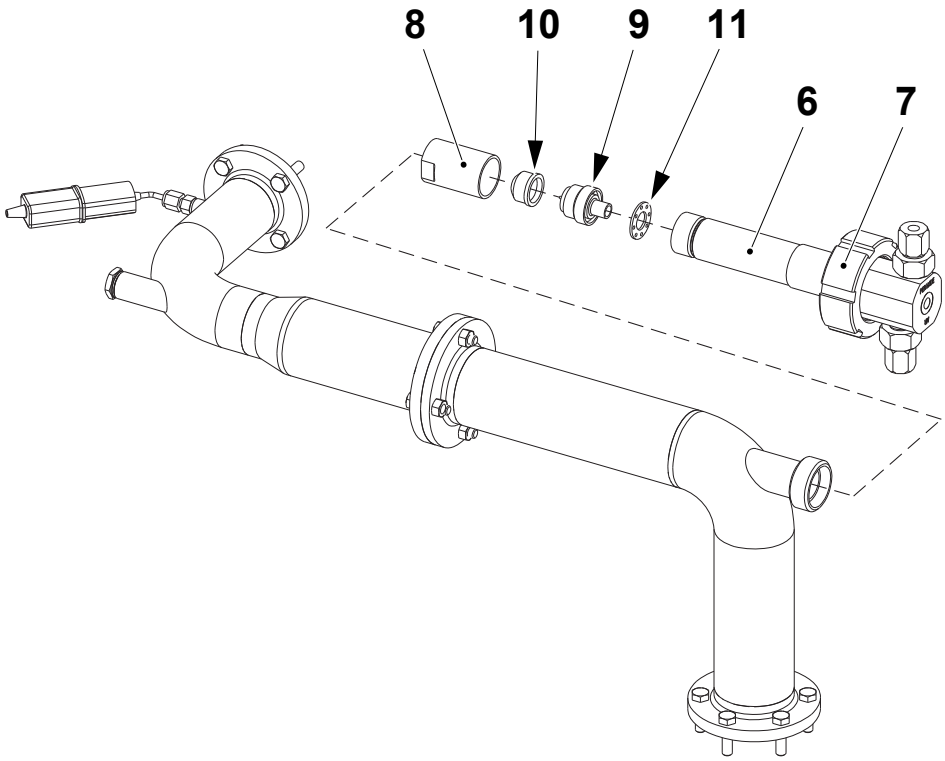

6 Nozzle group
7 Nut
8 Nut
9 Nozzle
10 Dome
11 Spacer

(Cont'd)

(Cont'd)

WARNING
Acids.
Follow the Safety Precautions.

h) Disconnect the pipe (12) from the pipe (13) by means of the nuts (14) and the screws (15).

i) Remove the container (16).

j) Clean the container (16) containing the balls with nitric acid (HNO_3) at 5-10%. The solution must have a temperature of 50°- 60°C during peroxide residue removal.

k) After cleaning flush the container (16) with water and then rinse with softened or distilled water.

l) Assemble in the reverse order.

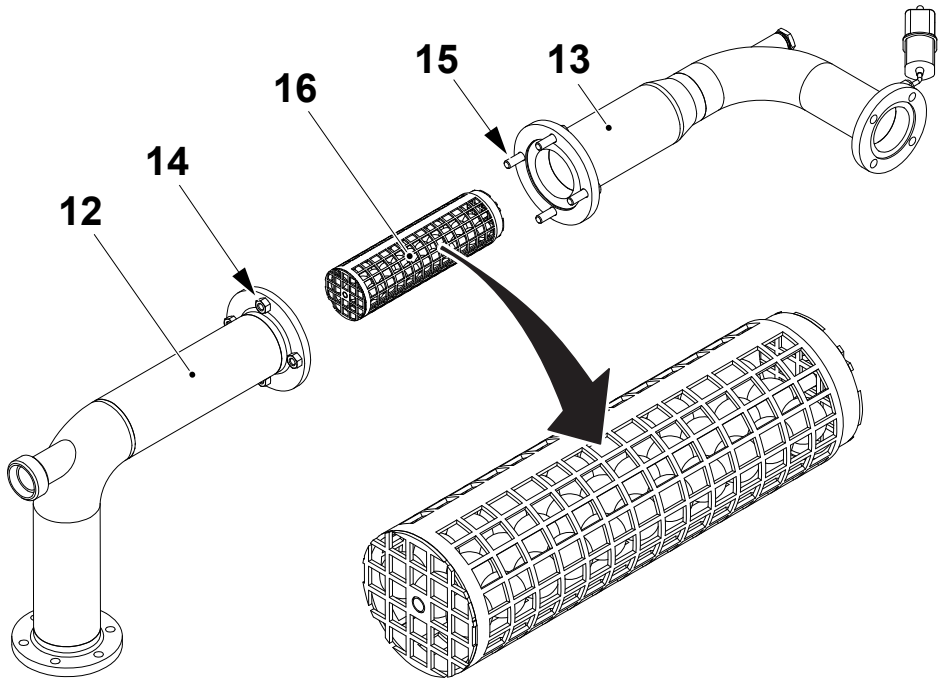

12 Pipe
13 Pipe
14 Nut
15 Screw
16 Container

1.4.1-3 Pipe Work Air - Check Change Over Valve

Machine Status	Mains Power OFF Air OFF Steam OFF Water OFF
SPC Reference	2550895-0200

WARNING

Burn hazard.

Follow the Safety Precautions.

CAUTION

Risk of serious production fault.

Never close the steam valve when the dairy product line is still in use by other machines. The steam in the product valve forms an aseptic barrier between the machine and the remaining dairy product line. Closing the steam valve will remove this barrier.

(Cont'd)

(Cont'd)

Check the valve functions correctly and that the shafts (1) move freely. If not change the bushings, see 1.4.1-4 Pipe Work Air - Overhaul Change Over Valve.

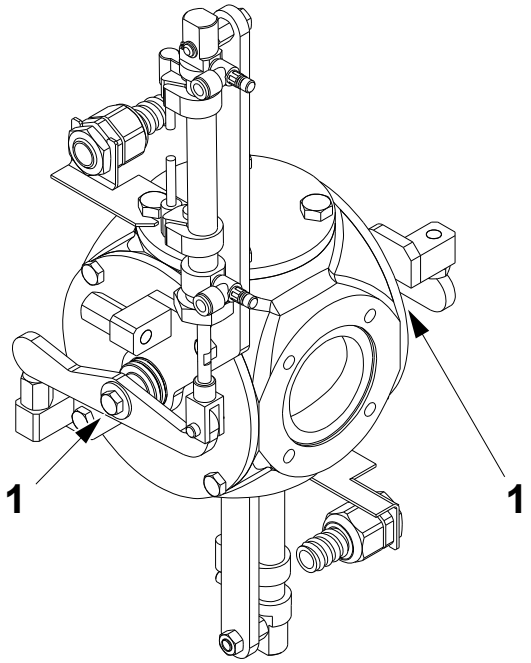

1 Shaft

1.4.1-4 Pipe Work Air - Overhaul Change Over Valve

Machine Status	Mains Power OFF Air OFF Steam OFF Water OFF
SPC Reference	2550895-0200

WARNING
Burn hazard.
Follow the Safety Precautions.

CAUTION
Risk of serious production fault.
Never close the steam valve when the dairy product line is still in use by other machines. The steam in the product valve forms an aseptic barrier between the machine and the remaining dairy product line. Closing the steam valve will remove this barrier.

(Cont'd)

(Cont'd)

Note! Valid for machines with T-order: 21208/00001 to 21208/00017.

Note! Before removing, note each spacer position (A) to (D). Wrongly assembled spacers may cause the valve to malfunction.

Position	TP No.
A	2582576-0000
B	2528061-0000
C	2528061-0000
D	2528062-0000

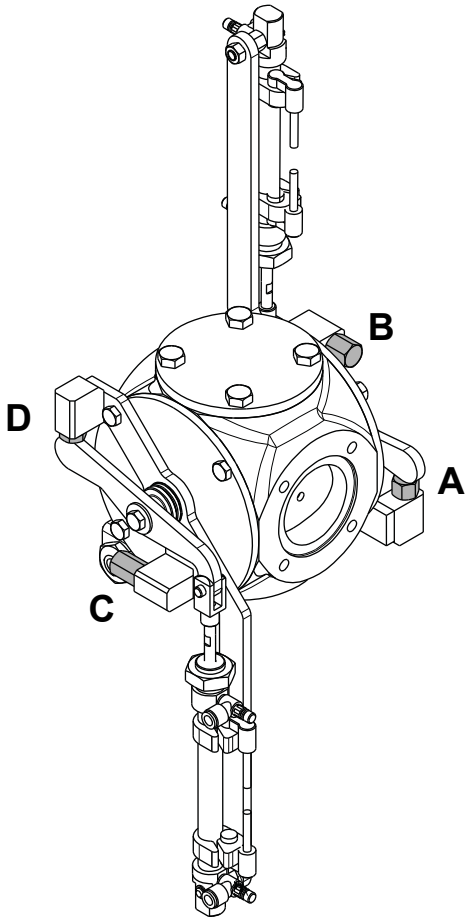

(Cont'd)

(Cont'd)

a) Remove the screw (1) and the washer (2).

b) Remove the arm (3), the screws (4) and the assembly (5).

c) Remove the shaft (6).

d) Remove and change the O-ring (7) and the bushing (8).

e) Remove the screws (9) and the lid (10).

f) Change the O-ring (11).

Note! Before assembling, position each spacer correctly, (A) to (D).

g) Assemble in the reverse order. Repeat the procedure for the other side of the change over valve.

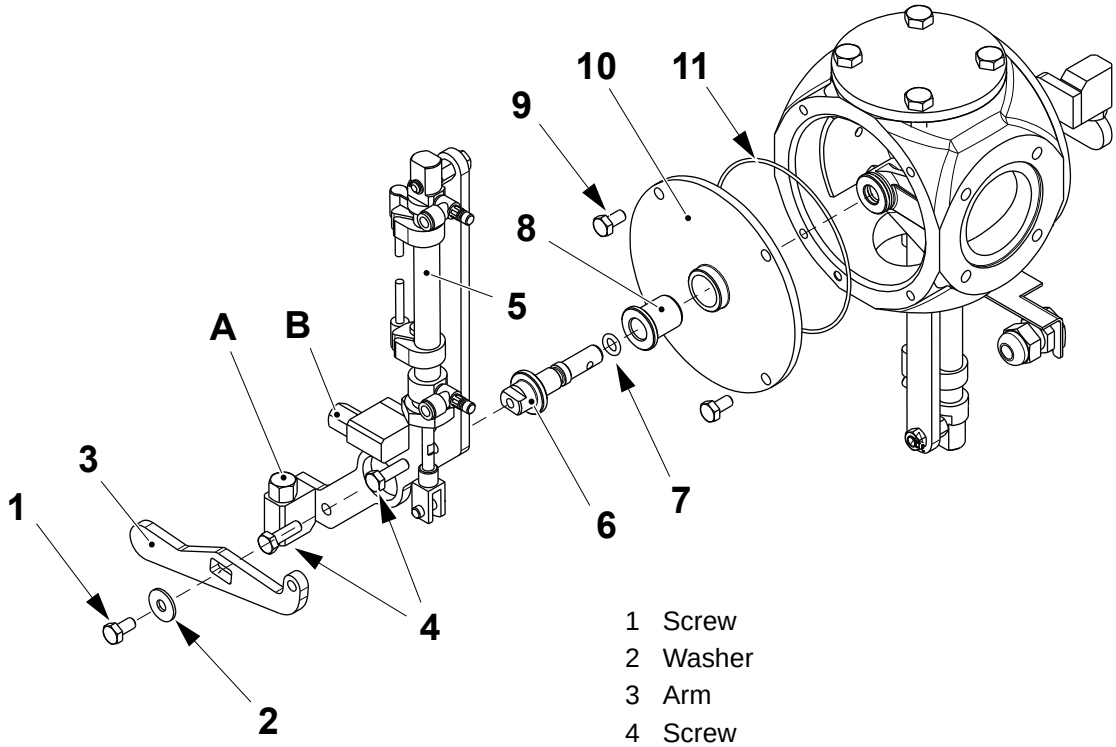

1 Screw
2 Washer
3 Arm
4 Screw
5 Assembly
6 Shaft
7 O-ring
8 Bushing
9 Screw
10 Lid
11 O-ring

(Cont'd)

(Cont'd)

Note! Valid for machines with T-order: 21208/00018 and above.

a) Remove the screw (1), the washer (2) and the arm (3).

b) Remove the screws (4) and the assembly (5).

c) Remove the shaft (6).

d) Remove and change the O-ring (7) and the bushing (8).

e) Remove the screws (9) and the lid (10).

f) Change the O-ring (11).

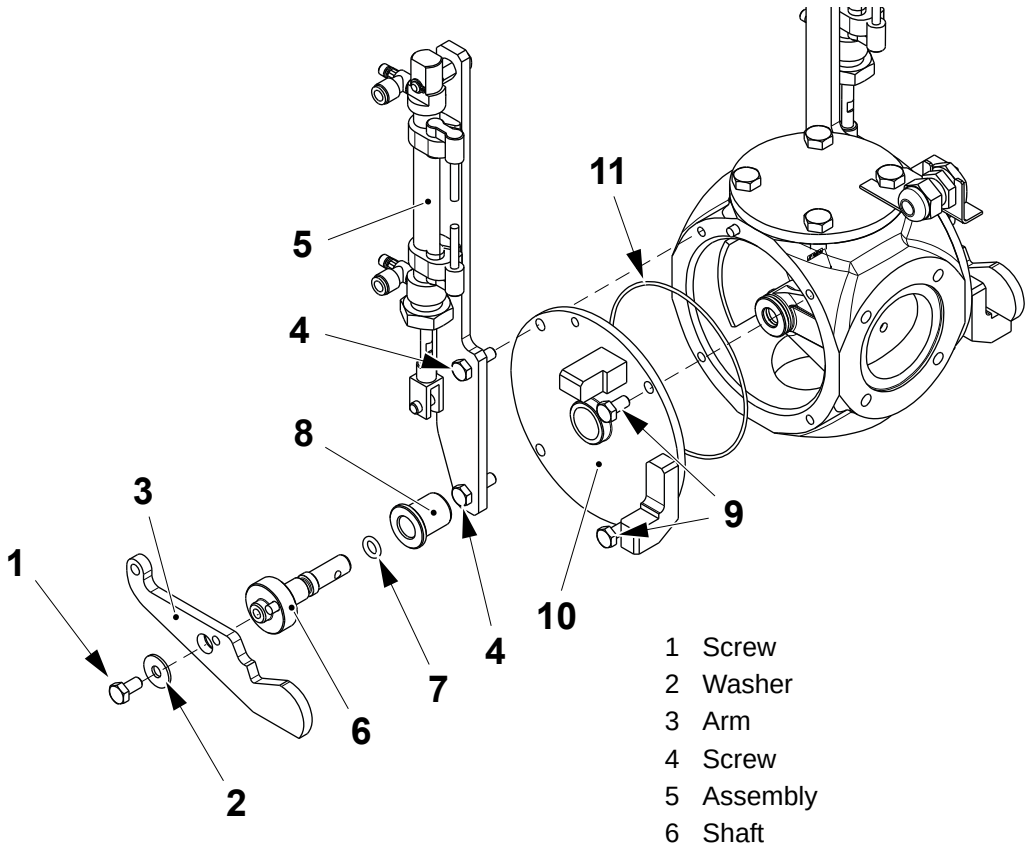

1 Screw
2 Washer
3 Arm
4 Screw
5 Assembly
6 Shaft
7 O-ring
8 Bushing
9 Screw
10 Lid
11 O-ring

(Cont'd)

(Cont'd)

Note! When assembling centre the lid (10) by the pin (12) and the arm (3) by the pin (13).

g) Assemble in the reverse order. Repeat the procedure for the other side of the change over valve.

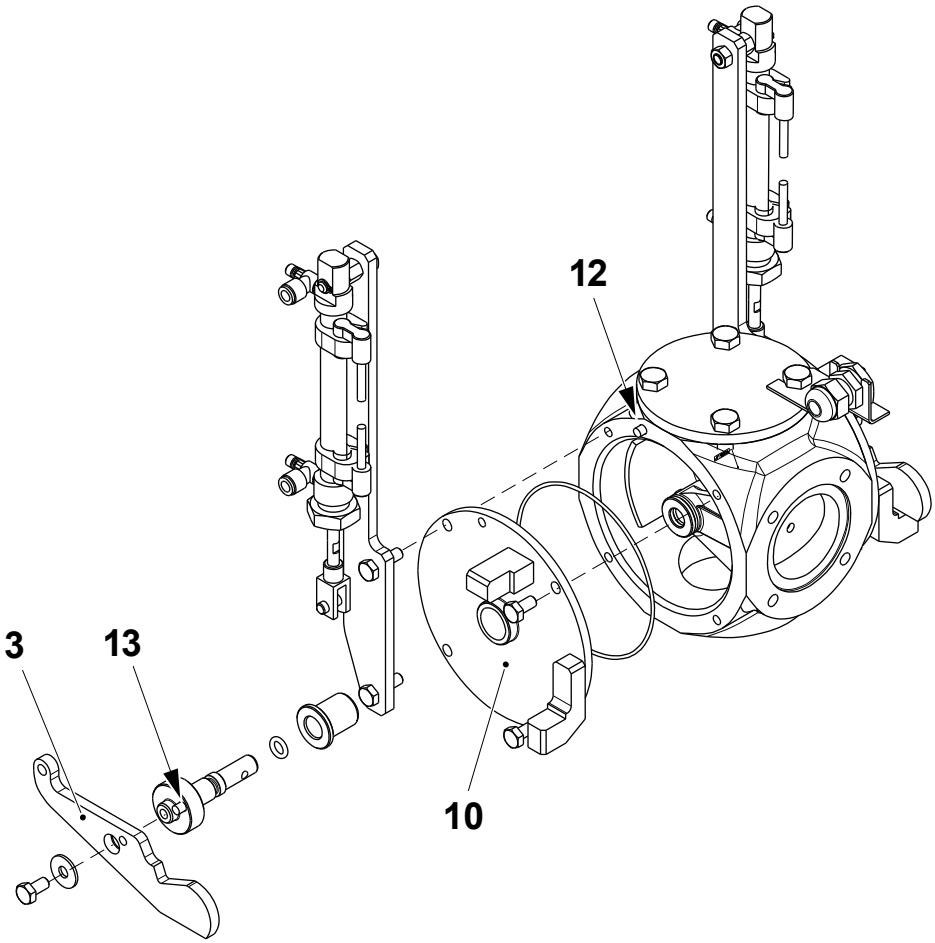

3 Arm
10 Lid
12 Pin
13 Pin

1.4.2 Compressor Unit

1.4.2-1 Compressor Unit - Check Pressure

Machine Status	PRODUCTION
SPC Reference	2700059-0200

WARNING
Burn hazard.
Follow the Safety Precautions.

Check that the pressure gauge (1) on the water separator (2) indicates the nominal sterile air pressure of 0.25 bar.

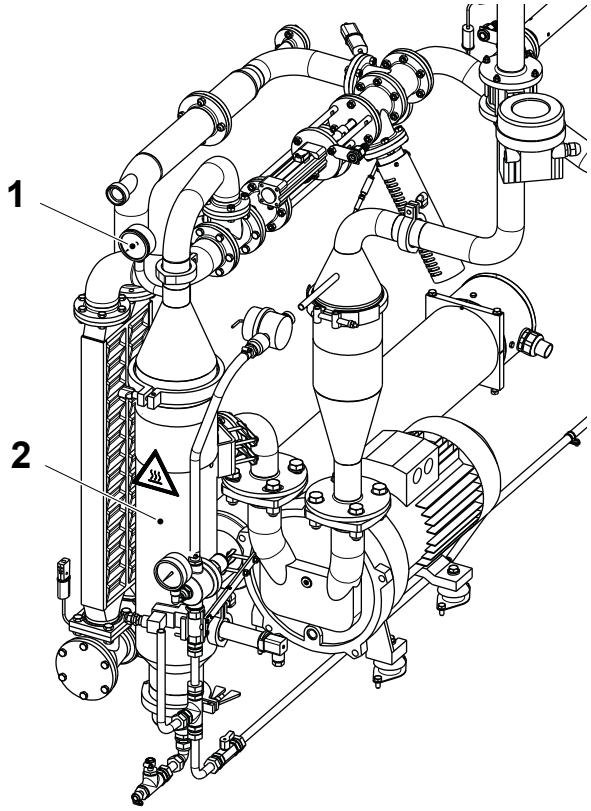

1 Pressure gauge
2 Water separator

(Cont'd)

(Cont'd)

If the correct sterile air pressure cannot be achieved, check the following:

- that the cause of too high sterile air pressure may be due to a blockage somewhere in the sterile air system pipe work
- that the cause of too low air pressure in the sterile air system may be due to a leakage in the sterile air system pipe work, a blocked filter in the suction system or insufficient compressor capacity.

1.4.2-2 Compressor Unit - Change Gaskets

Machine Status	Mains Power OFF Air OFF Steam OFF Water OFF
SPC Reference	2700059-0200

WARNING

Burn hazard.

Follow the Safety Precautions.

(Cont'd)

(Cont'd)

Note! Valid for machines with T-order: 21208/00001 to 21208/00017.

Check the flanges (1) of the compressor (2) for leaks. Remove the screws (3) and change the gaskets (4) if necessary.

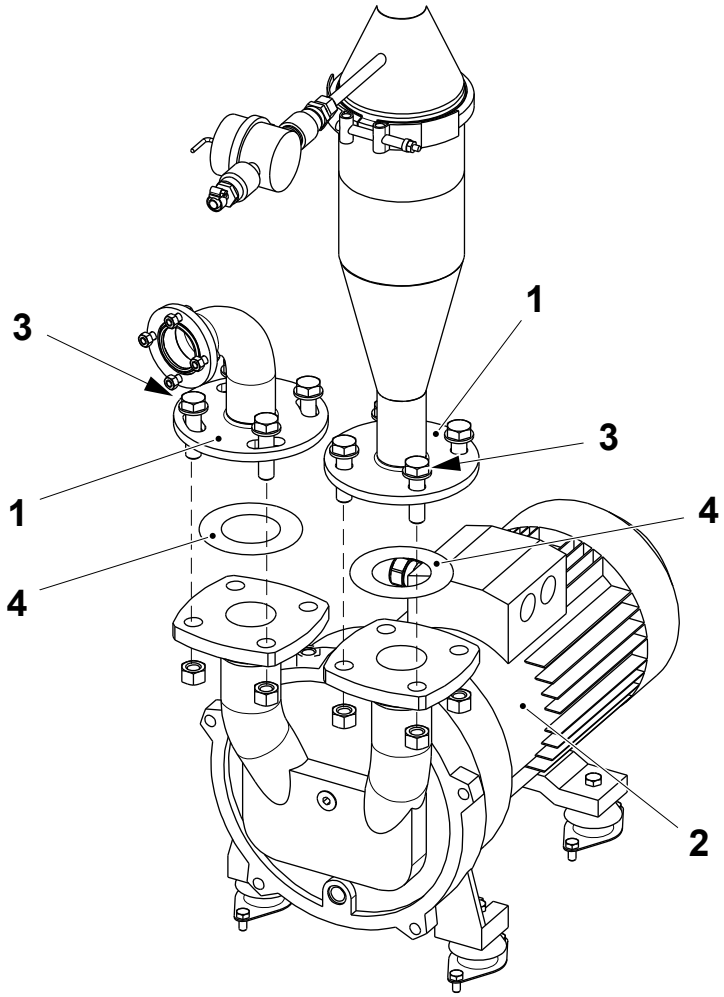

1 Flange
2 Compressor
3 Screw
4 Gasket

(Cont'd)

(Cont'd)

WARNING
Burn hazard.
Follow the Safety Precautions.

Note! Valid for machines with T-order: 21208/00018 and above.

Check the flanges (1) of the compressor (2) for leaks. Remove the screws (3) and (4) and change the expansion joints (5) if necessary.

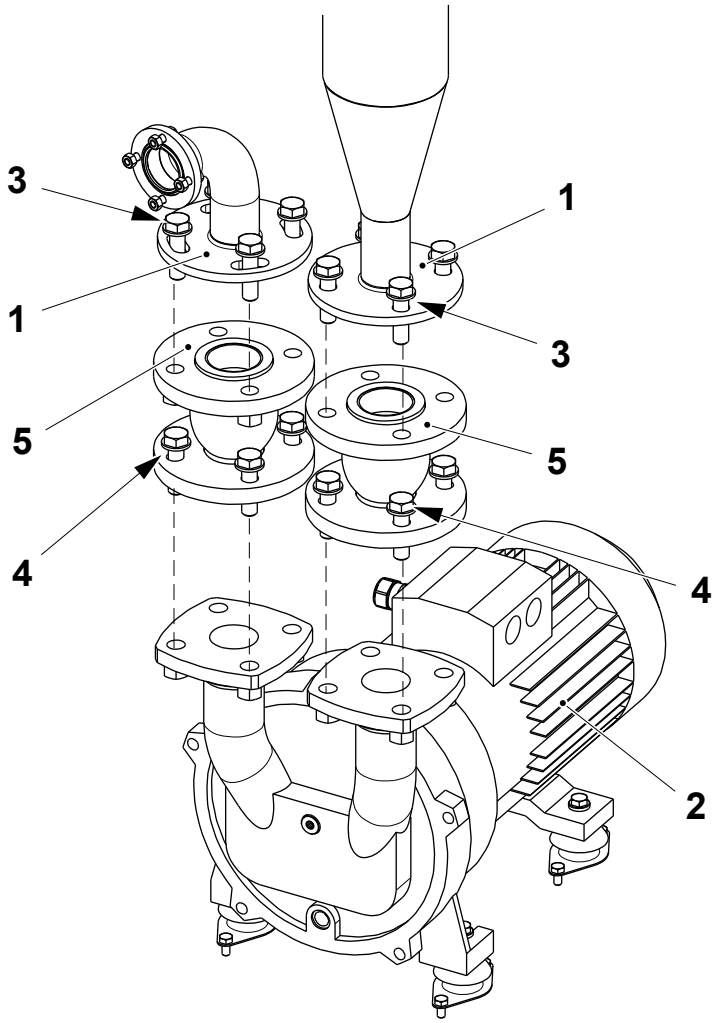

1 Flange
2 Compressor
3 Screw
4 Screw
5 Expansion joint

1.4.2-3 Compressor Unit - Clean Impeller

Machine Status	Mains Power OFF Air OFF Steam OFF Water OFF
Special Equipment	Container
SPC Reference	2700059-0200

WARNING

Burn hazard.

Follow the Safety Precautions.

(Cont'd)

(Cont'd)

a) Put a container (1) under the drain plug (2) of the compressor.

b) Remove the drain plug (2) and drain the water in the container (1).

c) Rotate occasionally the motor until no more water runs out, proceeding as follows:
   – remove the fan cowl (3)
   – rotate the motor fan (4) by hand in the running direction.

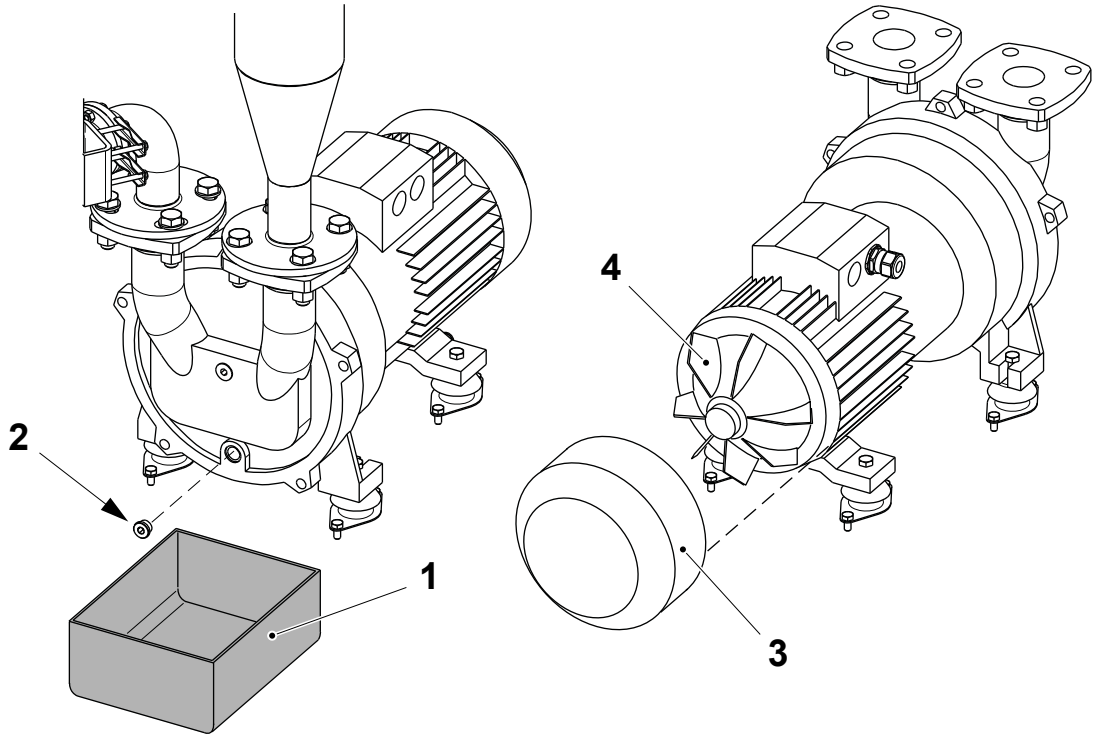

1 Container
2 Drain plug
3 Fan cowl
4 Motor fan

(Cont'd)

(Cont'd)

Note! Machines with T-order: 21208/00001 to 21208/00017 are supplied with the gaskets (8); machines with T-order: 21208/00018 are supplied with the expansion joints (9).

d) Remove the flanges (5) and (6) by the screws (7).

e) Remove the gaskets (8) or remove the expansion joints (9) by the screws (10).

f) Fit back the drain plug (2).

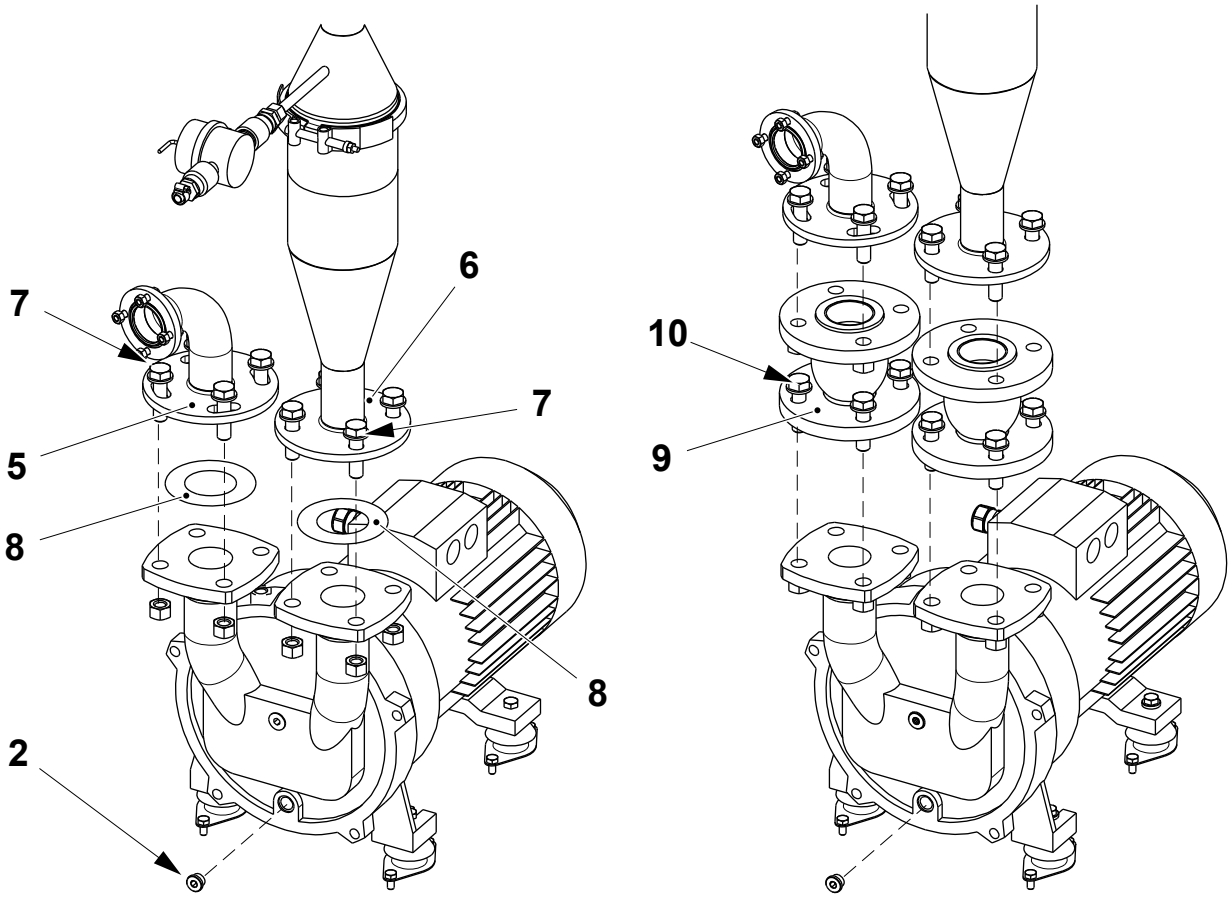

2 Drain plug
5 Flange
6 Flange
7 Screw
8 Gasket
9 Expansion joint
10 Screw

(Cont'd)

(Cont'd)

g) Fill the impeller chamber (11) through one of the pipes (12) with 5 litres about of acetic acid (CH_3COOH) 10% or other commercial available decalcifying agent.

h) Plug the pipes (12).

i) Let the decalcifying liquid operating for approx. 30 minutes, rotating occasionally the motor fan (4) in the running direction.

j) After 30 minutes, remove the drain plug (2) and drain the decalcifying liquid in a container, rotating the motor fan (4) in the running direction until no more liquid runs out.

k) Fit back the drain plug (2) and assemble in the reverse order.

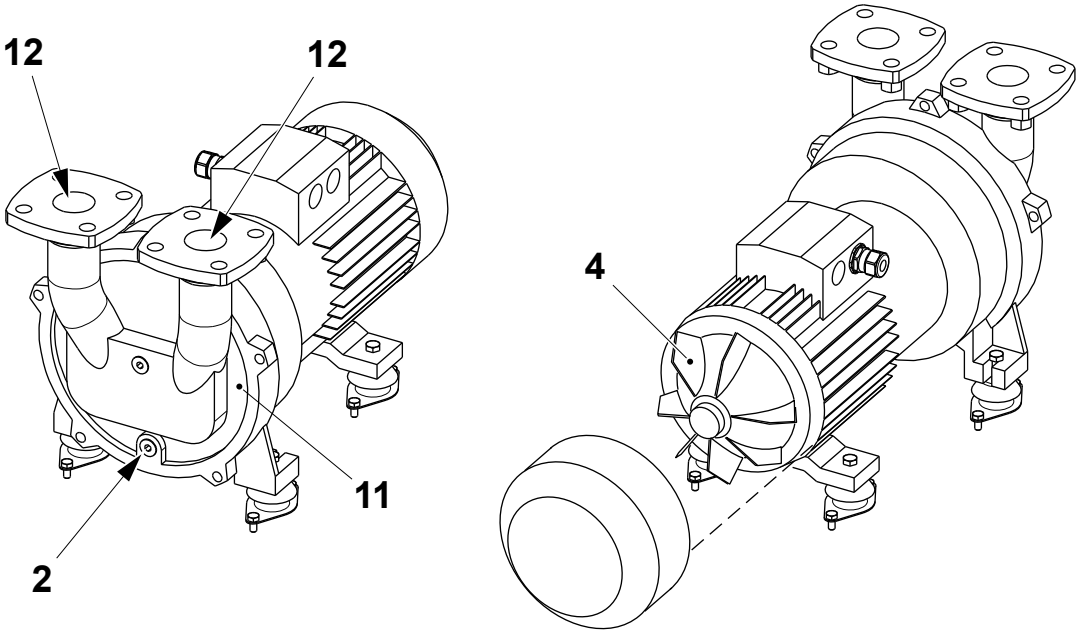

2 Drain plug
4 Motor fan
11 Impeller chamber
12 Pipe

1.4.3 Separator

1.4.3-1 Separator - Clean Filter and Floater

Machine Status	Mains Power OFF Air OFF Steam OFF Water OFF
Consumables	Lime Scale Removal Acid, See List
SPC Reference	1558769-0300

WARNING
Chemical products.
Follow the Safety Precautions.

CAUTION
Risk of serious production fault.
Never close the steam valve when the dairy product line is still in use by other machines. The steam in the product valve forms an aseptic barrier between the machine and the remaining dairy product line. Closing the steam valve will remove this barrier.

(Cont'd)

(Cont'd)

a) Remove the pipe connection (1).

b) Loosen the clamp (2) and remove the float unit (3), the seal (4) and the draining (5).

c) Remove the float (3) and clean it.

d) Shake the float (3) to make sure that no liquid has leaked into it. Change the float (3) if necessary.

e) If the valve (7) or the valve seat (6) is defective, change them, see 1.4.3-2 Separator - Change Valve and Valve Seat.

f) Dip the draining (5) into a container with deliming agent to remove the limescale residues.

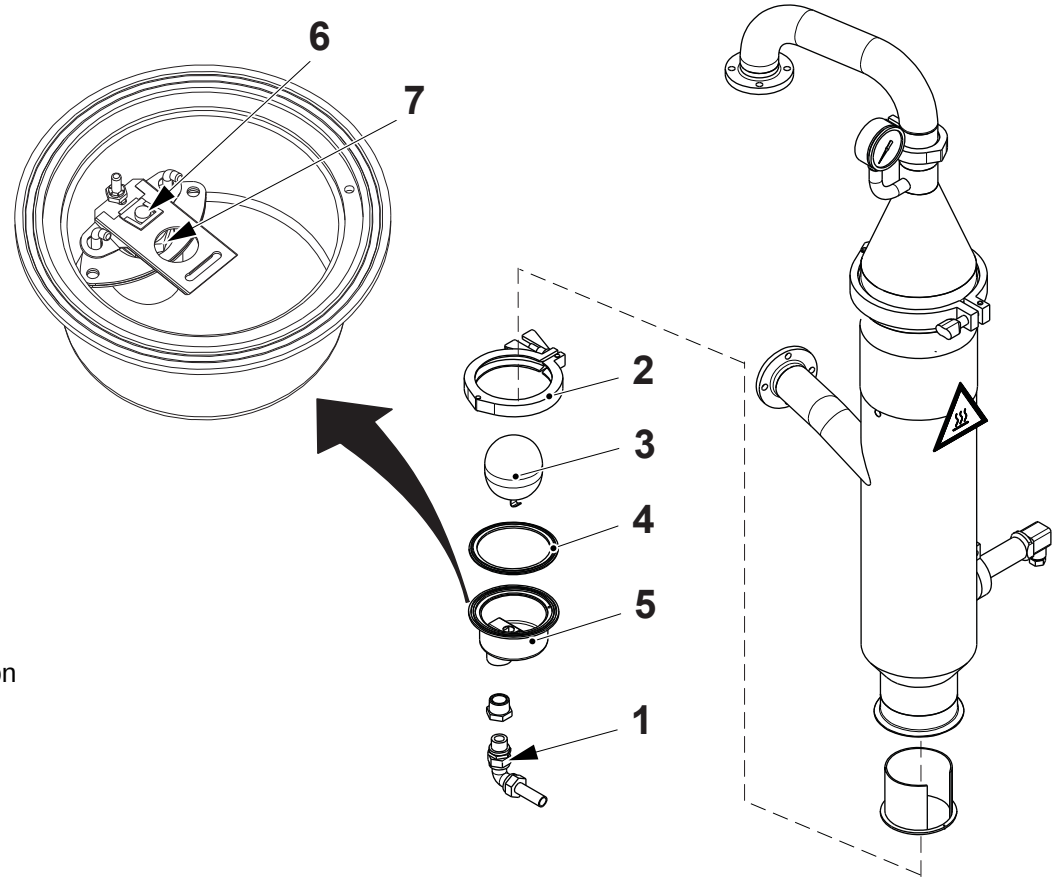

1 Pipe connection
2 Clamp
3 Float unit
4 Seal
5 Draining
6 Valve seat
7 Valve

(Cont'd)

(Cont'd)

g) Clean the inside of the separator with a sponge and water. Blow dry with compressed air.

h) Release the clamps (8) and (9).

i) Remove the upper section cover (10) and the gasket (11).

j) Remove the retaining ring (12).

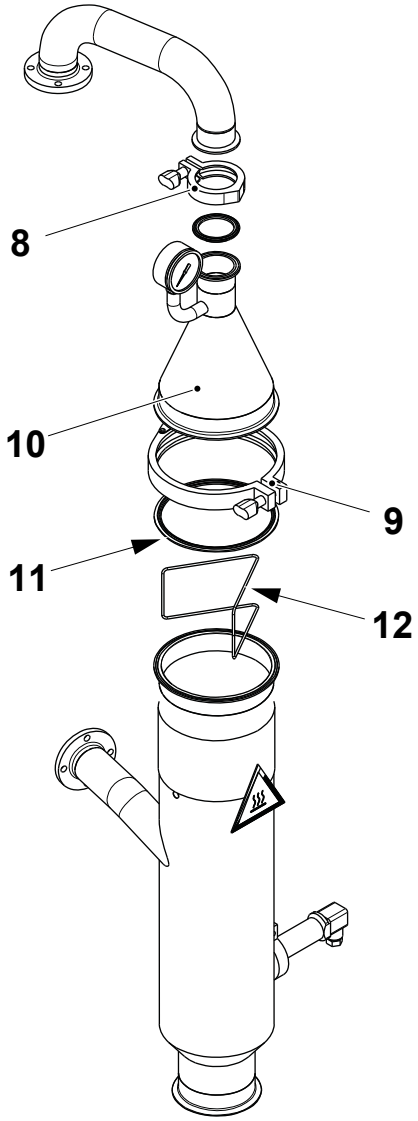

8 Clamp
9 Clamp
10 Upper section cover
11 Gasket
12 Retaining ring

(Cont'd)

(Cont'd)

WARNING

Acids.

Follow the Safety Precautions. Only use the acids listed below, do not use detergents.

k) Remove limescale from the filter (13) with one of the four acid solutions listed below. All the solutions must have an ambient temperature during lime scale removal.
   - acetic acid (CH_3COOH), 20%
   - nitric acid (HNO_3), 5-10%
   - citric acid ($C_6H_8O_7$), 20%
   - phosphoric acid (H_3PO_4), 5-10%

l) After limescale removal rinse with water.

m) Assemble in the reverse order and set the float unit, see 1.4.3-3 Separator - Set Float Unit.

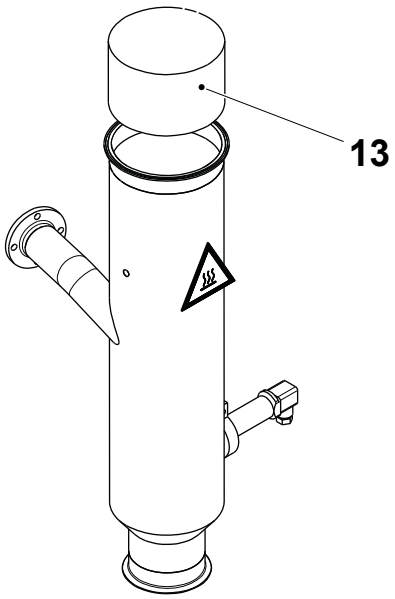

13 Filter

1.4.3-2 Separator - Change Valve and Valve Seat

Machine Status	Mains Power OFF Air OFF Steam OFF Water OFF
SPC Reference	1558769-0300

CAUTION
Risk of serious production fault.
Never close the steam valve when the dairy product line is still in use by other machines. The steam in the product valve forms an aseptic barrier between the machine and the remaining dairy product line. Closing the steam valve will remove this barrier.

(Cont'd)

(Cont'd)

a) Remove the float unit, see 1.4.3-1 Separator - Clean Filter and Floater.
b) On the draining (1), remove the nut (2) and lift off the valve lever (3).
c) Remove the clip (4), the valve (5) and the valve seat (6).
d) Change the valve (5) and the valve seat (6).
e) Install the valve lever (3) and the nut (2).
f) Set the float unit, see 1.4.3-3 Separator - Set Float Unit.
g) Assemble the float unit in the reverse order, see 1.4.3-1 Separator - Clean Filter and Floater.

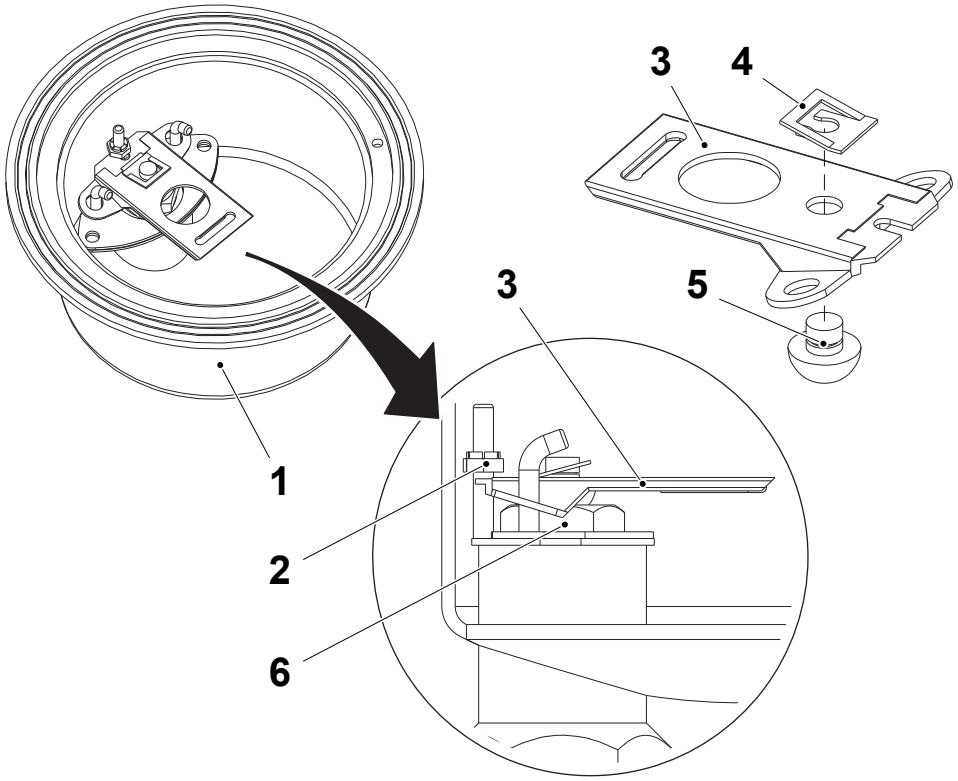

1 Draining
2 Nut
3 Valve lever
4 Clip
5 Valve
6 Valve seat

1.4.3-3 Separator - Set Float Unit

Machine Status	Mains Power OFF Air OFF Steam OFF Water OFF
SPC Reference	1558769-0300

CAUTION
Risk of serious production fault.
Never close the steam valve when the dairy product line is still in use by other machines. The steam in the product valve forms an aseptic barrier between the machine and the remaining dairy product line. Closing the steam valve will remove this barrier.

(Cont'd)

(Cont'd)

Press down on the valve lever (1) on each side of the valve (2) as indicated by the arrows in the illustration, to make the fulcrum points (3) horizontal on the valve seat (4).

In this position, set the distance **A** between the nut (5) and the valve lever (1).

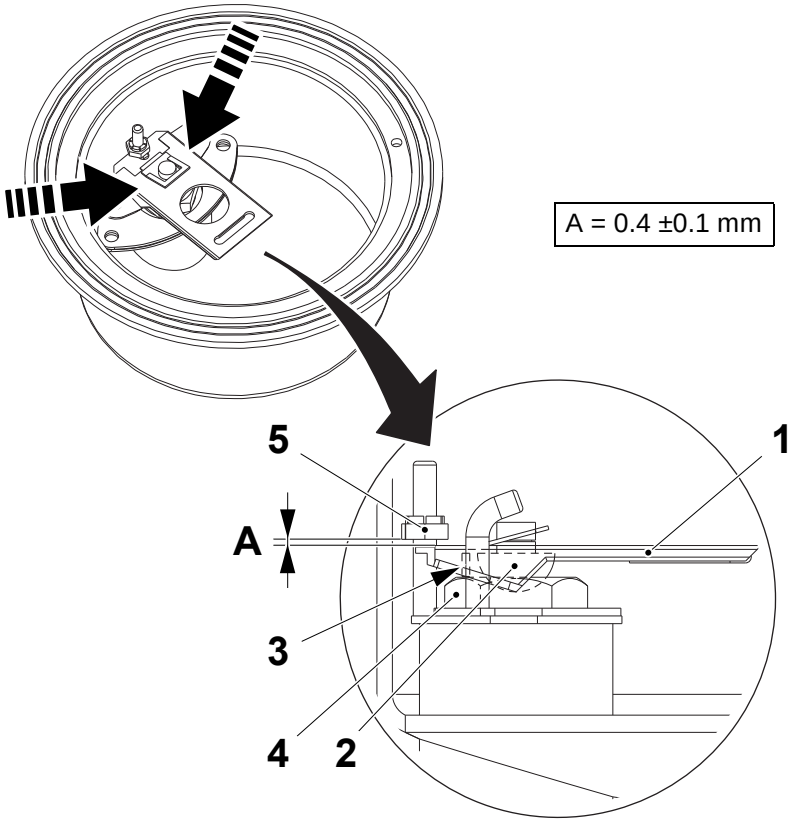

1 Valve lever
2 Valve
3 Fulcrum point
4 Valve seat
5 Nut

1.4.3-4 Separator - Check Pressure Gauge

Machine Status	Mains Power OFF Air OFF Steam OFF Water OFF
SPC Reference	1558769-0300

Check the level of the glycerine into the pressure gauge (1): the glycerine may leak out into the air flow. If necessary, change the pressure gauge (1).

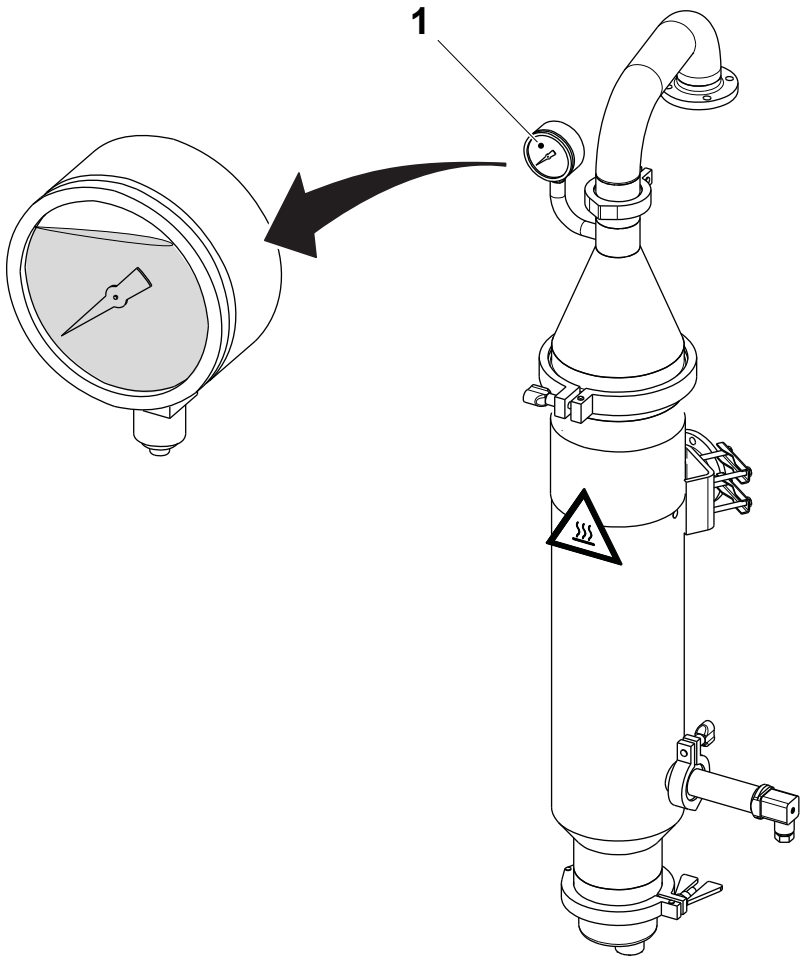

1 Pressure gauge

1.4.4 Heat Exchanger Valve

1.4.4-1 Heat Exchanger Valve - Overhaul

Machine Status	Mains Power OFF Air OFF Steam OFF Water OFF
SPC Reference	1532250-0200

WARNING
Burn hazard.
Follow the Safety Precautions.

CAUTION
Risk of serious production fault.
Never close the steam valve when the dairy product line is still in use by other machines. The steam in the product valve forms an aseptic barrier between the machine and the remaining dairy product line. Closing the steam valve will remove this barrier.

(Cont'd)

(Cont'd)

a) Remove the screws (1), (2) and (3) from the flanges and remove the heat exchanger valve (4).

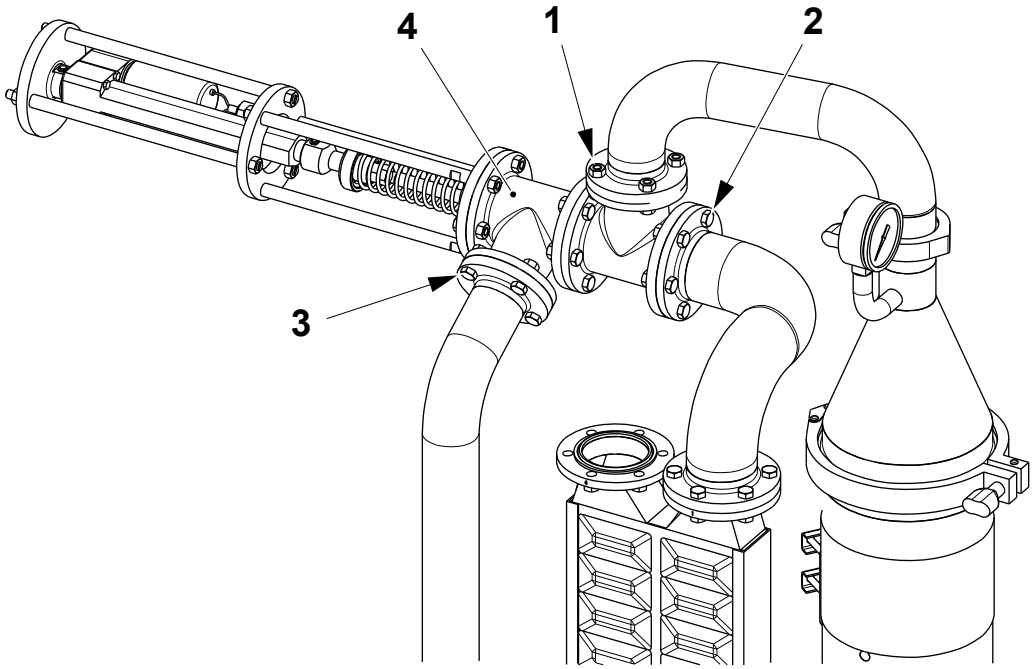

1 Screw
2 Screw
3 Screw
4 Heat exchanger valve

(Cont'd)

(Cont'd)

b) Change the gaskets (5), (6) and (7).

c) Remove the screws (8) and the T-pipe (9); change the gasket (10).

d) Remove the retaining ring (11) to separate the joint (12).

e) Loosen the nut (13) and slip off the shaft (14).

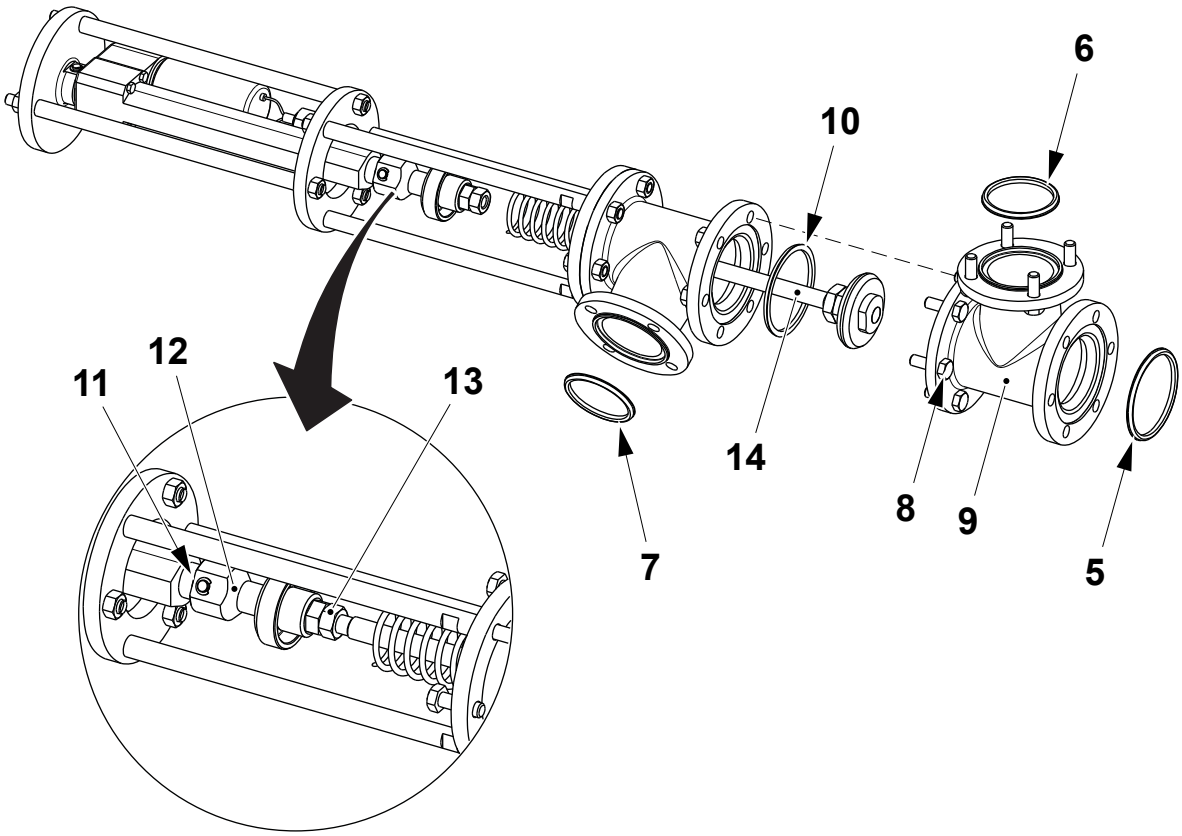

5 Gasket
6 Gasket
7 Gasket
8 Screw
9 T-pipe
10 Gasket
11 Retaining ring
12 Joint
13 Nut
14 Shaft

(Cont'd)

(Cont'd)

f) On the shaft (14), remove the nuts (15) and slip off the shutter (16). Change the shutter (16) if necessary.

g) Make sure that the shaft (14) is not damaged or bent. Change the shaft (14) if necessary.

h) Remove the T-pipe (17) by the screws (18) and the nuts (19); change the gasket (20).

i) Change the bearings (21) and the O-rings (22).

j) Assemble in the reverse order.

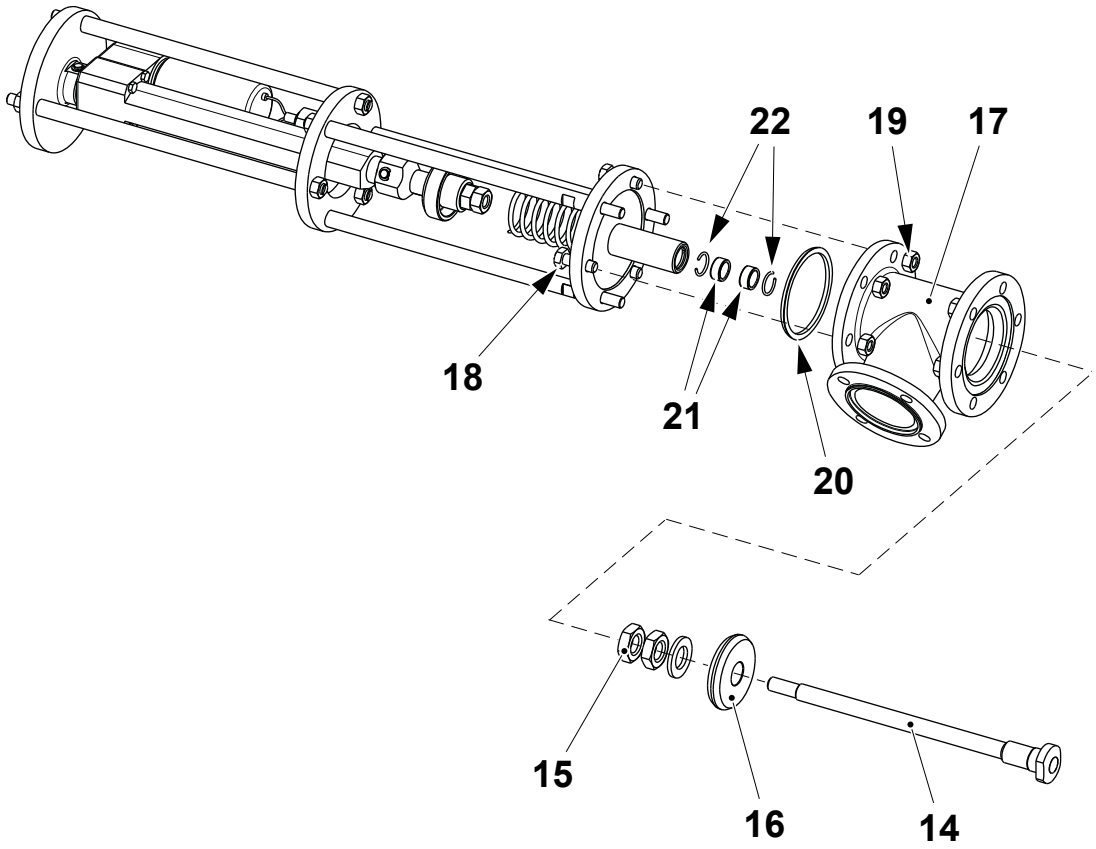

14 Shaft
15 Nut
16 Shutter
17 T-pipe
18 Screw
19 Nut
20 Gasket
21 Bearing
22 O-ring

1.4.4-2 Heat Exchanger Valve - Set

Machine Status	PREPARATION
SPC Reference	1532250-0200

Home Position

If necessary, set manually the heat exchanger valve home position. Proceed as follows:

a) In step PREPARATION, touch the MAINTENANCE CONTROL button (1) and enter the password required, see 9.6.3-2 HMI - User Management Log On.

b) Touch the STERILE SYSTEM button (2).

c) Touch the HOME HEAT EXCHANGER VALVE icon (3). The START/STOP buttons (4) are displayed.

d) Touch the ON button (4) to start the home position function. The maximum cooling position and the by pass position are set.

e) Press the EXIT button (5).

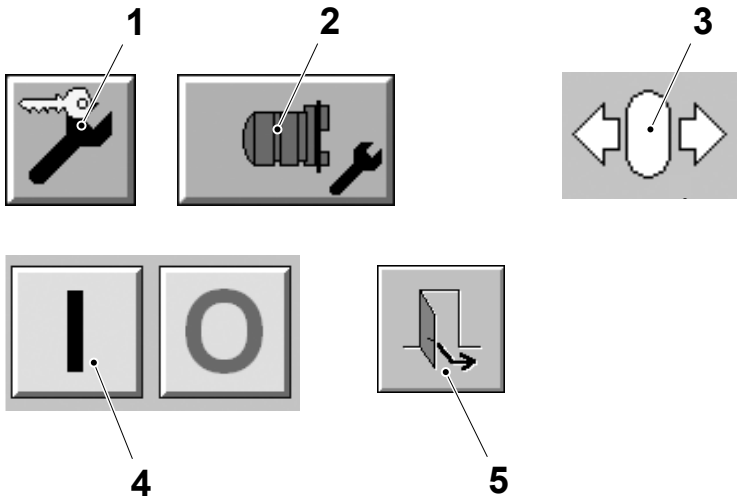

1 Maintenance control button
2 Sterile system button
3 Home heat exchanger icon
4 ON button
5 Exit button

(Cont'd)

(Cont'd)

Minimum Cooling Position

To set intermediate positions of the seal (1), proceed as follows:

a) In step PREPARATION, touch the MAINTENANCE CONTROL button (2) and enter the password required, see 9.6.3-2 HMI - User Management Log On.

b) Touch the STERILE SYSTEM button (3).

c) Touch the HEAT EXCHANGER VALVE SET POSITION icon (4).

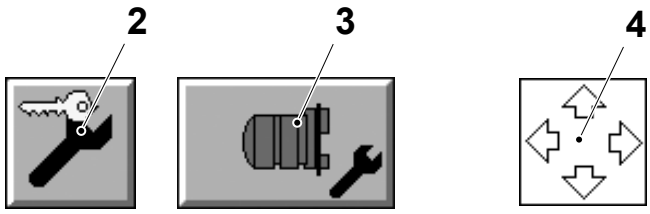

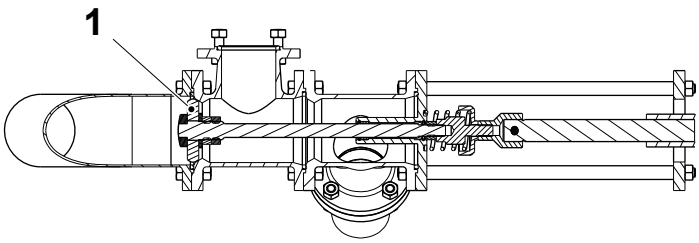

1 Seal
2 Maintenance control button
3 Sterile system button
4 Heat exchanger valve set position icon

(Cont'd)

(Cont'd)

Note! The maximum cooling position corresponds to 0% and the by-pass position is 100%.

d) Set the value by the ARROW buttons or the KEYBOARD button (5).

e) Touch the ON button (6) to start the function.

f) Touch the EXIT button (7).

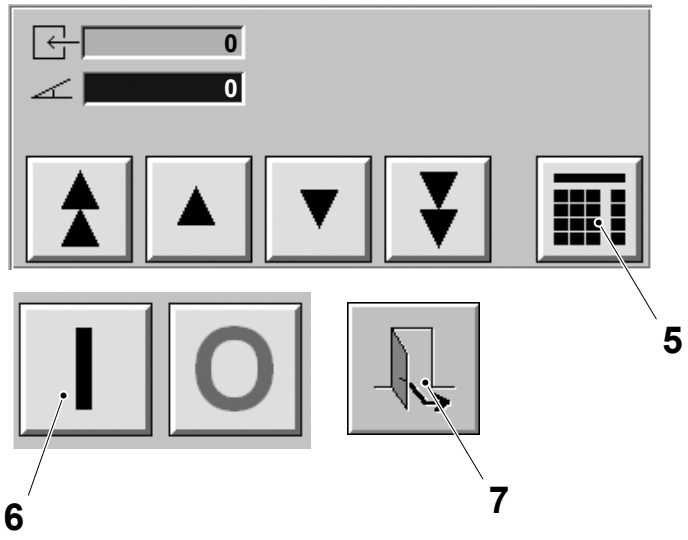

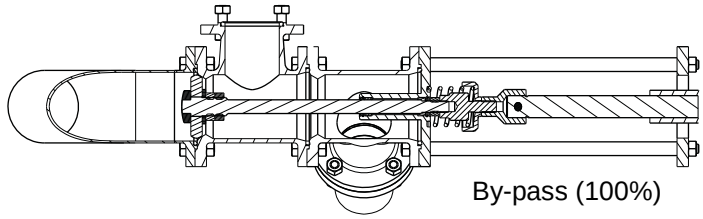

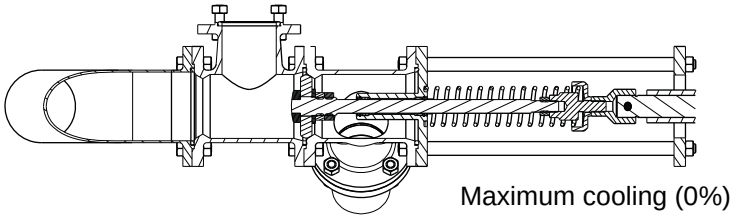

5 Keyboard button
6 ON button
7 Exit button

1.4.5 Air Super Heater

1.4.5-1 Air Super Heater - Check

Machine Status	Mains Power ON Air ON Steam ON Water ON
SPC Reference	1499158-0200

WARNING
Burn hazard.
Follow the Safety Precautions.

(Cont'd)

(Cont'd)

Make sure that the air superheater (1) temperature reaches 360°C.

a) Touch the PRODUCTION CONTROL button (2) on the TPOP display.
b) Touch the STERILE SYSTEM button (3).
c) Touch the SUPERHEATER TEMPERATURE icon (4).
d) Check the indication on the temperature display (5).
e) Press the EXIT button (6) to close the window.

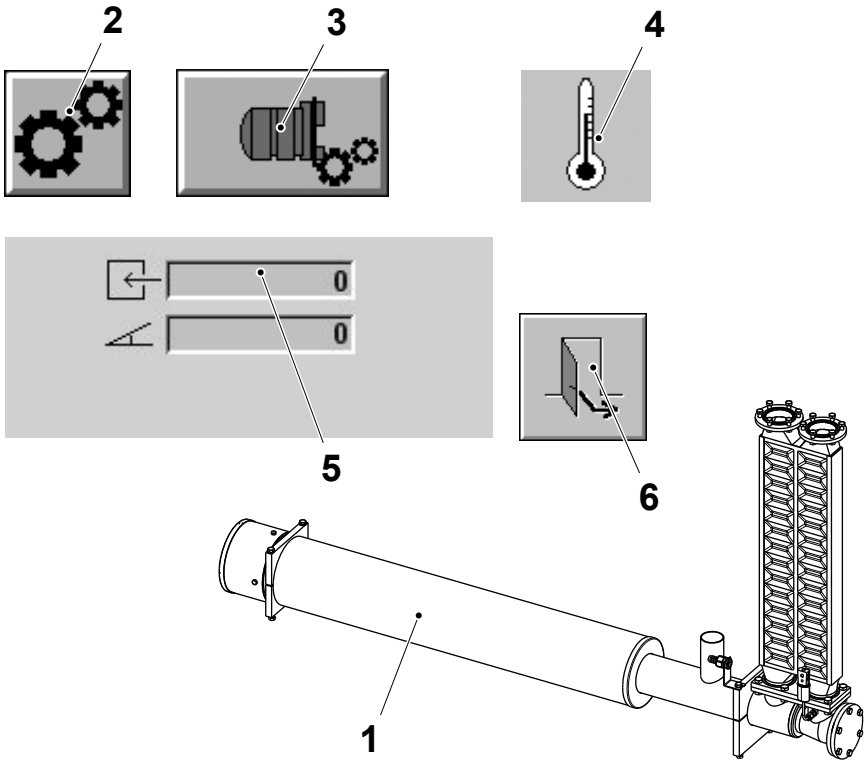

1 Air super heater
2 Production control button
3 Sterile system button
4 Superheater temperature icon
5 Temperature display
6 Exit button

1.4.5-2 Air Super Heater - Check Heat Exchanger

Machine Status	Mains Power ON Air ON Steam ON Water ON
Special Equipment	Pressure Test Equipment TP No. 1349738-0100
SPC Reference	1499158-0200

WARNING

Burn hazard.

Follow the Safety Precautions.

(Cont'd)

(Cont'd)

Remove lime scale from the heat exchanger with one of the four acid solutions listed in the next page. Proceed as follows:

a) Remove the screws (1) from the upper flanges and the screws (2) from the lower flanges.

b) Remove the heat exchanger (3) from the filling machine.

Note! All solutions must have an ambient temperature during lime scale removal.

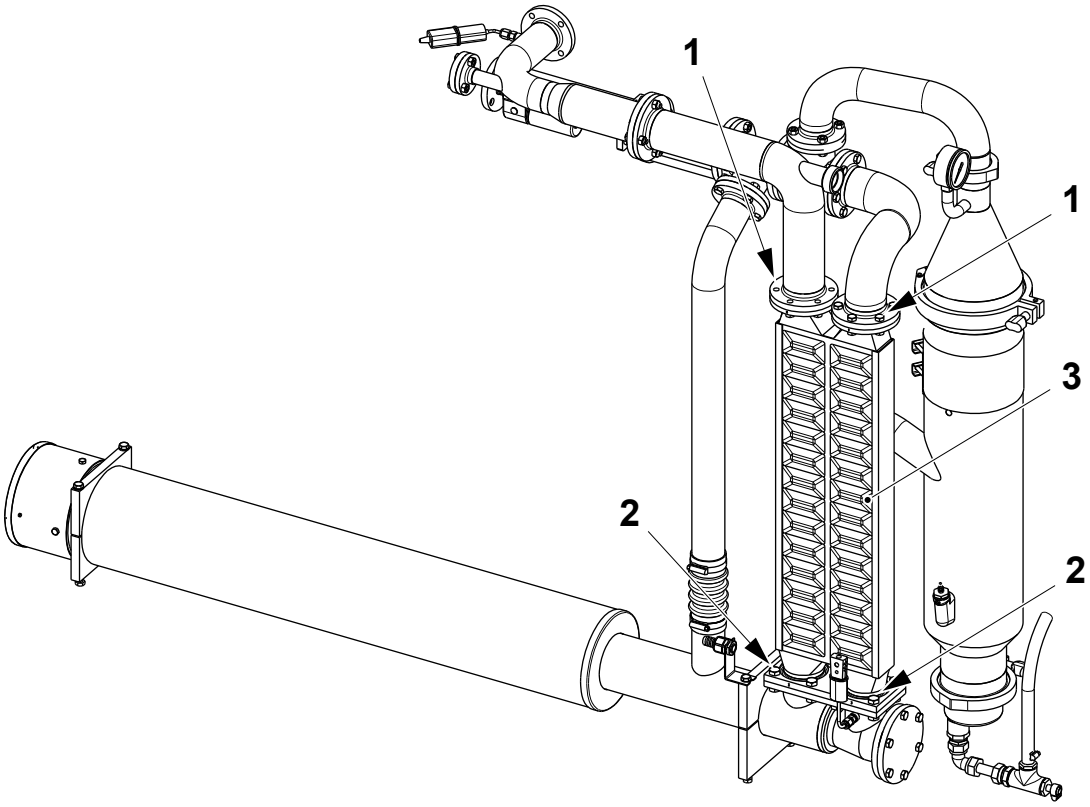

1 Screw
2 Screw
3 Heat exchanger

(Cont'd)

(Cont'd)

WARNING

Acids.

Follow the Safety Precautions. Only use the Acids listed below.

- acetic acid (CH_3COOH), 20%
- nitric acid (HNO_3), 5-10%
- citric acid ($C_6H_8O_7$), 20%
- phosphoric acid (H_3PO_4), 5-10%.

c) After limescale removal flush with water and then perform a final rinse with softened or distilled water.

(Cont'd)

(Cont'd)

d) Check the heat exchanger (3) for leaks as described below.

e) Seal the heat exchanger bottom connections using the blank-off flange (4).

f) Connect the pressure test equipment (5) with the flange (6), to one of the heat exchanger top connections.

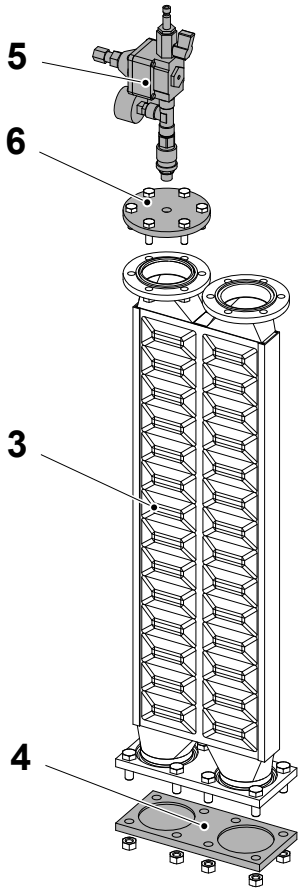

3 Heat exchanger
4 Blank-off flange
5 Pressure test equipment
6 Flange

(Cont'd)

(Cont'd)

CAUTION
Risk of damage to the equipment.
Before turning on the compressed air, turn the adjustment screw (7) anti-clockwise until the spring load is released and close the valve (8).

Note! Make sure that the equipment is connected in the correct direction. The flow must run from the valve (8) **towards** the pressure gauge (9) in the direction shown by arrow.

g) Connect the compressed air connection (10).

h) Submerge the heat exchanger in water. Take care **not** to drench the pressure controller (11). Let the air bubbles disappear.

i) Open the valve (8). Adjust the pressure to 0.5 bar on the pressure gauge (9), using the adjustment screw (7). Air bubbles will immediately show any leaking points in the heat exchanger.

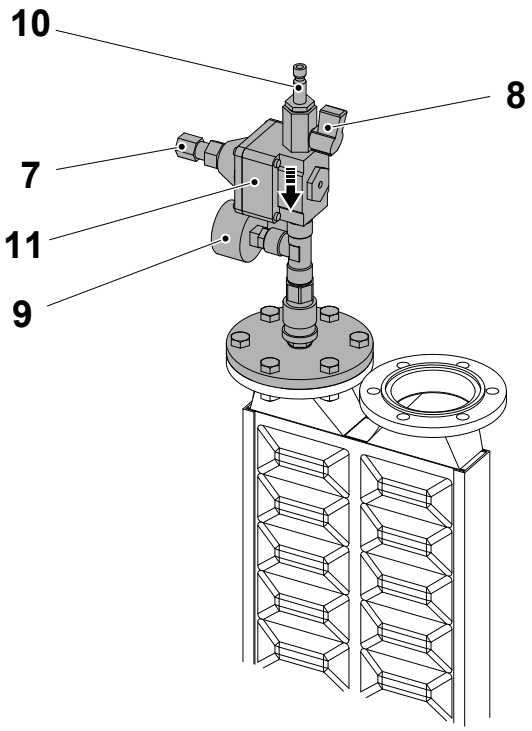

7 Adjustment screw
8 Valve
9 Pressure gauge
10 Compressed air connection
11 Pressure controller

(Cont'd)

(Cont'd)

j) Repeat the procedure with the other cooling coil (other connections).

k) If any leaks are detected or suspected, change the heat exchanger.

l) Change the four joint gaskets.

m) Install the heat exchanger on to the machine.

Note! Make sure that the numbers on the heat exchanger flanges correspond with the numbers on the pipes.

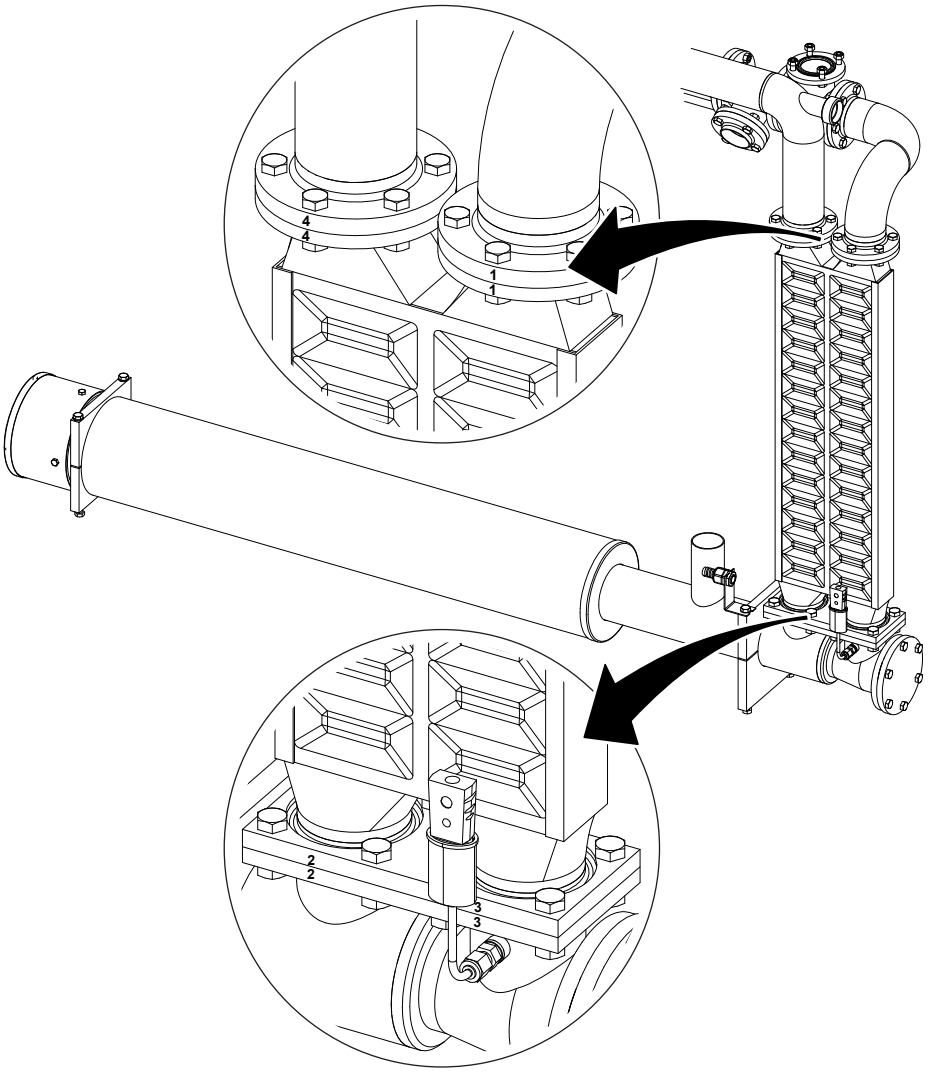

1.4.6 Air Valve

1.4.6-1 Air Valve - Set

Machine Status	Mains Power OFF Air OFF Steam OFF Water OFF
SPC Reference	1538166-0100

CAUTION
Risk of serious production fault.
Never close the steam valve when the dairy product line is still in use by other machines. The steam in the product valve forms an aseptic barrier between the machine and the remaining dairy product line. Closing the steam valve will remove this barrier.

(Cont'd)

(Cont'd)

a) Close the main air at the service unit.

b) Remove the air valve (1) and place it on a work bench, see 1.4.6-2 Air Valve - Overhaul.

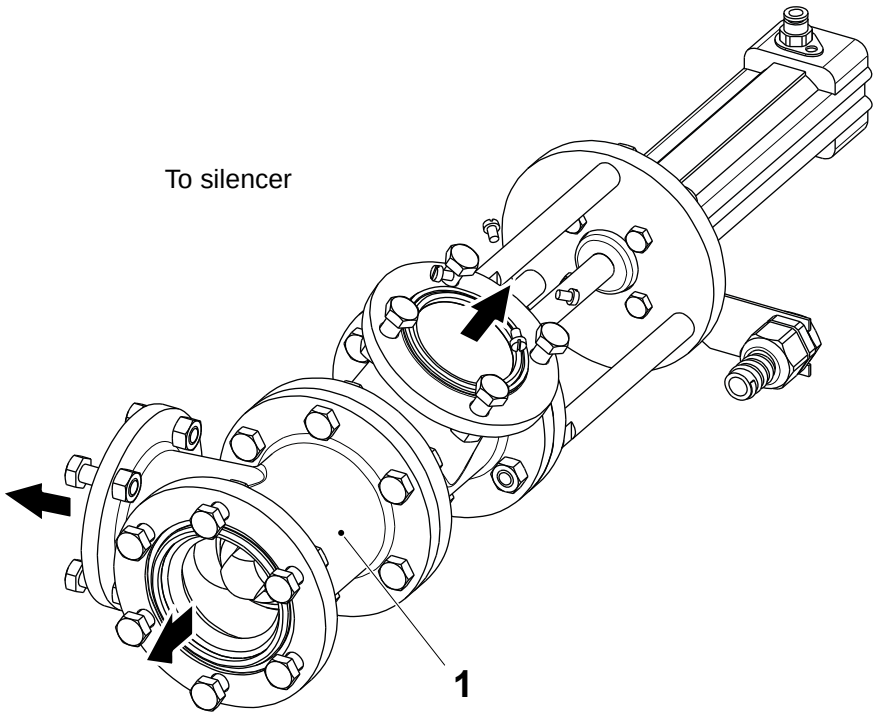

1 Air valve

(Cont'd)

(Cont'd)

c) Loosen the nut (2).

d) Unscrew and disconnect the piston rod (3) from the pendulum suspension (4).

e) Push the piston rod (3) all the way into the cylinder.

f) Move the shaft (5) so that the valve (6) is in position **A** as indicated in the in the illustration.

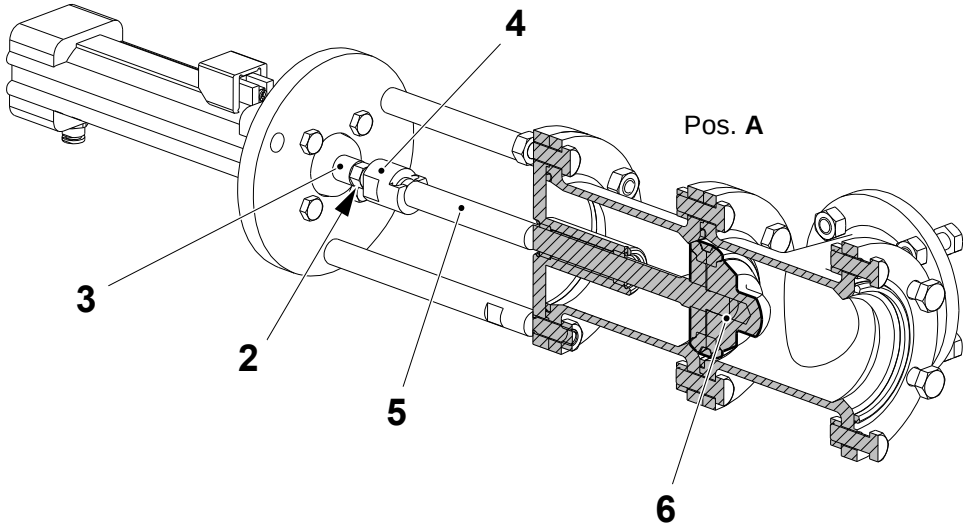

2 Nut
3 Piston rod
4 Pendulum suspension
5 Shaft
6 Valve

(Cont'd)

(Cont'd)

g) Holding the piston rod (3) in its position, screw the pendulum suspension (4) into the piston rod (3) until it starts to move, then screw in a half turn more. Tighten the nut (2).

h) Move the piston rod (5) by hand and check that the valve closes completely in both positions: **A** and **B**. If not repeat from item c).

i) Assemble in the reverse order.

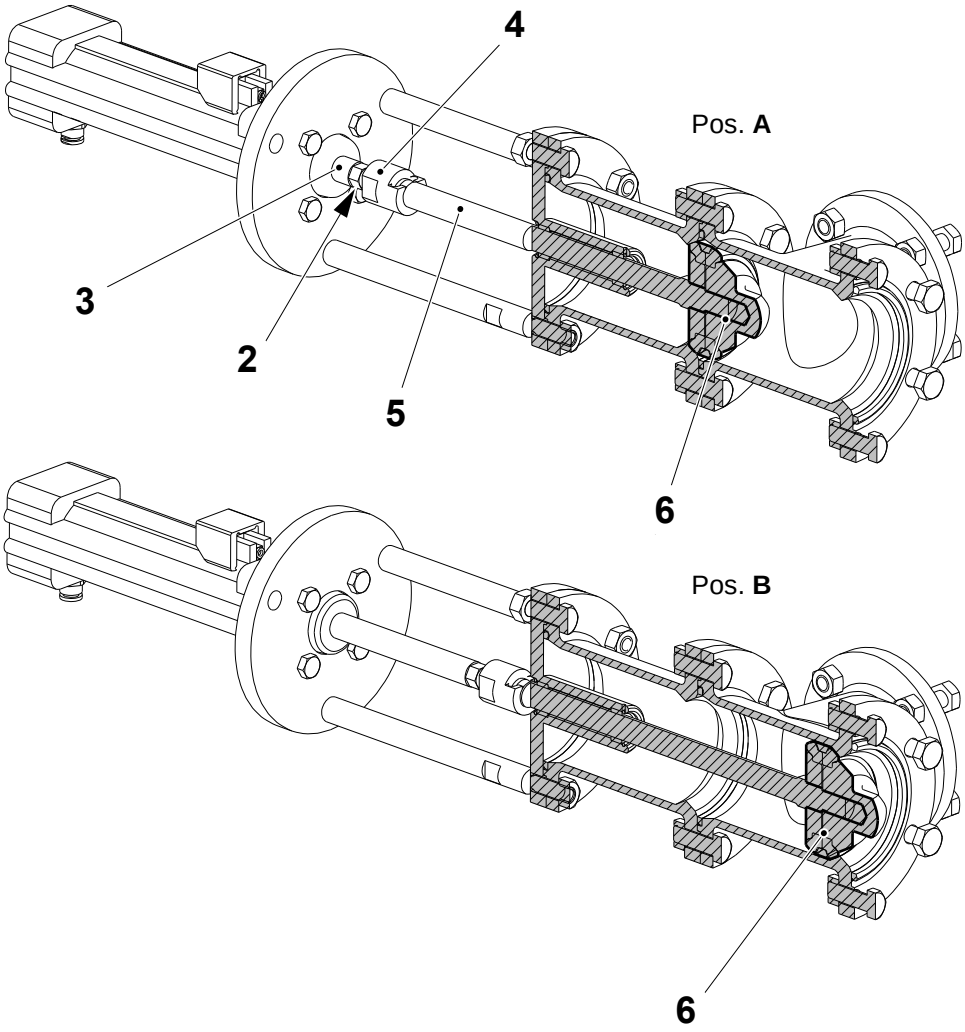

2 Nut
3 Piston rod
4 Pendulum suspension
5 Shaft
6 Valve

1.4.6-2 Air Valve - Overhaul

Machine Status	Mains Power OFF Air OFF Steam OFF Water OFF
SPC Reference	1538166-0100

WARNING
Burn hazard.
Follow the Safety Precautions.

CAUTION
Risk of serious production fault.
Never close the steam valve when the dairy product line is still in use by other machines. The steam in the product valve forms an aseptic barrier between the machine and the remaining dairy product line. Closing the steam valve will remove this barrier.

a) Remove the screws (1) and (2) and remove the air valve (3).

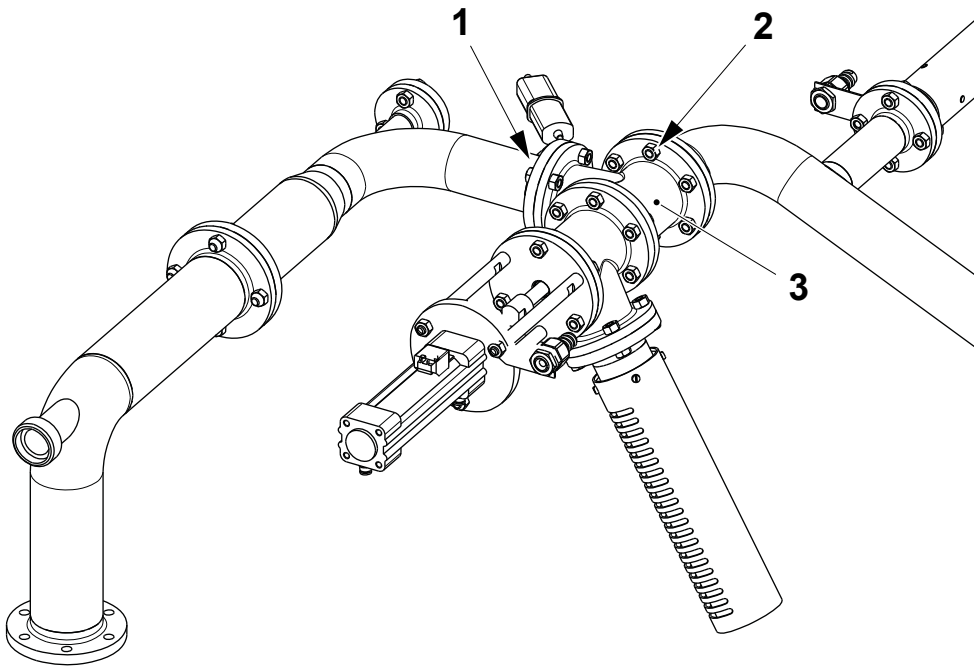

1 Screw
2 Screw
3 Air valve

(Cont'd)

(Cont'd)

b) Change the gaskets (4) and (5).

c) Remove the screws (6) and change the gasket (7).

d) Remove the screws (8) and change the gasket (9).

e) Remove the valve cone (10) and change the seal rings (11).

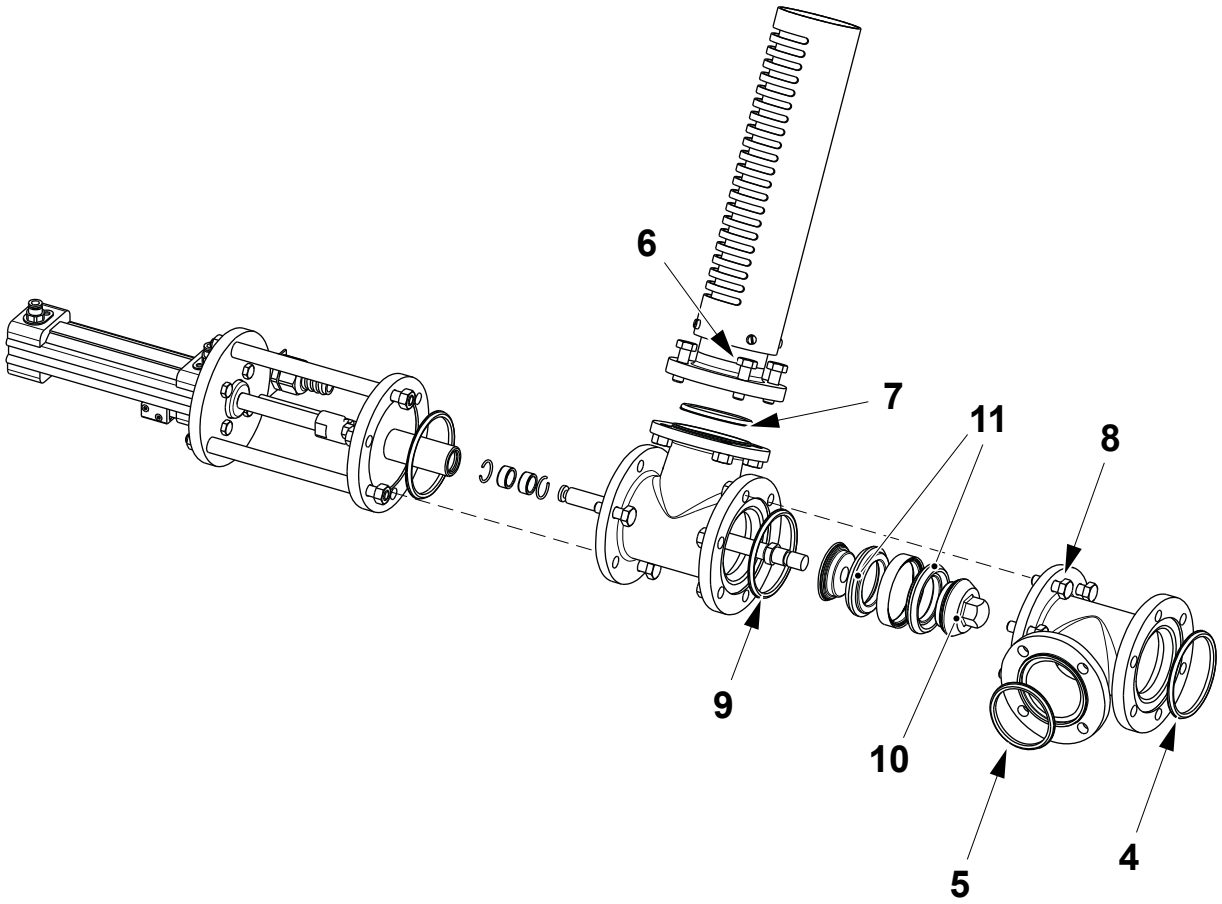

4 Gasket
5 Gasket
6 Screw
7 Gasket
8 Screw
9 Gasket
10 Valve cone
11 Seal ring

(Cont'd)

(Cont'd)

f) Remove the screws (12) and the nuts and change the gasket (13).

g) Disconnect the joint (14) and make sure that the shaft (15) is not damaged or bent. Change the shaft (15) if necessary.

h) Change the bearings (16) and the O-rings (17).

i) Make sure that the cylinder (18) moves freely. Change if necessary.

Note! When assembling tighten the valve cone (10) to 50 Nm using a torque wrench.

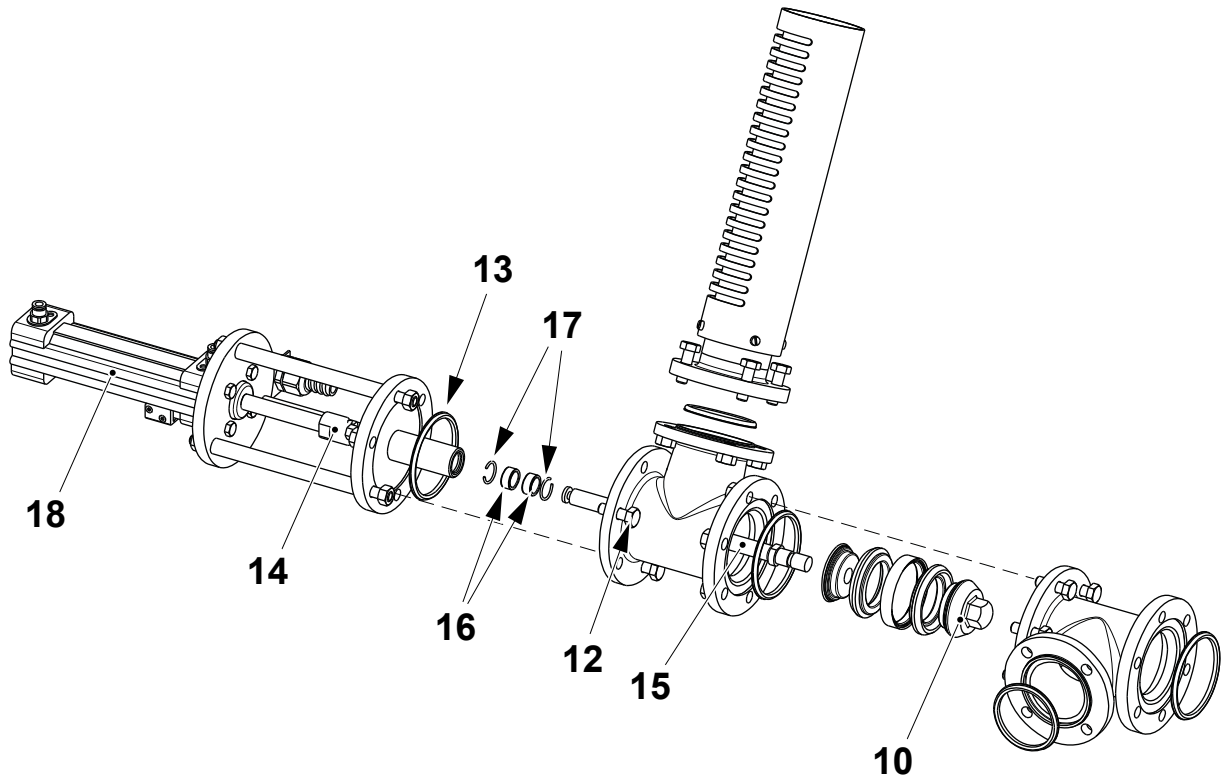

10 Valve cone
12 Screw
13 Gasket
14 Joint
15 Shaft
16 Bearings
17 O-rings
18 Cylinder

(Cont'd)

(Cont'd)

Note! When assembling, make sure that the T-pipe (19) with the silencer (20) is oriented as shown below.

j) Assemble in the reverse order.

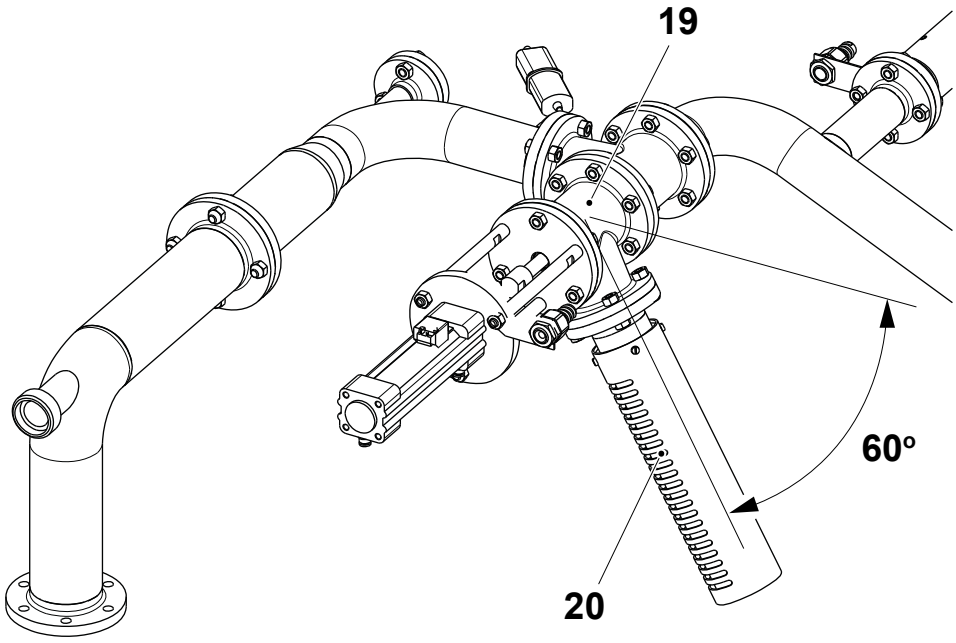

19 T-pipe
20 Silencer

1.4.6-3 Air Valve - Set Proximity Switch

Machine Status	Mains Power ON Air ON Steam OFF Water OFF
SPC Reference	1538166-0100

WARNING

Burn hazard.

Follow the Safety Precautions.

CAUTION

Risk of serious production fault.

Never close the steam valve when the dairy product line is still in use by other machines. The steam in the product valve forms an aseptic barrier between the machine and the remaining dairy product line. Closing the steam valve will remove this barrier.

(Cont'd)

(Cont'd)

a) Activate the valve U70K2300 on the superstructure pneumatic panel.

b) Set the proximity switch (1) position so that it is activated when the cylinder shaft (2) is in the lowest back position.

c) Deactivate the valve U70K2300 and make sure that the proximity switch is deactivated.

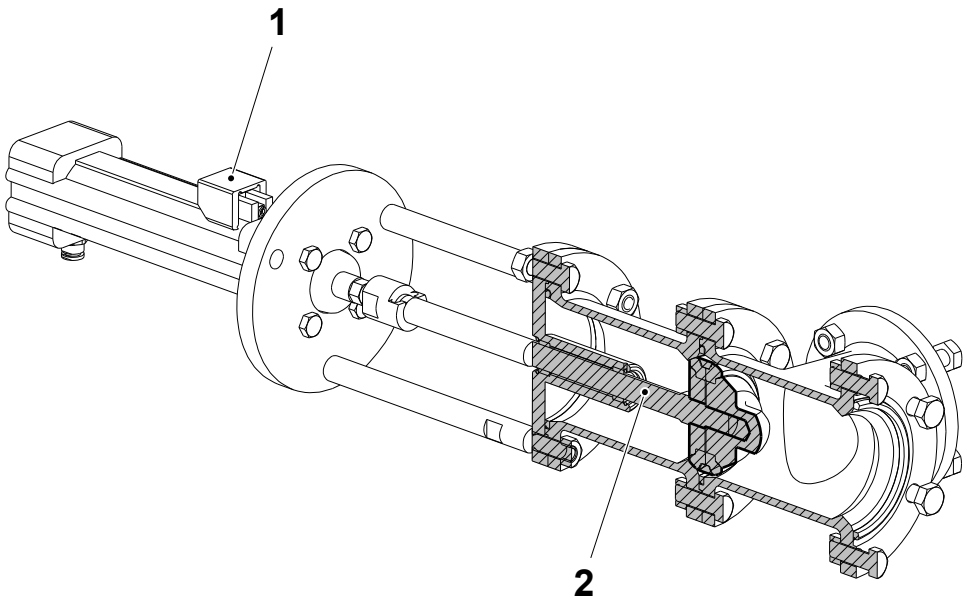

1 Proximity switch
2 Shaft

1.4.7 Scrubber

1.4.7-1 Scrubber - Set Pressure Regulator

Machine Status	HEAT STERILIZATION
SPC Reference	1499160-0300

Note! The setting must be done when the compressor (1) is running.

Remove the cap (2) and set the pressure regulator (3) to 1.4 bar. This pressure value corresponds to a delivery capacity of 6.5 l/min.

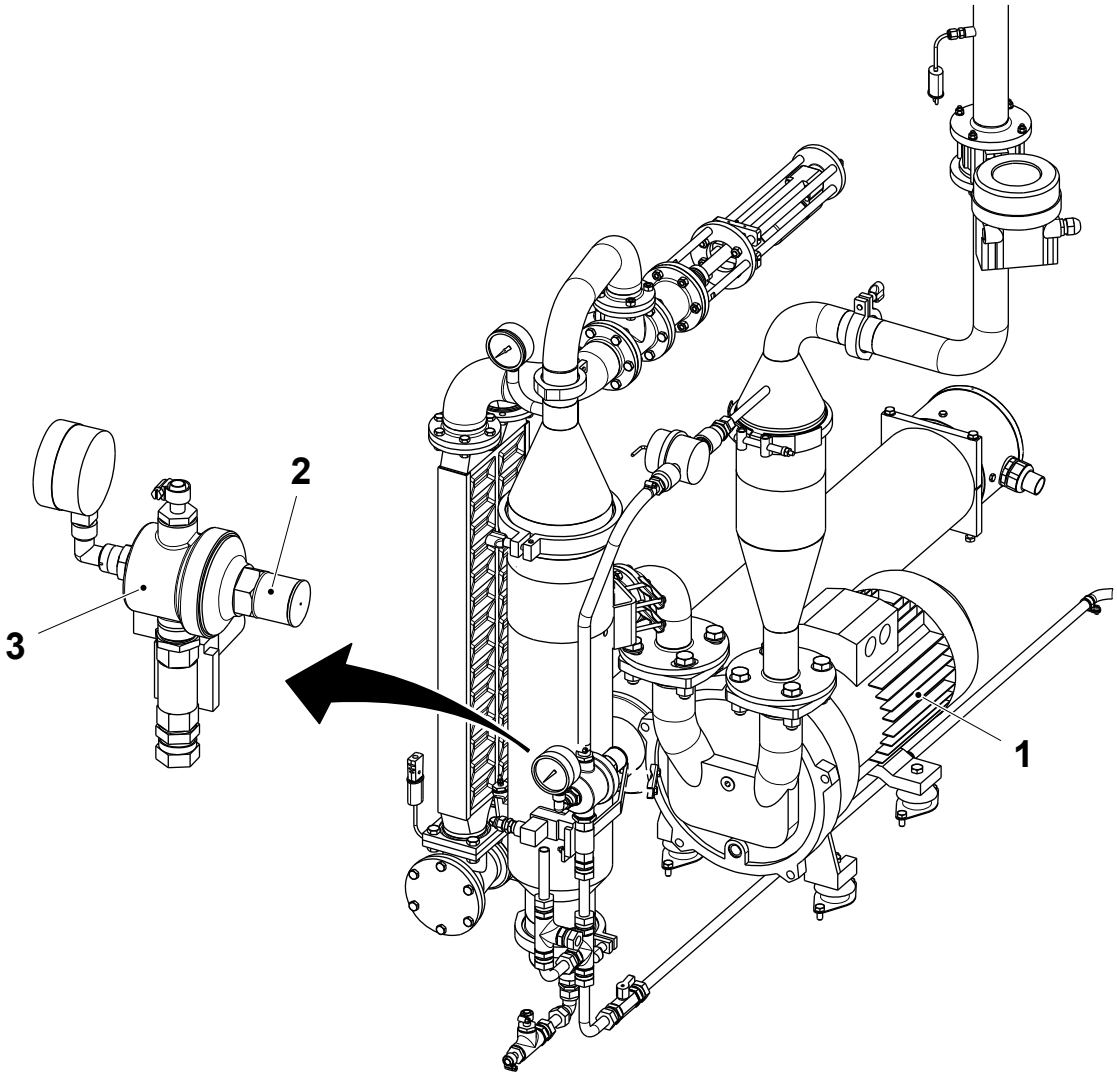

1 Compressor
2 Cap
3 Pressure regulator

1.4.7-2 Scrubber - Clean Filters

Machine Status	Mains Power OFF Air OFF Steam OFF Water OFF
Consumables	Lime Scale Removal Acid, See list
SPC Reference	1499160-0300

WARNING

Acids.

Follow the Safety Precautions.

CAUTION

Risk of serious production fault.

Never close the steam valve when the dairy product line is still in use by other machines. The steam in the product valve forms an aseptic barrier between the machine and the remaining dairy product line. Closing the steam valve will remove this barrier.

(Cont'd)

(Cont'd)

a) Loosen the clamp (1) and the holder (2) and remove the upper section cover (3).

b) Remove and clean the nozzle (4) with compressed air. If necessary, carefully use a needle to clean it.

c) Remove the O-ring (5) and check for damage. Change if necessary.

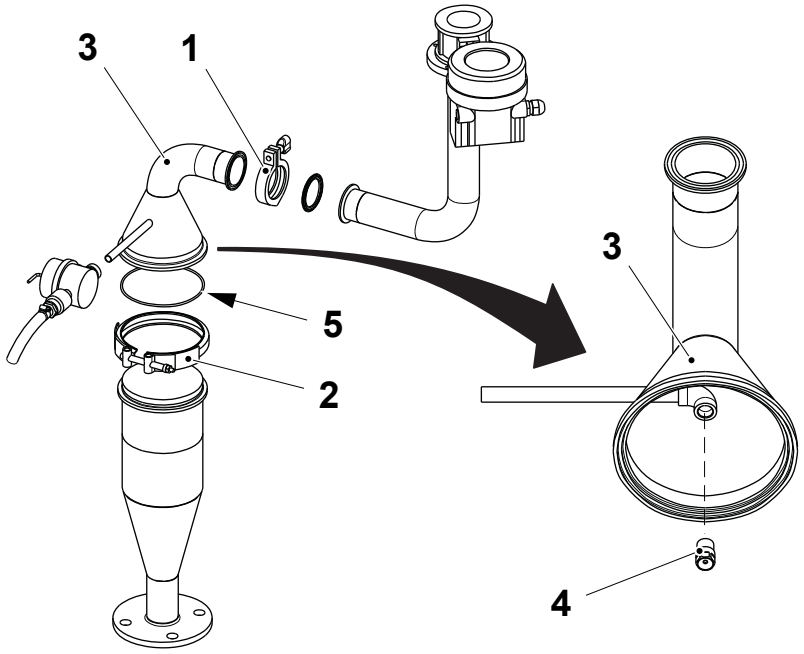

1 Clamp
2 Holder
3 Upper section cover
4 Nozzle
5 O-ring

(Cont'd)

(Cont'd)

CAUTION
Risk of damage to the equipment.
Only use the acids listed below.

d) Pull out the filters (6) and remove lime scale with one of the four acid solutions listed below. All solutions must have an ambient temperature during lime scale removal.
   - acetic acid (CH_3COOH), 20%
   - nitric acid (HNO_3), 5-10%
   - citric acid ($C_6H_8O_7$), 20%
   - phosphoric acid (H_3PO_4), 5-10%.

e) After lime scale removal, flush with water and then perform a final rinse with softened or distilled water.

f) Assemble in the reverse order and make sure that the upper filter (6) is in close contact with the upper section cover (3).

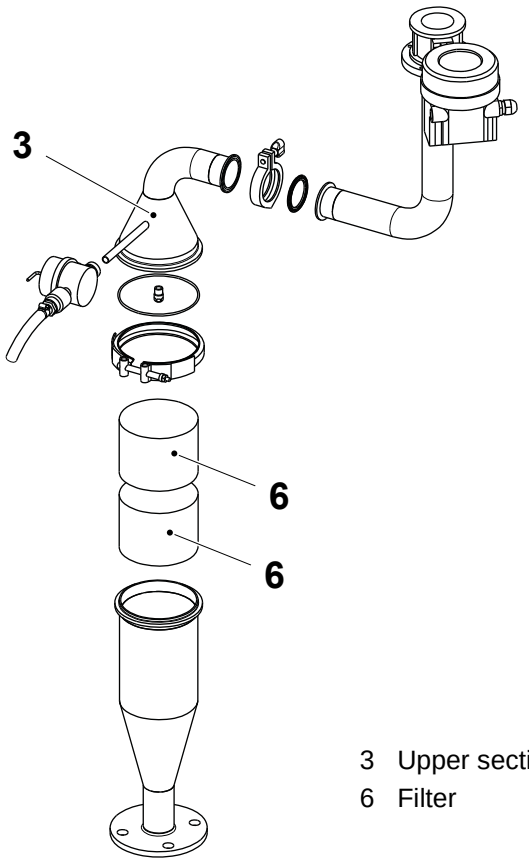

3 Upper section cover
6 Filter

1.4.8 Sterile Air Pipe

1.4.8-1 Sterile Air Pipe - Set Nozzle

Machine Status	Mains Power OFF Air OFF Steam OFF Water OFF
SPC Reference	2783088-0200

Note! Valid for machines equipped with the PT Flex unit.

CAUTION
Risk of serious production fault.
Never close the steam valve when the dairy product line is still in use by other machines. The steam in the product valve forms an aseptic barrier between the machine and the remaining dairy product line. Closing the steam valve will remove this barrier.

(Cont'd)

(Cont'd)

a) Loosen the knob (1).

b) Rotate the handle (2) until the distance **A** is set in the ruler (3) marked on the adjusting screw (4). The nozzle (5) moves sideways.

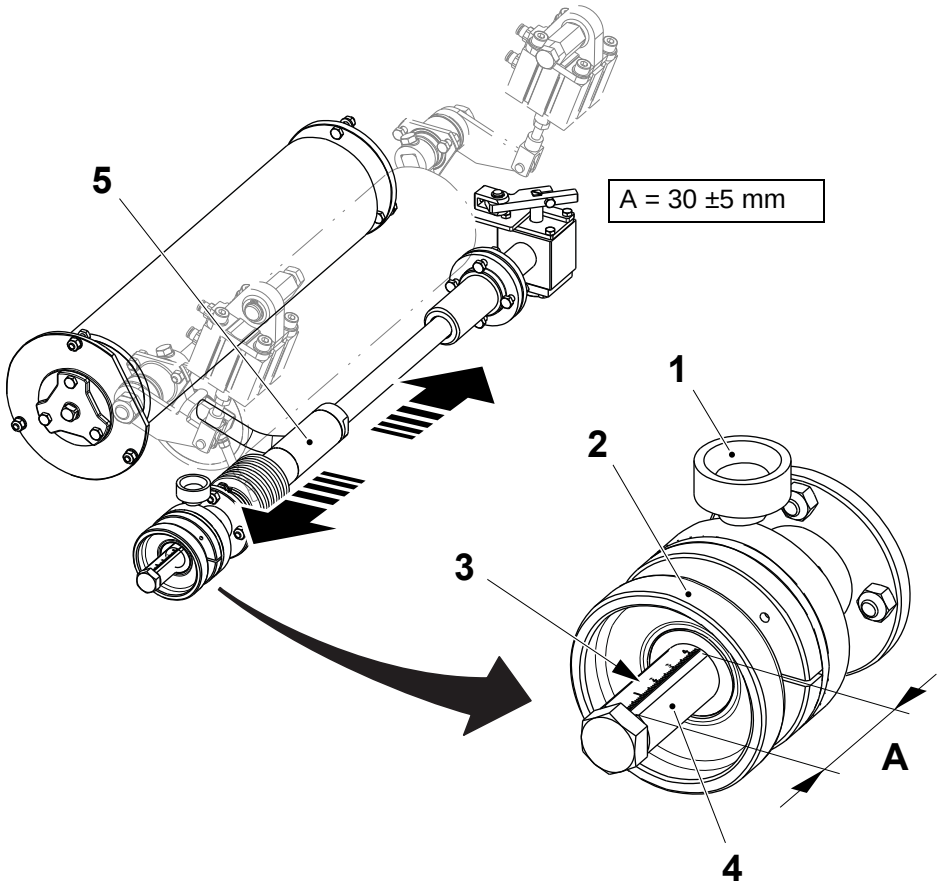

1 Knob
2 Handle
3 Ruler
4 Adjusting screw
5 Nozzle

(Cont'd)

(Cont'd)

c) Tighten the knob (1).

d) Check the distance **B** between the nozzle (5) and the packaging material (6). If not, loosen the knob (1) and turn gently by a key the adjusting screw (4) until the distance **B** is set, then tighten the knob (1).

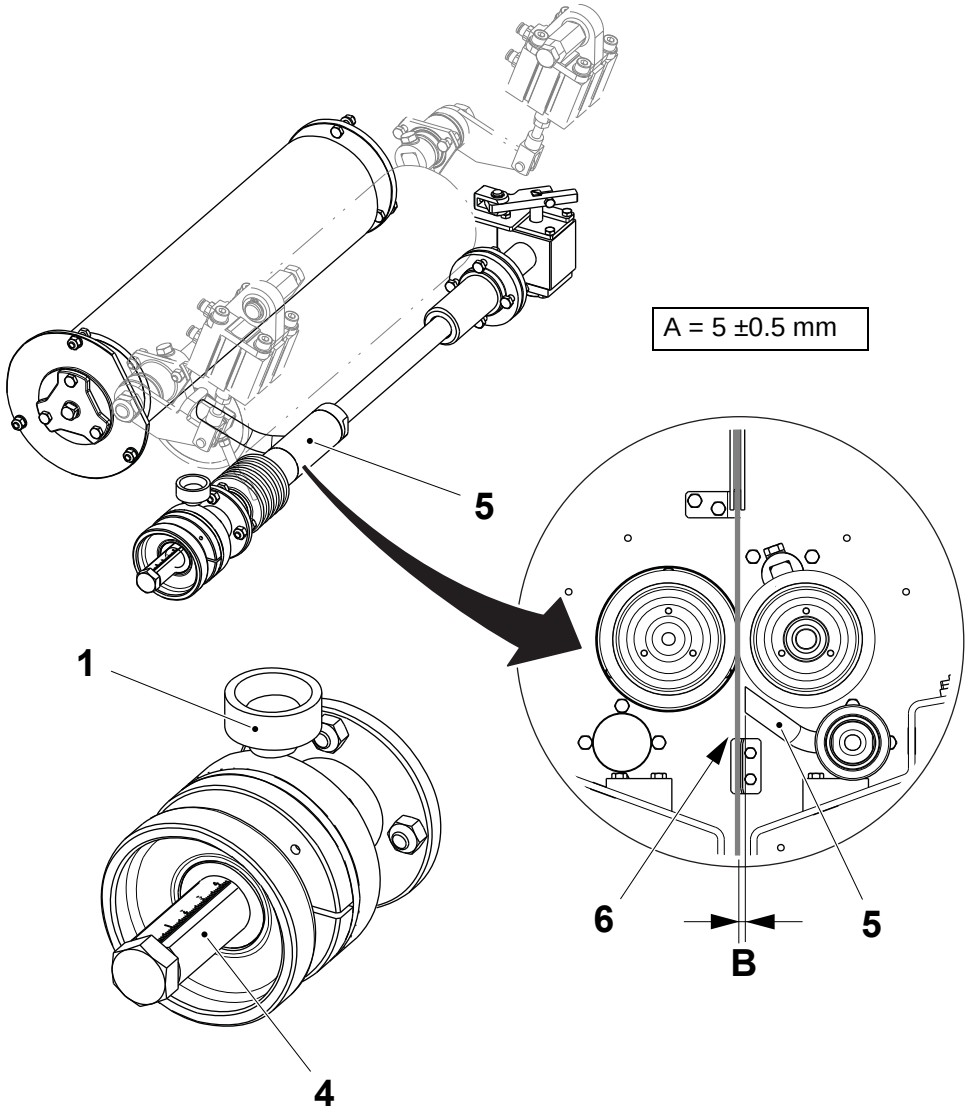

1 Knob
4 Adjusting screw
5 Nozzle
6 Packaging material

1.4.8-2 Sterile Air Pipe - Overhaul

Machine Status	Mains Power OFF Air OFF Steam OFF Water OFF
SPC Reference	2783088-0200

Note! Valid for machines with T-order: 21208/00018 and above equipped with PT Flex.

CAUTION
Risk of serious production fault.
Never close the steam valve when the dairy product line is still in use by other machines. The steam in the product valve forms an aseptic barrier between the machine and the remaining dairy product line. Closing the steam valve will remove this barrier.

(Cont'd)

(Cont'd)

Note! Use a stepladder to access the sterile air pipe on the LH side.

a) Remove the connectors U70W3050 (1) and U70W3060 (2) and the air hoses U70W2454 (3) and U70W2453 (4) from the cylinder (5).

b) Loosen the screw (6) to release the arm (7)

c) Remove the screws (8) and the bracket (9) with the cylinder (5).

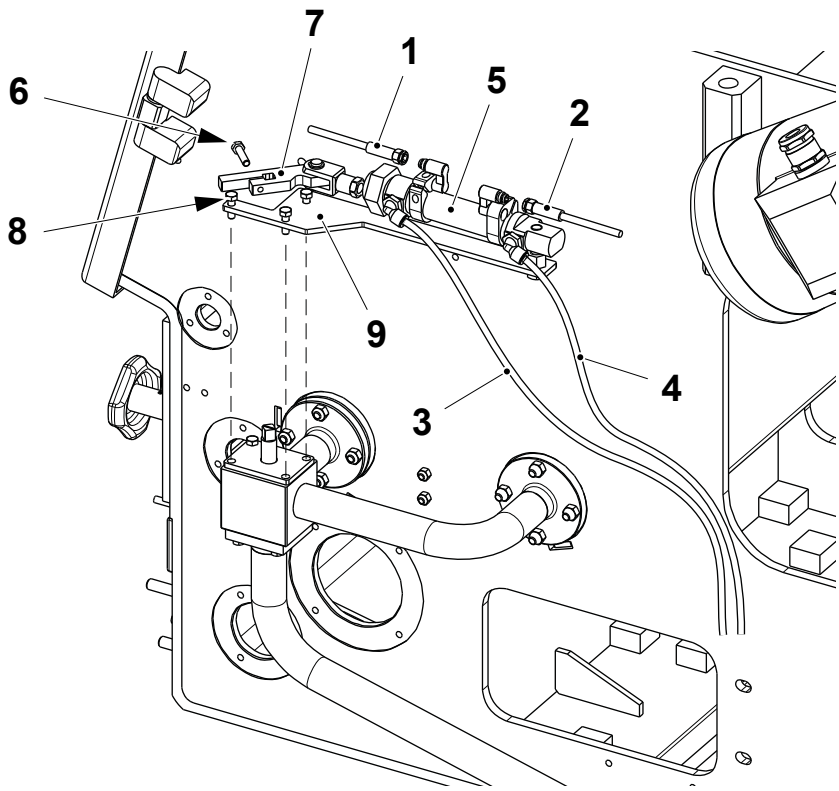

1 Connector U70W3050
2 Connector U70W3060
3 Hose U70W2454
4 Hose U70W2453
5 Cylinder
6 Screw
7 Arm
8 Screw
9 Bracket

(Cont'd)

(Cont'd)

d) Remove the screw (10) and the lid (11).

e) Extract the shutter (12) and change the O-rings (13) and (14).

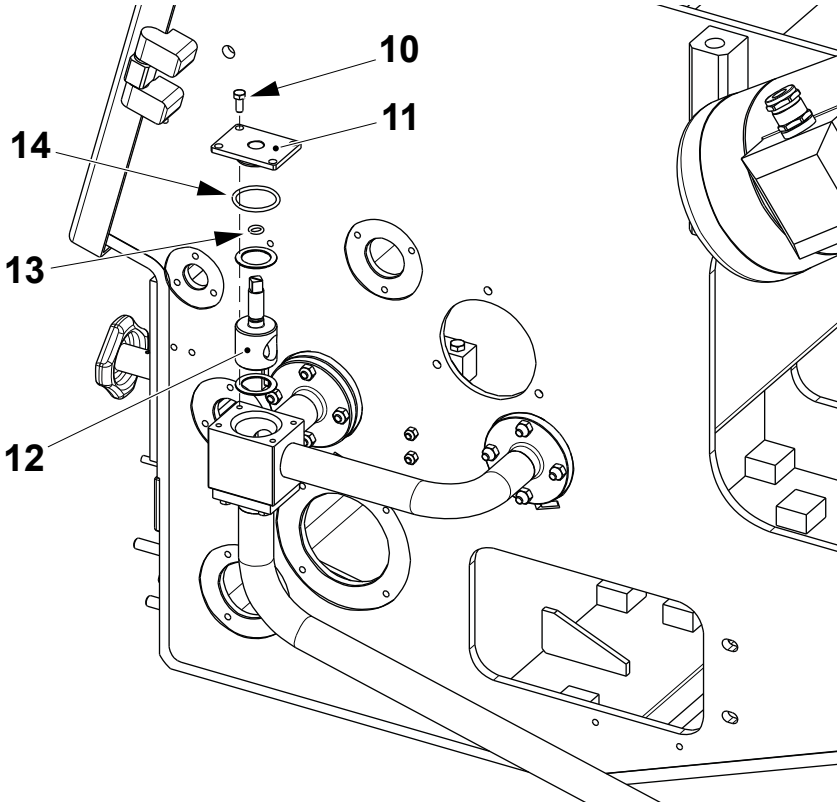

10 Screw
11 Lid
12 Shutter
13 O-ring
14 O-ring

(Cont'd)

(Cont'd)

f) Assemble in the reverse order.

Note! When assembling, make sure that the shutter (12) is fit with the big hole (15) oriented in the direction of the pipe (16) when the cylinder (5) is fully retracted, as indicated by the notch (17) on the shutter tip.

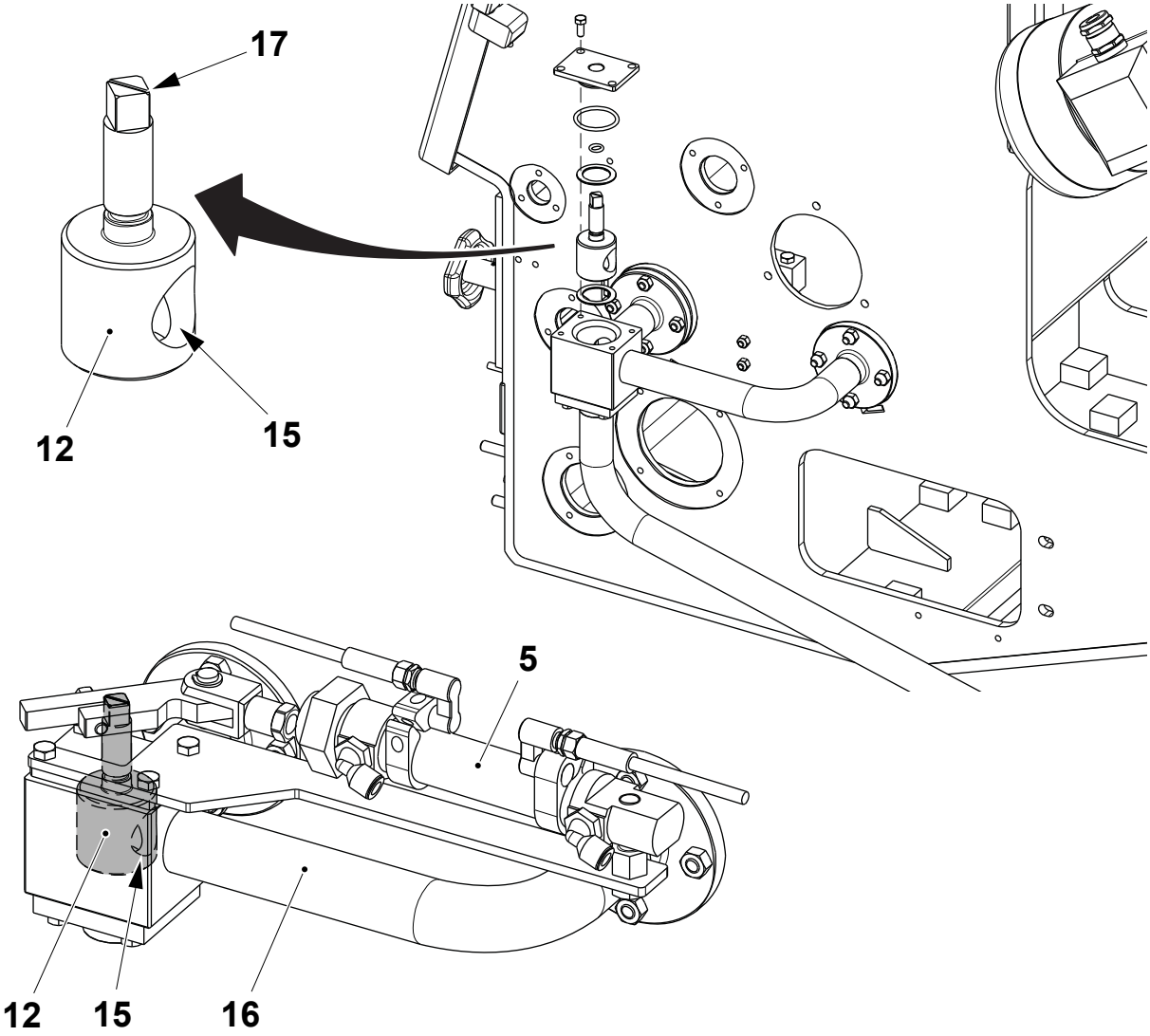

5 Cylinder
12 Shutter
15 Hole
16 Pipe
17 Notch

1.5 Filling System

SPC Reference	2501290-0300

1.5-1 Filling System - Description

The magnetic level detector (1) uses the position of the floater (2) to determine the level of the product inside the packaging material tube. A flow meter (3) placed before the servo dosing valve (4) reads the amount of product flow.

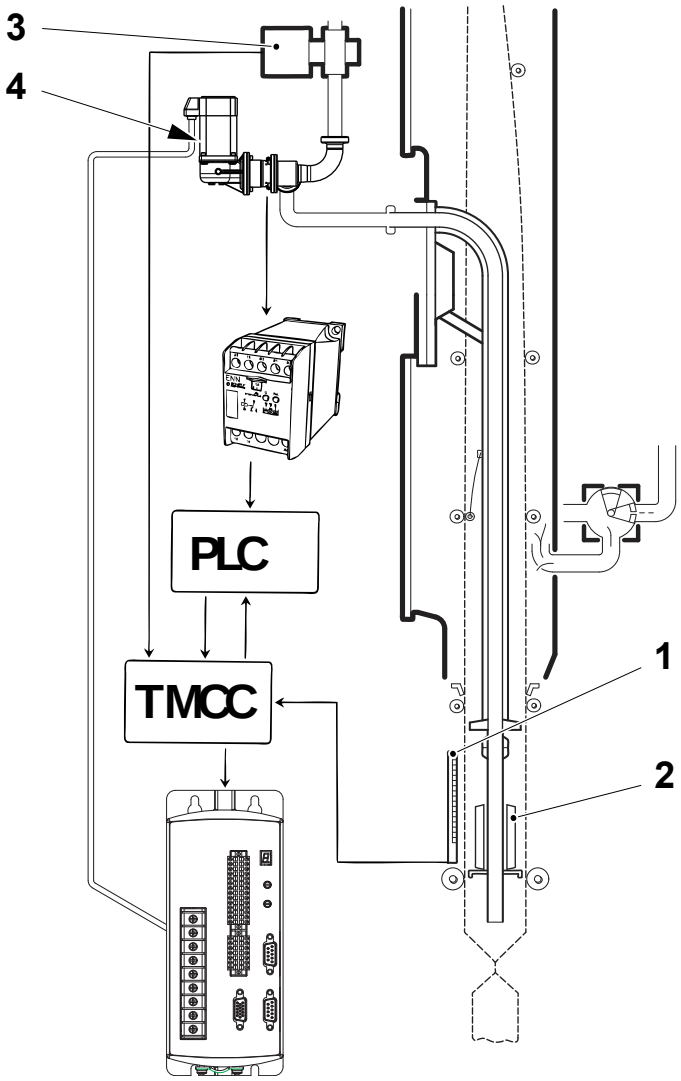

1 Level detector
2 Floater
3 Product flow meter
4 Servo dosing valve

(Cont'd)

(Cont'd)

These two signals are sent to the TMCC card that calculates the correct position of the servo dosing valve (4) in order to keep a constant flow and a constant level of product in the filling system.

The control signal is converted by the drive card (5) to a mechanical position for the motor, that drives the valve shutter.

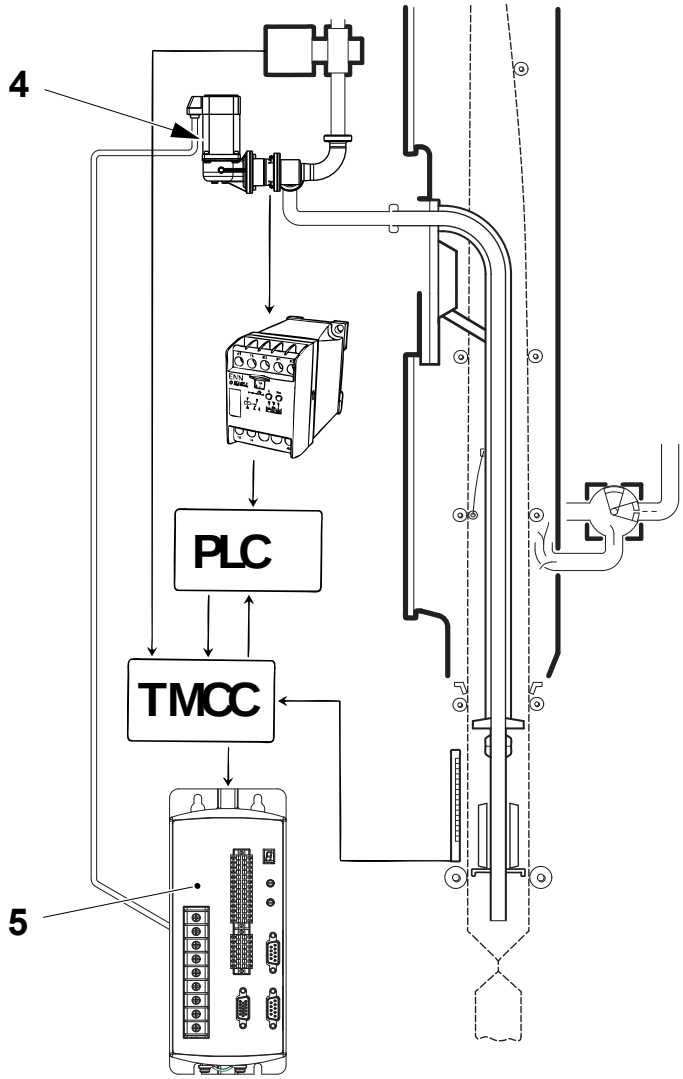

4 Servo dosing valve
5 Servo drive card

(Cont'd)

(Cont'd)

A leakage detector (6) detects leaks in the membranes of the servo dosing valve (4). Change the membranes if an alarm is activated on the TPOP, see also 1.5.3-1 Product Lines - Overhaul Regulating Valve.

The filling pipe (7) consists of two parts; the outlet is below the product level to prevent foaming, and is a counter pressure flange to increase the pressure in the bottom of the packaging material tube when the jaw system forms the package.

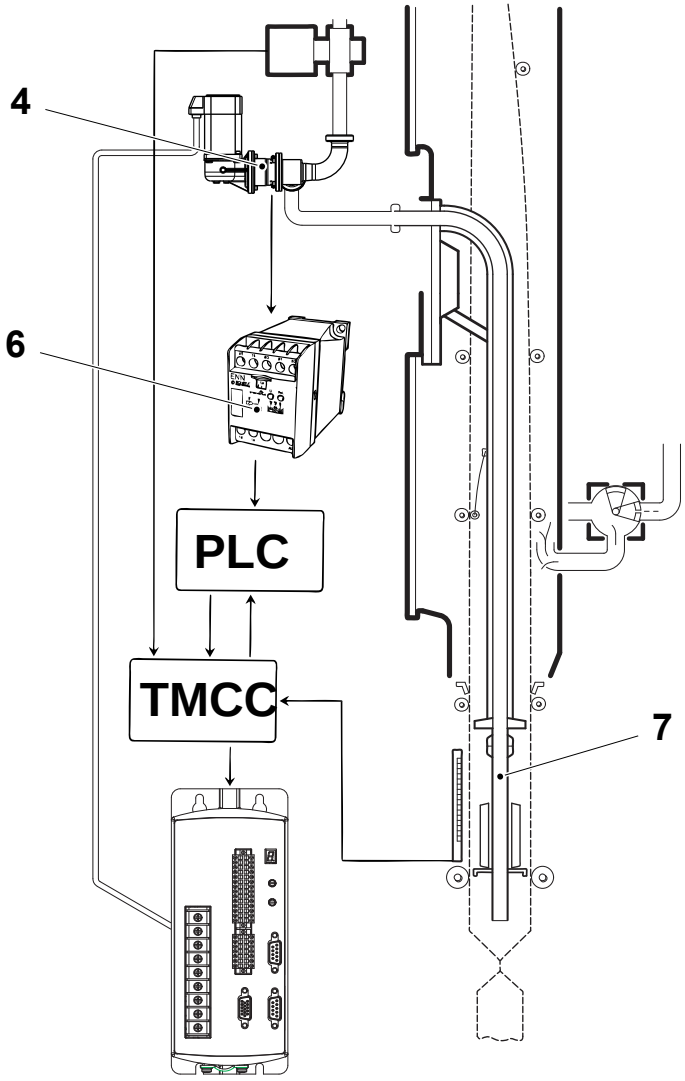

4 Servo dosing valve
6 Leakage detector
7 Filling pipe

(Cont'd)

(Cont'd)

On standard machines a swing pipe can be moved manually to switch between the production and CIP modes of the filling system.

1.5.1 Filling Pipe

1.5.1-1 Filling Pipe - Check

Machine Status	Mains Power OFF Air OFF Steam ON Water OFF
SPC Reference	2501310-0100

Check that:

- the pressure roller (1) is intact and rotates freely. Change if necessary
- the float (2) is intact and slides freely. Change if necessary
- the filling pipe (3) is centred to the lower forming ring (4). Set if necessary, see 1.5.1-4 Filling Pipe - Set Position.

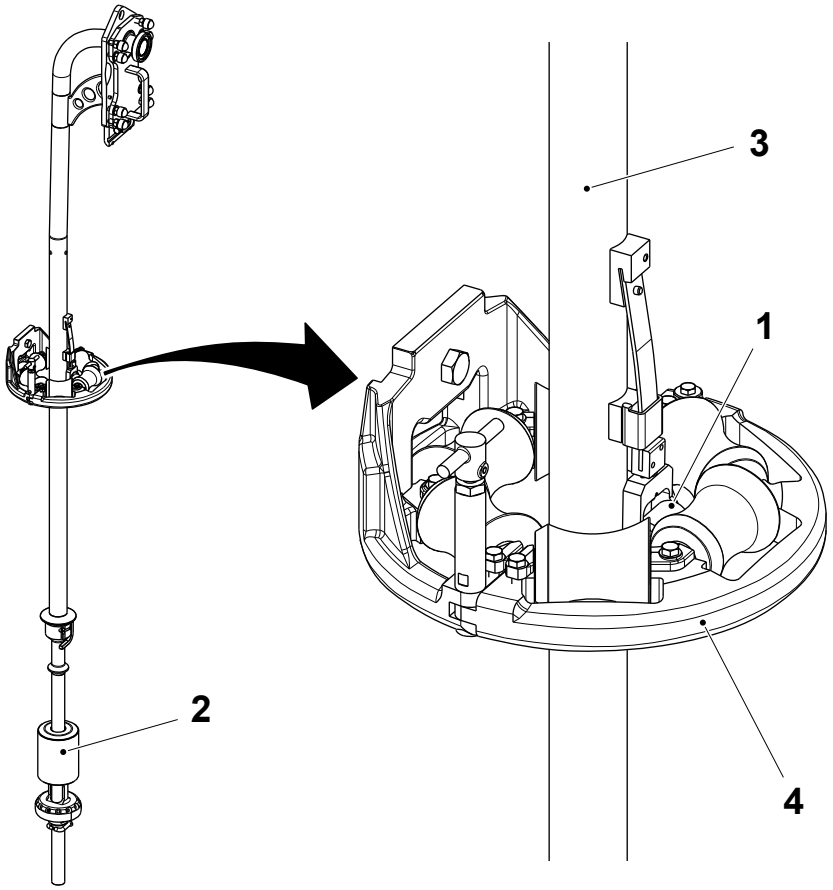

1 Pressure roller
2 Float
3 Filling pipe
4 Lower forming ring

1.5.1-2 Filling Pipe - Remove

Machine Status	Mains Power OFF Air OFF Steam ON Water OFF
SPC Reference	2501310-0100

a) Remove the pin (1) and the lower part of the filling pipe (2).

b) Remove the O-ring (3), check the O-ring (3) and change if necessary.

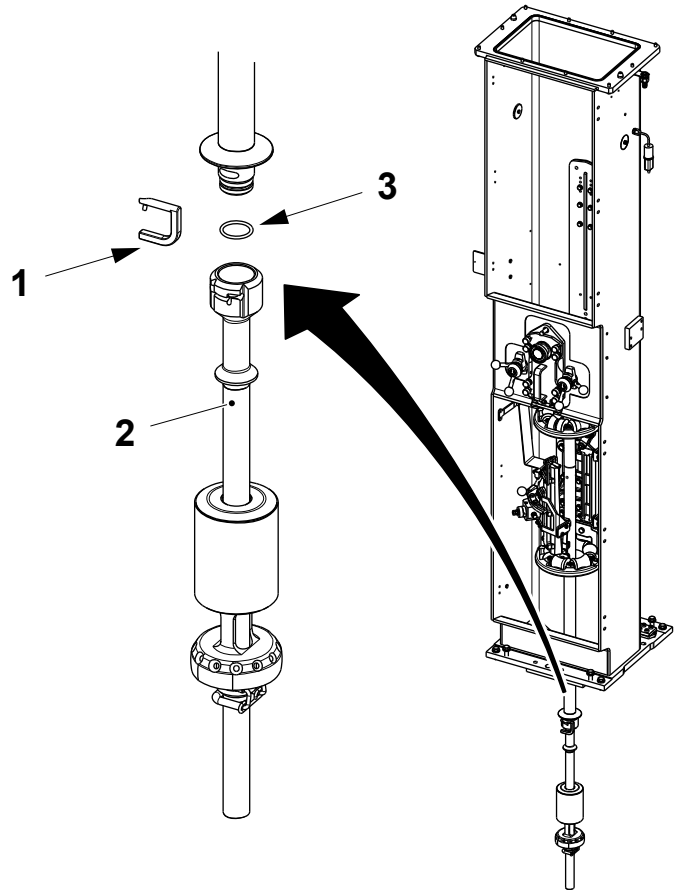

1 Pin
2 Filling pipe
3 O-ring

(Cont'd)

(Cont'd)

CAUTION
Risk of damage to the equipment.
Press the front half of the lower forming ring (7) backwards while turning the knob (6) to avoid damaging the threaded screw on the end of the knob (6).

c) Open the LS inductor (4) by turning the knob (5).

d) Unscrew the knob (6) and open the lower forming ring (7).

e) Remove the pressure rollers assembly (8) from the filling pipe.

f) Unscrew the knob (9) and open the upper forming ring (10).

Single pressure roller is shown

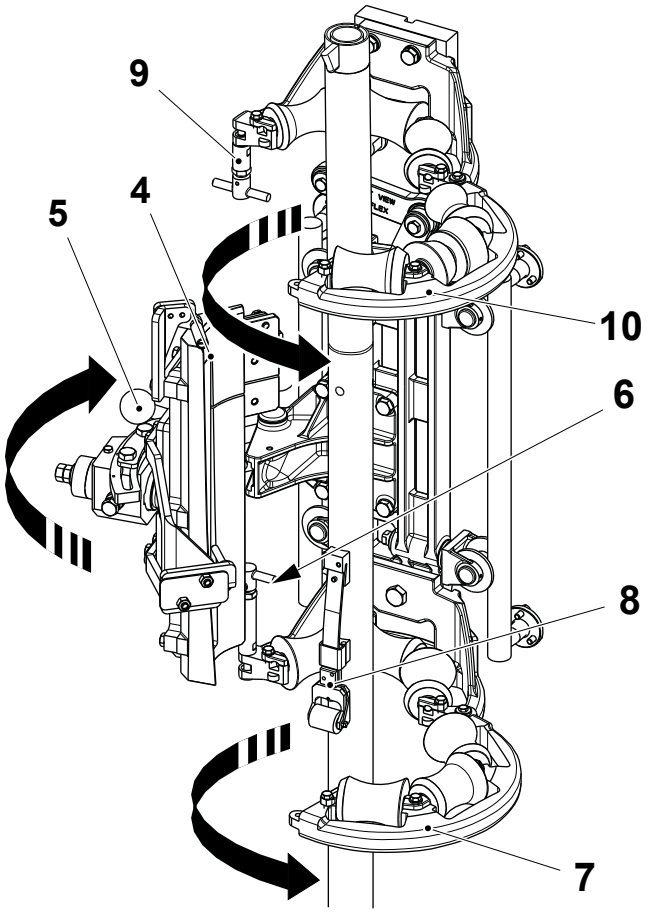

4 LS inductor
5 Knob
6 Knob
7 Lower forming ring
8 Pressure roller assembly
9 Knob
10 Upper forming ring

(Cont'd)

WARNING

Burn hazard.

The product pipe and adjacent components may be hot. If necessary wear personal protective equipment.

g) Loosen the screws (11), remove the clamp (12) and the covering panel (13).

h) Loosen the clamps (14) and the nuts (15) at either end the product pipe (16) and remove the pipe (16) and the gaskets (17).

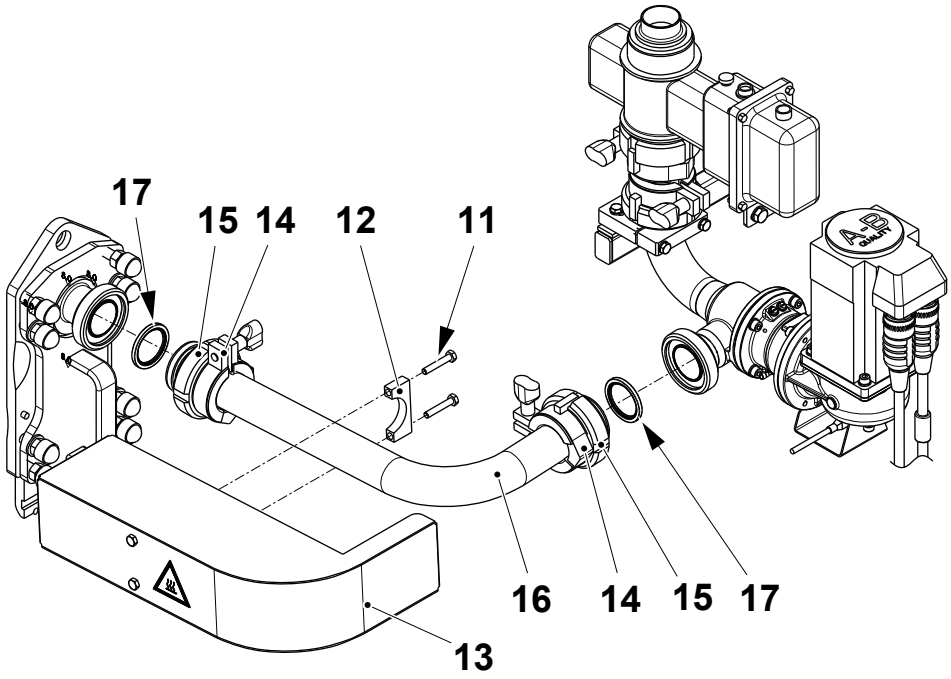

11 Screw
12 Clamp
13 Covering panel
14 Clamp
15 Nut
16 Pipe
17 Gasket

(Cont'd)

(Cont'd)

i) With one hand firmly holding the filling pipe (18), undo the locking handles (19).

j) Remove the filling pipe (18) and store it in a safe place.

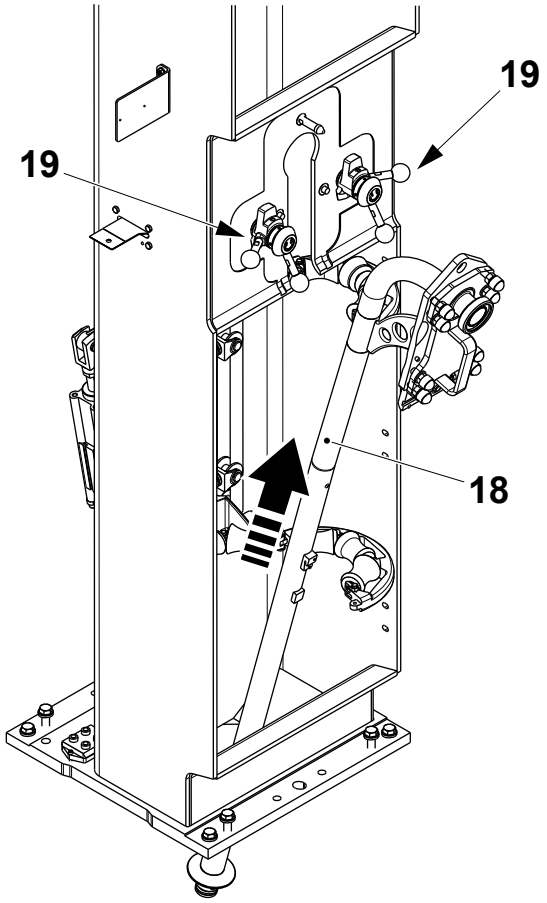

18 Filling pipe
19 Locking handle

1.5.1-3 Filling Pipe - Fit

Machine Status	Mains Power OFF Water OFF Air OFF Steam ON
SPC Reference	2501310-0100

CAUTION
Risk of damage to the equipment.
Press the front half of the lower forming ring (6) backwards while turning the knob (5) to avoid damaging the threaded screw on the end of the knob (5).

a) Unscrew the knob (1) and open the upper forming ring (2).

b) Open the LS inductor (3) by turning the knob (4).

c) Unscrew the knob (5) and open the lower forming ring (6).

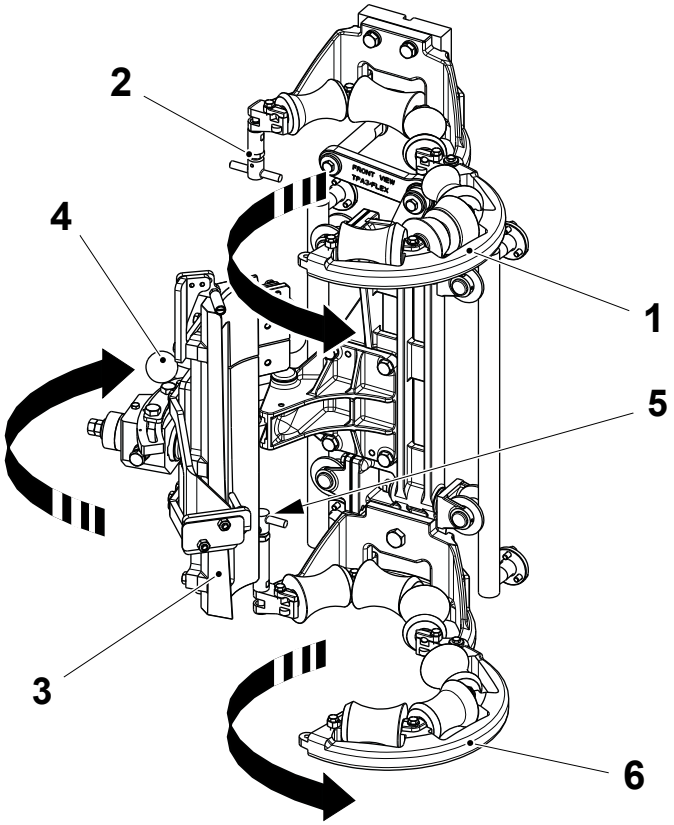

1 Knob
2 Upper forming ring
3 LS inductor
4 Knob
5 Knob
6 Lower forming ring

(Cont'd)

(Cont'd)

d) Fit the filling pipe (7) and secure it in to position with the locking handles (8).

e) Mount the pressure roller assembly (9) on to the filling pipe.

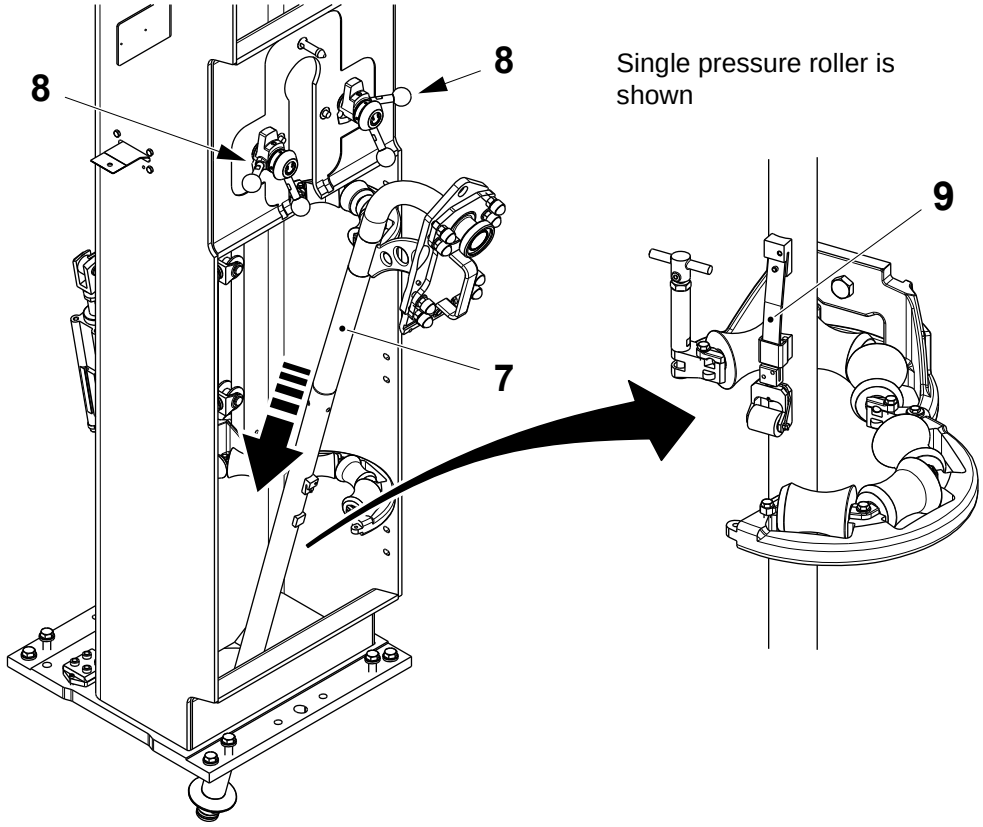

7 Filling pipe
8 Locking handle
9 Pressure roller assembly

(Cont'd)

(Cont'd)

CAUTION
Risk of damage to the equipment.
Press the front half of the lower forming ring (5) backwards while tightening the knob (6) to avoid damaging the threaded screw on the end of the knob (6).

f) Close the upper forming ring (1) and tighten the knob (2).

g) Close the LS inductor (3) by turning the knob (4).

h) Close the lower forming ring (5) tighten the knob (6)

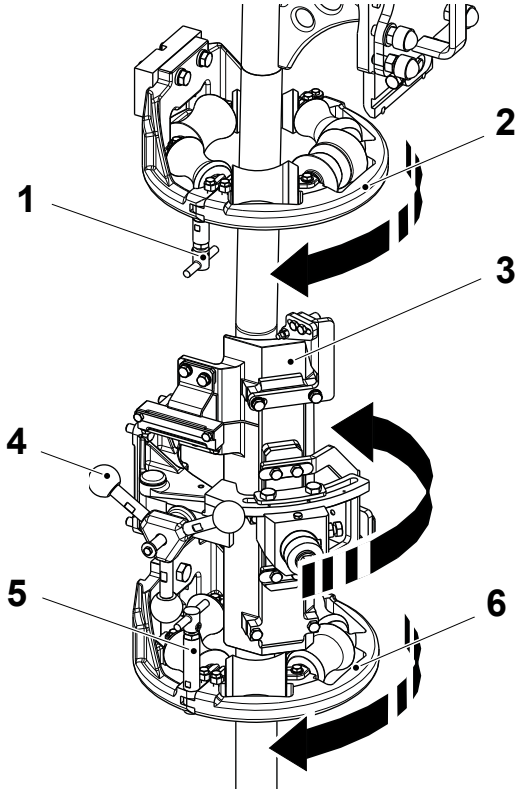

1 Upper forming ring
2 Knob
3 LS inductor
4 Knob
5 Forming ring
6 Knob

(Cont'd)

(Cont'd)

WARNING

Burn hazard.

The product pipe and adjacent components may be hot. If necessary wear personal protective equipment.

i) Fit the product pipe (10) and gaskets (11) by tightening the nuts (12) and locking them with the clamps (13).

j) Fit the clamps (14) and the covering panel (15) on the product pipe (10) by tightening the screws (16).

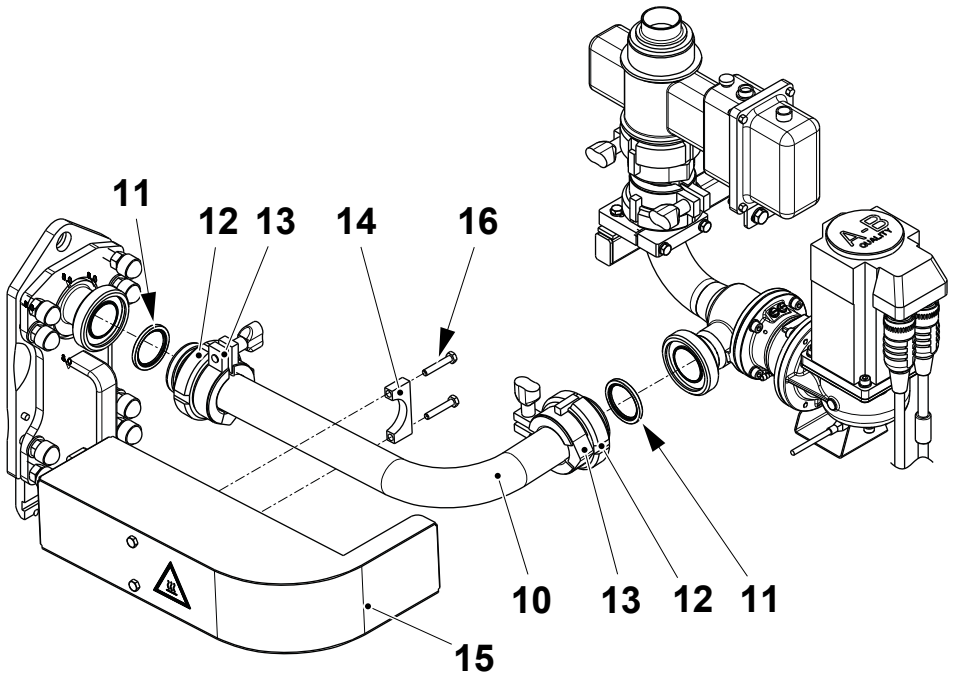

10 Product pipe
11 Gasket
12 Nut
13 Clamp
14 Clamp
15 Covering panel
16 Screw

(Cont'd)

(Cont'd)

k) Fit the O-ring (17) in its seat on the upper part of the filling pipe (18).

l) Fit the lower part of the filling pipe (19) and secure it in to position with the locking device (20).

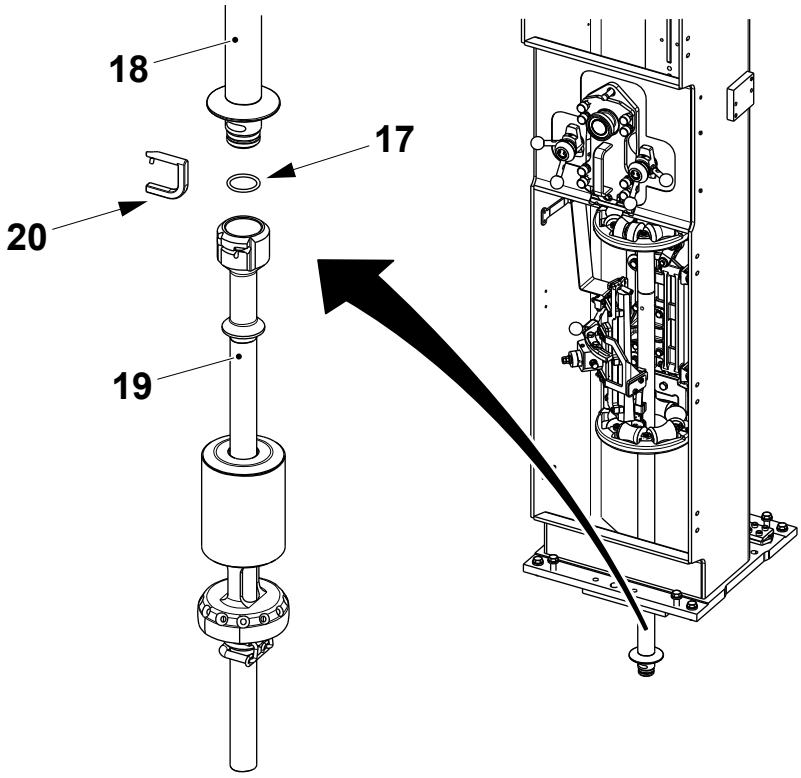

17 O-ring
18 Filling pipe, upper part
19 Filling pipe, lower part
20 Locking device

1.5.1-4 Filling Pipe - Set Position

Machine Status	PREPARATION
SPC Reference	2501310-0100

Note! For volume dependent template and tool codes, see 10.2 Templates and Tools. This setting procedure must performed in accordance with the instructions described in 1 Superstructure.

a) Swing out the design correction photocell holder (1).

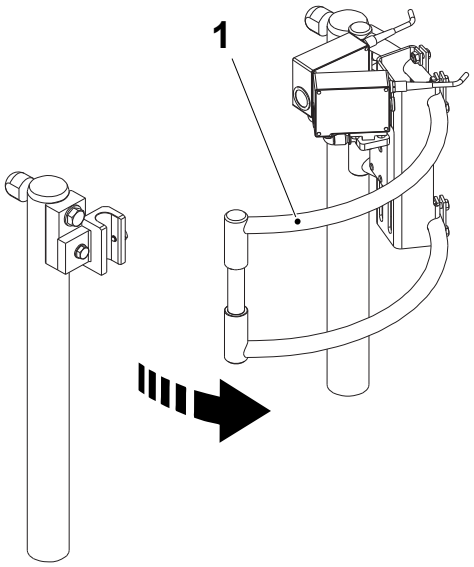

1 Photocell holder

(Cont'd)

(Cont'd)

WARNING

Burn hazard.

The product pipe and adjacent components may be hot. If necessary wear personal protective equipment.

b) Remove the covering panel (2) and the clamp (3).

c) Remove the clamps (4) and loosen the nuts (5) at either end the product pipe (6) and then remove the pipe and gaskets (7).

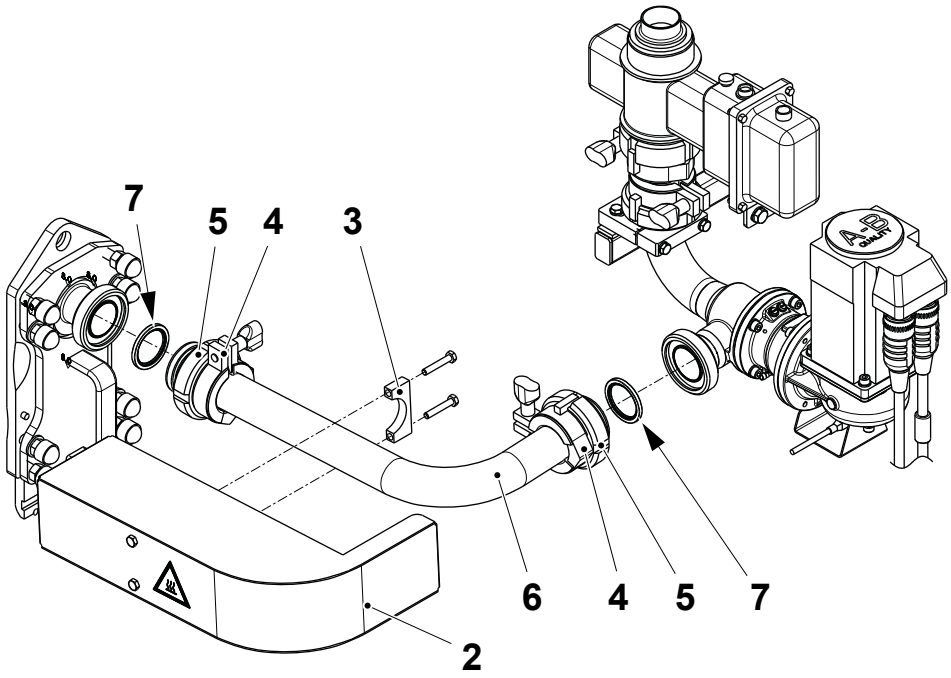

2 Covering panel
3 Clamp
4 Clamp
5 Nut
6 Pipe
7 Gasket

(Cont'd)

(Cont'd)

Note! The lower forming ring (11) must be in its closed position. Put a double piece of packaging material between the pressure roller and the counter roller, see 1.5.1-5 Filling Pipe - Set Pressure Roller.

d) Check that the seal (8) between the mounting plate (9) and the fastening plate (10) is compressed to dimension **A**.

Note! It is important to set the distance **A** correctly.

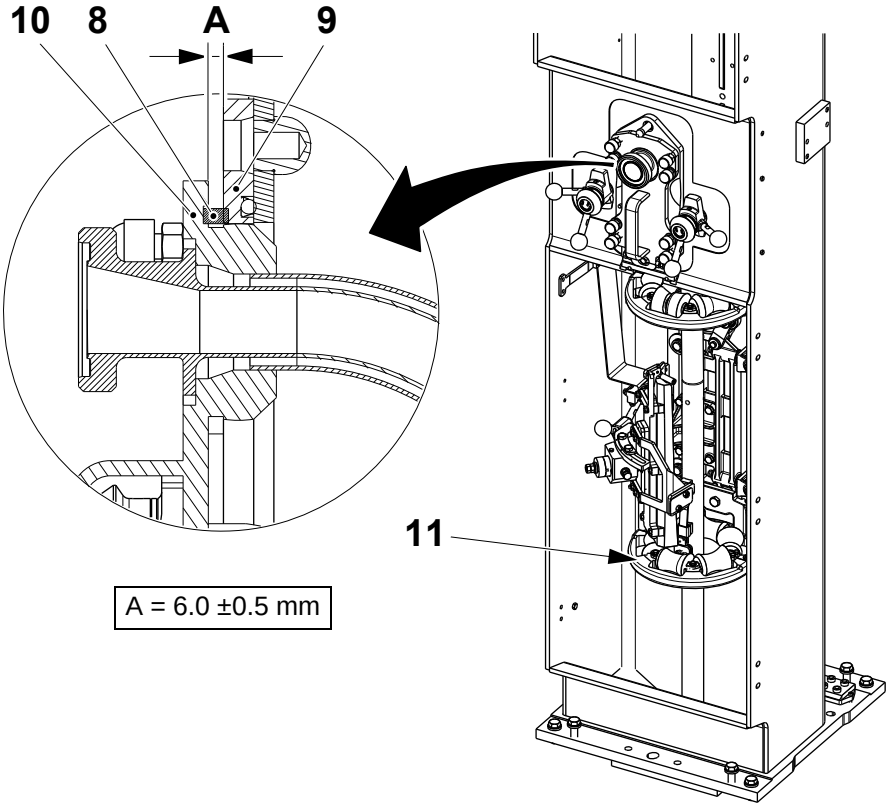

8 Seal
9 Mounting plate
10 Fastening plate
11 Lower forming ring

(Cont'd)

(Cont'd)

e) Centre the support rollers (12), see 4.2.6-6 Volume Curve Piece - Set Support Rollers.

f) Fit the O-ring (13) on the template (14).

g) Fit the template (14) on the flange (15).

h) Check that the filling pipe (16) and the template (14) are centred with respect to the support rollers (12). If the filling pipe is not correctly centred, continue with item i)

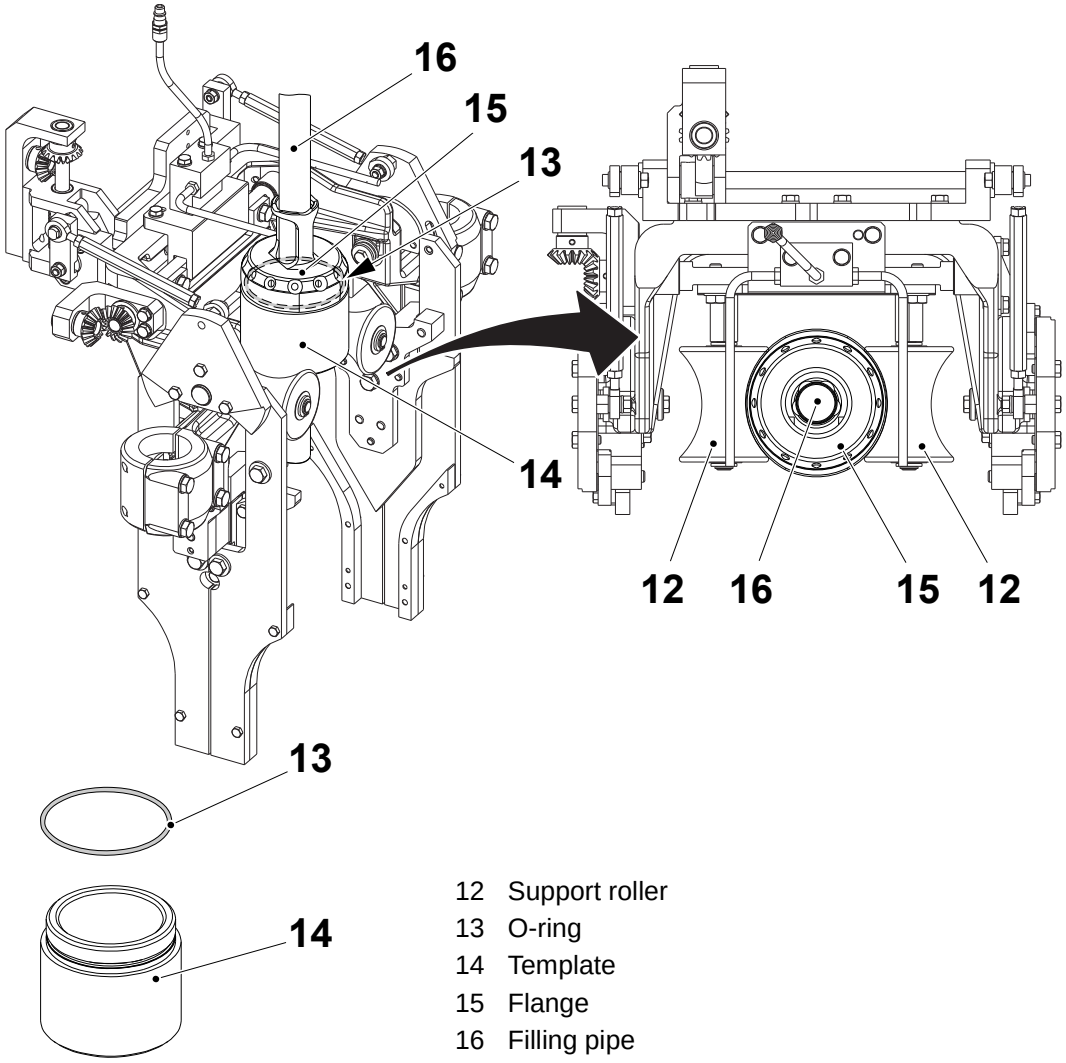

12 Support roller
13 O-ring
14 Template
15 Flange
16 Filling pipe

(Cont'd)

(Cont'd)

i) On the fastening plate (10), loosen the lock nuts on the screws (17) and (18). Loosen the screws (17) a few turns.

j) Align and centre the filling pipe to the template using the screws (18) and (19). Do not over tighten the screws (19). Lock in position with the lock nuts on screws (18)and (19).

k) Tighten the screws (17) on the fastening plate (10) until they just touch the mounting plate. Do not over tighten. Lock the screws (17) with the lock nuts.

l) Check that:

- the gasket compression is according to item d). If it is not correct, reset it and proceed from item i).
- the spring load is correct, see 1.5.1-5 Filling Pipe - Set Pressure Roller. Adjust if necessary
- the filling pipe alignment is according to step i).

Note! Fit new gaskets at both ends of the product pipe when assembling.

m) Assemble in the reverse order.

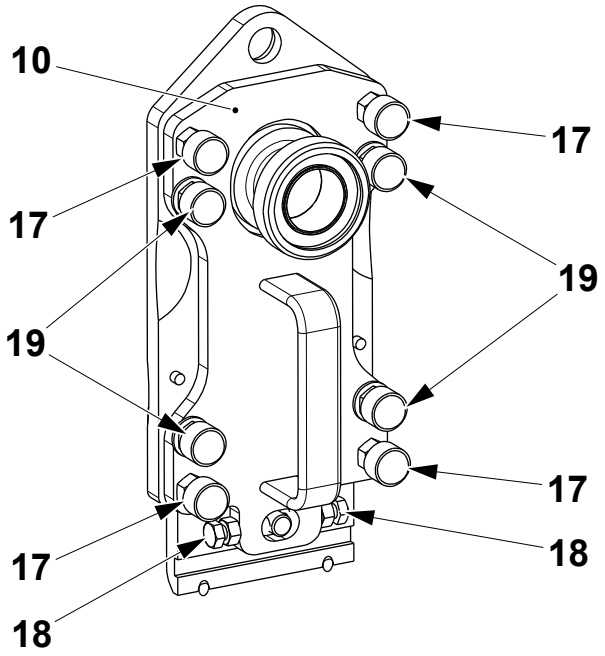

10 Fastening plate
17 Screw
18 Screw
19 Screw

1.5.1-5 Filling Pipe - Set Pressure Roller

Machine Status	HEAT STERILIZATION
Special Equipment	Force Gauge TP No. 90459-1467
SPC Reference	2501310-0100

Note! This setting procedure must be performed in accordance with the instructions described in 1-1 Superstructure - Setting Sequence, Type I.

(Cont'd)

(Cont'd)

Spring Force Table

Package	Force (N)
TBA 500 B	140 ±5
TBA 1000 B	140 ±5
TBA 1000 S	65 ±5
TBA 500 Sq	130 ±5
TBA 1000 Sq	130 ±5
TPA 750 Sq	140 ±5
TPA 1000 Sq	140 ±5
TBA 1500 S	70 ±5
TBA 2000 S	120 ±5

(Cont'd)

(Cont'd)

a) Fold a double piece of packaging material (5) and put it between the pressure roller (1) and the counter rollers (2).

b) Press the force gauge tool (4) against the spring (3). Take an accurate reading when the packaging material slips down, see the table on the previous page.

c) Adjust by bending or changing the spring (3) until the correct force is obtained.

d) Check the filling pipe position, see 1.5.1-4 Filling Pipe - Set Position.

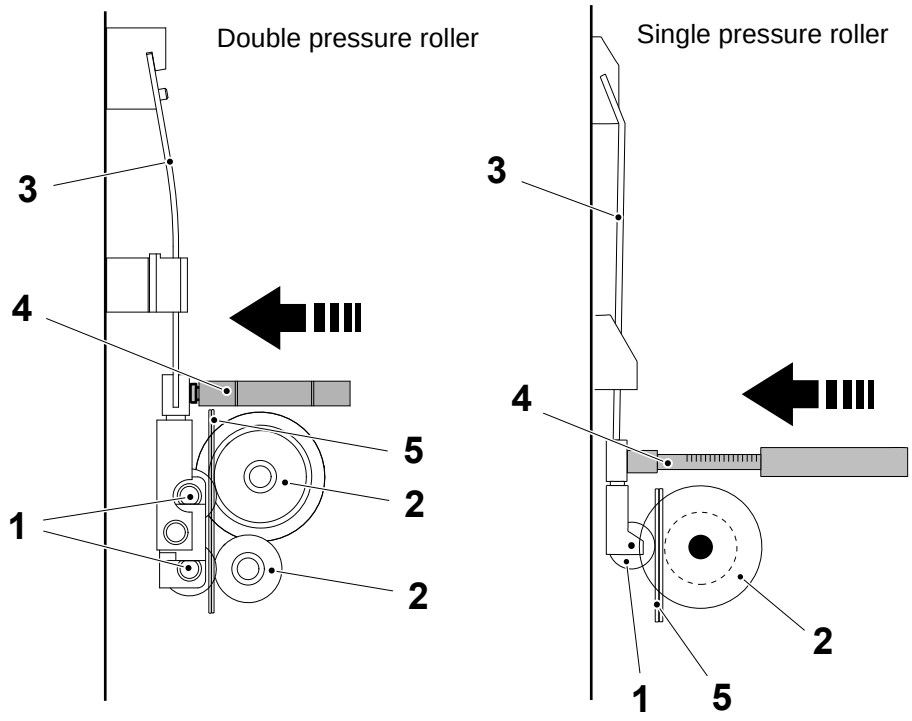

1 Pressure roller
2 Counter roller
3 Spring
4 Force gauge tool
5 Packaging material

1.5.1-6 Filling Pipe - Set Level Detector Position

Machine Status	Mains Power ON Air OFF Steam ON Water OFF
SPC Reference	2501310-0100

Basic Setting

Package	**A ±1.0 (mm)**
TBA 500 B	45.0
TBA 1000 B	45.0
TBA 1000 S	120.0
TBA 500 Sq	50.0
TBA 1000 Sq	50.0
TPA 750 Sq	45.0
TPA 1000 Sq	45.0
TBA 1500 S	134.0
TBA 2000 S	50.0

(Cont'd)

(Cont'd)

a) Set the distance **A** between the level detector (1) and the pressure flange (2) by means of the screws (3)

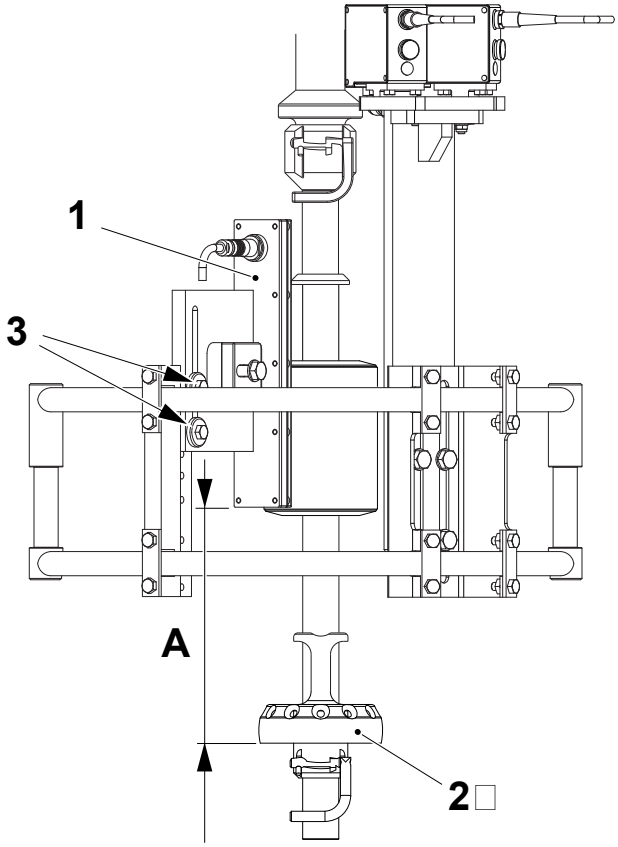

1 Level detector
2 Pressure flange
3 Screw

(Cont'd)

(Cont'd)

b) Set that the alignment and parallelism of the level detector (1) to the filling pipe (4) by means of the screws (5).

c) Step up the machine to step TIGHT TUBE.

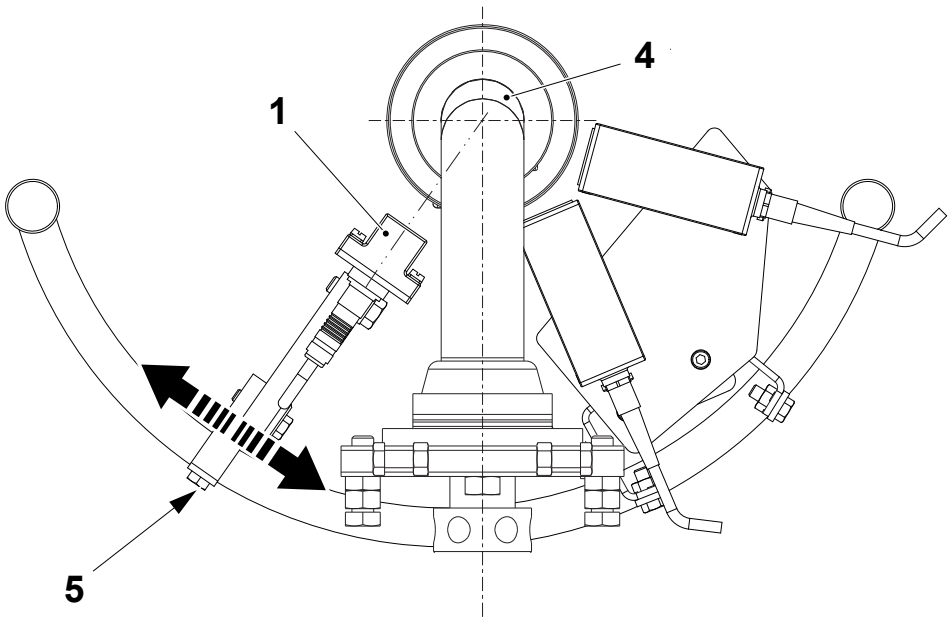

1 Level detector
4 Lower filling pipe
5 Screw

(Cont'd)

(Cont'd)

d) Check that the level detector (1) is parallel and aligned to the packaging material tube (6).

e) Set the distance **B** between the level detector (1) and the packaging material tube (6) by means of the screw (7).

Note! Check the distance **B** each time the touch guard (8) is opened.

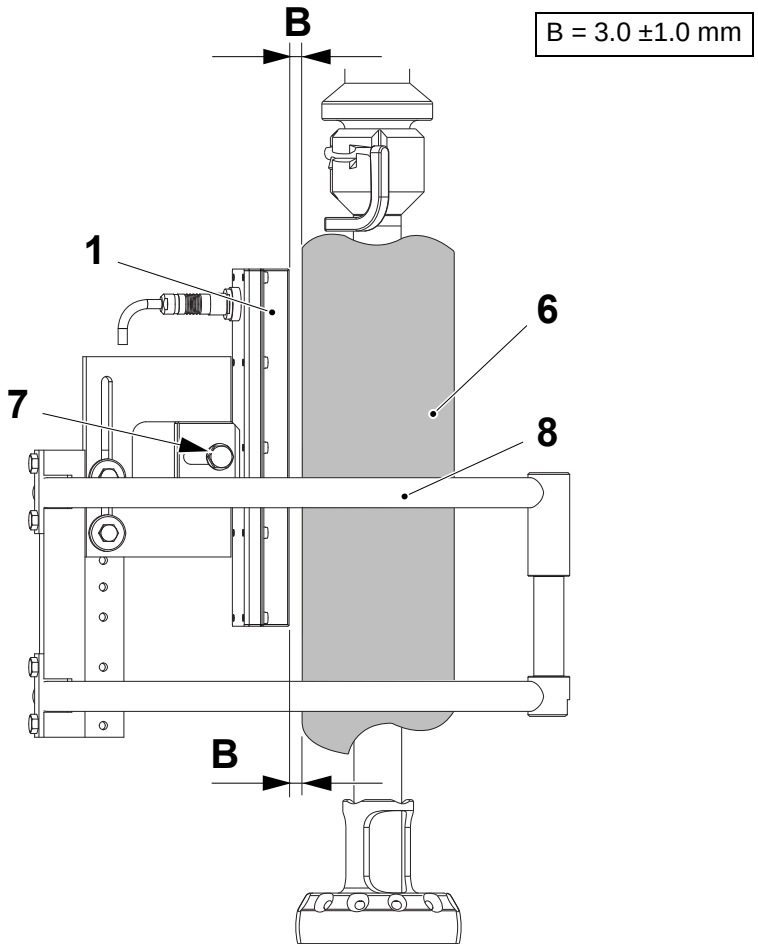

1 Level detector
6 Packaging material tube
7 Screw
8 Touch guard

(Cont'd)

(Cont'd)

Fine Setting

a) Make sure the floater (1) is at its lowest position.

b) Touch the PRODUCTION CONTROL button (2).

c) Touch the FILLING SYSTEM button (3).

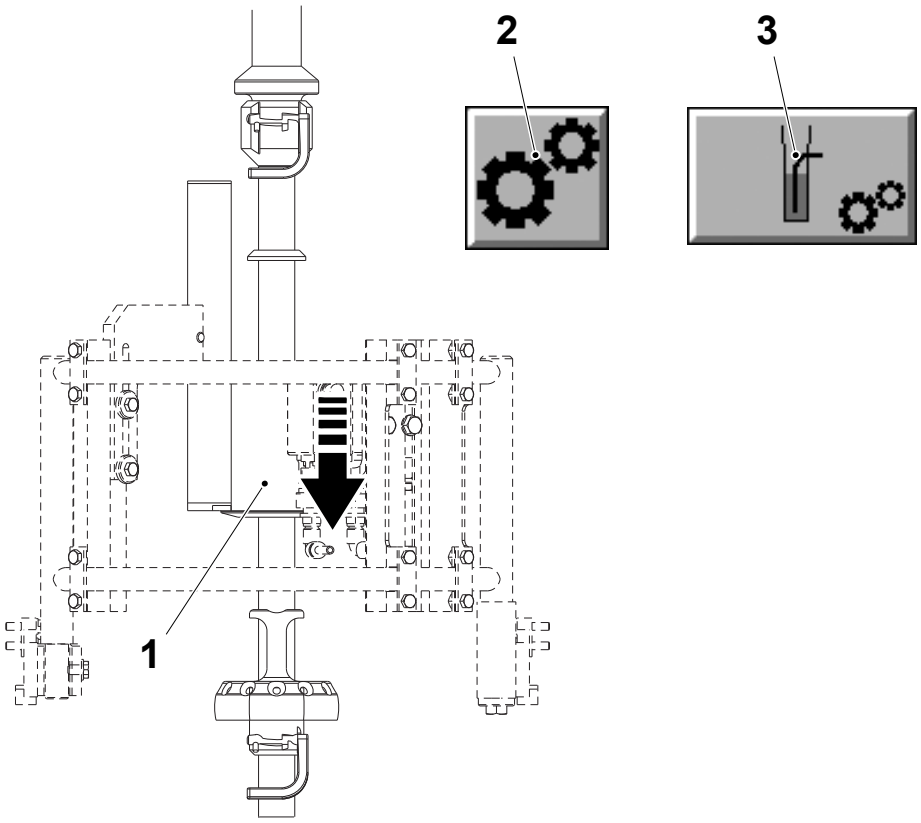

1 Floater
2 Production control button
3 Superstructure setting button

(Cont'd)

(Cont'd)

d) In the SUPERSTRUCTURE SETTINGS window touch the LEVEL INDICATOR icon (4) and check that the level indicator (5) is at 7% of the range. If not, loosen the screw (6) and adjust the sensor (7) until the level is at 7%. Tighten the screw (6) when the level is set.

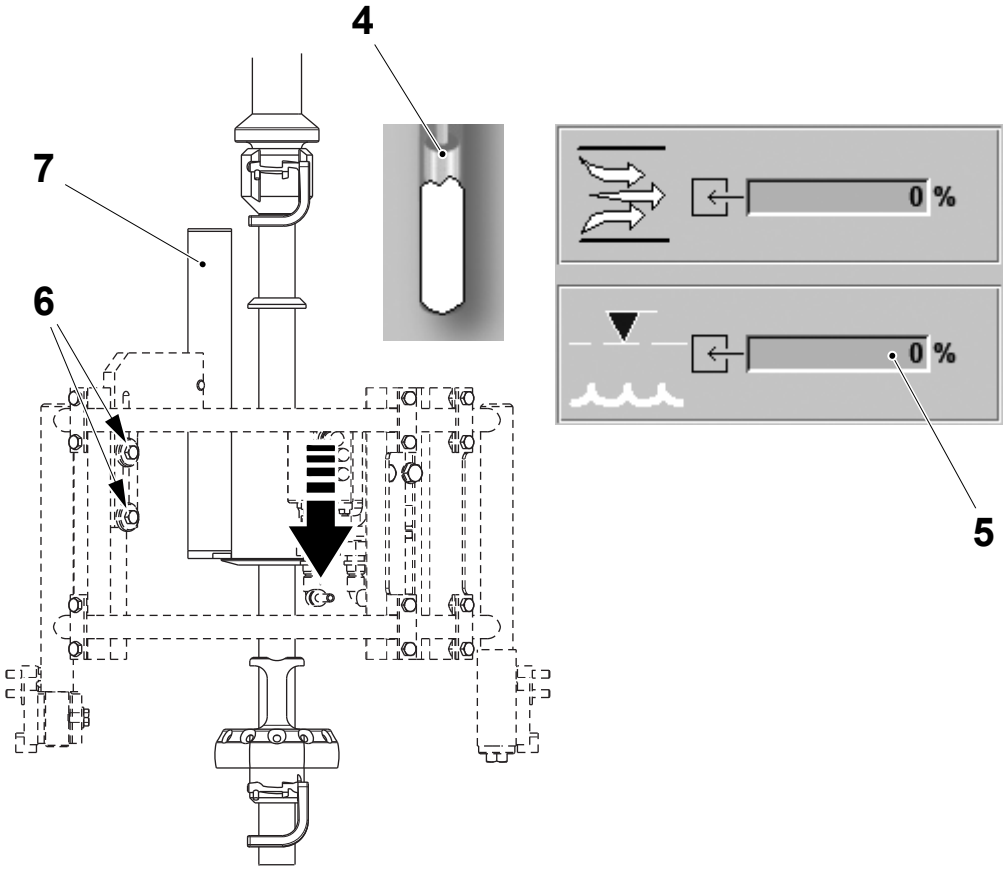

4 Level indicator icon
5 Level indicator
6 Screw
7 Sensor

1.5.1-7 Filling Pipe - Check Level Detector Function

Machine Status	Mains Power ON Air OFF Steam ON Water OFF
SPC Reference	2501310-0100

a) Cut a small slot (1) in the packaging material tube (2) above the pressure flange, so that is possible to reach the float (3).

b) Make sure that the float (3) is in the lowest position by lifting it up and releasing it.

c) Check the level sensor shows the lowest LED turned ON (with the floater in the bottom position) and verify that, by moving the floater (3) up and down, the LEDs on the level sensor turns on (two or three at the same time) corresponding to the floater position.

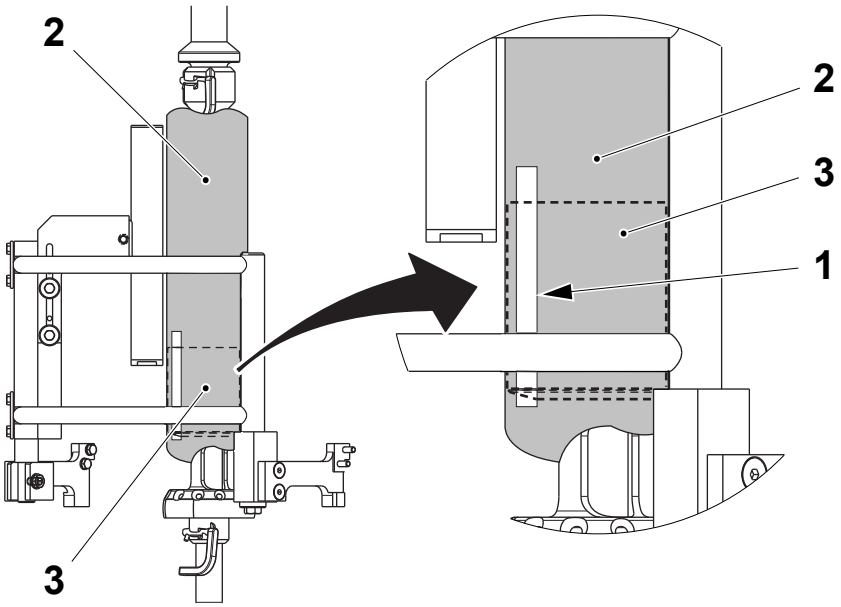

1 Slot
2 Packaging material tube
3 Float

(Cont'd)

(Cont'd)

d) Verify that not more than three LEDs turn on in every floater position: in this case increase the distance between the paper tube and the level sensor and repeat the test procedure again.

e) Check the level detector setting, see 1.5.1-6 Filling Pipe - Set Level Detector Position.

Change the level detector if necessary.

1.5.1-8 Filling Pipe - Change Locking Pins

Machine Status	Mains Power OFF Air OFF Steam ON Water OFF
SPC Reference	2501310-0100

a) Remove the stop pin (1) and the lower part of the filling pipe (2).

b) Open the locking pins (3) and remove the flange (4) and the floater (5).

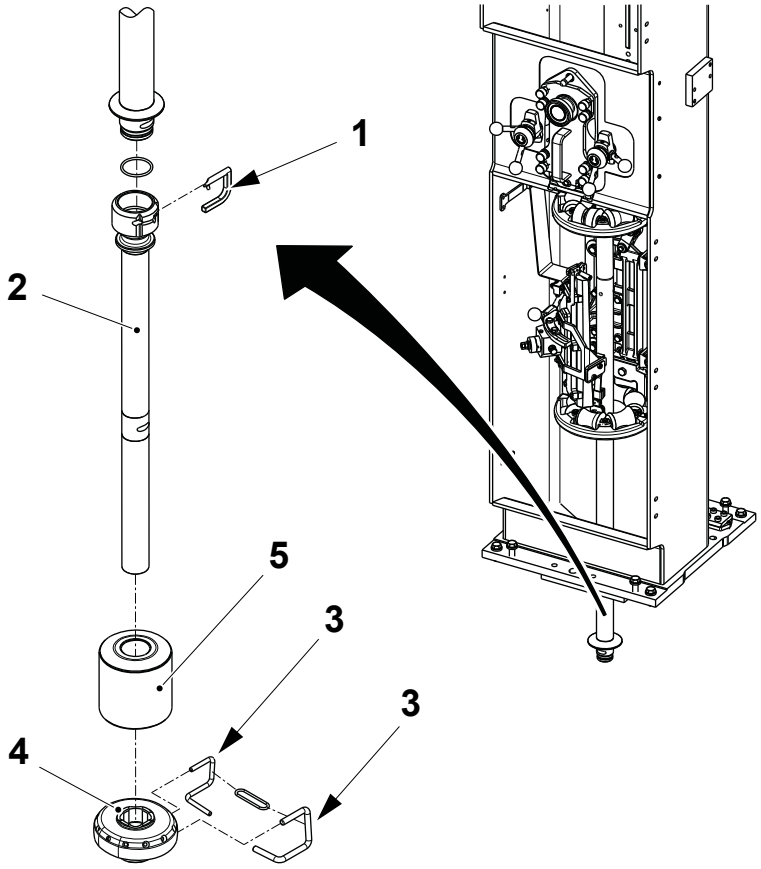

1 Stop pin
2 Filling pipe, lower part
3 Locking pin
4 Flange
5 Floater

(Cont'd)

(Cont'd)

c) Check for wear or damage:
   – the grooved seat (6) of the stop pin (1)
   – the grooved seat (7) of the locking pins (3).

   If necessary, change the lower part of the filling pipe (2).

d) Change the stop pin (1), the locking pins (3) and the link (8).

e) Assemble in the reverse order.

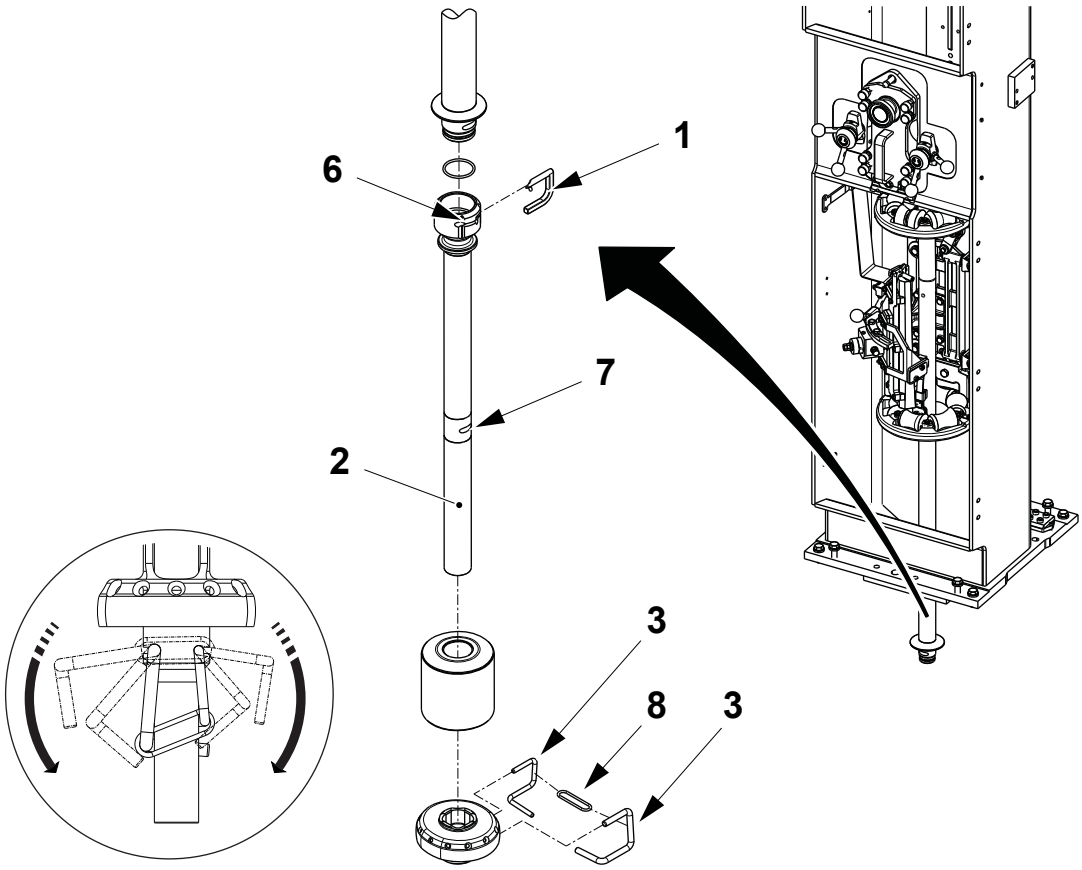

1 Stop pin
2 Filling pipe, lower part
3 Locking pin
6 Grooved seat
7 Grooved seat
8 Link

1.5.2 Product Valve

CAUTION
Risk of serious production fault.
No maintenance activity is authorised on the Product Valve unless the product supply line is idle and empty from product. Any operation requiring the interruption of the steam supply and disruption of the stream barrier between the machine and the product supply line can only be carried out when the product supply line is idle and empty from product.

1.5.2-1 Product Valve - Remove Cylinders

Machine Status	Mains Power OFF Air OFF Steam OFF Water OFF
Special Equipment	Tool Dismounting TP No.449969-0100
SPC Reference	1558494-0200

WARNING
Risk of personal injury.
Make sure that the steam and the compressed air have been turned off. Make sure that there is no product, steam or cleaning liquid in the line. In case of accident call for medical attention.

CAUTION
Risk of serious production fault.
Never close the steam supply valve to the machine until the product line is idle and empty from product. The steam in the product valve forms an aseptic barrier between the machine and the product supply line. Closing the steam valve will disrupt this barrier.

(Cont'd)

(Cont'd)

a) Remove the air connections (1) and, when required, the steam valve connections (2) from the cylinder.

b) Remove the two screws (3), collect the washers and remove the proximity switch brackets (4).

c) Turn the sleeves (5) until it is free from the cylinder.

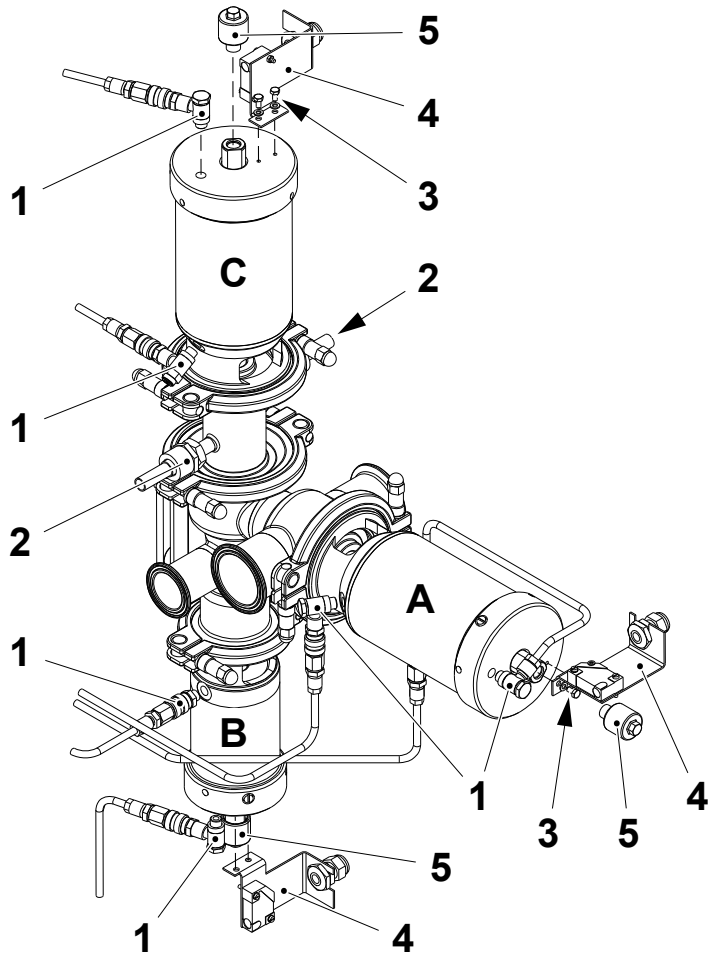

1 Air connection
2 Steam valve connection
3 Screw
4 Bracket
5 Sleeve

(Cont'd)

(Cont'd)

d) Fit the tool dismounting (6) and turn the handle clockwise (approx.5 turns) to release the piston pressure from the valve site.

e) Remove the clamp ring (7) and the valve **A**.

f) Check the gasket (8) and change it if necessary.

g) Change the O-rings if necessary, see <u>1.5.2-3 Product Valve - Change O-Rings</u>.

h) Repeat the same procedure for the valves **B** and **C**.

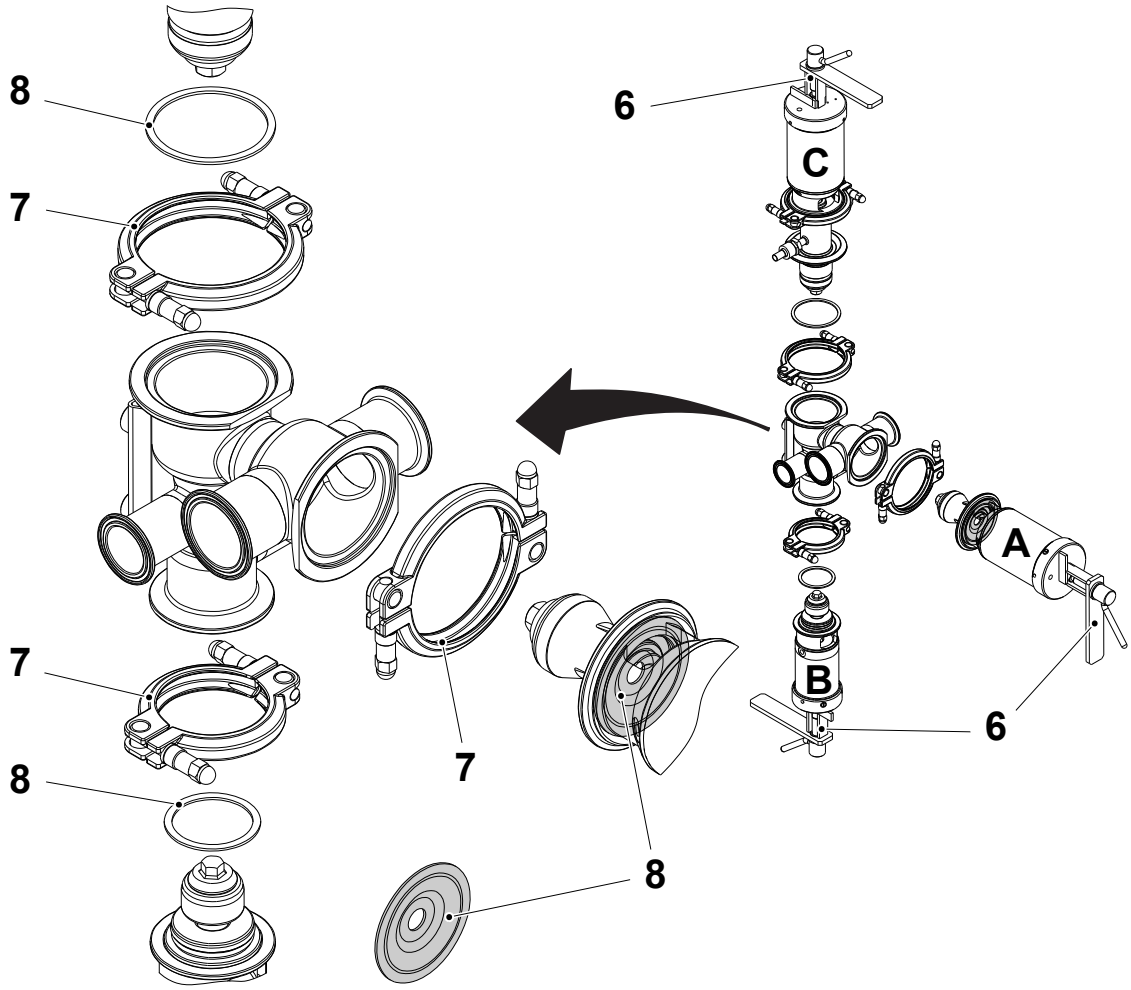

6 Tool dismounting
7 Clamp ring
8 Gasket

1.5.2-2 Product Valve - Change Seals and Membranes

Machine Status	Mains Power OFF Air OFF Steam OFF Water OFF
Special Equipment	Torque Wrench min. 50 Nm Tool Dismounting TP No.449969-0100
Consumables	Silicone Grease TP No. 90296-0009
SPC Reference	1558494-0200

WARNING

Risk of personal injury.

Make sure that the steam and the compressed air have been turned off. Make sure that there is no product, steam or cleaning liquid in the line. In case of accident call for medical attention.

CAUTION

Risk of serious production fault.

Never close the steam supply valve to the machine until the product line is idle and empty from product. The steam in the product valve forms an aseptic barrier between the machine and the product supply line. Closing the steam valve will disrupt this barrier.

(Cont'd)

(Cont'd)

Product Valve (A)

a) Remove the valve, see 1.5.2-1 Product Valve - Remove Cylinders.

b) Release the cylinder spring completely using the tool dismounting (7).

c) Remove the valve cone (1). Check the seal ring (2) and change it if necessary.

d) Remove the seal ring holder (3), the diaphragm (4), the ring (5) and the washer (6). Check the diaphragm (4) for damage and change if necessary.

e) Fit back the ring (5) and the washer (6) in to the cylinder housing with the grooves facing up.

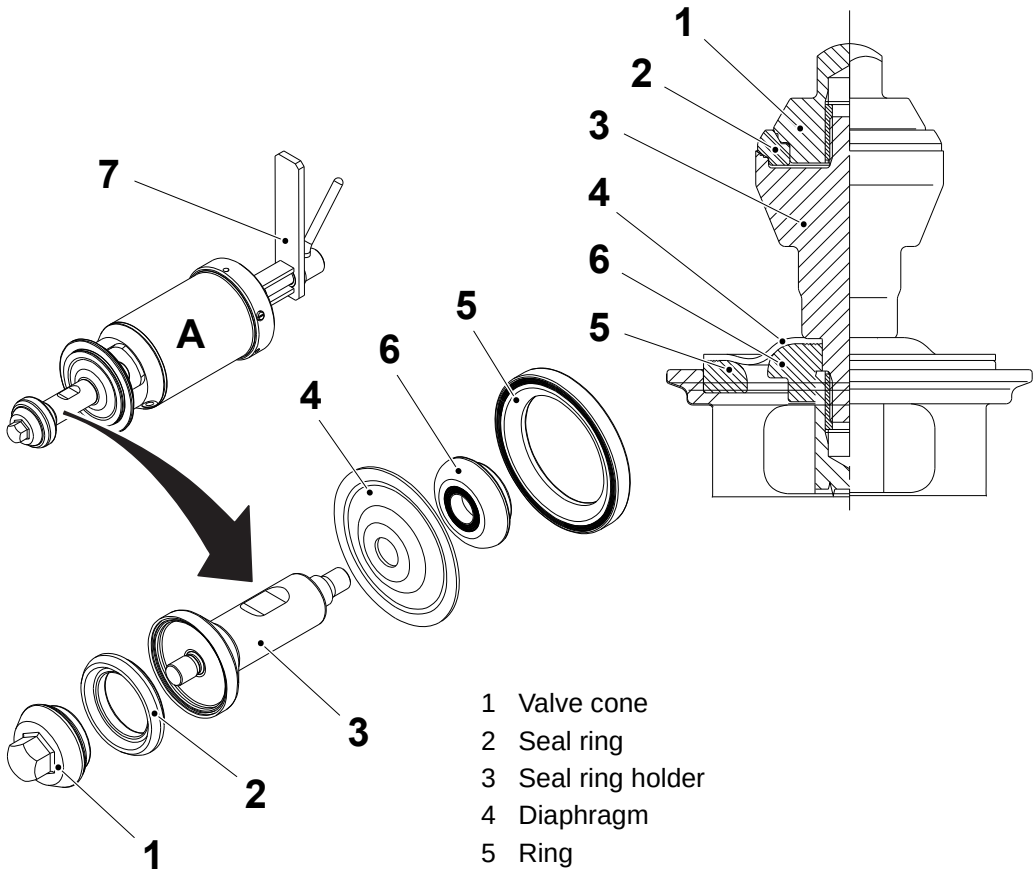

1 Valve cone
2 Seal ring
3 Seal ring holder
4 Diaphragm
5 Ring
6 Washer
7 Tool dismounting

(Cont'd)

(Cont'd)

CAUTION
Risk of serious production fault.
Fit the diaphragm (4) with the bulge pointing outside from the valve.

f) Fit the new diaphragm (4) and the complete seal ring holder (3) on to the piston rod.

g) Tighten the seal ring holder (3) completely.

h) Fit the seal ring (2) and the valve cone (1).

Note! Slowly tighten the valve cone (1) with a torque wrench set to 50 Nm.

i) Compress the cylinder spring completely using the handle tool (7).

j) Fit the cylinder and tighten the clamp ring (8).

k) Remove the tool dismounting (7) and screw in the sleeve (9) on the cylinder.

l) Fit the proximity switch bracket (10) and the air connection (11).

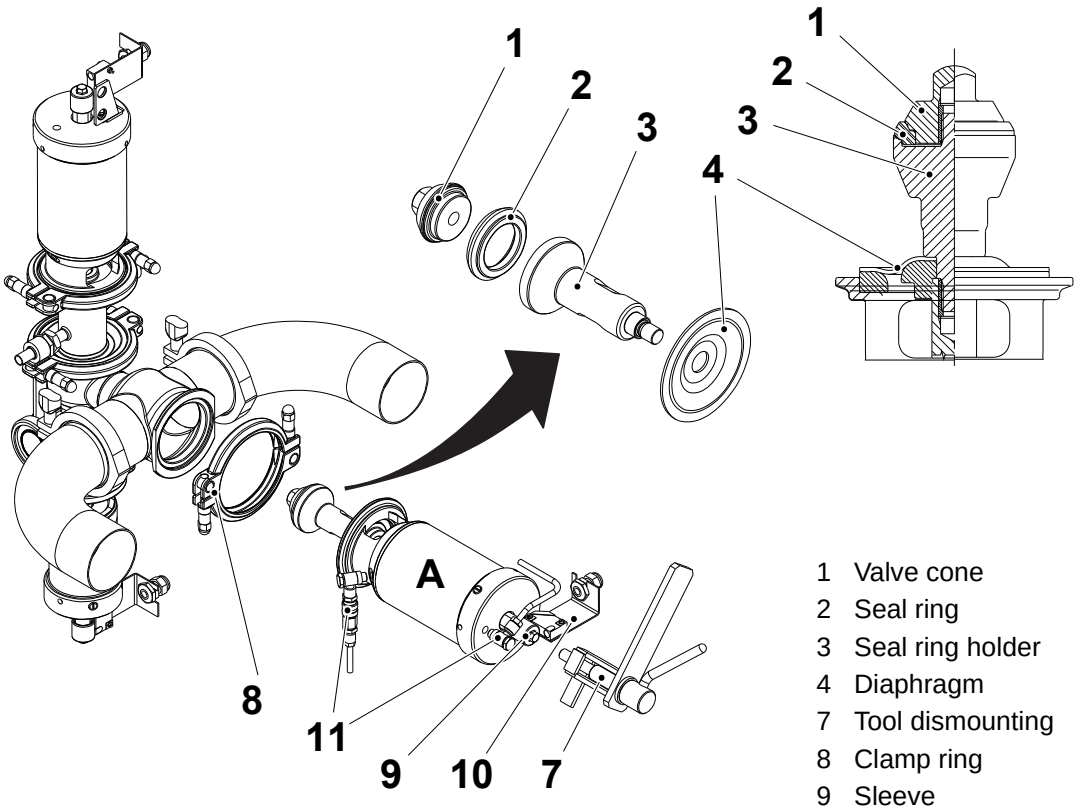

1 Valve cone
2 Seal ring
3 Seal ring holder
4 Diaphragm
7 Tool dismounting
8 Clamp ring
9 Sleeve
10 Bracket
11 Air connection

(Cont'd)

(Cont'd)

Sterile Air Valve (B)

a) Remove the valve, see 1.5.2-1 Product Valve - Remove Cylinders.

b) Release the cylinder spring completely using the tool dismounting (1).

c) Change the O-ring (2).

d) Remove the valve cone (3) and change the seal ring (4) and the rod seal (5).

e) Remove the washer (6) and change the O-ring (7).

f) Assemble in the reverse order.

Note! Tighten the valve cone (3) using a torque wrench set to 50 Nm.

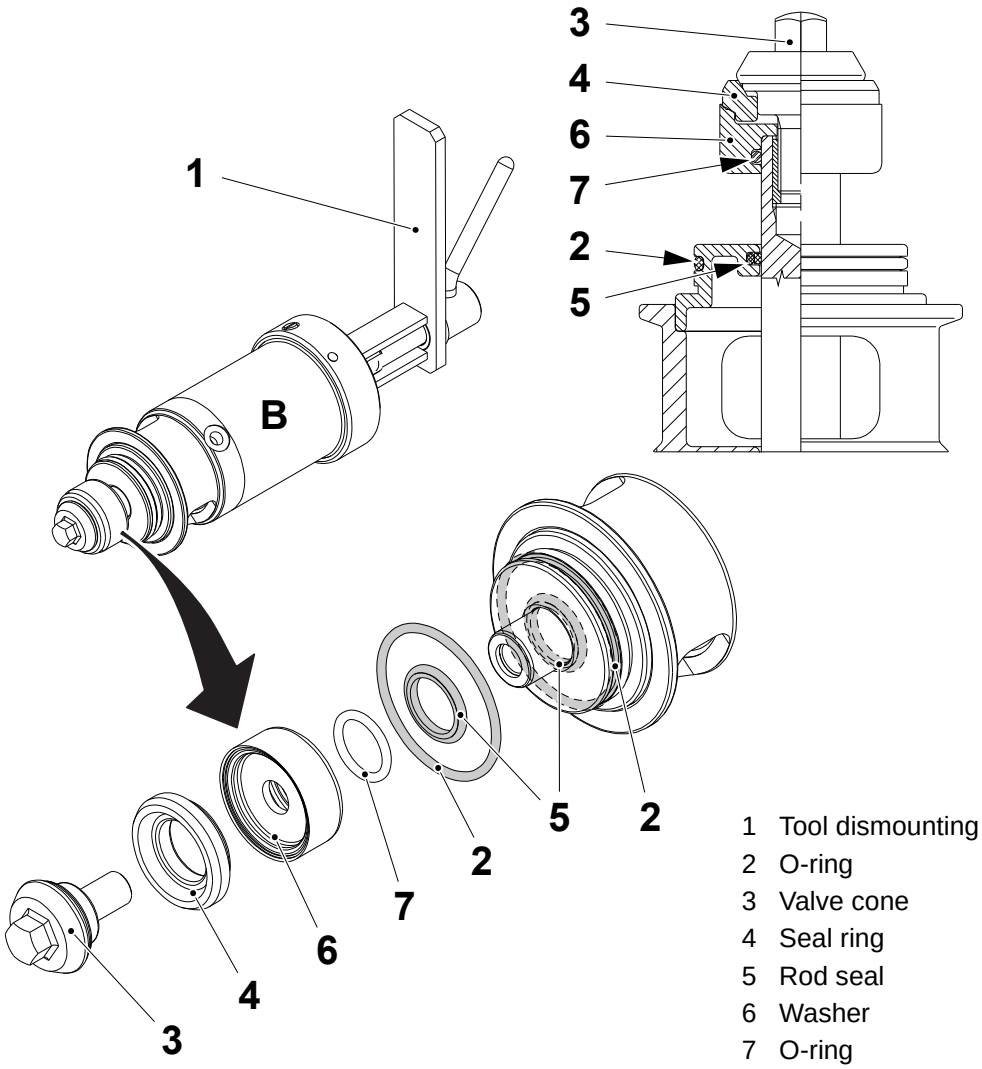

1 Tool dismounting
2 O-ring
3 Valve cone
4 Seal ring
5 Rod seal
6 Washer
7 O-ring

(Cont'd)

(Cont'd)

Steam Valve (C)

a) Remove the valve, see 1.5.2-1 Product Valve - Remove Cylinders.
b) Release the cylinder spring completely using the tool dismounting (1).
c) Remove the valve cone (2) and the ring (3).
d) Check the seal rings (4) and change if necessary.
e) Loosen the screws (5) and remove the holder (6).
f) Check the seal rings (7) and change if necessary.
g) Assemble in the reverse order.

Note! Tighten the valve cone (2) using a torque wrench set to 50 Nm.

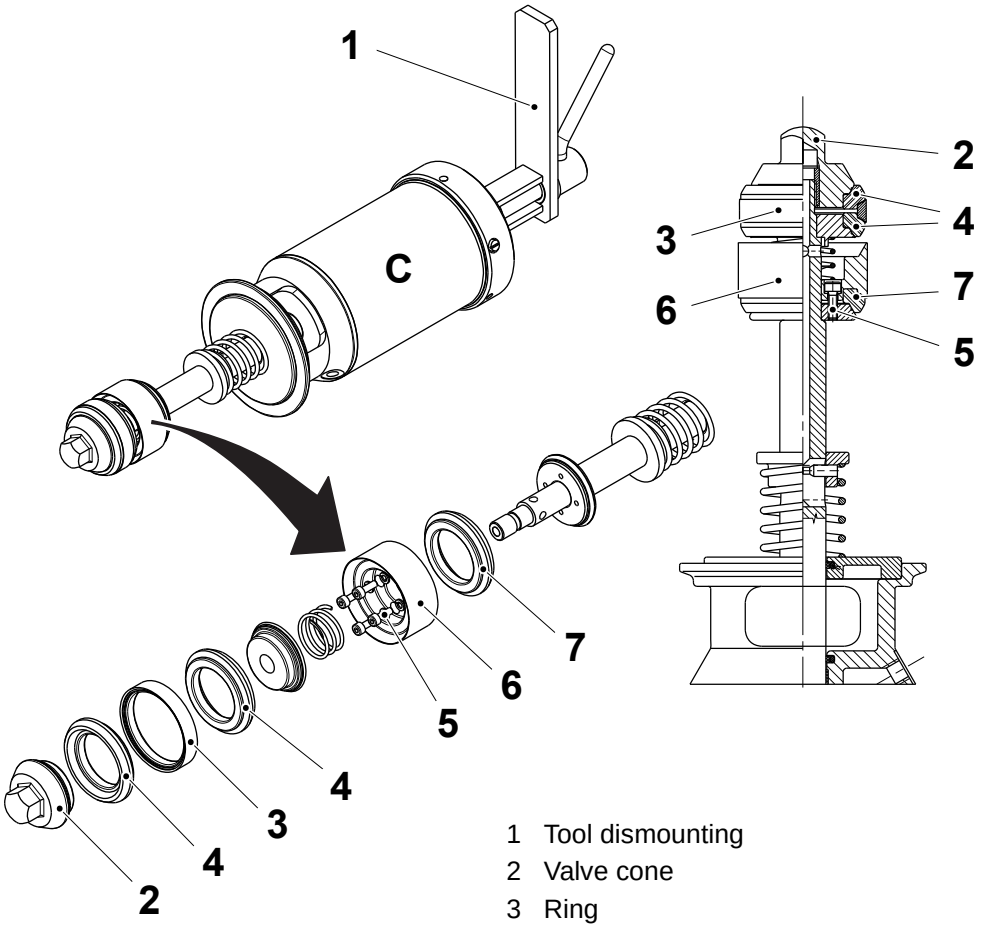

1 Tool dismounting
2 Valve cone
3 Ring
4 Seal ring
5 Screw
6 Holder
7 Seal ring

1.5.2-3 Product Valve - Change O-Rings

Machine Status	Mains Power OFF Air OFF Steam OFF Water OFF
Special Equipment	Tool Dismounting TP No.449969-0100
Consumables	Silicone Grease TP No. 90296-0009
SPC Reference	1558494-0200

WARNING

Risk of personal injury.

Make sure that the steam and the compressed air have been turned off. Make sure that there is no product, steam or cleaning liquid to the line. In case of accident call for medical attention.

CAUTION

Risk of serious production fault.

Never close the steam supply valve to the machine until the product line is idle and empty from product. The steam in the product valve forms an aseptic barrier between the machine and the product supply line. Closing the steam valve will disrupt this barrier.

(Cont'd)

(Cont'd)

A-Cylinder (Product Valve)

a) Remove the product valve, see 1.5.2-1 Product Valve - Remove Cylinders.

b) Remove the lock screws (1).

c) Loosen the tool dismounting (2) and remove the end section (3).

d) Check the O-ring (4), the wear ring (5) and the rod seal (6). Change if necessary.

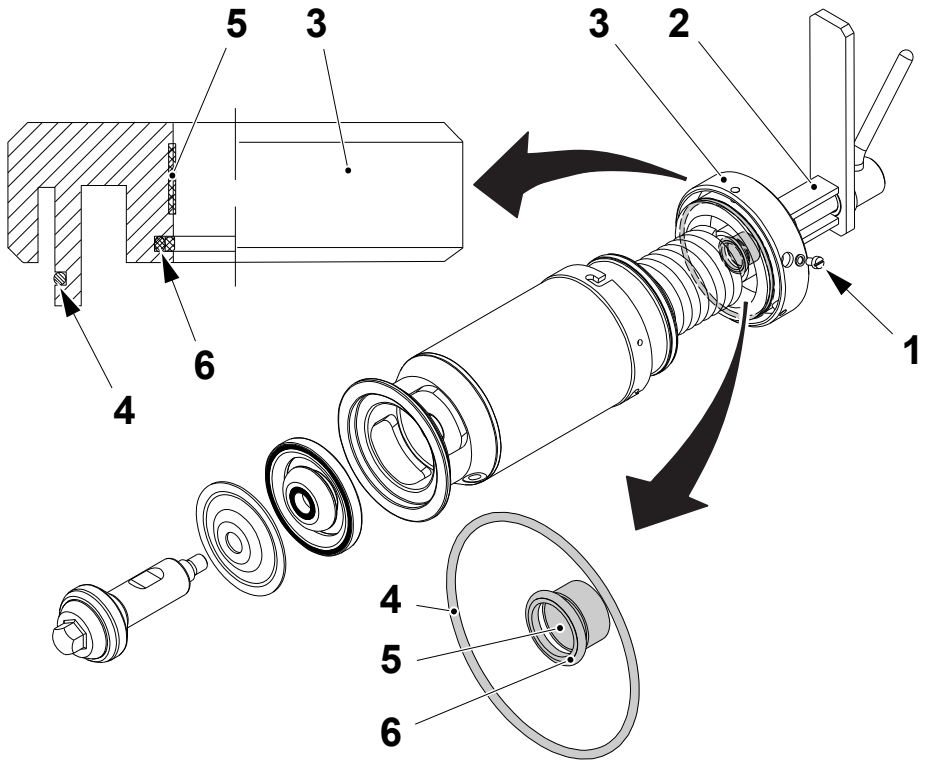

1 Lock screw
2 Tool dismounting
3 End section
4 O-ring
5 Wear ring
6 Rod seal

(Cont'd)

(Cont'd)

e) Remove the piston rod (7) together with the compression spring (8) and the piston (9).

f) Remove the locking washers (10) and disassemble the piston (9) from the piston rod (7).

g) Check the O-ring (11), the piston seal (12) the rod seal (13) and the wear ring (14). Change if necessary.

h) Lubricate the threads of the piston rod (7) with silicone grease TP No. 90296-0009, see 10.3-1 Lubricants.

i) Assemble in the reverse order.

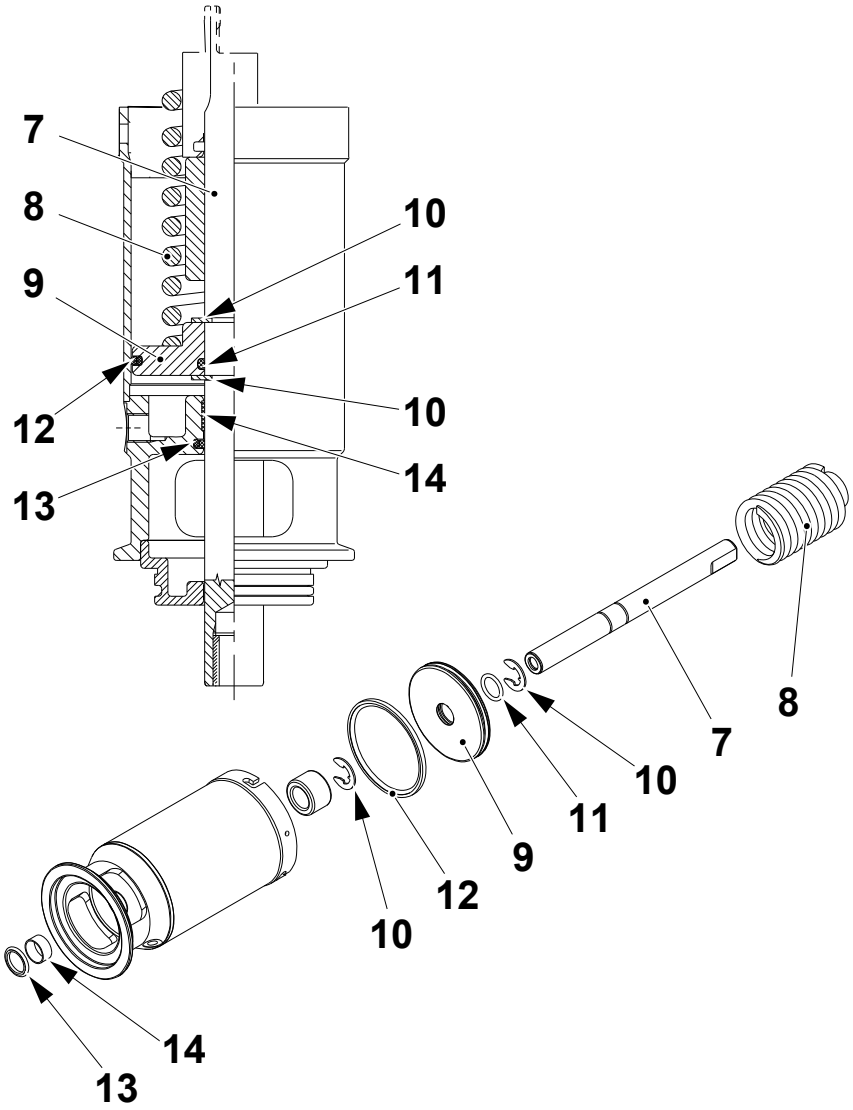

7 Piston rod
8 Compression spring
9 Piston
10 Locking washer
11 O-ring
12 Piston seal
13 Rod seal
14 Wear ring

(Cont'd)

(Cont'd)

B-Cylinder (Sterile Air Valve)

a) Remove the sterile air valve, see 1.5.2-1 Product Valve - Remove Cylinders.

b) Remove the lock screws (1).

c) Loosen the tool dismounting (2) and remove the end section (3).

d) Check the O-ring (4), the wear ring (5) and the rod seal (6). Change if necessary.

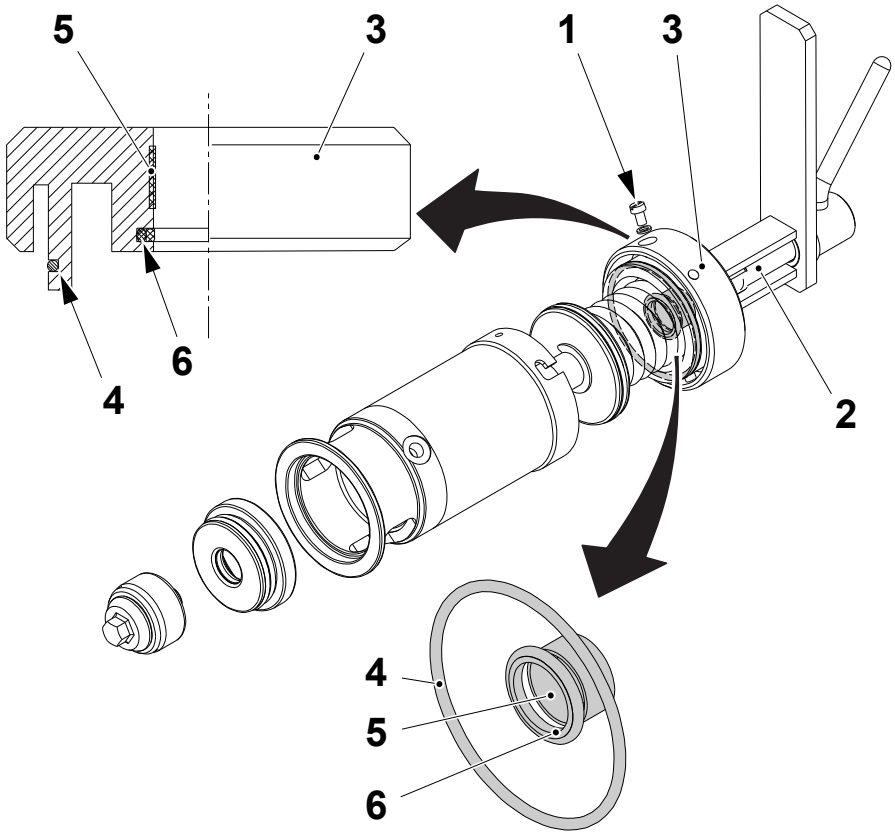

1 Lock screw
2 Tool dismounting
3 End section
4 O-ring
5 Wear ring
6 Rod seal

(Cont'd)

(Cont'd)

e) Remove the piston rod (7) with the compression spring (8) and the piston (9).

f) Remove the locking washers (10) and disassemble the piston (9) from the piston rod (7).

g) Check the O-rings (11), the piston seal (12), the rod seals (13) and the wear ring (14). Change them if necessary.

h) Lubricate the threads of the piston rod (7) with silicone grease TP No. 90296-0009, see 10.3-1 Lubricants.

i) Assemble in the reverse order.

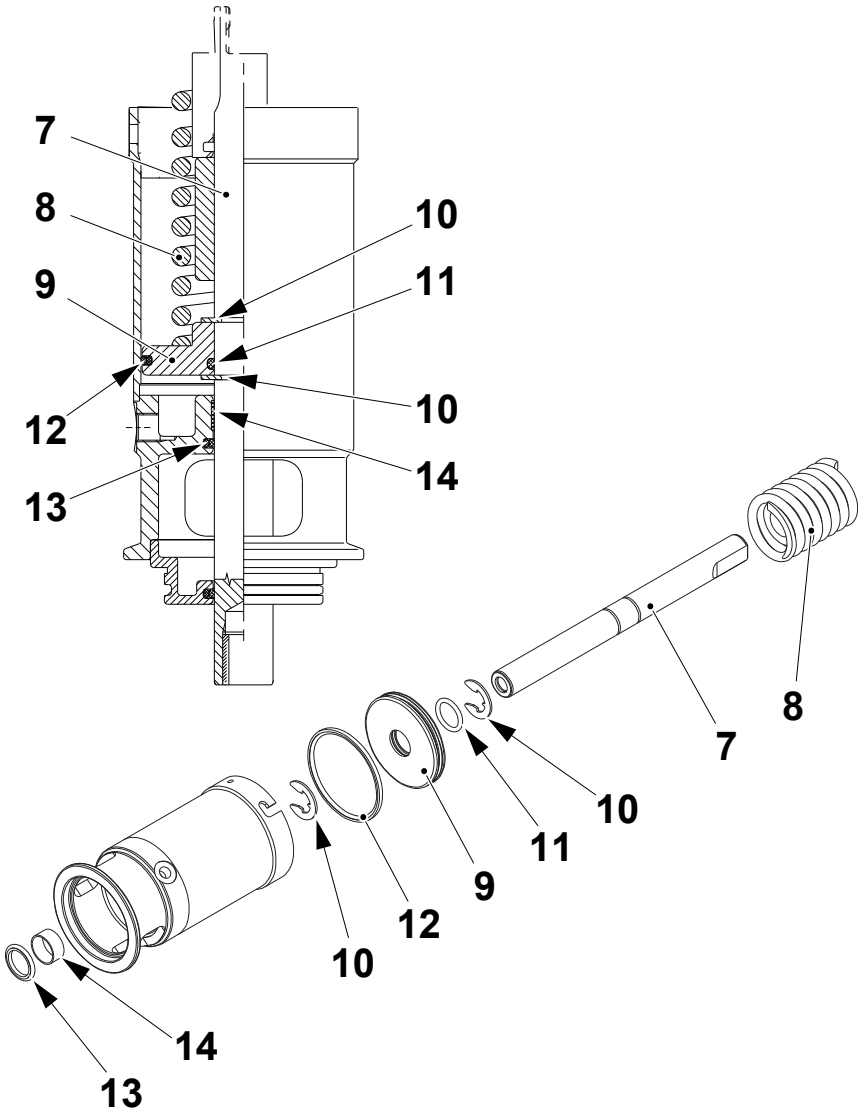

7 Piston rod
8 Compression spring
9 Piston
10 Locking washer
11 O-rings
12 Piston seal
13 Rod seal
14 Wear ring

(Cont'd)

(Cont'd)

C-Cylinder (Steam Valve)

a) Remove the steam valve, see 1.5.2-2 Product Valve - Change Seals and Membranes.

b) Remove the lock screws (1).

c) Loosen the tool dismounting (2) and remove the end section (3).

d) Check the O-ring (4), the wear ring (5), and the rod seal (6). Change if necessary.

e) Remove the cylindrical pin (7), the washer (8) and the compression spring (9).

f) Remove the sealing washer (10).

g) Check the rod seal (11). Change if necessary.

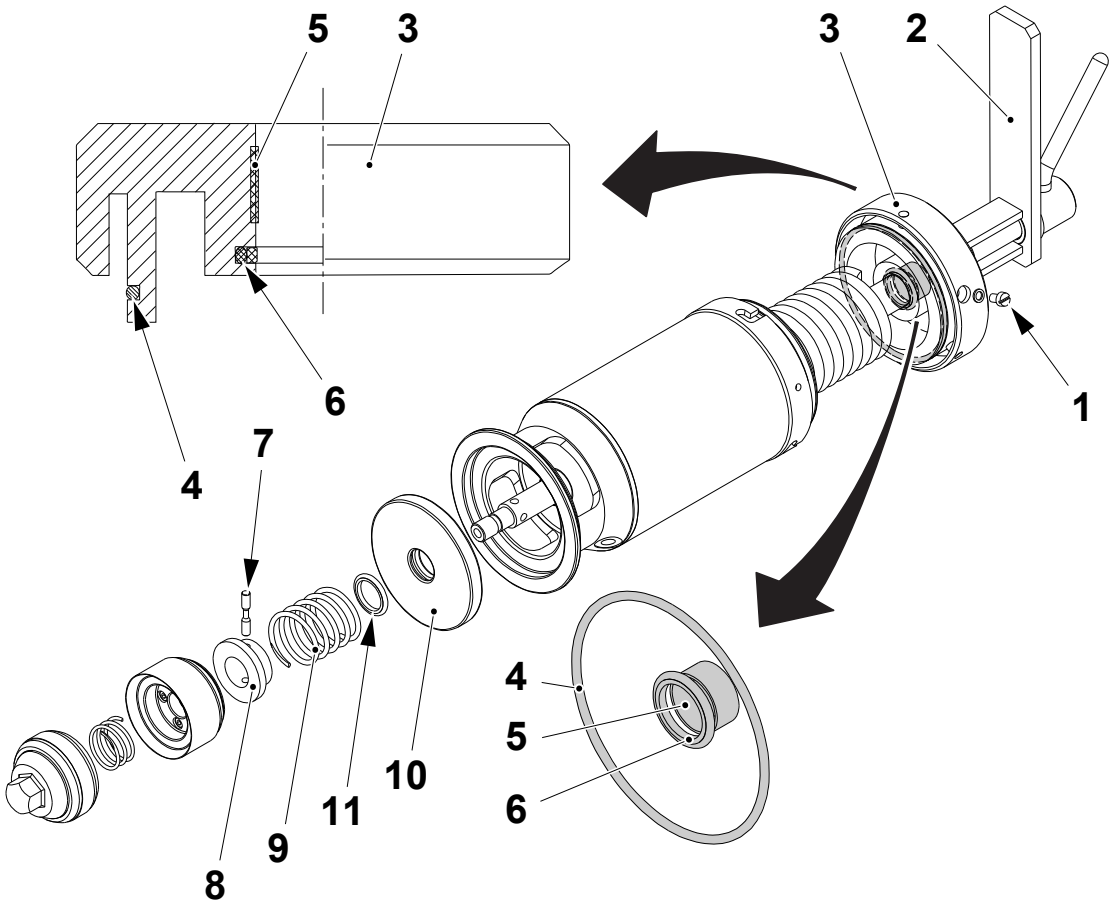

1 Lock screw
2 Tool dismounting
3 End section
4 O-ring
5 Wear ring
6 Rod seal
7 Cylindrical pin
8 Washer
9 Compression spring
10 Sealing washer
11 Rod seal

(Cont'd)

(Cont'd)

h) Remove the piston rod (12) with the compression spring (13) and the piston (14).

i) Remove the locking washers (15) and remove the piston (14) from the piston rod (12).

j) Check the O-rings (16), the piston seal (17), the rod seals (18) and the wear ring (19). Change them if necessary.

k) Lubricate the threads of the piston rod with silicone grease TP No. 90296-0009, see 10.3-1 Lubricants.

l) Assemble in the reverse order.

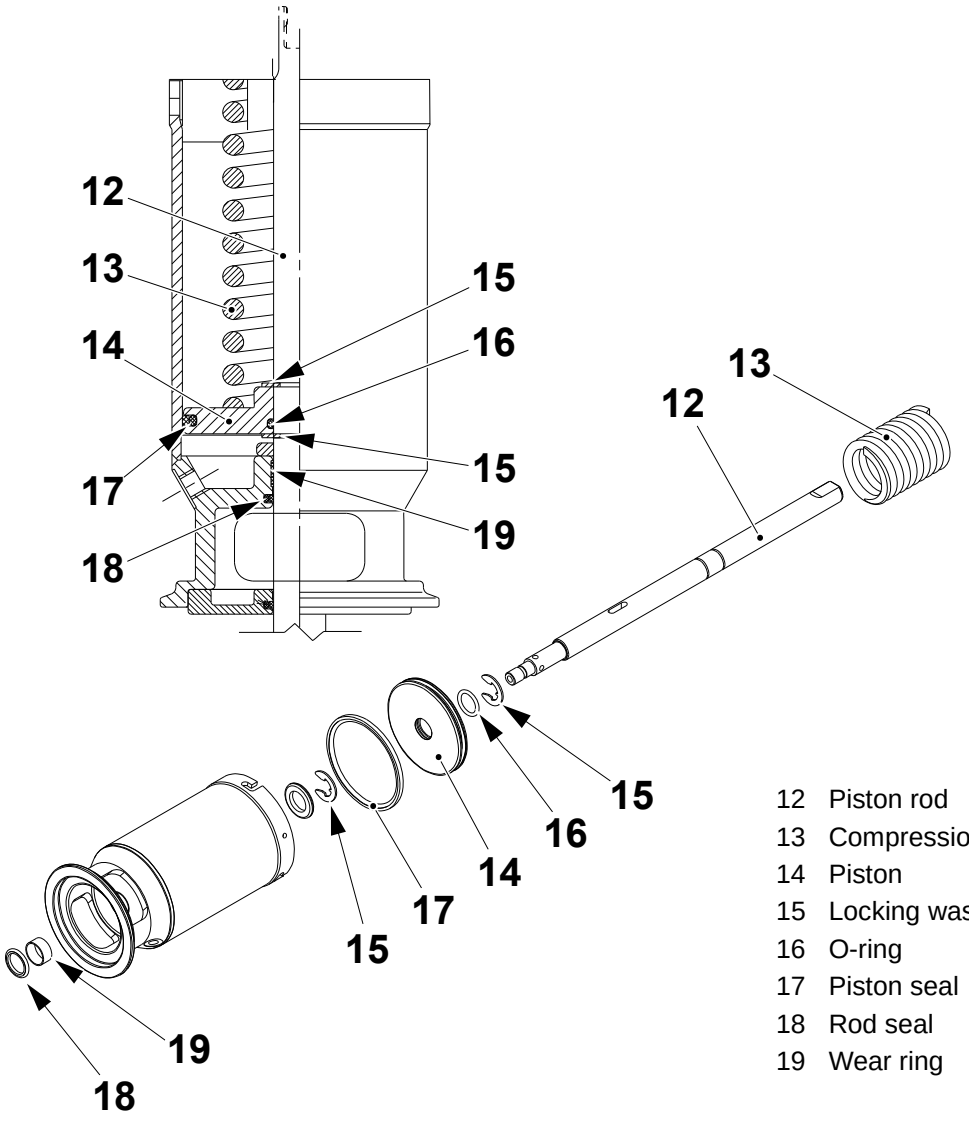

12 Piston rod
13 Compression spring
14 Piston
15 Locking washer
16 O-ring
17 Piston seal
18 Rod seal
19 Wear ring

1.5.2-4 Product Valve - Set Proximity Switches

Machine Status	Mains Power ON Air OFF Steam ON Water OFF
SPC Reference	1558494-0200

a) Set the position of the proximity switches (1) so that they are activated when the cylinder sleeve (3) is in its highest position.

b) Adjust by moving either the proximity switch (1) or the bracket (2).

c) Set the distance **A** between the proximity switch (1) and the cylinder sleeve (3).

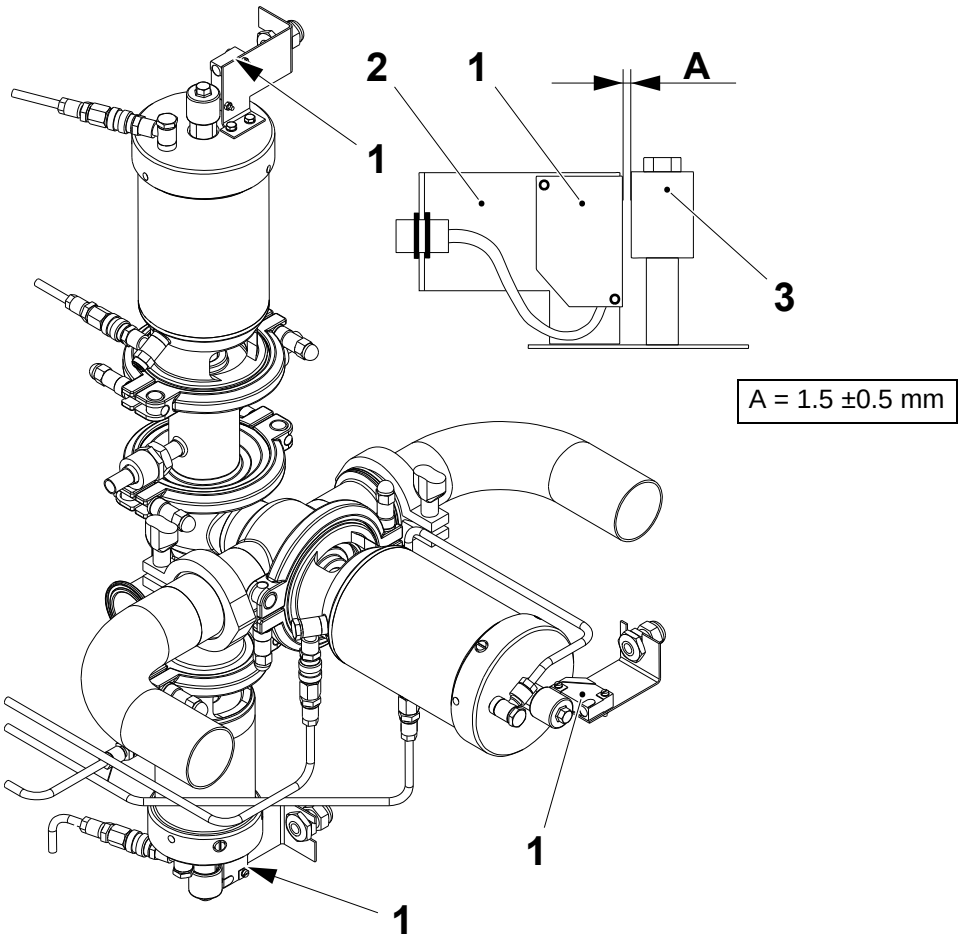

1 Proximity switch
2 Bracket
3 Cylinder sleeve

1.5.2-5 Product Valve - Empty Tube

Machine Status	PRODUCTION
SPC Reference	1558494-0200

If necessary, empty the tube by closing the A-valve in order to run the machine without product. Proceed as follows:

a) Touch the MAINTENANCE CONTROL button (1) and login, see 9.6.3-2 HMI - User Management Log On.

b) Touch the FILLING SYSTEM button (2).

c) Touch the EMPTY TUBE icon (3). The START/STOP buttons (4) are displayed.

d) Touch the ON button (4) to start the home position function.

e) Press the EXIT button (5).

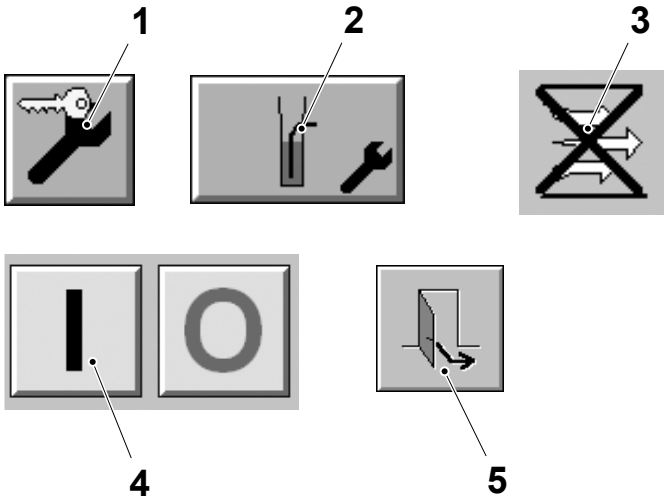

1 Maintenance control button
2 Filling system button
3 Empty tube icon
4 ON button
5 Exit button

1.5.3 Product Lines

1.5.3-1 Product Lines - Overhaul Regulating Valve

Machine Status	Mains Power OFF Air OFF Steam ON Water OFF
SPC Reference	2507060-0300

CAUTION
Risk of minor or moderate injury.
Spring under force.

(Cont'd)

(Cont'd)

a) Remove the connectors (1).
b) Loosen the screws (2) and remove the three electrical wires (3).
c) Disconnect the proximity switch (4).

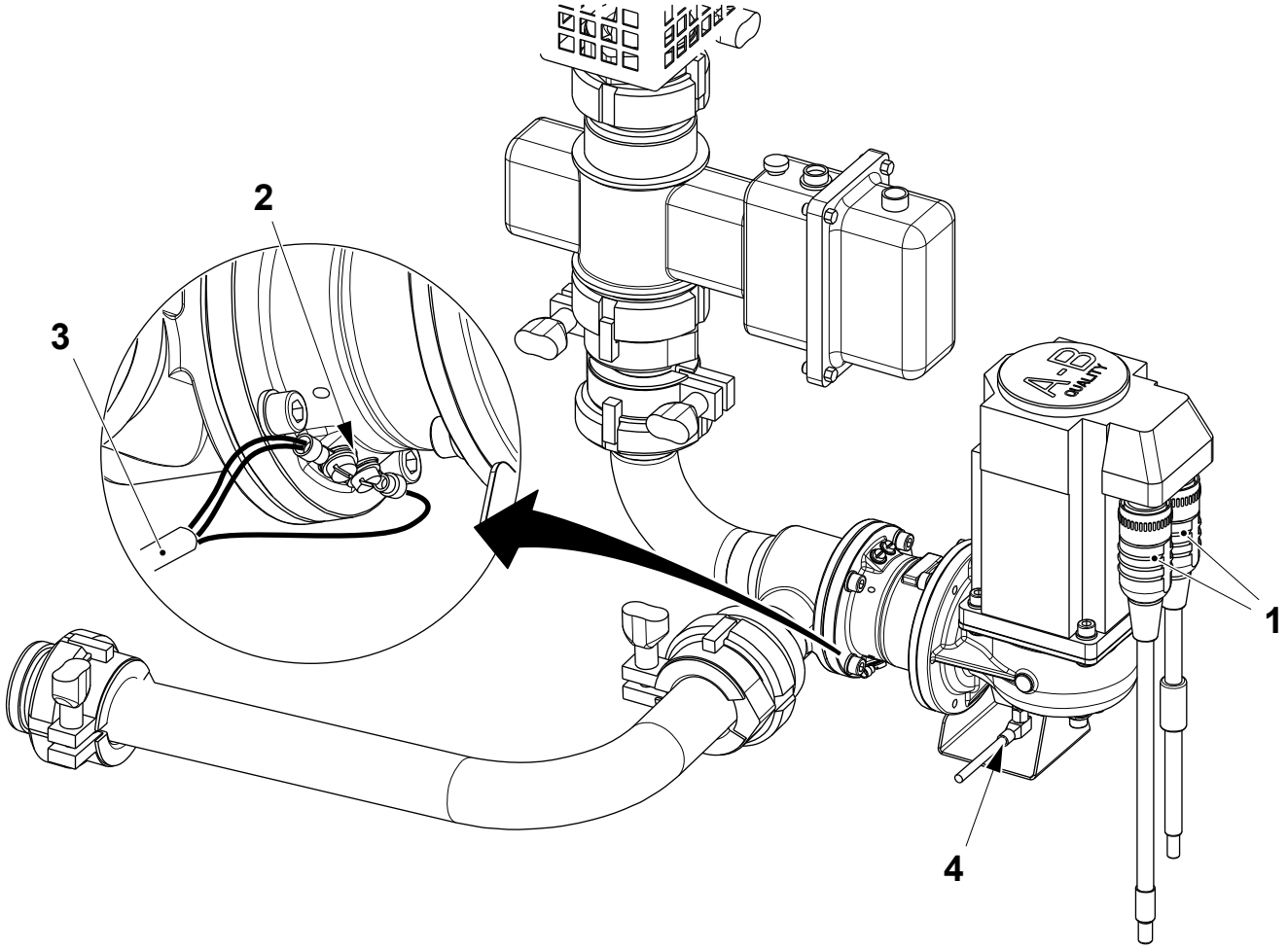

1 Connector
2 Screw
3 Electrical wires
4 Proximity switch

(Cont'd)

(Cont'd)

d) Loosen the clamps (5), the nuts (6) and remove the servo dosing valve (7).

e) Change the gasket (8) if necessary.

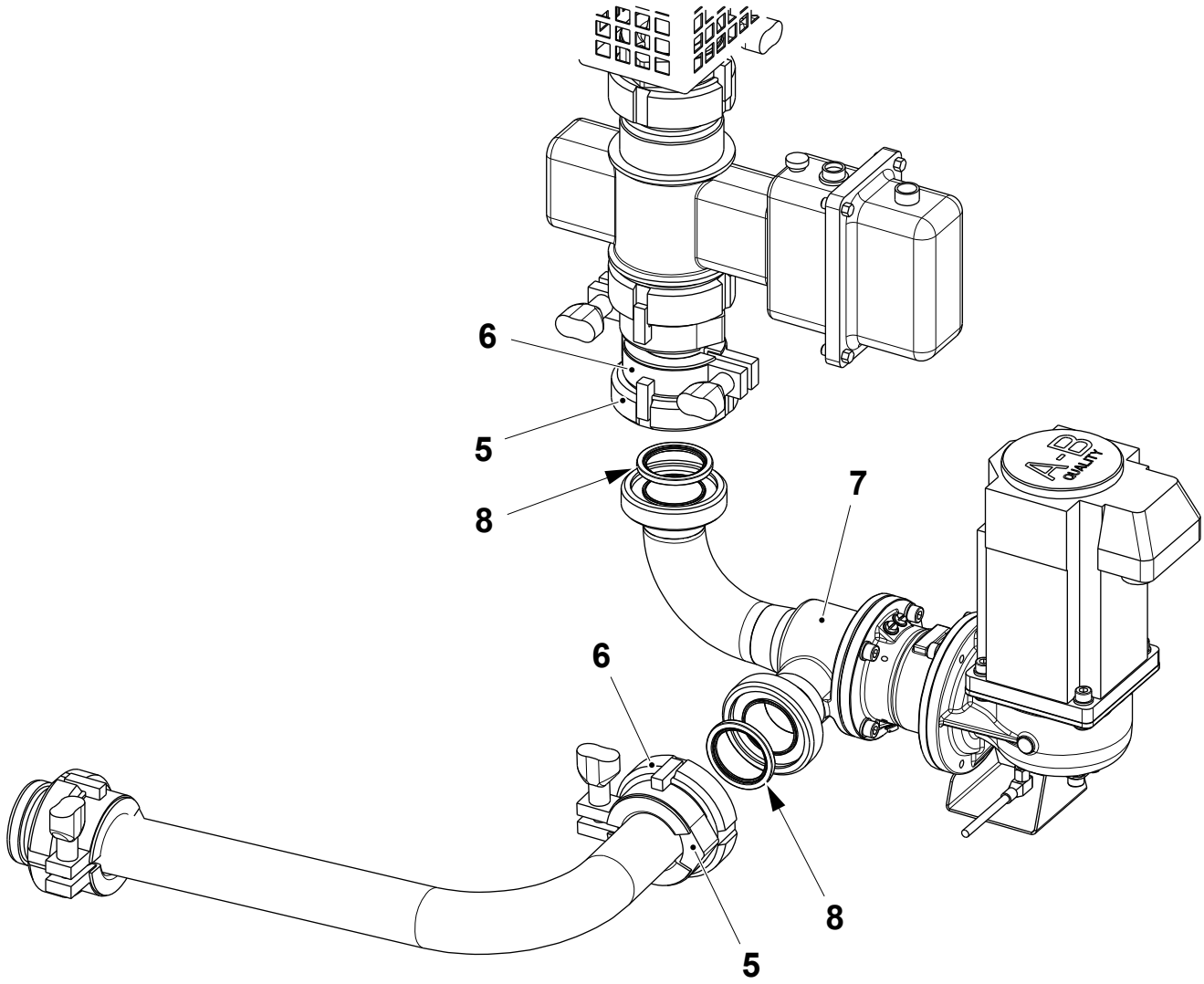

5 Clamp
6 Nut
7 Servo dosing valve
8 Gasket

(Cont'd)

(Cont'd)

f) Remove the regulating sleeve (9) by the screws (10).

g) Remove the servo motor (11) together with its support (12) by the screws (13).

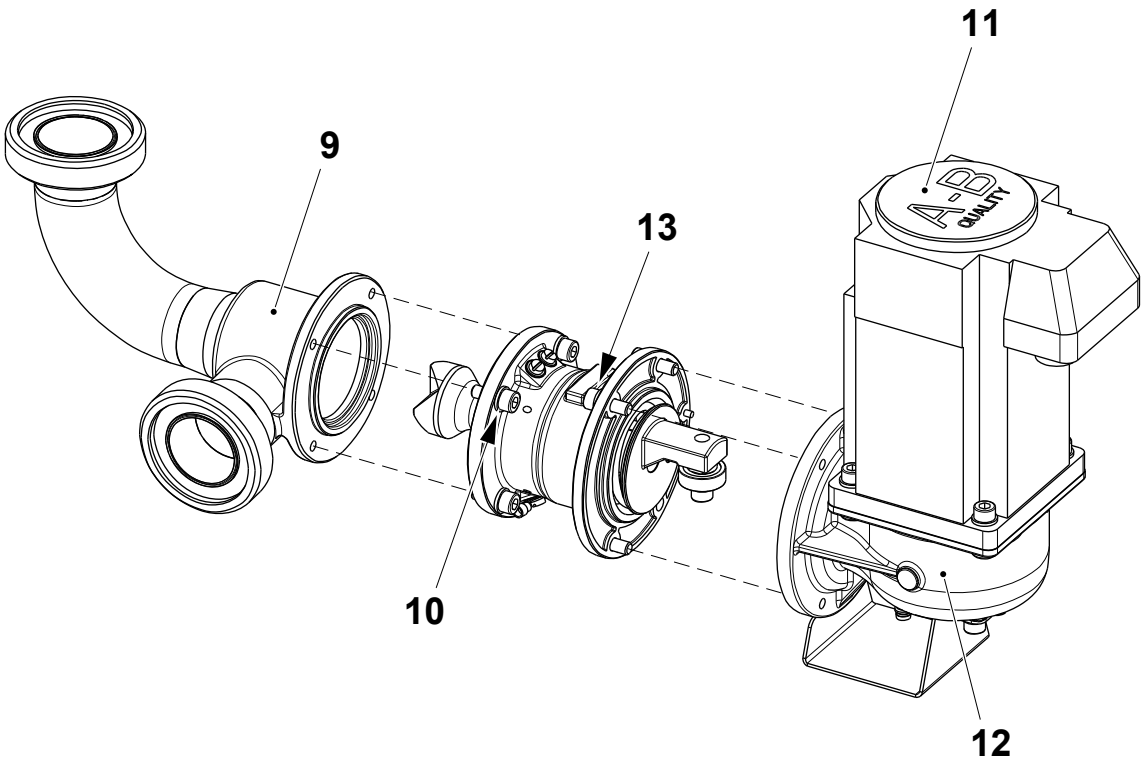

9 Regulating sleeve
10 Screw
11 Servo motor
12 Support
13 Screw

(Cont'd)

(Cont'd)

CAUTION
Risk of damage to the equipment.
Do not use an hammer to extract the cam (17). If it is blocked, remove the screw (15) and use an M8 screw as extractor.

h) Remove the servo motor (11) by the screws (14). Change the servo motor (11) if necessary.

i) Remove the screw (15).

j) Loosen the grub screw (16) and remove the cam (17) and the key (18).

k) Remove the screws (19) and the washer (20) and change the cam (17) if necessary.

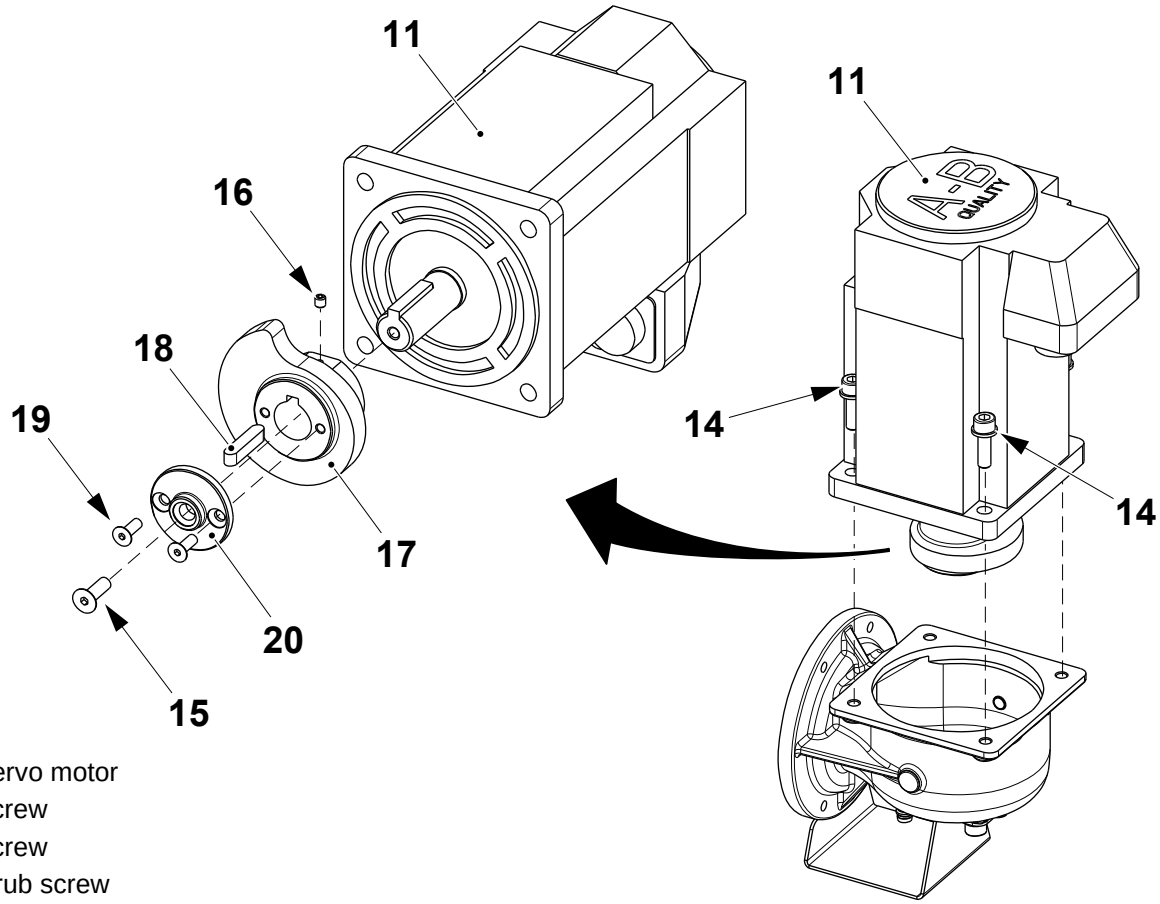

11 Servo motor
14 Screw
15 Screw
16 Grub screw
17 Cam
18 Key
19 Screw
20 Washer

(Cont'd)

(Cont'd)

l) Block the screw (21) by means of an allen key and unscrew the shutter (22).

m) Change the diaphragm (23) if necessary.

n) Change the shaft (24) if damaged or worn out.

o) Remove the spring (25) and the spring cushion (26) out of the housing (27). Change if necessary.

p) If necessary change the ball bearing (28) by means of the screw (29).

q) Assemble in the reverse order.

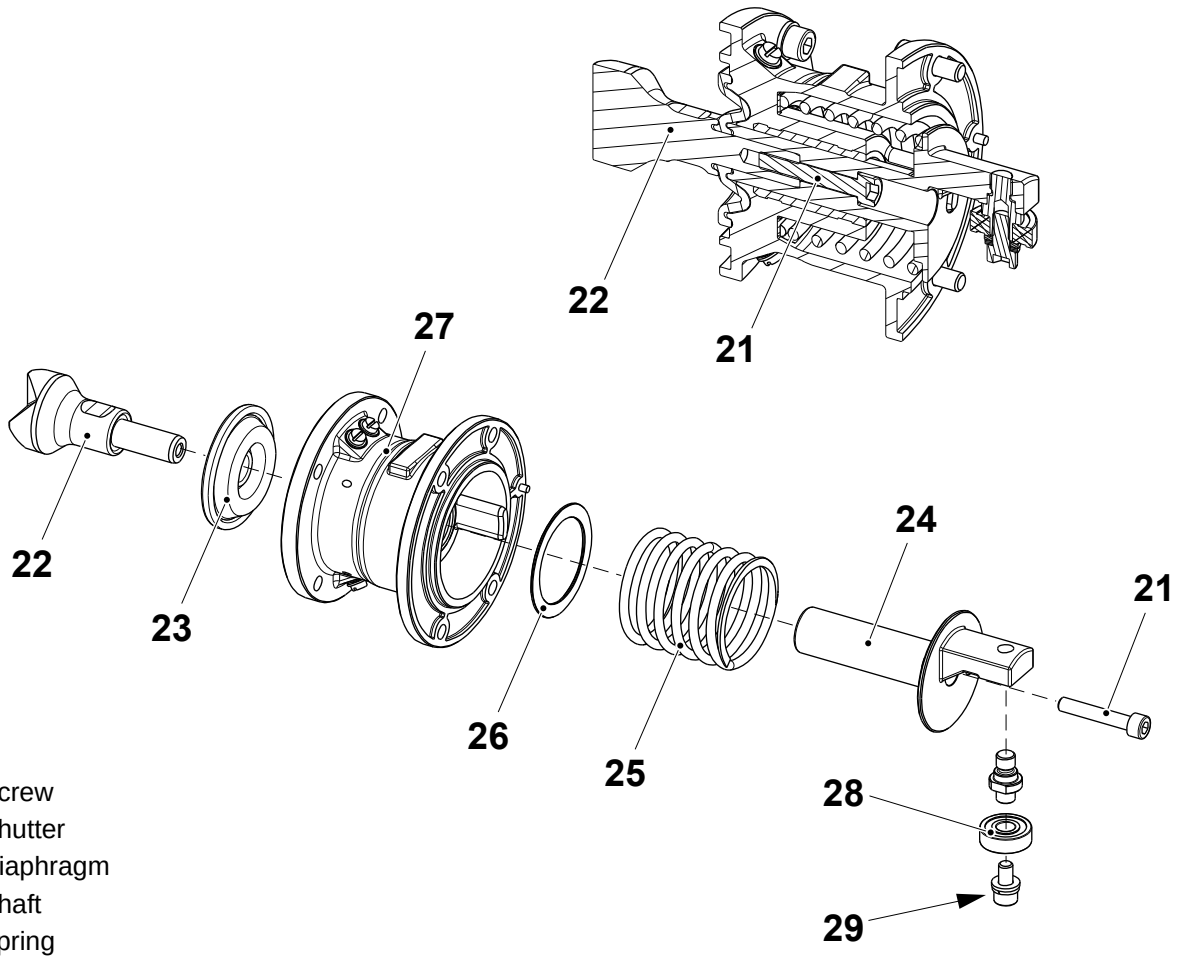

21 Screw
22 Shutter
23 Diaphragm
24 Shaft
25 Spring
26 Spring cushion
27 Housing
28 Ball bearing
29 Screw

1.5.3-2 Product Lines - Set Regulating Valve Proximity Switch

Machine Status	STEP ZERO
SPC Reference	2507060-0300

a) Loosen the nut (1) and screw out the proximity switch (2).
b) Screw in the proximity switch (2) until it just touches the screw (3).
c) Make sure that the LED on the proximity switch (2) lights up.
d) Screw the proximity switch (2) out half a turn and tighten the nut (1).
e) Make sure that the LED is still lit.

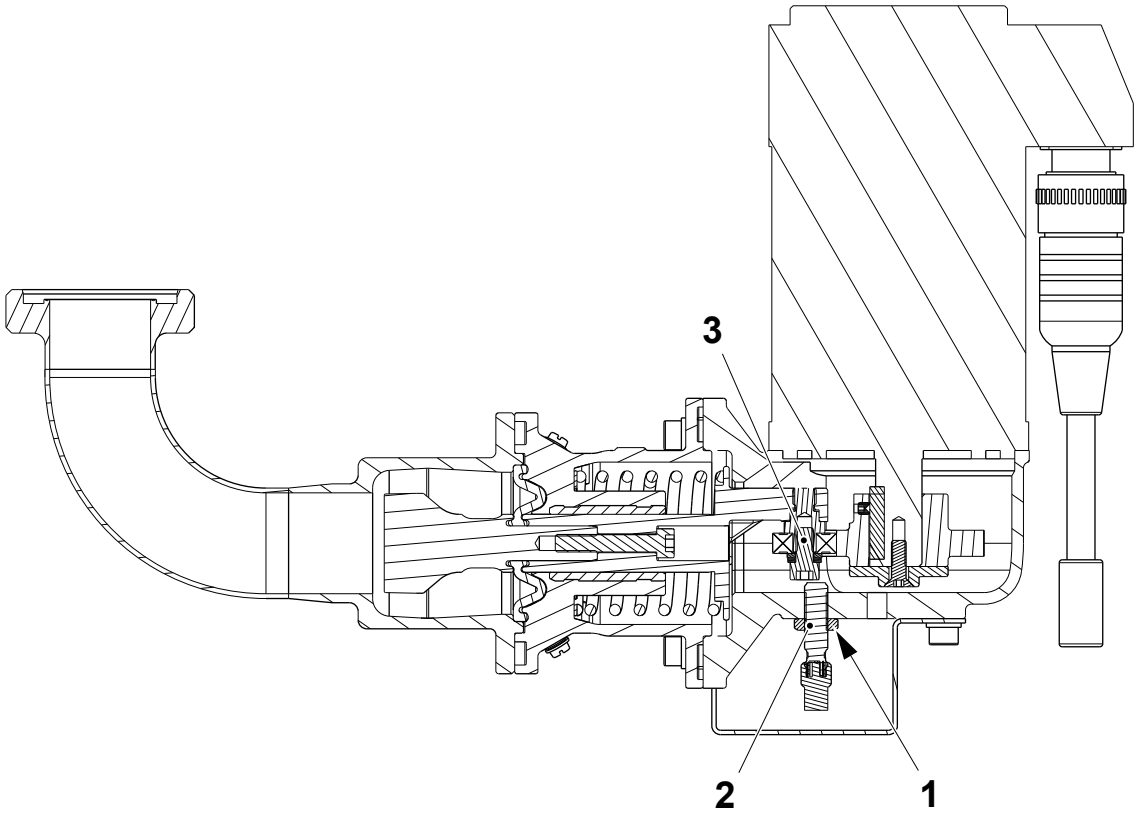

1 Nut
2 Proximity switch
3 Screw

1.5.3-3 Product Lines - Check Flow Meter Gaskets

Machine Status	Mains Power ON Air OFF Steam ON Water OFF
SPC Reference	2507060-0300

a) Loosen the locking rings (1) and unscrew the nuts (2) and remove the flow meter (3).

b) Check the gaskets (4). Change if necessary.

c) Assemble in the reverse order.

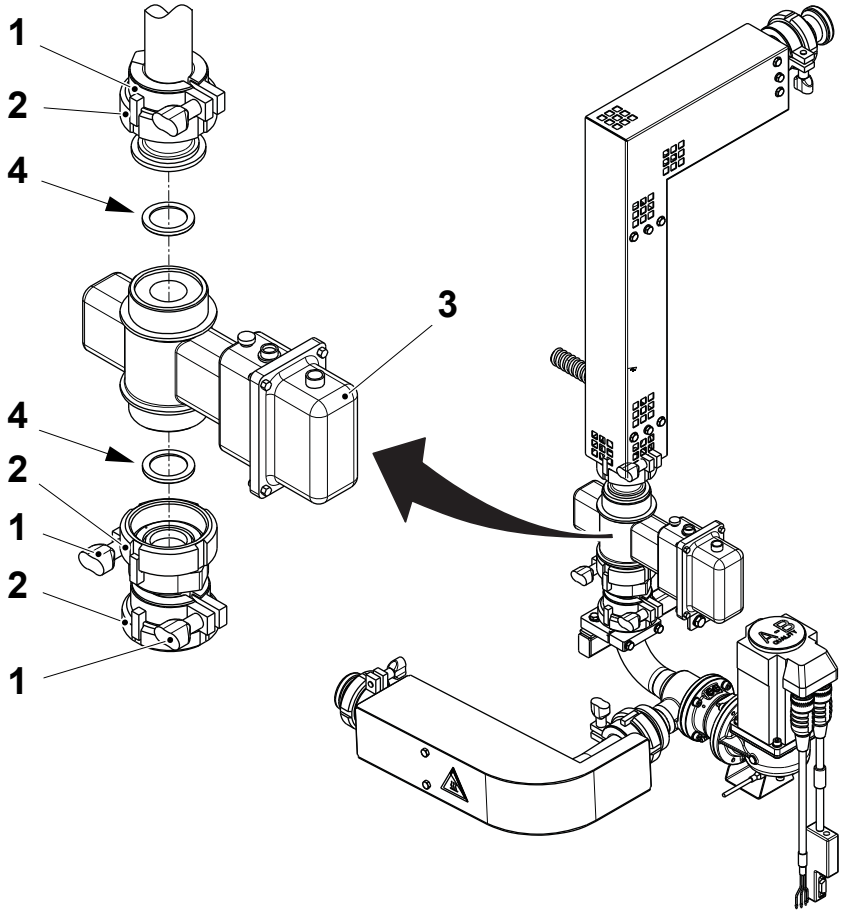

1 Locking ring
2 Nut
3 Flow meter
4 Gasket

1.5.3-4 Product Lines - Change Flow Meter

Machine Status	Mains Power ON Air OFF Steam ON Water OFF
SPC Reference	2507060-0300

a) Disconnect the connectors (1).

b) Loosen the locking rings (2) and the nuts (3) and remove the flow meter (4).

c) Change the gaskets (5).

d) Assemble the new flow meter in the reverse order and connect the connectors (1).

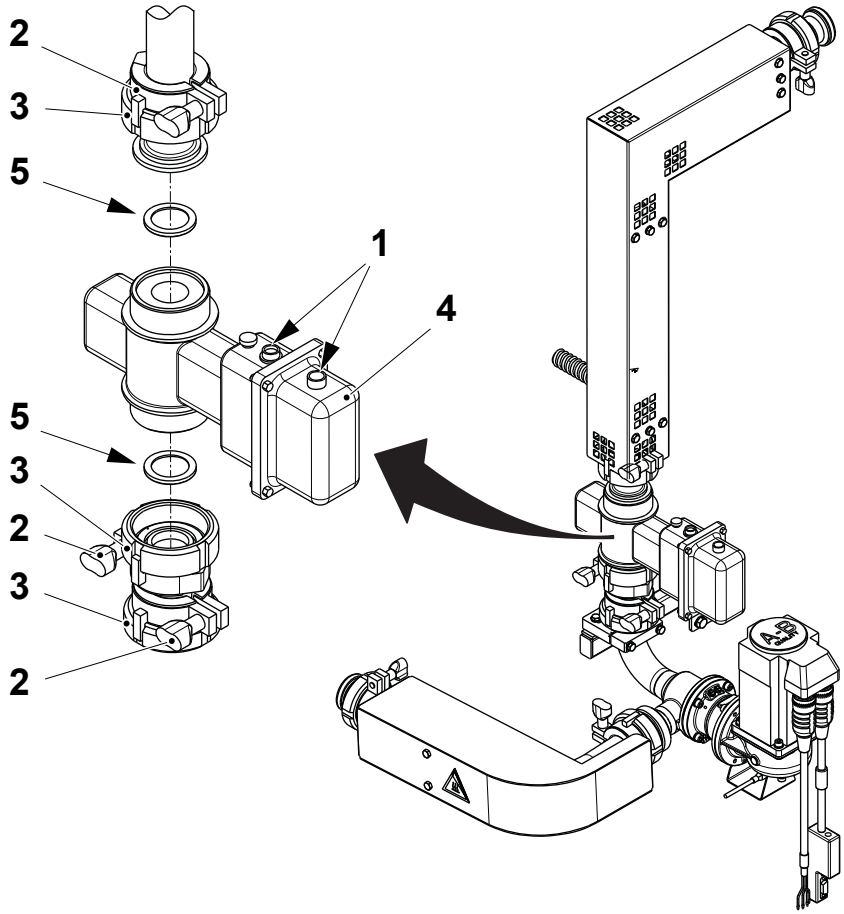

1 Connector
2 Locking ring
3 Nut
4 Flow meter
5 Gasket

(Cont'd)

(Cont'd)

e) Configure the flow meter as follows:
   - locate the front panel of the TMCC2 card A01K5210 (Filling System)
   - press the DOWN button (6) and the ENTER button (7) for at least 5 seconds, until the TMCC2 display (8) shows "TMCC2"
   - press the ENTER button (7), the TMCC2 card display (8) shows "RUN"
   - press the ENTER button (7) again to restart the program which restores the default flow meter configuration.

Note! By default the flow meter can read flows with a minimum conductivity of 30-35 µS/cm. If products with lower conductivity are used, set the EPIPE value to OFF, see 9.8-1 TMCC2 Controller - Description.

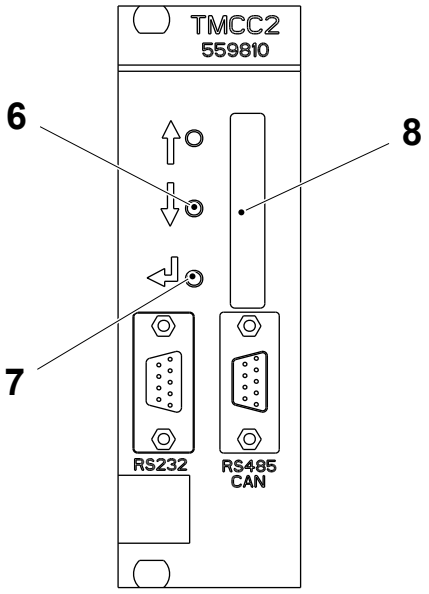

6 Down button
7 Enter button
8 Display

1.5.3-5 Product Lines - Move Regulating Valve

Machine Status	PREPARATION
SPC Reference	2507060-0300

Note! These functions are used only for diagnostics reasons. The regulating valve position is set automatically by the PLC program.

Regulating Valve Home Position

If necessary, set manually the regulating valve home position. Proceed as follows:

a) In step PREPARATION, touch the `MAINTENANCE CONTROL` button (1) and login, see 9.6.3-2 HMI - User Management Log On.

b) Touch the `FILLING SYSTEM` button (2).

c) Touch the `HOME REGULATING VALVE` icon (3). The `START/STOP` buttons (4) are displayed.

d) Touch the `ON` button (4) to start the home position function.

e) Press the `EXIT` button (5).

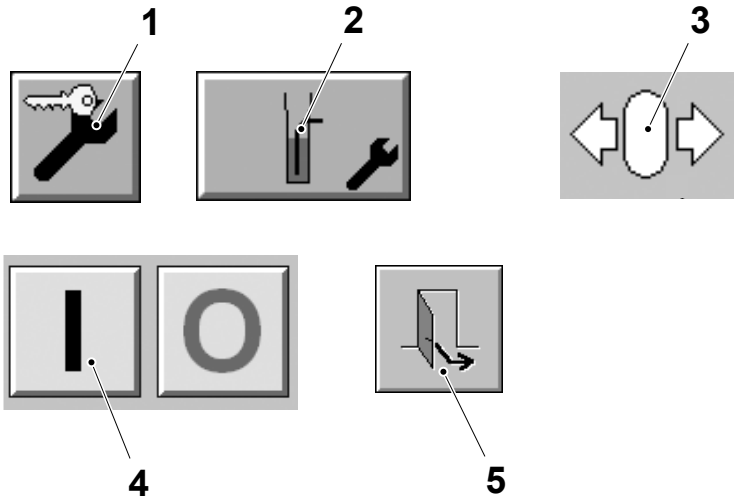

1 Maintenance control button
2 Filling system button
3 Home regulating valve icon
4 ON button
5 Exit button

(Cont'd)

(Cont'd)

Move Regulating Valve

To move the regulating valve in a specified position, proceed as follows:

a) In step PREPARATION, touch the MAINTENANCE CONTROL button (1) and login, see 9.6.3-2 HMI - User Management Log On.

b) Touch the FILLING SYSTEM button (2).

c) Touch the MOVE REGULATING VALVE icon (3).

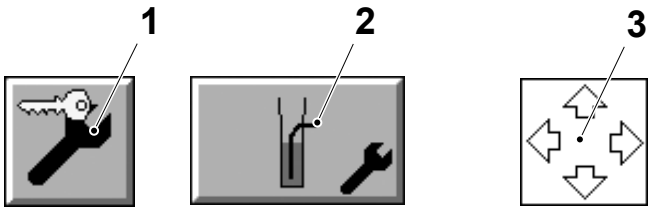

1 Maintenance control button
2 Sterile system button
3 Move regulating valve icon

(Cont'd)

(Cont'd)

d) Set the target position by the ARROW buttons or the KEYBOARD button (4).

e) Touch the ON button (5) to start the function.

f) Touch the EXIT button (6).

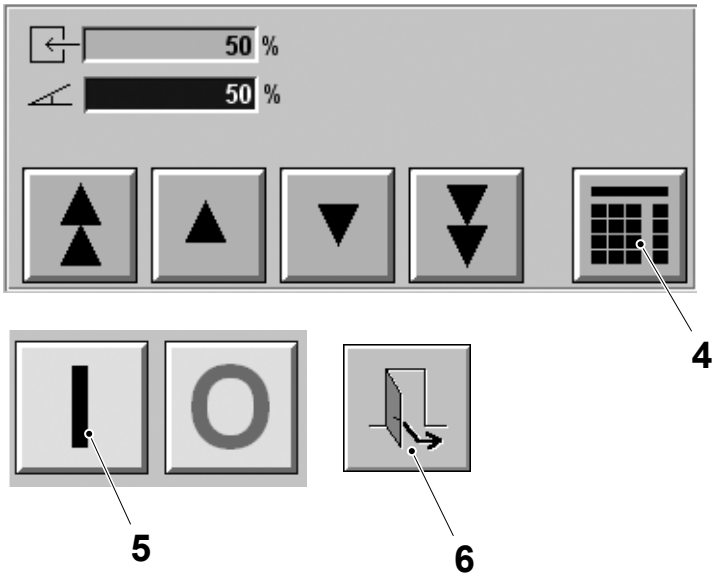

4 Keyboard button
5 ON button
6 Exit button

1.5.4 Steam System

1.5.4-1 Steam System - Clean Steam Trap

Machine Status	Mains Power OFF Air OFF Steam OFF Water OFF
Consumables	Lubricant TP No. 90296-57
SPC Reference	2545651-0300

WARNING

Risk of personal injury.

Turn off the steam and the compressed air. Make sure there is no product, steam or cleaning liquid on the line.

WARNING

Burn hazard.

The steam system and adjacent components may be hot. If necessary wear personal protective equipment.

CAUTION

Risk of serious production fault.

Never close the steam supply valve to the machine until the product line is idle and empty from product. The steam in the product valve forms an aseptic barrier between the machine and the product supply line. Closing the steam valve will disrupt this barrier.

(Cont'd)

(Cont'd)

a) Remove the steam trap (1) from the line.

b) Unscrew the cap (2).

c) Remove the spacer (3), the spring (4) and the strainer (5). Clean the parts if necessary.

d) Assemble in the reverse order.

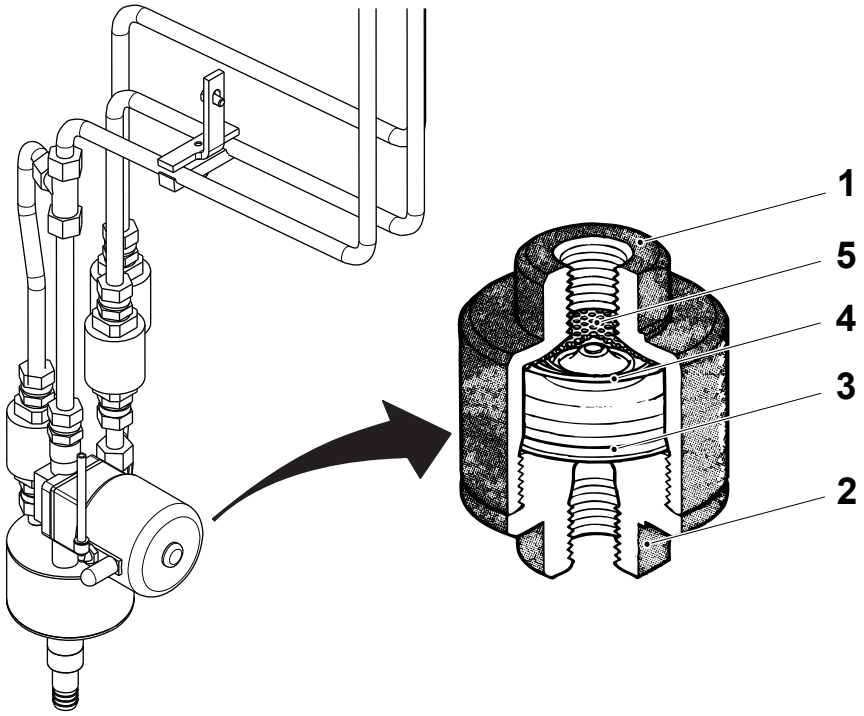

1 Steam trap
2 Cap
3 Spacer
4 Spring
5 Strainer

1.5.4-2 Steam System - Clean Filter

Machine Status	Mains Power OFF Air OFF Steam OFF Water OFF
Special Equipment	Tank 50 litres Filter Pall Profile 10µm Coalecher Element Pall SU range Thermometer Pressure Gauge
Consumables	Nitric Acid 14 - 15% (w/w)
SPC Reference	2545651-0300

WARNING
Risk of personal injury.
Turn off the steam and the compressed air. Make sure there is no product, steam or cleaning liquid in the line.

WARNING
Burn hazard.
The steam system and adjacent components may be hot. If necessary wear personal protective equipment.

CAUTION
Risk of serious production fault.
Never close the steam supply valve to the machine until the product line is idle and empty from product. The steam in the product valve forms an aseptic barrier between the machine and the product supply line. Closing the steam valve will disrupt this barrier.

(Cont'd)

(Cont'd)

Remove the O-ring (arrow) from the filter cartridge.

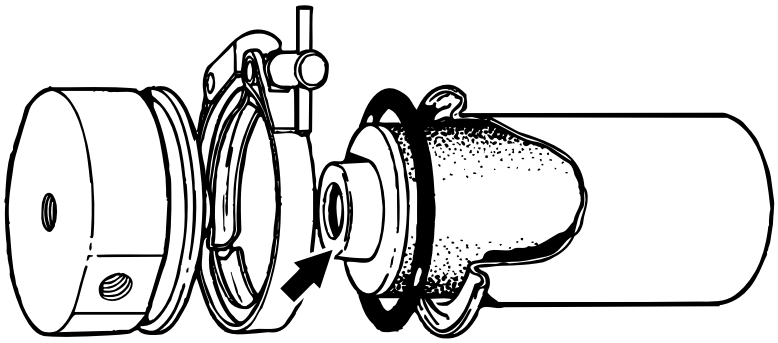

General Information

To obtain optimum performance of the filter cartridge:

- Clean the filter cartridge thoroughly before reusing (or return to Pall for cleaning and testing)
- First remove the O-ring, then label and store used cartridges.

Clean with distilled **and** filtered water.

Rinse using a 50 litre tank designed to avoid “dead spaces”. Filter the incoming water (renewal rate 5 l/min.) with a 10µm Pall Profile.

Agitate the contents of the tank with compressed air, filtered through a Pall SU Coalecher element.

(Cont'd)

(Cont'd)

Cleaning with Nitric Acid

WARNING

Risk of personal injury.

Follow the Safety Precautions. The cleaning procedure must not contravene any legal or local safety regulations.

Note! If the cartridge is highly contaminated or if the recommended temperature cannot be used, contact Pall Scientific & Laboratory Services for advice.

a) Immerse the filter cartridge in 14 - 15% (w/w) nitric acid at 60 - 70°C for 10 - 20 minutes.

b) Rinse the cartridge in water for at **least** 10 minutes.

c) Empty the tank and refill with water. Check the pH level of the tank contents is 6 - 8.

d) Rinse the cartridge again for at least two hours, or until the pH level of the tank contents is the same as that of the incoming water.

e) Flush the cartridge in the reverse direction with water. If the water from the cartridge is discoloured or is visibly contaminated, repeat steps a) and b).

(Cont'd)

(Cont'd)

Reverse Bubble Point Testing

Note! Do this **immediately** after the cleaning procedure.

a) Thoroughly soak the filter cartridge in water.

b) Plug one end of the cartridge and connect the other end to a compressed air line. The pressure should be 0 - 0.13 bar.

c) Submerge the filter cartridge in water. Keep the filter approximately 125 mm below the surface.

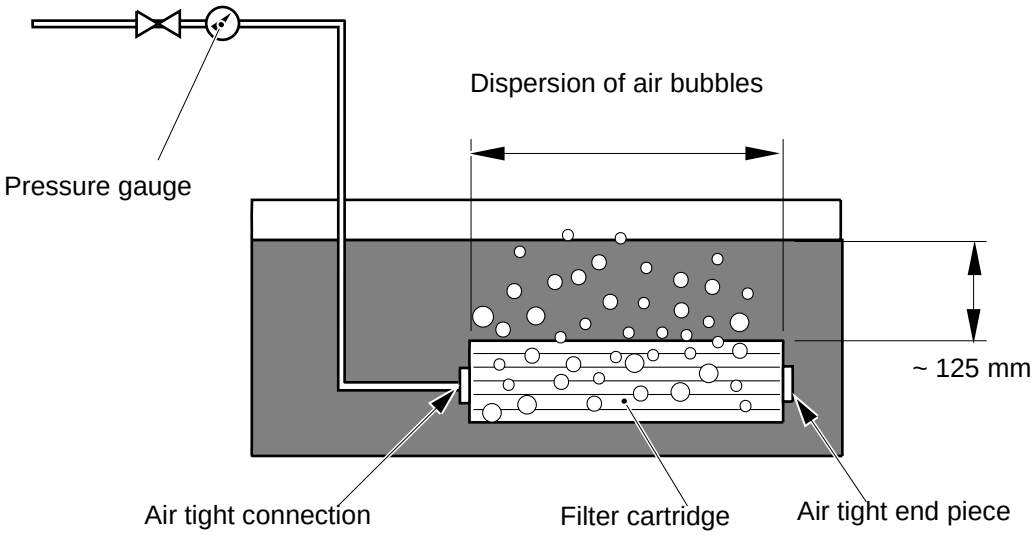

d) Gradually increase the air pressure while slowly rotating the cartridge, until air bubbles emerge. Record the air pressure at this point.

e) Carefully inspect the filter cartridge to ensure the air bubbles emerge at a similar rate from the entire cartridge.

f) Lower the pressure to half the recorded pressure. If air bubbles emerge from an isolated area of the cartridge at this pressure, replace the filter.

(Cont'd)

(Cont'd)

Drying Procedure

Dry the filter at 105 - 120°C for 1 - 2 hours.

After drying, visually check the filter cartridge for damage or corrosion. Change the cartridge if necessary.

Fit a new O-ring before fitting the filter cartridge.

1.5.4-3 Steam System - Check Membrane

Machine Status	Mains Power OFF Air OFF Steam OFF Water OFF
SPC Reference	2545651-0300

WARNING

Burn hazard.

The diaphragm valve and adjacent components may be hot. Wear heat-resistant protective gloves.

CAUTION

Risk of serious production fault.

Never close the steam supply valve to the machine until the product line is idle and empty from product. The steam in the product valve forms an aseptic barrier between the machine and the product supply line. Closing the steam valve will disrupt this barrier.

(Cont'd)

(Cont'd)

a) Remove the screws (1) and the diaphragm valve (2).

b) Remove and check the membrane (3) for wear or damage. Change if necessary.

c) Assemble in the reverse order.

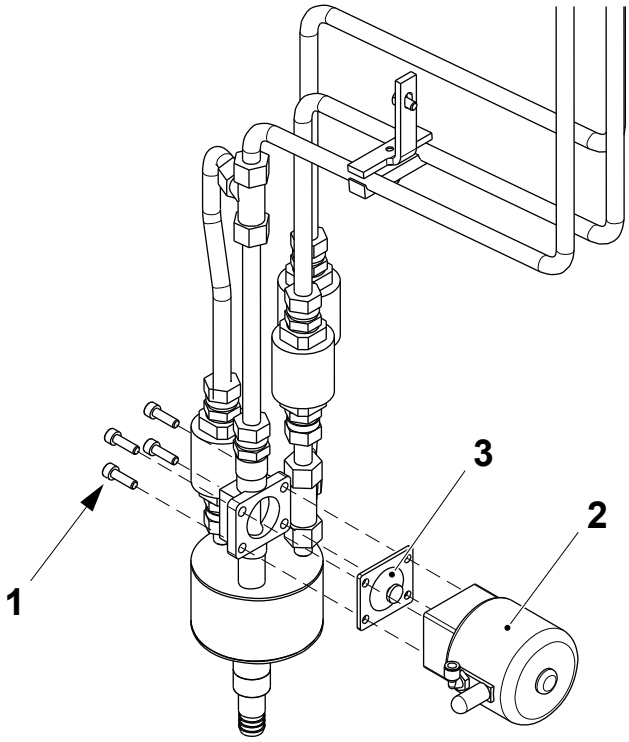

1 Screw
2 Diaphragm valve
3 Membrane

1.5.4-4 Steam System - Change Pressure Regulator

Machine Status	Mains Power OFF Air OFF Steam OFF Water OFF
SPC Reference	2545651-0300

WARNING

Burn hazard.

The pressure regulator and adjacent components may be hot. Wear heat-resistant protective gloves.

CAUTION

Risk of serious production fault.

Never close the steam supply valve to the machine until the product line is idle and empty from product. The steam in the product valve forms an aseptic barrier between the machine and the product supply line. Closing the steam valve will disrupt this barrier.

(Cont'd)

(Cont'd)

a) Close and padlock the steam supply valve (1) and turn OFF the air to the pressure regulator (2).

b) Remove the connection (3) and the couplings (4).

c) Change the pressure regulator (2).

d) Assemble in the reverse order.

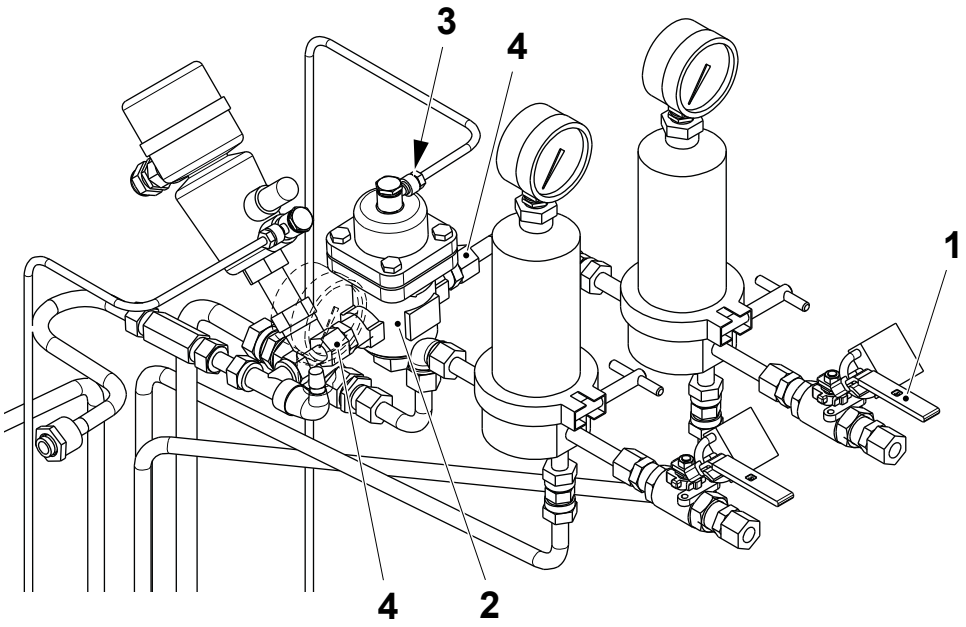

1 Steam supply valve
2 Pressure regulator
3 Connection
4 Coupling

1.5.4-5 Steam System - Set Pressure Regulator

Machine Status	Mains Power ON Air ON Steam ON Water ON
SPC Reference	2545651-0300

Note! Valid for machines with T-order: 21208/00001 to 21208/00010.

WARNING

Burn hazard.

Forcing the valves open allows hot steam to exit from the machine body. Keep the doors closed.

(Cont'd)

(Cont'd)

a) Open the steam supply valve (1).

b) Push the button (2) to force open the TCSB valve U70K1500 (3).

c) Make sure the steam flush valve U70K1430 (4) is closed.

d) Set the steam pressure gauge (5) to 1.7 bar by the regulator (6): this corresponds to a temperature of 130-131º C in the C-Valve.

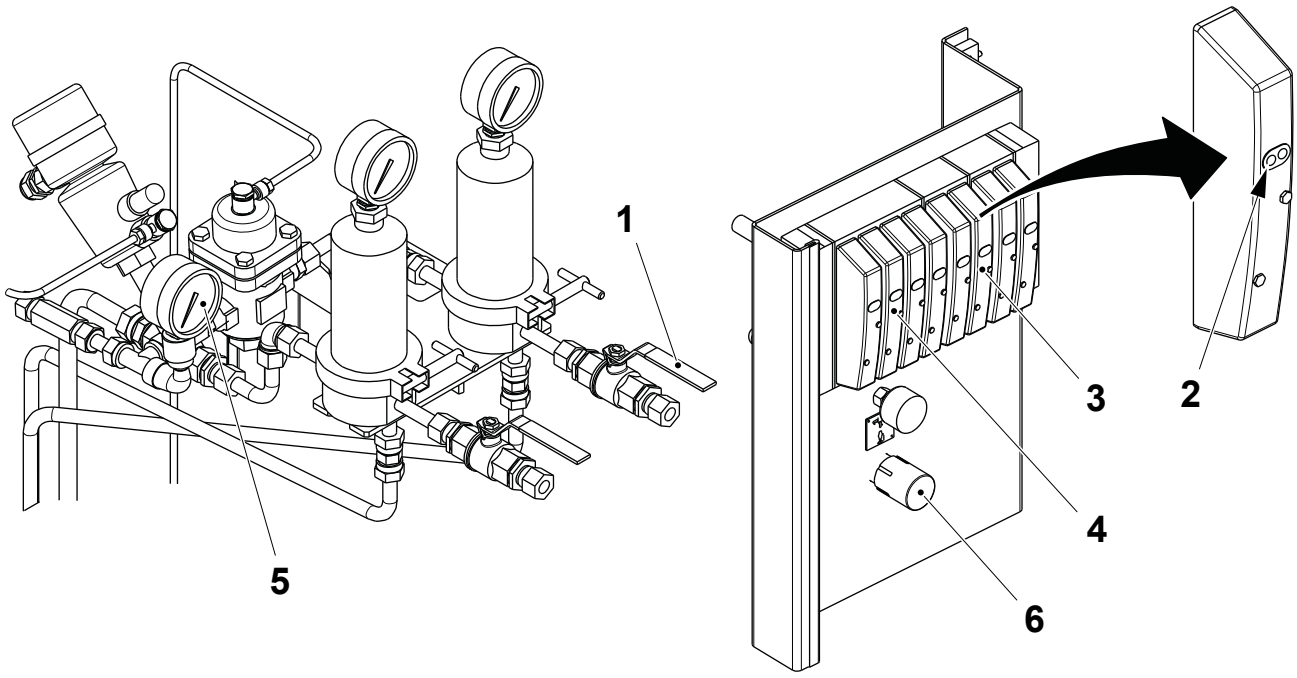

1 Steam supply valve
2 Button
3 TCSB valve (U70K1500)
4 Steam flush valve (U70K1430)
5 Pressure gauge
6 Regulator

(Cont'd)

(Cont'd)

Note! Valid for machines with T-order: 21208/00011 and above.

WARNING

Burn hazard.

Forcing the valves open allows hot steam to exit from the machine body. Keep the doors closed.

a) Open the steam supply valve (1).

b) Push the button (2) to force open the TCSB valve U70K1500 (3).

c) Make sure the steam flush valve U70K1430 (4) is closed.

d) Set the steam pressure gauge (5) to 1.7 bar by the regulator (6): this corresponds to a temperature of 130-131º C in the C-Valve.

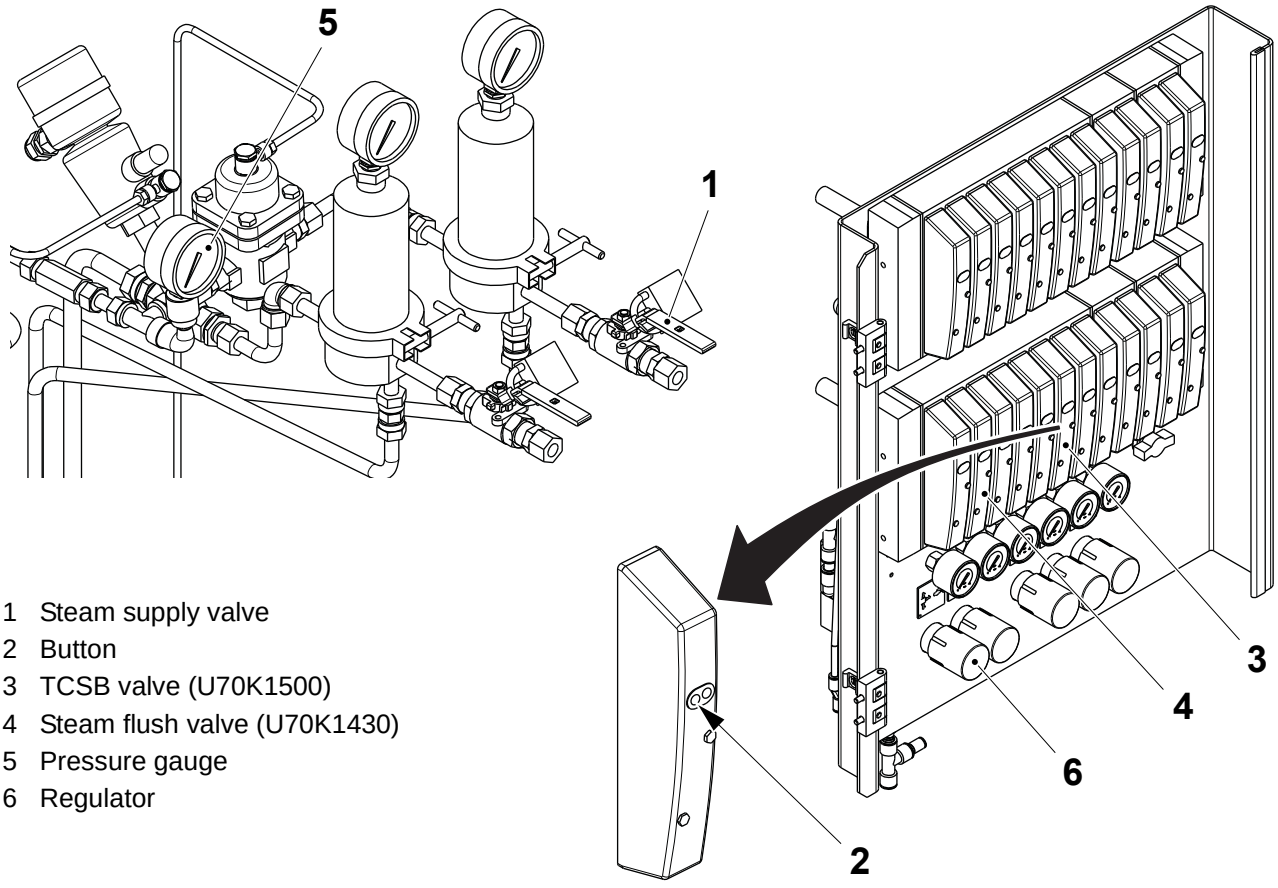

1 Steam supply valve
2 Button
3 TCSB valve (U70K1500)
4 Steam flush valve (U70K1430)
5 Pressure gauge
6 Regulator

1.5.4-6 Steam System - Set Steam Regulator

Machine Status	CLEANING CIP
SPC Reference	2545651-0300

WARNING

Burn hazard.

The steam regulator and adjacent components may be hot. Wear heat-resistant protective gloves.

a) Open the steam supply valve (1) for the cleaning system.

b) Fully open the steam pressure regulator (2).

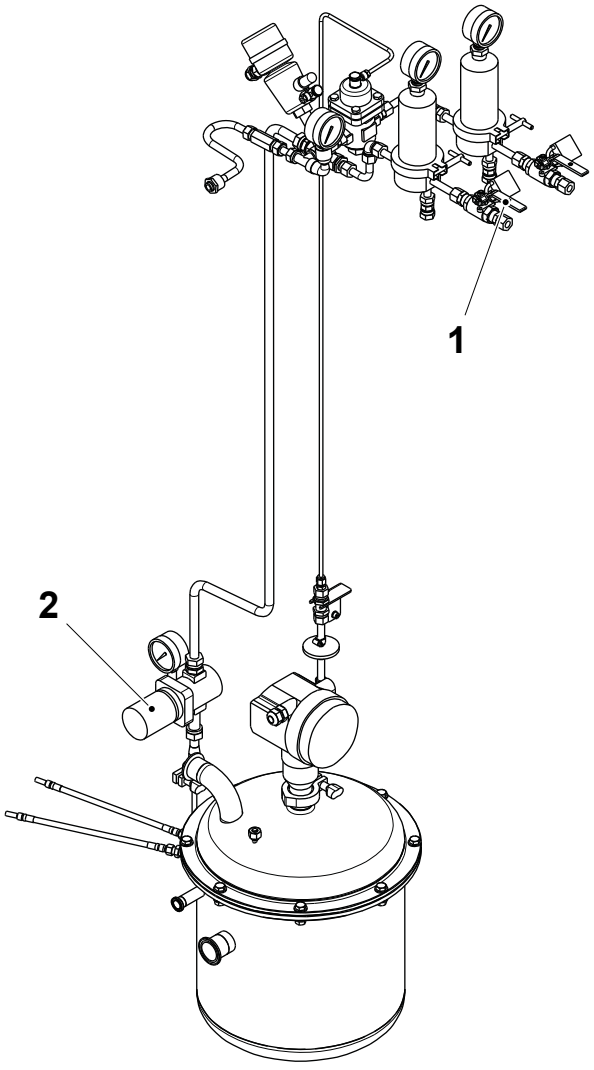

1 Steam supply valve
2 Pressure regulator

1.6 Cleaning System

SPC Reference	2512910-0300

1.6.1 Flow Switch

1.6.1-1 Flow Switch - Check Gaskets

Machine Status	Mains Power OFF Air OFF Steam ON Water OFF
SPC Reference	2539452-0300

Note! Only valid if the optional equipment automatic cleaning valve is not fitted.

Remove the clamp rings (1) and the swing pipe (2). Check the gaskets (3) for wear or damage. If necessary, change the gaskets (3).

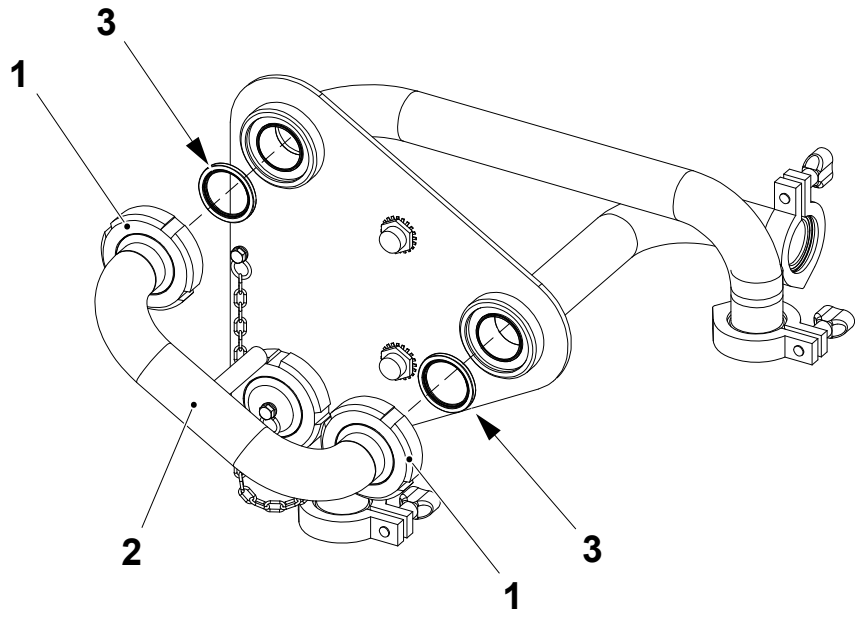

1 Clamp ring
2 Swing pipe
3 Gasket

1.6.1-2 Flow Switch - Set

Machine Status	Mains Power OFF Air OFF Steam ON Water OFF
SPC Reference	2539452-0300

a) Position the swing pipe (1) in the PRODUCTION position as shown below.

b) Set the distance **A** between the boss (2) and the proximity switch (3).

c) Remove the plug (4) and move the swing pipe (1) to the CLEANING position.

d) Set the distance **A** between the boss (2) and the proximity switch (5).

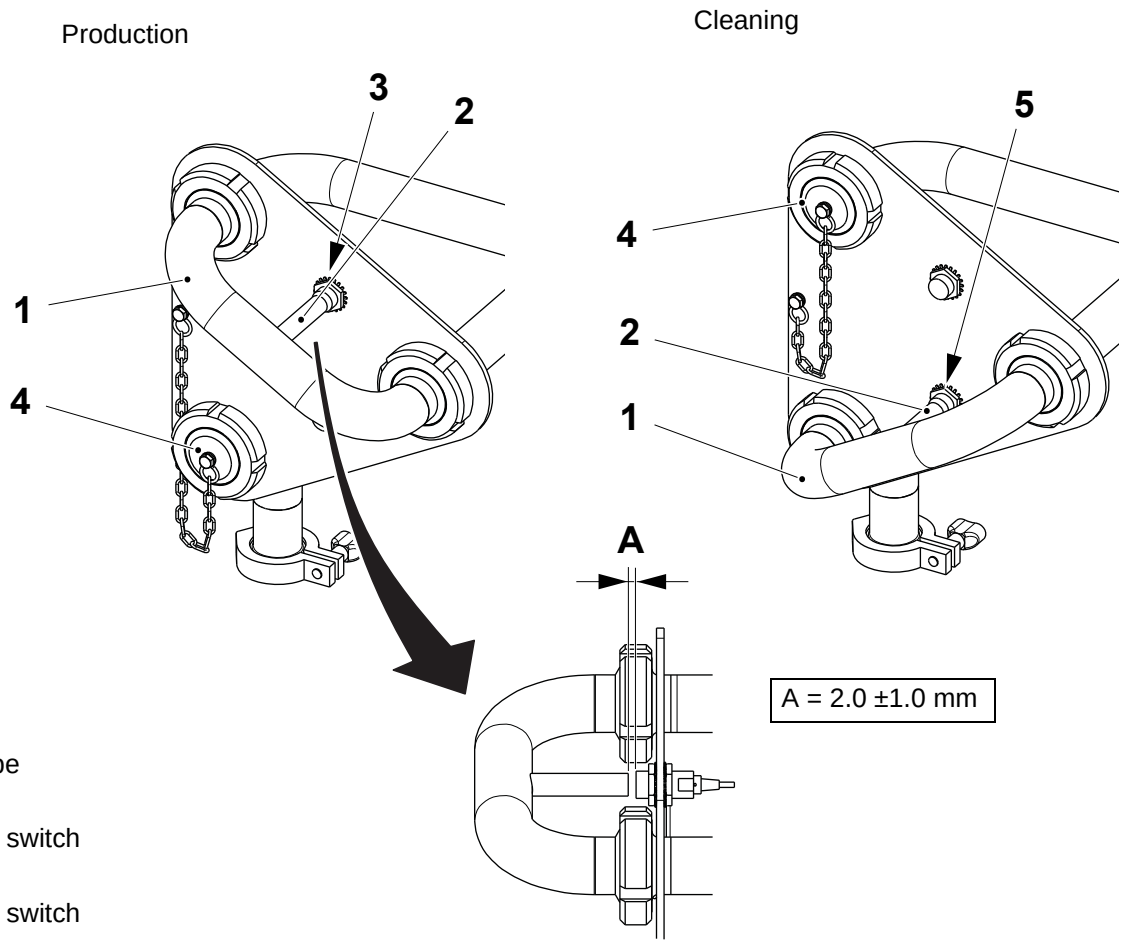

1 Swing pipe
2 Boss
3 Proximity switch
4 Plug
5 Proximity switch

1.6.1-3 Flow Switch - Change Sensor Gasket

Machine Status	Mains Power OFF Air OFF Steam ON Water OFF
SPC Reference	2539452-0300

Note! Valid for machines with T-order: 21208/00011 and above.

a) Loosen the clamp (1) and remove the temperature sensor (2).

b) Change the gasket (3).

c) Assemble in the reverse order.

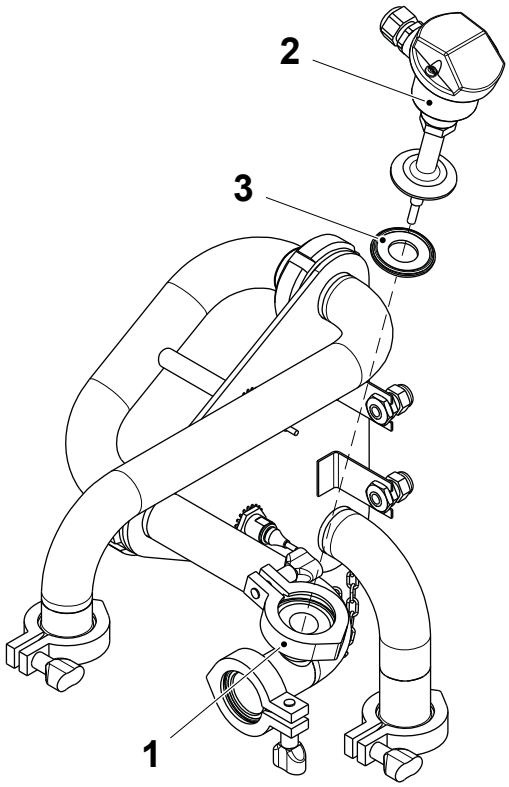

1 Clamp
2 Temperature sensor
3 Gasket

1.6.2 Cleaning Cup

1.6.2-1 Cleaning Cup - Check Gaskets

Machine Status	Mains Power OFF Air OFF Steam ON Water OFF
SPC Reference	2512936-0100

Check the gaskets (1) and (2). Change if necessary.

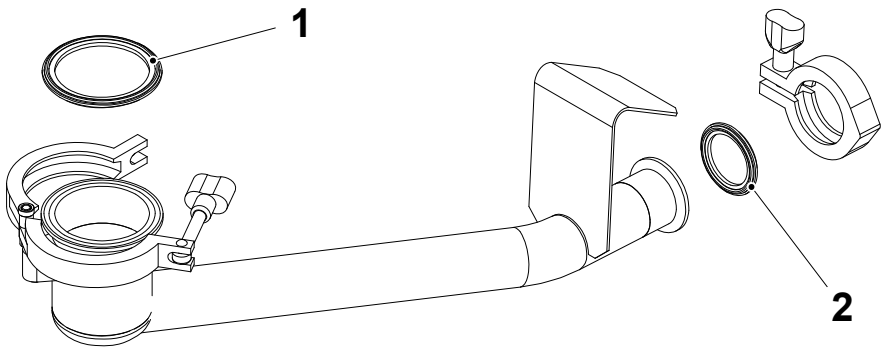

1 Gasket
2 Gasket

1.6.2-2 Cleaning Cup - Set Sensor

Machine Status	Mains Power OFF Air OFF Steam ON Water OFF
SPC Reference	2512936-0100

a) Fit the cleaning cup (1) onto the filling pipe (2).

b) Loosen the nuts (3) and set the distance **A** between the sensor (4) and the cleaning cup (1).

c) Tighten the nuts (3).

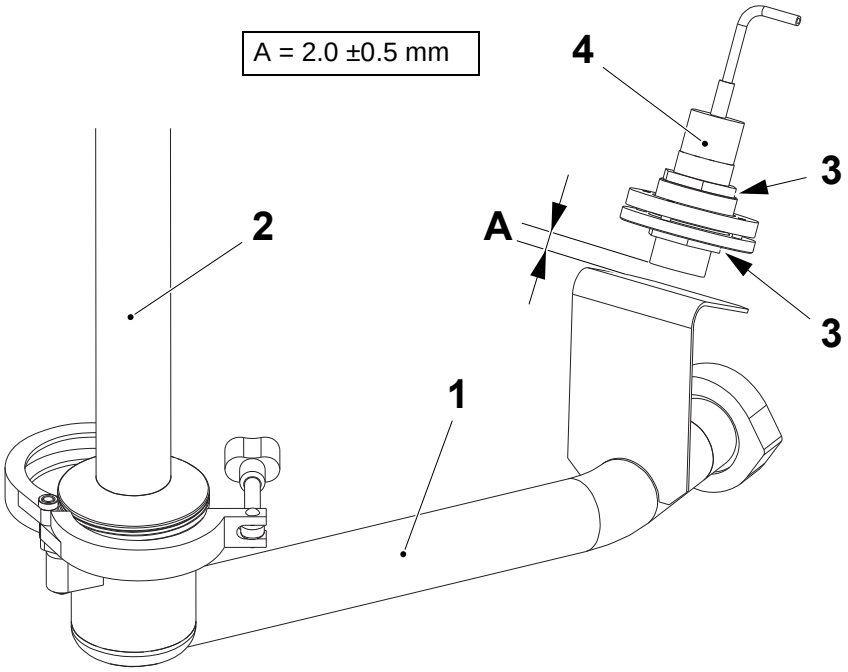

1 Cleaning cup
2 Filling pipe
3 Nut
4 Sensor

1.6.3 ICU

1.6.3-1 ICU - Check Leakages

Machine Status	Mains Power OFF Air OFF Steam ON Water OFF
SPC Reference	2775100-0100

WARNING
Caustic soda and nitric acid.
Read the Safety Precautions.

(Cont'd)

(Cont'd)

Check that there are no leakages around the connections indicated by the arrows in the illustration. Loosen the clamps (1) and change the gaskets (2) if necessary.

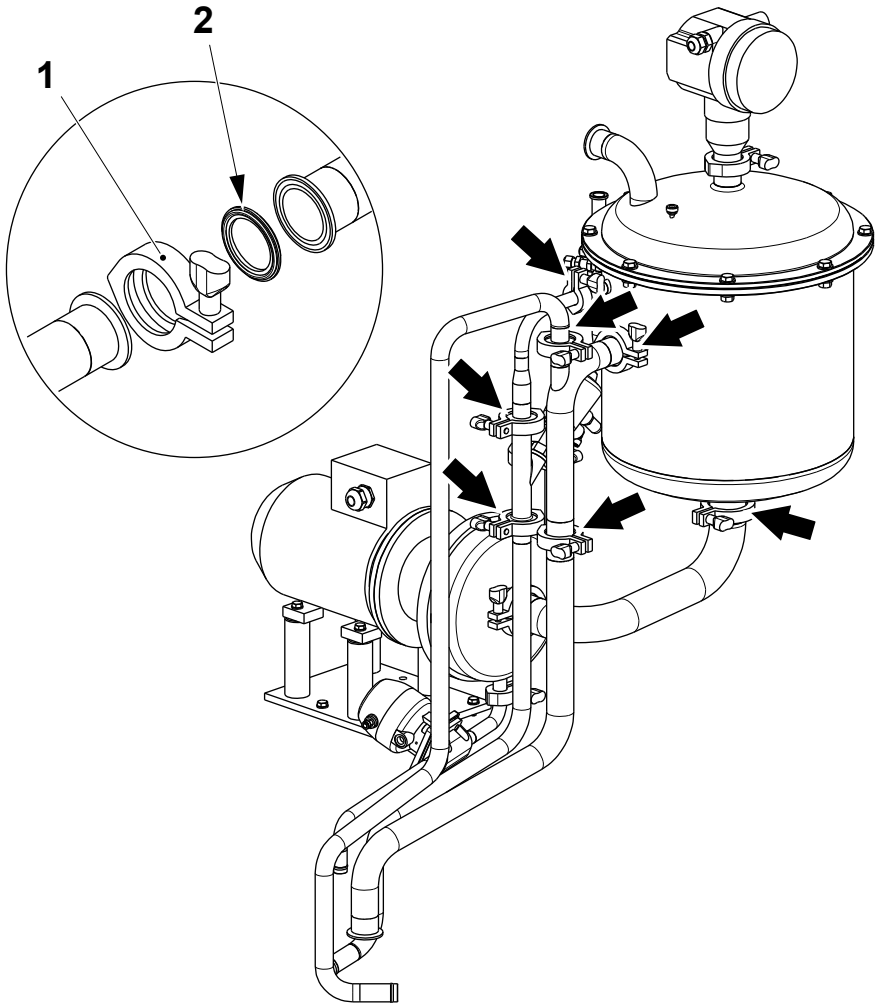

1 Clamp
2 Gasket

1.6.3-2 ICU - Check Pump

Machine Status	Mains Power OFF Air OFF Steam ON Water OFF
SPC Reference	2775100-0100

WARNING

Risk of burns.

Never service the pump when it is hot.

WARNING

Caustic soda and nitric acid.

Read the Safety Precautions.

(Cont'd)

(Cont'd)

Check that there are no leakages:

- around the pump housing (1) and the connection indicated by the arrows; if necessary, loosen the clamps (2) and change the gasket (3).
- around the pneumatic valve (4); if necessary, remove the pneumatic valve (4) by the screws (5) and change the diaphragm (6).

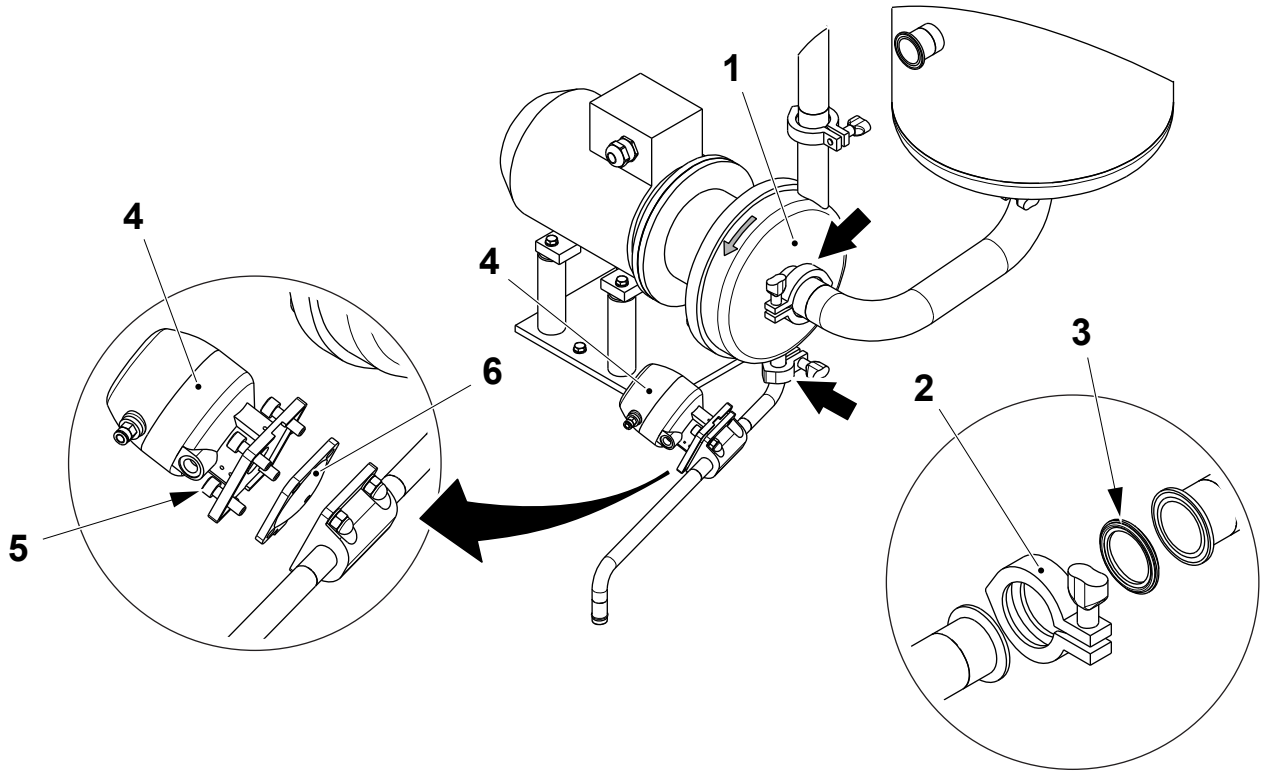

1 Pump housing
2 Clamp
3 Gasket
4 Pneumatic valve
5 Screw
6 Diaphragm

1.6.4 Pipe Work

1.6.4-1 Pipe Work - Check

Machine Status	Mains Power OFF Air OFF Steam ON Water OFF
SPC Reference	2833350-0100

WARNING
Caustic soda and nitric acid.
Read the Safety Precautions.

Check that there are no leakages at the clamps (1) of the change over valve.

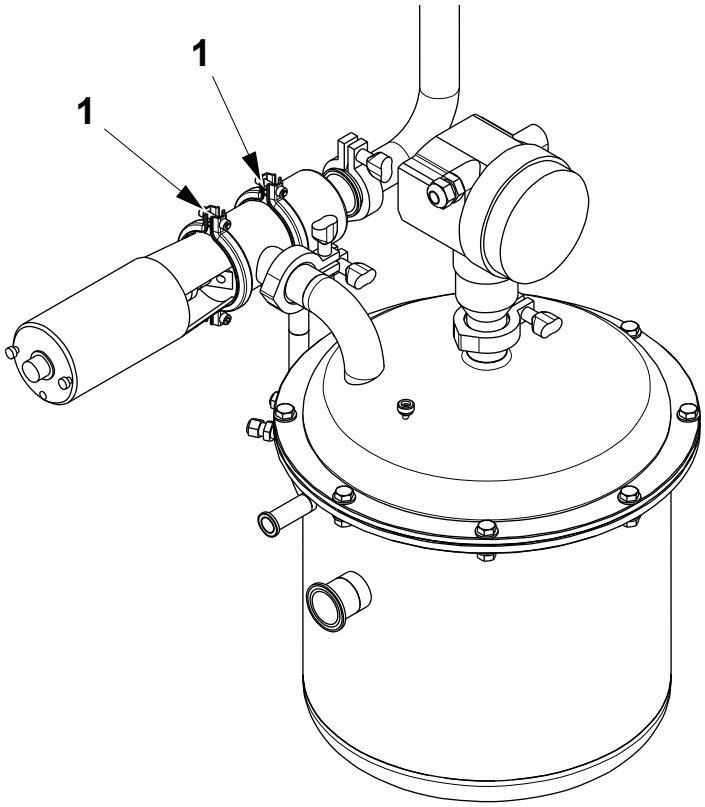

1 Clamp

(Cont'd)

(Cont'd)

Check that there are no leakages around the connections indicated by the arrows. Loosen the clamps (2) and change the gaskets (3) if necessary.

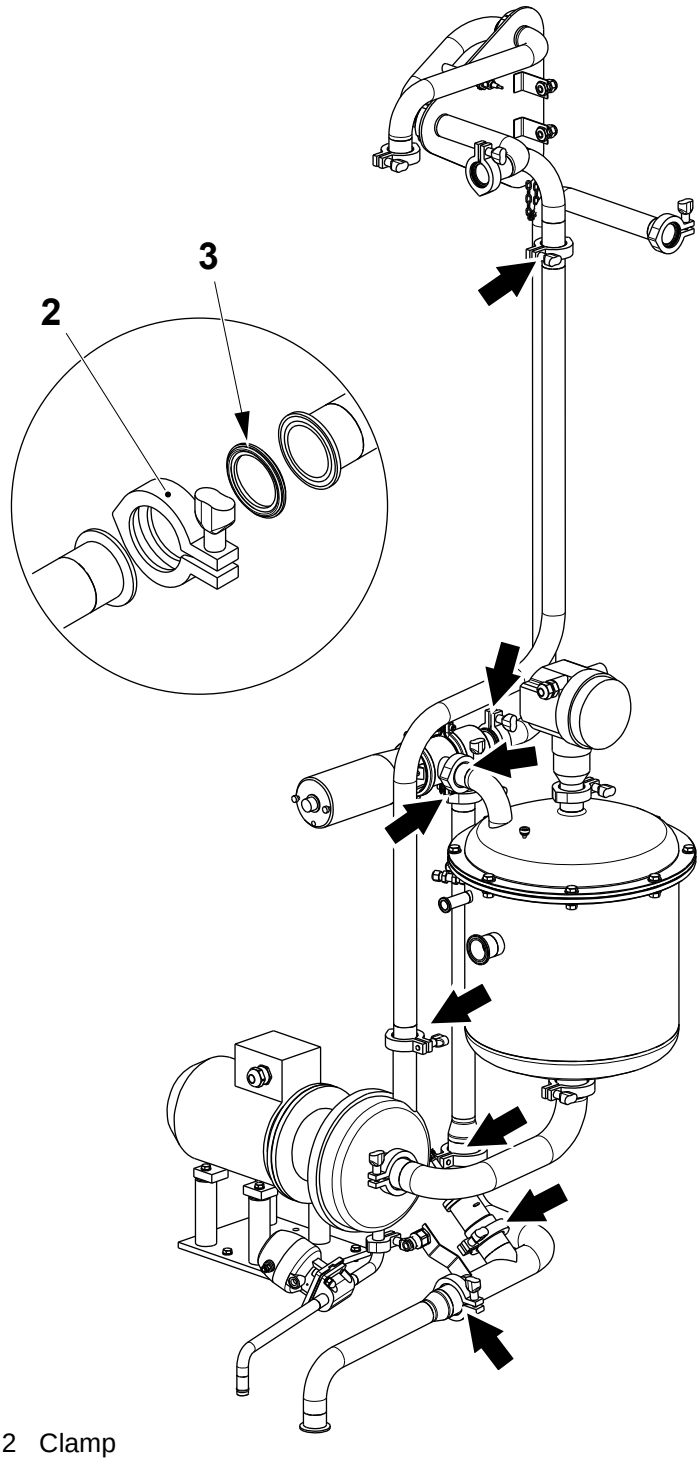

2 Clamp
3 Gasket

1.6.4-2 Pipe Work - Check Conductivity Sensor

Machine Status	Mains Power OFF Air OFF Steam ON Water OFF
SPC Reference	2833350-0100

WARNING

Burn hazard.

The components around the probe may be hot. Use protective gloves when removing the sensor.

WARNING

Caustic soda and nitric acid.

Read the Safety Precautions.

(Cont'd)

(Cont'd)

Note! Make sure that the probe (3) is fitted with the mark (5) oriented in the direction of the flow as indicated in the illustration. The flow must pass through the hole (6).

a) Remove the clamp (1) from the pipe (2) and the probe (3).

b) Clean the probe (3) with a non-abrasive brush.

c) Check the gasket (4). Change the gasket (4) if it is damaged or worn.

d) Assemble in the reverse order.

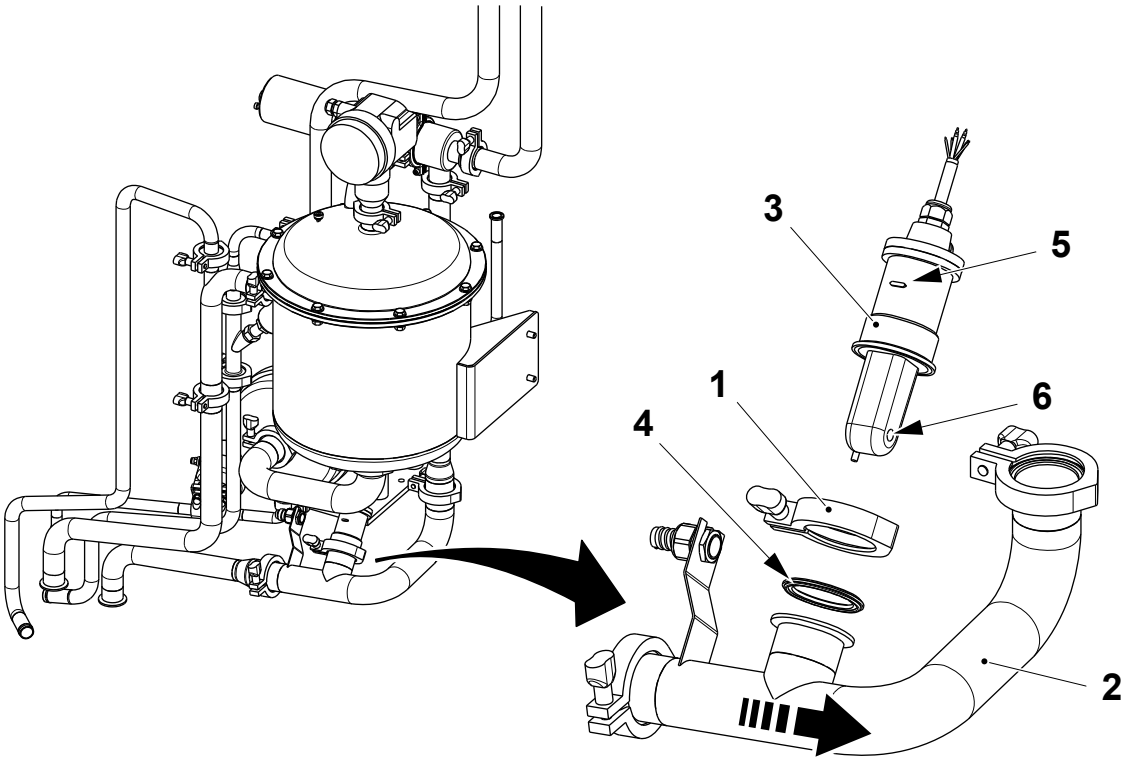

1 Clamp
2 Pipe
3 Probe
4 Gasket
5 Arrow
6 Hole

Flow of Cleaning Fluid

1.7 Hydrogen Peroxide

SPC Reference	2541680-0100

1.7-1 Hydrogen Peroxide - Check Leaks

Machine Status	HEAT STERILISATION
SPC Reference	2541680-0200

WARNING
Hydrogen Peroxide.
Follow the Safety Precautions.

(Cont'd)

(Cont'd)

Check the connections for leaks at the following points:

- the peroxide pipes (1)
- the bath (2)
- the heat exchanger (3).

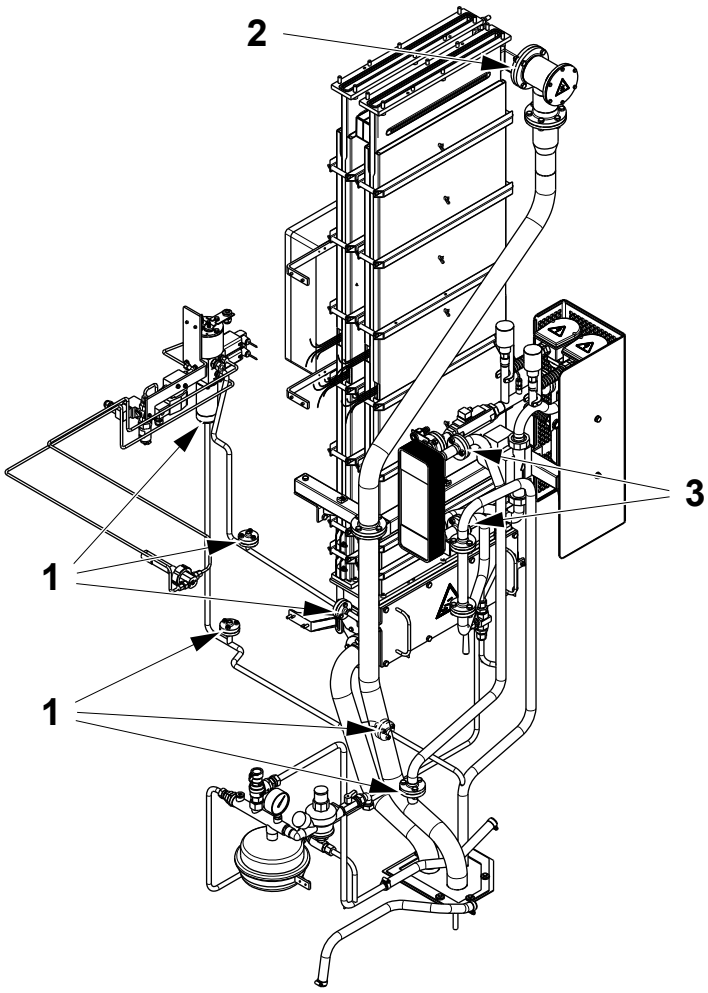

1 Peroxide pipes
2 Bath
3 Heat exchanger

1.7.1 Heating Unit

1.7.1-1 Heating Unit - Change Heating Elements

Machine Status	Mains Power OFF Air OFF Steam ON Water OFF
Special Equipment	Socket Wrench TP No. 90206-0330
Consumables	Thread Sealant TP No. 90157-0034
SPC Reference	1558495-0200

WARNING

Burn hazard.

The hydrogen peroxide system and adjacent components may be hot. Wear heat-resistant protective gloves.

a) Drain the water system by closing the shut off valve (1) and open the drain valve (2).

b) Remove the connection boxes (3).

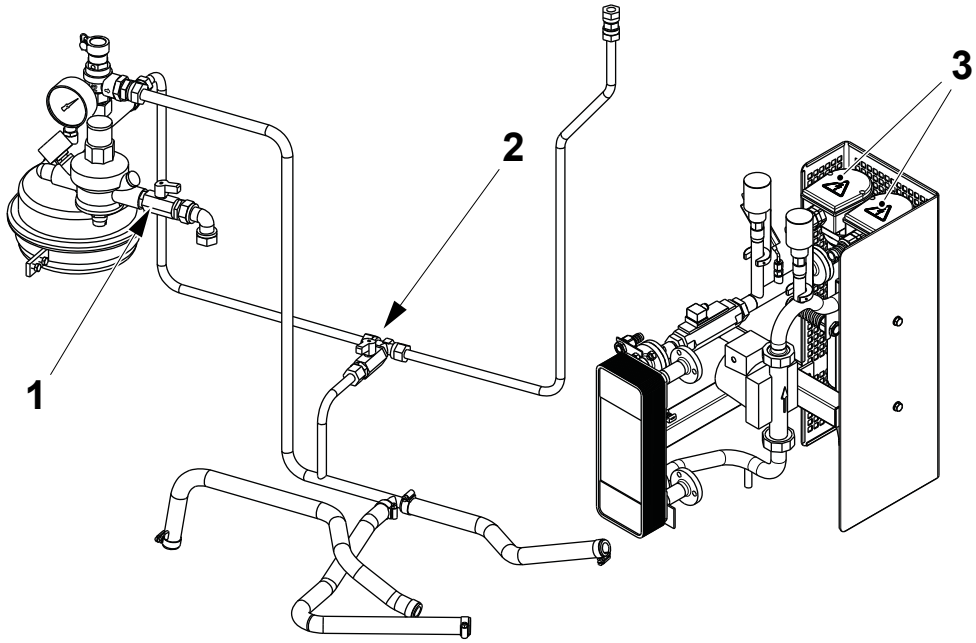

1 Shut off valve
2 Drain valve
3 Connection box

(Cont'd)

(Cont'd)

CAUTION
Risk of damage to the equipment.
Do not swap the position or the cables of the heating elements. The heating element (4) is marked U70R0340 and is connected with the cable (8) marked U70W0340, the heating element (5) is marked U70R0350 and is connected with the cable (9) marked U70W0350. See the EM circuit diagram.

c) Mark and remove all the electrical connections.

d) Remove the heating elements (4) and (5) with the aid of the tool (6).

e) Change the heating elements (4) and (5). Coat the threads (7) of the new heating elements with thread sealant.

f) Assemble in the reverse order. Refill the water circuit, see 1.7.2-2 Pressure Unit - Fill.

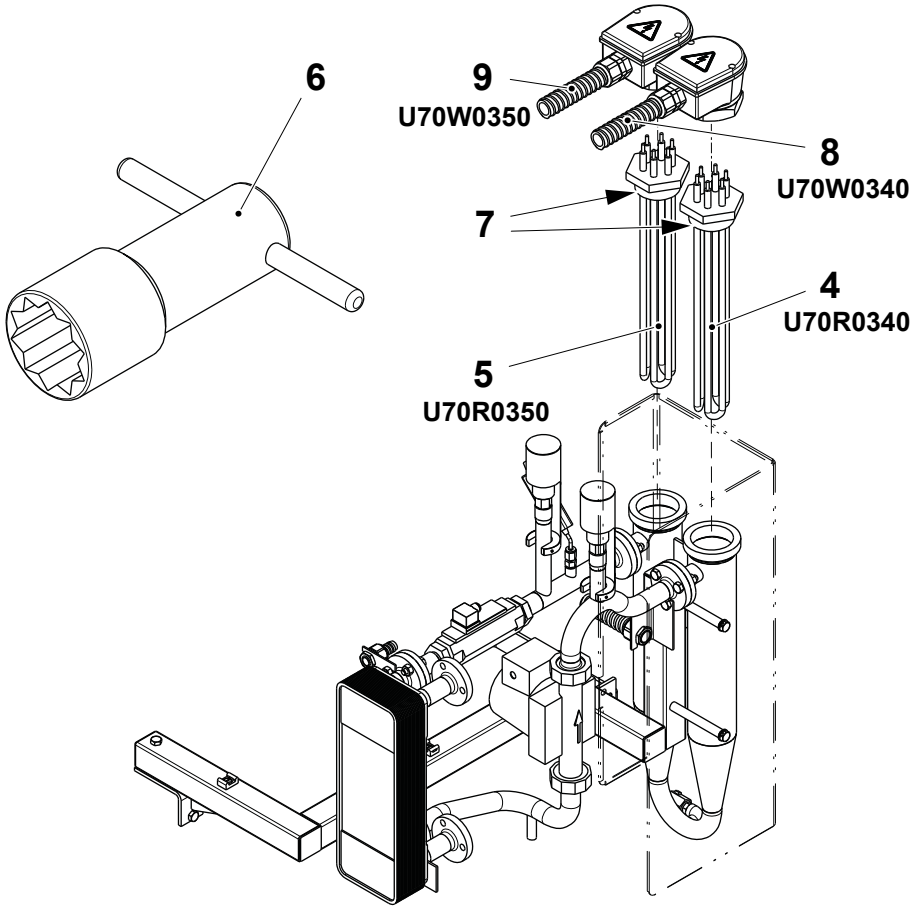

4 Heating element
5 Heating element
6 Tool
7 Thread
8 Cable
9 Cable

1.7.1-2 Heating Unit - Change Heat Exchanger

Machine Status	Mains Power OFF Air OFF Steam ON Water OFF
SPC Reference	1558495-0200

WARNING

Burn hazard.

The hydrogen peroxide system and adjacent components may be hot. Wear heat-resistant protective gloves.

a) Close the shut off valve (1).

b) Drain the water system by opening the drain valve (2).

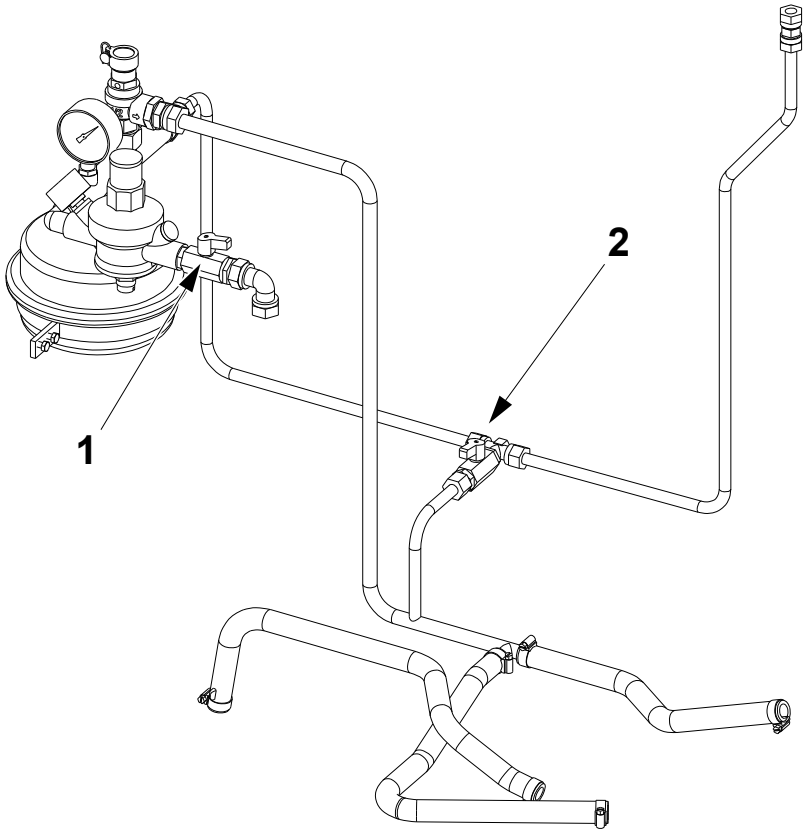

1 Shut off valve
2 Drain valve

(Cont'd)

(Cont'd)

c) Loosen the flanges (3) on the heat exchanger and remove it.

d) Change the heat exchanger, ensuring that the flanges (3) are sealed by means of new gaskets.

e) Close the drain valve (2) and open the shut off valve (1), see 1.7.2-2 Pressure Unit - Fill.

f) Check for leaks, see 1.7.2-1 Pressure Unit - Check Leaks.

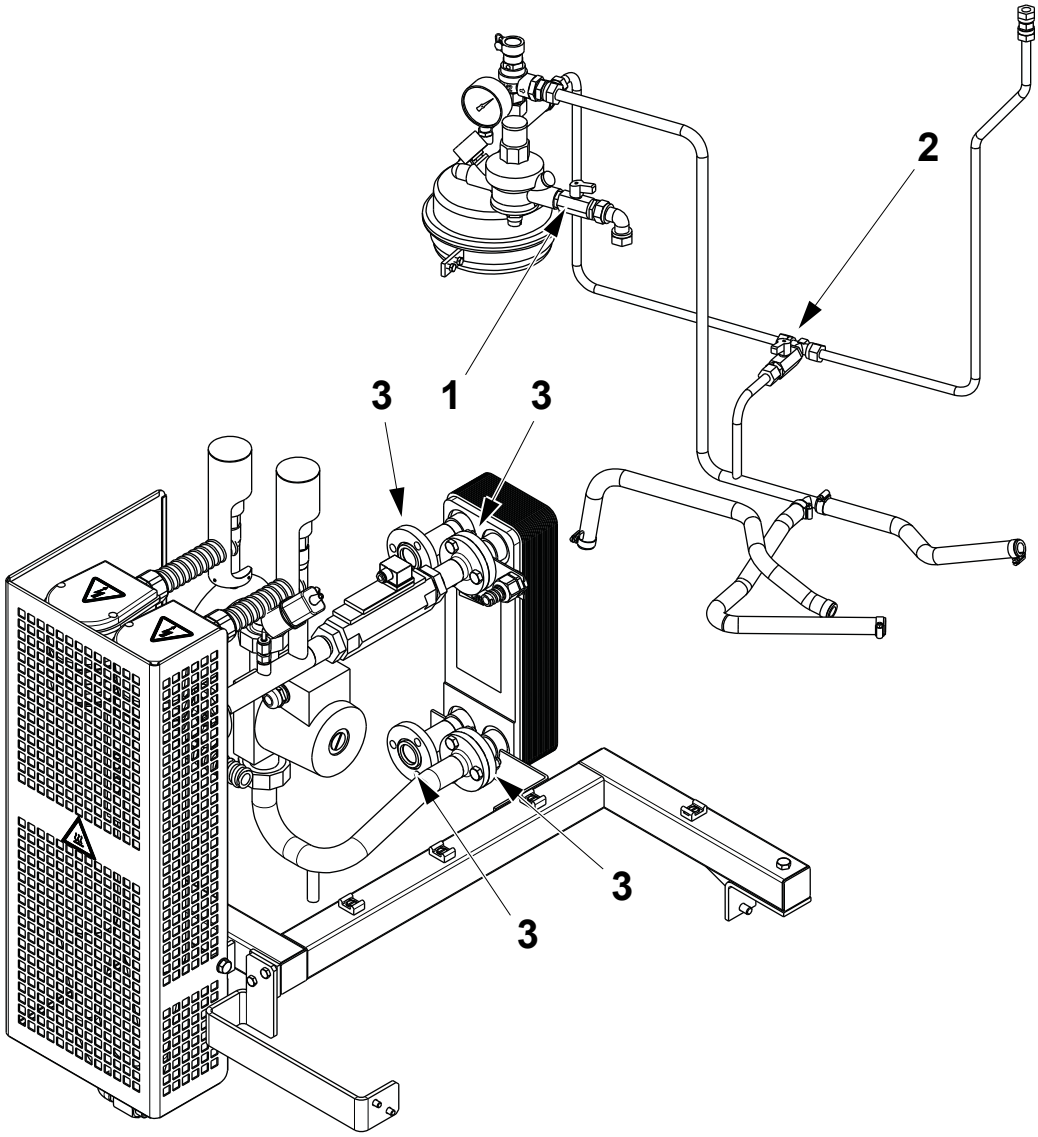

1 Shut off valve
2 Drain valve
3 Flange

1.7.1-3 Heating Unit - Drain U-bend

Machine Status	Mains Power OFF Air OFF Steam ON Water OFF
SPC Reference	1558495-0200

WARNING

Burn hazard.

The hydrogen peroxide system and adjacent components may be hot. Wear heat-resistant protective gloves.

Shut off the water supply to the heating unit and drain the system, see 1.7.1-2 Heating Unit - Change Heat Exchanger.

(Cont'd)

(Cont'd)

With the aid of a screwdriver, open the valve (1) and drain any water from the heating unit U-bend into a bucket.

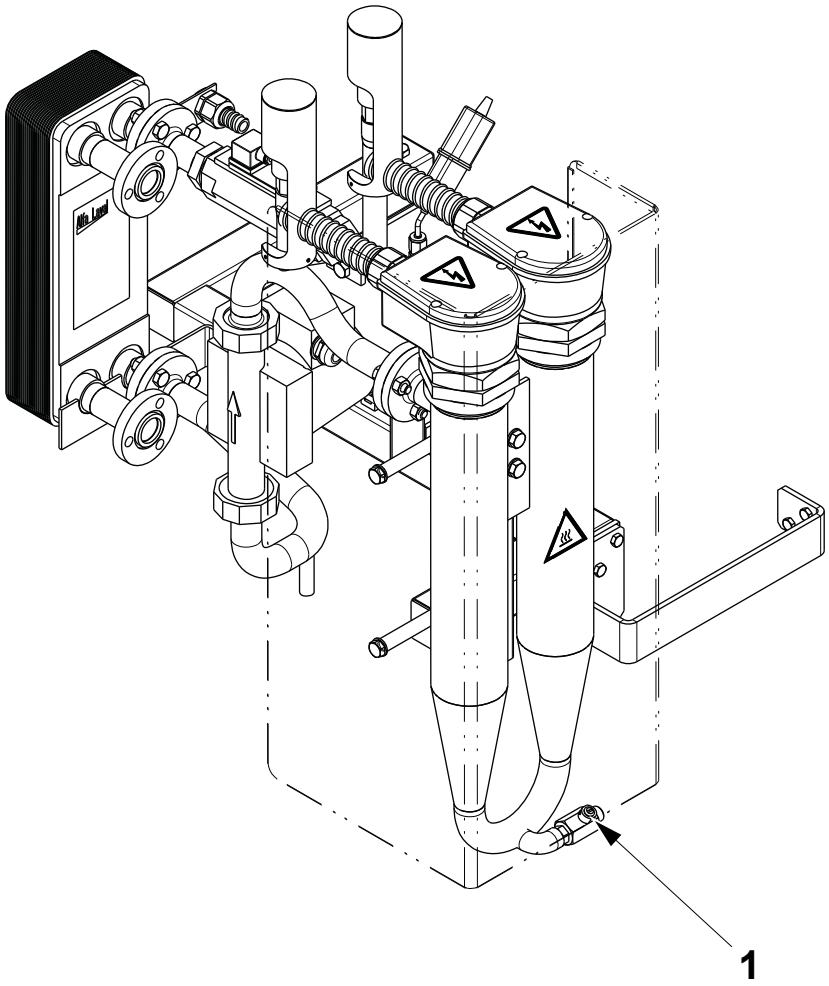

1 Valve

1.7.1-4 Heating Unit - Check Pump

Machine Status	Mains Power ON Air OFF Steam ON Water ON
SPC Reference	1558495-0200

WARNING

Burn hazard.

The hydrogen peroxide system and adjacent components may be hot. Wear heat-resistant protective gloves.

Check the pump (1) for leaks or excessive noise.

Note! Make sure that the pump (1) is set at the highest speed: the selector (2) must be turned to the maximum value.

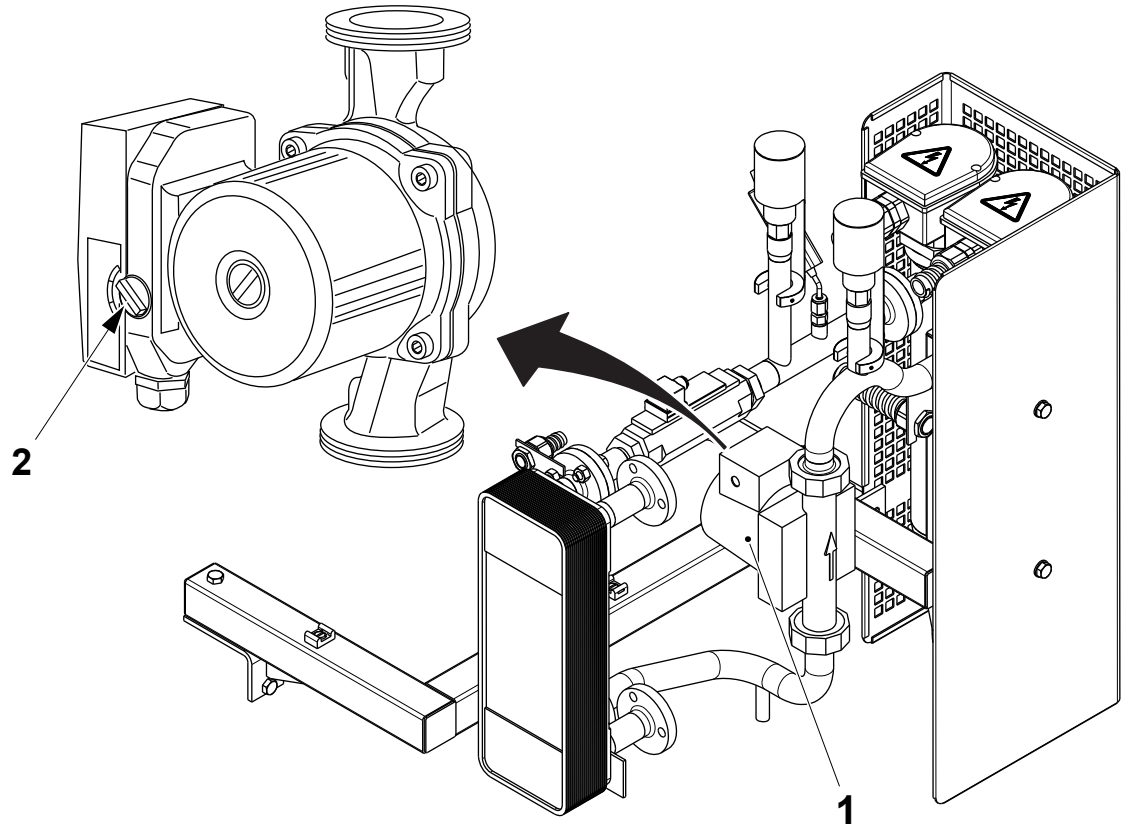

1 Pump
2 Selector

1.7.1-5 Heating Unit - Change Venting Valve

Machine Status	Mains Power ON Air OFF Steam ON Water OFF
SPC Reference	1558495-0200

WARNING

Burn hazard.

The hydrogen peroxide system and adjacent components may be hot. Wear heat-resistant protective gloves.

(Cont'd)

(Cont'd)

a) Shut off the water supply to the heating unit and drain the system, see items a) and b) in 1.7.1-2 Heating Unit - Change Heat Exchanger.

b) Remove the protection (1) by means of the three grub screws (2).

c) Remove the venting valve (3).

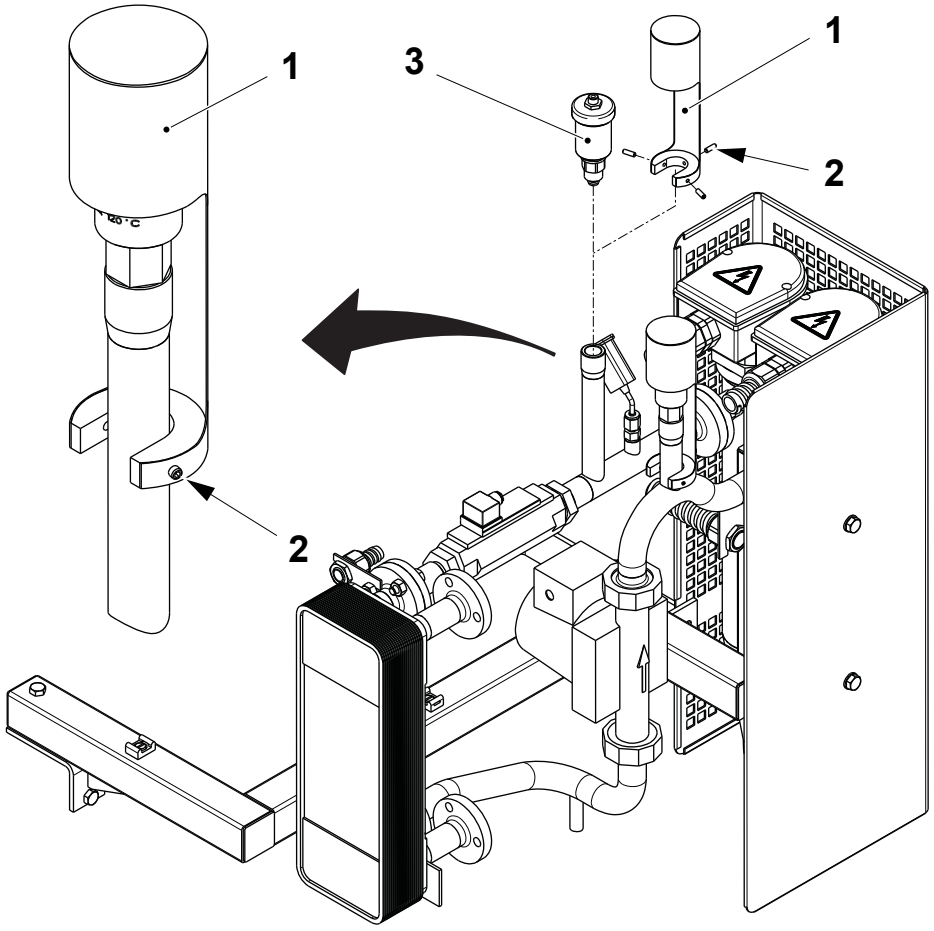

1 Protection
2 Grub screw
3 Venting valve

(Cont'd)

(Cont'd)

CAUTION
Risk of damage to the equipment.
The cap (5) must always be removed and discarded to ensure the correct function of the venting valve (4).

d) Before fitting the new venting valve (4), remove and discard the cap (5).

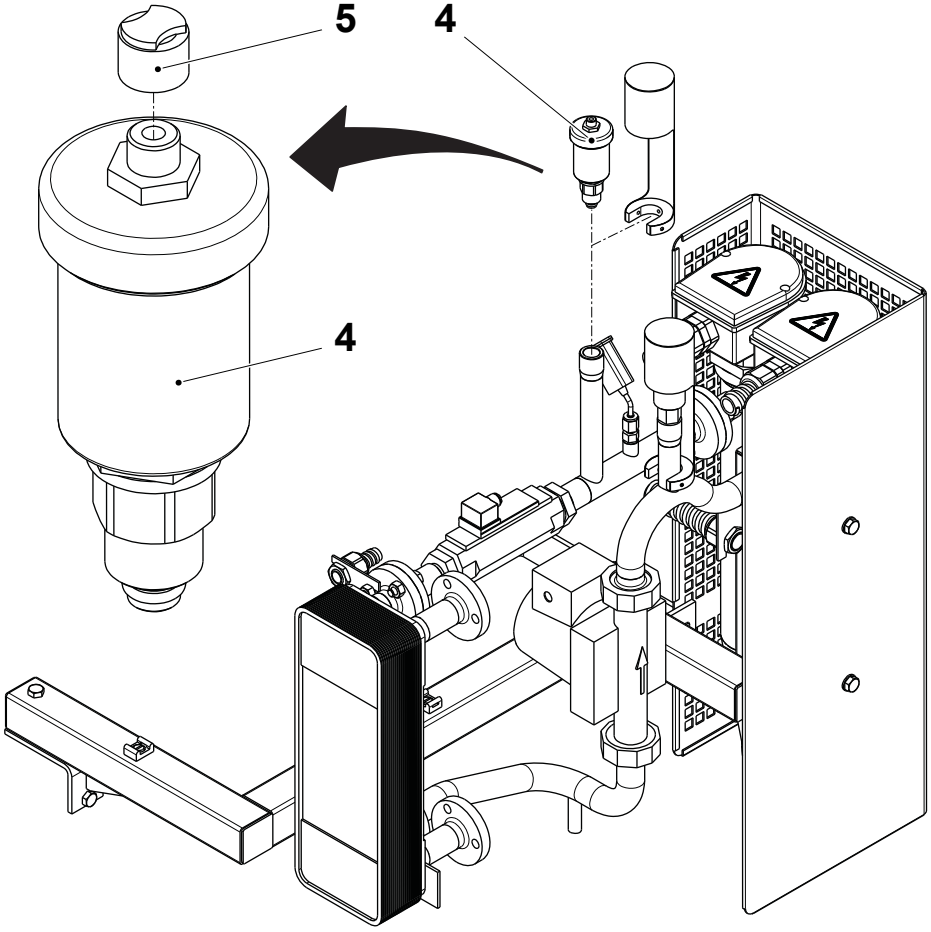

4 Venting valve
5 Cap

(Cont'd)

(Cont'd)

e) Assemble in the reverse order.

f) Fill the system with water, see 1.7.2-2 Pressure Unit - Fill.

Note! When assembling, ensure that the protections (1) are fitted at the distance **A** from the surface of the straight pipe (6) and the distance **B** from the surface of the curved pipe (7). Do not over-tighten the grub screws (2).

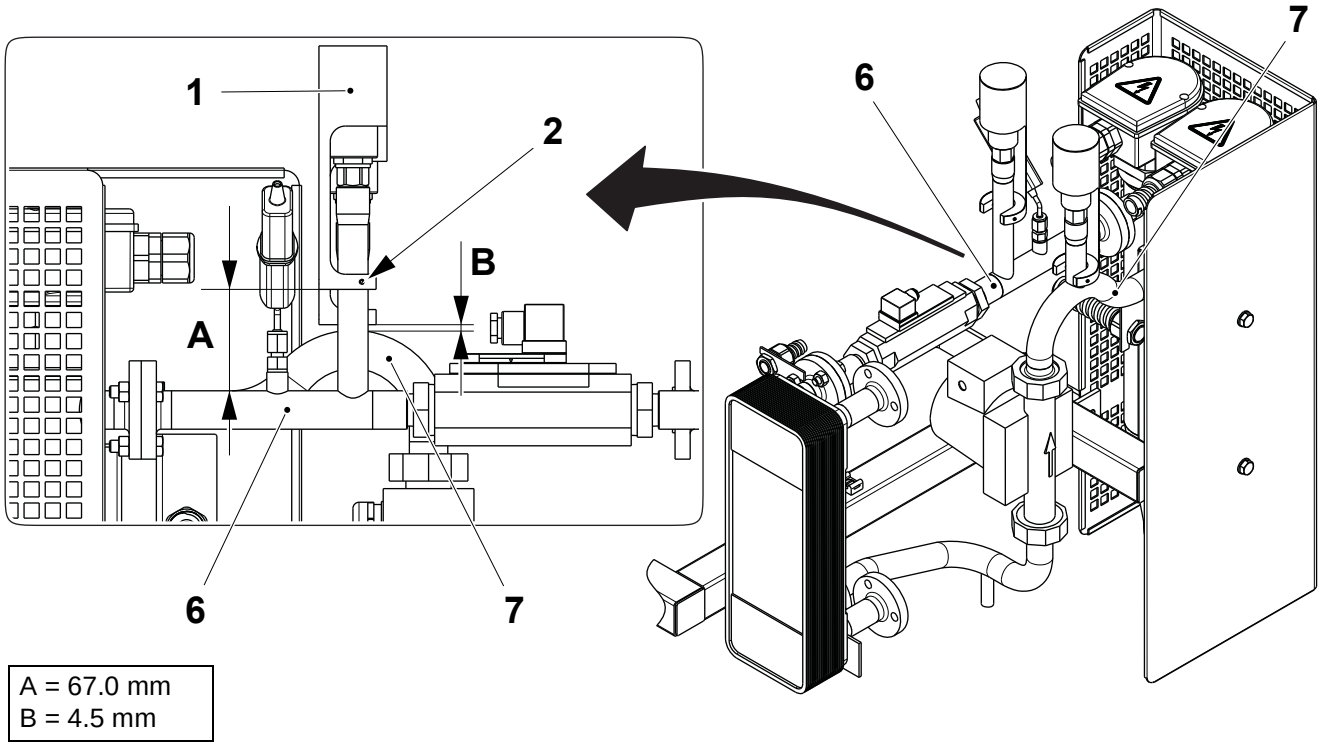

A = 67.0 mm
B = 4.5 mm

1 Protection
2 Screw
6 Straight pipe
7 Curved pipe

1.7.1-6 Heating Unit - Check Venting Valve Floater

Machine Status	Mains Power ON Air OFF Steam ON Water OFF
Consumables	For Venting Valve TP No. 90600-6015: O-rings TP No. 315202-0721 and TP No. 90600-6021 For Venting Valve TP No. 90187-0105: O-rings TP No. 90600-4411 and TP No. 90600-4412
SPC Reference	1558495-0200

WARNING

Burn hazard.

The hydrogen peroxide system and adjacent components may be hot. Wear heat-resistant protective gloves.

a) Shut off the water supply to the heating unit and drain the system, see items a) and b) in 1.7.1-2 Heating Unit - Change Heat Exchanger.

(Cont'd)

(Cont'd)

b) Remove the protection (1) by means of the three grub screws (2).

c) Unscrew the venting valve body (3) from the nipple (4).

Note! Do not remove the nipple (4).

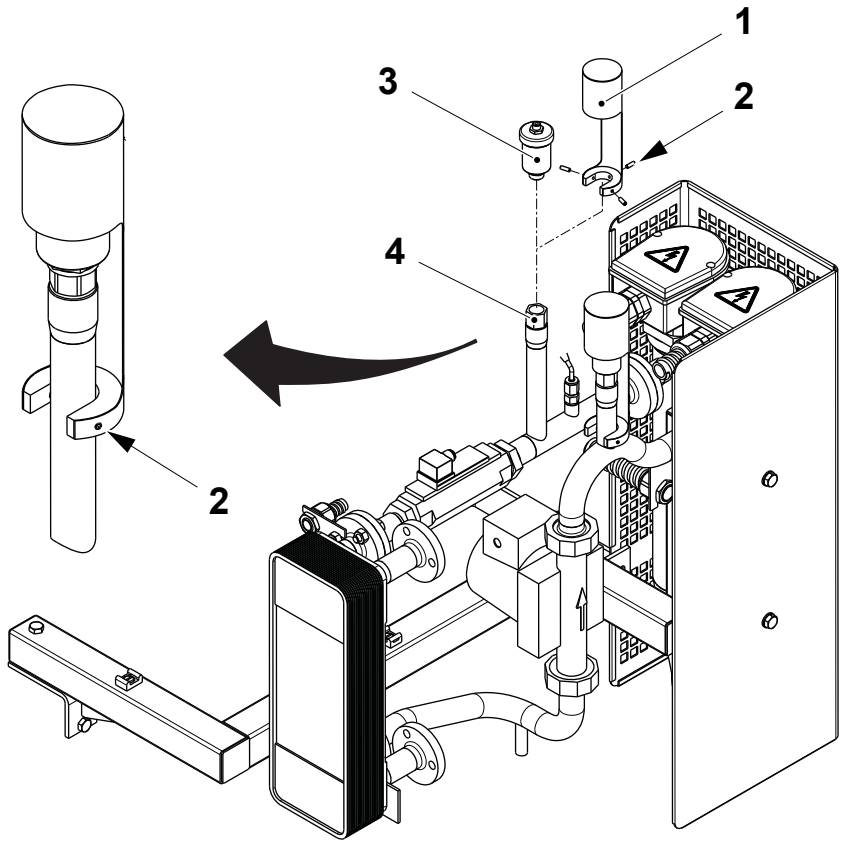

1 Protection
2 Grub screw
3 Venting valve body
4 Nipple

(Cont'd)

(Cont'd)

Note! Use the illustration to identify which type of venting valve is fitted to the machine.

d) Unscrew the venting valve lid (5) and check that the floater (6) inside the venting valve body (3) is not damaged and moves freely.

e) Check that the hole (7) is not clogged.

f) Clean inside the venting valve body (3) and remove any deposits of lime scale.

g) Change the o-rings (8).

Venting valve
TP No. 90600-6015

Venting valve
TP No. 90187-0105

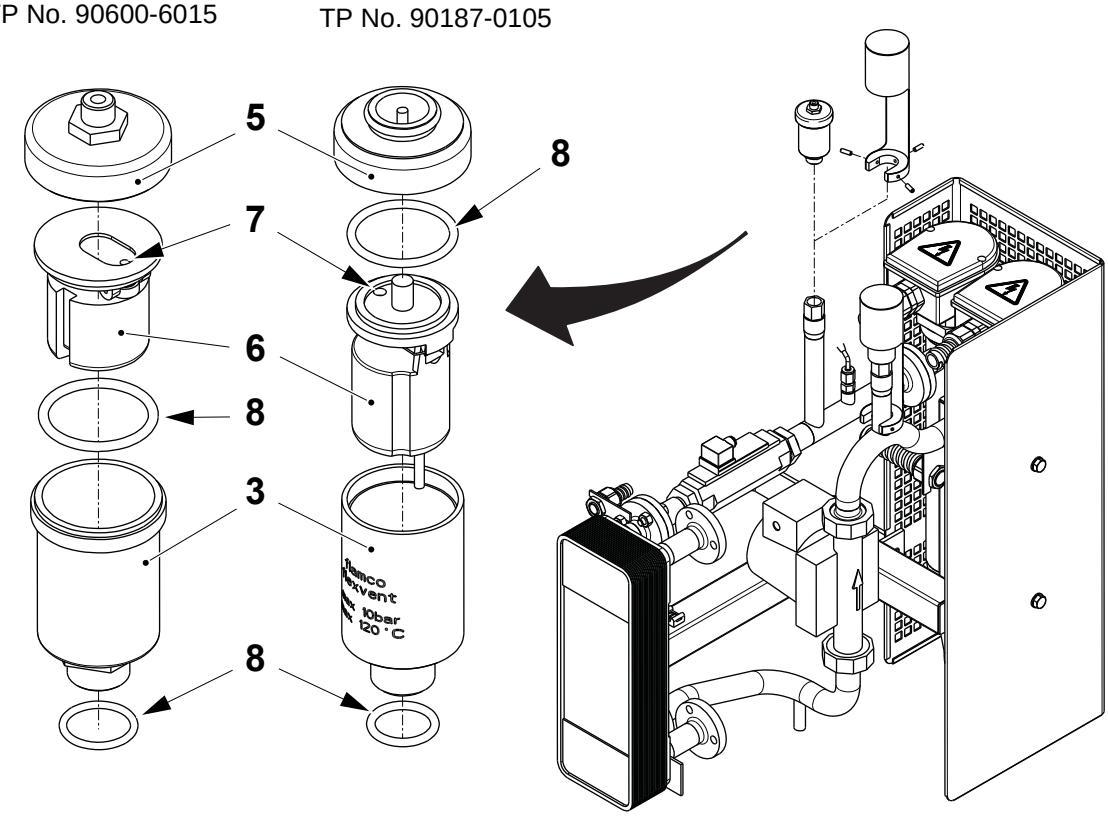

3 Venting valve body
5 Venting valve lid
6 Floater
7 Hole
8 O-ring

(Cont'd)

(Cont'd)

h) Assemble in the reverse order.

i) Fill the system with water, see1.7.2-2 Pressure Unit - Fill.

Note! When assembling, ensure that the protections (1) are fitted at the distance **A** from the surface of the straight pipe (9) and the distance **B** from the surface of the curved pipe (10). Do not over-tighten the grub screws (2).

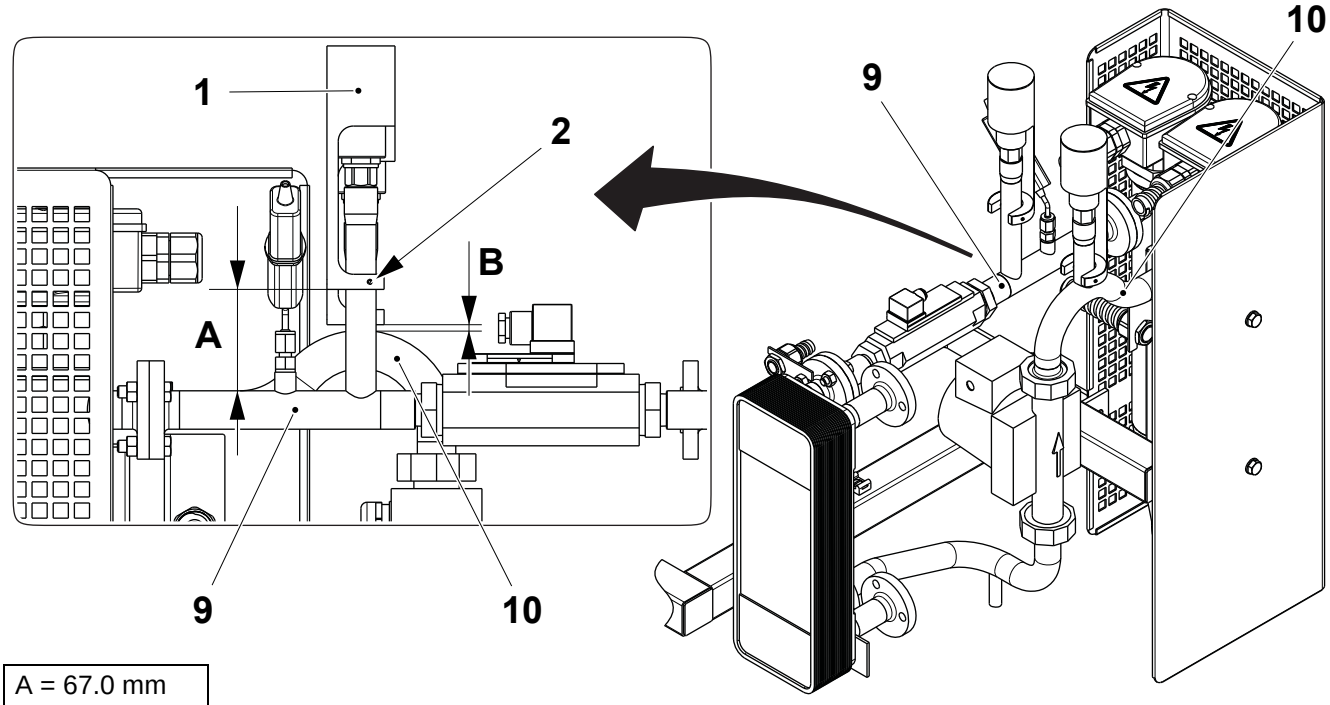

A = 67.0 mm
B = 4.5 mm

1 Protection
2 Grub screw
9 Straight pipe
10 Curved pipe

1.7.1-7 Heating Unit - Check Flow Switch

Machine Status	Mains Power OFF Air OFF Steam ON Water OFF
SPC Reference	1558495-0200

WARNING

Burn hazard.

The hydrogen peroxide system and adjacent components may be hot. Wear heat-resistant protective gloves.

Check on the flow switch (1) that the arrow on the movable body (2) is set to the minimum flow (30 l/min.), see the label. If not, adjust the position of the movable body (2) by the screw (3).

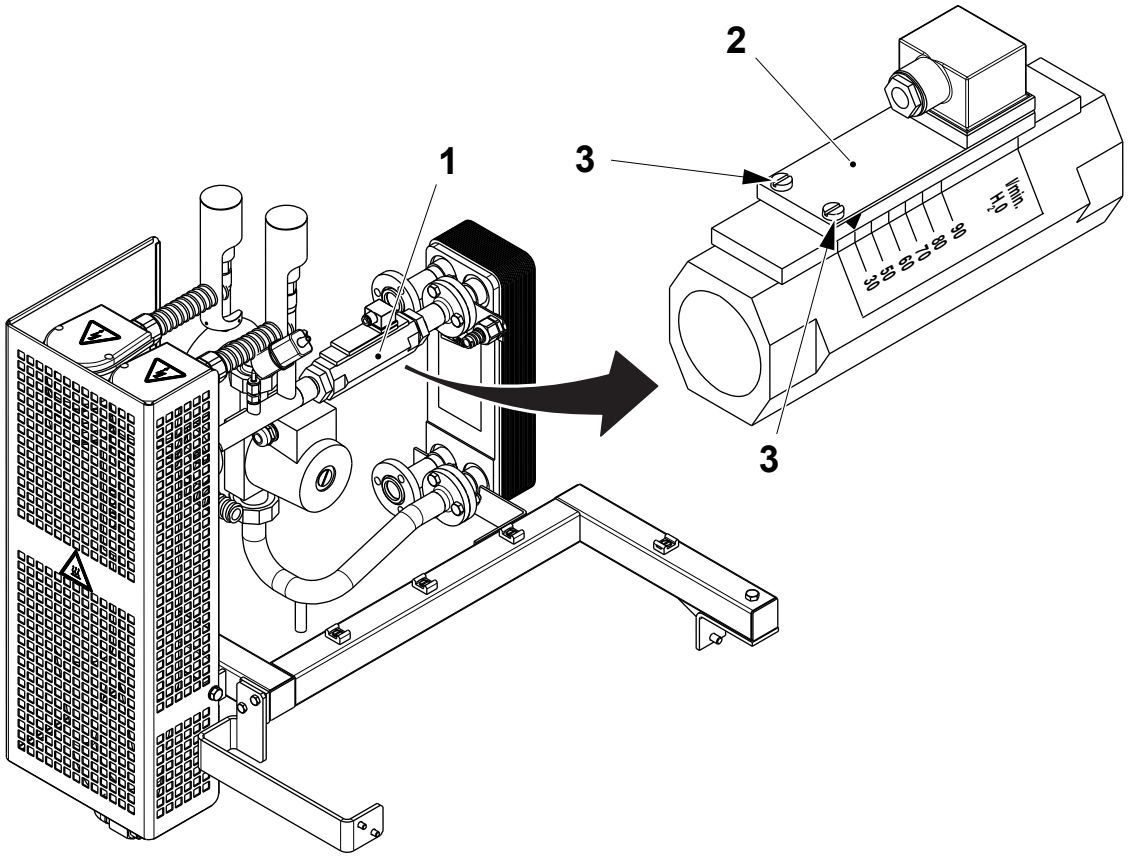

1 Flow switch
2 Movable body
3 Screw

1.7.2 Pressure Unit

1.7.2-1 Pressure Unit - Check Leaks

Machine Status	Mains Power OFF Air OFF Steam ON Water ON
SPC Reference	2531052-0100

WARNING
Hydrogen Peroxide.
Follow the Safety Precautions.

(Cont'd)

(Cont'd)

a) With a cold machine, check that the pressure in the liquid container (1) indicated on the pressure gauge (2) reaches at least 1.8 bar. If not, set the pressure with the automatic feeder (3), see 1.7.2-3 Pressure Unit - Set Pressure.

b) Step up the machine to step HEAT STERILISATION.

c) Check the pipe connections for leaks, see arrows. Change the seals if necessary.

d) Check the pump (4) for abnormal noise or vibrations.

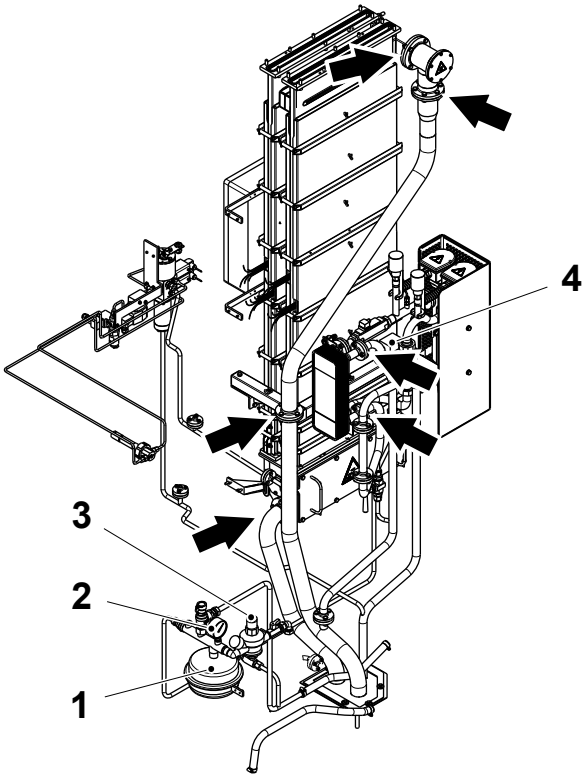

1 Container
2 Pressure gauge
3 Automatic feeder
4 Pump

1.7.2-2 Pressure Unit - Fill

Machine Status	Mains Power OFF Air OFF Steam ON Water ON
Special Equipment	Allen Key (10 mm)
SPC Reference	2531052-0100

WARNING
Hydrogen Peroxide.
Follow the Safety Precautions.

WARNING
Burn hazard.
The hydrogen peroxide system and adjacent components may be hot. Wear heat-resistant protective gloves.

(Cont'd)

(Cont'd)

a) Make sure the factory water supply is turned on.
b) Make sure the drain valve (1) is closed.
c) Open the shut off valve (2) to fill the system.

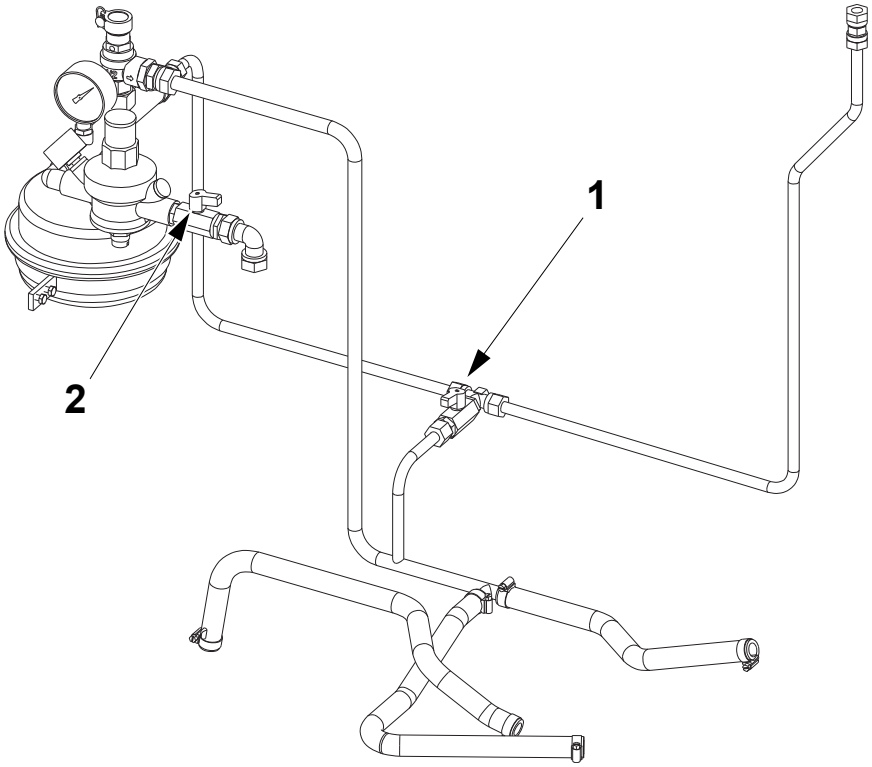

1 Drain valve
2 Shut off valve

(Cont'd)

(Cont'd)

Note! The shut off valve (2) must be left open to allow the circuit pressure to be held constant by the recharge valve (4).

d) Remove the cap (3) from the valve (4).

e) Turn the plug nut (5) with an allen key until a value of 1.8 ±0.3 bar is indicated by the pressure gauge (6).

f) Fit the cap (3) on to the valve (4).

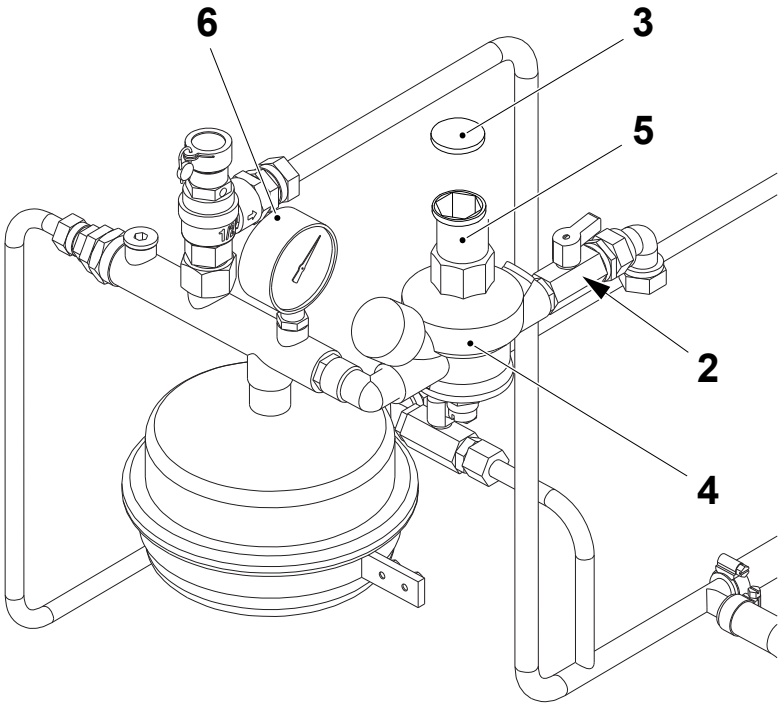

2 Shut off valve
3 Cap
4 Valve
5 Plug nut
6 Pressure gauge

1.7.2-3 Pressure Unit - Set Pressure

Machine Status	Mains Power OFF Air OFF Steam ON Water ON
Special Equipment	Allen Key (10 mm)
SPC Reference	2531052-0100

WARNING
Hydrogen Peroxide.
Follow the Safety Precautions.

(Cont'd)

(Cont'd)

a) Remove the cap (1) from the valve (2).

b) If the pressure is too high, first close the shut off valve (3), then tighten the plug nut (4) a few turns with an allen key. Release some pressure by opening and closing the ventilating valve (5).

c) Make sure that the ventilating valve (5) is closed, and that the shut off valve (3) is open.

d) Adjust the pressure to 1.8 ±0.3 bar by turning the plug nut (4) with an allen key.

e) Fit the cap (1) on to the valve (2).

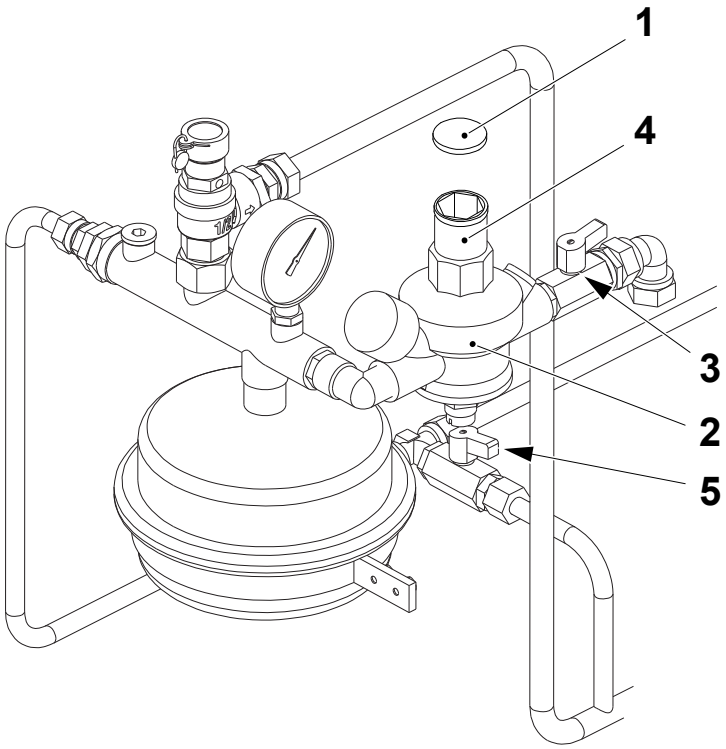

1 Cap
2 Valve
3 Shut off valve
4 Plug nut
5 Ventilating valve

1.7.3 Bath

1.7.3-1 Bath - Check Roller

Machine Status	Mains Power ON Air OFF Steam ON Water OFF
SPC Reference	2715556-0200

WARNING
Hydrogen Peroxide.
Follow the Safety Precautions.

(Cont'd)

(Cont'd)

a) Loosen the two lower screws (1), remove the rest of the screws (2) and remove the bottom cover (3).

b) Remove the gasket (4) and check for wear or damage. Change if necessary.

c) Remove any LS strip residue from the peroxide bath (5) and the roller (6).

d) Check the surface and rotation of the peroxide bath roller (6). Make sure that the roller (6) rotates freely.

e) Check the radial play of the bearings on the roller (6). If excessive change them, see 1.7.3-2 Bath - Change Roller Bushings.

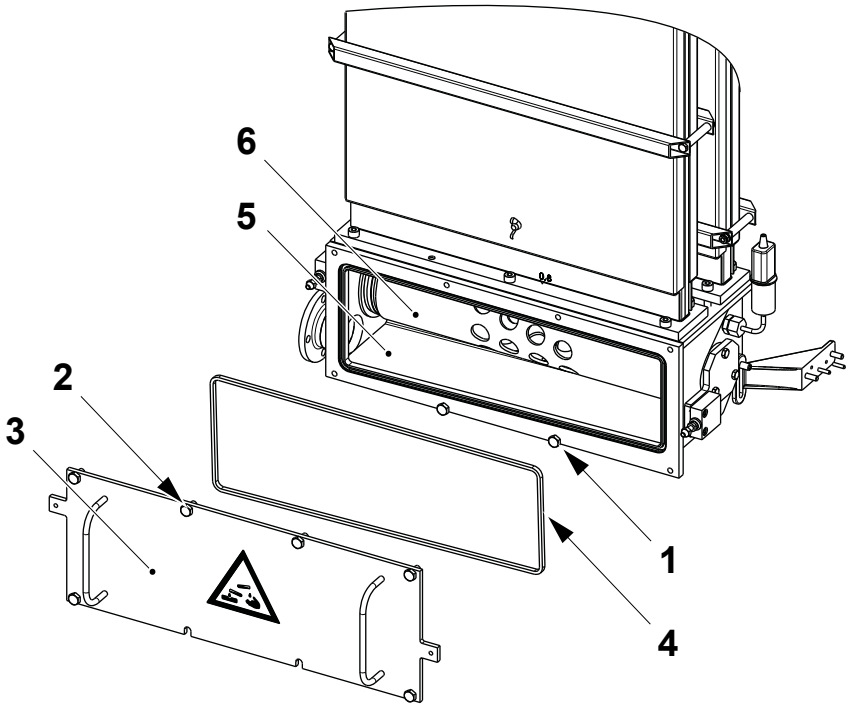

1 Screw
2 Screw
3 Bottom cover
4 Gasket
5 Bath
6 Roller

(Cont'd)

(Cont'd)

f) Assemble in the reverse order.

Note! The two micro switches (7) must not be activated until the screws (1) and (2) have been fully tightened. Make sure that the alarm functions on the TPOP display.

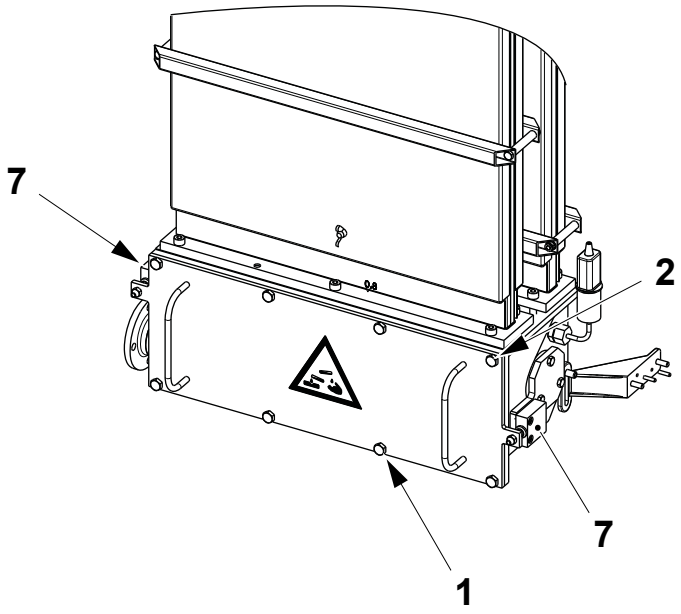

1 Screw
2 Screw
7 Micro switch

1.7.3-2 Bath - Change Roller Bushings

Machine Status	Mains Power OFF Air OFF Steam ON Water OFF
SPC Reference	2715556-0200

WARNING
Hydrogen Peroxide.
Follow the Safety Precautions.

(Cont'd)

(Cont'd)

Note! Valid for machines with T-order: 21208/00001 to 21208/00017.

a) Loosen the two screws (1), remove the six screws (2) and remove the bottom cover (3).

b) Remove the gasket (4) and change it.

c) Remove the screws (5) and the plates (6).

d) Remove the flanges (7) and the O-rings (8). Change the O-rings (8).

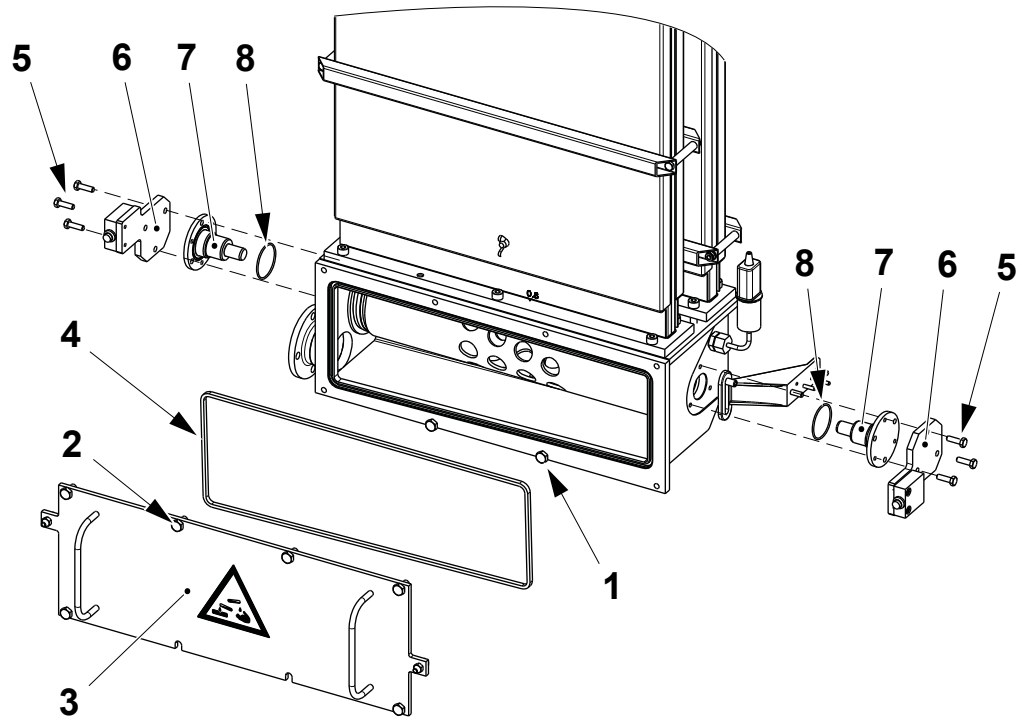

1 Screw
2 Screw
3 Bottom cover
4 Gasket
5 Screw
6 Plate
7 Shaft
8 O-ring

(Cont'd)

(Cont'd)

e) Remove the bending roller (9) and the wheels (10).

f) Remove and change the bushings (11).

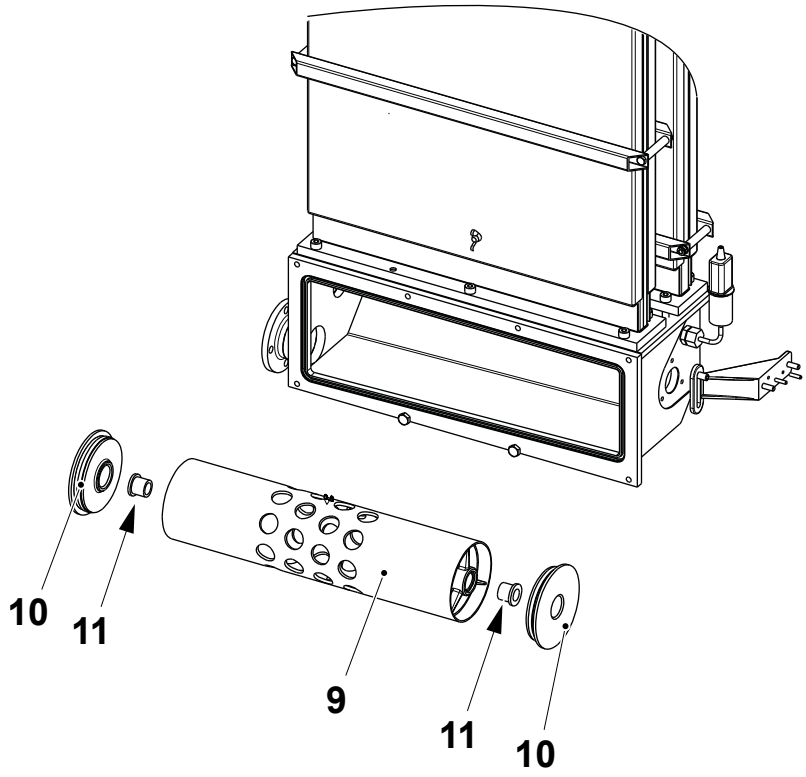

9 Roller
10 Wheel
11 Bushing

(Cont'd)

(Cont'd)

g) Assemble in the reverse order.

Note! When assembling, on both ends rotate the shafts (7) by 120°.

Note! The two micro switches (12) must not be activated until the two screws (1) and the six screws (2) have been fully tightened. Make sure that the alarm functions on the TPOP display.

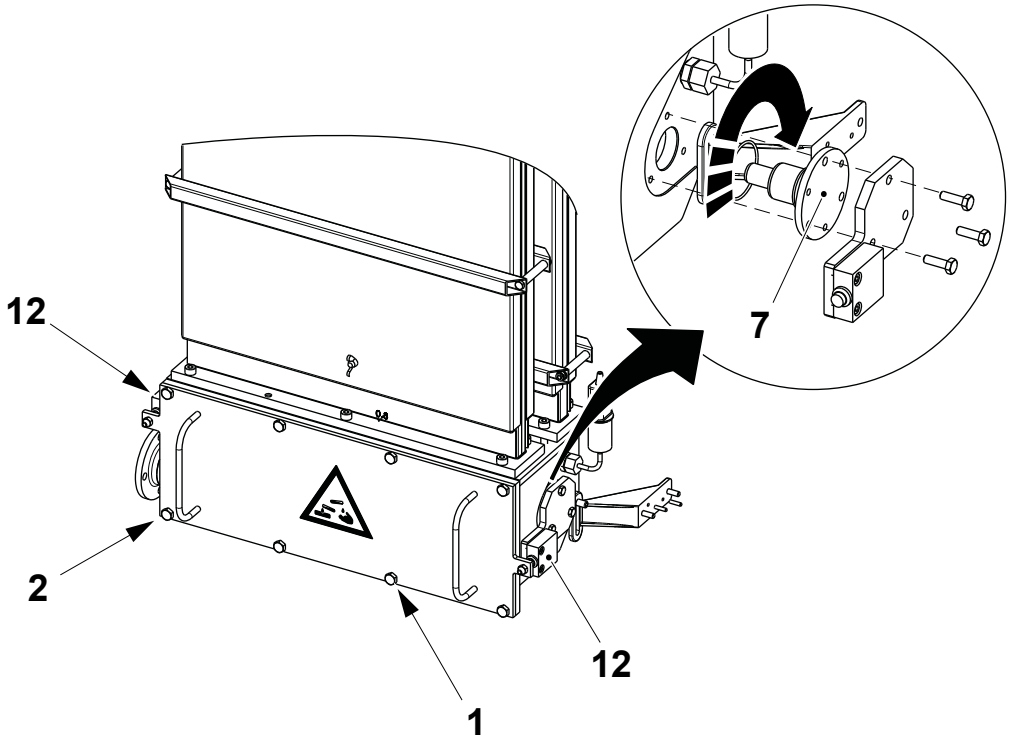

1 Screw
2 Screw
7 Shaft
12 Micro switch

(Cont'd)

(Cont'd)

WARNING
Hydrogen Peroxide.
Follow the Safety Precautions.

Note! Valid for machines with T-order: 21208/00018 and above.

a) Loosen the two screws (1), remove the six screws (2) and remove the bottom cover (3).

b) Remove and change the gasket (4).

c) Remove the screws (5) and the plate (6).

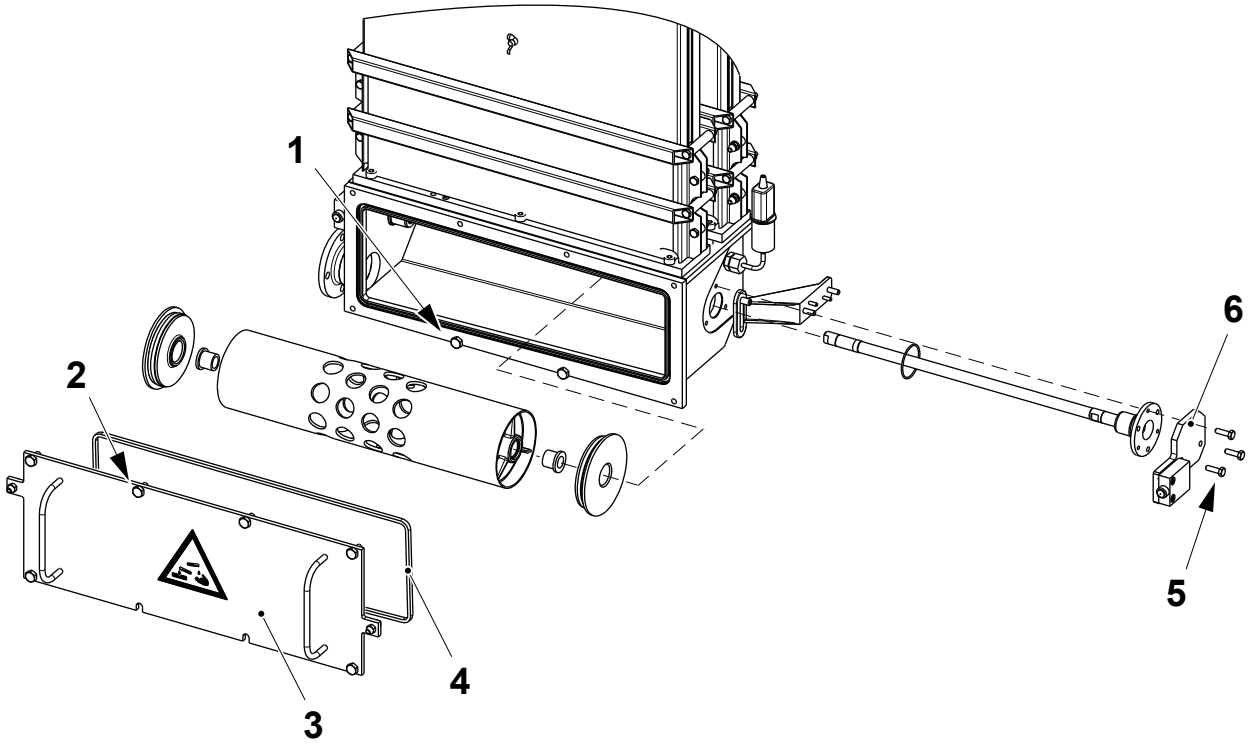

1 Screw
2 Screw
3 Bottom cover
4 Gasket
5 Screw
6 Plate

(Cont'd)

(Cont'd)

d) Extract the flange with the shaft (7) assembled. Change the O-ring (8).
e) Remove the bending roller (9) and the wheels (10).
f) Remove and change the bushings (11).

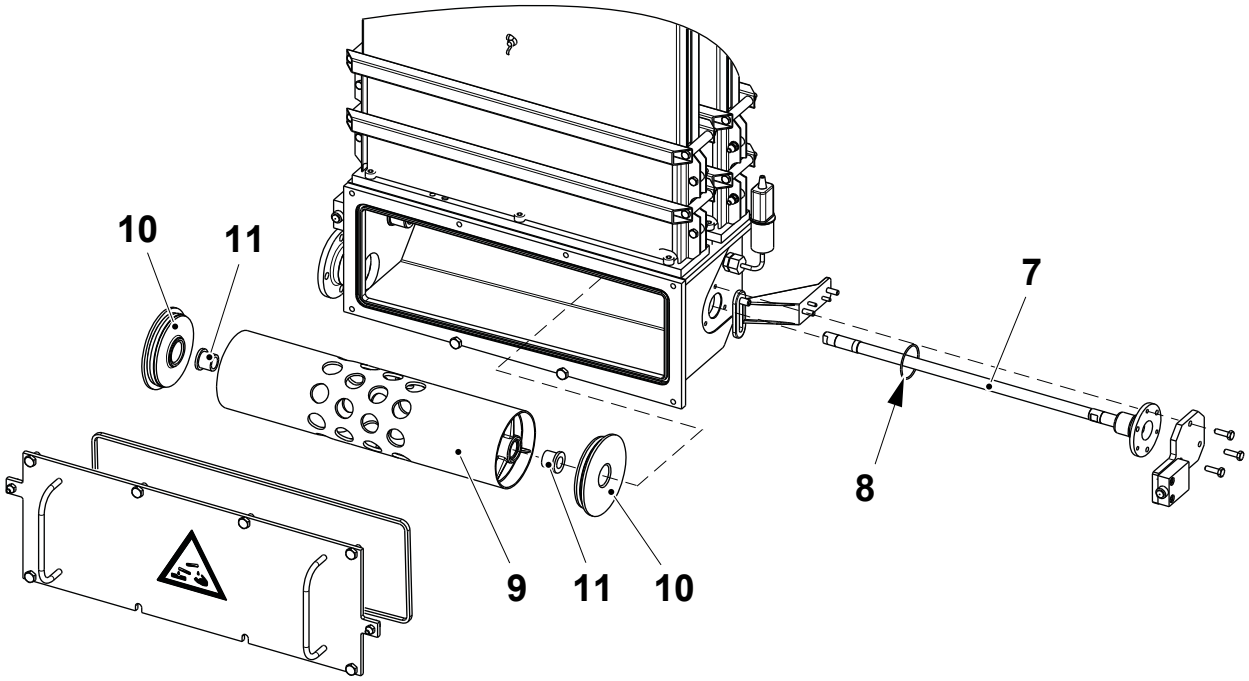

7 Flange with shaft
8 O-ring
9 Roller
10 Wheel
11 Bushing

(Cont'd)

(Cont'd)

g) Assemble in the reverse order.

Note! When assembling, rotate the flange with the shaft (7) assembled by 120°.

Note! The two micro switches (12) must not be activated until the two screws (1) and the six screws (2) have been fully tightened. Make sure that the alarm functions on the TPOP display.

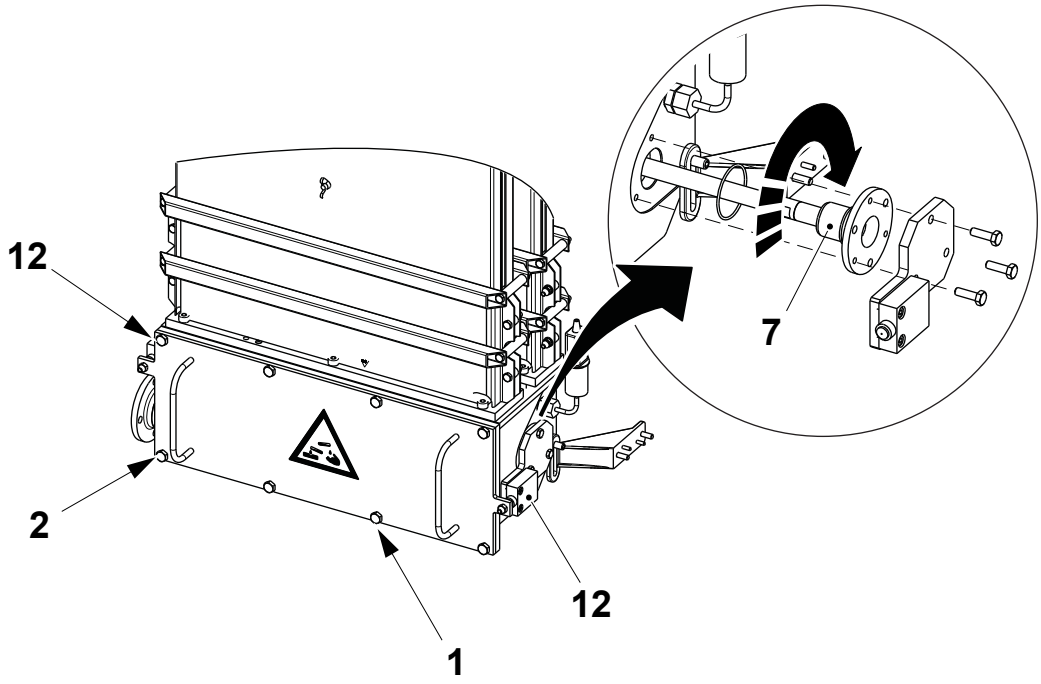

1 Screw
2 Screw
7 Flange with shaft
12 Micro switch

1.7.3-3 Bath - Change Heating Elements

Machine Status	Mains Power OFF Air OFF Steam ON Water OFF
SPC Reference	2715556-0200

WARNING

Burn hazard.

The hydrogen peroxide system and adjacent components may be hot. Wear heat-resistant protective gloves.

(Cont'd)

(Cont'd)

a) Mark and remove all the electrical connections (1).

b) Remove the screws (2), the square tubes (3) and the spacers (4).

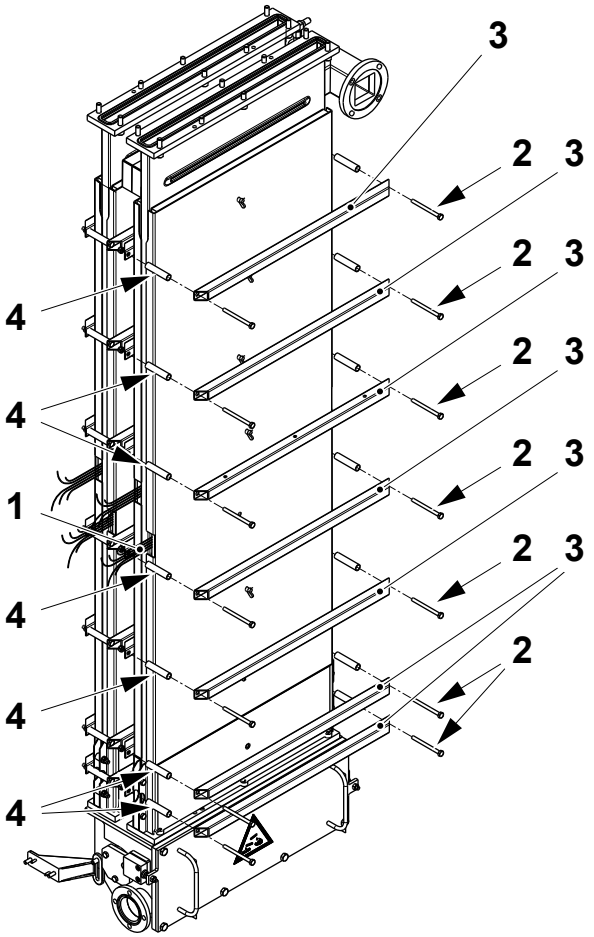

1 Electrical connections
2 Screw
3 Square tube
4 Spacer

(Cont'd)

(Cont'd)

CAUTION
Risk of damage to the equipment
The heating elements are fragile and must be handled with care. Do not fold the elements.

Note! The heating elements are not symmetrical. The surfaces of the heating elements are marked “in” and “out”. Make sure the inside of the heating elements are fitted facing the bath.

c) Remove the wing nuts (5).

d) Remove the cover (6) and the insulating mat (7).

e) Change the heating elements (8).

f) Assemble in the reverse order.

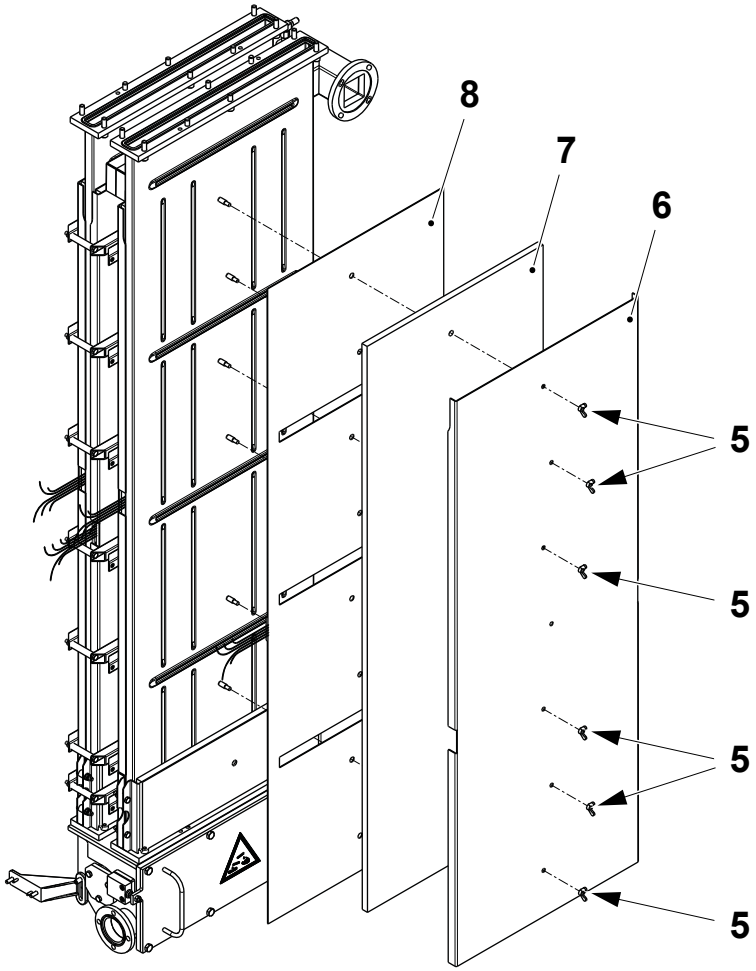

5 Wing nut
6 Cover
7 Insulating mat
8 Heating element

1.7.3-4 Bath - Set Bottom Cover Sensor

Machine Status	Mains Power ON Air OFF Steam ON Water OFF
SPC Reference	2715556-0200

WARNING

Hydrogen Peroxide.
Follow the Safety Precautions.

Note! Make sure that the bottom cover (1) is fitted and the screws (2) are tight.

a) Turn the screw (3) away from the micro switch (4) until the alarm appears on the TPOP.

b) Turn back the screw (3) one turn.

c) Tighten the nut (5).

d) Repeat for the other micro switch on the other side.

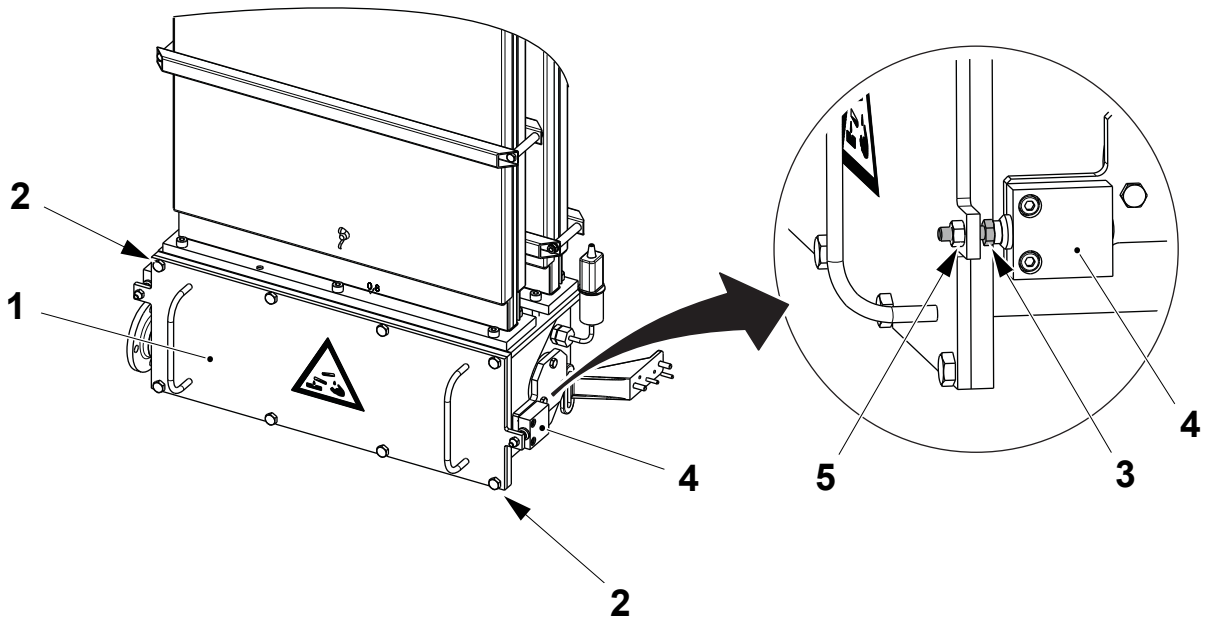

1 Bottom cover
2 Screw
3 Screw
4 Micro switch
5 Nut

1.7.4 Spray System

1.7.4-1 Spray System - Check

Machine Status	Mains Power OFF Air OFF Steam ON Water OFF
SPC Reference	2529485-0200

WARNING
Hydrogen Peroxide.
Follow the Safety Precautions.

Check for peroxide leakages in the spray unit.

Note! Mark all connections before removal.

Change the O-ring (1) if damaged or worn out.

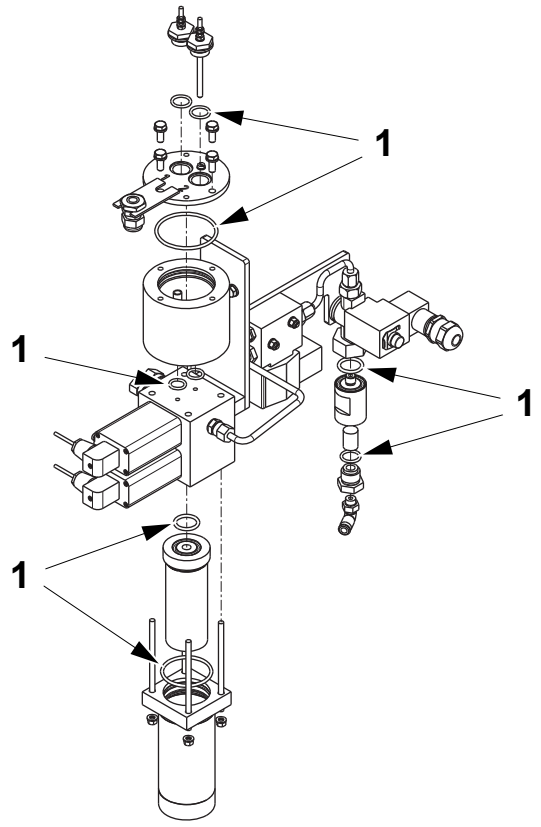

1 O-ring

1.7.4-2 Spray System - Clean Peroxide Filter

Machine Status	Mains Power OFF Air OFF Steam ON Water OFF
SPC Reference	2529485-0200

WARNING
Hydrogen Peroxide.
Follow the Safety Precautions.

(Cont'd)

(Cont'd)

a) Remove the nuts (1) and the filter housing (2).

b) Pull out the peroxide filter (3), rinse it with deionized water and clean it with compressed air.

c) If necessary change the peroxide filter (3).

d) Fit the peroxide filter (3) and the filter housing (2).

e) Tighten the nuts (1).

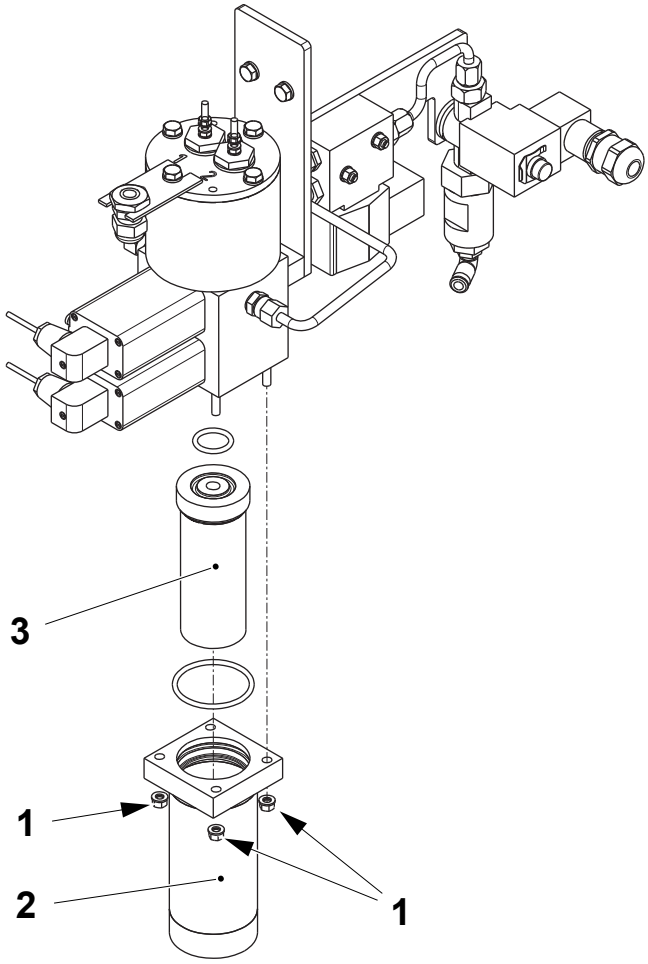

1 Nut
2 Filter housing
3 Peroxide filter

1.7.4-3 Spray System - Set Pressure

Machine Status	Mains Power OFF Air ON Steam ON Water OFF
SPC Reference	2529485-0200 2774455-0100

Set the air pressure for the spray system to 2.0 bar by the pressure regulator (1) located on the superstructure air panel. The pressure is shown on the pressure gauge (2).

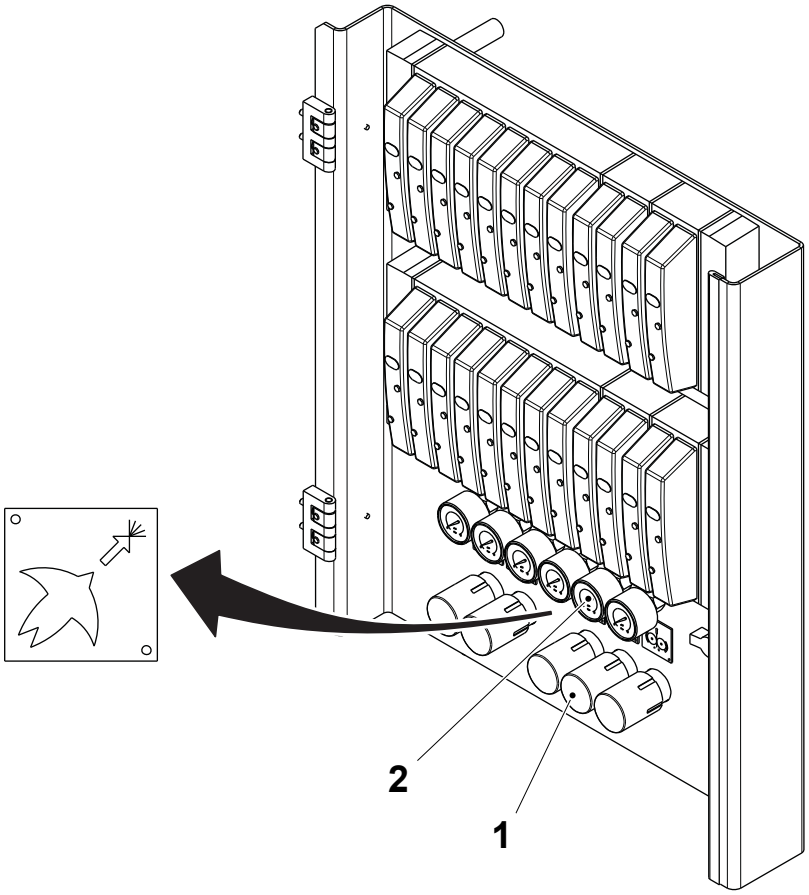

1 Pressure gauge
2 Pressure regulator

1.7.4-4 Spray System - Clean Filter

Machine Status	Mains Power OFF Air OFF Steam ON Water OFF
SPC Reference	2529485-0200

WARNING

Hydrogen Peroxide.

Follow the Safety precautions.

(Cont'd)

(Cont'd)

a) Remove the air pipe (1).
b) Remove the filter housing (2).
c) Remove the filter (3) from the filter housing (2).
d) Clean the filter (3) with compressed air.
e) Check the gaskets (4) for wear or damage and change if necessary.

Note! Make sure the gaskets (4) are fitted correctly during assembly.

f) Assemble in the reverse order.

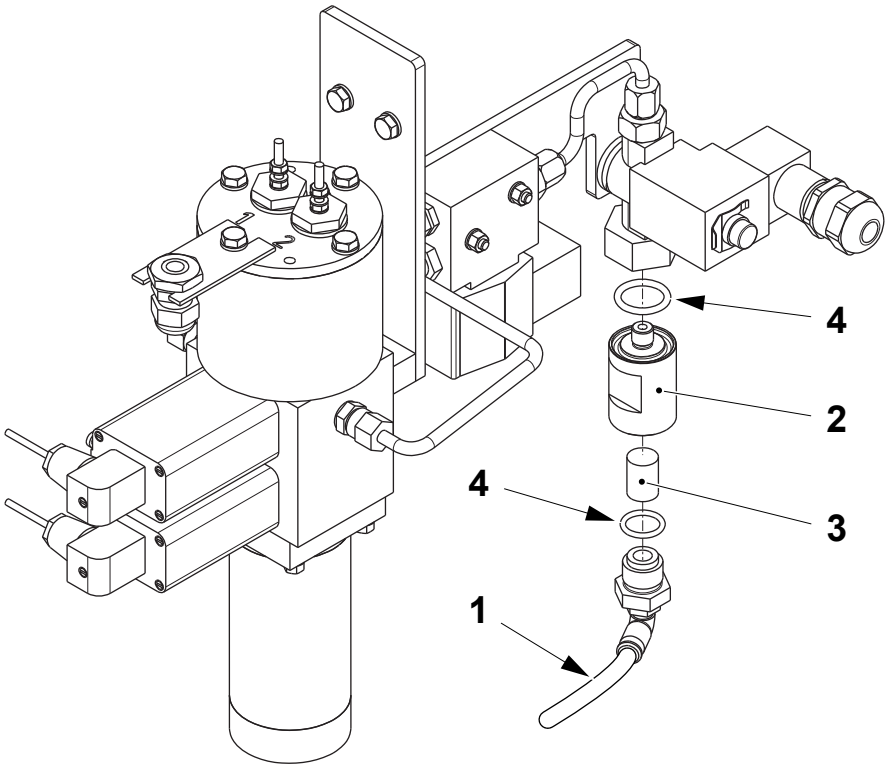

1 Air pipe
2 Filter housing
3 Filter
4 Gasket

1.8 Frame Section, Upper

SPC Reference	1558497-0300

1.8.1 Bending Roller

1.8.1-1 Bending Roller - Overhaul

Machine Status	Mains Power OFF Air OFF Steam ON Water OFF
SPC Reference	2552125-0100

Note! Valid for machines with T-order: 21208/00001 to 21208/00012.

(Cont'd)

(Cont'd)

Note! For machines fitted with the DIMC (OE), make sure that the roller (2) is fitted with the slot in the correct position.

a) Make sure that the brake unit (1) is set to ZERO.

b) Make sure that the roller (2) rotates freely. If not, remove the screws (3), the brake unit (1) and the splice detector (4).

c) Remove the screws (5) and the paper guide (6).

d) Remove the bending roller (2) and change the bearings (7).

e) Assemble in the reverse order and adjust if necessary, see 1.8.1-3 Bending Roller - Set Splice Detector.

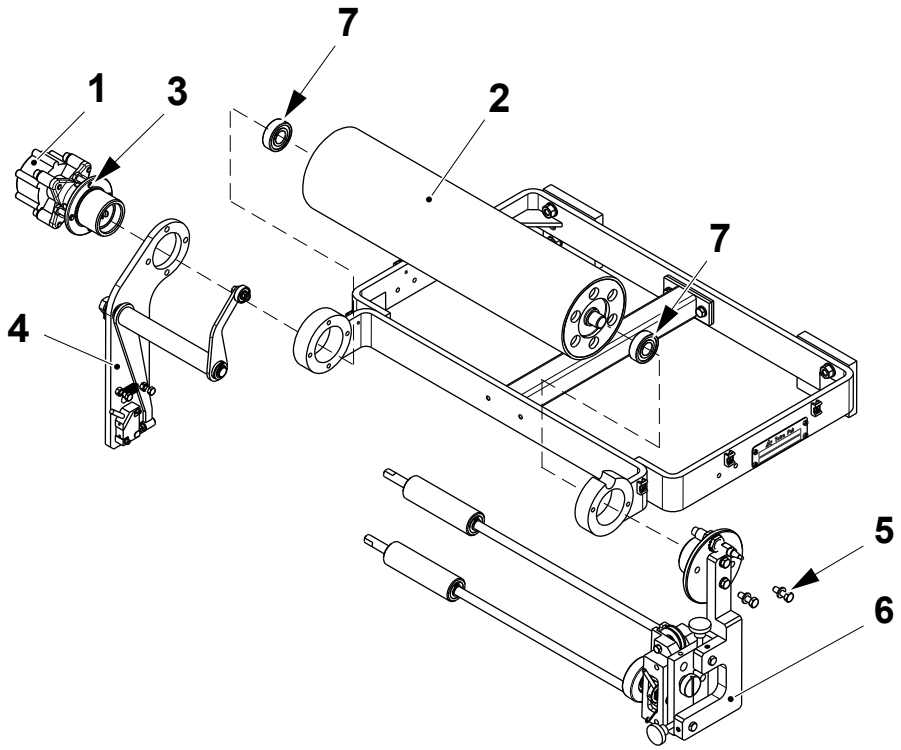

1 Brake unit
2 Roller
3 Screw
4 Splice detector
5 Screw
6 Paper guide
7 Bearing

(Cont'd)

(Cont'd)

Note! Valid for machines with T-order: 21208/00013 and above.

Note! Machines with T-order: 21208/00013 to 21208/00017 are not equipped with the adjusting knob (4).

Note! For machines fitted with the DIMC (OE), make sure that the roller (2) is fitted with the slot in the correct position.

a) Make sure that the brake unit (1) is set to ZERO.

b) Make sure that the roller (2) rotates freely. If not, change the ball bearings (3) as follows.

c) Loosen the adjusting knob (4) and unscrew the knob (5).

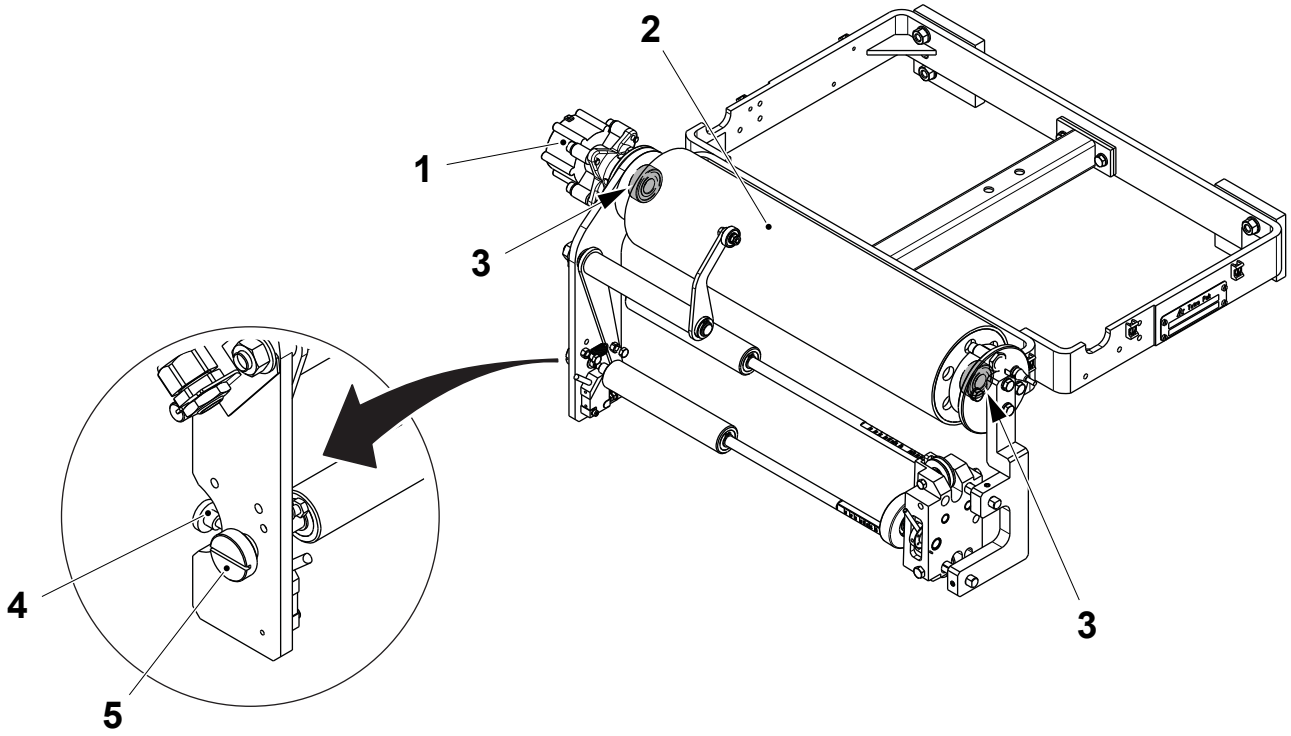

1 Brake unit
2 Roller
3 Ball bearing
4 Adjusting knob
5 Knob

(Cont'd)

(Cont'd)

d) Remove the screws (6), the brake unit (1) and the splice detector (7).

e) Remove the screws (8) and the plate (9).

f) Remove the bending roller (2) and change the bearings (3).

g) Assemble in the reverse order and adjust if necessary, see 1.8.1-3 Bending Roller - Set Splice Detector.

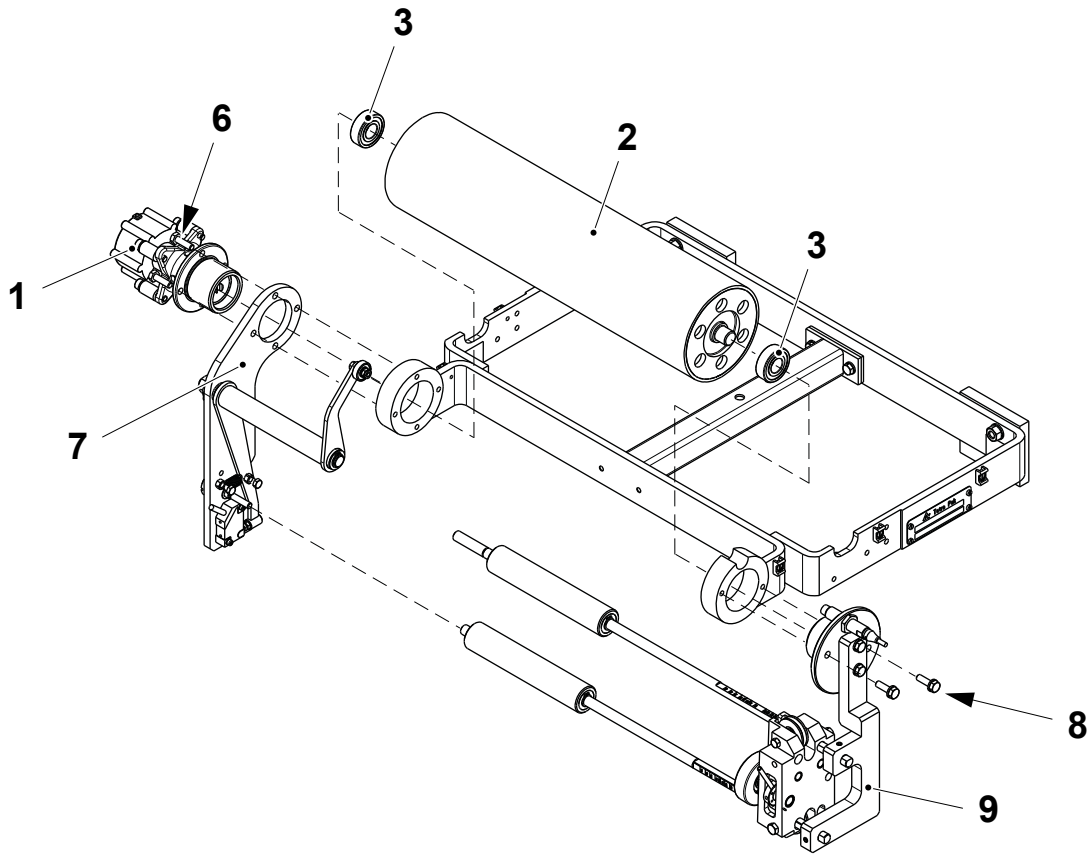

1 Brake unit
2 Roller
3 Ball bearing
6 Screw
7 Splice detector
8 Screw
9 Plate

1.8.1-2 Bending Roller - Check Splice Detector

Machine Status	Mains Power ON Air OFF Steam ON Water OFF
SPC Reference	2552125-0100

Note! Valid for machines with T-order: 21208/00001 to 21208/00020.

a) Make sure that the bearing (1) rotates easily, if not change it.

b) Make sure that the spring (2) is intact, if not change it.

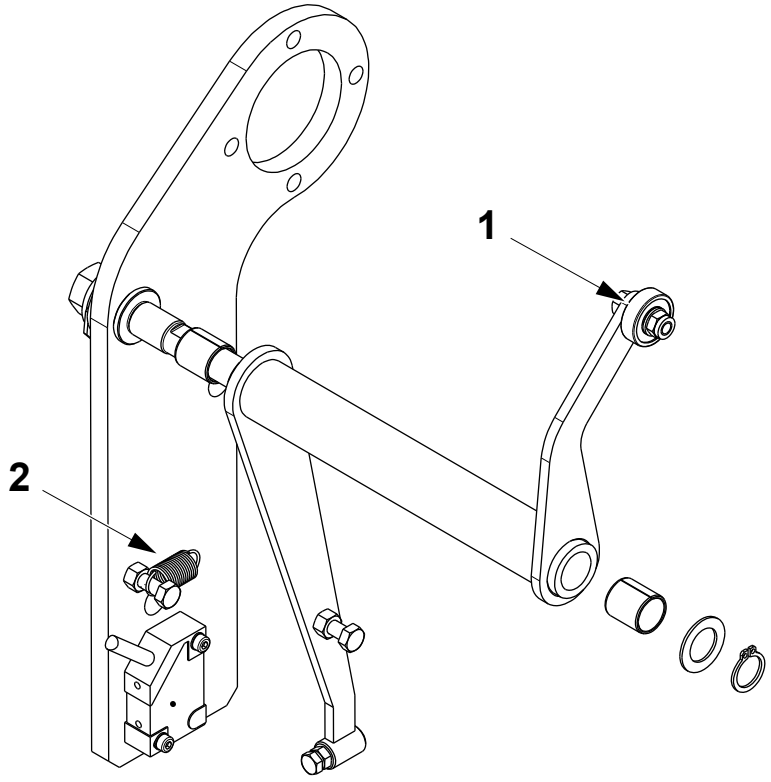

1 Brake unit
2 Roller

(Cont'd)

(Cont'd)

c) Make sure that the bracket (3) moves freely. If not, remove the retaining ring (4), the spring (2) and pull out the bracket. Clean the bushings (5) if necessary. Assemble in the reverse order.

d) Place a piece of packaging material under the bearing (1) and make sure the LED in the switch (6) is ON.

e) Place two pieces of packaging material under the bearing (1) and make sure the LED goes OFF. If not, adjust the splice detector, see 1.8.1-3 Bending Roller - Set Splice Detector.

f) Check that the machine ejects three packages and that the package with the taped piece is among these.

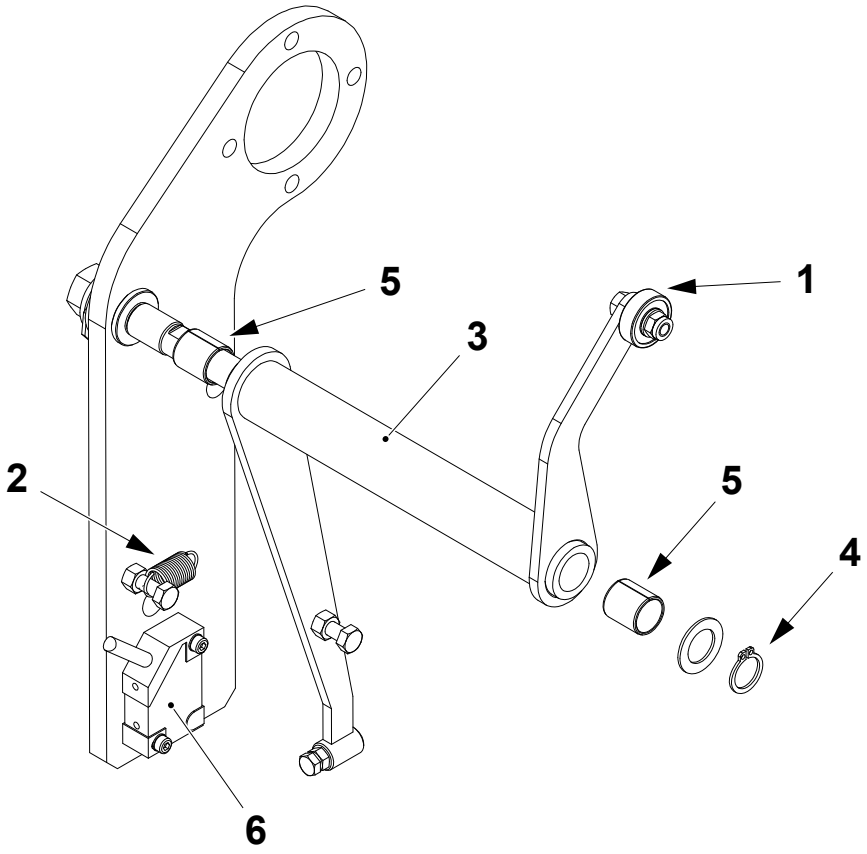

1 Bearing
2 Spring
3 Bracket
4 Retaining ring
5 Bushing
6 Switch

(Cont'd)

(Cont'd)

Note! Valid for machines with T-order: 21208/00021 and above.

a) Make sure that the bearing (1) rotates easily, if not change it.

b) Make sure that the spring (2) is intact, if not change it.

c) Make sure that the bracket (3) moves freely. If not, remove the retaining ring (4), the spring (2) and pull out the bracket. Clean the bushings (5) if necessary. Assemble in the reverse order.

d) Check the LED on the sensor (6) is OFF; slightly move the bracket (3) away from the sensor (6) and check the LED turns ON.

e) Check that the machine ejects three packages and that the package with the taped piece is among these.

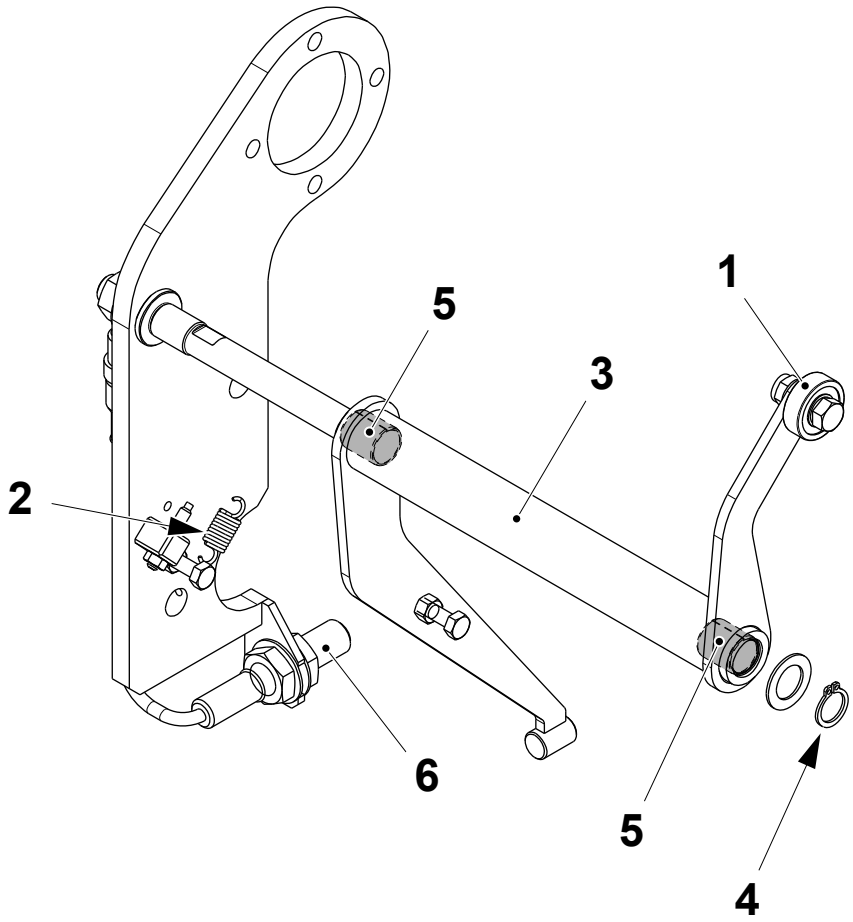

1 Bearing
2 Spring
3 Bracket
4 Retaining ring
5 Bushing
6 Sensor

1.8.1-3 Bending Roller - Set Splice Detector

Machine Status	Mains Power ON Air OFF Steam ON Water OFF
SPC Reference	2552125-0100

Note! Valid for machines with T-order: 21208/00001 to 21208/00020.

a) Set the screw (1) so that it touches the switch (2) and that the LED (3) goes ON.

b) Place two pieces of packaging material under the bearing (4).

c) Turn the screw (1) until the LED (3) goes OFF. Lock the screw (1).

Note! Make sure that with a single piece of packaging material the LED goes ON and that with two pieces of packaging material LED goes OFF.

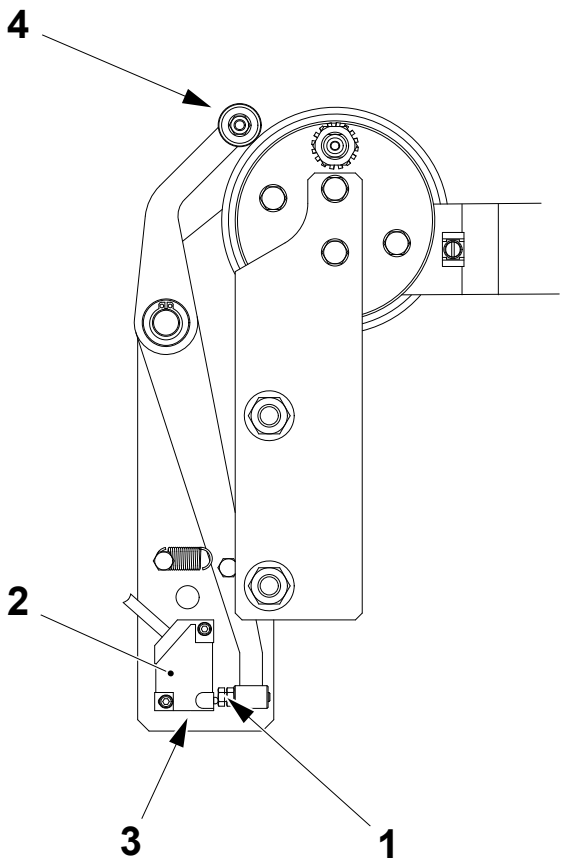

1 Screw
2 Switch
3 LED
4 Bearing

(Cont'd)

(Cont'd)

Note! Valid for machines with T-order: 21208/00021 and above.

a) With the packaging material (1) on the bending roller (2), adjust the grub screw (3) to move the bracket (4) until the bearing (5) lightly touches the packaging material (1).

b) Check by a feeler gauge that the clearance between the bearing (5) and the packaging material (1) is about 0.05 mm.

c) Loosen the nuts (6).

d) Set the distance **A** from the tip of the proximity sensor (7) and the mechanical stop (8).

e) Tighten the nuts (6).

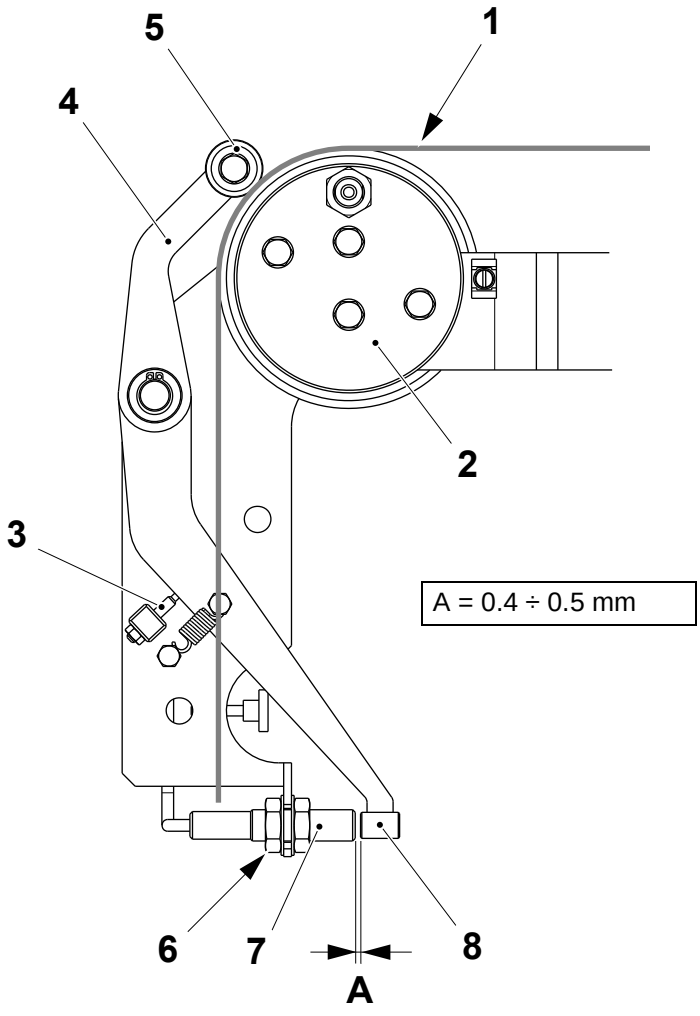

1 Packaging material
2 Bending roller
3 Screw
4 Bracket
5 Bearing
6 Nut
7 Proximity sensor
8 Mechanical stop

1.8.1-4 Bending Roller - Set Paper Guide Position

Machine Status	Mains Power OFF Air OFF Steam ON Water OFF
SPC Reference	2552125-0100

Note! Valid for machines with T-order: 21208/00001 to 21208/00012.

Note! The paper guide (5) must be adjusted so that the packaging material (1) is approximately centred over the bending roller (2). The packaging material must pass in front of the roller (3) and behind the roller (4).

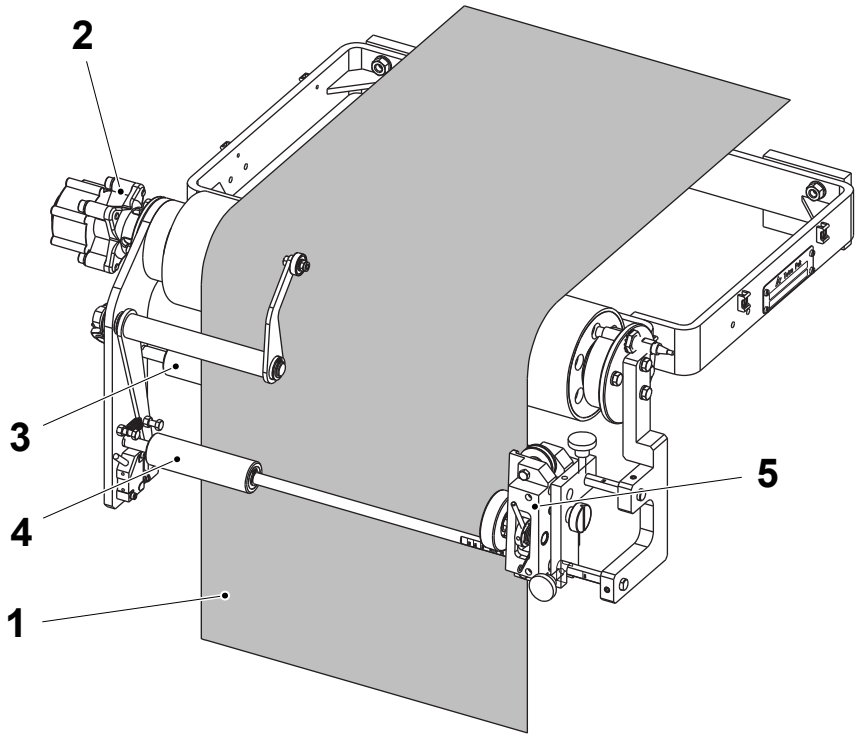

1 Packaging material
2 Bending roller
3 Roller
4 Roller
5 Paper guide

(Cont'd)

(Cont'd)

The paper guide (5) should be adjusted so that the packaging material passes between the guide rollers (6) and the edge guide roller (7) in such a way that the edge guide roller does not damage or bend the edge of the packaging material.

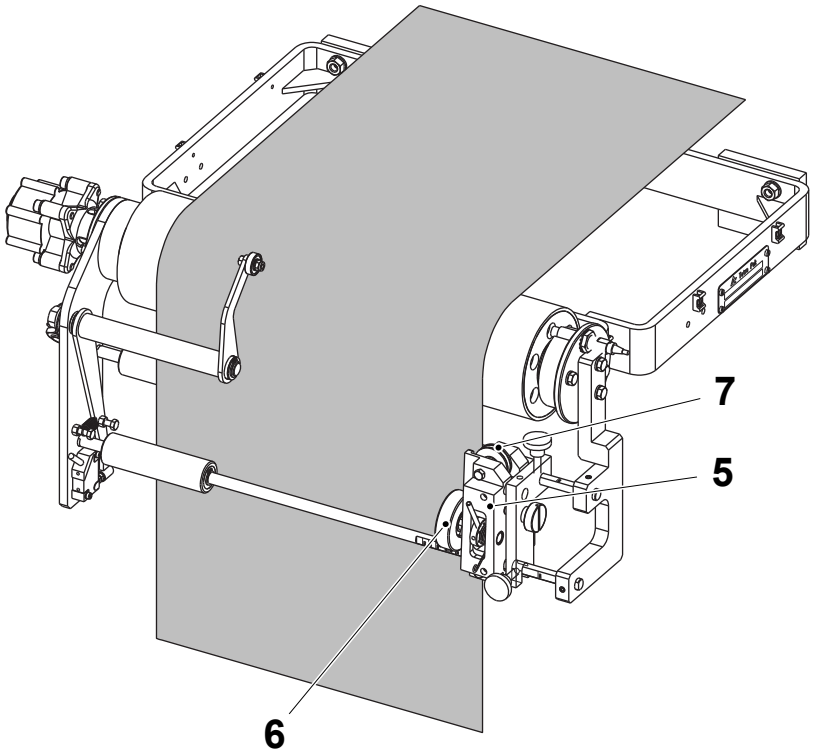

5 Paper guide
6 Guide roller
7 Edge guide roller

(Cont'd)

(Cont'd)

a) Loosen the screws (8) and (9).

b) Pull down the lever (10) to release the roller tension and feed the packaging material through the bending roller unit.

c) Pull down the lever (10) and slide the paper guide (5) until the packaging material is positioned between the guide rollers (6) and between the flanges of the edge guide roller (7).

d) Release the lever (10) and tighten the screws (8) and (9).

e) Turn the screw (11) to finely adjust the position of the packaging material between the flanges of the edge guide roller (7).

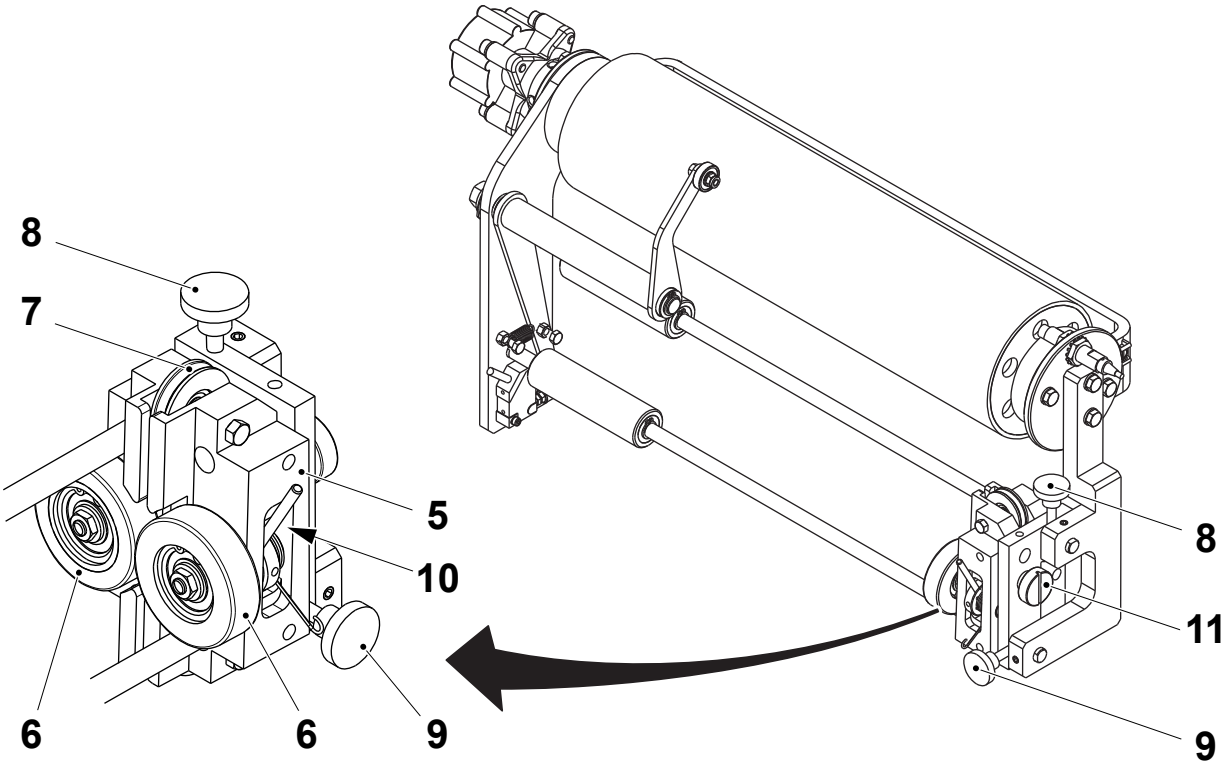

5 Paper guide
6 Guide roller
7 Edge guide roller
8 Screw
9 Screw
10 Lever
11 Screw

(Cont'd)

(Cont'd)

Note! Valid for machines with T-order: 21208/00013 and above.

Note! The paper guide (5) must be adjusted so that the packaging material (1) is approximately centred over the bending roller (2). The packaging material must pass in front of the roller (3) and behind the roller (4).

The paper guide (5) should be adjusted so that the packaging material passes between the guide rollers (6) and the edge guide roller (7) in such a way that the edge guide roller does not damage or bend the edge of the packaging material.

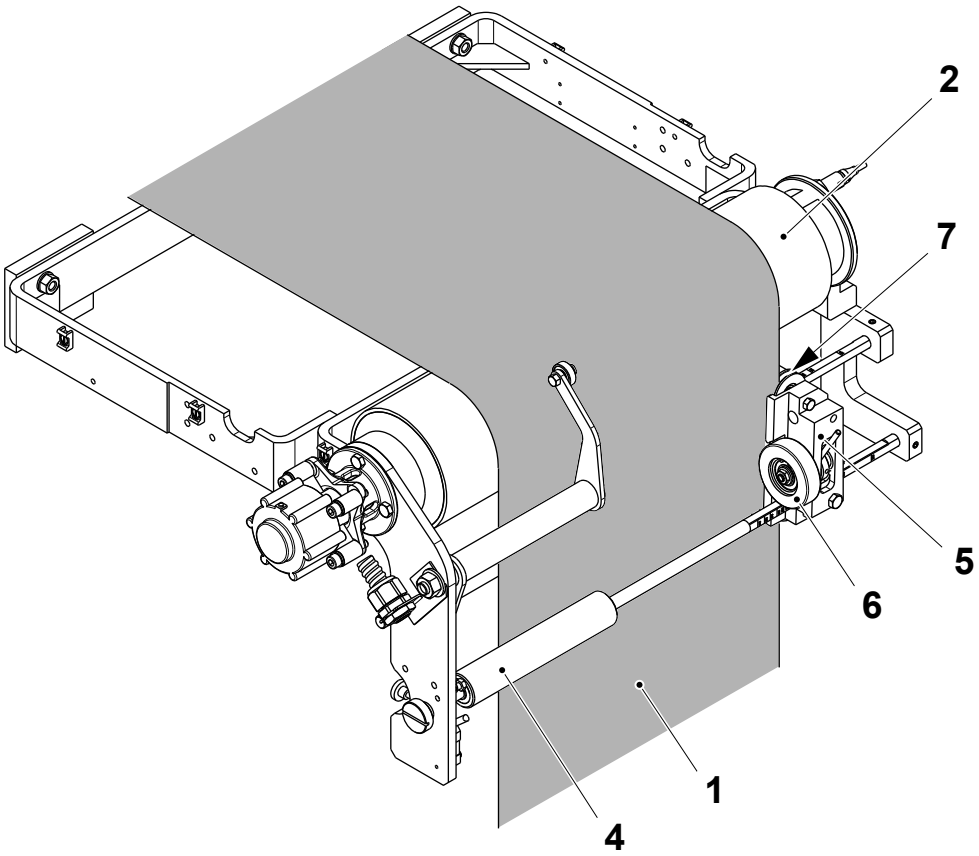

1 Packaging material
2 Bending roller
3 Roller
4 Roller
5 Paper guide
6 Guide roller
7 Edge guide roller

(Cont'd)

(Cont'd)

Note! Machines with T-order: 21208/00013 to 21208/00017are not equipped with the adjusting knob (12).

a) Loosen the screws (8) and (9).

b) Pull the lever (10) down to release the roller tension and feed the packaging material through the bending roller unit.

c) Pull the lever down and slide the web guide (6) until the packaging material is positioned between the guide rollers (5) and between the flanges of the edge guide roller (4).

d) Release the lever and tighten the screws (8) and (9).

e) Turn the screw (11) to finely adjust the position of the packaging material between the flanges of the edge guide roller.

f) Tighten the adjusting knob (12).

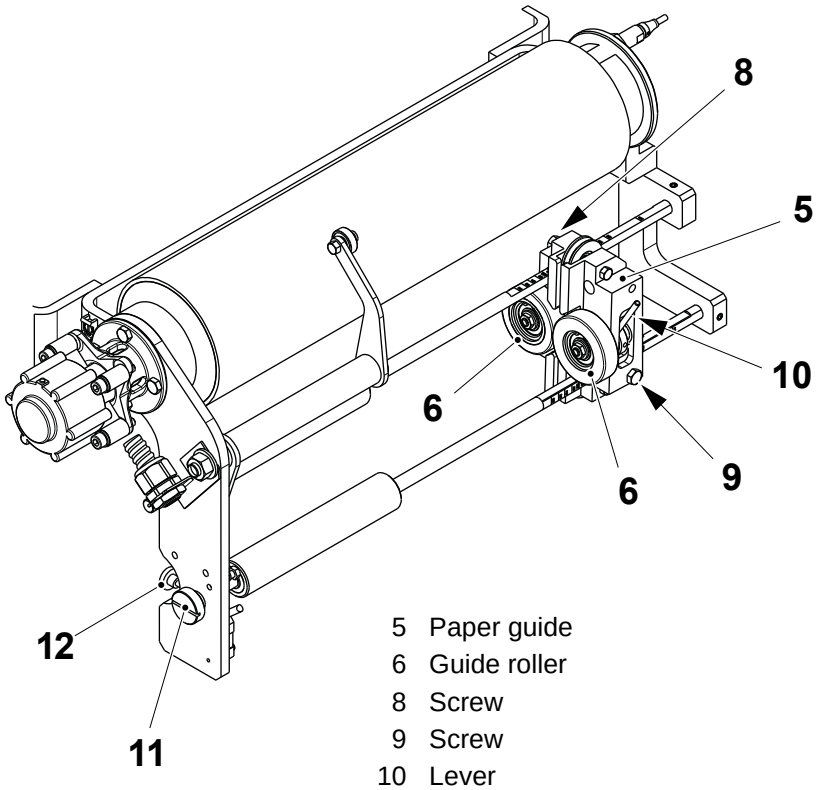

5 Paper guide
6 Guide roller
8 Screw
9 Screw
10 Lever
11 Screw
12 Adjusting knob

1.8.1-5 Bending Roller - Check Paper Guide

Machine Status	Mains Power OFF Air OFF Steam ON Water OFF
SPC Reference	2552125-0100

Check that the surfaces of the steel roller (1) and the rubber roller (2) are not damaged. Check also that they rotate freely. If there are any irregularities change the defective components, see the following pages.

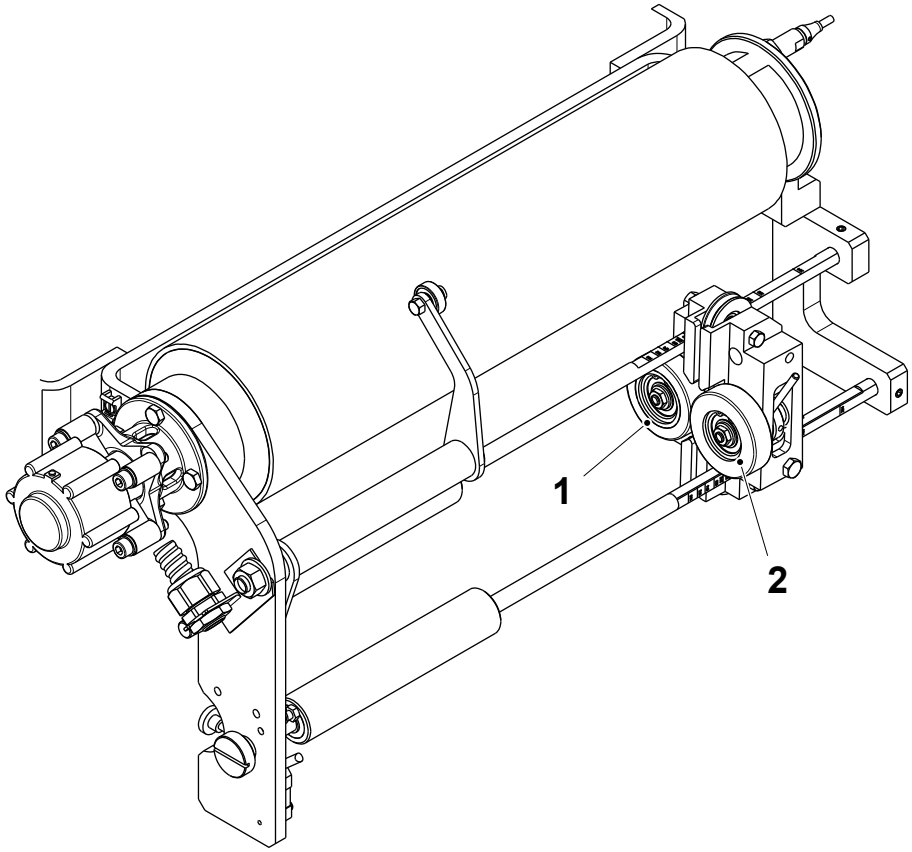

1 Steel roller
2 Rubber roller

(Cont'd)

(Cont'd)

Paper Guide Removal

Note! Valid for machines with T-order: 21208/00001 to 21208/00012.

g) Remove the screws (1) and separate the plate (2) from the roller (3).

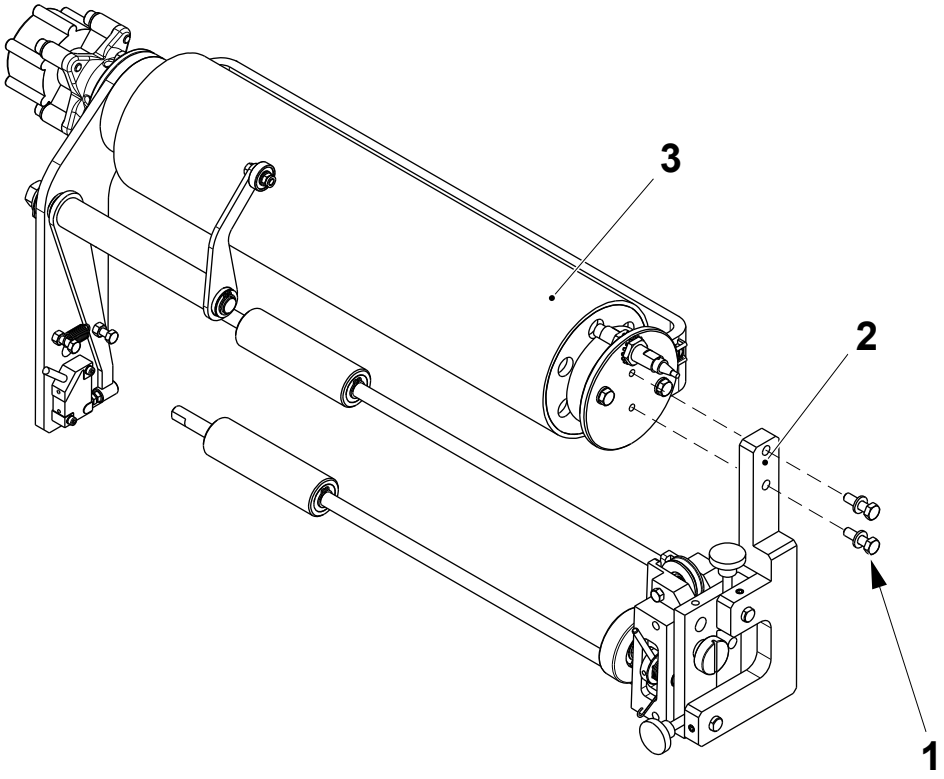

1 Screw
2 Plate
3 Roller

(Cont'd)

(Cont'd)

h) Remove the grub screws (4) and (5).

i) Separate the guide rollers (6) and (7) from the paper guide (8) and the plate (2).

j) Overhaul the paper guide (8), see Paper Guide Overhaul on page 1-380.

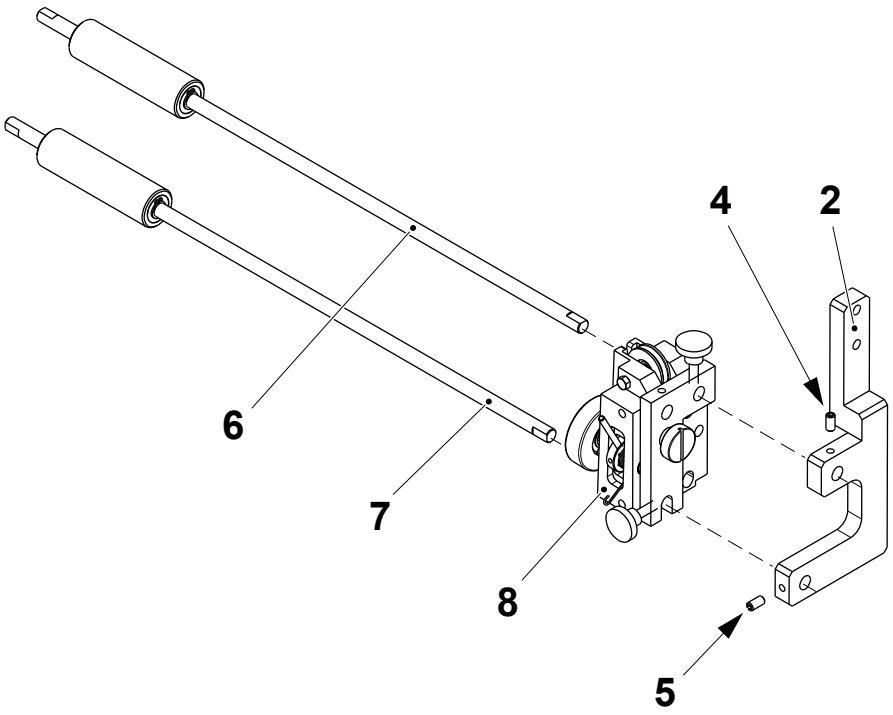

2 Plate
4 Grub screw
5 Grub screw
6 Guide roller
7 Guide roller
8 Paper guide

(Cont'd)

(Cont'd)

k) Assemble in the reverse order.

Note! When assembling, make sure that the datum lines (9) on the guide rollers (6) and (7) are both perfectly aligned with the plate (2).

l) Set the correct packaging material width, see 1.8.1-6 Bending Roller - Set Web Width.

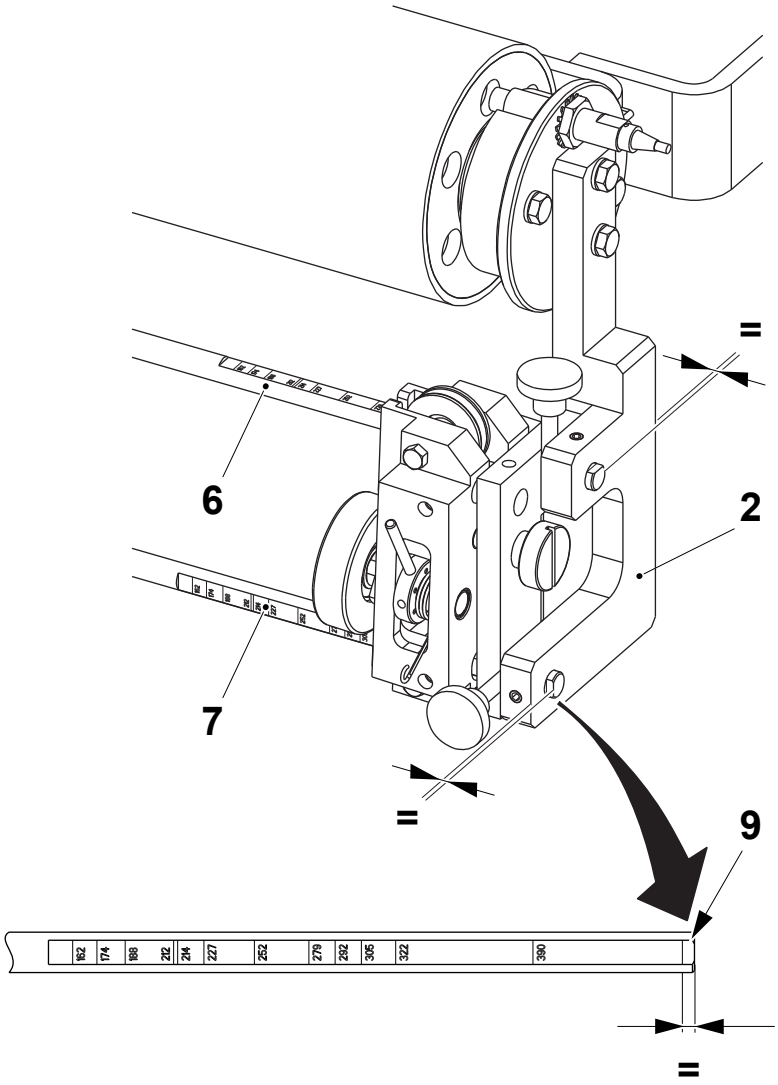

2 Plate
6 Guide roller
7 Guide roller
9 Datum line

(Cont'd)

(Cont'd)

Note! Valid for machines with T-order: 21208/00013 and above.

Note! Machines with T-order: 21208/00013 to 21208/00017are not equipped with the adjusting knob (1).

a) Loosen the adjusting knob (1) and unscrew the knob (2).

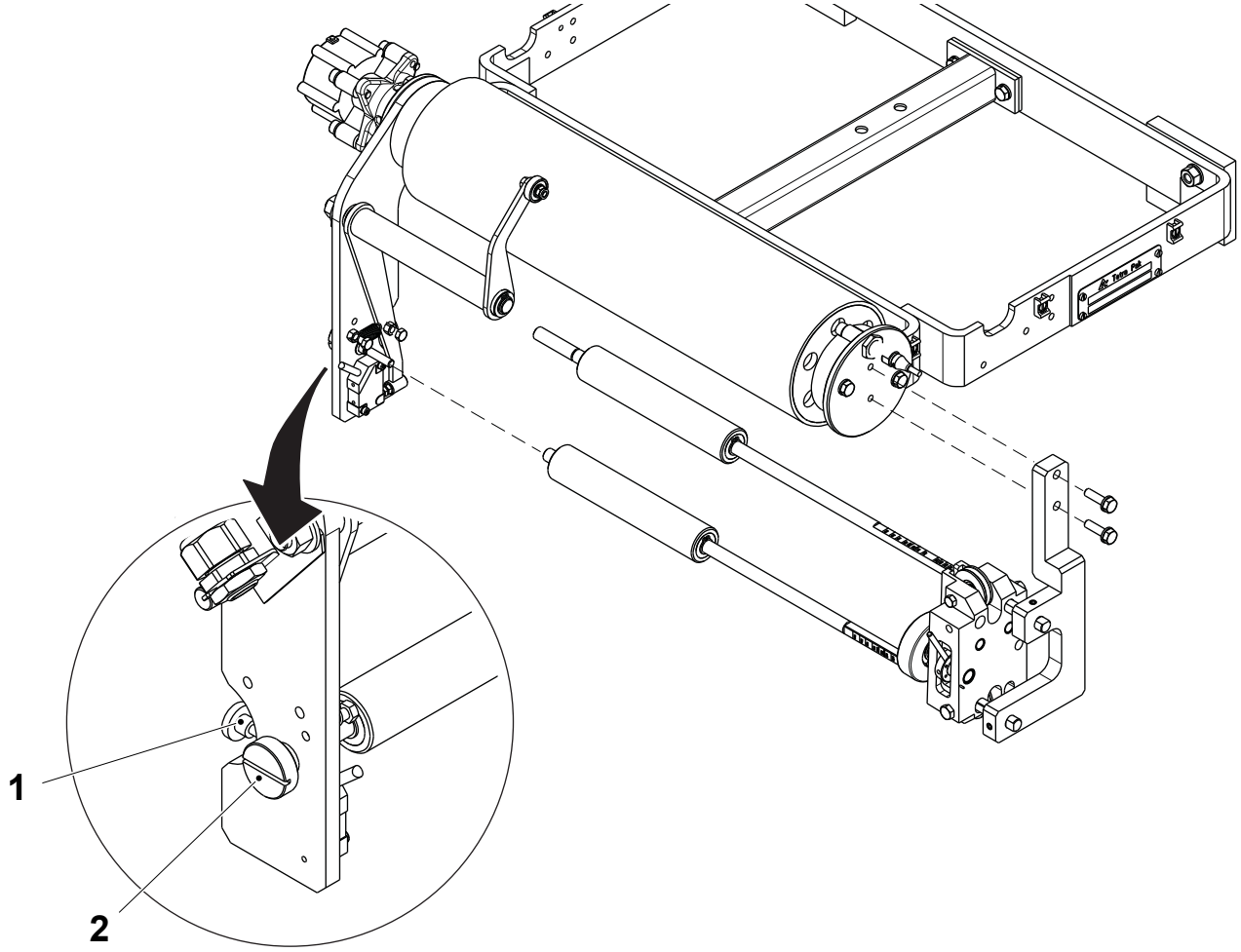

1 Adjusting knob
2 Knob

(Cont'd)

(Cont'd)

b) Remove the screws (3) and the paper guide assembly (4).

c) Loosen the grub screws (5) and remove the plate (6).

d) Loosen the screws (7) and slip off the paper guide (8).

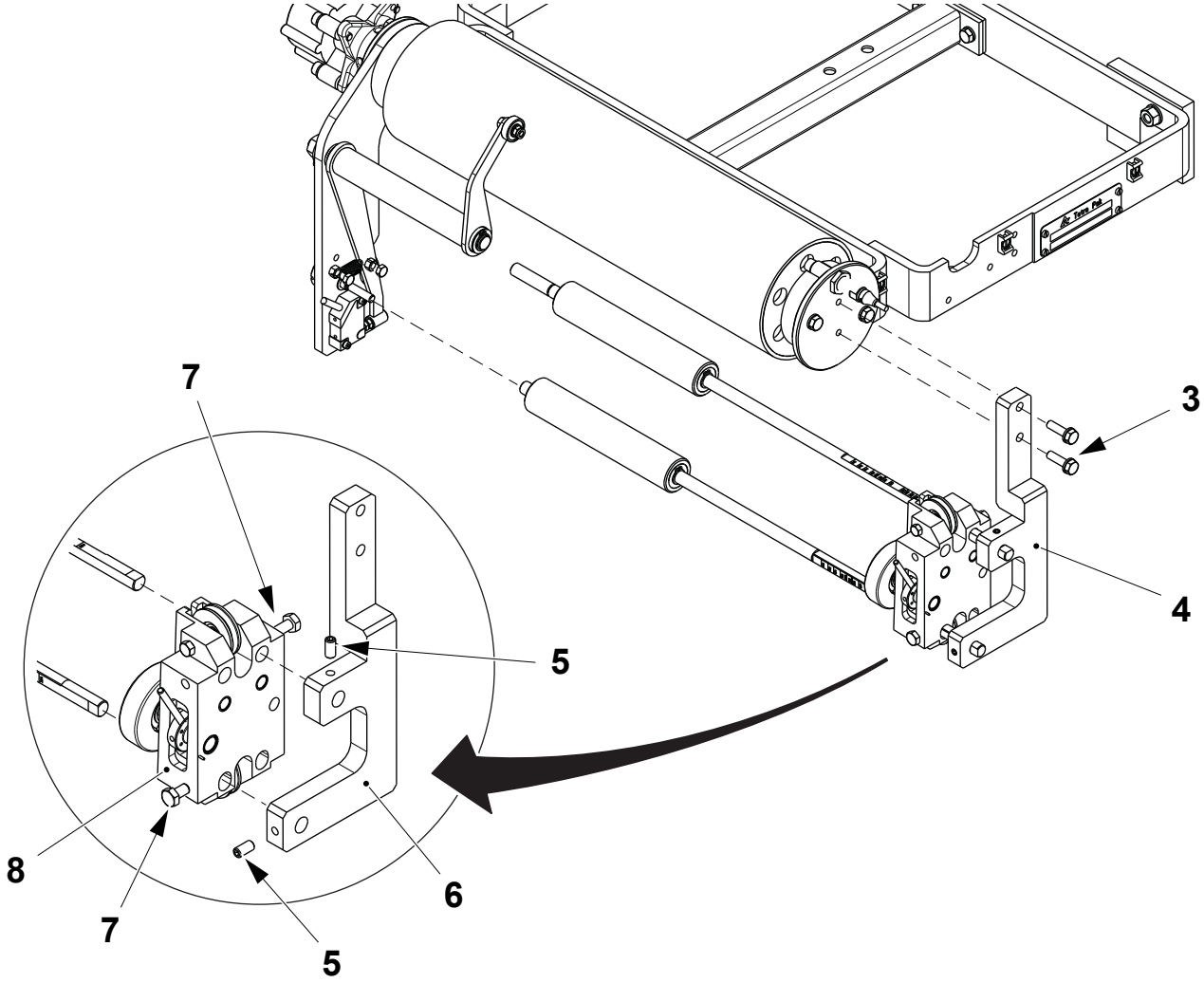

3 Screw
4 Paper guide assembly
5 Grub screw
6 Plate
7 Screw
8 Paper guide

(Cont'd)

(Cont'd)

e) Overhaul the paper guide, see Paper Guide Overhaul on page 1-380.

f) Assemble in the reverse order.

Note! When assembling, make sure that the ends of the rods (9) and (10) are aligned with the outer surface of the plate (6).

g) Set the correct packaging material width, see 1.8.1-6 Bending Roller - Set Web Width.

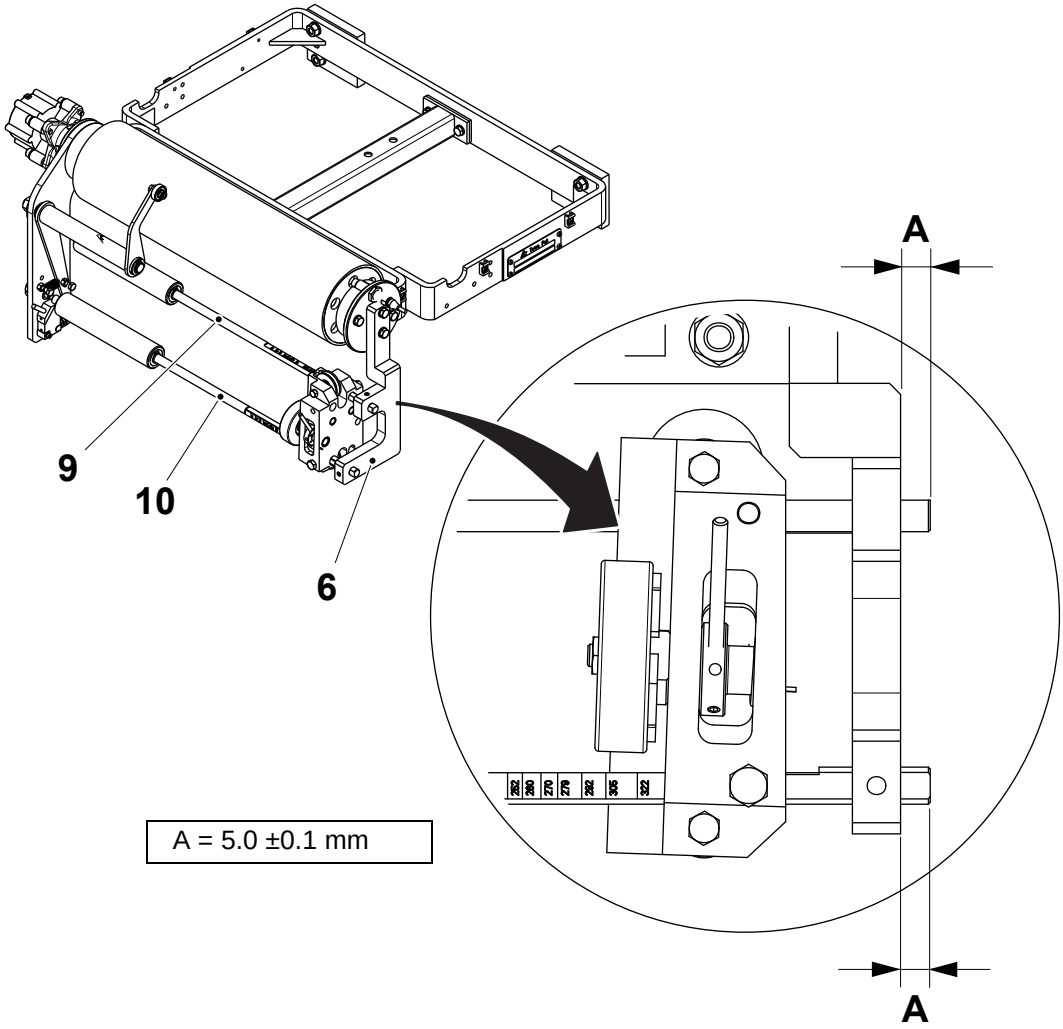

6 Plate
9 Rod
10 Rod

(Cont'd)

(Cont'd)

Paper Guide Overhaul

a) Remove the nuts (1), the washers (2) and the retaining rings (3).

b) Change the steel roller (4), the rubber roller (5) and the bearings (6).

c) Remove the shaft (7) and the wheel (8).

d) Change the bushing (9) and the bearing (10).

Note! When assembling, fit the rubber roller (5) on to the printed side of the packaging material web.

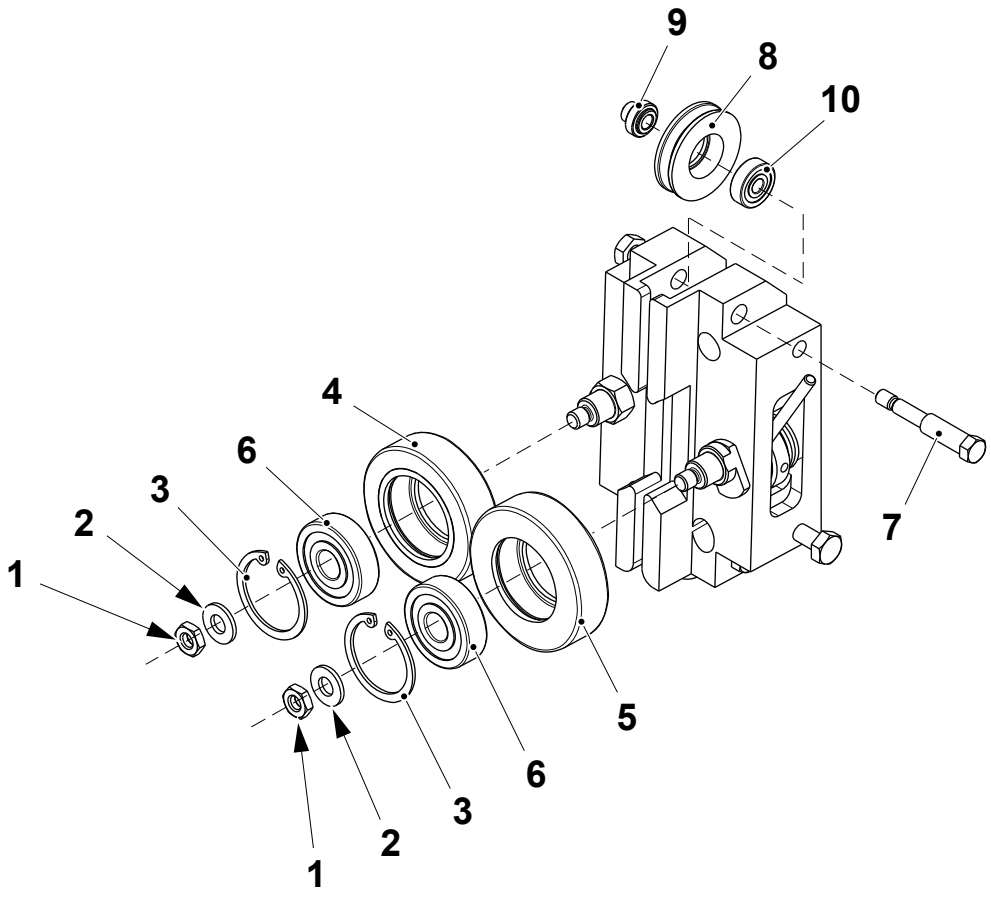

1 Nut
2 Washer
3 Retaining ring
4 Steel roller
5 Rubber roller
6 Bearing
7 Shaft
8 Wheel
9 Bushing
10 Bearing

(Cont'd)

(Cont'd)

e) Remove the lever (11).
f) Loosen the grub screw (12) and the eccentric shaft (13).
g) Remove the wheel (14) and change the spring (15).
h) Assemble in the reverse order.

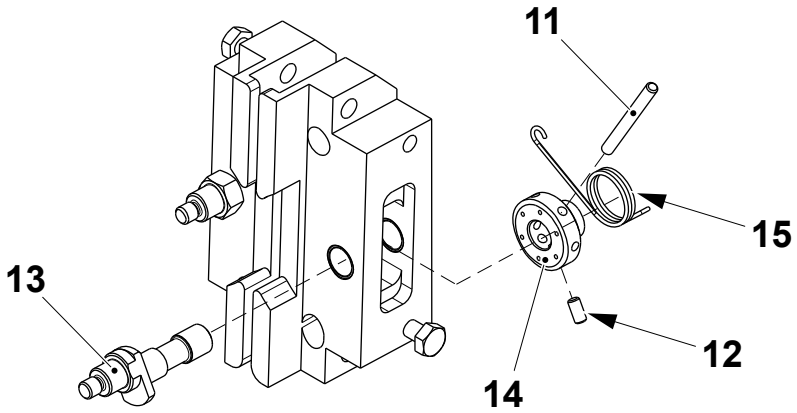

11 Lever
12 Grub screw
13 Shaft
14 Wheel
15 Spring

1.8.1-6 Bending Roller - Set Web Width

Machine Status	Mains Power OFF Air OFF Steam ON Water OFF
SPC Reference	2552125-0100

Note! Valid for machines with T-order: 21208/00001 to 21208/00012.

a) Loosen the screw (1) and set the distance **A** with the screw (2).

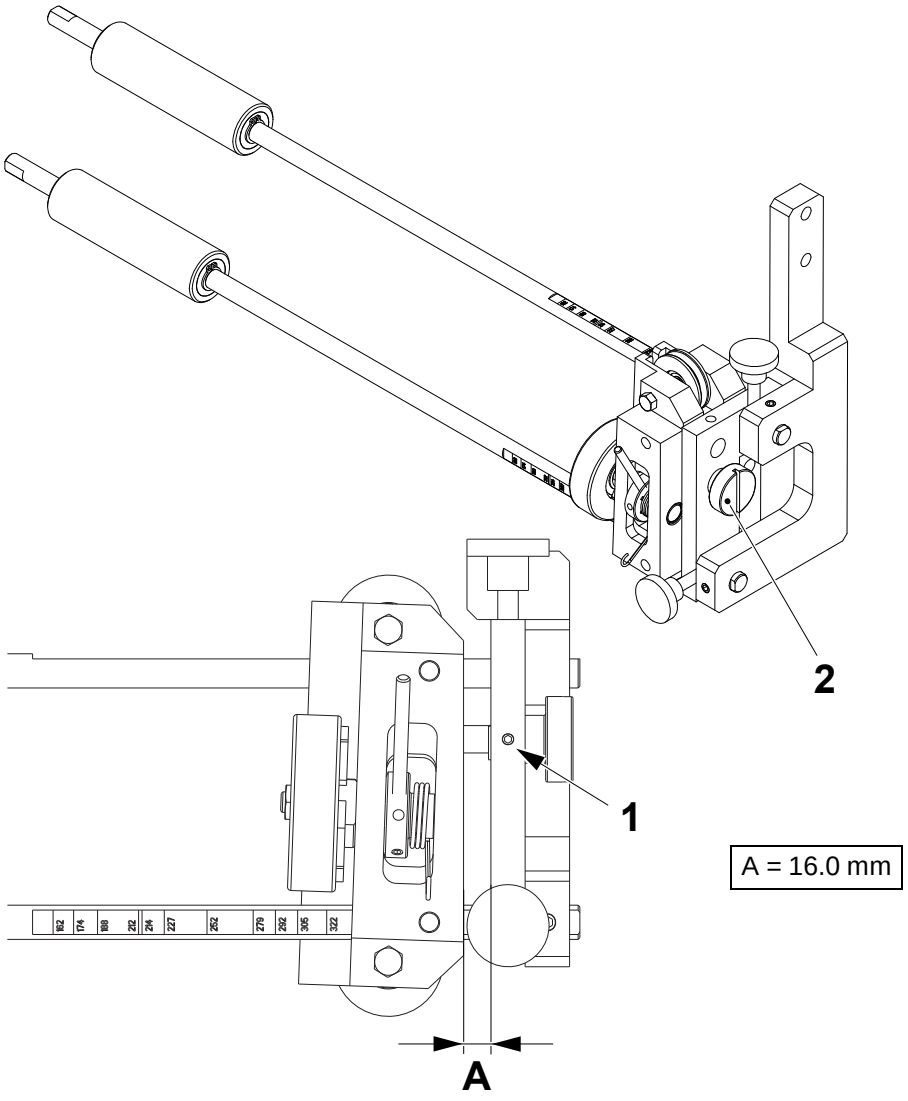

1 Screw
2 Screw

(Cont'd)

(Cont'd)

b) Loosen the screws (3) and set the web width, see table below, by aligning the correct datum line (4) on the rods (5) with the paper guide (6).

c) Fine adjust the web width with the screw (2).

d) Tighten the screw (1).

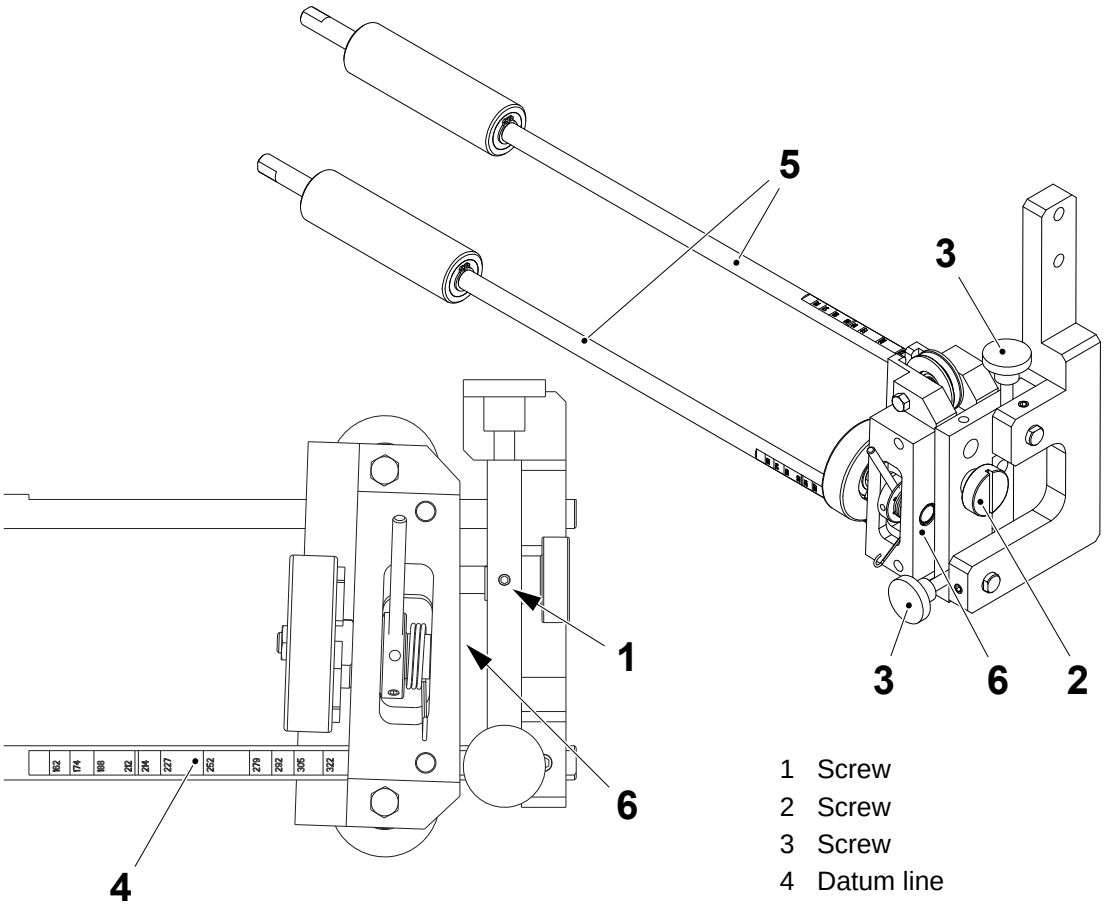

1 Screw
2 Screw
3 Screw
4 Datum line
5 Rod
6 Paper guide

(Cont'd)

(Cont'd)

Note! Valid for machines with T-order: 21208/00013 and above.

a) Loosen the screws (1) and set the web width, see the table, by aligning the correct datum line (2) on the rods (3) with the external surface of paper guide (4).

b) Fine adjust the web width with the knob (5).

c) Tighten the screws (1) and the adjusting knob (6).

Note! Machines with T-order: 21208/00013 to 21208/00017are not equipped with the adjusting knob (6).

Package	Web Width (mm)
TBA 500 B	322.0
TBA 1000 B	322.0
TBA 1000 S	305.0
TBA 500 Sq	292.0
TBA 1000 Sq	292.0
TPA 750 Sq	260.0
TPA 1000 Sq	260.0
TBA 1500 S	322.0
TBA 2000 S	383.0

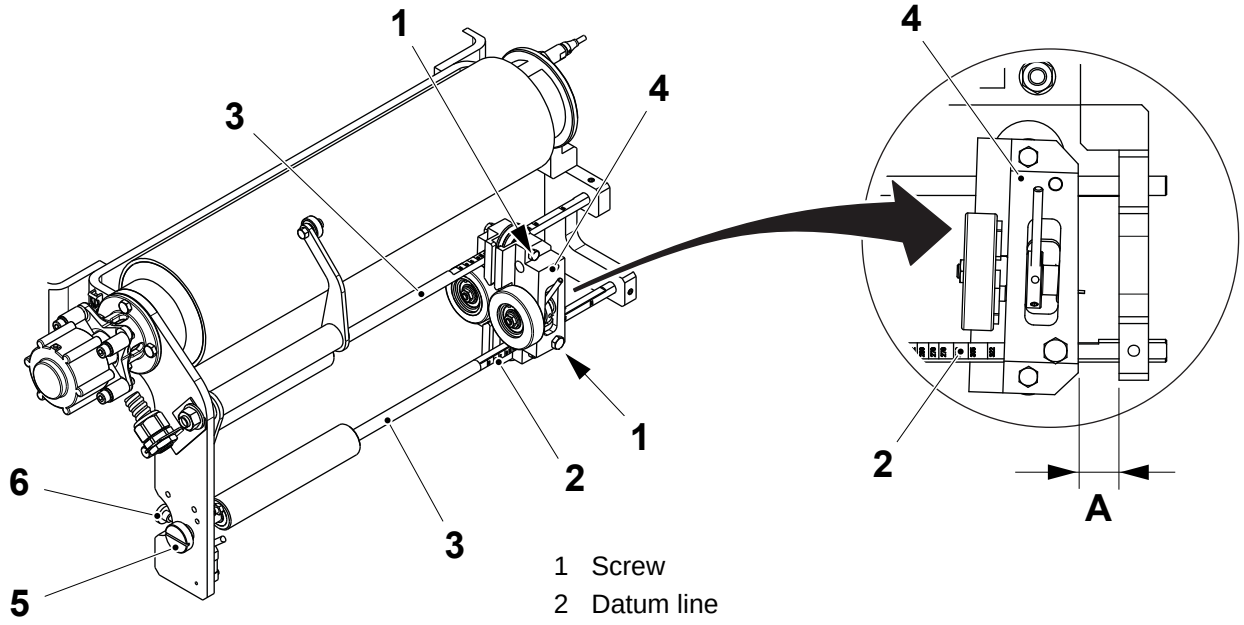

1 Screw
2 Datum line
3 Rod
4 Paper guide
5 Knob
6 Adjusting knob

1.8.1-7 Bending Roller - Set Paper Guide Pressure

Machine Status	Mains Power OFF Air OFF Steam ON Water OFF
SPC Reference	2552125-0100

a) Remove the lever (1) and loosen the grub screw (2).

b) Rotate the wheel (3) to adjust the tension:

– increase the pressure on the roller (4) until the packaging material (5) stays up against the guide wheel (6). If the packaging material edge curls or is damaged in any way, the pressure has been increased too much.

c) Tighten the grub screw (2).

d) Fit the lever (1) to test the tension.

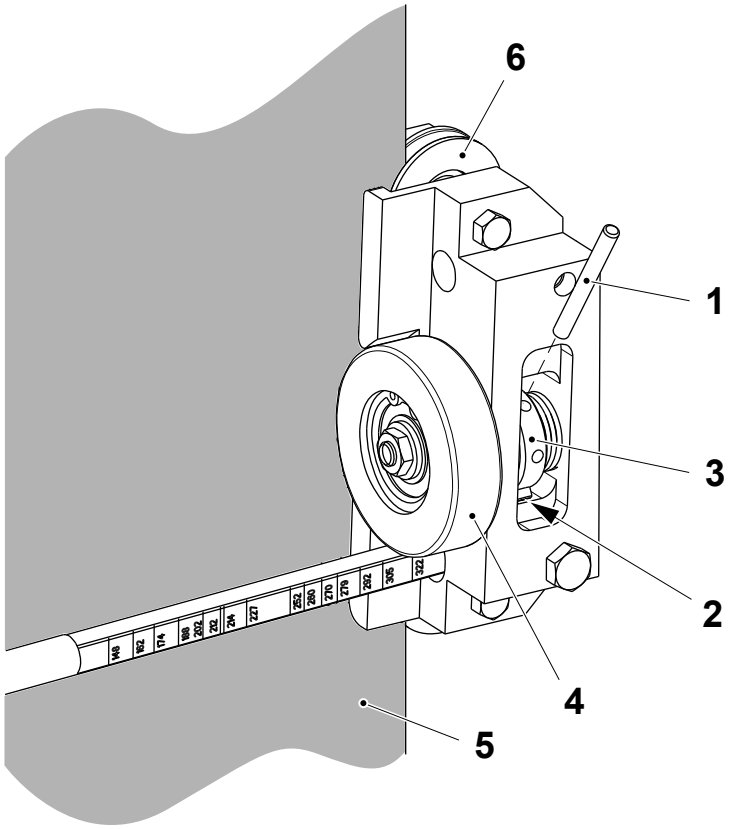

1 Lever
2 Grub screw
3 Wheel
4 Roller
5 Packaging material
6 Guide wheel

1.8.1-8 Bending Roller - Check Proximity Switch

Machine Status	Mains Power ON Air OFF Steam ON Water OFF
SPC Reference	2552125-0100

Check:

- the distance **A** between the roller (1) and the proximity switch (2).
- the function of the proximity switch (2). Turn the roller (1) and check that the proximity switch LED goes out when the proximity switch (2) passes over the holes in the bending roller (1).

Set the proximity switch if necessary, see 1.8.1-9 Bending Roller - Set Proximity Switch.

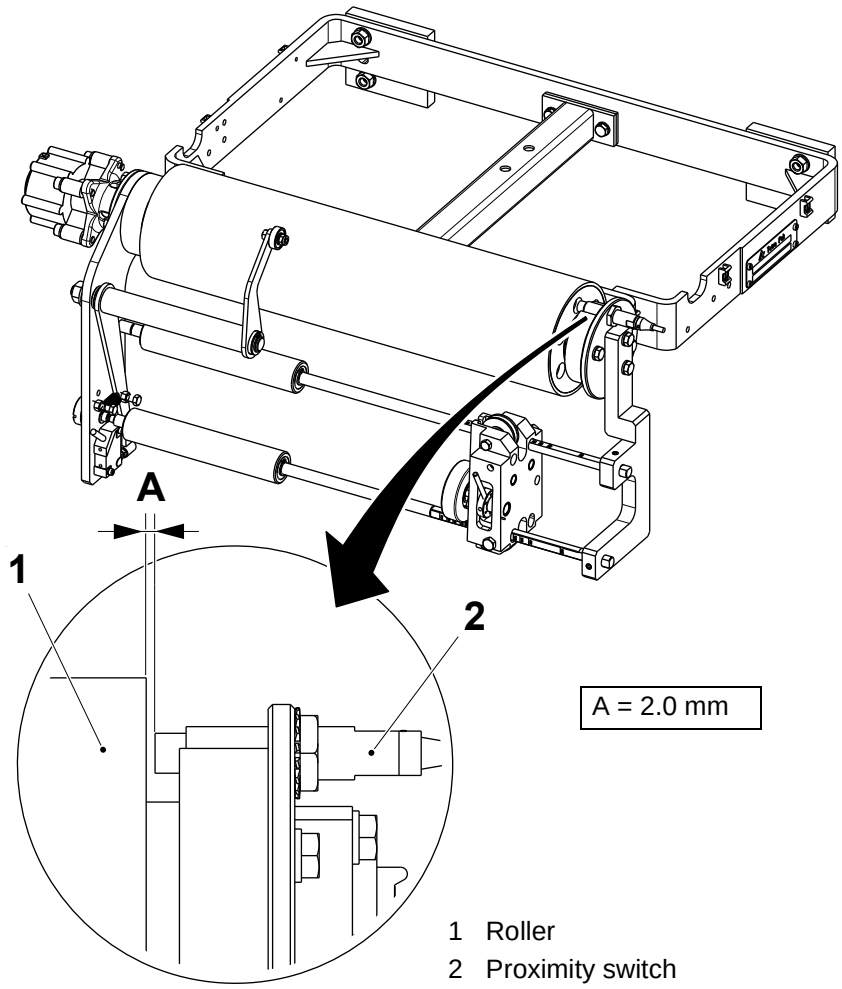

1 Roller
2 Proximity switch

1.8.1-9 Bending Roller - Set Proximity Switch

Machine Status	Mains Power ON Air OFF Steam ON Water OFF
SPC Reference	2552125-0100

a) Loosen the nut (1).

b) Set distance **A** between the proximity switch (2) and the surface of the roller (3).

c) Tighten the nut (1).

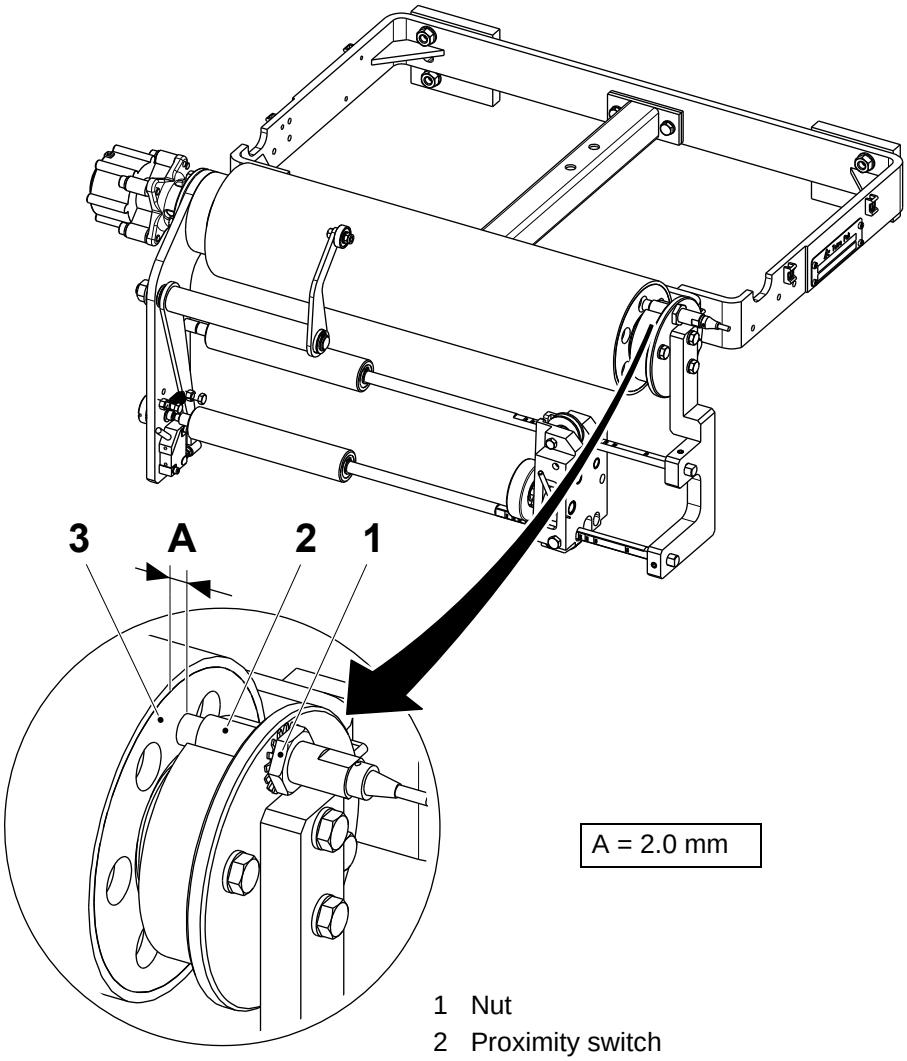

1 Nut
2 Proximity switch
3 Roller

1.9 Pneumatic System

SPC Reference	2528079-0400

1.9-1 Pneumatic System - Check

Machine Status	Mains Power OFF Air ON Steam ON Water OFF
SPC Reference	2528079-0400

Check that:

- the pneumatic pipes do not leak
- the components on the valve panel are clean and undamaged.

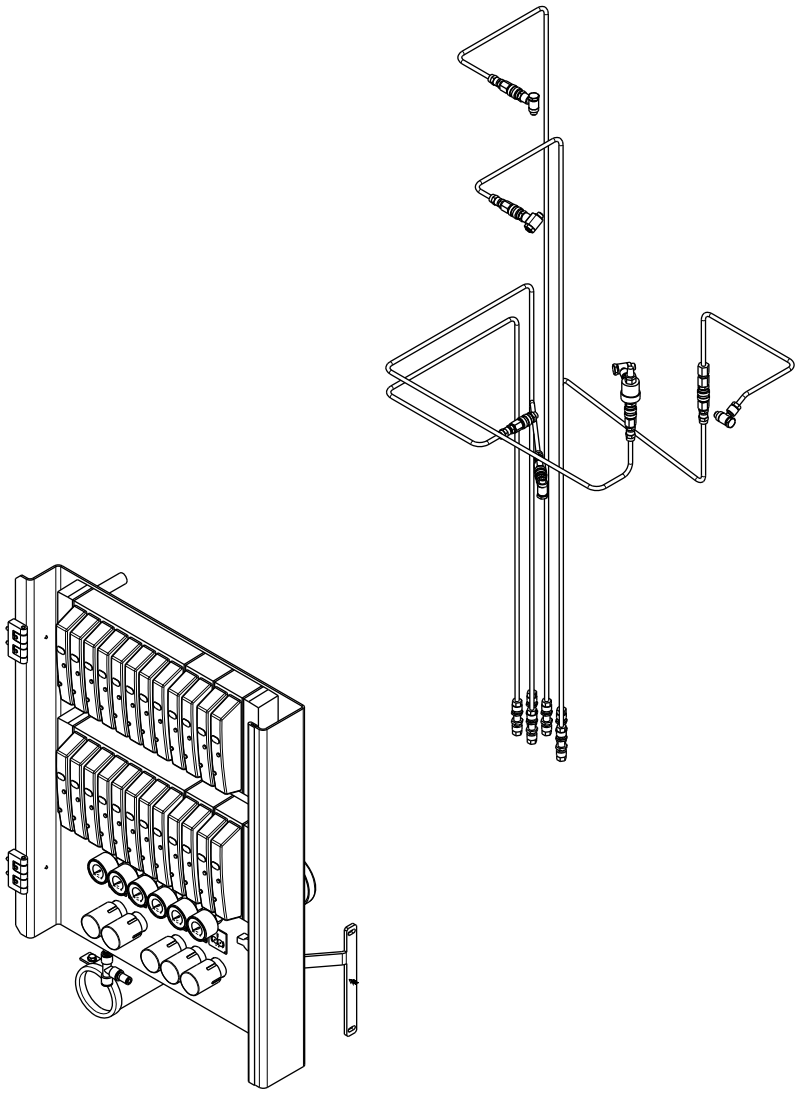

1.10 Connection Box

SPC Reference	2785246-0100

1.10-1 Connection Box - Check Pressure Sensor

Machine Status	Mains Power ON Air ON Steam ON Water OFF
SPC Reference	2785246-0100

a) Remove the hoses (1) and (2) from the pressure sensor (3).

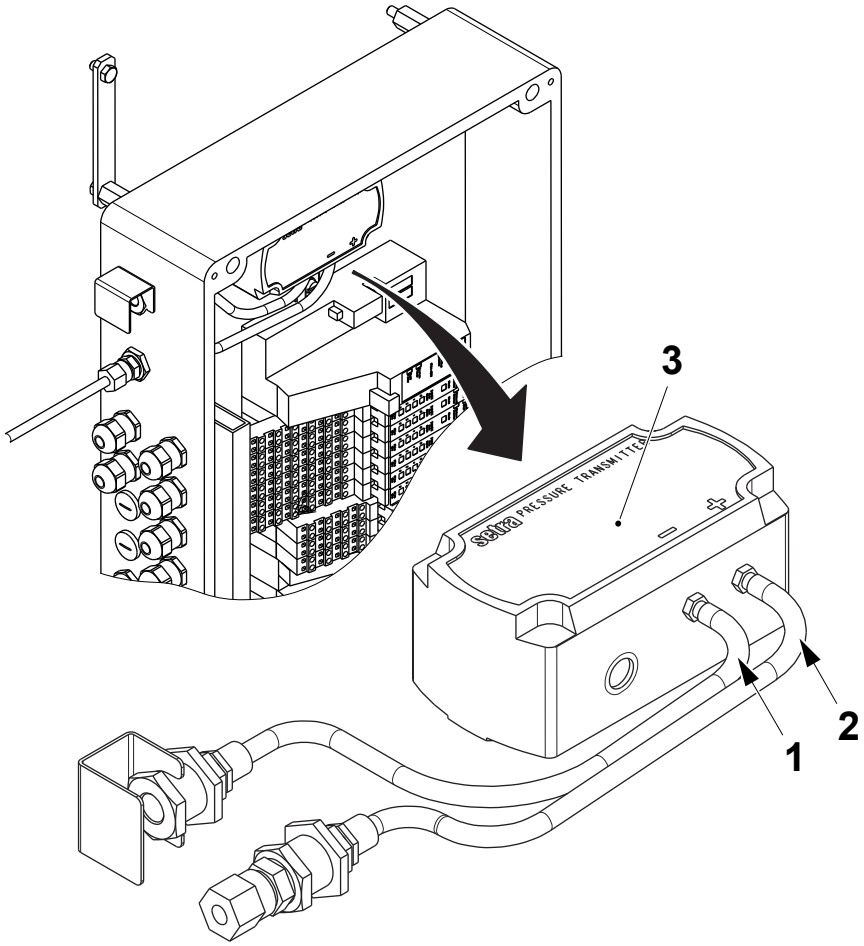

1 Hose
2 Hose
3 Pressure sensor

(Cont'd)

(Cont'd)

b) Touch the PRODUCTION CONTROL button (4) on the filling machine TPOP screen.

c) Touch the STERILE AIR SYSTEM button (5).

d) Touch the ASEPTIC CHAMBER AIR PRESSURE icon (6) to display the ASEPTIC CHAMBER AIR PRESSURE monitor (7).

e) The ASEPTIC CHAMBER AIR PRESSURE monitor (7) should show 0 ±2 units. If not, change the pressure sensor.

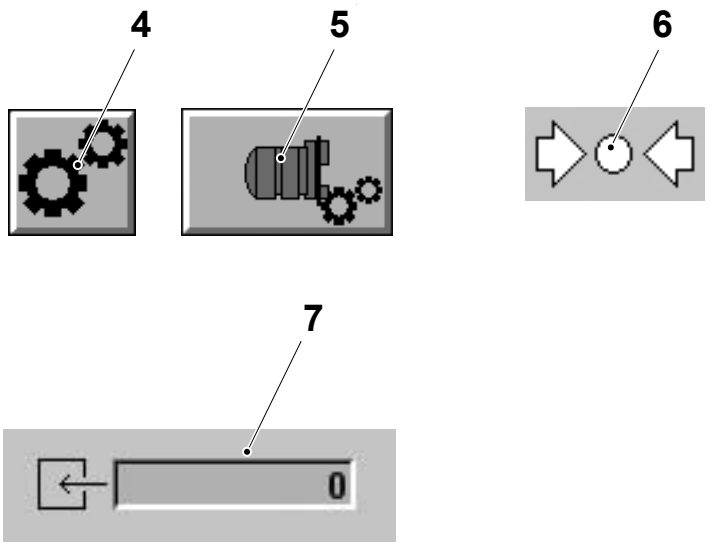

4 Production control button
5 Sterile air system button
6 Aseptic chamber air pressure icon
7 Aseptic chamber air pressure monitor

(Cont'd)

(Cont'd)

Note! If the pressure sensor must be changed, ensure that the cable (10) is wired and shielded according to the Electrical Manual.

Note! When assembling, make sure that the hoses (1) and (2) are properly connected.

f) Connect the hose (1) to the connection marked with the minus sign (8).

g) Connect the hose (2) from the aseptic chamber to the connection marked with the plus sign (9).

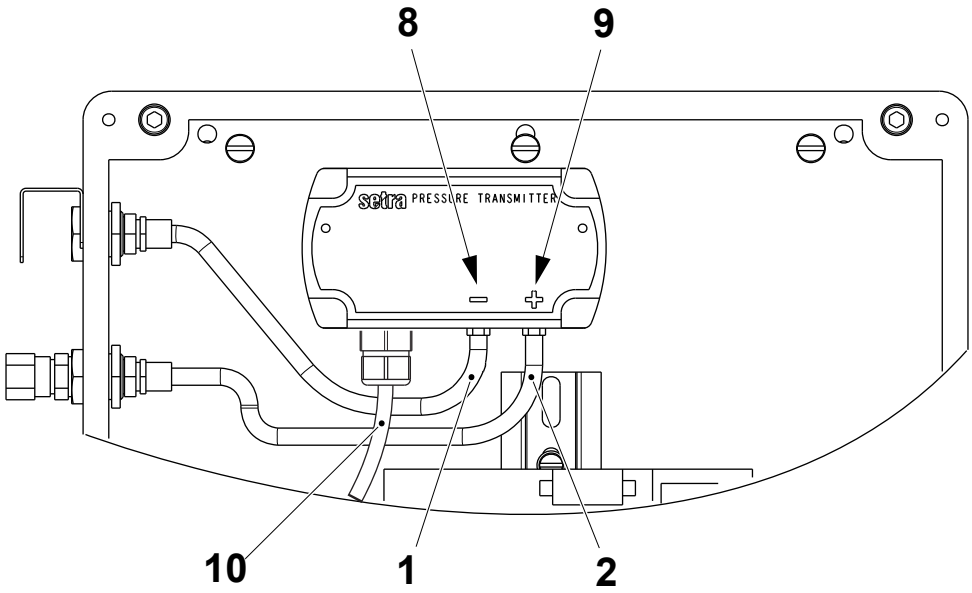

1 Hose
2 Hose
8 Minus connection
9 Plus connection
10 Cable

This page intentionally left blank

2 Machine Body

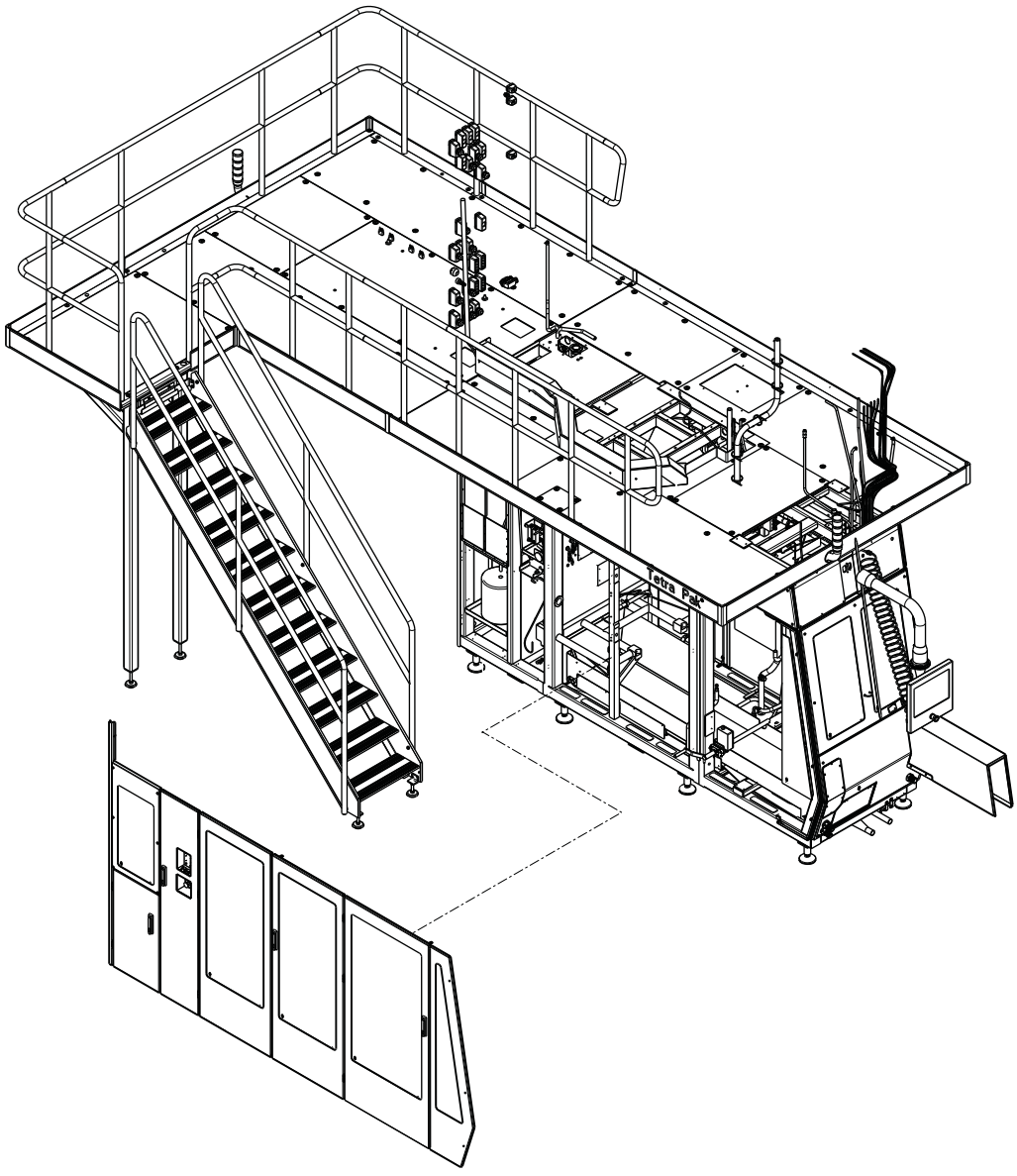

Machine Body - Description

SPC Reference	648559-0300

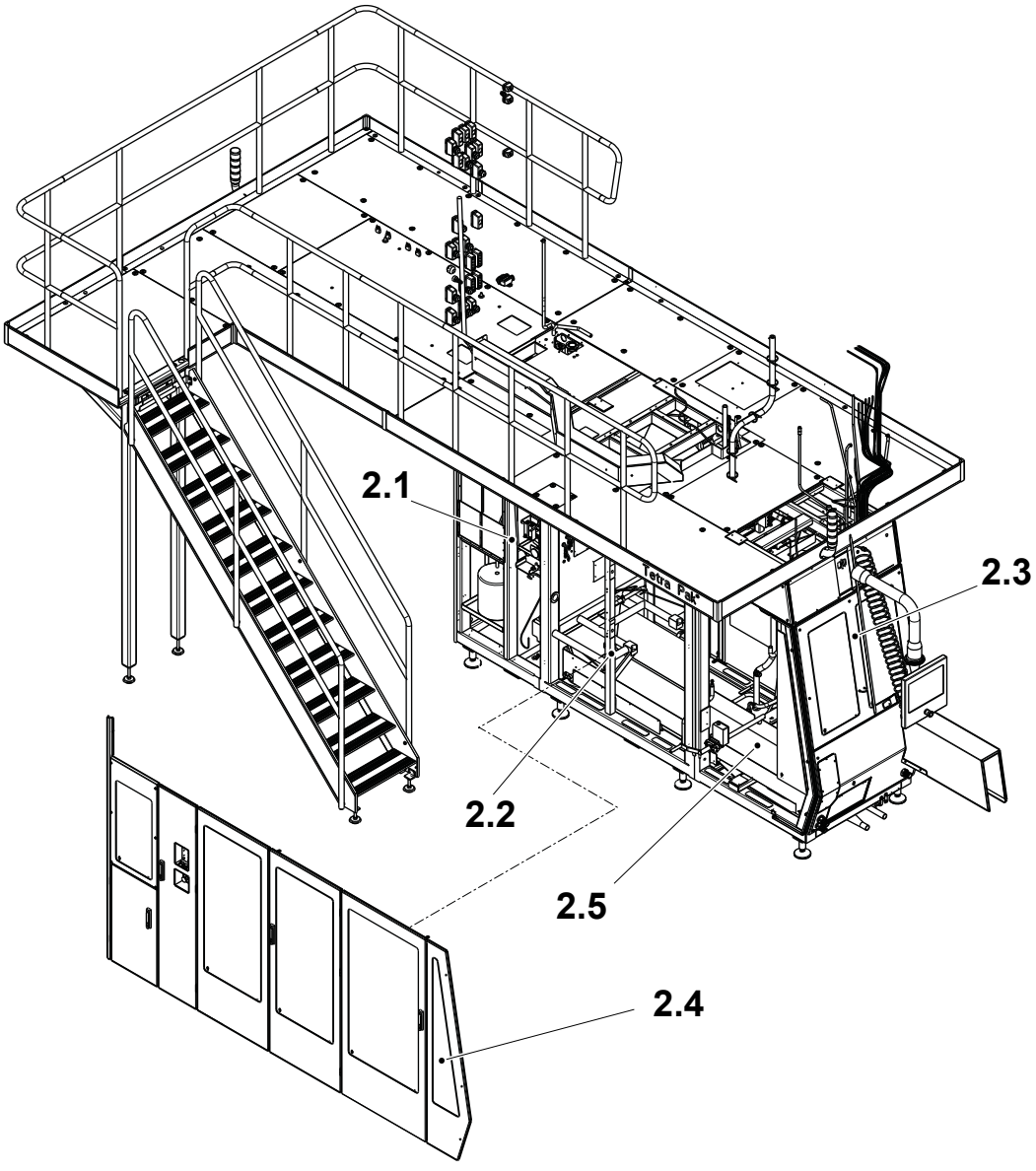

2.1 Rear Module
2.2 Central Module
2.3 Front Module
2.4 Doors and Covers
2.5 Waste Conveyor

2.1 Rear Module . . . . . 2 - 7

2.1.1 Machine Body . . . . . 2 - 7

2.1.1.1 Bending Roller . . . . . 2 - 7

2.1.1.1-1 Bending Roller - Check . . . . . 2 - 7

2.1.1.1-2 Bending Roller - Change Ball Bearings . . . . . 2 - 8

2.1.2 Hydrogen Peroxide . . . . . 2 - 9

2.1.2-1 Hydrogen Peroxide - Check Leakages . . . . . 2 - 9

2.1.2-2 Hydrogen Peroxide - Check Pump . . . . . 2 - 11

2.1.2-3 Hydrogen Peroxide - Set Pressure . . . . . 2 - 12

2.1.2.1 Peroxide Tank . . . . . 2 - 13

2.1.2.1-1 Peroxide Tank - Check . . . . . 2 - 13

2.1.2.2 Peroxide Pipe . . . . . 2 - 15

2.1.2.2-1 Peroxide Pipe - Check . . . . . 2 - 15

2.1.2.2-2 Peroxide Pipe - Clean Strainer . . . . . 2 - 17

2.1.2.3 Air Pipe-Line . . . . . 2 - 19

2.1.2.3-1 Air Pipe-Line - Check . . . . . 2 - 19

2.1.2.3-2 Air Pipe-Line - Change Gasket and Non Return Valve . . . . . 2 - 22

2.1.2.3-3 Air Pipe-Line - Change Filter . . . . . 2 - 24

2.1.2.4 Tank . . . . . 2 - 26

2.1.2.4-1 Tank - Check . . . . . 2 - 26

2.1.2.4-2 Tank - Clean . . . . . 2 - 28

2.1.2.5 Peroxide Pump . . . . . 2 - 30

2.1.2.5-1 Peroxide Pump - Change Pump . . . . . 2 - 30

2.1.2.5-2 Peroxide Pump - Overhaul Pump . . . . . 2 - 32

2.1.2.5-3 Peroxide Pump - Set Impeller . . . . . 2 - 38

2.1.3 Chemicals . . . . . 2 - 42

2.1.3-1 Chemicals - Check . . . . . 2 - 42

2.1.4 Integrated Cleaning Unit . . . . . 2 - 44

2.1.4.1 Alkali Circuit . . . . . 2 - 44

2.1.4.1-1 Alkali Circuit - Drain . . . . . 2 - 44

2.1.4.1-2 Alkali Circuit - Check Floats (Level Monitors) . 2 - 45

2.1.4.1-3 Alkali Circuit - Check Float Function (Level Monitor) . . . . . 2 - 49

2.1.4.1-4 Alkali Circuit - Check Pipe . . . . . 2 - 51
2.1.4.1-5 Alkali Circuit - Check Canister for Leakage . . . 2 - 53
2.1.4.1-6 Alkali Circuit - Change Canister . . . . . 2 - 55
2.1.4.1-7 Alkali Circuit - Set Proximity Switch . . . . . 2 - 58
2.1.4.2 Acid Circuit . . . . . 2 - 60
2.1.4.2-1 Acid Circuit - Drain . . . . . 2 - 60
2.1.4.2-2 Acid Circuit - Check Floats (Level Monitor) . . 2 - 60
2.1.4.2-3 Acid Circuit - Check Float Function (Level Monitor) . . . . . 2 - 61
2.1.4.2-4 Acid Circuit - Check Pipe . . . . . 2 - 61
2.1.4.2-5 Acid Circuit - Check Container for Leakages . . 2 - 61
2.1.4.2-6 Acid Circuit - Change Container . . . . . 2 - 62
2.1.4.2-7 Acid Circuit - Set Proximity Switch . . . . . 2 - 62
2.1.5 Pneumatic System . . . . . 2 - 63
2.1.5.1 Valve Panel . . . . . 2 - 63
2.1.5.1-1 Valve Panel - Check Photocell Filters . . . . . 2 - 63
2.1.5.1-2 Valve Panel - Set Photocell Pressure . . . . . 2 - 64
2.1.6 Electrical Equipment . . . . . 2 - 65
2.1.6.1 H_2O_2 Concentration Meter . . . . . 2 - 65
2.1.6.1-1 H_2O_2 Concentration Meter - Check Desiccant Cartridge . . . . . 2 - 65
2.1.6.1-2 H_2O_2 Concentration Meter - Change O-ring . . . 2 - 67
2.1.6.1-3 H_2O_2 Concentration Meter - Remove . . . . . 2 - 71
2.1.6.1-4 H_2O_2 Concentration Meter - Check Pt100 Sensor . . . . . 2 - 74
2.1.6.1-5 H_2O_2 Concentration Meter - Change Pt100 Sensor . . . . . 2 - 75
2.1.6.1-6 H_2O_2 Concentration Meter - Check Prism and Led . . . . . 2 - 76
2.2 Central Module . . . . . 2 - 78
2.2.1 Cleaning System . . . . . 2 - 78
2.2.1-1 Cleaning System - Check Nozzles . . . . . 2 - 78
2.2.2 Hydraulic System . . . . . 2 - 79
2.2.2-1 Hydraulic System - Description . . . . . 2 - 79
2.2.2-2 Hydraulic System - Change Oil . . . . . 2 - 80

2.2.2-3 Hydraulic System - Clean Tank . . . . . 2 - 82

2.2.2-4 Hydraulic System - Bleed . . . . . 2 - 84

2.2.2.1 Hydraulic Unit . . . . . 2 - 90

2.2.2.1-1 Hydraulic Unit - Check . . . . . 2 - 90

2.2.2.1-2 Hydraulic Unit - Set Pressure . . . . . 2 - 93

2.2.2.2 Hydraulic Tank . . . . . 2 - 96

2.2.2.2-1 Hydraulic Tank - Check Level Probe . . . . . 2 - 96

2.2.2.2-2 Hydraulic Tank - Change Air Filter . . . . . 2 - 98

2.2.2.2-3 Hydraulic Tank - Drain Collection Tray . . . . . 2 - 99

2.2.2.3 Hydraulic Valve . . . . . 2 - 100

2.2.2.3-1 Hydraulic Valve - Check Accumulator . . . . . 2 - 100

2.2.2.3-2 Hydraulic Valve - Change Accumulator . . . . . 2 - 101

2.2.2.3-3 Hydraulic Valve - Change Bi-stable Valve, Directional Valve and Solenoid . . . . . 2 - 104

2.2.2.3-4 Hydraulic Valve - Change Check Valves . . . . . 2 - 107

2.2.2.3-5 Hydraulic Valve - Change Pressure Reducing Valve . . . . . 2 - 109

2.2.2.3-6 Hydraulic Valve - Change Pressure Relief Valve . . . . . 2 - 111

2.2.2.4 Hydraulic Pump . . . . . 2 - 113

2.2.2.4-1 Hydraulic Pump - Change Filter Element . . . . 2 - 113

2.2.2.4-2 Hydraulic Pump - Change Pump . . . . . 2 - 116

2.2.2.4-3 Hydraulic Pump - Change Electrical Motor . . . 2 - 118

2.2.3 Lubrication System . . . . . 2 - 120

2.2.3.1 Central Lubrication . . . . . 2 - 120

2.2.3.1-1 Central Lubrication - Check Pressure Guard . . 2 - 120

2.2.3.1-2 Central Lubrication - Check Oil Pressure . . . . 2 - 122

2.2.3.1-3 Central Lubrication - Check Oil Feed . . . . . 2 - 123

2.2.3.1-4 Central Lubrication - Clean Oil Tank . . . . . 2 - 124

2.2.3.1-5 Central Lubrication - Bleed . . . . . 2 - 125

2.2.3.1-6 Central Lubrication - Fill Oil . . . . . 2 - 127

2.2.3.1-7 Central Lubrication - Change Filter Insert . . . . 2 - 128

2.2.3 Electric Equipment. . . . . 2 - 129

2.2.3-1 Electric Equipment - Check Fan . . . . . 2 - 129

2.3 Front Module . . . . . 2 - 131

2.3.1 Pneumatic System . . . . . 2 - 131

2.3.1-1 Pneumatic System - Check . . . . . 2 - 131

2.3.1-2 Pneumatic System - Set I/P Transducer . . . . . 2 - 132

2.4 Doors and Covers . . . . . 2 - 137

2.4-1 Doors and Covers - Remove . . . . . 2 - 137

2.4-2 Doors and Covers - Set Safety Switch . . . . . 2 - 139

2.4-3 Doors and Covers - Grease Locking Devices . 2 - 141

2.5 Waste Conveyor . . . . . 2 - 142

2.5-1 Waste Conveyor - Check . . . . . 2 - 142

2.5-2 Waste Conveyor - Change Coupling . . . . . 2 - 144

2.5-3 Waste Conveyor - Change Conveyor Belt . . . . 2 - 146

2.5-4 Waste Conveyor - Tension Conveyor Belt . . . 2 - 147

2.5-5 Waste Conveyor - Set Front Guard . . . . . 2 - 149

2.6 Crank . . . . . 2 - 150

2.6-1 Crank - Set Position . . . . . 2 - 150

2.1 Rear Module

SPC Reference	2504779-0200

2.1.1 Machine Body

2.1.1.1 Bending Roller

2.1.1.1-1 Bending Roller - Check

Machine Status	Mains Power OFF Air OFF Steam ON Water OFF
SPC Reference	2504784-0200

Check:

- the surface of the bending roller (1) for wear or damage
- for excessive play in the ball bearings by turning the bending roller (1) back and forwards
- that the material lock (2) grips the packaging material when it is positioned against the bending roller.

If necessary change the ball bearings or the bending roller, see 2.1.1.1-2 Bending Roller - Change Ball Bearings.

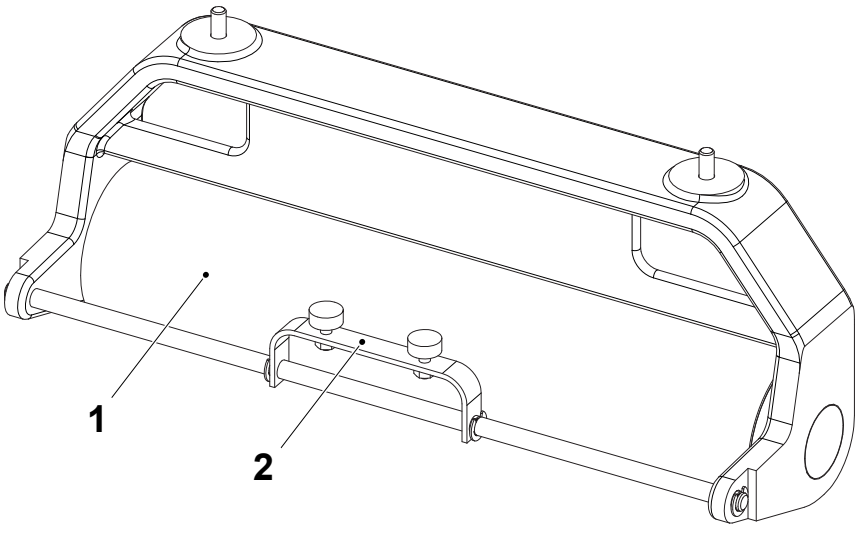

1 Bending roller
2 Material lock

2.1.1.1-2 Bending Roller - Change Ball Bearings

Machine Status	Mains Power OFF Air OFF Steam ON Water OFF
SPC Reference	2504784-0200

a) Remove the screws (1).

b) Remove the axle pins (2) and the bending roller (3).

c) Change the ball bearings (4).

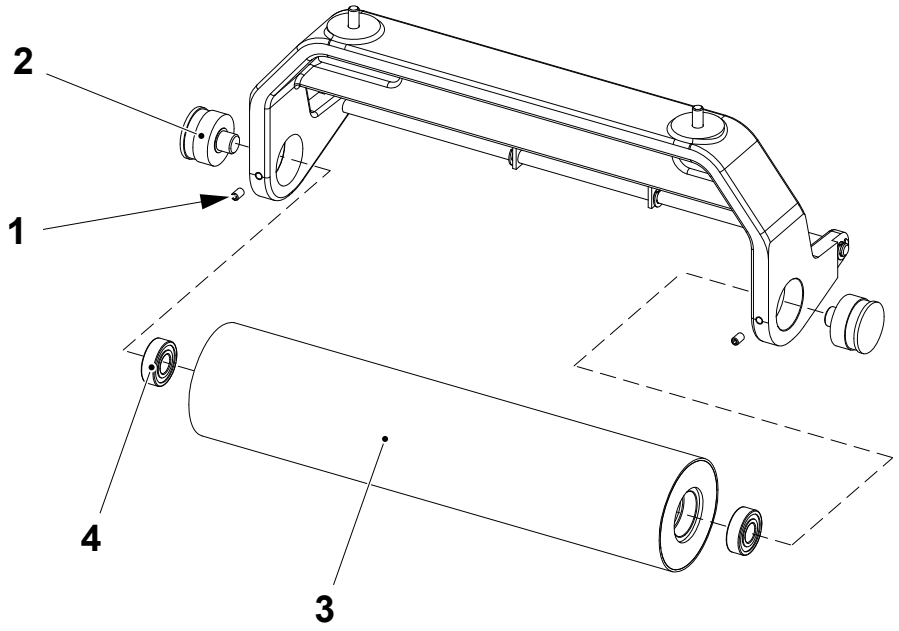

1 Screw
2 Axle pin
3 Bending roller
4 Ball bearing

2.1.2 Hydrogen Peroxide

2.1.2-1 Hydrogen Peroxide - Check Leakages

Machine Status	Mains Power OFF Air OFF Steam ON Water OFF
SPC Reference	2504781-0200

WARNING
Hydrogen Peroxide.
Follow the Safety Precautions.

(Cont'd)

(Cont'd)

Check the connections for leakages at:

- the cabinet (1)
- the peroxide pipe (2)
- the peroxide pump (3)
- the dilution tank (4)
- the peroxide tank (5).

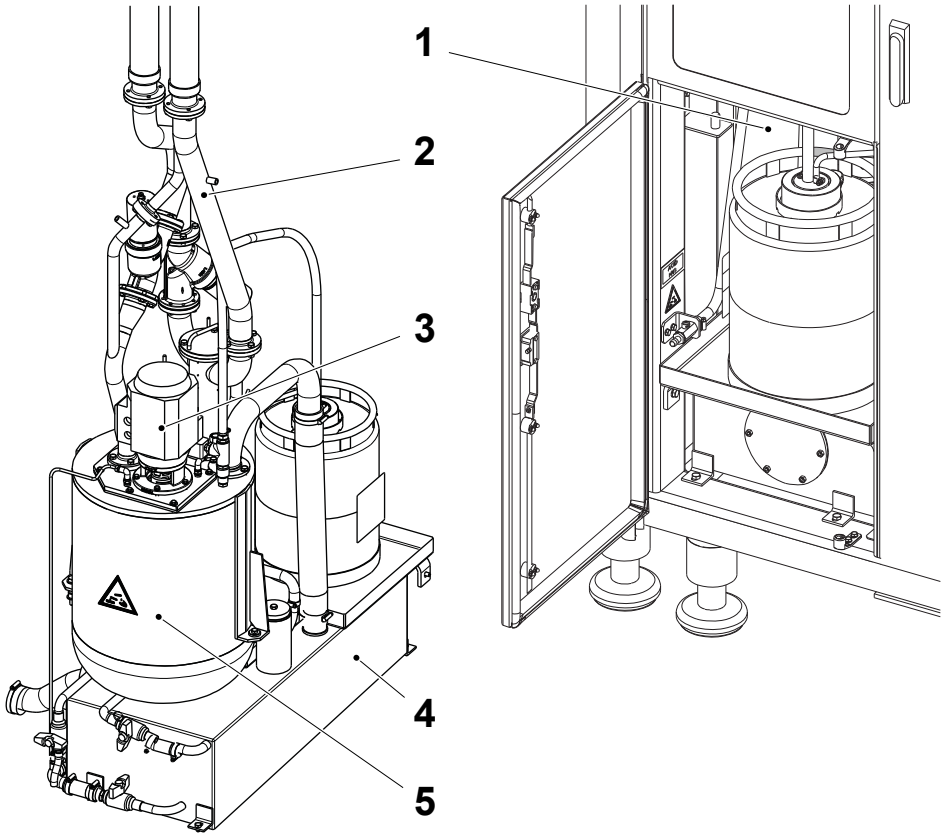

1 Cabinet
2 Peroxide pipe
3 Peroxide pump
4 Dilution tank
5 Peroxide tank

2.1.2-2 Hydrogen Peroxide - Check Pump

Machine Status	HEAT STERILIZATION
SPC Reference	2504781-0200

Place a screwdriver so that it is in contact with the peroxide pump (1). Check the peroxide pump (1) for abnormal noise or vibrations.

Change the pump (1) if necessary, see 2.1.2.5-1 Peroxide Pump - Change Pump.

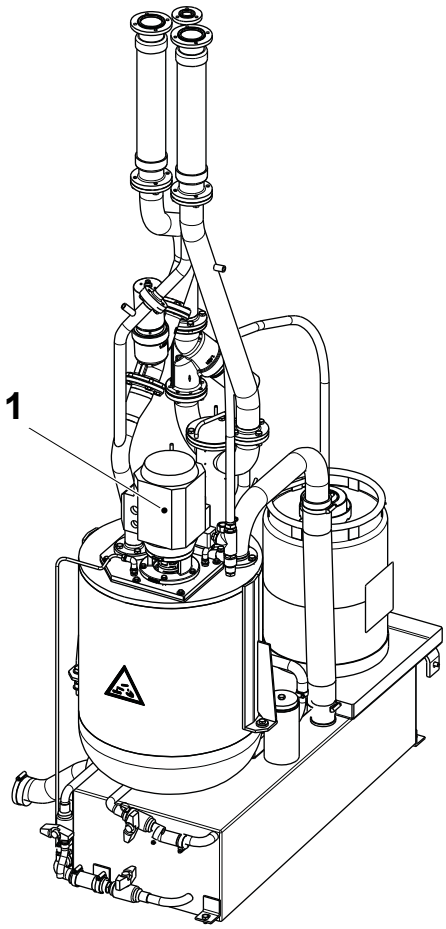

1 Peroxide pump

2.1.2-3 Hydrogen Peroxide - Set Pressure

Machine Status	HEAT STERILIZATION
SPC Reference	2504781-0200

Set the hydrogen peroxide tank filling pressure to 0.2 bar using the pressure regulator (1).

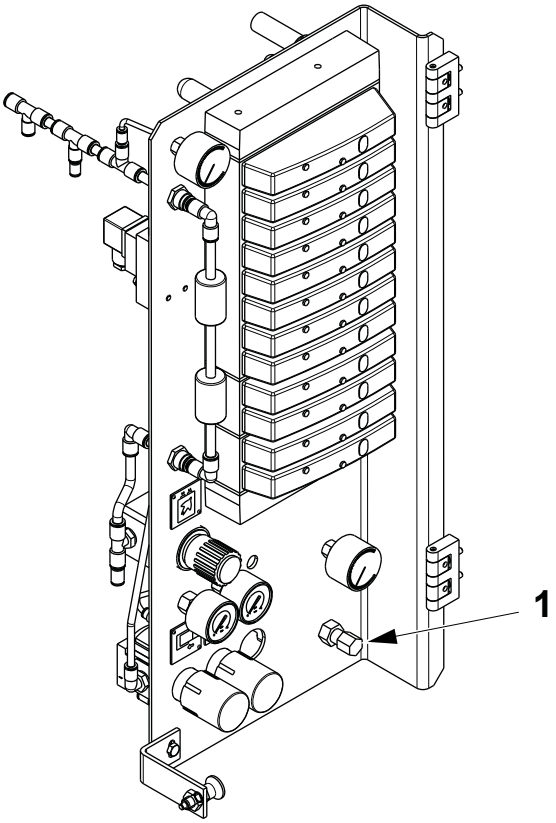

1 Pressure regulator

2.1.2.1 Peroxide Tank

2.1.2.1-1 Peroxide Tank - Check

Machine Status	Mains Power OFF Air OFF Steam ON Water OFF
Special Equipment	Brass Brush
SPC Reference	1282894-0200

WARNING
Hydrogen Peroxide.
Follow the Safety Precautions.

Check that:

- the electrical connections (1) are not rusted. Clean the connections with a brass brush if necessary

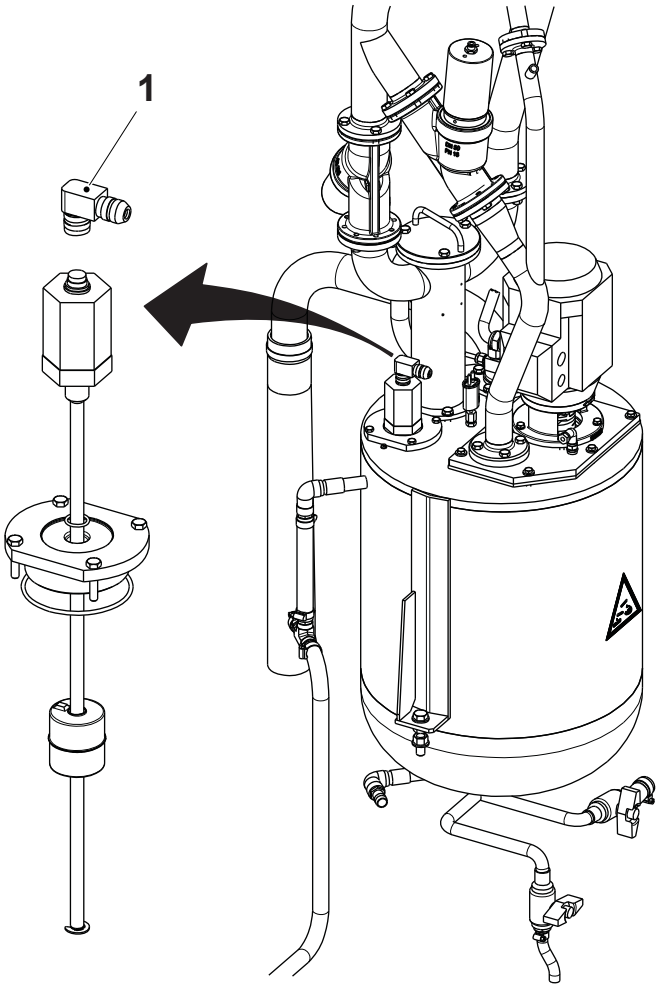

1 Connection

(Cont'd)

(Cont'd)

- there are no leaks at the connections (2) on the peroxide tank
- the float (3) is undamaged
- the O-rings (4) are not worn or damaged.

Change the parts if necessary.

Note! Make sure that the raised area (5) of the float (3) is facing up during the assembly.

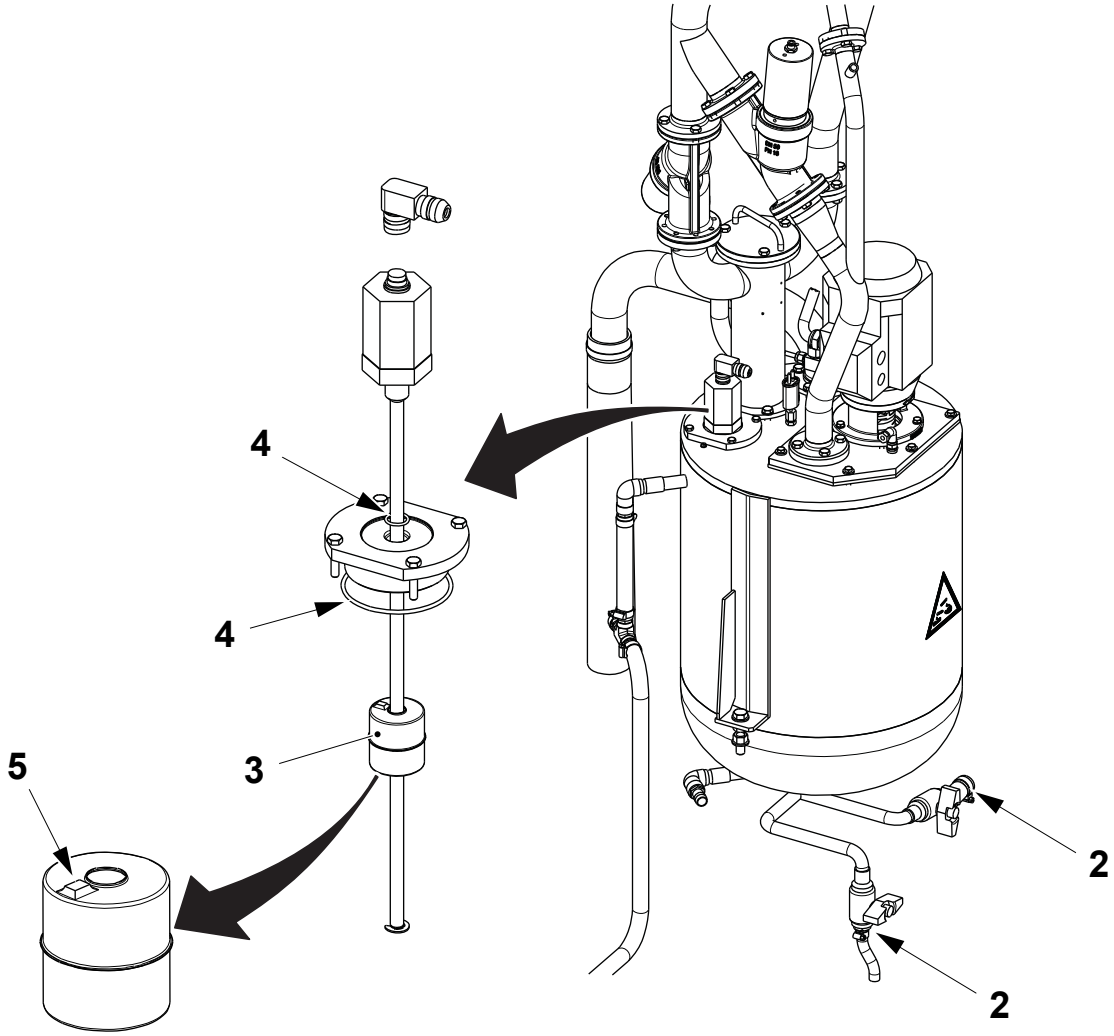

2 Connection
3 Float
4 O-ring
5 Raised area

2.1.2.2 Peroxide Pipe

2.1.2.2-1 Peroxide Pipe - Check

Machine Status	Mains Power OFF Air OFF Steam ON Water OFF
SPC Reference	1282895-0300

WARNING
Hydrogen Peroxide.
Follow the Safety Precautions.

Check that the strainer (1) is not dirty. Clean or change it if necessary, see 2.1.2.2-2 Peroxide Pipe - Clean Strainer.

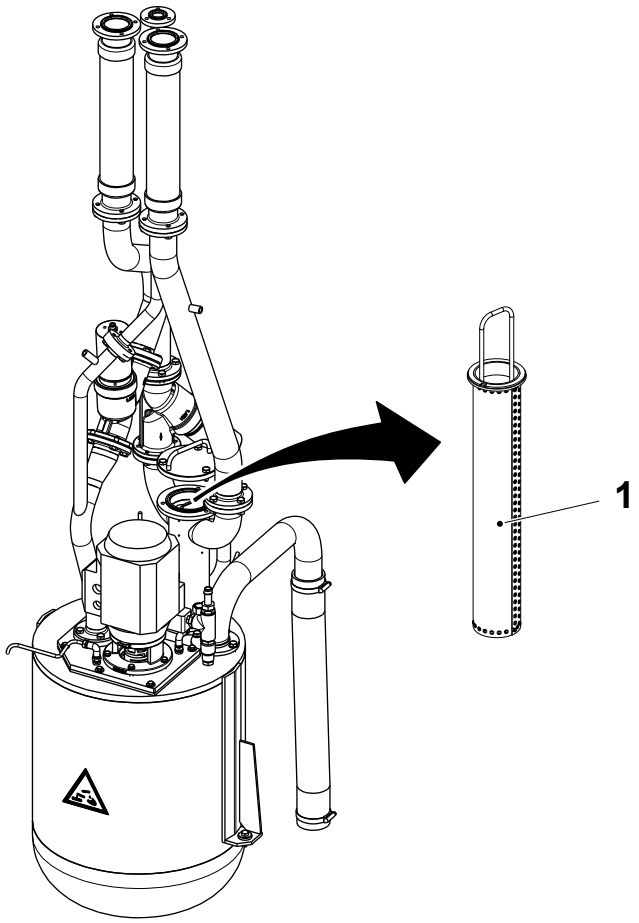

1 Strainer

(Cont'd)

(Cont'd)

Check during PRODUCTION

Turn the air and the mains power ON.

Check the pipe connections (indicated by the arrows) for any peroxide leakages. If there are leaks, change the gaskets (1) if necessary, as shown in the example below.

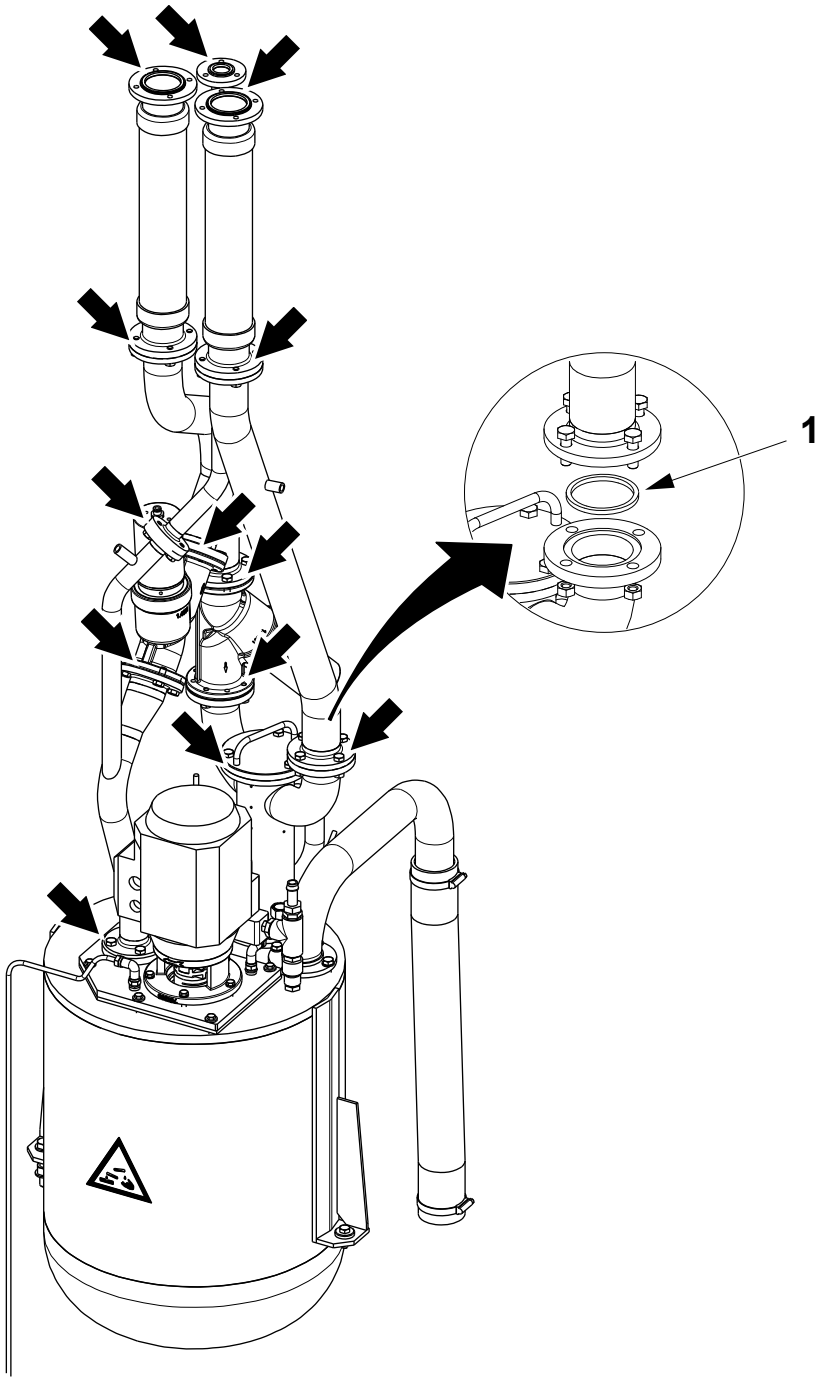

1 Gasket

2.1.2.2-2 Peroxide Pipe - Clean Strainer

Machine Status	Mains Power OFF Air OFF Steam ON Water OFF
SPC Reference	1282895-0300

WARNING
Hydrogen Peroxide.
Follow the Safety Precautions.

WARNING
Risk of eye injury.
Wear eye protection when blow drying the strainer.

(Cont'd)

(Cont'd)

a) Remove the screws (1).

b) Lift up the cover (2) and remove the strainer (3).

c) Clean the strainer (3) with distilled water and, if needed, blow dry with compressed air. Rinse the strainer (3) with distilled water.

d) Change the strainer (3) if necessary.

e) Check the gasket (4) and change it if necessary.

f) Assemble in the reverse order.

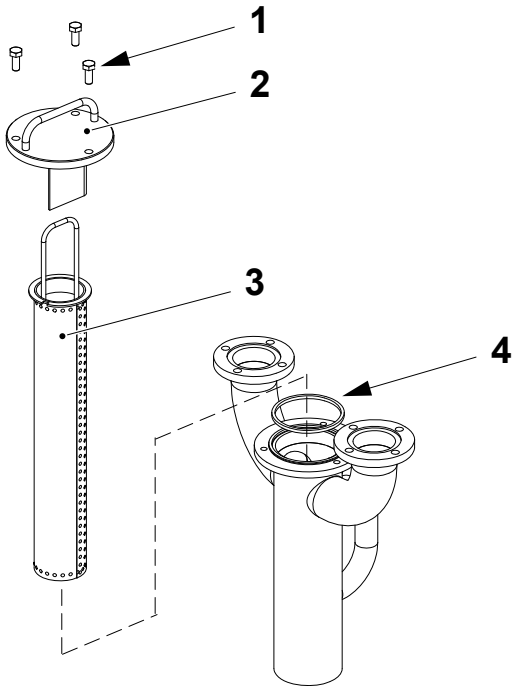

1 Screw
2 Cover
3 Strainer
4 Gasket

2.1.2.3 Air Pipe-Line

2.1.2.3-1 Air Pipe-Line - Check

Machine Status	Mains Power OFF Air OFF Steam ON Water OFF
SPC Reference	2506637-0200

WARNING
Hydrogen Peroxide.
Follow the Safety Precautions.

(Cont'd)

(Cont'd)

Check that:

- the hoses (1), the non return valve (2) and the gasket (3) do not leak. Change the non return valve (2) and the gasket (3) if necessary, see 2.1.2.3-2 Air Pipe-Line - Change Gasket and Non Return Valve
- the filter (4) on the valve panel (5) is not dirty. Clean or change if necessary, see 2.1.2.3-3 Air Pipe-Line - Change Filter.

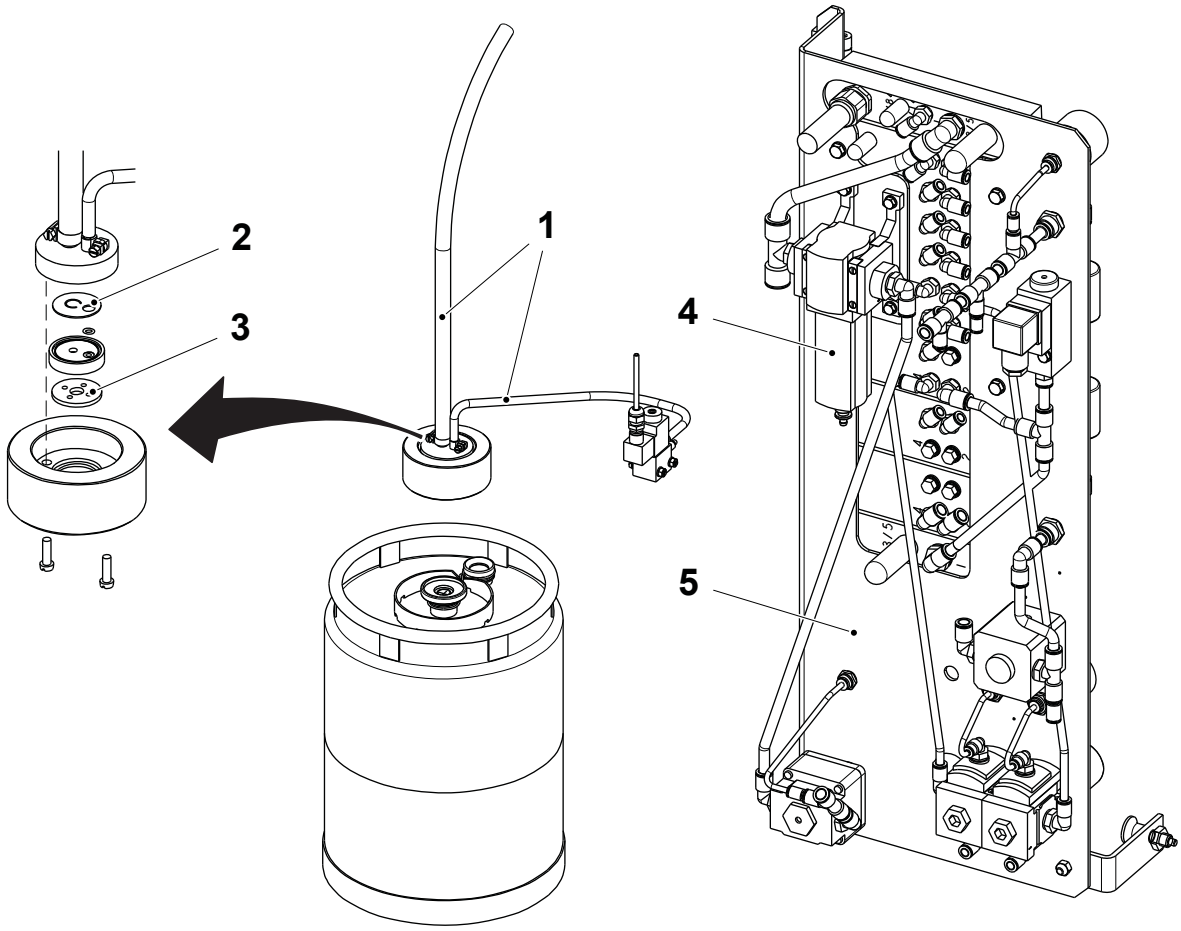

1 Hose
2 Non return valve
3 Gasket
4 Filter
5 Valve panel

(Cont'd)

(Cont'd)

Check During PRODUCTION

Check that the weight (6) is properly installed on the peroxide container (7) and that it does not leak.

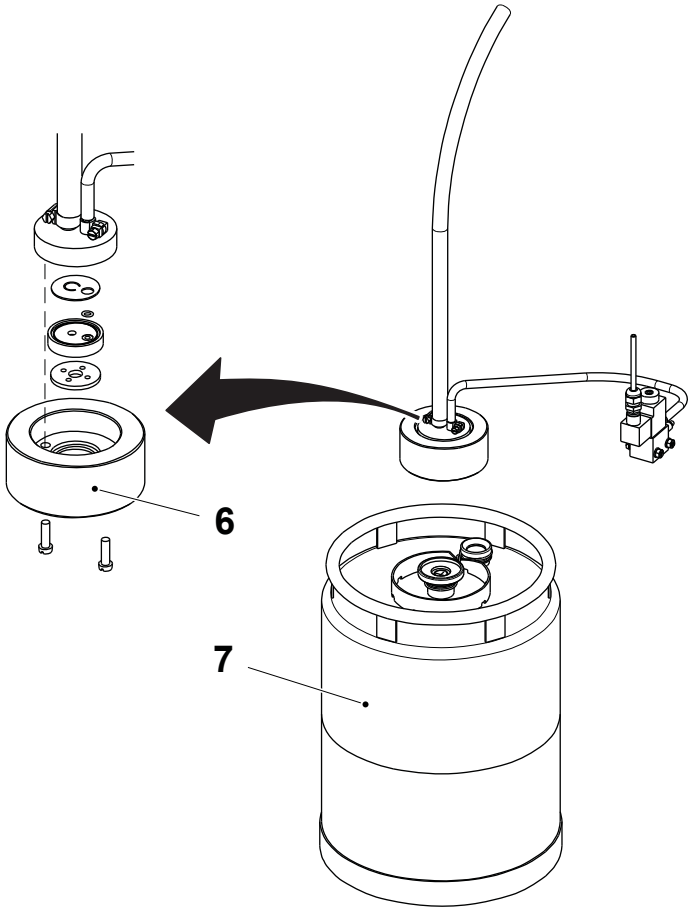

6 Weight
7 Peroxide container

2.1.2.3-2 Air Pipe-Line - Change Gasket and Non Return Valve

Machine Status	Mains Power OFF Air OFF Steam ON Water OFF
SPC Reference	2506637-0200

WARNING
Hydrogen Peroxide.
Follow the Safety Precautions.

(Cont'd)

(Cont'd)

a) Remove the weight (1) from the peroxide container (2).

b) Remove the two screws (3) securing the hose attachment (4) to the weight (1).

c) Remove the gasket (5) and change it if necessary.

d) Remove the washer (6) from the weight (1).

e) Remove the non-return valve (7) from the hose attachment (4). Change the non-return valve if necessary.

f) Assemble in the reverse order. Make sure that the O-ring (8) is fitted correctly.

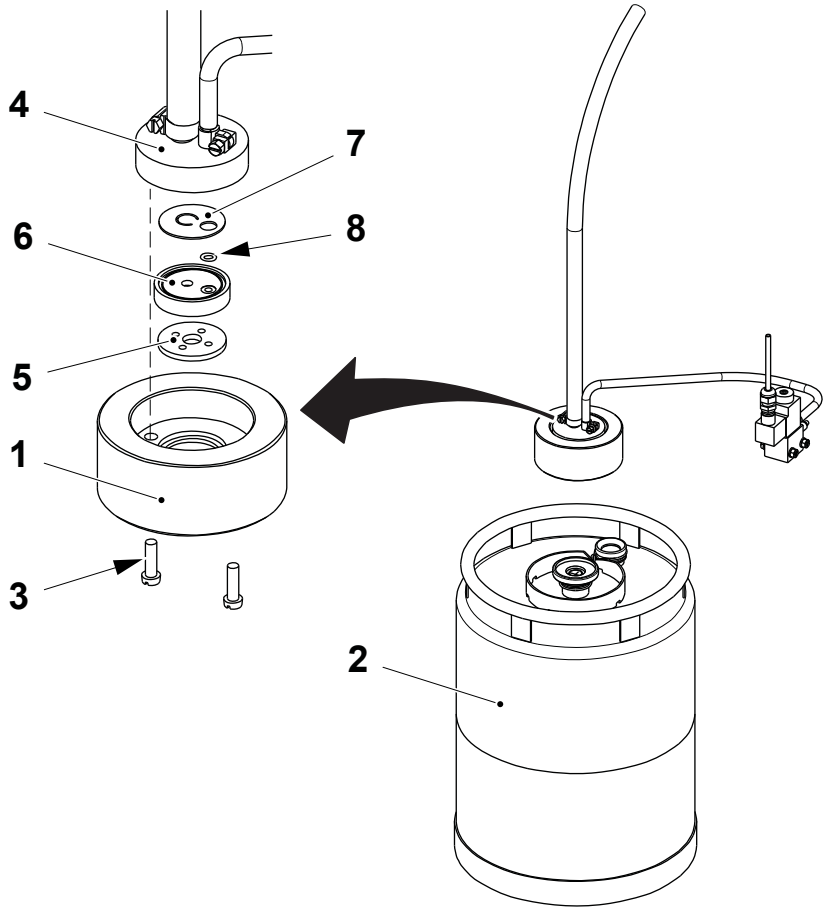

1 Weight
2 Peroxide container
3 Screw
4 Hose attachment
5 Gasket
6 Washer
7 Non return valve
8 O-ring

2.1.2.3-3 Air Pipe-Line - Change Filter

Machine Status	Mains Power OFF Air OFF Steam ON Water OFF
Special Equipment	Pliers
SPC Reference	2506637-0200

WARNING
Hydrogen Peroxide.
Follow the Safety Precautions.

(Cont'd)

(Cont'd)

a) On the valve panel (1) remove the reservoir (2). Change the O-ring if necessary.

b) Using a pair of pliers, remove and change the filter insert (3) inside the reservoir (2).

c) Assemble in the reverse order.

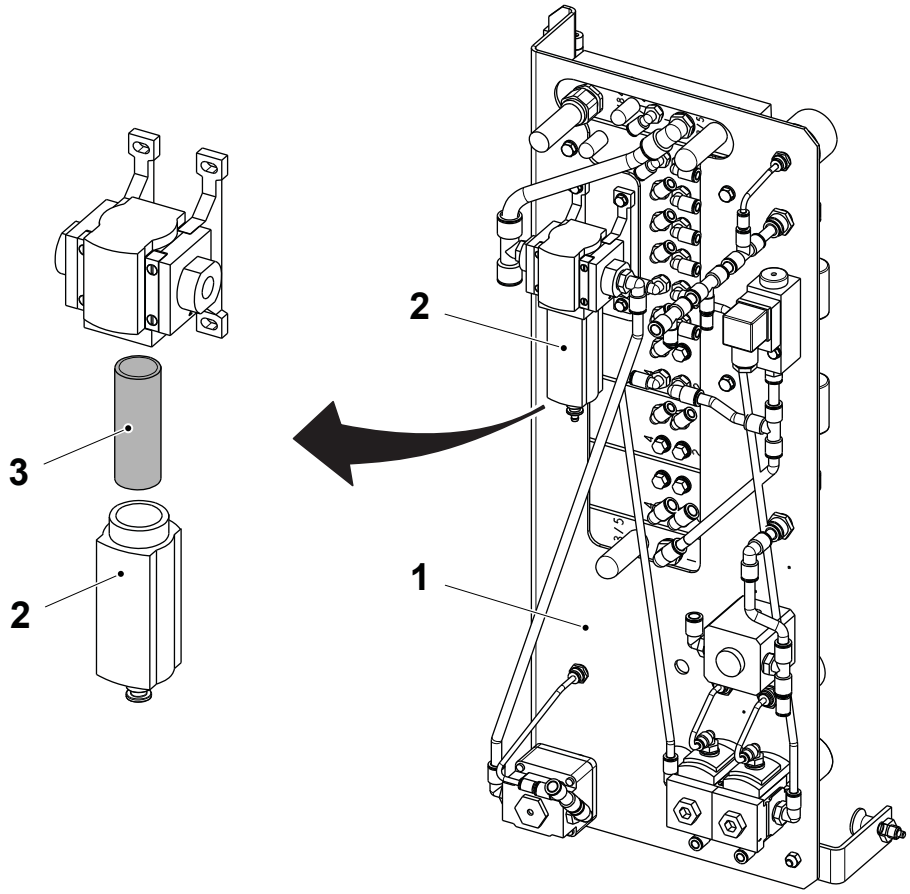

1 Valve panel
2 Reservoir
3 Filter

2.1.2.4 Tank

2.1.2.4-1 Tank - Check

Machine Status	PRODUCTION
SPC Reference	1282896-0200

WARNING
Hydrogen Peroxide.
Follow the Safety Precautions.

(Cont'd)

(Cont'd)

Check that:

- the drain hole (1) is not clogged. If necessary, clean the hole using a proper tool bar
- the pipe (2) is not clogged. If necessary, clean it, see 2.1.2.4-2 Tank - Clean
- the outlet hoses (3) and (4) do not leak
- the cover (5) does not leak
- the valve (6) does not leak
- the safety lid (7) is not stuck. Make sure that it moves freely, lifting by hand. If necessary, remove the safety lid (7) and clean it with water.

Note! To ensure the outlet concentration of peroxide is less than 1% w/w, run the machine for 24 hours in production before emptying the dilution tank.

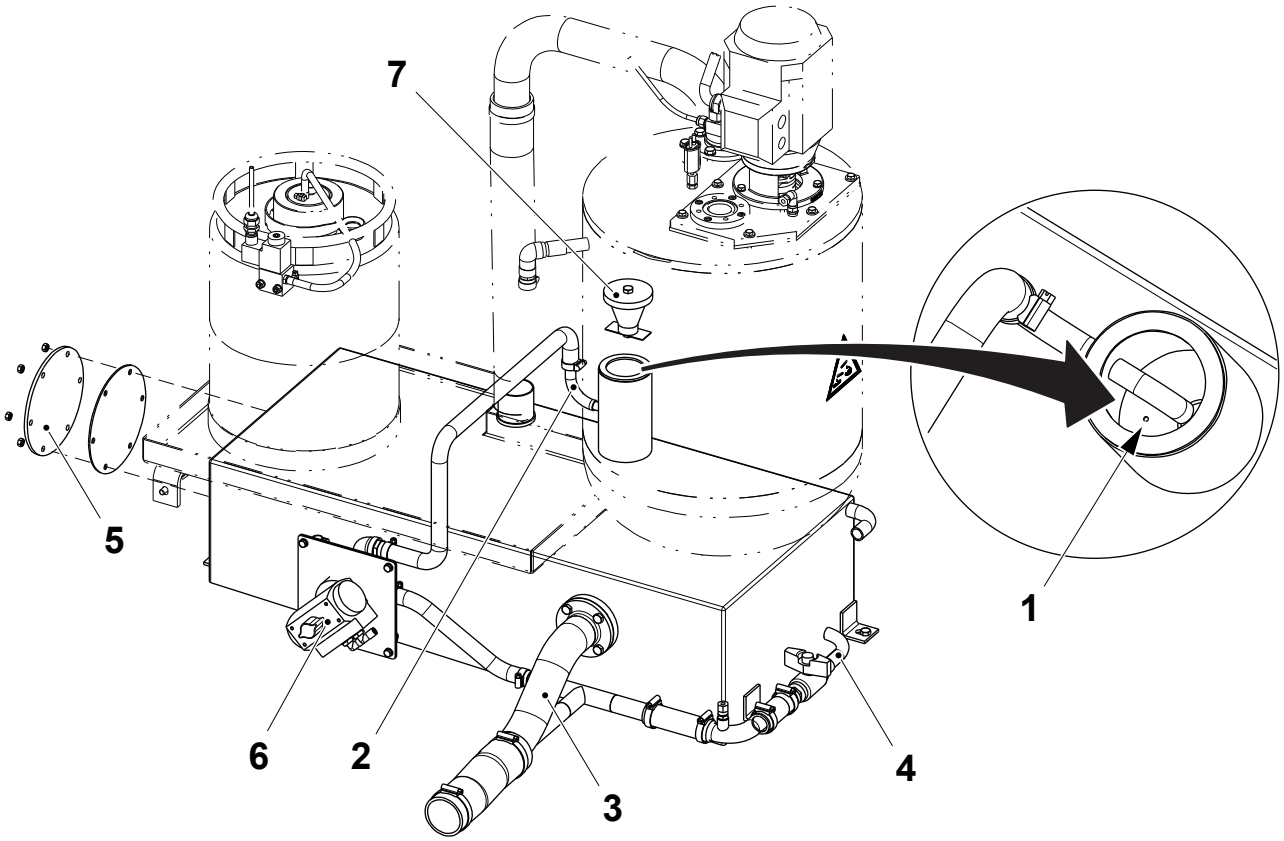

1 Drain hole
2 Pipe
3 Outlet hose
4 Outlet hose
5 Cover
6 Valve
7 Safety lid

2.1.2.4-2 Tank - Clean

Machine Status	Mains Power OFF Air OFF Steam ON Water OFF
SPC Reference	1282896-0200

WARNING
Hydrogen Peroxide.
Follow the Safety Precautions.

(Cont'd)

(Cont'd)

a) Remove the safety lid (1) and the hose (2).

b) Clean inside the pipe (3) using a deliming agent.

c) Remove the lime scale residue in the pipe (4) using a piece of iron wire, then pour an amount of deliming agent through the pipe (4).

d) Fit back the safety lid (1) and the hose (2).

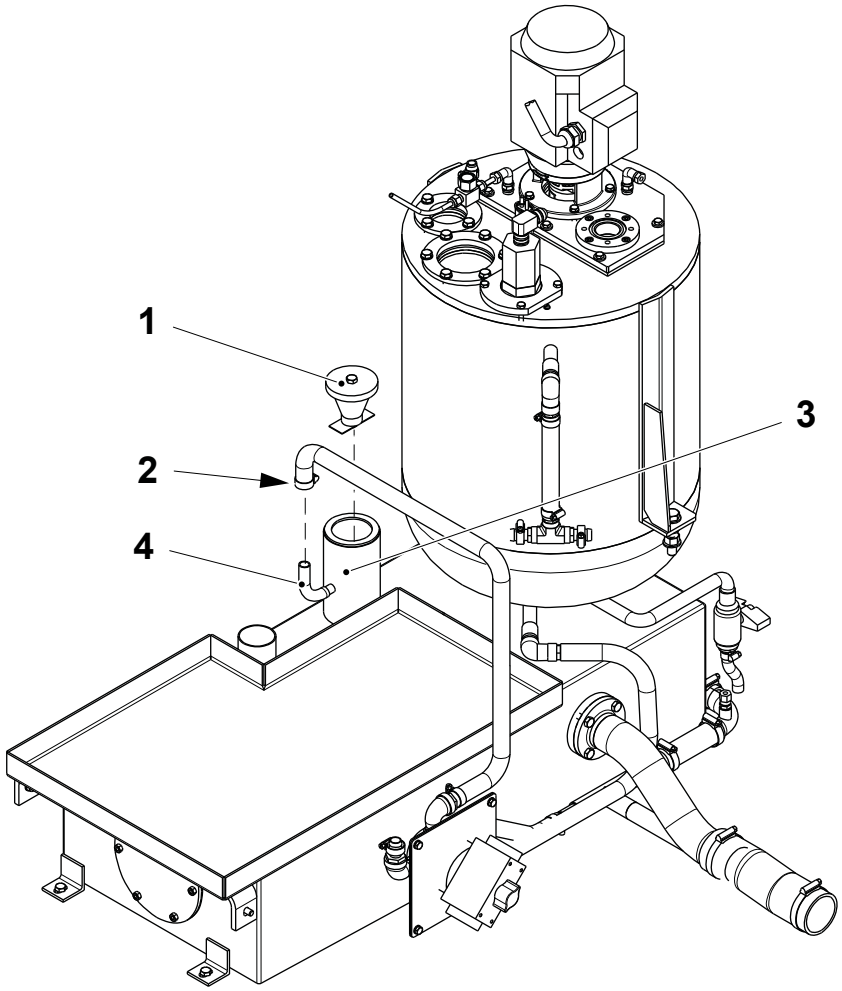

1 Safety lid
2 Hose
3 Pipe
4 Pipe

2.1.2.5 Peroxide Pump

2.1.2.5-1 Peroxide Pump - Change Pump

Machine Status	Mains Power OFF Air OFF Steam ON Water OFF
SPC Reference	996388-0700

WARNING
Hydrogen Peroxide.
Follow the Safety Precautions.

a) Make sure that the peroxide is not too concentrated and then drain the dilution tank.

b) Drain the hydrogen peroxide and rinse carefully with distilled water.

(Cont'd)

(Cont'd)

c) Label and disconnect the electrical connections to the motor (1).

d) Remove the screws at the flanges (2) and the pipe (3).

e) Remove the pipes (4) and (5).

f) Remove the screws (6) and lift and change the motor (1) together with the pump (7).

g) Assemble in the reverse order.

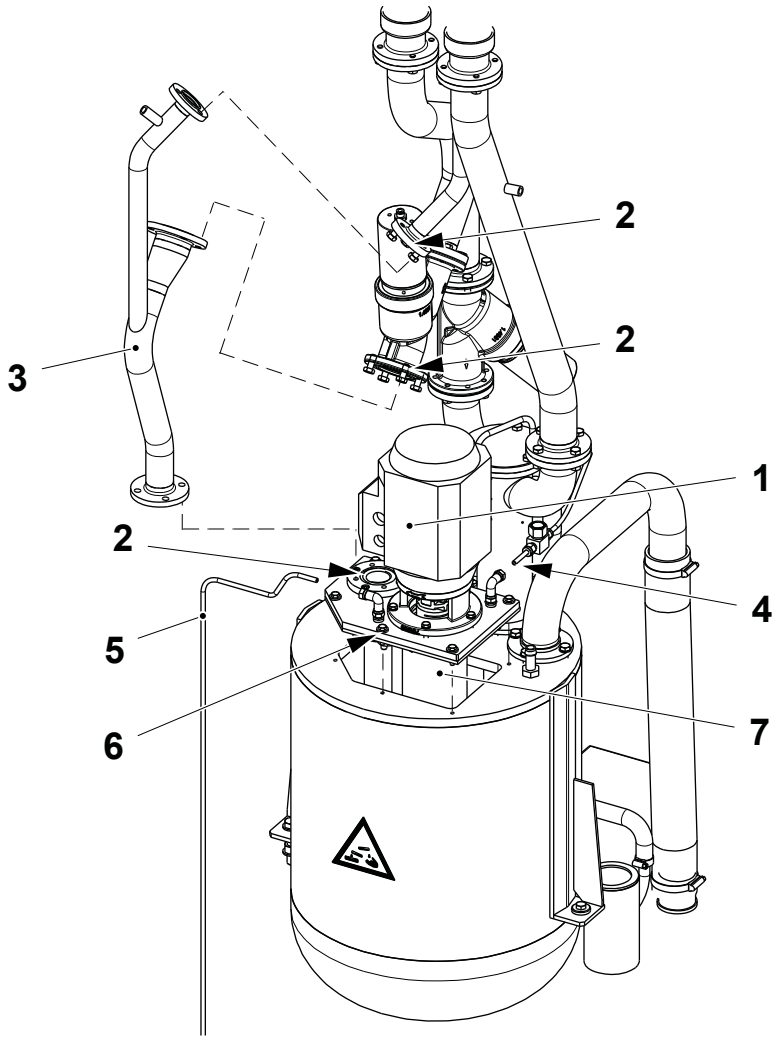

1 Motor
2 Flange
3 Pipe
4 Pipe
5 Pipe
6 Screw
7 Pump

2.1.2.5-2 Peroxide Pump - Overhaul Pump

Machine Status	Mains Power OFF Air OFF Steam ON Water OFF
SPC Reference	996388-0700

WARNING
Hydrogen Peroxide.
Follow the Safety precautions.

(Cont'd)

(Cont'd)

a) Remove the peroxide pump, see 2.1.2.5-1 Peroxide Pump - Change Pump.

b) Unscrew the screws (1) and remove the pipe (2).

c) Remove the O-rings (3), (4) and (5). Change them if necessary.

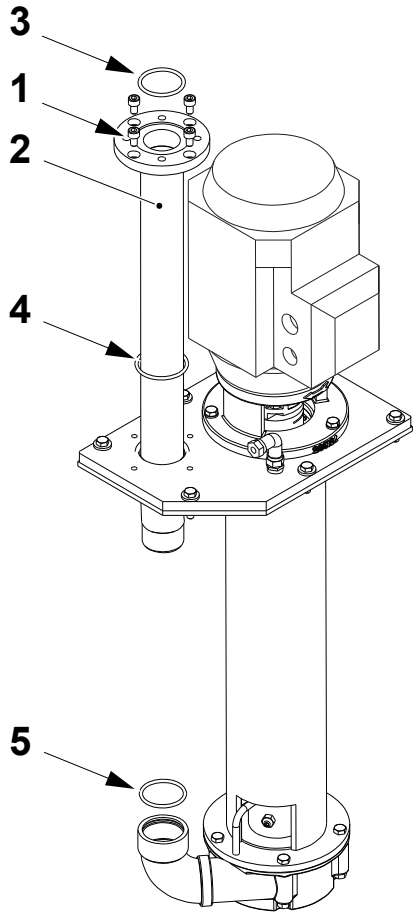

1 Screw
2 Pipe
3 O-ring
4 O-ring
5 O-ring

(Cont'd)

(Cont'd)

d) Mark the position of the pump housing (6) on the extension pipe (7).

e) Remove the screws (8), the nuts (9) and the pump housing (6).

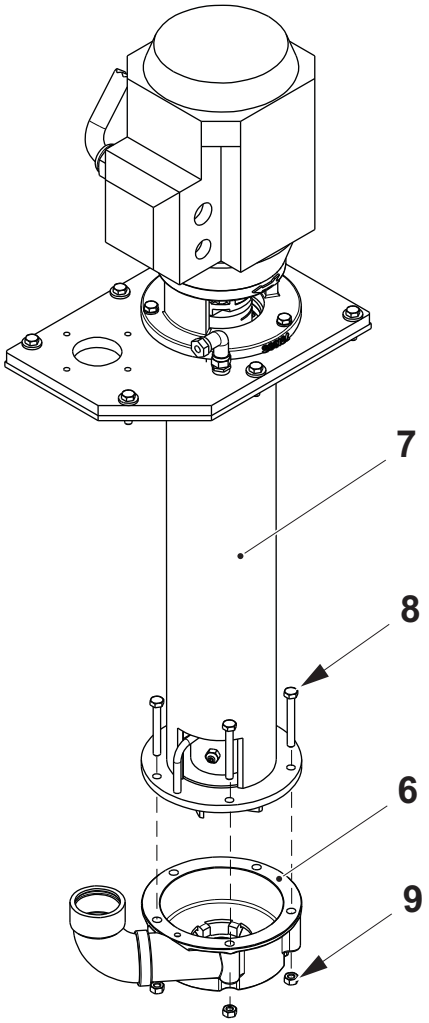

6 Pump housing
7 Extension pipe
8 Screw
9 Nut

(Cont'd)

(Cont'd)

f) Mark the position of the motor assembly (10) on the extension pipe (7).

g) Remove the screws (11) and the motor assembly (10).

h) Loosen the screw (12) and remove the coupling (13) from the motor shaft.

i) Remove the coupling disc (14).

j) Loosen the screw (15) and remove the coupling (16).

k) Remove the nut (17), the lock washer (18) and the spacer (19).

Note! When assembling the peroxide pump, check that the play between the coupling disc (14) and the couplings (13) and (16) is less than 0.3 mm with a feeler gauge.

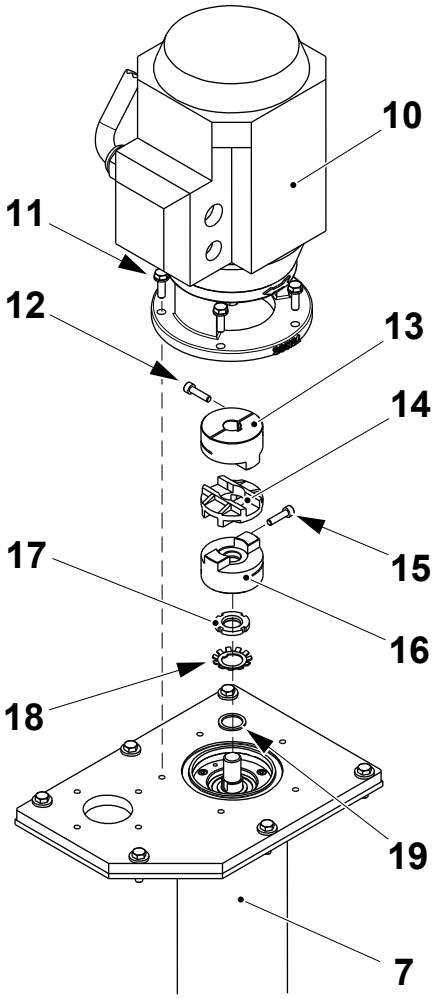

7 Extension pipe
10 Motor assembly
11 Screw
12 Screw
13 Coupling
14 Coupling disc
15 Screw
16 Coupling
17 Nut
18 Lock washer
19 Spacer

(Cont'd)

(Cont'd)

l) Loosen the nut (20) and the screw (21).

m) Slip off the impeller wheel (22) and the bushing (23). Change the impeller wheel (22) if necessary.

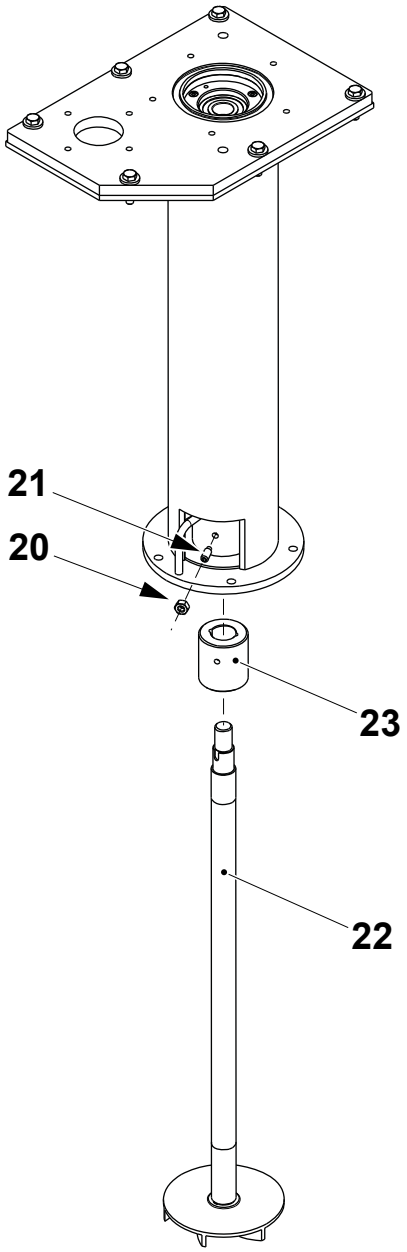

20 Nut
21 Screw
22 Impeller wheel
23 Bushing

(Cont'd)

(Cont'd)

n) Remove the screws (24) and the bushing (25).

o) Remove the ball bearing (26). Change if necessary.

p) Change the seal rings (27) and the O-rings (28).

q) Assemble in the reverse order.

r) Set the impeller, see 2.1.2.5-3 Peroxide Pump - Set Impeller.

Note! When assembling, centre the bushing (25) on the extension pipe (7) by the parallel pin (29).

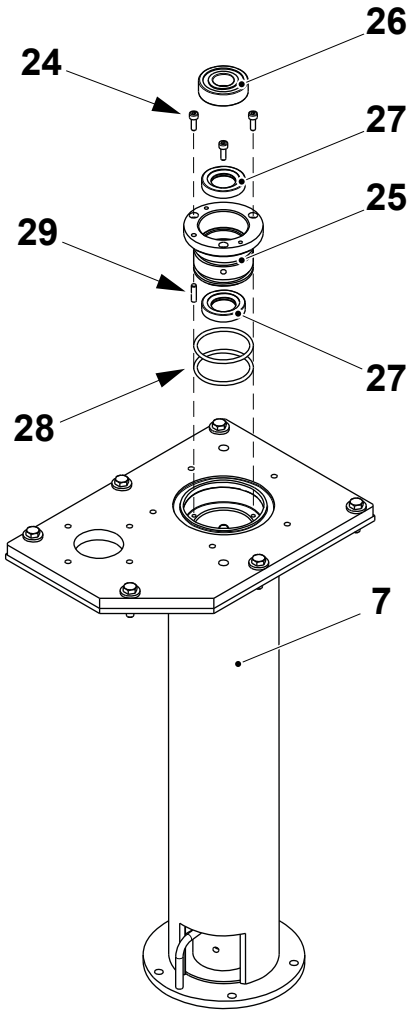

7 Extension pipe
24 Screw
25 Bushing
26 Ball bearing
27 Seal ring
28 O-ring
29 Parallel pin

2.1.2.5-3 Peroxide Pump - Set Impeller

Machine Status	Mains Power OFF Air OFF Steam ON Water OFF
SPC Reference	996388-0700

WARNING
Hydrogen Peroxide.
Follow the Safety Precautions.

(Cont'd)

(Cont'd)

a) Remove the peroxide pump, see 2.1.2.5-1 Peroxide Pump - Change Pump.

b) Remove the screws (1) and the pump housing (2).

c) Remove the motor (3) by the screws (4).

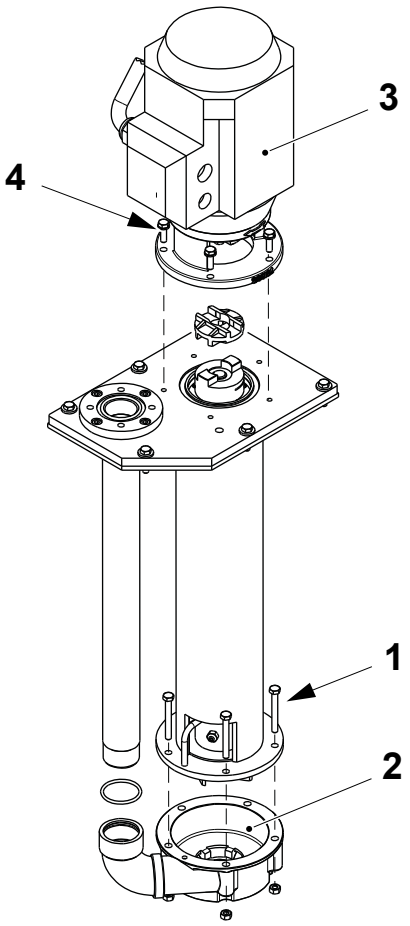

1 Screw
2 Pump housing
3 Motor
4 Screw

(Cont'd)

(Cont'd)

d) Check the distance **A** between the impeller wheel (5) and the extension pipe (6) by means of a feeler gauge. If necessary, proceed as follows to set the distance **A**:

- loosen the screw (7) to the coupling (8)
- loosen the round nut (9)
- move the shaft (10) and set the distance **A** by means of a feeler gauge
- tighten the round nut (9)
- fit the coupling (8) and tighten the screw (7).

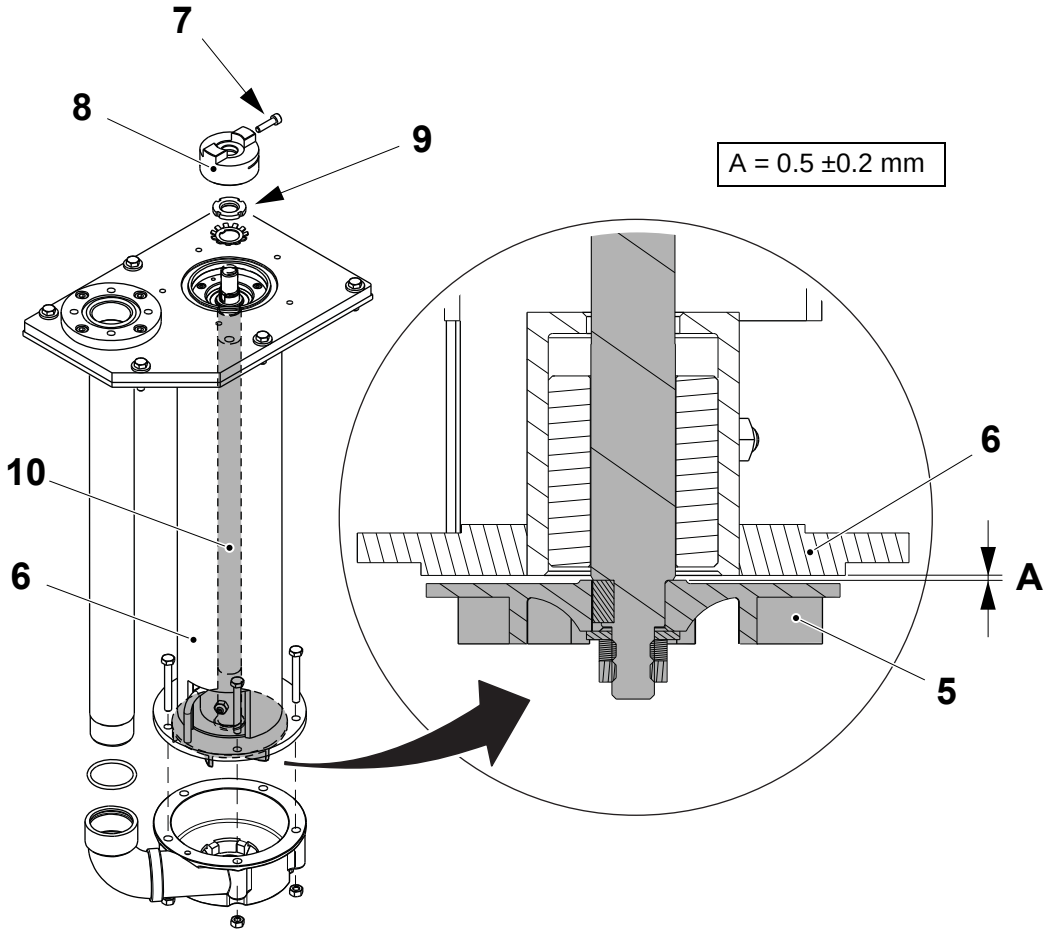

5 Impeller wheel
6 Extension pipe
7 Screw
8 Coupling
9 Round nut
10 Shaft

(Cont'd)

(Cont'd)

e) Check the total play, distance **B**, between the coupling (8), the coupling disc (11) and the coupling (12) by means of a feeler gauge. If necessary, proceed as follows to set the distance **B** between the coupling (8) and the coupling disc (11):
   - loosen the screw (13) to the coupling (12)
   - set the distance **B** by means of a feeler gauge
   - tighten the screw (13).

f) Assemble in the reverse order.

g) Fit the peroxide pump, see 2.1.2.5-1 Peroxide Pump - Change Pump.

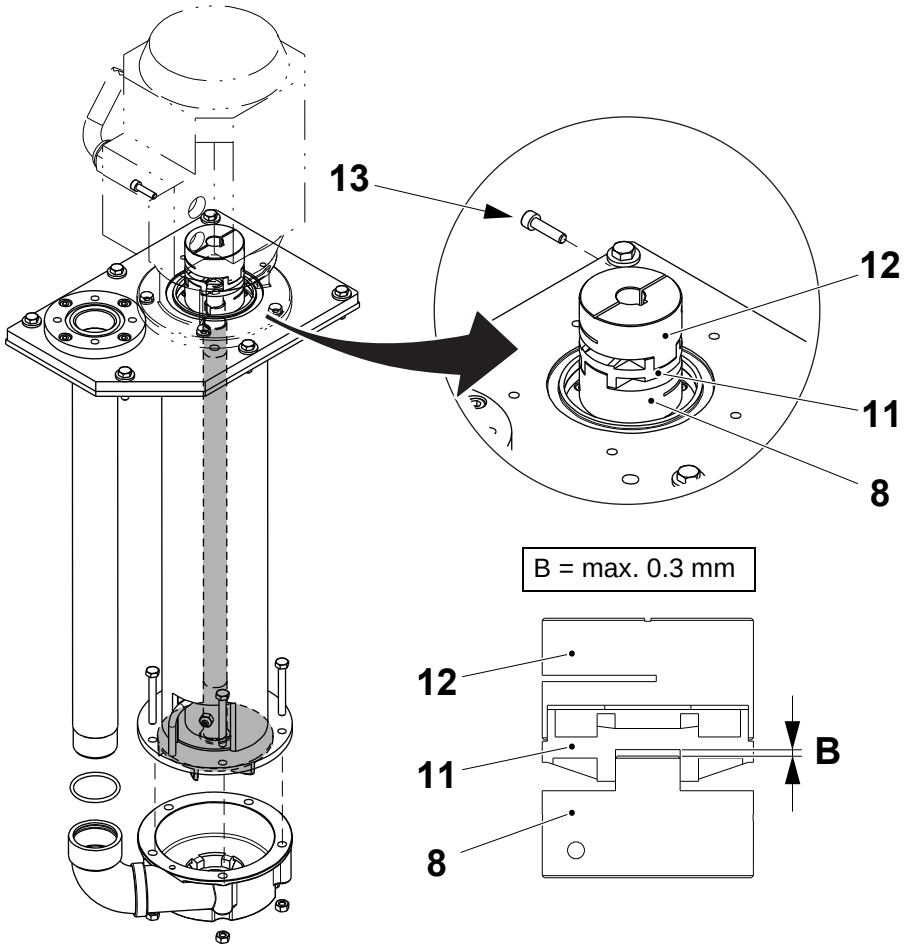

8 Coupling
11 Coupling disc
12 Coupling
13 Screw

2.1.3 Chemicals

2.1.3-1 Chemicals - Check

Machine Status	Mains Power ON Air ON Steam ON Water OFF
SPC Reference	2504782-0200

WARNING
Chemical products.
Follow the Safety Precautions.

(Cont'd)

(Cont'd)

Check that:

- the pump (1) runs smoothly without noise
- the pipe connections are free from detergent residue. Clean if necessary
- there are no leaks at the pipe connections
- the filter (2) is not clogged. Clean with compressed air or change if necessary.

Detergent	Consumption (l/cycle)
Alkali	1.2

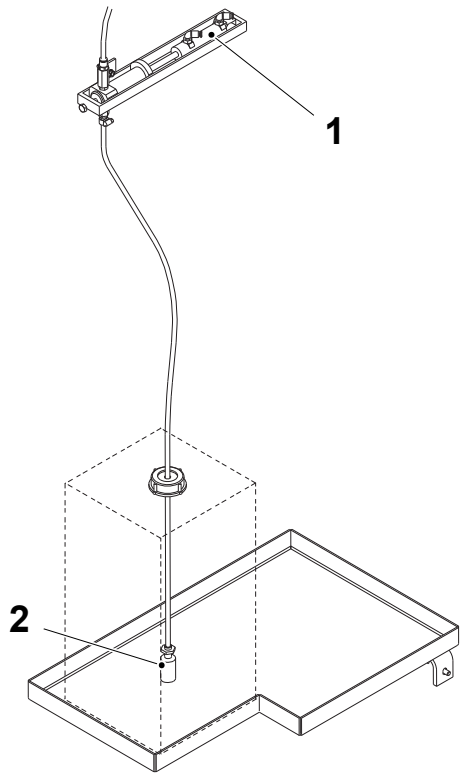

1 Pump
2 Filter

2.1.4 Integrated Cleaning Unit

2.1.4.1 Alkali Circuit

2.1.4.1-1 Alkali Circuit - Drain

Machine Status	Mains Power OFF Air OFF Steam ON Water OFF
SPC Reference	2544326-0200

WARNING

Caustic soda and nitric acid.
Follow the Safety Precautions.

Turn the main switch OFF and the system will automatically drain and return the chemicals to the canisters.

2.1.4.1-2 Alkali Circuit - Check Floats (Level Monitors)

Machine Status	Mains Power OFF Air OFF Steam ON Water OFF
SPC Reference	2544326-0200

WARNING
Caustic soda.
Follow the Safety Precautions.

(Cont'd)

(Cont'd)

a) Turn the main switch OFF.

b) Remove the screws (1) and the protective cover (2).

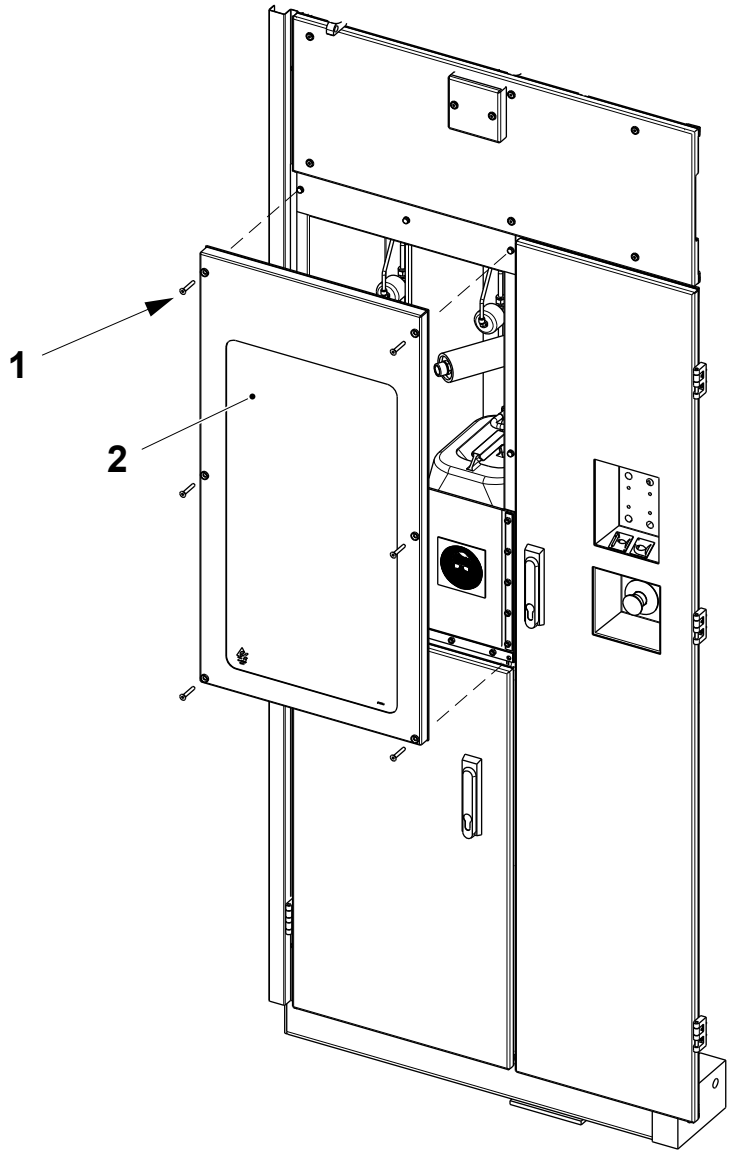

1 Screw
2 Protective cover

(Cont'd)

(Cont'd)

c) Disconnect the pipe (3) from the pump (4).
d) Unscrew the monitor housing (5).
e) Remove the level monitor assembly (6).

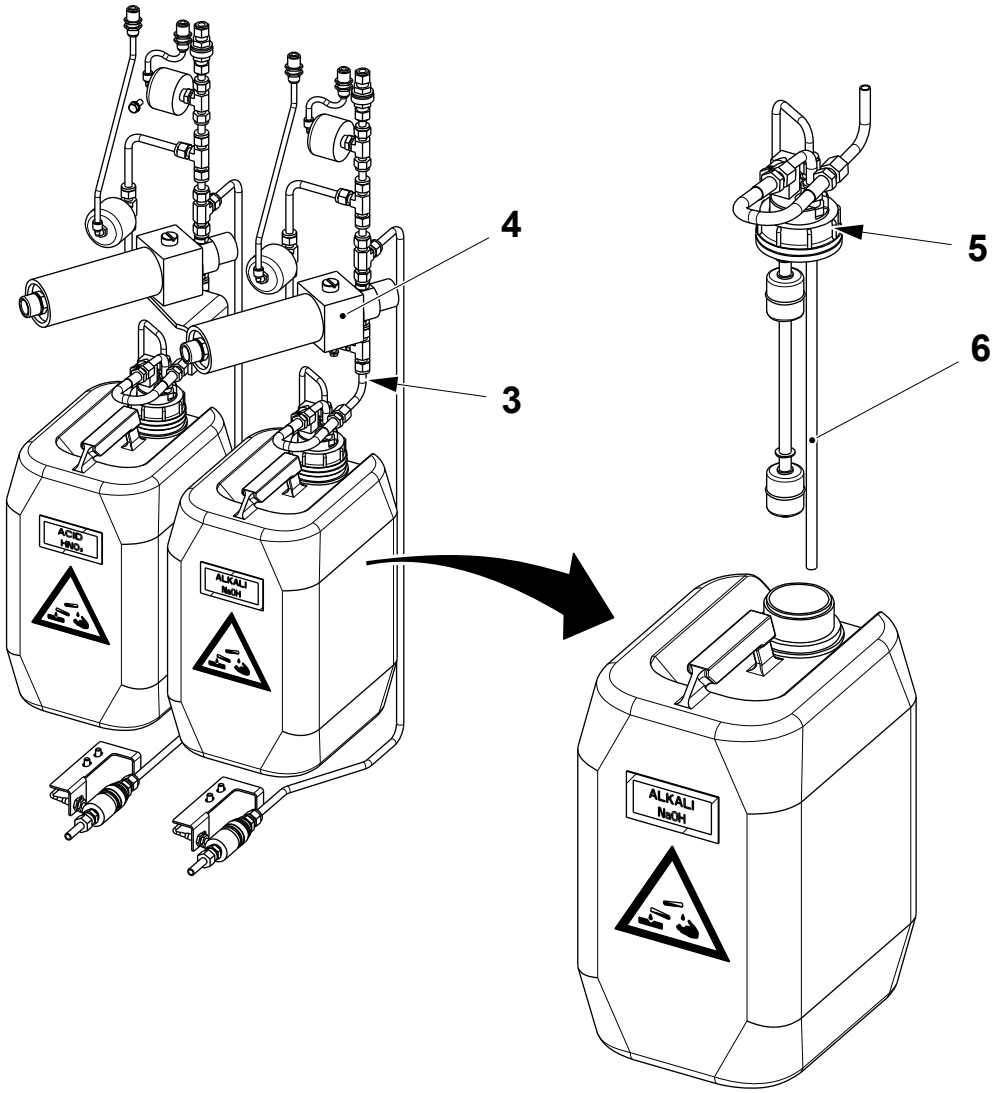

3 Pipe
4 Pump
5 Monitor housing
6 Level monitor assembly

(Cont'd)

(Cont'd)

f) Check that the safety hole (7) is not blocked.

g) Check that there are no holes in the floats (8) and that their movements are smooth and free.

h) Check that the circlips (9) are correctly installed and are not damaged.

i) Check that the O-ring (10) is not damaged.

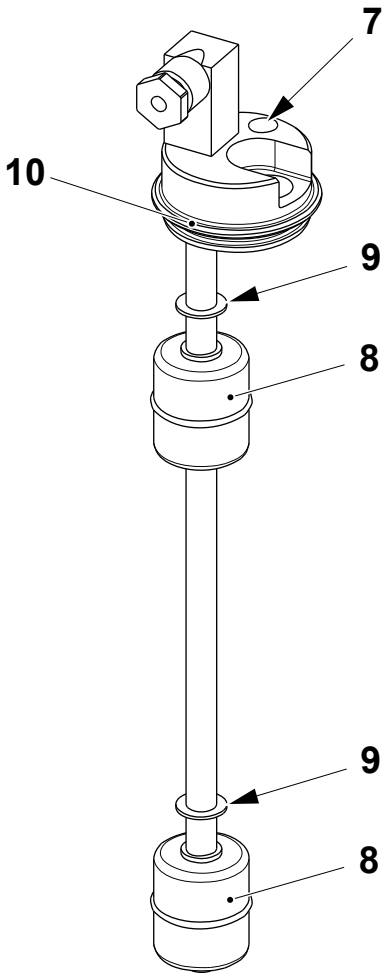

7 Safety hole
8 Float
9 Circlip
10 O-ring

2.1.4.1-3 Alkali Circuit - Check Float Function (Level Monitor)

Machine Status	Mains Power OFF Air OFF Steam ON Water OFF
SPC Reference	2544326-0200

WARNING
Caustic soda.
Follow the Safety Precautions.

Connect an ohmmeter between the connectors (1) and (2). Lift the float (3) to its upper position and check that the value on the ohmmeter display is 0.

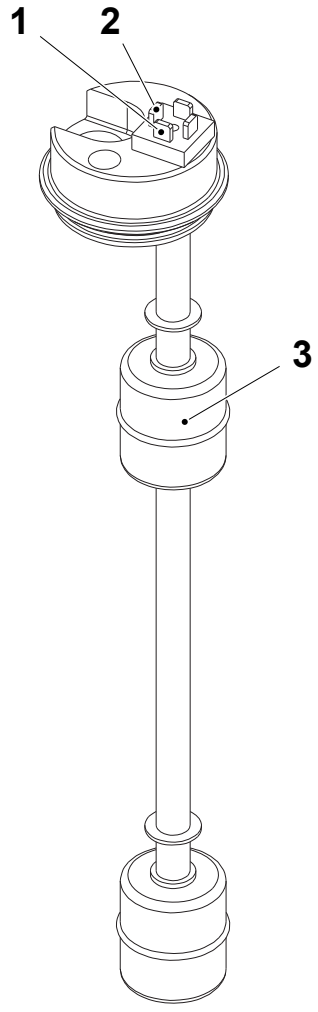

1 Connector
2 Connector
3 Float

(Cont'd)

(Cont'd)

Connect the ohmmeter between the connectors (1) and (4). Lift the float (5) to its upper position and check that the value on the ohmmeter display is 0.

Note! If the value displayed on the ohmmeter is not 0, remove the float (3) or (5) turn them upside down and repeat the check. The numbering of the connectors in the illustration corresponds to the physical markings on the equipment and as stated in the EM.

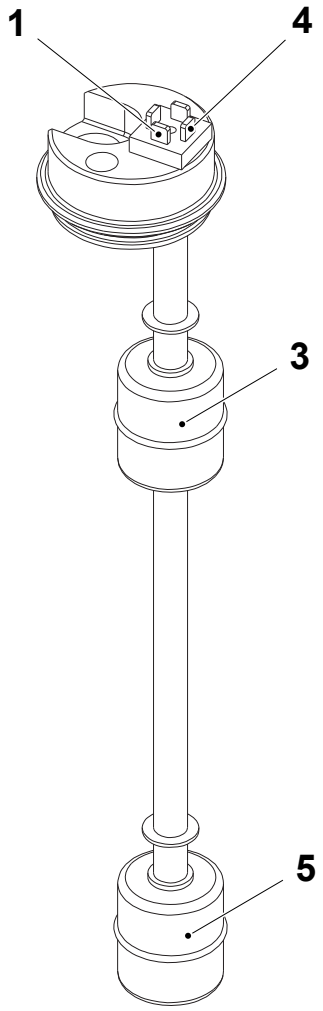

1 Connector
3 Float
4 Connector
5 Float

2.1.4.1-4 Alkali Circuit - Check Pipe

Machine Status	Mains Power OFF Air OFF Steam ON Water OFF
SPC Reference	2544326-0200

WARNING
Caustic soda.
Follow the Safety Precautions.

(Cont'd)

(Cont'd)

Check the following parts for wear or damage:

- the autoload plug (1)
- the autoload pipeline (2)
- the filter (3).

Change the parts if necessary.

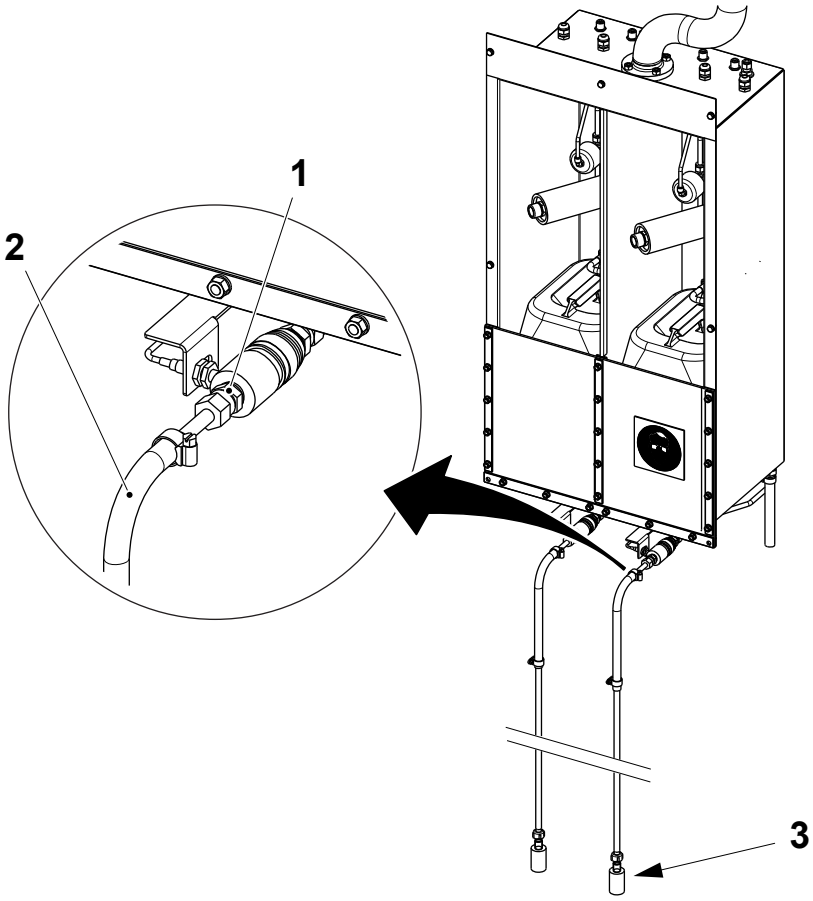

1 Autoload plug
2 Autoload pipeline
3 Filter

2.1.4.1-5 Alkali Circuit - Check Canister for Leakage

Machine Status	Mains Power OFF Air OFF Steam ON Water OFF
SPC Reference	2544326-0200

WARNING

Caustic soda.

Follow the Safety Precautions.

(Cont'd)

(Cont'd)

Check that there is no leakage:

- around the alkali canister (1)
- inside the ICU box (2)
- around the drain hose connection (3) and drain valve connection (4).

Change the canister if necessary, see 2.1.4.1-6 Alkali Circuit - Change Canister.

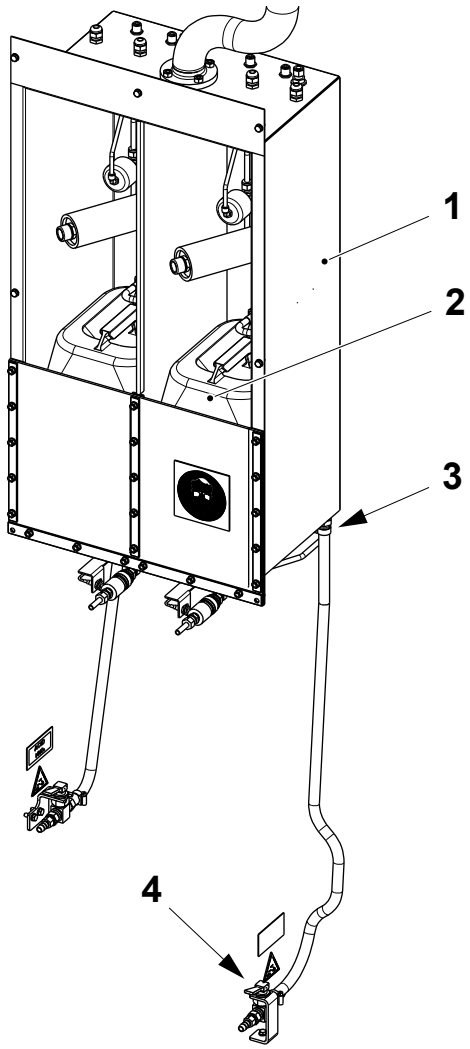

1 Alkali canister
2 ICU box
3 Drain hose connection
4 Valve connection

2.1.4.1-6 Alkali Circuit - Change Canister

Machine Status	Mains Power OFF Air OFF Steam ON Water OFF
SPC Reference	2544326-0200

WARNING

Caustic soda.

Follow the supplier’s instructions for the handling and disposal of the chemical products.

(Cont'd)

(Cont'd)

If there are chemicals inside the ICU box (1), follow the instructions below:

a) Open the relevant drain valve (2) and drain the chemicals into a temporary container.

b) Flush the ICU box with water and close the drain valve (2).

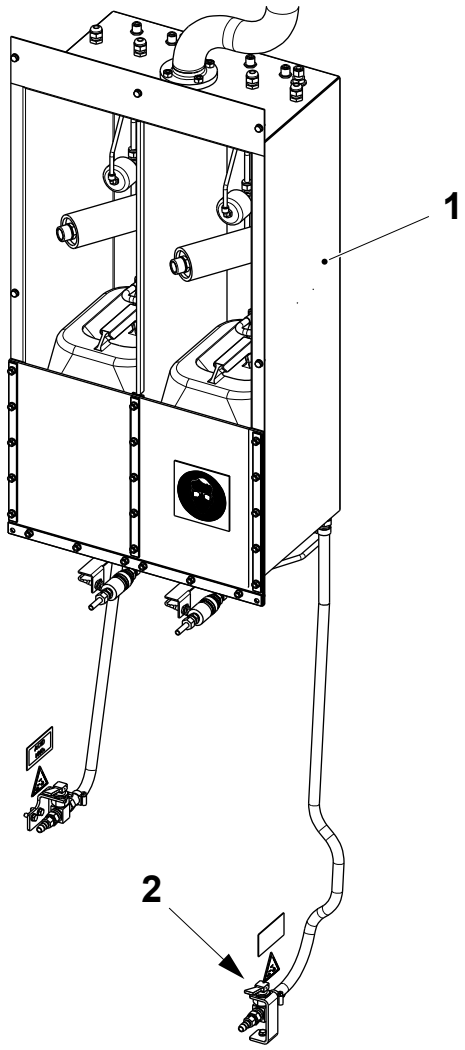

1 ICU box
2 Drain valve

(Cont'd)

(Cont'd)

c) Remove the nuts (3) and the protective cover (4).
d) Disconnect the pipe (5) at the connection (6).
e) Remove the canister (7).
f) Remove the level monitoring assembly (8).
g) Change the canister (7).
h) Assemble in the reverse order.

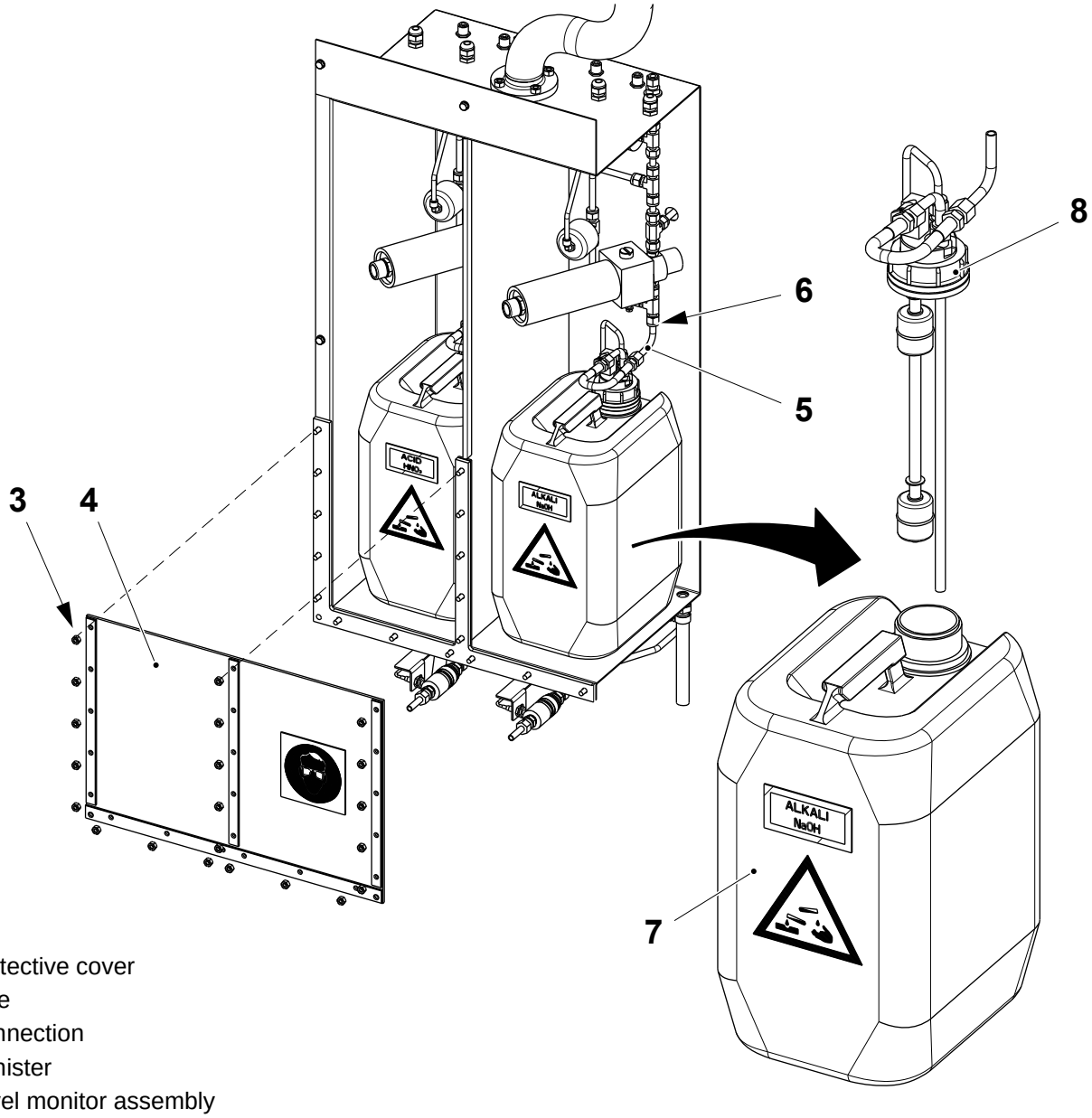

3 Nut
4 Protective cover
5 Pipe
6 Connection
7 Canister
8 Level monitor assembly

2.1.4.1-7 Alkali Circuit - Set Proximity Switch

Machine Status	Mains Power ON Air OFF Steam ON Water OFF
SPC Reference	2544326-0200

WARNING
Caustic soda.
Follow the Safety Precautions.

(Cont'd)

(Cont'd)

a) Insert the plug (1) of the external tank into the autoload connection (2).

b) Loosen the nuts (3) and set the distance **A** between the sensor (4) and the plug (1).

c) Check that the LED on the sensor (4) is lit.

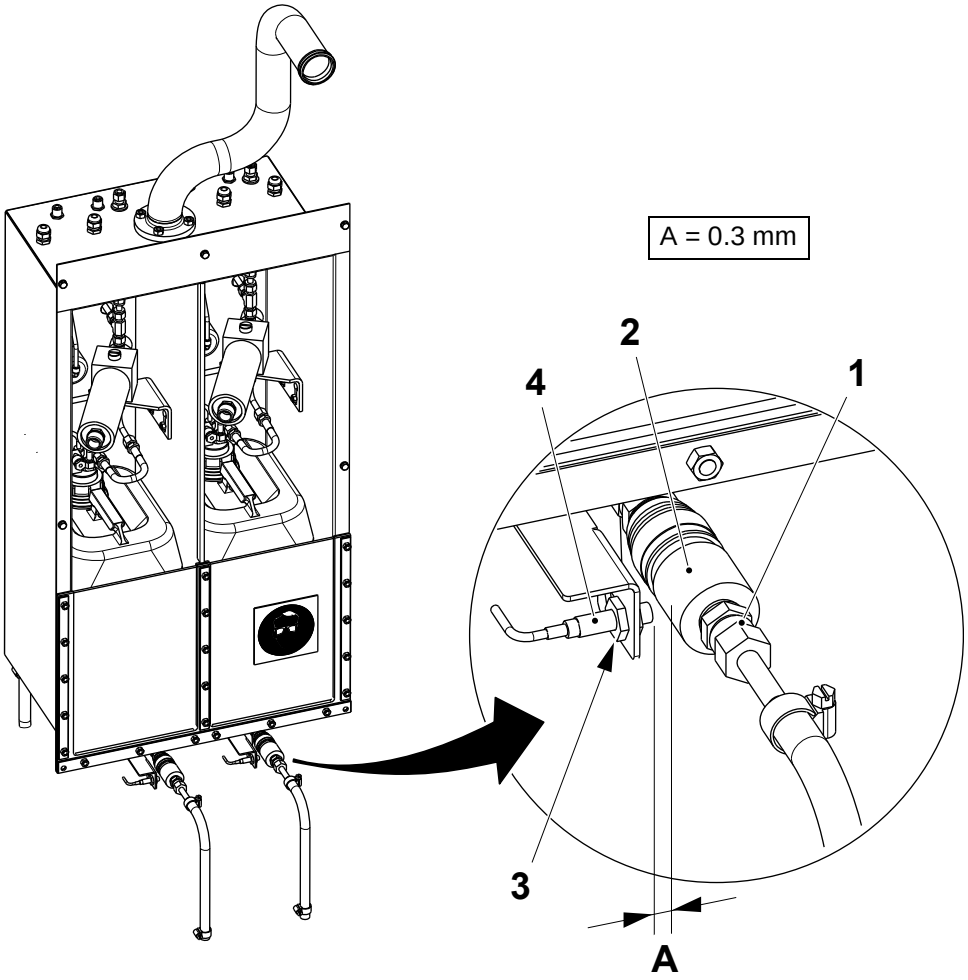

1 Plug
2 Autoload connection
3 Nut
4 Sensor
5 Start button

2.1.4.2 Acid Circuit

2.1.4.2-1 Acid Circuit - Drain

Machine Status	Mains Power OFF Air OFF Steam ON Water OFF
SPC Reference	2544326-0200

WARNING
NItric acid.
Follow the Safety Precautions.

Follow the procedure described in 2.1.4.1-1 Alkali Circuit - Drain.

2.1.4.2-2 Acid Circuit - Check Floats (Level Monitor)

Machine Status	Mains Power OFF Air OFF Steam ON Water OFF
SPC Reference	2544326-0200

WARNING
NItric acid.
Follow the Safety Precautions.

Follow the procedure described in 2.1.4.1-2 Alkali Circuit - Check Floats (Level Monitors).

2.1.4.2-3 Acid Circuit - Check Float Function (Level Monitor)

Machine Status	Mains Power OFF Air OFF Steam ON Water OFF
SPC Reference	2544326-0200

WARNING
NItric acid.
Follow the Safety Precautions.

Follow the procedure described in 2.1.4.1-3 Alkali Circuit - Check Float Function (Level Monitor).

2.1.4.2-4 Acid Circuit - Check Pipe

Machine Status	Mains Power OFF Air OFF Steam ON Water OFF
SPC Reference	2544326-0200

WARNING
NItric acid.
Follow the Safety Precautions.

Follow the procedure described in 2.1.4.1-4 Alkali Circuit - Check Pipe.

2.1.4.2-5 Acid Circuit - Check Container for Leakages

Machine Status	Mains Power OFF Air OFF Steam ON Water OFF
SPC Reference	2544326-0200

WARNING
NItric acid.
Follow the Safety Precautions.

Follow the procedure described in 2.1.4.1-5 Alkali Circuit - Check Canister for Leakage.

2.1.4.2-6 Acid Circuit - Change Container

Machine Status	Mains Power OFF Air OFF Steam ON Water OFF
SPC Reference	2544326-0200

WARNING
NItric acid.
Follow the Safety Precautions.

Follow the procedure described in 2.1.4.1-6 Alkali Circuit - Change Canister.

2.1.4.2-7 Acid Circuit - Set Proximity Switch

Machine Status	Mains Power OFF Air OFF Steam ON Water OFF
SPC Reference	2544326-0200

WARNING
NItric acid.
Follow the Safety Precautions.

Follow the procedure described in 2.1.4.1-7 Alkali Circuit - Set Proximity Switch.

2.1.5 Pneumatic System

2.1.5.1 Valve Panel

2.1.5.1-1 Valve Panel - Check Photocell Filters

Machine Status	Mains Power OFF Air OFF Steam ON Water OFF
SPC Reference	2774463-0100

Check the following parts for wear or damage:

- the filter (1), the normal colour of the filter is white. If it is coloured RED, it must be changed

Note! Red indicates that water is in the air supply.

- the filter (2), the normal colour of the filter is blue. If it is coloured PINK, it must be changed

Note! Pink indicates that water is in the air supply.

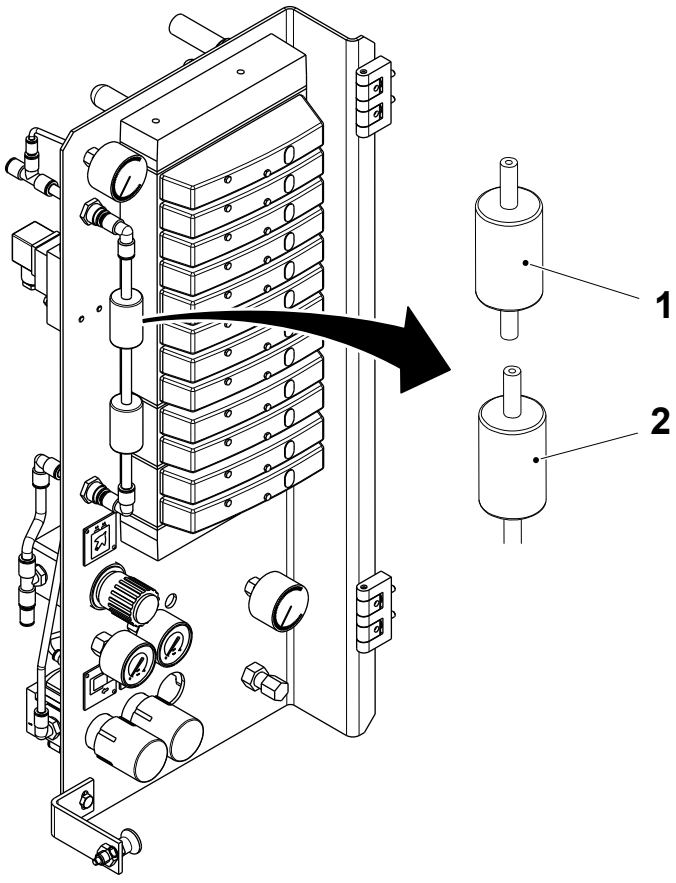

1 Filter
2 Filter

2.1.5.1-2 Valve Panel - Set Photocell Pressure

Machine Status	Mains Power OFF Air OFF Steam ON Water OFF
SPC Reference	2774463-0100

Set the design correction air pressure to 0.3 bar by means of the pressure regulator (1), on the machine body pneumatic panel (2).

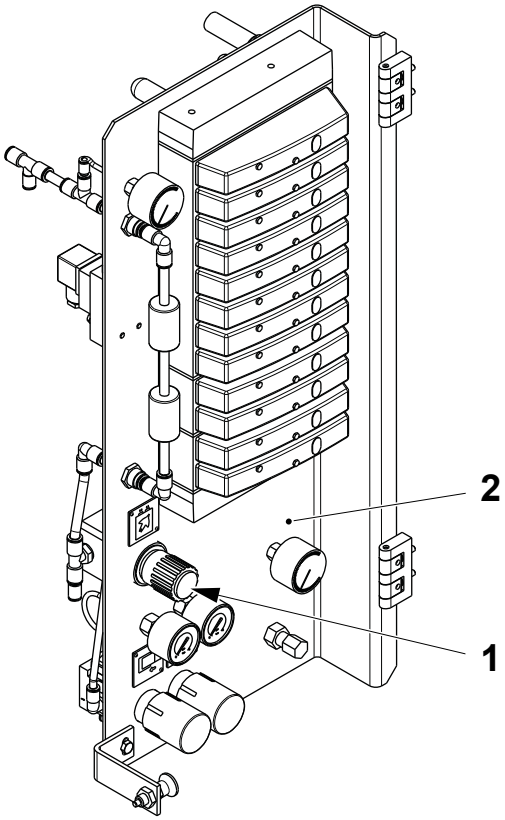

1 Pressure regulator
2 Pneumatic panel

2.1.6 Electrical Equipment

2.1.6.1 H_2O_2 Concentration Meter

2.1.6.1-1 H_2O_2 Concentration Meter - Check Desiccant Cartridge

Machine Status	Mains Power OFF Air OFF Steam ON Water OFF
SPC Reference	2519574-0200

WARNING
Hydrogen Peroxide.
Follow the Safety Precautions.

CAUTION
Risk of damage to the equipment.
If the cartridge has to be changed, prepare the new cartridge before removing the old cartridge and perform the replacement as quickly as possible to avoid humidity entering the meter. Humidity may cause reading errors.

(Cont'd)

(Cont'd)

Check the colour of the cartridge (1). If the cartridge is coloured light cyan or white, change the cartridge as follows:

a) Unscrew the old cartridge using the plastic housing (2) of the new cartridge.

b) Fit the new cartridge.

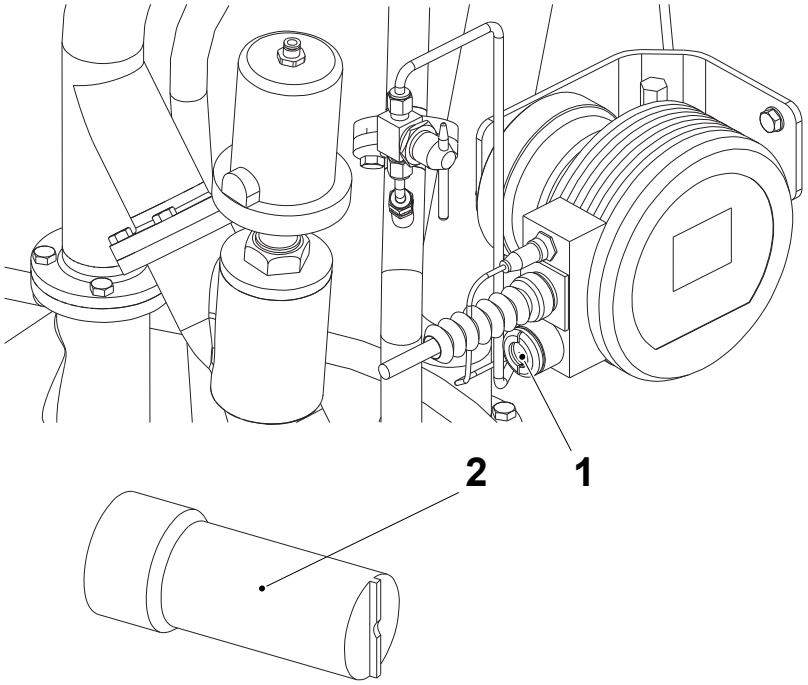

1 Cartridge
2 Housing

2.1.6.1-2 H_2O_2 Concentration Meter - Change O-ring

Machine Status	STEP ZERO
SPC Reference	2519574-0200

WARNING
Hydrogen Peroxide.
Follow the Safety Precautions.

CAUTION
Risk of damage to the equipment.
Sealing the cables with the plugs prevents oxidization and possible damage by peroxide.

(Cont'd)

(Cont'd)

a) Protect the pump (1) with a plastic bag, as peroxide may still be present inside the deflector (2) and close the tap (3).

b) Disconnect the power connection (4) and the PT100 connection (5).

c) Fit the plugs (6) and (7).

d) Seal the ends of the power connection (4) and the PT100 connection (5) with the plugs (8) and (9).

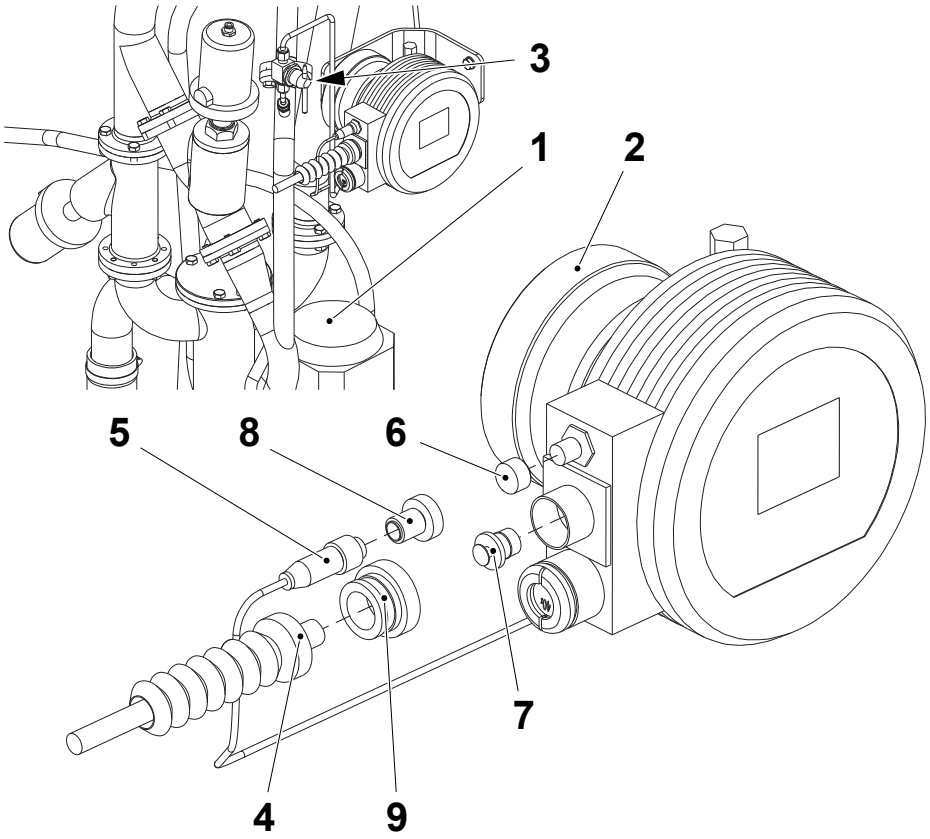

1 Pump
2 Deflector
3 Tap
4 Power connection
5 PT100 connection
6 Plug
7 Plug
8 Plug
9 Plug

(Cont'd)

(Cont'd)

CAUTION
Risk of damage to the equipment.
Avoid scratching the prism glass.

e) Remove the clamp (10) and the peroxide concentration meter (11).

f) Dissolve 7 grams of cleaning powder (TP No. 90459-1098) in 3 millilitres of distilled water. Pour the liquid on the prism (12) and wipe it off with clean paper to remove any peroxide residue.

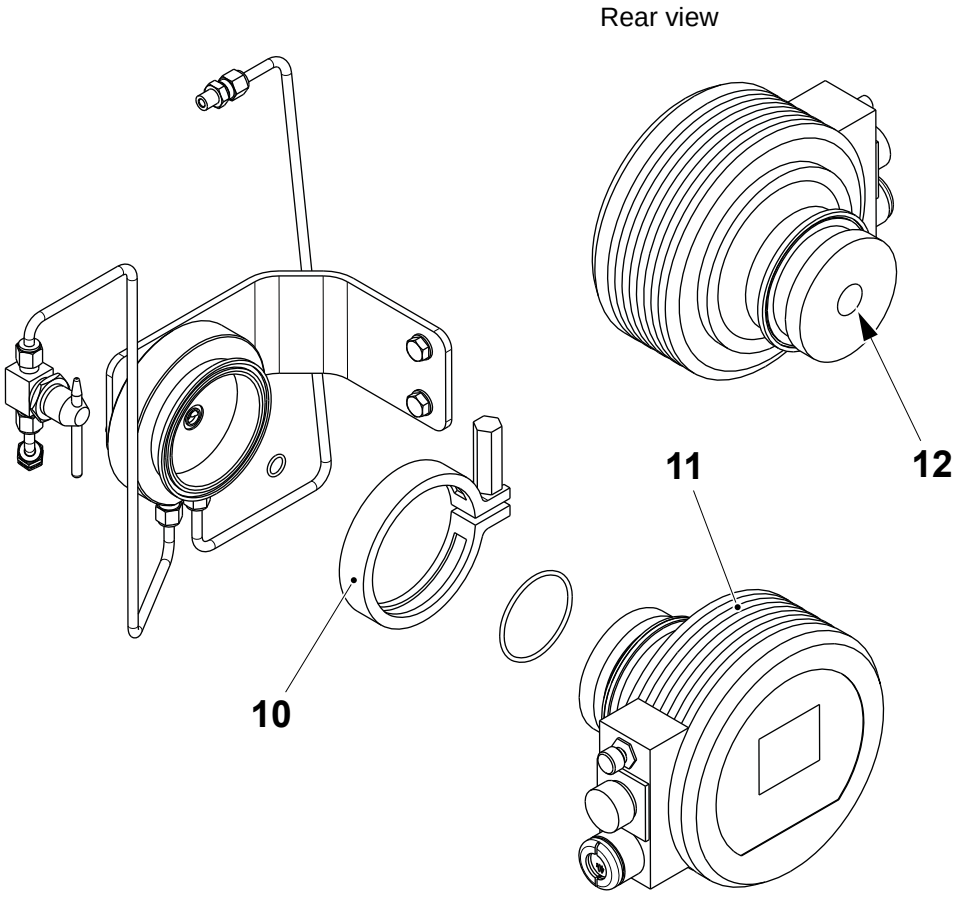

10 Clamp
11 Peroxide concentration meter
12 Prism

(Cont'd)

(Cont'd)

g) Remove any rubber residue remaining from the O-ring (13) and clean the deflector (2) with paper soaked in distilled water.

Note! When assembling, connect the PT100 connection first and the power connection last.

h) Change the O-rings (13) and (14) and assemble in the reverse order.

i) Open the tap (3).

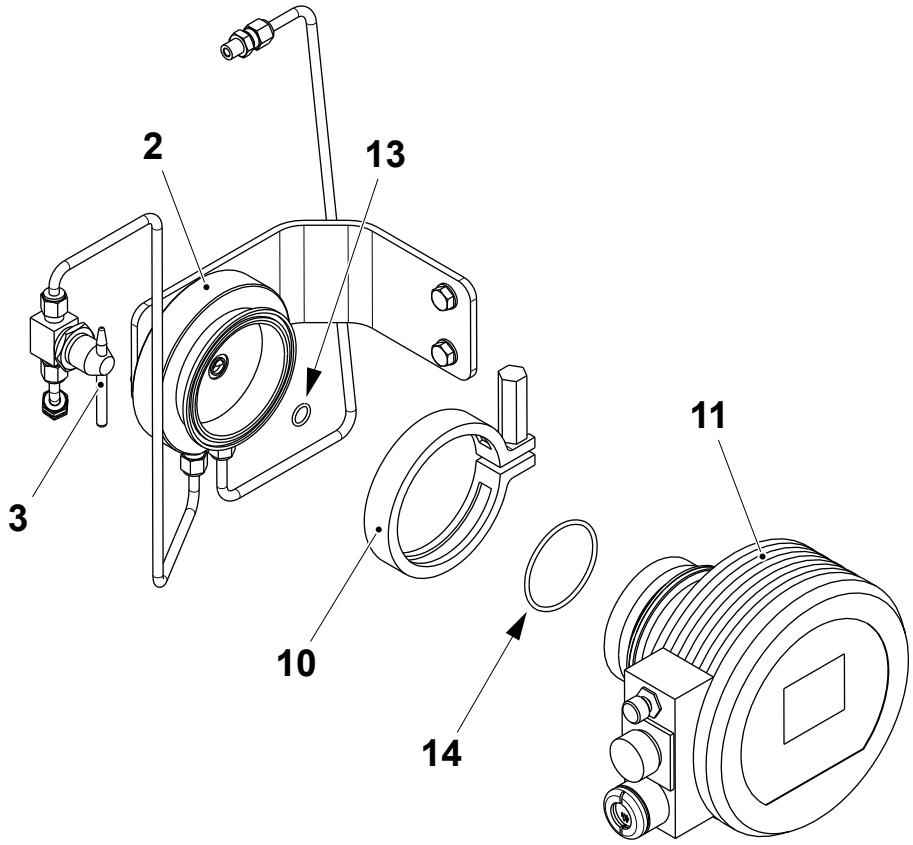

2 Deflector
3 Tap
13 O-ring
14 O-ring

2.1.6.1-3 H_2O_2 Concentration Meter - Remove

Machine Status	STEP ZERO
SPC Reference	2519574-0200

WARNING
Hydrogen Peroxide.
Follow the Safety Precautions.

CAUTION
Risk of damage to the equipment.
Sealing the cables with the plugs prevents oxidization and possible damage by peroxide.

(Cont'd)

(Cont'd)

a) Protect the pump (1) with a plastic bag, as peroxide may still be present inside the deflector (2).

b) Close the tap (3).

c) Disconnect the power connection (4) and the PT100 connection (5).

d) Fit the plugs (6) and (7).

e) Seal the cable ends (4) and (5) with the plugs (8) and (9).

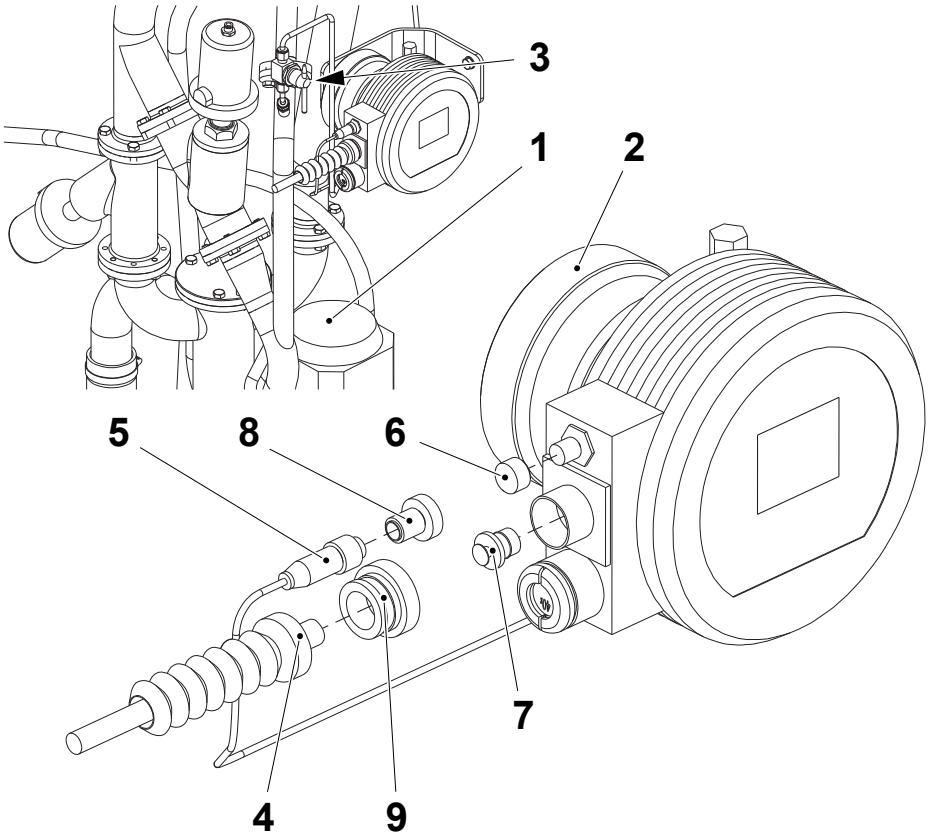

1 Pump
2 Deflector
3 Tap
4 Power connection
5 PT100 connection
6 Plug
7 Plug
8 Plug
9 Plug

(Cont'd)

(Cont'd)

WARNING

Risk of hydrogen peroxide leakage.

Make sure that the O-ring (14) is in place and in a good condition before assembling the plug (13).

f) Remove the clamp (10) and the peroxide concentration meter (11).

g) Fit the spacer (12) and the plug (13) onto the deflector (2) and lock it in to place with the clamp (10).

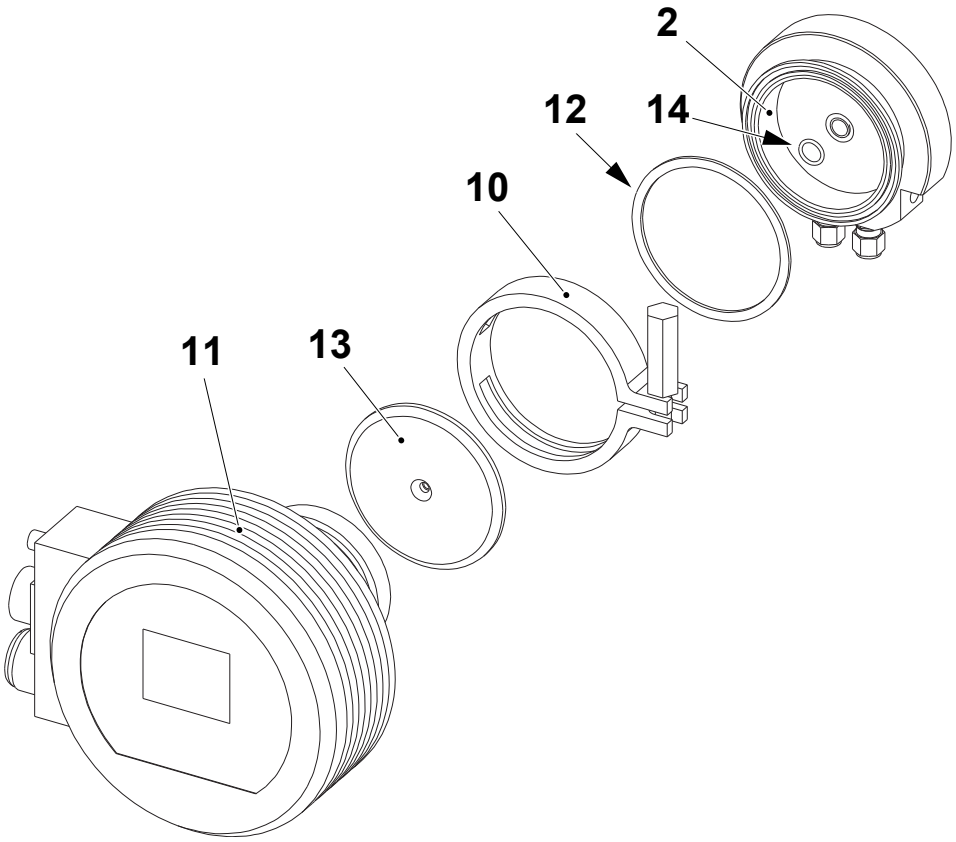

2 Deflector
10 Clamp
11 Peroxide concentration meter
12 Spacer
13 Plug
14 O-ring

2.1.6.1-4 H_2O_2 Concentration Meter - Check Pt100 Sensor

Machine Status	PRODUCTION
SPC Reference	2519574-0200

WARNING
Hydrogen Peroxide.
Follow the Safety Precautions.

Check the peroxide temperature, see the TPOP.

Check the peroxide temperature in the tank, see the TPOP. If the temperature values differ more than 3 to 5 °C, check the contacts of the PT100 connection (1) for oxidation. If necessary change the sensor, see 2.1.6.1-5 H_2O_2 Concentration Meter - Change Pt100 Sensor.

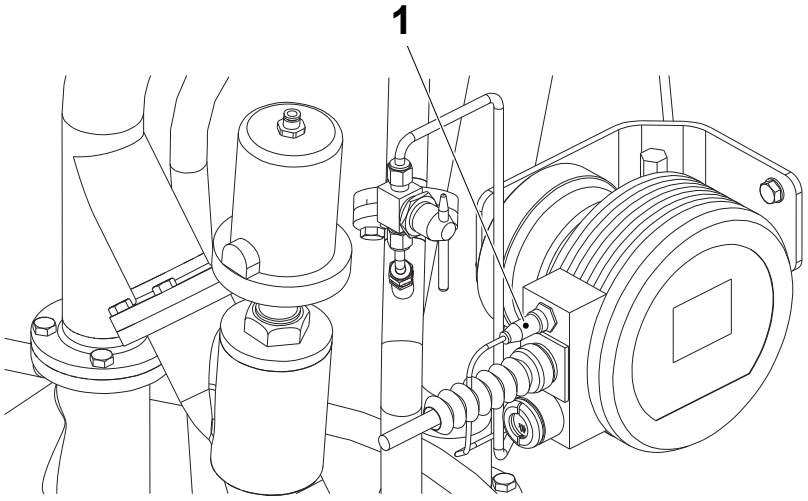

1 PT100 Connection

2.1.6.1-5 H_2O_2 Concentration Meter - Change Pt100 Sensor

Machine Status	STEP ZERO
SPC Reference	2519574-0200

CAUTION
Risk of damage to the equipment.
Apply teflon tape on threads before assembling the new sensor.

a) Close the tap (1).

b) Disconnect the power connection (2).

c) Protect the pump (3) with a plastic bag, as peroxide may still be present inside the deflector (4).

d) Disconnect the connector PT 100 (5) from the peroxide concentration meter (6) and unscrew the sensor (7) from the deflector (4).

e) Change the PT 100 sensor and assemble in the reverse order.

f) Connect the power connection (2).

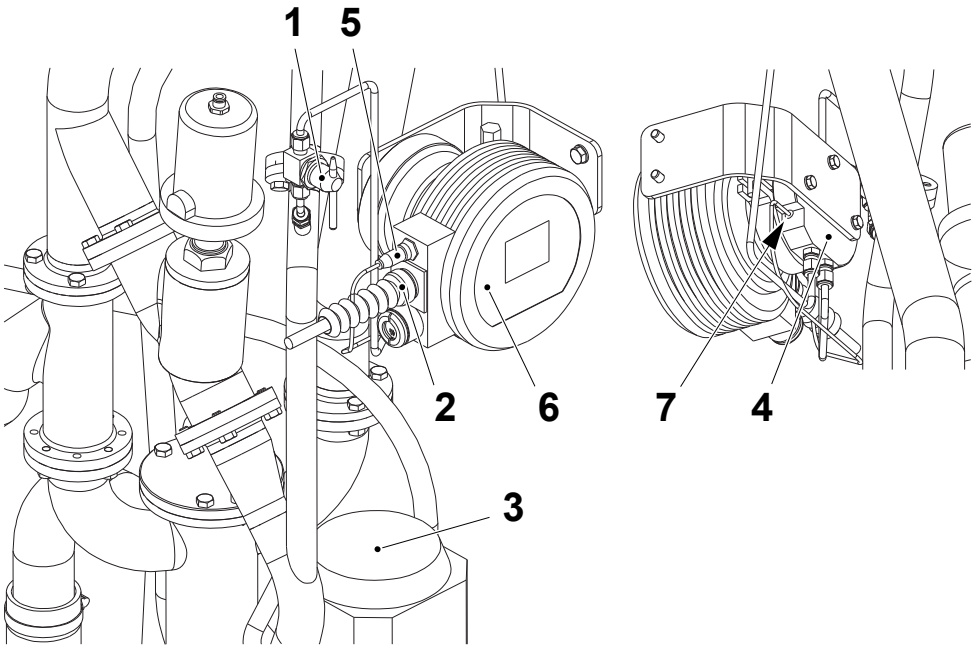

1 Tap
2 Power connection
3 Pump
4 Deflector
5 PT100 Connection
6 Peroxide concentration meter
7 Sensor

2.1.6.1-6 H_2O_2 Concentration Meter - Check Prism and Led

Machine Status	PRODUCTION
SPC Reference	2519574-0200

WARNING
Hydrogen Peroxide.
Follow the Safety precautions.

a) Press and hold the ENTER button (1) to display the menu.

b) Read the numeric value in the Deriv. value (2).

c) If the value is lower than 55000, clean the prism and change the O-ring, see 2.1.6.1-2 H_2O_2 Concentration Meter - Change O-ring.

d) Read the numeric value in the LED perform.% (3).

Note! If the value is lower than 50% the filling machine will stop.

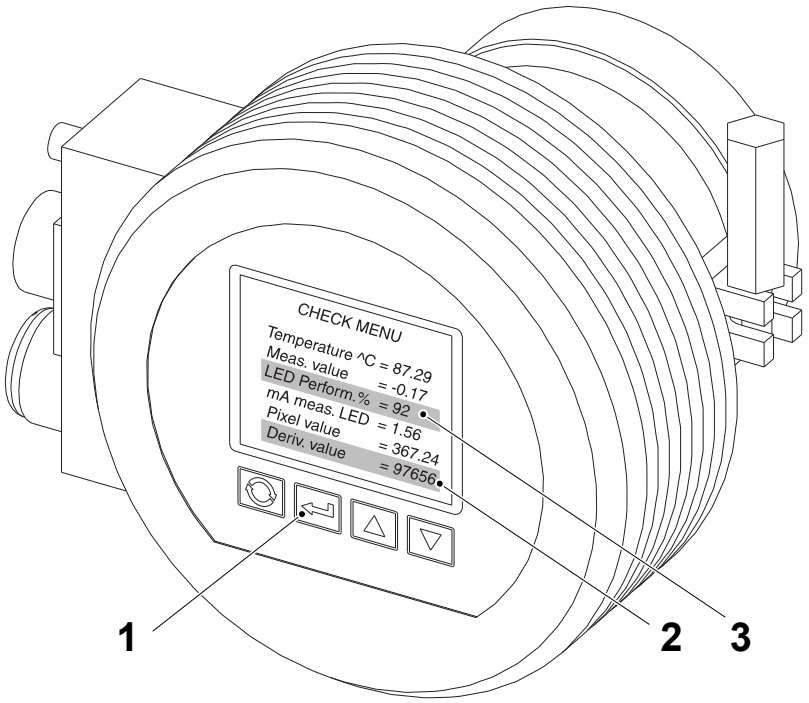

1 Button
2 Deriv. value
3 LED perform.%

(Cont'd)

(Cont'd)

e) If the value is between 50% and 60%, there will be a TPOP alarm. Clean the prism, see 2.1.6.1-2 H_2O_2 Concentration Meter - Change O-ring.

f) If after cleaning the alarm is still present, remove the instrument and send it to the manufacturer, see 2.1.6.1-3 H_2O_2 Concentration Meter - Remove.

g) To exit from the menu, press the ENTER button (1) twice.

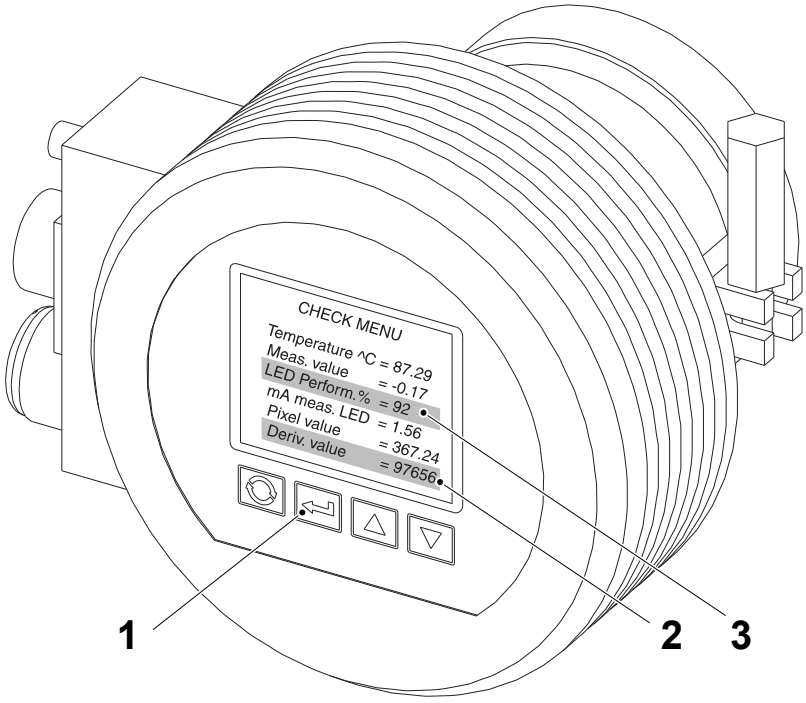

1 Button
2 Deriv. value
3 LED perform.%

2.2 Central Module

SPC Reference	2504785-0300

2.2.1 Cleaning System

2.2.1-1 Cleaning System - Check Nozzles

Machine Status	EXTERNAL CLEANING
SPC Reference	2504787-0200

Make sure that:

- the nozzles (1), indicated by the arrows in the illustration rotate easily
- the nozzles (1) are not clogged and are free from any cleaning solution deposit.

If necessary, remove and clean the nozzles (1).

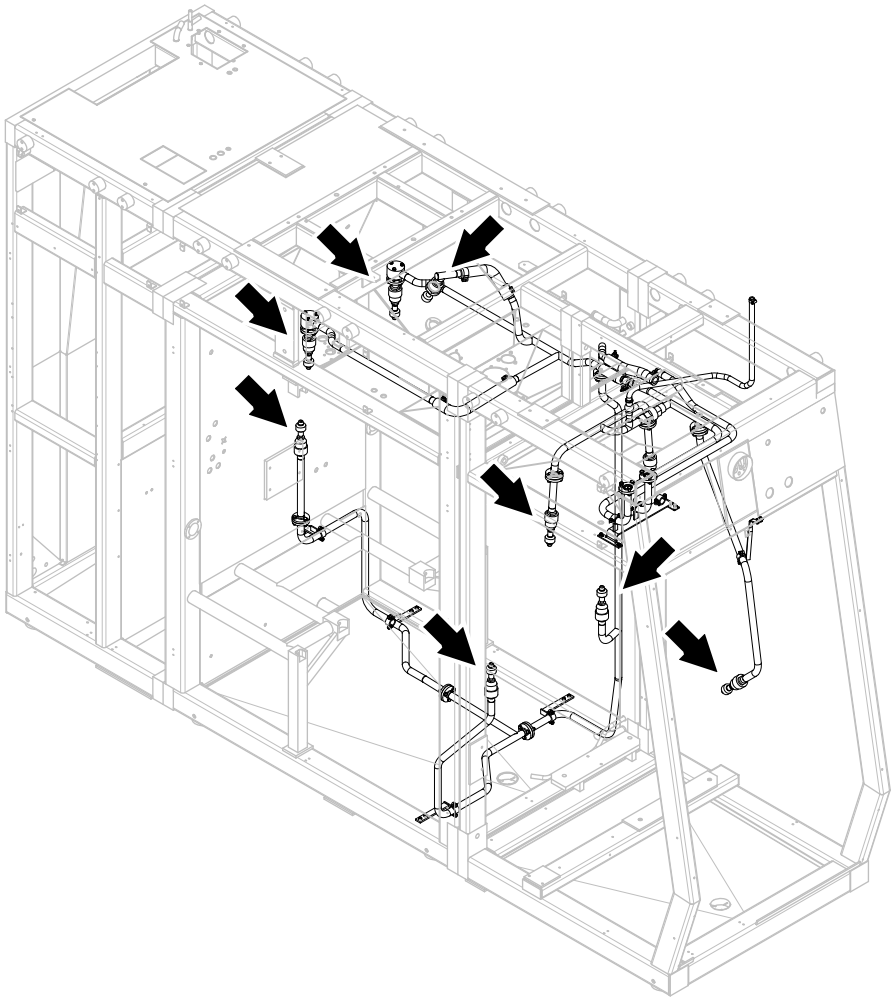

2.2.2 Hydraulic System

2.2.2-1 Hydraulic System - Description

SPC Reference	2546500-0200

The hydraulic system provides the hydraulic cylinders in the jaw system with oil. The movement of the pressure jaws and the cutting jaws in the jaw system are controlled by the three hydraulic valves (1). The oil to the hydraulic valves (1) comes from the hydraulic tank (2) via the hydraulic pump (3).

The oil passes through a hydraulic pressure filter (4) before it reaches the hydraulic valves (1). The return oil from the jaw system passes through the hydraulic valves (1) before it returns to the hydraulic tank (2).

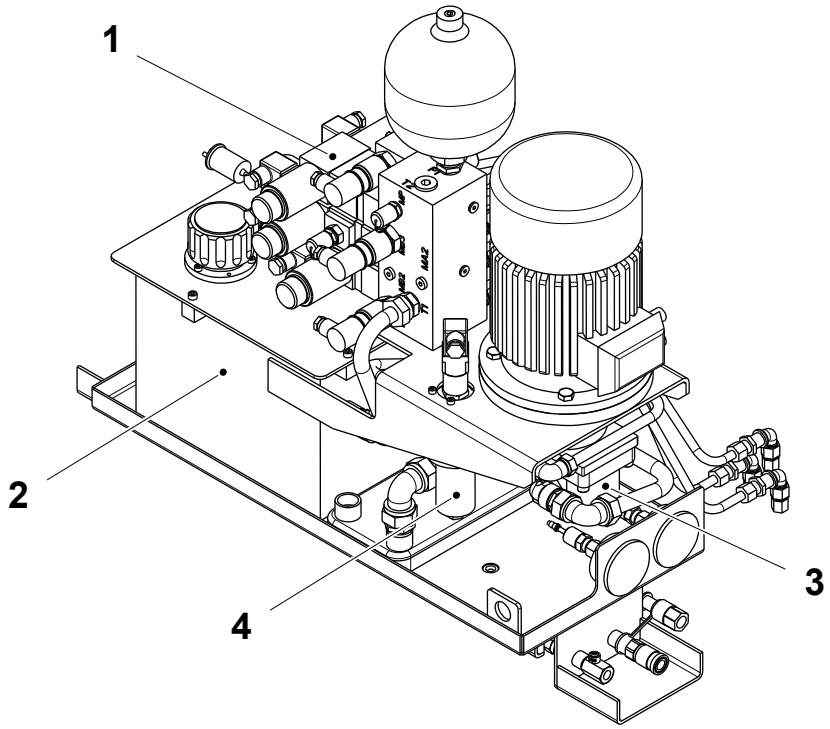

1 Hydraulic valve
2 Hydraulic tank
3 Hydraulic pump
4 Hydraulic pressure filter

2.2.2-2 Hydraulic System - Change Oil

Machine Status	Mains Power OFF Air OFF Steam ON Water OFF
Consumables	Lubricant, Code C
SPC Reference	2546500-0200

WARNING
Hydraulic oil.
Wear personal protective equipment.

a) Drain the oil through the valve (1).

b) Change the pressure filter (4), see 2.2.2.4-1 Hydraulic Pump - Change Filter Element, and the air filter (5), see 2.2.2.2-2 Hydraulic Tank - Change Air Filter.

c) Open the drain valve (2) to drain any oil from the collecting vessel (3).

d) Close the drain valve (2).

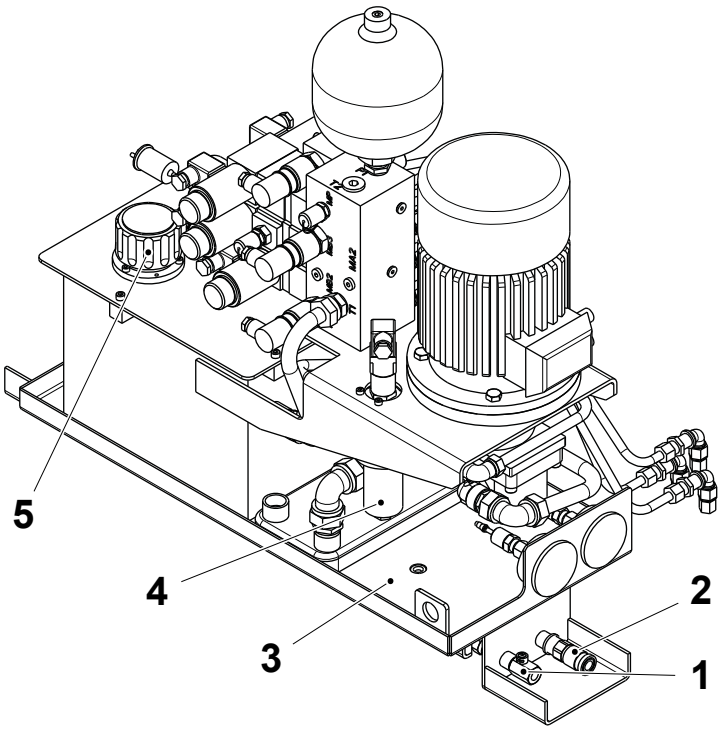

1 Valve
2 Drain valve
3 Collecting vessel
4 Pressure filter
5 Air filter

(Cont'd)

(Cont'd)

e) Touch the PRODUCTION CONTROL button (6) on the TPOP.

f) Touch the PACKAGE FORMING UNIT button (7).

g) Touch the HYDRAULIC OIL LEVEL icon (8).

h) Fill with oil (code C, see 10.3-1 Lubricants*)* through the valve (1) until the HYDRAULIC OIL LEVEL display (9) is at the maximum (green) level.

Note! Do not overfill.

i) Bleed the circuit, see 2.2.2-4 Hydraulic System - Bleed.

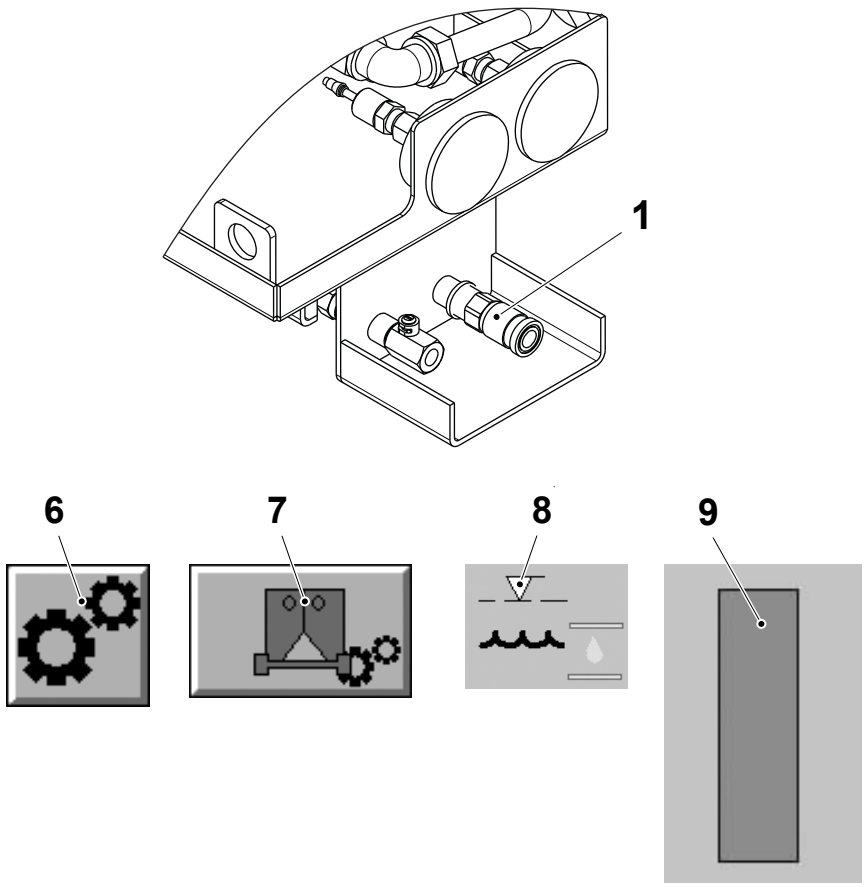

1 Valve
6 Production control button
7 Package forming unit button
8 Hydraulic oil level icon
9 Hydraulic oil level display

2.2.2-3 Hydraulic System - Clean Tank

Machine Status	Mains Power OFF Air OFF Steam ON Water OFF
Consumables	Lubricant, Code C
SPC Reference	2546500-0200

WARNING
Hydraulic oil.
Wear personal protective equipment.

a) Drain the oil by opening the valve (1).
b) Disconnect all six oil connections (2).
c) Pull out the hydraulic unit until it locks open.
d) Remove the level probe (3) according to 2.2.2.2-2 Hydraulic Tank - Change Air Filter.

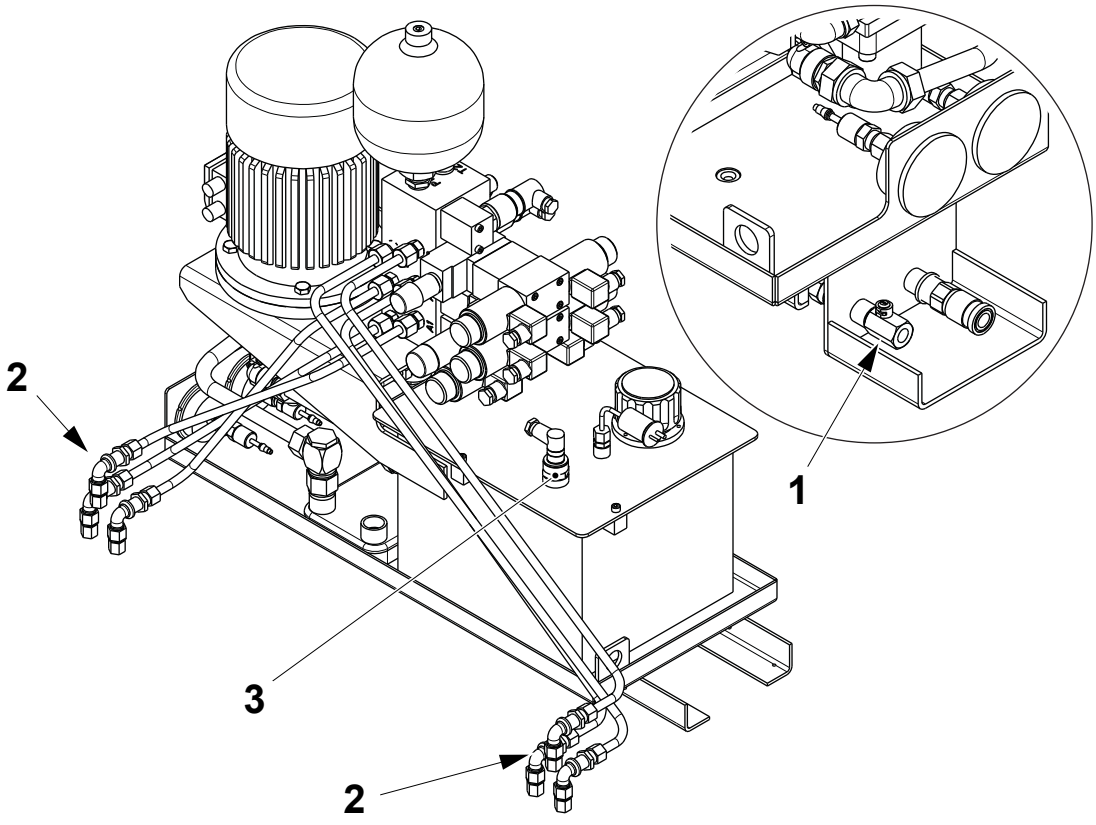

1 Valve
2 Oil connection
3 Level probe

(Cont'd)

(Cont'd)

e) Remove the four screws (4), the washers and the cover (5).

f) Clean the tank (6) with lint-free cloth.

Note! Make sure that there is no lint after cleaning.

g) Assemble in the reverse order.

h) Push the hydraulic unit in until it locks in the closed position.

i) Connect all six oil connections (2).

j) Close the valve (1) and fill with oil (code C, see 10.3-1 Lubricants) through the valve (1), see 2.2.2-2 Hydraulic System - Change Oil.

k) Bleed the circuit, see 2.2.2-4 Hydraulic System - Bleed.

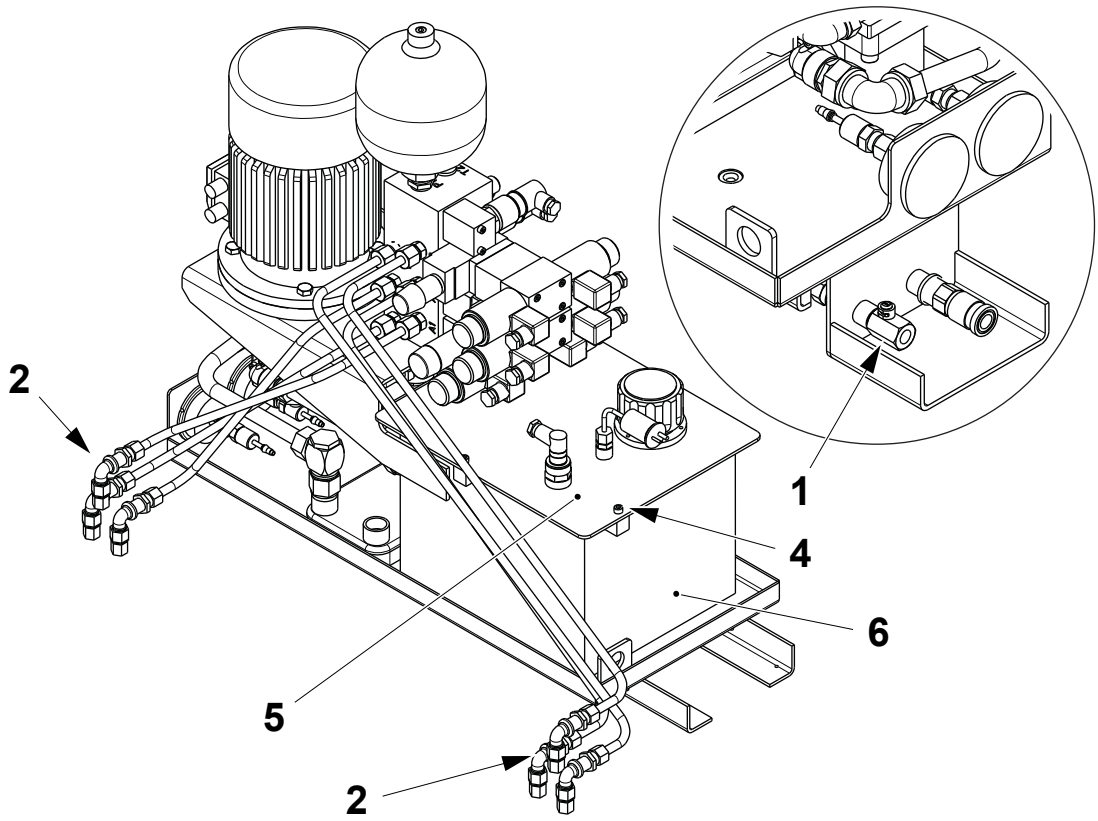

1 Valve
2 Oil connection
4 Screw
5 Cover
6 Tank

2.2.2-4 Hydraulic System - Bleed

Machine Status	Mains Power ON Air ON Steam ON Water OFF
Consumables	Lubricant, Code C
SPC Reference	2546500-0200

WARNING
Hydraulic oil.
Wear personal protective equipment.

a) Log on to the MAINTENANCE CONTROL window, see 9.6.3-2 HMI - User Management Log On.

b) Touch the MAINTENANCE CONTROL button (1).

c) Touch the PACKAGE FORMING UNIT button (2) to display the PACKAGE FORMING UNIT window.

d) Touch the HYDRAULIC SYSTEM icon (3).

e) Touch the START button (4).

f) Touch the OK button and wait for the machine movement to complete.

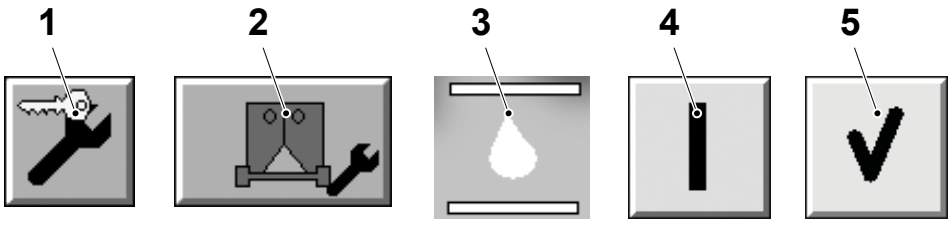

1 Maintenance control button
2 Package forming unit button
3 Hydraulic system icon
4 Start button
5 OK button

(Cont'd)

(Cont'd)

CAUTION

Risk of personal injury.

Touching the KNIFE button (2) activates the cutting movement of the knife.

Bleed the Knife Circuit

a) Touch the LH or RH side `JAW SYSTEM` button (1) for the side you want to bleed.

b) Touch the `KNIFE` button (2).

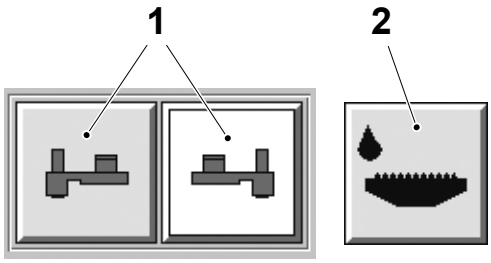

1 LH/RH jaw system button
2 Knife button

(Cont'd)

(Cont'd)

CAUTION

Risk of personal injury.

The venting screw (3) may be ejected with force by the hydraulic pressure. Never loosen the screw by more than two turns.

c) Loosen the venting screw (3) on the cutting jaw and bleed until oil with no air bubbles emerges.

d) Tighten the venting screw (3).

e) Touch the CYCLE button (4) and wait for the hydraulic cycle to complete.

f) Repeat the items b) to d) until no air is visible in the oil. When no air is visible repeat the procedure three more time to guarantee that the circuit is free from air.

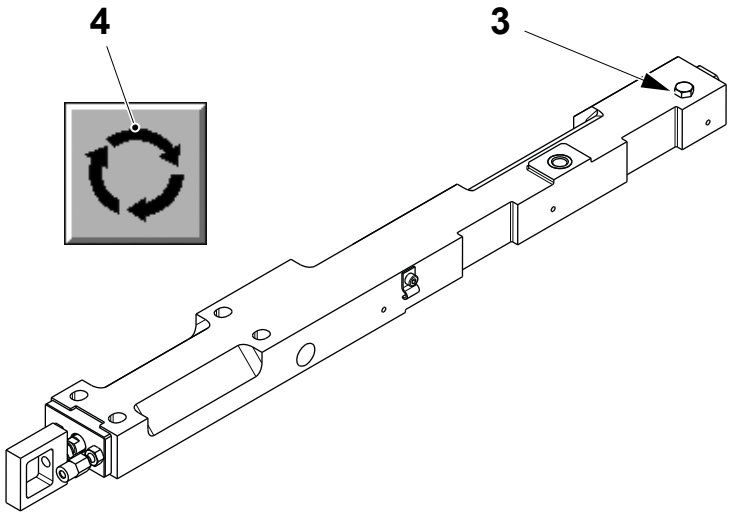

3 Venting screw
4 Cycle button

(Cont'd)

(Cont'd)

Bleed the Catches Circuit

Note! Moving the position of the shaft (2) connects the two sides of the hydraulic circuit and allows air to be bleed back to the hydraulic tank.

a) Remove the screw (1) from the LH or RH side carrier for the side that you want to bleed.

b) Turn the shaft (2) to the position indicated in the illustration.

c) Touch the LH or RH side `JAW SYSTEM` button (3) for the side you want to bleed.

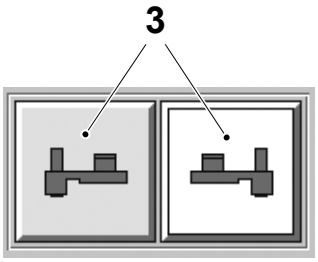

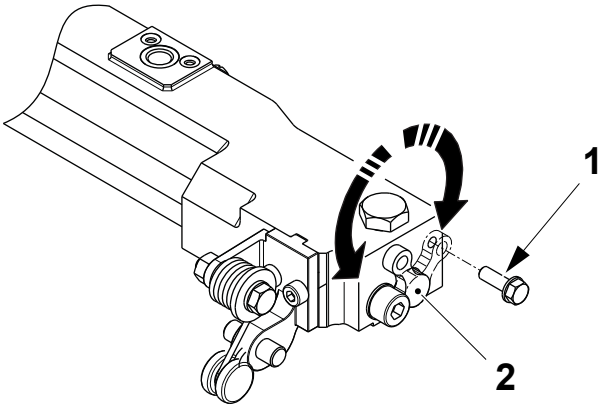

1 Screw
2 Shaft
3 LH/RH jaw system button

(Cont'd)

(Cont'd)

d) Touch the CATCHES OPEN button (4) to bleed air from the backside of the catches pistons, bleed the catches for a minimum of 30 seconds.

e) Touch the CATCHES OPEN button (4) again to stop the function. Wait for the hydraulic pressure to stabilize at 100 bar.

f) Touch the CATCHES CLOSED button (5) to the bleed air from the front side of the catches pistons, bleed the catches for a minimum of 30 seconds.

g) Touch the CATCHES CLOSED button (5) again to stop the function. Wait for the hydraulic pressure to stabilize at 100 bar.

h) Turn the shaft (2) to the position indicated in the illustration and fit and tighten the screw (1) by hand.

i) Touch the CYCLE button (6) and wait for the hydraulic cycle to complete.

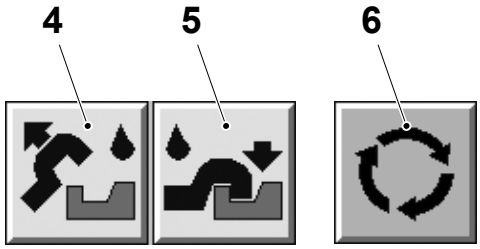

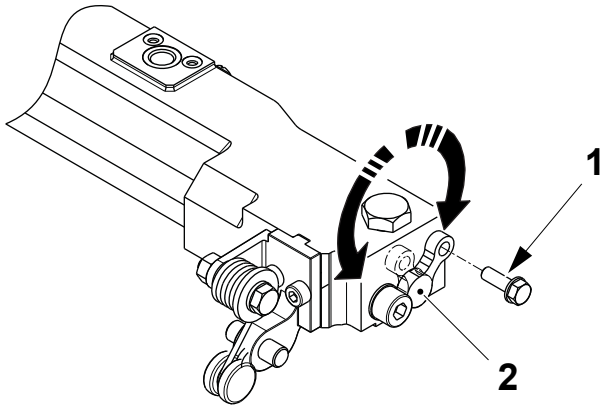

1 Screw
2 Shaft
4 Catches open button
5 Catches closed button
6 Cycle button

(Cont'd)

(Cont'd)

j) Repeat the items a) to i) three times to guarantee that no air bubbles are present in the hydraulic circuit.

k) Touch the STOP button (7) and then touch the OK button (8).

l) Make sure that the shaft (2) is in the position indicated in the illustration and tighten the screw (1).

m) Fill the oil tank if necessary, see 2.2.2-2 Hydraulic System - Change Oil.

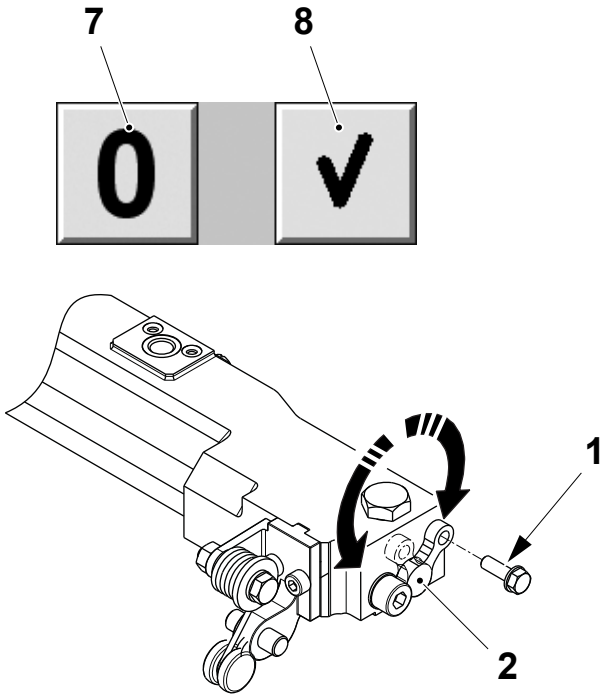

1 Screw
2 Shaft
7 Stop button
8 OK button

2.2.2.1 Hydraulic Unit

2.2.2.1-1 Hydraulic Unit - Check

Machine Status	Mains Power ON Air ON Steam ON Water OFF Hydraulic System ON
SPC Reference	2546500-0200

WARNING
Hydraulic oil.
Wear personal protective equipment.

(Cont'd)

(Cont'd)

Check the following parts for wear or damage:

- the hydraulic pump (1), check for noise and leaks. Change if necessary
- the hydraulic circuit, visually check for leaks in the hydraulic system.

Also check:

- that all connections are tightened
- that the rotation of the electrical motor (2) is in accordance with the directional arrow (3). Start the hydraulic unit to check
- that the oil tank is filled with oil. If necessary refill the oil tank according to 2.2.2-2 Hydraulic System - Change Oil

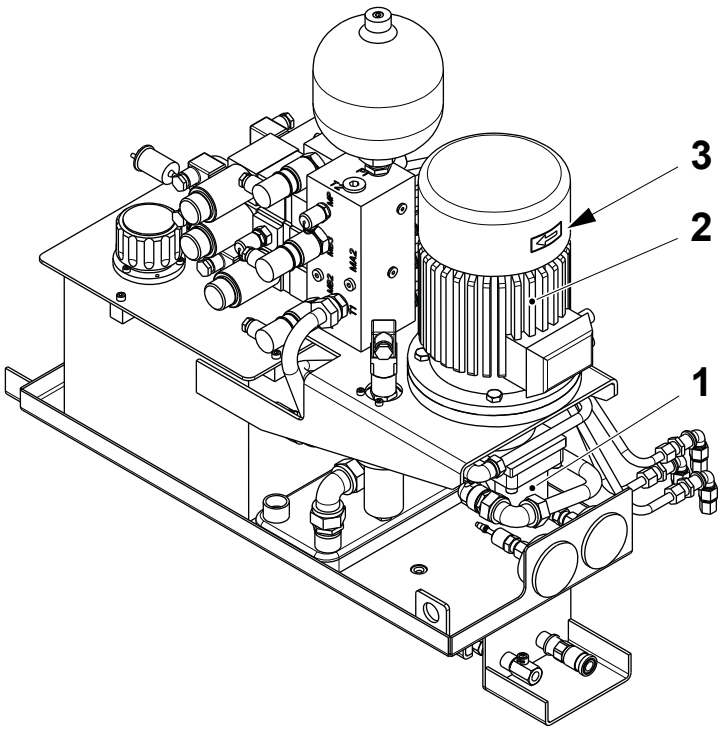

1 Hydraulic pump
2 Electrical motor
3 Arrow

(Cont'd)

(Cont'd)

- for the presence of water in the oil, open the drain valve (4), located in the central lubrication compartment to check. Change the oil if necessary, see 2.2.2-2 Hydraulic System - Change Oil
- the condition of the hydraulic pump (3) on the pressure gauge (5). The pressure should be 100 bar
- that the cutting jaw and the pressure jaw cylinders move correctly. If not, see 2.2.2-4 Hydraulic System - Bleed
- the complete system for oil leaks
- that there are no warnings or alarms on the TPOP.

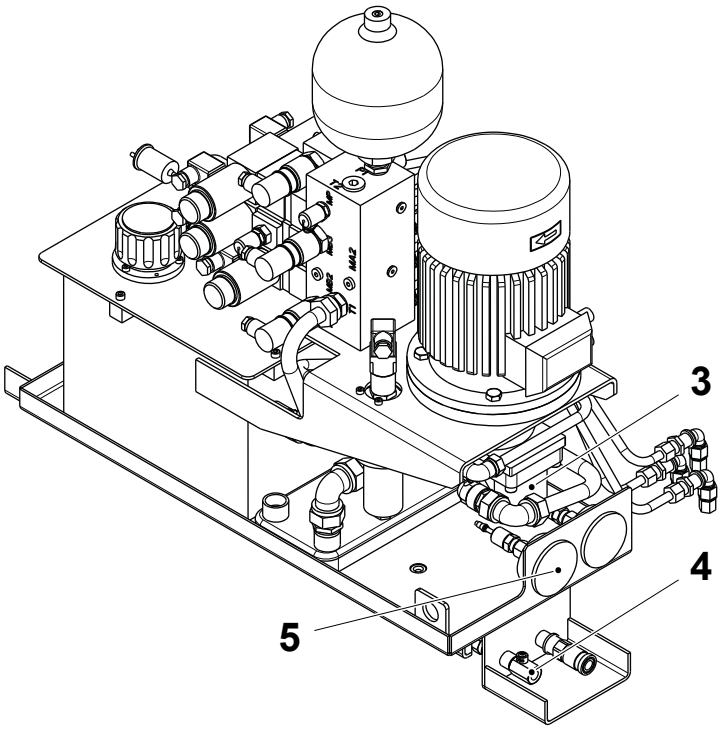

3 Hydraulic pump
4 Drain valve
5 Pressure gauge

2.2.2.1-2 Hydraulic Unit - Set Pressure

Machine Status	PREPARATION
SPC Reference	2546500-0200

WARNING
Hydraulic oil.
Wear personal protective equipment.

Jaw Pressure Setting

a) Touch the PRODUCTION CONTROL button (1) on the TPOP.

b) Touch the PACKAGE FORMING UNIT button (2).

c) Touch the HYDRAULIC OIL PRESSURE icon (3) to display the HYDRAULIC OIL PRESSURE display (4).

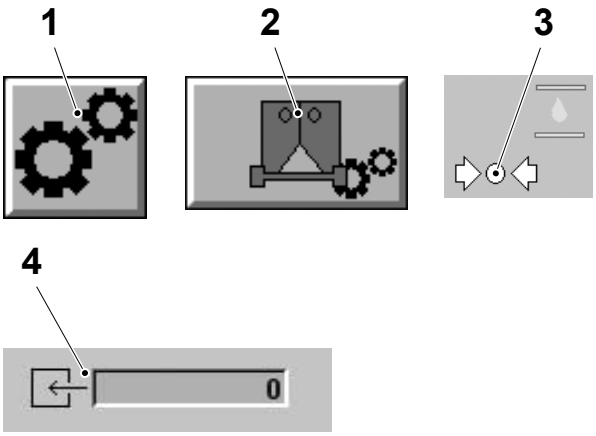

1 Production control button
2 Package forming unit button
3 Hydraulic oil pressure icon
4 Hydraulic oil pressure display

(Cont'd)

(Cont'd)

d) Loosen the lock nut (5).

e) Set the jaw pressure by turning the screw (6) on the relief valve (7) and checking the value shown on the HYDRAULIC OIL PRESSURE display (4), see 10.1 Technical Data for the correct value.

f) Tighten the lock nut (5).

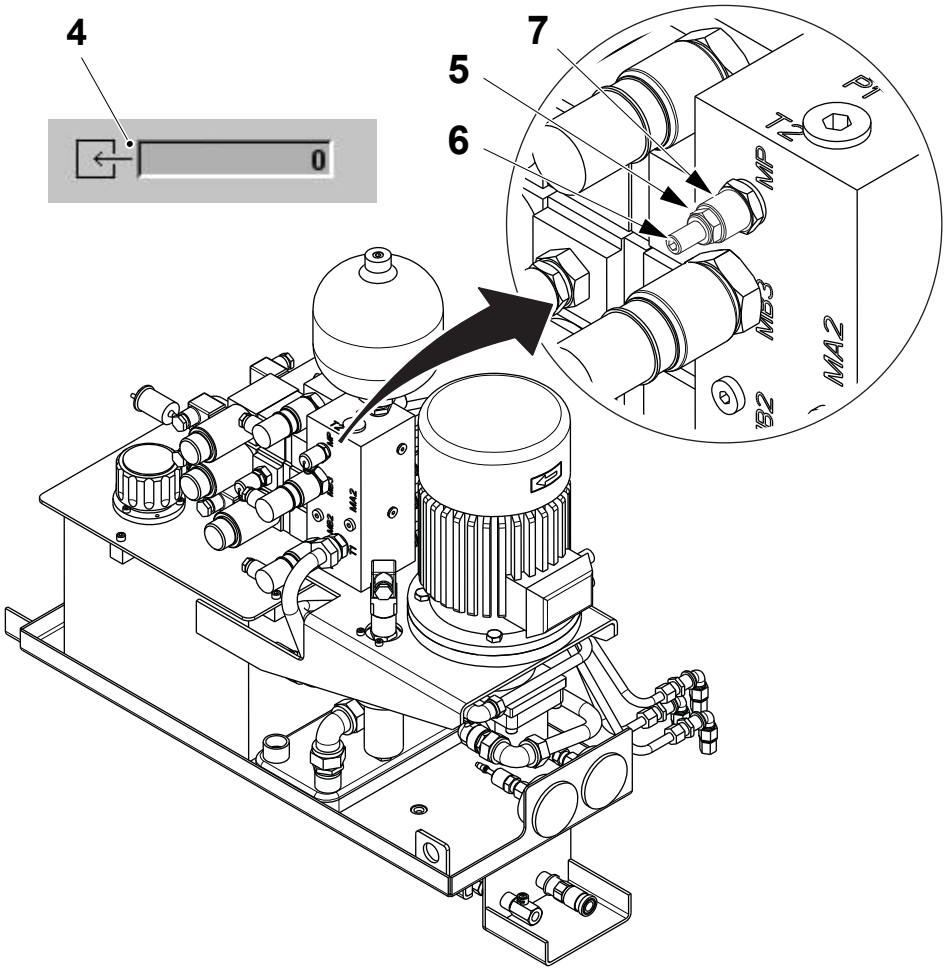

4 Hydraulic oil pressure display
5 Lock nut
6 Adjustment screw
7 Relief valve

(Cont'd)

(Cont'd)

Cutting Pressure Setting

a) Loosen the lock nut (1).

b) Set the cutting pressure by turning the screw (2) on the relief valve (3) and checking the value shown on the pressure gauge (4), see 10.1 Technical Data for the correct value.

c) Tighten the lock nut (1).

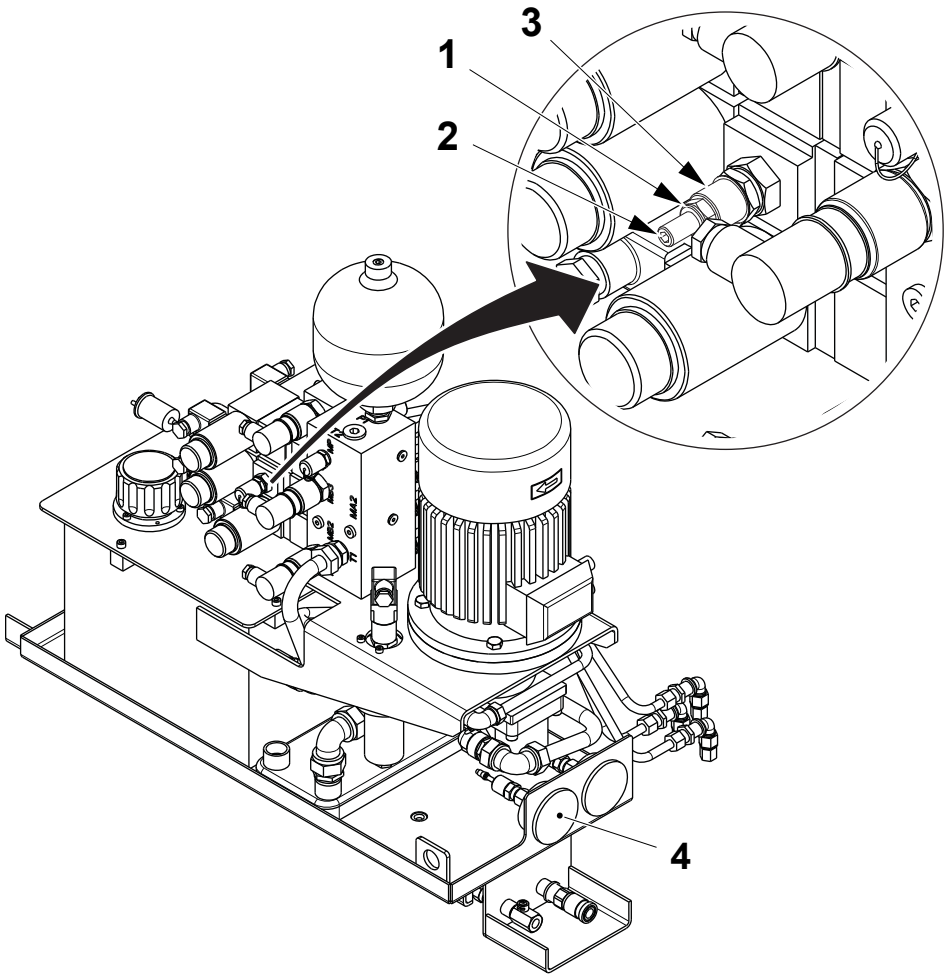

1 Lock nut
2 Screw
3 Relief valve
4 Pressure gauge

2.2.2.2 Hydraulic Tank

2.2.2.2-1 Hydraulic Tank - Check Level Probe

Machine Status	Mains Power ON Air OFF Steam ON Water OFF
SPC Reference	2546500-0200

WARNING

Hydraulic oil.

Wear personal protective equipment.

(Cont'd)

(Cont'd)

d) Remove the level probe (1) from the hydraulic tank (2).

e) Touch the PRODUCTION CONTROL button (3) on the TPOP.

f) Touch the PACKAGE FORMING UNIT button (4).

g) Touch the HYDRAULIC OIL LEVEL icon (5).

h) Move the float (6) and check that three different colour zones on the HYDRAULIC OIL LEVEL display (7) are visible.

i) Assemble in the reverse order.

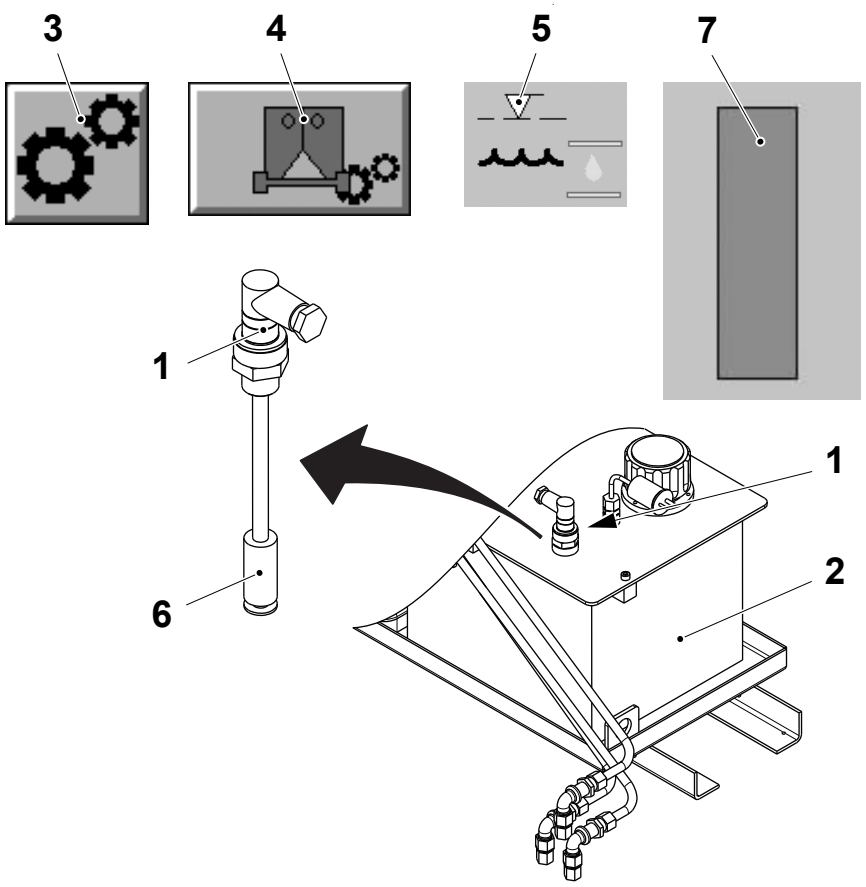

1 Level probe
2 Hydraulic tank
3 Production control button
4 Package forming unit button
5 Hydraulic oil level icon
6 Float
7 Hydraulic oil level display

2.2.2.2-2 Hydraulic Tank - Change Air Filter

Machine Status	Mains Power OFF Air OFF Steam ON Water OFF
SPC Reference	2546500-0200

WARNING

Hydraulic oil.

Wear personal protective equipment.

Note! Change the air filter (1) only when the pressure filter element (2) is replaced or when the air filter (1) is clogged (visual check).

a) Remove the air filter (1) by screwing it out from the hydraulic tank (3).

b) Blow clean the air filter (1) with compressed air or change if necessary.

c) Assemble in the reverse order.

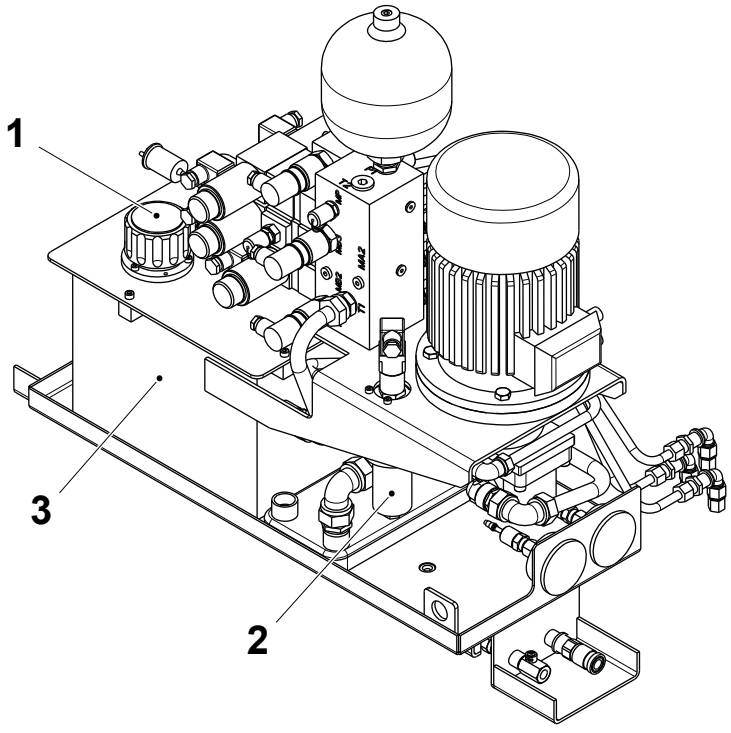

1 Air filter
2 Pressure filter element
3 Hydraulic tank

2.2.2.2-3 Hydraulic Tank - Drain Collection Tray

Machine Status	Mains Power OFF Air OFF Steam ON Water OFF
SPC Reference	2546500-0200

WARNING

Hydraulic oil.

Wear personal protective equipment.

Note! The waste water and oil should be handled as hazardous waste.

a) Place a collecting vessel under the valve (1).

b) Open the valve (1) and drain the oil and water from the collection tray.

c) Close the valve (1).

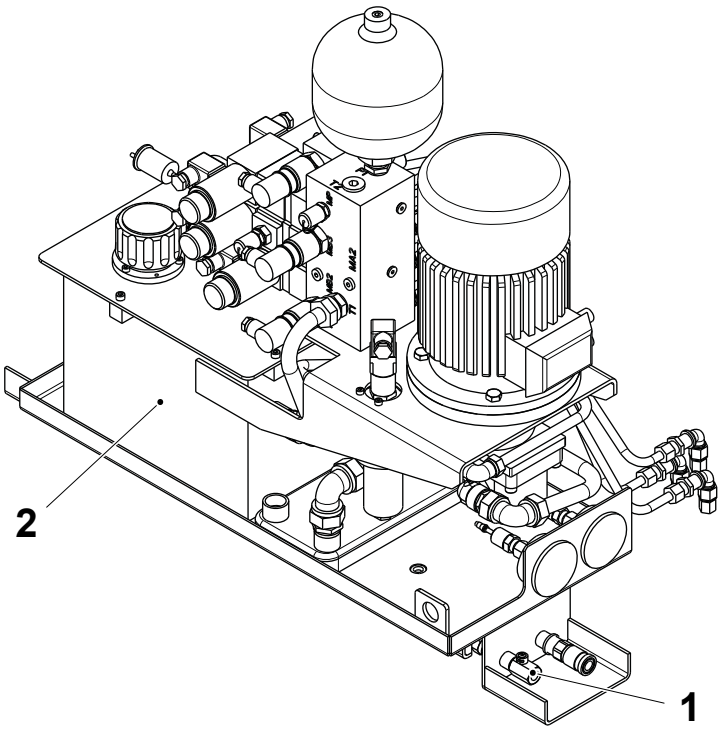

1 Valve
2 Hydraulic tank

2.2.2.3 Hydraulic Valve

2.2.2.3-1 Hydraulic Valve - Check Accumulator

Machine Status	Mains Power ON Air ON Steam ON Water ON
SPC Reference	2546500-0200

a) Step up the machine to PREPARATION and make sure that the hydraulic unit starts.

b) Stop the hydraulic unit by means of the PROGRAM DOWN button (1) on the TPOP.

Note! The oil temperature must by at least 30°C.

c) Check the oil pressure on the pressure gauge (2). The hydraulic pressure first drops slowly to an intermediate pressure before the pressure drops quickly to zero.

d) If the intermediate pressure is below 40 bar, step down the machine to ZERO and change the accumulator (3), see 2.2.2.3-2 Hydraulic Valve - Change Accumulator.

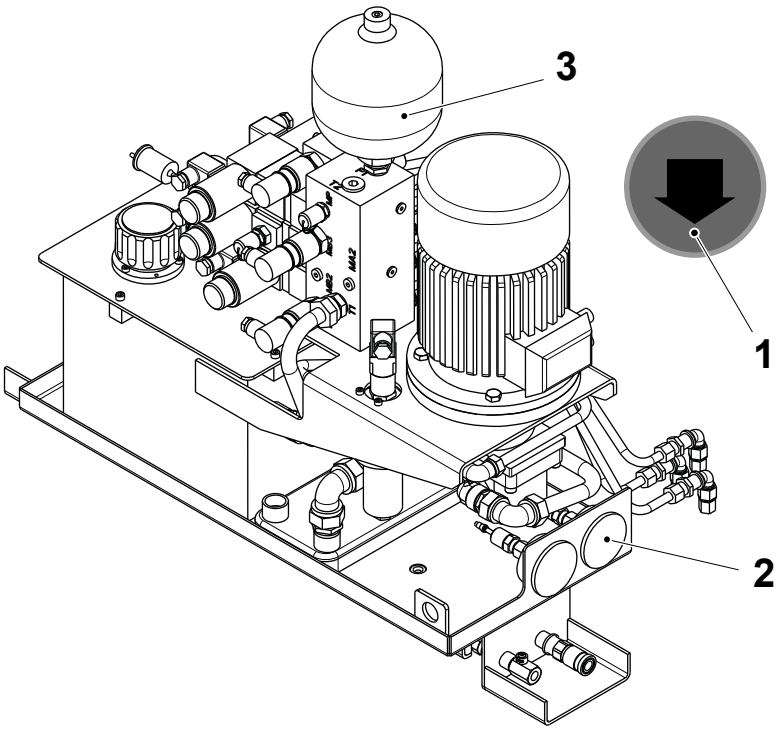

1 Program down button
2 Pressure gauge
3 Accumulator

2.2.2.3-2 Hydraulic Valve - Change Accumulator

Machine Status	Mains Power OFF Air OFF Steam ON Water OFF
Special Equipment	Oil Filter Pliers
SPC Reference	2546500-0200

WARNING
Hydraulic oil.
Wear personal protective equipment.

(Cont'd)

(Cont'd)

a) Press the PROGRAM DOWN button (1) on the TPOP to stop the hydraulic unit and wait until pressure gauge (2) shows 0 bar.

b) Remove the accumulator (3) from the manifold block (4) with the aid of oil filter pliers.

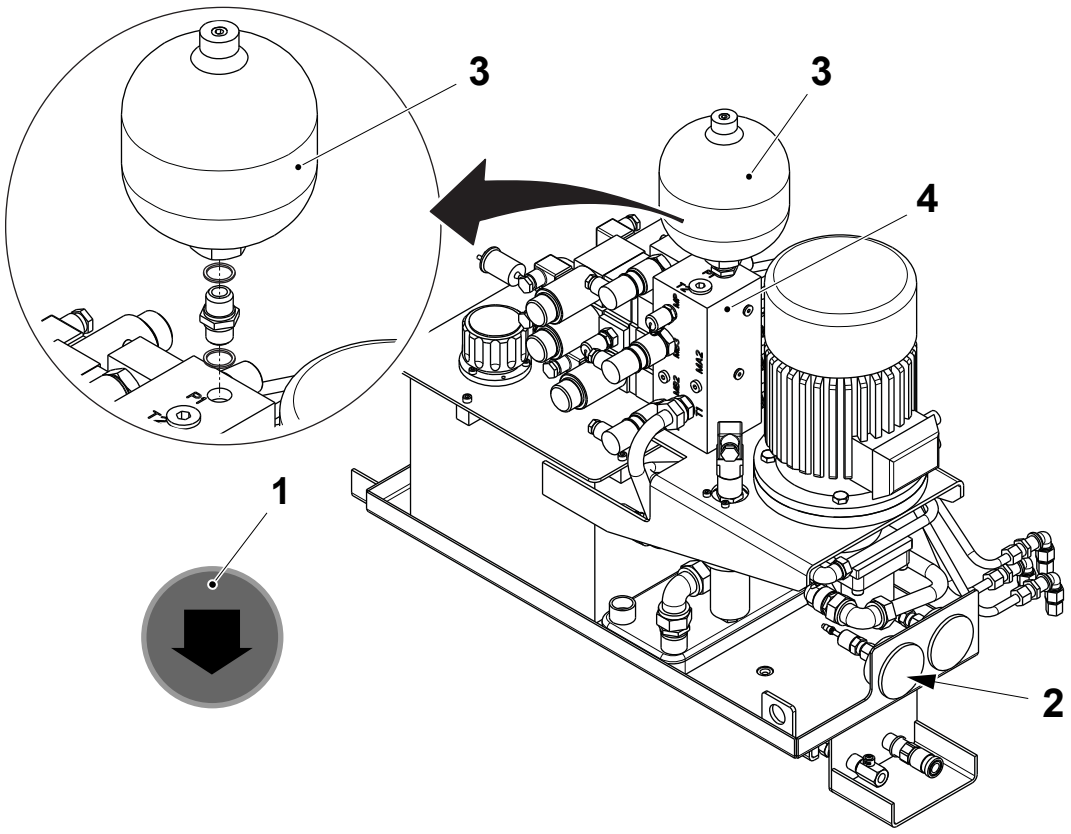

1 Program down button
2 Pressure gauge
3 Accumulator
4 Manifold block

(Cont'd)

(Cont'd)

c) Remove the double nipple (5) from the accumulator (3) by holding the accumulator nut (6).

d) Change the accumulator (3) and assemble in the reverse order.

e) Press the PROGRAM UP button (7) to start the hydraulic unit.

f) Bleed the system according to 2.2.2-4 Hydraulic System - Bleed.

g) Check for leaks in the hydraulic system.

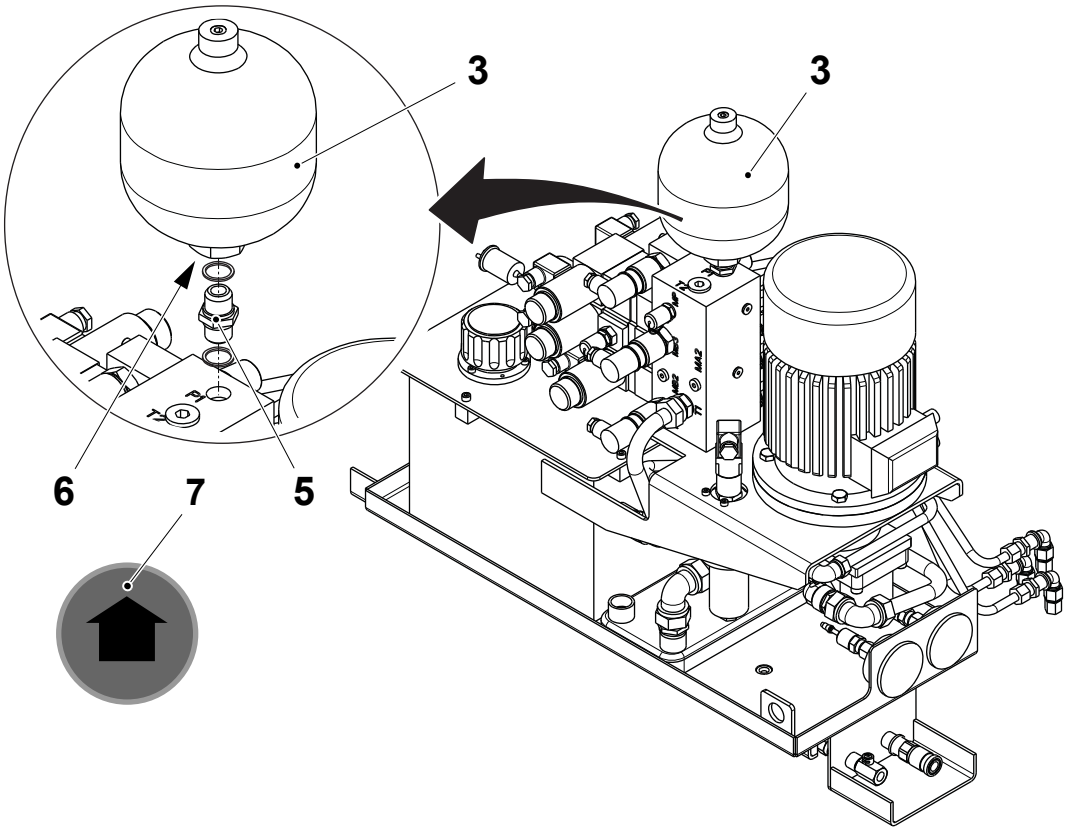

3 Accumulator
5 Double nipple
6 Accumulator nut
7 Manoeuvre button

2.2.2.3-3 Hydraulic Valve - Change Bi-stable Valve, Directional Valve and Solenoid

Machine Status	Mains Power OFF Air OFF Steam ON Water OFF
Special Equipment	Torque Wrench, min. 7 Nm
SPC Reference	2546500-0200

WARNING

Hydraulic oil.

Wear personal protective equipment.

Change Bi-stable and Directional Valve

a) Remove the six electrical connections (1).

b) Remove the screws (2).

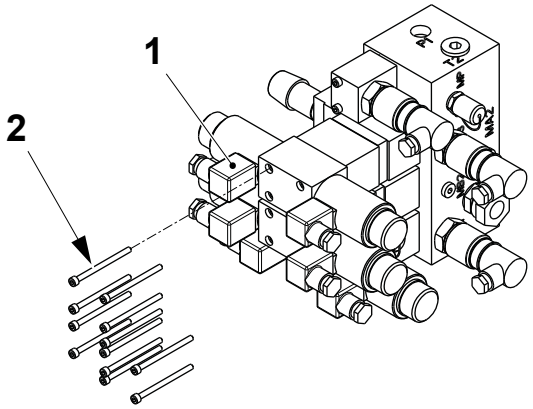

1 Electrical connection
2 Screw

(Cont'd)

(Cont'd)

Note! Check that the flow restrictor (3) underneath the directional valve (4) is in place. Check the O-rings (5) and change them if necessary.

c) Change the bi-stable valve (6) and the directional valve (4).

Note! The screws must be tightened to a torque of 7 to 9 Nm on assembly.

d) Assemble in the reverse order.

e) Bleed the system according to 2.2.2-4 Hydraulic System - Bleed.

f) Check for leaks in the hydraulic system.

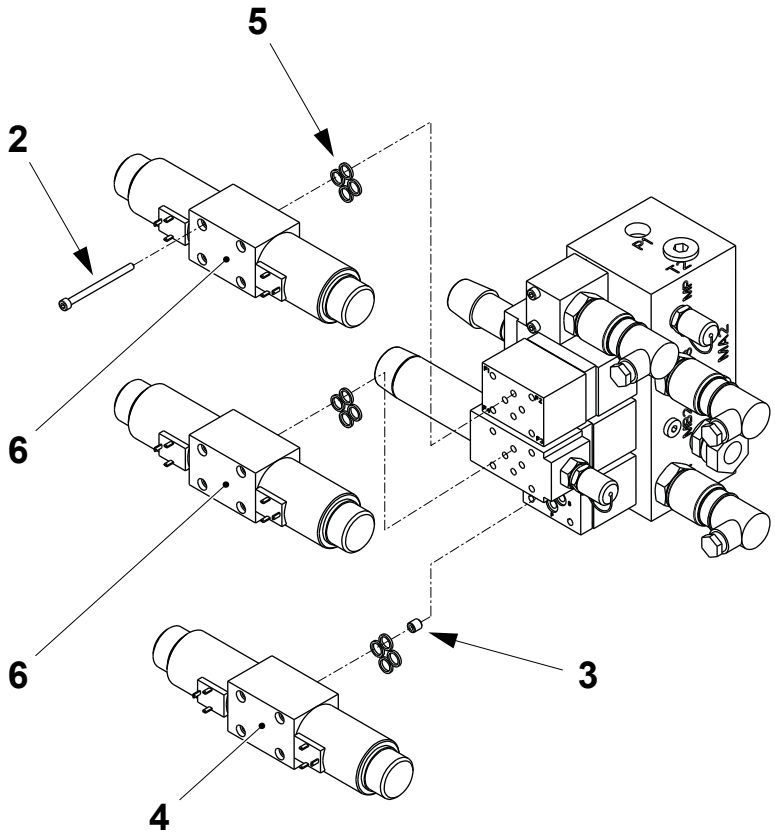

3 Flow restrictor
4 Directional valve
5 O-ring
6 Bi-stable valve

(Cont'd)

(Cont'd)

Change Solenoid

a) Remove the solenoid (1) from the bi-stable (2) or directional valve (3) by unscrewing the nut (4).

b) Assemble the new solenoid (1) on the bi-stable (2) or directional valve (3) by tightening the nut (4).

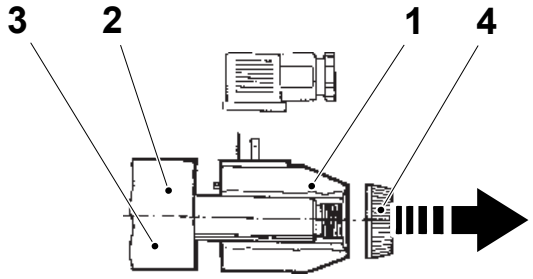

1 Solenoid
2 Bi-stable valve
3 Directional valve
4 Nut

2.2.2.3-4 Hydraulic Valve - Change Check Valves

Machine Status	Mains Power OFF Air OFF Steam ON Water OFF
SPC Reference	2546500-0200

WARNING
Hydraulic oil.
Wear personal protective equipment.

(Cont'd)

(Cont'd)

a) Remove the bi-stable valves (1) according to 2.2.2.3-3 Hydraulic Valve - Change Bi-stable Valve, Directional Valve and Solenoid.

b) Remove the check valves (2).

c) Change the O-rings (3) if necessary according to 2.2.2.3-3 Hydraulic Valve - Change Bi-stable Valve, Directional Valve and Solenoid.

d) Assemble the new check valves (2).

e) Assemble the bi-stable valves (1) according to 2.2.2.3-3 Hydraulic Valve - Change Bi-stable Valve, Directional Valve and Solenoid.

f) Bleed the system according to 2.2.2-4 Hydraulic System - Bleed.

g) Check for leaks in the hydraulic system.

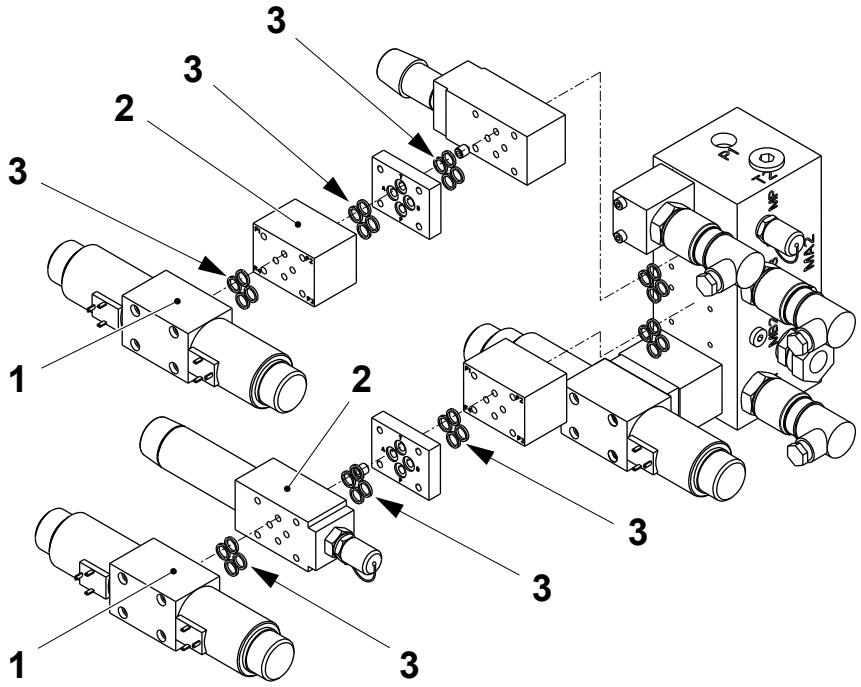

1 Bi-stable valve
2 Check valve
3 O-ring

2.2.2.3-5 Hydraulic Valve - Change Pressure Reducing Valve

Machine Status	Mains Power OFF Air OFF Steam ON Water OFF
SPC Reference	2546500-0200

WARNING

Hydraulic oil.

Wear personal protective equipment.

(Cont'd)

(Cont'd)

a) Remove the directional valve (1) according to 2.2.2.3-3 Hydraulic Valve - Change Bi-stable Valve, Directional Valve and Solenoid.

b) Change the pressure reducing valve (2).

c) Change the O-rings (3) if necessary.

d) Set the pressure according to 2.2.2.1-2 Hydraulic Unit - Set Pressure.

e) Bleed the system according to 2.2.2-4 Hydraulic System - Bleed.

f) Check for leaks in the hydraulic system.

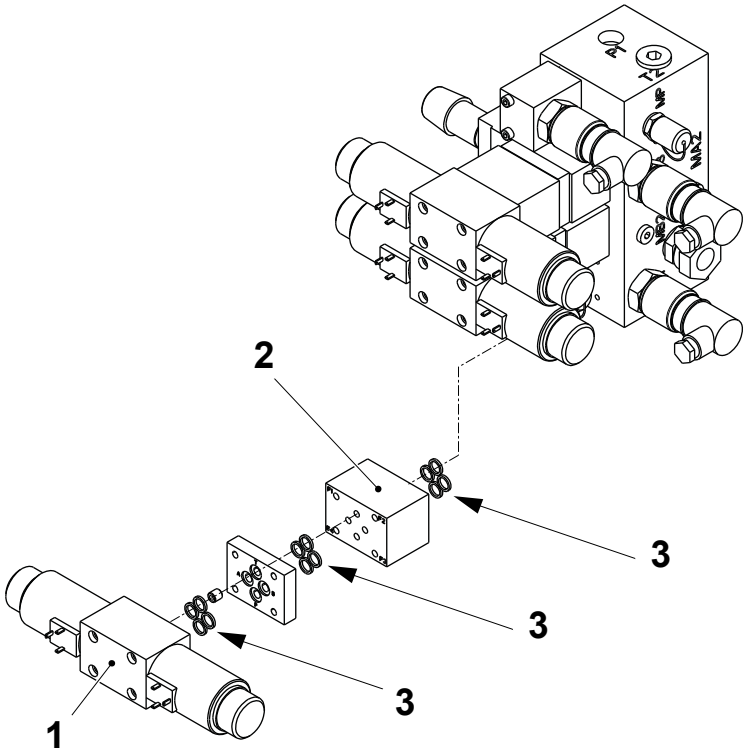

1 Directional valve
2 Pressure reducing valve
3 O-ring

2.2.2.3-6 Hydraulic Valve - Change Pressure Relief Valve

Machine Status	Mains Power OFF Air OFF Steam ON Water OFF
Special Equipment	Torque Wrench, min. 35 Nm
SPC Reference	2546500-0200

WARNING
Hydraulic oil.
Wear personal protective equipment.

(Cont'd)

(Cont'd)

CAUTION
Risk of personal injury.
Before starting the procedure ensure that the hydraulic pressure is 0 bar.

a) Remove the pressure relief valve (1) from the manifold block (2).

b) Fit the new pressure relief valve (1) and tighten to a torque of 35-40 Nm with the aid of a torque wrench.

c) Set the pressure relief valve (1) according to 2.2.2.1-2 Hydraulic Unit - Set Pressure.

d) Bleed the system according to 2.2.2-4 Hydraulic System - Bleed.

e) Check for leaks in the hydraulic system.

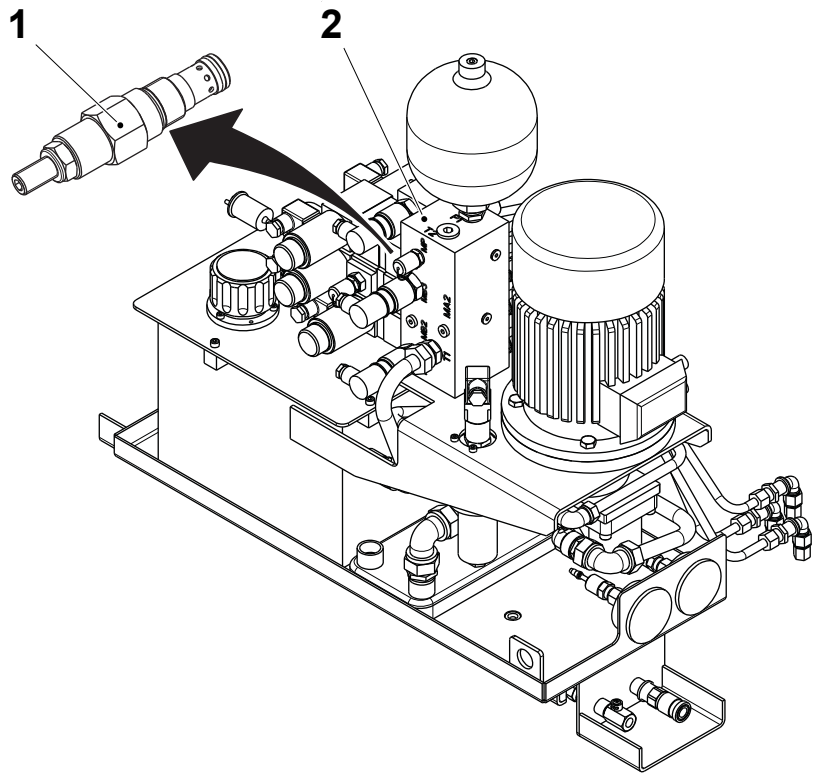

1 Pressure relief valve
2 Manifold block

2.2.2.4 Hydraulic Pump

2.2.2.4-1 Hydraulic Pump - Change Filter Element

Machine Status	Mains Power OFF Air OFF Steam ON Water OFF
Consumables	Lubricant, Code C
SPC Reference	2546500-0200

WARNING
Hydraulic oil.
Wear personal protective equipment.

Note! Change the filter element (1) when the TPOP shows the alarm BLOCKED PRESSURE FILTER ELEMENT.

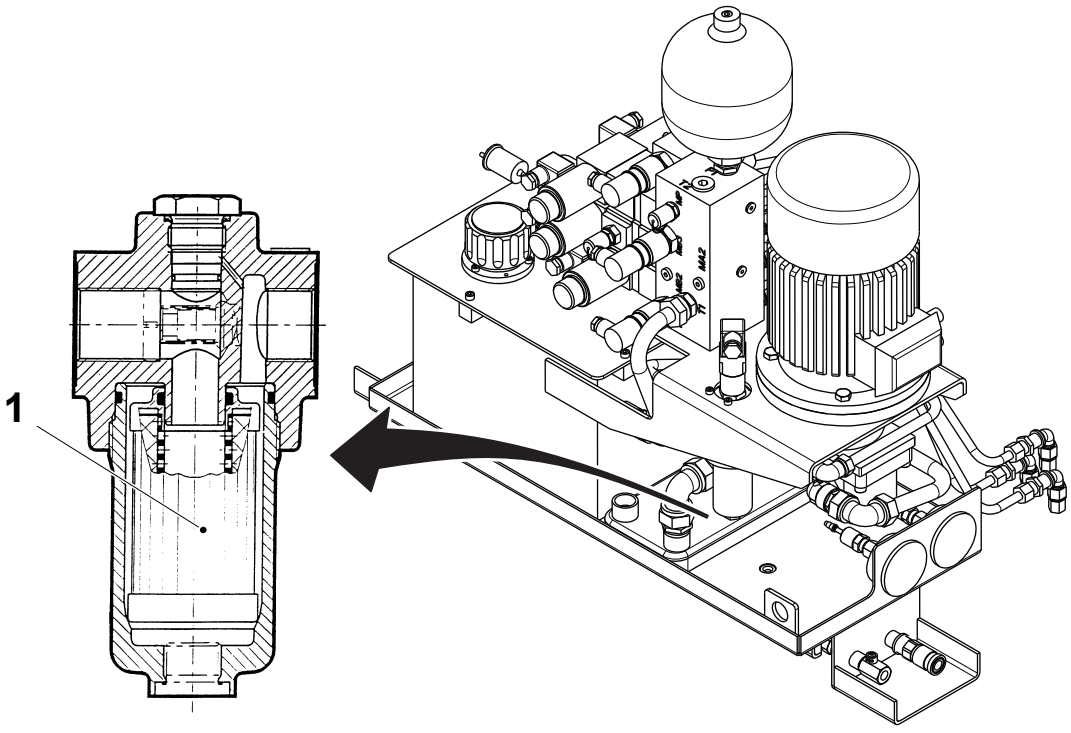

1 Filter element

(Cont'd)

(Cont'd)

a) Loosen the connections (2) and remove the pressure filter (3).

b) Remove the filter bowl (4) by unscrewing it.

c) Remove the filter element (1) and check for dirt residue and particles.

Note! The presence of dirt residue and particles may be due to damaged components within the system. Change the damaged parts if necessary.

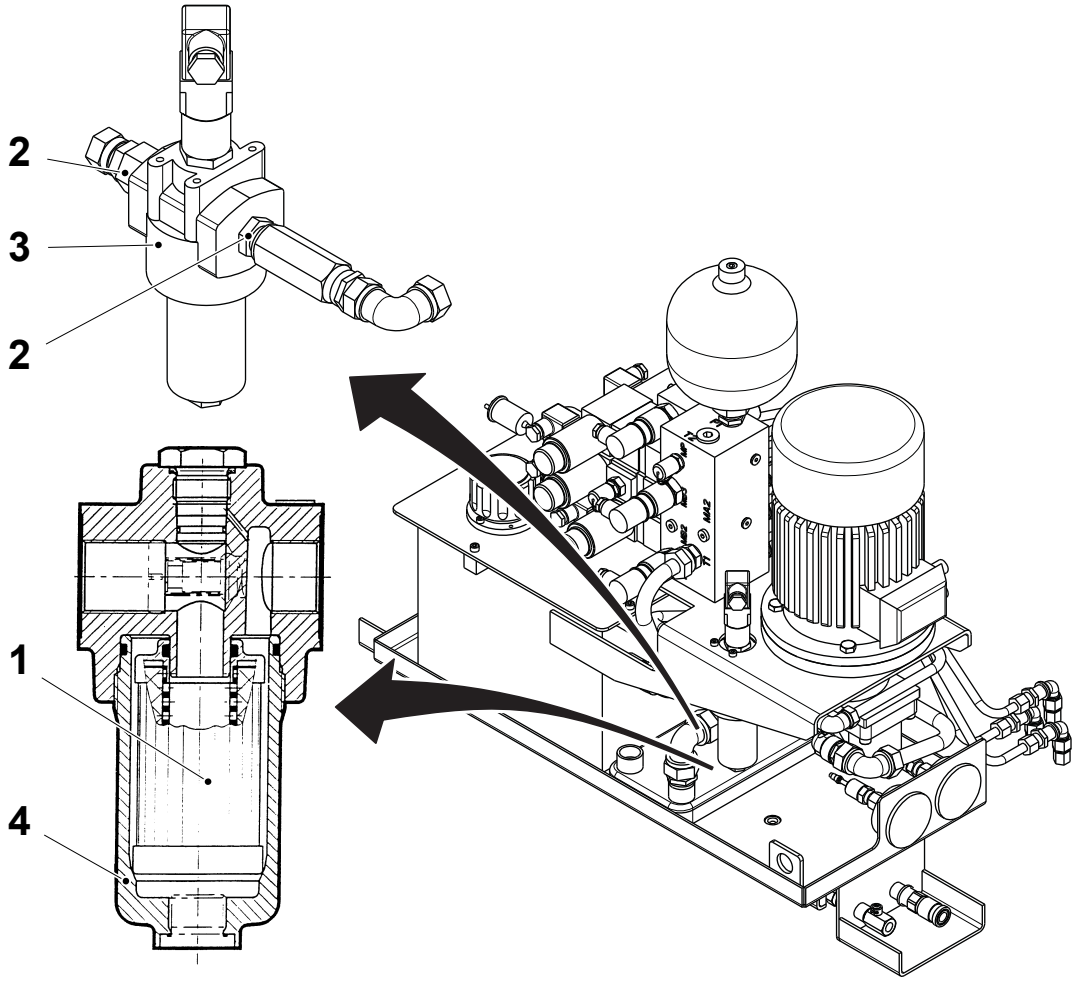

1 Filter element
2 Connection
3 Pressure filter
4 Filter bowl

(Cont'd)

(Cont'd)

d) Clean the inside of the filter bowl (4) with the aid of a lubricant.

e) Change the O-rings (5) if necessary. Lubricate the O-rings (5) with clean oil before assembling.

f) Fit the new filter element (1). Fit the filter bowl (4) completely and then loosen it by a quarter of a turn.

g) Fit the pressure filter (3) in place and tighten the connections (2).

h) Open the drain valve (6) to empty the collecting tray.

i) Bleed the hydraulic system according to 2.2.2-4 Hydraulic System - Bleed.

j) Check for leaks in the hydraulic system.

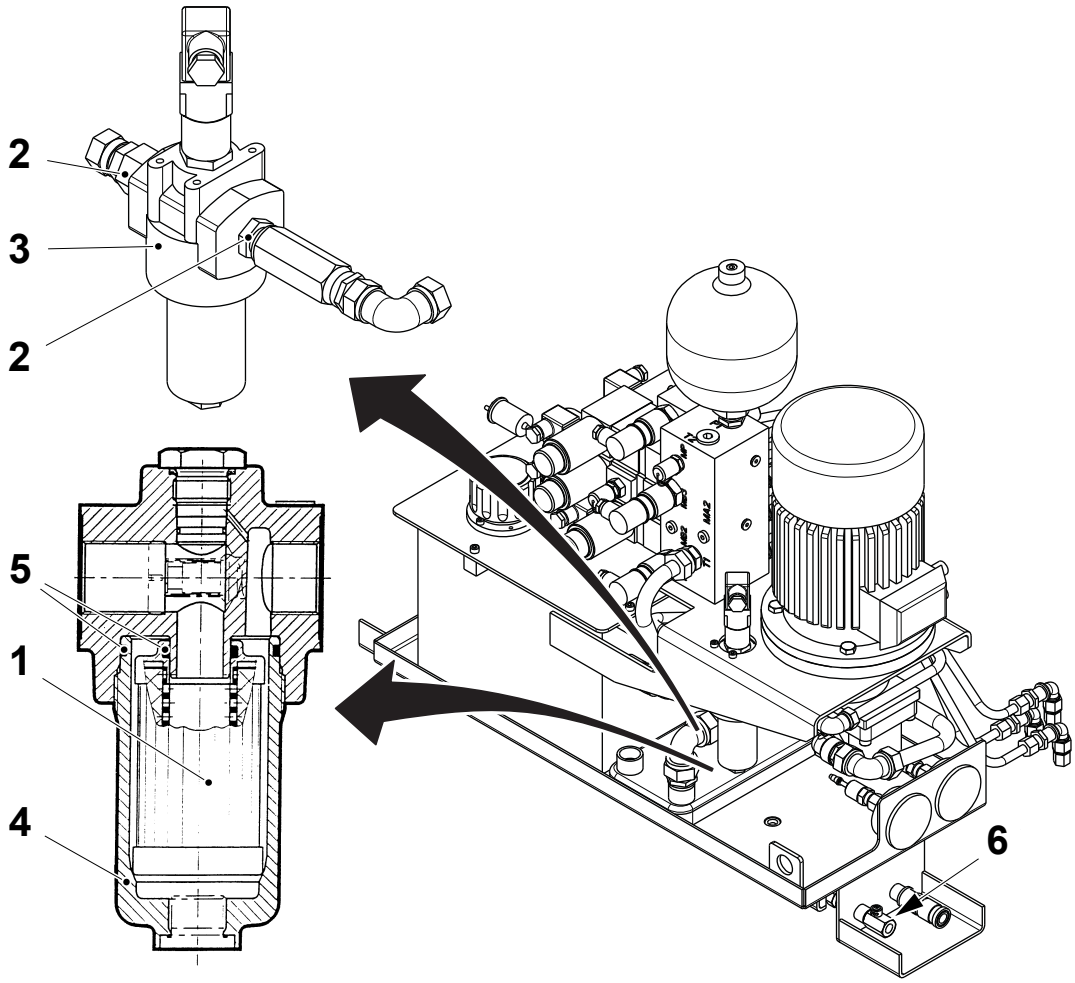

1 Filter element
2 Connection
3 Pressure filter
4 Filter bowl
5 O-ring
6 Drain valve

2.2.2.4-2 Hydraulic Pump - Change Pump

Machine Status	Mains Power OFF Air OFF Steam ON Water OFF
SPC Reference	2546500-0200

WARNING
Hydraulic oil.
Wear personal protective equipment.

a) Remove the motor, see 2.2.2.4-3 Hydraulic Pump - Change Electrical Motor.

(Cont'd)

(Cont'd)

b) Remove the screws (1) and the flanges (2).
c) Remove the nut (3).
d) Remove the screws (4) and the pump (5).
e) Assemble the new pump in the reverse order.
f) Bleed the system according to 2.2.2-4 Hydraulic System - Bleed.

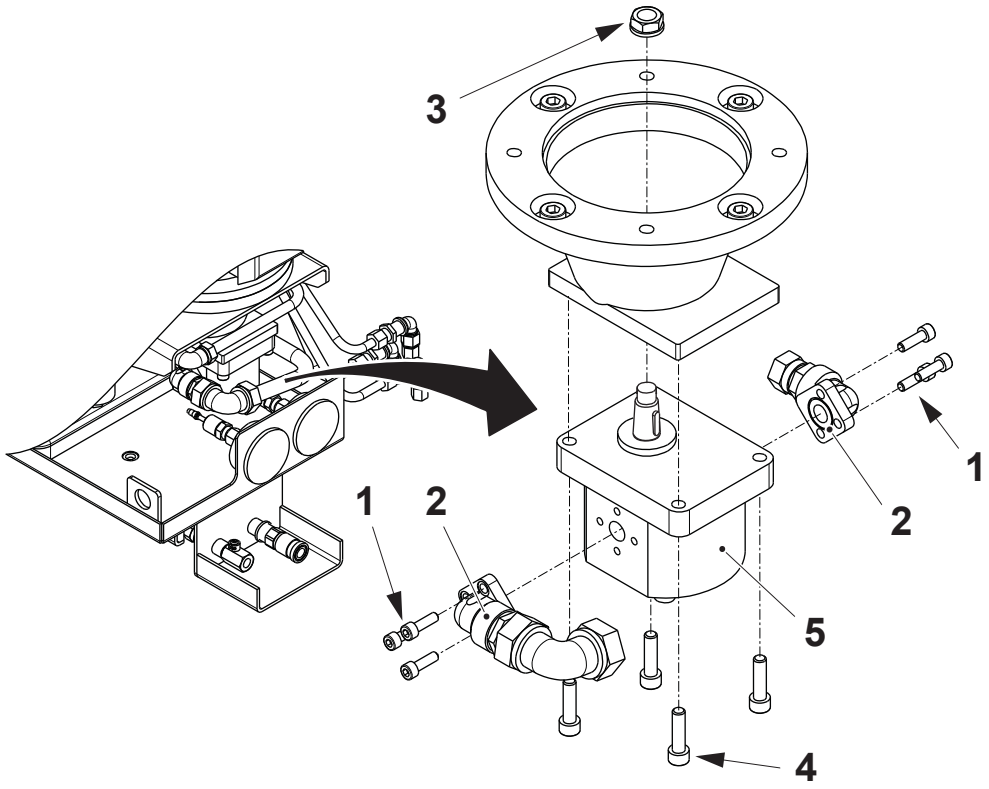

1 Screw
2 Flange
3 Nut
4 Screw
5 Pump

2.2.2.4-3 Hydraulic Pump - Change Electrical Motor

Machine Status	Mains Power OFF Air OFF Steam ON Water OFF
SPC Reference	2546500-0200

WARNING

Hydraulic oil.

Wear personal protective equipment.

a) Remove the cable (1) from the electrical motor (2).

b) Remove the four screws (3) holding the electrical motor (2) to the spacer piece (4).

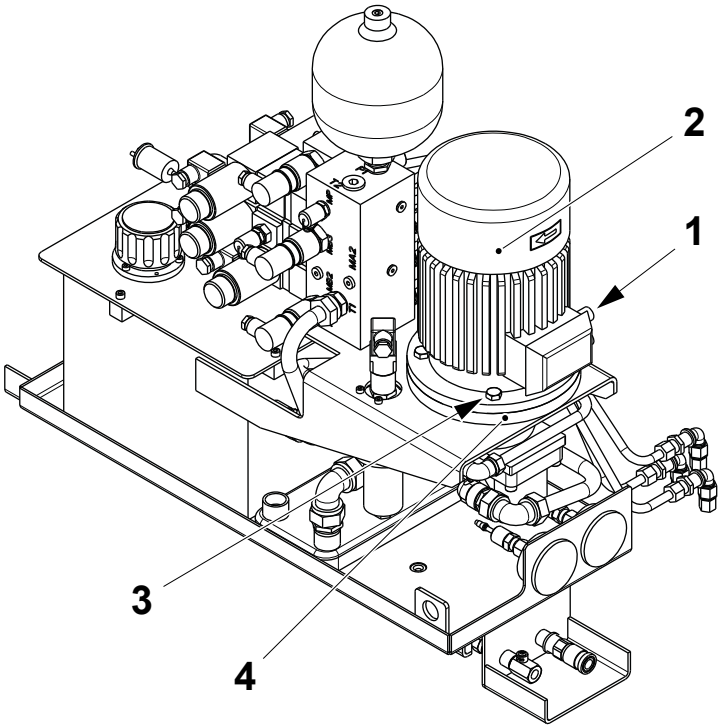

1 Cable
2 Electrical motor
3 Screw
4 Spacer piece

(Cont'd)

(Cont'd)

c) Remove and change the electrical motor (2) and the shaft coupling (5).

d) Assemble in the reverse order.

e) Press the PROGRAM UP button (6) to start the hydraulic unit.

f) Check that the pressure gauge (7) shows 100 bar and that the rotation on the electrical motor (2) is correct according to the arrow (8).

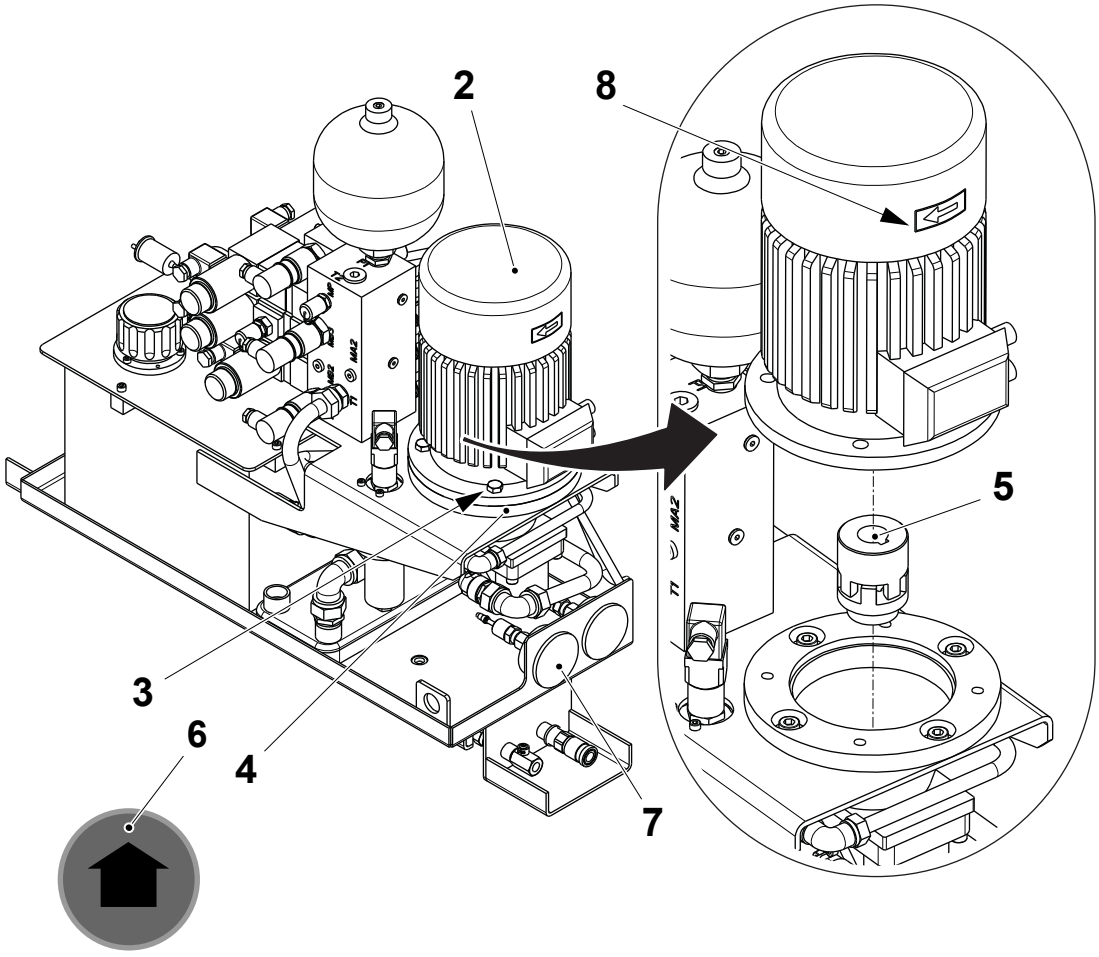

2 Electrical motor
5 Shaft coupling
6 Program up button
7 Pressure gauge
8 Arrow

2.2.3 Lubrication System

2.2.3.1 Central Lubrication

2.2.3.1-1 Central Lubrication - Check Pressure Guard

Machine Status	Mains Power ON Air ON Steam ON Water OFF
SPC Reference	2529167-0300

a) Loosen the screw (1) and remove the pressure guard cover (2).

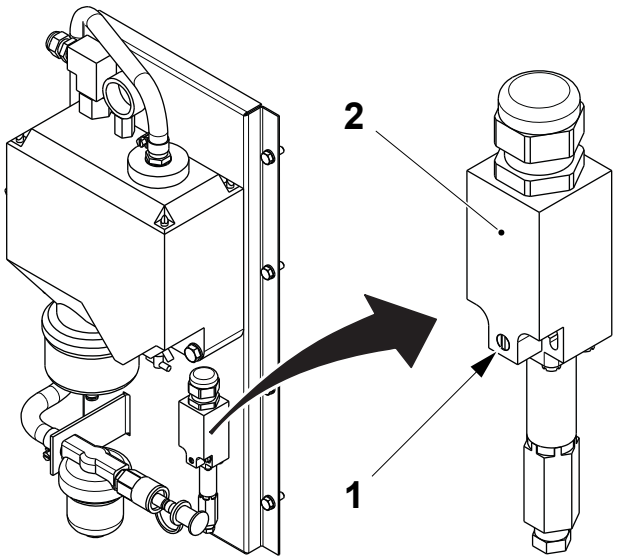

1 Screw
2 Pressure guard cover

(Cont'd)

(Cont'd)

b) Touch the PRODUCTION CONTROL button (3) on the TPOP display.

c) Touch the PACKAGE FORMING UNIT button (4).

d) Touch the MANUAL LUBRICATION icon (5).

e) Touch the START button (6) to enable the lubricating system.

f) Make sure that the mechanism inside the pressure guard is working. If not, change the pressure guard.

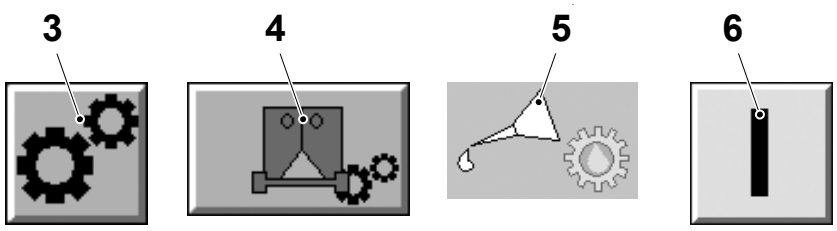

3 Production control button
4 Package forming unit button
5 Manual lubrication icon
6 Start button

2.2.3.1-2 Central Lubrication - Check Oil Pressure

Machine Status	Mains Power ON Air ON Steam ON Water OFF
Consumables	Lubricant, Code H
SPC Reference	2529167-0300

a) Remove the hose (1) and connect a 0-6 MPa pressure gauge (2) to the nipple (3).

b) Perform the items b), c), d) and e) in the pressure guard procedure, see 2.2.3.1-1 Central Lubrication - Check Pressure Guard.

c) Check that the pressure rises to at least 30 bar.

d) Thereafter, within 30 seconds, the pressure must drop to a value below 1 bar.

e) If not, check for leaks in the lubricating system, see 2.2.3.1-3 Central Lubrication - Check Oil Feed.

f) If the pressure is satisfactory remove the 0-6 MPa pressure gauge (2) and fit back the hose (1).

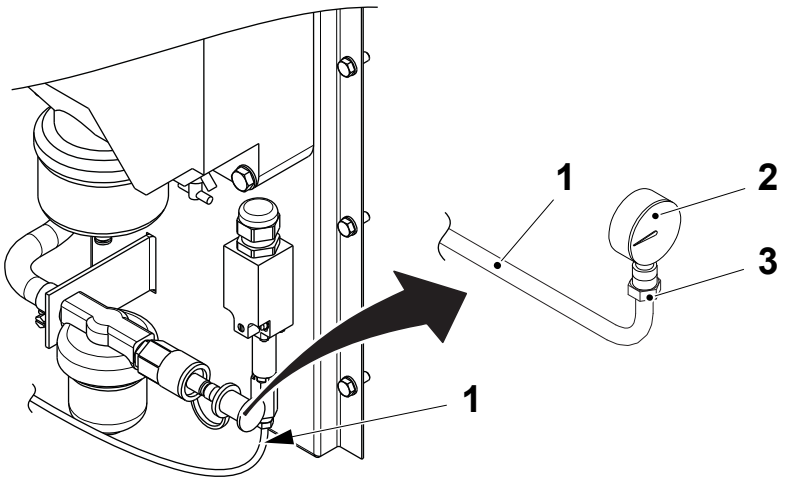

1 Hose
2 Pressure gauge
3 Nipple

2.2.3.1-3 Central Lubrication - Check Oil Feed

Machine Status	Mains Power ON Air ON Steam ON Water OFF
SPC Reference	2529167-0300

a) Perform items b), c), d) and e) in the pressure guard procedure, see 2.2.3.1-7 Central Lubrication - Change Filter Insert.

b) Make sure that the oil reaches:
   - the areas marked with arrows in the jaw system and design correction, see the illustration below
   - the four lubrication points on the jaw and yoke links on the drive unit
   - the final folder, see 5.7.1-1 Central Lubrication - Check.

c) Check for oil leakage by checking for air bubbles in the oil hoses. This indicates that the lubrication pump is leaking or there is a leak in the lubrication system.

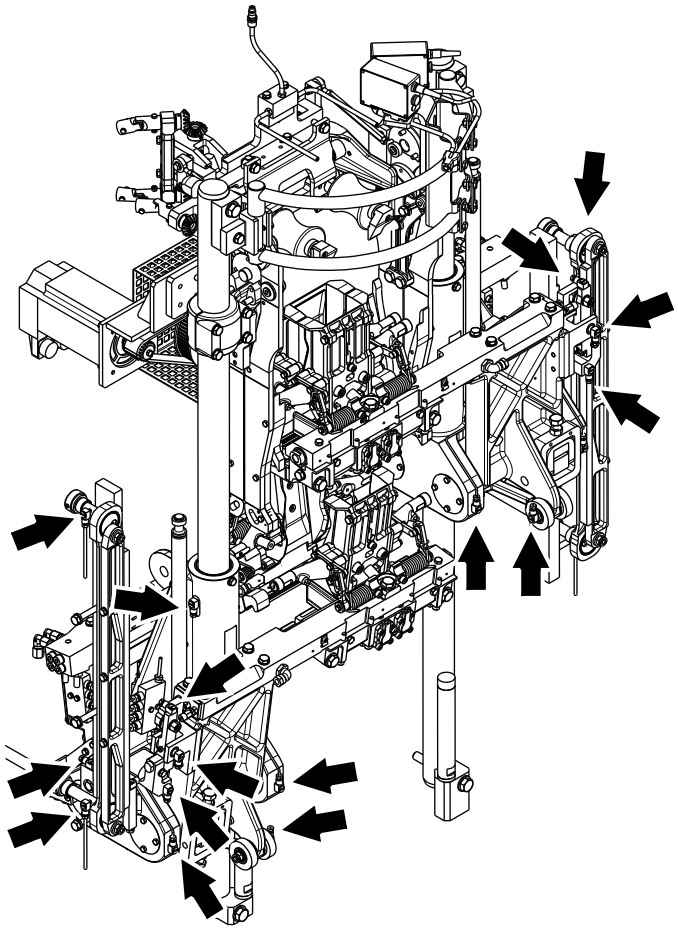

2.2.3.1-4 Central Lubrication - Clean Oil Tank

Machine Status	Mains Power OFF Air OFF Steam ON Water OFF
Consumables	Lubricant, Code H
SPC Reference	2529167-0300

a) Open the drain valve (1) and empty the oil from the tank.

b) Disconnect the level probe connection (4).

c) Remove the cover (3).

d) Clean the tank with dry, lint-free cloth. Make sure that there is no lint after cleaning.

e) Assemble in the reverse order and fill with oil (code H, see 10.3-1 Lubricants*)* through the nipple (2).

f) Bleed the system, see 2.2.3.1-5 Central Lubrication - Bleed.

g) Check the oil pressure, see 2.2.3.1-2 Central Lubrication - Check Oil Pressure.

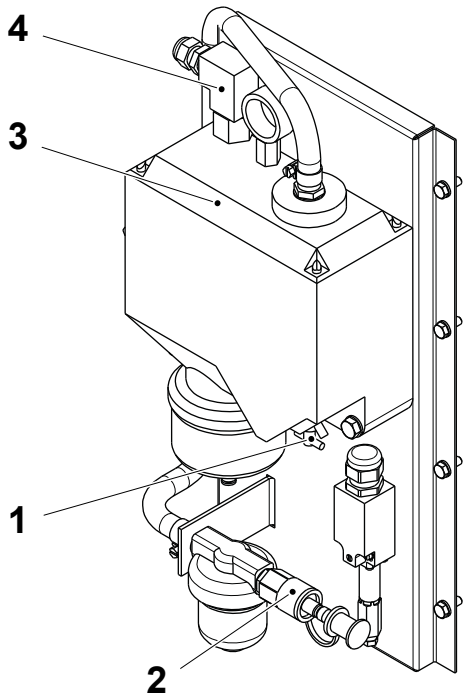

1 Drain valve
2 Nipple
3 Cover
4 Level probe

2.2.3.1-5 Central Lubrication - Bleed

Machine Status	Mains Power ON Air ON Steam ON Water OFF
SPC Reference	2529167-0300

Note! Loosen one bleeding point at a time.

a) To bleed the lubrication system loosen:
   - one distribution bleed nipple or hose nipple, indicated by the arrows
   - one venting valve on each drive unit runner block.

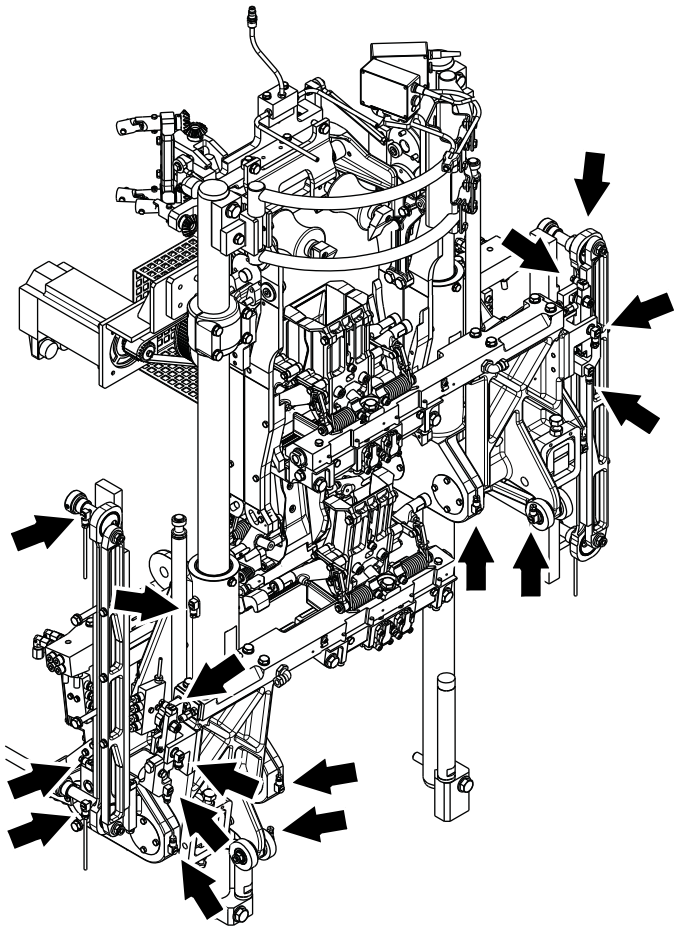

(Cont'd)

(Cont'd)

b) Perform items b), c) and d), in 2.2.3.1-7 Central Lubrication - Change Filter Insert.

c) Perform items e), in 2.2.3.1-7 Central Lubrication - Change Filter Insert, at 5 minute intervals until air free oil is bled out.

d) Tighten the distribution venting valve, bleed nipple or hose nipple.

Note! Always bleed the system whenever one of the main lines between the pump and the metering valve has been disconnected.

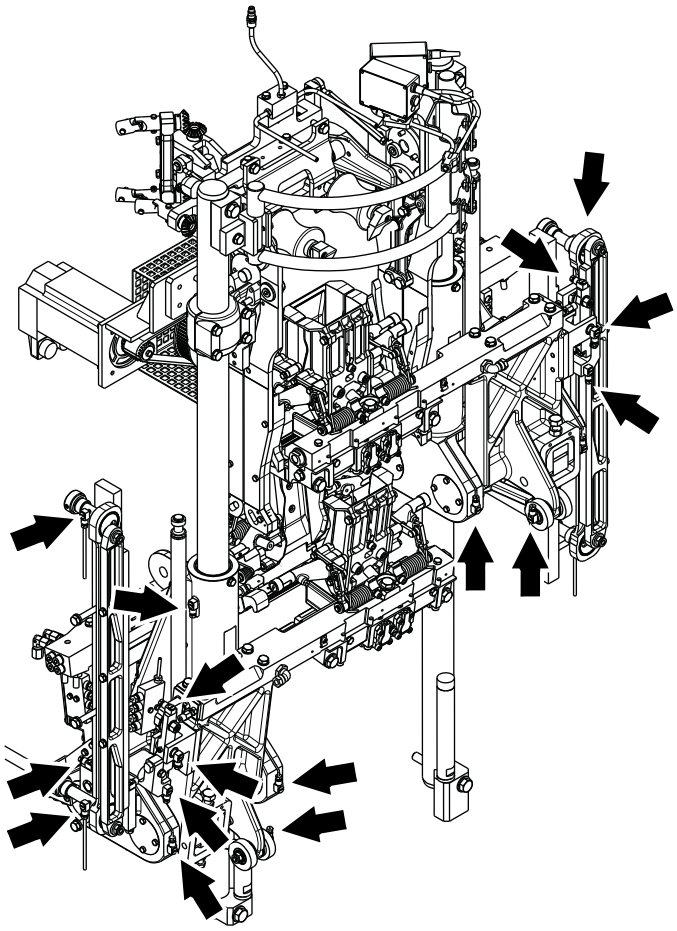

2.2.3.1-6 Central Lubrication - Fill Oil

Machine Status	Mains Power OFF Air OFF Steam ON Water OFF
Consumables	Lubricant, Code H
SPC Reference	2506776-0300

Fill with oil (code H, see 10.3-1 Lubricants) through the nipple (1). Check the oil pressure, see 2.2.3.1-2 Central Lubrication - Check Oil Pressure.

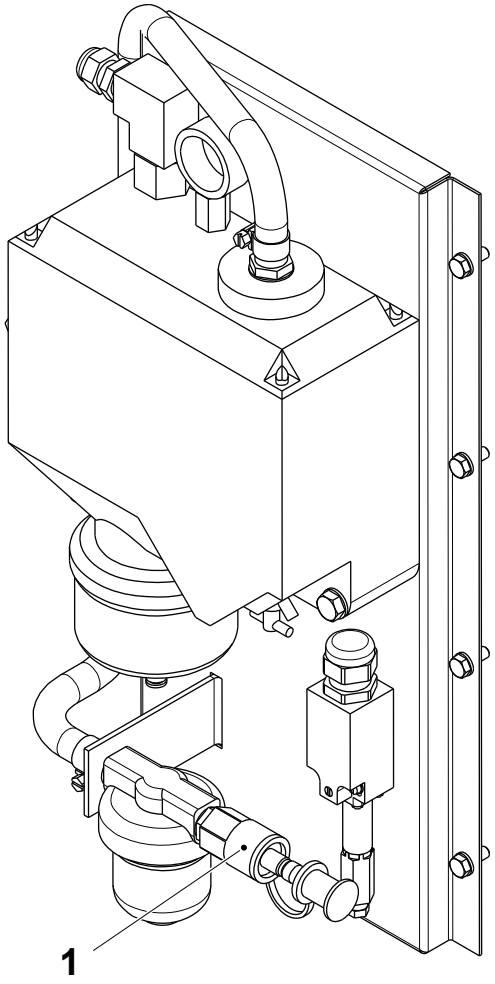

1 Nipple

2.2.3.1-7 Central Lubrication - Change Filter Insert

Machine Status	Mains Power OFF Air OFF Steam ON Water OFF
SPC Reference	2506776-0300

a) Remove the oil filter cover (1) and pull out the filter insert (2).

b) Remove and clean the filter insert (2) with compressed air. Change the filter insert (2) if necessary.

c) Fit back the filter insert (2) and tighten the oil filter cover (1).

d) Bleed the system according to 2.2.3.1-5 Central Lubrication - Bleed.

e) Check the oil pressure according to 2.2.3.1-2 Central Lubrication - Check Oil Pressure.

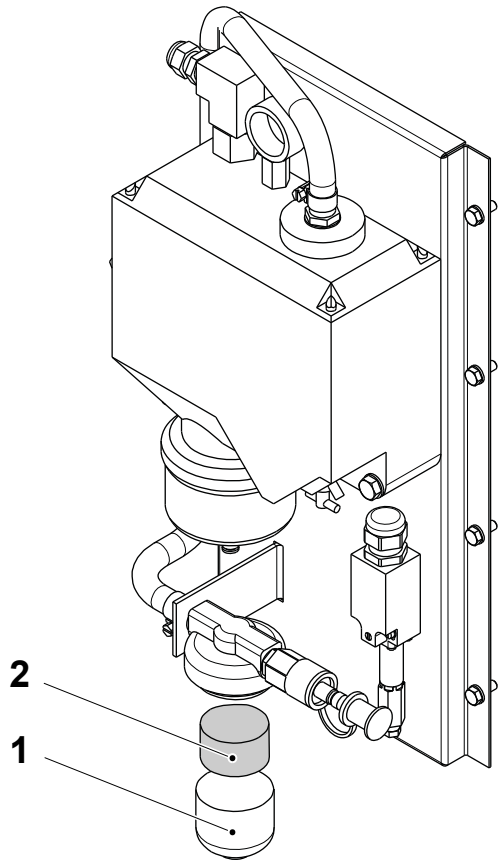

1 Oil filter
2 Filter insert

2.2.3 Electric Equipment

2.2.3-1 Electric Equipment - Check Fan

Machine Status	Mains Power OFF Air OFF Steam ON Water OFF
SPC Reference	2537857-0200 2994296-0100

Check that:

- the fan (1) is working in step PRODUCTION
- the fan (1) is securely fixed and there is not excessive radial play. If necessary change the fan (1), see on the next page.

Clean any build up of dirt from the fan (1) blades.

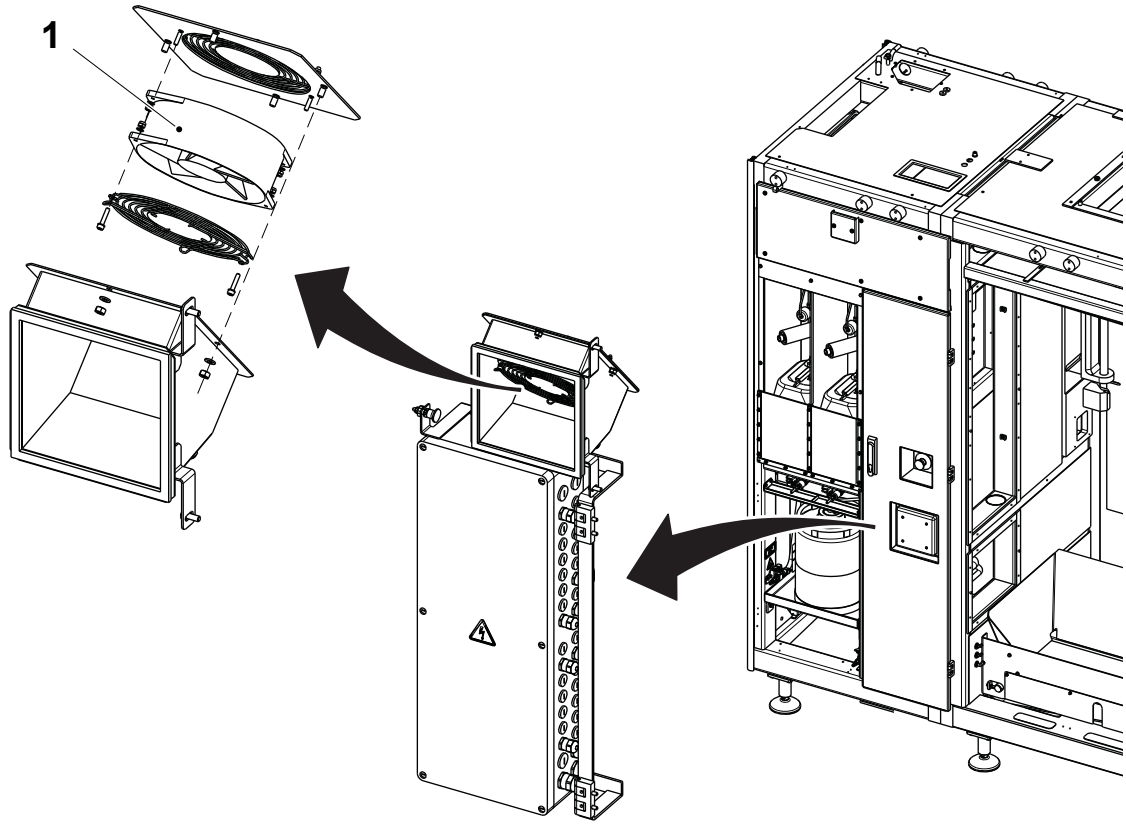

1 Fan

(Cont'd)

(Cont'd)

To change the fan (1), proceed as follows:

a) Disconnect the cable T40W9510 (2).

b) Remove the plate (3) by the three screws (4).

c) Remove the fingerguard (5) by the screws (6).

d) Remove and change the fan (1) by the nuts (7).

e) Assemble in the reverse order.

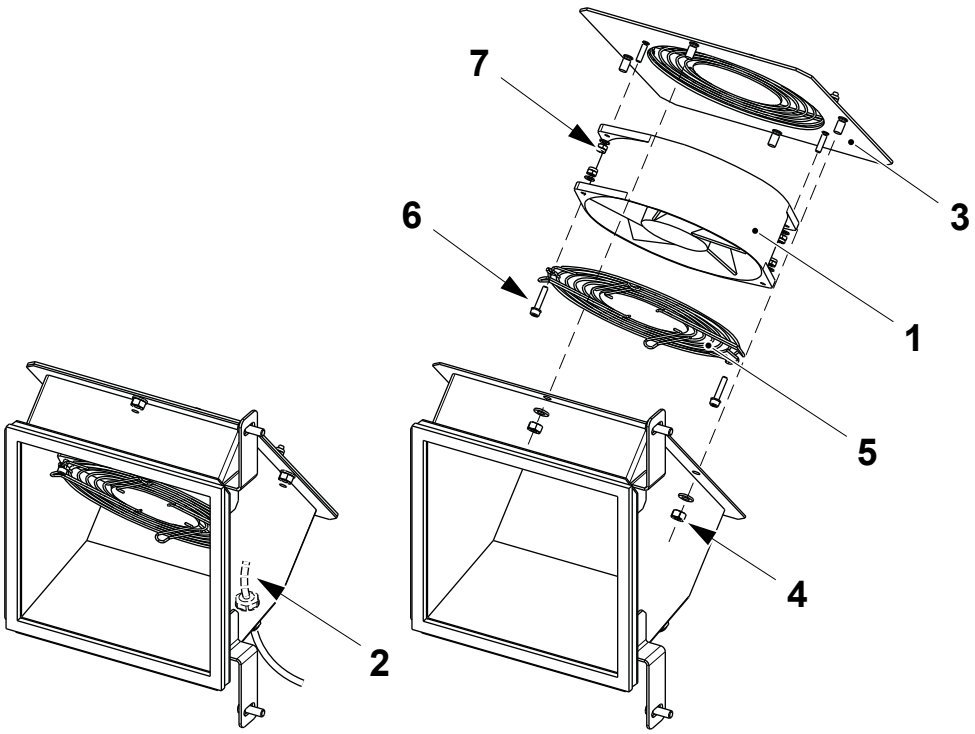

1 Fan
2 Cable T40W9510
3 Plate
4 Nut
5 Fingerguard
6 Screw
7 Nut

2.3 Front Module

SPC Reference	2504793-0200

2.3.1 Pneumatic System

2.3.1-1 Pneumatic System - Check

Machine Status	PRODUCTION
SPC Reference	2528044-0200

Make sure that:

- the hoses and the pipes are intact and their connections are secure
- there are no obvious obstructions or leaks
- all the hoses and cables are clamped securely.

Change if necessary.

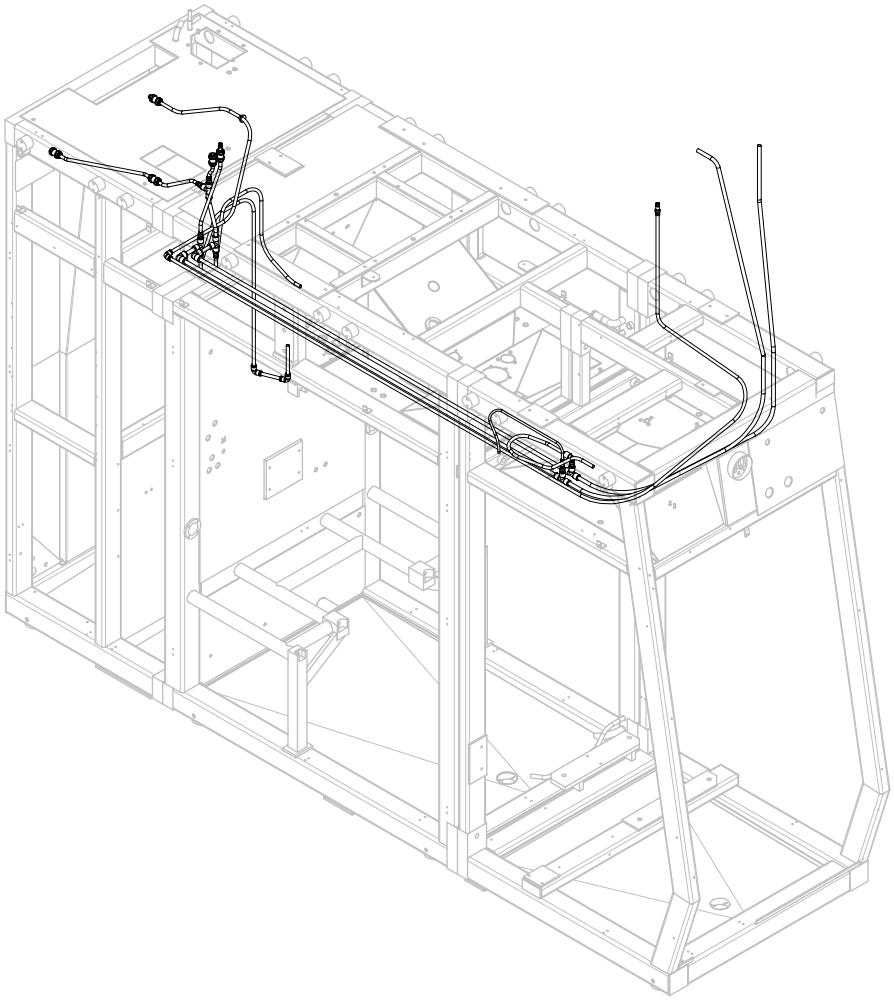

2.3.1-2 Pneumatic System - Set I/P Transducer

Machine Status	PREPARATION
SPC Reference	2528044-0200

CAUTION
Risk of damage to the equipment.
Be careful not to damage the trimmers with the screw driver.

Note! The I/P transducer No. T50T1540 is for the top flap heaters, the I/P transducer No. T50T1530 is for the bottom flap heaters.

(Cont'd)

(Cont'd)

a) Activate the flap heaters, see 5.9-5 Heating Chamber - Activate Flap Heaters.

b) On the I/P transducer for the flap heaters selected, remove the rubber cover (1) to display the three trimmers Z, S and G.

c) Turn the gain trimmer G (2) fully anti-clockwise.

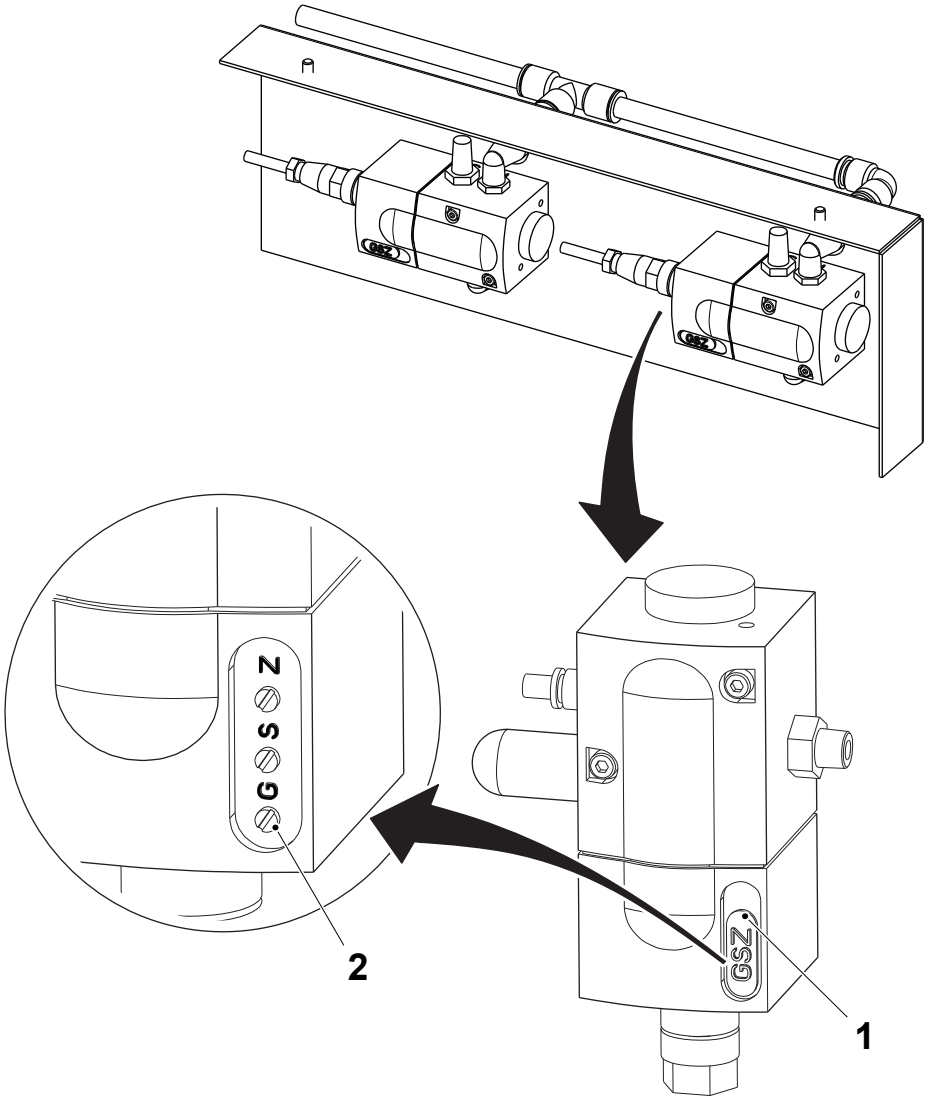

1 Rubber cover
2 Gain trimmer G

(Cont'd)

(Cont'd)

d) Touch the PRODUCTION CONTROL button (3).

e) Touch the FINAL FOLDER button (4).

f) Touch the FLAP HEATERS PRESSURE icon (5).

g) Touch the TOP FLAP HEATERS icon (6) or the BOTTOM FLAP HEATERS icon (7) to activate the couple of the flap heaters to be set.

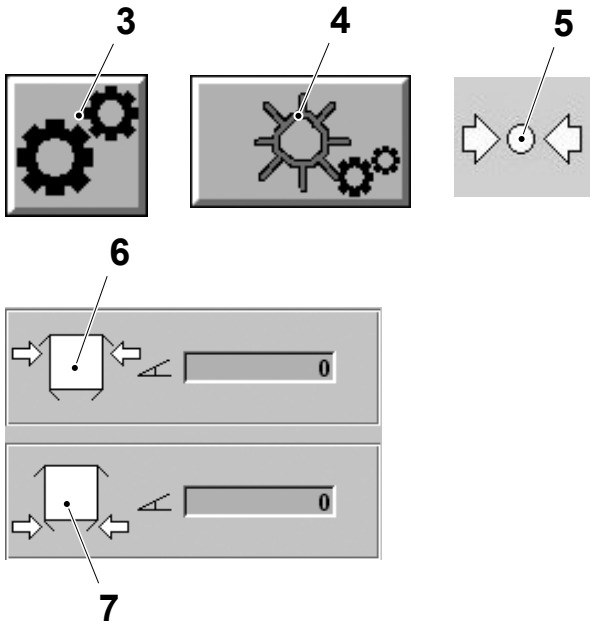

3 Production control button
4 Final folder button
5 Flap heaters pressure icon
6 Top flap heaters icon
7 Bottom flap heaters icon

(Cont'd)

(Cont'd)

h) Enter 0.0 bar as set point value (8) by the arrows buttons (9) or the keyboard button (10).

i) Adjust the process value (11) to 0.1 bar by means of the trimmer Z (12).

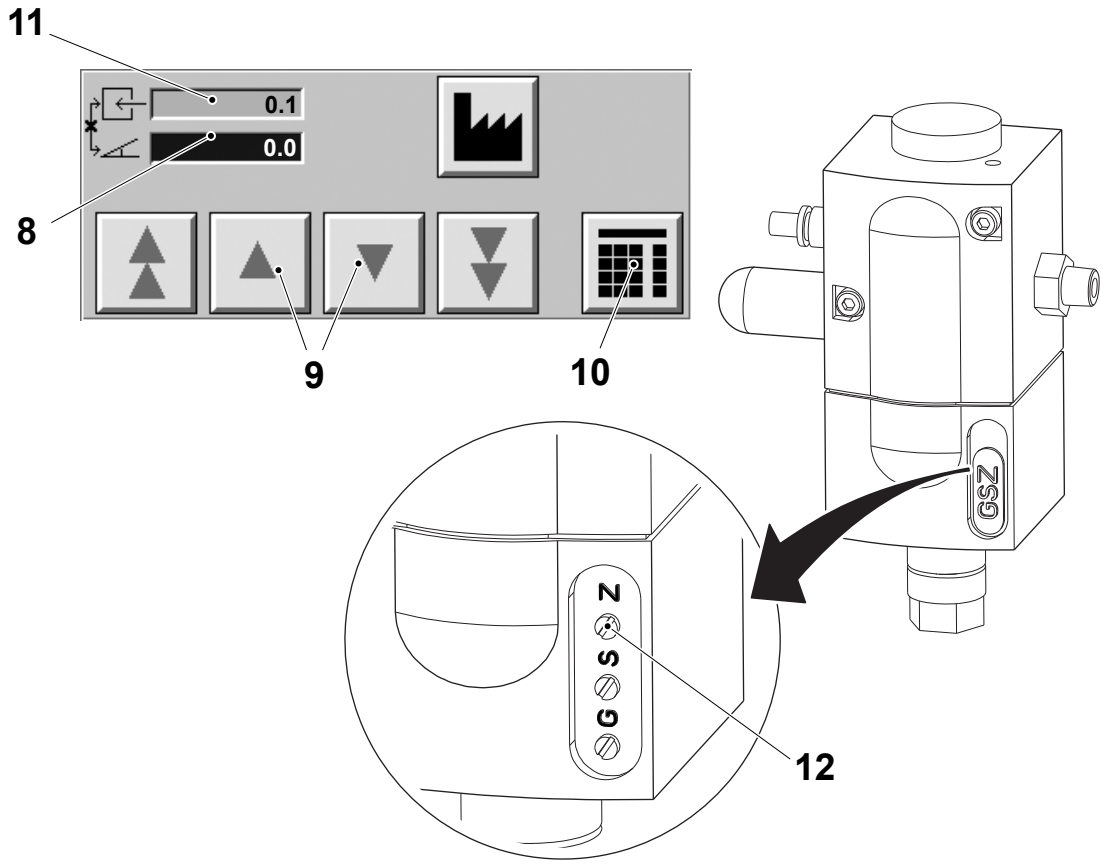

8 Set point value
9 Arrow button
10 Keyboard button
11 Process value
12 Trimmer Z

(Cont'd)

(Cont'd)

j) Enter 3.0 bar as set point value (8) by the ARROWS buttons (9) or the KEYBOARD button (10).

k) Check that the process value (11) corresponds to 3 bar; if not, adjust the pressure to 3.0 bar by means of the trimmer S (13).

l) Touch the EXIT button (14).

m) Fit back the rubber cover (1).

n) Repeat the same procedure for the other couple of flap heaters.

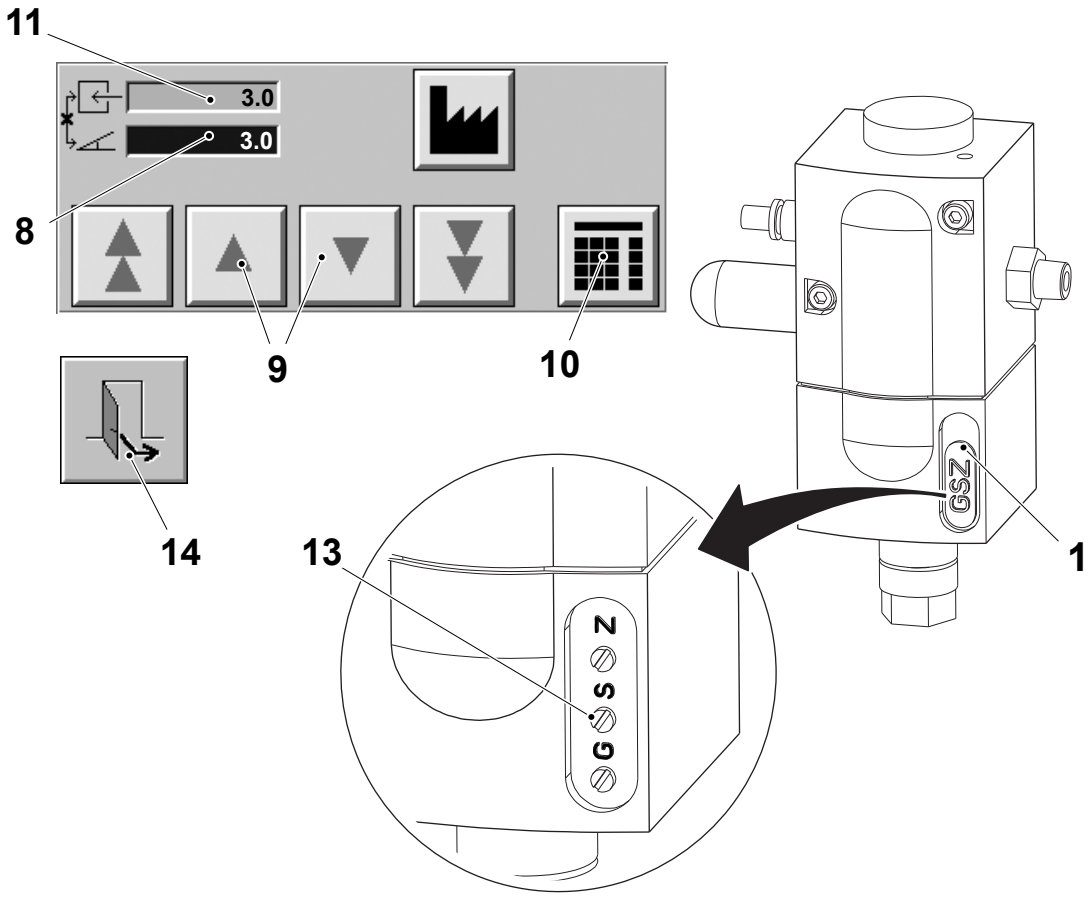

1 Rubber cover
11 Set point value
12 Arrow button
13 Keyboard button
14 Process value
13 Trimmer S
14 Exit button

2.4 Doors and Covers

SPC Reference	2504920-0200

2.4-1 Doors and Covers - Remove

Machine Status	Mains Power OFF Air OFF Steam ON Water OFF
SPC Reference	2504920-0200

Note! The RH side door or cover (2) must always be removed first, even if only the LH side door or cover (1) needs to be removed. Disconnect any electrical connections from the doors before removal. Doors with glass panels are heavy.

Remove the doors and the covers following this procedure:

a) Close the corresponding LH side door or cover.

b) Support the RH side door or cover.

(Cont'd)

(Cont'd)

Note! The hinge pins (3) must be tapped out from the underside of the hinge (5).

c) Tap out the pins (3) in the following order:
   – top hinge pin
   – bottom hinge pin
   – middle hinge pin (when used).

d) Move the door or cover (1) or (2) to disengage the hinge blocks (4) from the hinges (5).

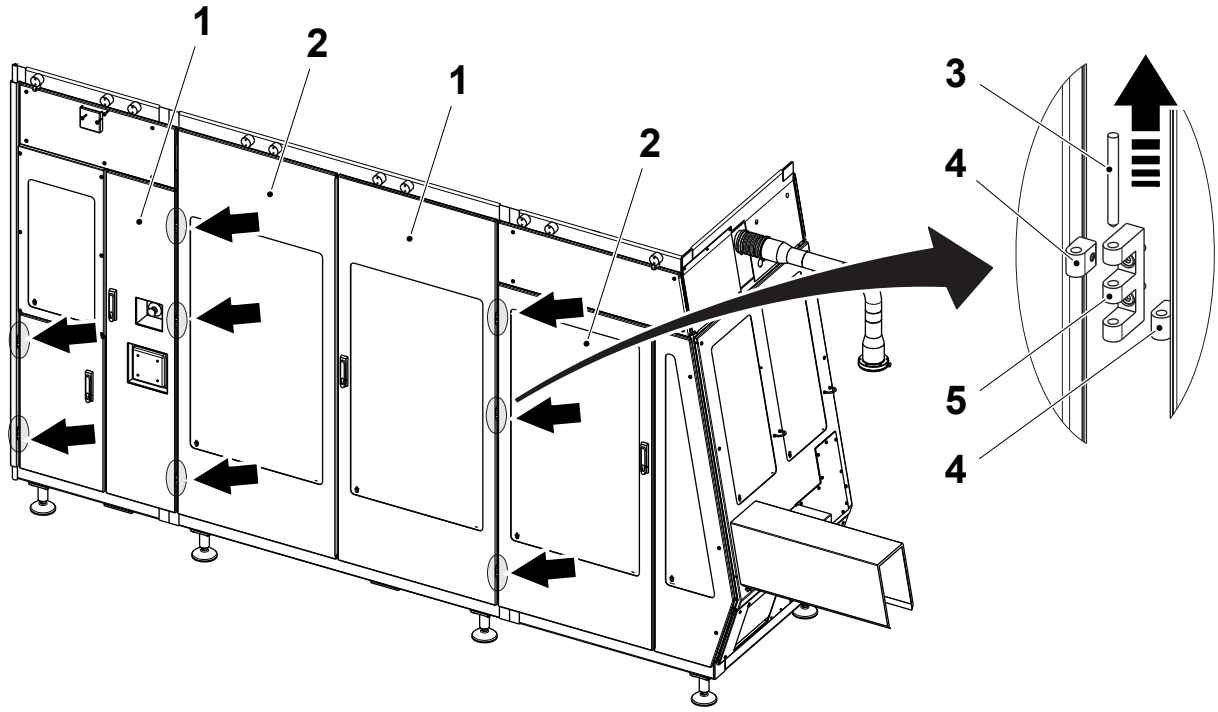

1 LH door
2 RH door
3 Hinge pin
4 Hinge block
5 Hinge

2.4-2 Doors and Covers - Set Safety Switch

Machine Status	Mains Power OFF Air OFF Steam ON Water OFF
Special Equipment	Tool for Snake Eyes M5 Screws TP No. 90600-2975 Tool for Special Round Nuts TP No. 2863968-0000
SPC Reference	2504920-0200

Note! This procedure enables the setting of the key assembly (1) so that it is correctly aligned with the safety switches (2) and key ways (3). The position of the safety switches (2) cannot be adjusted.

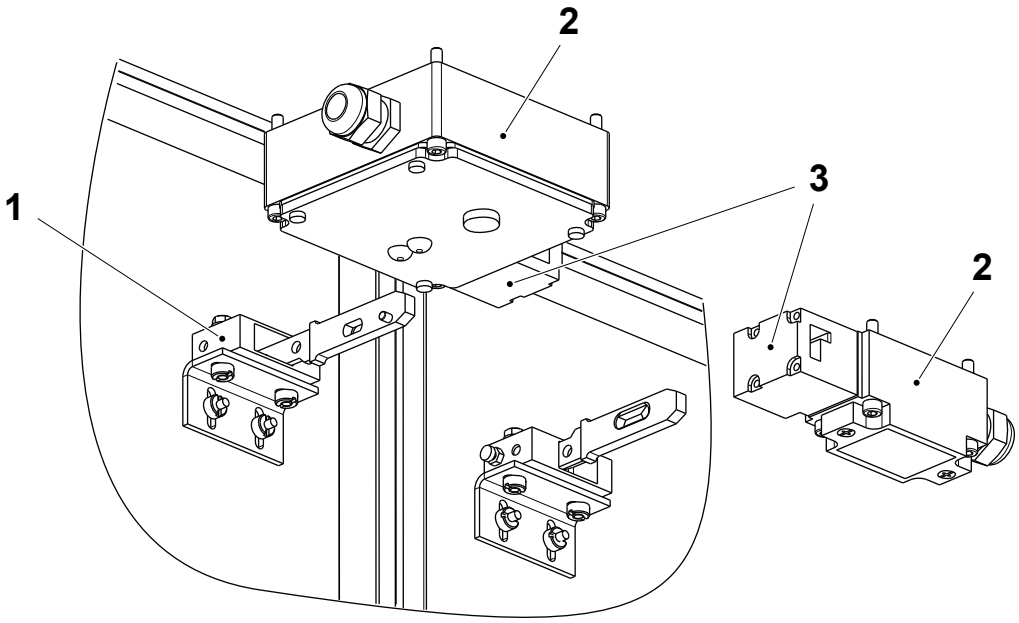

1 Key assembly
2 Safety switch
3 Key way

(Cont'd)

(Cont'd)

- To set the vertical alignment of the key assembly (1); loosen the two nuts (4) and adjust the support bracket (5) until the key (6) is correctly aligned. Tighten the nuts (4)
- To set the horizontal alignment of the key assembly (1); loosen the two nuts (7) and move the key assembly (1) until the key (6) is correctly aligned. Tighten the nuts (7)
- To set the angle of the key (6); turn the adjuster (8) clockwise or anticlockwise to change the angle of the key (6).

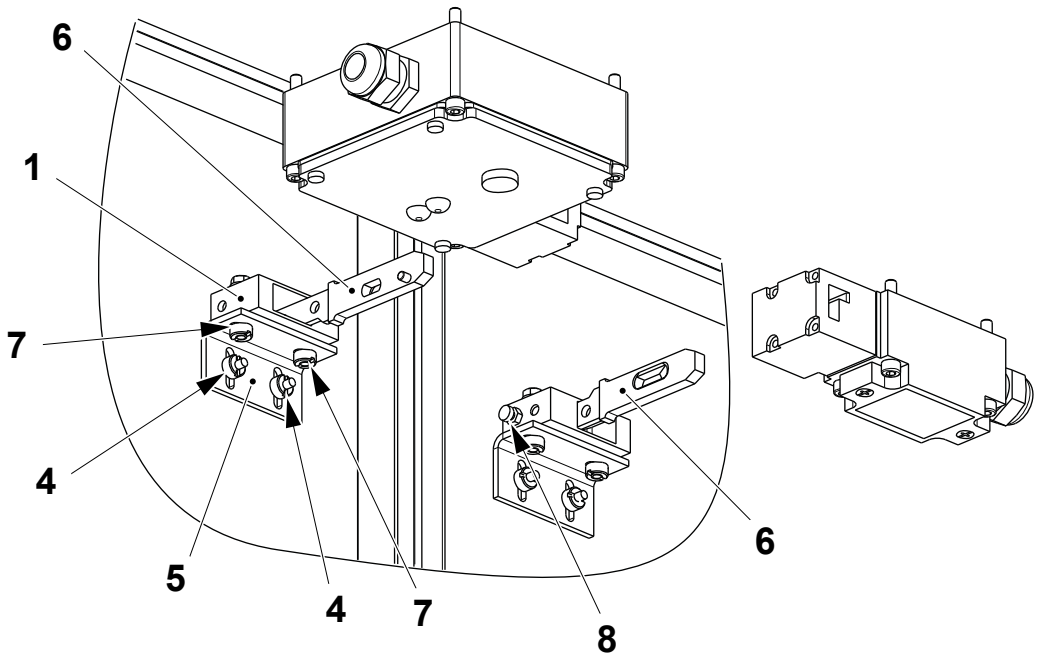

1 Key assembly
4 Nut
5 Support bracket
6 Key
7 Nut
8 Adjuster

2.4-3 Doors and Covers - Grease Locking Devices

Machine Status	Mains Power OFF Air OFF Steam ON Water OFF
Consumables	Synthetic Grease TP No. 90459-7413
SPC Reference	2504920-0200

On both sides of the machine body, grease the locking device (1) in the jaw system/final folder doors (2), see parts shown in grey, then open and close the turning handle (3) to check that the movement is smooth.

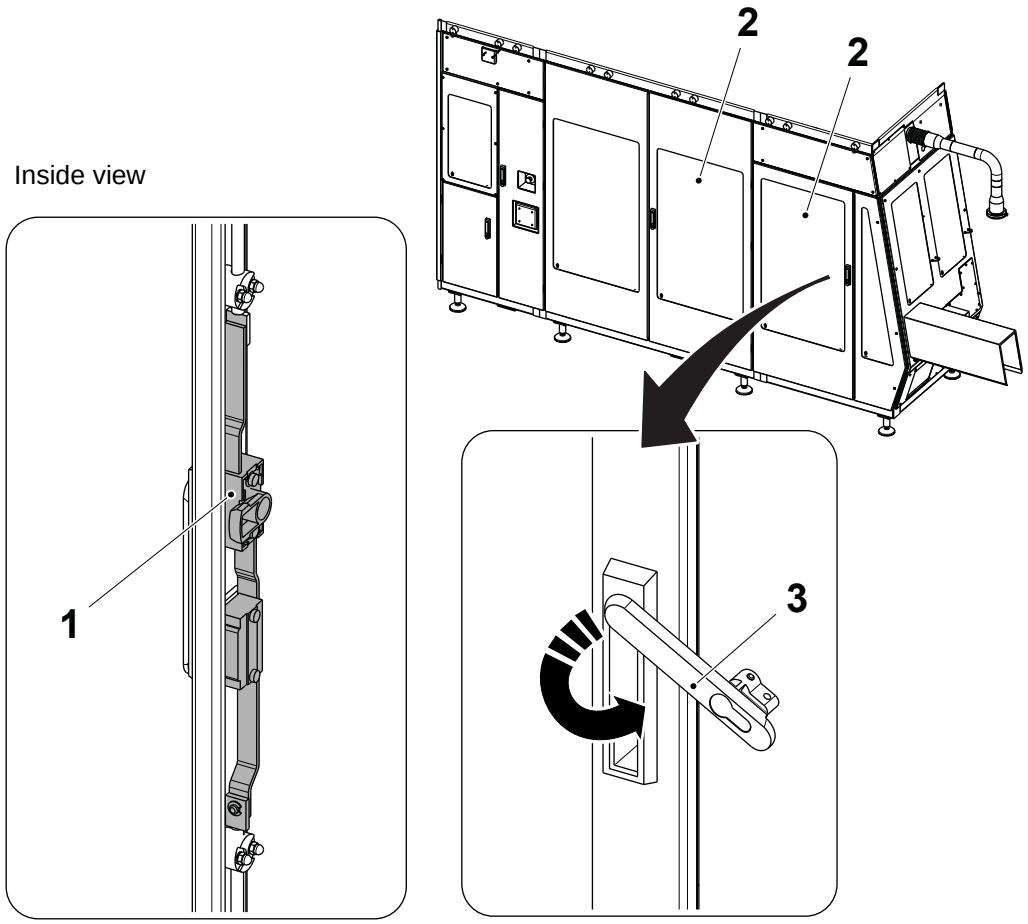

1 Locking device
2 JS/FFU doors
3 Turning handle

2.5 Waste Conveyor

SPC Reference	2930255-0100

2.5-1 Waste Conveyor - Check

Machine Status	Mains Power ON Air ON Steam ON Water OFF
SPC Reference	2930255-0100

(Cont'd)

(Cont'd)

Check that:

- the hatch (1) moves freely in both directions:
  - disconnect the air lines from the cylinder (2)
  - move the hatch (1)
- the teeth edge of the guard plate (3) is not worn out
- the conveyor belt (4) is not damaged. Change if necessary, see 2.5-3 Waste Conveyor - Change Conveyor Belt.

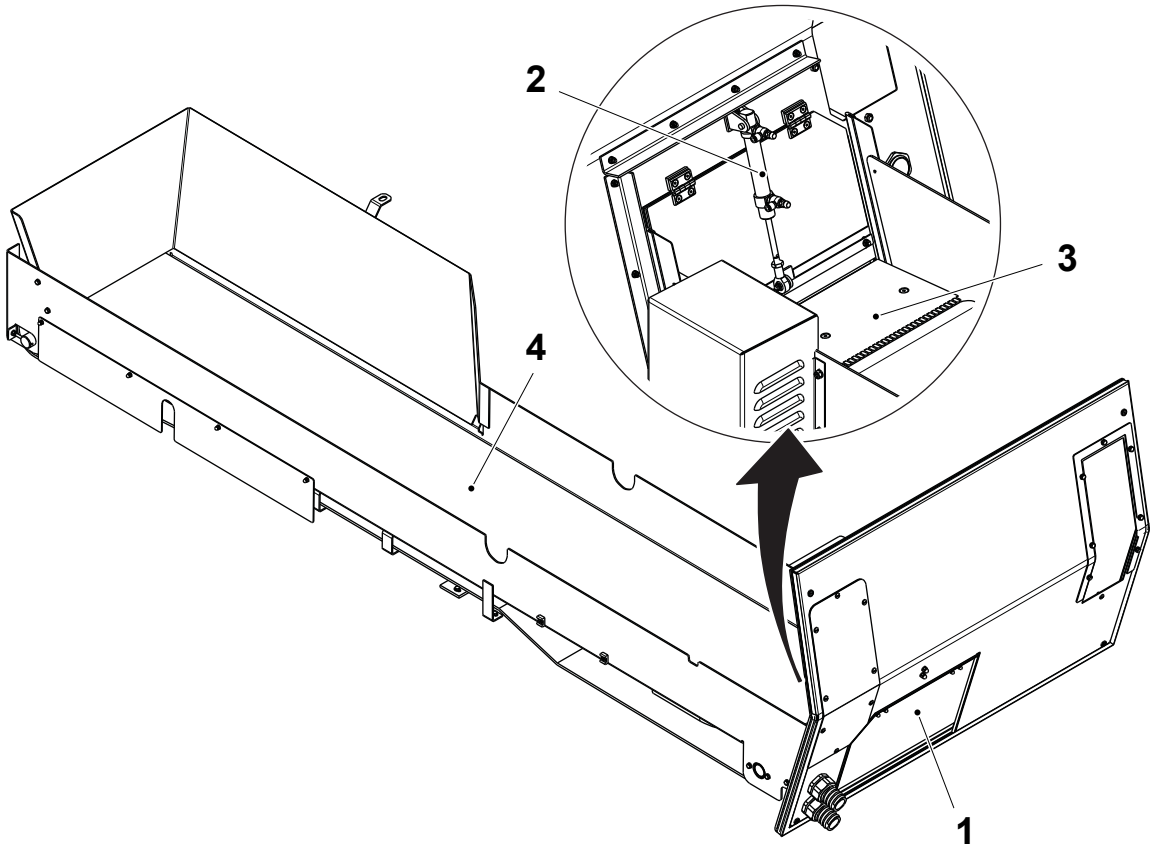

1 Hatch
2 Cylinder
3 Guard plate
4 Conveyor belt

2.5-2 Waste Conveyor - Change Coupling

Machine Status	Mains Power OFF Air OFF Steam ON Water OFF
SPC Reference	2930255-0100

Note! Valid for machines with T-order: 21208/00001 to 21208/00020.

a) Remove the nuts (1) and the motor cover (2).

b) Remove the screws (3) and the grub screws (4).

c) Remove the motor assembly (5).

d) Remove the coupling (6). Change it if necessary.

e) Assemble in the reverse order.

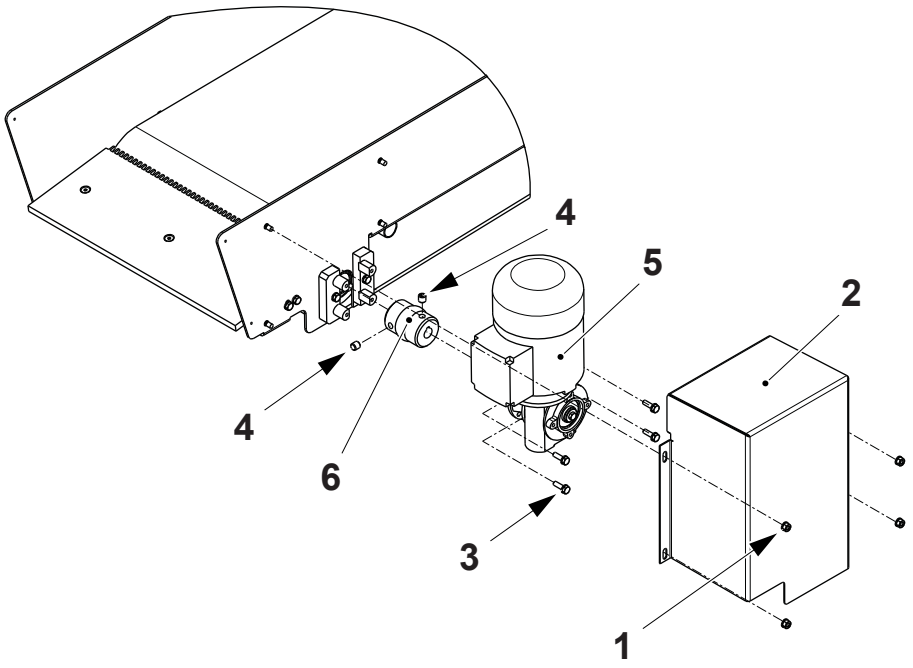

1 Nut
2 Motor cover
3 Screw
4 Grub screw
5 Motor assembly
6 Coupling

(Cont'd)

(Cont'd)

Note! Valid for machines with T-order: 21208/00021 and above.

a) Remove the nuts (1) and the motor cover (2).

b) Open the coupling (3).

c) Remove the screws (4) and remove the motor assembly (5).

d) Remove the coupling (3). Change it if necessary.

e) Assemble in the reverse order.

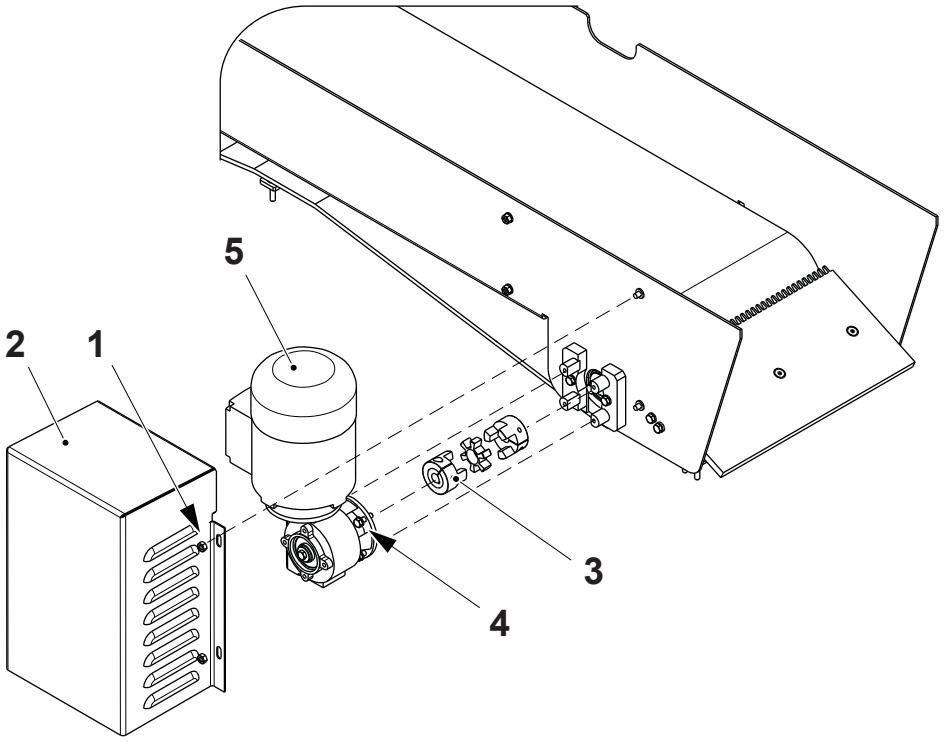

1 Nut
2 Motor cover
3 Coupling
4 Screw
5 Motor assembly

2.5-3 Waste Conveyor - Change Conveyor Belt

Machine Status	Mains Power OFF Air OFF Steam ON Water OFF
Special Equipment	4 mm Drift
SPC Reference	2930255-0100

a) Loosen the tensioning screws (1) on each side of the conveyor belt (2).

b) Release the tension of the conveyor belt (2).

c) Push out one of the plastic connecting pins (3) in the conveyor belt with the aid of a 4 mm drift.

d) Remove the conveyor belt and change it if necessary.

e) Assemble in the reverse order.

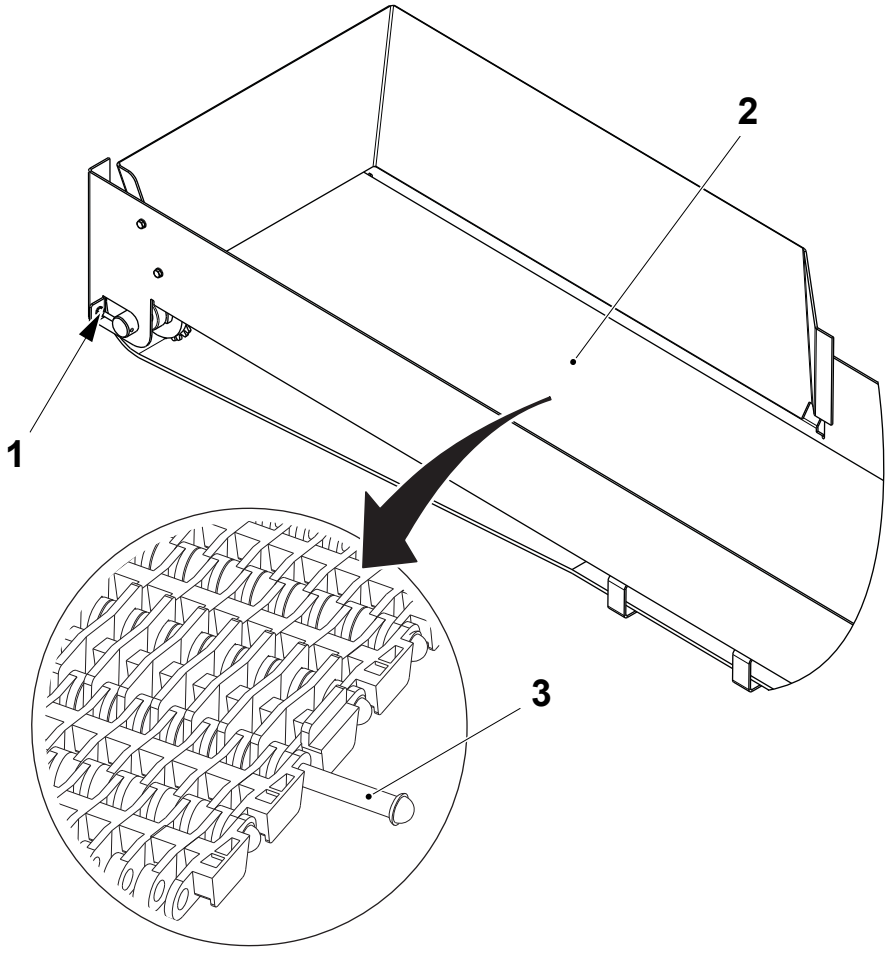

1 Screw
2 Conveyor belt
3 Pin

2.5-4 Waste Conveyor - Tension Conveyor Belt

Machine Status	Mains Power OFF Air OFF Steam ON Water OFF
Special Equipment	4 mm Drift
SPC Reference	2930255-0100

(Cont'd)

(Cont'd)

a) Loosen the tensioning screws (1) on each side of the conveyor belt (2).

b) Release the tension of the conveyor belt (2).

c) Push out two of the plastic connecting pins (3) in the conveyor belt with the aid of a 4 mm drift.

d) Remove one or more meshes (4) of the conveyor belt.

e) Assemble in the reverse order.

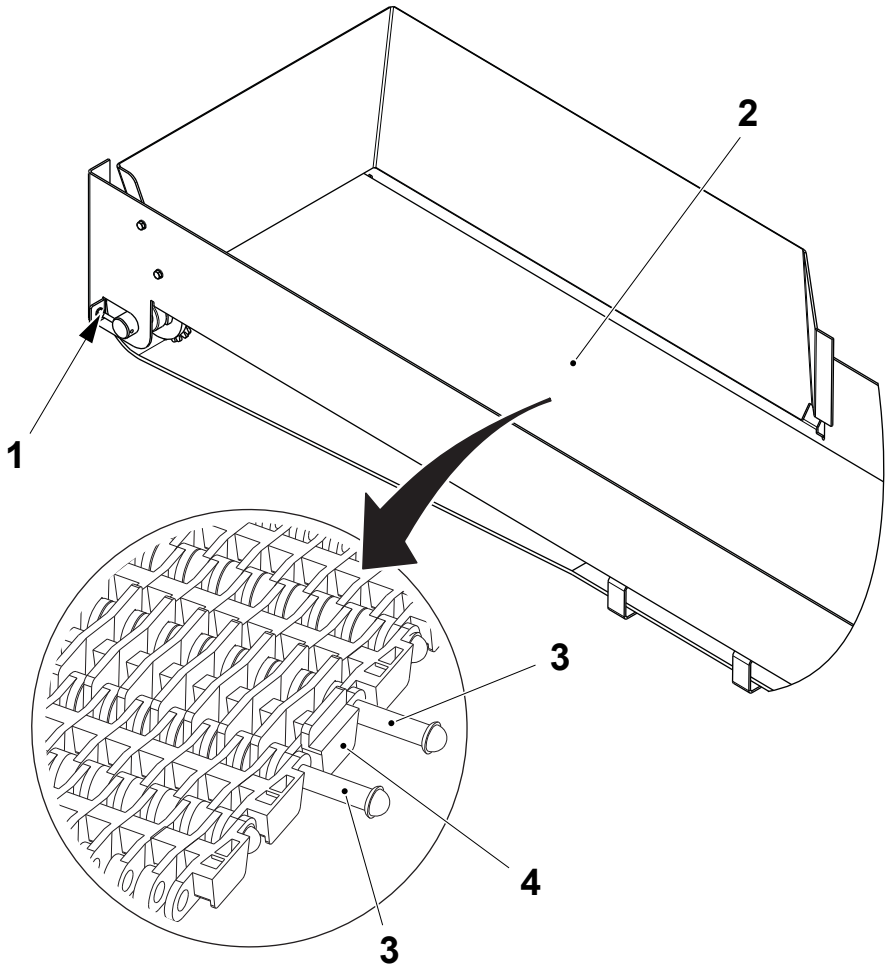

1 Screw
2 Conveyor belt
3 Pin
4 Mesh

2.5-5 Waste Conveyor - Set Front Guard

Pressure

Machine Status	Mains Power ON Air ON Steam ON Water OFF
SPC Reference	2930255-0100

Set the pressure for the front guard cylinder (1) to 1.0 bar using the pressure regulator (2).

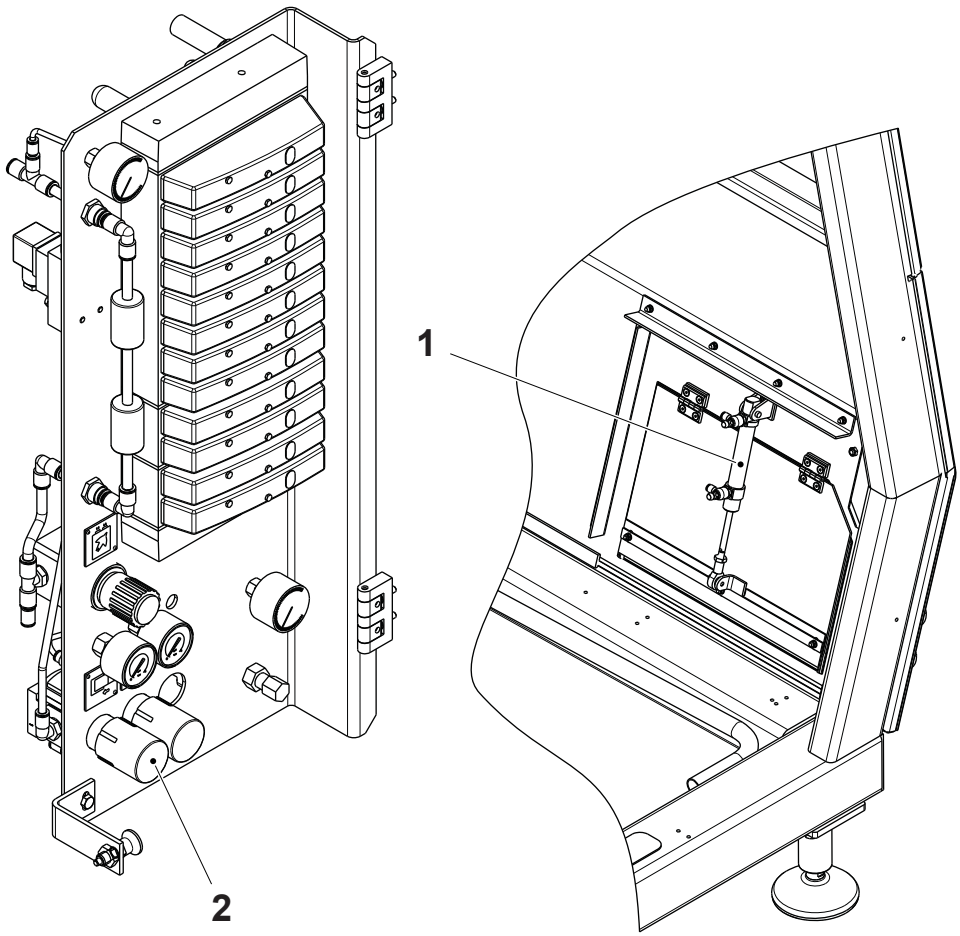

1 Cylinder
2 Pressure regulator

2.6 Crank

SPC Reference	2932047-0100

2.6-1 Crank - Set Position

Machine Status	Mains Power OFF Air OFF Steam ON Water OFF
SPC Reference	2932047-0100

a) Fit the crank (1) into the holder (2), make sure that the crank (1) fits correctly into the indexing gear.

b) Loosen the two nuts (3) on the holder (2).

c) Adjust the position of the plate (4) by means of the screws (5) until the plate (4) fits into the groove in the crank (1).

d) Tighten the two nuts (3) on the holder (2).

e) Lift the plate (4) and remove the crank (1).

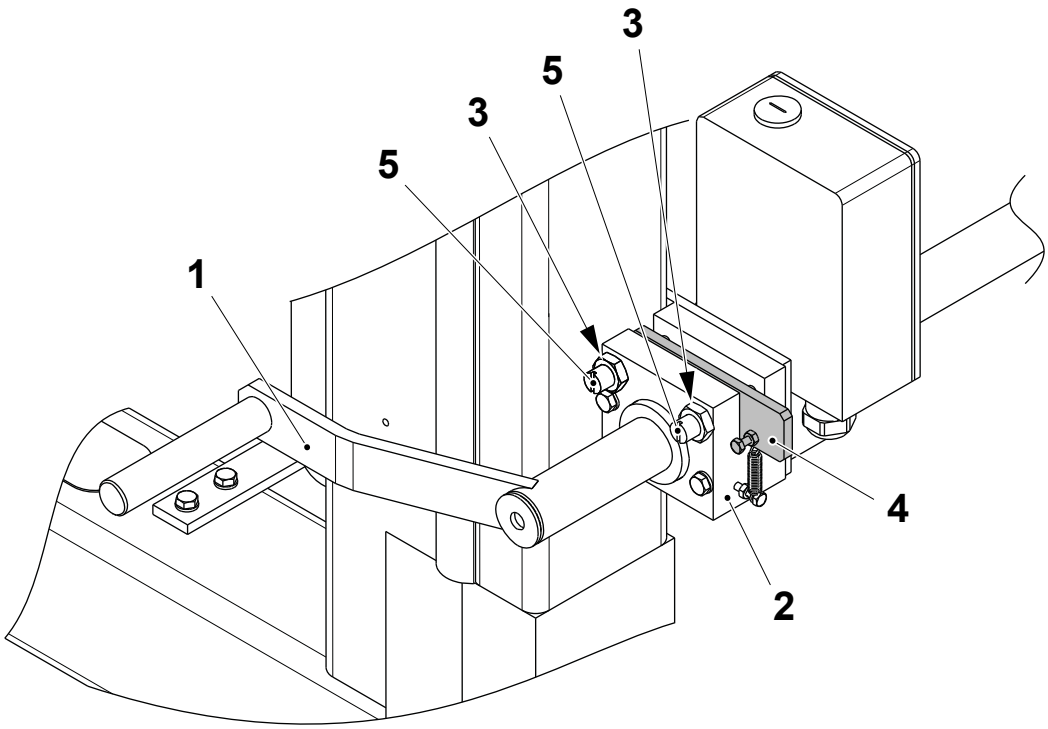

1 Crank
2 Holder
3 Nut
4 Plate
5 Screw

3 Drive Unit

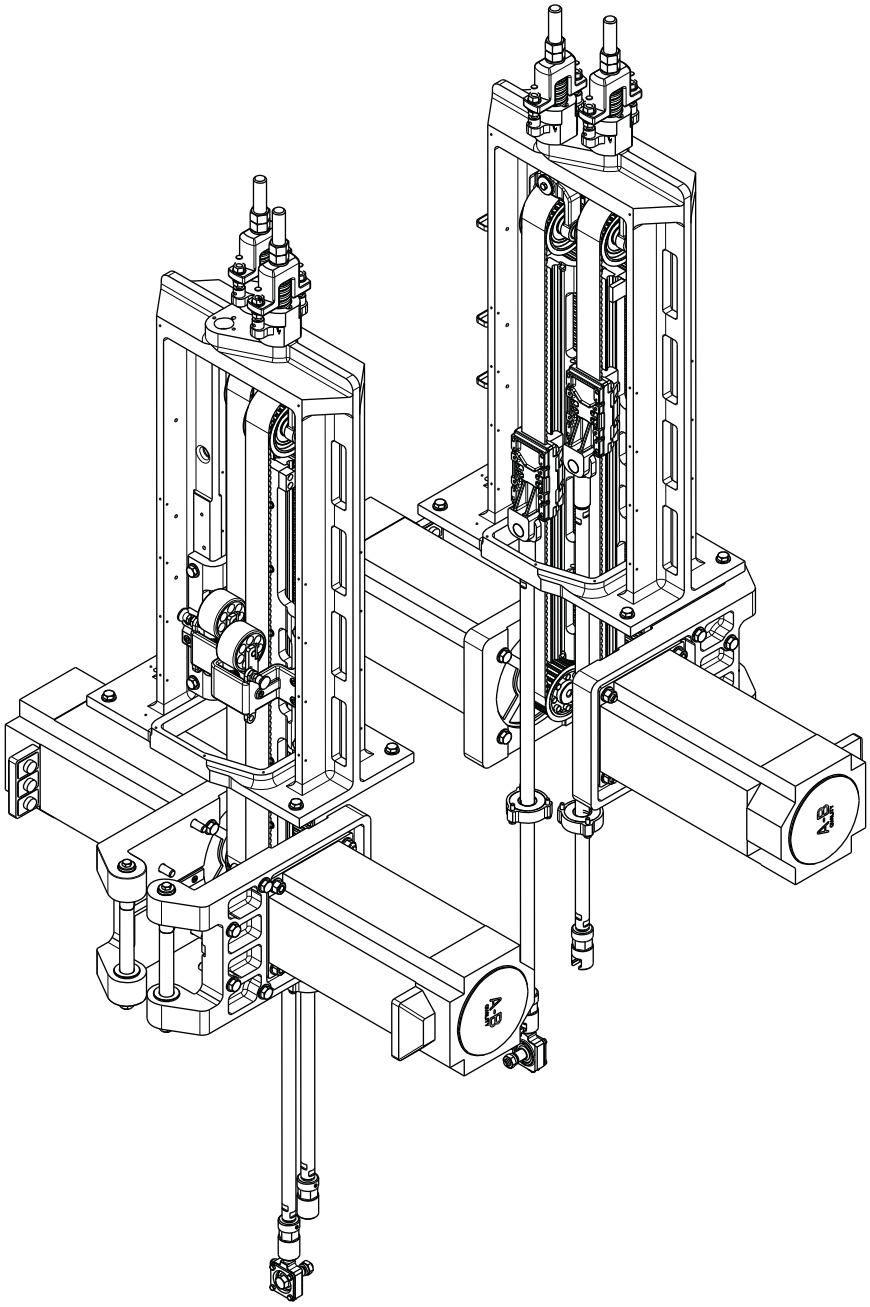

Drive Unit - Description

SPC Reference	648543-0500

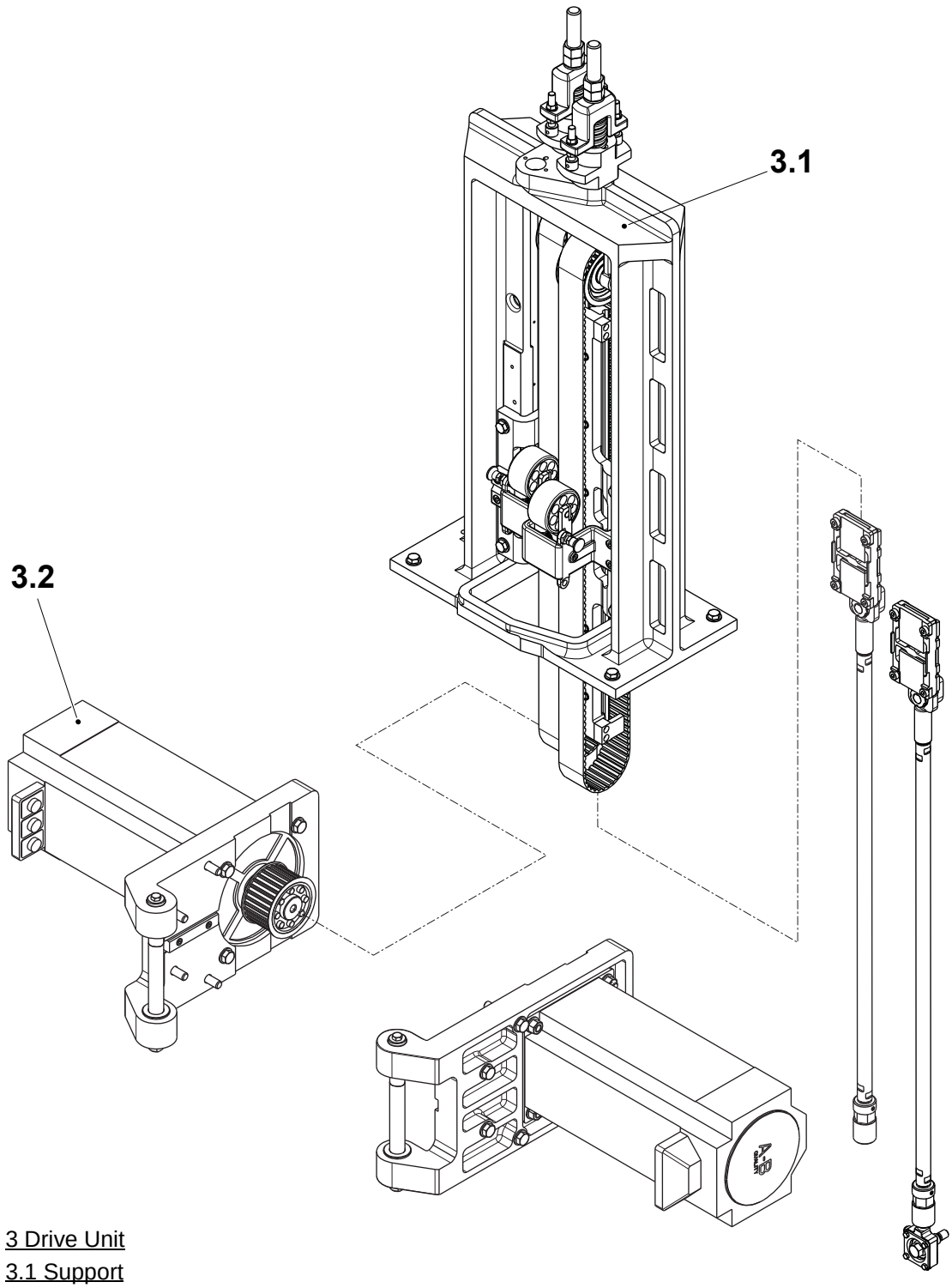

3 Drive Unit
3.1 Support
3.2 Motor Unit

3 Drive Unit . . . . . 3 - 5

3-1 Drive Unit - Setting Sequence . . . . . 3 - 5
3-2 Drive Unit - Lower Jaw System . . . . . 3 - 6
3-3 Drive Unit - Release Brakes . . . . . 3 - 7
3-4 Drive Unit - Referencing . . . . . 3 - 9
3-5 Drive Unit - Check Damper . . . . . 3 - 12
3-6 Drive Unit - Check Drive Belt . . . . . 3 - 13
3-7 Drive Unit - Set Drive Belt Tension . . . . . 3 - 16

3.1 Support. . . . . 3 - 21

3.1.1 Guide. . . . . 3 - 21

3.1.1-1 Guide - Change Drive Belt(s) . . . . . 3 - 21
3.1.1-2 Guide - Lubricate Runner Block . . . . . 3 - 31
3.1.1-3 Guide - Check Linear Units and Runner Blocks 3 - 32
3.1.1-4 Guide - Overhaul . . . . . 3 - 33

3.1.2 Damper . . . . . 3 - 36

3.1.2-1 Damper - Remove . . . . . 3 - 36
3.1.2-2 Damper - Overhaul . . . . . 3 - 37

3.1.3 Pulley. . . . . 3 - 39

3.1.3-1 Pulley - Change Wheel and Bearings . . . . . 3 - 39

3.1.4 Belt Tensioner . . . . . 3 - 41

3.1.4-1 Belt Tensioner - Remove . . . . . 3 - 41
3.1.4-2 Belt Tensioner - Overhaul . . . . . 3 - 43

3.1.5 Link . . . . . 3 - 44

3.1.5-1 Link - Check . . . . . 3 - 44
3.1.5-2 Link - Disconnect . . . . . 3 - 45
3.1.5-3 Link - Connect . . . . . 3 - 48
3.1.5-4 Link - Change Bearing . . . . . 3 - 51

3.2 Motor Unit. . . . . 3 - 52

3.2-1 Motor Unit - Check . . . . . 3 - 52
3.2-2 Motor Unit - Change . . . . . 3 - 53
3.4-2 Motor Unit - Overhaul . . . . . 3 - 71
3.4-3 Motor Unit - Change Flange . . . . . 3 - 74

This page intentionally left blank

3 Drive Unit

3-1 Drive Unit - Setting Sequence

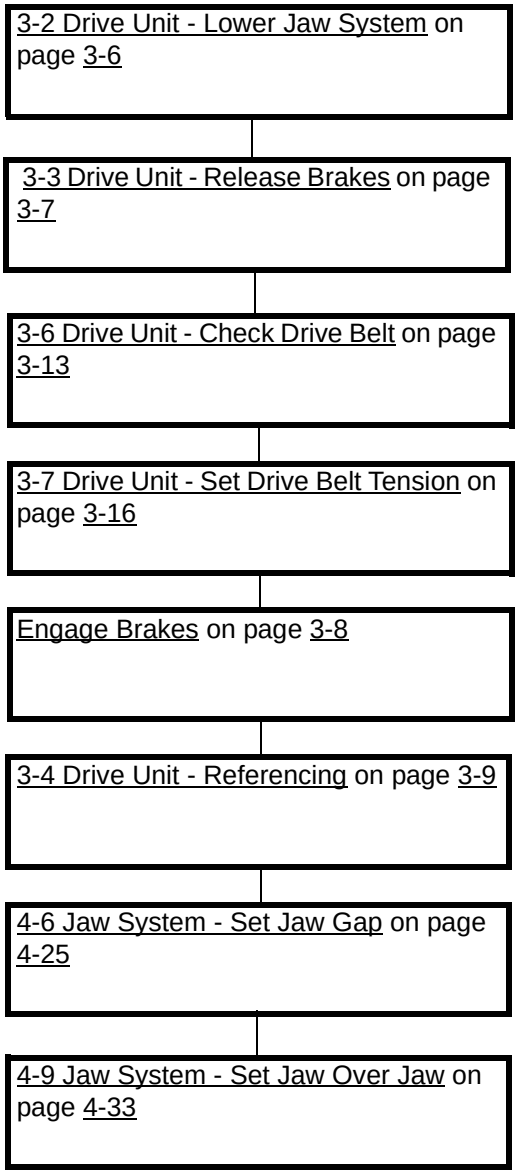

3-2 Drive Unit - Lower Jaw System

Machine Status	PREPARATION
SPC Reference	648543-0500

This procedure describes how to lower the jaw system so that the weight of the jaw system is supported and no further movement is possible.

Lower Jaw System

a) Log on to the MAINTENANCE CONTROL window, see 9.6.3-2 HMI - User Management Log On.

b) Touch the PACKAGE FORMING UNIT button (1) to display the PACKAGE FORMING UNIT window.

c) Touch the GO TO LOWEST POSITION icon (2).

d) Touch the LOWER LEFT JAW button (3) or the LOWER RIGHT JAW button (4).

e) Touch the OK button (5). The machine will now lower the chosen jaw pair.

f) If the other jaw pair must also be lowered touch the LOWER LEFT JAW button (3) or the LOWER RIGHT JAW button (4).

g) Touch the OK button (5). The machine will now lower the chosen jaw pair.

h) Perform the necessary mechanical work. The jaw system will automatically return to the working position when the machined is stepped up.

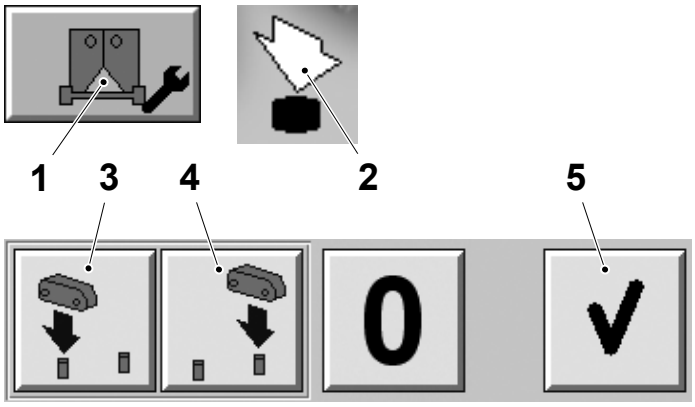

1 Package forming unit button
2 Go to lowest position icon
3 Lower left jaw button
4 Lower right jaw button
5 OK button

3-3 Drive Unit - Release Brakes

Machine Status	PREPARATION
SPC Reference	648543-0500

Note! This procedure describes how to release the brakes on the drive system. This procedure allows for releasing individual drive links.

a) Turn the service switch (1) on the electrical cabinet door to the service position.

b) Lower the jaw system, see 3-2 Drive Unit - Lower Jaw System so that the weight is supported and no further movement is possible.

c) Log on to the MAINTENANCE CONTROL window, see 9.6.3-2 HMI - User Management Log On.

d) Touch the PACKAGE FORMING UNIT button (2) to display the PACKAGE FORMING UNIT window.

e) Touch the BRAKES icon (3).

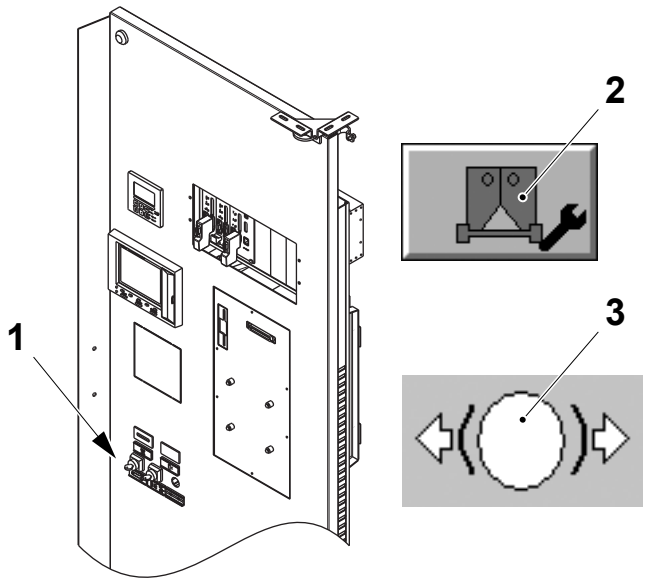

1 Service switch
2 Package forming unit button
3 Brakes icon

(Cont'd)

(Cont'd)

Note! Make sure that the jaw system is in safe condition.

f) The BRAKES COMMAND window appears.

g) Touch one of the four buttons for the required brake to be released, e.g. the LEFT JAW button (4).

h) Touch the OK button (5). The drive system operates.

i) Perform all mechanical work necessary.

Engage Brakes

j) Close all doors and clear any alarms on the TPOP display.

k) Touch the ZERO button (6) and then touch the OK button (5).

l) If further breaks have to be released, repeat items f) to i).

Note! There can be only one released brake at any time.

m) Touch the EXIT button (7) to exit from the PACKAGE FORMING UNIT window.

n) Turn the service switch (1) on the electrical cabinet door to the production position.

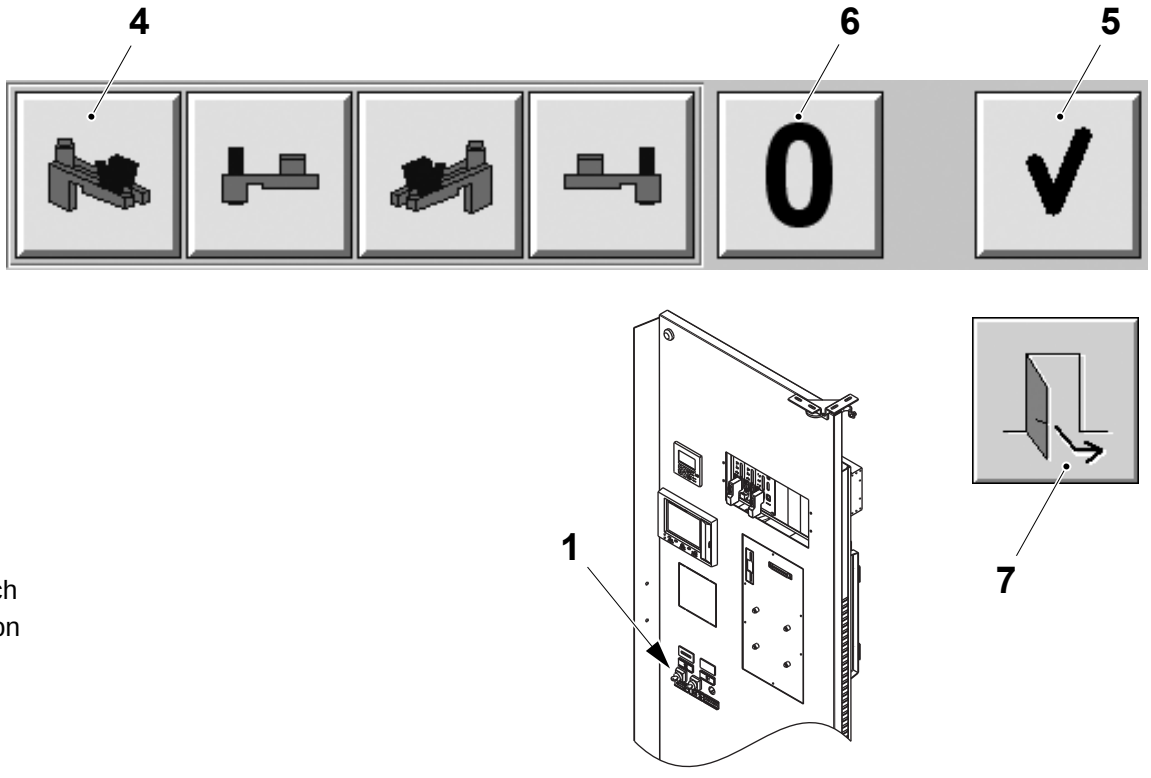

1 Service switch
4 Left jaw button
5 OK button
6 Zero button
7 Exit button

3-4 Drive Unit - Referencing

Machine Status	PREPARATION
SPC Reference	648543-0500

CAUTION
Risk of damage to the equipment.
Never reference the drive unit without first disconnecting and removing the jaw link to be referenced.

Note! The referencing procedure must be performed if any mechanical change has been made to the drive units or if a servo drive has been changed. The referencing procedure is not necessary if only the links connecting the drives to the jaw system have been disconnected.

a) Release the brakes, see 3-3 Drive Unit - Release Brakes.

b) On the servo motor to be referenced, disconnect and remove the upper and lower links, see 3.1.5-2 Link - Disconnect.

c) Remove all tools and equipment from the jaw system area.

d) Close all doors and clear all alarms on the TPOP display.

e) Log on to the `MAINTENANCE CONTROL` window, see 9.6.3-2 HMI - User Management Log On.

f) Touch the `PACKAGE FORMING UNIT` button (1) to display the `PACKAGE FORMING UNIT` window.

g) Touch the `DRIVE UNIT REFERENCING` button (2).

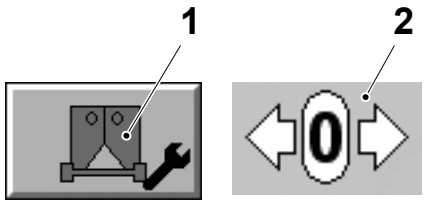

1 Package forming unit button
2 Drive unit referencing button

(Cont'd)

(Cont'd)

h) The DRIVE UNIT REFERENCING window is displayed.

i) Touch the button of the link to be referenced, for example; the LEFT YOKE button (3).

j) Touch the OK button (4). Monitor the progress of the link during the referencing manoeuvre.

Note! If the link touches any part of the machine the procedure will be aborted automatically.

k) The link button of the referenced link becomes green, e.g. LEFT YOKE button (3).

l) Reference the other three links following the same sequence from item i) to item k).

m) Touch the REFERENCING FINISHED button (5) until it becomes green.

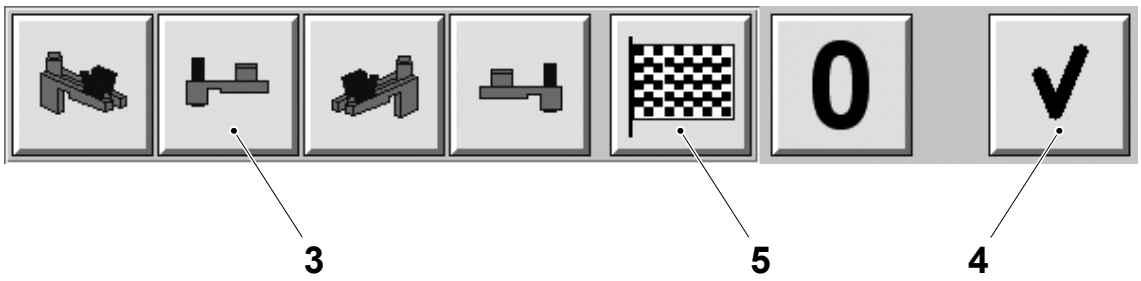

3 Left yoke button
4 OK button
5 Referencing finished button

(Cont'd)

(Cont'd)

n) Touch the ZERO button (6) and touch the OK button (4) to return to the JAW SYSTEM window.

o) Touch the EXIT button (7) to exit from the PACKAGE FORMING UNIT window.

p) Release the brakes and fit the links, see 3.1.5-3 Link - Connect.

q) If a new servo motor or drive belt has been fitted set the stroke, see 4-3 Jaw System - Set Stroke.

r) Set the jaw gap, see 4-6 Jaw System - Set Jaw Gap.

s) Set the jaw over jaw gap, see 4-9 Jaw System - Set Jaw Over Jaw.

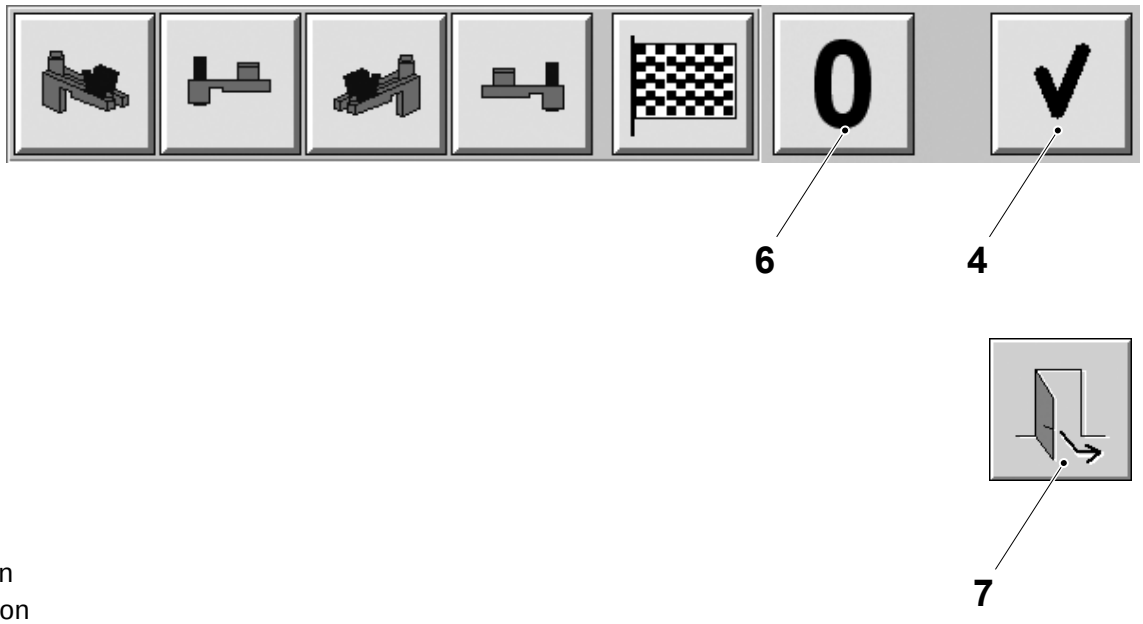

4 OK button
6 Zero button
7 Exit button

3-5 Drive Unit - Check Damper

Machine Status	Mains Power ON Air OFF Steam ON Water OFF
SPC Reference	648543-0500

Check that:

- the two wheels (1) can be secured away from the drive belts (2) by means of the two locking screws (3)
- that the locking screws (3) operate correctly
- the two wheels (1) are free from visible wear and damage. Change if necessary.
- the damper (4) is seated securely on the holder (5).
- when the wheels (1) are in the operating position:
  - the wheels (1) are against the drive belts (2)
  - there is no distortion of the drive belts (2).

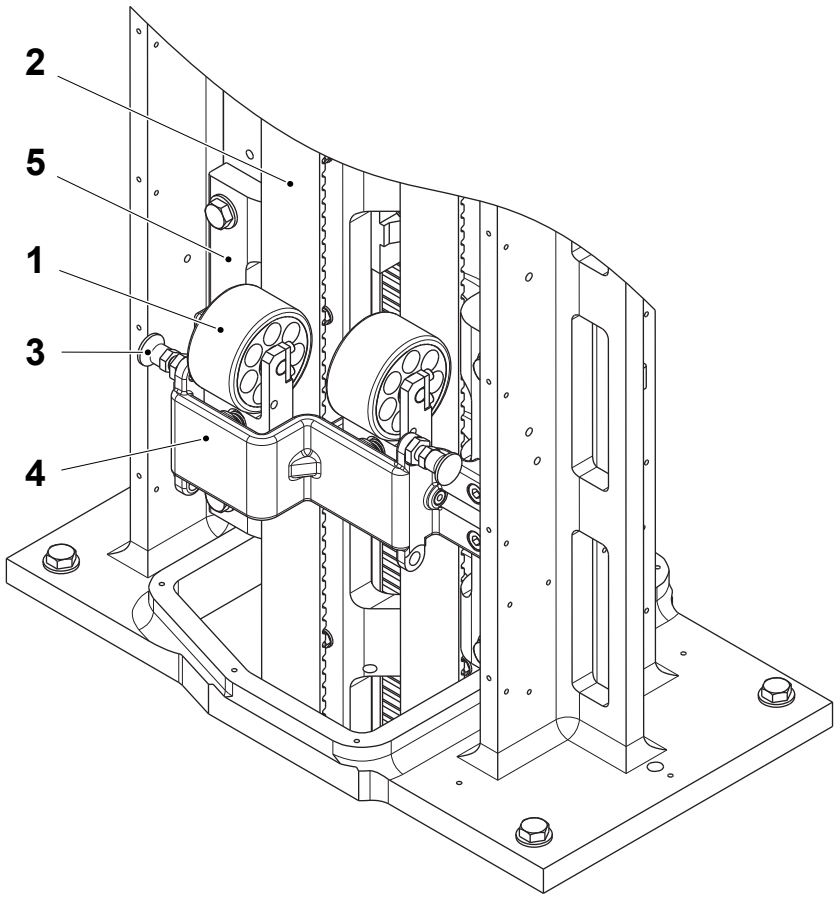

1 Wheel
2 Drive belt
3 Locking screw
4 Damper
5 Holder

3-6 Drive Unit - Check Drive Belt

Machine Status	Mains Power ON Air OFF Steam ON Water OFF
Special Equipment	Tensiometer TP No. 90600-3415
SPC Reference	648543-0500

Note! The correct tension of the drive belt must be measured with nothing touching the outside drive belt surface.

Check the Drive Belt

a) Remove all necessary machine covers.

b) Move the wheel (1) away from the drive belts (2) and secure by means of the two locking screws (3).

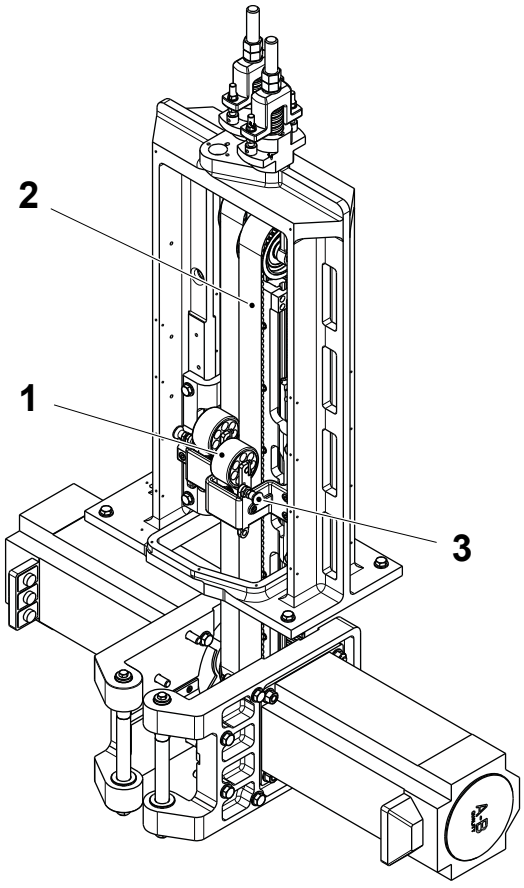

1 Wheel
2 Drive belt
3 Locking screw

(Cont'd)

(Cont'd)

c) Make sure that the drive belts (2) are correctly aligned and seated correctly on the servo motor (4) pulley and on the drive belt tensioner wheels (5).

d) Check that the drive belts (2) are free from visible wear or damage.

e) Change the drive belts (2) if necessary.

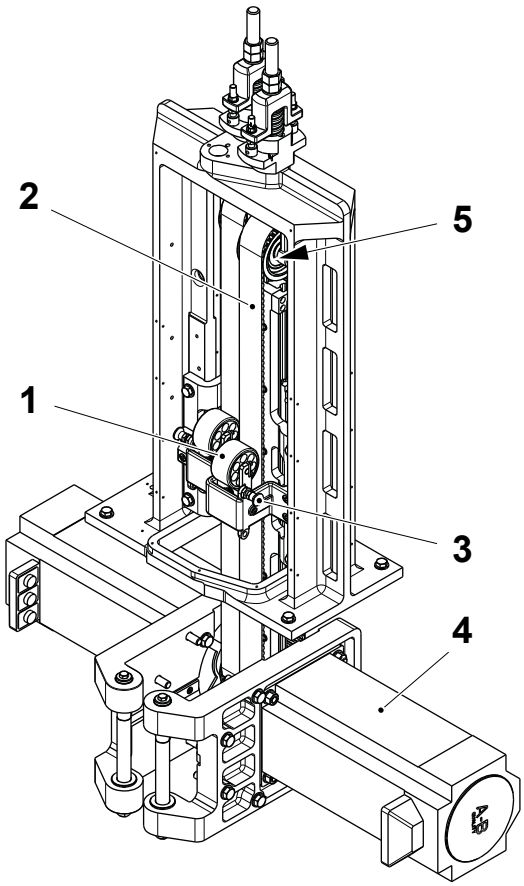

2 Drive belt
4 Servo motor
5 Drive belt tensioner wheel

(Cont'd)

(Cont'd)

Check the Drive Belt Tension

a) Turn OFF the power on the filling machine.

b) Check the tension of the drive belt (2) by means of a tensiometer:
   - position the tensiometer sensor (3) above the roller (4) and approximately 3.0 to 20.0 mm from the drive belt (2)
   - press the ON/OFF button on the tensiometer
   - tap the drive belt (2) with a allen key (5).

c) If the reading is the below 35 Hz or above 42 Hz range the drive belt tension requires adjustment, see 3-7 Drive Unit - Set Drive Belt Tension.

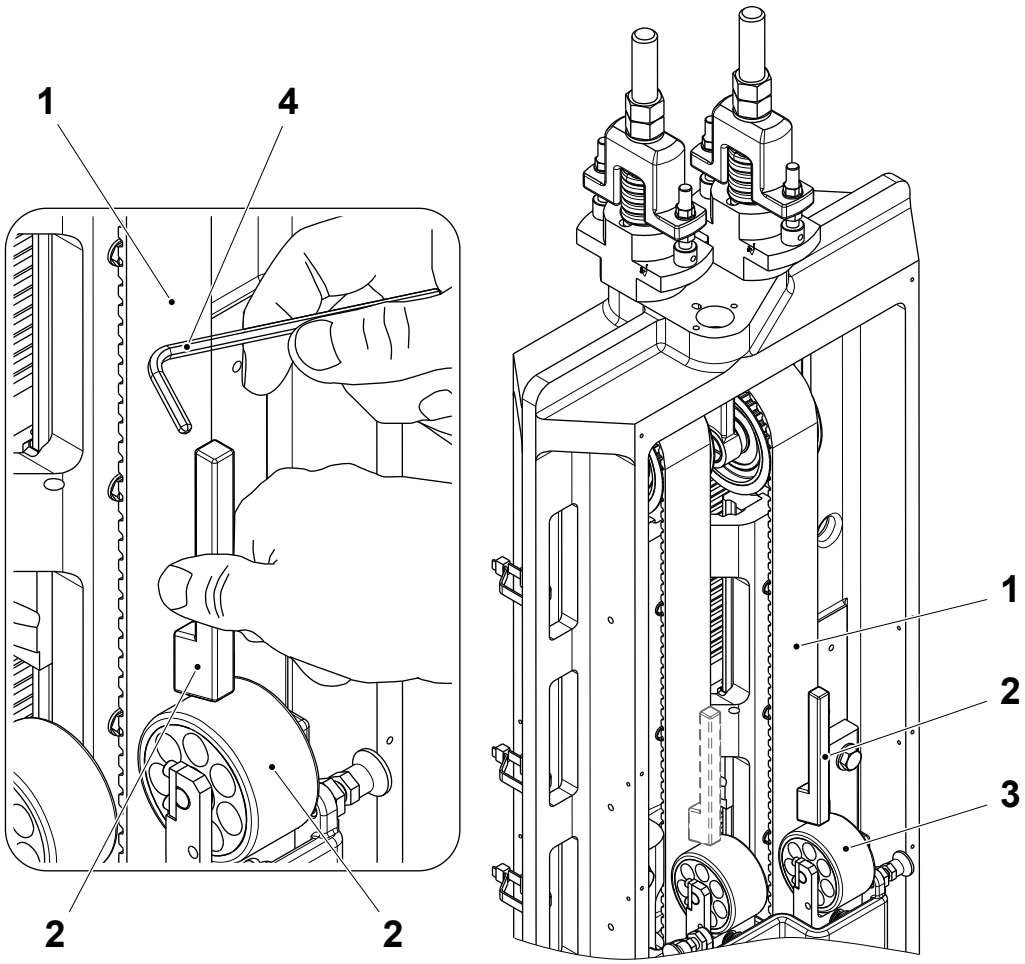

1 Drive belt
2 Tensiometer sensor
3 Roller
4 Allen key

3-7 Drive Unit - Set Drive Belt Tension

Machine Status	Mains Power ON Air OFF Steam ON Water OFF
Special Equipment	Belt tension meter, TP No. 90600-3415
SPC Reference	648543-0500

Note! The correct tension of the drive belt must be set with nothing touching the outer drive belt surface.

a) Release the brakes, see 3-3 Drive Unit - Release Brakes.

b) Remove all necessary machine covers.

c) Make sure that the two wheels (1) are secured away from the drive belts (2) by means of the locking screws (3).

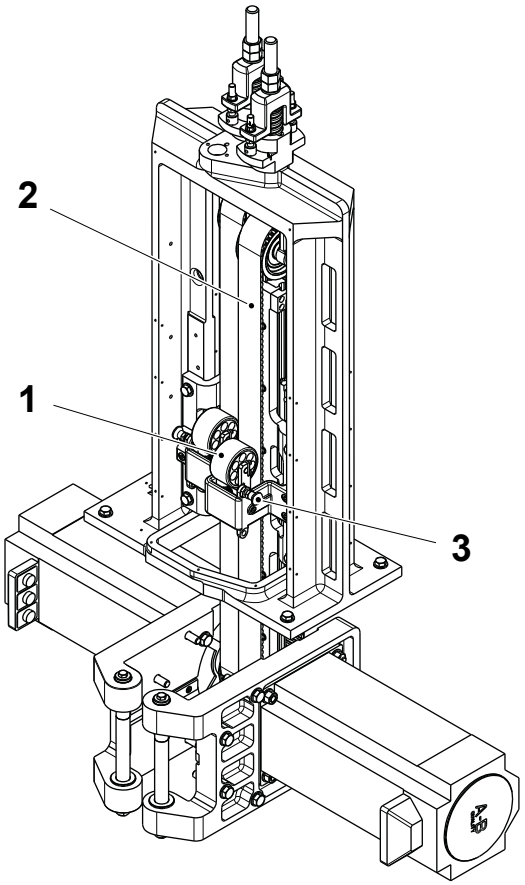

1 Wheel
2 Drive belt
3 Locking screw

(Cont'd)

(Cont'd)

d) Make sure that the four locking nuts (4) and (5) are loose and do not touch the upper and lower surfaces of the belt tensioner (6).

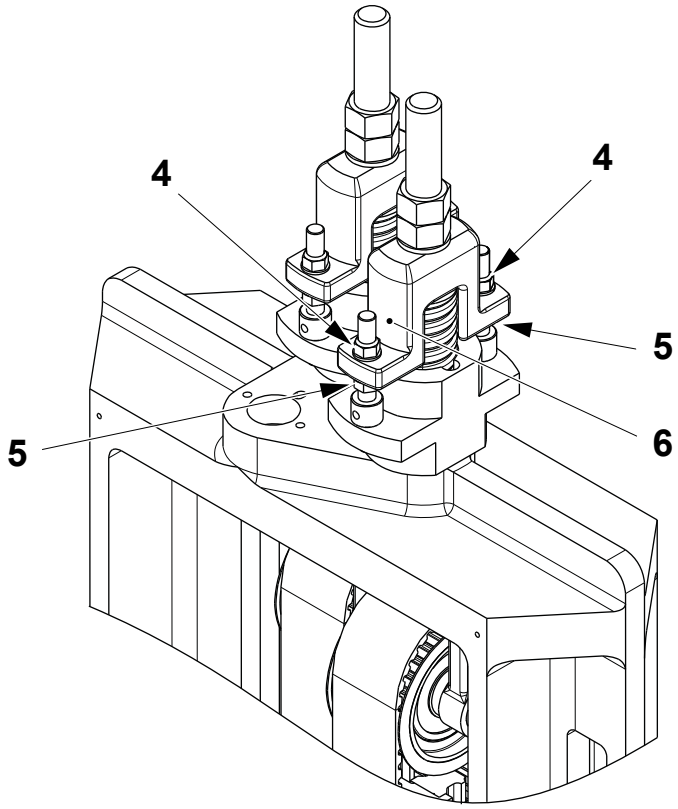

4 Locking nut
5 Locking nut
6 Belt tensioner

(Cont'd)

(Cont'd)

e) Tighten the nut (7) and check the belt tension with the tensiometer as follows:

- position the tensiometer sensor (8) above the roller (9) and approximately 3.0 to 20.0 mm from the drive belt (2)
- press the ON/OFF button on the tensiometer
- tap the drive belt (2) with a allen key (10).

The required initial tension is 40 Hz, if necessary adjust the initial setting by loosening or tightening the nut (7) by small increments:

- loosening the nut decreases the drive belt tension
- tightening the nut increases the drive belt tension.

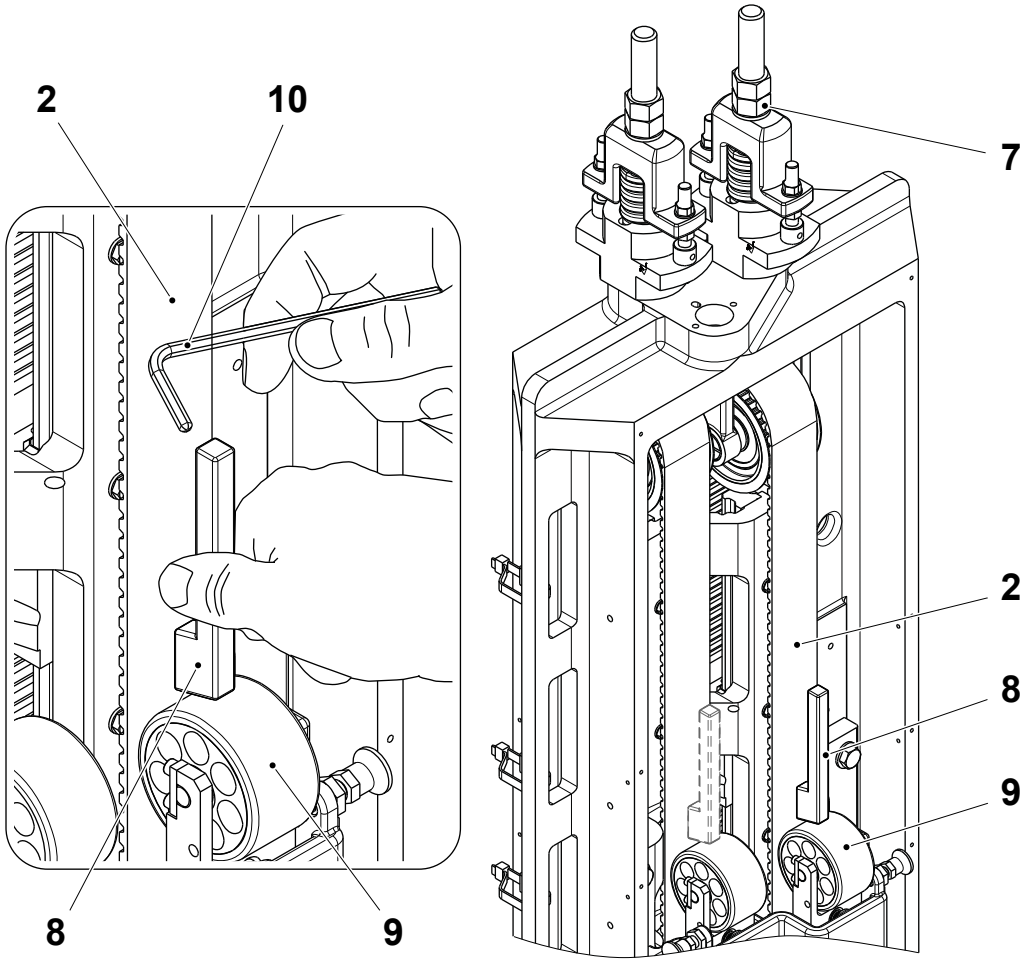

2 Drive belt
7 Nut
8 Tensiometer sensor
9 Roller
10 Allen key

(Cont'd)

(Cont'd)

f) Turn (but do not tighten) the four locking nuts (4) and (5) until the washers are just held on the surface of the belt tensioner (6) and so that the washers can no longer be moved.

g) Use the tensiometer to check again that the belt tension is 40 Hz.
   - position the tensiometer sensor (8) above the roller (9) and approximately 3.0 to 20.0 mm from the drive belt (2)
   - press the ON/OFF button on the tensiometer
   - tap the drive belt (2) with a allen key (10).

h) Using two spanners, simultaneously tighten the lower locking nuts (5), and the upper locking nuts (4).

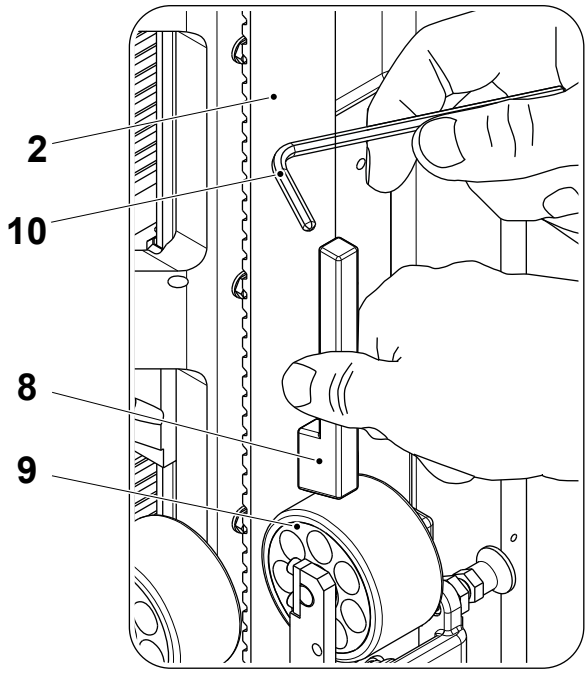

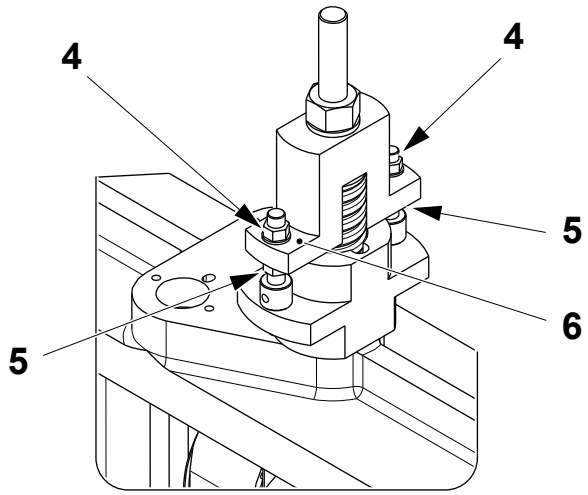

2 Drive belt
4 Locking nut
5 Locking nut
6 Belt tensioner
8 Tensiometer sensor
9 Roller
10 Allen key

(Cont'd)

(Cont'd)

i) Repeat item l) to check the belt tension, the belt tension should now be 42 Hz. If necessary, adjust the nut (7) to obtain the correct belt tension.

j) Fit the nut (11) to lock the nut (7).

k) Fit the cover (12).

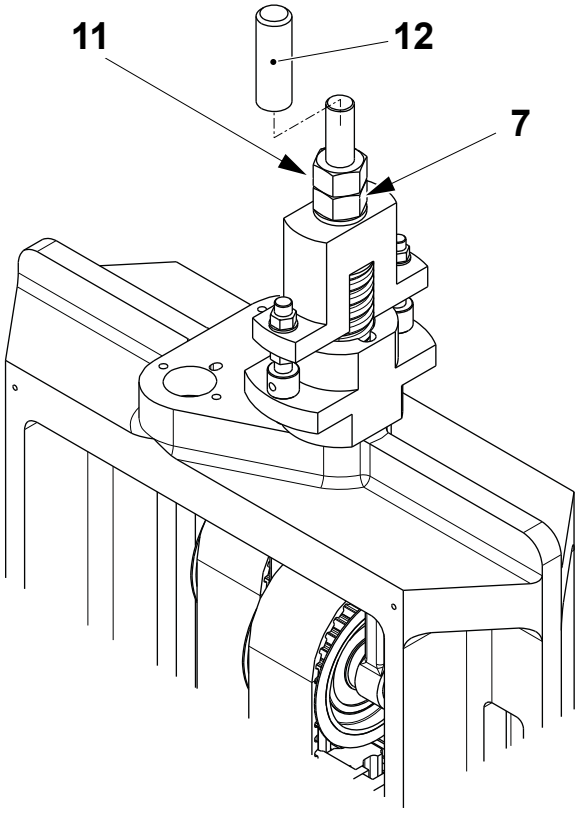

7 Nut
11 Nut
12 Cover

3.1 Support

SPC Reference	2872688-0100 2872689-0100

3.1.1 Guide

3.1.1-1 Guide - Change Drive Belt(s)

Machine Status	Mains Power ON Air OFF Steam ON Water OFF
SPC Reference	2872690-0100 2872691-0100

CAUTION
Risk of damage to the equipment.
Never change individual drive belts. Always change all four of the drive belts at the same time, regardless of their condition.

The following procedure describes the removal of one of the drive belts. Repeat this procedure for all four drive belts on the machine.

(Cont'd)

(Cont'd)

Remove the Drive Belt

a) Remove all the necessary machine covers.

b) Lock the two support pulleys (1) away from the drive belts (2) by means of the locking screws (3).

c) Lower the jaw system, see 3-2 Drive Unit - Lower Jaw System so that the weight is supported and no further movement is possible.

d) Release the brakes, see 3-3 Drive Unit - Release Brakes.

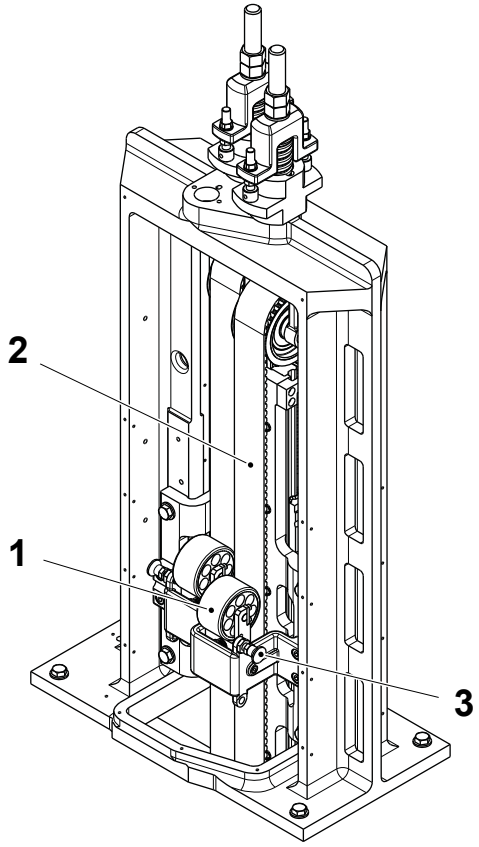

1 Support pulley
2 Drive belt
3 Locking screw

(Cont'd)

(Cont'd)

e) Open the jaw system doors and disconnect the required jaw system link:
   - disconnect the jaw link (LH or RH, or both) at the connection clamp, see 3.1.5-2 Link - Disconnect
   - disconnect the yoke link (LH or RH, or both) at the connection clamp, see 3.1.5-2 Link - Disconnect.

f) Loosen the four locking nuts (4) and (5) until they do not touch the upper and lower surfaces of the belt tensioner (6).

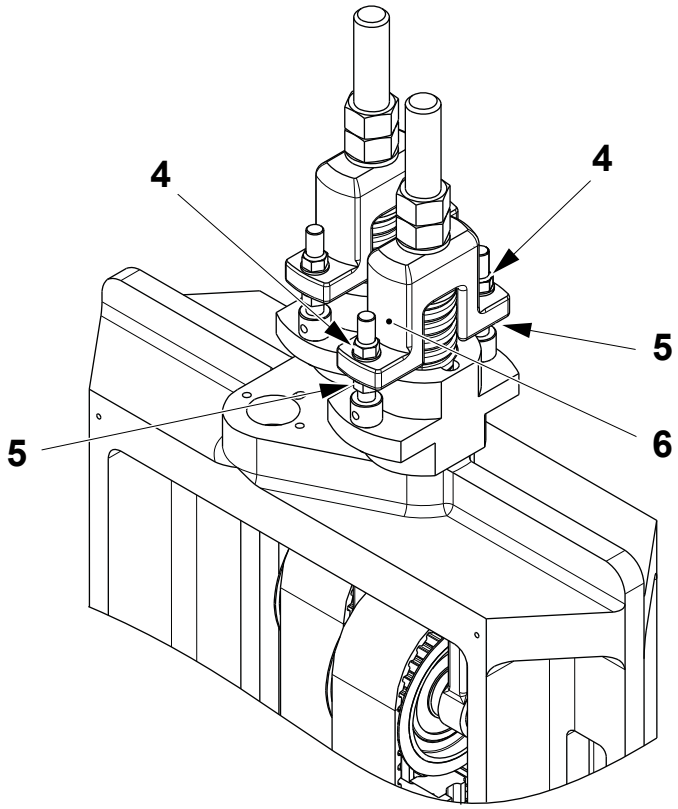

4 Locking nut
5 Locking nut
6 Belt tensioner

(Cont'd)

(Cont'd)

g) Remove the cover (7) and the nut (8).

h) Loosen the nut (9) on the top of the belt tensioner (6) to release the drive belt (2).

i) Loosen the nut (9) until it is level with the top of the shaft (10) on the belt tensioner (6).

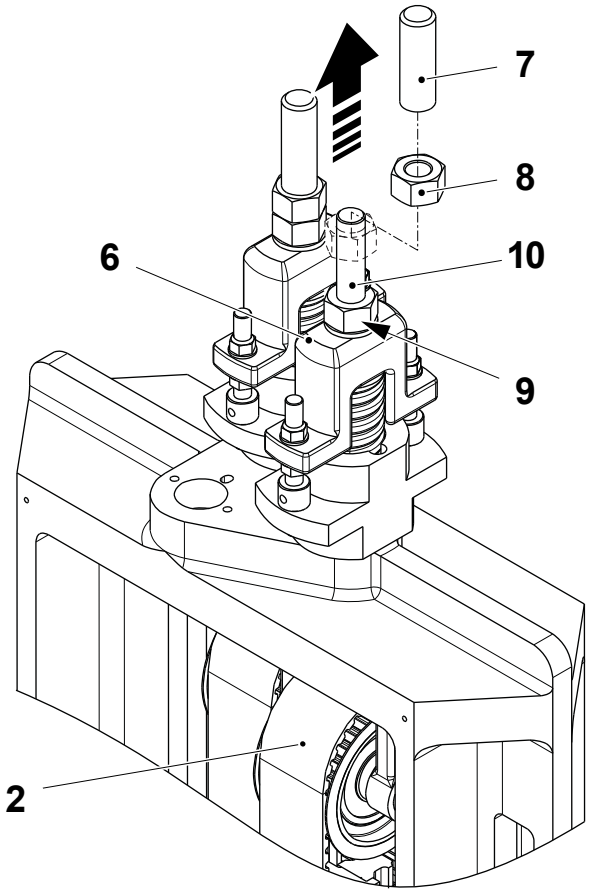

2 Drive belt
6 Belt Tensioner
7 Cover
8 Nut
9 Nut
10 Shaft

(Cont'd)

(Cont'd)

j) Remove the two shoulder screws (11) securing the lower drive belt holder (12) to the plate (13) on the runner block unit (14).

k) Remove the two shoulder screws (11) securing the upper drive belt holder (15) to the plate (13) on the runner block (14).

l) Remove the two drive belt holders (12) and (15) and remove the drive belt (2).

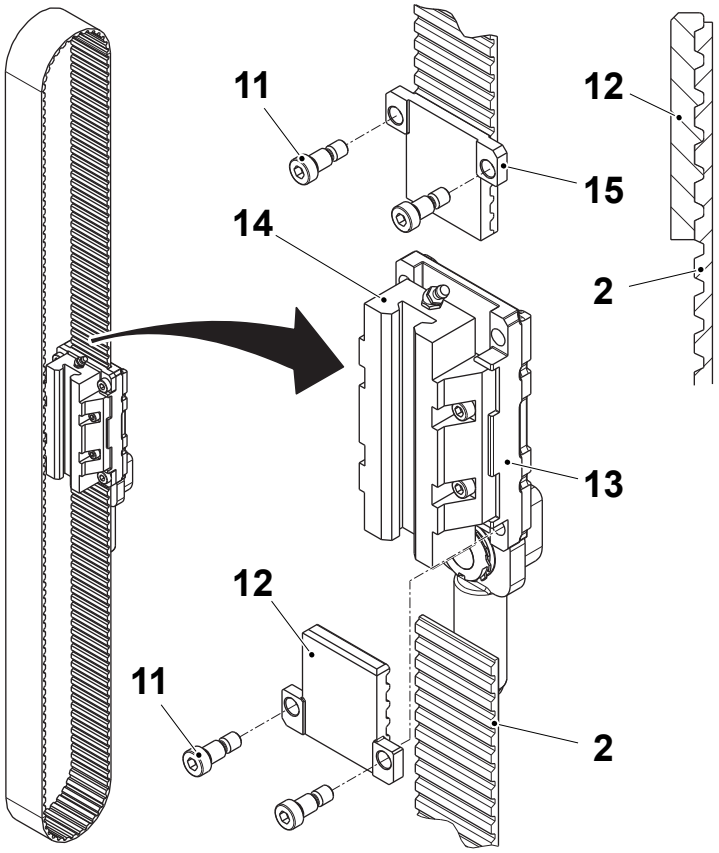

2 Drive belt
11 Shoulder screw
12 Lower belt holder
13 Plate
14 Runner block
15 Upper belt holder

(Cont'd)

(Cont'd)

Machine Checks when the Drive Belt is Removed

a) Check for lateral play in the motor pulley and for any visible wear and damage.

b) Check the runner block (1) for wear or damage.

c) Check the two drive belt holders (2) and (3) for damage.

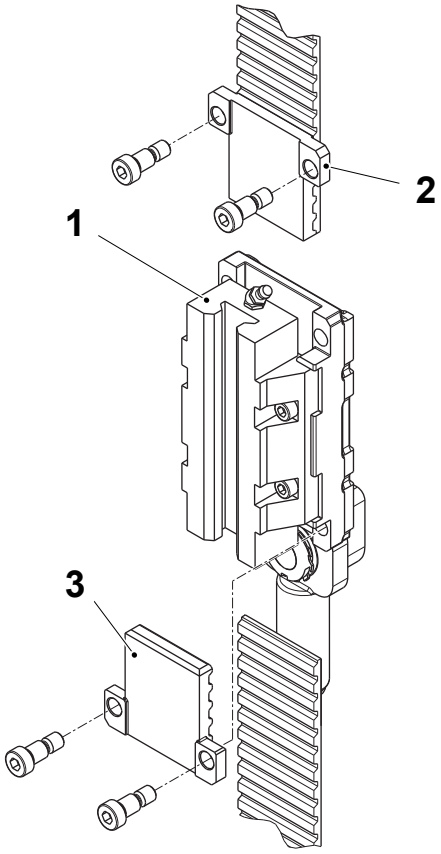

1 Lower belt holder
2 Runner block
3 Upper belt holder

(Cont'd)

(Cont'd)

Install the Drive Belt

a) Move the runner block (1) to the top of the guide (2) and insert a screwdriver (or similar tool) through the hole (3) in the support frame to lock the position of the runner block unit (1).

b) Thread the new drive belt around the motor pulley (4) and over the wheel (5).

Note! If necessary remove the four screws (6) securing the motor flange (7) to the main frame and move the servo motor (8) to access the motor pulley (4).

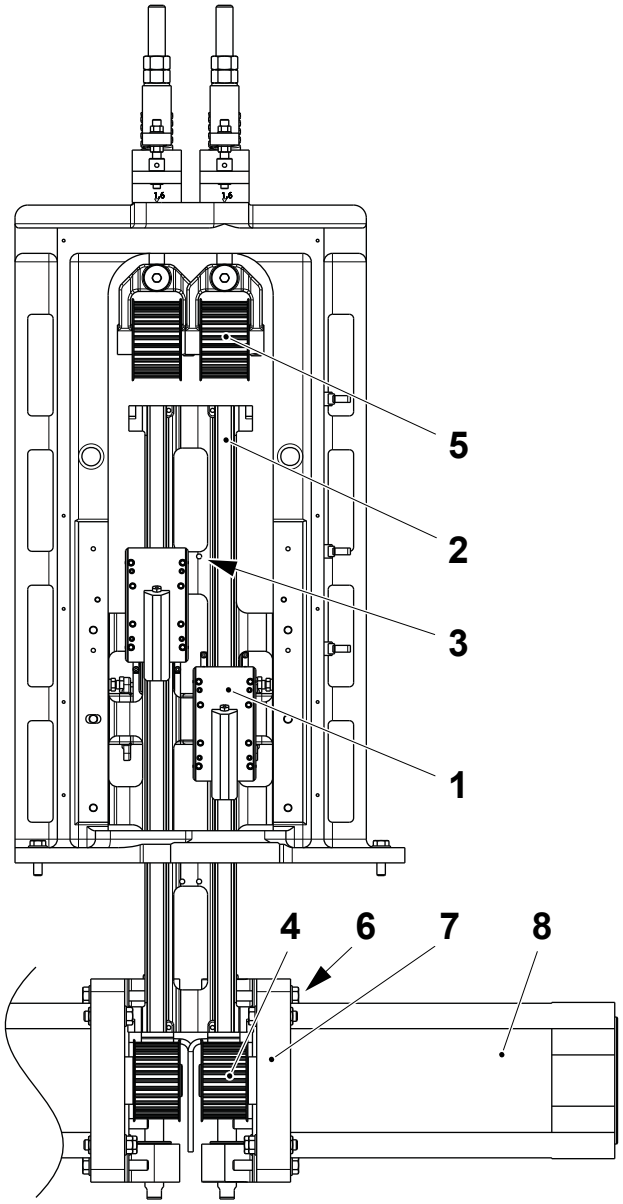

1 Runner block
2 Guide
3 Hole
4 Pulley
5 Wheel
6 Screw
7 Motor flange
8 Servo motor

(Cont'd)

(Cont'd)

CAUTION
Risk of damage to the equipment.
Make sure that the teeth of the drive belt are correctly engaged in the drive belt holder and correctly seated in the two pulleys.

(Cont'd)

(Cont'd)

Note! Fit new screws (12) each time the drive belt (10) is changed and tighten the screws (12) to a torque of 16N/m.

c) Position the lower drive belt holder (9) on the new drive belt (10).

d) Insert the lower drive belt holder (9) into the gap between the plate (11) and the runner block (1).

e) Tighten the drive belt holder (9) using the two screws (12).

Note! Make sure the drive belt (10) is seated correctly.

f) Position the upper drive belt holder (13) on the new drive belt (10).

g) Insert the upper drive belt holder (13) into the gap between the plate (11) and the runner block unit (1).

h) Tighten the drive belt holder (13) using the two screws (12).

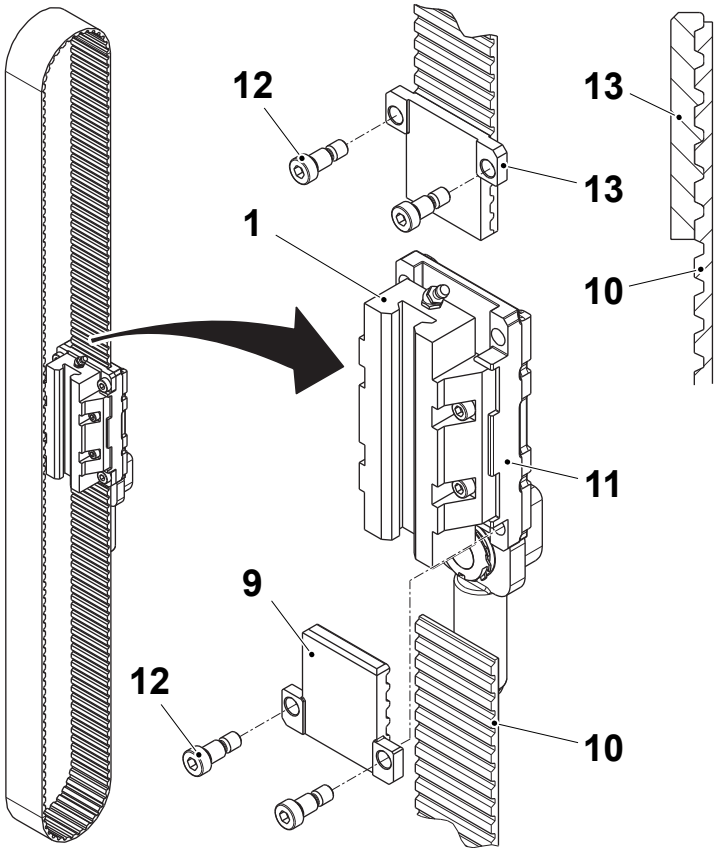

1 Runner block
9 Lower belt holder
10 Drive belt
11 Plate
12 Screw
13 Upper belt holder

(Cont'd)

(Cont'd)

i) Set the drive belt tension, see 3-7 Drive Unit - Set Drive Belt Tension.
j) Reference the drive unit, see 3-4 Drive Unit - Referencing.
k) Connect the links, see 3.1.5-3 Link - Connect.
l) Fit back all machine covers.

3.1.1-2 Guide - Lubricate Runner Block

Machine Status	Mains Power OFF Air OFF Steam ON Water OFF
Consumables	Grease, TP No. 90600-4330
SPC Reference	2872690-0100 2872691-0100

Fill the runner block (1) with 2.5 cc of grease TP No. 90600-4330 through the nipple (2). Repeat the procedure for the other runner blocks.

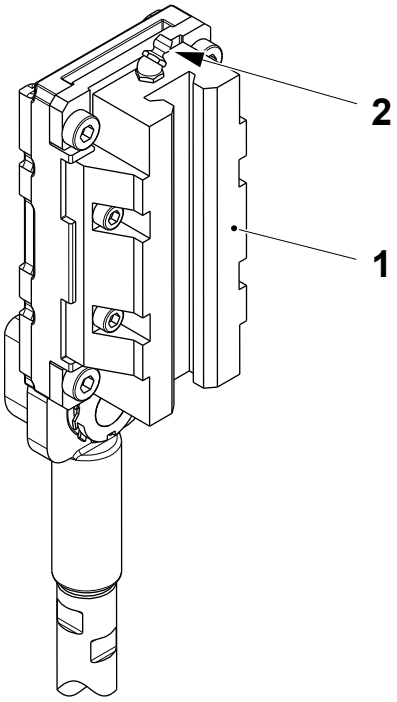

1 Runner block
2 Nipple

3.1.1-3 Guide - Check Linear Units and Runner Blocks

Machine Status	Mains Power OFF Air OFF Steam ON Water OFF
SPC Reference	2872690-0100 2872691-0100

a) Check the surface of the guides (1) for visible wear or damage.

b) Make sure that the runner blocks (2) move freely on the guides (1).

c) Make sure that the runner block (2) is securely mounted on the plate (3).

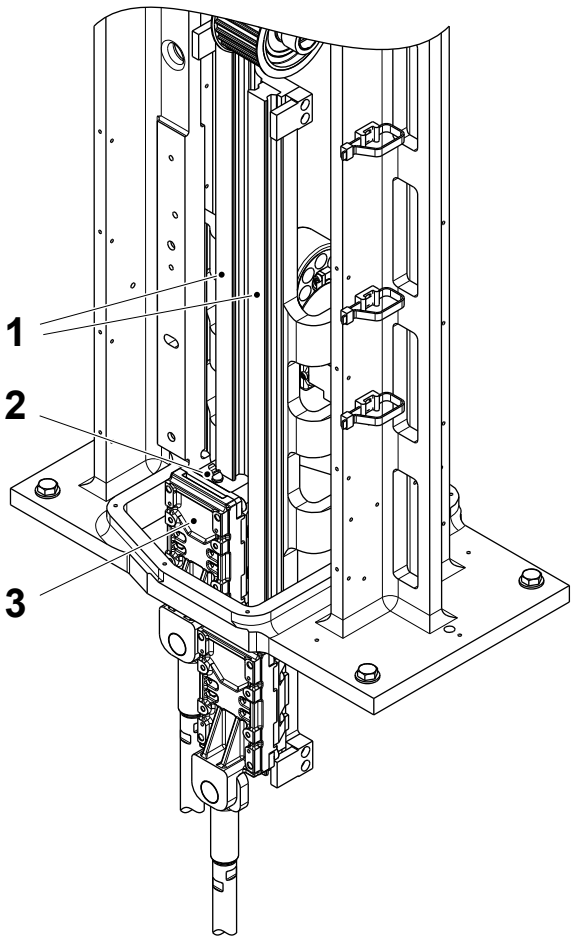

1 Guide
2 Runner block
3 Plate

3.1.1-4 Guide - Overhaul

Machine Status	Mains Power OFF Air OFF Steam ON Water OFF
SPC Reference	2872690-0100 2872691-0100

a) Remove the drive belt, see 3.1.1-1 Guide - Change Drive Belt(s).

b) Remove the six screws (1) securing the linear units (2) and the runner blocks (3) to the holder (4).

c) Remove the screws (5) securing the four stops (6), check the stops (6) for visible wear or damage and change them if necessary.

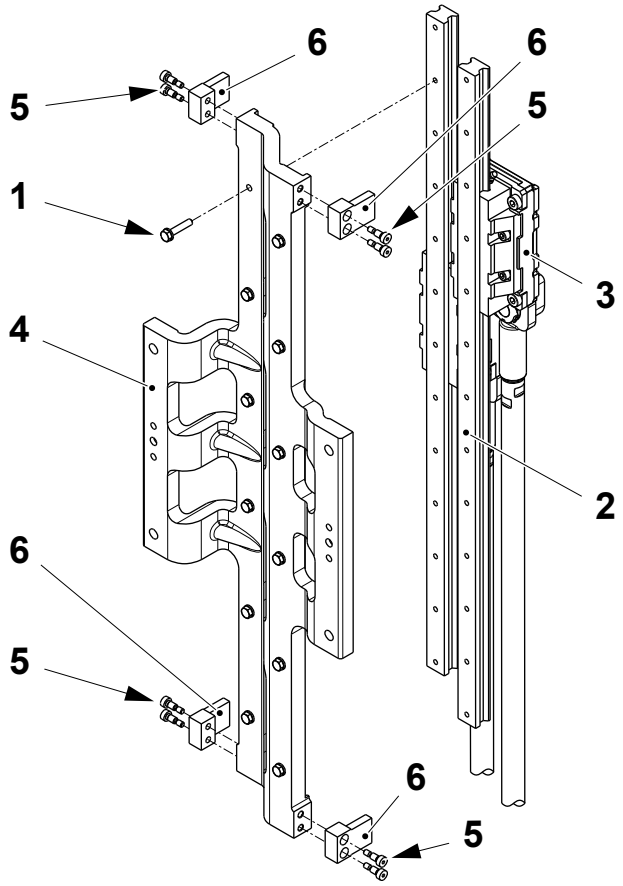

1 Screw
2 Linear unit
3 Runner block
4 Holder
5 Screw
6 Stop

(Cont'd)

(Cont'd)

d) Remove the runner block (3) from the linear unit (2).

e) Remove the screws (7) and separate the runner block (3) from the plate (8).

f) Remove the nipple (9) from the runner block (3).

g) Change the runner block (3) and the linear unit (2) and assemble in the reverse order.

h) Fill the runner block (3) with grease, see 3.1.1-2 Guide - Lubricate Runner Block.

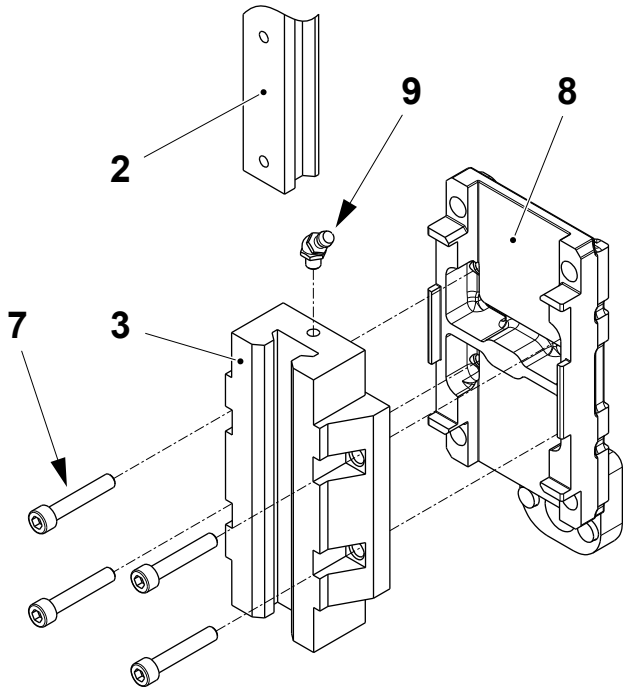

2 Linear unit
3 Runner block
7 Screw
8 Plate
9 Nipple

(Cont'd)

(Cont'd)

i) Remove the nut (10), the washer (11), the shaft (12) from the link (13) and change the bearing (14).

j) Assemble in the reverse order and repeat items d) to i) for the other link.

k) Repeat the procedure for the other drive unit.

l) Set the drive belt tension, see 3-7 Drive Unit - Set Drive Belt Tension.

m) Reference the drive units, see 3-4 Drive Unit - Referencing.

n) Connect the links, see 3.1.5-3 Link - Connect.

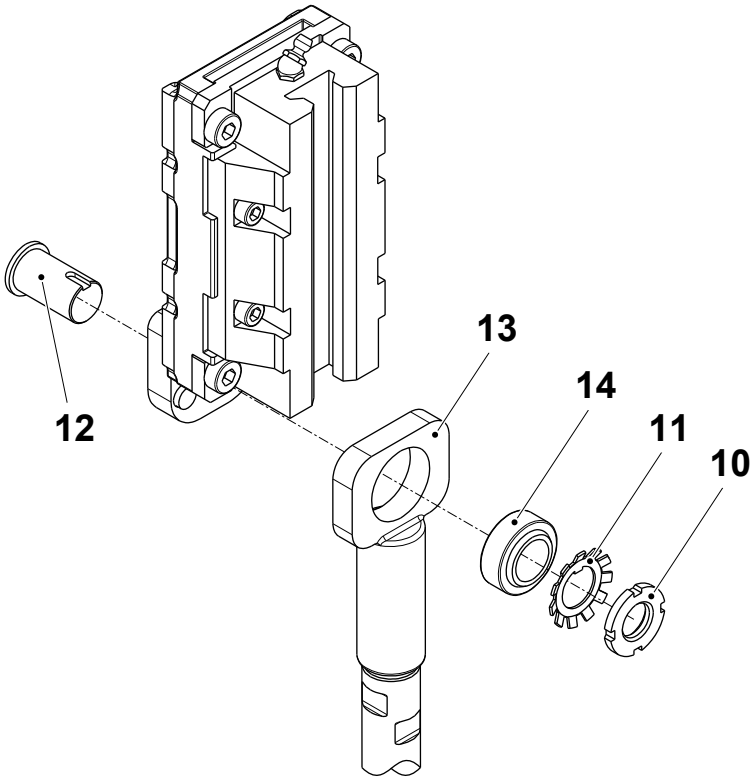

10 Nut
11 Washer
12 Shaft
13 Link
14 Bearing

3.1.2 Damper

SPC Reference	1487629-0100 1487630-0100

3.1.2-1 Damper - Remove

Machine Status	Mains Power ON Air OFF Steam ON Water OFF
Consumables	Shell Alvania Grease, TP No. 90296-0068
SPC Reference	1487629-0100 1487630-0100

a) Remove all the necessary machine covers.

b) Remove the four screws (1) securing the damper (2) to the holder (3).

c) Remove the two parallel pins (4) from the holder (3).

Note! Apply a layer of grease to the parallel pins (4).

d) Assemble in the reverse order.

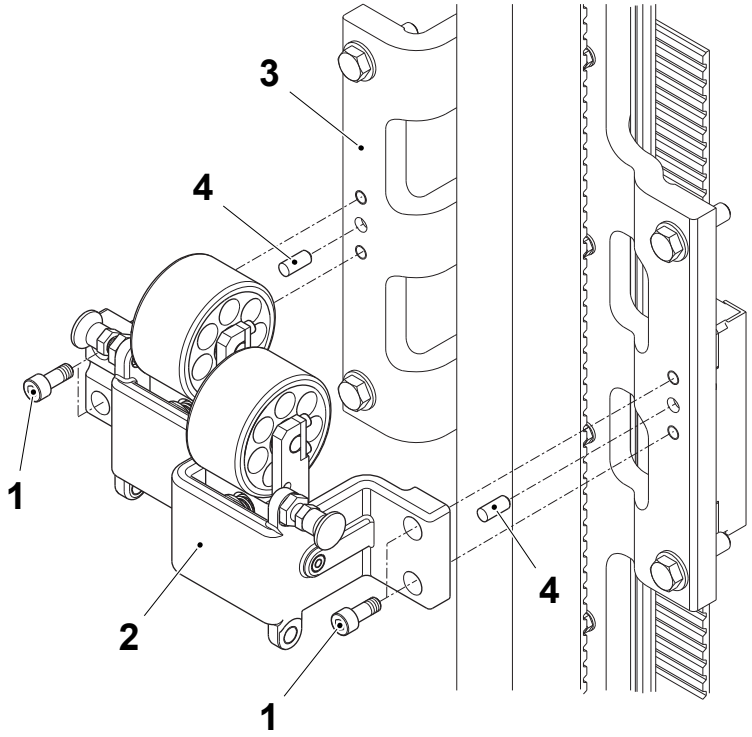

1 Screw
2 Damper
3 Holder
4 Parallel pin

3.1.2-2 Damper - Overhaul

Machine Status	Mains Power ON Air OFF Steam ON Water OFF
Consumables	Shell Alvania Grease, TP No. 90296-0068
SPC Reference	1487629-0100 1487630-0100

a) Remove the damper from the machine, see 3.1.2-1 Damper - Remove.

b) Remove the two screws (1).

c) Remove the two axle pins (2), the two forks (3) and the springs (4) from the bracket (5).

d) Remove the two locking screws (6) from the bracket (5).

e) Remove the two stoppers (7) from the bracket (5).

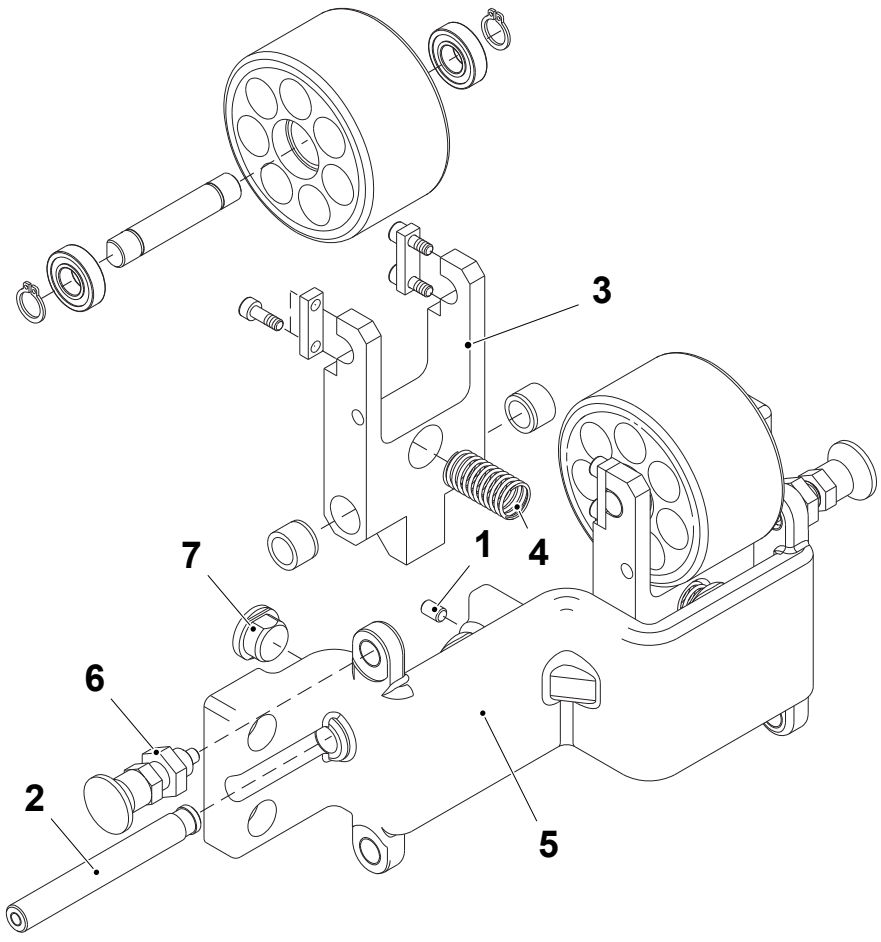

1 Screw
2 Axle pin
3 Fork
4 Spring
5 Bracket
6 Locking screw
7 Stopper

(Cont'd)

(Cont'd)

f) Remove the two plain bearings (8) from the fork (3).

g) Remove the four screws (9) and the two plates (10) from the fork (3) and remove the wheel assembly.

h) Remove the two circlips (11), the two ball bearings (12) and the axle pin (13) from the wheel (14).

Note! Apply a layer of grease to the axle pins on assembly.

i) Check the wheels (14), the plain bearings (8), the axle pin (13), the ball bearings (12) and the spring (4) for visible wear or damage. Change if necessary.

j) Assemble in the reverse order.

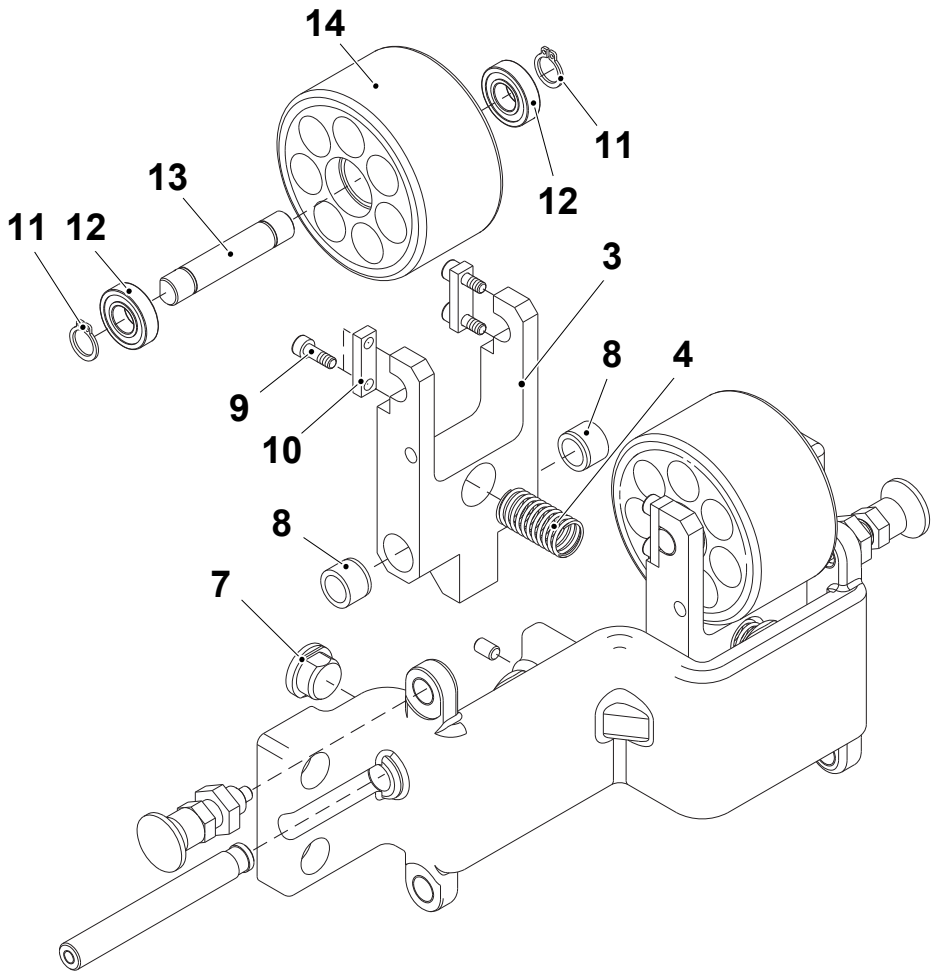

3 Fork
4 Spring
7 Stopper
8 Plain bearing
9 Screw
10 Plate
11 Circlip
12 Ball bearing
13 Axle pin
14 Wheel

3.1.3 Pulley

3.1.3-1 Pulley - Change Wheel and Bearings

Machine Status	Mains Power OFF Air OFF Steam ON Water OFF
SPC Reference	2803072-0100

a) Remove the drive belt from the tensioner wheel to be changed, see 3.1.1-1 Guide - Change Drive Belt(s).

b) Remove the screws (1), the washers (2) and the shaft (3) securing the pulley unit (4) to the shaft of the belt tensioner.

c) Remove the pulley (4).

d) Check that the wheel (5) rotates freely.

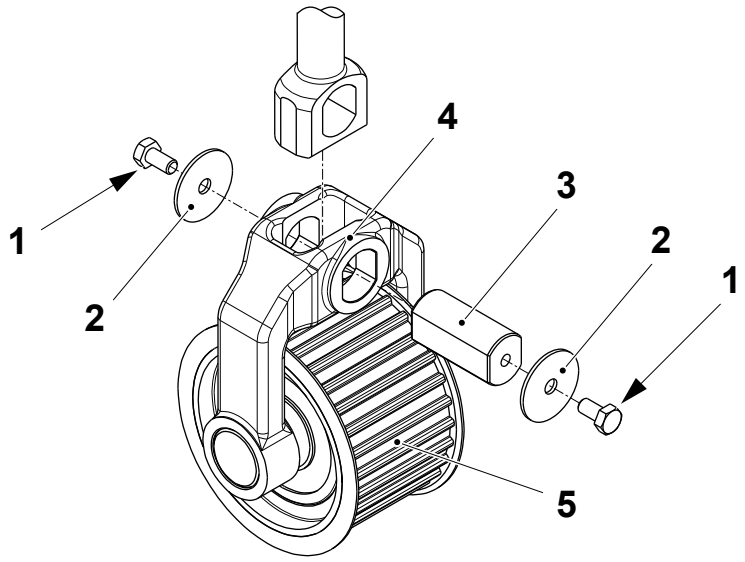

1 Screw
2 Washer
3 Shaft
4 Pulley
5 Wheel

(Cont'd)

(Cont'd)

e) Remove the screw (6) securing the shaft (7) to the pulley (4).

f) Remove the shaft (7) and wheel (5).

g) Remove the two spacers (8), the two ball bearings (9) and the inner spacer (10) from the wheel (5).

h) Change the wheel (5), the ball bearings (9) and the screw (6).

i) Assemble in the reverse order.

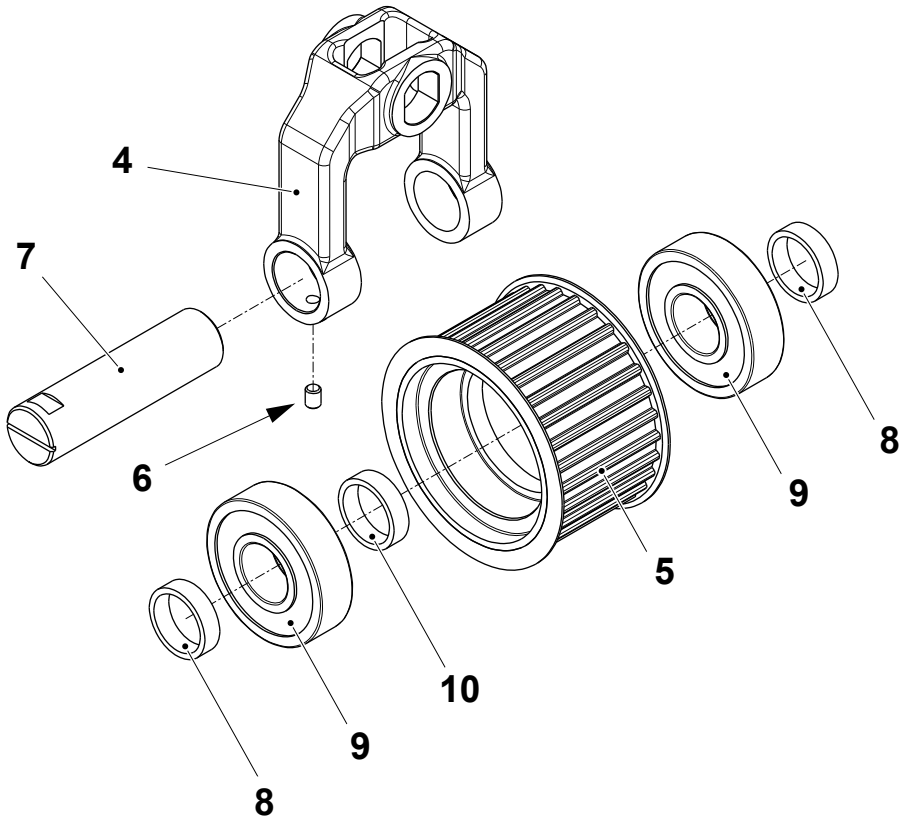

4 Pulley
5 Wheel
6 Screw
7 Shaft
8 Spacer
9 Ball bearing
10 Spacer

3.1.4 Belt Tensioner

SPC Reference	2872687-0100

3.1.4-1 Belt Tensioner - Remove

Machine Status	Mains Power OFF Air OFF Steam ON Water OFF
Consumables	Shell Alvania Grease, TP No. 90296-0068
SPC Reference	2872687-0100

a) Remove the cover (1).

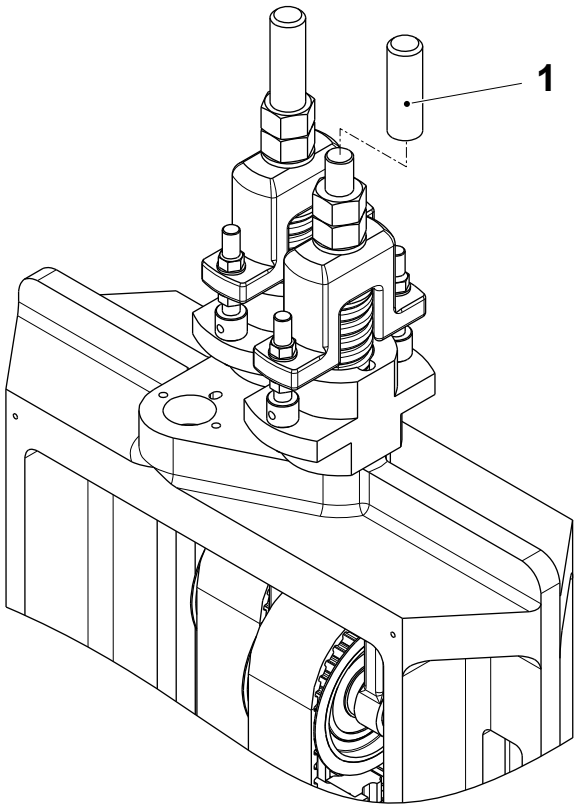

1 Cover

(Cont'd)

(Cont'd)

b) Remove the nuts (2) to release the tension on the drive belt (3).

c) Remove the two screws (4), the pin (5) and the belt tensioner (6).

d) Assemble in the reverse order.

e) Set the drive belt tension, see 3-7 Drive Unit - Set Drive Belt Tension.

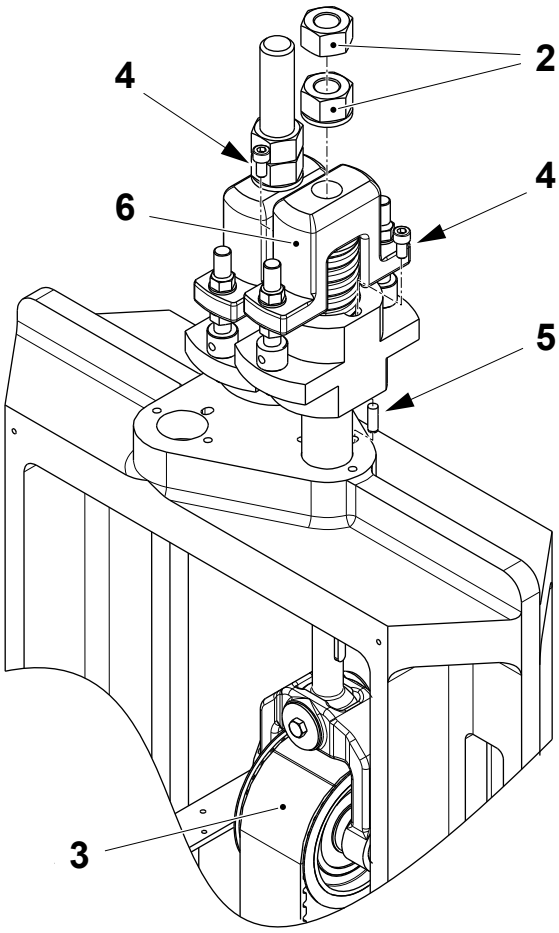

2 Nut
3 Drive belt
4 Screw
5 Pin
6 Belt tensioner

3.1.4-2 Belt Tensioner - Overhaul

Machine Status	Mains Power OFF Air OFF Steam ON Water OFF
Consumables	Shell Alvania Grease, TP No. 90296-0068
SPC Reference	2872687-0100

a) Remove the belt tensioner from the support frame, see 3.1.4-1 Belt Tensioner - Remove.

b) Check that the nut (1), the rocker (2), the spring (3), the screws (4), the wedge (5), the key (6), the pin (7), the shaft (8) and the nuts (9) are free from visible wear or damage. If necessary change any damaged or worn parts.

Note! Apply grease to the pin (7) on assembly.

c) Assemble in the reverse order and set the drive belt tension, see 3-7 Drive Unit - Set Drive Belt Tension.

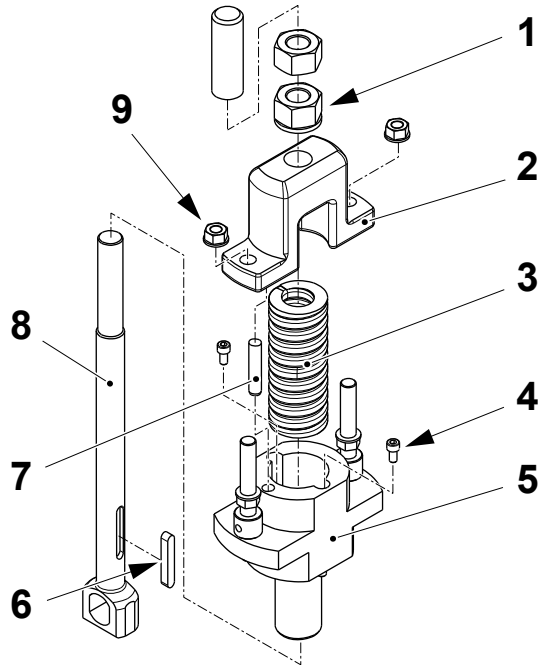

1 Nut
2 Rocker
3 Spring
4 Screw
5 Wedge
6 Key
7 Pin
8 Shaft
9 Nut

3.1.5 Link

SPC Reference	2872695-0100

3.1.5-1 Link - Check

Machine Status	Mains Power OFF Air OFF Steam ON Water OFF
SPC Reference	2872695-0100

Check the link rods (1) and (2) for wear or damage, check that:

- the connection clamps (3) are secure
- the link rods (1) and (2) are securely tightened to the runner blocks (4)
- the link rods (1) and (2) are securely tightened to the yoke or scissor arm
- the yoke link bearings (5) are not worn, if necessary see 3.1.5-4 Link - Change Bearing
- the gaskets (6) are not damaged or worn.

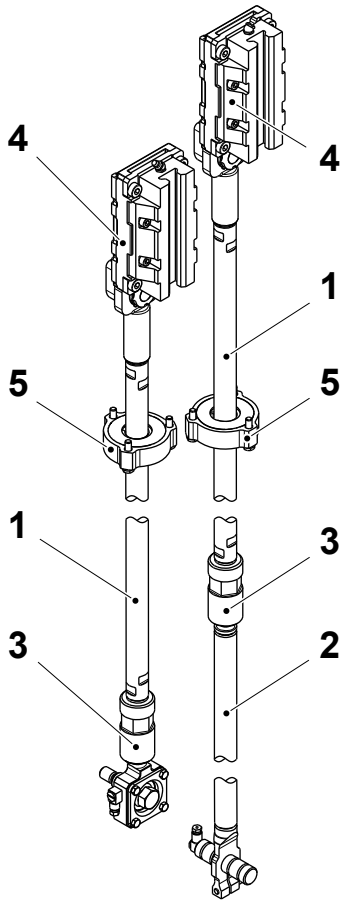

1 Link rod
2 Link rod
3 Connection clamp
4 Runner block
5 Yoke link bearings
6 Gasket

3.1.5-2 Link - Disconnect

Machine Status	Mains Power OFF Air OFF Steam ON Water OFF
SPC Reference	2872695-0100

Lower the jaw system, see 3-2 Drive Unit - Lower Jaw System so that the weight is supported and no further movement is possible.

(Cont'd)

(Cont'd)

Disconnect Yoke Link

a) Release the brake for the link to be disconnected, see 3-3 Drive Unit - Release Brakes.

b) Loosen the screw (1) and loosen the connection clamp (2) until there is enough space for the link rod (3) to be removed.

c) Separate the link rod (3) from the link (4).

d) If necessary, remove the link rod (3) from the runner block connection (5) and remove the connection clamp (2) from the link rod (3).

e) Follow the procedure 3.1.5-3 Link - Connect to assemble and connect the link.

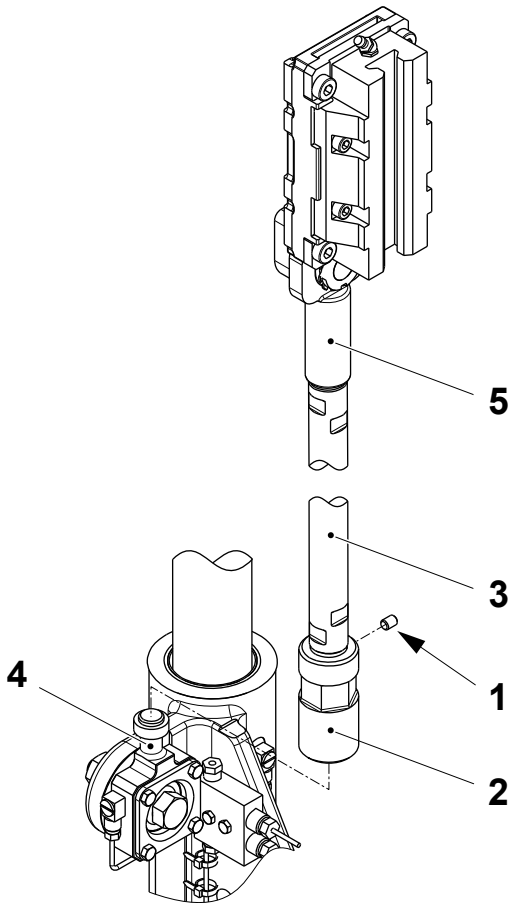

1 Screw
2 Connection clamp
3 Link rod
4 Link
5 Runner block connection

(Cont'd)

(Cont'd)

Disconnect Jaw Link

a) Release the brake for the link to be disconnected, see 3-3 Drive Unit - Release Brakes.

b) Loosen the screw (1) and loosen the connection clamp (2) until there is enough space for the link rod (3) to be removed.

c) Separate the link rod (3) from the link rod (4).

d) If necessary, remove the:
   - link rod (3) from the runner block connection (5).
   - connection clamp (2) from the link rod (3).
   - screw (6), the shaft (7) and the link rod (4).

e) Follow the procedure 3.1.5-3 Link - Connect to assemble and connect the link.

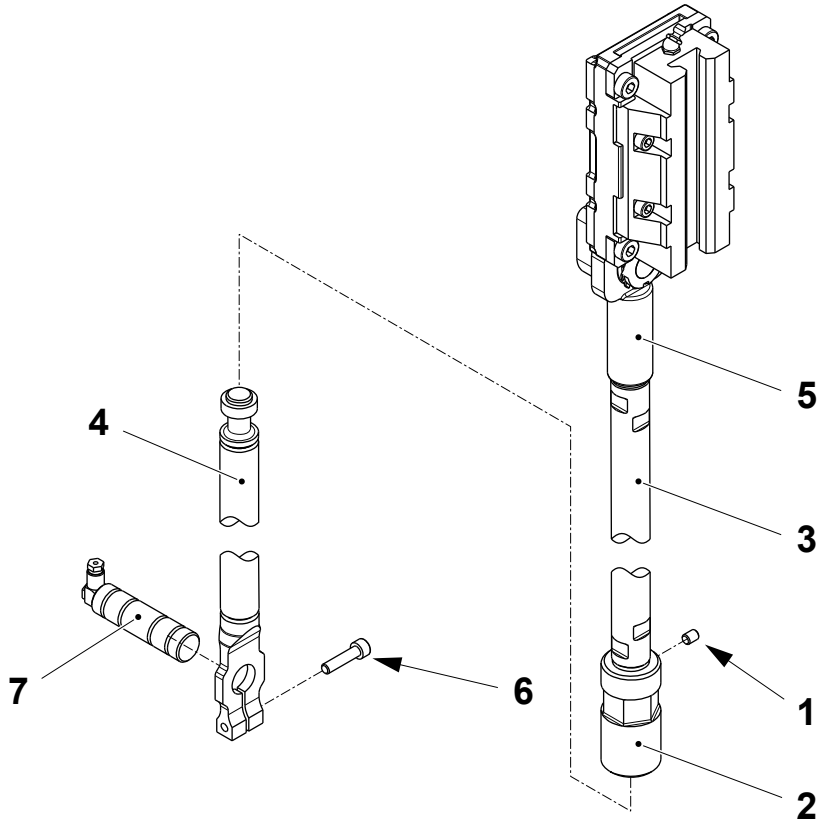

1 Screw
2 Connection clamp
3 Link rod
4 Link rod
5 Runner block connection
6 Screw
7 Shaft

3.1.5-3 Link - Connect

Machine Status	Mains Power OFF Air OFF Steam ON Water OFF
SPC Reference	2872695-0100

a) Make sure that the brake is released for the link to be connected, see 3-3 Drive Unit - Release Brakes.

b) If the yoke link rod (1) and jaw link rod (2) have been removed from the runner blocks;

– Pass the yoke link rod (1) and jaw link rod (2) through the seals (3) above the jaw system and screw the link rods (1) and (2) into the runner blocks (4).

Note! If the links have only been disconnected the referencing procedure is not necessary. Continue with item d).

c) Reference the drive system, see 3-4 Drive Unit - Referencing.

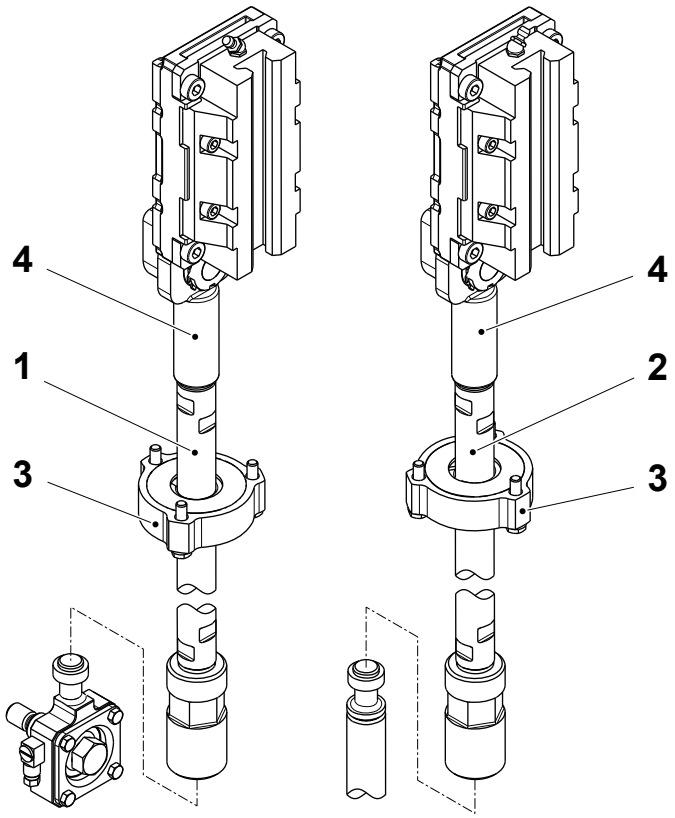

1 Yoke link rod
2 Jaw link rod
3 Seal
4 Runner block

(Cont'd)

(Cont'd)

d) Fit the yoke link rod (1) to the link (5).

e) Rotate the yoke link rod (1) and the link (5) in the direction that the clamp (6) will be tightened until both the yoke link rod (1) and the link (5) reach the mechanical stop.

f) Block the position of the yoke link rod (1) with a spanner and tighten the connection clamp (6).

g) Tighten the screw (7).

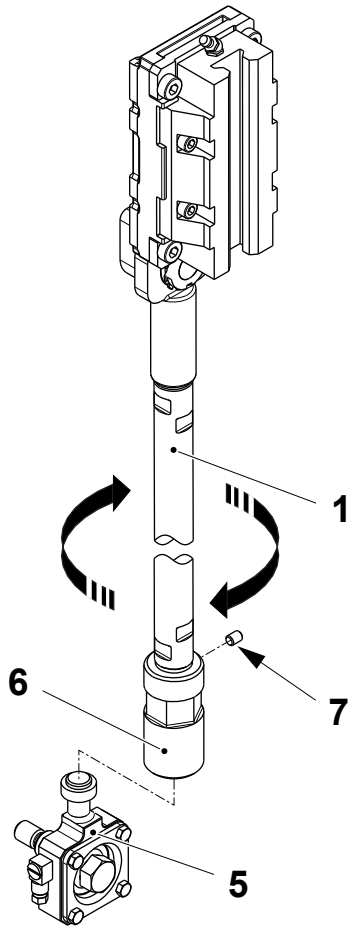

1 Yoke link rod
5 Link
6 Connection clamp
7 Screw

(Cont'd)

(Cont'd)

CAUTION
Risk of damage to the equipment.
The jaw link rod (2) must be held securely in position during the tightening of the connection clamp (9) to ensure that the runner block connection (11) is not secured in a position tangent to the runner block (12).

h) Fit the jaw link rod (2) to the link (8).

i) Block the position of the jaw link rod (2) with a spanner.

j) Tighten the connection clamp (9).

k) Tighten the screw (10).

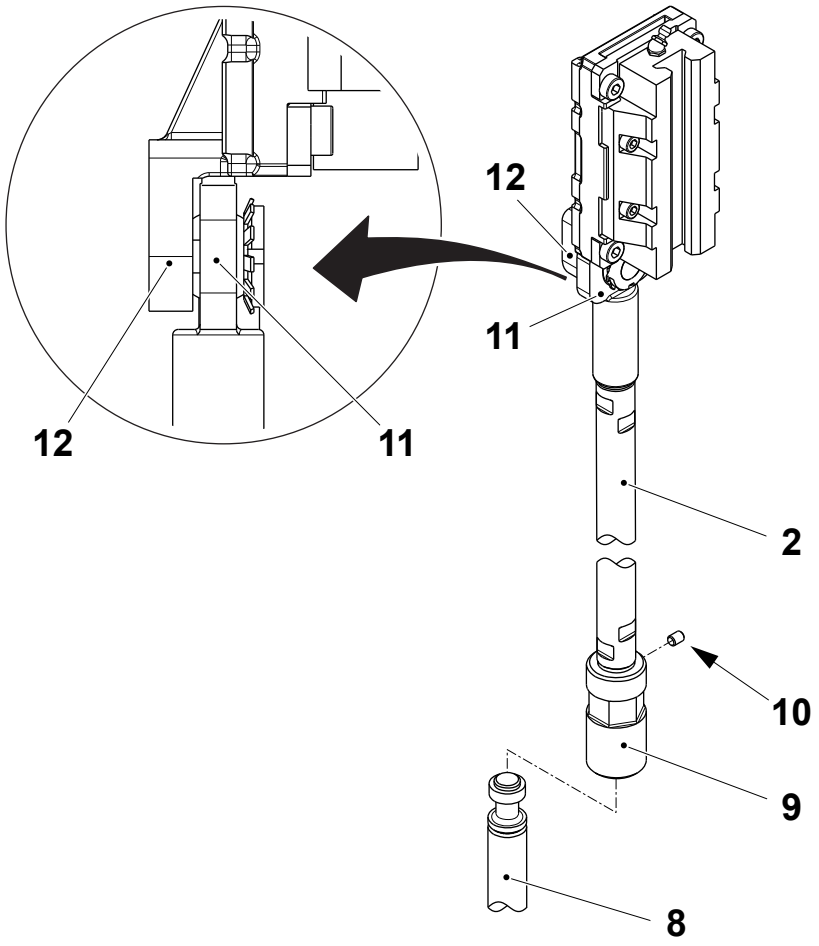

2 Jaw link rod
8 Link
9 Connection clamp
10 Screw
11 Runner block connection
12 Runner block

3.1.5-4 Link - Change Bearing

Machine Status	Mains Power OFF Air OFF Steam ON Water OFF
SPC Reference	2872695-0100

a) Lower the jaw system and disconnect the yoke link containing the bearing to be changed, see 3-2 Drive Unit - Lower Jaw System and 3.1.5-2 Link - Disconnect.

b) Remove the screw (1), the nut (2), oil connection (3) and the link (4).

c) On a work bench, remove the screws (5), the plate (6) and push out the bearing (7). If necessary, use a suitable tool to force out the bearing at the two points (8).

d) Change the bearing (7).

e) Assemble in the reverse order.

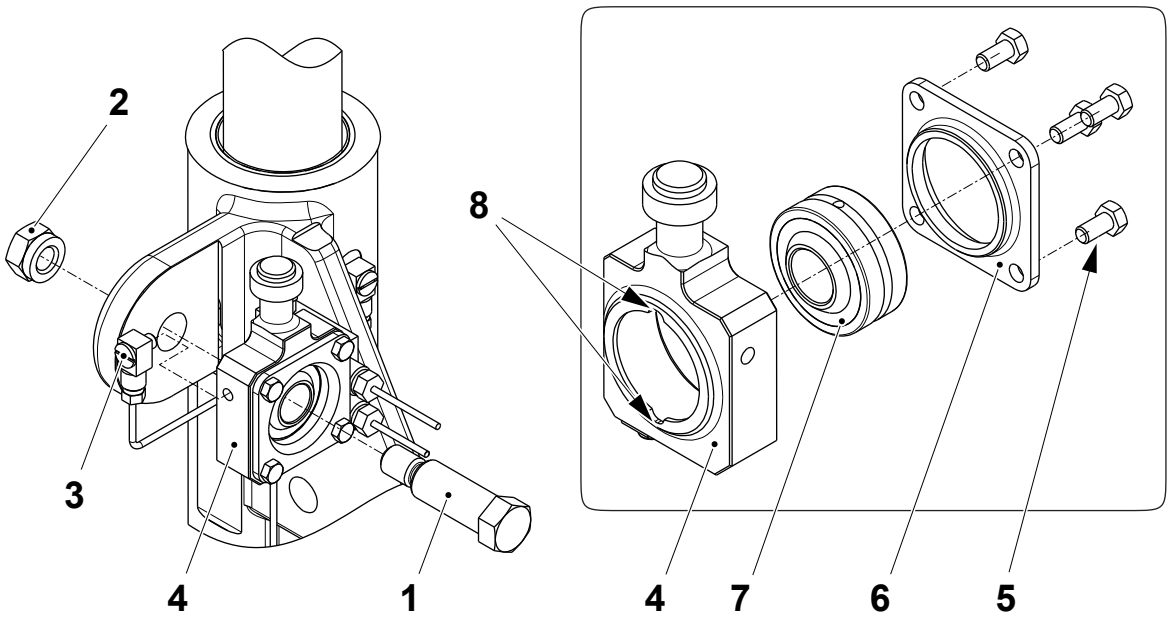

1 Screw
2 Nut
3 OIl connection
4 Link
5 Screw
6 Plate
7 Bearing
8 Point

3.2 Motor Unit

SPC Reference	2877148-0100

3.2-1 Motor Unit - Check

Machine Status	PRODUCTION
SPC Reference	2877148-0100

During production, check the four drive unit servo motors for any abnormal noise. If necessary change the drive unit servo motor(s), see 3.2-2 Motor Unit - Change and 3.4-2 Motor Unit - Overhaul.

3.2-2 Motor Unit - Change

Machine Status	Mains Power ON Air OFF Steam ON Water OFF
Special Equipment	Lifting Equipment TP No. 2646428-0100
Consumables	Cable Ties, Shell Alvania Grease, TP No. 90296-0068
SPC Reference	2877148-0100

Preparation

This procedure describes how to change one of the drive unit servo motors:

- LH yoke, rear servo (T40M9080) (1) or RH yoke, rear servo (T40M9090) (2)
- LH jaw, front servo (T40M9100) (3) or RH jaw, front servo (T40M9110) (4).

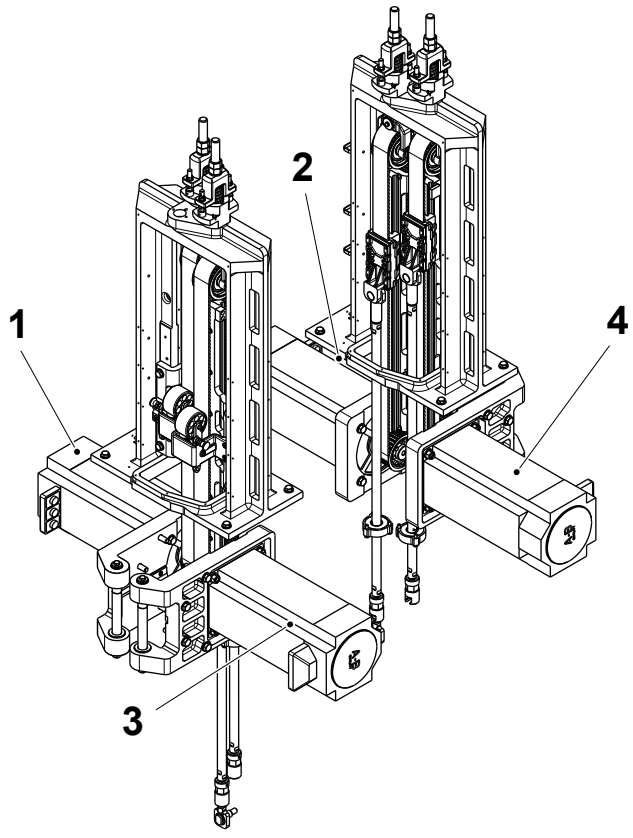

1 Servo T40M9080
2 Servo T40M9090
3 Servo T40M9100
4 Servo T40M9110

(Cont'd)

(Cont'd)

a) Lower the jaw system, see 3-2 Drive Unit - Lower Jaw System.
b) Identify which of the servo motors has to be changed.
c) Remove the machine covers (5).
d) Open both jaw system doors (6) on the side where the servo motor is going to be removed.

Machine RH side shown

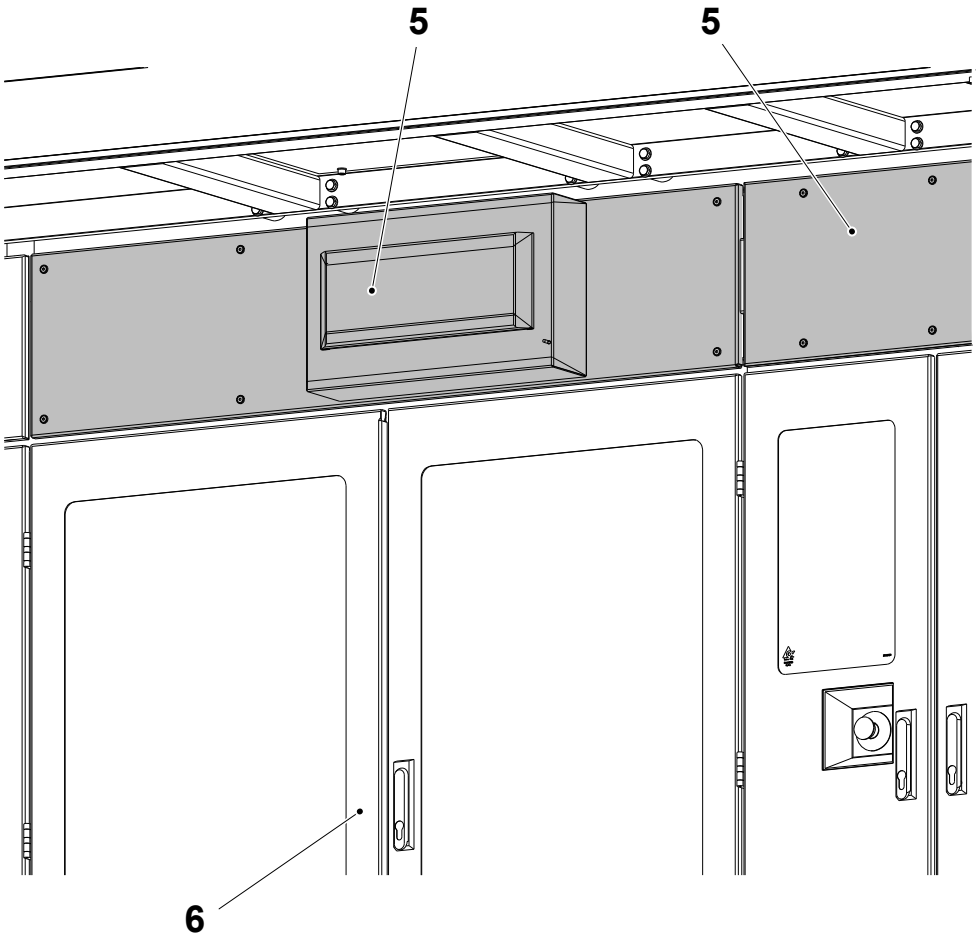

5 Cover
6 Door

(Cont'd)

(Cont'd)

Release the Drive Belt Tension

Lock the two support pulleys (1) away from the drive belts (2) using the two locking screws (3).

Loosen the nuts (4) on the top of the drive belt tensioner (5) to release the tension on the drive belt (2).

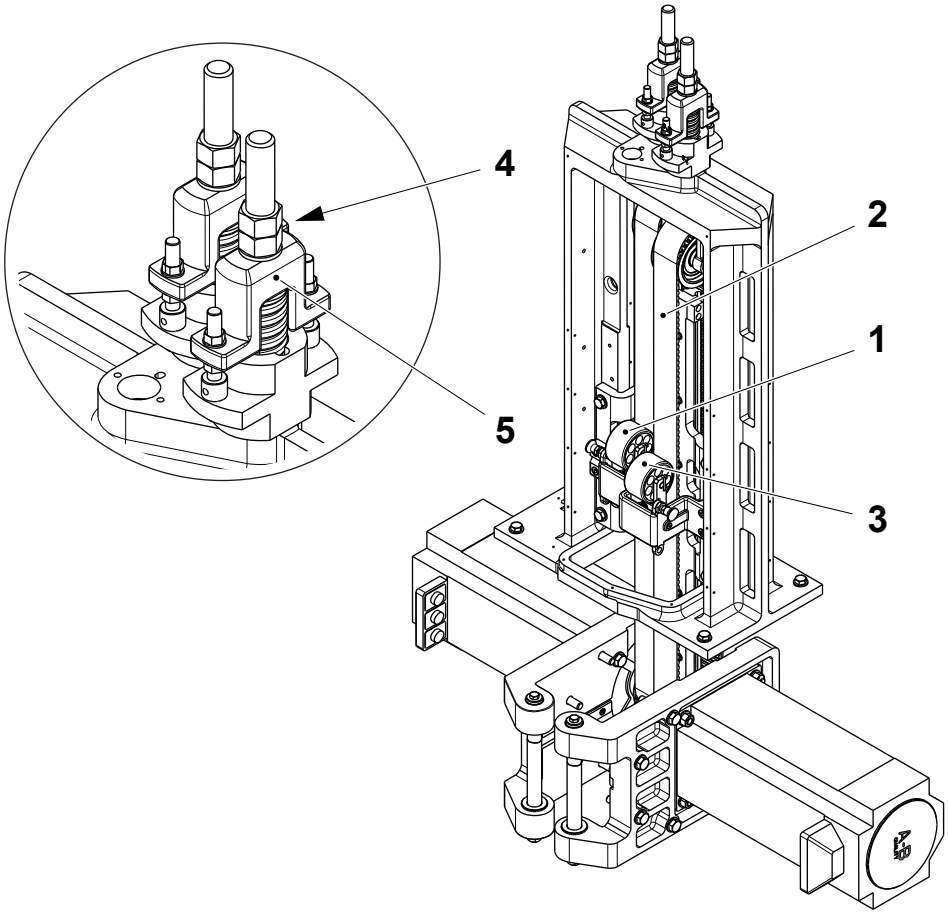

1 Support pulley
2 Drive belt
3 Locking screw
4 Locking nut
5 Screw
6 Nut
7 Drive belt tensioner

(Cont'd)

(Cont'd)

DANGER

Hazardous voltage.

Follow the lockout procedure before removing the electrical connections as described below. See the Safety Precautions.

Remove the Electrical Connections

a) Disconnect the electrical cables from the connections on the connection box (1) on the servo motor (2).

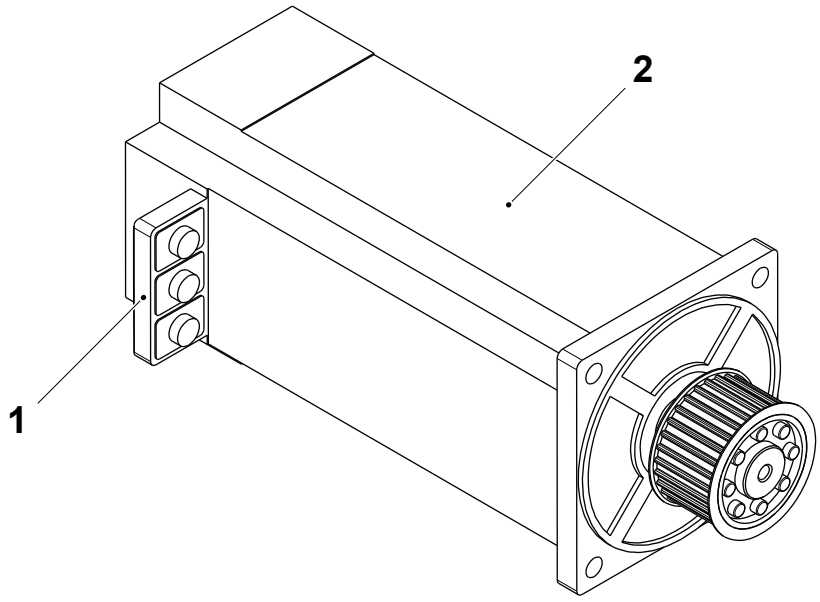

1 Connection box
2 Servo motor

(Cont'd)

(Cont'd)

CAUTION
Risk of personal injury.
The checker plate (2) is heavy.

Note! For LH side servo motor removal continue with Removing a LH Side Servo Motor on page 3-61.

Removing a RH Side Servo Motor

a) Remove the screws (1) and the checker plate (2) from under the platform.

b) Remove the four screws (3) securing the flange (4) to the main frame.

c) Rotate the flange (4) and the servo motor (5) through 90° out of the main frame.

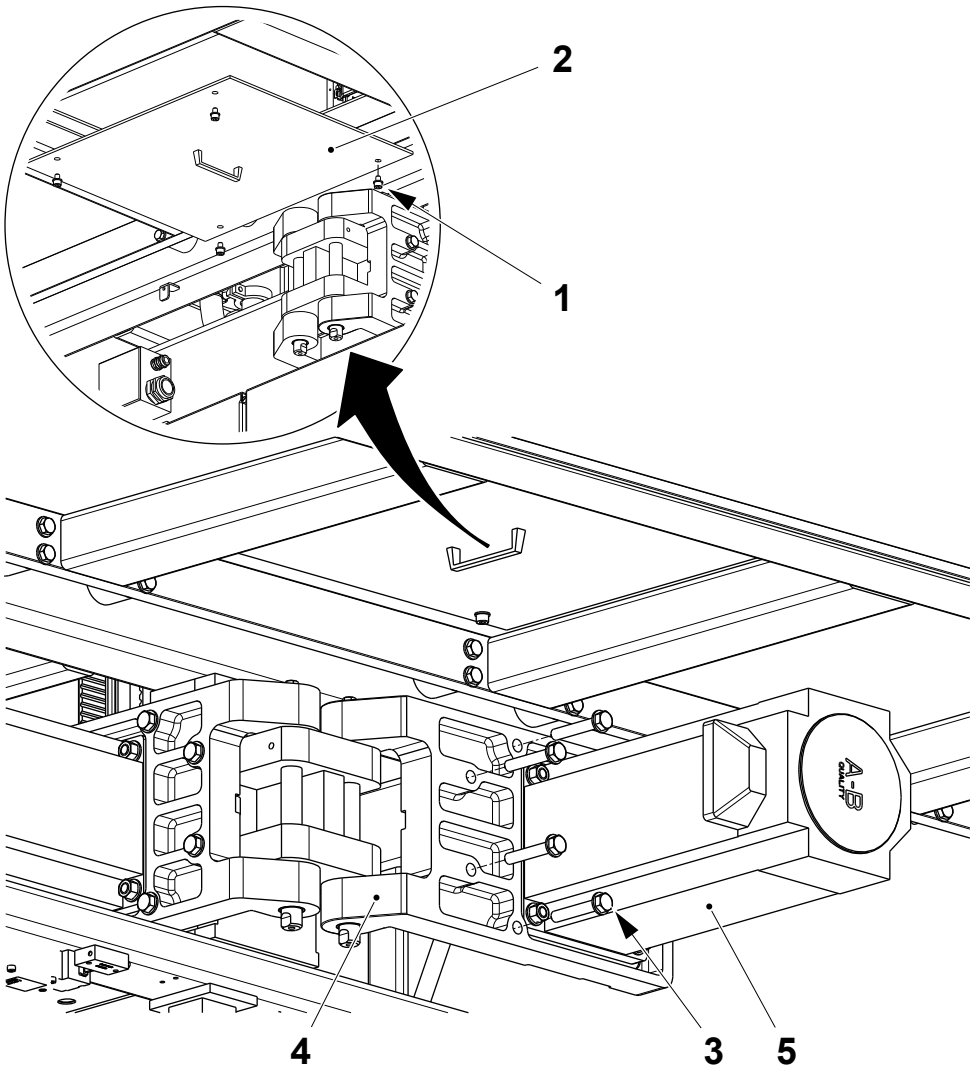

1 Screw
2 Checker plate
3 Screw
4 Flange
5 Servo motor

(Cont'd)

(Cont'd)

d) Fit the lifting bracket (6) to the machine frame by means of the screws (7).

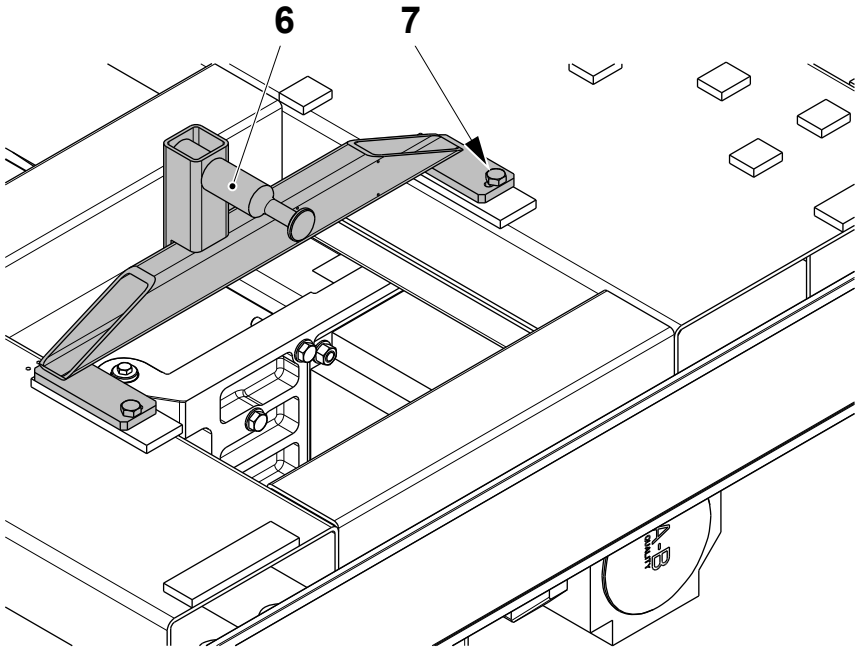

6 Bracket
7 Screw

(Cont'd)

(Cont'd)

CAUTION
Risk of injury or equipment damage.
The servo motor weighs approx. 50 kg. The lifting chains and the servo motor are not perpendicular. When the screws (11) are removed the servo motor will be forced over towards the machine body.

CAUTION
Risk of damage to the equipment.
Make sure that the lifting chains are tensioned before removing the screws (11). Make sure that all cables, pneumatic pipes and any tools or equipment do not hamper the movement of the flange (4).

(Cont'd)

(Cont'd)

Note! The screw (11) and the nut (12) must be removed from the top RH side corner of the servo motor before fitting the bracket (8).

e) Fit the bracket (8) to the servo motor (5) by means of the screws (9).

f) Fit the lifting tackle (10) to the lifting bracket (6) and to the lifting eye on the bracket (8).

g) Remove the four screws (11), the four nuts and six washers (12) securing the servo motor (5) to the flange (4).

h) Lower the servo motor (5) to the floor by means of the lifting tackle (10).

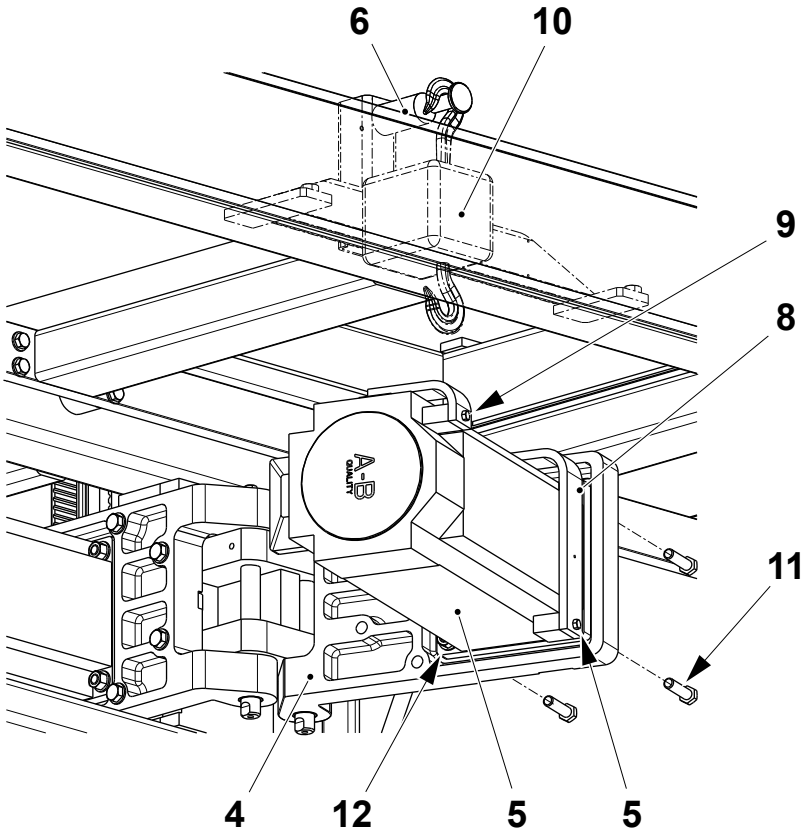

4 Flange
5 Servo motor
7 Bracket
8 Bracket
9 Screw
10 Lifting tackle
11 Screw
12 Nut and washer

(Cont'd)

(Cont'd)

Removing a LH Side Servo Motor

a) Remove the screws (1) and the checker plate (2).

b) Remove the two platform screws (3) from the machine platform.

c) Fit the lifting bracket (4) to the machine platform by means of the screws (5).

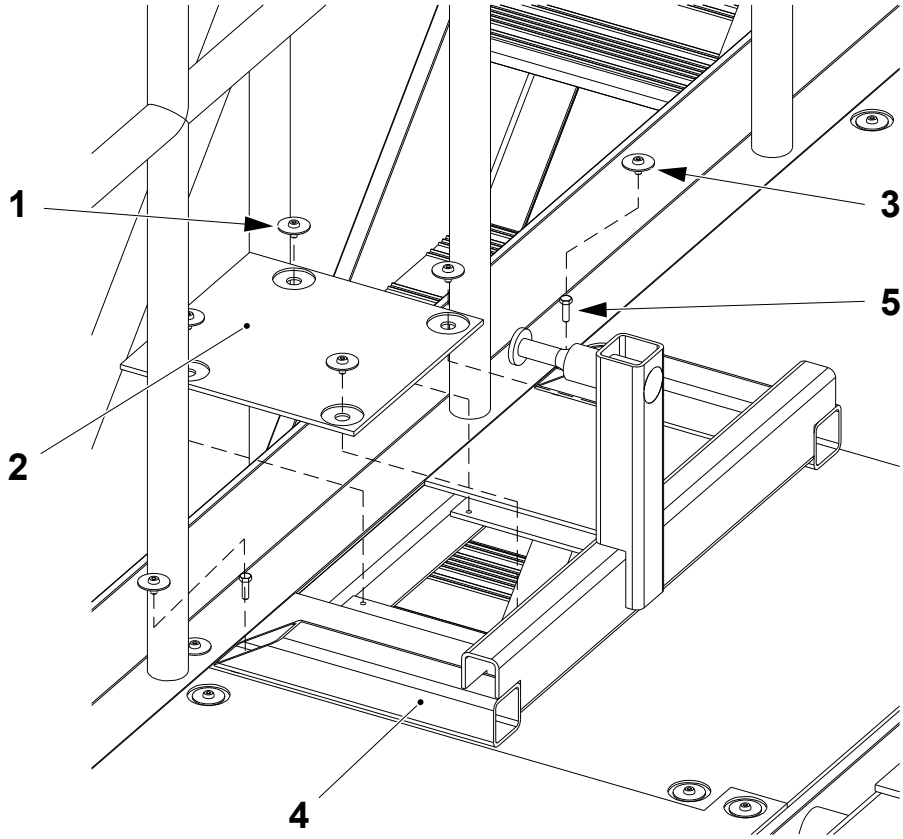

1 Screw
2 Checker plate
3 Screw
4 Lifting bracket
5 Screw

(Cont'd)

(Cont'd)

CAUTION
Risk of damage to the equipment.
Make sure that all cables, pneumatic pipes and any tools or equipment do not hamper the movement of the flange (7).

d) Remove the four screws (6) securing the flange (7) to the main frame.

e) Rotate the flange (7) and the servo motor (8) through 90° out of the main frame.

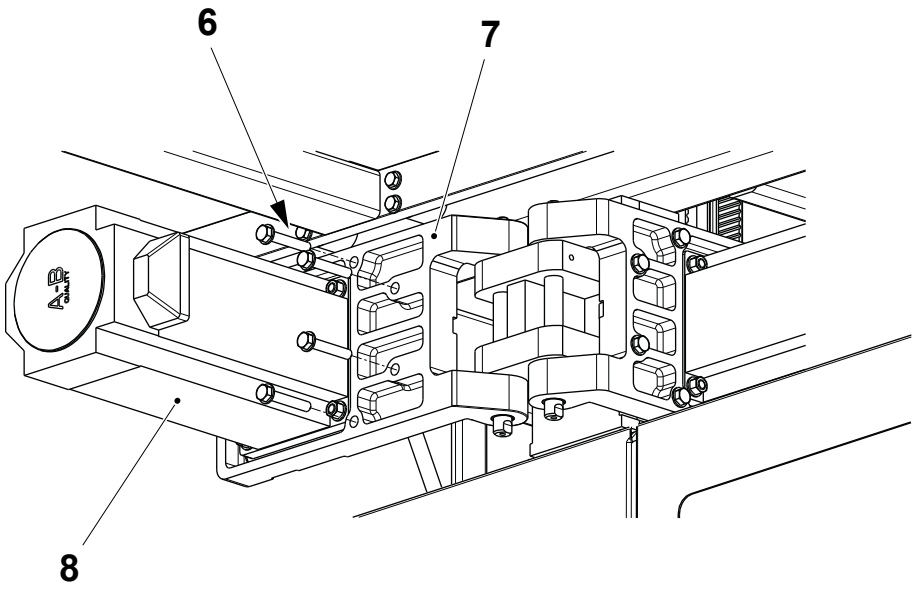

6 Screw
7 Flange
8 Servo motor

(Cont'd)

(Cont'd)

Note! The screw and the nut securing the servo motor to the flange must be removed from the top RH side corner of the servo motor before fitting the bracket.

f) Fit the bracket (9) to the servo motor (8) by means of the screws (10).

g) Fit the lifting tackle (11) to the lifting bracket (4) and to the lifting eye (12) on the bracket (9).

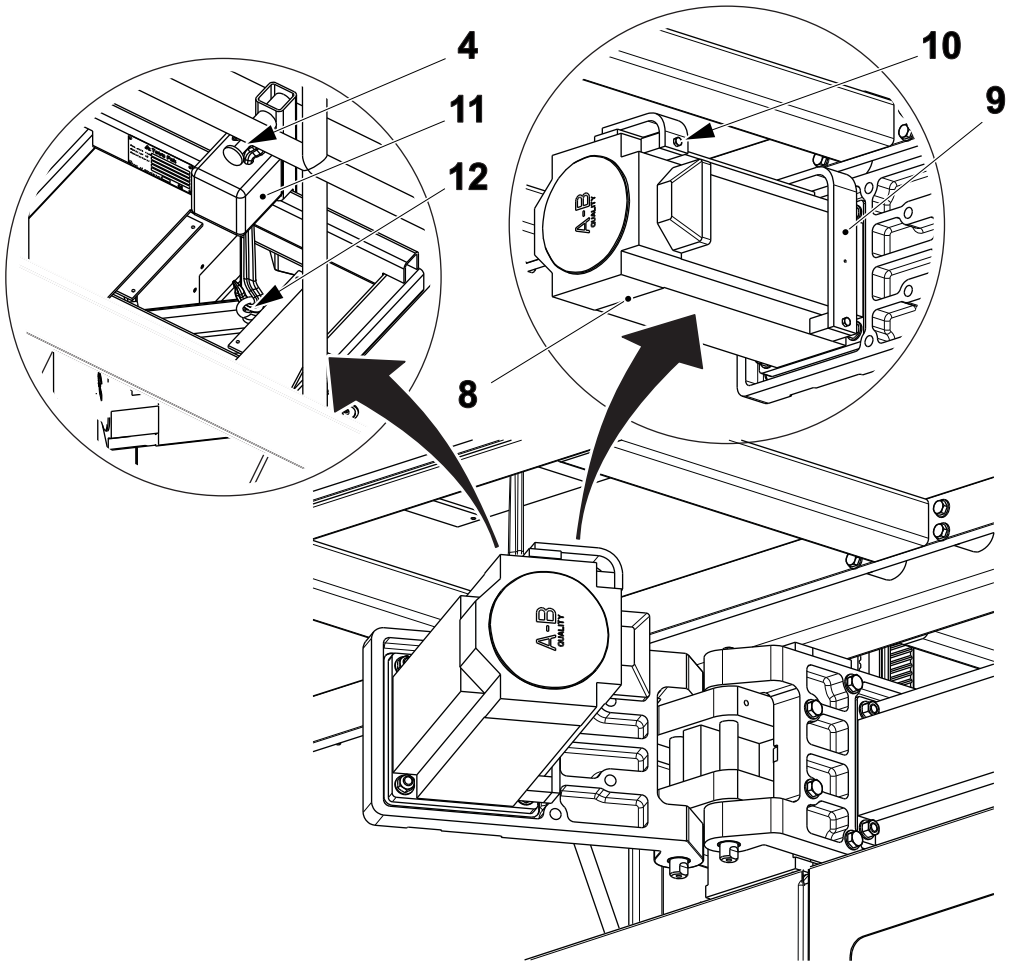

4 Lifting bracket
8 Servo motor
9 Bracket
10 Screw
11 Lifting tackle
12 Lifting eye

(Cont'd)

(Cont'd)

CAUTION

Risk of injury or equipment damage.

The servo motor weighs approx. 50 kg. The lifting chains and the servo motor are not perpendicular. When the screws (13) are removed the servo motor will be forced over towards the machine body.

CAUTION

Risk of damage to the equipment.

Make sure that the lifting chains are tensioned before removing the screws (13). Make sure that all cables, pneumatic pipes and any tools or equipment do not hamper the movement of the flange (7).

h) Remove the four screws (13) and the four nuts and six washers (14) securing the servo motor (8) to the flange (7).

i) Lower the servo motor (8) to the floor by means of the lifting tackle (11).

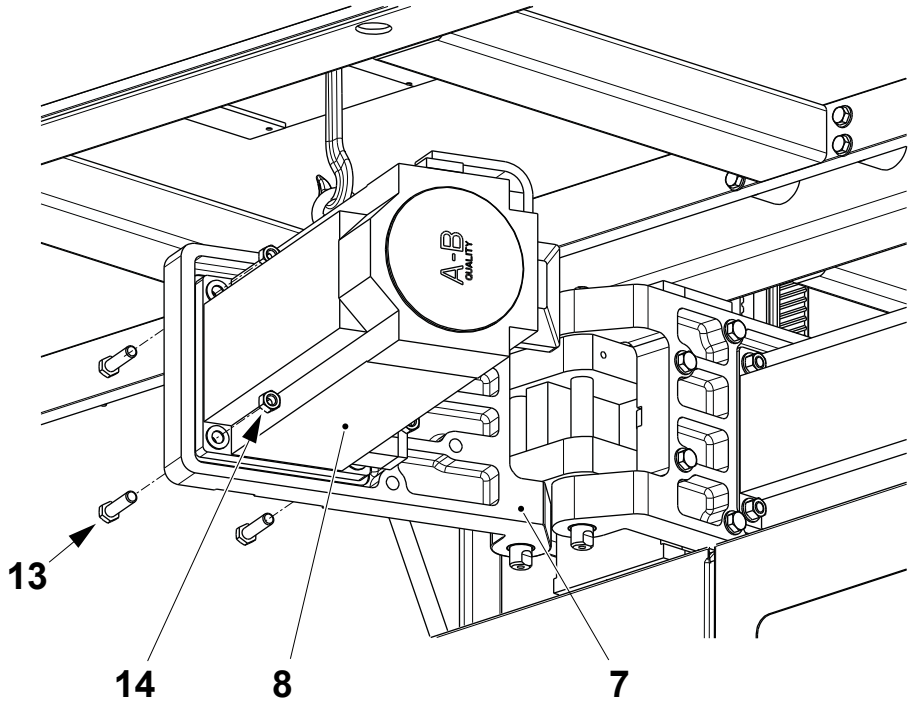

7 Flange
8 Servo motor
11 Lifting tackle
13 Screw
14 Nut and washer

(Cont'd)

(Cont'd)

CAUTION
Risk of injury or equipment damage.
The servo motor weighs approx. 50 kg.

Fitting the New Servo Motor

a) Remove all the protective covers and the caps from the new servo motor (1).

b) Make sure that the raised mounting surface and the shaft of the servo motor (1) and the flange (2) are clean.

c) Use the lifting equipment to lift the servo motor (1) up to the flange (2).

d) Position the servo motor (1) next to the flange (2).

e) Fit the servo motor (1) into the flange (2) and secure it using the four screws (3), the six washers (4) and the four nuts (5).

Note! Install one washer (4) under the head of the two screws (3) nearest to the hinge of the flange (2).

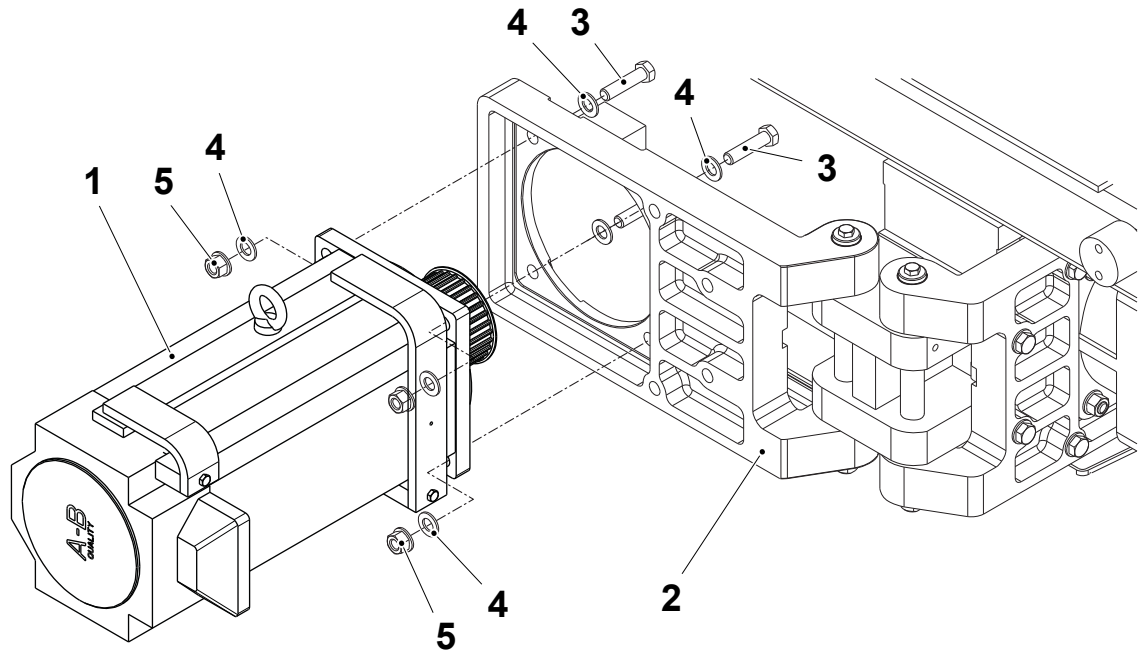

1 Servo motor
2 Flange
3 Screw
4 Washer
5 Nut

(Cont'd)

(Cont'd)

CAUTION
Risk of damage to the equipment.
Make sure the raised mounting surface of the servo motor (1) is evenly mounted into the hole in the flange (2).

f) Check that the servo motor (1) is correctly seated in the flange (2). Proceed as follows:

Measure and check the distance **A** between the surface of the servo motor (6) and the surface of the flange (7) at both the top and bottom of the flange. If necessary adjust the servo motor.

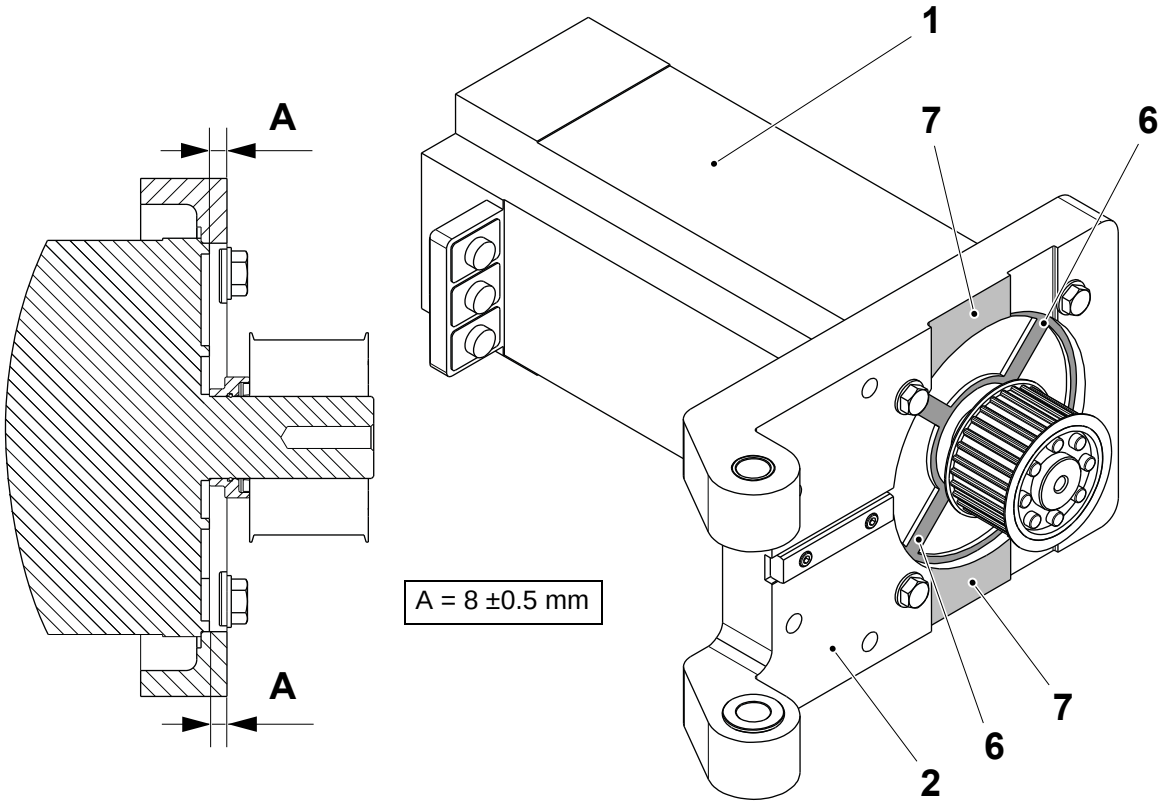

1 Servo motor
2 Flange
6 Servo motor surface
7 Flange surface

(Cont'd)

(Cont'd)

Commission the Servo Motor

a) Fit the three electrical cables to the connection box.

b) Turn ON the main power and step up the filling machine to PREPARATION.

c) Log on to the MAINTENANCE CONTROL window, see 9.6.3-2 HMI - User Management Log On.

d) Touch the PACKAGE FORMING UNIT button (1) to display the PACKAGE FORMING UNIT window.

e) Touch the appropriate SERVO MOTOR TEST icon (2) for the motor that has been changed.

f) Touch the POWER button (3).

g) Touch the OK button (4).

h) Check that the POWER button (3) turns green.

- if the POWER button (3) turns green the servo motor test is complete
- if the POWER button (3) does not turn green, continue with item j) to check the feedback connection.

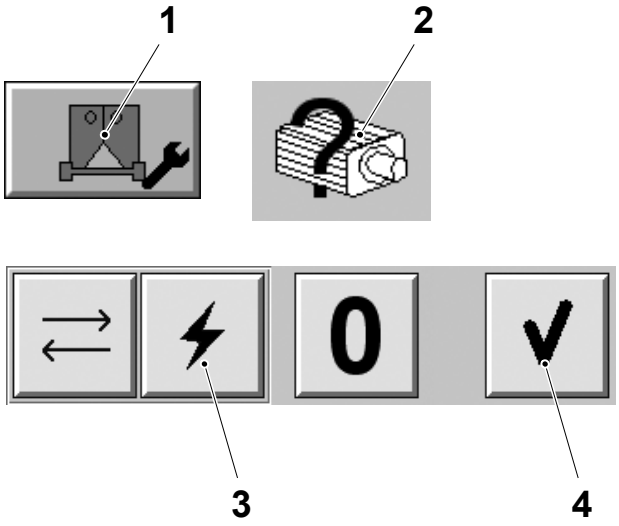

1 Package forming unit button
2 Servo motor test icon
3 Power button
4 OK button

(Cont'd)

(Cont'd)

i) Release the brake for the servo motor, see 3-3 Drive Unit - Release Brakes.

j) Touch the FEEDBACK button (5).

k) Touch the OK button (4).

l) Rotate the servo motor one complete revolution by hand.

m) Check that the FEEDBACK button (5) turns green.
   - if the FEEDBACK button (5) turns green check the power cables connections
   - if the FEEDBACK button (5) does not turn green, check the feedback cable connection.

n) Touch the ZERO button (6) and then touch the OK button (4) to return to the SERVO SETTINGS window.

o) Touch the EXIT button (7) to exit from the PACKAGE FORMING UNIT window.

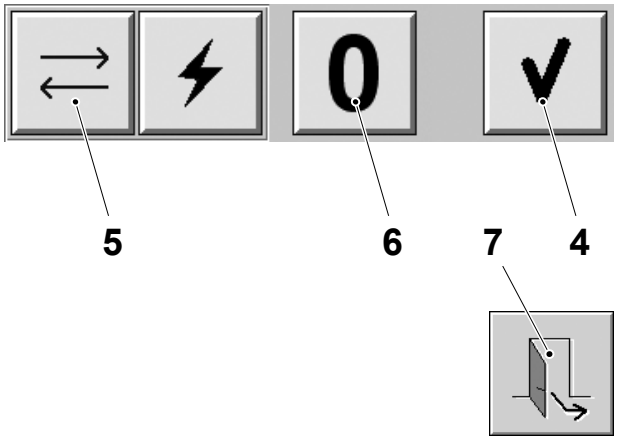

4 OK button
5 Feedback button
6 Zero button
7 Exit button

(Cont'd)

(Cont'd)

Finalize the Servo Motor Installation

a) Rotate the flange (1) and the servo motor (2) through 90° so that the drive pulley is inserted into the lower loop of the drive belt.

b) Install the four washers (3) to secure the flange (1) to the main frame.

c) Fit the checker plate to the machine platform. Follow the instruction a) on page 3-57 in the reverse order for a RH sevo motor installation or the instruction a) on page 3-61 in the reverse order for a LH sevo motor installation.

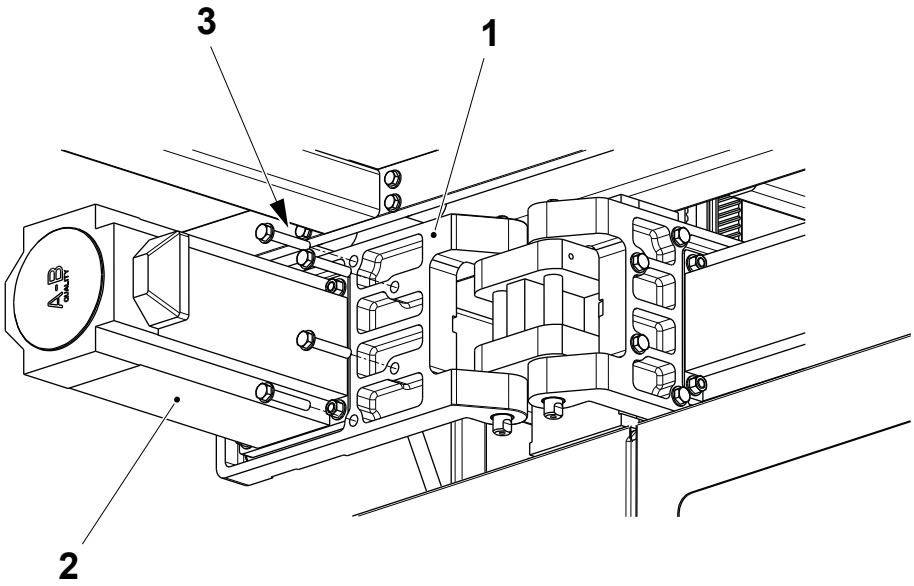

1 Flange
2 Servo motor
3 Screw

(Cont'd)

(Cont'd)

Note! Make sure that the drive belt (4) is seated correctly on the drive pulley and on the tensioner wheel.

d) Set the drive belt tension, see 3-7 Drive Unit - Set Drive Belt Tension.

e) Remove all the tools and the equipment.

f) Close the jaw system doors and fit back all machine covers.

g) Reference the drive unit, see 3-4 Drive Unit - Referencing.

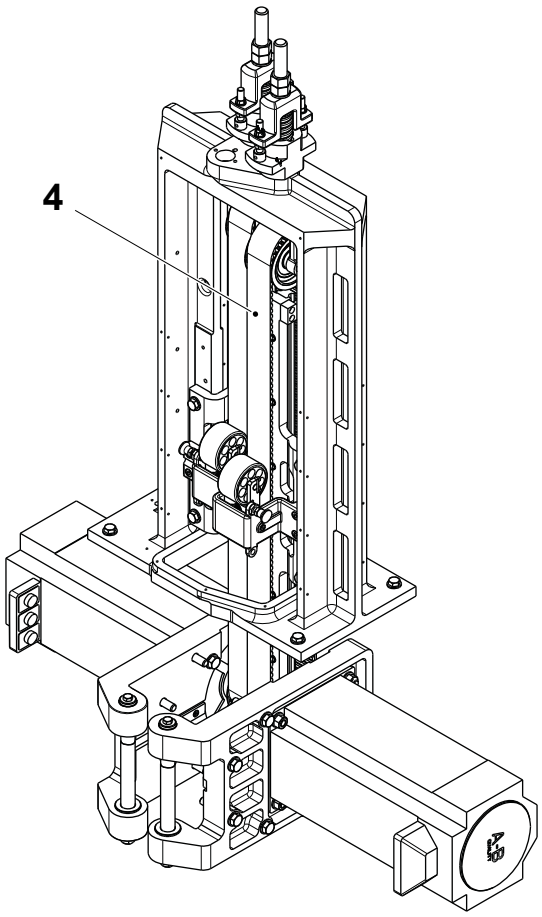

4 Drive belt

3.4-2 Motor Unit - Overhaul

Machine Status	Mains Power OFF Air OFF Steam ON Water OFF
Consumables	Shell Alvania Grease, TP No. 90296-0068
SPC Reference	2877148-0100

Disassemble Servo Motor

a) Remove the servo motor (1), see 3.2-2 Motor Unit - Change.

b) Loosen the shaft coupling (3) by means of the eight screws (2).

c) The shaft coupling (3) can be loosened by installing four of the eight screws (2) into the four pusher holes (4) to disengage the two coupling cones.

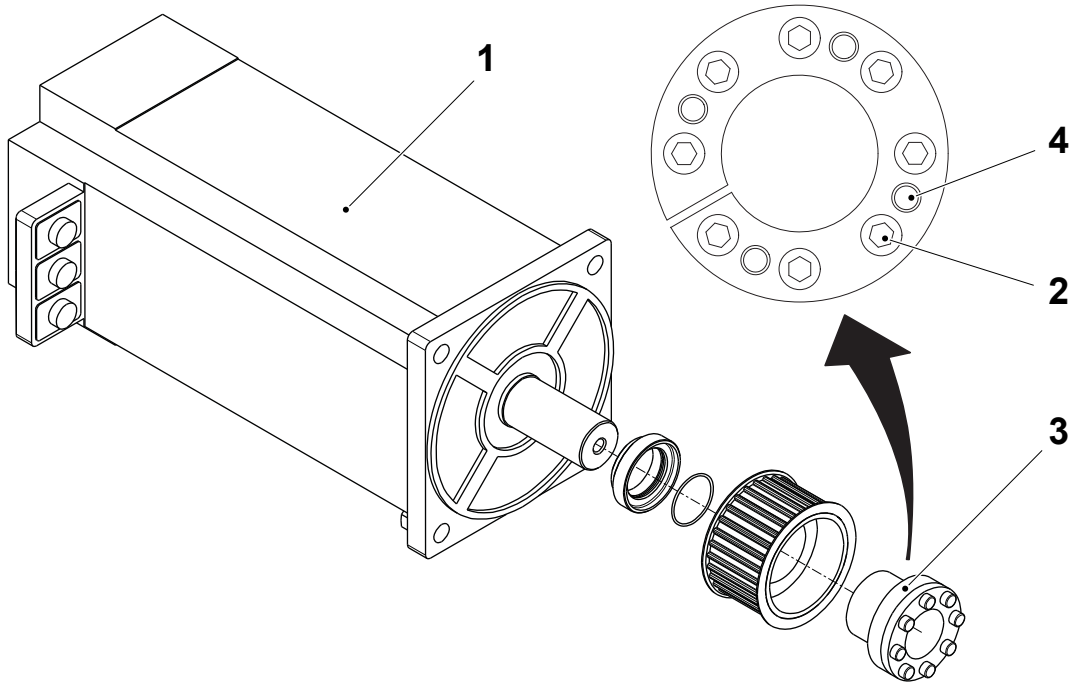

1 Servo motor
2 Screw
3 Shaft coupling
4 Pusher hole

(Cont'd)

(Cont'd)

d) Remove the shaft coupling (3) from the drive pulley (5).

e) Remove the drive pulley (5), the O-ring (6) and the spacer (7) and check for visible wear and damage. Change if necessary.

f) Check the inner surface of the shaft coupling (3).

g) On the servo motor (1) check:
   - the surface of the drive shaft (8)
   - that the raised flange on the servo motor (1) is not damaged
   - the electrical connectors on the servo motor (1) for signs of corrosion or damage. Change them if necessary.

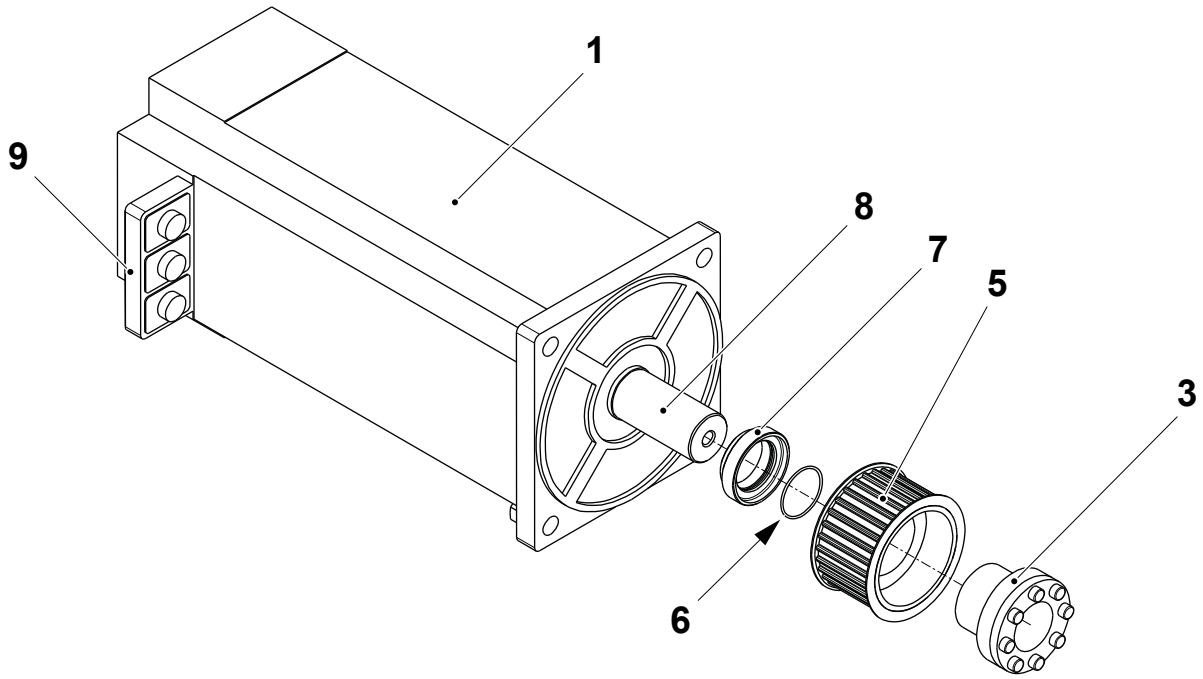

1 Servo motor
3 Shaft coupling
5 Drive pulley
6 O-ring
7 Spacer
8 Shaft
9 Connections

(Cont'd)

(Cont'd)

CAUTION
Risk of damage to the equipment.
Never use a hammer or any other tool to force the shaft coupling (3) onto the drive shaft (8). Any amount of force or shock used to assemble the shaft coupling (3) onto the drive shaft (8) will result in damage to the brake and bearings in the servo motor (1).

Servo Motor Assembly

Note! Clean the conical surface of the shaft coupling (3) and the drive shaft (8) before assembly. Apply a layer of grease to the O-ring (6) on assembly.

a) Fit the spacer (7) and the O-ring (6) on the drive shaft (8).

b) Insert the shaft coupling (3) into the drive pulley (5).

c) Fit the shaft coupling (3) and the drive pulley (5) on the drive shaft (8).

Note! Torque the eight coupling screws (2) on the shaft coupling (3) to 17 Nm on assembly.

d) Tighten the eight screws (2) in sequence to secure the shaft coupling (3) on the drive shaft (8).

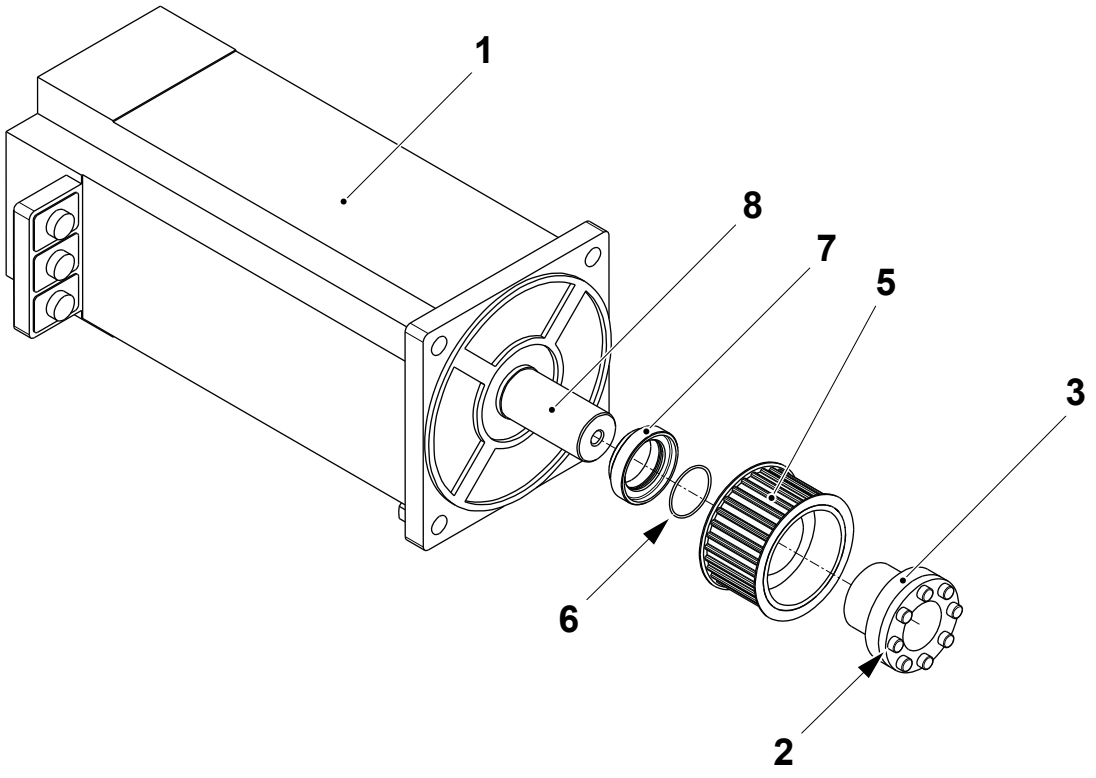

1 Servo motor
2 Screw
3 Shaft coupling
5 Drive pulley
6 O-ring
7 Spacer
8 Shaft

3.4-3 Motor Unit - Change Flange

Machine Status	Mains Power OFF Air OFF Steam ON Water OFF
SPC Reference	2877148-0100

a) Open the jaw system doors on the side where the flange has to be changed.

b) Remove the servo motor, see 3.2-2 Motor Unit - Change.

c) Remove the screw (3) and the washer (4) from the shaft (2).

d) Support the shaft (2) and the flange (1).

e) Remove the shaft (2) and the flange (1) from the main frame.

f) Check the condition of:
   – the shaft (2)
   – the two bushings (5) on the flange (1).

g) Assemble in the reverse order.

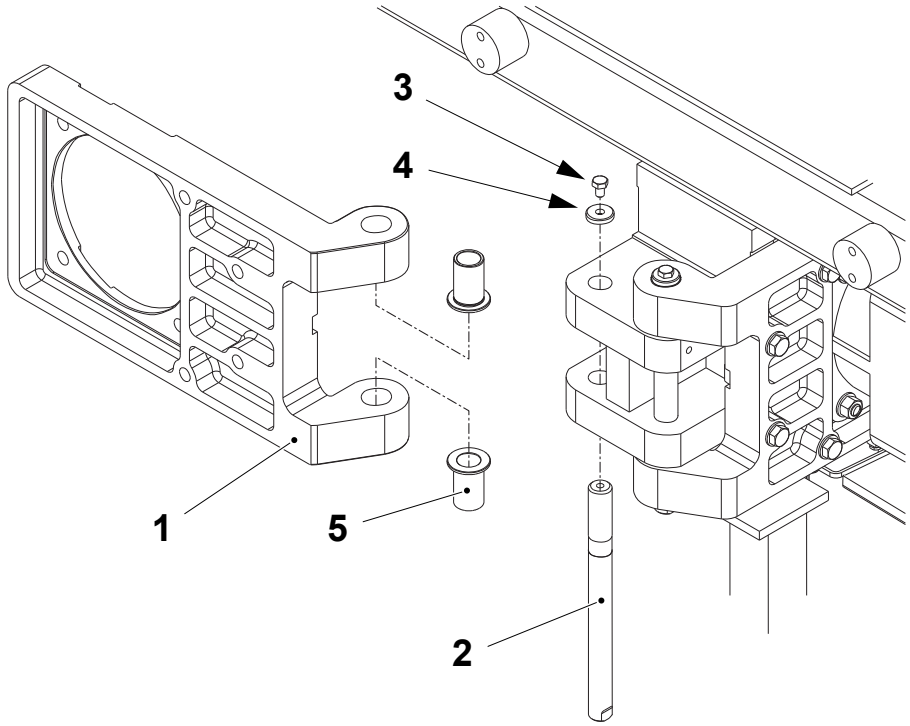

1 Flange
2 Shaft
3 Screw
4 Spacer
5 Bushing

4 Jaw System

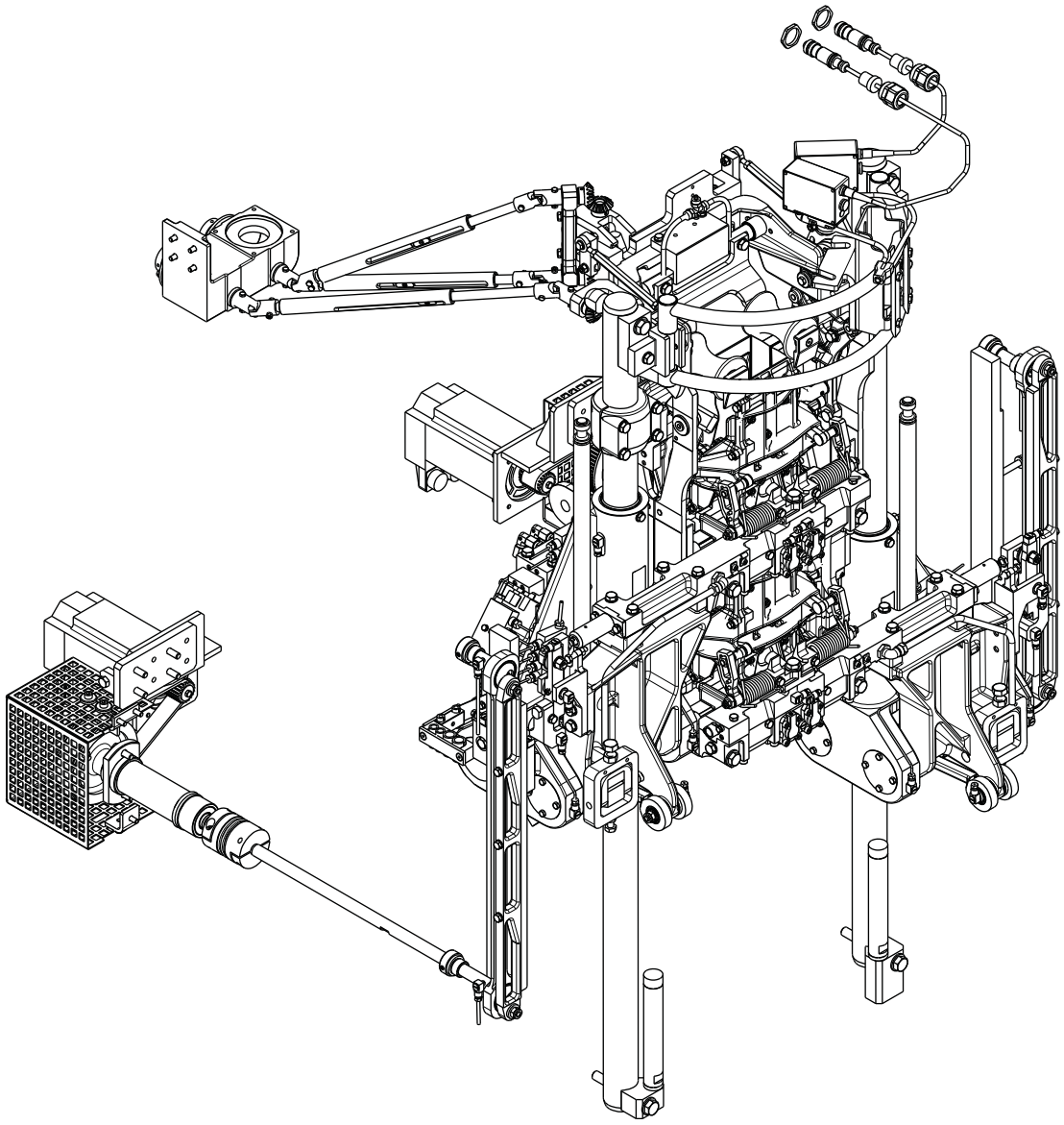

TechPub_2614345_0106 - 04_MM2819200_04en.fm

Jaw System - Description

SPC Reference	648549-0400

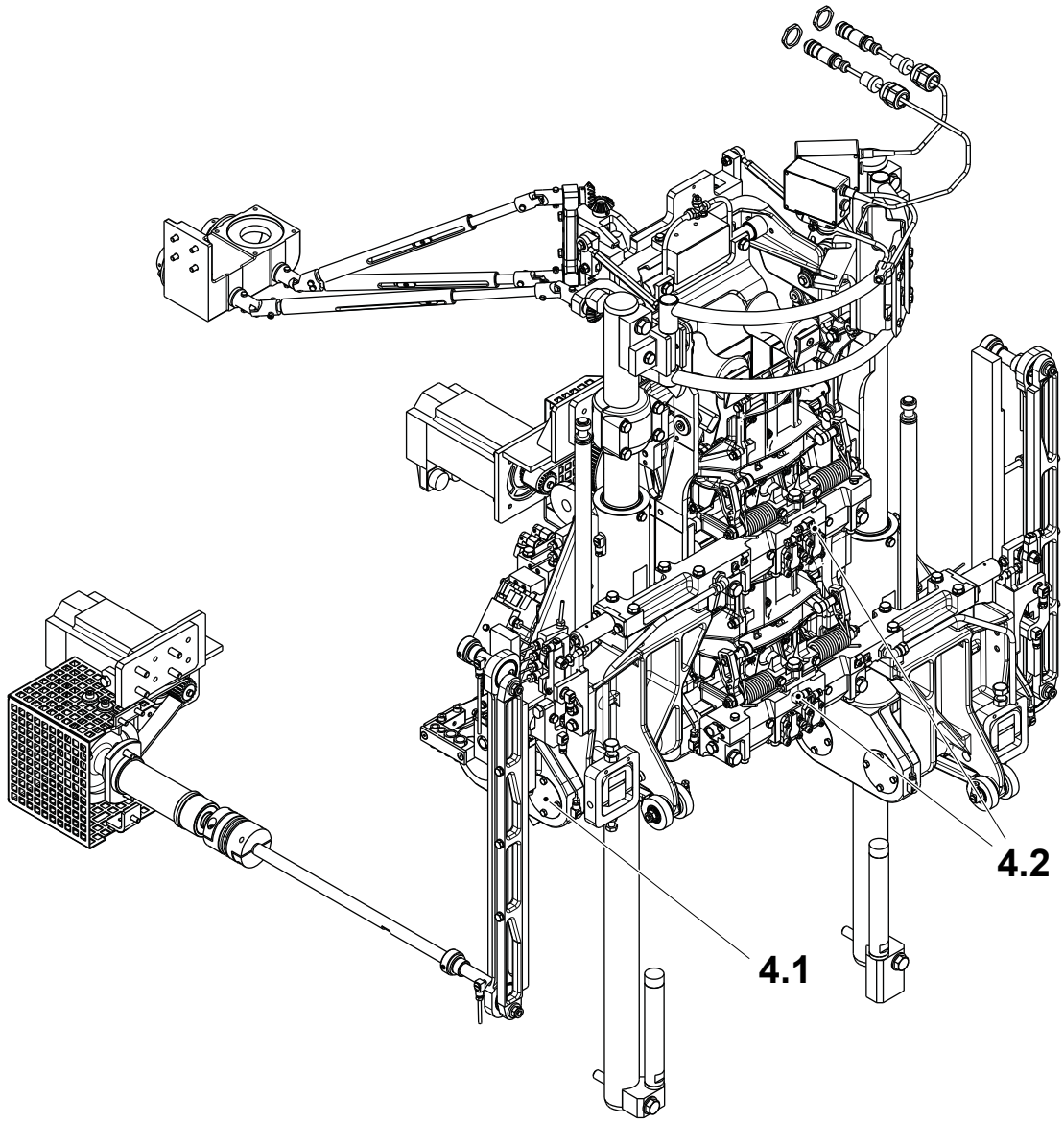

4 Jaw System
4.1 Base Unit
4.2 Forming Unit

TechPub_2614345_0106 - 04_MM2819200_04en.fm

4 Jaw System . . . . . 4 - 7

4-1 Jaw System - Setting Sequence . . . . . 4 - 7

4-2 Jaw System - Inching, Go To Position and Manual Operation Description . . . . . 4 - 8

4-3 Jaw System - Set Stroke . . . . . 4 - 15

4-4 Jaw System - Set Symmetry . . . . . 4 - 19

4-5 Jaw System - Set Volume Flaps Centring . . . . . 4 - 21

4-6 Jaw System - Set Jaw Gap . . . . . 4 - 25

4-7 Jaw System - Remove Front Volume Flaps . . . . 4 - 29

4-8 Jaw System - Set Cutting Alignment . . . . . 4 - 30

4-9 Jaw System - Set Jaw Over Jaw . . . . . 4 - 33

4-10 Jaw System - Set Folding Flaps . . . . . 4 - 41

4-11 Jaw System - Install Front Volume Flaps . . . . . 4 - 47

4-12 Jaw System - Check T-gap . . . . . 4 - 48

4-13 Jaw System - Set Volume Adjuster Height . . . . 4 - 50

4-14 Jaw System - Set Volume Flaps with the Volume Adjuster . . . . . 4 - 53

4.1 Base Unit . . . . . 4 - 66

4.1.1 Yoke . . . . . 4 - 66

4.1.1-1 Yoke- Check bearings . . . . . 4 - 66

4.1.1-2 Yoke - Check Plunger and Locating Pieces . . . . 4 - 67

4.1.1-3 Yoke - Remove Guide and Yoke . . . . . 4 - 69

4.1.1-4 Yoke - Change Bushings and Scraper . . . . . 4 - 71

4.1.1-5 Yoke - Change Plunger and Locating Piece . . . . 4 - 72

4.1.1-6 Yoke - Change Bearings . . . . . 4 - 74

4.1.2 Pressure Arm . . . . . 4 - 75

4.1.2-1 Pressure Arm - Check . . . . . 4 - 75

4.1.2-2 Pressure Arm - Set Play . . . . . 4 - 76

4.1.3 Cutting Arm . . . . . 4 - 77

4.1.3-1 Cutting Arm - Check . . . . . 4 - 77

4.1.3-2 Cutting Arm - Change Bearings and Shaft . . . . 4 - 79

4.1.3-3 Cutting Arm - Set Play . . . . . 4 - 82

4.1.3-4 Cutting Arm - Check Clearance . . . . . 4 - 83

TechPub_2614345_0106 - 04_MM2819200_04en.fm

4.1.4 Scissor Arm Link . . . . . 4 - 85

4.1.4-1 Scissor Arm Link - Check . . . . . 4 - 85

4.1.4-2 Scissor Arm Link - Change Shafts and Flange Bushings . . . . . 4 - 86

4.1.5 Design Correction . . . . . 4 - 88

4.1.5.1 Drive Unit . . . . . 4 - 88

4.1.5.1-1 Drive Unit - Check . . . . . 4 - 88

4.1.5.1-2 Drive Unit - Change Belt . . . . . 4 - 89

4.1.5.1-3 Drive Unit - Change Bearings and Seal Ring . . 4 - 90

4.1.5.1-4 Drive Unit - Set Belt Tension . . . . . 4 - 92

4.1.5.2 Design Correction Device . . . . . 4 - 95

4.1.5.2-1 Design Correction Device - Check . . . . . 4 - 95

4.1.5.2-2 Design Correction Device - Change Plain Bearings . . . . . 4 - 96

4.1.6 Cable Connection . . . . . 4 - 97

4.1.6-1 Cable Connection - Check . . . . . 4 - 97

4.1.7 Volume Adjuster . . . . . 4 - 98

4.1.7-1 Volume Adjuster - Check . . . . . 4 - 98

4.1.7-2 Volume Adjuster - Set . . . . . 4 - 99

4.1.7-3 Volume Adjuster - Remove . . . . . 4 - 100

4.1.7-4 Volume Adjuster - Assemble . . . . . 4 - 102

4.1.7-5 Volume Adjuster - Set Height . . . . . 4 - 106

4.2 Forming Unit. . . . . 4 - 107

4.2.1 Pressure Jaw . . . . . 4 - 107

4.2.1-1 Pressure Jaw - Check . . . . . 4 - 107

4.2.1-2 Pressure Jaw - Remove . . . . . 4 - 109

4.2.1-3 Pressure Jaw - Remove Volume Flaps . . . . . 4 - 110

4.2.1-4 Pressure Jaw - Install Volume Flaps . . . . . 4 - 111

4.2.1-5 Pressure Jaw - Assemble . . . . . 4 - 112

4.2.1-6 Pressure Jaw - Change Seals . . . . . 4 - 113

4.2.1-7 Pressure Jaw - Check Inductor . . . . . 4 - 120

4.2.1-8 Pressure Jaw - Change Inductor and O-rings . 4 - 124

4.2.1-9 Pressure Jaw - Change Transformer . . . . . 4 - 128

4.2.1-11 Pressure Jaw - Check Catches and Clearance . 4 - 130

TechPub_2614345_0106 - 04_MM2819200_04en.fm

4.2.2 Cutting Jaw . . . . . 4 - 132

4.2.2-1 Cutting Jaw - Check . . . . . 4 - 132

4.2.2-2 Cutting Jaw - Remove . . . . . 4 - 135

4.2.2-3 Cutting Jaw - Assemble . . . . . 4 - 136

4.2.2-4 Cutting Jaw - Change Seals . . . . . 4 - 137

4.2.2-5 Cutting Jaw - Change Oil . . . . . 4 - 144

4.2.2-6 Cutting Jaw - Change Cutting Rails . . . . . 4 - 146

4.2.3 Knife . . . . . 4 - 149

4.2.3-1 Knife - Check . . . . . 4 - 149

4.2.3-2 Knife - Change . . . . . 4 - 150

4.2.4 Volume Flaps . . . . . 4 - 153

4.2.4-1 Volume Flaps - Check . . . . . 4 - 153

4.2.4-2 Volume Flaps - Change Bushings, Curve Rollers, Cams and Shims . . . . . 4 - 154

4.2.6 Volume Curve Piece . . . . . 4 - 159

4.2.6-1 Volume Curve Piece - Check Curve Unit . . . . . 4 - 159

4.2.6-2 Volume Curve Piece - Change Cams . . . . . 4 - 161

4.2.6-3 Volume Curve Piece - Set . . . . . 4 - 162

4.2.6-4 Volume Curve Piece - Check Support Rollers . 4 - 163

4.2.6-5 Volume Curve Piece - Change Support Roller Flange Bushings . . . . . 4 - 164

4.2.6-6 Volume Curve Piece - Set Support Rollers . . . 4 - 165

4.2.6-7 Volume Curve Piece - Check Tube Flushing . . 4 - 166

4.2.7 Photocell Unit . . . . . 4 - 167

4.2.7-1 Photocell Unit - Check . . . . . 4 - 167

4.2.7-2 Photocell Unit - Set . . . . . 4 - 168

TechPub_2614345_0106 - 04_MM2819200_04en.fm

This page intentionally left blank

TechPub_2614345_0106 - 04_MM2819200_04en.fm

4 Jaw System

4-1 Jaw System - Setting Sequence

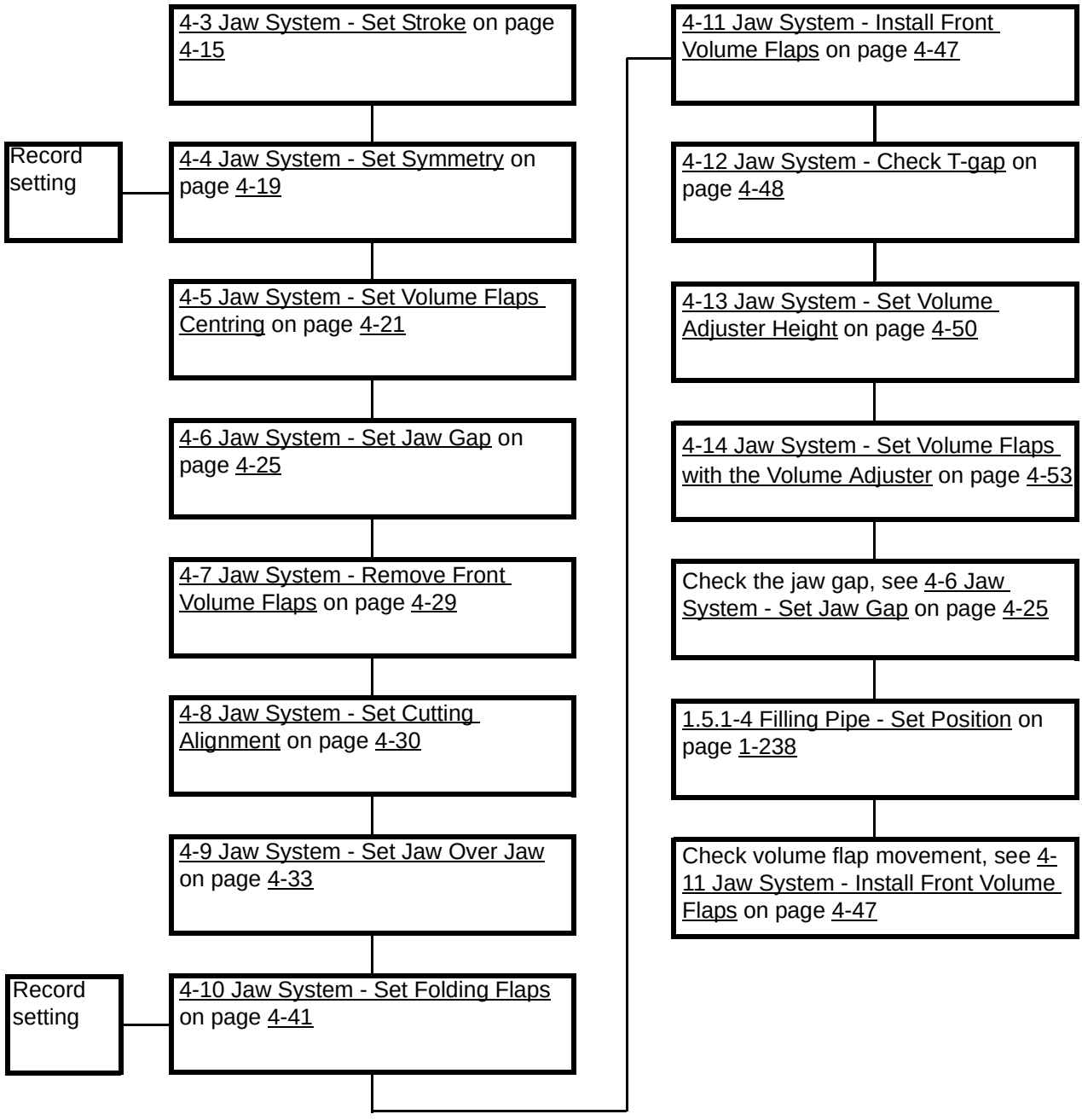

TechPub_2614345_0106 - 04_MM2819200_04en.fm

4-2 Jaw System - Inching, Go To Position and Manual Operation Description

Machine Status	PREPARATION
SPC Reference	648549-0400

Inching (catches and knives ON)

a) Step up the machine to PREPARATION.

b) Touch the PRODUCTION CONTROL button (1).

c) Touch the PACKAGE FORMING UNIT button (2) to display the PACKAGE FORMING UNIT window.

d) Touch the JAW INCHING icon (3) and the JAW INCHING window (4) is displayed.

e) Touch one of the following buttons:

– the SLOW INCHING button (5), to slow inch the jaw system to check the machine movement or to reach an approximate position

– the FAST INCHING button (6) to fast inch the jaw system to check the machine movement.

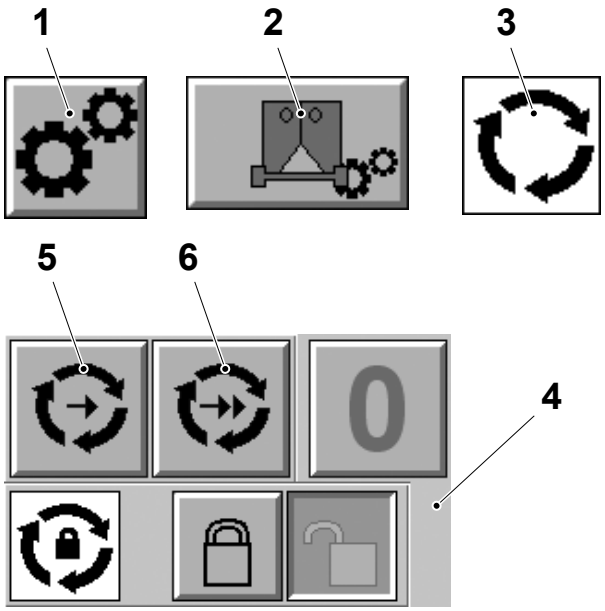

1 Production control button
2 Package forming unit button
3 Jaw inching icon
4 Jaw inching window
5 Slow inching button
6 Fast inching button

(Cont'd)

TechPub_2614345_0106 - 04_MM2819200_04en.fm

(Cont'd)

Note! The INCHING LOCK button (7) permits the physical JAW SYSTEM INCHING button (8) to be released once the machine movement has started. The machine movement is stopped by pressing the SHORT STOP button (9). The INCHING LOCK button (7) is only available when logged on to the TPOP as a “tptechnician”.

f) If necessary, touch the INCHING LOCK button (7).

g) Press and hold the JAW SYSTEM INCHING button (8) to slow inch the machine. If the INCHING LOCK button (7) has been enabled, release the JAW SYSTEM INCHING button (8) when the machine movement has started.

h) If the INCHING LOCK button (7) has been enabled, press the SHORT STOP button (9) to stop the machine movement.

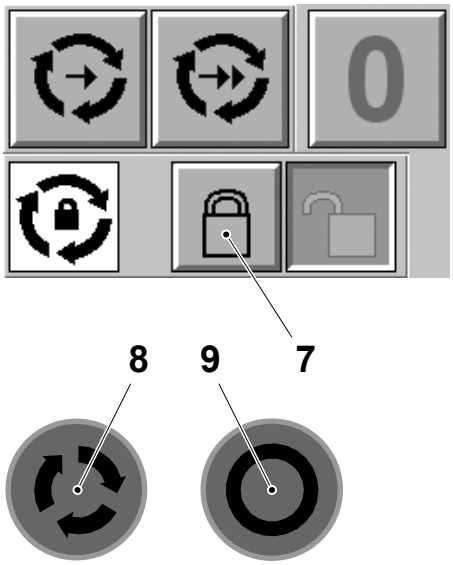

7 Inching lock button
8 Jaw system inching button
9 Short stop button

(Cont'd)

TechPub_2614345_0106 - 04_MM2819200_04en.fm

(Cont'd)

START, STOP and OK Buttons

The START button (1), STOP button (2) and OK button (3) are used in the activation of the jaw system movement, the buttons use colours to indicate the status of the selected function. The colours have the following meaning:

- LIGHT GREY, the function is not enabled
- GREY, the function is enabled
- FLASHING WHITE, the function request has been accepted and the system is waiting for the command to start (e.g. pressing the OK button)
- WHITE, the function is active
- FLASHING GREEN, the function step has complete and the system is ready to receive new input parameters
- GREEN, the function is complete and a new instance of the function can be started.

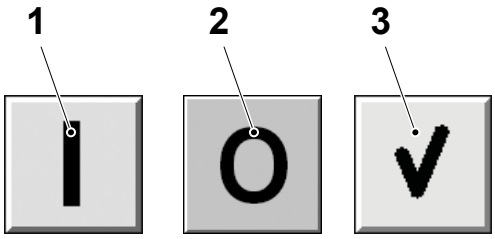

1 Start button
2 Stop button
3 OK button

(Cont'd)

TechPub_2614345_0106 - 04_MM2819200_04en.fm

(Cont'd)

Go To Position (catches and knives OFF)

Moves the jaw system to a specified position.

a) Step up the machine to PREPARATION.

b) Touch the PRODUCTION CONTROL button (1).

c) Touch the PACKAGE FORMING UNIT button (2) to display the PACKAGE FORMING UNIT window.

d) Touch the JAW POSITION icon (3) and the ANGLE SELECTOR window (4) is displayed.

e) Use the ARROW buttons (5) to select the required angle.

f) Touch the START button (6).

g) Touch the OK button (7) to start the machine movement.

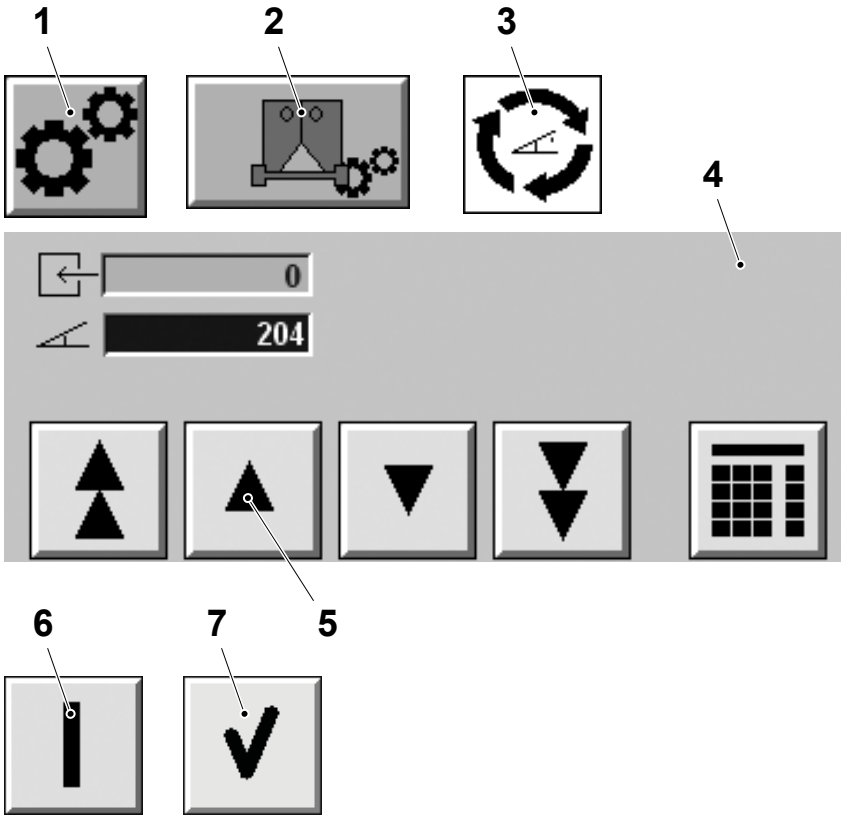

1 Production control button
2 Package forming unit button
3 Jaw system position icon
4 Angle selector window
5 Arrow button
6 Start button
7 OK button

(Cont'd)

TechPub_2614345_0106 - 04_MM2819200_04en.fm

(Cont'd)

Manual Operation

Moves the LH or RH side of the jaw system to a maintenance position.

a) Step up the machine to PREPARATION.

b) Touch the `MAINTENANCE CONTROL` button (1).

c) Log on to the `MAINTENANCE CONTROL` window, see 9.6.3-2 HMI - User Management Log On.

d) Touch the `PACKAGE FORMING UNIT` button (2) to display the `PACKAGE FORMING UNIT` window.

e) Touch the `MANUAL OPERATION` icon (3) and the `MANUAL OPERATION` window (4) is displayed.

f) Touch the `START` button (5).

g) Touch the `OK` button (6) to enable the manual operation mode.

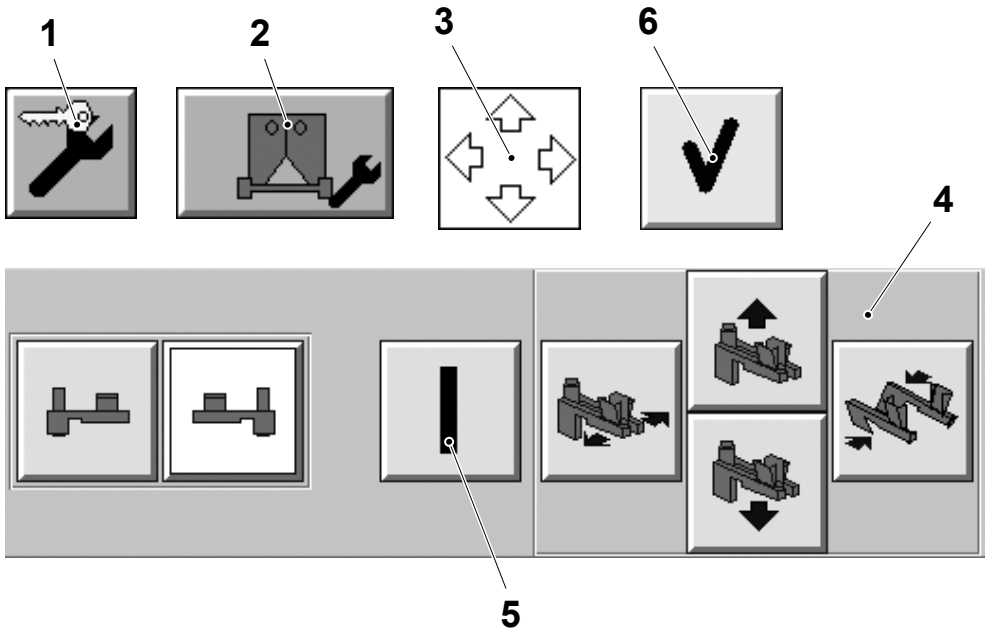

1 Maintenance control button
2 Package forming unit button
3 Manual operation icon
4 Manual operation window
5 Start button
6 OK button

(Cont'd)

TechPub_2614345_0106 - 04_MM2819200_04en.fm

(Cont'd)

Note! Make sure that the machine movement can be performed safely and without any mechanical interference.

h) Touch the `LH SIDE` button (7) or `RH SIDE` button (8).

i) Touch one of the following buttons to activate the required action:
   - `OPEN JAW` button (9), `CLOSE JAW` button (10)
   - `RAISE JAW` button (11), `LOWER JAW` button (12).

j) Press the `JAW SYSTEM INCHING` button (13) to start the machine movement and release the button when necessary.

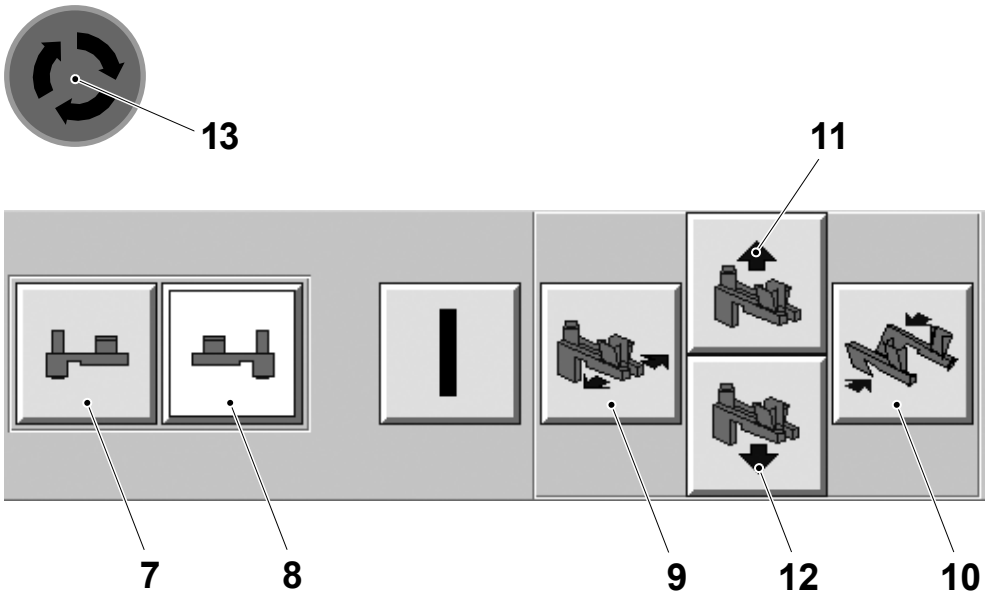

7 LH side button
8 RH side button
9 Open jaw button
10 Close jaw button
11 Raise jaw button
12 Lower jaw button
13 Jaw system inching button

(Cont'd)

TechPub_2614345_0106 - 04_MM2819200_04en.fm

(Cont'd)

k) To deactivate the action, touch the selected button:
   – `OPEN JAW` button (9), `CLOSE JAW` button (10)
   – `RAISE JAW` button (11), `LOWER JAW` button (12).

l) Touch the `STOP` button (14).

m) Touch the `OK` button (6) to disable the manual operation mode.

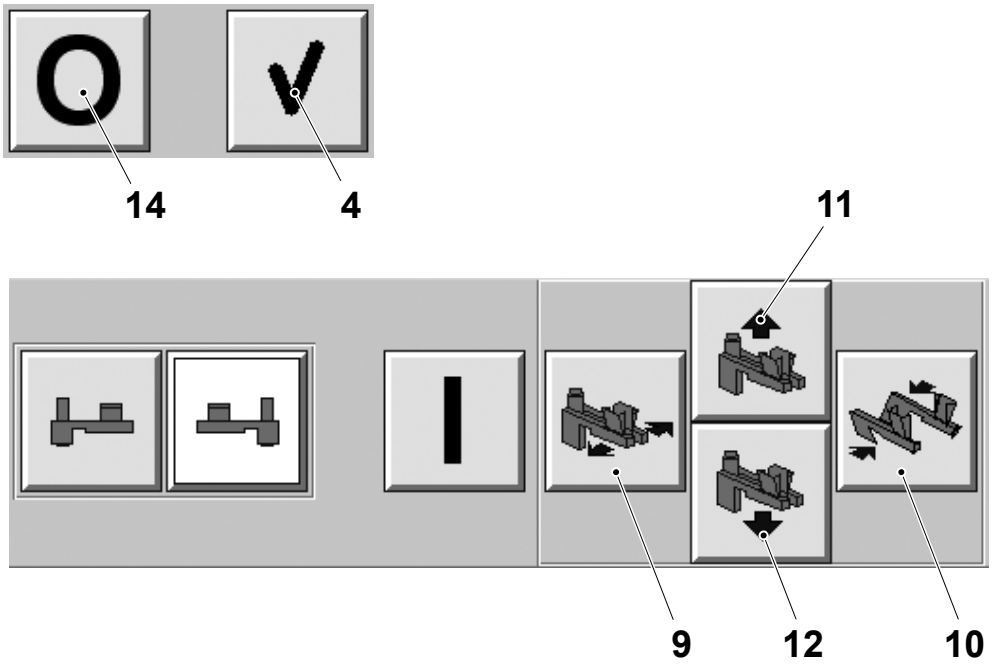

6 OK button
9 Open jaw button
10 Close jaw button
11 Raise jaw button
12 Lower jaw button
14 Stop button

TechPub_2614345_0106 - 04_MM2819200_04en.fm

4-3 Jaw System - Set Stroke

Machine Status	PREPARATION
SPC Reference	648549-0400

a) Log on to the MAINTENANCE CONTROL window, see 9.6.3-2 HMI - User Management Log On.

b) Touch the PACKAGE FORMING UNIT button (1) to display the PACKAGE FORMING UNIT window.

c) Touch the LH SIDE CHANGE STROKE icon (2) to display the CHANGE STROKE window (3).

d) Touch the GO TO UPPER POSITION button 4).

e) Touch the OK button (5) to start the machine movement.

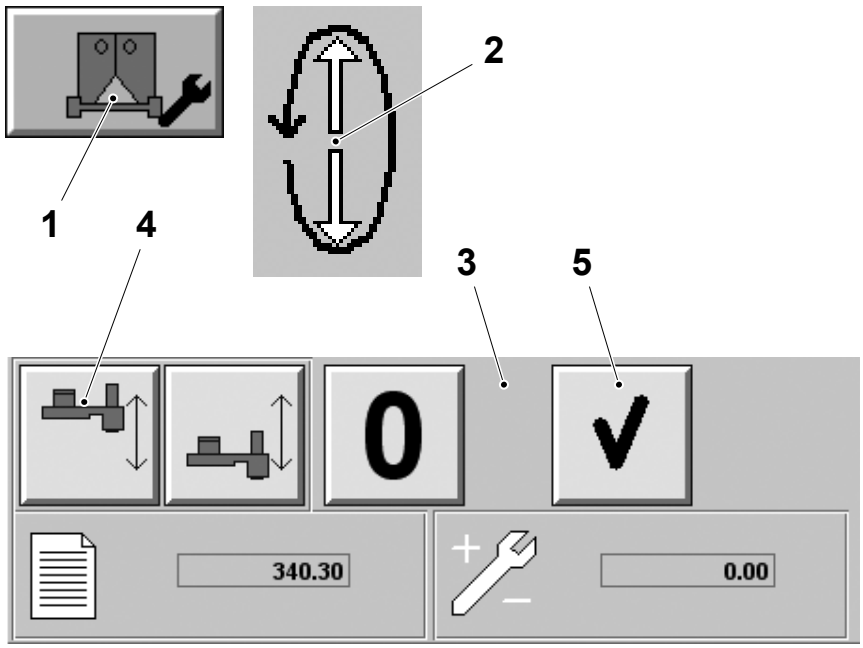

1 Package forming unit button
2 LH side change stroke icon
3 Change stroke window
4 Go to upper position window
5 OK button

(Cont'd)

TechPub_2614345_0106 - 04_MM2819200_04en.fm

(Cont'd)

f) Fit the point measuring clamp (6) on the LH side guide (7).

g) Push down the pin (8) until it touches the surface of the yoke.

h) Touch the `GO TO LOWER POSITION` button (9).

i) Touch the `OK` button (5) to start the machine movement.

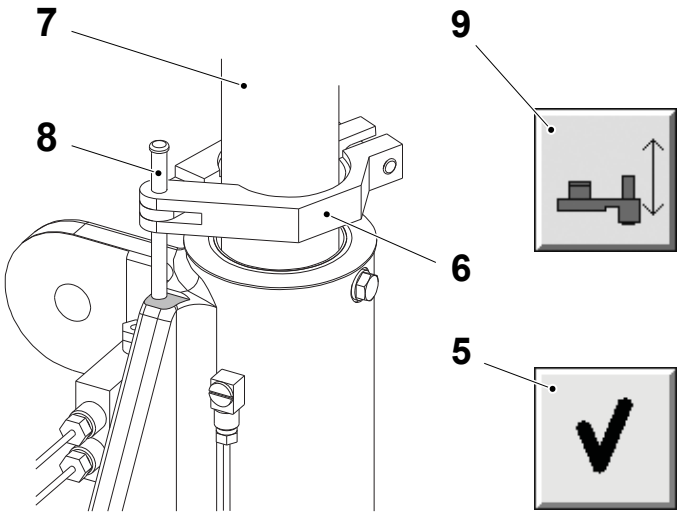

5 OK button
6 Point measuring clamp
7 Guide
8 Pin
9 Go to lower position button

(Cont'd)

TechPub_2614345_0106 - 04_MM2819200_04en.fm

(Cont'd)

j) With the aid of a micrometer, measure the distance **A** (the stroke) between the pin (8) and the yoke (10).

k) Repeat items a) to j) for RH side guide.

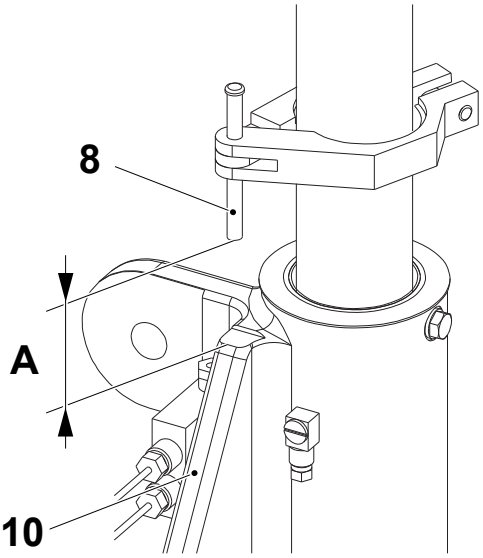

8 Pin
10 Yoke

(Cont'd)

TechPub_2614345_0106 - 04_MM2819200_04en.fm

(Cont'd)

l) Check the distance **A** (the stroke) with the nominal stroke value (11) displayed in the CHANGE STROKE window (3).

m) If the difference between the two values exceeds 0.1 mm, touch the ADJUSTMENT button (12) and then use the ARROW buttons (13) to input the stroke correction value in the ADJUSTMENT box (14).

n) Touch the OK button (15) for two seconds to enter the new stroke correction value.

Note! After entering the stroke correction, always re-check the stroke measurement with the point measuring clamp.

o) Touch the EXIT button (16) to exit the PACKAGE FORMING UNIT window.

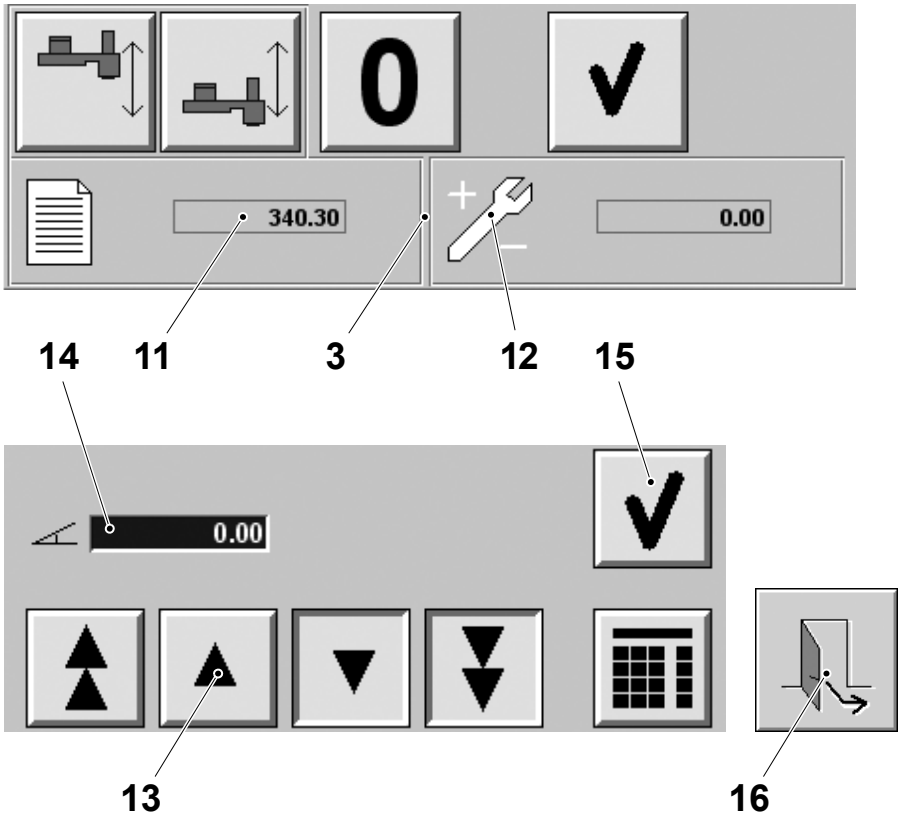

3 Change stroke window
10 Nominal stroke value
11 Adjustment button
12 Arrow button
13 Adjustment box
14 Enter button
15 Exit button

TechPub_2614345_0106 - 04_MM2819200_04en.fm

4-4 Jaw System - Set Symmetry

Machine Status	PREPARATION
Special Equipment	Setting Tools (2) TP No. 2644317-0100 / 2644318-0100 Compression Spring (1) TP No. 72846-0101 See 10.2 Templates and Tools
SPC Reference	648549-0400

a) Use the GO TO POSITION function to slow inch the machine to 204° LH side (24° RH side), see 4-2 Jaw System - Inching, Go To Position and Manual Operation Description.

b) Fit the compression spring (1) between the carriers.

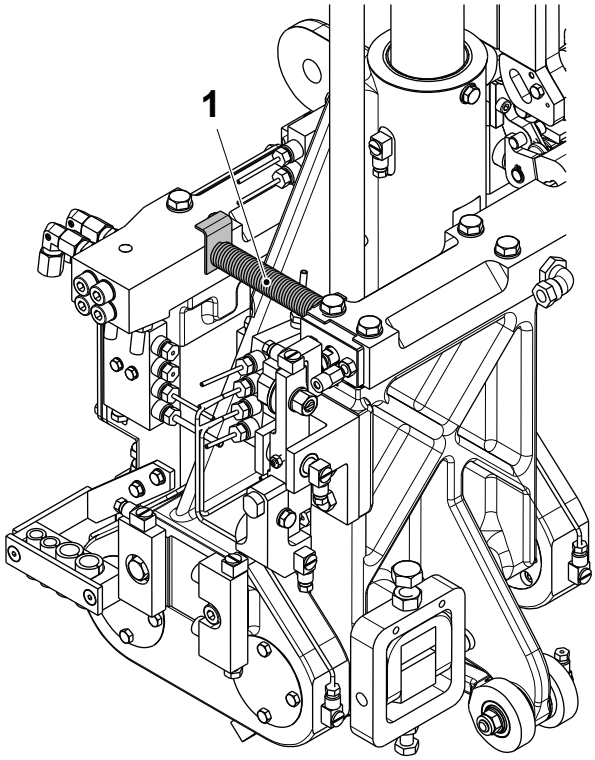

1 Compression spring

(Cont'd)

TechPub_2614345_0106 - 04_MM2819200_04en.fm

(Cont'd)

c) Fit the jaw setting tools (2) to the LH side cutting jaw carrier (3) and to the LH side pressure jaw carrier (4) in the positions indicated in the illustration.

d) On both the cutting jaw carrier and the pressure jaw carrier:
   – measure the distance between the round bar (5) on the jaw setting tool (2) and the machined surface (6) on of the yoke (7) with a feeler gauge.
   – the two distances must be equal. Adjust by means of the screws (8).

e) Repeat the procedure for the RH side cutting and pressure jaws.

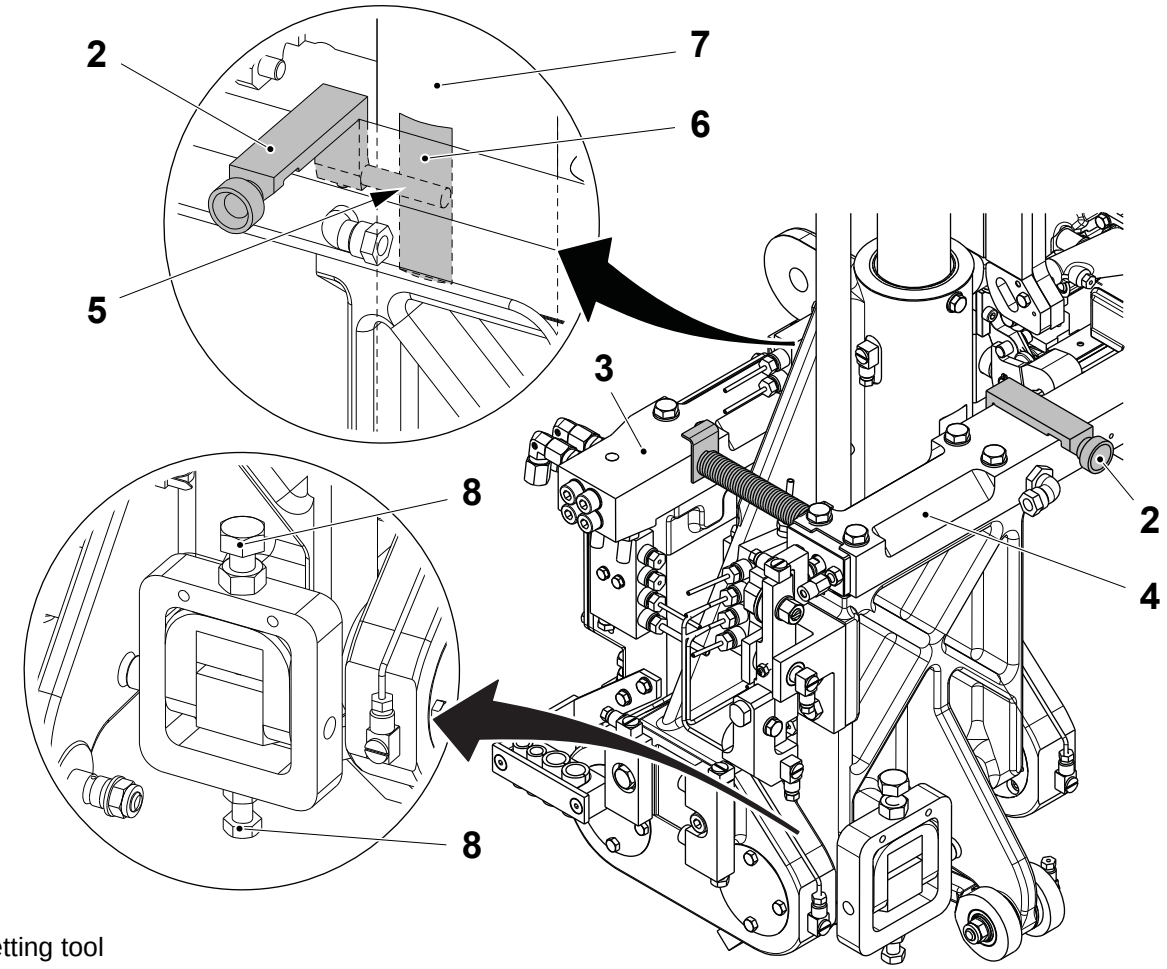

2 Jaw setting tool
3 Carrier (cutting)
4 Carrier (pressure)
5 Bar
6 Machined surface
7 Yoke
8 Screw

TechPub_2614345_0106 - 04_MM2819200_04en.fm

4-5 Jaw System - Set Volume Flaps Centring

Machine Status	PREPARATION
Special Equipment	Tool (6) TP No. 2640292-0000 Ruler (8) TP No. 2640814-0000 Template (9), see 10.2 Templates and Tools
SPC Reference	648549-0400

a) Use the GO TO POSITION function to slow inch the machine until the rollers (1) are inside the straight part of the cam (2) and the front and rear volume flaps (3) are parallel, see 4-2 Jaw System - Inching, Go To Position and Manual Operation Description.

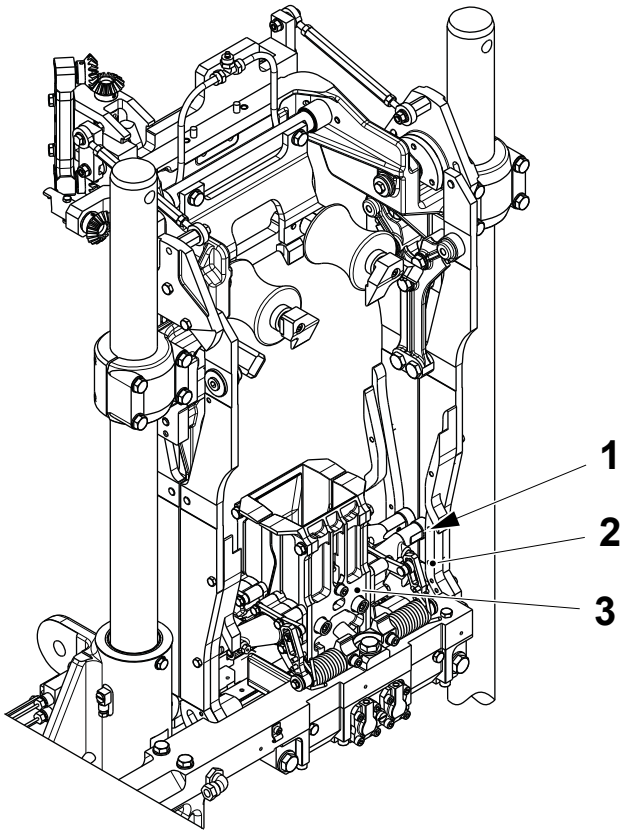

1 Roller
2 Cam
3 Volume flap

(Cont'd)

TechPub_2614345_0106 - 04_MM2819200_04en.fm

(Cont'd)

b) Loosen the screws (4) and remove the spacer (5).

c) Fit the tool (6) using the screws (4) and the locating pins (7).

d) Fit and lock the ruler tool (8).

e) Place the template (9) on the ruler tool (8) and slide it into the inner volume flap. Move the ruler tool (8) as required.

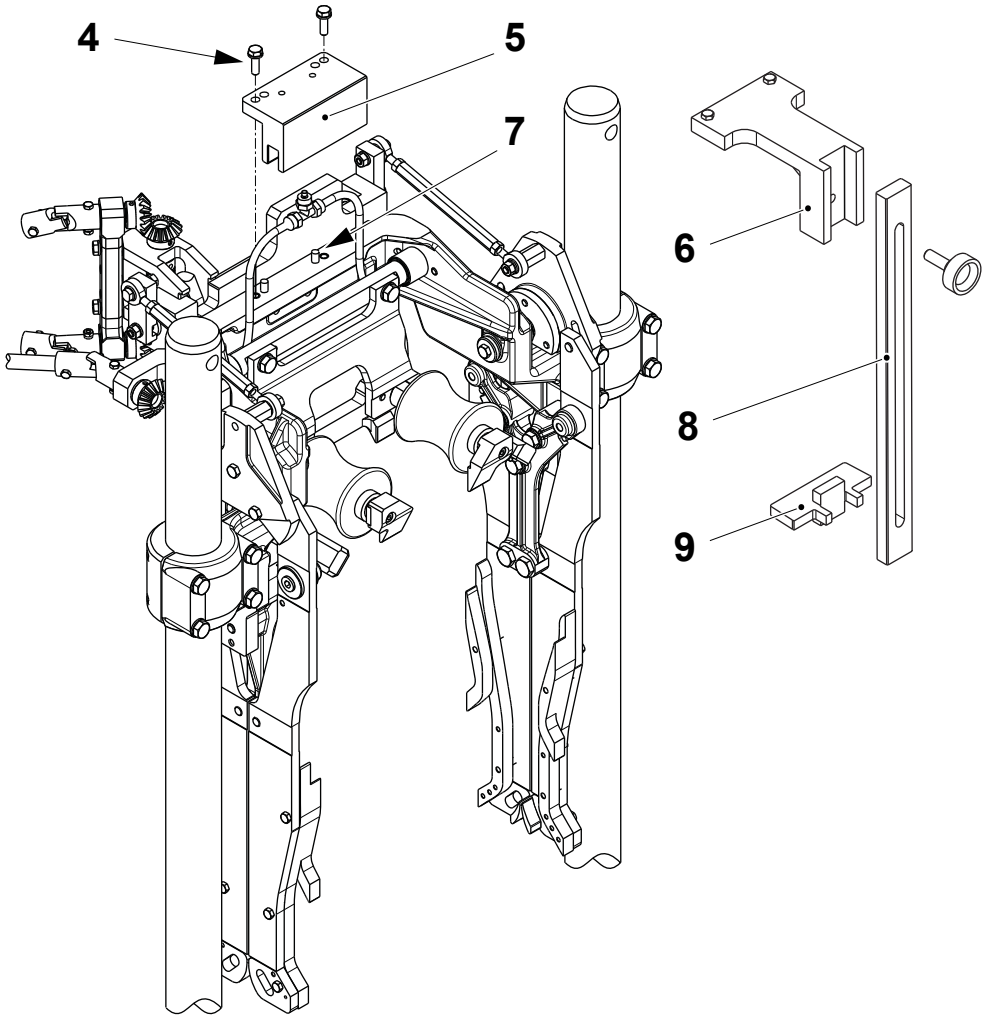

4 Screw
5 Spacer
6 Tool
7 Pin
8 Ruler tool
9 Template

(Cont'd)

TechPub_2614345_0106 - 04_MM2819200_04en.fm

(Cont'd)

f) Loosen the screws (10) on the pressure jaw carrier (11).

g) Adjust the inner volume flap so that the template (9) can be inserted to a depth of approx. 5-10 mm by moving the pressure jaw carrier (11).

h) Tighten the screws (10) and remove the template (9) from the ruler tool (8).

i) Loosen the screws (12) on the cutting jaw carrier (13).

j) Align the outer volume flap with the inner volume flap.

k) Tighten the screws (12) on the cutting jaw carrier (13).

l) Remove the ruler tool (8) and the tool (6).

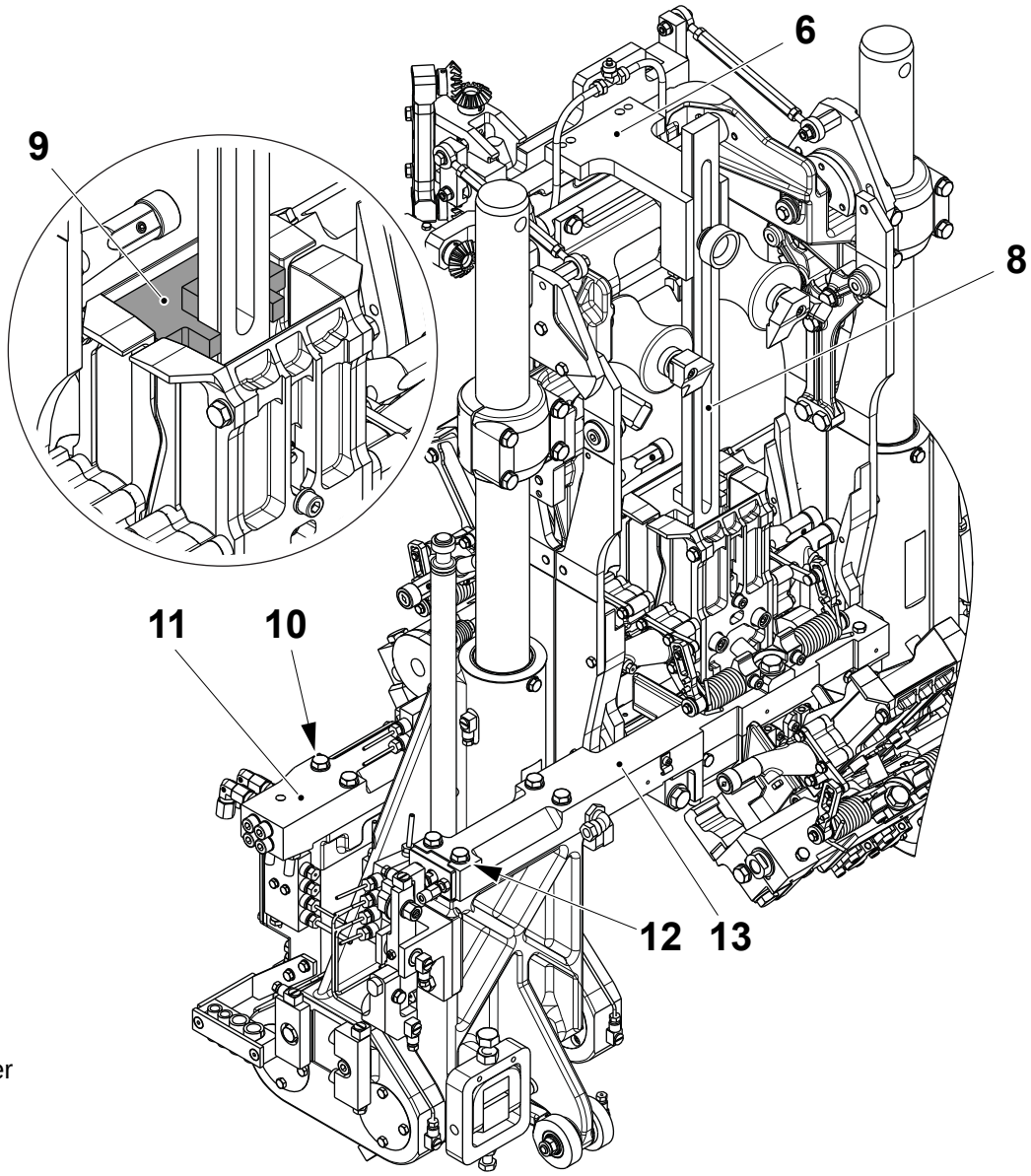

6 Tool
8 Ruler tool
9 Template
10 Screw
11 Pressure jaw carrier
12 Screw
13 Cutting jaw carrier

(Cont'd)

TechPub_2614345_0106 - 04_MM2819200_04en.fm

(Cont'd)

m) Set the distance **A** between the cutting jaw (13) and the screw (14).

n) Close the final folder doors and reset the alarms.

o) Repeat the procedure for the RH side jaw pair.

p) Fit the spacer (5) by means of the locating pins (7) and tighten the screws (4).

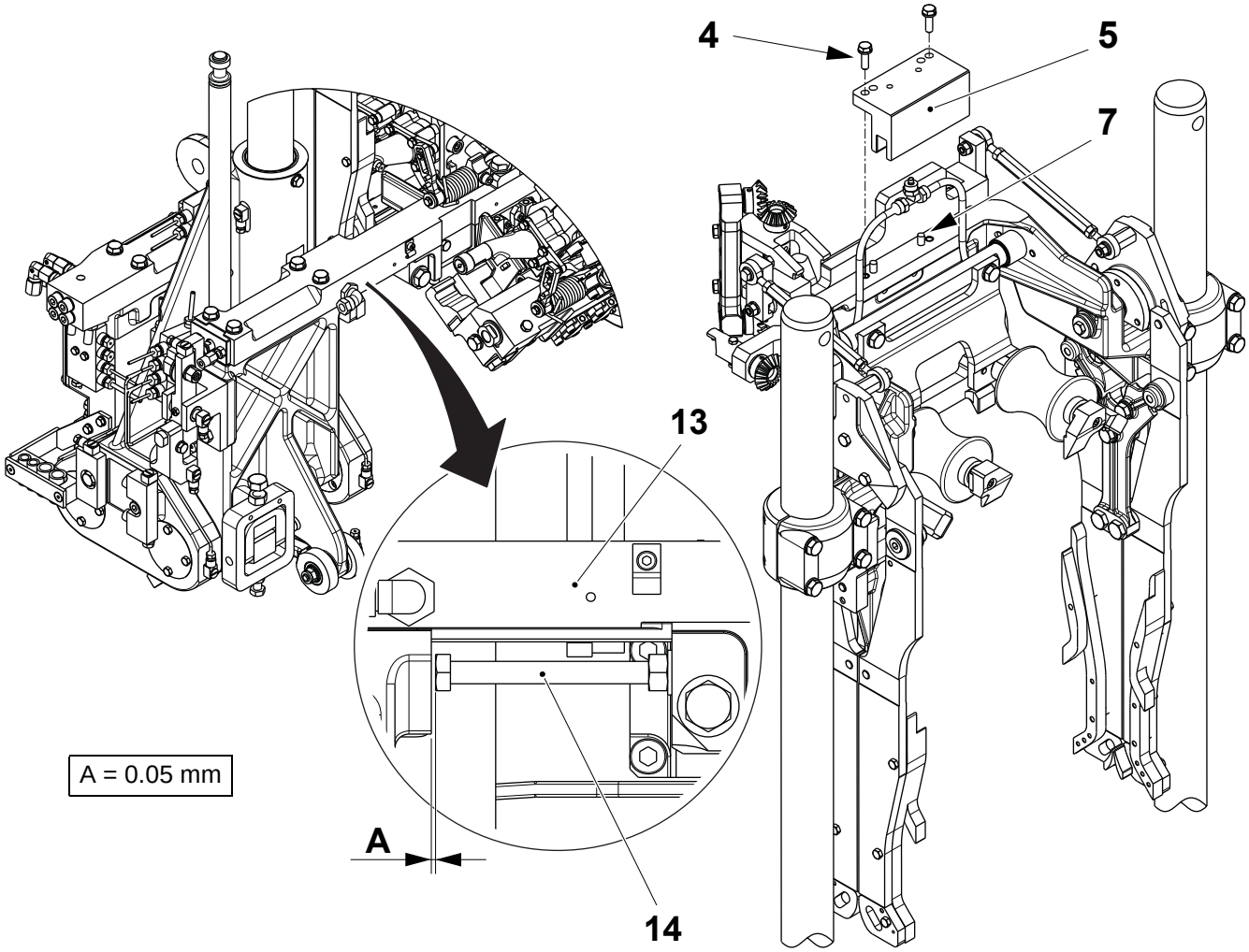

4 Screw
5 Spacer
7 Pin
10 Cutting jaw carrier
14 Screw

TechPub_2614345_0106 - 04_MM2819200_04en.fm

4-6 Jaw System - Set Jaw Gap

Machine Status	PREPARATION
Special Equipment	Compression Spring (1) TP No.72846-0101, Feeler Gauge
SPC Reference	648549-0400

a) Log on to the MAINTENANCE CONTROL window, see 9.6.3-2 HMI - User Management Log On.

b) Touch the PACKAGE FORMING UNIT button (1) to display the PACKAGE FORMING UNIT window.

c) Touch the LH SIDE JAW GAP icon (2) to display the JAW GAP window (3).

d) Touch the START button (4).

e) Touch the OK button (5) to start the machine movement.

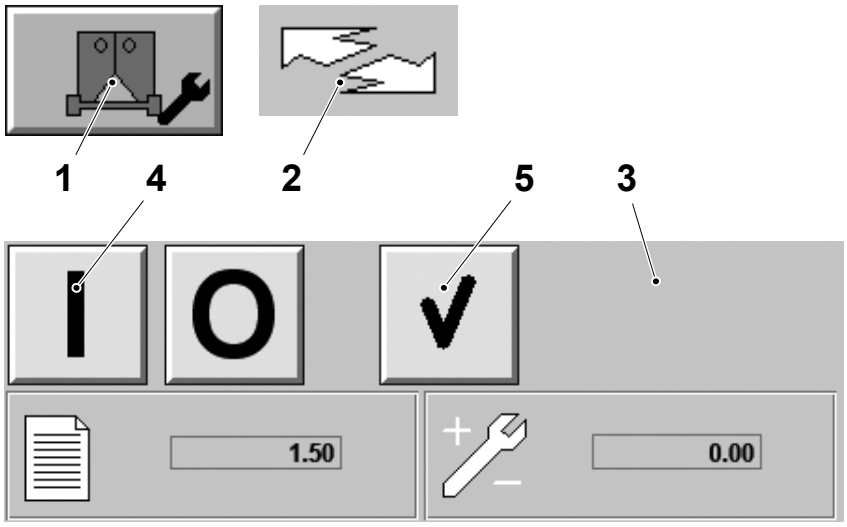

1 Package forming unit button
2 LH side jaw gap icon
3 Jaw gap window
4 Start button
5 OK button

(Cont'd)

TechPub_2614345_0106 - 04_MM2819200_04en.fm

(Cont'd)

f) Open the LH jaw system doors.

g) Fit the compression spring (6) between the two carriers.

h) Measure and note the distance **A** between the inductor (7) and the dolly (8) using a feeler gauge.

i) Remove the compression spring (6).

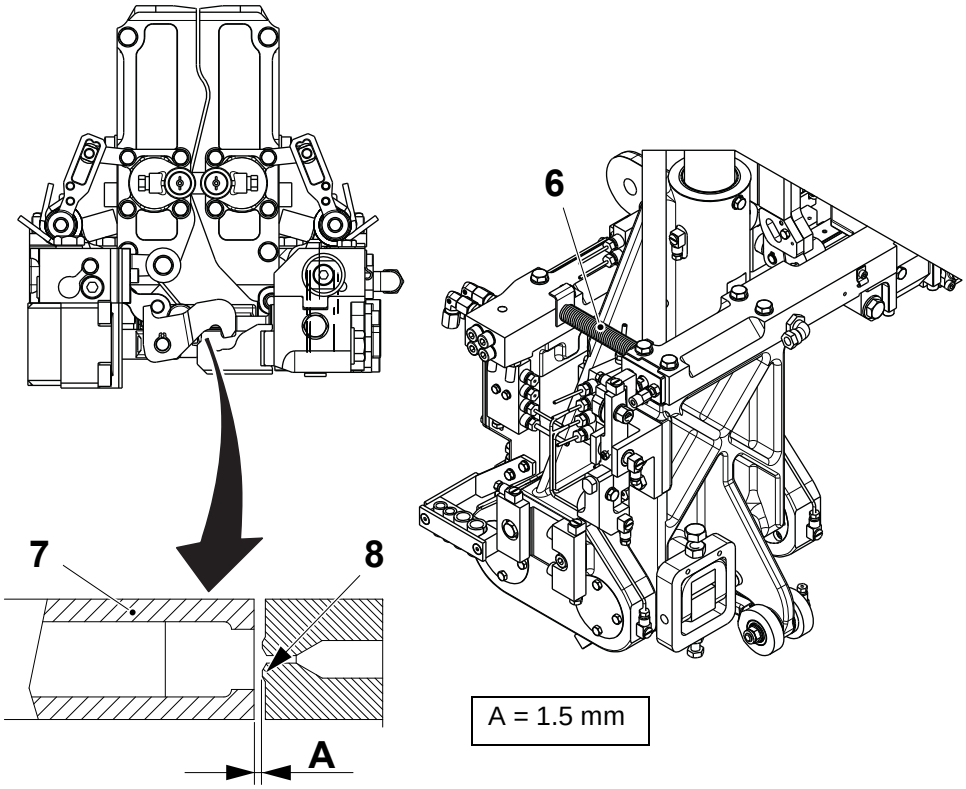

6 Compression spring
7 Inductor
8 Dolly

(Cont'd)

TechPub_2614345_0106 - 04_MM2819200_04en.fm

(Cont'd)

j) Using 1.5 mm as the nominal distance (9), calculate the correction value for the jaw gap, see the table of examples:

Measured distance A mm	Jaw gap variation (1.5-A) mm
1.30	0.20
1.35	0.15
1.40	0.10
1.45	0.05
1.50	0
1.55	-0.05
1.60	-0.10
1.65	-0.15
1.70	-0.20

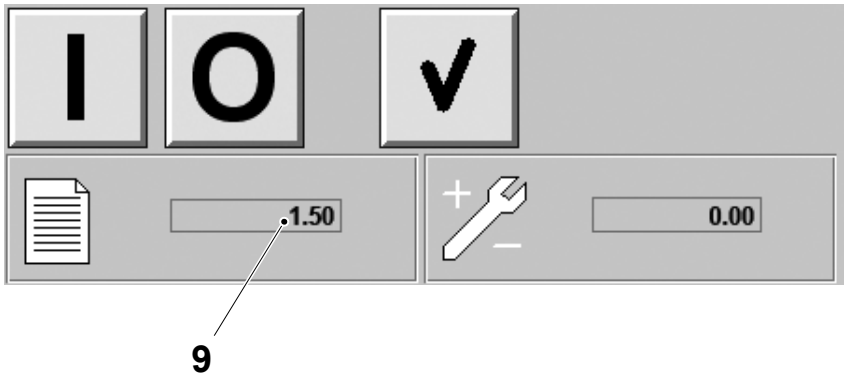

9 Nominal distance

(Cont'd)

TechPub_2614345_0106 - 04_MM2819200_04en.fm

(Cont'd)

Note! The correction value is expressed in millimeters.

k) Touch the ADJUSTMENT button (10).

l) Use the ARROW buttons (11) to enter the new value in the ADJUSTMENT box (12). Example:

Current value =	0.80
Correction value	-0.15
New value =	0.65

m) Touch the ENTER button (13) for two seconds to enter the new correction value.

n) Touch the RH SIDE JAW GAP icon (14) and repeat steps a) to l) for the RH side.

o) Touch the EXIT button (15) to exit the PACKAGE FORMING UNIT window.

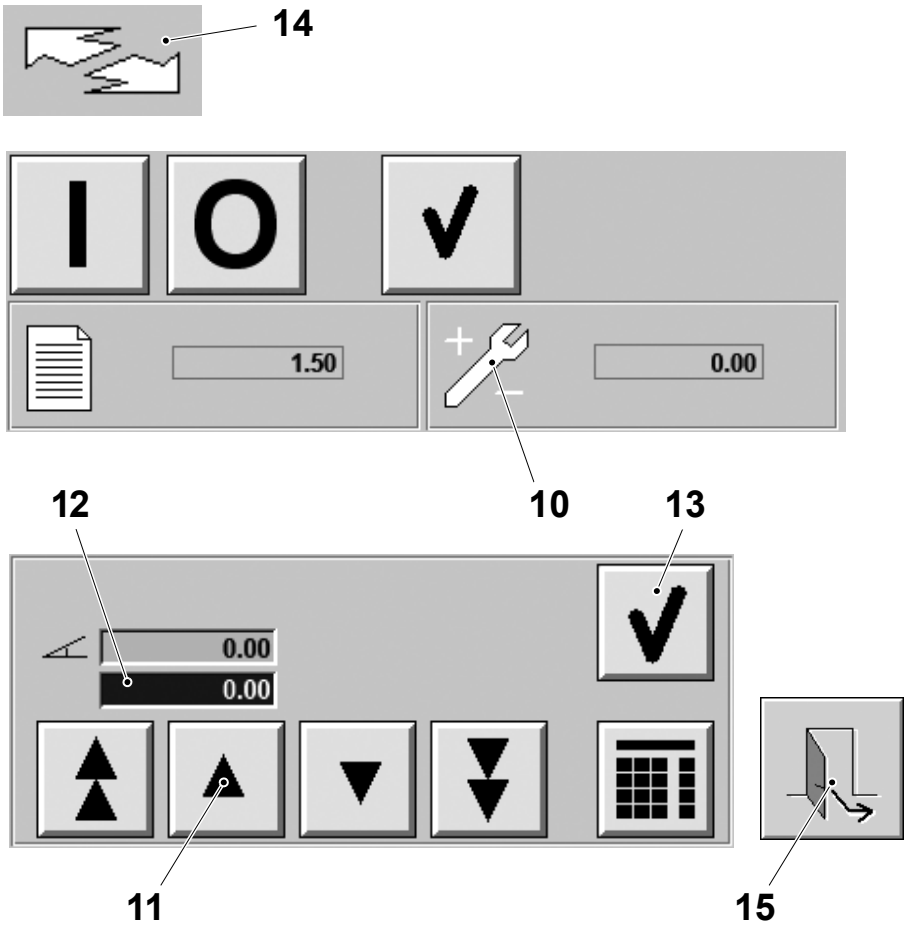

10 Adjustment button
11 Arrow button
12 Adjustment box
13 Enter button
14 RH side jaw gap icon
15 Exit button

TechPub_2614345_0106 - 04_MM2819200_04en.fm

4-7 Jaw System - Remove Front Volume Flaps

Machine Status	Mains Power ON Air ON Steam ON Water ON
SPC Reference	648549-0400

Note! Be careful not to loose the two o-rings (3).

a) Use the GO TO POSITION function to slow inch the machine to 24° LH side (204° RH side), see 4-2 Jaw System - Inching, Go To Position and Manual Operation Description.

b) Remove the screw (1).

c) Remove the front volume flap (2).

d) Repeat the procedure for the RH side.

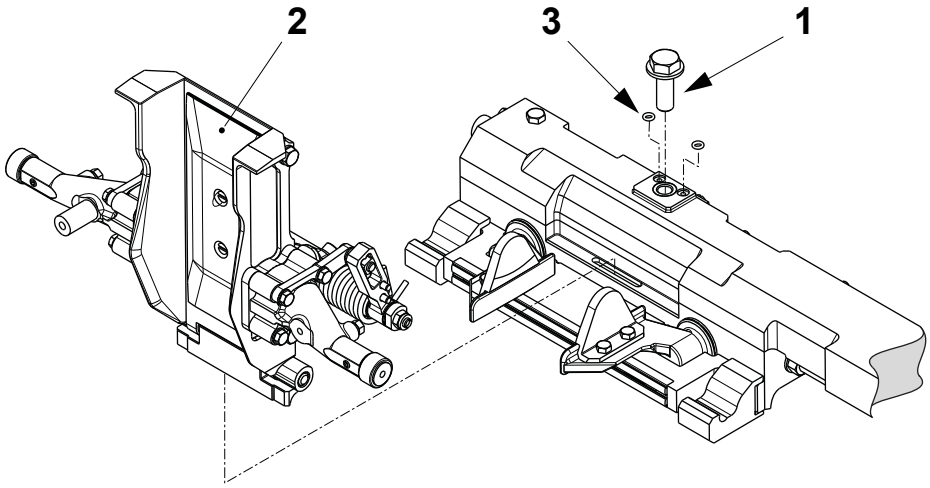

1 Screw
2 Volume flap
3 O-ring

TechPub_2614345_0106 - 04_MM2819200_04en.fm

4-8 Jaw System - Set Cutting Alignment

Machine Status	PREPARATION
SPC Reference	648549-0400

Preliminary Check

a) Make sure that there are no active alarms on the TPOP display.

b) Press the PROGRAM UP button (1) and make sure that the hydraulic unit starts.

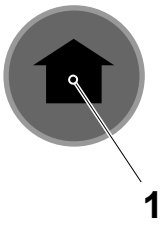

1 Program up button

(Cont'd)

TechPub_2614345_0106 - 04_MM2819200_04en.fm

(Cont'd)

c) Press the JAW SYSTEM INCHING button (2) until the jaw system is in a position where it is possible to access to the inductor (3).

d) Attach two pieces of tape (4) to the inductor (3), see Fig 1.

e) Slow inch the jaws together and make sure that the knife cuts through the tape (4).

f) Slow inch the jaws apart. Remove the upper RH and the lower LH pieces of tape (4).

g) Make sure that the cutting position is exactly horizontal and that the knife does not cut into the inductor, see Fig 2.

h) Repeat the procedure for the other jaw pair.

i) If the cutting is out of alignment, see Fig 3, check the knife, see 4.2.3-2 Knife - Change and then perform the basic setting as indicated on page 4-32.

Fig.1

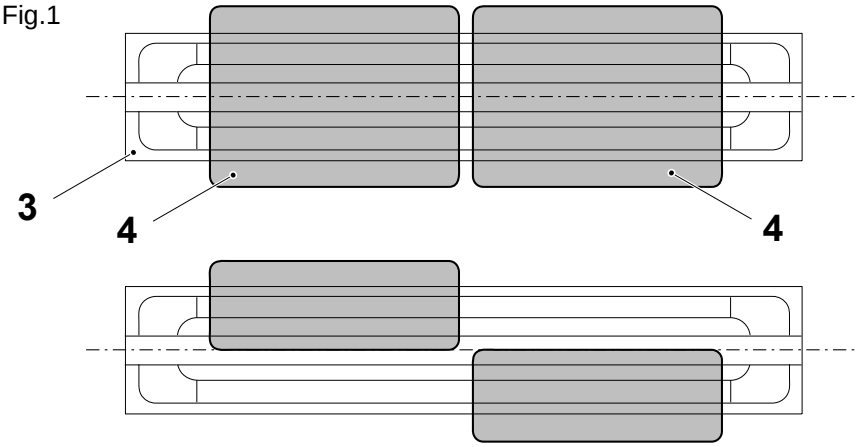

Fig.2 Correct cutting position

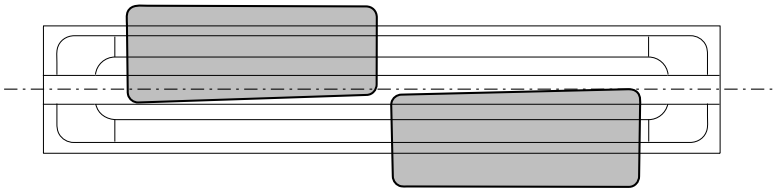

Fig.3 Out of alignment

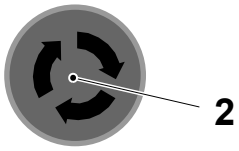

2 Jaw system inching button
3 Inductor
4 Tape

(Cont'd)

TechPub_2614345_0106 - 04_MM2819200_04en.fm

(Cont'd)

Basic Setting

a) Use the GO TO POSITION function to slow inch the machine to 204° LH side, see 4-2 Jaw System - Inching, Go To Position and Manual Operation Description.

b) Use a ruler to make sure that the bottom of the knife holder (5) is level with the bottom of the inductor (3).

c) If the difference is bigger than 0.1 mm, the cutting guide must be adjusted using shims (8).

d) Loosen the screws (6) and lift the carrier (7) on the cutting side.

e) Remove or add the same number of shims (8) on both sides of the carrier.

f) Check the distance **A** between the carrier (7) and the screw (9).

g) Check the T-gap, see 4-12 Jaw System - Check T-gap.

h) Use the GO TO POSITION function to slow inch the machine to 24° LH side, see 4-2 Jaw System - Inching, Go To Position and Manual Operation Description, and repeat the procedure to set the RH jaw.

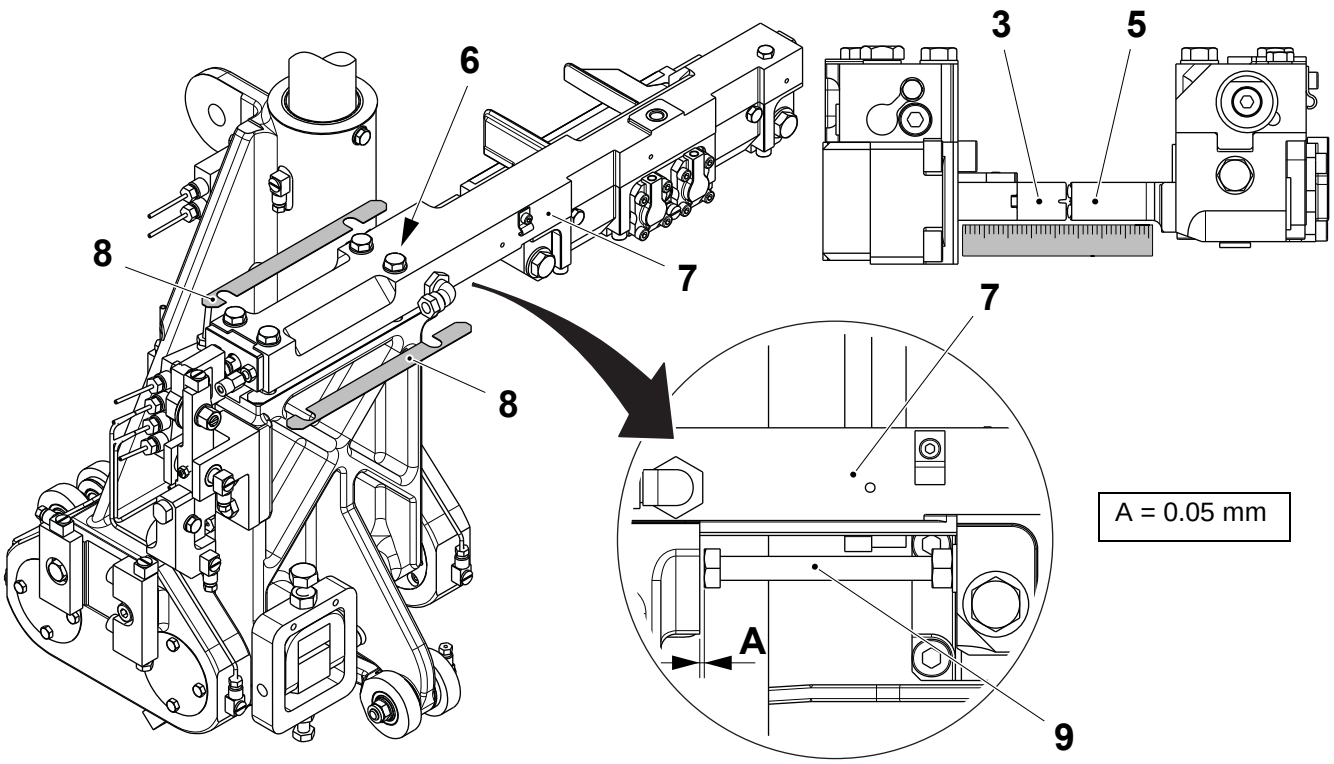

3 Inductor
5 Knife holder
6 Screw
7 Carrier
8 Shim
9 Screw

TechPub_2614345_0106 - 04_MM2819200_04en.fm

4-9 Jaw System - Set Jaw Over Jaw

Machine Status	PREPARATION
Special Equipment	Rod Micrometer
SPC Reference	648549-0400

Equalize Jaw Over Jaw

The following procedure describes how to adjust the jaw system so that the position of the LH and RH sides of the jaw system are equal and correctly balanced to compensate for the mechanical tolerances. After the equalization the jaw system must be set to the nominal value for the package to be produced, see Set Nominal Jaw Over Jaw.

a) Remove the LH and RH front volume flaps, see 4-7 Jaw System - Remove Front Volume Flaps.

b) Log on to the `MAINTENANCE CONTROL` window, see 9.6.3-2 HMI - User Management Log On.

c) Touch the `PACKAGE FORMING UNIT` button (1) to display the `PACKAGE FORMING UNIT` window.

d) Touch the `JAW OVER JAW` icon (2) to display the `JAW OVER JAW` window (3).

e) Touch the `LEFT JAW OVER RIGHT JAW` button (4).

f) Touch the `OK` button (5) to start the machine movement.

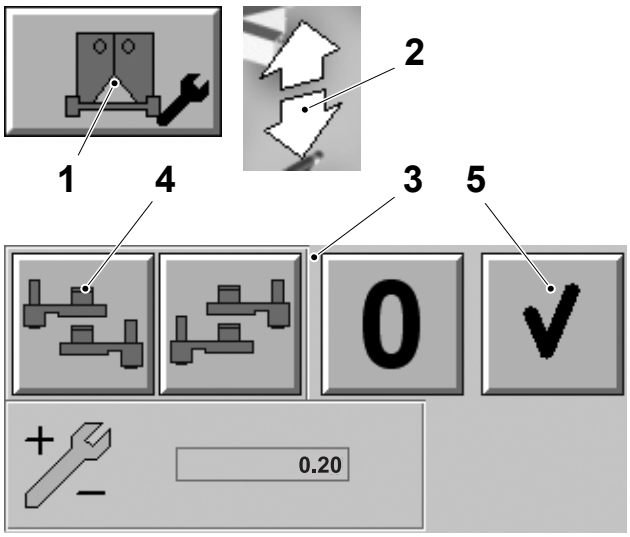

1 Package forming unit button
2 Jaw over jaw icon
3 Jaw over jaw window
4 Left jaw over right jaw button
5 OK button

(Cont'd)

TechPub_2614345_0106 - 04_MM2819200_04en.fm

(Cont'd)

g) Open the LH side jaw system doors and use a rod micrometer to measure and record the distance **A** between the inductors (6).

h) Close the LH jaw system doors and reset any alarms on the TPOP.

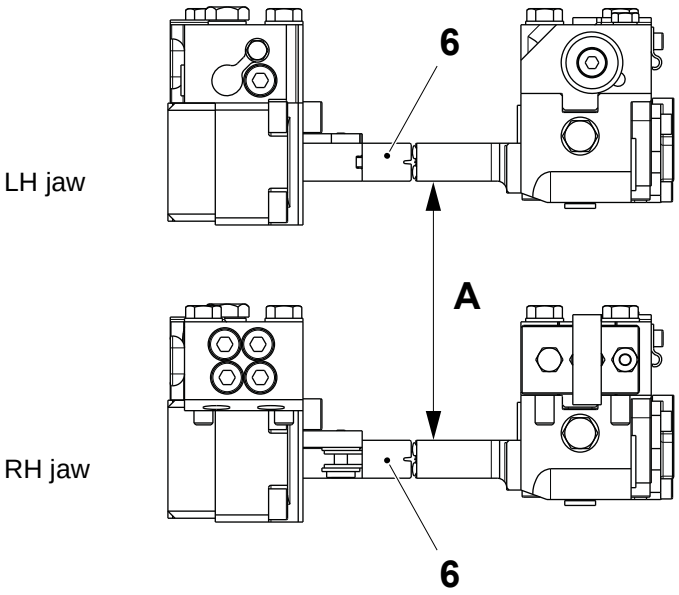

6 Inductor

(Cont'd)

TechPub_2614345_0106 - 04_MM2819200_04en.fm

(Cont'd)

i) Touch the RIGHT JAW OVER LEFT JAW button (7).

j) Touch the OK button (5) to start the machine movement.

k) Open the RH side jaw system doors and use a rod micrometer to measure and record the distance **B** between the inductors (6).

l) Close the LH jaw system doors and reset any alarms on the TPOP.

If the difference between the distances **A** and **B** exceeds 0.1 mm, adjust the setting as described on the following page.

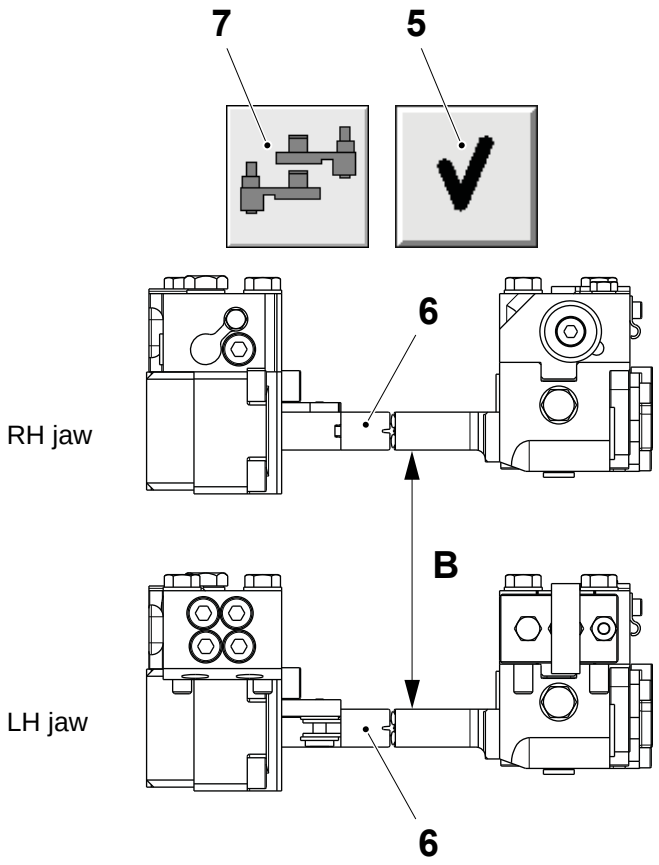

5 OK button
6 Inductor
7 Right jaw over left jaw button

(Cont'd)

TechPub_2614345_0106 - 04_MM2819200_04en.fm

(Cont'd)

m) Calculate the equalization value for the jaw over jaw by means of the following formula:

$$\text{CurrentValue} + \frac{\left[\text{A} - \text{B}\right]}{2} = \text{NewValue}$$

For example: If distance **A** equals 250.00 mm and distance **B** equals 250.10 mm and the value in the SETTING box (8) is currently 0.20 mm, then the new equalization value to be entered is calculated as follows:

$$0.2 + \frac{\left[250.00 - 250.10\right]}{2} = 0.15$$

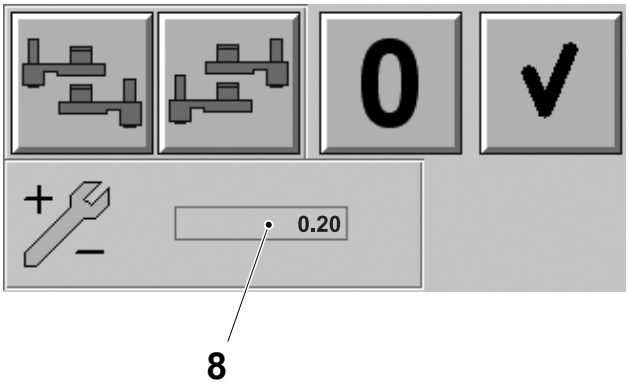

8 Setting box

(Cont'd)

TechPub_2614345_0106 - 04_MM2819200_04en.fm

(Cont'd)

n) Touch the ADJUSTMENT button (9).

o) Use the ARROW buttons (10) to enter the new value in the ADJUSTMENT box (11).

p) Touch the OK button (12) to enter the new correction value.

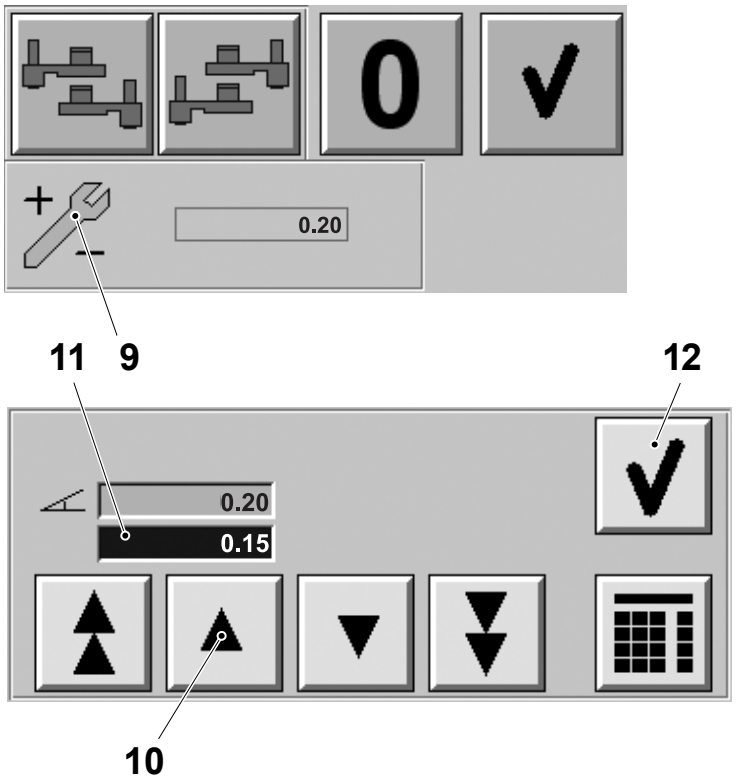

9 Adjustment button
10 Arrow button
11 Adjustment box
12 OK button

(Cont'd)

TechPub_2614345_0106 - 04_MM2819200_04en.fm

(Cont'd)

Set Nominal Jaw Over Jaw

The following procedure describes how to adjust the position of the LH and RH sides of the jaw system to the nominal value, the procedure must only be performed after equalization, see Equalize Jaw Over Jaw on page 4-33.

a) If not already done, Log on to the `MAINTENANCE CONTROL` window, see 9.6.3-2 HMI - User Management Log On.

b) Touch the `PACKAGE FORMING UNIT` button (1) to display the `PACKAGE FORMING UNIT` window.

c) Touch the `NOMINAL JAW OVER JAW` icon (2) to display the `NOMINAL JAW OVER JAW` window (3).

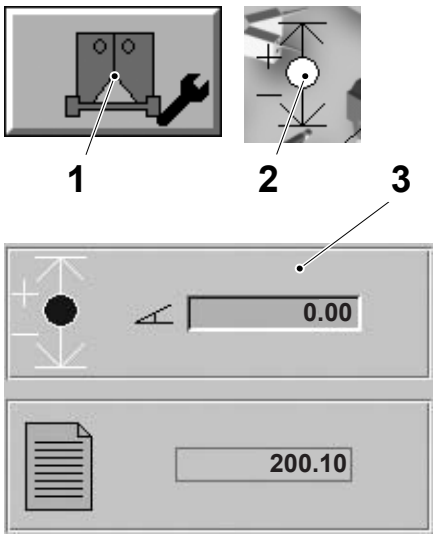

1 Package forming unit button
2 Nominal jaw over jaw icon
3 Nominal jaw over jaw window

(Cont'd)

TechPub_2614345_0106 - 04_MM2819200_04en.fm

(Cont'd)

d) Calculate the correction value for the jaw over jaw using the following formula:

Nominalvalue – Equalizedvalue + Currentcorrectionvalue = Newcorrectionvalue

For example:

If the equalized value is 200.15 and the nominal value in the NOMINAL VALUE box (4) is 200.10 and the current correction value in the CORRECTION VALUE box (5) is 0.20, then the new correction value to be entered is calculated as follows:

200.10 – 200.15 + 0.2 = 0.15

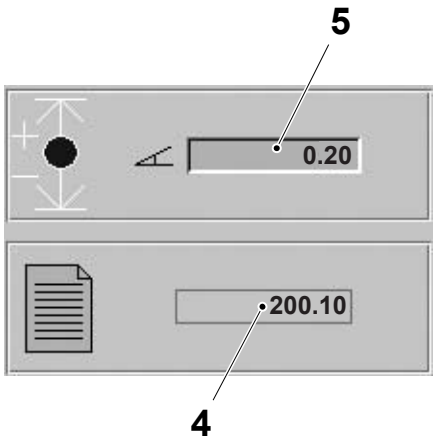

4 Nominal jaw value box
5 Correction value box

(Cont'd)

TechPub_2614345_0106 - 04_MM2819200_04en.fm

(Cont'd)

e) Touch the ADJUSTMENT icon (6) to display the ADJUSTMENT window (7).

f) Use the ARROW buttons (8) to enter the correction value into the NEW VALUE box (9).

g) Touch the OK button (10) to confirm the correction value.

h) Fit the front volume flaps, see 4-11 Jaw System - Install Front Volume Flaps.

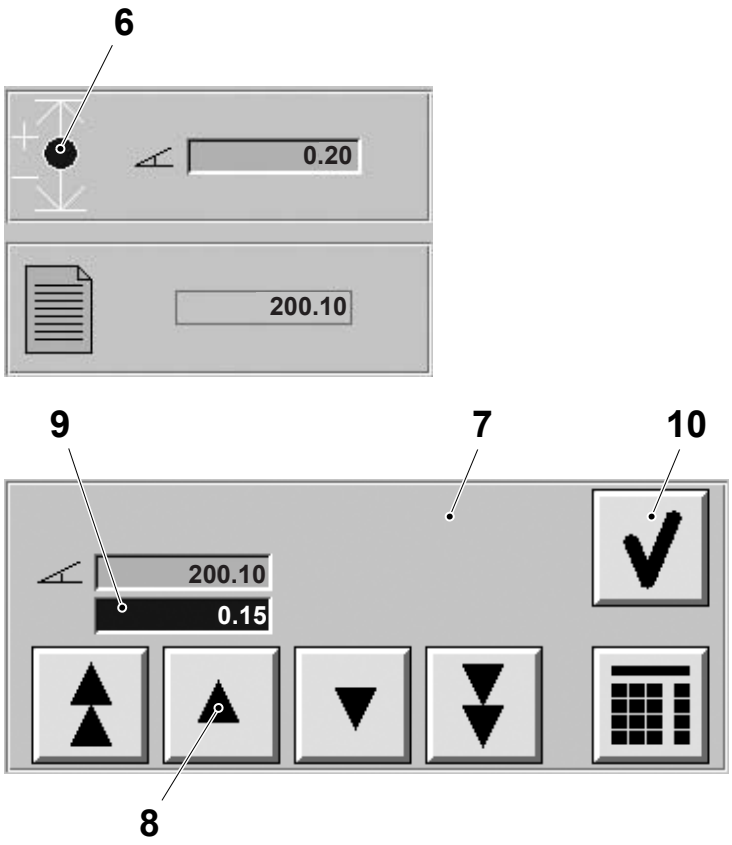

6 Adjustment icon
7 Adjustment window
8 Arrow button
9 New value box
10 OK button

TechPub_2614345_0106 - 04_MM2819200_04en.fm

4-10 Jaw System - Set Folding Flaps

Machine Status	PREPARATION
Special Equipment	Dynamometer TP No. 74767-0102
SPC Reference	648549-0400

Set Home Position

a) Set the belt tension on both the LH and RH side drive units, see 4.1.5.1-4 Drive Unit - Set Belt Tension.

b) Log on to the `MAINTENANCE CONTROL` window, see 9.6.3-2 HMI - User Management Log On.

c) Touch the `PACKAGE FORMING UNIT` button (1) to display the `PACKAGE FORMING UNIT` window.

d) Touch the `FOLDING FLAPS` icon (2) to display the `FOLDING FLAPS` window (3).

e) Touch the `LEFT` button (4) and then touch the `REFERENCING` button (5).

f) Touch the `OK` button (6) and wait for the jaw movement to complete.

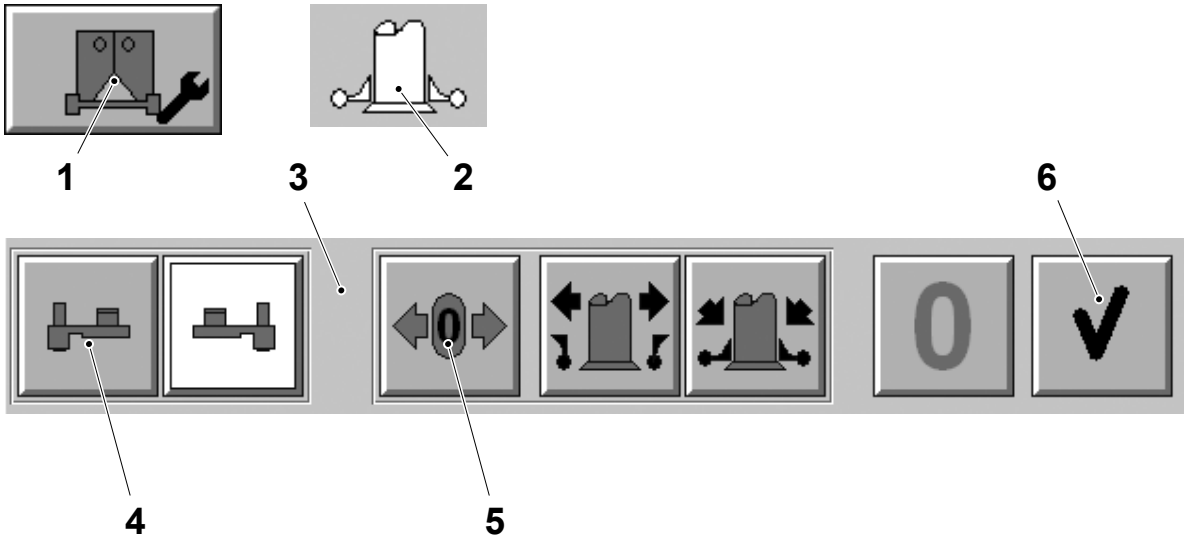

1 Package forming unit button
2 Folding flaps icon
3 Folding flaps window
4 Left button
5 Referencing button
6 OK button

TechPub_2614345_0106 - 04_MM2819200_04en.fm

(Cont'd)

Note! Make sure that the design correction servo motor reaches the home position.

g) Loosen the screw (7) and align the position of the sensor (8) with the pin (9) on the pulley (10).

h) Set the distance **A** between the sensor (8) and the pin (9).

i) Tighten the screw (7).

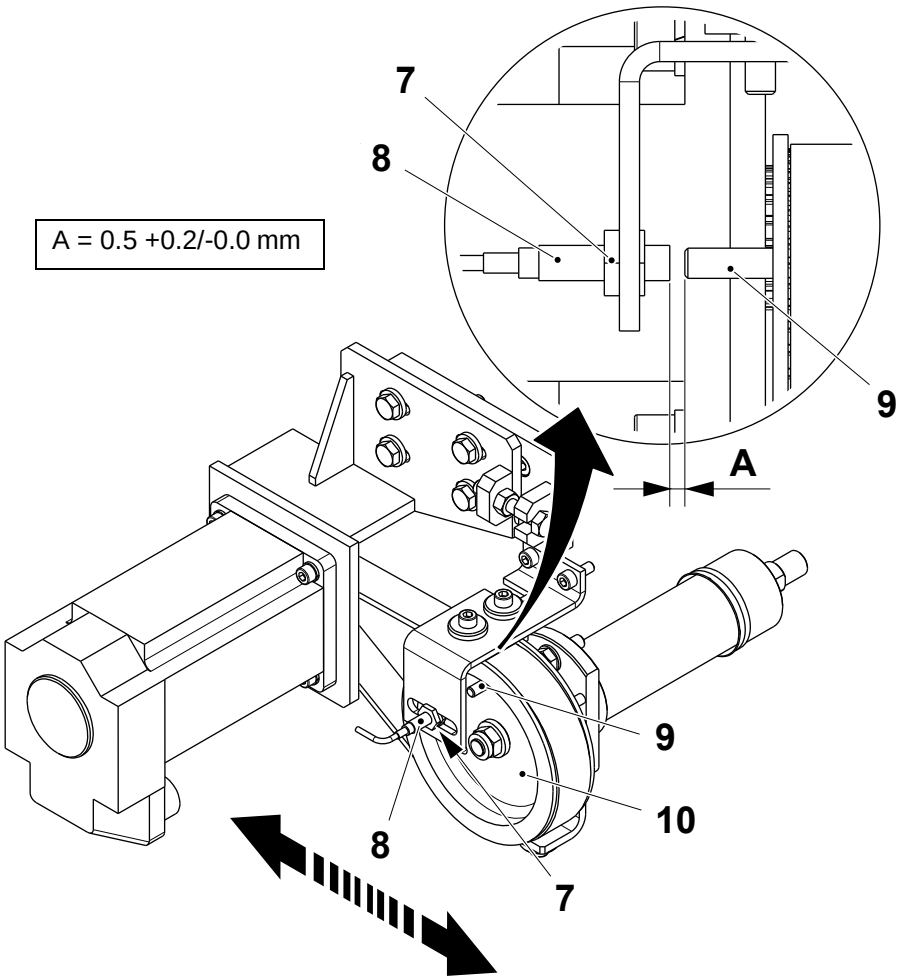

7 Screw
8 Sensor
9 Pin
10 Pulley

(Cont'd)

TechPub_2614345_0106 - 04_MM2819200_04en.fm

(Cont'd)

j) Open the jaw system doors and loosen the two screws (11) on the clutch (12).

Note! Set the distance **B** on the outer side of the beam (16). For the RH the distance **B** is set at the top of the design correction device and for the LH side the distance **B** is set at the bottom of the design correction device.

k) Rotate the shaft (13) and set the distance **B** between the surface of the bar (14) and the surface of the strut (15).

l) Tighten the screws (11).

m) Repeat the procedure for the RH side from point e) on page 4-41, touching the `RIGHT` button where appropriate.

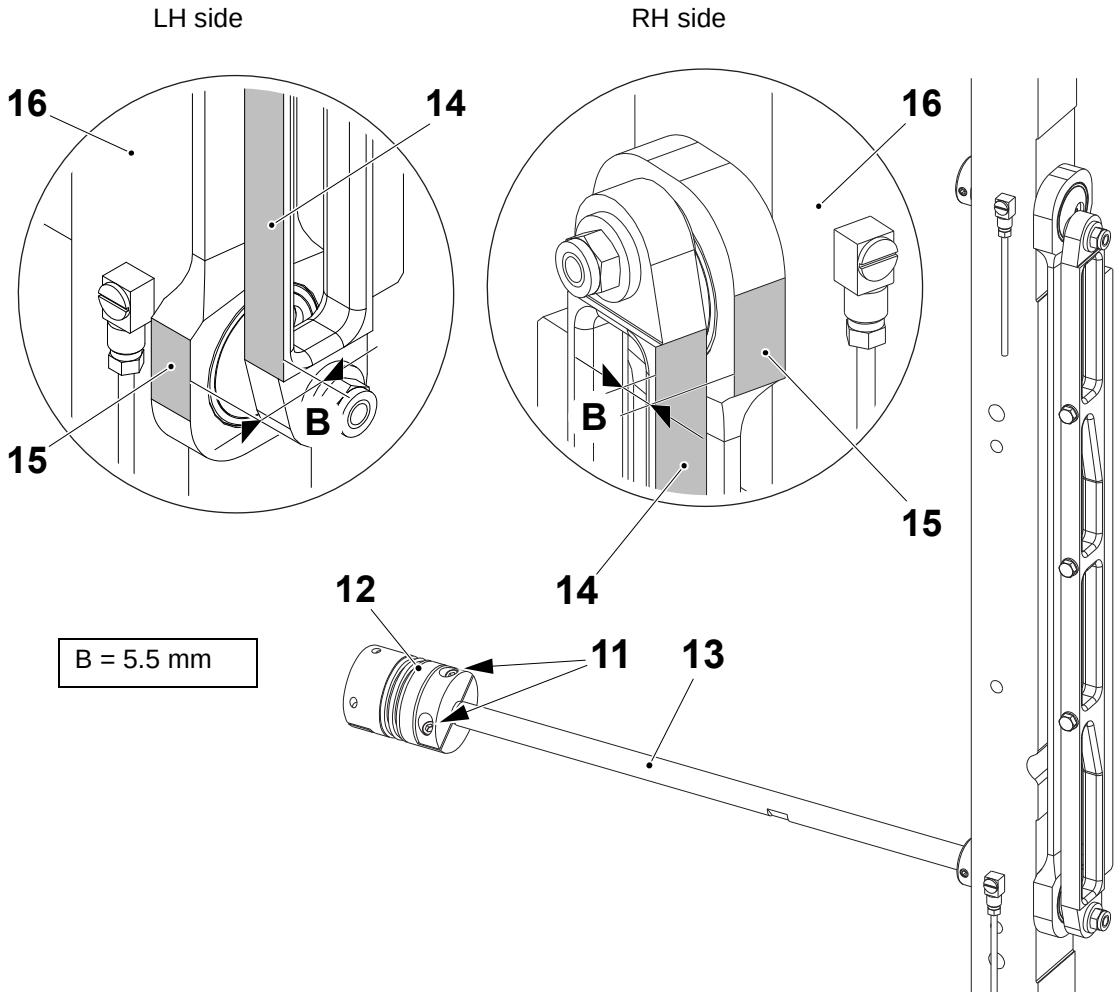

11 Screw
12 Clutch
13 Shaft
14 Bar
15 Strut
16 Beam

(Cont'd)

TechPub_2614345_0106 - 04_MM2819200_04en.fm

(Cont'd)

Set Folding Flap Position

a) If not already done, log on to the MAINTENANCE CONTROL window, see 9.6.3-2 HMI - User Management Log On.

b) Touch the PACKAGE FORMING UNIT button (1) to display the PACKAGE FORMING UNIT window.

c) Touch the FOLDING FLAPS icon (2) to display the FOLDING FLAPS window (3).

d) Touch the LEFT button (4) and then touch the OPEN button (5).

e) Touch the OK button (6) and wait for the jaw movement to complete.

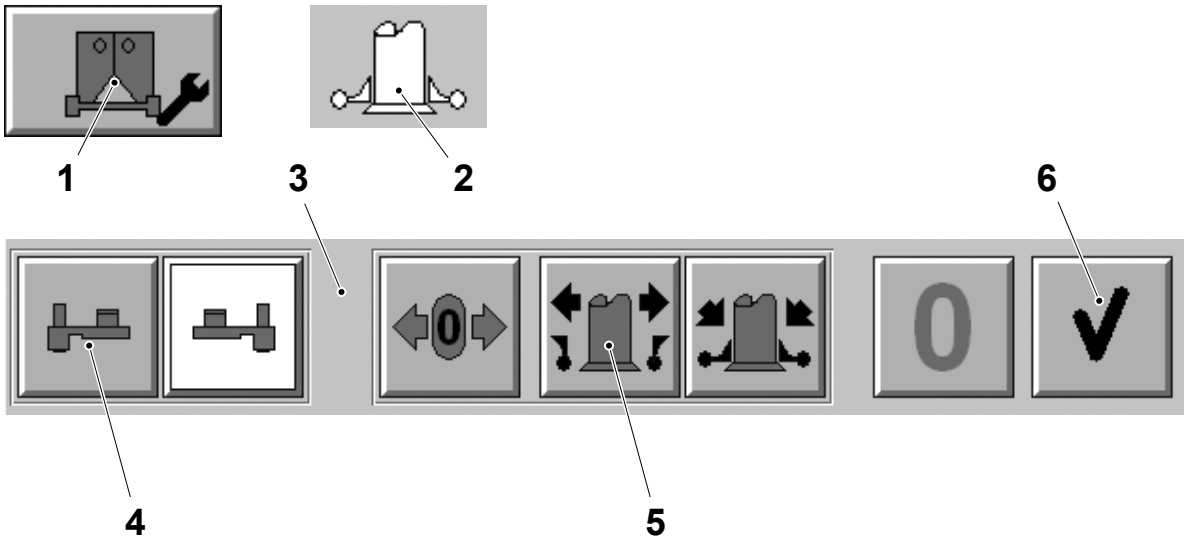

1 Package forming unit button
2 Folding flaps icon
3 Folding flaps window
4 Left button
5 Open button
6 OK button

(Cont'd)

TechPub_2614345_0106 - 04_MM2819200_04en.fm

(Cont'd)

f) Set the distance **C** between the LH side folding flap cam (7) and the roller (8) using the screw (9).

g) Release the joint (10) and move the roller from the folding flap cam (7).

h) Use a dynamometer (11) to set the release force of the joint (10) using the spring loaded screw (12).

i) Close the final folder doors and reset the alarms.

LH side shown

LH side shown

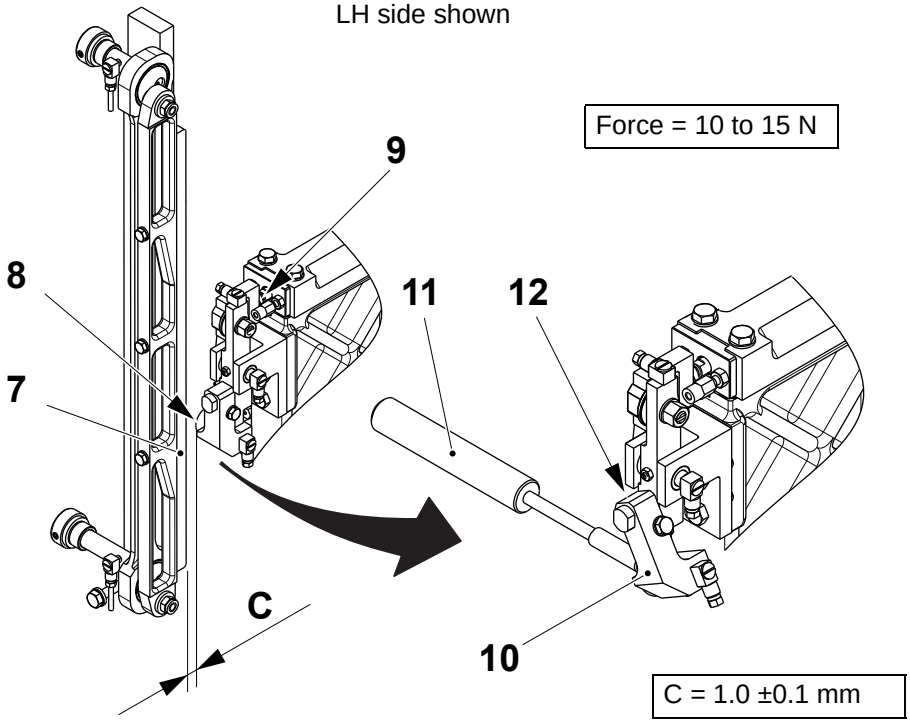

7 Cam
8 Roller
9 Screw
10 Joint
11 Dynamometer
12 Spring loaded screw

(Cont'd)

TechPub_2614345_0106 - 04_MM2819200_04en.fm

(Cont'd)

j) Touch the LEFT button (4) and then touch the CLOSE button (13).

k) Touch the OK button (6) and wait for the jaw movement to complete.

l) Put the joint (10) and the roller in the working position next to the cam.

m) Set the distance **D** between the folding flaps (14) and the cutting jaw (15) using the screw (16).

n) Repeat the procedure for the RH side from point d) on page 4-44, touching the RIGHT button where appropriate.

Package	**D ±0.05 (mm)**
TBA 500 B - TBA 1000 B - TBA 500 Sq - TBA 1000 Sq TBA 1000 S	0.9
TPA 750 Sq - TPA 1000 Sq - TBA 1500 S - TBA 2000 S	1.1

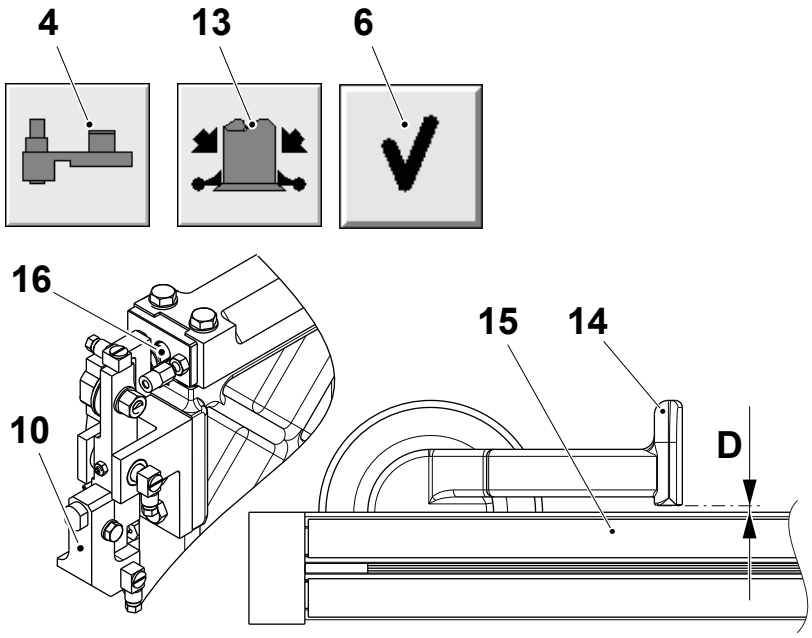

4 Left button
6 OK button
10 Joint
13 Close button
14 Folding flap
15 Cutting jaw
16 Screw

TechPub_2614345_0106 - 04_MM2819200_04en.fm

4-11 Jaw System - Install Front Volume Flaps

Machine Status	Mains Power ON Air OFF Steam ON Water OFF
SPC Reference	648549-0400

Note! Make sure that the o-rings (3) are fitted.

a) Use the GO TO POSITION function to slow inch the machine to 24° LH side (204° RH side), see 4-2 Jaw System - Inching, Go To Position and Manual Operation Description.

b) Fit the front volume flap (1) onto the cutting jaw.

c) Tighten the screw (2).

d) Repeat the procedure for the RH side.

e) Activate the manual lubrication cycle to ensure that the volume flaps are sufficiently lubricated.

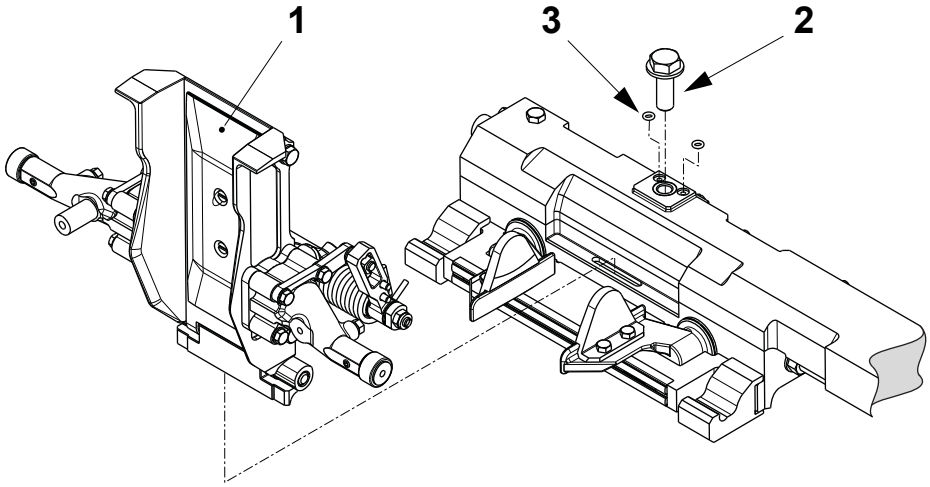

1 Volume flap
2 Screw
3 O-ring

TechPub_2614345_0106 - 04_MM2819200_04en.fm

4-12 Jaw System - Check T-gap

Machine Status	PREPARATION
SPC Reference	648549-0400

a) Log on to the MAINTENANCE CONTROL window, see 9.6.3-2 HMI - User Management Log On.

b) Touch the PACKAGE FORMING UNIT button (1) to display the PACKAGE FORMING UNIT window.

c) Touch the JAW OVER JAW icon (2) to display the JAW OVER JAW window (3).

d) Touch the LEFT JAW OVER RIGHT JAW button (4).

e) Touch the OK button (5) and wait for the jaw movement to complete.

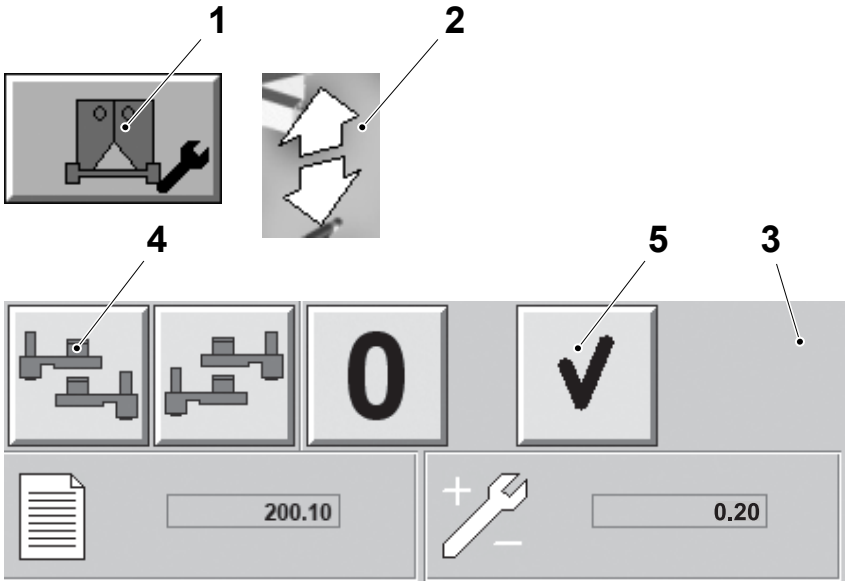

1 Package forming unit button
2 Jaw over jaw icon
3 Jaw over jaw window
4 Left jaw over right jaw button
5 OK button

(Cont'd)

TechPub_2614345_0106 - 04_MM2819200_04en.fm

(Cont'd)

f) Make sure that the volume flaps (6) are exactly perpendicular to the carriers (7).

Note! Always check the distance **A** on both the volume flaps as the shims on the cutting jaw could cause a slight difference.

g) Use a feeler gauge to measure the distance **A** between the top of the volume flaps (6) and the bottom of the inductor (8).

h) Check the T-gap for the RH over LH jaws. Repeat the procedure detailed in items b) to g), touching the `RIGHT JAW OVER LEFT JAW` button (9) where appropriate.

i) If either of the distances **A** (T-gap) are incorrect repeat the basic setting, see 4-1 Jaw System - Setting Sequence.

Package	A = min. (mm)
TBA 500 B - TBA 1000 B - TBA 500 Sq - TBA 1000 Sq TPA 750 Sq - TPA 1000 Sq - TBA 1000 S - TBA 1500 S TBA 2000 S	1.0

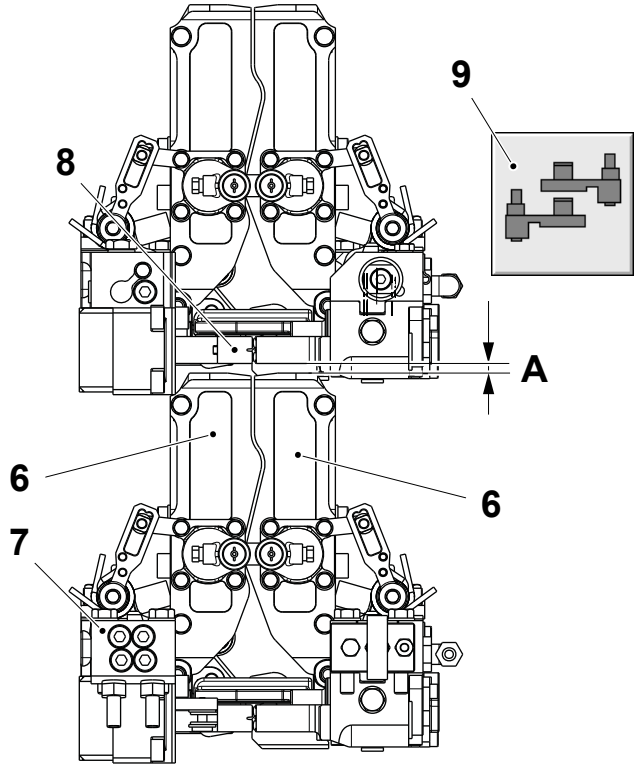

6 Volume flap
7 Carrier
8 Inductor
9 Right jaw over left jaw button

TechPub_2614345_0106 - 04_MM2819200_04en.fm

4-13 Jaw System - Set Volume Adjuster Height

Machine Status	PREPARATION
SPC Reference	2613646-0100

a) Log on to the MAINTENANCE CONTROL window, see 9.6.3-2 HMI - User Management Log On.

b) Touch the PACKAGE FORMING UNIT button (1) to display the PACKAGE FORMING UNIT window.

c) Touch the VOLUME ADJUSTER icon (2) to display the VOLUME ADJUSTER window (3).

d) Touch the START button (4).

e) Touch the OK button (5) and wait for the jaw movement to complete.

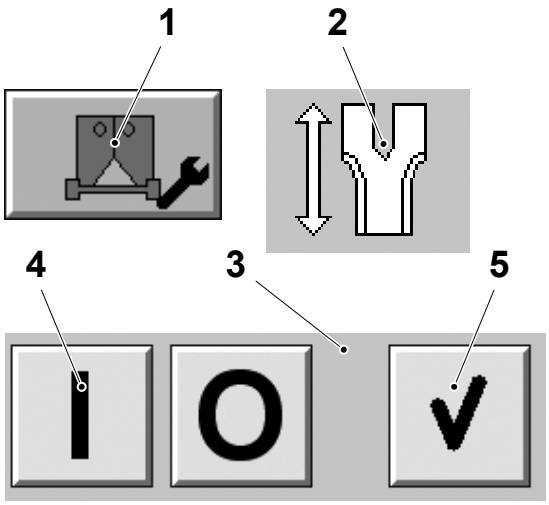

1 Package forming unit button
2 Volume adjuster icon
3 Volume adjuster window
4 Start button
5 OK button

(Cont'd)

TechPub_2614345_0106 - 04_MM2819200_04en.fm

(Cont'd)

Note! Valid for all volumes except TBA 500 B, TBA 500 Sq and TPA 750 Sq. For TBA 500 B, TBA 500 Sq and TPA 750 Sq see page 4-52.

a) Loosen the screws (1) on both the LH and RH sides.

b) Adjust the volume adjuster (2) up or down so that the bottom of the roller (3), on the volume flap (4), is aligned with the bottom of the rail bracket (5), see the illustration below.

c) Tighten the screws (1). Check on the opposite side that the volume flaps movement is smooth and uniform.

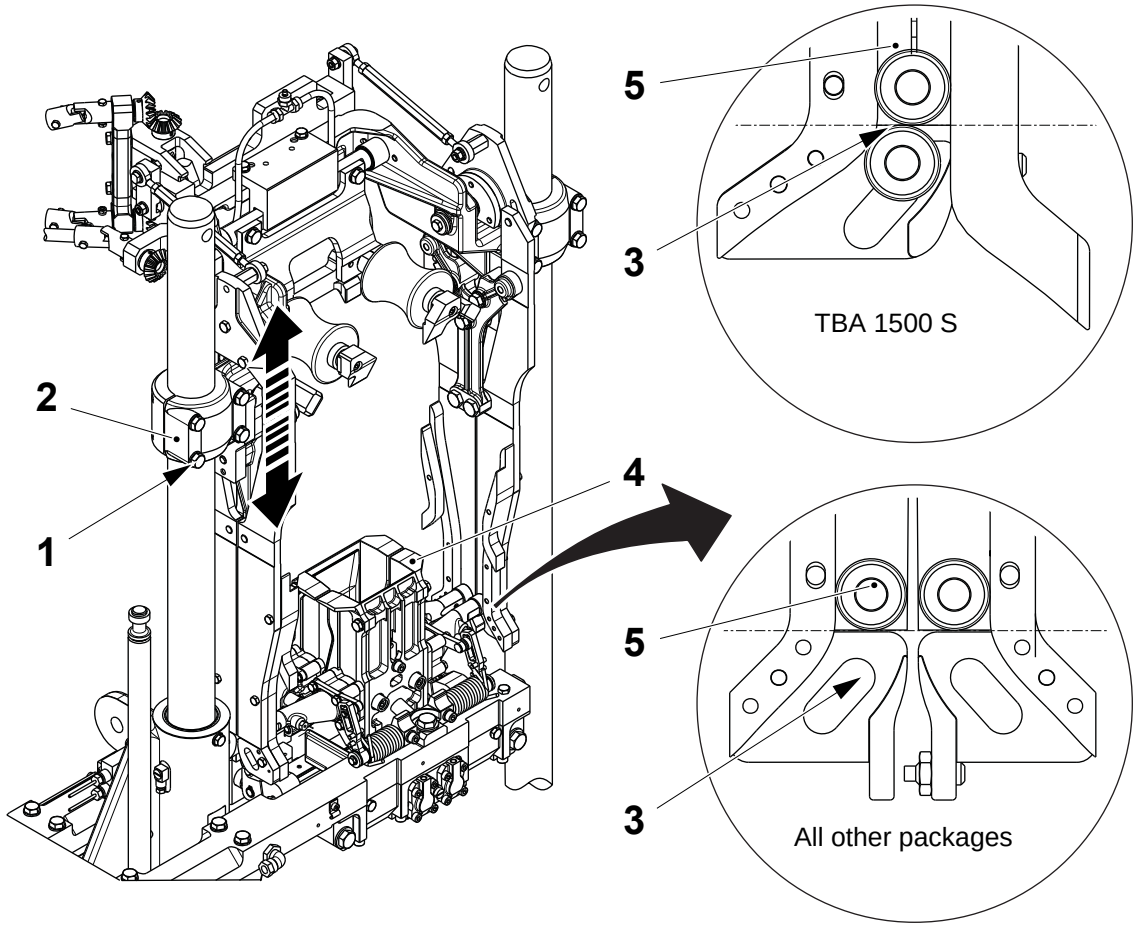

1 Screw
2 Volume adjuster
3 Roller
4 Volume flap
5 Rail bracket

(Cont'd)

TechPub_2614345_0106 - 04_MM2819200_04en.fm

(Cont'd)

Note! Valid for the volumes TBA 500 B, TBA 500 Sq and TPA 750 Sq. For all other volumes see page 4-51.

a) Loosen the screws (1) on both the LH and RH sides.

b) Adjust the volume adjuster (2) up or down so that the top surface of the inner cam (3) is aligned with the surface of the carrier (3), see the illustration below.

c) Tighten the screws (1). Check on the opposite side that the volume flaps movement is smooth and uniform.

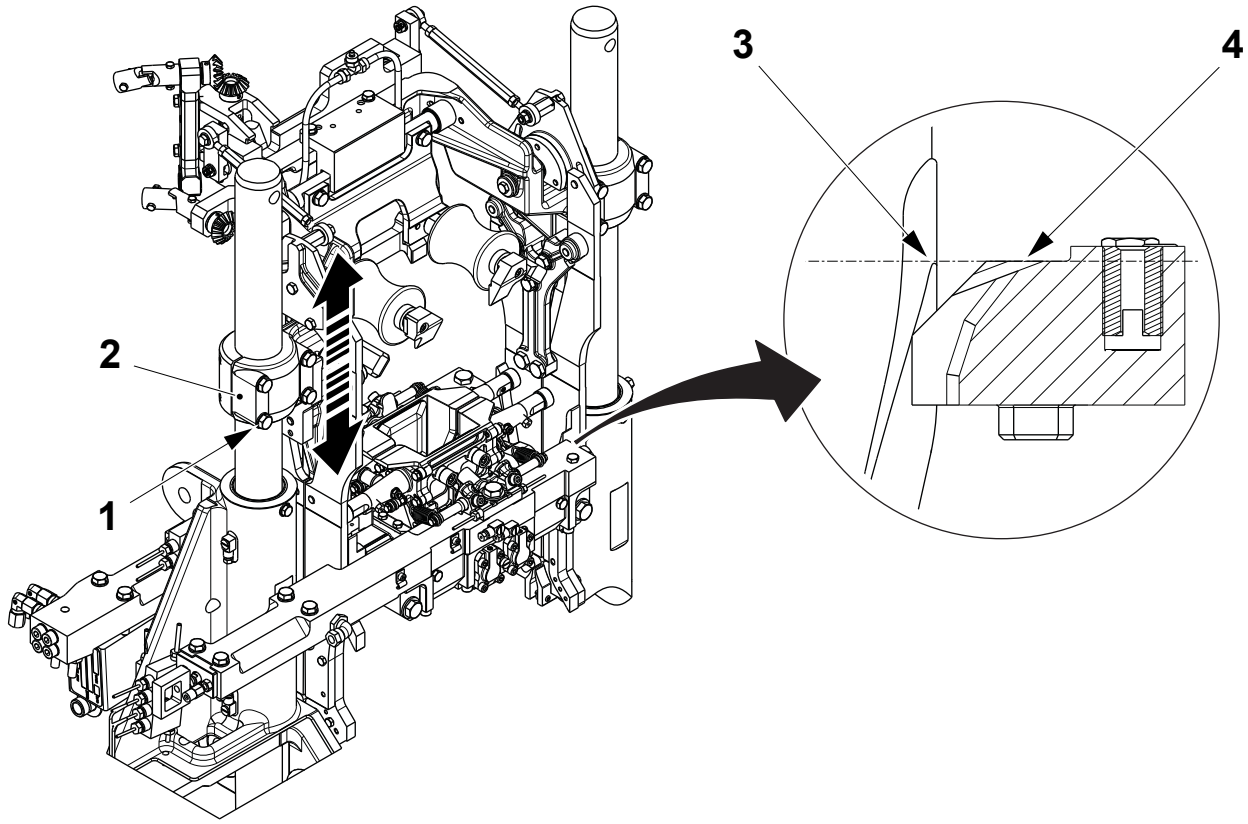

1 Screw
2 Volume adjuster
3 Inner cam
4 Carrier

TechPub_2614345_0106 - 04_MM2819200_04en.fm

4-14 Jaw System - Set Volume Flaps with the Volume Adjuster

Machine Status	PREPARATION
SPC Reference	2613646-0100

Set the volume adjuster height, see 4-13 Jaw System - Set Volume Adjuster Height.

Set Volume Flaps Closest Position

a) Log on to the MAINTENANCE CONTROL window, see 9.6.3-2 HMI - User Management Log On.

b) Touch the PACKAGE FORMING UNIT button (1) to display the PACKAGE FORMING UNIT window.

c) Touch the VOLUME ADJUSTER icon (2) to display the VOLUME ADJUSTER window (3).

d) Touch the LEFT JAW button (4).

e) Touch the OK button (5) to start the machine movement.

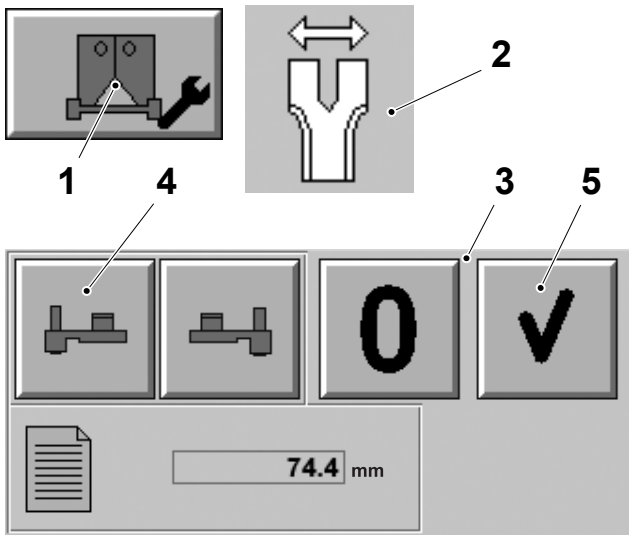

1 Package forming unit button
2 Volume adjuster icon
3 Volume adjuster window
4 Left jaw button
5 OK button

(Cont'd)

TechPub_2614345_0106 - 04_MM2819200_04en.fm

(Cont'd)

f) Open the jaw system doors and measure and record the distance **A** between the inner surface of the LH side volume flaps (6).

g) Close the jaw system doors and reset any alarms on the TPOP.

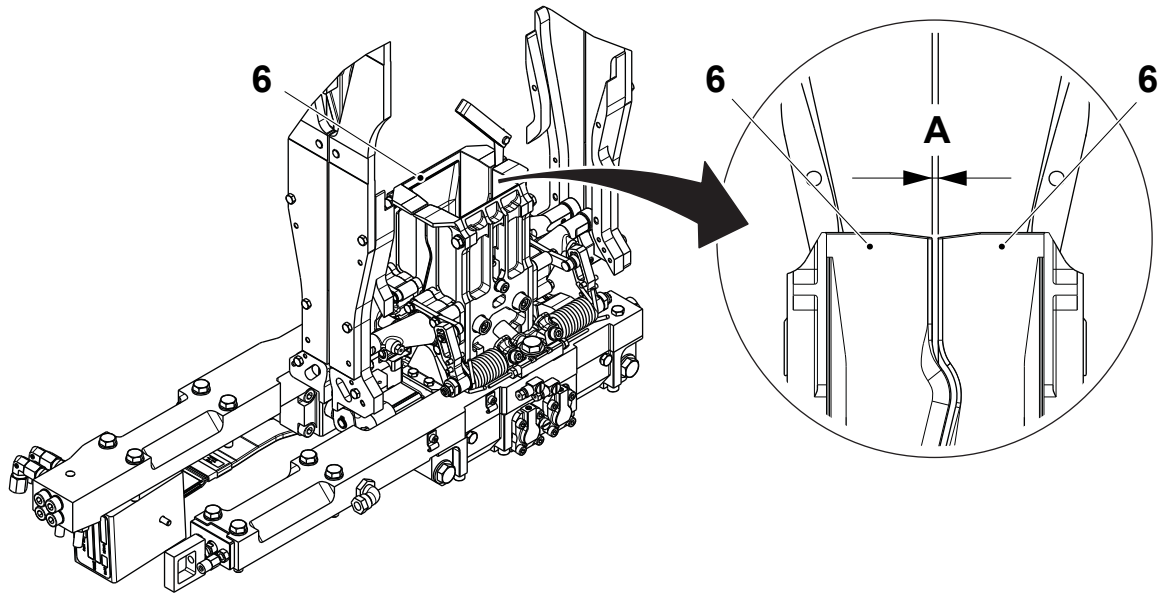

6 Volume flap

(Cont'd)

TechPub_2614345_0106 - 04_MM2819200_04en.fm

(Cont'd)

h) Touch the `RIGHT JAW` button (7).

i) Touch the `OK` button (5) to start the machine movement.

j) Open the jaw system doors and measure and record the distance **B** between the inner surface of the RH side volume flaps (6).

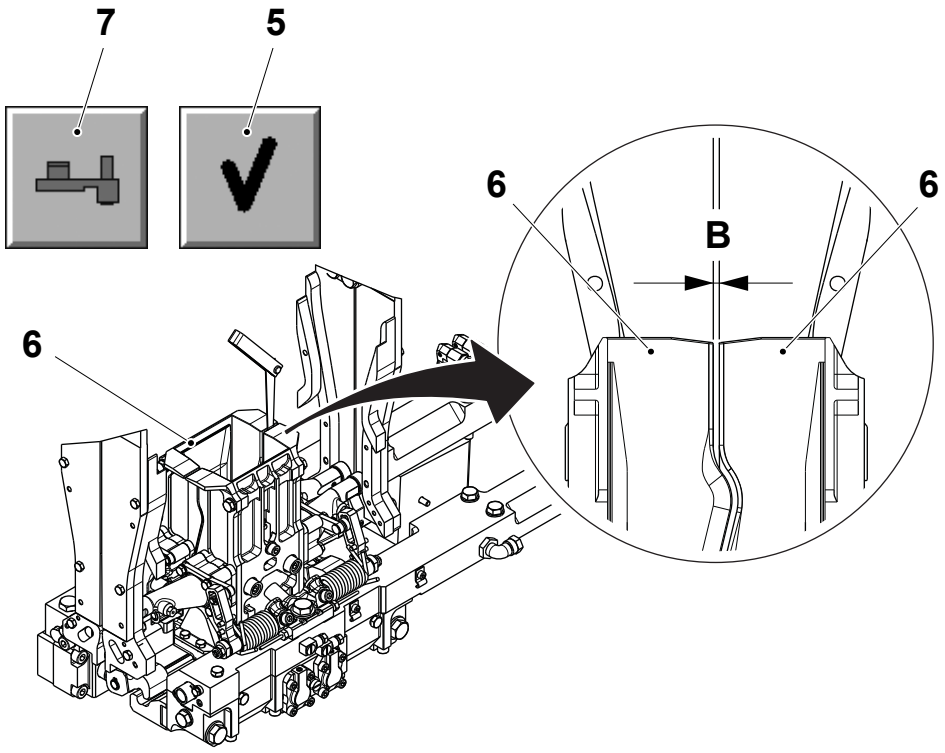

5 OK button
6 Volume flap
7 Right jaw button

(Cont'd)

TechPub_2614345_0106 - 04_MM2819200_04en.fm

(Cont'd)

k) Determine which of the recorded distances **A** and **B** is the smaller of the two measurements, then use the TPOP function touching the `LEFT JAW` button (4) or `RIGHT JAW` button (7) to reposition the jaw system to the jaw pair with the smaller measurement.

l) Touch the `OK` button (5) to start the machine movement.

m) Position a feeler gauge (8) between the volume flaps (6) and use the volume adjuster knob (9) to set a clearance of 0.1 ±0.05 mm between the volume flaps (6).

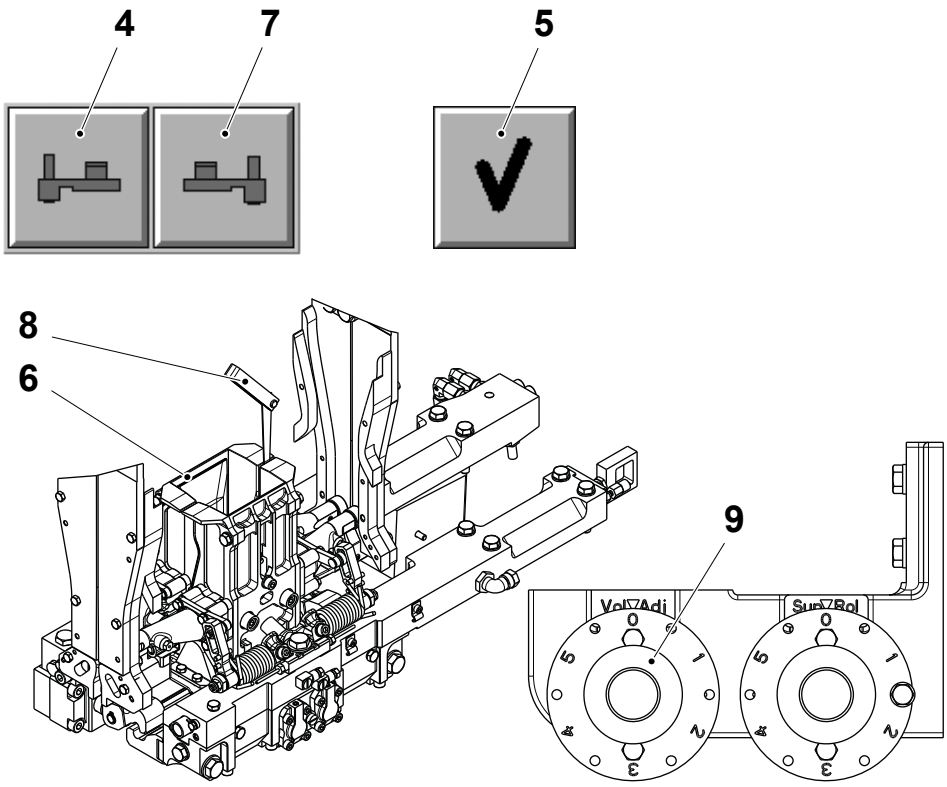

4 Left jaw button
5 OK button
6 Volume flap
7 Right jaw button
8 Feeler gauge
9 Volume adjuster knob

(Cont'd)

TechPub_2614345_0106 - 04_MM2819200_04en.fm

(Cont'd)

n) On both sides of the volume adjuster, loosen the nuts (10) and adjust the set screws (11) until the set screws (11) are touching the puller cams (12).

o) Tighten the nuts (10).

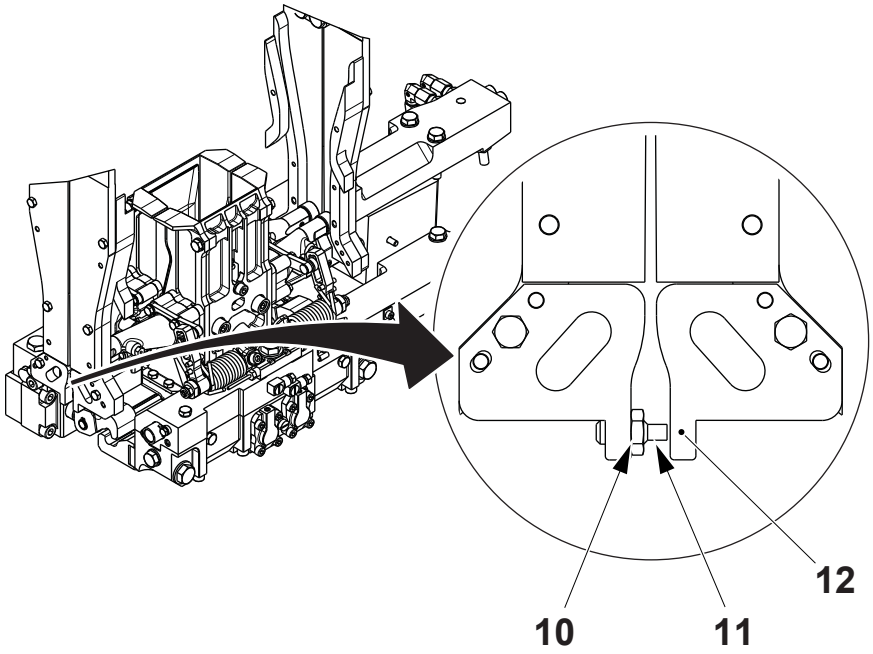

10 Nut
11 Screw
12 Puller cam

(Cont'd)

TechPub_2614345_0106 - 04_MM2819200_04en.fm

(Cont'd)

Set Volume Flaps Parallelism

a) If not already done, Log on to the MAINTENANCE CONTROL window, see 9.6.3-2 HMI - User Management Log On.

b) Touch the PACKAGE FORMING UNIT button (1) to display the PACKAGE FORMING UNIT window.

c) Touch the VOLUME ADJUSTER icon (2) to display the VOLUME ADJUSTER window (3).

d) Touch the LEFT JAW button (4).

e) Touch the OK button (5) to start the machine movement.

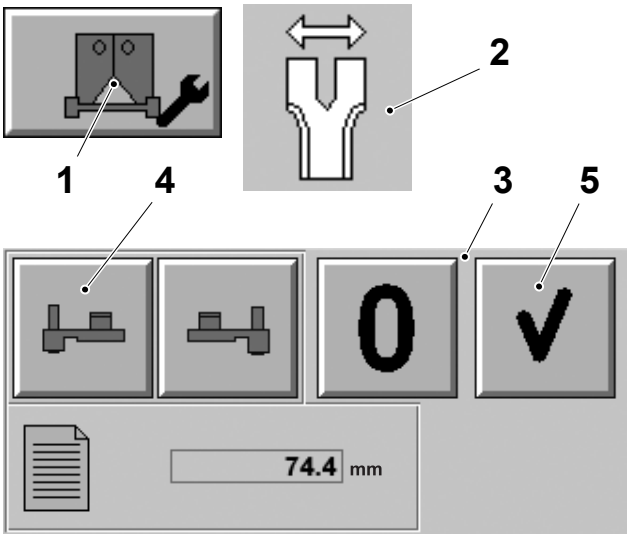

1 Package forming unit button
2 Volume adjuster icon
3 Volume adjuster window
4 Left jaw button
5 OK button

(Cont'd)

TechPub_2614345_0106 - 04_MM2819200_04en.fm

(Cont'd)

f) Open the jaw system doors and measure and record the distance **A** between the inner surface of the LH side volume flaps (6).

g) Close the jaw system doors and reset any alarms on the TPOP.

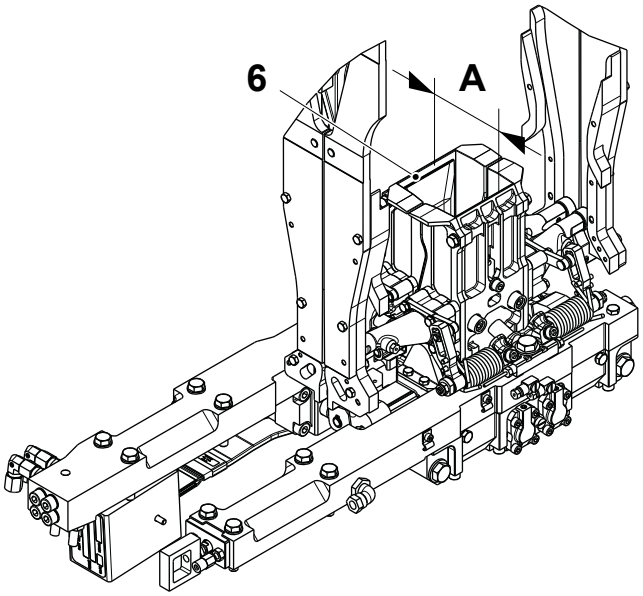

6 Volume flap

(Cont'd)

TechPub_2614345_0106 - 04_MM2819200_04en.fm

(Cont'd)

h) Touch the RIGHT JAW button (7).

i) Touch the OK button (5) to start the machine movement.

j) Open the jaw system doors and measure and record the distance **B** between the inner surface of the RH side volume flaps (6).

k) Close the jaw system doors and reset any alarms on the TPOP.

If the difference between the distances **A** and **B** exceeds 0.1 mm, adjust the setting as described on the following page.

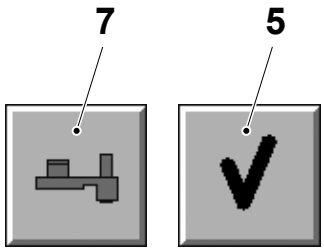

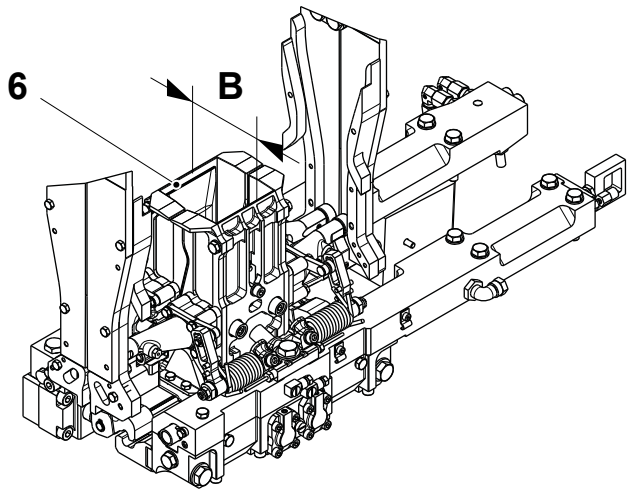

5 OK button
6 Volume flap
7 Right jaw button

(Cont'd)

TechPub_2614345_0106 - 04_MM2819200_04en.fm

(Cont'd)

l) Calculate the correction value for the volume flap parallelism by means of the following formula:

$$\frac{(A + B)}{2} - \text{nominalvalue} = \text{correctionvalue}$$

For example; if distance **A** equals 74.9 mm and distance **B** equals 74.6 mm and the value in the NOMINAL VALUE box (8) is 74.4 mm, then the correction value is calculated as follows:

$$\frac{(74.8 + 74.6)}{2} - 74.4 = 0.30$$

Note! The correction procedure is applied to only one jaw side.

m) Subtract the correction value from either the distance **A** or distance **B** depending onto which side the correction will be applied; for example if the correction will be applied to the RH side volume flaps, the distance **B** must be adjusted to:

$$74.6 - 0.30 = 74.3$$

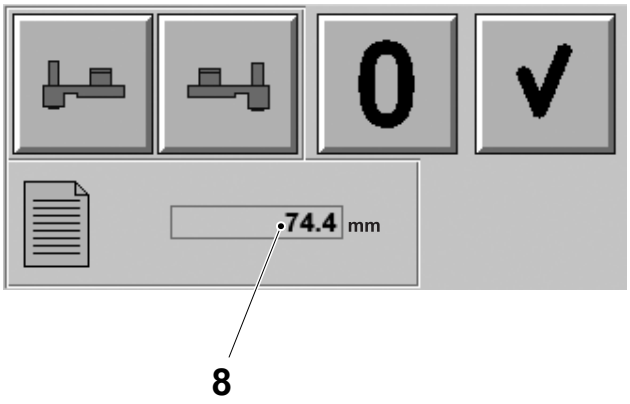

8 Nominal value box

(Cont'd)

TechPub_2614345_0106 - 04_MM2819200_04en.fm

(Cont'd)

n) Use the VOLUME ADJUSTER knob (9) to adjust the volume flaps (6) until the new value for distance **B** is achieved.

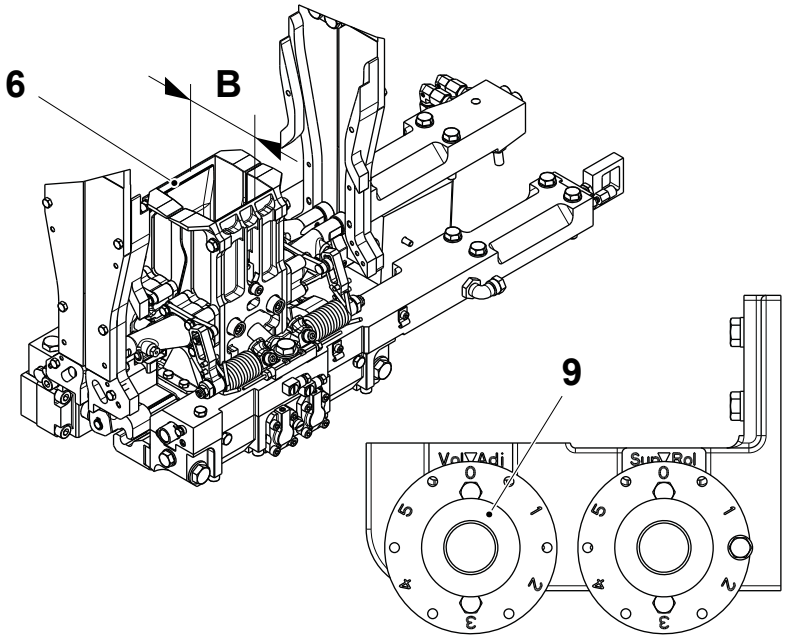

6 Volume flap
9 Volume adjuster knob

(Cont'd)

TechPub_2614345_0106 - 04_MM2819200_04en.fm

(Cont'd)

Set Package Basic Weight

Step up the machine to PRODUCTION and check the weight of the packages, see the section Package Checks in the OM for further information. To adjust the package weight proceed as follows:

- Remove the screws (1) and the volume bulge (2)
- Add or remove the shims (3) to set the package weight
- Fit the volume bulge (2) with the screws (1).

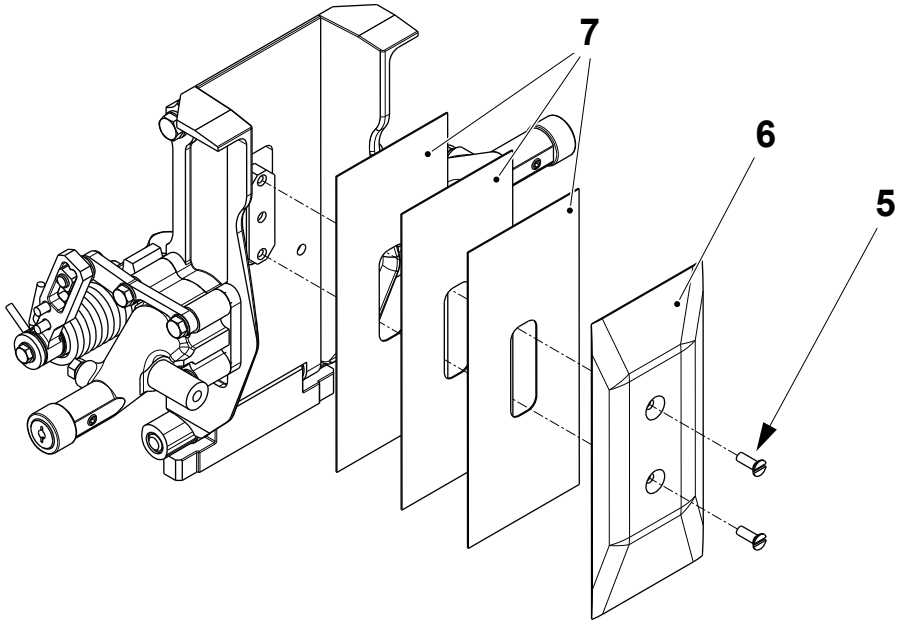

1 Screw
2 Volume bulge
3 Shim

(Cont'd)

TechPub_2614345_0106 - 04_MM2819200_04en.fm

(Cont'd)

Set Package Final Weight

Step up the machine to PRODUCTION and check the weight of the packages, see the section Package Checks in the OM for further information. To adjust the package weight proceed as follows:

a) Touch the `PRODUCTION CONTROL` button (1).

b) Touch the `PACKAGE FORMING UNIT` button (2).

c) Touch the `PACKAGE WEIGHT` icon (3).

d) To adjust the package weight for packages:
   - created in the LH side jaw pair touch the icon (4).
   - created in the RH side jaw pair touch the icon (5).

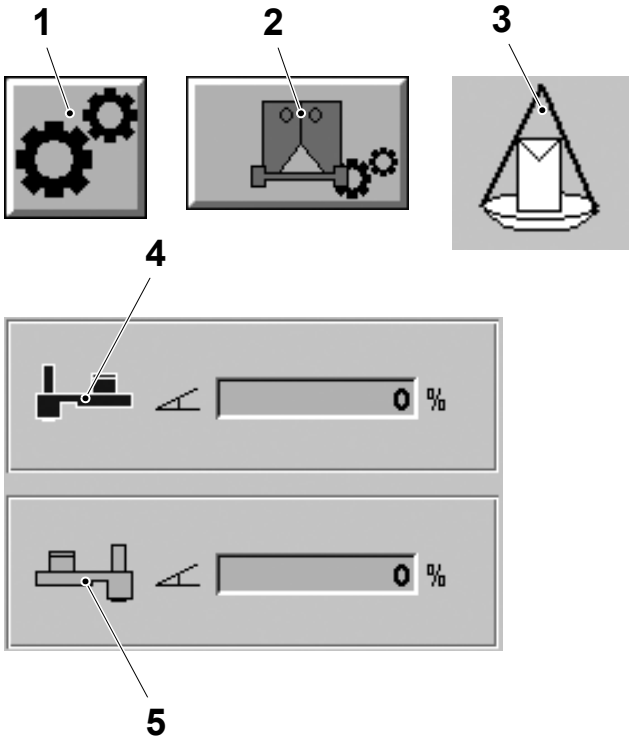

1 Production control button
2 Package forming unit button
3 Package weight icon
4 LH side jaw pair icon
5 RH side jaw pair icon

(Cont'd)

TechPub_2614345_0106 - 04_MM2819200_04en.fm

(Cont'd)

e) The PACKAGE WEIGHT regulator (6) is displayed.

f) Use the ARROW buttons (7) to enter an adjustment value as a percentage of the correction.

g) Touch the OK button (8).

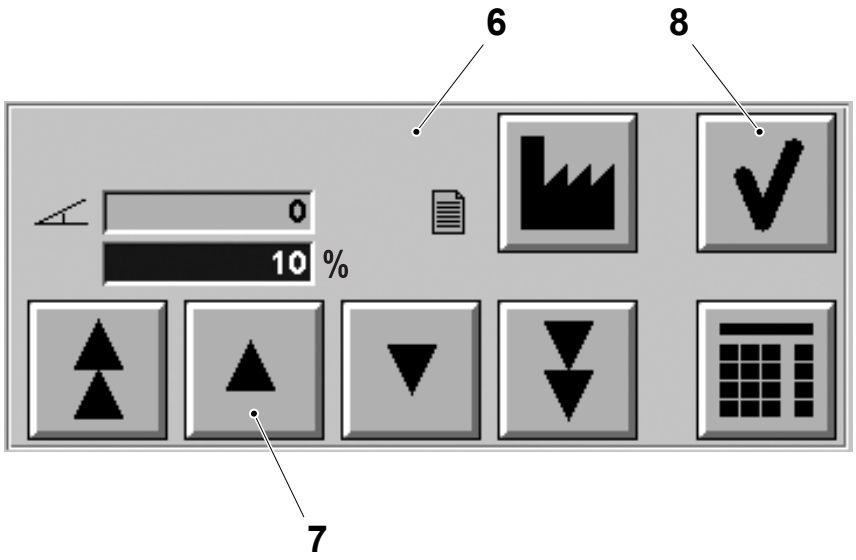

6 Package weight regulator
7 Arrow button
8 OK button

TechPub_2614345_0106 - 04_MM2819200_04en.fm

4.1 Base Unit

SPC Reference	2552002-0300

4.1.1 Yoke

4.1.1-1 Yoke- Check bearings

Machine Status	Mains Power OFF Air OFF Steam ON Water OFF
SPC Reference	1348455-0300 1348460-0300

Check the following parts for visual wear or damage:

- the bearings (1) for excessive play between the yoke (2) and the pressure and cutting arms (3)
- the hydraulic oil hoses and that there are no oil leaks.

Change the parts if necessary.

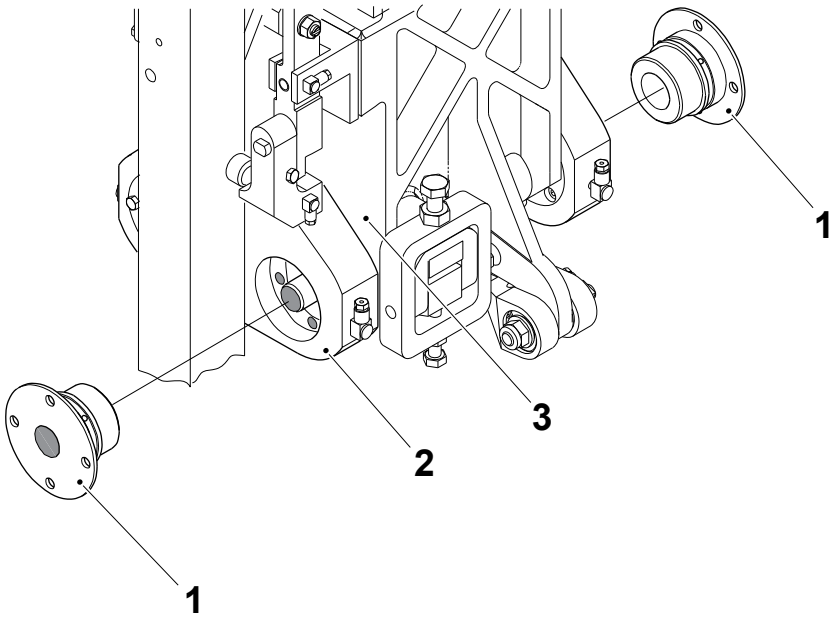

1 Bearing
2 Yoke
3 Arm

TechPub_2614345_0106 - 04_MM2819200_04en.fm

4.1.1-2 Yoke - Check Plunger and Locating Pieces

Machine Status	Mains Power ON Air OFF Steam ON Water OFF
SPC Reference	1348455-0300 1348460-0300

a) Use the GO TO POSITION function to slow inch the machine to 216° LH side (36° RH side), see 4-2 Jaw System - Inching, Go To Position and Manual Operation Description.

b) Remove the screw (1), the oil connection and the spring housing (2).

c) Remove the springs (3) and check for wear or damage. Change if necessary.

d) Check the plungers (4) for wear or damage, check the distance **A**. Change if necessary.

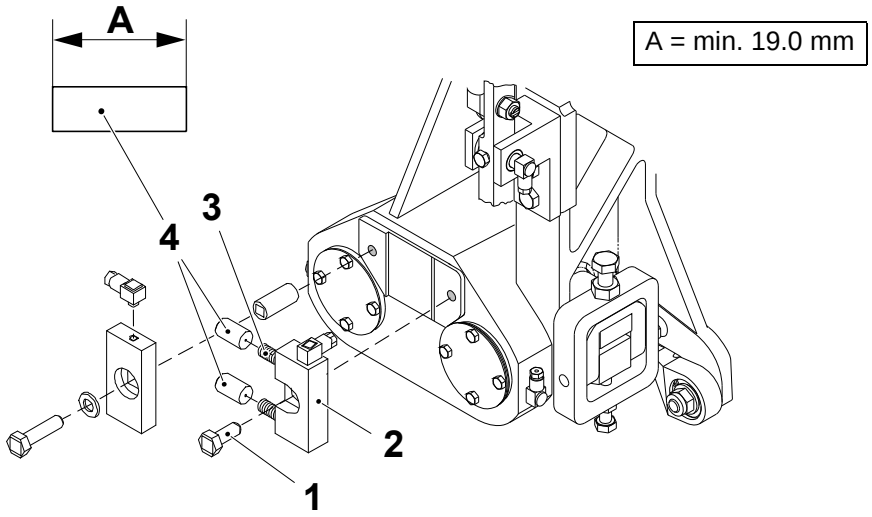

1 Screw
2 Spring housing
3 Spring
4 Plunger

(Cont'd)

TechPub_2614345_0106 - 04_MM2819200_04en.fm

(Cont'd)

e) Loosen the lock nuts (5) and move aside the cam (6) and the strut (7).

f) Remove the screw (8), the washer and the oil connection.

g) Pull out the locating piece (9) and the sleeve (10).

h) Check the locating piece (9) for wear or damage, check the distance **B**. Change if necessary.

i) Assemble in the reverse order.

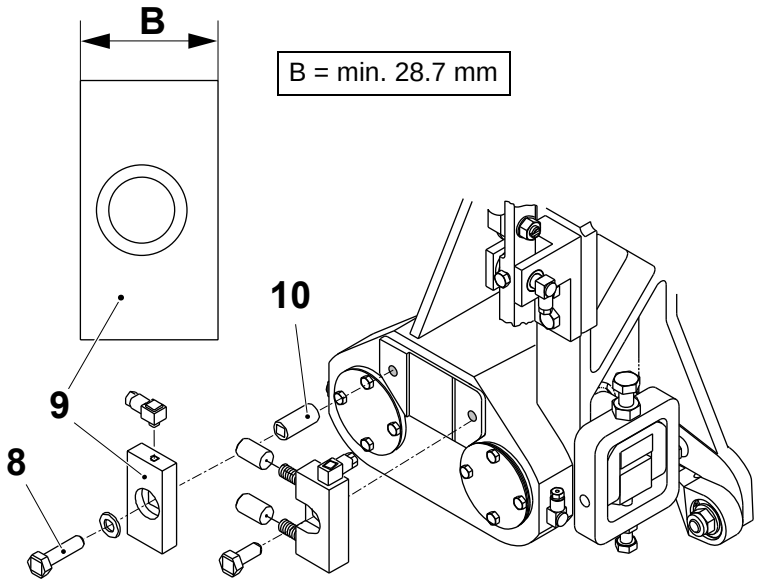

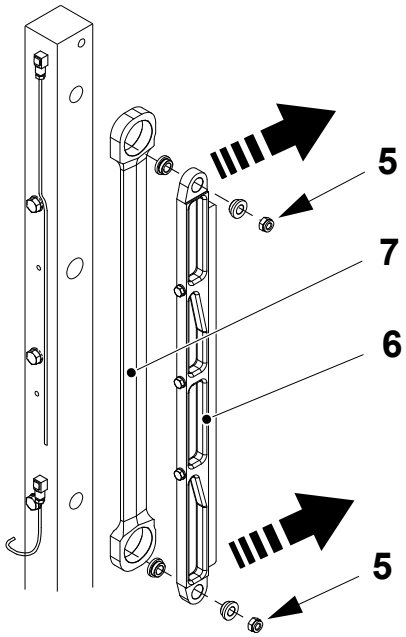

5 Lock nut
6 Cam
7 Strut
8 Screw
9 Locating piece
10 Sleeve

TechPub_2614345_0106 - 04_MM2819200_04en.fm

4.1.1-3 Yoke - Remove Guide and Yoke

Machine Status	Mains Power ON Air OFF Steam ON Water OFF
SPC Reference	1348455-0300 1348460-0300

a) Remove the cantilever, see 4.1.7-3 Volume Adjuster - Remove.

b) Release the brakes, see 3-3 Drive Unit - Release Brakes.

c) Loosen the screw (1) and remove the shaft (2).

d) Separate the axle (3) from the scissor arm (4), see 4.1.4-2 Scissor Arm Link - Change Shafts and Flange Bushings.

e) Remove the water, oil and hydraulic connections from the jaw pair.

f) Remove the spring housing (5).

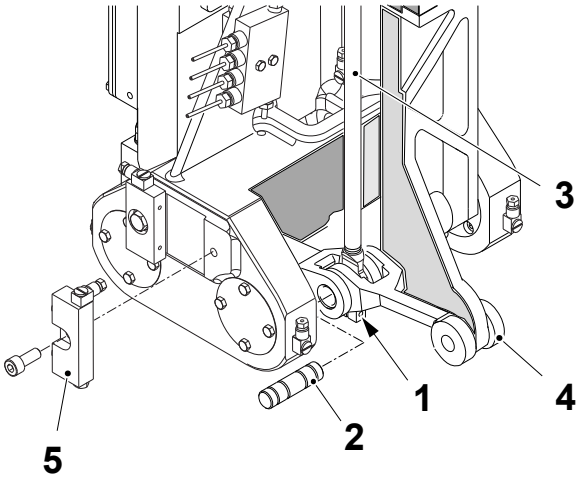

1 Screw
2 Shaft
3 Axle
4 Scissor arm
5 Housing

(Cont'd)

TechPub_2614345_0106 - 04_MM2819200_04en.fm

(Cont'd)

CAUTION

Risk of personal injury.

Make sure that the piece of wood is securely fixed in position.

g) Unscrew the screws (6) on the guide (7).

h) Support the weight of the yoke (8) with a piece of wood.

Note! The yoke (8) weighs approximately 40 kg. When disconnecting the link the weight must be supported.

i) Remove the nut (9) and separate the lower link head (10) from the yoke (8).

j) Remove the guide (7) and the yoke (8).

k) Assemble in the reverse order.

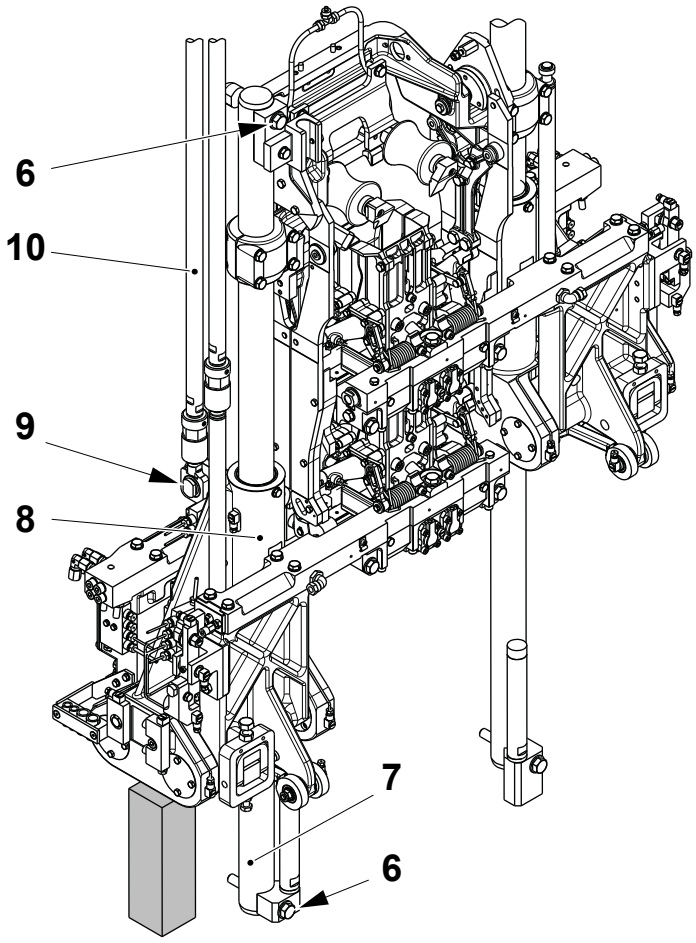

6 Screw
7 Guide
8 Yoke
9 Nut
10 Link head

TechPub_2614345_0106 - 04_MM2819200_04en.fm

4.1.1-4 Yoke - Change Bushings and Scraper

Machine Status	Mains Power OFF Air OFF Steam ON Water OFF
SPC Reference	1348455-0300 1348460-0300

a) Remove the guide and the yoke, see 4.1.1-3 Yoke - Remove Guide and Yoke.

b) Loosen the screw (1) and remove the lid (2).

c) Remove and change the bushing (3) and the scraper (4).

d) Remove the clip (5).

e) Remove and change the bushing (6).

f) Assemble in the reverse order.

1 Screw
2 Lid
3 Bushing
4 Scraper
5 Clip
6 Bushing

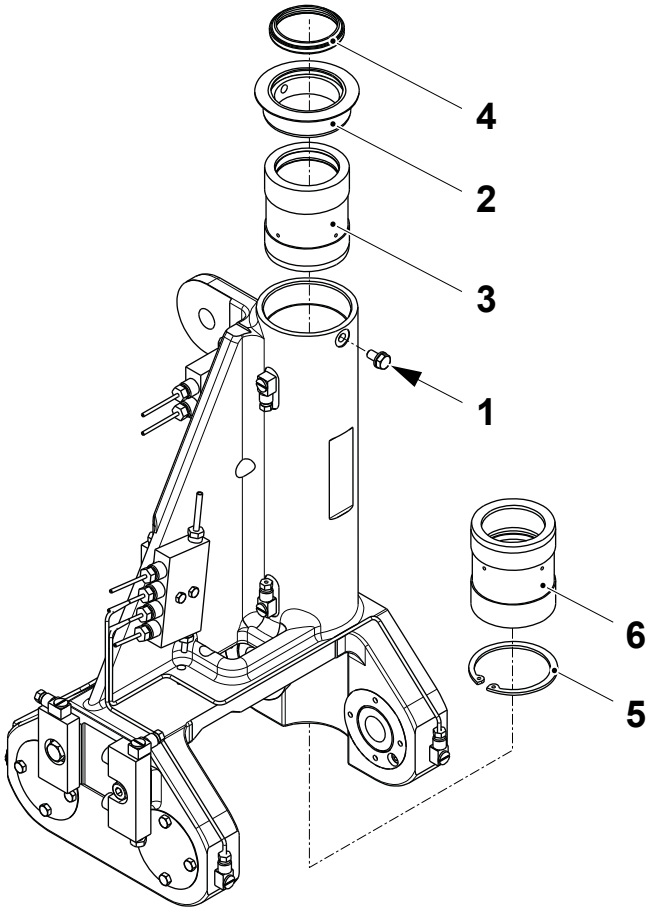

TechPub_2614345_0106 - 04_MM2819200_04en.fm

4.1.1-5 Yoke - Change Plunger and Locating Piece

Machine Status	Mains Power ON Air OFF Steam ON Water OFF
SPC Reference	1348455-0300 1348460-0300

Plunger

a) Use the GO TO POSITION function to slow inch the machine to 196° LH side (16° RH side), see 4-2 Jaw System - Inching, Go To Position and Manual Operation Description.

b) Remove the screw (1), the oil connection and the spring housing (2).

c) Remove the springs (4) and check for wear or damage. Change if necessary.

d) Change the plungers (3).

e) Assemble in the reverse order.

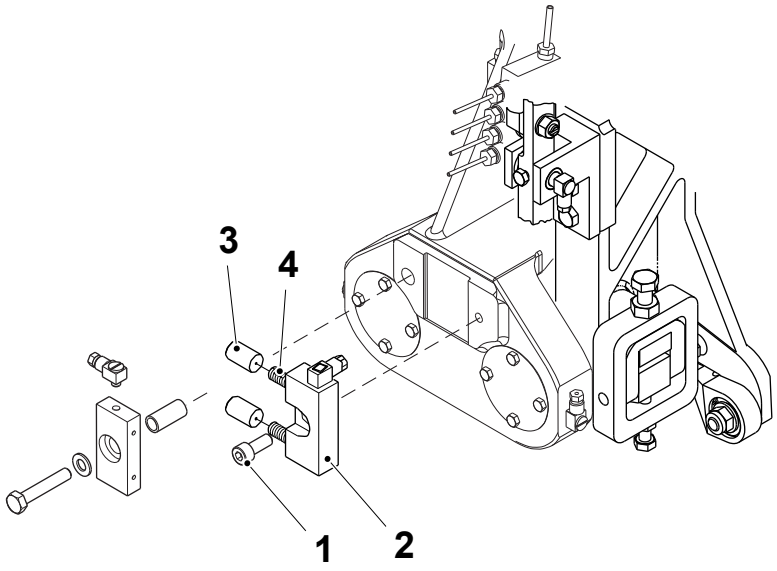

1 Screw
2 Spring housing
3 Plunger
4 Spring

(Cont'd)

TechPub_2614345_0106 - 04_MM2819200_04en.fm

(Cont'd)

Locating Piece

a) Use the GO TO POSITION function to slow inch the machine to 216° LH side (36° RH side), see 4-2 Jaw System - Inching, Go To Position and Manual Operation Description.

b) Remove the lubrication connection (5).

c) Remove the screw (6) and the washer (7).

d) Remove the locating piece (8) and the bushing (9) and change them.

e) Assemble in the reverse order.

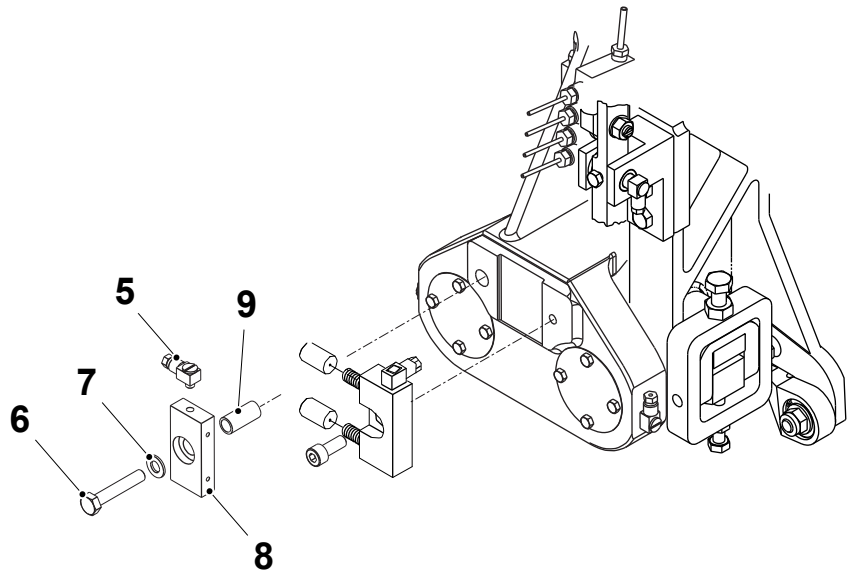

5 Lubrication connection
6 Screw
7 Washer
8 Locating piece
9 Bushing

TechPub_2614345_0106 - 04_MM2819200_04en.fm

4.1.1-6 Yoke - Change Bearings

Machine Status	Mains Power OFF Air OFF Steam ON Water OFF
SPC Reference	1348455-0300 1348460-0300

a) Lower the jaw system, see 3-2 Drive Unit - Lower Jaw System.

b) Remove the spring housing and the locating piece, see 4.1.1-5 Yoke - Change Plunger and Locating Piece.

c) Remove the four screws (1) and the lid (2).

d) Remove the bearing (3) and change it.

e) Assemble in the reverse order.

Note! Make sure that the arrow (4) marked on the bearing (3) is pointing upwards.

f) Repeat from item c) for the other three bearings.

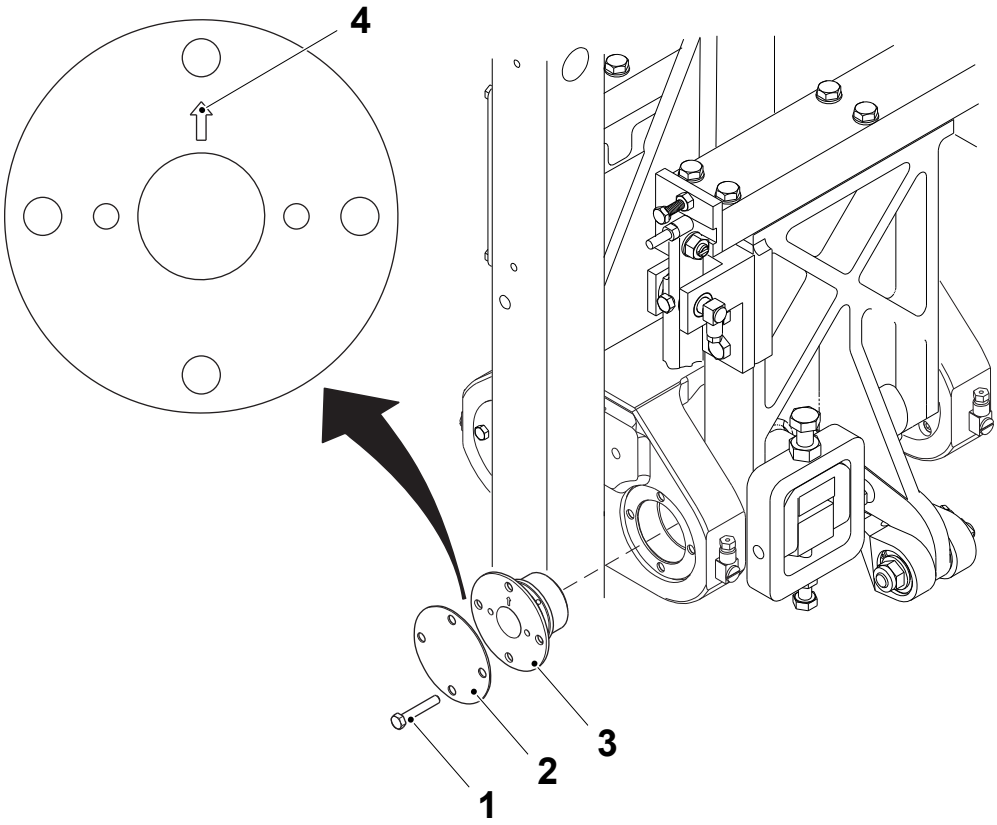

1 Screw
2 Lid
3 Bearing
4 Arrow

TechPub_2614345_0106 - 04_MM2819200_04en.fm

4.1.2 Pressure Arm

4.1.2-1 Pressure Arm - Check

Machine Status	Mains Power OFF Air OFF Steam ON Water OFF
SPC Reference	1348456-0300 1348461-0300

Note! Perform the following procedure on the two pressure arms.

a) Check the toothed segments (1) for wear and for cracks on the teeth.

b) Check for excessive play between the two toothed segments (1) on the pressure arm (2) and on the cutting arm (3). If excessive, adjust with the toothed segments (1), see 4.1.2-2 Pressure Arm - Set Play.

c) Check the oil block (4) and the separation block (5) for oil leaks.

Change the parts if necessary.

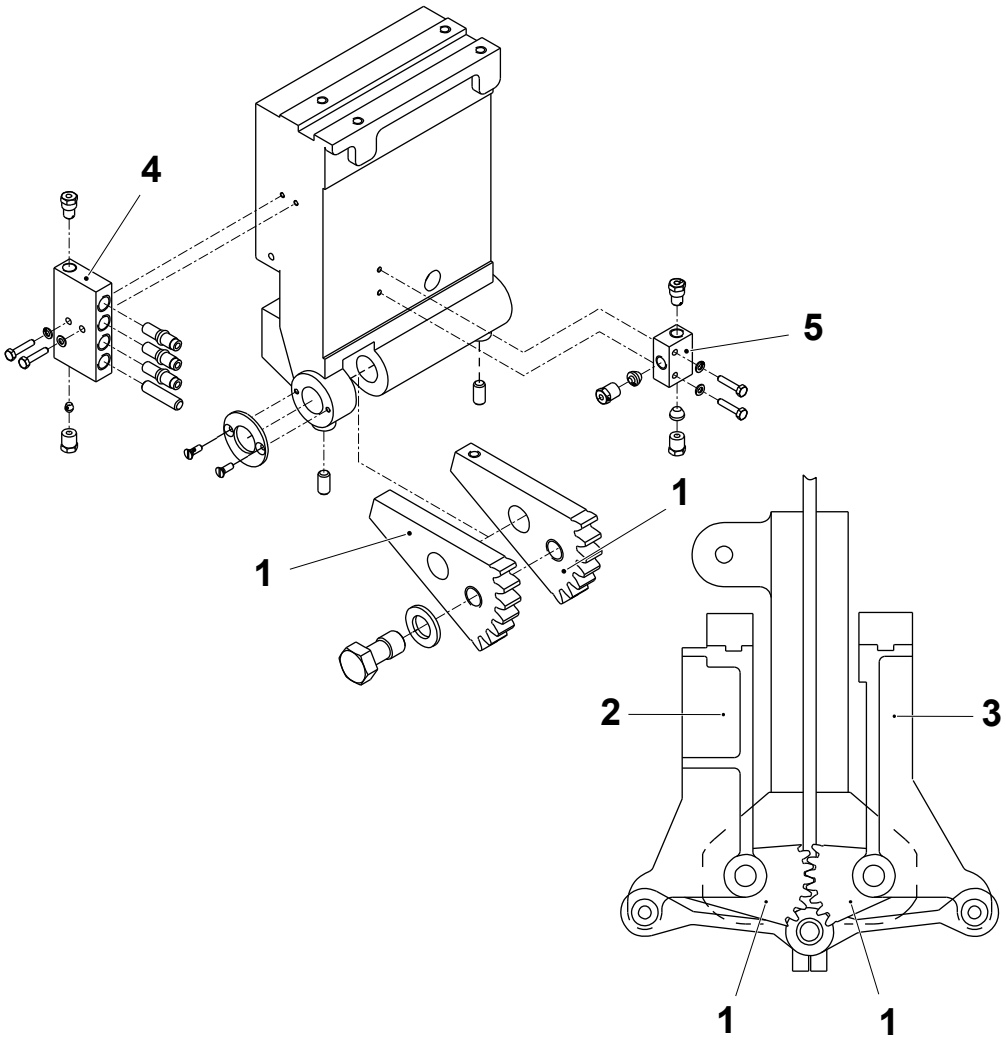

1 Toothed segment
2 Pressure arm
3 Cutting arm
4 Oil block
5 Separation block

TechPub_2614345_0106 - 04_MM2819200_04en.fm

4.1.2-2 Pressure Arm - Set Play

Machine Status	Mains Power OFF Air OFF Steam ON Water OFF
SPC Reference	1348456-0300 1348461-0300

Note! Perform the following procedure on the two pressure arms.

a) Remove the scissor arm, see 4.1.4-2 Scissor Arm Link - Change Shafts and Flange Bushings.

b) Adjust until the movement is easy and the teeth play is as limited as possible throughout the movement.

c) Loosen the nut (2) and the screw (3) and set the play using the setting screw (1).

d) Tighten the screw (3) and the nut (2).

e) After any changes check the jaw symmetry, see 4-4 Jaw System - Set Symmetry.

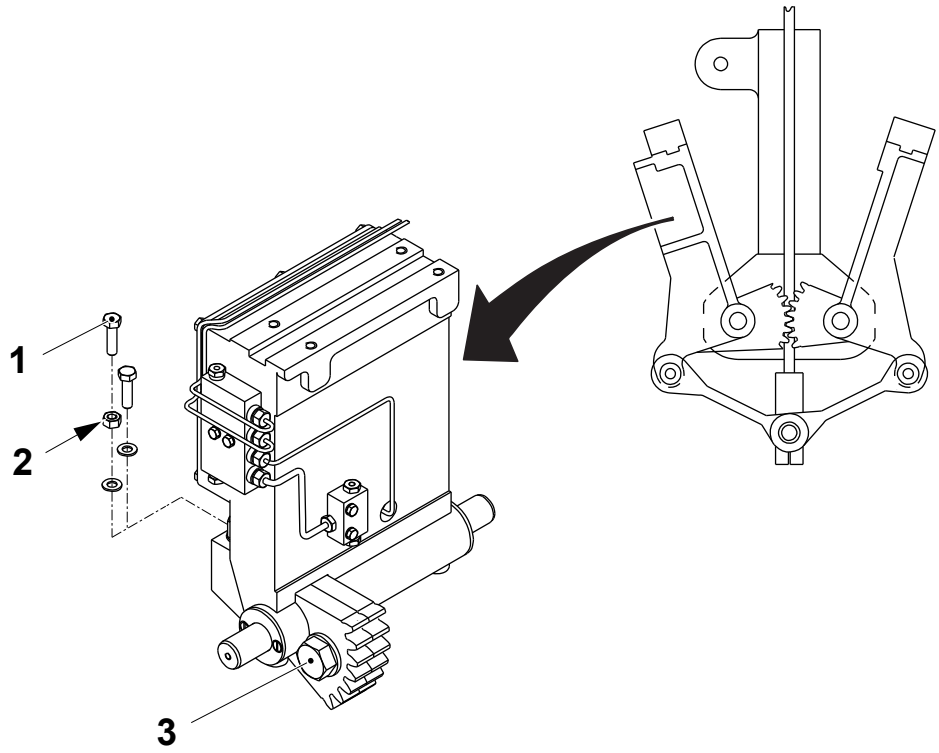

1 Screw
2 Nut
3 Screw

TechPub_2614345_0106 - 04_MM2819200_04en.fm

4.1.3 Cutting Arm

4.1.3-1 Cutting Arm - Check

Machine Status	Mains Power OFF Air OFF Steam ON Water OFF
SPC Reference	2791163-0100 2791164-0100

Note! Perform the following procedure on the two cutting arms.

(Cont'd)

TechPub_2614345_0106 - 04_MM2819200_04en.fm

(Cont'd)

Check the following parts for visual wear or damage:

- the toothed segments (1) for cracks on the teeth
- the oil blocks (2) for any oil leaks
- the shaft (3) and the roller (4)
- the joint (5) that it moves backward freely
- the flanges (6) and the shaft (7)
- the piece (8) and the shaft (9).

Change the parts if necessary.

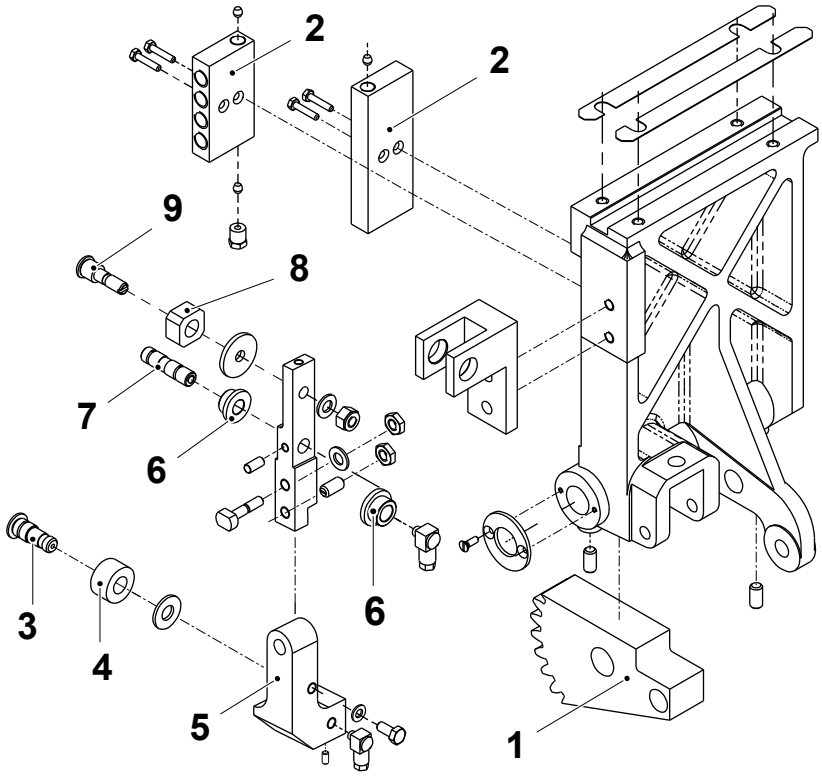

1 Toothed segment
2 Oil block
3 Shaft
4 Roller
5 Joint
6 Flange
7 Shaft
8 Piece
9 Shaft

TechPub_2614345_0106 - 04_MM2819200_04en.fm

4.1.3-2 Cutting Arm - Change Bearings and Shaft

Machine Status	Mains Power OFF Air OFF Steam ON Water OFF
SPC Reference	2791163-0100 2791164-0100

CAUTION

Risk of personal injury.

The tooth part (9) could drop down unexpectedly.

Note! Perform the following procedure on the two cutting arms.

(Cont'd)

TechPub_2614345_0106 - 04_MM2819200_04en.fm

(Cont'd)

a) Remove the spring housing (1), see 4.1.1-2 Yoke - Check Plunger and Locating Pieces.

b) On both sides, remove the four screws (2) and the lids (3).

c) Remove and change the bearings (4).

d) Remove the lace (5) and the spacer (6).

e) Remove the stop screws (7).

f) Remove and change the shaft (8).

g) Remove the screws (10) and if necessary the washers (11).

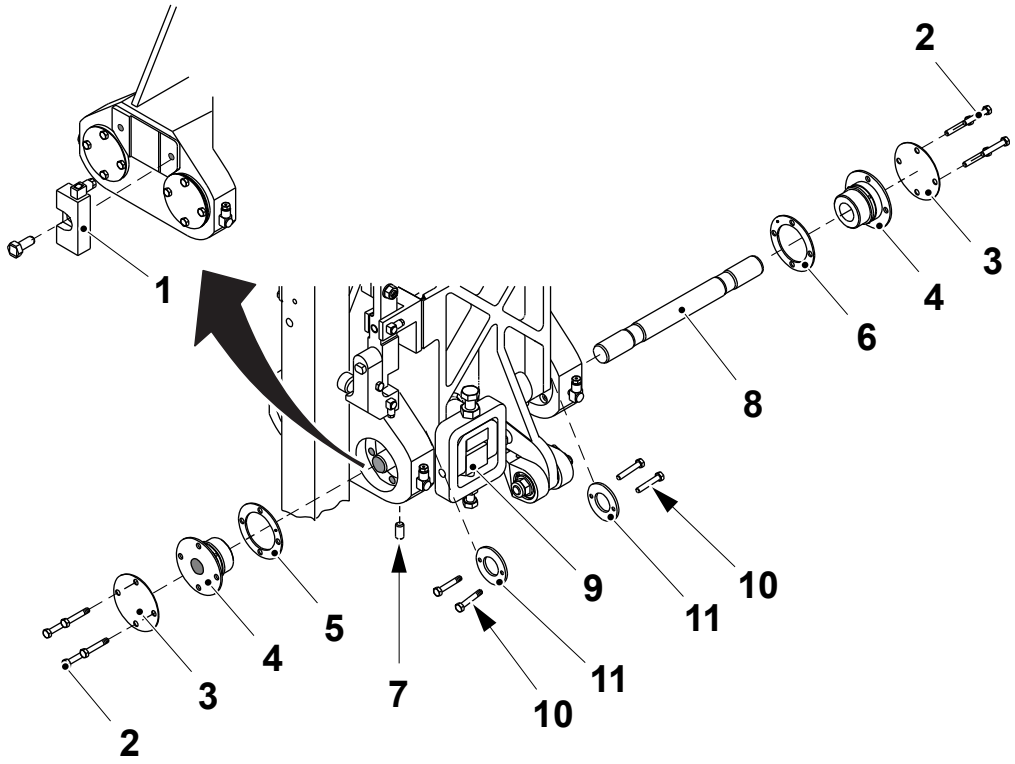

1 Spring housing
2 Screw
3 Lid
4 Bearing
5 Lace
6 Spacer
7 Stop screw
8 Shaft
9 Tooth part
10 Screw
11 Washer

(Cont'd)

TechPub_2614345_0106 - 04_MM2819200_04en.fm

(Cont'd)

h) Assemble in the following order:
- the washer (11) and the screws (10)
- the lace (5)
- the spacer (6)
- the bearings (4)

Note! Make sure that the arrow marked on the bearings (4) is pointing upwards.

- the tooth part (9)
- the shaft (8)

Note! Make sure that the shaft (8) is centred in the middle of the bearings (4).

- the stop screw (7)
- the lids (3) and secure using the four screws (2)
- the spring housing (1).

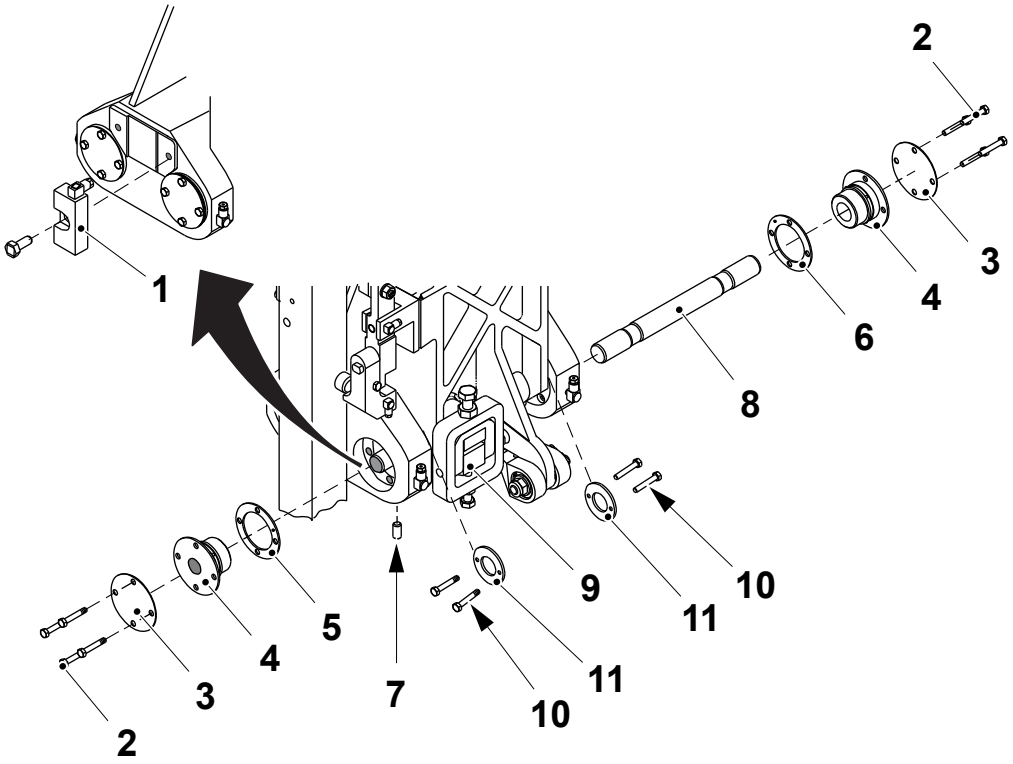

1 Spring housing
2 Screw
3 Lid
4 Bearing
5 Lace
6 Spacer
7 Stop screw
8 Shaft
9 Tooth part
10 Screw
11 Washer

TechPub_2614345_0106 - 04_MM2819200_04en.fm

4.1.3-3 Cutting Arm - Set Play

Machine Status	Mains Power OFF Air OFF Steam ON Water OFF
Special Equipment	Feeler Gauge
SPC Reference	2791163-0100 2791164-0100

Note! Perform the following procedure on both cutting arms.

a) Apply light pressure to the cutting arm (1) in the direction of the arrow, see the illustration below.

b) Measure the play between the yoke (2) and the cutting arm (1) using a feeler gauge.

c) Adjust the laces (3), located on the bearings (4), and the washers (5) so that the play between the yoke (2) and the cutting arm (1) is between 0.05 and 0.1 mm.

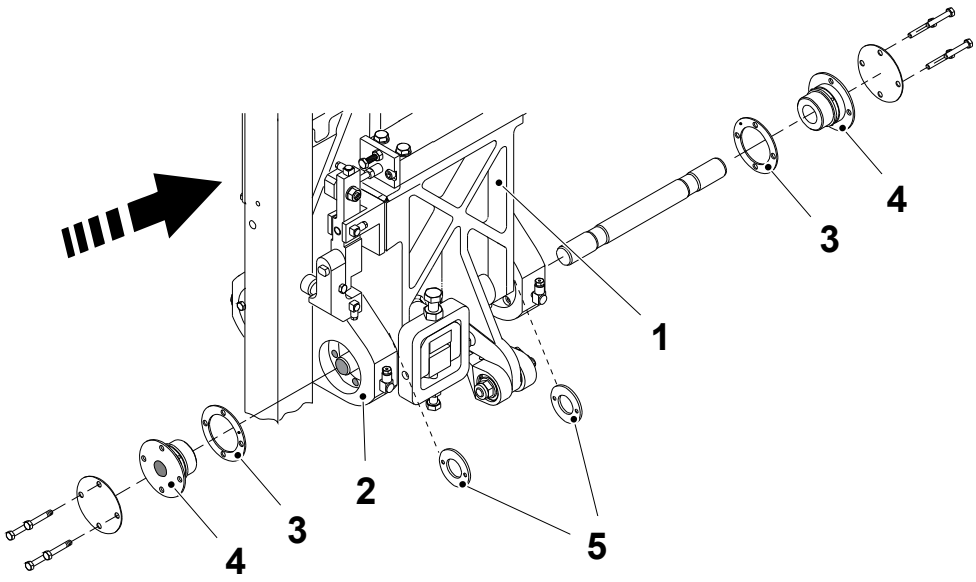

1 Cutting arm
2 Yoke
3 Lace
4 Bearing
5 Washer

TechPub_2614345_0106 - 04_MM2819200_04en.fm

4.1.3-4 Cutting Arm - Check Clearance

Machine Status	Mains Power OFF Air OFF Steam ON Water OFF
SPC Reference	2791163-0100 2791164-0100

Note! Perform the following procedure on both cutting arms.

(Cont'd)

TechPub_2614345_0106 - 04_MM2819200_04en.fm

(Cont'd)

a) Use a feeler gauge to check the distance **A** between the washer (1) and the cutting jaw ear (2).

b) Check that the bracket (4) and the arm (5) are parallel to the cam (3).

c) If necessary, adjust the bracket (4) position using the screws (6).

d) Check the distance **A** after that any adjustment is made.

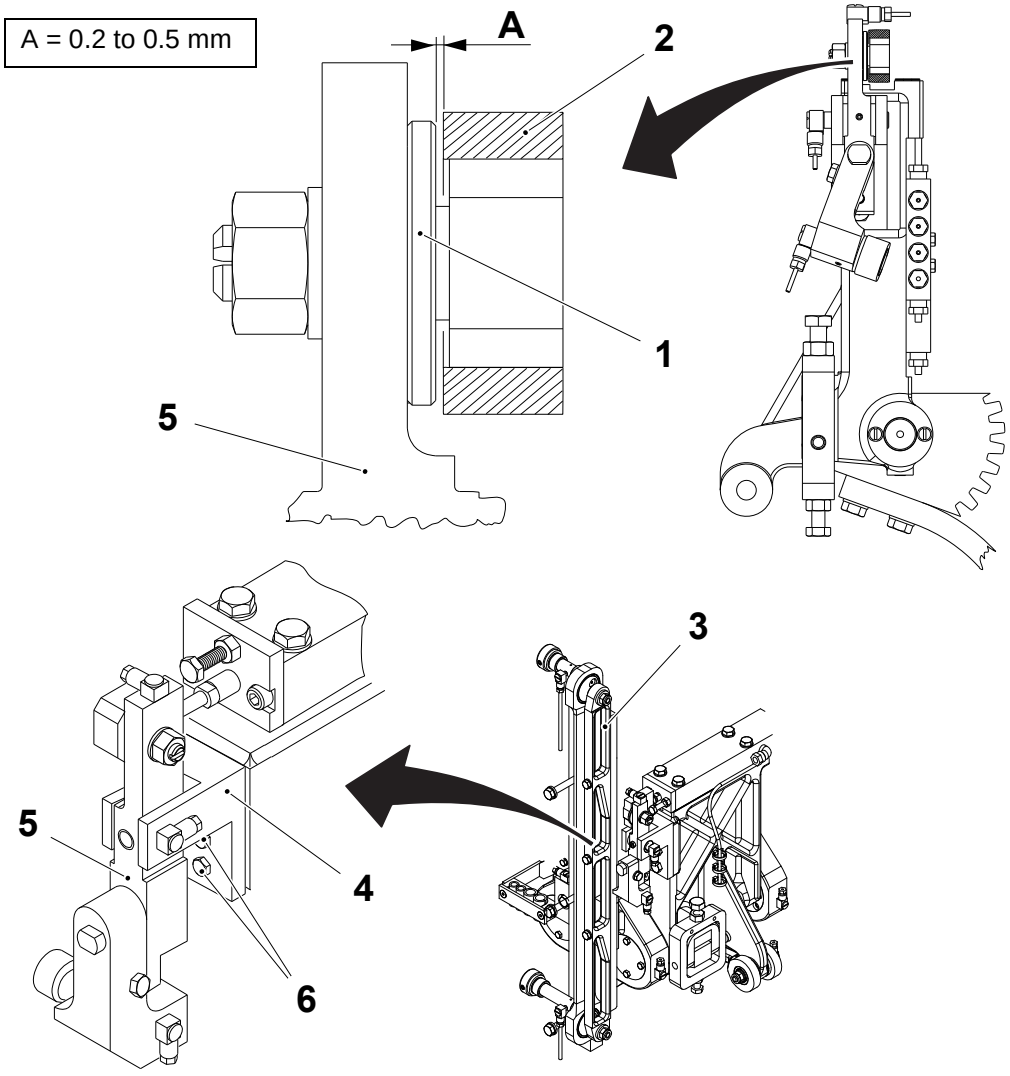

1 Washer
2 Ear
3 Cam
4 Bracket
5 Arm
6 Screw

TechPub_2614345_0106 - 04_MM2819200_04en.fm

4.1.4 Scissor Arm Link

4.1.4-1 Scissor Arm Link - Check

Machine Status	Mains Power OFF Air OFF Steam ON Water OFF
SPC Reference	1348466-0100

Note! Perform the following procedure on both scissor arms.

a) Lower the jaw system, see 3-2 Drive Unit - Lower Jaw System.

b) Check the following parts for visual wear or damage:

- the jaw link (1)
- the shafts (2) and (3).

Use a feeler gauge to check that the play on the shafts does not exceed 0.1 mm. Change the parts if necessary.

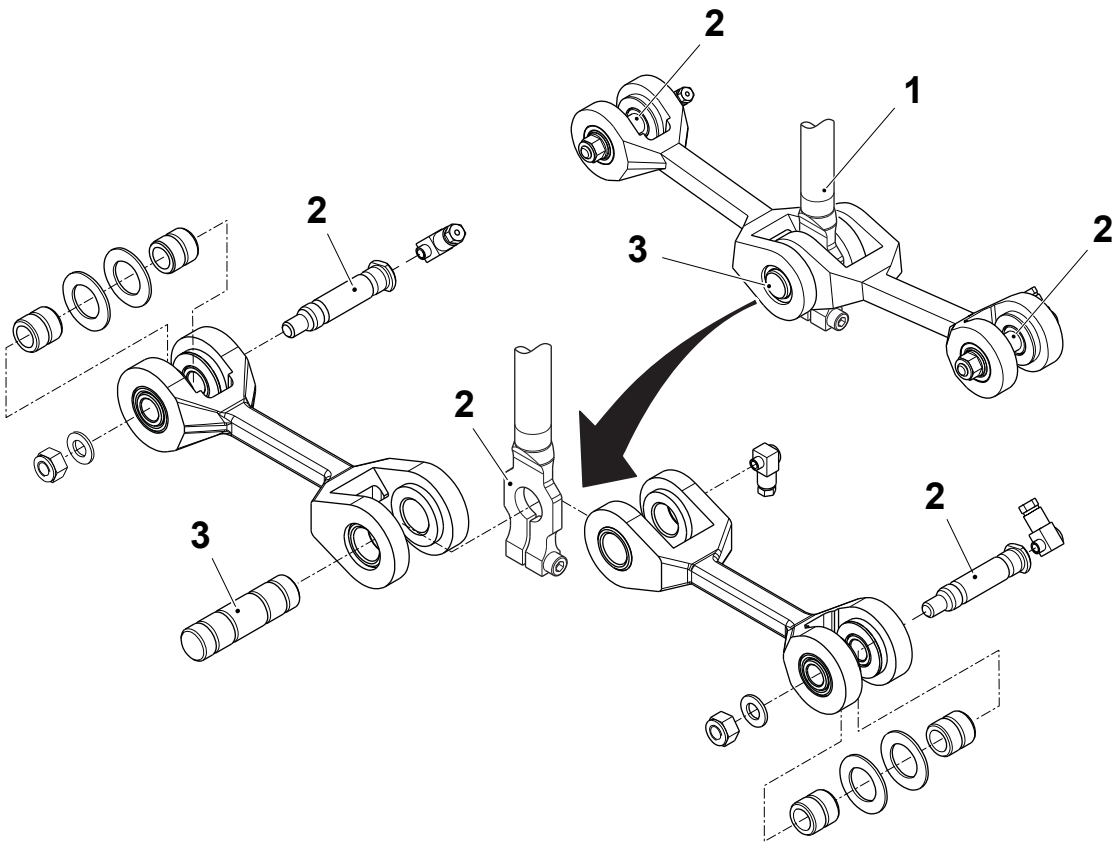

1 Jaw link
2 Shaft
3 Shaft

TechPub_2614345_0106 - 04_MM2819200_04en.fm

4.1.4-2 Scissor Arm Link - Change Shafts and Flange Bushings

Machine Status	Mains Power OFF Air OFF Steam ON Water OFF
SPC Reference	1348466-0100

Note! Perform the following procedure on both scissor arms.

a) Lower the jaw system, see 3-2 Drive Unit - Lower Jaw System.

b) Disconnect the jaw link (1) at the connection clamp, see 3.1.5-2 Link - Disconnect.

c) Remove the nuts (3) and the washers (4) from each side of the scissor arm (7).

d) Remove the lubrication connections (5) and the shafts (6) from both sides.

e) Remove the scissor arm (7) and lower the jaw link (2) from the yoke.

f) Change the two shafts (6).

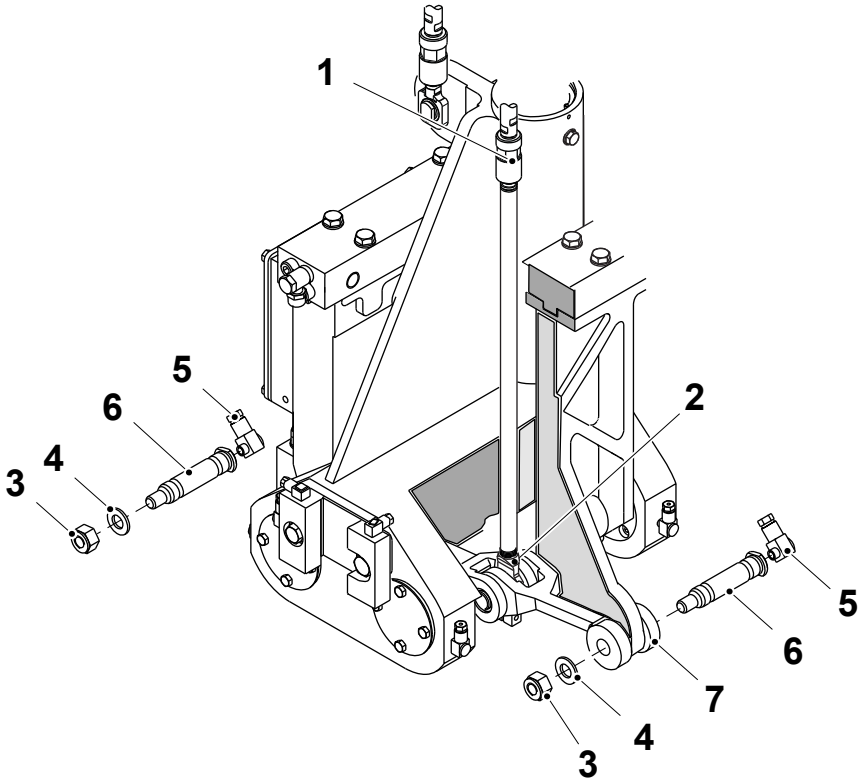

1 Jaw link
2 Lower jaw link
3 Nut
4 Washer
5 Oil connection
6 Shaft
7 Scissor arm

(Cont'd)

TechPub_2614345_0106 - 04_MM2819200_04en.fm

(Cont'd)

g) Remove and change the sleeves (8).

h) Remove the oil connection (10).

i) Loosen the screw (9) and remove the shaft (11) to separate the two halves of the scissor arm.

j) Check the shaft (11) for visual wear or damage and change if necessary.

k) Remove the links (12) together with the bushings (13) and change if necessary.

l) Assemble in the reverse order.

Note! During the assembly make sure that the shaft (11) is centred in the middle of the two scissor arm halves.

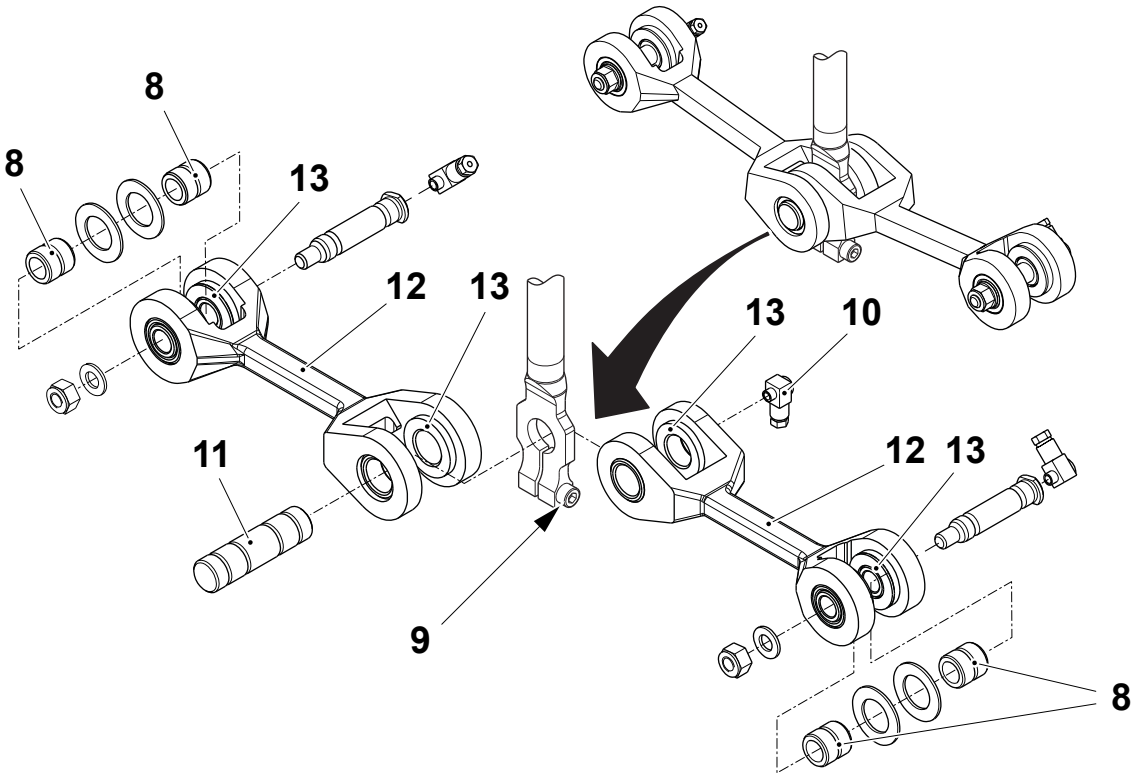

8 Sleeve
9 Screw
10 Oil connection
11 Shaft
12 Link
13 Bushing

TechPub_2614345_0106 - 04_MM2819200_04en.fm

4.1.5 Design Correction

4.1.5.1 Drive Unit

4.1.5.1-1 Drive Unit - Check

Machine Status	Mains Power OFF Air OFF Steam ON Water OFF
SPC Reference	2792301-0200 2792302-0200

Check:

- that the timing belt (1) is seated correctly on the wheel and the pulley
- the timing belt (1) for visual wear or damage. Change if necessary, see 4.1.5.1-2 Drive Unit - Change Belt
- the timing belt tension. Set if necessary, see 4.1.5.1-4 Drive Unit - Set Belt Tension
- that the top of the screw (2), on the wheel (3), is flat so that the proximity switch can read properly.

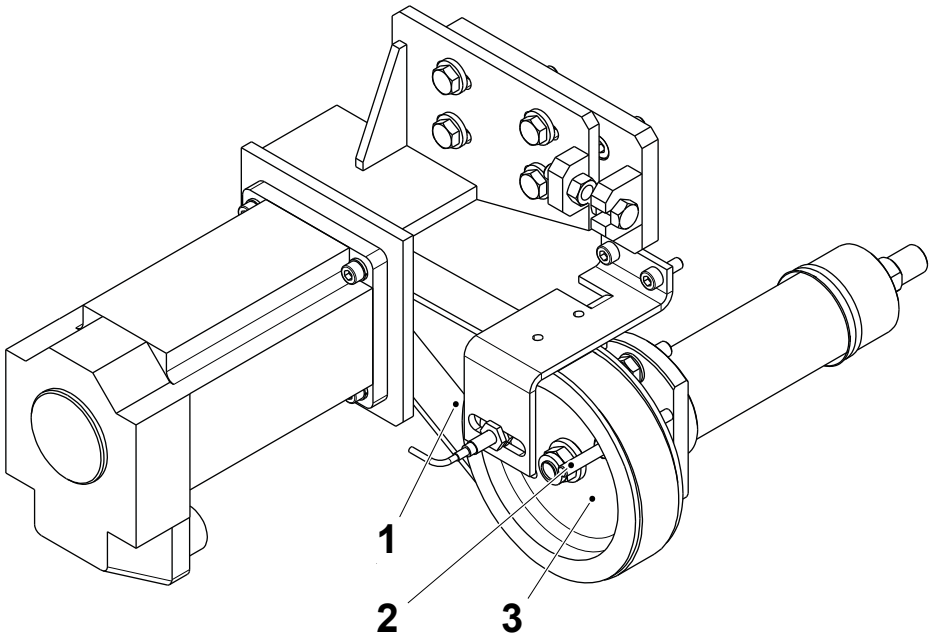

1 Timing belt
2 Screw
3 Wheel

TechPub_2614345_0106 - 04_MM2819200_04en.fm

4.1.5.1-2 Drive Unit - Change Belt

Machine Status	Mains Power OFF Air OFF Steam ON Water OFF
SPC Reference	2792301-0200 2792302-0200

a) Loosen the screw (1) and the four screws (2).

b) Move the plate (3), using the slotted holes, to remove the tension on the timing belt (4).

c) Remove the timing belt (4) and check for visible wear or damage. Change if necessary.

d) Assemble in the reverse order.

e) Set the timing belt (4) tension, see 4.1.5.1-4 Drive Unit - Set Belt Tension.

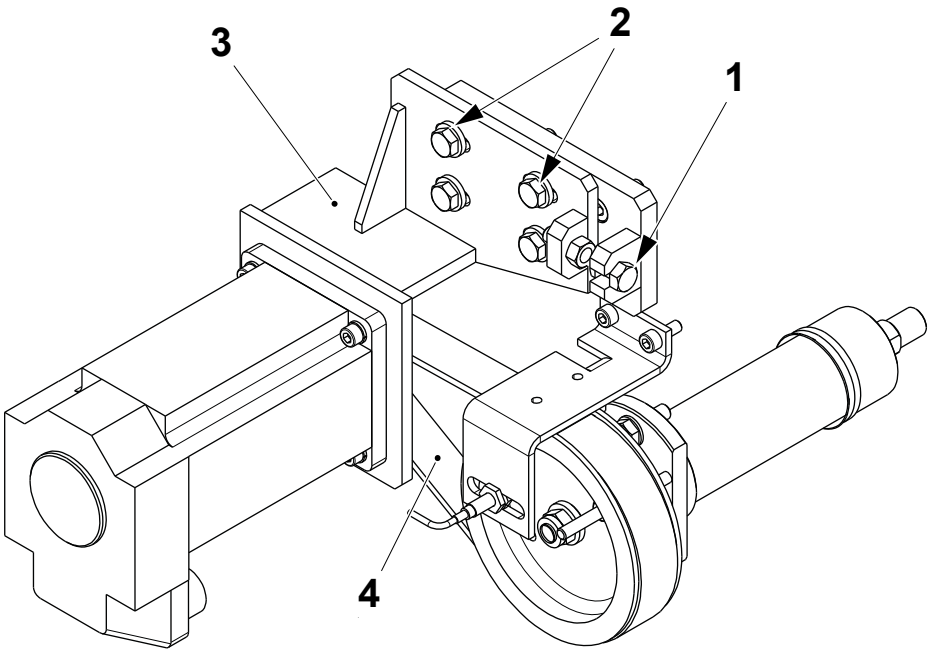

1 Screw
2 Screw
3 Plate
4 Timing belt

TechPub_2614345_0106 - 04_MM2819200_04en.fm

4.1.5.1-3 Drive Unit - Change Bearings and Seal Ring

Machine Status	Mains Power OFF Air OFF Steam ON Water OFF
SPC Reference	2792301-0200 2792302-0200

a) Remove the screws (1) and the bracket (2).

b) Remove the timing belt (3), see 4.1.5.1-2 Drive Unit - Change Belt.

c) Remove the nut (4). and the pulley (5).

d) Loosen the screws (6) on the coupling (7).

e) Remove the screws (8) and the support (9).

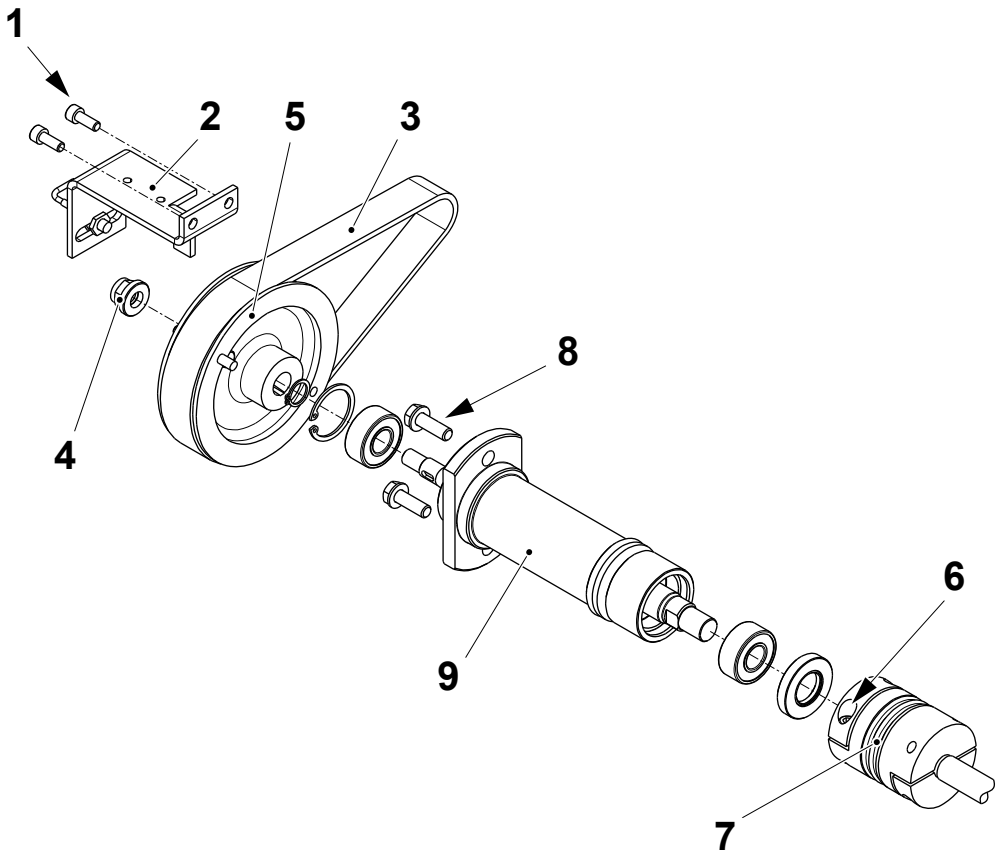

1 Screw
2 Bracket
3 Belt
4 Nut
5 Pulley
6 Screw
7 Coupling
8 Screw
9 Support

(Cont'd)

TechPub_2614345_0106 - 04_MM2819200_04en.fm

(Cont'd)

f) Remove the retaining rings (10), (11) and the ball bearing (12).

g) Remove the shaft (13), the seal (14) and the ball bearing (15).

h) Change the ball bearings (12) and (15). Check the seals (14) and (16). Change the parts if necessary.

i) Assemble in the reverse order.

j) Set the timing belt (3) tension, see 4.1.5.1-4 Drive Unit - Set Belt Tension.

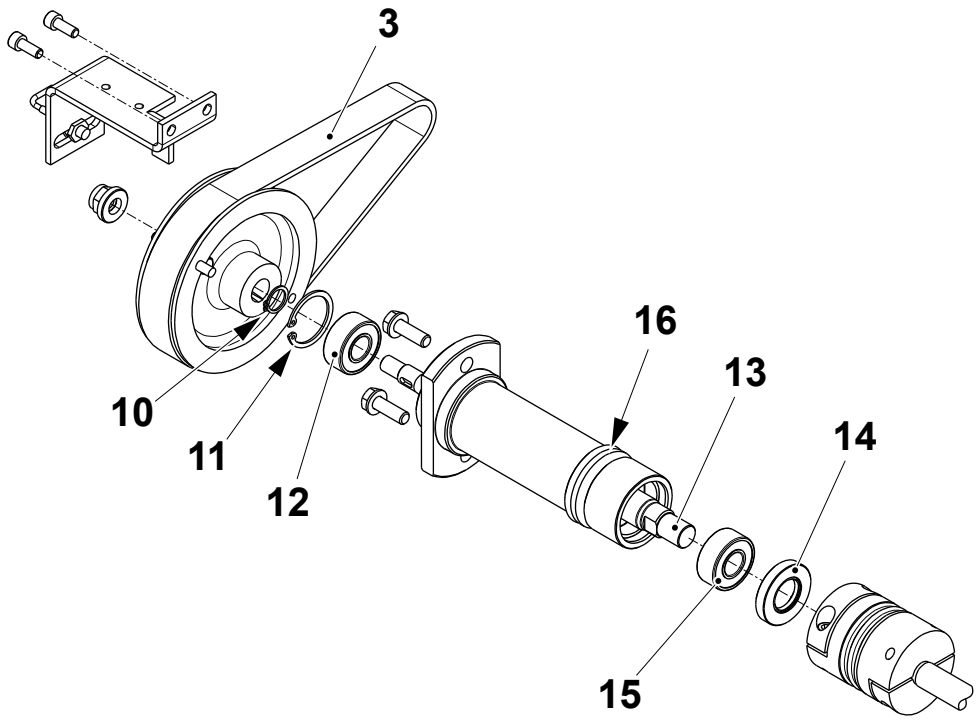

3 Belt
10 Retaining ring
11 Retaining ring
12 Ball bearing
13 Shaft
14 Seal
15 Ball bearing
16 Seal

TechPub_2614345_0106 - 04_MM2819200_04en.fm

4.1.5.1-4 Drive Unit - Set Belt Tension

Machine Status	Mains Power OFF Air OFF Steam ON Water OFF
Special Equipment	TP No. 90600-3415
SPC Reference	2792301-0200 2792302-0200

Setting with Tensiometer

Note! It is recommended to use the tensiometer TP No. 90600-3415 to set the drive belt tension. If an ultrasonic tensiometer is not available, follow the procedure Setting with Dynamometer on page 4-94.

a) If not already done, loosen the four screws (1) securing the plate (2).

b) Adjust the tension on the drive belt (3) by means of the screw (4) and check the tension with the tensiometer as follows:

- position the tensiometer sensor (5) against the surface (6) of the bracket (7) and with the end of the sensor positioned centrally over the drive belt (3).
- use a 5.0 mm allen key (8) to set the end of the tensiometer sensor (5) at a distance of 5.0 ±0.25 mm from the drive belt (3)

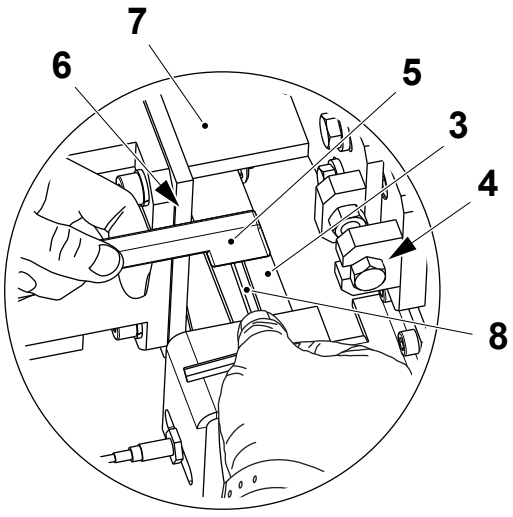

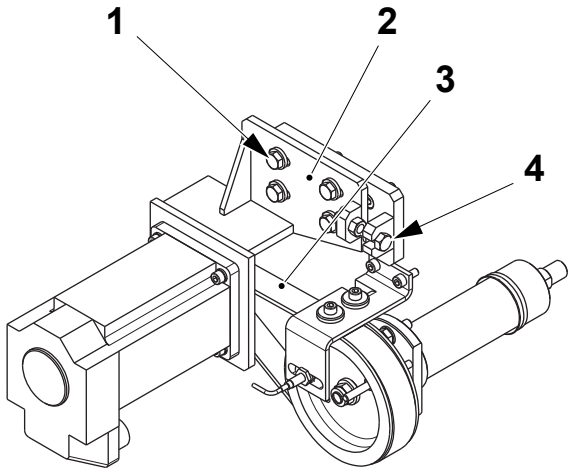

1 Screw
2 Plate
3 Drive belt
4 Screw
5 Tensiometer sensor
6 Surface
7 Bracket
8 Allen key

(Cont'd)

TechPub_2614345_0106 - 04_MM2819200_04en.fm

(Cont'd)

– press the reset icon on the tensiometer
– tap the drive belt (3) with the allen key (8).

The required tension is 100 ±5Hz, if necessary adjust the setting by loosening or tightening the screw (4) by small increments:

– loosening the screw decreases the drive belt tension
– tightening the screw increases the drive belt tension.

c) When the required tension is achieved tighten the four screws (1) to secure the plate (2).

d) Use the tensiometer to check that the tension has not altered after tightening the screws.

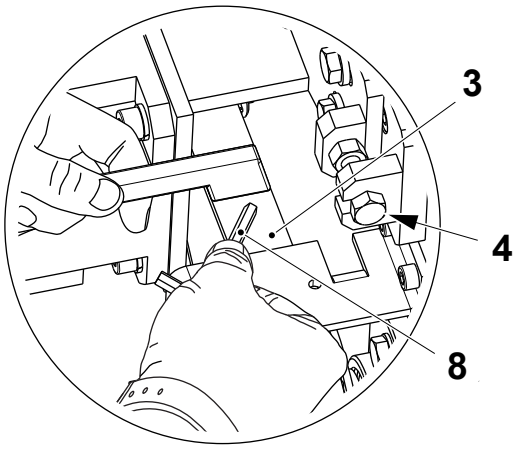

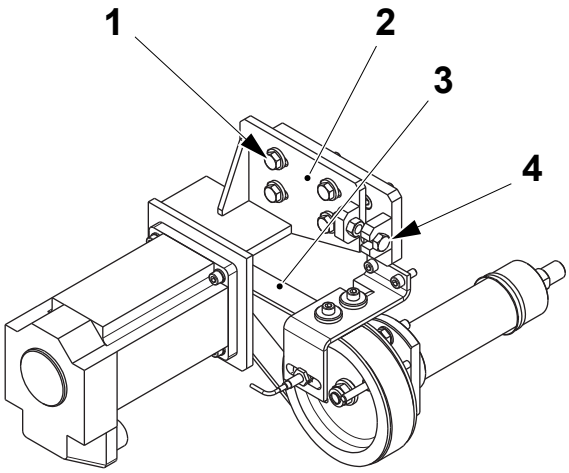

1 Screw
2 Plate
3 Drive belt
4 Screw
8 Allen key

(Cont'd)

TechPub_2614345_0106 - 04_MM2819200_04en.fm

(Cont'd)

Setting with Dynamometer

a) Loosen the four screws (1) securing the plate (2) and the nut (3).

b) Adjust the tension on the drive belt (4) by means of the screw (5).

c) Set the drive belt (4) so that it can be flexed by 4.0±1.0 mm with a force of 10 Nm at point **A**.

d) Tighten the four screws (1) to secure the plate (2) and the nut (3).

e) Use the dynamometer to check that the tension has not altered after tightening the screws.

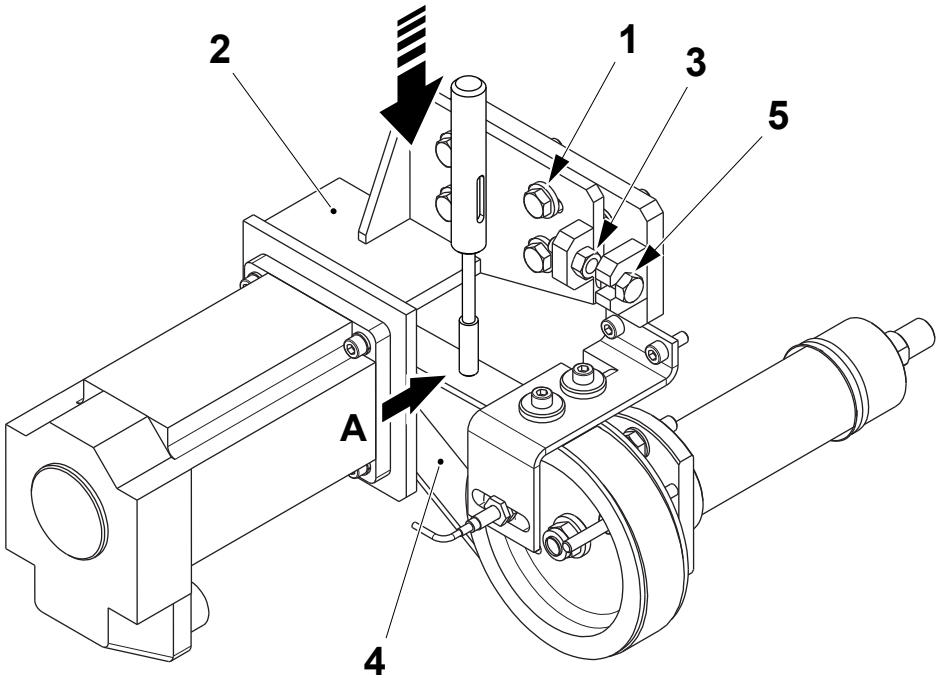

1 Screw
2 Plate
3 Nut
4 Drive belt
5 Screw

TechPub_2614345_0106 - 04_MM2819200_04en.fm

4.1.5.2 Design Correction Device

4.1.5.2-1 Design Correction Device - Check

Machine Status	Mains Power OFF Air OFF Steam ON Water OFF
SPC Reference	2503665-0200 2503666-0200

Check the following details for visual wear or damage:

- the folding flap cam (1) surface for marks and that the cam moves easily
- the flange bushings (2) and (3) for excessive play
- the oil connections (4) for oil leakage
- the plain bearings (5)
- the eccentric shafts (6) make sure that they are not bent or cracked and that they turn freely.

Change the parts if necessary.

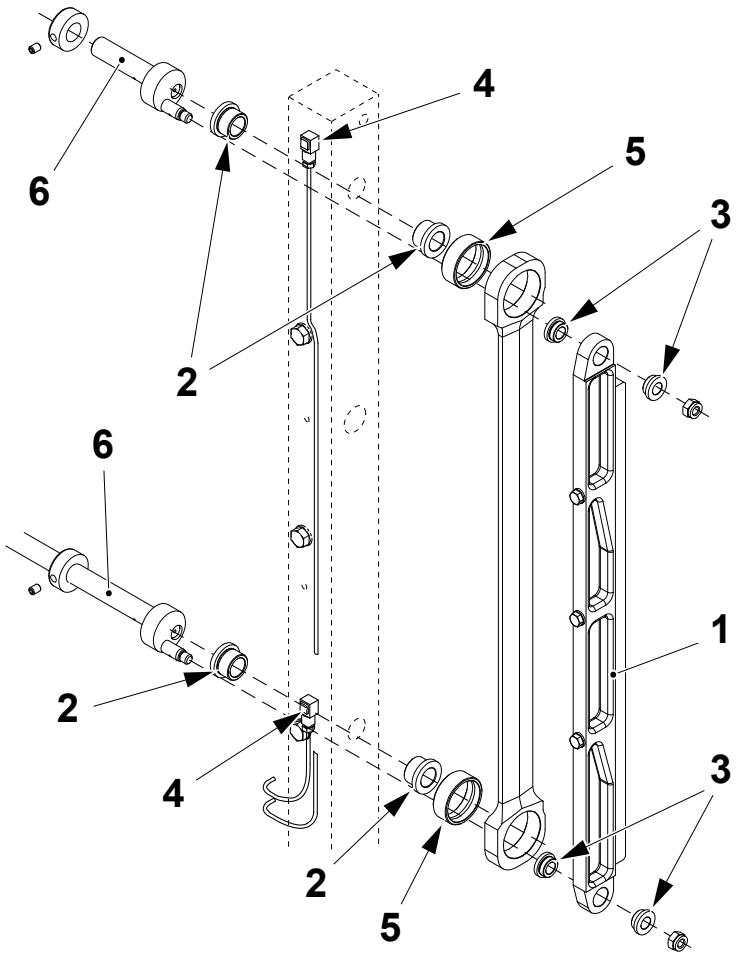

1 Folding flap cam
2 Flange bushing
3 Flange bushing
4 Oil connection
5 Plain bearing
6 Eccentric shaft

TechPub_2614345_0106 - 04_MM2819200_04en.fm

4.1.5.2-2 Design Correction Device - Change Plain Bearings

Machine Status	Mains Power OFF Air OFF Steam ON Water OFF
SPC Reference	2503665-0200 2503666-0200

a) Remove the two oil connections (1).

b) Remove the two nuts (2).

c) Remove the folding flap cam (3) and the strut (4).

d) Remove the two pins (5) and remove the two retainers (6).

e) Remove the eccentric shafts (7).

f) Remove the eight flange bushings (8) and (9), the two plain bearings (10) and change them if necessary.

g) Assemble in the reverse order.

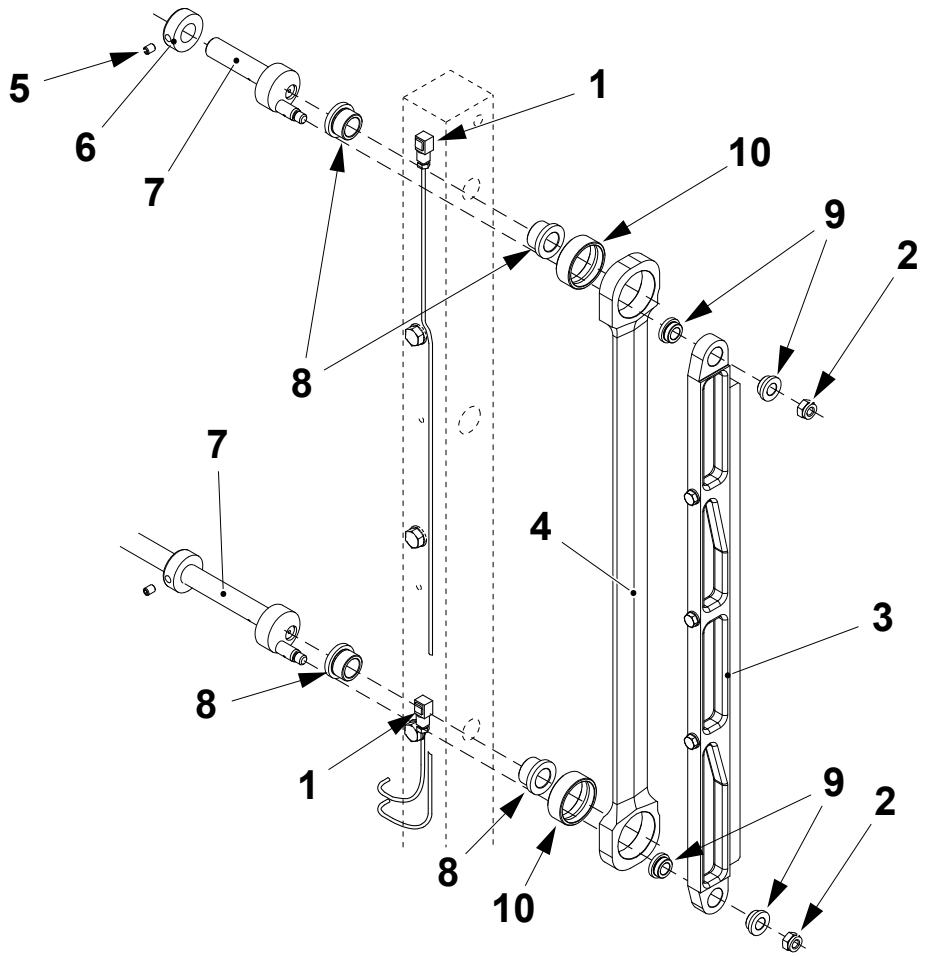

1 Oil connection
2 Nut
3 Folding flap cam
4 Strut
5 Pin
6 Retainer
7 Eccentric shaft
8 Flange bushing
9 Flange bushing
10 Plain bearing

TechPub_2614345_0106 - 04_MM2819200_04en.fm

4.1.6 Cable Connection

4.1.6-1 Cable Connection - Check

Machine Status	Mains Power OFF Air OFF Steam ON Water OFF
Special Equipment	Brass Brush
SPC Reference	2872698-0100

Check on both the RH and LH sides that:

- the water coolant hoses (1), the hydraulic oil hoses (2) and the central lubrication pipes (3) do not leak
- the hoses and pipes are intact and their connections are secure
- all the hoses and cables are clamped securely
- the insulation of the coaxial cables (4) and their connections are not damaged and that the electrical conductors are not oxidized. If necessary clean them with a brass wire brush.

Change the parts if necessary.

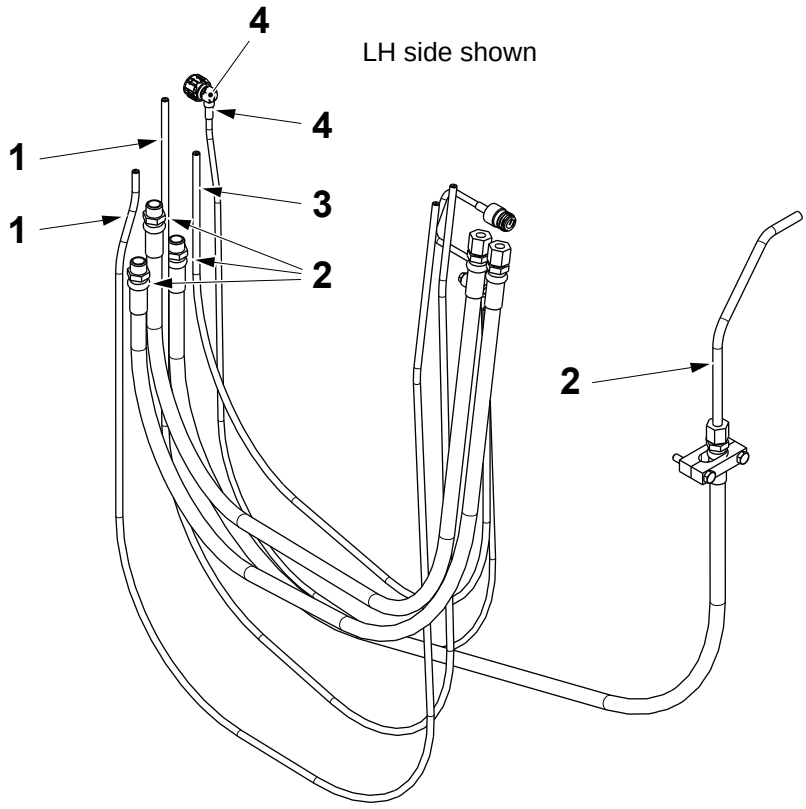

1 Water coolant hose
2 Hydraulic oil hose
3 Lubrication pipe
4 Coaxial cable

TechPub_2614345_0106 - 04_MM2819200_04en.fm

4.1.7 Volume Adjuster

4.1.7-1 Volume Adjuster - Check

Machine Status	Mains Power OFF Air OFF Steam ON Water OFF
SPC Reference	2613646-0100

a) Make sure that the rods (1) rotate freely.

b) Turn the volume adjustment knob (2), to check that the roller plates (3) open and close.

c) Remove the safety screw (4). Turn the support roller knob (5) and check that the support rollers (6) move correctly.

d) Turn the support roller knob (5) to its previous position and fit the safety screw (4).

Change the parts if necessary. Set the volume adjuster, see 4.1.7-2 Volume Adjuster - Set.

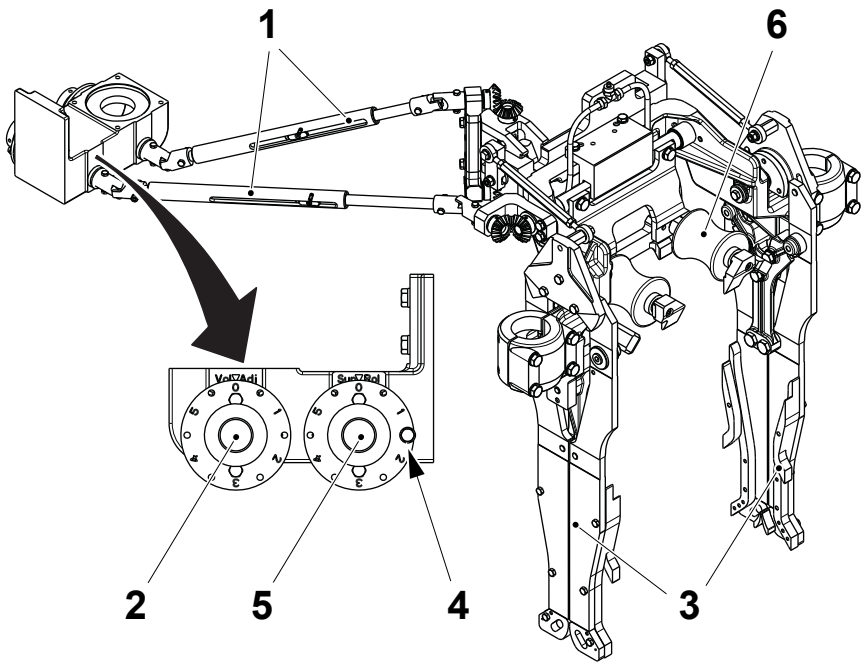

1 Rod
2 Volume adjustment knob
3 Roller plate
4 Safety screw
5 Support roller knob
6 Support roller

TechPub_2614345_0106 - 04_MM2819200_04en.fm

4.1.7-2 Volume Adjuster - Set

Machine Status	Mains Power OFF Air OFF Steam ON Water OFF
SPC Reference	2613646-0100

Follow the procedure described in 4-14 Jaw System - Set Volume Flaps with the Volume Adjuster.

TechPub_2614345_0106 - 04_MM2819200_04en.fm

4.1.7-3 Volume Adjuster - Remove

Machine Status	Mains Power OFF Air OFF Steam ON Water OFF
SPC Reference	2613646-0100

Note! For TBA 1000 Sq proceed with 4-7 Jaw System - Remove Front Volume Flaps before performing the following procedure.

a) If not already done, lower the jaw system, see 3-2 Drive Unit - Lower Jaw System.

b) Swing open the photocell holder (1).

c) Remove the screws (2) and retract the rods (3).

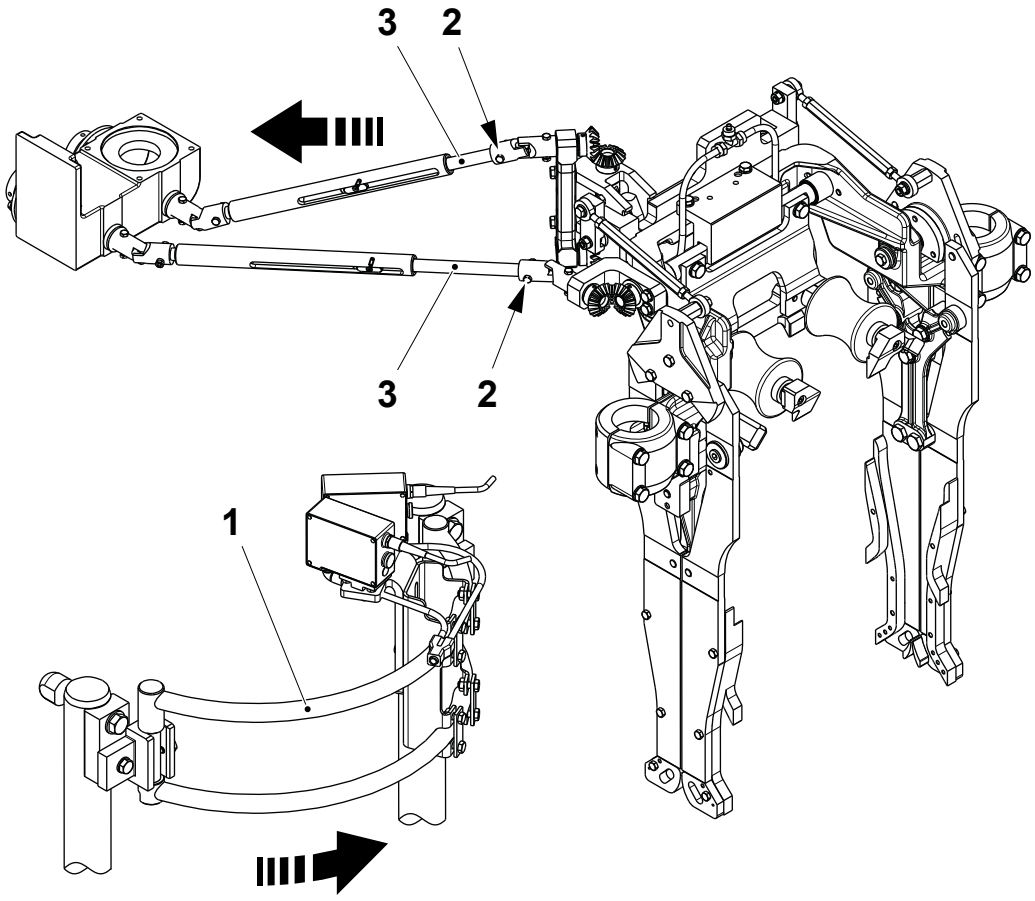

1 Holder
2 Screw
3 Rod

(Cont'd)

TechPub_2614345_0106 - 04_MM2819200_04en.fm

(Cont'd)

d) Disconnect the water hose (4) from its connection on the machine frame.

Note! Measure and record the height of the cantilever.

e) Remove the eight screws (5) and the washers from the cantilever (6).

f) Remove the cantilever (6) assembly from the yoke guides.

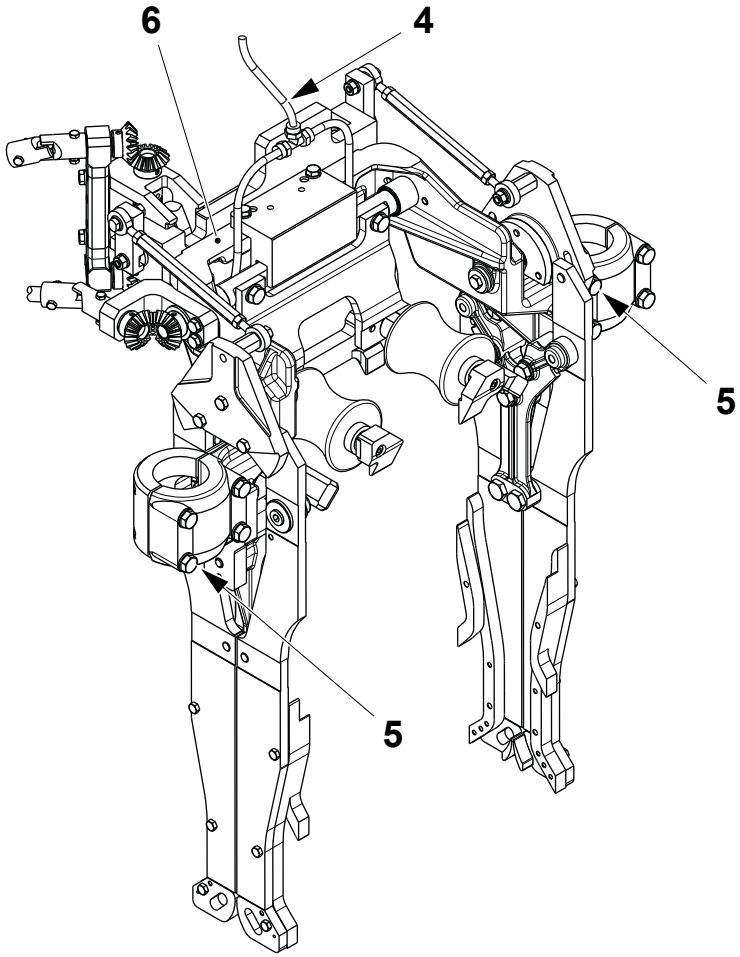

4 Hose
5 Screw
6 Cantilever

TechPub_2614345_0106 - 04_MM2819200_04en.fm

4.1.7-4 Volume Adjuster - Assemble

Machine Status	Mains Power OFF Air OFF Steam ON Water OFF
SPC Reference	2613646-0100

a) If not already done, lower the jaw system, see 3-2 Drive Unit - Lower Jaw System.

Package	**Basic Height A (mm)**
TBA 500 B	930.83
TBA 1000 B	930.83
TBA 500 Sq	958.5
TBA 1000 Sq	958.5
TPA 750 Sq	1002.6
TPA 1000 Sq	1002.6
TBA 1000 S	948.8
TBA 1500 S	985.0
TBA 2000 S	1023.8

(Cont'd)

TechPub_2614345_0106 - 04_MM2819200_04en.fm

(Cont'd)

b) Fit the volume adjuster (1) assembly on the yoke guides and secure loosely by means of the eight screws (2).

c) Set the basic height, distance **A** of the volume adjuster, from the machined surface (3) to the underside surface of the volume adjuster (4), (see the table on the previous page).

d) Tighten the eight screws (2).

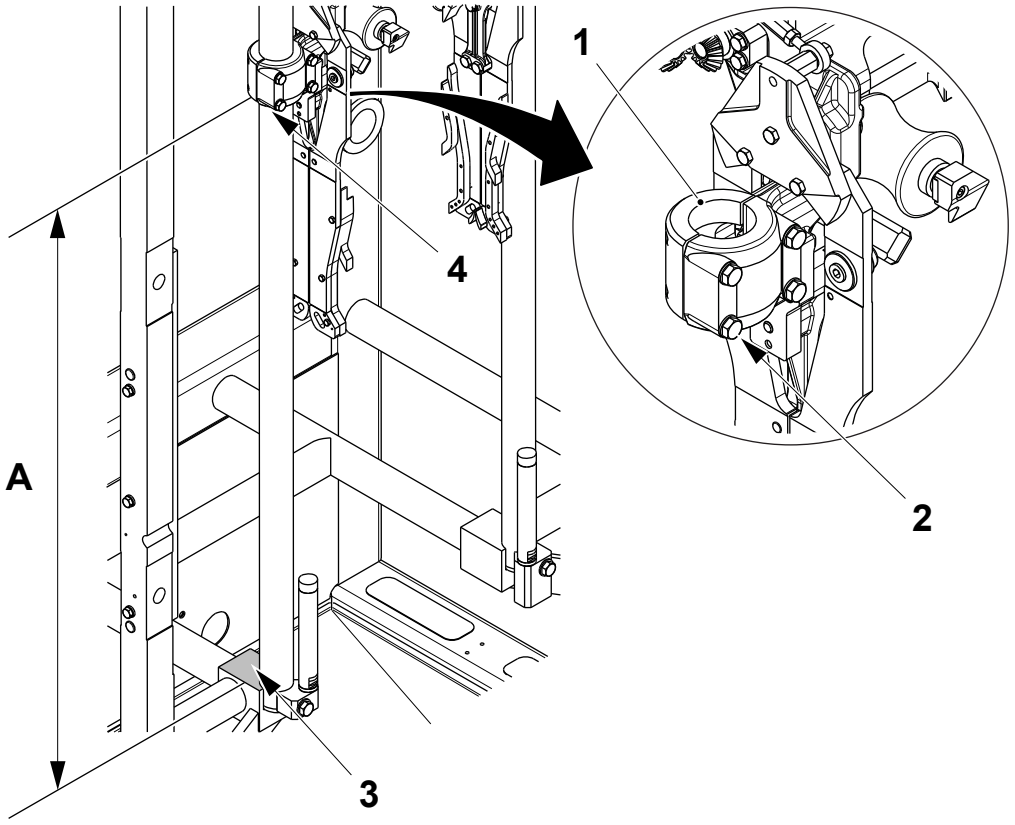

1 Volume adjuster
2 Screw
3 Machined surface
4 Volume adjuster surface

(Cont'd)

TechPub_2614345_0106 - 04_MM2819200_04en.fm

(Cont'd)

e) Connect the water hose (5) to the plug located on the machine frame.

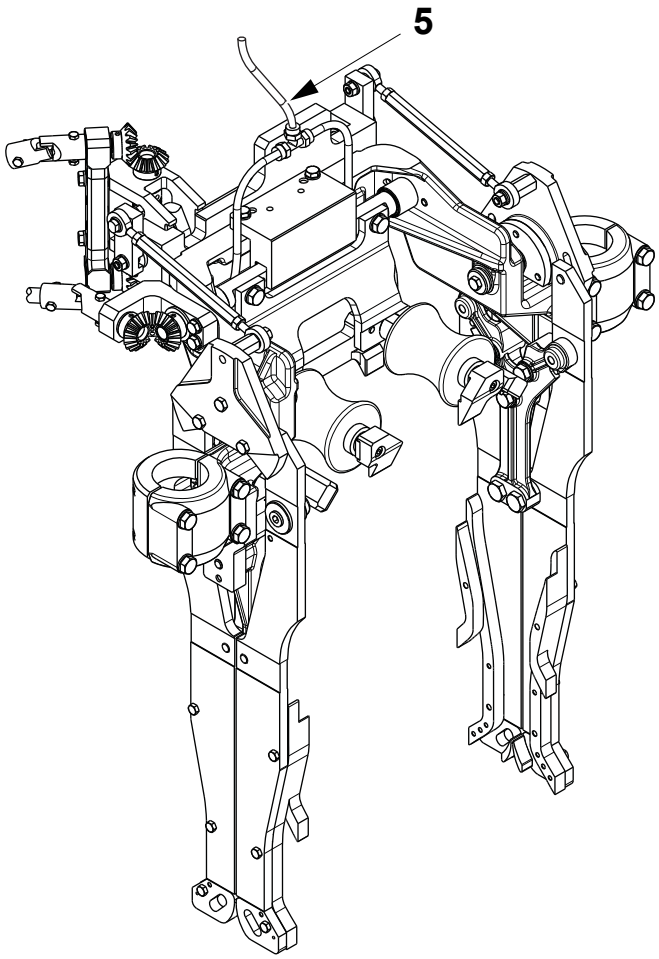

5 Water hose

TechPub_2614345_0106 - 04_MM2819200_04en.fm

(Cont'd)

(Cont'd)

f) Extend the two rods (6) and fit the screws (7).

g) Move the photocell holder (8) over to the working position.

h) Set the volume adjuster height, see 4.1.7-5 Volume Adjuster - Set Height.

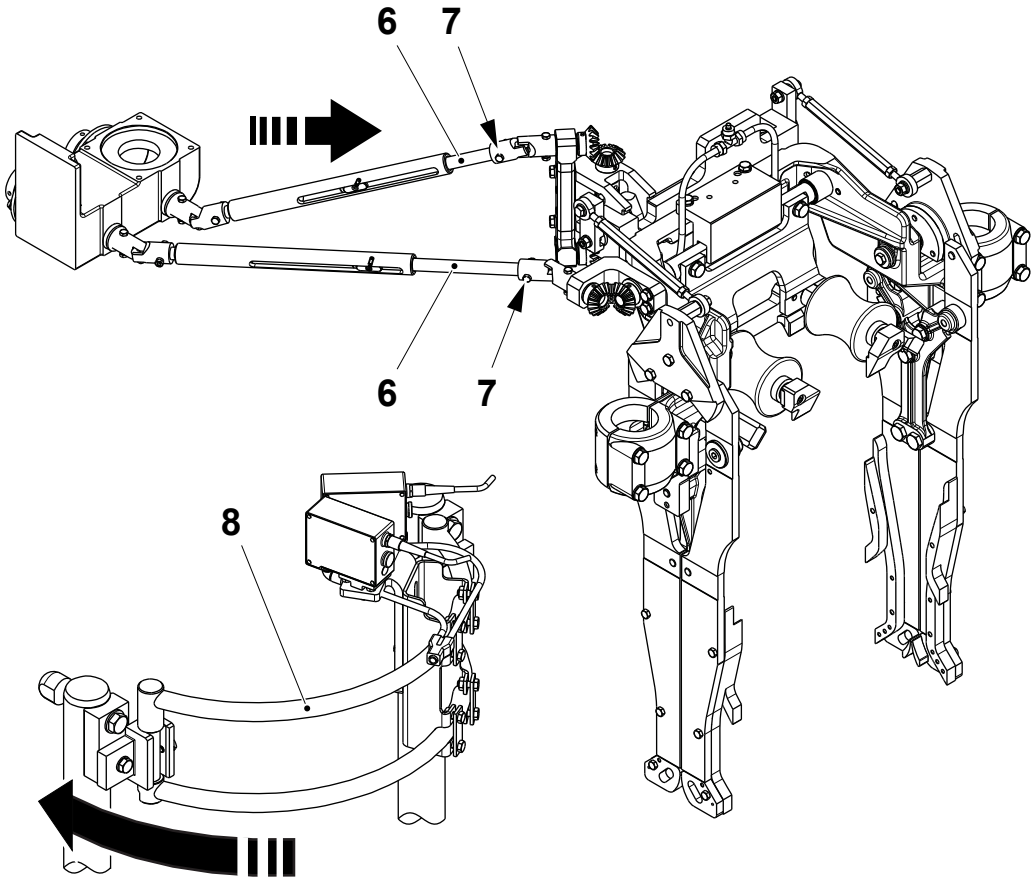

6 Rod
7 Screw
8 Photocell holder

TechPub_2614345_0106 - 04_MM2819200_04en.fm

4.1.7-5 Volume Adjuster - Set Height

Machine Status	Mains Power OFF Air OFF Steam ON Water OFF
SPC Reference	2613646-0100

Follow the procedure described in 4-13 Jaw System - Set Volume Adjuster Height.

TechPub_2614345_0106 - 04_MM2819200_04en.fm

4.2 Forming Unit

SPC Reference	2552003-0200

4.2.1 Pressure Jaw

4.2.1-1 Pressure Jaw - Check

Machine Status	Mains Power OFF Air OFF Steam ON Water OFF
SPC Reference	2832241-0100 2832242-0100

Note! Valid for stand alone volumes only.

Check the following parts for visual wear or damage:

- the oil hoses and the oil connections and also for any oil leakage
- the cooling water hoses, and connections and also for any leakage
- the catches (1) and also for any oil leakage
- the shafts (2)
- the inductor (3) for any marks on the surface of the inductor
- the lids (4) and also for any oil leakage

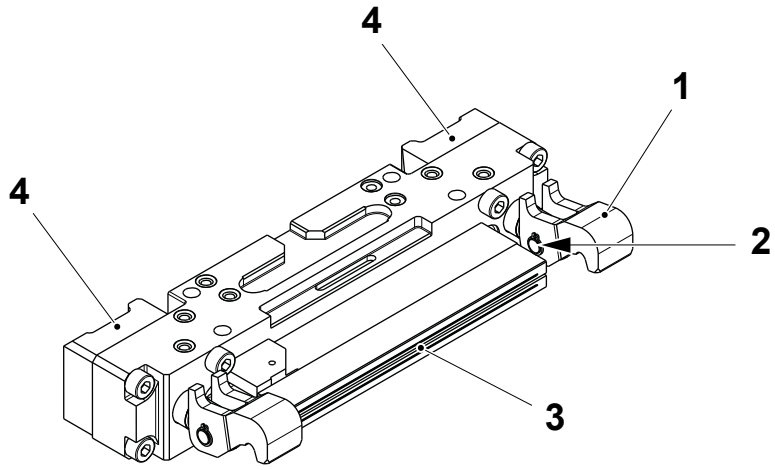

1 Catch
2 Shaft
3 Inductor
4 Lid

(Cont'd)

TechPub_2614345_0106 - 04_MM2819200_04en.fm

(Cont'd)

- the venting screws (5), the water connections (6), the screws (7) and the oil connections (8) and (9). Check these carefully for oil and cooling water leakage
- the brackets (10)
- the rollers (11)
- the springs (12).

Change the parts if necessary.

Check the correct flows on the transversal sealing flowmeters S4309 and S4310, located in the service unit. Set if necessary, see 6.1.2-2 Flow Meter - Set Flows.

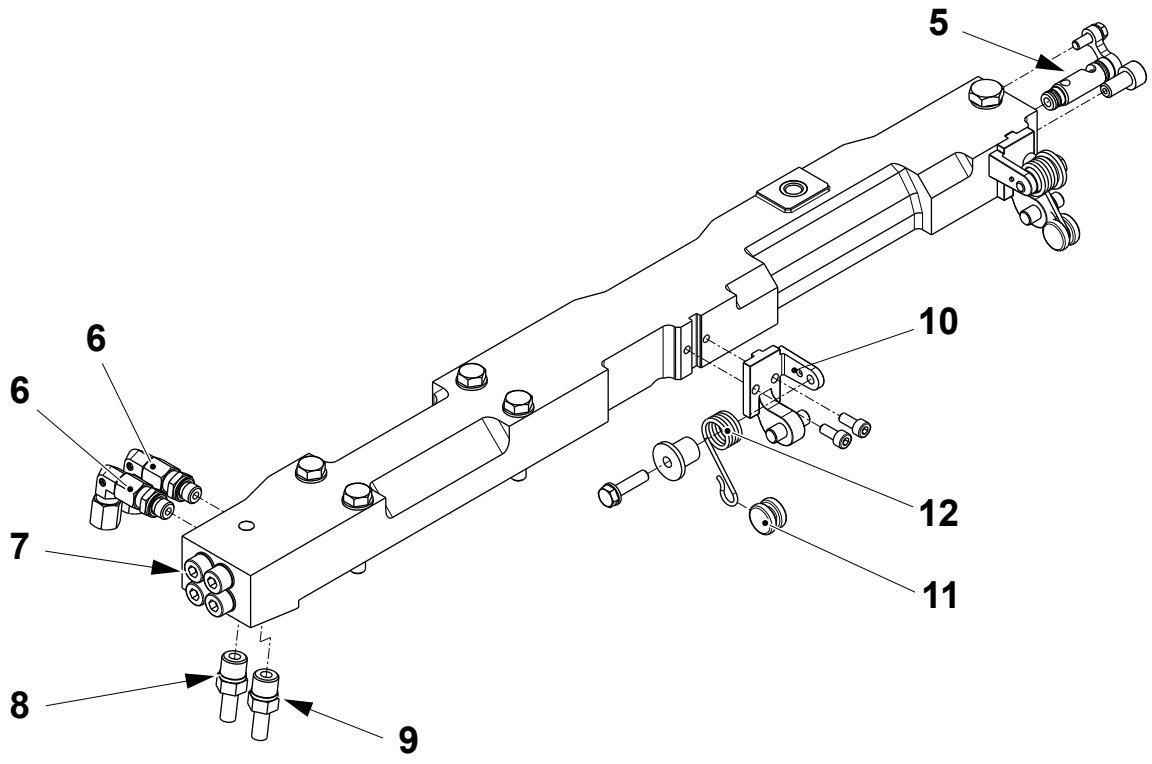

5 Screw
6 Water connection
7 Screw
8 Oil connection
9 Oil connection
10 Bracket
11 Roller
12 Spring

TechPub_2614345_0106 - 04_MM2819200_04en.fm

4.2.1-2 Pressure Jaw - Remove

Machine Status	Mains Power OFF Air OFF Steam ON Water OFF
SPC Reference	2832241-0100 2832242-0100

a) Remove the hydraulic hoses (1) by means of the nuts (2).

b) Remove the cooling hoses (3) by means of the screws (4).

c) Remove the busbar (5) by means of the screw (6).

d) Remove the pressure jaw group together with the carrier (7) by means of the four screws (8).

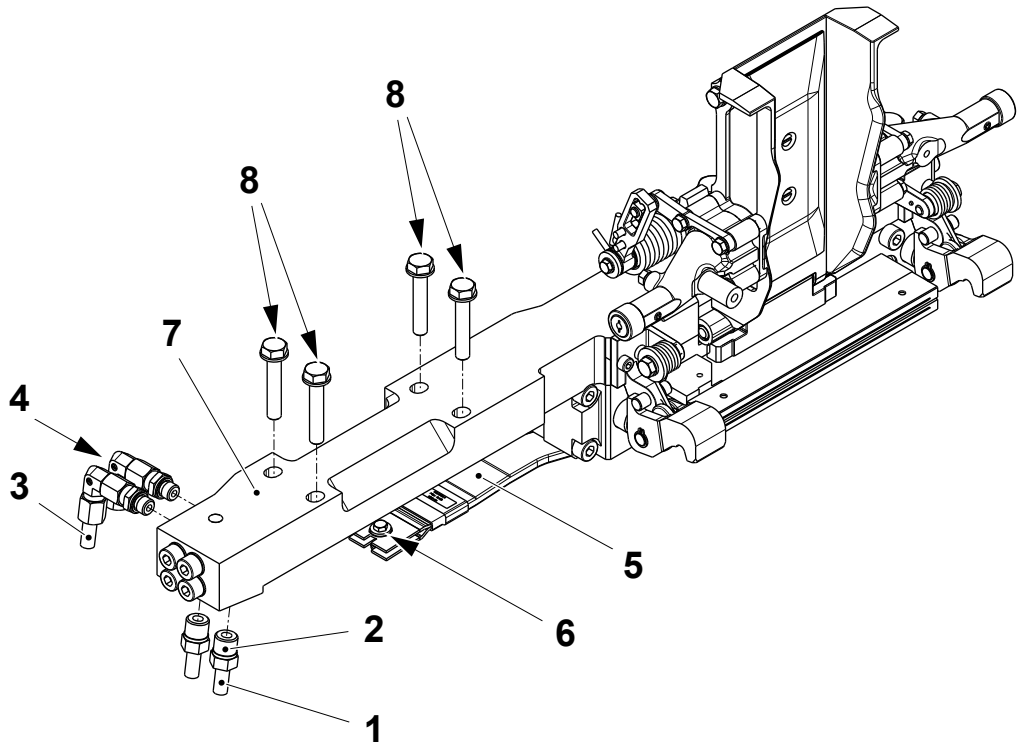

1 Hose
2 Nut
3 Hose
4 Screw
5 Busbar
6 Screw
7 Carrier
8 Screw

TechPub_2614345_0106 - 04_MM2819200_04en.fm

4.2.1-3 Pressure Jaw - Remove Volume Flaps

Machine Status	Mains Power ON Air OFF Steam ON Water OFF
SPC Reference	2832241-0100 2832242-0100

Note! For TBA 1000 Sq only, Use the GO TO POSITION function to slow inch the machine to 18° LH side (198° RH side).

a) Use the GO TO POSITION function to slow inch the machine to 24° LH side (204° RH side), see 4-2 Jaw System - Inching, Go To Position and Manual Operation Description.

b) Remove the screw (1).

c) Remove the rear volume flap (2).

d) Repeat the procedure for the RH side.

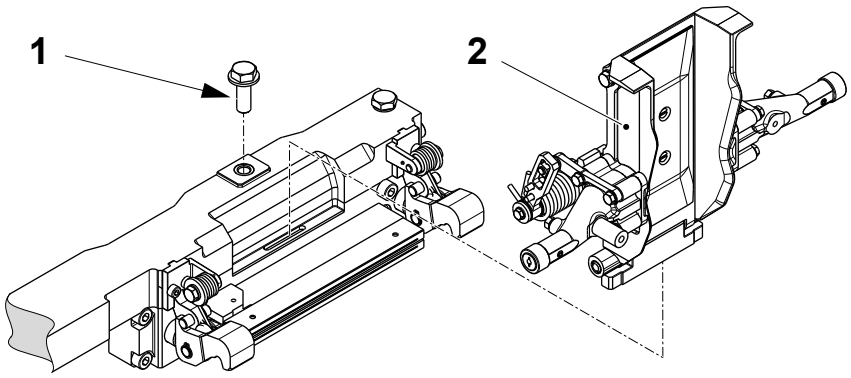

1 Screw
2 Volume flap

TechPub_2614345_0106 - 04_MM2819200_04en.fm

4.2.1-4 Pressure Jaw - Install Volume Flaps

Machine Status	Mains Power ON Air OFF Steam ON Water OFF
SPC Reference	2832241-0100 2832242-0100

Note! For TBA 1000 Sq only, Use the GO TO POSITION function to slow inch the machine to 18° LH side (198° RH side).

a) Use the GO TO POSITION function to slow inch the machine to 24° LH side (204° RH side), see 4-2 Jaw System - Inching, Go To Position and Manual Operation Description.

b) Fit the volume flap (1) to the pressure jaw by means of the screw (2).

c) Repeat the procedure for the RH side.

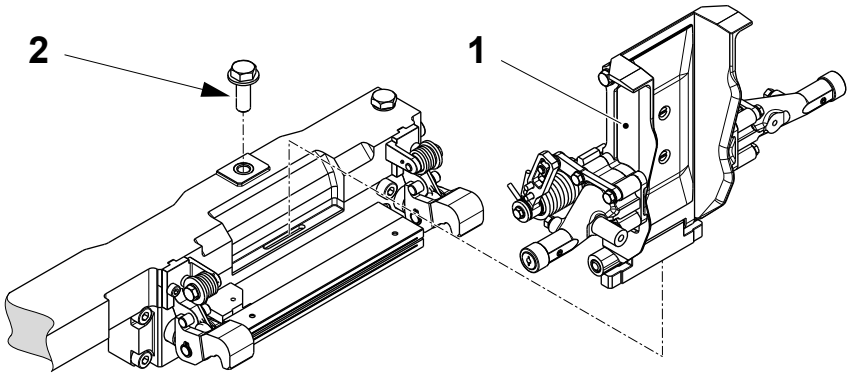

1 Volume flap
2 Screw

TechPub_2614345_0106 - 04_MM2819200_04en.fm

4.2.1-5 Pressure Jaw - Assemble

Machine Status	Mains Power OFF Air OFF Steam ON Water OFF
SPC Reference	2832241-0100 2832242-0100

a) Fit the pressure jaw group together with the carrier (1) by means of the four screws (2).

b) Fit the busbar (3) by means of the screw (4).

c) Fit the cooling hoses (5) by means of the screws (6).

d) Fit the hydraulic hoses (7) by means of the nuts (8).

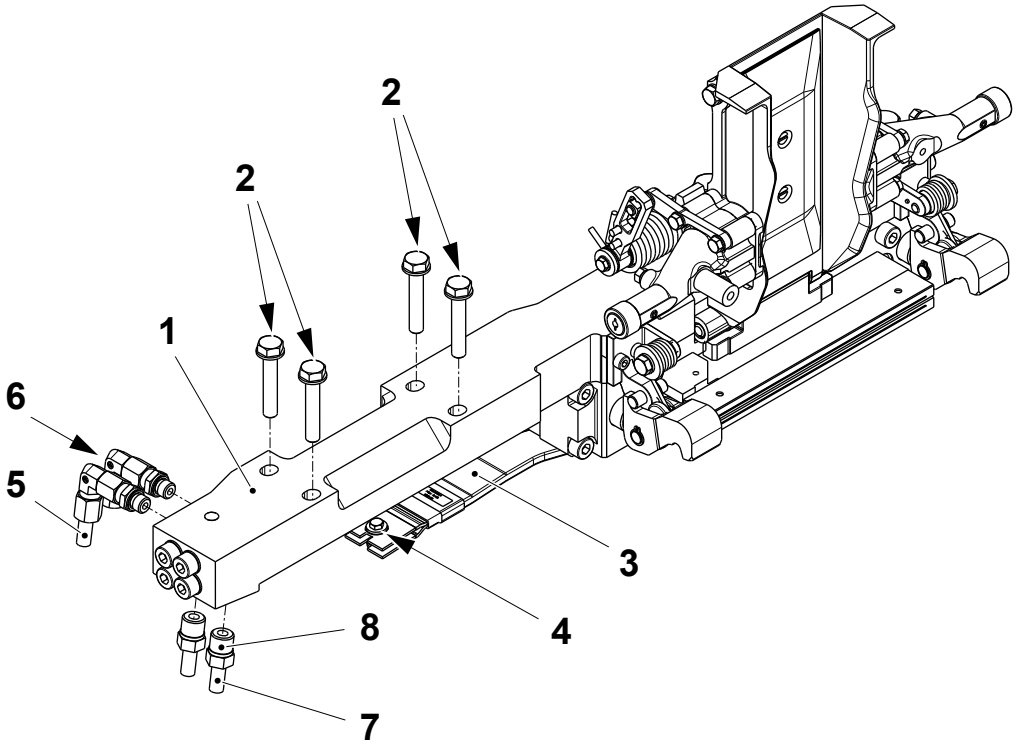

1 Carrier
2 Screw
3 Busbar
4 Screw
5 Cooling hose
6 Screw
7 Hydraulic hose
8 Nut

TechPub_2614345_0106 - 04_MM2819200_04en.fm

4.2.1-6 Pressure Jaw - Change Seals

Machine Status	Mains Power OFF Air OFF Steam ON Water OFF
Special Equipment	Torque Wrench min. 20 Nm Assembly Tool TP No. 2778300-0000, TP No. 90091-0378 Assembly Tool TP No. 2925912-0100
SPC Reference	2832241-0100 2832242-0100

Note! For package dependent template and tool codes, see 10.2 Templates and Tools.

(Cont'd)

TechPub_2614345_0106 - 04_MM2819200_04en.fm

(Cont'd)

a) Remove the circlips (1) and pull out the shafts (2) from the catches (3).
b) Remove the catches (3) from the pistons (4).
c) Remove the screws (5), lids (6) and the springs (7).
d) Remove and change the O-rings (8).

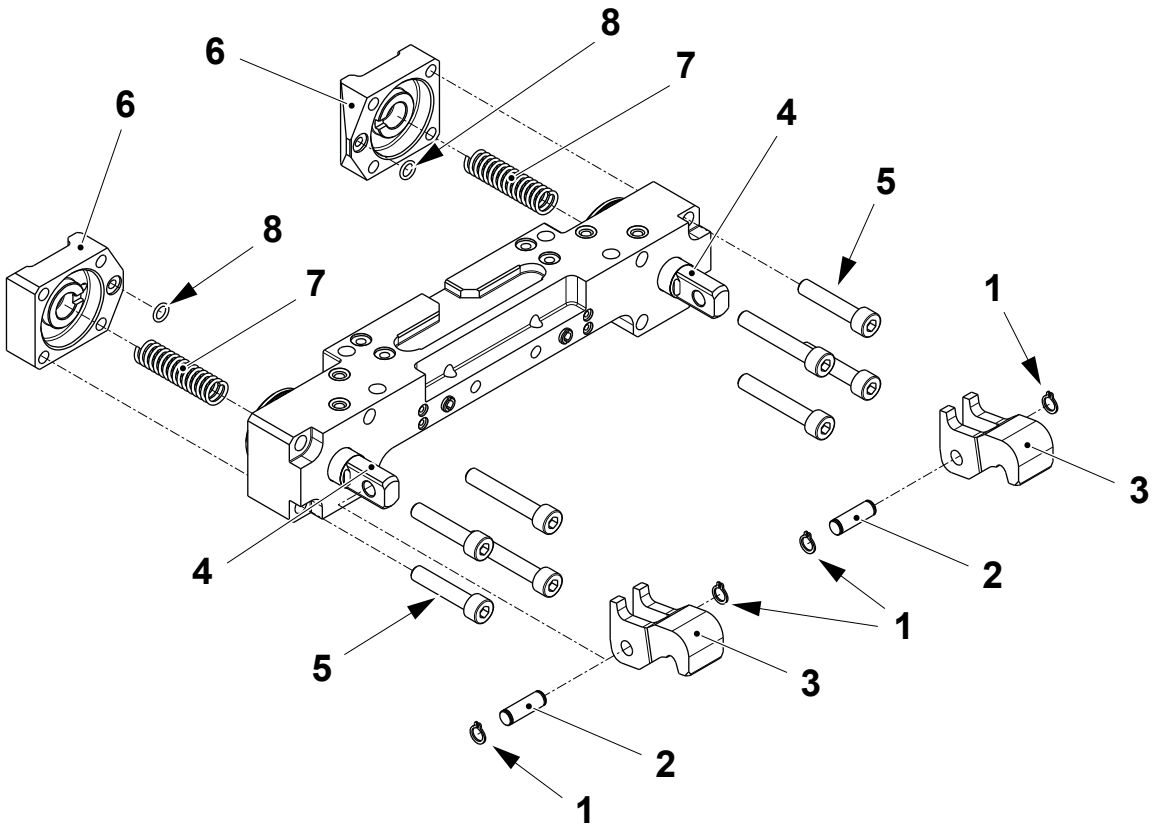

1 Circlip
2 Shaft
3 Catch
4 Piston
5 Screw
6 Lid
7 Spring
8 O-ring

(Cont'd)

TechPub_2614345_0106 - 04_MM2819200_04en.fm

(Cont'd)

e) Remove the pistons (4) from the bearing housing (9) and change the wear rings (10) and the seals (11). See Piston Seal Assembly on page 4-119 to change the seals (11).

f) Remove the sleeves (12).

g) Remove and change the back rings (13) and the seals (14).

h) Remove the seals (15), the spacers (16), the wear rings (17) and the scraper (18) From the bearing housing (9).

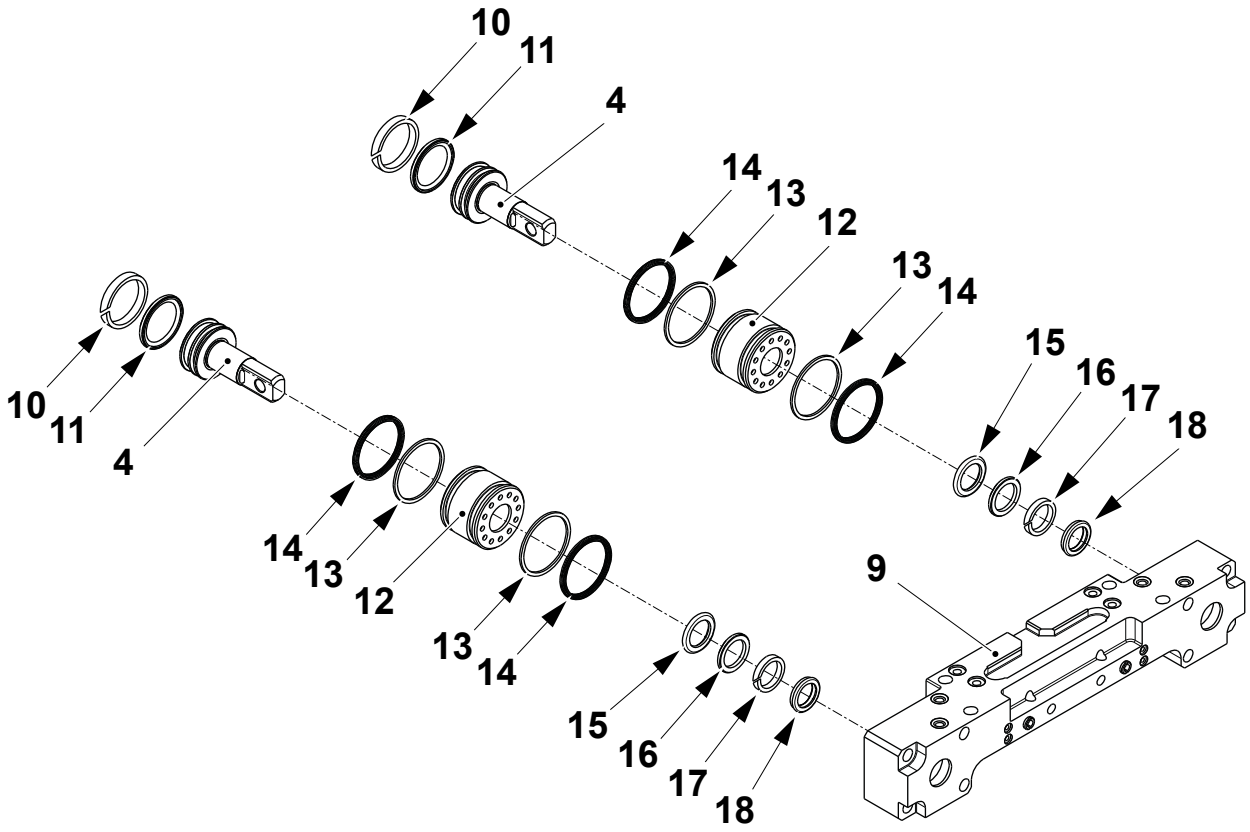

4 Piston
9 Bearing housing
10 Wear ring
11 Seal
12 Sleeve
13 Back ring
14 Seal
15 Seal
16 Spacer
17 Wear ring
18 Scraper

(Cont'd)

TechPub_2614345_0106 - 04_MM2819200_04en.fm

(Cont'd)

i) Fit the seals (15), the spacers (16) the wear rings (17) and the scrapers (18) into the bearing housing (9) according to the illustration.

j) Fit the back rings (13) and the seals (14) onto the sleeves (12) according to the illustration.

k) Fit the sleeves (12) into the bearing housing (9).

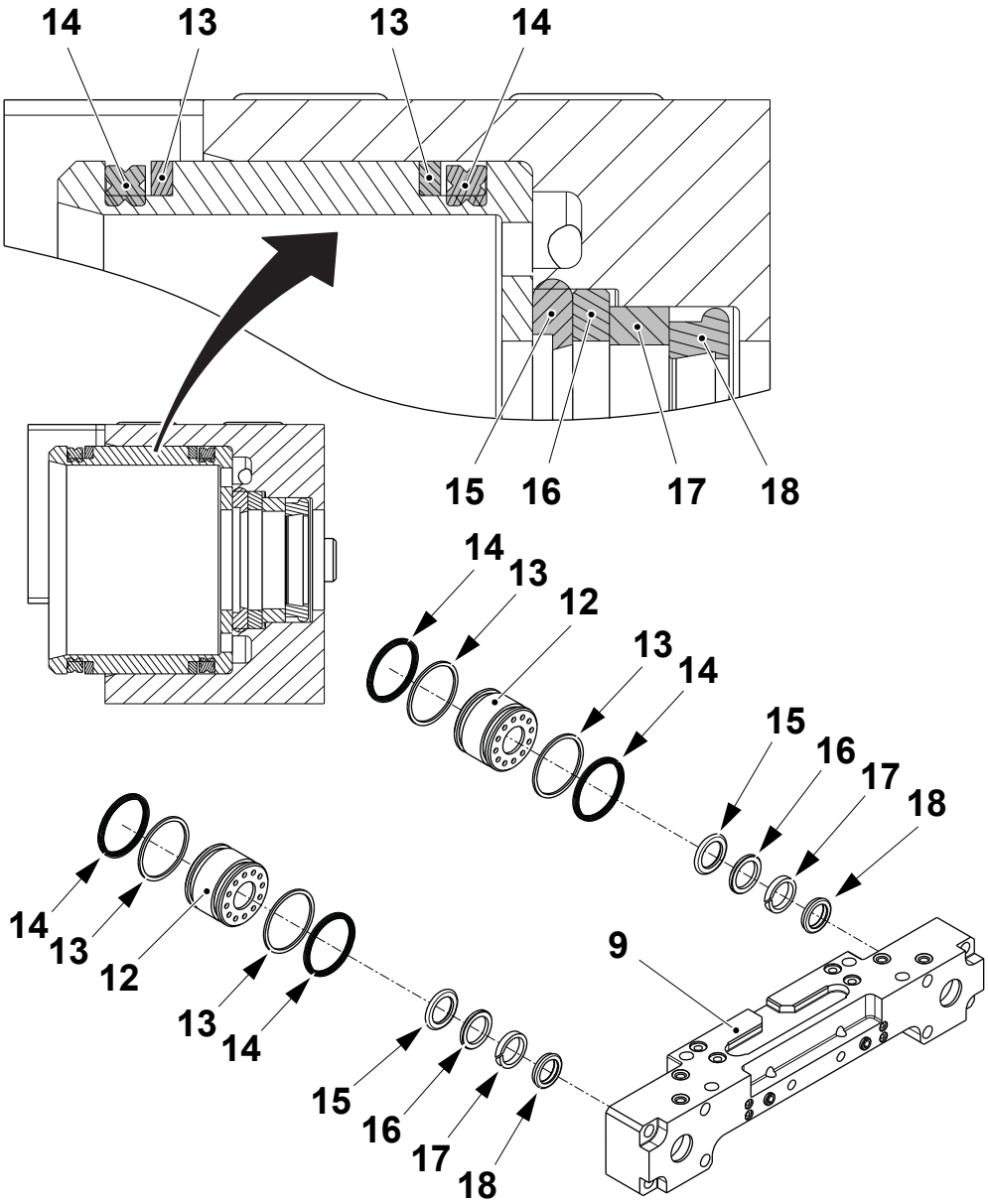

9 Bearing housing
12 Sleave
13 Back ring
14 Seal
15 Seal
16 Spacer
17 Wear ring
18 Scraper

(Cont'd)

TechPub_2614345_0106 - 04_MM2819200_04en.fm

(Cont'd)

l) Fit the assembly tool (19) onto the piston (4).

m) Apply a small amount of hydraulic oil onto the assembly tool (19), the wear ring (10) and piston seal (11).

n) Fit the assembly tool (19) into the bearing housing (9) and gently push the piston (4) into the sleeve (12).

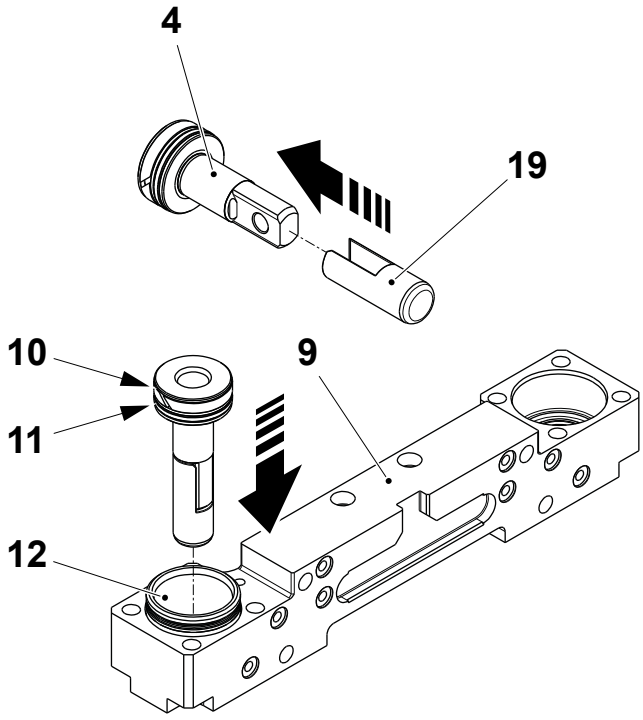

4 Piston
9 Bearing housing
10 Wear ring
11 Seal
12 Sleeve
19 Assembly tool

(Cont'd)

TechPub_2614345_0106 - 04_MM2819200_04en.fm

(Cont'd)

o) Fit the spring (7) and the O-rings (8).

p) Fit the lids (6) and tighten the screws (5) to a torque of 20 Nm.

q) Fit the catches (3) on the pistons (4) with the shafts (2) and the circlips (1).

r) Bleed the hydraulic circuit for the catches, see 2.2.2-4 Hydraulic System - Bleed.

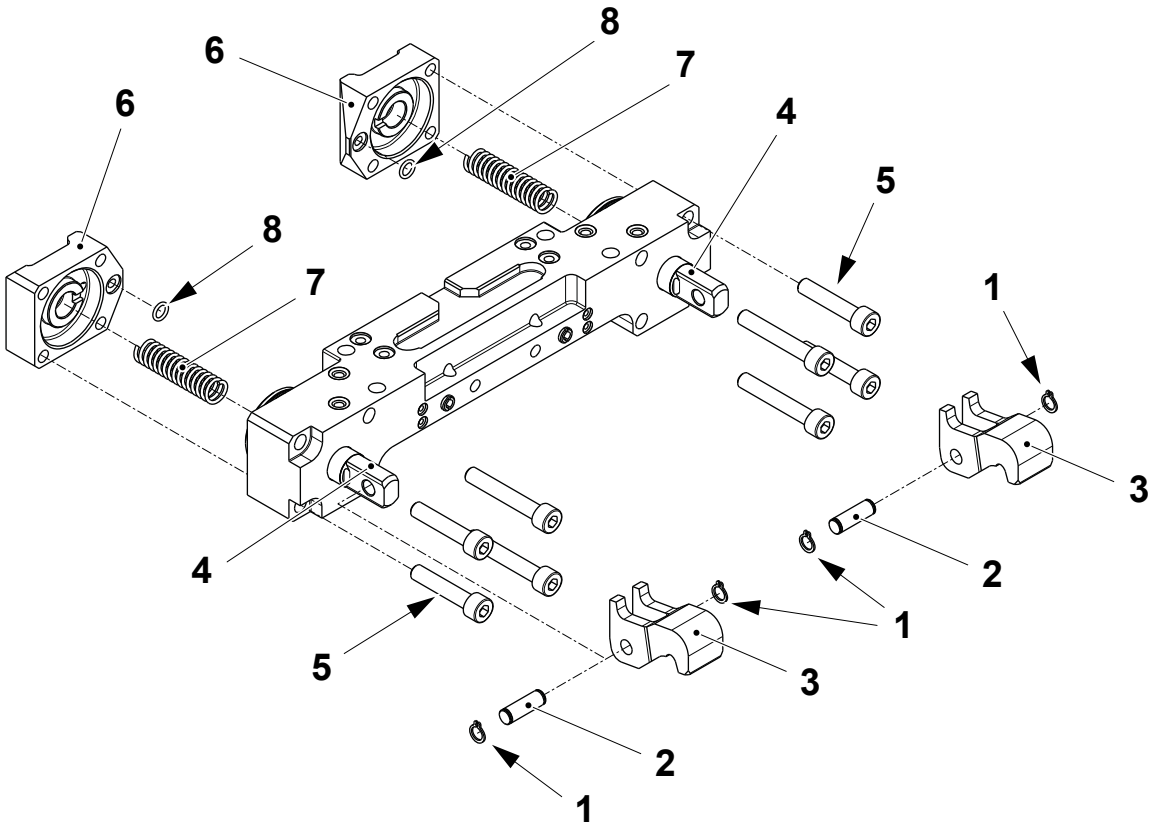

1 Circlip
2 Shaft
3 Catch
4 Piston
5 Screw
6 Lid
7 Spring
8 O-ring

(Cont'd)

TechPub_2614345_0106 - 04_MM2819200_04en.fm

(Cont'd)

Piston Seal Assembly

Package	Tool TP No.	Seal Ring (3) TP No.
TBA 2000 S	2778300-0000	90459-2173
All other volumes	90091-0378	90459-0428

Note! Use boiling water to assist in the fitting and shaping of the seal ring (3).

a) Fit the cone tool (1) onto the plunger (2).

b) Slide the seal ring (3) onto the cone tool (1).

c) Move the seal ring (3) into the groove (4) on the plunger (2) using the assembly tool (5).

d) Remove the guide cone tool (1) and the assembly tool (5).

e) Slide the calibration tool (6) over the plunger (2) to shape and calibrate the seal ring (3).

f) Fit the wear ring (7).

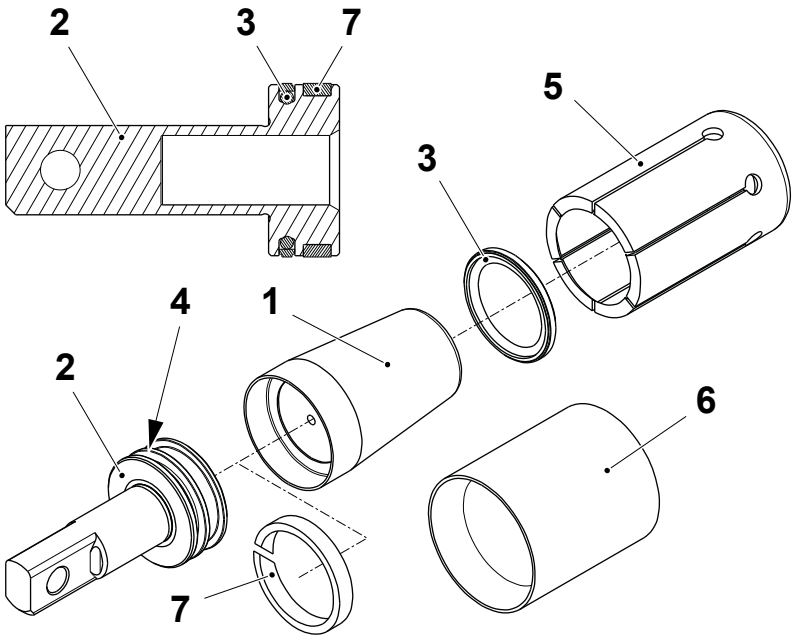

1 Cone tool
2 Plunger
3 Seal ring
4 Groove
5 Assembly tool
6 Calibration tool
7 Wear ring

TechPub_2614345_0106 - 04_MM2819200_04en.fm

4.2.1-7 Pressure Jaw - Check Inductor

Machine Status	Mains Power OFF Air OFF Steam ON Water OFF
Special Equipment	Tool TP No. 2908997-0100
SPC Reference	2832241-0100 2832242-0100

Check the quality of the TS, see the OM and the BoC. If necessary, perform the following checks on the inductors (1).

Check the following parts for wear or damage:

- the inductor (1), carefully check that the slot (2) in the inductor (1) is not blocked and that the edges are not deformed. Clean the inductor (1) with a brass wire brush if necessary
- the electrical conductors (3), make sure that they are free from oxidation. Clean them with a brass wire brush if necessary

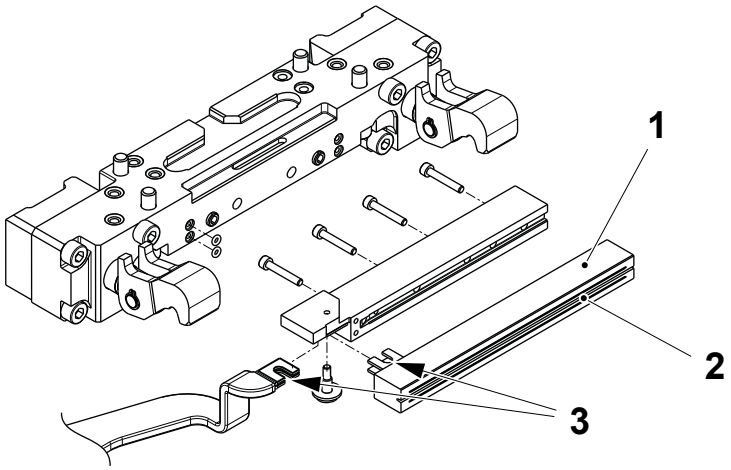

1 Inductor
2 Slot
3 Conductor

(Cont'd)

TechPub_2614345_0106 - 04_MM2819200_04en.fm

(Cont'd)

- the flow through the cooling water pipes, make sure that the cooling water pipes are not blocked by limescale deposit
- the rail (4), make sure that the rail (4) is not damaged. Clean the rail (4) with a brass wire brush if necessary
- the bus bar (5), make sure that the busbar (5) is not damaged and is free from oxidation.

Change if necessary. Set the transversal sealing if necessary, see 9.9.1-6 IH Equipment - Set Sealing.

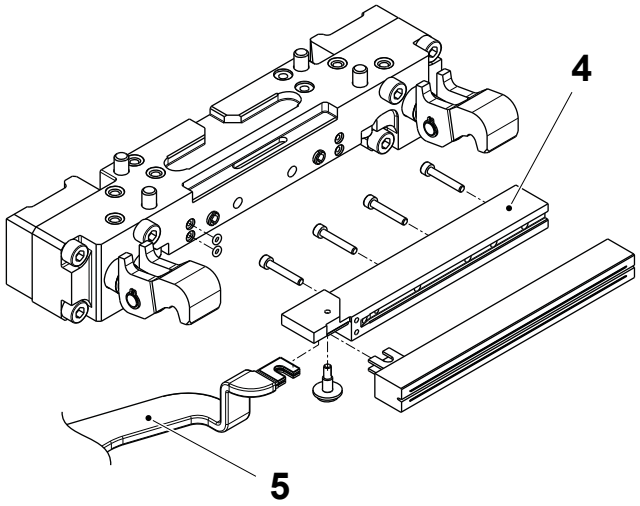

4 Rail
5 Busbar

TechPub_2614345_0106 - 04_MM2819200_04en.fm

(Cont'd)

(Cont'd)

Micrometer Check

a) Reset the tool (1) by fitting the template (2) under the slide (3).

b) Remove the template (2).

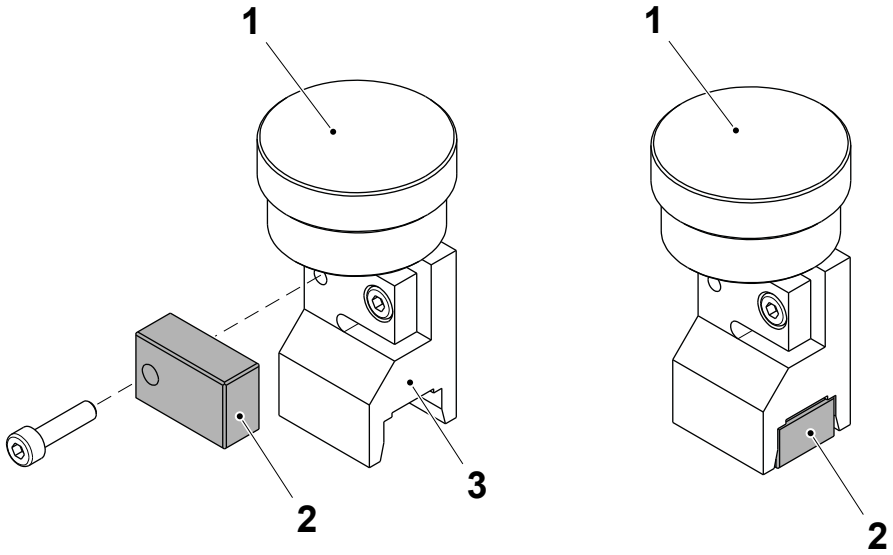

1 Tool
2 Template
3 Slide

(Cont'd)

TechPub_2614345_0106 - 04_MM2819200_04en.fm

(Cont'd)

c) Fit the tool (1) above the inductor (4) and move it on the inductor (4) to check that the thickness of the ridge (5) is **A** throughout the inductor length.

d) Remove the tool (1), rotate it by 180º and fit it back on the inductor (4) to check the same distance in the second ridge (6).

e) If the ridge thickness in some part is lower than 0.2 mm, change the inductor (4).

f) Repeat the procedure for the other inductor.

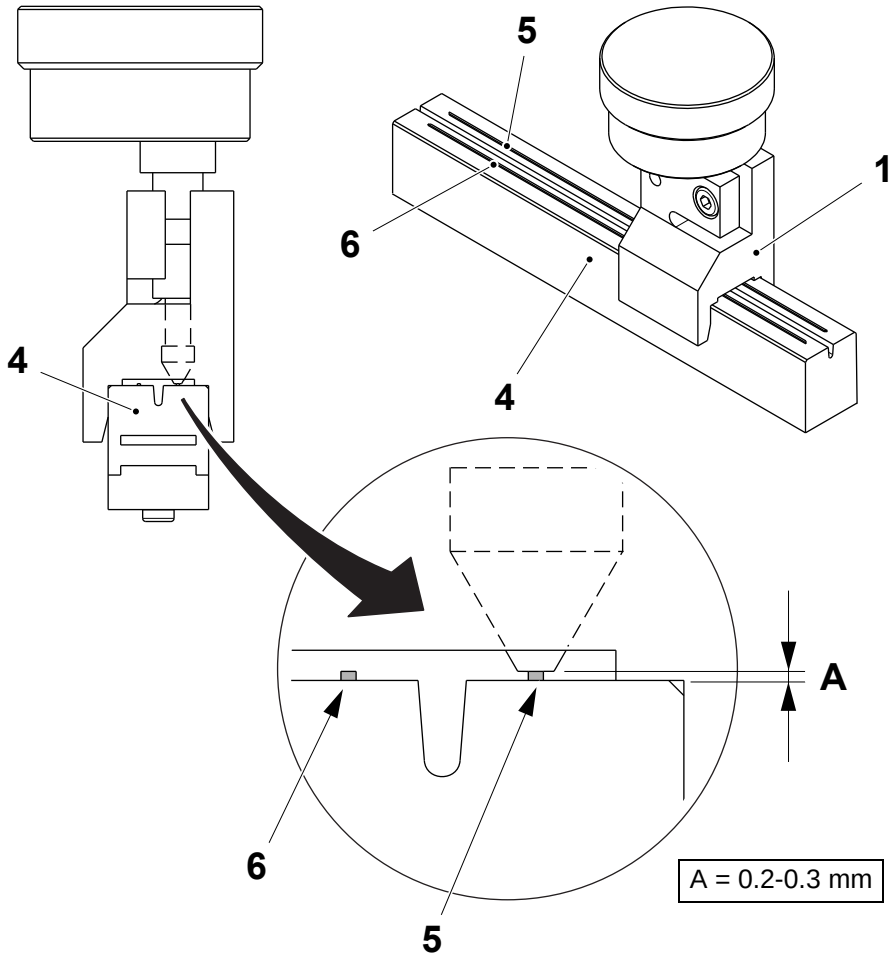

1 Tool
4 Inductor
5 Ridge
6 Ridge

TechPub_2614345_0106 - 04_MM2819200_04en.fm

4.2.1-8 Pressure Jaw - Change Inductor and O-rings

Machine Status	PRODUCTION
Special Equipment	Brass Wire Brush
SPC Reference	2832241-0100 2832242-0100

Note! If the inductors are changed during PREPARATION it is sufficient to slow inch the machine to any position where the jaws are open and the inductors can be accessed. When the inductors have been changed, check the cutting alignment, see 4-8 Jaw System - Set Cutting Alignment.

Preparation

a) On the TPOP display touch the PRODUCTION CONTROL button (1).

b) Touch the PACKAGE FORMING UNIT button (2) to display the PACKAGE FORMING UNIT window.

c) Touch the JAW SELECTOR icon (3).

d) Touch one of the following buttons:
   - the LEFT JAW button (4) to change the inductor in the LH pressure jaw
   - the RIGHT JAW button (5) to change the inductor in the RH pressure jaw.

e) Press the SHORT STOP button (6).

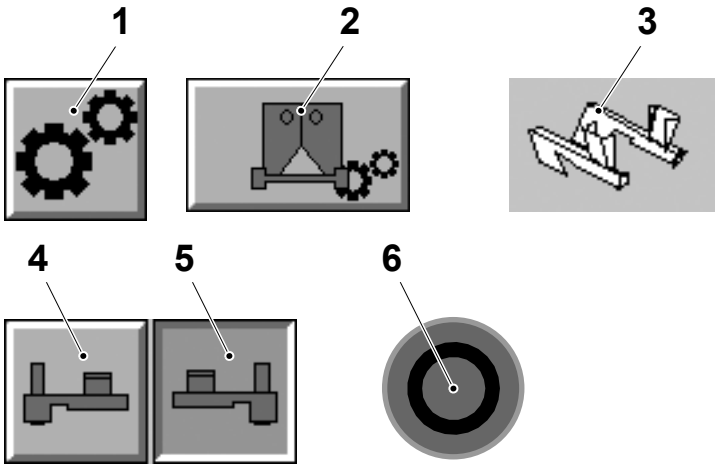

1 Production control button
2 Package forming unit button
3 Jaw selector icon
4 Left jaw button
5 Right jaw button
6 Short stop button

(Cont'd)

TechPub_2614345_0106 - 04_MM2819200_04en.fm

(Cont'd)

f) Touch the `INDUCTOR` icon (7) in the `PACKAGE FORMING UNIT` window.

g) Touch the `OPEN` button (8).

h) Touch the `OK` button (9). The jaw system moves to a position where the jaws are open and the inductors are easily accessible.

i) Close the two cooling water circulation valves on the machine body wall.

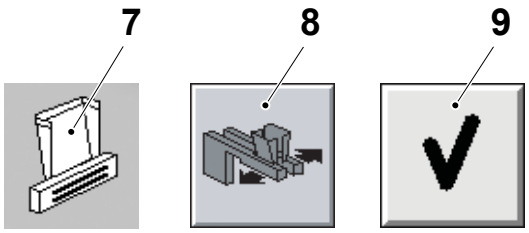

7 Inductor icon
8 Open button
9 Ok button

(Cont'd)

TechPub_2614345_0106 - 04_MM2819200_04en.fm

(Cont'd)

Change Inductor and O-rings

a) Remove the screws (1) from the bearing housing (2).

b) Remove the screws and the washers and disconnect the busbar (3) from the inductor (4).

c) Remove the rail (5) together with the inductor (4).

d) Remove the four screws (6) from the rail (5).

e) Separate the rail (5) from the inductor (4).

f) Clean the inductor (4) with a brass wire brush or change it if damaged or worn out.

g) Change the O-rings (7).

h) Assemble in the reverse order.

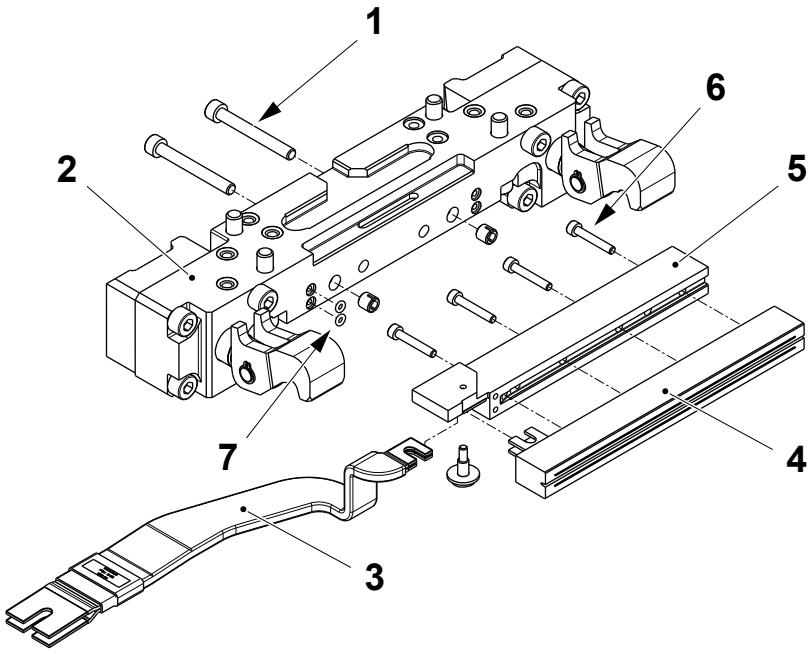

1 Screw
2 Bearing housing
3 Busbar
4 Inductor
5 Rail
6 Screw
7 O-ring

(Cont'd)

TechPub_2614345_0106 - 04_MM2819200_04en.fm

(Cont'd)

Note! When the inductors have been changed, check the cutting alignment, see 4-8 Jaw System - Set Cutting Alignment.

Completion

a) Close the doors and reset all the alarms.

b) Touch the CLOSE button (1).

c) Touch the OK button (2).

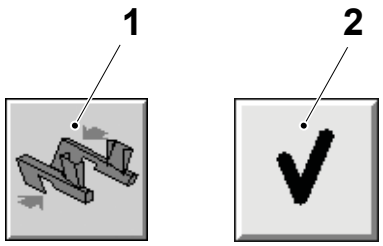

1 Close button
2 Program up button

TechPub_2614345_0106 - 04_MM2819200_04en.fm

4.2.1-9 Pressure Jaw - Change Transformer

Machine Status	Mains Power OFF Air OFF Steam ON Water OFF
SPC Reference	2832241-0100 2832242-0100

Note! Perform the following procedure on both pressure jaws.

a) Disconnect the IH cable (1) from the transformer (2).

b) Loosen the screws (3) and remove the covering plate (4).

c) Remove the spacers (5) and the gasket (6).

d) Loosen the screw (7), (8) and disconnect the busbar (9) from the transformer (2).

e) Change the transformer (2).

f) Assemble in the reverse order.

Note! If the IH cable is changed, follow the guidelines on the following page to fit the cable.

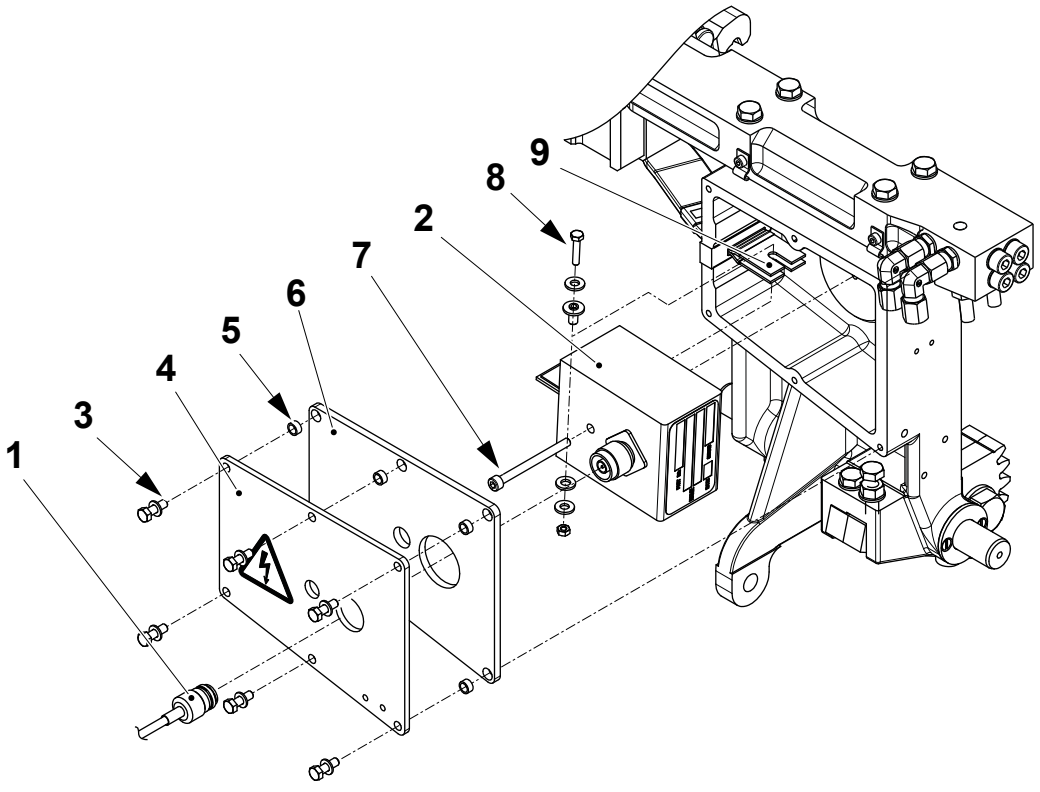

1 IH cable
2 Transformer
3 Screw
4 Covering plate
5 Spacer
6 Gasket
7 Screw
8 Screw
9 Busbar

TechPub_2614345_0106 - 04_MM2819200_04en.fm

(Cont'd)

(Cont'd)

If the IH cable is changed, make sure that the cable is fitted as indicated in the illustration and that:

- the distances **A** and **B** are attained
- the slot (1) is facing inwards, as indicated in the illustration
- the length of the hose protection (2) is distributed equally at the top and bottom of the clamping block (3), as indicated in the illustration.

Note! The IH cable must not be secured or strapped to any of the other cables and hoses coming from the machine body.

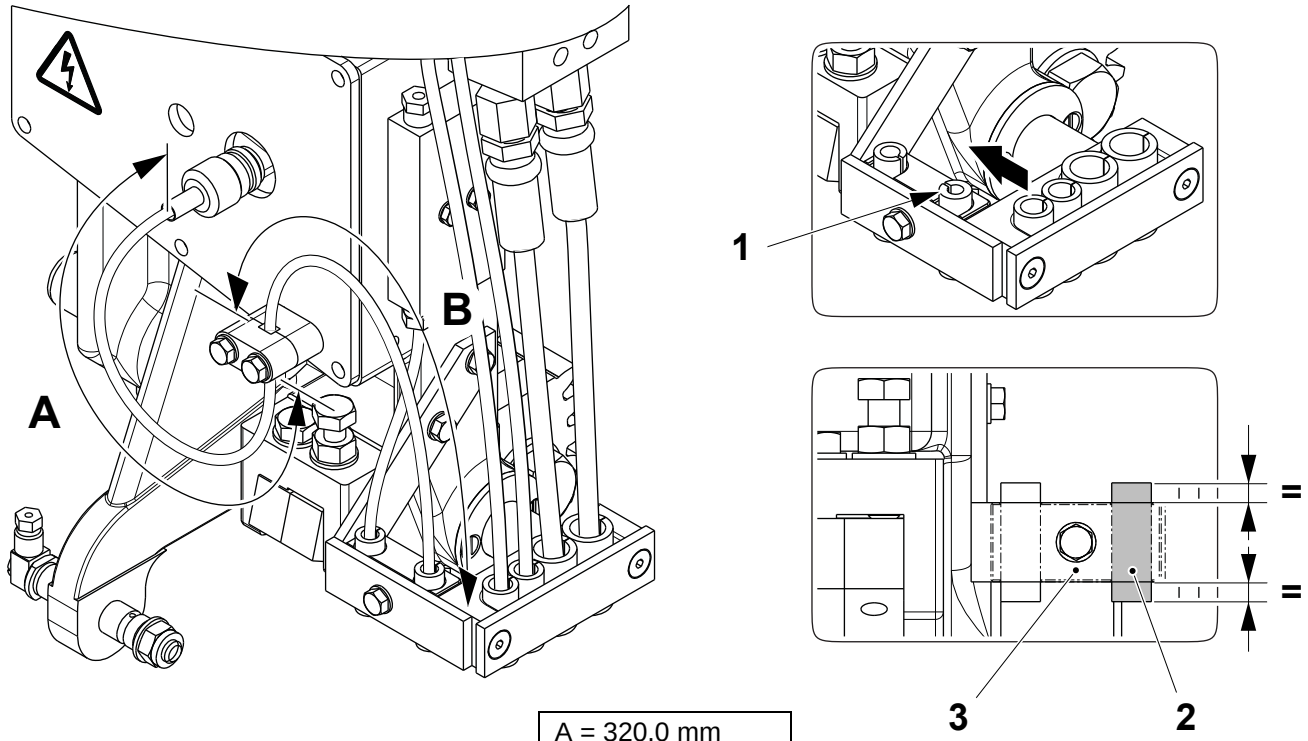

A = 320.0 mm
B = 250.0 mm

1 Slot
2 Hose protection
3 Clamping block

TechPub_2614345_0106 - 04_MM2819200_04en.fm

4.2.1-11 Pressure Jaw - Check Catches and Clearance

Machine Status	Mains Power ON Air ON Steam ON Water ON
SPC Reference	2832241-0100 2832242-0100

Make sure that the contact surfaces of the catches are not worn. Check the catches for any hydraulic oil leakage.

Check the distance **A** as follows:

a) Put a piece of double packaging material (0.7 - 0.9 mm) of the same width as the transversal sealing between the jaws. Cut the packaging material so that the folding flaps slip away.

b) Make sure that there are no active alarms on the TPOP display.

c) Close the catches, see Bleed the Catches Circuit on page 2-87.

d) If the distance **A** is less than 5.4 mm check and if necessary change the following parts:
   - the dollies
   - the inductors
   - the catches and the pistons.

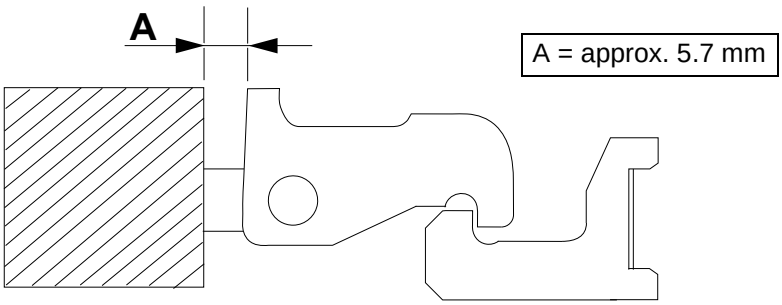

(Cont'd)

TechPub_2614345_0106 - 04_MM2819200_04en.fm

(Cont'd)

Catch Clearance

Check the distances **B** and **C** as follows:

a) Make sure that there are no active alarms on the TPOP display.

b) Use the GO TO POSITION function to slow inch the machine to 138° LH side (318° RH side), see 4-2 Jaw System - Inching, Go To Position and Manual Operation Description.

c) Check the distance **B** between the catches during the disengagement movement.

d) Use the GO TO POSITION function to slow inch the machine to 17° LH side (197° RH side), see 4-2 Jaw System - Inching, Go To Position and Manual Operation Description.

e) Check the distance **C** between the catches (1) and the pressure jaws (2).

B = min. 0.7 mm
C = min. 4.0 mm

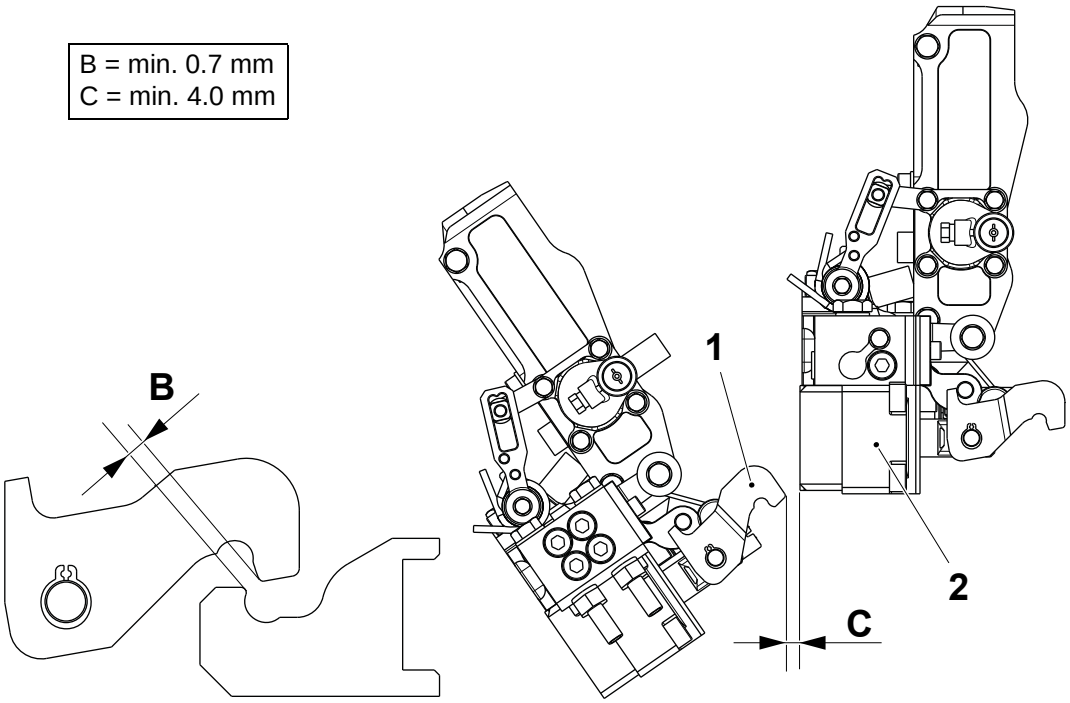

1 Catch
2 Pressure jaw

TechPub_2614345_0106 - 04_MM2819200_04en.fm

4.2.2 Cutting Jaw

4.2.2-1 Cutting Jaw - Check

Machine Status	Mains Power OFF Air OFF Steam ON Water OFF
SPC Reference	2832818-0100 2832819-0100

Check:

- the oil hoses and connections for visual wear or damage
- for oil leakage.
- the catches (1) for visual wear or damage
- that the engagements of the catches (1) are not worn
- the clearance, see 4.2.1-11 Pressure Jaw - Check Catches and Clearance.

Change the parts if necessary.

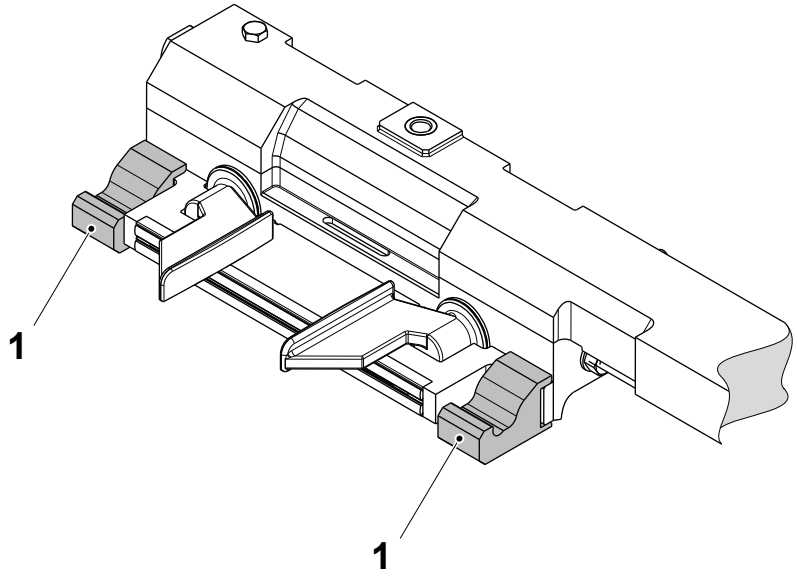

1 Catch

(Cont'd)

TechPub_2614345_0106 - 04_MM2819200_04en.fm

(Cont'd)

- that the folding flaps (2) turn easily
- the folding flaps (2) for excessive radial play and for any oil leakage.

Change the parts if necessary.

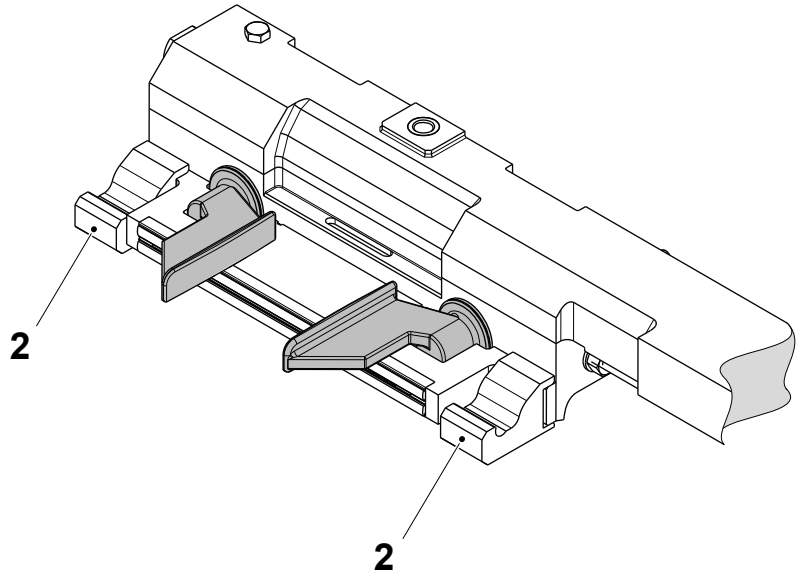

2 Folding flap

(Cont'd)

TechPub_2614345_0106 - 04_MM2819200_04en.fm

(Cont'd)

- for oil leakage at the points indicated by the arrows in the illustration
- pull the bracket (3) and check that the folding flaps mechanism is moving and working correctly.

Change the parts if necessary.

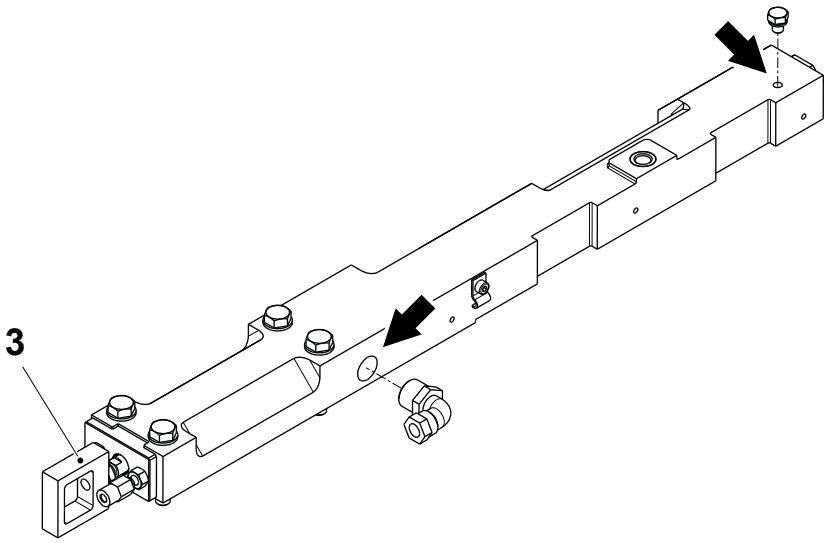

3 Bracket

TechPub_2614345_0106 - 04_MM2819200_04en.fm

4.2.2-2 Cutting Jaw - Remove

Machine Status	Mains Power OFF Air OFF Steam ON Water OFF
SPC Reference	2832818-0100 2832819-0100

Remove the hose (1) by means of the nut (2).

Remove the screws (3) and the carrier (4) together with the cutting jaw.

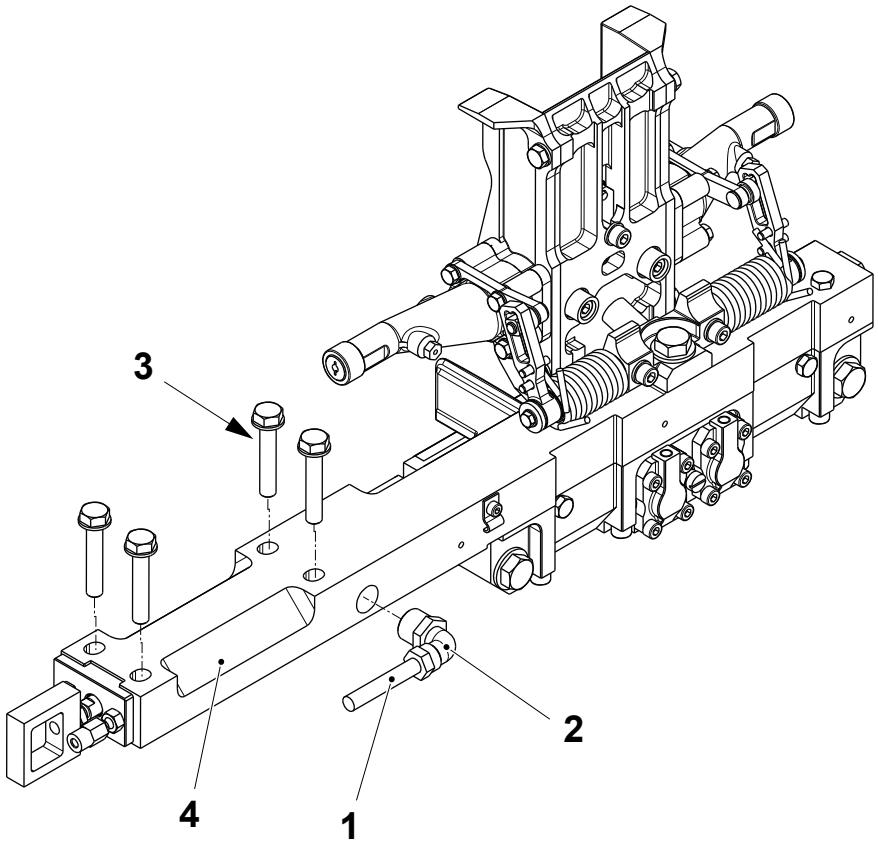

1 Hose
2 Nut
3 Screw
4 Carrier

TechPub_2614345_0106 - 04_MM2819200_04en.fm

4.2.2-3 Cutting Jaw - Assemble

Machine Status	Mains Power OFF Air OFF Steam ON Water OFF
SPC Reference	2832818-0100 2832819-0100

Fit the carrier (1) together with the cutting jaw by means of the screws (2).

Fit the hose (3) by means of the nut (4).

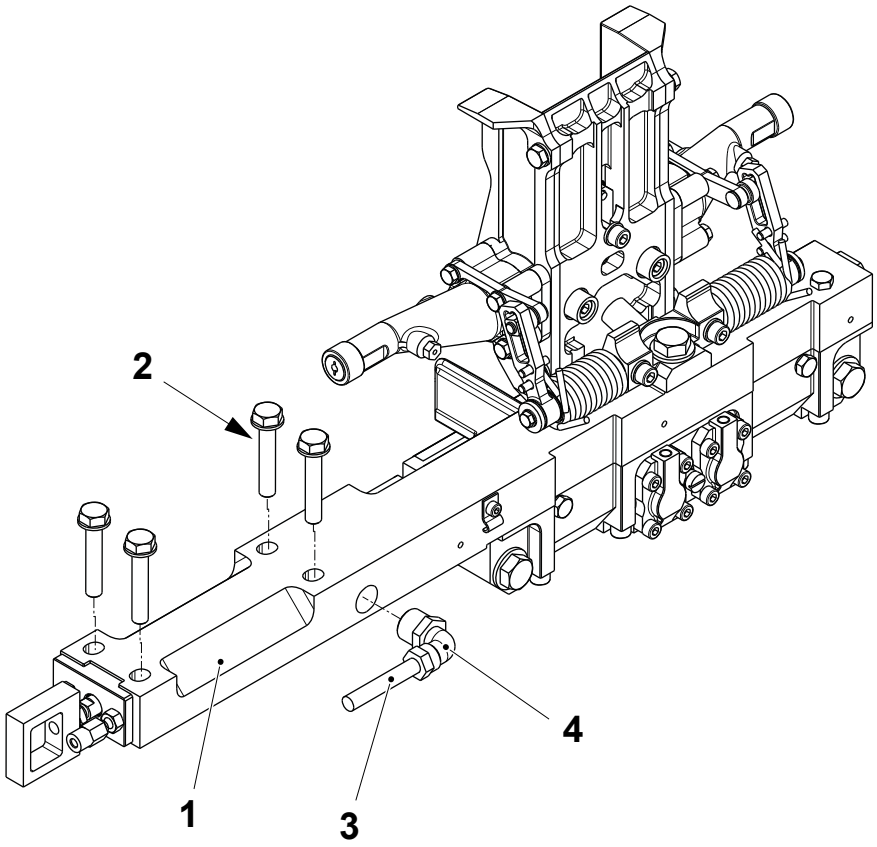

1 Carrier
2 Screw
3 Hose
4 Nut

TechPub_2614345_0106 - 04_MM2819200_04en.fm

4.2.2-4 Cutting Jaw - Change Seals

Machine Status	Mains Power OFF Air OFF Steam ON Water OFF
Special Equipment	Torque Wrench min. 20 Nm Assembly Tool TP No. 2979733-0000, 2979734-0100 Assembly Tool TP No. 2979735-0000, 2979736-0100
SPC Reference	2832818-0100 2832819-0100

Note! For volume dependent template and tool codes, see 10.2 Templates and Tools.

a) Drain the oil from the bearing housing (1), see 4.2.2-5 Cutting Jaw - Change Oil.

b) Remove the cutting jaw (2), see 4.2.2-2 Cutting Jaw - Remove.

c) Remove the six screws (3) and separate the bearing housing (1) from the carrier (4).

d) Remove the seal (5) and the two O-rings (6).

e) Remove the knife holder, see 4.2.3-2 Knife - Change.

f) Check the bearing housing (1) for visual wear or damage and change it if necessary.

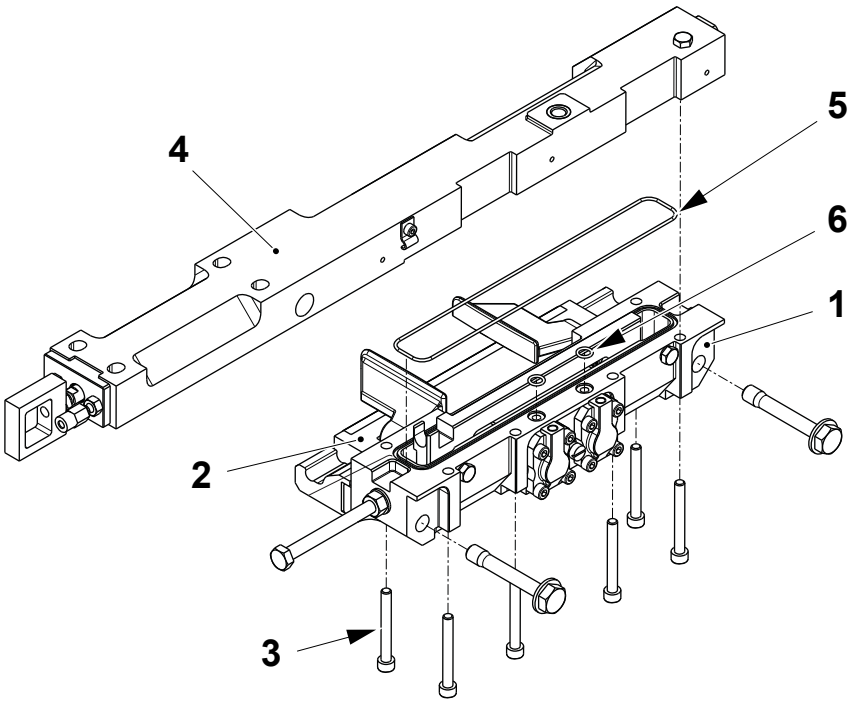

1 Bearing housing
2 Cutting jaw
3 Screw
4 Carrier
5 Seal
6 O-ring

(Cont'd)

TechPub_2614345_0106 - 04_MM2819200_04en.fm

(Cont'd)

g) Remove the screws (7) and the cover (8) and remove the sleeve (9) together with the plunger (10) from the bearing housing (2).

Note! Take care not to damage the plunger (10) when removing the seals.

h) Remove and change the back-up ring (11), the O-ring (12), the wear rings (13) and (14), the piston seal (15), the seal ring (16) and the O-ring (17). See Plunger Seal Assembly on page 4-141 to change the piston seal (15) and the seal ring (16).

i) Assemble in the reverse order and repeat the procedure for the other piston.

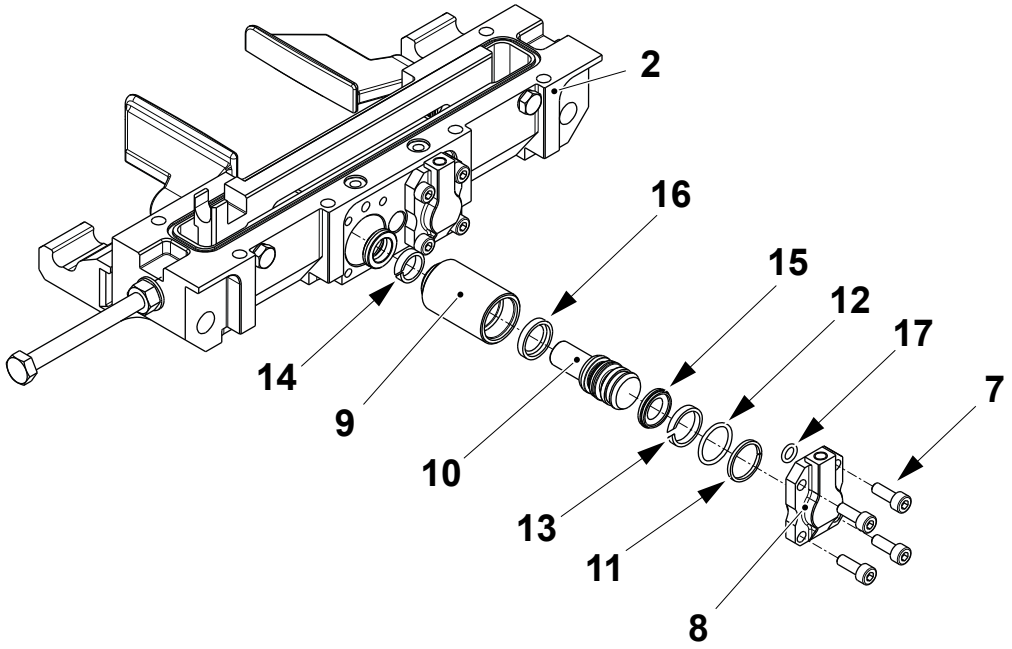

1 Bearing housing
7 Screw
8 Cover
9 Sleeve
10 Plunger
11 Back-up ring
12 O-ring
13 Wear ring
14 Wear ring
15 Piston seal
16 Seal ring

(Cont'd)

TechPub_2614345_0106 - 04_MM2819200_04en.fm

(Cont'd)

j) Remove the screws (17), the plate (18) and the carrier ruler (19).

k) Remove the screw (20) and the folding flap (21).

l) Change the seal ring (22), see Folding Flap Seal Assembly on page 4-143.

m) Assemble in the reverse order and repeat the procedure for the other folding flap.

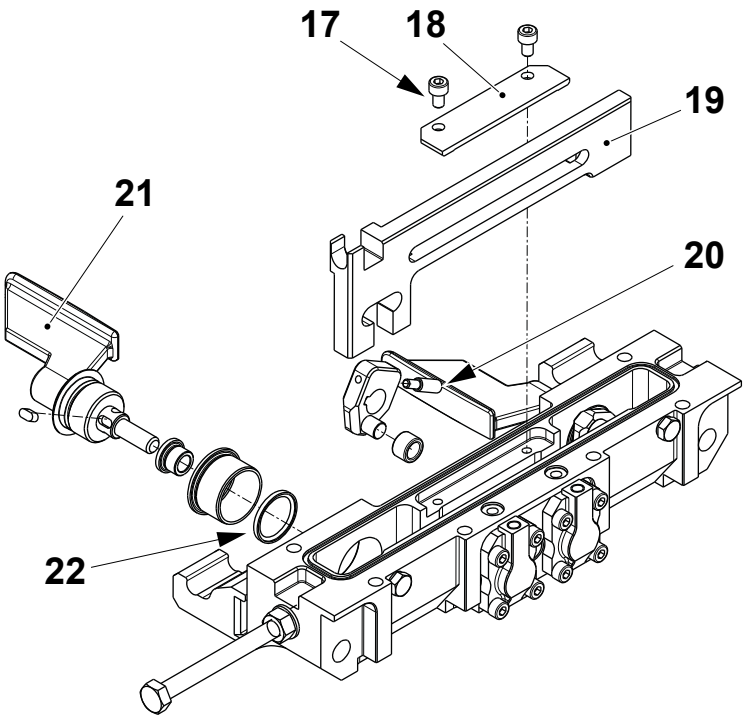

17 Screw
18 Plate
19 Carrier ruler
20 Screw
21 Folding flap
22 Seal ring

(Cont'd)

TechPub_2614345_0106 - 04_MM2819200_04en.fm

(Cont'd)

n) Fit the knife holder, see 4.2.3-2 Knife - Change.

o) Fit the seal (5) and the two O-rings (6) on the bearing housing (1).

p) Fit the bearing housing (1) on the carrier (4) and secure using the six screws (3).

q) Bleed the hydraulic circuit for the knife, see 2.2.2-4 Hydraulic System - Bleed.

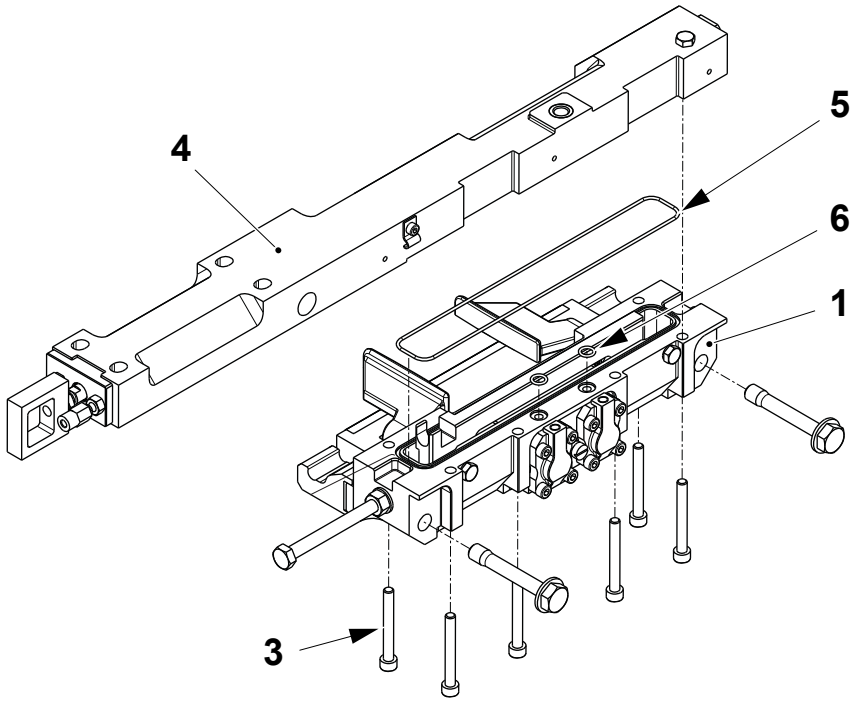

1 Bearing housing
3 Screw
4 Carrier
5 Seal
6 O-ring

(Cont'd)

TechPub_2614345_0106 - 04_MM2819200_04en.fm

(Cont'd)

Plunger Seal Assembly

Package	Tool TP No.	Seal Ring (3) TP No.	Piston Seal (7) TP No.
TBA 2000 S	2979734-0000	90459-6022	90459-6024
All other volumes	2979733-0000	90459-6023	90459-6019

Note! Use boiling water to assist in the fitting and shaping of the seal ring (3).

a) Fit the cone tool (1) onto the plunger (2).

b) Slide the seal ring (3) onto the cone tool (1).

c) Move the seal ring (3) into the groove (4) on the plunger (2) using the assembly tool (5).

d) Remove the guide cone tool (1) and the assembly tool (5).

e) Slide the calibration tool (6) over the plunger (2) to shape and calibrate the seal ring (3)

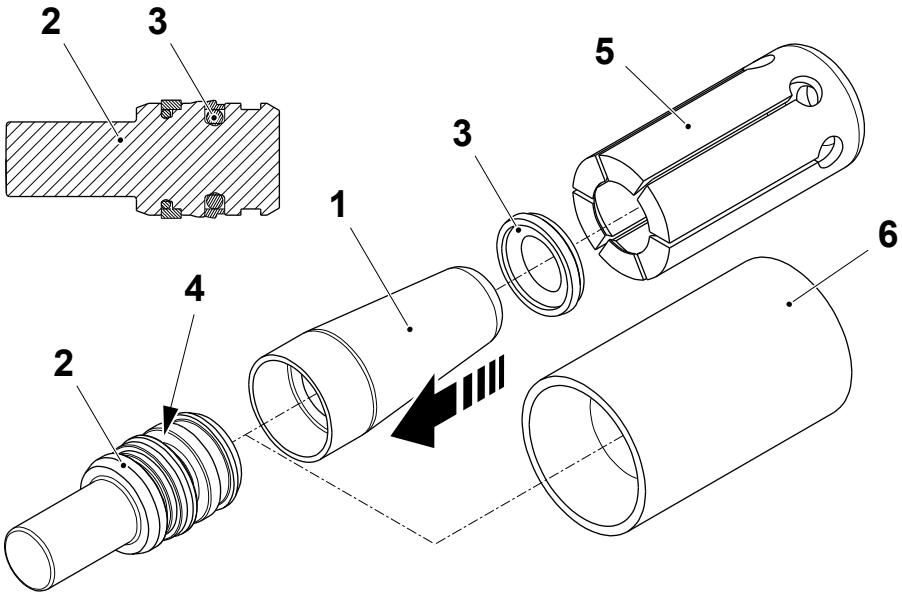

1 Cone tool
2 Plunger
3 Seal ring
4 Groove
5 Assembly tool
6 Calibration tool

(Cont'd)

TechPub_2614345_0106 - 04_MM2819200_04en.fm

(Cont'd)

Note! Use boiling water to assist in the fitting and shaping of the piston seal (7).

a) Fit the cone tool (1) onto the other end of the plunger (2).

b) Slide the piston seal (7) onto the cone tool (1).

c) Move the piston seal (7) into the groove (8) on the plunger (2) using the assembly tool (5).

d) Remove the guide cone tool (1) and the assembly tool (5).

e) Slide the calibration tool (6) over the plunger (2) to shape and calibrate the piston seal (7).

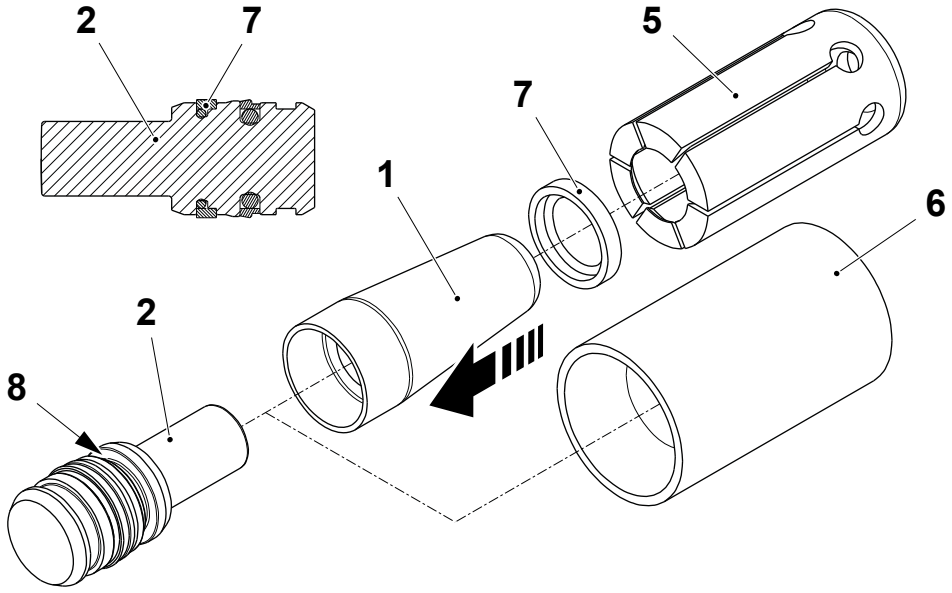

1 Cone tool
2 Plunger
5 Assembly tool
6 Calibration tool
7 Piston seal
8 Groove

TechPub_2614345_0106 - 04_MM2819200_04en.fm

(Cont'd)

(Cont'd)

Folding Flap Seal Assembly

Package	Tool TP No.	Seal Ring (3) TP No.
TBA 2000 S	2979735-0000	90459-2258
All other volumes	2979736-0000	90600-2017

Note! Use boiling water to assist in the fitting and shaping of the seal ring (3).

a) Fit the cone tool (1) onto the folding flap (2).

b) Slide the seal ring (3) onto the cone tool (1).

c) Move the seal ring (3) into the groove (4) on the folding flap (2) using the assembly tool (5).

d) Remove the guide cone tool (1) and the assembly tool (5).

e) Slide the calibration tool (6) over the plunger (2) to shape and calibrate the seal ring (3)

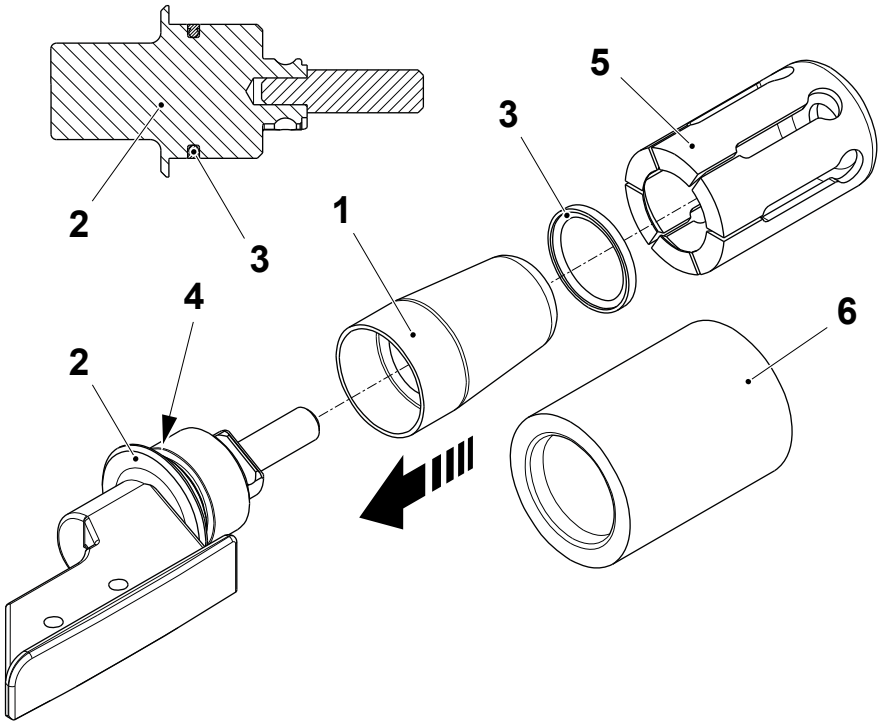

1 Cone tool
2 Folding flap
3 Seal ring
4 Groove
5 Assembly tool
6 Calibration tool

TechPub_2614345_0106 - 04_MM2819200_04en.fm

4.2.2-5 Cutting Jaw - Change Oil

Machine Status	Mains Power ON Air OFF Steam ON Water OFF
Consumables	Lubricant Code H TP No. 90296-0073 or TP No. 90296-0075
SPC Reference	2832818-0100, 2832819-0100

Perform the following procedure on both the LH and RH side cutting jaws.

a) Use the GO TO POSITION function to slow inch the machine until the LH or RH side cutting jaw is in the open position, see 4-2 Jaw System - Inching, Go To Position and Manual Operation Description.

(Cont'd)

TechPub_2614345_0106 - 04_MM2819200_04en.fm

(Cont'd)

CAUTION
Risk of damage to the equipment.
To ensure that the cutting jaws are filled with the correct quantity of oil the cutting jaws must be positioned in the horizontal position during the filling procedure.

b) Drain the oil from the bearing housing (1) by removing the drain plugs (2) and the filling plugs (3).

c) Fit and tighten the drain plugs (2).

d) Use the GO TO POSITION function to slow inch the machine until the LH or RH side cutting jaw is in the horizontal position, see 4-2 Jaw System - Inching, Go To Position and Manual Operation Description.

e) Fill with oil through the filling plugs holes (4).

f) Manually move the ear (5) to ensure that both the internal chambers of the bearing housing (1) are filled with the oil.

g) Continue to fill with oil through the filling plugs holes (4) until oil comes out of the filling plugs holes (4).

h) Fit and tighten the filling plugs (3).

i) Repeat the procedure for the other cutting jaw.

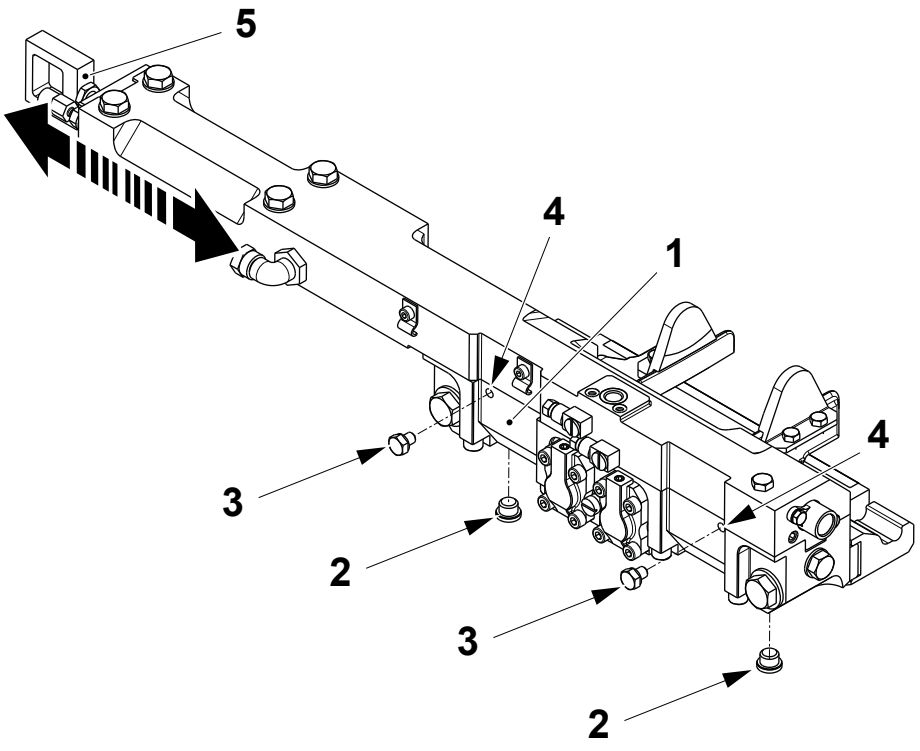

1 Bearing housing
2 Drain plug
3 Filling Plug
4 Filling plug hole
5 Ear

TechPub_2614345_0106 - 04_MM2819200_04en.fm

4.2.2-6 Cutting Jaw - Change Cutting Rails

Machine Status	Mains Power ON Air OFF Steam ON Water OFF
SPC Reference	2832818-0100 2832819-0100

WARNING
Chemical products.
Follow the Safety Precautions.

WARNING
Risk of cutting injury.
The knife is sharp and may be hot. Wear personal protective equipment.

Perform the following procedure on both cutting jaws.

a) Slow inch the jaw pair to the open position, see 4-2 Jaw System - Inching, Go To Position and Manual Operation Description.

(Cont'd)

TechPub_2614345_0106 - 04_MM2819200_04en.fm

(Cont'd)

b) Remove the screw (1), and the spring (2).

c) Remove the two screws (3) securing the catches (4) and the cutting jaw (5) to the bearing housing (6).

d) Remove the four screws (7) and the cutting rails (8) from the cutting jaw (5).

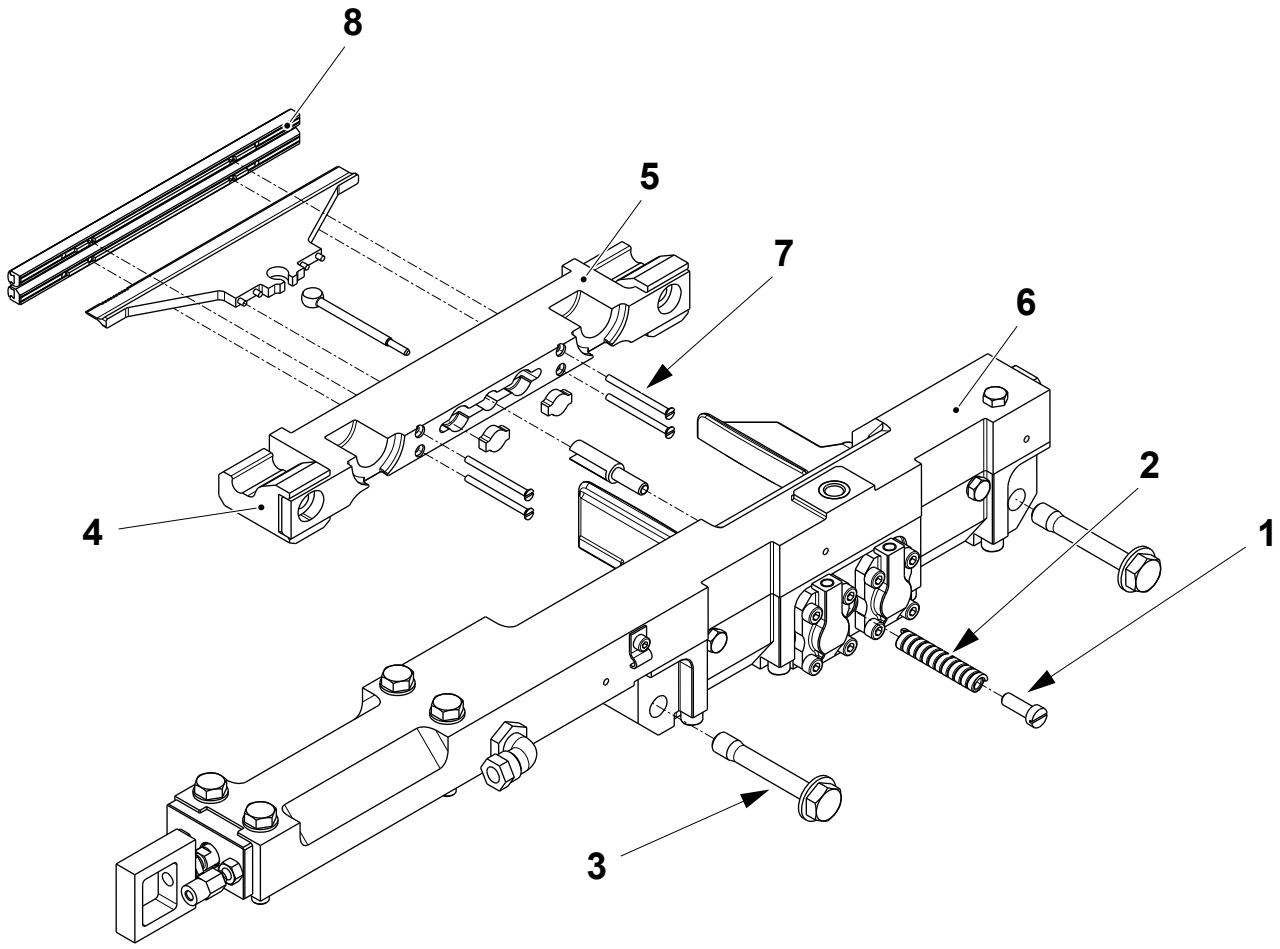

1 Screw
2 Spring
3 Screw
4 Catch
5 Cutting jaw
6 Bearing housing
7 Screw
8 Cutting rail

(Cont'd)

TechPub_2614345_0106 - 04_MM2819200_04en.fm

(Cont'd)

e) Remove the dollies (9) from the two cutting rails (8).

f) Clean any packaging material and product residue and inspect the rubber dollies (10) and the cutting rails (8).

g) Change them if damaged or worn out.

h) Assemble in the reverse order.

Note! The screws (3) must be tightened with a torque of 42 Nm.

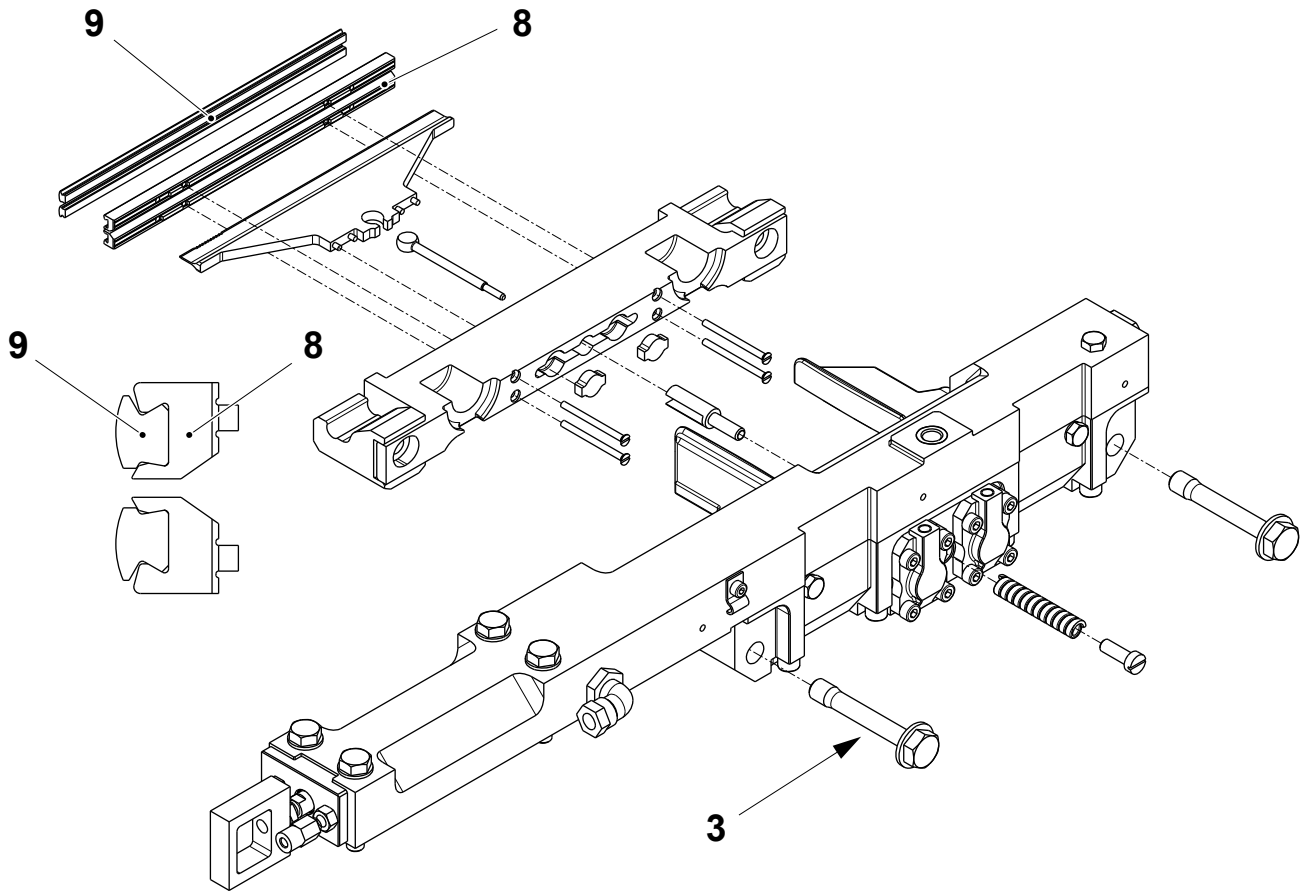

3 Screw
8 Cutting rail
9 Dolly

TechPub_2614345_0106 - 04_MM2819200_04en.fm

4.2.3 Knife

4.2.3-1 Knife - Check

Machine Status	Mains Power OFF Air OFF Steam ON Water OFF
Consumables	Silicon Grease Code L
SPC Reference	2588317-0100

WARNING

Risk of cutting injury.

The knife is sharp and may be hot. Wear personal protective equipment.

Check the following parts for visual wear or damage:

- the knife (1), change the knife as required, see 4.2.3-2 Knife - Change
- the spacer (2), lubricate it with silicon grease (code L, see 10.3-1 Lubricants) before assembly
- the link (3), the spring (4), the nut (5) and the shock absorbers (6).

Change the parts as required.

Note! When assembling make sure the nut (5) is tight.

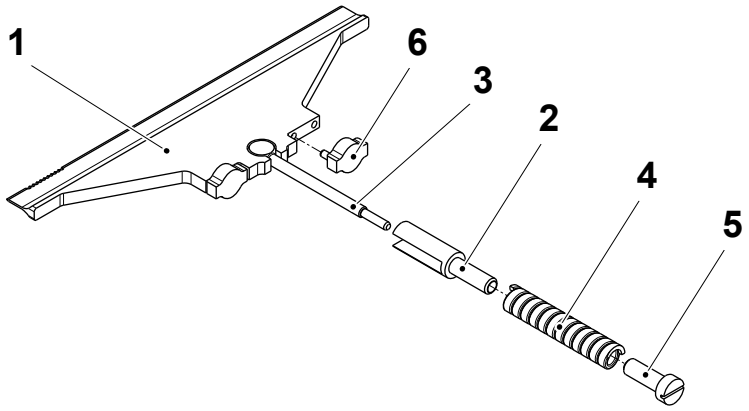

1 Knife
2 Spacer
3 Link
4 Spring
5 Nut
6 Shock absorber

TechPub_2614345_0106 - 04_MM2819200_04en.fm

4.2.3-2 Knife - Change

Machine Status	Mains Power ON Air OFF Steam ON Water OFF
Special Equipment	Pliers Brass Brush
Consumables	Silicon Grease Code L
SPC Reference	2588317-0100

WARNING

Risk of cutting injury.

The knife is sharp and may be hot. Wear personal protective equipment.

a) Slow inch the jaw pair to the open position, see 4-2 Jaw System - Inching, Go To Position and Manual Operation Description.

(Cont'd)

TechPub_2614345_0106 - 04_MM2819200_04en.fm

(Cont'd)

b) Remove the screw (1), and the spring (2).

c) Remove the two screws (3) securing the catches (4) and the cutting jaw (5) to the bearing housing (6).

d) Remove the four screws (7) and the cutting rails (8) from the cutting jaw (5).

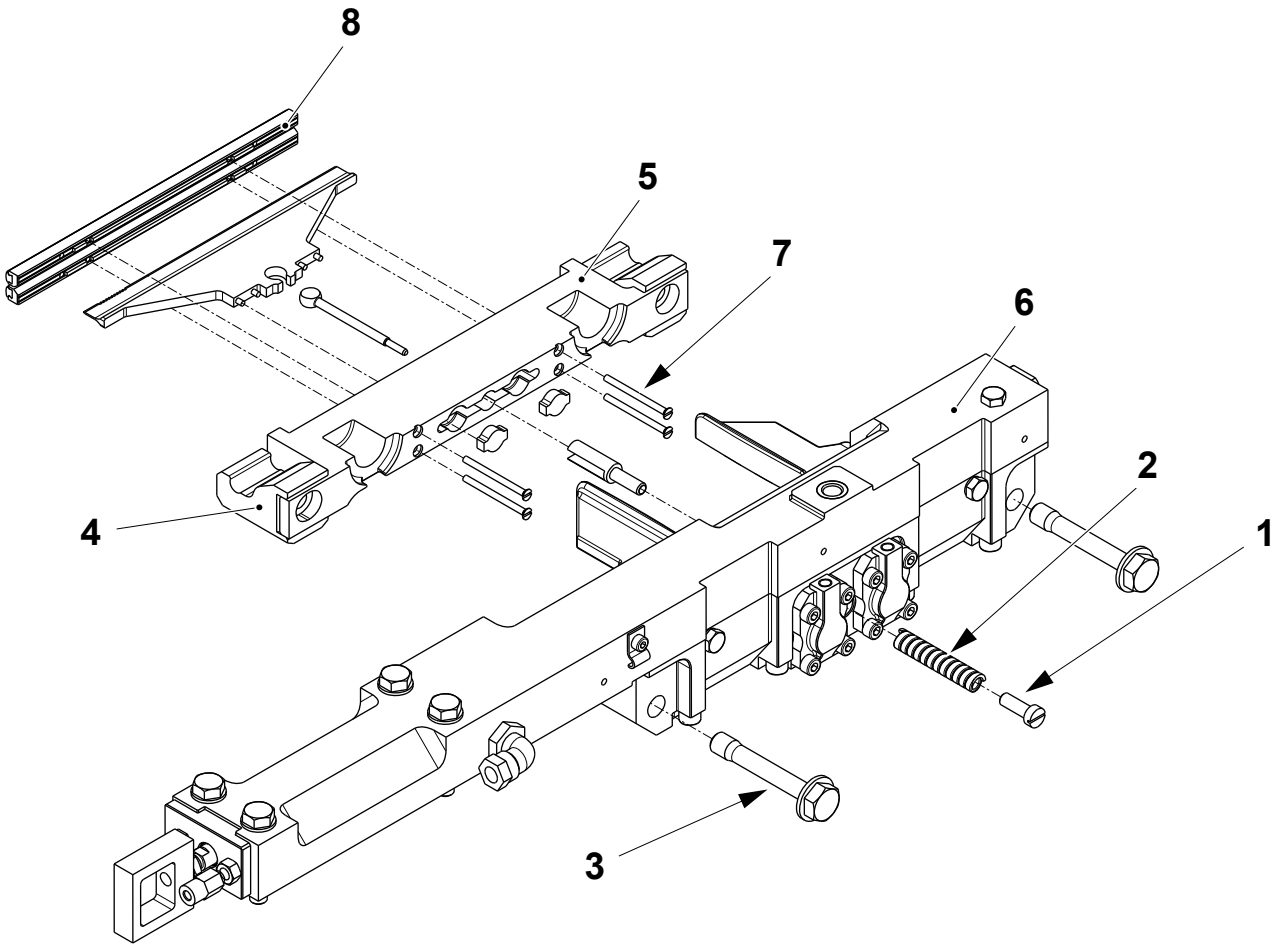

1 Screw
2 Spring
3 Screw
4 Catch
5 Cutting jaw
6 Bearing housing
7 Screw
8 Cutting rail

(Cont'd)

TechPub_2614345_0106 - 04_MM2819200_04en.fm

(Cont'd)

e) Remove the spacer (9) and the shock absorbers (10).

f) Use pliers to pull out the knife (11) together with the link (12).

Note! Apply a layer of grease (code L, see 10.3-1 Lubricants) to the link (12) when assembling.

g) Clean any packaging material and product residue from the knife (11) with a brass brush.

h) Change the knife (11) if necessary.

Note! The screws (3) must be tightened with a torque of 42 Nm.

i) Assemble in the reverse order.

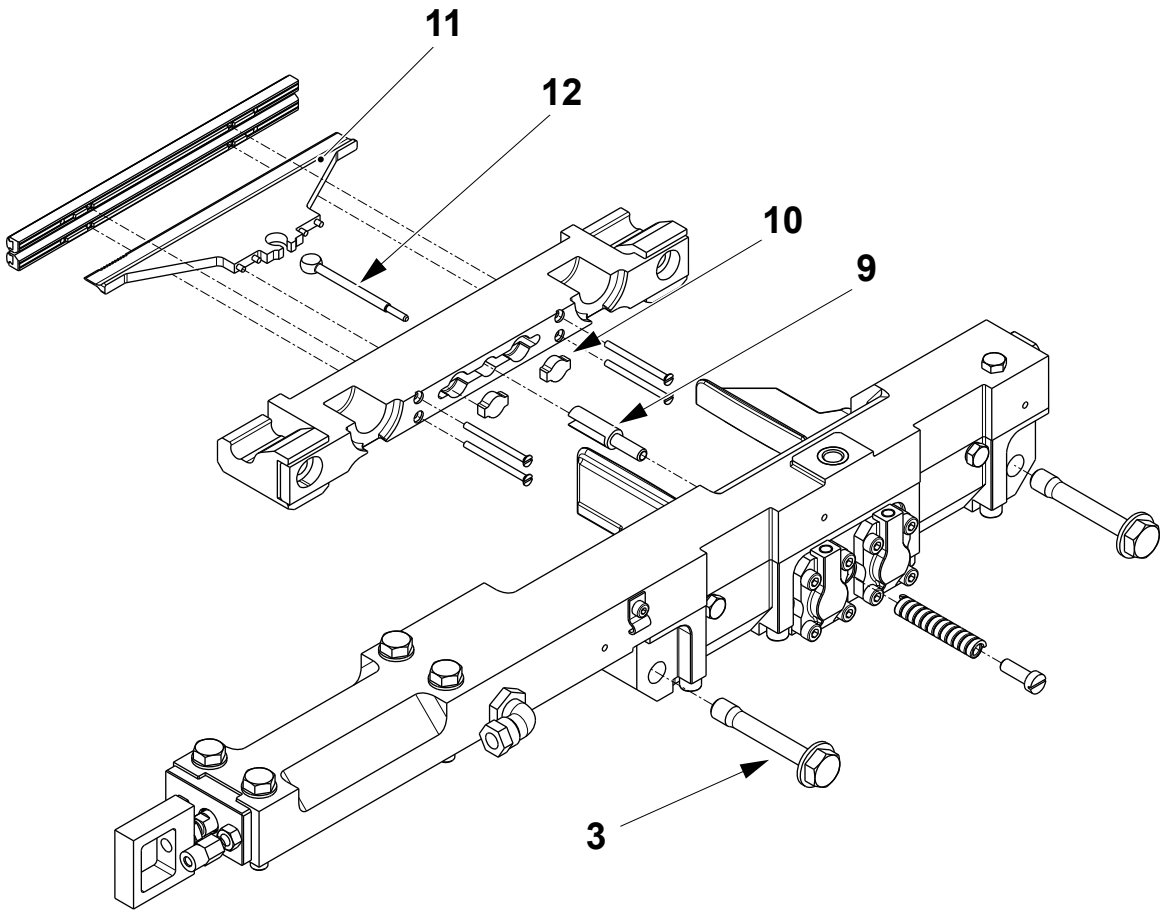

3 Screw
9 Spacer
10 Shock absorber
11 Knife
12 Link

TechPub_2614345_0106 - 04_MM2819200_04en.fm

4.2.4 Volume Flaps

4.2.4-1 Volume Flaps - Check

Machine Status	Mains Power OFF Air OFF Steam ON Water OFF
SPC Reference	2810640-0100 2810641-0100

Check the following parts for visual wear or damage:

- the curve roller (1) and that the radial play on the curve roller (1) does not exceed 0.5 mm
- the springs (2)
- the brass cams (3)
- the volume bulge (4)
- the bushings (5) and that the radial play on the bushing (5) does not exceed 0.5 mm
- the shock absorbers (6).

Change the parts if necessary.

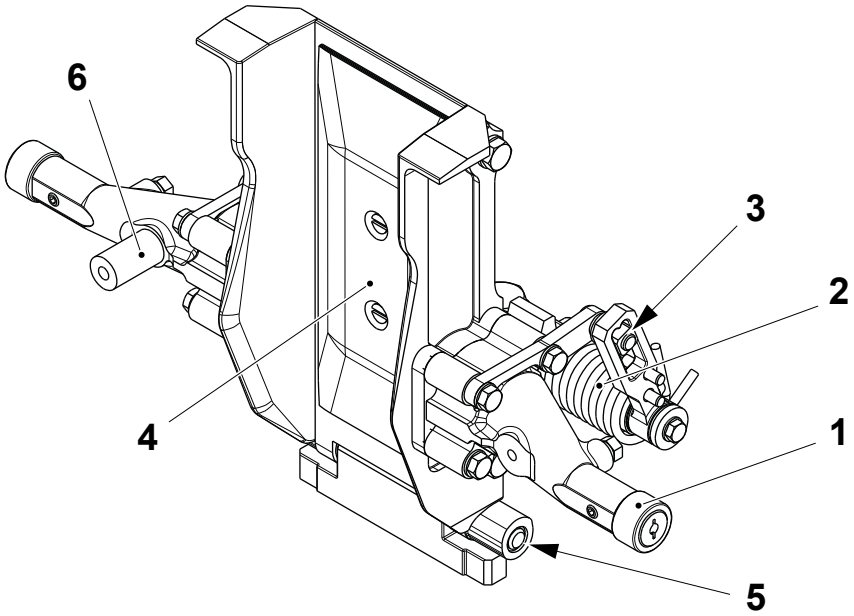

1 Curve roller
2 Spring
3 Brass cam
4 Volume bulge
5 Bushing
6 Shock absorber

TechPub_2614345_0106 - 04_MM2819200_04en.fm

4.2.4-2 Volume Flaps - Change Bushings, Curve Rollers, Cams and Shims

Machine Status	Mains Power OFF Air OFF Steam ON Water OFF
SPC Reference	2810640-0100 2810641-0100

Remove Volume Flaps

Follow the instructions in 4-7 Jaw System - Remove Front Volume Flaps to remove the front volume flaps or 4.2.1-3 Pressure Jaw - Remove Volume Flaps to remove the rear volume flaps.

Change Bushings

a) Remove the grub screw (1) and the shaft (2).

b) Separate the volume flap (3) from the shock absorber (4).

c) Change the bushings (5).

d) Assemble in the reverse order.

e) Repeat for the procedure for the other volume flaps.

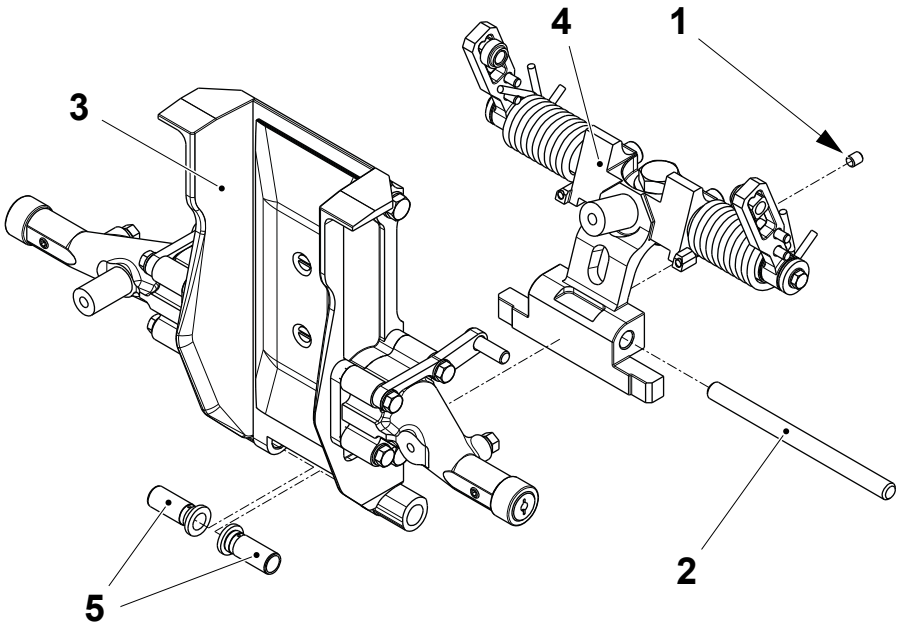

1 Grub screw
2 Shaft
3 Volume flap
4 Shock absorber
5 Bushing

(Cont'd)

TechPub_2614345_0106 - 04_MM2819200_04en.fm

(Cont'd)

Change Curve Rollers

a) Remove the screw (1).

b) Remove and change the curve roller (2).

c) Assemble in the reverse order.

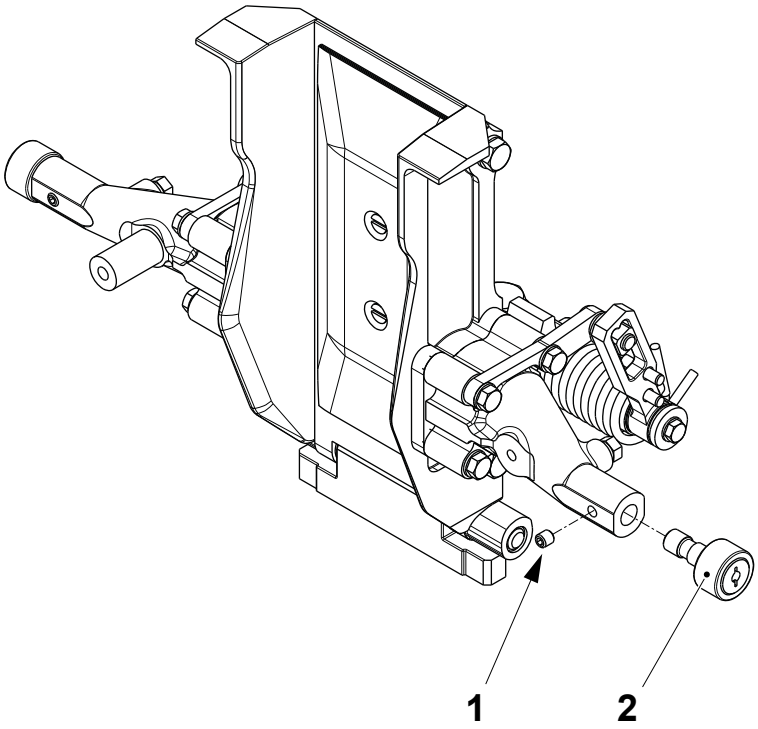

1 Screw
2 Roller

(Cont'd)

TechPub_2614345_0106 - 04_MM2819200_04en.fm

(Cont'd)

Rotate Cams

a) Remove the two screws (1) and the bracket (2).

b) Rotate the cam (3) to position an unused cam surface to the working position.

c) Assemble in the reverse order.

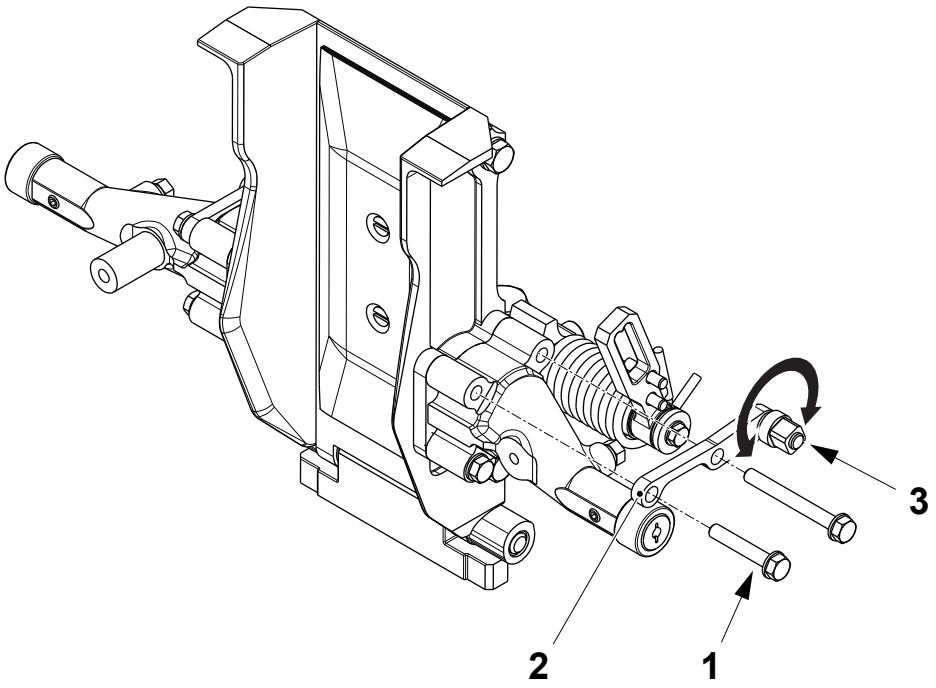

1 Screw
2 Bracket
3 Cam

TechPub_2614345_0106 - 04_MM2819200_04en.fm

(Cont'd)

(Cont'd)

Change Volume Shims

a) Loosen the screw (1).

b) Lift up and remove the volume bulge (2) together with the volume shims (3).

c) Change the damaged or worn parts.

d) Assemble in the reverse order.

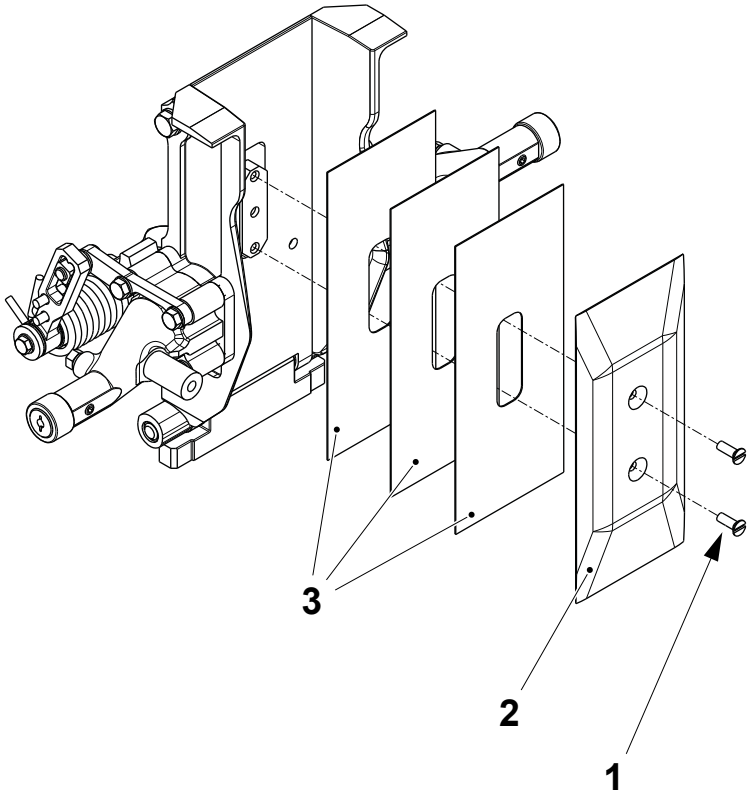

1 Screw
2 Volume bulge
3 Volume shim
4 Wedge

(Cont'd)

TechPub_2614345_0106 - 04_MM2819200_04en.fm

(Cont'd)

Fit Volume Flaps

Follow the instructions in 4-11 Jaw System - Install Front Volume Flaps to fit the front volume flaps or 4.2.1-4 Pressure Jaw - Install Volume Flaps in the reverse order to fit the rear volume flaps.

TechPub_2614345_0106 - 04_MM2819200_04en.fm

4.2.6 Volume Curve Piece

4.2.6-1 Volume Curve Piece - Check Curve Unit

Machine Status	Mains Power OFF Air OFF Steam ON Water OFF
SPC Reference	2855528-0100

Check the following parts for visual wear or damage:

- the eccentric (1), make sure that it turns easily
- the axle (2)

Change the parts if necessary.

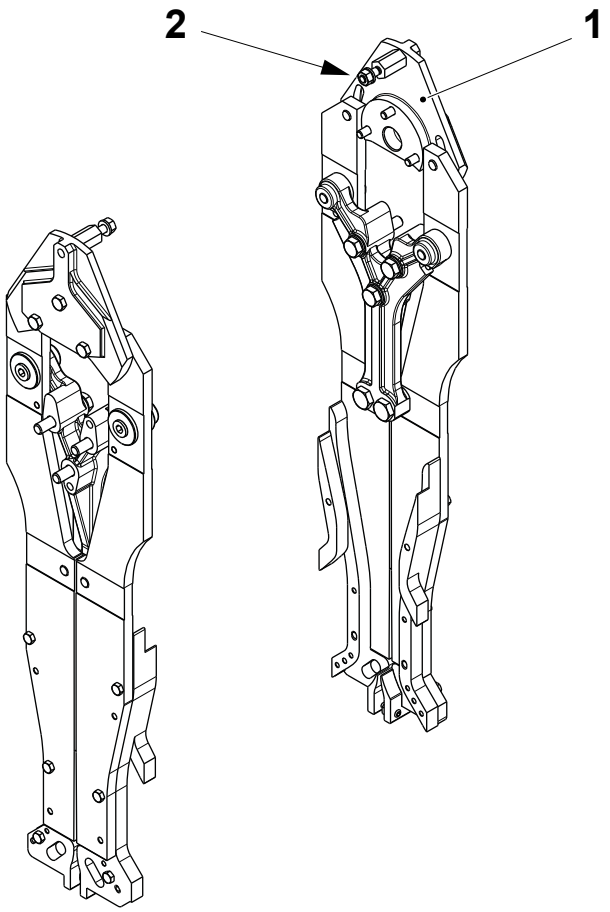

1 Eccentric
2 Axle

(Cont'd)

TechPub_2614345_0106 - 04_MM2819200_04en.fm

(Cont'd)

Check:

- the volume cams (3) for wear or damage
- the distance **A** between the two volume cams (3).

Change the volume cams if necessary, see 4.2.6-2 Volume Curve Piece - Change Cams. If necessary set the volume curve piece, see 4-14 Jaw System - Set Volume Flaps with the Volume Adjuster.

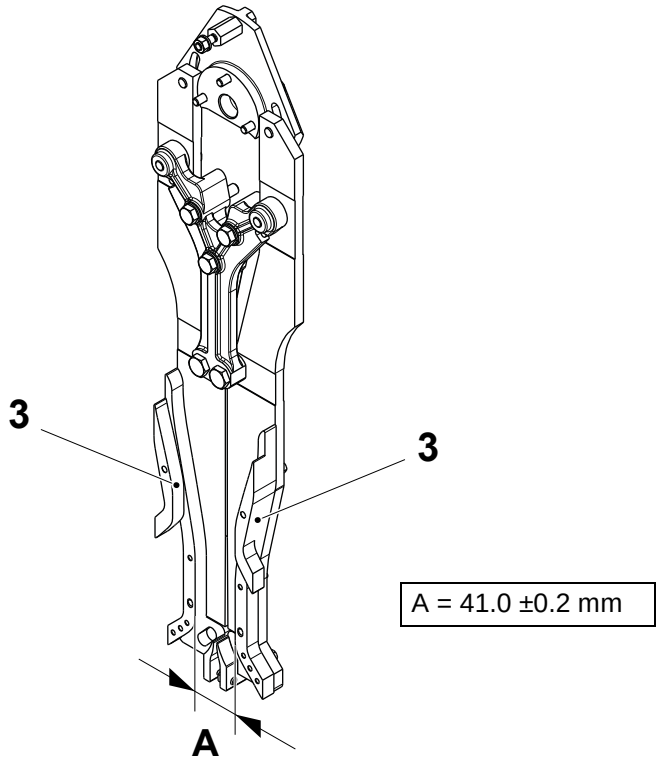

3 Volume cam

TechPub_2614345_0106 - 04_MM2819200_04en.fm

4.2.6-2 Volume Curve Piece - Change Cams

Machine Status	Mains Power ON Air OFF Steam ON Water OFF
SPC Reference	2855528-0100

a) Lower the jaw system, follow the procedure described in 3-2 Drive Unit - Lower Jaw System.

b) Remove the screws (1) and the volume cams (2).

c) Remove the screws (3) and the cams (4).

d) Change the volume cams (2) and the cams (4).

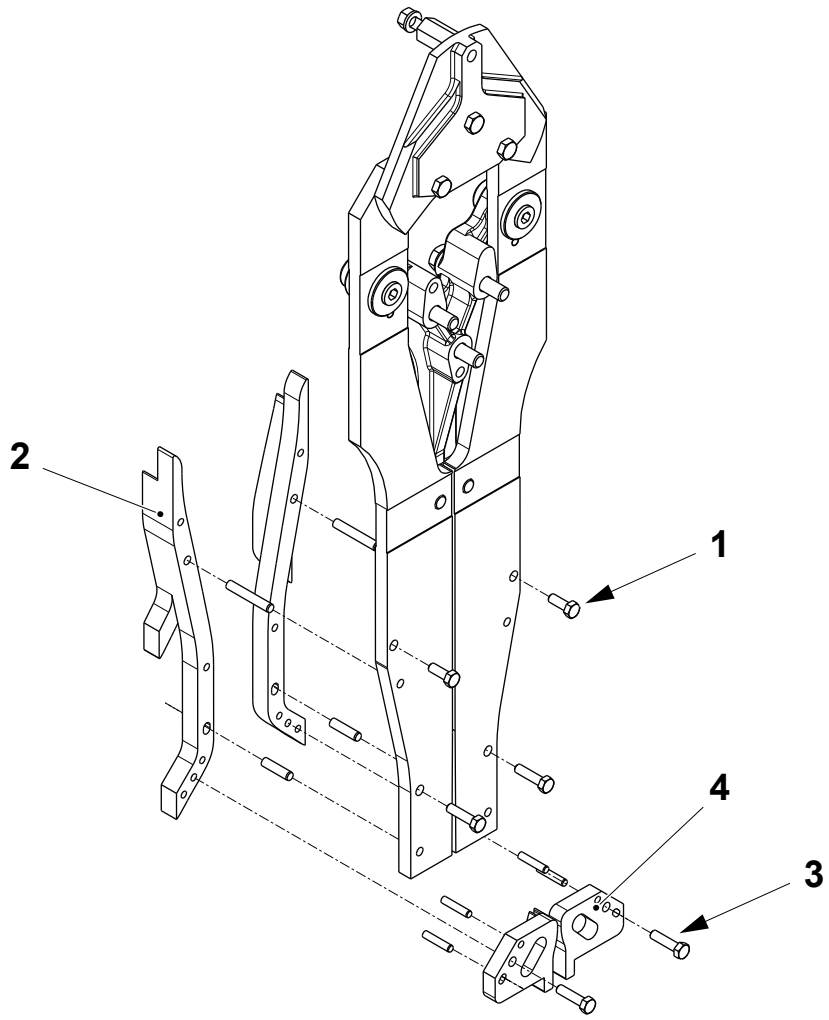

1 Screw
2 Volume cam
3 Screw
4 Cam

TechPub_2614345_0106 - 04_MM2819200_04en.fm

4.2.6-3 Volume Curve Piece - Set

Machine Status	Mains Power OFF Air OFF Steam ON Water OFF
SPC Reference	2855528-0100

Follow the procedure described in 4-14 Jaw System - Set Volume Flaps with the Volume Adjuster.

TechPub_2614345_0106 - 04_MM2819200_04en.fm

4.2.6-4 Volume Curve Piece - Check Support Rollers

Machine Status	Mains Power OFF Air OFF Steam ON Water OFF
SPC Reference	2855528-0100

Check the following parts for visual wear or damage:

- the support rollers (1), make sure that they rotate easily. If necessary clean the support rollers (1)
- the shafts (2), make sure that they are not bent
- the bushings (3), make sure that the play of the bushings (3) is not excessive
- the guides (4).

Change the parts if necessary.

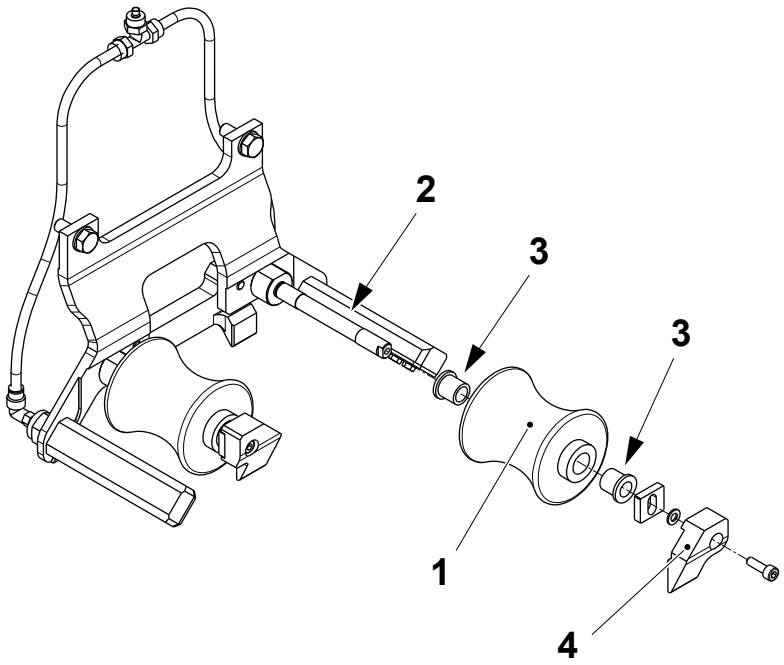

1 Support roller
2 Shaft
3 Bushing
4 Guide

TechPub_2614345_0106 - 04_MM2819200_04en.fm

4.2.6-5 Volume Curve Piece - Change Support Roller Flange Bushings

Machine Status	Mains Power OFF Air OFF Steam ON Water OFF
SPC Reference	2855528-0100

a) Remove the screw (1), the guide (2)and the spacer (3).

b) Remove the flange bushings (4) and the support roller (5).

c) Change the flange bushings (4).

d) Assemble in the reverse order.

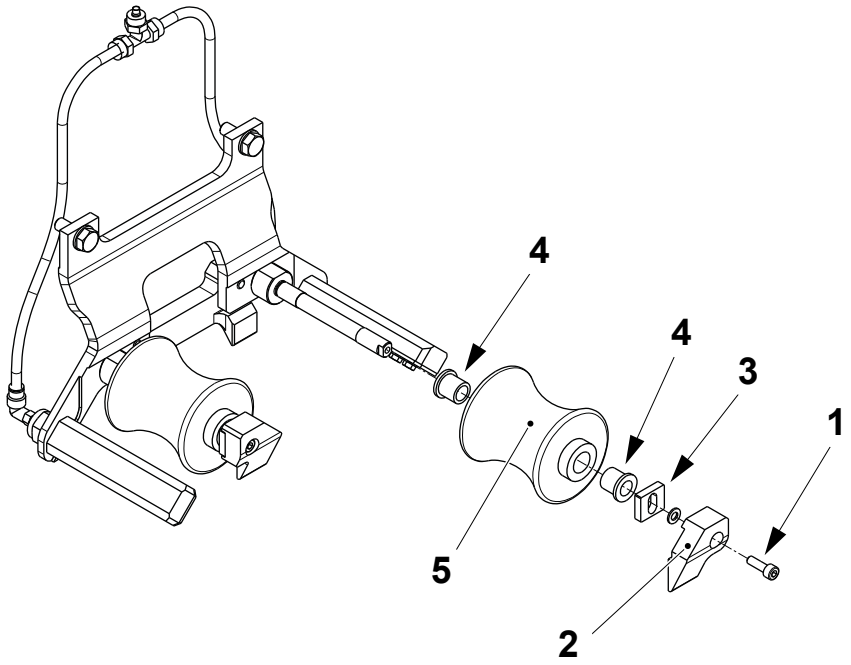

1 Screw
2 Guide
3 Spacer
4 Flange bushing
5 Support roller

TechPub_2614345_0106 - 04_MM2819200_04en.fm

4.2.6-6 Volume Curve Piece - Set Support Rollers

Machine Status	Mains Power OFF Air OFF Steam ON Water OFF
Special Equipment	Pin TP No. 311101-0369
SPC Reference	2855528-0100

a) Remove the security screw (1) from the support rollers adjustment knob (2).

b) Fit the alignment pin (3) into the hole in the shaft (4).

c) Use the knob (2) to adjust the position of the shaft (4) in order to align the pin (3) with the hole in the cantilever (5).

d) When the two holes are aligned and the pin (3) fits into the hole in the cantilever (5), remove the screws (6) and rotate the disc (7) until the zero mark is aligned with the arrow on the bracket (8).

e) Tighten the screws (6).

f) Fit the security screw (1) and remove the pin (3) from the support roller assembly.

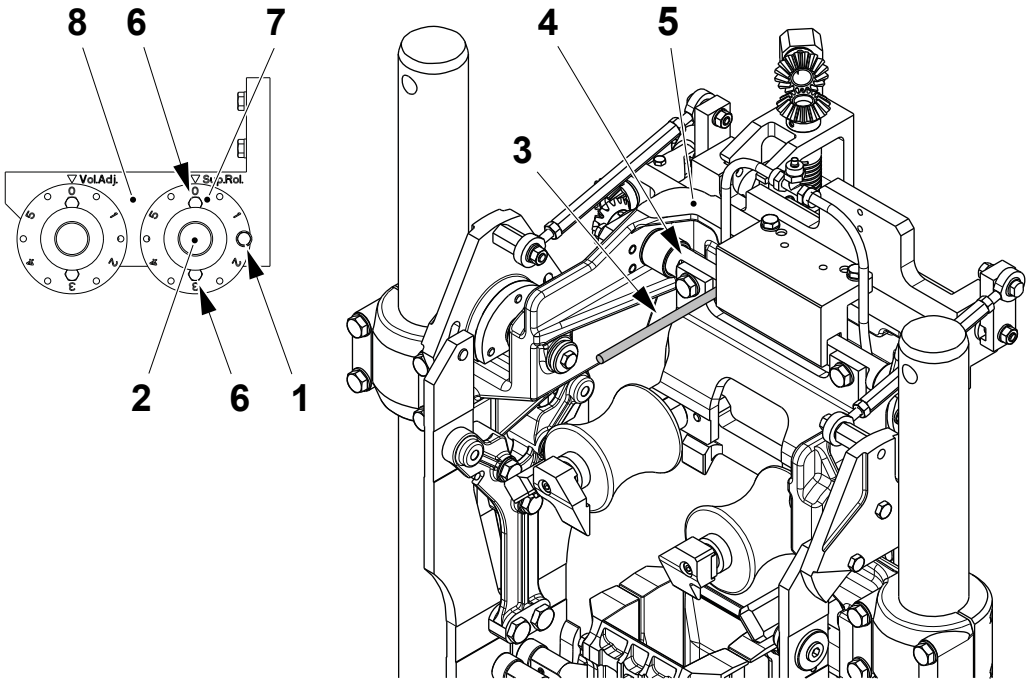

1 Screw
2 Knob
3 Pin
4 Shaft
5 Cantilever
6 Screw
7 Disc
8 Bracket

TechPub_2614345_0106 - 04_MM2819200_04en.fm

4.2.6-7 Volume Curve Piece - Check Tube Flushing

Machine Status	Mains Power OFF Air OFF Steam ON Water OFF
SPC Reference	2855528-0100

Check the following parts for visual wear or damage:

- the tube flushing devices (1), make sure that water passes through the holes (2)
- the hoses (3), check for any water leaks.

Change the parts if necessary.

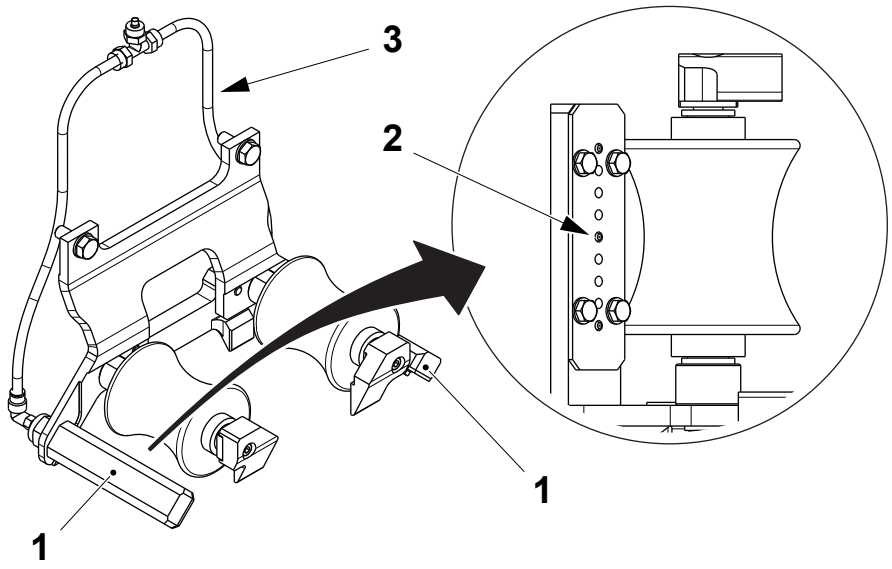

1 Flushing device
2 Hole
3 Hose

TechPub_2614345_0106 - 04_MM2819200_04en.fm

4.2.7 Photocell Unit

4.2.7-1 Photocell Unit - Check

Machine Status	Mains Power OFF Air OFF Steam ON Water OFF
SPC Reference	2876313-0100

Check the following parts for wear or damage:

- the O-rings (1), check for air leaks. Change them if necessary
- the photocell lenses (2), make sure that the photocell lenses are intact and clean. If necessary, clean the lenses with a proper cleaning solution.

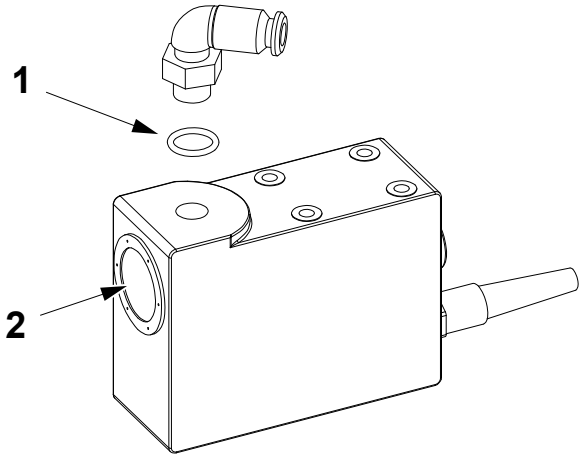

1 O-ring
2 Lens

TechPub_2614345_0106 - 04_MM2819200_04en.fm

4.2.7-2 Photocell Unit - Set

Machine Status	Mains Power ON Air ON Steam ON Water OFF
SPC Reference	2876313-0100

Photocells Position

a) Log on to the MAINTENANCE CONTROL window, see 9.6.3-2 HMI - User Management Log On.

b) Touch the PACKAGE FORMING UNIT button (1) to display the PACKAGE FORMING UNIT window.

c) Touch the PHOTOCELL HEIGHT icon (2) to display the PHOTOCELL HEIGHT window (3).

d) Touch the START button (4).

e) Touch the OK button (5) and wait for the jaw movement to complete.

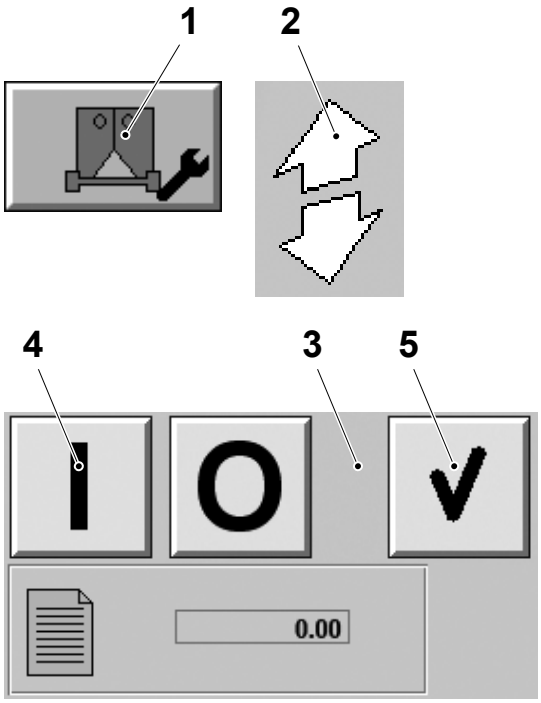

1 Package forming unit button
2 Photocell height icon
3 Photocell height window
4 Start button
5 OK button

(Cont'd)

TechPub_2614345_0106 - 04_MM2819200_04en.fm

(Cont'd)

f) Make sure that the photocells (6) are level.

g) Loosen the screws (7) and set the nominal distance (8) as displayed in the PHOTOCELL HEIGHT window (3) between the centre of the lens of the photocells (6) and the surface of the cutting jaw (9).

h) Tighten the screws (7).

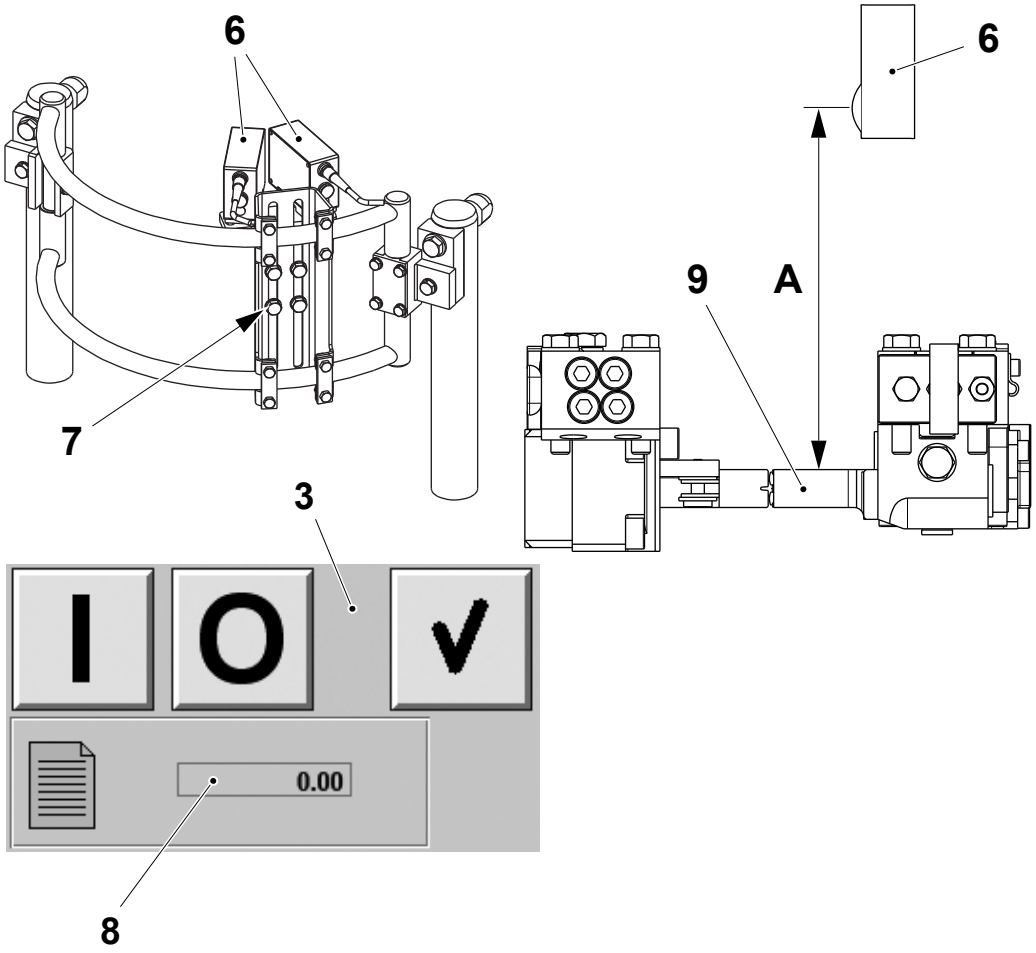

3 Photocell height window
6 Photocell
7 Screw
8 Nominal distance
9 Cutting jaw

(Cont'd)

TechPub_2614345_0106 - 04_MM2819200_04en.fm

(Cont'd)

Photocells Trigger Marks Reading

Loosen the screws (1) on the photocells holder (2) and set the distance **B** between the photocells (3) and the sealed tube (4).

Use the screws (5) to set the photocell so that the light spots are centred on the photocell trigger marks on the tube (4).

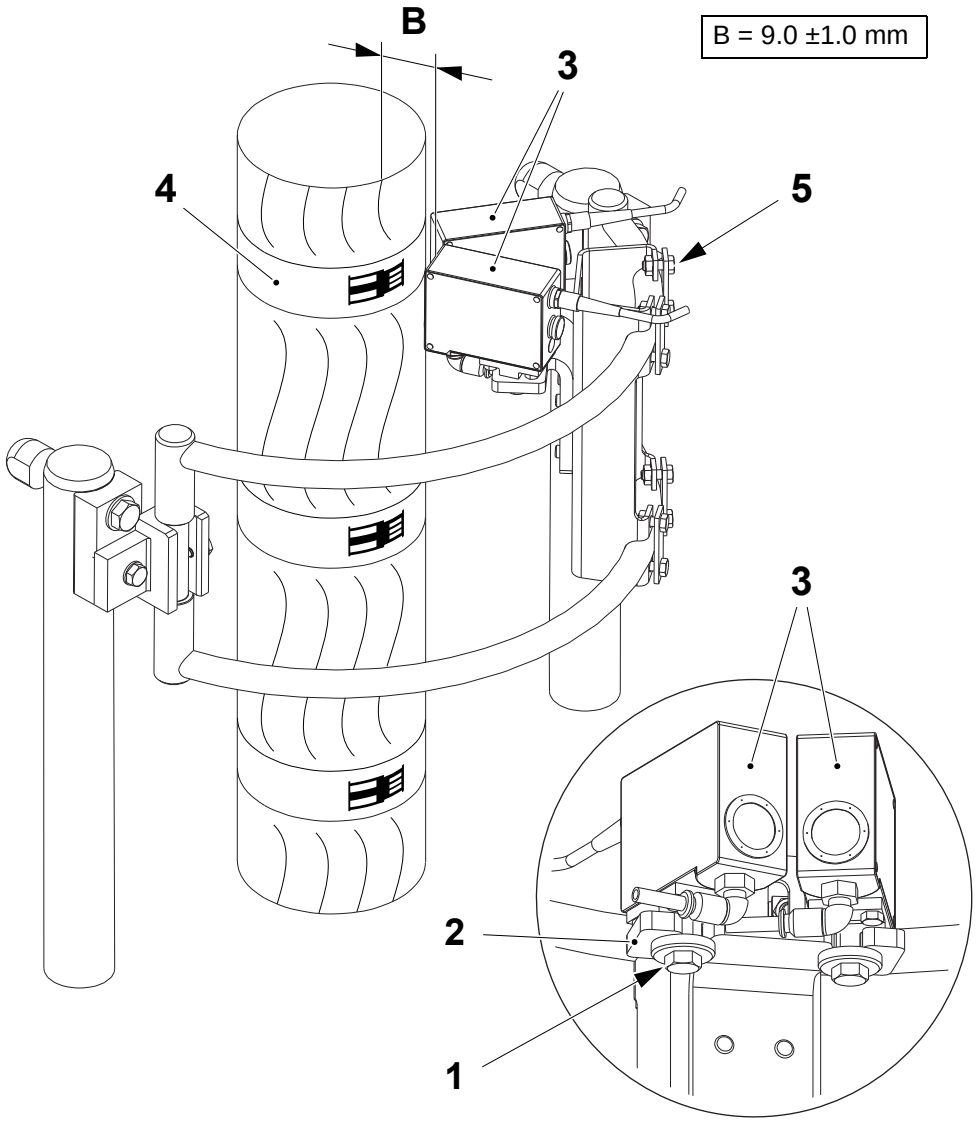

1 Screw
2 Holder
3 Photocell
4 Tube
5 Screw

(Cont'd)

TechPub_2614345_0106 - 04_MM2819200_04en.fm

(Cont'd)

Photocells Colour Setting and Sensitivity

By default, the photocell produces a green light spot. For most packaging material this is the correct setting and no further adjustment will be required.

If a bar code reading error occurs, the colour of the light spot can be changed to better match the foreground colour of the bar code by means of the TPOP, continue as follows:

a) Touch the PRODUCTION CONTROL button (1).

b) Touch the PACKAGE FORMING UNIT button (2) and then touch the PHOTOCELL icon (3).

c) Touch the COLOUR SPOT icon (4) to display the COLOUR SPOT dialogue window (5).

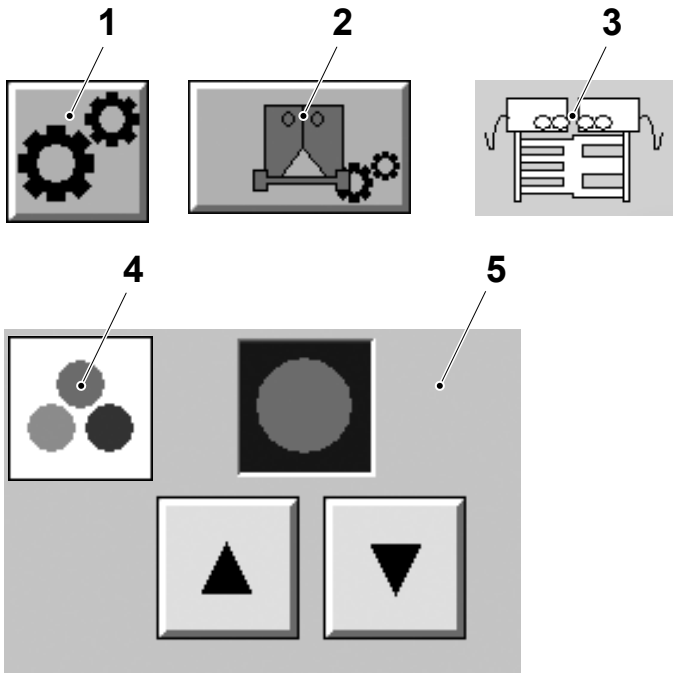

1 Production control button
2 Package forming unit button
3 Photocell icon
4 Colour spot icon
5 Colour spot dialogue window

(Cont'd)

TechPub_2614345_0106 - 04_MM2819200_04en.fm

(Cont'd)

d) Use the ARROW buttons (6) to select a colour that suits the current packaging material, see the table below.

e) Touch the EXIT button (7).

Barcode Foreground Colour	**Spot Colour**
Black	Green, Red or Blue
Blue	Green or Red
Light blue/Cyan	Red
Green	Red or Blue
Yellow	Blue
Red	Green or Blue
Magenta	Green

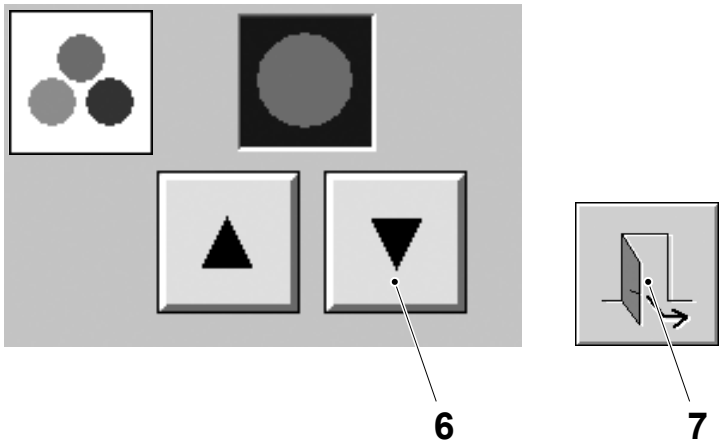

6 Arrow button
7 Exit button

(Cont'd)

TechPub_2614345_0106 - 04_MM2819200_04en.fm

(Cont'd)

If a bar code reading error continue to occur after the colour setting of the photocells, the photocells sensitivity can be adjusted by means of the TPOP, continue as follows:

a) Touch the PRODUCTION CONTROL button (1).

b) Touch the PACKAGE FORMING UNIT button (2) and then touch the PHOTOCELL icon (3).

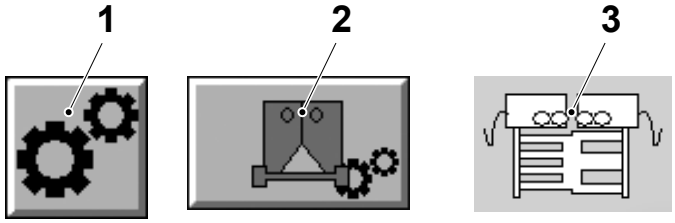

1 Production control button
2 Package forming unit button
3 Photocell icon

(Cont'd)

TechPub_2614345_0106 - 04_MM2819200_04en.fm

(Cont'd)

c) Touch the SENSITIVITY icon (4) to display the SENSITIVITY dialogue window (5).

d) Use the ARROW buttons (6) to enter the new value in the ADJUSTMENT box (7).

Note! Higher values reduce sensitivity.

e) Touch the ENTER button (8) to accept the new value.

f) Touch the EXIT button (9) to exit the PACKAGE FORMING UNIT window.

If errors continue to occur after the photocells colour and sensitivity setting, set the photocells manually, see 9.8-4 TMCC2 Controller - Photocells Manual Setting.

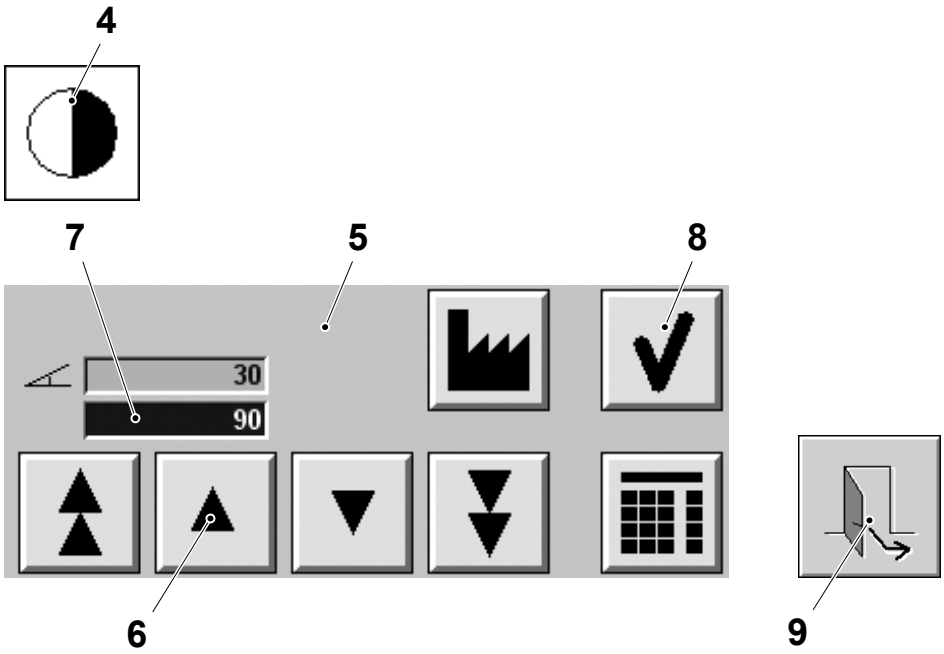

4 Sensitivity icon
5 Sensitivity dialogue window
6 Arrow button
7 Adjustment box
8 Enter button
9 Exit button

(Cont'd)

TechPub_2614345_0106 - 04_MM2819200_04en.fm

(Cont'd)

Design Correction Fine Setting

Check that the bottom creases are correctly positioned on the packages. To fine adjust the position of the bottom creases proceed as follows:

a) On the TPOP display touch the PRODUCTION CONTROL button (1).

b) Touch the PACKAGE FORMING UNIT button (2).

c) Touch the DESIGN CORRECTION icon (3).

d) Use the ARROW buttons (4) on the DESIGN CORRECTION window to fine set the position of the bottom creases.

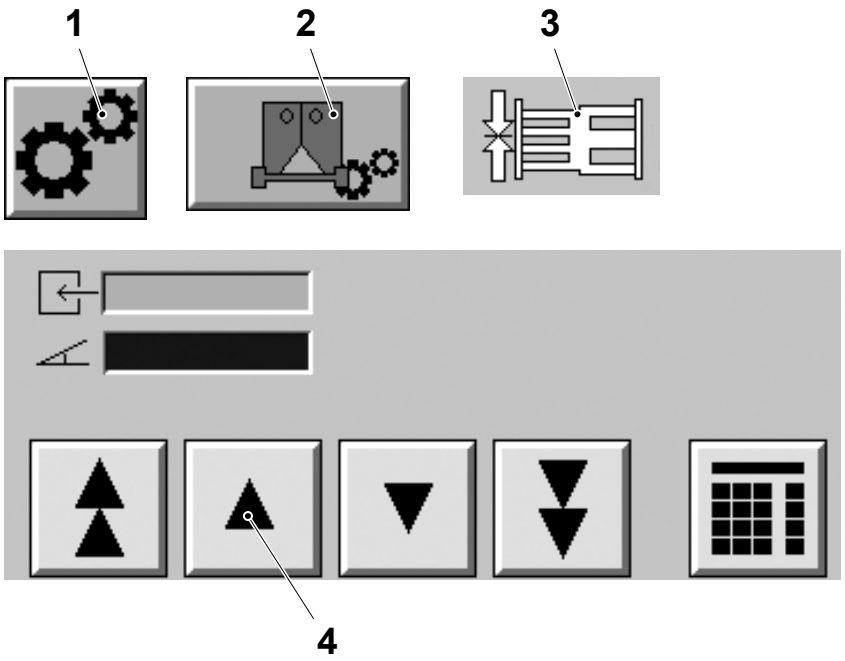

1 Production control button
2 Package forming unit button
3 Design correction icon
4 Arrow button

TechPub_2614345_0106 - 04_MM2819200_04en.fm

This page intentionally left blank

TechPub_2614345_0106 - 04_MM2819200_04en.fm

5 Final Folder

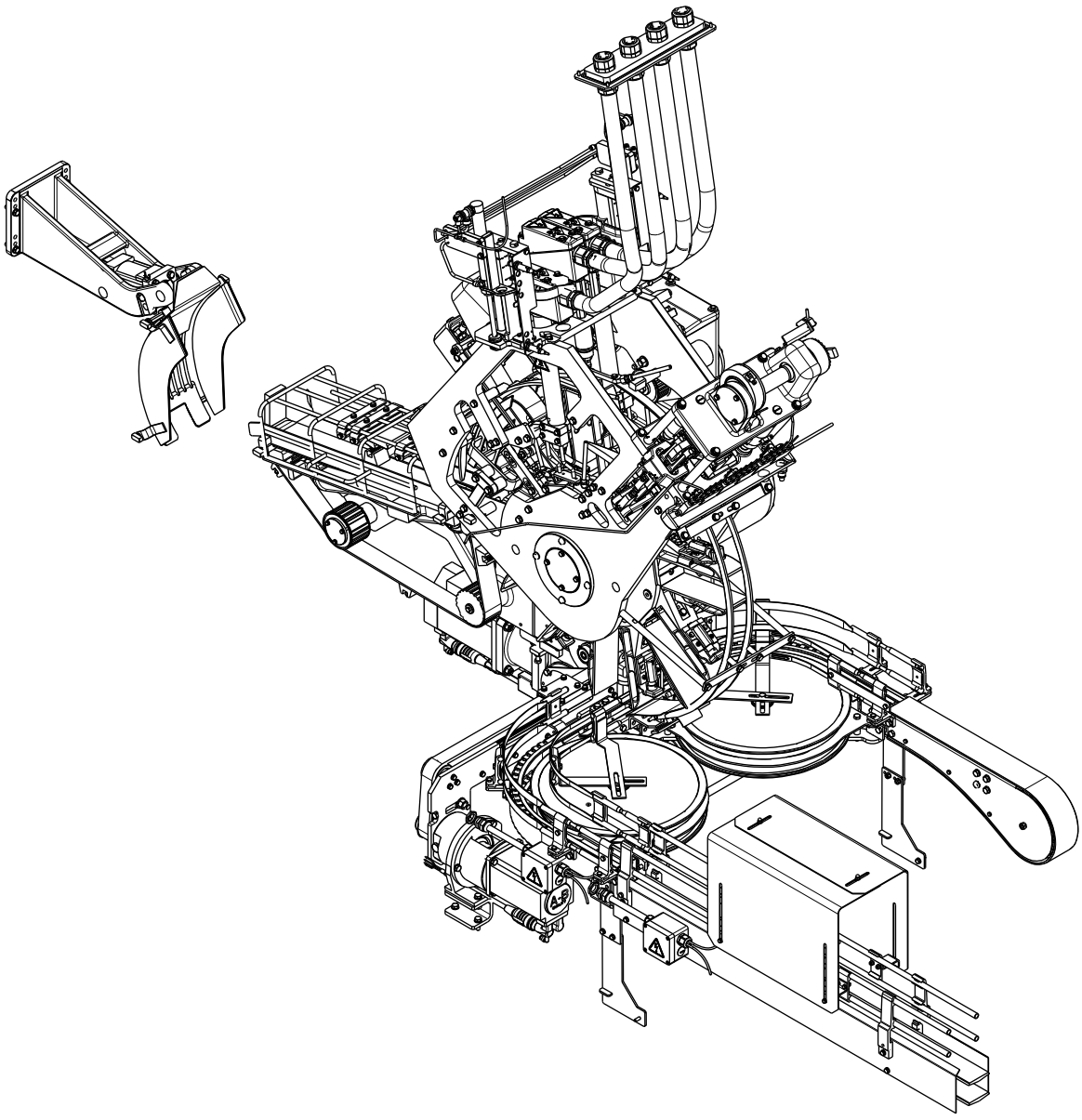

TechPub_2614345_0106 - 05_MM2819200_04en.fm

Final Folder - Description

SPC Reference	648552-0200

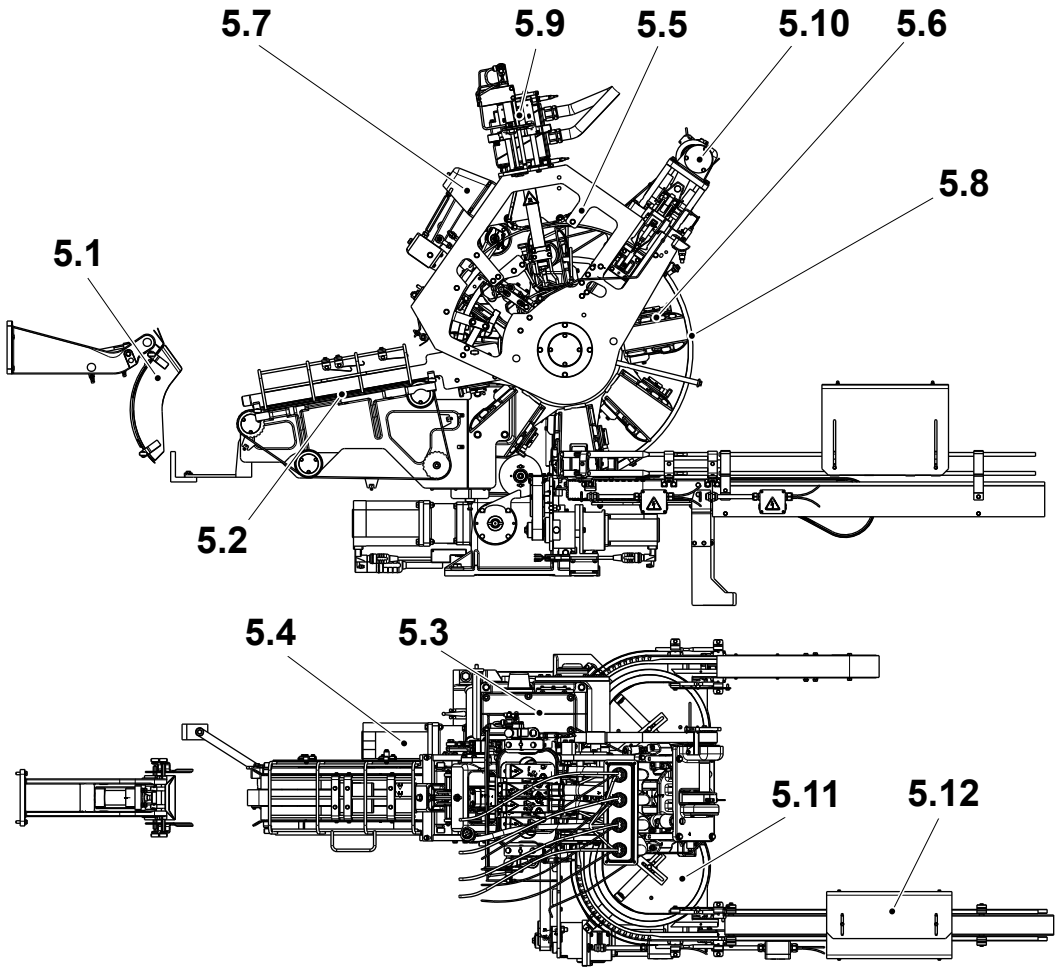

5 Final Folder
5.1 Drop Chute
5.2 Infeed Conveyor
5.3 Indexing Unit
5.4 Motor Unit
5.5 Frame Work
5.6 Wheel
5.7 Pull-Down Device
5.8 Folding Part
5.9 Heating Chamber
5.10 Pressure Device
5.11 Outfeed Unit
5.12 Last Point DE

TechPub_2614345_0106 - 05_MM2819200_04en.fm

5 Final Folder . . . . . 5 - 7

5-1 Final Folder - Setting Sequence . . . . . 5 - 7

5-2 Final Folder - Synchronise Wheel to the Indexing Unit . . . . . 5 - 8

5-3 Final Folder - Referencing . . . . . 5 - 11

5-4 Final Folder - Set Drop Chute Position . . . . . 5 - 15

5-5 Final Folder - Synchronise Infeed Conveyor . . . 5 - 18

5-6 Final Folder - Synchronise Pull-down Device . . 5 - 23

5-7 Final Folder - Set Pull-down Device Parallelism 5 - 25

5-8 Final Folder - Set Pull-down Device Position . . 5 - 26

5-9 Final Folder - Set Pull-down Device Lower Turning Position . . . . . 5 - 28

5-10 Final Folder - Set Top Section . . . . . 5 - 30

5-11 Final Folder - Set Top Rail . . . . . 5 - 32

5-12 Final Folder - Set Flap Heater Nozzles . . . . . 5 - 34

6-13 Final Folder - Set Folding Part . . . . . 5 - 38

5-14 Final Folder - Set Pressure Device Lower Turning Position . . . . . 5 - 40

5-15 Final Folder - Set Pressure Device Pushers . . . . 5 - 41

5-16 Final Folder - Synchronise Overload Switches . 5 - 45

5-17 Final Folder - Set Package Outfeed Counting Photocells . . . . . 5 - 47

5-18 Final Folder - Set External Conveyor Motor Speed . . . . . 5 - 48

5.1 Drop Chute . . . . . 5 - 49

5.1-1 Drop Chute - Check . . . . . 5 - 49

5.1-2 Drop Chute - Set . . . . . 5 - 51

5.2 Infeed Conveyor . . . . . 5 - 52

5.2-1 Infeed Conveyor - Synchronisation . . . . . 5 - 52

5.2-2 Infeed Conveyor - Set Belts . . . . . 5 - 53

5.2-3 Infeed Conveyor - Check Belts . . . . . 5 - 55

5.2-4 Infeed Conveyor - Change Belts . . . . . 5 - 56

5.2-5 Infeed Conveyor - Overhaul . . . . . 5 - 58

5.2-6 Infeed Conveyor - Set Inductive Switch . . . . . 5 - 64

TechPub_2614345_0106 - 05_MM2819200_04en.fm

6.2-7 Infeed Conveyor - Grease . . . . . 5 - 65

5.2.1 Protective Cover . . . . . 5 - 68

5.2.1-1 Protective Cover - Set . . . . . 5 - 68

5.3 Indexing Unit . . . . . 5 - 70

5.3-1 Indexing Unit - Check Oil Level . . . . . 5 - 70
5.3-2 Indexing Unit - Change Oil . . . . . 5 - 72
5.3-3 Indexing Unit - Clean Filter . . . . . 5 - 73
5.3-4 Indexing Unit - Set Protractor . . . . . 5 - 74
5.3-5 Indexing Unit - Set Pressure . . . . . 5 - 76
5.3-6 Indexing Unit - Set Inductive Switch . . . . . 5 - 77
5.3-7 Indexing Unit - Set Clutch Tension . . . . . 5 - 78
5.3-8 Indexing Unit - Change Cam Shaft Seal Ring and O-ring . . . . . 5 - 80
5.3-9 Indexing Unit - Overhaul Cam Shaft . . . . . 5 - 82
5.3-10 Indexing Unit - Overhaul Protractor Shaft . . . . 5 - 85
5.3-11 Indexing Unit - Overhaul Low Shaft . . . . . 5 - 87
5.3-12 Indexing Unit - Overhaul Vertical Shaft . . . . . 5 - 91
5.3-13 Indexing Unit - Overhaul Motor Shaft . . . . . 5 - 95
5.3-14 Indexing Unit - Change Superior Box . . . . . 5 - 100
5.3-15 Indexing Unit - Overhaul Superior Box . . . . . 5 - 101
5.3-16 Indexing Unit - Change Oil Filter . . . . . .5 - 111

5.4 Motor Unit . . . . . 5 - 112

5.4-1 Motor Unit - Check . . . . . 5 - 112
5.4-2 Motor Unit - Set Pressure . . . . . 5 - 113
5.4-3 Motor Unit - Change . . . . . 5 - 114

5.5 Frame Work . . . . . 5 - 118

5.5-1 Frame Work - Overhaul . . . . . 5 - 118
5.5-2 Frame Work - Set Inductive Switch . . . . . 5 - 122

5.6 Wheel . . . . . 5 - 123

5.6-1 Wheel - Change . . . . . 5 - 123
5.6-2 Wheel - Change Rollers and Bushings . . . . . 5 - 128

5.7 Pull-Down Device . . . . . 5 - 130

TechPub_2614345_0106 - 05_MM2819200_04en.fm

5.7-1 Pull-Down Device - Set Parallelism . . . . . 5 - 130
5.7-2 Pull-Down Device - Synchronisation . . . . . 5 - 130
5.7-3 Pull-Down Device - Set Lower Turning Position . . . . . 5 - 130
5.7-4 Pull-Down Device - Set Position . . . . . 5 - 130
5.7-5 Pull-Down Device - Change Bushings . . . . . 5 - 131
5.7-6 Pull-Down Device - Check Link Heads . . . . . 5 - 132
5.7-7 Pull-Down Device - Set Folding Fin Device . . 5 - 133

5.7.1 Central Lubrication . . . . . 5 - 136

5.7.1-1 Central Lubrication - Check . . . . . 5 - 136
5.7.1-2 Central Lubrication - Bleed . . . . . 5 - 138

5.8 Folding Part . . . . . 5 - 139

5.8-1 Folding Part - Set . . . . . 5 - 139
5.8-2 Folding Part - Set Top Rails . . . . . 5 - 140
5.8-3 Folding Part - Check Water Leaks . . . . . 5 - 141
5.8-4 Folding Part - Set Flap Blowing Pressure . . . . 5 - 142

5.9 Heating Chamber. . . . . 5 - 143

5.9-1 Heating Chamber - Change Heating Elements 5 - 143
5.9-2 Heating Chamber - Set Nozzles . . . . . 5 - 147
5.9-3 Heating Chamber - Set Pressures . . . . . 5 - 148
5.9-4 Heating Chamber - Set I/P Transducers . . . . . 5 - 150
5.9-5 Heating Chamber - Activate Flap Heaters . . . . 5 - 151

5.10 Pressure Device. . . . . 5 - 152

5.10-1 Pressure Device - Set Lower Turning Position 5 - 152
5.10-2 Pressure Device - Set Pushers . . . . . 5 - 152
5.10-3 Pressure Device - Set Belt . . . . . 5 - 153
5.10-4 Pressure Device - Change . . . . . 5 - 154
5.10-5 Pressure Device - Overhaul . . . . . 5 - 155
5.10-6 Pressure Device - Change Lever Bushings . . . 5 - 162
5.10-7 Pressure Device - Set Inductive Switch . . . . . 5 - 163
5.10-8 Pressure Device - Check Belt . . . . . 5 - 164
5.10-9 Pressure Device - Check Package Pressure . . . 5 - 165
5.10-10 Pressure Device - Grease Belt Tensioner . . . . . 5 - 167

TechPub_2614345_0106 - 05_MM2819200_04en.fm

5.11 Outfeed Unit . . . . . 5 - 168

5.11-1 Outfeed Unit - Change Drive Belt . . . . . 5 - 168
5.11-2 Outfeed Unit - Set Drive Belt Tension . . . . . 5 - 169
5.11-3 Outfeed Unit - Change Carrier . . . . . 5 - 171
5.11-4 Outfeed Unit - Change Bushing and Bearings 5 - 172
5.11-5 Outfeed Unit - Check Oil Level . . . . . 5 - 173
5.11-6 OutFeed Unit - Set Counting Photocells . . . . . 5 - 174
5.11-7 OutFeed Unit - Reference Servo . . . . . 5 - 174
5.11-8 Outfeed Unit - Set Queue Photocells . . . . . 5 - 175

5.11.1 Outfeed Conveyor . . . . . 5 - 176

5.11.1-1 Outfeed Conveyor - Set End Unit Proximity Switch . . . . . 5 - 176

5.12 Last Point DE . . . . . 5 - 177

5.12-1 Last Point DE - Set Photocells . . . . . 5 - 177

TechPub_2614345_0106 - 05_MM2819200_04en.fm

5 Final Folder

5-1 Final Folder - Setting Sequence

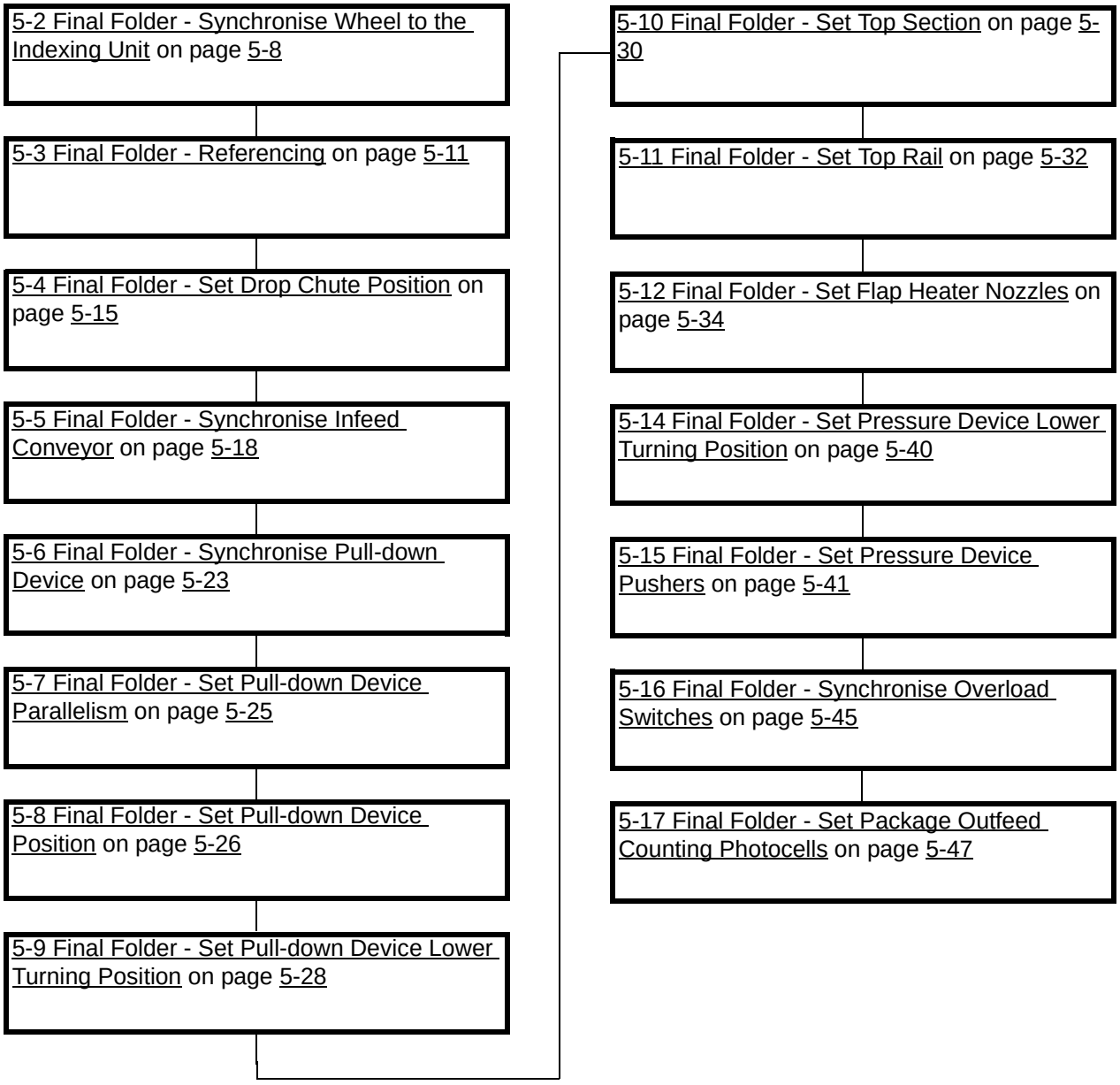

TechPub_2614345_0106 - 05_MM2819200_04en.fm

5 Final Folder

5-2 Final Folder - Synchronise Wheel to the Indexing Unit

Machine Status	Mains Power OFF Air OFF Steam ON Water OFF
Special Equipment	Template Pin TP No. 1350498 Template TP No. 2773587
SPC Reference	2927613-0100 2931385-0100

Note! Do not remove the screw from the clamping element.

(Cont'd)

TechPub_2614345_0106 - 05_MM2819200_04en.fm

(Cont'd)

a) Crank the final folder to 0°.

b) Remove the external frame, see 5.6-1 Wheel - Change.

c) Remove the eight screws (1),the cover (2) and the O-rings (3) and (4).

d) Loosen the screw on clamping element (5).

e) Turn the wheel (6) by hand and align the hole (7) in the wheel to the hole in the cam.

f) Install the template pin (8) through the holes.

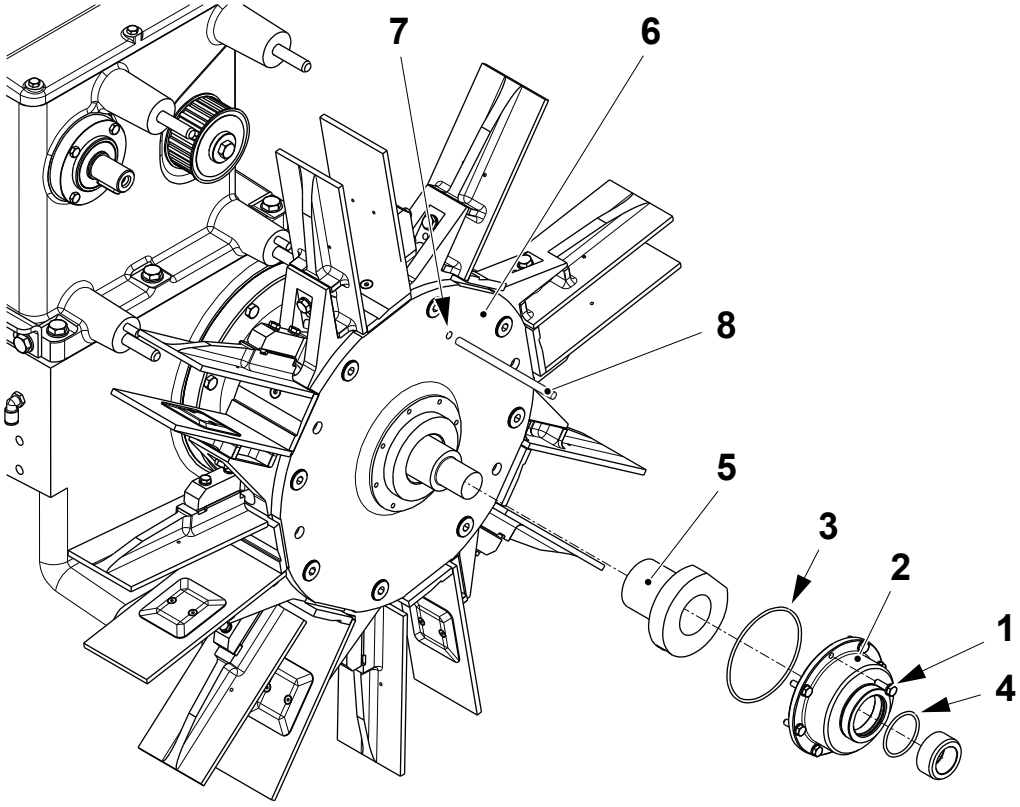

1 Screw
2 Cover
3 O-ring
4 O-ring
5 Clamping element
6 Wheel
7 Hole
8 Template pin

(Cont'd)

TechPub_2614345_0106 - 05_MM2819200_04en.fm

(Cont'd)

g) Fit the tool (9) on the shaft of the indexing gear and tighten the screw (10).

h) Tighten the screw on the clamping element (5), to a torque of 21Nm.

i) Remove the template pin (8).

j) Remove the screw (10) and the tool (9).

k) Install the O-rings (3) and (4), the cover (2) and secure using the screws (1).

l) Install the external frame, see 5.6-1 Wheel - Change.

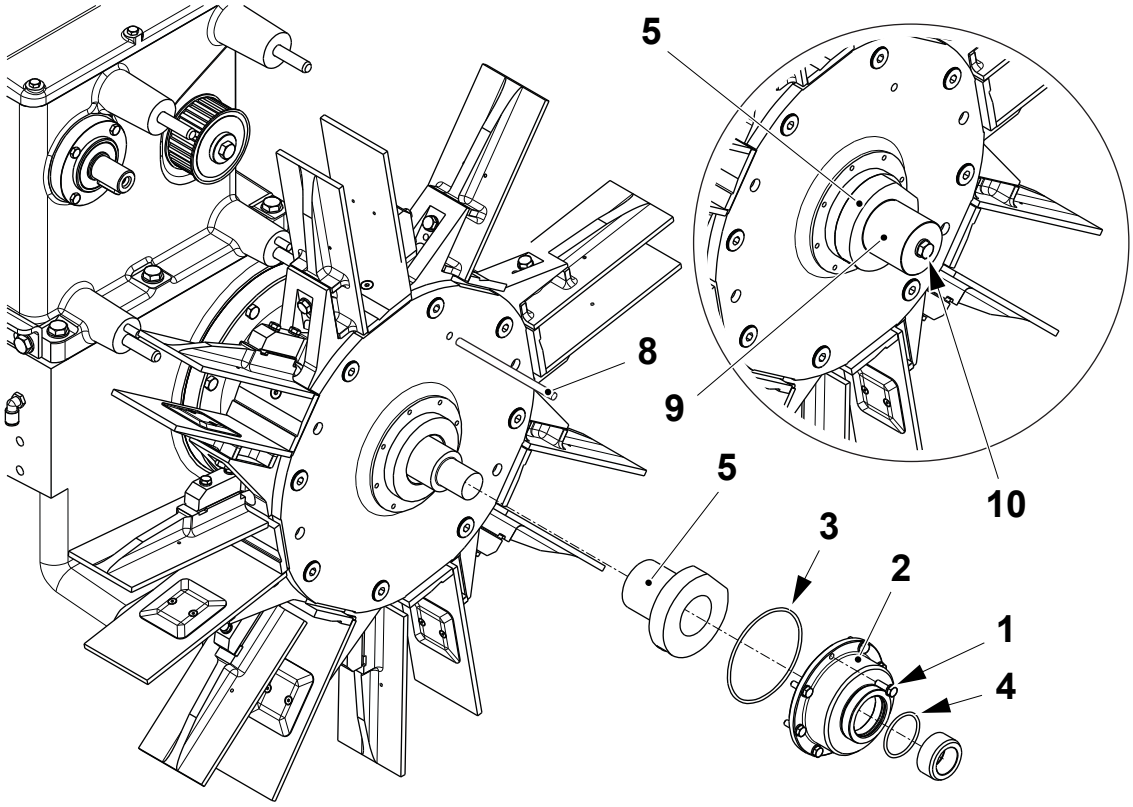

1 Screw
2 Cover
3 O-ring
4 O-ring
5 Clamping element
8 Template pin
9 Tool
10 Screw

TechPub_2614345_0106 - 05_MM2819200_04en.fm

5-3 Final Folder - Referencing

Machine Status	PREPARATION
SPC Reference	648552-0200

CAUTION
Risk of damage to the equipment.
Never reference the servo motor without first checking that there is no possible mechanical interference.

Note! The referencing procedure must be completed if any mechanical change has been made to the system.

(Cont'd)

TechPub_2614345_0106 - 05_MM2819200_04en.fm

(Cont'd)

Indexing Unit Servo Motor

a) On the TPOP display touch the MAINTENANCE SYSTEM button (1).

b) Touch the FINAL FOLDER UNIT button (2).

c) Touch the FINAL FOLDER REFERENCING icon (3) for the indexing unit.

d) Crank the final folder to the angle degrees stated in the box (4) and touch the START button (5).

e) Touch the OK button (6) and wait until the START button (3) changes colour to green.

f) Press the EXIT button (7).

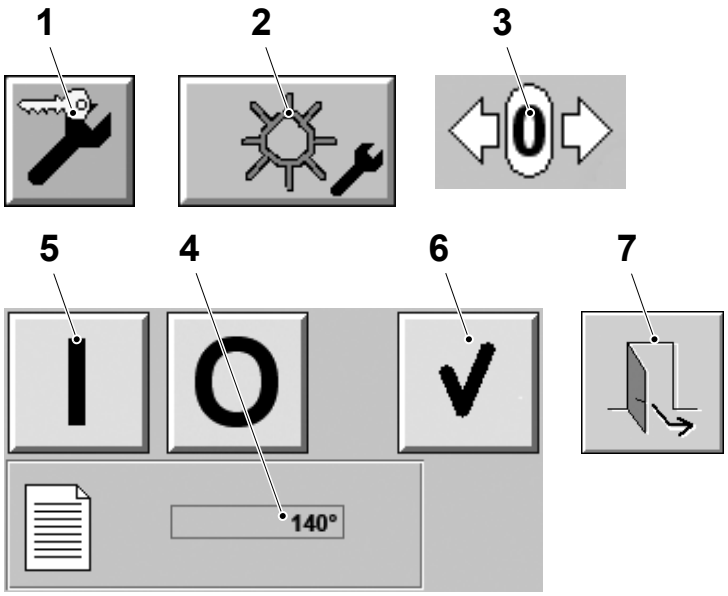

1 Maintenance system button
2 Final folder unit button
3 Final folder referencing icon
4 Box
5 Start button
6 OK button
7 Exit button

(Cont'd)

TechPub_2614345_0106 - 05_MM2819200_04en.fm

(Cont'd)

CAUTION
Risk of damage to the equipment.
Never reference the servo motor without first checking that there is no possible mechanical interference.

Note! The referencing procedure must be completed if any mechanical change has been made to the system.

Outfeed Unit Servo Motor

a) Mover the pusher assembly (1) until it reaches the mechanical stop (2).

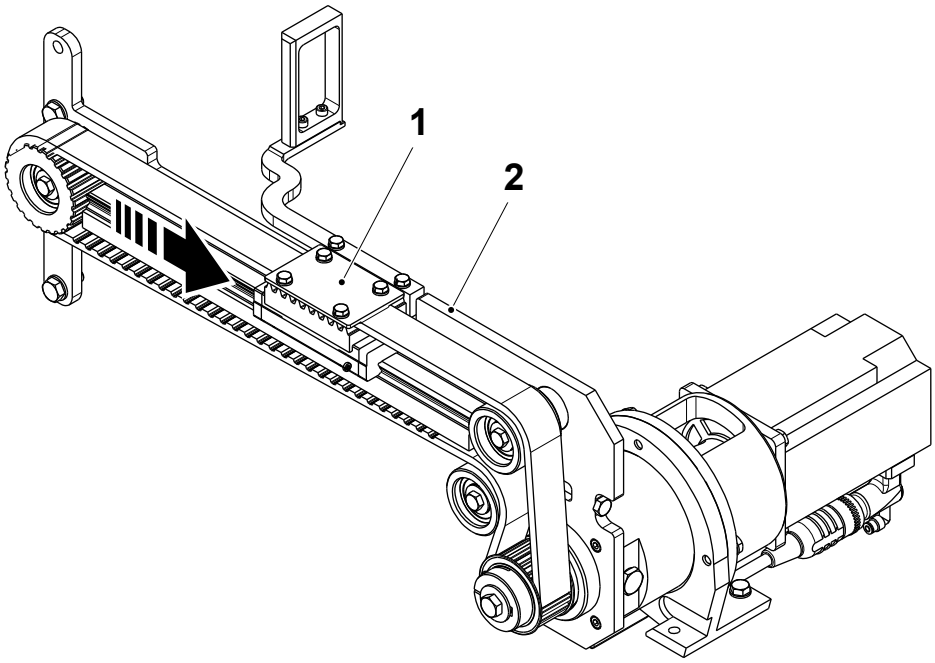

1 Pusher assembly
2 Brake

(Cont'd)

TechPub_2614345_0106 - 05_MM2819200_04en.fm

(Cont'd)

b) On the TPOP display touch the MAINTENANCE SYSTEM button (3).

c) Touch the FINAL FOLDER UNIT button (4).

d) Touch the FINAL FOLDER REFERENCING icon (5) for the outfeed unit.

e) Touch the START button (6).

f) Touch the OK button (7) and wait until the START button (6) changes colour to green.

g) Press the EXIT button (8).

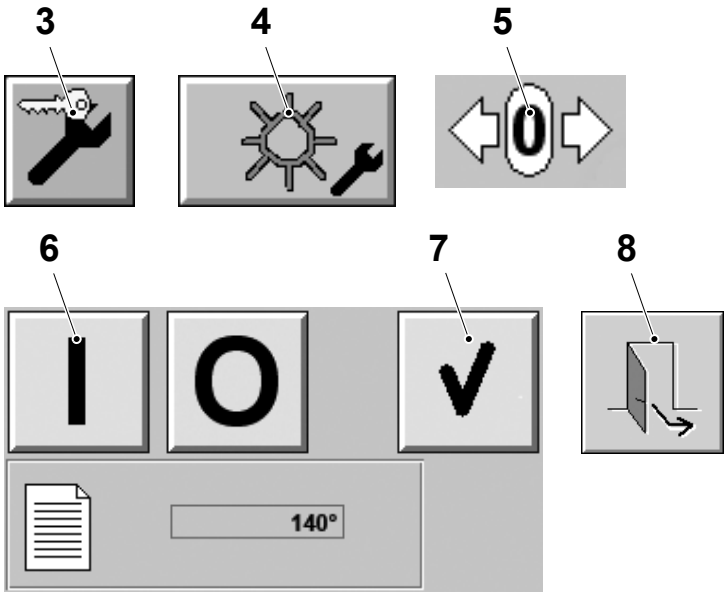

3 Maintenance system button
4 Final folder unit button
5 Final folder referencing icon
6 Start button
7 OK button
8 Exit button

TechPub_2614345_0106 - 05_MM2819200_04en.fm

5-4 Final Folder - Set Drop Chute Position

Machine Status	Mains Power OFF Air OFF Steam ON Water OFF
SPC Reference	2876472-0100 1361922-0200 2537128-0100

Note! Not valid for the TPA 1000 Sq package, see page 5-17.

(Cont'd)

TechPub_2614345_0106 - 05_MM2819200_04en.fm

(Cont'd)

a) Move the cradle (1) by hand into the production position.

b) Loosen the nut (2) and set the distance **A** between the cradle (1) and the package guides (3) by means of the cylinder piston head (4).

c) Tighten the nut (2).

d) Check the drop chute functionality, see 5.1-1 Drop Chute - Check.

Package	**A ±5.0 (mm)**
TPA 750 Sq - TPA 1000 Sq	18.0
All other packages	9.0

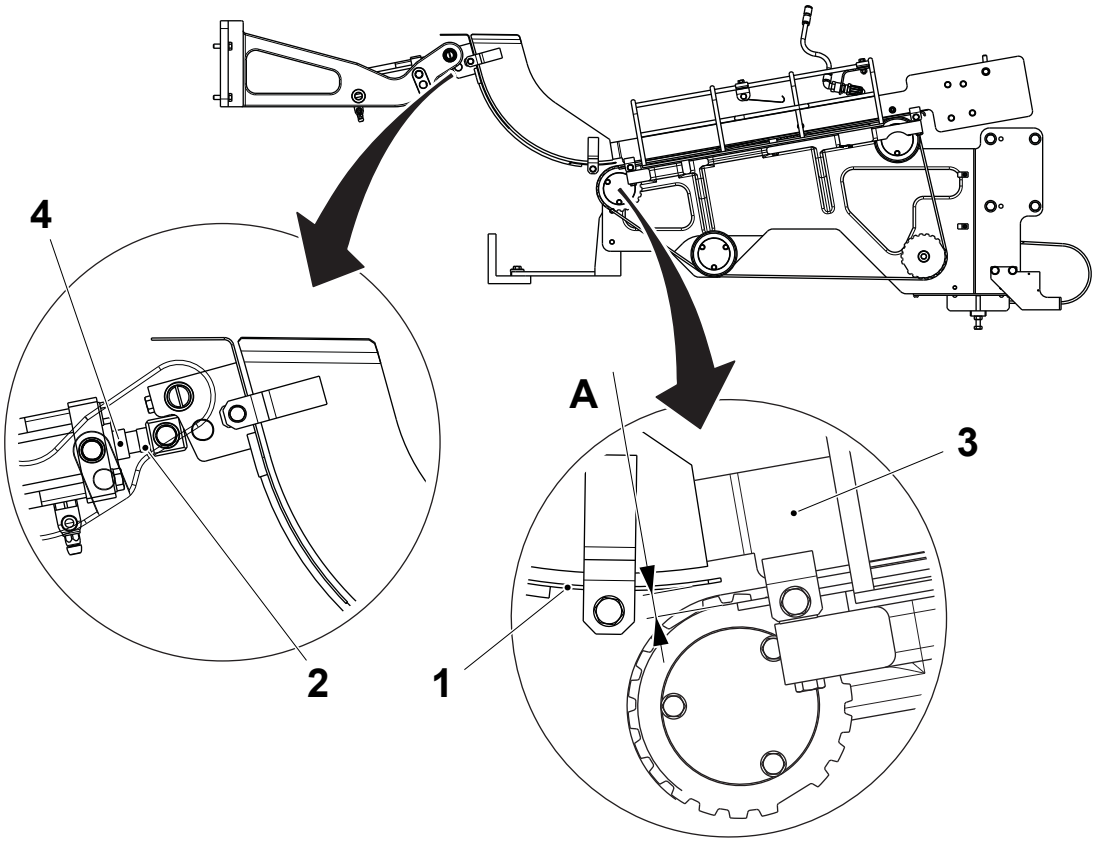

1 Cradle
2 Nut
3 Package guide
4 Piston head

(Cont'd)

TechPub_2614345_0106 - 05_MM2819200_04en.fm

5 Final Folder

(Cont'd)

Note! Valid for TPA 1000 Sq stand alone package only.

a) Move the cradle (1) by hand into the production position.

b) Loosen the nut (2) and set the distance **A** between the cradle (1) and the package guides (3) by means of the cylinder piston head (4).

c) Tighten the nut (2).

d) Check the drop chute functionality, see 5.1-1 Drop Chute - Check.

Package	A ±5.0 (mm)
TPA 1000 Sq	26.0

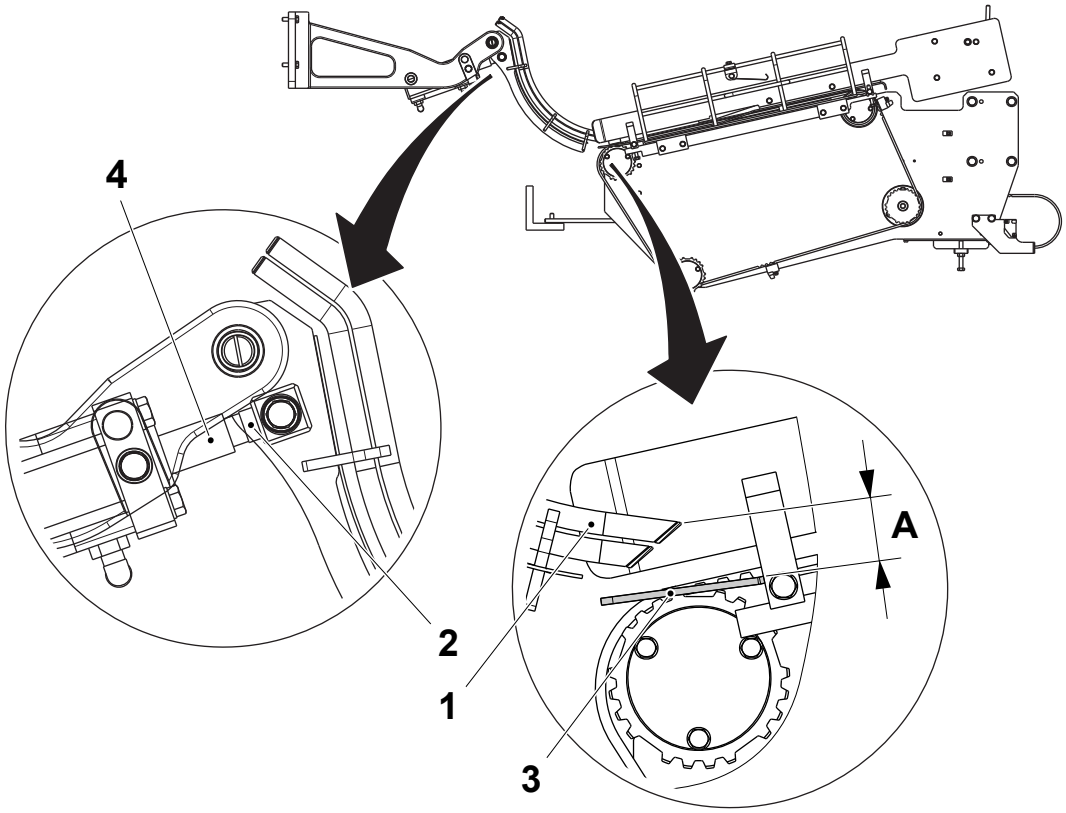

1 Cradle
2 Nut
3 Package guide
4 Piston head

TechPub_2614345_0106 - 05_MM2819200_04en.fm

5-5 Final Folder - Synchronise Infeed Conveyor

Machine Status	Mains Power OFF Air OFF Steam ON Water OFF
SPC Reference	1517298-0300 2931389-0100 1361923-0200

a) Crank the final folder to 0°.

b) Loosen the belt (1) tension by means of the roller (2).

c) Remove the belt (1) from the toothed pulley (3).

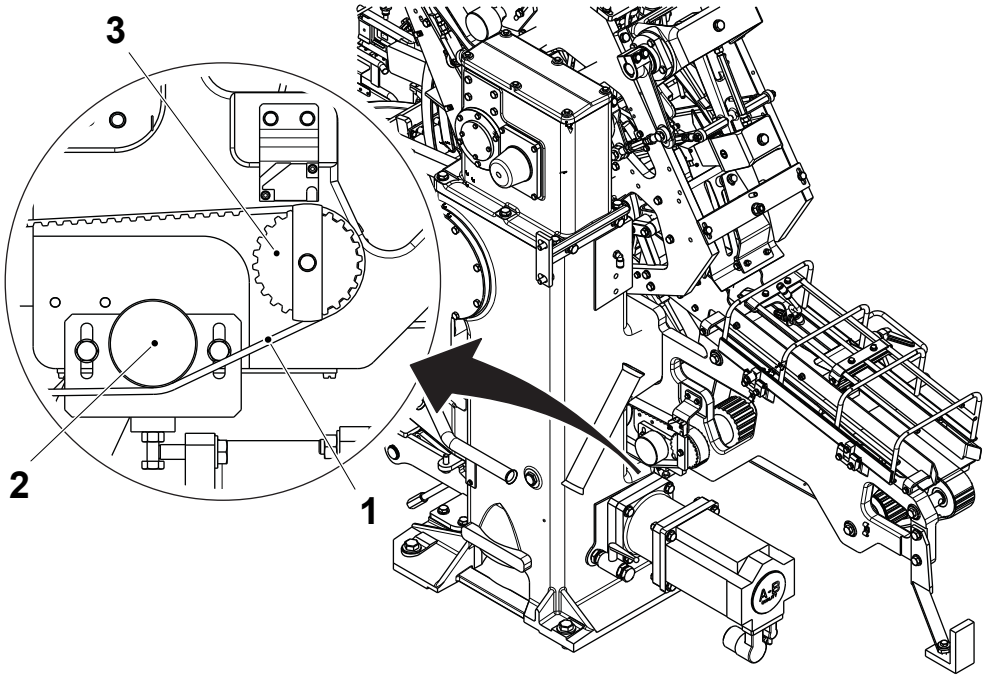

1 Belt
2 Roller
3 Toothed pulley

(Cont'd)

TechPub_2614345_0106 - 05_MM2819200_04en.fm

(Cont'd)

Table for Distance A

Package	A ±5.0 (mm)
TBA 500 B	431.0
TBA 1000 B	510.0
TBA 1000 S	602.0
TBA 500 Sq	545.0
TBA 1000 Sq	645.0
TPA 1000 Sq	694.0
TPA 750 Sq	635.0
TBA 1500 S	750.0
TBA 2000 S	710.0

(Cont'd)

TechPub_2614345_0106 - 05_MM2819200_04en.fm

(Cont'd)

Note! Make sure that the wedge (6) underneath the carrier (7) is positioned on a chamber tooth (8) in the toothed pulley (9) when the final folder is cranked.

d) Set the distance **A** between the carrier (4) and the bottom plate (5) of the wheel by turning the toothed pulley (3), see the table on the previous page.

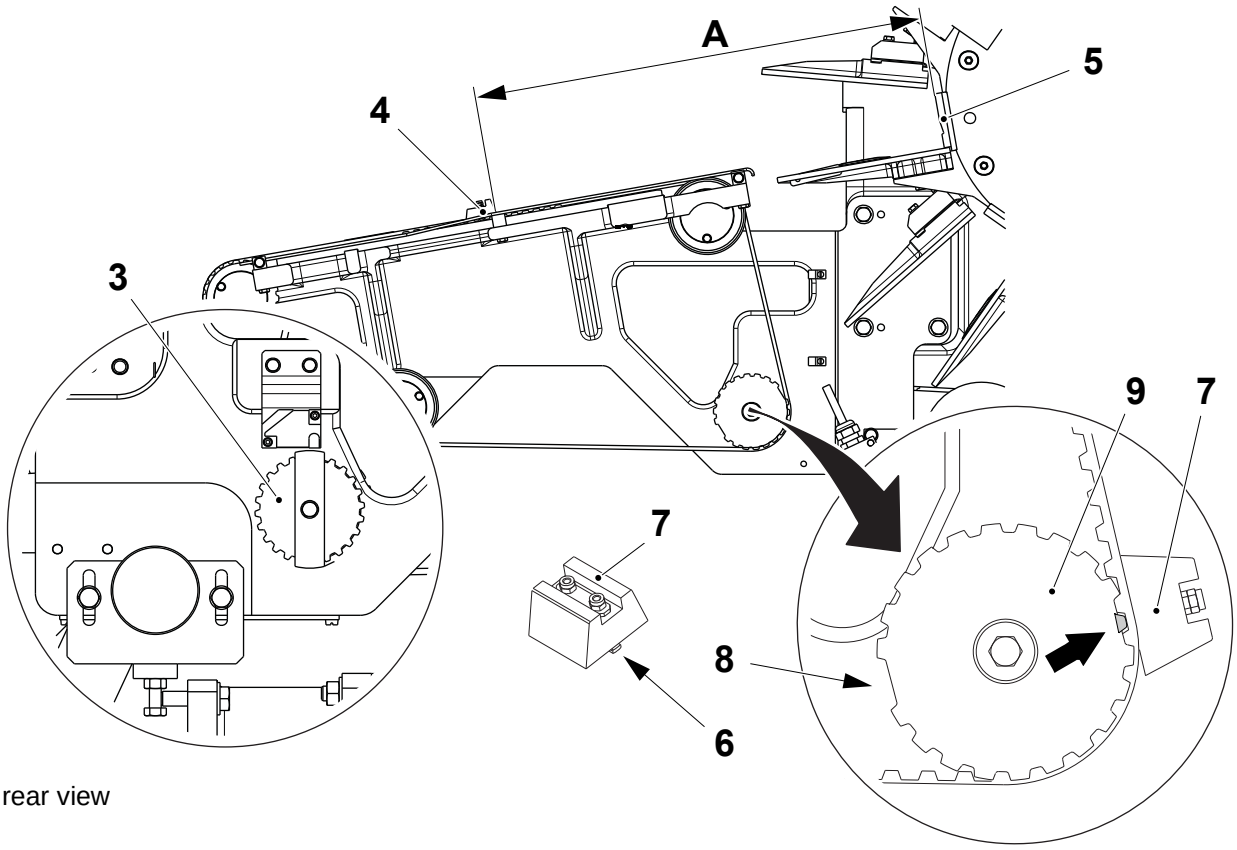

rear view

1 Belt
3 Toothed pulley
4 Carrier
5 Bottom plate
6 Wedge
7 Carrier
8 Chamber tooth
9 Toothed pulley

(Cont'd)

TechPub_2614345_0106 - 05_MM2819200_04en.fm

(Cont'd)

e) Fit the belt (1). Set if necessary, see 5.2-2 Infeed Conveyor - Set Belts.

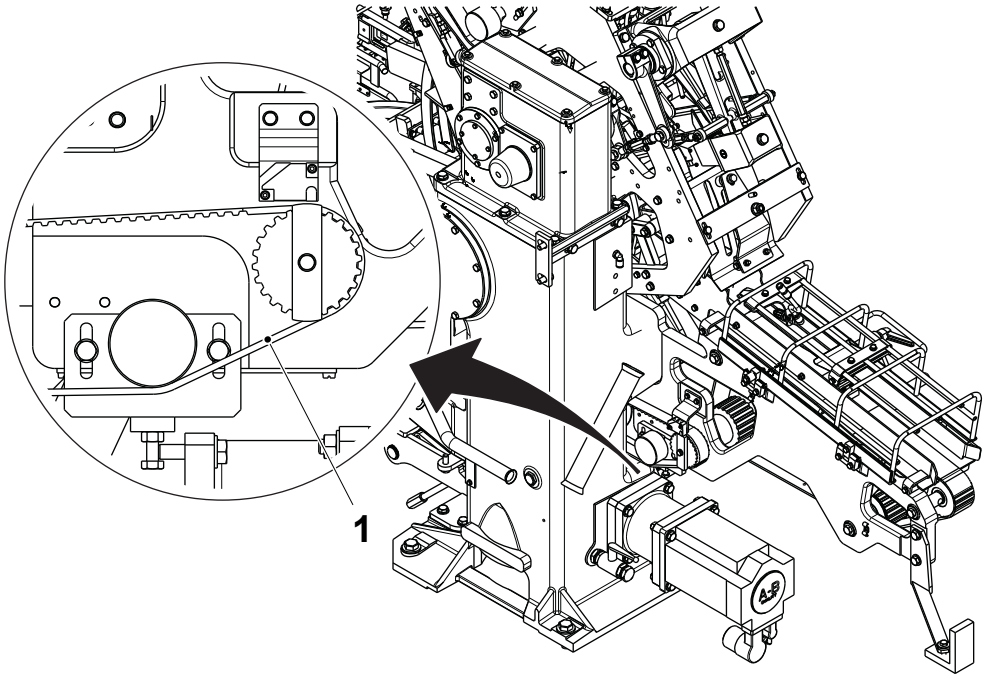

1 Belt

(Cont'd)

TechPub_2614345_0106 - 05_MM2819200_04en.fm

(Cont'd)

Production Setting

During PRODUCTION, make sure that the packages transfer smoothly from the infeed conveyor to the final folder. To fine adjust the synchronisation proceed as follows:

a) Touch the PRODUCTION CONTROL button (1) on the TPOP.

b) Touch the FINAL FOLDER button (2).

c) In the FINAL FOLDER window, touch the FINAL FOLDER SYNCHRONISATION icon (3).

d) Use the ARROW buttons (4) to increase or decrease the position of the packages on the conveyor entering the final folder wheel.

e) Touch the EXIT button (5).

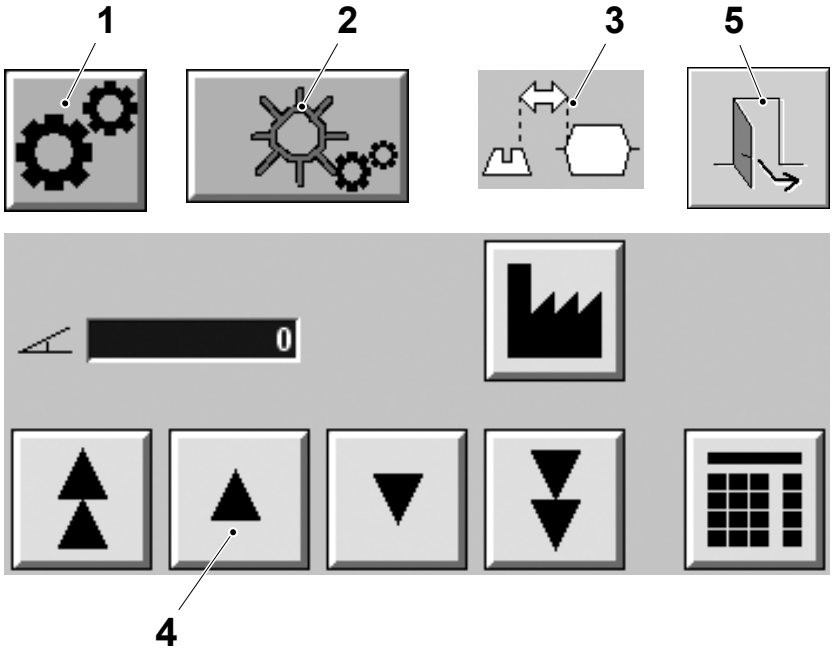

1 Production control button
2 Final folder button
3 Final folder synchronisation icon
4 Arrow button
5 Exit button

TechPub_2614345_0106 - 05_MM2819200_04en.fm

5-6 Final Folder - Synchronise Pull-down Device

Machine Status	Mains Power OFF Air OFF Steam ON Water OFF
Special Equipment	Torque Wrench min. 4 Nm
SPC Reference	2769842-0100

a) Crank the final folder to 310°.

(Cont'd)

TechPub_2614345_0106 - 05_MM2819200_04en.fm

(Cont'd)

b) Remove the screws (1) and the cover (2) of the indexing gear.

c) Remove the nut (3) and disconnect the link head (4).

d) Loosen the nut (5) and set the distance **A** by turning the link head (4). Tighten the nut (5).

e) Loosen the clamping element (6) and turn the eccentric until the pin (7) is in the position nearest the link end as shown in the figure.

f) Tighten the screws of the clamping element with a torque of 4 Nm with the aid of the torque wrench.

g) Fit the link head (4) on the pin (7) with the nut (3).

h) Fit the cover (1).

i) Set the lower turning position, see 5-9 Final Folder - Set Pull-down Device Lower Turning Position.

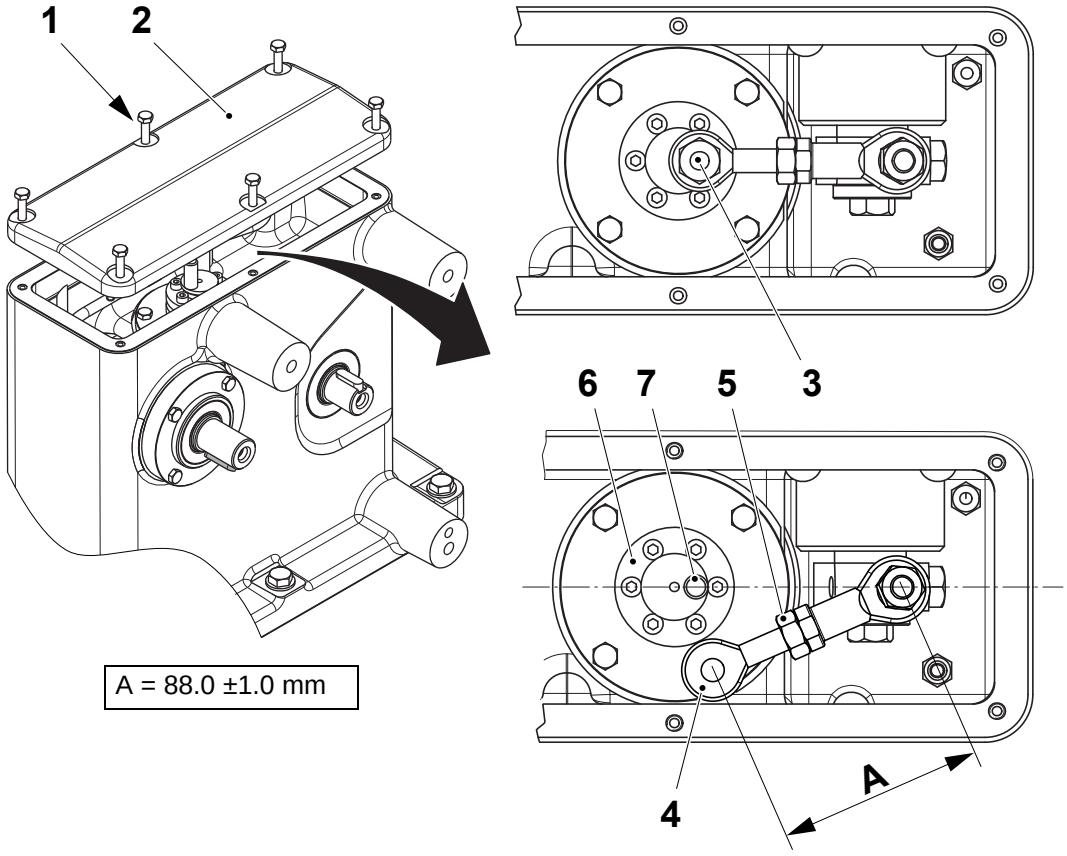

A = 88.0 ±1.0 mm

1 Screw
2 Cover
3 Nut
4 Link head
5 Nut
6 Clamping element
7 Pin

TechPub_2614345_0106 - 05_MM2819200_04en.fm

5-7 Final Folder - Set Pull-down Device Parallelism

Machine Status	Mains Power OFF Air OFF Steam ON Water OFF
SPC Reference	2769842-0100

Crank the final folder to 310° and set the pusher (1) parallel to the bottom plate (2) of the wheel by means of the tie rod (3).

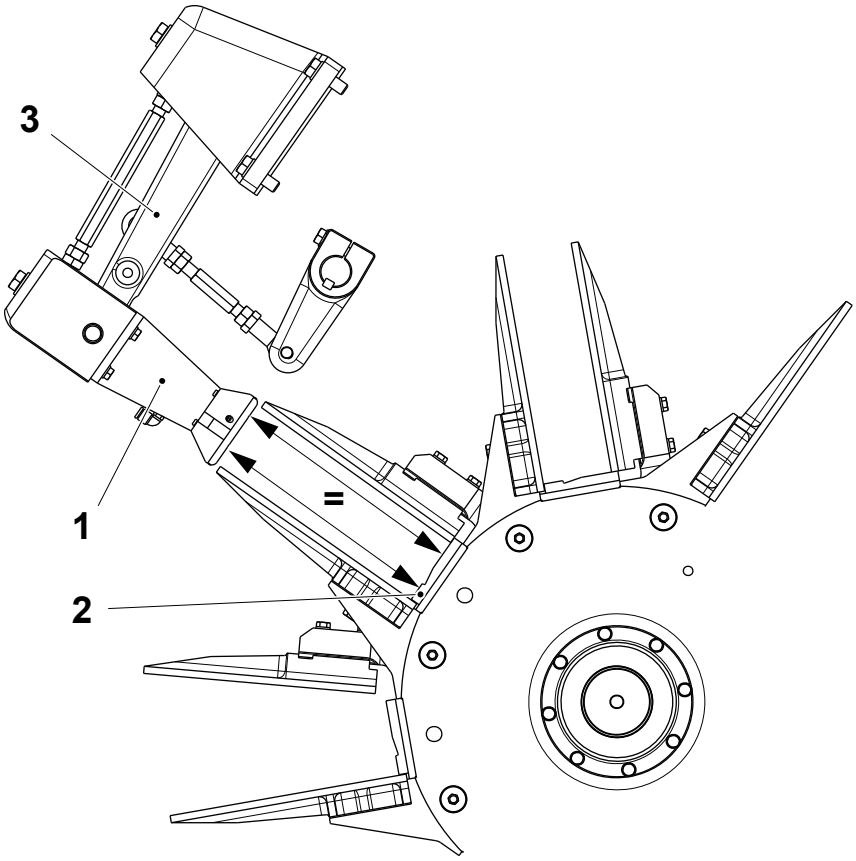

1 Pusher
2 Bottom plate
3 Tie rod

TechPub_2614345_0106 - 05_MM2819200_04en.fm

5-8 Final Folder - Set Pull-down Device Position

Machine Status	Mains Power OFF Air OFF Steam ON Water OFF
SPC Reference	2769842-0100

a) Set the lower turning position, see 5-9 Final Folder - Set Pull-down Device Lower Turning Position.

b) Crank the final folder to approximately 310°.

c) Centre the pusher (2) in relation to the flaps (1) by means of the screws (3).

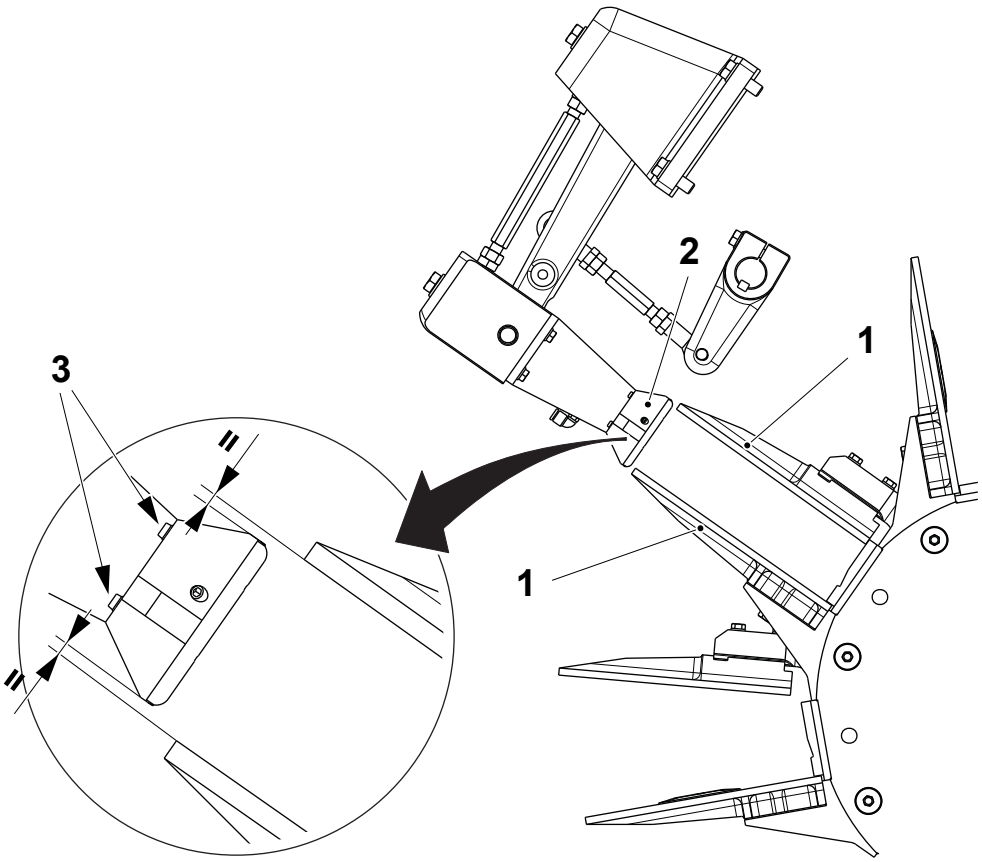

1 Flap
2 Pusher
3 Screw

(Cont'd)

TechPub_2614345_0106 - 05_MM2819200_04en.fm

(Cont'd)

d) Remove the screw (4) by means of the nut (5).

e) Remove the screw (6) and loosen the screws (7).

f) Shift sideways the lever (8) and centre the pusher (2) (distance **A**), transversely in relation to the flaps (1) by adding or removing the shims (9).

g) Assemble in the reverse order.

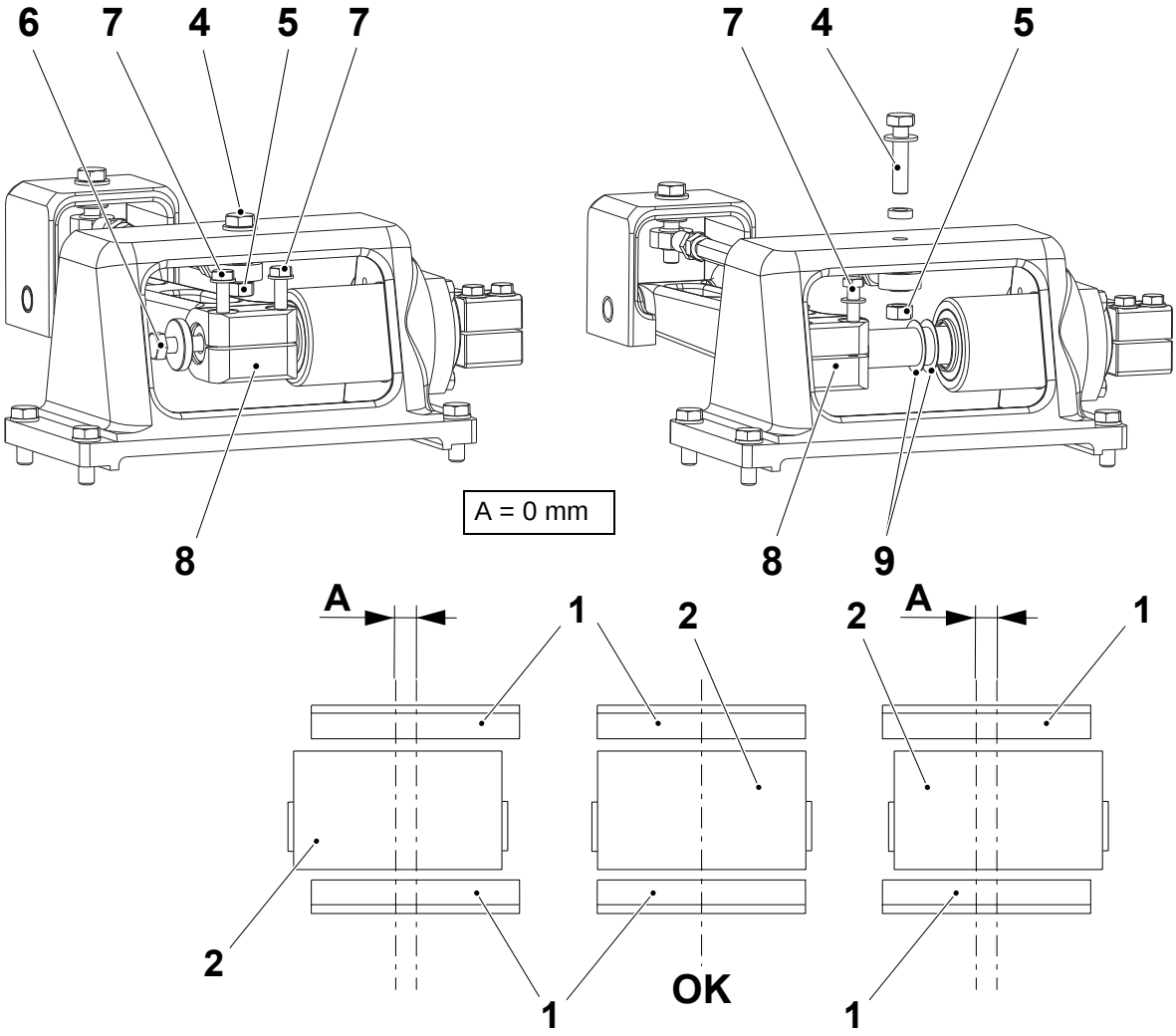

1 Flap
2 Pusher
4 Screw
5 Nut
6 Screw
7 Screw
8 Lever
9 Shim

TechPub_2614345_0106 - 05_MM2819200_04en.fm

5-9 Final Folder - Set Pull-down Device Lower Turning Position

Machine Status	Mains Power OFF Air OFF Steam ON Water OFF
SPC Reference	2769842-0100

a) Crank the final folder to approximately 310°.

Package	**A ±5.0 (mm)**
TBA 500 B	87.0
TBA 1000 B	165.0
TBA 1000 S	194.0
TBA 500 Sq	208.0
TBA 1000 Sq	208.0
TPA 1000 Sq	234.0
TPA 750 Sq	177.0
TBA 1500 S	247.0
TBA 2000 S	240.0

(Cont'd)

TechPub_2614345_0106 - 05_MM2819200_04en.fm

(Cont'd)

b) Set the distance **A** between the surface of the pusher (1) and the bottom plate (2) by adjusting the tie rod (3), see the table on the previous page.

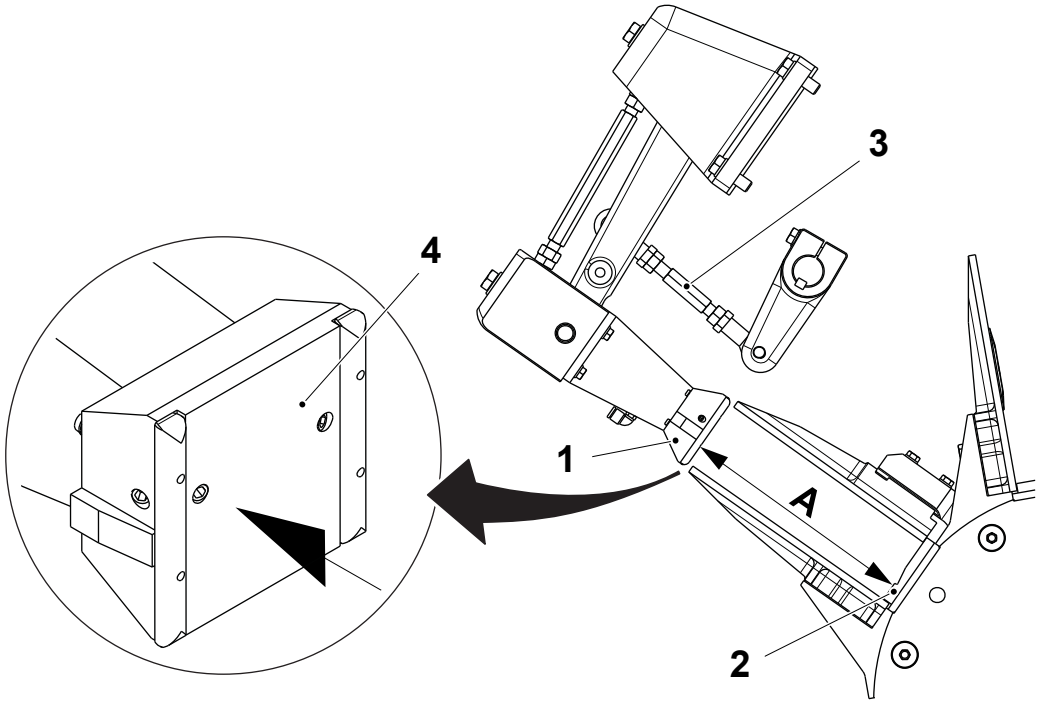

1 Pusher
2 Bottom plate
3 Tie rod
4 Pusher surface

TechPub_2614345_0106 - 05_MM2819200_04en.fm

5-10 Final Folder - Set Top Section

Machine Status	Mains Power OFF Air OFF Steam ON Water OFF
SPC Reference	2861926-0100

a) Crank the final folder to approximately 310°.

b) Set the pusher in the pull down device, see 5-8 Final Folder - Set Pull-down Device Position.

(Cont'd)

TechPub_2614345_0106 - 05_MM2819200_04en.fm

(Cont'd)

c) Set the distance **C** by means of the screws (2).

d) Set the distance **A** by means of the screws (1).

e) Set the distance **B** by means of the screws (3).

Package	A ±0.5 (mm)	B ±1.0 (mm)	C ±1.0 (mm)
TBA 500 B	4.0	36.0	3.0
TBA 1000 B	4.0	36.0	3.0
TBA 1000 S	4.0	36.0	3.0
TBA 500 Sq	4.0	36.0	3.0
TBA 1000 Sq	4.0	36.0	3.0
TPA 750 Sq	7.0	32.0	15.0
TPA 1000 Sq	7.0	32.0	15.0
TBA 1500 S	6.0	35.0	2.5
TBA 2000 S	5.0	35.0	3.0

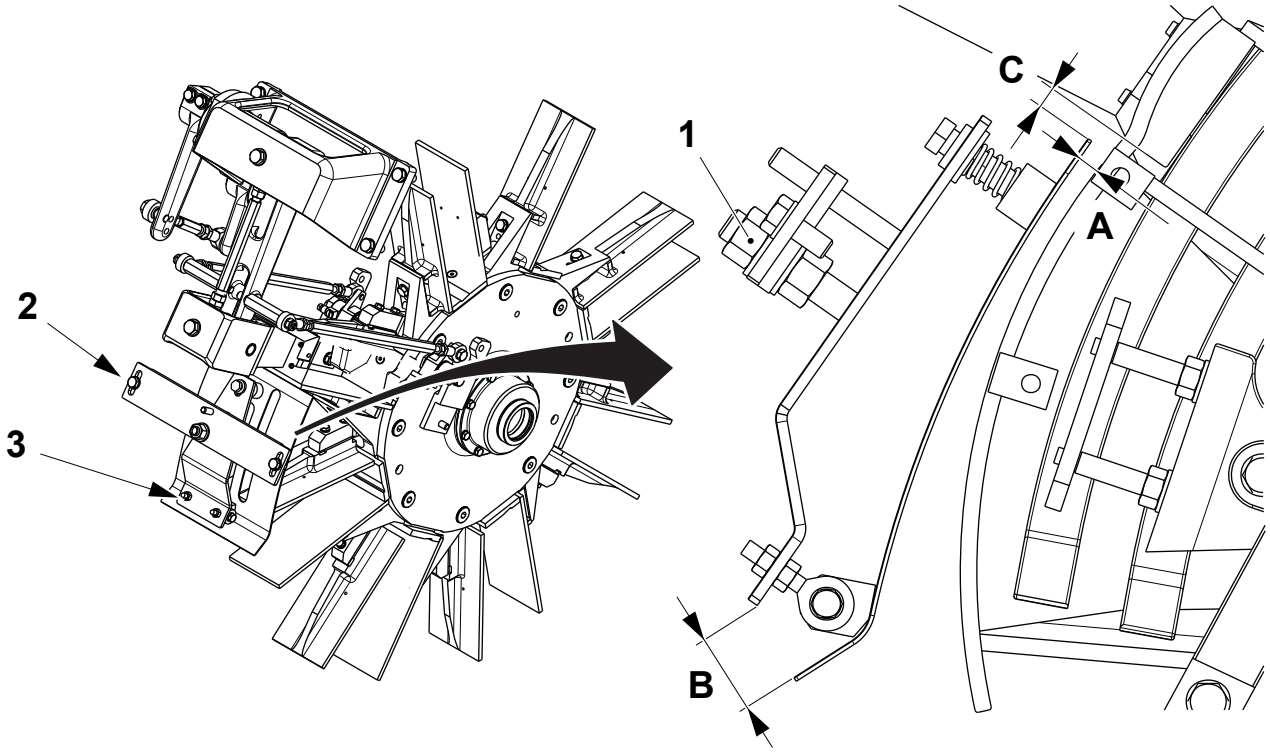

1 Screw
2 Screw
3 Screw

(Cont'd)

TechPub_2614345_0106 - 05_MM2819200_04en.fm

5-11 Final Folder - Set Top Rail

Machine Status	Mains Power OFF Air OFF Steam ON Water OFF
SPC Reference	2818115-0100

WARNING

Risk of burns.

The nozzles and other parts nearby may be hot. Wear personal protective equipment.

Package	**A ±0.5 (mm)**
TBA 500 B	5.5
TBA 1000 B	5.5
TBA 1000 S	5.0
TBA 500 Sq	5.0
TBA 1000 Sq	5.0
TPA 750 Sq	7.0
TPA 1000 Sq	7.0
TBA 1500 S	-
TBA 2000 S	10.0

(Cont'd)

TechPub_2614345_0106 - 05_MM2819200_04en.fm

(Cont'd)

Set the distance **A** between the cooling bars (1) and the edge of the bracket (2) by means of the screws (3), see the table on the previous page.

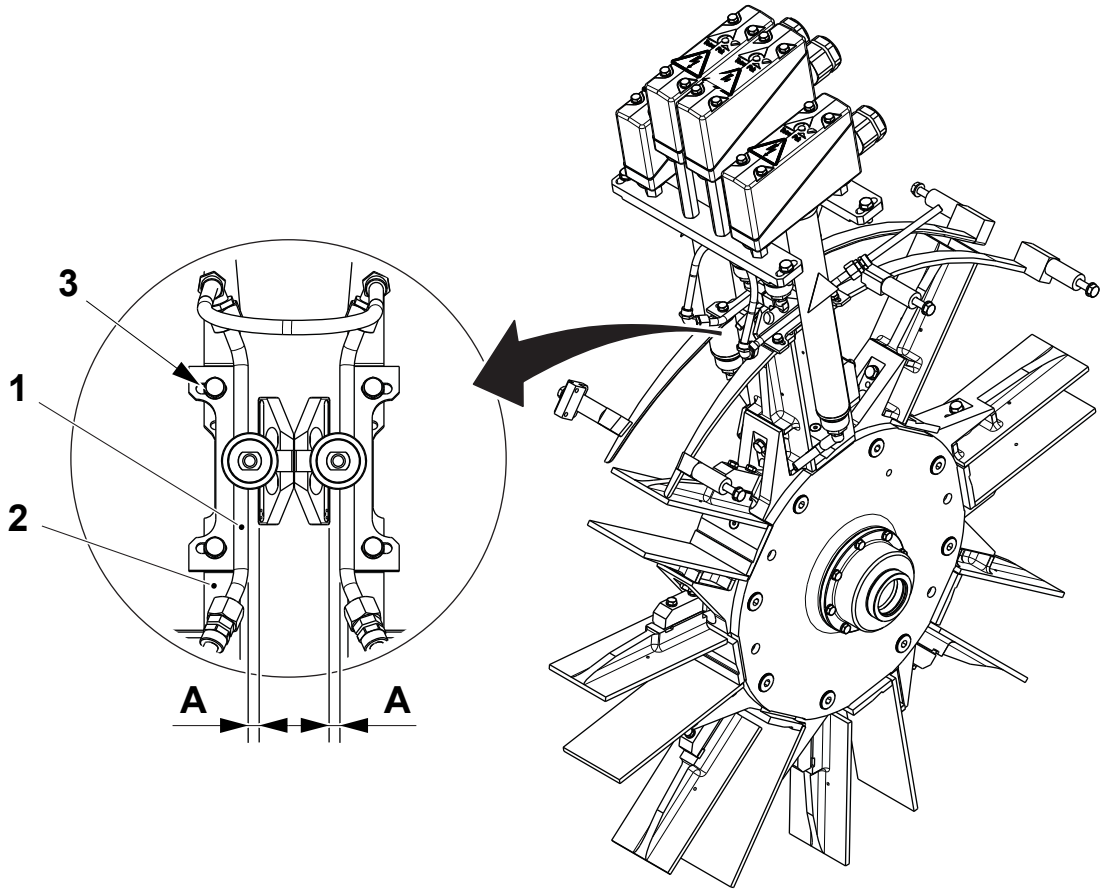

1 Heater nozzle
2 Folding bar
3 Screw

TechPub_2614345_0106 - 05_MM2819200_04en.fm

5-12 Final Folder - Set Flap Heater Nozzles

Machine Status	Mains Power OFF Air OFF Steam ON Water OFF
SPC Reference	2876462-0100

WARNING

Risk of burns.

The nozzles and other parts nearby may be hot. Wear personal protective equipment.

Loosen the nuts (1) and centre the upper nozzles (1) in relation to the flap.

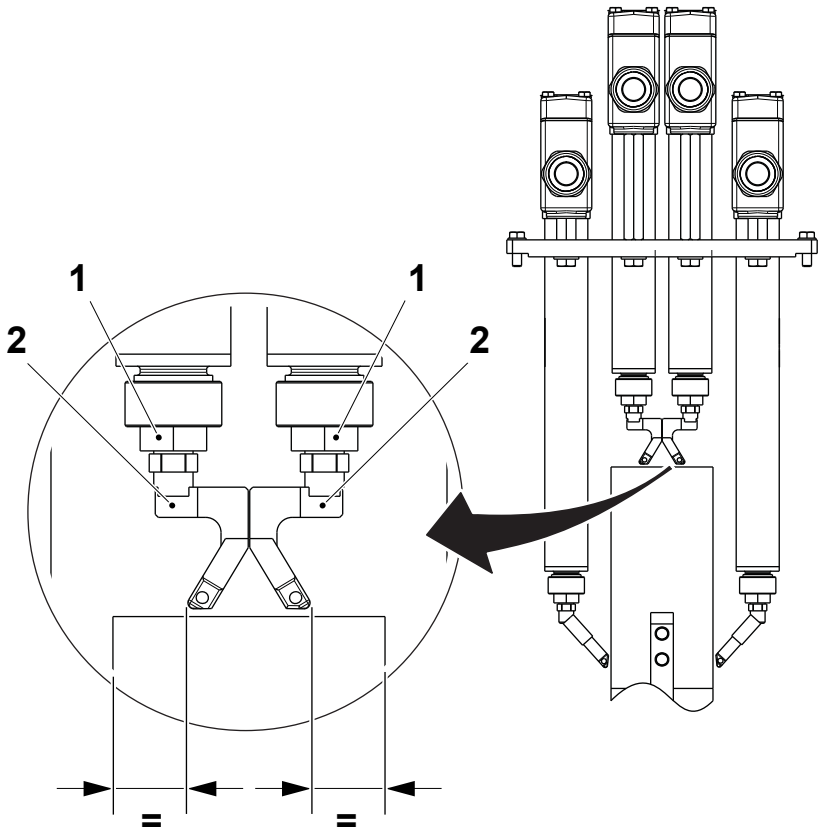

1 Nut
2 Upper nozzle

(Cont'd)

TechPub_2614345_0106 - 05_MM2819200_04en.fm

(Cont'd)

Loosen the nuts (3) and set the distance **A** on both the lower nozzles (4).

Package	**A ±0.5 (mm)**
TBA 500 B	4.0
TBA 1000 B	4.0
TBA 1000 S	4.0
TBA 500 Sq	5.0
TBA 1000 Sq	5.0
TPA 750 Sq	6.0
TPA 1000 Sq	6.0
TBA 1500 S	4.5
TBA 2000 S	3.0

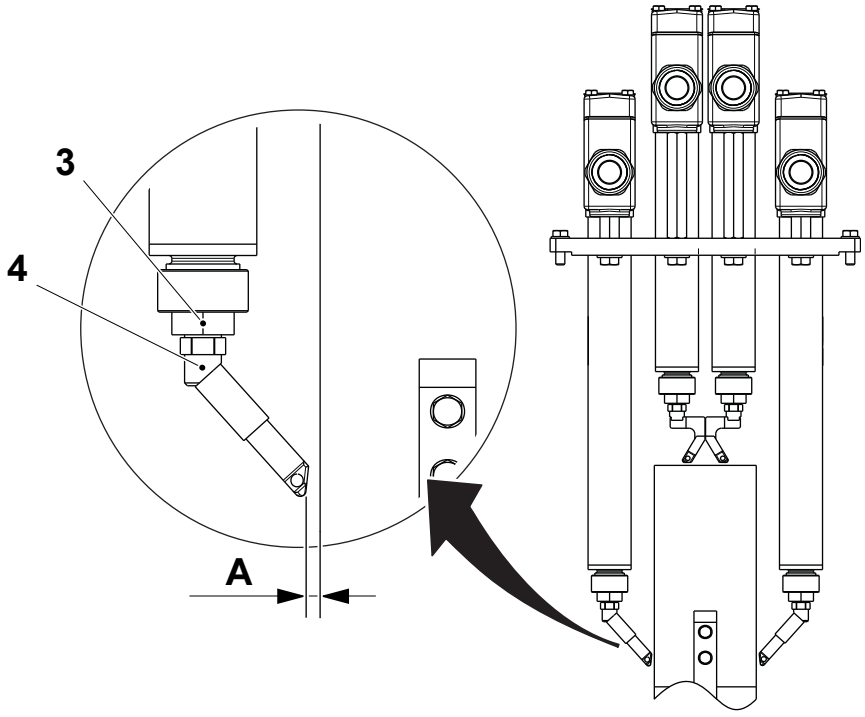

3 Nut
4 Lower nozzle

(Cont'd)

TechPub_2614345_0106 - 05_MM2819200_04en.fm

(Cont'd)

The following procedure describes how to adjust the temperature of the individual nozzles for flap sealing.

Note! The flap heater temperature is a parameter set in the recipe and depends and the packaging material being used in production. This procedure must be performed after analysis of the sealing and then saved to the package recipe via the TPOP.

a) Touch the PRODUCTION CONTROL button (5) on the TPOP.

b) Touch the FINAL FOLDER button (6).

c) In the FINAL FOLDER window, touch the TEMPERATURE icon (7).

d) Touch one of the four regulator panels:
   - the LOWER LH NOZZLE icon (8)
   - the LOWER RH NOZZLE icon (9)
   - the UPPER LH NOZZLE icon (10)
   - the UPPER LH NOZZLE icon (11).

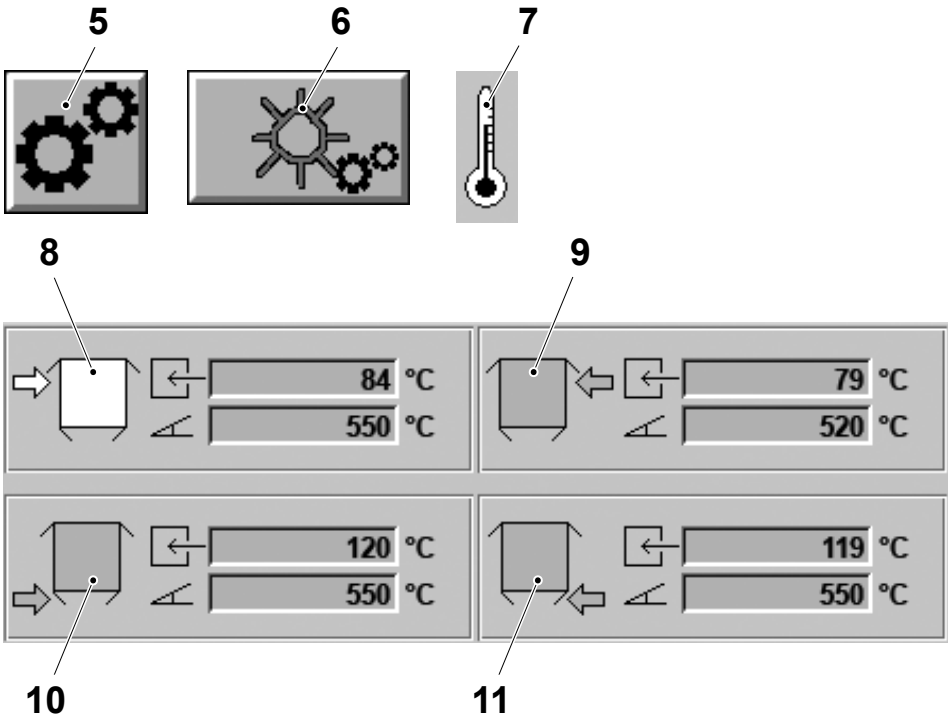

5 Setting system button
6 Final folder button
7 Temperature icon
8 Lower LH nozzle icon
9 Lower RH nozzle icon
10 Upper LH nozzle icon
11 Upper RH nozzle icon

(Cont'd)

TechPub_2614345_0106 - 05_MM2819200_04en.fm

(Cont'd)

Note! Touching the FACTORY button (14), resets the nozzle setting to the default value.

e) Use the ARROW buttons (12) to adjust the temperature setting.

f) Press the EXIT button (13).

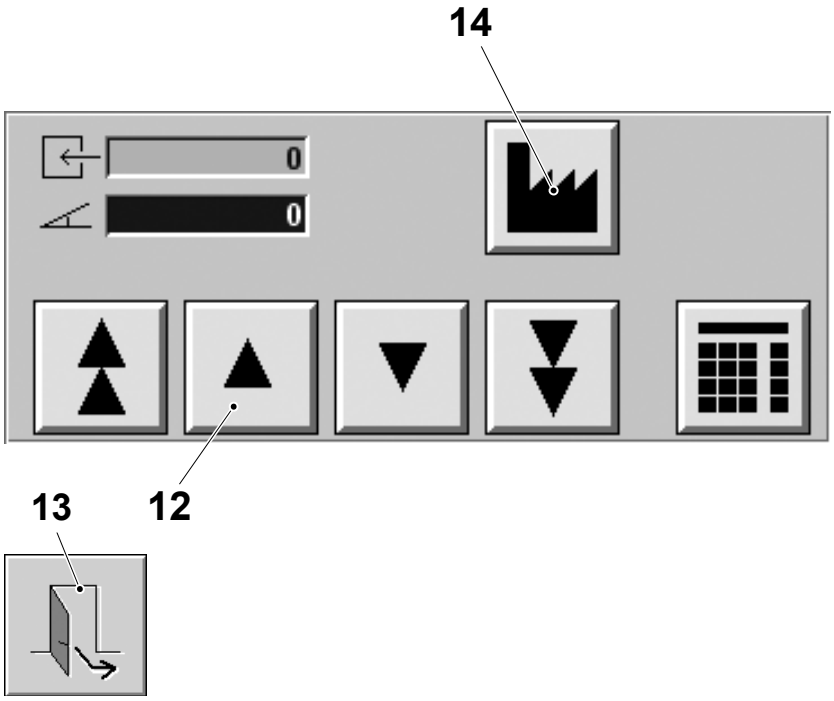

12 Arrow button
13 Exit button
14 Factory button

TechPub_2614345_0106 - 05_MM2819200_04en.fm

5 Final Folder

6-13 Final Folder - Set Folding Part

Machine Status	Mains Power OFF Air OFF Steam ON Water OFF
SPC Reference	2543480-0100

Note! The following procedure is only valid for the packages listed in the table for Distance A. For packages not listed, continue with 5-14 Final Folder - Set Pressure Device Lower Turning Position on page 5-40.

Distance A

Package	A ±0.5 (mm)
TBA 500 B	268.7
TBA 1000 B	347.0
TBA 500 Sq	282.0
TBA 1000 Sq	379.0
TPA 1000 Sq	351.0
TPA 750 Sq	296.0

(Cont'd)

TechPub_2614345_0106 - 05_MM2819200_04en.fm

(Cont'd)

a) On both sides of the final folder, set the distance **A** between the cooling rail (1) and the mounting plate (2) of the flap heaters, see the table on the previous page.

b) Loosen the screws (3) on the reference bracket (4) and the screws (5) on the bracket (6).

c) Adjust the position of the bracket (6) to set the distance **A** and tighten the screws (5).

d) Move the reference bracket (4) accordingly and tighten the screws (3).

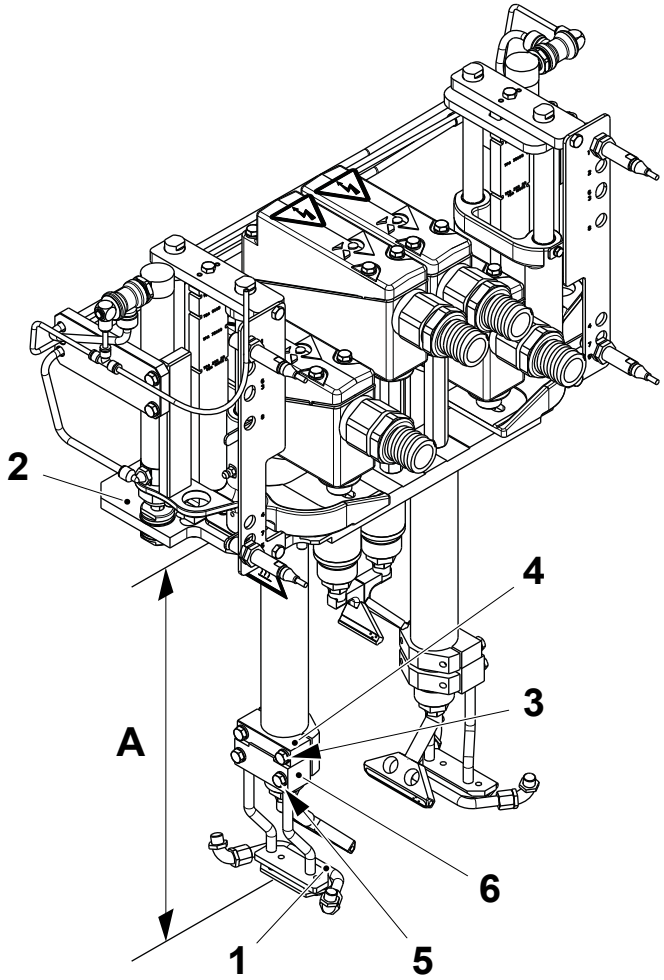

1 Cooling rail
2 Mounting plate
3 Screw
4 Bracket
5 Screw
6 Bracket

TechPub_2614345_0106 - 05_MM2819200_04en.fm

5-14 Final Folder - Set Pressure Device Lower Turning Position

Machine Status	Mains Power OFF Air OFF Steam ON Water OFF
SPC Reference	2857893-0100

Note! For TBA 500 Sq and TBA 100 Sq only, crank the final folder to 280°. For all other volumes crank the final folder to 250°.

a) Crank the final folder to 250°.

b) Loosen the tension on the belt (1) and remove the belt from the toothed pulley (2).

c) Turn the toothed pulley (2) until the plate (3) is in the lowest position.

d) Install and set the belt (1), see 5.10-3 Pressure Device - Set Belt.

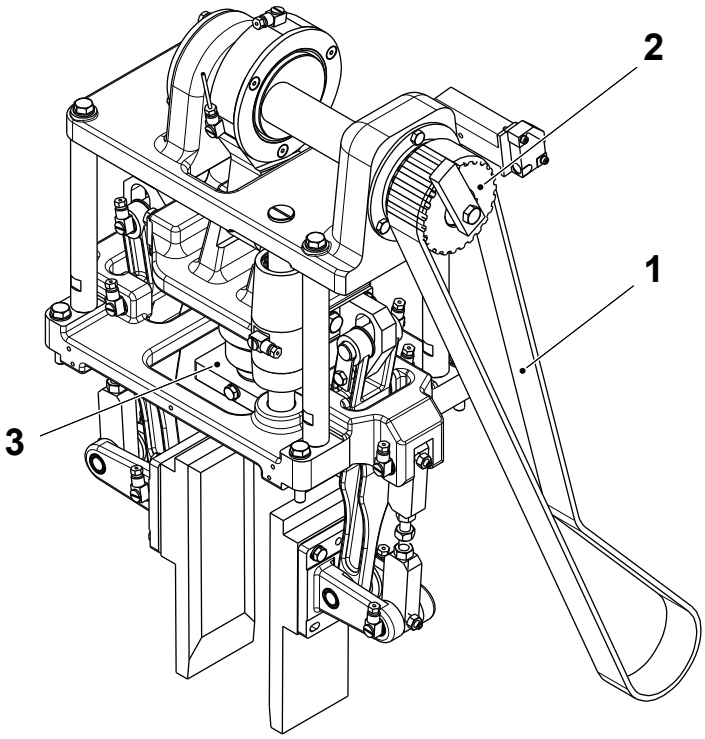

1 Belt
2 Toothed pulley
3 Plate

TechPub_2614345_0106 - 05_MM2819200_04en.fm

5-15 Final Folder - Set Pressure Device Pushers

Machine Status	Mains Power OFF Air OFF Steam ON Water OFF
SPC Reference	2857893-0100

Note! For TBA 500 Sq and TBA 100 Sq only, crank the final folder to 280°. For all other volumes crank the final folder to 250°.

Note! For TBA 1000 Sq and TBA 500 Sq disregard items b) to d) and perform only items e) to g).

a) Crank the final folder to approximately 250°.

b) Set the pushers (1) parallel to the flaps (2) by means of the adjusting screws (3).

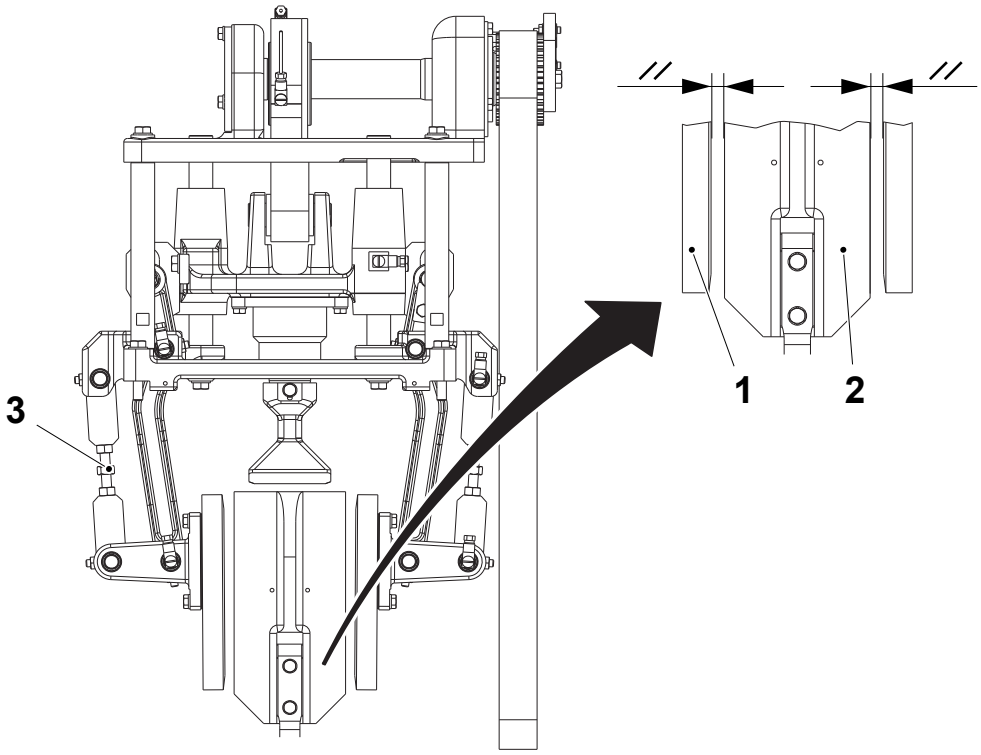

1 Pusher
2 Flap
3 Adjusting screw

(Cont'd)

TechPub_2614345_0106 - 05_MM2819200_04en.fm

(Cont'd)

c) Pull the pusher levers (4) outwards and check the distance **A** between the pushers (1) and the flaps (2).

d) If necessary, set the distance **A** using the shims (5) underneath the pushers (2).

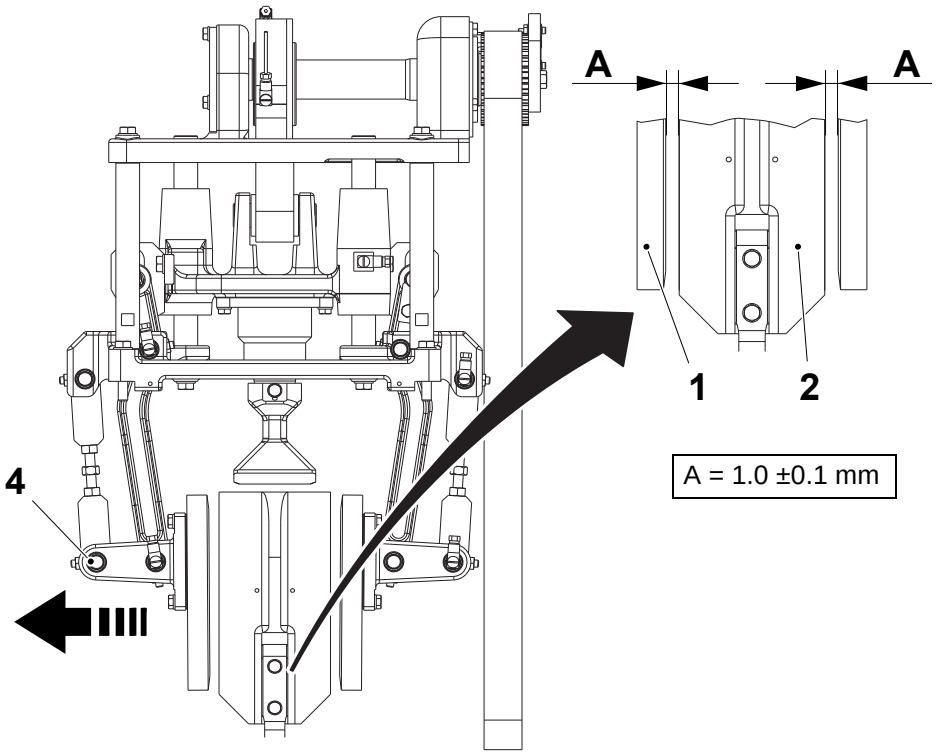

1 Pusher
2 Flap
4 Lever
5 Shim

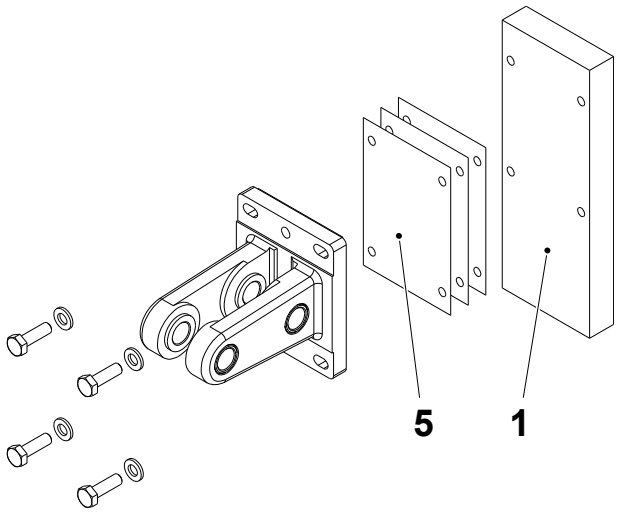

(Cont'd)

TechPub_2614345_0106 - 05_MM2819200_04en.fm

5 Final Folder

(Cont'd)

Note! Items e) to f). are valid for TBA 1000 Sq and TBA 500 Sq only.

e) Set the internal package pressure according to 5.10-9 Pressure Device - Check Package Pressure.

f) Set the distances **A** and **B** between the pushers (1) and the flaps (2) by means of the adjusting screws (3).

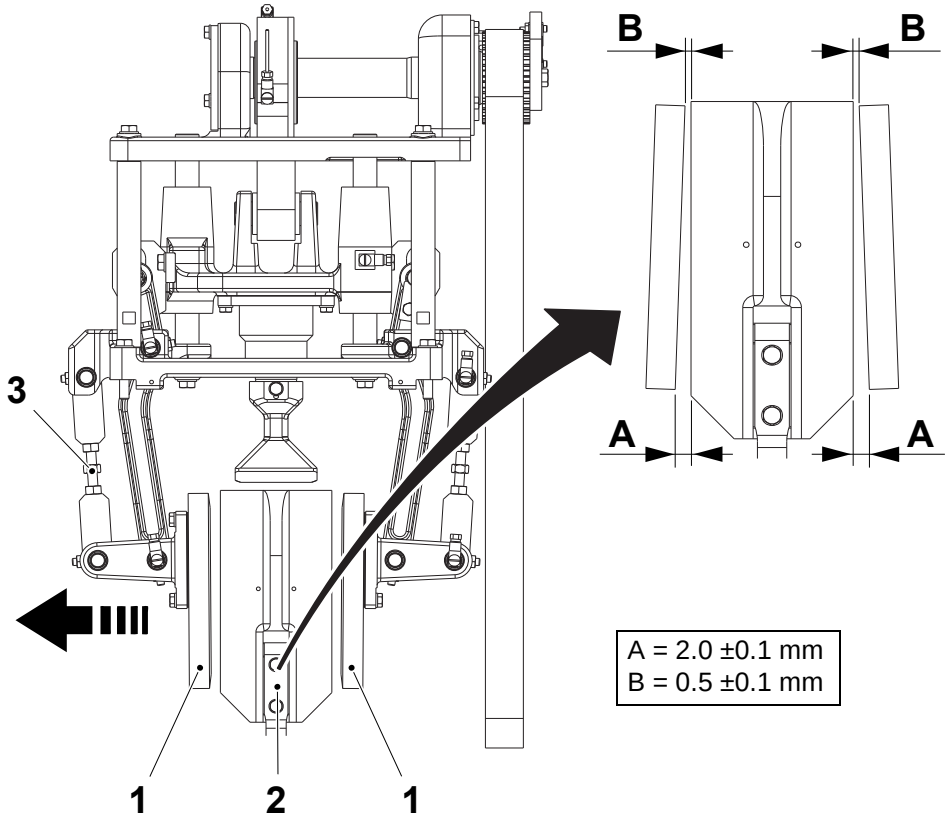

1 Pusher
2 Flap
3 Adjusting screw

(Cont'd)

TechPub_2614345_0106 - 05_MM2819200_04en.fm

(Cont'd)

g) Set the pushers (1) centred to the flaps (2) by means of the screws (6).

Note! Do not perform the following item for TBA 1000 Sq and TBA 500 Sq.

h) Set the internal package pressure according to 5.10-9 Pressure Device - Check Package Pressure.

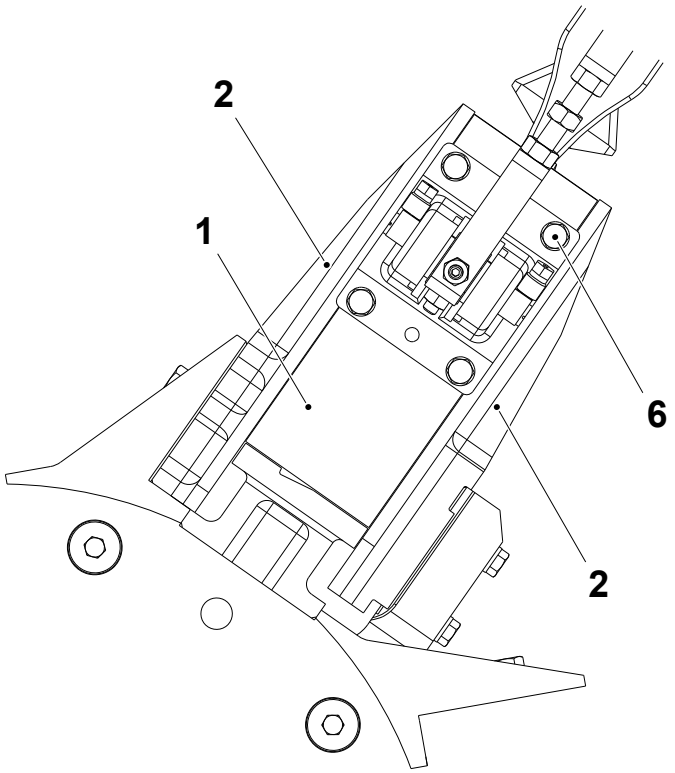

1 Pusher
2 Flap
4 Screw

TechPub_2614345_0106 - 05_MM2819200_04en.fm

5-16 Final Folder - Synchronise Overload Switches

Machine Status	Mains Power ON Air OFF Steam ON Water OFF
SPC Reference	648552-0200

a) Crank the final folder until the overload inductive switch (1) is centred on one of the screws (2) of the wheel (3).

b) Loosen the screw (4) on the pressure device.

c) Rotate the activator (5) until it is aligned with the mark (6) on the overload inductive switch (7).

d) Tighten the screw (4) on the pressure device.

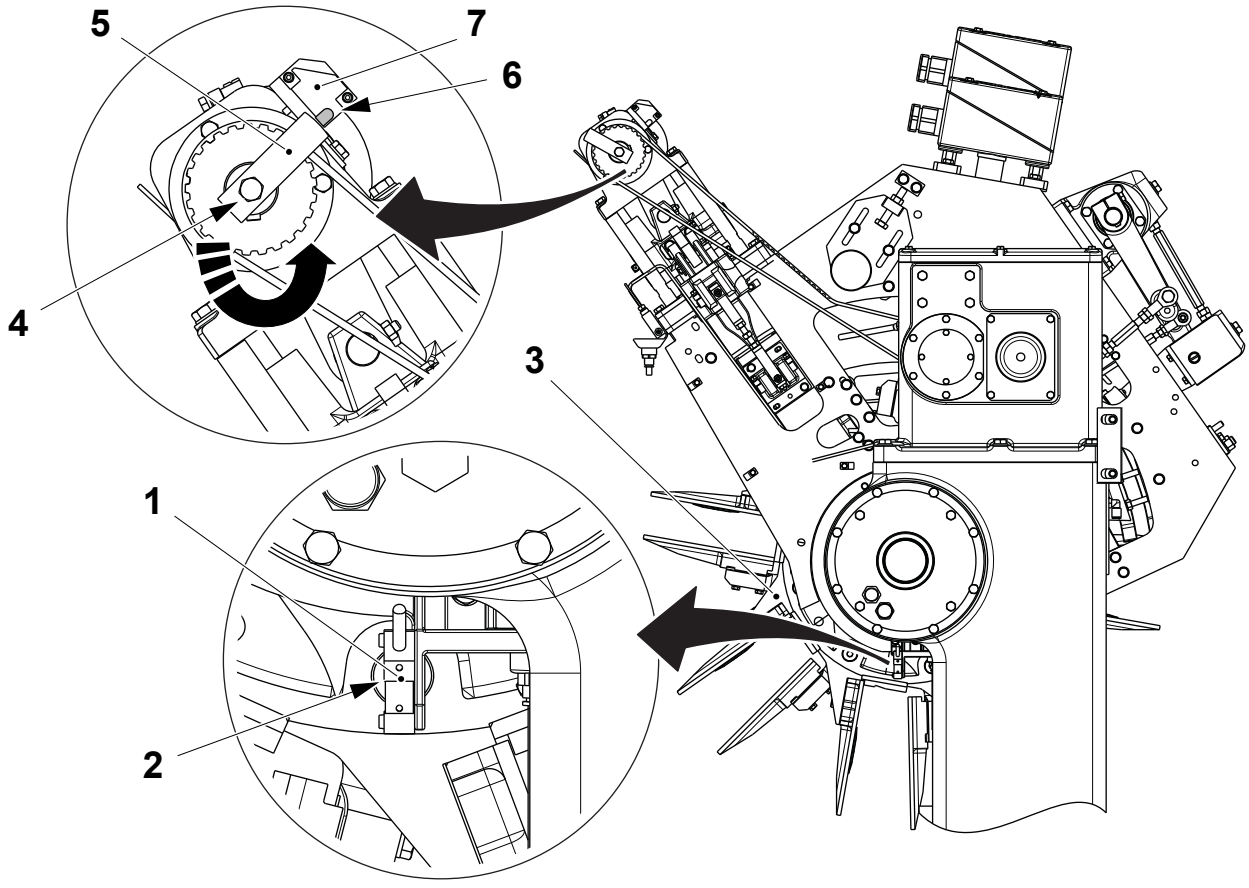

1 Inductive switch
2 Screw
3 Wheel
4 Screw
5 Activator
6 Mark
7 Inductive switch

(Cont'd)

TechPub_2614345_0106 - 05_MM2819200_04en.fm

(Cont'd)

e) On the infeed conveyor (8), loosen the screw (9) and rotate the activator (10) until it is aligned with the mark (11) on the overload inductive switch (12).

f) Tighten the screw (9).

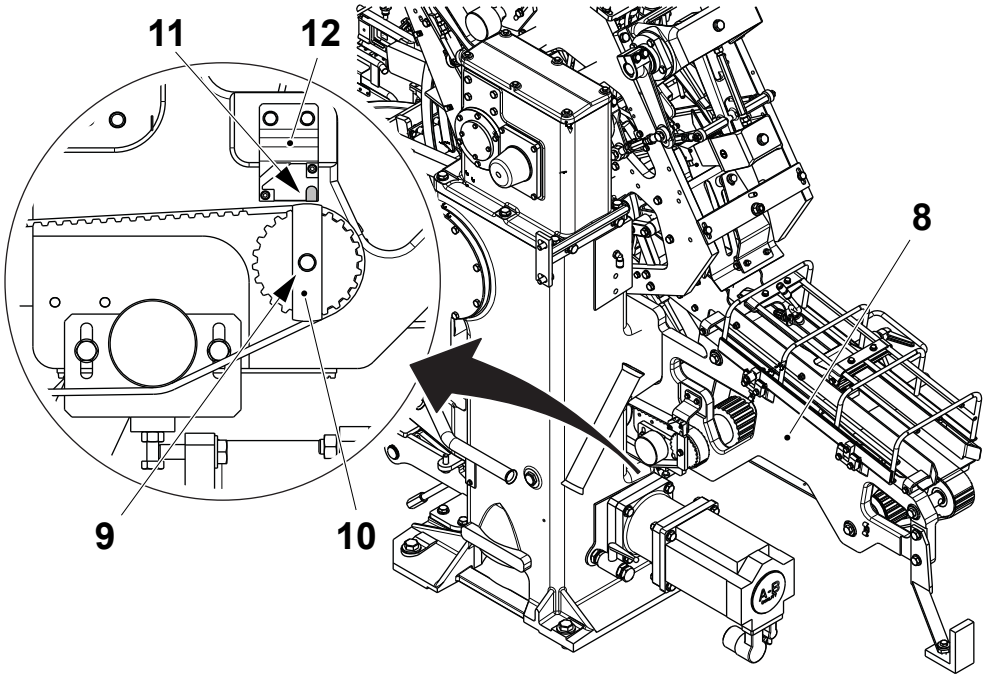

8 Infeed conveyor
9 Screw
10 Activator
11 Mark
12 Inductive switch

TechPub_2614345_0106 - 05_MM2819200_04en.fm

5-17 Final Folder - Set Package Outfeed Counting Photocells

Machine Status	Mains Power ON Air OFF Steam ON Water OFF
SPC Reference	648552-0200

a) The photocells are composed of one transmitter (1) and one receiver (2) and they must be positioned in front of each other.

b) Open the cover (3) on the receiver photocell (2).

c) Make sure that the receiver photocell (2) is set to PNP (positive logic) and L-ON (the signal will be sent when NO object is detected between the photocells), see figure below.

d) Check the transmitter (1) and the receiver (2) photocells position, see figure below.

e) Begin without any object to be detected. Turn the sensitivity potentiometer (4) anti-clockwise (toward min.) and then clockwise until both the green LED (5) and the red LED (6) light up. To secure the setting turn clockwise the sensitivity potentiometer (4) just a little bit more.

f) Place the package to be detected between the photocells. Check that the green LED (5) comes on and the red LED (6) light goes off.

g) Close the cover (3) on the receiver photocell (2).

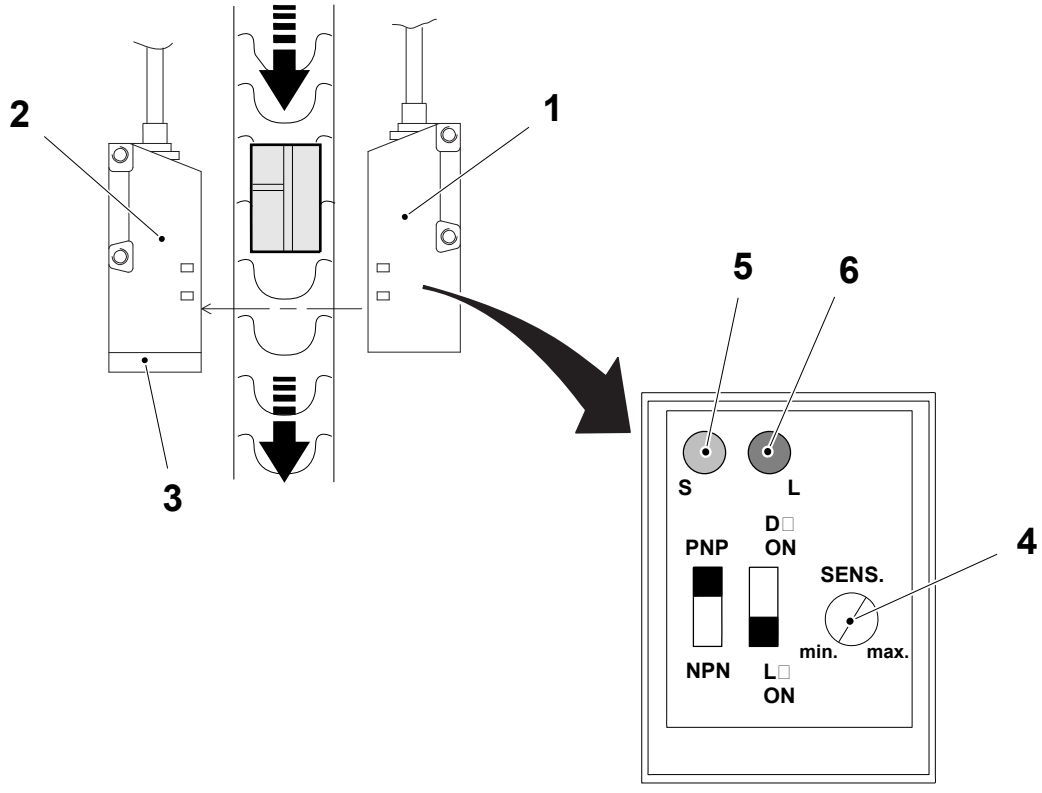

1 Transmitter
2 Receiver
3 Cover
4 Potentiometer
5 Green LED
6 Red LED

TechPub_2614345_0106 - 05_MM2819200_04en.fm

5-18 Final Folder - Set External Conveyor Motor Speed

Machine Status	Mains Power ON Air OFF Steam ON Water OFF
SPC Reference	648552-0200

a) On the TPOP display touch the PRODUCTION CONTROL button (1).

b) Touch the FINAL FOLDER button (2).

c) Touch the EXTERNAL CONVEYOR MOTOR SPEED icon (3).

d) Set the external conveyor motor speed by means of the ARROW buttons (4).

e) Touch the EXIT button (5).

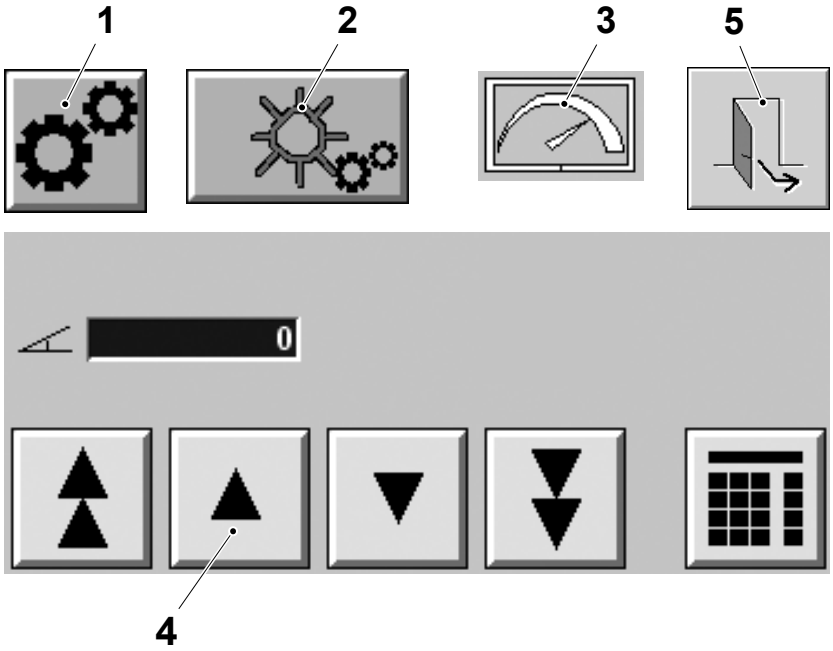

1 Setting system button
2 Final folder button
3 External conveyor motor speed icon
4 Arrow button
5 Exit button

TechPub_2614345_0106 - 05_MM2819200_04en.fm

5.1 Drop Chute

SPC Reference	2876472-0100 1361922-0200 2537128-0100

5.1-1 Drop Chute - Check

Machine Status	PREPARATION
SPC Reference	2876472-0100 1361922-0200 2537128-0100

a) Close completely the screws (1) and (2), on the drop chute cylinder (3) then open the screws (1) and (2) one turn.

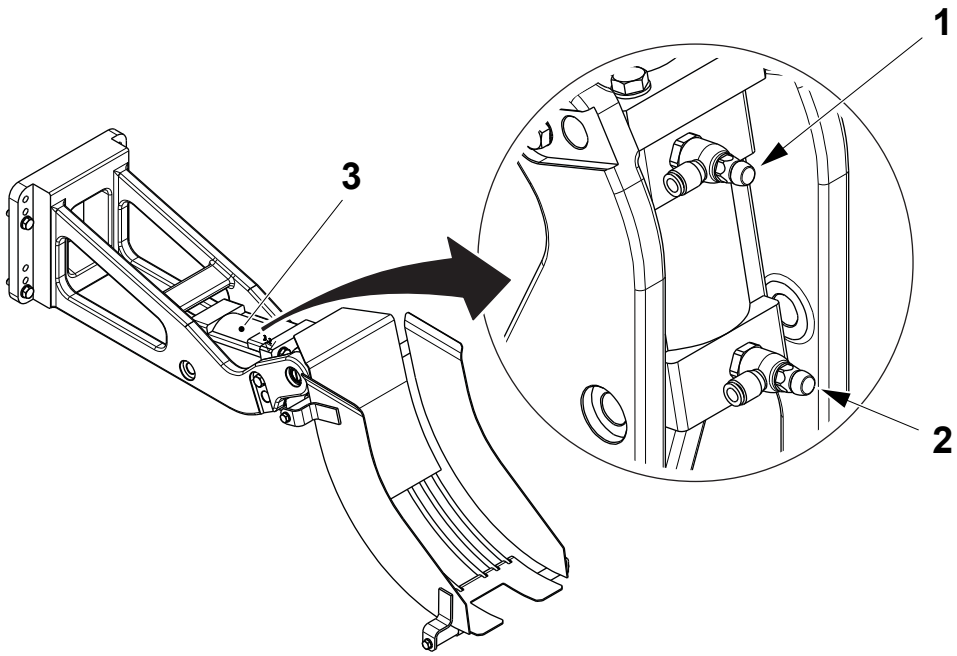

1 Screw
2 Screw
3 Drop chute cylinder

(Cont'd)

TechPub_2614345_0106 - 05_MM2819200_04en.fm

(Cont'd)

Note! This procedure must be performed with the jaw system doors closed.

b) Push the PACKAGE EJECTOR button (4) and check that the drop chute (5) moves in a controlled and satisfactory manner, the movement should be smooth and precise.

c) Adjust the drop chute movement by means of the screws (1) and (2) until the drop chute (5) moves quickly but smoothly.

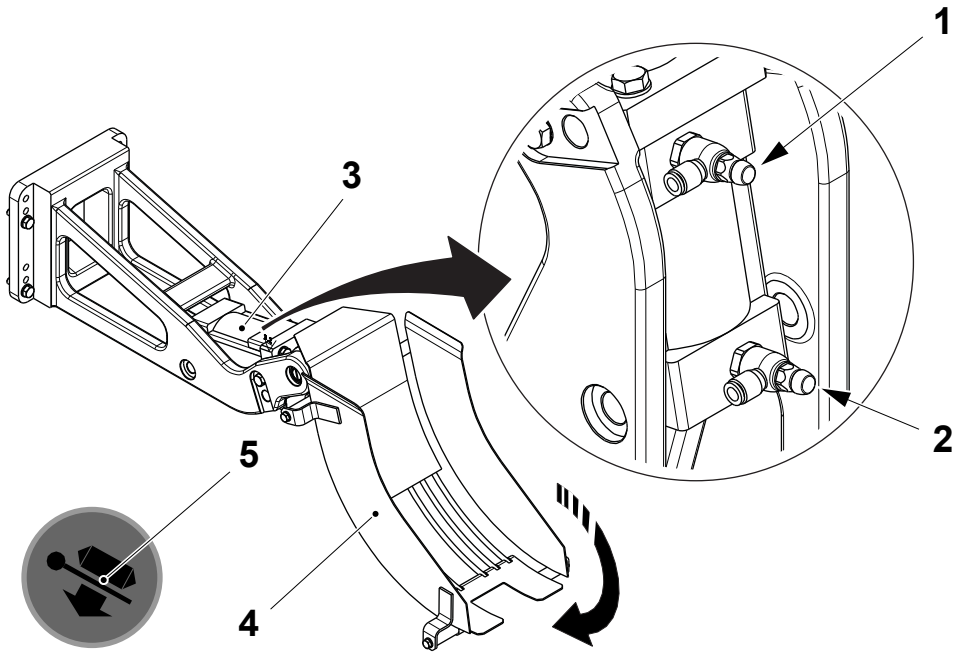

4 Screw
5 Screw
4 Package ejector button
5 Drop chute

TechPub_2614345_0106 - 05_MM2819200_04en.fm

5.1-2 Drop Chute - Set

Machine Status	Mains Power OFF Air OFF Steam ON Water OFF
SPC Reference	2876472-0100 1361922-0200 2537128-0100

Follow the procedures described in 5-4 Final Folder - Set Drop Chute Position.

TechPub_2614345_0106 - 05_MM2819200_04en.fm

5.2 Infeed Conveyor

SPC Reference	1517298-0300 1361923-0200 2931389-0100

5.2-1 Infeed Conveyor - Synchronisation

SPC Reference	1517298-0300 1361923-0200 2931389-0100

Follow the procedures described in 5-5 Final Folder - Synchronise Infeed Conveyor.

TechPub_2614345_0106 - 05_MM2819200_04en.fm

5.2-2 Infeed Conveyor - Set Belts

Machine Status	Mains Power OFF Air OFF Steam ON Water OFF
Special Equipment	Dynamometer TP No. 74767-102
SPC Reference	1517298-0300 1361923-0200 2931389-0100

Note! Make sure that the wedge (1) on the toothed belt (2) is positioned on the chamber tooth (3). Always measure the belt tension using a dynamometer.

a) Loosen the screw (4) and set the belt (2) tension to 50 N with a deflection of 4 mm, by rotating the roller (5).

b) Tighten the screw (4).

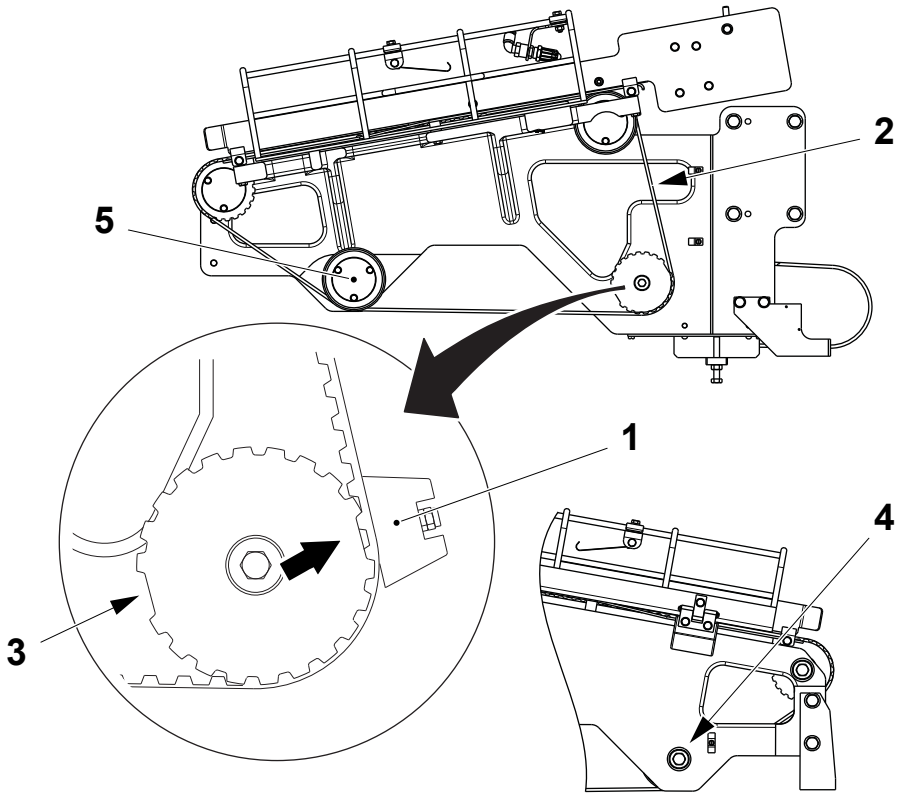

1 Wedge
2 Belt
3 Chamber tooth
4 Screw
5 Roller

(Cont'd)

TechPub_2614345_0106 - 05_MM2819200_04en.fm

(Cont'd)

c) Loosen the two screws (6) and unlock the screw (7).

d) Use the screw (7) to set the belt (8) tension to 30 N with a deflection of 4 mm.

e) Lock the screw (7) and tighten the screws (6).

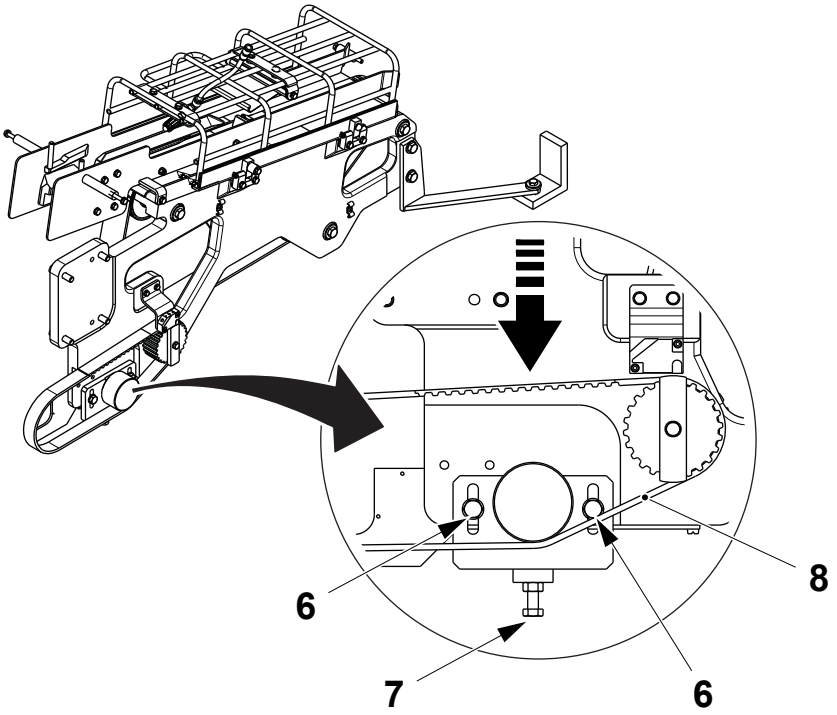

6 Screw
7 Screw
8 Belt

TechPub_2614345_0106 - 05_MM2819200_04en.fm

5.2-3 Infeed Conveyor - Check Belts

Machine Status	Mains Power OFF Air OFF Steam ON Water OFF
SPC Reference	1517298-0300 1361923-0200 2931389-0100

Check the belts (1) and (2) for visible wear or damage.

Change the belts (1) and (2) if necessary, see 5.2-4 Infeed Conveyor - Change Belts.

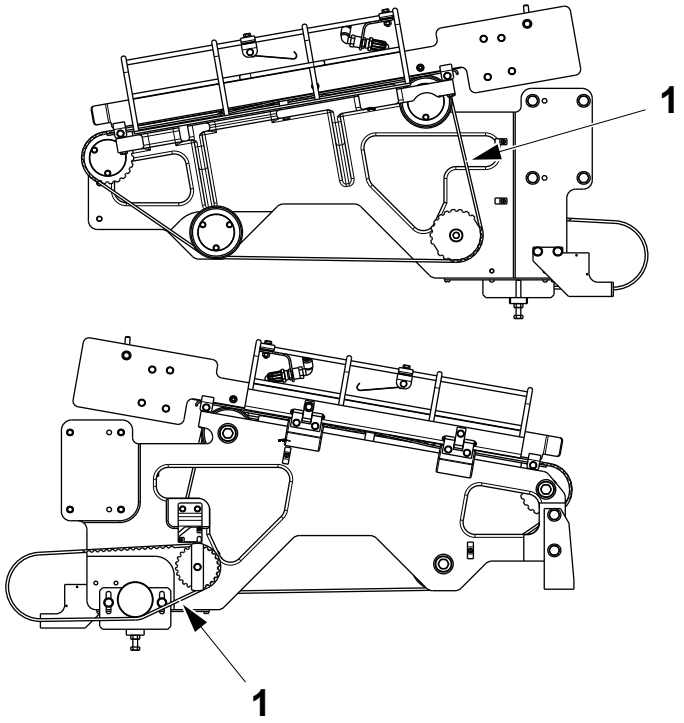

1 Belt
2 Belt

TechPub_2614345_0106 - 05_MM2819200_04en.fm

5.2-4 Infeed Conveyor - Change Belts

Machine Status	Mains Power OFF Air OFF Steam ON Water OFF
SPC Reference	1517298-0300 1361923-0200 2931389-0100

a) Loosen the screws (1) on the moving plate (2).

b) Loosen the rollers (3) tension by means of the moving plate (2).

c) Remove and change the belt (4).

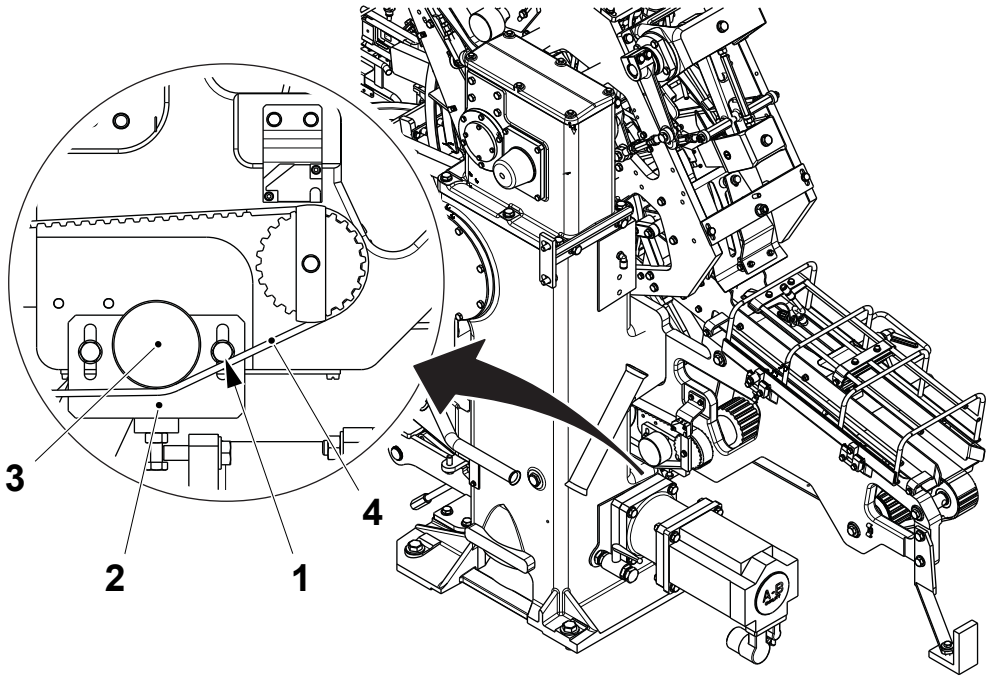

1 Screw
2 Moving plate
3 Roller
4 Belt

(Cont'd)

TechPub_2614345_0106 - 05_MM2819200_04en.fm

(Cont'd)

d) Loosen the roller (5) tension by means of the eccentric underneath.
e) Remove the screws (6) and the plate (7).
f) Remove and change the belt (8).
g) Assemble in the reverse order.
h) Set the tension of the belts, see 5.2-2 Infeed Conveyor - Set Belts.
i) Set the infeed conveyor, see 5.2-1 Infeed Conveyor - Synchronisation.

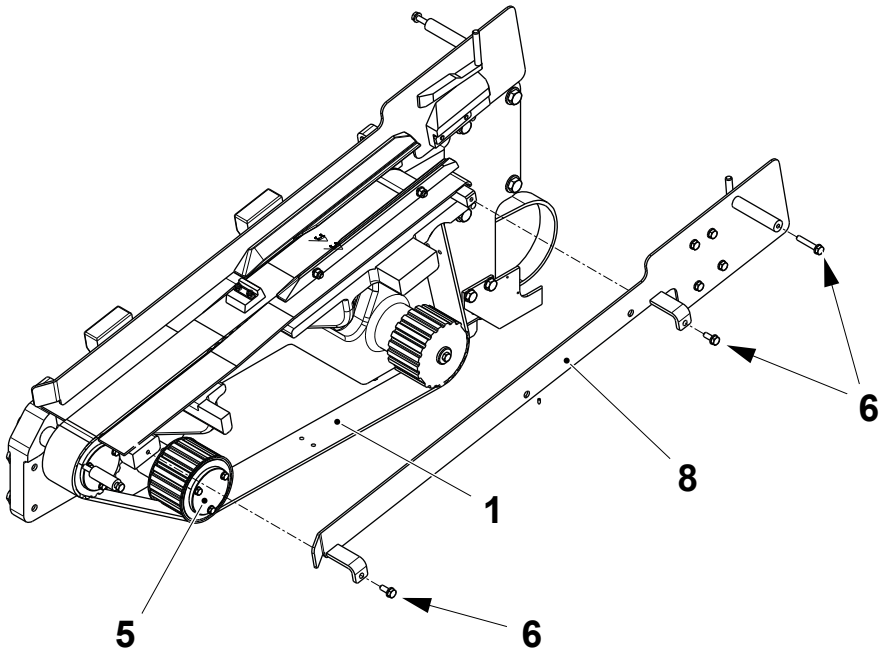

5 Roller
6 Screw
7 Plate
8 Belt

TechPub_2614345_0106 - 05_MM2819200_04en.fm

5.2-5 Infeed Conveyor - Overhaul

Machine Status	Mains Power OFF Air OFF Steam ON Water OFF
Consumables	Silicon Grease Code F
SPC Reference	1517298-0300 1361923-0200 2931389-0100

a) Remove the three screws (1), the washers (2) and the cover (3).

b) Remove the screw (4) and the washer (5) and pull out the toothed pulley (6).

c) Remove and change the O-ring (7), the ball bearings (8) and (9), the spacer (10) and the seal ring (11).

Note! Apply a layer of silicon grease (code F, see 10.3-1 Lubricants) to the seal ring (11) on assembly.

1 Screw
2 Washer
3 Cover
4 Screw
5 Washer
6 Toothed pulley
7 O-ring
8 Ball bearing
9 Ball bearing
10 Spacer
11 Seal ring

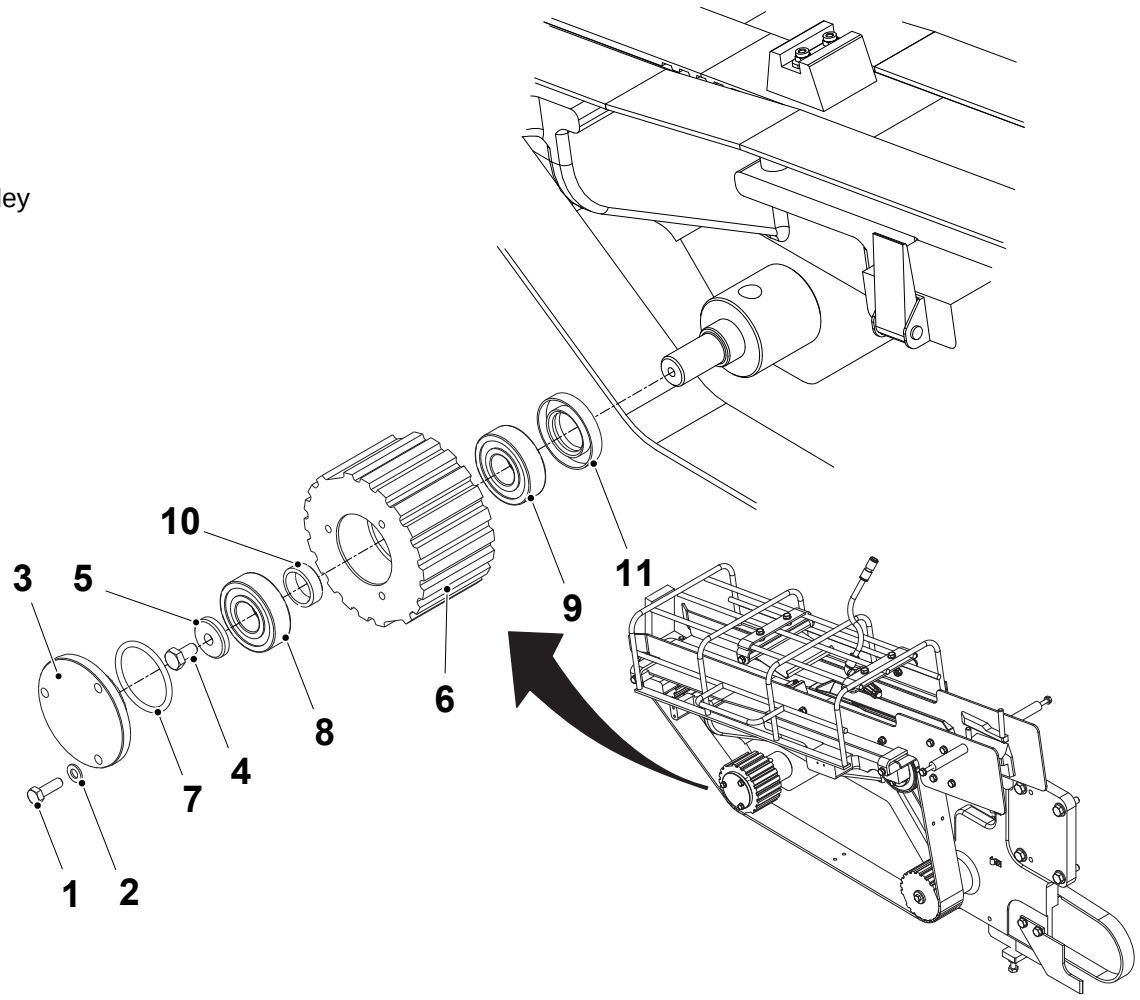

(Cont'd)

TechPub_2614345_0106 - 05_MM2819200_04en.fm

(Cont'd)

d) Remove the guide plate (12) and the timing belt (13), see 5.2-4 Infeed Conveyor - Change Belts.

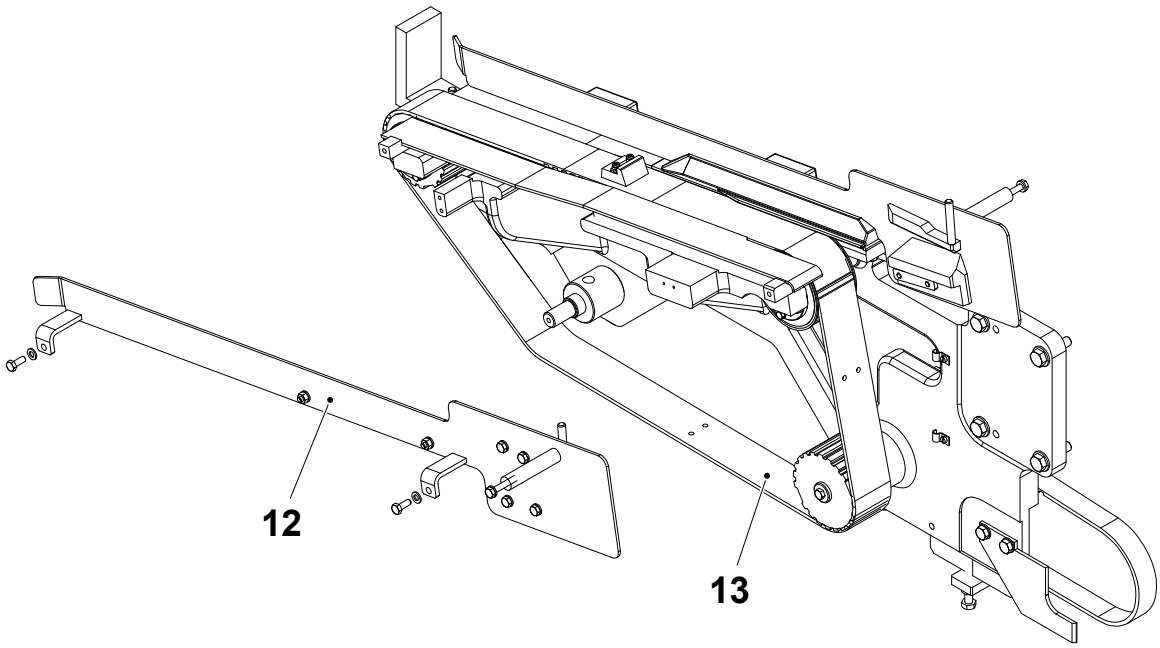

12 Guide plate
13 Timing belt

(Cont'd)

TechPub_2614345_0106 - 05_MM2819200_04en.fm

(Cont'd)

e) Remove the screw (14) and the washer (15) and remove the toothed pulley (16) and the shaft (17).

f) Remove the three screws (18) and the washers (19) and remove the cover (20).

g) Remove the screw (21) and the washer (22) and pull out the toothed pulley (16).

h) Remove and change the O-ring (23), the ball bearings (24) and (25), the spacer (26) and the seal ring (27).

Note! Apply a layer of silicon grease (code F, see 10.3-1 Lubricants) to the seal ring (27) on assembly.

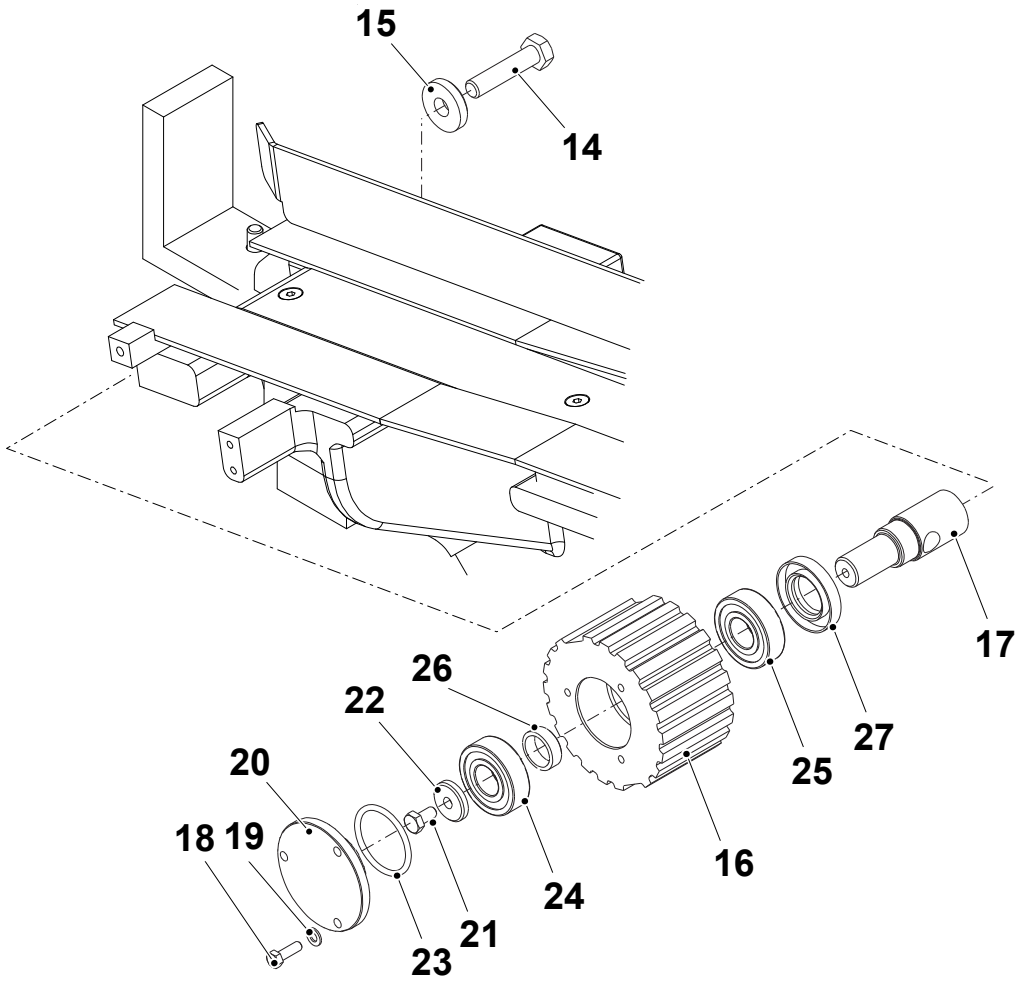

14 Screw
15 Washer
16 Toothed pulley
17 Shaft
18 Screw
19 Washer
20 Cover
21 Screw
22 Washer
23 O-ring
24 Ball bearing
25 Ball bearing
26 Spacer
27 Seal ring

(Cont'd)

TechPub_2614345_0106 - 05_MM2819200_04en.fm

(Cont'd)

i) Remove the screw (28) and the washer (29) and remove the toothed pulley (30) and the shaft (31).

j) Remove the three screws (32) and the washers (33) and remove the cover (34).

k) Remove the screw (35) and the washer (36) and pull out the toothed pulley (30).

l) Remove and change the O-ring (37), the ball bearings (38) and (39), the spacer (40) and the seal ring (41).

Note! Apply a layer of silicon grease (code F, see 10.3-1 Lubricants) to the seal ring (41) on assembly.

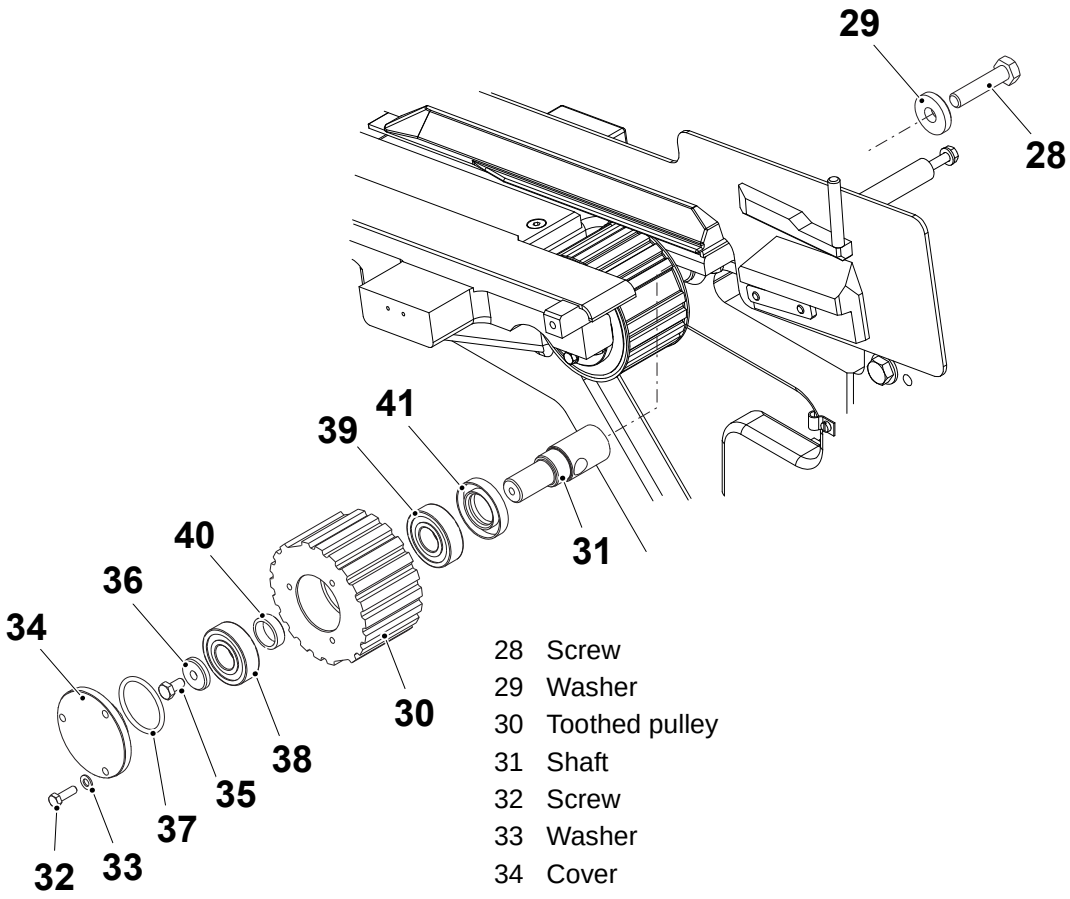

28 Screw
29 Washer
30 Toothed pulley
31 Shaft
32 Screw
33 Washer
34 Cover
35 Screw
36 Washer
37 O-ring
38 Ball bearing
39 Ball bearing
40 Spacer
41 Seal ring

(Cont'd)

TechPub_2614345_0106 - 05_MM2819200_04en.fm

(Cont'd)

m) Remove the screw (42), the washer (43), the flag (44) and the toothed pulley (45).

Note! Make sure that the two keys (54) are correctly installed in the shaft (49) on assembly.

n) Remove the screw (46) and the washer (47) and remove the toothed pulley (48) together with the shaft (49).

o) Change the seal ring (50), the spacer (51), the O-ring (52) and the ball bearing (53).

p) Change the seal ring (55), the spacer (56), the O-ring (57) and the ball bearing (58).

Note! Apply a layer of silicon grease (code F, see 10.3-1 Lubricants) to the seal rings (50) and (55) on assembly.

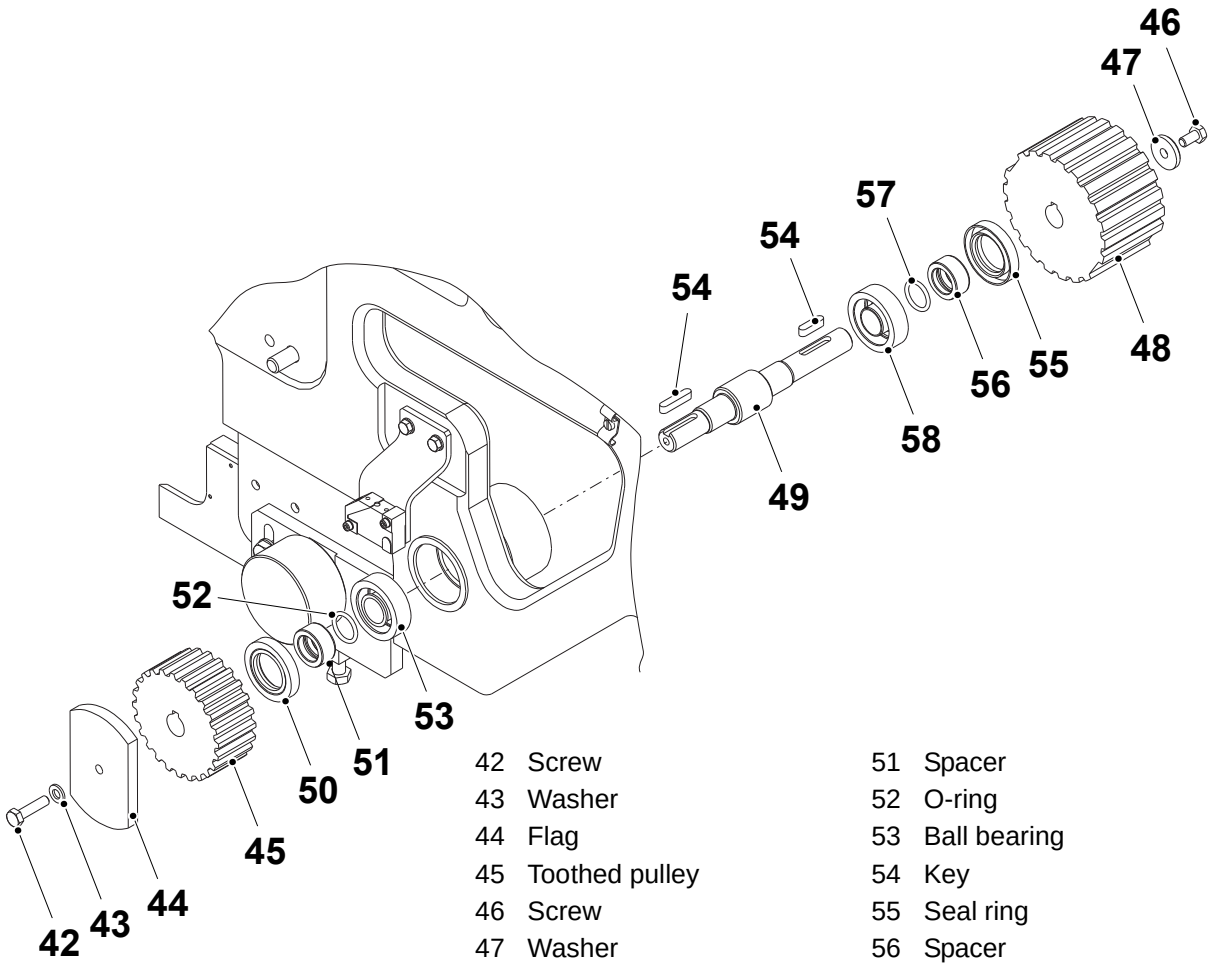

42	Screw	51	Spacer
43	Washer	52	O-ring
44	Flag	53	Ball bearing
45	Toothed pulley	54	Key
46	Screw	55	Seal ring
47	Washer	56	Spacer
48	Toothed pulley	57	O-ring
49	Shaft	58	Ball bearing
50	Seal ring		

TechPub_2614345_0106 - 05_MM2819200_04en.fm

(Cont'd)

(Cont'd)

q) Remove the two screws (59) and the washers (60) and remove the roller (61) and the plate (62).

r) Remove the screw (63) and remove the circlip (66) and the roller (61) from the shaft (64).

s) Remove the circlip (65) and change the ball bearing (67) and the seal ring (68).

Note! Apply a layer of silicon grease (code F, see 10.3-1 Lubricants) on the seal ring (68) on assembly.

t) Assemble in the reverse order.

u) Set the belt tension, see 5.2-2 Infeed Conveyor - Set Belts.

v) Set the infeed conveyor, see 5.2-1 Infeed Conveyor - Synchronisation.

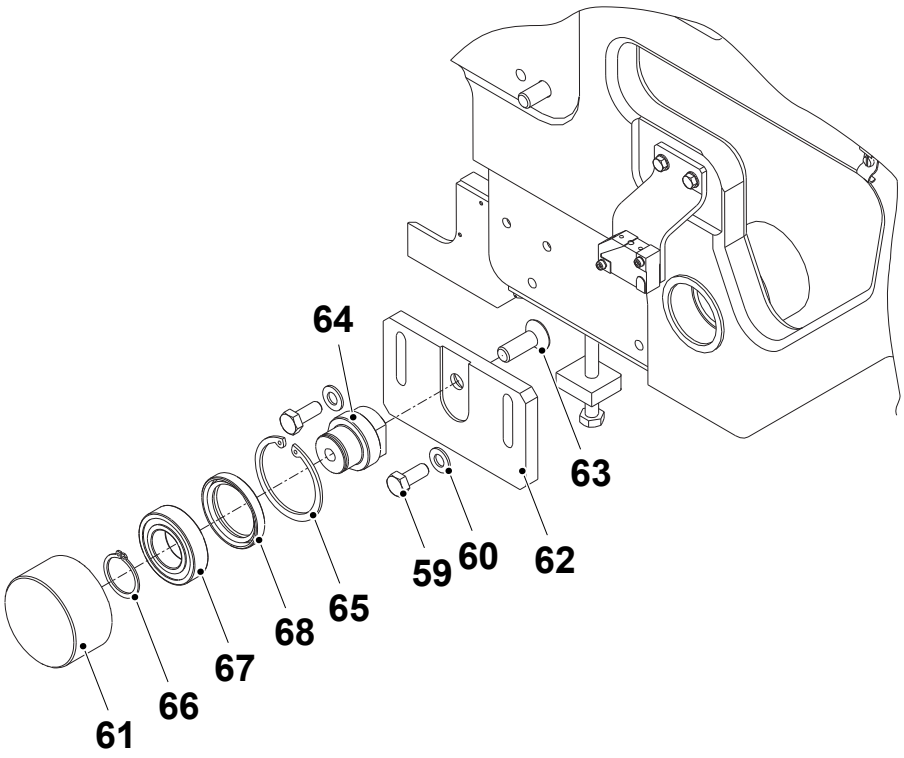

59 Screw
60 Washer
61 Roller
62 Plate
63 Screw
64 Shaft
65 Circlip
66 Circlip
67 Ball bearing
68 Seal ring

TechPub_2614345_0106 - 05_MM2819200_04en.fm

5.2-6 Infeed Conveyor - Set Inductive Switch

Machine Status	Mains Power ON Air OFF Steam ON Water OFF
SPC Reference	1517298-0300 1361923-0200 2931389-0100

a) Crank the final folder to 80°.

b) Loosen the screw (1) and turn the activator (2) anti-clockwise until the inductive switch (3) LED goes ON.

c) Tighten the screw (1).

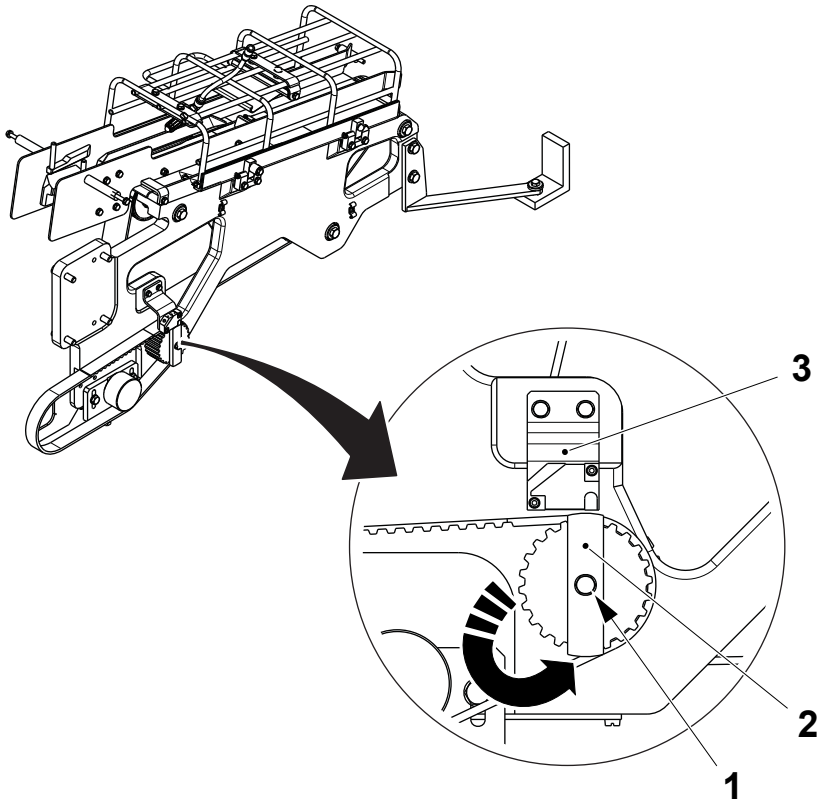

1 Screw
2 Activator
3 Inductive switch

TechPub_2614345_0106 - 05_MM2819200_04en.fm

6.2-7 Infeed Conveyor - Grease

Machine Status	Mains Power OFF Air OFF Steam ON Water OFF
Consumables	Shell Alvania Grease EP 2 TP No. 90296-0068
SPC Reference	1517298-0250 1361923-0200 2522129-0100

(Cont'd)

TechPub_2614345_0106 - 05_MM2819200_04en.fm

(Cont'd)

a) On each of the toothed pulleys (1), remove the larger (M6) screws (2).

b) Fill with grease through the nipples (3) until the grease is discharged through the screw holes of the screws (2).

c) Fit the screws (1).

d) Remove the screw (4) on the toothed pulley (5).

e) Fill with grease through the nipple (6) until the grease is discharged through the screw hole of the screw (4).

f) Fit the screw (4).

View from below

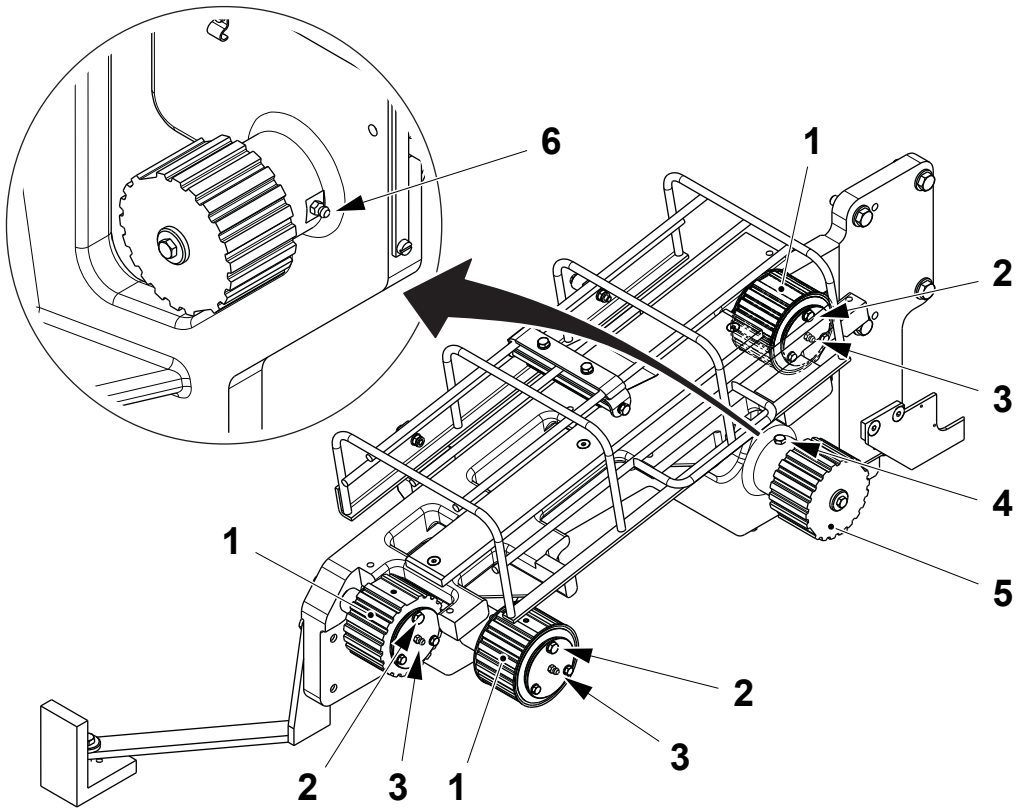

1 Tooth Pulley
2 Screw
3 Nipple
4 Screw
5 Tooth Pulley
6 Nipple

(Cont'd)

TechPub_2614345_0106 - 05_MM2819200_04en.fm

(Cont'd)

g) Remove the screw (7) on the belt tensioner (8).

h) Fill with grease through the nipple (9) until the grease is discharged through the screw hole of the screw (7).

i) Fit the screw (7).

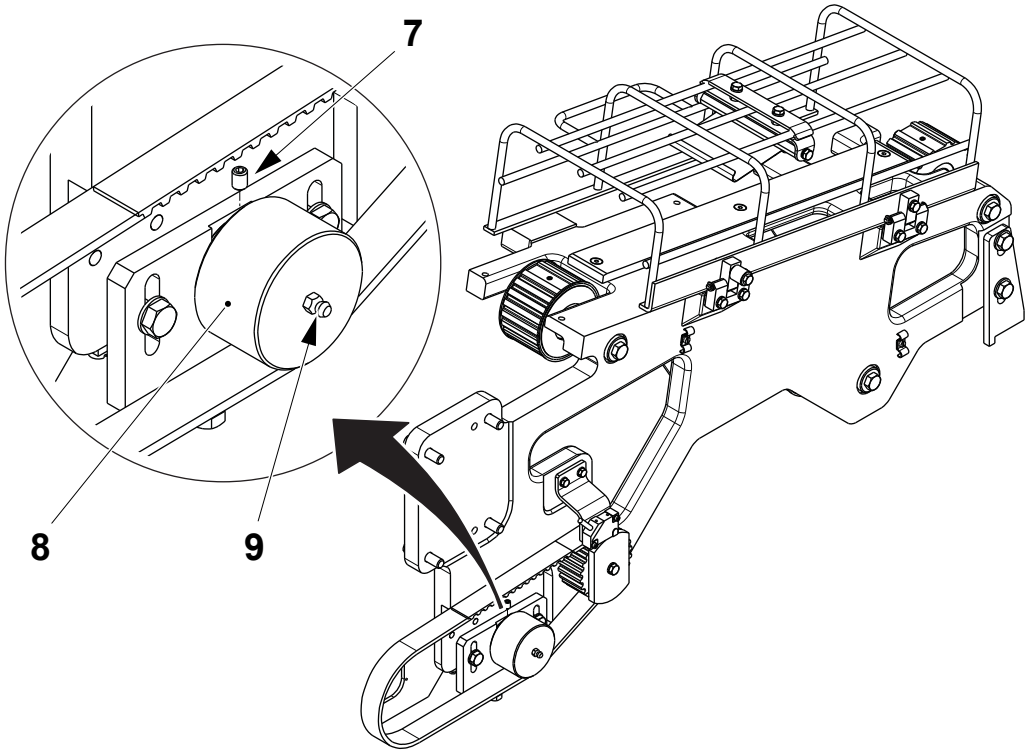

7 Screw
8 Belt tensioner
9 Nipple

TechPub_2614345_0106 - 05_MM2819200_04en.fm

5.2.1 Protective Cover

SPC Reference	2889590-0100

5.2.1-1 Protective Cover - Set

Machine Status	Mains Power OFF Air OFF Steam ON Water OFF
SPC Reference	2889590-0100

Note! Only valid for protective covers equipped with one spring (1).
For machines with two springs, see the following page.

Check that the spring (1) has a deflection of the distance **A** when a package (3) pass the spring (1). If necessary, set the spring (1) as follows:

a) Loosen the two screws (2) and adjust the position of the spring (1).

b) Tighten the two screws (2).

c) Check the distance **A** with a package (3). If necessary, repeat items a) to b).

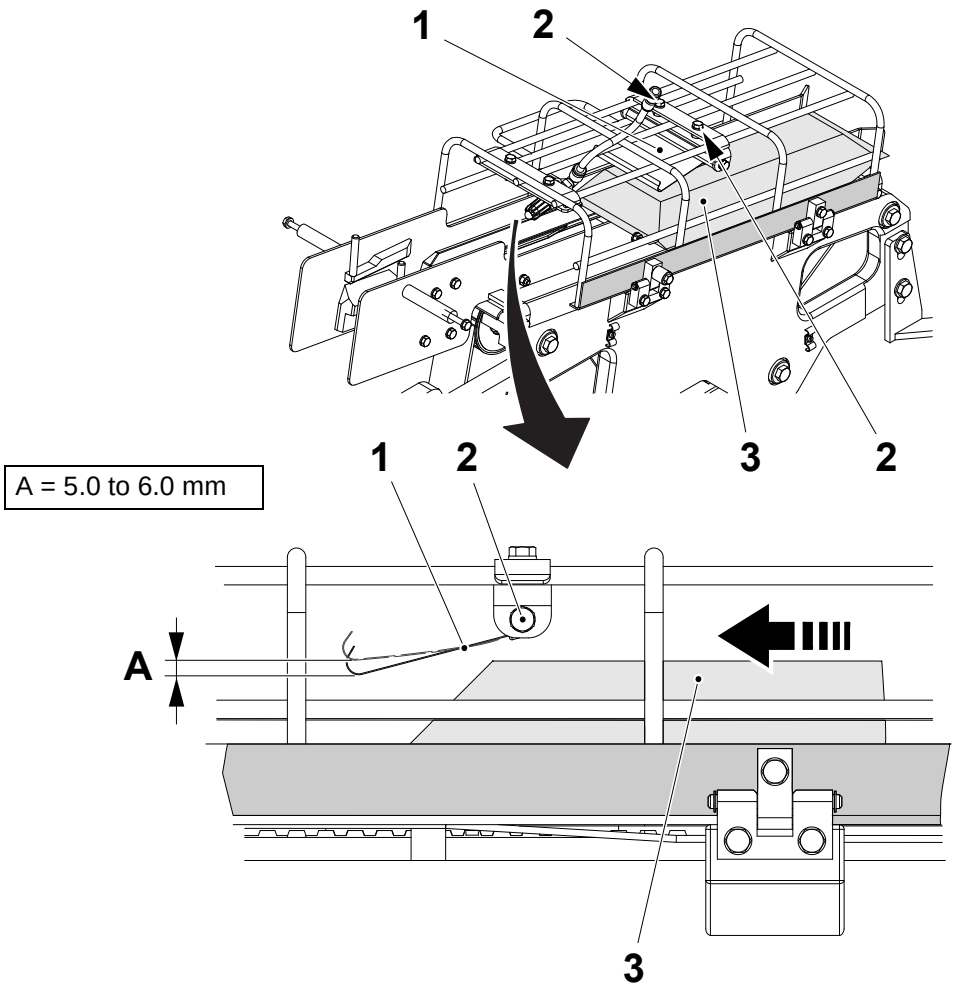

1 Spring
2 Screw
3 Package

(Cont'd)

TechPub_2614345_0106 - 05_MM2819200_04en.fm

(Cont'd)

Note! Only valid for protective covers equipped with the springs (1) and (2).

d) Loosen the screws (3) and set the distance **A** between the spring (2) and the rail (4). Tighten the screws (1).

e) Loosen the screws (5) and set the distance **B** between the spring (1) and the rail (4). Tighten the screws (5).

Check that the springs (1) and (2) have a deflection of the distance **C** when a package (6) pass the springs (1) and (2). If required, set the springs (1) and (2) as follows:

f) Loosen the screws (7) and (8) and adjust the position of the springs (1) and (2).

g) Tighten the screws (7) and (8).

h) Check the distance **A** with a package (6). If required, perform items f) to h).

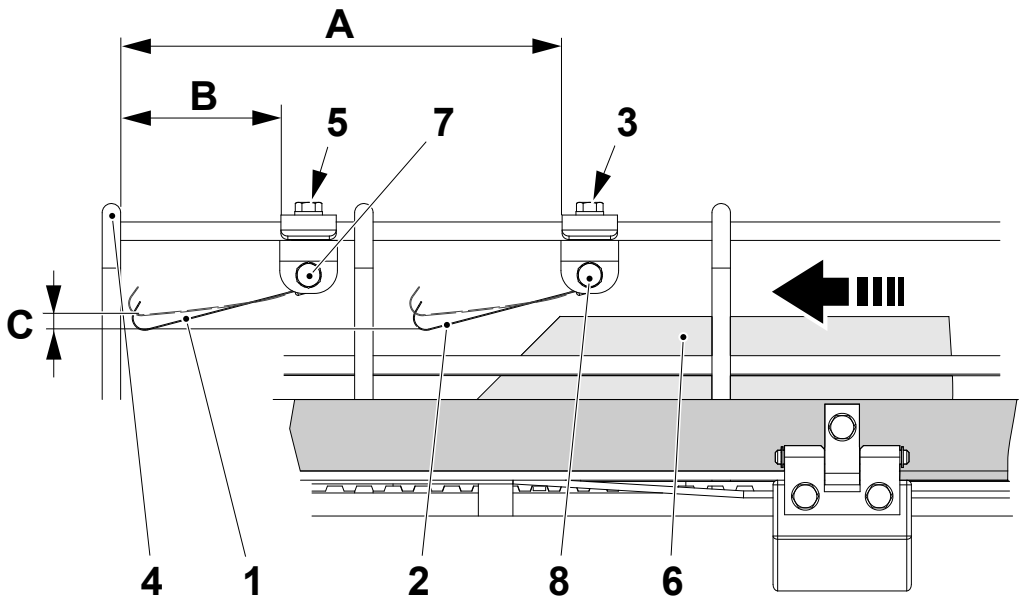

1 Screw
2 Spring
3 Rail
4 Screw
5 Spring

A = 65.0 mm
B = 160.0 mm
C = 5.0 to 6.0 mm

TechPub_2614345_0106 - 05_MM2819200_04en.fm

5.3 Indexing Unit

SPC Reference	2931385-0100

5.3-1 Indexing Unit - Check Oil Level

Machine Status	PRODUCTION
Consumables	Oil, TP No. 330002-2200
SPC Reference	2931385-0100

WARNING
Lubricant.
Wear personal protective equipment.

CAUTION
Risk of damage to the equipment.
Inch the final folder for at least two minutes before checking the oil level.
Add small amounts of oil at a time. Do not overfill.

(Cont'd)

TechPub_2614345_0106 - 05_MM2819200_04en.fm

(Cont'd)

CAUTION
Risk of personal injury.
The indexing unit is pressurised. Always remove the pneumatic hose used to create the over-pressure before removing screws from the indexing unit.

During a PRODUCTION check the level of the oil in the oil level indicator (1). The oil level must be between the maximum and minimum level marked on the oil level indicator (1).

If necessary:

- remove the screws (2) and the lid (3)
- slowly add oil (code B, see 10.3-1 Lubricants) through the top of the indexing unit until the bottom level glass (2) is just full. Do not overfill.
- fit the lid (3) by means of the screws (2).

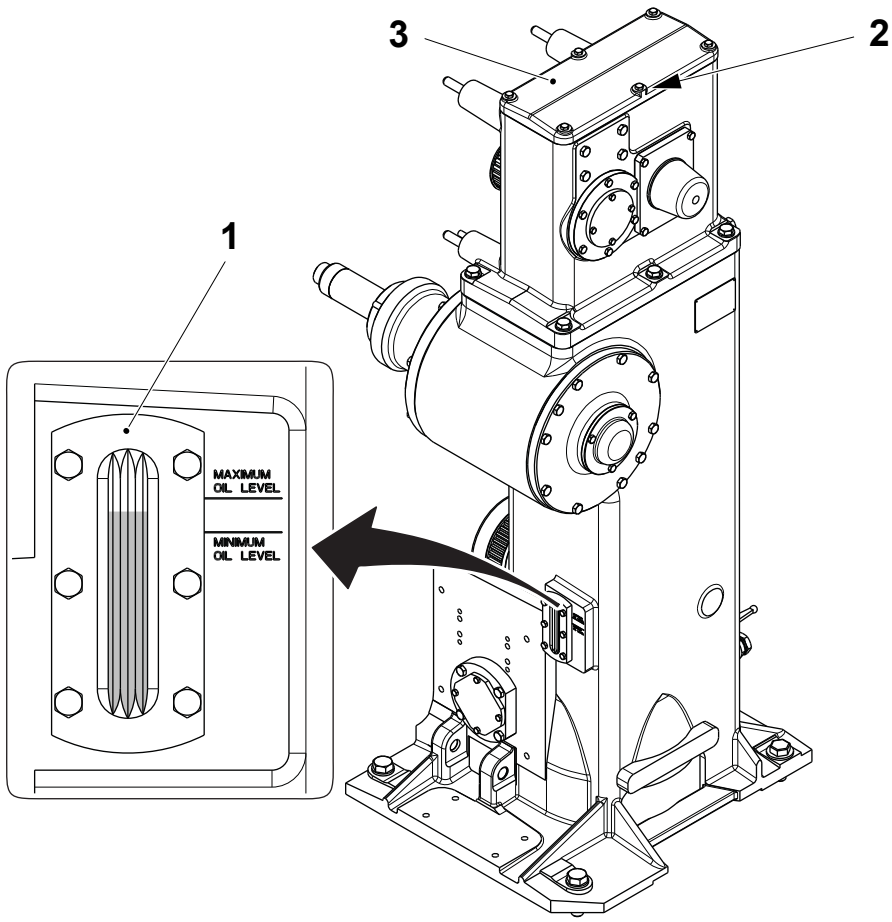

1 Oil level indicator
2 Screw
3 Lid

TechPub_2614345_0106 - 05_MM2819200_04en.fm

5.3-2 Indexing Unit - Change Oil

Machine Status	Mains Power OFF Air OFF Steam ON Water OFF
Consumables	Oil, TP No. 330002-2200
SPC Reference	2931385-0100

CAUTION

Risk of personal injury.

The indexing unit is pressurised. Always remove the pneumatic hose used to create the over-pressure before removing screws from the indexing unit.

a) Remove the screws (1) and the lid (2).

b) Fit a hose to the valve (3), located at the bottom of the indexing gear.

c) Open the valve (3) and drain the oil into a container.

d) When the oil is drained, close the valve (3) and remove the hose.

e) Fill up with oil (code B, see 10.3-1 Lubricants) approximately 14 litres, through the top of the indexing unit.

f) Fit the lid (2) by means of the screws (1).

g) Check the oil level, see 5.3-1 Indexing Unit - Check Oil Level.

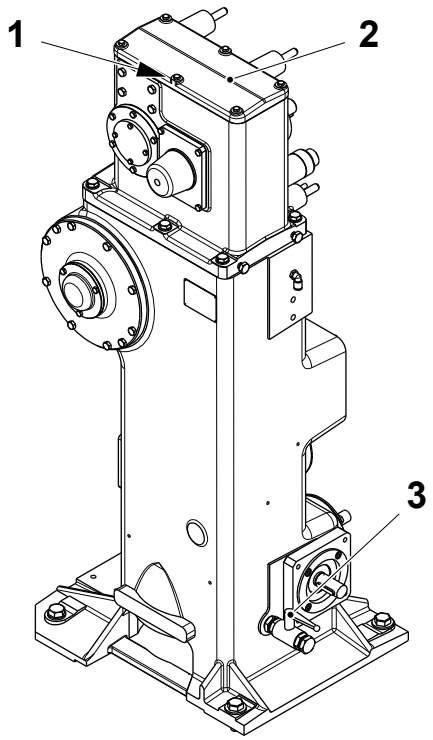

1 Screw
2 Lid
3 Valve
4 Level glass

TechPub_2614345_0106 - 05_MM2819200_04en.fm

5.3-3 Indexing Unit - Clean Filter

Machine Status	Mains Power OFF Air OFF Steam ON Water OFF
Consumables	Paraffin Oil
SPC Reference	2931385-0100

a) Drain the oil from the indexing gear, see 5.3-2 Indexing Unit - Change Oil.

b) Remove the cover (1).

c) Pull out and clean the filter cartridge (2) first with paraffin oil and after by blowing with compressed air.

d) Check the O-ring (3) and the seals (4) and (5) for damage. Change if necessary.

e) Assemble in the reverse order.

f) Fill with oil, see 5.3-2 Indexing Unit - Change Oil.

TechPub_2614345_0106 - 05_MM2819200_04en.fm

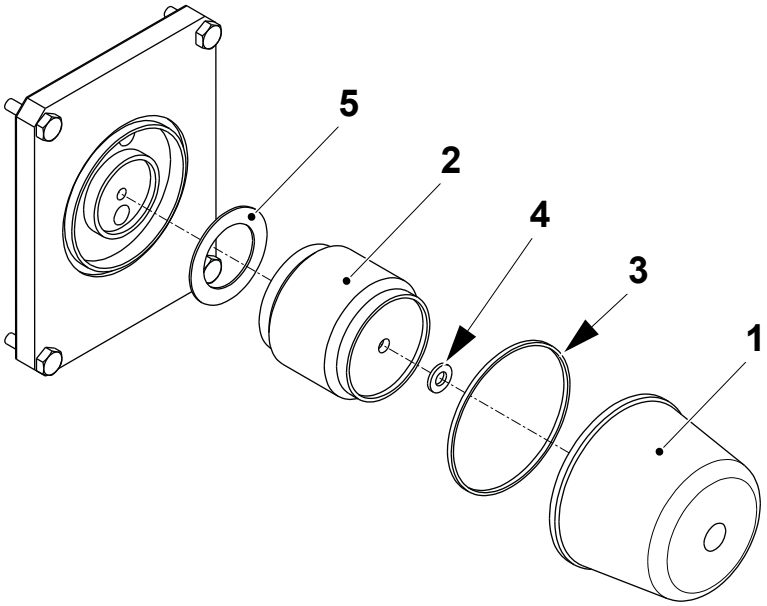

1 Cover
2 Filter cartridge
3 O-ring
4 Seal
5 Seal

5.3-4 Indexing Unit - Set Protractor

Machine Status	Mains Power OFF Air OFF Steam ON Water OFF
Special Equipment	Dial Test Indicator
SPC Reference	2931385-0100

a) Crank the final folder until the wheel stops moving.

b) Place a piece of adhesive tape (4) on the guides (1) as shown.

c) Make an accurate mark (2) on the tape at the position of the fixed flap.

d) Measure the distance **A** along the inside edge of the guide (1) in the direction of wheel rotation. Make a second mark (3) at this position.

e) Crank slowly until the fixed flap aligns with the second mark.

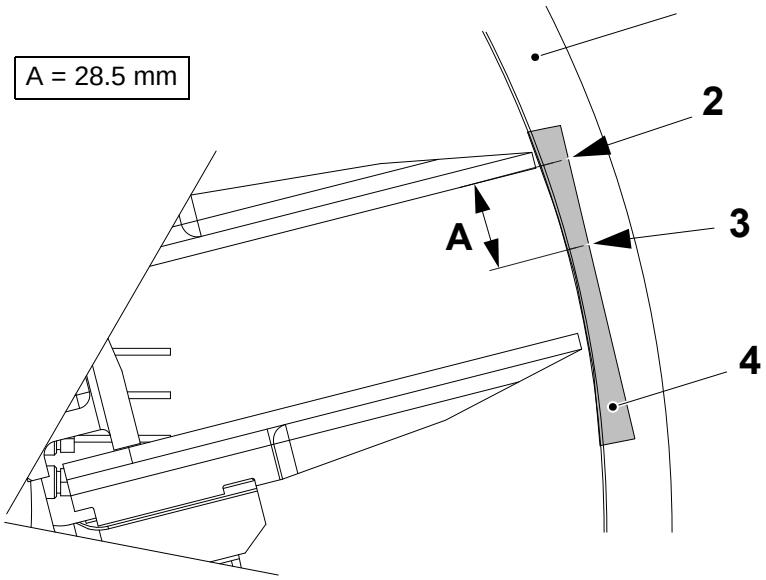

1 Guide
2 Mark
3 Mark
4 Adhesive tape

(Cont'd)

TechPub_2614345_0106 - 05_MM2819200_04en.fm

(Cont'd)

f) Loosen the two screws (5) on the protractor (6).

g) Turn the protractor (6) until the angle **B** on the outer scale of the protractor aligns with the side of the bracket (7).

h) Tighten the two screws (5).

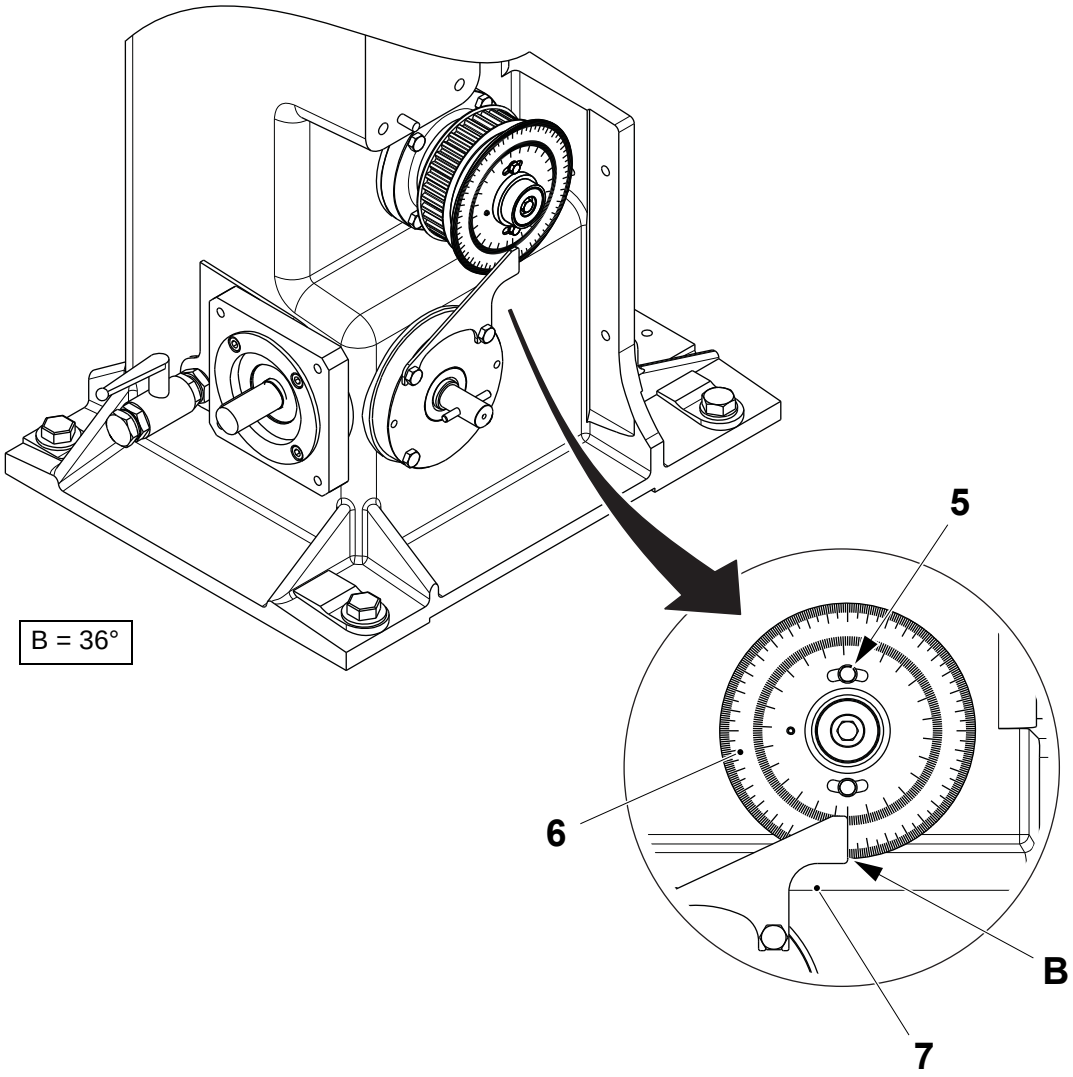

5 Protractor
6 Screw
7 Slot
8 Bracket

(Cont'd)

TechPub_2614345_0106 - 05_MM2819200_04en.fm

5.3-5 Indexing Unit - Set Pressure

Machine Status	Mains Power OFF Air ON Steam ON Water OFF
SPC Reference	2931385-0100

Set the over pressure for the indexing gear to 0.3 bar using the pressure regulator (1) on the machine body pneumatic panel (2).

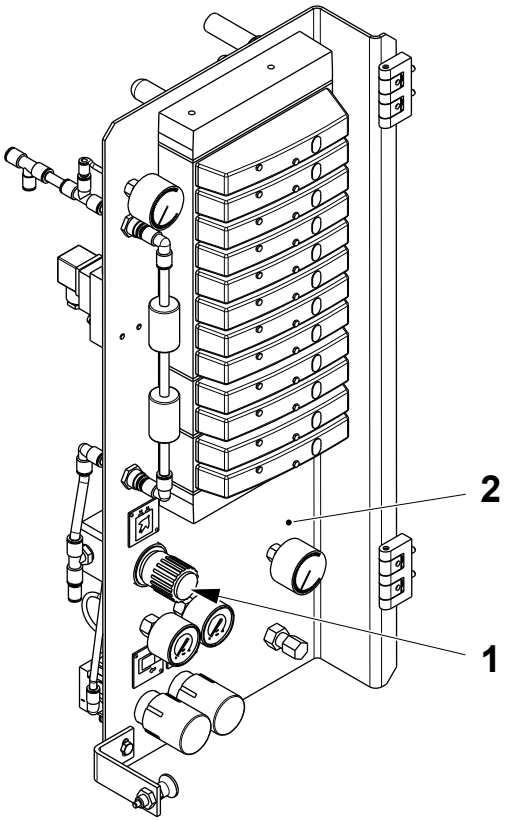

1 Pressure regulator
2 Air panel

TechPub_2614345_0106 - 05_MM2819200_04en.fm

5.3-6 Indexing Unit - Set Inductive Switch

Machine Status	Mains Power OFF Air OFF Steam ON Water OFF
SPC Reference	2931385-0100

a) Crank the final folder until a wheel bolt (1) is in front of the inductive switch (2).

b) Loosen the screws (3) and set the distance **A** between the bolt (1) and the inductive switch (2) by moving the inductive switch (2).

c) Tighten the screws (3).

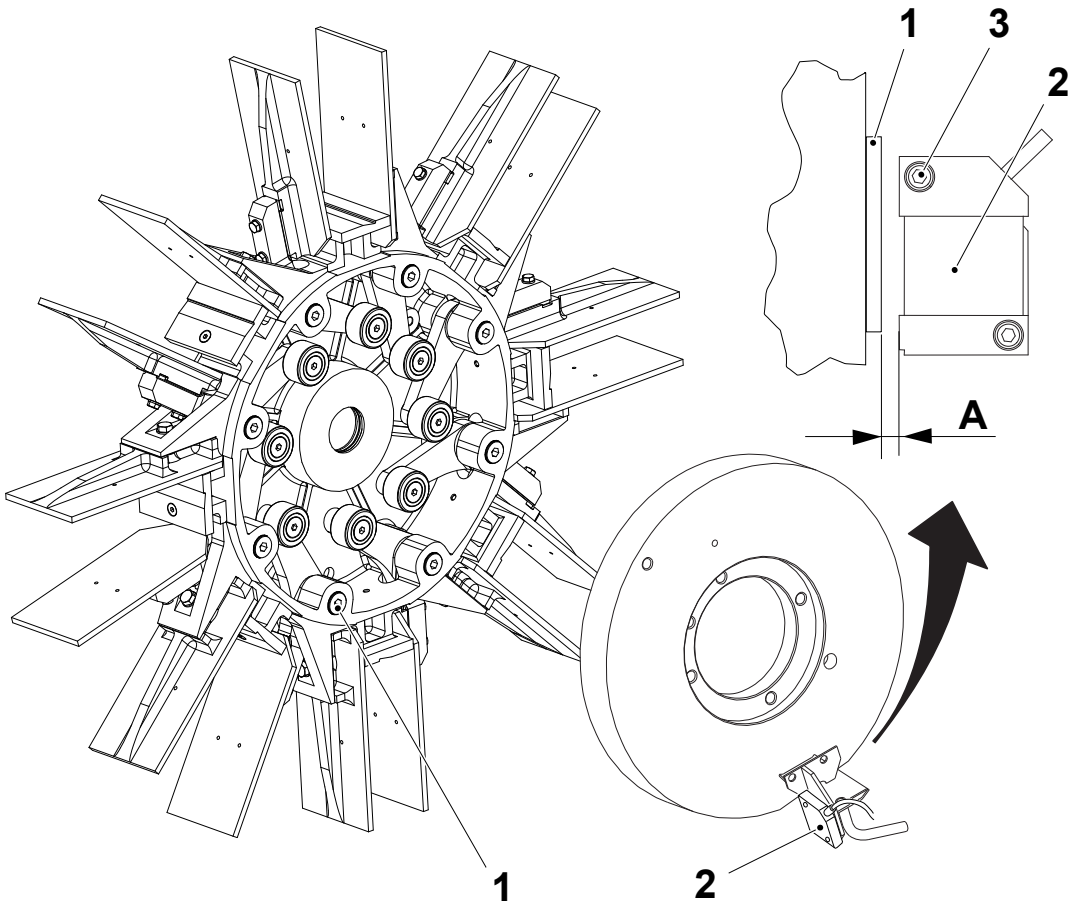

1 Bolt
2 Inductive switch
3 Screw

A = 0.5 ±0.1 mm

TechPub_2614345_0106 - 05_MM2819200_04en.fm

5.3-7 Indexing Unit - Set Clutch Tension

Machine Status	Mains Power OFF Air OFF Steam ON Water OFF
SPC Reference	2931385-0100

CAUTION

Risk of personal injury.

The indexing unit is pressurised. Always remove the pneumatic hose used to create the over-pressure before removing screws from the indexing unit.

Note! During the removal of the components a small quantity of lubricant oil may be released from the indexing gear.

a) Remove the cover (1) together with the o-ring (2) by means of the screws (2).

b) Remove the screw (4) and adjust the position of the washers (5) and washer (6) to set the correct clutch tension, see the table and illustration on the following page.

c) Assemble in the reverse order.

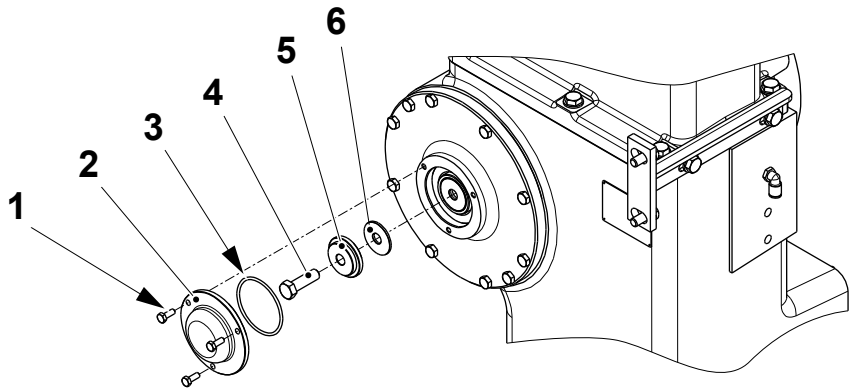

1 Cover
2 O-ring
3 Screw
4 Screw
5 Washer
6 Washer

(Cont'd)

TechPub_2614345_0106 - 05_MM2819200_04en.fm

(Cont'd)

Clutch Position Setting Table

Packages	Position
TBA 500 B	B
TBA 1000 B	B
TBA 1000 S	B
TBA 500 Sq	B
TBA 1000 Sq	B
TPA 750 Sq	C
TPA 1000 Sq	C
TBA 1500 S	C
TBA 2000 S	C

Position A

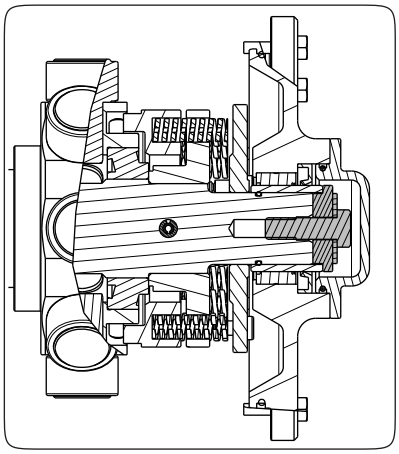

Position B

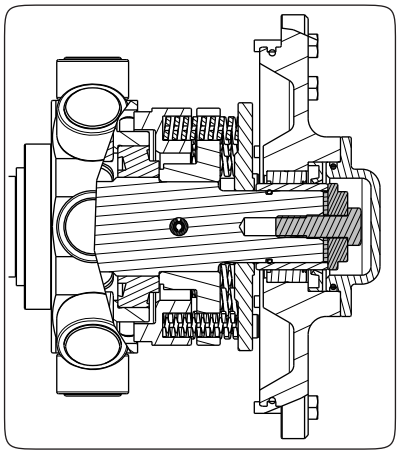

Position C

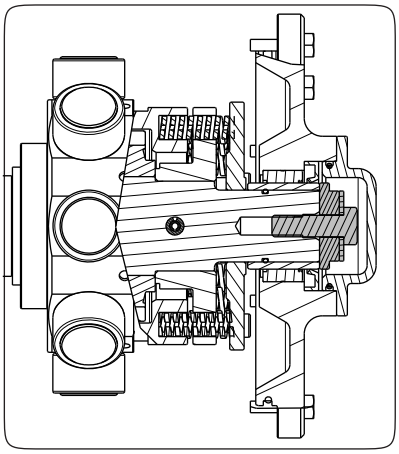

TechPub_2614345_0106 - 05_MM2819200_04en.fm

5.3-8 Indexing Unit - Change Cam Shaft Seal Ring and O-ring

Machine Status	Mains Power OFF Air OFF Steam OFF Water OFF
SPC Reference	2931385-0100

Note! During the removal of the components a small quantity of lubricant oil may be released from the indexing gear.

a) Remove the seal ring (1) and the spacer (2).

b) Change the seal ring (1).

c) Remove the round nut (3) and the lock washer (4).

d) Remove and change the O-ring (5).

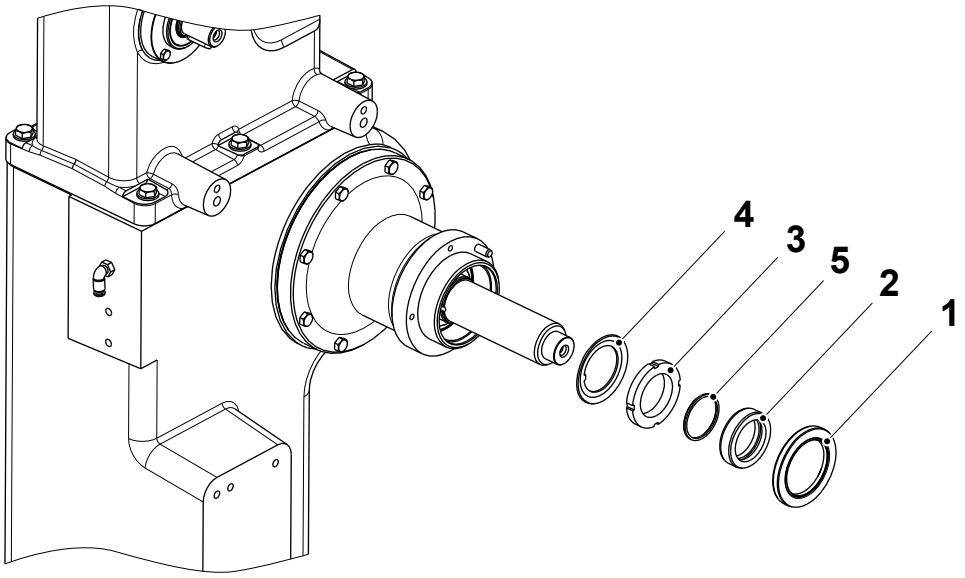

1 Seal ring
2 Spacer
3 Round nut
4 Lock washer
5 O-ring

(Cont'd)

TechPub_2614345_0106 - 05_MM2819200_04en.fm

(Cont'd)

e) Remove the screws (6), the cover (7) and the O-ring (8).

f) Change the O-ring (8).

g) Assemble in the reverse order.

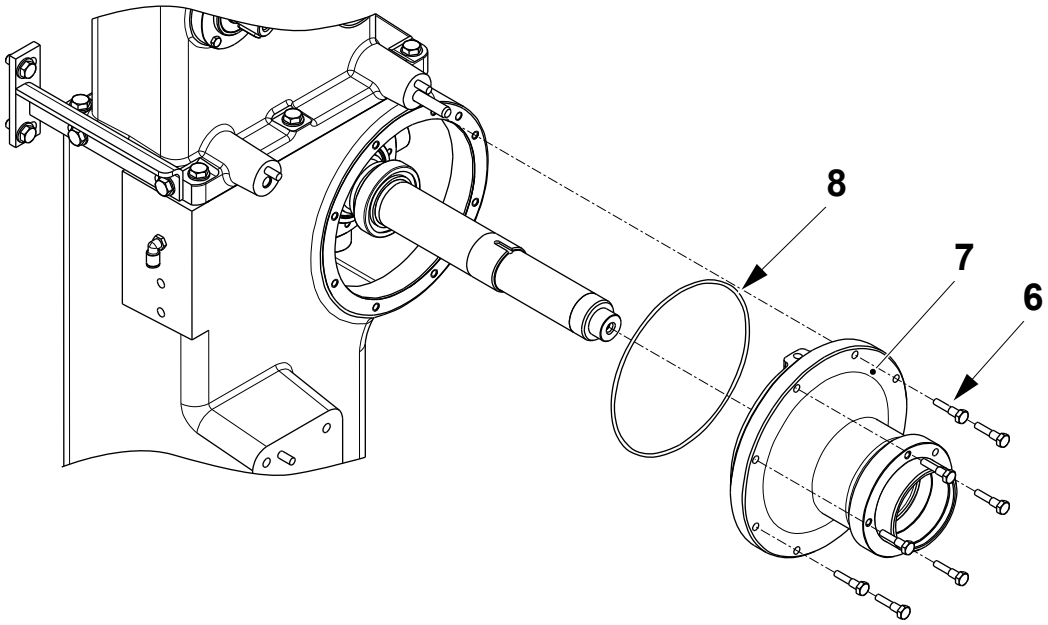

6 Screw
7 Cover
8 O-ring

TechPub_2614345_0106 - 05_MM2819200_04en.fm

5.3-9 Indexing Unit - Overhaul Cam Shaft

Machine Status	Mains Power OFF Air OFF Steam OFF Water OFF
SPC reference	2931385-0100

CAUTION

Risk of personal injury.

The indexing unit is pressurised. Always remove the pneumatic hose used to create the over-pressure before removing screws from the indexing unit.

Note! During the removal of the components a small quantity of lubricant oil may be released from the indexing gear.

(Cont'd)

TechPub_2614345_0106 - 05_MM2819200_04en.fm

(Cont'd)

a) Remove the screws (1) and the flange (2).
b) Remove and change the O-ring (3).
c) Remove the screw (4), the washers (5) and (6) and the spacer (7).
d) Remove and change the seal (8).

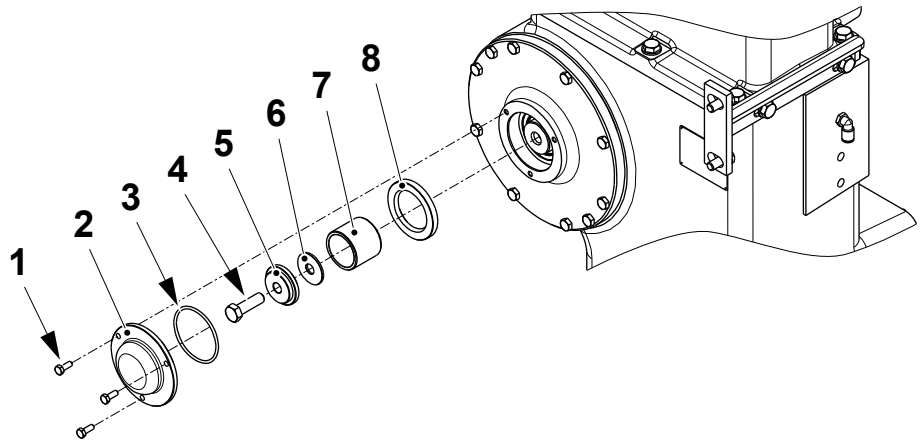

1 Screw
2 Flange
3 O-ring
4 Screw
5 Washer
6 Washer
7 Spacer
8 Seal

(Cont'd)

TechPub_2614345_0106 - 05_MM2819200_04en.fm

(Cont'd)

a) Remove the screws (9) and the flange (10).

b) Remove the spacer (11).

c) Remove and change the O-ring (12).

d) Remove the spring housing (13). On a work bench remove the screws (14) and the plate (15) form the spring housing (13).

e) Remove and change the springs (16).

f) Remove and change the O-ring (17).

g) Assemble in the reverse order.

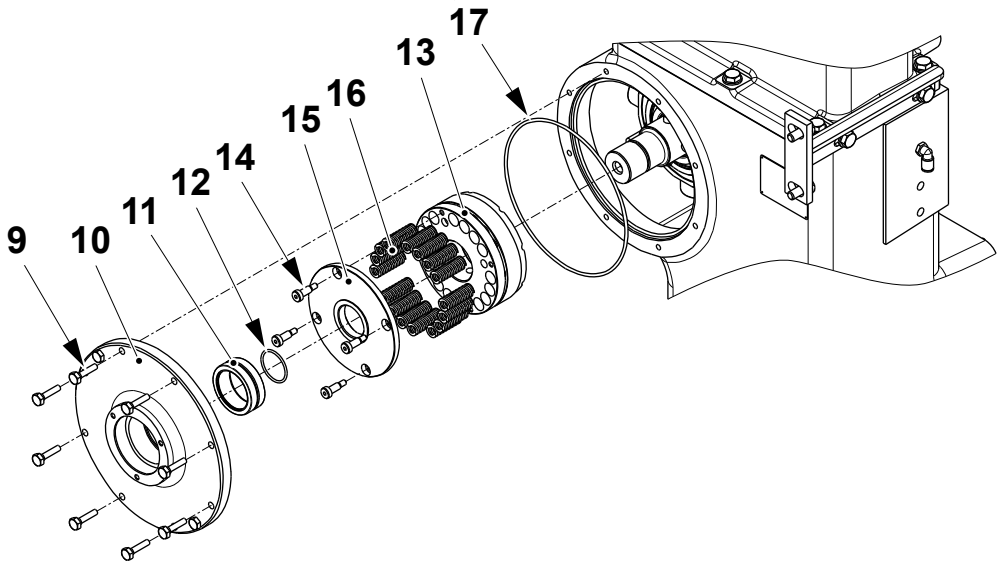

9 Screw
10 Flange
11 Spacer
12 O-ring
13 Spring housing
14 Screw
15 Plate
16 Spring
17 O-ring

TechPub_2614345_0106 - 05_MM2819200_04en.fm

5.3-10 Indexing Unit - Overhaul Protractor Shaft

Machine Status	Mains Power OFF Air OFF Steam OFF Water OFF
SPC reference	2931385-0100

Change Protractor Shaft O-ring

a) Remove the nut (1).
b) Open the tap (2) and drain off the lubricant into a suitable container.
c) Remove the flange (3) by means of the screws (4).
d) Change the O-ring (5).
e) Fit the flange (3) by means of the screws (4).
f) Restore the correct quantity of lubricant.

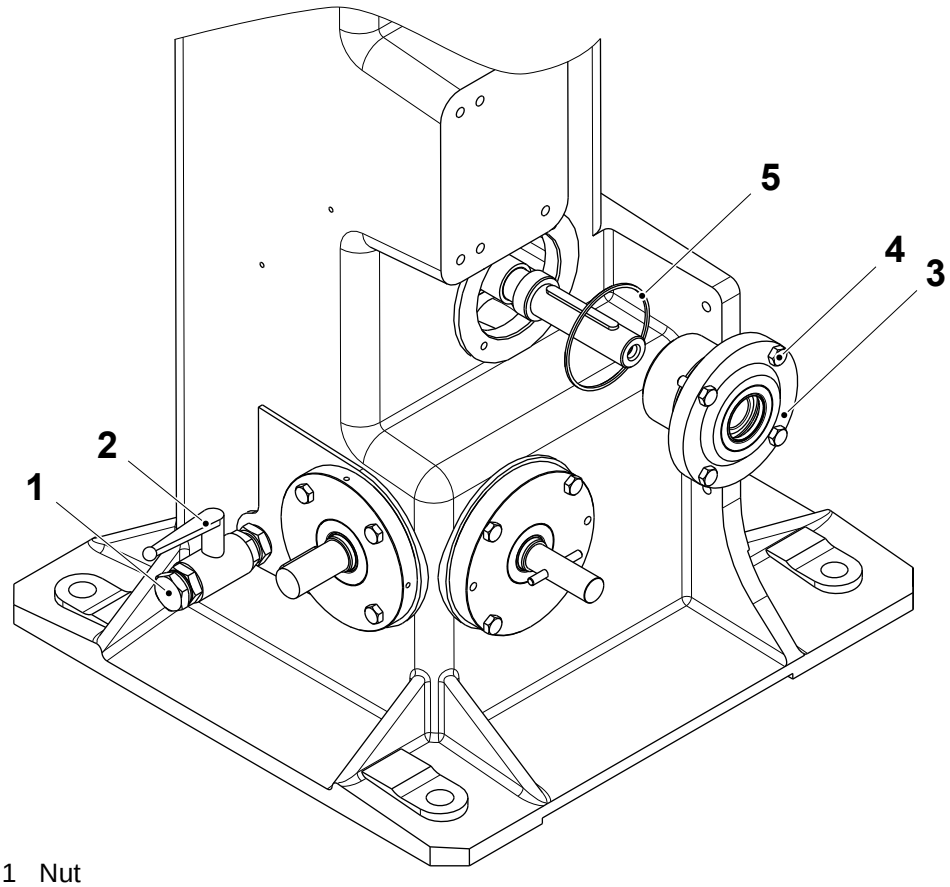

1 Nut
2 Tap
3 Flange
4 Screw
5 O-ring

(Cont'd)

TechPub_2614345_0106 - 05_MM2819200_04en.fm

(Cont'd)

Change Protractor Shaft Seal Ring

a) Remove the nut (1).

b) Open the tap (2) and drain off the lubricant into a suitable container.

c) Change the seal ring (3).

d) Restore the correct quantity of lubricant.

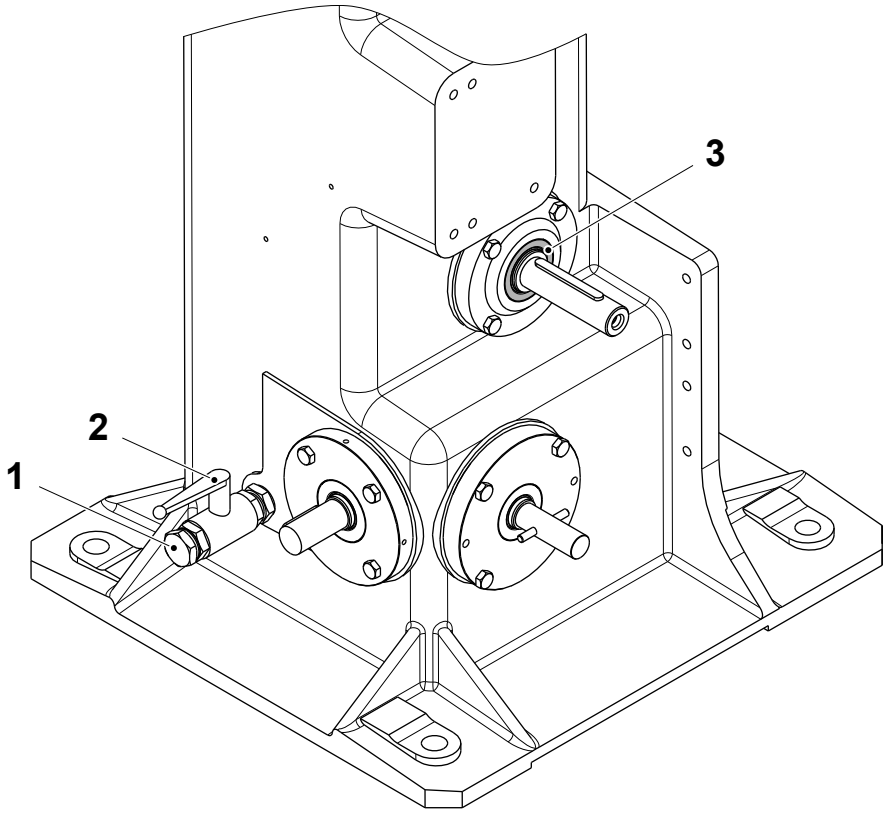

1 Nut
2 Tap
3 Seal ring

TechPub_2614345_0106 - 05_MM2819200_04en.fm

5.3-11 Indexing Unit - Overhaul Low Shaft

Machine Status	Mains Power OFF Air OFF Steam OFF Water OFF
SPC reference	2931385-0100

Change Low Shaft O-ring

a) Remove the nut (1).

b) Open the tap (2) and drain off the lubricant into a suitable container.

c) Remove the flange (3) together with the shaft (4) by means of the screws (5).

d) Change the O-ring (6).

e) Fit the flange (3) together with the shaft (4) by means of the screws (5).

f) Restore the correct quantity of lubricant.

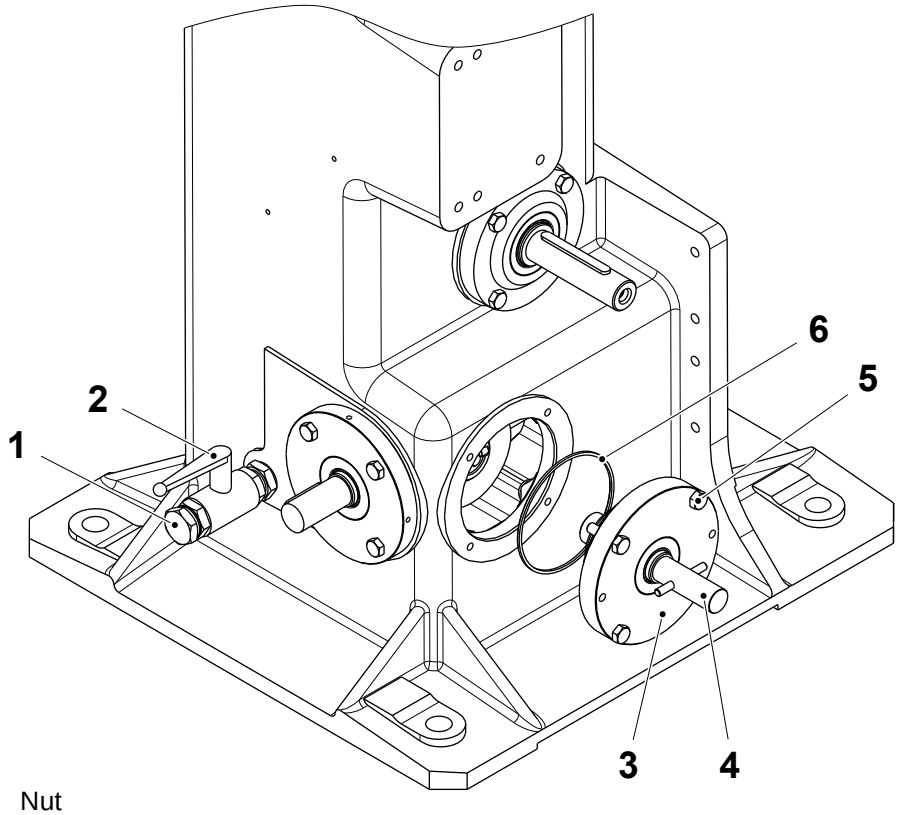

1 Nut
2 Tap
3 Flange
4 Shaft
5 Screw
6 O-ring

(Cont'd)

TechPub_2614345_0106 - 05_MM2819200_04en.fm

(Cont'd)

Change Low Shaft Seal Ring

a) Remove the nut (1).
b) Open the tap (2) and drain off the lubricant into a suitable container.
c) Remove the pin (3).
d) Change the seal ring (4).
e) Fit the pin (3).
f) Restore the correct quantity of lubricant.

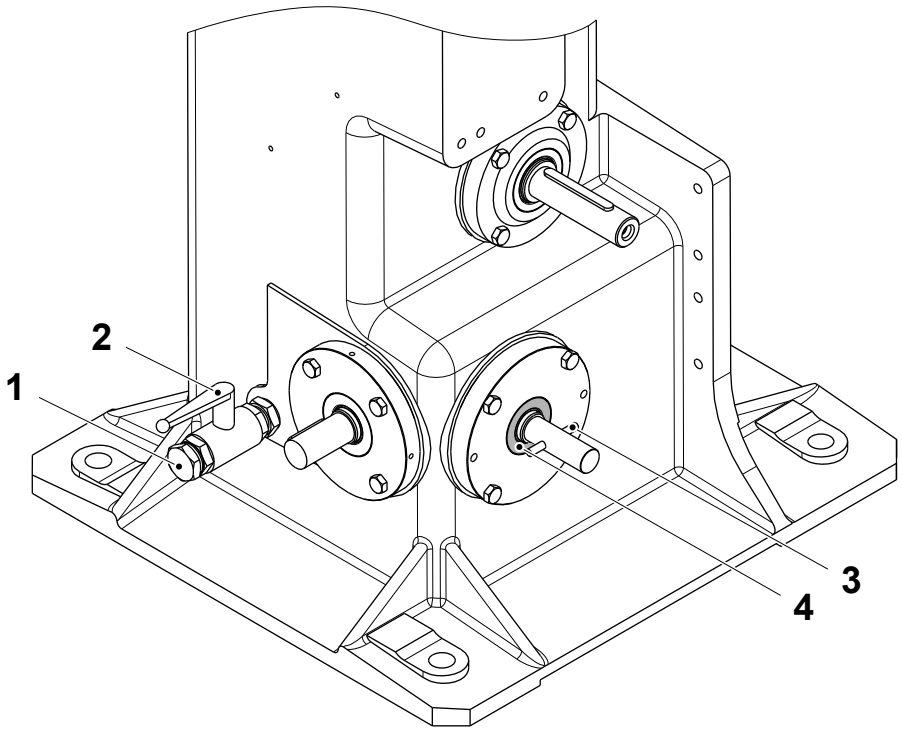

1 Nut
2 Tap
3 Pin
4 Seal ring

(Cont'd)

TechPub_2614345_0106 - 05_MM2819200_04en.fm

(Cont'd)

Change Low Shaft Spring

a) Remove the nut (1).

b) Open the tap (2) and drain off the lubricant into a suitable container.

c) Remove the flange (3) together with the shaft (4) by means of the screws (5).

d) Remove the screw (6), the washer (7), the gear (8), the pin (9) and the seal ring (10).

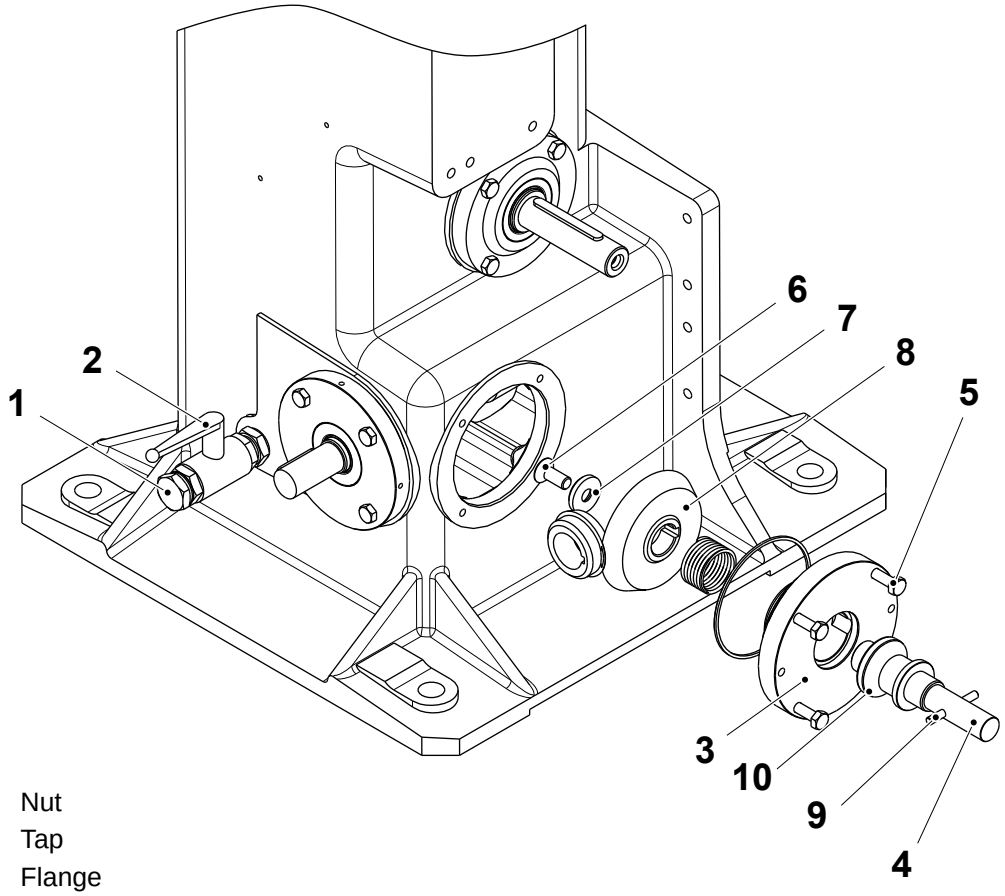

1 Nut
2 Tap
3 Flange
4 Shaft
5 Screw
6 Screw
7 Washer
8 Gear
9 Pin
10 Seal ring

(Cont'd)

TechPub_2614345_0106 - 05_MM2819200_04en.fm

(Cont'd)

e) Remove the shaft (4) from the flange (3).
f) Change the spring (11).
g) Fit the shaft (4) on the flange (3).
h) Change the seal ring (10).
i) Fit the pin (9) and the gear (8).
j) Fit the washer (7).
k) Fit and tighten the screw (6).
l) Fit the flange (3) together with the shaft (4) by means of the screws (5).
m) Restore the correct quantity of lubricant.

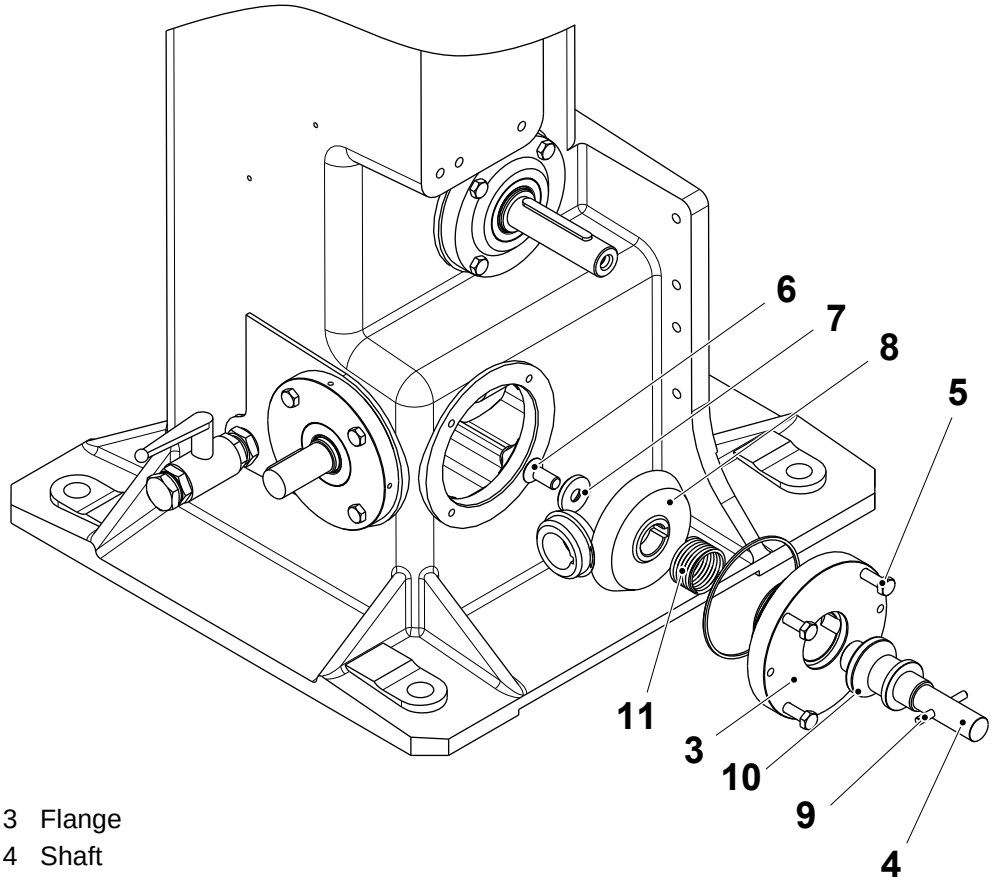

3 Flange
4 Shaft
5 Screw
6 Screw
7 Washer
8 Gear
9 Pin
10 Seal ring
11 Spring

TechPub_2614345_0106 - 05_MM2819200_04en.fm

5.3-12 Indexing Unit - Overhaul Vertical Shaft

Machine Status	Mains Power OFF Air OFF Steam OFF Water OFF
SPC reference	2931385-0100

Change Vertical Shaft Seal Ring

a) Remove the nut (1).

b) Open the tap (2) and drain off the lubricant into a suitable container.

c) Remove the key (3).

d) Change the seal ring (4).

e) Fit the key (3).

f) Restore the correct quantity of lubricant.

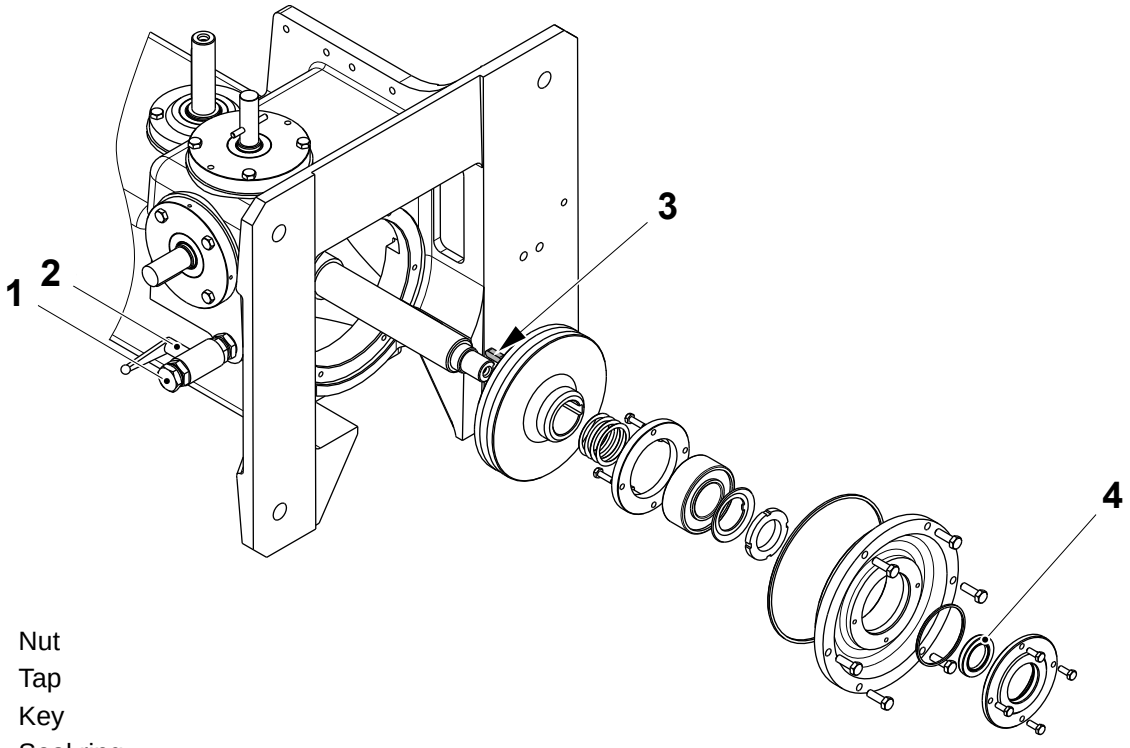

1 Nut
2 Tap
3 Key
4 Seal ring

(Cont'd)

TechPub_2614345_0106 - 05_MM2819200_04en.fm

(Cont'd)

Change Vertical Shaft O-ring

a) Remove the nut (1).
b) Open the tap (2) and drain off the lubricant into a suitable container.
c) Remove the key (3).
d) Remove the flange (4) by means of the screws (5).
e) Change the O-ring (6).
f) Remove the seal ring (7).
g) Fit the flange (4) by means of the screws (5).
h) Fit the sealing ring (7) and the key (3).
i) Restore the correct quantity of lubricant.

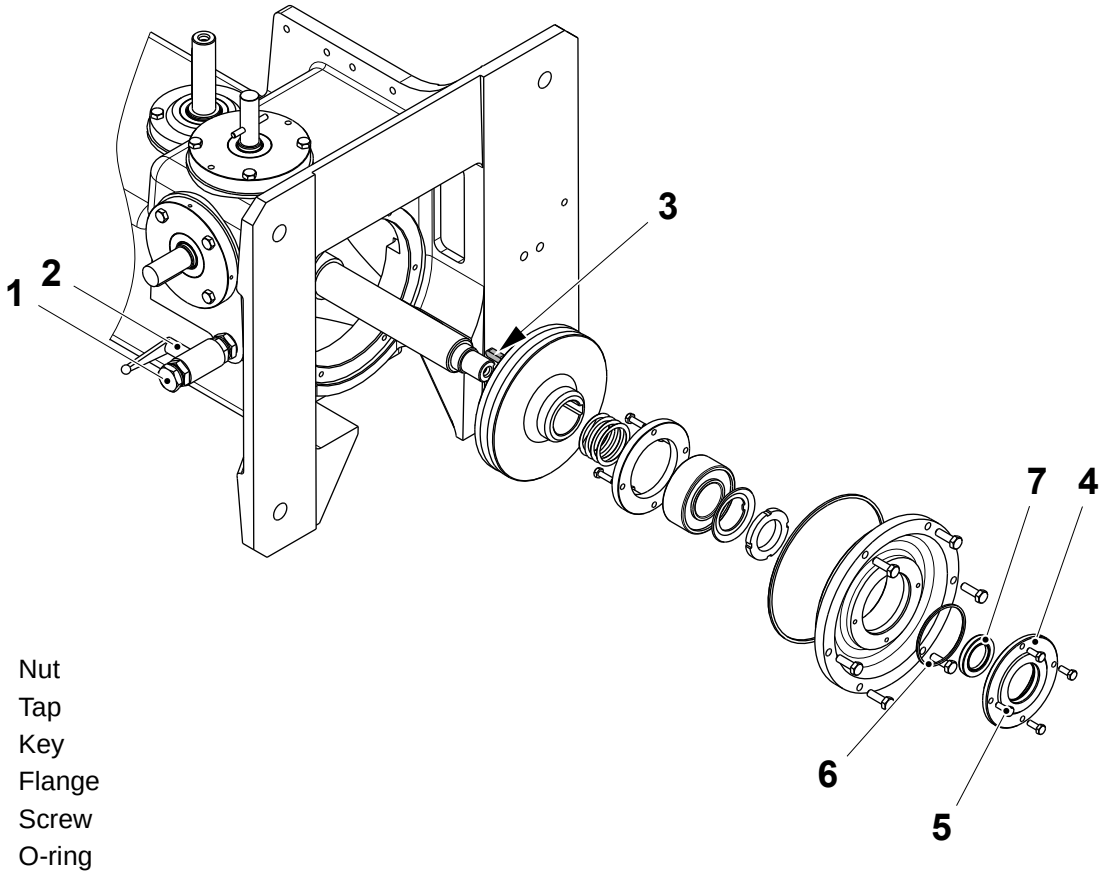

1 Nut
2 Tap
3 Key
4 Flange
5 Screw
6 O-ring
7 Seal ring

(Cont'd)

TechPub_2614345_0106 - 05_MM2819200_04en.fm

(Cont'd)

Vertical Shaft Flange O-ring

a) Remove the nut (1).
b) Open the tap (2) and drain off the lubricant into a suitable container.
c) Remove the key (3) and the seal ring (4).
d) Remove the flange (5) by means of the screws (6).
e) Remove the round nut (7) and the lock washer (8).
f) Remove the flange (9) by means of the screws (10).

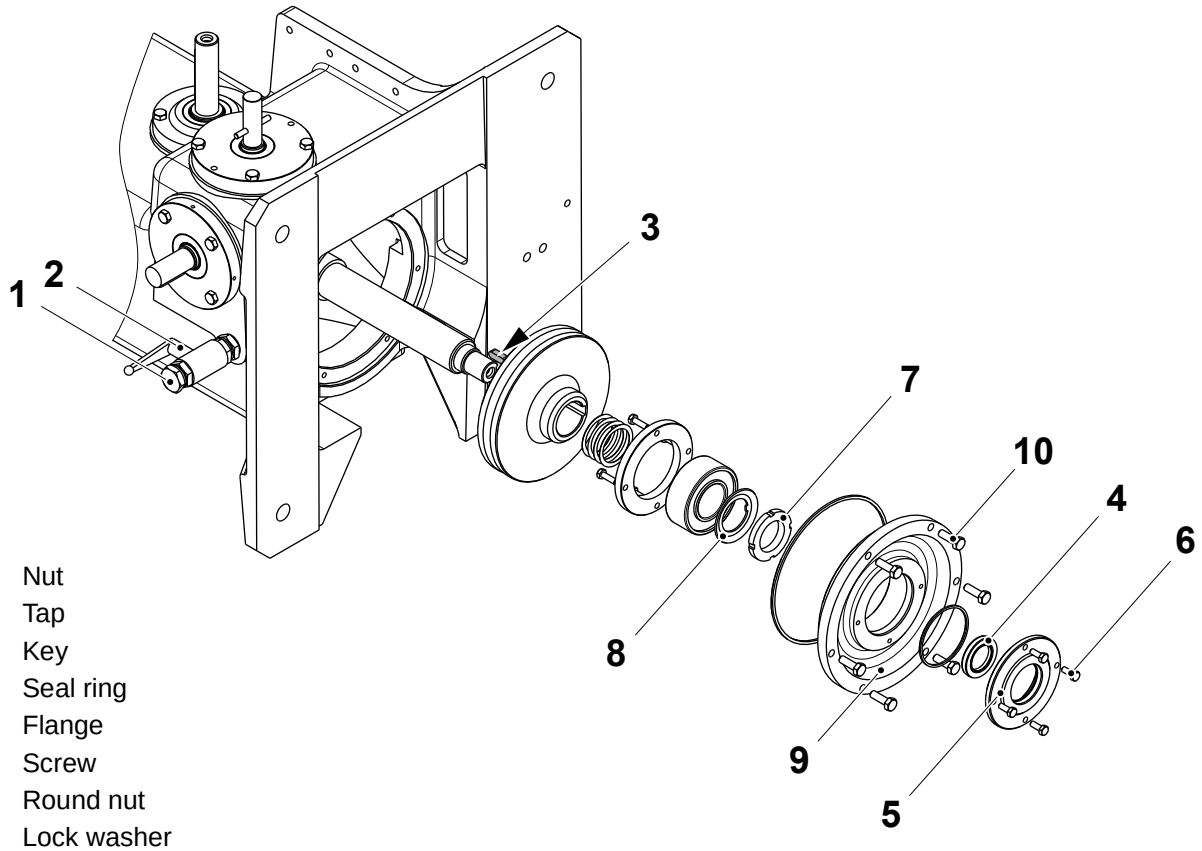

1 Nut
2 Tap
3 Key
4 Seal ring
5 Flange
6 Screw
7 Round nut
8 Lock washer
9 Flange
10 Screw

(Cont'd)

TechPub_2614345_0106 - 05_MM2819200_04en.fm

(Cont'd)

g) Change the O-ring (11).
h) Fit the flange (9) by means of the screws (10).
i) Fit the round nut (7) and the lock washer (8).
j) Change the O-ring (12).
k) Fit the flange (5) by means of the screws (6).
l) Fit the seal ring (4) and the key (3).
m) Restore the correct quantity of lubricant.
n) Using the crank turn the index to verify the correct operation.

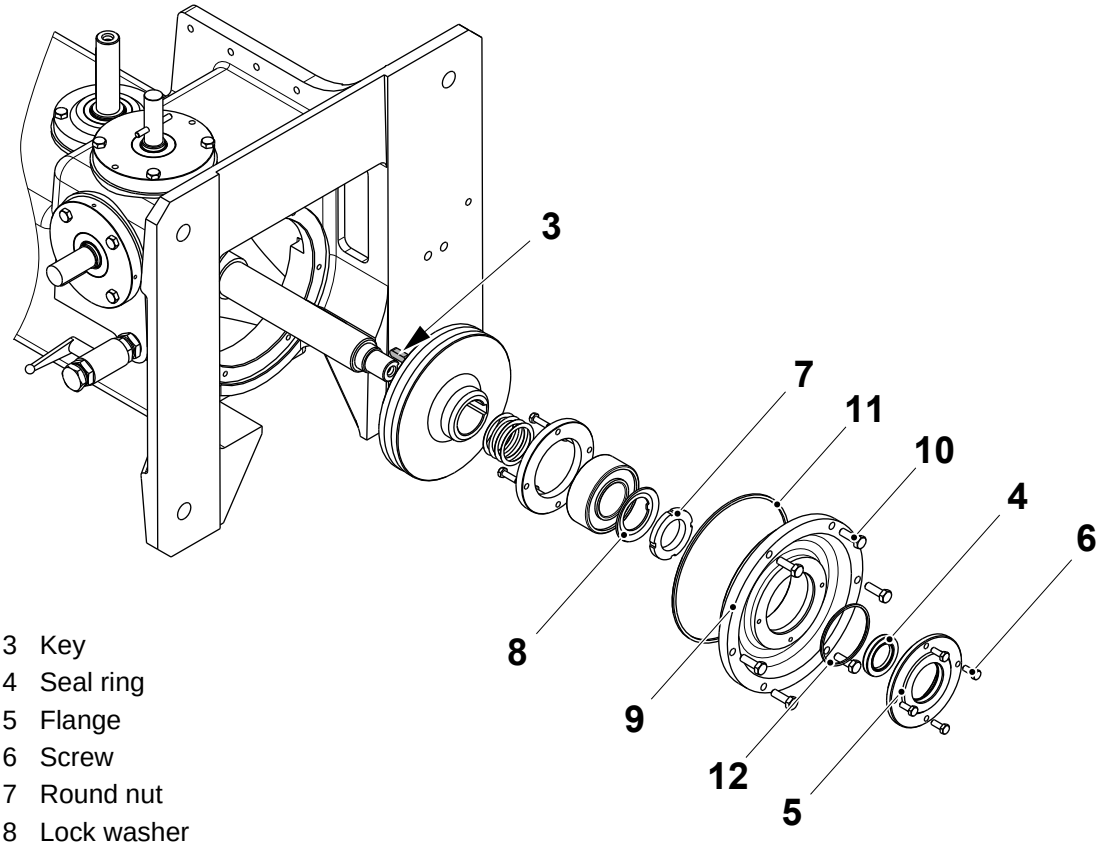

3 Key
4 Seal ring
5 Flange
6 Screw
7 Round nut
8 Lock washer
9 Flange
10 Screw
11 O-ring
12 O-ring

TechPub_2614345_0106 - 05_MM2819200_04en.fm

5.3-13 Indexing Unit - Overhaul Motor Shaft

Machine Status	Mains Power OFF Air OFF Steam OFF Water OFF
SPC reference	2931385-0100

Change Motor Shaft O-ring

a) Remove the nut (1).
b) Open the tap (2) and drain off the lubricant into a suitable container.
c) Remove the key (3).
d) Remove the flange (4) by means of the screws (5).
e) Remove the seal ring (6).
f) Change the O-ring (7).
g) Fit the flange (4) by means of the screws (5).
h) Change the seal ring (6).
i) Fit the key (3).
j) Restore the correct quantity of lubricant.

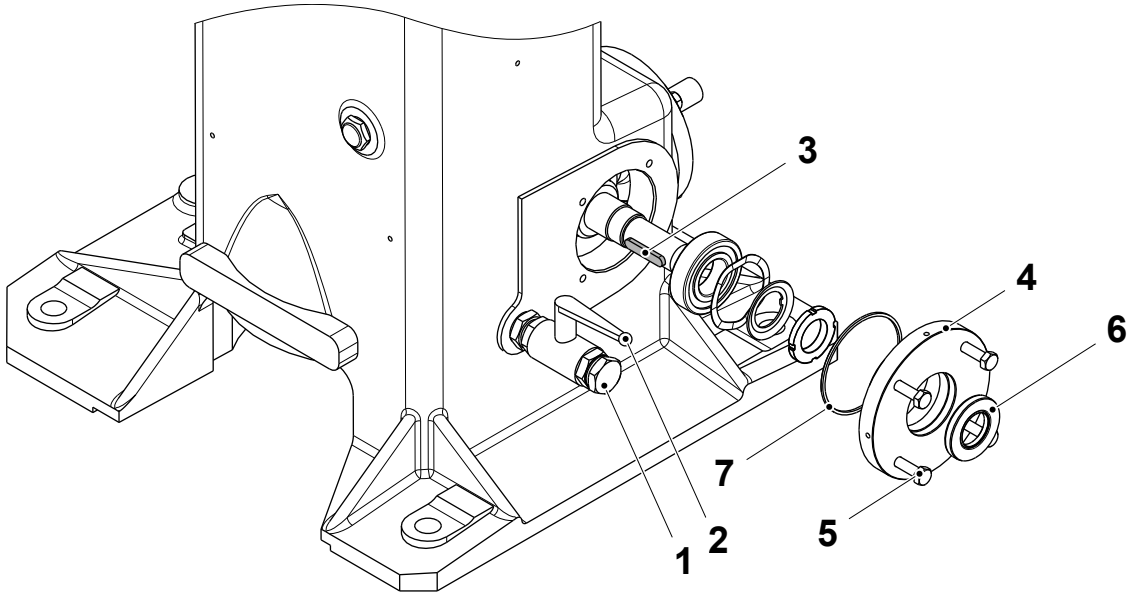

1 Nut
2 Tap
3 Key
4 Flange
5 Screw
6 Seal ring
7 O-ring

(Cont'd)

TechPub_2614345_0106 - 05_MM2819200_04en.fm

(Cont'd)

Change Motor Shaft Sealing Ring

a) Remove the nut (1).
b) Open the tap (2) and drain off the lubricant into a suitable container.
c) Remove the key (3).
d) Change the seal ring (4).
e) Fit the key (3).
f) Restore the correct quantity of lubricant.

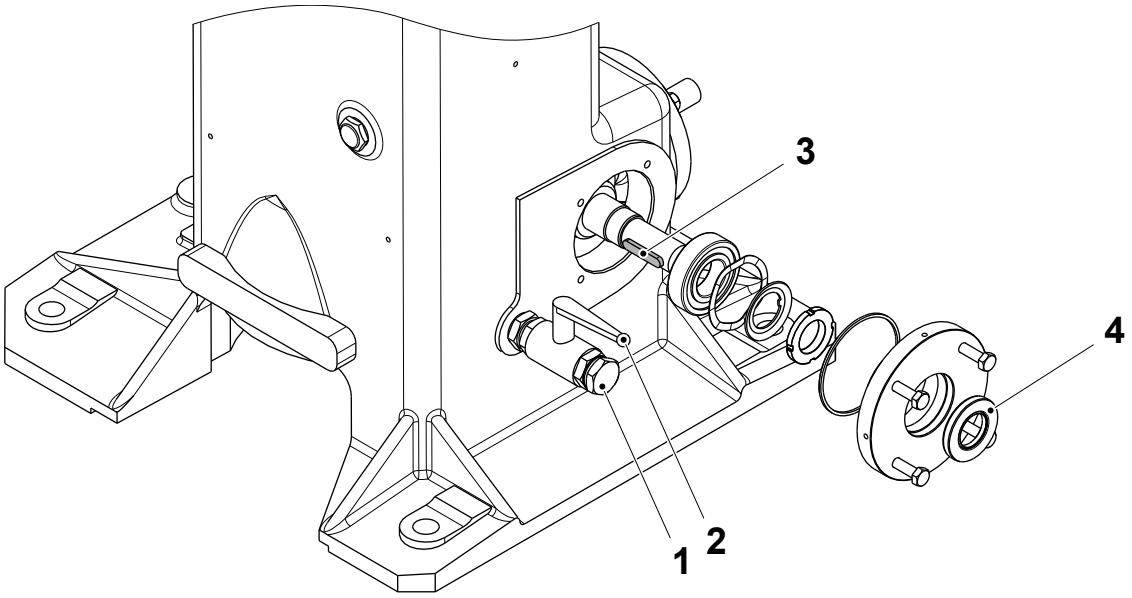

1 Nut
2 Tap
3 Key
4 Seal ring

TechPub_2614345_0106 - 05_MM2819200_04en.fm

(Cont'd)

(Cont'd)

Motor Shaft Blind Side O-ring

a) Remove the nut (1).
b) Open the tap (2) and drain off the lubricant into a suitable container.
c) Remove the flange (3) by means of the screws (4).
d) Change the O-ring (5).
e) Fit the flange (3) by means of the screws (4).
f) Restore the correct quantity of lubricant.

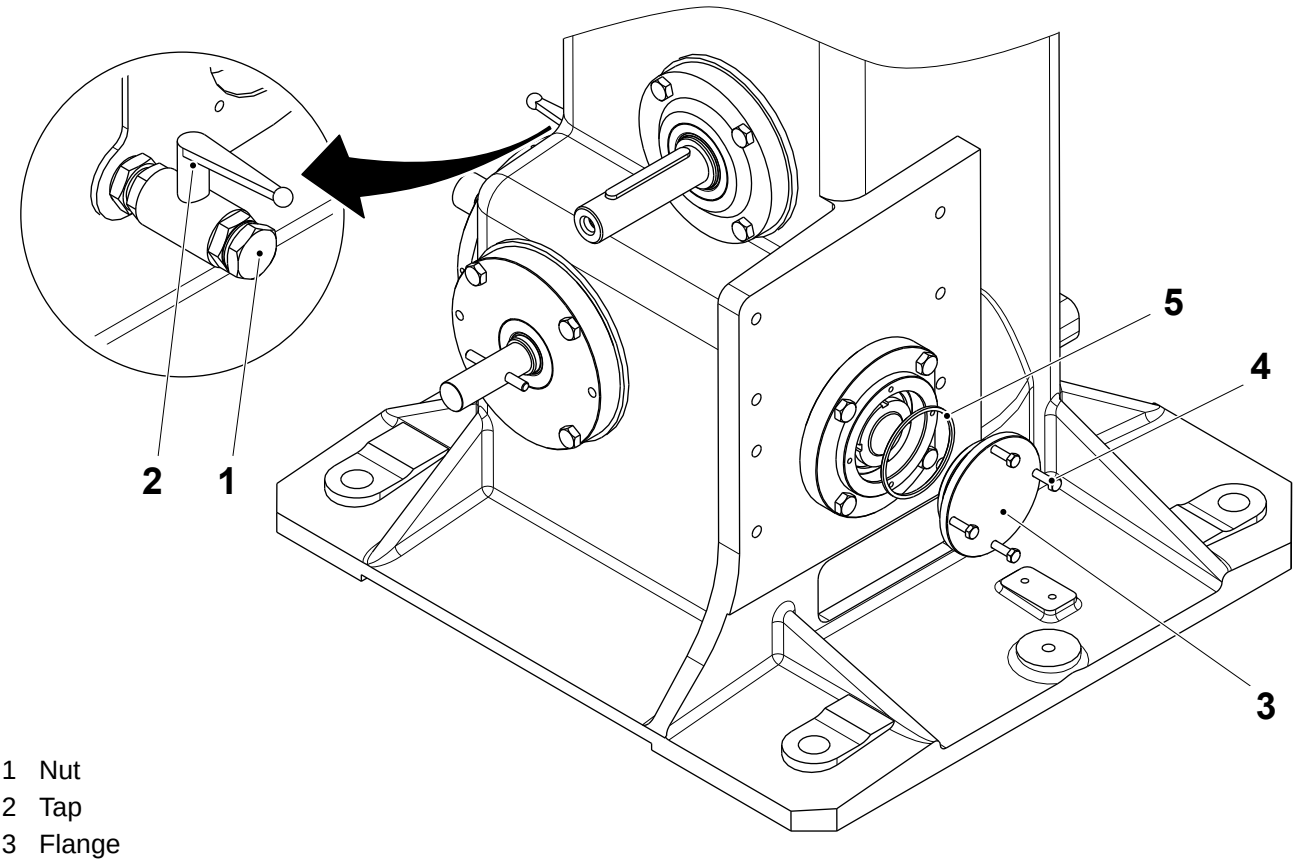

1 Nut
2 Tap
3 Flange
4 Screw
5 O-ring

(Cont'd)

TechPub_2614345_0106 - 05_MM2819200_04en.fm

(Cont'd)

Change Motor Shaft Blind Side Screw Flange O-ring

a) Remove the nut (1).
b) Open the tap (2) and drain off the lubricant into a suitable container.
c) Remove the flange (3) by means of the screws (4).
d) Remove the round nut (5) and the lock washer (6).
e) Remove the flange (7) together with the bearing (8).
f) Change the O-ring (9).

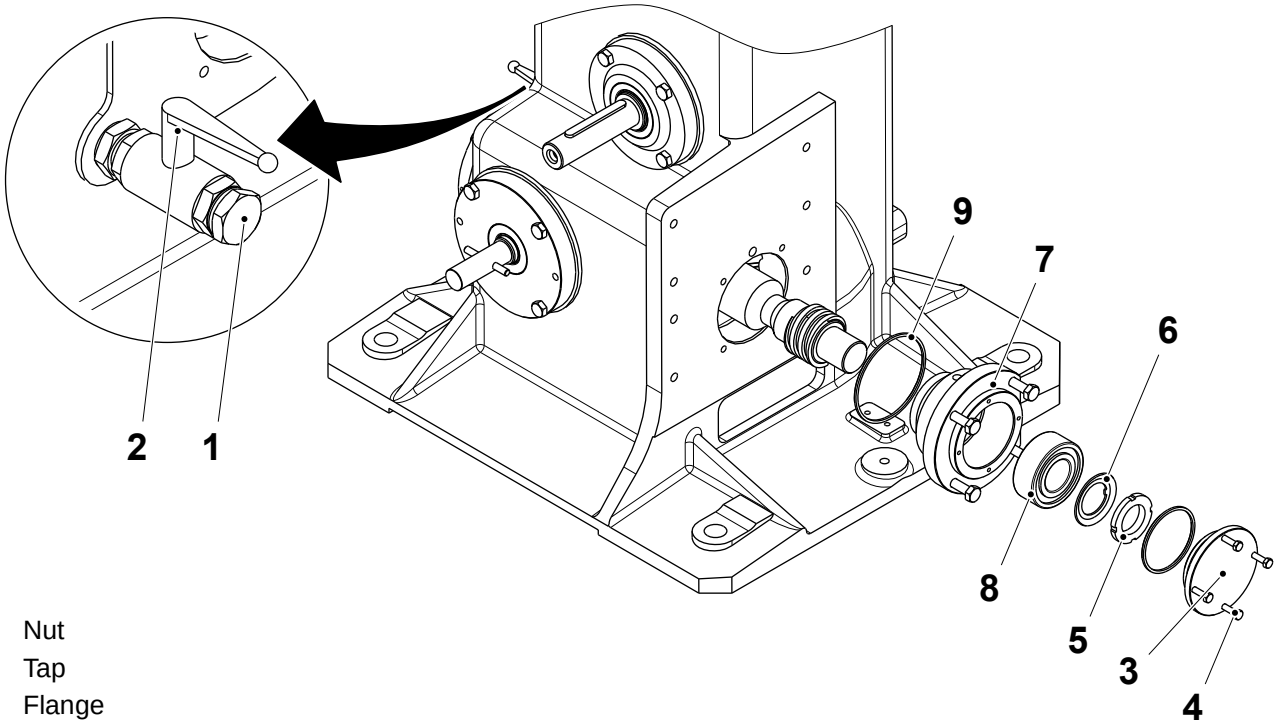

1 Nut
2 Tap
3 Flange
4 Screw
5 Round nut
6 Lock washer
7 Flange
8 Bearing
9 O-ring

(Cont'd)

TechPub_2614345_0106 - 05_MM2819200_04en.fm

(Cont'd)

g) Fit the pump (10) if it is been removed during the previous operations.
h) Fit the bearing (8) in the flange (7).
i) Fit the flange (7) by means of the screws (11).
j) Fit the lock washer (6) and the round nut (5).
k) Fit the flange (3) by means of the screws (4).
l) Restore the correct quantity of lubricant.

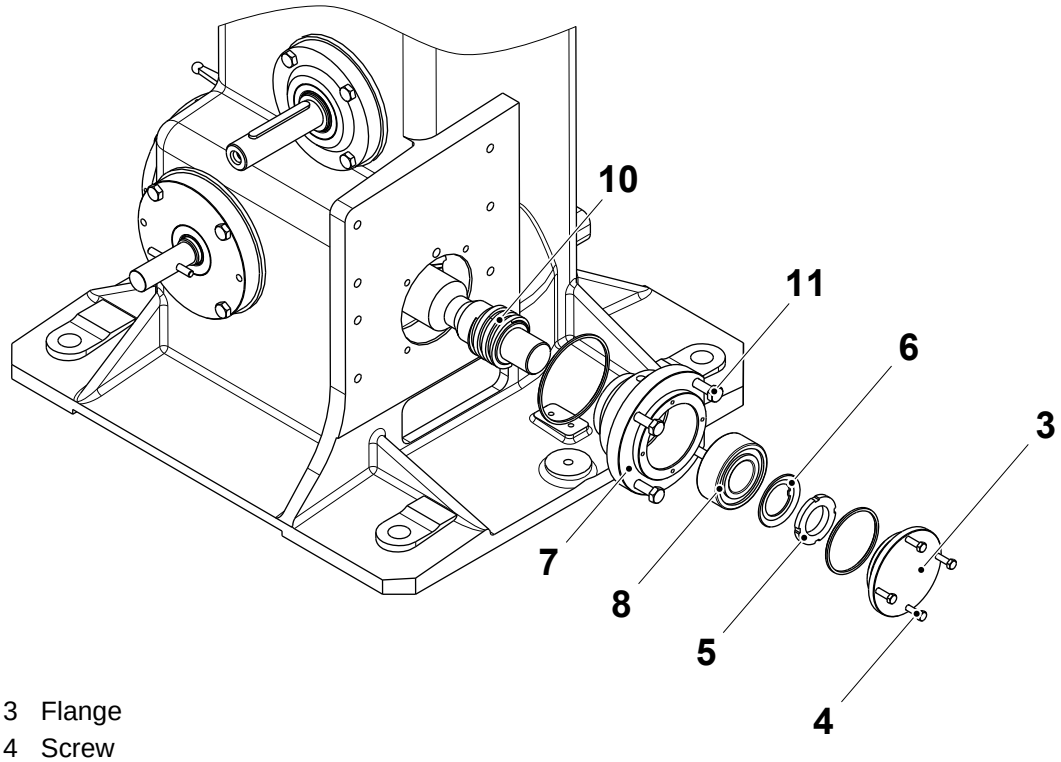

3 Flange
4 Screw
5 Round nut
6 Lock washer
7 Flange
8 Bearing
10 Pump
11 Screw

TechPub_2614345_0106 - 05_MM2819200_04en.fm

5.3-14 Indexing Unit - Change Superior Box

Machine Status	Mains Power OFF Air OFF Steam OFF Water OFF
SPC reference	2931385-0100

Note! During the removal of the components a small quantity of lubricant oil may be released from the indexing gear.

a) Remove the screws (1).

b) Change the box (2) together with the gasket (3).

c) Fit the screws (1).

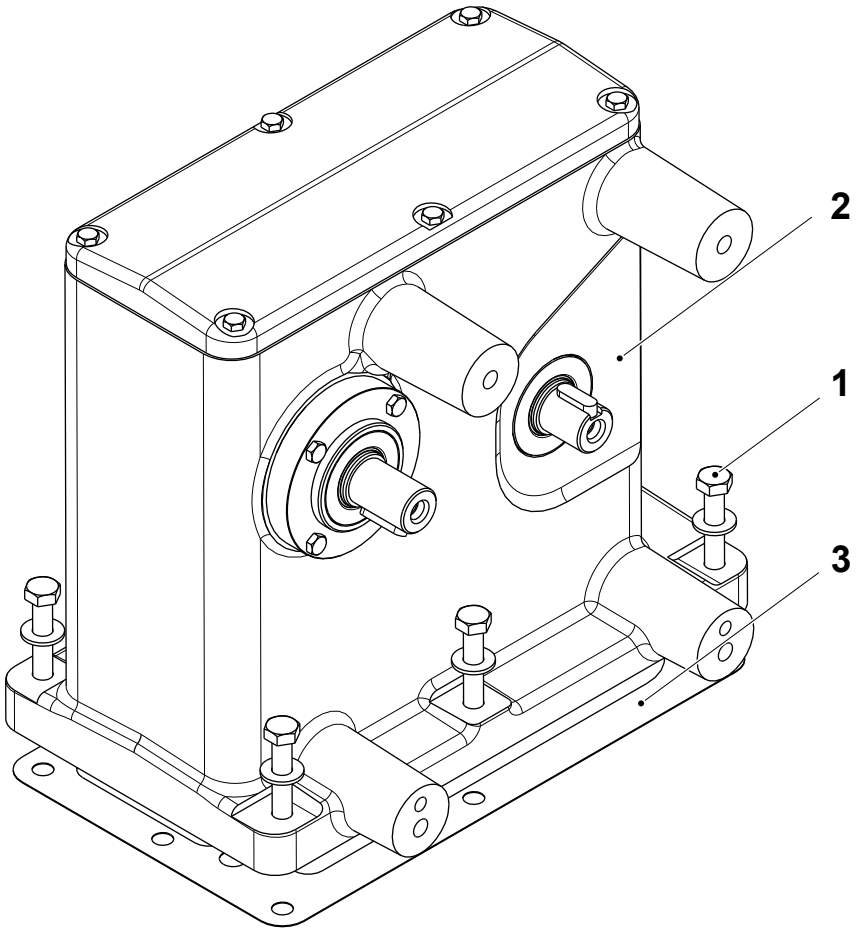

1 Screw
2 Box
3 Gasket

TechPub_2614345_0106 - 05_MM2819200_04en.fm

5.3-15 Indexing Unit - Overhaul Superior Box

Machine Status	Mains Power OFF Air OFF Steam OFF Water OFF
SPC reference	2931385-0100

Note! During the removal of the components a small quantity of lubricant oil may be released from the indexing gear.

Change Superior Box Inferior Gasket

a) Remove the box (1) by means of the screws (2).

b) Change the gasket (3).

c) Fit the box (1) by means of the screws (2).

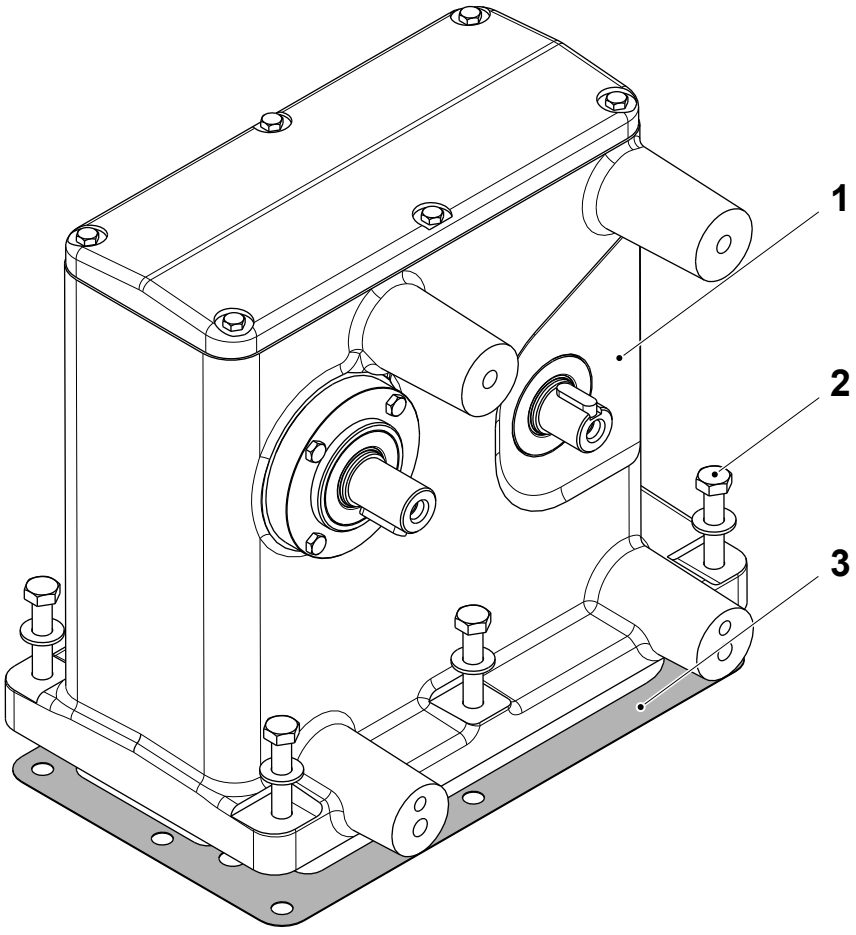

1 Box
2 Screw
3 Gasket

(Cont'd)

TechPub_2614345_0106 - 05_MM2819200_04en.fm

(Cont'd)

Change Superior Box Superior Gasket

a) Remove the cover (1) by means of the screws (2).

b) Change the gasket (3).

c) Fit the cover (1) by means of the screws (2).

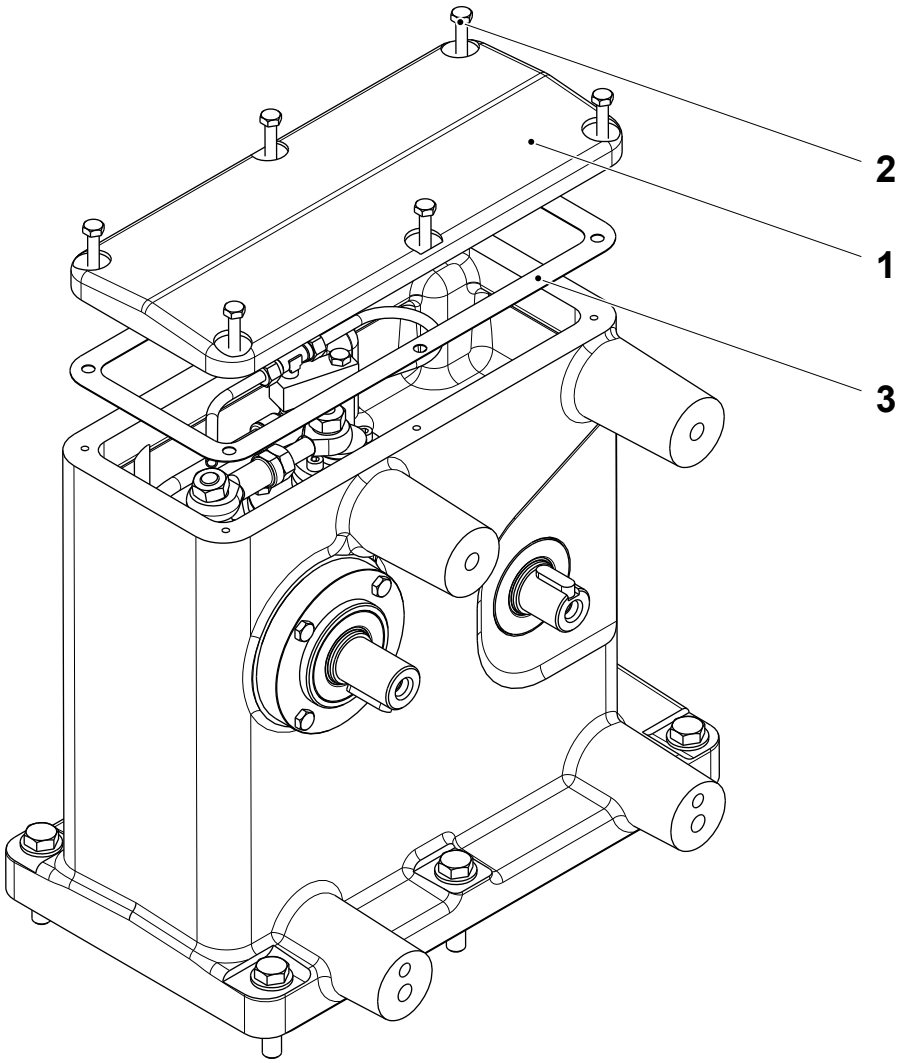

1 Cover
2 Screw
3 Gasket

(Cont'd)

TechPub_2614345_0106 - 05_MM2819200_04en.fm

(Cont'd)

Note! During the removal of the components a small quantity of lubricant oil may be released from the indexing gear.

Change Superior Box Coupling

a) Remove the box (1) by means of the screws (2).

b) Change the coupling (3).

c) Change the gasket (4).

d) Fit the box (1) by means of the screws (2).

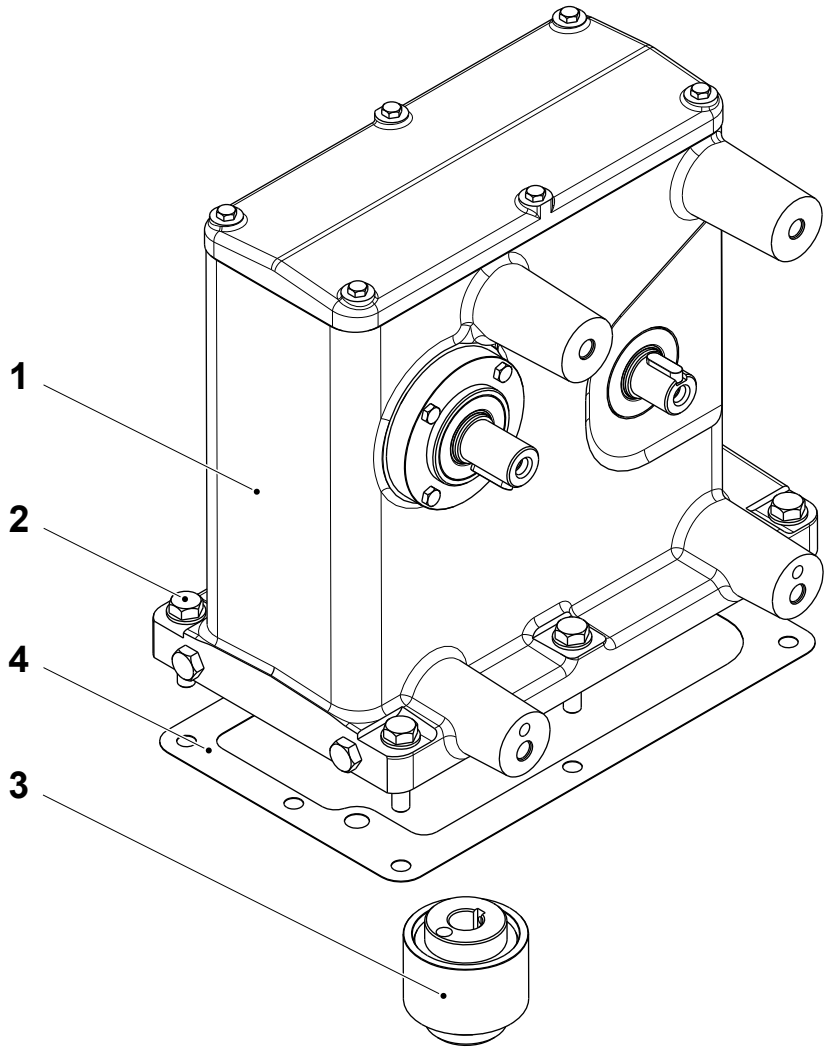

1 Box
2 Screw
3 Coupling
4 Gasket

(Cont'd)

TechPub_2614345_0106 - 05_MM2819200_04en.fm

(Cont'd)

Change Superior Box Pulley Shaft Seal Ring

a) Remove the key (1).

b) Change the seal ring (2).

c) Fit the key (1).

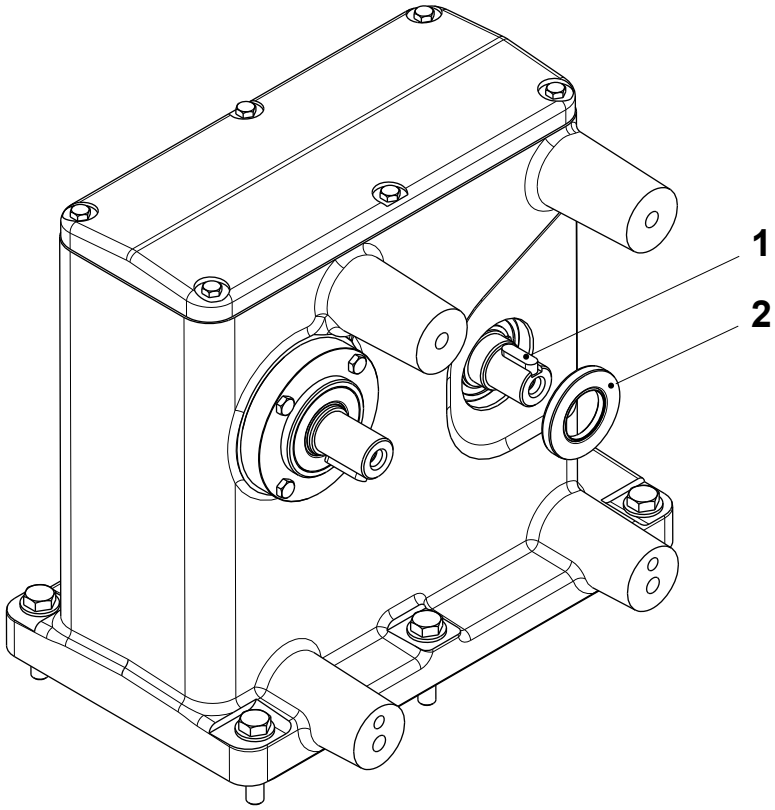

1 Key
2 Seal ring

TechPub_2614345_0106 - 05_MM2819200_04en.fm

(Cont'd)

(Cont'd)

Change Superior Box Pulley Shaft O-ring

a) Remove the flange (1) by means of the screws (2).

b) Change the O-ring (3).

c) Fit the flange (1) by means of the screws (2).

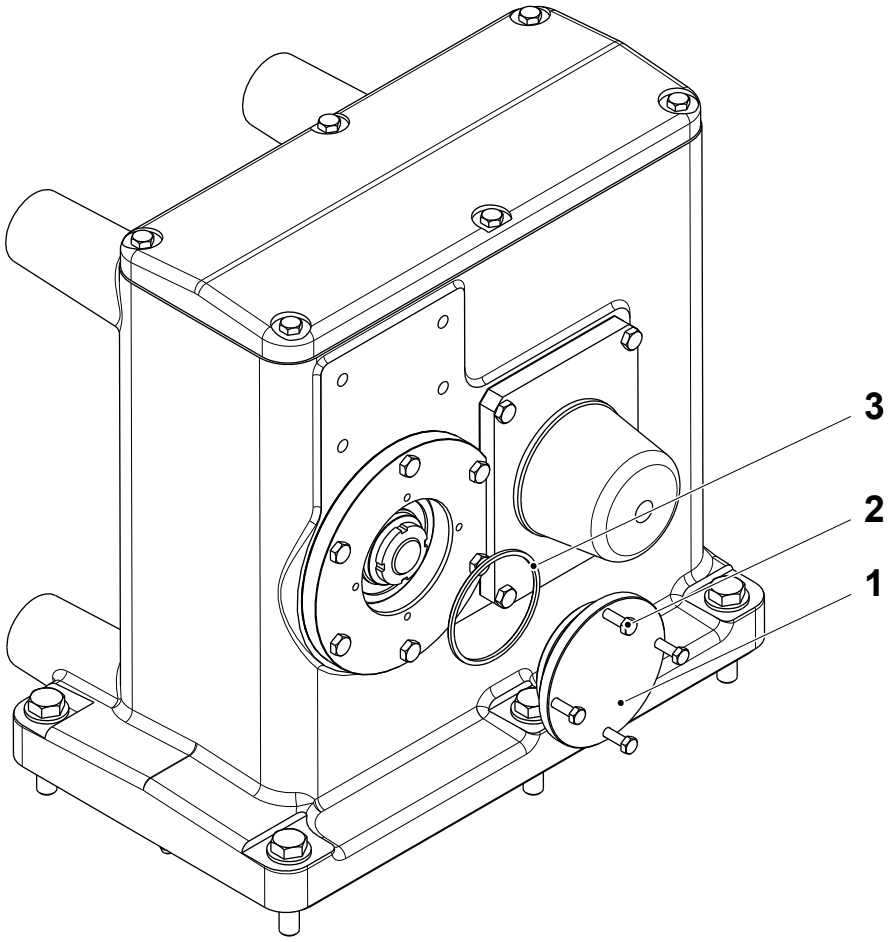

1 Flange
2 Screw
3 O-ring

(Cont'd)

TechPub_2614345_0106 - 05_MM2819200_04en.fm

(Cont'd)

Change Superior Box Connecting Rod Shaft Seal Ring

a) Remove the key (1).

b) Change the seal ring (2).

c) Fit the key (1).

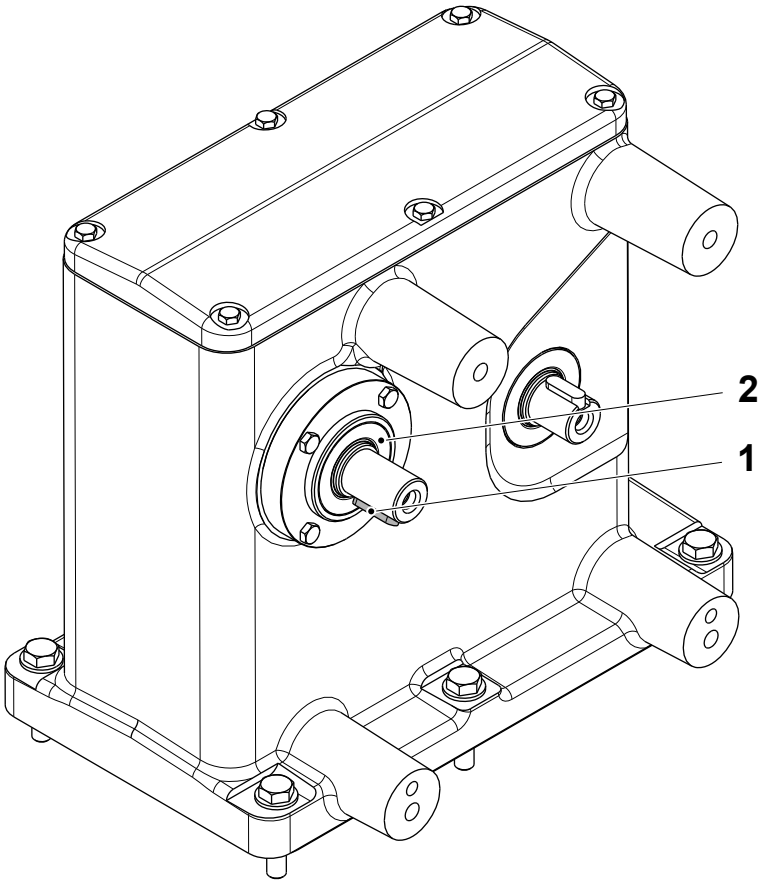

1 Key
2 Seal ring

(Cont'd)

TechPub_2614345_0106 - 05_MM2819200_04en.fm

(Cont'd)

Change Superior Box Connecting Rod Shaft O-ring

a) Remove the cover (1) by means of the screws (2).

b) Loosen the screw (3).

c) Remove the screw (4) and the washer (5).

d) Remove the flange (6) by means of the screws (7).

e) Change the O-ring (8).

f) Fit the flange (6) by means of the screws (7). Make sure to insert the kit rod ends (9).

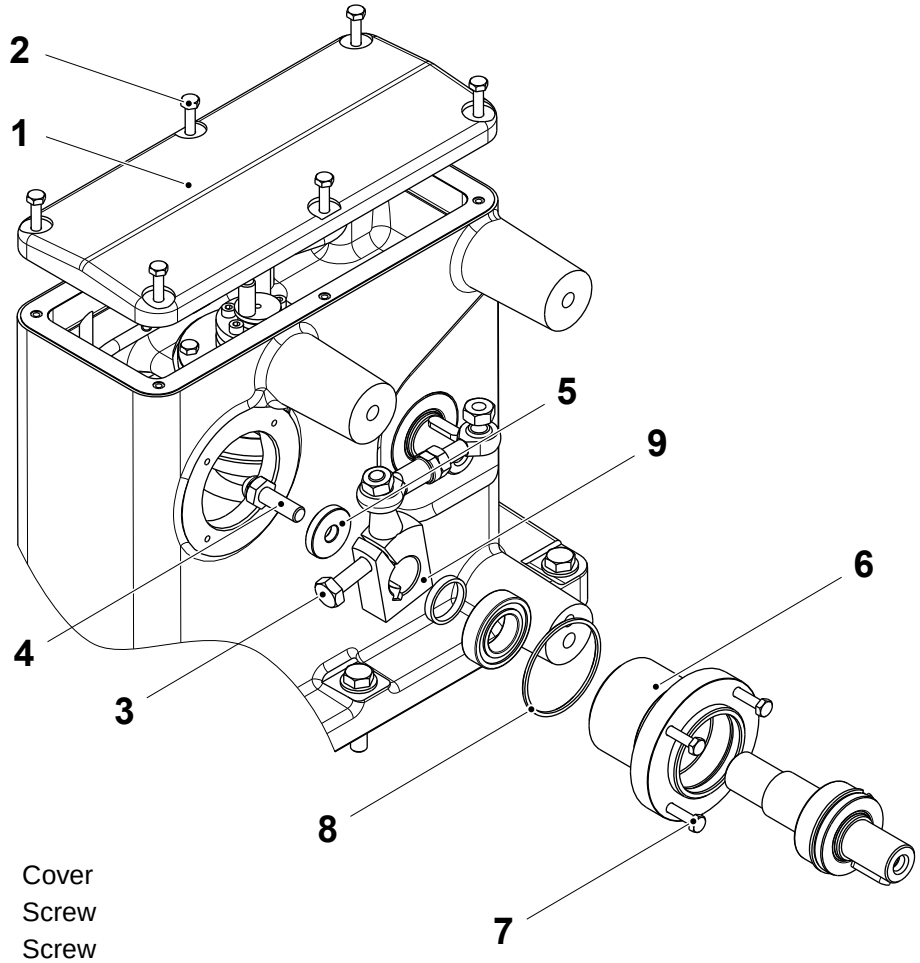

1 Cover
2 Screw
3 Screw
4 Screw
5 Washer
6 Flange
7 Screw
8 O-ring
9 Kit rod ends

(Cont'd)

TechPub_2614345_0106 - 05_MM2819200_04en.fm

(Cont'd)

g) Make sure the spacer (10) is fitted between the bearing (11) and the kit rod ends (9).

h) Fit the washer (5) and the screw (4).

i) Loosen the screw (4).

j) Tighten the screw (3).

k) Tighten the screw (4).

l) Fit the cover (1) by means the screws (2).

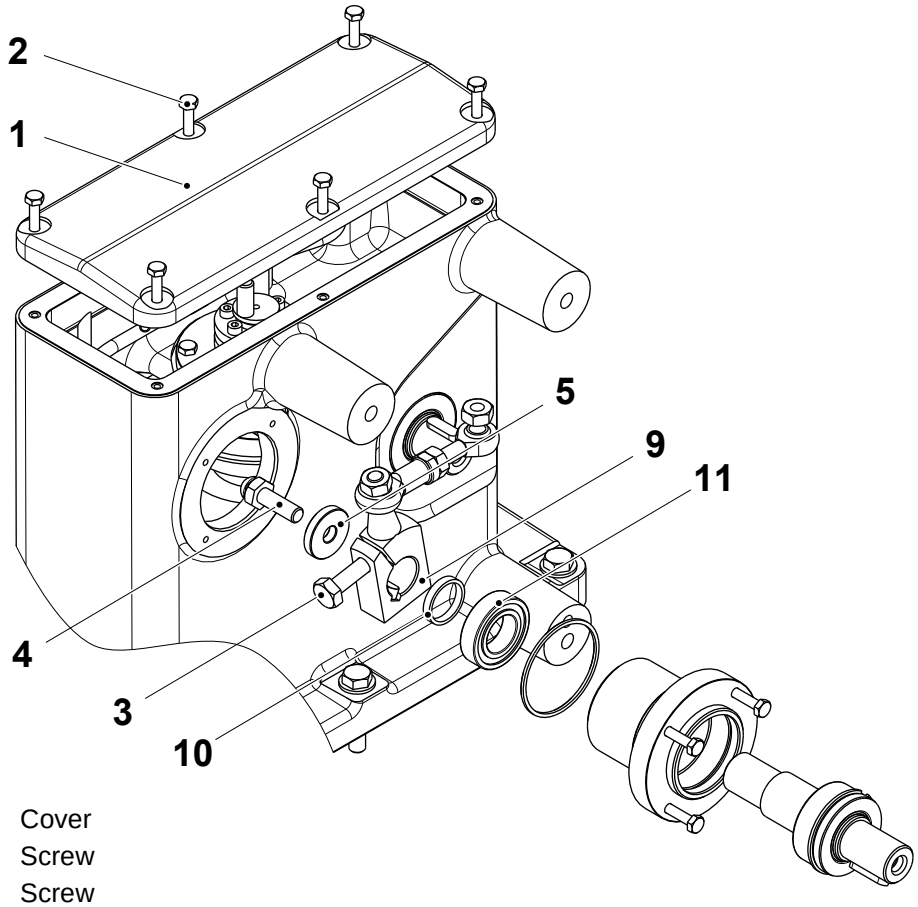

1 Cover
2 Screw
3 Screw
4 Screw
5 Washer
9 Kit rod ends
10 Spacer
11 Bearing

(Cont'd)

TechPub_2614345_0106 - 05_MM2819200_04en.fm

(Cont'd)

Change Superior Box Connecting Rod Shaft Kit Rod Ends

a) Remove the cover (1) by means of the screws (2).
b) Remove the nut (3).
c) Loosen the screw (4).
d) Remove the screw (5) and the washer (6).
e) Remove the flange (7) by means of the screws (8).
f) Change the kit rod ends (9) and the O-ring (10).

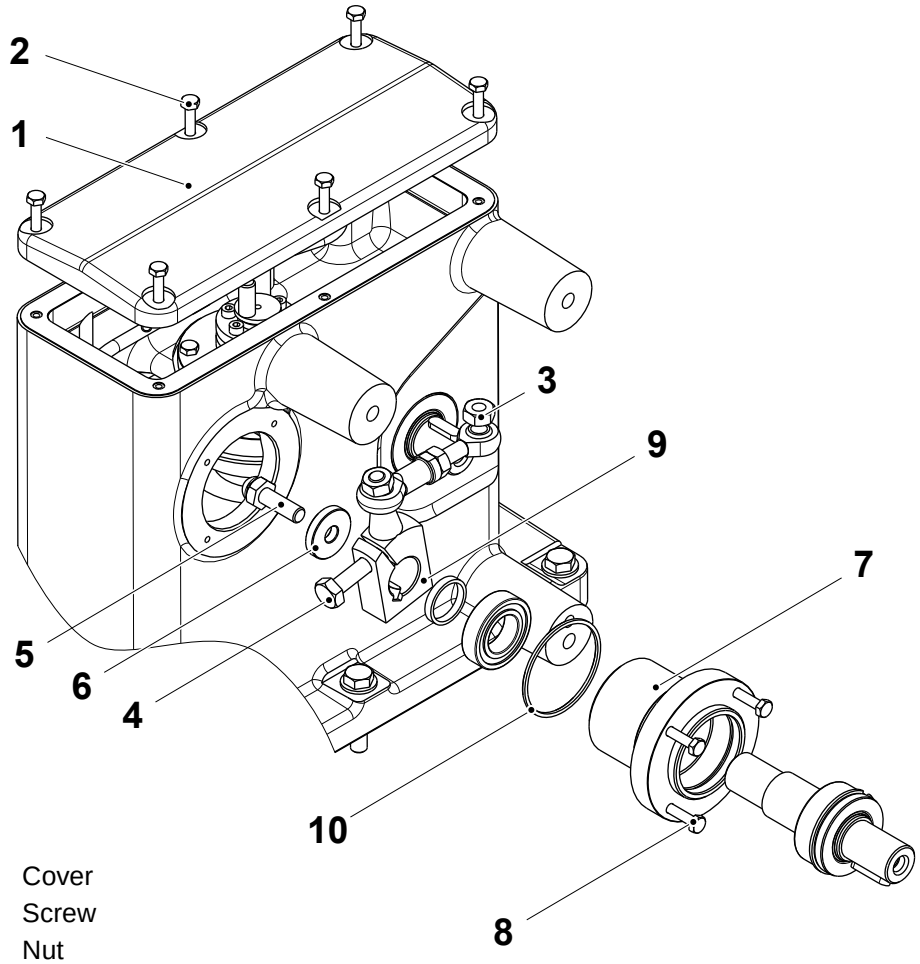

1 Cover
2 Screw
3 Nut
4 Screw
5 Screw
6 Washer
7 Flange
8 Screw
9 Kit rod ends
10 O-ring

(Cont'd)

TechPub_2614345_0106 - 05_MM2819200_04en.fm

(Cont'd)

g) Fit the flange (7) by means of the screws (8). Make sure to insert the kit rod ends (9).

h) Make sure the spacer (11) is fitted between the bearing (12) and the kit rod ends (9).

i) Fit the washer (6) and the screw (5).

j) Loosen the screw (5) and tighten the screw (4).

k) Tighten the screw (5).

l) Fit and tighten the nut (3).

m) Fit the cover (1) by means of the screws (2).

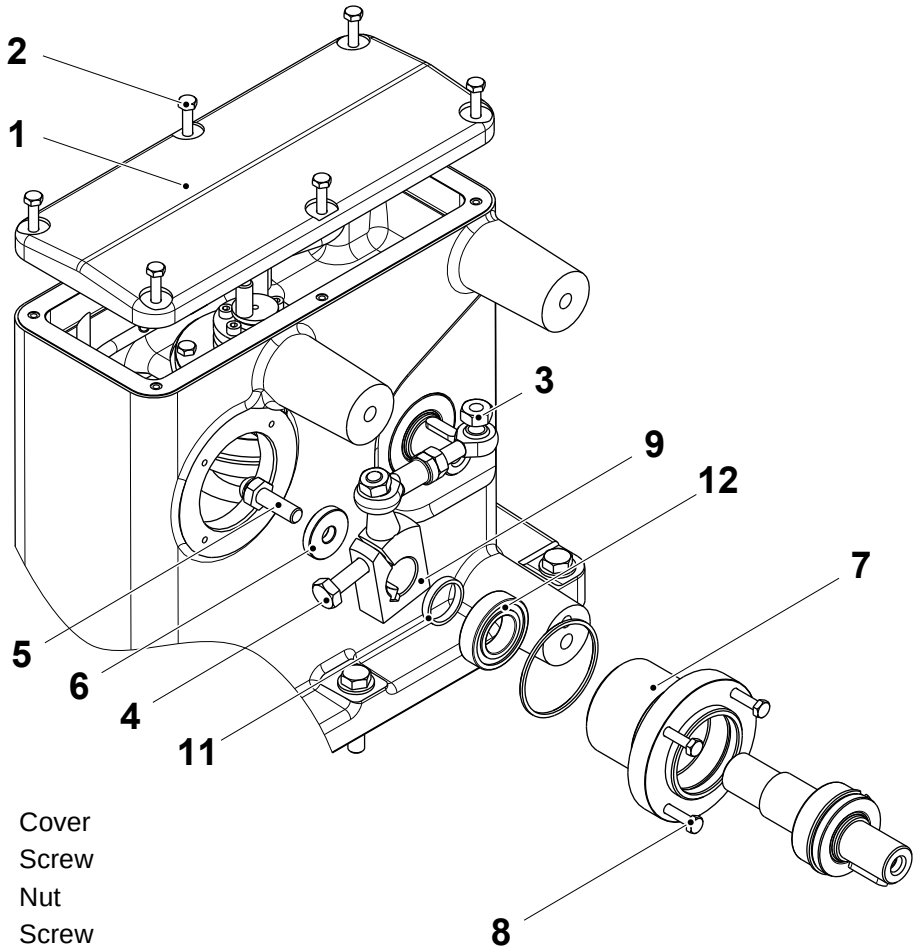

1 Cover
2 Screw
3 Nut
4 Screw
5 Screw
6 Washer
7 Flange
8 Screw
9 Kit rod ends
11 Spacer
12 Bearing

TechPub_2614345_0106 - 05_MM2819200_04en.fm

5.3-16 Indexing Unit - Change Oil Filter

Machine Status	Mains Power OFF Air OFF Steam OFF Water OFF
SPC reference	2931385-0100

Note! During the removal of the components a small quantity of lubricant oil may be released from the indexing gear.

Loosen and change the oil filter (1). Tighten the oil filter (1).

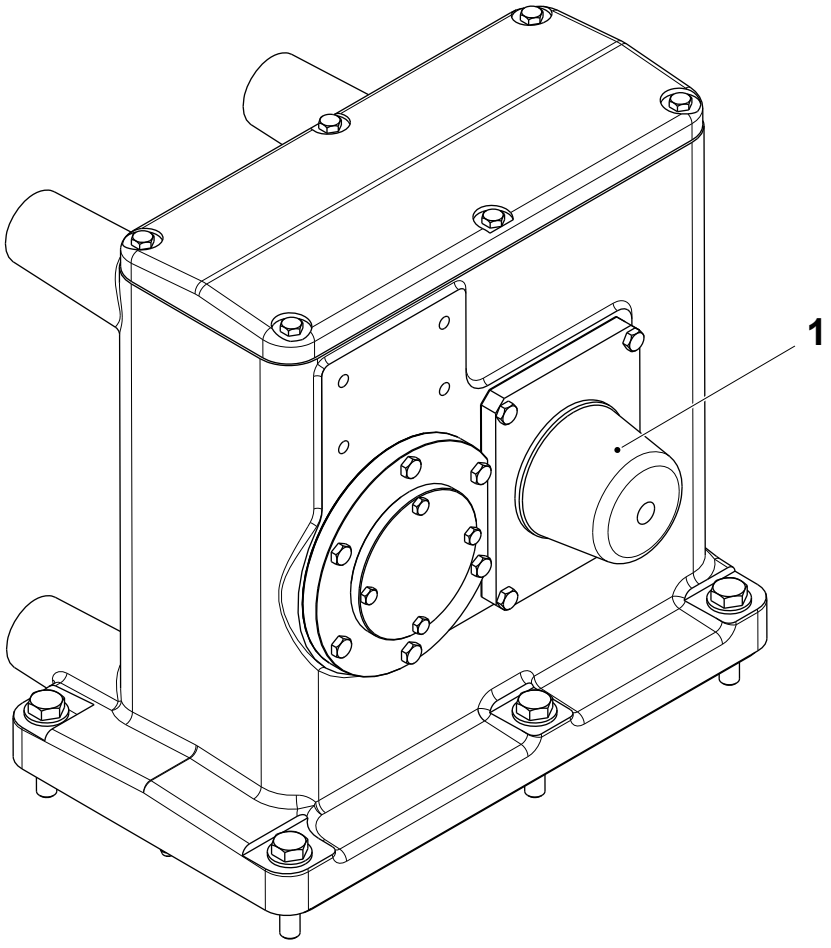

1 Oil filter

TechPub_2614345_0106 - 05_MM2819200_04en.fm

5.4 Motor Unit

SPC Reference	2751519-0100

5.4-1 Motor Unit - Check

Machine Status	Mains Power OFF Air OFF Steam ON Water OFF
SPC Reference	2751519-0100

a) Make sure that there are no oil leaks:
   – between the motor unit coupling (2) and the gearbox flange (3)
   – between the motor unit coupling (2) and the motor unit (1).

b) Make sure that the two electrical connectors and the air connection are secure.

c) Check the performance of the motor unit by slow inching the machine one complete cycle, see 4-2 Jaw System - Inching, Go To Position and Manual Operation Description.

d) Make sure there are no air leaks from the motor unit (1) air connection.

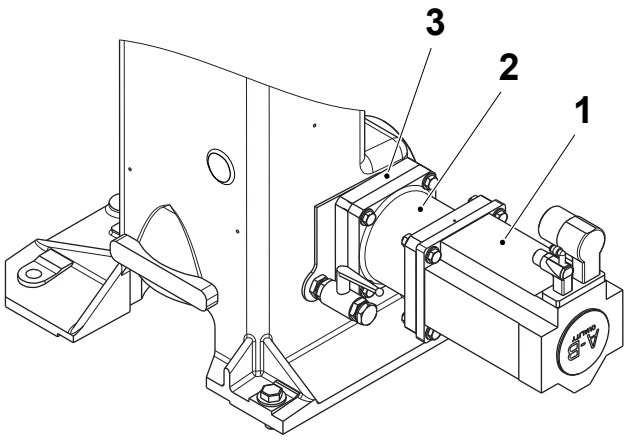

1 Motor unit
2 Motor unit coupling
3 Gearbox flange

TechPub_2614345_0106 - 05_MM2819200_04en.fm

5.4-2 Motor Unit - Set Pressure

Machine Status	Mains Power ON Air OFF Steam ON Water OFF
SPC Reference	2751519-0100

Follow the procedure described in 5.3-5 Indexing Unit - Set Pressure.

TechPub_2614345_0106 - 05_MM2819200_04en.fm

5.4-3 Motor Unit - Change

Machine Status	Mains Power OFF Air OFF Steam ON Water OFF
Consumables	Silicon Grease TP No. 90296-0068
SPC Reference	2751519-0100

CAUTION
Risk of personal injury.
The motor unit weighs approximately 15 kg.

a) Disconnect the over pressure air supply and the electrical connectors from the motor unit (1).

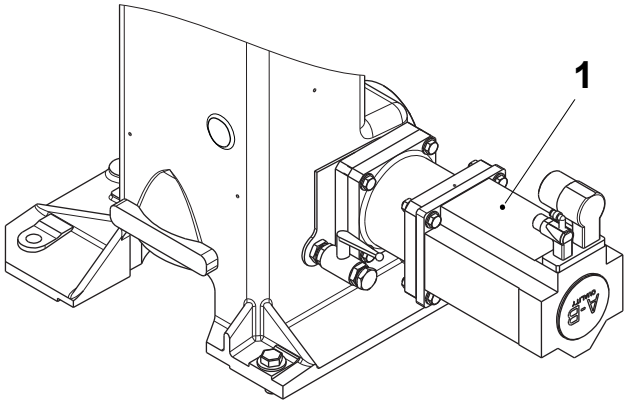

1 Motor unit

(Cont'd)

TechPub_2614345_0106 - 05_MM2819200_04en.fm

(Cont'd)

b) Support the motor unit (1) and remove the four screws (2) securing the motor unit (1) to the flange (3).

c) Move the motor unit (1) from the flange (3) to disengage the coupling (4) from the shaft coupling (5).

d) Loosen the screw (6) and remove the coupling (4) from the motor unit (1) drive shaft.

e) Remove the four screws (7) securing the flange (3) to the gearbox flange (8).

f) Loosen the screw (9) and remove the shaft coupling (5) from the gearbox shaft (10).

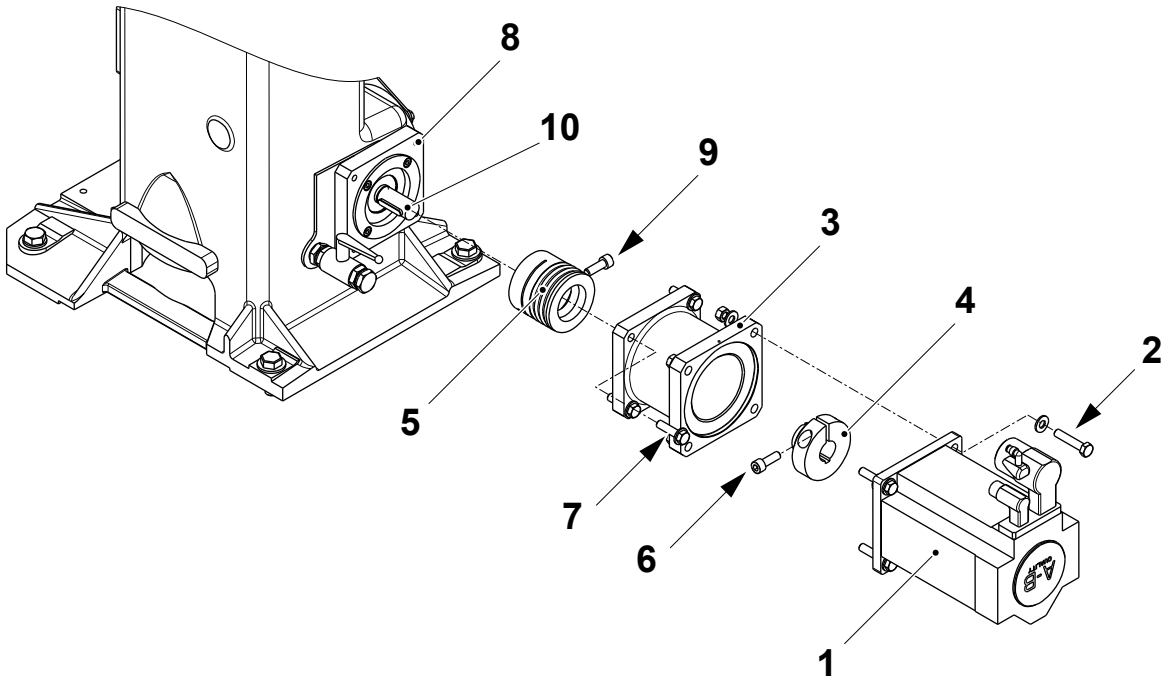

1 Motor unit
2 Screw
3 Flange
4 Coupling
5 Shaft coupling
6 Screw
7 Screw
8 Gearbox flange
9 Screw
10 Gearbox shaft

(Cont'd)

TechPub_2614345_0106 - 05_MM2819200_04en.fm

(Cont'd)

g) Check the coupling (4) and shaft coupling (5) for visible wear or damage. Change if necessary.

h) Check the gearbox shaft (10) for visible wear or damage.

i) Apply a layer of grease (code F, see 10.3-1 Lubricants) to the couplings and the gearbox shaft.

j) Check the over pressure air filter in the pneumatic unit in the service unit.

k) Assemble in the reverse order.

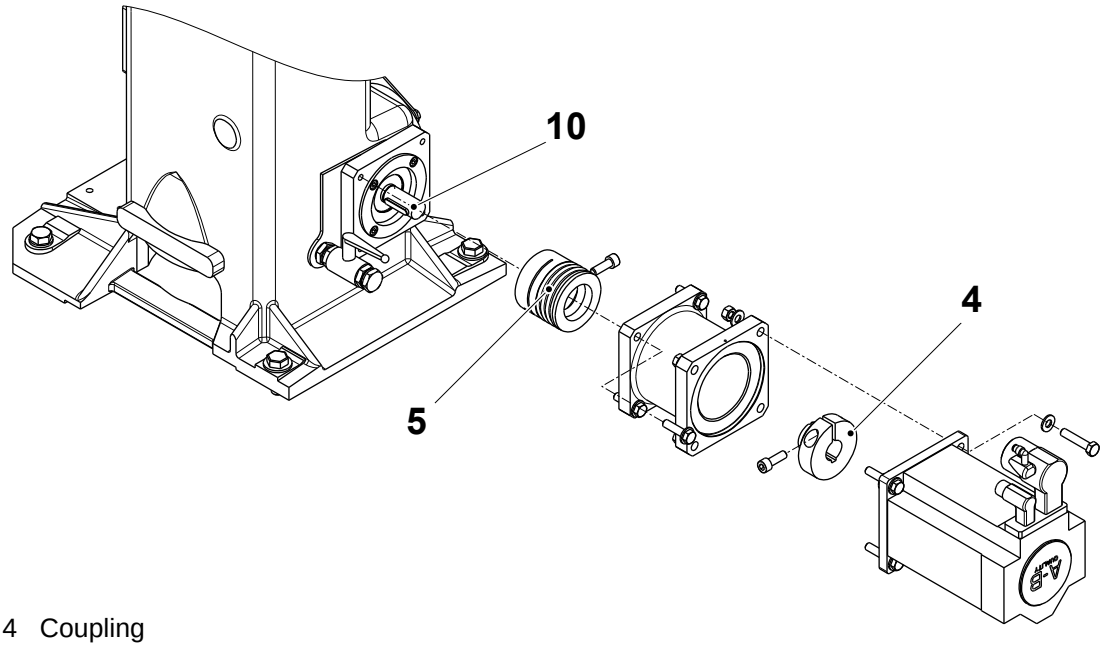

4 Coupling
5 Shaft coupling
10 Gearbox shaft

TechPub_2614345_0106 - 05_MM2819200_04en.fm

(Cont'd)

(Cont'd)

l) On assembly set the distance **A** between the coupling (4) and the end of the motor unit shaft (11).

m) On assembly set the distance **B** between the shaft coupling (5) and the gearbox flange (8).

n) Perform the servo motor referencing, see 5-3 Final Folder - Referencing on page 5-11.

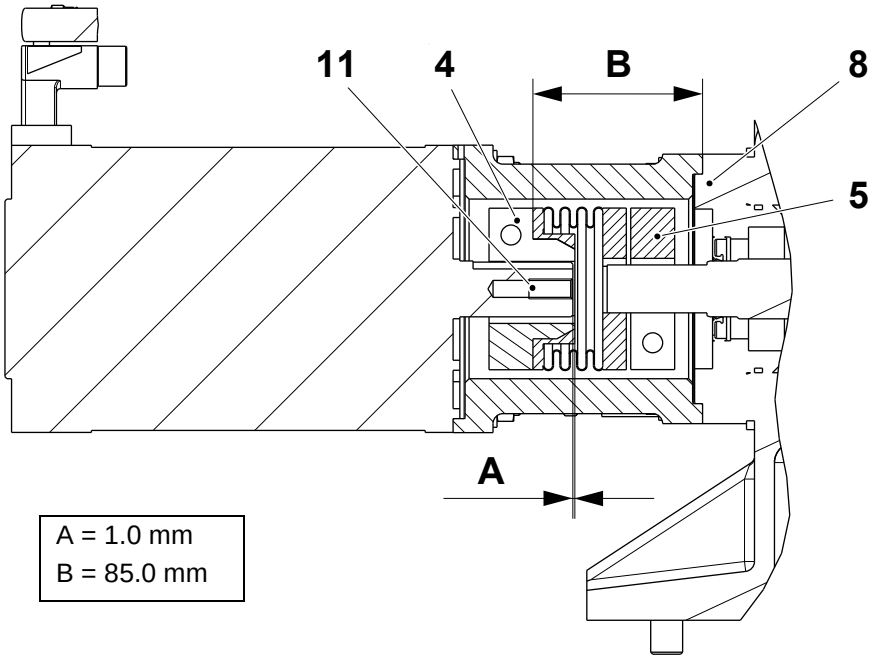

4 Coupling
5 Shaft coupling
8 Gearbox flange
11 Motor unit shaft

TechPub_2614345_0106 - 05_MM2819200_04en.fm

5.5 Frame Work

SPC Reference	2895568-0100

5.5-1 Frame Work - Overhaul

Machine Status	Mains Power OFF Air OFF Steam ON Water OFF
Consumables	Silicon Grease TP No. 90296-0068
SPC Reference	2895568-0100

a) Crank the final folder to 0°.

(Cont'd)

TechPub_2614345_0106 - 05_MM2819200_04en.fm

(Cont'd)

b) Remove the screws (1) in the external frame.
c) Remove the screws (2) and the spacers (3) in the external frame.
d) Remove the screw (4).
e) Remove screws (5) and the LH infeed guide (6).

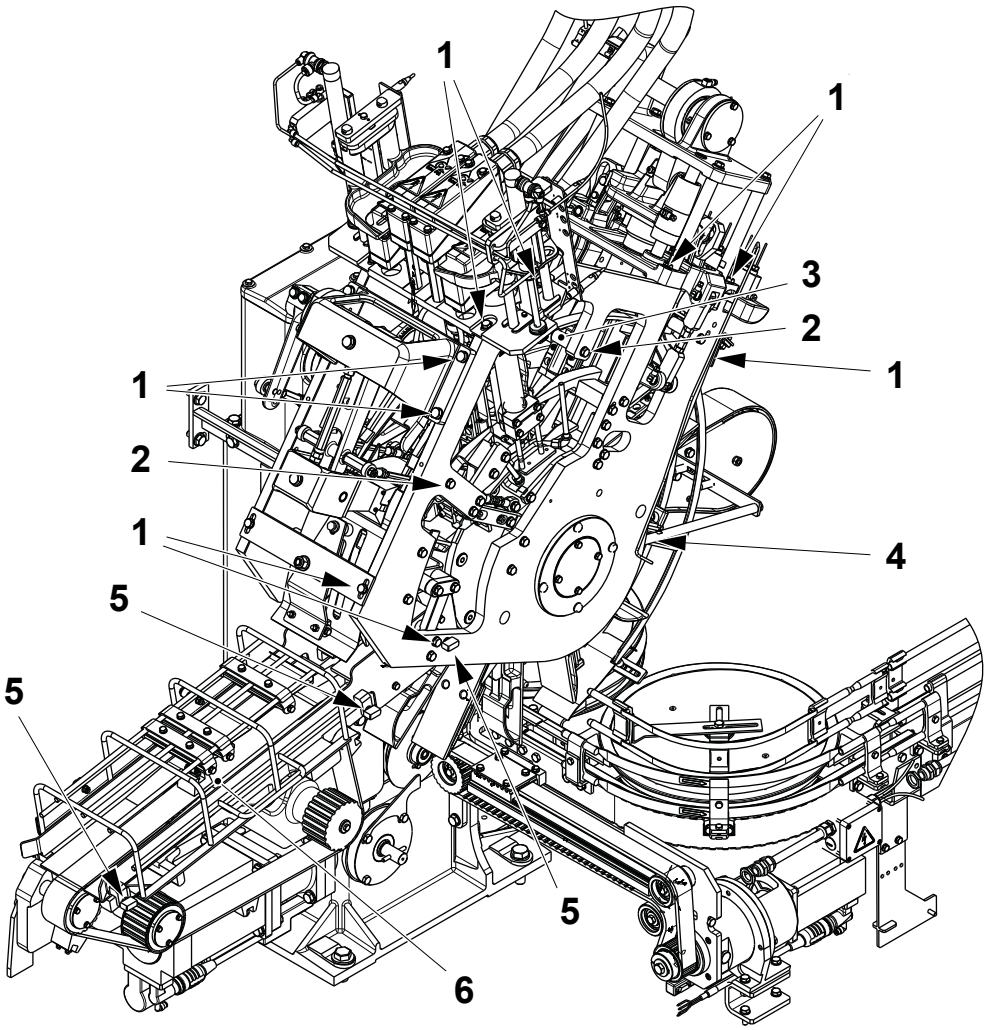

1 Screw
2 Screw
3 Spacer
4 Screw
5 Screw
6 Infeed guide

(Cont'd)

TechPub_2614345_0106 - 05_MM2819200_04en.fm

(Cont'd)

f) Remove the screws (7), the flange (8) and change the O-ring (9).

g) Remove the screw (10) and the washer (11).

h) Remove the external frame (12).

i) Change the seal ring (13) and the ball bearing (14).

Note! Apply a layer of grease (code F, see 10.3-1 Lubricants) to the seal ring assembly.

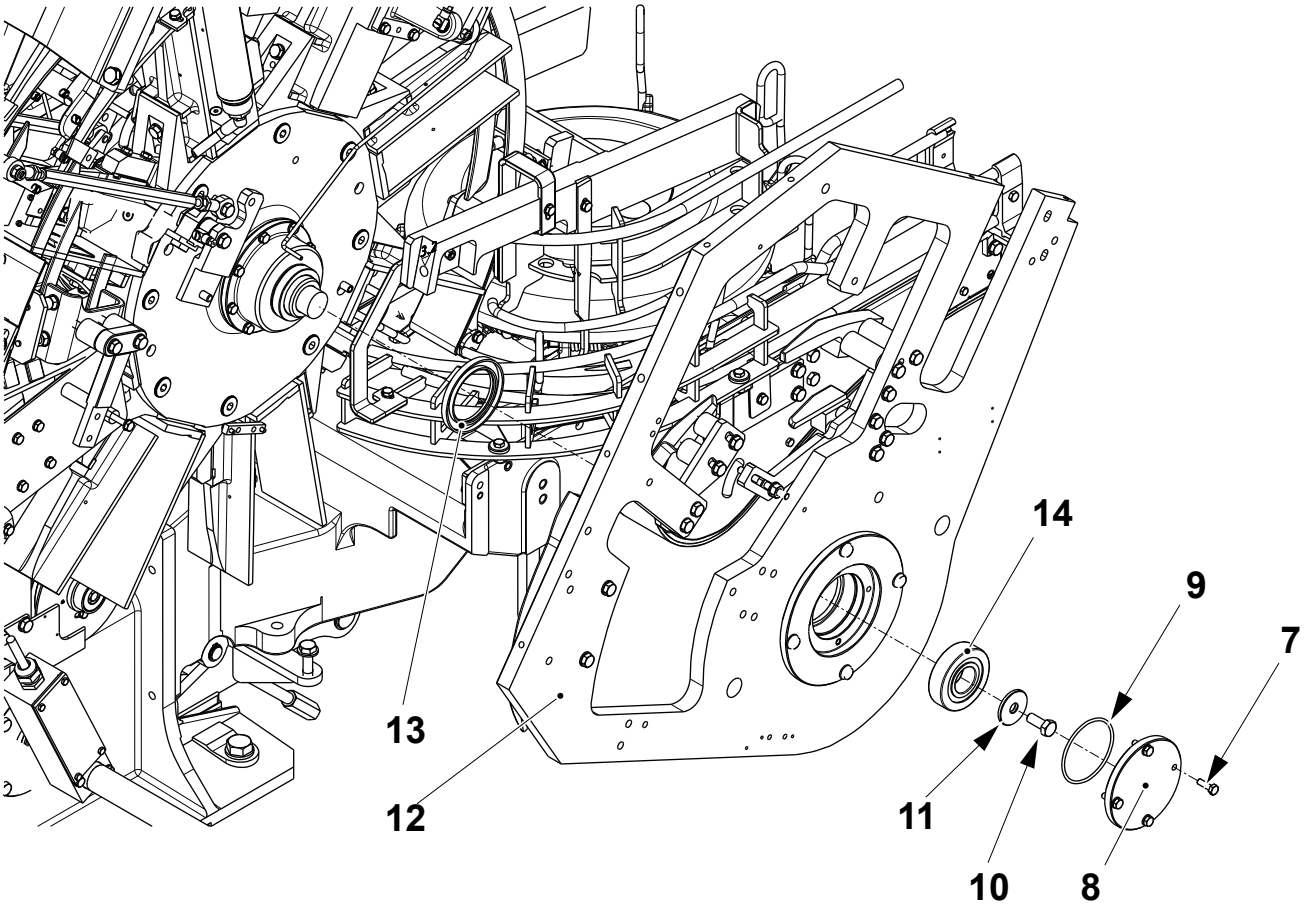

7 Screw
8 Flange
9 O-ring
10 Screw
11 Washer
12 External frame
13 Seal ring
14 Ball bearing

(Cont'd)

TechPub_2614345_0106 - 05_MM2819200_04en.fm

(Cont'd)

j) Remove the belt tensioner (18).

k) Remove the circlip (19) and the roller (20).

l) Remove the circlip (21) and change the ball bearing (22) and the seal ring (23).

m) Check the axle bolt (24) for visible wear or damage. Change if necessary.

n) Assemble in the reverse order.

Note! Apply a layer of grease (code F, see 10.3-1 Lubricants) to the seal ring on assembly.

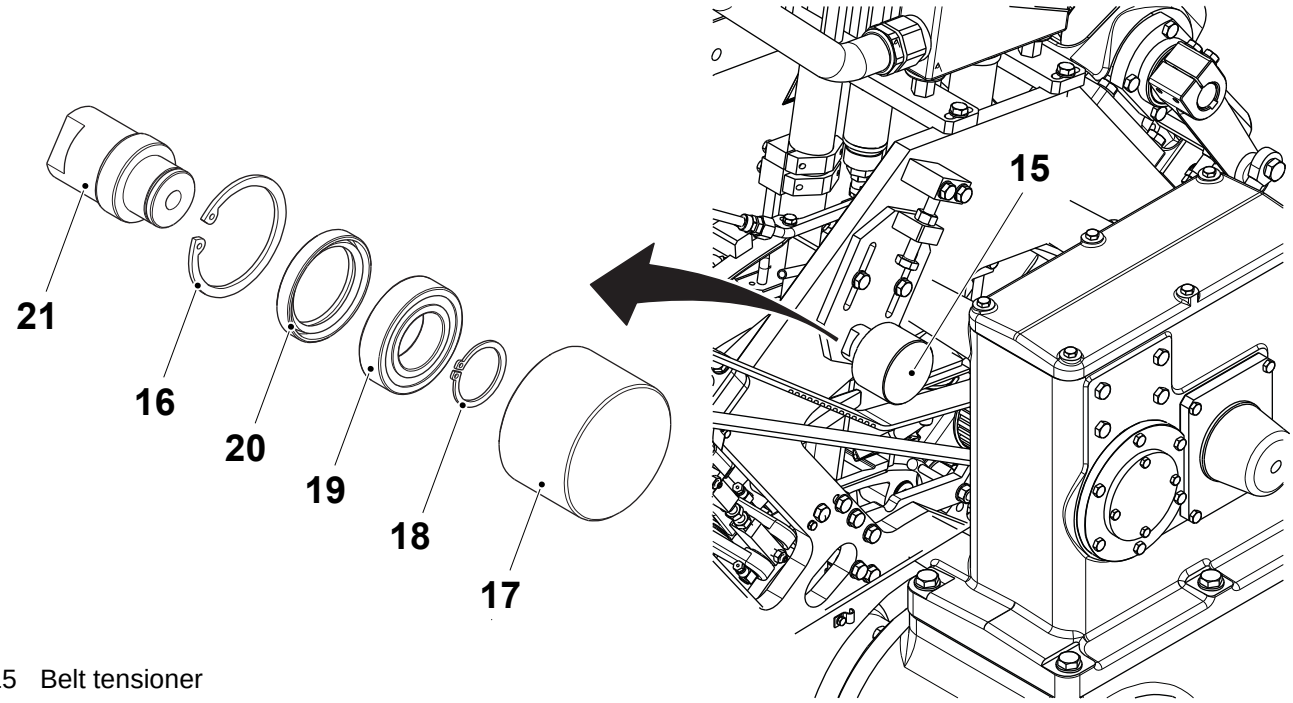

15 Belt tensioner
16 Circlip
17 Roller
18 Circlip
19 Ball bearing
20 Seal ring
21 Axle bolt

TechPub_2614345_0106 - 05_MM2819200_04en.fm

5.5-2 Frame Work - Set Inductive Switch

Machine Status	Mains Power ON Air OFF Steam ON Water OFF
SPC Reference	2895568-0100

a) Crank the final folder until one screw (3) of the wheel is in front of the inductive switch (2).

b) Loosen the screw (1) and set the distance **A** between the screw (3) and the inductive switch (2). Tighten the screw (1).

c) Crank the final folder and make sure that the inductive switch (2) LED goes ON with all the screws (3) in the wheel and that there is no contact between them.

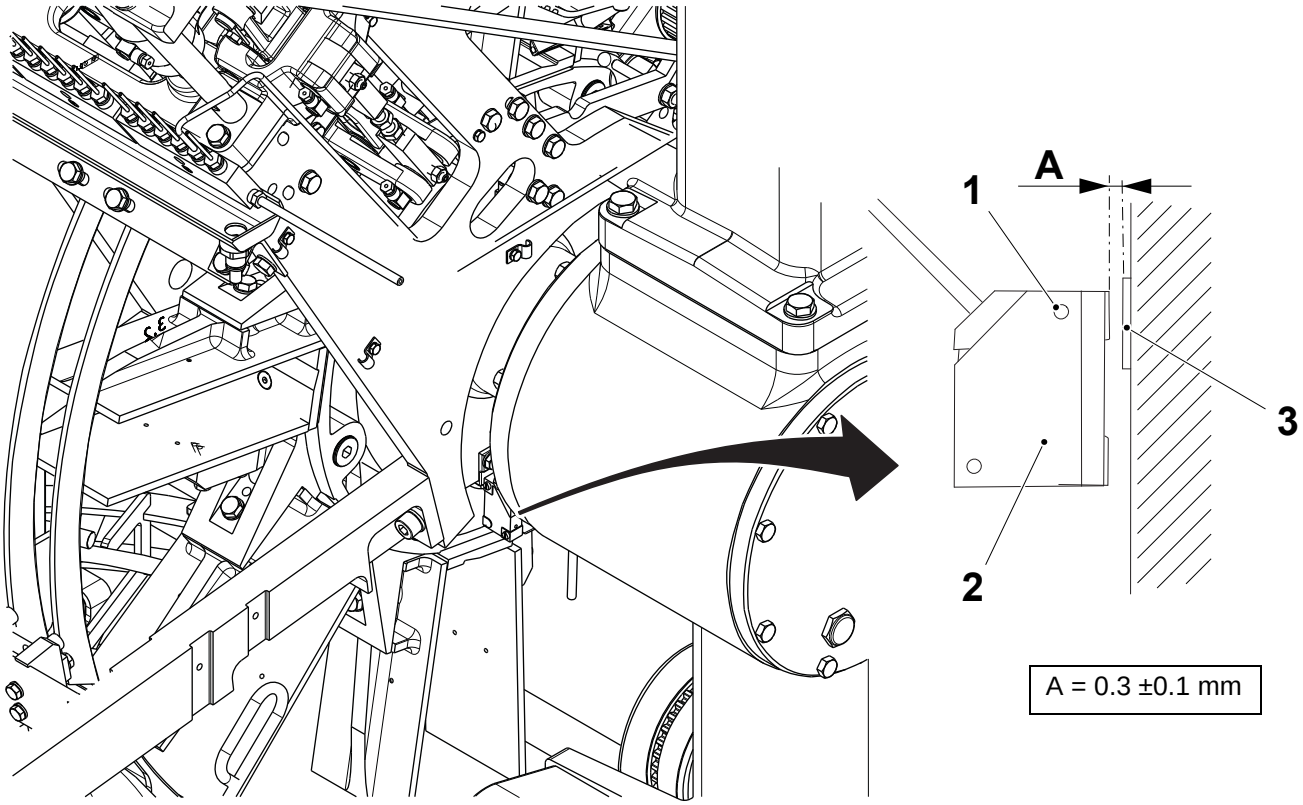

1 Screw
2 Inductive switch
3 Screw

TechPub_2614345_0106 - 05_MM2819200_04en.fm

5.6 Wheel

SPC Reference	2927613-0100

5.6-1 Wheel - Change

Machine Status	Mains Power OFF Air OFF Steam ON Water OFF
Special Equipment	Template TP No. 2773587-0000 Template Pin TP No. 1350498-0000
SPC Reference	2927613-0100

Remove Wheel

a) Remove the external frame, see 5.5-1 Frame Work - Overhaul.

b) On the LH side of the pressure device (1), remove the four screws (2) and the pusher (3).

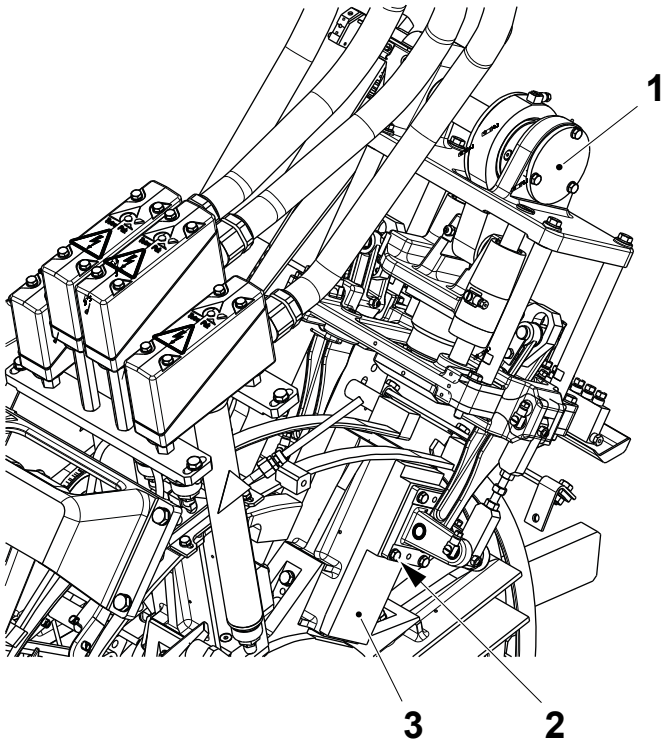

1 Pressure device
2 Screw
3 Pusher

(Cont'd)

TechPub_2614345_0106 - 05_MM2819200_04en.fm

(Cont'd)

CAUTION

Risk of personal injury.

The wheel weighs approximately 30 kg. Two people are needed to perform this operation.

c) Remove the screws (4), the cover (5) and the O-rings (6) and (7).

d) Change the O-rings (6) and (7) if necessary.

Note! Do not remove the screw from the clamping element.

e) Loosen the screw on the clamping element (8) and pull out the wheel (9).

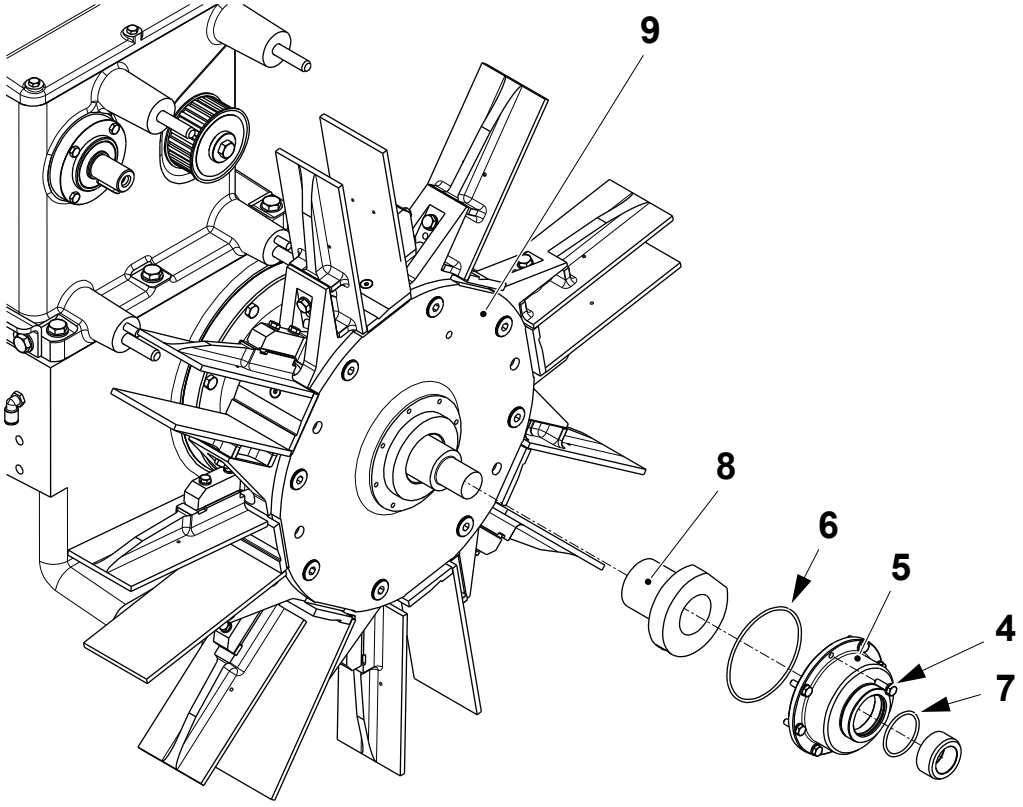

4 Screw
5 Cover
6 O-ring
7 O-ring
8 Clamping element
9 Wheel

(Cont'd)

TechPub_2614345_0106 - 05_MM2819200_04en.fm

(Cont'd)

Assemble Wheel

a) Install the clamping element (1) without tightening the screw.

b) Set all the movable flaps (2) in the closed position.

c) Install the wheel (3) on the shaft (4) of the indexing unit. Push the wheel (3) into contact with the cam (5).

d) Set all the movable flaps (2) in the open position.

e) Push the wheel (3) firmly against the cam (5). The wheel (3) must move about 30 mm inwards.

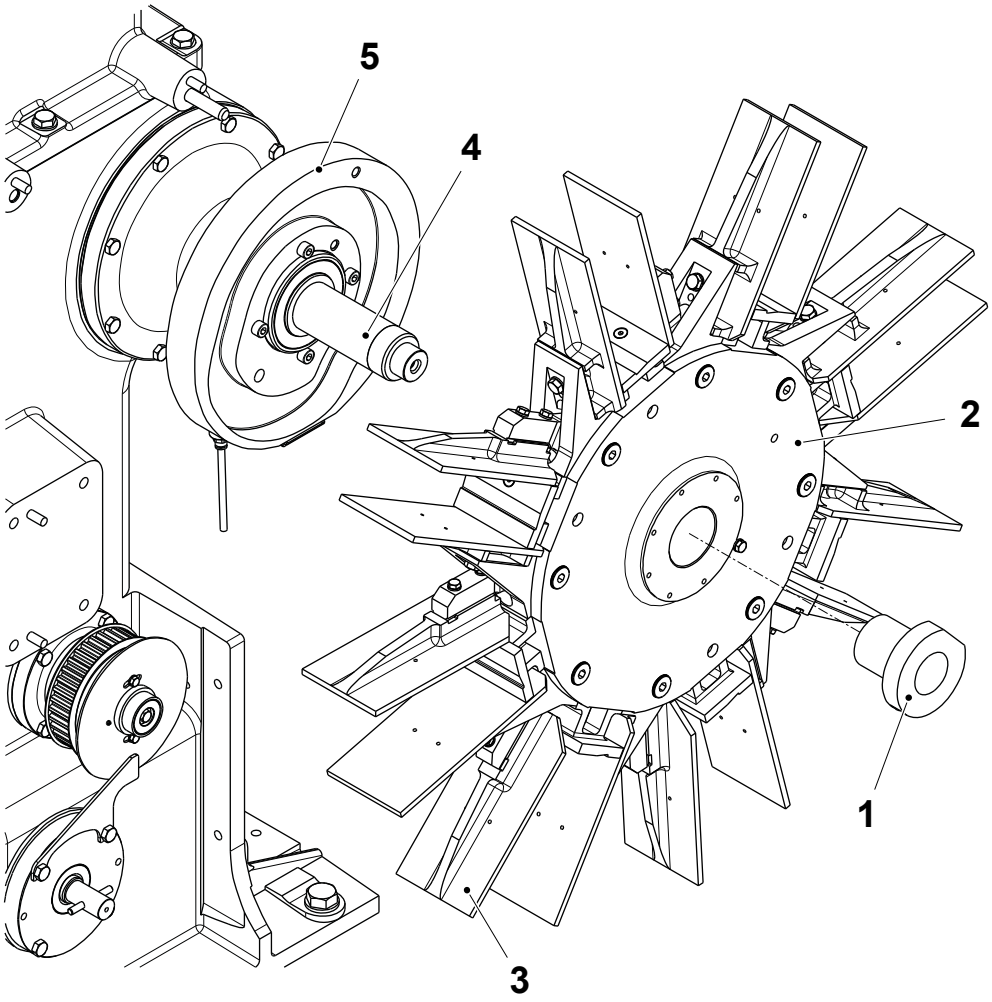

1 Clamping element
2 Movable flap
3 Wheel
4 Shaft
5 Cam

(Cont'd)

TechPub_2614345_0106 - 05_MM2819200_04en.fm

(Cont'd)

f) Turn the wheel (3) by hand and align the hole (6) in the wheel to the hole in the cam.

g) Install the template pin (7) through the two holes.

h) Install the template (8) on the shaft of the indexing gear and tighten the screw (9).

i) Tighten the screw on the clamping element (1), to a torque of 21Nm.

j) Remove the template pin (7).

k) Remove the screw (9) and the template (8).

l) Install the O-rings (10) and (11), the cover (12) and secure using the screws (13).

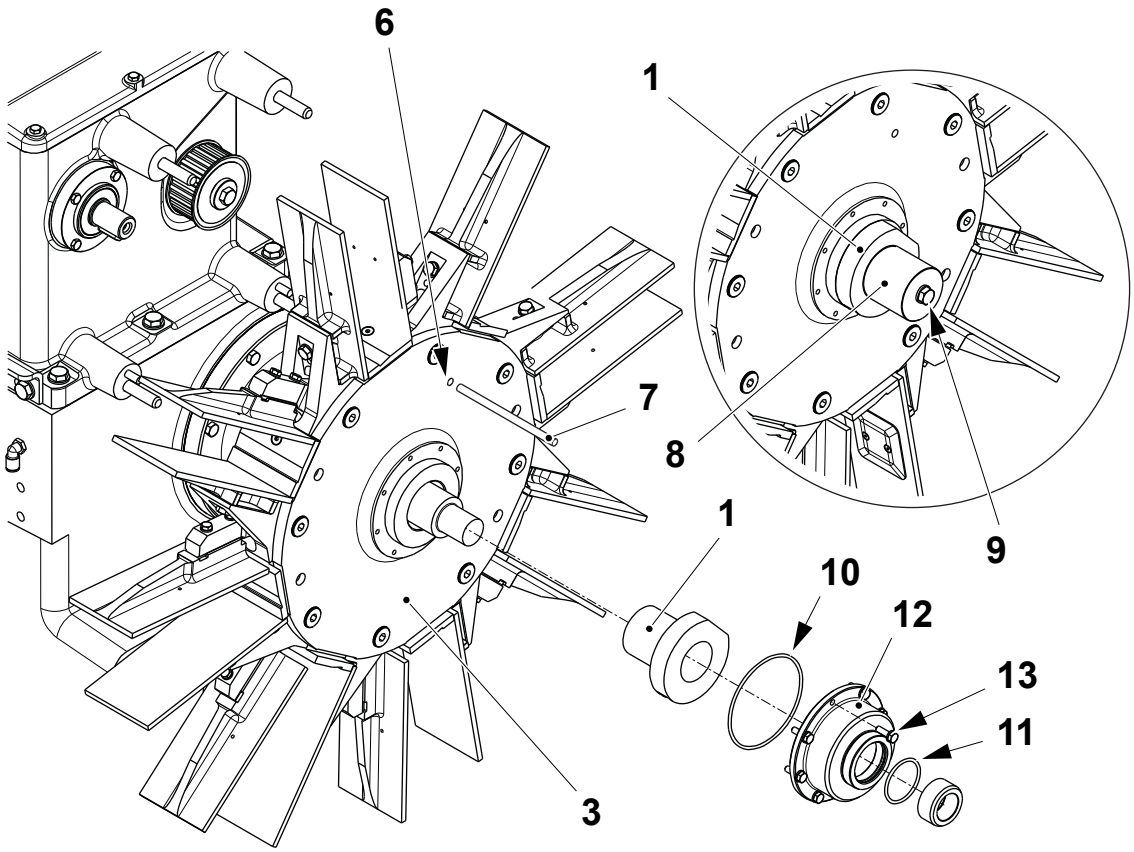

1 Clamping element
3 Wheel
6 Hole
7 Template pin
8 Template
9 Screw
10 O-ring
11 O-ring
12 Cover
13 Screw

(Cont'd)

TechPub_2614345_0106 - 05_MM2819200_04en.fm

(Cont'd)

m) Install the pusher (14) and the shims on the LH side of the pressure device (15) and secure using the four screws (16) and the washers.

n) Fit the external frame, see 5.5-1 Frame Work - Overhaul.

o) Set the nozzle if necessary, see 5.9-2 Heating Chamber - Set Nozzles.

p) Set the pusher if necessary, see 5.10-2 Pressure Device - Set Pushers.

q) Set the guides if necessary, see 5.8-1 Folding Part - Set.

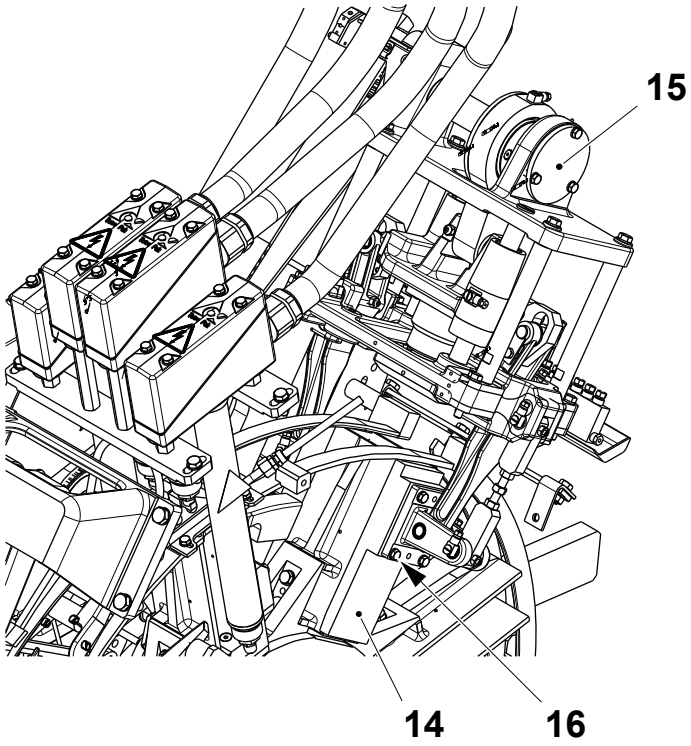

14 Pusher
15 Pressure device
16 Screw

TechPub_2614345_0106 - 05_MM2819200_04en.fm

5.6-2 Wheel - Change Rollers and Bushings

Machine Status	Mains Power OFF Air OFF Steam ON Water OFF
SPC Reference	2927613-0100

a) Remove the wheel, see 5.6-1 Wheel - Change.

b) Remove the screw (1), the axle pin (2), the roller (3) and the washer (4). Change the axle pin (2) and the roller (3).

c) Remove the screw (5), the two bushings (6) and the screw holder (7).

d) Change the bushings (6).

e) Pull out the flap (8) and change the two flange bushing (9) from the wheel hub.

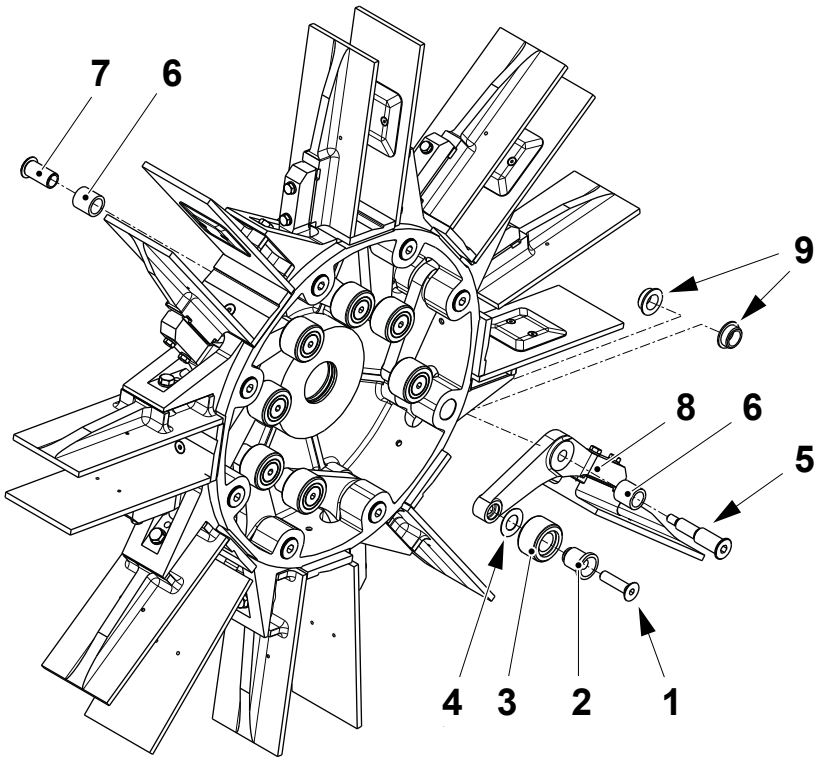

1 Screw
2 Axle pin
3 Roller
4 Washer
5 Screw
6 Bushing
7 Screw holder
8 Flap
9 Flange bushing

(Cont'd)

TechPub_2614345_0106 - 05_MM2819200_04en.fm

(Cont'd)

f) Assemble in the reverse order and repeat the procedure for the other seven arms.

g) Install the wheel, see 5.6-1 Wheel - Change.

TechPub_2614345_0106 - 05_MM2819200_04en.fm

5.7 Pull-Down Device

SPC Reference	2769842-0100

5.7-1 Pull-Down Device - Set Parallelism

Machine Status	Mains Power OFF Air OFF Steam ON Water OFF
SPC Reference	2769842-0100

Follow the procedure described in 5-7 Final Folder - Set Pull-down Device Parallelism.

5.7-2 Pull-Down Device - Synchronisation

Machine Status	Mains Power OFF Air OFF Steam ON Water OFF
SPC Reference	2769842-0100

Follow the procedure described in 5-6 Final Folder - Synchronise Pull-down Device.

5.7-3 Pull-Down Device - Set Lower Turning Position

Machine Status	Mains Power OFF Air OFF Steam ON Water OFF
SPC Reference	2769842-0100

Follow the procedure described in 5-9 Final Folder - Set Pull-down Device Lower Turning Position.

5.7-4 Pull-Down Device - Set Position

Machine Status	Mains Power OFF Air OFF Steam ON Water OFF
SPC Reference	2769842-0100

Follow the procedure described in 5-8 Final Folder - Set Pull-down Device Position.

TechPub_2614345_0106 - 05_MM2819200_04en.fm

5.7-5 Pull-Down Device - Change Bushings

Machine Status	Mains Power OFF Air OFF Steam ON Water OFF
SPC Reference	2769842-0100

a) Remove the grub screws (1) and push out the axle pin (2).

b) Remove the bracket (3) group by means of the screw (4).

c) Push out and change the bushings (5).

d) Assemble in the reverse order and set the pusher if necessary, see 5.7-2 Pull-Down Device - Synchronisation.

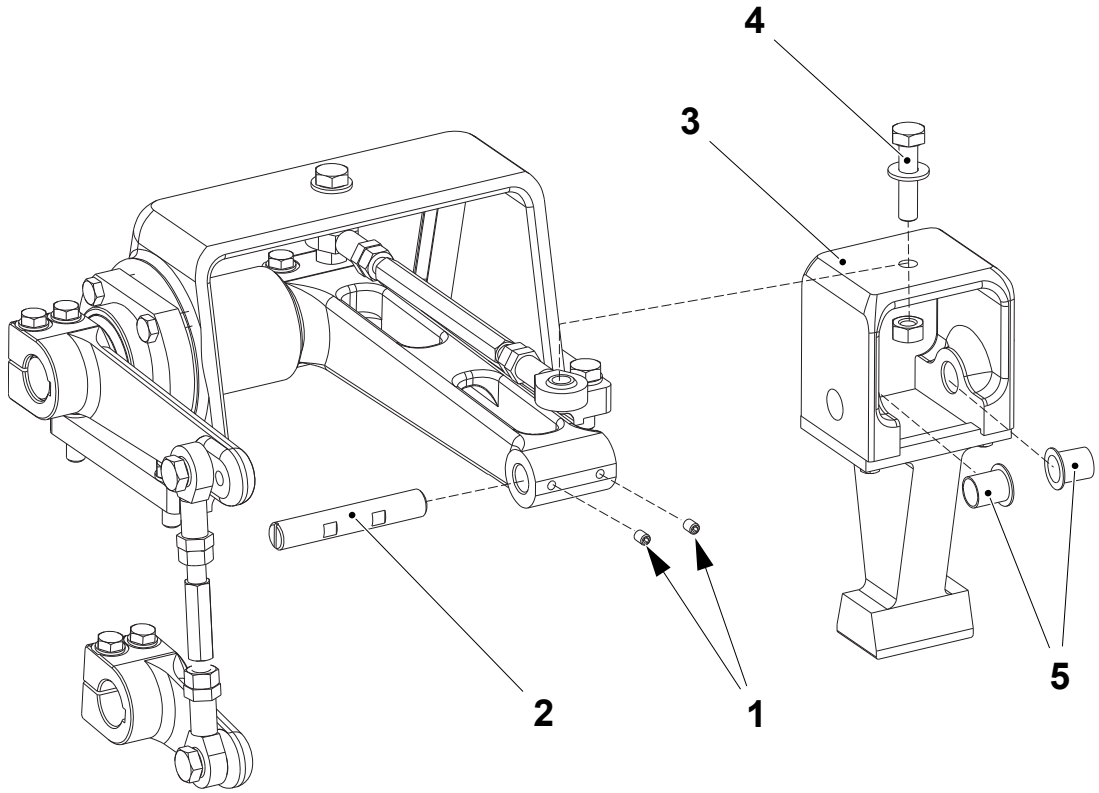

1 Grub screw
2 Axle pin
3 Bracket
4 Screw
5 Bushing

TechPub_2614345_0106 - 05_MM2819200_04en.fm

5.7-6 Pull-Down Device - Check Link Heads

Machine Status	Mains Power OFF Air OFF Steam ON Water OFF
SPC Reference	2769842-0100

Note! For machines producing packages with a reverse fin, the arm (1) is positioned in the hole (2).

Check the play in the link heads indicated by the arrows in the illustration.

Change the link heads if necessary and set, see 5.7-2 Pull-Down Device - Synchronisation and 5.7-3 Pull-Down Device - Set Lower Turning Position.

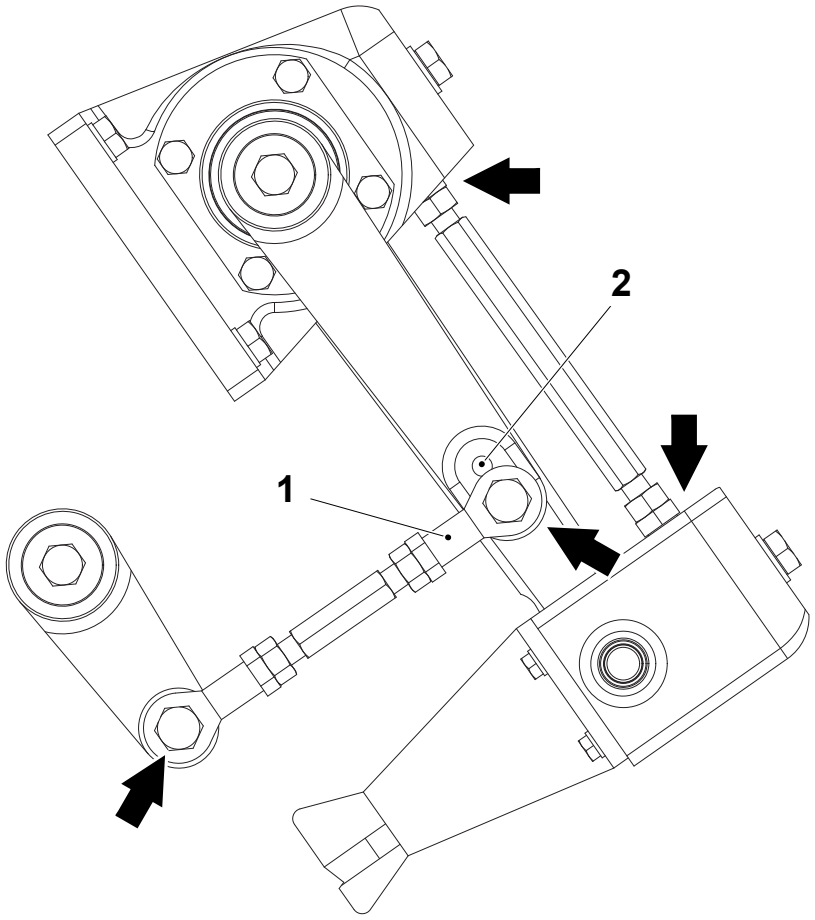

1 Arm
2 Hole

TechPub_2614345_0106 - 05_MM2819200_04en.fm

5.7-7 Pull-Down Device - Set Folding Fin Device

Machine Status	Mains Power OFF Air OFF Steam ON Water OFF
SPC Reference	2769842-0100

Note! Valid for stand alone RF volumes only.

a) Remove the nuts (1) and the screws (2).

b) Remove the tie rods (3) from both sides of the pull-down device.

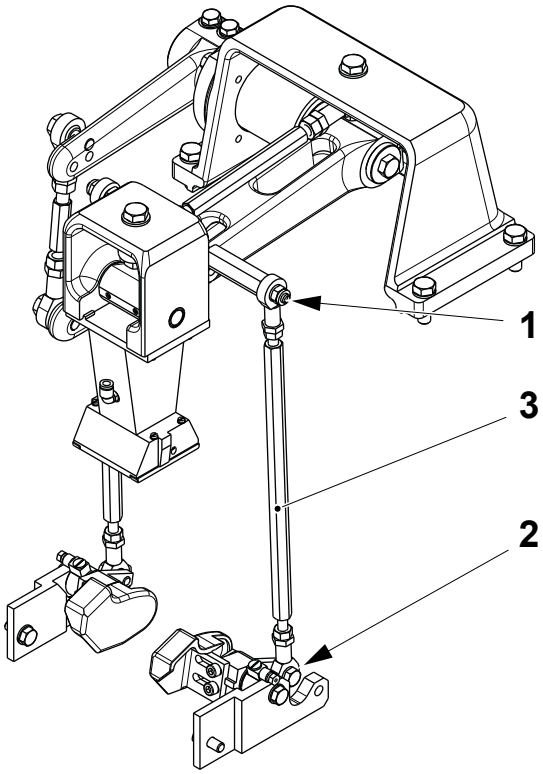

1 Nut
2 Screw
3 Tie rod

(Cont'd)

TechPub_2614345_0106 - 05_MM2819200_04en.fm

(Cont'd)

c) Place the tie rods (3) on a bench and set the distance **A** between the centre of the axis of the two eye-bolts by turning the eye-bolts (4).

d) Fit the tie rods (3) on the screws (5).

Package	**A ±0.5 (mm)**
TBA 1000 Sq	267.0
TPA 1000 Sq	332.0
TPA 1000 Sq StreamCap	360.0
TBA 1000 S	369.0
TBA 1000 B	339.0

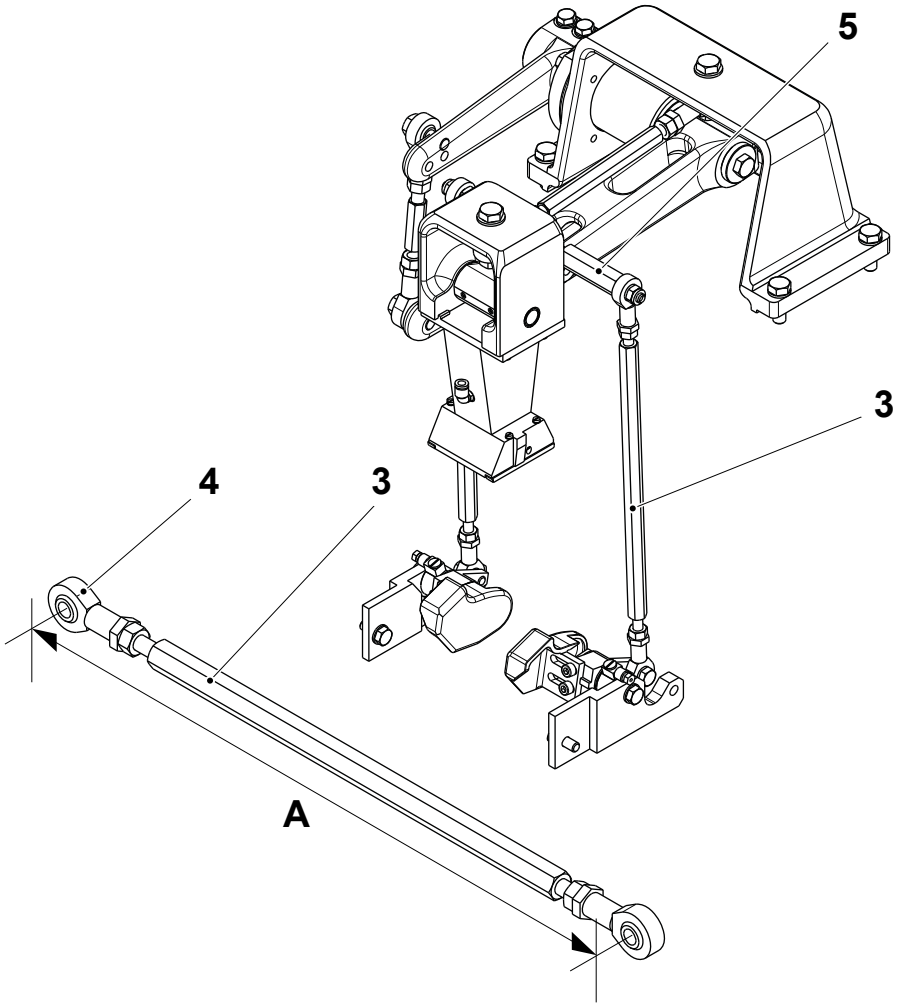

3 Tie rod
4 Eye-bolt
5 Screw

(Cont'd)

TechPub_2614345_0106 - 05_MM2819200_04en.fm

(Cont'd)

a) Crank the final folder to 180°.

b) Loosen the screws (1).

c) Set the distance **B** between the surface of the flap axle (2) and the reverse fin cam (3).

d) Tighten the screws (1).

e) Repeat the procedure on the other side of the pull-down device.

Package	**B ±0.5 (mm)**
TBA 500 Sq - TBA 1000 Sq	5.0
TPA 750 Sq - TPA 1000 Sq	1.0
TBA 1000 B	9.0
TBA 1000 S	7.0

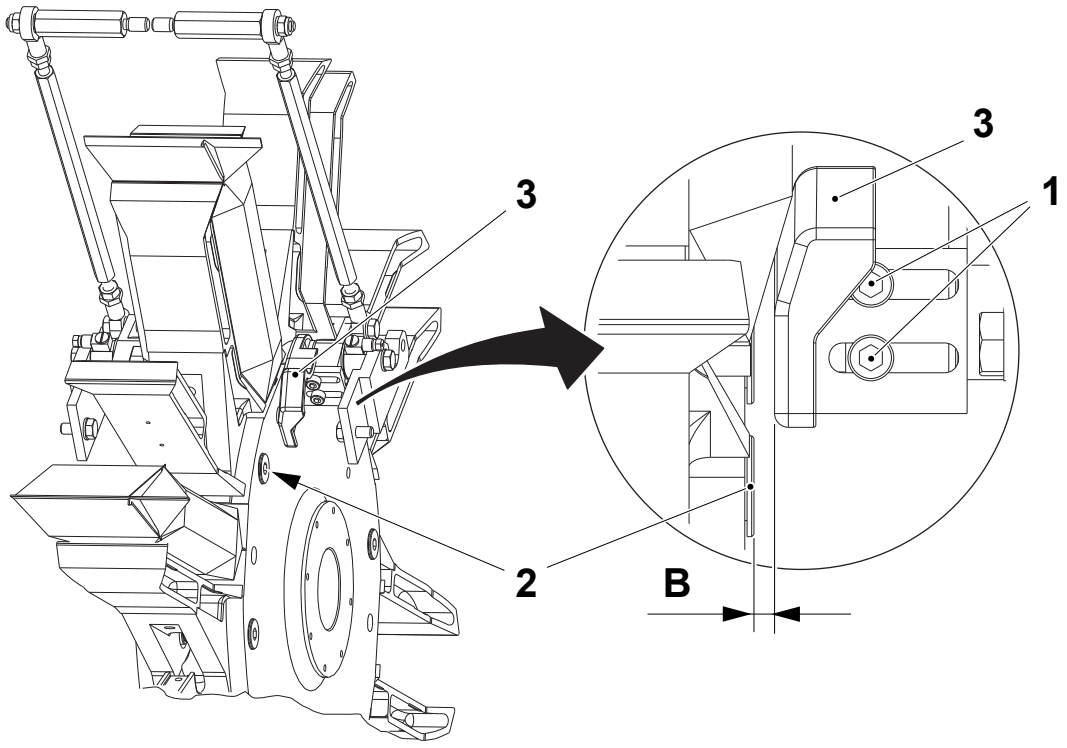

1 Screw
2 Flap axle
3 Cam

TechPub_2614345_0106 - 05_MM2819200_04en.fm

5.7.1 Central Lubrication

5.7.1-1 Central Lubrication - Check

Machine Status	Mains Power ON Air ON Steam ON Water OFF
SPC Reference	2769842-0100

a) Touch the PRODUCTION CONTROL button (1) on the TPOP display.

b) Touch the PACKAGE FORMING UNIT button (2).

c) Touch the MANUAL LUBRICATION icon (3).

d) Touch the START button (4) to enable the lubricating system.

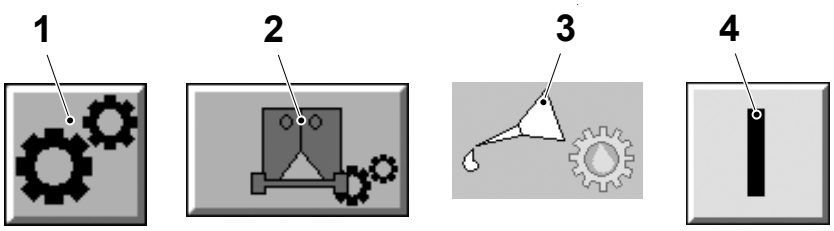

1 Production control button
2 Package forming unit button
3 Manual lubrication icon
4 Start button

(Cont'd)

TechPub_2614345_0106 - 05_MM2819200_04en.fm

(Cont'd)

e) Make sure that oil reaches the areas marked with arrows in the final folder, see the illustration below. Check for oil leakage.

Note! Check for air bubbles in the oil hoses. This indicates that the lubrication pump is leaking or there is a leak in the lubrication system.

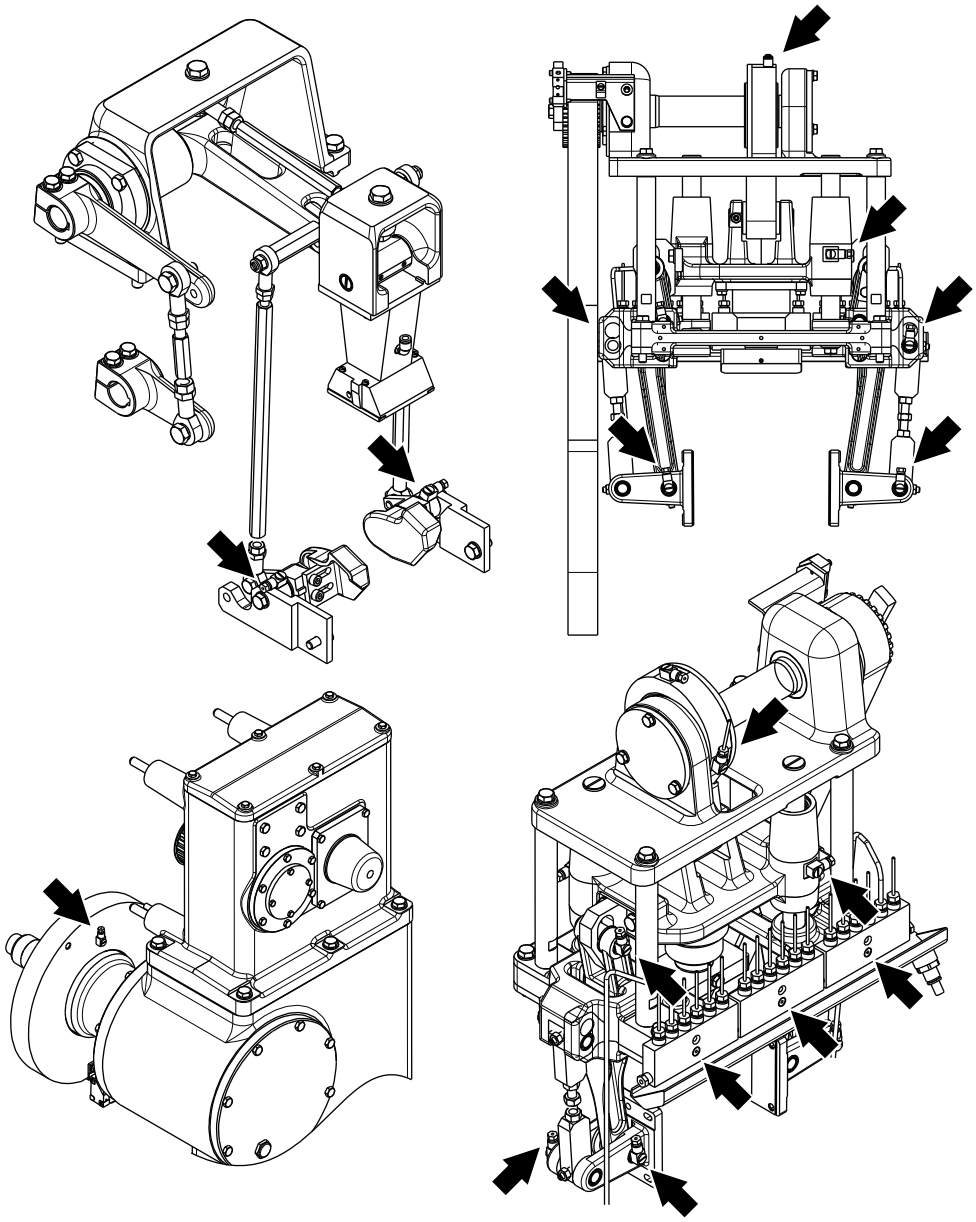

TechPub_2614345_0106 - 05_MM2819200_04en.fm

5.7.1-2 Central Lubrication - Bleed

Machine Status	Mains Power ON Air ON Steam ON Water OFF
SPC Reference	2769842-0100

a) Loosen the venting plug (1) from the oil distribution block (2).

b) Start the lubrication system, follow items a) to d) in 5.7.1-1 Central Lubrication - Check and repeat at 5 minute intervals until air free oil is bled out.

c) Close the venting plug (1) on the oil distribution block (2).

d) Start the lubrication system, follow items a) to d) in 5.7.1-1 Central Lubrication - Check to pressurize the system.

Note! Always bleed the system whenever one of the main lines between the pump and the venting plug has been disconnected.

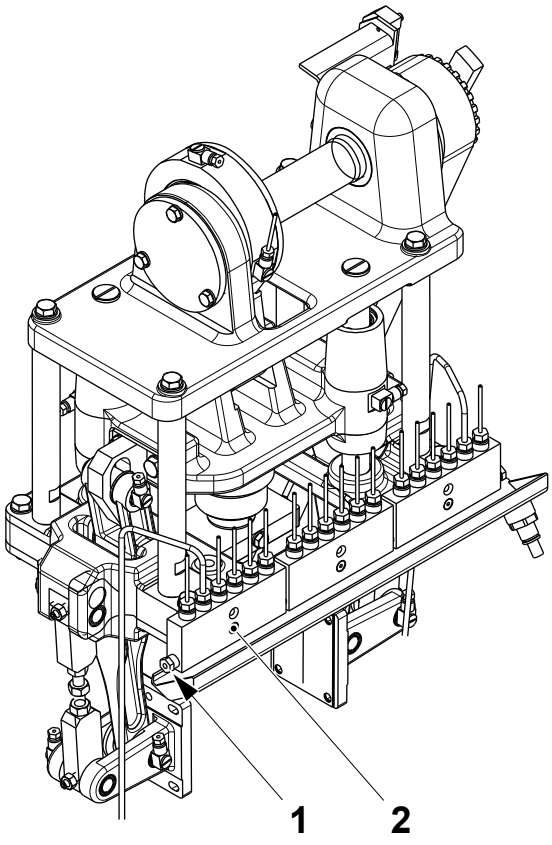

1 Venting plug
2 Oil distribution block

TechPub_2614345_0106 - 05_MM2819200_04en.fm

5.8 Folding Part

SPC Reference	2866604-0100

5.8-1 Folding Part - Set

Machine Status	Mains Power OFF Air OFF Steam ON Water OFF
SPC Reference	2866604-0100

Follow the procedure described in 5-10 Final Folder - Set Top Section and the procedure described in 5-11 Final Folder - Set Top Rail.

TechPub_2614345_0106 - 05_MM2819200_04en.fm

5.8-2 Folding Part - Set Top Rails

Machine Status	Mains Power OFF Air OFF Steam ON Water OFF
SPC Reference	2866604-0100

Follow the procedures described in 5-11 Final Folder - Set Top Rail.

TechPub_2614345_0106 - 05_MM2819200_04en.fm

5.8-3 Folding Part - Check Water Leaks

Machine Status	PREPARATION
SPC Reference	2866604-0100

Check that the cooling water reaches the places marked with arrows in the illustration. Check carefully for any water leaks.

Check the correct flow is shown in the flowmeter (1), located in the service unit. Set if necessary, see 6.1.2-2 Flow Meter - Set Flows.

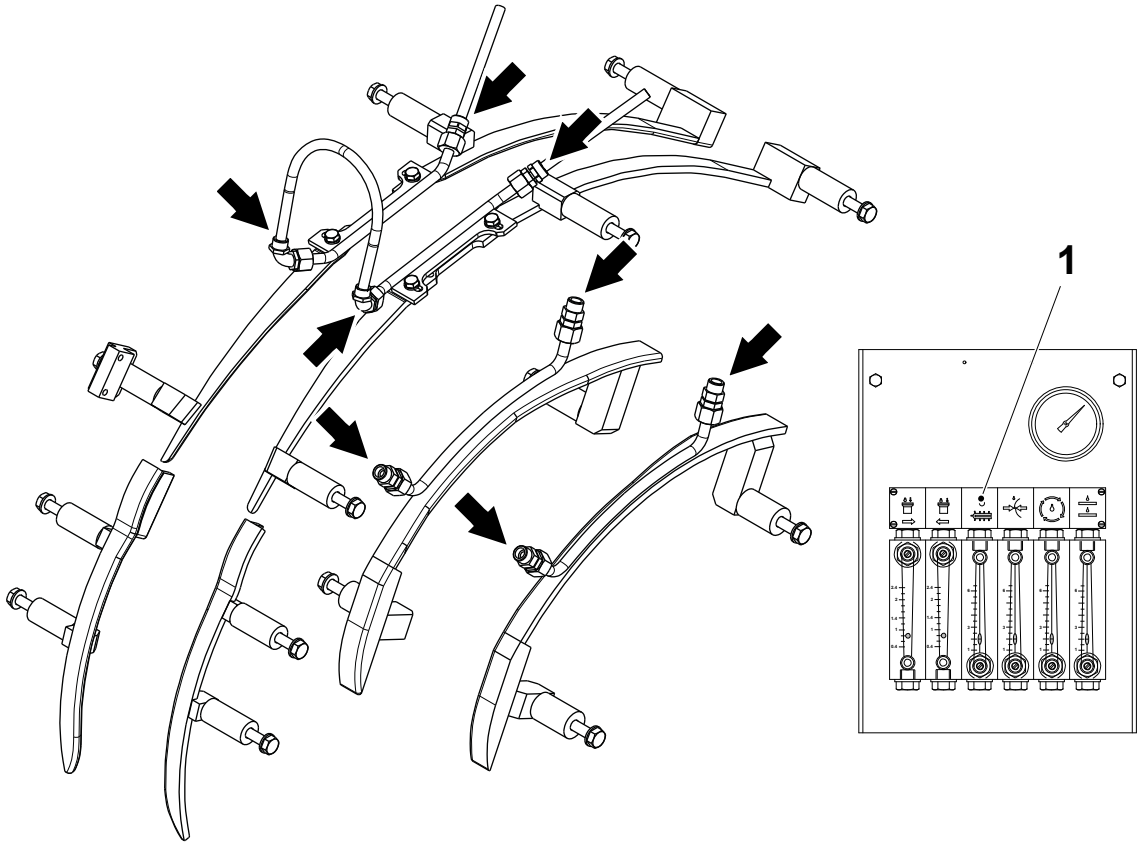

1 Flowmeter

TechPub_2614345_0106 - 05_MM2819200_04en.fm

5.8-4 Folding Part - Set Flap Blowing Pressure

Machine Status	Mains Power OFF Air ON Steam ON Water OFF
SPC Reference	2866604-0100

Set the flap blowing air pressure according to 10.1 Technical Data, by means of the pressure regulator (1), located on the machine body pneumatic valve panel (2).

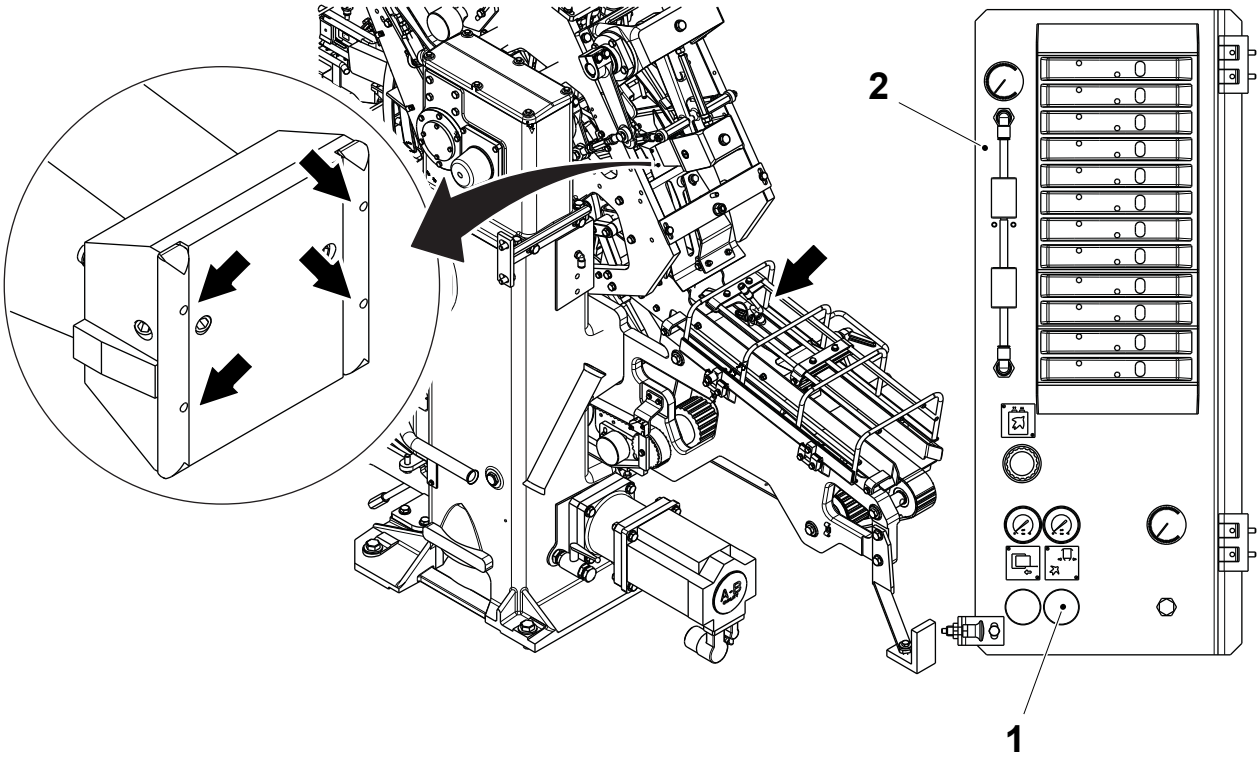

1 Pressure regulator
2 Valve panel

TechPub_2614345_0106 - 05_MM2819200_04en.fm

5.9 Heating Chamber

SPC Reference	2876462-0100

5.9-1 Heating Chamber - Change Heating Elements

Machine Status	Mains Power OFF Air OFF Steam ON Water OFF
SPC Reference	2876462-0100

DANGER

Hazardous voltage.

Will shock, burn or cause death. There is high voltage inside the flap heater.

WARNING

Risk of burns.

The flap heater and other parts nearby may be hot. Wear personal protective equipment.

(Cont'd)

TechPub_2614345_0106 - 05_MM2819200_04en.fm

(Cont'd)

a) Remove the four screws (1), and the cover (2).
b) Remove the gasket (3) and check for damage. Change if necessary.
c) Disconnect the thermocouple connector (4).
d) Record and disconnect the wires from the terminal block (5).
e) Remove the pneumatic connection (6).

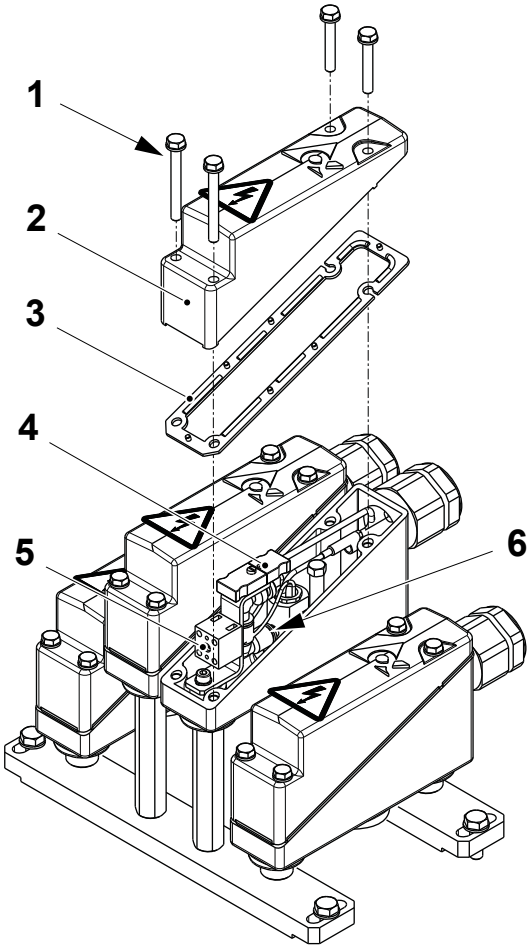

1 Screw
2 Cover
3 Gasket
4 Thermocouple connection
5 Terminal block
6 Pneumatic connection

(Cont'd)

TechPub_2614345_0106 - 05_MM2819200_04en.fm

(Cont'd)

f) Remove the screw (7) and the bracket (8).
g) Loosen the screw (9).
h) Remove the heating element (10) and the O-ring (11).
i) Change the heating element (10) and the O-ring (11).

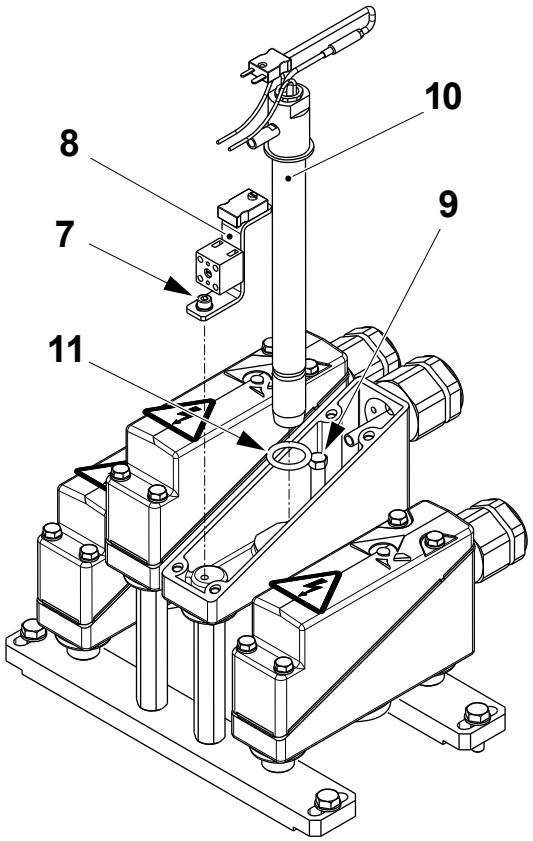

7 Screw
8 Bracket
9 Screw
10 Heating element
11 O-ring

(Cont'd)

TechPub_2614345_0106 - 05_MM2819200_04en.fm

(Cont'd)

CAUTION
Risk of damage to the equipment.
During assembly, make sure that the gasket (3) is fitted correctly. If the gasket (3) is fitted incorrectly or over compressed by the screws (1), water can enter inside the unit.

j) Assemble in the reverse order, paying special attention not to damage the gasket (3).

k) Tighten the screws (1) until the mechanical stops (12) of the cover (2) touch the base (13) of the heating element. The screws (1) must tightened to a torque of 9.3 Nm.

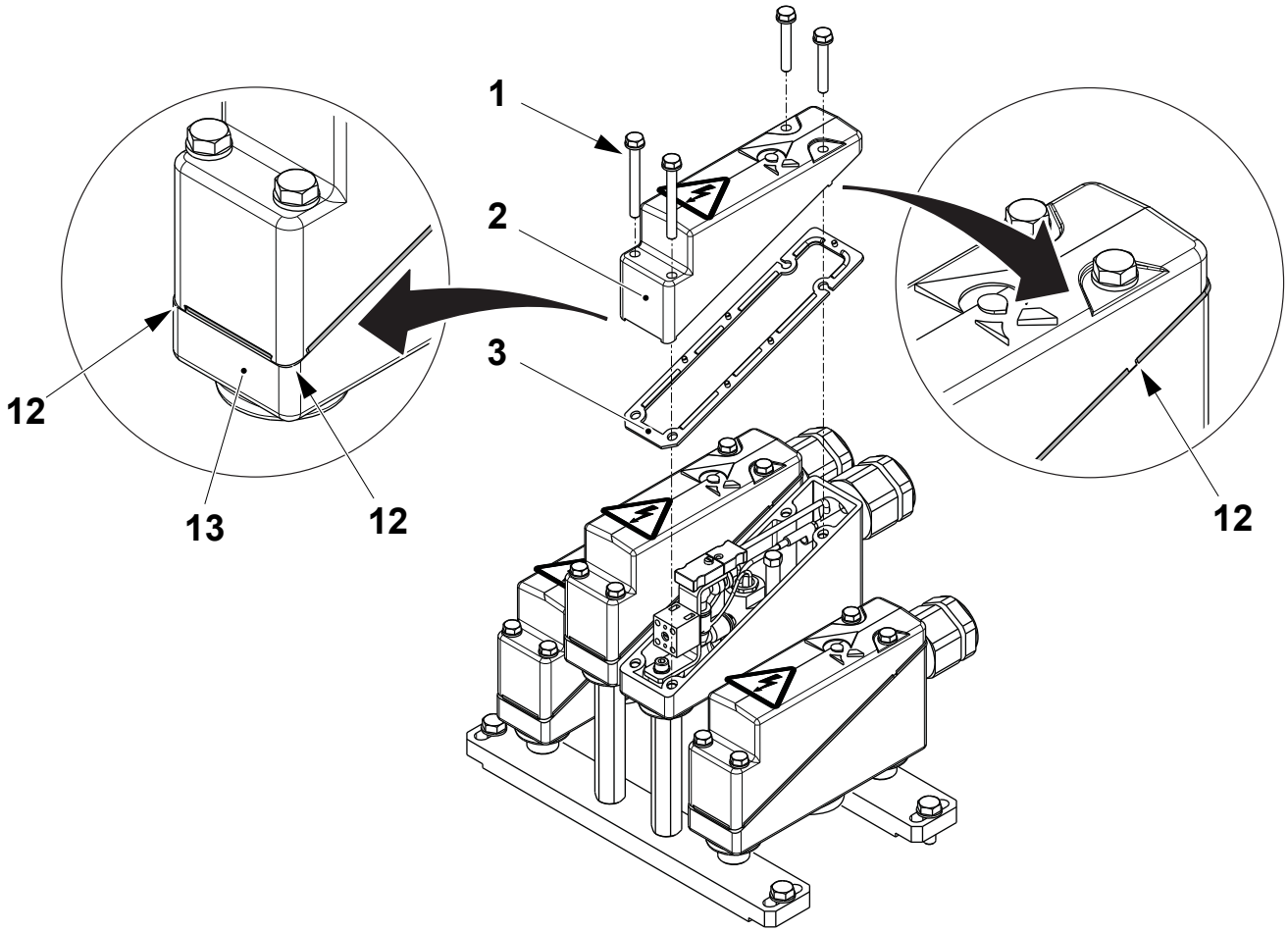

1 Screw
2 Cover
3 Gasket
12 Mechanical stop
13 Base

TechPub_2614345_0106 - 05_MM2819200_04en.fm

5.9-2 Heating Chamber - Set Nozzles

Machine Status	Mains Power OFF Air OFF Steam ON Water OFF
SPC Reference	2876462-0100

Follow the procedures described in 5-12 Final Folder - Set Flap Heater Nozzles.

TechPub_2614345_0106 - 05_MM2819200_04en.fm

5.9-3 Heating Chamber - Set Pressures

Machine Status	Mains Power OFF Air ON Steam ON Water OFF
SPC Reference	2876462-0100

a) Touch the PRODUCTION CONTROL button (1) on the TPOP display.

b) Touch the FINAL FOLDER button (2).

c) Touch the FLAP HEATERS PRESSURE icon (3).

d) Touch either the TOP FLAP HEATER NOZZLES icon (4) or the BOTTOM FLAP HEATER NOZZLES icon (5) to display the associated regulator window.

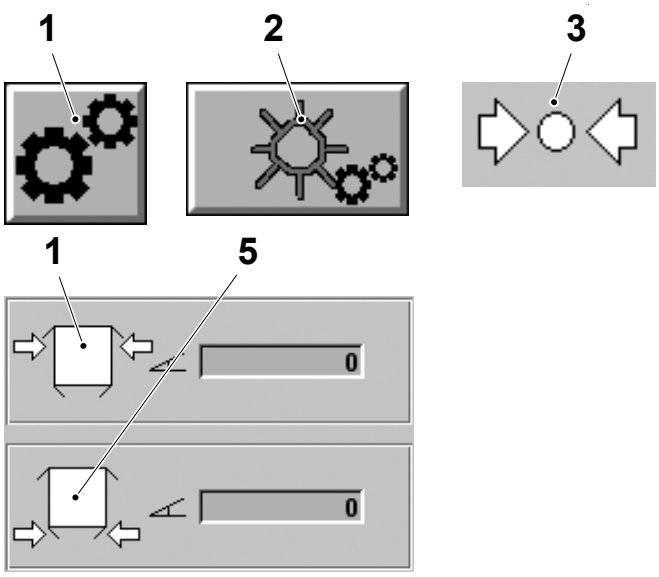

1 Production control button
2 Final folder button
3 Flap heater pressure icon
4 Top flap heater nozzles icon
5 Bottom flap heater nozzles icon

(Cont'd)

TechPub_2614345_0106 - 05_MM2819200_04en.fm

(Cont'd)

e) Use the ARROW buttons (6) to set the pressure according to 10.1 Technical Data, or touch the FACTORY button (7) to reset the value to the factory setting.

f) Touch the EXIT button (8).

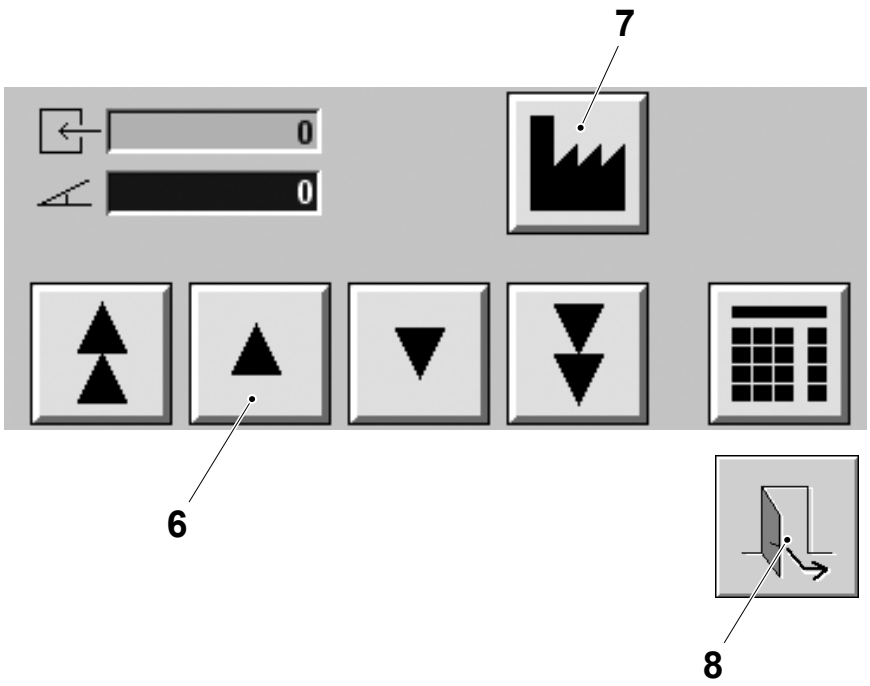

6 Arrow button
7 Factory button
8 Exit button

TechPub_2614345_0106 - 05_MM2819200_04en.fm

5.9-4 Heating Chamber - Set I/P Transducers

Machine Status	Mains Power OFF Air ON Steam ON Water OFF
SPC Reference	2876462-0100

The pressure of the flap heaters is controlled by the two I/P transducers located in the machine body. To set the I/P transducers, see 2.3.1-2 Pneumatic System - Set I/P Transducer on page 2-132.

TechPub_2614345_0106 - 05_MM2819200_04en.fm

5.9-5 Heating Chamber - Activate Flap Heaters

Machine Status	PREPARATION
SPC Reference	2876462-0100

Note! This function is used to activate the air flow in the flap heaters.

a) Log on to the MAINTENANCE CONTROL window, see 9.6.3-2 HMI - User Management Log On.

b) Touch the FINAL FOLDER button (1).

c) Touch the FLAP HEATERS PRESSURE icon (2).

d) Touch the TOP FLAP HEATERS icon (3) or the BOTTOM FLAP HEATERS icon (4) to activate the air flow on the flap heaters that have been selected.

Note! The air flow is deactivated by touching the OFF button (5).

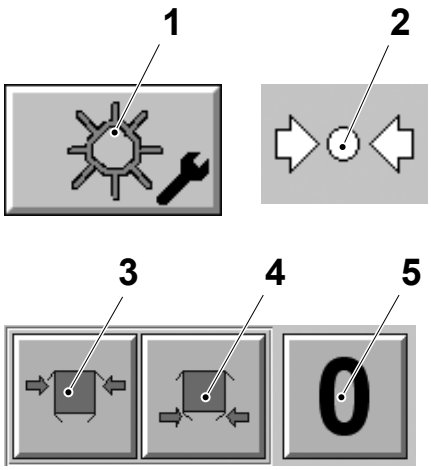

1 Final folder button
2 Flap heater pressure icon
3 Top flap heaters icon
4 Bottom flap heaters icon
5 OFF button

TechPub_2614345_0106 - 05_MM2819200_04en.fm

5.10 Pressure Device

SPC Reference	2857893-0100

5.10-1 Pressure Device - Set Lower Turning Position

Machine Status	Mains Power OFF Air OFF Steam ON Water OFF
SPC Reference	2857893-0100

Follow the procedures described in 5-14 Final Folder - Set Pressure Device Lower Turning Position.

5.10-2 Pressure Device - Set Pushers

Machine Status	Mains Power OFF Air OFF Steam ON Water OFF
SPC Reference	2857893-0100

Follow the procedures described in 5-15 Final Folder - Set Pressure Device Pushers.

TechPub_2614345_0106 - 05_MM2819200_04en.fm

5.10-3 Pressure Device - Set Belt

Machine Status	Mains Power OFF Air OFF Steam ON Water OFF
Special Equipment	Dynamometer TP No. 74767-102
SPC Reference	2857893-0100

a) Loosen the two screws (1).

b) With the aid of a dynamometer, set the belt tension to 40 N with a deflection of 10 mm, by means of the screw (2).

c) Tighten the screws (1).

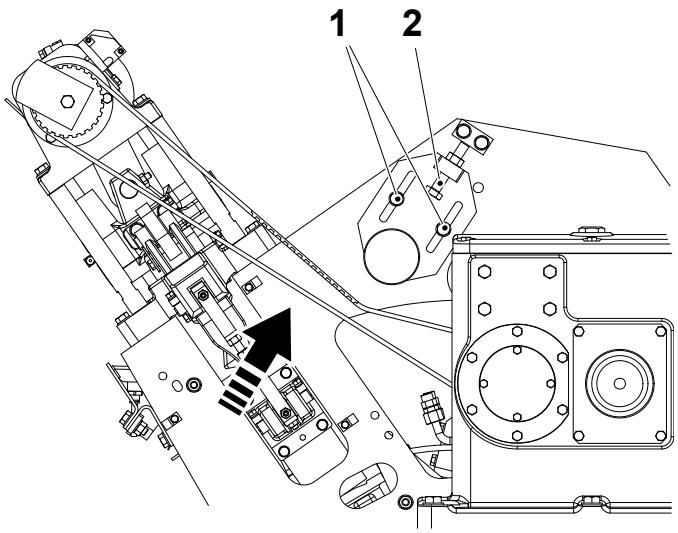

1 Screw
2 Screw

TechPub_2614345_0106 - 05_MM2819200_04en.fm

5.10-4 Pressure Device - Change

Machine Status	Mains Power OFF Air OFF Steam ON Water OFF
SPC Reference	2857893-0100

a) Crank the final folder to 65°.

b) Remove all the oil connections.

c) Remove the bracket (1) together with the inductive switch (2).

d) Loosen the belt (3) tension and remove the belt (3) from the toothed pulley (4).

e) Remove the screws (5) and pull out the pressure device.

f) Change the pressure device and assemble in the reverse order.

g) Set the pressure device, see 5.10-1 Pressure Device - Set Lower Turning Position.

h) Set the belts tension, see 5.10-3 Pressure Device - Set Belt.

i) Set the inductive switch (2), see 5.10-7 Pressure Device - Set Inductive Switch and 5-16 Final Folder - Synchronise Overload Switches.

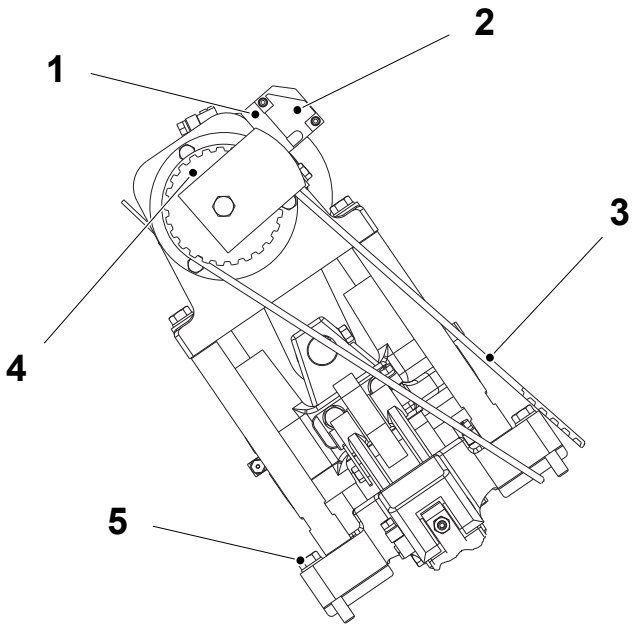

1 Bracket
2 Switch
3 Belt
4 Toothed pulley
5 Screw

TechPub_2614345_0106 - 05_MM2819200_04en.fm

5.10-5 Pressure Device - Overhaul

Machine Status	Mains Power OFF Air OFF Steam ON Water OFF
Consumables	Silicon Grease TP No. 90296-0068
SPC Reference	2857893-0100

a) Remove the pressure device, see 5.10-4 Pressure Device - Change.

b) Remove the four screws (1) and the washers (2).

c) Loosen the lock nut (4) and remove the screw (5).

d) Push out the shaft (6) and lift out the upper section (3).

e) Remove the screw (7) and the clamp (8) and pull out the axle pin (9) from both cams. Lift off the support (10).

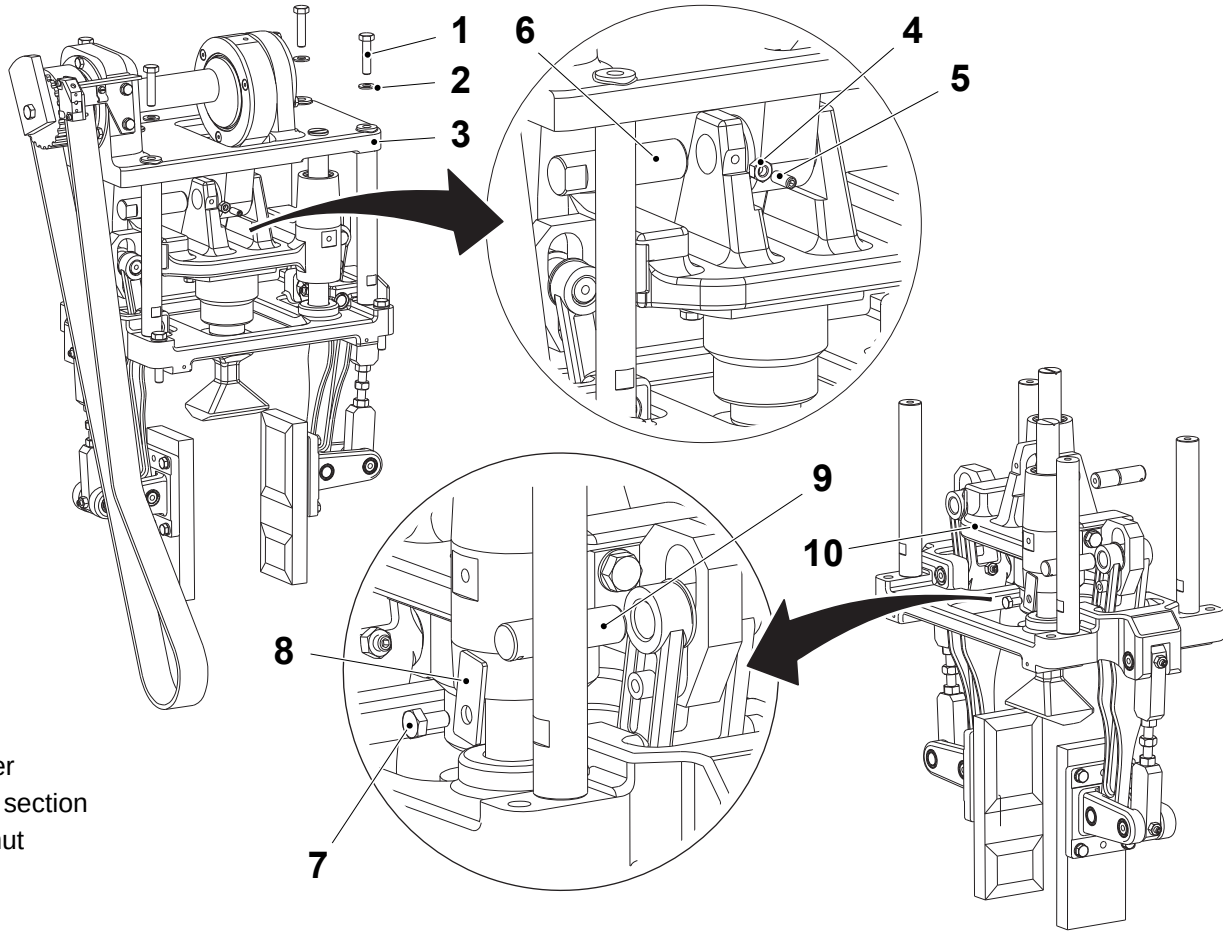

1 Screw
2 Washer
3 Upper section
4 Lock nut
5 Screw
6 Shaft
7 Screw
8 Clamp
9 Axle pin
10 Support

(Cont'd)

TechPub_2614345_0106 - 05_MM2819200_04en.fm

(Cont'd)

f) Remove the four rings (11) and pull out the inserts (12) and the bushings (13).

g) Change the bushings (13).

h) Remove and change the scraper (14) from each insert (12).

i) Change the inserts (12).

j) Change the two thrust washers (15) on each cam (16). Make sure that the teflon side of the thrust washers faces the cams (16).

k) Change the roller (17) on each cam (16).

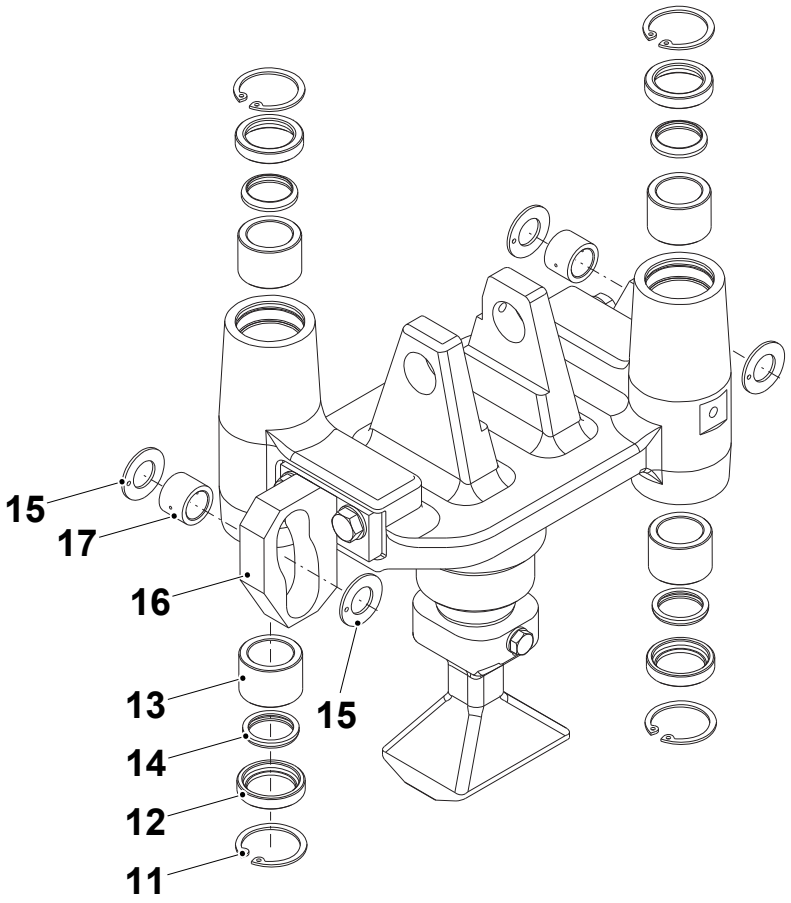

11 Ring
12 Insert
13 Bushing
14 Scraper
15 Thrust washer
16 Cam
17 Roller

(Cont'd)

TechPub_2614345_0106 - 05_MM2819200_04en.fm

(Cont'd)

l) Remove the screw (18) and the washer (19) and remove the plate (20).

m) Remove the two screws (21) and the washers (22) and remove the flange (23).

n) Remove and change the bushing (24).

o) Check the spring (25) for damage. Change if necessary.

p) Check the two cams (16) for damage. Change if necessary.

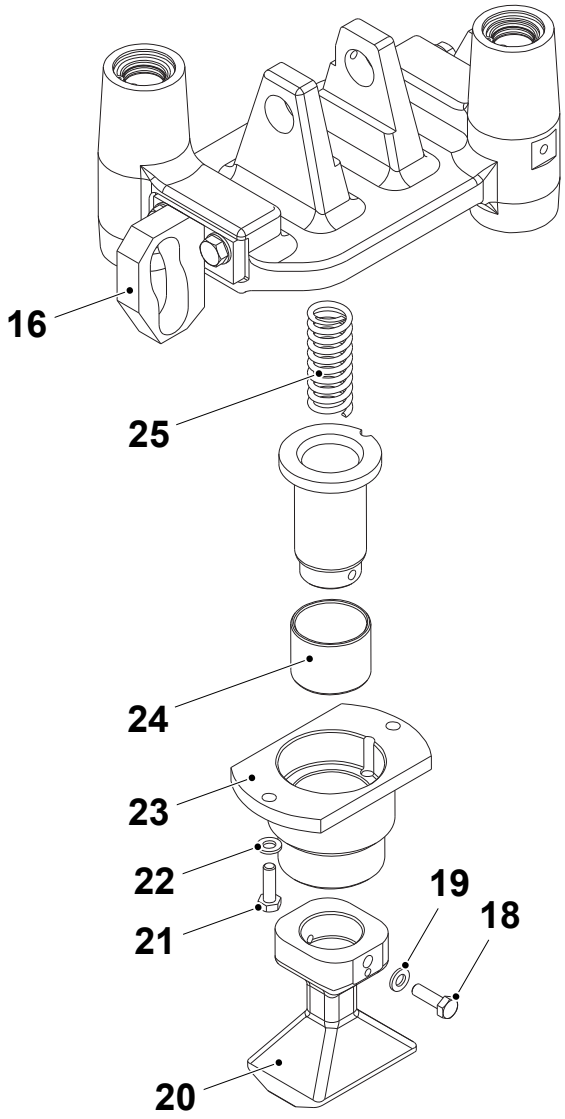

16 Cam
18 Screw
19 Washer
20 Plate
21 Screw
22 Washer
23 Flange
24 Bushing
25 Spring

(Cont'd)

TechPub_2614345_0106 - 05_MM2819200_04en.fm

(Cont'd)

q) On each lever (26) loosen the two lock nuts (27) and remove the stop screws (28).

r) Pull out the two shafts (29) and remove the lever (26).

s) Remove the four bushings (30). Change the two shafts (29) and the four bushings (30).

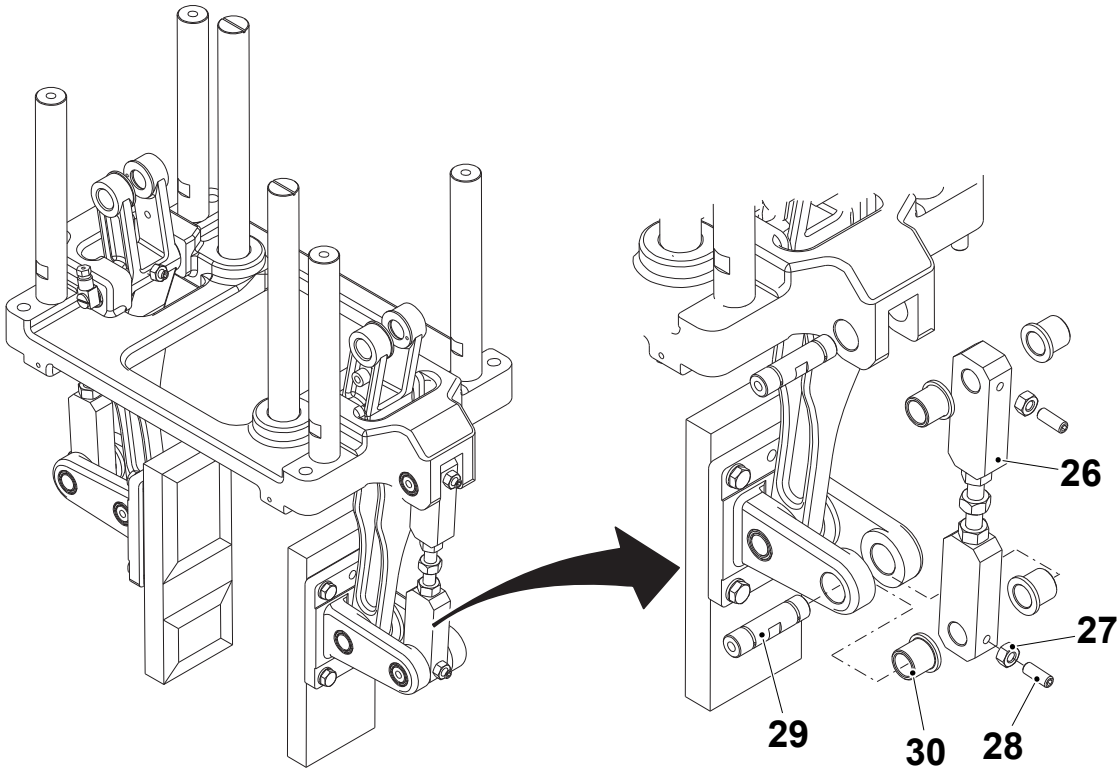

26 Lever
27 Lock nut
28 Stop screw
29 Shaft
30 Bushing

(Cont'd)

TechPub_2614345_0106 - 05_MM2819200_04en.fm

(Cont'd)

t) Remove the three screws (31) and the washers (32) and remove the flange (33).

u) Change the O-ring (34).

v) Remove the screw (35) and the washer (36).

Note! The belt wheel is fixed to the shaft (37) by a clamping element inside the outer cover. If the wheel is to be changed, torque the clamping screws to 17 Nm during assembly.

w) Pull out the shaft (37) and the connecting rod (38).

x) Change the seal ring (39).

Note! Install the sea (39) about 6 mm inside the holder on assembly.

y) Pull out the spacer (40) and change the O-ring (41).

Note! Apply a layer of grease (code F, see 10.3-1 Lubricants) to the spacer (40) on assembly.

z) Remove and change the ball bearing (42).

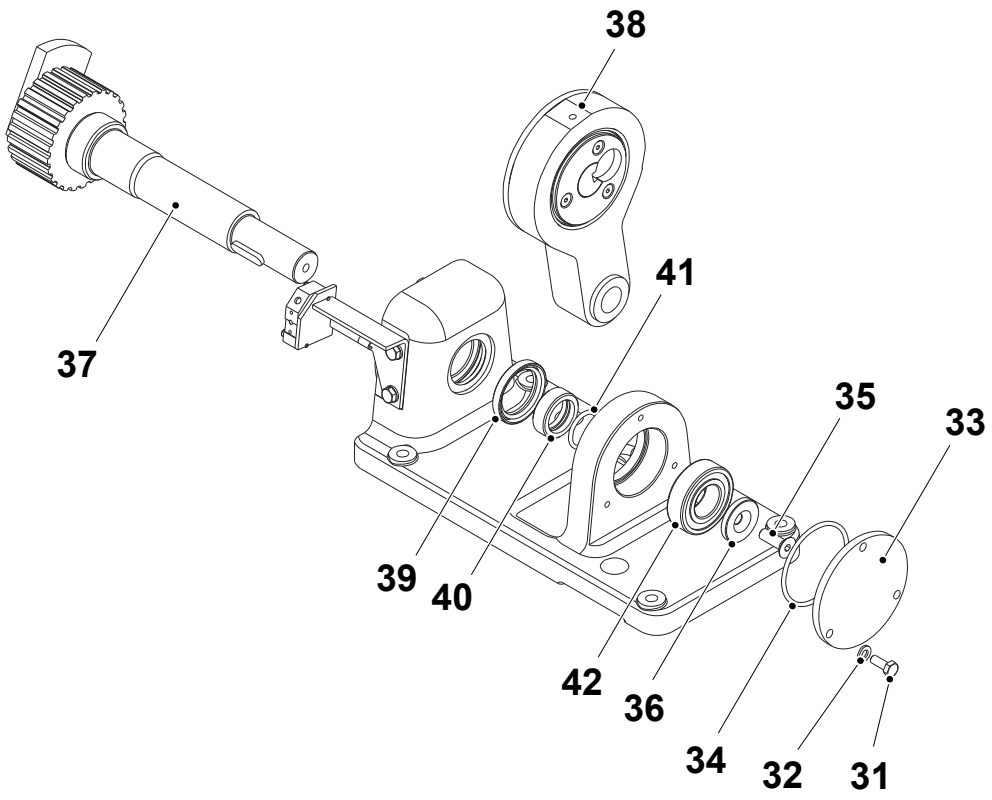

31 Screw
32 Washer
33 Flange
34 O-ring
35 Screw
36 Washer
37 Shaft
38 Connecting rod
39 Seal ring
40 Spacer
41 O-ring
42 Ball bearing

(Cont'd)

TechPub_2614345_0106 - 05_MM2819200_04en.fm

(Cont'd)

aa) Remove the three screws (43) and the flange (44).

ab) Remove and change the O-ring (45), the seal ring (46), the ball bearing (47) and the seal ring (48).

Note! Apply a layer of grease (code F, see 10.3-1 Lubricants) to the seal rings (46) and (48) on assembly.

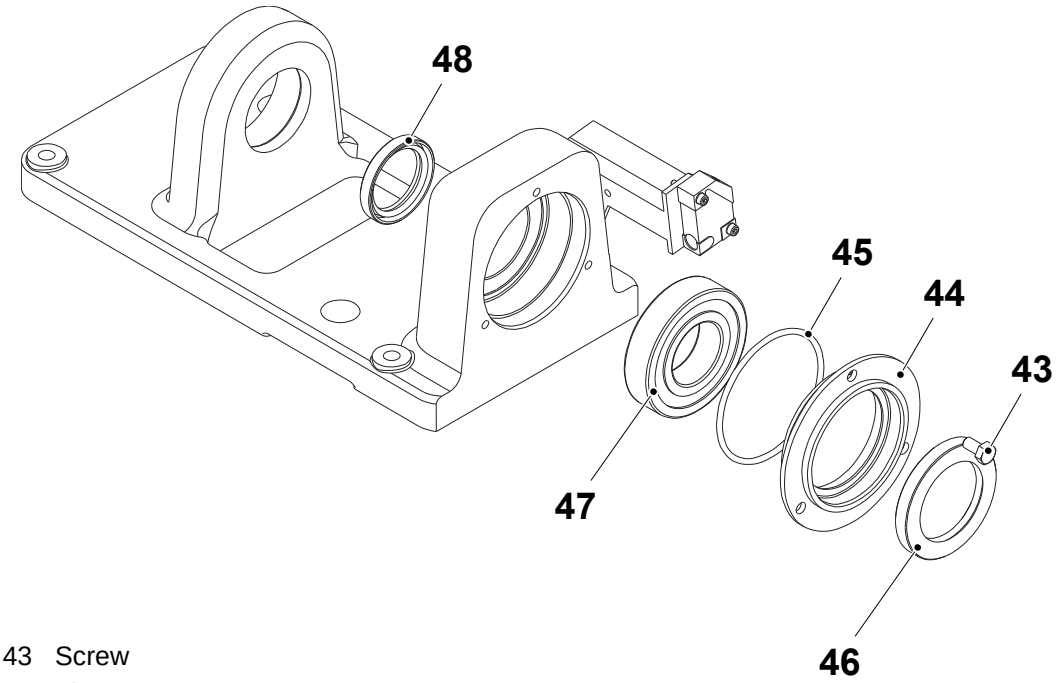

43 Screw
44 Flange
45 O-ring
46 Seal ring
47 Ball bearing
48 Seal ring

TechPub_2614345_0106 - 05_MM2819200_04en.fm

(Cont'd)

(Cont'd)

ac) Pull out and change the two bushings (49) from the connecting rod (38).

ad) Remove the three screws (50) and the flange (51).

ae) Change the O-ring (52) and the seal ring (53).

af) Remove the three screws (54) and separate the two eccentrics (55) and (56).

ag) Change the ball bearing (57), the seal ring (58) and the O-ring (59).

ah) Assemble in the reverse order.

Note! Apply a layer of grease (code F, see 10.3-1 Lubricants) to the ball bearing (57) on assembly.

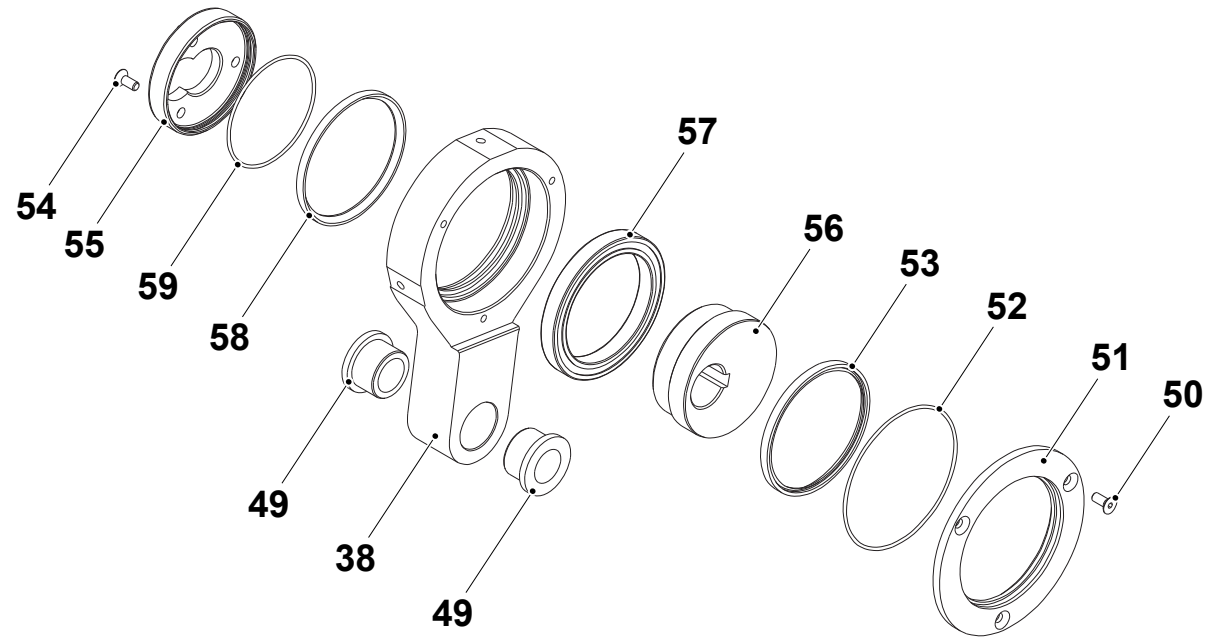

38 Connecting rod
49 Bushing
50 Screw
51 Flange
52 O-ring
53 Seal ring
54 Screw
55 Eccentric
56 Eccentric
57 Ball bearing
58 Seal ring
59 O-ring

TechPub_2614345_0106 - 05_MM2819200_04en.fm

5.10-6 Pressure Device - Change Lever Bushings

Machine Status	Mains Power OFF Air OFF Steam ON Water OFF
SPC Reference	2857893-0100

a) Remove the pressure device, see 5.10-4 Pressure Device - Change.

b) Remove the stop screws (1).

c) Pull out the shafts (2) and the bushings (3).

d) Change the bushings (3).

e) Assemble in the reverse order.

f) Repeat the sequence in all the positions marked by arrows.

g) Fit the pressure device and set it, see 5.10-1 Pressure Device - Set Lower Turning Position.

h) Set the belts tension, see 5.10-3 Pressure Device - Set Belt.

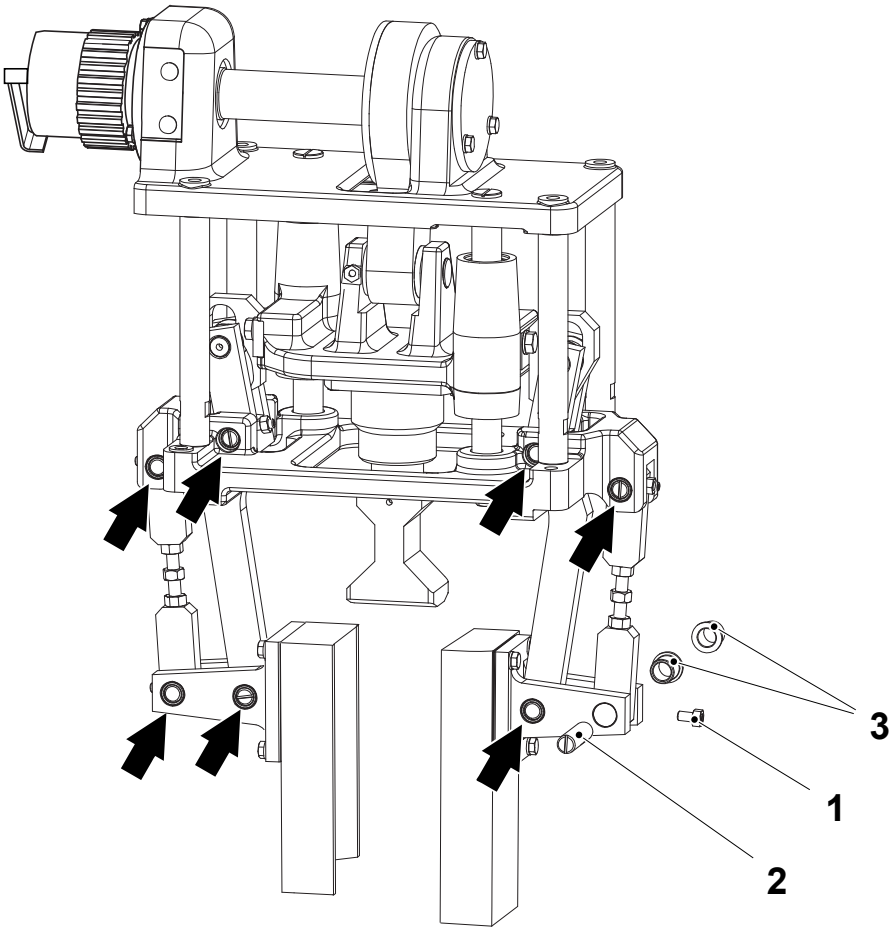

1 Stop screw
2 Shaft
3 Bushing

TechPub_2614345_0106 - 05_MM2819200_04en.fm

5.10-7 Pressure Device - Set Inductive Switch

Machine Status	Mains Power ON Air OFF Steam ON Water OFF
SPC Reference	2857893-0100

a) Crank the final folder until the flag (2) is in front of the inductive switch (3).

b) Loosen the screw (4) and set the distance **A** between the flag (2) and the inductive switch (3) by moving the inductive switch.

c) Tighten the screw (4).

d) Crank the final folder to 80°.

e) Loosen the screw (1).

f) Turn the flag (2) anti-clockwise until the inductive switch (3) LED is ON.

g) Tighten the screw (1).

TechPub_2614345_0106 - 05_MM2819200_04en.fm

A = 0.5 ±0.1 mm

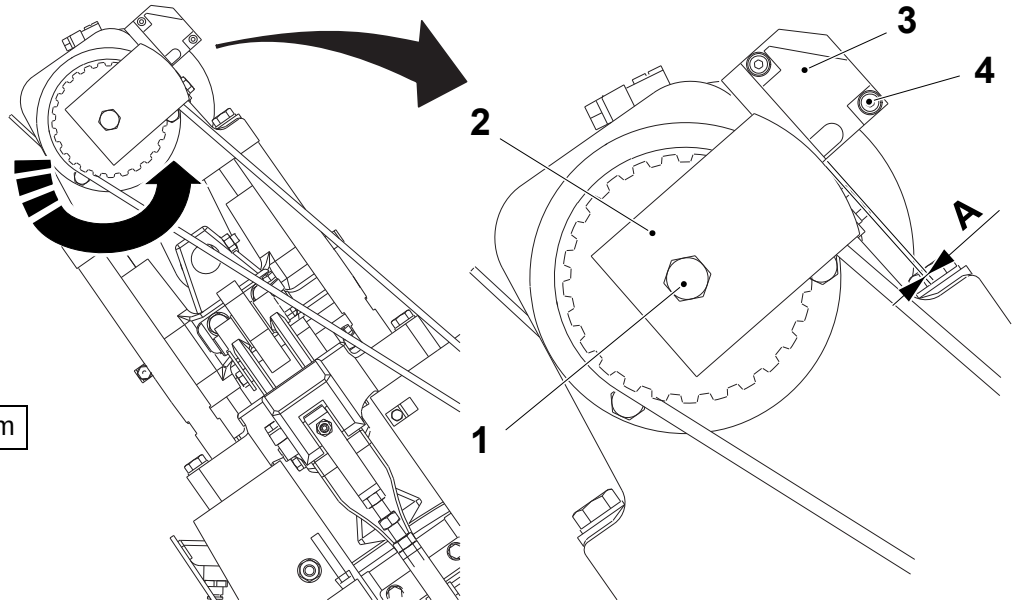

1 Screw
2 Flag
3 Inductive switch
4 Screw

5.10-8 Pressure Device - Check Belt

Machine Status	Mains Power OFF Air OFF Steam ON Water OFF
SPC Reference	2857893-0100

Check the belt for wear or damage. Change and set if necessary, see 5.10-3 Pressure Device - Set Belt.

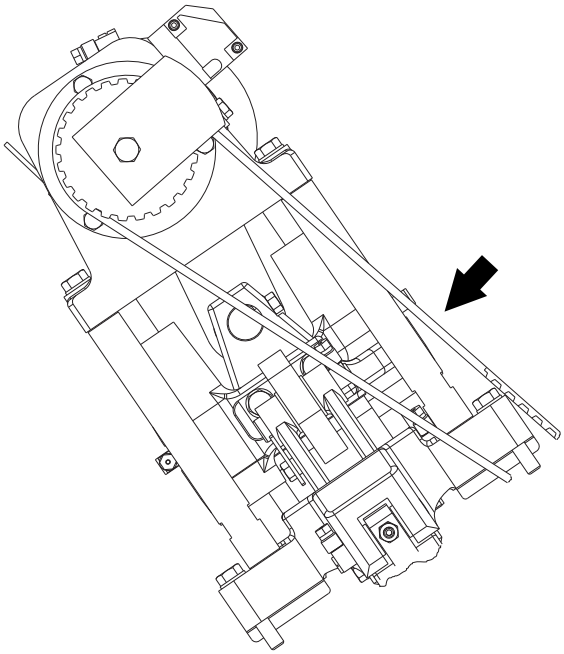

TechPub_2614345_0106 - 05_MM2819200_04en.fm

5.10-9 Pressure Device - Check Package Pressure

Machine Status	Mains Power OFF Air OFF Steam ON Water OFF
Special Equipment	Needle Pressure Gauge TP No. 1478583-0100
SPC Reference	2857893-0100

Note! The package must be well shaped and have the correct weight.

a) Place a filled package on the infeed conveyor.

b) Crank the final folder until the package (3) reaches the pressure device (approximately 250°).

c) Insert the needle (2) of the pressure gauge (1) in the space between the pusher (4) and the flap (5) of the pressure device so that the needle (2) enters the package.

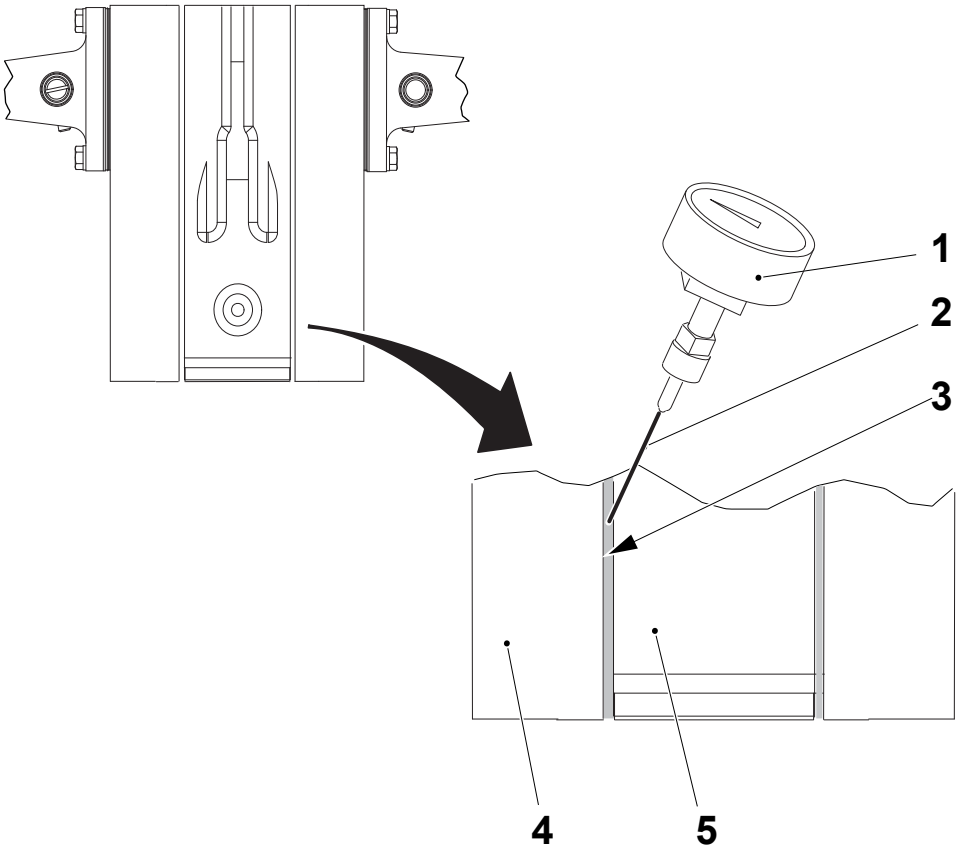

1 Pressure gauge
2 Needle
3 Package
4 Pusher
5 Flap

(Cont'd)

TechPub_2614345_0106 - 05_MM2819200_04en.fm

(Cont'd)

CAUTION
Risk of damage to the equipment.
Too much pressure can cause serious damage to the pressure device and the final folder clutch.

d) Check the pressure on the pressure gauge. The pressure package must be between 0.7 and 1.0 bar. For TPA 1000 Sq with HI the pressure must be between 1.0 and 1.3 bar.

If the pressure is low:

- Remove the pusher (8) and the support (7) by means of the screws (6)
- Add peelable shims (9) between the pusher (8) and the support (7) until the correct pressure is reached (add the same number of shims (9) on both sides of the pusher (8)
- Assemble in the reverse order.

If the pressure is high:

- Remove the pusher (8) and the support (7) by means of the screws (6)
- Remove peelable shims (9) between the pusher (8) and the support (7) until the correct pressure is reached (remove the same number of shims (9) on both sides of the pusher (8)
- Assemble in the reverse order.

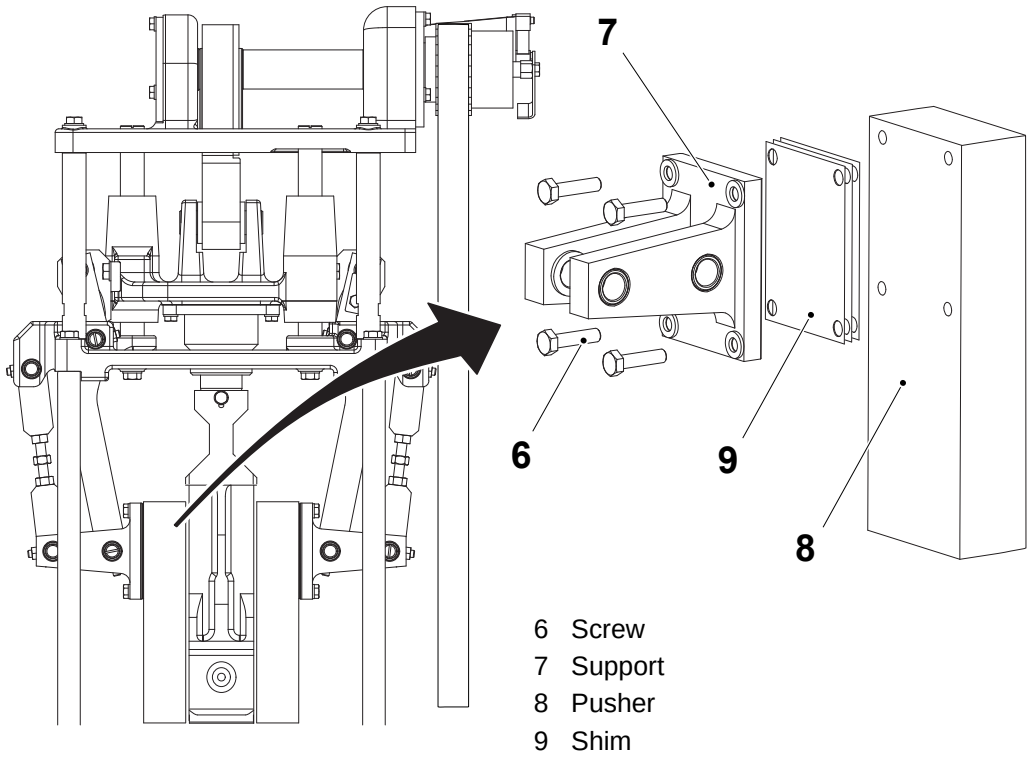

6 Screw
7 Support
8 Pusher
9 Shim

TechPub_2614345_0106 - 05_MM2819200_04en.fm

5.10-10 Pressure Device - Grease Belt Tensioner

Machine Status	Mains Power OFF Air OFF Steam ON Water OFF
Consumables	Shell Alvania Grease EP 2 TP No. 90296-0068
SPC Reference	2857893-0100

a) Remove the screw (1) on the belt tensioner (2).

b) Fill with grease through the nipple (3) until the grease is discharged through the screw hole of the screw (1).

c) Fit the screw (1).

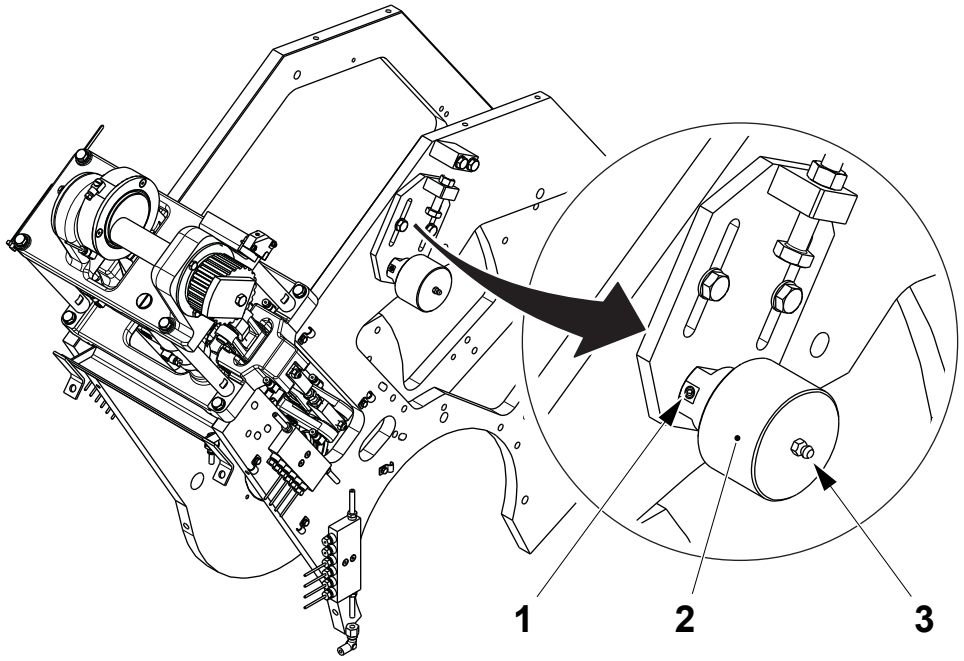

1 Screw
2 Belt tensioner
3 Nipple

TechPub_2614345_0106 - 05_MM2819200_04en.fm

5.11 Outfeed Unit

SPC Reference	2922972-0100

5.11-1 Outfeed Unit - Change Drive Belt

Machine Status	PRODUCTION
SPC Reference	2922972-0100

a) Loosen the belt tension by means the nut (1) and the screw (2).

b) Remove the screws (3) and the plate (4).

c) Remove and change the drive belt (5).

d) Assemble in the reverse order.

e) Set the drive belt tension, see 5.11-2 Outfeed Unit - Set Drive Belt Tension and perform the outfeed referencing, see 5.11-7 OutFeed Unit - Reference Servo.

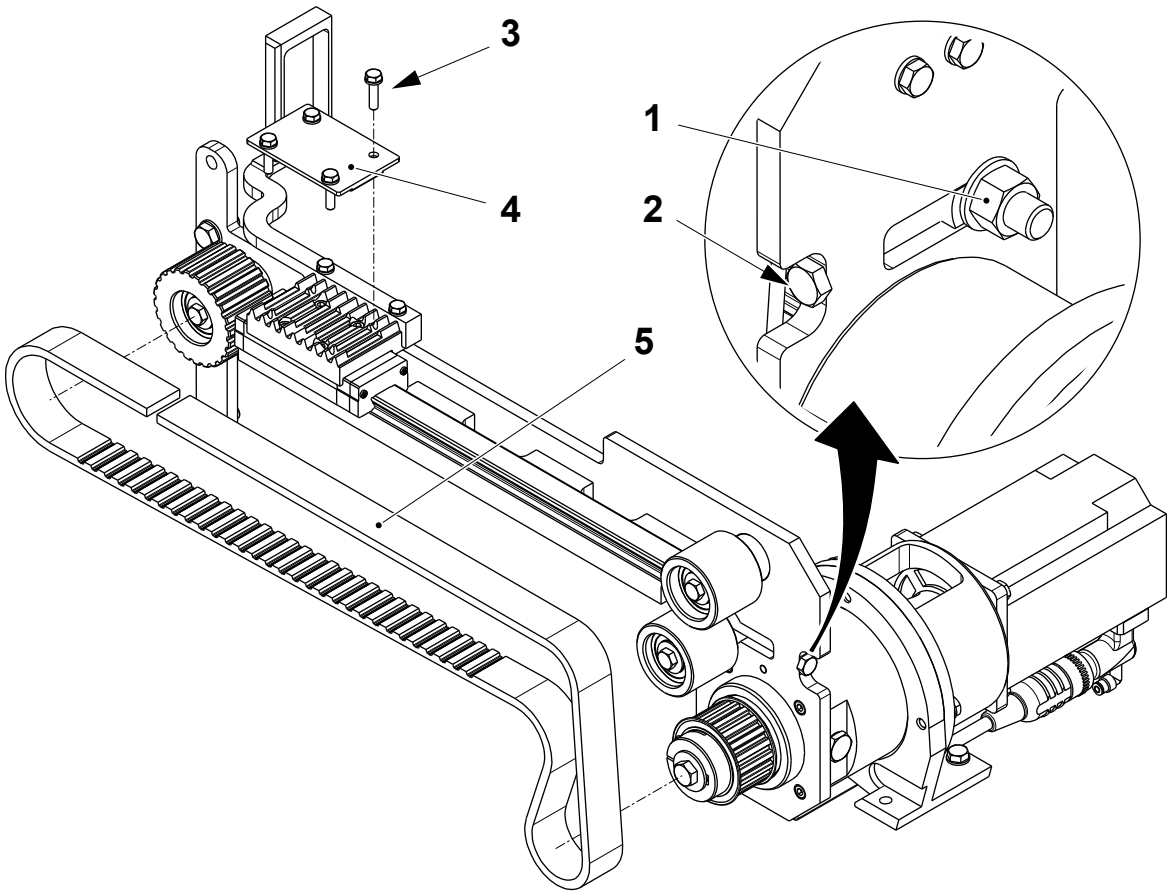

1 Nut
2 Screw
3 Screw
4 Plate
5 Drive belt

TechPub_2614345_0106 - 05_MM2819200_04en.fm

5.11-2 Outfeed Unit - Set Drive Belt Tension

Machine Status	Mains Power OFF Air OFF Steam ON Water OFF
SPC Reference	2922972-0100

a) Position the tensiometer sensor (1) distance **A** from the drive belt (2).

b) Press the ON/OFF button on the tensiometer (3).

c) Tap the drive belt (2) with an allen key (4).

d) The belt tension should be 35 ± 2 Hz, if the reading is outside this range, continue with the procedure on the following page to set the belt tension.

A = 3.0 to 20.00 mm

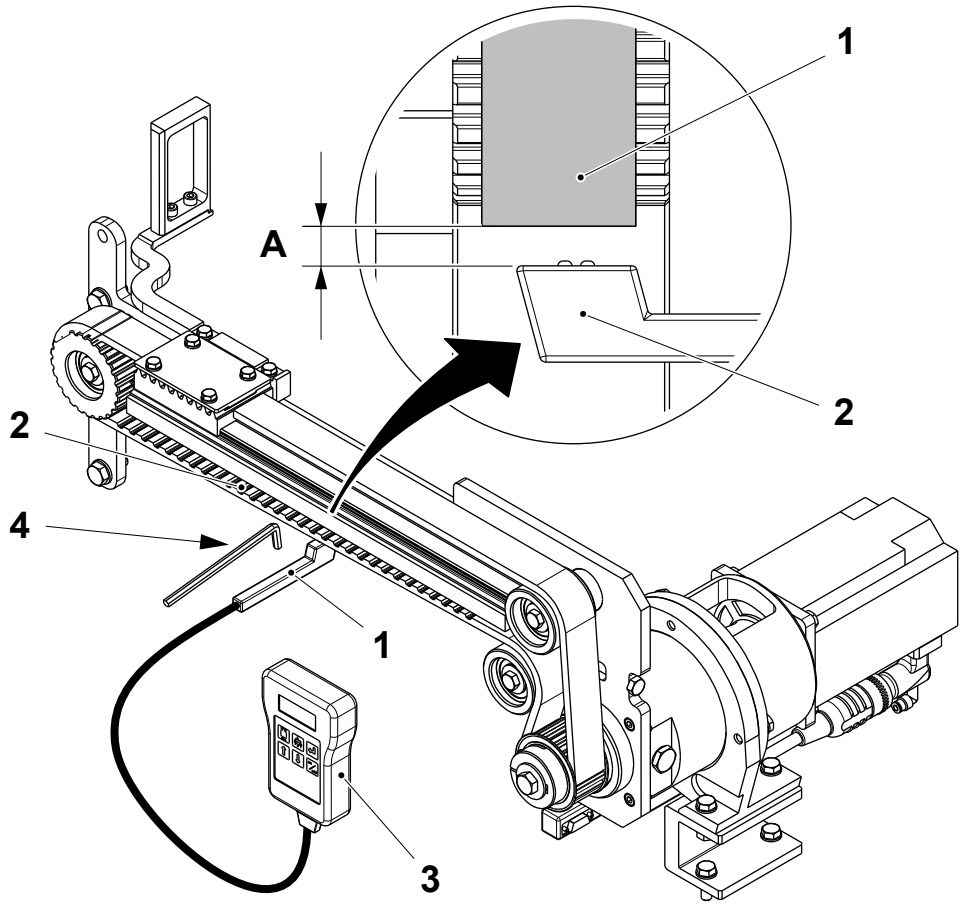

1 Tensiometer sensor
2 Drive belt
3 Tensiometer
4 Allen key

(Cont'd)

TechPub_2614345_0106 - 05_MM2819200_04en.fm

(Cont'd)

e) Loosen the nut (5).

f) Adjust the tension of the drive belt (2) by means of the screw (6).

g) Check the belt tension again, position the tensiometer sensor (1) distance **A** from the drive belt (2).

h) Press the ON/OFF button on the tensiometer (3).

i) Tap the drive belt (2) with an allen key (4).

j) The belt tension should be 35 ± 2 Hz, if the reading is outside this range, adjust by means of the screw (6) until the required tension is achieved.

k) Use a spanner to hold the position of the screw (6) and tighten the nut (5).

A = 3.0 to 20.00 mm

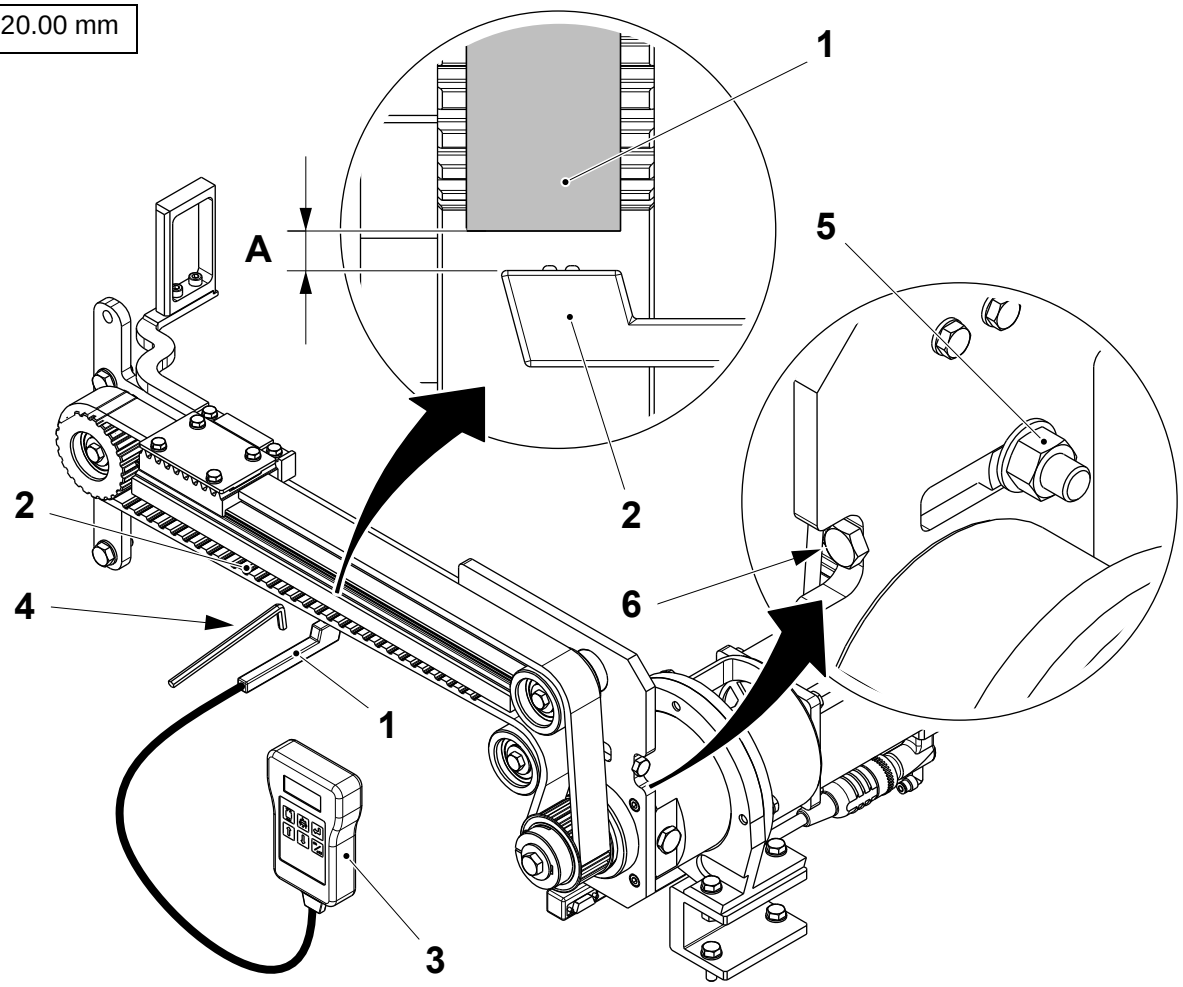

1 Tensiometer sensor
2 Drive belt
3 Tensiometer
4 Allen key

TechPub_2614345_0106 - 05_MM2819200_04en.fm

5.11-3 Outfeed Unit - Change Carrier

Machine Status	Mains Power OFF Air OFF Steam ON Water OFF
SPC Reference	2922972-0100

a) Remove the drive belt (1), see 5.11-1 Outfeed Unit - Change Drive Belt.

b) Remove the screws (2) and the pulley (3).

c) Remove the screws (4) and the pusher assembly (5).

d) Slide the carrier (6) off the rail (7) and change the carrier (6).

e) Assemble in the reverse order.

f) Set the belt tension, see 5.11-2 Outfeed Unit - Set Drive Belt Tension and perform the outfeed referencing, see 5.11-7 OutFeed Unit - Reference Servo.

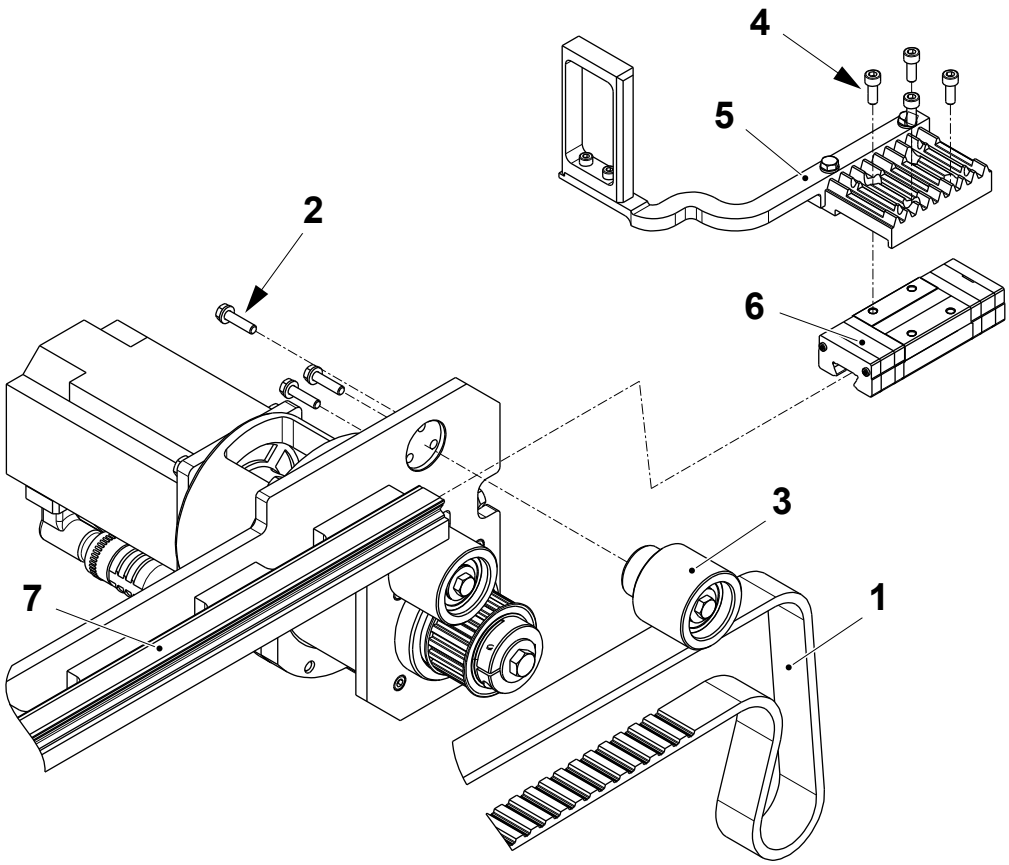

1 Belt
2 Screw
3 Pulley
4 Screw
5 Pusher assembly
6 Carrier
7 Rail

TechPub_2614345_0106 - 05_MM2819200_04en.fm

5.11-4 Outfeed Unit - Change Bushing and Bearings

Machine Status	Mains Power OFF Air OFF Steam ON Water OFF
SPC Reference	2922972-0100

a) Remove the drive belt, see 5.11-1 Outfeed Unit - Change Drive Belt.

b) Remove the screw (1), the bearing (2), the spacer (3), the pulley (4) and the bearing (5).

c) Change the bearings (2) and (5) and the spacer (3).

d) Assemble in the reverse order and repeat the procedure for the three other pulleys.

e) Set the belt tension, see 5.11-2 Outfeed Unit - Set Drive Belt Tension and perform the outfeed referencing, see 5.11-7 OutFeed Unit - Reference Servo.

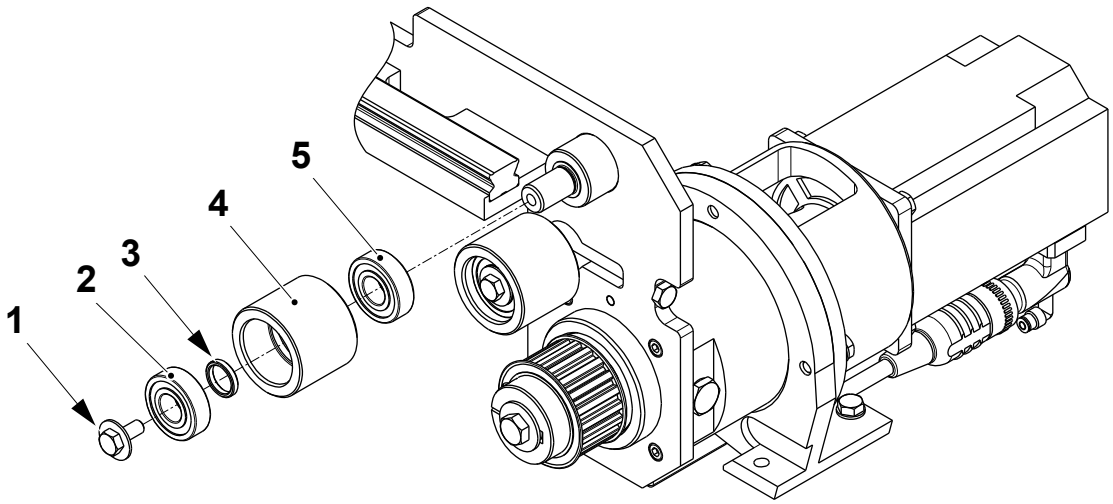

1 Screw
2 Bearing
3 Spacer
4 Pulley
5 Bearing

TechPub_2614345_0106 - 05_MM2819200_04en.fm

5.11-5 Outfeed Unit - Check Oil Level

Machine Status	Mains Power OFF Air OFF Steam ON Water OFF
Consumables	Oil, TP No. 330002-2200
SPC Reference	2922972-0100

Remove the screw (1) and check the oil level. If necessary, add oil until it comes out from the hole (2), use oil code **B**, see 10.3 Consumables.

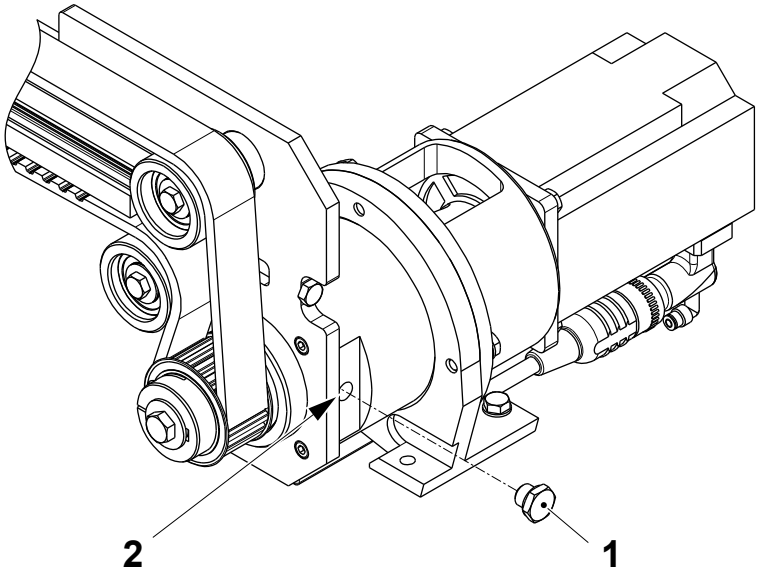

1 Screw
2 Hole

TechPub_2614345_0106 - 05_MM2819200_04en.fm

5.11-6 OutFeed Unit - Set Counting Photocells

Machine Status	Mains Power ON Air OFF Steam ON Water OFF
SPC Reference	2922972-0100

To set the photocells, see 5-17 Final Folder - Set Package Outfeed Counting Photocells.

5.11-7 OutFeed Unit - Reference Servo

Machine Status	Mains Power OFF Air OFF Steam ON Water OFF
SPC Reference	2922972-0100

Follow the procedures described in 5-3 Final Folder - Referencing.

TechPub_2614345_0106 - 05_MM2819200_04en.fm

5.11-8 Outfeed Unit - Set Queue Photocells

Machine Status	Mains Power ON Air OFF Steam ON Water OFF
SPC Reference	2922972-0100

a) The photocells are composed of one transmitter (1) and one receiver (2) and they must be positioned in front of each other.

b) Open the cover (3) on the receiver photocell (2).

c) Make sure that the receiver photocell (2) is set to PNP (positive logic) and L-ON (the signal will be sent when NO object is detected between the photocells), see figure below.

d) Check the transmitter (1) and the receiver (2) photocells position, see figure below.

e) Begin without any object to be detected. Turn the sensitivity potentiometer (4) anti-clockwise (toward min.) and then clockwise until both the green LED (5) and the red LED (6) light up. To secure the setting turn clockwise the sensitivity potentiometer (4) just a little bit more.

f) Place the package to be detected between the photocells. Check that the green LED (5) comes on and the red LED (6) light goes off.

g) Close the cover (3) on the receiver photocell (2).

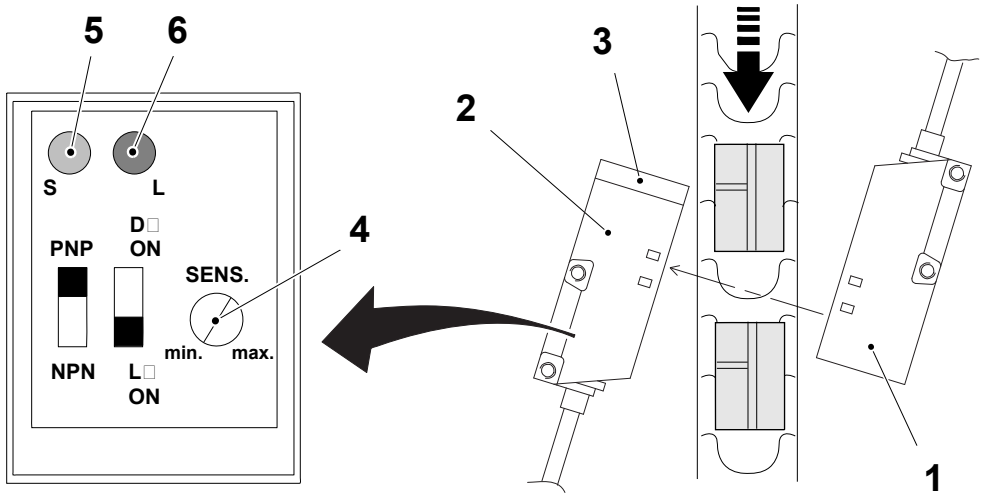

1 Transmitter
2 Receiver
3 Cover
4 Potentiometer
5 Green LED
6 Red LED

TechPub_2614345_0106 - 05_MM2819200_04en.fm

5.11.1 Outfeed Conveyor

5.11.1-1 Outfeed Conveyor - Set End Unit Proximity Switch

Machine Status	Mains Power ON Air ON Steam ON Water OFF
SPC Reference	2952916-0100

a) Remove the conveyor chain (1) from the end unit (2).

b) Remove the six screws (3), the screw (4), the nut (5) and the side plate (6) together with the sensor (7).

c) Loosen the nuts (8) and set the distance **A** between the innner surface of the side plate (6) and the end of the sensor (7).

d) Assemble in the reverse order.

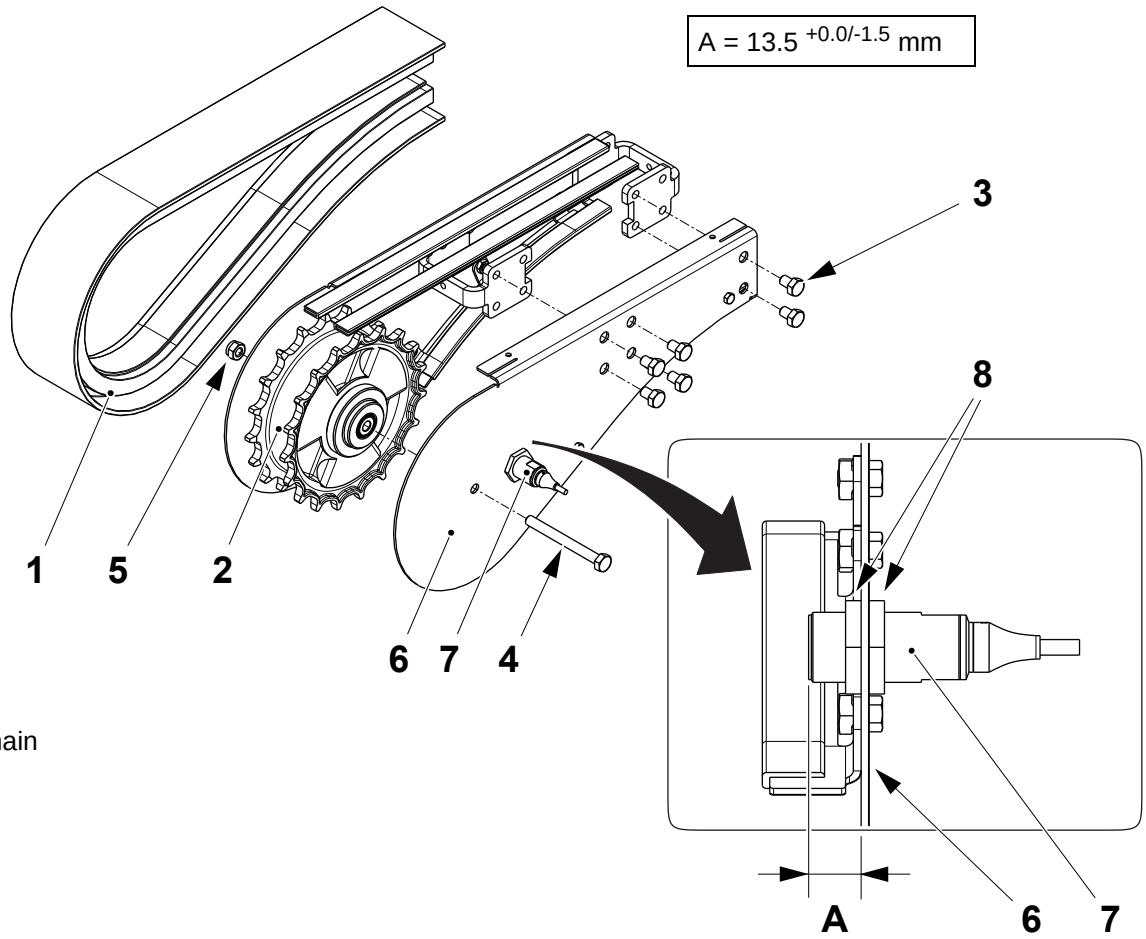

1 Conveyor chain
2 End unit
3 Screw
4 Screw
5 Nut
6 Side plate
7 Sensor
8 Nut

TechPub_2614345_0106 - 05_MM2819200_04en.fm

5.12 Last Point DE

SPC Reference	2872916-0100

5.12-1 Last Point DE - Set Photocells

Machine Status	Mains Power OFF Air OFF Steam ON Water OFF
SPC Reference	2872916-0100

Set the photocells position, see 5-17 Final Folder - Set Package Outfeed Counting Photocells.

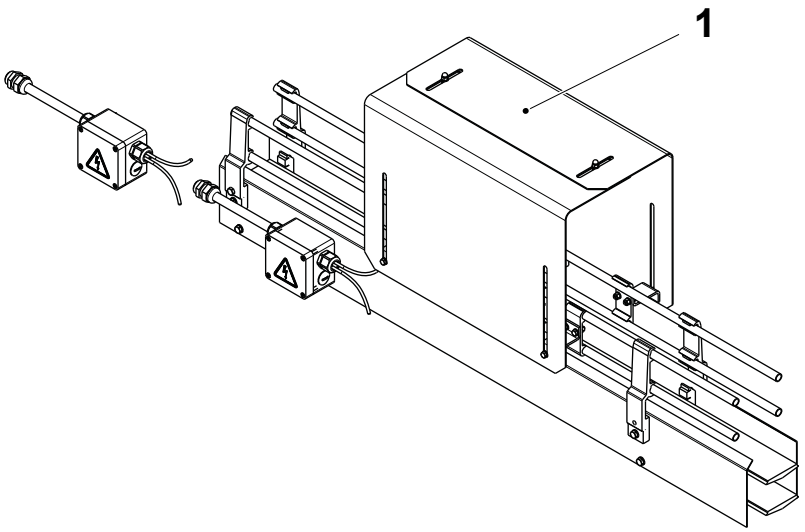

1 Last point DE

TechPub_2614345_0106 - 05_MM2819200_04en.fm

This page intentionally left blank

TechPub_2614345_0106 - 05_MM2819200_04en.fm

6 Service Unit

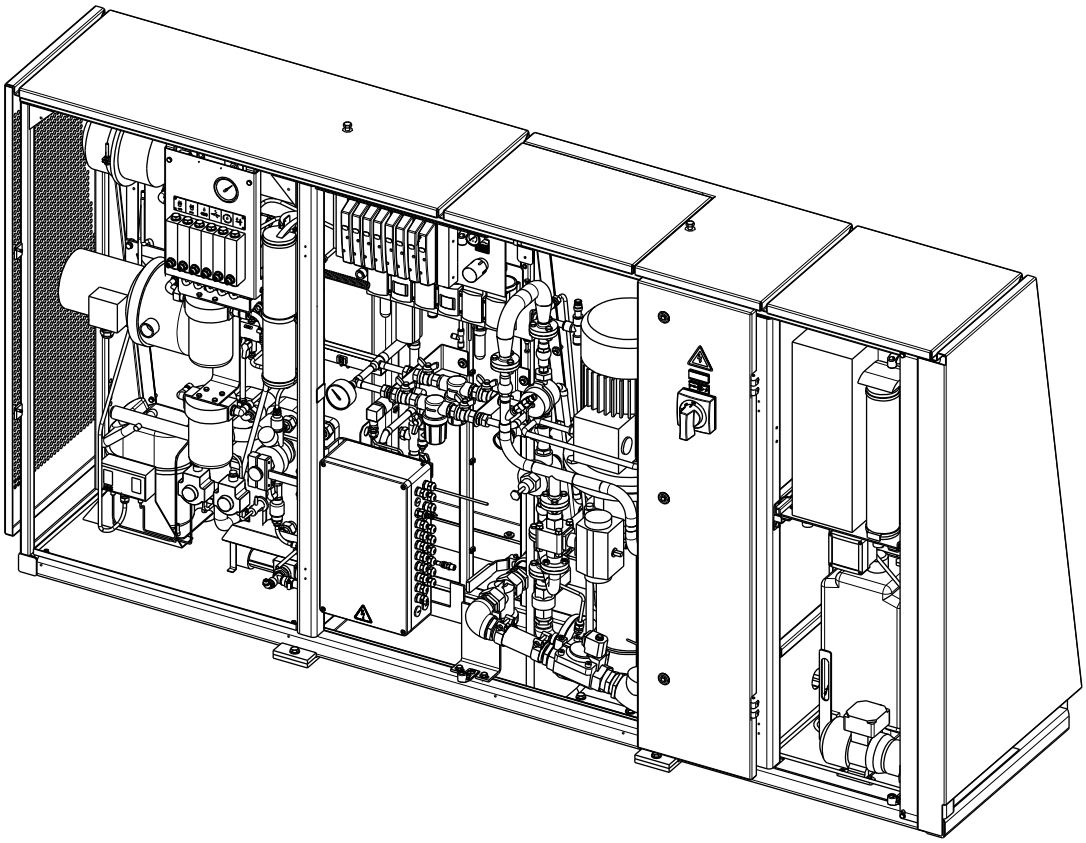

TechPub_2614345_0106 - 06_MM2819200_04en.fm

Service Unit - Description

SPC Reference	648506-0500

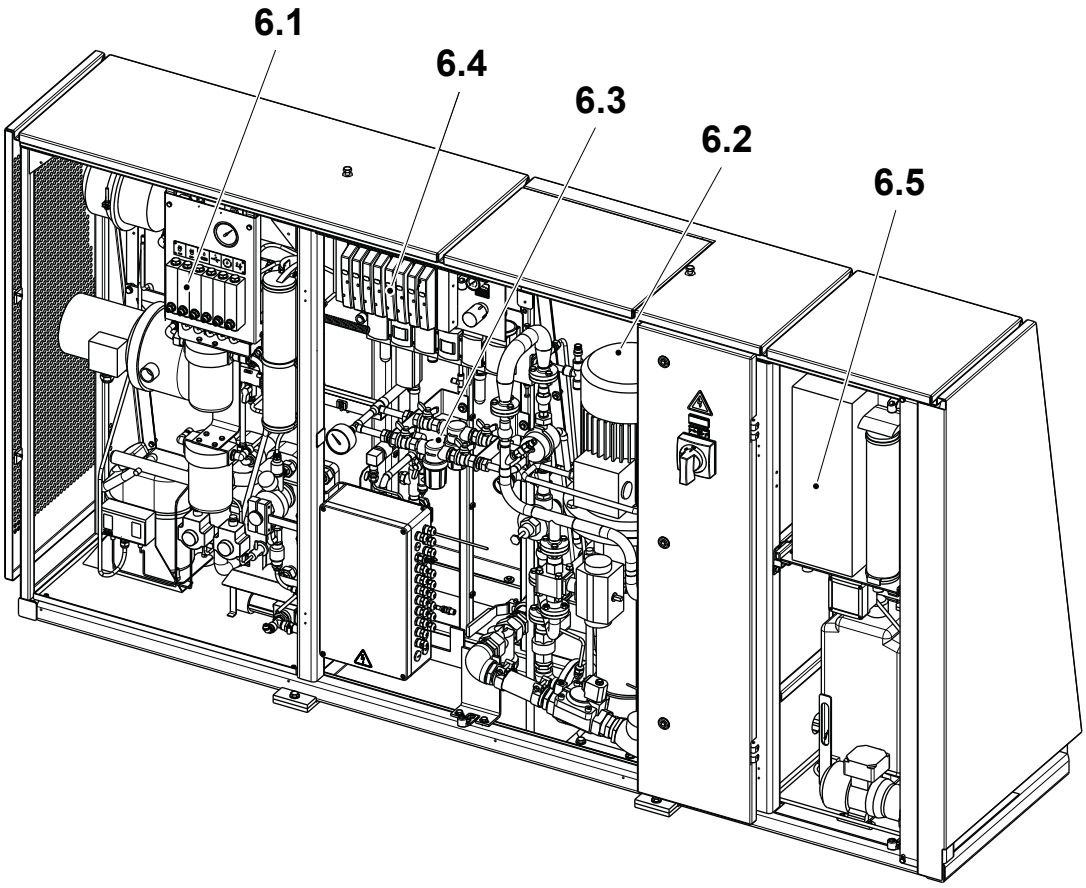

6.1 Cooling Water System
6.2 Foaming Unit
6.3 Water Panel
6.4 Supply System
6.5 Water System

TechPub_2614345_0106 - 06_MM2819200_04en.fm

6.1 Cooling Water System . . . . . 6 - 5

6.1-1 Cooling Water System - Check . . . . . 6 - 5

6.1-2 Cooling Water System - Fill . . . . . 6 - 7

6.1.1 Compressor Unit . . . . . 6 - 8

6.1.1-1 Compressor Unit - Check Sight Glass . . . . . 6 - 8

6.1.1-2 Compressor Unit - Check . . . . . 6 - 10

6.1.2 Flow Meter . . . . . 6 - 11

6.1.2-1 Flow Meter - Change Filter . . . . . 6 - 11

6.1.2-2 Flow Meter - Set Flows . . . . . 6 - 13

6.1.2-3 Flow Meter - Change Filter Insert . . . . . 6 - 14

6.2 Foaming Unit . . . . . 6 - 16

6.2-1 Foaming Unit - Check Connections . . . . . 6 - 16

6.2-2 Foaming Unit - Set Pressures . . . . . 6 - 17

6.2.1 Pipe . . . . . 6 - 18

6.2.1-1 Pipe - Change Filter . . . . . 6 - 18

6.2.2 Pump . . . . . 6 - 19

6.2.2-1 Pump - Change Gaskets . . . . . 6 - 19

6.3 Water Panel . . . . . 6 - 21

6.3-1 Water Panel - Check Pressure Switch . . . . . 6 - 21

6.3-2 Water Panel - Clean Filters . . . . . 6 - 22

6.3-3 Water Panel - Set Tube Flushing Device . . . . . 6 - 24

6.4 Supply System . . . . . 6 - 25

6.4.1 Pneumatic Panel . . . . . 6 - 25

6.4.1-1 Pneumatic Panel - Check . . . . . 6 - 25

6.4.1-2 Pneumatic Panel - Set Pressure . . . . . 6 - 27

6.4.1-3 Pneumatic Panel - Clean Filter Insert . . . . . 6 - 28

6.5 Water System . . . . . 6 - 29

6.5.1 Filter . . . . . 6 - 29

6.5.1-1 Filter - Change Pressure Regulator . . . . . 6 - 29

6.5.1-2 Filter - Set Pressure Regulator . . . . . 6 - 31

TechPub_2614345_0106 - 06_MM2819200_04en.fm

6.5.1-3 Filter - Change Filter Insert . . . . . 6 - 32

6.5.2 Sterile Water System . . . . . 6 - 33

6.5.2-1 Sterile Water System - Start-Up . . . . . 6 - 33

6.5.2-2 Sterile Water System - Set . . . . . 6 - 35

6.5.2-3 Sterile Water System - Clean Reverse Osmosis Cartridge . . . . . 6 - 38

6.5.2-4 Sterile Water System - Change Progard Pack . . 6 - 40

6.5.2-5 Sterile Water System - Drain Reservoir . . . . . 6 - 43

6.5.3 Circuit . . . . . 6 - 44

6.5.3-1 Circuit - Set Conductivity Meter . . . . . 6 - 44

6.5.3-2 Circuit - Change Filter . . . . . 6 - 47

6.5.4 Electrical Connection . . . . . 6 - 48

6.5.3-1 Electrical Connection- Set Sensor Sensitivity . . 6 - 48

TechPub_2614345_0106 - 06_MM2819200_04en.fm

6.1 Cooling Water System

SPC Reference	1095612-0400

6.1-1 Cooling Water System - Check

Machine Status	PRODUCTION
SPC Reference	1095612-0400

WARNING

Refrigerant gas.

Cooling media R134A, follow the Safety Precautions.

(Cont'd)

TechPub_2614345_0106 - 06_MM2819200_04en.fm

(Cont'd)

Check that:

- there are no water leaks at the connections
- the pump (1) runs smoothly without excessive noise or vibrations
- the water pressure gauge (2) shows the correct water pressure in the circuit, see 10.1 Technical Data
- the values of the flow meter (3) are correct. Set the flows if necessary, see 6.1.2-2 Flow Meter - Set Flows.

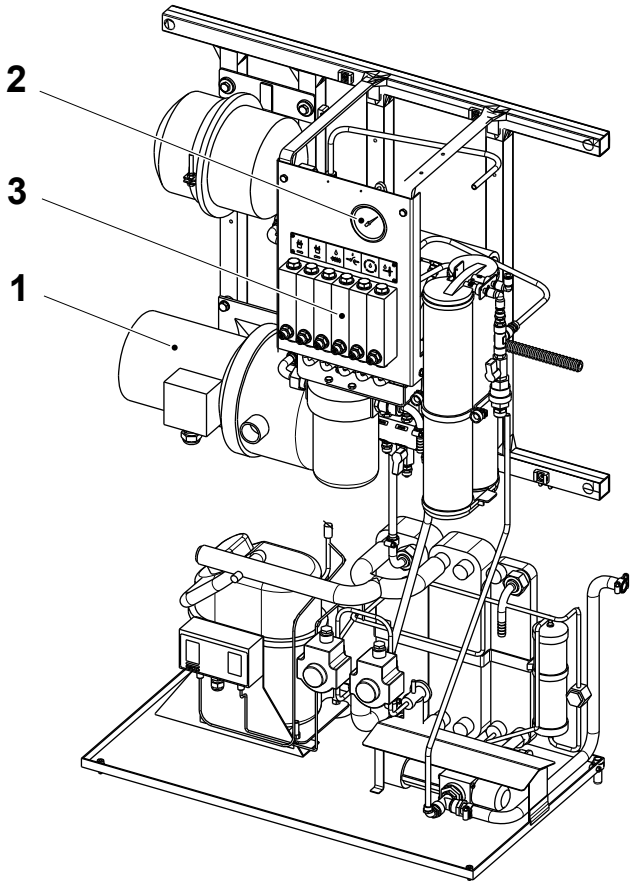

1 Pump
2 Pressure gauge
3 Flow meters

TechPub_2614345_0106 - 06_MM2819200_04en.fm

6.1-2 Cooling Water System - Fill

Machine Status	Mains Power ON Air ON Steam ON Water ON
SPC Reference	1095612-0400

WARNING

Refrigerant gas.
Cooling media R134A, follow the Safety Precautions.

Note! Make sure that the circuit is correctly connected and that the valves located in the final folder chamber are open.

a) Open the water valve (1) to fill the cooling water circuit.

b) Leave the pump (2) running for approximately one minute.

c) When the water pressure gauge (3) reaches 2 bar, close the valve (1).

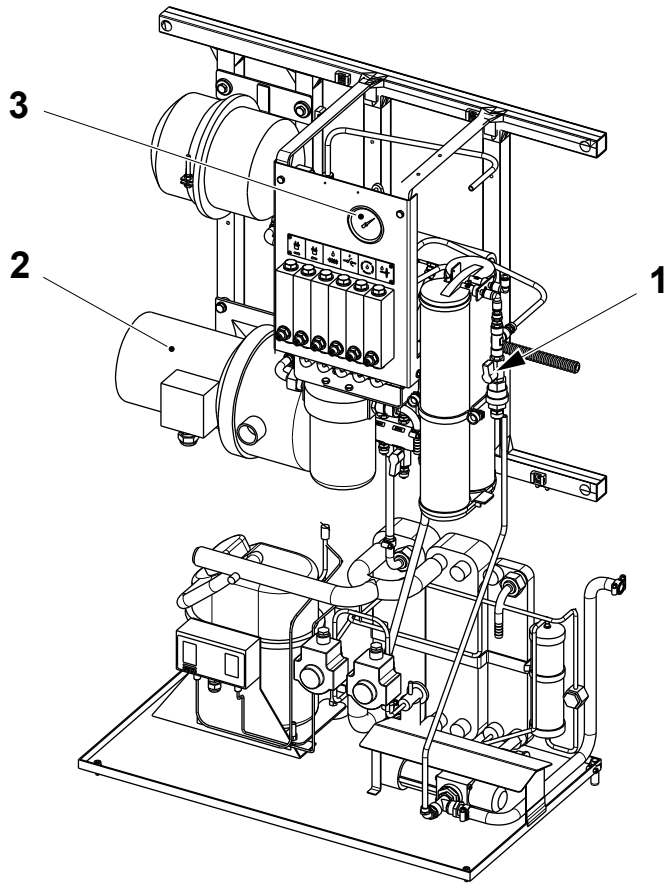

1 Valve
2 Pump
3 Pressure gauge

TechPub_2614345_0106 - 06_MM2819200_04en.fm

6.1.1 Compressor Unit

6.1.1-1 Compressor Unit - Check Sight Glass

Machine Status	Mains Power ON Air ON Steam ON Water ON
SPC Reference	1095710-0400

WARNING

Refrigerant gas.

Cooling media R134A, follow the Safety Precautions.

Note! The compressor unit must only be serviced or repaired by a company authorised in the repair and service of refrigeration units. See the SPC for the compressor's internal serviceable spare part codes.

(Cont'd)

TechPub_2614345_0106 - 06_MM2819200_04en.fm

(Cont'd)

Check that:

- there are not gas bubbles in the sight glass (1). If air bubbles are present call the local Tetra Pak Service
- the pin inside the sight glass (1) is GREEN. If the pin is YELLOW call a local authorised service for refrigerating units.

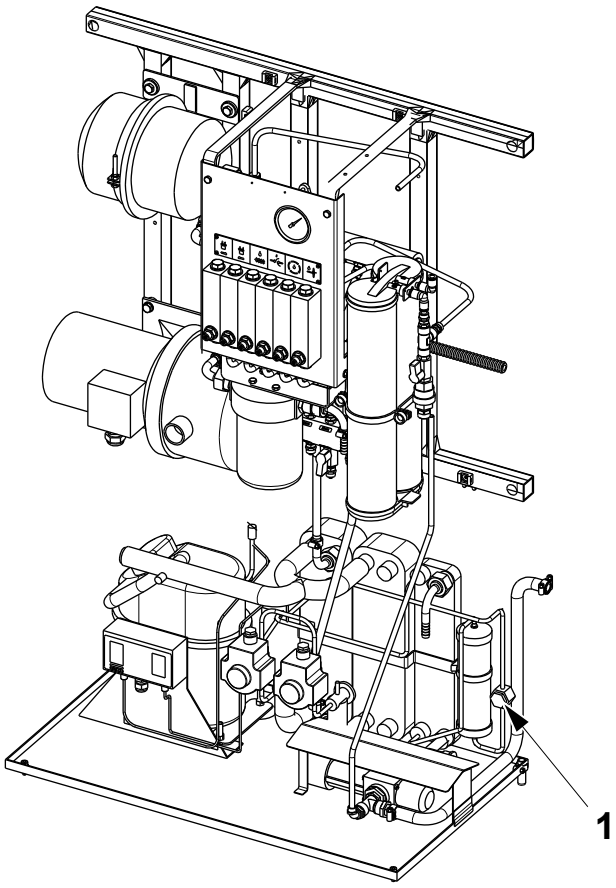

1 Sight glass

TechPub_2614345_0106 - 06_MM2819200_04en.fm

6.1.1-2 Compressor Unit - Check

Machine Status	PRODUCTION
Special Equipment	Thermometer min. 40°C
SPC Reference	1095710-0400

WARNING

Refrigerant gas.

Cooling media R134A, follow the Safety Precautions.

Use a thermometer to check the temperature of the water from the hose (1). The temperature must be between 30°C and 35°C when the compressor (2) is running.

If not, call the local Tetra Pak Service.

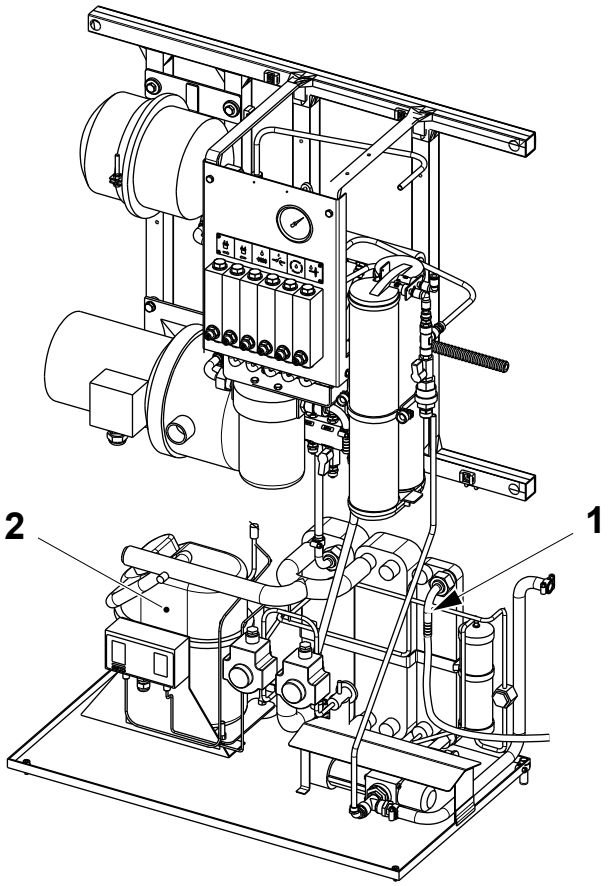

1 Hose
2 Compressor

TechPub_2614345_0106 - 06_MM2819200_04en.fm

6.1.2 Flow Meter

6.1.2-1 Flow Meter - Change Filter

Machine Status	Mains Power OFF Air OFF Steam ON Water OFF
SPC Reference	2552113-0200

WARNING

Refrigerant gas.

Cooling media R134A, follow the Safety Precautions.

a) Close the circuit flow meter (1) by means of the screw (2).

b) Remove the two knobs (3) to release the support (4).

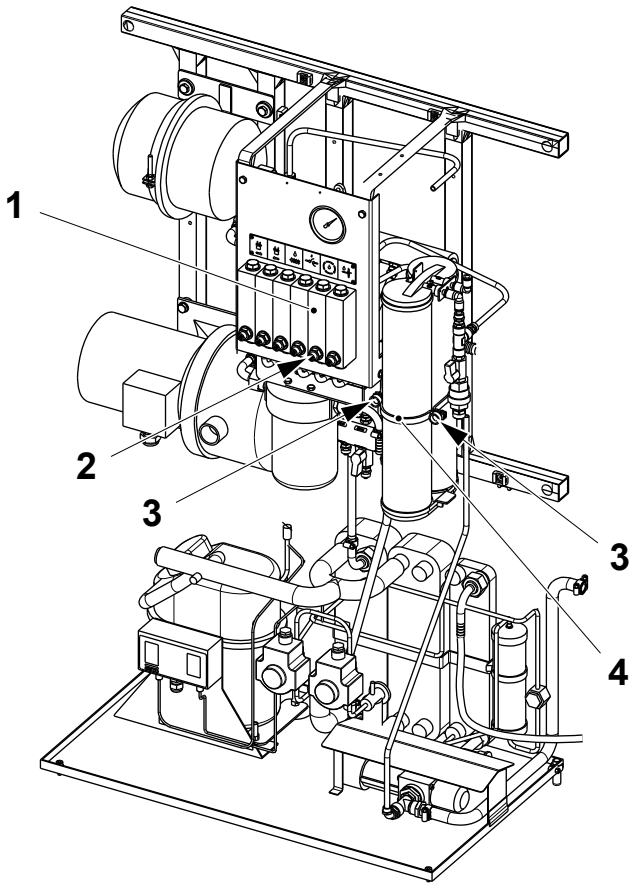

1 Flow meter
2 Screw
3 Knob
4 Support

(Cont'd)

TechPub_2614345_0106 - 06_MM2819200_04en.fm

(Cont'd)

c) Remove the fastening plate (5) and pull out the connection block (6).

d) Remove the filter cartridge (7).

e) Fit the new filter cartridge and assemble in the reverse order.

f) Open the circuit flow meter (1) by means of the screw (2).

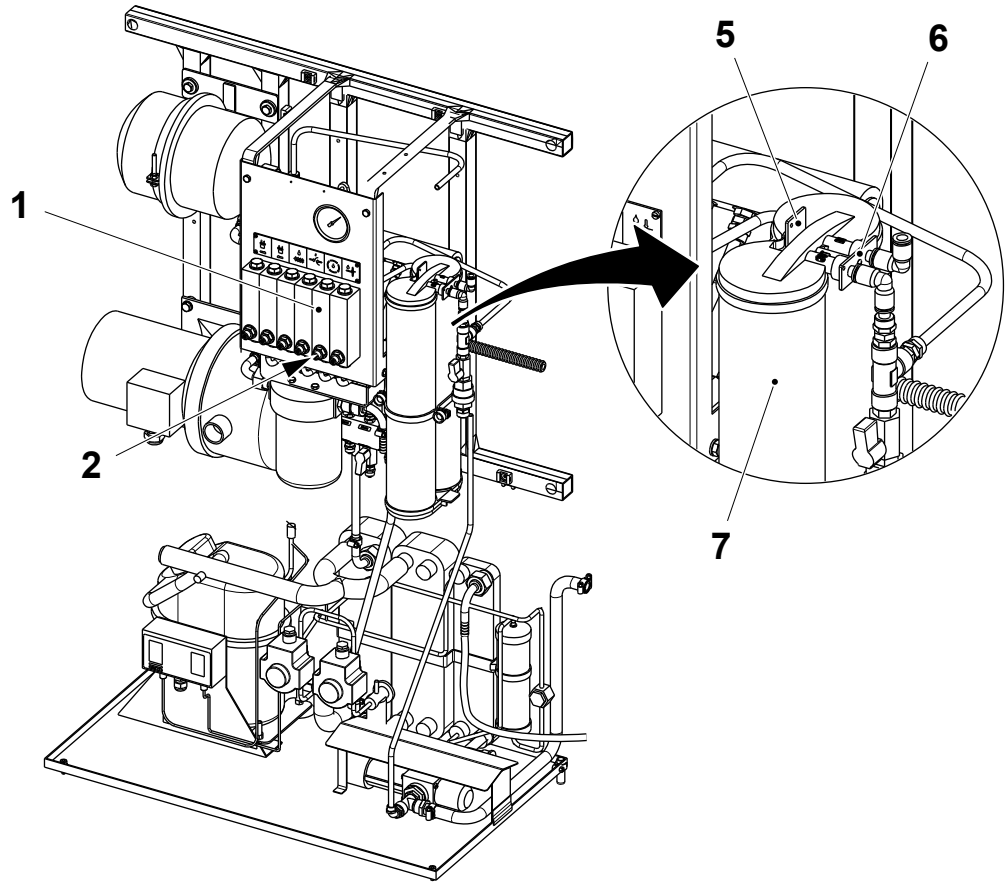

1 Flow meter
2 Screw
5 Fastening plate
6 Connection block
7 Filter cartridge

TechPub_2614345_0106 - 06_MM2819200_04en.fm

6.1.2-2 Flow Meter - Set Flows

Machine Status	PRODUCTION
SPC Reference	2552113-0200

Set the flows by turning the setting screw (7) for each of the flow meters (1), (2), (3), (4), (5) and (6) as indicated in the following table:

Flow meters	**Flow rate (l/min.)**
TS right (jaw system)	See 10.1 Technical Data
TS left (jaw system)	See 10.1 Technical Data
Final folder	See 10.1 Technical Data
IH transfer LS sealing	See 10.1 Technical Data
De-ionizer (DI) circuit	See 10.1 Technical Data
Hydraulic system	See 10.1 Technical Data

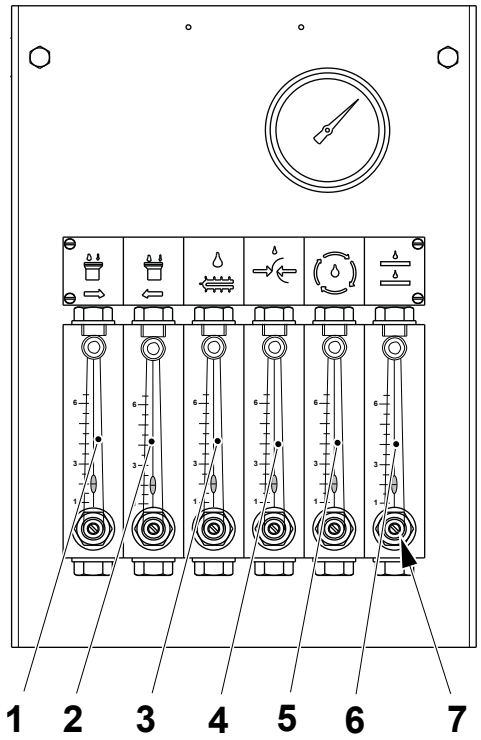

1 Flow meter TS left (jaw system)
2 Flow meter TS right (jaw system)
3 Flow meter Final folder
4 Flow meter IH-LS transformator
5 Flow meter DI-circuit
6 Flow meter Hydraulic system
7 Setting screw

TechPub_2614345_0106 - 06_MM2819200_04en.fm

6.1.2-3 Flow Meter - Change Filter Insert

Machine Status	Mains Power OFF Air OFF Steam ON Water OFF
SPC Reference	2552113-0200

a) Drain the water from the circuit by disconnecting the hose (1) in the final folder (2). Approximately one litre of water must be discarded.

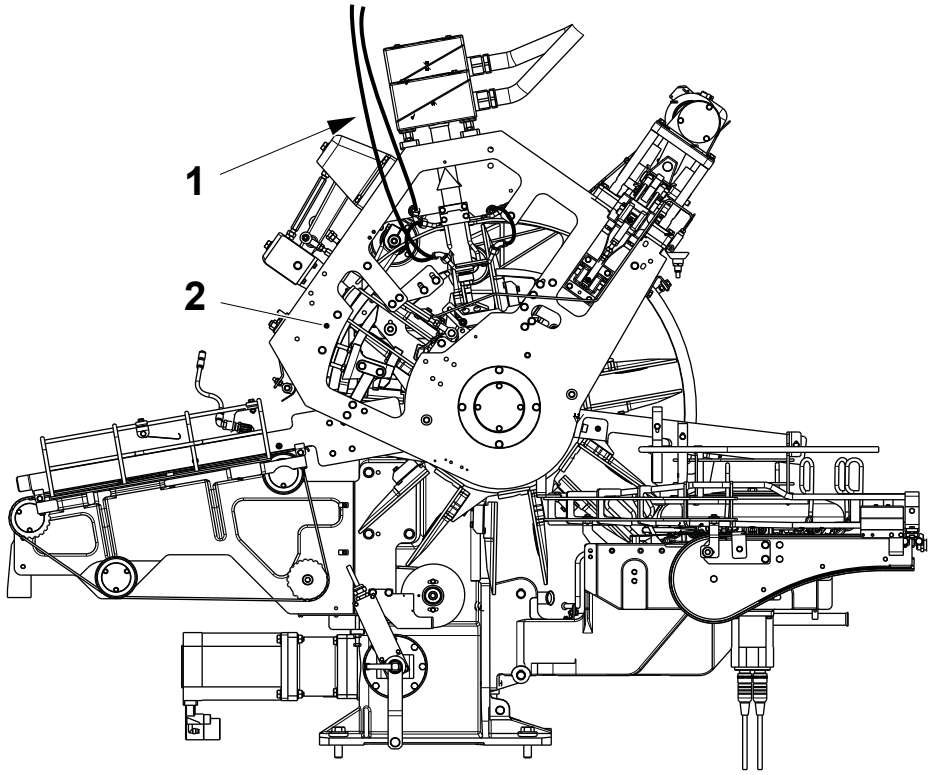

1 Hose
2 Final folder

(Cont'd)

TechPub_2614345_0106 - 06_MM2819200_04en.fm

(Cont'd)

b) Screw out the filter housing (3) and remove the filter insert (4). Clean the filter insert with compressed air or change if necessary.

c) Check the O-ring (5) for damage. Change if necessary.

d) Fit back the filter insert (4), the O-ring (5) and the filter housing (3).

e) Fill the cooling water system, see 6.1-2 Cooling Water System - Fill.

Note! Check during PRODUCTION that there are no leaks.

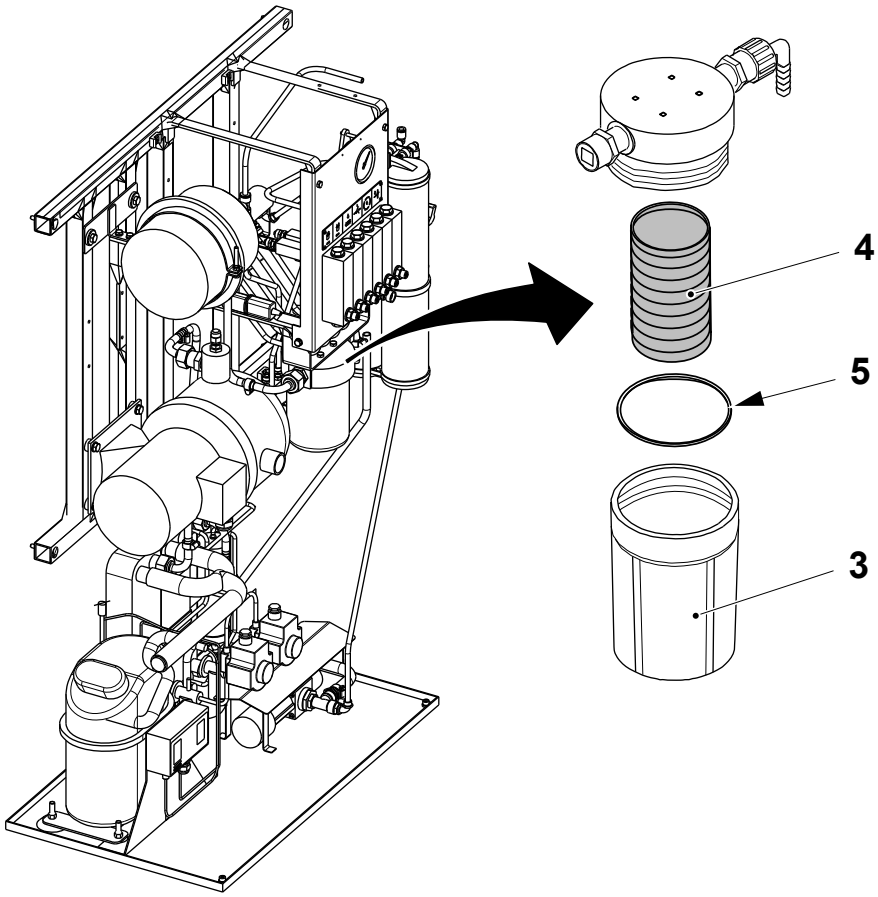

3 Filter housing
4 Filter insert
5 O-ring

TechPub_2614345_0106 - 06_MM2819200_04en.fm

6.2 Foaming Unit

SPC Reference	1095627-0400

6.2-1 Foaming Unit - Check Connections

Machine Status	EXTERNAL CLEANING
SPC Reference	1095627-0400

Check:

- for leakages in the pipe connections, see arrows. Change the seals if necessary
- for leakages in the cleaning pump connections, see arrows. Change the seals if necessary.

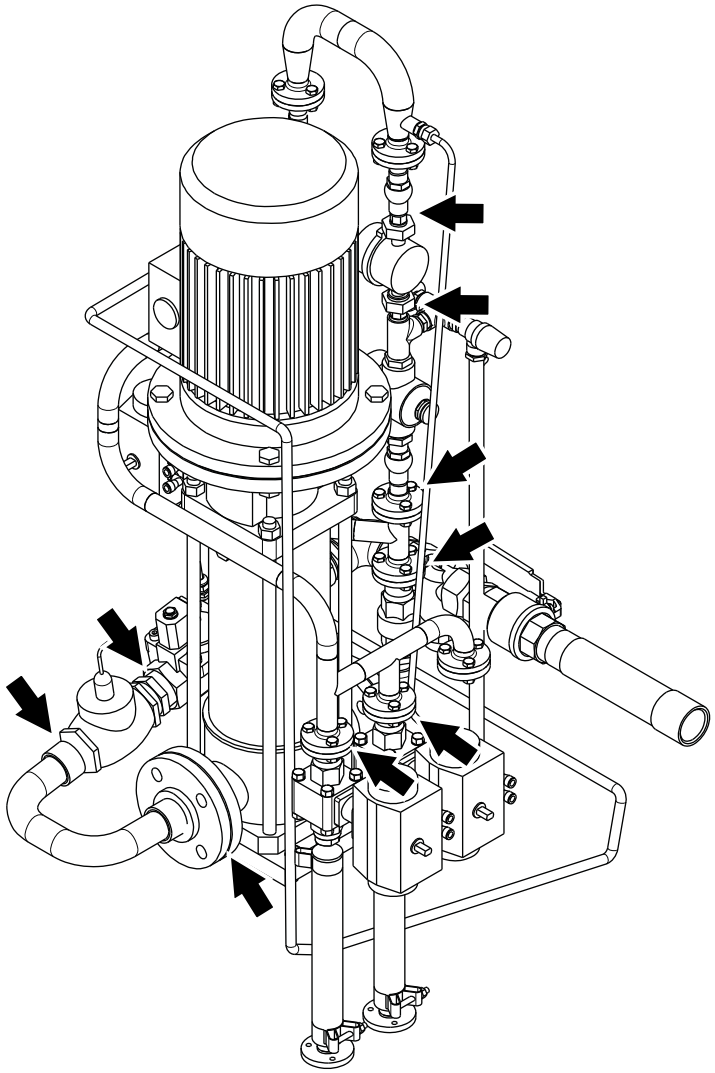

TechPub_2614345_0106 - 06_MM2819200_04en.fm

6.2-2 Foaming Unit - Set Pressures

Machine Status	EXTERNAL CLEANING
SPC Reference	1095627-0400

Cleaning Pressure

Step up the machine to EXTERNAL CLEANING.

Check the pressure gauge (1) and set the cleaning pressure by means of the adjustment screw (2) on the pressure regulator (3), see 10.1 Technical Data.

Foam Pressure

Set the foam pressure by means of the pressure regulator (4), see 10.1 Technical Data.

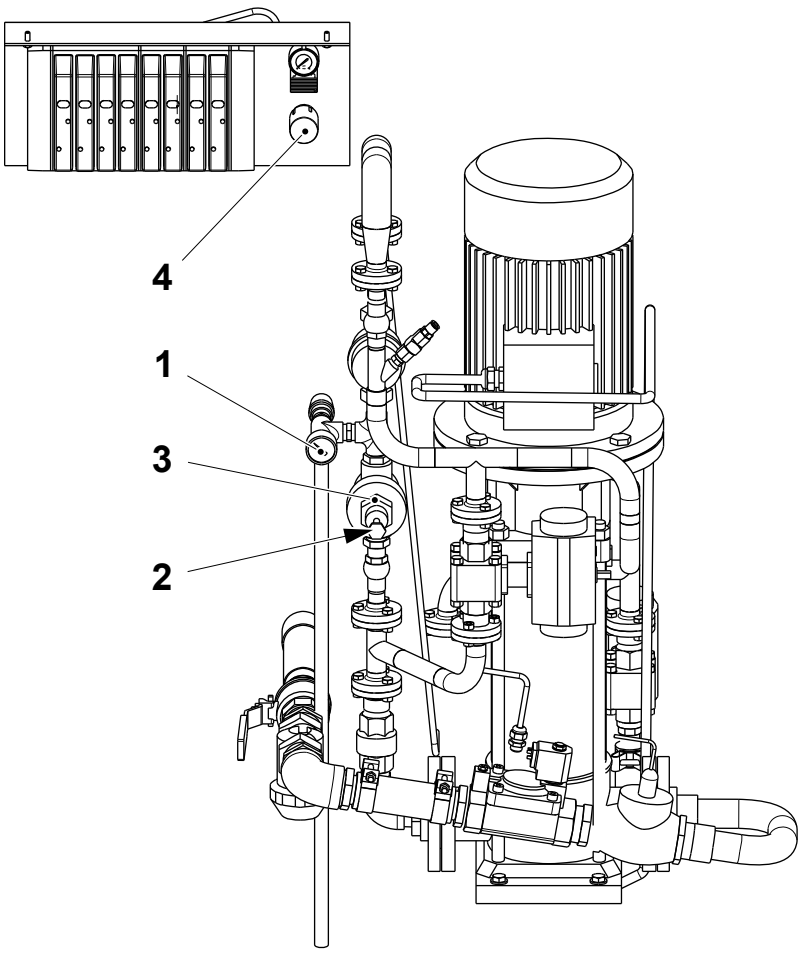

1 Pressure gauge
2 Adjustment screw
3 Pressure regulator
4 Pressure regulator

TechPub_2614345_0106 - 06_MM2819200_04en.fm

6.2.1 Pipe

6.2.1-1 Pipe - Change Filter

Machine Status	Mains Power OFF Air OFF Steam ON Water OFF
SPC Reference	1095672-0200

a) Close the valve (1).

b) Remove the filter housing (2) and pull out the filter insert (3). Clean or change the filter insert.

c) Check the O-ring (4) for damage. Change if necessary.

d) Install the filter insert (3), the O-ring (4) and the filter housing (2).

e) Open the valve (1).

f) Make sure during PRODUCTION that there are no leaks at the filter housing (2).

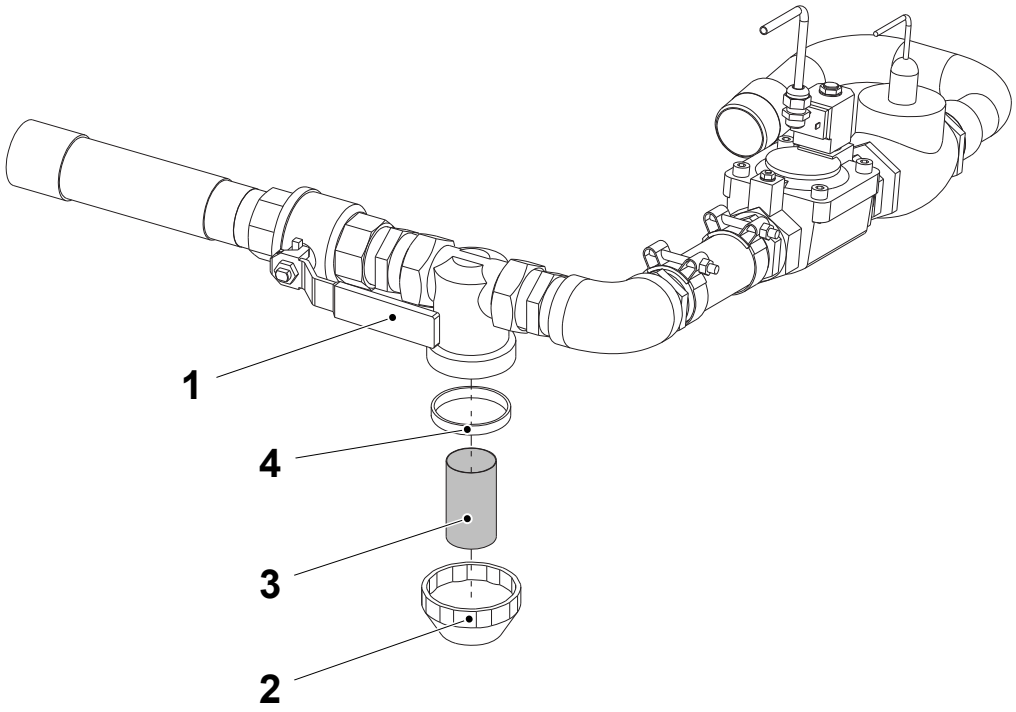

1 Valve
2 Filter housing
3 Filter insert
4 O-ring

TechPub_2614345_0106 - 06_MM2819200_04en.fm

6.2.2 Pump

6.2.2-1 Pump - Change Gaskets

Machine Status	Mains Power OFF Air OFF Steam ON Water OFF
SPC Reference	1095676-0200 1095675-0200

a) Remove the screws (1) and the pipe (2).

b) Change the gaskets (3).

c) Fit the pipe (2) by means of the screws (1).

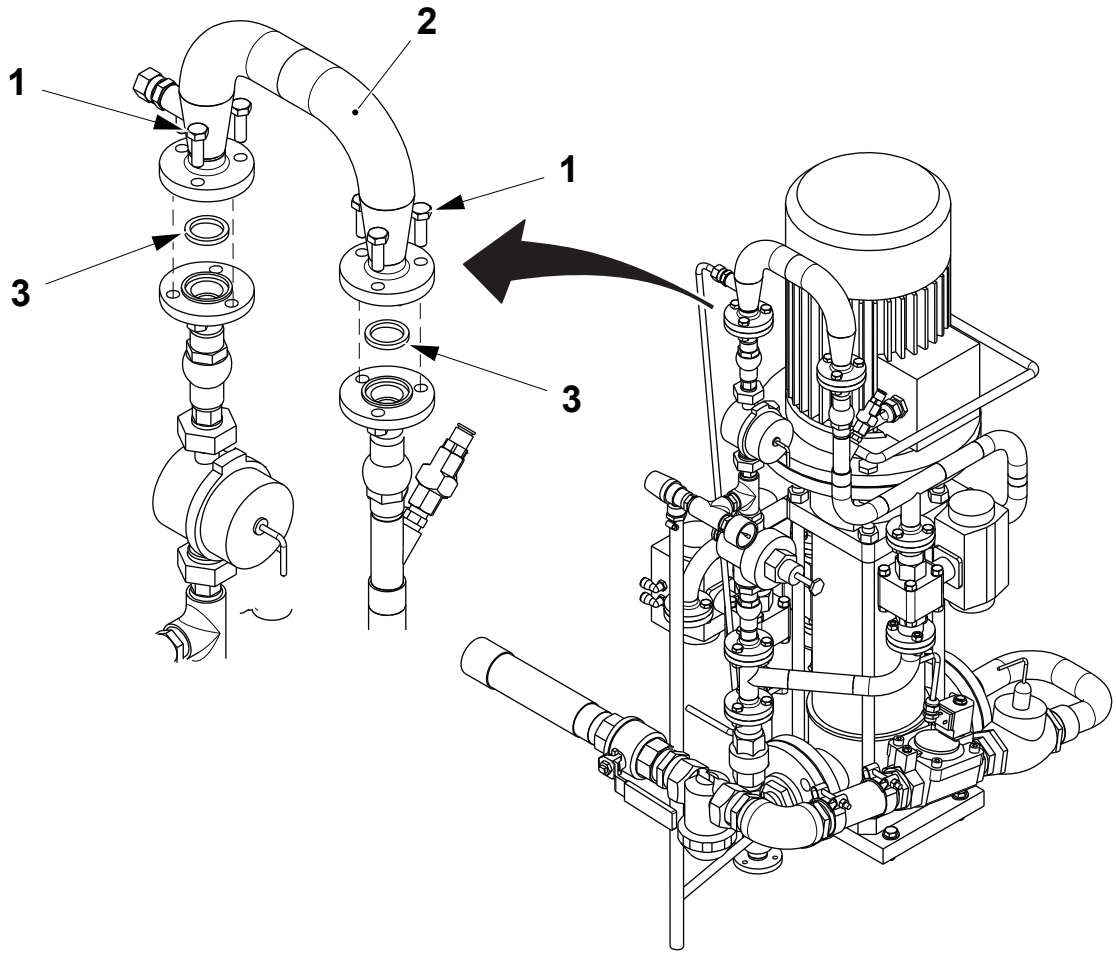

1 Screw
2 Pipe
3 Gasket

(Cont'd)

TechPub_2614345_0106 - 06_MM2819200_04en.fm

(Cont'd)

d) Remove the screws (4) and the pipe (5).
e) Change the gaskets (6).
f) Remove the non-return valve (7) and change the gasket (8).
g) Fit back the non-return valve (7).
h) Fit the pipe (5) by means of the screws (4).

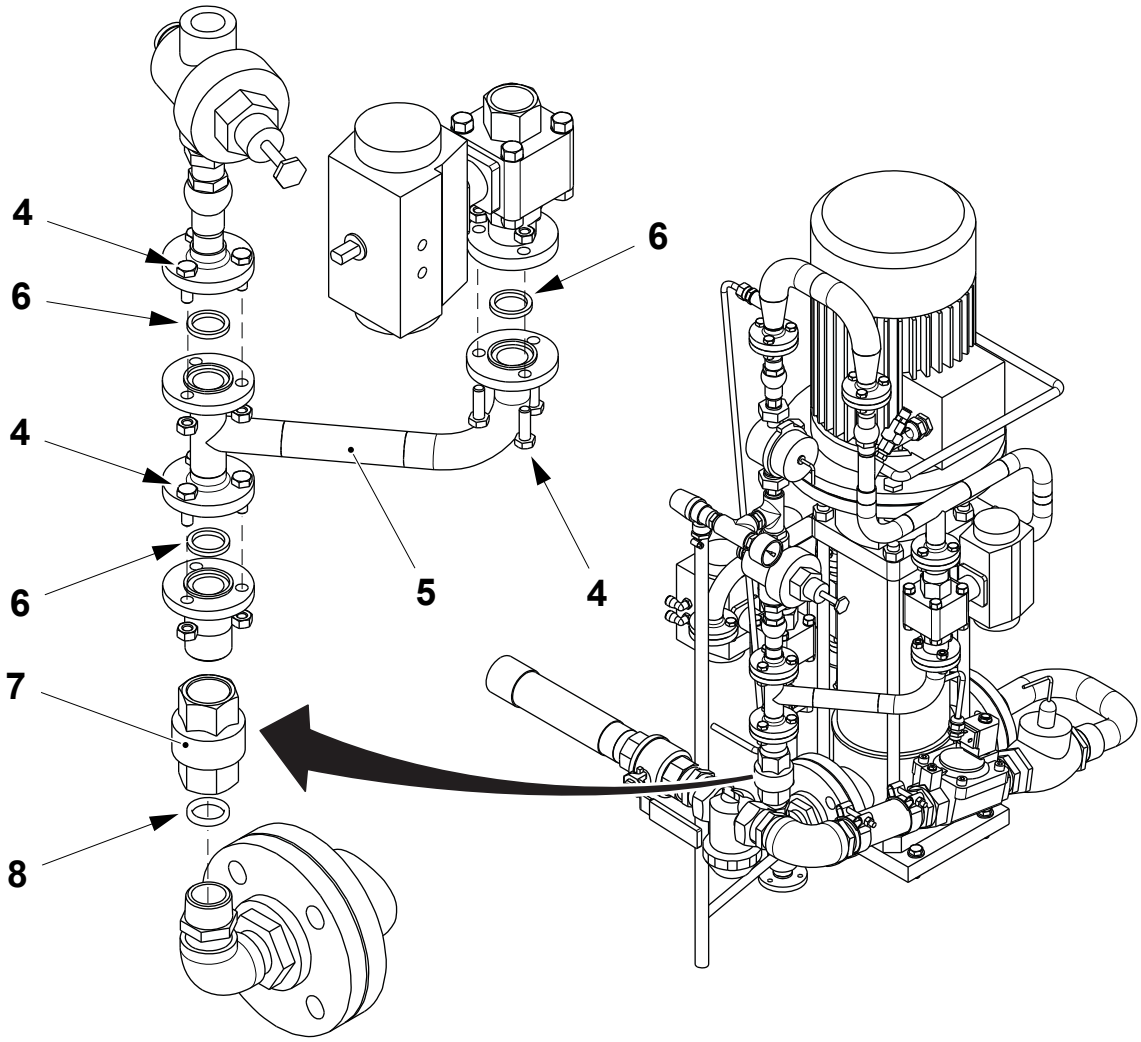

4 Screw
5 Pipe
6 Gasket
7 Non-return valve
8 Gasket

TechPub_2614345_0106 - 06_MM2819200_04en.fm

6.3 Water Panel

SPC Reference	1095608-0200

6.3-1 Water Panel - Check Pressure Switch

Machine Status	Mains Power ON Air ON Steam ON Water ON
SPC Reference	1095608-0200

a) Slowly close the valve (1) on the open line and make sure that the `WATER SUPPLY` alarm on the TPOP display comes ON when the pressure gauge (2) drops below 2 bar.

b) If not, change the pressure switch (3).

c) Open the valve (1).

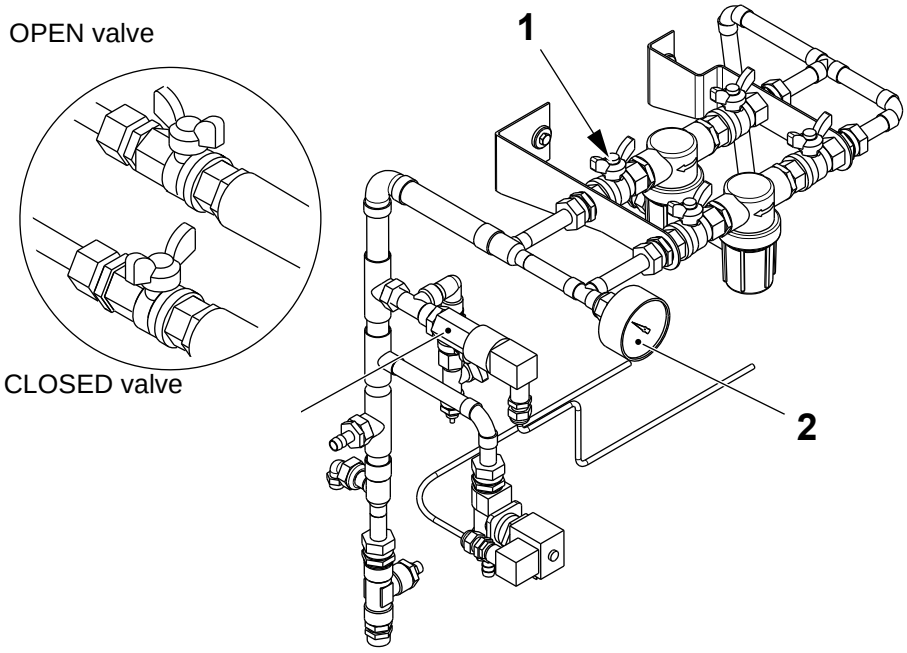

1 Valve
2 Pressure gauge
3 Pressure switch

TechPub_2614345_0106 - 06_MM2819200_04en.fm

6.3-2 Water Panel - Clean Filters

Machine Status	Mains Power OFF Air OFF Steam ON Water OFF
SPC Reference	1095608-0200

(Cont'd)

TechPub_2614345_0106 - 06_MM2819200_04en.fm

(Cont'd)

Cold Water

a) Close the four cold water supply valves (1).

b) Remove the filter housing (2) and pull out the filter insert (3). Clean the filter insert with compressed air or change if necessary.

c) Check the O-ring (4) for damage. Change if necessary.

d) Install the filter insert (3), the O-ring (4) and the filter housing (2).

e) Repeat items b) to d) on the other filter.

f) Open both water supply valves on one filtering line.

g) Make sure that during PRODUCTION there are no leaks from the filter housings (2).

Note! During PRODUCTION only one filtering line should be open at any time.

During PRODUCTION

Clean the filter insert on the closed line. Then open both valves on the closed line, close both valves on the other line and clean the other filter insert.

TechPub_2614345_0106 - 06_MM2819200_04en.fm

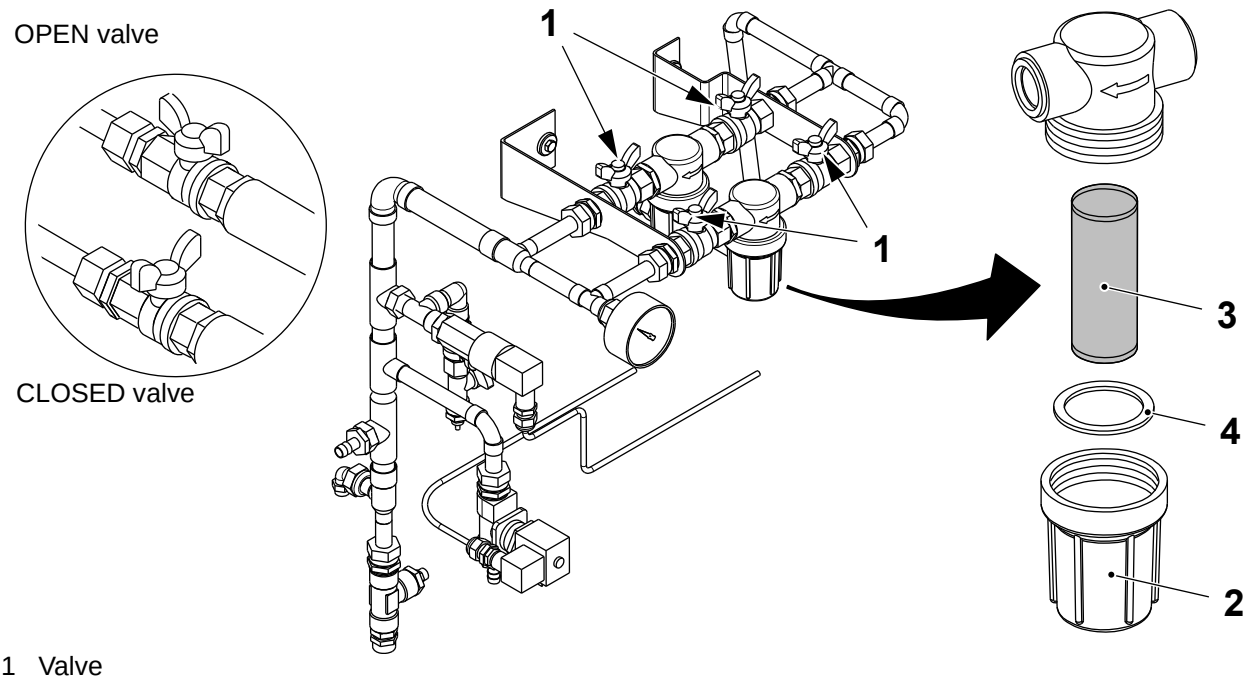

1 Valve
2 Filter housing
3 Filter insert
4 O-ring

6.3-3 Water Panel - Set Tube Flushing Device

Machine Status	PRODUCTION
SPC Reference	1095608-0100

Set the water pressure to the tube flushing device using the tube flushing knob (1), located below the hydraulic unit on the RH side of the machine body.

Set the tube flushing device so that the water reaches the packaging material tube without splashing.

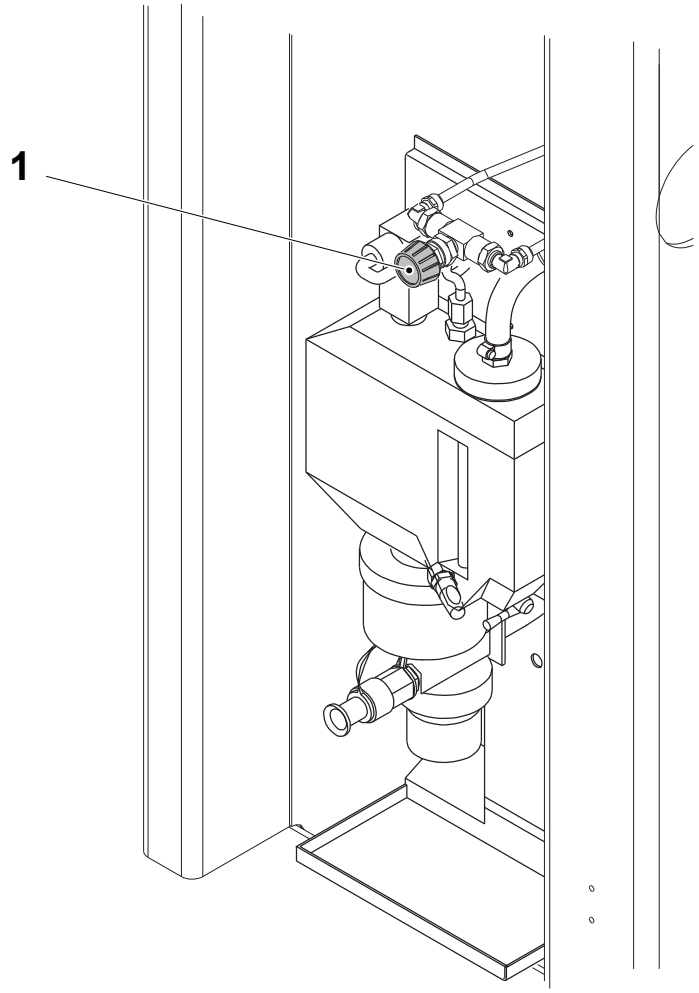

1 Tube flushing knob

TechPub_2614345_0106 - 06_MM2819200_04en.fm

6.4 Supply System

SPC Reference	1095714-0400

6.4.1 Pneumatic Panel

6.4.1-1 Pneumatic Panel - Check

Machine Status	Mains Power ON Air ON Steam ON Water OFF
SPC Reference	2708544-0100

(Cont'd)

TechPub_2614345_0106 - 06_MM2819200_04en.fm

(Cont'd)

a) Make sure that there are no leaks at the pneumatic unit.

b) Record the pressure on the air pressure gauge (4).

c) Lower the pressure to 5.5 bar using the pressure regulator (2) and make sure that the air supply alarm starts to flash on the TPOP.

d) Set the pressure to the previously recorded value.

e) Close the shut-off valve (3) and make sure that the pressure gauge (4) indicates zero. If not change the shut-off valve (3) or the pressure gauge (4).

f) Open the shut-off valve (3).

g) Check the filter insert (5). If the pressure is too low, clean or change it, see 6.4.1-3 Pneumatic Panel - Clean Filter Insert.

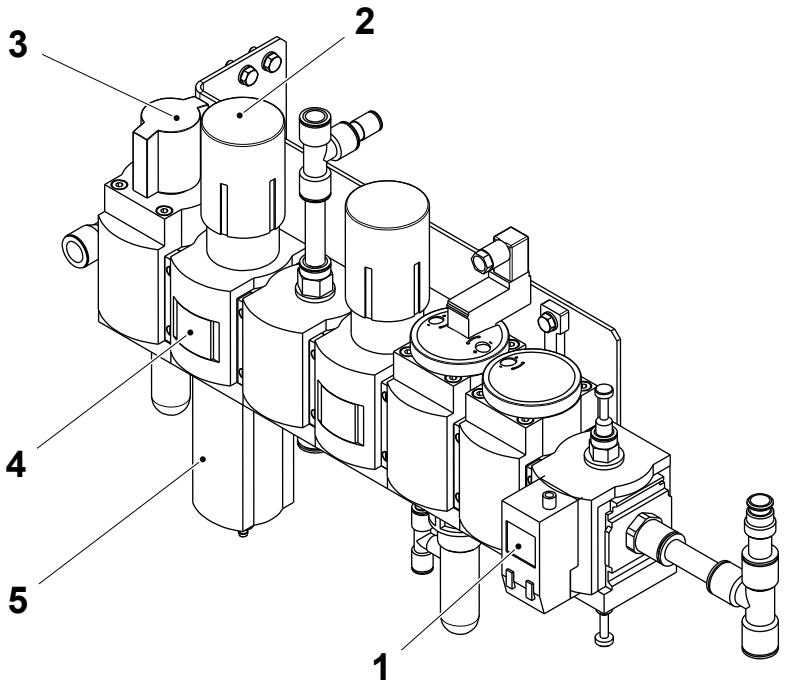

1 Pressure switch
2 Pressure regulator
3 Shut-off valve
4 Pressure gauge
5 Filter insert

TechPub_2614345_0106 - 06_MM2819200_04en.fm

6.4.1-2 Pneumatic Panel - Set Pressure

Machine Status	Mains Power ON Air ON Steam ON Water OFF
SPC Reference	2708544-0100

Set the pressure regulator (1) so that the pressure gauge (2) shows the correct pressure as stated in 10.1 Technical Data.

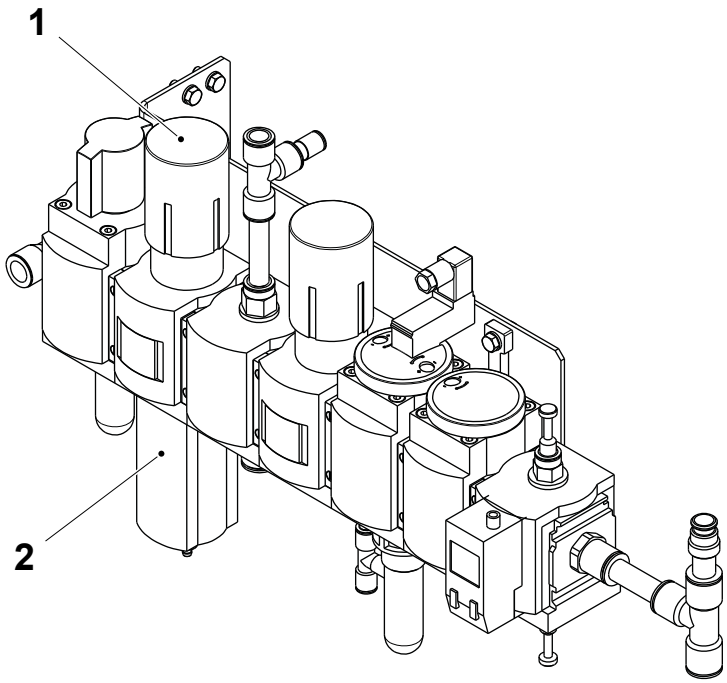

1 Pressure regulator
2 Pressure gauge

TechPub_2614345_0106 - 06_MM2819200_04en.fm

6.4.1-3 Pneumatic Panel - Clean Filter Insert

Machine Status	Mains Power ON Air ON Steam ON Water OFF
Consumables	Soap
SPC Reference	2708544-0100

a) Turn off the main air supply using the shut-off valve (1).

b) Remove the reservoir (2) and change the O-ring if necessary.

c) Clean the reservoir (2) with soapy water and rinse with plenty of clean water.

d) Remove and clean the filter insert (3) inside the reservoir (2). Change if necessary.

e) Install the reservoir and make sure that the O-ring is correctly fitted.

f) Open the air inlet valve and make sure there are no leaks from the reservoir.

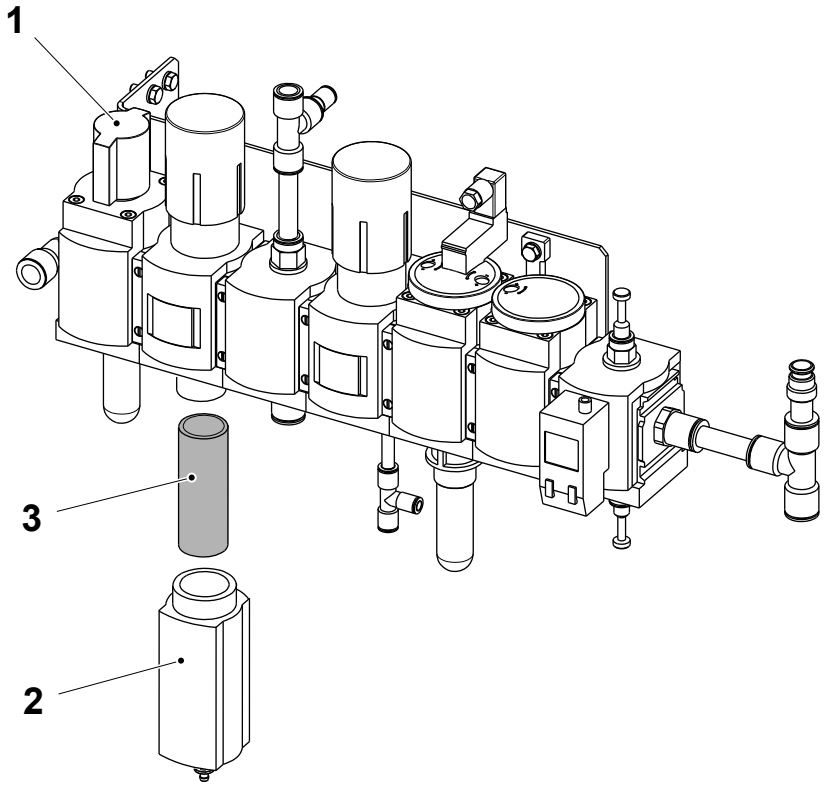

1 Shut-off valve
2 Reservoir
3 Filter insert

TechPub_2614345_0106 - 06_MM2819200_04en.fm

6.5 Water System

SPC Reference	2833381-0100

Note! Only valid for the volume TBA 2000 S and for filling machines fitted with the DIMC Flex preapplicator (OE),

6.5.1 Filter

6.5.1-1 Filter - Change Pressure Regulator

Machine Status	Mains Power OFF Air OFF Steam ON Water OFF
SPC Reference	2795888-0100

(Cont'd)

TechPub_2614345_0106 - 06_MM2819200_04en.fm

(Cont'd)

a) Close the valve (1).
b) Remove the pipe connections (2) and (3).
c) Remove the screws (4) the holders (5), (6) and the pressure regulator (7).
d) Fit the new pressure regulator, assemble in the reverse order.
e) Open the valve (1).
f) Set the pressure regulator, see 6.5.1-2 Filter - Set Pressure Regulator.

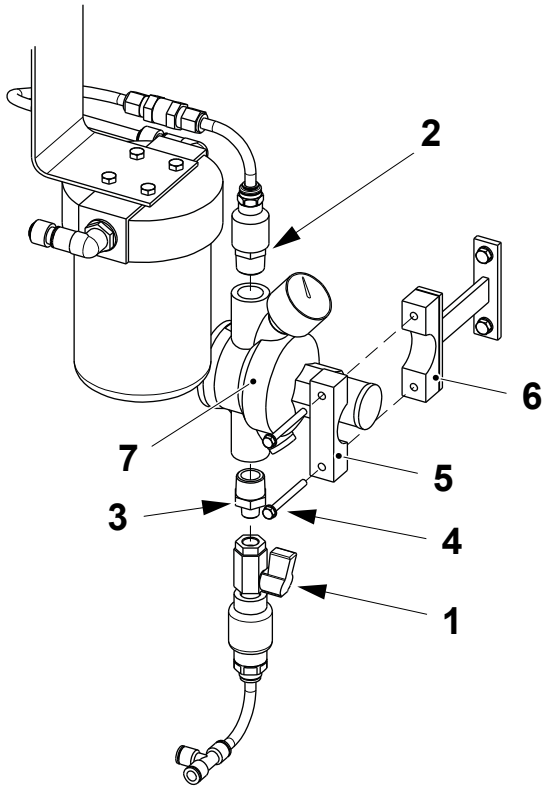

1 Valve
2 Pipe connection
3 Pipe connection
4 Screw
5 Holder
6 Holder
7 Pressure regulator

TechPub_2614345_0106 - 06_MM2819200_04en.fm

6.5.1-2 Filter - Set Pressure Regulator

Machine Status	Mains Power OFF Air ON Steam ON Water OFF
SPC Reference	2795888-0100

a) Remove the cap (1).

b) Set the water pressure on the manometer (2) to 2.6 bar.

c) Fit the cap (2).

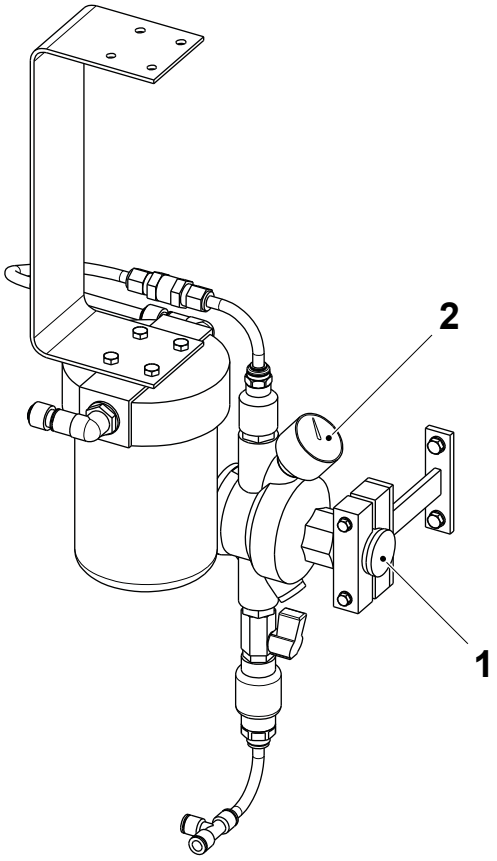

1 Cap
2 Manometer

TechPub_2614345_0106 - 06_MM2819200_04en.fm

6.5.1-3 Filter - Change Filter Insert

Machine Status	Mains Power OFF Air OFF Steam ON Water OFF
SPC Reference	2795888-0100

Follow the instructions in 6.1.2-3 Flow Meter - Change Filter Insert to change the peroxide reducer filter insert (1).

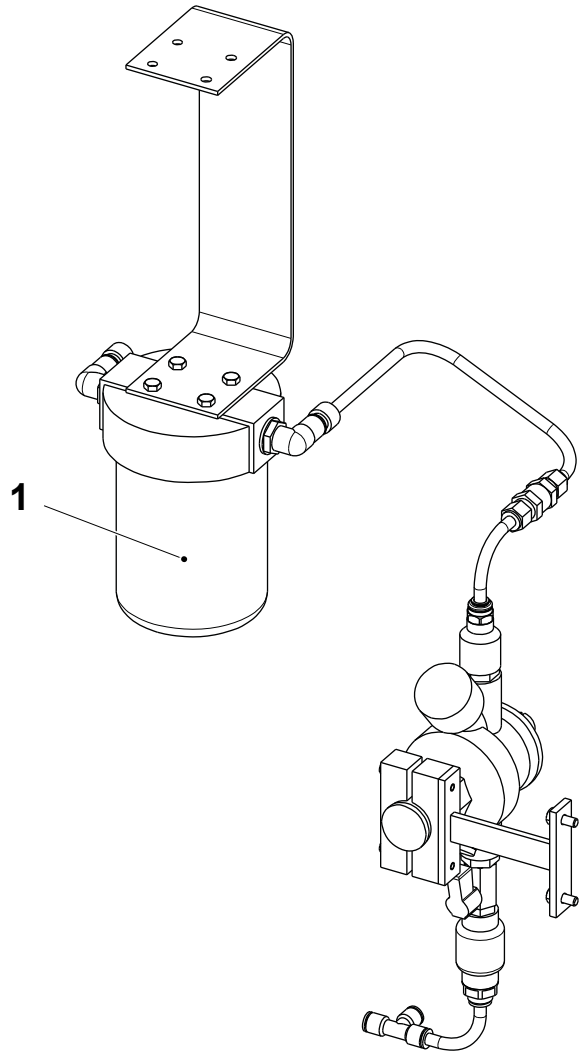

1 Filter

TechPub_2614345_0106 - 06_MM2819200_04en.fm

6.5.2 Sterile Water System

6.5.2-1 Sterile Water System - Start-Up

Machine Status	Mains Power ON Air OFF Steam ON Water ON
SPC Reference	2879650-0100

a) Make sure that the water supply valves (1) and (2) are open.

b) Turn the power ON by the switch (3). The display (4) shows the serial number for 10 sec.

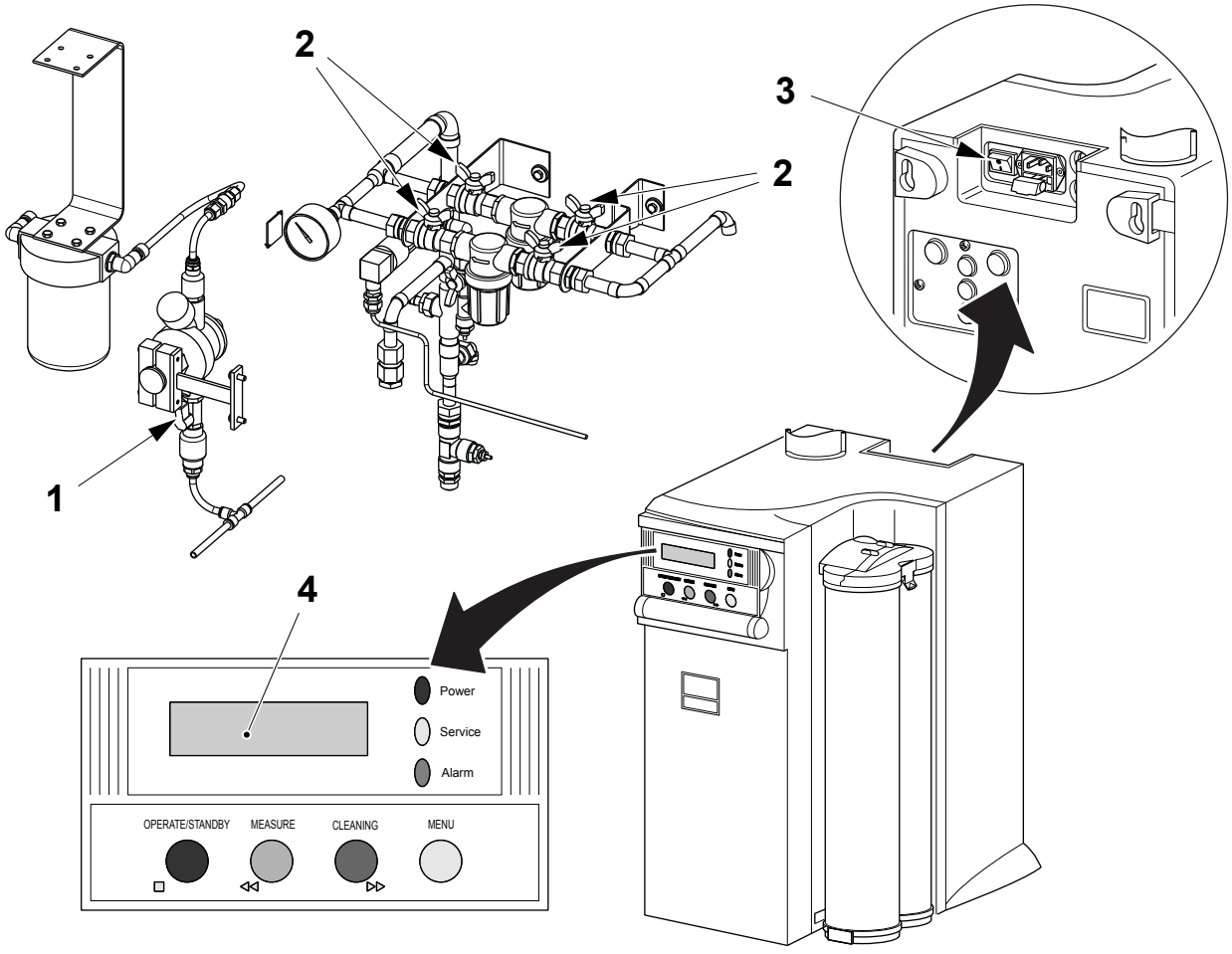

1 Valve
2 Valve
3 Switch
4 Display

(Cont'd)

TechPub_2614345_0106 - 06_MM2819200_04en.fm

(Cont'd)

Note! If the LOW PRESSURE alarm is displayed on the display (4), press the OPERATE/STANDBY button (5) for 2 seconds.

c) Press the MENU button (6) for 2 seconds: the display (4) shows the lifetime of the Progard pack (7).

d) Press twice the MENU button (6): the rinsing cycle starts after a 10 seconds delay and the display (4) shows the countdown of the remaining time.

Note! The rinsing cycle requires 4 hours about: it is mandatory when the sterile water system is starting-up and every time a new Progard pack (7) is installed.

At the end of the system rinse cycle, the display (4) shows TANK FULL and the sterile water system switches automatically to OPERATE mode in order to fill the reservoir.

Note! When the machine is in step PREPARATION, the pump starts filling the UV lamp cooling circuit: the LOW FLOW alarm is shown on the TPOP until the circuit is completely filled and working.

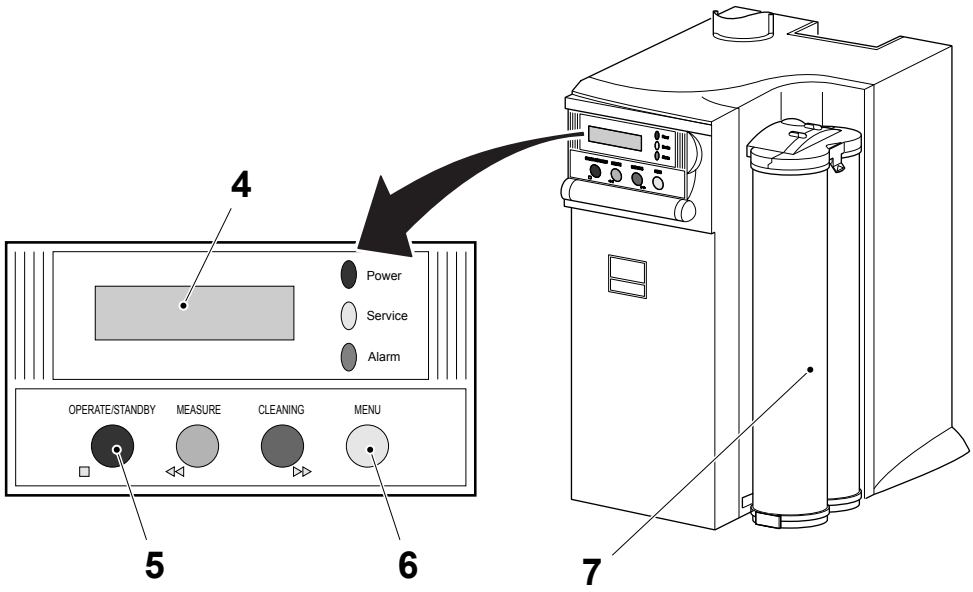

4 Display
5 Operate/Standby button
6 menu button
7 Progard pack

TechPub_2614345_0106 - 06_MM2819200_04en.fm

6.5.2-2 Sterile Water System - Set

Machine Status	Mains Power ON Air OFF Steam ON Water ON
SPC Reference	2879650-0100

Note! The following settings; Language, Alarm Signal and Measurement Unit, can be set in sequence by pressing the OPERATE/STANDBY button (4) after each single setting.

Language

a) Press the MENU button (1) for two seconds.

b) Press the MENU button (1) again.

c) Press the CLEANING button (2) to scroll through the available languages.

d) When the desired language is displayed, press the MENU button (1) for two seconds to validate the choice. The displays returns to the start mode.

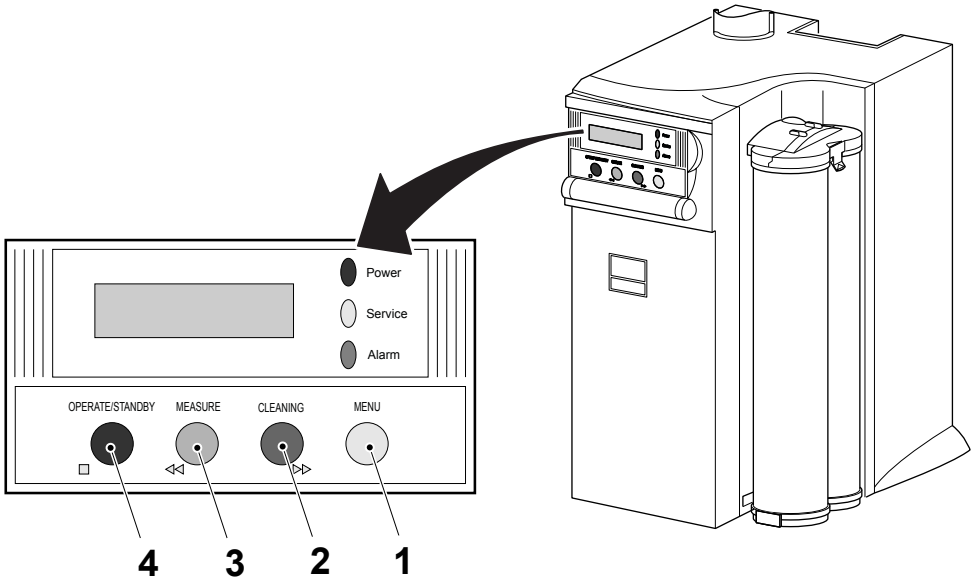

1 Menu button
2 Cleaning button
3 Measure button
4 Operate/Standby button

(Cont'd)

TechPub_2614345_0106 - 06_MM2819200_04en.fm

(Cont'd)

Alarm Signal ON/OFF

Note! The alarm signal is OFF by default. It is important to switch it ON.

a) Press the MENU button (1) for two seconds.

b) Press the MENU button (1) again.

c) Press the OPERATE/STANDBY button (4).

d) Press the CLEANING button (2) or the MEASURE button (3) to activate or deactivate the alarm signal.

Measurement Unit (µS)

a) Press the MENU button (1) for two seconds.

b) Press the MENU button (1) again.

c) Press three times the OPERATE/STANDBY button (4).

d) Press the CLEANING button (2) or the MEASURE button (3) to select µS as measurement unit.

e) Press the MENU button (1) for two seconds to validate units and to return to the start mode.

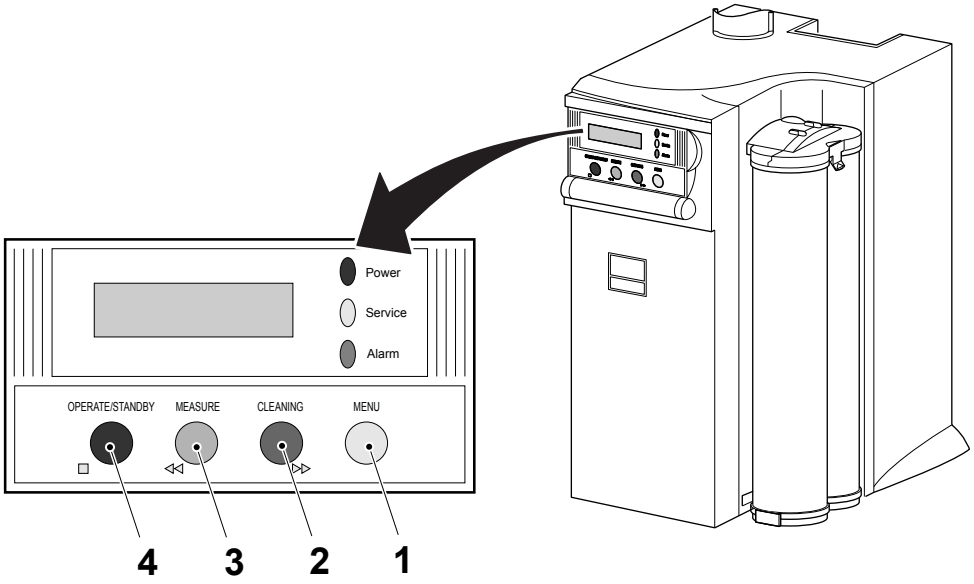

1 Menu button
2 Cleaning button
3 Measure button
4 Operate/Standby button

(Cont'd)

TechPub_2614345_0106 - 06_MM2819200_04en.fm

(Cont'd)

Date and Time

a) Press the MENU button (1) for two seconds.

b) Press the MENU button (1) four times. The calendar screen is displayed and the hours digits are flashing.

c) Press the CLEANING button (2) or the MEASURE button (3) to change the hours.

d) Press the OPERATE/STANDBY button (4) to validate.

e) Repeat the same steps to change the minutes, the day of the week, the month, the date and the year.

f) Press the MENU button (1) for more than two seconds to return to the start mode.

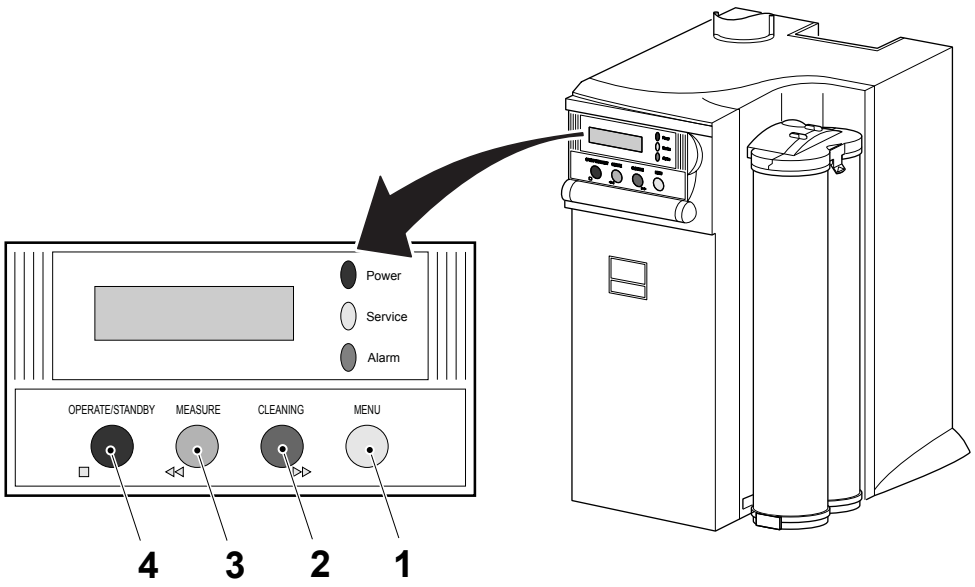

1 Menu button
2 Cleaning button
3 Measure button
4 Operate/Standby button

TechPub_2614345_0106 - 06_MM2819200_04en.fm

6.5.2-3 Sterile Water System - Clean Reverse Osmosis Cartridge

Machine Status	PRODUCTION
Special Equipment	Chlorine Tablets TP No. 90600-5773
SPC Reference	2879650-0100

WARNING
Hazardous substances.
Follow the Safety Precautions.

Note! The reverse osmosis cartridge is inside the sterile water system. To keep it clean and efficient a chlorine tablets must be added every 3 months.

(Cont'd)

TechPub_2614345_0106 - 06_MM2819200_04en.fm

(Cont'd)

Note! The message "START AUTOCLEAN" on the display (1) informs that the chlorine tablet must be added.

a) Press the OPERATE/STANDBY button (2) for two seconds. The message "STANDBY" on the display (1) flashes.

b) When message "STANDBY" on the display (1) stops flashing, open the plug (3) and drop in a chlorine tablet.

c) Close and tighten the plug (3) without forcing.

d) Press the CLEANING button (4) for two seconds. The chlorine cleaning cycle starts after a 10 seconds delay.

At the end of this cycle the sterile water system switches automatically in OPERATE mode.

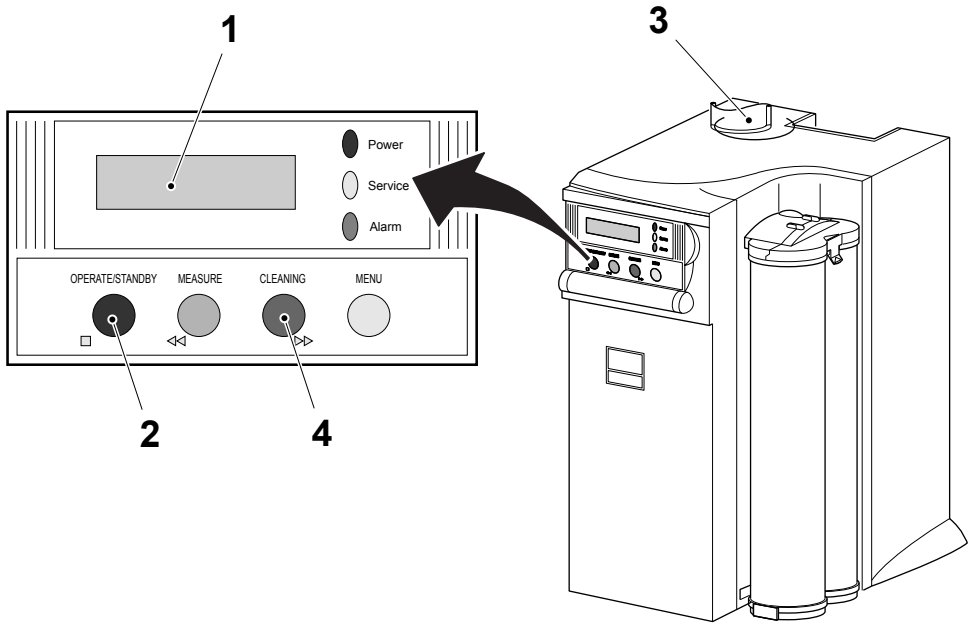

1 Display
2 Operate/Standby button
3 Plug
4 Cleaning button

TechPub_2614345_0106 - 06_MM2819200_04en.fm

6.5.2-4 Sterile Water System - Change Progard Pack

Machine Status	Mains Power ON Air OFF Steam ON Water ON
Special Equipment	Maintenance Kit TP No. 90600-3267
SPC Reference	2879650-0100

Note! The Progard pack (1) is a pretreatment pack that removes particles and free chlorine from the incoming water. In addition, it helps to prevent mineral scaling in hard water areas. The Progard pack (1) must be replaced maximum every six months.

a) Press the OPERATE/STANDBY button (2) for two seconds. The message "STANDBY" on the display (3) flashes.

b) When message "STANDBY" on the display (3) stops flashing, lift the pack adapter cover (4).

c) Remove the locking clip (5).

d) Remove the Progard pack (1).

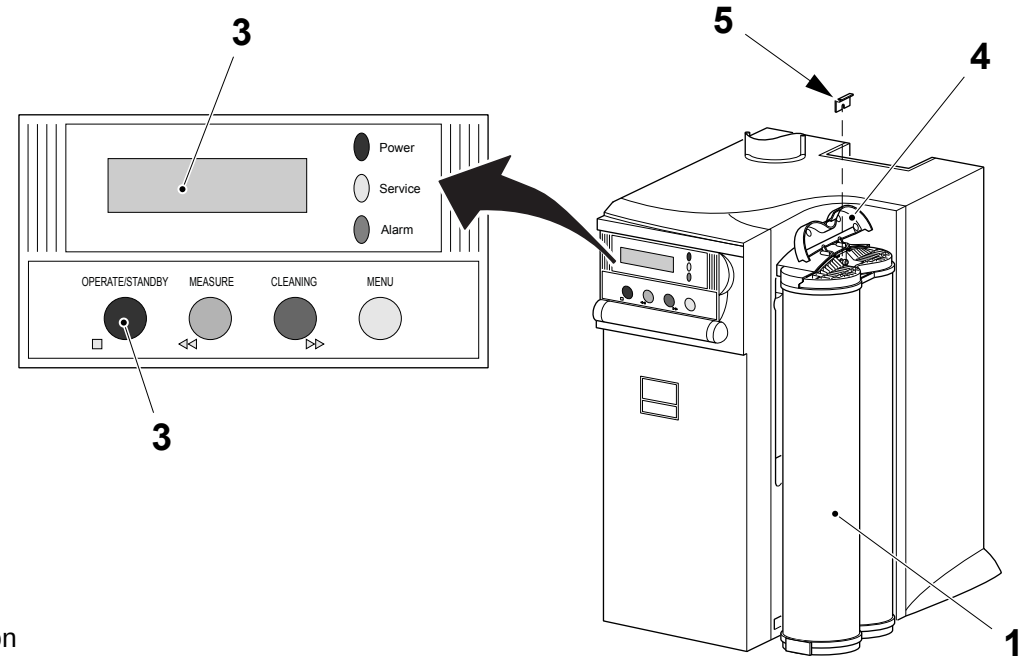

1 Progard Pack
2 Operate/Standby button
3 Display
4 Pack adapter cover
5 Locking clip

(Cont'd)

TechPub_2614345_0106 - 06_MM2819200_04en.fm

(Cont'd)

e) Remove the protective plugs (6) from the Progard pack (1) and wet the pack O-rings (7) using a few drop of clean water.

f) Slide the Progard pack (1) onto the metal guide pin (8).
   – lift up the pack slightly and push the bottom of the pack into the lower slot (9)
   – push the pack completely in the upper slots (10).

g) Lock the pack in place with the locking clip (5).

h) Lower the pack adapter cover (4).

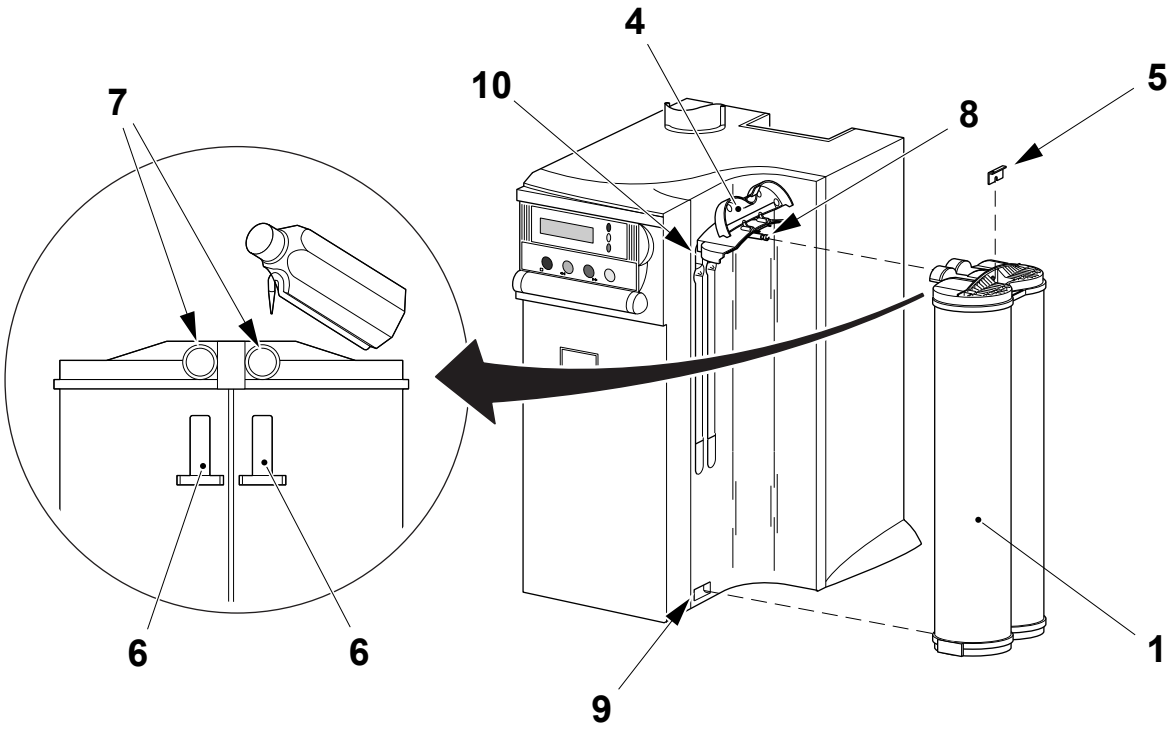

1 Progard Pack
4 Pack adapter cover
5 Locking clip
6 Protective plugs
7 O-ring
8 Guide pin
9 Lower slot
10 Upper slot

(Cont'd)

TechPub_2614345_0106 - 06_MM2819200_04en.fm

(Cont'd)

Note! In order to not exceed the capacity of the vent filter (13), it is recommended to replace it at the same time that the Progard pack is changed.

i) Remove the plug (11) of the reservoir (12) and change the vent filter (13) inside the plug (11).

j) Perform the rinsing cycle, see 6.5.2-1 Sterile Water System - Start-Up from step c).

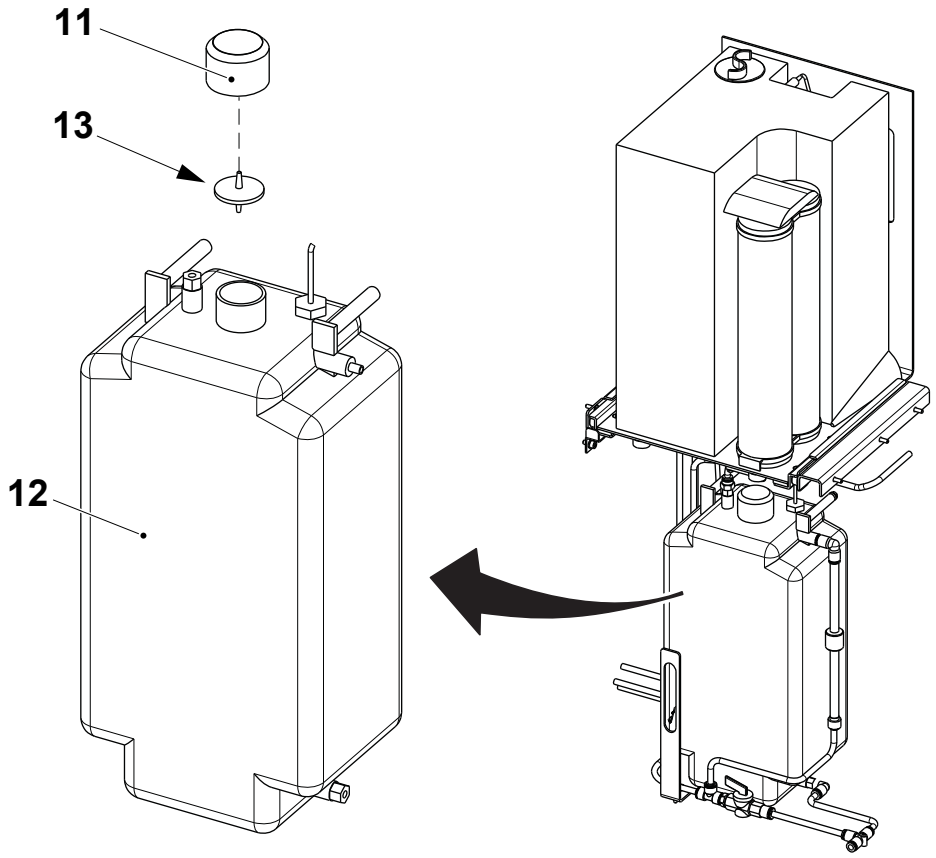

11 Plug
12 Reservoir
13 Vent filter

TechPub_2614345_0106 - 06_MM2819200_04en.fm

6.5.2-5 Sterile Water System - Drain Reservoir

Machine Status	Mains Power ON Air OFF Steam ON Water ON
SPC Reference	2879650-0100

Note! If the machine has been stopped for a protracted time (approximately two weeks) it is suggested to drain the reservoir (1).

Drain the distilled water in the reservoir (1) as follows.

a) Press the OPERATE/STANDBY button (2) for two seconds. The message "STANDBY" on the display (3) flashes.

b) When message "STANDBY" on the display (3) stops flashing, open the valve (4).

c) When the reservoir is empty, close the valve (4).

When restarting the machine, make sure that the valve (4) is closed, then press the OPERATE/STANDBY button (2).

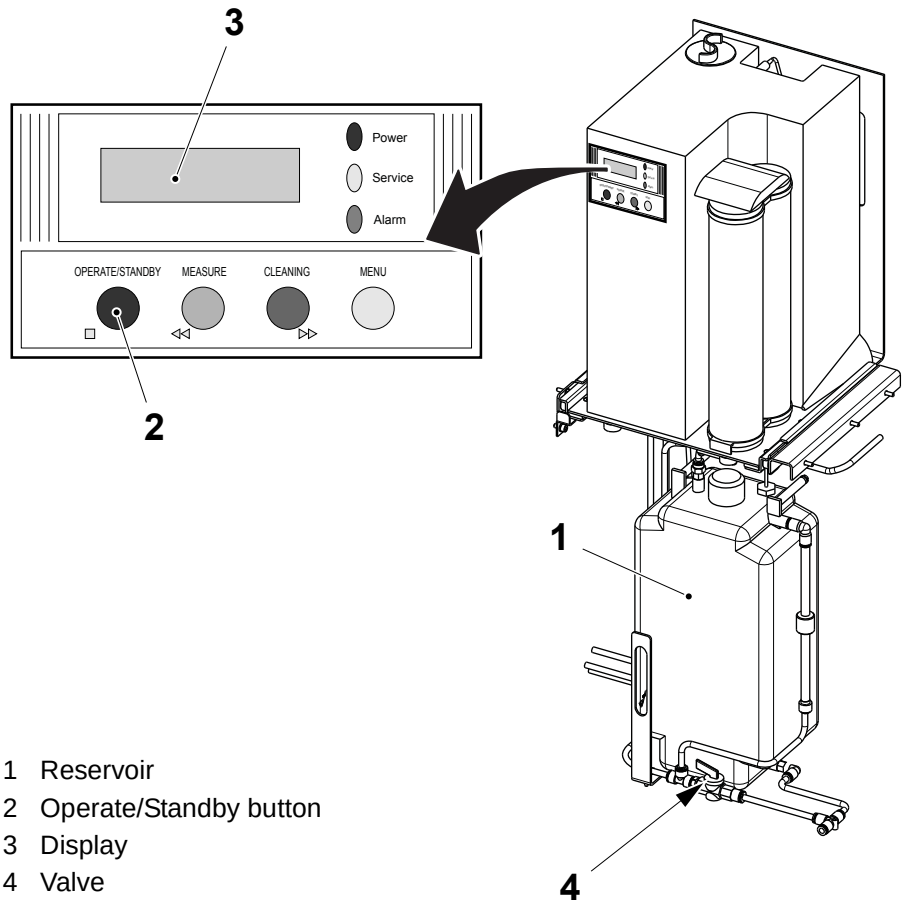

1 Reservoir
2 Operate/Standby button
3 Display
4 Valve

TechPub_2614345_0106 - 06_MM2819200_04en.fm

6.5.3 Circuit

6.5.3-1 Circuit - Set Conductivity Meter

Machine Status	Mains Power ON Air OFF Steam ON Water OFF
SPC Reference	2879650-0100

Note! In the normal operating mode, touching the button (1) will switch the display (3) between indicating the conductivity (mS), temperature (°C) or output signal (mA).

a) Touch and hold the button (1) and the ENTER button (2) for five seconds to enter the conductivity meter calibration mode.

b) Touch the buttons (1) or (4) until `UNIT` is shown in the display (3) and touch the ENTER button (2). Check that the unit is set to two decimal digits.

c) Touch the button (1) until `CELL CST` is shown in the display (3) and then touch the ENTER button (2).

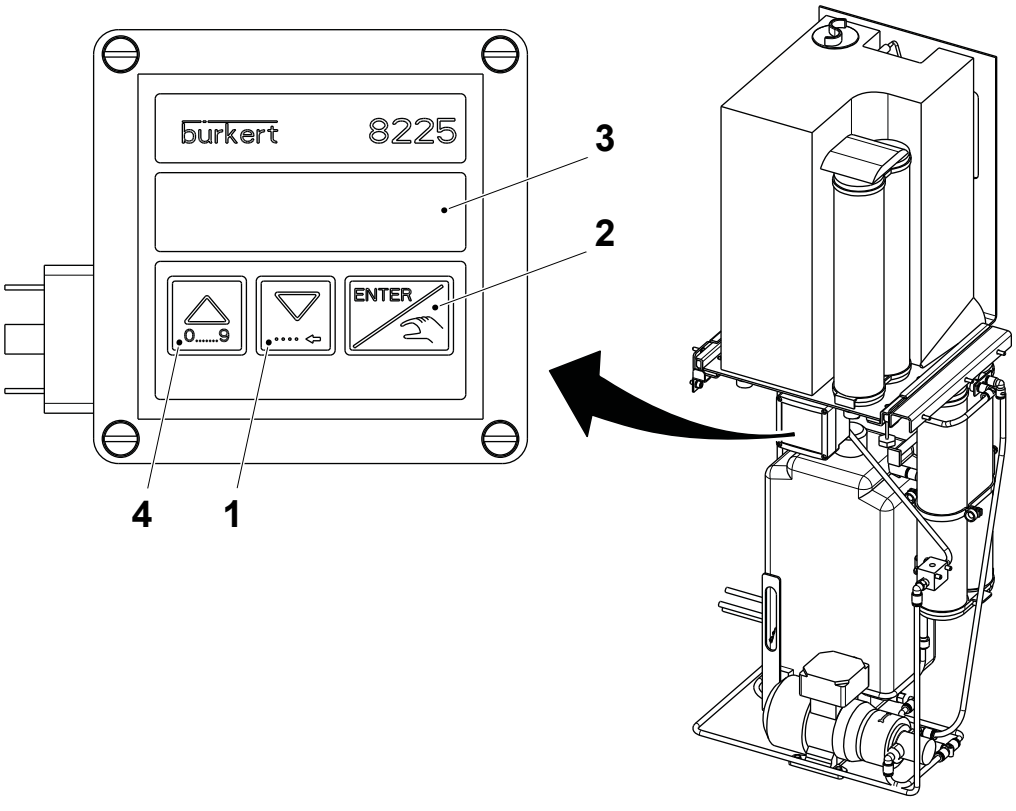

1 Button
2 Enter button
3 Display
4 Button

(Cont'd)

TechPub_2614345_0106 - 06_MM2819200_04en.fm

(Cont'd)

Note! The CELL CONSTANT value is indicated on the label attached to the conductivity meter.

d) Enter the CELL CONSTANT value by means of the buttons (1) and (4).
   - the button (4) changes the value of a digit
   - the button (1) is used to move from one digit to the next digit.

e) Touch the ENTER button (2).

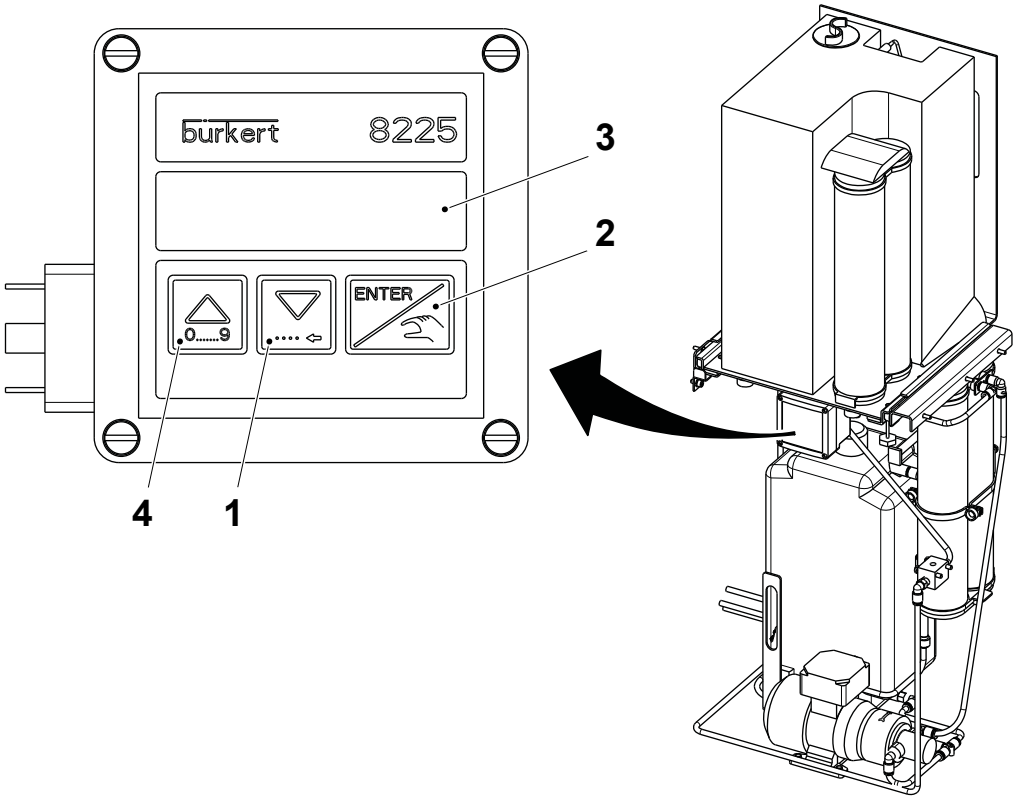

1 Button
2 Enter button
3 Display
4 Button

(Cont'd)

TechPub_2614345_0106 - 06_MM2819200_04en.fm

(Cont'd)

f) Touch the button (1) until CURRENT is shown in the display (3) and then touch the ENTER button (2).

Note! The output current range is 4-20 mA.

g) The starting value of the conductivity measuring range is displayed. Enter the value 00.00 by means of the buttons (1) and (4).

h) Touch the ENTER button (2). The end value of the measuring range is displayed. Enter the value 04.00 by means of the buttons (1) and (4).

i) Touch the ENTER button (2).

j) Touch the button (1) until END is shown in the display (3) and then touch the ENTER button (2). The new parameters are saved and the conductivity meter returns to its operating mode.

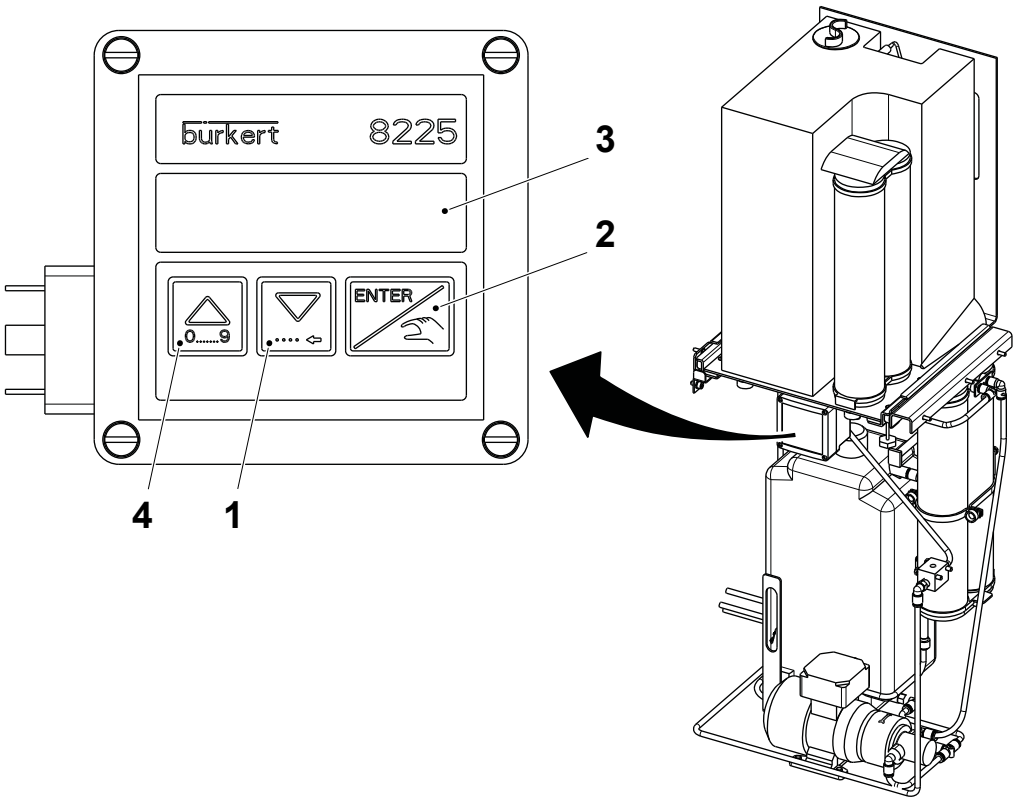

1 Button
2 Enter button
3 Display
4 Button

TechPub_2614345_0106 - 06_MM2819200_04en.fm

6.5.3-2 Circuit - Change Filter

Machine Status	Mains Power ON Air OFF Steam ON Water OFF
SPC Reference	2879650-0100

a) Remove the two knobs (1) to release the support (2).

b) Remove the fastening plate (3) and pull out the connection block (4).

c) Remove the filter cartridge (5).

d) Fit the new filter cartridge and assemble in the reverse order.

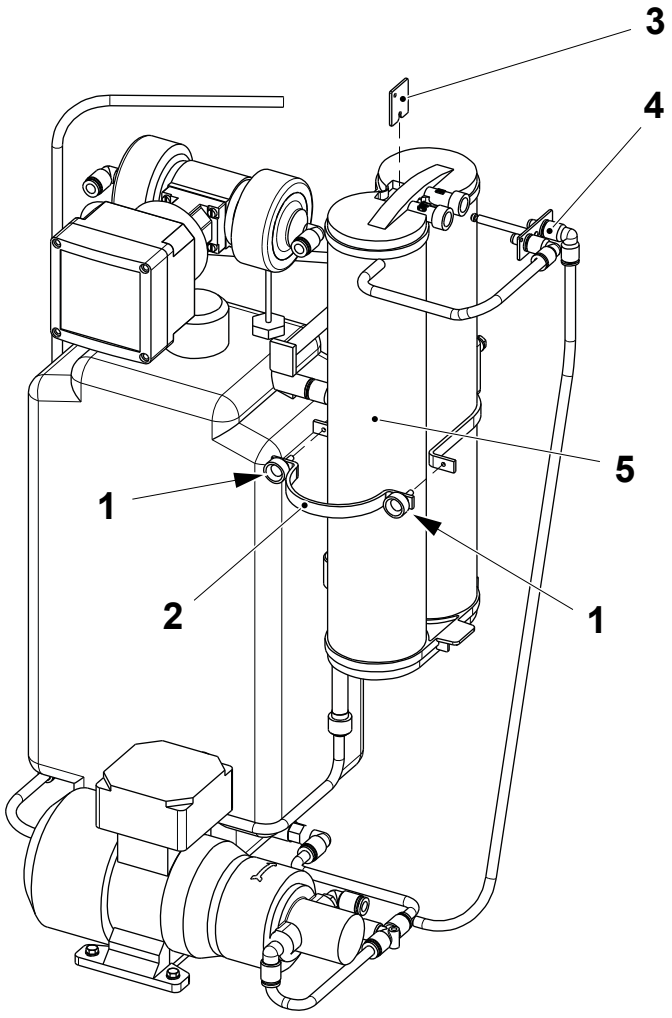

1 Knob
2 Support
3 Fastening plate
4 Connection block
5 Filter cartridge

TechPub_2614345_0106 - 06_MM2819200_04en.fm

6.5.4 Electrical Connection

6.5.3-1 Electrical Connection- Set Sensor Sensitivity

Machine Status	Mains Power ON Air OFF Steam ON Water OFF
SPC Reference	2879651-0100

Use a screwdriver to set the sensitivity of the sensor (1) to the minimum.

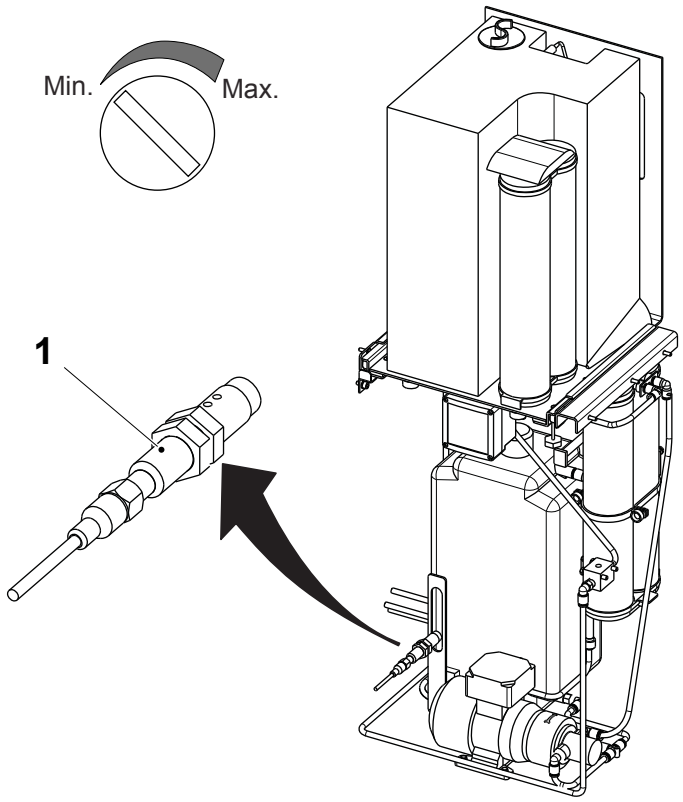

1 Sensor

TechPub_2614345_0106 - 06_MM2819200_04en.fm

8 Automatic Splicing Unit

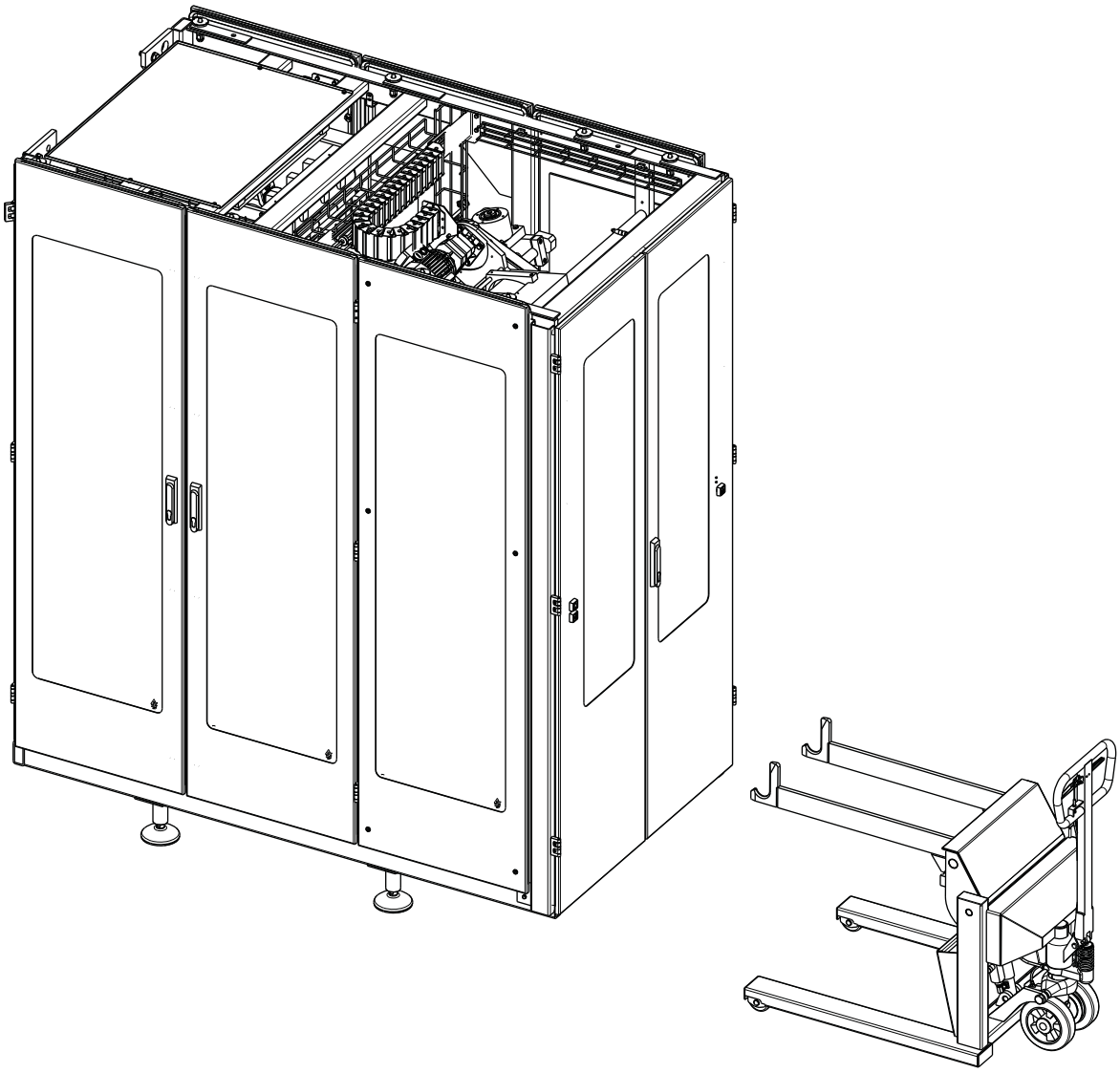

Automatic Splicing Unit - Description

SPC Reference	648528-0300

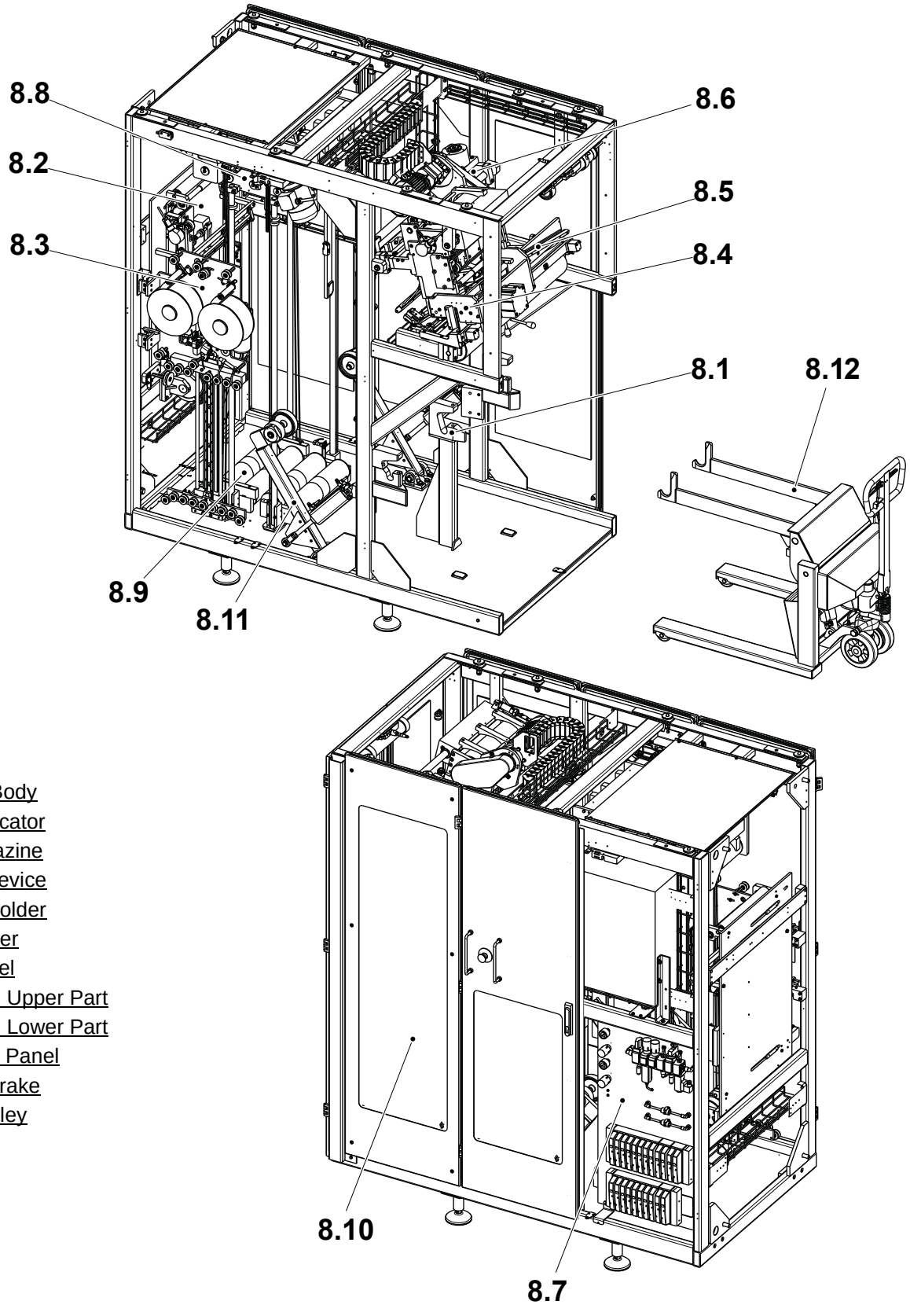

8.1 Machine Body
8.2 Strip Applicator
8.3 Strip Magazine
8.4 Splicing Device
8.5 Material Holder
8.6 Side Feeder
8.7 Valve Panel
8.8 Magazine, Upper Part
8.9 Magazine, Lower Part
8.10 Covering Panel
8.11 Bobbin Brake
8.12 Reel Trolley

8 ASU . . . . . 8 - 9

8-1 ASU - Setting Sequence . . . . . 8 - 9
8-2 ASU - Check Function . . . . . 8 - 11
8-3 ASU - Force Manual Splice in Design . . . . . 8 - 19

8.1 Machine Body . . . . . 8 - 20

8.1-1 Machine Body - Check Bearing Blocks . . . . . 8 - 20
8.1-2 Machine Body - Change Bearing Blocks . . . . . 8 - 22
8.1-3 Machine Body - Check Bending Roller . . . . . 8 - 25
8.1-4 Machine Body - Overhaul Bending Roller . . . . 8 - 26
8.1-5 Machine Body - Set Photocell Position . . . . . 8 - 27
8.1-6 Machine Body - Set Photocell Sensitivity . . . . . 8 - 29
8.1-7 Machine Body - Set Alignment . . . . . 8 - 30

8.1.1 Connection Box . . . . . 8 - 31

8.1.1-1 Connection Box - Change Transformer . . . . . 8 - 31

8.2 Strip Applicator . . . . . 8 - 33

8.2.1 Splice Detector . . . . . 8 - 33

8.2.1-1 Splice Detector - Check . . . . . 8 - 33
8.2.1-2 Splice Detector - Set . . . . . 8 - 37

8.2.2 Inductor . . . . . 8 - 39

8.2.2-1 Inductor - Check . . . . . 8 - 39
8.2.2-2 Inductor - Change Transformer . . . . . 8 - 40
8.2.2-3 Inductor - Change Rollers . . . . . 8 - 48
8.2.2-4 Inductor - Set Position . . . . . 8 - 50
8.2.2-5 Inductor - Set Volume . . . . . 8 - 52
8.2.2-6 Inductor - Check Pressure Rollers . . . . . 8 - 54
8.2.2-7 Inductor - Change Pressure Rollers . . . . . 8 - 55
8.2.2-8 Inductor - Set Pressure Roller . . . . . 8 - 56
8.2.2-9 Inductor - Set Proximity Switch . . . . . 8 - 57
8.2.2-10 Inductor - Change Adhesive Tape . . . . . 8 - 58
8.2.2-11 Inductor - Change Pulley Ball Bearings . . . . . 8 - 62

8.2.3 Strip Guide . . . . . 8 - 63

8.2.3-1 Strip Guide - Check . . . . . 8 - 63

8.2.3-2 Strip Guide - Set . . . . . 8 - 64
8.2.3-3 Strip Guide - Change Guide Wheel Ball Bearing 8 - 68
8.2.4 Rollers . . . . . 8 - 69
8.2.4-1 Rollers - Change Bearings . . . . . 8 - 69
8.2.5 Bending Roller . . . . . 8 - 73
8.2.5-1 Bending Roller - Change Bearings . . . . . 8 - 73
8.3 Strip Magazine . . . . . 8 - 74
8.3-1 Strip Magazine - Check Rollers . . . . . 8 - 74
8.3-2 Strip Magazine - Change Transducer . . . . . 8 - 75
8.3-3 Strip Magazine - Set Sensor and Spring . . . . . 8 - 77
8.3.1 Heating Device . . . . . 8 - 78
8.3.1-1 Heating Device - Check . . . . . 8 - 78
8.3.1-2 Heating Device - Set Position . . . . . 8 - 80
8.3.1-3 Heating Device - Change Plunger . . . . . 8 - 83
8.3.2 Hub . . . . . 8 - 84
8.3.2-1 Hub - Change Motor . . . . . 8 - 84
8.3.2-2 Hub - Set Spring Loaded Screw . . . . . 8 - 85
8.3.3 Buffer . . . . . 8 - 86
8.3.3-1 Buffer - Check . . . . . 8 - 86
8.3.4 Cutting Table . . . . . 8 - 87
8.3.4-1 Cutting Table - Check . . . . . 8 - 87
8.3.4-2 Cutting Table - Change Pads and Finger . . . . . 8 - 88
8.3.4-3 Cutting Table - Set . . . . . 8 - 90
8.3.5 Mounting Sheet . . . . . 8 - 91
8.3.5-1 Mounting Sheet - Check Rollers . . . . . 8 - 91
8.4 Splicing Device . . . . . 8 - 92
8.4-1 Splicing Device - Check Drive Unit . . . . . 8 - 92
8.4-2 Splicing Device - Drive Unit Overhaul . . . . . 8 - 93
8.4-3 Splicing Device - Set Drive Unit Belt . . . . . 8 - 97
8.4-4 Splicing Device - Change Photocell . . . . . 8 - 98
8.4-5 Splicing Device - Set Photocell Position . . . . . 8 - 100
8.4-6 Splicing Device - Set Photocell Sensitivity . . . 8 - 102

8.4-7 Splicing Device - Set Photocell Alignment . . . 8 - 103
8.4-8 Splicing Device - Move to Maintenance Position . . . . . 8 - 106
8.4-9 Splicing Device - Change Bearings . . . . . 8 - 107

8.4.1 Paper Guide . . . . . 8 - 109

8.4.1-1 Paper Guide - Check . . . . . 8 - 109
8.4.1-2 Paper Guide - Change Ball Bearings and Bushings . . . . . 8 - 110
8.4.1-3 Paper Guide - Change Guide Wheels Ball Bearings . . . . . 8 - 112
8.4.1-4 Paper Guide - Set Position . . . . . 8 - 113
8.4.1-5 Paper Guide - Set Spring Tension . . . . . 8 - 114

8.4.2 Paper Slide . . . . . 8 - 115

8.4.2-1 Paper Slide - Check . . . . . 8 - 115
8.4.2-2 Paper Slide - Change Rollers . . . . . 8 - 116

8.4.3 Pressure Jaw . . . . . 8 - 117

8.4.3-1 Pressure Jaw - Check Knife and Dolly . . . . . 8 - 117
8.4.3-2 Pressure Jaw - Change Cylinders . . . . . 8 - 121

8.4.4 Heating Unit . . . . . 8 - 126

8.4.4-1 Heating Unit - Check Sealing Plate . . . . . 8 - 126
8.4.4-2 Heating Unit - Change Heating Bar . . . . . 8 - 129
8.4.4-3 Heating Unit - Change Guides . . . . . 8 - 134
8.4.4-4 Heating Unit - Change Pneumatic Hose . . . . . 8 - 136

8.4.5 Counter Roller . . . . . 8 - 137

8.4.5-1 Counter Roller - Check . . . . . 8 - 137
8.4.5-2 Counter Roller - Overhaul . . . . . 8 - 138
8.4.5-3 Counter Roller - Set Cylinder . . . . . 8 - 141

8.5 Material Holder. . . . . 8 - 142

8.5-1 Material Holder - Change Blade . . . . . 8 - 142
8.5-2 Material Holder - Set Proximity Sensor . . . . . 8 - 145
8.5-3 Material Holder - Change Ball Bearings . . . . . 8 - 147
8.5-4 Material Holder - Set Cutting Table . . . . . 8 - 150

8.6 Side Feeder . . . . . 8 - 155

8.6-1 Side Feeder - Referencing . . . . . 8 - 155

8.6-2 Side Feeder - Change Timing Belt . . . . . 8 - 157
8.6-3 Side Feeder - Check Timing Belt Tension . . . . 8 - 159
8.6-4 Side Feeder - Overhaul . . . . . 8 - 161

8.7 Pneumatic Panel . . . . . 8 - 167

8.7-1 Pneumatic Panel - Set Pressure Switch . . . . . 8 - 167
8.7-2 Pneumatic Panel - Change Filters . . . . . 8 - 170
8.7-3 Pneumatic Panel - Set Pilot Valve Pressure . . . 8 - 172

8.8 Magazine, Upper Part . . . . . 8 - 173

8.8-1 Magazine, Upper Part - Change Roller Bearings . . . . . 8 - 173
8.8-2 Magazine, Upper Part - Set Pressure Rollers . 8 - 178

8.8.1 Paper Guide . . . . . 8 - 179

8.8.1-1 Paper Guide - Check . . . . . 8 - 179
8.8.1-3 Paper Guide - Set Position . . . . . 8 - 180

8.8.2 Paper Slide . . . . . 8 - 181

8.8.2-1 Paper Slide - Check . . . . . 8 - 181

8.8.3 Pressure Roller . . . . . 8 - 182

8.8.3-1 Pressure Roller - Check . . . . . 8 - 182
8.8.3-2 Pressure Roller - Change Bearings . . . . . 8 - 183
8.8.3-3 Pressure Roller - Set . . . . . 8 - 186

8.8.4 Counter Roller . . . . . 8 - 187

8.8.4-1 Counter Roller - Change . . . . . 8 - 187

8.9 Magazine, Lower Part . . . . . 8 - 189

8.9-1 Magazine, Lower Part - Check . . . . . 8 - 189
8.9-2 Magazine, Lower Part - Change Ball Bearings 8 - 190
8.9-3 Magazine, Lower Part - Set Proximity Switch 8 - 191
8.9-4 Magazine, Lower Part - Set Dampers . . . . . 8 - 192
8.9-5 Magazine - Change Ropes . . . . . 8 - 193

8.10 Covering Panel . . . . . 8 - 195

8.10-1 Covering Panel - Check . . . . . 8 - 195
8.10-2 Covering Panel - Set Safety Switches . . . . . 8 - 197
8.10-3 Covering Panel - Change Safety Key . . . . . 8 - 198

8.11 Bobbin Brake . . . . . 8 - 199

8.11-1 Bobbin Brake - Set . . . . . 8 - 199

8.12 Reel Trolley . . . . . 8 - 202

8.12-1 Reel Trolley - Check . . . . . 8 - 202
8.12-2 Reel Trolley - Change Pump Cylinder . . . . . 8 - 204
8.12-3 Reel Trolley - Set Regulating Valve . . . . . 8 - 206
8.12-4 Reel Trolley - Change Sink Valve . . . . . 8 - 207
8.12-5 Reel Trolley - Overhaul Lifting Cylinder . . . . . 8 - 210
8.12-6 Reel Trolley - Remove Fork Wheel . . . . . 8 - 211
8.12-7 Reel Trolley - Remove Guide Wheel . . . . . 8 - 212
8.12-8 Reel Trolley - Set Brake . . . . . 8 - 213

This page intentionally left blank

8 ASU

8-1 ASU - Setting Sequence

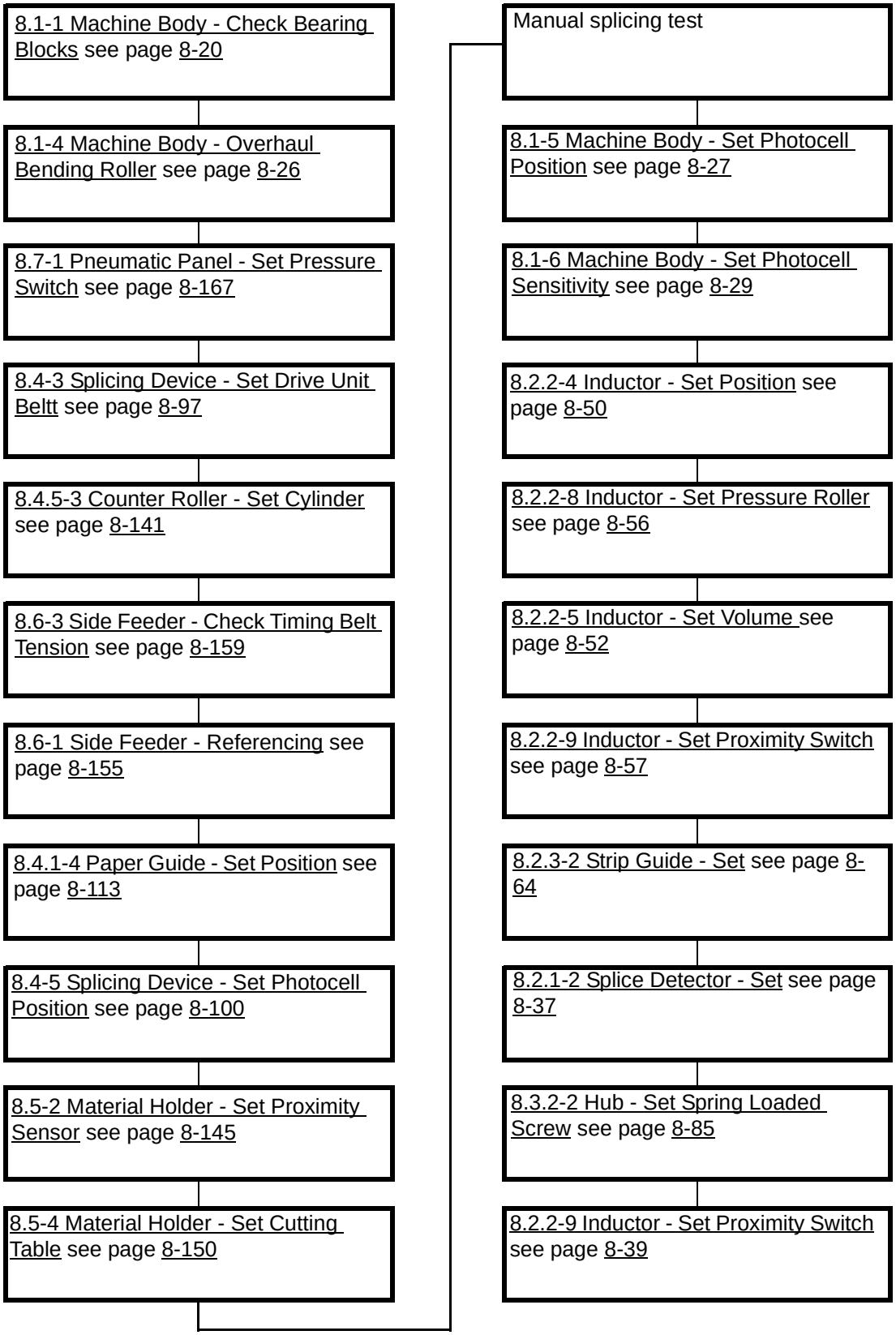

(Cont'd)

(Cont'd)

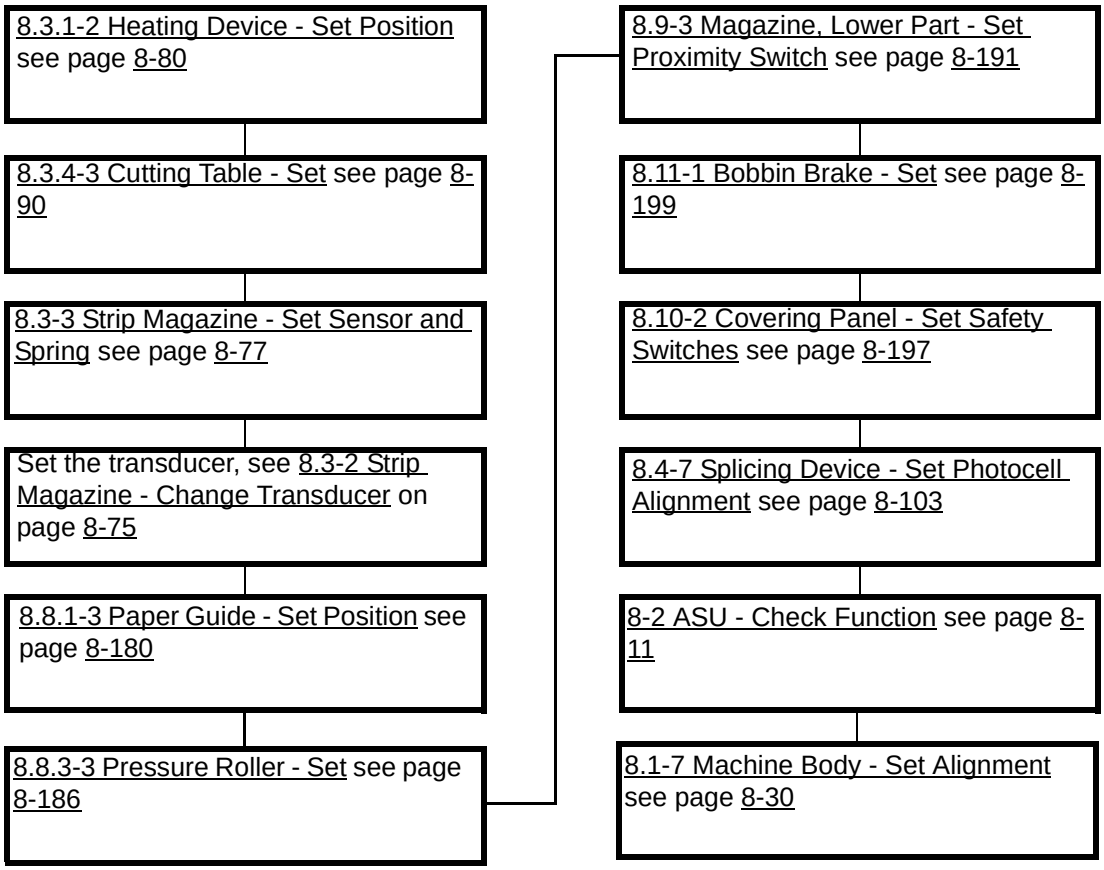
8.3.1-2 Heating Device - Set Position see page 8-80
8.3.4-3 Cutting Table - Set see page 8-90
8.3-3 Strip Magazine - Set Sensor and Spring see page 8-77
Set the transducer, see 8.3-2 Strip Magazine - Change Transducer on page 8-75
8.8.1-3 Paper Guide - Set Position see page 8-180
8.8.3-3 Pressure Roller - Set see page 8-186
8.9-3 Magazine, Lower Part - Set Proximity Switch see page 8-191
8.11-1 Bobbin Brake - Set see page 8-199
8.10-2 Covering Panel - Set Safety Switches see page 8-197
8.4-7 Splicing Device - Set Photocell Alignment see page 8-103
8-2 ASU - Check Function see page 8-11
8.1-7 Machine Body - Set Alignment see page 8-30

8-2 ASU - Check Function

Machine Status	PRODUCTION
SPC Reference	648528-0300

Raise the empty material holder and thread the packaging material through the material holder. Push the MATERIAL LOCKING button and check that the packaging material is correctly locked.

Perform a manual splice for each reel of packaging material, and check the following:

- Sealing alignment
- Overlap
- Sealing parallelism
- Spliced package length
- Cutting
- Sealing.

(Cont'd)

(Cont'd)

Sideways Sealing Alignment

Note! Check the alignment on the strip application side of the packaging material.

Check that the new and old pieces of packaging material on the two packages with a splice are aligned within the tolerance (distance **A**).

If necessary, set the sealing alignment, see 8.4.1-4 Paper Guide - Set Position and 8.5-4 Material Holder - Set Cutting Table.

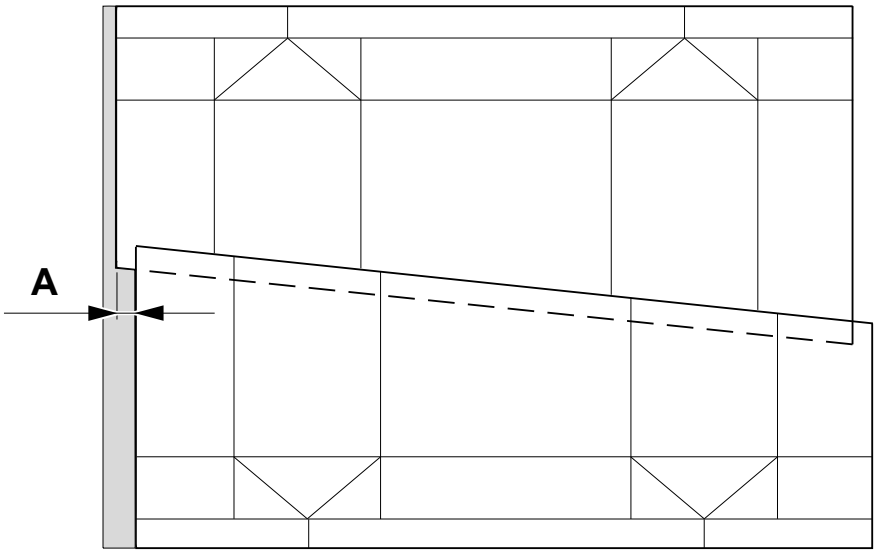

A = 0 ±0.5 mm

(Cont'd)

(Cont'd)

Overlap

Check that the overlap is correct. The over lap is the distance **B** between the edge cut manually (1) and the edge cut by the splicing device (2).

If necessary, set the material holder position. See 8.5-4 Material Holder - Set Cutting Table on page 8-150.

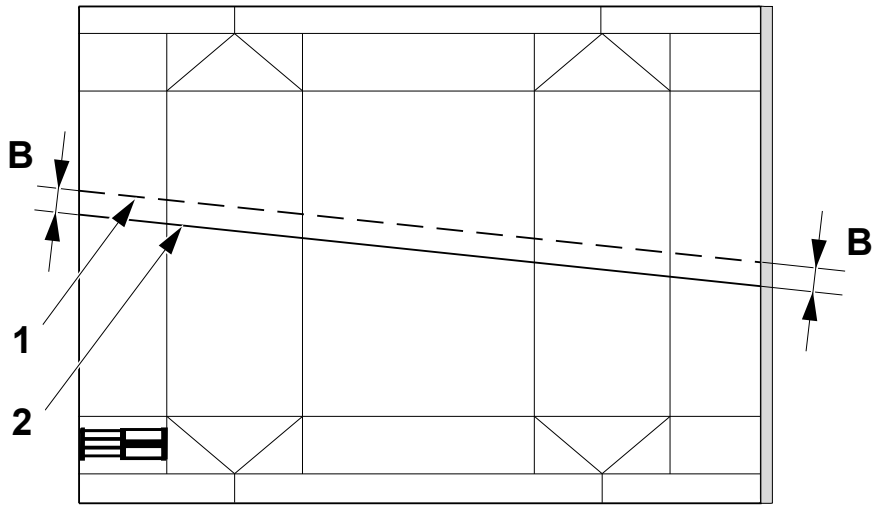

B = 16.5 ±0.5 mm

1 Manual cut
2 Splicing device cut

(Cont'd)

(Cont'd)

Sealing Parallelism

Check the parallelism, distance **C**, between the new and the old packaging material web.

With the aid of a straight edge (1) check that the new packaging material web diverges by not more than the distance **C** in 1 metre from the splice. If necessary set the sealing parallelism, see 8.5-4 Material Holder - Set Cutting Table.

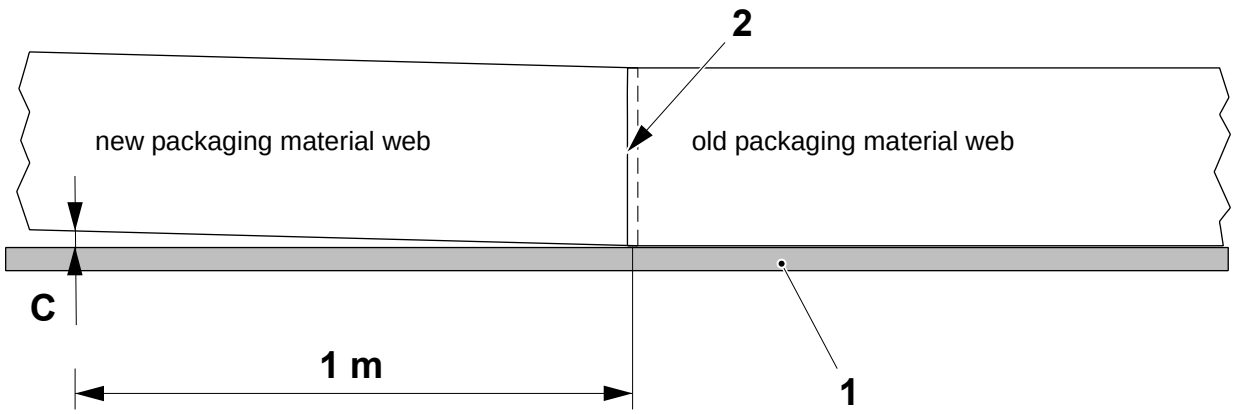

C = max 1.0 mm

1 Edge
2 Splice

(Cont'd)

(Cont'd)

Spliced Package Length

Measure that the distance **D** between the top and the bottom creases of the package spliced by the ASU and compare it with a normal package.

If the distance **D** diverges by 1.5 mm from the normal package length, set the spliced package repeat length offset, proceed as follows.

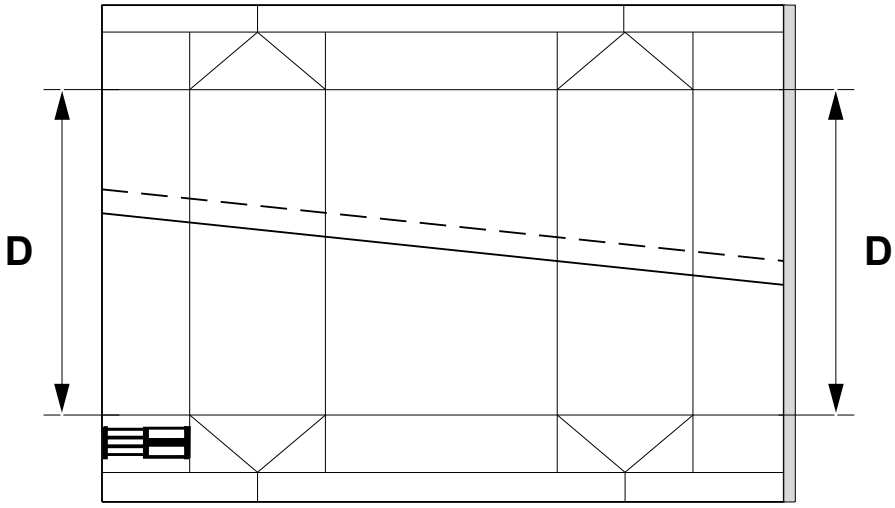

D = ±1.5 mm

(Cont'd)

(Cont'd)

a) Touch the PRODUCTION CONTROL button (1).

b) Touch the ASU button (2).

c) Touch the SPLICED PACKAGE REPEAT LENGTH OFFSET icon (3).

d) Change the current value with the ARROW buttons (4) or the KEYBOARD button (5), or reset the factory value by the FACTORY button (6).

Note! The repeat length can be corrected with this adjustment if the error is maximum 1mm.

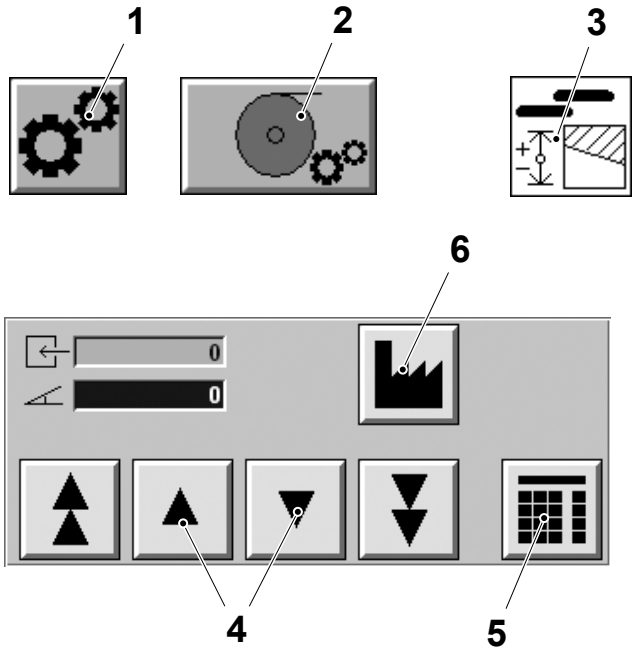

1 Production control button
2 ASU button
3 Spliced package repeat length icon
4 Arrow button
5 Keyboard button
6 Factory button

(Cont'd)

(Cont'd)

Cutting

Check that the manually cut paper edge is OK. If not change the material holder knife, see 8.5-1 Material Holder - Change Blade.

Check that the automatically cut paper edge is OK. If not change the splicing device knife, see 8.4.3-1 Pressure Jaw - Check Knife and Dolly.

Splice

Pull apart and examine the splice (1).

The splice is acceptable if it remains intact and:

- a delamination between the two inner coating takes place
- a rupture takes place in the printed paper board layer.

The splice is defective if:

- the splice is so weak the two plastic layers separate without rupturing.

If the splice is defective, check the heating device, see 8.4.4-1 Heating Unit - Check Sealing Plate.

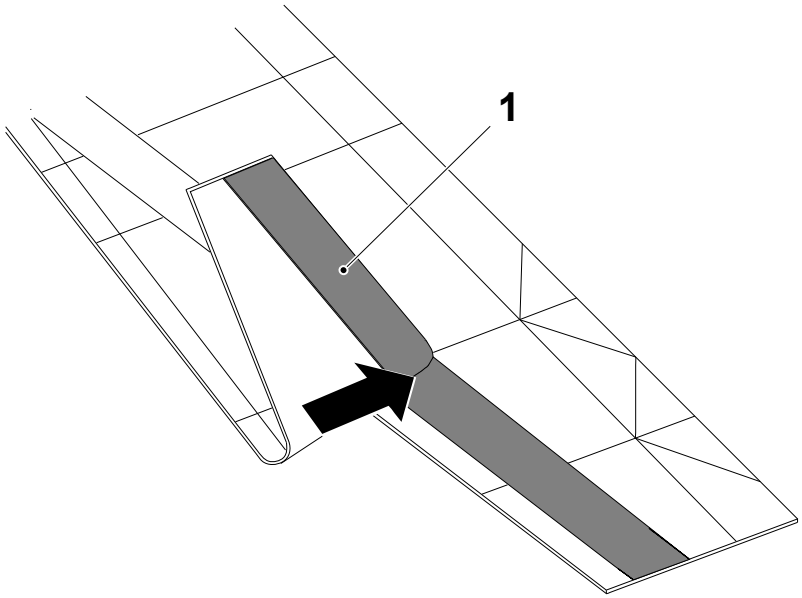

1 Splice

(Cont'd)

(Cont'd)

If necessary, change the current value of the constant heat bar temperature. Proceed as follows:

a) Touch the PRODUCTION CONTROL button (2).

b) Touch the ASU button (3).

c) Touch the CONSTANT HEAT BAR TEMPERATURE icon (4).

d) Change the current value with the ARROW buttons (5) or the KEYBOARD button (6), or reset the factory value by the FACTORY button (7).

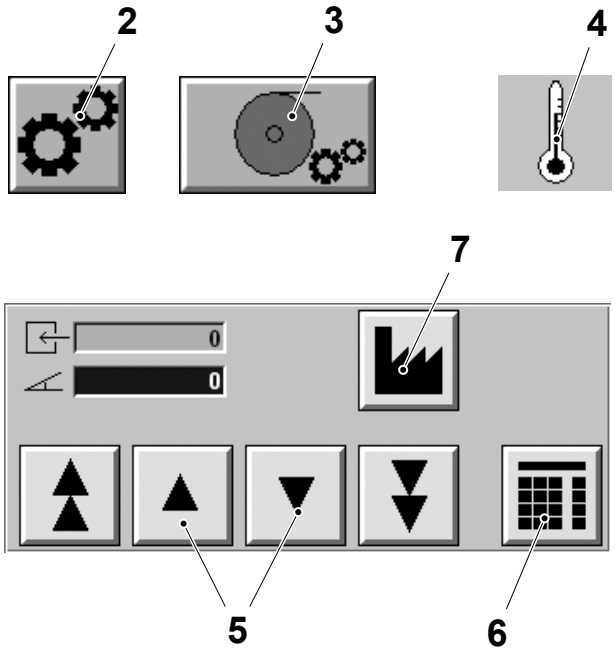

2 PRODUCTION CONTROL button
3 ASU button
4 Constant heat bar temperature icon
5 Arrow button
6 Keyboard button
7 Factory button

8-3 ASU - Force Manual Splice in Design

Machine Status	PREPARATION
SPC Reference	648528-0300

Note! Perform this procedure to execute a packaging material splice regarding the bar code position and by-passing the alarm conditions. The machine must be in step PREPARATION or higher.

a) In the TPOP panel, touch the MAINTENANCE CONTROL button (1) and enter the password required, see 9.6.3-2 HMI - User Management Log On.

b) Touch the ASU button (2).

c) Touch the FORCE MANUAL SPLICE icon (3). The ON/OFF buttons are displayed.

d) Touch the ON button (4) to enable the function.

e) Press the MANUAL WEB SPLICE button (5) to perform the packaging material splice.

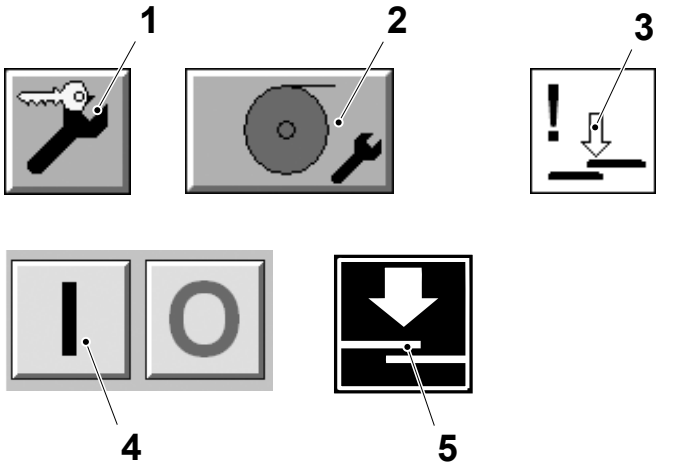

1 Maintenance control button
2 ASU button
3 Force manual splice icon
4 On button
5 Manual web splice button

8.1 Machine Body

SPC Reference	2741026-0100

8.1-1 Machine Body - Check Bearing Blocks

Machine Status	Mains Power OFF Air OFF Steam ON Water OFF
SPC Reference	2741026-0100

Note! Valid for machines with T-order: 21211/00001 to 21211/00012.

Check if the bearing blocks (1) and (2) are worn or damaged.

If the distance **A** is less than the value given below, change the bearing blocks, see 8.1-2 Machine Body - Change Bearing Blocks.

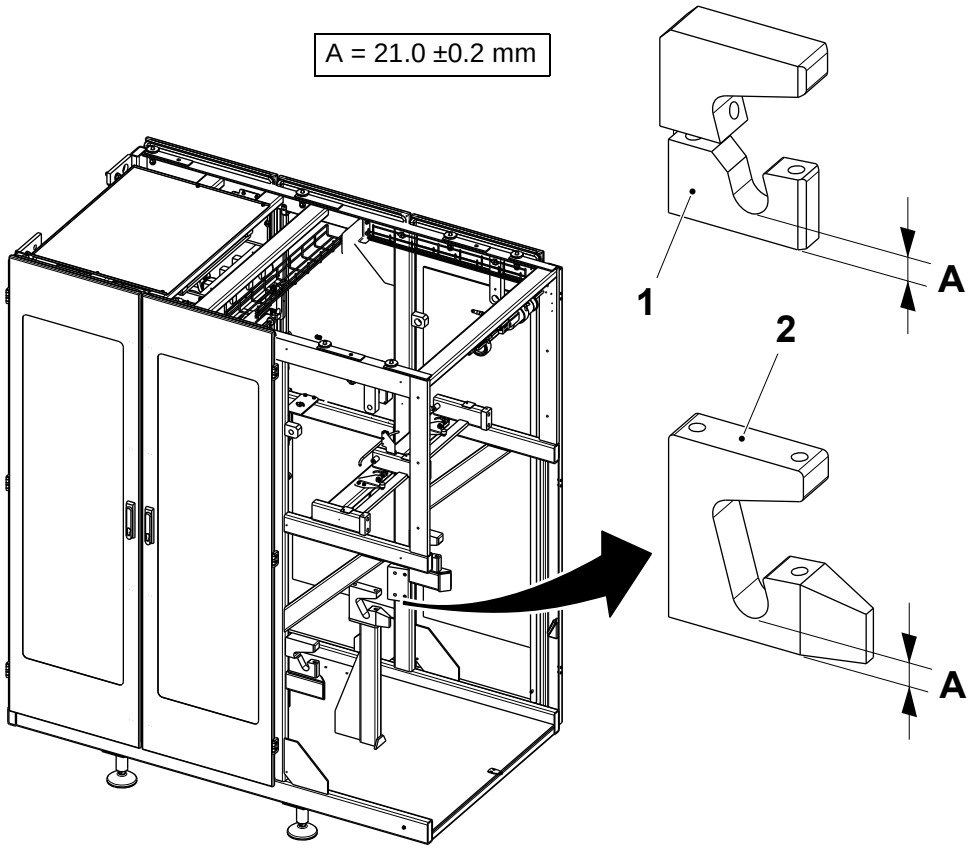

1 Bearing block
2 Bearing block

(Cont'd)

(Cont'd)

Note! Valid for machines with T-order: 21211/00013 and above.

Check if the bearing blocks (1) are worn or damaged.

If the distance **A** is less than the value given below, change the bearing blocks, see 8.1-2 Machine Body - Change Bearing Blocks.

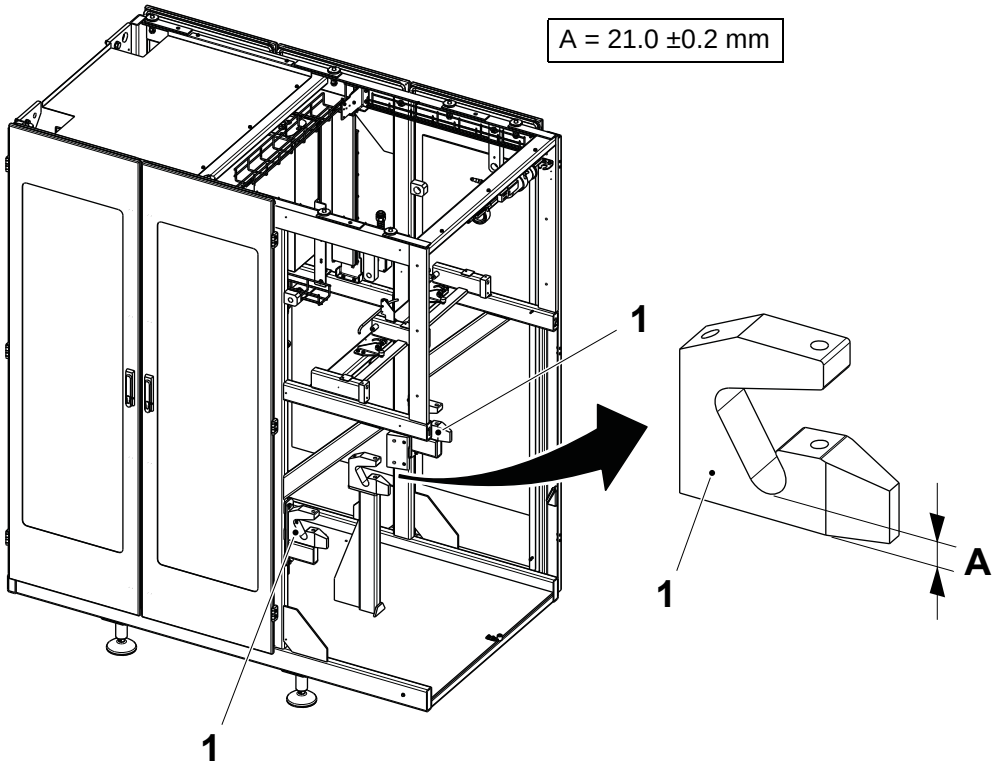

1 Bearing block

8.1-2 Machine Body - Change Bearing Blocks

Machine Status	Mains Power OFF Air OFF Steam ON Water OFF
SPC Reference	2741026-0100

Note! Valid for machines with T-order: 21211/00001 to 21211/00012.

(Cont'd)

(Cont'd)

a) At the side bearing blocks (1), remove the screw (2) and the upper part (3) of the bearing blocks (1).

b) Remove the screws (4) and change the lower parts of bearing blocks (1).

c) Fit back the upper part (3) by the screw (2).

d) Remove the screws (5) and change the central bearing block (6).

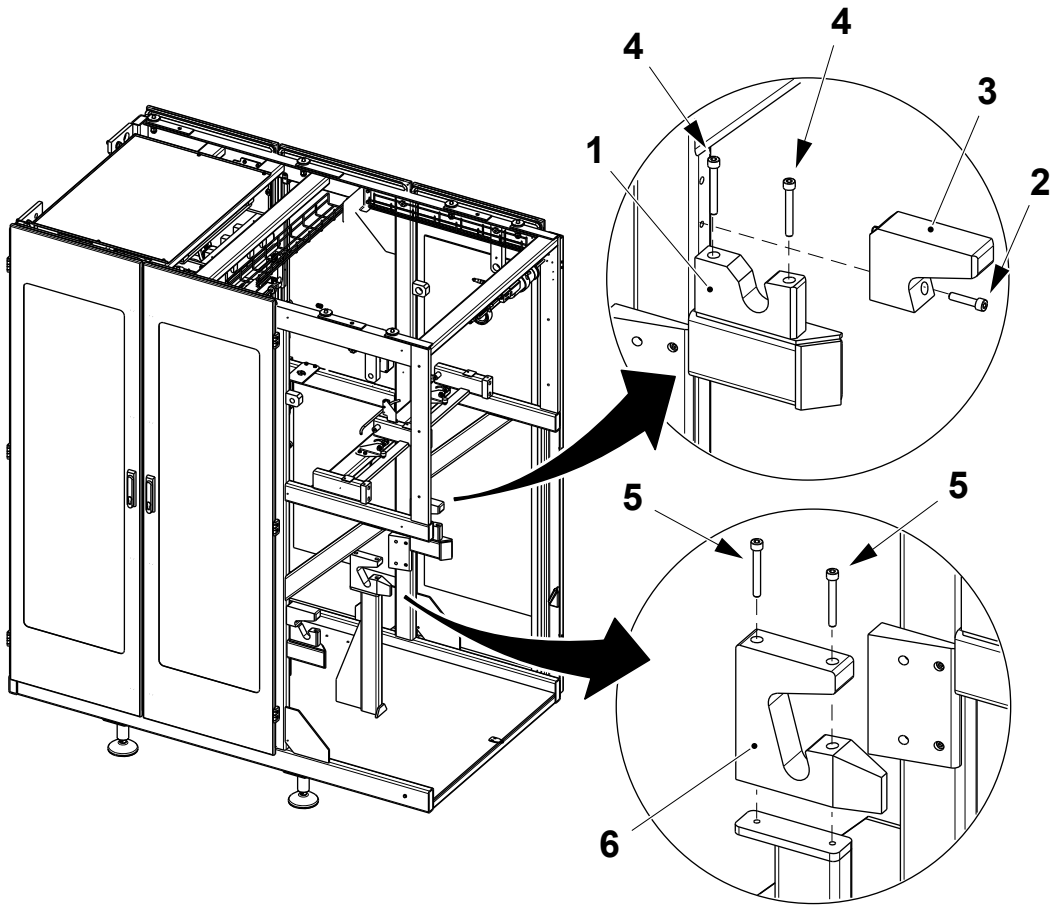

1 Bearing block
2 Screw
3 Upper part
4 Screw
5 Screw
6 Bearing block

(Cont'd)

(Cont'd)

Note! Valid for machines with T-order: 21211/00013 and above.

a) Remove the screws (1) and (2) to change the side bearing blocks (3).

b) Take note of the shims, if present, under the bearing blocks (3) and (5).

c) Remove the screws (4) to change the central bearing block (5).

d) Assemble in the reverse order fitting back the same quantity of shims, if present, under the bearing blocks (3) and (5).

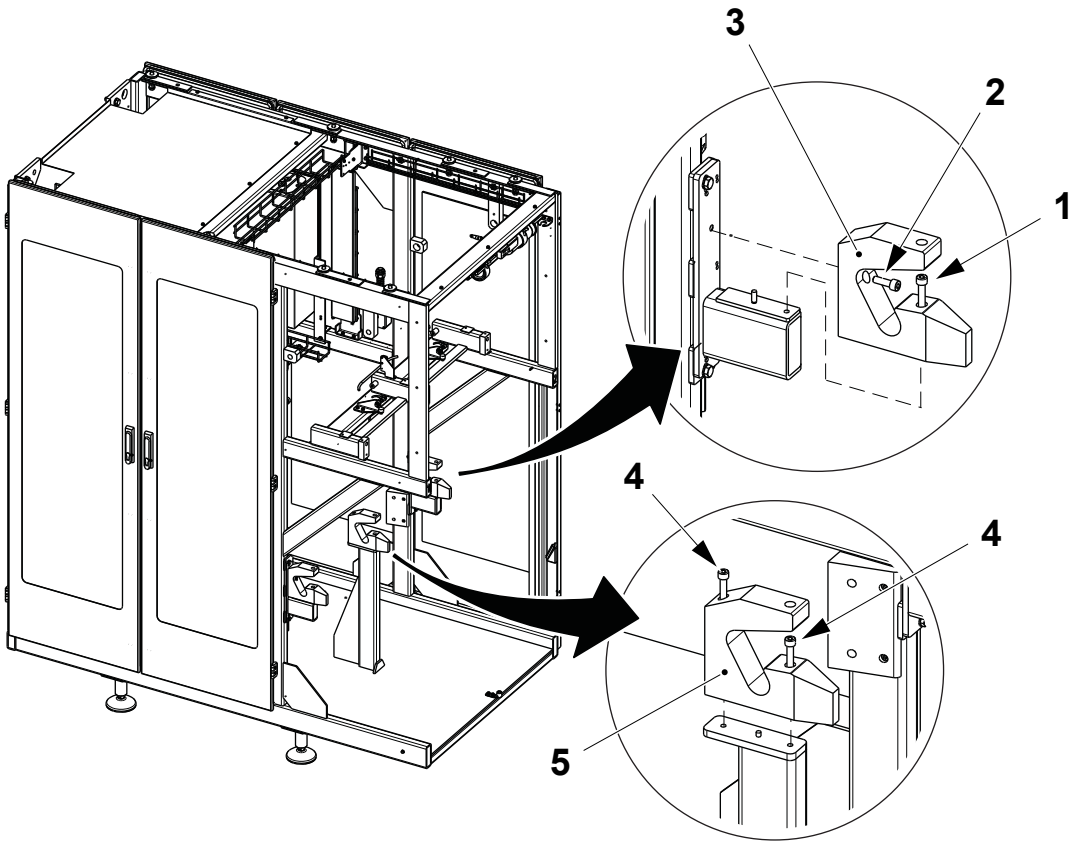

1 Screw
2 Screw
3 Bearing block
4 Screw
5 Bearing block

8.1-3 Machine Body - Check Bending Roller

Machine Status	Mains Power OFF Air OFF Steam ON Water OFF
SPC Reference	2741026-0100

Check that:

- the bending roller (1) rotates freely without play
- the surface of the roller (1) is not worn or damaged.

If necessary, change the ball bearings and the roller (1), see 8.1-4 Machine Body - Overhaul Bending Roller.

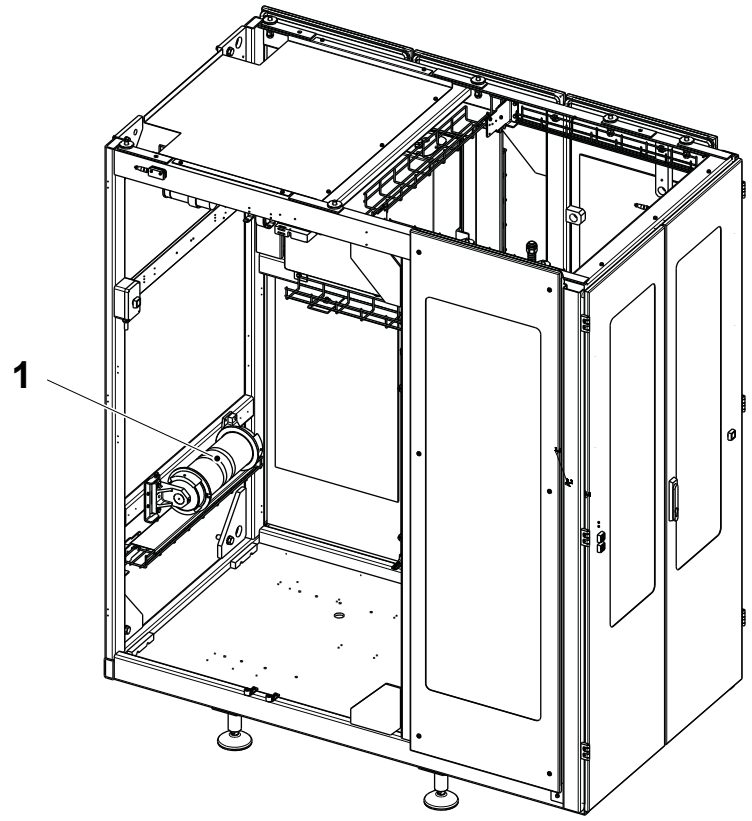

1 Bending roller

8.1-4 Machine Body - Overhaul Bending Roller

Machine Status	Mains Power OFF Air OFF Steam ON Water OFF
SPC Reference	2741026-0100

a) Remove the grub screws (1).
b) Remove the axle pins (2) and the roller (3).
c) Remove the ball bearings (4).
d) Change the roller (3) and the ball bearings (4).
e) Remove the screws (5), the brackets (6) and change the flanges (7).
f) Assemble in the reverse order.

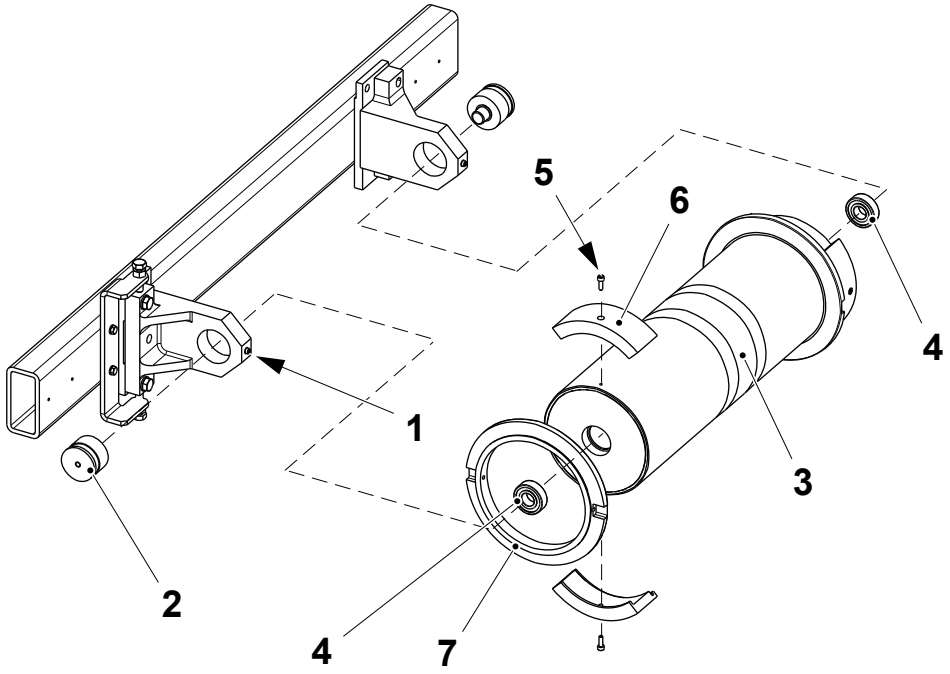

1 Grub screw
2 Axle pin
3 Roller
4 Ball bearing
5 Screw
6 Bracket
7 Flange

8.1-5 Machine Body - Set Photocell Position

Machine Status	Mains Power ON Air OFF Steam ON Water OFF
SPC Reference	2741026-0100

Empty Loop - Full Loop Photocells

Adjust the position of the photocell (1) until it is levelled in height with the reflector (2) and the green LED (3) is lit on the photocell (1); when the packaging material loop is present, also the red LED (4) is lit.

Repeat the procedure for the photocell (5) and the reflector (6). Both the LEDs (3) and (4) must be lit on the photocell (2) when there is not any packaging material in between.

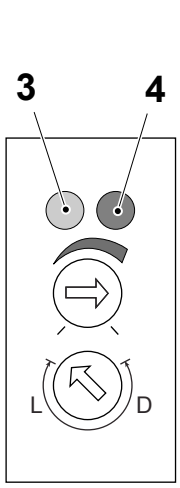

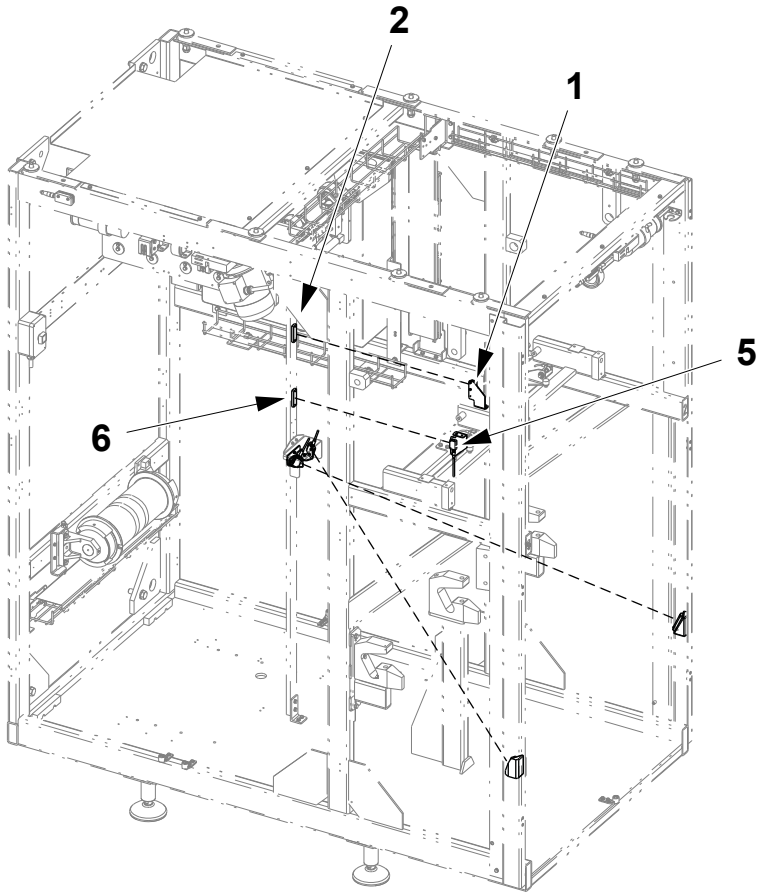

1 Photocell
2 Reflector
3 Green LED
4 Red LED
5 Reflector
6 Photocell

(Cont'd)

(Cont'd)

Empty Bobbin Reel Photocells

Set the angle of the photocells (7) for the empty reels so that the signal is received crosswise from the reflectors (8) on the opposite side. Only the green LED (3) must be lit when the reel is empty or missing.

Adjust the angle of the photocells (7) as follows:

a) Fit a reel core (9) in position into the reel holder.

b) Put a piece of packaging material (10) on the reel core (9) and check that both the LEDs (3) and (4) are lit.

c) Move the packaging material (10) up and check that the red LED (4) shut off when there is a window of 10 mm between the packaging material (10) and the reel core (9).

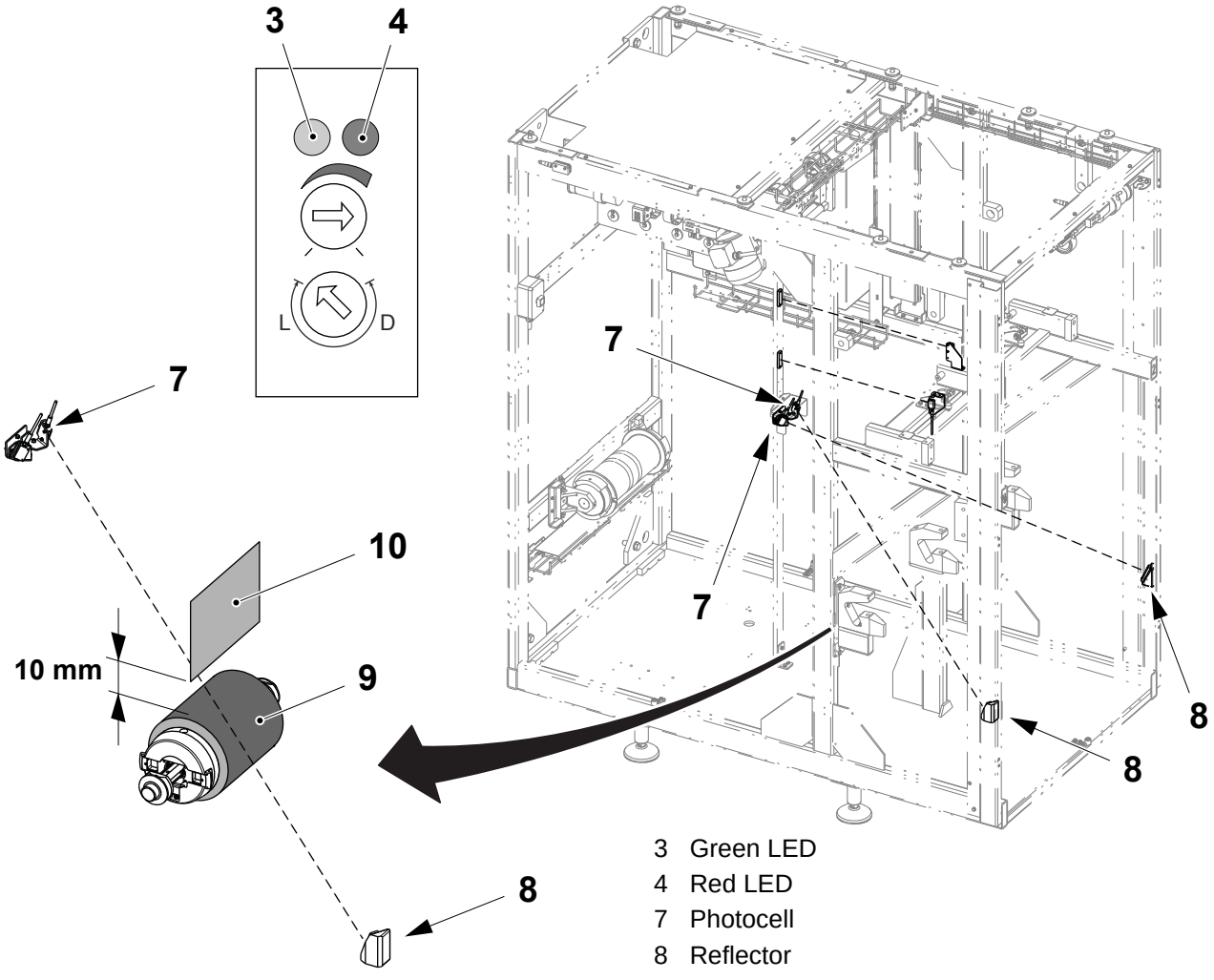

3 Green LED
4 Red LED
7 Photocell
8 Reflector
9 Reel core
10 Packaging material

8.1-6 Machine Body - Set Photocell Sensitivity

Machine Status	Mains Power ON Air OFF Steam ON Water OFF
SPC Reference	2741026-0100

Set Photocell (1) for Empty Loop Detection

Turn the switch (4) so that the arrow points to D. Turn the switch (5) so that the arrow points to the maximum of the signal intensity.

Set Photocell (2) for Empty Bobbin Reel Detection on Both Lines

Turn the switch (4) so that the arrow points to D. Turn the switch (5) so that the arrow points to the maximum of the signal intensity.

Set Photocell (3) for Full Loop Detection

Turn the switch (4) so that the arrow points to L. Turn the switch (5) so that the arrow points to the maximum of the signal intensity.

The green LED (6) indicates that the power is ON. The red LED (7) indicates that the signal is received from the reflector.

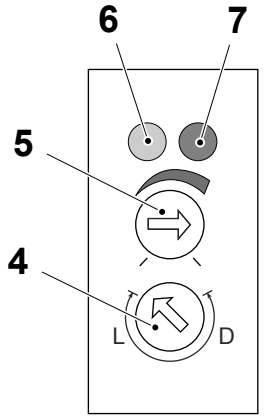

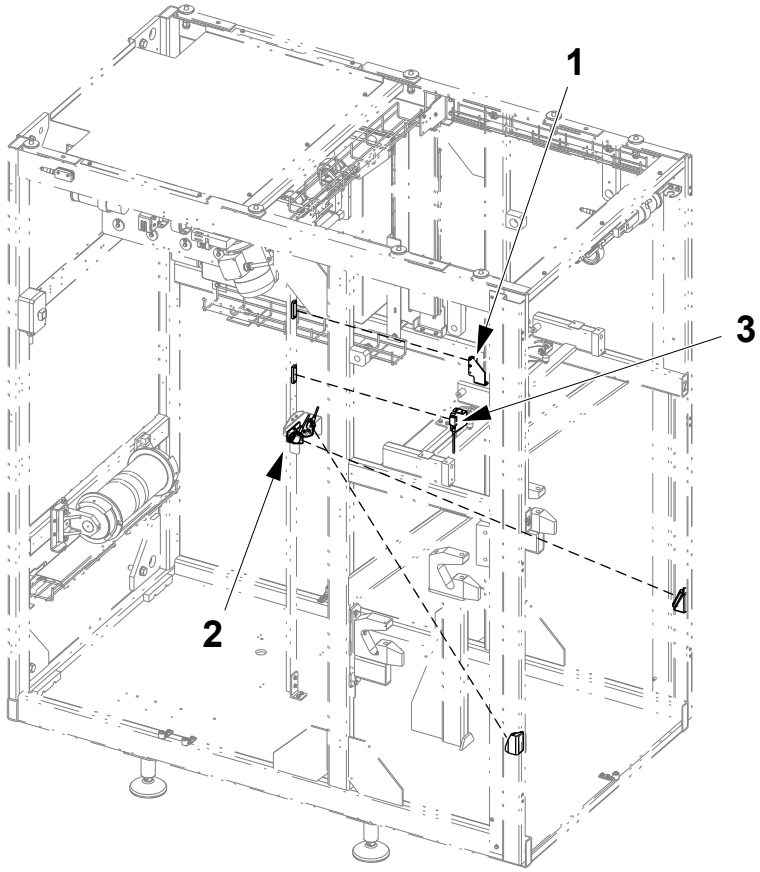

1 Photocell
2 Photocell
3 Photocell
4 Switch
5 Switch
6 Green LED
7 Red LED

8.1-7 Machine Body - Set Alignment

Machine Status	TUBE SEALING
SPC Reference	2741026-0100

Note! The packaging material edge (3) must lay without friction on the flange (2) on the strip applicator side.

Adjust the alignment of the bending roller (1) as follows:

a) Set the inductor position, see 8.2.2-5 Inductor - Set Volume, Basic Setting.

b) Pull the packaging material in contact with the flange (2).

c) Perform the fine setting of the inductor, see 8.2.2-5 Inductor - Set Volume, Fine Setting.

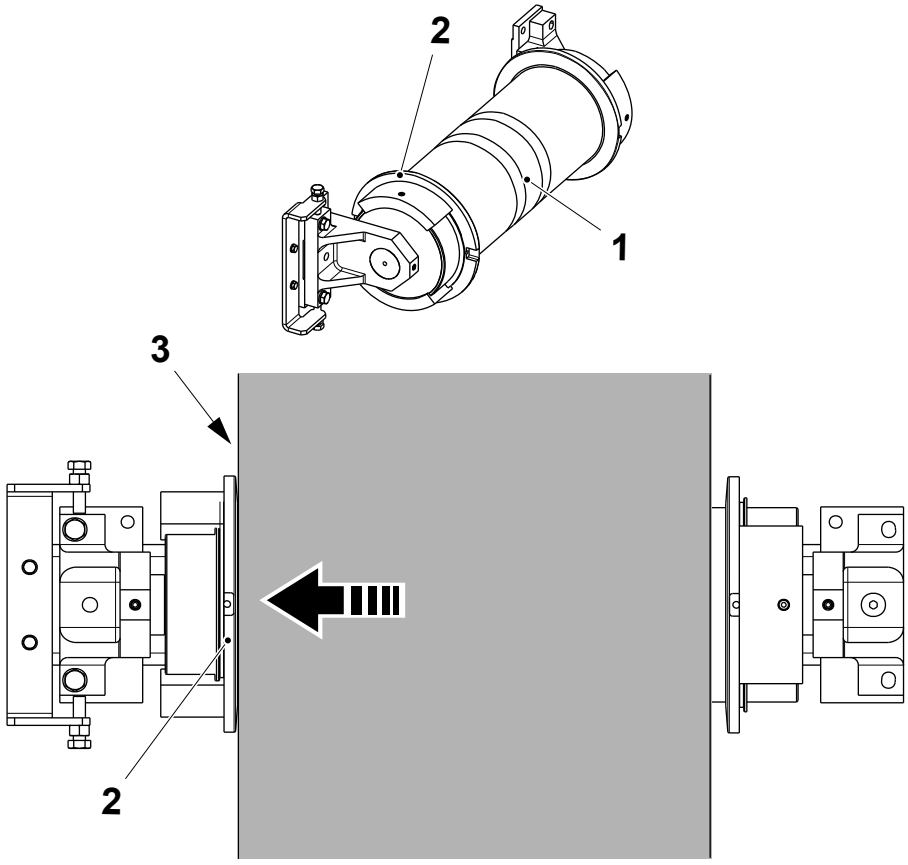

1 Bending roller
2 Flange
3 Packaging material edge

8.1.1 Connection Box

8.1.1-1 Connection Box - Change Transformer

Machine Status	Mains Power OFF Air OFF Steam ON Water OFF
SPC Reference	2806682-0100

DANGER

Hazardous voltage.

Will cause shock, burns or even death. Perform the lockout procedure procedure before starting any work.

(Cont'd)

(Cont'd)

a) Disconnect the transformer cables according to the Electrical Manual.

b) Remove the transformer (1) by the screws (2).

c) Assemble in the reverse order.

Note! Connect the power cable to the terminal (3) corresponding to the voltage used in the country where the machine is installed. The different voltage are marked on the terminals (3).

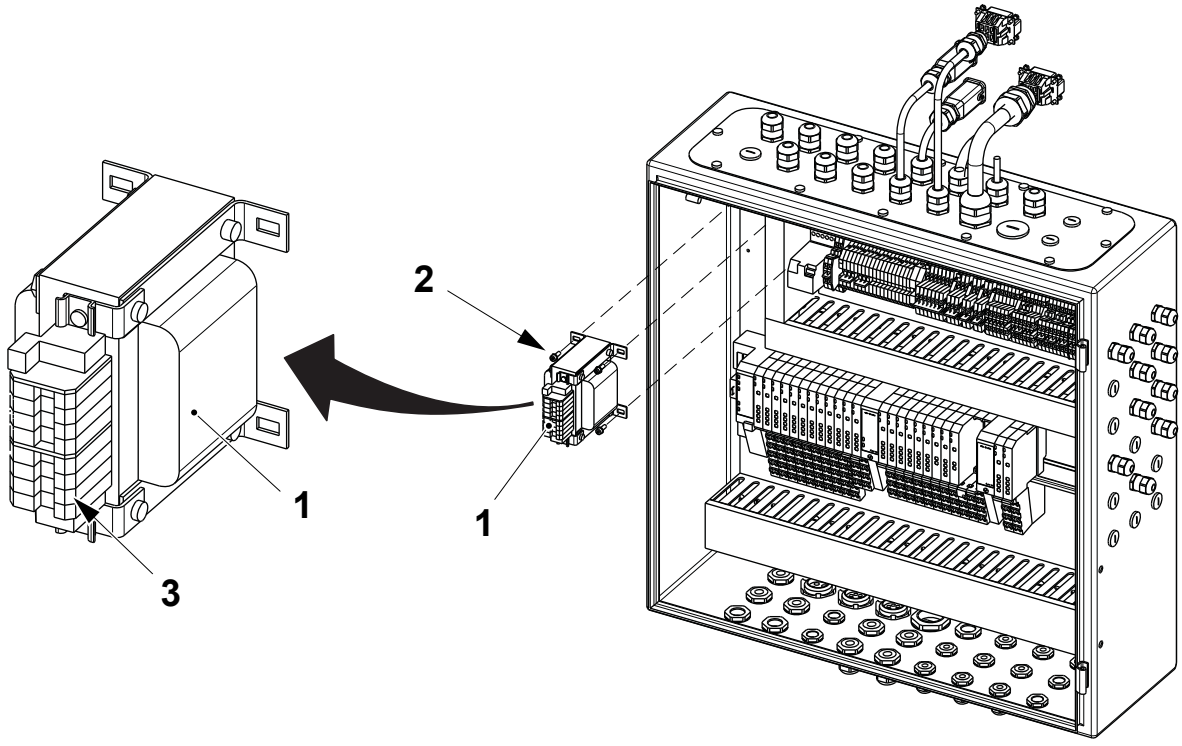

1 Transformer
2 Screw
3 Terminals

8.2 Strip Applicator

SPC Reference	2765667-0100

8.2.1 Splice Detector

8.2.1-1 Splice Detector - Check

Machine Status	Mains Power ON Air OFF Steam ON Water OFF
SPC Reference	2859436-0100

Note! Valid for machines with T-order: 21208/00001 to 21208/00020.

(Cont'd)

(Cont'd)

Check that:

- the ball bearing (1) rotates easily. Change if necessary
- the spring (2) works correctly. Change if necessary
- the bracket (3) is easy to turn. If not, remove the retaining ring (4) and the spring (2) and pull out the bracket (3). Clean the bushings (5) and the shaft (6). Assemble in the reverse order.

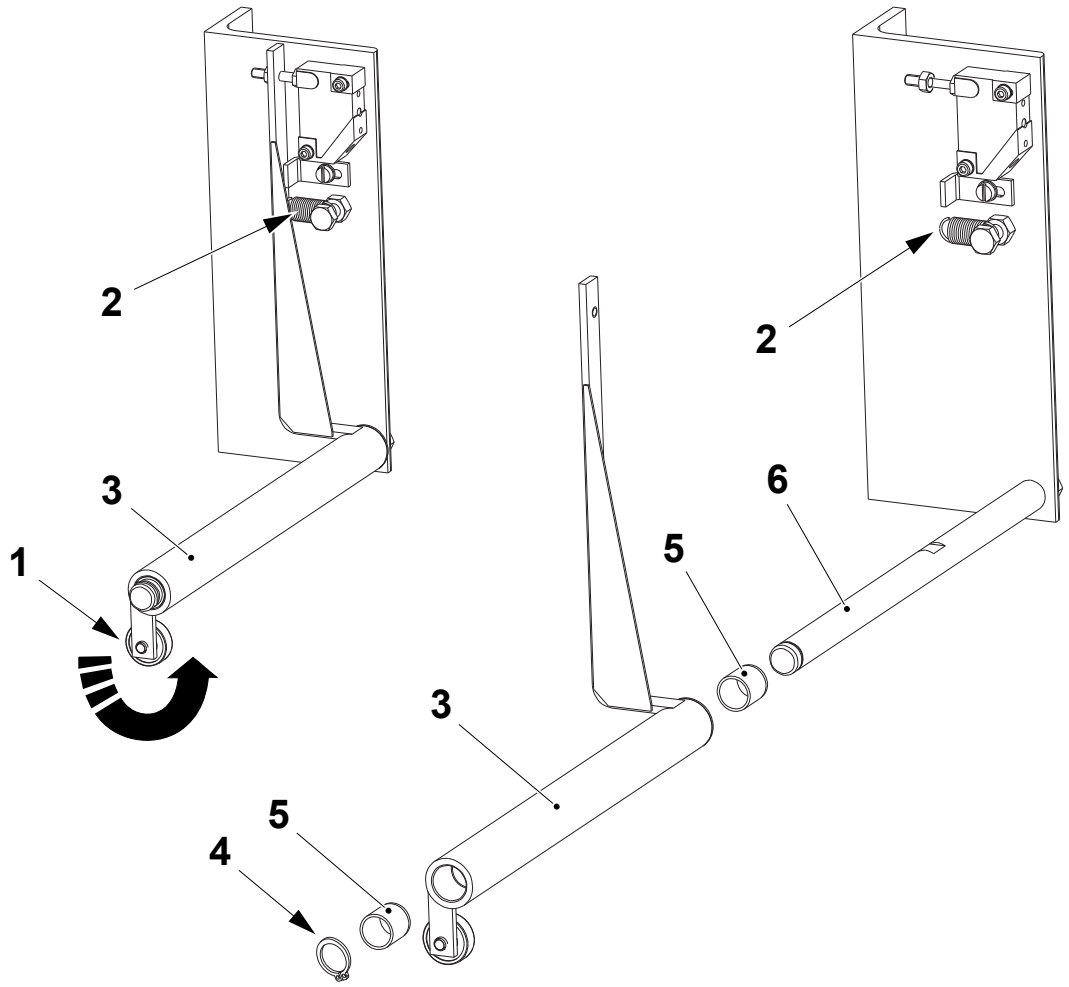

1 Ball bearing
2 Spring
3 Bracket
4 Retaining ring
5 Bushing
6 Shaft

(Cont'd)

(Cont'd)

Feed the packaging material (7) past the ball bearing (1) as if preparing the machine for production. Check that the LED (8) on the proximity switch is ON.

Insert a second piece of packaging material (9) between the original packaging material (7) and the ball bearing and check that the LED (8) is OFF.

If not, set the splice detector, see 8.2.1-2 Splice Detector - Set.

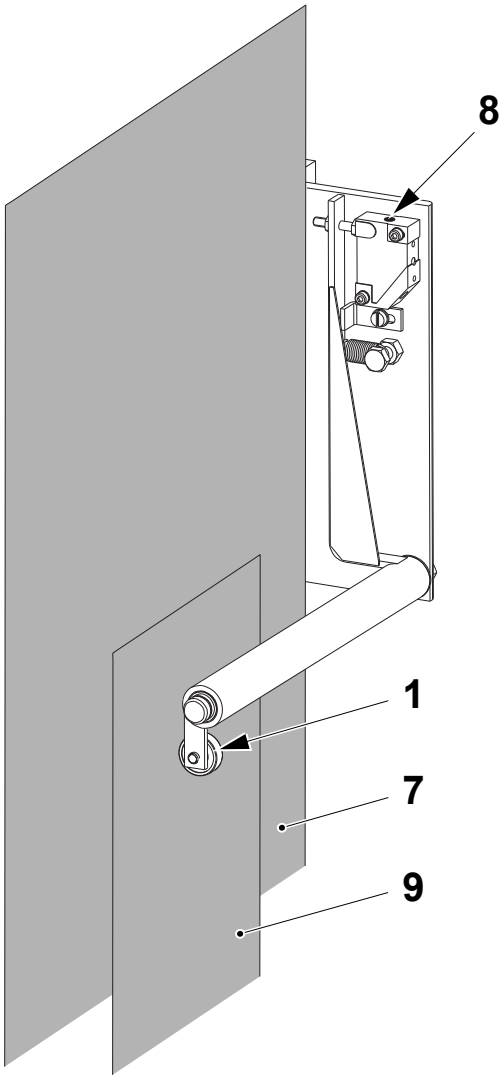

1 Ball bearing
7 Packaging material
8 LED
9 Packaging material

(Cont'd)

(Cont'd)

Note! Valid for machines with T-order: 21208/00021 and above.

Check that:

- the ball bearings (1) rotates easily. Change if necessary
- the spring (2) works correctly. Change if necessary.

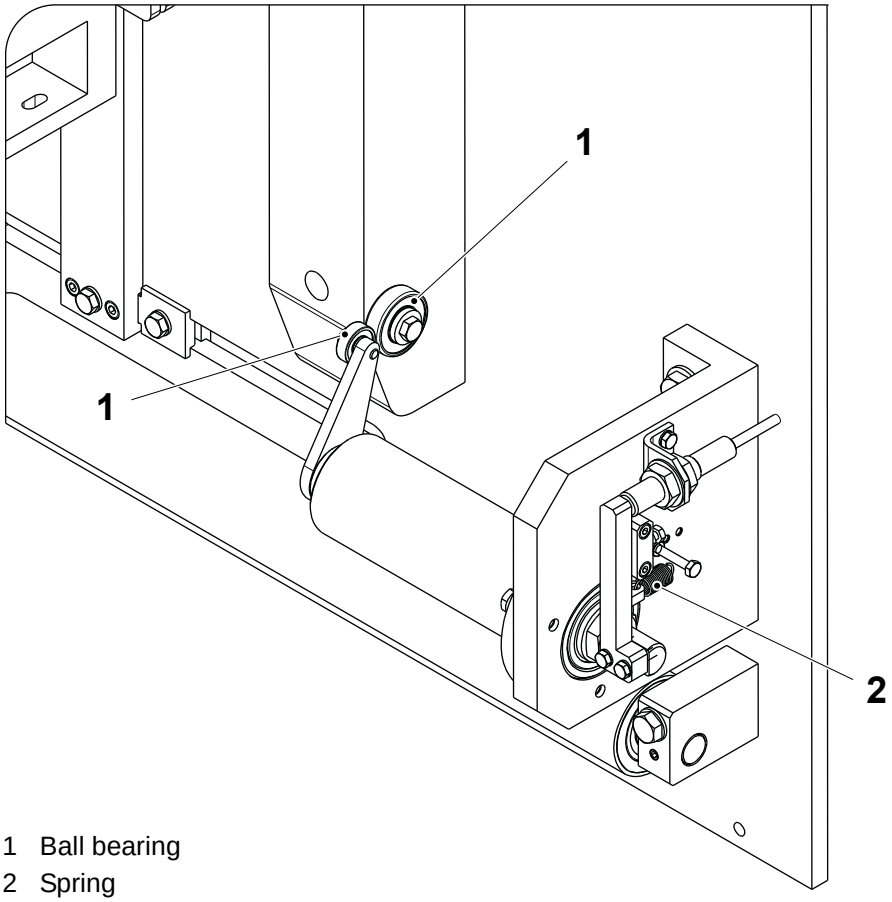

1 Ball bearing
2 Spring

8.2.1-2 Splice Detector - Set

Machine Status	Mains Power ON Air OFF Steam ON Water OFF
SPC Reference	2859436-0100

Note! Valid for machines with T-order: 21208/00001 to 21208/00020.

a) Turn the screw (1) until the LED (2) is ON.

b) Feed the packaging material (3) past the ball bearing (4) as if preparing the machine for production and then insert a second piece of packaging material (5) between the original packaging material (3) and the ball bearing. This simulates a spliced piece of packaging material.

c) Turn the screw (1) until the LED is OFF.

d) Remove the second piece of packaging material (5) and check that the LED is ON.

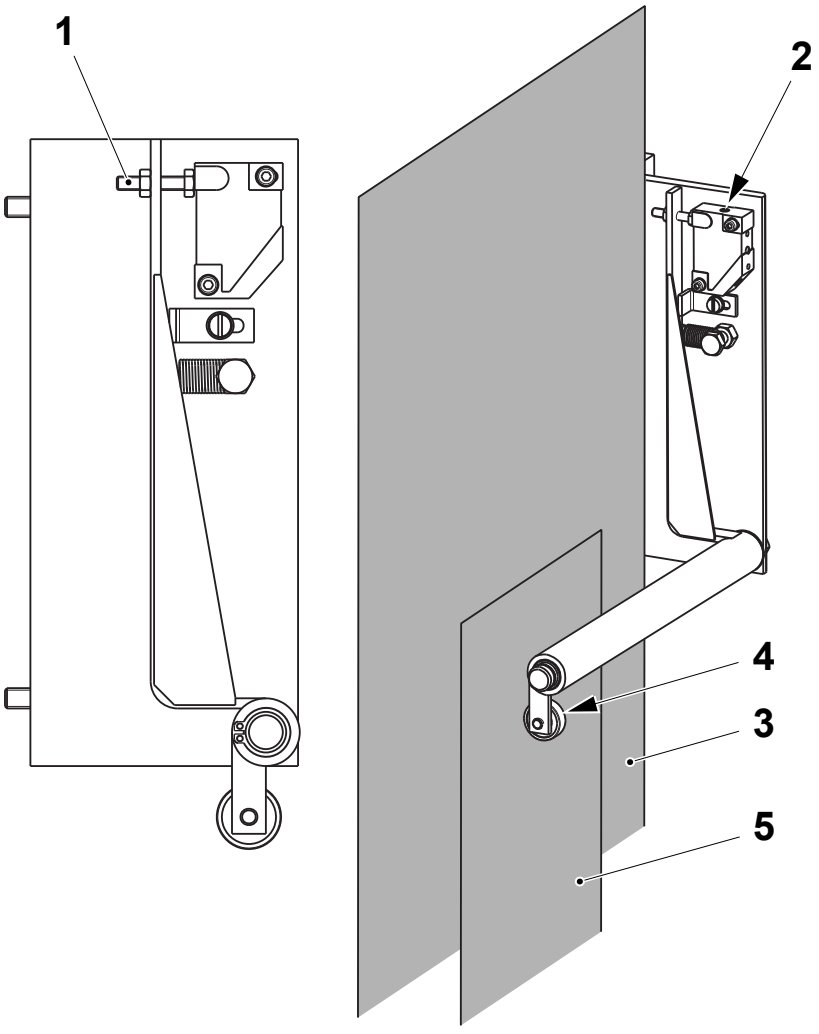

1 Screw
2 LED
3 Packaging material
4 Ball bearing
5 Packaging material

(Cont'd)

(Cont'd)

Note! Valid for machines with T-order: 21208/00021 and above.

a) Remove the packaging material.

b) When the ball bearing (1) on the splice detector is in contact with the ball bearing (2) on the strip applicator, loosen the nuts (3) and move the proximity switch (4) in contact with the bar (5), then tighten the nuts (3).

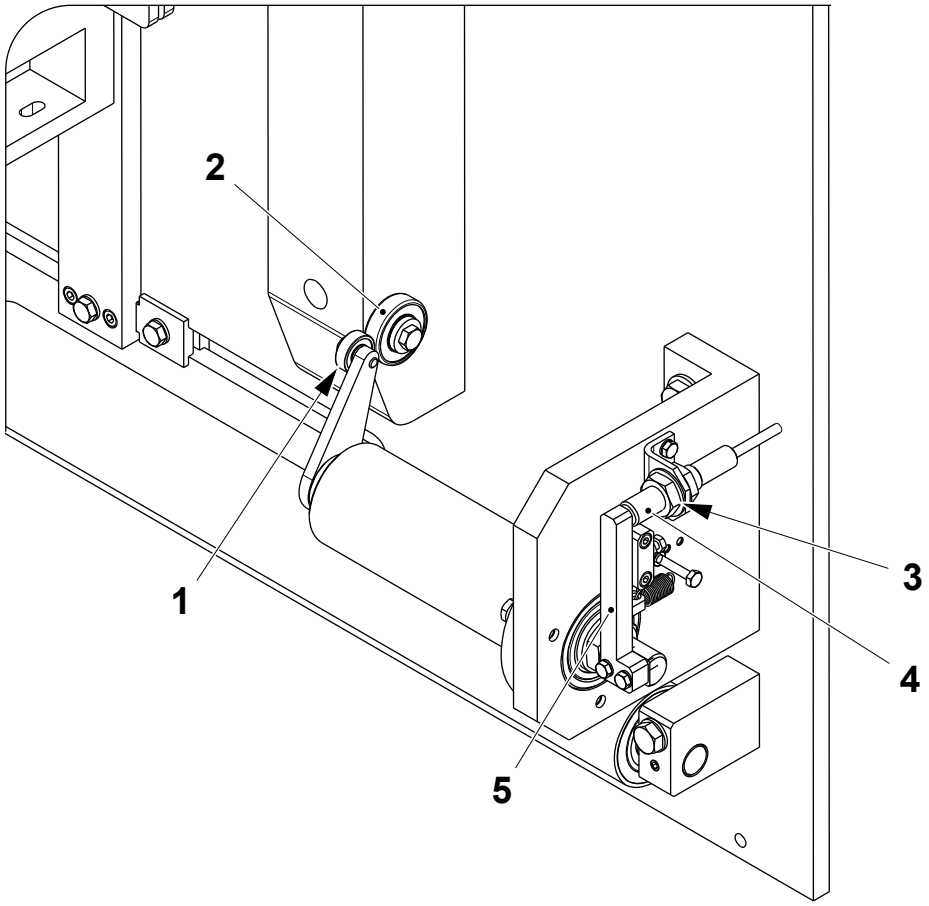

1 Ball bearing
2 Ball bearing
3 Nut
4 Proximity switch
5 Bar

8.2.2 Inductor

8.2.2-1 Inductor - Check

Machine Status	Mains Power OFF Air OFF Steam ON Water OFF
SPC Reference	2765668-0100

Check:

- the inductor (1) for wear or damage. If necessary, clean the inductor (1) by removing any plastic residue and change the adhesive teflon tape, see 8.2.2-10 Inductor - Change Adhesive Tape
- the transformer (2) for wear or damage. If necessary, change the transformer (2), see 8.2.2-2 Inductor - Change Transformer
- the rollers (3) for wear or damage. If necessary, change the roller (3), see 8.2.2-3 Inductor - Change Roller
- that the rollers (3) rotate freely without play and the silicon rubber layer on the surface of each roller (3) is undamaged. If necessary, change the rollers, see 8.2.2-3 Inductor - Change Roller.

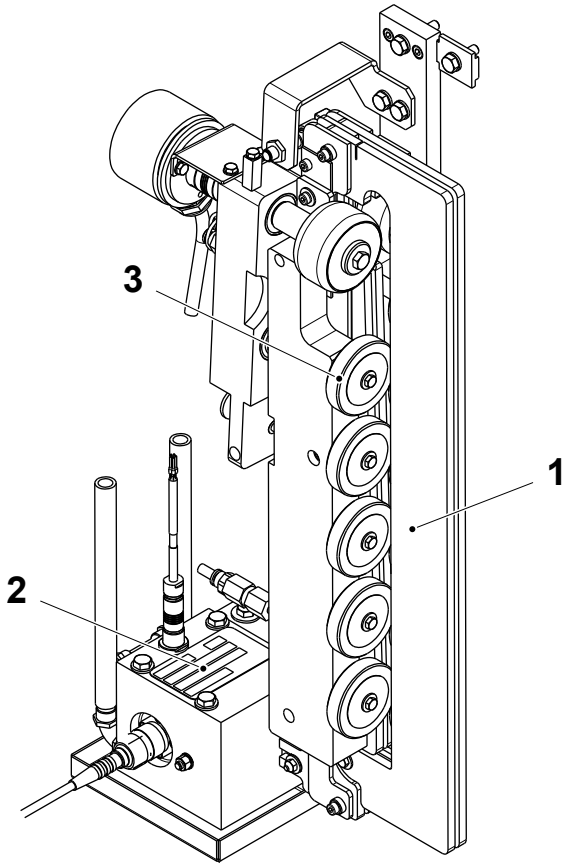

1 Inductor
2 Transformer
3 Roller

8.2.2-2 Inductor - Change Transformer

Machine Status	Mains Power OFF Air OFF Steam ON Water OFF
SPC Reference	2765668-0100

Note! Valid for machines with T-order: 21208/00001 to 21208/00020.

a) Close the cooling water valves in the machine body.

(Cont'd)

(Cont'd)

b) Disconnect the coaxial cable (1).
c) Disconnect the cooling hoses (2).
d) Loosen the nut (3) and the screw (4).

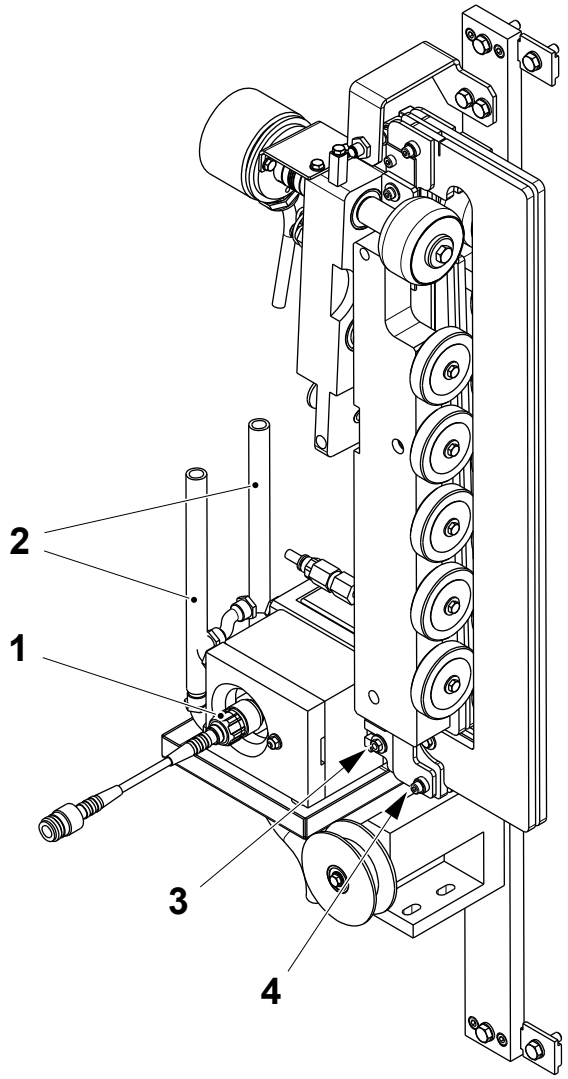

1 Coaxial cable
2 Hose
3 Nut
4 Screw

(Cont'd)

(Cont'd)

e) Remove the screws (5) and slip off the transformer assembly (6).
f) Remove the screw (7) and the insulator (8).
g) Loosen the nut (9) and remove the screw (10)
h) Separate the transformer (11) from the cooling plates (12).
i) Change the transformer (11) and assemble in the reverse order.

5 Screw
6 Transformer assembly
7 Screw
8 Insulator
9 Nut
10 Screw
11 Transformer
12 Cooling plate

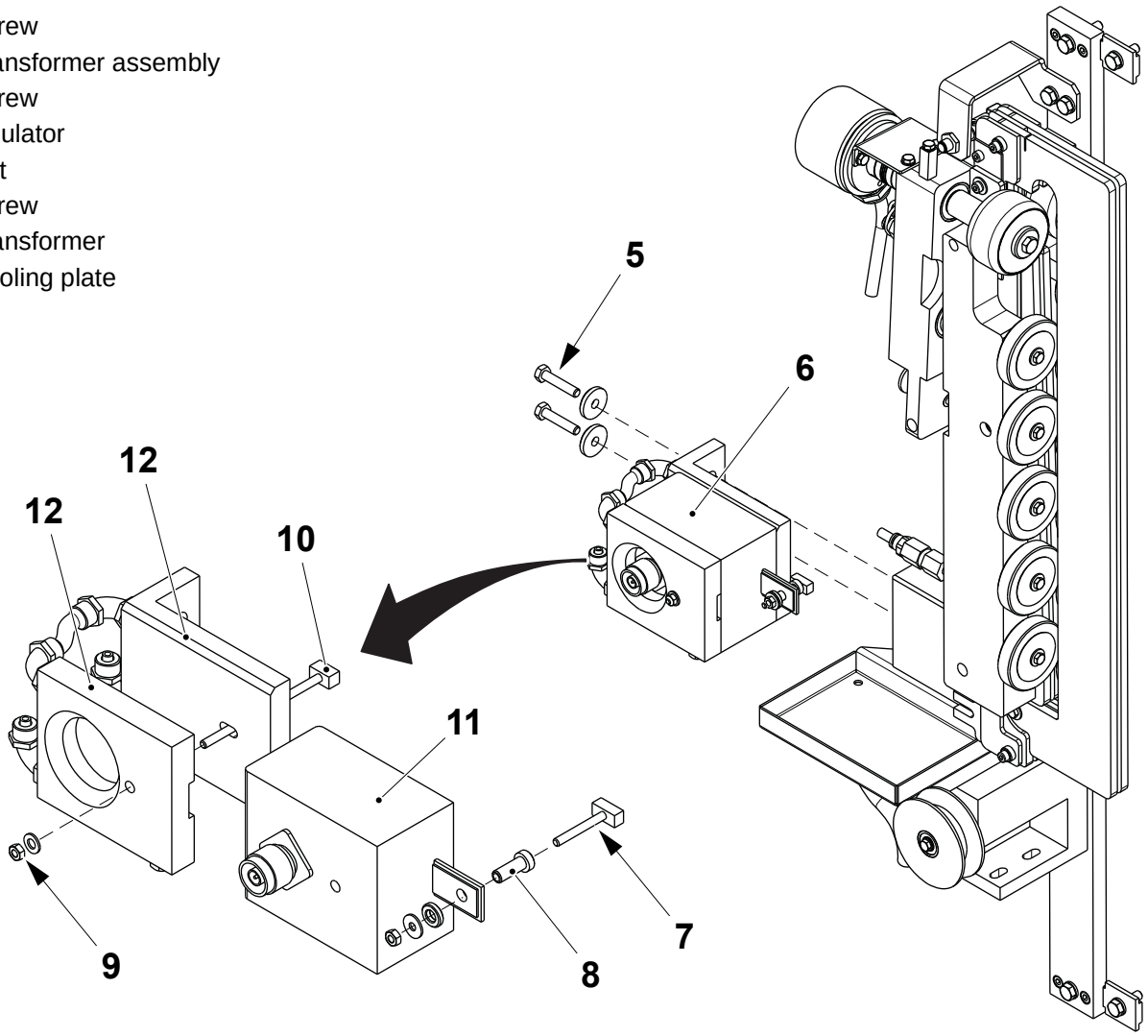

(Cont'd)

(Cont'd)

Note! Valid for machines with T-order: 21208/00021 and above.

a) Close the cooling water valves in the machine body.

b) Disconnect the coaxial cable (1) and the VMN cable (2).

c) Disconnect the cooling hoses (3).

d) Loosen the nut (4).

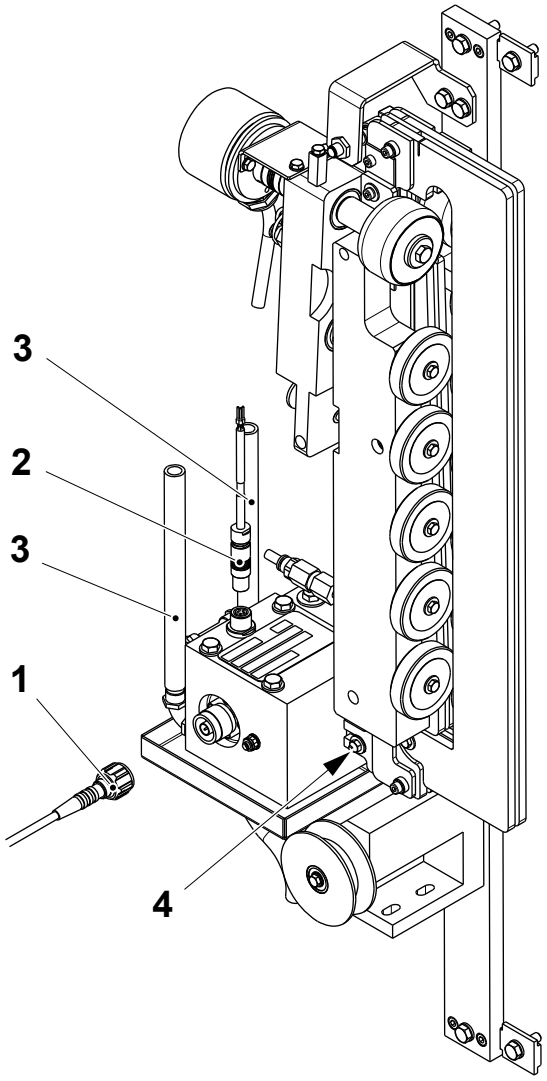

1 Coaxial cable
2 VMN cable
3 Hose
4 Nut

(Cont'd)

(Cont'd)

e) Remove the screws (5) and extract the transformer assembly (6).

f) Move the transformer assembly (6) on the work bench.

g) Remove the nut (7) and slip off the transformer (8).

h) Remove the screw (9) and the insulator (10) from the copper contact (11) and fit them on the new transformer.

5 Screw
6 Transformer assembly
7 Nut
8 Transformer
9 Screw
10 Insulator
11 Copper contact

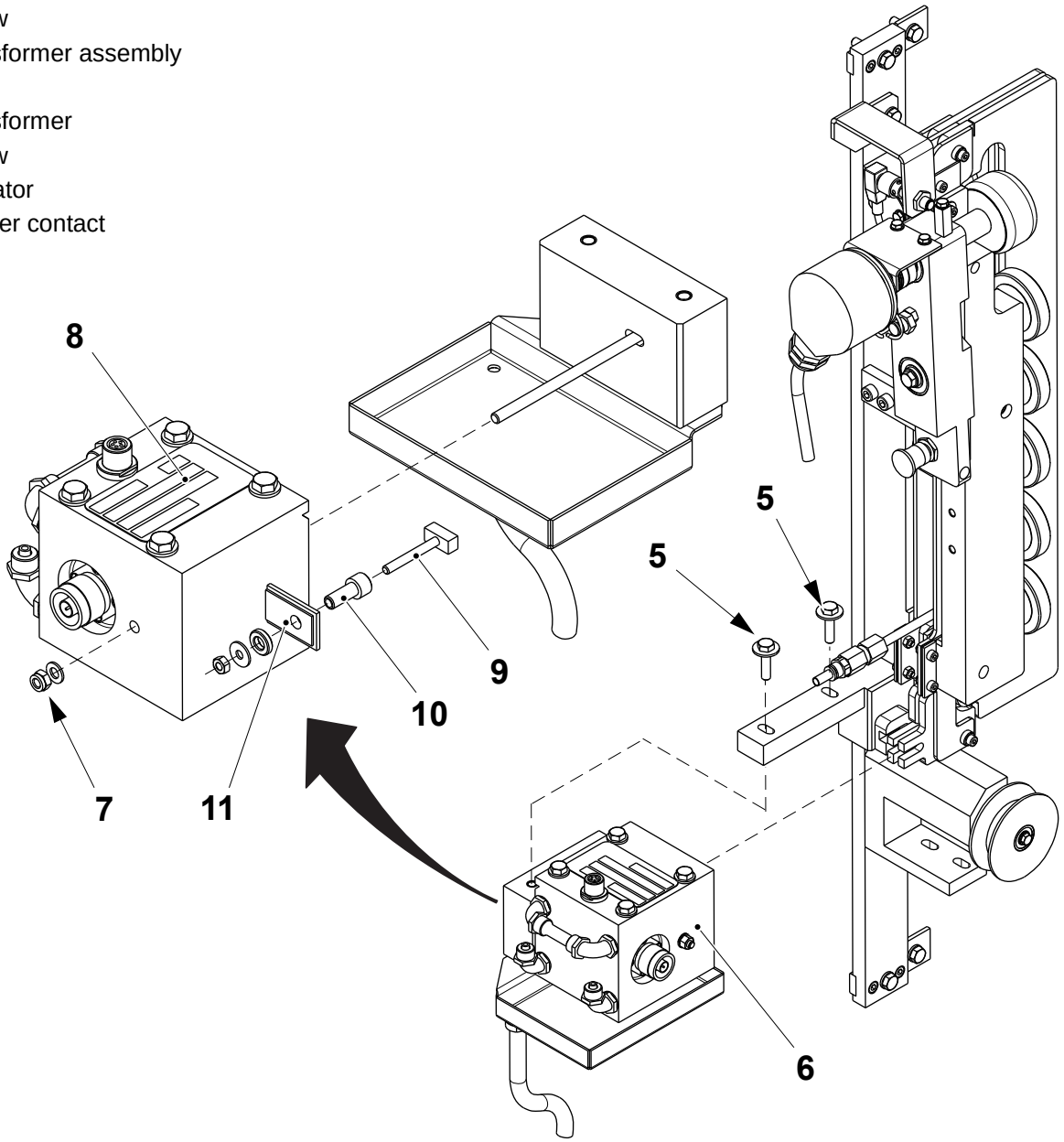

(Cont'd)

(Cont'd)

i) Assemble the new transformer (8) on the screw (12) without tightening the nut (7).

j) Push the transformer assembly (6) in the slot of the inductor plate (13) so that the copper contact (11) is as much as possible in contact with the inductor plate (13).

k) Tighten the nut (4)

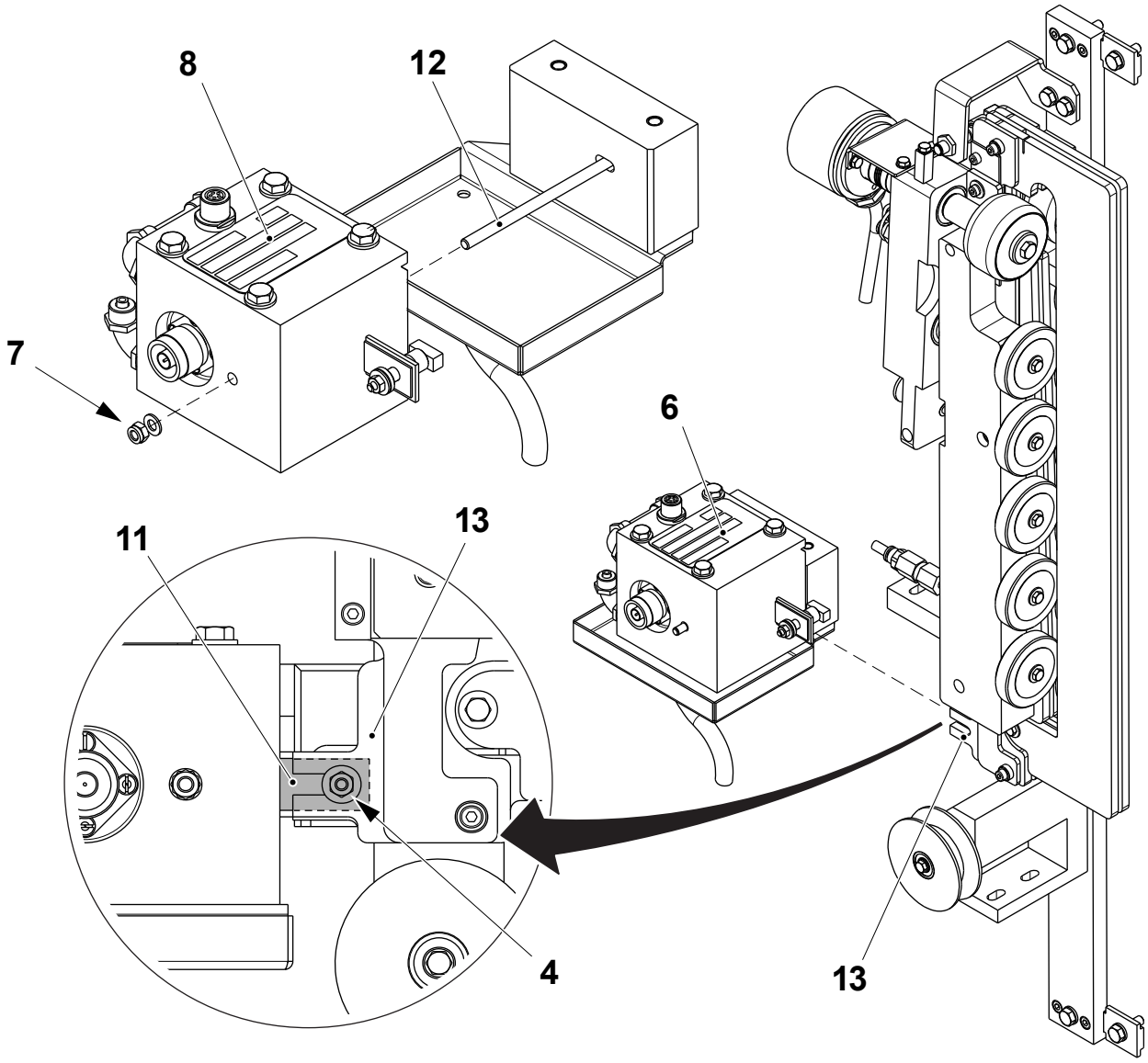

4 Nut
6 Transformer assembly
7 Nut
8 Transformer
11 Copper contact
12 Screw
13 Inductor plate

(Cont'd)

(Cont'd)

Note! Once the nuts (4) and (7) are tight, the transformer (8) is in the correct position. Do not overtighten the screws (5): the transformer (8) might be bent against the support (14).

l) Tighten the nut (7).

m) Tighten the screw (5) paying attention to not bend the transformer (8) against the support (14).

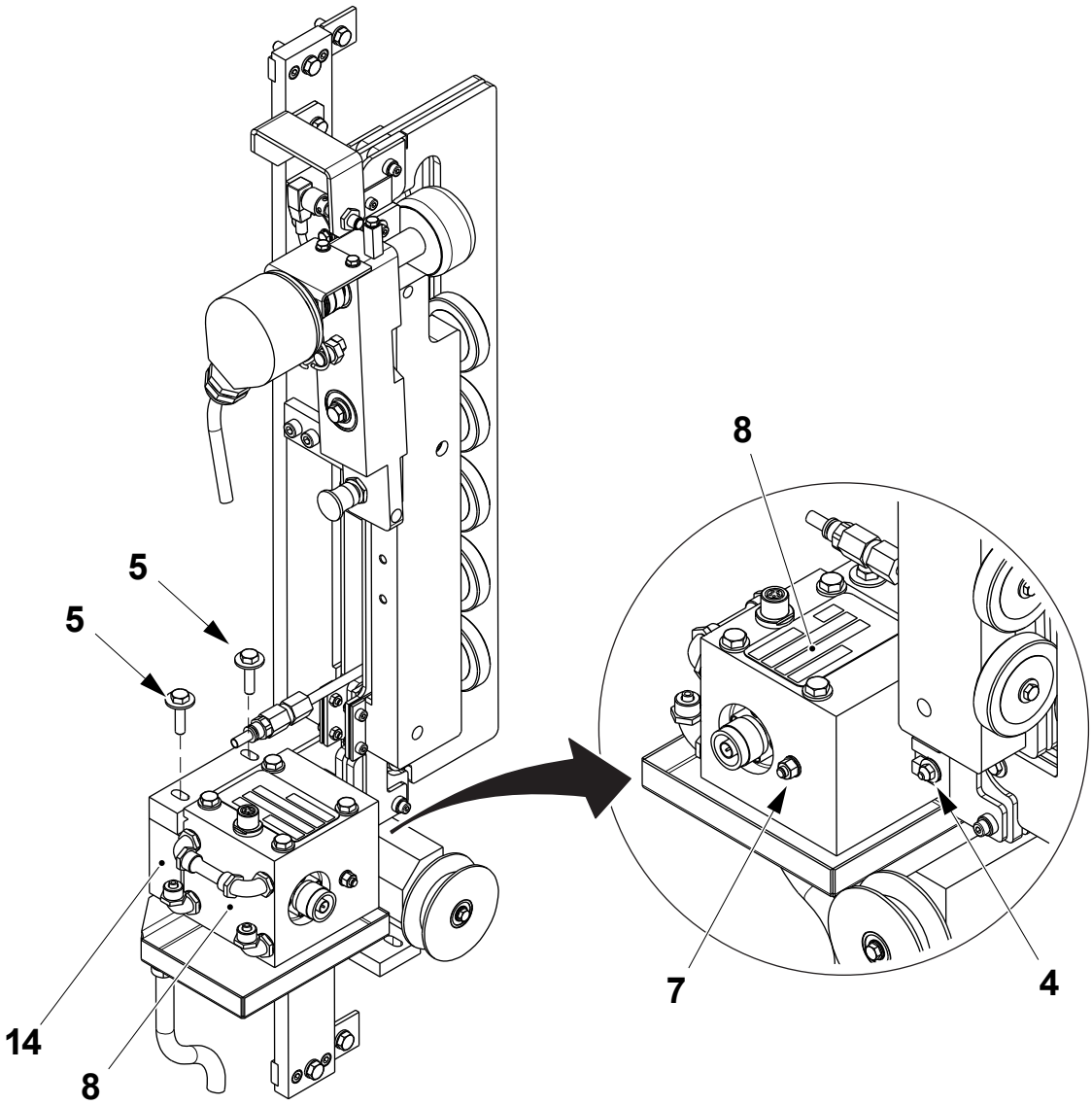

4 Nut
5 Screw
7 Nut
8 Transformer
14 Support

(Cont'd)

(Cont'd)

n) Fit back the cooling hoses (3).

o) Connect the coaxial cable (1) and the VMN cable (2).

p) Open the cooling water valves in the machine body.

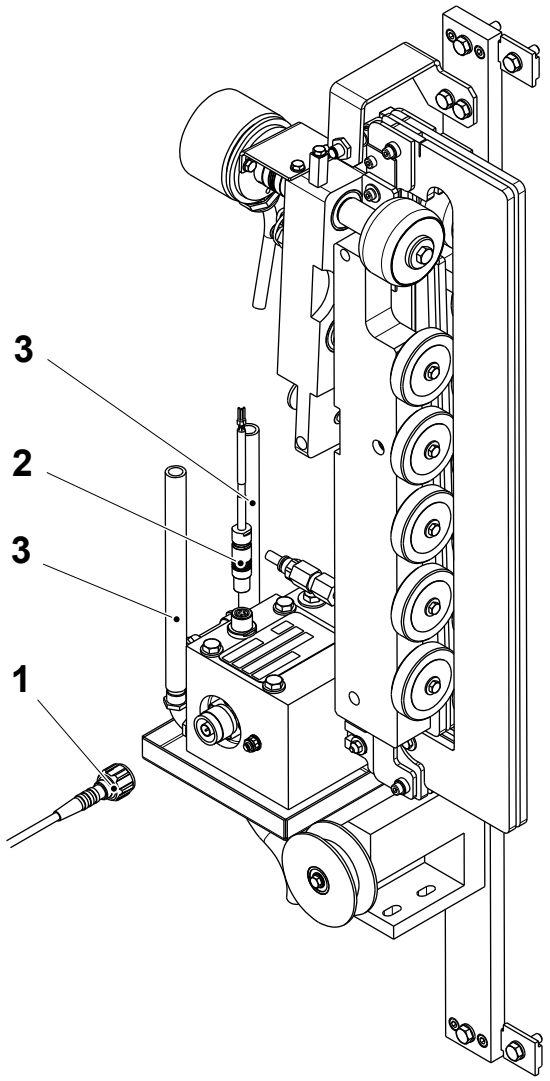

1 Coaxial cable
2 VMN cable
3 Hose

8.2.2-3 Inductor - Change Rollers

Machine Status	Mains Power OFF Air OFF Steam ON Water OFF
SPC Reference	2765668-0100

a) Remove the transformer (1), see 8.2.2-2 Inductor - Change Transformer.
b) Disconnect the encoder cable (2).
c) Remove the spring (3).
d) Remove the screw (4) and the roller assembly (5).
e) Place the roller assembly (5) on the work bench.
f) Remove the screws (6) and change the rollers (7).

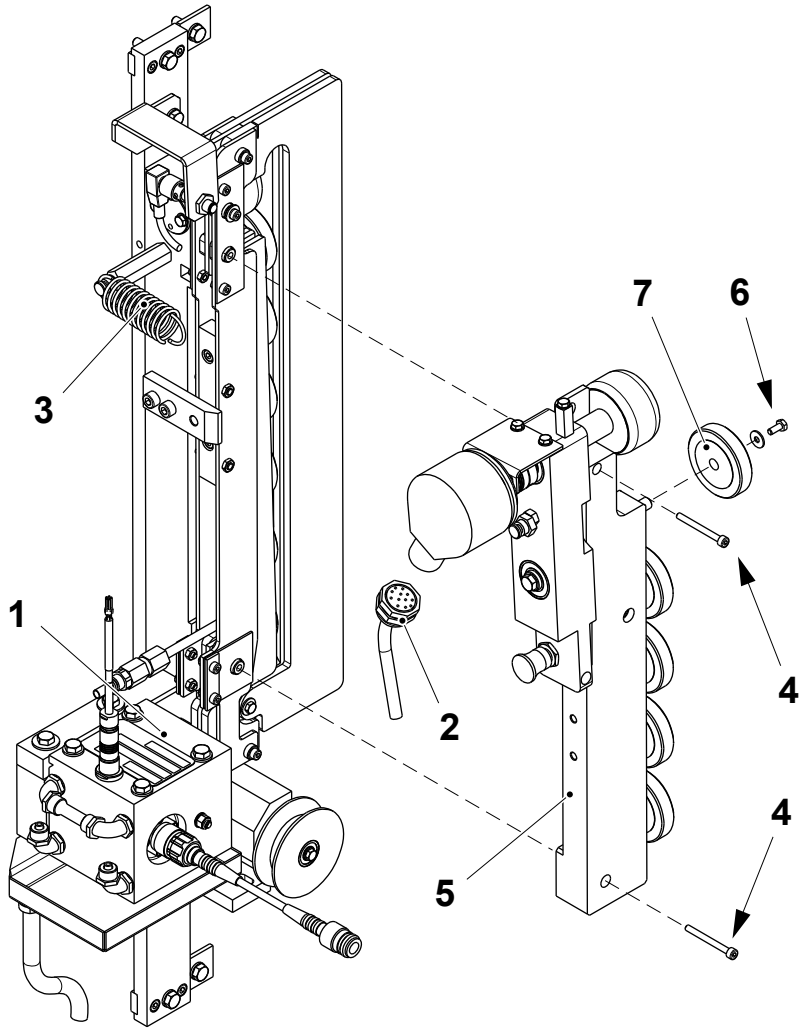

1 Transformer
2 Encoder cable
3 Spring
4 Screw
5 Roller assembly
6 Screw
7 Roller

(Cont'd)

(Cont'd)

g) Disconnect the air hose (8).
h) Remove the screw (9) and the inductor (10).
i) Remove the screws (11) and change the rollers (12).
j) Remove the screw (13) and change the counter roller (14).
k) Assemble in the reverse order.

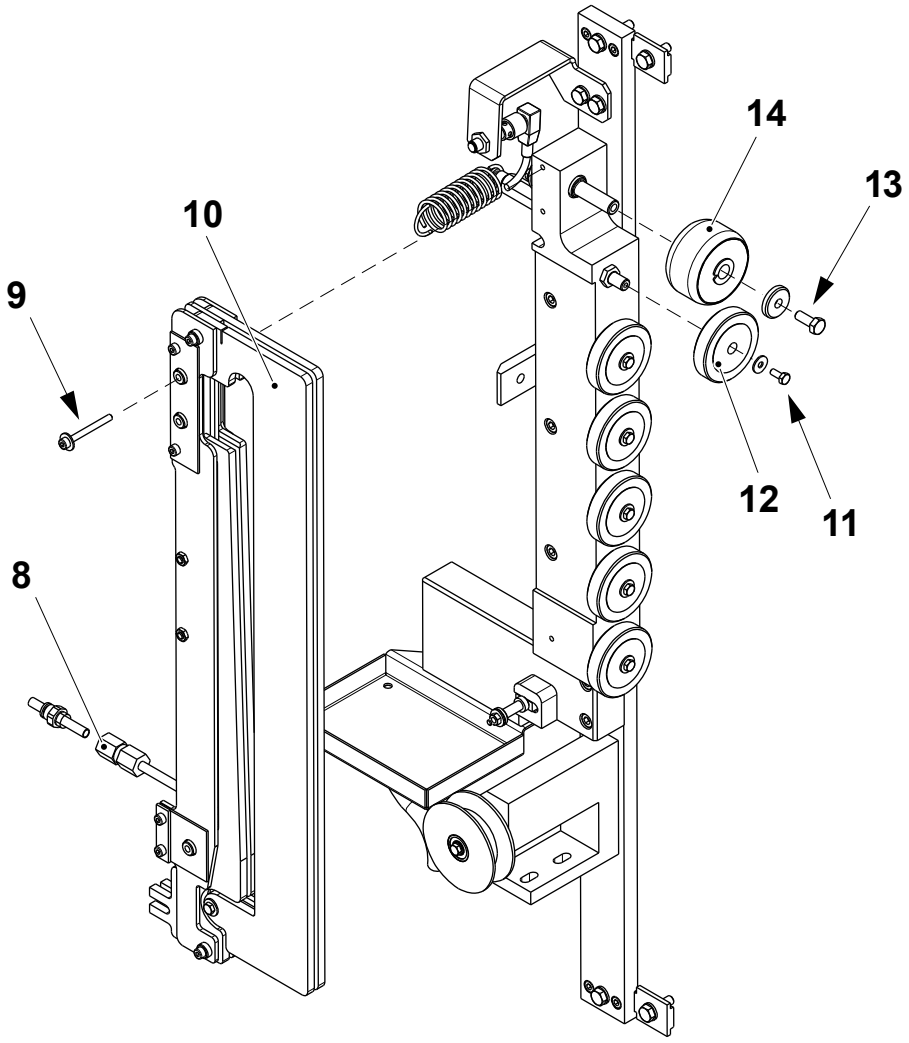

8 Air hose
9 Screw
10 Inductor
11 Screw
12 Roller
13 Screw
14 Counter roller

8.2.2-4 Inductor - Set Position

Machine Status	Mains Power OFF Air OFF Steam ON Water OFF
SPC Reference	2765668-0100

Remove the strip applicator plate and move it on the work bench.

Check that the plumb line (1) stretched over the rollers (2) is at the distance **A** from the inductor plates (3). If not, set the inductor position as follows.

A = 0.7 ÷ 1.0 mm

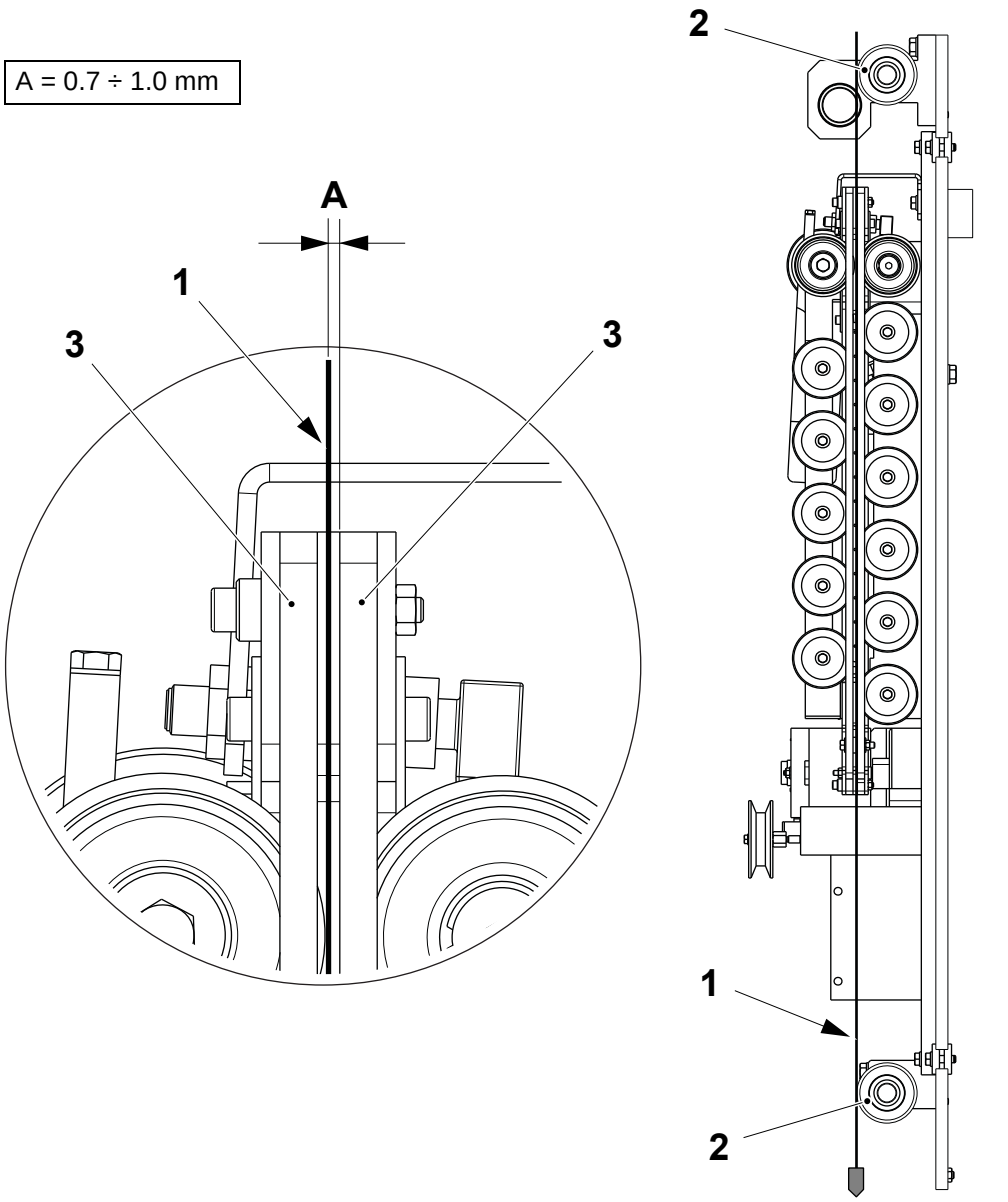

1 Plumb line
2 Roller
3 Inductor plate

(Cont'd)

(Cont'd)

a) Remove the transformer (4), see 8.2.2-2 Inductor - Change Transformer.
b) Remove the spring (5).
c) Remove the two screws (6) and the screw (7).
d) Remove the inductor assembly (8).
e) Add or remove shims (9) and (10) to move the inductor in order to obtain the distance **A**, see page 8-32.
f) Assemble in the reverse order.

4 Transformer
5 Spring
6 Screw
7 Screw
8 Inductor assembly
9 Shim
10 Shim

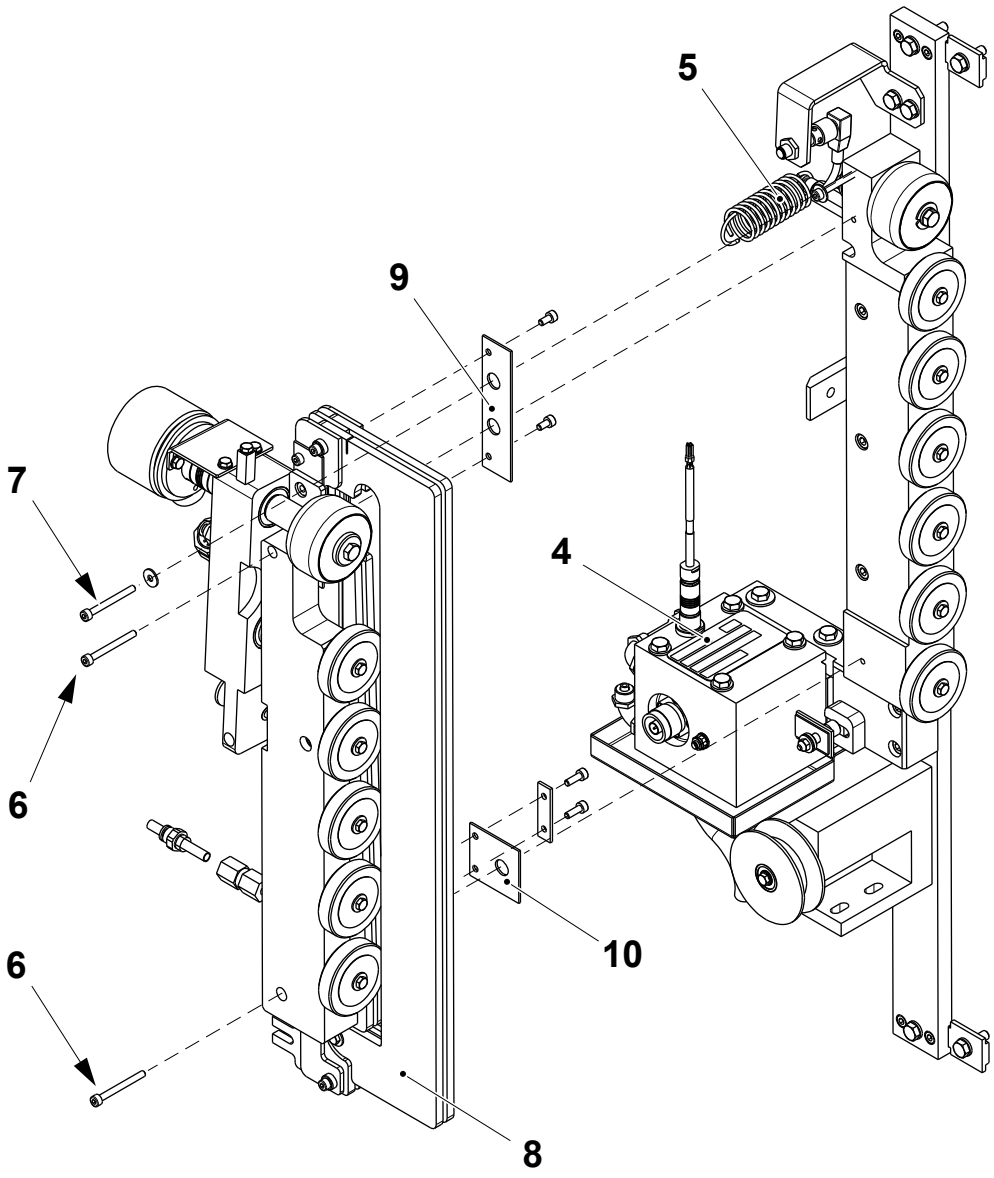

8.2.2-5 Inductor - Set Volume

Machine Status	Mains Power OFF Air OFF Steam ON Water OFF
SPC Reference	2765668-0100

Basic Setting

a) Loosen the screws (1) and (2).

b) Set the distance **A** between the edge of the fastening bracket (3) and the edge of the bottom panel (4).

c) Tighten the screws (1) and (2).

Package	**A ±1.0 (mm)**
TBA 1000 S	163
TBA 1000 Sq - TBA 500 Sq	168
TPA 1000 Sq	185
TBA 2000 S	123
TBA 1000 B - TBA 500 B	156

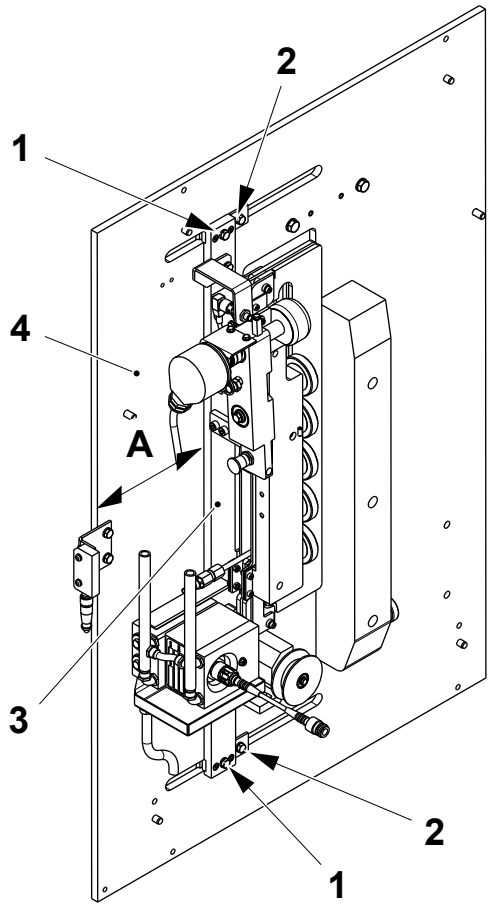

1 Screw
2 Screw
3 Fastening bracket
4 Bottom panel

(Cont'd)

(Cont'd)

Fine Setting

a) Step up the machine to TUBE SEALING.

b) Move the inductor (1) by the screws (2) and (3) so that:

- the packaging material edge (4) is aligned with the notch (5) on the top of the sealing plate
- the packaging material edge (4) is aligned with the bottom edge (6) of the sealing plate.

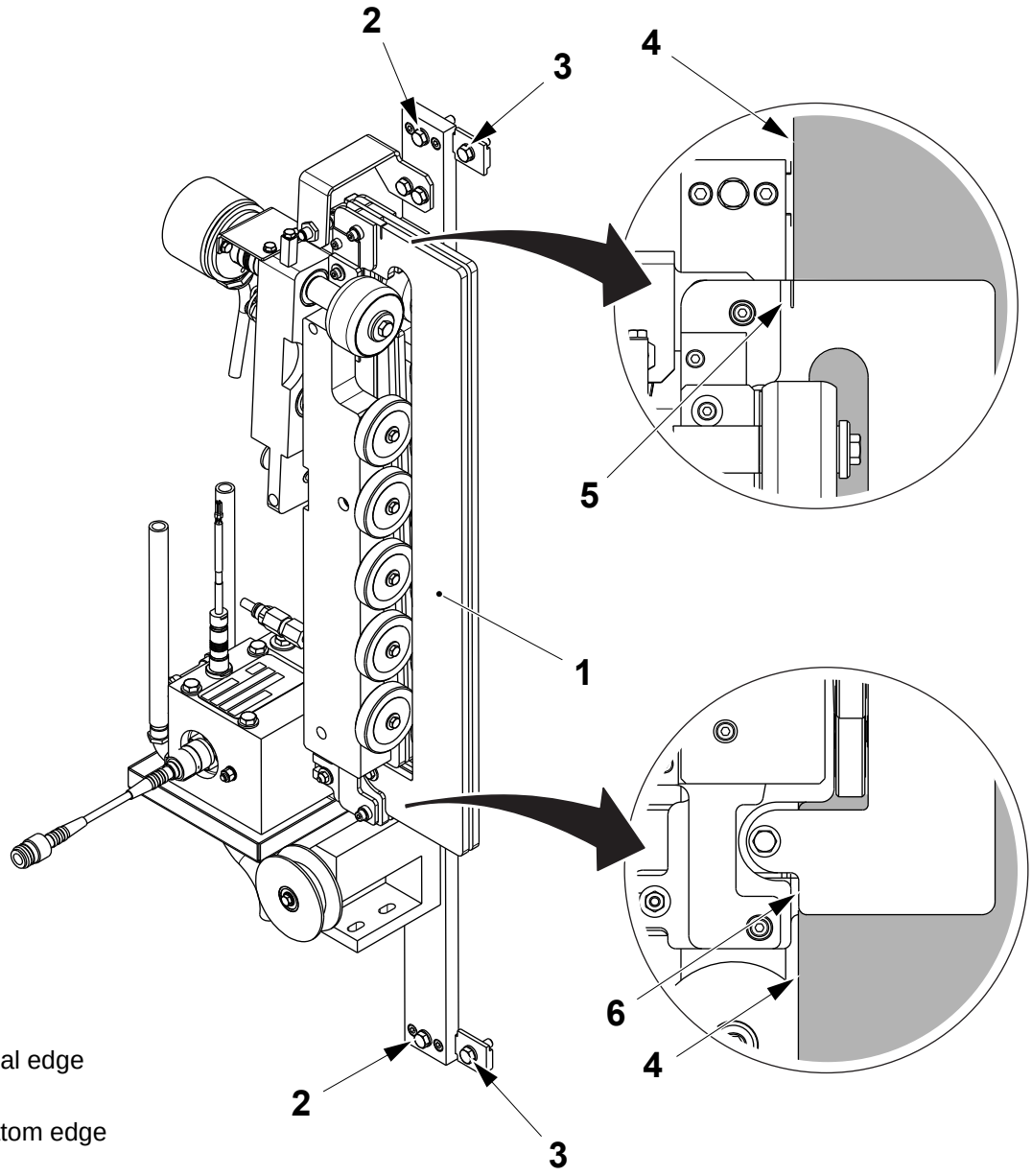

1 Inductor
2 Screw
3 Screw
4 Packaging material edge
5 Notch
6 Sealing plate, bottom edge

8.2.2-6 Inductor - Check Pressure Rollers

Machine Status	Mains Power OFF Air OFF Steam ON Water OFF
SPC Reference	2765668-0100

Check:

- the rollers (1) and (2) for excessive wear
- the roller (1) for radial play. The maximum allowable radial play is 0.3 mm
- that the rollers (1) and (2) rotate freely without play and the silicon rubber layer on the surface of each roller is undamaged.

If necessary, change the roller (1), see 8.2.2-7 Inductor - Change Pressure Rollers and the roller (2), see 8.2.2-3 Inductor - Change Rollers.

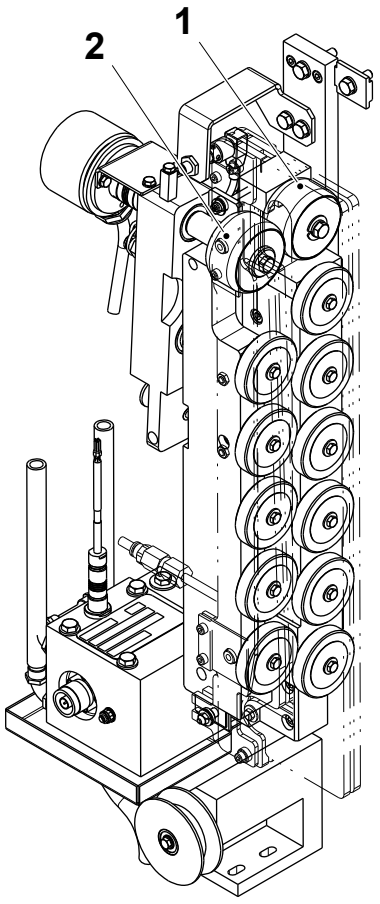

1 Roller
2 Roller

8.2.2-7 Inductor - Change Pressure Rollers

Machine Status	Mains Power OFF Air OFF Steam ON Water OFF
SPC Reference	2765668-0100

a) Open the rollers by the arm (1).

b) Hold the shaft (2) by a key, see arrow, and remove the screw (3) to change the pressure roller (4).

c) Remove the screws (5).

d) Remove the screws (6) and slip off the shaft (7) holding the roller (8) by hand.

e) Remove and change the roller (8).

f) Assemble in the reverse order.

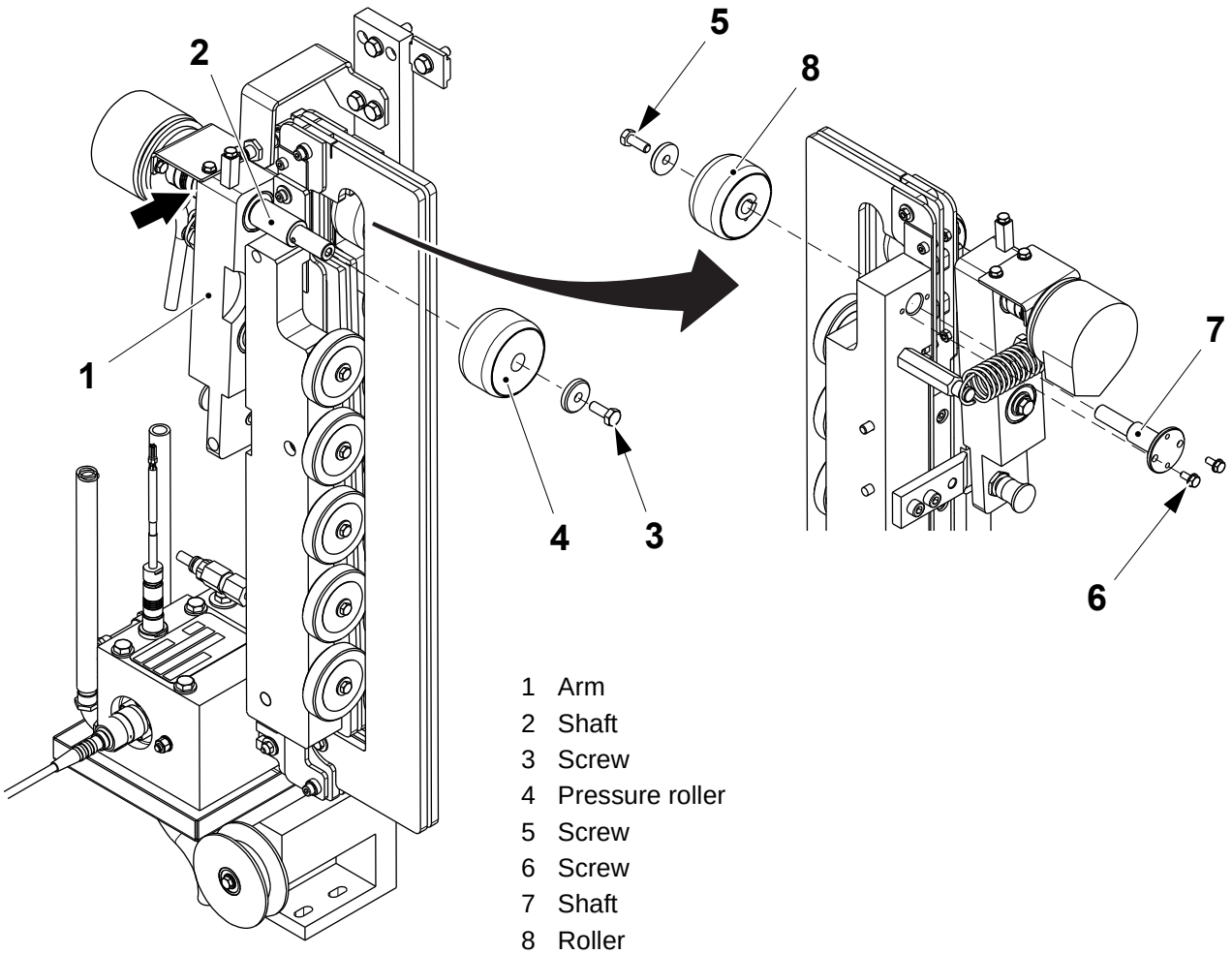

1 Arm
2 Shaft
3 Screw
4 Pressure roller
5 Screw
6 Screw
7 Shaft
8 Roller

8.2.2-8 Inductor - Set Pressure Roller

Machine Status	Mains Power OFF Air OFF Steam ON Water OFF
Special Equipment	Force gauge, TP No. 90459-1467
SPC Reference	2765668-0100

a) Insert a piece of packaging material (1) and a piece of LS strip (2) under the roller (3).

a) Fit the push force gauge in the groove (4) of the arm (5).

b) Push the arm (5) to measure the force of the spring (2).

c) Pull the LS strip (2) and push the arm (5) at the same time.

d) The spring force is the value displayed on the dynamometer when the LS strip (2) starts sliding. The value must be 25 N.

e) Set the tension of the spring (6) by turning the eccentric shaft (7).

Note! If a pull force gauge is used, pull the shaft (8): the spring force when the LS strip (2) starts sliding must be 21-22 MN.

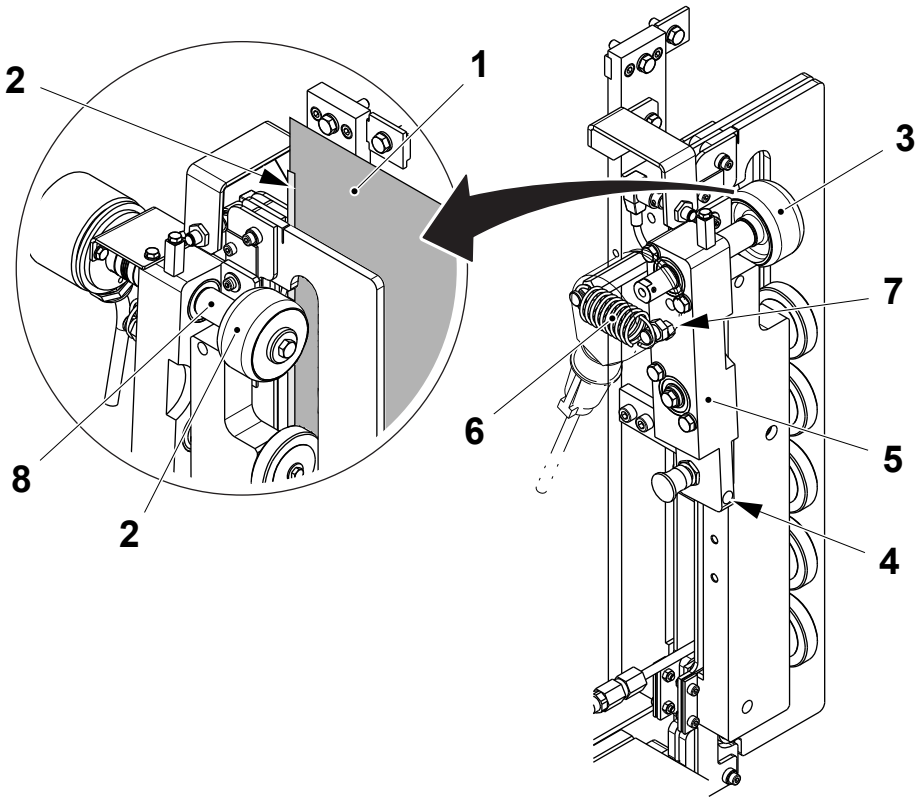

1 Packaging material
2 LS strip
3 Roller
4 Groove
5 Arm
6 Spring
7 Eccentric shaft
8 Shaft

8.2.2-9 Inductor - Set Proximity Switch

Machine Status	Mains Power ON Air OFF Steam ON Water OFF
SPC Reference	2765668-0100

a) Insert a piece of packaging material (1) under the roller (2).

b) Loosen the nuts (3).

c) Set the distance **A** between the head of the proximity switch (4) and the cam (5) by moving the proximity switch (4).

d) Tighten the nuts (3).

Note! Make sure that the LED on the proximity switch (4) is still lit when manually moving the roller (2) sideways.

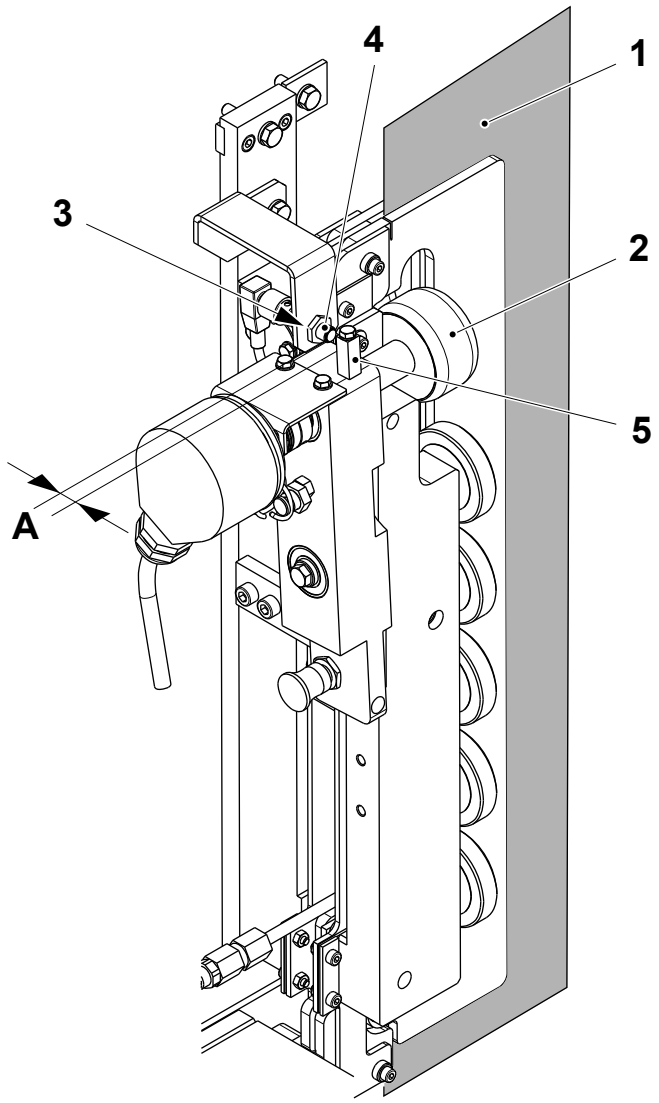

A = 0.5 to 1.0 mm

1 Packaging material
2 Roller
3 Nut
4 Proximity switch
5 Cam

8.2.2-10 Inductor - Change Adhesive Tape

Machine Status	Mains Power ON Air OFF Steam ON Water OFF
Special Equipment	Tape, TP No. 2507111-0000
SPC Reference	2765668-0100

a) Remove the inductor (1), see 8.2.2-3 Inductor - Change Rollers and place it on the work bench.

b) Remove the external screws (2) and all the spacers (3).

c) Extract the sealing plates (4).

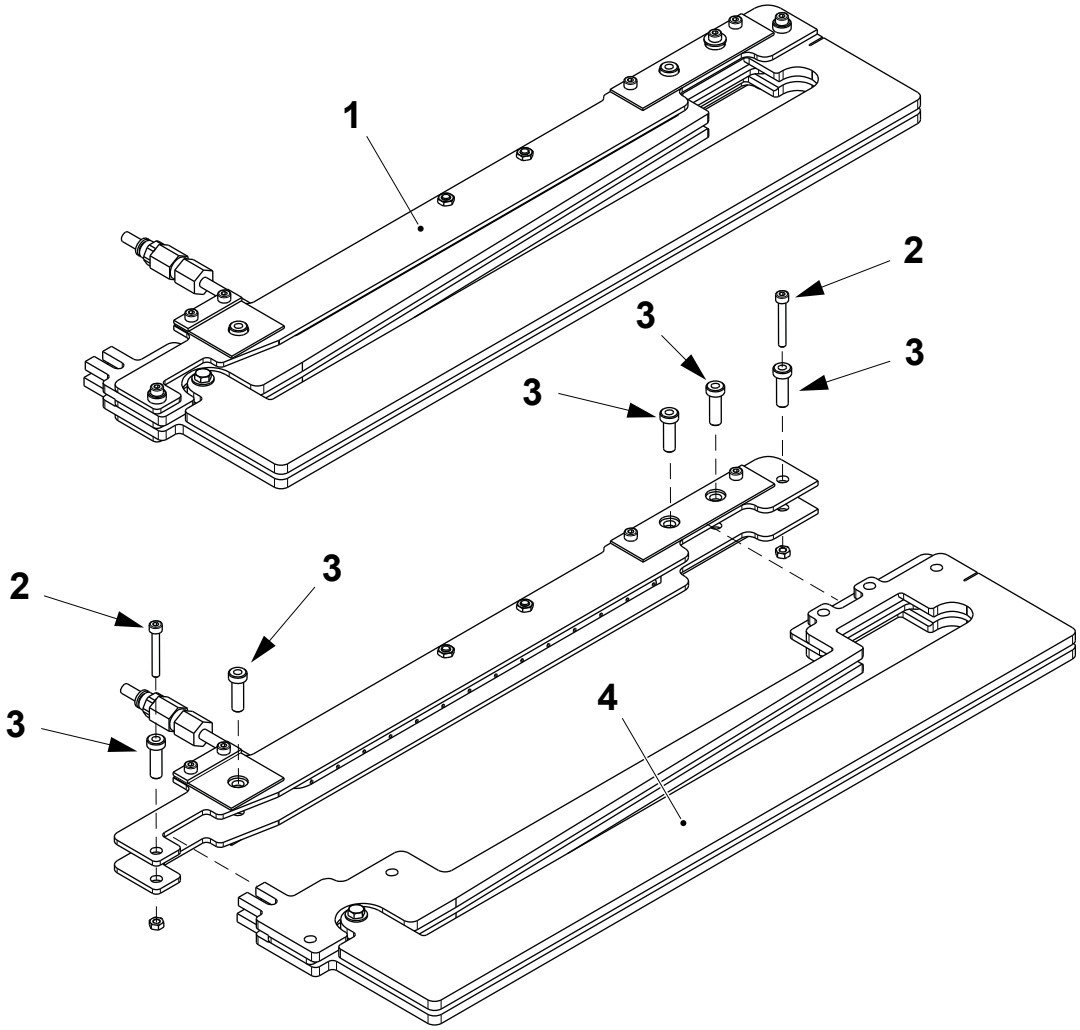

1 Inductor
2 Screw
3 Spacer
4 Sealing plate

(Cont'd)

(Cont'd)

d) Remove the screw (5).

e) Separate the sealing plates (4) from the insulating plates (6) and (7).

f) Remove the worn adhesive teflon tape from the internal surface of each sealing plate (4).

g) Clean the internal surface of each sealing plate (4) with an alcoholic detergent and a non-metallic object.

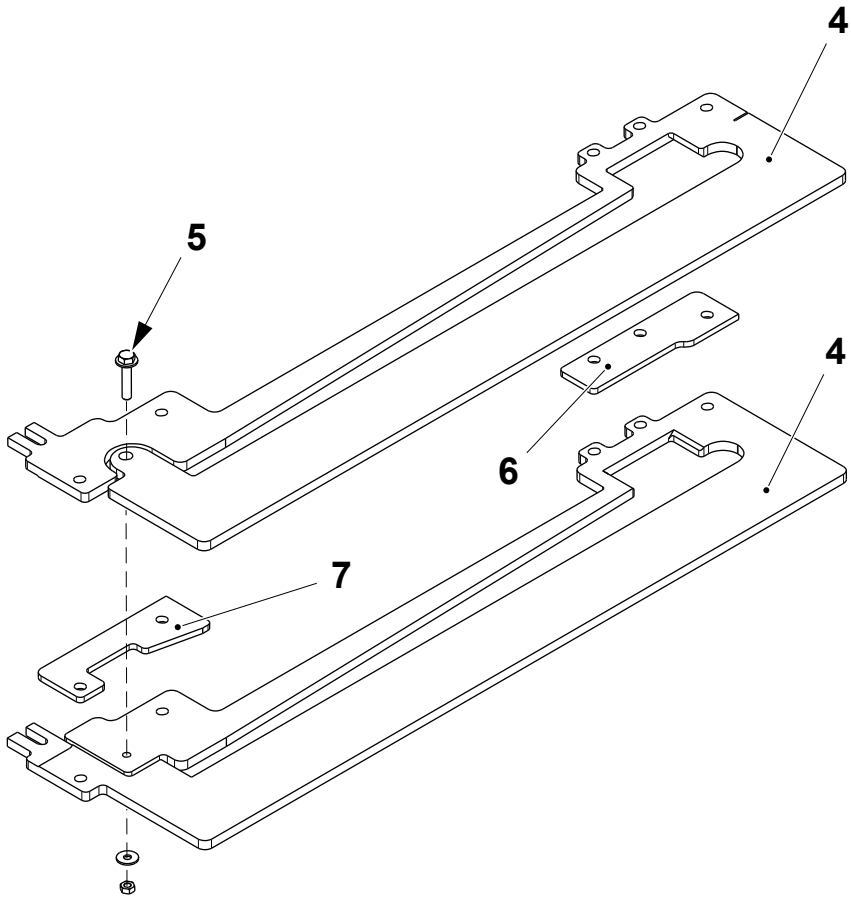

4 Sealing plate
5 Screw
6 Insulating plate
7 Insulating plate

(Cont'd)

(Cont'd)

Note! The adhesive teflon tape must be applied carefully avoiding to leave air bubbles or scrapes. Use a teflon plate so that the tape adheres perfectly on the surfaces.

h) Apply the adhesive teflon tape TP No. 2507111-0000 on the internal surface of each sealing plate, just on the areas shown as grey (8).

i) Cut the exceeding adhesive teflon tape along the edge of the sealing plates.

Note! Pay attention to not apply the adhesive teflon tape on the area in contact with the insulating plates (6) and (7).

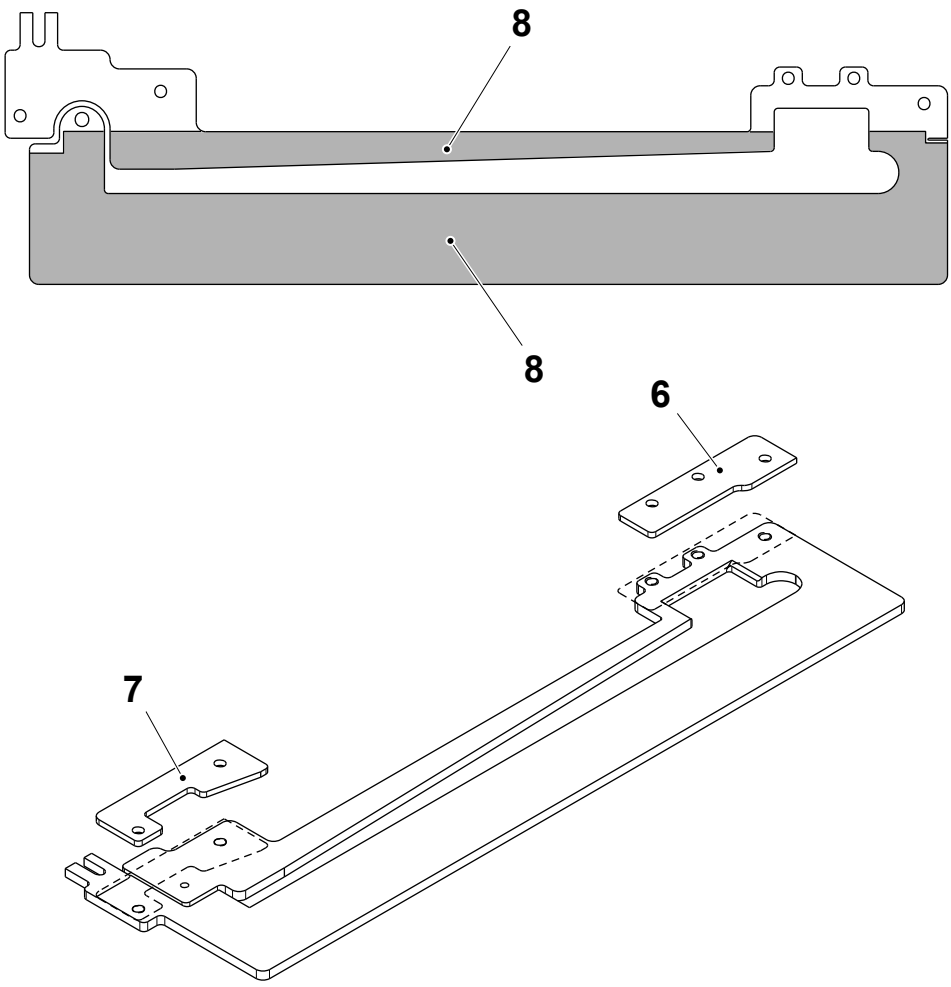

6 Insulating plate
7 Insulating plate
8 Adhesive teflon tape area

(Cont'd)

(Cont'd)

j) Assemble in the reverse order without tightening the external screws (2) and the screw (5).

k) With the aid of a spacer, set the distance **A** between the sealing plate edges (9) and (10).

l) Tighten the screw (5).

m) Tighten the external screws (2).

n) Assemble the inductor on the strip applicator, following 8.2.2-3 Inductor - Change Rollers in the reverse order.

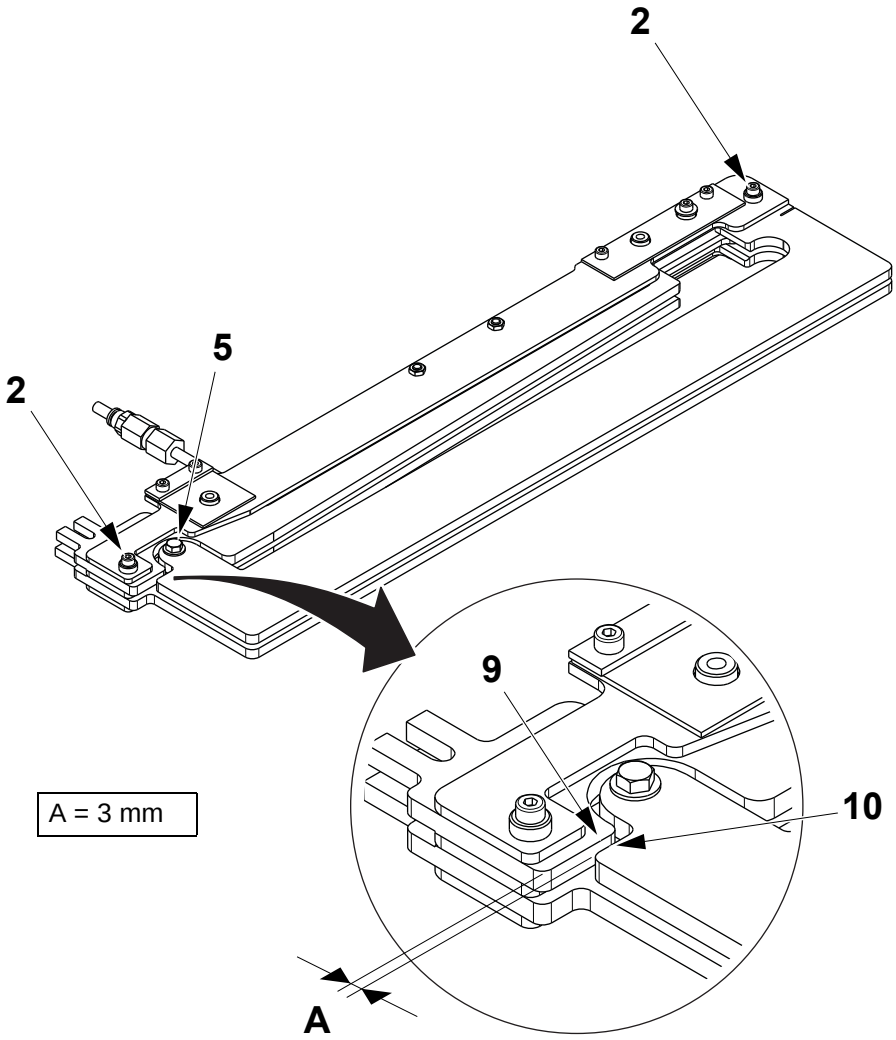

2 Screw
4 Sealing plate
5 Screw
9 Sealing plate edge
10 Sealing plate edge

8.2.2-11 Inductor - Change Pulley Ball Bearings

Machine Status	Mains Power OFF Air OFF Steam ON Water OFF
SPC Reference	2765668-0100

a) Remove the screw (1) and the pulley (2).

b) Change the ball bearings (3).

c) Fit back the pulley (2) by the screws (1).

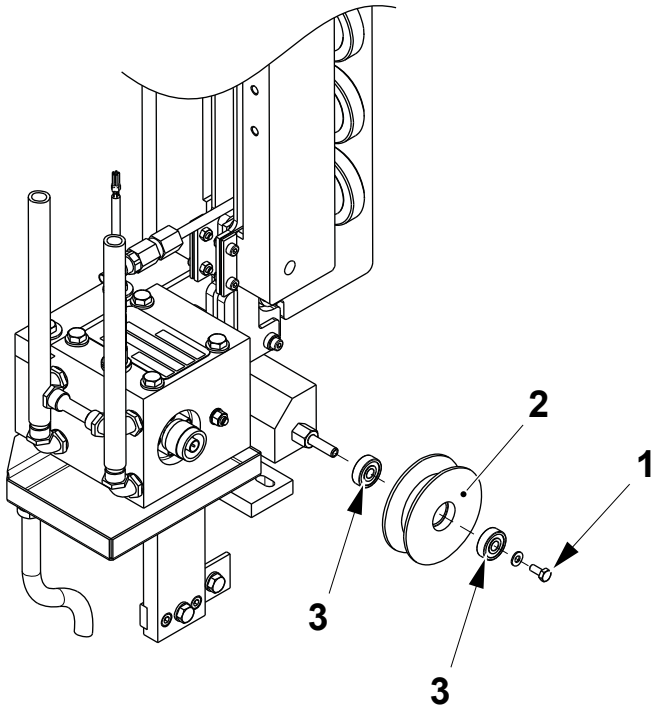

1 Screw
2 Pulley
3 Ball bearings

8.2.3 Strip Guide

8.2.3-1 Strip Guide - Check

Machine Status	Mains Power OFF Air OFF Steam ON Water OFF
SPC Reference	2806658-0100

Check that:

- the guide wheel (1) and the rollers (2) rotate freely. The rollers (2) may have a maximum radial play of 1.0 mm and a maximum axial play of 0.5 mm. If necessary, change the guide wheel (1) and the rollers (2).
- the surfaces of the guide wheel (1) and the rollers (2) are undamaged
- the LS strip lies in the centre of the rollers (2). If not, adjust the position of the rollers, see 8.2.3-2 Strip Guide - Set.

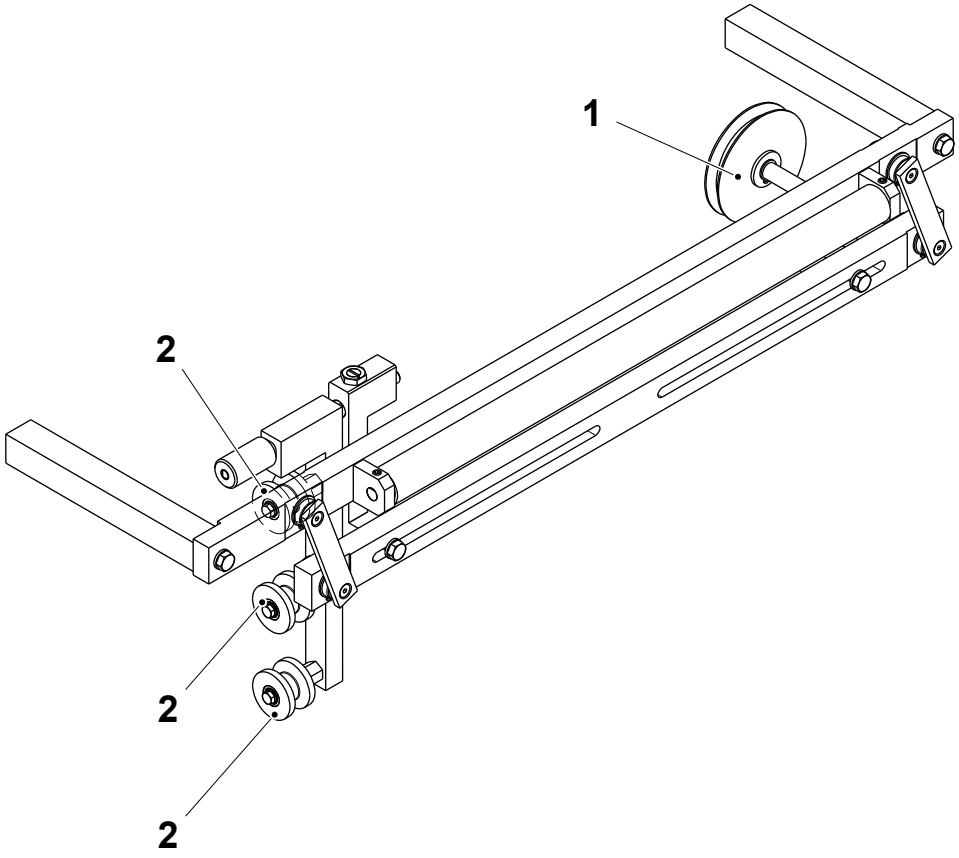

1 Guide wheel
2 Roller

8.2.3-2 Strip Guide - Set

Machine Status	Mains Power OFF Air OFF Steam ON Water OFF
SPC Reference	2806658-0100

a) Remove the screws (1) and the strip guide (2).

b) Place the strip guide (2) on the work bench.

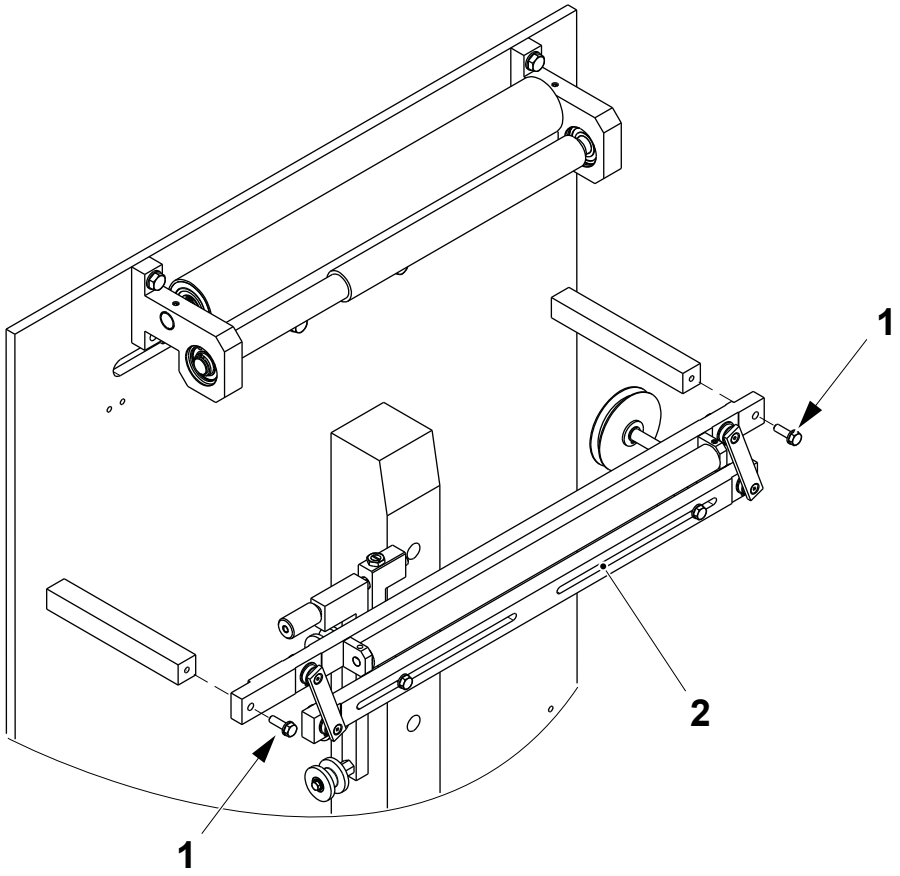

1 Screw
2 Strip guide

(Cont'd)

(Cont'd)

c) Loosen the screws (3) and (4).

d) Set the distance **A** between the bracket (5) and the end of the rod (6) by moving the bracket (5).

e) Tighten the screw (3).

Package	**A ±0.5 (mm)**
TBA 1000 S	76
TBA 1000 Sq - TBA 500 Sq	86
TBA 2000 S	40
TPA 1000 Sq	100
TBA 1000 B - TBA 500 B	75

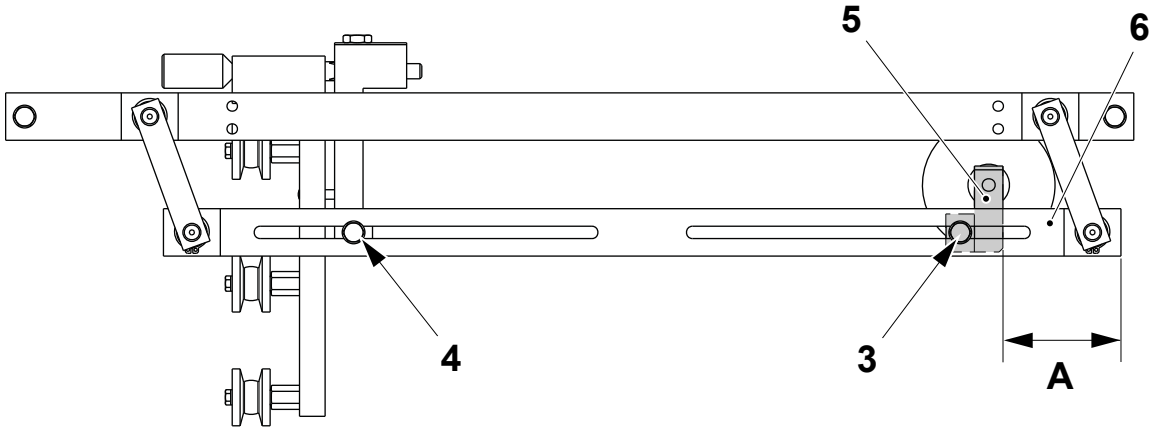

3 Screw
4 Screw
5 Bracket
6 Rod

(Cont'd)

(Cont'd)

f) Set the distance **B** between the bracket (5) and the bracket (7) by moving the rod (6).

g) Tighten the screw (4).

h) Set the distance **C** between the brackets (7) and the support (8) by turning the adjusting screw (7).

Package	B ±0.5 (mm)	C ±1.0 (mm)
TBA 1000 S	269	6
TBA 1000 Sq - TBA 500 Sq	255	6
TBA 2000 S	348	6
TPA 1000 Sq	223	6
TBA 1000 B - TBA 500 B	284	6

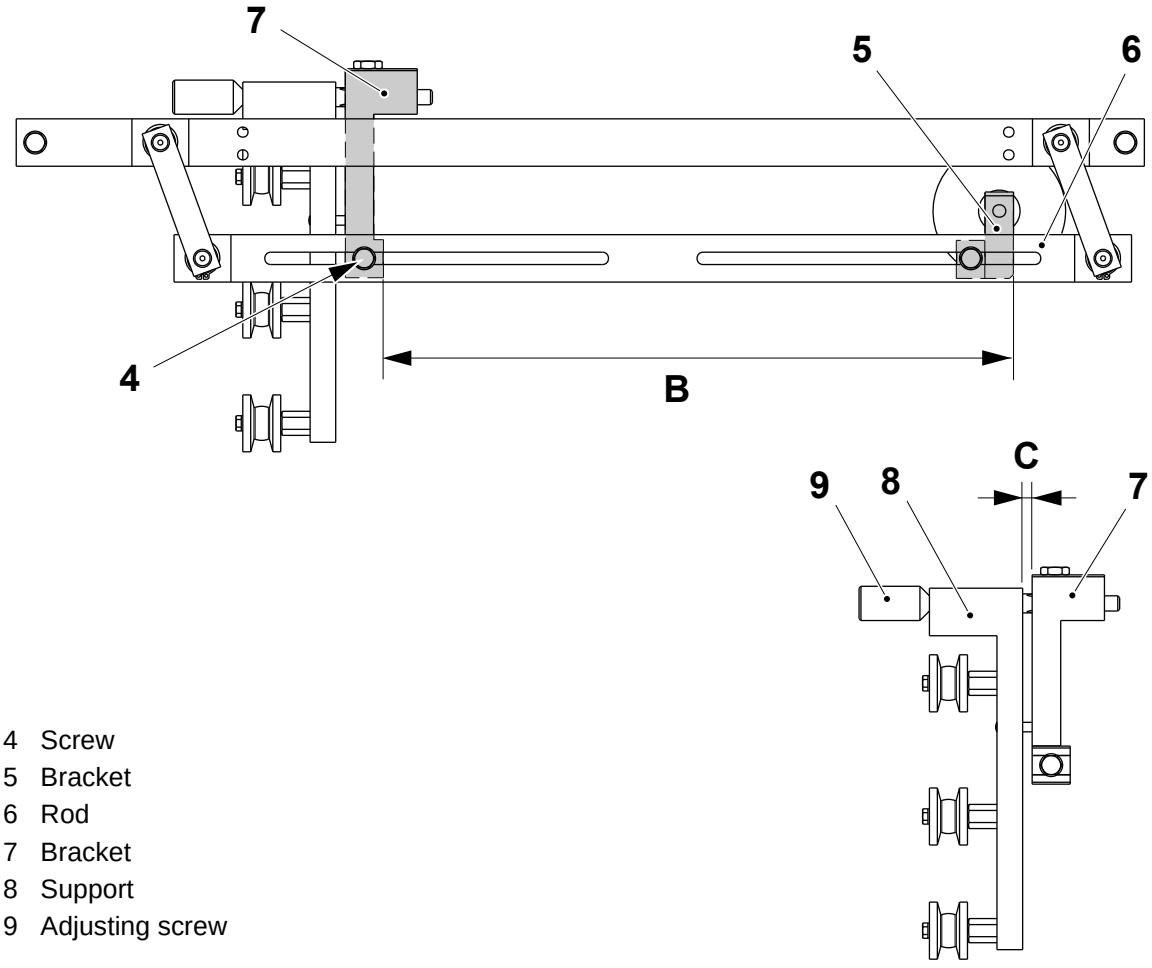

4 Screw
5 Bracket
6 Rod
7 Bracket
8 Support
9 Adjusting screw

(Cont'd)

(Cont'd)

i) During PRODUCTION, check that the strip (10) is positioned symmetrically over the edge of the packaging material (11). If necessary, adjust the strips position by turning the adjusting screw (9).

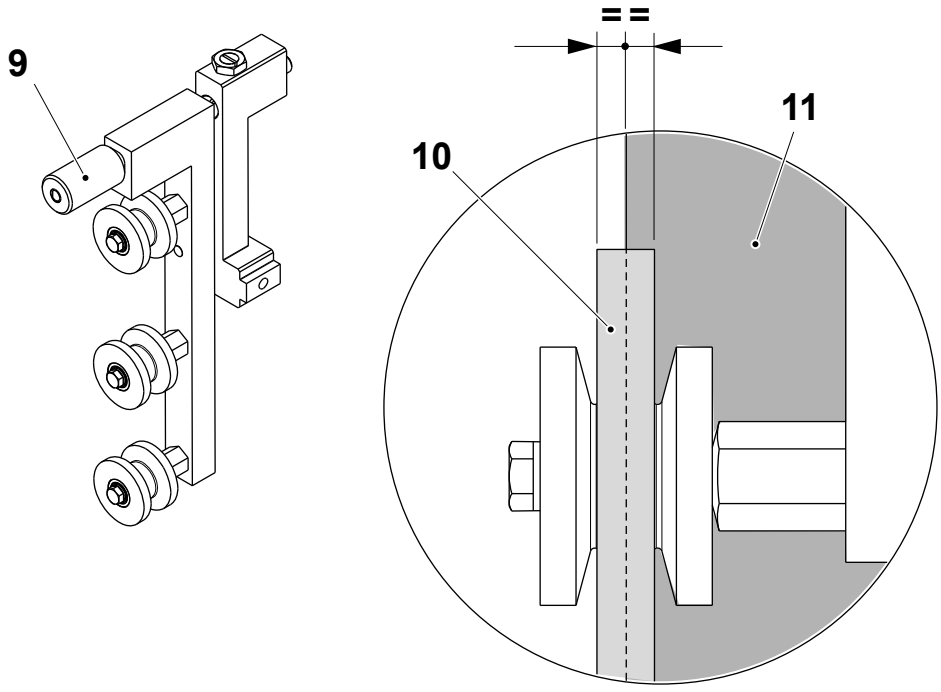

9 Adjusting screw
10 Strip
11 Packaging material

8.2.3-3 Strip Guide - Change Guide Wheel Ball Bearing

Machine Status	Mains Power OFF Air OFF Steam ON Water OFF
SPC Reference	2806658-0100

a) Remove the screws (1) and bring the strip guide (2) on the work bench.
b) Remove the nut (3), the washer (4) and extract the guide wheel (5).
c) Remove the retaining ring (6) and change the ball bearing (7).
d) Assemble in the reverse order.

1 Screw
2 Strip guide
3 Nut
4 Washer
5 Guide wheel
6 Retaining ring
7 Ball bearing

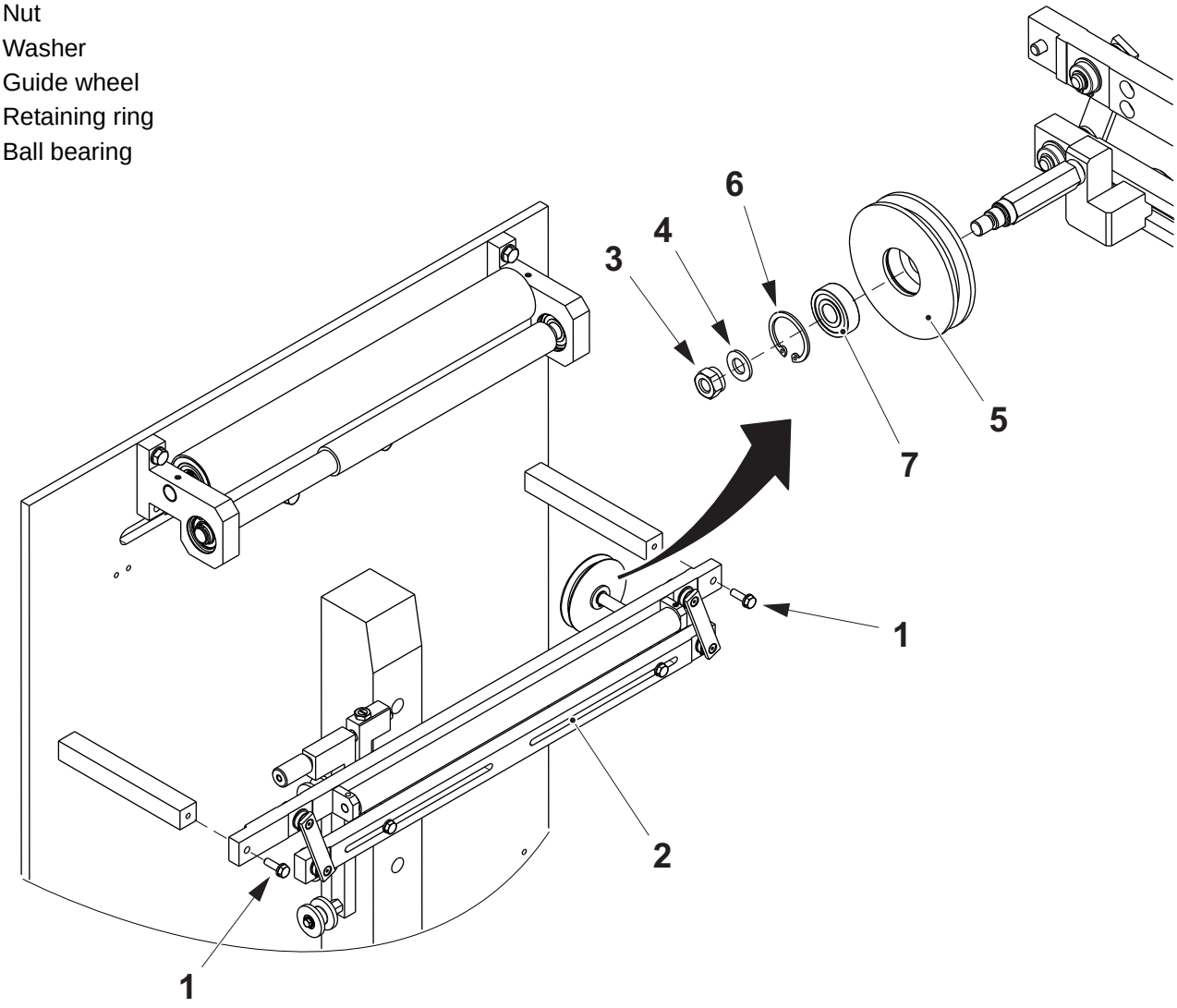

8.2.4 Rollers

8.2.4-1 Rollers - Change Bearings

Machine Status	Mains Power OFF Steam OFF Water OFF Air OFF
SPC Reference	2771065-0100 2771070-0100 2863550-0100

Remove and place on the work bench:

- the screws (1) and the upper roller assembly (2)
- the screws (3) and the lower roller assembly (4)
- the screws (5) and the middle roller assembly (6).

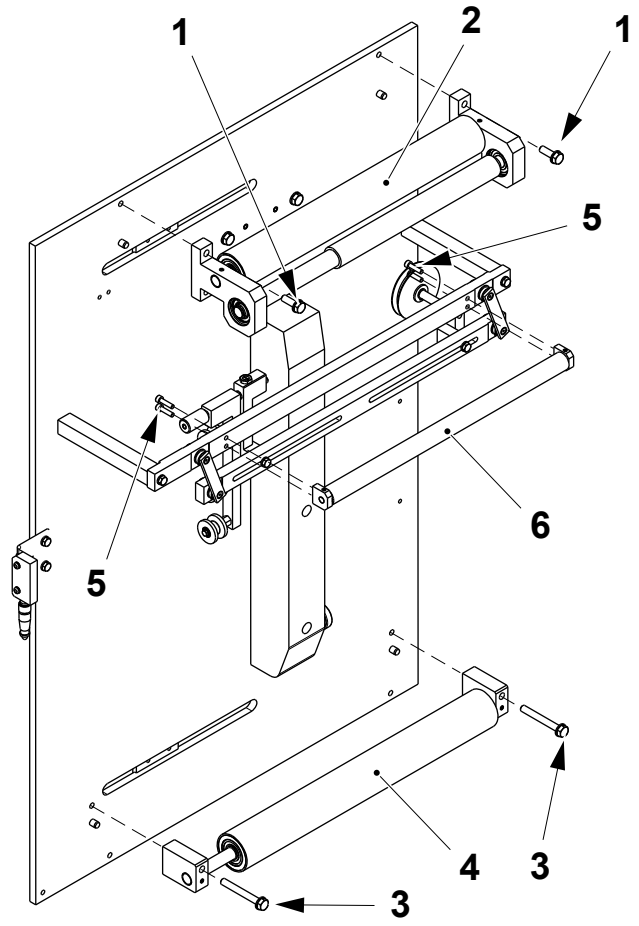

1 Screw
2 Upper roller assembly
3 Screw
4 Lower roller assembly
5 Screw
6 Middle roller assembly

(Cont'd)

(Cont'd)

Upper Roller

a) Remove the retaining rings (1) and (2).
b) Loosen the grub screws (3).
c) Pull the supports (4) off the rollers (5) and (6).
d) Extract and change the ball bearings (7).
e) Remove the retaining rings (8).
f) Extract and change the ball bearings (9).
g) Assemble in the reverse order.

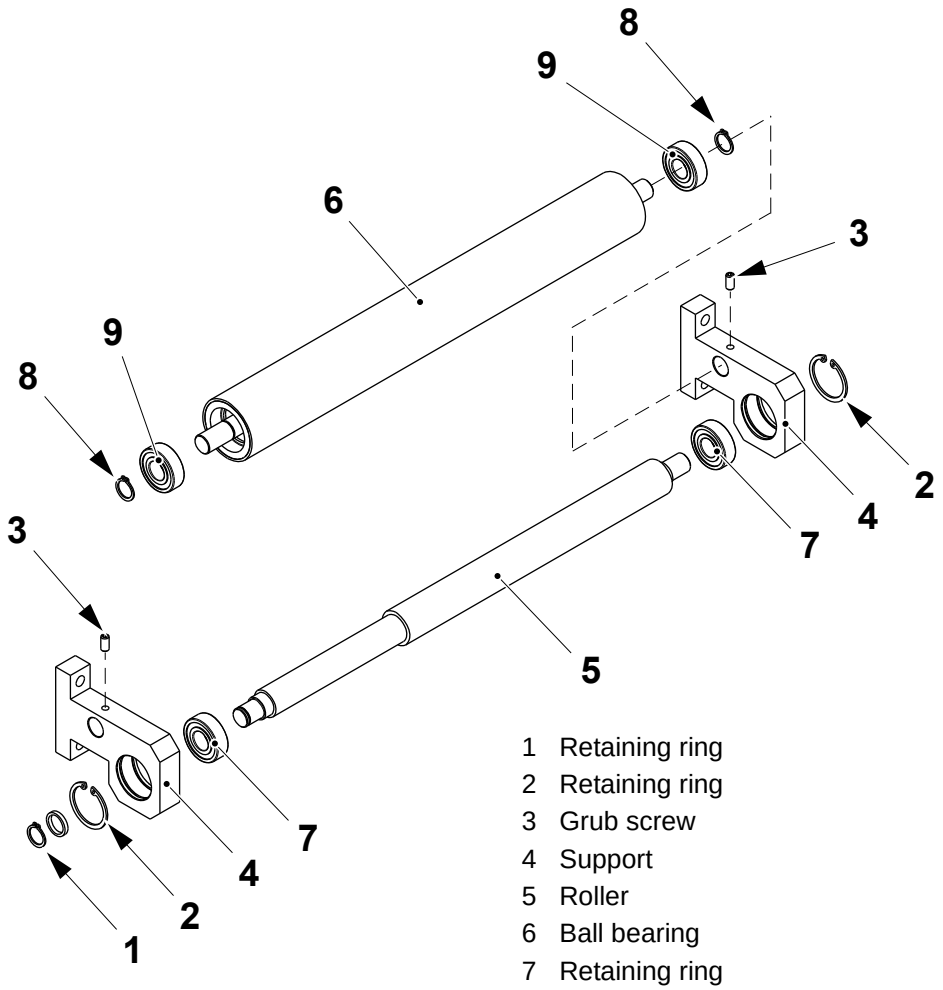

1 Retaining ring
2 Retaining ring
3 Grub screw
4 Support
5 Roller
6 Ball bearing
7 Retaining ring
8 Retaining ring
9 Ball bearing

(Cont'd)

(Cont'd)

Lower Roller

a) Loosen the grub screws (1).

b) Pull the supports (2) off the roller (3).

c) Remove the retaining rings (4).

d) Extract and change the ball bearings (5).

e) Assemble in the reverse order.

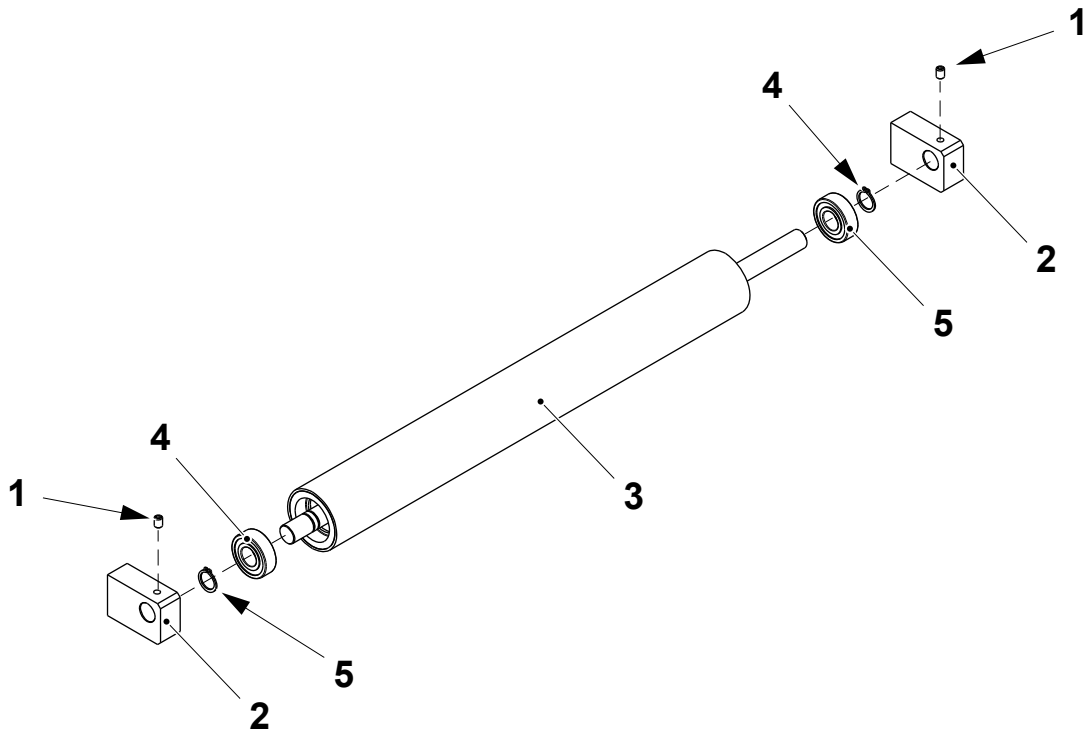

1 Grub screw
2 Support
3 Roller
4 Retaining ring
5 Ball bearing

(Cont'd)

(Cont'd)

Middle Roller

a) Loosen the grub screw (1)

b) Pull the brackets (2) out of the roller (3).

c) Remove the pins (4).

d) Remove and change the ball bearings (5).

e) Assemble in the reverse order.

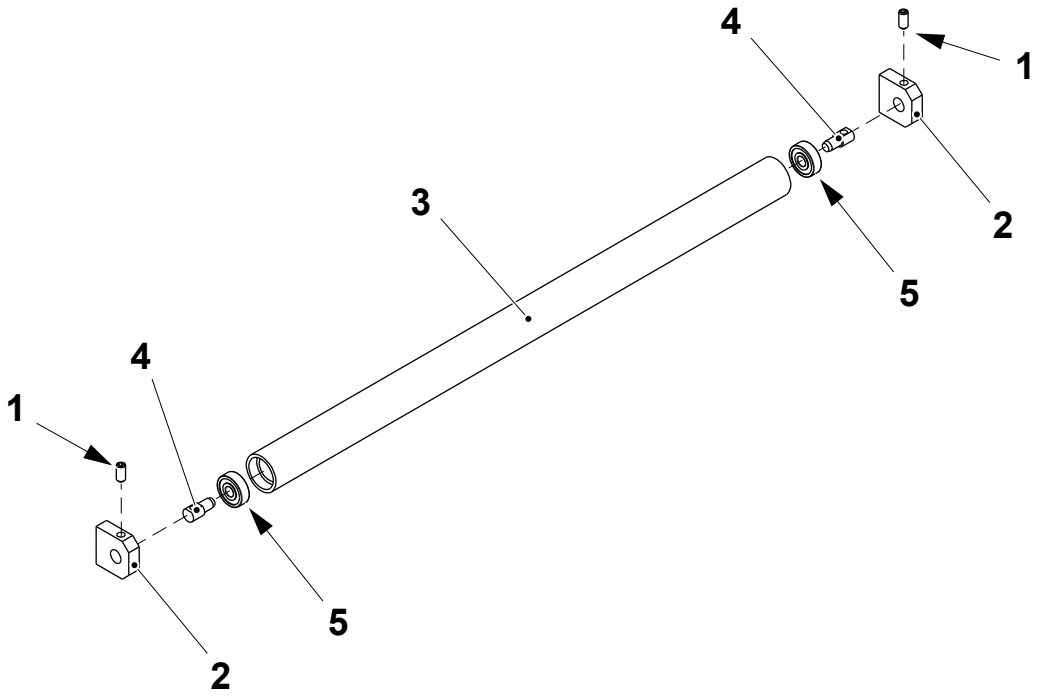

1 Grub screw
2 Bracket
3 Roller
4 Pin
5 Ball bearing

8.2.5 Bending Roller

8.2.5-1 Bending Roller - Change Bearings

Machine Status	Mains Power OFF Steam OFF Water OFF Air OFF
SPC Reference	2771081-0100

a) Remove the screw (1).

b) Remove the roller (2) and the bearings (3).

c) Change the bearings (3).

d) Assemble in the reverse order.

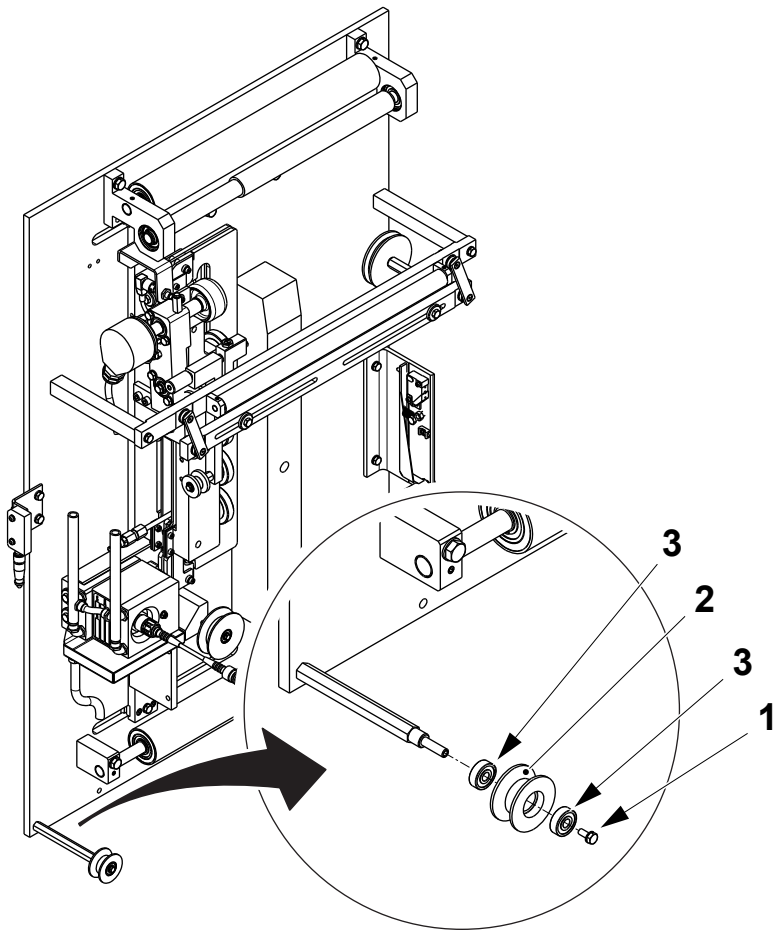

1 Screw
2 Roller
3 Bearing

8.3 Strip Magazine

SPC Reference	2843884-0100

8.3-1 Strip Magazine - Check Rollers

Machine Status	Mains Power OFF Air OFF Steam ON Water OFF
SPC Reference	2843884-0100

Check that:

- all the rollers in the strip magazine (marked in the picture below by the dashed line) are intact and rotate freely. If necessary, remove the screw (1) and change the ball bearings (2) and the roller (3)
- the rollers are free from strip material. Clean the rollers if necessary.

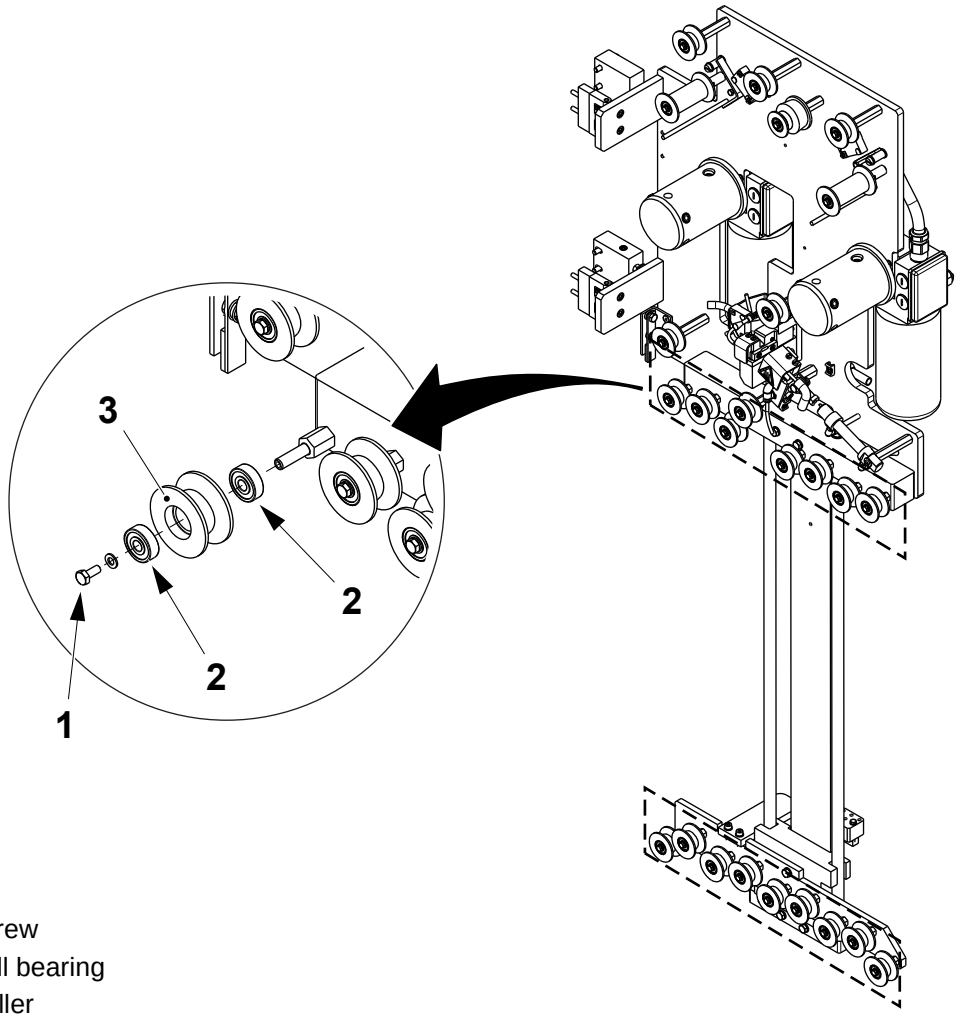

1 Screw
2 Ball bearing
3 Roller

8.3-2 Strip Magazine - Change Transducer

Machine Status	Mains Power OFF Air OFF Steam ON Water OFF
SPC Reference	2843884-0100

a) Disconnect the electrical connection (1).

b) Remove the screws (2) and the transducer (3).

c) Slip off the clamps (4) and change the transducer (3).

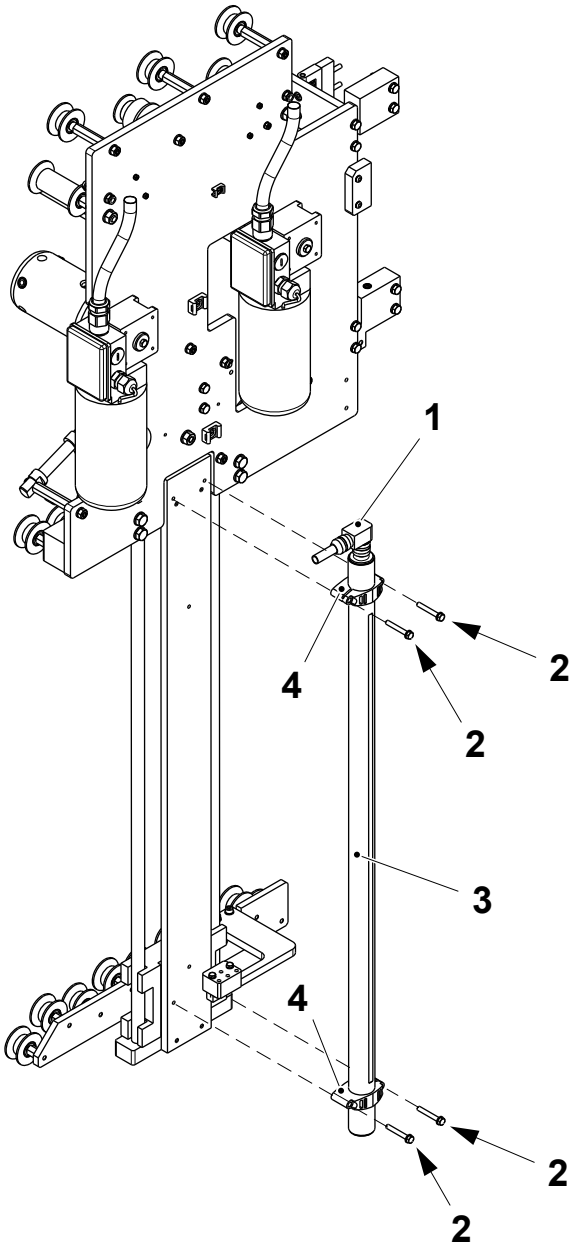

1 Electrical connection
2 Screw
3 Transducer
4 Clamp

(Cont'd)

(Cont'd)

d) Assemble in the reverse order making sure to set the distance **A** between the top of the sensor (5) and the mark (6) on the transducer (3) when the magazine (7) is raised in its upper position.

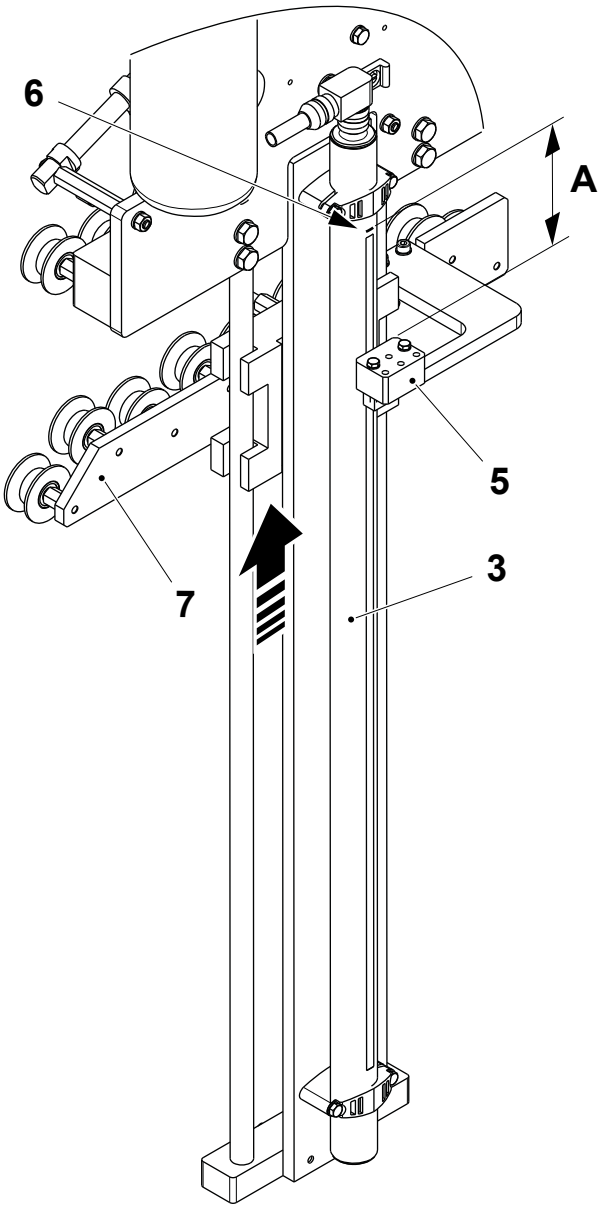

A = 10 ±0.1 mm

3 Transducer
5 Sensor
6 Mark
7 Magazine

8.3-3 Strip Magazine - Set Sensor and Spring

Machine Status	Mains Power OFF Air OFF Steam ON Water OFF
SPC Reference	2843884-0100

Set the spring (1) in front of the symbol (2) on the sensor (3). If the LED on the sensor is ON**,** when the strip is prepared, adjust the spring by turning it.

Note! The sensor (3) must be in contact with the spring (1) pushing slightly on it. This will prevent reading problems due to the vibrations of the spring (1).

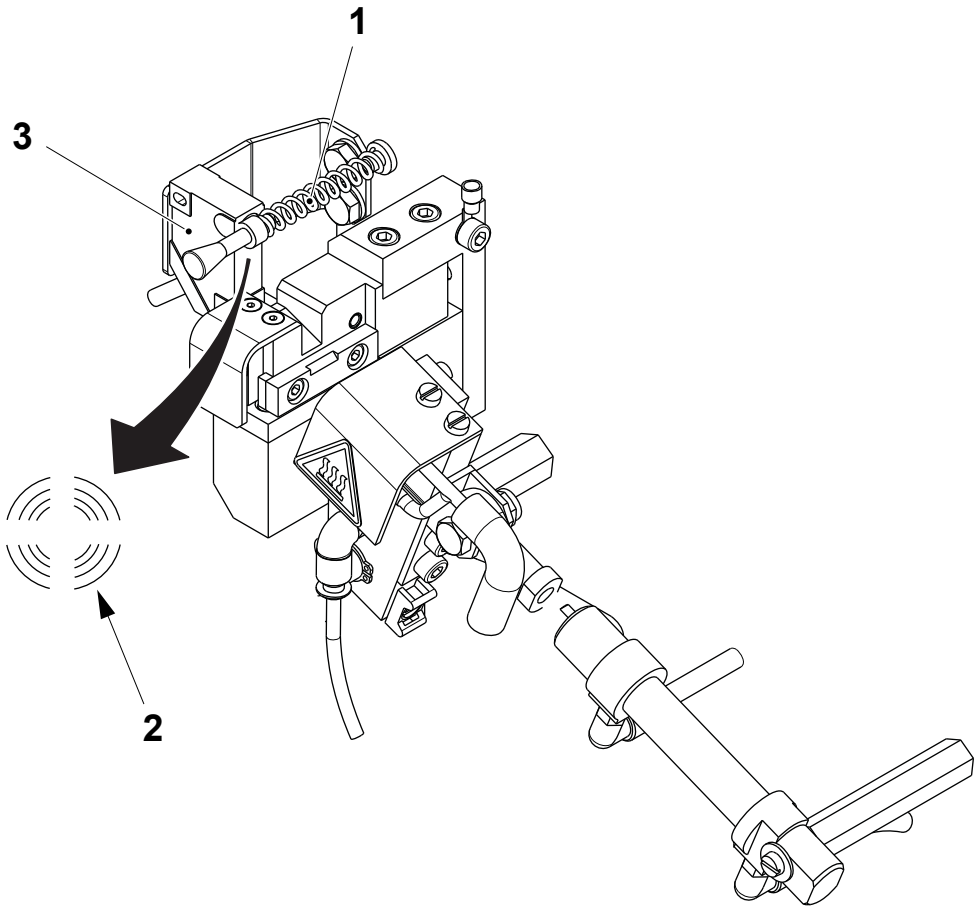

1 Spring
2 Symbol
3 Sensor

8.3.1 Heating Device

8.3.1-1 Heating Device - Check

Machine Status	PRODUCTION
SPC Reference	2765649-0100

WARNING

Burn hazard.

Some parts may be hot. Wear personal protective equipment.

(Cont'd)

(Cont'd)

CAUTION
Risk of damage to the equipment.
Do not clean the sealing block (1).

Note! When fitting the sealing block (1) make sure that it is correctly positioned, see 8.3.1-2 Heating Device - Set Position.

Check that:

- the sealing block (1) is intact. If necessary, remove the screws (2) and change the sealing block (1), see 8.3.1-2 Heating Device - Set Position.
- the cylinder piston (3) moves freely and smoothly
- there are no air leaks in the air connections (4) and (5).

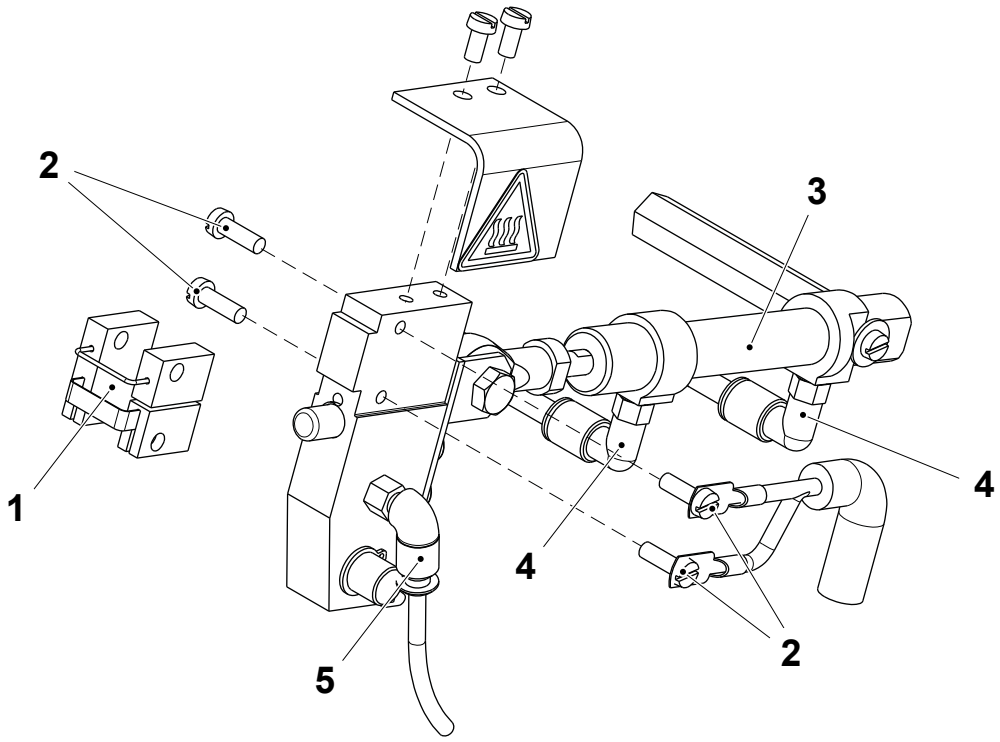

1 Sealing block
2 Screw
3 Cylinder piston
4 Air connection
5 Air connection

8.3.1-2 Heating Device - Set Position

Machine Status	Mains Power OFF Air OFF Steam ON Water OFF
SPC Reference	2765649-0100

WARNING

Burn hazard.

Some parts may be hot. Wear personal protective equipment.

a) Loosen the screw (1).

b) Push the strip sealing (2) up and then to the left so the RH side of the strip sealing (2) is aligned with the edge of the holder (3).

c) Tighten the screw (1).

d) Make sure that the connector block (4) does not touch the connector block (5). If necessary, loosen the screw (6) and move the connector block (5) away from the connector block (4) until there is a gap between the blocks.

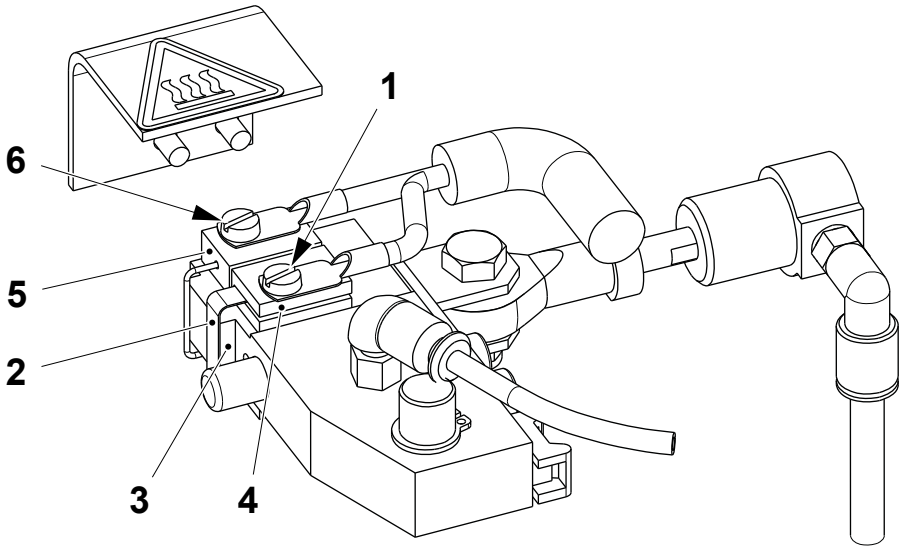

1 Screw
2 Strip sealing
3 Holder
4 Connector block
5 Connector block
6 Screw

(Cont'd)

(Cont'd)

e) Set the parallelism between the holder (3) and the pad (7) by means of the screws (8) at the rear of the plate (9).

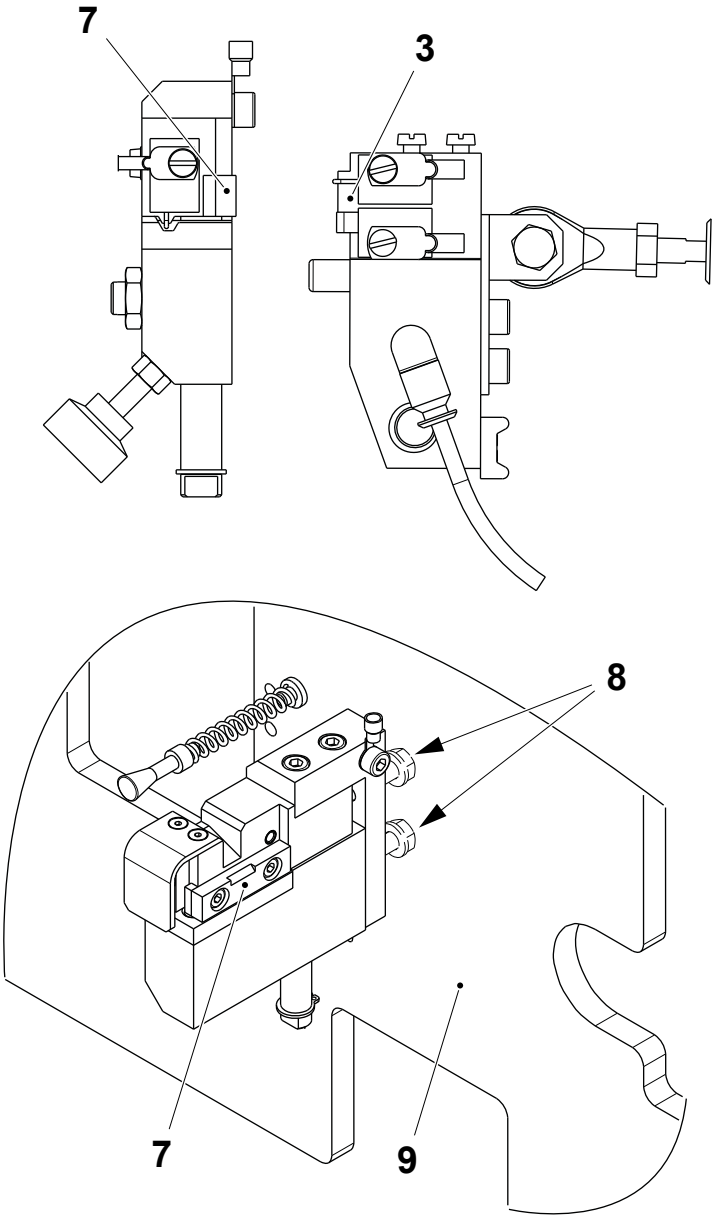

3 Holder
7 Pad
8 Screw
9 Plate

(Cont'd)

(Cont'd)

f) Push the piston rod of the cylinder (10) fully in by hand.

g) Loosen the nut (11).

h) Set the distance **A** between the plunger (12) and the block (13) by turning the piston rod (14).

i) Tighten the nut (11).

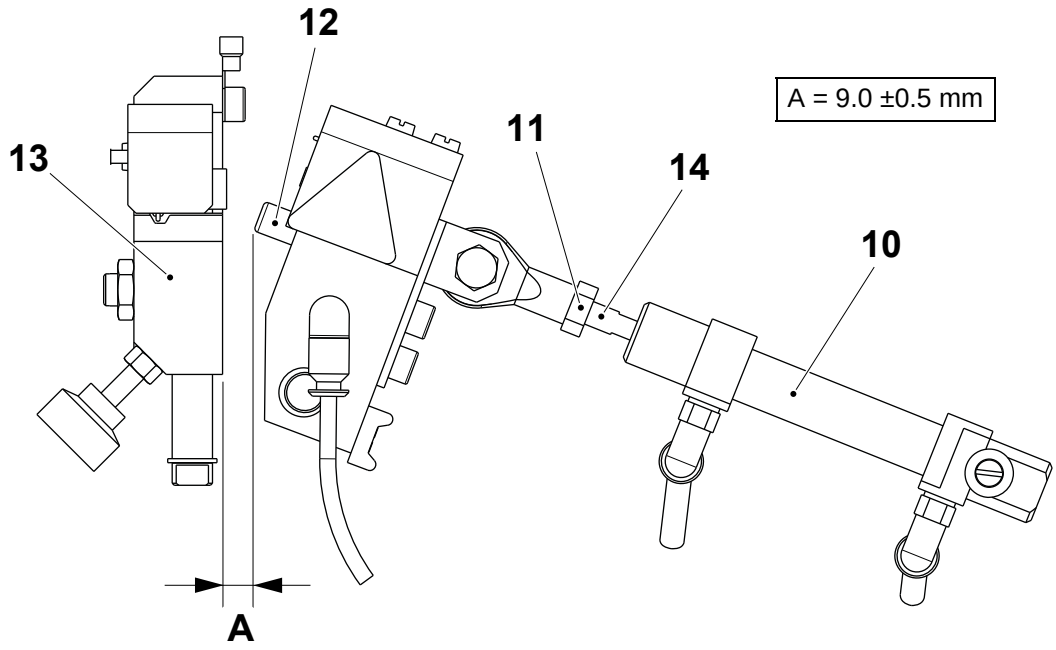

10 Cylinder
11 Nut
12 Plunger
13 Block
14 Piston rod

8.3.1-3 Heating Device - Change Plunger

Machine Status	Mains Power OFF Air OFF Steam ON Water OFF
SPC Reference	2765649-0100

WARNING

Burn hazard.

Some parts may be hot. Wear personal protective equipment.

a) Remove the screws (1).

b) Remove the spring (2).

c) Remove and change the plunger (3).

d) Assemble in the reverse order.

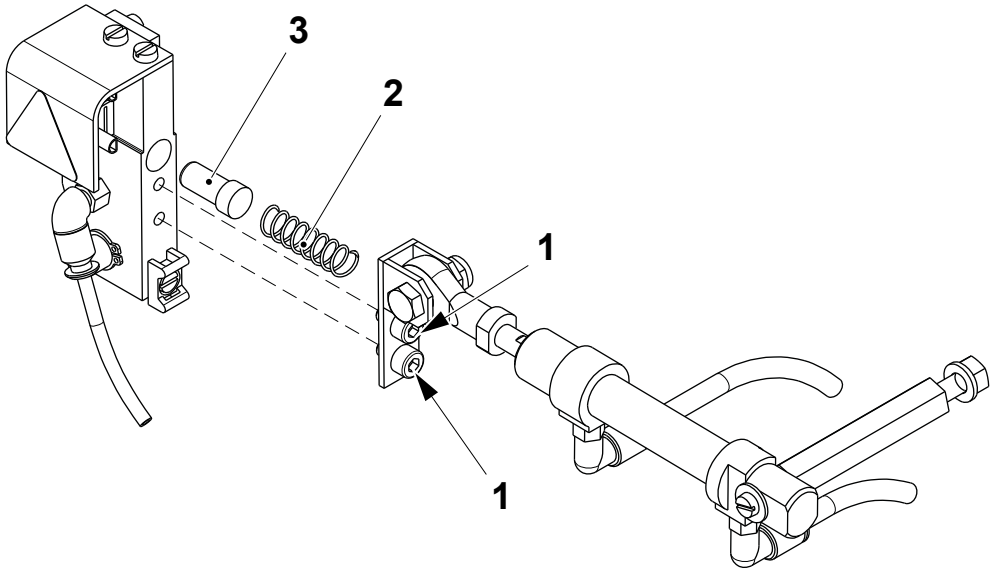

1 Screw
2 Spring
3 Plunger

8.3.2 Hub

8.3.2-1 Hub - Change Motor

Machine Status	Mains Power OFF Air OFF Steam ON Water OFF
SPC Reference	2843840-0100

a) Remove the bobbin holder (1).

b) Remove the screw (2) and the hub (3).

c) Disconnect the motor cable, see the Electrical Manual.

d) Remove the screws (4) and change the motor (5).

e) Assemble in the reverse order and check the axle rotation.

f) Check that the bobbin holder (1) is properly locked onto the hub (3) by the spring-loaded screws (6). If necessary, set the spring-loaded screws, see 8.3.2-2 Hub - Set Spring Loaded Screw.

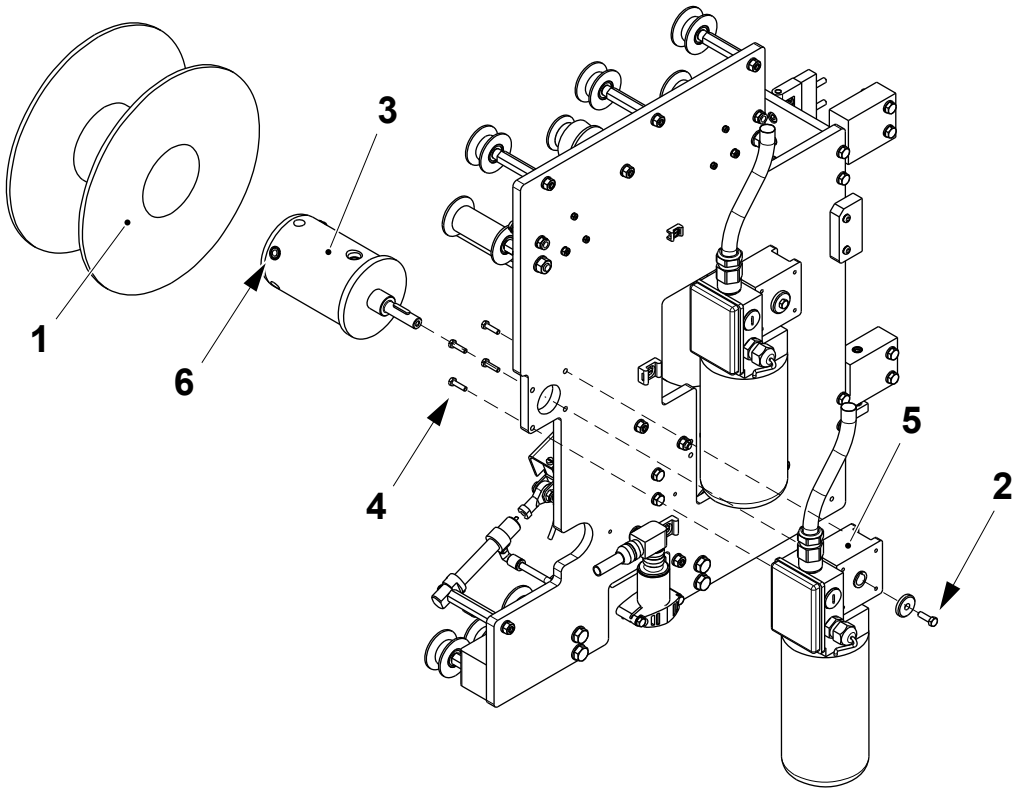

1 Bobbin holder
2 Screw
3 Hub
4 Screw
5 Motor
6 Spring-loaded screw

8.3.2-2 Hub - Set Spring Loaded Screw

Machine Status	Mains Power OFF Air OFF Steam ON Water OFF
Consumables	Locking Fluid, TP No. 90157-0016
SPC Reference	2843840-0100

a) Remove the old spring-loaded screw (1) from the hub (2) and clean the thread.

b) Apply locking fluid to the thread and fit the spring-loaded screw to the hub (2).

c) Turn the screw (1) to set the distance **A** between the top of the screw and the surface of the hub (2).

d) Repeat steps a) to c) for the other spring-loaded screws on the two hubs.

e) Fit a bobbin on the hub. If the bobbin is too tight or too loose, adjust the spring loaded screws.

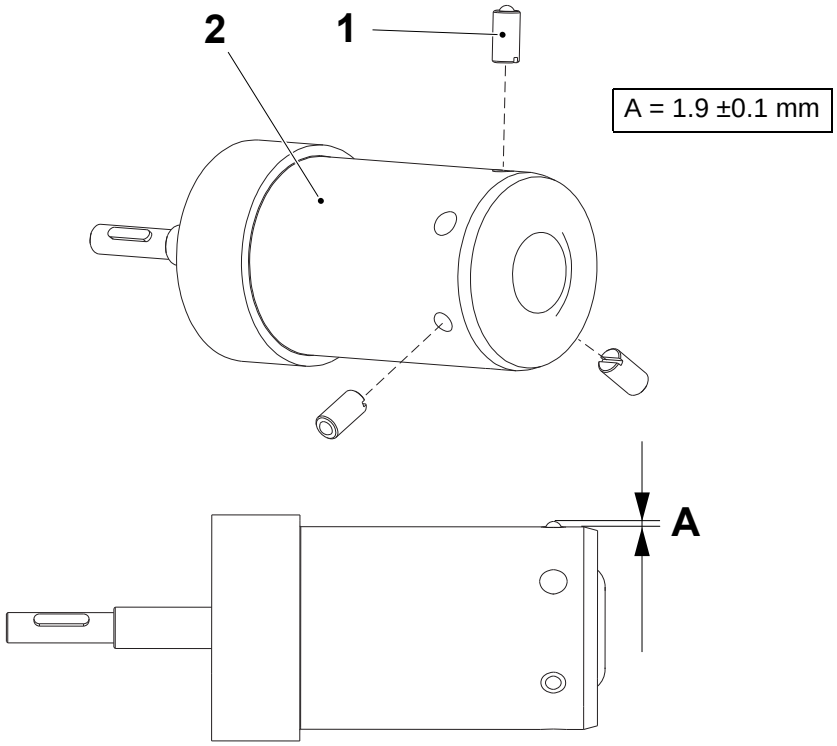

1 Spring-loaded screw
2 Hub

8.3.3 Buffer

SPC Reference	2843848-0100

8.3.3-1 Buffer - Check

Machine Status	Mains Power OFF Air OFF Steam ON Water OFF
SPC Reference	2843848-0100

Lift the bracket (1) and check that it moves smoothly. If not, clean the guides (2).

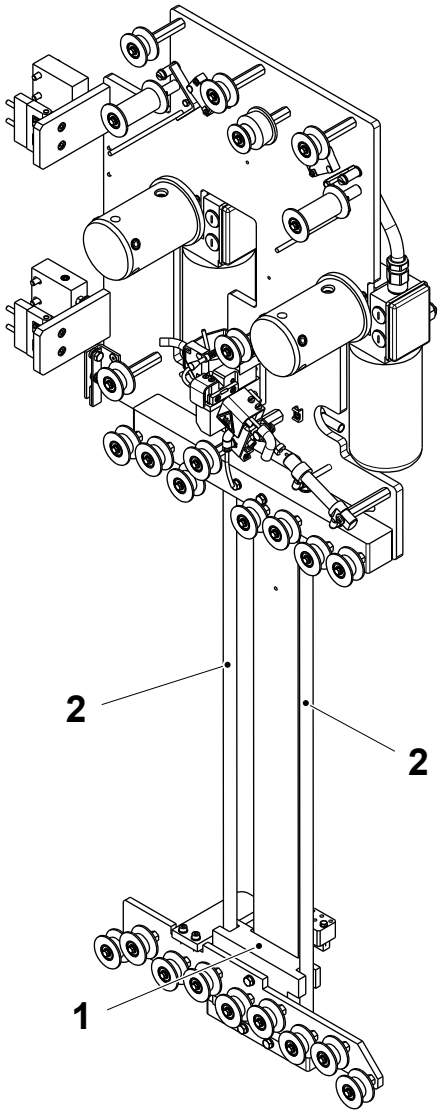

1 Bracket
2 Guide

8.3.4 Cutting Table

8.3.4-1 Cutting Table - Check

Machine Status	Mains Power OFF Air OFF Steam ON Water OFF
SPC Reference	2765653-0100

Lift the knob (1) up and down and check that the slider (2) moves easily. If not, clean the slider (2), the shaft (3) and the splicing table (4).

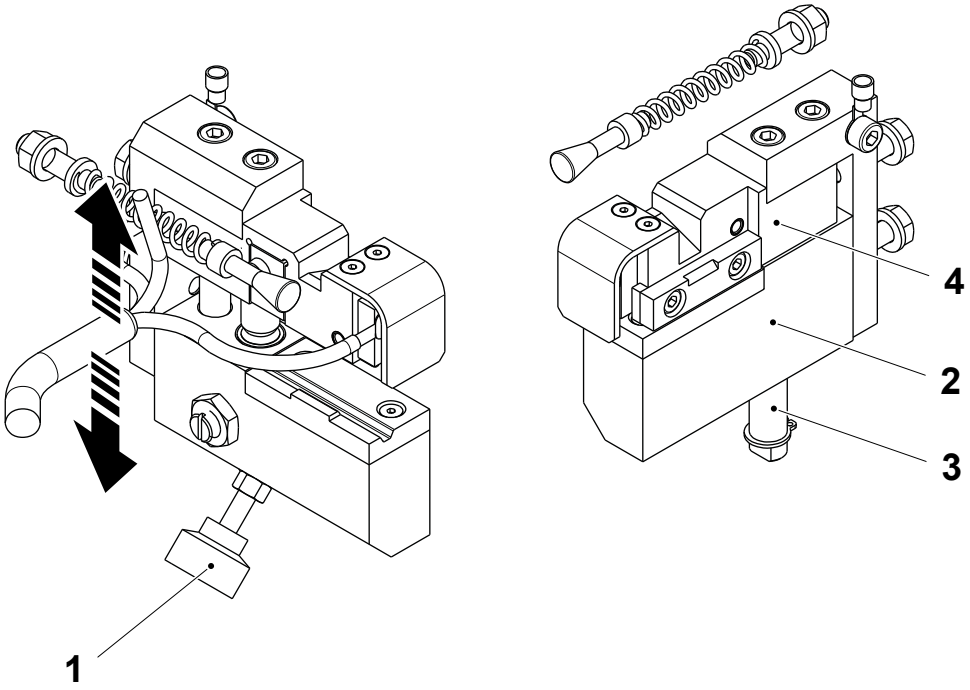

1 Knob
2 Slider
3 Shaft
4 Splicing table

8.3.4-2 Cutting Table - Change Pads and Finger

Machine Status	Mains Power OFF Air OFF Steam ON Water OFF
SPC Reference	2765653-0100

a) Remove the nut (1) and change the finger (2).

b) Remove the screws (3) and change the pad (4).

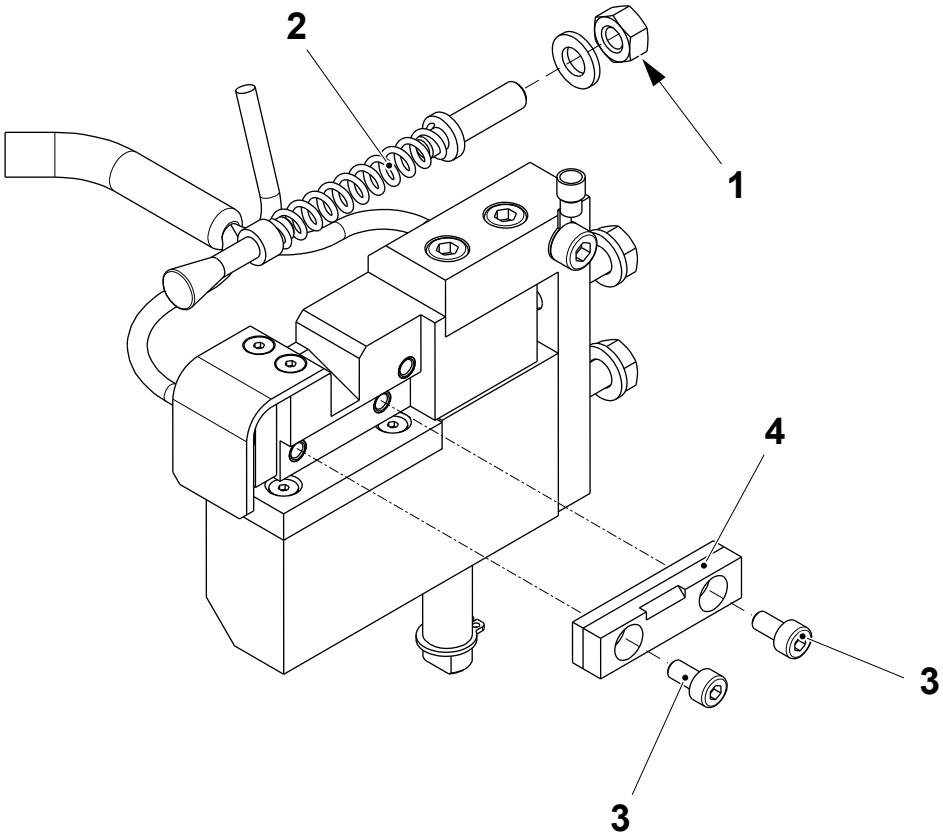

1 Nut
2 Finger
3 Screw
4 Pad

(Cont'd)

(Cont'd)

c) Loosen the nut (5) and the screw (6).

d) Pull down the slider (7) by means of the handle (8).

e) Remove the screws (9) and change the pad (10).

f) Assemble in the reverse order. Set the cutting table, see 8.3.4-3 Cutting Table - Set.

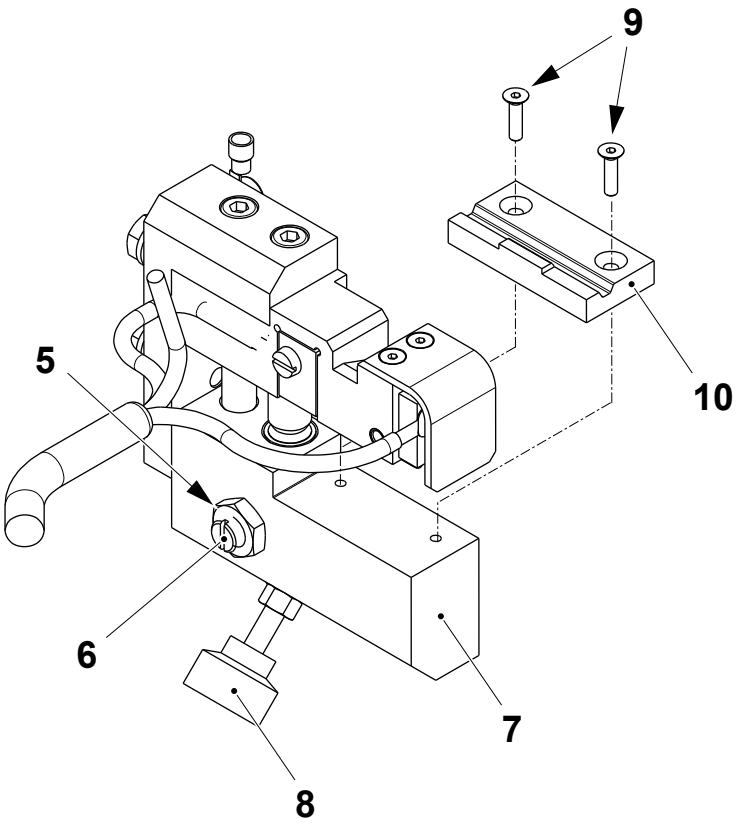

5 Nut
6 Screw
7 Slider
8 Handle
9 Screw
10 Pad

8.3.4-3 Cutting Table - Set

Machine Status	Mains Power OFF Air OFF Steam ON Water OFF
SPC Reference	2765653-0100

a) Loosen the nut (1) and the screw (2).

b) Move the slider (3) up and down.

c) Adjust the screw (2) until the slider (3) clicks into place.

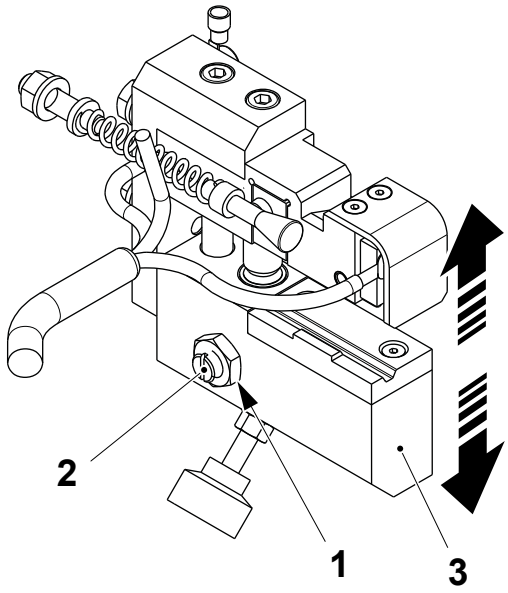

1 Nut
2 Screw
3 Slider

8.3.5 Mounting Sheet

8.3.5-1 Mounting Sheet - Check Rollers

Machine Status	Mains Power OFF Air OFF Steam ON Water OFF
SPC Reference	2843883-0100

Check that:

- the nine rollers on the mounting sheet are intact and rotate freely. If necessary, remove the screw (1) and change the bearings (2) and the roller (3)
- the rollers are free from strip material. Clean the rollers if necessary.

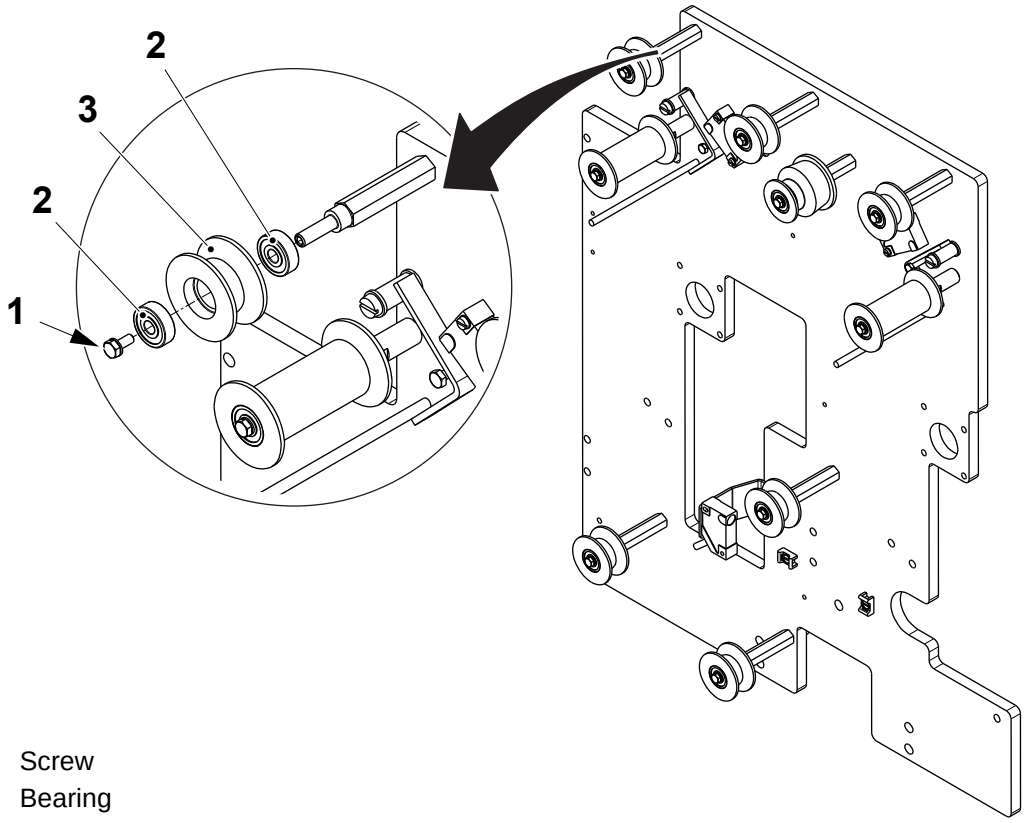

1 Screw
2 Bearing
3 Roller

8.4 Splicing Device

SPC Reference	2737941-0100

8.4-1 Splicing Device - Check Drive Unit

Machine Status	Mains Power OFF Air OFF Steam ON Water OFF
SPC Reference	2737941-0100

a) Remove the screws (1) and the cover (2).

b) Check:
   - the timing belt (3) for wear or damage
   - the timing belt (3) tension, see 8.4-3 Splicing Device - Set Drive Unit Belt
   - the roller (4) for wear, damage or excessive radial play.

c) If necessary, change any worn or damaged parts, see 8.4-2 Splicing Device - Drive Unit Overhaul.

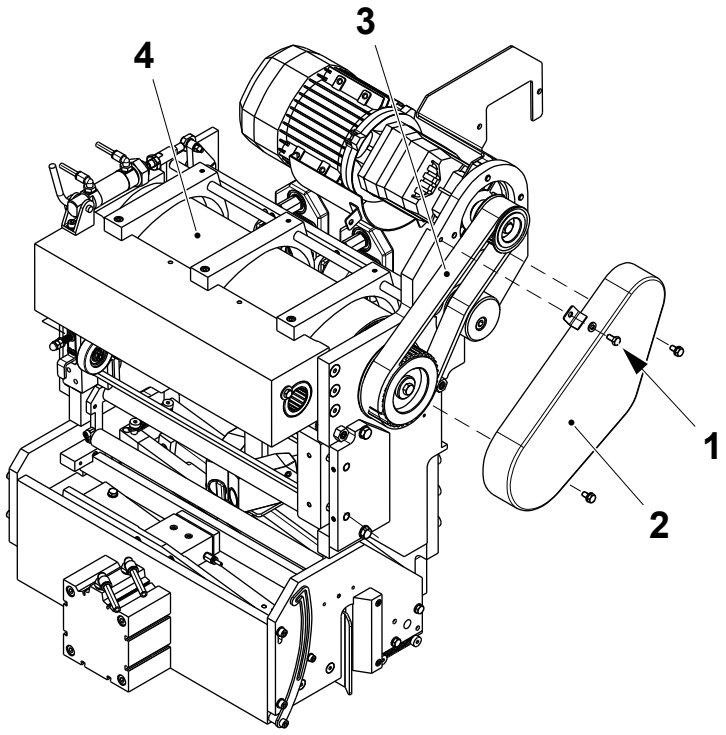

1 Screw
2 Cover
3 Timing belt
4 Roller

8.4-2 Splicing Device - Drive Unit Overhaul

Machine Status	Mains Power OFF Air OFF Steam ON Water OFF
SPC Reference	2737941-0100

a) Remove the screws (1) and the cover (2).

b) Loosen the screw (3) and remove the straining pulley (4).

c) Remove and change the timing belt (5).

d) Remove the screw (6) and the toothed pulley (7).

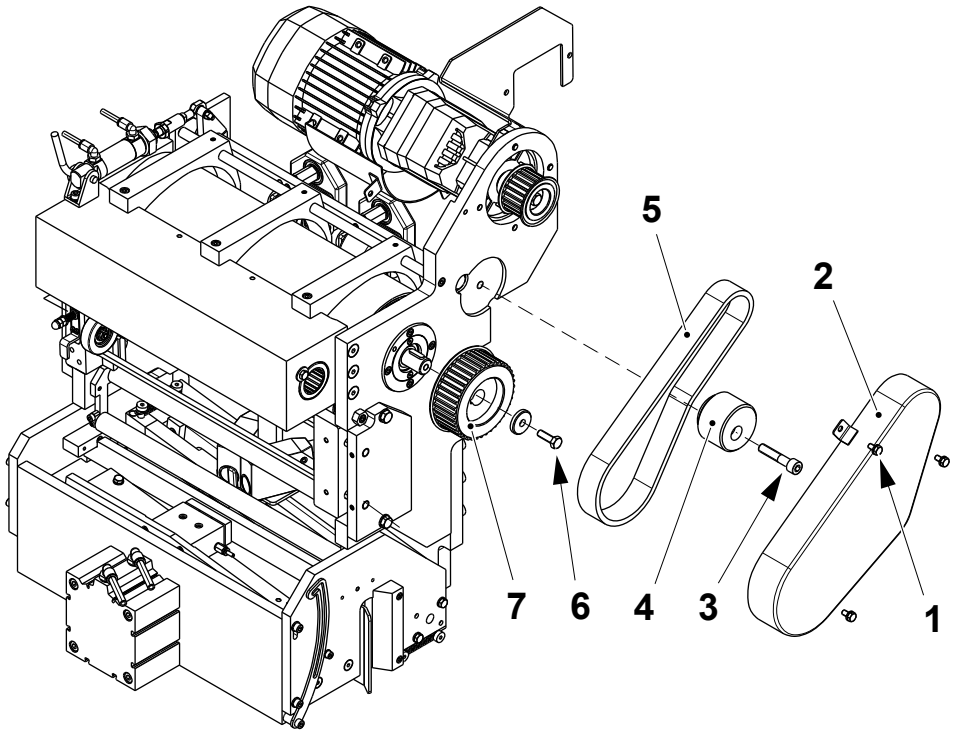

1 Screw
2 Cover
3 Screw
4 Straining pulley
5 Timing belt
6 Screw
7 Toothed pulley

(Cont'd)

(Cont'd)

e) Remove the paper guide (8) and the pressure roller (9), see 8.4.5-2 Counter Roller - Overhaul.

f) Loosen the screw (10) to release the clamp that fastens the encoder (11).

g) Remove the two screws (12) and the encoder (11).

h) Remove the screws (13) and the flange (14).

i) Remove the retaining ring (15) and change the ball bearing (16).

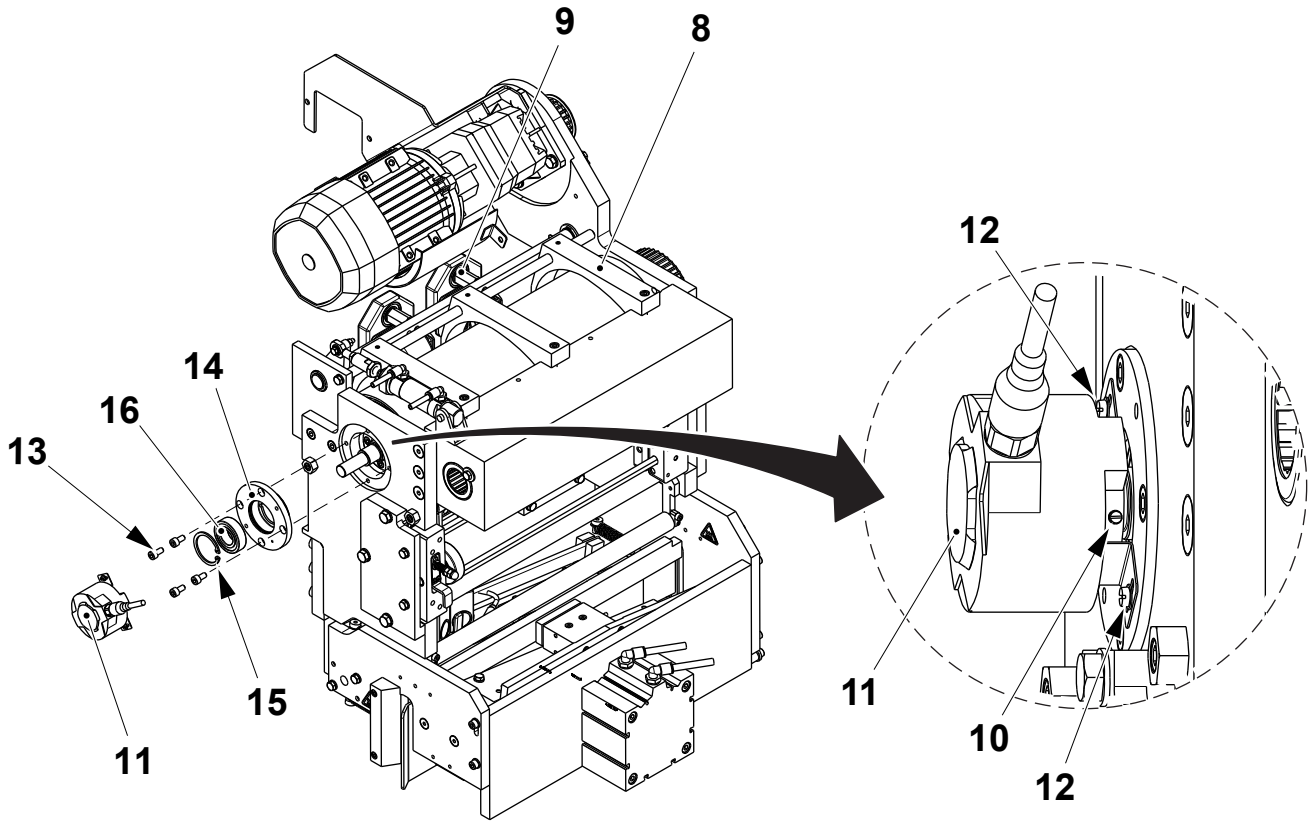

8 Paper guide
9 Pressure roller
10 Screw
11 Encoder
12 Screw
13 Screw
14 Flange
15 Retaining ring
16 Ball bearing

(Cont'd)

(Cont'd)

j) Remove the key (17) by inserting a pin punch through the hole (18).

k) Remove the screws (19) and the flange (20) using the screws (19) as extractor.

l) Remove the screws (21) and the ring (22).

m) Remove and change the ball bearing (23).

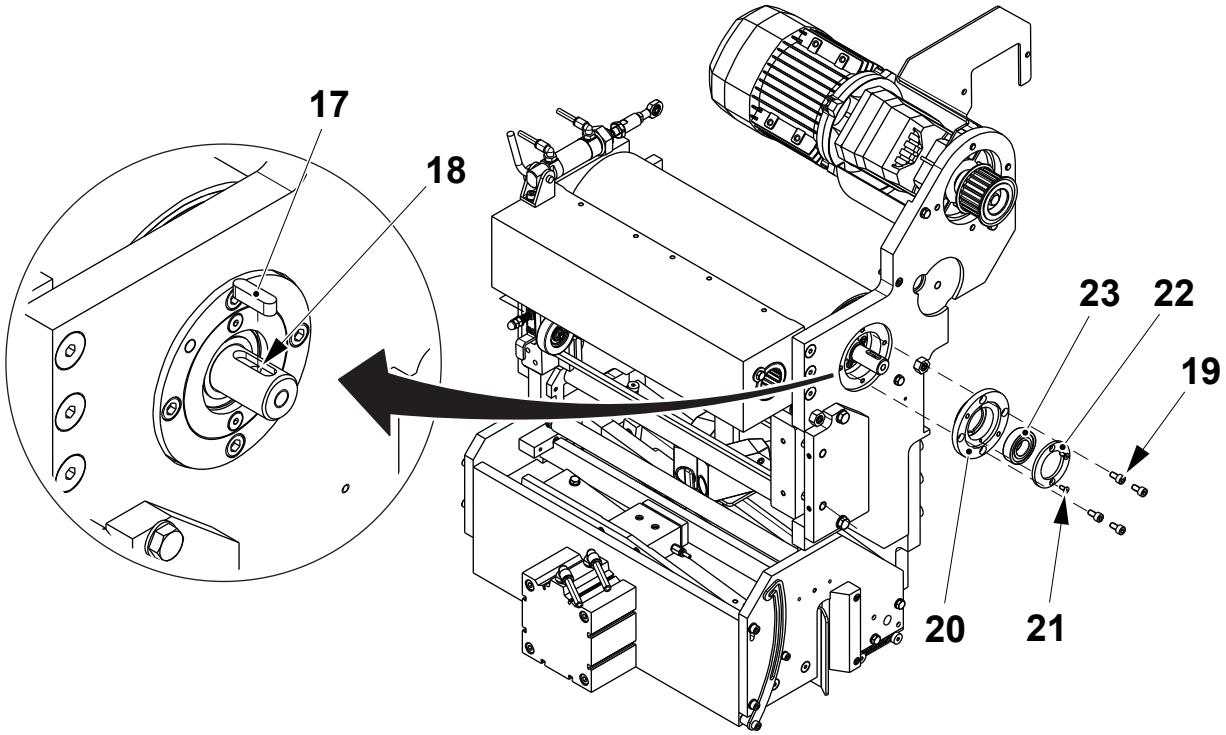

17 Key
18 Hole
19 Screw
20 Flange
21 Screw
22 Ring
23 Ball bearing

(Cont'd)

(Cont'd)

n) On both sides, remove the screws (24) and the shaft (25).

o) Remove the roller (26); change it if necessary.

p) Remove the screw (27) and the protection (28). Clean the protection (28) from the residues of oil.

q) Assemble in the reverse order.

r) Set the timing belt tension, see 8.4-3 Splicing Device - Set Drive Unit Belt.

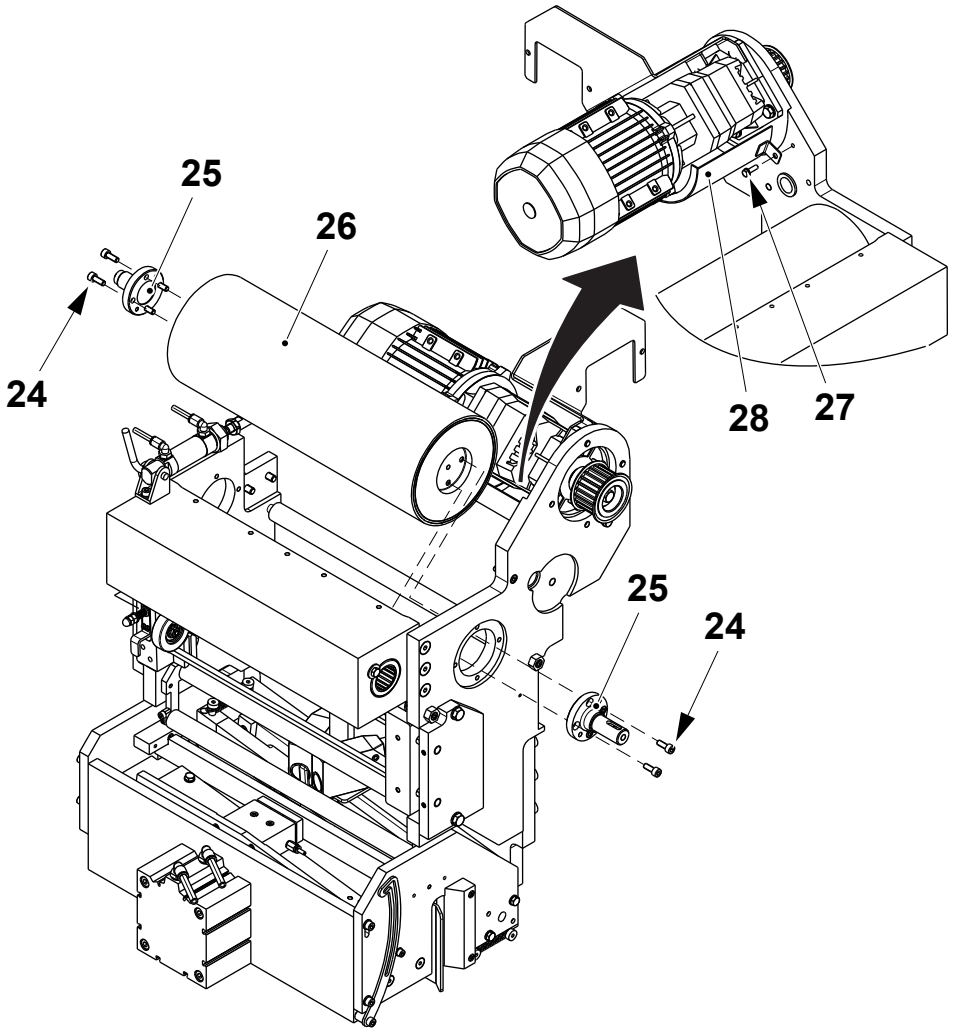

24 Screw
25 Shaft
26 Roller
27 Screw
28 Protection

8.4-3 Splicing Device - Set Drive Unit Belt

Machine Status	Mains Power OFF Air OFF Steam ON Water OFF
Special Equipment	Dynamometer TP No. 90459-1467
SPC Reference	2737941-0100

a) Remove the screws (1) and the cover (2).

b) Use the dynamometer to apply a force of 32 N in the middle of the belt (3), see arrow. The belt (3) should deflect 4.5 mm.

c) To adjust the belt tension, loosen the screw (4) and turn the straining pulley (5).

d) Tighten the screw (3) and fit back the cover (2) with the screws (1).

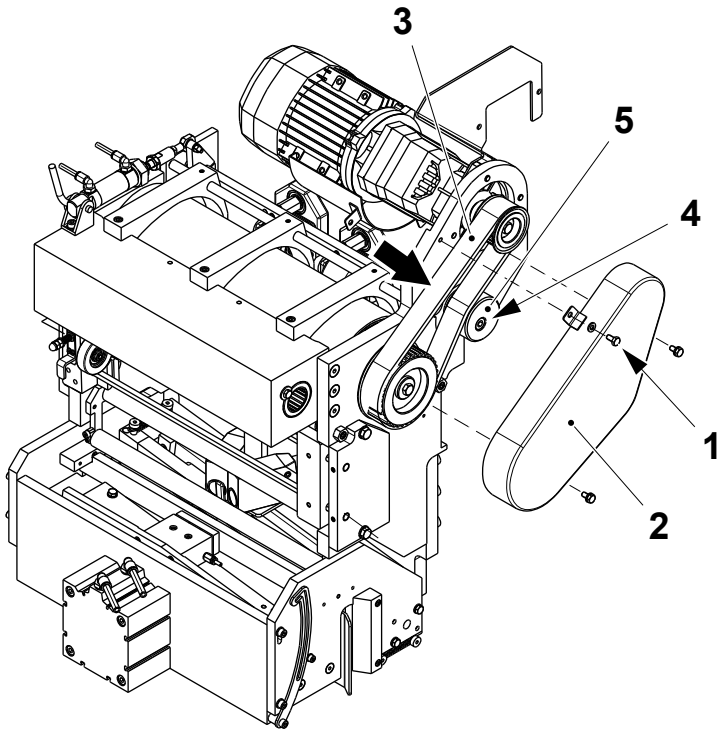

1 Screw
2 Cover
3 Belt
4 Screw
5 Straining pulley

8.4-4 Splicing Device - Change Photocell

Machine Status	Mains Power OFF Air OFF Steam ON Water OFF
SPC Reference	2737941-0100

WARNING

Burns hazard.

Parts under the photocells may be hot.

a) Remove the screws (1) and the guide rail (2).

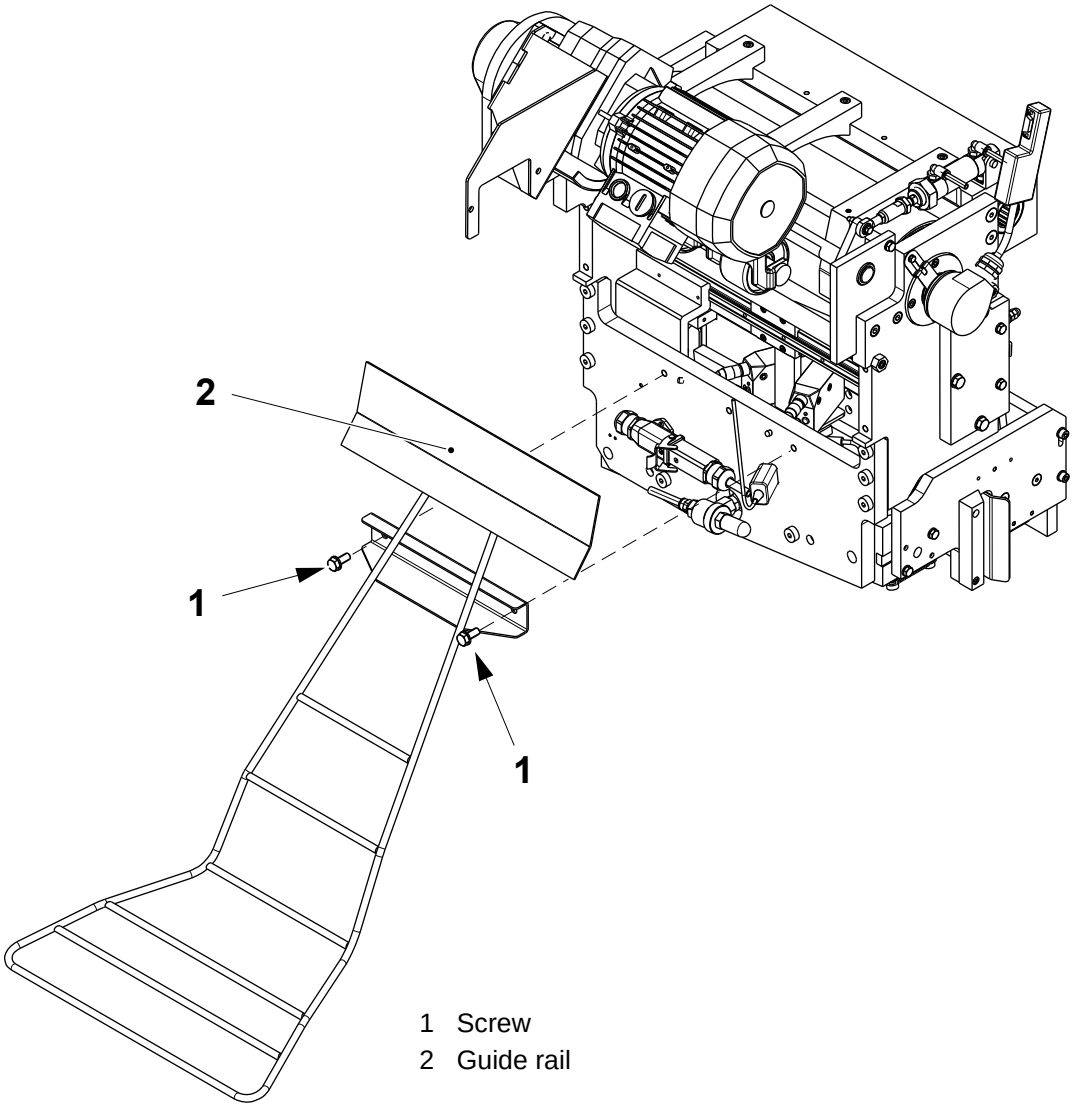

1 Screw
2 Guide rail

(Cont'd)

(Cont'd)

b) Hold by hand the photocells unit (3) while a second person removes the screws (4).

c) Remove the photocells unit (3) from the back of the splicing device.

d) Disconnect the cable (5) from the rear of the photocells (6).

e) Remove the screws (7) and change the photocell (6).

f) Assemble in the reverse order.

Note! Do not loosen the knob (8) to keep the position setting of the support (9).

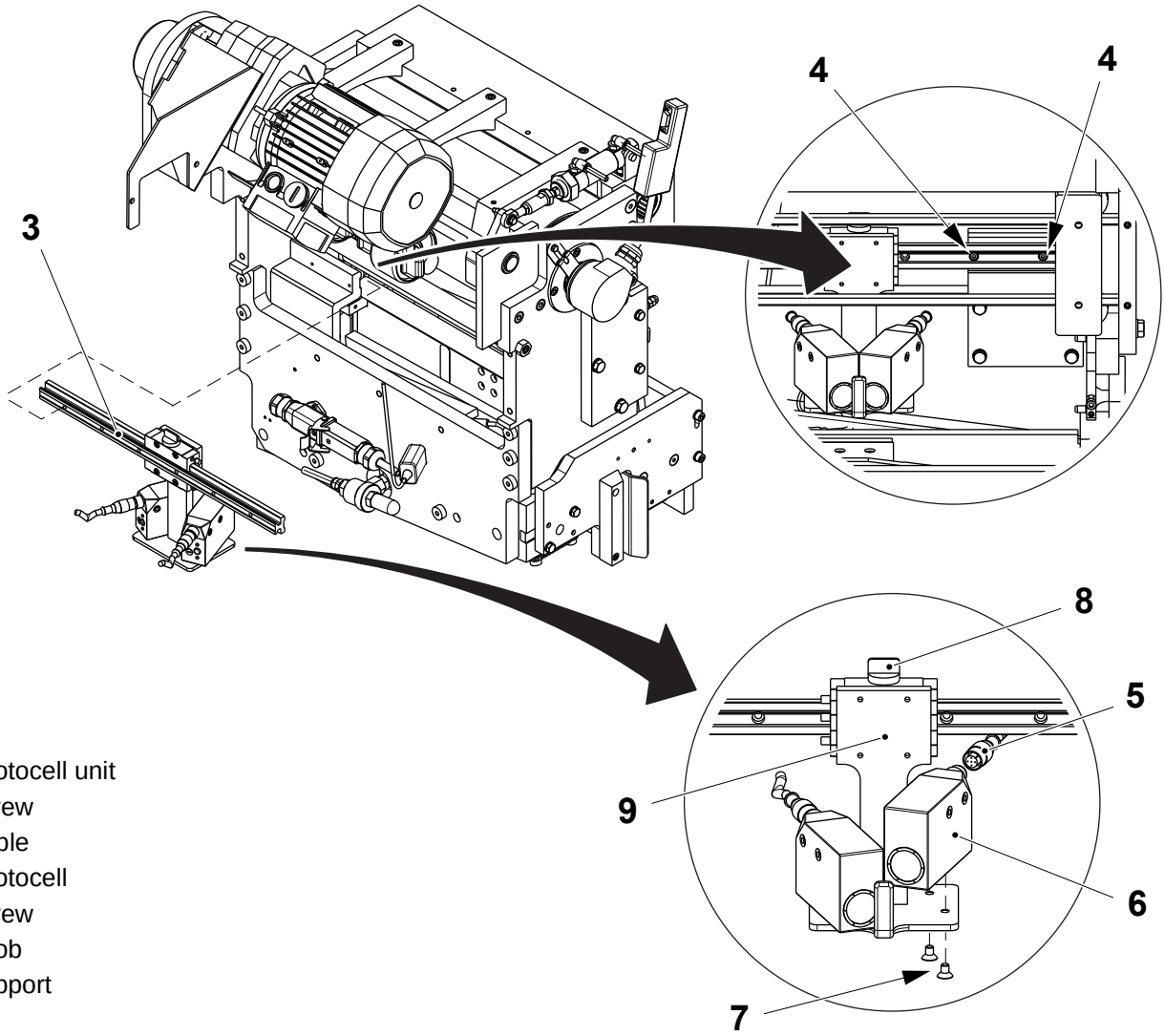

3 Photocell unit
4 Screw
5 Cable
6 Photocell
7 Screw
8 Knob
9 Support

8.4-5 Splicing Device - Set Photocell Position

Machine Status	Mains Power ON Air OFF Steam ON Water OFF
SPC Reference	2737941-0100

WARNING

Risk of crushing.

If the splicing device is moved out of position it will return rapidly to its former position when the doors are closed.

a) Prepare a piece of packaging material (1) making two cuts (2) on the bar code (3).

b) Apply a piece of opaque adhesive tape (4) on the bar code (3).

Note! The adhesive tape must be opaque in order to see the green spot lights.

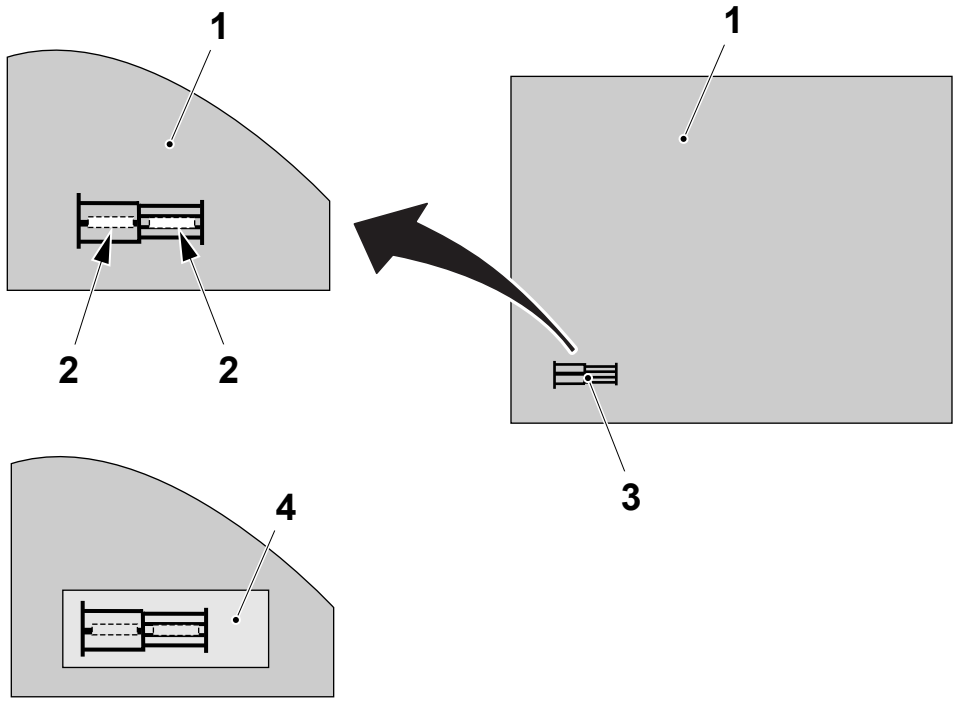

1 Packaging material
2 Cut
3 Bar code
4 Opaque adhesive tape

(Cont'd)

(Cont'd)

Note! The colour of the photocell spot light (6) must be set according to the bar code foreground colour, see 3.2-2 Photocell Unit - Set.

c) Insert the piece of packaging material (1) through the paper guide (5).

d) Check that the spot lights (6) are centred on the two parts of the bar code.

e) If necessary, loosen the knob (7) and move the photocells support (8) until the spot lights (6) are centred; then tighten the knob (7).

Note! Use always the paper guide (5) as reference. If the bar code is on the RH side, cut a piece of packaging material “L” shaped.

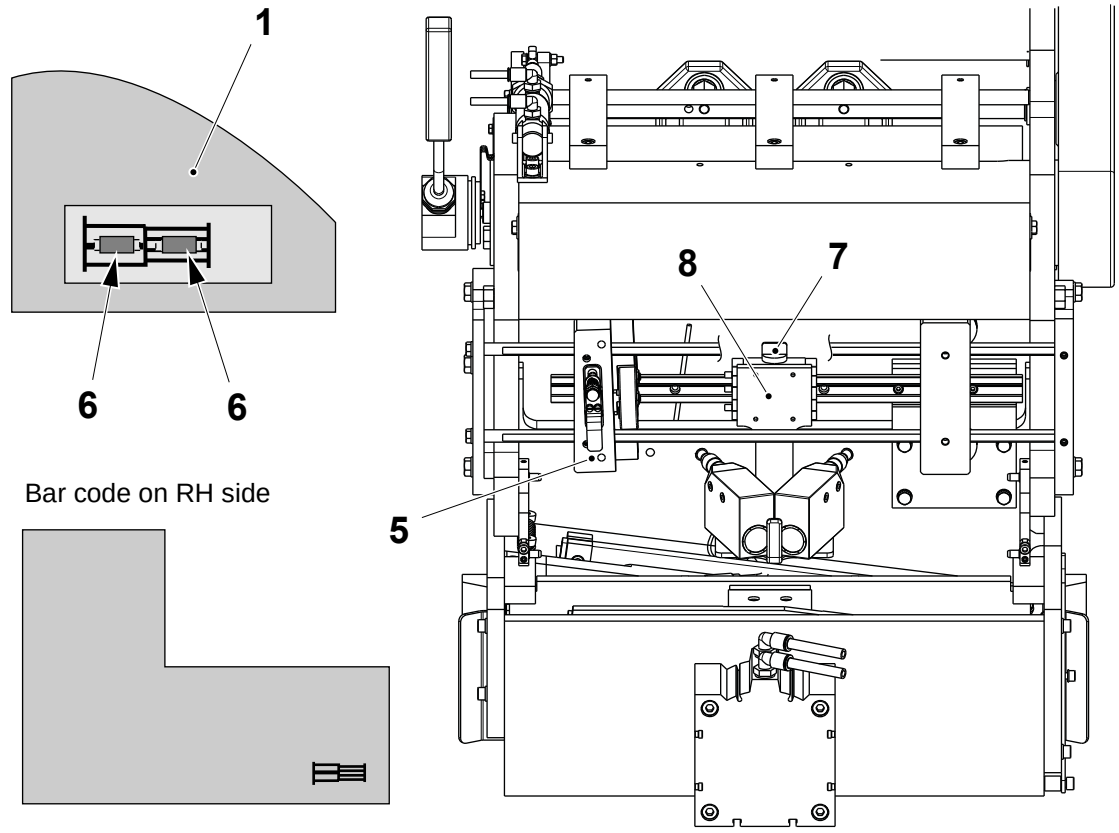

1 Packaging material
5 Paper guide
6 Spot light
7 Knob
8 Support

8.4-6 Splicing Device - Set Photocell Sensitivity

Machine Status	Mains Power ON Air OFF Steam ON Water OFF
SPC Reference	2737941-0100

Set the photocells, see Photocells Colour Setting and Sensitivity in 4.2.7-2 Photocell Unit - Set.

8.4-7 Splicing Device - Set Photocell Alignment

Machine Status	PRODUCTION
Special Equipment	PC and RS 232-C Communication Cable
SPC Reference	2737941-0100

Check Alignment

a) Configure a PC to be used as a hyperterminal and connect it to the TMCC2, see 9.8-2 TMCC2 Controller - Set Communication.

b) Connect the communication cable between the PC and the front panel connector (1) of the TMCC2 card A01K5200 (Photocells Decoder).

c) Type `H` and press the ENTER key.

d) Type `A1` and press the ENTER key.

e) Check that the value displayed is 1 ±0.20. This means that the spot light alignment is correct.

f) If necessary, stop the machine in NORMAL STOP and modify the photocells alignment as follows.

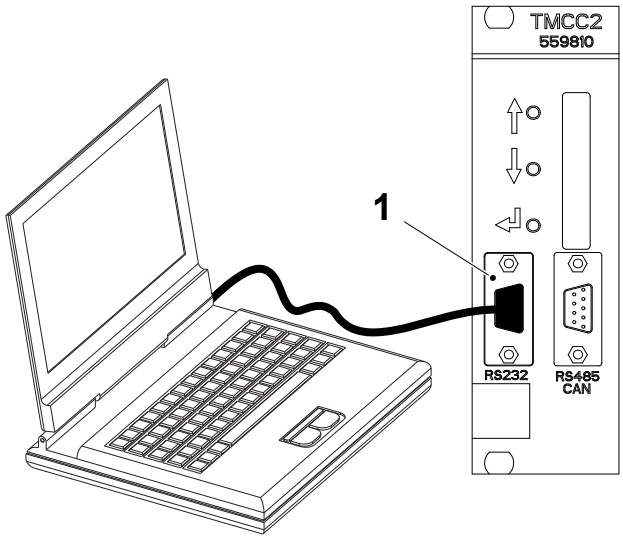

1 TMCC2 connector

(Cont'd)

(Cont'd)

Set Alignment

a) Remove the screws (1) and the guide rail (2).

b) Modify the alignment of the photocell support (3) by the screws (4).

Note! If the value displayed is less than 0.8 the photocell (5) pointing the barcode with 3 bars has to be moved upwards, if the value is more than 1.2 the photocell (5) pointing the barcode with 3 bars has to be moved downwards.

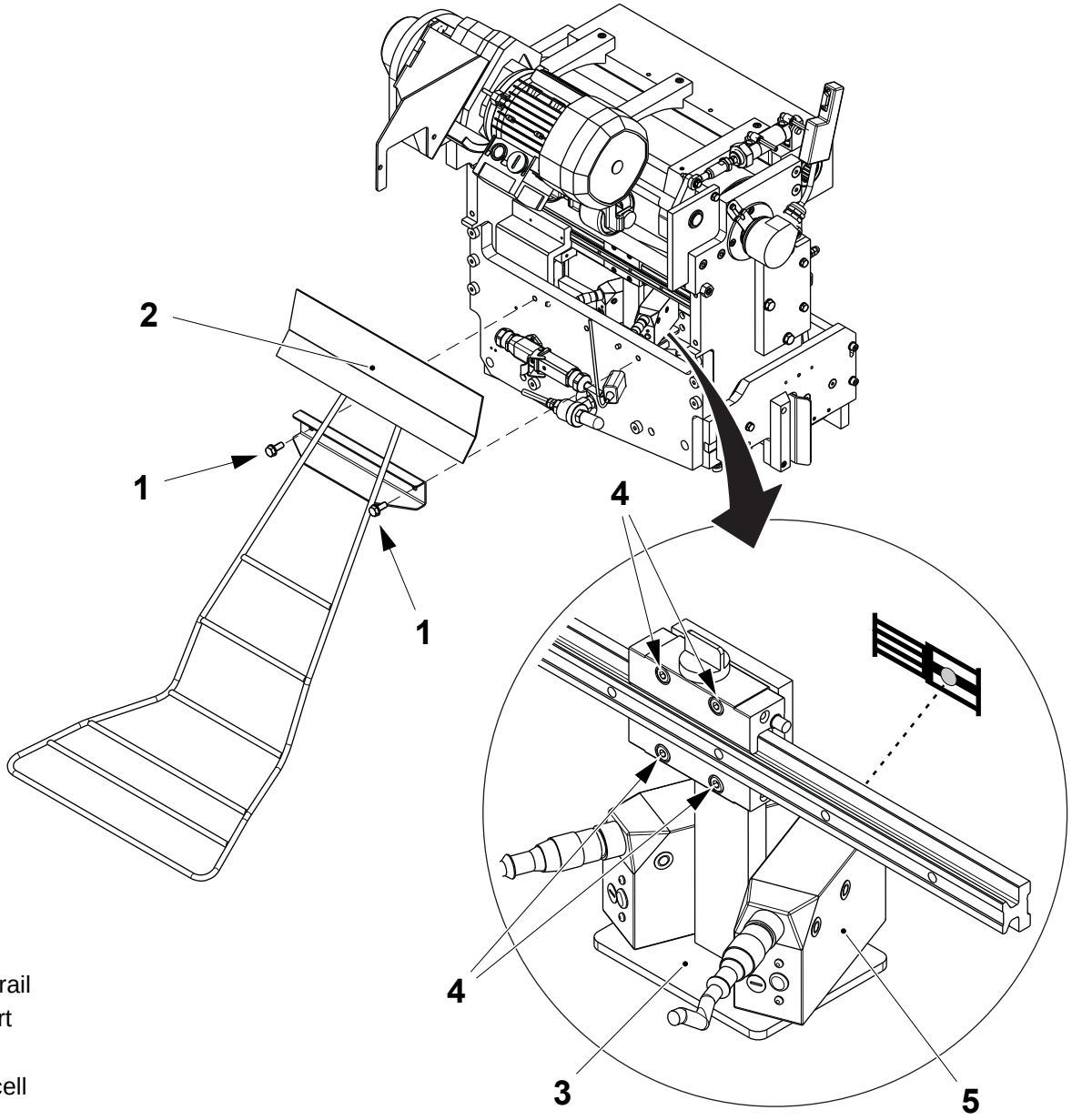

1 Screw
2 Guide rail
3 Support
4 Screw
5 Photocell

(Cont'd)

(Cont'd)

c) Assemble in the reverse order and check again the alignment, see Check Alignment.

d) Repeat until the TMCC2 card displays the correct alignment value.

8.4-8 Splicing Device - Move to Maintenance Position

Machine Status	PREPARATION
SPC Reference	2737941-0100

Note! The current position of the splicing head is indicated by the green coloured arrow button.

a) Touch the PRODUCTION CONTROL button (1).

b) Touch the ASU button (2).

c) Touch the MOVE SPLICING HEAD button (3).

d) Touch the CENTRAL POSITION button (4) to move the splicing head in central position between the material holders.

e) Touch the OK button (5) to start the splicing head movement.

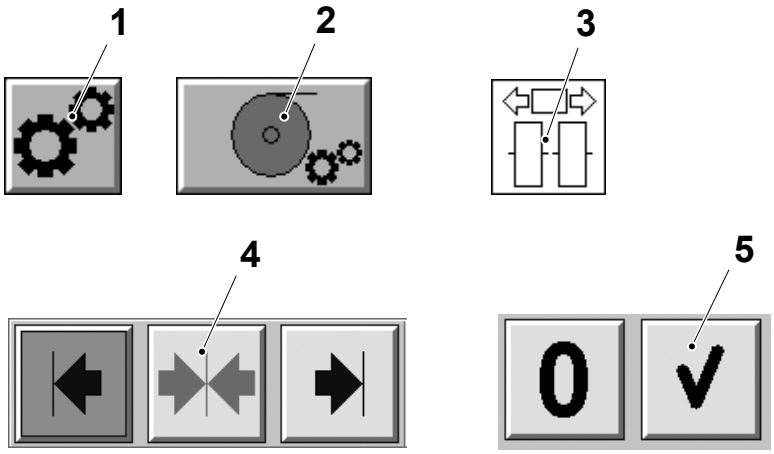

1 Production control button
2 ASU button
3 Move splicing head button
4 Central position button
5 OK button

8.4-9 Splicing Device - Change Bearings

Machine Status	Mains Power ON Air OFF Steam ON Water OFF
SPC Reference	2737941-0100

a) Remove the screws (1) and the two rollers (2).

b) Separate the rollers from the brackets (3) and change the bearings (4).

c) Remove the screws (5) and the roller (6).

d) Change the bearings (7).

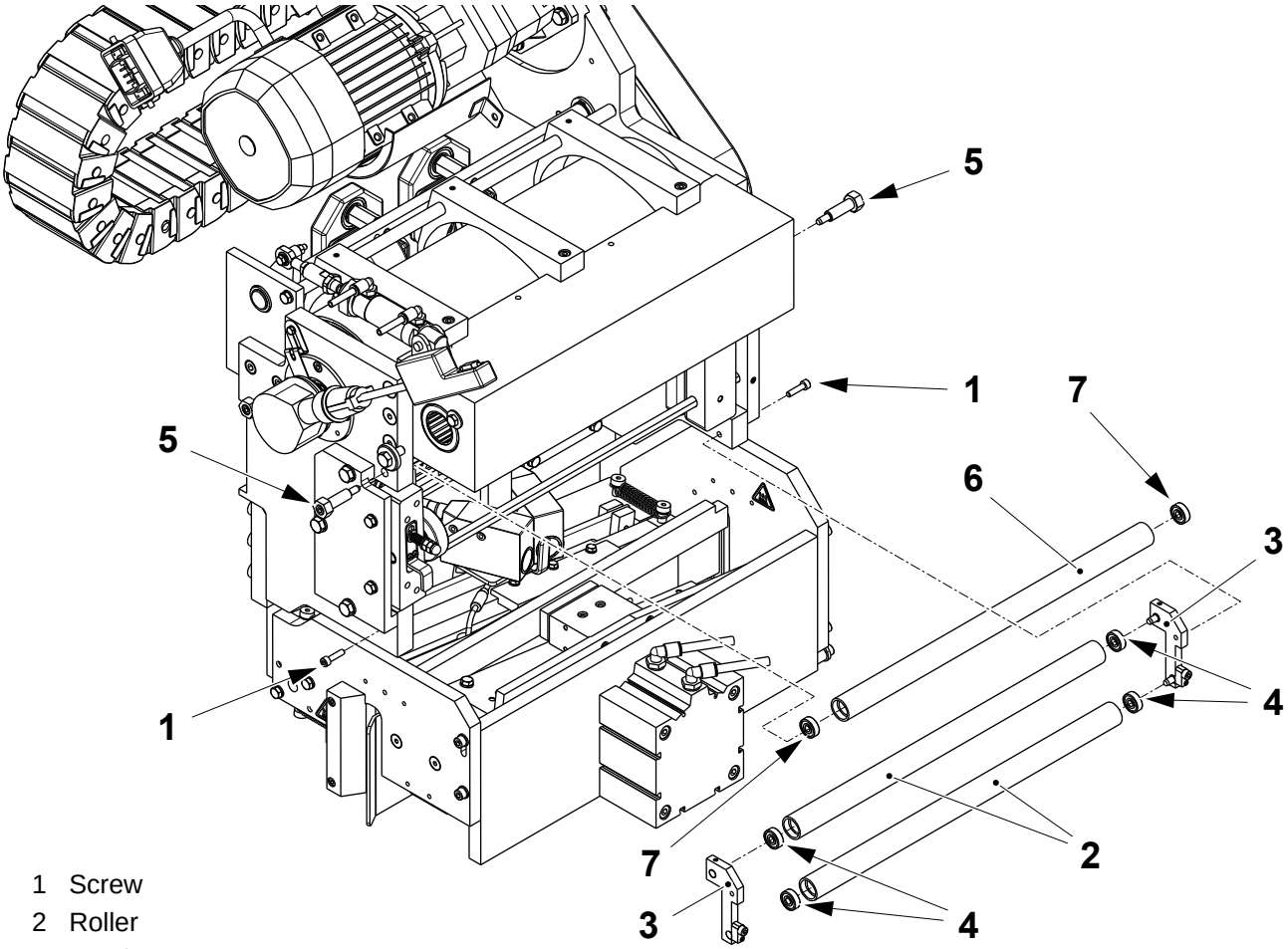

1 Screw
2 Roller
3 Bracket
4 Bearing
5 Screw
6 Roller
7 Bearing

(Cont'd)

(Cont'd)

e) Remove the screws (8) and the roller (9).

f) Change the bearings (10).

g) Assemble in the reverse order.

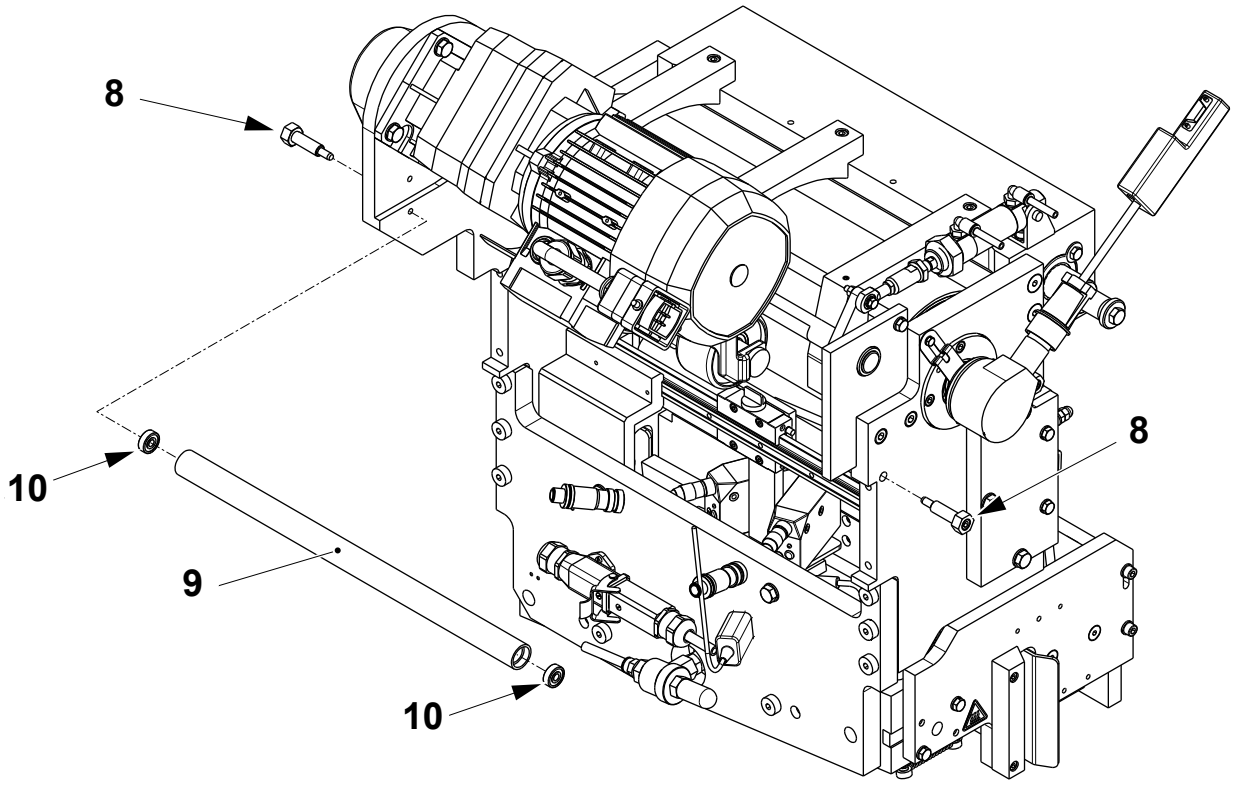

8 Screw
9 Roller
10 Bearing

8.4.1 Paper Guide

8.4.1-1 Paper Guide - Check

Machine Status	Mains Power OFF Air OFF Steam ON Water OFF
SPC Reference	2737931-0100

Check that:

- the surfaces of the pressure rollers (1) and the guide rollers (2) are undamaged. If damaged, change the guide rollers, see 8.4.1-2 Paper Guide - Change Ball Bearings and Bushings and 8.4.1-3 Paper Guide - Change Guide Wheels Ball Bearings.
- the pressure rollers (1) and the guide rollers (2) rotate freely. If not, change the ball bearings, see 8.4.1-2 Paper Guide - Change Ball Bearings and Bushings and 8.4.1-3 Paper Guide - Change Guide Wheels Ball Bearings.
- the packaging material can be moved up and down causing the pressure rollers (1) to rotate without marking the packaging material. If not, see 8.4.1-5 Paper Guide - Set Spring Tension.

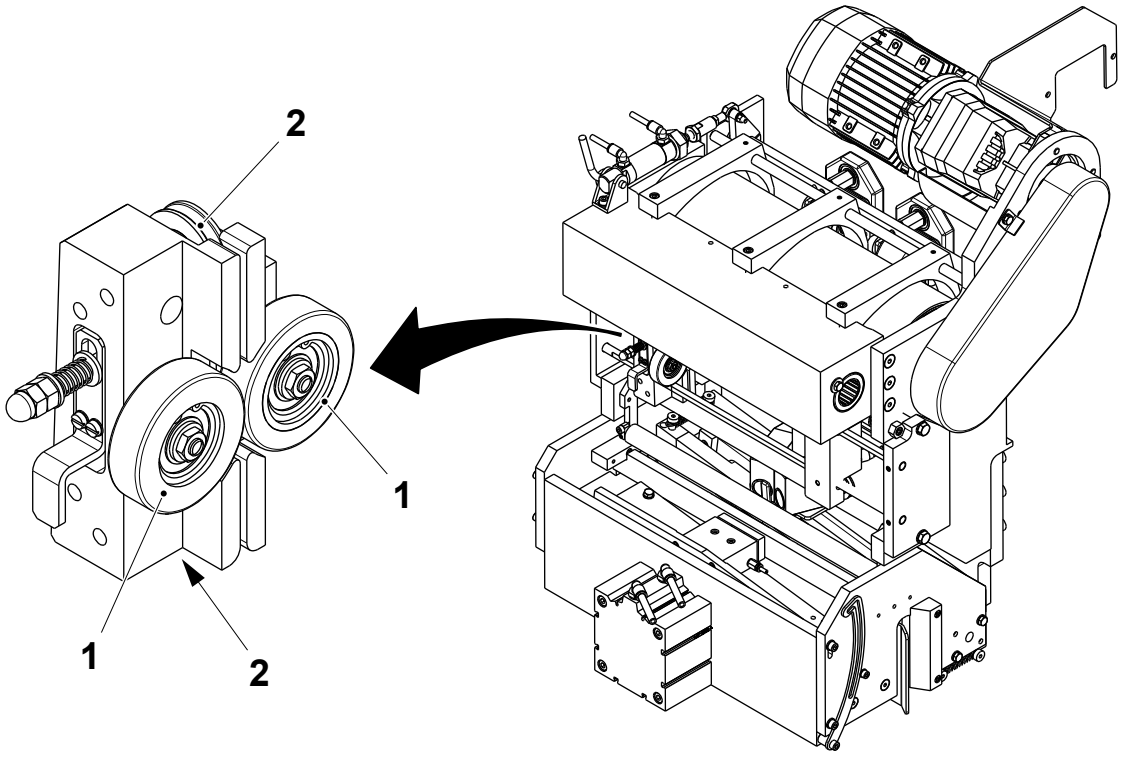

1 Pressure roller
2 Guide roller

8.4.1-2 Paper Guide - Change Ball Bearings and Bushings

Machine Status	Mains Power OFF Air OFF Steam ON Water OFF
SPC Reference	2737931-0100

Note! The rubber coated roller (4) must be fitted on the printed side of the packaging material web.

a) Remove the nuts (1) and the retaining rings (2).

b) Remove the rollers (3) and (4) and the ball bearings (5). Change them if necessary.

c) Remove the nuts (6) and the spring (7).

d) Remove the screw (8), the eccentric shaft (9) and the sleeve (10).

e) Check the bushings (11). Change them if necessary.

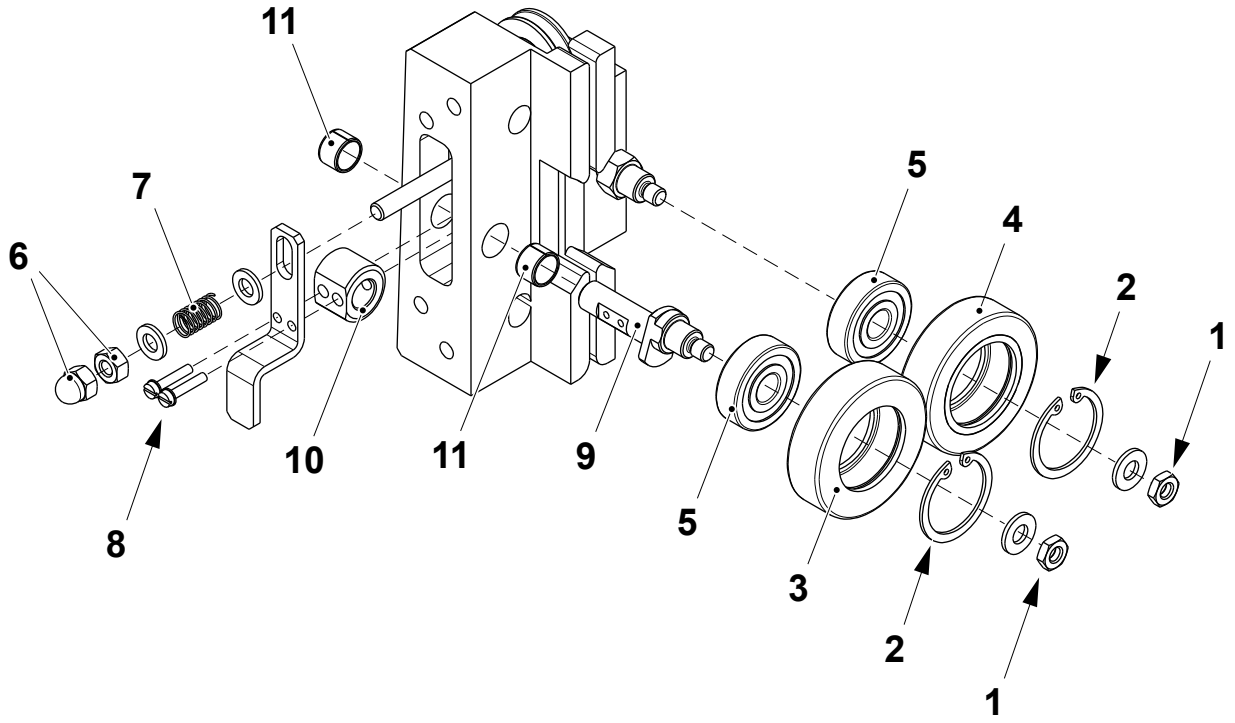

1 Nut
2 Retaining ring
3 Roller
4 Roller
5 Ball bearing
6 Nut
7 Spring
8 Screw
9 Eccentric shaft
10 Sleeve
11 Bushing

(Cont'd)

(Cont'd)

f) Assemble in the reverse order.

g) Set the spring tension, see 8.4.1-5 Paper Guide - Set Spring Tension.

Note! When the paper guide is removed for maintenance, after having fit it back always perform the following settings: 8.4.1-4 Paper Guide - Set Position and 8.4-5 Splicing Device - Set Photocell Position.

8.4.1-3 Paper Guide - Change Guide Wheels Ball Bearings

Machine Status	Mains Power OFF Air OFF Steam ON Water OFF
SPC Reference	2737931-0100

a) Remove the nuts (1).

b) Remove the guide wheels (2) and the ball bearings (3). Change them if necessary.

c) Assemble in the reverse order.

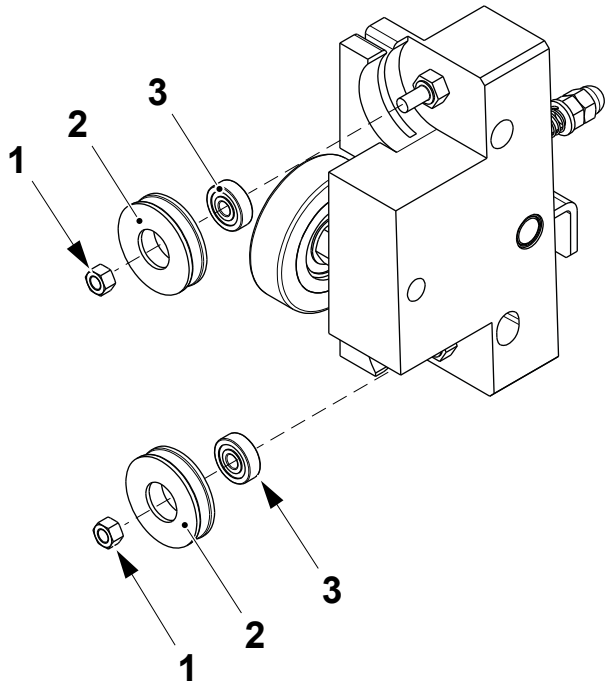

1 Nut
2 Guide wheel
3 Ball bearing

8.4.1-4 Paper Guide - Set Position

Machine Status	Mains Power OFF Air OFF Steam ON Water OFF
SPC Reference	2737931-0100

Loosen the grub screws (1) and set the distance **A** between the paper guide (2) and the frame (3), then tighten the grub screws (1).

Package	**A ±0.5 (mm)**
TBA 1000 S	51
TBA 1000 Sq - TBA 500 Sq	56
TBA 2000 S	10
TPA 1000 Sq	70
TBA 1000 B - TBA 500 B	41

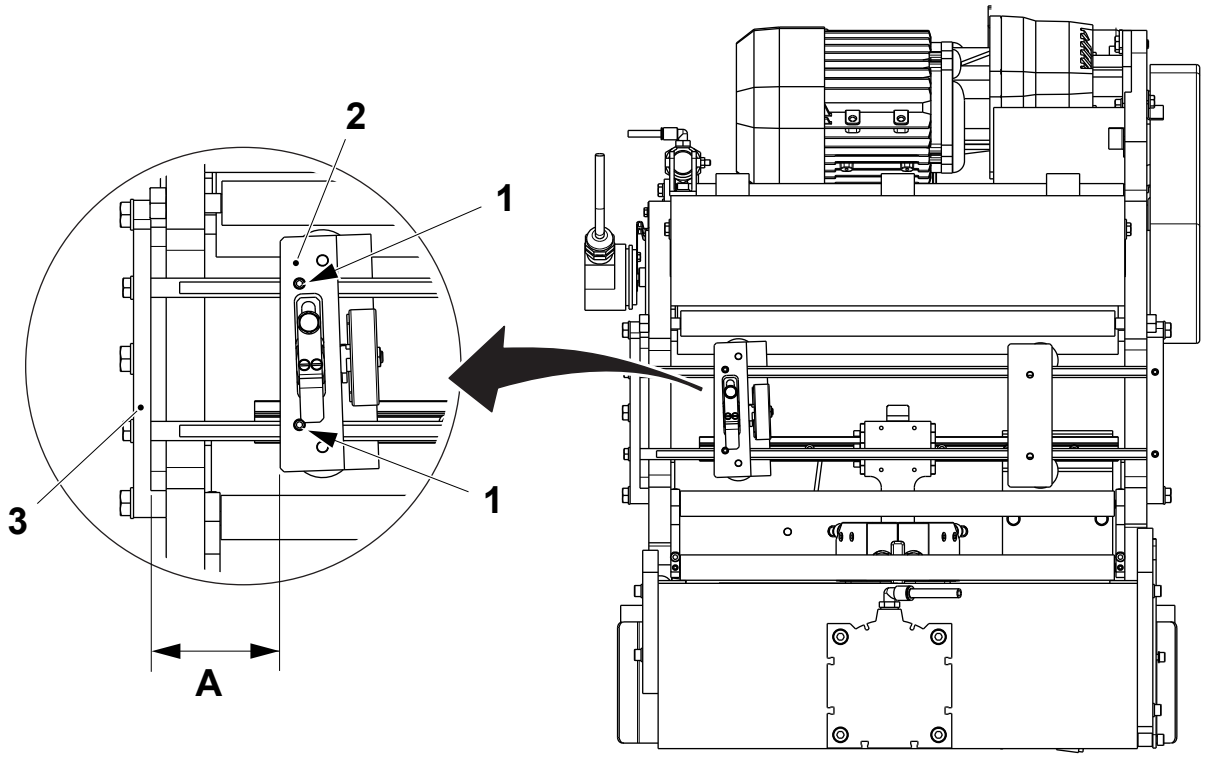

1 Grub screw
2 Paper guide
3 Frame

8.4.1-5 Paper Guide - Set Spring Tension

Machine Status	Mains Power OFF Air OFF Steam ON Water OFF
SPC Reference	2737931-0100

Adjust the pressure between the rollers (1) with the nuts (2), compress the spring (3) to increase the pressure. The two rollers must grip the packaging material (4) firmly without marking it.

Make sure that the edge of the packaging material (4) just touch the inside of the guide rollers (5) to avoid damaging the edge of the packaging material (4).

Note! If the roller applies too much pressure when set, the packaging material will be damaged. If it applies too little pressure, the packaging material may slip out of the guide.

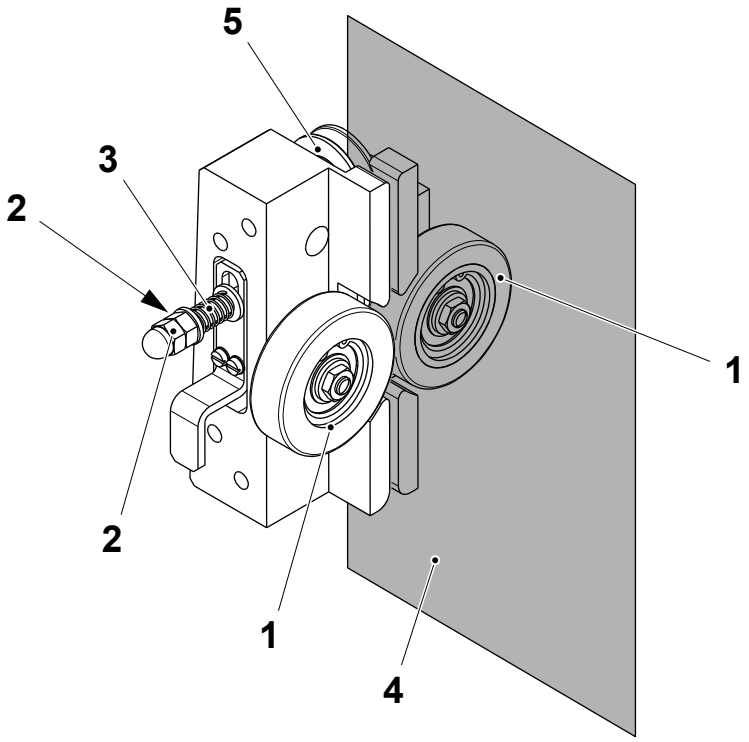

1 Roller
2 Nut
3 Spring
4 Packaging material
5 Roller

8.4.2 Paper Slide

8.4.2-1 Paper Slide - Check

Machine Status	Mains Power OFF Air OFF Steam ON Water OFF
SPC Reference	2776086-0100 2985585-0100

Check that the rollers (1) rotate freely and the surfaces of the rollers (1) are undamaged. If necessary, change the roller and the ball bearings, see 8.4.2-2 Paper Slide - Change Rollers.

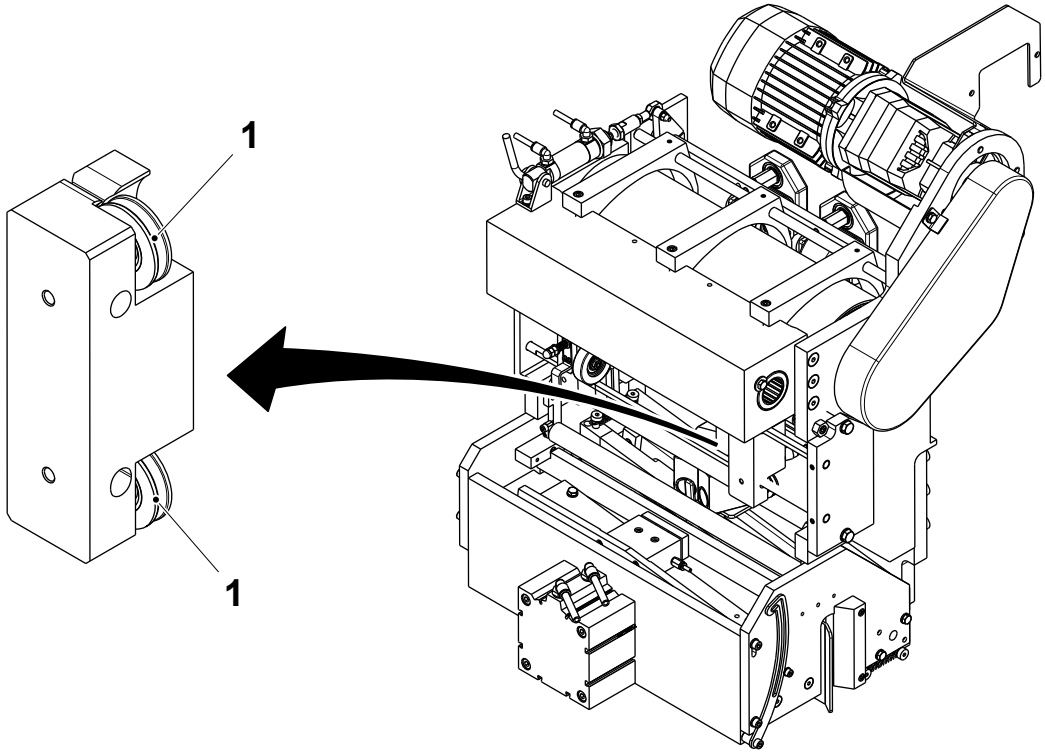

1 Roller

8.4.2-2 Paper Slide - Change Rollers

Machine Status	Mains Power OFF Air OFF Steam ON Water OFF
SPC Reference	2776086-0100

a) Remove the nuts (1).

b) Remove and change the rollers (2) and the ball bearings (3).

c) Assemble in the reverse order.

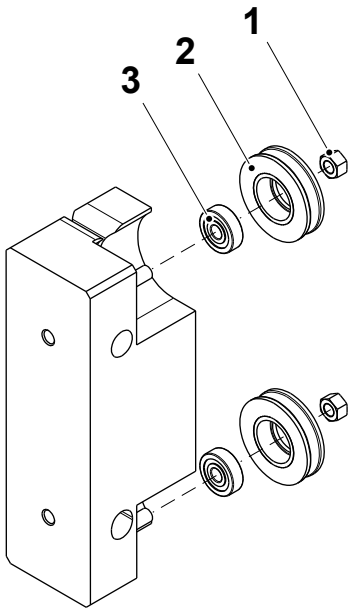

1 Screw
2 Roller
3 Ball bearing

8.4.3 Pressure Jaw

8.4.3-1 Pressure Jaw - Check Knife and Dolly

Machine Status	Mains Power OFF Air OFF Steam ON Water OFF
SPC Reference	2741003-0100

a) Move the splicing device in maintenance position, see 8.4-8 Splicing Device - Move to Maintenance Position.

b) Remove the screws (1) and loosen the screws (2).

c) Move the plate (3) downwards and swing it open.

d) Lock the plate (3) in position with the catch (4).

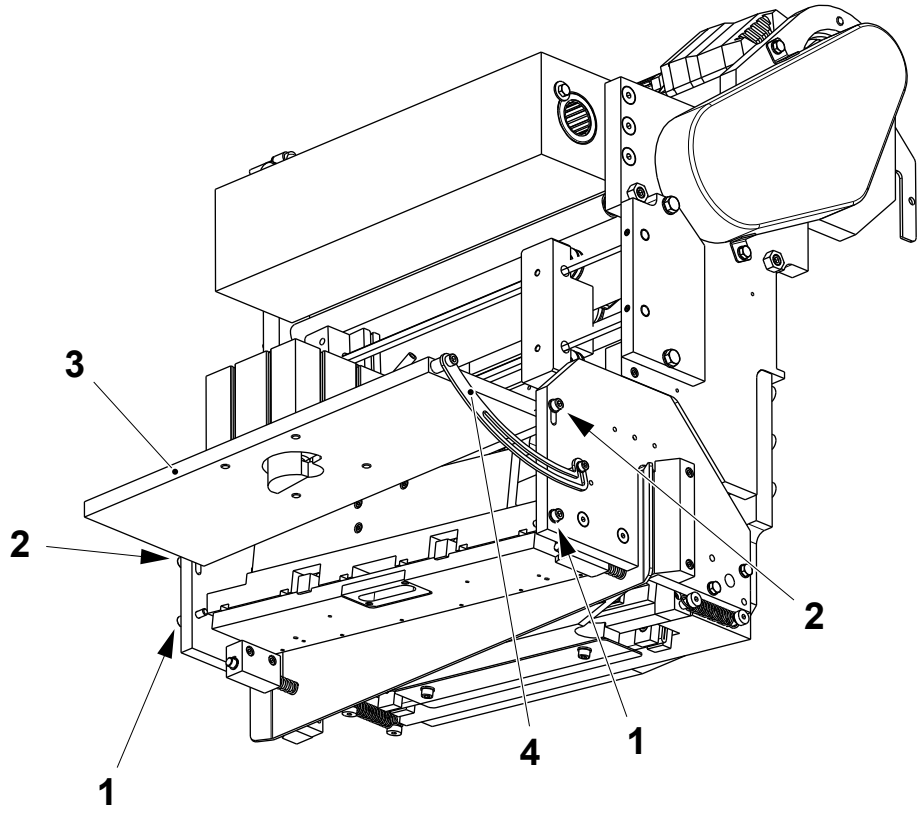

1 Screw
2 Screw
3 Plate
4 Catch

(Cont'd)

(Cont'd)

WARNING
Blade hazard.
The knife is sharp. Wear personal protective equipment.

e) Slip off the knife holder (5).

f) Check the knife (6) for wear or damage. If necessary, remove the screws (7) and change the knife (6).

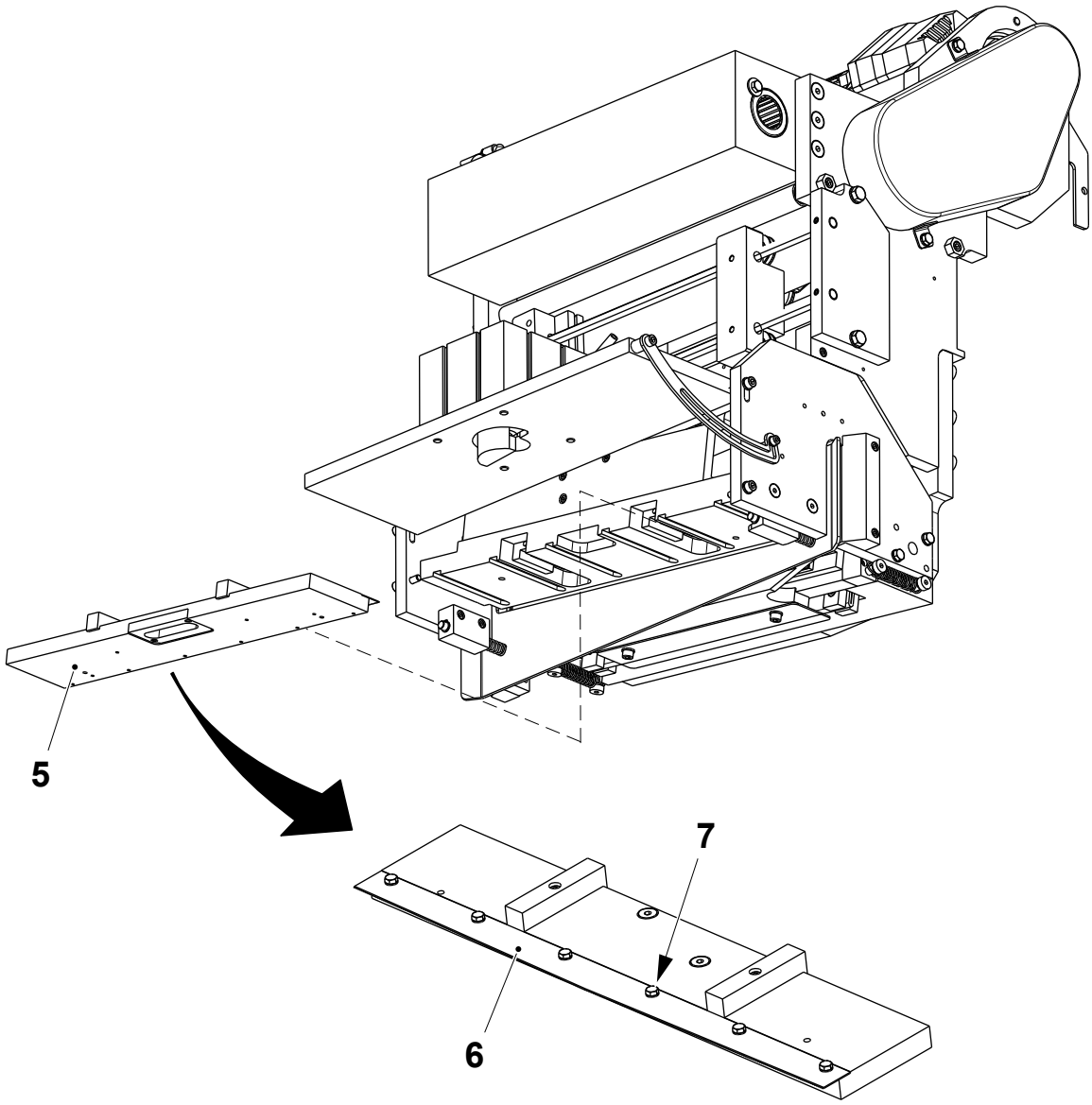

5 Knife holder
6 Knife
7 Screw

(Cont'd)

(Cont'd)

g) Remove the screws (8) and rotate the support (9) by 90º.

h) Remove the plate (10) from the guide (11) and slip it off sideways from RH side to LH side.

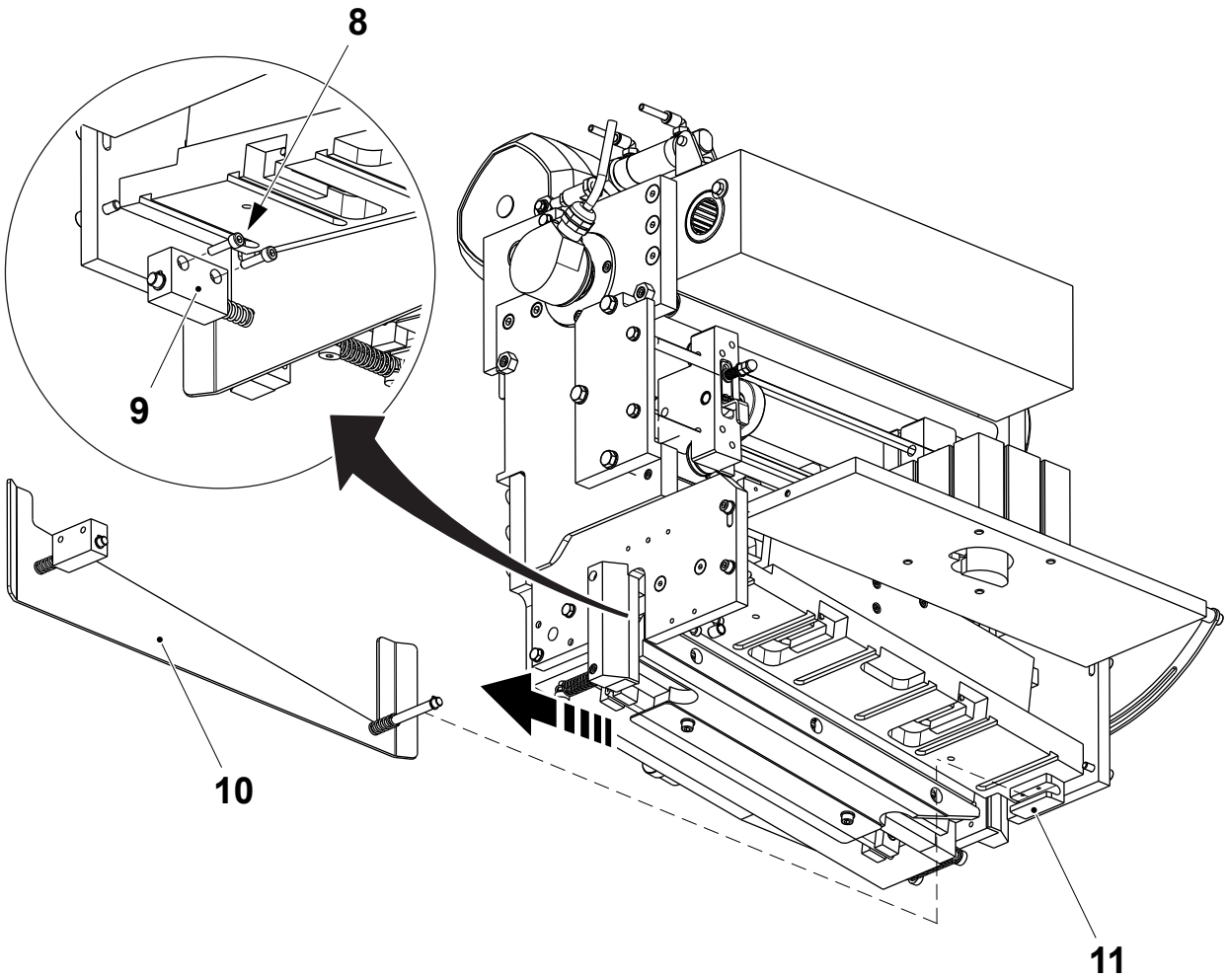

8 Screw
9 Support
10 Plate
11 Guide

(Cont'd)

(Cont'd)

i) Disconnect the air hoses from the web tension cylinder (12).

j) Remove the screws (13) and pull out the dolly holder (14).

k) Check the dolly (15) for wear or damage. If necessary, change the dolly (15).

l) Assemble in the reverse order.

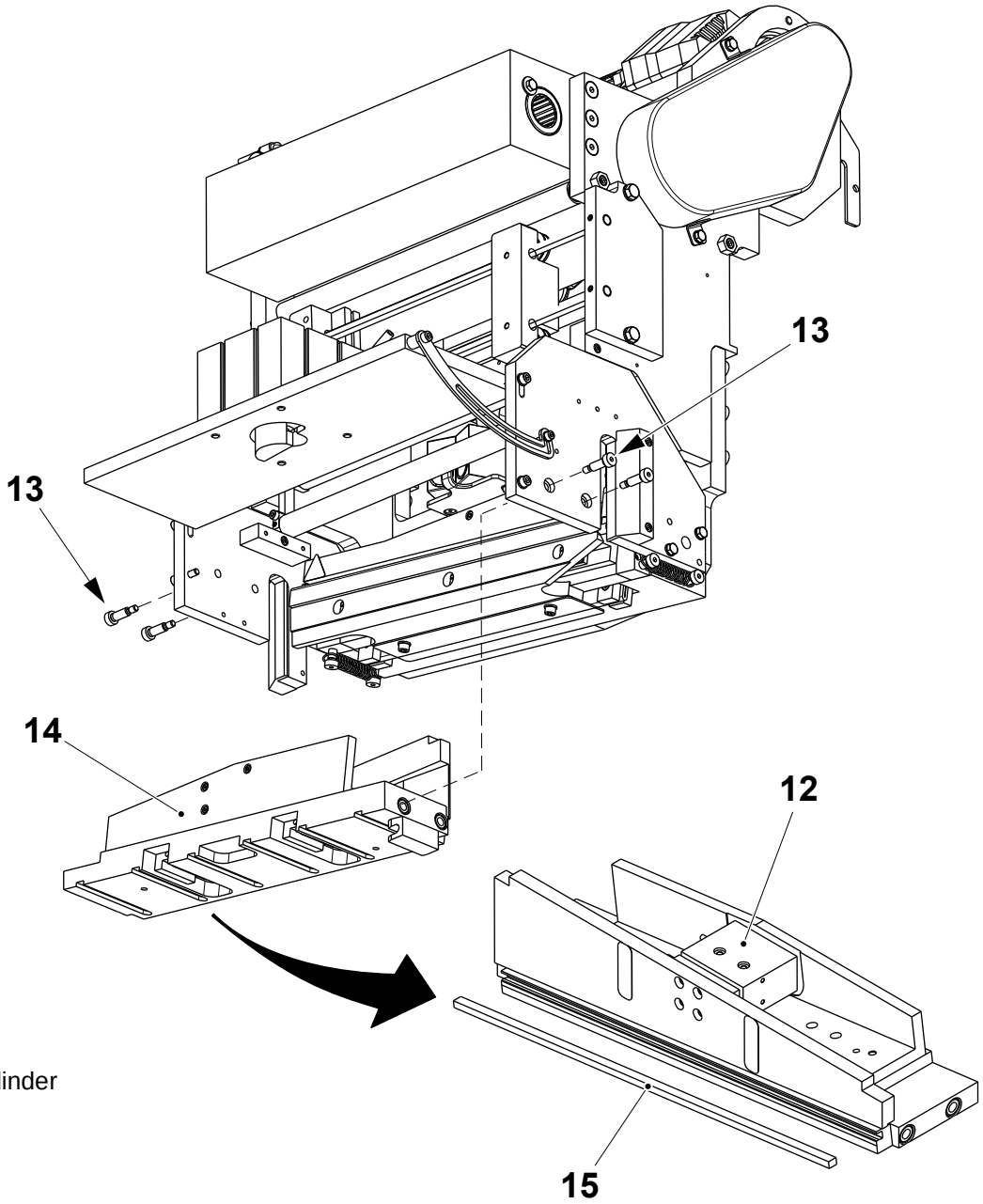

12 Web tension cylinder
13 Screw
14 Dolly holder
15 Dolly

8.4.3-2 Pressure Jaw - Change Cylinders

Machine Status	Mains Power OFF Air OFF Steam ON Water OFF
Special Equipment	Locking Fluid TP No. 90157-0016
SPC Reference	2741003-0100

Cutting Cylinder

a) Lift the plate (1), see 8.4.3-1 Pressure Jaw - Check Knife and Dolly.

b) Disconnect the air hoses (2) from the cylinder (3).

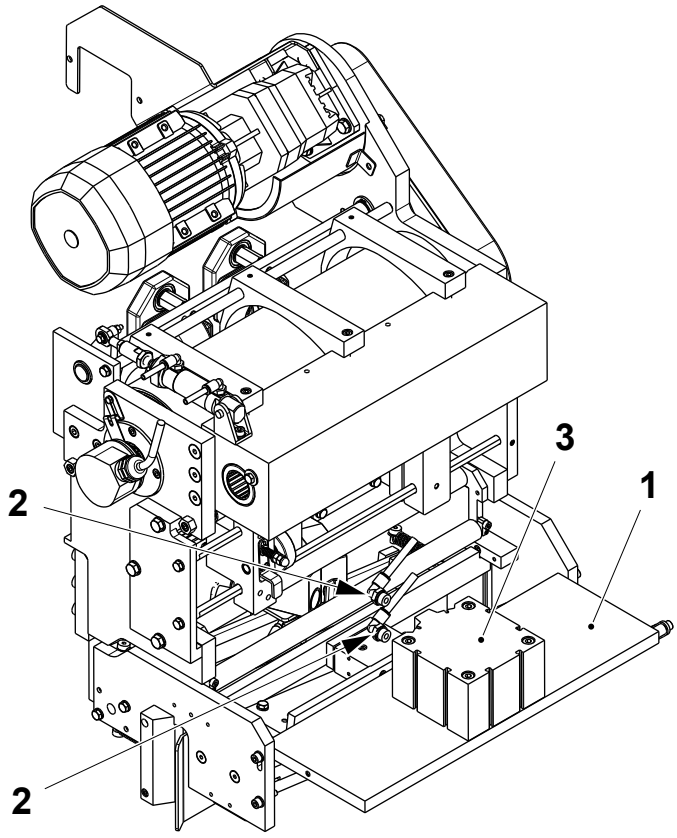

1 Plate
2 Air hose
3 Cylinder

(Cont'd)

(Cont'd)

c) Remove the screws (4).

d) Remove the cylinder (3).

e) Hold the cylinder piston (5) with the spanner and turn the pin (6) to separate it from the cylinder (3).

f) Apply locking fluid to the threads of the pin (6) and fit it in the new cylinder.

g) Assemble in the reverse order.

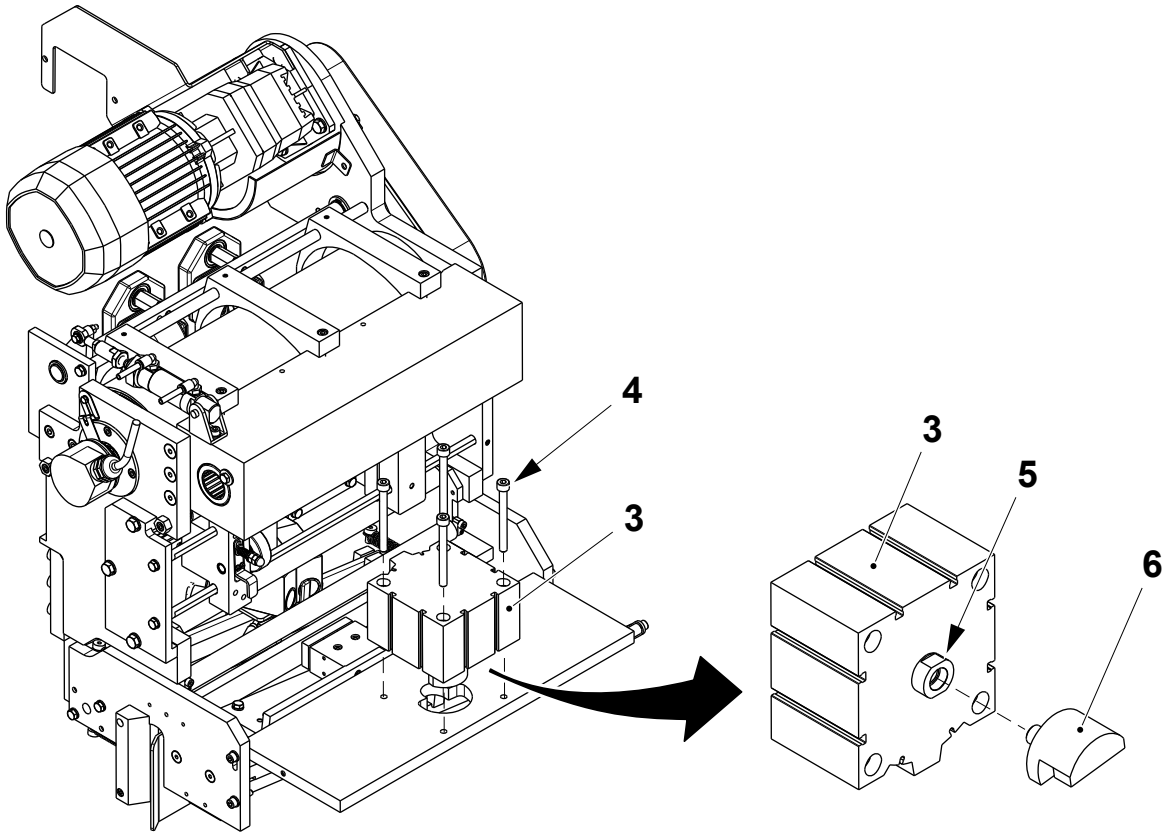

3 Cylinder
4 Screw
5 Cylinder piston
6 Pin

(Cont'd)

(Cont'd)

WARNING

Blade hazard.

The knife is sharp. Wear personal protective equipment.

Web Tension Cylinder

a) Move the splicing device in maintenance position, see 8.4-8 Splicing Device - Move to Maintenance Position.

b) Disconnect the air hoses from the cylinder (1).

c) Remove the knife holder (2), the plate (3) and the dolly holder (4), see 8.4.3-1 Pressure Jaw - Check Knife and Dolly.

d) Place the dolly holder (4) on the work bench.

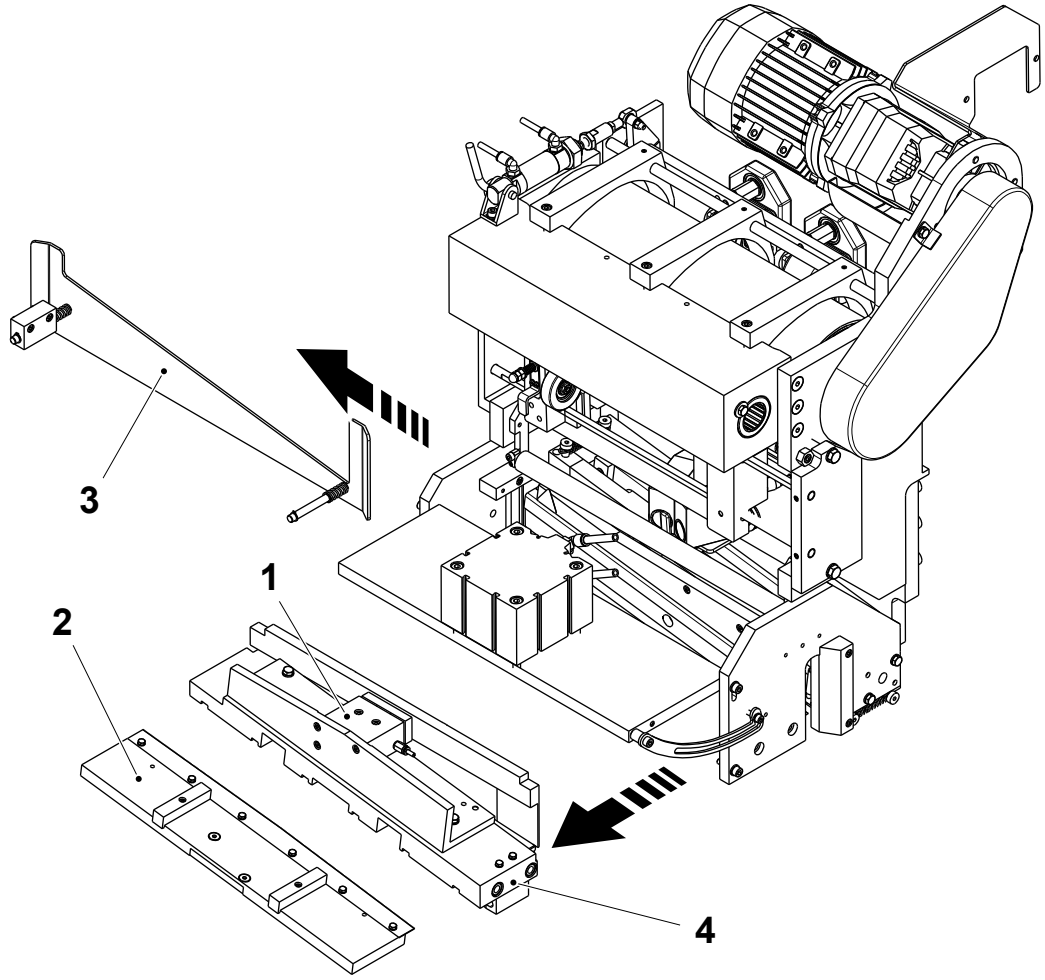

1 Cylinder
2 Knife holder
3 Plate
4 Dolly holder

(Cont'd)

(Cont'd)

e) Remove the screw (5) and the rail (6).
f) Remove the screws (7) and change the cylinder (1).
g) Fit back the rail (6) by the screws (5).
h) Assemble in the reverse order.

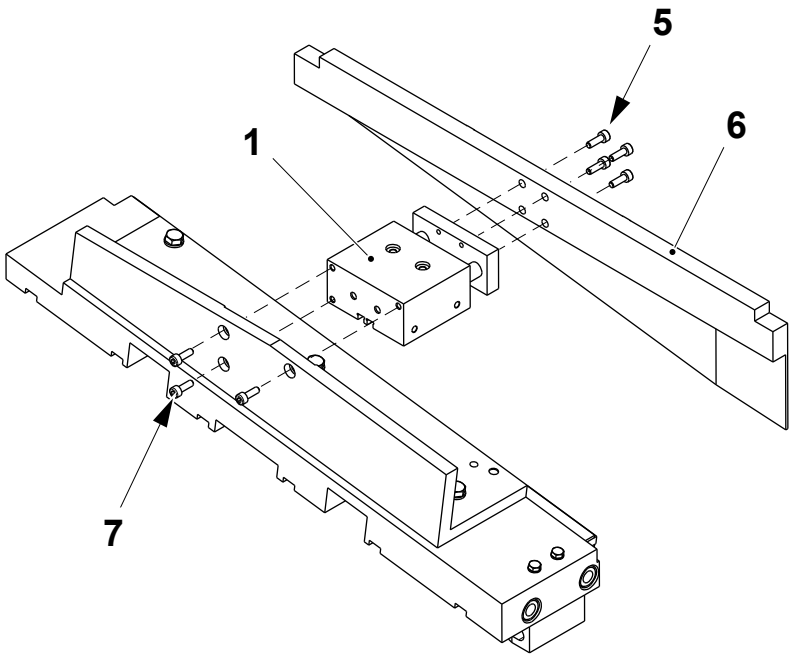

1 Cylinder
5 Screw
6 Rail
7 Screw

(Cont'd)

(Cont'd)

i) Check that the web tension is set to 2 bar. If the pressure is wrong, turn the control knob (8) until the pressure gauge (9) indicates the correct pressure.

j) Check that the air circuit is set to the correct pressure, see 10.1 Technical Data. If the pressure is wrong, turn the control knob (10) until the pressure gauge (11) indicates the correct pressure.

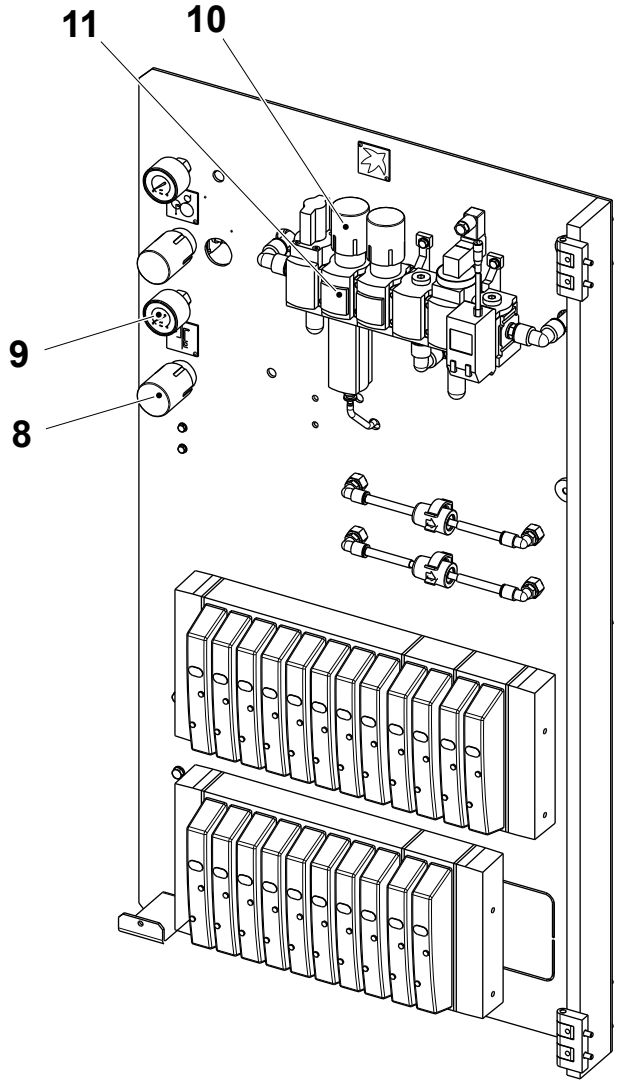

8 Control knob
9 Pressure gauge
10 Control knob
11 Pressure gauge

8.4.4 Heating Unit

8.4.4-1 Heating Unit - Check Sealing Plate

Machine Status	Mains Power OFF Air OFF Steam ON Water OFF
Special Equipment	Sealing Plate Cleaning Tool TP No. 2994287-0000
SPC Reference	2797149-0100

WARNING

Risk of burns.

The sealing plate is hot after use. Nearby parts may also be hot. Wear heat resistant protective gloves.

a) Move the splicing device in maintenance position, see 8.4-8 Splicing Device - Move to Maintenance Position.

(Cont'd)

(Cont'd)

WARNING
Blade hazard.
The knife is sharp. Wear personal protective equipment.

b) Swing the plate (1) open and remove the knife holder (2) and the plate (3), see 8.4.3-1 Pressure Jaw - Check Knife and Dolly.

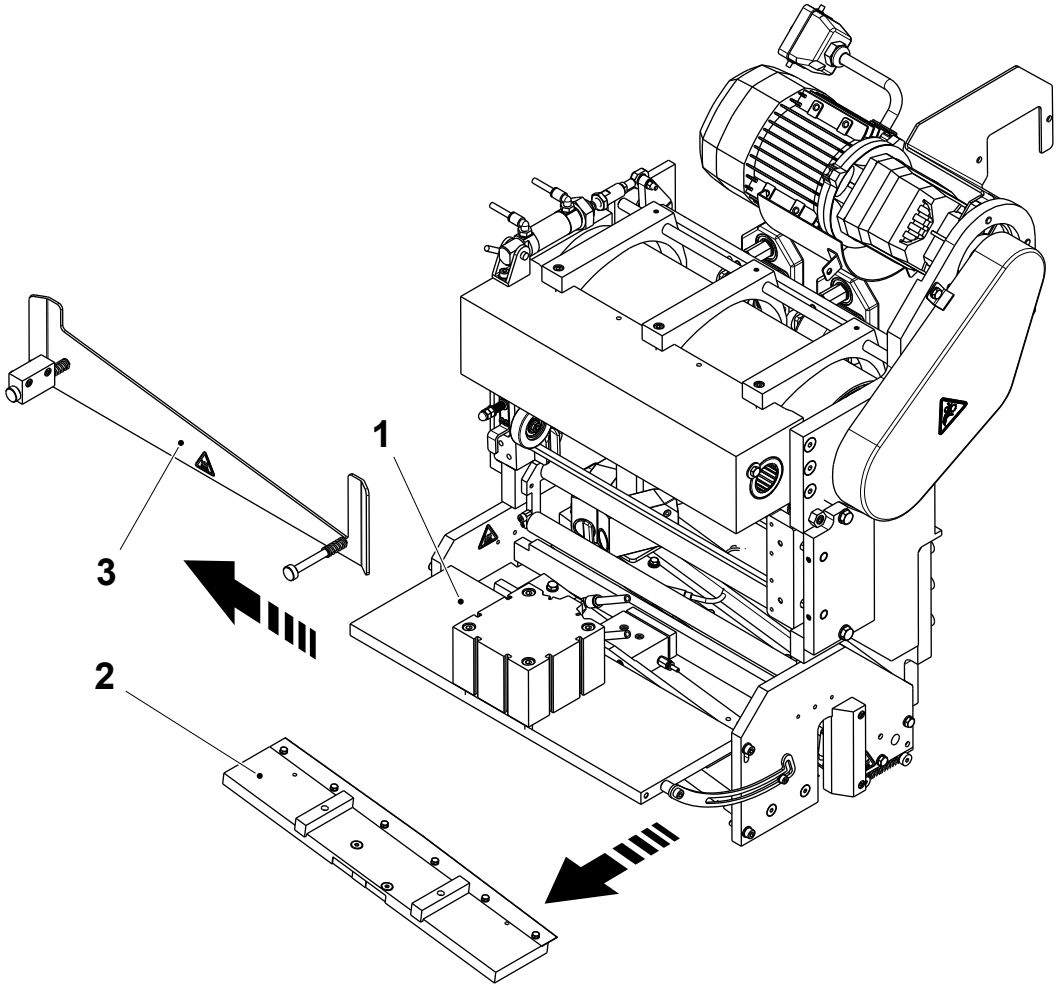

1 Plate
2 Knife Holder
3 Plate

(Cont'd)

(Cont'd)

CAUTION
Risk of damage to the equipment.
Do not use metallic or abrasive tools for cleaning. The surface treatment on the sealing plate is easily damaged.

c) Check the sealing plate (4) for wear or damage. Change if necessary, see 8.4.4-2 Heating Unit - Change Heating Bar.

d) Check that the sealing plate (4) is free from packaging material deposits. Clean if necessary with the tool (5) TP No. 2994287-0000.

Note! Perform the cleaning when the sealing plate is still warm.

e) With aid of a feeler gauge, check the distance **A** between the sealing plate (4) and the counter bar (6).

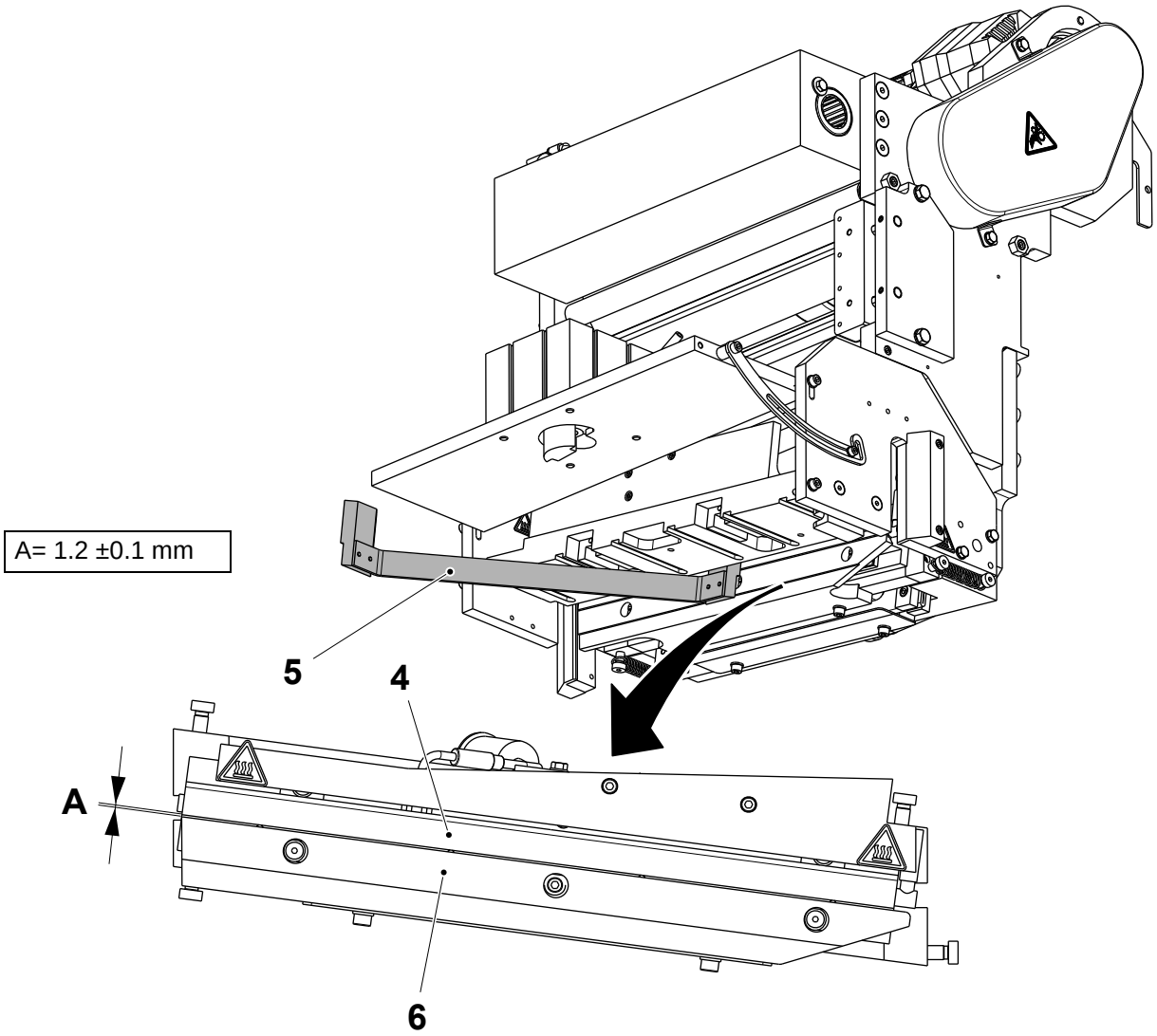

4 Sealing plate
5 Tool
6 Counter bar

8.4.4-2 Heating Unit - Change Heating Bar

Machine Status	Mains Power OFF Air OFF Steam ON Water OFF
Consumables	Silicone Paste TP No. 90296-0051
SPC Reference	2592567-0100

WARNING

Risk of burns.

The sealing plate is hot after use. Nearby parts may also be hot. Wear heat resistant protective gloves.

a) Move the splicing device in maintenance position, see 8.4-8 Splicing Device - Move to Maintenance Position.

(Cont'd)

(Cont'd)

WARNING
Blade hazard.
The knife is sharp. Wear personal protective equipment.

b) Swing the plate (1) open and remove the knife holder, the plate and the dolly holder, see 8.4.3-1 Pressure Jaw - Check Knife and Dolly.

c) Disconnect the air hoses (2) from the cylinder (3).

d) Remove the screws (4) and (5) and remove the plate (1).

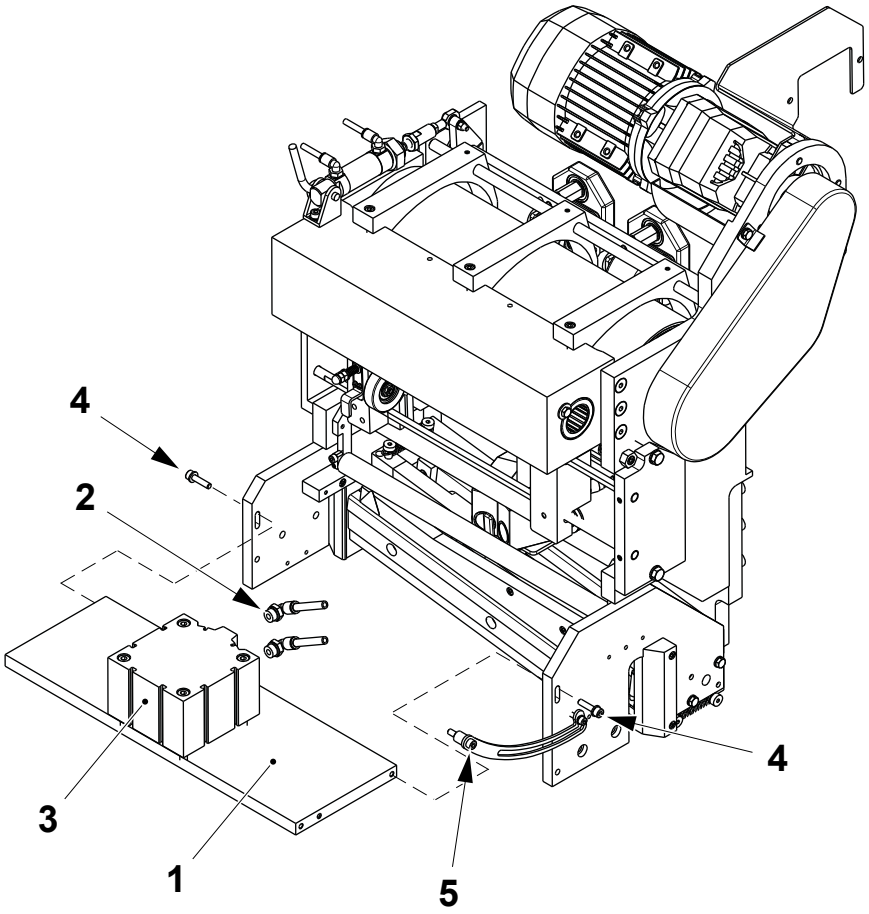

1 Plate
2 Air hose
3 Cylinder
4 Screw
5 Screw

(Cont'd)

(Cont'd)

e) Disconnect the electrical connection (6) and the thermocouple (7).

f) Unhook the four springs (8) securing the four shoulder screws (9) and remove the constant heat device (10).

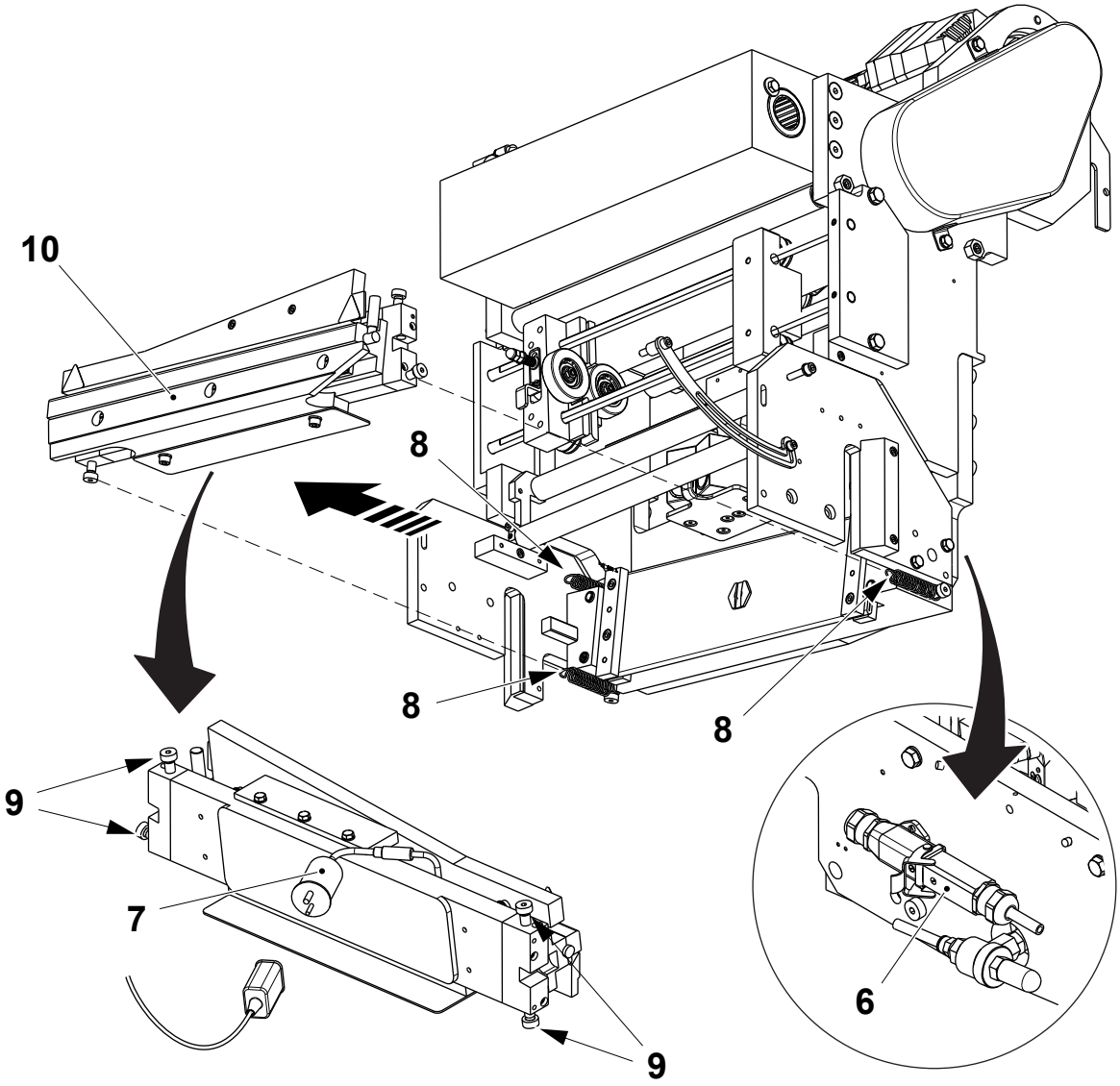

6 Electrical connection
7 Thermocouple
8 Spring
9 Shoulder screw
10 Constant heat device

(Cont'd)

(Cont'd)

g) Remove the screws (11) and the plate (12).

h) Remove the screws (13) and the counter bar (14).

i) Remove the two screws (15) and the spacers (16).

j) Remove the four screws (17) taking care of the washers (18), the plate (19) and the spacers (20).

Note! When assembling insert the washers (18) as shown below.

k) Remove the sealing plate assembly (21).

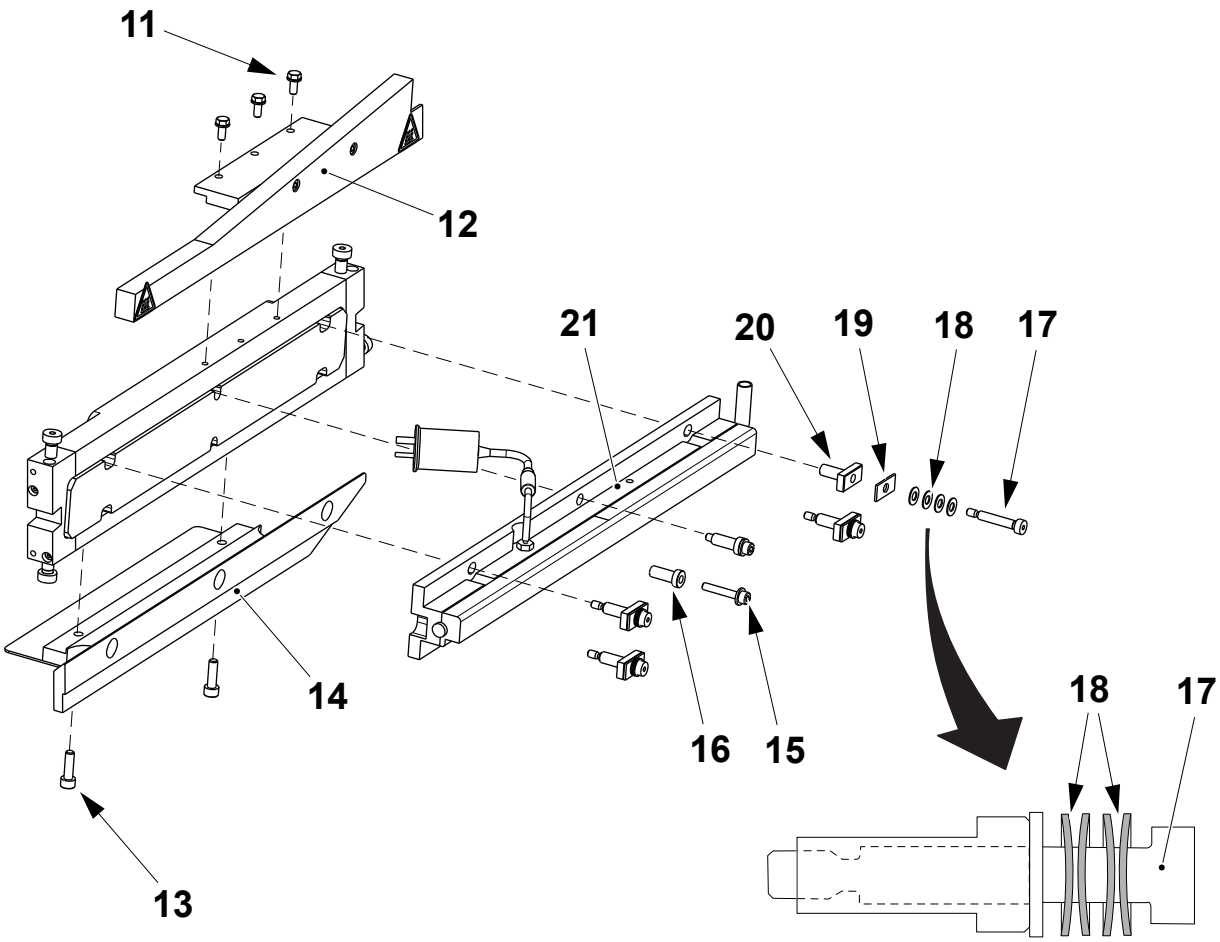

11 Screw
12 Plate
13 Screw
14 Counter bar
15 Screw
16 Spacer
17 Screw
18 Washer
19 Plate
20 Spacer
21 Sealing plate assembly

(Cont'd)

(Cont'd)

Note! Apply the silicone paste on the new heating bar (24).

l) Loosen the screws (22) and remove the sealing plate (23) and the heating bar (26).

m) Change the heating bar (24) if necessary, applying on it the silicone paste.

n) Assemble in the reverse order.

Note! When assembling set the distance **A** between the end of the heating bar (24) and the sealing plate (23).

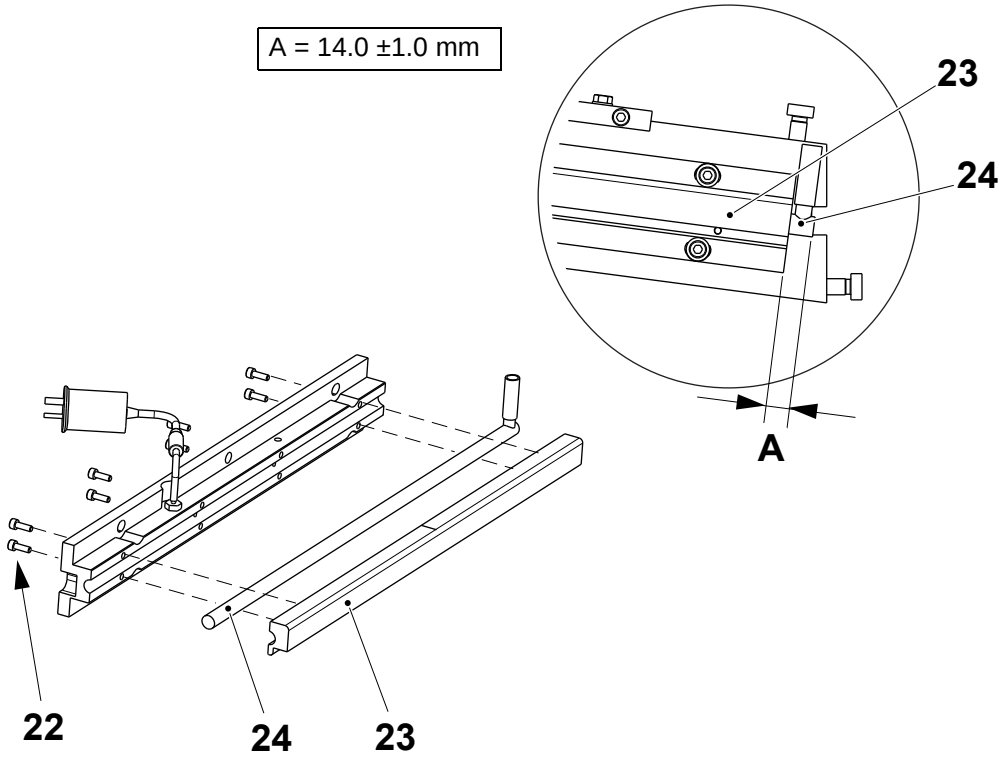

22 Screw
23 Sealing plate
24 Heating bar

8.4.4-3 Heating Unit - Change Guides

Machine Status	Mains Power OFF Air OFF Steam ON Water OFF
SPC Reference	2797149-0100

a) Remove the heating unit (1), see 8.4.4-2 Heating Unit - Change Heating Bar from step a) to e).

b) Remove the shoulder screws (2).

c) Remove the screws (3) and change the guides (4).

d) Assemble the guides (4) on the heating unit (1) by centring the pins (5).

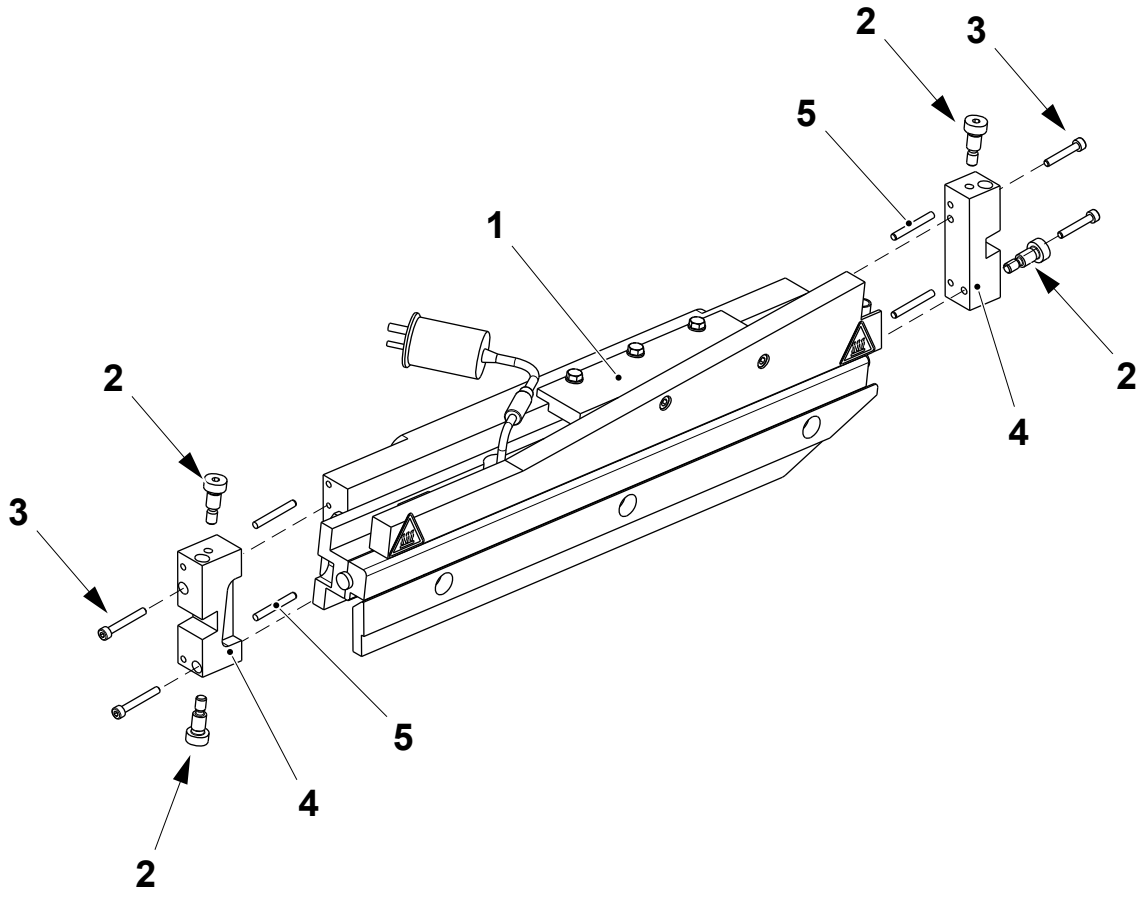

1 Heating unit
2 Shoulder screw
3 Screw
4 Guide
5 Pin

(Cont'd)

(Cont'd)

Note! Make sure that the heating unit has been removed from the splicing device.

e) On both sides of the splicing device frame remove the screw (6) and change the guide (7).

f) Assemble in the reverse order.

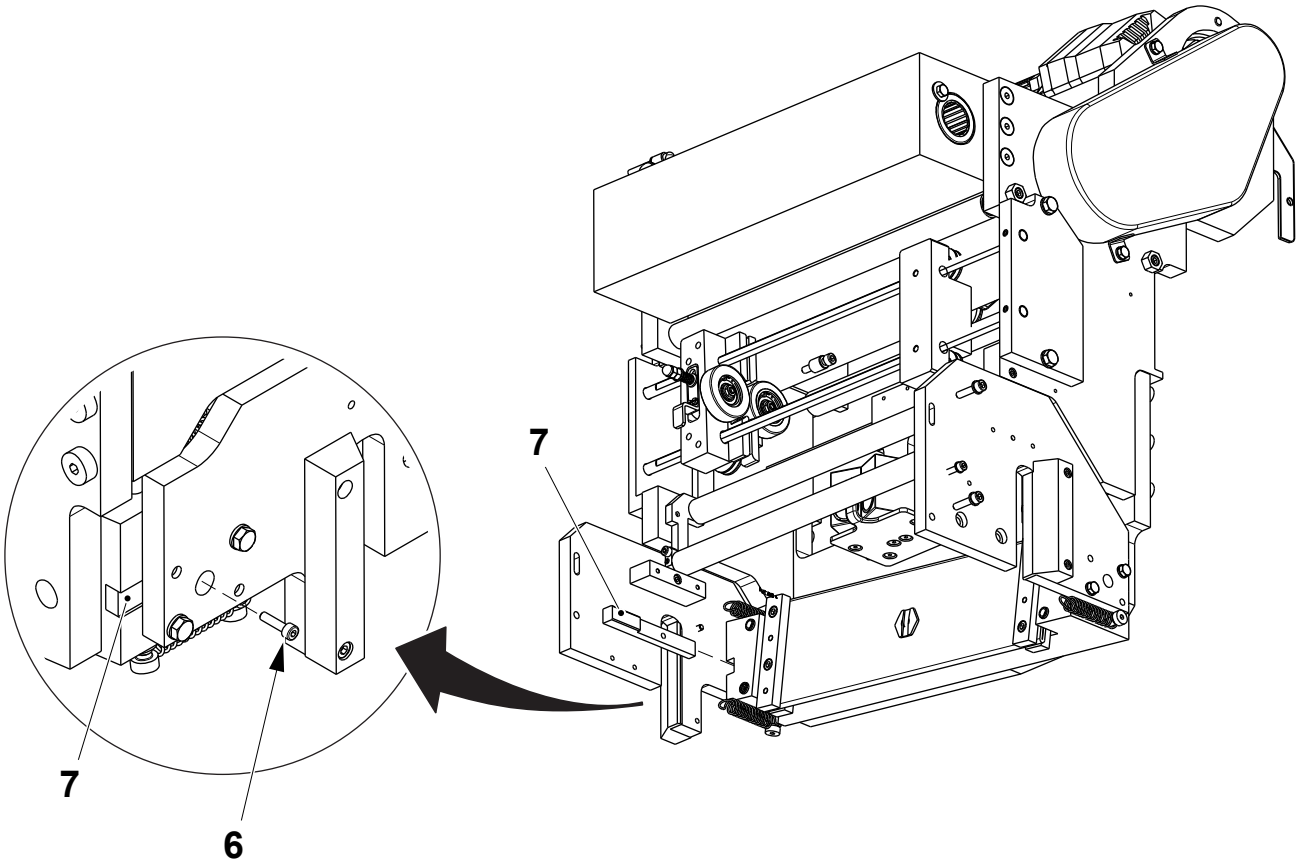

6 Screw
7 Guide

8.4.4-4 Heating Unit - Change Pneumatic Hose

Machine Status	Mains Power OFF Air OFF Steam ON Water OFF
SPC Reference	2797149-0100

a) Remove the constant heat device, see 8.4.4-2 Heating Unit - Change Heating Bar from step a) to e).

b) With the aid of two keys hold the nipple (1) and loosen the quick exhaust valve (2).

c) Remove and change the pneumatic hose (3).

d) Assemble in the reverse order.

Note! When assembling wrap the quick exhaust valve (2) with teflon tape.

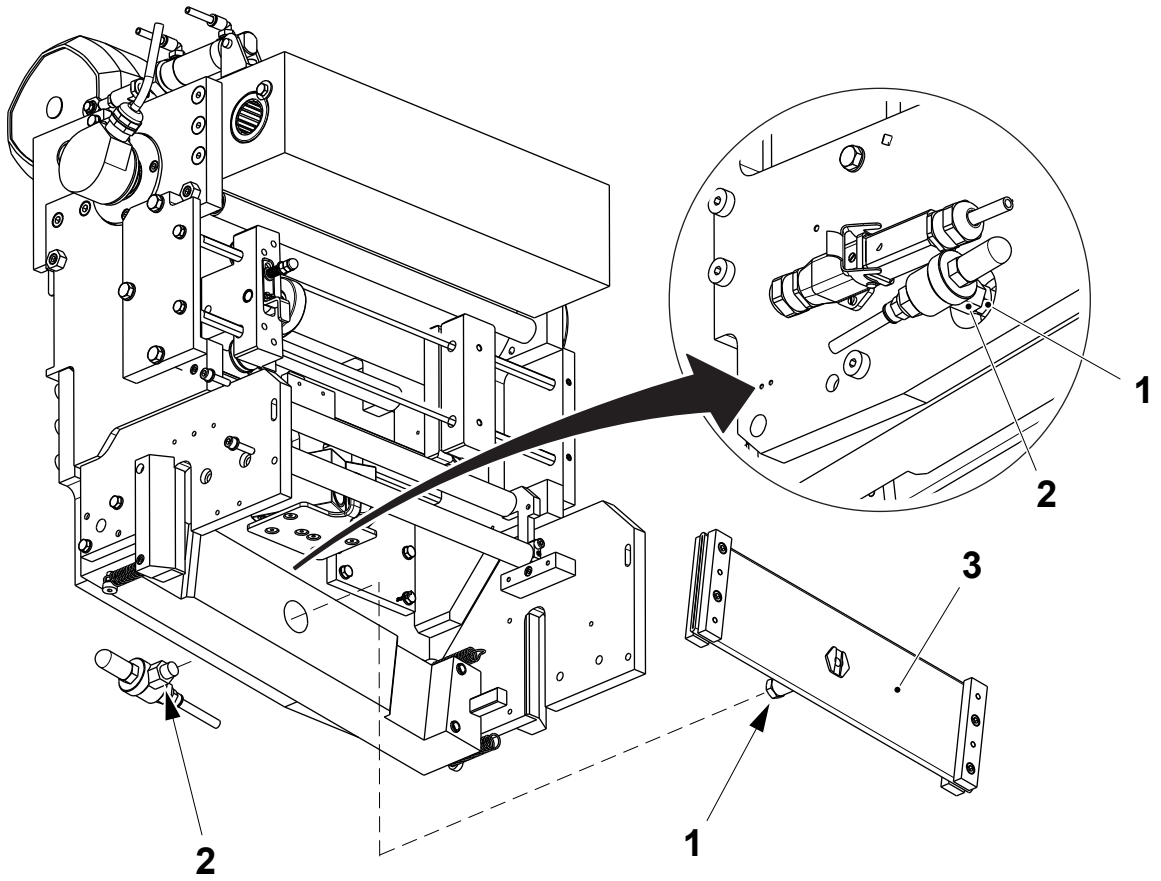

1 Nipple
2 Quick exhaust valve
3 Pneumatic hose

8.4.5 Counter Roller

8.4.5-1 Counter Roller - Check

Machine Status	Mains Power OFF Air OFF Steam ON Water OFF
SPC Reference	2806679-0100

Check that:

- the counter rollers (1) work correctly when they are moved from the cylinder (2). If not, set the cylinder, see 8.4.5-3 Counter Roller - Set Cylinder.
- the surface of the counter rollers (1) are not worn or damaged and the ball bearings rotate freely. If not, change any worn parts, see 8.4.5-2 Counter Roller - Overhaul.

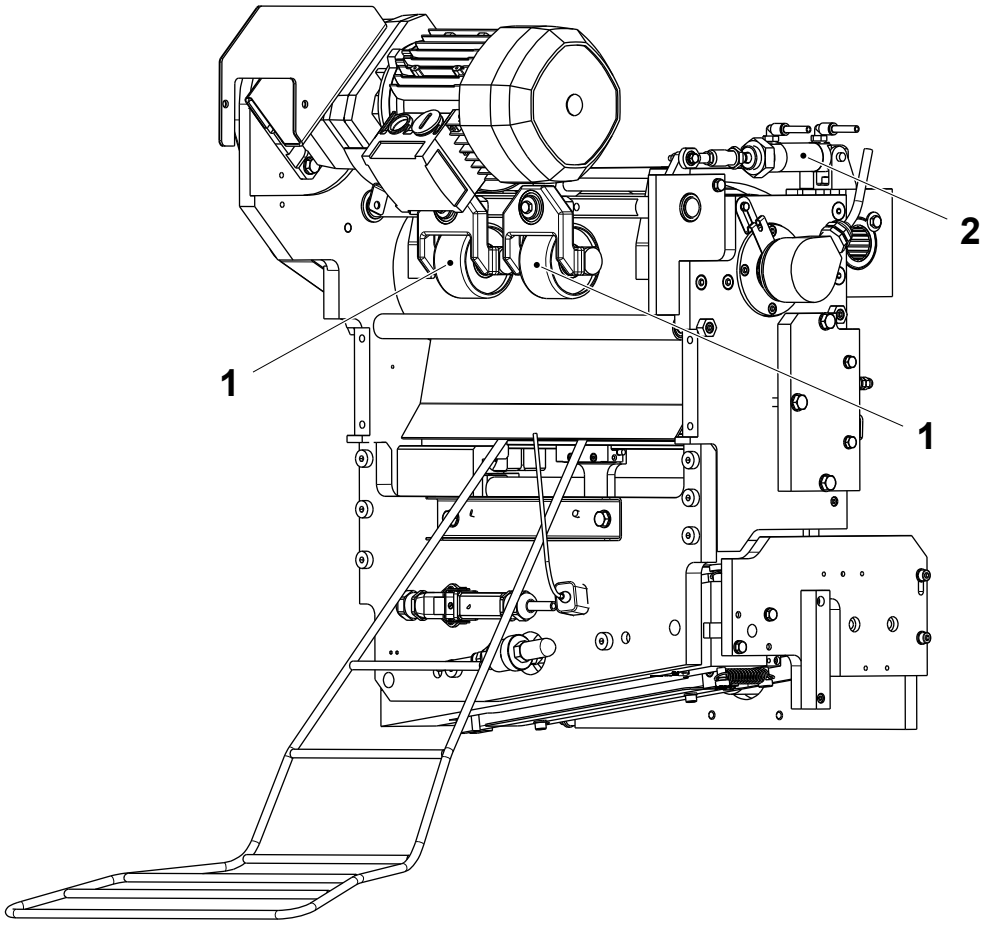

1 Counter roller
2 Cylinder

8.4.5-2 Counter Roller - Overhaul

Machine Status	Mains Power OFF Air OFF Steam ON Water OFF
SPC Reference	2806679-0100

a) Remove the screws (1) and the cover (2).

a) Remove the screws (3) and (4).

b) Remove the screws (5) and the paper guide (6).

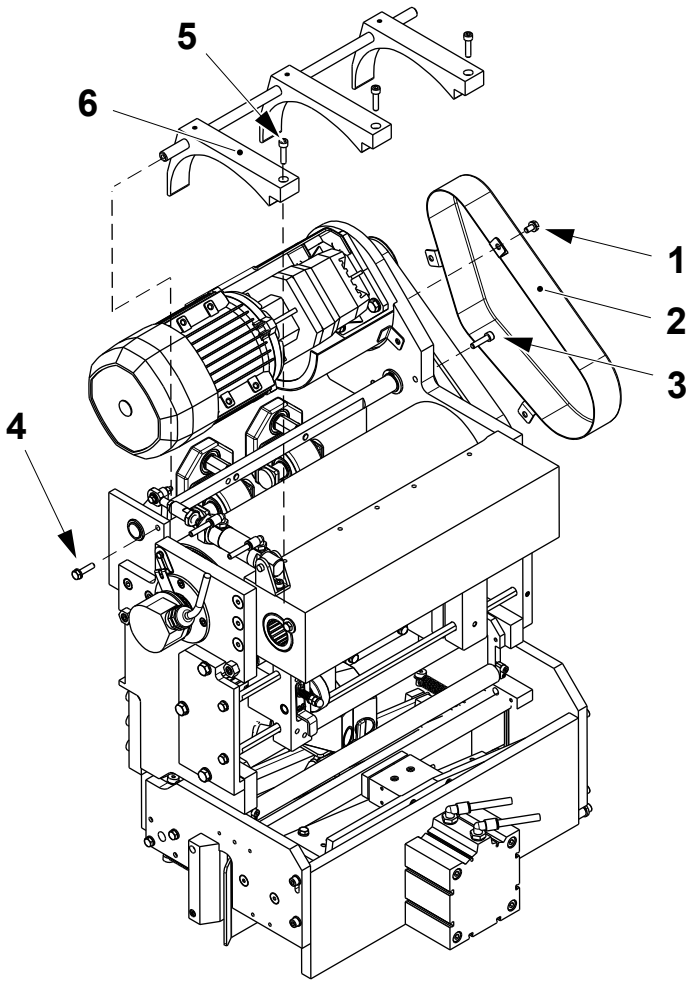

1 Screw
2 Cover
3 Screw
4 Screw
5 Screw
6 Paper guide

(Cont'd)

(Cont'd)

c) Remove the nut (7) and disconnect the cylinder rod end (8) from the lever (9).

d) Remove the retaining ring (10).

e) Remove the screws (11) and the counter roller assembly (12)

f) Change the flange bearing (13).

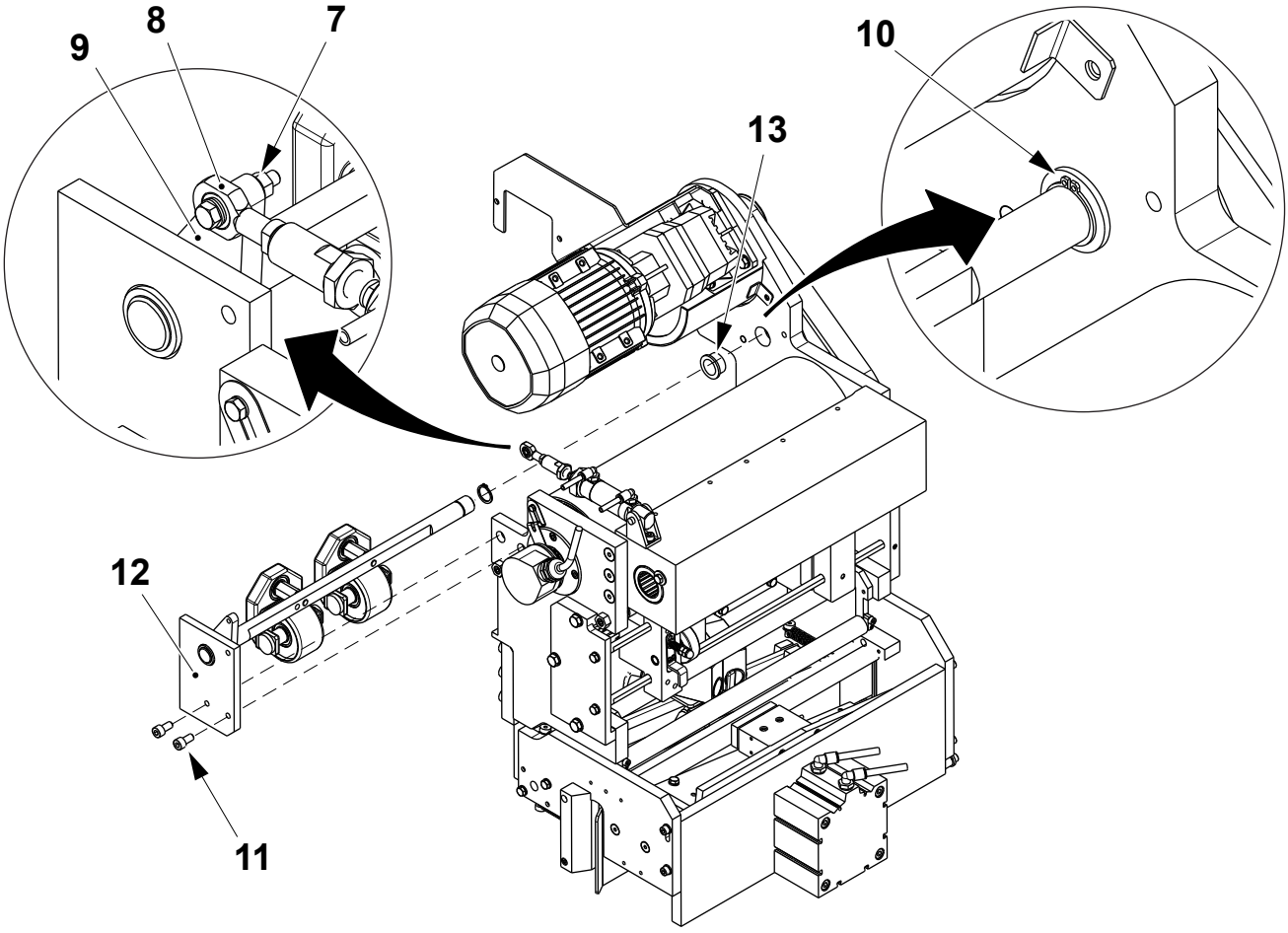

7 Nut
8 Rod end
9 Lever
10 Retaining ring
11 Screw
12 Counter roller assembly
13 Flange bearing

(Cont'd)

(Cont'd)

g) Remove the retaining ring (14) and separate the shaft (15) from the plate (16).

h) Change the flange bearing (17).

i) Remove the counter rollers from the shaft (15) by the screw (18)

j) Remove the ball bearings (19) and change them if necessary.

k) Loosen the nut (20) and remove the axle (21).

l) Remove the wheel (22) and change the ball bearings (23) if necessary.

m) Assemble in the reverse.

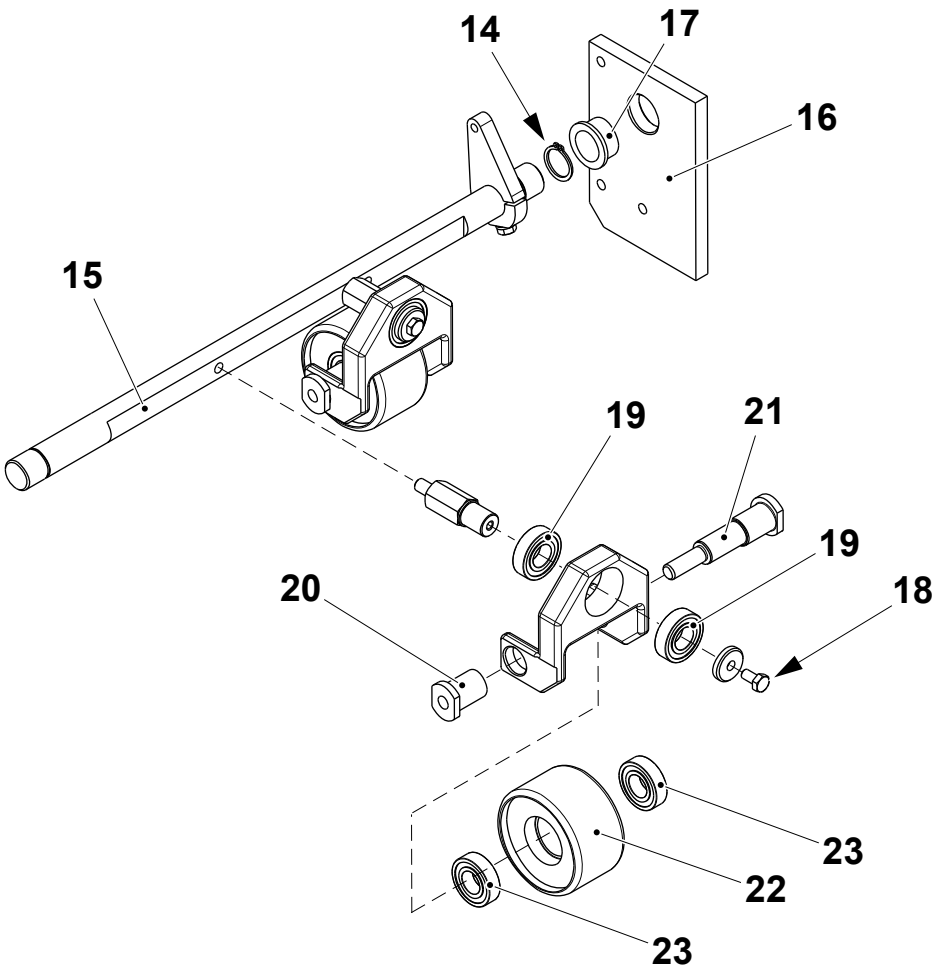

14 Retaining ring
15 Shaft
16 Plate
17 Flange bearing
18 Screw
19 Ball bearing
20 Nut
21 Axle
22 Wheel
23 Ball bearing

8.4.5-3 Counter Roller - Set Cylinder

Machine Status	Mains Power OFF Air OFF Steam ON Water OFF
SPC Reference	2806679-0100

When the cylinder (1) is fully retracted, set the distance **A** between the centre of the rod eye (2) and the threaded base (3) by means of the nut (4).

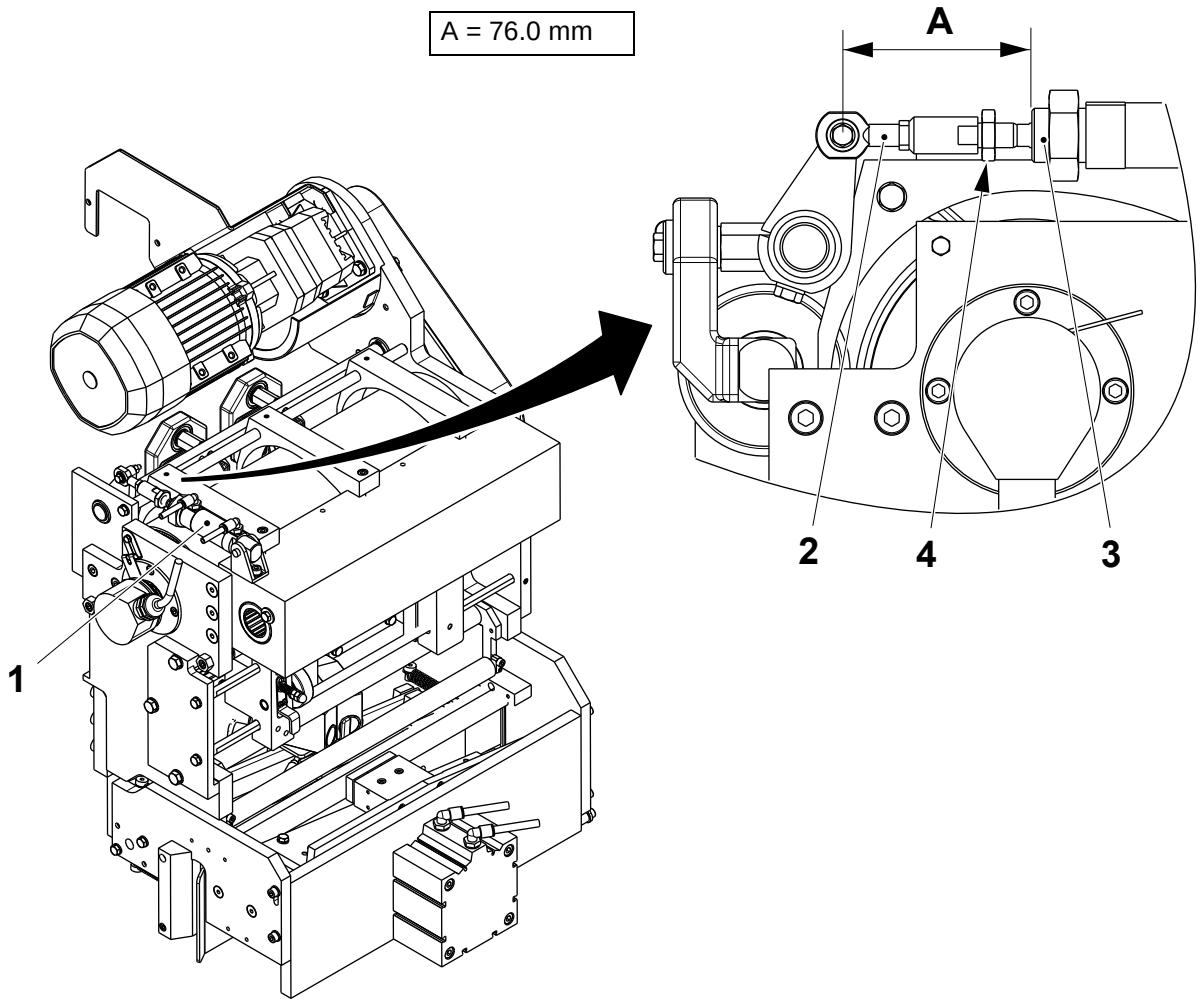

1 Cylinder
2 Rod eye
3 Threaded base
4 Nut

8.5 Material Holder

8.5-1 Material Holder - Change Blade

Machine Status	Mains Power OFF Air OFF Steam ON Water OFF
SPC Reference	2731220-0100

Note! The blade (1) must be placed on the blade holder (2) so that the sharp edge cuts the packaging material by moving the slide (3) from RH side to LH side on the cutting table (4), see arrow.

a) Check the sharpness of the blade (1) by moving the slide (3) over a piece of packaging material.

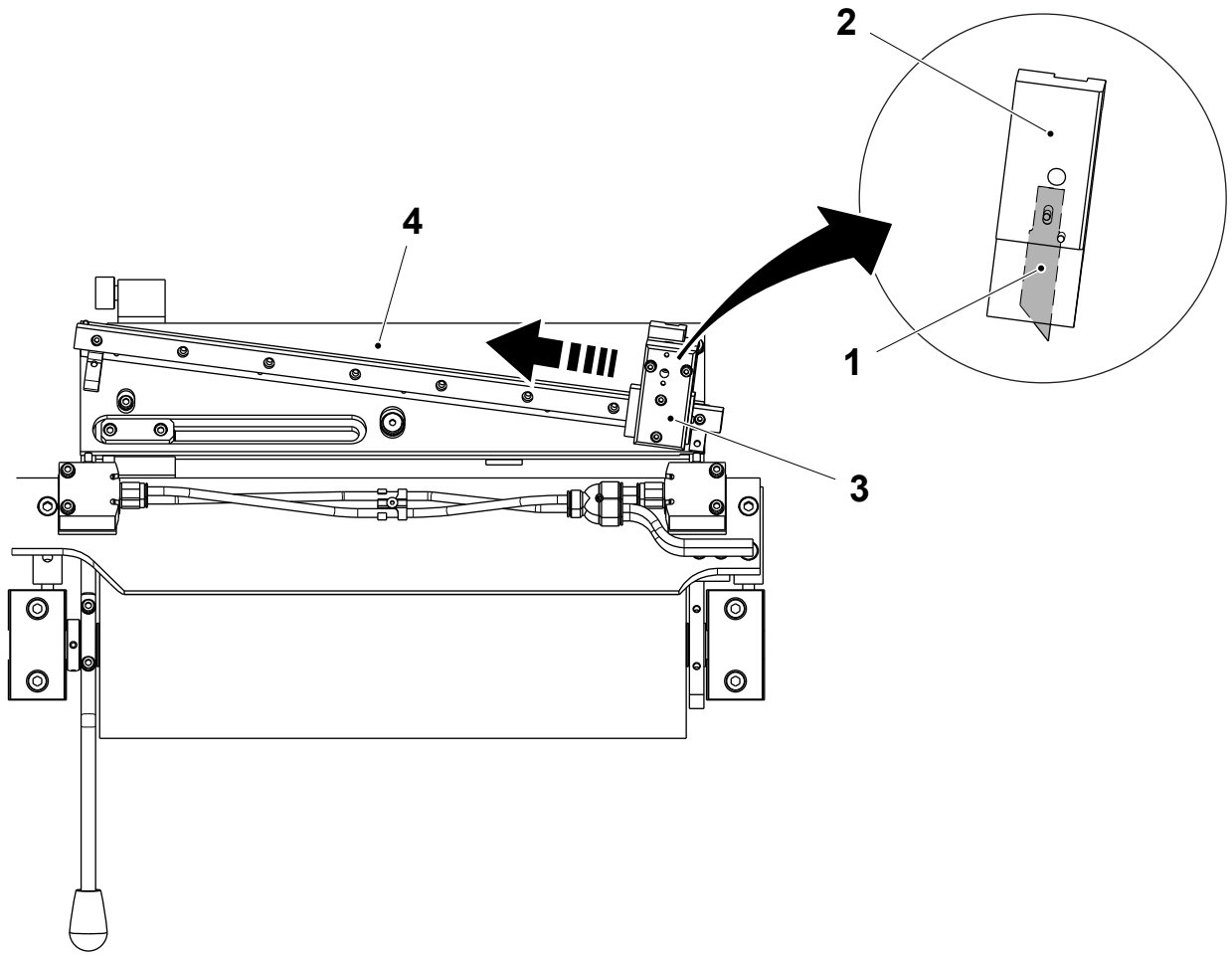

1 Blade
2 Blade holder
3 Slide
4 Cutting table

(Cont'd)

(Cont'd)

b) If necessary, change the blade (1):
   - loosen the grub screw (5) and remove the blade holder (2)
   - change the blade (1)
   - clean the blade holder (2) of any packaging material residue
   - assemble in the reverse order.

Note! Check the grub screw (6) is in line with the surface of the blade (1). This grub screw (6) prevents the wrong fitting of the blade (1).

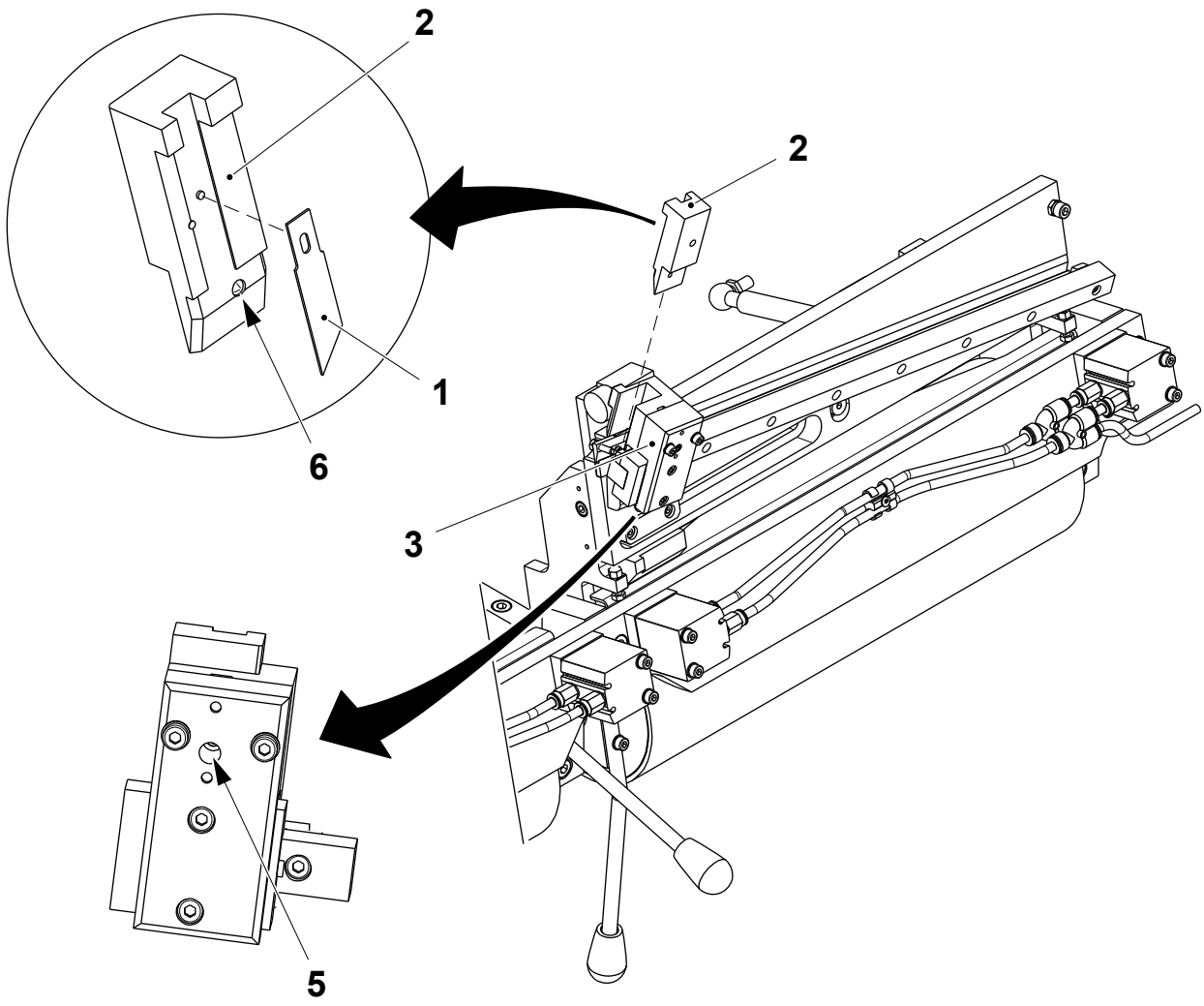

1 Blade
2 Blade holder
3 Slide
5 Grub screw
6 Grub screw

(Cont'd)

(Cont'd)

c) Check the distance **A** between the blade (1) and the ruler (7).

d) If necessary, remove the screws (8) and (9) and add or remove shims (10) between the bracket (11) and the runner block (12).

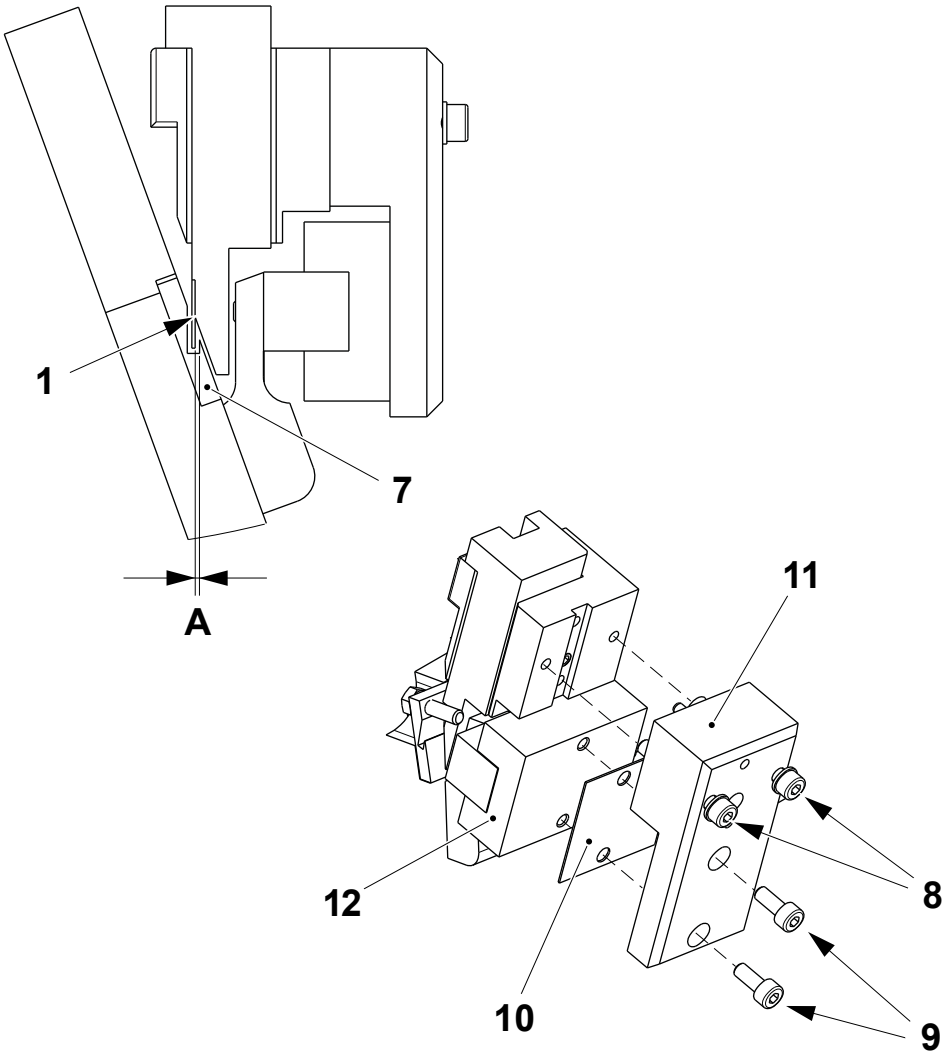

A = 0.2 mm

1 Blade
7 Ruler
8 Screw
9 Screw
10 Shim
11 Bracket
12 Runner block

8.5-2 Material Holder - Set Proximity Sensor

Machine Status	Mains Power OFF Air OFF Steam ON Water OFF
SPC Reference	2731220-0100

a) Loosen the nuts (1).

b) Set the distance **A** between the proximity sensor (2) and the bracket (3).

c) Tighten the nuts (1).

A = 1.2 ±0.5 mm

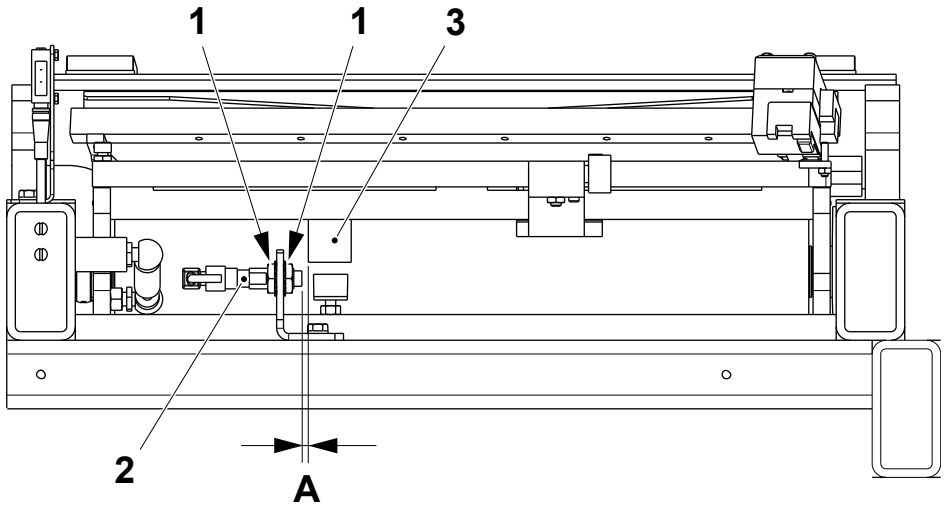

1 Nut
2 Proximity sensor
3 Bracket

(Cont'd)

(Cont'd)

d) Set the distance **B** from the frame (4) to the cutting table (5) by the damper (6): this is the lowest position of the cutting table (4).

Note! If the distance B is higher than 7.5 mm the proximity switch will not detect the cutting table presence.

B = 5.5 ±1.0 mm

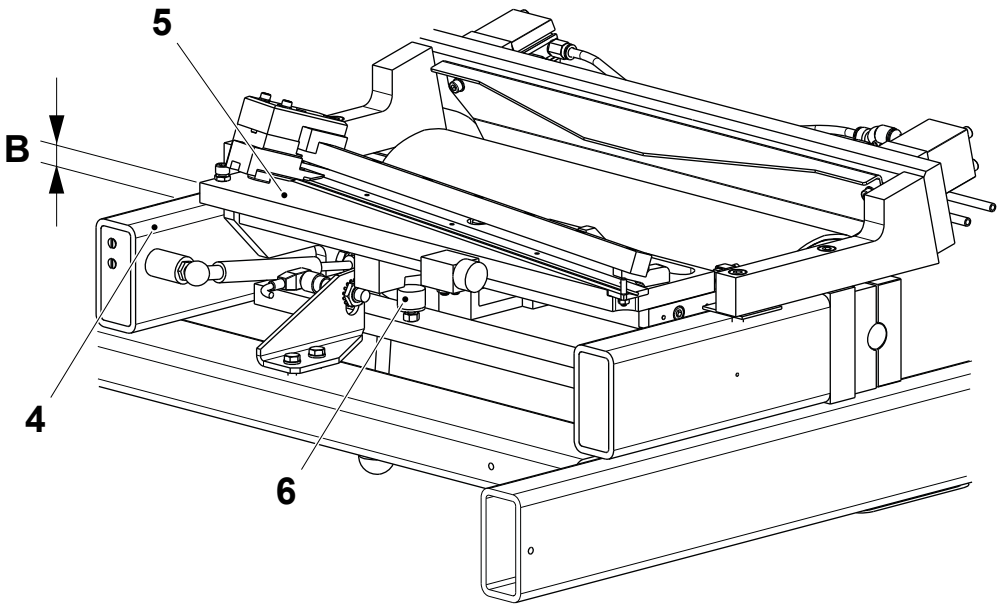

4 Frame
5 Cutting table
6 Damper

8.5-3 Material Holder - Change Ball Bearings

Machine Status	Mains Power OFF Air OFF Steam ON Water OFF
SPC Reference	2731220-0100

a) Use a screwdriver to disconnect the caps (1) and remove the gas spring (2).

b) Remove the screws (3) and the shaft brackets (4).

c) Remove the roller and cutting table assembly (5) and place it on the work bench.

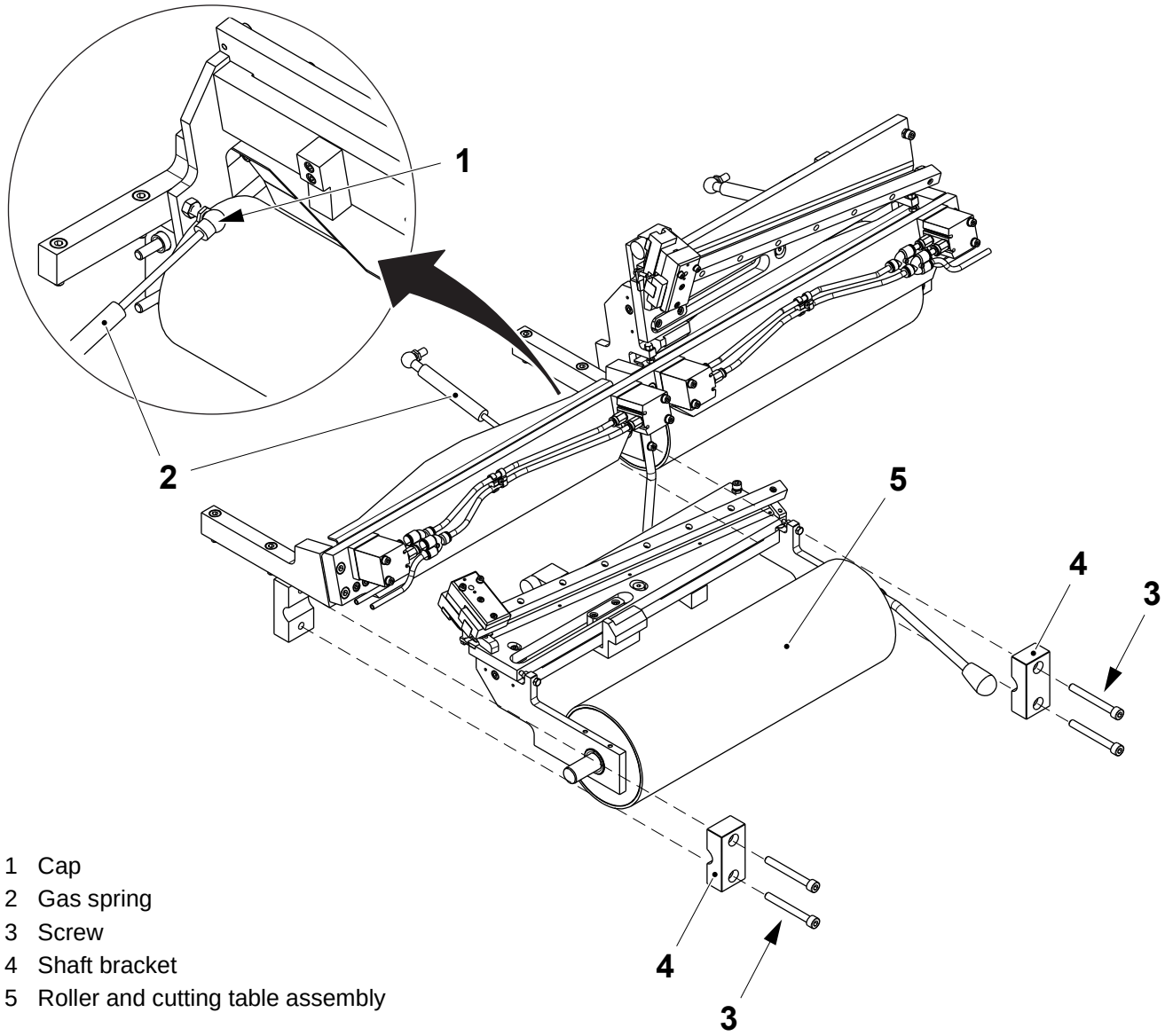

1 Cap
2 Gas spring
3 Screw
4 Shaft bracket
5 Roller and cutting table assembly

(Cont'd)

(Cont'd)

d) Loosen the grub screws (6) and remove the spacer (7).

e) Remove the shaft (8) taking care of the spacers (9).

f) Remove the bending roller (10) and change the ball bearings (11).

g) Remove the flange bushings (12) from the brackets (13). Change the flange bushings (12) if necessary.

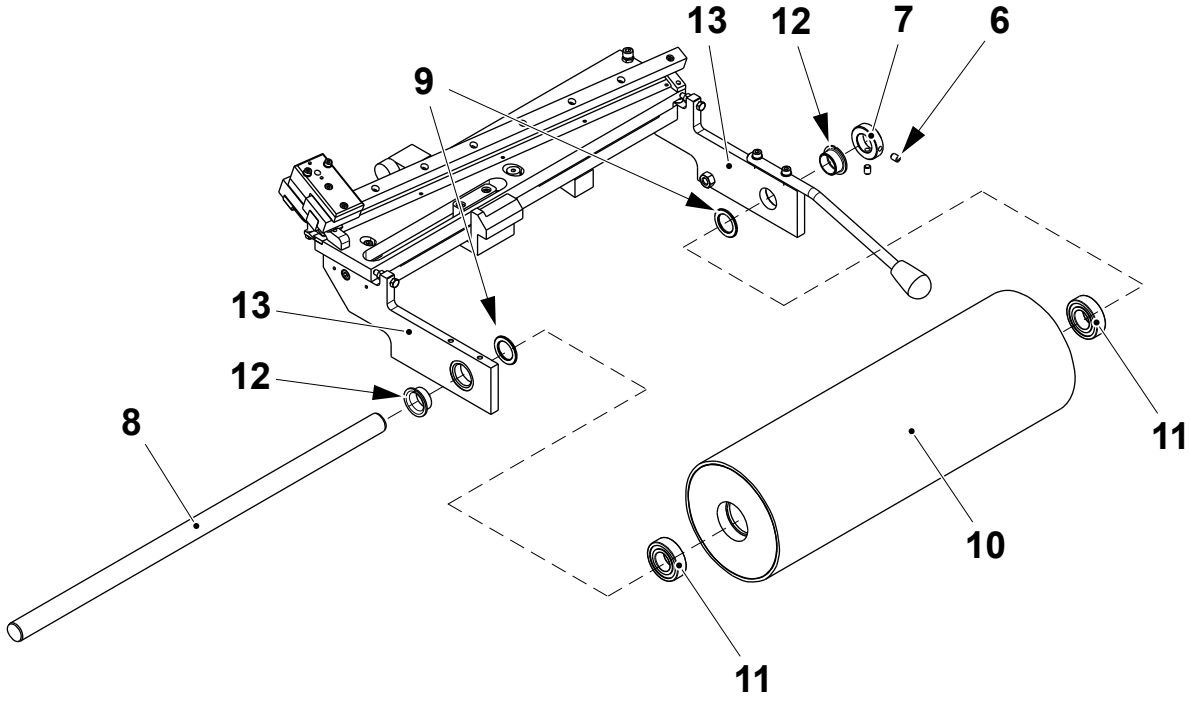

6 Grub screw
7 Spacer
8 Shaft
9 Spacer
10 Bending roller
11 Ball bearing
12 Flange bushing
13 Bracket

(Cont'd)

(Cont'd)

h) Assemble in the reverse order.

i) When assembling take care of the following procedures on both the material holders in order to align them correctly:

- make sure that the ends of the shafts (8) mate each other in the middle of the shaft bracket (4)
- push the bracket (13) towards the outer side of the module, see arrows, then move the spacer (7) against the bracket (13) and tighten the grub screw (6).

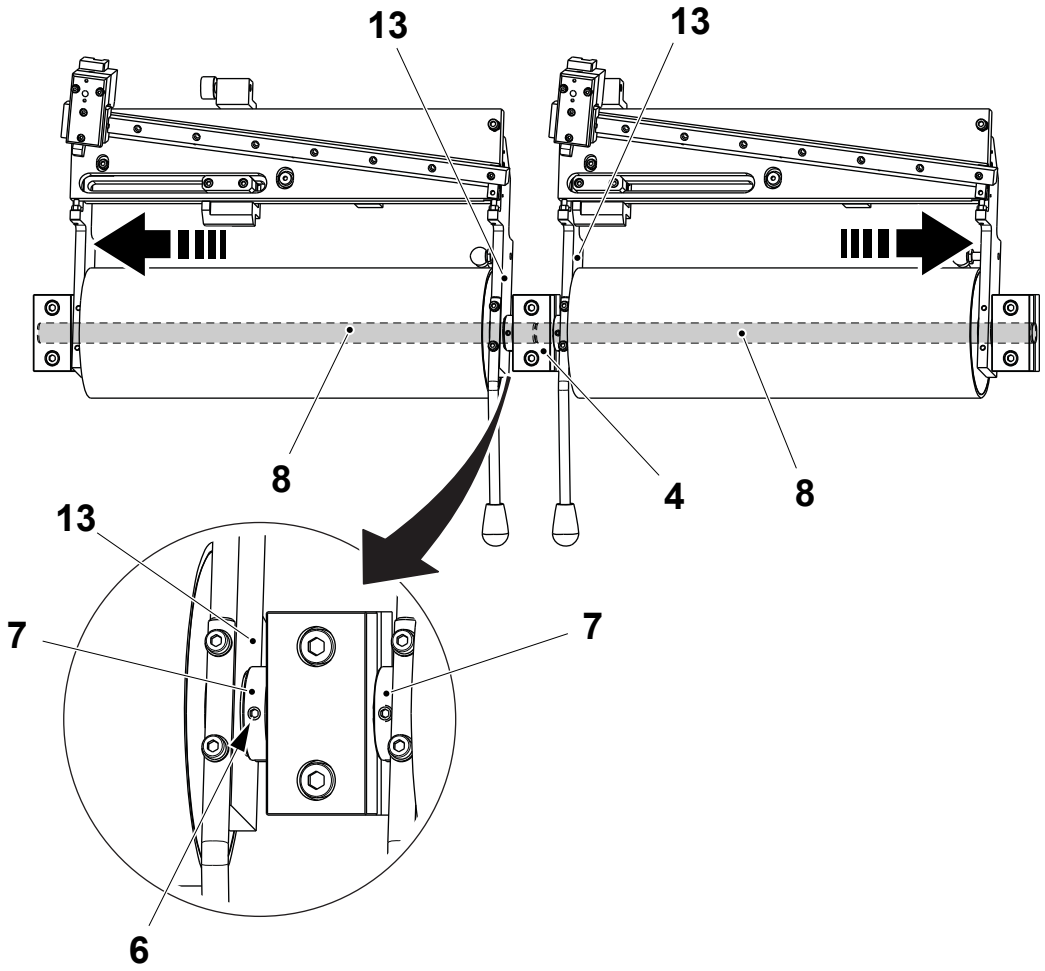

4 Shaft bracket
6 Grub screw
7 Spacer
8 Shaft
13 Bracket

8.5-4 Material Holder - Set Cutting Table

Machine Status	PREPARATION
SPC Reference	2731220-0100

Sideways Alignment - Basic Setting

j) Set the paper guide (3), see 8.4.1-4 Paper Guide - Set Position.

k) Thread the packaging material through the material holder (1), the splicing device (4) up to the drive roller of the magazine.

l) Prepare the material holder (2) for the splice without threading the packaging material through.

m) Perform a new splice: the splicing device (4) moves on the material holder (2).

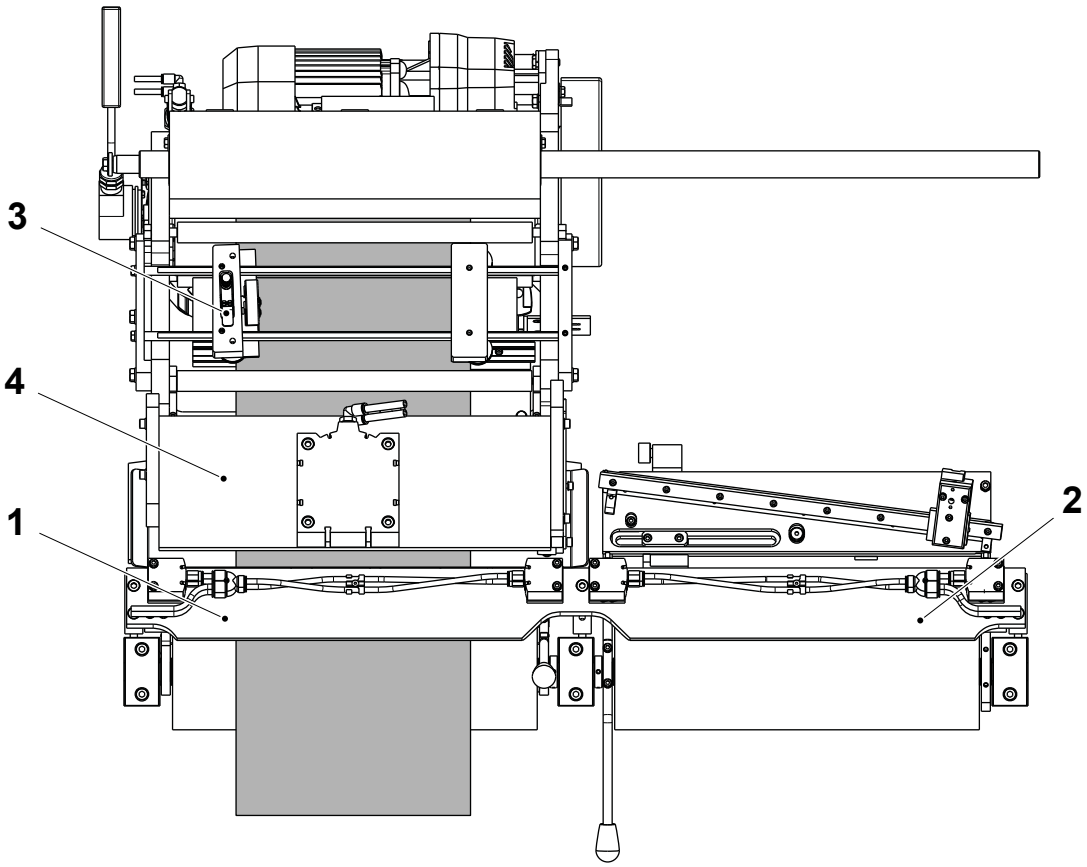

1 Material holder
2 Material holder
3 Paper guide
4 Splicing device

(Cont'd)

(Cont'd)

n) Lift the cutting table (5) of the material holder (1).

o) Loosen the screws (6) and move the guide (7) so that the tooth (8) and touch the packaging material edge.

p) Tighten the screws (6).

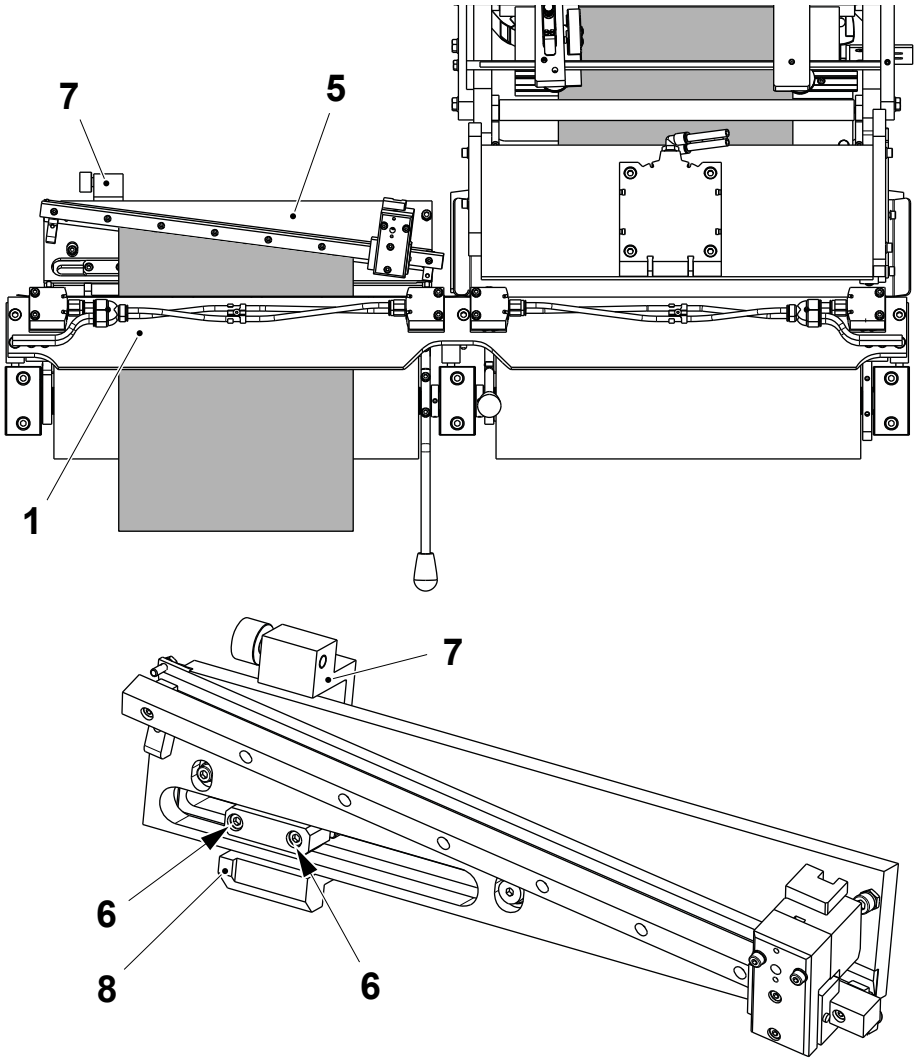

1 Material holder
5 Cutting table
6 Screw
7 Guide
8 Tooth

(Cont'd)

Sideways Alignment - Fine Adjustment

q) Loosen the screws (1) and move slightly the guide (2) to set the sideways alignment within the tolerance (distance **A**).

r) Tighten the screws (1).

a) Perform a new splice and check the new sideways alignment is correct.

Note! Check the alignment on the strip application side of the packaging material.

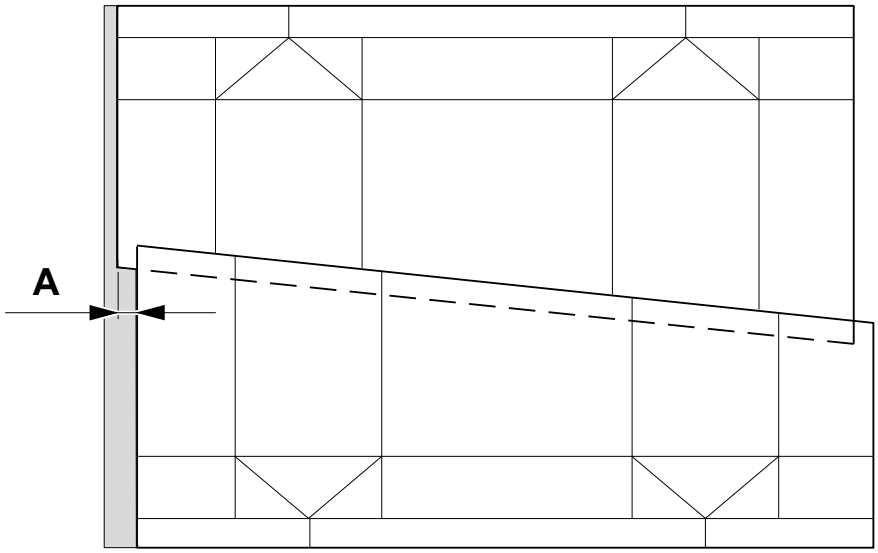

A = 0 ±0.5 mm

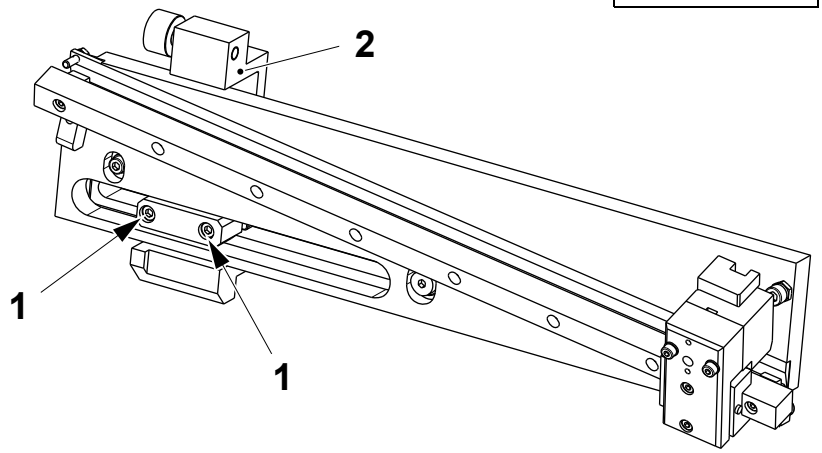

1 Nut
2 Guide

(Cont'd)

(Cont'd)

Overlap - Fine Adjustment

a) Loosen the shoulder screw (1) and the screw (2)

b) Adjust the position of the cutting table (3) by means of the screws (4).

c) Tighten the shoulder screw (1) and the screw (2).

d) Tighten the nuts (5).

e) Perform a new splice and check that the new splice overlap is correct (distance **B**).

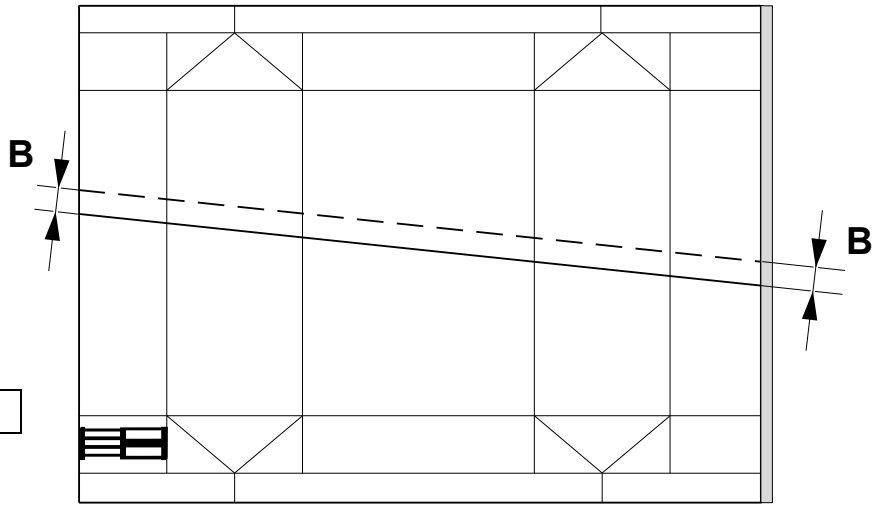

B = 16.5 ±0.5 mm

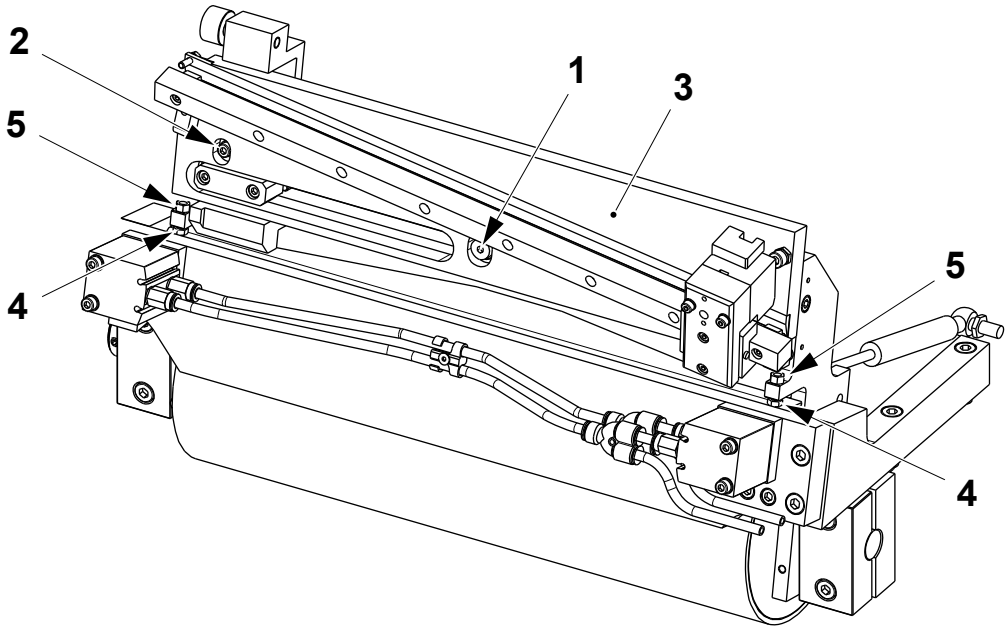

1 Shoulder screw
2 Screw
3 Cutting table
4 Screw
5 Nut

(Cont'd)

(Cont'd)

Sealing Parallelism

a) Modify the parallelism as follows: loosen the grub screw (1) and turn the adjusting screw (2) click by click to move the surface that has to be in contact with the packaging material, then tighten the grub screw (1).

b) Perform a new splice and check that the new packaging material web diverges by not more than the distance **C** in 1 metre from the splice.

Note! The packaging material edge (3) is shown as a dashed line. One click of the adjusting screw (2) corresponds to a movement of 1 mm.

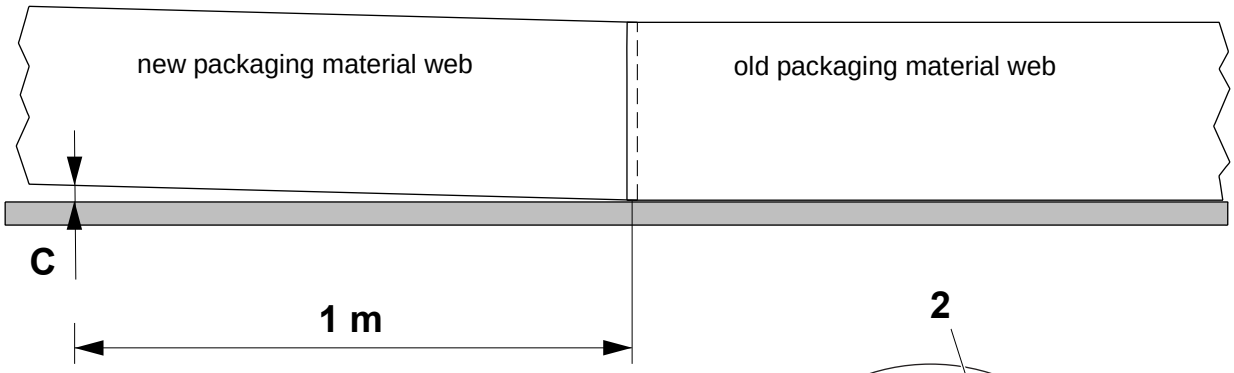

C = max 1 mm

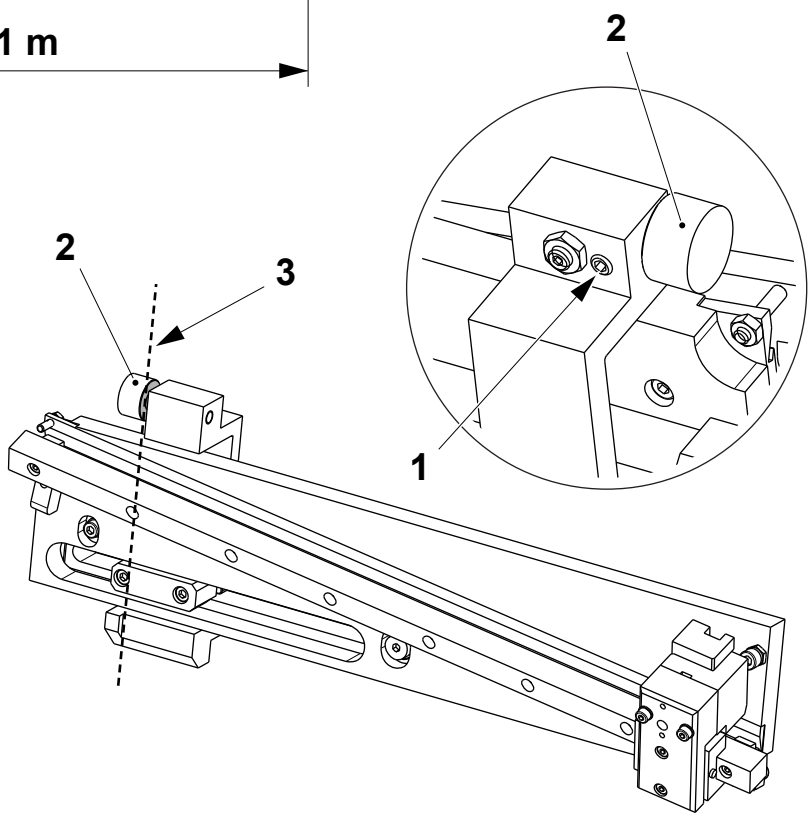

1 Grub screw
2 Adjusting screw
3 Packaging material edge

8.6 Side Feeder

8.6-1 Side Feeder - Referencing

Machine Status	STEP ZERO
SPC Reference	2751571-0100

Note! Perform this procedure after every time a maintenance operation on the side feeder is executed.

Note! Cover the ASU loop photocells by a tape before referencing.

(Cont'd)

(Cont'd)

a) In the TPOP panel, touch the MAINTENANCE CONTROL button (1) and enter the password required, see 9.6.3-2 HMI - User Management Log On.

b) Touch the ASU button (2).

c) Touch the SPLICING HEAD HOME POSITION icon (3). The ON/OFF buttons are displayed.

d) Touch the ON button (4) to enable the home position function.

e) Touch the OK button (5) to move the splicing device in home position.

Note! If there is an obstacle in the splicing device stroke, the home position function aborts and a green dot appears on the SPLICING HEAD HOME POSITION icon (3) on the TPOP: in this case remove the obstacle and repeat the procedure.

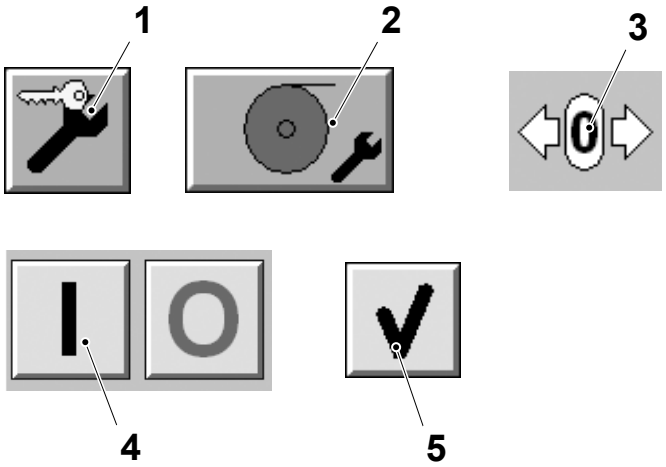

1 Maintenance control button
2 ASU button
3 Splicing head home position icon
4 On button
5 OK button

8.6-2 Side Feeder - Change Timing Belt

Machine Status	Mains Power OFF Air OFF Steam ON Water OFF
SPC Reference	2751571-0100

a) Remove the cover (1) by the screws (2).

b) Loosen the screws (3).

c) Loosen the nut (4) and remove the threaded bar (5).

d) Loosen the screws (6) and remove the plates (7).

e) Remove and change the timing belt (8).

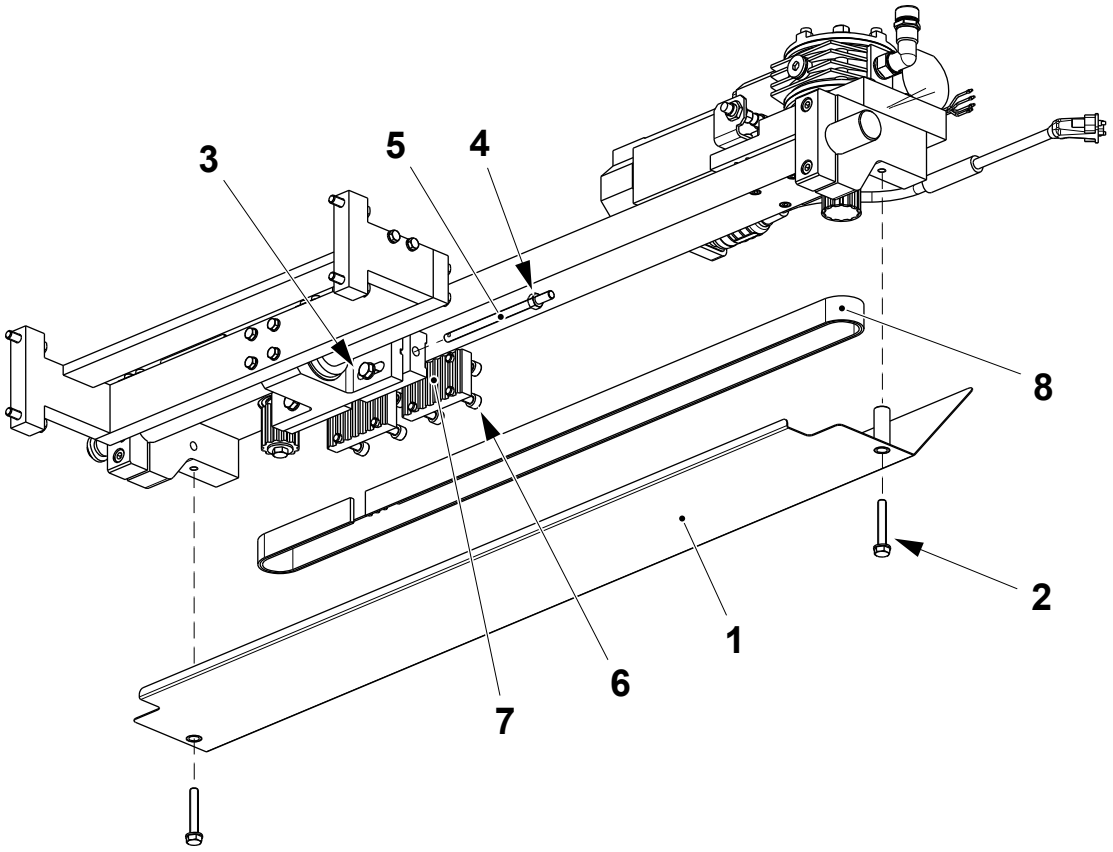

1 Cover
2 Screw
3 Screw
4 Nut
5 Threaded bar
6 Screw
7 Plate
8 Timing belt

(Cont'd)

(Cont'd)

f) Assemble in the reverse order.

g) Set the timing belt tension, see 8.6-2 Side Feeder - Check Timing Belt Tension.

h) Set the home position of the splicing device, see 8.6-1 Side Feeder - Referencing.

8.6-3 Side Feeder - Check Timing Belt Tension

Machine Status	Mains Power OFF Air OFF Steam ON Water OFF
Special Equipment	Tensiometer TP No. 90600-3415
SPC Reference	2751571-0100

Remove the cover (1) by the screws (2) and check the tension of the timing belt (1) by means of a tensiometer:

a) Position the end of the tensiometer sensor 10 mm from the timing belt (3).

b) Press the reset icon on the tensiometer.

c) Tap the timing belt (3) with a screw driver or similar tool. Record the reading from the tensiometer.

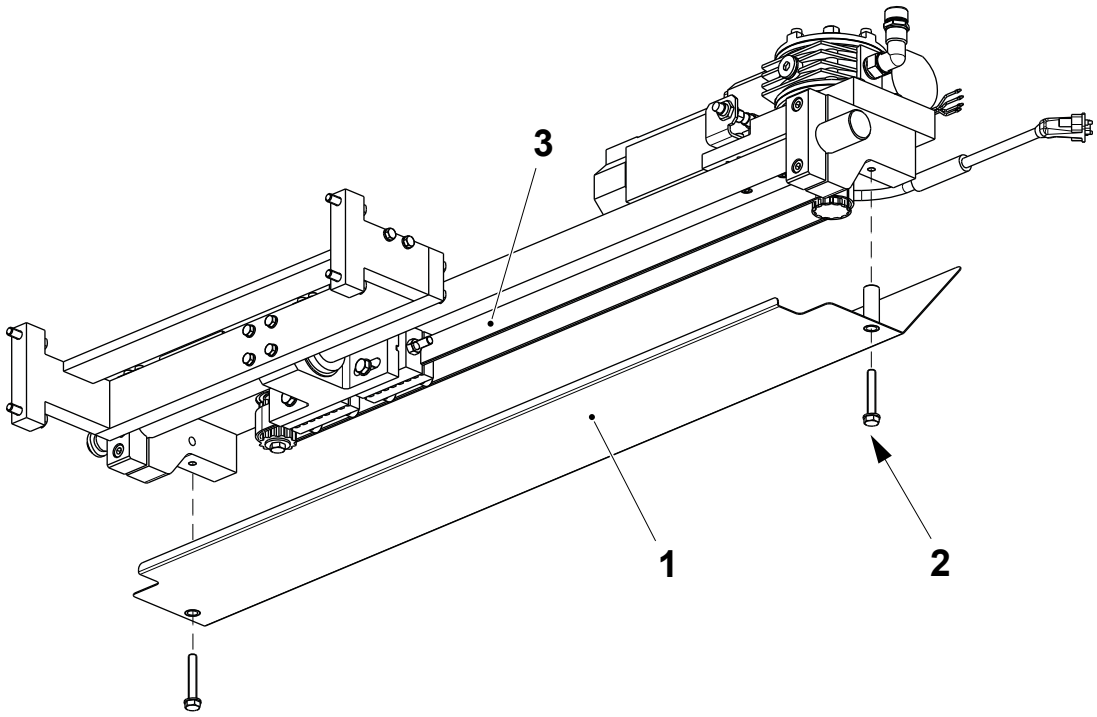

1 Cover
2 Screw
3 Timing belt

(Cont'd)

(Cont'd)

If the reading is outside the 32-33 Hz range the drive belt tension requires adjustment. Proceed as follows:

a) Loosen the screws (2).

b) Tighten or loosen the hexagonal nut (3) by small increments:
   – loosening the nut decreases the timing belt tension
   – tightening the nut increases the timing belt tension.

c) Tighten the screws (2).

d) Assemble in the reverse order.

e) Set the home position of the splicing device, see 8.6-1 Side Feeder - Referencing.

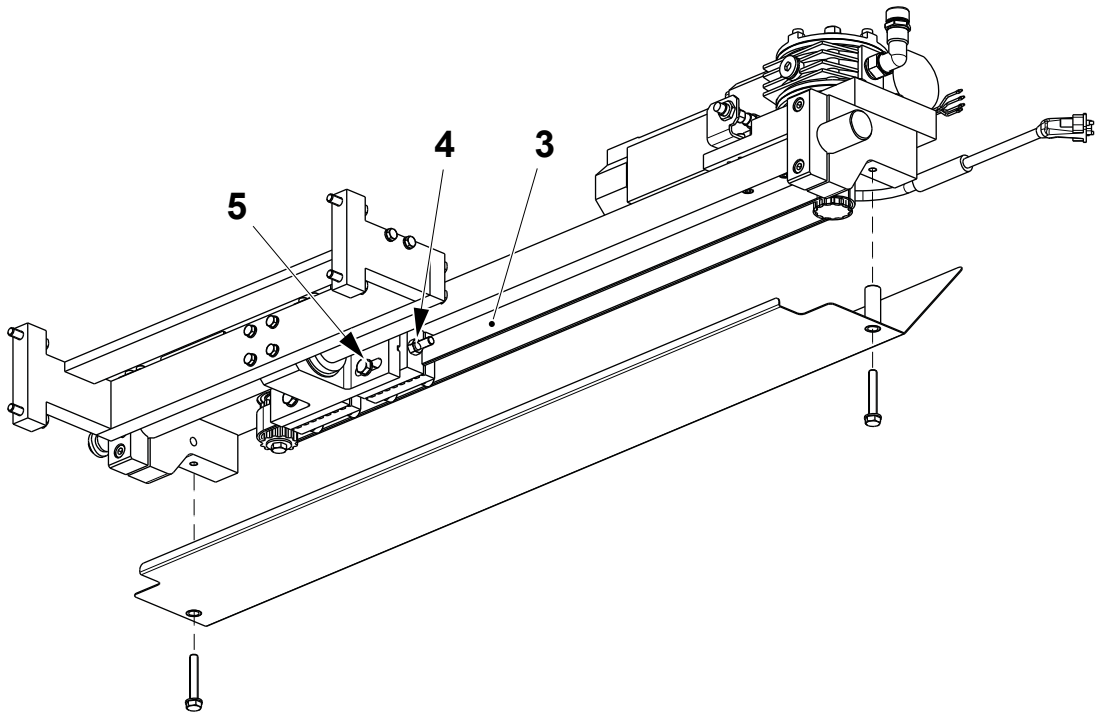

3 Timing belt
4 Screw
5 Nut

8.6-4 Side Feeder - Overhaul

Machine Status	Mains Power OFF Air OFF Steam ON Water OFF
Special Equipment	Rope
SPC Reference	2751571-0100

Change Ball Bearings

a) Remove the timing belt (1), see 8.6-2 Side Feeder - Change Timing Belt.

b) Remove the screws (2) and the cover (3).

c) Remove the retaining ring (4) and the ball bearing (5). Change the ball bearings (5) if necessary.

1 Timing belt
2 Screw
3 Cover
4 Retaining ring
5 Ball bearing

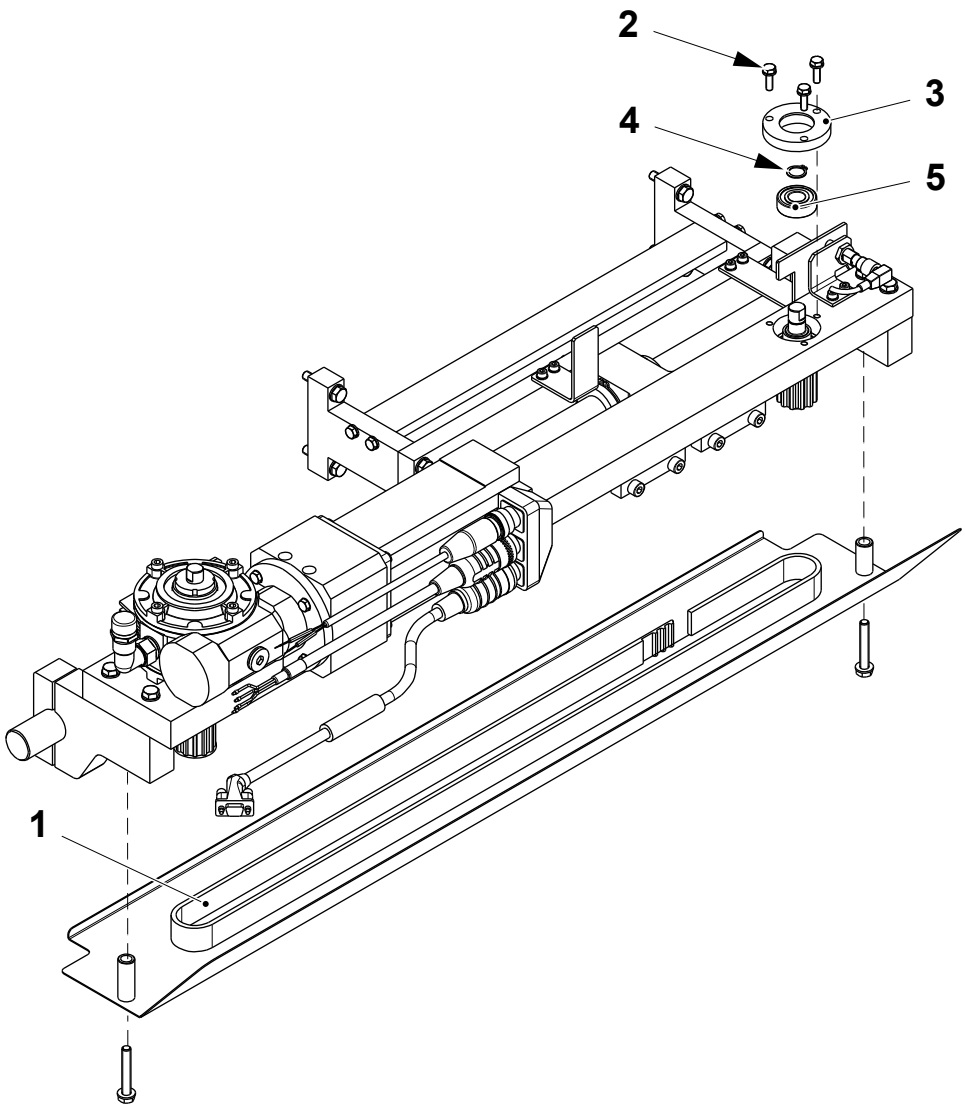

(Cont'd)

(Cont'd)

d) Remove the screw (6) and the pulley (7).

e) Remove the screws (8) and pull out the shaft (9).

f) Remove the spacer (10) and the ball bearing (11). Change the ball bearing (11) if necessary.

g) Assemble in the reverse order.

h) Set the home position of the splicing device, see 8.6-1 Side Feeder - Referencing.

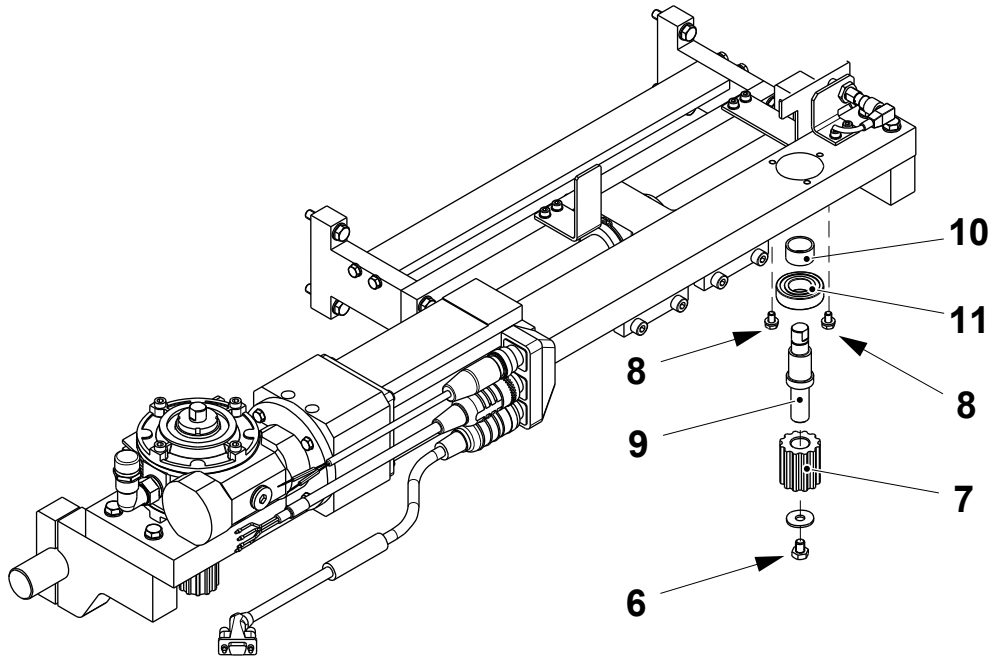

6 Screw
7 Pulley
8 Screw
9 Shaft
10 Spacer
11 Ball bearing

(Cont'd)

(Cont'd)

Change Linear Bushing

WARNING

Risk of crushing.

Secure the splicing device (2) to the ASU frame using a rope. When the splicing device (2) is separated from the side feeder (3), it swings freely on the shaft (4).

a) Remove the screws (1) to separate the splicing device (2) from the side feeder (3).

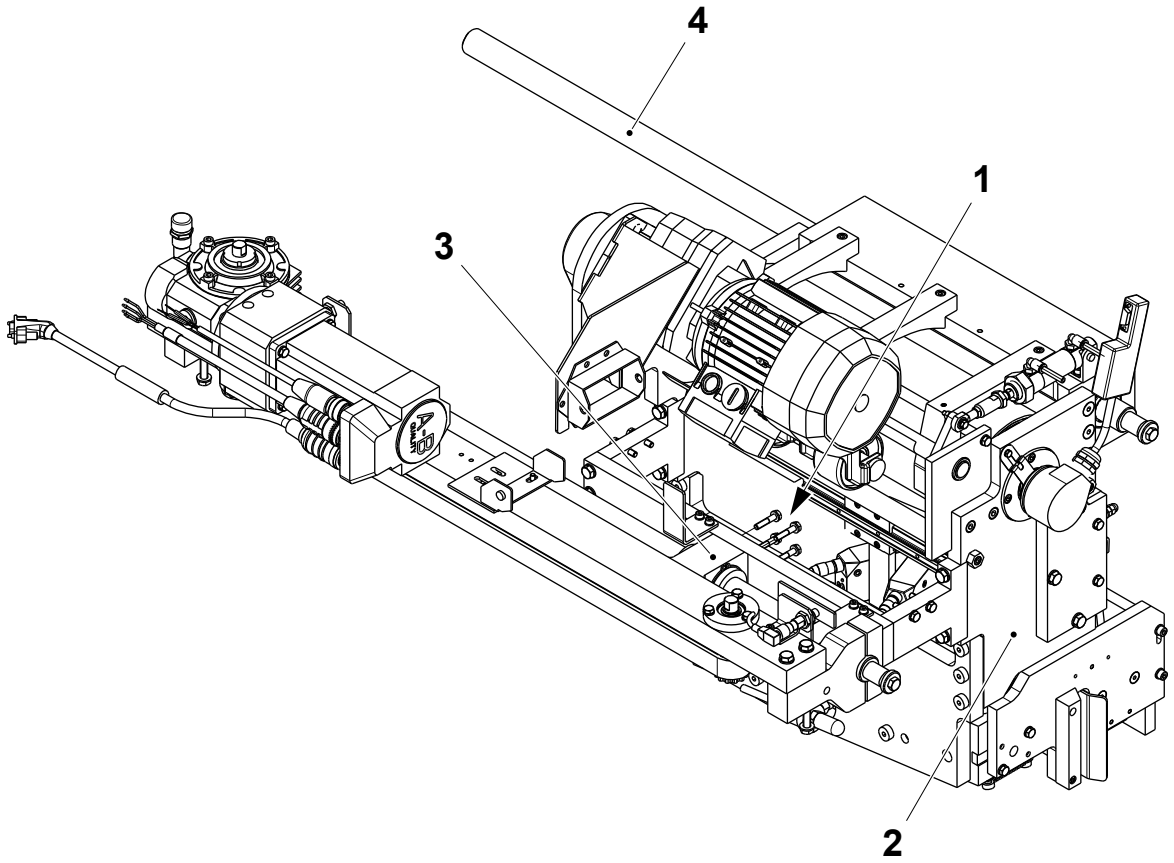

1 Screw
2 Splicing device
3 Side feeder

(Cont'd)

(Cont'd)

b) Remove the screw (4).
c) Remove the covering panel (5).
d) Loosen the screws (6).
e) Slip off the shaft (7) beyond the bushing support (8).
f) Remove the retaining ring (9) and change the linear bushing (10).
g) Assemble in the reverse order.
h) Set the home position of the splicing device, see 8.6-1 Side Feeder - Referencing.

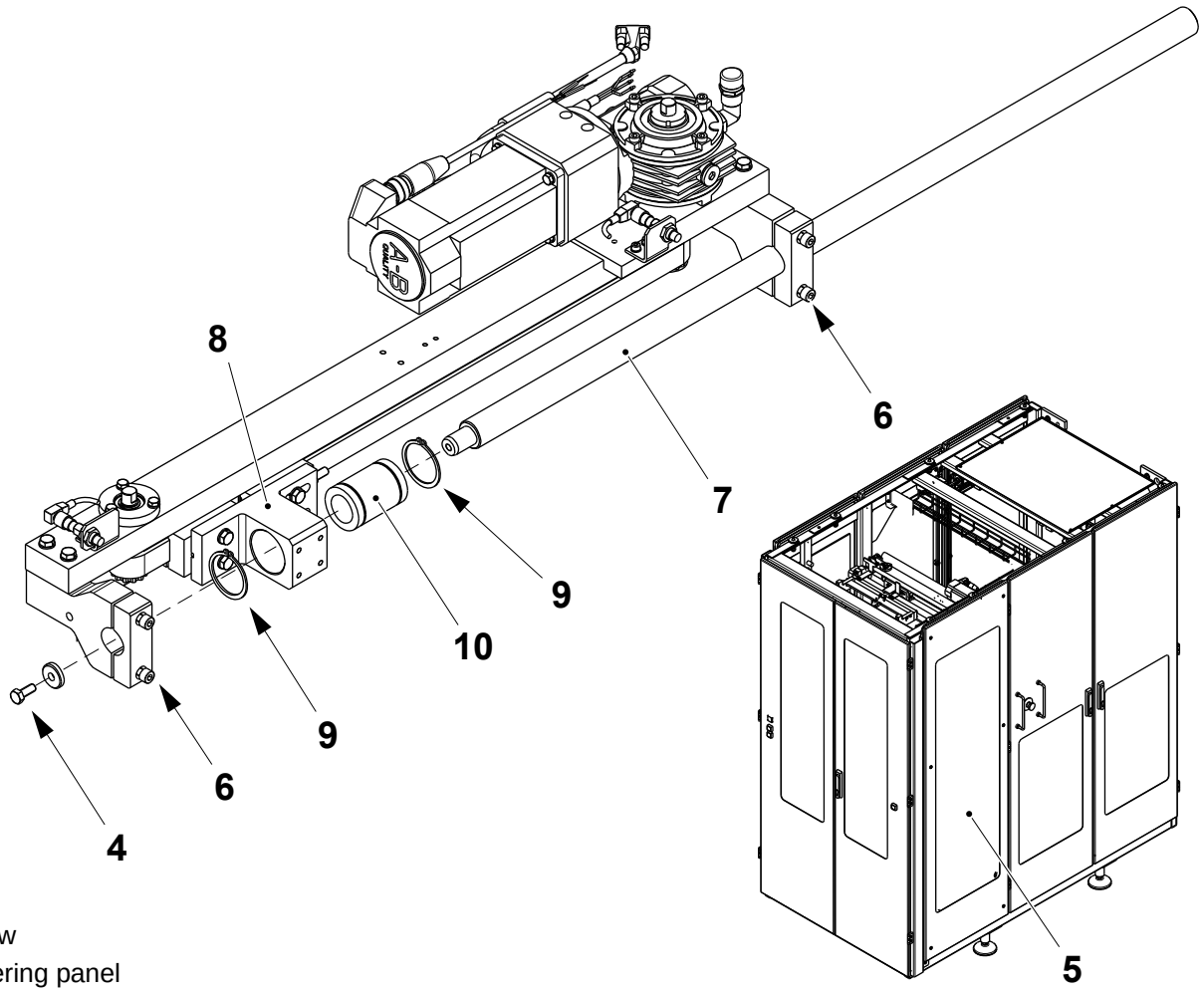

4 Screw
5 Covering panel
6 Screw
7 Shaft
8 Bushing support
9 Retaining ring
10 Linear bushing

(Cont'd)

(Cont'd)

Change Worm Gear

a) Remove the timing belt, see 8.6-2 Side Feeder - Change Timing Belt.

b) Disconnect the three motor cables (1).

c) Remove the screws (2) and move the worm gear (3) with the motor (4) and the pulley (5) on the work bench.

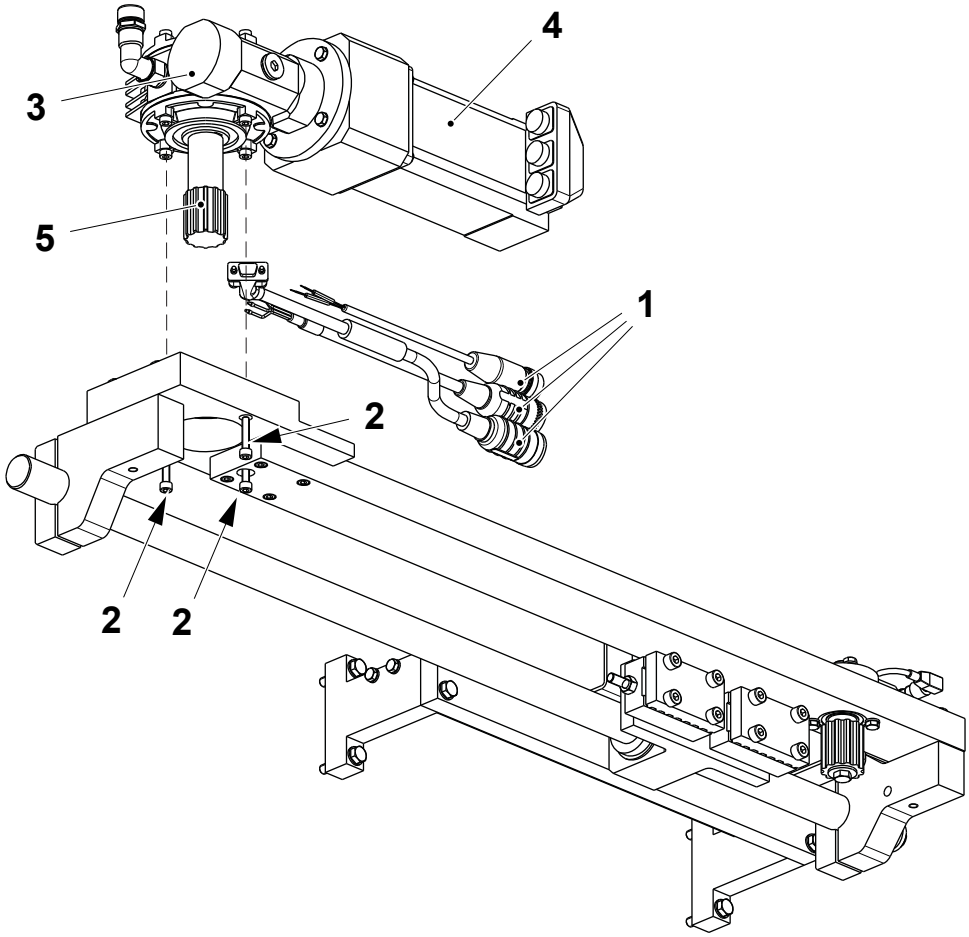

1 Cables
2 Screw
3 Worm gear
4 Motor
5 Pulley

(Cont'd)

(Cont'd)

d) On the work bench, remove the clamping element (6) and slip off the pulley (5).

e) Remove the screws (7) and the worm gear (3).

f) Remove the screws (8) and the flange (9).

g) Remove the coupling (10) and the shaft (11).

h) Assemble in the reverse order, tightening the clamping element with a torque of 95 N.

Note! When assembling, take care that the coupling (10) is beating on the motor (4) and the shaft (11) is beating on the coupling (10).

i) Set the home position of the splicing device, see 8.6-1 Side Feeder - Referencing.

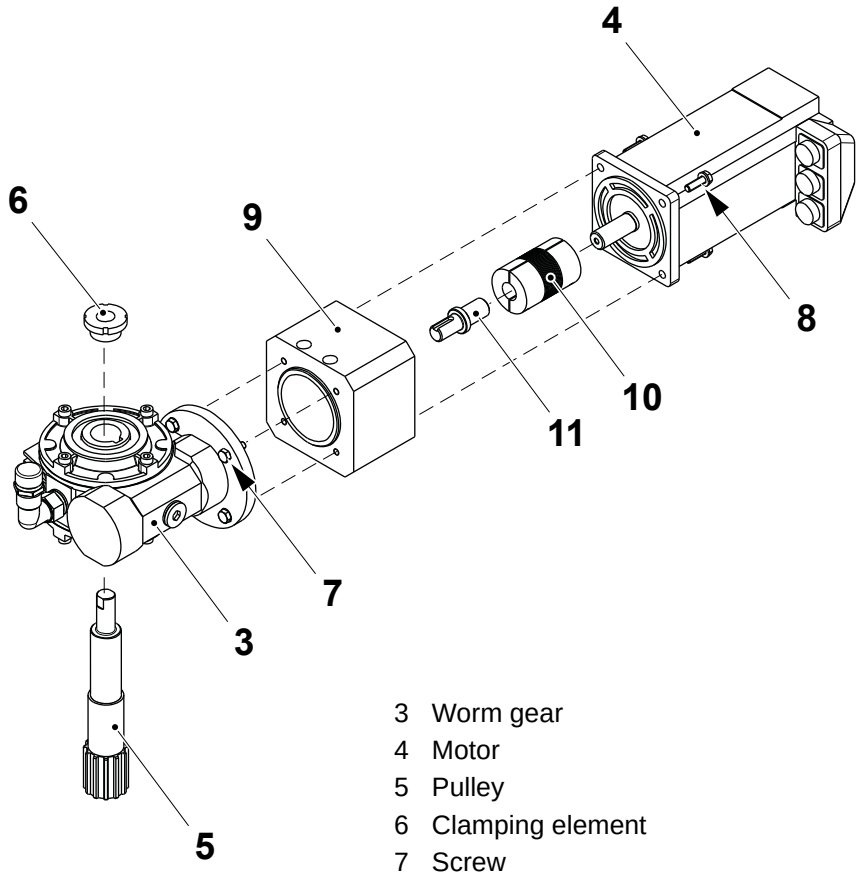

3 Worm gear
4 Motor
5 Pulley
6 Clamping element
7 Screw
8 Screw
9 Flange
10 Coupling
11 Shaft

8.7 Pneumatic Panel

SPC Reference	2790920-0100

8.7-1 Pneumatic Panel - Set Pressure Switch

Machine Status	Mains Power OFF Air ON Steam ON Water OFF
SPC Reference	2790920-0100

Note! Valid for machines with T-order: 21208/00001 to 21208/00020.

(Cont'd)

(Cont'd)

a) Turn the main air control knob (1) until the pressure gauge (2) indicates 6 bar.

b) In the ASU electrical cabinet, check that the LED 3 of the card 10A1020 is activated.

c) Turn back the control knob (1) to reduce the main air pressure to 5.5 bar.

d) Check that the LED 3 of the card 10A102 switches OFF.

e) If not, adjust the screw (3) under the pressure switch (4) and repeat the procedure until the result is obtained.

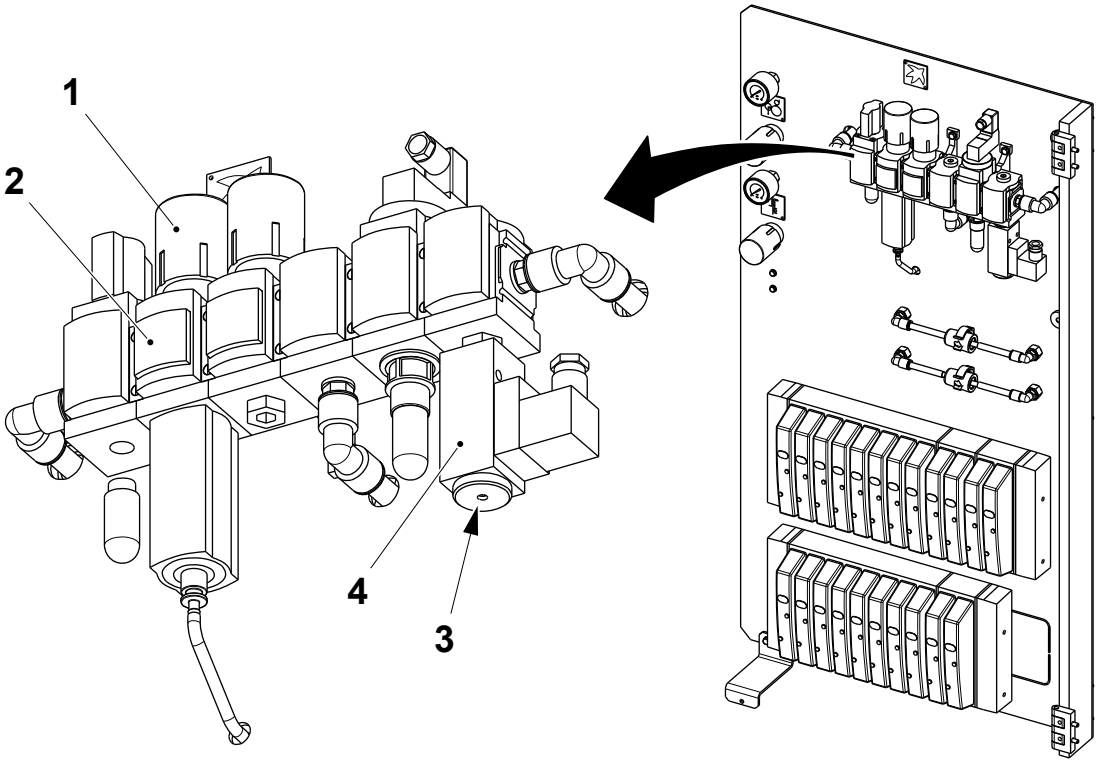

1 Control knob
2 Pressure gauge
3 Screw
4 Pressure switch

(Cont'd)

(Cont'd)

Note! Valid for machines with T-order: 21208/00021 and above.

a) Press the EDIT button (1) and select "A" with the UP button (2) or the DOWN button (3).

b) Press the EDIT button (1) and select "THRESHOLD COMPARATOR" with the UP button (2) or the DOWN button (3).

c) Press the EDIT button (1) and set "SP" (SWITCHING PRESSURE), to 4.5 bar with the UP button (2) or the DOWN button (3).

d) Press the EDIT button (1) and set "HY" (HYSTERESIS), to 0 with the UP button (2) or the DOWN button (3).

e) Press the EDIT button (1) and select "NC" (NORMALLY CLOSED CONTACT), with the UP button (2) or the DOWN button (3).

f) Press the EDIT button (1).

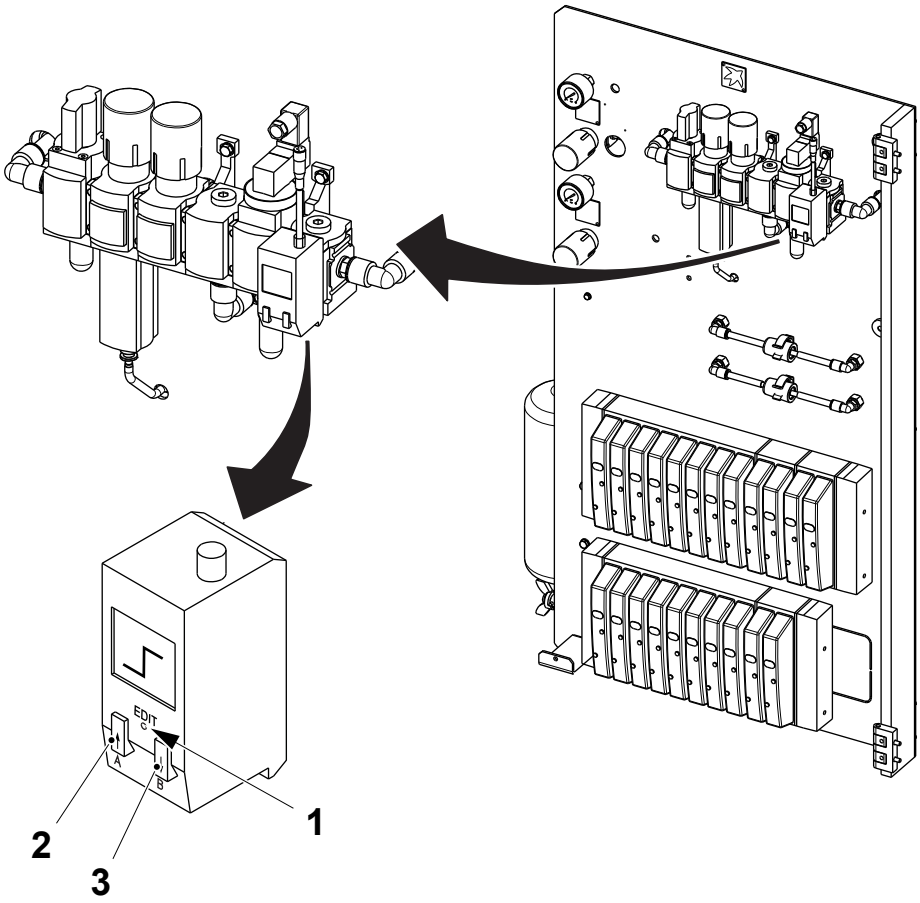

1 Edit button
2 Up button
3 Down button

8.7-2 Pneumatic Panel - Change Filters

Machine Status	Mains Power OFF Air OFF Steam ON Water OFF
SPC Reference	2790920-0100

SA Inductor Air Filters

Check the filters (1) for wear or damage: the filters (1) normally have the white colour. If it is different, change them.

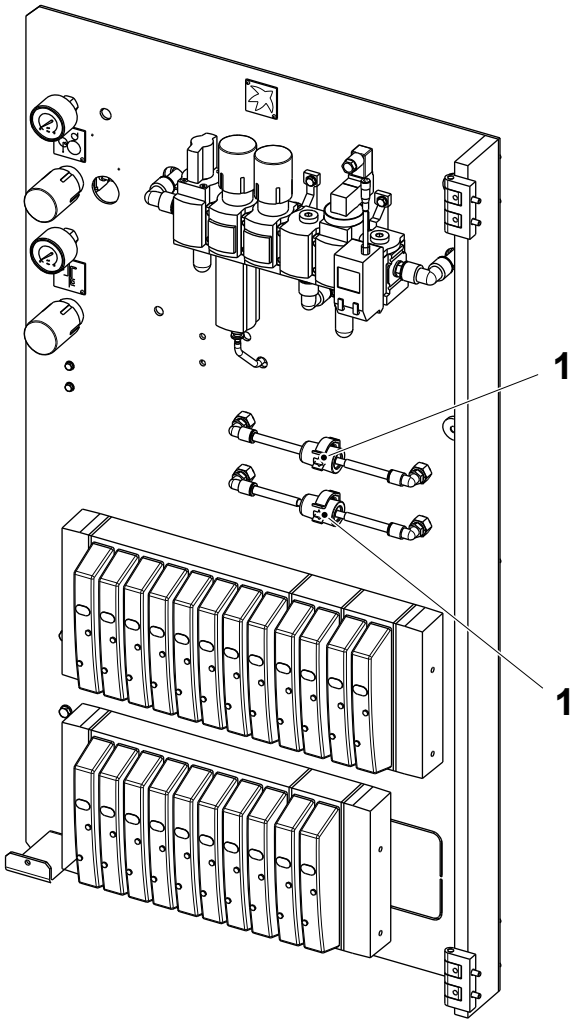

1 Filter

(Cont'd)

(Cont'd)

Main Air Pressure Regulator Filter

Remove the reservoir (1) of the main air pressure regulator (2) and change the filter (3).

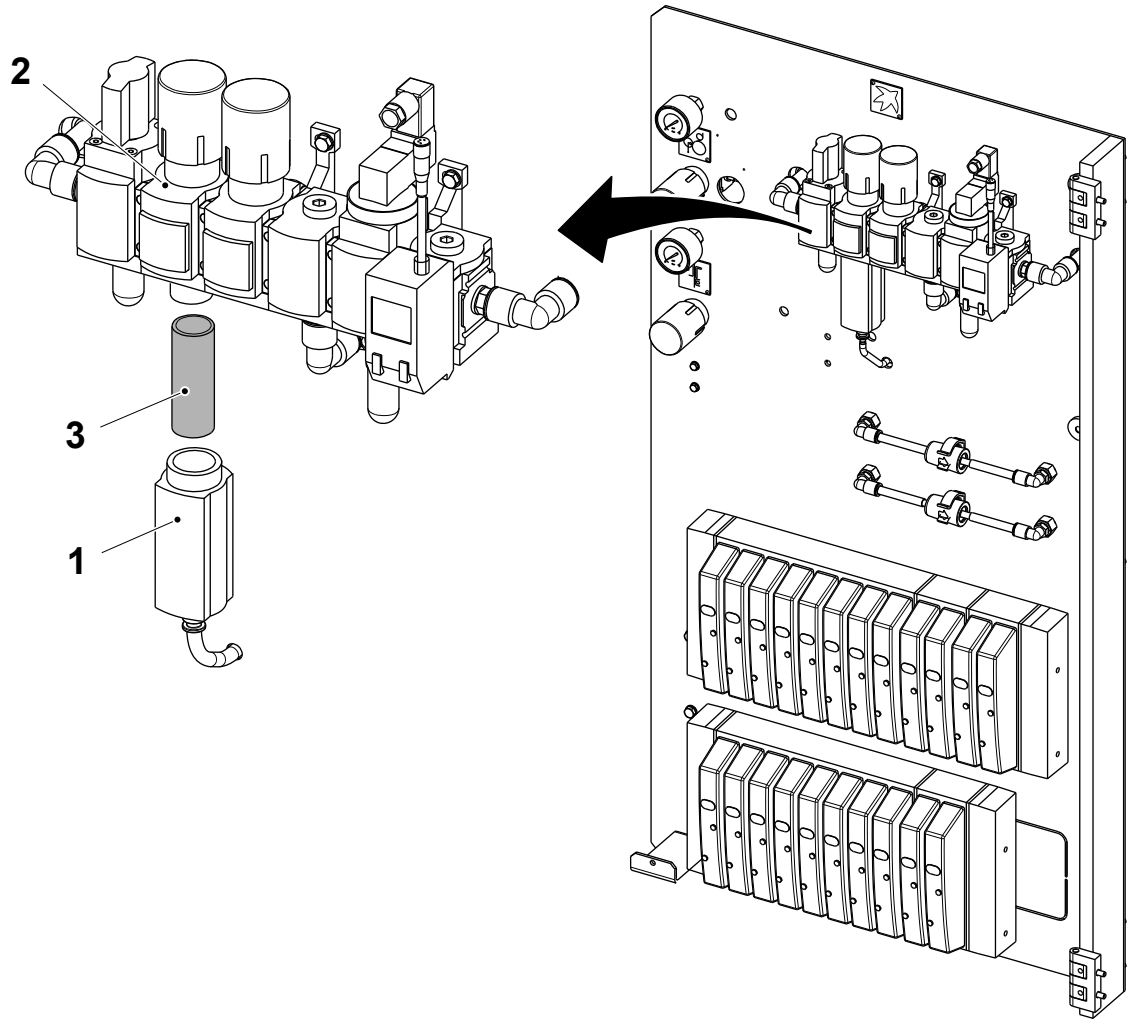

1 Reservoir
2 Pressure regulator
3 Filter

8.7-3 Pneumatic Panel - Set Pilot Valve Pressure

Machine Status	Mains Power OFF Air ON Steam ON Water OFF
SPC Reference	2790920-0100

Set the pilot valves pressure to 4-5 bar by the pressure regulator (1).

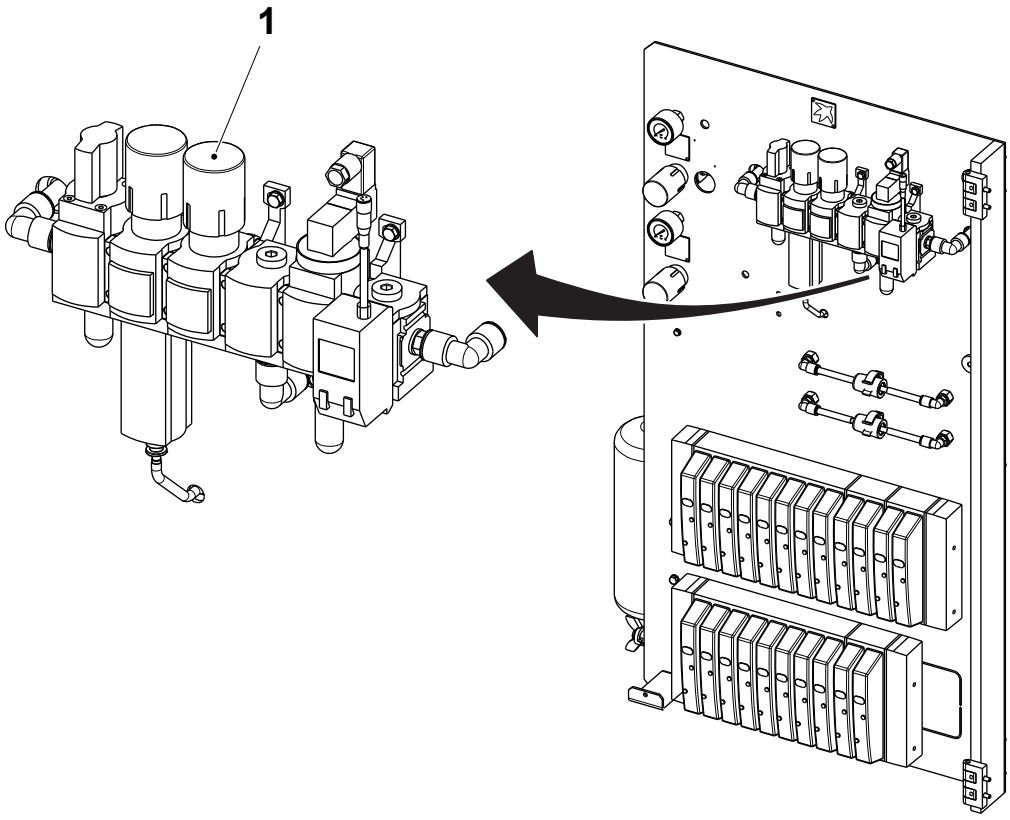

1 Pressure regulator

8.8 Magazine, Upper Part

SPC Reference	2731242-0100

8.8-1 Magazine, Upper Part - Change Roller Bearings

Machine Status	Mains Power OFF Air OFF Steam ON Water OFF
Special Equipment	Rope 2.5 m
SPC Reference	2731242-0100

Drive Unit

Note! Secure the worm gear motor (4) to the side of the ASU using a rope.

a) Remove the screw (1) and the cover (2).

b) Remove the four screws (3) and the worm gear motor (4).

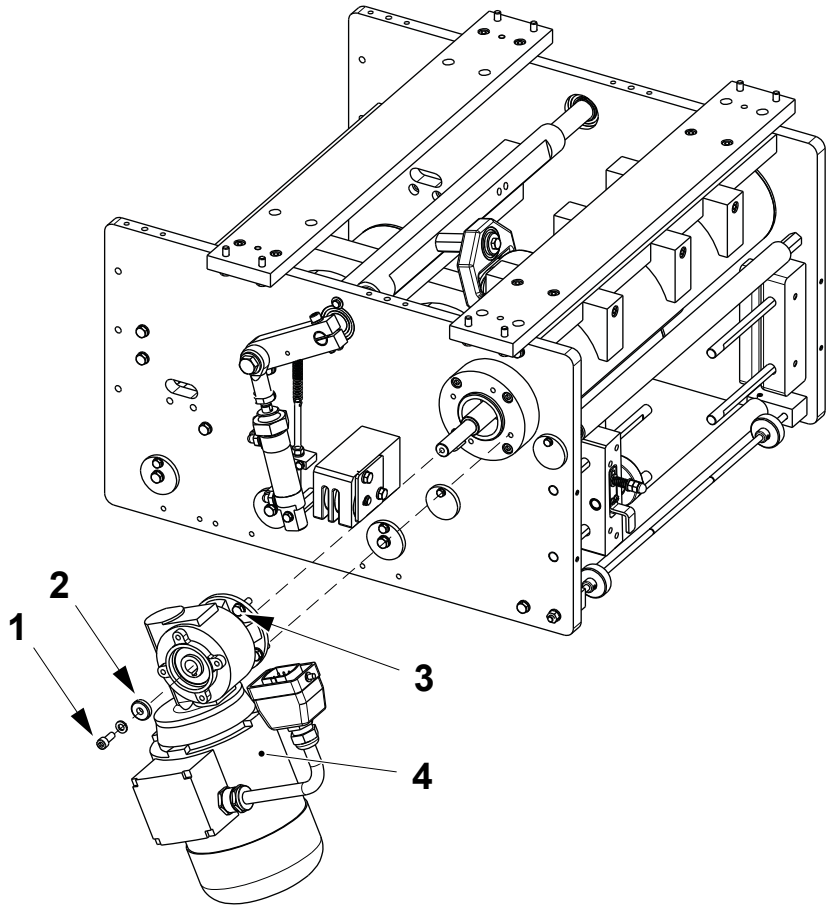

1 Screw
2 Cover
3 Screw
4 Worm gear motor

(Cont'd)

(Cont'd)

c) Remove the screws (5) and the guides (6).

d) Loosen the nut (7) and remove the screw (8).

e) Remove the pin (9) and the rollers assembly (10).

f) Loosen the grub screws (11) and remove the shafts (12) with the paper slide (13) installed.

g) Loosen the grub screws (14) and remove the shafts (15) with the paper guide (16) installed.

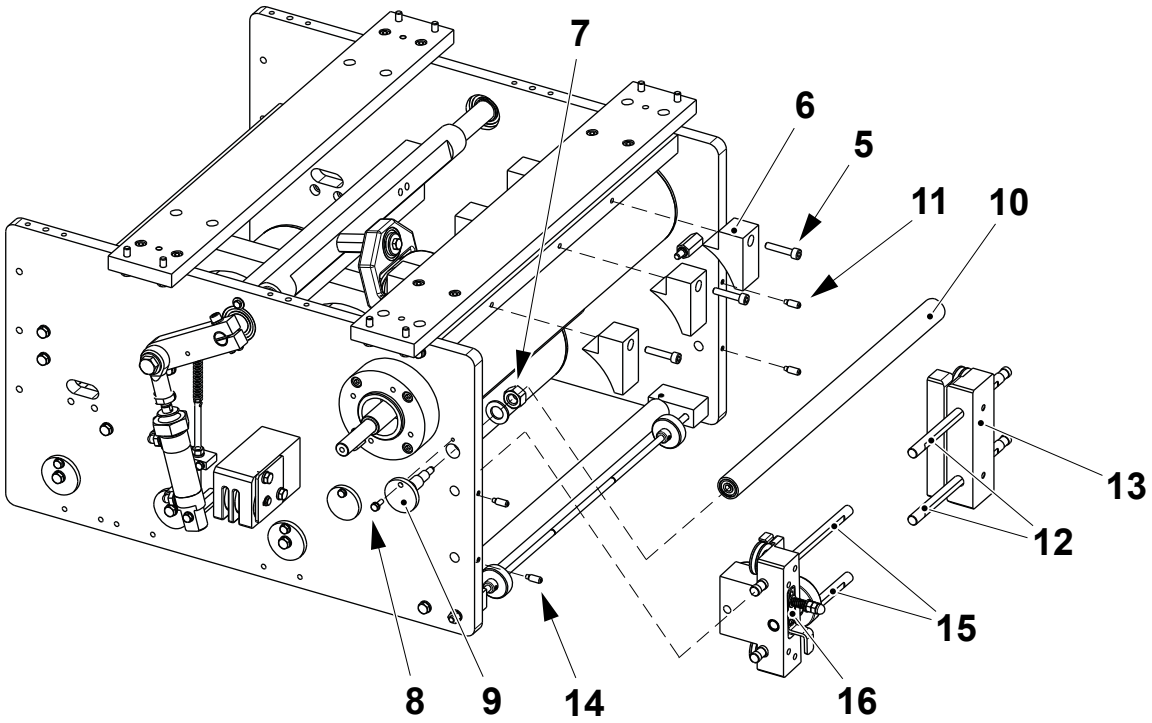

5 Screw
6 Guide
7 Nut
8 Screw
9 Pin
10 Roller assembly
11 Grub screw
12 Shaft
13 Paper slide
14 Grub screw
15 Shaft
16 Paper guide

(Cont'd)

(Cont'd)

h) Remove the three screws (17) to separate the shaft (18) from the bending roller (19).

i) Remove screws (20) and the pin (21) holding by hand the bending roller (19).

j) Remove the bending roller (19) and change the ball bearing (22).

k) Change the bending roller (19) if necessary.

l) Assemble in the reverse order.

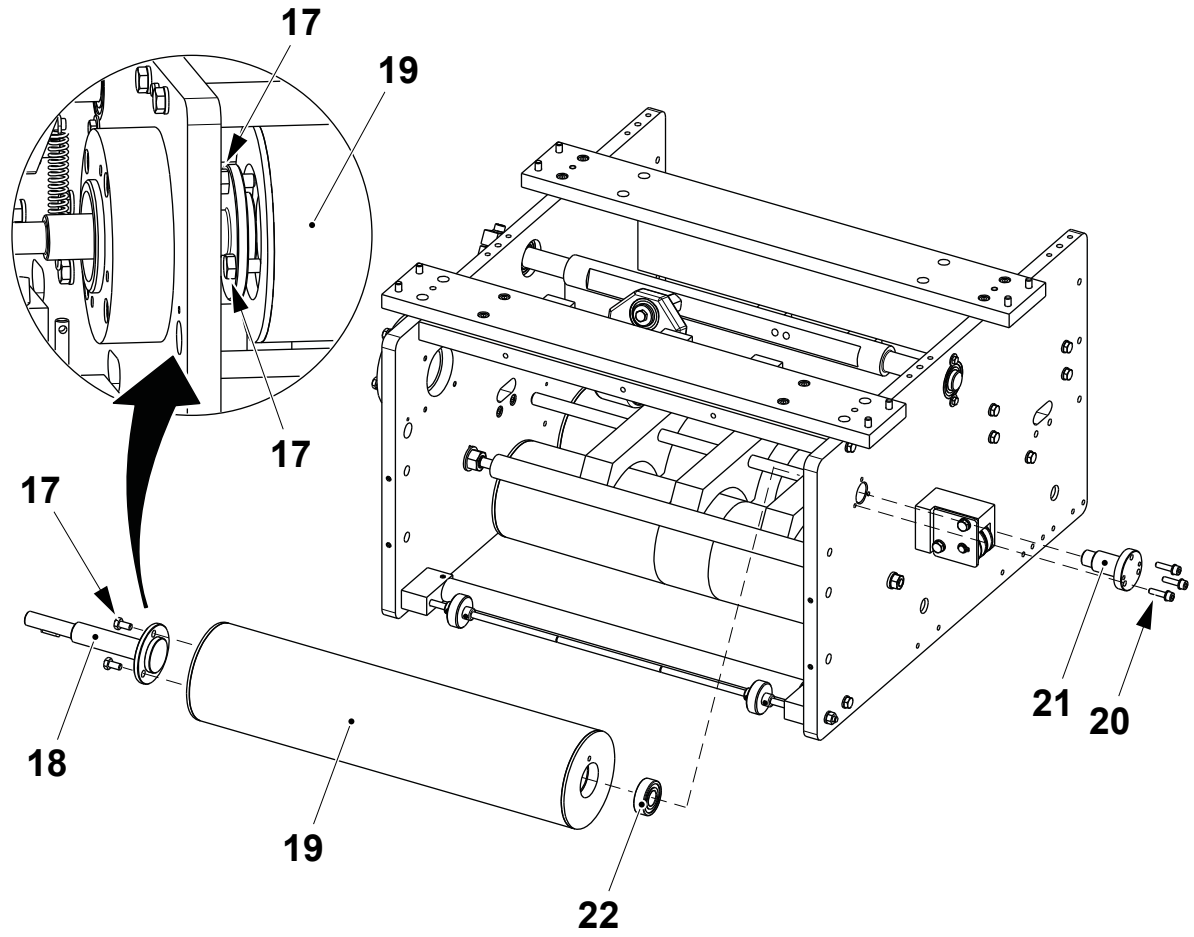

17 Screw
18 Shaft
19 Bending roller
20 Screw
21 Pin
22 Ball bearing

(Cont'd)

(Cont'd)

Bending Rollers

a) Remove the screws (1) and (2).
b) Remove the pin (3) holding by hand the bending roller (4).
c) Remove the bending roller (4).
d) Remove the retaining rings (5) and change the ball bearings (6).
e) Repeat the same procedure for the other bending rollers.
f) Assemble in the reverse order.

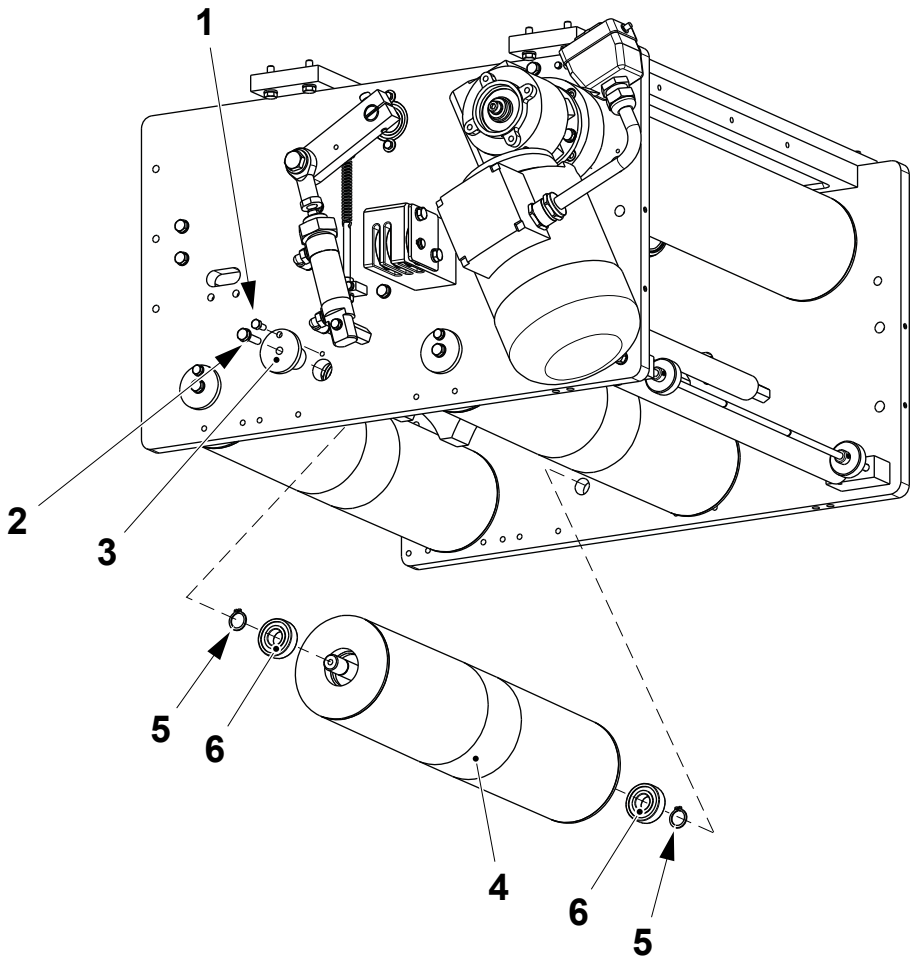

1 Screw
2 Screw
3 Pin
4 Bending roller
5 Retaining ring
6 Ball bearing

(Cont'd)

(Cont'd)

Roller

a) Remove the nuts (1) and the screws (2) and the roller assembly.

b) Loosen the grub screws (3) and remove the roller (4).

c) Change the bearings (5).

d) Assemble in the reverse order.

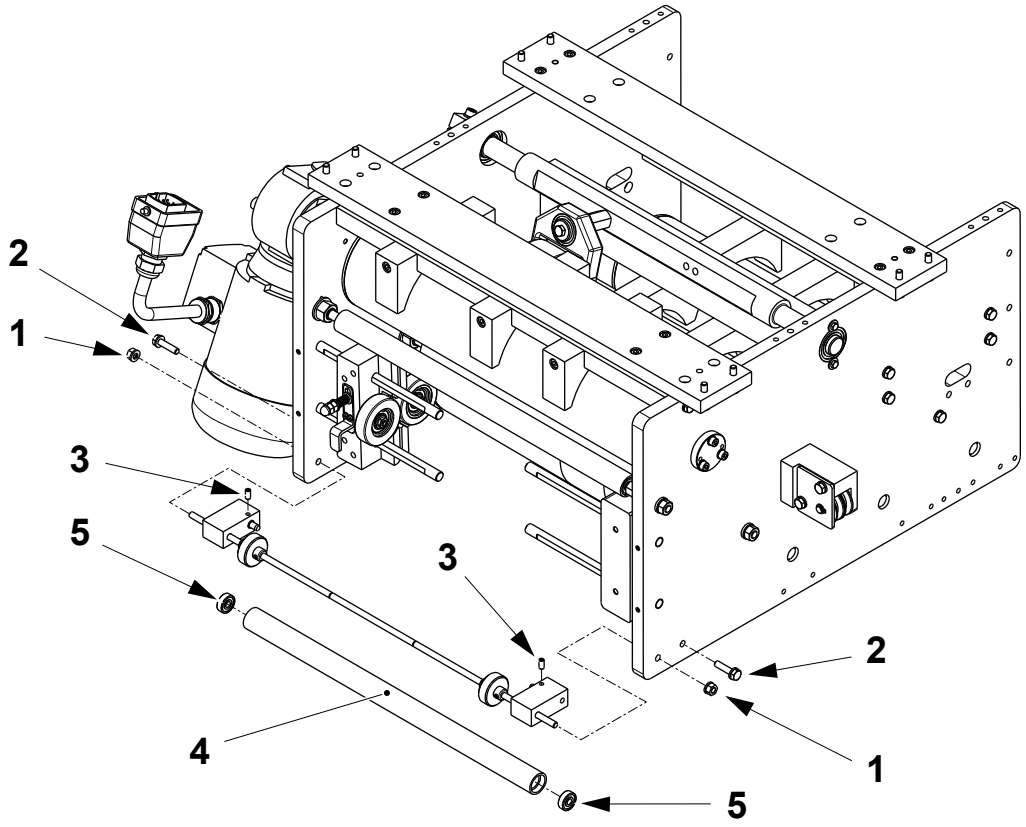

1 Nut
2 Screw
3 Screw
4 Roller
5 Bearing

8.8-2 Magazine, Upper Part - Set Pressure Rollers

Machine Status	Mains Power OFF Air OFF Steam ON Water OFF
SPC Reference	2731242-0100

Set the distance **A** between the four pressure rollers (1) and the packaging material edge: for each pressure roller (1) loosen the screws (2) and move them along the guide pin (3), then tighten the screws (2).

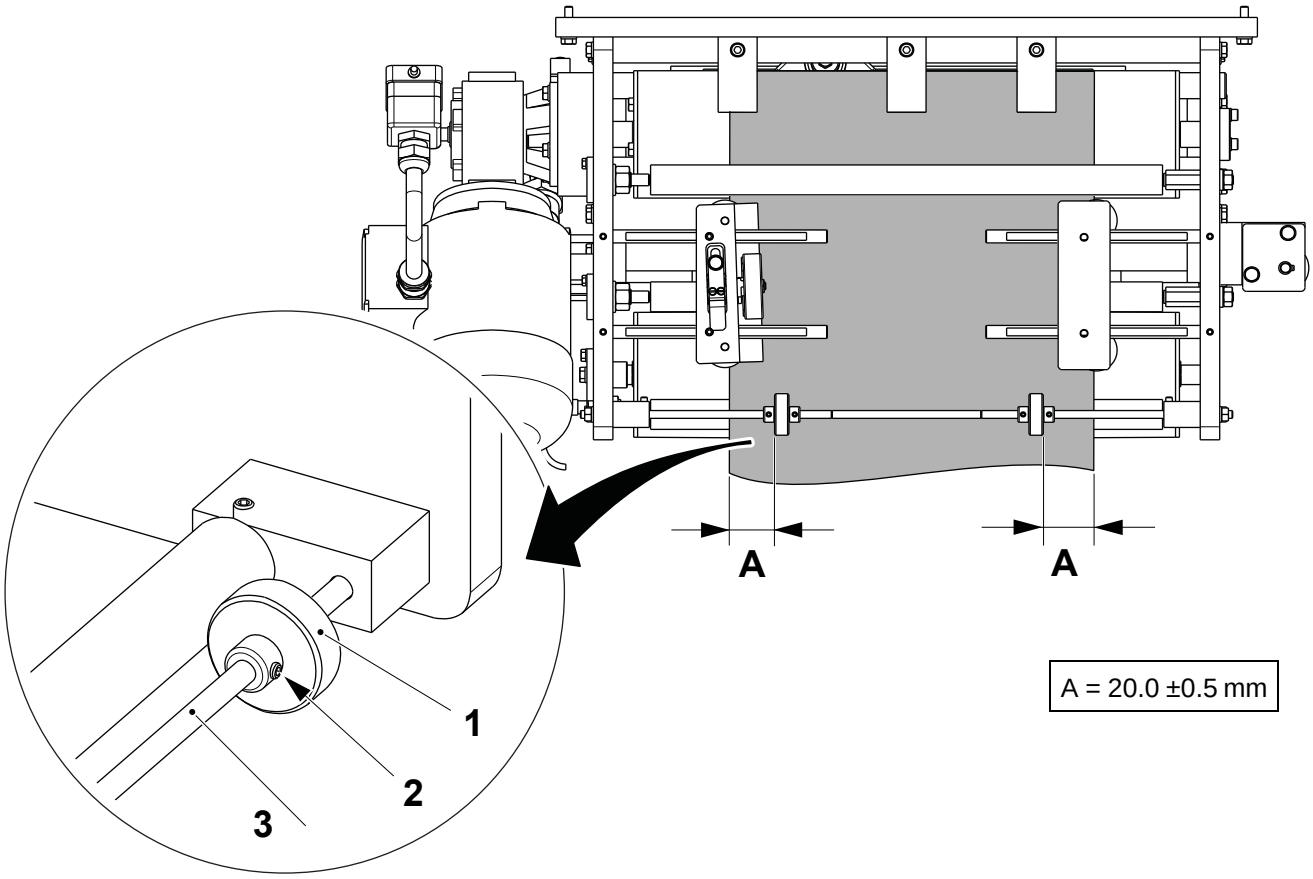

1 Pressure roller
2 Screw
3 Guide pin

8.8.1 Paper Guide

8.8.1-1 Paper Guide - Check

Machine Status	Mains Power OFF Air OFF Steam ON Water OFF
SPC Reference	2737931-0100

Check that:

- the surfaces of the guide rollers (1) and the rollers (2) are undamaged. If damaged, change the guide rollers, see 8.4.1-2 Paper Guide - Change Ball Bearings and Bushings.
- the guide rollers (1) and the rollers (2) rotate freely. If not, change the ball bearings, see 8.4.1-2 Paper Guide - Change Ball Bearings and Bushings.
- the packaging material can be moved up and down causing the guide rollers (1) to rotate without marking the packaging material. If not, see 8.4.1-5 Paper Guide - Set Spring Tension.

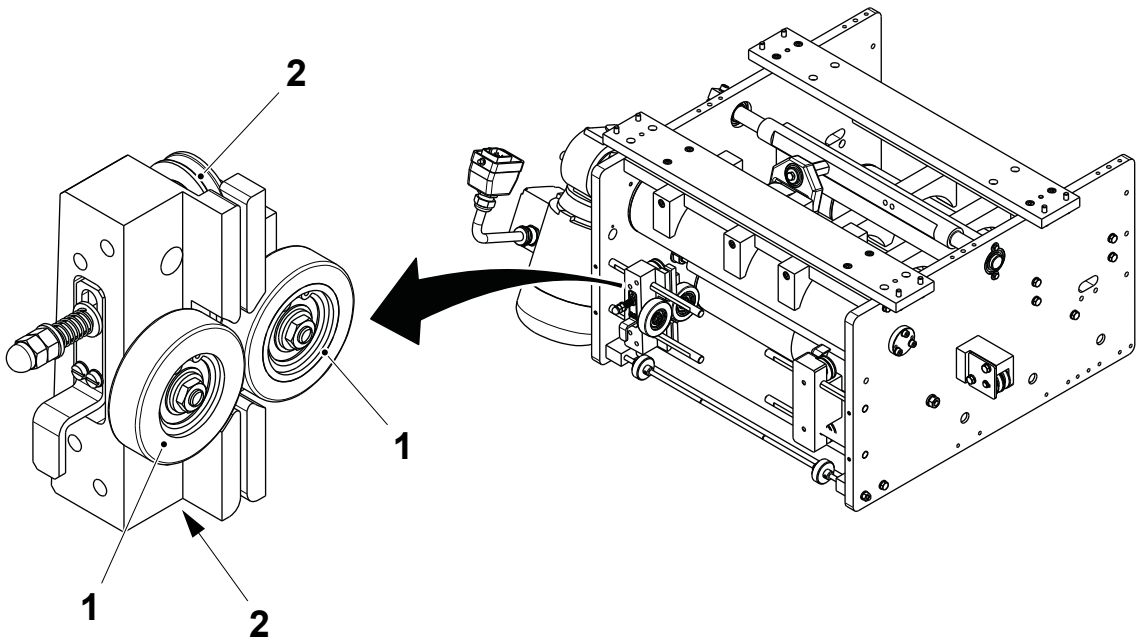

1 Guide roller
2 Roller

8.8.1-3 Paper Guide - Set Position

Machine Status	Mains Power OFF Air OFF Steam ON Water OFF
SPC Reference	2737931-0100

Loosen the grub screws (1) and set the distance **A** between the paper guide (2) and the frame (3). Tighten the grub screws (1).

Package	**A ±0.5 (mm)**
TBA 1000 S	42
TBA 1000 Sq - TBA 500 Sq	47
TBA 2000 S	2.0
TPA 1000 Sq	63.0
TBA 1000 B - TBA 500 B	35.0

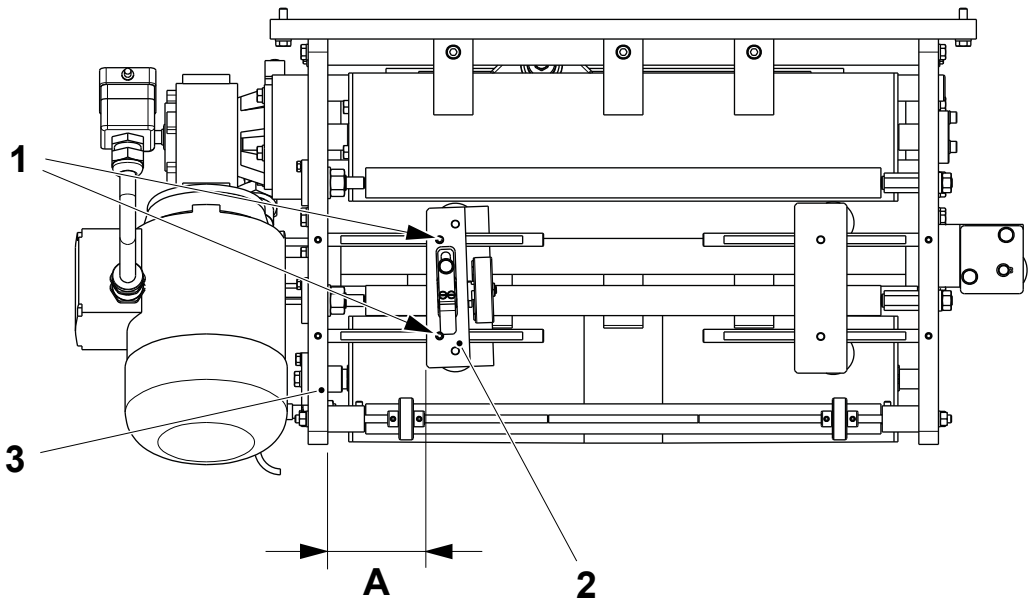

1 Grub screw
2 Paper guide
3 Frame

8.8.2 Paper Slide

8.8.2-1 Paper Slide - Check

Machine Status	Mains Power OFF Air OFF Steam ON Water OFF
SPC Reference	2776086-0100

Check that the rollers (1) rotate freely and the surfaces of the rollers (1) are undamaged. If necessary, change the roller and the ball bearings, see 8.4.2-2 Paper Slide - Change Rollers.

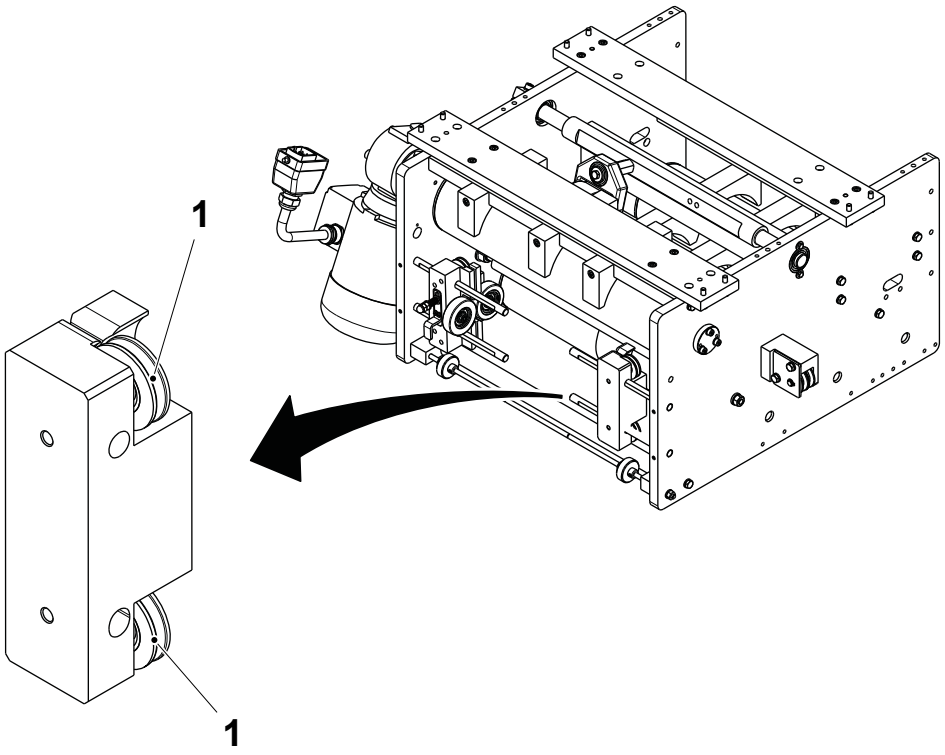

1 Roller

8.8.3 Pressure Roller

8.8.3-1 Pressure Roller - Check

Machine Status	Mains Power OFF Air OFF Steam ON Water OFF
SPC Reference	2731245-0100

Check that:

- the cylinder (1) moves the shaft (2) so that the surface of the counter roller (3) is in constant contact with the bending roller (4). If not set the spring (5), see 8.8.2-3 Pressure Roller - Set.
- the counter roller (3) rotates freely and that it is not worn or damaged. Change if necessary, see 8.8.3-1 Counter Roller - Check.

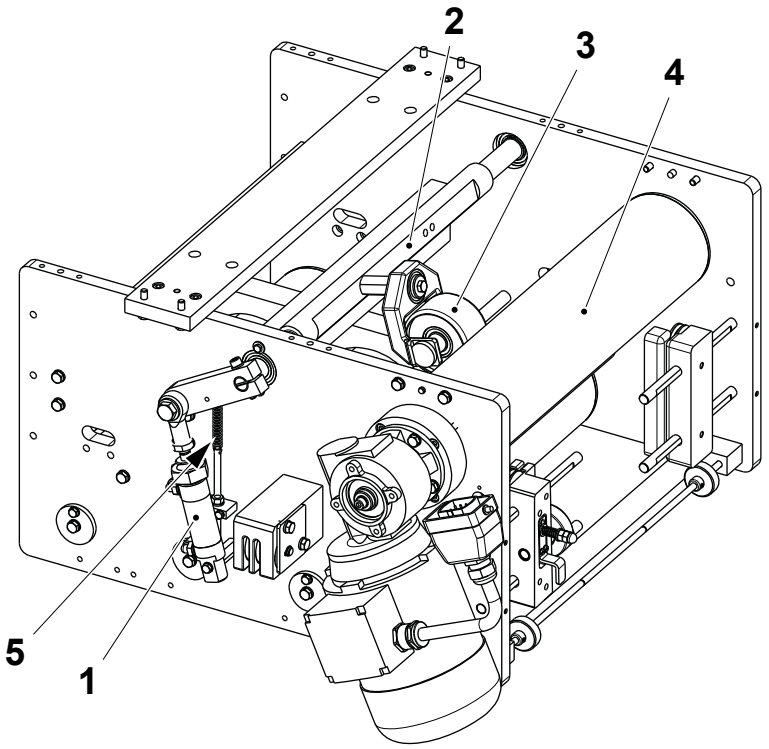

1 Cylinder
2 Shaft
3 Counter roller
4 Bending roller
5 Spring

8.8.3-2 Pressure Roller - Change Bearings

Machine Status	Mains Power OFF Air OFF Steam ON Water OFF
SPC Reference	2731245-0100

a) Remove the bending rollers (1), see 8.8-1 Magazine, Upper Part - Change Roller Bearings.

b) Remove the screws (2) on both sides and extract the guide assembly (3).

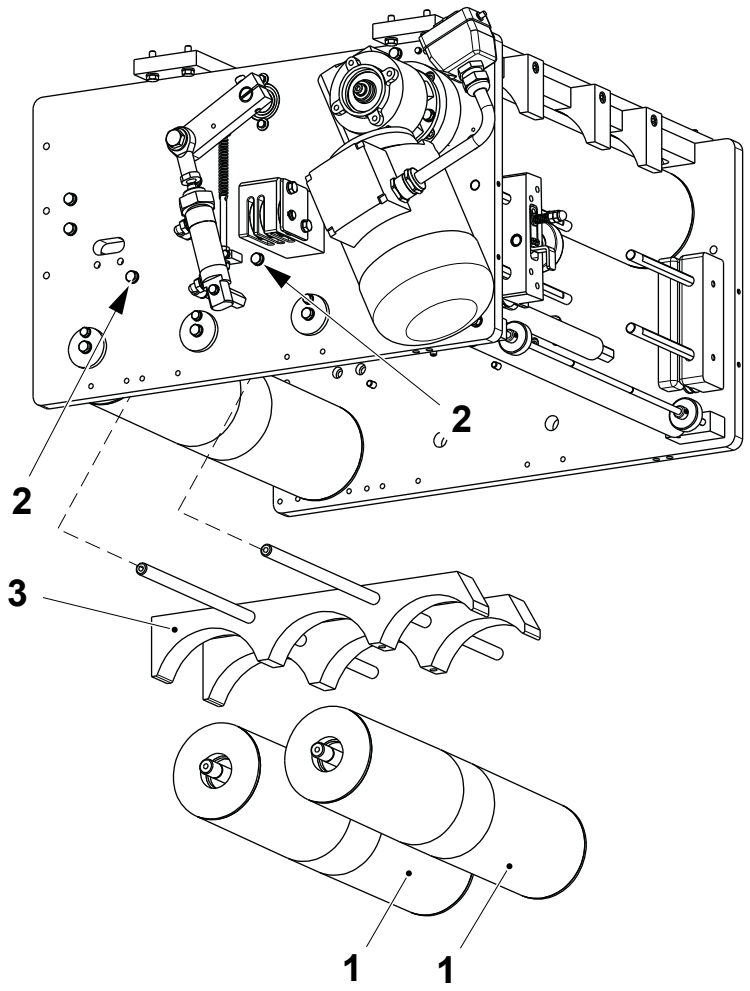

1 Bending roller
2 Screw
3 Guide assembly

(Cont'd)

(Cont'd)

c) Loosen the nut (4) and remove the spring (5).
d) Remove the screw (6) to make the shaft (7) free from the rocker arm (8).
e) Rotate manually the shaft (7) downwards to access the counter roller (9).
f) Loosen the pin (10) and remove the counter roller (9).
g) Check the counter roller, see 8.8.3-1 Counter Roller - Check.

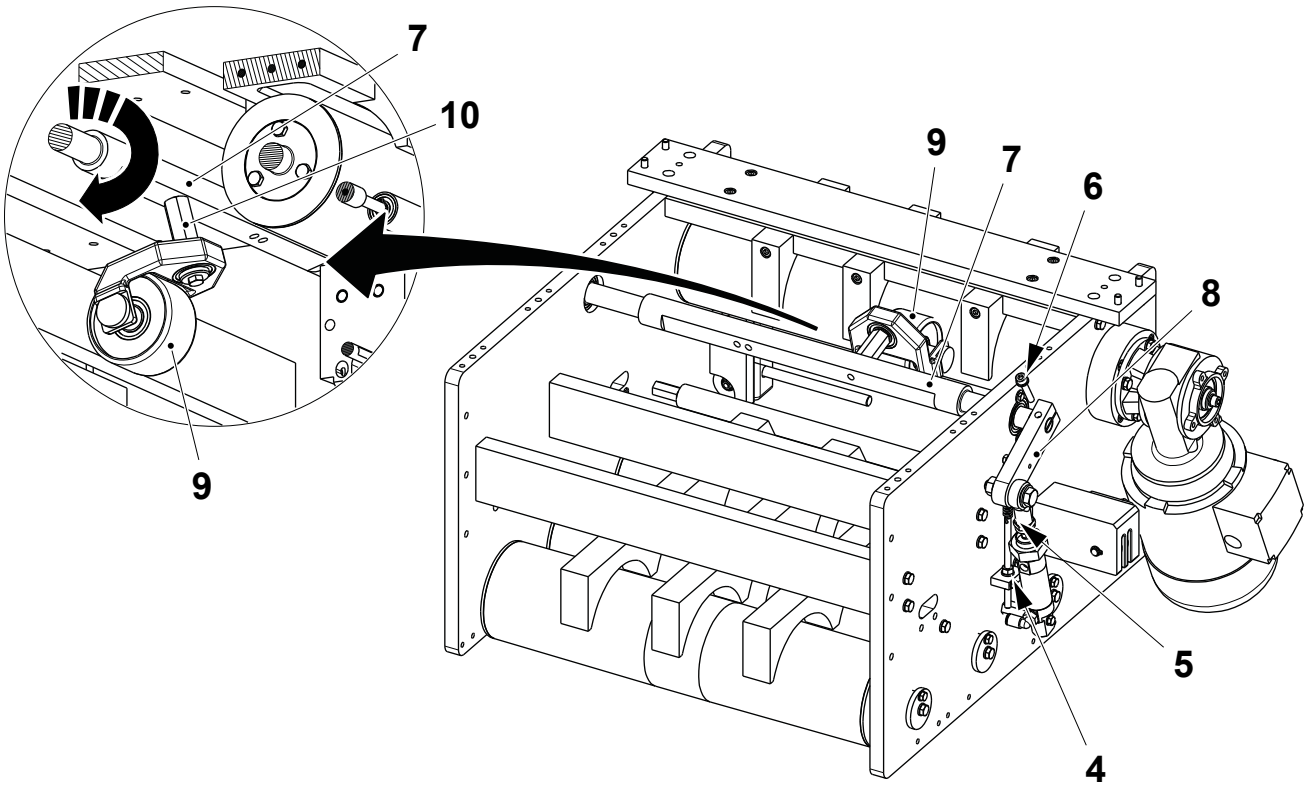

4 Nut
5 Spring
6 Screw
7 Shaft
8 Rocker arm
9 Counter roller
10 Pin

(Cont'd)

(Cont'd)

h) Remove the retaining rings (11).

i) Remove the screws (12) on both sides.

j) Slip off the shaft (7) and change the ball bearings (13).

k) Assemble in the reverse order.

l) Set the pressure roller, see 8.8.2-3 Pressure Roller - Set.

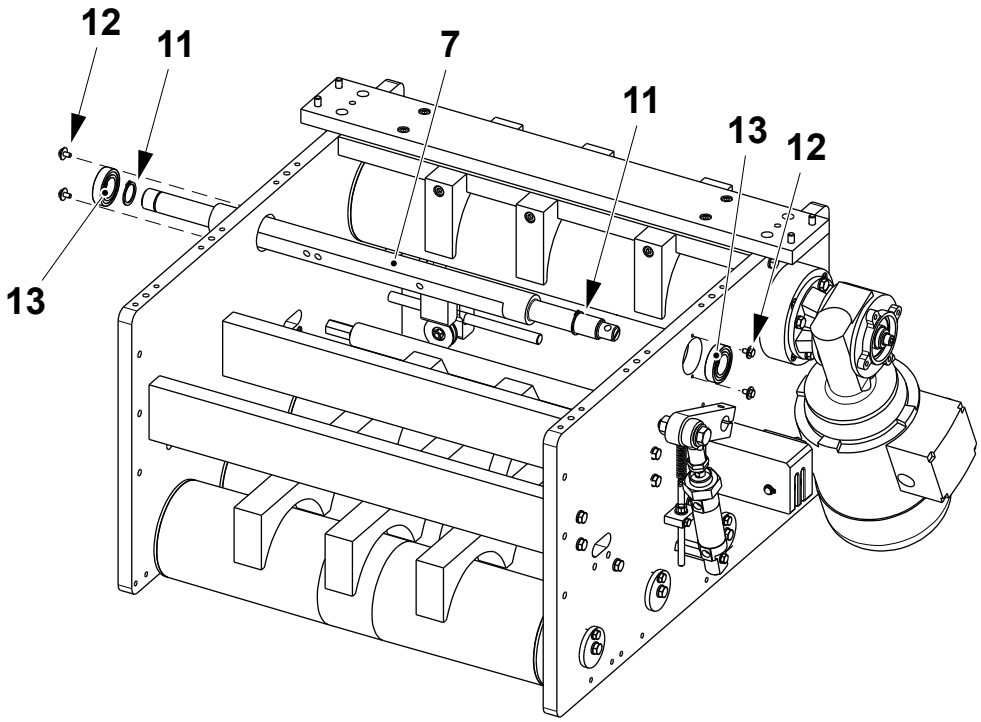

7 Shaft
11 Retaining ring
12 Screw
13 Ball bearing

8.8.3-3 Pressure Roller - Set

Machine Status	Mains Power OFF Air OFF Steam ON Water OFF
SPC Reference	2731245-0100

a) When the cylinder (1) is fully retracted, set the distance **A** by means of the nut (2).

b) Tension the spring (3) by the nut (4) until the distance **B** is obtained.

c) Check that the counter roller (5) is in constant contact with the bending roller (7) when the cylinder (1) is fully retracted. If not tighten the nut (4) to increase the spring tension.

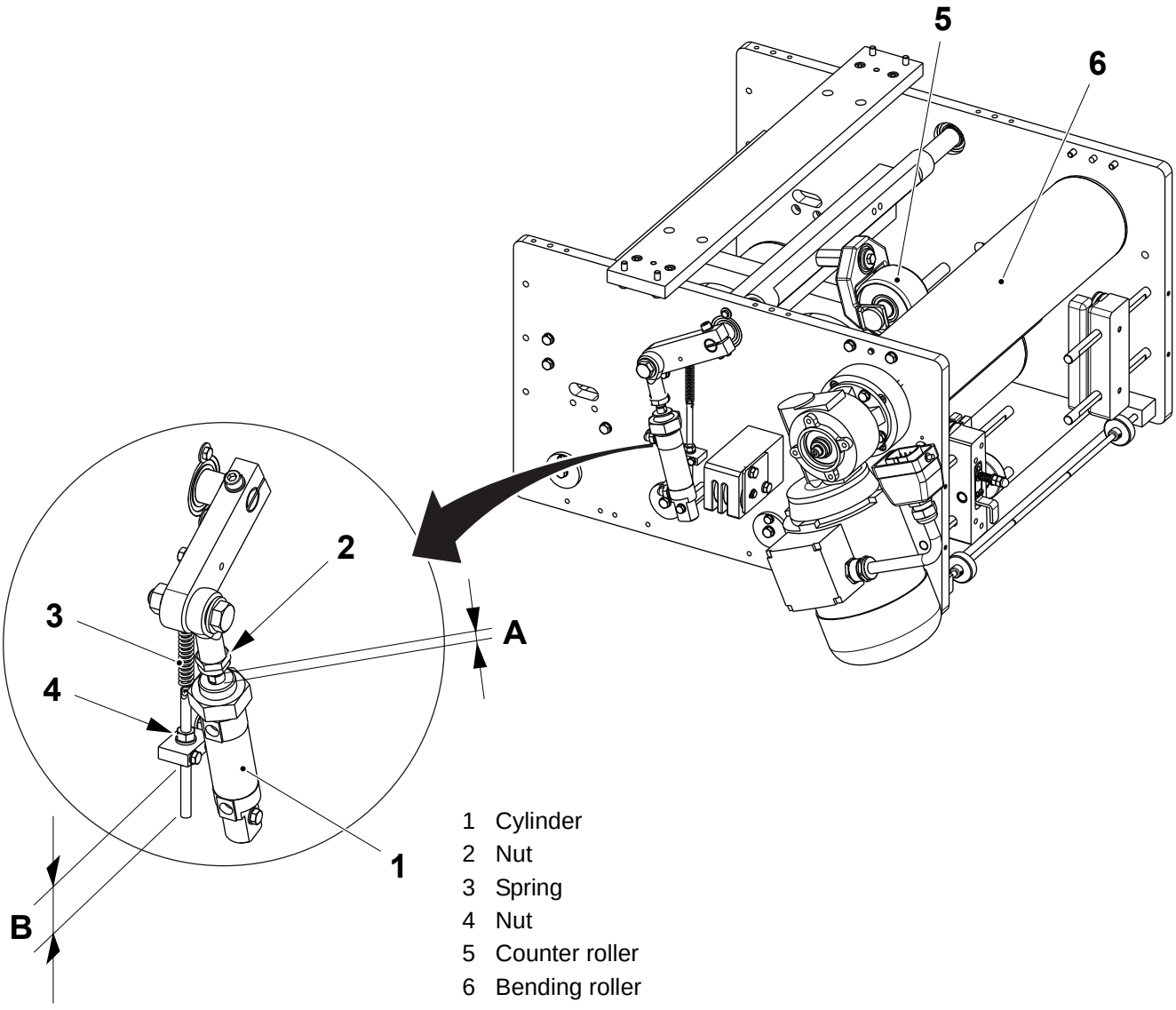

1 Cylinder
2 Nut
3 Spring
4 Nut
5 Counter roller
6 Bending roller

8.8.4 Counter Roller

8.8.4-1 Counter Roller - Change

Machine Status	Mains Power OFF Air OFF Steam ON Water OFF
SPC Reference	2731251-0100

a) Remove the counter roller from the pressure roller axle, see 8.8.2-2 Pressure Roller - Change Bearings.

(Cont'd)

(Cont'd)

b) Remove the screw (1) and the shaft (2).

c) Remove the ball bearings (3) and check them for wear or damage. Change the ball bearings (3) if necessary.

d) Loosen the nut (4) and remove the axle (5).

e) Remove the wheel (6) and change the ball bearings (7) if necessary.

f) Assemble in the reverse order.

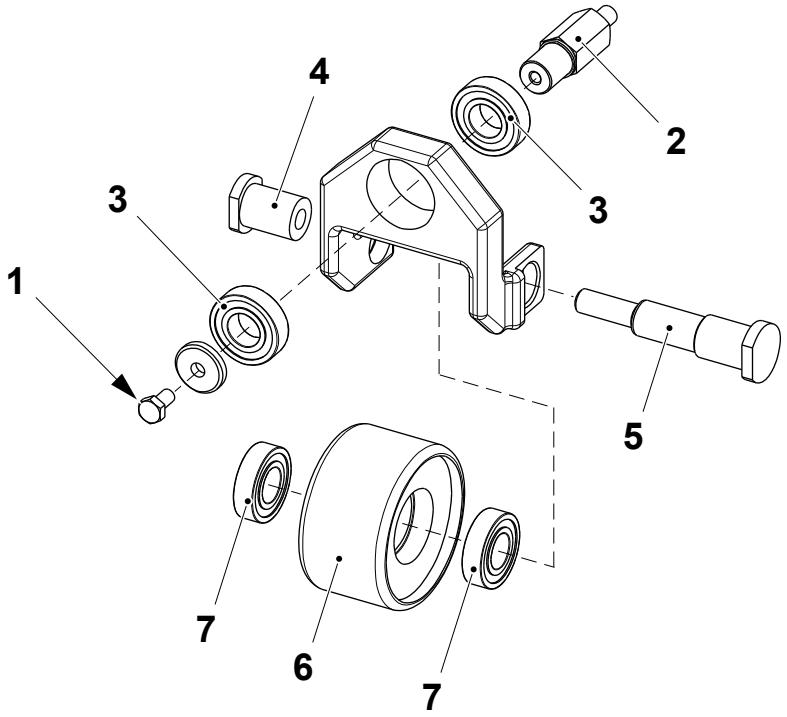

1 Screw
2 Shaft
3 Ball bearing
4 Nut
5 Axle
6 Wheel
7 Ball bearing

8.9 Magazine, Lower Part

SPC Reference	2746324-0100

8.9-1 Magazine, Lower Part - Check

Machine Status	Mains Power OFF Air OFF Steam ON Water OFF
SPC Reference	2731242-0100

Check that:

- the rollers (1) rotate freely without play and that the surfaces of the rollers are not worn or damaged. If necessary change the rollers, see 8.9-2 Magazine, Lower Part - Change Ball Bearings.
- the rollers rise and fall smoothly when they are moved by the ropes (2).
- the LED of the proximity switch (3) is ON when the bracket is moved to its upper or lower position. If not set the proximity switches, see 8.9-3 Magazine, Lower Part - Set.

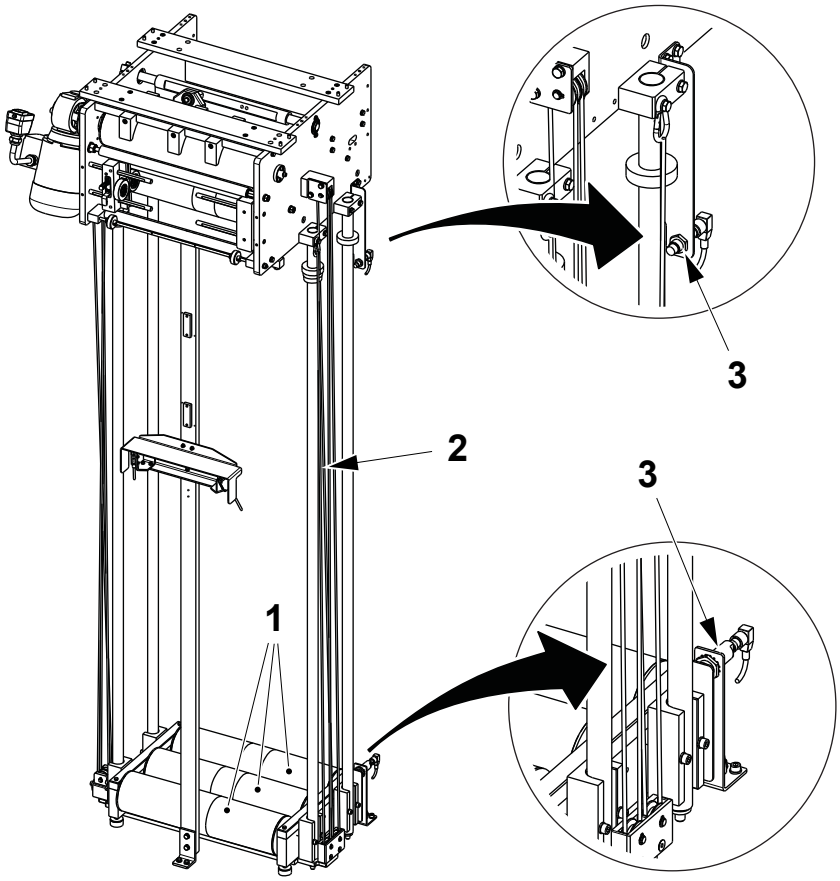

1 Roller
2 Rope
3 Proximity switch

8.9-2 Magazine, Lower Part - Change Ball Bearings

Machine Status	Mains Power OFF Air OFF Steam ON Water OFF
SPC Reference	2731242-0100

a) On both sides, remove the screws (1) and the bracket (2).
b) Remove the screw (3) and lift out the roller (4).
c) Remove the retaining rings (5).
d) Remove and change the ball bearings (6).
e) Repeat the same procedure for the other rollers (7).
f) Assemble in the reverse order.

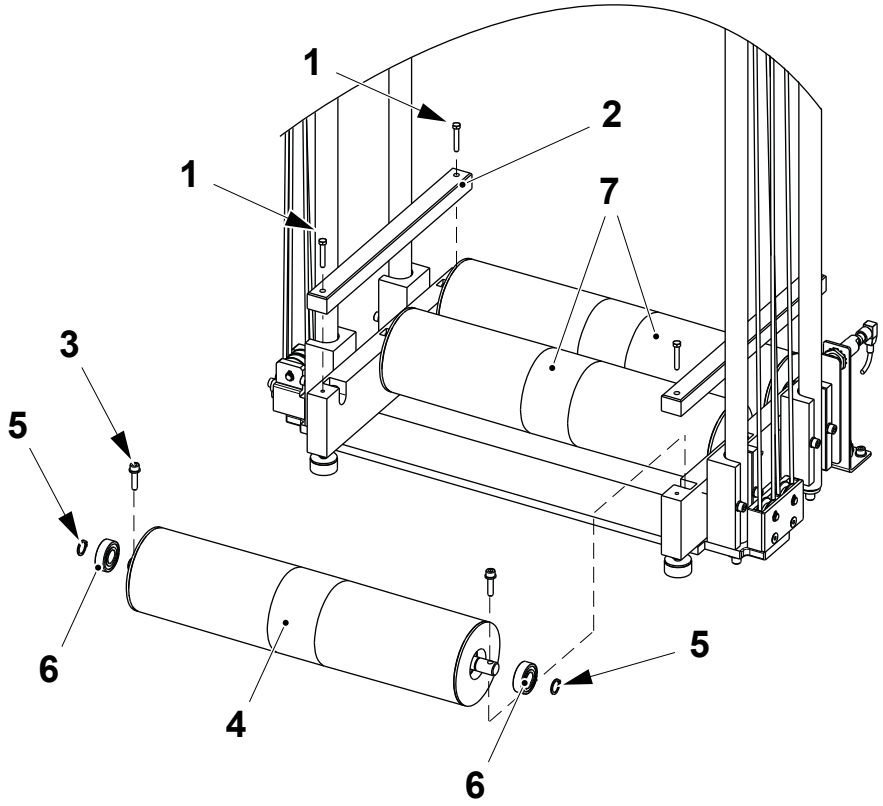

1 Screw
2 Bracket
3 Screw
4 Roller
5 Retaining ring
6 Ball bearing
7 Roller

8.9-3 Magazine, Lower Part - Set Proximity Switch

Machine Status	Mains Power OFF Air OFF Steam ON Water OFF
SPC Reference	2731242-0100

a) Make sure that the magazine rollers (1) are in the lower position.

b) Loosen the nut (2) and move the proximity switch (3) to set the distance **A** between the plate (4) and the proximity switch (3).

c) Check that the LED of the proximity switch (3) is ON. If not, repeat point b).

d) Move the magazine rollers (1) in the upper position and repeat the same setting for the upper proximity switch (5).

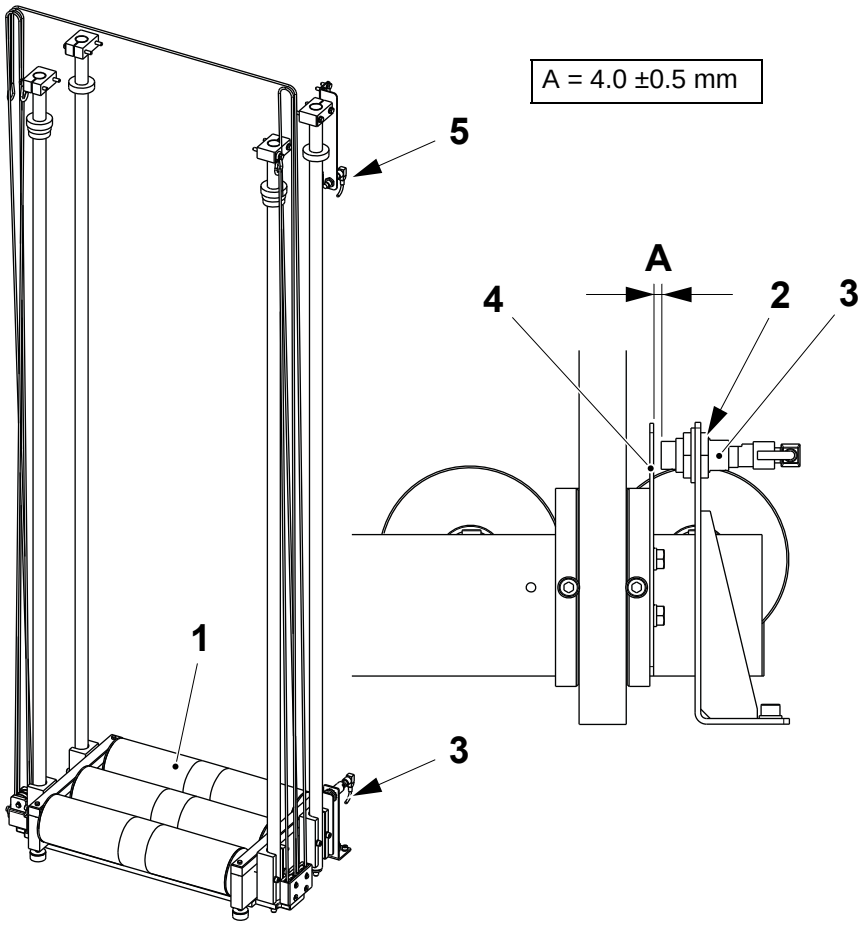

1 Magazine rollers
2 Nut
3 Proximity switch
4 Plate
5 Proximity switch

8.9-4 Magazine, Lower Part - Set Dampers

Machine Status	Mains Power OFF Air OFF Steam ON Water OFF
SPC Reference	2731242-0100

a) Loosen the nut (1) and set the distance **A** between the damper (2) and the bracket (3).

b) Tighten the nut (1).

c) Repeat the procedure for all the dampers.

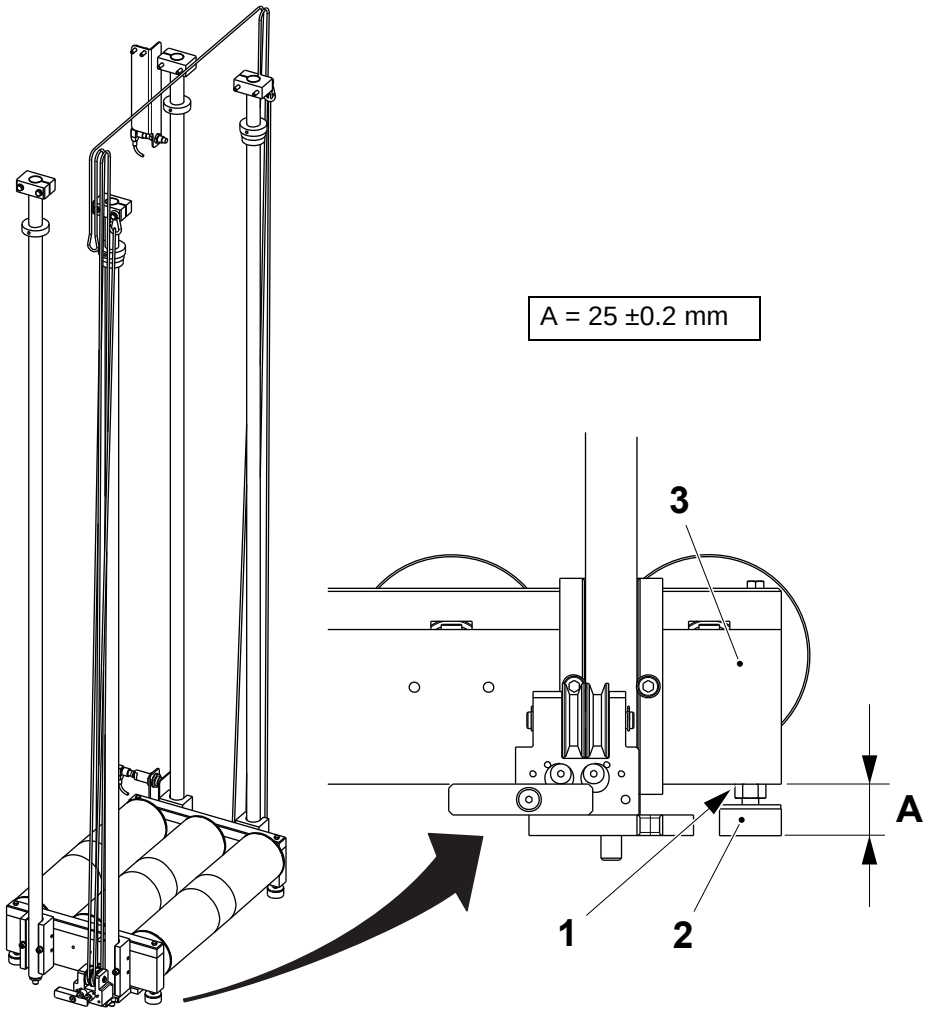

1 Nut
2 Damper
3 Bracket

8.9-5 Magazine - Change Ropes

Machine Status	Mains Power OFF Steam ON Water OFF Air OFF
SPC Reference	2731242-0100

a) Remove the wire lock (1).

b) Loosen one end of the rope from the snap hook (2).

c) Connect the end of the rope with the end of the new rope by melting together the rope ends.

d) Secure the other end of the new rope to the snap hook (2).

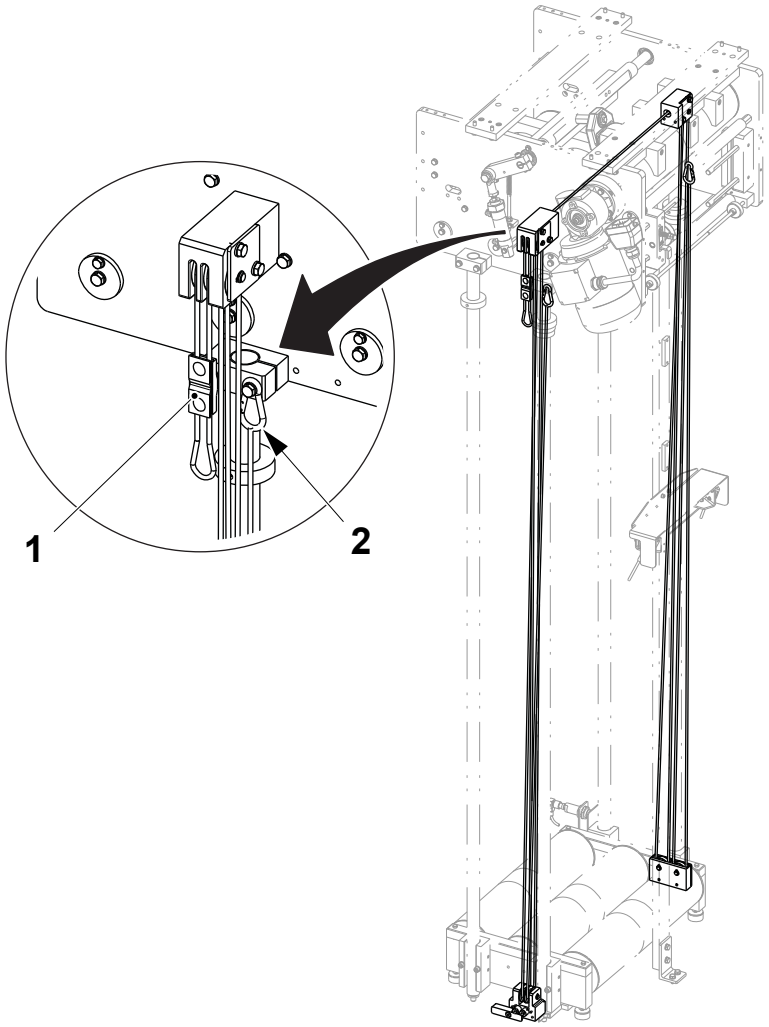

1 Wire lock
2 Snap hook

(Cont'd)

(Cont'd)

e) Loosen the other end of the rope from the opposite snap hook (3).

f) Slip off the rope by pulling it: when the old rope is wholly out, the new rope is fitted in its place.

g) Separate the new rope from the old one and connect the end of the new rope to the snap hook (3).

h) Pull the rope from the pulley (4) in order to create a loop and fit the wire lock (1) approximately 10 cm under the pulley (4).

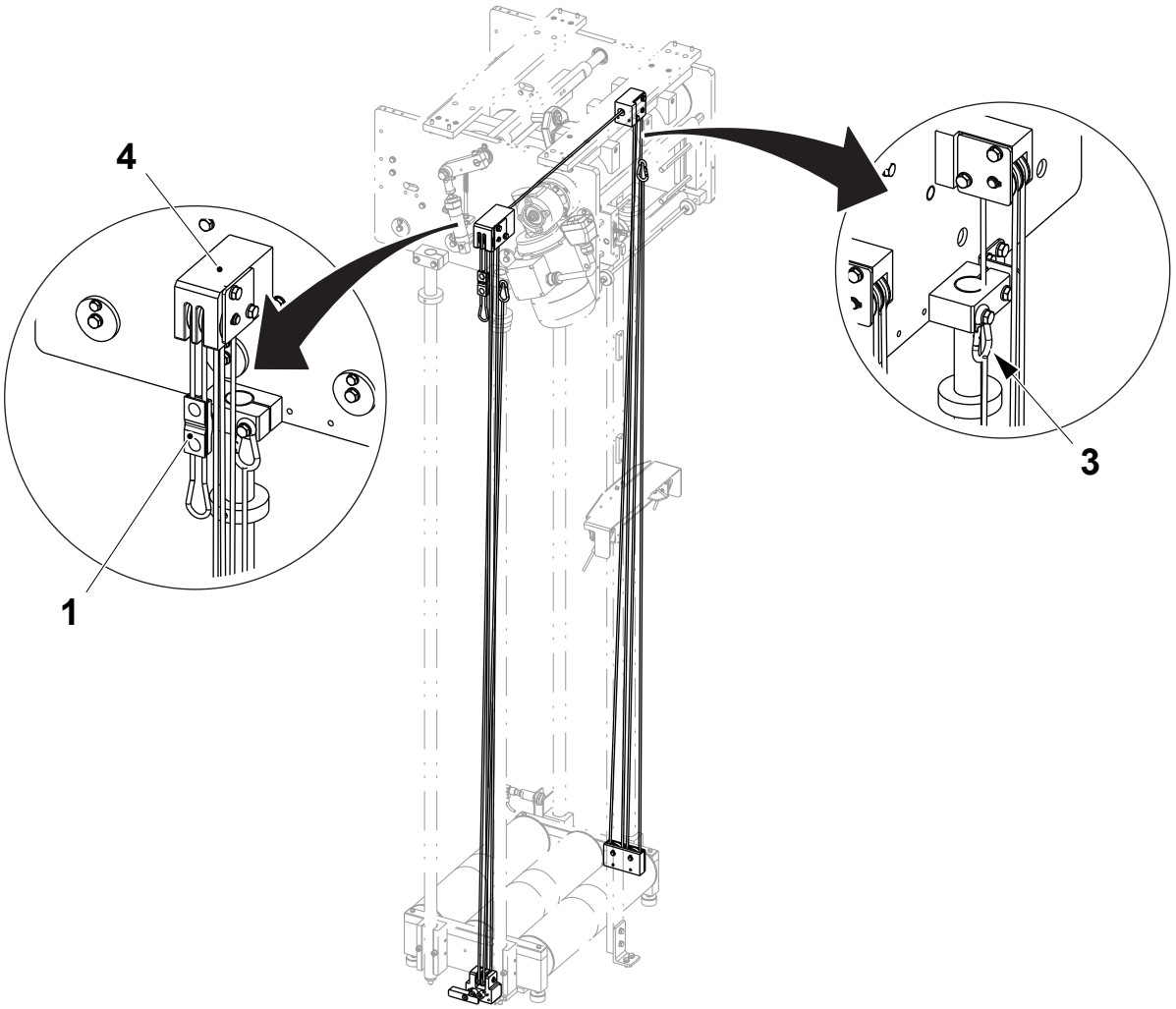

1 Wire lock
3 Snap hook
4 Pulley

8.10 Covering Panel

SPC Reference	2746328-0100

8.10-1 Covering Panel - Check

Machine Status	Mains Power OFF Air OFF Steam ON Water OFF
SPC Reference	2746328-0100

Check that:

- the safety switches operate when the doors are opened. If not, change the defective switch and set it, see 8.10-2 Covering Panel - Set Safety Switches.

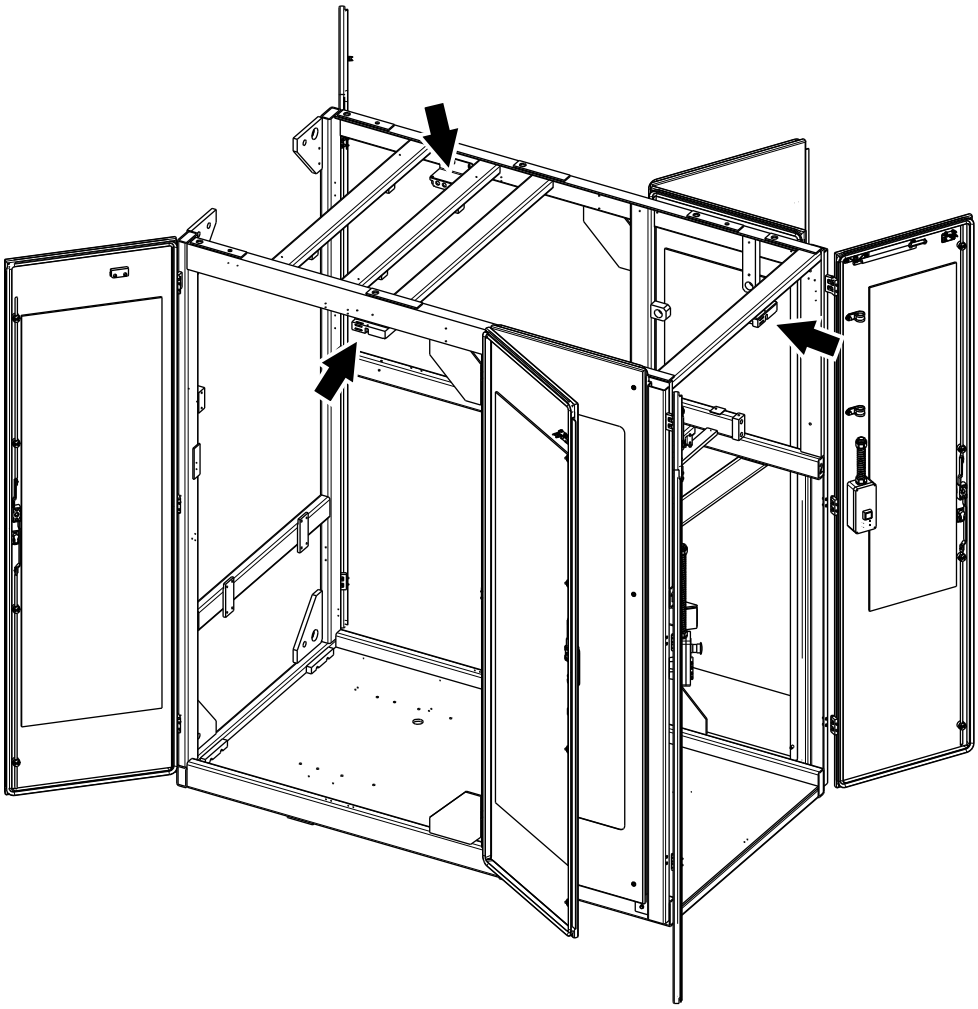

(Cont'd)

(Cont'd)

- the rubber strip (1) is not worn or damaged. If necessary, change the rubber strip (1)
- the rubber strip (1) is fitted correctly. If necessary, adjust the rubber strip (1)
- the locking arms (2) run smoothly in the guide lugs (3)
- the locking arms (2) engage with the locking plates (4) and (5) when the door is closed
- the locking arms (2) are free from the locking plates (4) and (5) when the door is opened

i) the latch (6) locks when the door is closed

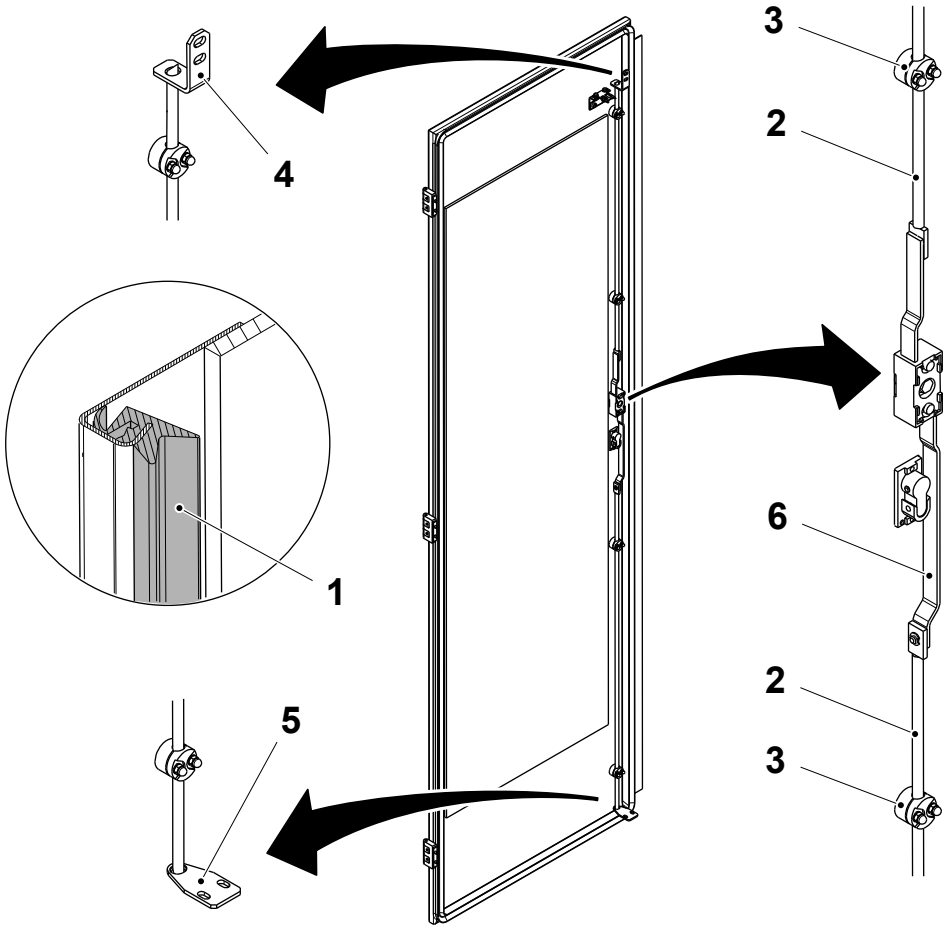

1 Rubber strip
2 Locking arm
3 Guide lug
4 Locking plate
5 Locking plate
6 Latch

8.10-2 Covering Panel - Set Safety Switches

Machine Status	Mains Power OFF Air OFF Steam ON Water OFF
SPC Reference	2746328-0100

a) On every safety switches (grey marked) loosen the screws (1) set the distance **A** between the switch (2) and the key holder (3).

b) Close the doors.

c) Check if the DOOR OPEN alarm on the TPOP is still ON. If the alarm is ON, repeat the procedure until the doors can be closed without any alarm.

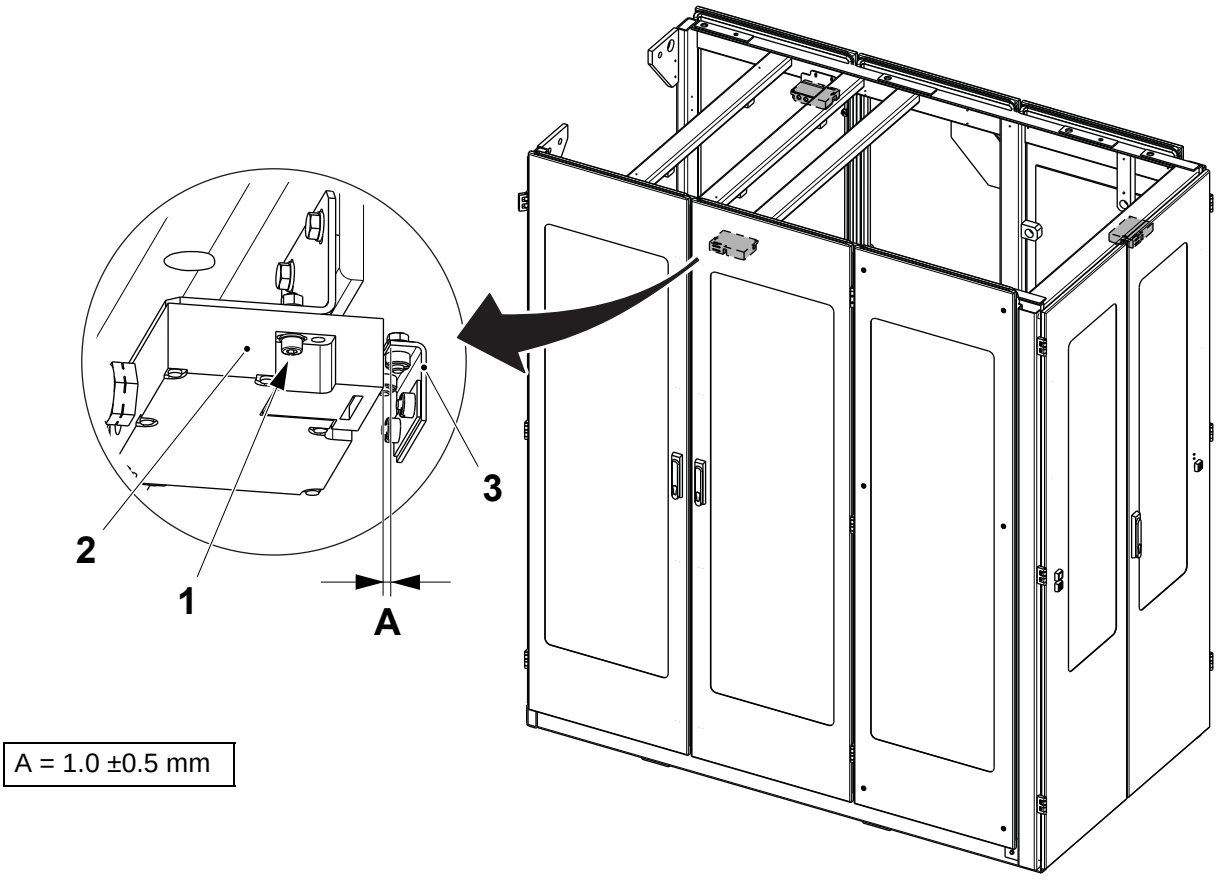

A = 1.0 ±0.5 mm

1 Screw
2 Switch
3 Key holder

8.10-3 Covering Panel - Change Safety Key

Machine Status	Mains Power OFF Air OFF Steam ON Water OFF
Special Equipment	Tool for Snake Eyes M5 Screws TP No. 90600-2975 Tool for Special Round Nuts TP No. 2863968-0000
SPC Reference	2746328-0100

If the safety key (1) is broken or damaged, change as follows.

a) Loosen the nuts (2) using the required tool.

b) Remove the screws (3) and change the safety key (1).

c) Tighten the nuts (2) using the required tool.

d) Set the safety switch, see 8.10-2 Covering Panel - Set Safety Switches.

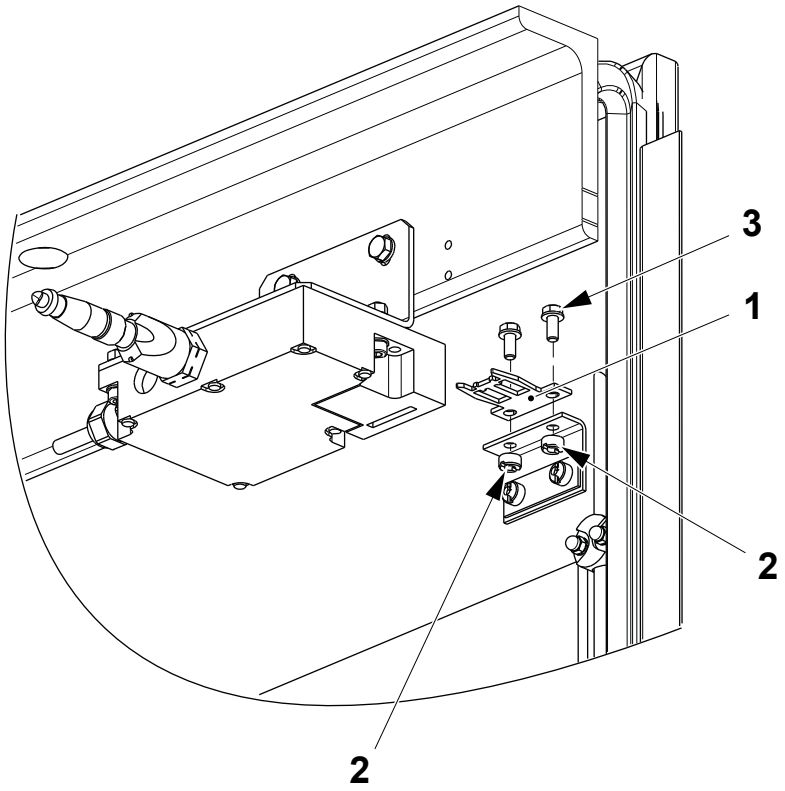

1 Safety key
2 Nut
3 Screw

8.11 Bobbin Brake

SPC Reference	2731222-0100

8.11-1 Bobbin Brake - Set

Machine Status	Mains Power OFF Air OFF Steam ON Water OFF
SPC Reference	2731222-0100

When the piston rod (1) of the cylinder (2) is fully open, set the distance **A** by means of the nut (3).

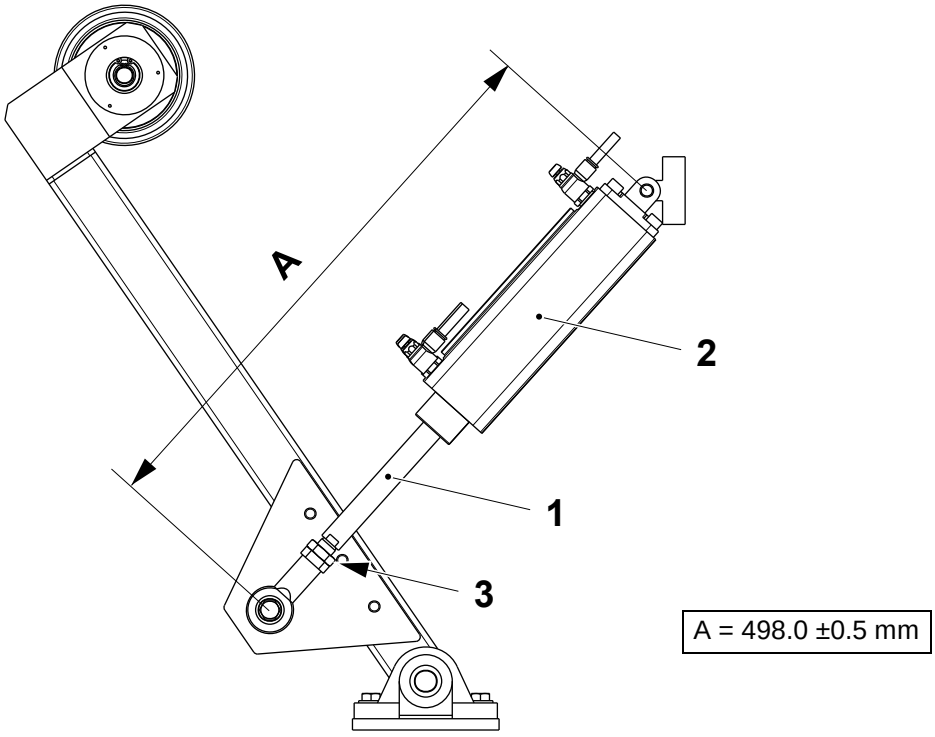

1 Piston rod
2 Cylinder
3 Nut

(Cont'd)

(Cont'd)

Set the distance **B** between the wheel (4) and the magazine rod (5) by adjusting the position of the plate (6) with the screws (7).

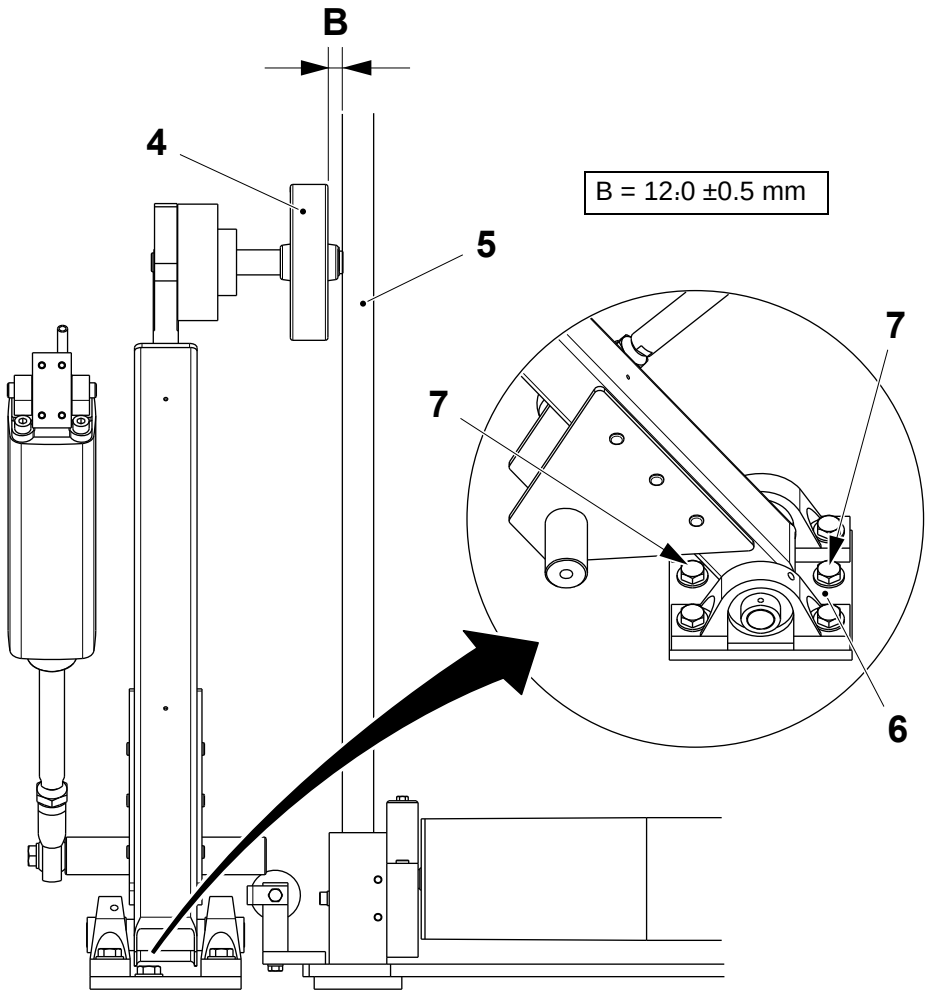

4 Wheel
5 Magazine rod
6 Plate
7 Screw

(Cont'd)

(Cont'd)

Set Pressure

Check that the bobbin brake pneumatic pressure is set to 0.6-0.8 bar. To set the pressure, turn the control knob (1) until the pressure gauge (2) indicates the correct pressure.

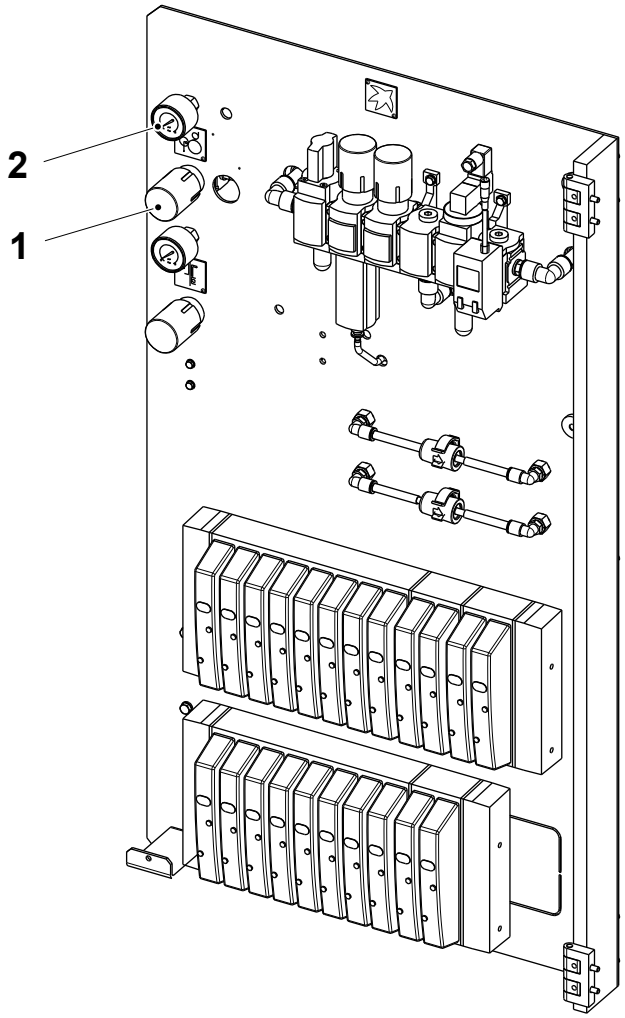

1 Control knob
2 Pressure gauge

8.12 Reel Trolley

SPC Reference	90600-3339

8.12-1 Reel Trolley - Check

Machine Status	Mains Power OFF Air OFF Steam ON Water OFF
SPC Reference	90600-3339

a) Pull the brake handle (1) and check that the brake releases. If not, see 8.12-8 Reel Trolley - Set Brake.

b) Check that all connections are free from oil. Clean if necessary.

c) Pump up the arms to their highest position and check that the cylinder piston (2) is dry. Clean if necessary.

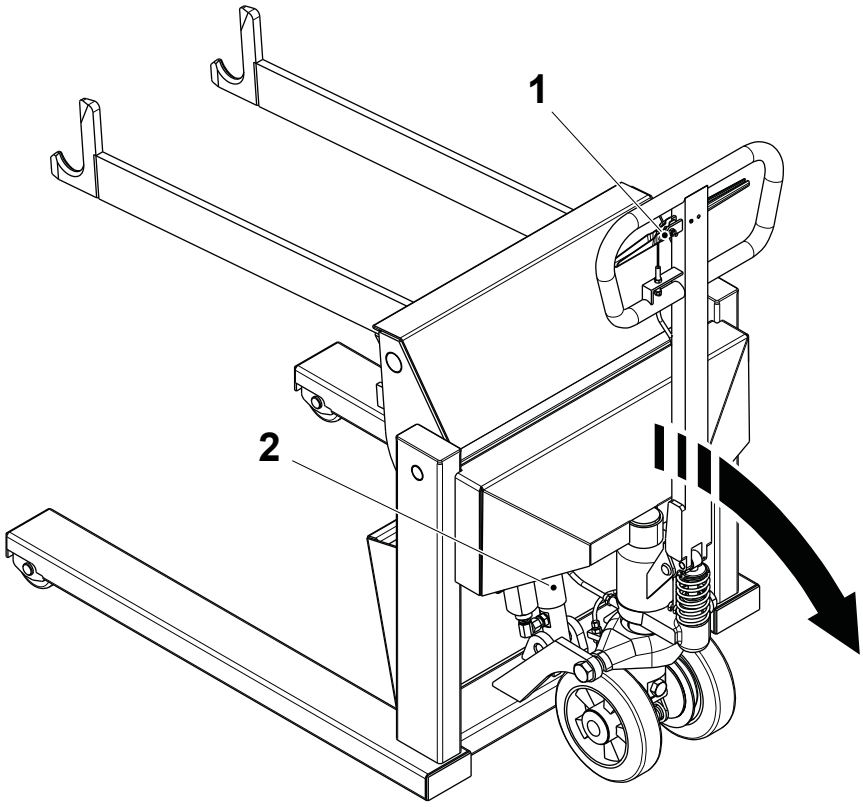

1 Handle
2 Cylinder piston

(Cont'd)

(Cont'd)

d) Put a packaging material reel in the trolley and pump up the arms until the reel lifts from the floor. Wait for 10 minutes.

e) Make sure that the reel does not sink, sinking can be caused by a broken pump cylinder (3). Change if necessary, see 8.12-2 Reel Trolley - Change Pump Cylinder.

f) Pump up the arms again until the reel lifts from the floor and then let it down while pulling the handle (1). If the arms sink very quickly, set the regulating valve (4), see 8.12-3 Reel Trolley - Set Regulating Valve.

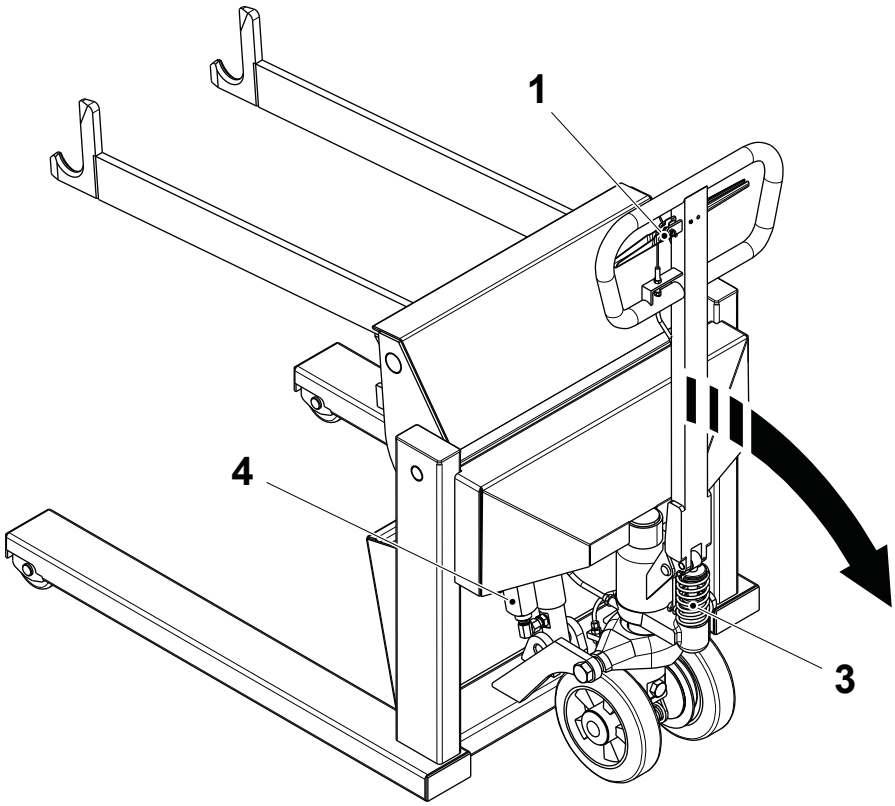

1 Handle
3 Pump cylinder
4 Regulating valve

8.12-2 Reel Trolley - Change Pump Cylinder

Machine Status	Mains Power OFF Air OFF Steam ON Water OFF
Consumables	Hydraulic Oil, TP No. 90459-1310
SPC Reference	90600-3339

a) Release the tie rod (1) from the valve arm (2).
b) Remove the screw (3) from the axle pin (4).
c) Turn the axle pin (4) clockwise a little and pull out the tie rod (1).
d) Pull out the axle pin (4) and remove the handle (5).
e) Remove the split pin (6), the washer (7) and the spring (8).

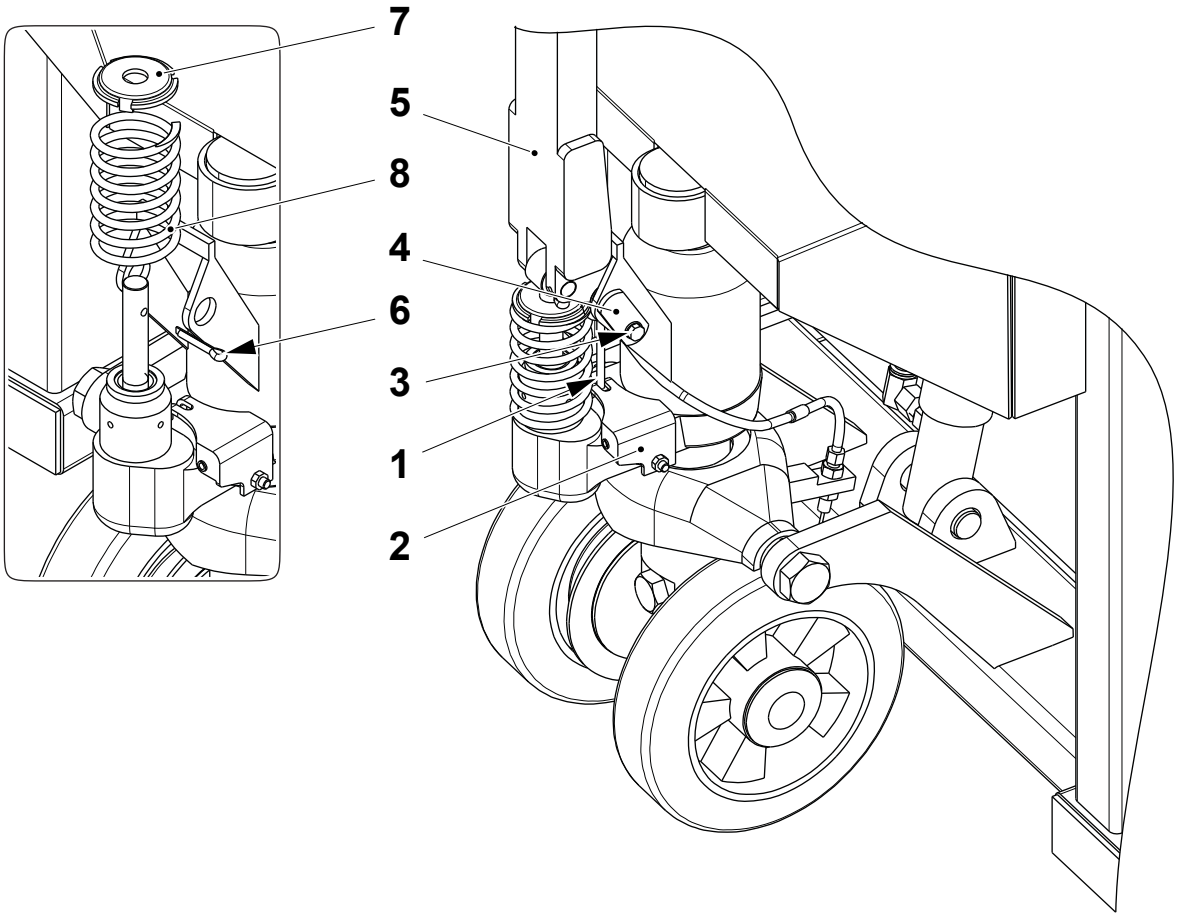

1 Tie rod
2 Valve arm
3 Screw
4 Axle pin
5 Handle
6 Split pin
7 Washer
8 Spring

(Cont'd)

(Cont'd)

f) Unscrew the cylinder (9).

g) Remove and change the O-ring (10).

h) Pull the axle (11) in the direction indicated by the arrow in the illustration.

i) Remove the oil seal (12), the retaining ring (13), the spacer (14) and the seal (15).

j) Change the oil seal (12) and the seal (15).

k) Assemble in the reverse order.

l) Put the arms in the lowered position. If necessary, remove the plug (16) and fill with oil, code **C**, see 10.3-1 Lubricants. Fill until oil starts to flow out of the plug hole.

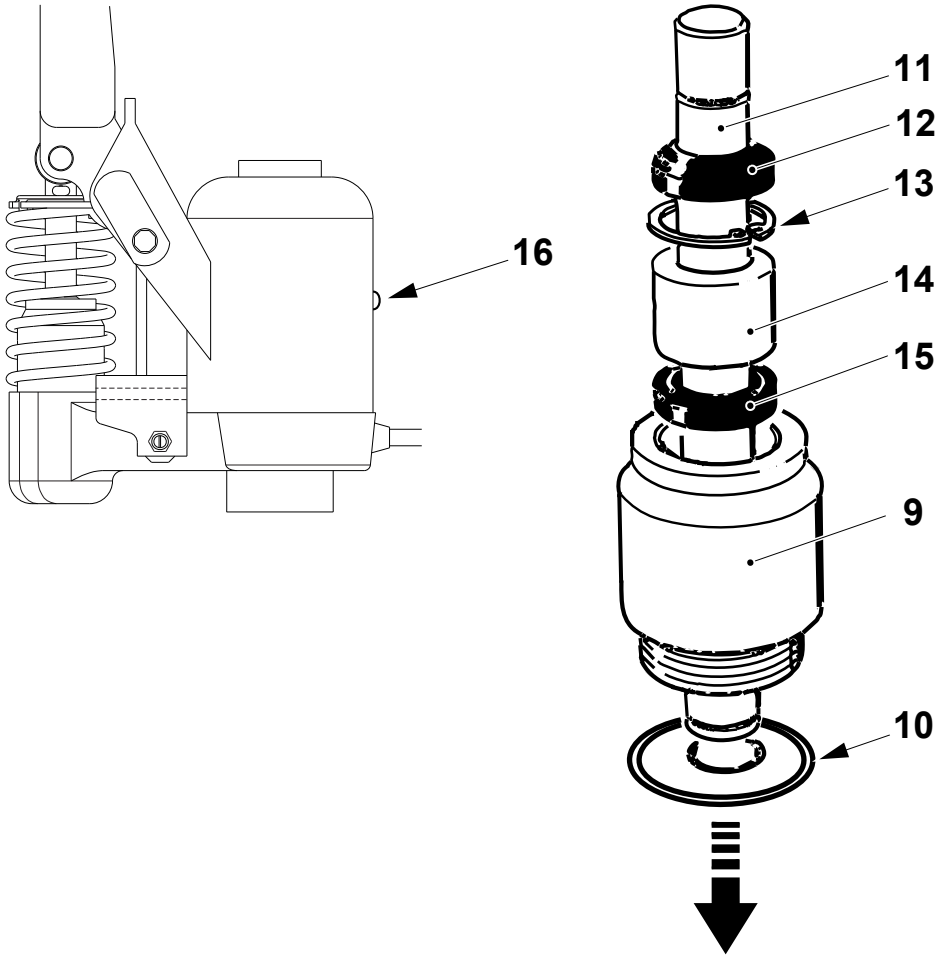

9 Cylinder
10 O-ring
11 Axle
12 Oil seal
13 Retaining ring
14 Spacer
15 Seal
16 Plug

8.12-3 Reel Trolley - Set Regulating Valve

Machine Status	Mains Power OFF Air OFF Steam ON Water OFF
SPC Reference	90600-3339

a) Pump up the handle (1) to lift the arms (2) to their highest position.

b) Pull in the handle (3) to lower the arms. Set the knob (4) so that the arms reach the lowest position in 8 - 9 seconds.

c) If it is not possible to set the correct value, change the sink valve, see 8.12-4 Reel Trolley - Change Sink Valve.

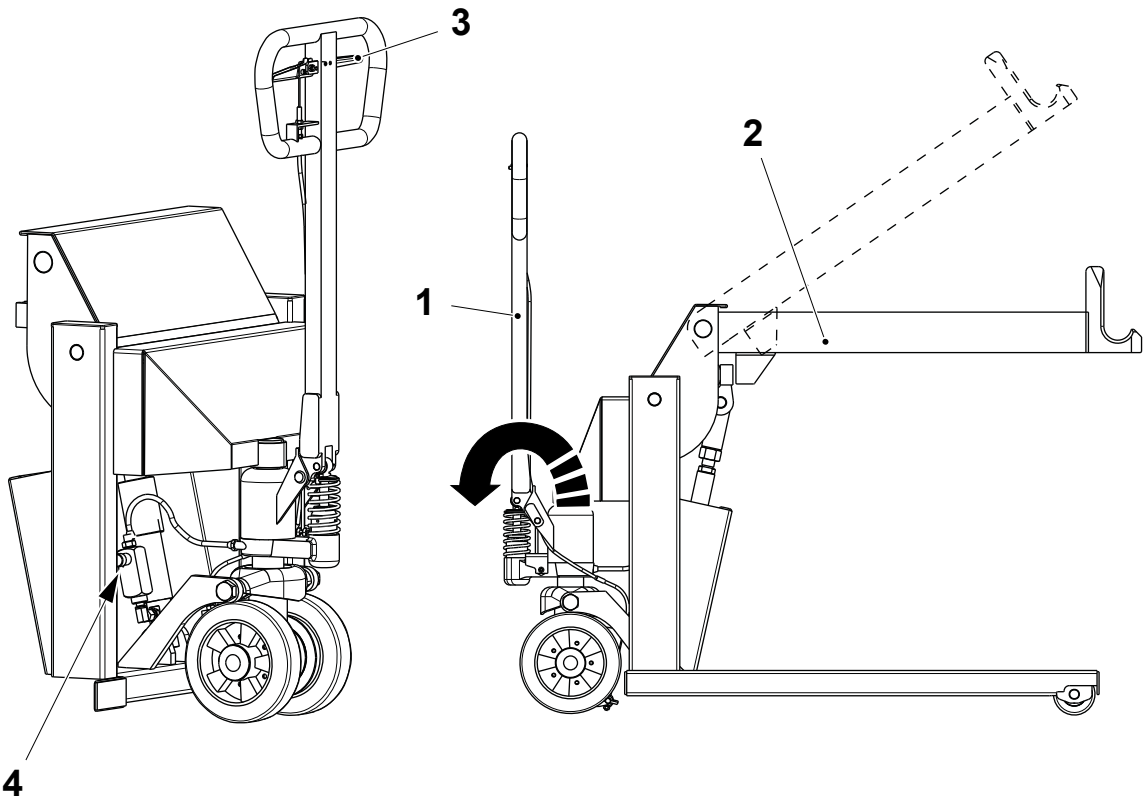

1 Handle
2 Arm
3 Handle
4 Knob

8.12-4 Reel Trolley - Change Sink Valve

Machine Status	Mains Power OFF Air OFF Steam ON Water OFF
Consumables	Hydraulic Oil, TP No. 90459-1310
SPC Reference	90600-3339

a) Release the tie rod (1) and drive out the spring pin (2).

b) Remove the valve arm (3).

c) Unscrew and remove the sink valve (4).

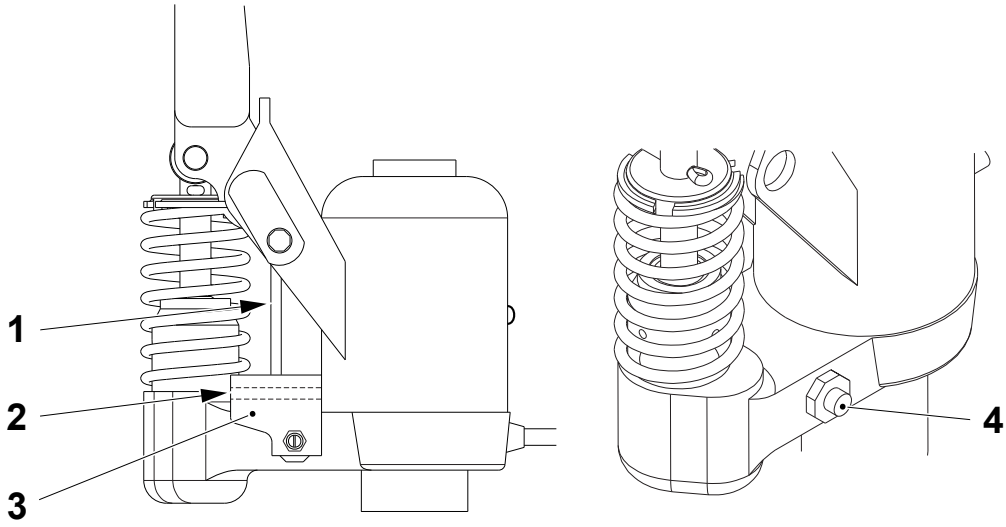

1 Tie rod
2 Spring pin
3 Valve arm
4 Sink valve

(Cont'd)

(Cont'd)

d) Remove and change the O-rings (5), the copper washer (6) and the teflon washer (7).

e) Assemble in the reverse order.

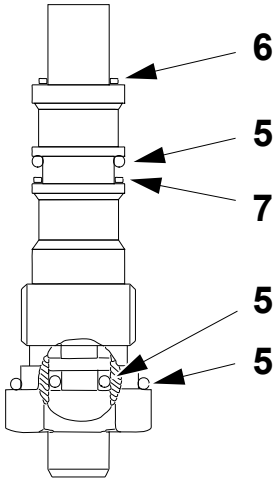

5 O-ring
6 Copper washer
7 Teflon washer

(Cont'd)

(Cont'd)

f) Pump up the arms to their highest position.

g) Loosen the lock nut (8).

h) Unscrew the setting screw (9).

i) Press in the handle (sink) and, at the same time, turn the screw (9) to the point out, where the lifting arms start to sink.

j) Without moving the screw (9), tighten the lock nut (8).

k) Put the arms of the trolley in their lowest position. If necessary, remove the plug (10) and fill with oil, code **C**, see 10.3-1 Lubricants. Fill until oil starts to flow out of the plug hole.

l) Set the sink time, see 8.12-3 Reel Trolley - Set Regulating Valve.

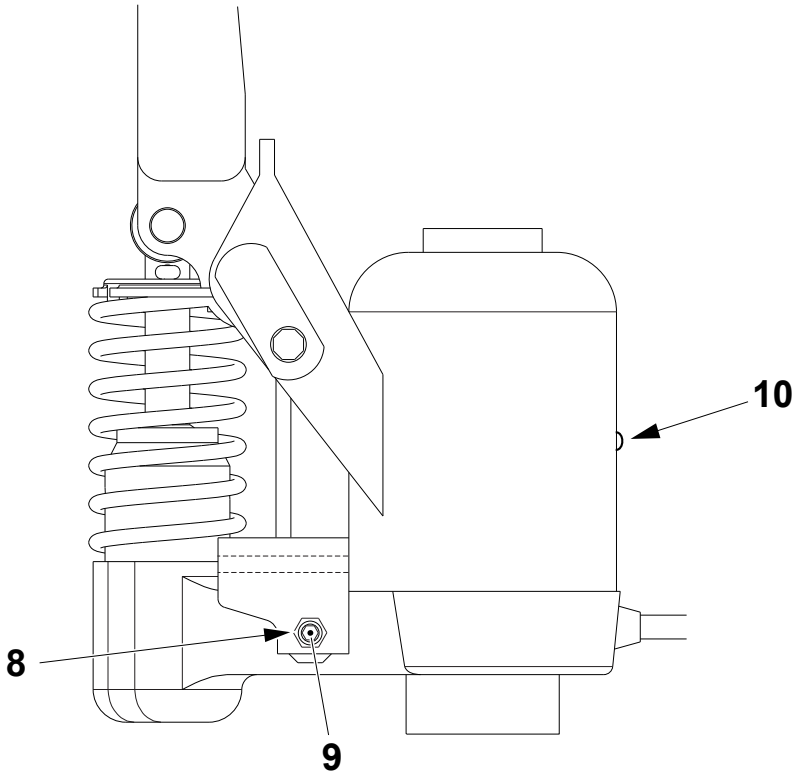

8 Lock nut
9 Setting screw
10 Plug

8.12-5 Reel Trolley - Overhaul Lifting Cylinder

Machine Status	Mains Power OFF Air OFF Steam ON Water OFF
Consumables	Hydraulic Oil, TP No. 90459-1310
SPC Reference	90600-3339

a) Disconnect the oil connection (1).

b) Drive out the spring pins (2) and remove the axles (3).

c) Pull out the cylinder piston (4) and change the seal (5).

d) Remove the retaining ring (6) and the spacer (7).

e) Change the seal (8).

f) Assemble in the reverse order. If necessary, remove the plug (9) and fill with oil, code **C**, see 10.3-1 Lubricants. Fill until oil starts to flow out of the plug hole.

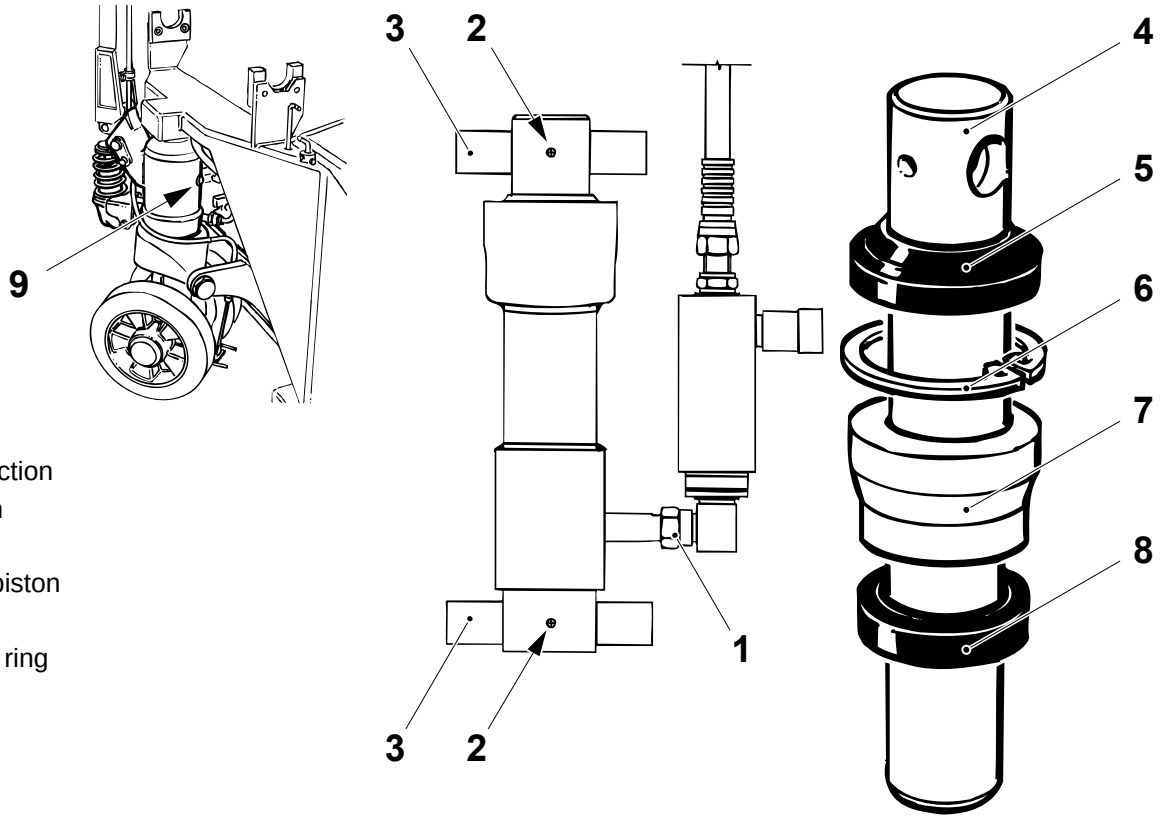

1 Oil connection
2 Spring pin
3 Axle
4 Cylinder piston
5 Seal
6 Retaining ring
7 Spacer
8 Seal
9 Oil plug

8.12-6 Reel Trolley - Remove Fork Wheel

Machine Status	Mains Power OFF Air OFF Steam ON Water OFF
SPC Reference	90600-3339

a) Position the trolley on its side.

b) Remove the pins (1) from the axle (2) and pull out the axle.

c) Remove the wheel (3) and the sleeves (4).

d) Assemble in the reverse order.

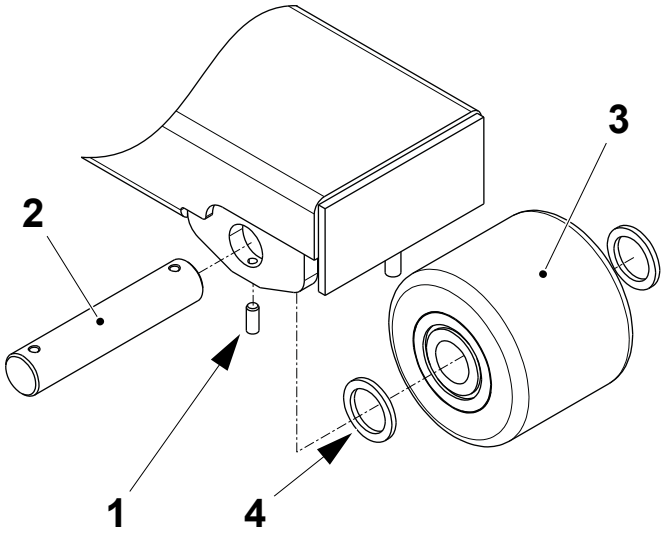

1 Pin
2 Axle
3 Wheel
4 Sleeve

8.12-7 Reel Trolley - Remove Guide Wheel

Machine Status	Mains Power OFF Air OFF Steam ON Water OFF
SPC Reference	90600-3339

a) Position the trolley on its side.
b) Remove the plastic plug (1), the retaining ring (2) and the wheel (3).
c) Release the torsion spring (4).
d) Remove the spring (5) holding the two linings (6) of the brakes together.
e) Assemble in the reverse order.

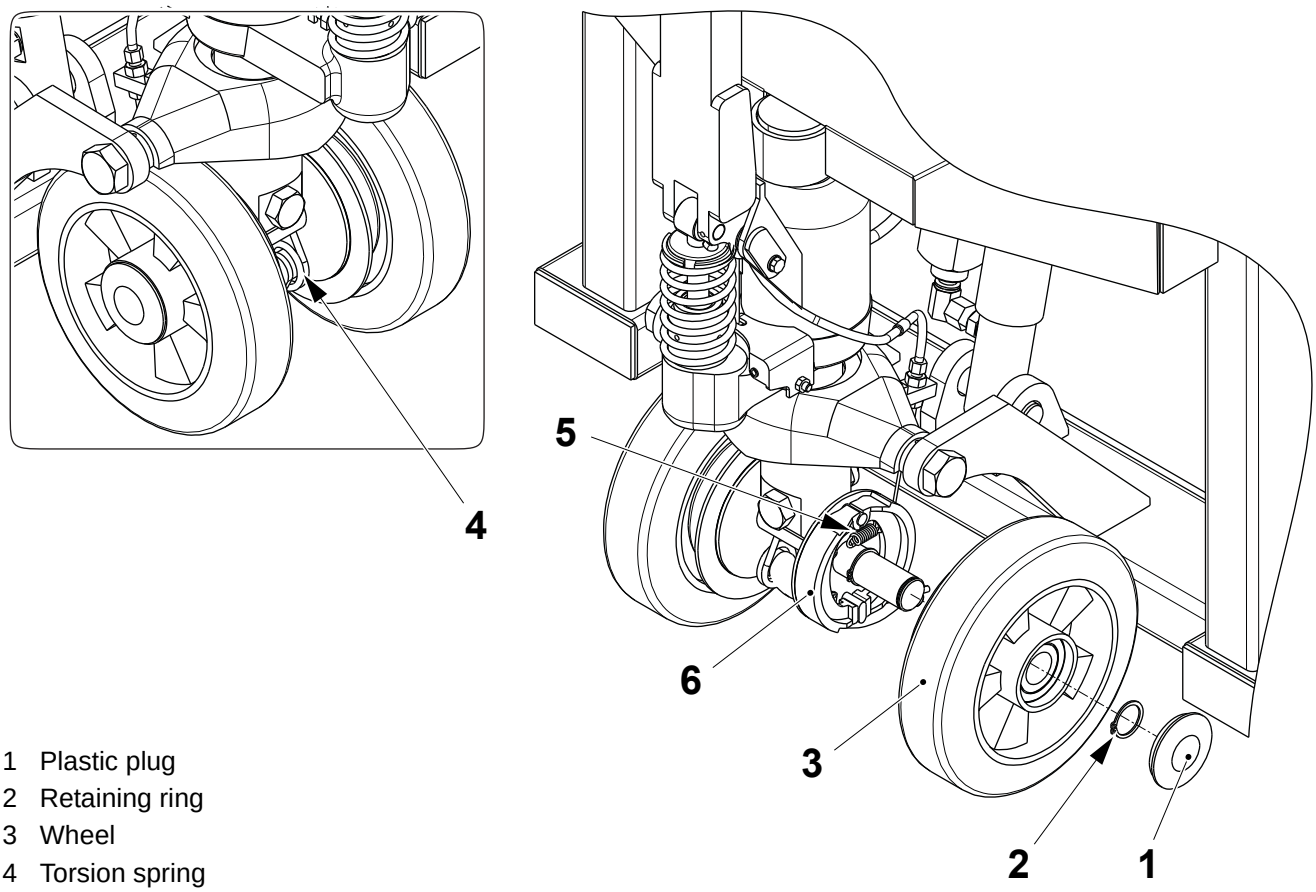

1 Plastic plug
2 Retaining ring
3 Wheel
4 Torsion spring
5 Spring
6 Brake lining

8.12-8 Reel Trolley - Set Brake

Machine Status	Mains Power OFF Air OFF Steam ON Water OFF
SPC Reference	90600-3339

Press in the brake handle to the distance **A**.

Adjust the nuts (1) and (2) until the brake releases.

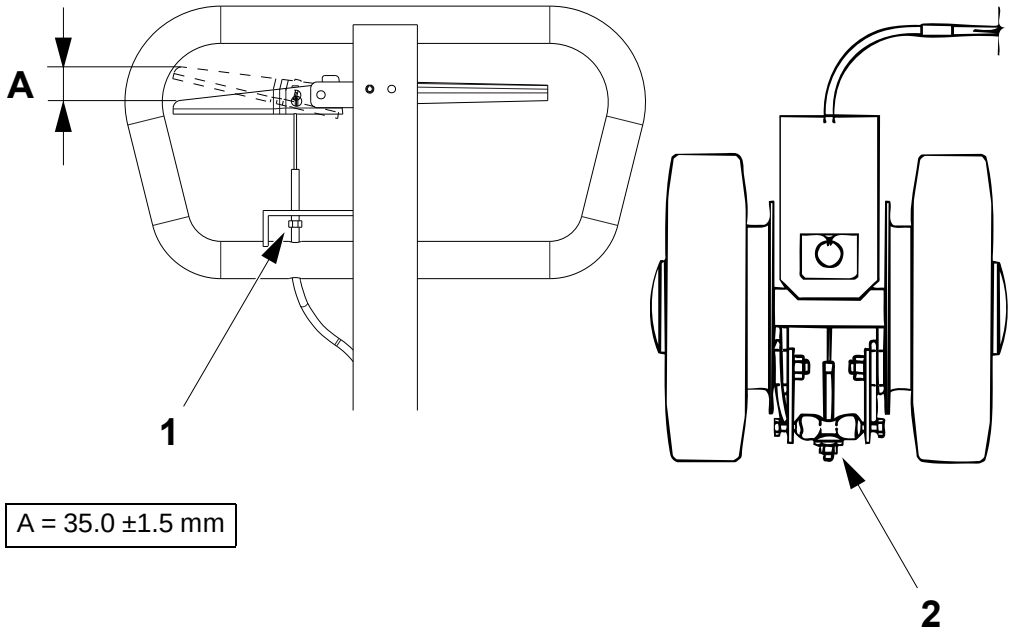

A = 35.0 ±1.5 mm

1 Nut
2 Nut

This page intentionally left blank

9 Electrical System

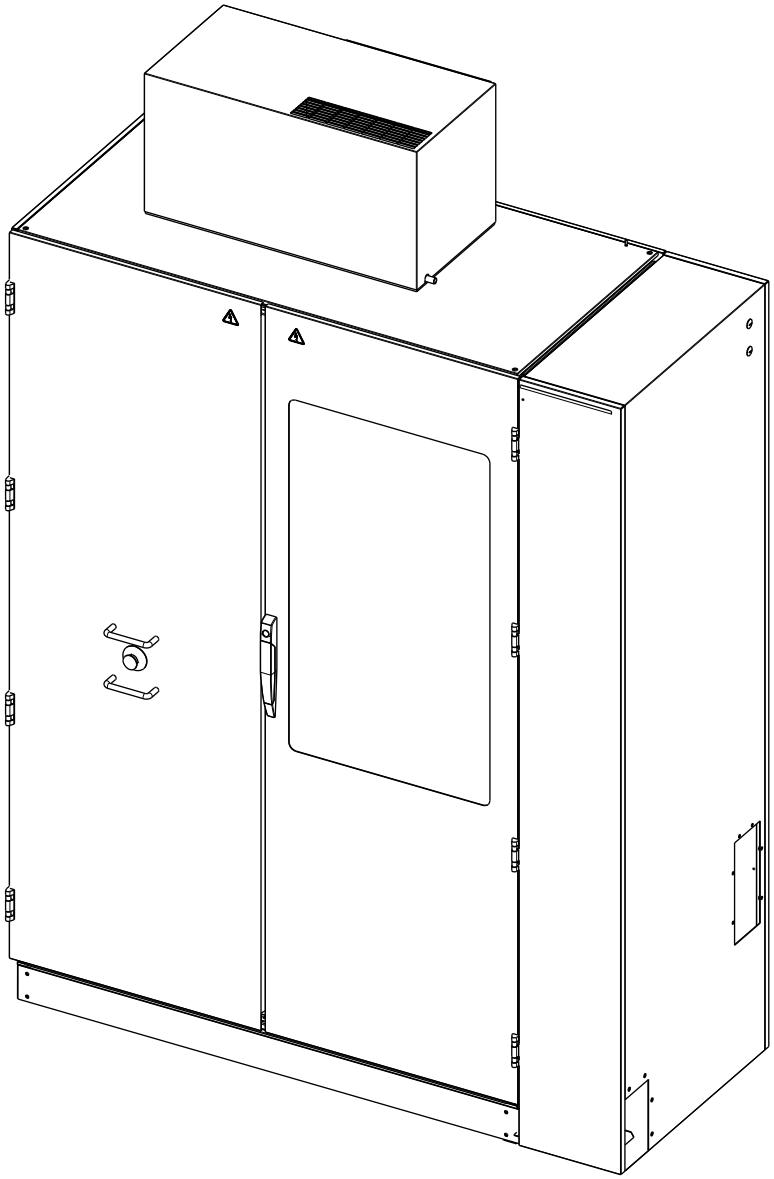

Electrical System - Description

SPC Reference	648539-0300

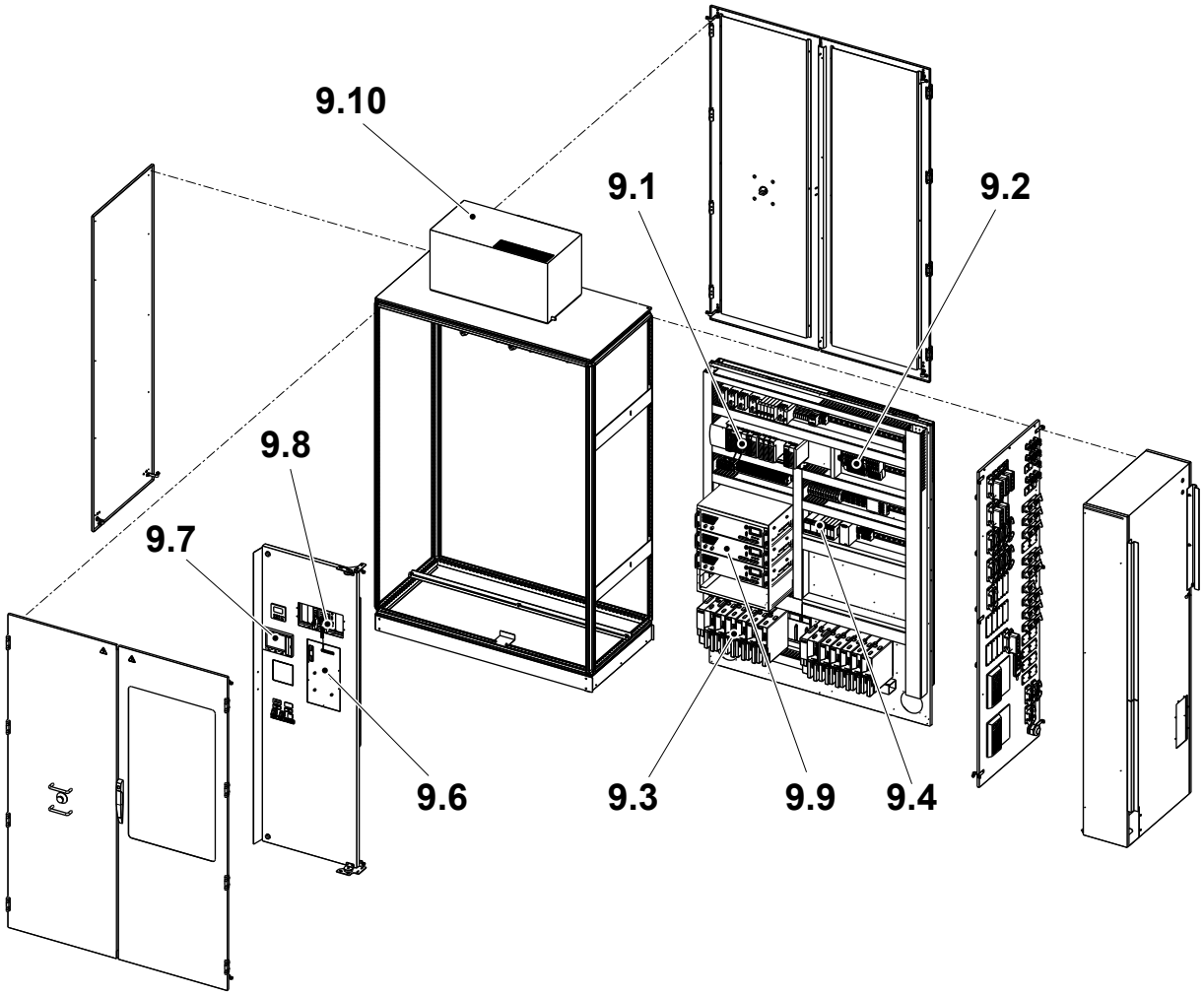

9.1 PLC
9.2 Distributed I/O
9.3 Servo System
9.4 Safety System
9.5 Power Supply
9.6 HMI and PLMS
9.7 Control Devices and Sensors
9.8 TMCC2 Controller
9.9 TPIH
9.10 Cooling System

9.1 PLC . . . . . 9 - 9

9.1.1 Preparation for PLC Communication . . . . . 9 - 9

9.1.1-1 Preparation for PLC Communication - Configure PC Network Communications . . . . . 9 - 9

9.1.1-2 Preparations for PLC Communication - Configure RSLinx . . . . . 9 - 19

9.1.2 CPU Module . . . . . 9 - 23

9.1.2-1 CPU Module - Change . . . . . 9 - 23

9.1.2-2 CPU Module - Load Firmware . . . . . 9 - 29

9.1.2-3 CPU Module - Download Program . . . . . 9 - 33

9.1.2-4 CPU Module - LED Description . . . . . 9 - 44

9.1.2-5 CPU Module - Change Battery . . . . . 9 - 46

9.1.3 EtherNet/IP Module . . . . . 9 - 48

9.1.3-1 EtherNet/IP Module - Change . . . . . 9 - 48

9.1.3-2 EtherNet/IP Module - Set IP Address . . . . . 9 - 53

9.1.3-3 EtherNet/IP Module - Load Firmware . . . . . 9 - 59

9.1.3-4 EtherNet/IP Module - LED Description . . . . . 9 - 60

9.1.4 Digital I/O Modules . . . . . 9 - 62

9.1.4-1 Digital I/O Modules - Change . . . . . 9 - 62

9.1.4-2 Digital I/O Modules - LED Description . . . . . 9 - 67

9.2 Distributed I/O . . . . . 9 - 70

9.2-1 Distributed I/O - Description . . . . . 9 - 70

9.2.1 DeviceNet Scanner Module . . . . . 9 - 72

9.2.1-1 DeviceNet Scanner Module - Change . . . . . 9 - 72

9.2.1-2 DeviceNet Scanner Module - Set Node Address and Baud Rate . . . . . 9 - 77

9.2.1-3 DeviceNet Scanner Module - Load Firmware . . 9 - 80

9.2.1-4 DeviceNet Scanner Module - Download Program . . . . . 9 - 81

9.2.1-5 DeviceNet Scanner Module - LED Description . 9 - 85

9.2.1-6 DeviceNet Scanner Module - Error Codes . . . . . 9 - 87

9.2.2 DeviceNet Point I/O . . . . . 9 - 91

9.2.2.1 DeviceNet Point I/O Adapter . . . . . 9 - 91

9.2.2.1-1 DeviceNet Point I/O Adapter - Change . . . . . 9 - 91
9.2.2.1-2 DeviceNet Point I/O Adapter - Set Node Address . . . . . 9 - 95
9.2.2.1-3 DeviceNet Point I/O Adapter - Download Program . . . . . 9 - 96
9.2.2.1-4 DeviceNet Point I/O Adapter - LED Description . . . . . 9 - 100
9.2.2.2 DeviceNet Point I/O Module. . . . . 9 - 104
9.2.2.2-1 DeviceNet Point I/O Module - Change . . . . . 9 - 104
9.2.2.2-2 DeviceNet Point I/O Module - LED Description . . . . . 9 - 108
9.2.3 DeviceNet Compact Block I/O . . . . . 9 - 115
9.2.3-1 DeviceNet Compact Block I/O - Change . . . . 9 - 115
9.2.3-2 DeviceNet Compact Block I/O - Set Node Address . . . . . 9 - 118
9.2.3-3 DeviceNet Compact Block I/O - Download Program . . . . . 9 - 119
9.2.3-4 DeviceNet Compact Block I/O - LED Description . . . . . 9 - 123
9.2.4 DeviceNet PowerFlex . . . . . 9 - 125
9.2.4.1 DeviceNet PowerFlex Adapter . . . . . 9 - 125
9.2.4.1-1 DeviceNet PowerFlex Adapter - Change . . . . 9 - 125
9.2.4.1-2 DeviceNet PowerFlex Adapter - Set Node Address and Baud Rate . . . . . 9 - 129
9.2.4.1-3 DeviceNet PowerFlex Adapter - Download Program . . . . . 9 - 132
9.2.4.1-4 DeviceNet PowerFlex Adapter - LED Description . . . . . 9 - 136
9.3 Servo System . . . . . 9 - 142
9.3-1 Servo System - Description . . . . . 9 - 142
9.3.1 Sercos Module. . . . . 9 - 147
9.3.1-1 Sercos Module - Change . . . . . 9 - 147
9.3.1-2 Sercos Module - Load Firmware . . . . . 9 - 151
9.3.1-3 Sercos Module - LED Description . . . . . 9 - 152
9.3.2 Servo Drive . . . . . 9 - 156
9.3.2-1 Servo Drive - Change . . . . . 9 - 156
9.3.2-2 Servo Drive - Set Baud Rate . . . . . 9 - 162

9.3.2-3 Servo Drive - Load Firmware . . . . . 9 - 163
9.3.2-4 Servo Drive - LED Description . . . . . 9 - 164
9.3.2-5 Servo Drive - Error Codes . . . . . 9 - 166

9.4 Safety System . . . . . 9 - 172

9.4-1 Safety System - Description . . . . . 9 - 172
9.4-2 Safety System - Troubleshooting . . . . . 9 - 173

9.4.1 Pluto Module. . . . . 9 - 175

9.4.1-1 Pluto Module - Load Program . . . . . 9 - 175
9.4.1-2 Pluto Module - LED Description . . . . . 9 - 182
9.4.1-3 Pluto Module - Configure in an Existing Application . . . . . 9 - 186
9.4.1-4 Pluto Module - Set ID-FIX Address after Replacing an ID-FIX . . . . . 9 - 189
9.4.1-5 Pluto Module - Error Codes . . . . . 9 - 197
9.4.1-6 Pluto Module - Check Safety Relays Function 9 - 200

9.5 Power Supply. . . . . 9 - 206

9.5.1 Frequency Converter. . . . . 9 - 206

9.5.1-1 Frequency Converter - Change Parameters . . . 9 - 206
9.5.1-2 Frequency Converters - Error Codes . . . . . 9 - 212

9.5.2 Overload Protection. . . . . 9 - 214

9.5.2-1 Overload Protection - Set . . . . . 9 - 214
9.5.2-2 Overload Protection - Set Base Unit(s) . . . . . 9 - 215

9.5.3 Residual Current Device . . . . . 9 - 216

9.5.3-1 Residual Current Device - Check . . . . . 9 - 216

9.6 HMI and PLMS . . . . . 9 - 218

9.6-1 HMI and PLMS - Description . . . . . 9 - 218
9.6-2 HMI and PLMS - Log On Procedure . . . . . 9 - 220
9.6-3 HMI and PLMS - Install Software . . . . . 9 - 223

9.6.1 PLMS NRG Configurator . . . . . 9 - 230

9.6.1-1 PLMS NRG Configurator - Description . . . . . 9 - 230
9.6.1-2 PLMS NRG Configurator - Set Machine ID . . 9 - 231
9.6.1-3 PLMS NRG Configurator - Select Allowed Languages . . . . . 9 - 232

9.6.1-4 PLMS NRG Configurator - Export/Import Configuration . . . . . 9 - 233
9.6.1-5 PLMS NRG Configurator - Translate Non-Tetra Pak DE Event Codes . . . . . 9 - 238
9.6.1-6 PLMS NRG Configurator - Distribution Equipment Setup . . . . . 9 - 241
9.6.1-7 PLMS NRG Configurator - Defragment the IPC Hard Disk . . . . . 9 - 244
9.6.1-8 PLMS NRG Configurator - Set Date and Time 9 - 246

9.6.2 PLMS NRG . . . . . 9 - 248

9.6.2-1 PLMS NRG - Copy Performance and Process Data . . . . . 9 - 248

9.6.3 HMI . . . . . 9 - 256

9.6.3-1 HMI - User Management Description . . . . . 9 - 256
9.6.3-2 HMI - User Management Log On . . . . . 9 - 258
9.6.3-3 HMI - User Management Change Password . . 9 - 261

9.7 Control Devices and Sensors . . . . . 9 - 268

9.7.1 IPC . . . . . 9 - 268

9.7.1-1 IPC - Description . . . . . 9 - 268
9.7.1-2 IPC - Change CompactFlash Memory Card . . 9 - 271

9.7.2 Level Control . . . . . 9 - 272

9.7.2-1 Level Control - Description . . . . . 9 - 272
9.7.2-2 Level Control - Set . . . . . 9 - 275

9.7.3 Conductivity Meter . . . . . 9 - 276

9.7.3-1 Conductivity Meter - Description . . . . . 9 - 276
9.7.3-2 Conductivity Meter - Set . . . . . 9 - 281
9.7.3-3 Conductivity Meter - Calibrate . . . . . 9 - 287
9.7.3-4 Conductivity Meter - Error Codes . . . . . 9 - 296
9.7.3-5 Conductivity Meter - Change Conductivity Sensor . . . . . 9 - 299
9.7.3-6 Conductivity Meter - Change Fuse . . . . . 9 - 301

9.7.4 Recorder. . . . . 9 - 302

9.7.4-1 Recorder - Description . . . . . 9 - 302
9.7.4-2 Recorder - Set Date, Time and Language . . . . 9 - 310
9.7.4-3 Recorder - Load Configuration Data . . . . . 9 - 314

9.7.4-4 Recorder - Calibrate . . . . . 9 - 320
9.7.4-5 Recorder - Log In and Log Off . . . . . 9 - 323
9.7.4-6 Recorder - Change CompactFlash Card . . . . . 9 - 326
9.7.5 Paper Recorders (OE) . . . . . 9 - 328
9.7.5-1 Paper Recorders - Process Recorder Description . . . . . 9 - 328
9.7.5-2 Paper Recorders - CIP Recorder Description . . 9 - 332
9.7.5-3 Paper Recorders - Set Date And Time . . . . . 9 - 335
9.7.5-4 Paper Recorders - Clean Chart Carriage . . . . . 9 - 336
9.7.5-5 Paper Recorders - Change Fuse . . . . . 9 - 337
9.7.6 Temperature Regulators . . . . . 9 - 338
9.7.6-1 Temperature Regulators - Calibrate . . . . . 9 - 338
9.7.6.1 Calibrator . . . . . 9 - 355
9.7.6.1-1 Calibrator - Set Fluke 714 . . . . . 9 - 355
9.7.6.1-2 Calibrator - Set Micromite II . . . . . 9 - 358
9.7.7 Thermocouples . . . . . 9 - 361
9.7.7-1 Thermocouples - Check . . . . . 9 - 361
9.8 TMCC2 Controller . . . . . 9 - 365
9.8-1 TMCC2 Controller - Description . . . . . 9 - 365
9.8-2 TMCC2 Controller - Set Communication . . . . 9 - 385
9.8-3 TMCC2 Controller - Load Program . . . . . 9 - 386
9.8-4 TMCC2 Controller - Photocells Manual Setting . . . . . 9 - 389
9.8-5 TMCC2 Controller - Set Filling Window . . . . 9 - 391
9.8-6 TMCC2 Controller - Display Report . . . . . 9 - 392
9.9 TPIH . . . . . 9 - 399
9.9-1 TPIH - Description . . . . . 9 - 399
9.9.1 IH Equipment . . . . . 9 - 403
9.9.1-1 IH Equipment - LCD Display . . . . . 9 - 403
9.9.1-2 IH Equipment - Error Handling . . . . . 9 - 407
9.9.1-3 IH Equipment - Check Function . . . . . 9 - 415
9.9.1-4 IH Equipment - Check Cables . . . . . 9 - 419
9.9.1-5 IH Equipment - Change Generator . . . . . 9 - 420
9.9.1-6 IH Equipment - Set Sealing . . . . . 9 - 422

9.9.1-7 IH Equipment - Set CAN Communication . . . 9 - 429
9.9.1-8 IH Equipment - Load Firmware . . . . . 9 - 431
9.9.1-9 IH Equipment - Set Display Contrast . . . . . 9 - 438

9.10 Cooling System . . . . . 9 - 439

9.10.1 Cooling Unit . . . . . 9 - 439

9.10.1-1 Cooling Unit - Clean Filter . . . . . 9 - 439
9.10.1-2 Cooling Unit - Change Filter . . . . . 9 - 441
9.10.1-3 Cooling Unit - Check . . . . . 9 - 443
9.10.1-4 Cooling Unit - Overhaul . . . . . 9 - 445
9.10.1-5 Cooling Unit - Troubleshooting . . . . . 9 - 451

9.11 Signal Exchange . . . . . 9 - 452

9.11.1 Signal Exchange . . . . . 9 - 452

9.11.1-1 Signal Exchange - Configuration . . . . . 9 - 452

9.1 PLC

SPC Reference	648539-0300

9.1.1 Preparation for PLC Communication

9.1.1-1 Preparation for PLC Communication - Configure PC Network Communications

Machine Status	Mains Power ON Air OFF Steam ON Water OFF
Special Equipment	PC with CD drive
SPC Reference	648539-0300

Before data can be sent to the PLC from the PC via an ethernet cable, the PC network settings must first be configured. The following procedure describes how to configure the PC network communications.

(Cont'd)

(Cont'd)

Disable Wireless Network Connection

a) Open the START MENU (1) on the PC and select SETTINGS (2) and then NETWORK CONNECTIONS (3) to open the NETWORK CONNECTIONS window (4).

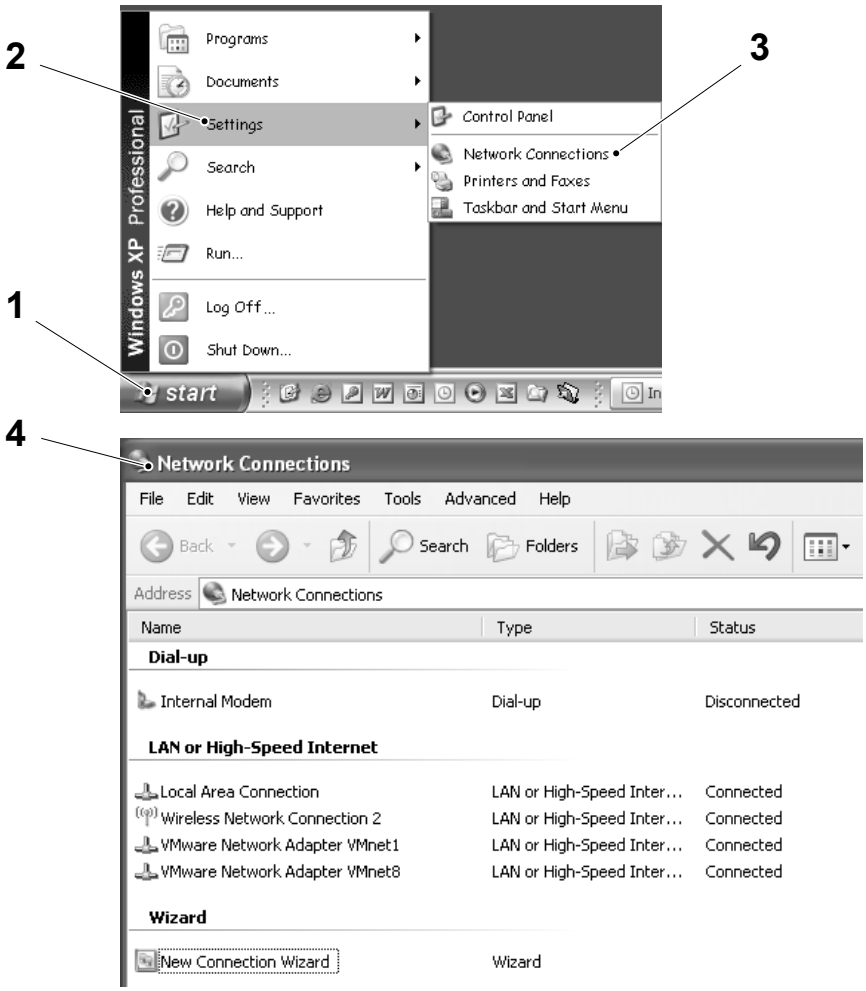

1 Start menu
2 Settings
3 Network connections
4 Network connections window

(Cont'd)

(Cont'd)

b) In the NETWORK CONNECTIONS window (4) select the WIRELESS NETWORK CONNECTION (5).

c) Right click the PC mouse and select DISABLE (6).

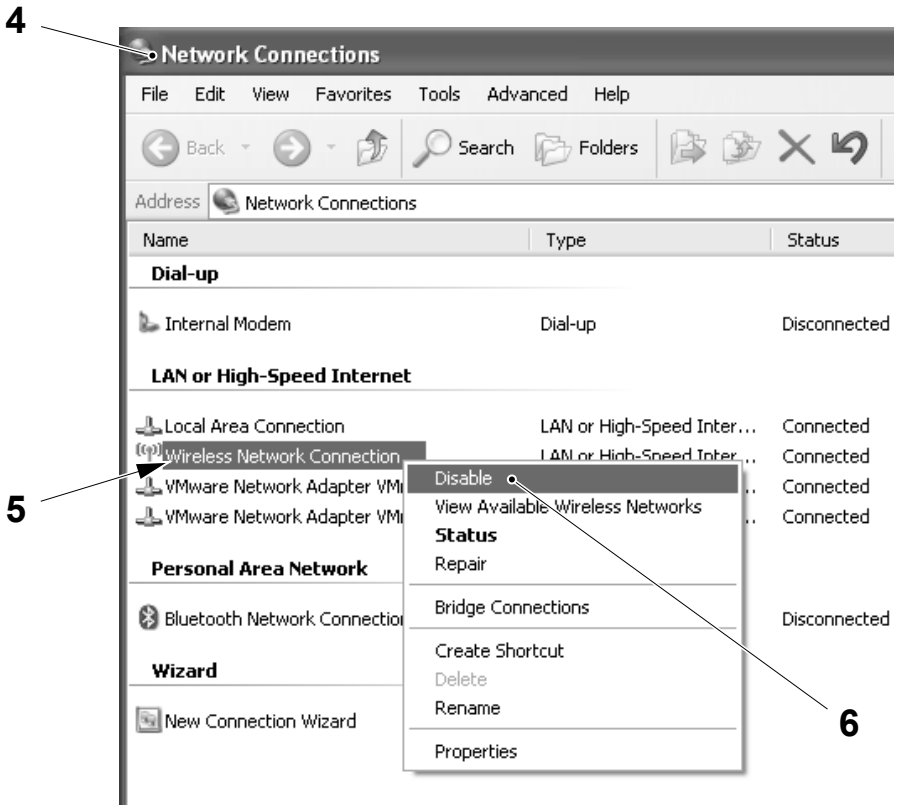

4 Network connections window
5 Wireless network connection
6 Disable

(Cont'd)

(Cont'd)

Disable Firewall Protection

Open the firewall protection software on the PC and perform one of the following to disable the firewall protection:

- In the section INTERNET STATUS (1), select CURRENT STATUS (2). Select the DISABLE button (3) to disable the PC firewall.

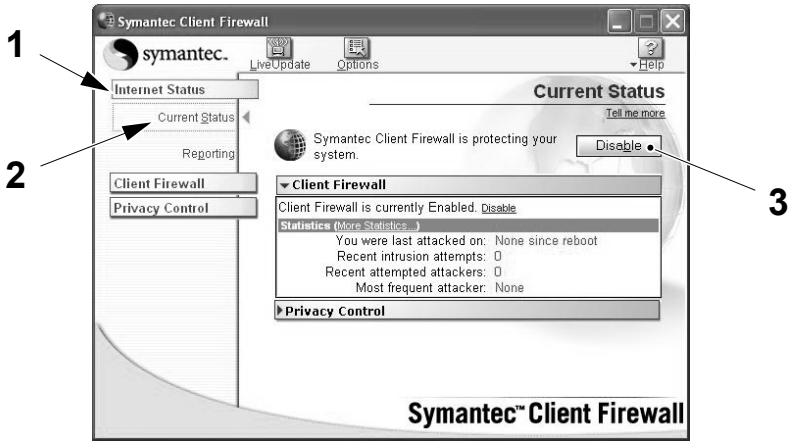

1 Internet status
2 Current status
3 Disable button

(Cont'd)

(Cont'd)

- In the section CLIENT FIREWALL (4), select INTERNET ZONE CONTROL (5). Select the TRUSTED tab (6) and then select the ADD button (7). Enter an IP address range, for example 10.0.0.1 to 10.0.0.99.

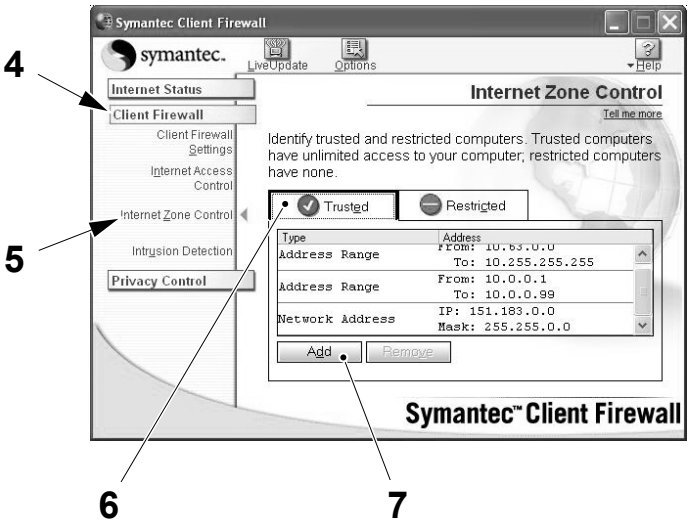

4 Client firewall
5 Internet zone control
6 Trusted tab
7 Add button

(Cont'd)

(Cont'd)

Configure PC IP Address

a) Open the START MENU (1) on the PC and select SETTINGS (2) and then NETWORK CONNECTIONS (3) to open the NETWORK CONNECTIONS window (4).

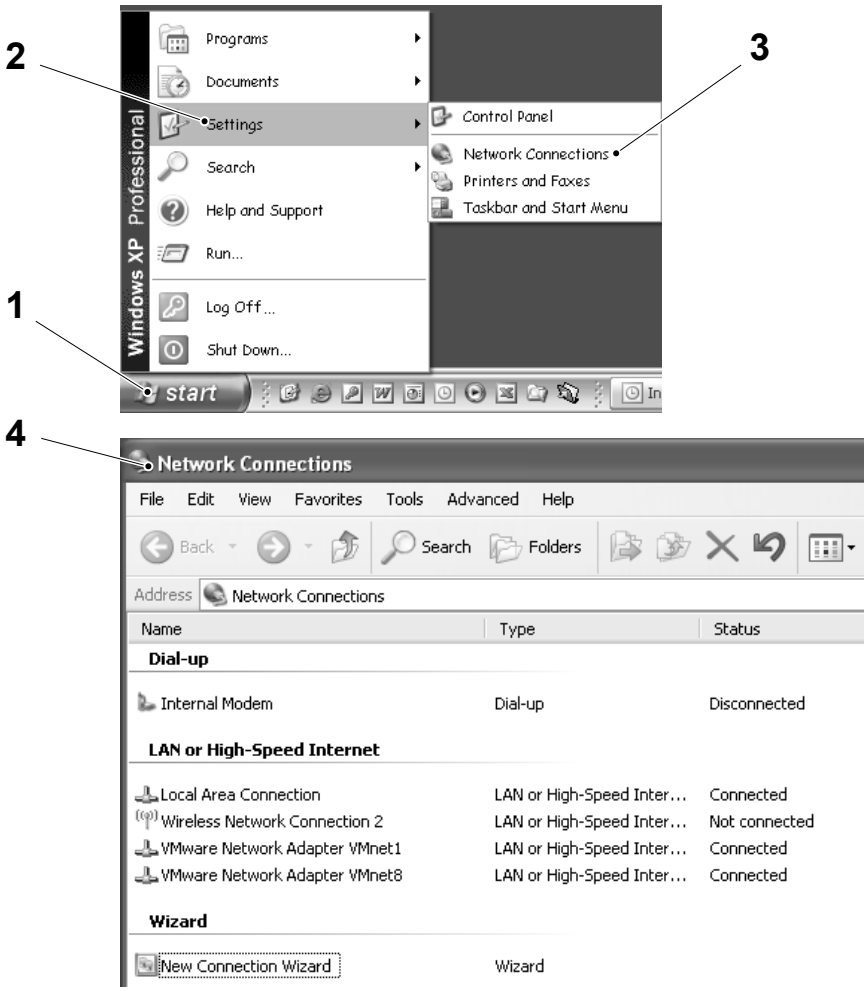

1 Start menu
2 Settings
3 Network connections
4 Network connections window

(Cont'd)

(Cont'd)

Note! The LOCAL AREA CONNECTION (5) is given only as an example, if multiple area connections are listed in the NETWORK CONNECTIONS WINDOW (4), select the required network connection.

b) In the NETWORK CONNECTIONS window (4) select the LOCAL AREA CONNECTION (5) and right click the PC mouse to select PROPERTIES (6).

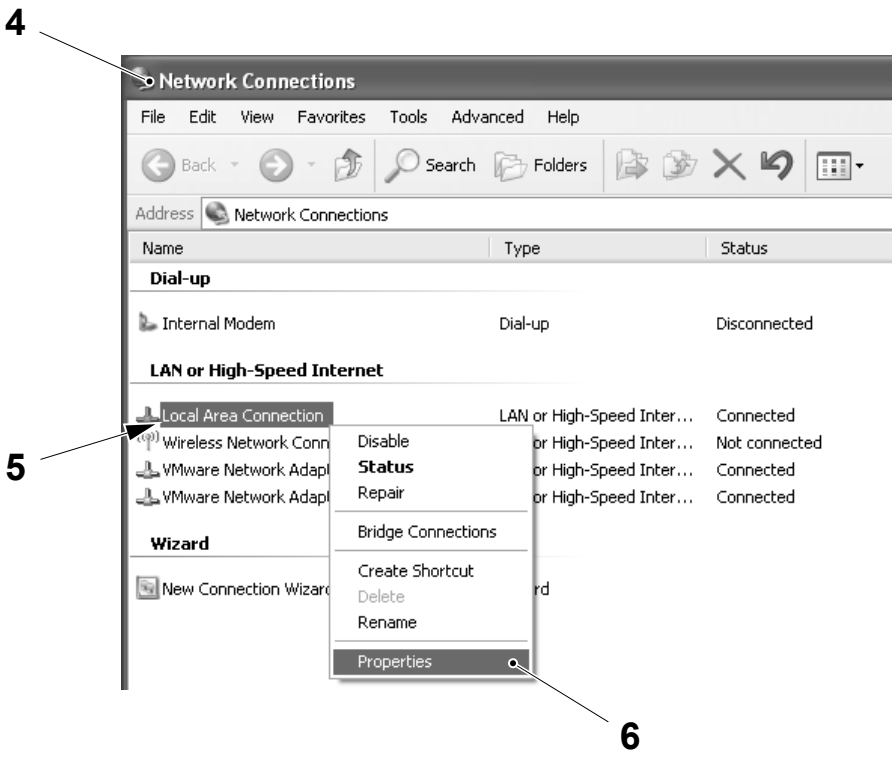

4 Network connections window
5 Local area connection
6 Properties window

(Cont'd)

(Cont'd)

c) In the LOCAL AREA CONNECTION PROPERTIES window (7) select INTERNET PROTOCOL (TCP/IP) (8) and then select PROPERTIES (9).

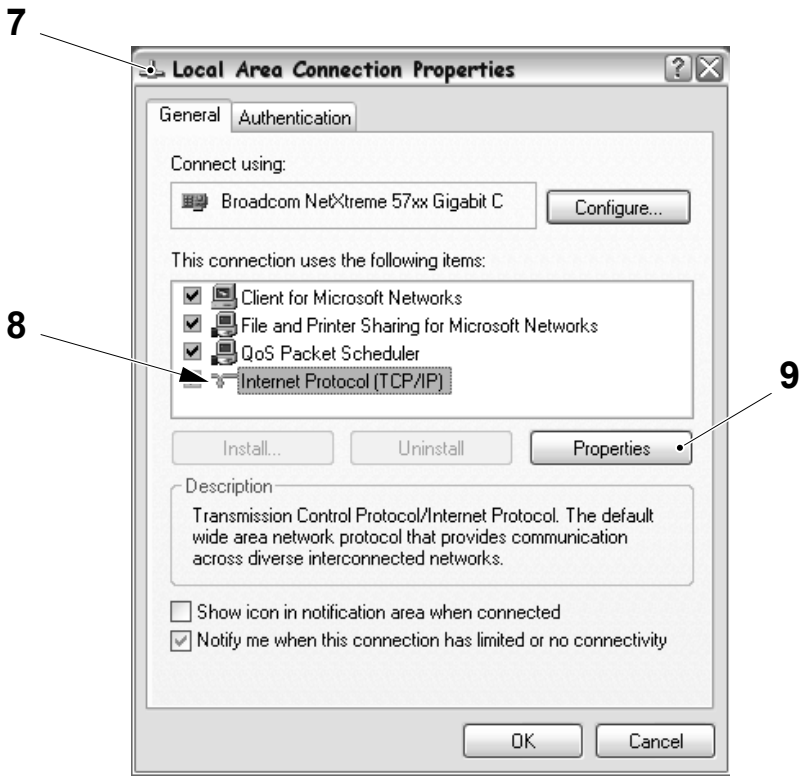

7 Local area connection properties window
8 Internet protocol (TCP/IP)
9 Properties

(Cont'd)

(Cont'd)

Note! The unique number “XX” must be within the range of the permitted IP addresses if the firewall protection is configured to allow a range of IP addresses (see the section Disable Firewall Protection) and higher than the number 30 to avoid possible conflicts with machine device IP addresses, see the Table of Assigned IP Addresses for A3/Flex and A3/Speed on the following page.

d) Check the USE THE FOLLOWING IP ADDRESS button (10) and the USE THE FOLLOWING DNS SERVER ADDRESSES button (11).

e) In the IP ADDRESS box (12) enter an IP address using the following format: 10.255.1.XX, where “XX” is a unique number not already assigned to any PC or PLC connected to the same network.

f) In the SUBNET MASK box (13) enter the subnet mask as indicated in the illustration.

g) Select the OK button (14) to confirm the setting and close the window.

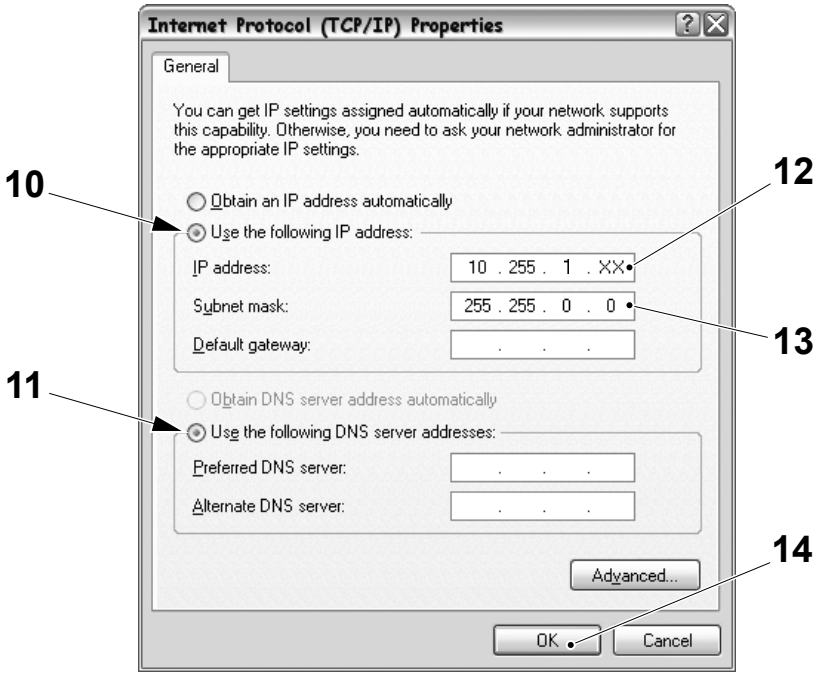

10 Use the following IP address button
11 Use the following DNS server addresses button
12 IP address box
13 Subnet mask box
14 OK button

(Cont'd)

(Cont'd)

Table of Assigned IP Addresses for A3/Flex and A3/Speed

Machine	Device	IP address	Subnet mask
A3/Flex A3/Speed	TPOP	10.0.0.3	255.255.0.0
A3/Flex A3/Speed	PLC FM	10.0.0.21	255.255.0.0
A3/Flex	PLC DIMC	10.0.0.23	255.255.0.0
A3/Speed	PLC PT Speed	10.0.0.24	255.255.0.0
A3/Flex	Vision System	10.0.0.25	255.255.0.0
A3/Flex	PLC PT Flex (374 No Genius)	10.0.0.26	255.255.0.0
A3/Flex 0150	Rockwell PLC FM	10.0.1.21	
A3/Flex 0150	Rockwell PLC PT	10.0.1.26	

9.1.1-2 Preparations for PLC Communication - Configure RSLinx

Machine Status	Mains Power ON Air OFF Steam ON Water OFF
Special Equipment	PC with CD drive Ethernet communication cable
SPC Reference	648539-0300

The RSLinx software enables seamless communication between the PC and the PLC and its components over different networks such as ethernet and DeviceNet. Before communication is possible, the network and IP addresses for the PC and PLC must be set in RSLinx as follows:

a) Open the START menu on the PC and select PROGRAMS (1), ROCKWELL SOFTWARE (2), RSLINX (3) and then RSLINX CLASSIC (4).

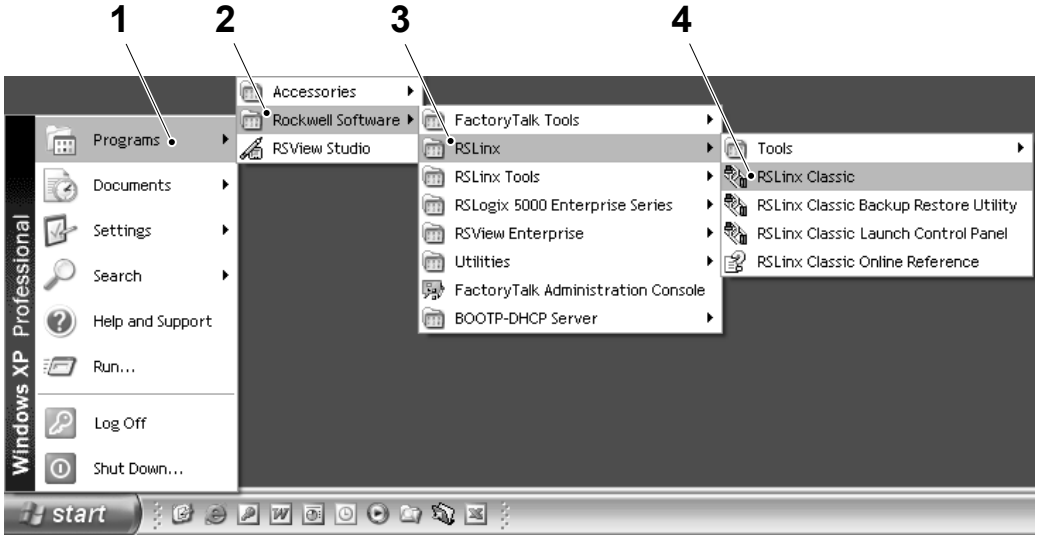

1 Programs
2 Rockwell software
3 RSLinx
4 RSLinx Classic

(Cont'd)

(Cont'd)

b) The RSLINX CLASSIC PROFESSIONAL window (5) appears, select the CONFIGURE DRIVERS button (6).

c) In the CONFIGURE DRIVERS window (7), select ETHERNET DEVICES (8) from the drop down menu.

d) Select the ADD NEW button (9).

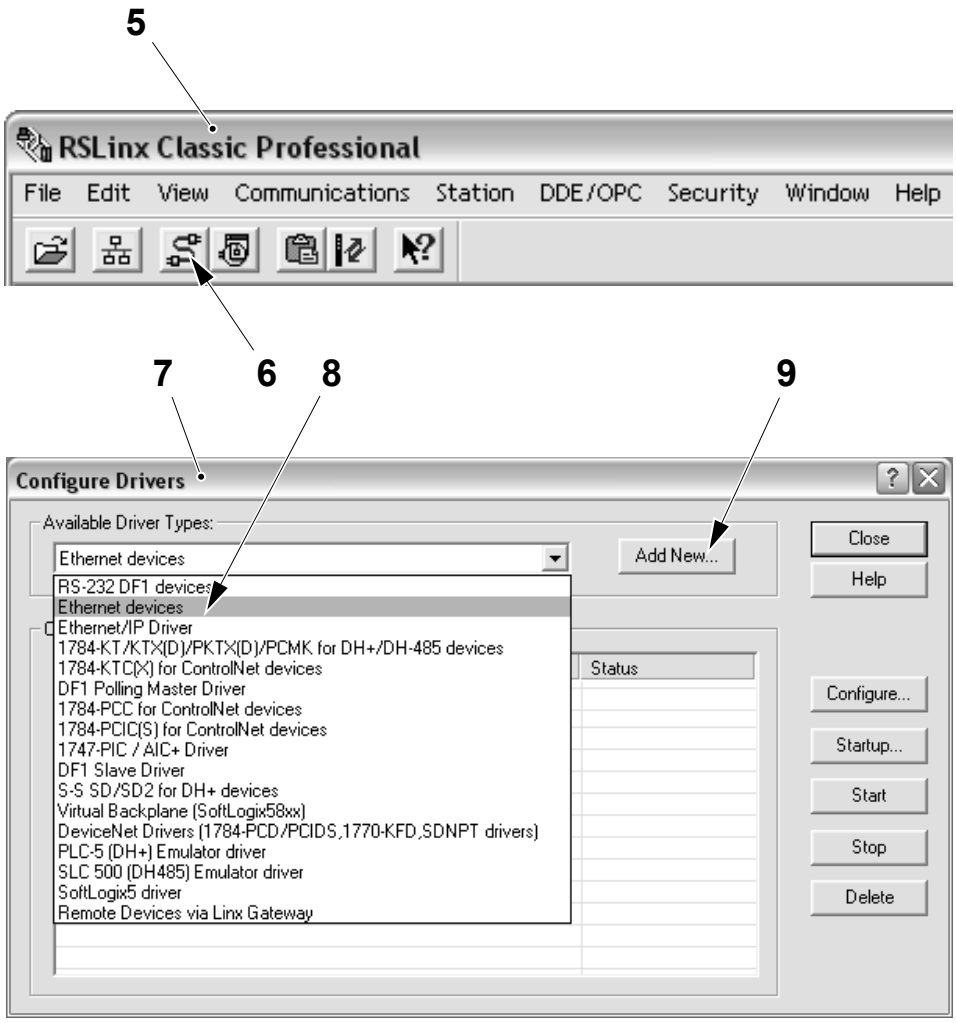

5 RSlinx gateway window
6 Configure drivers button
7 Configure drivers window
8 Ethernet devices
9 Add new button

(Cont'd)

(Cont'd)

e) Accept the default driver name that appears by selecting the OK button (10).

f) Enter the PC's IP address (set in 9.1.1-1 Preparation for PLC Communication - Configure PC Network Communications) in the HOST NAME field (11) and then select the ADD NEW button (12).

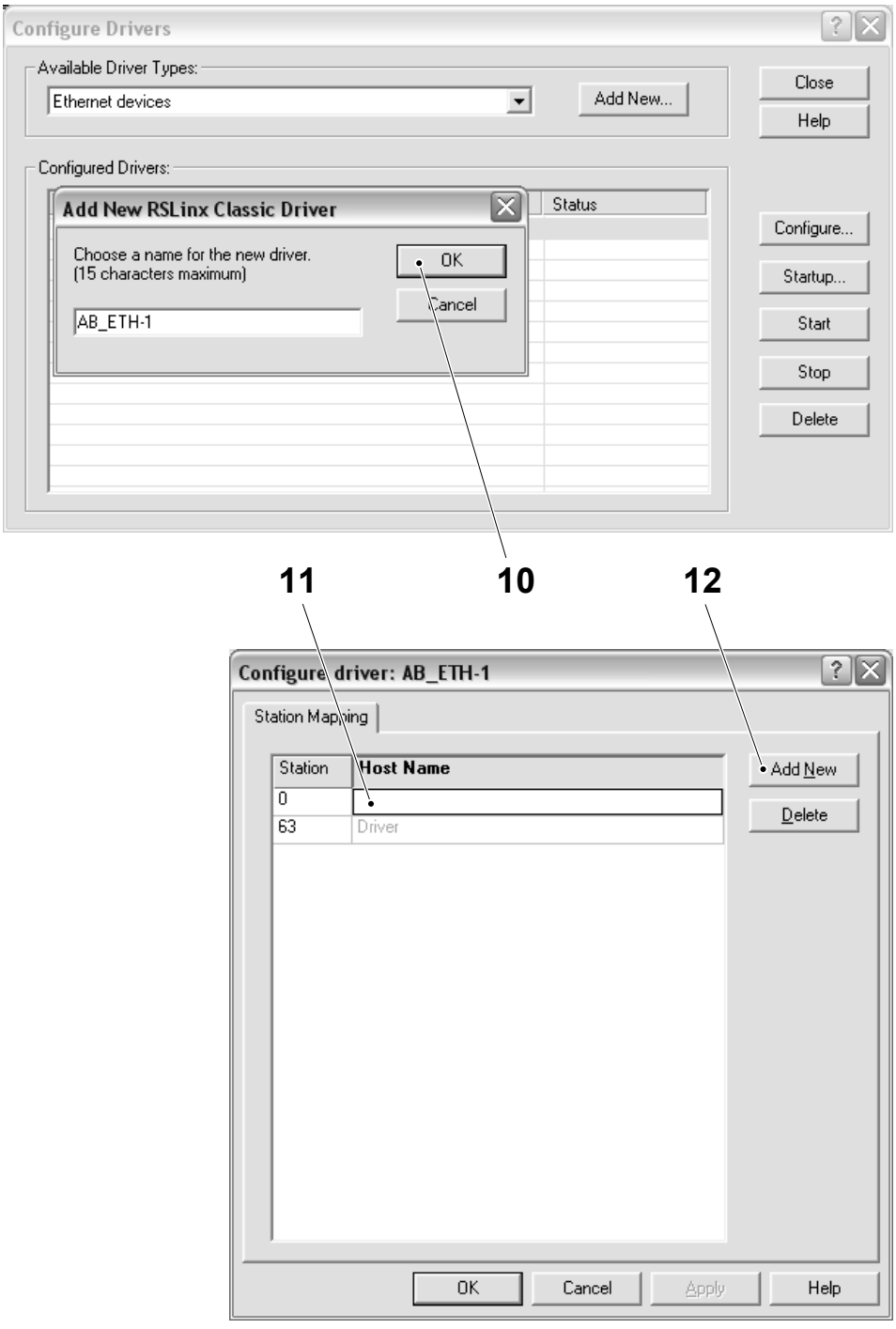

10 OK button
11 Host name field
12 Add new button

(Cont'd)

(Cont'd)

g) Enter the IP address 10.255.1.21 for the PLC in the HOST NAME field (13).

h) Select the OK button (14) to save the configuration.



13 Host name field
14 OK button

9.1.2 CPU Module

9.1.2-1 CPU Module - Change

Machine Status	Mains Power OFF Air OFF Steam ON Water OFF
SPC Reference	90459-2471

Note! New CPU modules are supplied with basic firmware. The correct firmware revision must be installed before the PLC program can be downloaded to the CPU module.

Preparation

Before changing the CPU module:

- Use the RSLinx Classic program to verify and record the firmware version of the PLC program.
- Use the Flow Chart of Procedures for Changing the CPU module on the next page to determine which procedures must be performed and their correct sequence.

(Cont'd)

(Cont'd)

Flow Chart of Procedures for Changing the CPU module

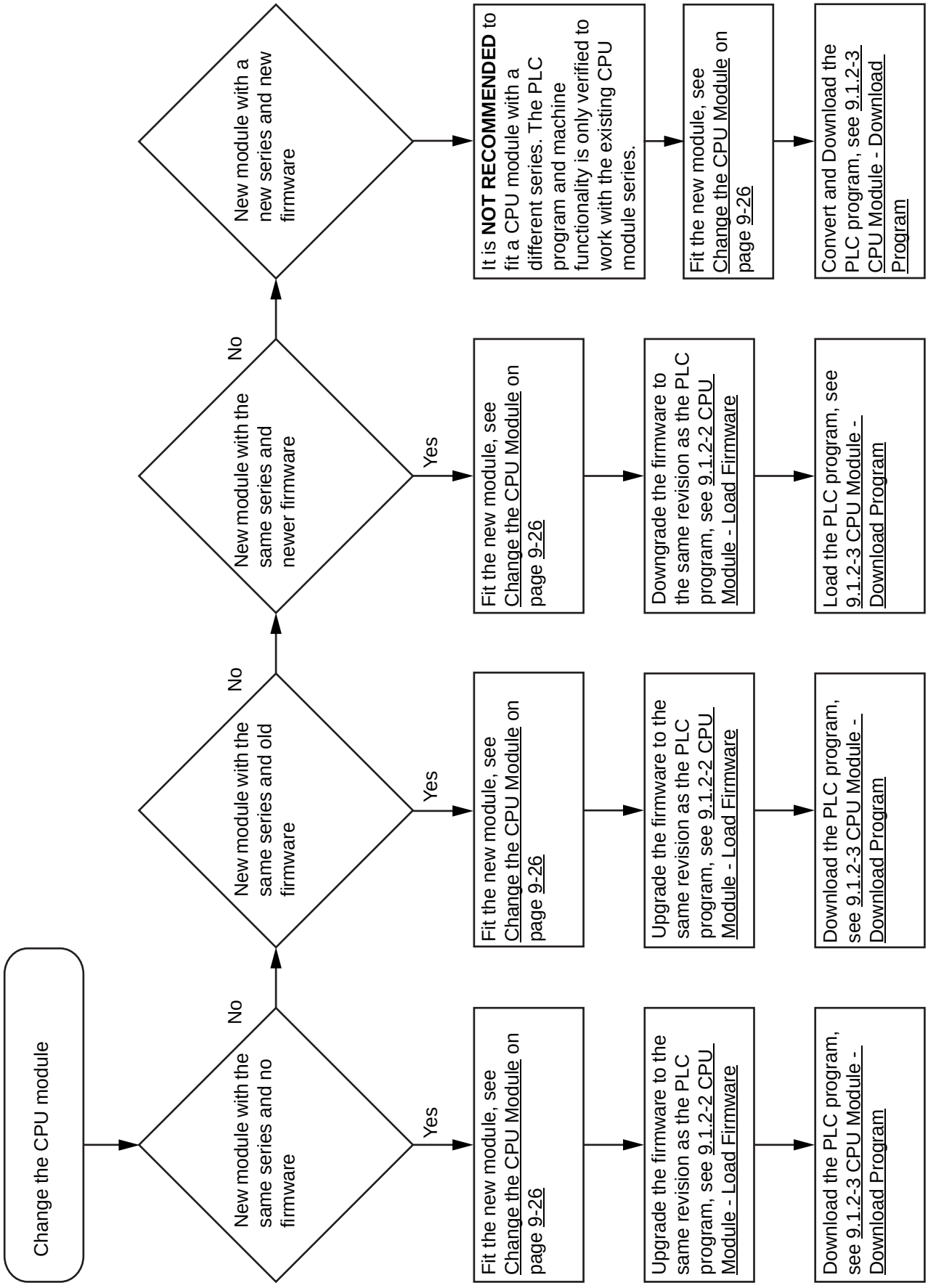

(Cont'd)

(Cont'd)

Note! It is recommended that the mains power is turned OFF before the PLC is removed or installed. The PLC may be removed or installed with the chassis power ON and the system operating, but doing this repeatedly may cause excessive wear to the contacts on the module and its mating connector. Worn contacts can create electrical resistance that may effect the operation of the module.

Note! If the CPU module is removed with the power turned ON, all the devices connected to CPU module will go to their configured default state.

Note! A CompactFlash card fitted inside the CPU module is used to store the filling machines package and volume recipe parameters. When the CPU module is changed, the CompactFlash card must be transferred from the old CPU module to the new CPU module.

(Cont'd)

(Cont'd)

Change the CPU Module

a) Press the locking tabs on the top and the bottom of the CPU module.

b) Slide the CPU module out of the chassis.

c) Push the retaining clip (1) to the LH side and press the eject button (2) to remove the CompactFlash card (3) from the CPU module.

d) Store the CompactFlash card (3) in a safe and clean place.

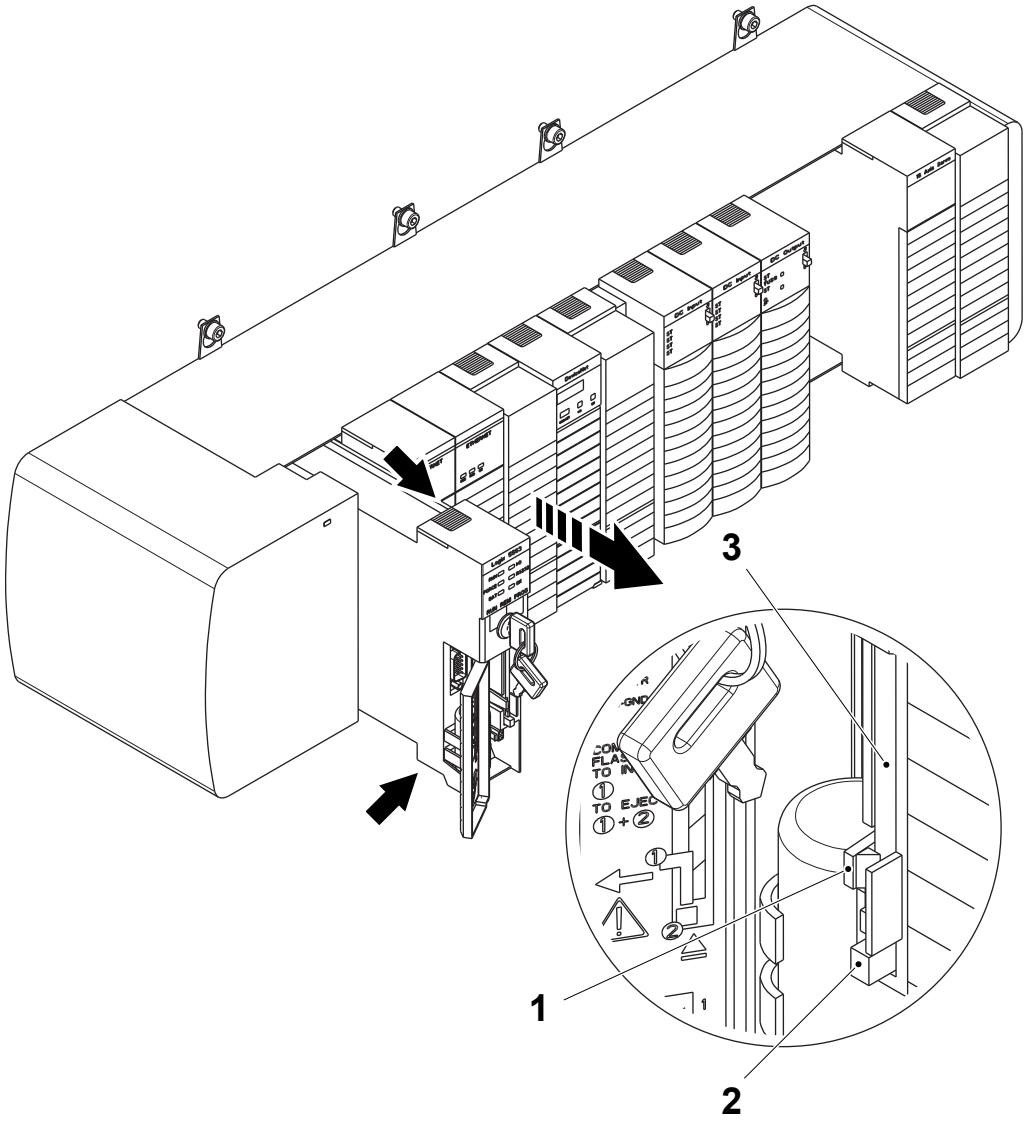

1 Retaining clip
2 Eject button
3 CompactFlash card

(Cont'd)

(Cont'd)

e) Fit the CompactFlash card (3) into the new CPU module.

f) Insert the key (4) into the new CPU module.

g) Turn the key (4) to the REM position.

h) Align the new CPU module with the top and the bottom guides in the chassis.

i) Slide the CPU module into the chassis. Make sure it is flush with the power supply or the other modules and the top and bottom latches are engaged.

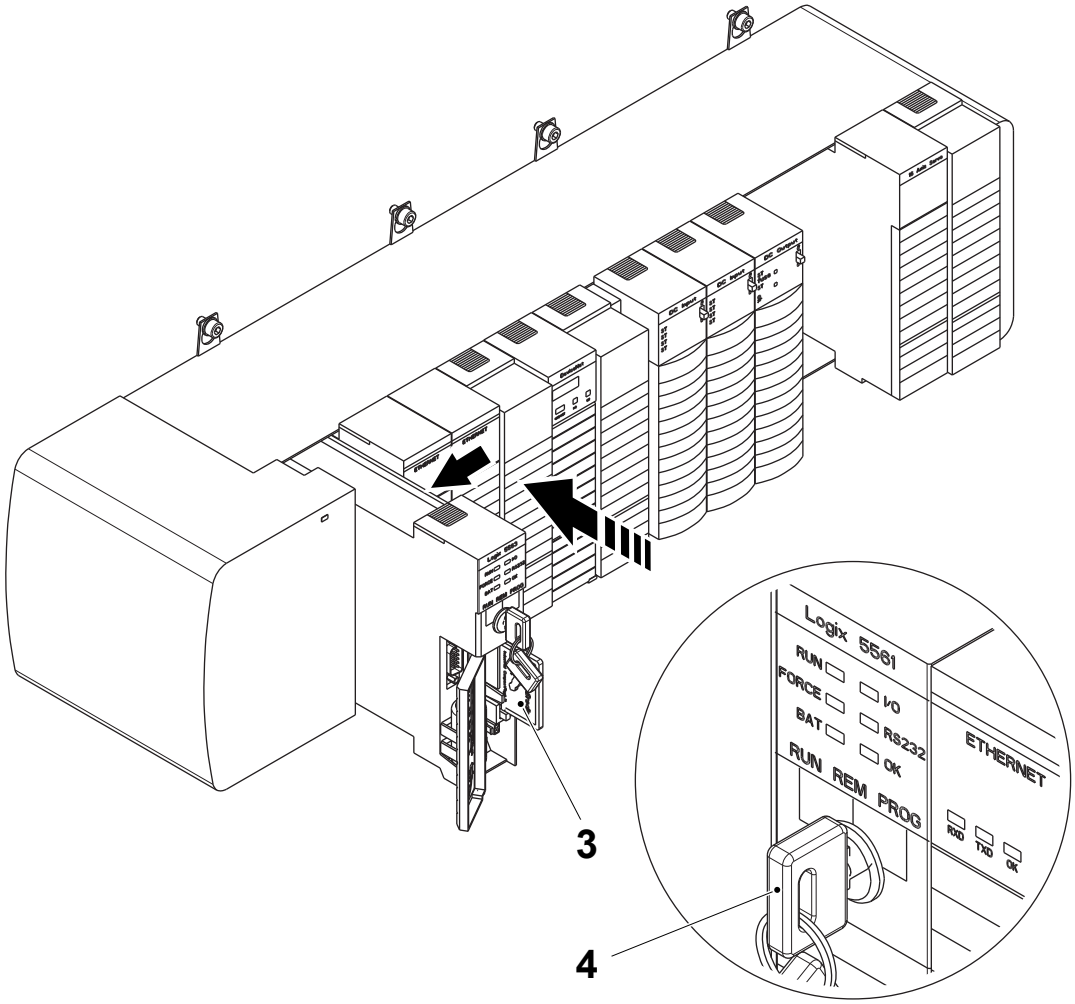

3 CompactFlash card
4 Key

(Cont'd)

(Cont'd)

j) Turn the mains power switch to the ON position.

k) Check the status of the CPU module LED's according to the table in section 9.1.2-4 CPU Module - LED Description.

l) Continue with the necessary procedures as described in Flow Chart of Procedures for Changing the CPU module on page 9-24.

9.1.2-2 CPU Module - Load Firmware

Machine Status	Mains Power ON Air OFF Steam ON Water OFF
Special Equipment	PC with CD Drive Ethernet communication cable
SPC Reference	90459-2471

CAUTION
Risk of damage to the equipment.
If a firmware download is interrupted, for example by a loss of power or if the communication fails between the module and the PC, the module will be corrupted.

Note! The table lists the required firmware versions for all rack mounted or distributed devices. The device firmware should be equal to or higher than the revision stated in the table. Do not upgrade the firmware unnecessarily and never downgrade the device firmware.

Use the table below to identify the correct firmware revision for the module to be flashed.

PLC				
Slot No.	**Pos. No.**	**Module type**	**TP No.**	**Firmware revision**
0	A01K2000	1756-L63/B	90459-6559	=15.4.31
1	A01K2010	1756-ENBT	90459-2477	= 3.9.1
2	A01K2020	1756-ENBT	90459-2477	= 3.9.1
4	A01K2040	1756-DNB A/B	90459-2479	= 7.1
		1756-DNB C	90600-4543	= 10.5
		1756-DNB D	90600-5840	= 11.2
6	A01K2060	1756-IB32B	90459-6556	>= 3.5
7	A01K2070	1756-IB32B	90459-6556	>= 3.5
8	A01K2080	1756-OB16E/A	90459-2474	>= 3.3
9	A01K2090	1756-OB16IS	90600-4033	>= 1.2
13	A01K2120	1756-M16SE	90459-2481	= 15.37

(Cont'd)

(Cont'd)

MOTION			
Pos. No.	**Module type**	**TP No.**	**Firmware revision**
T50T9000	2094-BC02-BM02 SERIES A	90459-7211	= 1.92.03
	2094-BC02-BM02 SERIES B	90600-5212	= 1.111
T50T9010	2094-BM01 SERIES A	90459-7214	= 1.92.03
	2094-BM01 SERIES B	90600-5214	= 1.111
T10T9020	2094-BM01 SERIES A	90459-7214	= 1.92.03
	2094-BM01 SERIES B	90600-5214	= 1.111
U70T9030	2094-BM01 SERIES A	90459-7214	= 1.92.03
	2094-BM01 SERIES B	90600-5214	= 1.111
T40T9040	2094-BM01 SERIES A	90459-7214	= 1.92.03
	2094-BM01 SERIES B	90600-5214	= 1.111
T40T9050	2094-BM01 SERIES A	90459-7214	= 1.92.03
	2094-BM01 SERIES B	90600-5214	= 1.111
T40T9080	2094-BC04-M03 SERIES A	90459-7212	= 1.92.03
T40T9090	2094-BM03 SERIES A	90459-7216	= 1.92.03
T40T9100	2094-BM02 SERIES A	90459-7215	= 1.92.03
	2094-BM02 SERIES B	90600-5216	= 1.111
T40T9110	2094-BM02 SERIES A	90459-7215	= 1.92.03
	2094-BM02 SERIES B	90600-5216	= 1.111

(Cont'd)

(Cont'd)

a) Make sure that the PC is configured as described in 9.1.1-1 Preparation for PLC Communication - Configure PC Network Communications and in 9.1.1-2 Preparations for PLC Communication - Configure RSLinx.

b) Open the start menu on the PC and select `PROGRAMS` (1), `FLASH PROGRAMMING TOOLS` (2) and `CONTROL FLASH` (3).

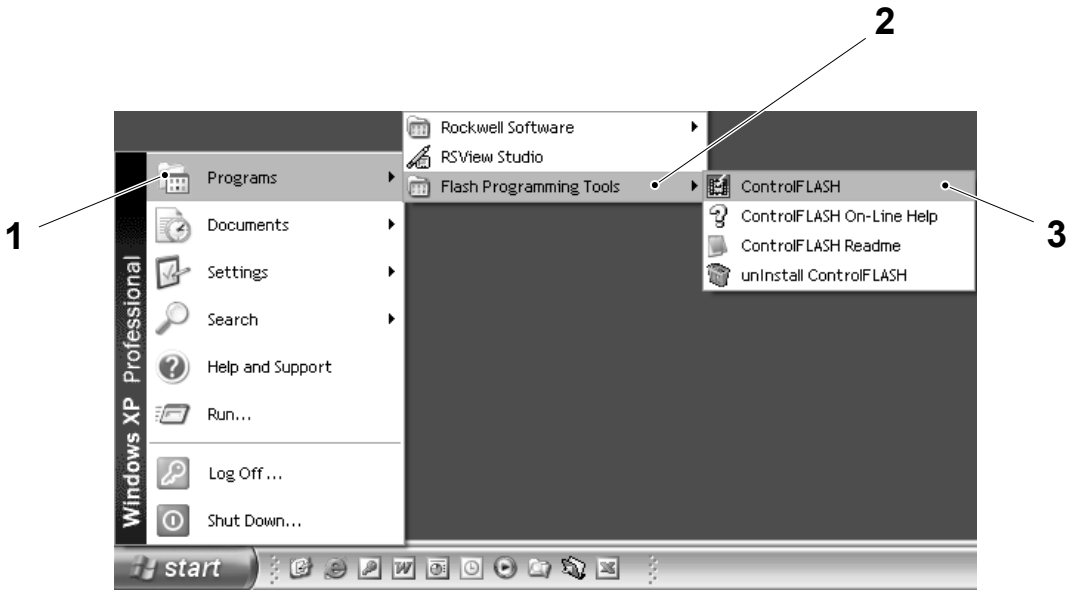

1 Programs
2 Flash programming tools
3 Control flash

(Cont'd)

(Cont'd)

c) Follow the instructions in the `CONTROL FLASH PROGRAM` window (4) to load the firmware.

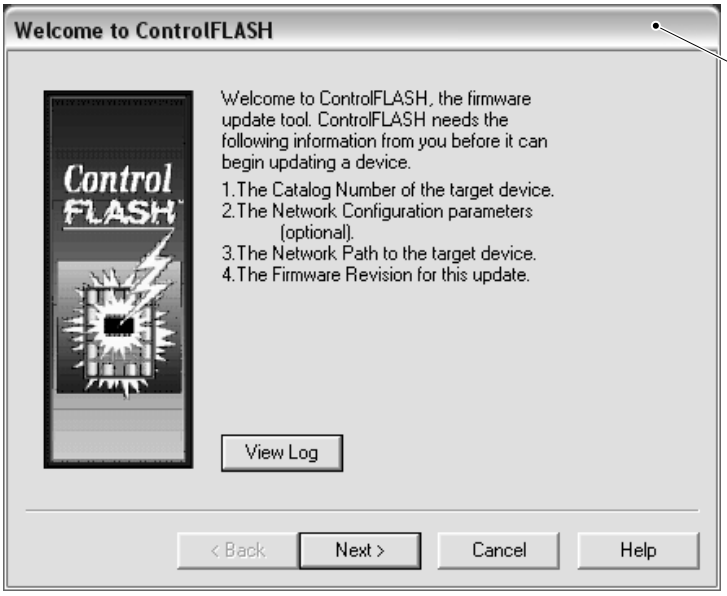

4 Control Flash program window

9.1.2-3 CPU Module - Download Program

Machine Status	Mains Power ON Air OFF Steam ON Water OFF
Special Equipment	Ethernet communication cable PC with CD drive
SPC Reference	90459-2471

Note! To connect to the CPU module using an ethernet communication cable, the PC must first be configured for this type of communication. See 9.1.1-1 Preparation for PLC Communication - Configure PC Network Communications and 9.1.1-2 Preparations for PLC Communication - Configure RSLinx for more details.

a) Connect the ethernet communication cable between a vacant connection port on the ethernet switch (1) and the PC (2).

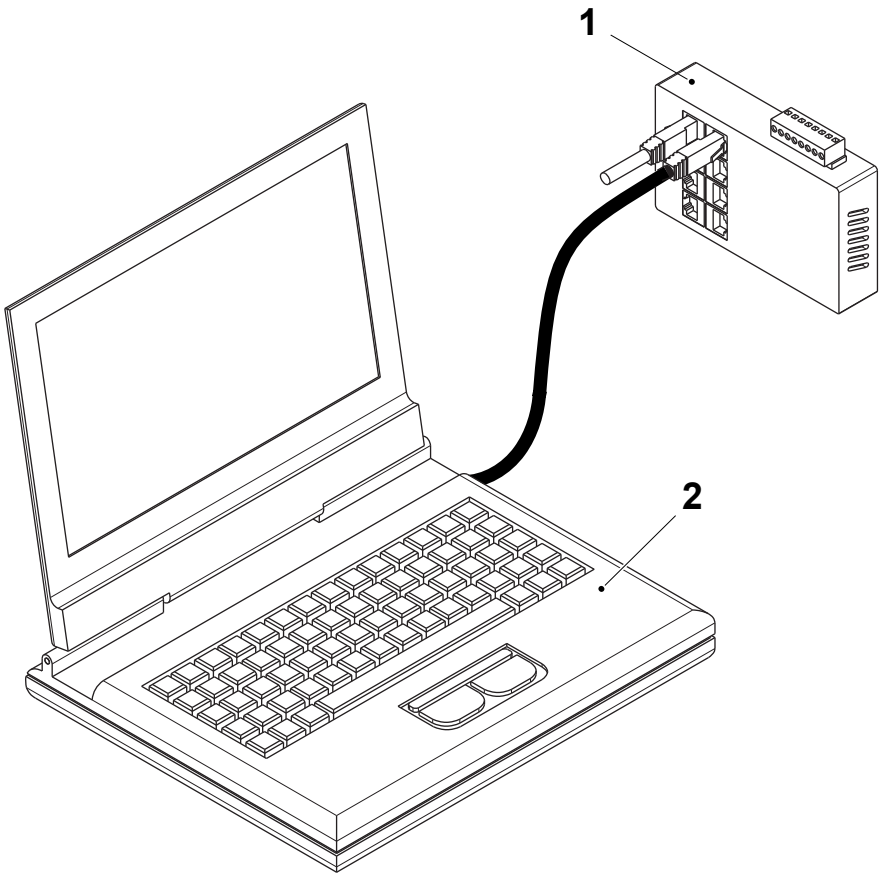

1 Ethernet switch
2 PC

(Cont'd)

(Cont'd)

b) Insert the CD marked Softw_CD_A3_F into the PC CD drive.

c) Browse to the CD drive and copy the compressed program folder to the PC desktop and extract the program file.

d) Double click on the program file to automatically start the RSLogix program and open the program file.

e) Select the `COMMUNICATION` menu (1) and then select `GO ONLINE` (2).

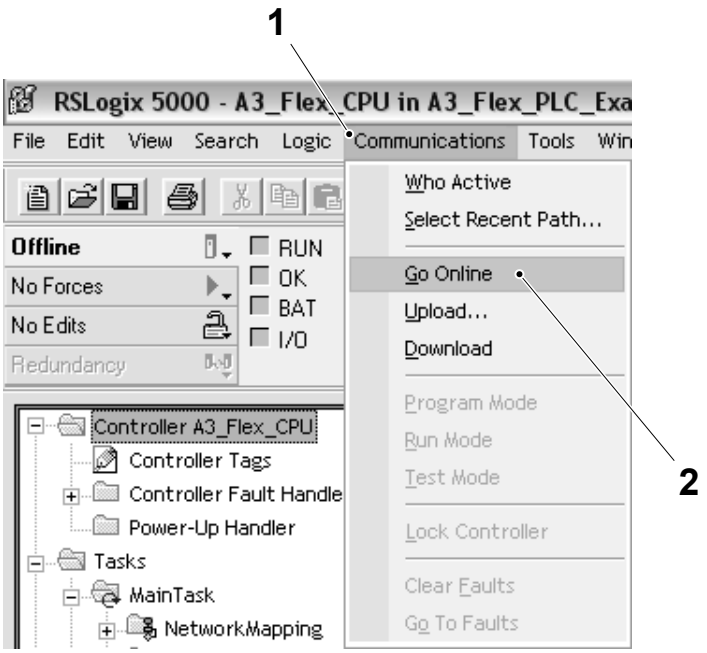

1 Communication menu
2 Go online

(Cont'd)

(Cont'd)

Note! If the program matches the program in the CPU module, an online connection will be established without any further messages. A download of the program is not necessary.

f) The CONNECTED TO GO ONLINE window (3) appears.

g) Select the DOWNLOAD button (4).

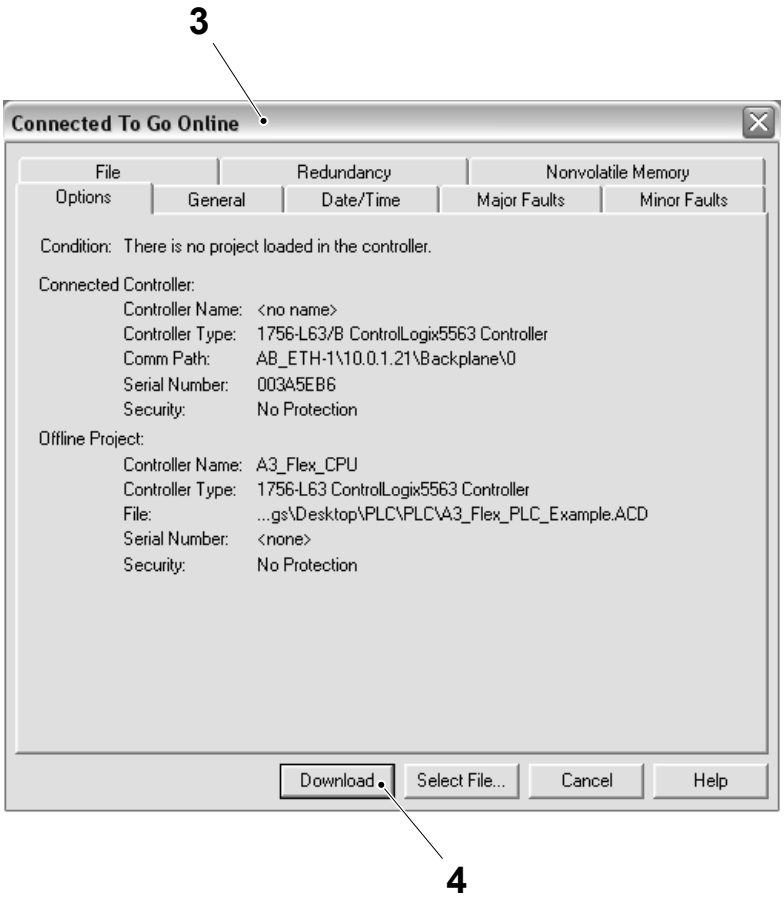

3 Connected to go online window

4 Download button

(Cont'd)

(Cont'd)

Note! All the values and settings in the CPU module will be replaced with those from the downloaded program.

h) Select the DOWNLOAD button (5) in the DOWNLOAD window (6).

i) When the download is complete the dialogue box (7) appears, select the YES button (8) to put the PLC in RUN MODE.

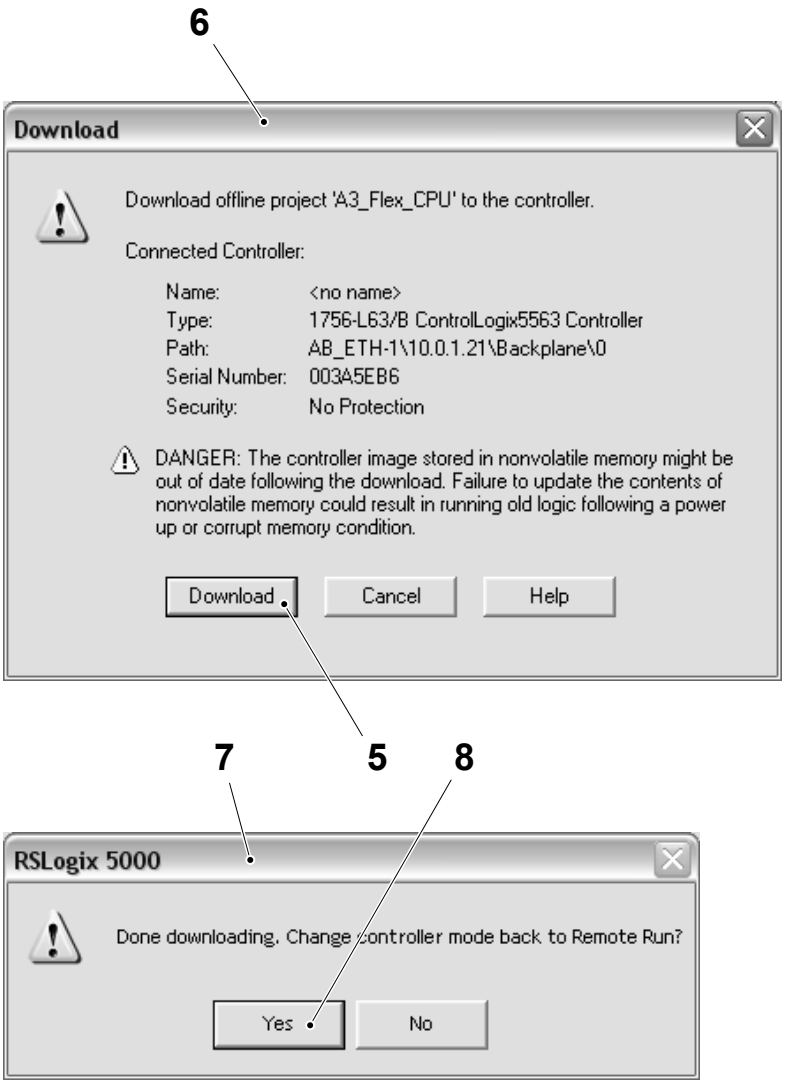

5 Download window
6 Download button
7 Dialogue box
8 Yes button

(Cont'd)

(Cont'd)

j) If the download is to a replacement PLC controller continue with the procedure below to set the nonvolatile memory.

Set Nonvolatile Memory

a) Select the `COMMUNICATION` menu (1) and then select `GO ONLINE` (2).

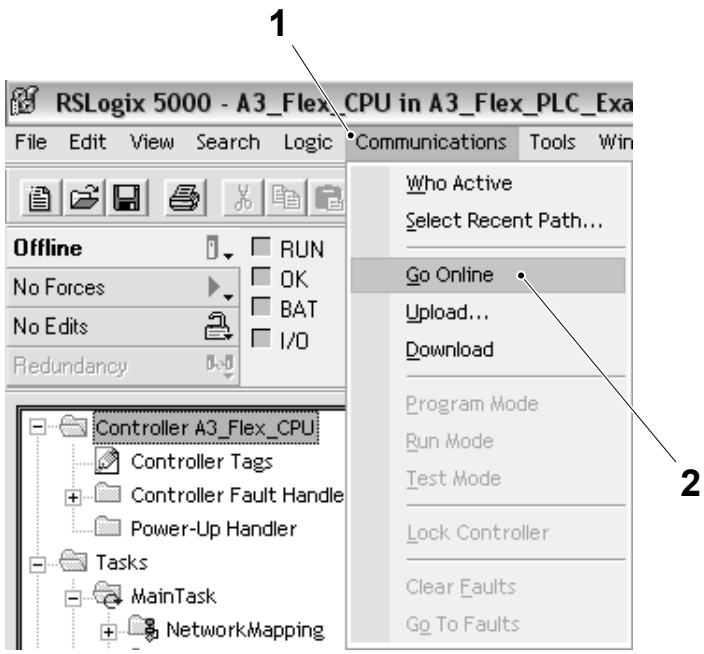

1 Communication menu
2 Go online

(Cont'd)

(Cont'd)

b) Select the COMMUNICATION menu (1), then select PROGRAM MODE (3).

c) When the dialogue box (4) appears, select the YES button (5) to put the PLC in PROGRAM MODE.

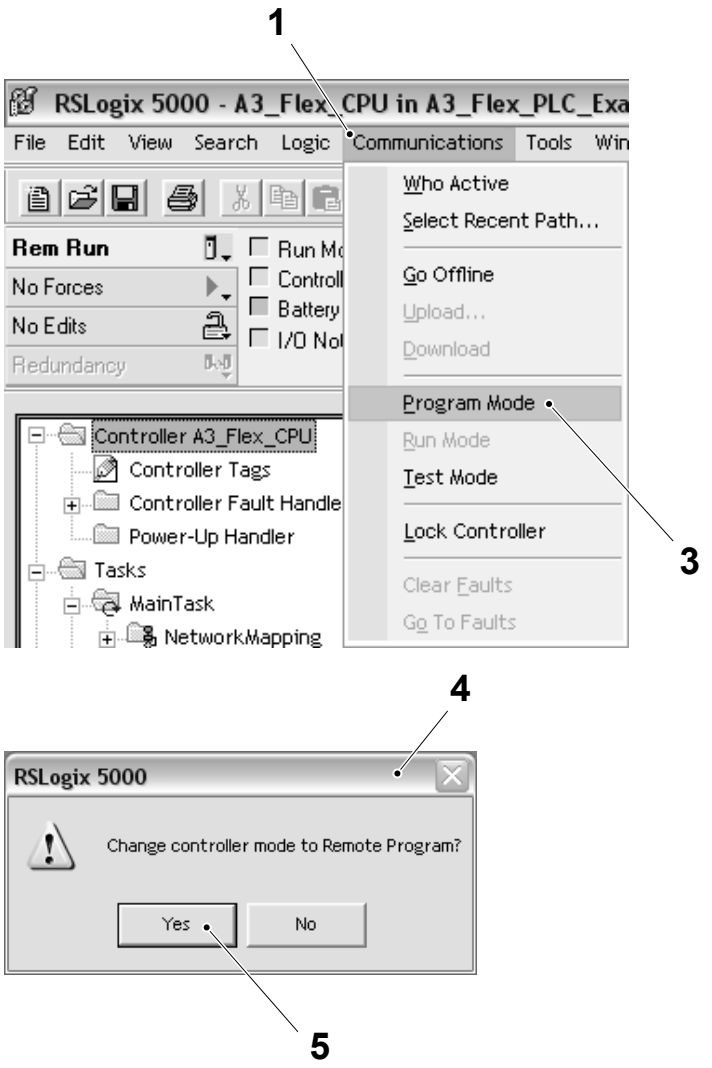

1 Communication menu
3 Program mode
4 Dialogue box
5 Yes button

(Cont'd)

(Cont'd)

d) On the ONLINE tool bar, select the CONTROLLER PROPERTIES button (6).

e) Select the NONVOLATILE MEMORY tab (7).

f) Select the LOAD/STORE button (8).

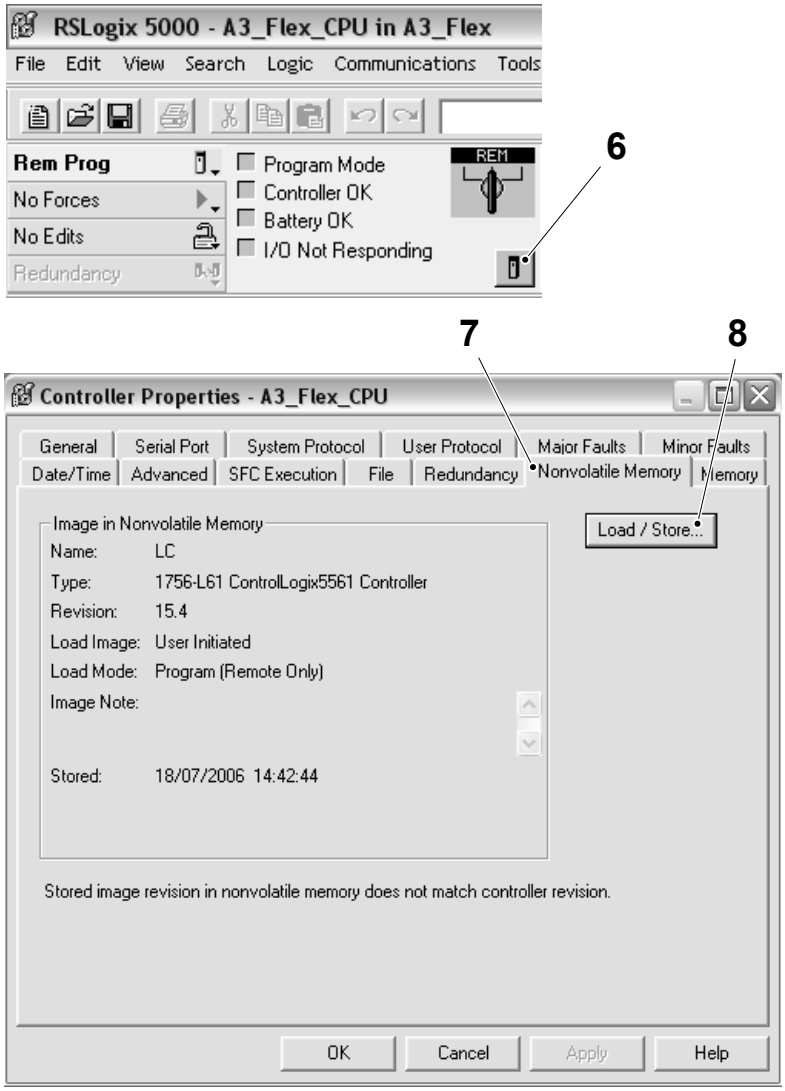

6 Controller properties button
7 Nonvolatile memory tab
8 Load/store button

(Cont'd)

(Cont'd)

g) In the NONVOLATILE MEMORY LOAD/STORE window (9), select ON CORRUPT MEMORY from the drop down list of the LOAD IMAGE option (10).

h) In the NONVOLATILE MEMORY LOAD/STORE window (9), select RUN (REMOTE ONLY) from the drop down list of the LOAD MODE option (11).

i) Select the STORE button (12).

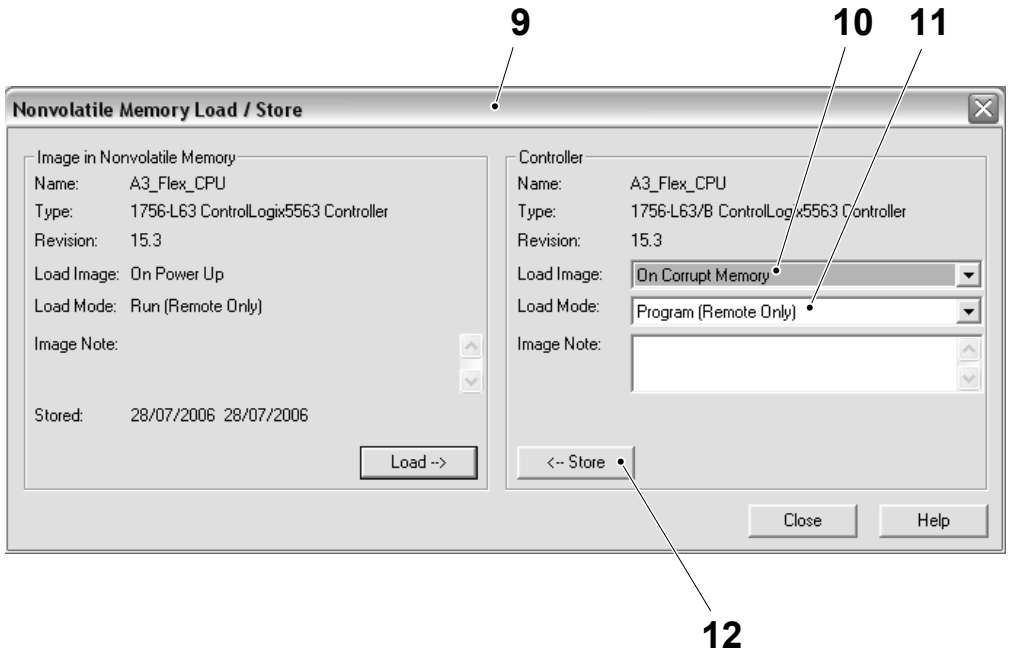

9 Nonvolatile memory load/store window
10 Load image option
11 Load mode option
12 Store button

(Cont'd)

(Cont'd)

j) Select the YES button (13) to confirm the store.

k) During the process a dialogue box indicates that the store is in progress, select the OK button (14).

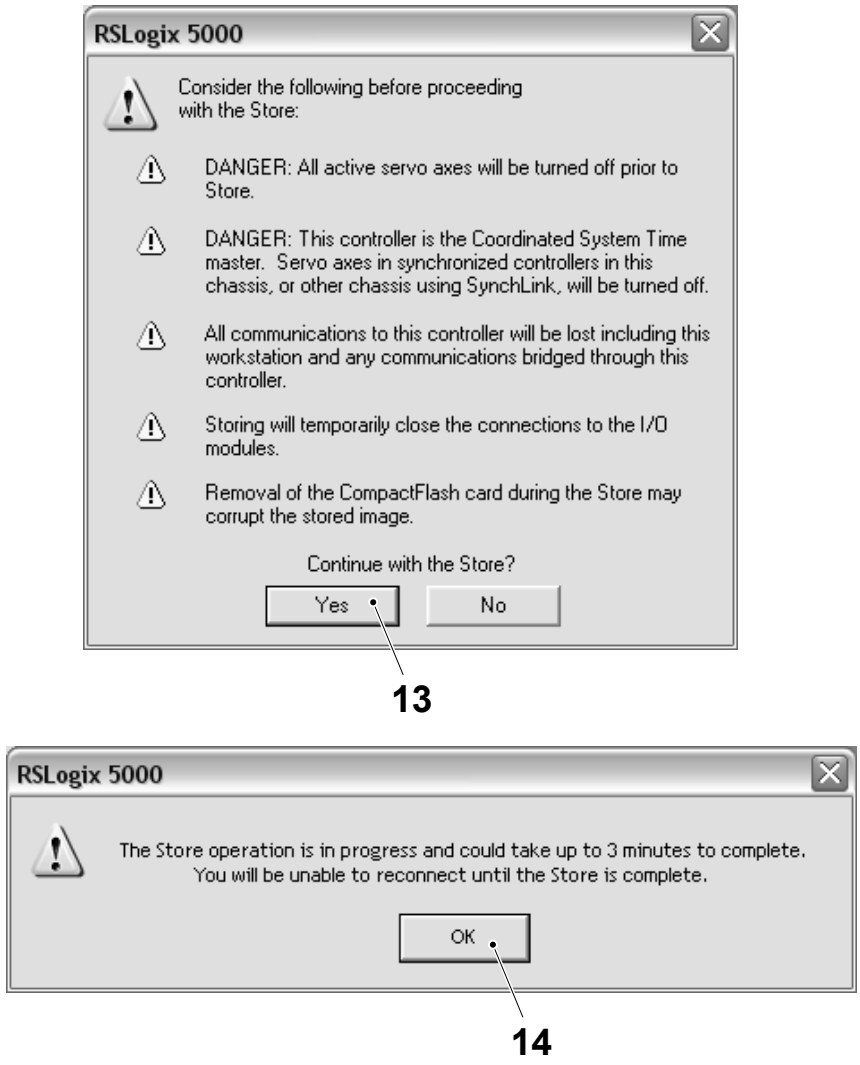

13 Yes button
14 OK button

(Cont'd)

(Cont'd)

l) Select the OK button (15) to close the CONTROLLER PROPERTIES window.

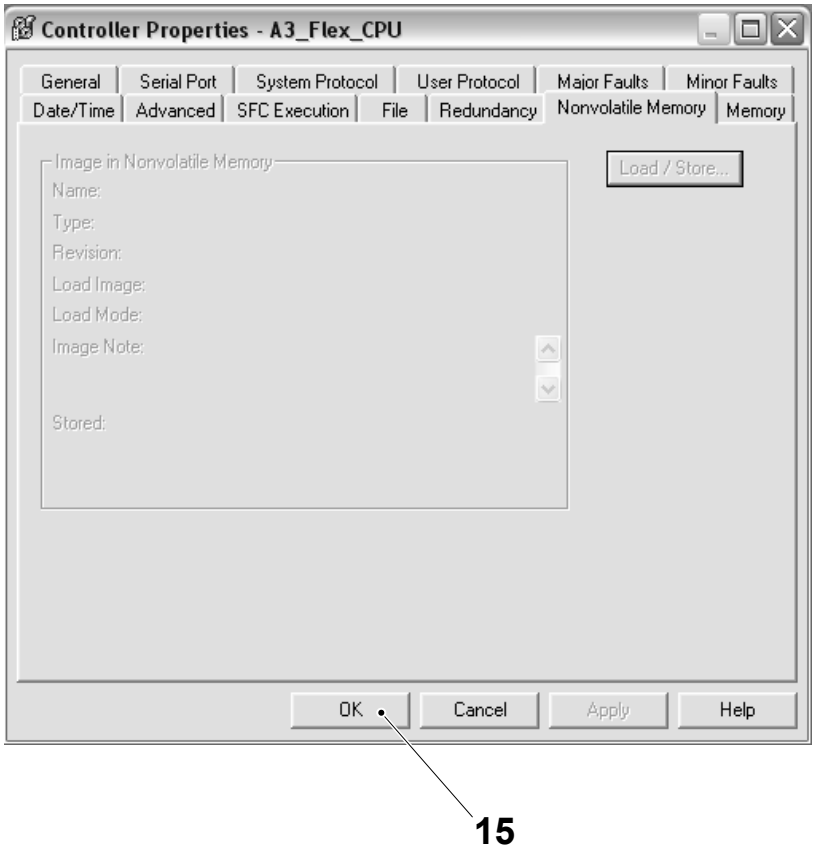

15 OK button

(Cont'd)

(Cont'd)

m) Select the COMMUNICATION menu (1) and then select GO ONLINE (2).

n) Select the COMMUNICATION menu (1), then select RUN MODE (16) to put the PLC in RUN MODE.

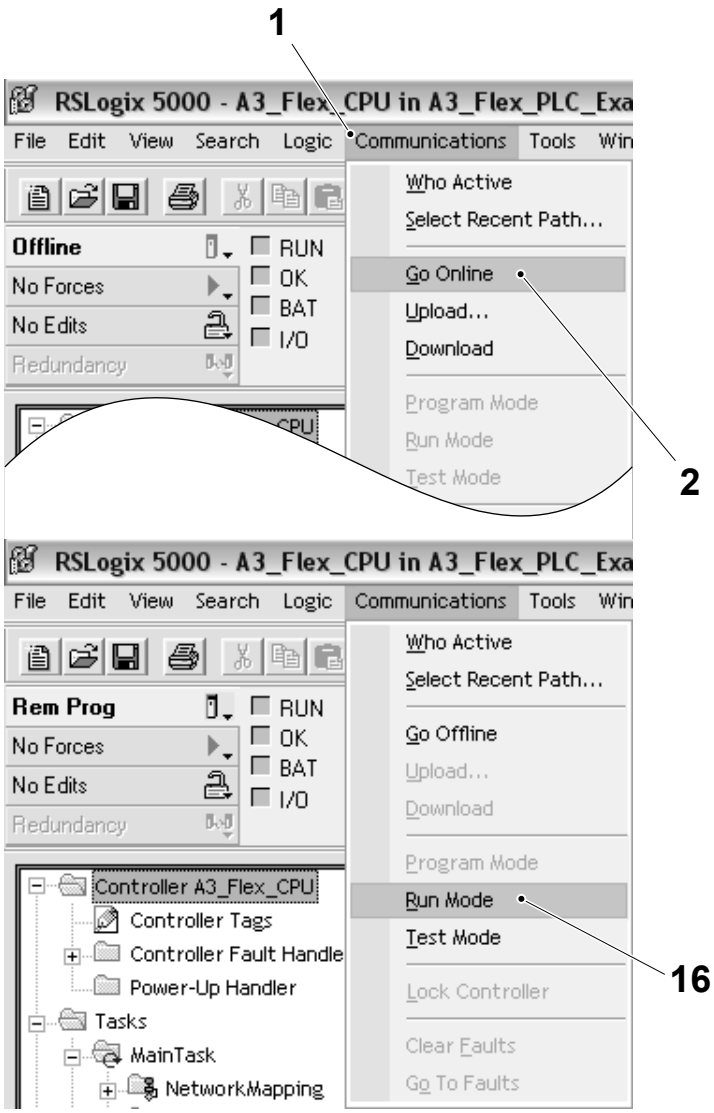

1 Communication menu
2 Go online
16 Run mode

9.1.2-4 CPU Module - LED Description

Machine Status	Mains Power ON
SPC Reference	90459-2471

LED	Colour	Description
RUN (1)	Off	The module is in Program or Test mode.
	Solid green	The module is in Run mode.
I/O (2)	Off	There are no devices in the I/O configuration of the module. or The module does not contain a project (module memory is empty).
	Solid green	The module is communicating with all the devices in its I/O configuration.
	Flashing green	One or more devices in the I/O configuration of the module are not responding.
	Flashing red	The chassis is bad. Replace the chassis.
FORCE (3)	Off	No tags contain I/O force values. I/O forces are inactive (disabled).
	Solid amber	I/O forces are active (enabled). I/O force values may or may not exist.
RS232 (4)	Off	There is no activity.
	Solid green	Data is being received or transmitted.

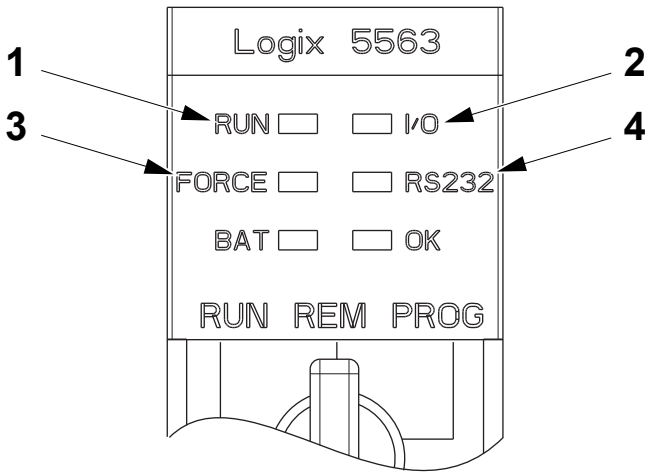

1 Run LED
2 I/O LED
3 Force LED
4 RS232 LED

(Cont'd)

(Cont'd)

LED	Colour	Description
BAT (5)	Off	The battery supports memory.
	Solid red	The battery is not installed. or The battery is 95% discharged and should be replaced.
OK (6)	Off	No power is applied.
	Flashing red	If the module is new, then the module requires a firmware update. If the module is **not** new, then a board major fault has occurred. To clear the fault, either turn the key switch to PROG, then to RUN and then back to PROG again or go on-line with RSLogix 5000 software.
	Solid red	The module detected a non-recoverable fault, so it cleared the project from memory. To recover: 1. Cycle power to the chassis. 2. Download the project. 3. Change to Run mode. If the OK LED remains solid red, contact your Rockwell Automation representative or local distributor.
	Solid green	The module is ok.
	Flashing green	The module is storing or loading a project to or from nonvolatile memory.

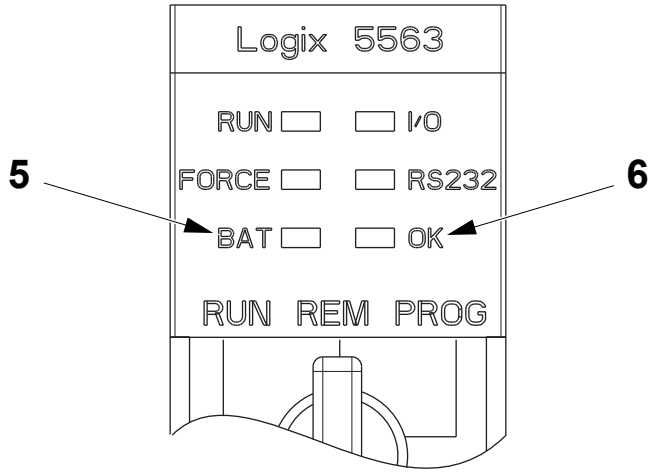

5 Bat LED
6 OK LED

9.1.2-5 CPU Module - Change Battery

Machine Status	Mains Power ON Air OFF Steam ON Water OFF
SPC Reference	90459-2471

CAUTION
Loss of data.
Make sure that the mains power switch is turned to the ON position. Failure to do this may result in the data stored in the CPU module being lost.

(Cont'd)

(Cont'd)

a) Press the clip (1) and disconnect the battery cable connection (2) from the connection (3) and remove the battery (4).

b) Connect the battery cable for the new battery to the connection (3) and fit the new battery. Make sure that the new battery is fitted with the arrow (5) pointing upwards.

c) Write the date of the battery installation on the battery label (6).

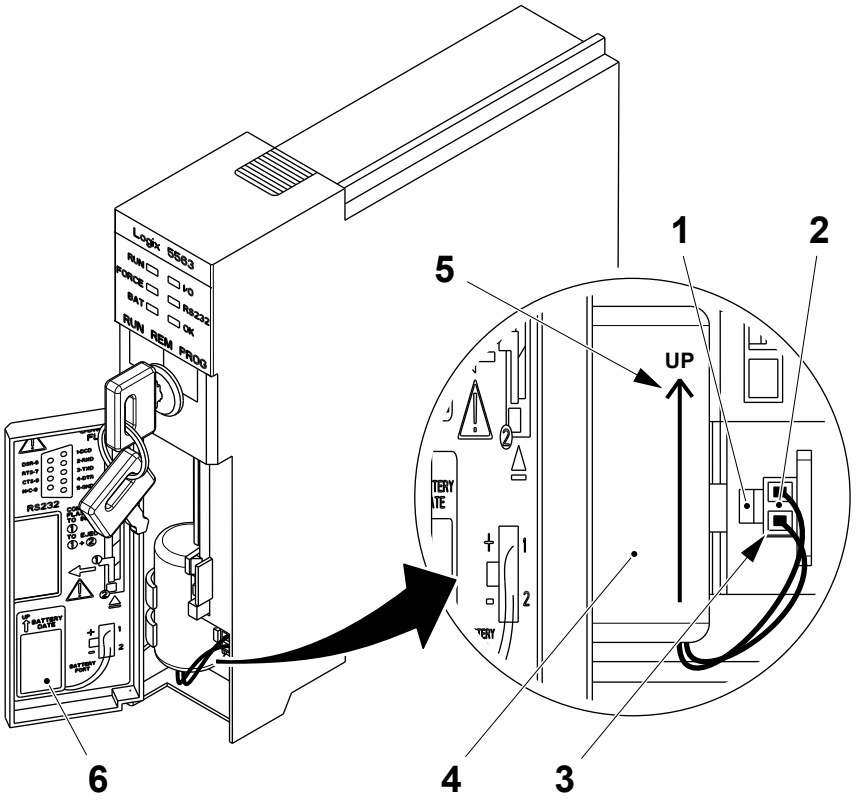

1 Clip
2 Battery cable connection
3 Connection
4 Battery
5 Arrow
6 Label

9.1.3 EtherNet/IP Module

9.1.3-1 EtherNet/IP Module - Change

Machine Status	Mains Power OFF Air OFF Steam ON Water OFF
SPC Reference	90459-2477

Note! The firmware revision of the new EtherNet/IP module maybe equal to, or newer than the firmware revision of the old EtherNet/IP module. Using a newer firmware revision may create errors when going online, such as unrecognized device or device mismatch if the PC does not contain the very latest EDS files.

Preparation

Before changing the EtherNet/IP module:

- Use the RSLinx Classic program to verify and record the firmware version of the existing EtherNet/IP module.
- Use the Flow Chart of Procedures for Changing the EtherNet/IP Module on the next page to determine which procedures must be performed and their correct sequence.

(Cont'd)

(Cont'd)

Flow Chart of Procedures for Changing the EtherNet/IP Module

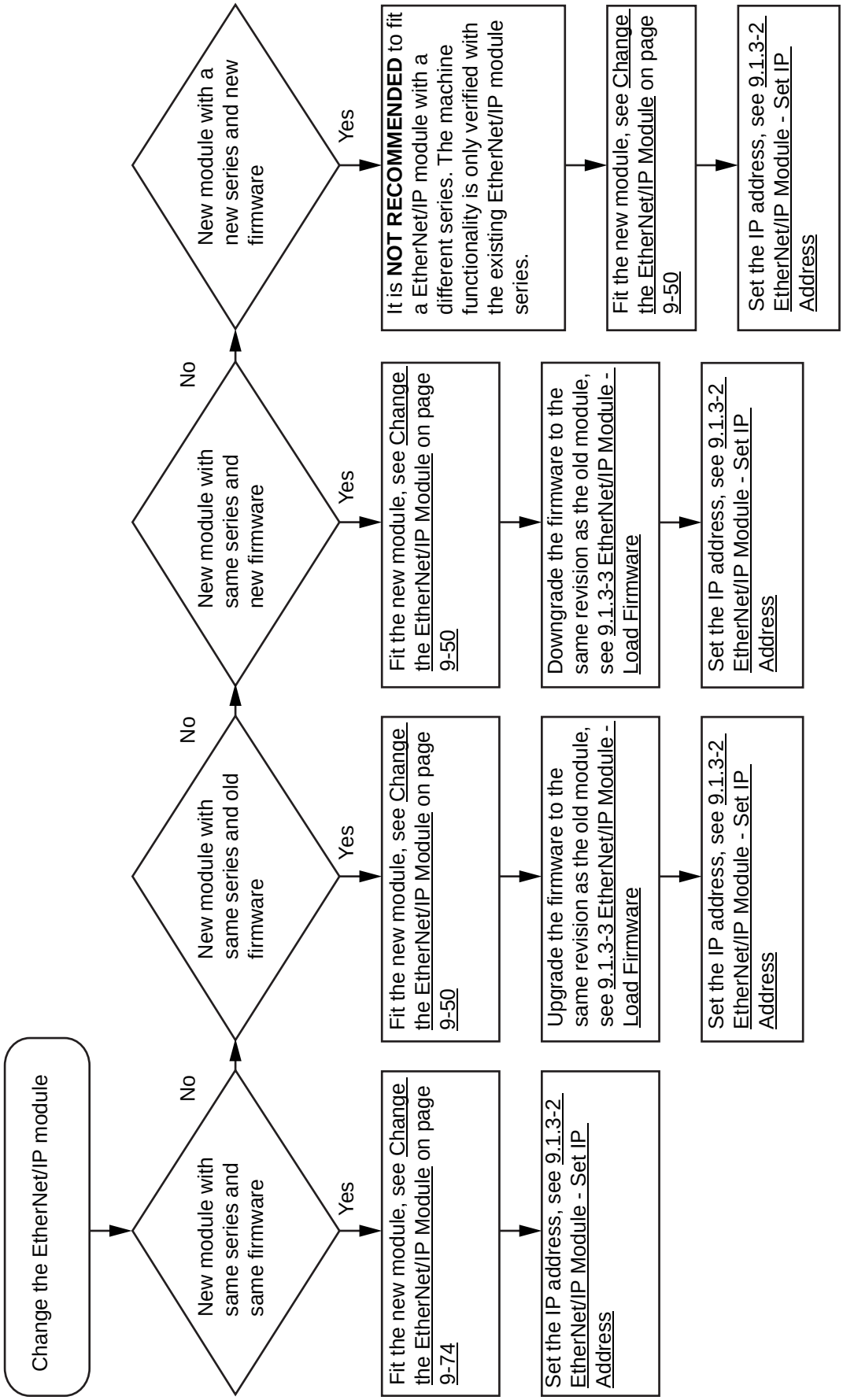

(Cont'd)

(Cont'd)

Change the EtherNet/IP Module

a) Remove the cable connection (1) from the EtherNet/IP module.

b) Press the locking tabs on the top and the bottom of the EtherNet/IP module.

c) Slide the EtherNet/IP module out of the chassis.

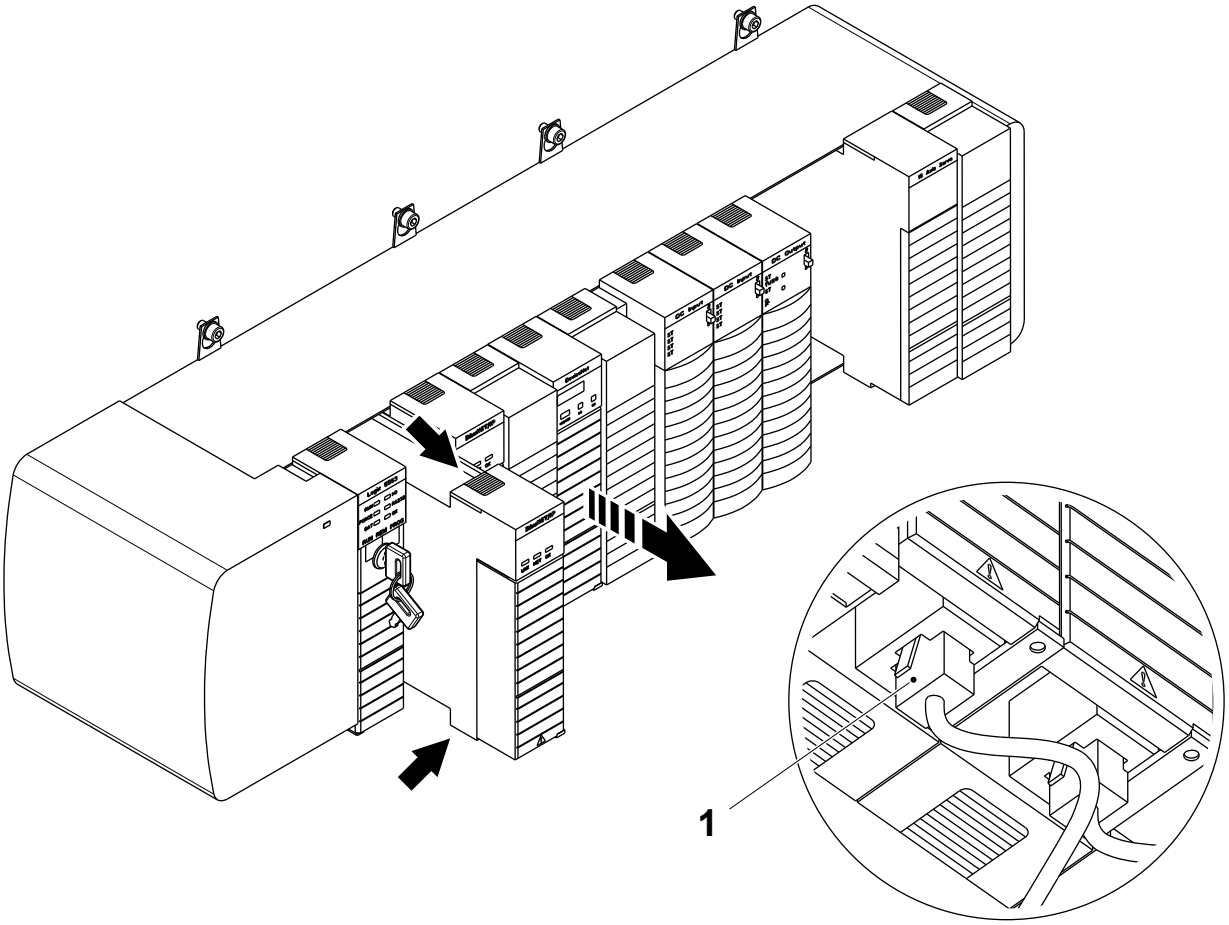

1 Cable connection

(Cont'd)

(Cont'd)

d) Verify and record the MAC address (2) of the new EtherNet/IP module printed in the position indicated in the illustration.

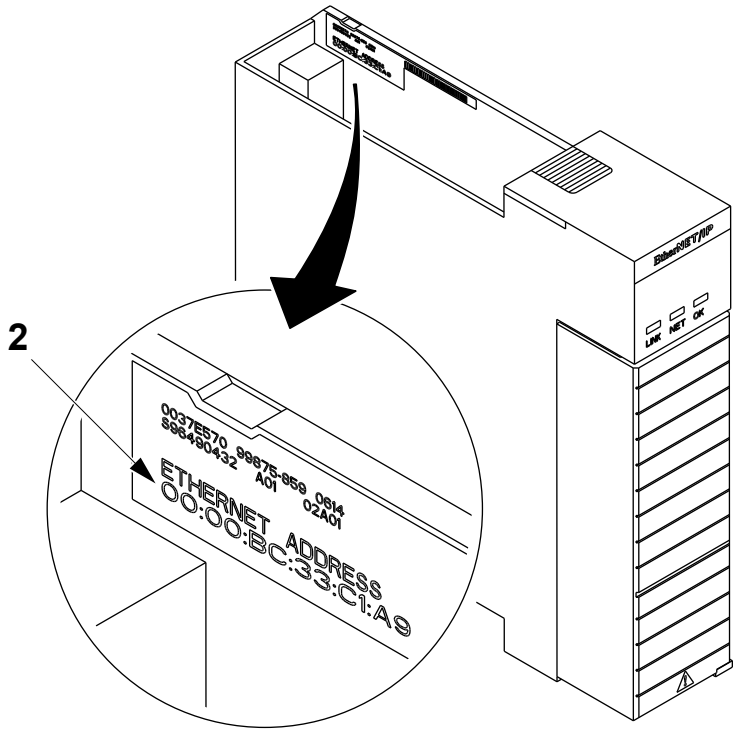

2 MAC address

(Cont'd)

(Cont'd)

e) Align the new EtherNet/IP module with the top and the bottom guides in the chassis.

f) Slide the EtherNet/IP module into the chassis. Make sure it is flush with the other modules and the top and bottom latches are engaged.

g) Fit the cable connection (1) to the EtherNet/IP module.

h) Turn the mains power switch to the ON position.

i) Check the status of the EtherNet/IP module LED's according to the table in section 9.1.3-4 EtherNet/IP Module - LED Description.

j) Continue with the necessary procedures as described in Flow Chart of Procedures for Changing the EtherNet/IP Module on page 9-49.

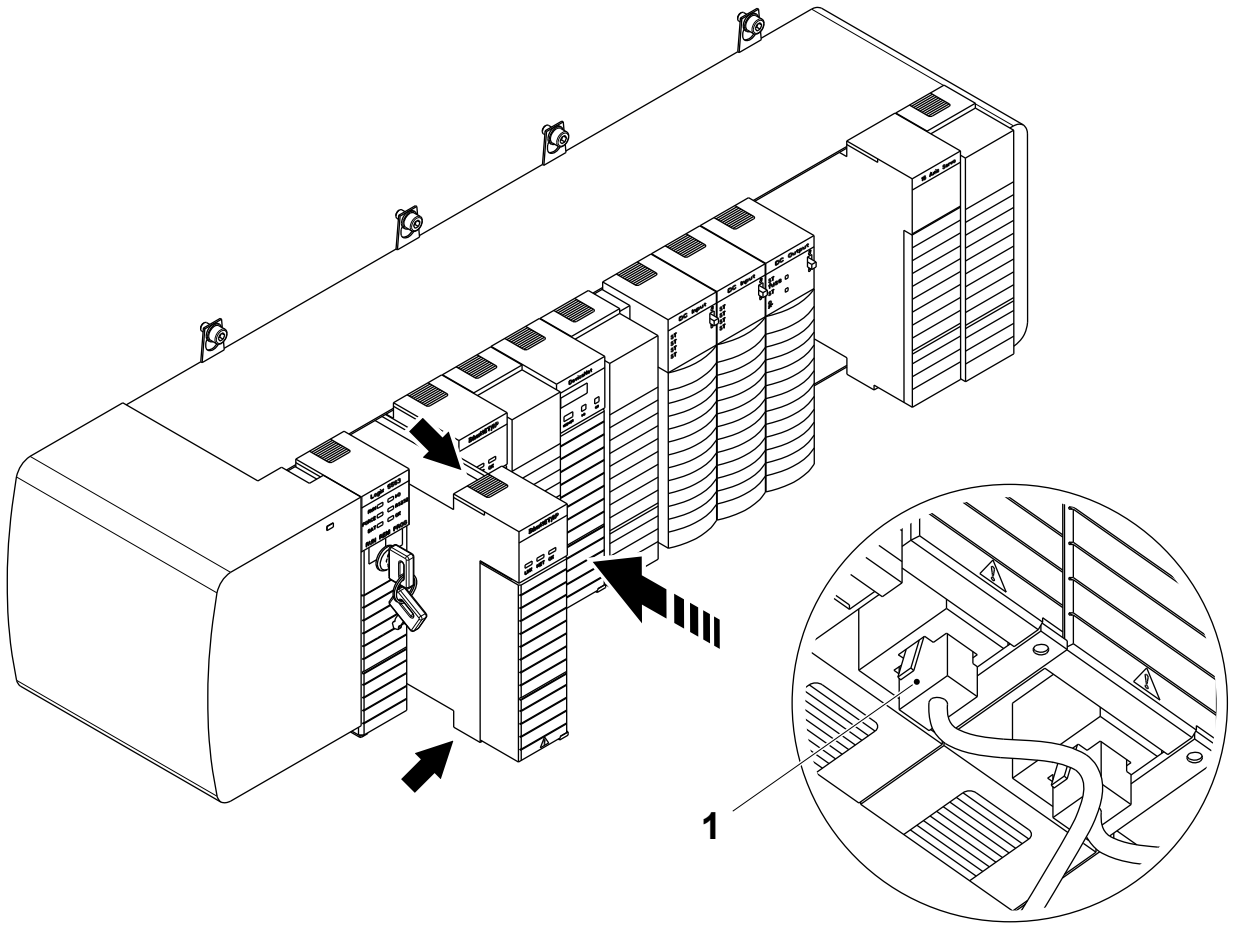

1 Cable connection

9.1.3-2 EtherNet/IP Module - Set IP Address

Machine Status	Mains Power ON Air OFF Steam ON Water OFF
SPC Reference	90459-2477

New EtherNet/IP modules have a MAC address programmed as a factory setting. The MAC address must be changed to an IP address as described below:

a) Connect the ethernet communication cable between a vacant connection port on the ethernet switch (1) and the PC (2).

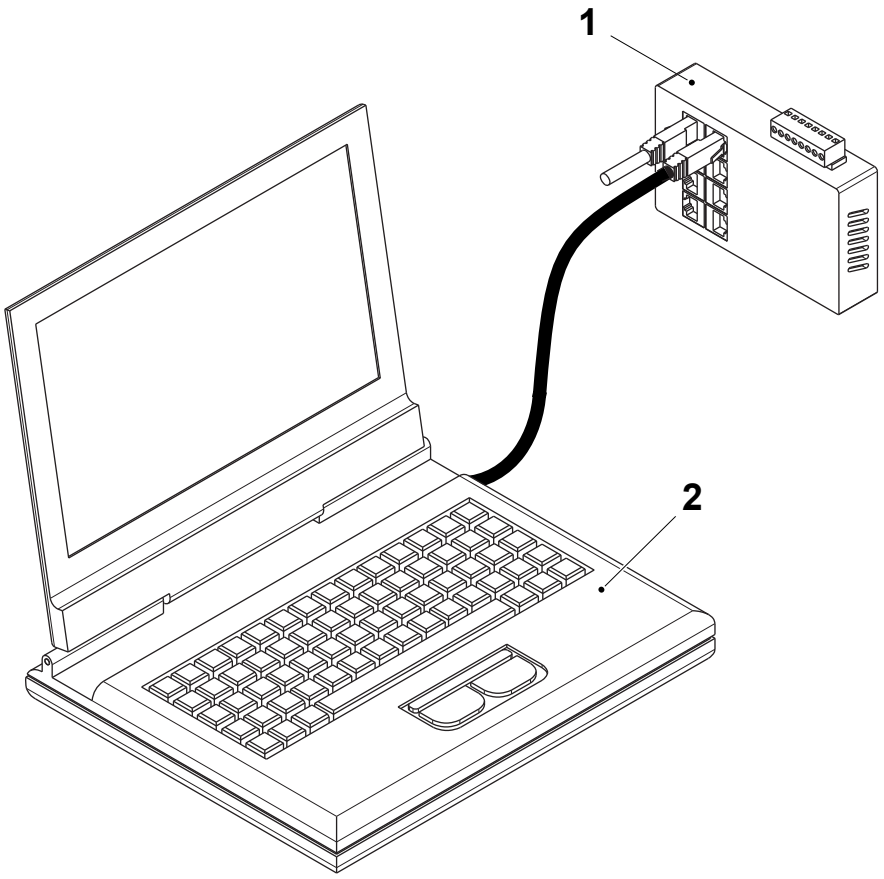

1 Ethernet switch
2 PC

(Cont'd)

(Cont'd)

b) Make sure that the network cable between the Ethernet switch and the EtherNet/IP module is connected.

c) Open the `RSLINX CLASSIC PROFESSIONAL` program and select `EXIT AND SHUTDOWN` (1).

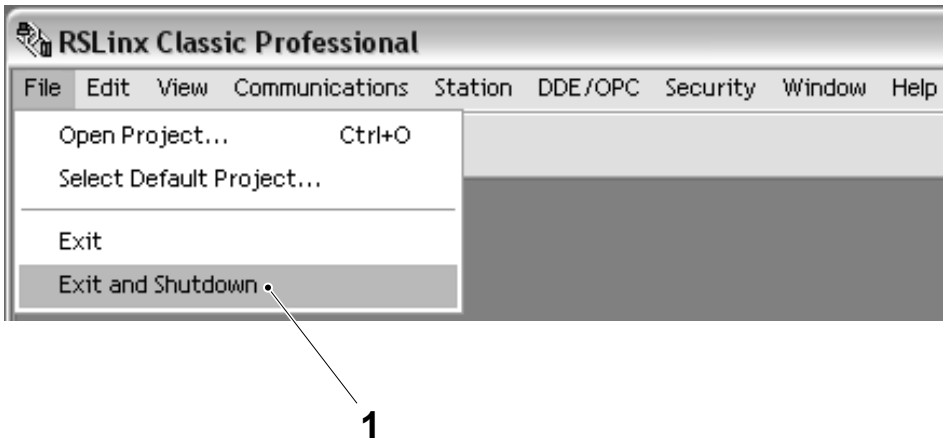

1 Exit and shutdown

(Cont'd)

(Cont'd)

d) Open the START menu on the PC and select PROGRAMS (2), ROCKWELL SOFTWARE (3), BOOTP DHCP SERVER (4) and then BOOTP DHCP SERVER (5).

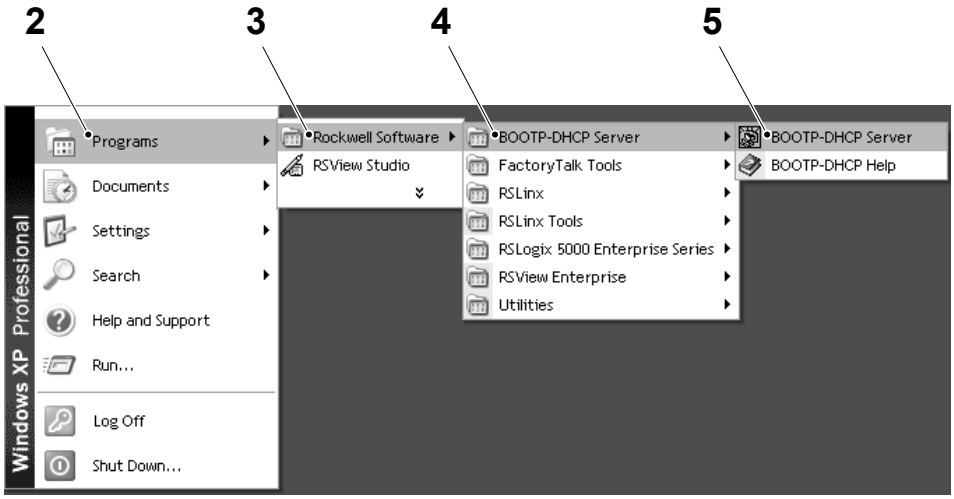

2 Program
3 Rockwell software
4 BOOTP DHCP server
5 BOOTP DHCP server

(Cont'd)

(Cont'd)

Note! If it is the first time the `BOOT DHCP Server` program is used, a network setting will be requested. Otherwise continue with step g)

e) Enter `255.255.0.0` as the `SUBNET MASK` (6). All other settings should be set to zero.

f) Select the `OK` button (7).

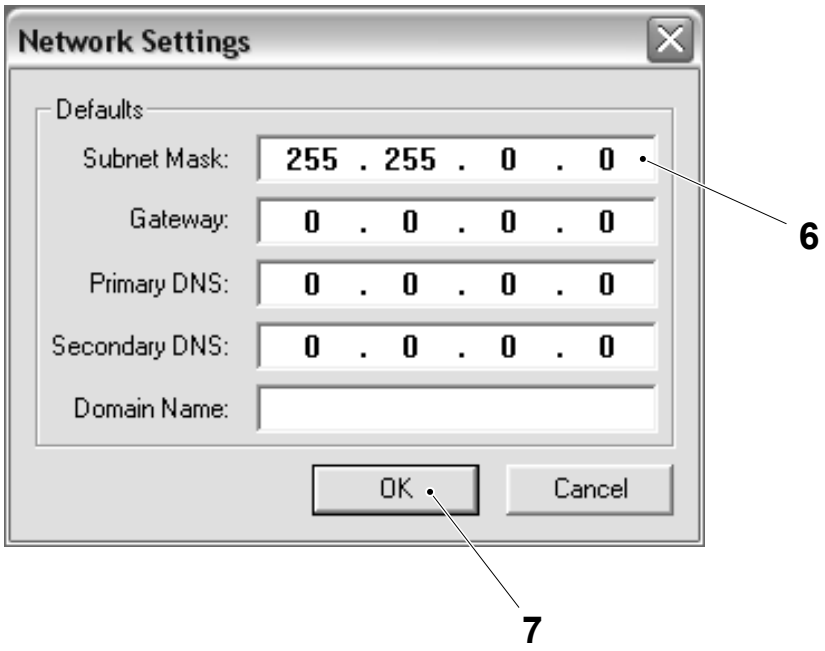

6 Subnet Mask
7 OK button

(Cont'd)

(Cont'd)

g) When the MAC address appears in the REQUEST HISTORY window (8) of the BOOTP DHCP SERVER window (9), check that the same address is displayed on the EtherNet module and select the NEW button (10) to begin the conversion from the MAC address to an IP address.

h) When the MAC address appears in the RELATION LIST window (11), select the MAC address.

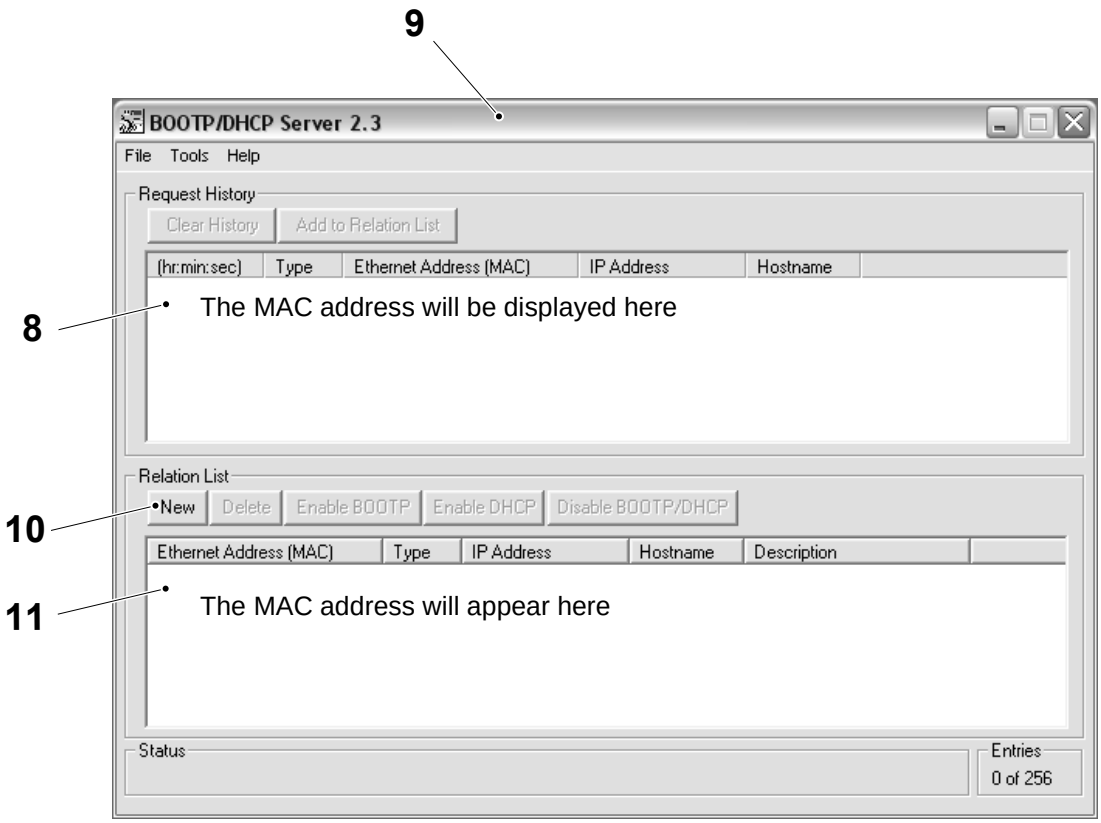

8 BOOT DHCP server window
9 Request history window
10 New button
11 Relation list window

(Cont'd)

(Cont'd)

EtherNet/IP Module			
PLC Slot No.	**Pos. No.**	**Module type**	**IP address**
1	A01K2010	1756-ENBT	10.255.1.21
2	A01K2020	1756-ENBT	10.0.0.201

i) Enter the MAC address in the MAC ADDRESS field (12) and the new IP address (see the table above) in the IP ADDRESS field (13) of the NEW ENTRY window (14).

j) Select the OK button (15). The new IP address will appear in the REQUEST HISTORY window (9).

k) Select the EtherNet/IP module in the RELATION LIST window (11) and then select the DISABLE BOOTP/DHCP button (16).

l) After the EtherNet/IP module has been configured, check that the correct IP address appears on the display on the EtherNet/IP module.

m) Disconnect the PC from the Ethernet switch.

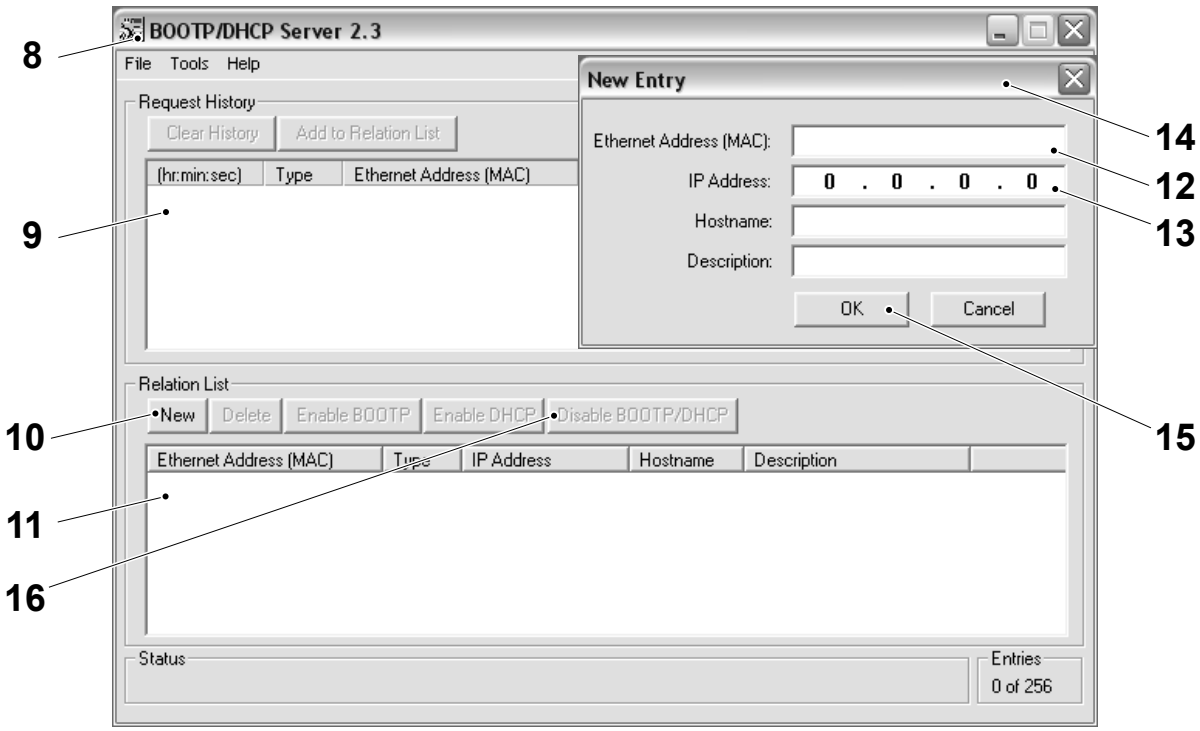

8 Request history window
9 New button
12 MAC address field
13 IP address field
14 OK button
15 Disable BOOTP/DHCP button
16 Relation list window

9.1.3-3 EtherNet/IP Module - Load Firmware

Machine Status	Mains Power ON Air OFF Steam ON Water OFF
Special Equipment	PC with CD Drive Ethernet communication cable
SPC Reference	90459-2477

Follow the procedure described in 9.1.2-2 CPU Module - Load Firmware to load the firmware for the EtherNet/IP module.

9.1.3-4 EtherNet/IP Module - LED Description

Machine Status	Mains Power ON Air OFF Steam ON Water OFF
SPC Reference	90459-2477

LED	Colour	Description
LINK (1)	Off	No data transmission. Module is not ready for transmission
	Solid green	Ready. Module is ready to communicate.
	Flashing green	Module is communicating over the network.
NET (2)	Off	Module is not powered or does not have an IP address. Verify there is chassis power and make sure the module has been configured.
	Solid green	Module has an IP address and has established at least one connection.
	Flashing green	Module has an IP address and but has no established connections.
	Solid red	A duplicate IP address has been detected. Make sure that the IP address assigned to this module is not the same as that for any other device already on the network.
	Flashing red	A connection has timed out. One or more of the connections targeting the module has timed out.

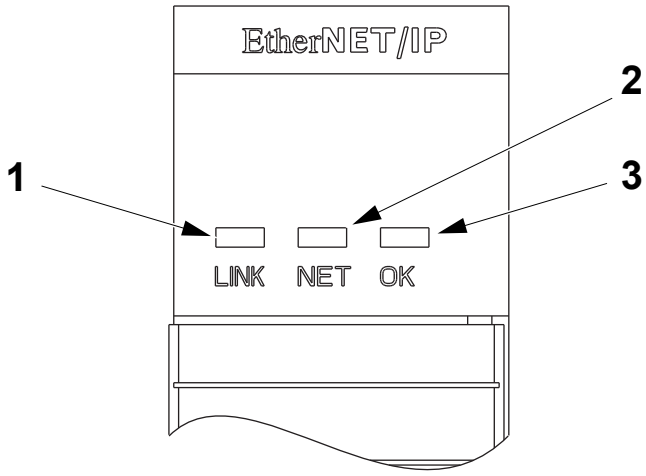

1 LINK LED
2 NET LED
3 OK LED

(Cont'd)

(Cont'd)

LED	Colour	Description
OK (3)	Off	The module does not have 24 V DC power. Verify there is chassis power and make sure the module has been correctly inserted in the chassis.
	Solid green	Module is operating correctly.
	Flashing green	Module is not configured.
	Solid red	Major fault. An non-recoverable fault has been detected, cycle the power to the module. If the fault remains replace the module.
	Flashing red	A duplicate IP address has been detected. Make sure that the IP address assigned to this module is not the same as that for any other device already on the network. Or A recoverable fault has been detected. This could be caused by an error in the configuration.
	Flashing red/ green	The module is performing the self-test on power up.

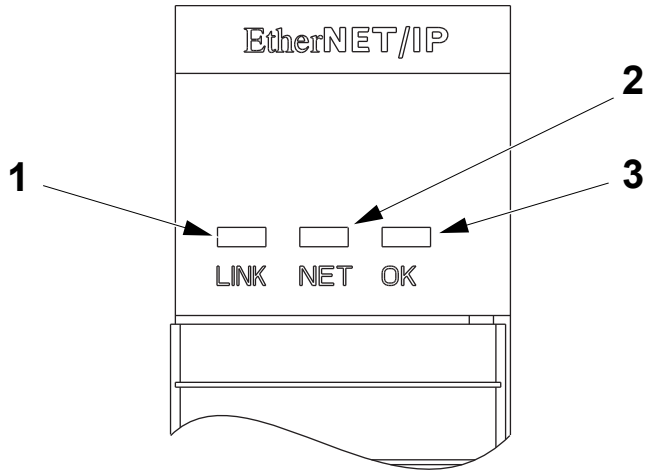

1 LINK LED
2 NET LED
3 OK LED

9.1.4 Digital I/O Modules

9.1.4-1 Digital I/O Modules - Change

Machine Status	Mains Power OFF Air OFF Steam ON Water OFF
SPC Reference	90459-6556 90459-2474 90600-4033

Note! Before removing the module from the chassis, it is necessary to remove the removable terminal block (1) from the module.

a) Unlock the locking tab (2) at the top of the module.

b) Open the door of the removable terminal block (1) and pull the removable terminal block (1) off the module.

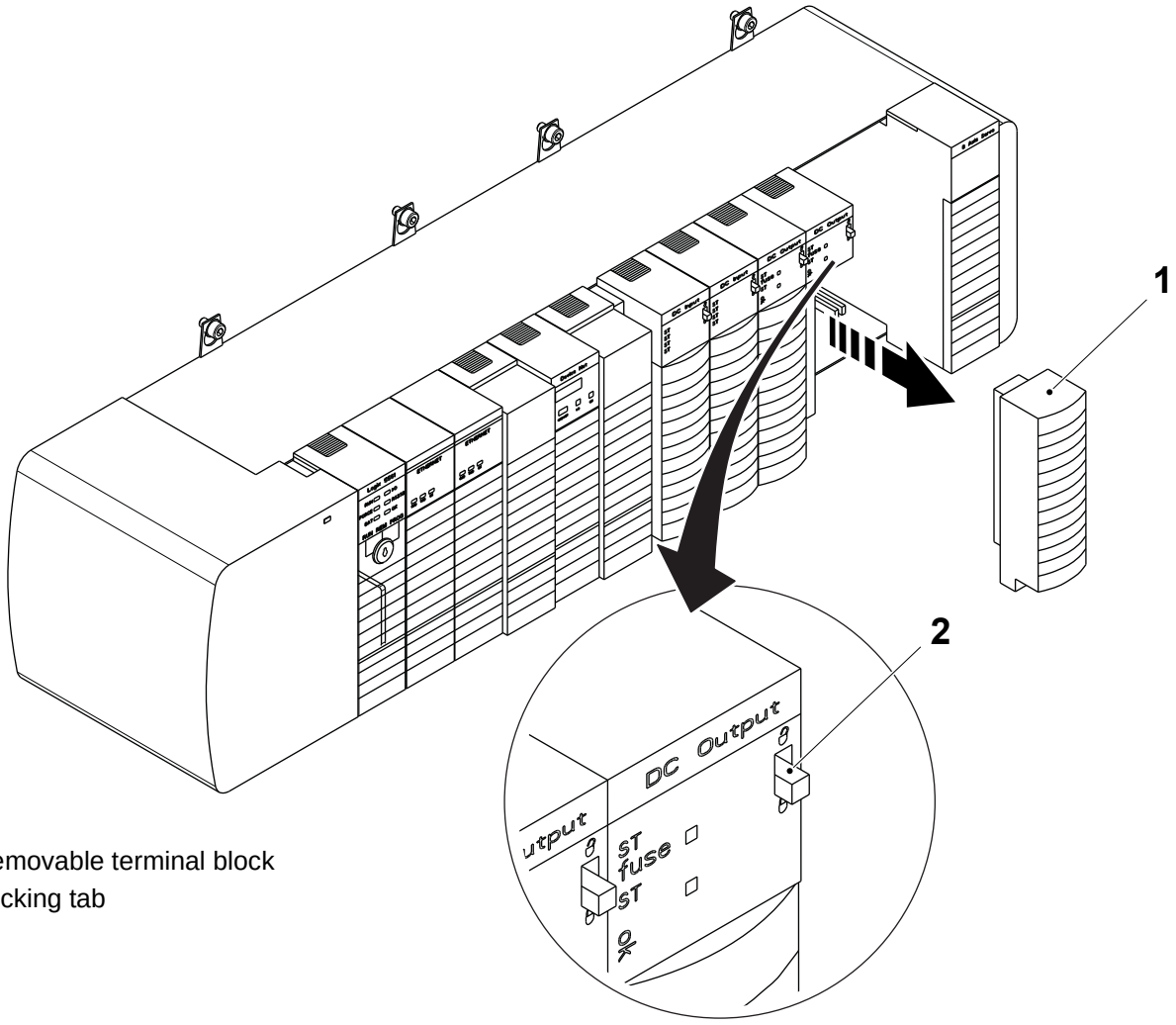

1 Removable terminal block
2 Locking tab

(Cont'd)

(Cont'd)

c) Press the locking tabs on the top and the bottom of the Digital Input/ Output module (3).

d) Slide the Digital Input/Output module (3) out of the chassis.

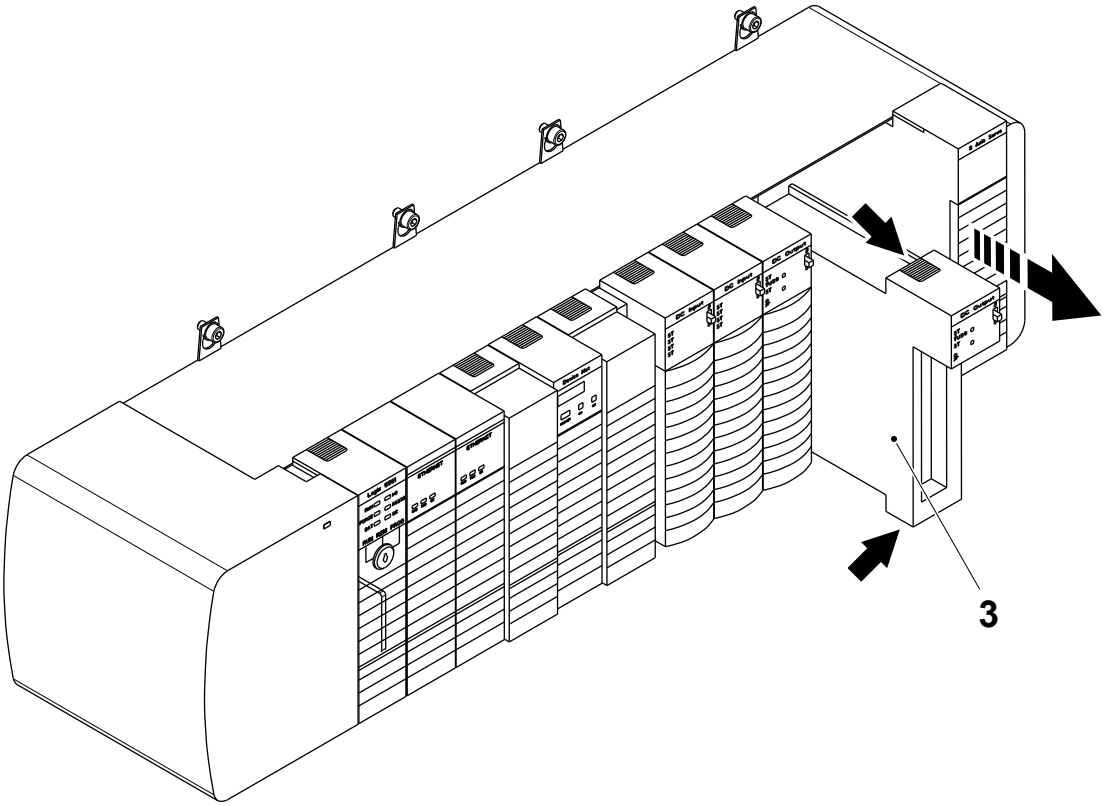

3 Digital I/O module

(Cont'd)

(Cont'd)

e) Align the new Digital Input/Output module (3) with the top and the bottom guides in the chassis.

f) Slide the Digital Input/Output module (3) into the chassis. Make sure it is flush with the other modules and the top and bottom latches are engaged.

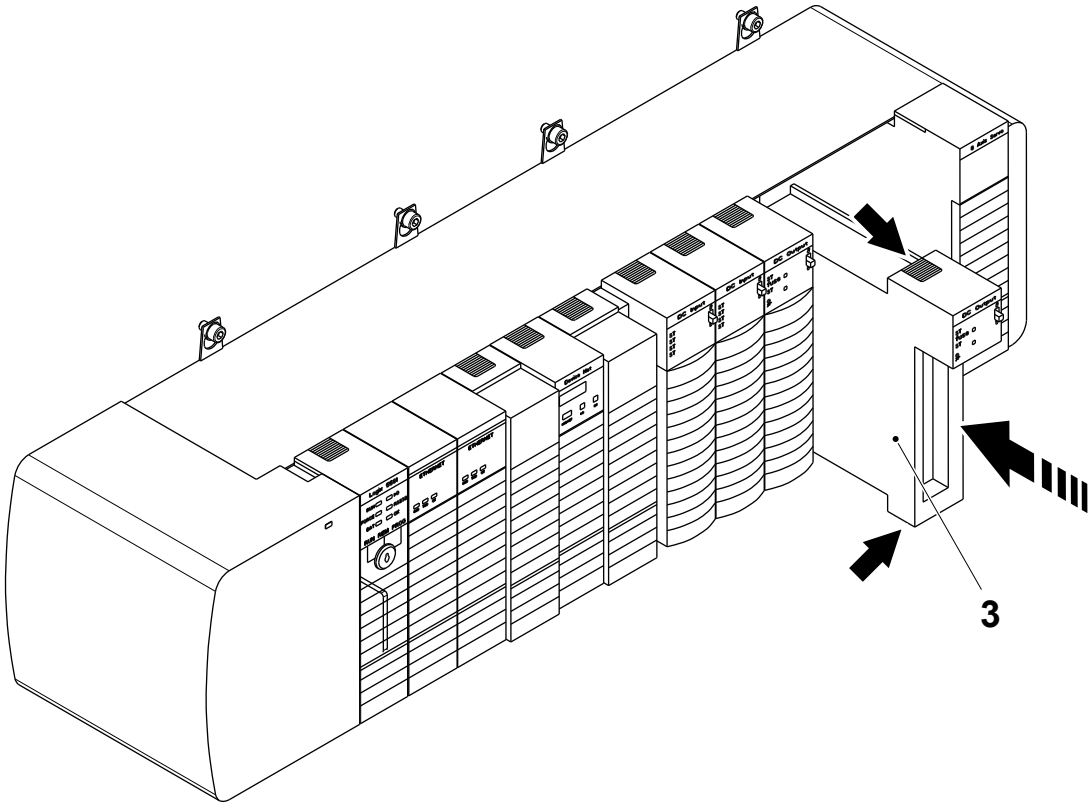

3 Digital I/O module

(Cont'd)

(Cont'd)

g) If necessary, change the removable terminal block (1) as follows:
   - Wire the terminal plate (4) according to the EM.
   - Align the grooves at the bottom of each side of the housing (5) with the side edges of the terminal plate (4).
   - Slide the terminal plate (4) into the housing (5) until it snaps into place.

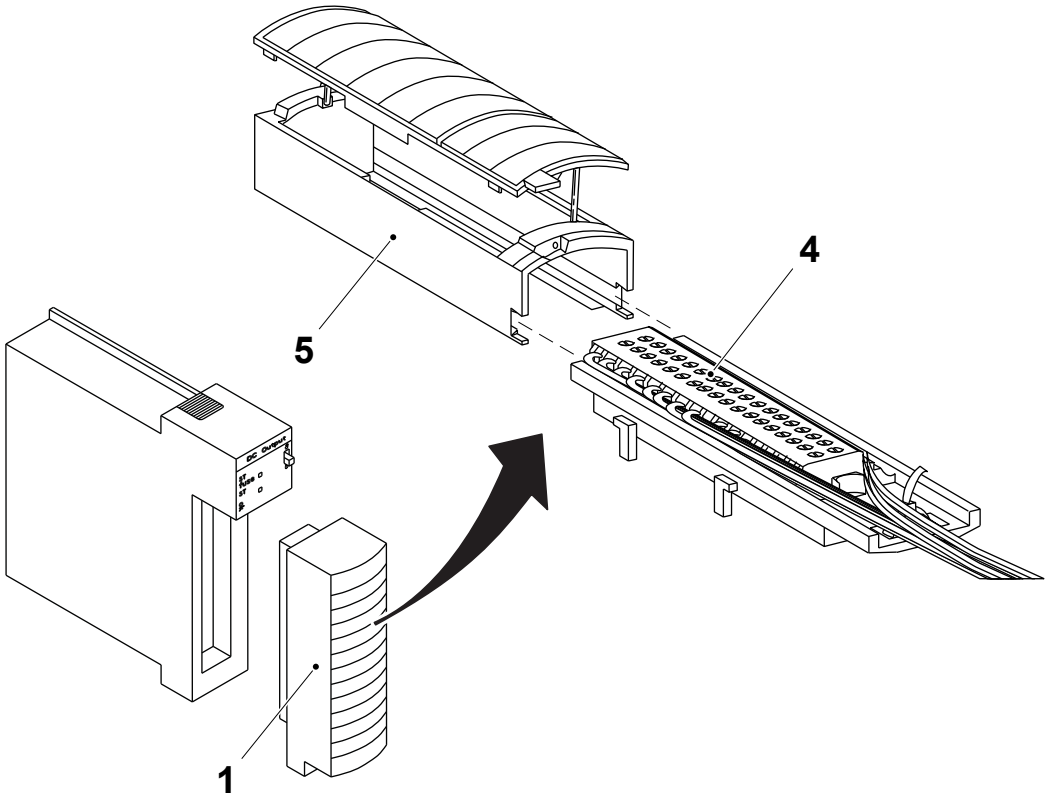

1 Removable terminal block
4 Terminal plate
5 Housing

(Cont'd)

(Cont'd)

h) Align the top, bottom and left side guides of the removable terminal block (1) with the guides on the module (3).

i) Press quickly and evenly to seat the removable terminal block (1) on the module (3) until the latches snap into place.

j) Slide the locking tab (2) down to lock the removable terminal block (1) onto the module (3).

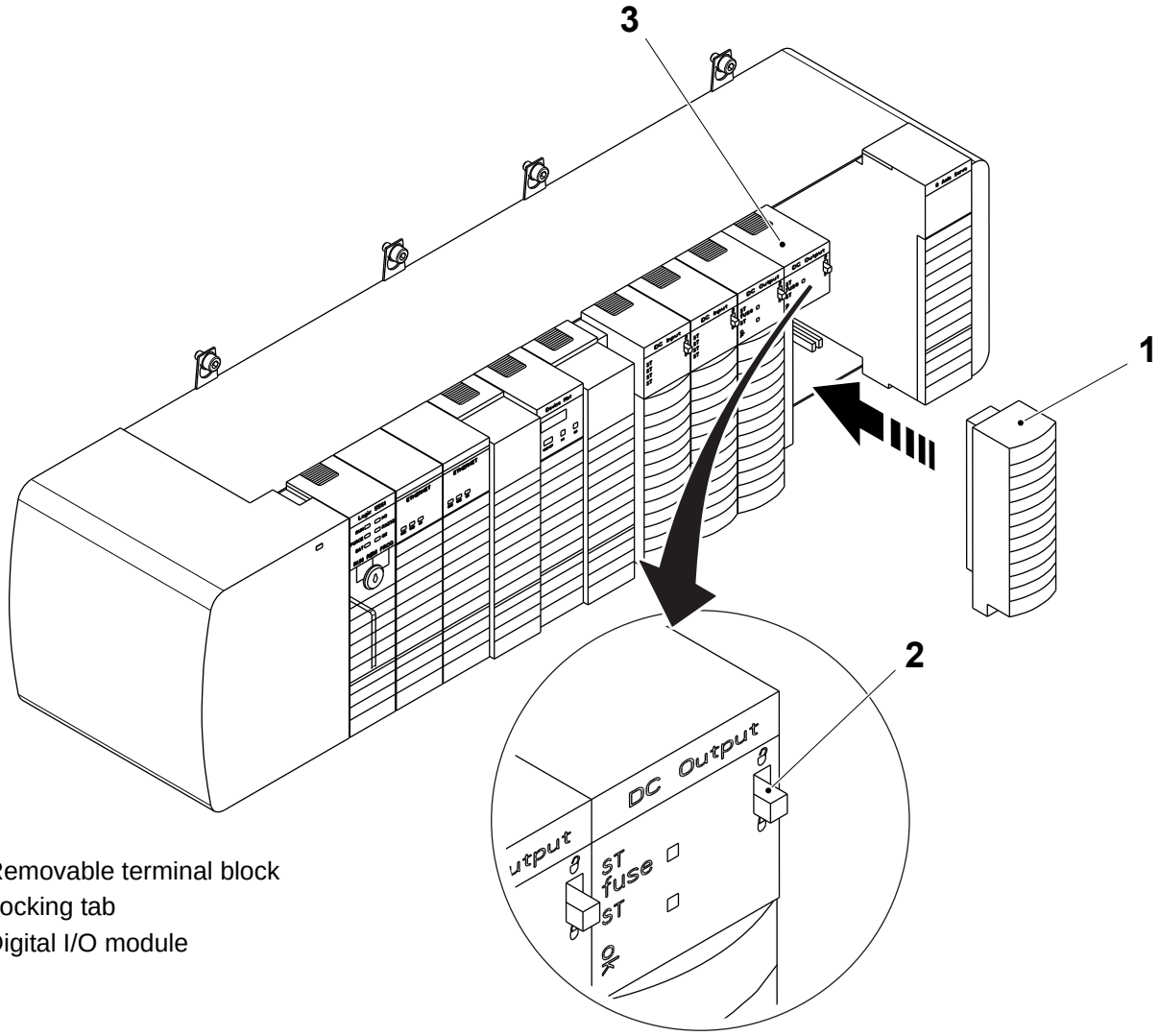

1 Removable terminal block
2 Locking tab
3 Digital I/O module

9.1.4-2 Digital I/O Modules - LED Description

Machine Status	Mains Power OFF Air OFF Steam ON Water OFF
SPC Reference	90459-6556 90459-2474 90600-4033

Each ControlLogix diagnostic digital I/O module has an LED indicator on the front of the module that allows you to check the module health and operational status of a module. The LED displays vary for each module.

The following status can be checked with the LED indicators:

- **I/O status** - This yellow display indicates the ON/OFF state of the field device.
- **Module status** - This green display indicates the module communication status.
- **Fuse status** - This display is only found on electronically fused modules and indicates the state of the module fuse.

(Cont'd)

(Cont'd)

Input Module 1756-IB/32 LED Description

LED indicators	Colour	Description
OK (1)	Green light	The inputs are being multicast and in normal operating state.
	Flashing green light	The module has passed internal diagnostics but is not multicasting inputs or it is inhibited.
	Flashing red light	Previously established communication has timed out. Check controller and chassis communication.
	Red light	The module must bereplaced.
I/O STATE (2)	Yellow	The input is active.

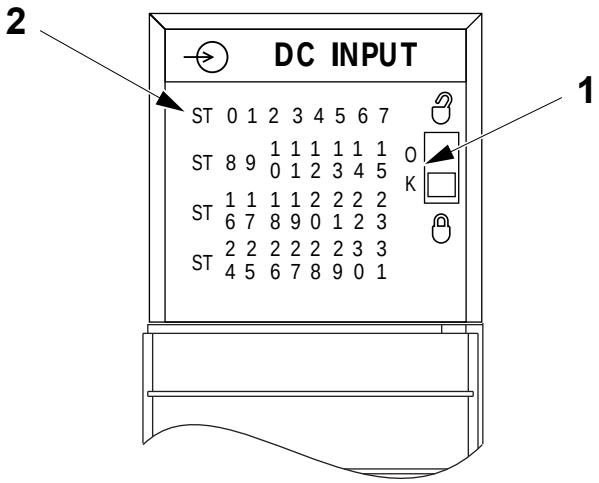

1 Module status
2 I/O status

(Cont'd)

(Cont'd)

Input Module 1756-OB16E and OB16IS LED Description

LED indicators	Colour	Description
OK (1)	Steady green light	The outputs are actively being controlled by a system processor.
	Flashing green light	The module has passed internal diagnostics but is not multicasting inputs or it is inhibited.
	Flashing red light	Previously established communication has timed out. Check controller and chassis communication.
	Steady red light	The module must bereplaced.
I/O STATE (2)	Yellow	The output is active.
I/O FUSE (3)	Red	A short overload fault has occurred for a point in this group. Check wiring for short overload. Check the module properties in RSLogix 5000 and reset the fuse.

Output module 1756-OB16E

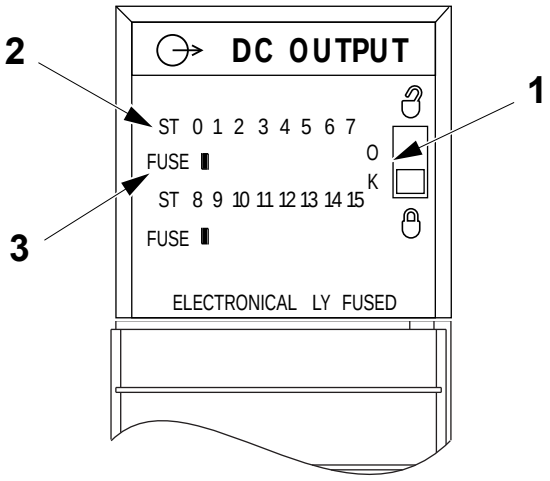

Output module 1756-OB16IS

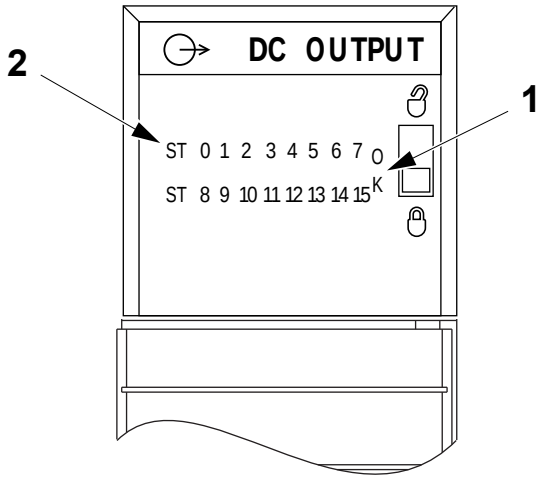

1 Module status
2 I/O status
3 Fuse status

9.2 Distributed I/O

SPC Reference	2840947-0100

9.2-1 Distributed I/O - Description

SPC Reference	2840947-0100

Communication between all the distributed I/O devices in the filling machine is provided through a DeviceNet network. DeviceNet is a bi-directional communications network which allows communication between the PLC module and distributed I/O devices such as sensors and actuators.

(Cont'd)

(Cont'd)

The DeviceNet network on the filling machine utilizes a master and slave architecture and the physical network is composed of a trunk line (1) with multiple drops (2). Each drop terminates with a slave node (3) and each sensor or actuator in the filling machine is connected to a node. The DeviceNet master (4) is located in the PLC rack serving as a intermediary allowing direct communication with the CPU module. For filling machines fitted with a pre-applicator unit, the DeviceNet master in the PLC rack of the pre-applicator electrical cabinet acts as both a slave node to the DeviceNet master located in the filling machine PLC rack and also as a DeviceNet master to the slave nodes in the pre-applicator unit.

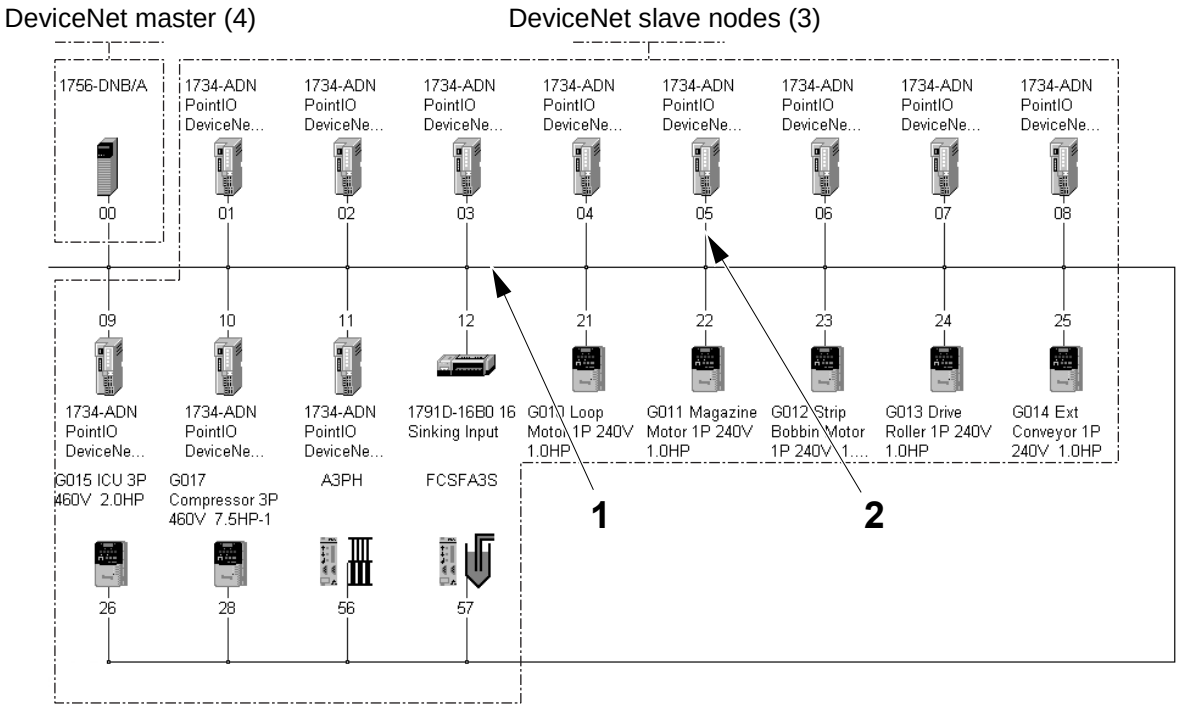

1 Trunk line
2 Drop line
3 Slave node
4 DeviceNet master

9.2.1 DeviceNet Scanner Module

9.2.1-1 DeviceNet Scanner Module - Change

Machine Status	Mains Power ON Air OFF Steam ON Water OFF
Special Equipment	PC with CD Drive Ethernet communication cable
SPC Reference	90459-2479

Note! The firmware revision of the new DeviceNet scanner module maybe equal to, or newer than the firmware revision of the old DeviceNet scanner module. Using a newer firmware revision may create errors when going online, such as unrecognized device or device mismatch if the PC does not contain the very latest EDS files.

Preparation

Before changing the DeviceNet scanner module:

- Use the RSLinx Classic program to verify and record the firmware version of the DeviceNet scanner module.
- Use the RSLogix program to select `PROGRAM MODE` from the `COMMUNICATION` menu.
- Use the Flow Chart of Procedures for Changing the DeviceNet Scanner Module on the next page to determine which procedures must be performed and their correct sequence.

(Cont'd)

(Cont'd)

Flow Chart of Procedures for Changing the DeviceNet Scanner Module

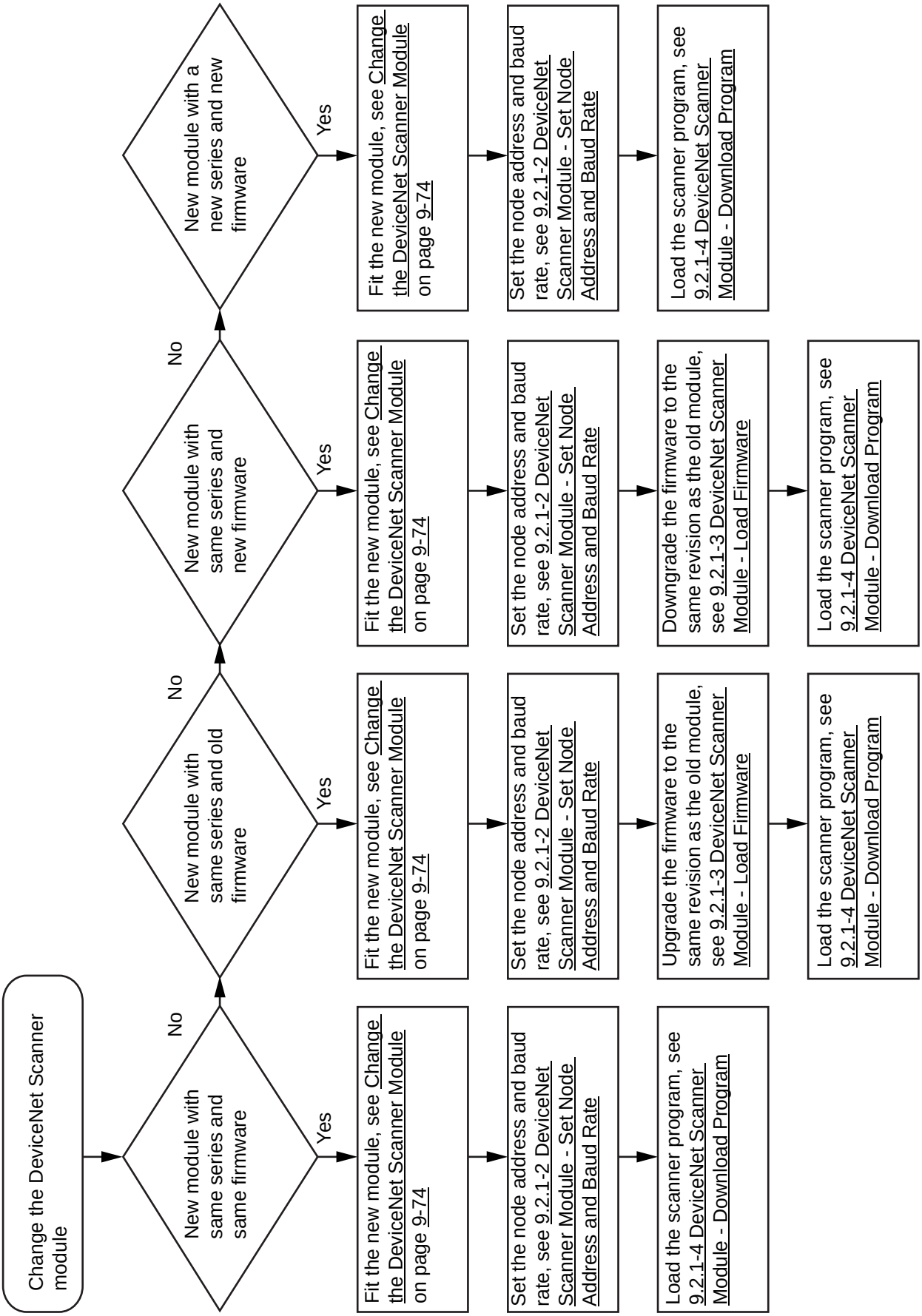

(Cont'd)

(Cont'd)

Change the DeviceNet Scanner Module

a) Remove the cable connection (1) from the DeviceNet scanner module.

b) Press the locking tabs on the top and the bottom of the DeviceNet scanner module.

c) Slide the DeviceNet scanner module out of the chassis.

A DeviceNet scanner module series A/B is shown

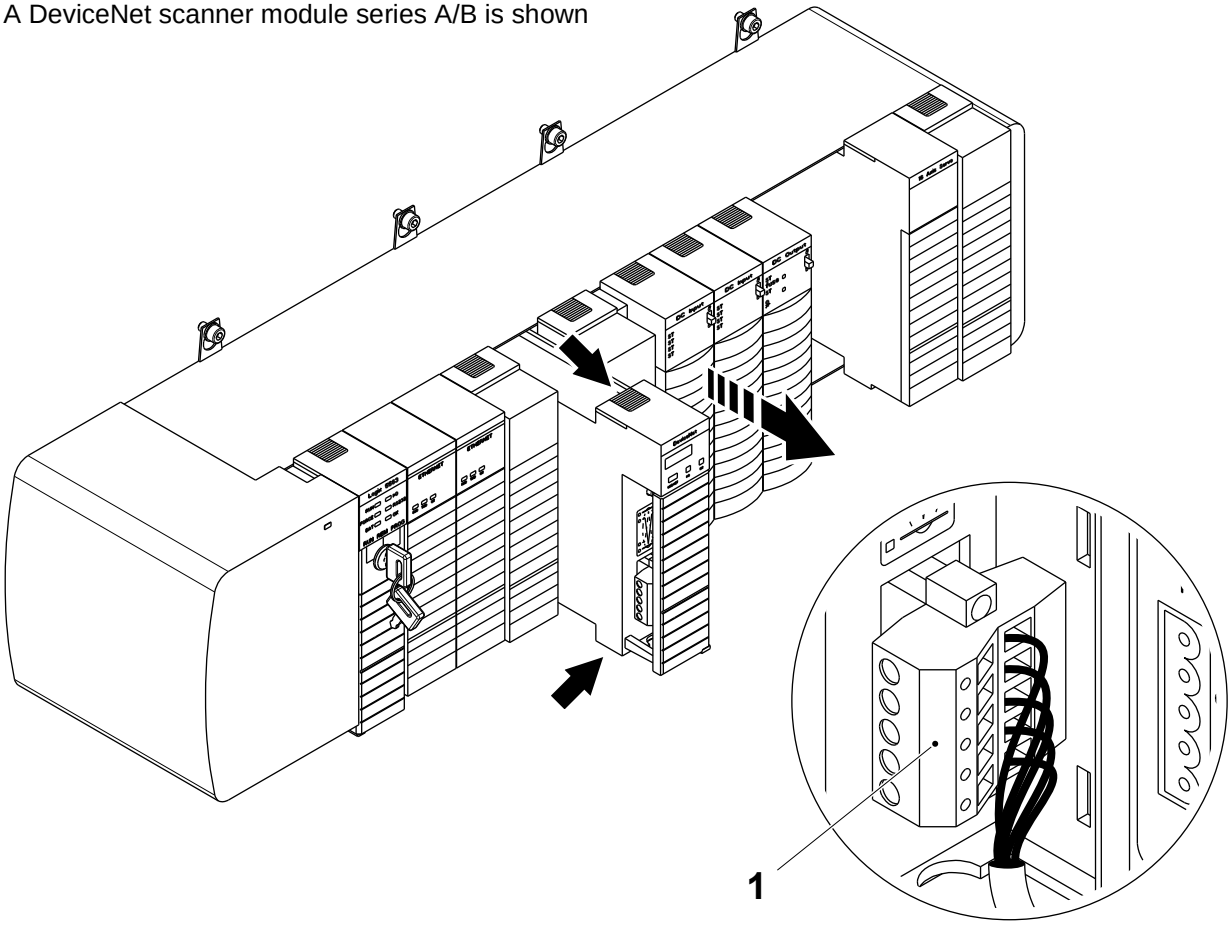

1 Cable connection

(Cont'd)

(Cont'd)

Note! For DeviceNet scanner module series C, the node address and baud rate must be set before fitting the module, see 9.2.1-2 DeviceNet Scanner Module - Set Node Address and Baud Rate

d) Align the new DeviceNet scanner module with the top and the bottom guides in the chassis.

e) Slide the DeviceNet scanner module into the chassis. Make sure it is flush with the other modules and the top and bottom latches are engaged.

f) Fit the cable connection (1) to the DeviceNet scanner module. If necessary, see the illustration or the EM for wiring of the cable connection (1).

A DeviceNet scanner module series A/B is shown

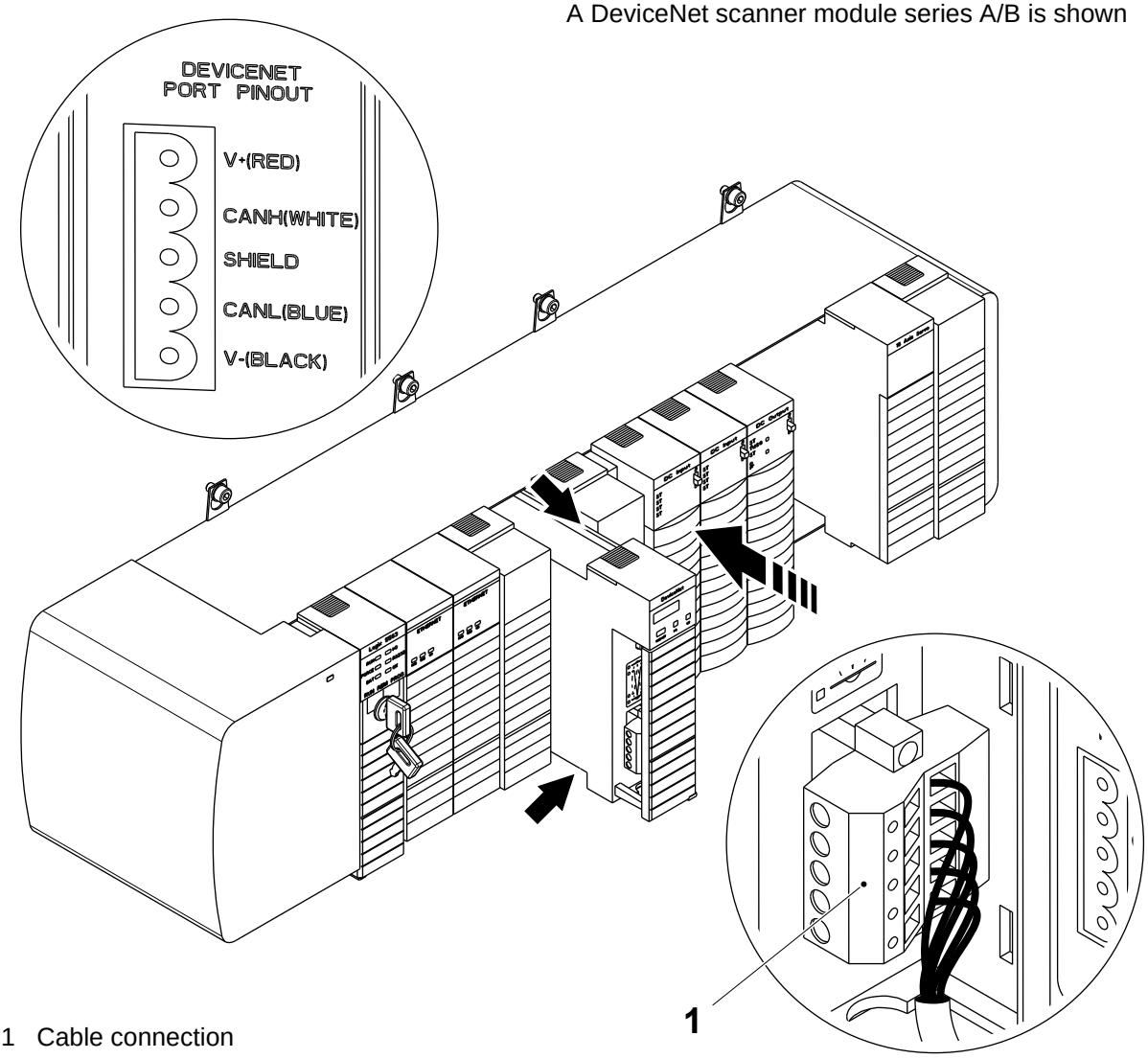

1 Cable connection

(Cont'd)

(Cont'd)

g) Turn the mains power switch to the ON position.

h) Check the status of the DeviceNet scanner module LED's according to the table in section 9.2.1-5 DeviceNet Scanner Module - LED Description.

i) Continue with the necessary procedures as described in Flow Chart of Procedures for Changing the DeviceNet Scanner Module on page 9-92.

9.2.1-2 DeviceNet Scanner Module - Set Node Address and Baud Rate

Machine Status	Mains Power ON Air OFF Steam ON Water OFF
SPC Reference	90459-2479 (Series A/B) 90600-4543 (Series C) 90600-5840 (Series D)

Use the illustration below to identify the series of the DeviceNet Scanner module installed on the machine, then follow the setting procedure for the module:

- for series A/B modules, see DeviceNet Scanner Module Series A/B on page 9-78
- for series C/D modules, see DeviceNet Scanner Module Series C/D on page 9-79

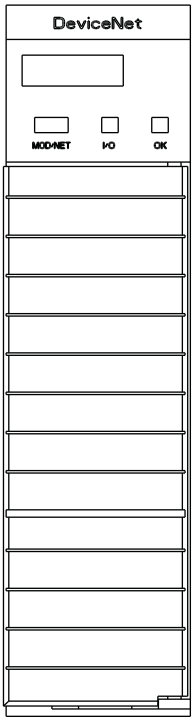

Module 1756 DNB Series A/B

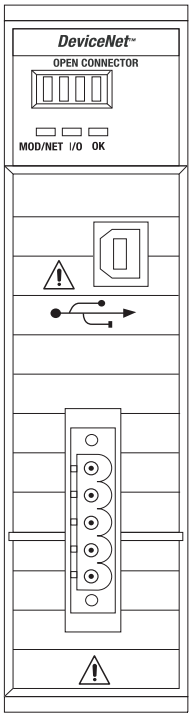

Module 1756 DNB Series C/D

(Cont'd)

(Cont'd)

DeviceNet Scanner Module Series A/B

Note! The push button (1) has two functions; with the network cable connected, the push button (1) is used to set the node address and with the network cable disconnected, the push button (1) is used to set the baud rate. If a fault is made during the setting procedure, remove the module from the chassis, then fit the module back to the chassis and repeat the setting procedure.

a) Make sure that the 24 V on the network cable is connected.

b) Push the button (1) and release it when the display shows 00 to set the node address.

c) Disconnect the network cable with the 24 V.

d) Push the button (1) and release it when the display shows 500 to set the baud rate.

e) Connect the network cable with the 24 V.

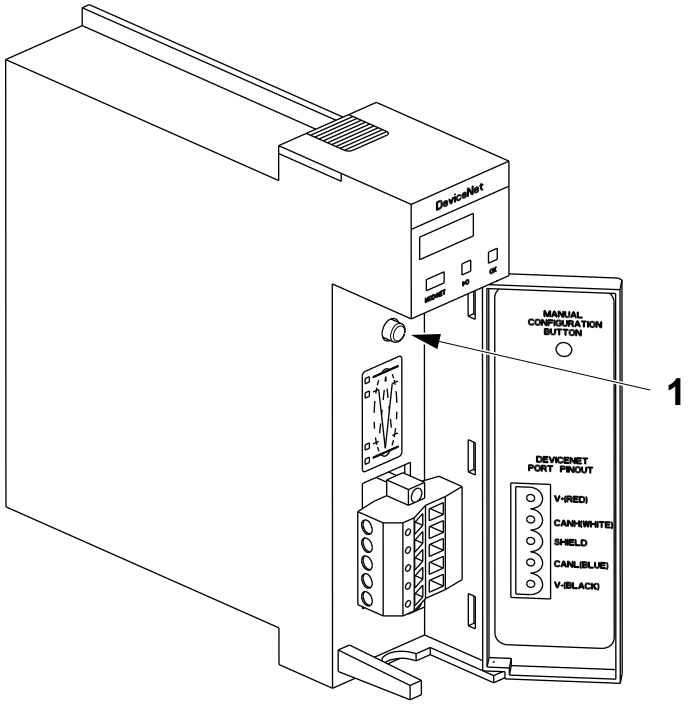

1 Push button

(Cont'd)

(Cont'd)

DeviceNet Scanner Module Series C/D

Set the switches (1), (2) and (3) according to the table below.

Switch Number	Setting Position	Note
1	2	Sets the baud rate to 500 Kbps
2	0	Sets the first digit of the node address
3	0	Sets the second digit of the node address

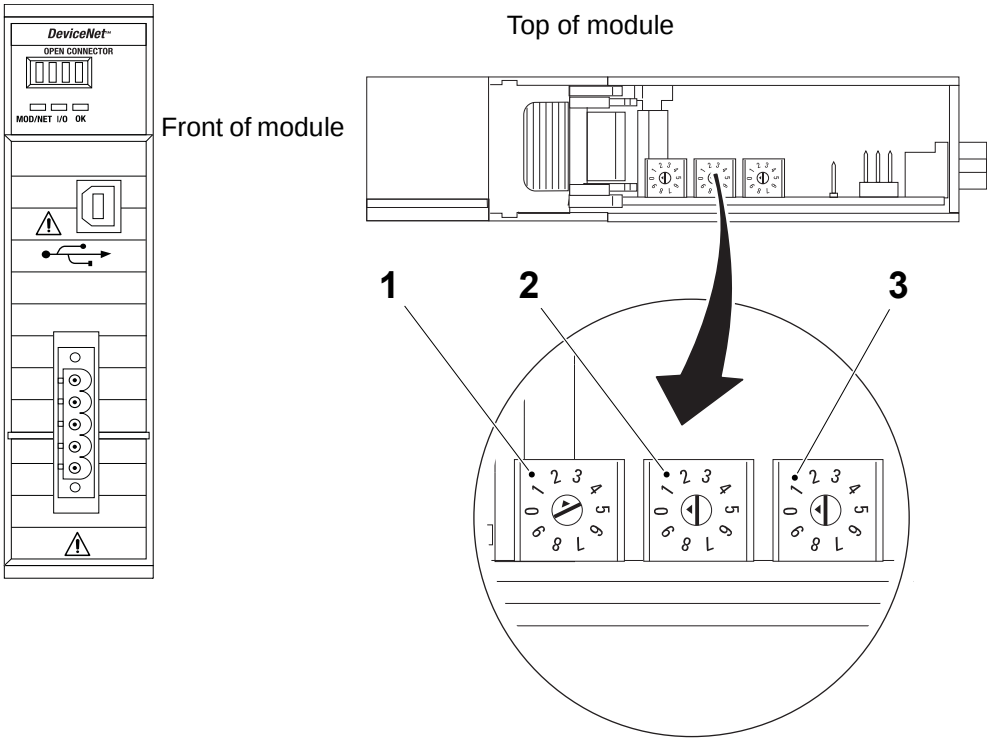

1 Switch for baud rate
2 Switch for first node digit
3 Switch for second node digit

9.2.1-3 DeviceNet Scanner Module - Load Firmware

Machine Status	Mains Power ON Air OFF Steam ON Water OFF
Special Equipment	PC with CD Drive Ethernet communication cable
SPC Reference	90459-2479 (Series A/B) 90600-4543 (Series C) 90600-5840 (Series D)

Follow the procedure described in 9.1.2-2 CPU Module - Load Firmware to load the firmware for the DeviceNet scanner module.

9.2.1-4 DeviceNet Scanner Module - Download Program

Machine Status	Mains Power ON Air OFF Steam ON Water OFF
Special Equipment	PC with CD Drive Ethernet communication cable
SPC Reference	90459-2479

Note! To connect to the CPU module using an ethernet communication cable, the PC must first be configured for this type of communication. See 9.1.1-1 Preparation for PLC Communication - Configure PC Network Communications and 9.1.1-2 Preparations for PLC Communication - Configure RSLinx for more details.

(Cont'd)

(Cont'd)

a) Set the address and baud rate for the DeviceNet scanner module, see 9.2.1-2 DeviceNet Scanner Module - Set Node Address and Baud Rate.

b) Connect the ethernet communication cable between a vacant connection port on the ethernet switch (1) and the PC (2).

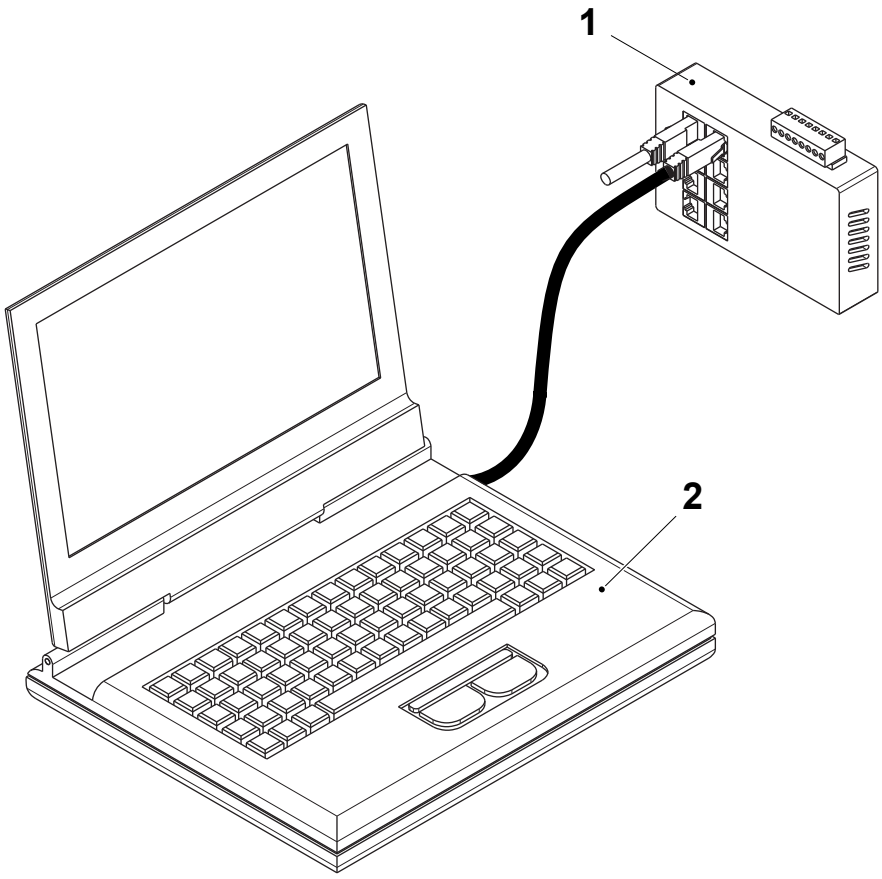

1 Ethernet switch
2 PC

(Cont'd)

(Cont'd)

Note! The CPU module must not be in RUN position for the program load.

c) Turn the key on the CPU module to the PROG mode position.

d) Insert the CD marked Softw_CD_A3_Finto the PC CD drive.

e) Browse to the CD drive and copy the compressed program folder to the PC desktop and extract the program file.

f) Double click on the program file to automatically start the RSNetWorx program and to open the program file.

g) Select the NETWORK menu (3) and then select ONLINE (4).

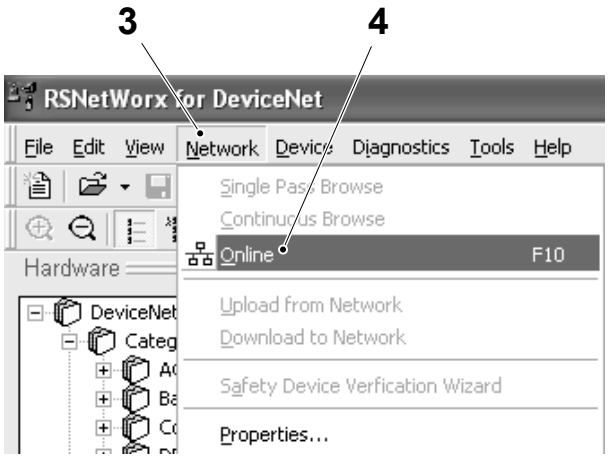

3 Network menu
4 Online

(Cont'd)

(Cont'd)

h) Highlight the DeviceNet scanner (5) and right click the PC mouse, select `DOWNLOAD TO DEVICE` (6) to start the download.

i) When the dialogue box (7) appears, select the `YES` button (8) to continue.

j) When the download is complete, close the RSNetWorx program and turn the key on the CPU module to the REM mode position.

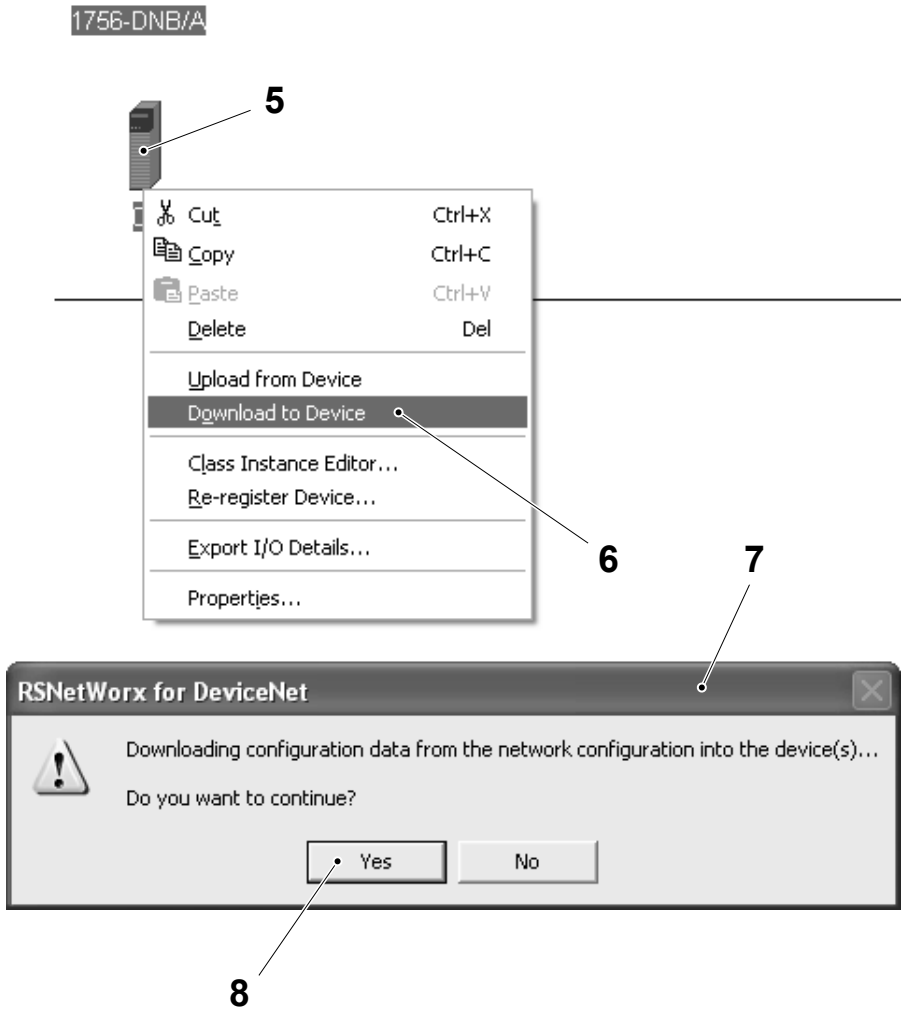

5 DeviceNet scanner
6 Download to device
7 Dialogue box
8 Yes button

9.2.1-5 DeviceNet Scanner Module - LED Description

Machine Status	Mains Power ON Air OFF Steam ON Water OFF
SPC Reference	90459-2479

LED	Colour	Description
MOD/NET (1)	Off	Scanner is not online. The scanner has not completed the Dup_MAC_ID test or the device is not powered
	Solid green	Scanner is operating normally and is online with connections established
	Flashing green	Scanner is operating normally and is online but with NO connections established. The Scanner has passed the Dup_MAC_ID test but has NO established connections to other Nodes
	Flashing red	Recoverable fault and/or one or more I/O connection in timed out state
	Solid red	Scanner has an unrecoverable fault and made need to be replaced. Failed communication device. The Scanner has detected an error (duplicate MAC ID or bus-off) that has rendered it incapable of communicating on the network

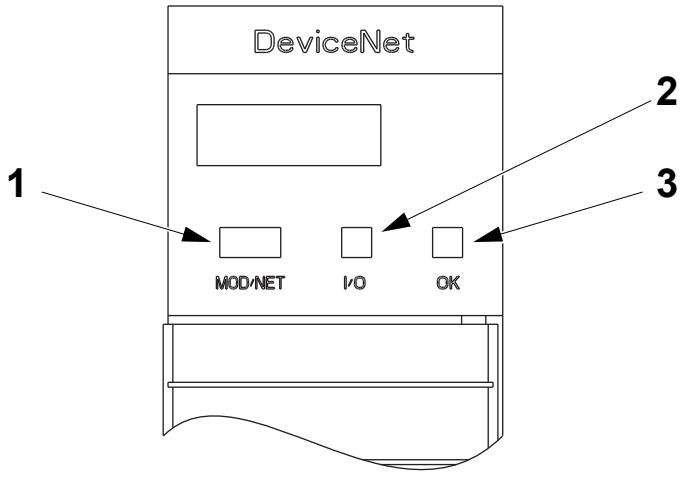

1 MOD/NET LED
2 I/O LED
3 OK LED

(Cont'd)

(Cont'd)

LED	Colour	Description
I/O (2)	Off	Scanner is not online
	Solid green	Scanner is in RUN mode, outputs are under control and inputs are being consumed
	Flashing green	Scanner is in IDLE mode, outputs are not under control and inputs are being consumed
OK (3)	Off	No power applied to the scanner. Apply chassis power. Verify module is completely inserted into chassis and backplane
	Solid green	Scanner is operating normally. The scanner is connected to at least one CPU module
	Flashing green	Stand-by mode. The scanner is operating correctly, however no CPU module is controlling the scanner. Verify the scanner is correctly configured in the CPU module I/O configuration
	Solid red	The scanner has an unrecoverable fault; change the device or the scanner is in self test during power up; wait until self test has finished

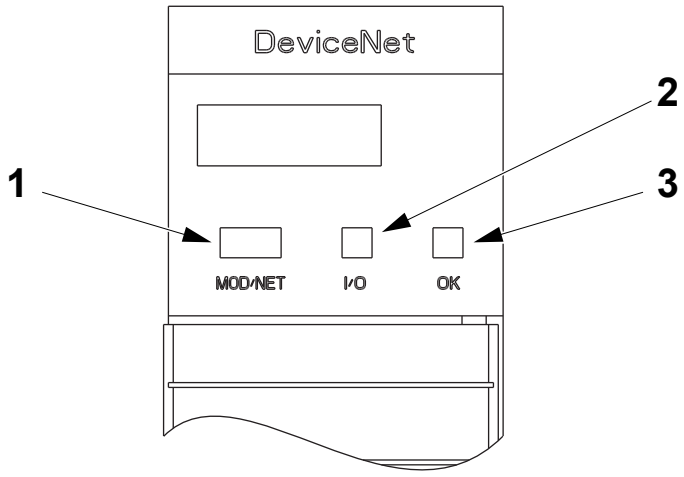

1 MOD/NET LED
2 I/O LED
3 OK LED

9.2.1-6 DeviceNet Scanner Module - Error Codes

Machine Status	Mains Power ON Air OFF Steam ON Water OFF
Special Equipment	PC with CD Drive Ethernet communication cable
SPC Reference	90459-2479

During normal operation the display (1) toggles between displaying the node address of the DeviceNet scanner module and the current operating mode.

When an error occurs, the display (1) toggles between displaying the node address of the DeviceNet scanner module followed by the node address of the device from where the error originated and finally the error code.

Refer to the error codes table below to identify error code and the corrective actions.

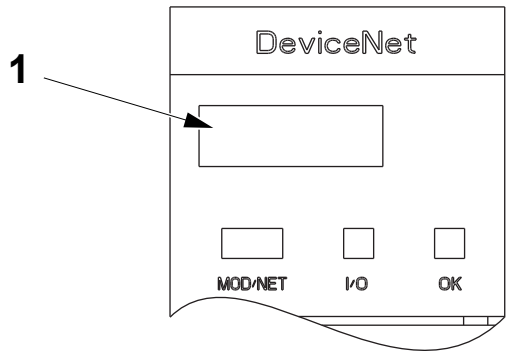

1 Display

(Cont'd)

(Cont'd)

Error code	Description	Action
70	Scanner failed Duplicate Node Address check. The display shows the message “Duplicate Node Address”	Change the scanner address to the correct node address A#00
71	Illegal data in scan list table (node number alternately flashes)	Reconfigure the scan list table and remove any illegal data
72	Slave device stopped communicating (node number alternately flashes)	Inspect the slave devices and verify the connections
73	Device’s identity information does not match electronic key in scan list table entry (node number alternately flashes)	Verify that the correct device is at this node number. Make sure that the device at the scrolling node address matches the desired electronic key (vendor, product code, product type, etc.)
74	Data overrun on port detected	Modify your configuration and check for invalid data. Check network communication traffic
75	No traffic detected on network	Check the network configuration
76	No direct network traffic for scanner detected	None. The scanner hears other network communication but none for itself
77	Data size expected by the device does not match scan list entry (node number alternately flashes)	Reconfigure the module for the correct transmit and receive data sizes
78	Slave device in scan list table does not exist (node number alternately flashes)	Add the device to the network or delete the scan list entry for that device

(Cont'd)

(Cont'd)

Error code	Description	Action
79	Scanner has failed to transmit a message	Make sure the module is connected to the network. Check for disconnected cables
80	Scanner is in IDLE mode	Put the module in run mode. Enable RUN bit in Module Command Register
81	Scanner is in FAULT mode	Check Module Command Register for FAULT bit set
82	Error detected in sequence of fragmented I/O messages from device (node number alternately flashes)	Check scan list table entry for slave device
83	Slave device is returning error responses when scanner attempts to communicate with it (node number alternately flashes)	Check accuracy of scan list table entry. Check slave device configuration. Slave device may be in another master's scan list. Reboot slave device
84	Scanner is initializing the DeviceNet network.	None. This code clears itself once scanner attempts to initialize all devices on the network
85	Data size was incorrect for this device at runtime.	Slave device is transmitting incorrect length data. Try replacing slave device
86	Device is producing zero length data (idle state) while scanner is in RUN mode.	Check device configuration and slave node status
90	User has disabled communication port.	Check Module Command Register for DISABLE bit set
91	Bus-off condition detected con comm. port. Scanner is detecting communication errors.	Check DeviceNet connections and physical media integrity. Check system for failed slave devices or other possible sources of network interference

(Cont'd)

(Cont'd)

Error code	Description	Action
92	No network power detected on communication port.	Provide network power. Make sure that module drop cable is proving network power to scanner communication port
95	Application FLASH update in progress.	None. Do not disconnect the module while application flash is in progress. If this is done existing data in the scanner's memory will be lost.
97	Scanner halted by user command.	Check Module Command Register for HALT bit set
98	General firmware error.	Replace module
A#00 to A#63	Normal operation. The numeric display matches the scanners node address on the DeviceNet network.	No action
IDLE	Scanner is in IDLE mode.	Put the CPU module in RUN mode. Enable RUN bit in Module Command Register
Network Disabled	User has disabled communication port.	Reconfigure the module. Check Module Command Register
No Network Power	No network power detected on communication port.	Provide network power. Make sure that module drop cable is proving network power to scanner communication port
NoRX	No scan list is active in the module or no messages have been received by the scanner.	Enter a scan list. Check DeviceNet connection on front of module
NoTX	No direct network traffic for scanner device.	None. The scanner hears other network communication

9.2.2 DeviceNet Point I/O

9.2.2.1 DeviceNet Point I/O Adapter

9.2.2.1-1 DeviceNet Point I/O Adapter - Change

Machine Status	Mains Power ON Air OFF Steam ON Water OFF
Special Equipment	PC with CD Drive Ethernet communication cable
SPC Reference	90459-2494

Note! The firmware revision of the new DeviceNet Point I/O adapter maybe equal to, or newer than the firmware revision of the old DeviceNet Point I/O adapter. Using a newer firmware revision may create errors when going online, such as unrecognized device or device mismatch if the PC does not contain the very latest EDS files.

Preparation

Before changing the DeviceNet Point I/O adapter:

- Use the RSLinx Classic program to verify and record the firmware version of the DeviceNet Point I/O adapter.
- Verify and record the node address of the DeviceNet Point I/O adapter.
- Use the Flow Chart of Procedures for Changing the DeviceNet Point I/O Adapter on the next page to determine which procedures must be performed and their correct sequence.

(Cont'd)

(Cont'd)

Flow Chart of Procedures for Changing the DeviceNet Point I/O Adapter

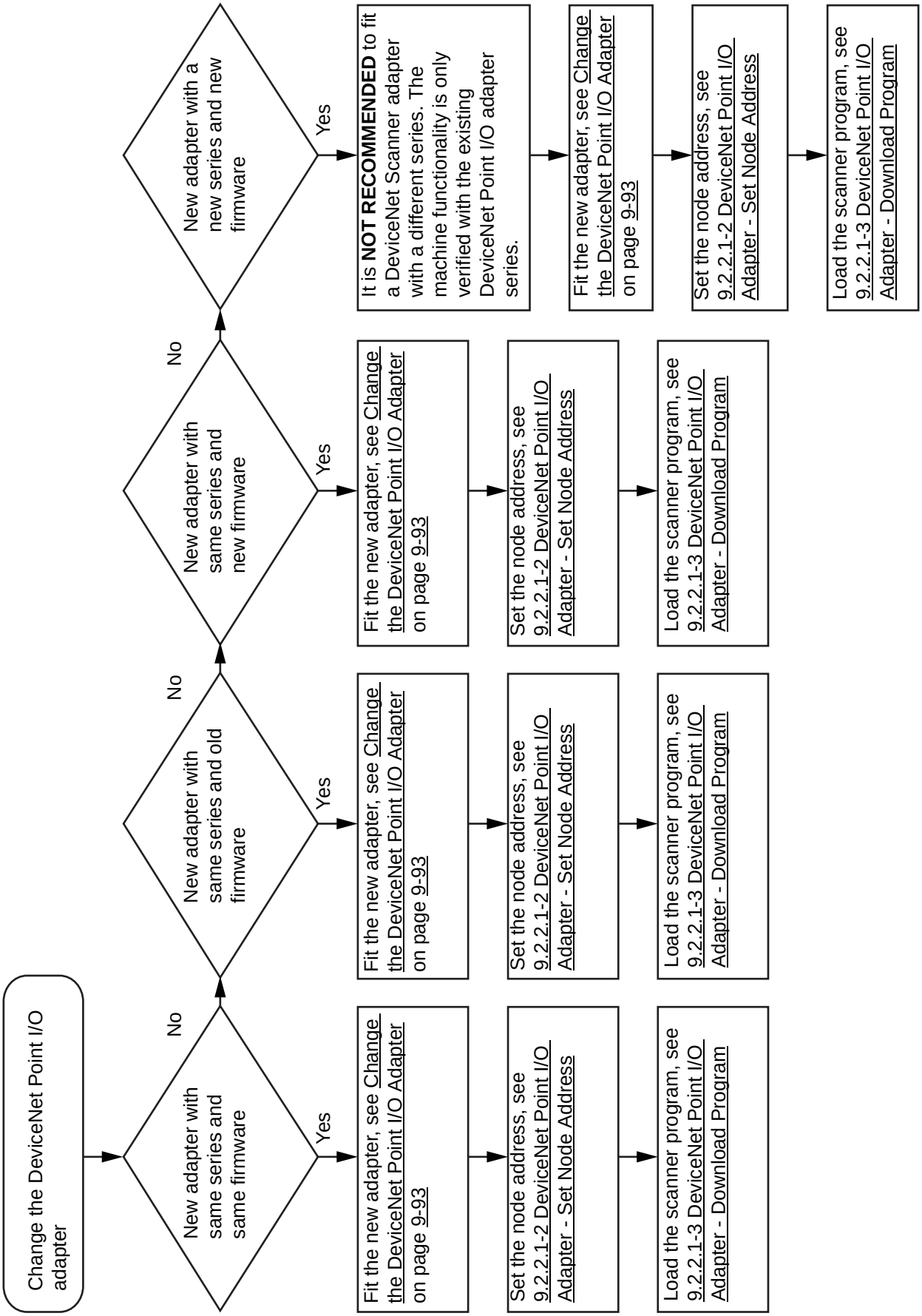

(Cont'd)

(Cont'd)

Change the DeviceNet Point I/O Adapter

a) Remove the power connection (1).

b) Remove the cable connection (2).

c) Remove the first I/O module (3).

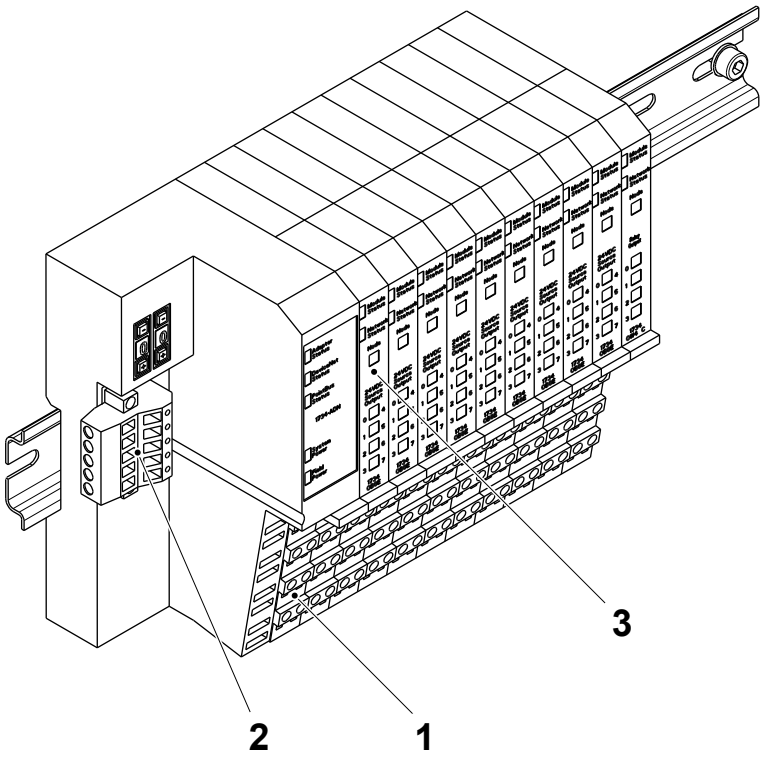

1 Power connection
2 Cable connection
3 I/O module

(Cont'd)

(Cont'd)

d) Turn the screw (4) to release the Point I/O adapter (5) and slide out the adapter.

e) Remove the blank connectors and the cover plate from the new adapter.

f) Fit the new adapter and turn the screw (4).

g) Fit the I/O module (3).

h) Fit the cable connection (2).

i) Fit the power connection (1).

j) Continue with the necessary procedures as described in Flow Chart of Procedures for Changing the DeviceNet Point I/O Adapter on page 9-92.

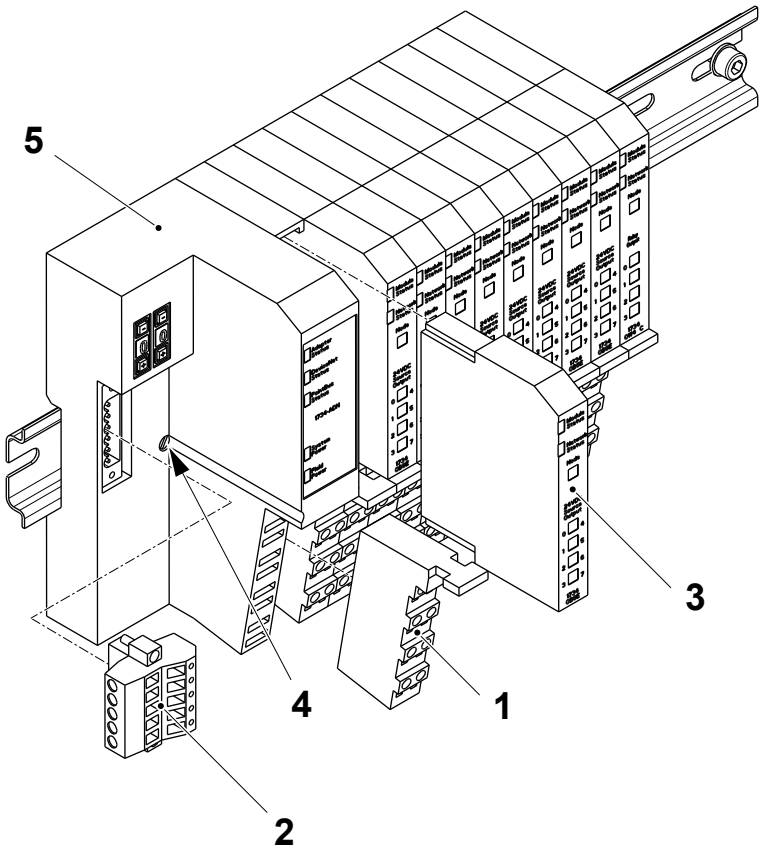

1 Power connection
2 Cable connection
3 I/O module
4 Screw
5 Point I/O adapter

9.2.2.1-2 DeviceNet Point I/O Adapter - Set Node Address

Machine Status	Mains Power ON Air OFF Steam ON Water OFF
SPC Reference	90459-2494

Note! For this type of adapter the baud rate is set automatically.

Note! Check the EM for the filling machine if the node address is unknown.

Use the push buttons (1) to set the node address for the Point I/O adapter.

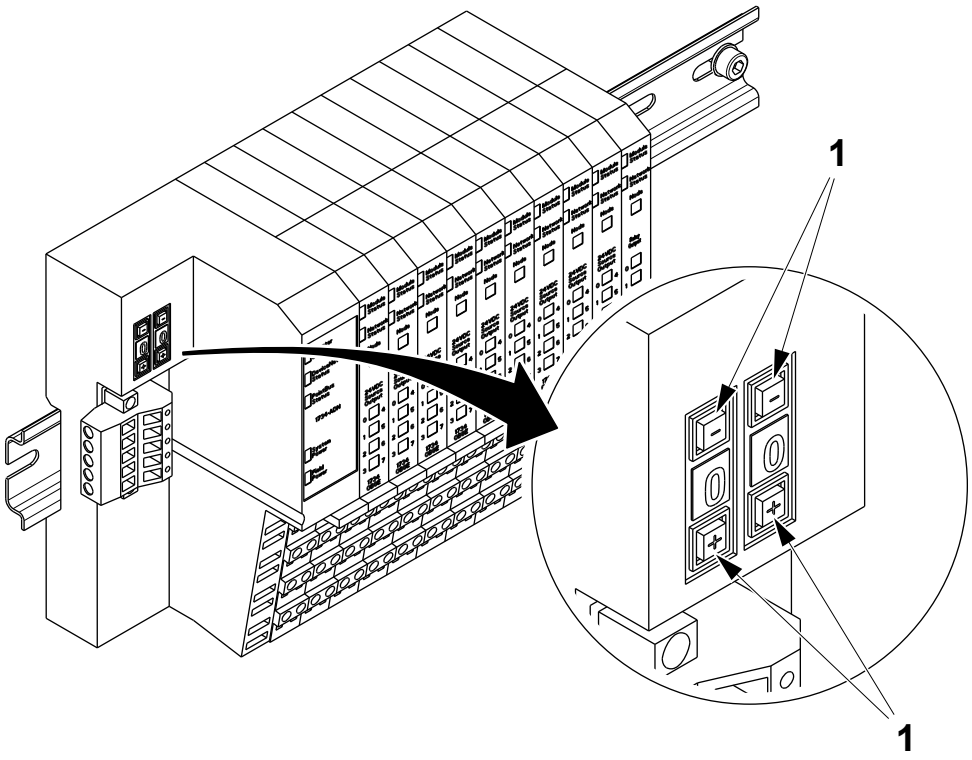

1 Push button

9.2.2.1-3 DeviceNet Point I/O Adapter - Download Program

Machine Status	Mains Power ON Air OFF Steam ON Water OFF
Special Equipment	PC with CD Drive Ethernet communication cable
SPC Reference	90459-2494

Note! To connect to the CPU module using an ethernet communication cable, the PC must first be configured for this type of communication. See 9.1.1-1 Preparation for PLC Communication - Configure PC Network Communications and 9.1.1-2 Preparations for PLC Communication - Configure RSLinx for more details.

(Cont'd)

(Cont'd)

a) Set the node address for the DeviceNet Point I/O adapter, see 9.2.2.1-2 DeviceNet Point I/O Adapter - Set Node Address.

b) Connect the ethernet communication cable between a vacant connection port on the ethernet switch (1) and the PC (2).

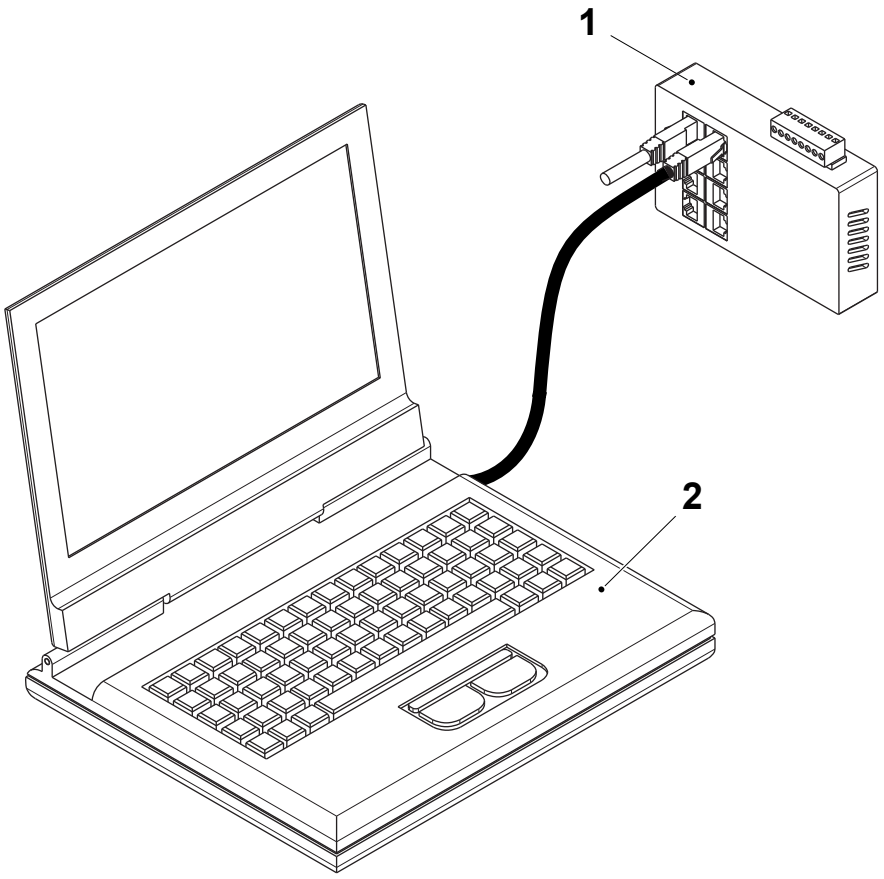

1 Ethernet switch
2 PC

(Cont'd)

(Cont'd)

Note! The CPU module must not be in RUN position for the program load.

c) Turn the key on the CPU module to the PROG mode position.

d) Insert the CD marked software CD Softw_CD_A3_Finto the PC CD drive.

e) Browse to the CD drive and copy the compressed program folder to the PC desktop and extract the program file.

f) Double click on the program file to automatically start the RSNetWorx program and to open the program file.

g) Select the `NETWORK` menu (3) and then select `ONLINE` (4).

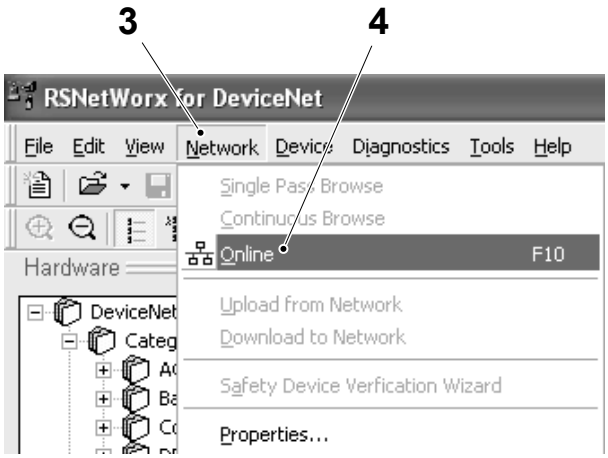

3 Network menu
4 Online

(Cont'd)

(Cont'd)

h) Highlight the `DeviceNet Point I/O adapter` (5) and right click the PC mouse, select `DOWNLOAD TO DEVICE` (6) to start the download.

i) When the dialogue box (7) appears, select the `YES` button (8) to continue.

j) When the download is complete, close the RSNetWorx program and turn the key on the CPU module to the REM mode position.

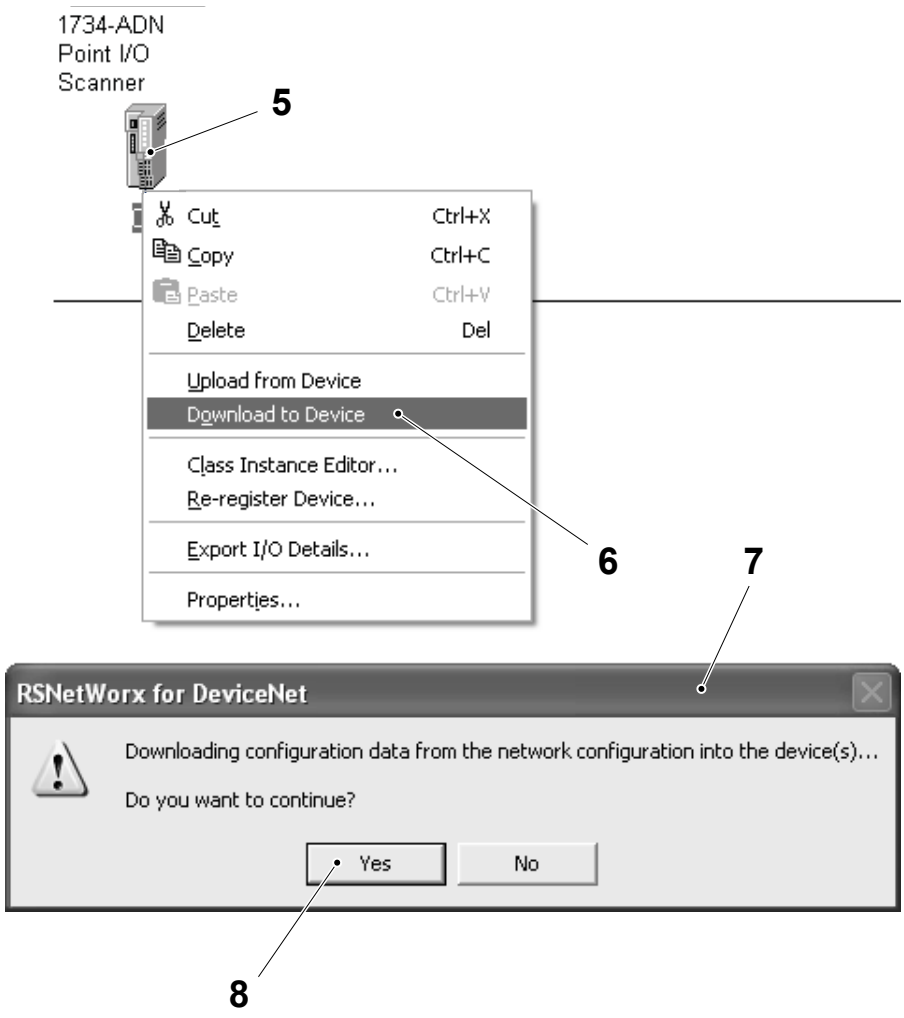

5 DeviceNet Point I/O adapter
6 Download to device
7 Dialogue box
8 Yes button

9.2.2.1-4 DeviceNet Point I/O Adapter - LED Description

Machine Status	Mains Power ON Air OFF Steam ON Water OFF
SPC Reference	90459-2494

LED	Colour	Description
Adapter status (1)	Off	No power is applied to the device.
	Solid green	Device is operating normally.
	Flashing green	Device needs to be commissioned because configuration is missing, incomplete or incorrect.
	Flashing red	Recoverable fault is present.
	Solid red	Unrecoverable fault may require the adapter to be changed.
	Flashing red/ green	Device is in self-test

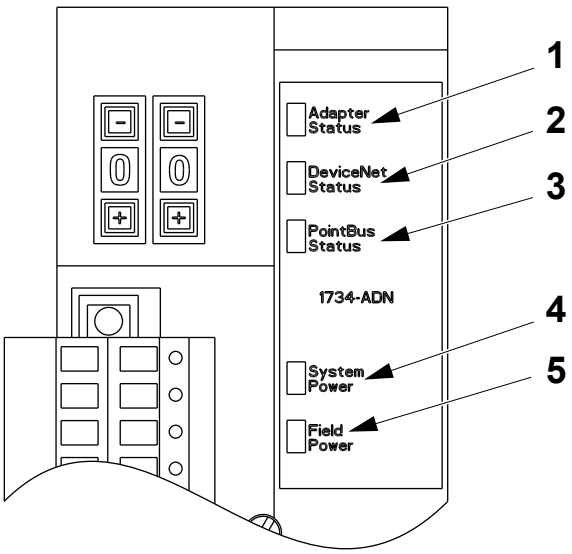

1 Adapter status LED
2 DeviceNet status LED
3 PointBus status LED
4 System power
5 Field power

(Cont'd)

(Cont'd)

LED	Colour	Description
DeviceNet status (2)	Off	Device is not online: - the device is autobauding. - the device has not completed the dup_MAC_id test. Check the adapter status indicator to determine if more time is required to complete the dup_MAC_id test or if power is required at the module.
	Solid green	Device is online and has connections in the established state
	Flashing green	Device is online but has no connections in the established state
	Flashing red	1 or more I/O connections are in a timed-out state. Determine the cause of the time-out. An increase in packet rate may be required.
	Solid red	Critical link failure - communication device failed. Device detected error that prevents it from communicating on the network. Make sure the device is using the correct MAC ID and baud rate.

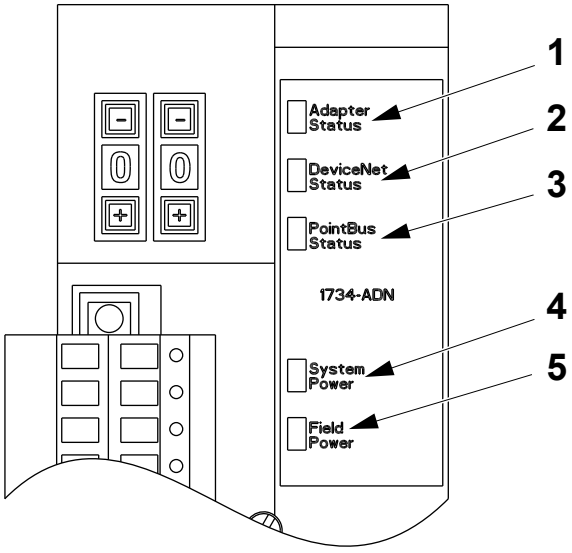

1 Adapter status LED
2 DeviceNet status LED
3 PointBus status LED
4 System power
5 Field power

(Cont'd)

(Cont'd)

LED	Colour	Description
PointBus status (3)	Off	Device is not online: - the device is autobauding. - the device has not completed the dup_MAC_id test. Check the adapter status indicator to determine if more time is required to complete the dup_MAC_id test or if power is required at the module.
	Solid green	Device is online and has connections in the established state
	Flashing green	Device is online but has no connections in the established state
	Flashing red	No scan list is available. I/O module is missing. Make sure all I/O modules are connecting and using the correct MAC ID's. Check the "Cycling Node Status" parameter in RSNetWorx for DeviceNet.
	Solid red	Critical link failure - communication device failed. Device detected error that prevents it from communicating on the network. Make sure an I/O module is not using the MAC ID = 0. Make sure all backplane modules are connecting at the correct baud rate.

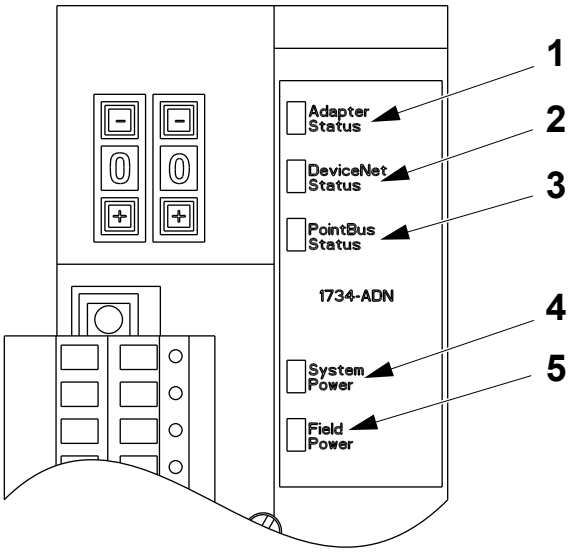

1 Adapter status LED
2 DeviceNet status LED
3 PointBus status LED
4 System power
5 Field power

(Cont'd)

(Cont'd)

LED	Colour	Description
System power (4)	Off	Field power is OFF. DC-DC converter problem. Check adapter configuration. Turn the Field power ON.
	Solid green	System power is ON. DC-DC converter is active (5V)
Field power (5)	Off	Check adapter configuration. Turn the Field power ON.
	Solid green	Power is ON with 24V present.

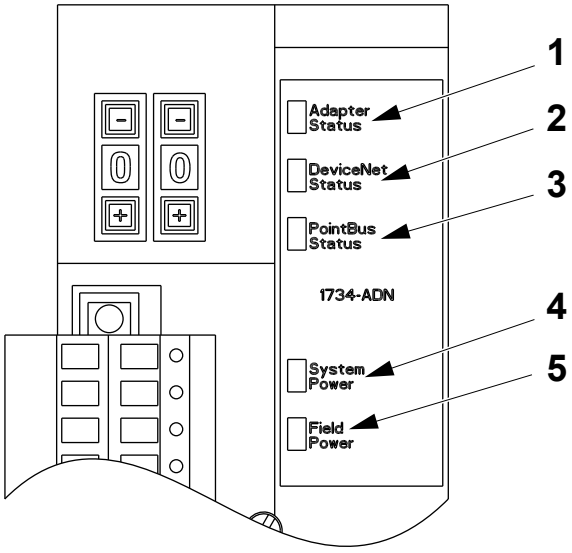

1 Adapter status LED
2 DeviceNet status LED
3 PointBus status LED
4 System power
5 Field power

9.2.2.2 DeviceNet Point I/O Module

9.2.2.2-1 DeviceNet Point I/O Module - Change

Machine Status	Mains Power ON Air OFF
Special Equipment	PC with CD Drive Ethernet communication cable
SPC Reference	2887527-0100 2888718-0100

Preparation

Before changing the DeviceNet Point I/O module:

- Use the RSLinx Classic program to verify and record the firmware version of the DeviceNet Point I/O module.
- Use the Flow Chart of Procedures for Changing the DeviceNet Point I/O Adapter on the next page to determine which procedures must be performed and their correct sequence.

Note! The Point I/O module configuration parameter set is stored in the Point I/O Adapter. Each time power is applied to a Point I/O module, the configuration is restored. If problems occur, then download the program to the Point I/O Adapter, see 9.2.2.1-3 DeviceNet Point I/O Adapter - Download Program for more details.

(Cont'd)

(Cont'd)

Flow Chart of Procedures for Changing a DeviceNet Point I/O Module

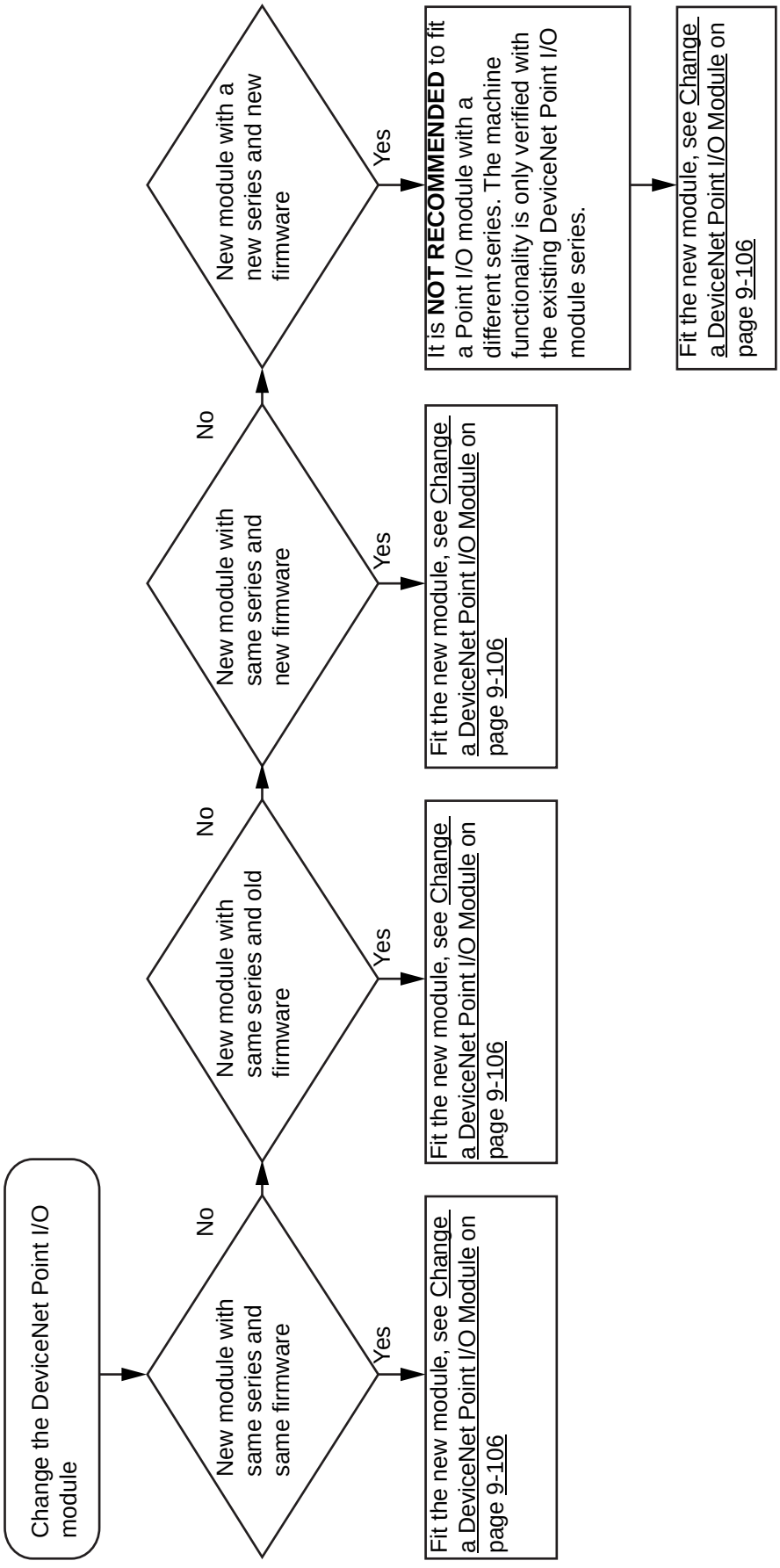

(Cont'd)

(Cont'd)

Change a DeviceNet Point I/O Module

a) Remove the power connection (1).

b) Remove the cable connection (2).

c) Remove the I/O module (3).

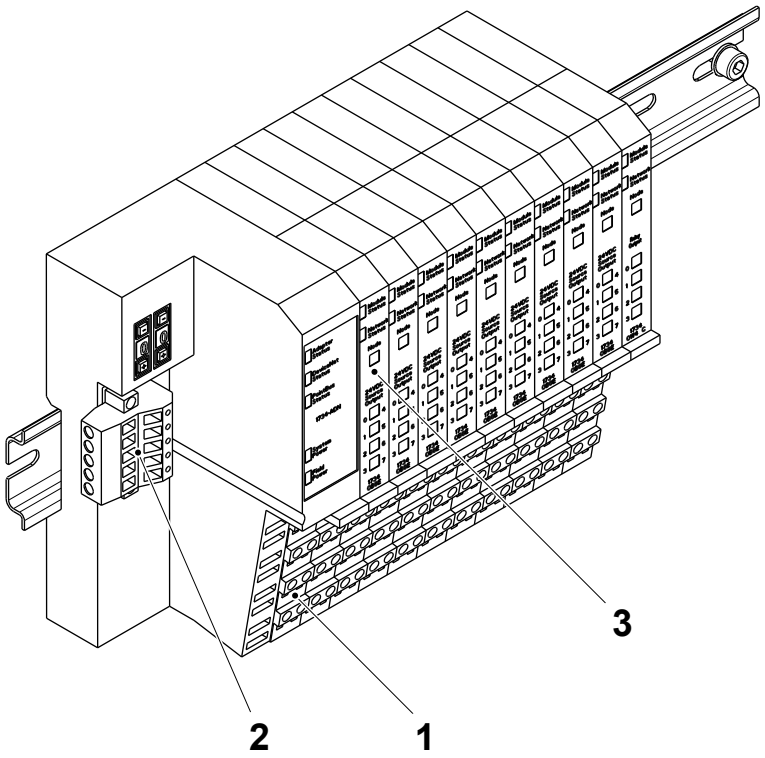

1 Power connection
2 Cable connection
3 I/O module

(Cont'd)

(Cont'd)

d) Fit the new I/O module (4).

e) Fit the cable connection (2).

f) Fit the power connection (1).

g) Continue with the necessary procedures as described in Flow Chart of Procedures for Changing a DeviceNet Point I/O Module on page 9-105.

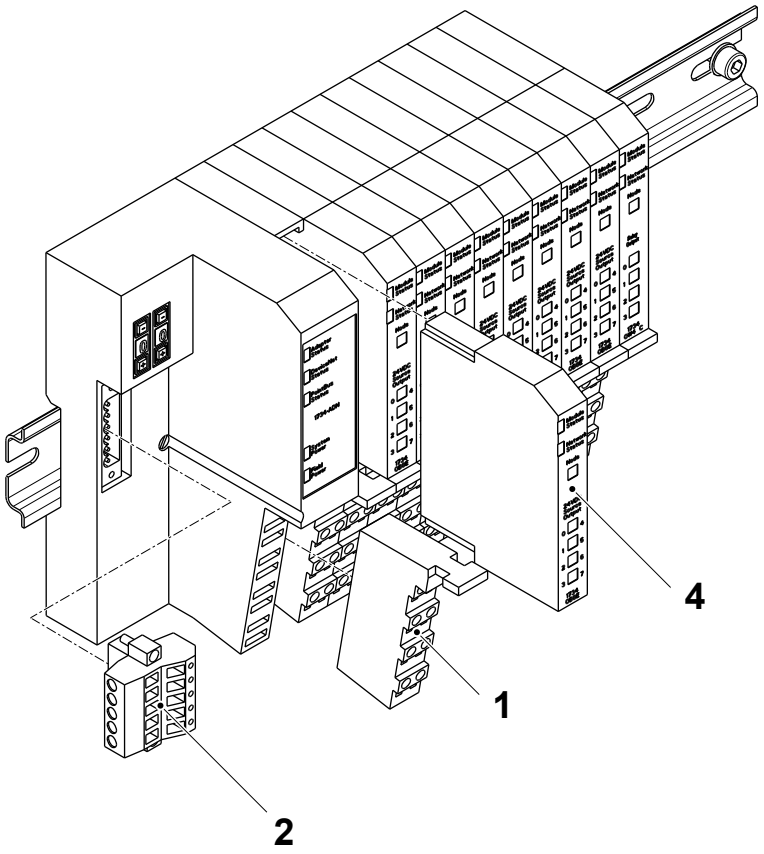

1 Power connection
2 Cable connection
4 I/O module

9.2.2.2-2 DeviceNet Point I/O Module - LED Description

Machine Status	Mains Power ON Air OFF
SPC Reference	2887527-0100 2888718-0100

Note! The module and network status LED descriptions are the same for all types of DeviceNet Point I/O modules, see the following pages for module specific LED descriptions.

Module and Network Status LEDS

LED	Colour	Description
Module status (1)	Green	Device operating normally
	Flashing Green	Device needs commissioning due to configuration missing, incomplete or incorrect
	Flashing Red	Recoverable fault
	Red	Unrecoverable fault may require device replacement
	Flashing Red/ Green	Device is in self-test

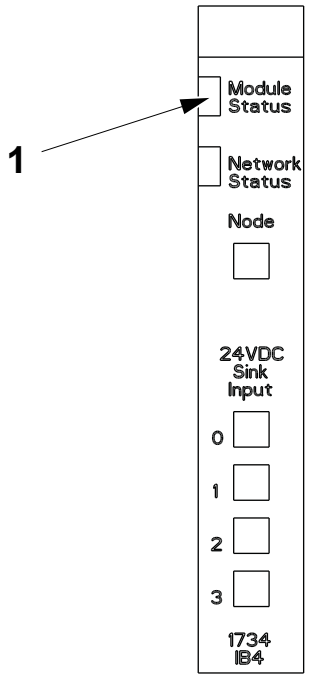

1 Module status LED

(Cont'd)

(Cont'd)

LED	Colour	Description
Network status (2)	Off	Device is not on-line - Device has not completed dup_MAC_id test. - Device not powered - check module status indicator
	Flashing Green	Device is on-line but has no connections in the established state
	Green	Device on-line and has connections in the established state
	Flashing Red	One or more I/O connections in timed-out state
	Red	Critical link failure - failed communication device. Device detected error that prevents it communicating on the network
	Flashing Red/ Green	Communication faulted device - the device has detected a network access error and is in communication faulted state. Device has received and accepted an Identify Communication Faulted Request - long protocol message

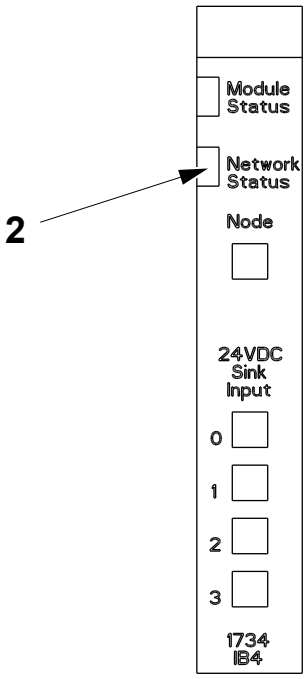

2 Network status LED

(Cont'd)

(Cont'd)

Digital Input Module

LED	Colour	Description
Input status (1)	Off	Input is in the off-state
	Yellow	Input is in the on-state

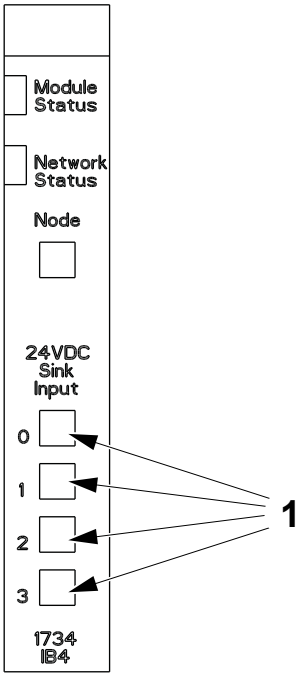

1 Input status LED

(Cont'd)

(Cont'd)

Digital Output Module

LED	Colour	Description
Output status (1)	Off	All outputs are inactive
	Yellow	One or more output is active and under control
	Flashing red	Open circuit detected - no load (Off-state only). Connect load or disable no load detection
	Solid Red	Short circuit detected (On-state only). Remove short or overloaded circuit

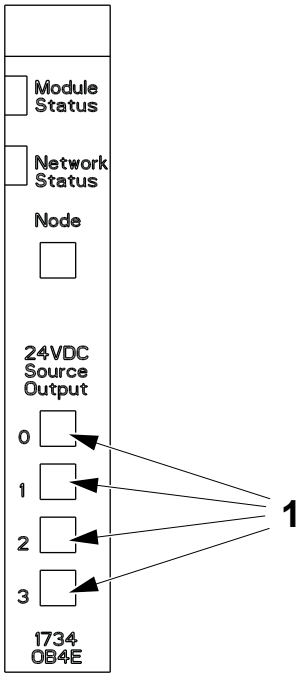

1 Output Status LED

(Cont'd)

(Cont'd)

Thermocouple Module

LED	Colour	Description
Thermocouple input status (1)	Off	Module in CAL mode
	Solid Green	Normal (channel scanning inputs)
	Flashing Green	Channel being calibrated
	Solid Red	Major channel fault
	Flashing Red	Channel at end of range (over or under)

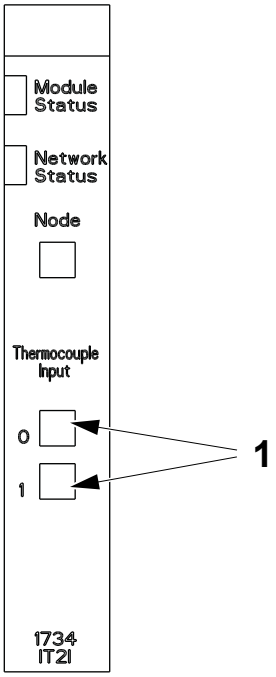

1 Thermocouple input status LED

(Cont'd)

(Cont'd)

Analog Output Module

LED	Colour	Description
Analogue output status (1)	Off	Module in CAL mode
	Solid Green	Normal operation present with channel actively controlling outputs
	Flashing Green	Channel being calibrated
	Flashing Red	No field power is present. Apply field power
	Solid Red	A Low or High Clamp alarm is present. Operate within normal range

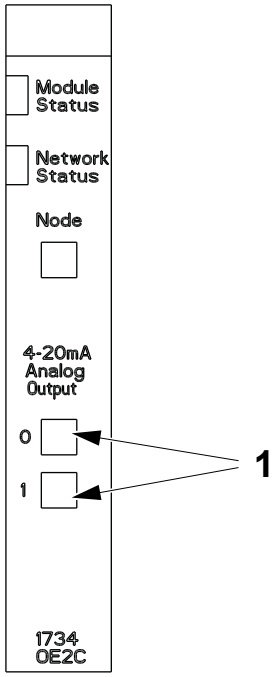

1 Analogue output status LED

(Cont'd)

(Cont'd)

Counter/Encoder Module

LED	Colour	Description
Input status (1)	Off	Input is inactive
	Yellow	Input is active and under control

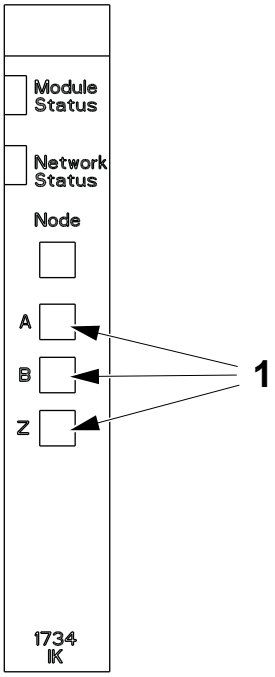

1 Input status LED

9.2.3 DeviceNet Compact Block I/O

9.2.3-1 DeviceNet Compact Block I/O - Change

Machine Status	Mains Power ON Air OFF
Special Equipment	PC with CD Drive Ethernet communication cable
SPC Reference	90459-2497

Preparation

Before changing the DeviceNet compact block I/O:

- Verify and record the node address of the DeviceNet compact block I/O.
- Use the Flow Chart of Procedures for Changing the DeviceNet Compact Block I/O on the next page to determine which procedures must be performed and their correct sequence.

(Cont'd)

(Cont'd)

Flow Chart of Procedures for Changing the DeviceNet Compact Block I/O

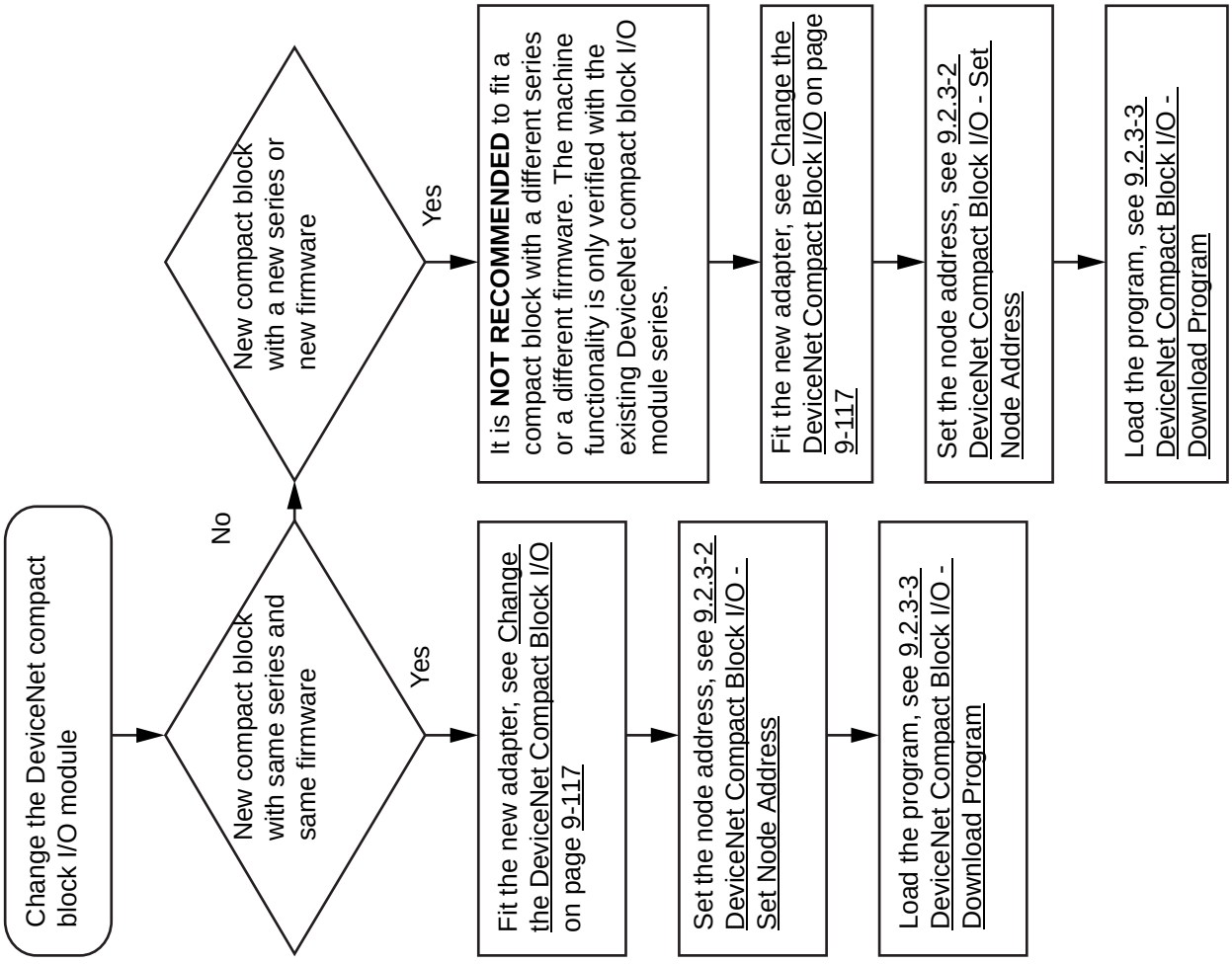

(Cont'd)

(Cont'd)

Change the DeviceNet Compact Block I/O

a) Remove the cable connection (1).

b) Remove the screws (2) and pull off the terminal block (3).

c) Pull out the lever (4) to release the compact block (5) from the rail (6) and remove the compact block (5).

d) To fit the new compact block (5), pull out the lever (4) and push down on the compact block (5) to lock the new compact block (5) to the rail (6).

e) Fit the terminal block (3) with the screws (2).

f) Fit the cable connection (1).

g) Continue with the necessary procedures as described in Flow Chart of Procedures for Changing the DeviceNet Compact Block I/O on page 9-116.

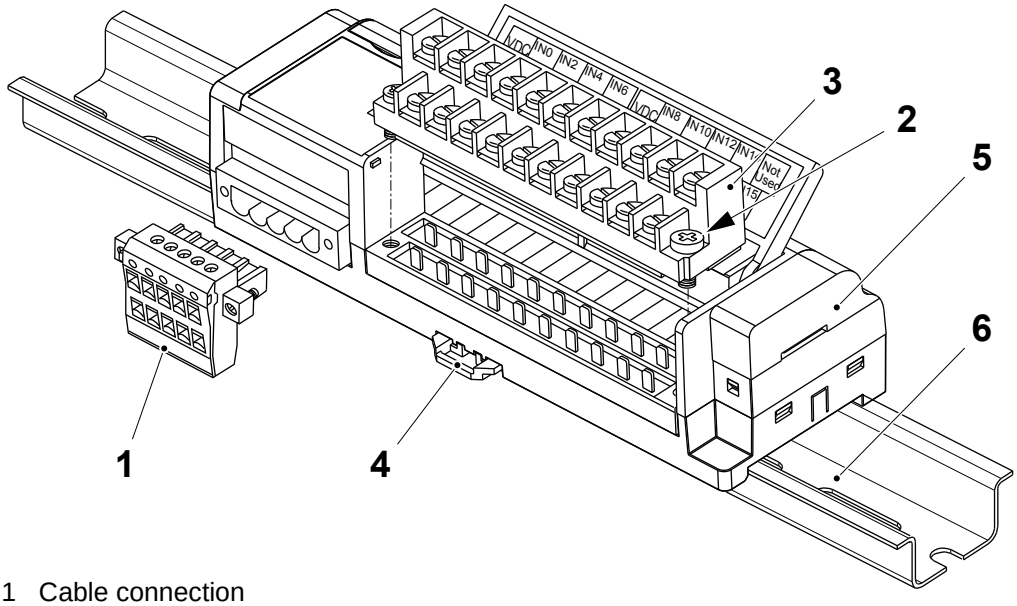

1 Cable connection
2 Screw
3 Terminal block
4 Lever
5 Compact block
6 Rail

9.2.3-2 DeviceNet Compact Block I/O - Set Node Address

Machine Status	Mains Power ON Air OFF
SPC Reference	90459-2497

Note! For this type of adapter the baud rate is set automatically.

Set the two rotary switches, under the cover (1) to the node address 12 for the compact block I/O module.

Switch	Number
MSD	1
LSD	2

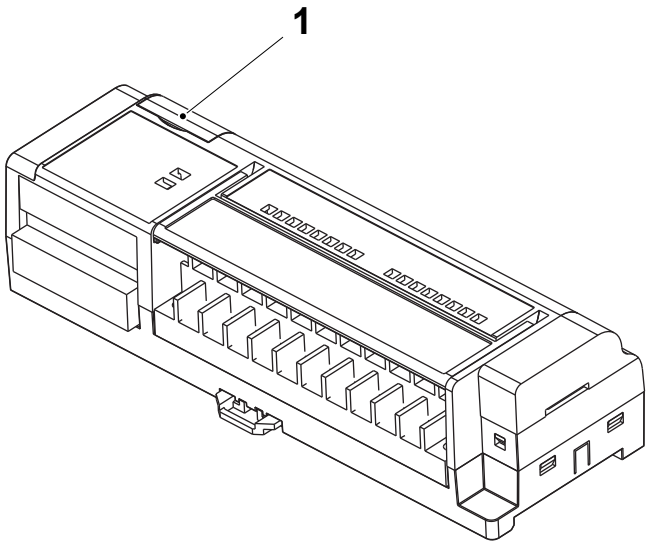

1 Cover

9.2.3-3 DeviceNet Compact Block I/O - Download Program

Machine Status	Mains Power ON Air OFF
Special Equipment	PC with CD Drive Ethernet communication cable
SPC Reference	90459-2497

Note! To connect to the CPU module using an ethernet communication cable, the PC must first be configured for this type of communication. See 9.1.1-2 Preparations for PLC Communication - Configure RSLinx and 9.1.2-1 CPU Module - Change for more details.

(Cont'd)

(Cont'd)

a) Set the node address for the compact block I/O module, see 9.2.3-2 DeviceNet Compact Block I/O - Set Node Address.

b) Connect the ethernet communication cable between a vacant connection port on the ethernet switch (1) and the PC (2).

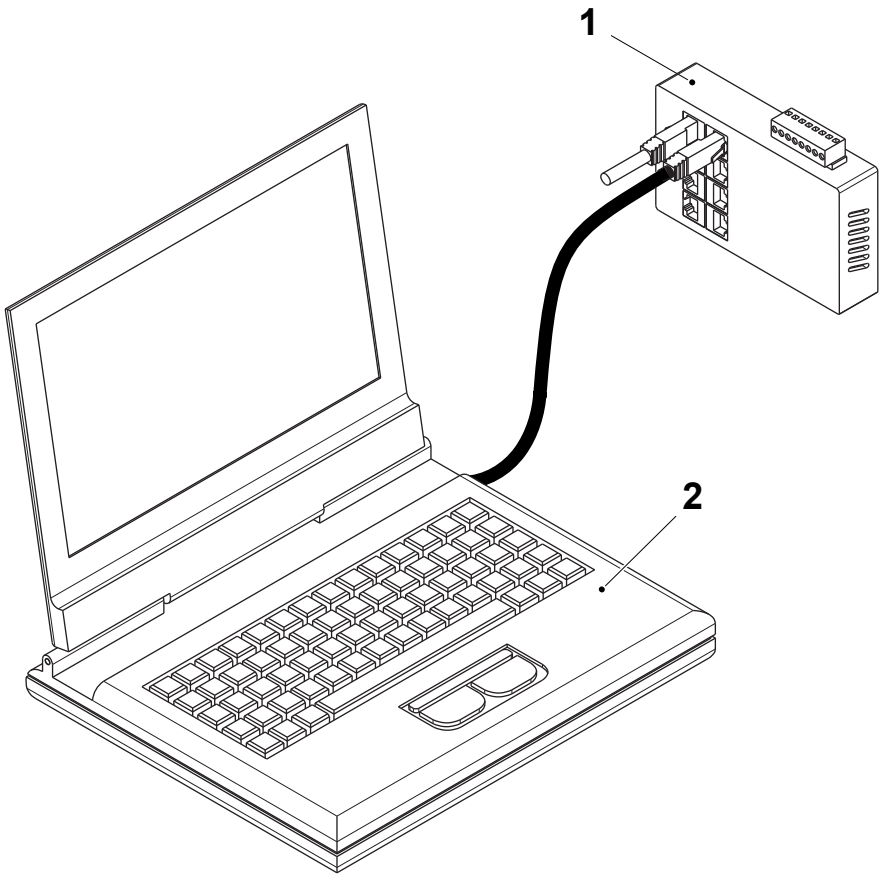

1 Ethernet switch
2 PC

(Cont'd)

(Cont'd)

Note! The CPU module must not be in RUN position for the program load.

c) Turn the key on the CPU module to the PROG mode position.

d) Insert the CD marked SOFTW_CD_A3_Finto the PC CD drive.

e) Browse to the CD drive and copy the compressed program folder to the PC desktop and extract the program file.

f) Double click on the program file to automatically start the RSNetWorx program and to open the program file.

g) Select the NETWORK menu (3) and then select ONLINE (4).

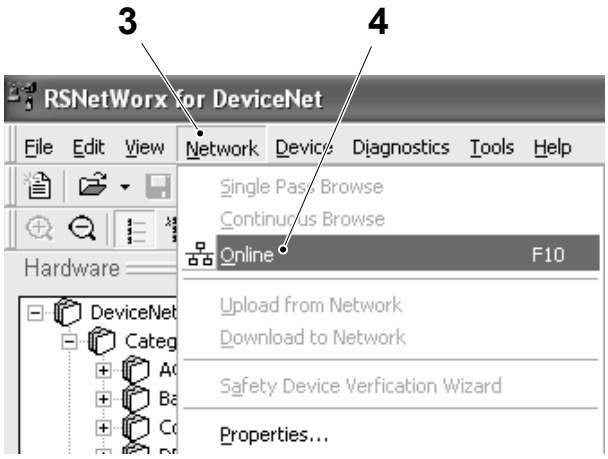

3 Network menu
4 Online

(Cont'd)

(Cont'd)

h) Highlight the DEVICENET COMPACT BLOCK I/O (5) and right click the PC mouse, select DOWNLOAD TO DEVICE (6) to start the download.

i) When the dialogue box (7) appears, select the YES button (8) to continue.

j) When the download is complete, close the RSNetWorx program and turn the key on the CPU module to the REM mode position.

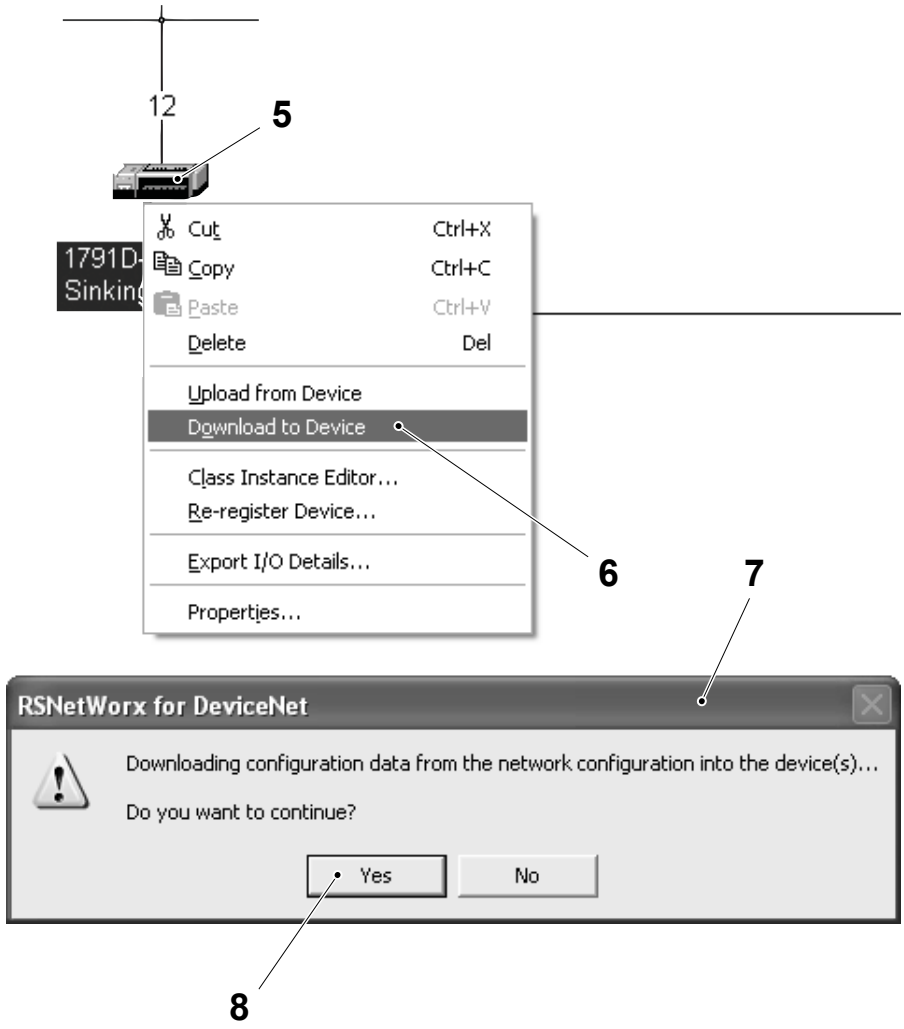

5 DeviceNet compact block I/O
6 Download to device
7 Dialogue box
8 Yes button

(Cont'd)

9.2.3-4 DeviceNet Compact Block I/O - LED Description

Machine Status	Mains Power ON Air OFF
SPC Reference	90459-2497

LED	Colour	Description
Network Status (1)	Off	No power or auto bauding
	Flashing Green/Off	On line but not connected
	Solid Green	On line, link OK, connected
	Flashing Red	Recoverable fault - (expansion module fault or module configuration error)
		I/O connection fault - one or more I/O connections in the timed-out state
	Solid Red	Unrecoverable fault
		Communication failure - duplicate node address present or incorrect baud rate
	Green to Red to Off	At powerup only - LED test

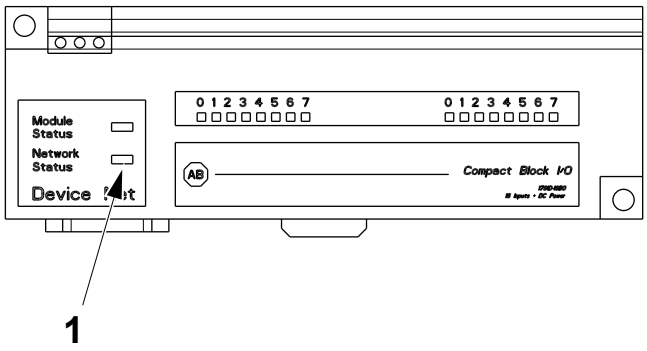

1 Network status LED

(Cont'd)

(Cont'd)

LED	Colour	Description
Module Status (2)	Off	Logic is disabled
	Solid Green	Logic is enabled
	Flashing Green	Local forces are applied and local logic is enabled
I/O Status (3)	Outputs	None - Output not energized
		Yellow - Output energized
	Inputs	None - No valid input
		Yellow - Valid input

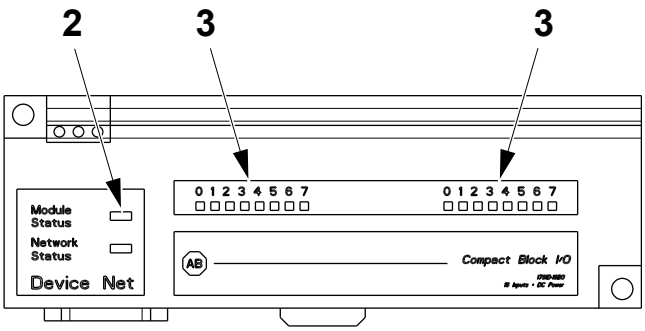

2 Module status LED
3 I/O status LED

9.2.4 DeviceNet PowerFlex

9.2.4.1 DeviceNet PowerFlex Adapter

9.2.4.1-1 DeviceNet PowerFlex Adapter - Change

Machine Status	Mains Power ON Air OFF Steam ON Water OFF
Special Equipment	PC with CD Drive Ethernet communication cable
SPC Reference	90459-2614

Note! The firmware revision of the new DeviceNet PowerFlex adapter maybe equal to, or newer than the firmware revision of the old DeviceNet PowerFlex adapter. Using a newer firmware revision may create errors when going online, such as unrecognized device or device mismatch if the PC does not contain the very latest EDS files.

Preparation

Before changing the DeviceNet PowerFlex adapter:

- Use the RSLinx Classic program to verify and record the firmware version of the DeviceNet PowerFlex adapter.
- Verify and record the node address of the DeviceNet PowerFlex adapter.
- Use the Flow Chart of Procedures for Changing the DeviceNet PowerFlex Adapter on the next page to determine which procedures must be performed and their correct sequence.

(Cont'd)

(Cont'd)

Flow Chart of Procedures for Changing the DeviceNet PowerFlex Adapter

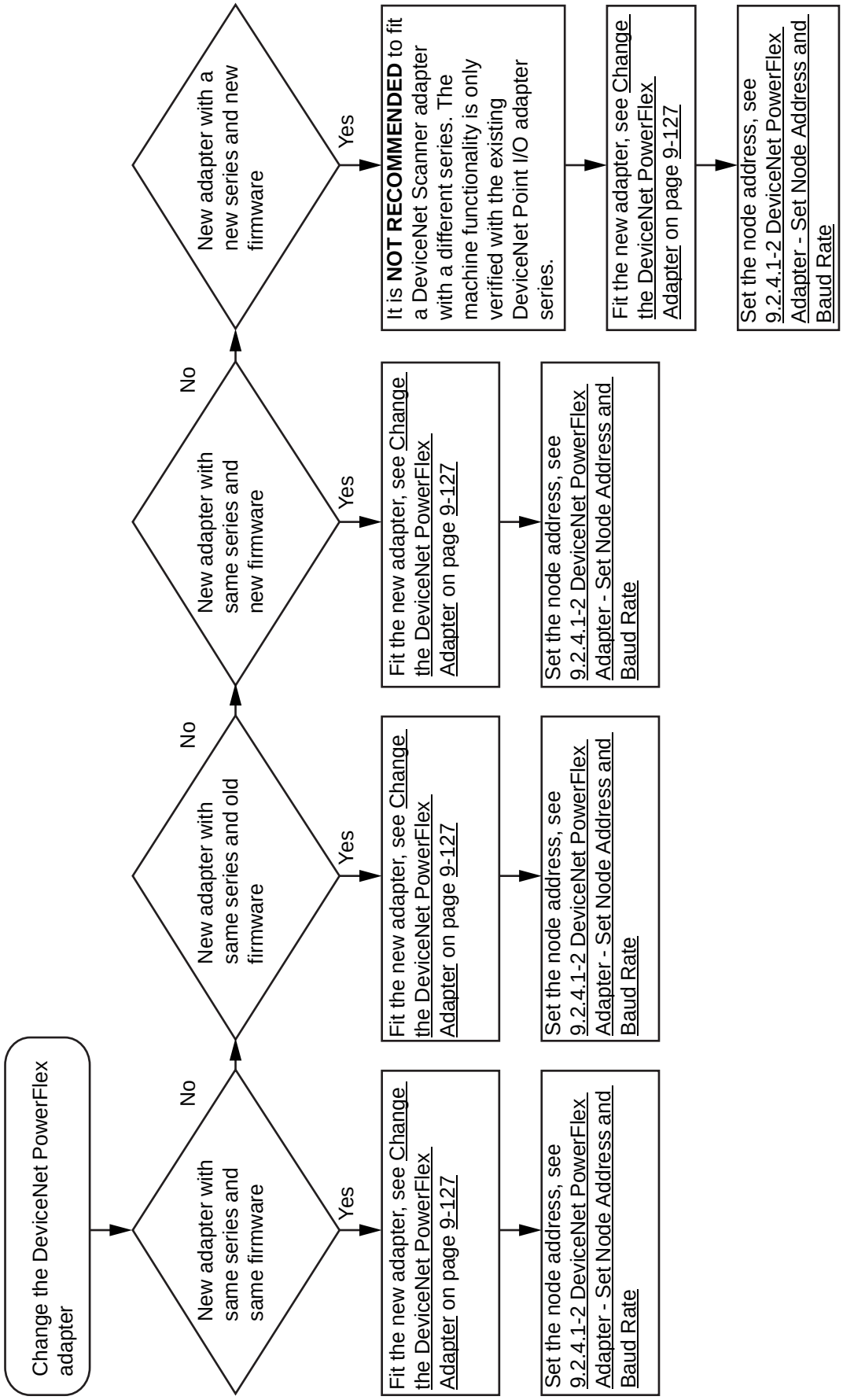

(Cont'd)

(Cont'd)

Change the DeviceNet PowerFlex Adapter

a) Remove the cover (1) from the front of the PowerFlex drive (2).

b) Disconnect the devicenet cable (3) and the internal interface cable (4) from the adapter (5).

c) Press the clips (6) and pull out the adapter (5) from the cover (1).

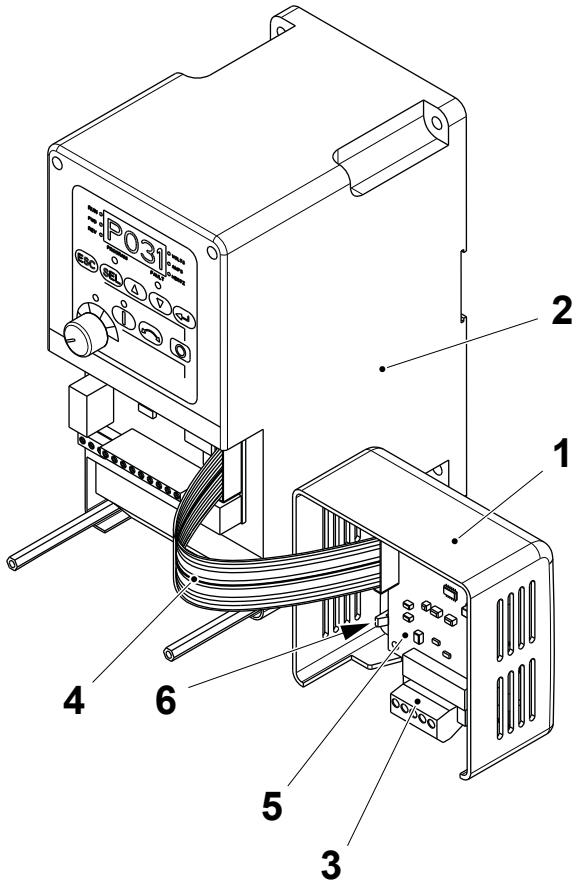

1 Cover
2 PowerFlex 40 drive
3 DeviceNet cable
4 Internal interface cable
5 Adapter
6 Clip

(Cont'd)

(Cont'd)

d) Fit the new adapter and assemble in the reverse order.

e) Continue with the necessary procedures as described in Flow Chart of Procedures for Changing the DeviceNet PowerFlex Adapter on page 9-126.

9.2.4.1-2 DeviceNet PowerFlex Adapter - Set Node Address and Baud Rate

Machine Status	Mains Power ON Air OFF Steam ON Water OFF
SPC Reference	90459-2614

Note! Check the frequency converter in the filling machine Electrical Manual for the correct node address and baud rate settings.

The DIP switches (1) under the frequency converter front cover (2) are used to set the baud rate and node number of the DeviceNet PowerFlex adapter.

The DIP switches 1-6 determine the node address and the F/C switches 7 and 8 determine the baud rate. Set the DIP switches (1) according to the table on the following page.

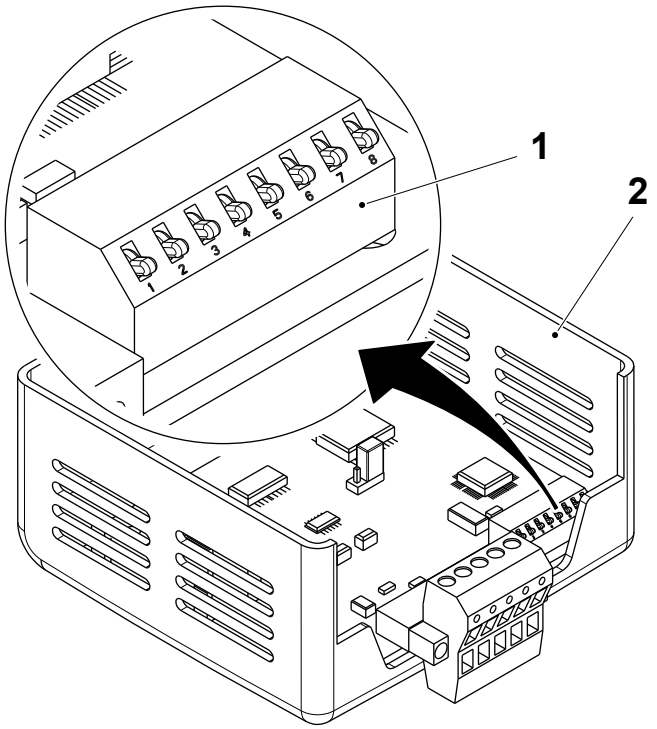

1 DIP switch
2 Front cover

(Cont'd)

(Cont'd)

Note! The baud rate determined by the position of the switches 7 and 8, as indicated in the table, corresponds to 500 kbps.

DNet Power Flex Adaptor	Node No.	Switch No.							
		1	2	3	4	5	6	7	8
T10T0160 ASU Loop	**21**	UP	DOWN	UP	DOWN	UP	DOWN	DOWN	UP
T10T0170 ASU Magazine	**22**	DOWN	UP	UP	DOWN	UP	DOWN	DOWN	UP
T10T0180 Strip Bobbin	**23**	UP	UP	UP	DOWN	UP	DOWN	DOWN	UP
U70T0310 Drive Roller	**24**	DOWN	DOWN	DOWN	UP	UP	DOWN	DOWN	UP
T50T0260 Ext. Conv.	**25**	UP	DOWN	DOWN	UP	UP	DOWN	DOWN	UP
U70T0320 ICU Pump	**26**	DOWN	UP	DOWN	UP	UP	DOWN	DOWN	UP
U30T0220 Perox. Pump	29	UP	DOWN	UP	UP	UP	DOWN	DOWN	UP
U70T0330 DIMC Cap Blower	27	UP	UP	DOWN	UP	UP	DOWN	DOWN	UP
U70T0300 Compressor	28	DOWN	DOWN	UP	UP	UP	DOWN	DOWN	UP

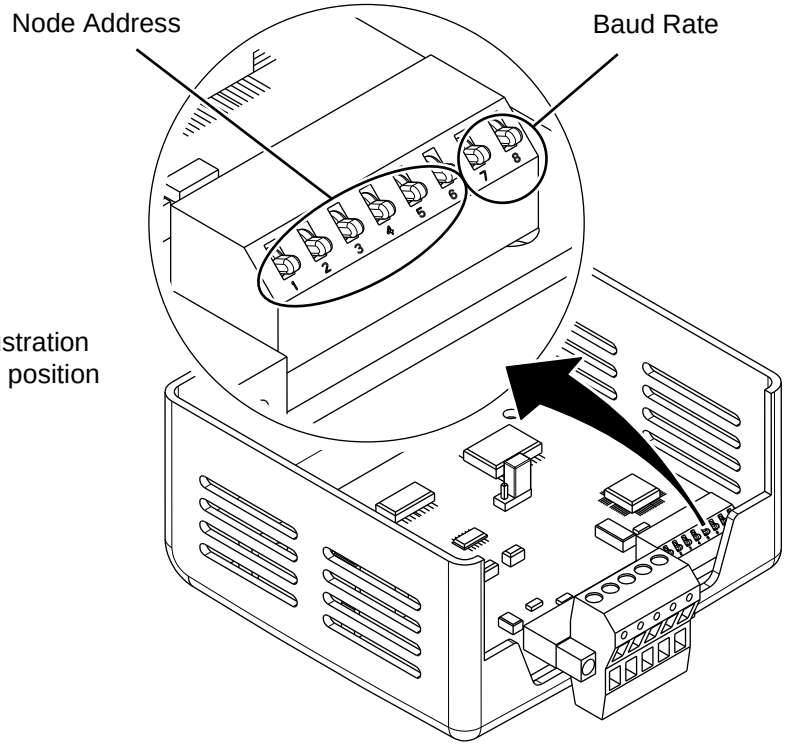

The switches in the illustration are shown in the down position

(Cont'd)

(Cont'd)

The jumper (3) on the connector (4) determines the operating mode of the adapter. Set the jumper (3) to the right as shown in the illustration to select the SINGLE DRIVE mode.

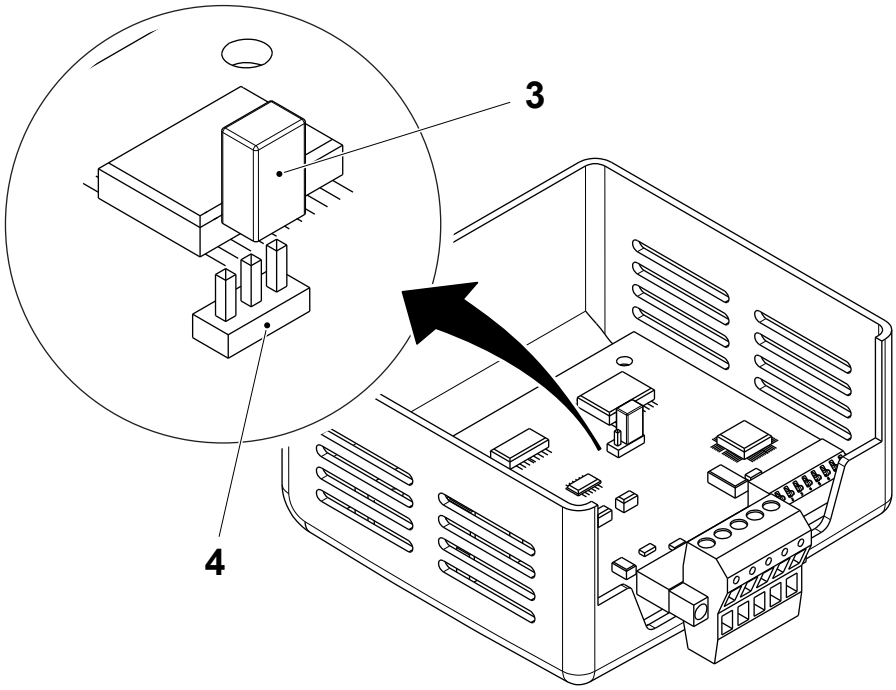

3 Jumper
4 Connector

9.2.4.1-3 DeviceNet PowerFlex Adapter - Download Program

Machine Status	Mains Power ON Air OFF Steam ON Water OFF
Special Equipment	PC with CD Drive Ethernet communication cable
SPC Reference	90459-2494

Note! To connect to the CPU module using an ethernet communication cable, the PC must first be configured for this type of communication. See 9.1.1-1 Preparation for PLC Communication - Configure PC Network Communications and 9.1.1-2 Preparations for PLC Communication - Configure RSLinx for more details.

(Cont'd)

(Cont'd)

a) Set the node address for the DeviceNet PowerFlex adapter, see 9.2.4.1-2 DeviceNet PowerFlex Adapter - Set Node Address and Baud Rate.

b) Connect the ethernet communication cable between a vacant connection port on the ethernet switch (1) and the PC (2).

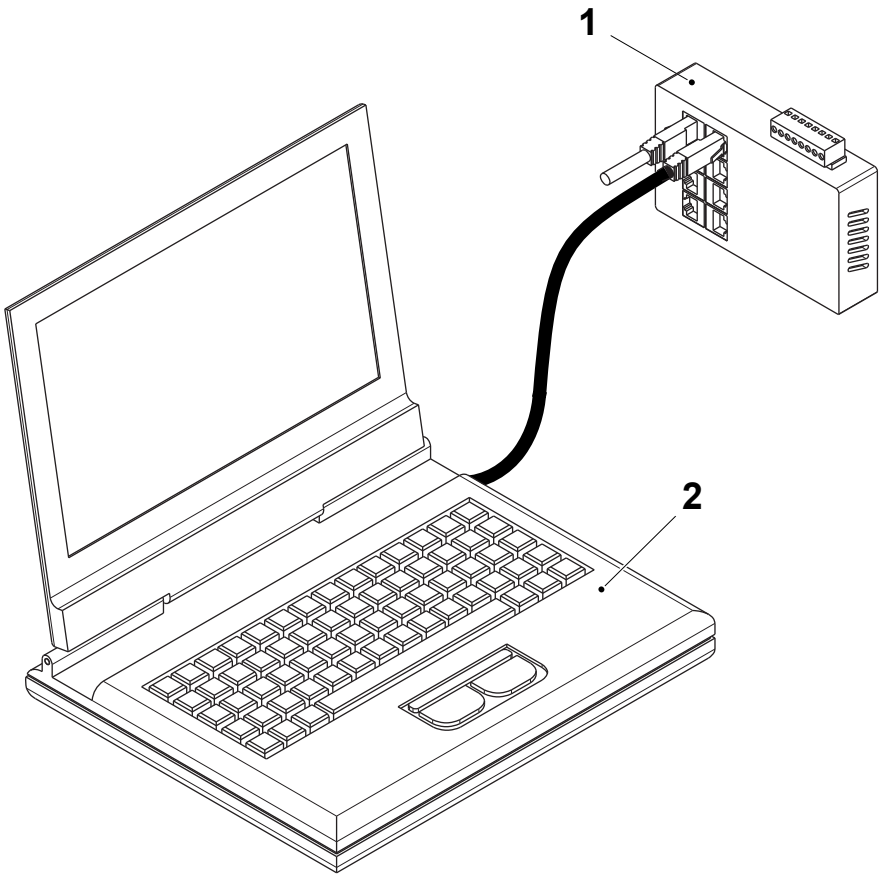

1 Ethernet switch
2 PC

(Cont'd)

(Cont'd)

Note! The CPU module must not be in RUN position for the program load.

c) Turn the key on the CPU module to the PROG mode position.

d) Insert the CD marked SOFTW_CD_A3_Finto the PC CD drive.

e) Browse to the CD drive and copy the compressed program folder to the PC desktop and extract the program file.

f) Double click on the program file to automatically start the RSNetWorx program and to open the program file.

g) Select the NETWORK menu (3) and then select ONLINE (4).

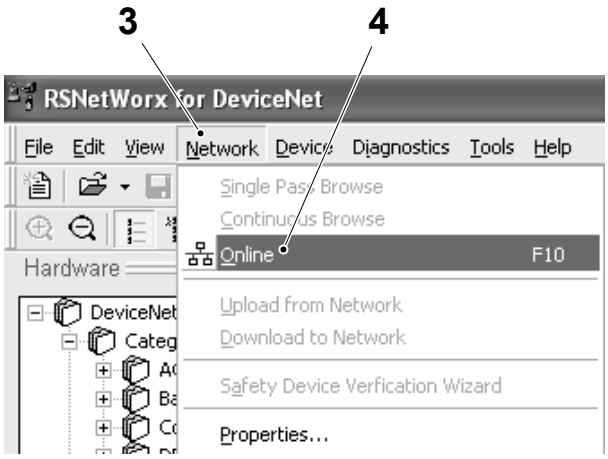

3 Network menu
4 Online

(Cont'd)

(Cont'd)

h) Highlight the `DeviceNet PowerFlex adapter` (5) and right click the PC mouse, select `DOWNLOAD TO DEVICE` (6) to start the download.

i) When the dialogue box (7) appears, select the `YES` button (8) to continue.

j) When the download is complete, close the RSNetWorx program and turn the key on the CPU module to the REM mode position.

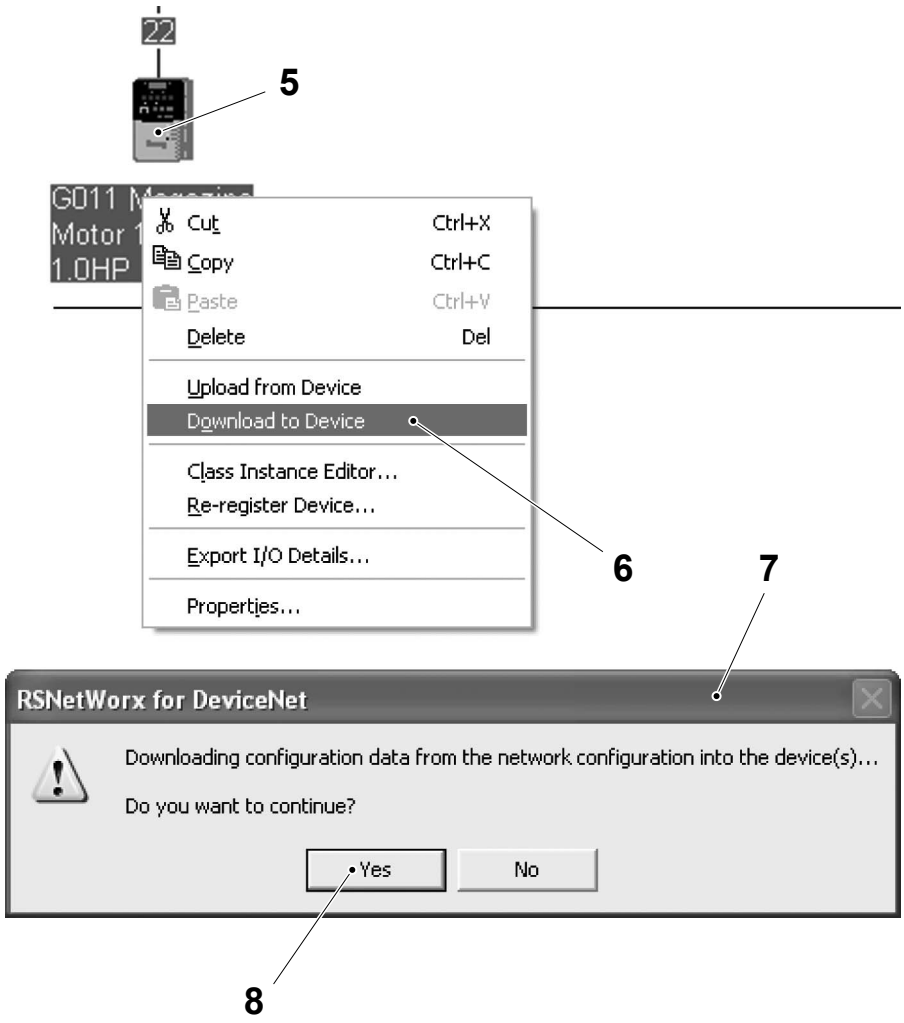

5 Devicenet adapter
6 Download to device
7 Dialogue box
8 Yes button

9.2.4.1-4 DeviceNet PowerFlex Adapter - LED Description

Machine Status	Mains Power ON Air OFF Steam ON Water OFF
SPC Reference	90459-2614

LED	Colour	Description
PORT (1)	Off	The adapter is not powered or connected correctly to the drive. Check the ribbon cable connecting the adapter is securely fitted to the drive. Apply power to the adapter.
	Solid green	The adapter is properly connected and is communicating with the drive.
	Flashing green	The adapter is establishing an I/O connection to the drive or (DSI I/O Config) is configured for all I/O disabled. The LED will turn GREEN or RED. Check the setting of parameter 15 (DSI I/O Config). The adapter is operating normally if no DSI I/O is enabled.

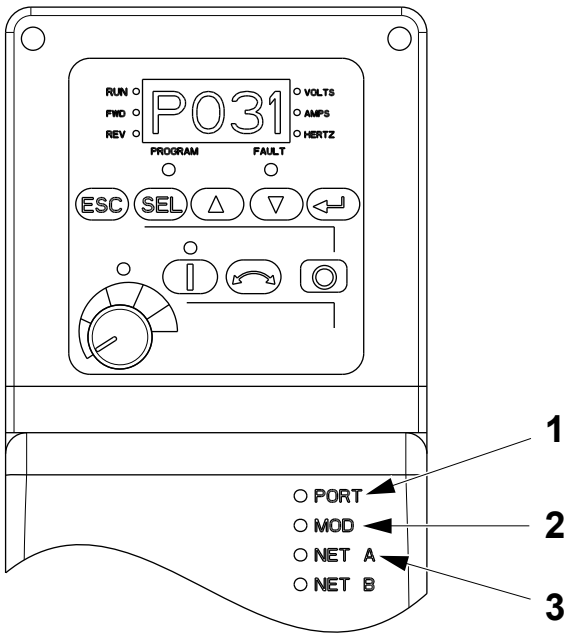

1 PORT LED
2 MOD LED
3 NET A LED

(Cont'd)

(Cont'd)

LED	Colour	Description
PORT (1)	Flashing red	The adapter is not receiving communications from a drive, a connected drive has failed or a drive is missing. Clear any drive faults, Check that all cables are securely connected. Cycle power to the drive.
	Solid red	The drive has refused an I/O connection from the adapter. Another DSI peripheral is using the same DSI port as the adapter. Check that all DSI cables are securely connected and undamaged. If necessary, replace any damaged cable.
	Solid orange	Daisy-chained devices in the Multi-Drive mode are not of the correct type. Install the correct modules.

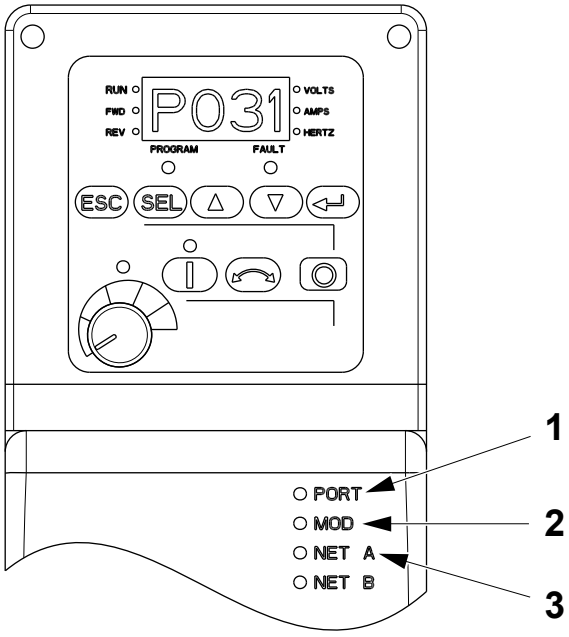

1 PORT LED
2 MOD LED
3 NET A LED

(Cont'd)

(Cont'd)

LED	Colour	Description
MOD (2)	Off	The adapter is not powered or connected correctly to the drive. Check the ribbon cable connecting the adapter is securely fitted to the drive. Apply power to the adapter.
	Solid green	The adapter is operational and transferring I/O data.
	Flashing green	The adapter is operational but is not transferring I/O data. Put the scanner in the RUN mode. Program the controller to recognize and transmit I/O data to the adapter. Configure the adapter for the program in the controller. The adapter is operating normally if no DSI I/O is enabled.

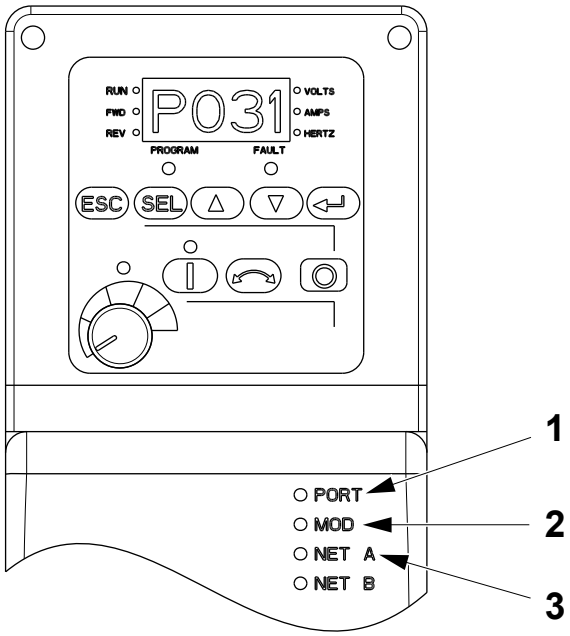

1 PORT LED
2 MOD LED
3 NET A LED

(Cont'd)

(Cont'd)

LED	Colour	Description
MOD (2)	Flashing red	The adapter has failed the firmware test, a connected drive has failed or a drive is missing. Clear any drive faults. Cycle power to the drive. If cycling power does not correct the problem, the parameter settings may have been corrupted. Restore default values reconfigure the adapter. If restoring default values does not correct the problem, flash the adapter with the latest firmware release. Determine which drive is missing or has failed. Check cabling and configuration settings.
	Solid red	The adapter has failed the hardware test Cycle power to the drive. Replace the adapter.

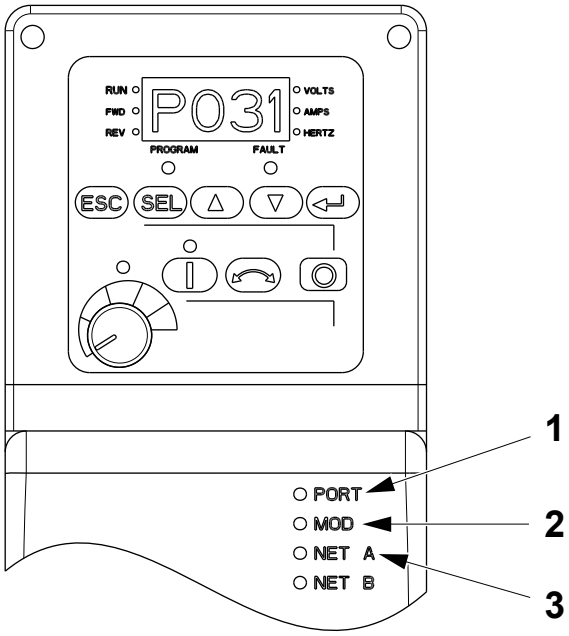

1 PORT LED
2 MOD LED
3 NET A LED

(Cont'd)

(Cont'd)

LED	Colour	Description
NET A (3)	Off	The adapter and/or the network is not powered or the adapter is not connected correctly to the network. Check that the ribbon cable is securely connected to the adapter and to the drive. Check that the DeviceNet cable is correctly connected. Apply power to the adapter and the network.
	Solid green	The adapter is properly connected and is communicating with devices on the network.
	Flashing green	The adapter is properly connected but is not communicating with any devices on the network. Put the scanner in the RUN mode, or apply power to the peer device that will send I/O data. Configure a controller or peer device to recognize and transmit I/O to the adapter. Configure the adapter for the program in the controller or the I/O from the peer device.

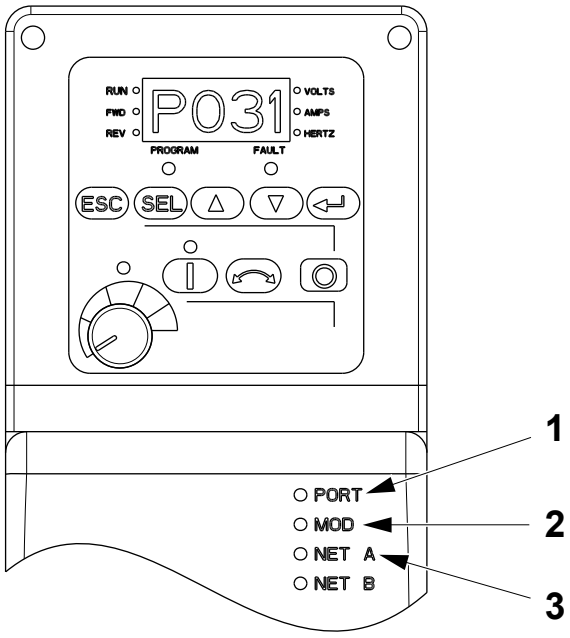

1 PORT LED
2 MOD LED
3 NET A LED

(Cont'd)

(Cont'd)

LED	Colour	Description
NET A (3)	Flashing red	A DeviceNet I/O connection has timed out. Put the scanner in the RUN mode, or apply power to the peer device that will send I/O data. Check the amount of traffic on the network.
	Solid red	Failed duplicate node detection test or bus off condition exists.

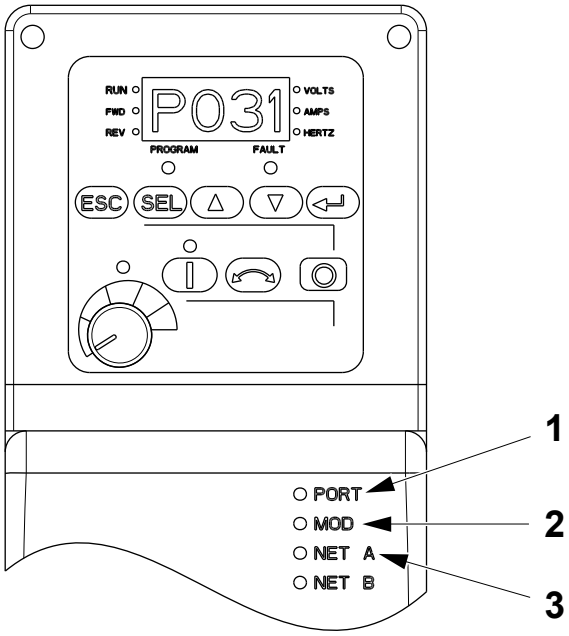

1 PORT LED
2 MOD LED
3 NET A LED

9.3 Servo System

SPC Reference	2840936-0100

9.3-1 Servo System - Description

SPC Reference	2840936-0100

The servo system is managed by the CPU module (1) which communicates with the Sercos module (2) through the backplane of the PLC rack (3). The Sercos module (2) communicates through an optical fiber network (4) with the two servo racks (5) containing the IAM (Integrated Axis Modules) (6) and the AM (Axis Module) servo drives (7).

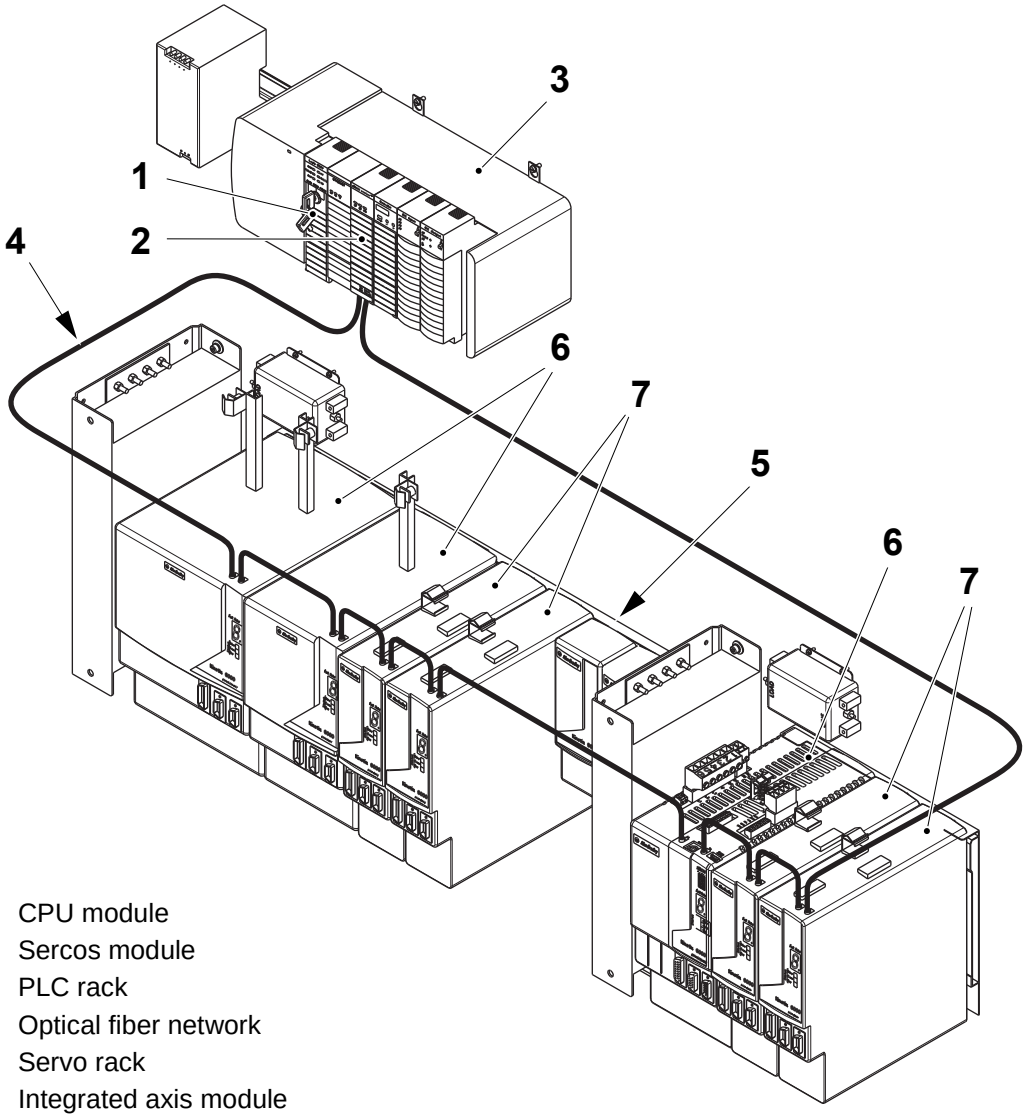

1 CPU module
2 Sercos module
3 PLC rack
4 Optical fiber network
5 Servo rack
6 Integrated axis module
7 Axis module

(Cont'd)

(Cont'd)

The servo drive racks each contain an IAM drive and the AM servo drives.

Each servo drive rack is powered with 400 V/AC via the power connector (1) on the top of the IAM and control power 240V/AC to the AM drives is supplied through the control power connector (2) on top of the IAM. A DC bus through the servo drive rack backplane provides the drives with DC power.

The IAM (3) provides power to the AM servo drives (4) in the servo drive rack (5) and also functions as a servo drive for one servo motor. Each rack has a base node number, which is set by the plus and minus switches (6) on the IAM.

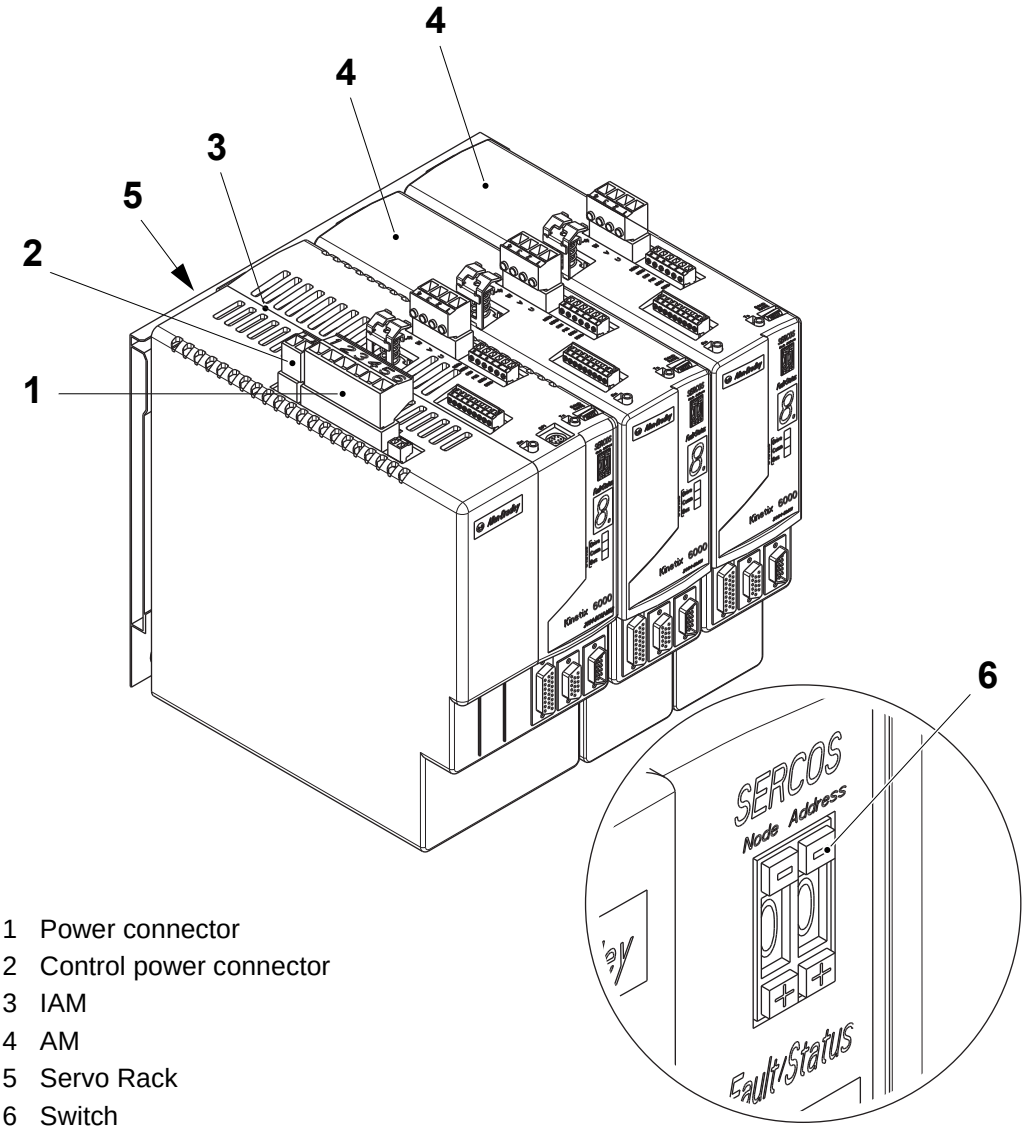

1 Power connector
2 Control power connector
3 IAM
4 AM
5 Servo Rack
6 Switch

(Cont'd)

(Cont'd)

The AM servo drives each have a node number which is determined by the base node number set on the IAM and by the rack slot in which the drive is located.

The fault/status display (7) on the AM servo drive indicates the current system status, when the:

- LED segments are displayed alternatively in a rotating pattern, this indicates the system is checking for a closed optical ring
- digit “1” is displayed, this indicates that the optical ring has been checked and that the physical communication is in place. The system is now checking for active nodes
- digit “2” is displayed, this indicates that all nodes in the optical ring are active. The system is now checking the configuration of the nodes

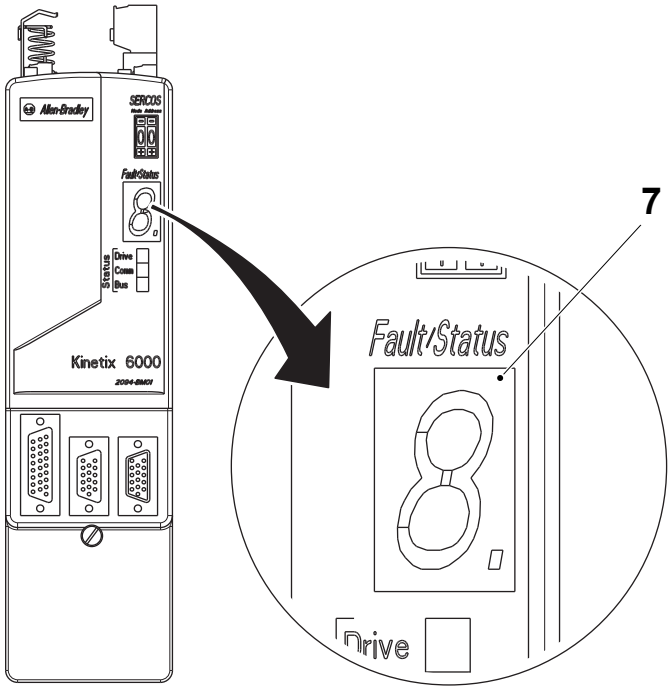

7 Fault/status display

(Cont'd)

(Cont'd)

- digit “3” is displayed, this indicates that all nodes are configured according to the application software. The system is now checking for motor types
- digit “4” is displayed, this indicates that the motor type matching for all axis is complete and the system is running
- letter “E” is displayed, this indicate an error, see section 9.3.2-5 Servo Drive - Error Codes.

(Cont'd)

(Cont'd)

On the front of each AM servo drive are three D-sub connectors:

- connector (8) is for I/O communications
- connector (9) is for position feedback from the servo motor
- connector (10) is for auxiliary position feedback.

The AM servo drives (4) are connected to the servo motors with uninterrupted cabling which is used to:

- supply power to the servo motors
- receive signals with position indicator feedback
- activate and deactivate if fitted, the servo motors mechanical brake.

The connectors for servo motor power (11) and power to the mechanical brake of the motor (12) are located on top of the drive.

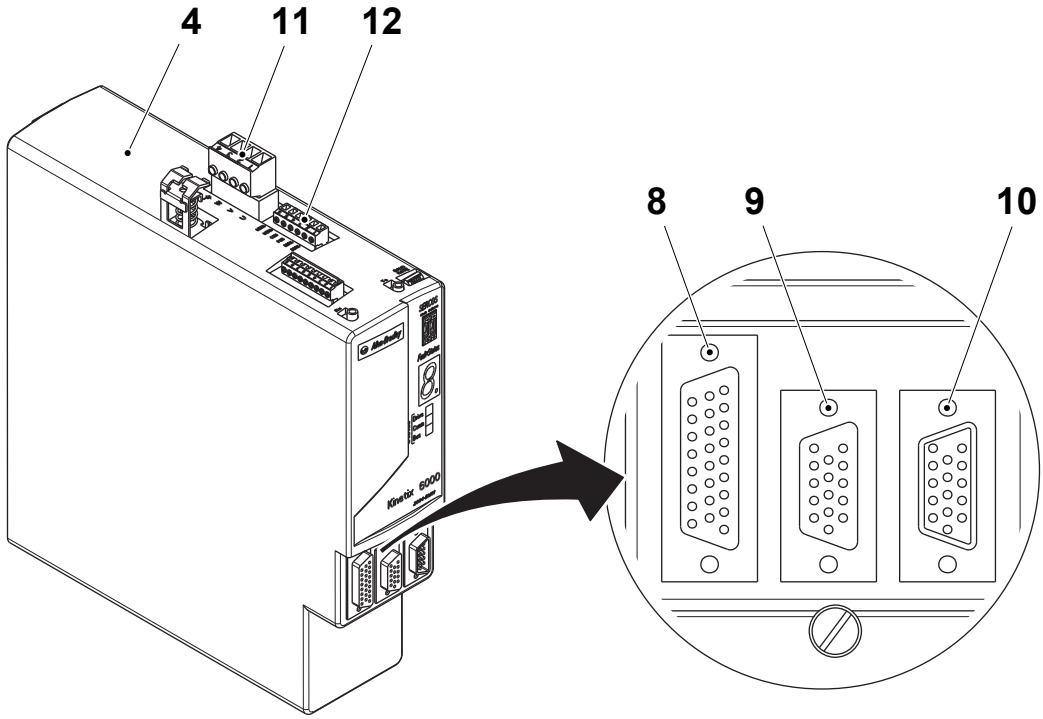

4 Servo drive
8 Connector for I/O communication
9 Connector for position feedback
10 Connector
11 Motor power
12 Brake power

(Cont'd)

9.3.1 Sercos Module

9.3.1-1 Sercos Module - Change

Machine Status	Mains Power OFF Air OFF Steam ON Water OFF
SPC Reference	90459-2481

Preparation

Before changing the Sercos module:

- Use the RSLinx Classic program to verify and record the firmware version of the existing Sercos module.
- Use the Flow Chart of Procedures for Changing the Serco Module on the next page to determine which procedures must be performed and their correct sequence.

(Cont'd)

(Cont'd)

Flow Chart of Procedures for Changing the Serco Module

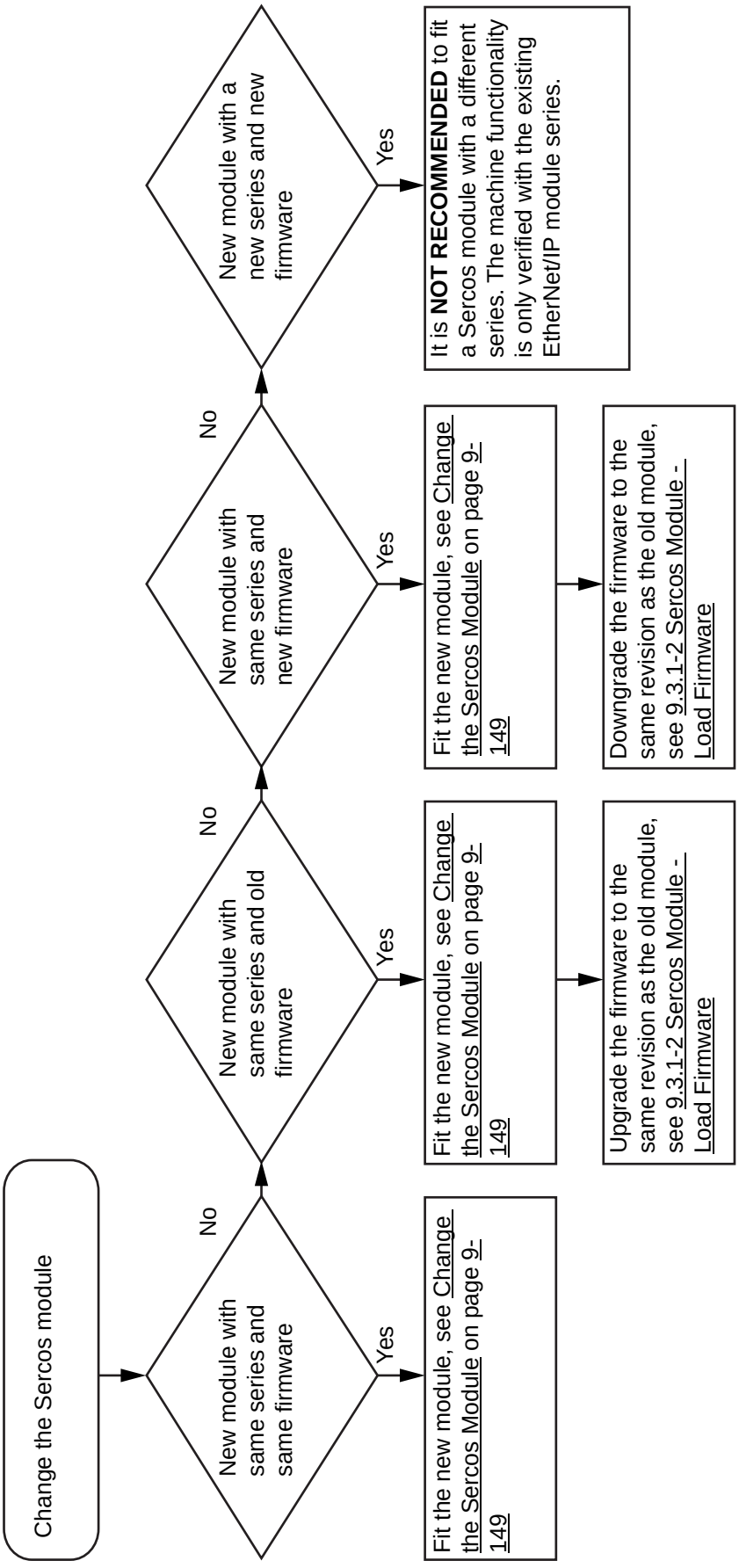

(Cont'd)

(Cont'd)

Change the Sercos Module

a) Mark the receive connector (1) and the transmit connector (2) and remove the connectors from the Sercos module (3).

b) Push in and hold the top and bottom locking tabs (4) on the Sercos module (3).

c) Pull the Sercos module (3) out of the chassis (5).

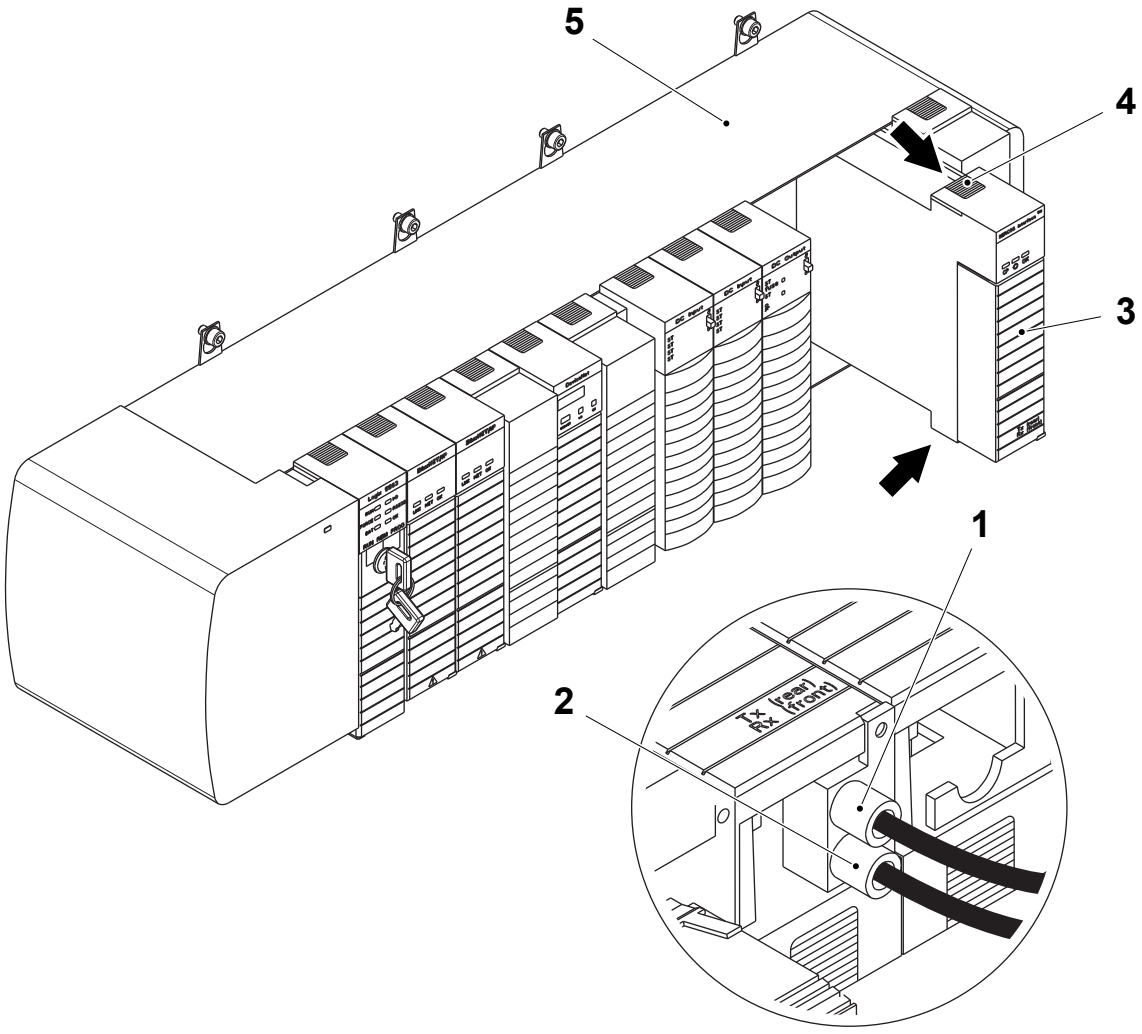

1 Receive connector, Rx
2 Transmit connector, Tx
3 Sercos module
4 Locking tab
5 Chassis

(Cont'd)

(Cont'd)

d) Align the new Sercos module (3) with the top and the bottom guides in the chassis.

e) Slide the Sercos module (3) into the chassis. Make sure it is flush with the other modules and the top and bottom latches are engaged.

f) Connect the receive connector (1) and the transmit connector (2) to the Sercos module (3).

g) Continue with the necessary procedures as described in Flow Chart of Procedures for Changing the Serco Module on page 9-148.

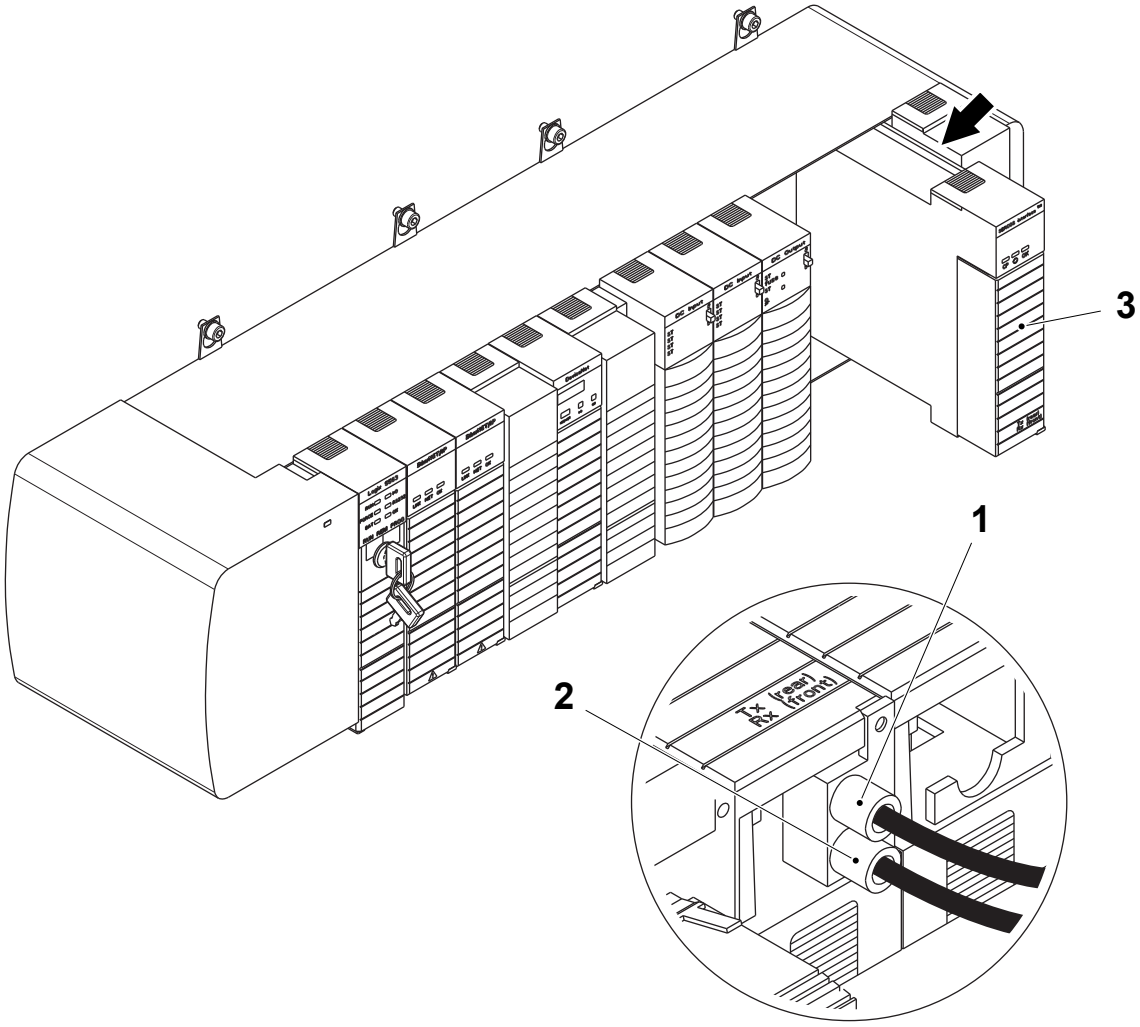

1 Receive connector, Rx
2 Transmit connector, Tx
3 Sercos module

9.3.1-2 Sercos Module - Load Firmware

Machine Status	Mains Power ON Air OFF Steam ON Water OFF
Special Equipment	PC with CD Drive Ethernet communication cable
SPC Reference	90459-2481

Follow the procedure described in 9.1.2-2 CPU Module - Load Firmware to load the firmware for the Sercos module.

9.3.1-3 Sercos Module - LED Description

Machine Status	Mains Power ON Air OFF Steam ON Water OFF
SPC Reference	90459-2481

The Sercos module has three LED's indicating the state of the system.

- The CP LED (Sercos communication) (1) displays the status of the communication phases
- The Sercos ring LED (2) displays the status of the Sercos network
- The OK LED (3) indicates the status of the module and the communication.

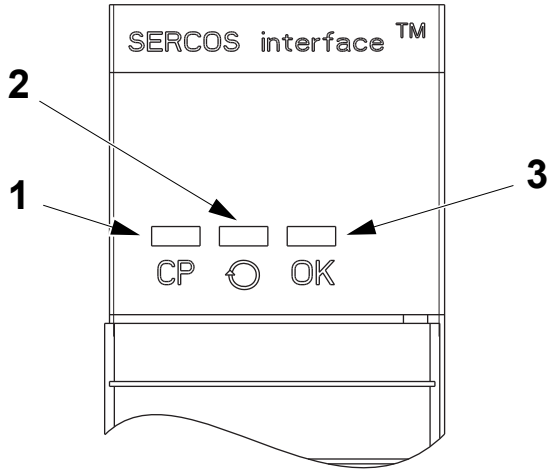

1 Sercos communication LED
2 Sercos ring LED
3 OK LED

(Cont'd)

(Cont'd)

During power up, the module completes a self test that includes an indicator test. All LEDs go red for one second, green for one second and OFF for one second.

LED	Colour	Description
CP (1)	Solid Orange	In Phase -1: Autobaud detection in progress.
	Off	In Phase 0: looking for a closed ring.
	Flashing Red	In Phase 1: looking for active nodes.
	Alternating Red/Green	In Phase 2: configuration of nodes for communication.
	Flashing Green	In Phase 3: configuration of device specific parameters
	Solid Green	In Phase 4: configured and active.
Sercos ring (2)	Solid Green	The ring, drive, and axes are configured and are actively communicating through to the nodes on the ring.
	Flashing Red	The module has detected a setup or configuration fault with the ring. Check the configuration as follows: - Ensure drive and axes addresses are correct - Remove excess axes from ring - Make sure application program has selected the proper ring cycle period and baud rate.

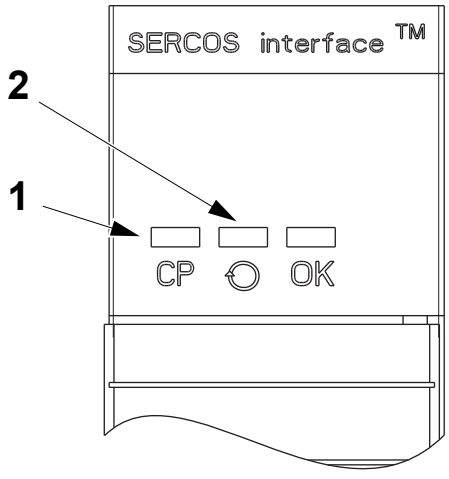

1 Sercos communication LED
2 Sercos ring LED

(Cont'd)

LED	Colour	Description
Sercos ring (2)	Solid Red	The module has detected a hardware or installation fault with the ring. Check as follows: - Make sure all cables are properly installed - Make sure the cable is of the correct type and length - Make sure application program has configured the ring transmit level of the module to high when using specified cables - Make sure the transmit levels of the drive are set appropriately - Inspect cables for damage - Inspect the drives for any faults
	Off	The module has detected no ring data on its receiver or has not successfully completed phase 2. Check as follows: - Make sure all cables are properly installed - Inspect cable for wear and damage - Inspect drives for faults.
	Flashing Green	The ring, drive, or axes are not configured but, at least one has been identified. Not a problem if the system has not been configured. If you are having configuration problems with the ring, drive, and axes, make sure that the application program is setup properly for the equipment in use.

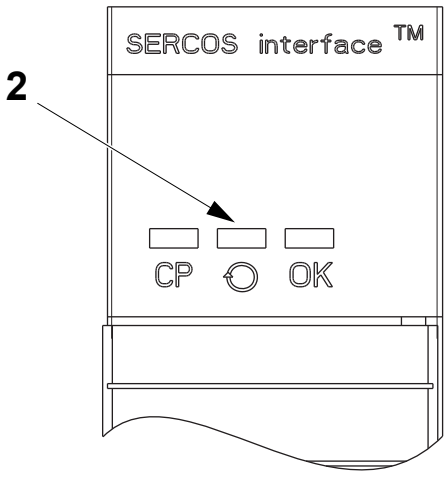

2 Sercos ring LED

(Cont'd)

(Cont'd)

OK (3)	Off	The module is not operating. Apply chassis power. Verify the module is completely inserted into the chassis and backplane.
	Flashing Green	The module has passed internal diagnostics, but has not established active communications.
	Steady Green	Data is being exchanged and the module is in the normal operating state.
	Flashing Red	A major recoverable failure has occurred or an firmware upgrade is in progress. If an firmware upgrade is in progress, complete the upgrade. If a firmware upgrade is not in progress, cycle the power.
	Solid Red	A potential non-recoverable fault has occurred. Cycle the power to the module. If the solid red persists, replace the module.

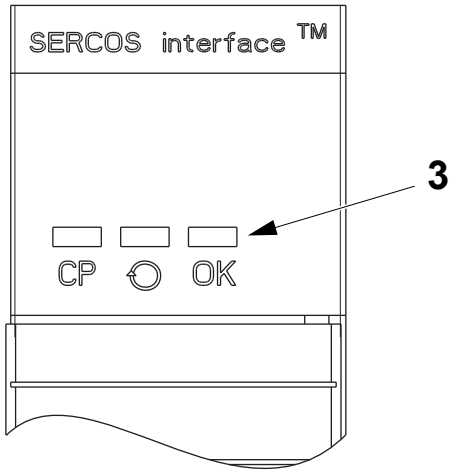

3 OK LED

9.3.2 Servo Drive

9.3.2-1 Servo Drive - Change

Machine Status	Mains Power OFF Air OFF Steam ON Water OFF
SPC Reference	2840936-0100

Preparation

Before changing the servo drive:

- Use the RSLinx Classic program to verify and record the firmware version of the servo drive.
- Use the Flow Chart of Procedures for Changing an IAM or AM Drive on the next page to determine which procedures must be performed and their correct sequence.

(Cont'd)

(Cont'd)

Flow Chart of Procedures for Changing an IAM or AM Drive

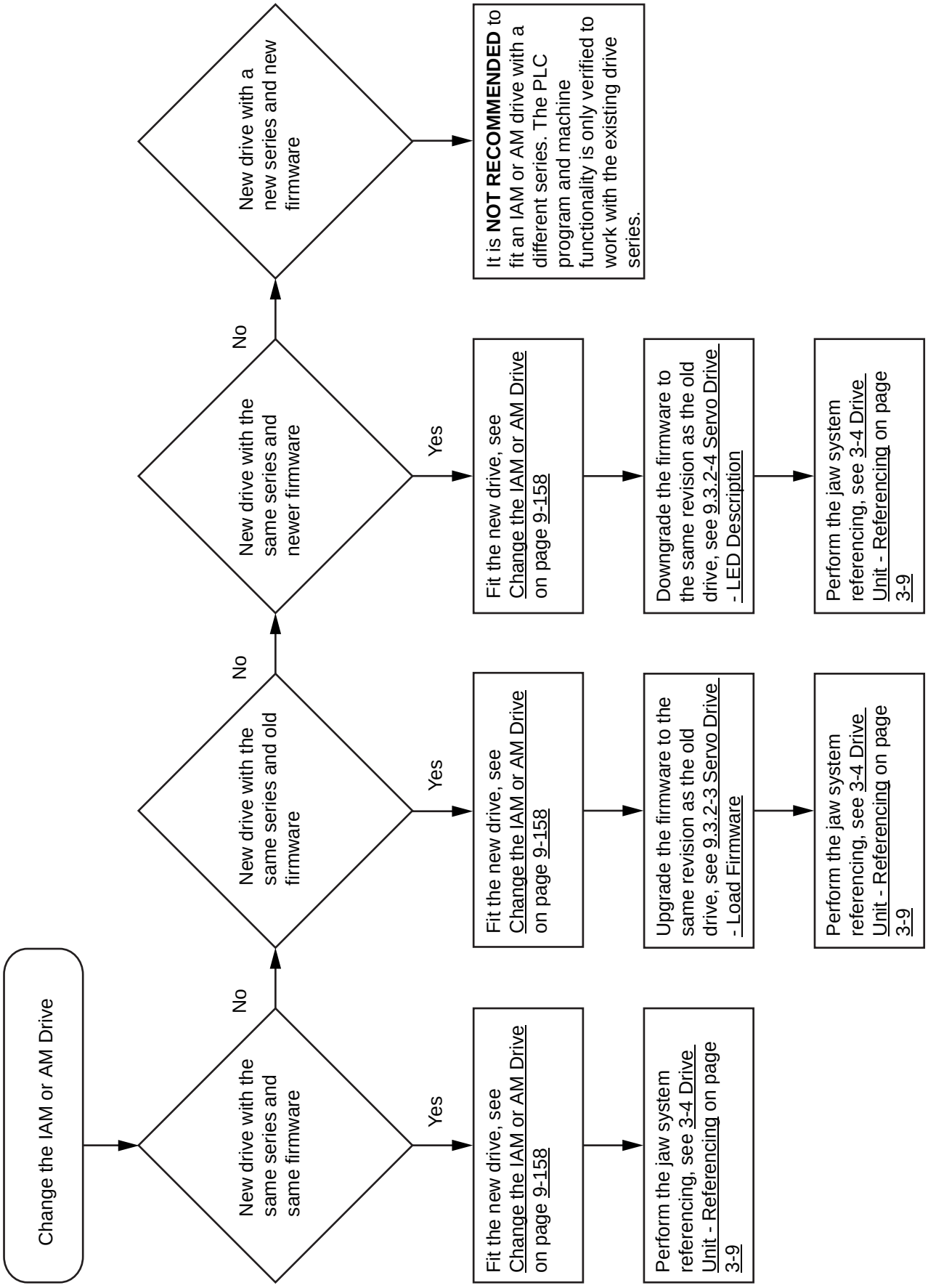

(Cont'd)

(Cont'd)

WARNING

Hazardous voltage.

Make sure that all control and input power has been removed from the servo system. Wait five minutes for the DC bus to completely discharge before proceeding.

Change the IAM or AM Drive

a) Mark and record the position of all connectors from the servo drive and then remove the connectors.

b) Use a screwdriver to remove the motor cable (1) from the cable shield clamp (2).

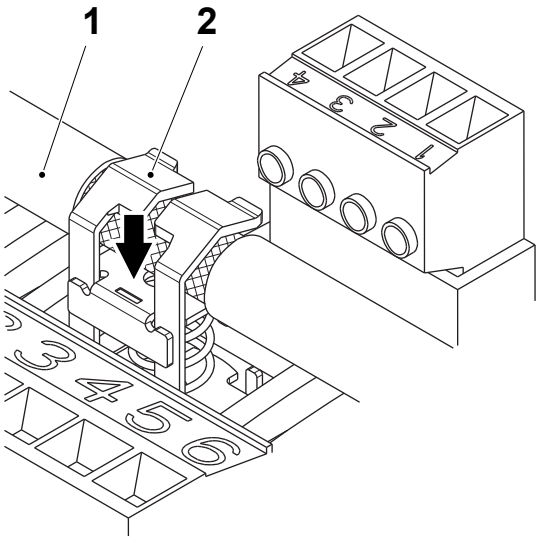

1 Motor cable
2 Clamp

(Cont'd)

(Cont'd)

c) Loosen the screw (3).

d) Grip the top and bottom of the servo drive (4) and gently pull the servo drive away from the connectors enough to clear the guide pins (5) (the servo drive will pivot on the top bracket). Lift the bracket out of the power rail slot (6) and remove the servo drive from the power rail.

e) If the servo drive to be changed is an IAM module, record the node address (7) and baud rate settings (8).

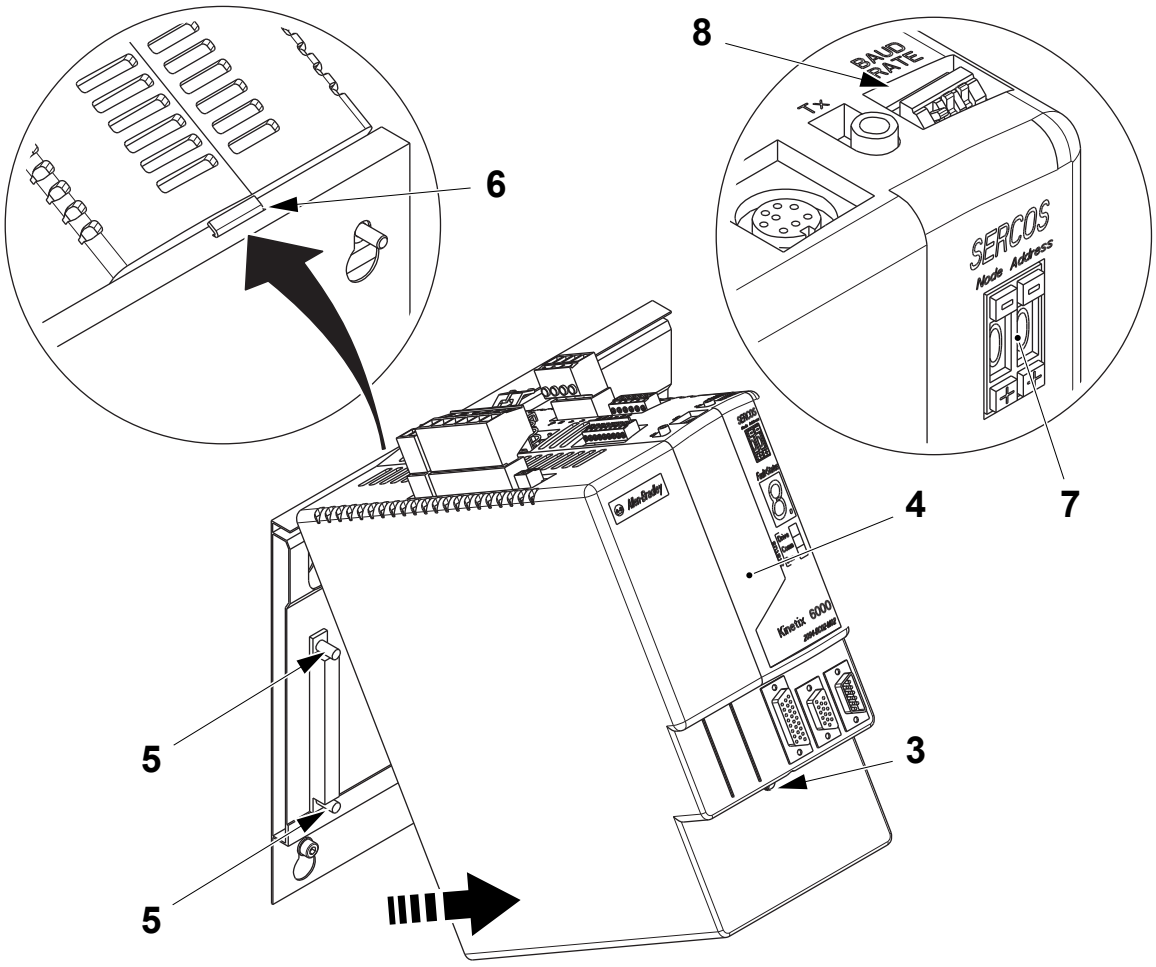

3 Screw
4 Servo drive
5 Guide pin
6 Power rail slot
7 Node address
8 Baud rate

(Cont'd)

(Cont'd)

CAUTION
Risk of damage to the equipment.
Make sure the guide pins (5) are correctly seated.

f) Attach the new servo drive mounting bracket (9) to the slot (10) in the power rail (11).

Note! The IAM has two power rail connectors and guide pins (5), all other servo drives have only one connector and one guide pin (5).

g) Align the guide pins (5) on the power rail with the guide pin holes in the back of the servo drive (4).

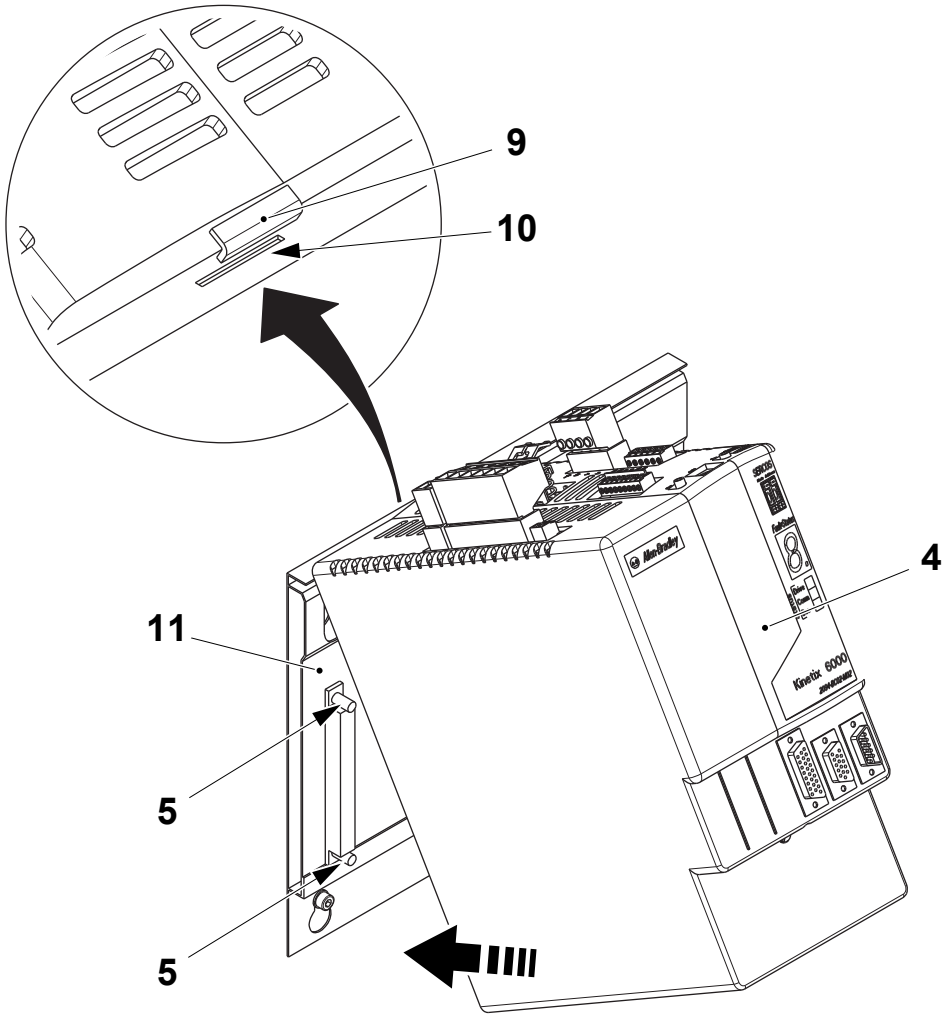

4 Servo drive
5 Guide pin
9 Mounting bracket
10 Slot
11 Power rail

(Cont'd)

(Cont'd)

h) Tighten the screw (3) to a torque of 2.26 Nm.

i) If the servo drive is an IAM, set the node address (7) and the baud rate (8) according to the setting recorded previously.

j) Connect the servo drive connectors and apply power to the system.

k) Check that the system is operating properly, see 9.3.2-4 Servo Drive - LED Description.

l) Continue with the necessary procedures as described in Flow Chart of Procedures for Changing an IAM or AM Drive on page 9-157.

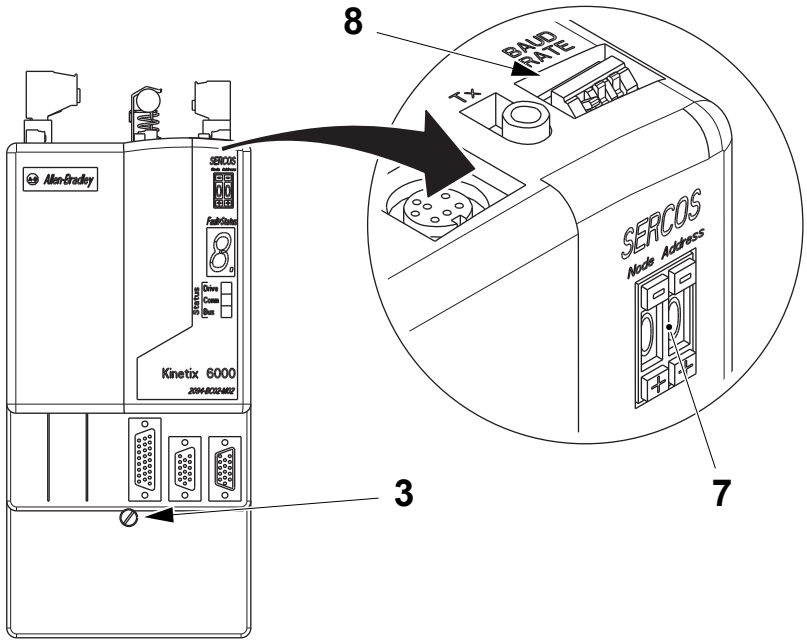

3 Screw
7 Node address
8 Baud rate

9.3.2-2 Servo Drive - Set Baud Rate

Machine Status	Mains Power OFF Air OFF Steam ON Water OFF
SPC Reference	2840936-0100

Set the DIP switches for the IAM and AM drives according to the table and the illustration below.

Optical power (1)	On
Baud rate LSB (2)	On
Baud rate MSB (3)	Off

The illustration shows an Integrated Axis Module

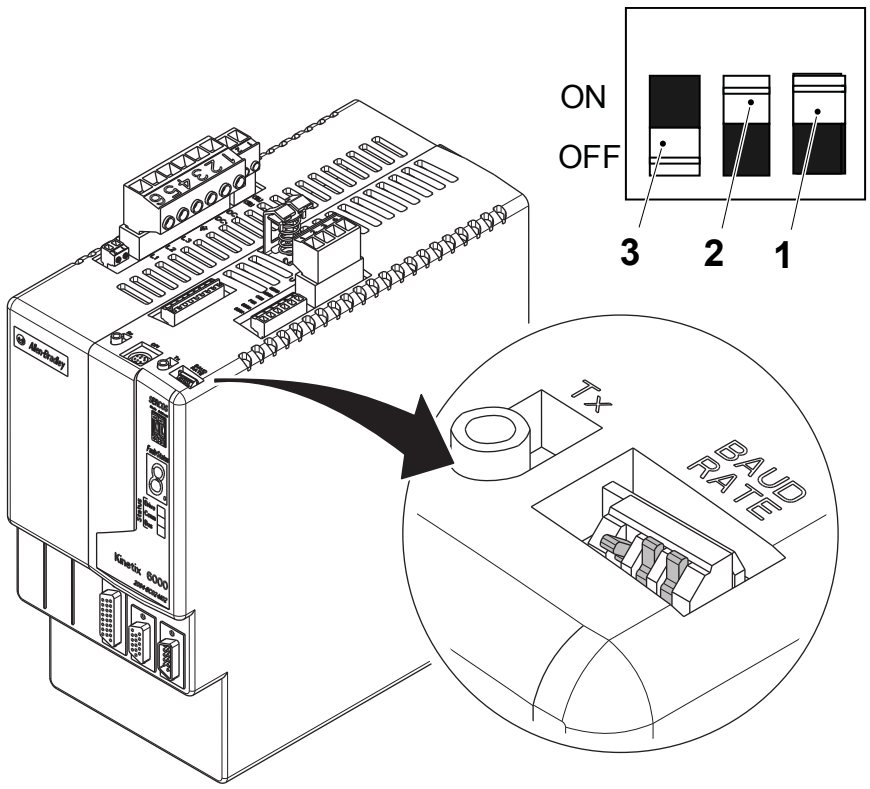

1 DIP switch optical power
2 DIP switch baud rate LSB
3 DIP switch baud rate MSB

9.3.2-3 Servo Drive - Load Firmware

Machine Status	Mains Power ON Air OFF Steam ON Water OFF
SPC Reference	2840936-0100

CAUTION
Risk of damage to the equipment.
To avoid injury or damage to the equipment due to unpredictable motor activity, do not apply AC input power or establish communications with the SERCOS module.

Note! After a firmware download the jaw system referencing procedure must be performed, see 3-4 Drive Unit - Referencing on page 3-9.

Follow the procedure described in 9.1.2-2 CPU Module - Load Firmware to load the firmware for the servo drive.

9.3.2-4 Servo Drive - LED Description

Machine Status	Mains Power ON Air OFF Steam ON Water OFF
SPC Reference	2840936-0100

LED	Colour	Status	Action
Drive Status (1)	Off	Normal, no faults	
	Solid red	Drive faulted	Read the error code in the Fault status display and see the section Error codes
Comm Status (2)	Off	No communication	Check for loose fiber optic connection or damaged fiber optic cable. Check that the fiber optic cables are not cross-connected.
	Flashing green	Establishing communication	System is still in the process of establishing SERCOS communication.
	Solid green	Communication ready	No faults or failures

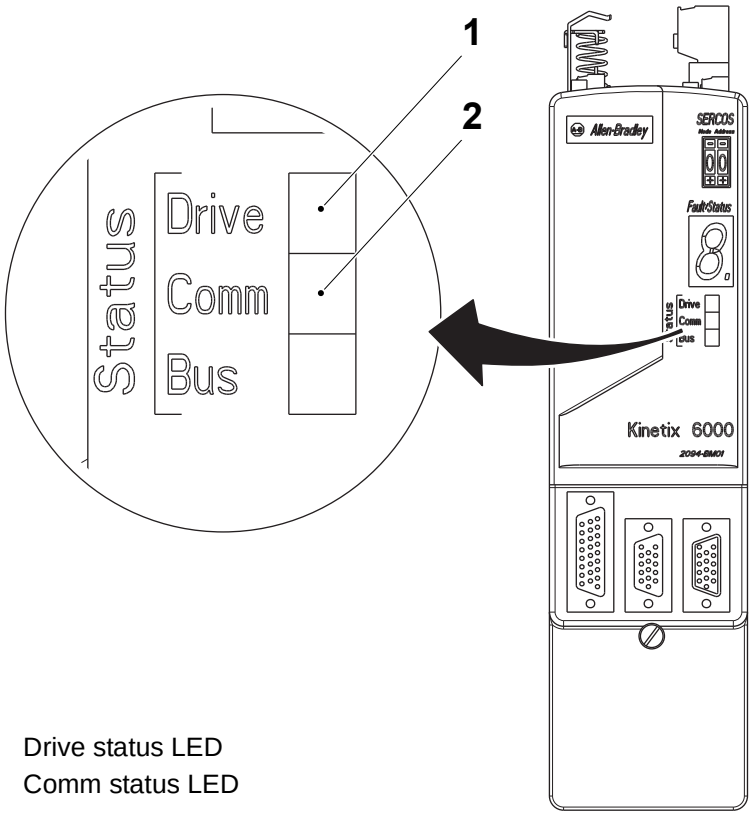

1 Drive status LED
2 Comm status LED

(Cont'd)

(Cont'd)

LED	Colour	Status	Action
Bus Status (3)	Off	Bus power not present	
	Flashing green	Power is present, axis enabled. No faults or failures.	Normal when: 24V is **not** applied to Hardware Enable Input (IOD-2). or MSO instruction is **not** commanded in RSLogix 5000 software.
	Solid green	Power is present, axis enabled. No faults or failures.	Normal when: 24V is applied to Hardware Enable Input (IOD-2). or MSO instruction is commanded in RSLogix 5000 software.

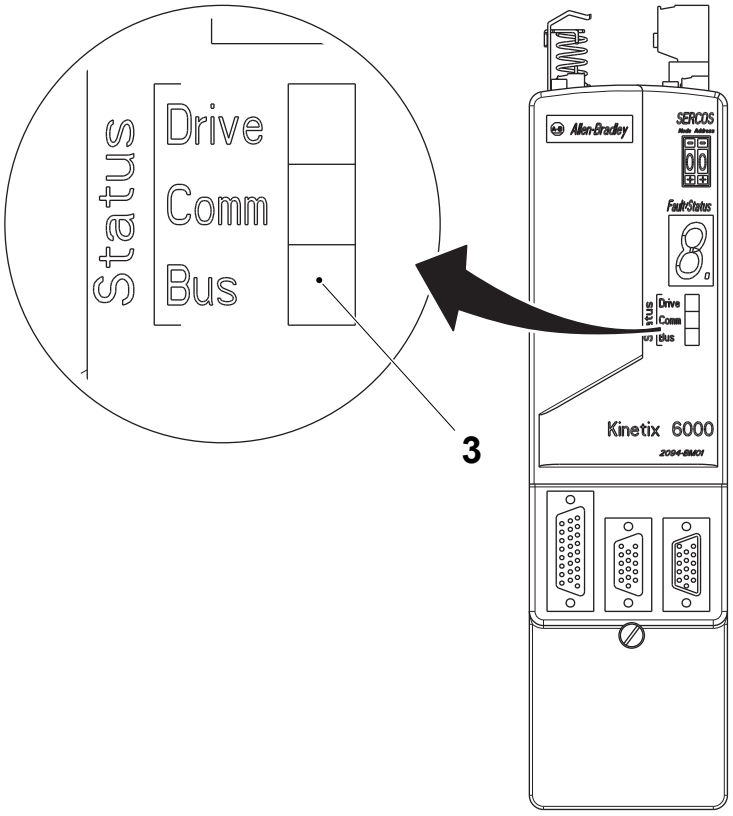

3 Bus status LED

9.3.2-5 Servo Drive - Error Codes

Machine Status	Mains Power ON Air OFF Steam ON Water OFF
SPC Reference	2840936-0100

When an error occurs, the fault/status LED on the front of the servo drive will display the letter E followed by a two-digit error code, one digit at a time. Refer to the error codes table below to identify error codes and the corrective actions.

Error code	Fault message RSLogix (HIM)	Problem	Description	Action
		Power indicator not ON	No AC power or auxiliary logic power	Verify AC control power is applied to the Kinetix 6000.
			Internal power supply malfunction	Change the module
		Motor jumps when first enabled.	Motor wiring error	Check motor wiring. Run Hookup test in RSLogix 5000
			Incorrect motor chosen	Verify the proper motor is selected
		Digital I/O not working correctly	I/O power supply disconnected	Verify connections and I/O power source
E00	**BusUndervoltage Fault** (Blown fuse)	A blown fuse was detected on the inverter PCB	Blown fuse	Change the module
E04	**MotorOvertemp Fault** (Motor Overtemp)	Motor thermal switch tripped	High motor ambient temperature and/or excessive current	Operate within (not above) the continuous torque rating for the ambient temperature (40°C maximum). Lower ambient temperature, increase motor cooling
			Motor wiring error	Check motor wiring at MF connector on the IAM/AM
			Incorrect motor selection	Verify the proper motor has been selected

Error code	Fault message RSLogix (HIM)	Problem	Description	Action
E05	**DriveOvercurrent Fault** (Power Fault)	Self-protection of the Intelligent Power Module (IPM) is indicating a major power related fault condition	Motor cables short circuit	Verify continuity of motor power cable and connector
			Motor winding internal short circuit internally	Disconnect motor power cables from the motor. If the motor is difficult to turn by hand, it may need to be replaced
			Kinetix 6000 temperature too high	Check for clogged vents or defective fan. - Make sure cooling is not restricted by insufficient space around the unit.
			Operation above continuous power rating and/or product environmental ratings	Verify ambient temperature is not too high. Operate within the continuous power rating. Reduce acceleration rates
			Kinetix 6000 has a short circuit, over current, or failed component	Remove all power and motor connections, and perform a continuity check from the DC bus to the U, V, and W motor outputs. If a continuity exists, check for wire fibers between terminals, or send drive in for repair
E06	**HardOvertravel Fault** (+/- Hard Overtravel)	Axis moved beyond the physical travel limits in the positive/negative direction	Dedicated over travel input is inactive	Check wiring. Verify motion profile. Verify axis configuration in software
E07	**MotFeedbackFault** (Motor Feedback Loss)	The feedback wiring is open, has a short circuit, or missing		Check motor encoder wiring. Run Hookup test in RSLogix 5000
E09	**BusUndervoltage Fault** (Bus Under Voltage)	With three-phase power present, the DC bus voltage is below limits	DC bus voltage for 460V system is below 275V DC bus voltage for 230V system is below 137V	Verify voltage level of the incoming AC power. Check AC power source for glitches or line drop. Install an uninterrupted power supply (UPS) on your AC input
		DC bus voltage fell below the undervoltage limit while an axis on the follower power rail was enabled		Disable follower axis before removing the power

Error code	Fault message RSLogix (HIM)	Problem	Description	Action
E10	**DriveOvervoltage Fault** (Bus Overvoltage)	The DC bus voltage is above limits	Excessive regeneration of power. When the motor is driven by an external mechanical power source, it may regenerate too much peak energy through the Kinetix 6000's power supply. The system faults to save itself from an overload	Contact Tetra Pak
			DC bus voltage for 460V system is over 820V DC bus voltage for 230V system is over 410V	Verify input is within specifications
E11	**MotFeedbackFault** (Illegal Hall State)	State of Hall feedback inputs is incorrect	Bad connections	Verify the Hall wiring at the MF connector on the IAM/AM. Verify 5V power supply to the encoder
E16	**Softovertravel Fault** (+/- Software Overtravel)	Axis position exceeded maximum software setting		Verify motion profile. Verify over-travel settings are appropriate
E18	**OverSpeedFault** (Overspeed Fault)	Motor speed has exceeded 150% of maximum rated speed. The 100% trip point is dictated by the lesser of the user velocity limits or the motor rated base speed		Check cables for noise. Check tuning
E19	**PositionErrorFault** (Follow Error)	Position error limit was exceeded		Verify sizing of system. Verify mechanical integrity of system within specification limits
E20	**MotFeedbackFault** (Mtr Fdbk AQB)	Motor Encoder State Error	The motor encoder encountered an illegal transition	Use shielded cables with twisted pair wires. Route the feedback away from potential noise sources. Check the system grounds. Replace the motor/encoder
E21	**AuxFeedback Fault** (Aux Feedback Comm)	Communication was not established with an intelligent encoder.		Verify auxiliary encoder wiring
E30	**MotFeedbackFault** (Motor Feedback Comm)	Communication was not established with an intelligent encoder		Verify motor selection. Verify the motor supports automatic identification. Verify motor encoder wiring

Error code	Fault message RSLogix (HIM)	Problem	Description	Action
E34	**GroundShortFault** (Ground Fault)	Excessive ground current in the converter was detected	Wiring error	Check motor power wiring. Check input power wiring (refer to Kinetix 6000 Installation Manual, publication 2094-IN001x-EN-P, regarding use of isolation transformer)
			Motor internal ground short	Replace motor
			Internal malfunction	Disconnect motor power cable from drive and enable drive with current limit set to 0. If fault clears, then a wiring error or motor internal problem exists. If fault remains, call your A-B representative
			Grounded control power terminal (applies to 230V systems only)	Remove ground from control power input. Source control power from three phase input power. Add isolation transformer for control power.
E35	**DriveUndervoltage Fault** (Precharge Fault)	Converter pre-charge cycle failed.	Low AC input voltage	Check input AC voltage on all phases
			Internal malfunction	Call your A-B representative
E36	**DriveOvertemp Fault** (System Overtemperature)	Converter thermal switch tripped	Excessive heat exists in the power circuitry	Check for clogged vents or defective fan. Ensure cooling is not restricted by insufficient space around the unit
E37	**PowerPhaseLoss** Fault	One or more phases of the input AC power is missing. Axis was enabled when main (3-phase) power was removed. Common bus follower axis was enabled when DC bus power was removed.		Check input AC voltage on all phases. Disable axis before removing power. Clear fault
E38	**SERCOSFault** (SERCOS Ring Flt)	The SERCOS ring is not active after being active and operational	Cable disconnected	Check that the fiber optic cable is present and connected properly.
E39	**DriveHardFault** (Self Sense Flt)	Control hardware fault detected	Motion required for self-sensing start-up commutation was obstructed	Verify that there are no impediments to motion at startup, such as hard limits. Check motor or encoder wiring using wiring diagnostics
E43	**DriveEnableInput** (Drive Enable Flt)	Missing Drive Enable Input Signal	An attempt was made to enable the axis through software while the Drive Enable hardware input was inactive. The Drive Enable input transitioned from active to inactive while the axis was enabled	Disable the Drive Enable Input fault. Verify that Drive Enable hardware input is active whenever the drive is enabled through software

Error code	Fault message RSLogix (HIM)	Problem	Description	Action
E49	**DriveHardFault** (Safe-off HW Flt)	Safe-off function mismatch. Drive will not allow motion.	Loose wiring at SO connector. Cable/header not seated properly in SO connector. Safe-off circuit missing +24V DC.	Verify wire terminations, cable/ header connections, and +24V. Reset error and run proof test. If error persists, return the drive to Allen-Bradley.
E50	**SERCOSFault** (Sercos Same ADDR)	Duplicate node address detected on SERCOS ring		Verify that each SERCOS drive is assigned an unique node address
E54	**DriveHardFault** (Ifbk HW Fault)	Current feedback hardware fault detected.		Replace the module
E60	**DriveHardFault** (Unknown Axis)	Illegal ID bits detected		Replace the module
E61	**AuxFeedback Fault** (Aux Fdbk AQB)	Auxiliary Encoder State Error	The auxiliary encoder encountered an illegal transition	Use shielded cables with twisted pair wires. Route the feedback away from potential noise sources. Check the system grounds. Replace the motor/encoder
E62	**AuxFeedback Fault** (Aux Fdbk Loss)	The feedback wiring is open, has a short circuit, or missing		Check the motor feedback cable connectors/wiring to the IAM/ AM and motor
E63	**AuxFeedback Noise** (Aux Fdbk Noise)	Noise on auxiliary feedback cable.	Recommended grounding, per installation instructions, has not been followed.	Verify grounding. Route feedback cable away from noise sources. Refer to System Design for Control of Electrical Noise Reference Manual, publication GMC-RM001.
E64	**MotorFeedback Noise** (Mtr Fdbk Noise)	Noise on motor feedback cable.		
E65	**No Fault Message** (condition indicated by on-screen message) (Hookup Fault)	Hookup procedure failed	Motor or feedback device malfunction	Check motor power/feedback wiring. Refer to on-screen message for resolution
E66	**No Fault Message** (condition indicated by on-screen message) (Atune Flt)	Autotune procedure failed	Motor or feedback device malfunction	Check motor power/feedback wiring. Refer to on-screen message solution. Perform Hookup in RSLogix 5000. Consult RSLogix 5000 for help screen
E67	**DriveHardFault** (Task init)	Operation system failed.	Software initalization fault detected due to hardware failure.	Cycle power. If fault persists, replace module.
E68	**DriveHardFault** (SCANport™Comm)	DPI communication failed	The DPI device or cable is faulty	Check DPI connections
E69	**HardDriveFault** (Objects init)	Non-volatile memory is corrupt due to control board hardware failure		Load default parameters, save to non-volatile memory, and recycle power or reset the drive
E70	**DriveHardFault** (NV Mem Init)	Non-volatile memory is corrupt due to control board software error		Load default parameters, save to non-volatile memory, and recycle power or reset the drive

Error code	Fault message RSLogix (HIM)	Problem	Description	Action
E71	**DriveHardFault** (Memory Init)	RAM or flash memory validation failure		Cycle power. If fault persists, replace module
E72	**DriveOvertemp Fault** (Drive Overtemp)	Inverter thermal switch tripped	The fan on the IAM or an AM failed	Replace the failed module
			The cabinet ambient temperature is above rating.	Check the cabinet temperature
			The machine duty cycle requires an RMS current exceeding the continuous rating of the module	Contact Tetra Pak
			The airflow access to the Kinetix 6000 is limited or blocked	Check airflow and re-route cables away from the Kinetix 6000 system
E73	**Communicate** (Backplane Comm)	Power rail CAN communications failed		Check module for proper mount
		Power rail connection has a short circuit or is open		Check power rail and module for foreign objects
E74	**DriveOvercurrent Fault** (BusOverCurrent)	DC link current exceeds rating	Motor or transmission malfunction	Check for proper motor sizing. Check/replace transmission device. Check/replace motor
			IAM not properly sized	Contact Tetra Pak
E75	**DriveOvervoltage Fault** (Shunt Time Out)	The IAM or AM has exceeded its shunt resistor continuous rating		Use properly sized shunt or modify duty cycle of the application. System uses internal shunt and requires external shunt for additional capacity.
E76	**DriveHardFault** (Can Init)	DPI hardware initialization fault detected	Control board hardware failure	Reset system. If fault persists, replace the module
E77	**DriveHardFault** (Module Mismatch)	Either 230V AM is installed on power rail with 460V IAM, or 460V AM is installed on power rail with 230V IAM		Replace mismatched module
E78	**DriveHardFault** (SERCOS Init)	Control hardware fault detected		Cycle power. If fault persists, replace module
E79	**DriveOvervoltage Fault** (Shunt Module Flt)	SM Temperature Fault LED status is solid Red		Refer to Temperature Fault LED description
		SM Shunt Fault LED status is solid Red		Refer to Shunt Fault LED description
		Module missing from power rail		Install missing module on power rail. Fill empty slot with slot filler module
E80	**HardwareFault** (CPLD FLT)	Control hardware fault detected		Replace module
E81	**DriveHardFault** (Common Bus Flt)	Follower IAM detected ac input power being applied.		Remove ac input power connections from follower IAM.
E90	**DriveHardFault** (Pre-charge Timeout Flt)	Pre-charge resistor power exceeds the resistor rating.		Allow resistor to cool.

9.4 Safety System

SPC Reference	2840934-0100

9.4-1 Safety System - Description

SPC Reference	2840934-0100

The safety system of the filling machine is managed by the two Pluto Safety PLC modules 01F500 and 01F501. To increase the number of input and output possibilities, the modules are assisted by five expansion relays (01F502, 01F503, 01F504, 01F505 and 01F506).

The pluto system monitors the:

- emergency stop buttons
- door safety switches
- machine covers fitted with a safety switch
- contactors for AC motor driven units
- modules for the servo controlled units
- contactors for units using AC power.

When an emergency stop button is pushed, a door is opened or a cover is removed, an emergency stop signal is sent to the CPU module which then takes the necessary actions to stop the machine.

When the emergency stop button is released, the door is closed or the cover is replaced, a reset signal is generated by the CPU module when the alarm is reset on the TPOP.

9.4-2 Safety System - Troubleshooting

Machine Status	Mains Power ON Air OFF Steam ON Water OFF
SPC Reference	2840934-0100

Note! The PLC only monitors the channel with constant +24V DC.

When the safety system alarm symbol (1) appears on the TPOP, this indicates that the PLC has received an input that all door safety switches and emergency stop buttons are in the OK condition, but that the safety system has not been reset.

Two types of fault may cause this condition, two channel faults and feedback faults, see the table on the following page to identify the fault type and the relevant actions to be taken.

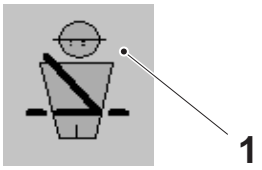

1 Safety system alarm symbol

(Cont'd)

(Cont'd)

Two Channel Fault		
Problem	**Description**	**Action**
The system will trip but it will not automatically reset when the input is OK again.	One of the channels (inputs) may have been temporarily interrupted but is now OK. The LED associated with the faulty input will flash as will the information output to the PLC.	Open and close both channels (for example by opening and closing a door in the affected circuit) and reset the alarm.
The system will trip and cannot be reset.	One or both channels are permanently off. The LED associated with the faulty input is OFF.	Repair the faulty circuit, open and close both channels (for example by opening and closing a door in the affected circuit) and reset the alarm.
Feedback Fault		
Problem	**Description**	**Action**
The system cannot be reset.	One of the feedback circuits has not been closed when the output has tripped. The LED associated with the faulty input (feedback circuit) is OFF and the information output to the PLC will be ON.	Repair the faulty circuit or contactor and reset the alarm.

9.4.1 Pluto Module

9.4.1-1 Pluto Module - Load Program

Machine Status	Mains Power ON Air OFF Steam ON Water OFF
Special Equipment	PC with Pluto Manager Pluto Communication Cable TP No. 90459-6033
SPC Reference	2840934-0100

Note! Pluto Manager software version 1.25 or above is needed to load the program. A registration code is required to run the Pluto Manager software, when prompted for a registration code type MUTE in the dialogue box.

(Cont'd)

(Cont'd)

a) Connect the PC (1) to the Pluto module (2).

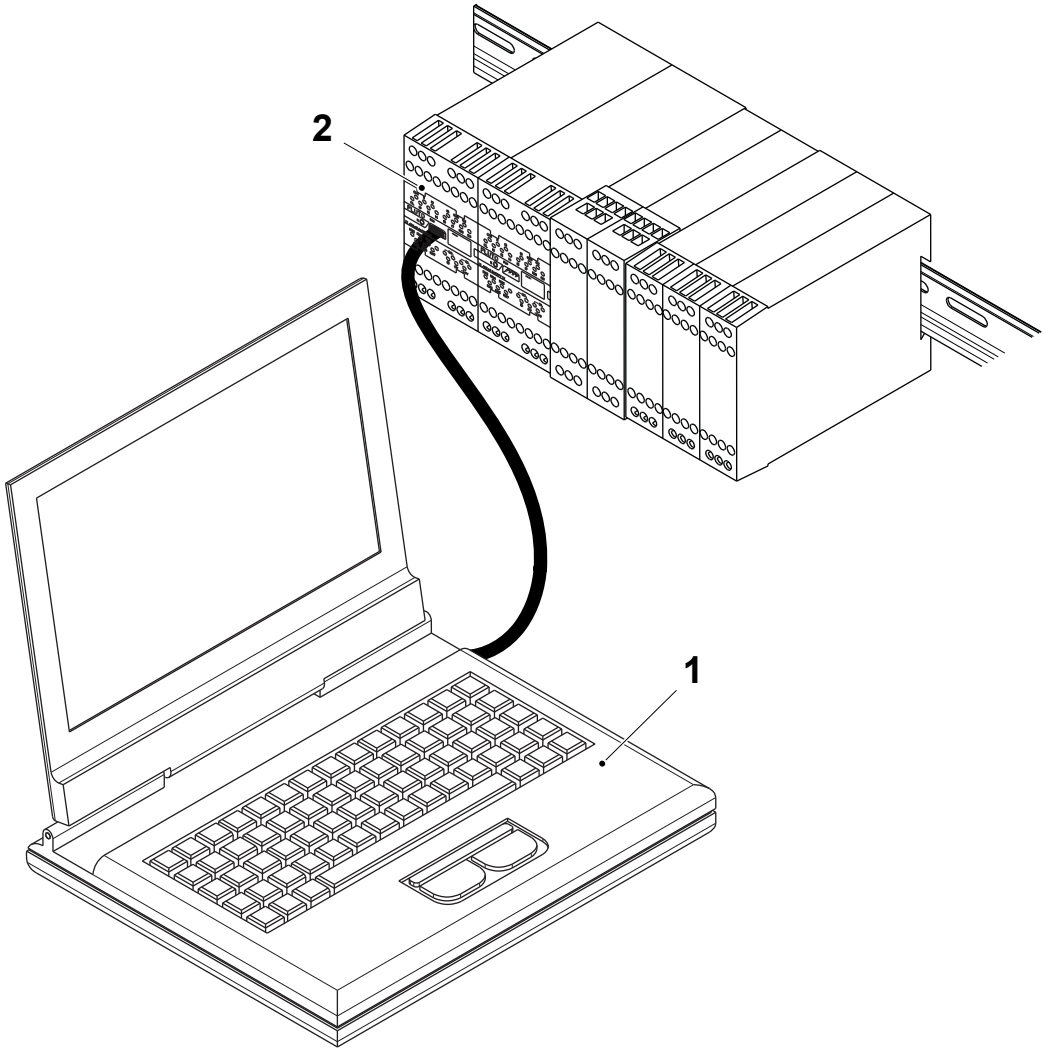

1 PC
2 Pluto module

(Cont'd)

(Cont'd)

b) Open the Pluto Manager by double clicking the PLUTO MANAGER icon (3) on the PC desktop.

c) In the Pluto Manager window, select PROJECTS (4) and then select OPEN (5).

Note! Make sure that the files *.spe and *.hps are available and stored in thesame directory before to start the download procedure.

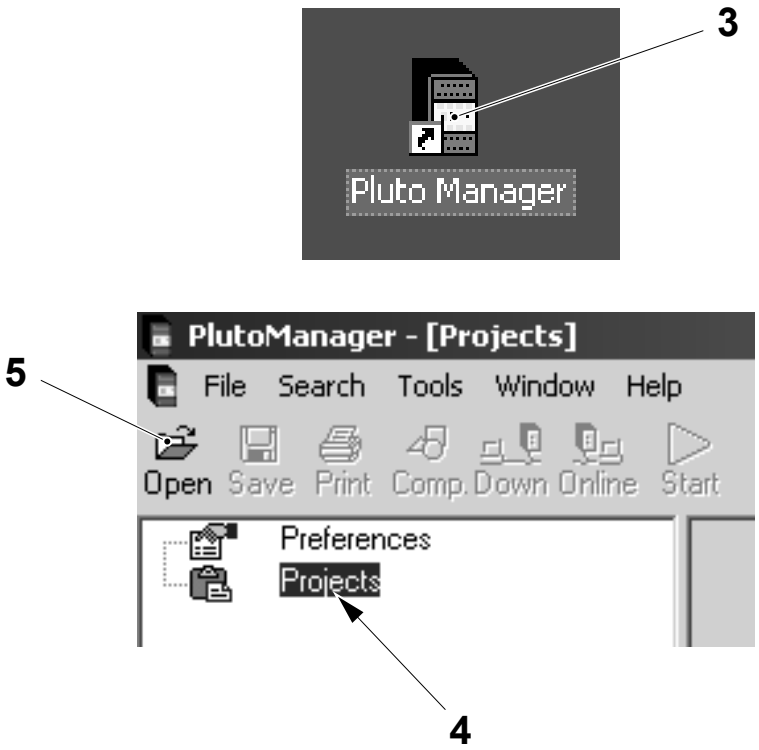

3 Pluto manager icon
4 Projects
5 Open

(Cont'd)

(Cont'd)

Note! The project number shown in the illustration is an example.

d) Select the required `PROJECT FILE*.spe` (6) and then select `OPEN` (7).

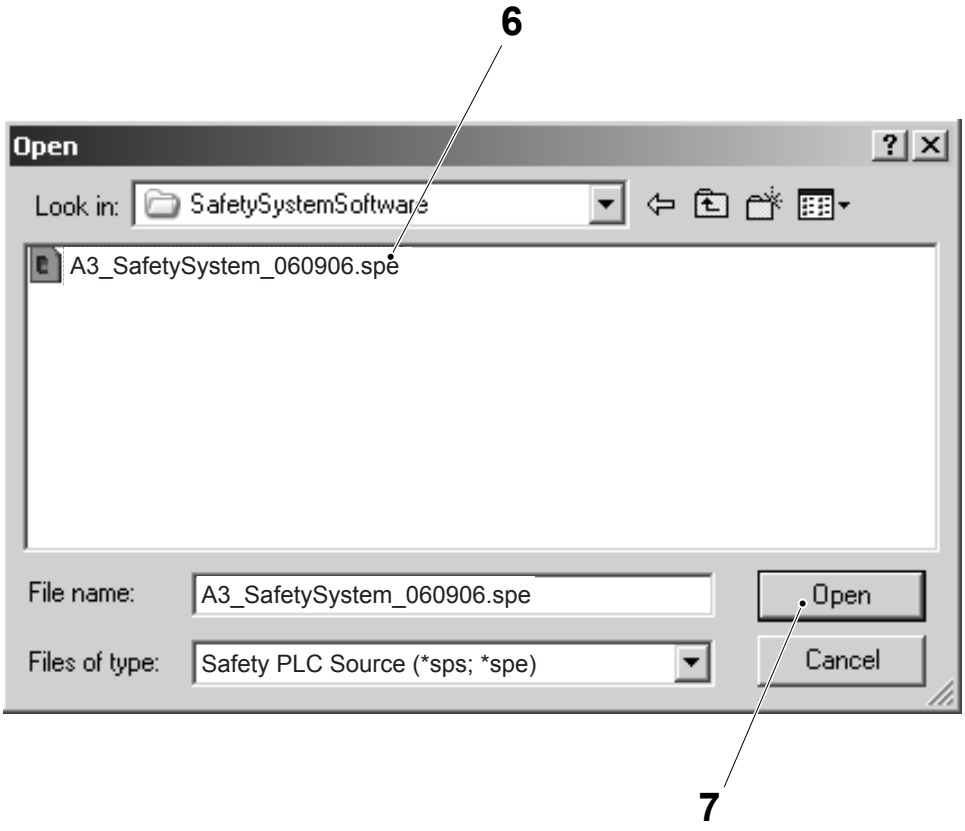

6 Project
7 Open

(Cont'd)

(Cont'd)

e) Select the DOWN button (8).

f) If the Pluto module is not assigned with a password, a dialogue window appears asking for a new password. Enter the password **abc80** in the PASSWORD field (9).

g) Repeat the password in the CONFIRM PASSWORD field (10) and then select the OK button (11).

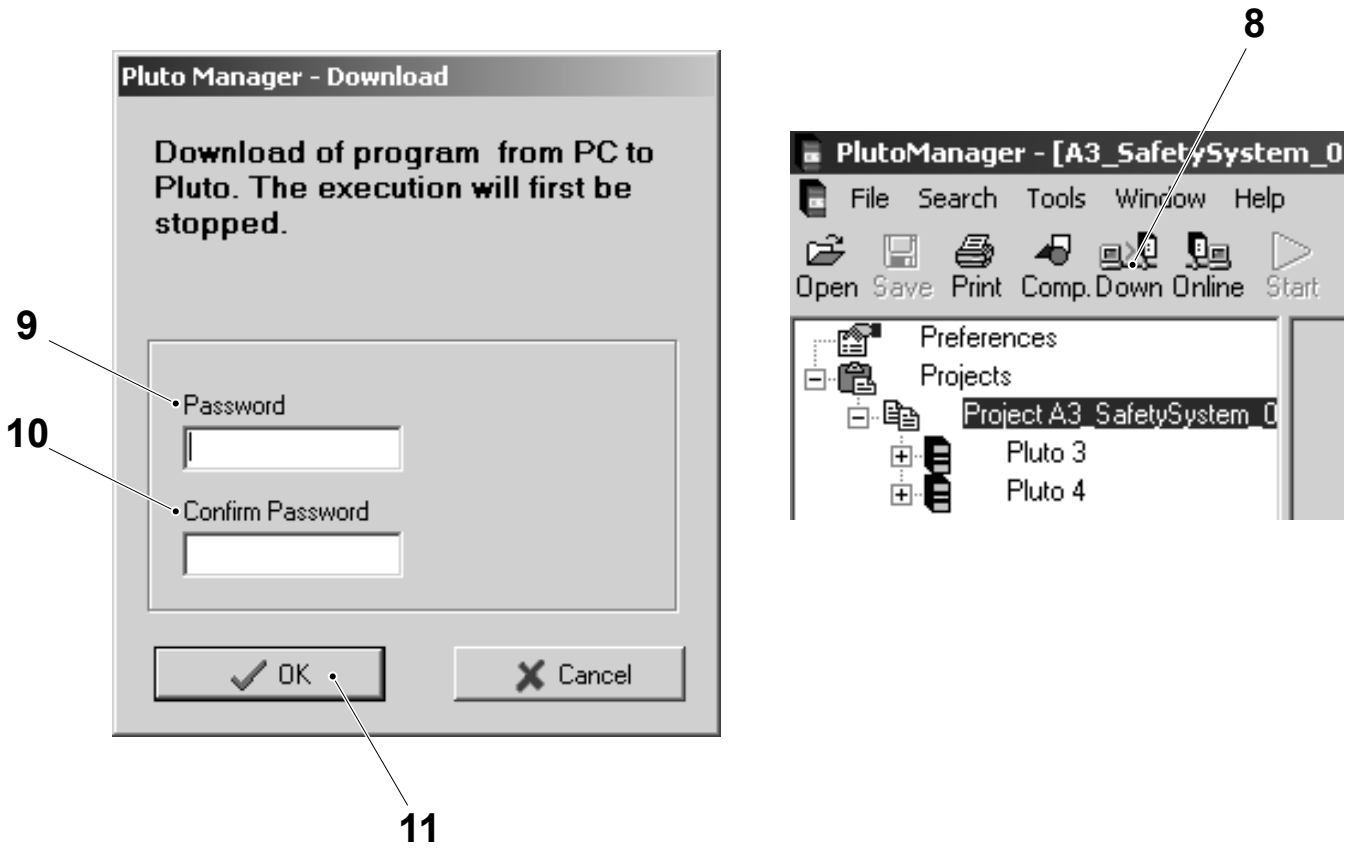

8 Down button
9 Password field
10 Confirm Password field
11 OK button

(Cont'd)

(Cont'd)

h) If the Pluto module is assigned with a password, a dialogue box appears asking for the password.

i) Type the password **abc80** in the PASSWORD field (12).

j) Select the OK button (13).

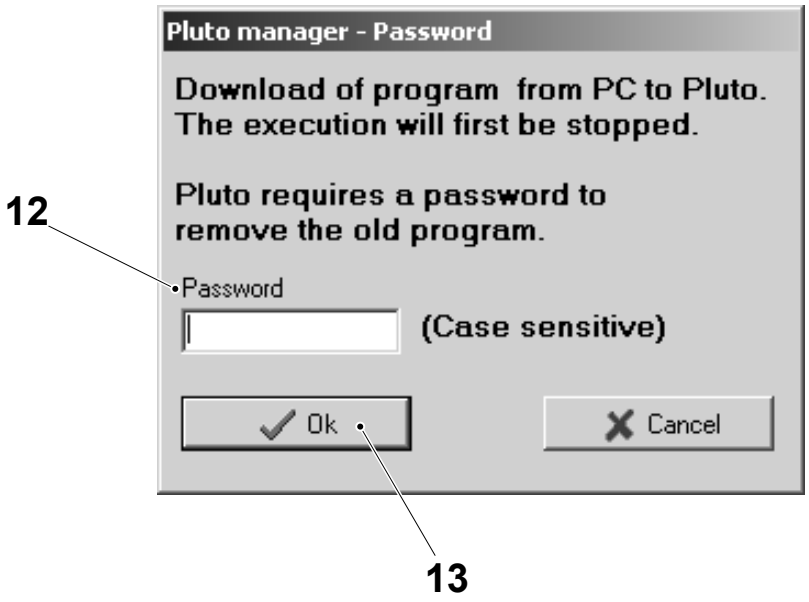

12 Password field
13 OK button

(Cont'd)

(Cont'd)

Note! If the fault message `COULDN'T ESTABLISH CONNECTION` appears there is no connection with the Pluto module. Check the communication cable is correctly connected.

Note! If the fault message Connection time out appears the communication has been interrupted. Check the communication cable is correctly connected.

k) When the download is complete the dialogue box appears, select the `YES` button (14).

Note! A warning is given if the program project is for several Pluto modules and all modules are not connected to the bus.

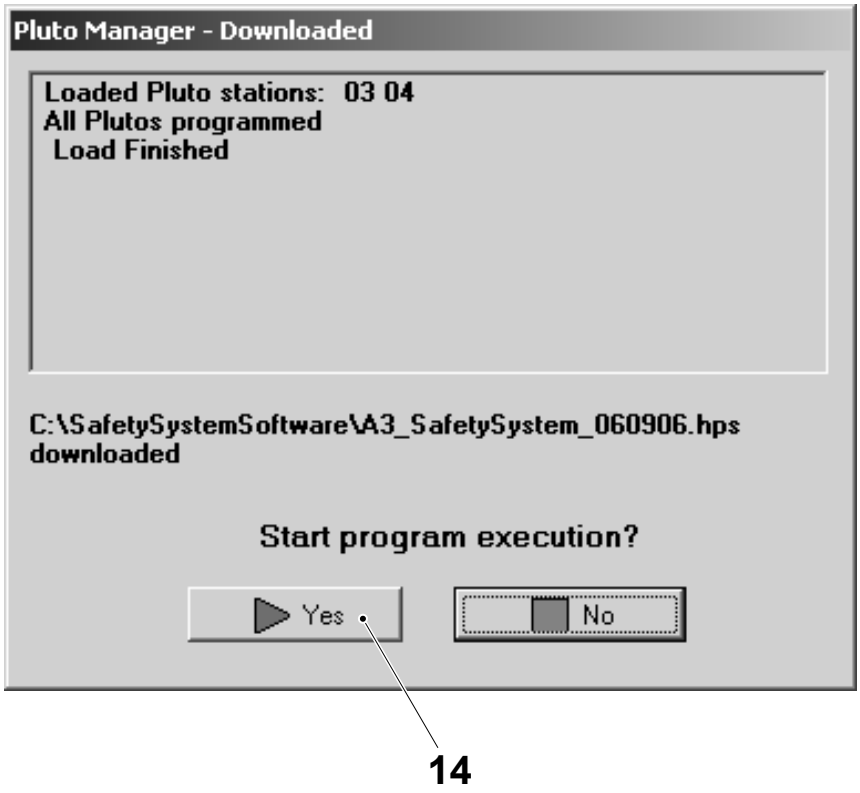

14 Yes button

9.4.1-2 Pluto Module - LED Description

Machine Status	Mains Power ON Air OFF Steam ON Water OFF
Special Equipment	PC with Pluto Manager Pluto Communication Cable TP No. 90459-6033
SPC Reference	2840934-0100

Pluto Module 01F500

LED	Description
I0	Emergency stops input chain
I1	FFU crank on position chain 1
I2	FFU crank on position chain 2
I3	Not used
I4	Top doors feedback
I5	Pre-applicator emergency stops feedback
I6	Emergency stops feedback
I7	Final folder and jaw system feedback

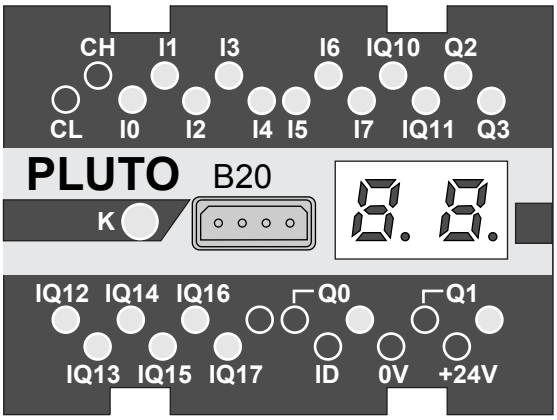

(Cont'd)

(Cont'd)

LED	Description
Q0	Safety line top doors
Q1	Safety line pre-applicator service
Q2	Safety line emergency stops
Q3	Safety line jaw system and final folder
IQ10	Output pulse to safety circuits
IQ11	Emergency stop input chain
IQ12	Jaw system and final folder input chain
IQ13	Jaw system and final folder input chain
IQ14	ASU magazine doors input chain
IQ15	ASU splice head doors input chain
IQ16	Not used
IQ17	Top doors input chain
ID	Identifier on the CAN bus
0V	0V
+24V	+24V DC (L12)

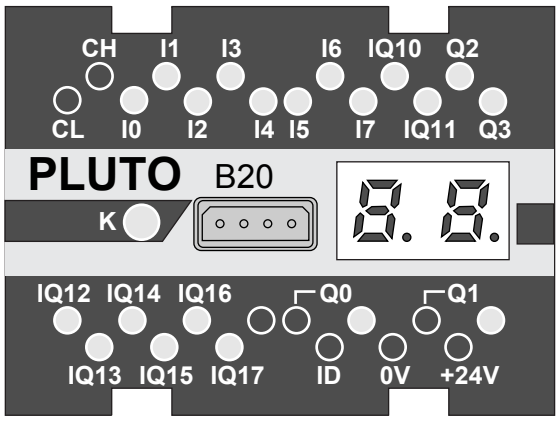

(Cont'd)

(Cont'd)

Pluto Module 01F501

LED	Description
I0	Safety system reset bit 0
I1	Safety system reset bit 1
I2	Pre-applicator service input chain
I3	ASU brake feedback
I4	ASU magazine feedback
I5	ASU splice head feedback
I6	Pre-applicator doors feedback
I7	Jaw brakes feedback

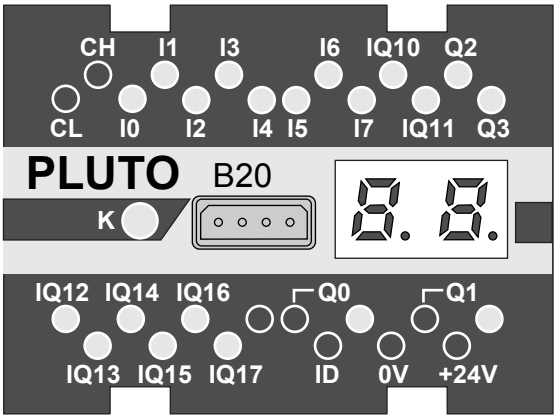

(Cont'd)

(Cont'd)

LED	Description
Q0	Safety line ASU magazine
Q1	Safety line ASU splice head
Q2	Safety line pre-applicator
Q3	jaw system safety brakes
IQ10	Output pulse to safety circuits
IQ11	Pre-applicator doors input chain
IQ12	Service release ASU brakes
IQ13	Service release jaw brakes
IQ14	Emergency stop info signal
IQ15	ASU safety brake
IQ16	Safety system OK bit 0
IQ17	Safety system OK bit 1
ID	Identifier on the CAN bus
0V	0V
+24V	+24V DC (L12)

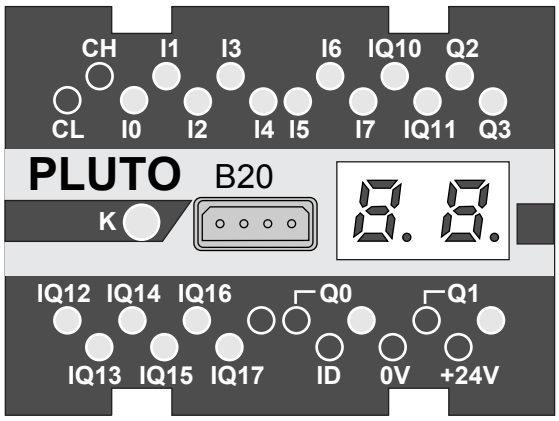

9.4.1-3 Pluto Module - Configure in an Existing Application

Machine Status	Mains Power ON Air OFF Steam ON Water OFF
Special Equipment	PC with Pluto Manager Pluto Communication Cable TP No. 90459-6033
SPC Reference	2840934-0100

The safety system comprises of two Pluto modules which are loaded with a common program. The modules check each other to confirm that they contain exactly the same version of the program. With a program mismatch the modules do not accept each others I/O data.

(Cont'd)

(Cont'd)

If a new Pluto module belonging to a program project is connected to the bus that is already connected to one or more Pluto modules, two situations may arise depending upon the status of the new Pluto module:

- The new Pluto does not contain a PLC program (error code E20) but it is fitted with the correct IDFIX circuit. When this is the case the new Pluto can be programmed using its self programming function. To do this proceed as follows:
  - Press the K button (1) on the Pluto front panel for two seconds. The display flashes L indicating that the system is ready for self programming.
  - Press the K button (1) again.
  - The program load is started. This is indicated by a steady ‘L’ on the display.

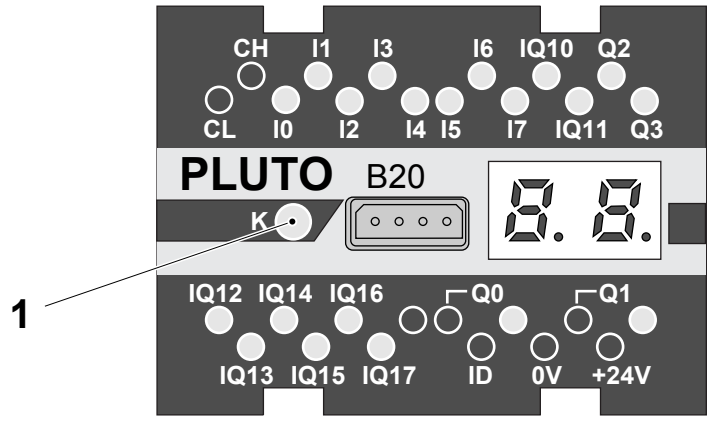

1 K button

(Cont'd)

(Cont'd)

- The new Pluto is fitted with correct ID-fix circuit but loaded with wrong version of the program.

  When this is the situation, all Pluto modules of the project will display the error code E27 indicating that the new Pluto module with the incorrect software has been detected. The modules will run the PLC program, but will not accept I/O data from the new Pluto module.

  To correct this situation, download the correct version of the program to any of the modules in the project, all of them will be updated with the same version. To download the program, see 9.4.1-1 Pluto Module - Load Program.

9.4.1-4 Pluto Module - Set ID-FIX Address after Replacing an ID-FIX

Machine Status	Mains Power ON Air OFF Steam ON Water OFF
Special Equipment	PC with Pluto Manager Pluto Communication Cable TP No. 90459-6033
SPC Reference	2840934-0100

To enable the PLC to identify a Pluto module, an ID code must be given to the module. This is done by connecting an ID-FIX (1), between the ID terminal (2) and the 0V terminal (3) at the front of the Pluto module (4). The unique code associated with the ID-FIX must then be entered in PLC program.

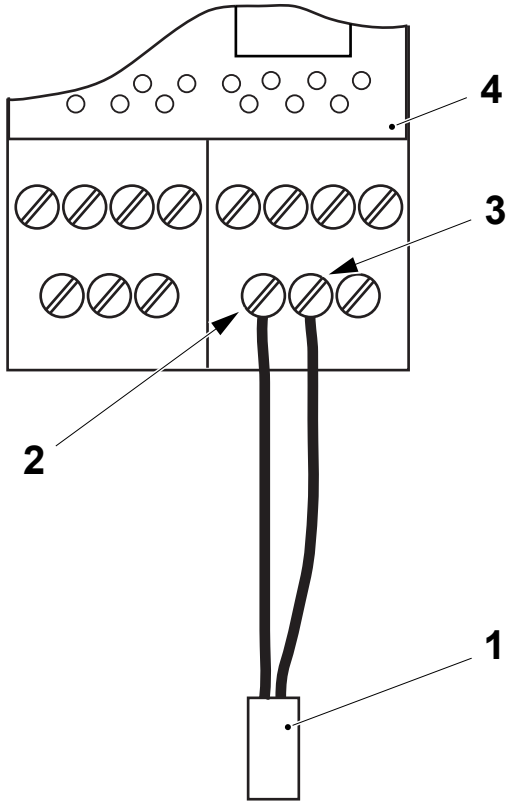

1 ID-FIX
2 ID terminal
3 0V terminal
4 Pluto module

(Cont'd)

(Cont'd)

a) Connect the PC (1) to the Pluto module (2).

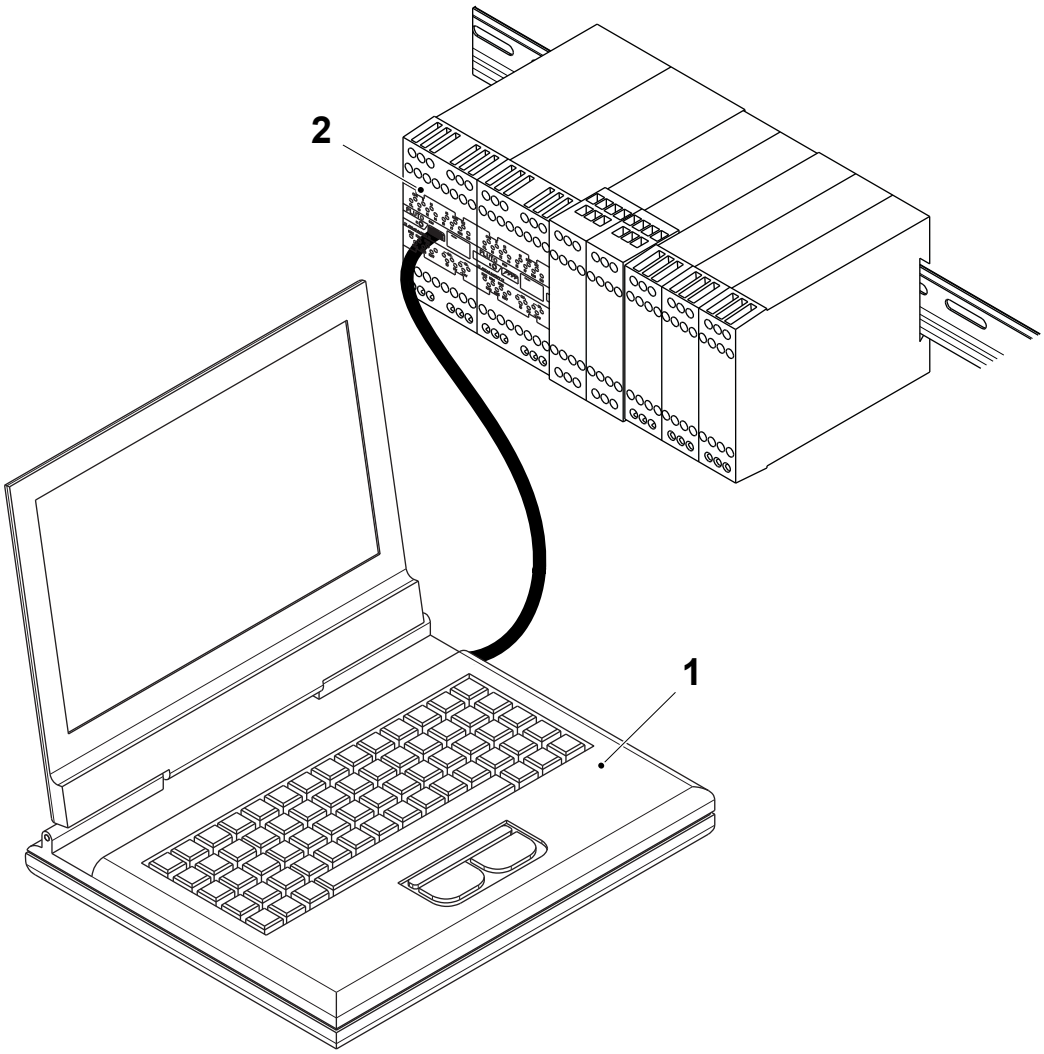

1 PC
2 Pluto module

(Cont'd)

(Cont'd)

b) Open the Pluto Manager by double clicking the PLUTO MANAGER icon (3) on the PC desktop.

c) In the Pluto Manager window, select PROJECTS (4) and then select OPEN (5).

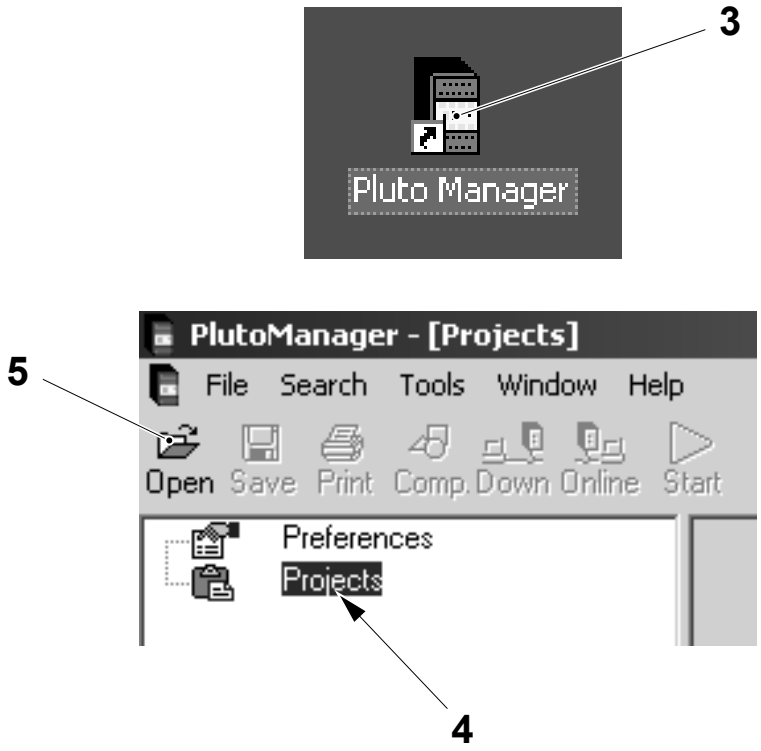

3 Pluto manager icon
4 Projects
5 Open

(Cont'd)

(Cont'd)

Note! The project number shown in the illustration is an example.

d) Select the required PROJECT (6) and then select OPEN (7).

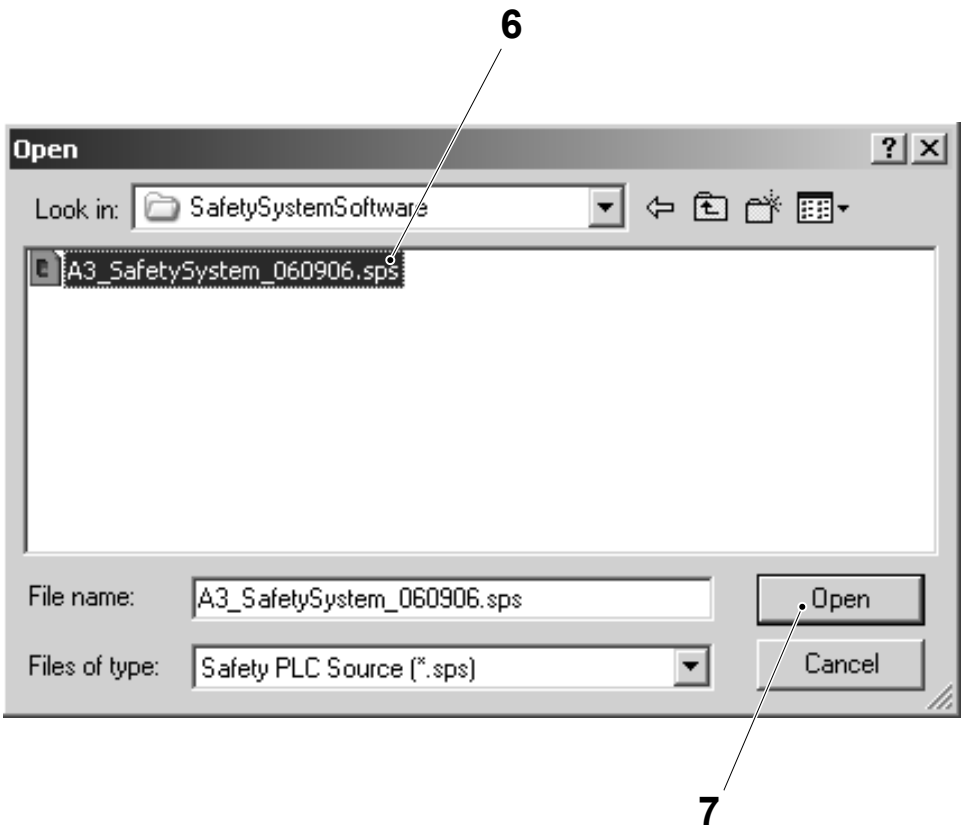

6 Project
7 Open

(Cont'd)

(Cont'd)

e) In the window that opens, click on the PLUTO 14 icon (8).

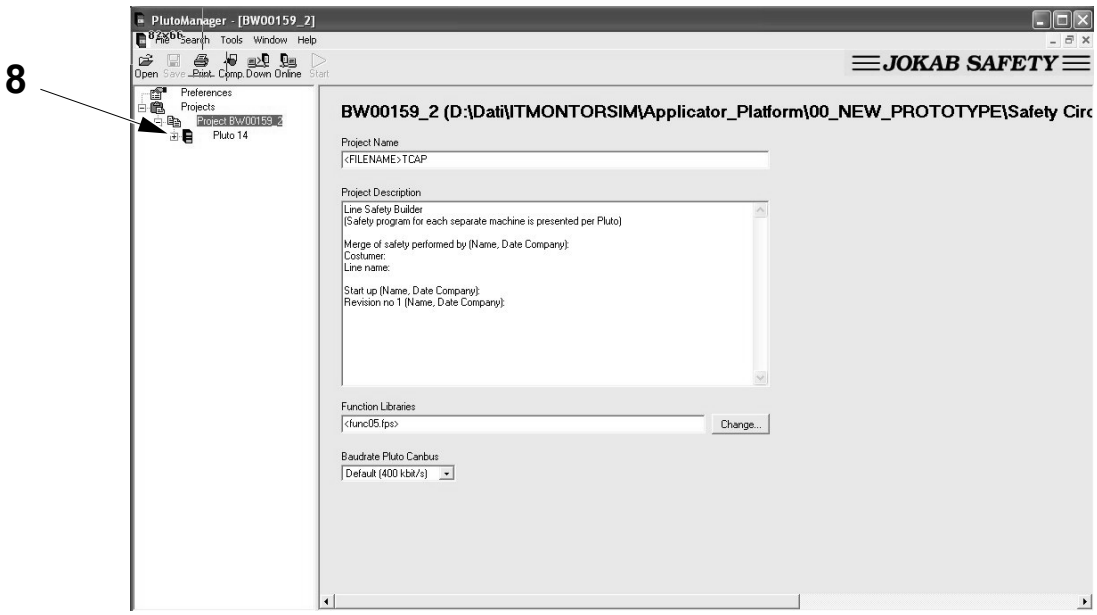

8 PLUTO 14

(Cont'd)

(Cont'd)

f) The IDFIX number (14000009F000) appears in the `IDFIX` window (9).

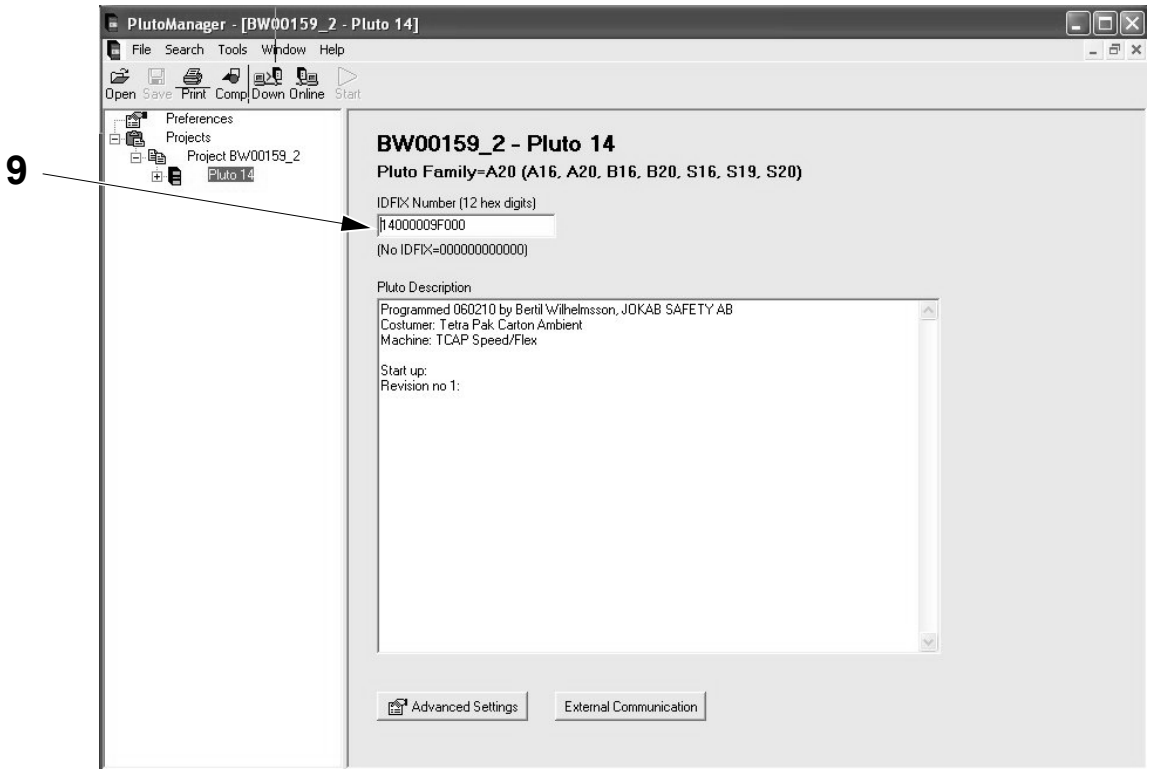

9 IDFIX number

(Cont'd)

(Cont'd)

g) Select the TOOLS menu (10) and then select WRITE IDFIX (11).

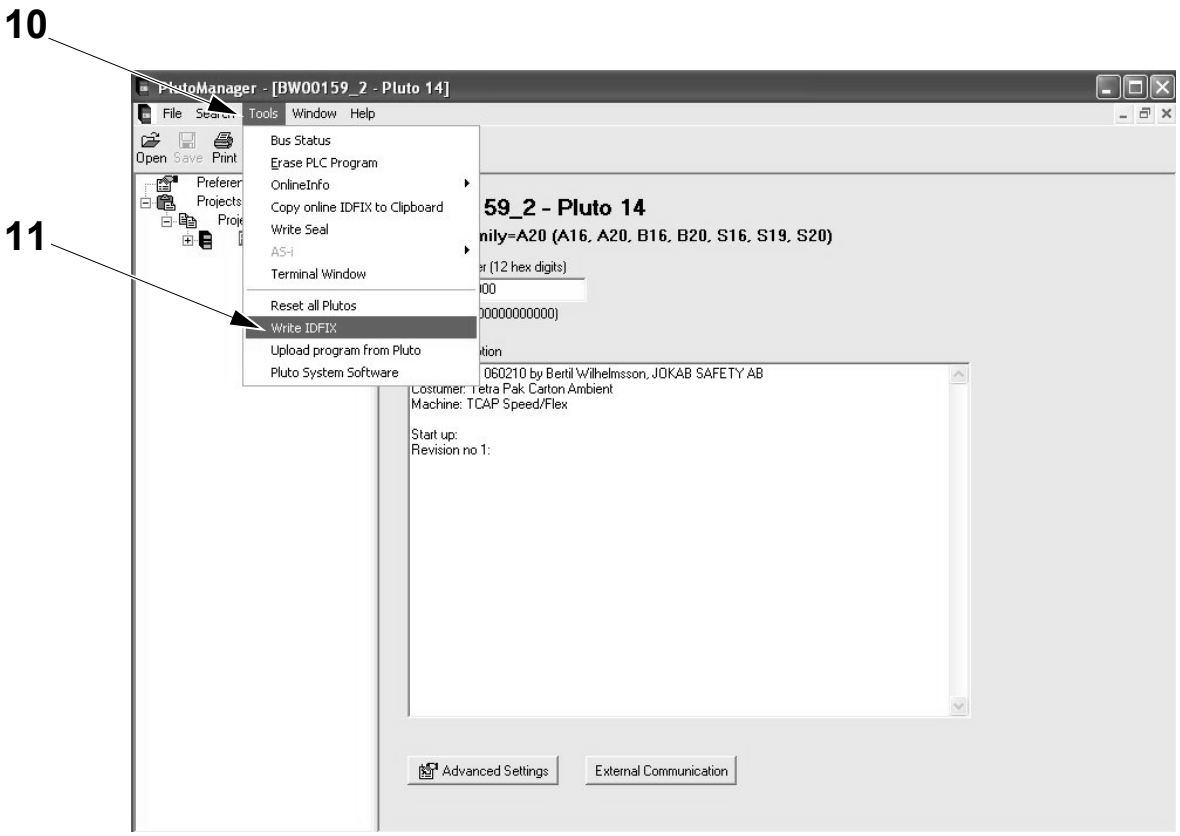

10 Tools menu
11 Write IDFIX

(Cont'd)

(Cont'd)

CAUTION
Risk of damage to the equipment.
Do not select the ERASE PROTECT ID checkbox (12). Doing so will prevent any further IDFIX changes being made. Do not press the SUGGEST UNIQUE ID button (13).

h) Write the IDFIX code, displayed in the IDFIX window (9), in the ID NUMBER field (14) and select WRITE ID CIRCUIT (15).

i) Select CLOSE (16).

Note! The ID-FIX code for the Pluto module is shown below.

Unit	ID number
09F000	14000009F000

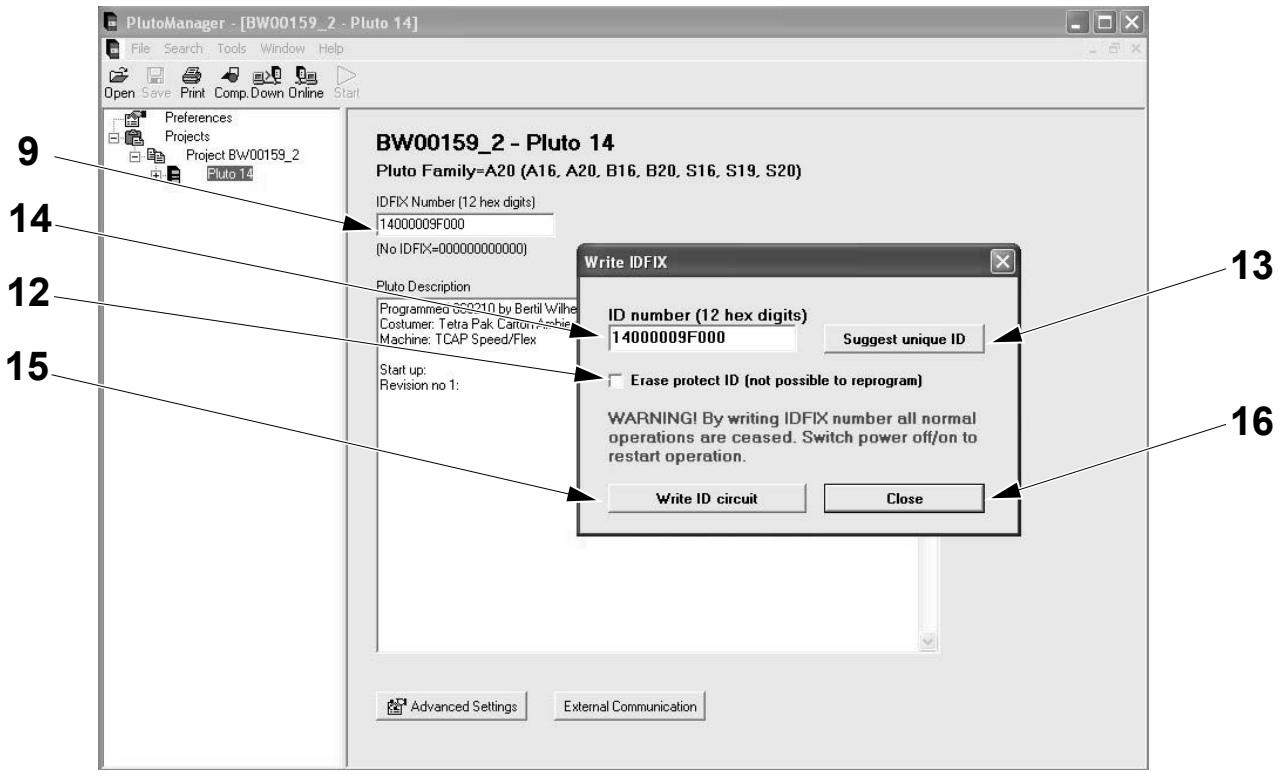

9 IDFIX number
12 ERASE PROTECT ID
13 SUGGEST UNIQUE ID
14 ID NUMBER
15 WRITE ID CIRCUIT
16 CLOSE

9.4.1-5 Pluto Module - Error Codes

Machine Status	Mains Power ON Air OFF Steam ON Water OFF
Special Equipment	PC with Pluto Manager Pluto Communication Cable TP No. 90459-6033
SPC Reference	2840934-0100

General Status Messages

Message	Description
-	Power up
n	Run mode for station number 0-9. (n = station number)
P nn	Run mode for station number 10-31. (nn = station number)
L	Program load mode state. Flashing ‘L’, ready for self programming (program found in other unit).
H	Program execution stopped from PC computer.

(Cont'd)

(Cont'd)

Internal Error Codes

Note! The table below shows the Internal Error codes. For the User Error codes, identified by the characters UE before the number, see the Electrical Manual.

Faults		
Error Code	**Fault and Possible Reason**	**Reset Action**
E10	Dynamic output short circuited to foreign voltage	Remedy of fault
E11	IQ_for illuminated push button function. Missing diode	Remedy of fault
E12	Short circuit between two dynamic inputs	Remedy of fault
E13	Static output Q10...Q17 short circuited to 0V or Q2-Q3 overloaded	Reset button, power off/on
E14	Static output Q10...Q17 short circuited to 24V	Remedy of fault
E15	Power supply below 18V	Reset button, power off/on
E16	Power supply above 30V	Reset button, power off/on
E17		
E18	CAN-bus fault. (Short circuit, termination resistor, etc.)	Remedy of fault+ reset button
E19	Other unit same station ID on CAN-bus.	
E20	PLC program not loaded	Load the program
E21	PLC program CRC error	Re-load with valid PLC-program
E22	Identifier problem. External identifier can not be read.	Power off/on
E23	Unmatched ID. Identifier does not match declaration in program.	Exchange of identifiers or re-declaration of identifier in program
E24	Erroneous PLC code. Invalid PLC instructions.	Reload with valid code
E25	For version A16. Non existing output used in program.	
E26	Baud rate conflict. Unit programmed for other baud rate than current bus baud rate.	Cycle the power to the unit or reset with pluto manager to reboot the unit and start with programmed baud rate.
E27	Wrong checksum for unit member in common program.	Reprogramming or reboot

(Cont'd)

(Cont'd)

I/O Faults		
Error Code	**Fault and Possible Reason**	**Reset Action**
E40	Error output Q0-Q3	Remedy of fault + reset button
E41	Error output Q2 or Q3. Overload or foreign voltage.	Remedy of fault + reset button
E42	Error output Q0 or Q1. (No answer from relay monitoring)	Remedy of fault + reset button
E43	Error output Q0 or Q1. (Self test of transistors)	Power off/on
E45	Analogue functions not calibrated.	System must be calibrated
E49	Error calibration values, analogue functions	Recalibration
CPU Faults		
Error Code	**Fault and Possible Reason**	**Reset Action**
E50	a/b twin input data diff	Power off/on
E51	a/b twin output data diff	Power off/on
E59	Calibration analogue functions CRC fault	Power off/on
E60	Twin self test monitoring	Power off/on
E61	Timer IRQ monitoring	Power off/on
E62	Internal serial communication	Power off/on
E63	Boot-flash CRC	Power off/on
E64	OS-flash CRC	Power off/on
E65	PLC-flash CRC	Power off/on
E66	5 volt under/over voltage monitoring	Power off/on
E67	CPU-test error	Power off/on
E68	Ram-test error	Power off/on
E69	Scan cycle time over run	Power off/on
E70	System, sum of system and stack monitoring	Power off/on
E71	Pluto used for IDFIX writing. Normal operation ceased	Power off/on
E80	Undefined self-test error	Power off/on

9.4.1-6 Pluto Module - Check Safety Relays Function

Machine Status	Mains Power ON Air OFF Steam ON Water OFF
SPC Reference	2840934-0100

To verify the functionality of the safety expansion relays, check that the safety outputs are lit when the alarms are deactivated and that they switch off when an alarm is activated by an open door or an emergency stop push button pressed.

Follow the instructions to check the functionality of a specific safety expansion relay. Check the reference designation on the label to locate the specific safety relay in the electrical cabinet.

Safety Relay	**Safety Line**
F01K5020	Emergency Stop Push Buttons
F01K5030	Jaw System/Final Folder doors
F01K5040	Jaw System/Final Folder doors
F10K5050	ASU doors
F70K5060	Superstructure doors

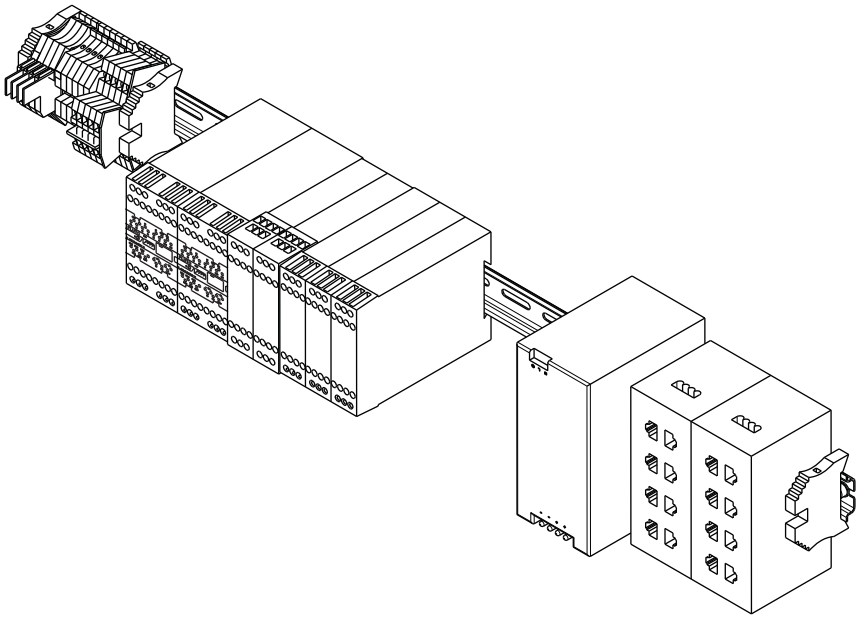

(Cont'd)

(Cont'd)

Emergency Stop Push Button - Safety Expansion Relay F01K5020

Make sure that the all emergency stop push buttons are deactivated and the alarms are reset. Check in the electrical cabinet that the safety output F01K5020 is ON.

Operate the emergency stop push buttons one by one (see section Protective Devices in the ii Safety Precautions chapter for their location) and check that an alarm is displayed on the TPOP. Check that the safety output F01K5020 switches off.

Release the stop button that was used and reset the alarm after the test.

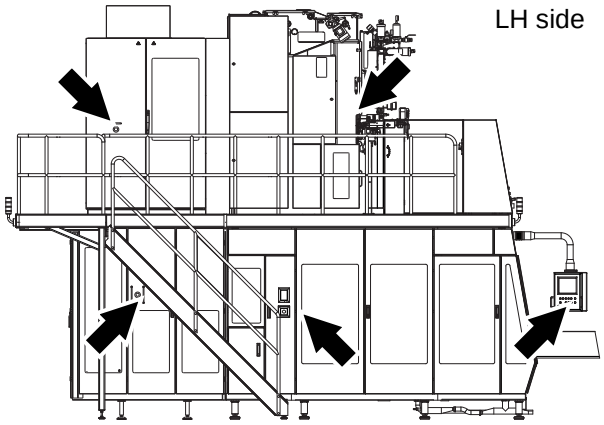

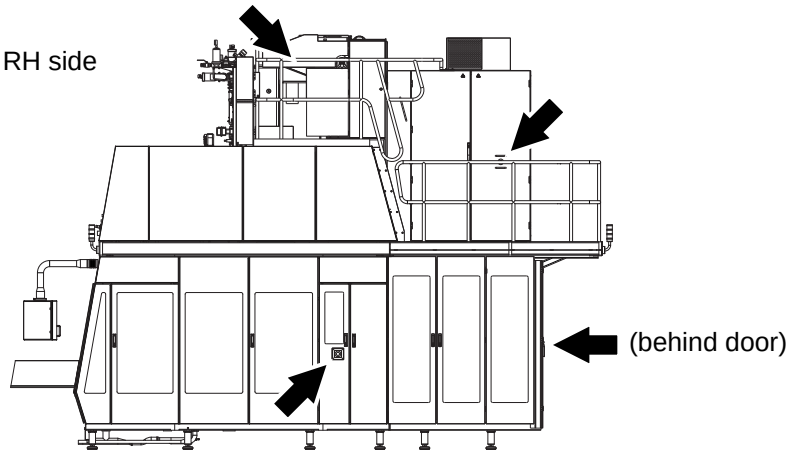

(Cont'd)

(Cont'd)

Machine Body Door Guards - Safety Expansion Relays F01K5030 and F01K5040

Make sure that all the doors at the machine body are closed and any alarm is reset. Check in the electrical cabinet that the safety outputs F01K5030 and F01K5040 are ON.

Open the doors indicated by arrows, one by one, and check that an alarm is displayed on the TPOP. Check that the safety outputs F01K5030 and F01K5040 switch OFF.

Close the door and reset the alarm after the test.

LH side

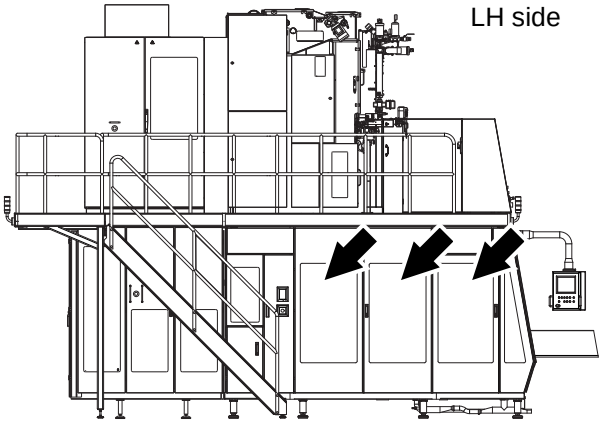

RH side

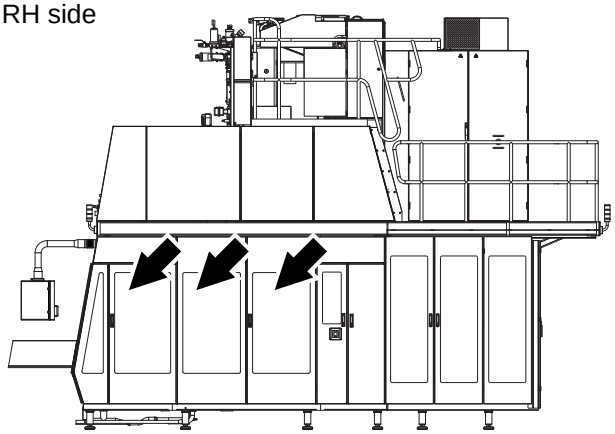

(Cont'd)

(Cont'd)

ASU Splicing Head Door Guard - Safety Expansion Relay F10K5050

Make sure that all the doors in the back of the ASU module are closed and any alarms are reset. Check in the electrical cabinet that the safety output F10K5050 is ON

Open the doors of the ASU indicated by arrows, one by one, and check that an alarm is displayed on the TPOP. Check that the safety output F10K5050 switches OFF.

Close the door and reset the alarm after the test.

(2 doors)

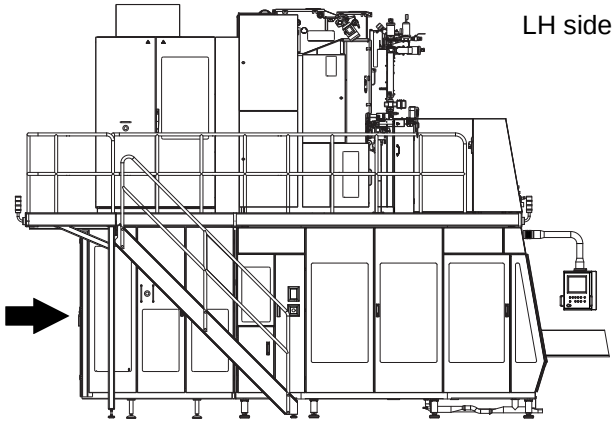

(Cont'd)

(Cont'd)

ASU Magazine Door Guards - Safety Relay F01K5010-Q0

Make sure that all the side doors of the ASU module are closed and any alarm is reset. Check in the electrical cabinet that the safety output F01K5010-Q0 is ON.

Note! Check the output Q0 of the safety relay F01K5010.

Open the doors of the ASU indicated by arrows, one by one, and check that an alarm is displayed on the TPOP. Check that the safety output F10K5010-Q0 switches OFF.

Close the door and reset the alarm after the test. Check in the electrical cabinet that the safety output F01K5010-Q0 is ON.

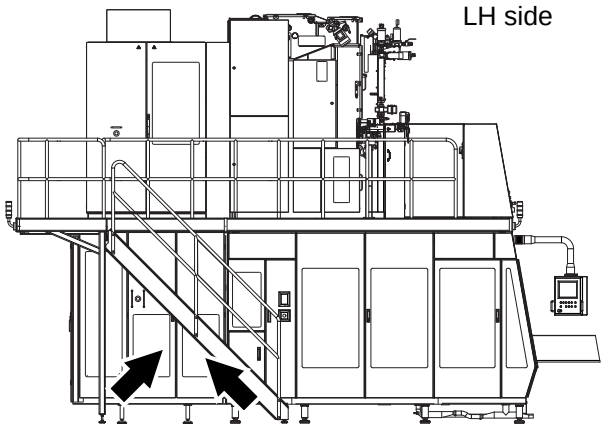

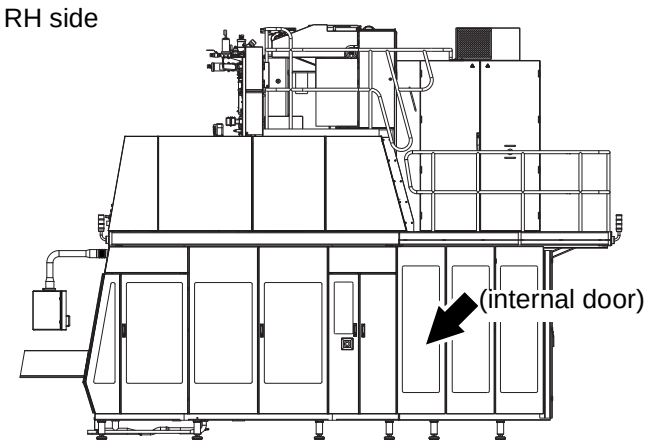

(Cont'd)

(Cont'd)

Superstructure Door Guards - Safety Expansion Relay F70K5060
Make sure that all the top doors in the superstructure are closed and any alarms is reset. Check in the electrical cabinet that the safety output F70K5060 is ON.

Open the doors indicated by arrows, one by one, and check that an alarm is displayed on the TPOP. Check that the safety output F70K5060 switches OFF.

Close the door and reset the alarm after the test.

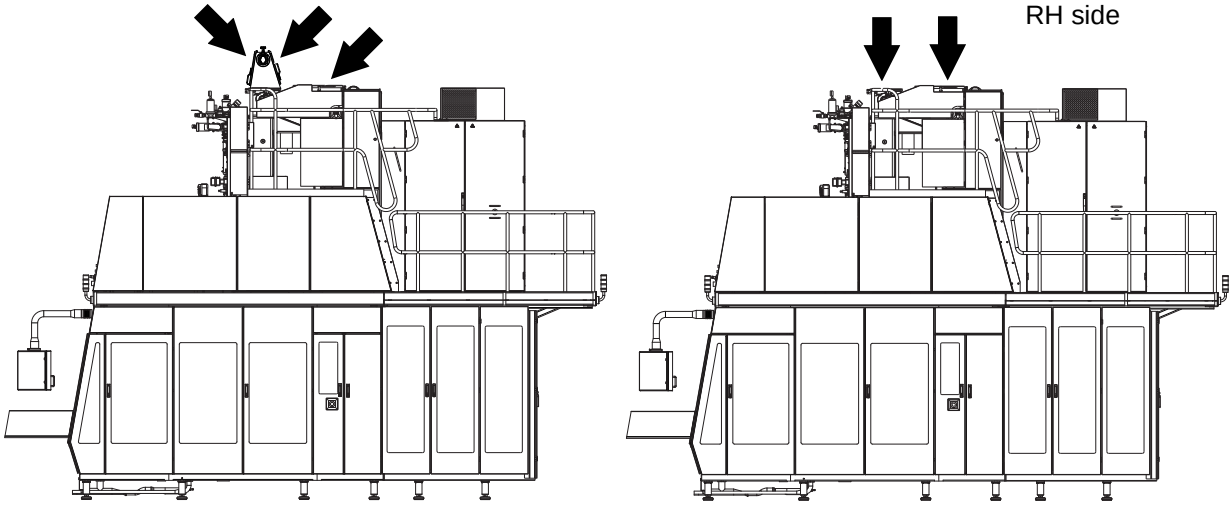

Machines with upper section

9.5 Power Supply

SPC Reference	1548127-0250

9.5.1 Frequency Converter

9.5.1-1 Frequency Converter - Change Parameters

Machine Status	Mains Power ON Air OFF Steam ON Water OFF
SPC Reference	2840943-0100

The frequency converter parameter sets are stored in the program loaded in the DeviceNet scanner module. Each time power is applied to a frequency converter and communication is established with the DeviceNet scanner module, the parameter set is written into the frequency converter from the DeviceNet scanner module.

As a consequence, changes to the parameter set should be made via the DeviceNet scanner program. It is not recommended to make manual changes to the parameter set directly on the frequency converter, the following procedure should only be used in cases where the DeviceNet scanner program is not available.

(Cont'd)

(Cont'd)

Note! The numbering in the illustration below may not correspond to the location in the electrical cabinet. Check the reference designation in the label above the frequency converters to locate a specific frequency converter.

Frequency Converter	Function
T10T0160 (1)	Drive, paper loop, ASU
T10T0170 (2)	Drive, paper store, ASU magazine
T10T0180 (3)	Drive, strip bobbin
U70T0310 (4)	Drive, feed packaging material (column)
T50T0260 (5)	Drive, external conveyor
U70T0320 (6)	ICU pump
U30T0220 (7)	Hydrogen peroxide pump
U70T0330 (8)	DIMC cap blower (OE)
U70T0300 (9)	Sterile air compressor

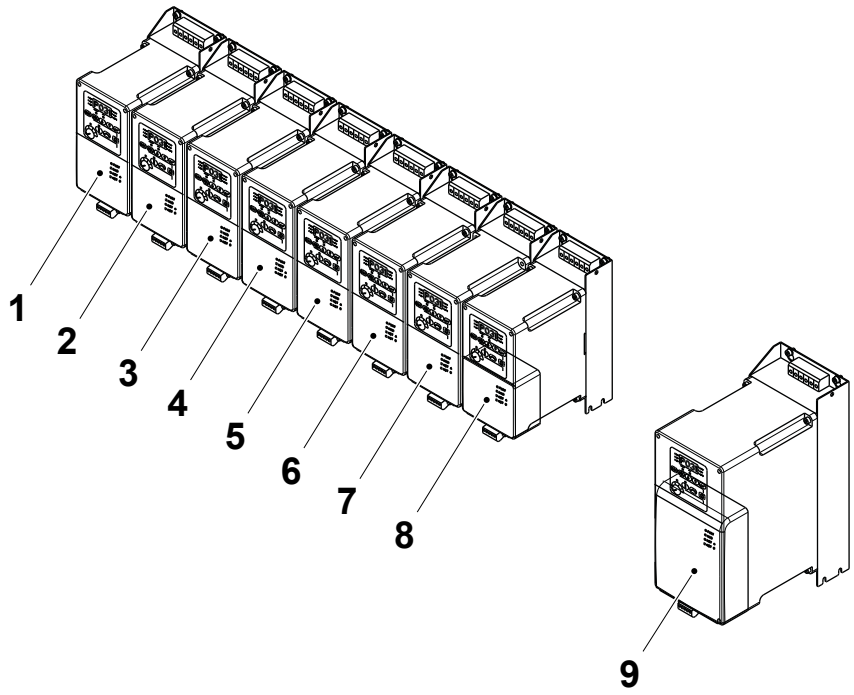

1 Frequency converter ASU loop
2 Frequency converter ASU magazine
3 Frequency converter strip bobbin
4 Frequency converter drive roller
5 Frequency converter external conveyor
6 Frequency converter ICU
7 Frequency converter hydrogen peroxide pump
8 Frequency converter cap blower (OE)
9 Frequency converter compressor

(Cont'd)

(Cont'd)

Note! Before setting the converter, make sure that the sink/source switch is set to the SRC position.

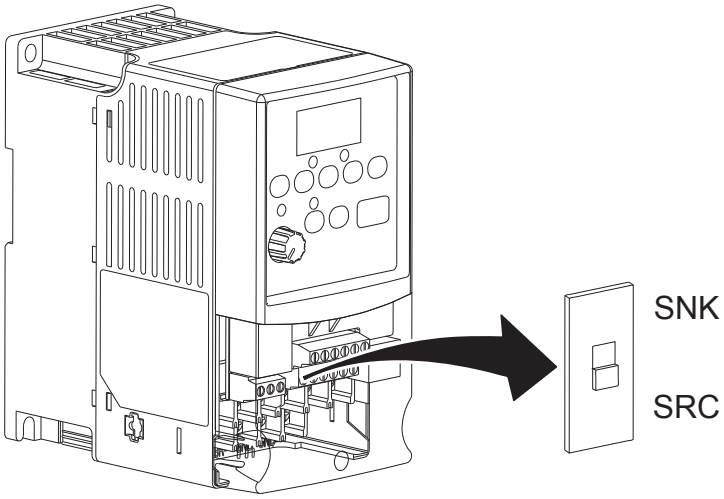

(Cont'd)

(Cont'd)

a) Press the ESC button (1) twice. The letter d, P, or A flashes.

b) Press the UP or DOWN button (2) or (3) to scroll through the group menu (d, P or A).

c) Press the ENTER button (4) or the SEL button (5) to enter a group. The digit on the right of the 3 digit parameter, in the example below 031, flashes.

d) Press the UP or DOWN button (2) or (3) to scroll through the parameters that are in the group.

e) Press the ENTER button (4) or the SEL button (5) to view the value of a parameter. To return to the parameter number without editing, press the ESC button (1).

f) To edit a parameter value, press the ENTER button (4) or the SEL button (5) to enter the program mode. The digit on the right flashes and the Program LED (6) turns red when the value can be edited.

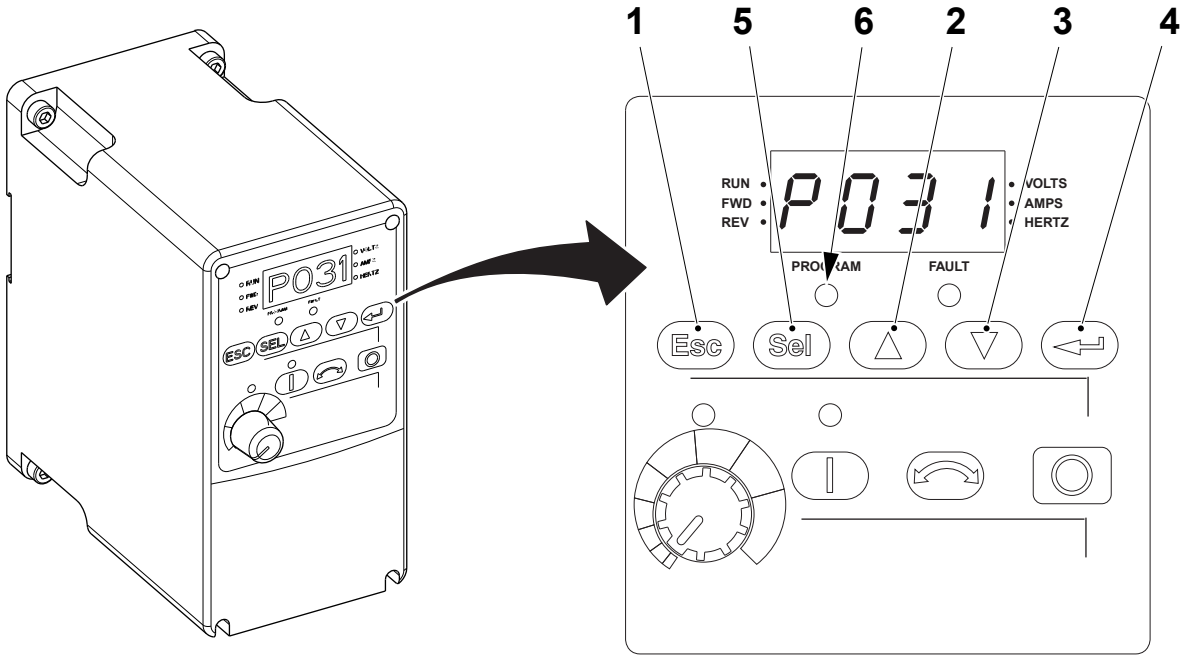

1 ESCAPE button
2 UP button
3 DOWN button
4 ENTER button
5 SELECT button
6 Program LED

(Cont'd)

(Cont'd)

g) Press the UP or the DOWN button (2) or (3) to change the parameter value. Press the SEL (5) button to move from digit to digit or from bit to bit. When a digit or bit flashes, it can be changed.

h) Press the either:
   – ESC button (1) to cancel a change. The digit or bit stops flashing, the previous is restored and the Program LED turns OFF
   – the ENTER button (4) to save a change. The digit or bit stops flashing and the Program LED turns OFF.

i) Press the ESC button (1) to return to the parameter list.

j) Continue to press ESC button (1) to leave the programming menu. When pressing the ESC button (1) does not change the display, d001 (output frequency) is displayed.

k) Press the ENTER button (4) or the SEL button (5) to enter the group menu.

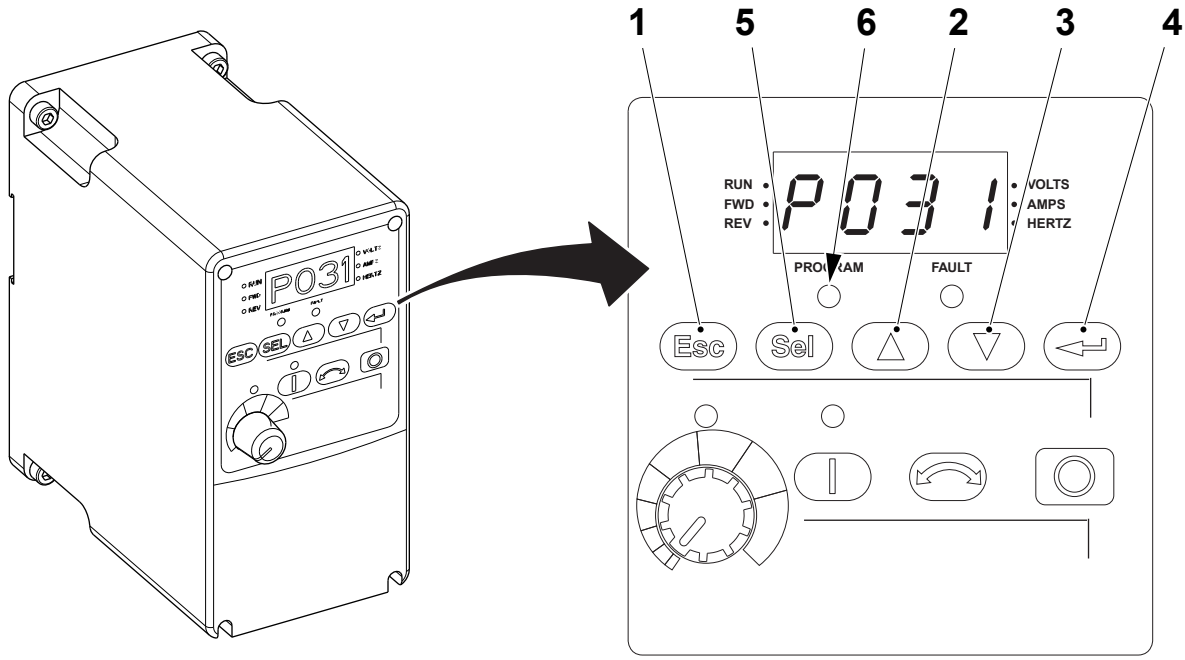

1 ESCAPE button
2 UP button
3 DOWN button
4 ENTER button
5 SELECT button
6 Program LED

(Cont'd)

(Cont'd)

Customised Inverter Values

Note! For parameters not shown in the table, choose the default value. See the “Rockwell” manual for more details.

Par.	Description	Unit	Default	T10T0160 ASU Loop	T10T0170 ASU Magazine	T10T0180 Strip Bobbin	U70T0310 Drive Roller	T50T0260 Ext.I Conv.	U70T0320 ICU	U70T0330 Cap Blow. (OE)	U30T0220 Perox. Pump	U70T0300 Compressor
P031	Motor NP Volts	V	230*	230	230	230	230	230	400	400	230	400
P032	Motor NP Hertz	Hz	60	50	50	50	50	50	50	50	50	50
P033	Motor OL Current	A	2.3**	2.7	1.4	0.7	2.0	2.4	6.0	7.0	3.0	16
P034	Minimum Freq	Hz	0.0									
P035	Maximum Freq	Hz	60	100	100	100	100	100	60	100	80	60
P036	Start Source		0	2	5	5	5	5	5	5	5	5
P037	Stop Mode		0	4	4	4	4	4	4	4	4	4
P038	Speed Reference		0	5	5	5	5	5	5	5	5	5
P039	Accel Time 1	Sec	10.0	1.0	0.5	0.5	0.0	3.0	3.0	3.0	1.0	5.0
P040	Decel Time 1	Sec	10.0	0.1	0.5	0.1	0.1	3.0	3.0	3.0	1.0	5.0
P041	Reset To Defaults		0									
P125	Torque Perf Mode		1			0	0	0	0	0	0	0

* Default value is 460V for U70T0320, G016 and G017.

** Default values are:

- 4.5 A for U70T0310 and T50T0260
- 4.0 A for U70T0320
- 8.7 A for U70T0330
- 18.0 A for U30T0300

9.5.1-2 Frequency Converters - Error Codes

Machine Status	Mains Power ON Air OFF Steam ON Water OFF
SPC Reference	2840943-0100

To clear a fault, press the Stop key, cycle power or set A100 (Fault clear) to 1 or 2.

No.	Fault	Default
F2	Auxiliary Input*	Check remote wiring.
F3	Power Loss	Monitor the incoming AC line for low voltage or line power interruption.
F4	UnderVoltage*	Monitor the incoming AC line for low voltage or line power interruption.
F5	OverVoltage*	Monitor the AC line for high voltage or transient conditions. Bus overvoltage can also be caused by motor regeneration. Extend the decel time or install dynamic brake option.
F6	Motor Stalled*	Increase [Accel Time x] or reduce load so drive output current does not exceed the current set by parameter A089 [Current Limit].
F7	Motor Overload*	An excessive motor load exists. Reduce load so drive output current does not exceed the current set by parameter P033 [Motor OL Current].
F8	Heatsink OvrTmp*	Check for blocked or dirty heat sink fins. Verify that ambient temperature has not exceeded 40ºC (140ºF) for IP 30/NEMA 1/UL Type 1 installations or 50ºC (122ºF) for Open type installations. Check fan.
F12	HW OverCurrent*	Check programming. Check for excess load, improper DC boost setting, DC brake volts set too high or other causes of excess current.
F13	Ground Fault	Check the motor and external wiring to the drive output terminals for a grounded conditions.
F29	Analog Input Loss*	An analog input is configured to fault on signal loss. A signal loss has occurred.

*Auto-Reset/Run type fault. Configure with parameters A092 and A093.

(Cont'd)

(Cont'd)

No.	Fault	Default
F33	Auto Rstrt Tries	Correct the cause of the fault and manually clear.
F38	Phase U to Gnd	Check the wiring between the drive and motor. Check motor for grounded phase. Replace drive if fault cannot be cleared.
F39	Phase V to Gnd	
F40	Phase W to Gnd	
F41	Phase UV Short	Check the motor and drive output terminal wiring for a shorter condition. Replace drive if fault cannot be cleared.
F42	Phase UW Short	
F43	Phase VW Short	
F48	Params Defaulted	The drive was commanded to write default values to EEPROM. Clear the fault or cycle power to the drive. Program the drive parameters as needed.
F63	SW OverCurrent*	Check load requirements and A098 [SW Current Trip] setting.
F64	Drive Overload*	Reduce load or extend Accel Time.
F70	Power Unit	Cycle Power. Replace drive if fault cannot be cleared.
F71	Net Loss	The communication network has faulted.
F80	SVC Autotune	The autotune function was either cancelled by the user or failed.
F81	Comm Loss	If adapter was not intentionally disconnected, check wiring to the port. Replace wiring, port expander, adapters or complete drive as required. Check connection. An adapter was intentionally disconnected. Turn off using A105 [Comm Loss Action].
F100	Parameter Checksum	Restore factory defaults
F122	I/O Board Fail	Cycle Power. Replace drive if fault cannot be cleared.

*Auto-Reset/Run type fault. Configure with parameters A092 and A093.

9.5.2 Overload Protection

9.5.2-1 Overload Protection - Set

Machine Status	Mains Power OFF Air OFF Steam ON Water OFF
SPC Reference	2840941-0100

Set the overload protections following the table below; check the reference designation on the label to locate the specific overload protection.

A01F5410	DC Power supply unit	4.0 A
T50F9000	Main/Auxiliary power servo motors	32.0 A
T40F0050	Waste packs transportation	1.1 A
T40F0040	Hydraulic pump	3.5 A
K80F0111	Circulation cooling water	1.6 A
K80F0121	Circulation cooling media	2.3 A
A01F5810	Cooling electrical cabinet	2.7 A
K80F0471	External cleaning pump	10.1 A (50 Hz) 11.3 A (60 Hz)
U70F0100	Peroxide heat exchanger water pump	0.7 A

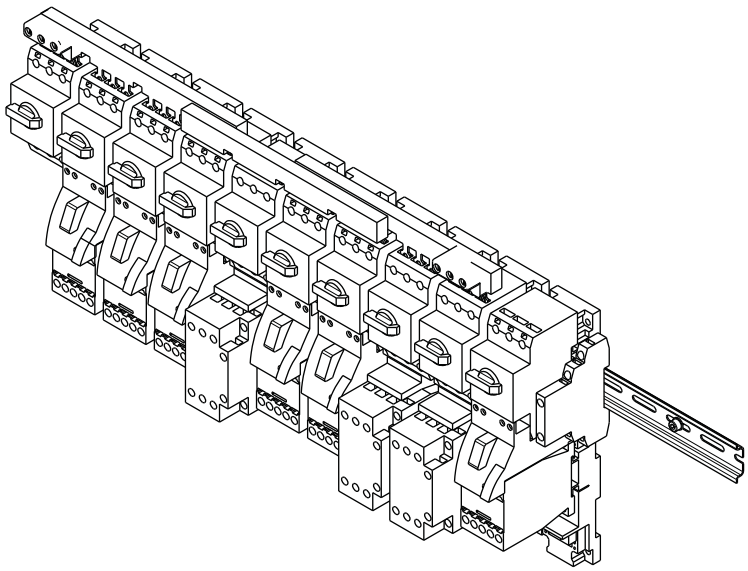

9.5.2-2 Overload Protection - Set Base Unit(s)

Machine Status	Mains Power OFF Air OFF Steam ON Water OFF
SPC Reference	2840941-0100

Set the distances **A** and **B** on the base unit (1) by means of the screws (2) and (3).

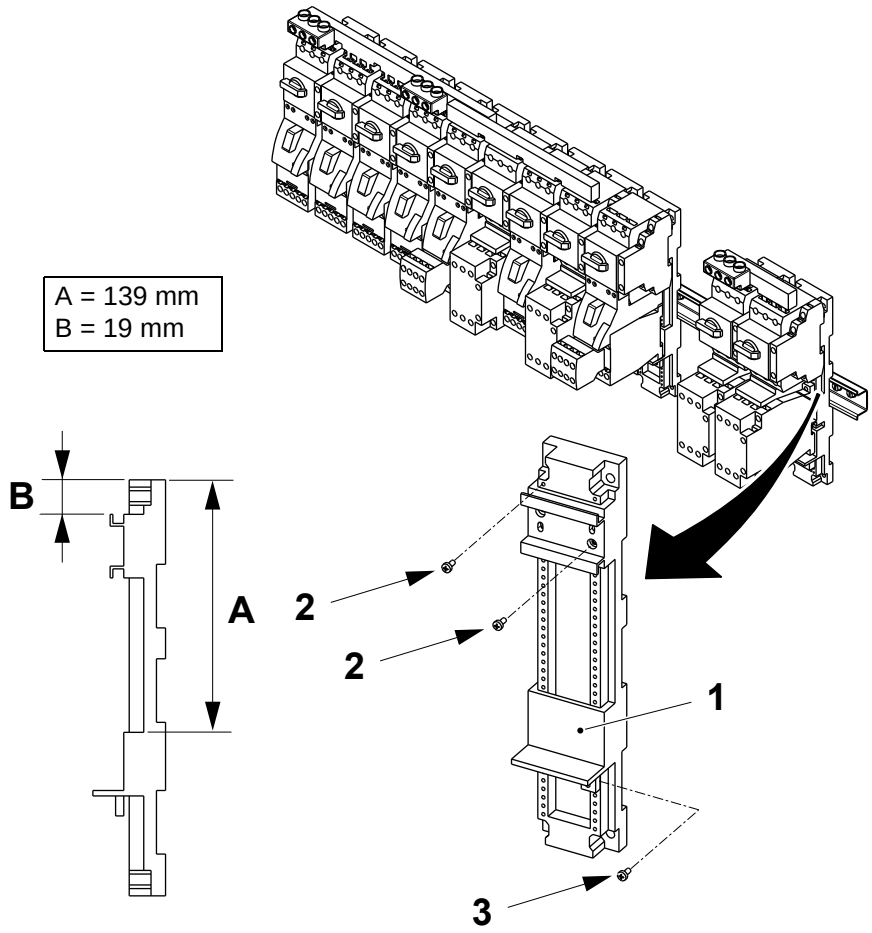

1 Base unit
2 Screw
3 Screw

9.5.3 Residual Current Device

9.5.3-1 Residual Current Device - Check

Machine Status	Mains Power ON Air OFF Steam ON Water OFF
SPC Reference	2840934-0100

DANGER

Hazardous voltage.
Can shock, burn or cause death. Change the RCD (1) if it does not trip immediately.

The RCD (1) must always be tested before using the socket outlet (2).

a) Make sure that the switch (3) is in the ON position.

b) Press the TEST button (4).

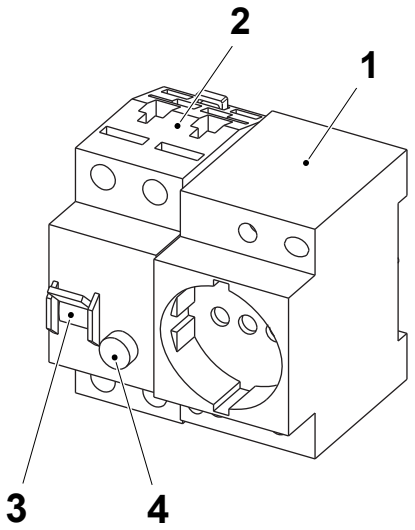

1 RCD (residual current device)
2 Socket outlet
3 Switch
4 Test button

(Cont'd)

(Cont'd)

c) The RCD (1) must trip immediately and the switch (3) must jump to the OFF position. If the switch does not jump to the OFF position, change the RCD.

d) Set the switch (3) to the ON position.

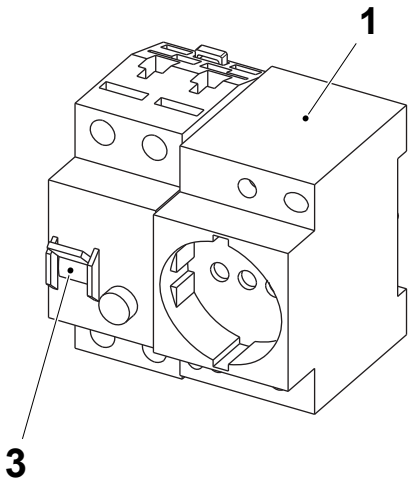

1 RCD (residual current device)
3 Switch

9.6 HMI and PLMS

SPC Reference	2922532-0100

9.6-1 HMI and PLMS - Description

SPC Reference	2922532-0100

The HMI (Human Machine Interface) is the control software that is graphically represented on the touch screen as an interface for operating and controlling filling machines.

(Cont'd)

(Cont'd)

PLMS (Packaging Line Monitoring System) is the data management system for collecting, analysing and monitoring the operational performance of filling machines and packaging lines.

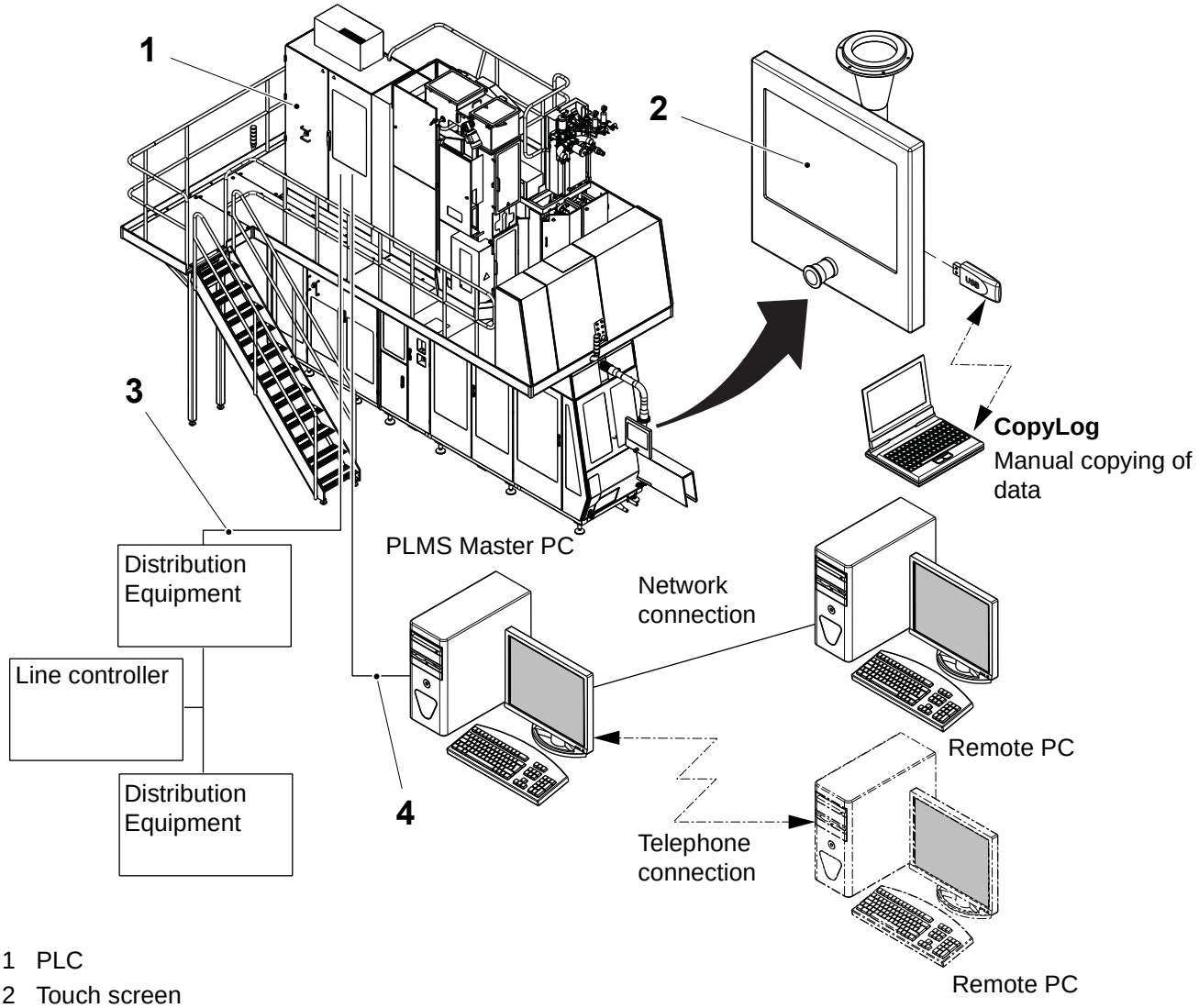

1 PLC
2 Touch screen
3 Line communication
4 External communication

9.6-2 HMI and PLMS - Log On Procedure

Machine Status	Mains Power ON Air OFF Steam ON Water OFF
Special Equipment	Keyboard with USB connector
SPC Reference	2922532-0100

When the machine is switched on, the system automatically logs on as an operator. This allows for the daily use of the machine. For some purposes it may be necessary to log off as an operator and log on as an installer.

The installer has higher privileges and is allowed to:

- install software
- change the PLMS configuration
- change the date and time.

(Cont'd)

(Cont'd)

Log On as an Installer

a) Remove the plug (1) from the control panel (2) and connect a USB keyboard.

b) Press CTRL + ESC and choose `LOG OFF OPERATOR` from the `START` menu (3).

c) Press the `YES` button or the ENTER key.

d) Log on with the following identity:

User name: installer

Password: installer

After logging on as an installer, the `START` menu (3) can be used to perform the necessary tasks.

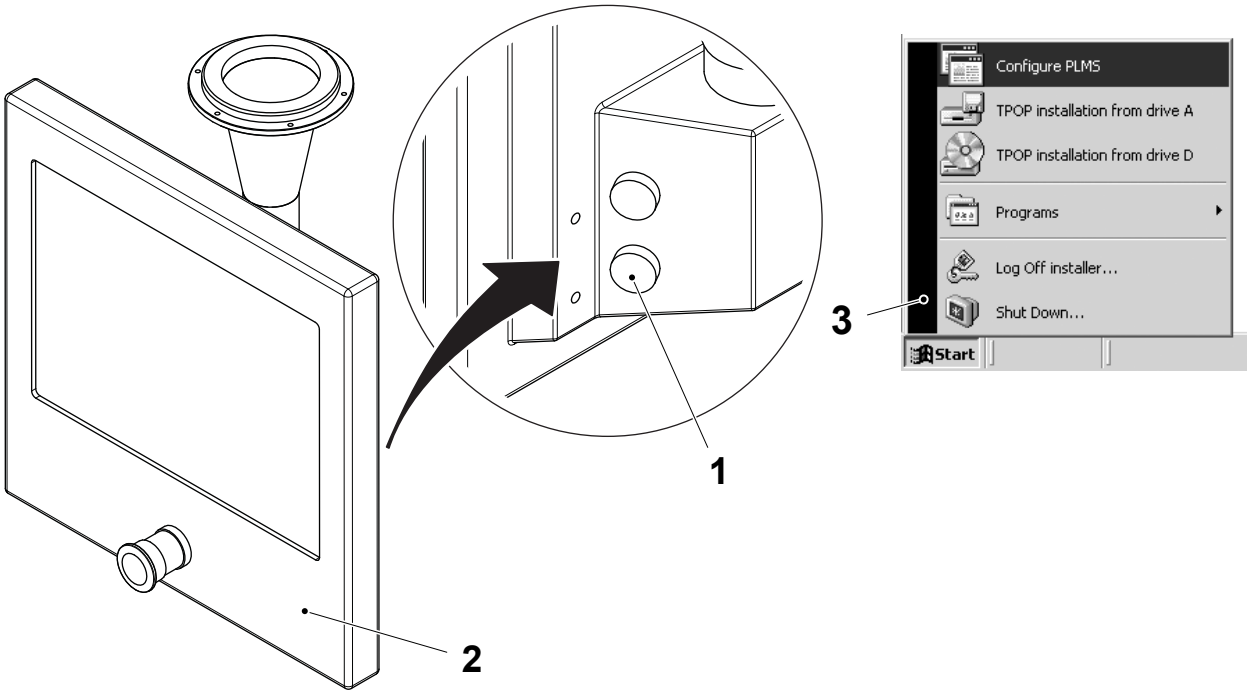

1 Plug
2 Control panel
3 Start-menu

(Cont'd)

(Cont'd)

Restart and Log On as an Operator

Note! Logging on as an operator must always be done by a Windows XP SP2 restart.

a) Press CTRL + ESC and choose `SHUT DOWN` from the `START` menu (3).

b) Select `RESTART` from the list and select the `OK` button or the press ENTER key.

c) Remove the keyboard from the control panel (2) and fit back the plug (1).

d) The system is now restarted in normal operating mode.

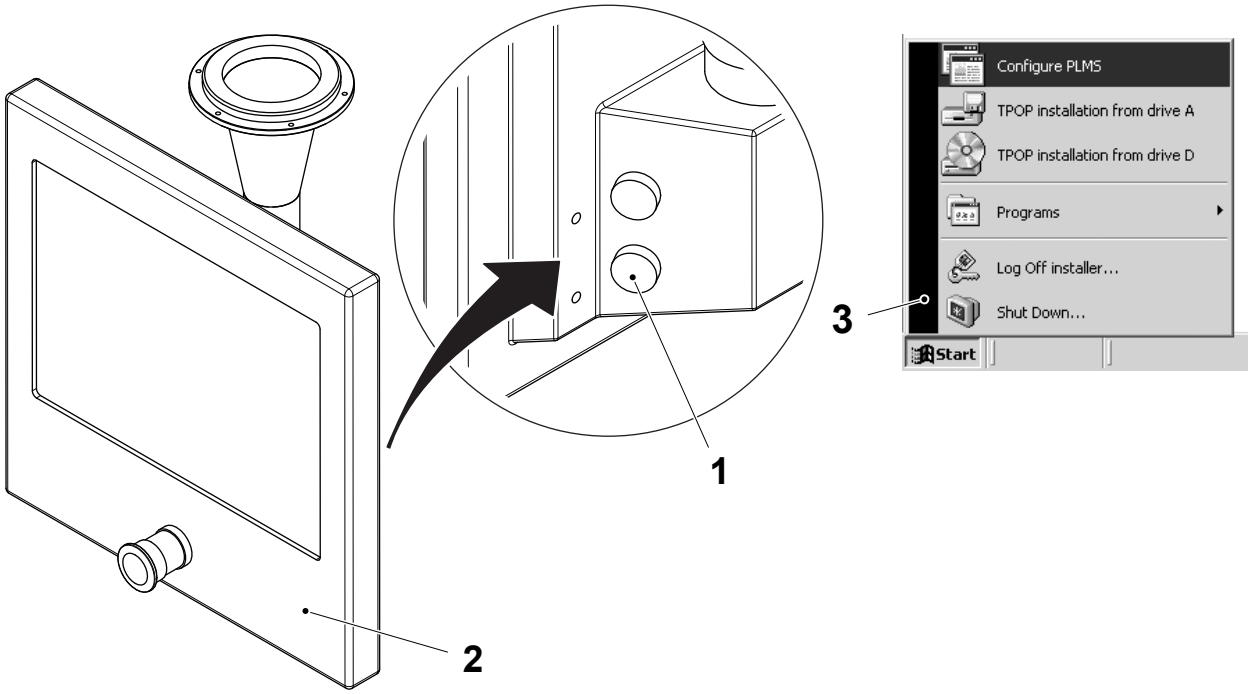

1 Plug
2 Control panel
3 Start-menu

(Cont'd)

9.6-3 HMI and PLMS - Install Software

Machine Status	Mains Power ON Air OFF Steam ON Water OFF
Special Equipment	Keyboard with USB connector
SPC Reference	2922532-0100

Required Material

- TPOP Basic V3.1 DVD
- Software CD.

Installation Order

You must always follow the order below when installing software. If you are only updating one or more programs then jump directly to the specific software sections.

- TPOP Basic V3.1 DVD on page 9-225
- Software CD on page 9-227, including:
  - PLMS Logger
  - PLMS Logger Config
  - TPOP HMI

(Cont'd)

(Cont'd)

Connect the Keyboard

Remove the plug (1) from the control panel (2) and connect a keyboard.

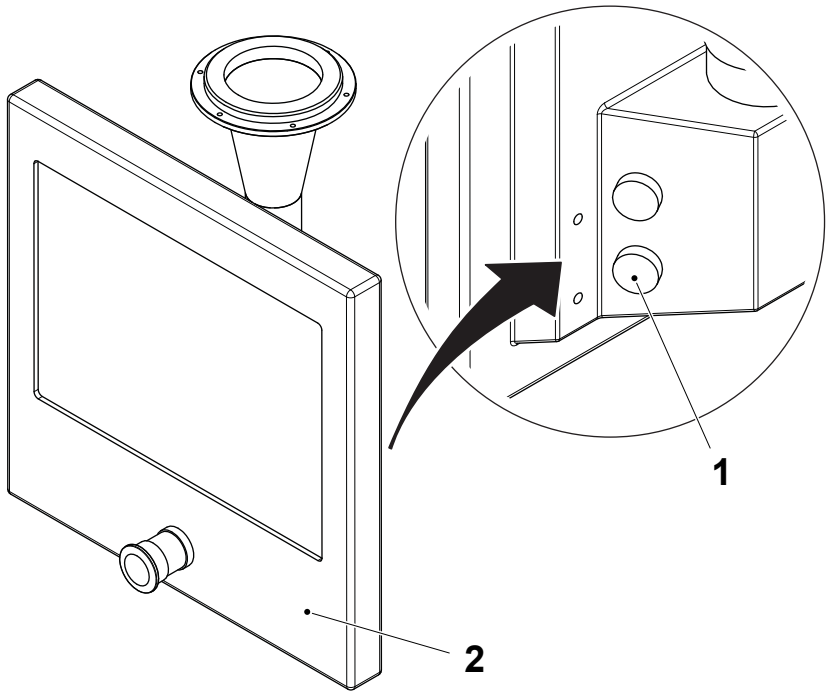

1 Plug
2 Control panel

(Cont'd)

(Cont'd)

Note! The software must be installed on the TPOP hardware platform B&R APC620 ver. 5P62: TETRAPAK-17. Check the hardware version on the label found behind the door (1) of the IPC.

TPOP Basic V3.1 DVD

a) Insert the TPOP Basic V 3.1 DVD CD1 in the DVD/CD-drive of the Industrial PC (1).

b) Turn the mains power switch on the service unit to the OFF position.

c) Turn the mains power switch on the service unit to the ON position.

d) Press any key when the text `PRESS ANY KEY TO BOOT FROM CD OR DVD...` is displayed on the TPOP.

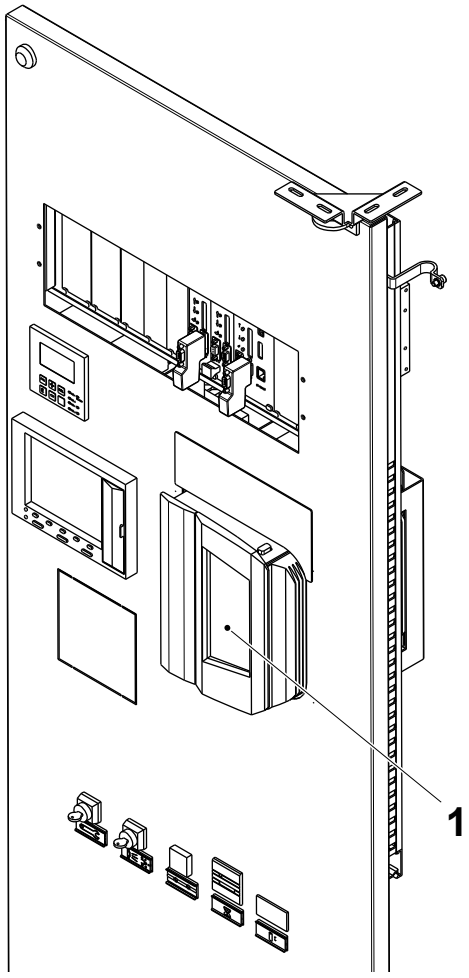

1 Industrial PC (IPC)

(Cont'd)

(Cont'd)

e) The Windows XP SP2 and the TPOP Basic software is now loaded and the system is configured. At the end of the installation, the DVD is automatically ejected.

Note! The installation process will take approximately 35 minutes.

f) When prompted, enter the current date and time.

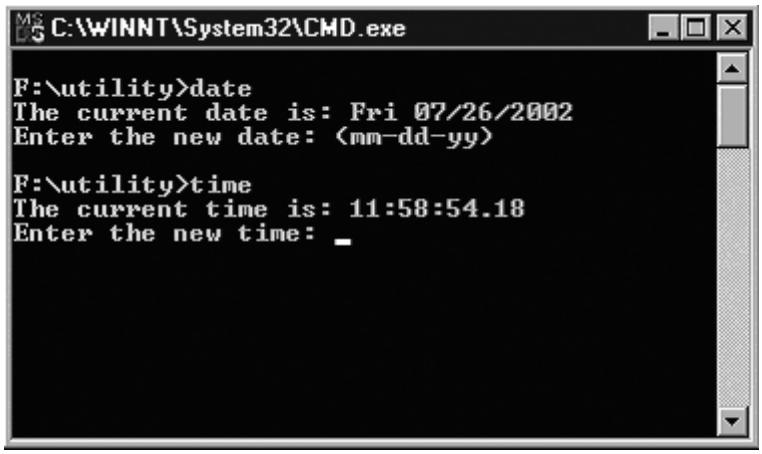

g) Click on the FINISH button in the dialogue box.



h) Continue to install the PLMS Logger, HMI, PLMS Config and other software, see the section Software CD on page 9-227.

(Cont'd)

(Cont'd)

Software CD

The Software CD includes the installation software for PLMS Logger, TPOP HMI and PLMS Config.

a) Log on as an installer, see 9.6-2 HMI and PLMS - Log On Procedure.

b) Insert the CD marked SOFTW_CD_A3_F into the IPC CD reader.

c) From the START menu choose TPOP INSTALLATION FROM DRIVE D.

d) The INSTALLATION SCREEN (1) appears.

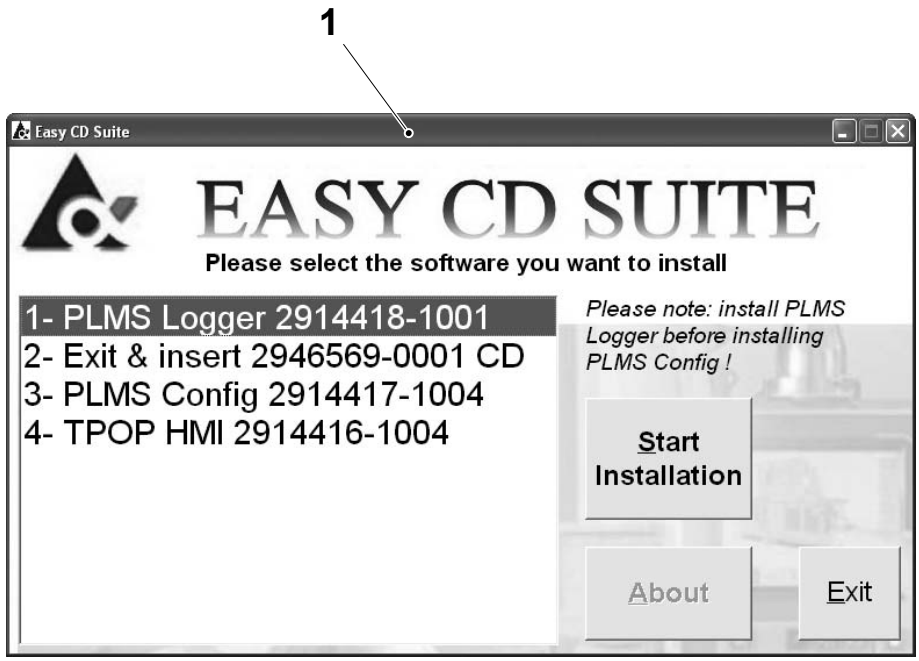

1 Installation screen

(Cont'd)

(Cont'd)

Note! If both PLMS Logger and PLMS Config are to be installed, PLMS Logger must always be installed before PLMS Config.

e) Select the software to be installed and touch the `START INSTALLATION` button (2).

f) Follow the instructions on the screen, and when prompted accept the default values.

g) Once the PLMS Logger has been installed, touch the `EXIT` button (3) and insert the CD PLMS NRG 100 PATCH.

h) Install the patch, then remove the CD PLMS NRG 100 PATCH and insert the software CD.

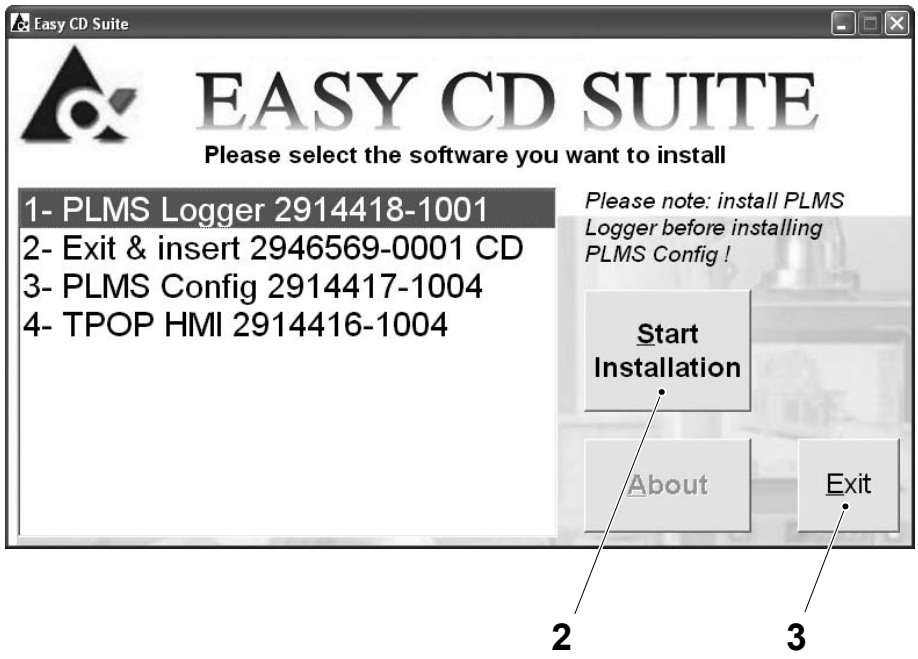

2 Start installation button
3 Exit button

(Cont'd)

(Cont'd)

i) Repeat the items e) and f) to install more software.

j) Touch the EXIT button (3) when all the necessary software has been installed.

k) Remove the software CD when the installation is finished.

l) From the START menu choose CONFIGURE PLMS.

m) Configure the available options in the PLMS NRG Configurator window, see section 9.6.1 PLMS NRG Configurator for details of the settings that can be made.

n) If all settings have been made, restart and log on as an operator, see 9.6-2 HMI and PLMS - Log On Procedure.

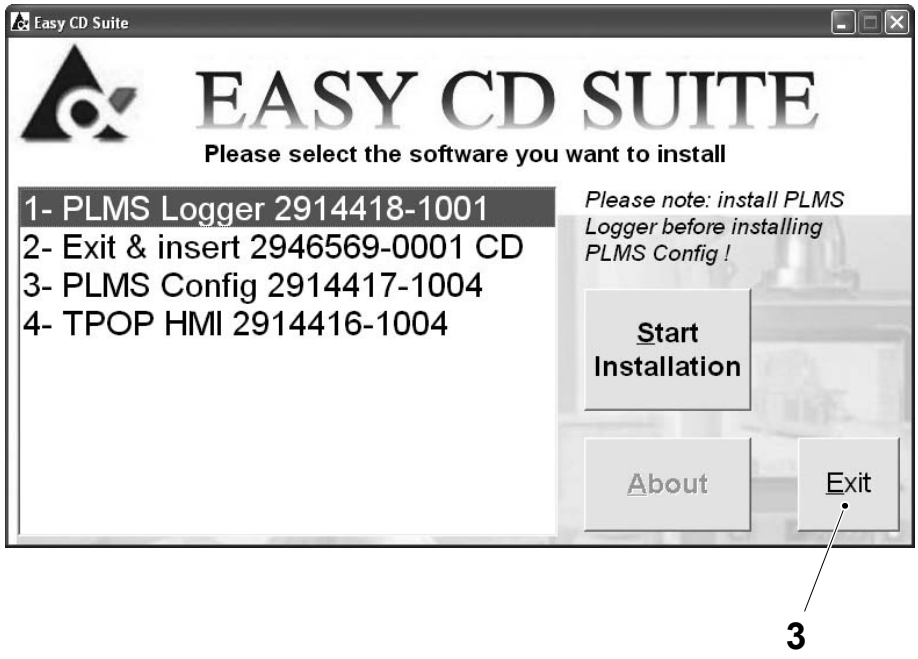

3 Exit button

9.6.1 PLMS NRG Configurator

9.6.1-1 PLMS NRG Configurator - Description

PLMS NRG is used to access the PLMS components that can be enabled and configured when logged on as an installer. The illustration shows the PLMS NRG main window (1) and the four PLMS component category buttons:

- PLMS NRG configuration (2)
- Distribution equipment setup (3) - not available
- Operator sheet standard setup (4) - not available
- Hardware and network. (5).

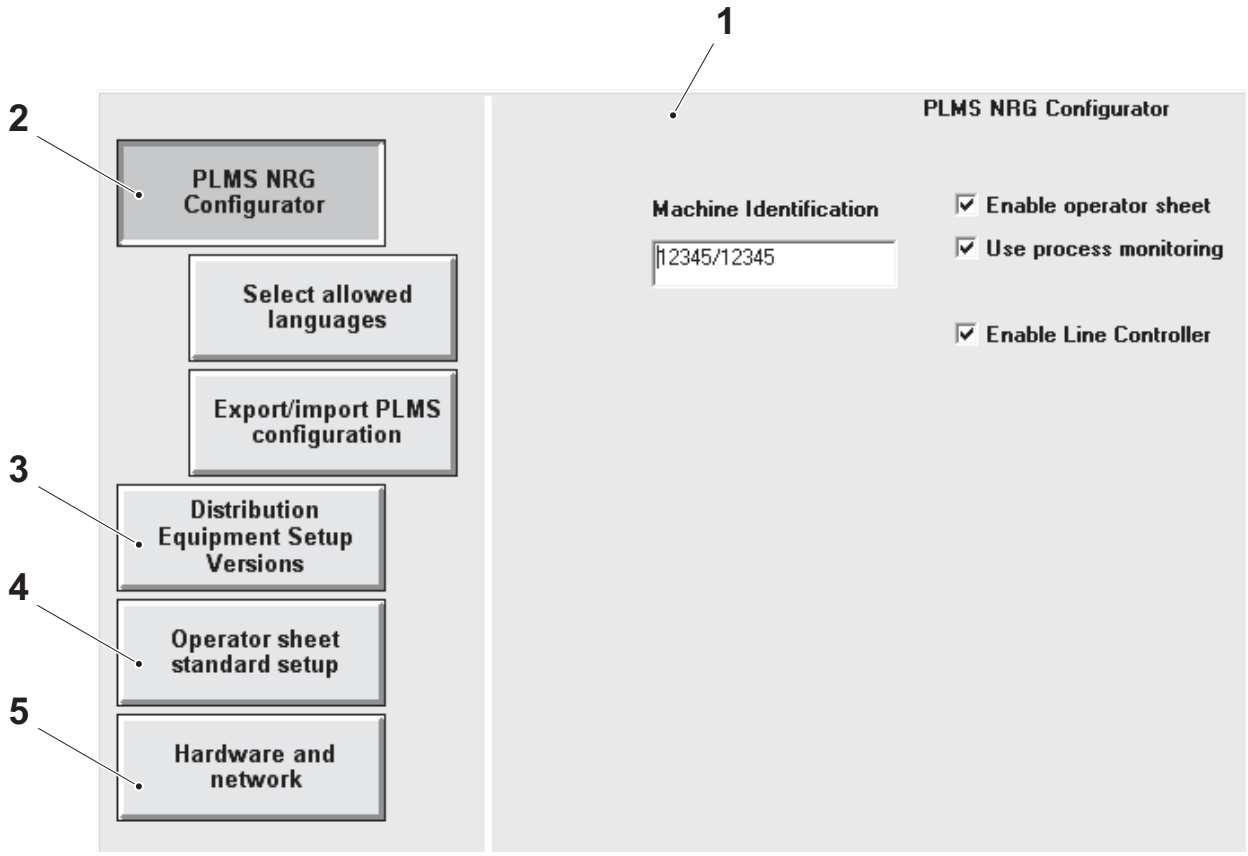

1 PLMS NRG main window
2 PLMS NRG configuration button
3 Distribution equipment setup button
4 Operator sheet standard setup button
5 Hardware and network button

9.6.1-2 PLMS NRG Configurator - Set Machine ID

Machine Status	Mains Power ON Air OFF Steam ON Water OFF
Special Equipment	Keyboard with USB connector

a) Log on as an installer, see 9.6-2 HMI and PLMS - Log On Procedure.

b) From the START menu choose CONFIGURE PLMS.

c) In the PLMS NRG window, touch the MACHINE IDENTIFICATION field (1) to activate it, then use the keyboard to type the last five digits of the machine number followed by the first five digits.

If the machine identity is set in a previous installation, this serial number will be suggested.

Note! The machine serial number is found on the LH side of the machine on the machine plate.

Restart and log on as an operator, see 9.6-2 HMI and PLMS - Log On Procedure.

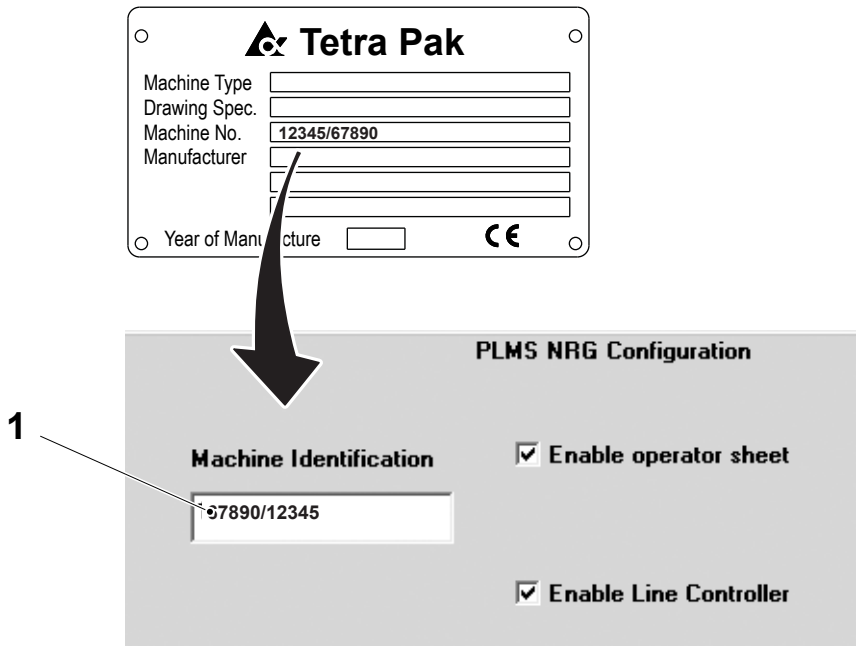

1 Machine identification field

9.6.1-3 PLMS NRG Configurator - Select Allowed Languages

Machine Status	Mains Power ON Air OFF Steam ON Water OFF
Special Equipment	Keyboard with USB connector

a) Log on as an installer, see 9.6-2 HMI and PLMS - Log On Procedure.

b) From the START menu choose CONFIGURE PLMS.

c) In the PLMS NRG window, touch the SELECT ALLOWED LANGUAGES button (1).

d) Choose the required language by selecting the corresponding check box (2). If necessary, touch the CHANGE FLAG button (3) to select an alternative flag icon.

Restart and log on as an operator, see 9.6-2 HMI and PLMS - Log On Procedure.

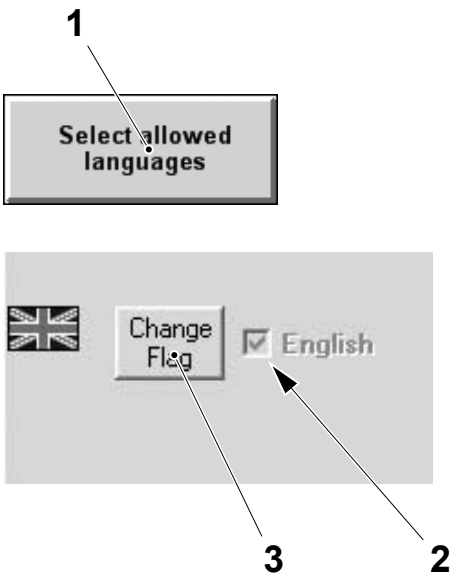

1 Select allowed languages button
2 Check box
3 Change flag button

9.6.1-4 PLMS NRG Configurator - Export/Import Configuration

Machine Status	Mains Power ON Air OFF Steam ON Water OFF
Special Equipment	Keyboard with USB connector

This section describes how to import and export the PLMS NRG Configurator setup so that it can be used on several machines without having to repeat the settings on each machine individually.

a) Log on as an installer, see 9.6-2 HMI and PLMS - Log On Procedure.

b) From the START menu choose CONFIGURE PLMS.

c) In the PLMS NRG window, touch the EXPORT/IMPORT PLMS CONFIGURATION button (1).

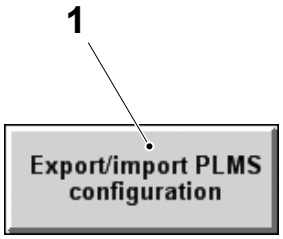

1 Export/import PLMS configuration button

(Cont'd)

(Cont'd)

Importing from a USB Key

a) Remove the plug (1) from the control panel (2) and insert the USB key.

b) Choose the items to be imported by selecting the check box (3) next to each of the items.

c) Touch the `IMPORT PLMS CONFIGURATION FROM DISKETTE` button (4).

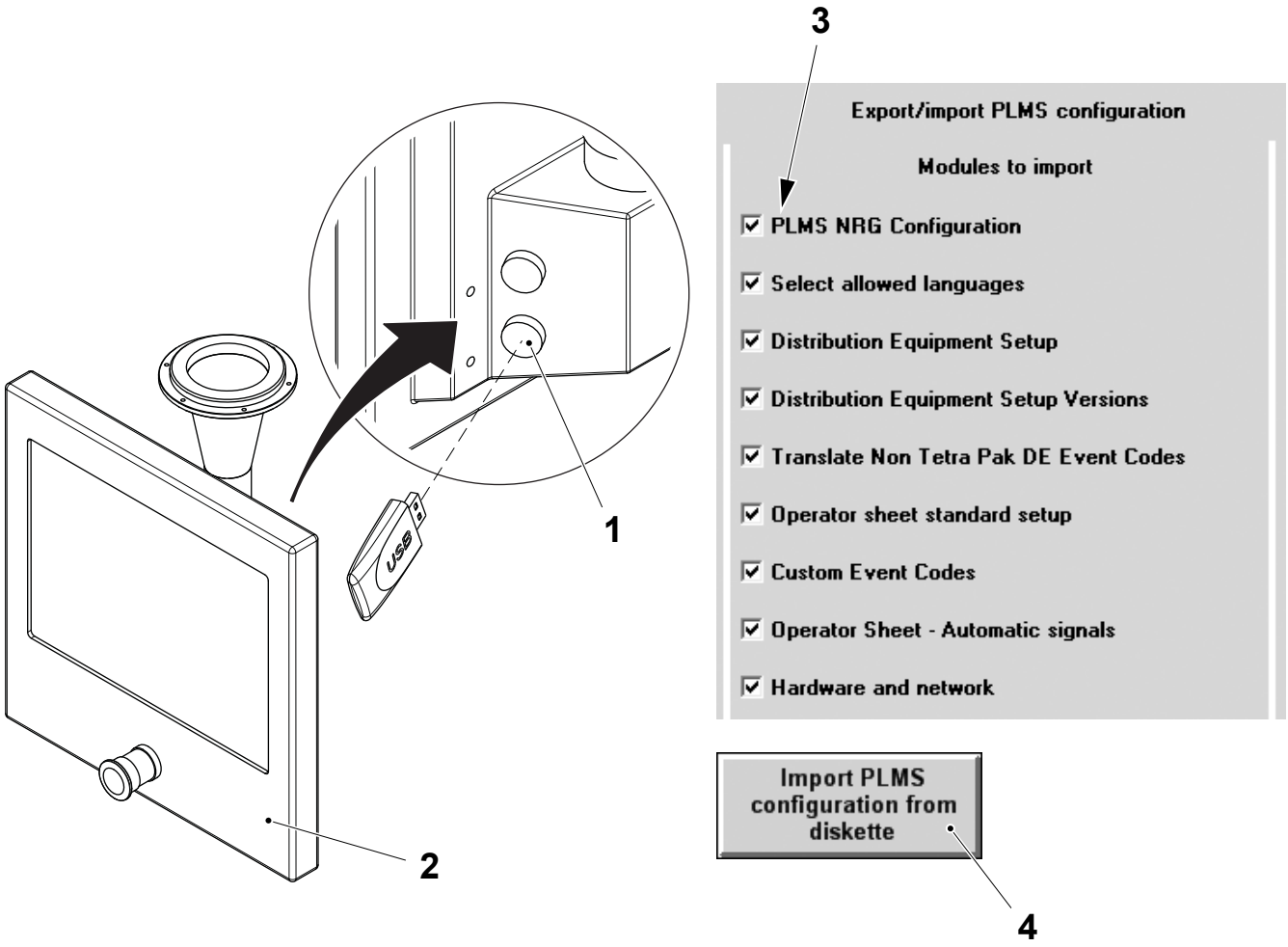

1 Plug
2 Control panel
3 Check box
4 Import PLMS configuration from diskette button

(Cont'd)

(Cont'd)

d) When the dialogue box appears, touch the YES button (5) to continue or the NO button (6) to stop the import action.

e) Restart and log on as an operator, see 9.6-2 HMI and PLMS - Log On Procedure.

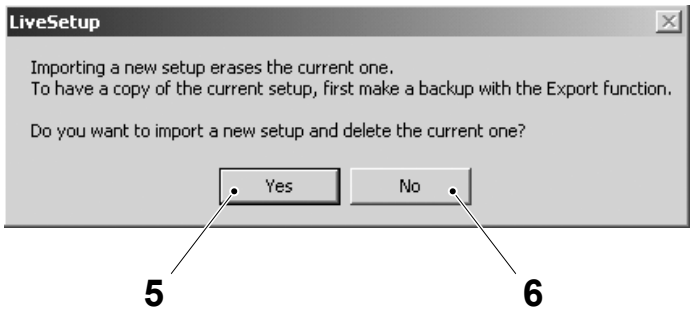

5 Yes button
6 No button

(Cont'd)

(Cont'd)

Exporting to a USB Key

a) Choose the items to be exported by selecting the check box (1) next to each of the items.

b) Touch the `EXPORT PLMS CONFIGURATION TO DISKETTE` button (2).

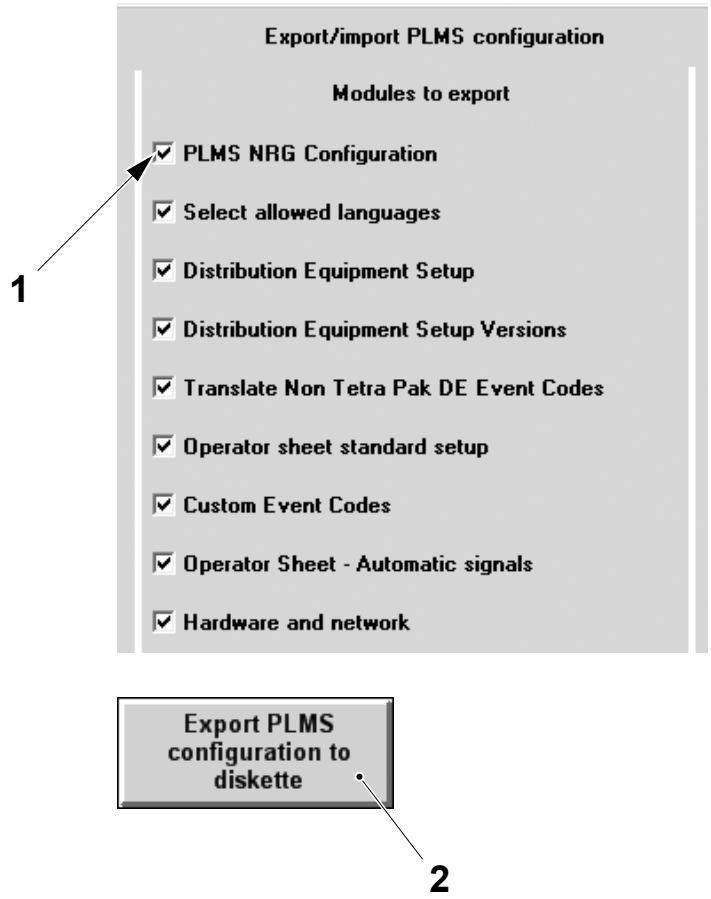

1 Check box
2 Export PLMS configuration to diskette button

(Cont'd)

(Cont'd)

c) When the dialogue box appears, remove the plug (3) from the control panel (4) and insert a USB key.

d) Touch the OK button (5) to continue or the CANCEL button (6) to stop the export action.

e) Restart and log on as an operator, see 9.6-2 HMI and PLMS - Log On Procedure.

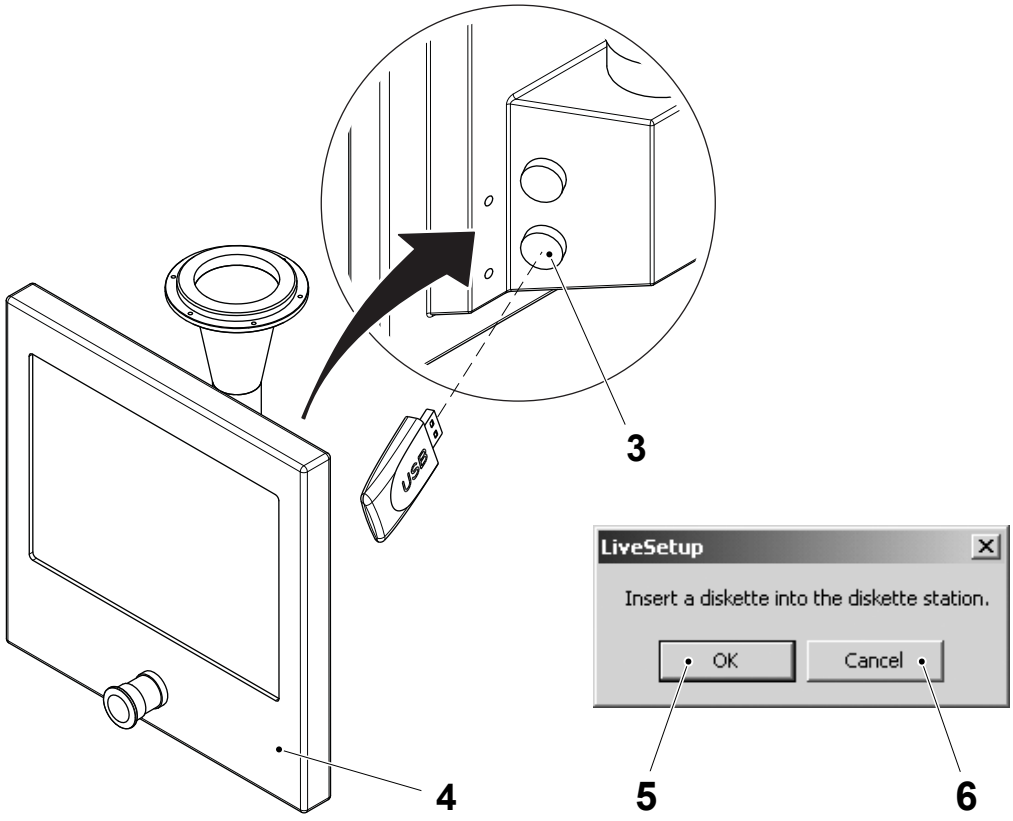

3 Plug
4 Control panel
5 OK button
6 Cancel button

9.6.1-5 PLMS NRG Configurator - Translate Non-Tetra Pak DE Event Codes

Machine Status	Mains Power ON Air OFF Steam ON Water OFF
Special Equipment	Keyboard with USB connector

The following describes how to rename non-Tetra Pak event codes to the names of actual equipment that are in the packaging line.

a) Log on as an installer, see 9.6-2 HMI and PLMS - Log On Procedure.

(Cont'd)

(Cont'd)

b) From the START menu choose CONFIGURE PLMS.

c) Touch the TRANSLATE NON-TETRA PAK DE EVENT CODES button (1) in the PLMS NRG window.

d) The TRANSLATE NON-TETRA PAK DE EVENT CODES window (2) appears.

e) Use the ARROW buttons (3) to select an event from the LIST box (4).

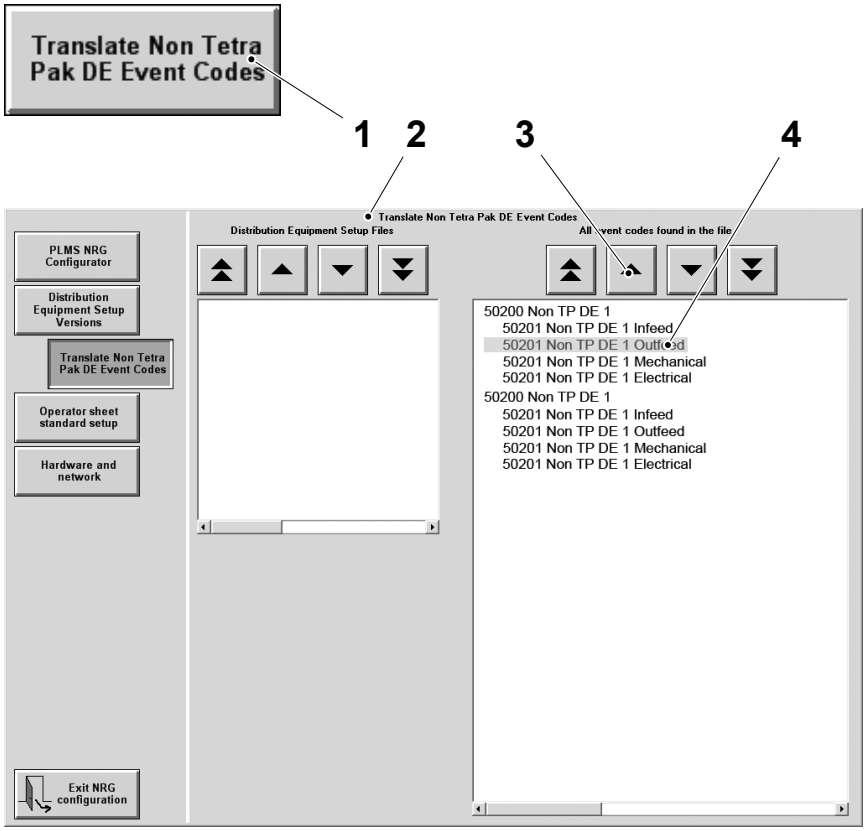

1 Translate non-Tetra Pak DE event codes button
2 Translate non-Tetra Pak DE event codes window
3 Arrow button
4 List box

(Cont'd)

(Cont'd)

f) Input the desired text for the event in the EVENT CODE DESCRIPTION box (5) and touch the UPDATE button (6).

Note! To exit the TRANSLATE NON-TETRA PAK DE EVENT CODES window without saving the changes, touch the CANCEL button (9).

g) Touch the OK button (7) to save the changes and exit the TRANSLATE NON-TETRA PAK DE EVENT CODES window.

h) If the WARNING MESSAGE window (8) appears, the DE setup must be correctly configured before the renaming of the event can be completed.

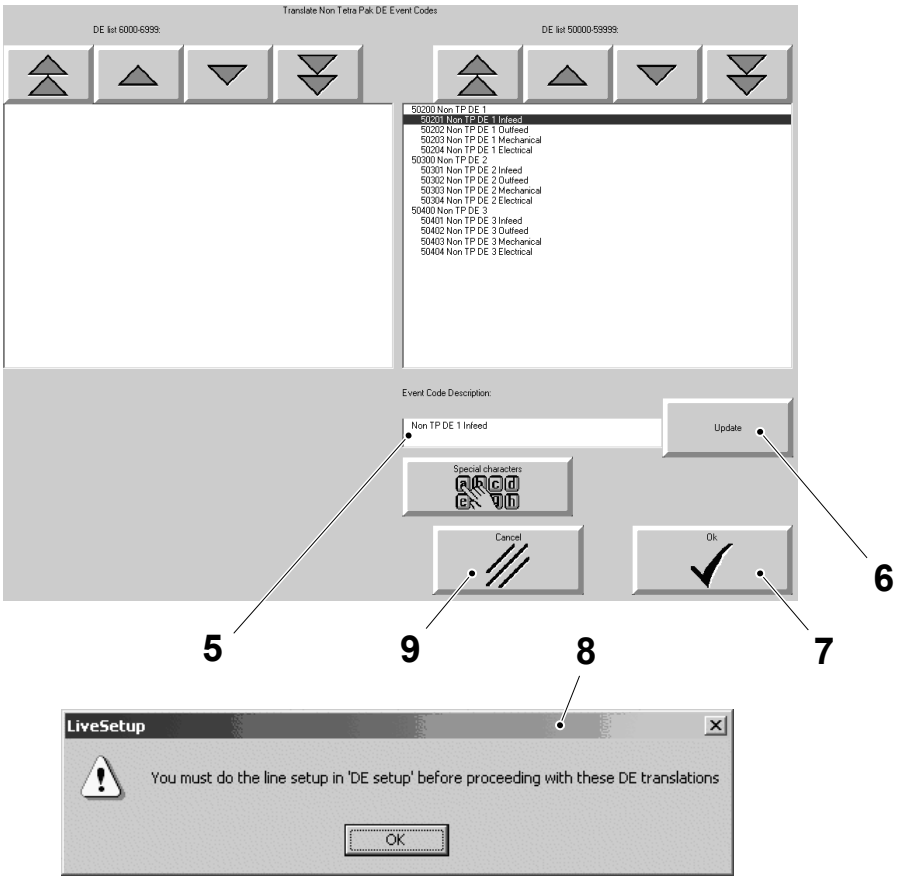

5 Event code description box
6 Update button
7 OK button
8 Warning message window
9 Cancel button

9.6.1-6 PLMS NRG Configurator - Distribution Equipment Setup

Machine Status	Mains Power ON Air OFF Steam ON Water OFF
Special Equipment	Keyboard with USB connector

Note! The following procedure is only necessary if the Tetra Pak Line Controller is not to be used in the packaging line configuration.

a) Log on as an installer, see 9.6-2 HMI and PLMS - Log On Procedure.

b) From the START menu choose CONFIGURE PLMS.

c) Touch the DISTRIBUTION EQUIPMENT SETUP VERSIONS button (1) in the PLMS NRG window.

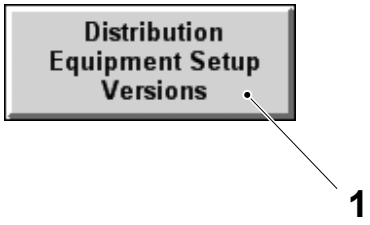

1 Distribution equipment setup versions button

(Cont'd)

(Cont'd)

d) The DISTRIBUTION EQUIPMENT SETUP VERSIONS window (2) appears.

e) Use the ARROW buttons (3) to select a DE equipment from the LIST box (4).

f) Select a POSITION button (5) that represents the position of the chosen DE in the packaging line configuration.

g) Touch the ADD button (6), If a mistake is made touch the DELETE button (7) to remove the DE from the POSITION button (5).

h) Use the CATCH DE PRIORITY DOWNGRADED button (8) to set the correct alarm priorities for the DE.

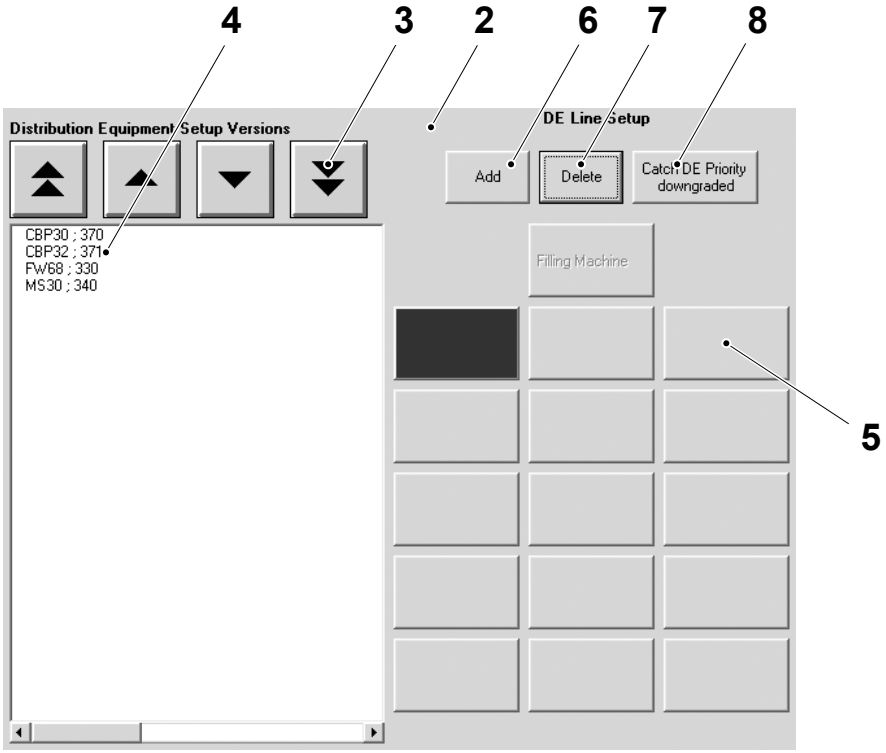

2 Distribution equipment setup versions window
3 Arrow button
4 List box
5 Position button
6 Add button
7 Delete button
8 Catch DE priority downgraded button

(Cont'd)

(Cont'd)

i) If needed adjust the value in the DE CAUSE ALARM DELAY IN SECONDS box (9). This increases the time that the alarm is maintained on the filling machine TPOP.

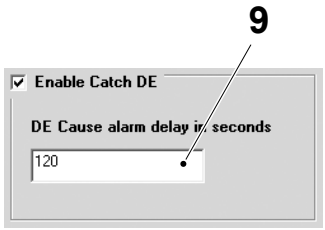

9 DE cause alarm delay in seconds box

9.6.1-7 PLMS NRG Configurator - Defragment the IPC Hard Disk

Machine Status	Mains Power ON Air OFF Steam ON Water OFF
Special Equipment	Keyboard with USB connector

If the boot-up sequence for the TPOP takes more time than can normally be expected, there is a possibility that the IPC hard disk requires defragmenting. To start the disk defragmenter perform the following:

a) Log on as an installer, see 9.6-2 HMI and PLMS - Log On Procedure.

(Cont'd)

(Cont'd)

b) From the START menu choose CONFIGURE PLMS.

c) Touch the DEFRAGMENT THE HARD DISK button (1) in the PLMS NRG window.

d) The following WARNING MESSAGE window (2) appears.

e) Select the YES button (3) to start the disk defragmenter.

The disk defragmenter is a system tool of Microsoft Windows, see the disk defragmenter help menu for more details on using the disk defragmenter.

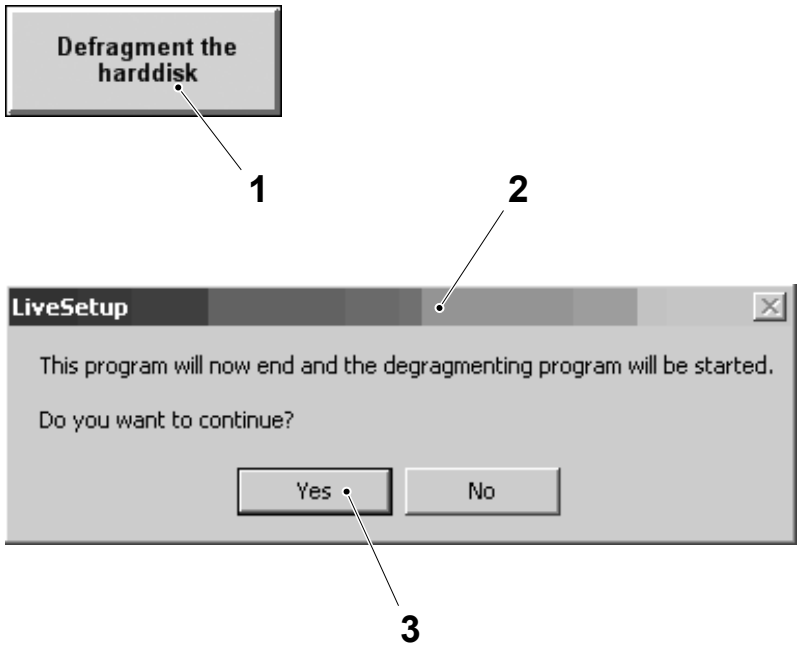

1 Defragment the hard disk button
2 Warning message window
3 Yes button

9.6.1-8 PLMS NRG Configurator - Set Date and Time

Machine Status	Mains Power ON Air OFF Steam ON Water OFF
Special Equipment	Keyboard with USB connector

a) Log on as an installer, see 9.6-2 HMI and PLMS - Log On Procedure.

b) From the START menu choose CONFIGURE PLMS.

c) Touch the TIME AND DATE button (1) in the PLMS LIVE window.

d) Use the ARROW buttons (2) to set the date and the ARROW buttons (3) to set the time.

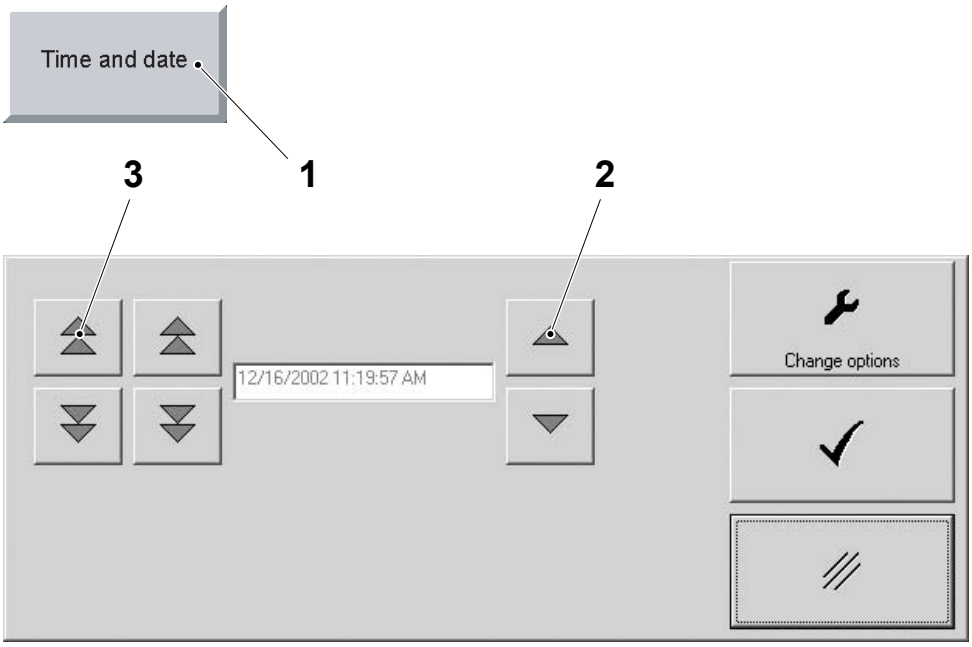

1 Time and date button
2 Arrow button
3 Arrow button

(Cont'd)

(Cont'd)

e) Touch the CHANGE OPTIONS button (4) to select time zone and daylight savings time option. The CHANGE OPTIONS window (5) appears.

f) Select country from the list (6) and select the check box (7) if the daylight savings time should be adjusted automatically.

g) Touch the OK button (8) to save and exit from the CHANGE OPTIONS window (5) or the EXIT button (9) to exit without saving.

h) Touch the OK button (10) to save and exit or the EXIT button (11) to exit without saving.

i) If all work with the PLMS is finished, restart and log on as an operator, see 9.6-2 HMI and PLMS - Log On Procedure.

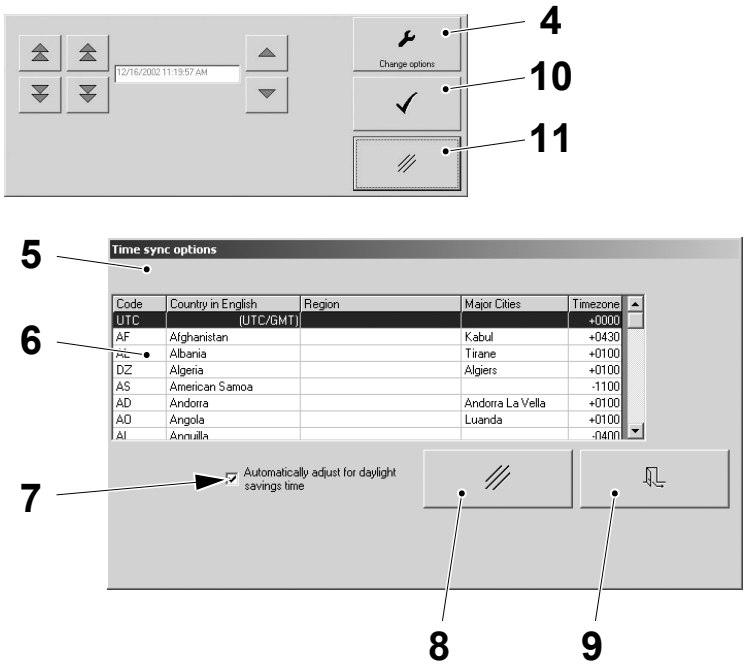

4 Change options button
5 Change options window
6 Country list
7 Checkbox
8 OK button
9 Exit button
10 OK button
11 Exit button

9.6.2 PLMS NRG

9.6.2-1 PLMS NRG - Copy Performance and Process Data

Machine Status	Mains Power ON Air OFF Steam ON Water OFF
SPC Reference	2922532-0100

To analyse data collected by the system, the data must first be copied to an office PC. There are two possible methods:

- direct communication between the filling machine and an office PC by means of the external network connection (level 5). See the PLMS Centre User Manual for the communication configuration using the Netcom module
- manual copying by means of a USB key.

This section describes how to manually copy the data only.

The copied data can be analysed in an office PC utilising the PLMS Centre analysis program. For more information, see PLMS Centre User Manual.

It is possible to copy performance data and process data for different kinds of analyse:

- performance data files, to be analysed with the PLMS Centre analysis program using the Performance Analysis module
- process event and parameter data files, to be analysed with the PLMS Centre analysis program using the Process Analysis module

Note! The data files are in the *.xml file format and are compressed into a ***.zip folder** which can be extracted with the program WinZip.

(Cont'd)

(Cont'd)

Copy Performance Data Files

a) Remove the plug (1) from the control panel (2) and insert a USB memory key into the USB slot.

b) Touch the PLMS SETUP button (3).

c) Touch the COPYLOGGED DATA button (4).

d) Touch the PERFORMANCE DATA button (5).

Note! The PERFORMANCE DATA button (5) is pre-selected by default.

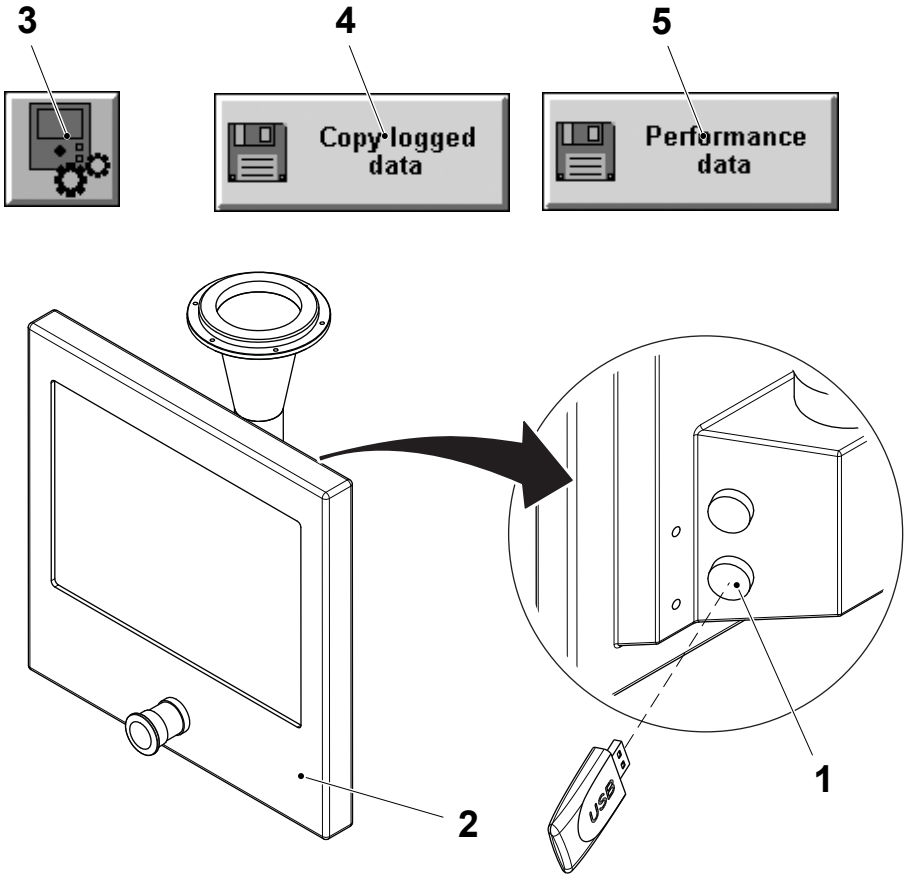

1 Plug
2 Control panel
3 PLMS setup button
4 Copy logged data button
5 Performance data button

(Cont'd)

(Cont'd)

Note! The COPYLOG STARTING DATE button (6) is set by default to the last downloading date. The COPYLOG ENDING DATE button (7) is set by default to the date of yesterday. To download the data files from a different period of time follow the procedure Change the Copylog Start/End Date on page 9-255.

e) Touch the OK button (8) to download the performance data files.

Note! Do not press the TPOP RESET button (9) on the control panel during the copying procedure, if flashing! The starting date is automatically updated every time the data log is copied.

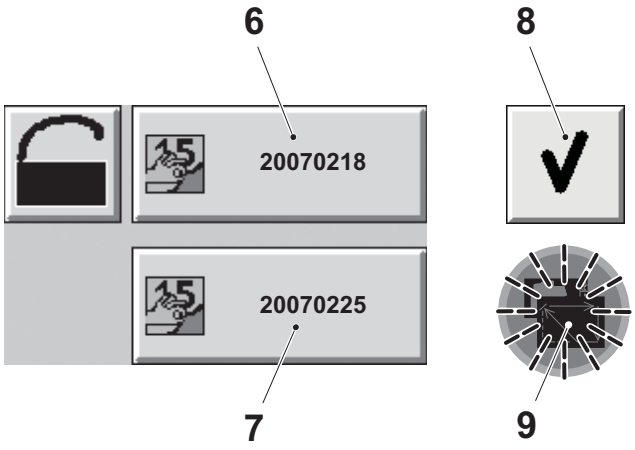

6 Copylog starting date button
7 Copylog ending date button
8 OK button
9 TPOP reset button

(Cont'd)

(Cont'd)

Note! If the icon (13) is displayed, read the accompanying help text on the TPOP and perform the necessary action(s).

f) When the download is complete the icon (10) is displayed.

g) If necessary, touch the `EJECT DRIVE` button (11).

h) Touch the `EXIT` button (12).

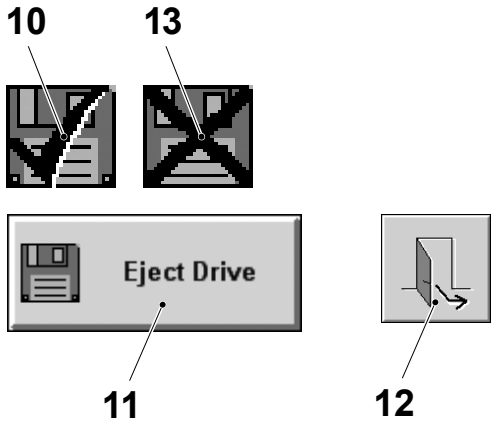

10 Icon
11 Eject drive button
12 Exit button
13 Icon

(Cont'd)

(Cont'd)

Copy Process Data Files

a) Remove the plug (1) from the control panel (2) and insert a USB memory key into the USB slot.

b) Touch the `PLMS SETUP` button (3).

c) Touch the `COPYLOGGED DATA` button (4).

d) Touch the `PROCESS DATA` button (5).

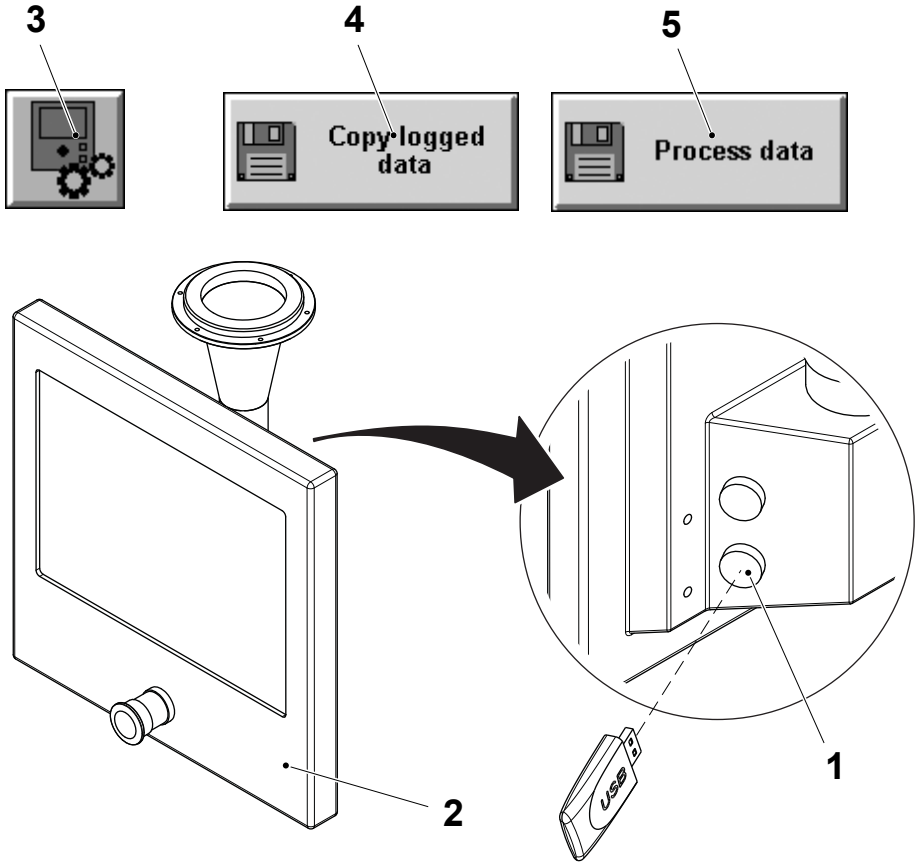

1 Plug
2 Control panel
3 PLMS setup button
4 Copy logged data button
5 Process data button

(Cont'd)

(Cont'd)

Note! The COPYLOG STARTING DATE button (6) is set by default to the last downloading date. The COPYLOG ENDING DATE button (7) is set by default to the date of yesterday. To download the data files from a different period of time follow the procedure Change the Copylog Start/End Date on page 9-255.

e) Touch the OK button (8) to download the process data files.

Note! Do not press the TPOP RESET button (9) on the control panel during the copying procedure, if flashing! The starting date is automatically updated every time the data log is copied.

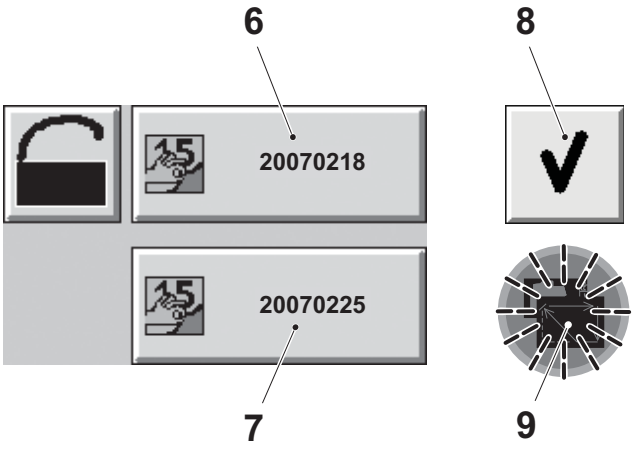

6 Copylog starting date button
7 Copylog ending date button
8 OK button
9 TPOP reset button

(Cont'd)

(Cont'd)

Note! If the icon (13) is displayed, read the accompanying help text on the TPOP and perform the necessary action(s).

f) When the download is complete the icon (10) is displayed.

g) If necessary, touch the `EJECT DRIVE` button (11).

h) Touch the `EXIT` button (12).

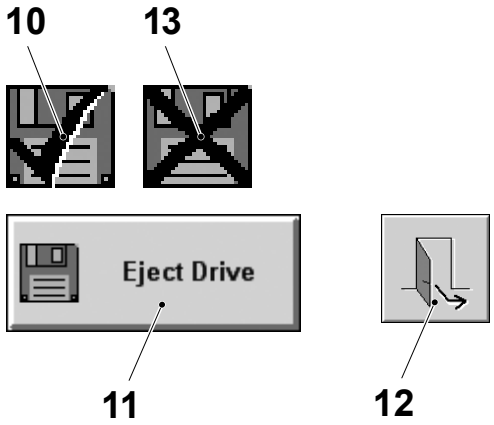

10 Icon
11 Eject drive button
12 Exit button
13 Icon

(Cont'd)

(Cont'd)

Change the Copylog Start/End Date

To download the data files from a different period of time follow the instructions below.

a) Touch the LOCK button (1).

b) Touch the COPYLOG STARTING DATE button (2) and select a date from the calender (3).

c) Touch the COPYLOG END DATE button (4) and select a date from the calender (3).

d) Touch the OK button (5) to download the files.

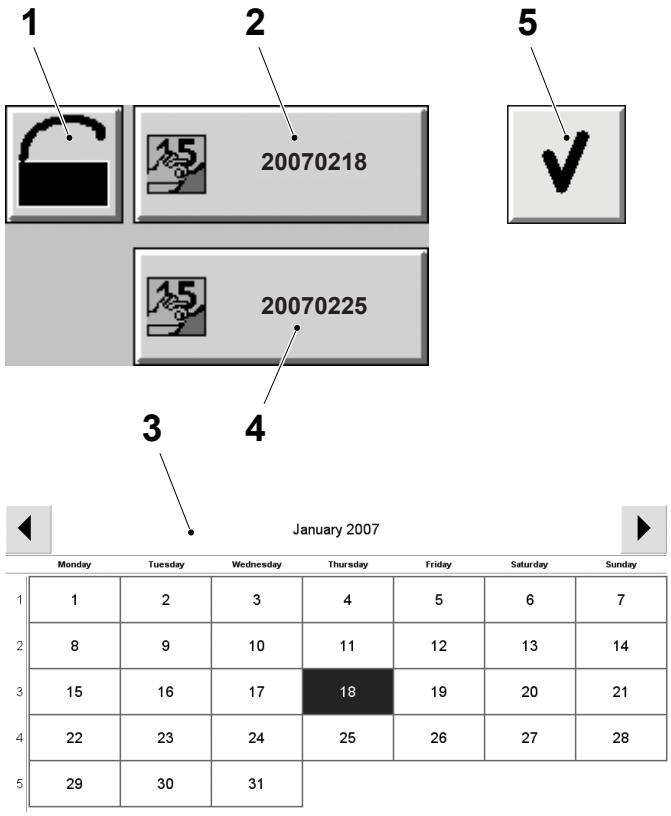

1 Lock button
2 Copy log start date button
3 Calendar
4 Copy log end date button
5 OK button

9.6.3 HMI

9.6.3-1 HMI - User Management Description

SPC Reference	2922532-0100

The HMI includes certain sections which have restricted access and are password protected. Access is permitted and defined by the user profile and the password used to log on, see the table below for a description of each of the available user profiles and the corresponding level of access.

Note! The default machine operator has no user log on profile or access to the restricted areas of the HMI.

User Profile	User Name	Password	Access Description
TP service technician	tptechnician	not provided	Access to: - user administration - shifts definition - supervisor reserved settings - TP reserved production control settings and functions - production control settings and functions - TP reserved maintenance control settings and functions - maintenance control settings and functions - create and delete recipes - software installation and configuration - shutdown - diagnostic - full access to the configuration window - alarm management - basic recipe management

(Cont'd)

(Cont'd)

User Profile	User Name	Password	Access Description
Supervisor	supervisor	shiftsup	Access to: - user administration - shifts definition - supervisor reserved settings - production control settings and functions - maintenance control settings and functions - create and delete recipes - software installation and configuration - partial access to the configuration window - alarm management - basic recipe management
Service technician	technician	custtech	Access to: - production control settings and functions - maintenance control settings and functions - create and delete recipes - software installation and configuration - partial access to the configuration window - alarm management - basic recipe management
Power operator	pwroperator	expertop	Access to: - power operator reserved production control settings and functions - alarm management - basic recipe management
Operator (default user without log on)	-	-	Access to: - production control settings and functions - alarm management - basic recipe management

9.6.3-2 HMI - User Management Log On

SPC Reference	2922532-0100

This procedure describes how to log on to the HMI and to access the restricted password protected sections of the HMI. The level of access permitted is defined by the user profile, see 9.6.3-1 HMI - User Management Description.

Note! After 15 minutes of HMI inactivity the user is automatically logged out.

To log on to the HMI proceed as described below:

a) On the TPOP, touch the SYSTEM SETUP button (1).

b) In the SYSTEM SETUP window, touch the USER MANAGEMENT button (2).

c) Touch the LOG ON button (3) to display the LOG ON window (4).

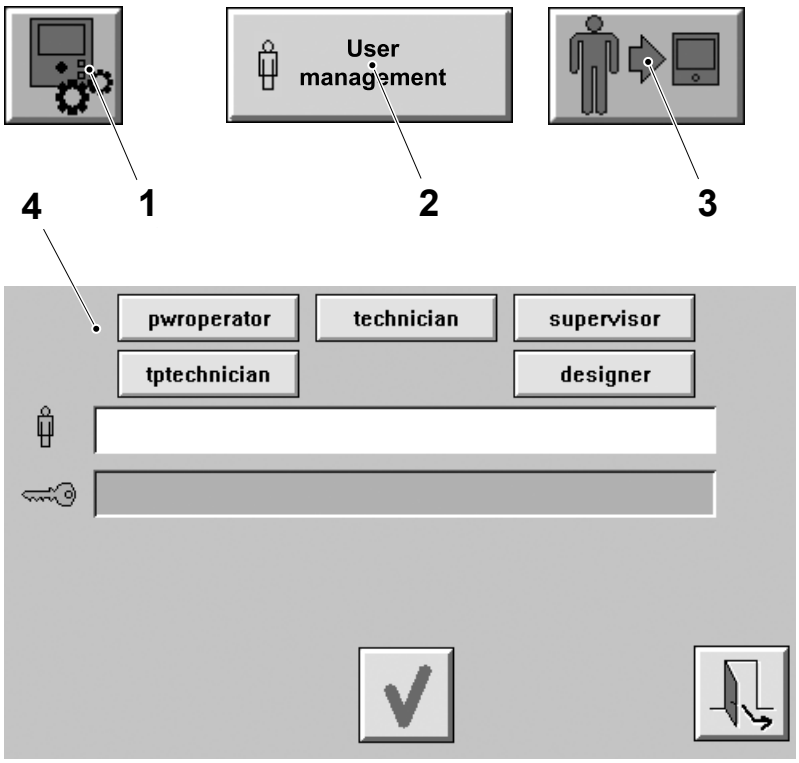

1 System setup button
2 User management button
3 Log on button
4 Log On window

(Cont'd)

(Cont'd)

Note! Pwroperator is used as an example in the illustration.

d) Touch the appropriate USER button (5) corresponding to your user profile.

e) Touch the PASSWORD box (6) to display the keyboard (7).

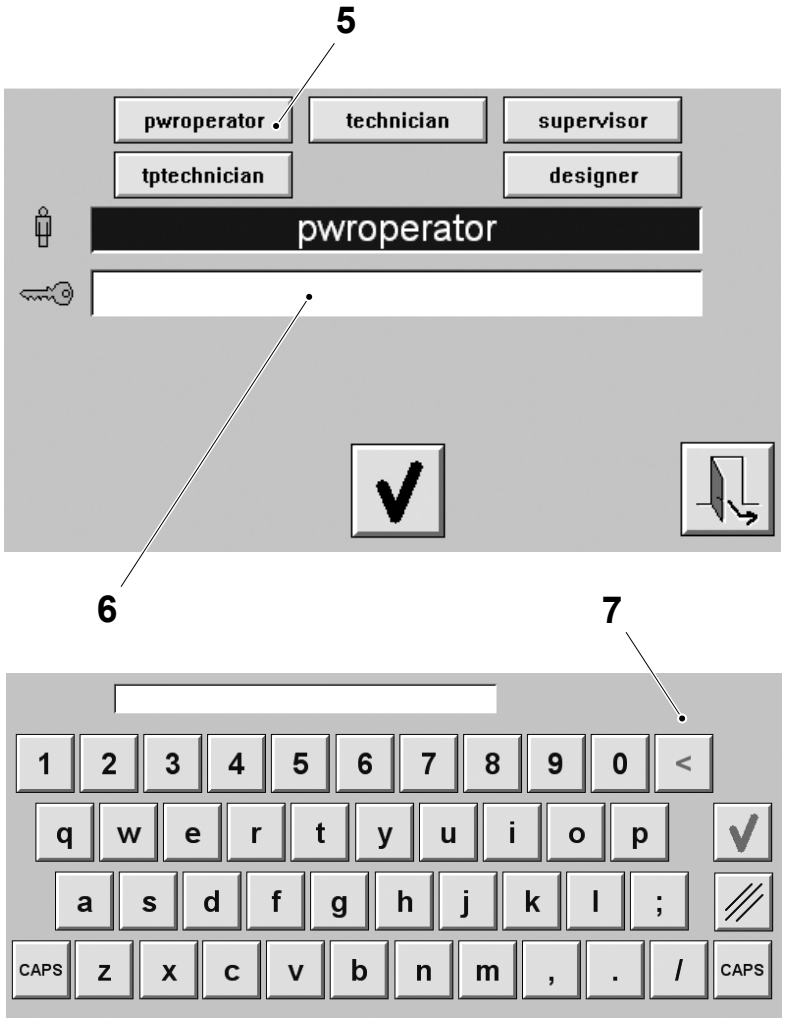

5 User button
6 Password box
7 Keyboard

(Cont'd)

(Cont'd)

f) Use the keyboard (7) to enter the password and then touch the OK button (8).

g) Touch the OK button (9) in the LOG ON window (4).

The user is now logged on to the HMI with the corresponding level of access. All changes to the system are recorded along with the user ID information.

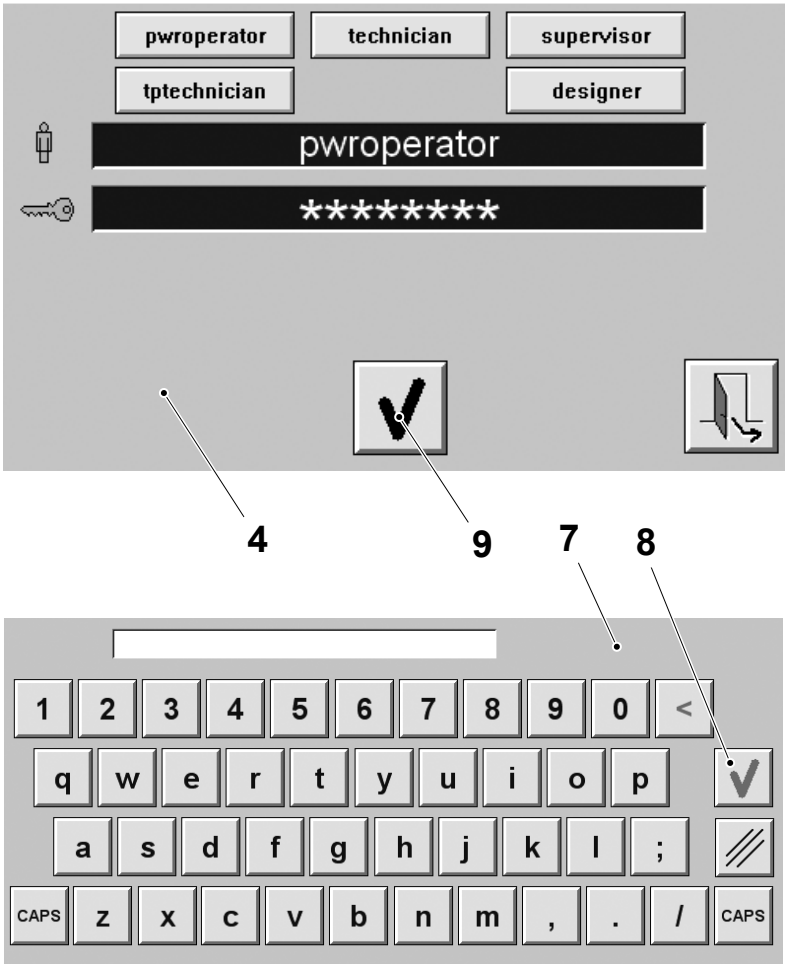

4 Log on window
7 Keyboard
8 OK button
9 OK button

9.6.3-3 HMI - User Management Change Password

SPC Reference	2922532-0100

CAUTION
Risk of unplanned machine stoppage.
If the default passwords are changed and subsequently forgotten, the HMI software must be reinstalled before access to the restricted sections of the HMI is restored.

The user with the profile “supervisor” has the authority to set and change the passwords for the user profiles of “technician” and “pwroperator”. To change the password of either the user profiles proceed as follows:

a) Log on to the HMI as the user profile “supervisor”, see 9.6.3-2 HMI - User Management Log On.

b) In the `USER MANAGEMENT` window, touch either the:
   – `ENABLE PWROPERATOR CHANGE PASSWORD` button (1) for the user profile “pwroperator”
   – `ENABLE TECHNICIAN CHANGE PASSWORD` button (2) for the user profile “technician”.

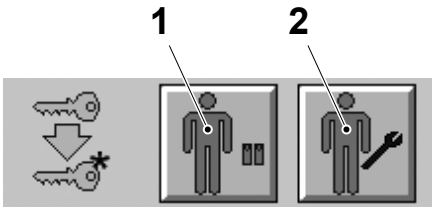

1 Enable pwroperator change password button
2 Enable technician change password button

(Cont'd)

(Cont'd)

c) Touch the LOG OFF button (3).

d) Log on to the HMI using the user profile chosen in item b), see 9.6.3-2 HMI - User Management Log On.

e) The CHANGE PASSWORD button (4) is now visible in the USER MANAGEMENT window, touch the CHANGE PASSWORD button (4) to display the CHANGE PASSWORD dialogue box (5).

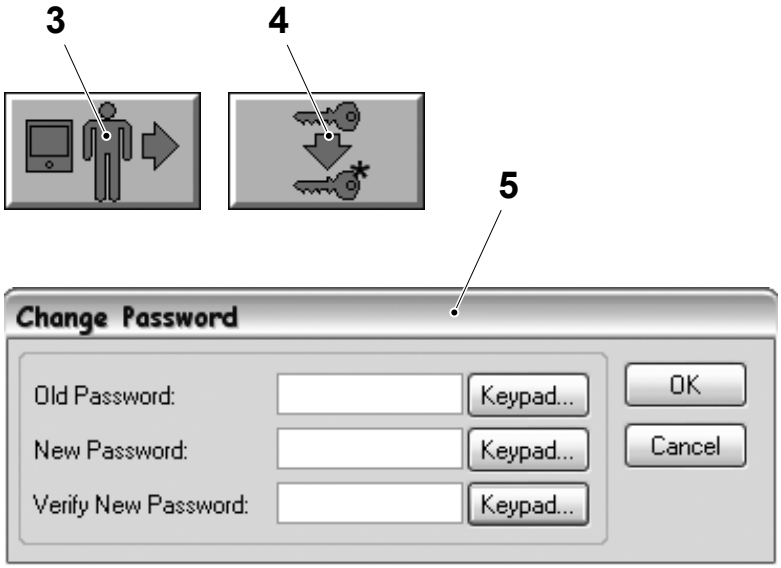

3 Log off button
4 Change password button
5 Change password dialogue box

(Cont'd)

(Cont'd)

f) Touch the KEYPAD button (6) to display the keypad (7).

g) Use the keypad to enter the current password then touch the ENTER button (8).

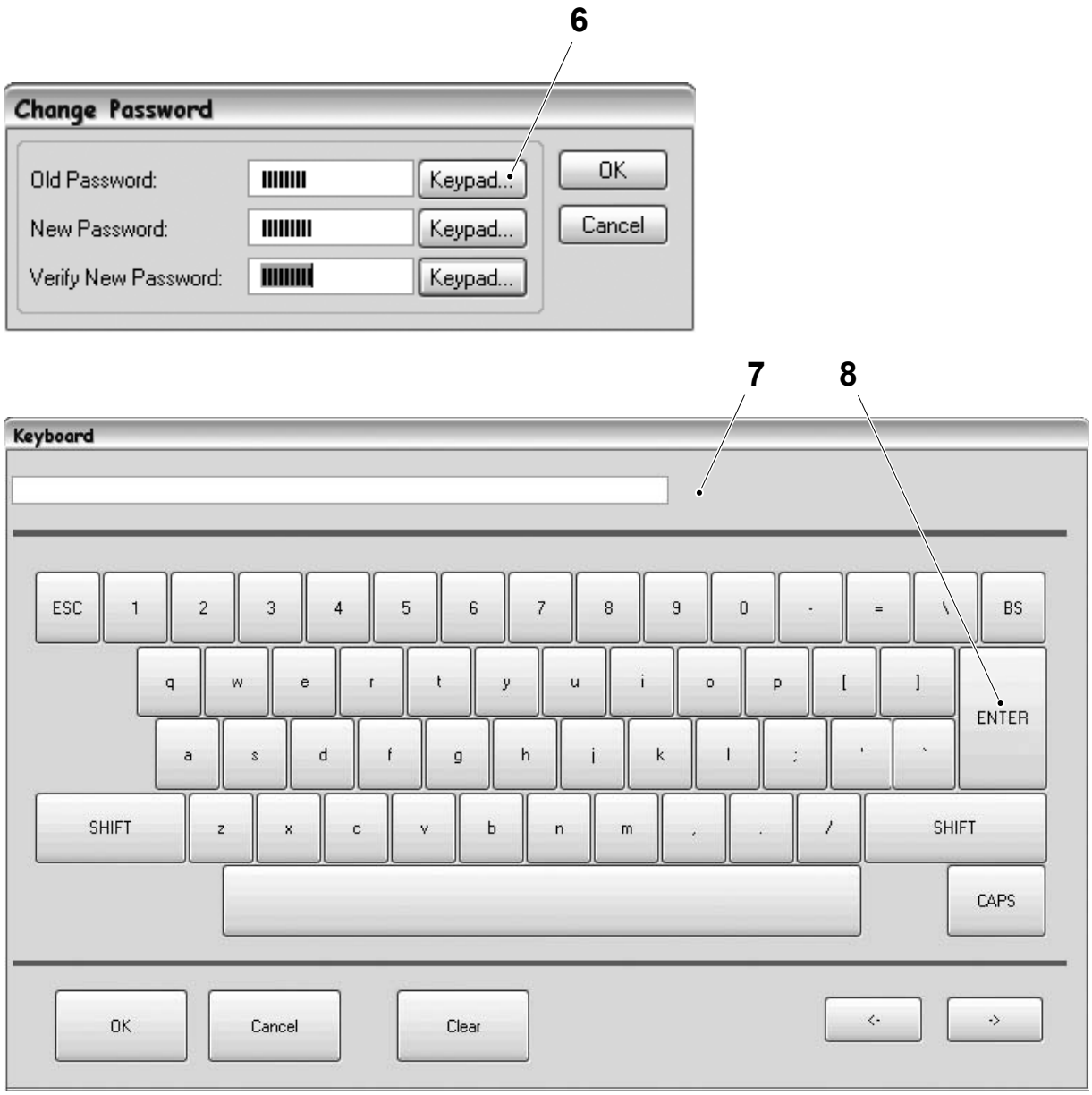

6 Keypad button
7 Keypad
8 Enter button

(Cont'd)

(Cont'd)

h) Touch the KEYPAD button (9) to display the keypad (7).

i) Use the keypad to enter the new password then touch the ENTER button (8).

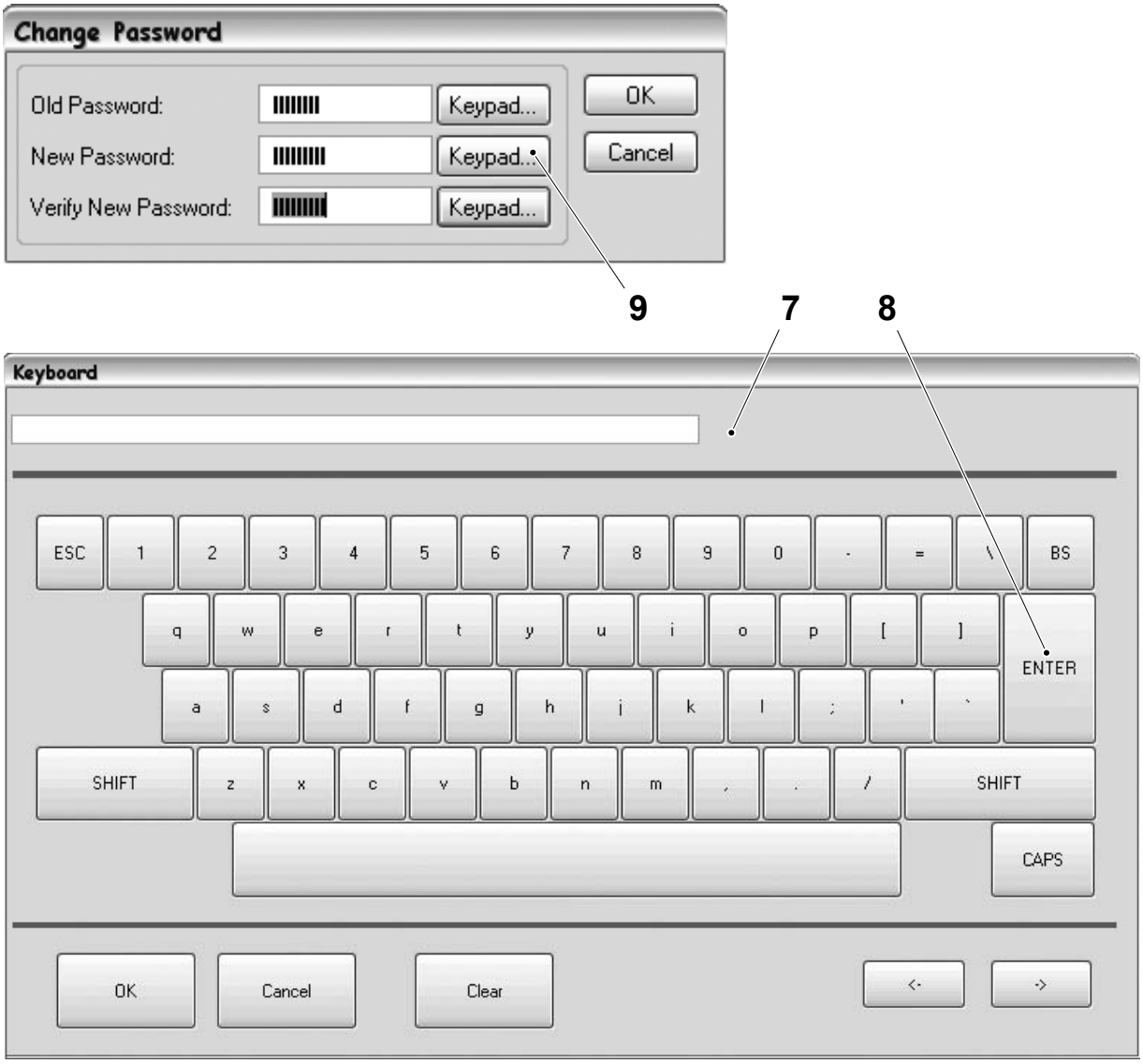

7 Keypad
8 Enter button
9 Keypad button

(Cont'd)

(Cont'd)

j) Touch the KEYPAD button (10) to display the keypad (7).

k) Use the keypad to repeat the new password then touch the ENTER button (8).

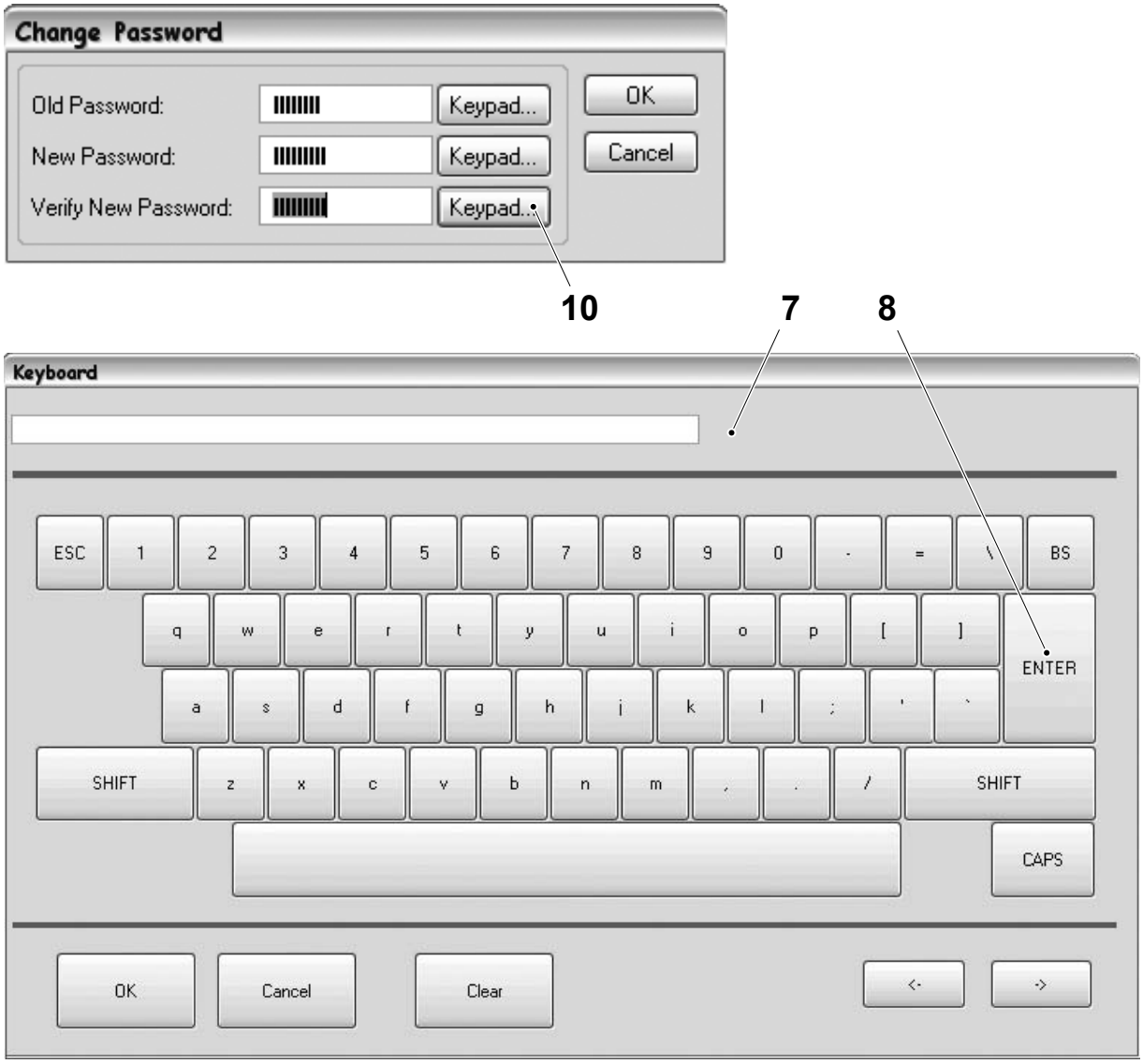

7 Keypad
8 Enter button
10 Keypad button

(Cont'd)

(Cont'd)

l) Touch the OK button (11).

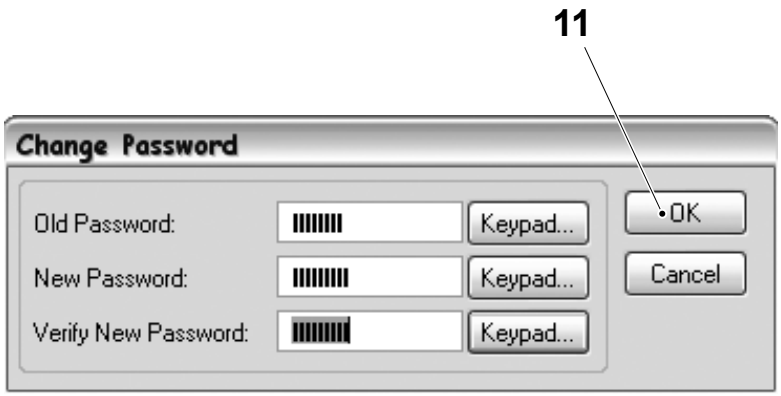

11 OK button

(Cont'd)

(Cont'd)

Note! If the ENABLE CHANGE PASSWORD buttons are not deselected by the "supervisor" profile, the CHANGE PASSWORD button remains visible and accessible in the profiles for the "pwroperator" and "technician".

m) Touch the LOG OFF button (3).

n) Log on to the HMI as the user profile "supervisor", see 9.6.3-2 HMI - User Management Log On.

o) In the USER MANAGEMENT window, depending on which button was selected in item b) deselect the:

- ENABLE PWROPERATOR CHANGE PASSWORD button (1) for the user profile "pwroperator"
- ENABLE TECHNICIAN CHANGE PASSWORD button (2) for the user profile "technician".

If necessary repeat the procedure to change the password for the other user profile. The password for the user profile "supervisor" can be changed by logging on as the "supervisor" and selecting the CHANGE PASSWORD button in the USER MANAGEMENT window.

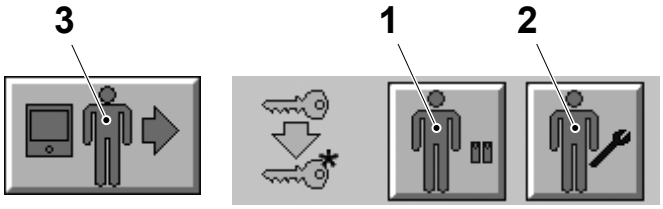

1 Enable pwroperator change password button
2 Enable technician change password button
3 Log off button

9.7 Control Devices and Sensors

SPC Reference	90458-2580 90459-5187 90459-1615

9.7.1 IPC

9.7.1-1 IPC - Description

SPC Reference	90600-3694

The IPC (Industrial PC) is the core component of the TPOP system and consists of a computer with the TPOP and PLMS software and all the physical connections needed for communicating with the rest of the system.

(Cont'd)

(Cont'd)

- COM3 RS232/422/485 port (1)
- SDL/DVI port (2): connects the TPOP to the IPC
- 24V power (3)
- two USB port (4)
- Line Network level 6 (5): used for communication with DE
- Int. network level 7 (6): used for communication with the PLC (connected to the ethernet switch)
- two COM RS232 port (7)
- Ext. network level5 (8): external network

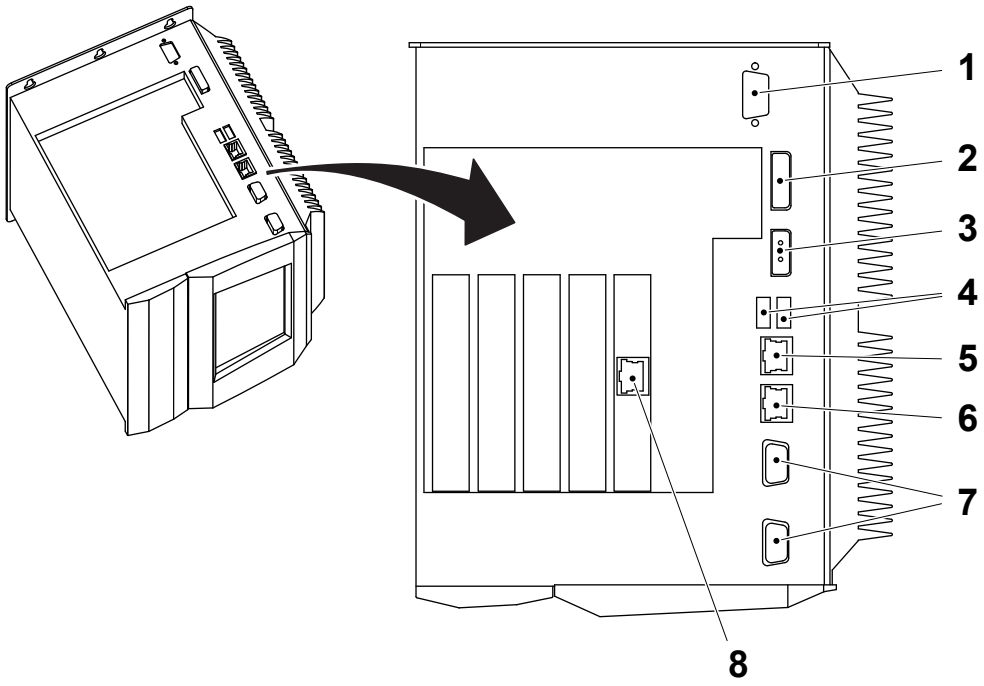

1 RS232/422/485 port
2 SDL/DVI port
3 24V power
4 USB port
5 LVL6
6 LVL7
7 RS232
8 LVL5

(Cont'd)

(Cont'd)

- Cover (9)
- CompactFlash1 (10): 4Gb for operating system
- CompactFlash2 (11): 8Gb for logger data
- DVD drive (12)
- PS2 port (13): connects a PS2 mouse or keyboard to the IPC.

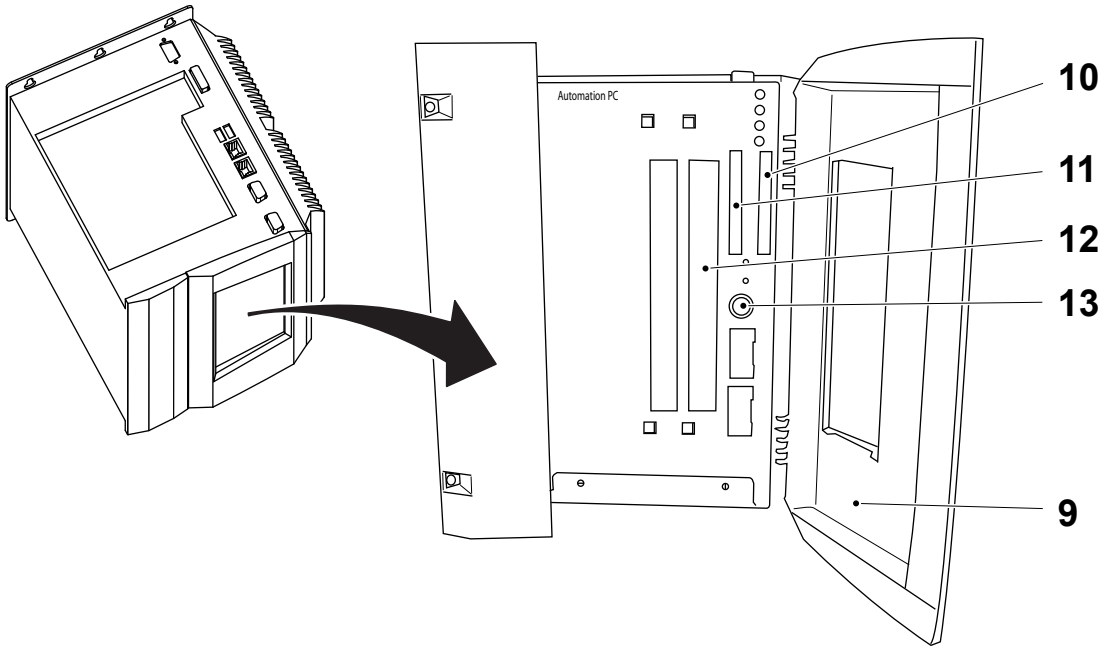

9 Cover
10 CompactFlash1 4Gb
11 CompactFlash2 8Gb
12 DVD drive
13 PS2 port

9.7.1-2 IPC - Change CompactFlash Memory Card

Machine Status	Mains Power OFF Air OFF Steam ON Water OFF
SPC Reference	90600-3694

a) Open the door of the electrical cabinet.

b) Open the cover (1) of the IPC (2).

Note! The CompactFlash memory card (3) contains the operating system. In case of replacement, re-install the software, see 9.6-3 HMI and PLMS - Install Software.

c) Press the button on the CompactFlash memory card to be changed (3) or (4) to eject the memory card.

d) Fit the new CompactFlash memory card (3) or (4).

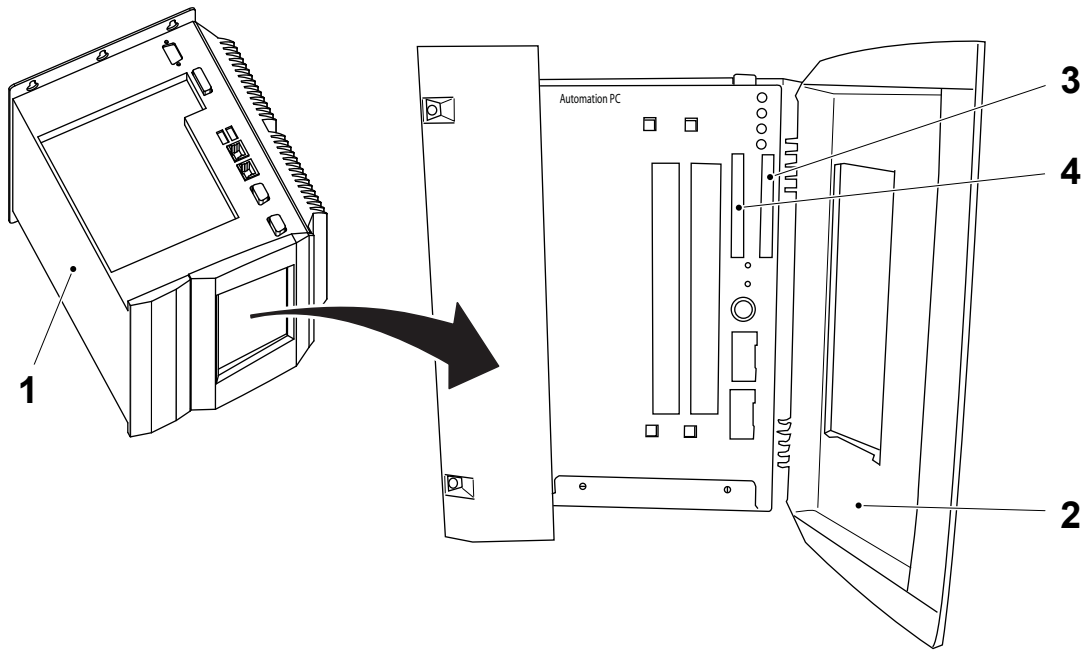

1 IPC
2 Cover
3 CompactFlash memory card
4 CompactFlash memory card

9.7.2 Level Control

9.7.2-1 Level Control - Description

SPC Reference	90458-2580

The level regulator relays (RM4-LA) monitor fluid levels by measuring the change in resistance of immersed and non immersed electrodes. The relay sensitivity must be set according to the conductivity of the fluid.

Connection box U70X1000

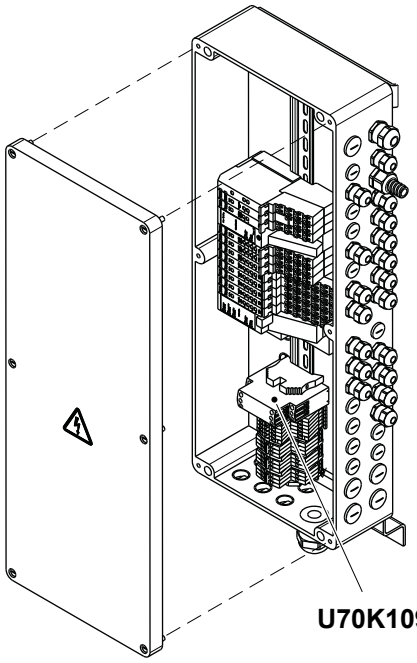

Connection box U70X3000

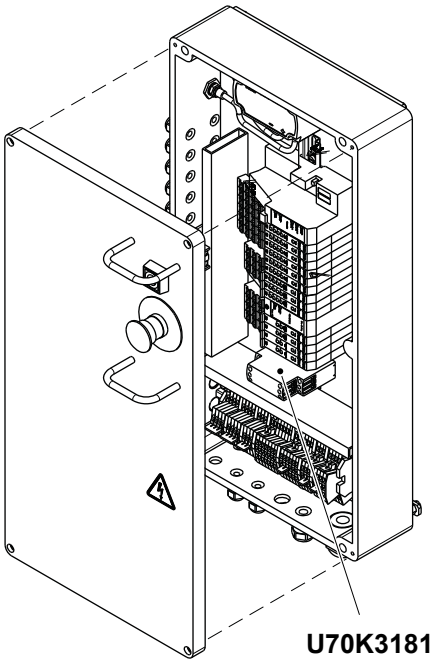

Connection box U70X4000 (OE)

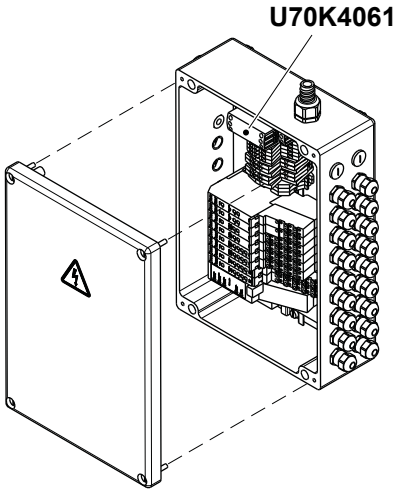

U70K3181Hydrogen peroxide spray tank
U70K1091Regulating valve leakage
U70K4061HI level peroxide spray tank (OE)

(Cont'd)

(Cont'd)

The level regulator parameters are set using the potentiometer and selectors shown in the illustration below:

a) The selector (1) sets the filling/empty functionality:
   - in the empty function the output relay is activated when the high level electrode is immersed and deactivated when the low level electrode is "dry"
   - in the fill function the output relay is activated when the low level electrode is "dry" and deactivated when the high level electrode is immersed.

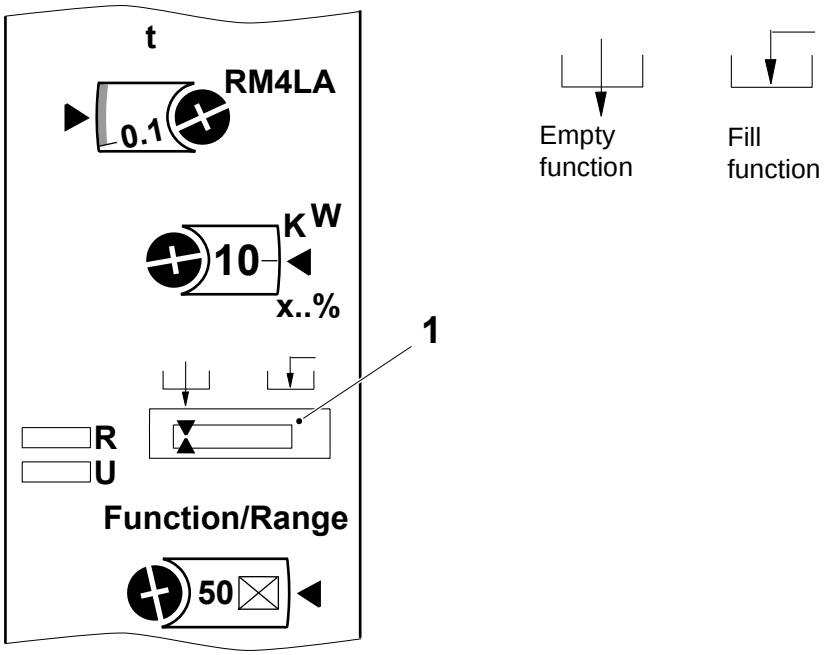

1 Functionality selector

(Cont'd)

(Cont'd)

b) The potentiometer (2) gives a fine adjustment of the sensitivity as a percentage (%) of the sensitivity range (6).

c) The potentiometer (3) sets the delay.

d) The selector (6) sets the sensitivity range of the relay and the energisation time delay option.

e) The yellow LED (4) is lit when the relay is CLOSED.

f) The green LED (5) is lit when the power is ON.

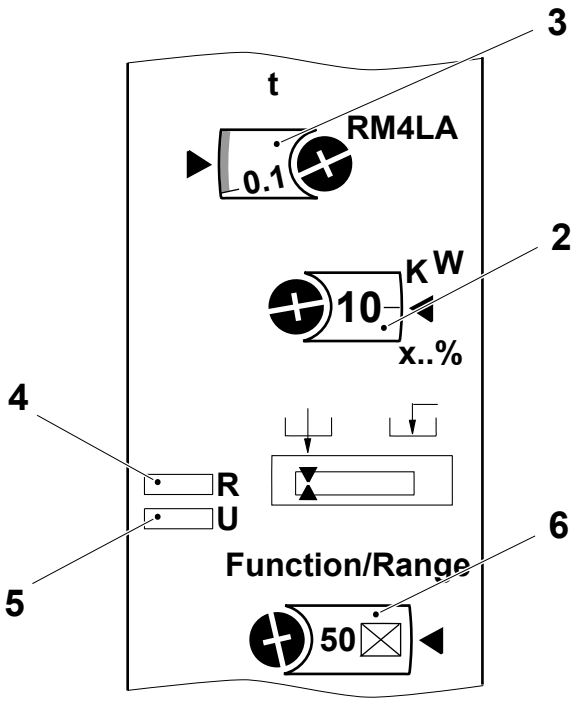

2 Fine adjustment potentiometer
3 Adjustment of timing
4 Yellow LED
5 Green LED
6 Function mode selector and sensitivity

9.7.2-2 Level Control - Set

Machine Status	Mains Power ON Air OFF Steam ON Water OFF
SPC Reference	90458-2580

Set the display functions with a screwdriver, see table below:

Description		Time value (1)	R-value (2)	Functionality sector(3)	Function/ range (4)
Hydrogen peroxide spray tank	U70K3181	0	20		50 ☒
Regulating valve leakage	U70K1091	0	60		500 ☒
HI	U70K4061	0	20		50 ☒

Note! It is recommended that the functionality selector (3) is always set according to the table to avoid problems.

When necessary make fine adjustments by means of the potentiometer (2).

Make sure that the yellow LED is lit when the level is obtained.

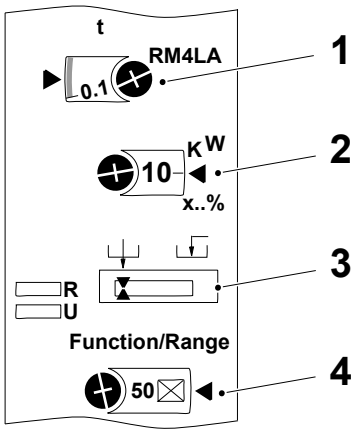

1 Time value
2 R-value fine adjustment potentiometer
3 Functionality selector
4 Function/range selector

9.7.3 Conductivity Meter

SPC Reference	90459-5187

9.7.3-1 Conductivity Meter - Description

SPC Reference	90459-5187

Conductivity is calculated by measuring the current flowing through a fluid at a known reference voltage. The signal is converted into digital information and thereafter processed according to temperature and calibration values.

The conductivity meter (1) supplies the PLC with 2 analogue signals:
1 conductivity signal and 1 temperature signal.

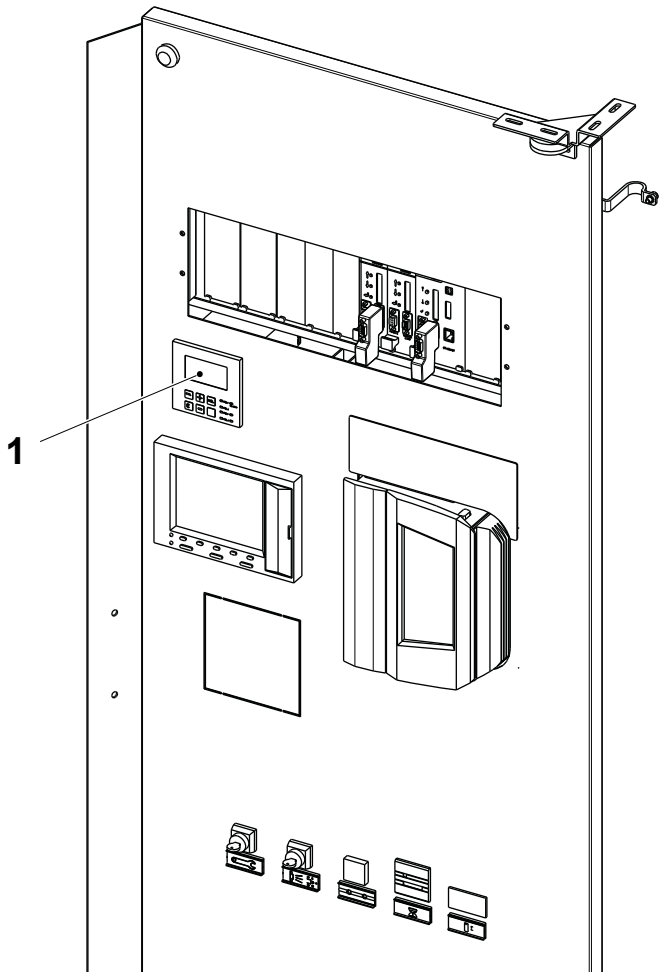

1 Conductivity meter

(Cont'd)

(Cont'd)

Conductivity Meter Front Panel

The components of the conductivity meter front panel used to manage the conductivity and temperature of the CIP cleaning fluid include:

- the LC display (1)
- the alarm LED (2)

Note! Pressing the CAL or ENTER button will display a prompt for the access code; 22. Entering 0 or any other number will display the calibration and setup data in read only mode.

- the ENTER button (3). The ENTER button is used to save entered data and to move between the setup parameters within the setup menu groups
- the CAL button (4). The CAL button is used to accept calibration data and to move between the fields of the calibration menu

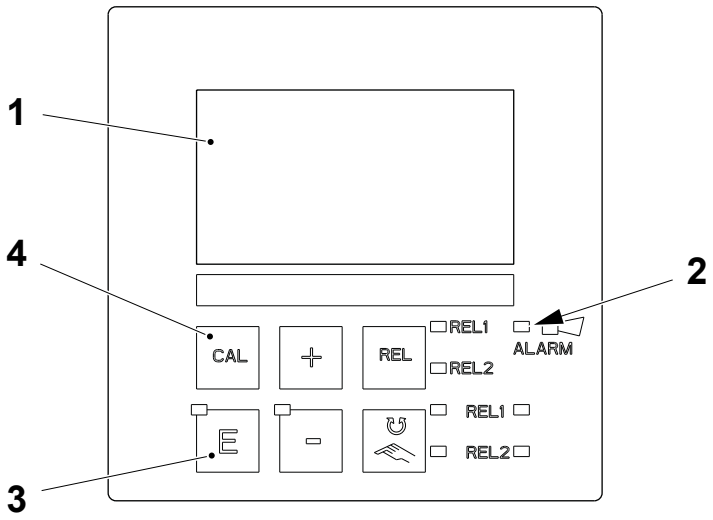

1 LC display
2 Alarm LED
3 Enter button
4 CAL button

(Cont'd)

(Cont'd)

- the PLUS and MINUS buttons (5). The PLUS or MINUS buttons are used to select setup menu levels and to input setup parameters and numerical values. Pressing the PLUS button during normal operation changes the LC display mode of the conductivity and temperature. Pressing the MINUS button during normal operation displays the last error code and error message. Pressing the PLUS and MINUS buttons together in the setup mode exits the current level of the setup menu. To lock the front panel buttons press the PLUS and ENTER buttons together for 3 seconds, the code prompt will display “9999”. To unlock the front panel buttons press the MINUS and CAL buttons together for 3 seconds, the code prompt will display “0”.

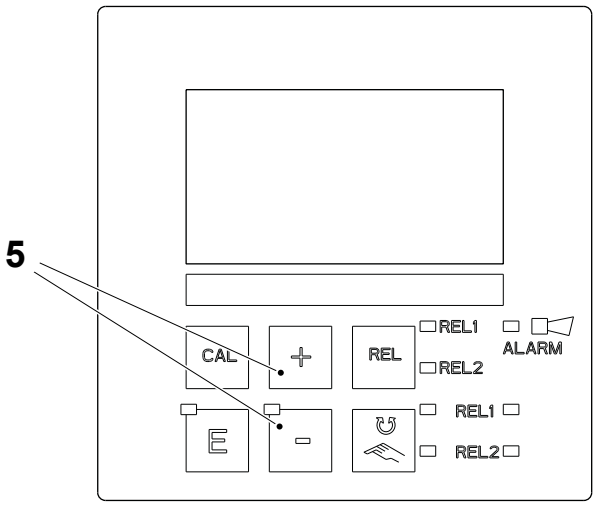

5 Plus/minus button

(Cont'd)

(Cont'd)

Conductivity Meter Front Panel LC Display

The LC display shows the measured and configured parameters in the setup, configuration and operational modes of the conductivity meter. The elements within the LC display used in the management of the conductivity and temperature of the CIP cleaning fluid include the following:

- MEAS (1), indicates that the conductivity meter is in the normal operational mode
- CAL (2), indicates that the conductivity meter is in the calibration mode
- SETUP (3), indicates that the conductivity meter is in the setup mode
- mS/cm (example) (4), indicates the unit of measurement for the currently displayed value

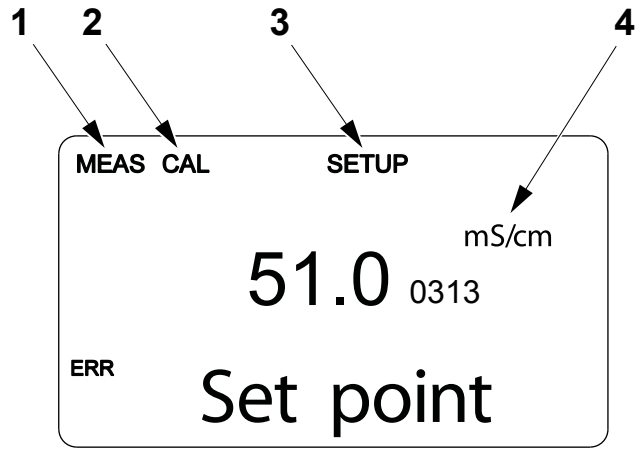

1 MEAS indicator
2 CAL indicator
3 SETUP indicator
4 Unit of measurement indicator

(Cont'd)

(Cont'd)

- 0313 (example) (5), indicates the number of the currently displayed function in the setup and calibration modes.
- Set Point (example) (6), in setup or calibration modes this indicates the name of the currently displayed function. In normal operational mode this indicates the secondary measured value (temperature).
- ERR (7), indicates that an error has occurred.

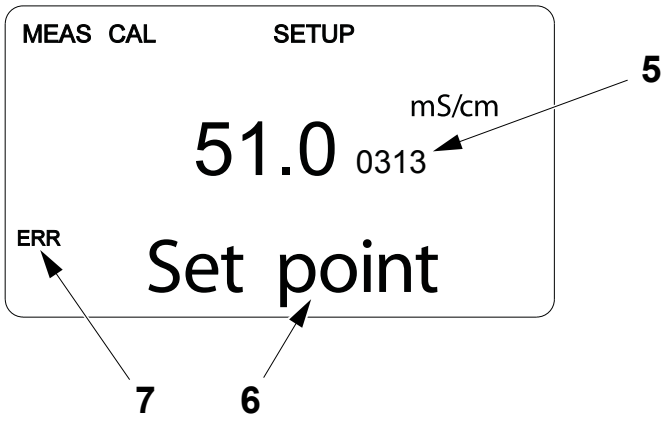

5 Function number indicator
6 Function name/secondary measured value indicator
7 Error indicator

9.7.3-2 Conductivity Meter - Set

Machine Status	Mains Power ON Air OFF Steam ON Water OFF
SPC Reference	90459-5187

a) Press the ENTER button (1).

b) Press the PLUS or MINUS buttons (2) to input 22 in the LC display (3).

c) Press the ENTER button (1) to enter the SETTING MODE menu

d) Set the conductivity meter according to the Setting Table on page 9-282. Use the PLUS or MINUS buttons (2) to select the setup menu levels and to input setup parameters and numerical values. Use the ENTER button to save input data and to move between the setup parameters within the setup menu levels.

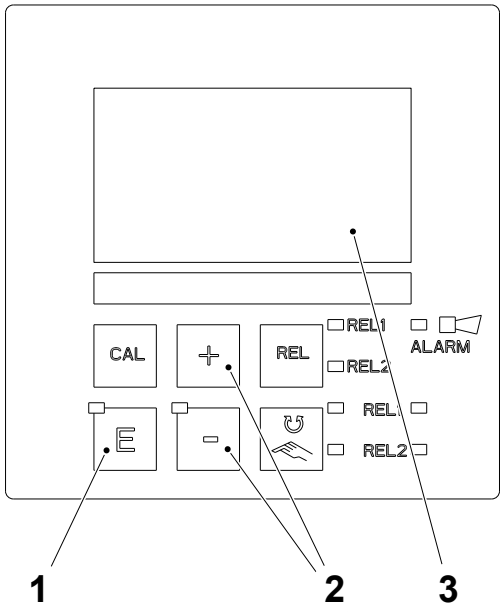

1 Enter button
2 Plus/minus button
3 LC display

(Cont'd)

(Cont'd)

Note! Pressing the PLUS and MINUS buttons together in the setup mode exits the current level of the setup menu.

Note! The label (1) on the conductivity sensor cable indicates the value (2) for the parameter A5 (cell constant value). Once the conductivity sensor is calibrated, the default value will be modified.

Setting Table

Setting Mode Menu			
Level	A SETUP 1		
Parameter Code	**Default**	**Input**	**Description**
A1	ind		selects operating mode
A4	auto	mS/cm	selects unit displayed
A5	1.980 1/cm	See value indicated on the sensor cable	sets cell constant value
A7	1		sets measured value damping

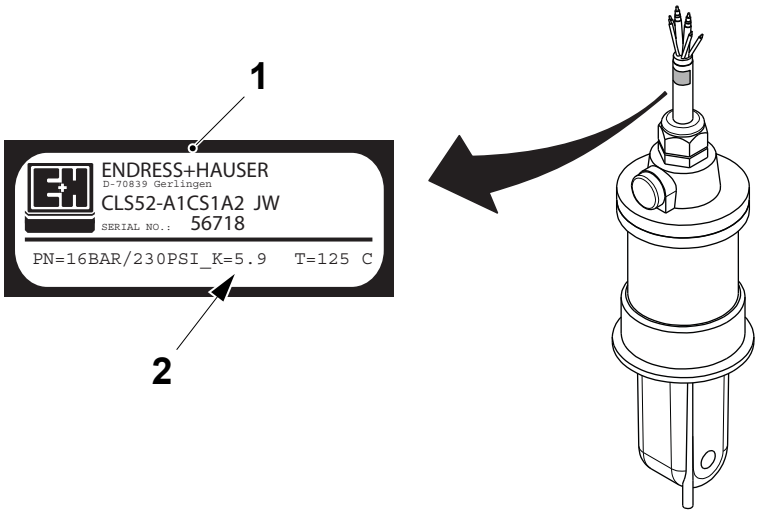

1 Label (example)
2 Parameter A5

(Cont'd)

(Cont'd)

Note! For OUT 1, make sure that the scale displayed for the parameter 0313 is mS/cm. For OUT 2, make sure that the scale displayed for the parameter 0313 is °C.

Level	B SETUP 2		
Parameter Code	**Default**	**Input**	**Description**
B1	Pt100	Pt1k	selects temperature measurement type
B2	lin		selects temperature compensation type
B3	2.10 %/K	1.80 %/K	sets temperature coefficient
B5	xx.x °C		temperature display of actual value
B6	0.0 °C		sets temperature difference
B7	25.0°C		sets reference temperature
Level	O OUTPUT		
Sub Level	OUT 1		
Parameter Code	**Default**	**Input**	**Description**
O3	lin		selects characteristic
O311	4-20		sets current range
O312	0 µS/cm		sets min. measured value
O313	2000 mS/cm	100.0 mS/cm	sets max. measured value

(Cont'd)

(Cont'd)

Sub Level	OUT 2		
Parameter Code	**Default**	**Input**	**Description**
O2	°C		selects measured variable for 2nd output
O3	lin		selects characteristic
O311	4-20		sets current range
O312	0.0 °C		sets min. measured value
O313	150.0 °C	100.0 °C	sets max. measured value
Level	F ALARM		
Parameter Code	**Default**	**Input**	**Description**
F1	Latch		selects contact type
F2	S		select time unit
F3	0		enter alarm delay
F4	22mA		select error current
F5	1	55	select error code*
F6	yes	no	set alarm contact to be effective
F7	no		set error current to be effective
F9	< R		select return to menu
Level	S SERVICE		
Parameter Code	**Default**	**Input**	**Description**
FUNCTION NOT USED			
Level	E E+H SERV		
Parameter Code	**Default**	**Input**	**Description**
FUNCTION NOT USED			

* If necessary, check that the error codes have been correctly set, see Check Entered Alarm Error Codes on page 9-285.

(Cont'd)

(Cont'd)

After setting the conductivity meter perform the calibration procedure, see 9.7.3-3 Conductivity Meter - Calibrate on page 9-287.

Check Entered Alarm Error Codes

To make sure that the alarm error codes have been correctly set, follow this procedure:

a) Press the ENTER button (1).

b) Press the PLUS or MINUS buttons (2) to input 22 in the LC display (3).

c) Press the ENTER button (1) to enter the `SETTING MODE` menu.

d) Use the PLUS or MINUS buttons (2) to select the setup menu level `ALARM` and press the ENTER button (1).

e) Press the ENTER button (2) until the parameter F5 appears.

f) Use the PLUS or MINUS buttons (2) to select the error code to be checked.

g) Use the ENTER button (1) to check the parameters F6 and F7.

Note! For all the error codes shown in the paragraph 9.7.3-4 Conductivity Meter - Error Codes the parameter F6 must be set to "`YES`" and the parameter F7 must be set to "`NO`". Only for the error code E055 both the parameters F6 and F7 must be set to "`NO`", see setting table on page 9-283.

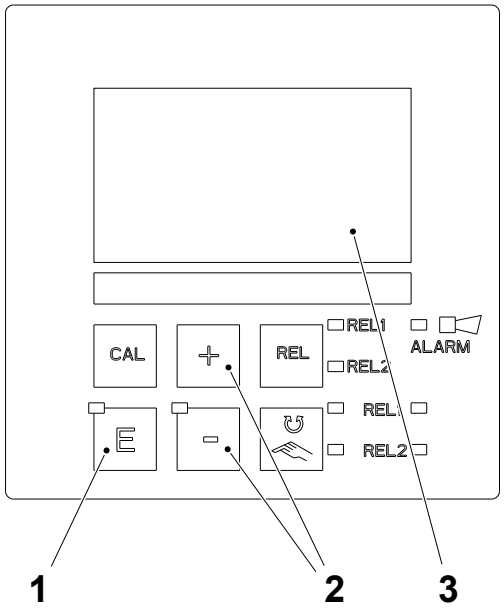

1 Enter button
2 Plus/minus button
3 LC display

(Cont'd)

(Cont'd)

h) Press the ENTER button (1) to display the parameter F9.

i) Use the PLUS or MINUS buttons (2) to select NEXT and press the ENTER button (1).

j) Repeat the procedure from step f).

k) When the check is finished, select `<R` in the parameter F9 by the PLUS or MINUS buttons (2).

l) Press the ENTER button (1) to return to the `SETTING MODE` menu.

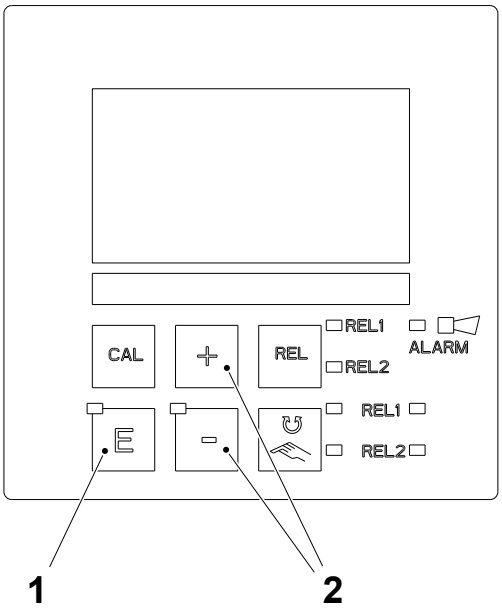

1 Enter button
2 Plus/minus button

9.7.3-3 Conductivity Meter - Calibrate

Machine Status	Mains Power ON Air OFF Steam ON Water OFF
Special Equipment	Resistor Wire fitted with terminal connections
SPC Reference	90459-5187

Note! Before performing the calibration procedure, make sure that the conductivity meter has been set according to 9.7.3-2 Conductivity Meter - Set.

Air Calibration

Remove the conductivity sensor from the pipe work, see 1.6.4-2 Pipe Work - Check Conductivity Sensor. Make sure the conductivity sensor is clean and dry before performing the calibration procedure.

(Cont'd)

(Cont'd)

a) Press the CAL button (1).
b) Press the PLUS or MINUS buttons (2) to input 22 in the LC display (3).
c) Press the CAL button (1) to enter the `CALIBRATION MODE` menu.

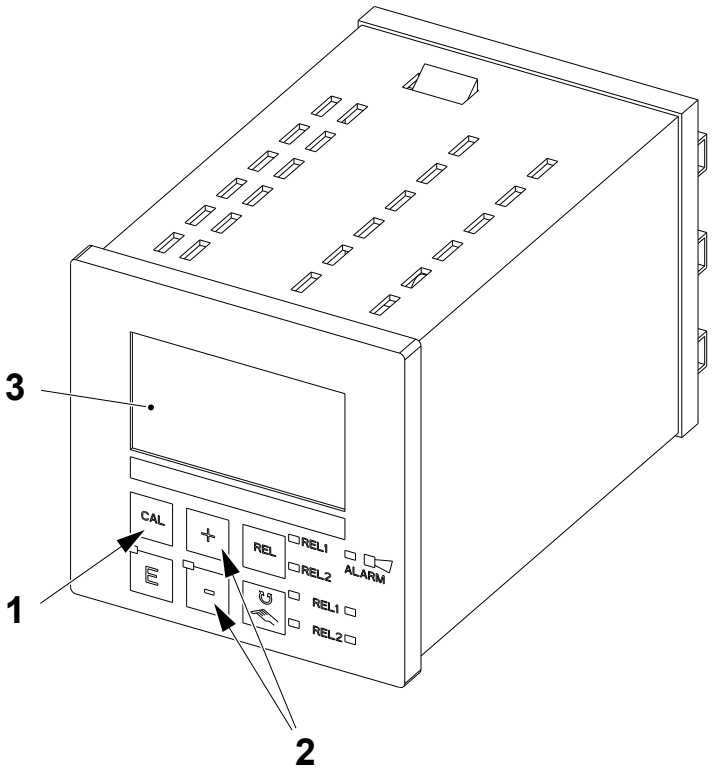

1 CAL button
2 Plus/minus button
3 LC display

(Cont'd)

(Cont'd)

d) Perform the calibration through the conductivity meter according to the table below; refer to 9.7.3-1 Conductivity Meter - Description to access the calibration mode menu.

Table for Air Calibration

Calibration Mode Menu			
Level	C CALIBRAT		
Sub Level	AIRS		
Parameter Code	**Default**	**Description**	**Action**
C111	xx µS/cm	starts air calibration	press the CAL button
C112	xxx µS/cm	displays the currently measured value	press the CAL button
C113	o.k.	displays the status of the calibration	press the CAL button
C114	yes	stores the current calibration result	press the CAL button

Cell Calibration

Calibrate the instrument using a common resistor with the following specifications:

Rated power	>0.25 W
Resistance range	59 - 100 ohm
Tolerance	±0.1%

(Cont'd)

(Cont'd)

a) Insert a wire (1) with a length of 200 mm through the conductivity sensor (2).

b) Connect both ends of the wire (1) to a resistor (3) by the terminal connections (4) to as shown below.

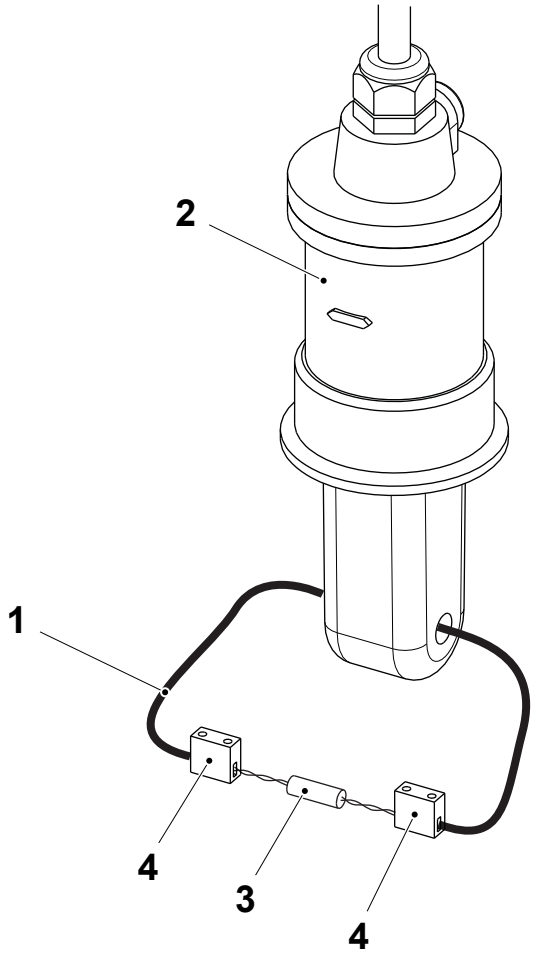

1 Wire
2 Sensor
3 Resistor
4 Terminal connection

(Cont'd)

(Cont'd)

c) Press the CAL button (5) on the conductivity meter.

d) Press the PLUS or MINUS buttons (6) to select 22 in the LC display (7).

e) Press the CAL button (5) to enter the `CALIBRATION` mode.

f) Press the CAL button (5) and use the PLUS and MINUS buttons (6) to access the `CELLC` submenu.

g) Press the CAL button (5) to access the calibration parameters.

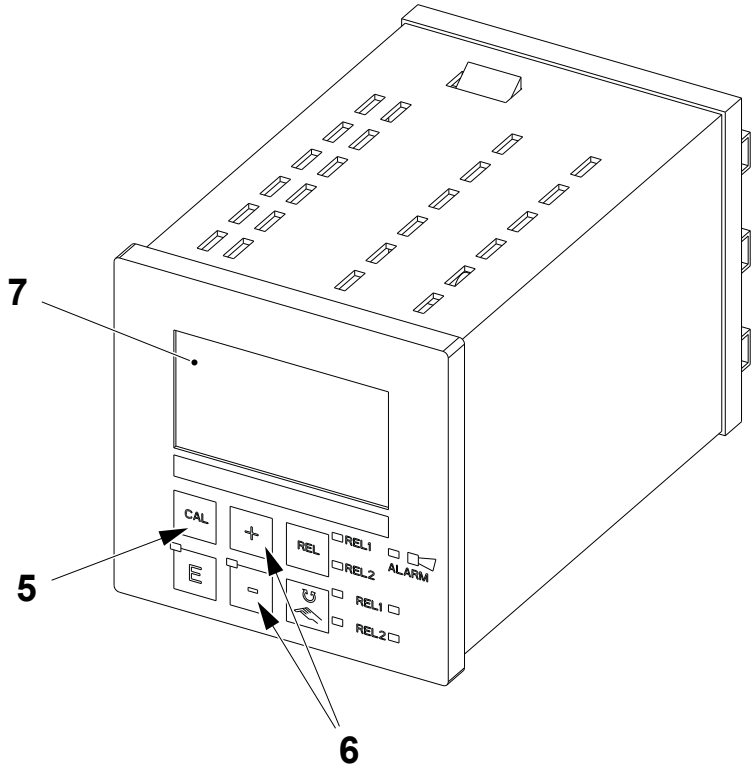

5 CAL button
6 Plus/minus button
7 LC display

(Cont'd)

(Cont'd)

h) Press the PLUS or MINUS buttons (6) to input 0 as temperature coefficient α [PARAMETER C122].

i) Press the CAL button (5) to continue the calibration.

j) Press the PLUS or MINUS buttons (6) to input the conductivity value [PARAMETER C123] according to the resistor being used and the constant cell value indicated on the conductivity sensor cable, see page 9-282. Check on the following table.

Simulation Resistance [R] ohm	Cell Constant [k] 1/cm	Conductivity Value mS/cm
100	5.2 5.9 6.3	43.0 48.8 52.1
86.6	5.2 5.9 6.3	49.6 56.3 60.1
82.5	5.2 5.9 6.3	52.1 59.1 63.1
78.7	5.2 5.9 6.3	54.6 62.0 66.2
75	5.2 5.9 6.3	57.3 65.0 69.4
59	5.2 5.9 6.3	72.8 82.6 88.2

k) If a resistor with a different resistance is used, though within the range 59-100 ohm, calculate the conductivity value to input using the following formula.

$$\text{Conductivity value (mS/cm)} = \frac{k \times 1}{(R/1000) \times 1.21}$$

Note! If the conductivity value is higher than 100 mS/cm, the TPOP will always display only 100 mS/cm while the recorder does not display anything.

(Cont'd)

(Cont'd)

l) Press the CAL button (5) to continue the calibration.

m) The calculated constant cell value [PARAMETER C124] is displayed; press the CAL button (5) to continue the calibration.

n) The status of the calibration is displayed [PARAMETER C125]; press the CAL button (5) to continue the calibration.

o) Press the CAL button (5) to store current the calibration result [PARAMETER C126]: the LC display (7) shows YES.

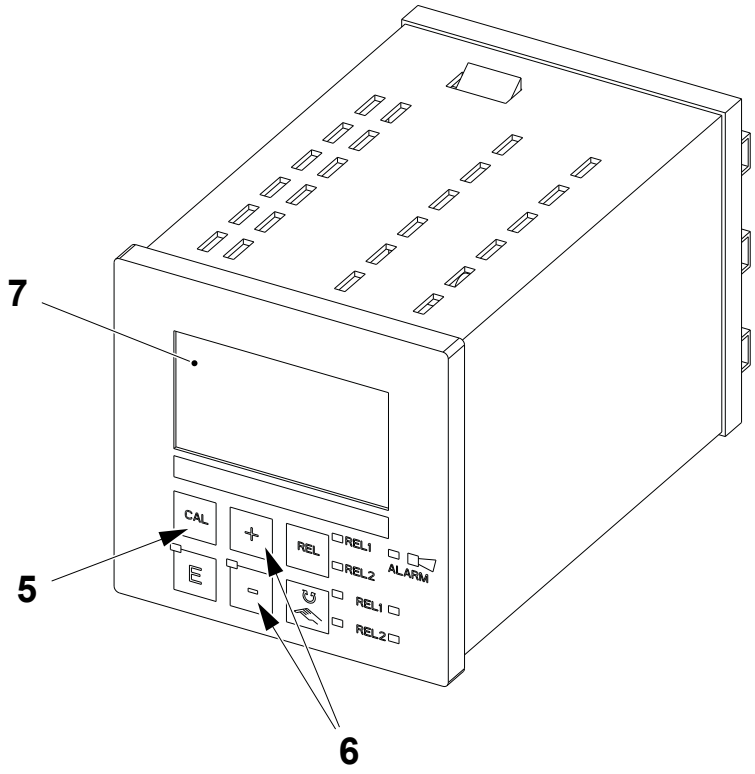

5 CAL button
6 Plus/minus button
7 LC display

(Cont'd)

(Cont'd)

Final Check

a) Press repeatedly the PLUS button (1) until the uncompensated conductivity value [UNCOMPVAL] is displayed.

b) Disconnect the terminal connections (2) from the resistor (3) until the conductivity value in the LC display (4) drops down to 0.

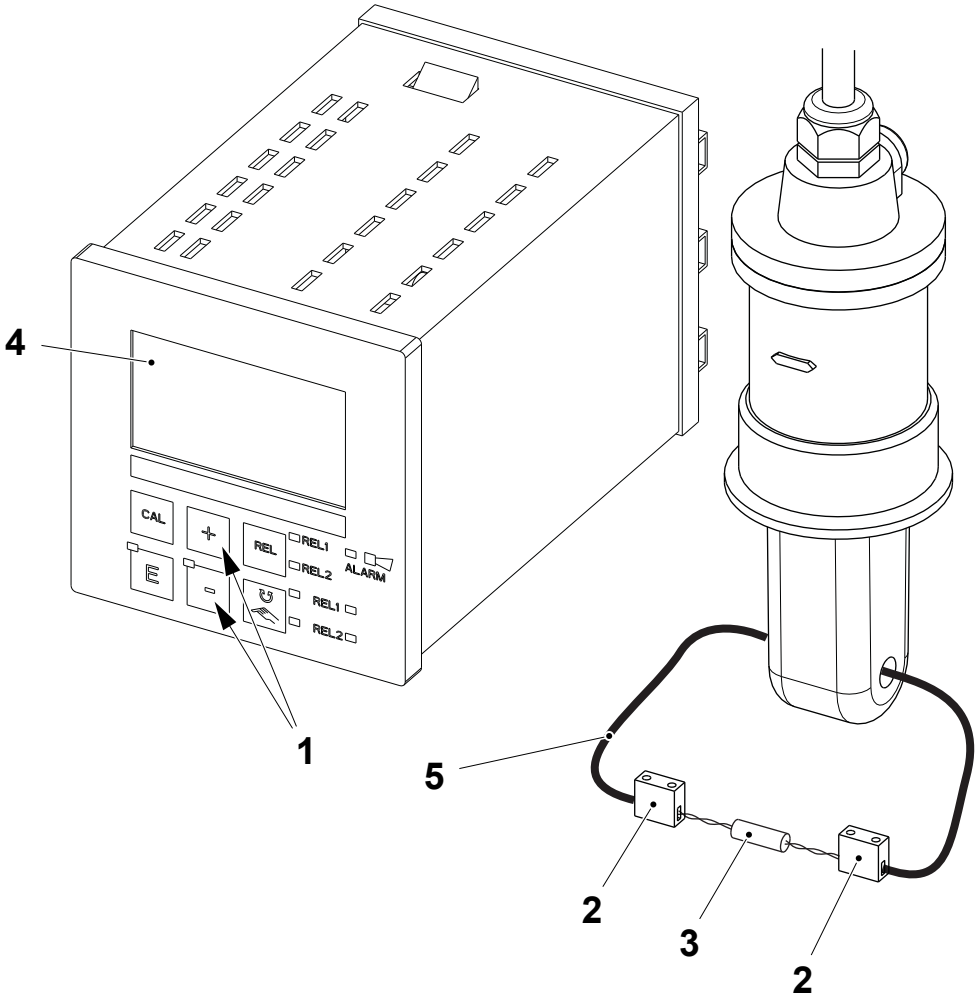

1 Plus button
2 Terminal connection
3 Resistor
4 LC display
5 Wire

(Cont'd)

(Cont'd)

c) Reconnect the terminal connections (2) to verify that the conductivity value in the LC display (4) corresponds to the entered conductivity value.

d) Press the PLUS button (1) to exit from the uncompensated conductivity value display.

e) Remove the wire (5) and the resistor (3).

f) Fit the conductivity sensor, see 1.6.4-2 Pipe Work - Check Conductivity Sensor.

Note! If the conductivity meter reading on the LCD display is not within the tolerance of ±2 mS/cm, see the table on page 9-292, perform the cell calibration.

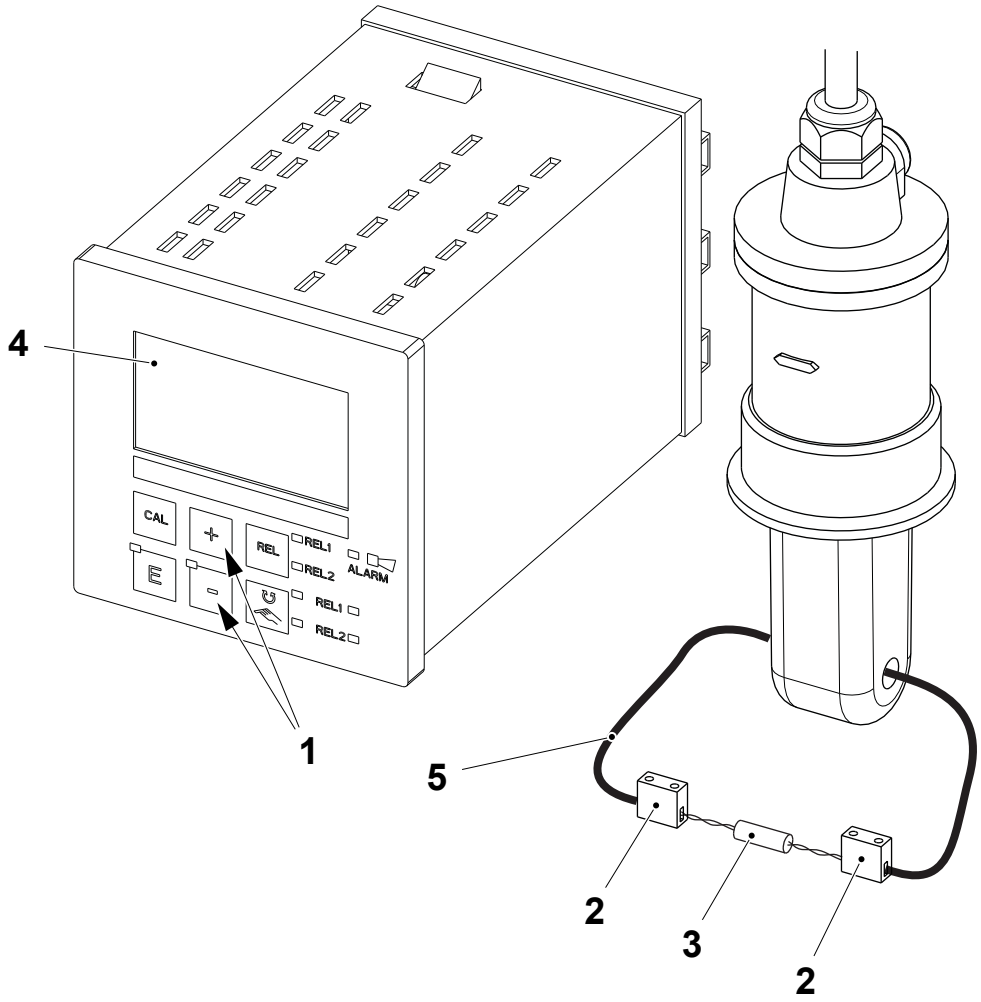

1 Plus button
2 Terminal connection
3 Resistor
4 LC display
5 Wire

9.7.3-4 Conductivity Meter - Error Codes

Machine Status	Mains Power ON Air OFF Steam ON Water OFF
SPC Reference	90459-5187

If an error occurs with the conductivity meter the alarm LED (1) is lit and the letters ERR appear in the LC display (2). Press the MINUS button (3) to display the error code and message, see the table on the following page for a list of the error codes and corrective actions.

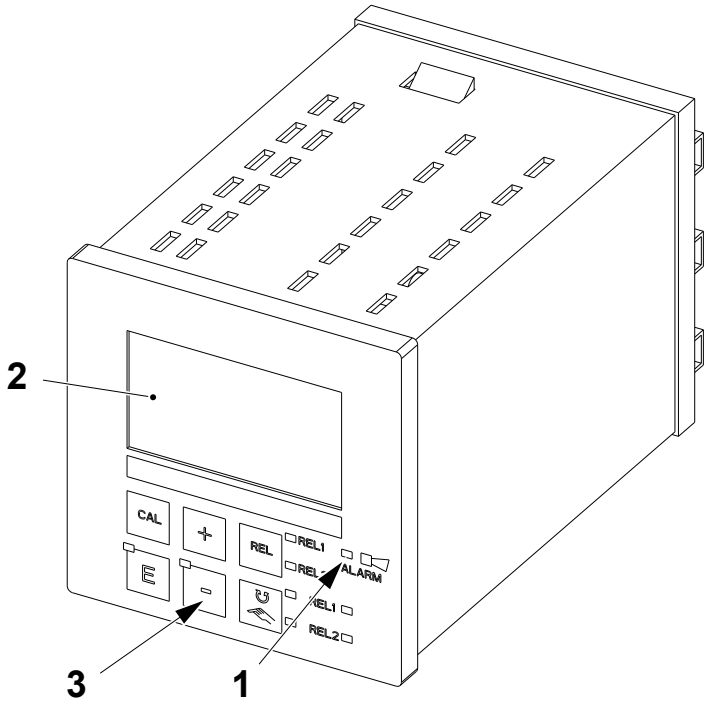

1 Alarm LED
2 LC display
3 Minus button

(Cont'd)

(Cont'd)

Error Code	Display Message	Action
E001	EEPROM memory error	Switch the conductivity meter OFF and then ON again. If the error continues change the conductivity meter
E002	Instrument not calibrated, calibration data invalid, user data invalid (EEPROM error), instrument software not compatible to hardware (controller)	
E003	Download error	
E004	Transmitter software version not compatible with module hardware version	
E007	Transmitter malfunction, conductivity meter software not compatible with transmitter version	
E008	Sensor or sensor connection faulty	Check the conductivity sensor and conductivity sensor connections
E010	Temperature sensor defective, not connected or short-circuit (measurement continues with 25 °C)	Check the temperature sensor and connections. Check the correct option has been chosen in the setup parameter B1
E025	Limit for Air Set offset exceeded	Make sure the sensor is dry and repeat the air set calibration procedure. If the error continues change the sensor
E036	Calibration range of sensor exceeded	Check the conductivity sensor and connections. Clean the conductivity sensor and perform the calibration procedure
E037	Below calibration range of sensor	
E045	Calibration aborted	Perform the calibration procedure
E049	Calibration range of installation factor exceeded	Check/clean the conductivity sensor and perform the calibration procedure
E050	Below calibration range of installation factor	
E055	Below main parameter measuring range	Immerse sensor in conductive medium or perform the Air Set
E057	Main parameter measuring range exceeded	Check measurement and connections
E059	Below temperature measuring range	
E061	Temperature measuring range exceeded	

(Cont'd)

(Cont'd)

Error Code	Display Message	Action
E063	Below current output range 1	Check setup configuration. If this error occurs after the calibration procedure the setup parameter S9 in setup menu level S SERVICE must be set to FACTY to reset the factory values and the setup procedure described in 9.7.3-2 Conductivity Meter - Set must be repeated.
E064	Current output range 1 exceeded	Check measured value and current assignment
E065	Below current output range 2	
E066	Current output range 2 exceeded	
E077	Temperature outside α value table range	Check/clean the conductivity sensor. Check the conductivity meter configuration.
E078	Temperature outside concentration table	
E079	Conductivity outside concentration table	
E154	Below lower alarm threshold for period exceeding alarm delay	Check/clean the conductivity sensor and perform the calibration procedure
E155	Above upper alarm threshold for period exceeding alarm delay	
E156	Actual value below alarm threshold (set point) for longer than the set permissible period	
E157	Actual value exceeds alarm threshold (set point) for longer than the set permissible period	
E162	Dosage stop	Check the settings in the CURRENT INPUT and CHECK function groups.
E171	Flow in main stream to low or zero	Restore flow
E172	Switch-OFF limit for current input exceeded	Check process variables at sending measuring instrument. Change range assignment if necessary
E173	Current input < 4 mA	Check process variables at sending measuring instrument
E174	Current input > 20 mA	Check process variables at sending measuring instrument. Change range assignment if necessary

9.7.3-5 Conductivity Meter - Change Conductivity Sensor

Machine Status	Mains Power OFF Air OFF Steam ON Water OFF
SPC Reference	90459-5187

a) Make sure that the Mains Power is OFF.

b) Remove the conductivity sensor (1), see 1.6.4-2 Pipe Work - Check Conductivity Sensor.

c) Remove the clip (2) and disconnect the old conductivity sensor (1) from the conductivity meter (3).

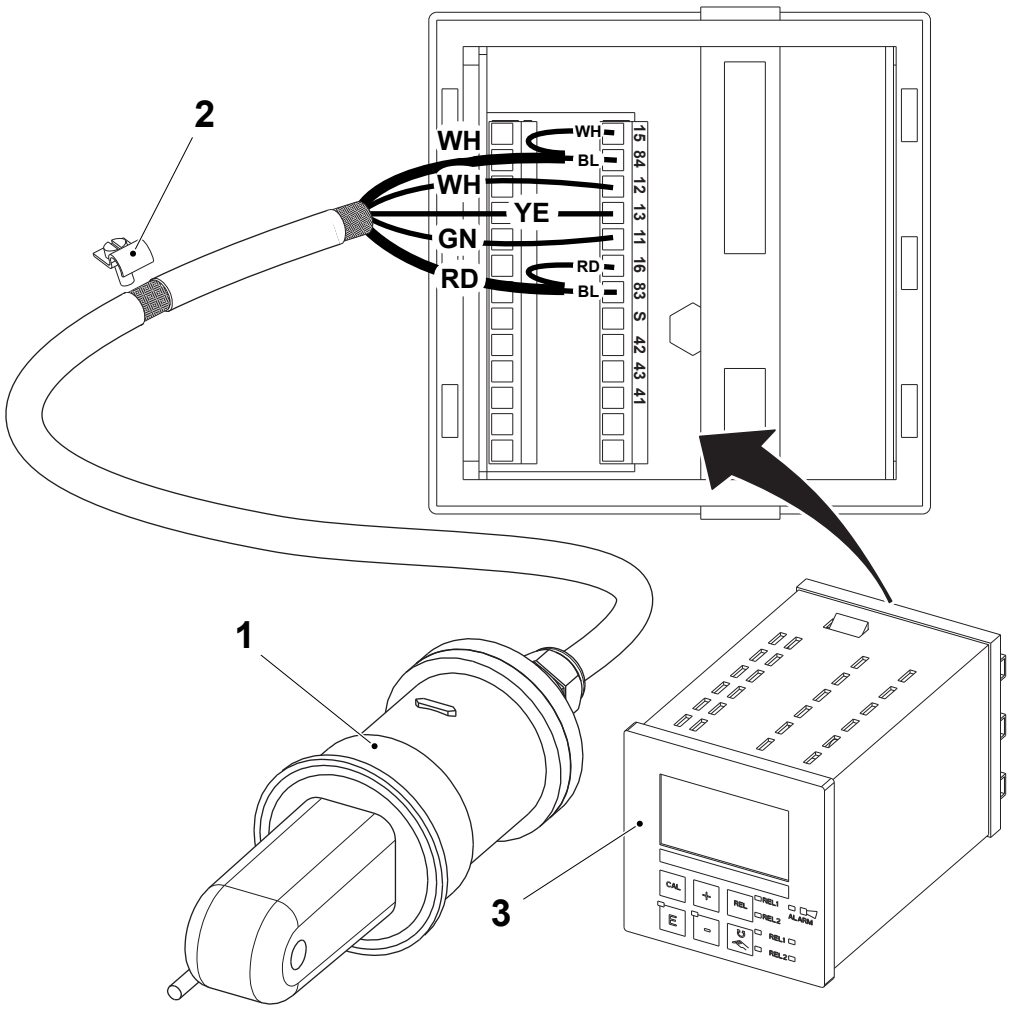

1 Conductivity sensor
2 Clip
3 Conductivity meter

(Cont'd)

(Cont'd)

Note! Do not cut the conductivity sensor cable. The label (4) attached to the conductivity sensor cable contains data required for setting and calibration of the sensor.

d) Connect the new conductivity sensor (1) to the conductivity meter (3). For the wiring of the individual connections, see the illustration below.

e) Turn the Mains Power ON.

f) Calibrate the conductivity sensor (1), see 9.7.3-3 Conductivity Meter - Calibrate on page 9-287.

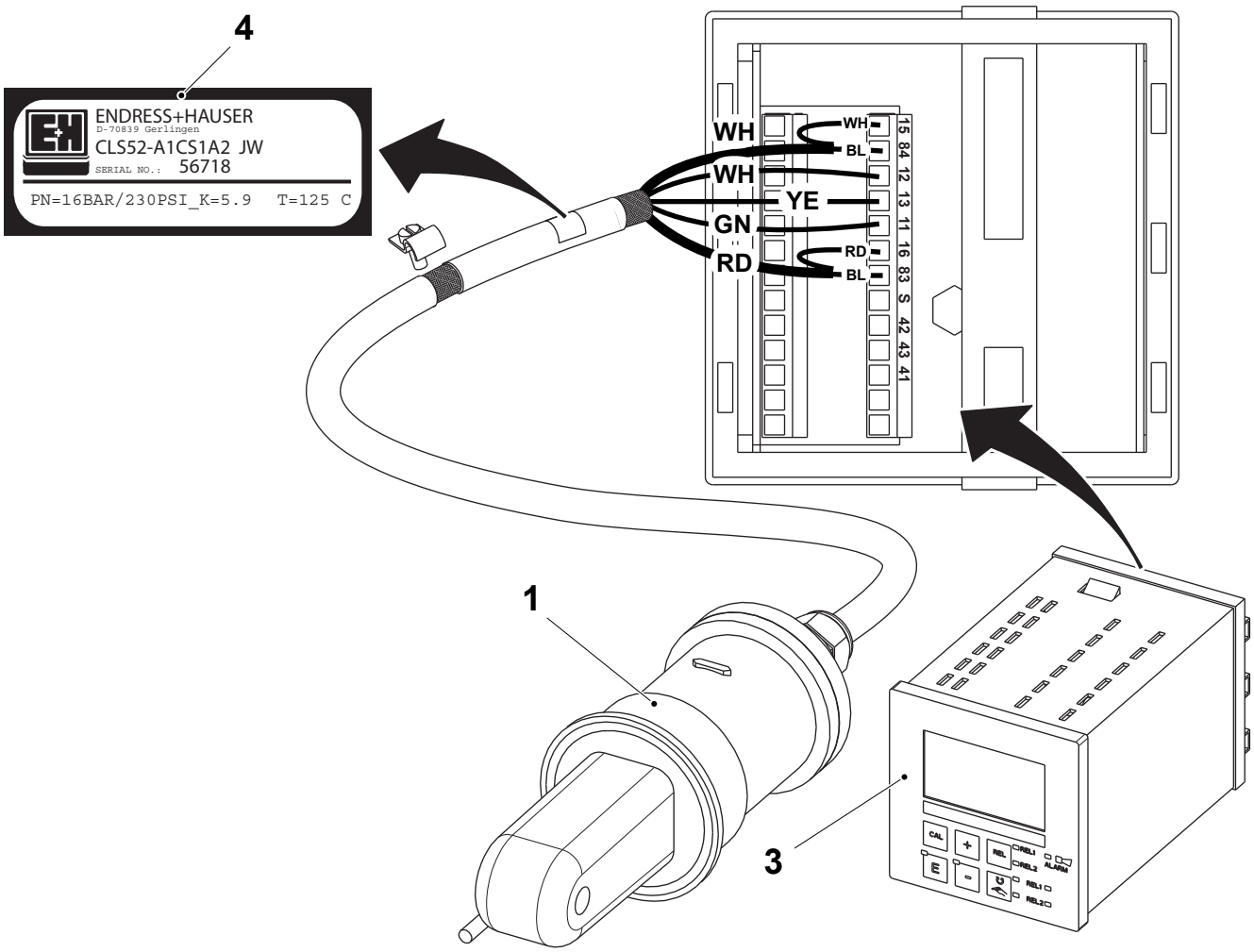

1 Conductivity sensor
3 Conductivity meter
4 Label

9.7.3-6 Conductivity Meter - Change Fuse

Machine Status	Mains Power OFF Air OFF Steam ON Water OFF
Consumables	Fuse 3.15 A
SPC Reference	90459-5187

a) Make sure that the Mains Power is OFF.

b) Disconnect the cable connection (1) from the rear of the conductivity meter (2).

c) Remove the end frame (3) from the rear of the conductivity meter (2).

d) Remove the screw (4) and pull out the component frame (5).

e) Remove the lid (6) from the fuse compartment (7) and change the fuse.

f) Assemble in the reverse order.

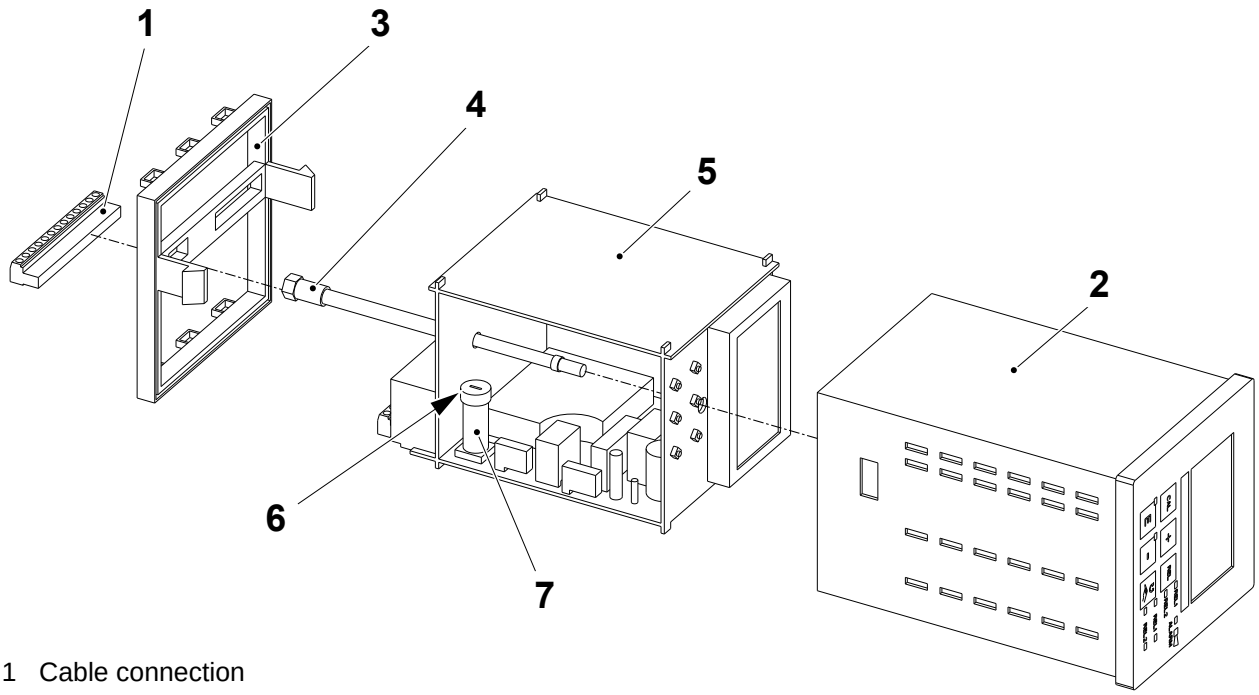

1 Cable connection
2 Conductivity meter
3 End frame
4 Screw
5 Component frame
6 Lid
7 Fuse compartment

9.7.4 Recorder

9.7.4-1 Recorder - Description

SPC Reference	90459-6436 90459-4033

Analog Parameters

The recorder registers the following analog Production and CIP parameters:

Record type	Channel No.	Type	Colour	Description
Production data	AN1	Analog	Blue	**Hydrogen peroxide temperature** If the temperature of the sterile bath exceeds its upper or lower limit the machine stops. This event is recorded by the digital **Sterile parameter 2**. The sterile bath temperature is measured in °C.
Production data	AN2	Analog	Brown	**Air knife temperature** If the temperature of the air knife exceeds its upper or lower limit during **Production**, the machine stops. This event is recorded by the digital **Sterile parameter 2**. The air knife temperature is measured in °C.
Production data	AN3	Analog	Black	**Air sterilization (incineration) temperature** If the temperature of the incinerated air exceeds its upper or lower limit the machine steps down to **Zero** position. This event is recorded by the digital **Sterile parameter 1**. The temperature of the incinerated air is measured in °C.
Production data	AN4	Analog	Red	**Hydrogen peroxide concentration** If the concentration of the hydrogen peroxide exceeds its upper or lower limit the machine stops. This event is recorded by the digital **Sterile parameter** *2*. The peroxide concentration is measured in % p/p.
-	AN5	Analog	-	Not used

(Cont'd)

(Cont'd)

Record type	Channel No.	Type	Colour	Description
Production data	AN6	Analog	Green	HI air temperature (OE) If the temperature of the HI air exceeds its upper or lower limit the machine stops. This event is recorded by the digital **Sterile parameter 2**. The HI air temperature is measured in °C.
CIP data	AN7	Analog	Blue	**CIP conductivity** It measures the conductivity of the cleaning liquid during CIP. The signal is sent from the conductivity meter. The conductivity is measured in mS/cm.
CIP data	AN8	Analog	Brown	**CIP Flow rate** It measures the flow of the cleaning liquid during CIP. The signal comes from the flow meter. The flow rate is measured in litres/h.
CIP data	AN9	Analog	Black	**CIP Temperature** It measures the temperature of the cleaning liquid during CIP. The signal comes from the conductivity meter. The CIP temperature is measured in °C.
-	AN10	Analog	-	Not used
-	AN11	Analog	-	Not used
-	AN12	Analog	-	Not used

Digital Parameters

The recorder registers the following digital Production and CIP parameters:

Record type	Channel No.	Type	Colour	Description
Production data	DI1	Digital	Purple	**Sterile parameter 1** It records sterile parameter events that have caused the machine to shutdown. The event is recorded with a pulse from the zero reference lasting for the duration of the event and continuing for a further 5 minutes after the event has ended. After a sterile parameter event, the machine must be re-sterilised. On completion of filling machine sterilisation (drying finished), a pulse is recorded for 30 seconds.

(Cont'd)

(Cont'd)

Record type	Channel No.	Type	Colour	Description
Production data	DI2	Digital	Red	**Sterile parameter 2** It records operational parameter events that have caused the machine to stop. The event is recorded with a pulse from the zero reference lasting for the duration of the event and continuing for a further 5 minutes after the event has ended. If a hydrogen peroxide concentration event occurs prior to the start of the **Production** phase, the event is recorded with a pulse from the zero reference lasting for the duration of the event and continuing for a further 30 seconds after the event has ended.
Production data	DI3	Digital	Green	**Main motor operating** It records when the main motor is **On**.
Production data	DI4	Digital	Purple	**Filling machine in production** It records when the filling machine is producing filled packages. This signal also records when the machine is in **Intermediate cleaning** and **Final cleaning**. **Intermediate cleaning** is indicated by a pulse at 1 minute intervals from the zero reference lasting for the duration of the cleaning phase. **Final cleaning** is indicated by a pulse at 2.5 minute intervals from the zero reference lasting for the duration of the cleaning phase.

(Cont'd)

(Cont'd)

Note! The analog signal AN6 records data for the HI optional equipment (OE).

The illustration below shows a sample screen shot of the PRODUCTION DATA record.

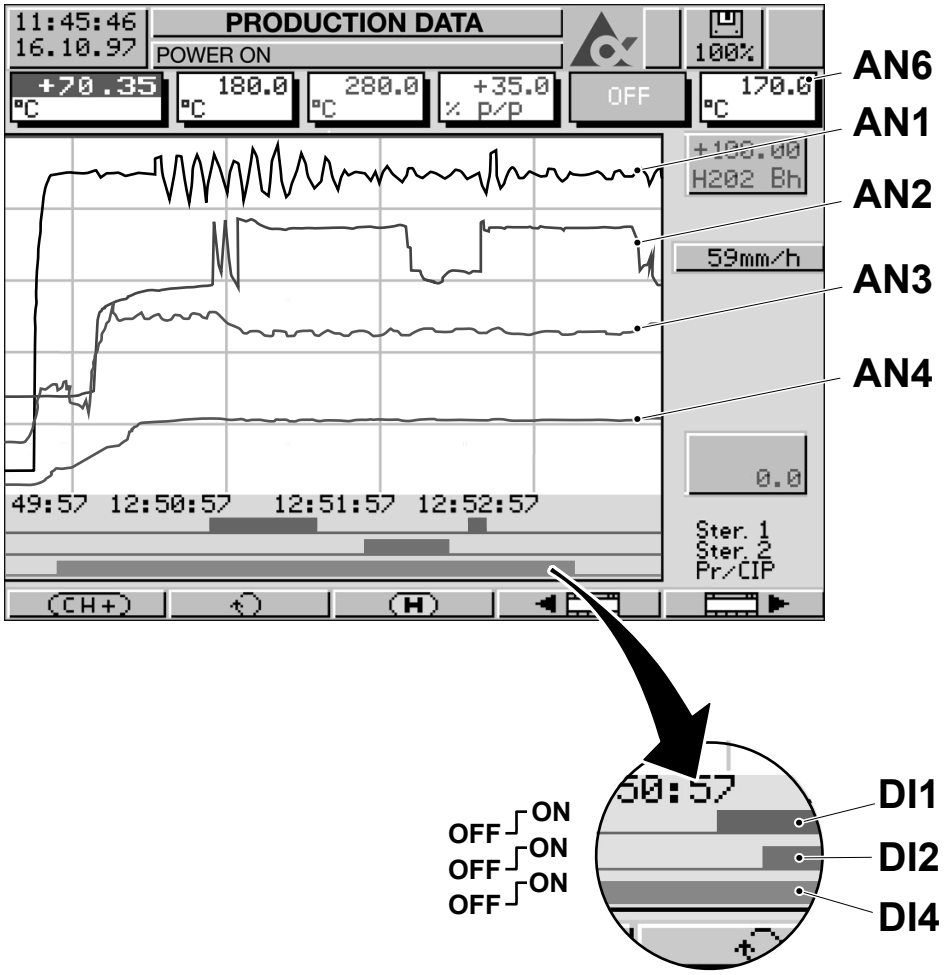

(Cont'd)

(Cont'd)

The illustration below shows a sample screen shot of the `CIP DATA` record.

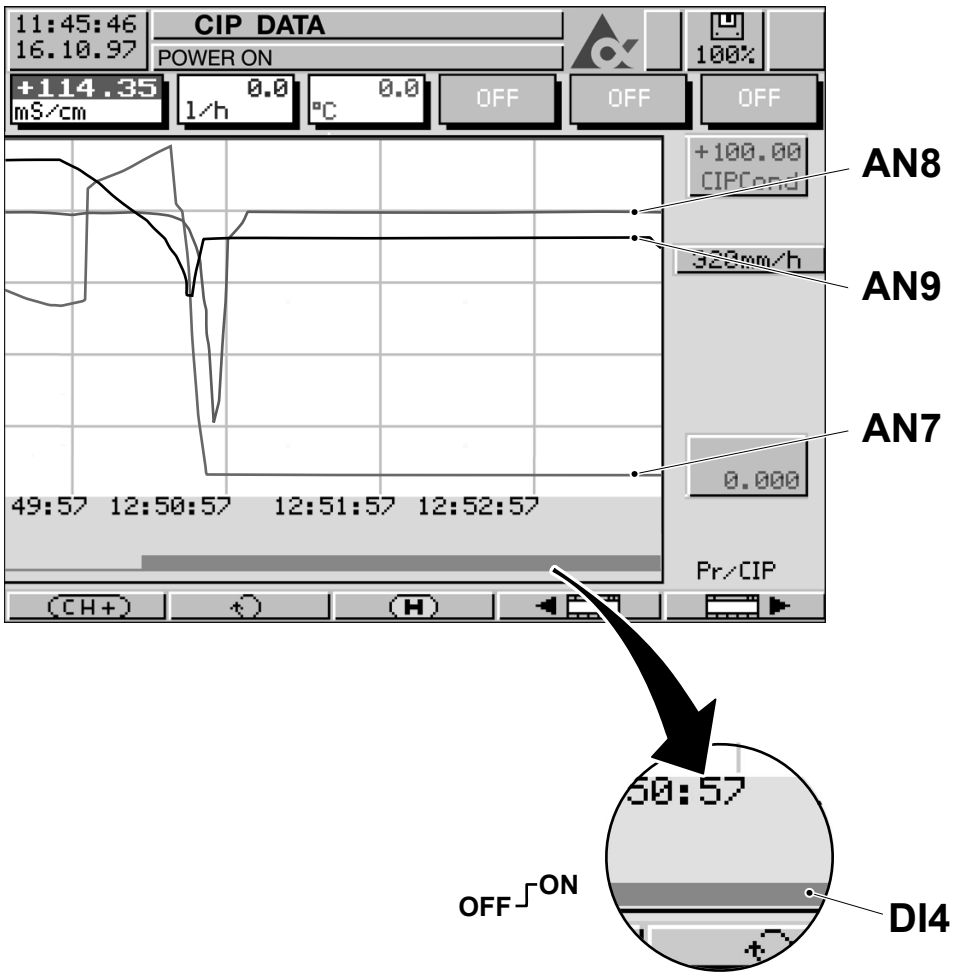

(Cont'd)

(Cont'd)

The illustration below shows a sample screen shot of the MAIN MOTOR data record.

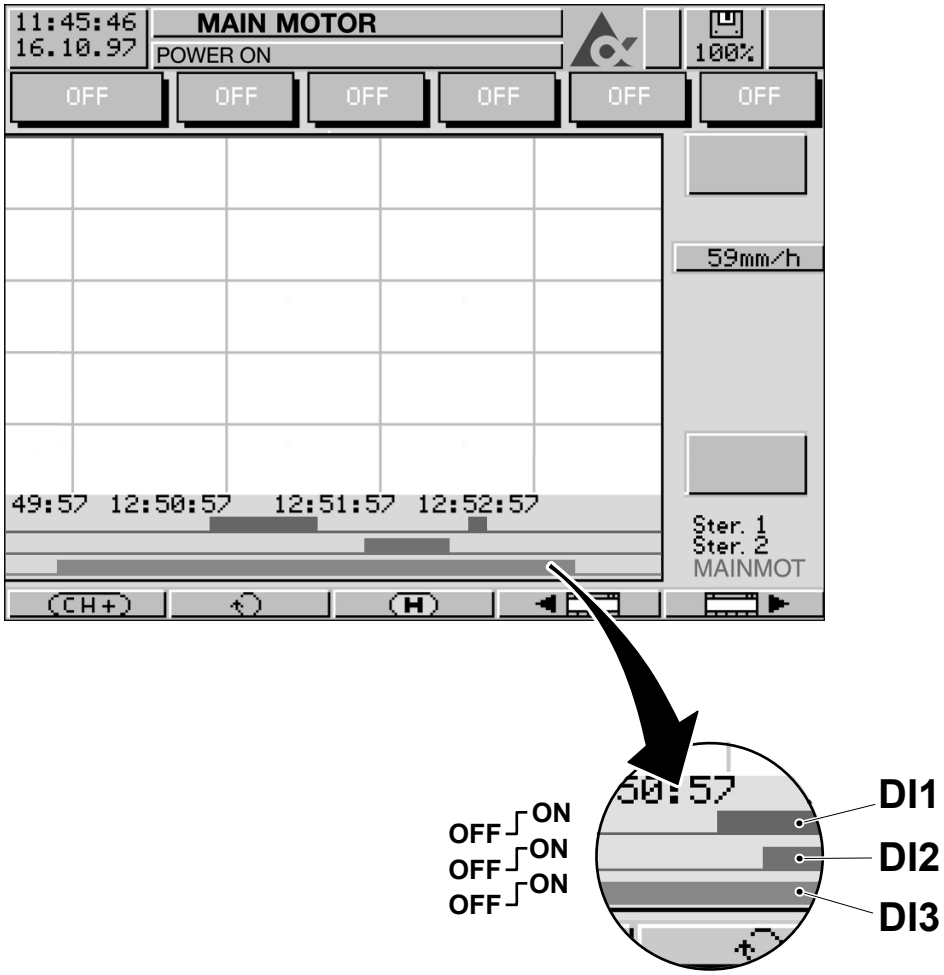

(Cont'd)

(Cont'd)

Note! For detailed information, see the manual supplied on the JUMO installation disk.

Power Supply

The power supply to the recorder is always switched ON. The recorder starts to record production data from the PREPARATION phase and continues to record for five minutes after the PRODUCTION ENDED phase has finished. The recorder starts to record CIP data at the start of the cleaning cycle and continues to record for five minutes after the cleaning cycle has finished.

CompactFlash Memory Card

The data is automatically saved in the CompactFlash memory card at regular intervals. If the CompactFlash memory card alarm function is enabled on the PLC program, when 31Mb of the CompactFlash memory is used an alarm is activated on the TPOP and the filling machine performs a SHORT STOP. Eject the CompactFlash memory card and download the recorded data, see 9.7.4-6 Recorder - Change CompactFlash Card.

The Jumo recorder can continue recording data in its internal memory. Erase the data stored on the CompactFlash memory card and fit CompactFlash memory card into the recorder as soon as possible.

Batch Report

Each time the recorder starts to record production data, an incremental batch report is created. The operator has the possibility to input the serial number of the filling machine and information about the current batch. Batch report data is only saved to the CompactFlash memory card if the report END; UPDATE CF C. function is used, see 9.7.4-6 Recorder - Change CompactFlash Card.

(Cont'd)

(Cont'd)

Password

Note! For filling machines compliant with the FDA 21 CFR Part 11 regulations for electronic signatures, individual passwords and user rights are assigned to users of the recorder and to users of the PC Evaluation program. If necessary contact the administrator of the recorder for access. For all other filling machines see the standard password configuration below.

The recorder has two standard user ID and password configurations allowing different access rights to the recorder:

- The user ID `MASTER` and the password `9200`. Logon as the `MASTER` to have full access to all the configuration parameters and to all the functions of the CompactFlash memory card.
- The user ID `USER` and the password `0`. Logon as the `USER` allows access to download the recorded data in the CompactFlash memory card without any priviledges to access configuration parameters.

PC Evaluation Program (PCA3000)

The recorder is supplied with a software programme for archiving and reviewing the data recorded by the recorder. For detailed information on the PC Evaluation program, see the manual supplied on the JUMO installation disk.

PC Security Management Program

The recorder is supplied with a software programme for the administration of user rights to access the recorder, the use of the PC evaluation software and for the issue of electronic signatures to recorded data. The PC Security management software is utilized for filling machines required to operate in compliance with the FDA 21 CFR Part 11 regulation, see the manual supplied on the JUMO installation disk.

9.7.4-2 Recorder - Set Date, Time and Language

Machine Status	Mains Power ON Air OFF Steam ON Water OFF
SPC Reference	90459-6436 90459-4033

Note! For detailed information, see the manual supplied on the JUMO installation disk.

a) Perform the log in as “Master” to access the configuration functions, see 9.7.4-5 Recorder - Log In and Log Off.

b) Press the MENU button (1).

c) Use the ARROW buttons (2) to select the PARAMETER window (3) and press the ENTER button (4).

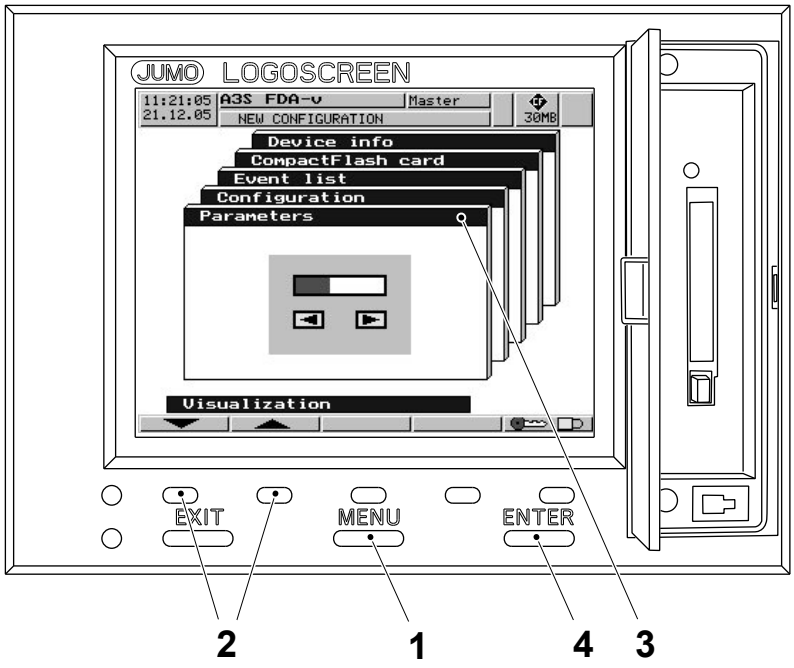

1 Menu button
2 Arrow button
3 Parameter window
4 Enter button

(Cont'd)

(Cont'd)

d) Select DATE AND TIME and press the ENTER button (4).

e) In the DATE AND TIME window, select DATE and press the ENTER button (4).

f) Use the ARROW buttons (2) and (5) to set the date and press the ENTER button (4).

g) Repeat the point f) to select and set the time.

h) Press the EXIT button (6) to exit from the PARAMETER window. The record performs an automatic reset.

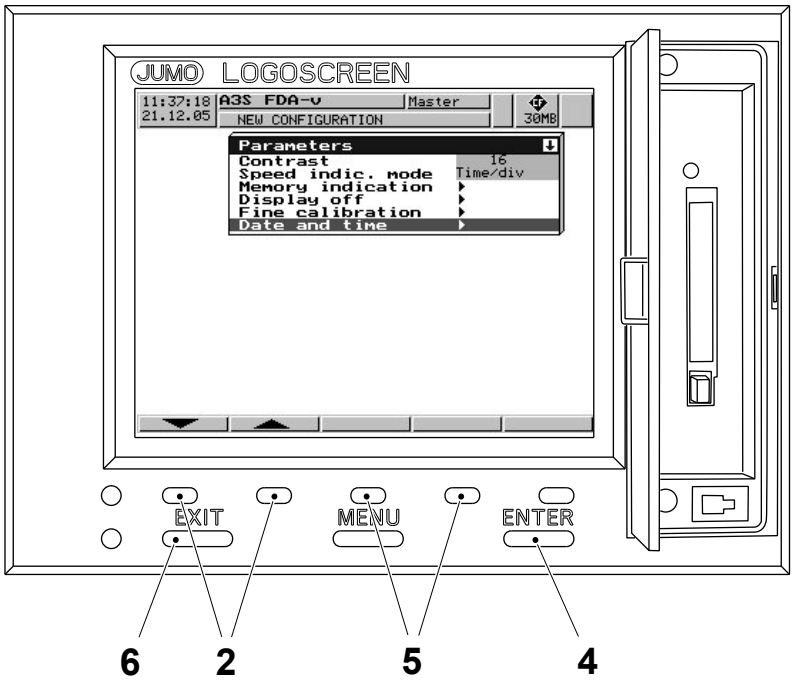

2 Arrow button
4 Enter button
5 Arrow button
6 Exit button

(Cont'd)

(Cont'd)

i) Use the ARROW buttons (2) to select the CONFIGURATION window (7) and press the ENTER button (4).

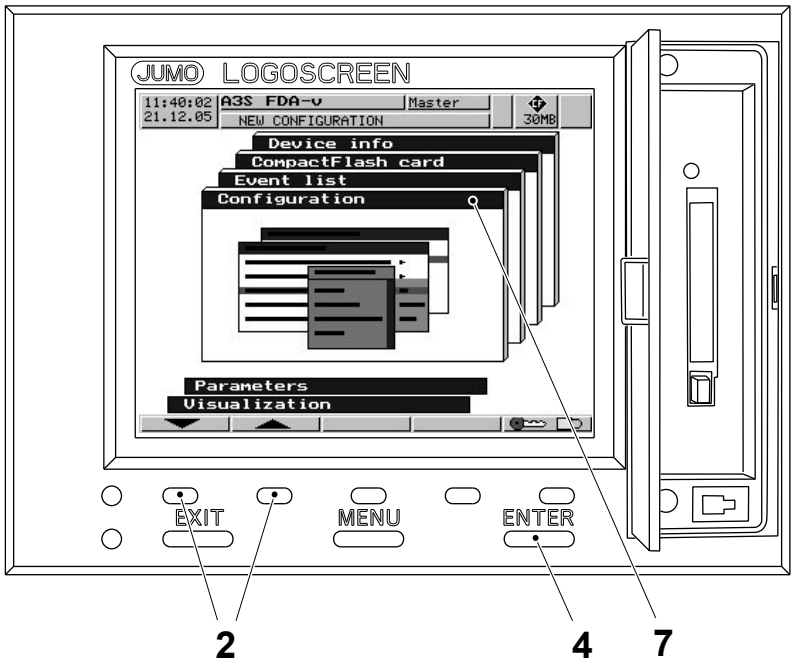

2 Arrow button
4 Enter button
7 Configuration window

(Cont'd)

(Cont'd)

j) Select DEVICE DATA and press the ENTER button (4).

k) In the DEVICE DATA window (8) select LANGUAGE and press the ENTER button (4).

l) Use the ARROW buttons (2) to set the desired language and press the ENTER button (4).

m) Press the EXIT button (7) twice to exit from the CONFIGURATION window. The record performs an automatic reset.

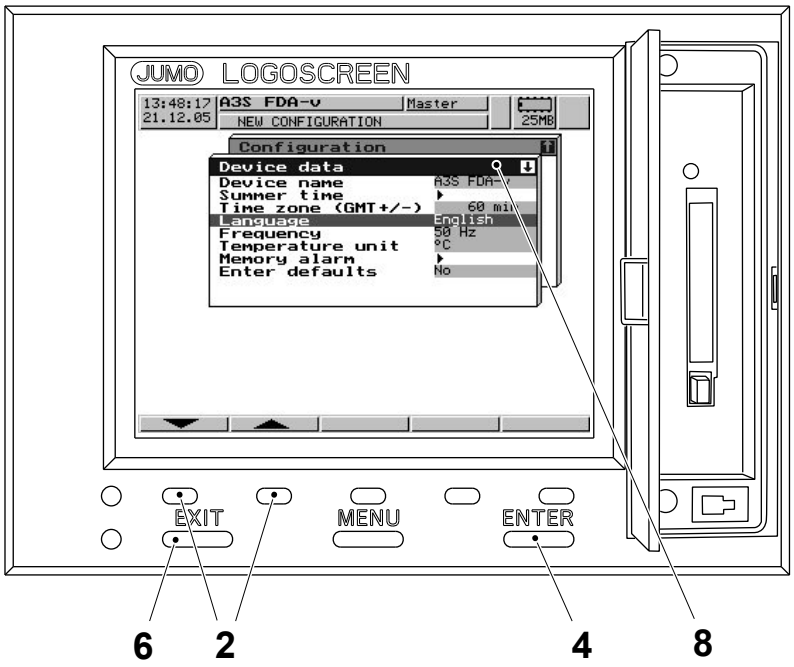

2 Arrow button
4 Enter button
6 Exit button
8 Device data window

9.7.4-3 Recorder - Load Configuration Data

Machine Status	Mains Power ON Air OFF Steam ON Water OFF
Special Equipment	PC with CD Drive Communication Cable RS 232-C CompactFlash reader/writer
SPC Reference	90459-6436 90459-4033

Loading via Serial Interface

Note! For detailed information, see the manual supplied on the JUMO installation disk.

a) Connect the serial communication cable supplied with the recorder between the PC (1) and the setup plug (2) on the front of the recorder.

b) Start the Setup Program Logoscreen CF.

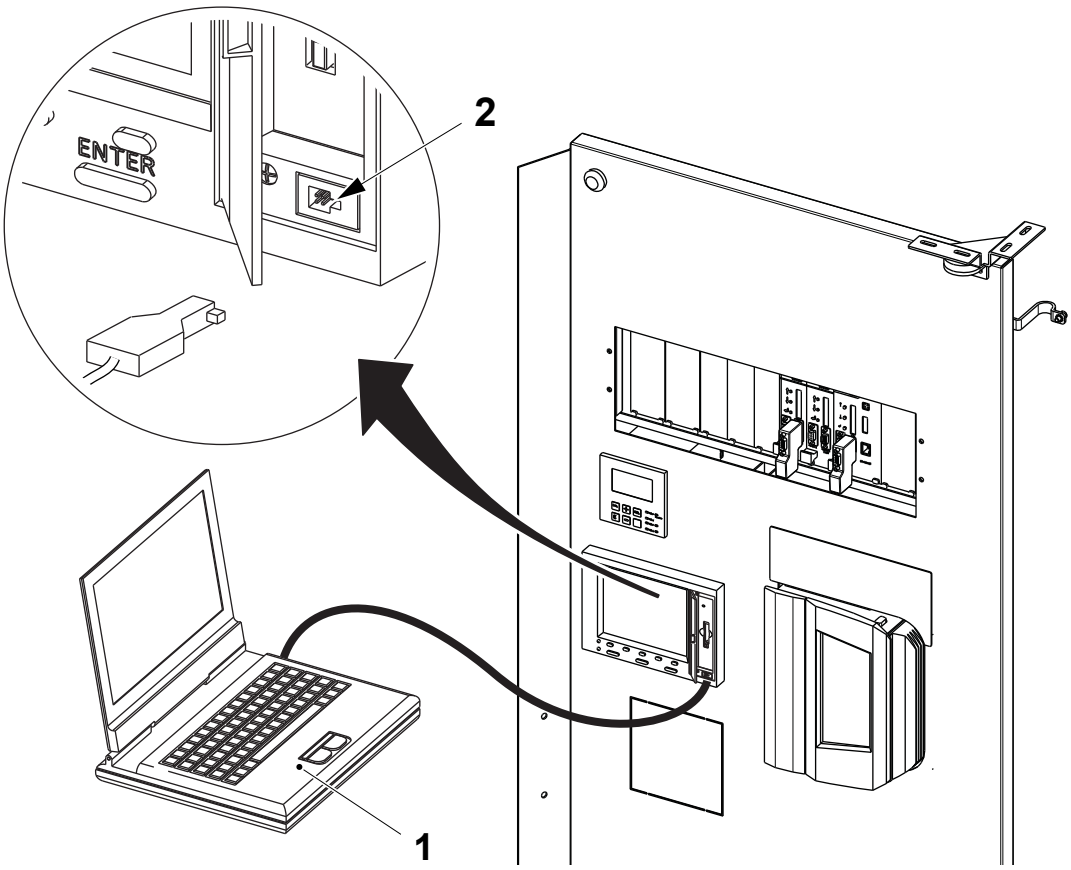

1 Personal Computer (PC)
2 Setup plug

(Cont'd)

(Cont'd)

Note! If there has never been any previous communication with a device, the “Assistant for Device Settings” will automatically be started when the first attempt at communication is made.

c) Insert the CD marked SOFTW_CD_A3_F into the PC CD reader.

d) Locate the folder `PROCESS RECORDER` and copy the configuration file to the PC desktop.

e) Establish a connection between the PC and the recorder by clicking on the `ESTABLISH CONNECTION` button (3).

f) Select the recorder in the device list and click the `CONNECTION` button (4).

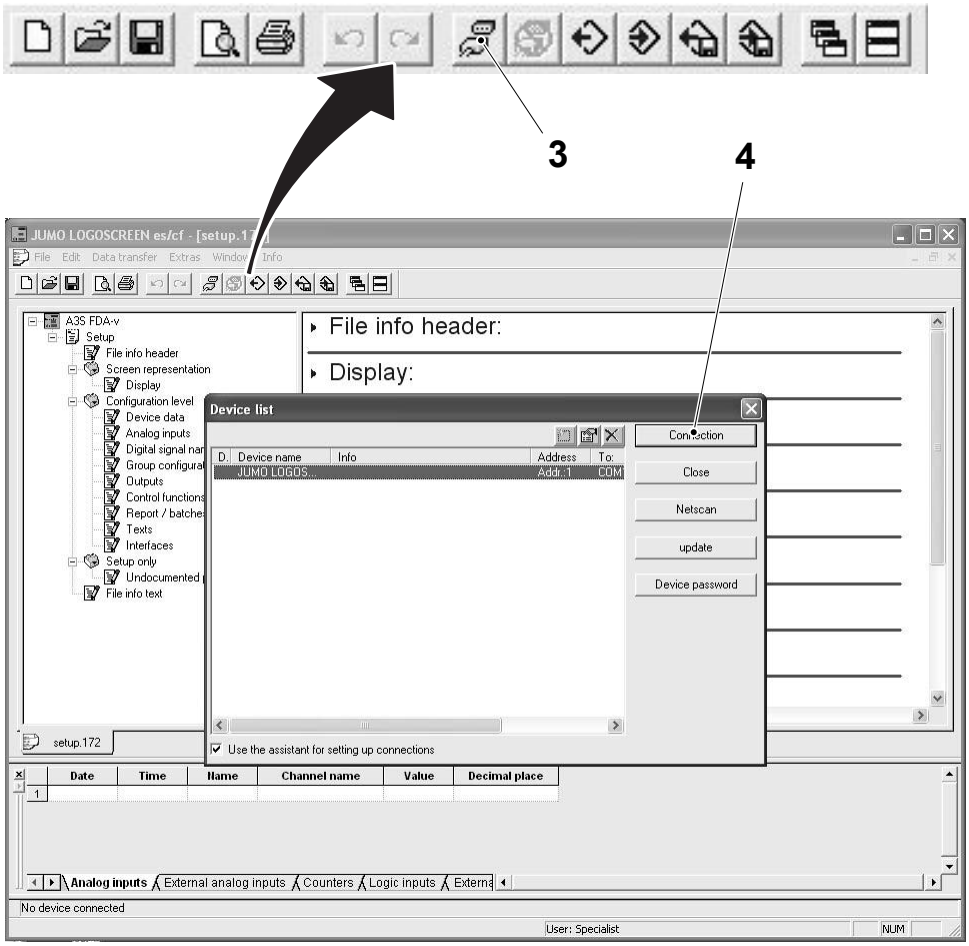

3 Establish connection button
4 Connection button

(Cont'd)

(Cont'd)

g) Click on the OPEN button (5) and locate the configuration file and then open the file.

h) Click on the DATA TRANSFER TO DEVICE button (6) to upload the new recorder configuration settings.

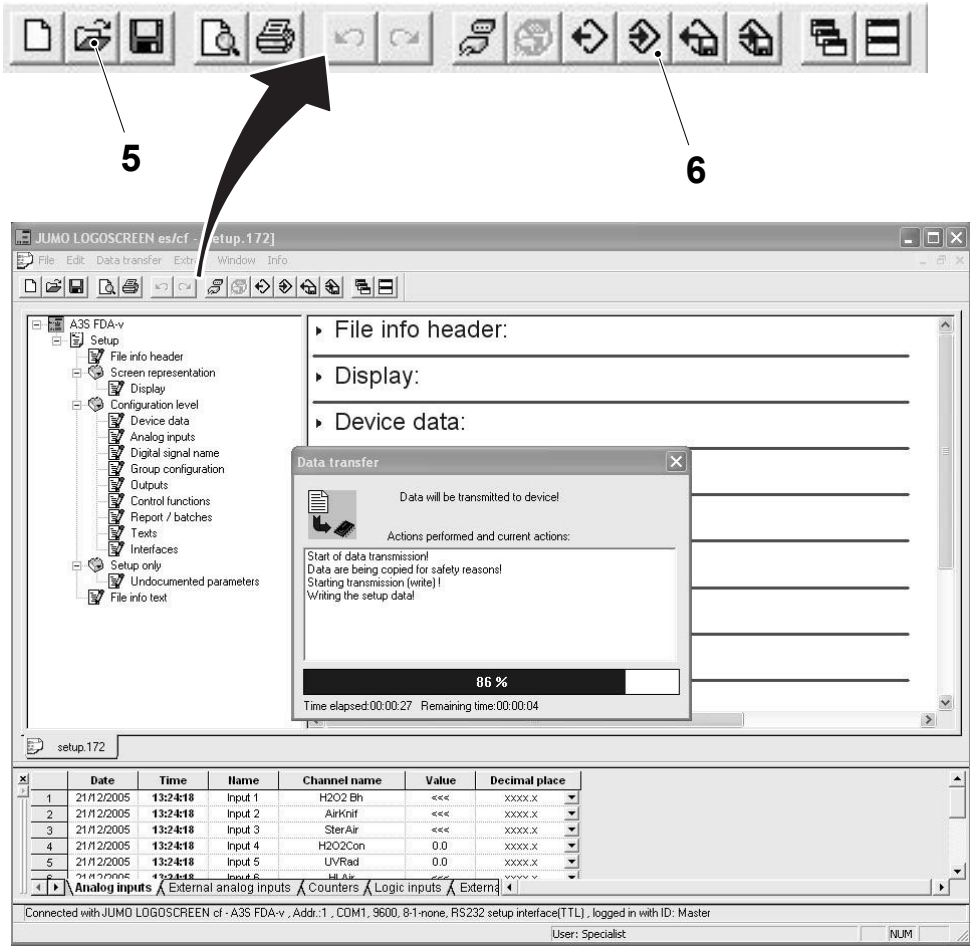

5 Open button

6 Data transfer to device button

(Cont'd)

(Cont'd)

i) When the new recorder configuration settings have been uploaded the recorder performs an automatic reset. The name of the new configuration appears on the top of the display.

j) Close the Setup Program Logoscreen CF and disconnect the communication cable.

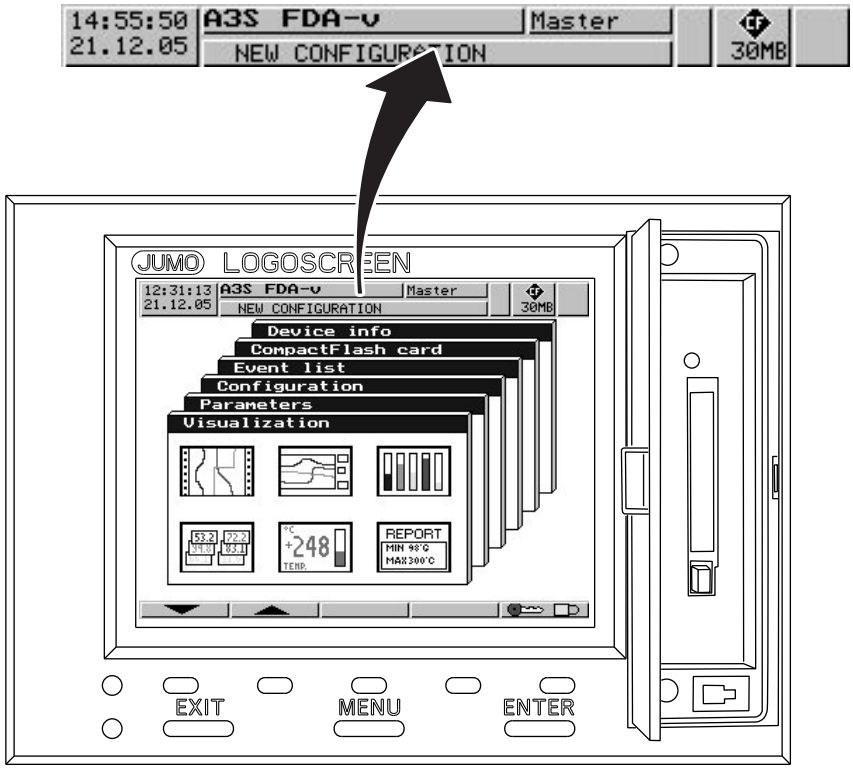

(Cont'd)

(Cont'd)

Loading from CompactFlash Card

Note! For detailed information, see the manual supplied on the JUMO installation disk.

a) From the installation CD, copy the configuration files `JUMO RECORDER\xxxxxx-100x\K17201.set` and `K17202.set` into the CompactFlash memory card (using a CompactFlash reader/writer, not supplied).

b) Open the recorder door (1) and insert the CompactFlash memory card with the configuration data into the CompactFlash slot (2).

c) Perform the log in as “Master” to access the CompactFlash Card functions, see 9.7.4-5 Recorder - Log In and Log Off.

d) Press the MENU button (3).

e) Use the ARROW buttons (4) to select the `COMPACTFLASH CARD` window (5) and press the ENTER button (6).

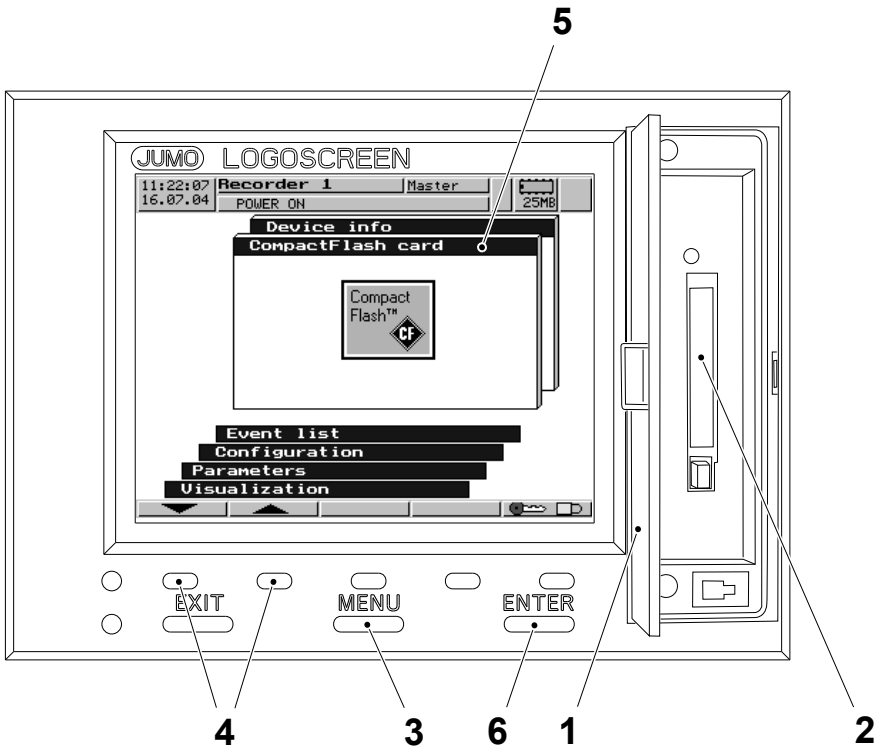

1 Door
2 CompactFlash slot
3 Menu button
4 Arrow button
5 CompactFlash card window
6 Enter button

(Cont'd)

(Cont'd)

f) Use the ARROW buttons (4) to select the `CF CARD TO CONFIG DATA` window (7) and press the START button (8).

g) Press the START button (8) to upload the new recorder configuration settings.

h) When the new recorder configuration settings have been uploaded the recorder performs an automatic reset. The name of the new configuration appears on the top of the display.

Note! Do not remove the CompactFlash memory card while the signal LED (9) is ON.

i) Eject the CompactFlash memory card from the CompactFlash slot (2).

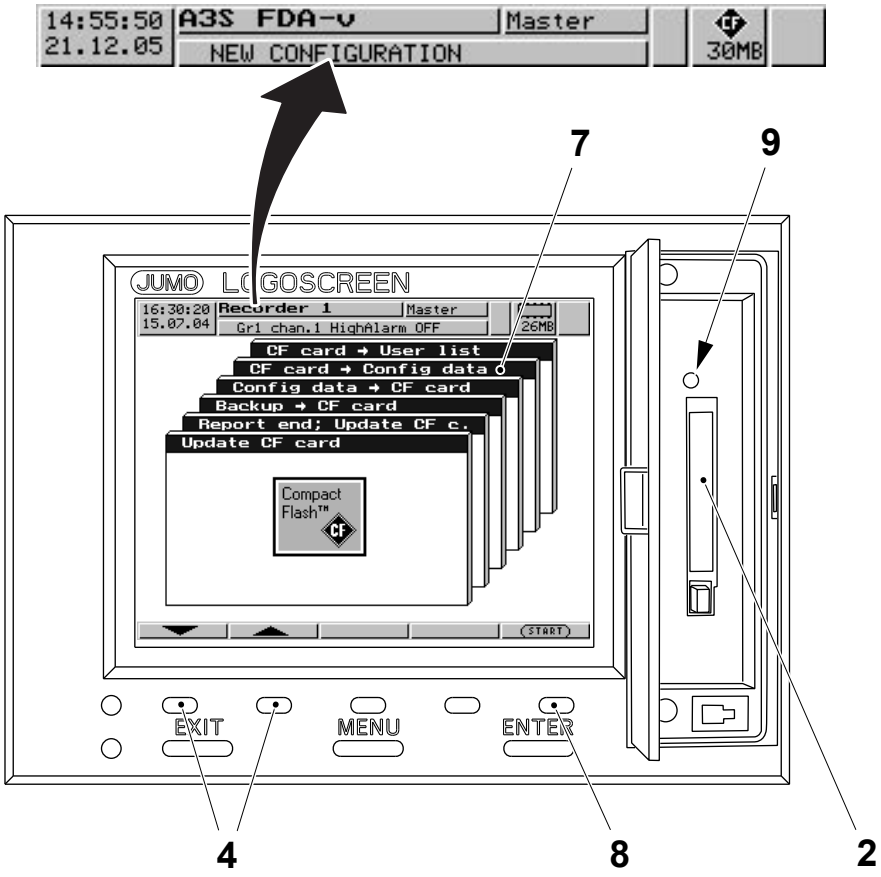

2 CompactFlash slot
4 Arrow button
7 CF card to config data window
8 Start button
9 Signal LED

9.7.4-4 Recorder - Calibrate

Machine Status	Mains Power ON Air OFF Steam ON Water OFF
SPC Reference	90459-6436 90459-4033

Note! For detailed information, see the manual supplied on the JUMO installation disk.

It is possible to compensate for false signals received by the recorder, such as systematic errors in the signals sent from thermocouples.

For example, if a thermocouple indicates a temperature value which is consistently 5 °C less than the true temperature at the lower end of its reading range and 10 °C less, at the higher end of its reading range, this can be corrected by the recorder.

To fine calibrate the signals received by the recorder proceed as follows:

a) Perform the log in as “Master” to access the configuration functions, see 9.7.4-5 Recorder - Log In and Log Off.

b) Press the MENU button (1).

c) Use the ARROW buttons (2) to select the PARAMETER window (3) and press the ENTER button (4).

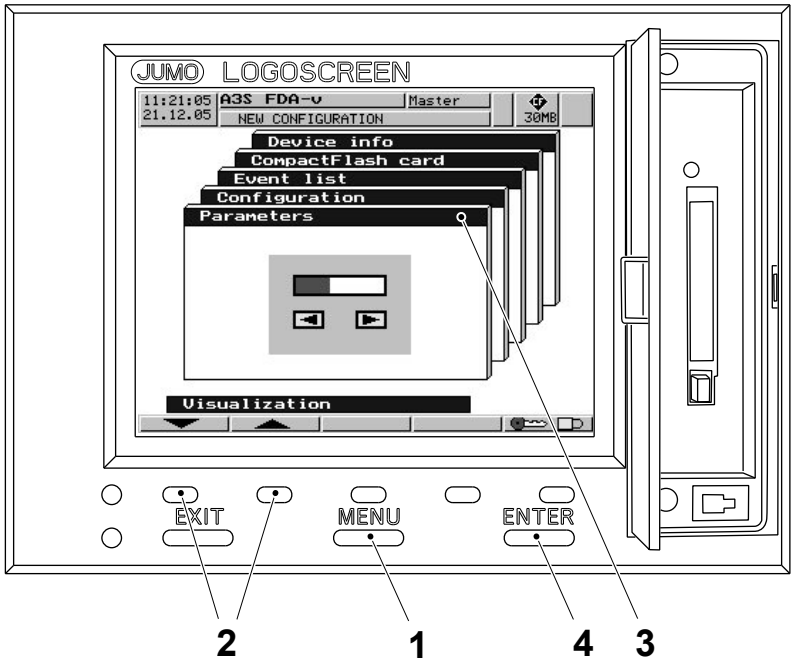

1 Menu button
2 Arrow button
3 Parameter window
4 Enter button

(Cont'd)

(Cont'd)

d) Use the ARROW buttons (2) to select `FINE CALIBRATION` (5) and press the ENTER button (4).

e) In the `FINE CALIBRATION` window select the desired Analogue input to be corrected (AN1-9) and press the ENTER button (4).

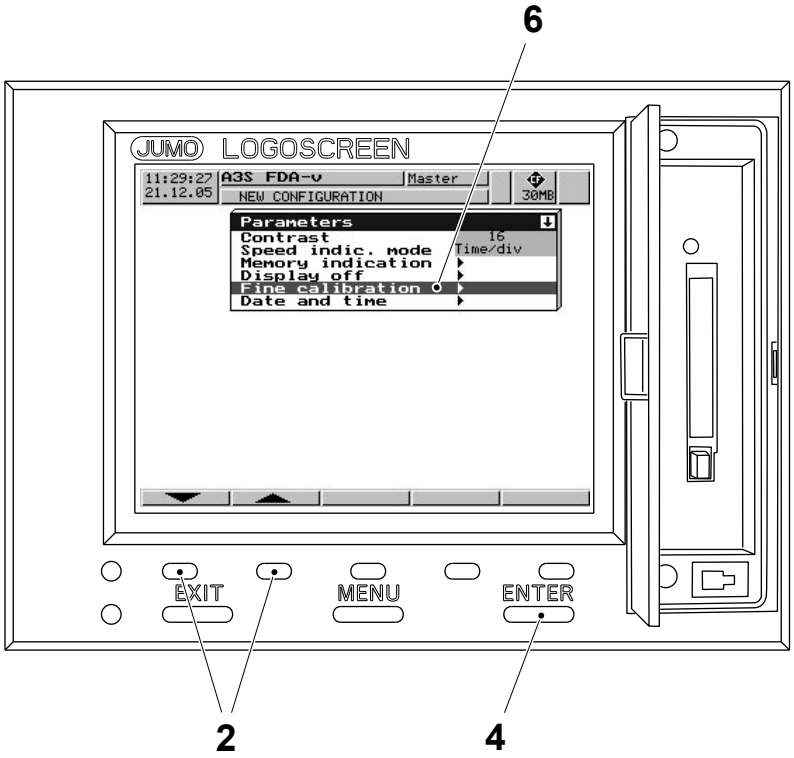

2 Arrow button
4 Enter button
5 Fine calibration

(Cont'd)

(Cont'd)

f) Use the ARROW buttons (2) to select ACTUAL START VALUE and press the ENTER button (4).

g) Use the ARROW buttons (2) and (6) to set the ACTUAL START VALUE of the reading range (e.g. 200 °C) and press the ENTER button (4).

h) Use the ARROW buttons (2) to select SET START VALUE and press the ENTER button (4).

i) Use the ARROW buttons (2) and (6) to set the TARGET START VALUE of the range (the true starting value of the signal range received from the thermocouple, e.g. 205 °C) and press the ENTER button (4).

j) Use the ARROW buttons (2) to select ACTUAL END VALUE and press the ENTER button (4).

k) Use the ARROW buttons (2) and (6) to set the ACTUAL END VALUE of the reading range (e.g. 300 °C) and press the ENTER button (4).

l) Use the ARROW buttons (2) and (6) to set the TARGET END VALUE of the range (the true ending value of the signal range received from the thermocouple, e.g. 310 °C) and press the ENTER button (4).

m) Use the ARROW buttons (2) to select ACTUAL START VALUE and press the ENTER button (4).

n) Press the EXIT button (7) twice to exit from the PARAMETER window and automatically reset the recorder.

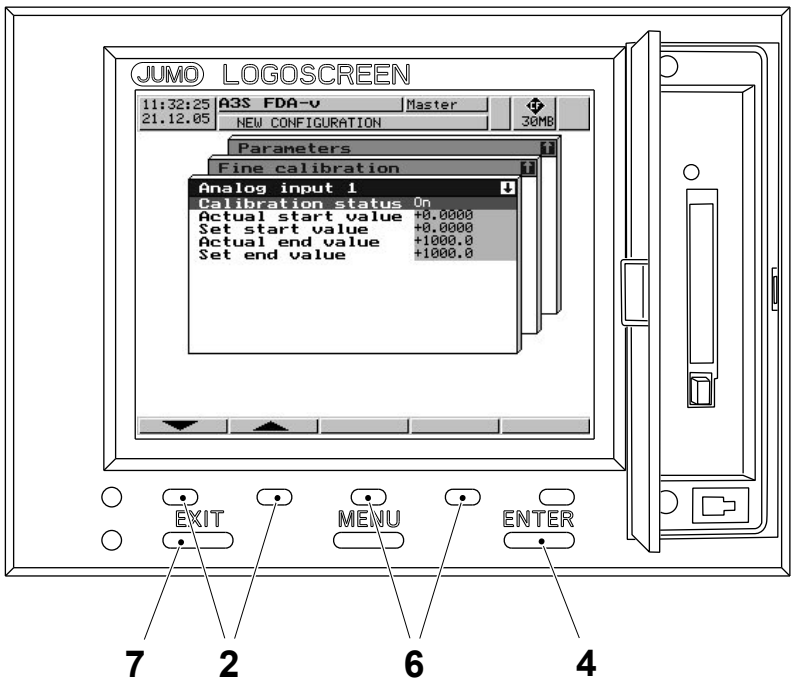

2 Arrow button
4 Enter button
6 Arrow button
7 Exit button

9.7.4-5 Recorder - Log In and Log Off

Machine Status	Mains Power ON Air OFF Steam ON Water OFF
SPC Reference	90459-6436 90459-4033

Note! For detailed information, see the manual supplied on the JUMO installation disk.

Log In Procedure

Note! To access the CONFIGURATION menu and the COMPACTFLASH CARD menu, it is necessary to login to the recorder.

a) Press the MENU button (1). The functions CompactFlash card and Configuration are disabled.

b) Press the LOG IN AND LOG OFF button (2).

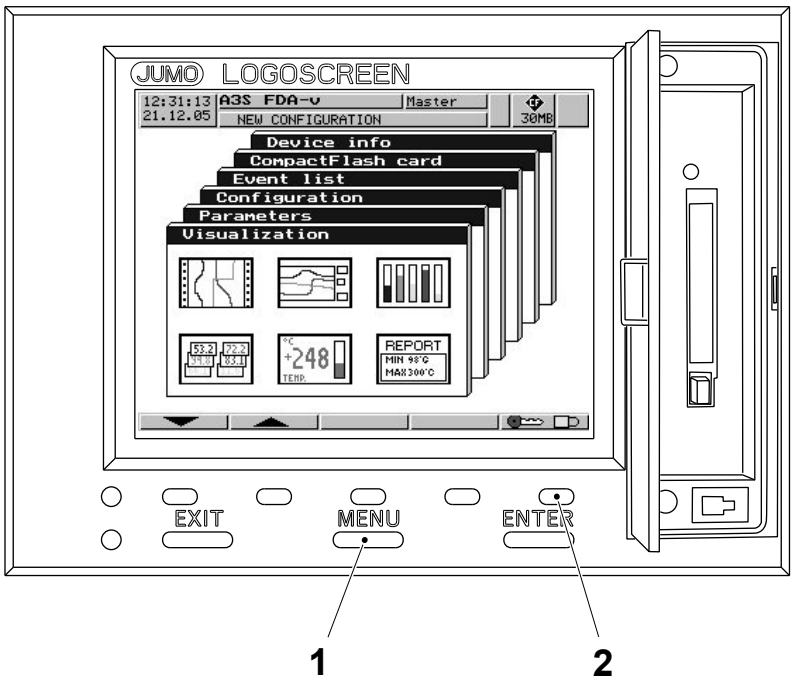

1 Menu button
2 Log in and log off button

(Cont'd)

(Cont'd)

c) Use the ARROW button (3) to select the LOG-IN window and press ENTER button (4).

Note! The recorder is delivered by default with an internal user list which comprises two user ID's. The user ID named MASTER allows full access to all the configuration parameters and the password is 9200. The user ID named USER allows the download of the recorded data only and the password is 0.

Note! If the recorder has been configured with individual user ID's, contact the administrator of the equipment for access to the recorder.

d) Select the user name and press ENTER (4).

e) Enter the password and press ENTER button (4). The functions COMPACTFLASH CARD and CONFIGURATION menus are now enabled and the name of the logged-in user appears on the top of the display.

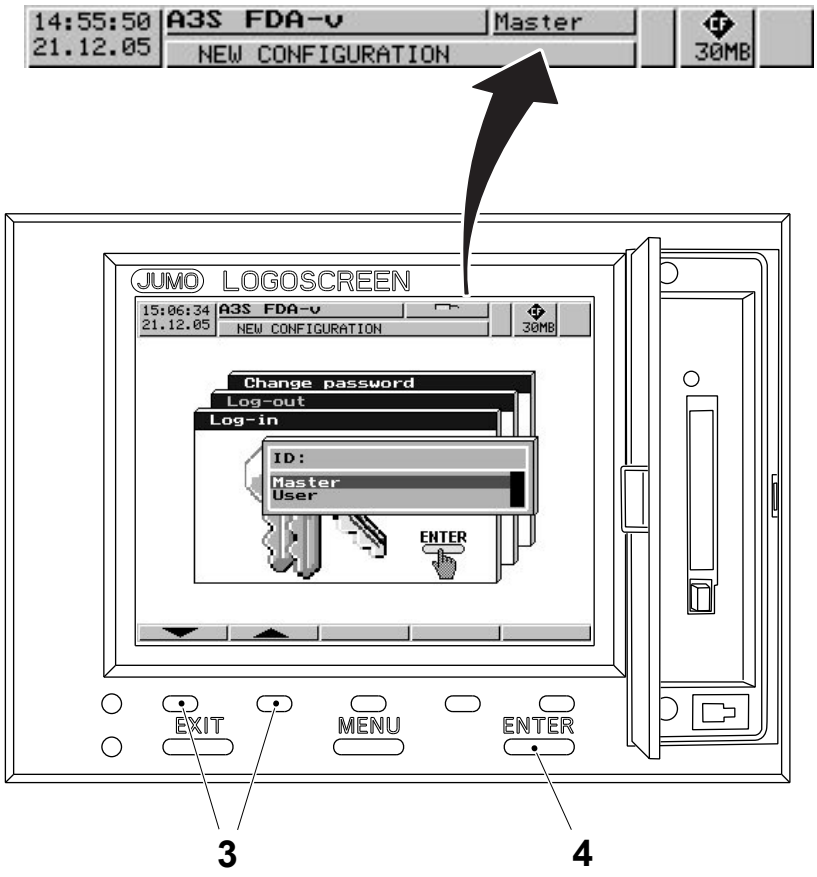

3 Arrow button
4 Enter button

(Cont'd)

(Cont'd)

Log Out Procedure

f) Use the ARROW button (3) to select the `LOG-OFF` window. The user currently logged in is shown on the top of the display.

g) Press the ENTER button (4).

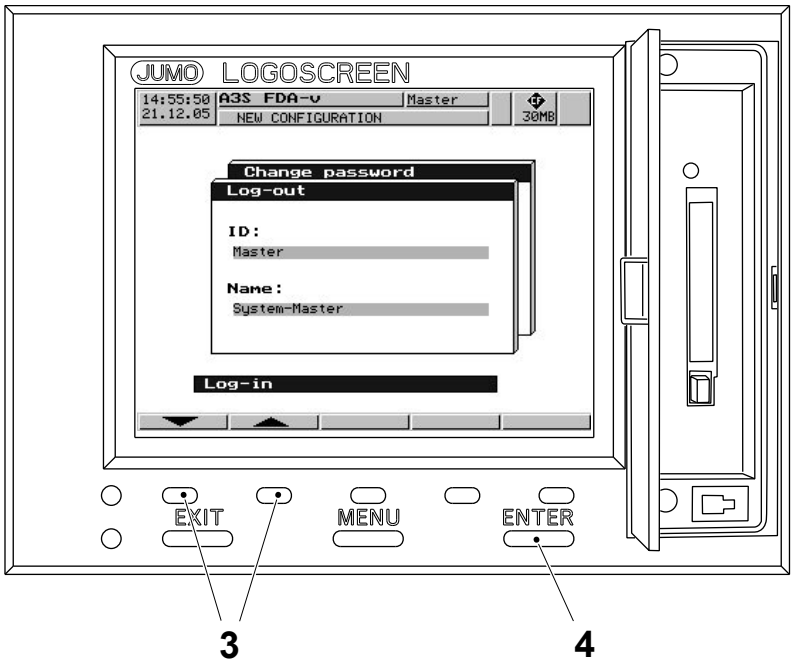

3 Arrow button
4 Enter button

9.7.4-6 Recorder - Change CompactFlash Card

Machine Status	Mains Power ON Air OFF Steam ON Water OFF
SPC Reference	90459-6436 90459-4033

Note! For detailed information, see the manual supplied on the JUMO installation disk.

a) Perform the log in to access the CompactFlash Card functions, see 9.7.4-5 Recorder - Log In and Log Off.

b) Press the MENU button (1).

c) Use the ARROW buttons (2) to select the `COMPACTFLASH CARD` window (3) and press the ENTER button (4).

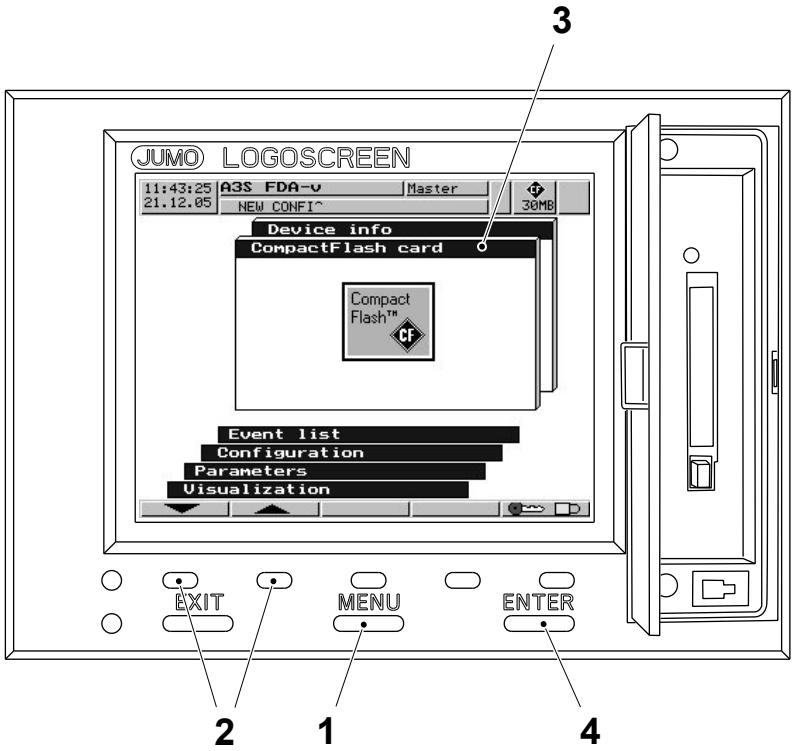

1 Menu button
2 Arrow button
3 CompactFlash card window
4 Enter button

(Cont'd)

(Cont'd)

Note! If the batch reports are also to be downloaded to the diskette, select the `REPORT END; UPDATE CF C.` window (5).

d) Use the ARROW buttons (2) to select the `UPDATE CF CARD` window (6) and press the START button (7).

e) Any remaining PRODUCTION and CIP record data is saved to the CompactFlash card. When the operation is completed, open the door (8) and eject the CompactFlash card from the CompactFlash slot (9).

f) Insert the new CompactFlash card into the CompactFlash slot (9) and close the door (8).

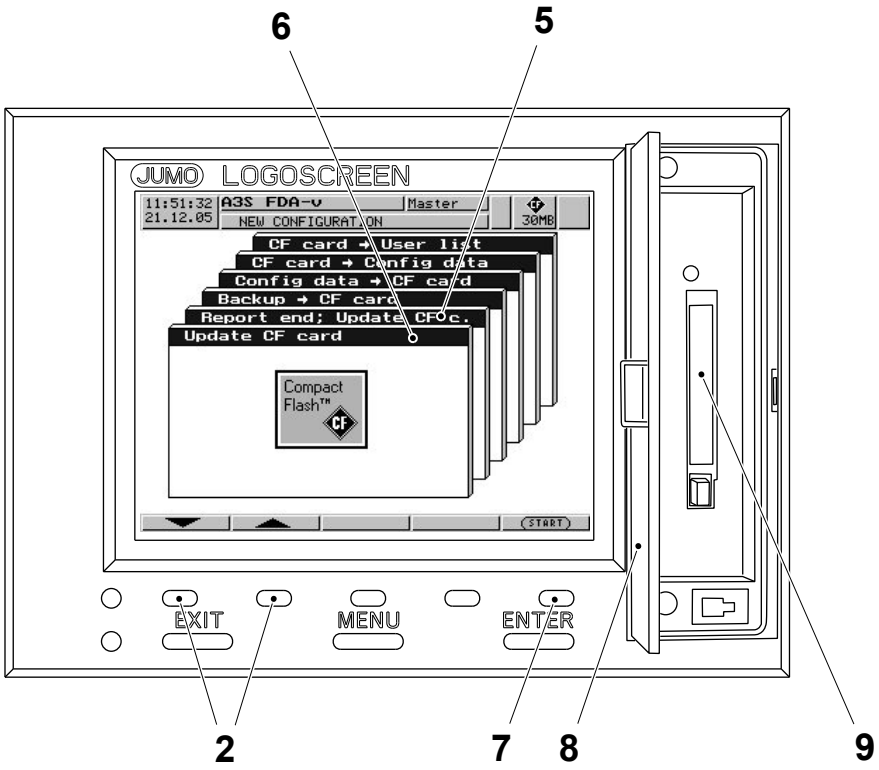

2 Arrow button
5 Report end; update CF card window
6 Update CF card window
7 Start button
8 Door
9 CompactFlash slot

9.7.5 Paper Recorders (OE)

9.7.5-1 Paper Recorders - Process Recorder Description

SPC Reference	90332-0020

Parameters

The process recorder registers the following parameters:

Channel No.	Type	Colour	Description
AN1	Analog	Blue	**Hydrogen peroxide temperature** If the temperature of the sterile bath exceeds its upper or lower limit the machine stops. This event is recorded by the digital **Sterile parameter 2**. The sterile bath temperature is measured in °C with a range of 0-100 °C.
AN2	Analog	Brown	**Air knife temperature** If the temperature of the air knife exceeds its upper or lower limit during **Production**, the machine stops. This event is recorded by the digital **Sterile parameter 2**. The air knife temperature is measured in °C with a range of 0-300 °C.
AN3	Analog	Black	**Sterile air temperature** If the temperature of the air super heater exceeds its upper or lower limit the machine steps down to **Zero** position. This event is recorded by the digital **Sterile parameter 1**. The air super heater temperature is measured in °C with a range of 0-400 °C.
AN4	Analog	Red	**Hydrogen peroxide concentration** If the concentration of the hydrogen peroxide exceeds its upper or lower limit the machine stops. This event is recorded by the digital **Sterile parameter** 2. The peroxide concentration is in measured % p/p with a range of 0-60 % p/p.
AN5	Analog	-	Not used
AN6	Analog	Green	HI air temperature (OE) If the temperature of the HI air exceeds its upper or lower limit the machine stops. This event is recorded by the digital **Sterile parameter 2**. The HI air temperature is measured in °C with a range of 0-400 °C.

(Cont'd)

(Cont'd)

Channel No.	Type	Colour	Description
DI1	Digital	Purple	**Sterile parameter 1** It records sterile parameter events that have caused the machine to shutdown. The event is recorded with a pulse from the zero reference lasting for the duration of the event and continuing for a further 5 minutes after the event has ended. After a sterile parameter event, the machine must be re-sterilised. On completion of filling machine sterilisation (drying finished), a pulse is recorded for 30 seconds. The process recorder prints a supplementary batch text in conjunction with this signal. The batch text is displayed on five lines as follows: TP A3/Flex... nr..... *Aseptic* * TPCA * The operator can write the serial number of the filling machine and batch information on the dotted line.
DI2	Digital	Red	**Sterile parameter 2** It records operational parameter events that have caused the machine to stop. The event is recorded with a pulse from the zero reference lasting for the duration of the event and continuing for a further 5 minutes after the event has ended. If a hydrogen peroxide concentration event occurs prior to the start of the **Production** phase, the event is recorded with a pulse from the zero reference lasting for the duration of the event and continuing for a further 30 seconds after the event has ended.
DI3	Digital	Green	**Main motor operating** It records when the main motor is **On**.
DI4	Digital	Black	**Filling machine in production** It records when the filling machine is producing filled packages. This signal is also recorded by the CIP recorder when the machine is in **Intermediate cleaning** and **Final cleaning**.

(Cont'd)

(Cont'd)

The figure below shows a sample process recorder printout.

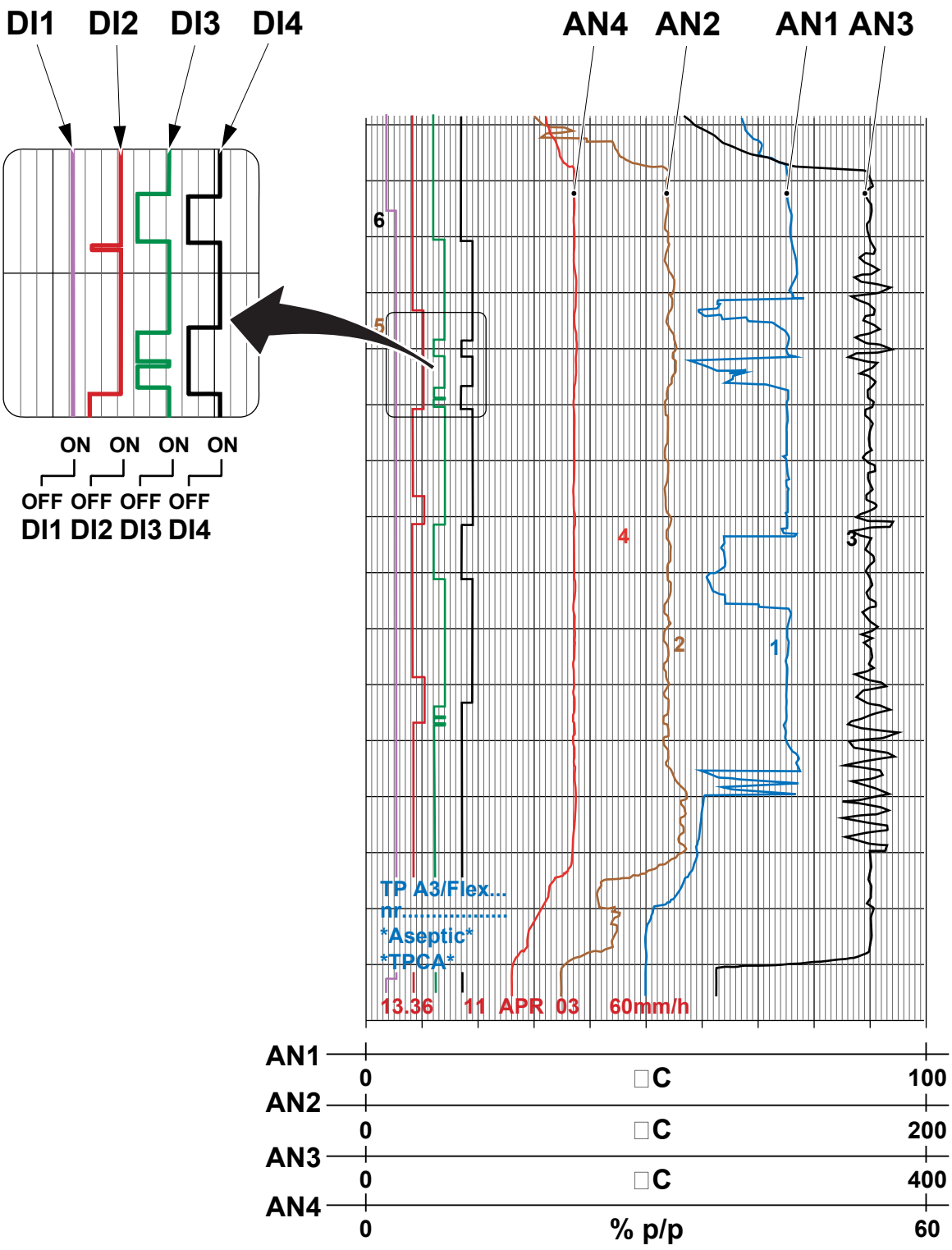

(Cont'd)

(Cont'd)

The power supply to the recorder is switched ON from the PREPARATION phase and is switched OFF five minutes after the PRODUCTION ENDED phase has finished.

The paper cassette autonomy is about 12 days. Pen autonomy is about 170 days (with the process recorder running 24h a day).

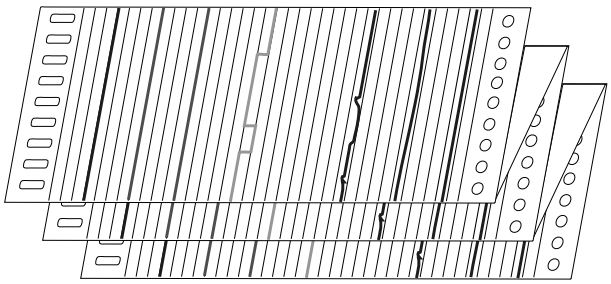

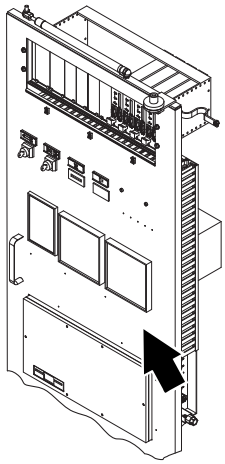

Passwords

The process recorder has two passwords, for different access privileges:

- Password #1 gives limited access to the configuration
- Password #2 gives full access.

9.7.5-2 Paper Recorders - CIP Recorder Description

SPC Reference	90332-0020

Parameters

The CIP recorder registers the following parameters:

Channel No.	Type	Colour	Description
AN1	Analog	Not defined	Not used
AN2	Analog	Not defined	Not used
AN3	Analog	Not defined	Not used
AN4	Analog	Blue	**CIP conductivity** It measures the conductivity of the cleaning liquid during CIP. The signal is sent from the conductivity meter. The conductivity is measured in mS/cm with a range of 0-100 mS/cm.
AN5	Analog	Brown	**CIP Flow rate** It measures the flow of the cleaning liquid during CIP. The signal comes from the flow meter. The flow rate is measured in litres/h with a range of 0-15000 litres/h.
AN6	Analog	Black	**CIP Temperature** It measures the temperature of the cleaning liquid during CIP. The signal comes from the conductivity meter. The CIP temperature is measured in °C with a range of 0-100 °C.
DI4	Digital	Black	This signal records when the machine is in **Intermediate cleaning** and **Final cleaning**. **Intermediate cleaning** is indicated by a pulse at 1 minute intervals from the zero reference lasting for the duration of the cleaning phase. **Final cleaning** is indicated by a pulse at 2.5 minute intervals from the zero reference lasting for the duration of the cleaning phase.

(Cont'd)

(Cont'd)

The figure below shows a sample CIP recorder printout.

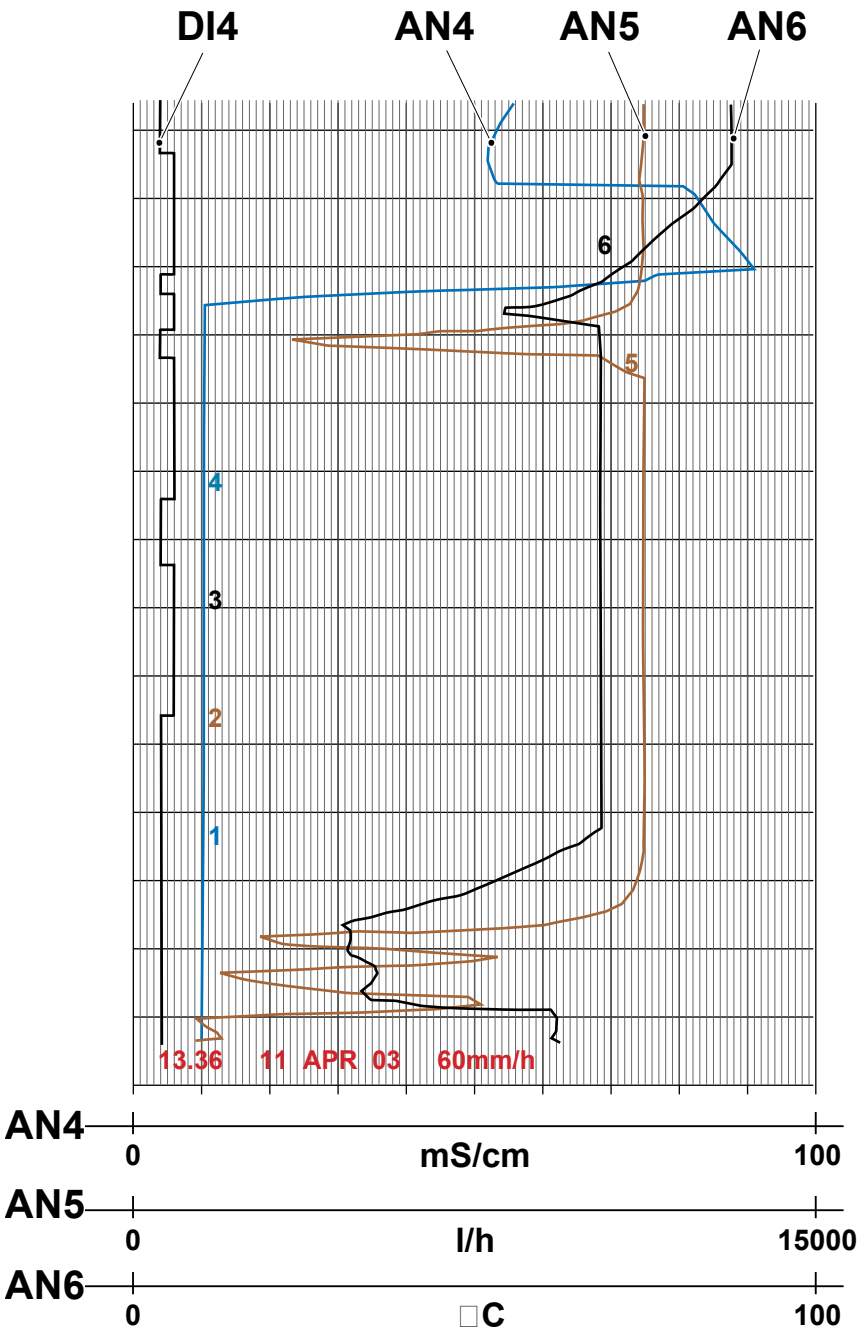

(Cont'd)

(Cont'd)

The power supply to the recorder is switched ON when the CIP CLEANING CYCLE starts and is switched OFF five minutes after the CIP CLEANING CYCLE has finished.

The paper cassette autonomy is about 12 days. Pen autonomy is about 170 days (with the process recorder running 24h a day).

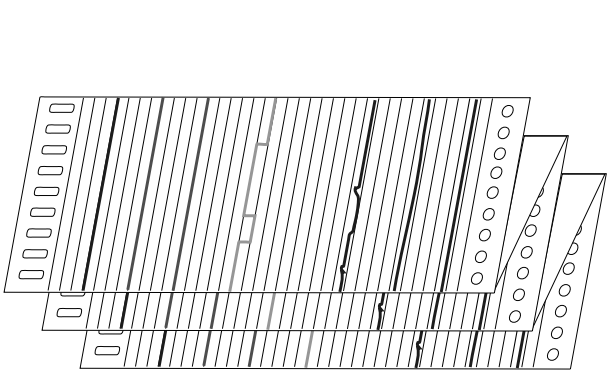

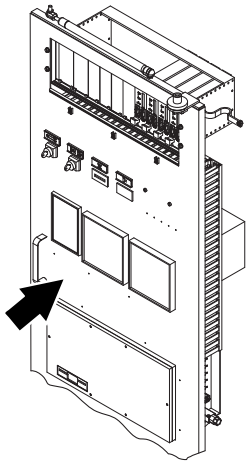

Passwords

The CIP recorder has two passwords, for different access privileges:

- Password #1 gives limited access to the configuration
- Password #2 gives full access.

9.7.5-3 Paper Recorders - Set Date And Time

Machine Status	Mains Power ON Air OFF Steam ON Water OFF
SPC Reference	90332-0020

Note! For further information, see the Honeywell manual (Ref. EN1l-6136).

a) Open the front cover. Press the SETUP key (1).

b) Press the ARROW key (5) five times. The message R/W MISCEL appears on the display.

c) Press the ENTER key (6). The message MI1 TIME appears on the display.

d) Press the ENTER key (6) twice to confirm. The time flashes on the display.

e) Use the ARROW keys (2), (3), (4) and (5) to set the current time. Press the ENTER key to move from hours to minutes.

f) Press the ENTER key (6) again to confirm.

g) Press the ARROW key (5). The message MI1 DATE appears on the display.

h) Press the ENTER key (6) to set the date.

i) Repeat items e) and f) to set the date.

j) Press the SETUP key (1) twice to return to normal operation. Close the front cover.

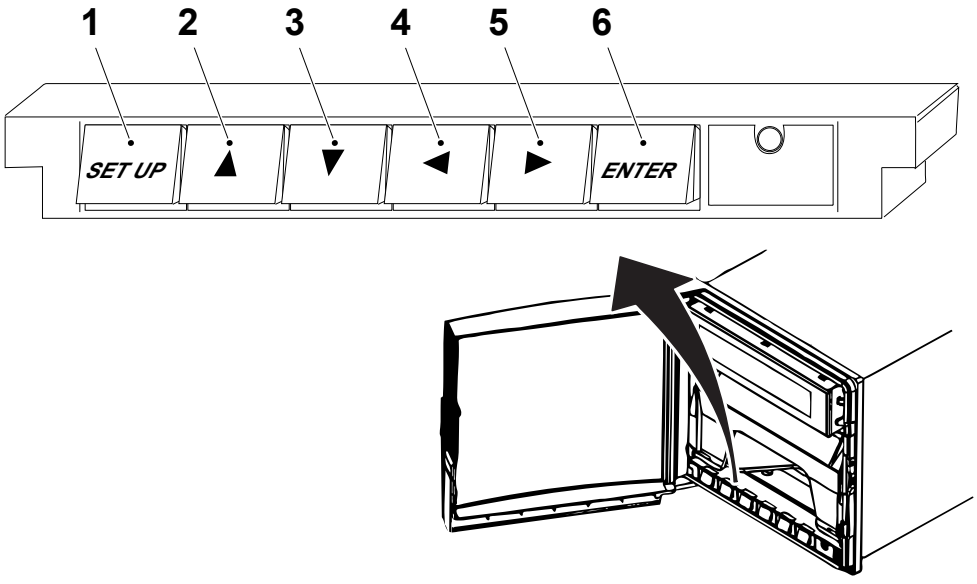

1 Setup key
2 Arrow key up
3 Arrow key down
4 Arrow key left
5 Arrow key right
6 Enter key

9.7.5-4 Paper Recorders - Clean Chart Carriage

Machine Status	Mains Power OFF Air OFF Steam ON Water OFF
SPC Reference	90332-0020

a) Open the front cover of the process recorder and pull out the chart cassette.

b) Open the cassette and remove the paper chart.

c) Clean the guide rods of the cassette with a dry cotton cloth.

d) Clean the cassette with a damp cloth.

Note! Do not lubricate!

e) Fit the paper chart. Close the cassette and fit it. Close the front cover of the recorder.

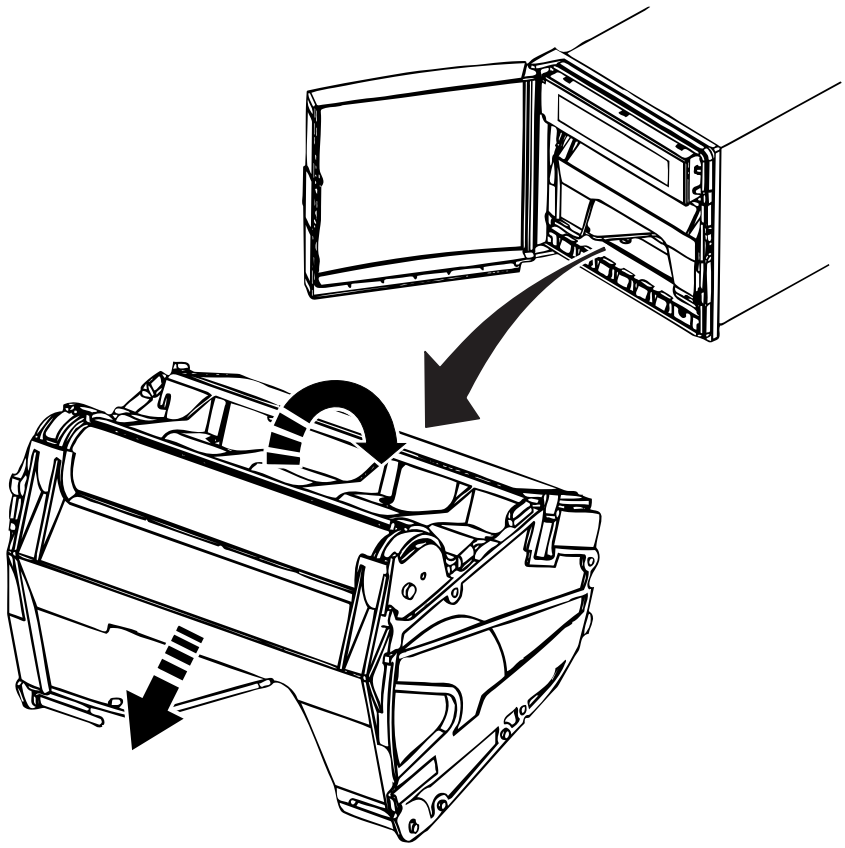

9.7.5-5 Paper Recorders - Change Fuse

Machine Status	Mains Power OFF Air OFF Steam ON Water OFF
SPC Reference	90332-0020

a) Swing out the panel of the electrical cabinet.

b) Change the fuse (1) at the rear of the process recorder.

c) Close the panel.

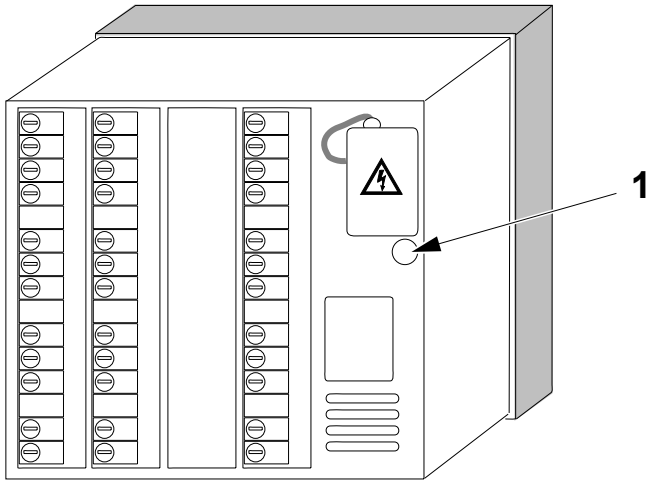

1 Fuse

9.7.6 Temperature Regulators

9.7.6-1 Temperature Regulators - Calibrate

Machine Status	Mains Power ON Air OFF Steam ON Water OFF
Special Equipment	PC with CD drive Adhesive Label - No. 90194-0113 Micromite II Calibrator - TP No. 90410-0338 Micromite II Thermocouple Cable - TP No. 90326-0308 or FLUKE 714 Calibrator - TP No. 90458-0914 FLUKE 714 Thermocouple Cable - TP No. 90458-0915 Precision Resistor - High Precision Resistor - 1000 ohm, 0.05% ppm/oC 3000 ohm, 0.05% ppm/oC - Calibrated Resistor Decade Box, 0,05% Precision Voltage Source (+100 mV, 1mV resolution - accuracy =3 µV or better)
SPC Reference	648539-0300

Note! Before calibration, make sure that the calibrator has already been set, see 9.7.6.1-1 Calibrator - Set Fluke 714 or 9.7.6.1-2 Calibrator - Set Micromite II.

Note! Energise the module at least 10 minutes before calibration.

Calibration must be performed when a thermocouple module is changed or at least once a year.

(Cont'd)

(Cont'd)

Note! To connect to the CPU module using an ethernet communication cable, the PC must first be configured for this type of communication. See 9.1.1-1 Preparation for PLC Communication - Configure PC Network Communications and 9.1.1-2 Preparations for PLC Communication - Configure RSLinx for more details.

a) Connect the ethernet communication cable between a vacant connection port on the ethernet switch (1) and the PC (2).

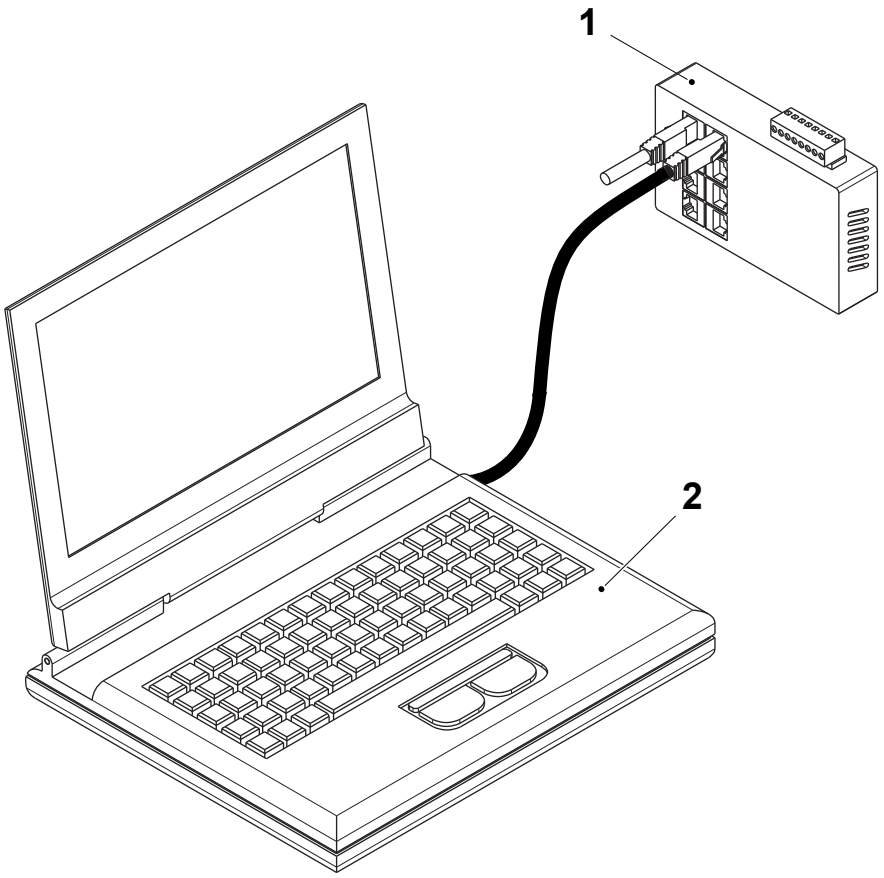

1 Ethernet switch
2 PC

(Cont'd)

(Cont'd)

b) Start the RSNetWorx program and select the NETWORK menu (3) and then select ONLINE (4).

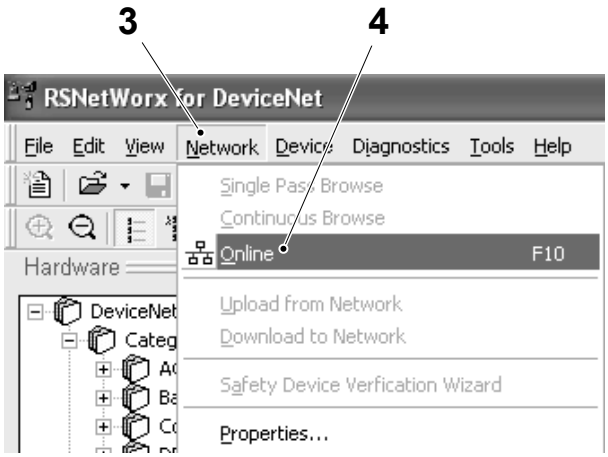

3 Network menu
4 Online

(Cont'd)

(Cont'd)

c) Navigate to the required DeviceNet Point I/O adapter and then double click on the icon to display the sub-network.

d) Double click on the DeviceNet thermocouple module (5) to open the PARAMETER window (6).

e) If the EDS EDITOR window (7) appears, select the UPLOAD button (8) to continue.

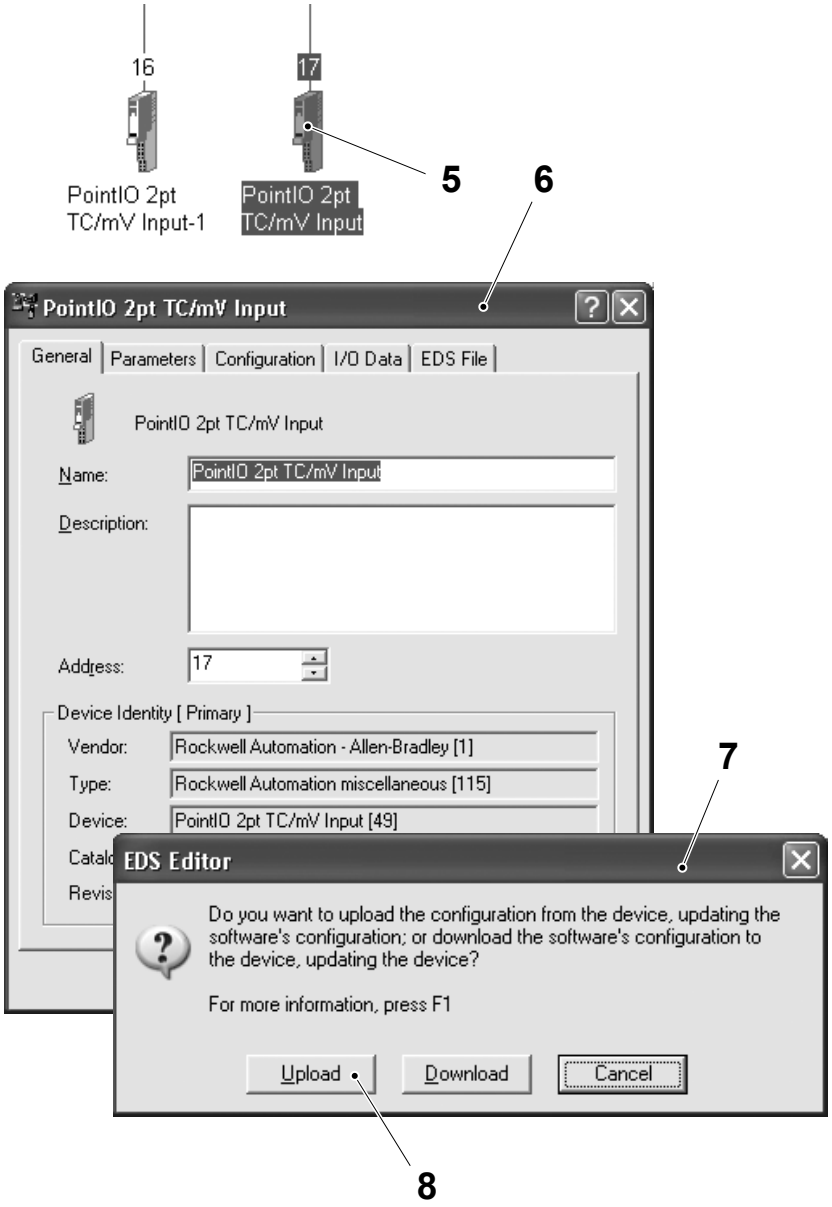

5 DeviceNet thermocouple module
6 Parameter window
7 EDS editor window
8 Upload button

(Cont'd)

(Cont'd)

f) From the PARAMETER window check the GROUPS box (9) and select CALIBRATION (10).

Note! The calibration procedure consists of two phases: first the calibration of the Input, see Input (mV) Calibration and after that the calibration of the Cold Junction Compensation, see Cold Junction Compensation (CJC) Calibration.

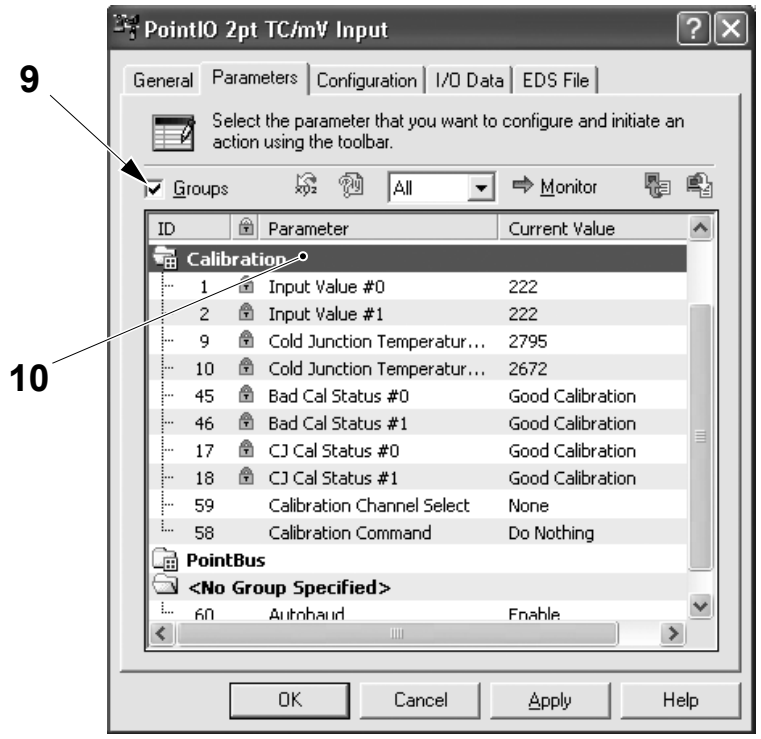

9 Groups box
10 Calibration

(Cont'd)

(Cont'd)

Input (mV) Calibration

a) Connect the precision voltage source to the module 1734-RTBCJC (1) by the copper wire, according to the diagram shown below.

Note! It is also possible to connect only one channel in order to calibrate one channel at a time.

Note! Make sure that the module is updated to the firmware Rev. 3.004, see the label (2).

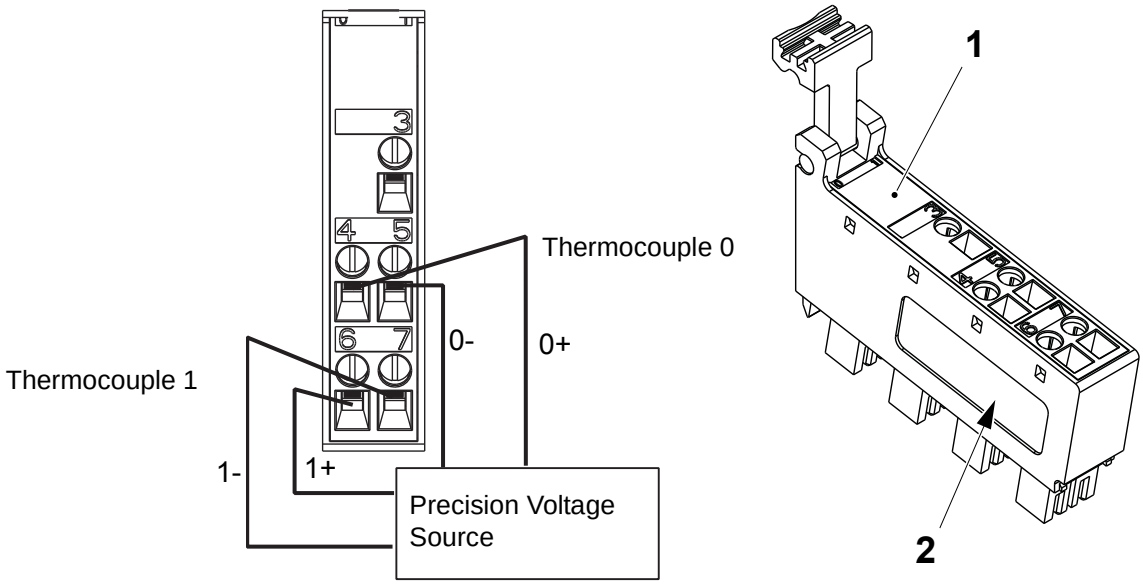

1 Module 1734-RTBCJC
2 Label

(Cont'd)

(Cont'd)

b) In the CONFIGURATION dialogue window select the parameter No. 7 THERMOCOUPLE TYPE (4) and select mV from the drop down list (5).

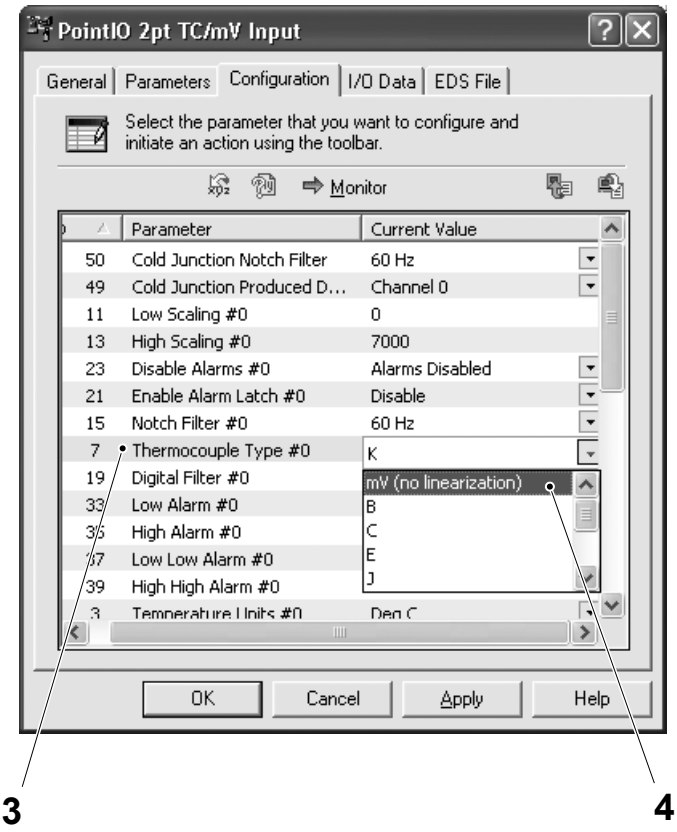

3 Thermocouple type
4 Drop down list

(Cont'd)

(Cont'd)

c) Return to the PARAMETER dialogue window and click on the parameter No. 59 CALIBRATION CHANNEL SELECT (5) to enable the CHANNEL SELECTION drop down list (6).

d) Select either INPUT CHANNEL 0 or INPUT CHANNEL 1 (or BOTH CHANNELS) from the CHANNEL SELECTION drop down list (6).

e) Click the DOWNLOAD TO DEVICE icon (7) or the APPLY button (8). The LED status indicators on the input module turn off.

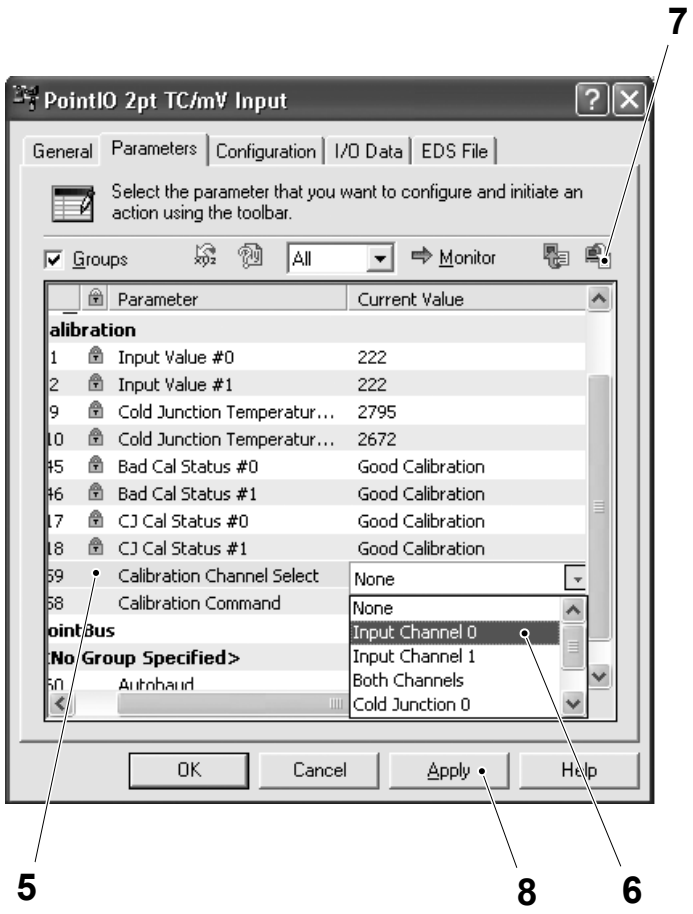

5 Calibration channel select
6 Channel select drop down list
7 Download to device icon
8 Apply button

(Cont'd)

(Cont'd)

f) Click on the parameter `No. 58 CALIBRATION COMMAND` (9) and select `BEGIN INPUT CALIBRATION` from the drop down list (10).

g) Click the `DOWNLOAD TO DEVICE` icon (7) or the `APPLY` button (8).

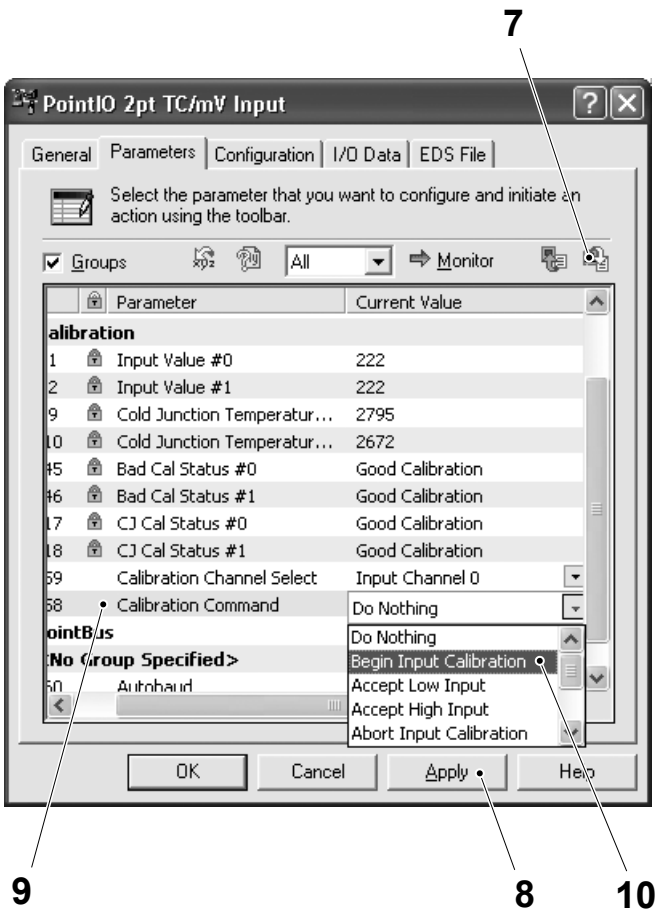

7 Download to device icon
8 Apply button
9 Calibration command
10 Drop down list

(Cont'd)

(Cont'd)

h) Use the precision voltage source to apply 0.00 mV to the input module for the channels being calibrated.

i) Select ACCEPT LOW INPUT from the CALIBRATION COMMAND drop down list (10).

j) Click the DOWNLOAD TO DEVICE icon (7) or the APPLY button (8). The LED status indicators for the channels being calibrated blink green.

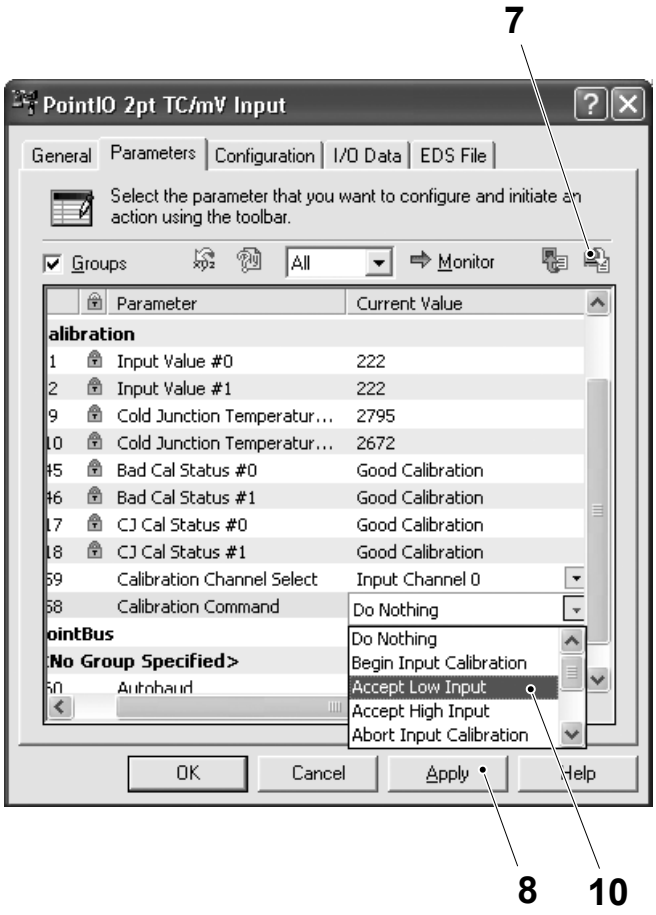

7 Download to device icon
8 Apply button
10 Drop down list

(Cont'd)

(Cont'd)

k) Use the precision voltage source to apply 70.0 mV to the input module for the channels being calibrated.

l) Select ACCEPT HIGH INPUT from the CALIBRATION COMMAND drop down list (10).

m) Click the DOWNLOAD TO DEVICE icon (7) or the APPLY button (8).

n) Repeat steps above to calibrate the other channel if has been chosen to calibrate one channel at a time.

o) The calibration is now complete. The LED status indicators on the thermocouple module should be green or flashing red if no load is present.

Note! If an error has occurred during the calibration procedure select ABORT INPUT CALIBRATION from the drop down list (10) to restore the previous calibration values.

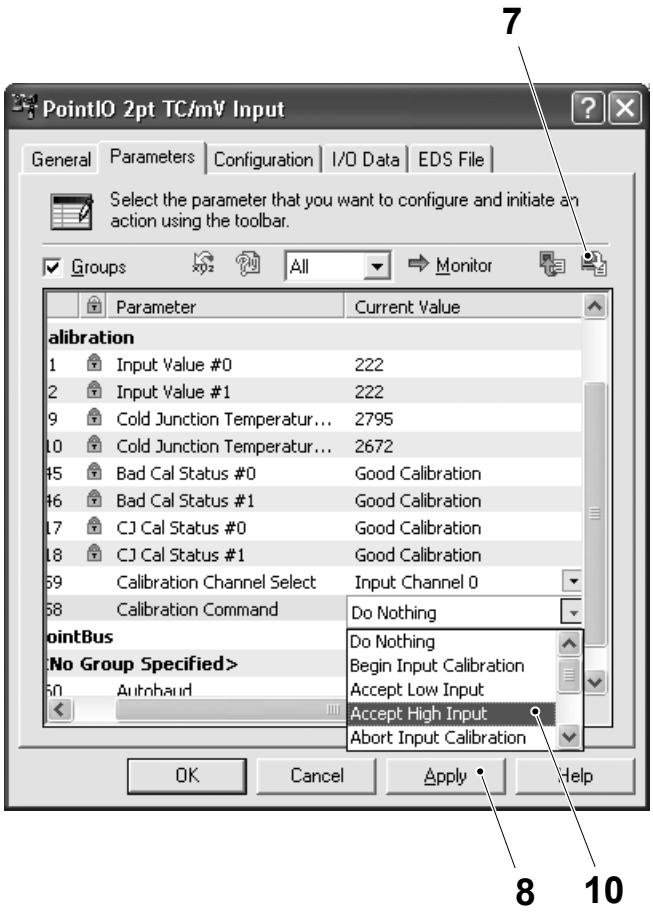

7 Download to device icon
8 Apply button
10 Drop down list

(Cont'd)

(Cont'd)

Cold Junction Compensation (CJC) Calibration

a) Connect the precision resistor to the module 1734-RTB (1) according to the diagram shown below.

Note! It is also possible to connect only one channel in order to calibrate one channel at a time.

Note! Make sure that the module is updated to the firmware Rev. 3.004, see the label (2).

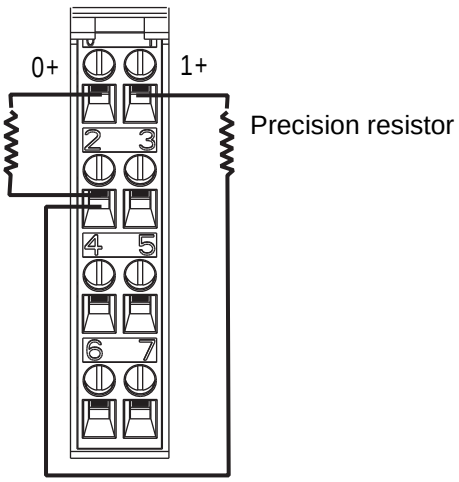

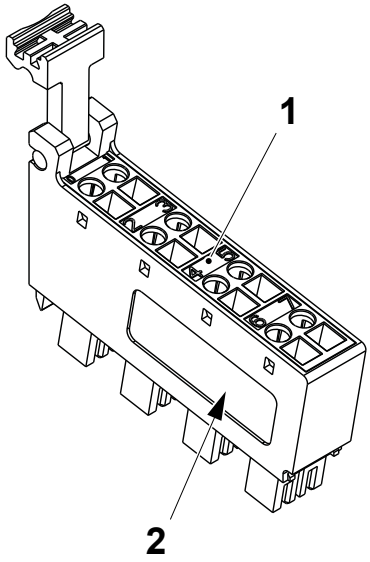

1 Module 1734-RTB
2 Label

(Cont'd)

(Cont'd)

b) In the CONFIGURATION dialogue window select the parameter No. 7 THERMOCOUPLE TYPE (3) and select K from the drop down list (4).

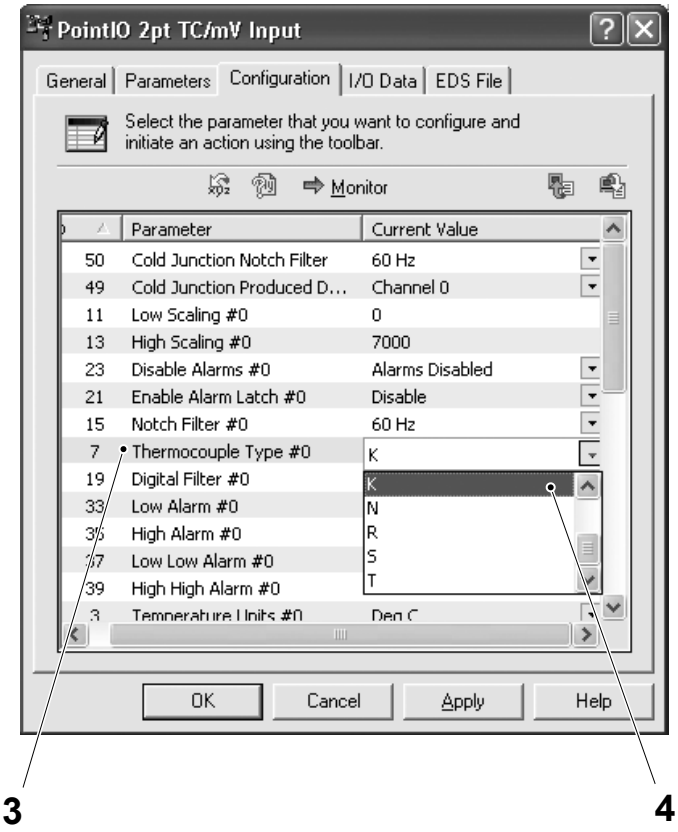

3 Thermocouple type
4 Drop down list

(Cont'd)

(Cont'd)

c) Return to the PARAMETER dialogue window and click on the parameter No. 59 CALIBRATION CHANNEL SELECT (5) to enable the CHANNEL SELECTION drop down list (6).

d) Select COLD JUNCTION 0, COLD JUNCTION 1 or BOTH COLD JUNCTIONS at once from the CHANNEL SELECTION drop down list (6).

e) Click the DOWNLOAD TO DEVICE icon (7) or the APPLY button (8).

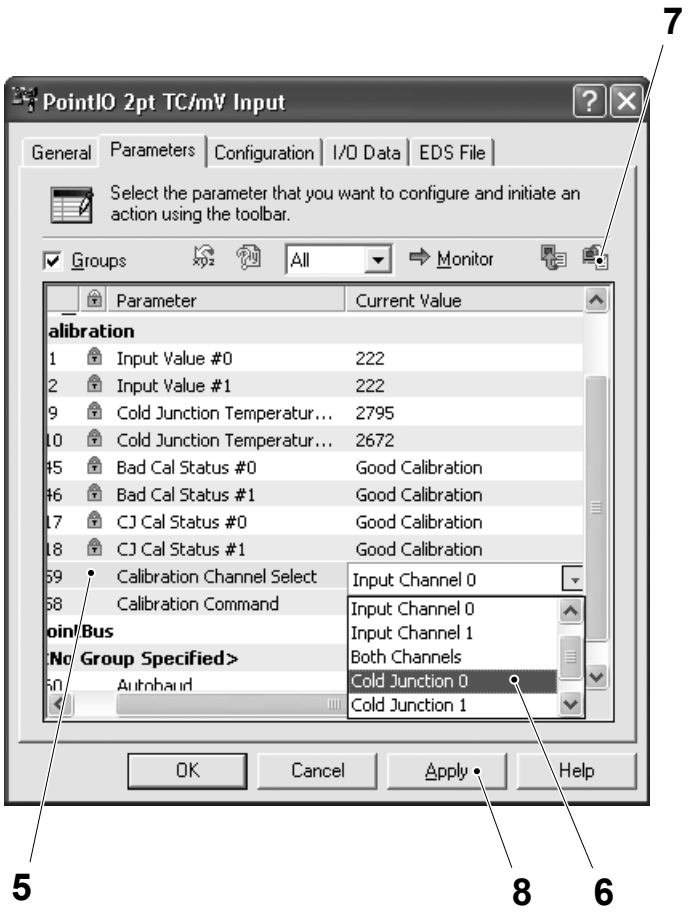

5 Calibration channel select
6 Channel select drop down list
7 Download to device icon
8 Apply button

(Cont'd)

(Cont'd)

f) Click on the parameter `No. 58 CALIBRATION COMMAND` (9) and select `BEGIN CJC CALIBRATION` from the drop down list (10).

g) Click the `DOWNLOAD TO DEVICE` icon (7) or the `APPLY` button (8).

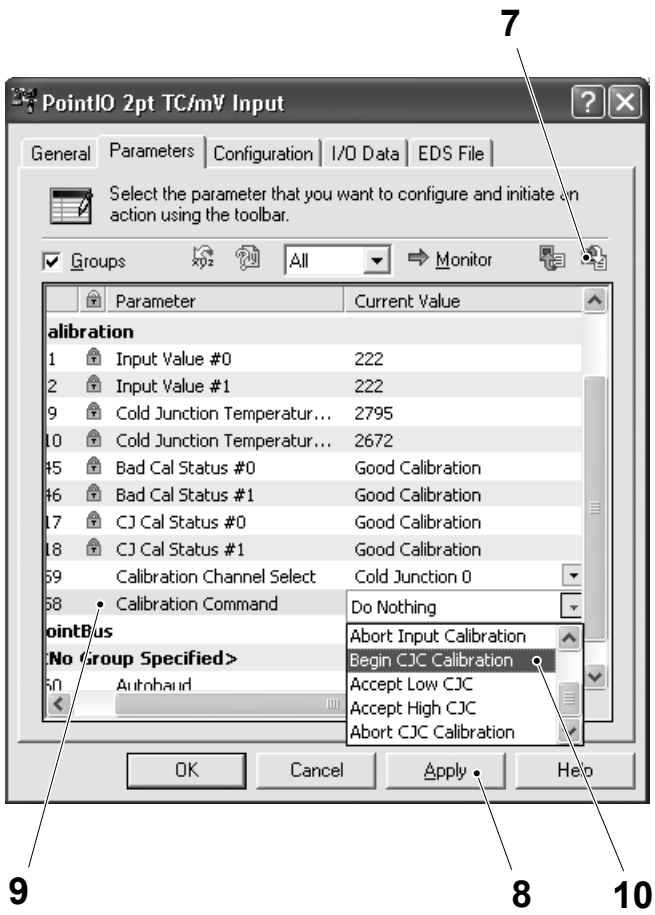

7 Download to device icon
8 Apply button
9 Calibration command
10 Drop down list

(Cont'd)

(Cont'd)

h) Use the precision resistor to apply 1000 ohm to the CJC channels being calibrated.

i) Select ACCEPT LOW CJC from the CALIBRATION COMMAND drop down list (10).

j) Click the DOWNLOAD TO DEVICE icon (7) or the APPLY button (8).

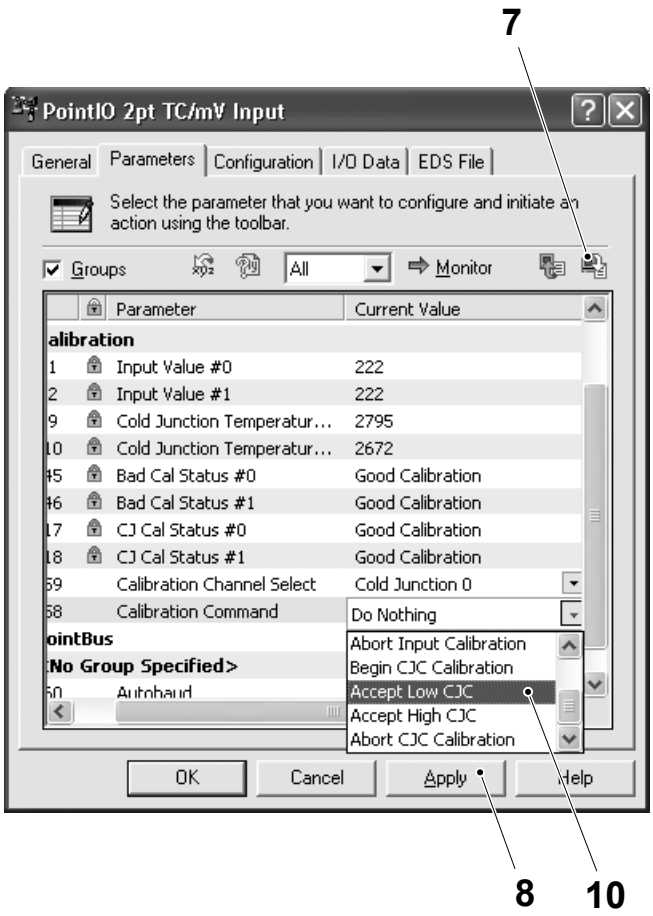

7 Download to device icon
8 Apply button
10 Drop down list

(Cont'd)

(Cont'd)

k) Use the precision resistor to apply 3000 ohm to the CJC channels being calibrated.

l) Select ACCEPT HIGH CJC from the CALIBRATION COMMAND drop down list (10).

m) Click the DOWNLOAD TO DEVICE icon (7) or the APPLY button (8).

n) Repeat steps above to calibrate the other channel if has been chosen to calibrate one channel at a time. The calibration is complete when both high and low inputs have been accepted for both channels.

Note! If an error has occurred during the calibration procedure select ABORT CJC CALIBRATION from the drop down list (10) to restore the previous calibration values.

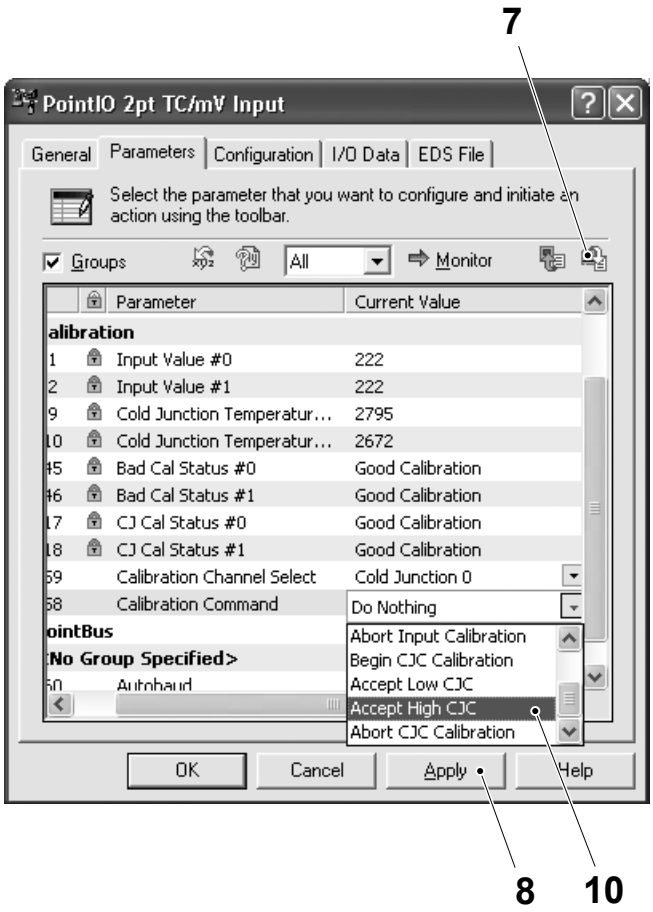

7 Download to device icon
8 Apply button
10 Drop down list

9.7.6.1 Calibrator

9.7.6.1-1 Calibrator - Set Fluke 714

Machine Status	Mains Power OFF Air OFF Steam ON Water OFF
Special Equipment	FLUKE 714 Calibrator TP No. 90458-0914

DANGER

Hazardous voltage.
Follow the safety information in the “Instruction Sheet” delivered with the calibrator.

Note! Turn ON the mains power at least 15 minutes before setting.

(Cont'd)

(Cont'd)

To Set the mV Output Value

a) Press the ON/OFF button (1) to switch on the calibrator.

b) Press the TC TYPE button (2) to show the indication mV (3) on the display.

c) Connect the calibrator to the thermocouple module through the connector (4) and a type K thermocouple cable.

d) Press the INPUT-OUTPUT button (5) to show OUTPUT (6) on the display.

e) Set the output voltage (7) with the buttons (8) and (9).

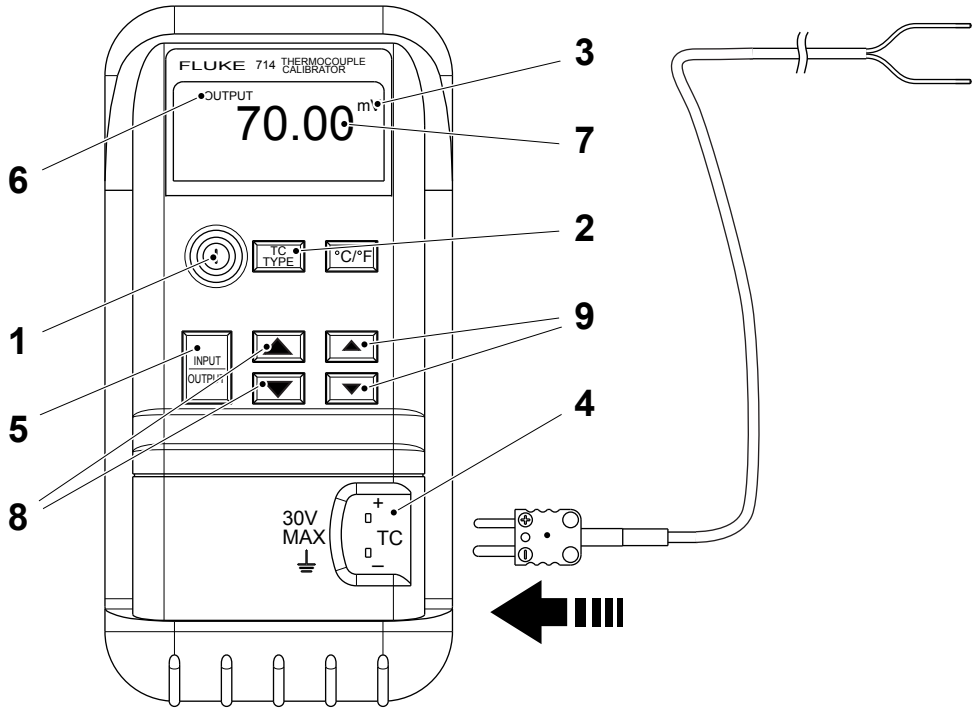

1 ON/OFF button
2 TC TYPE button
3 mV indicator
4 Calibrator connection
5 INPUT-OUTPUT button
6 INPUT-OUTPUT indicator
7 Voltage indicator
8 STEP UP/DOWN buttons 10 mV steps
9 STEP UP/DOWN buttons 0.01 mV steps

(Cont'd)

(Cont'd)

To Read a Temperature Value

a) Press the ON/OFF button (1) to switch on the calibrator.

b) Press the button (2) to toggle the indication °C or °F (3) on the display.

c) Press the TC TYPE button (4) to show the thermocouple TYPE K (5).

d) Connect the calibrator to the thermocouple TYPE K through the connector (6) and a type K thermocouple cable.

e) Press the INPUT-OUTPUT button (7) to show INPUT (8) on the display. Actual temperature (9) is shown.

For further information on the calibrator, see the “Instruction Sheet” delivered with the calibrator.

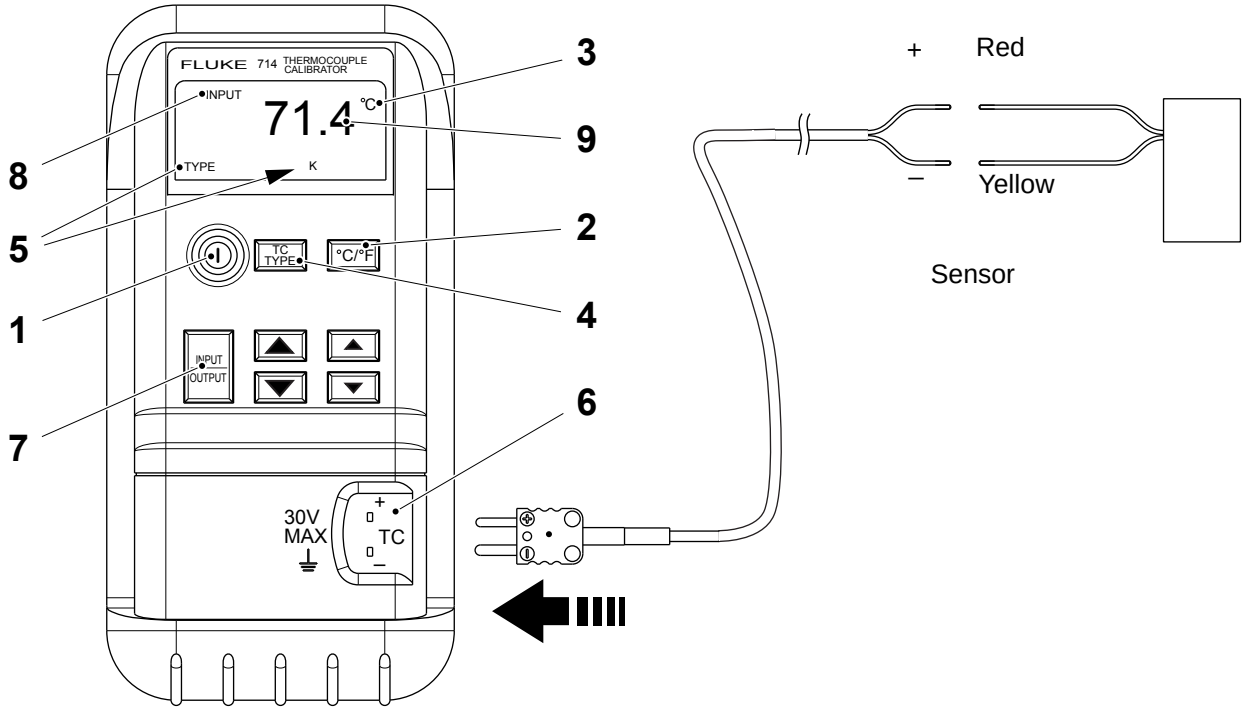

1 ON/OFF button
2 °F or °C button
3 °F or °C indicator
4 TC TYPE button
5 Thermocouple type
6 Calibrator connection
7 INPUT-OUTPUT button
8 INPUT-OUTPUT indicator
9 Temperature indicator

9.7.6.1-2 Calibrator - Set Micromite II

Machine Status	Mains Power OFF Air OFF Steam ON Water OFF
Special Equipment	Micromite II Calibrator TP No. 90410-0338

Note! Make sure that the Micromite II is switched OFF before disconnecting the AC-adapter or removing the batteries. Failure to do so will cause the instrument to lose the set-up information.

Note! Turn ON mains power at least 15 minutes before setting.

(Cont'd)

(Cont'd)

To Set a mV Output Value

a) Turn ON the mains power.

b) Connect the + input (1) (yellow lead) and the - input (2) (red lead) of the calibrator to the thermocouple module through a type K thermocouple cable.

c) Press the ON/OFF key (3) to switch ON the instrument.

d) Press the SELECT key (4) and the SENSOR key (5).

e) Move the flashing cursor to the right or to the left by pressing the UP (6) or DOWN (7) keys to select the mV option.

f) Press the ENTER key (8) when the cursor is indicating mV.

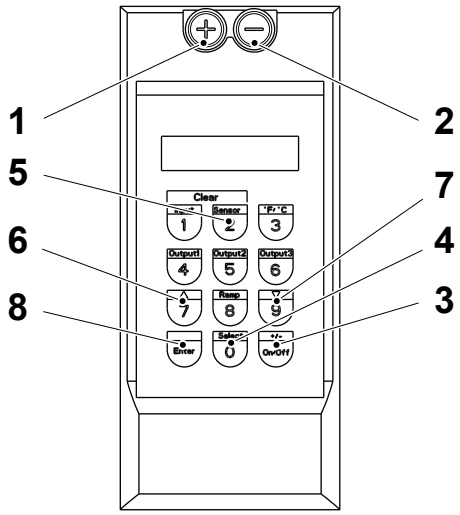

1 Input (+)
2 Input (-)
3 On/Off key
4 Select key
5 Sensor key
6 Up key
7 Down key
8 Enter key

(Cont'd)

(Cont'd)

g) Press the SELECT key (4) and the OUTPUT 1 key (9) to set the output voltage.

h) Use the numeric keys to type the voltage value and press the ENTER key (8).

i) To clear an output value, simultaneously press the INPUT key (10) and the SENSOR key (5).

To Read a Temperature Value

a) Turn ON the mains power.

b) Connect the type K thermocouple to the + input (1) (yellow lead) and to the - input (2) (red lead).

c) Press the ON/OFF key (3) to switch ON the instrument.

d) Press the F/C key (11) to select “centigrade”.

e) Press the SELECT key (4) and the SENSOR key (5).

f) Move the flashing cursor to the right or to the left by pressing the UP (6) or DOWN (7) keys to select the thermocouple type.

g) Press the ENTER key (8) when the cursor is indicating TYPE K.

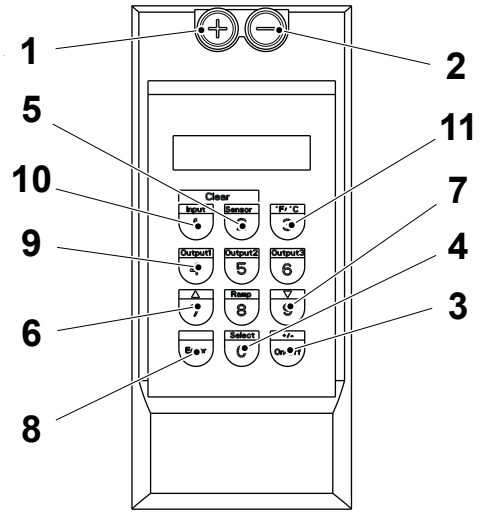

1 Input (+)
2 Input (-)
3 On/Off key
4 Select key
5 Sensor key
6 Up key
7 Down key
8 Enter key
9 Output 1 key
10 Input key
11 F/C key

9.7.7 Thermocouples

9.7.7-1 Thermocouples - Check

Machine Status	Mains Power OFF Air OFF Steam ON Water OFF
Special Equipment	Calibration Oven TP No. 90410-0337 Extension Wire TP No. 90410-0309
SPC Reference	90031-0065

Note! This check must be done when a temperature regulator is changed or at least once a year.

(Cont'd)

(Cont'd)

a) Turn ON the oven by connecting the mains plug.

b) Press the FUNC key (2) to select the Set-up mode, indicated by a flashing SP on the calibrator display (1).

c) Use the UP (3) or DOWN (4) keys to set the temperature value at 100°C.

Note! Pressing the key once changes the value by 0.1°C. Pressing the key for at least two seconds makes the temperature value change more quickly.

d) Press the FUNC key (2) again to select RUN MODE. The oven is now ready for measuring operations.

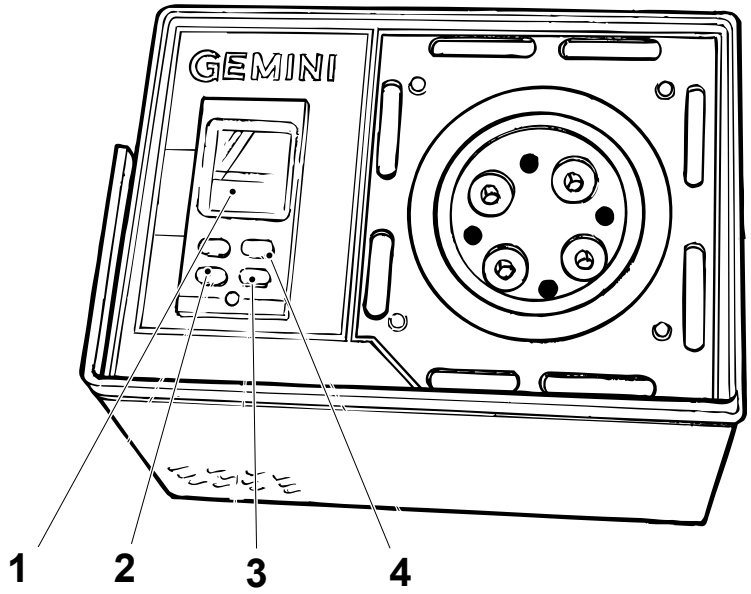

1 Display
2 Func key
3 Up key
4 Down key

(Cont'd)

(Cont'd)

e) Detach the machine thermocouple and place it in one of the cavities (5) in the oven.

f) Place the calibrated thermocouple (to be found in the calibration kit) in an adjacent cavity of the oven (6). Make sure that the two thermocouples are inserted to an equal depth in the oven.

Note! Before calibration, be sure that the calibrator already is set, see 9.7.6.1-1 Calibrator - Set Fluke 714.

g) Use the extension wire to connect the calibrator to the thermocouple from the machine. Note the temperature reading on the display.

h) Connect the calibrator to the calibrated thermocouple. Note the temperature reading on the calibrator display.

i) Obtain the correction value for the calibrated thermocouple
   - thermocouple fault plus Micromite II fault (from the Pentronic Calibration Certificate)
   - thermocouple fault plus FLUKE 714 fault.

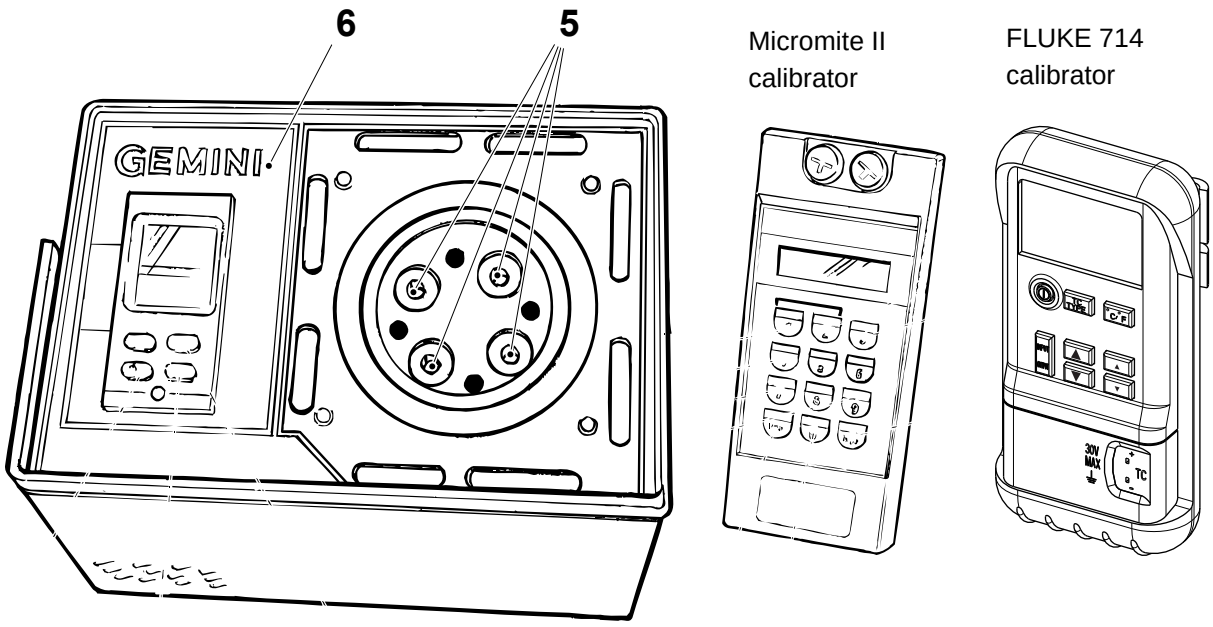

5 Cavity
6 Oven

(Cont'd)

(Cont'd)

j) When the value of the machine thermocouple deviates by more than ± 1.1°C from the value of the calibrated thermocouple, change the machine thermocouple.

k) On completion of the measurement, leave the oven on and allow it cool by setting the temperature value to 0. This cools the oven more quickly.

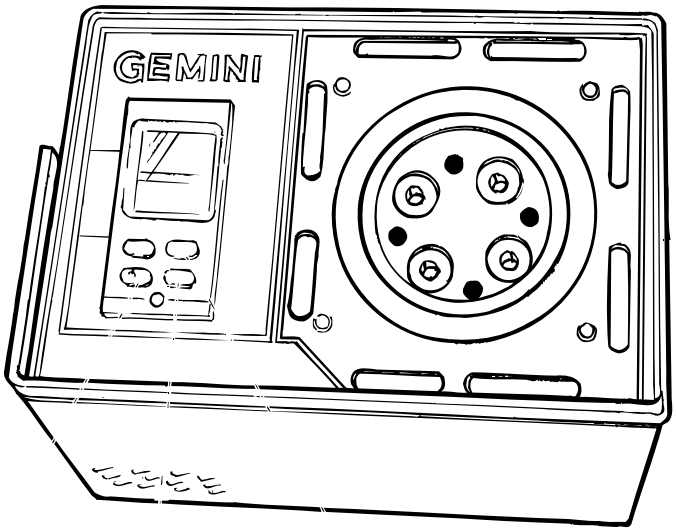

Micromite II calibrator

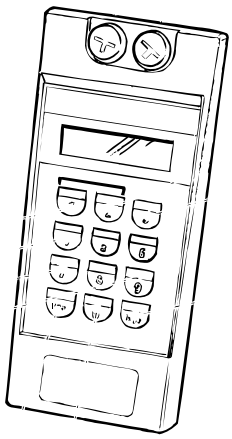

FLUKE 714 calibrator

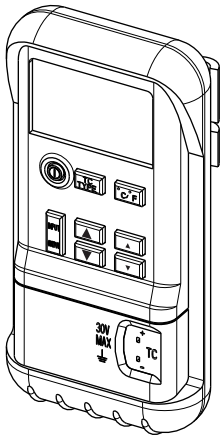

9.8 TMCC2 Controller

SPC Reference	2849071-0100

9.8-1 TMCC2 Controller - Description

SPC Reference	2849071-0100

The Tetra Pak Multi-purpose Compact Controllers (TMCC2) in the electrical cabinet are used to control and monitor the photocells, that are part of the packaging material positioning system and to monitor the sealing process.

TMCC2 Card A01K5200 (Photocells Decoder)

Introduction

The TMCC2 card A01K5200 is a microprocessor card that has the following functions:

- reads the ASU and DCS register marks and gives the signal to the PLC for controlling the position of the paper
- reads up to four fast input signals (like paper splice sensor) converting it to a longer pulse readable by the PLC
- implements a DeviceNet communication in order to take part to the machine communication network.

The program parameterization and some of the I/O signals (the not time critical ones) are performed by means this communication protocol.

(Cont'd)

(Cont'd)

Photocells Decoder Program Overview

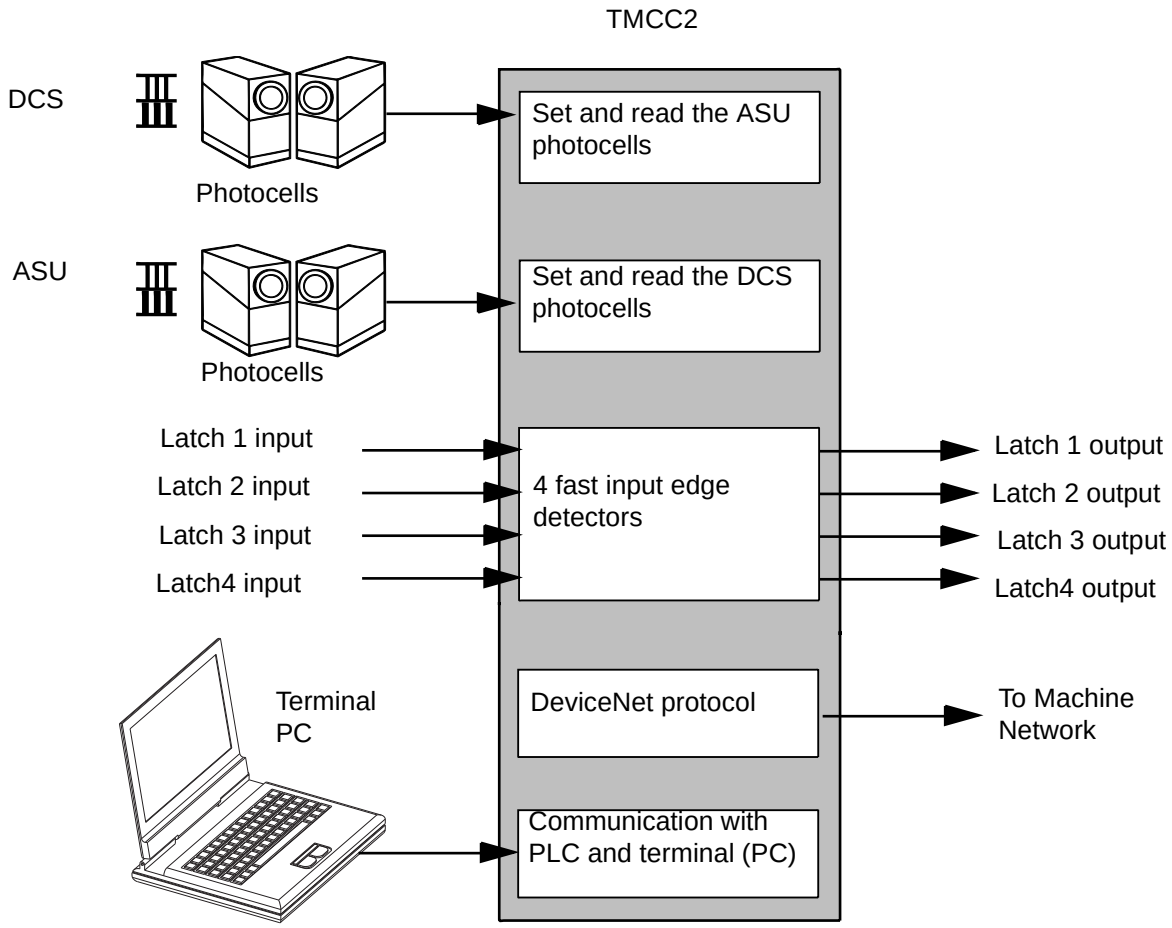

(Cont'd)

(Cont'd)

Buttons and Display

The buttons (1) and the display (2) located on the front panel of the TMCC2 card A01K5200 are used to select one of several program functions.

The display (2) is used for the following purposes:

- when the TMCC2 is idle the display (2) shows program information
- when the TMCC2 is working the display (2) is used as LEDs to display the operation of the TMCC2
- when a button (1) is pushed, the display (2) is used to navigate through a menu structure allowing the TMCC2 to be set up.

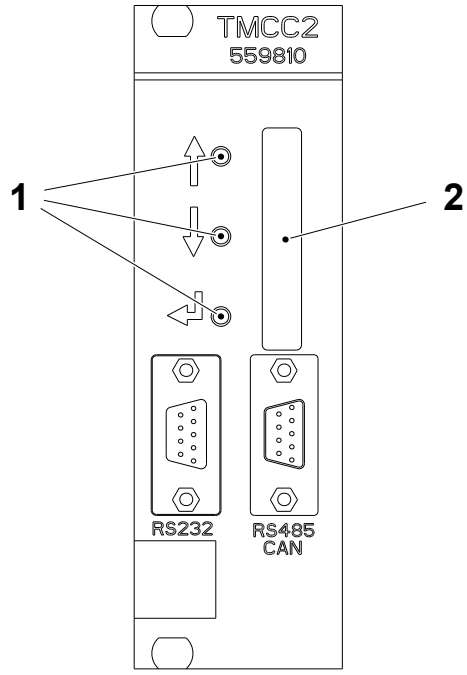

1 Button
2 Display

(Cont'd)

(Cont'd)

When the communication with the photocells fails an error message is displayed as follows:

ASU 3 Bars Ph. failure	Photocells fault
ASU 4 Bars Ph. failure	Photocells fault
ASU 3 Bars and ASU 4 Bars Ph. failure	Photocells fault
DCS 3 Bars Ph. failure	Photocells fault
DCS 3 Bars and ASU 3 Bars Ph. failure	Photocells fault
DCS 3 Bars and ASU 4 Bars Ph. failure	Photocells fault
DCS 3 Bars, ASU 3 Bars and ASU 4 Bars Ph. failure	Photocells fault
DCS 4 Bars Ph. failure	Photocells fault
DCS 4 Bars and ASU 3 Bars Ph. failure	Photocells fault
DCS 4 Bars and ASU 4 Bars Ph. failure	Photocells fault
DCS 4 Bars, ASU 3 Bars and ASU 4 Bars Ph. failure	Photocells fault
DCS 3 Bars and DCS 4 Bars Ph. failure	Photocells fault
DCS 3 Bars, DCS 4 Bars and ASU 3 Bars Ph. failure	Photocells fault
DCS 3 Bars, DCS 4 Bars and ASU 4 Bars Ph. failure	Photocells fault
All photocells failure	Photocells fault
On Line, but no connections in the unstablished state	DeviceNet communication fault
One or more I/O connections are in Timed-Out state	DeviceNet communication fault
A3PH program incapable of communicating on the network	DeviceNet communication fault
A3PH not On Line	DeviceNet communication fault

(Cont'd)

(Cont'd)

LED Display

The display, used as LEDs, provides the following information when the machine is in the normal PRODUCTION mode.

Card A01K5200		
LED	**Function**	**Description**
1	Register mark ASU	ASU register mark signal, the flash is approx. 40 ms
2	Register mark DCS	DCS register mark signal, the flash is approx. 40 ms
3	ASU photocells fault	
4	DCS photocells fault	
5	Splice detector ASU	Flashes when latch 1 pulse is activated
6	Splice detector SS	Flashes when latch 2 pulse is activated
7	Not used	
8	Not used	

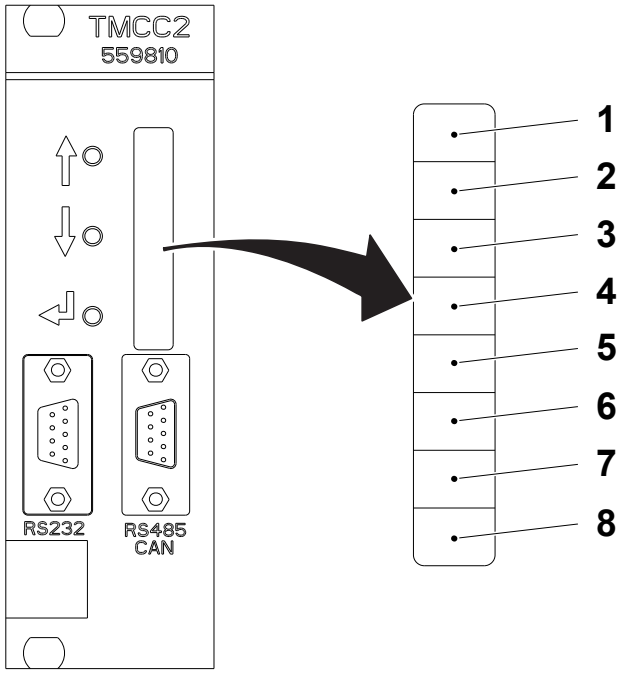

1 Register mark ASU
2 Register mark DCS
3 ASU photocells fault
4 DCS photocells fault
5 Splice detector ASU
6 Splice detector SS
7 Not used
8 Not used

(Cont'd)

(Cont'd)

Menu System

Pushing any button on the TMCC2 card A01K5200 enters the first level of the menu. The ARROW buttons are then used to select an item and the ENTER button to access the submenus of that item.

Card A01K5200				
Menu level				
1	2	3	4	Description
SPOT COL				Spot color menu
	GREEN			Select green spot color
	BLUE			Select blue spot color
	RED			Select red spot color
	BACK			Exit from spot color menu
DYN.TH.				Dynamic threshold menu
	PTH=xxh			Change dynamic threshold setting
CALIB.				Manual calibration menu
	USE CAL.			Use manual calibration
	RUN CAL.			Run manual calibration
	BACK			Exit manual calibration menu
ASU PLS				ASU pulse length menu
	PL=xx			Change ASU pulse length
LATCH 1				Latch 1 input menu
	CONFIG			Config. Latch 1 input
		xxxxxxxx		Change Latch 1 configuration
	PLS LEN			Latch 1 pulse length
		PL=xx		Change Latch 1 pulse length
	BACK			Exit from Latch 1 input menu
LATCH 2				Latch 2 input menu
	CONFIG			Config. Latch 2 input
		xxxxxxxx		Change Latch 2 configuration
	PLS LEN			Latch 2 pulse length
		PL=xx		Change Latch 2 pulse length
	BACK			Exit from Latch 2 input menu

(Cont'd)

(Cont'd)

Card A01K5200				
Menu level				
1	2	3	4	Description
LATCH 3				Latch 3 input menu
	CONFIG			Config. Latch 3 input
		xxxxxxxx		Change Latch 3 configuration
	PLS LEN			Latch 3 pulse length
		PL=xx		Change Latch 3 pulse length
	BACK			Exit from Latch 3 input menu
LATCH 4				Latch 4 input menu
	CONFIG			Config. Latch 4 input
		xxxxxxxx		Change Latch 4 configuration
	PLS LEN			Latch 4 pulse length
		PL=xx		Change Latch 4 pulse length
	BACK			Exit from Latch 4 input menu
MAC ID				MAC ID menu
	MACID=xx			Change Nod MAC ID
BACK				Exit from menu structure

System Data

A PC can be used to enter commands and parameters in the A3PH program and read data from the TMCC2, see 9.8-6 TMCC2 Controller - Display Report.

(Cont'd)

(Cont'd)

TMCC2 Card A01K5210 (Filling System)

Introduction

The TMCC2 card A01K5210 is a microprocessor card that reads the product flow and the product level inside the paper tube and calculates the output via a double PID-algorithm.

The output value drives the actuator composed by an I/P transducer and a regulating valve. Process specific parameters are sent from the PLC.

Filling Control System Overview

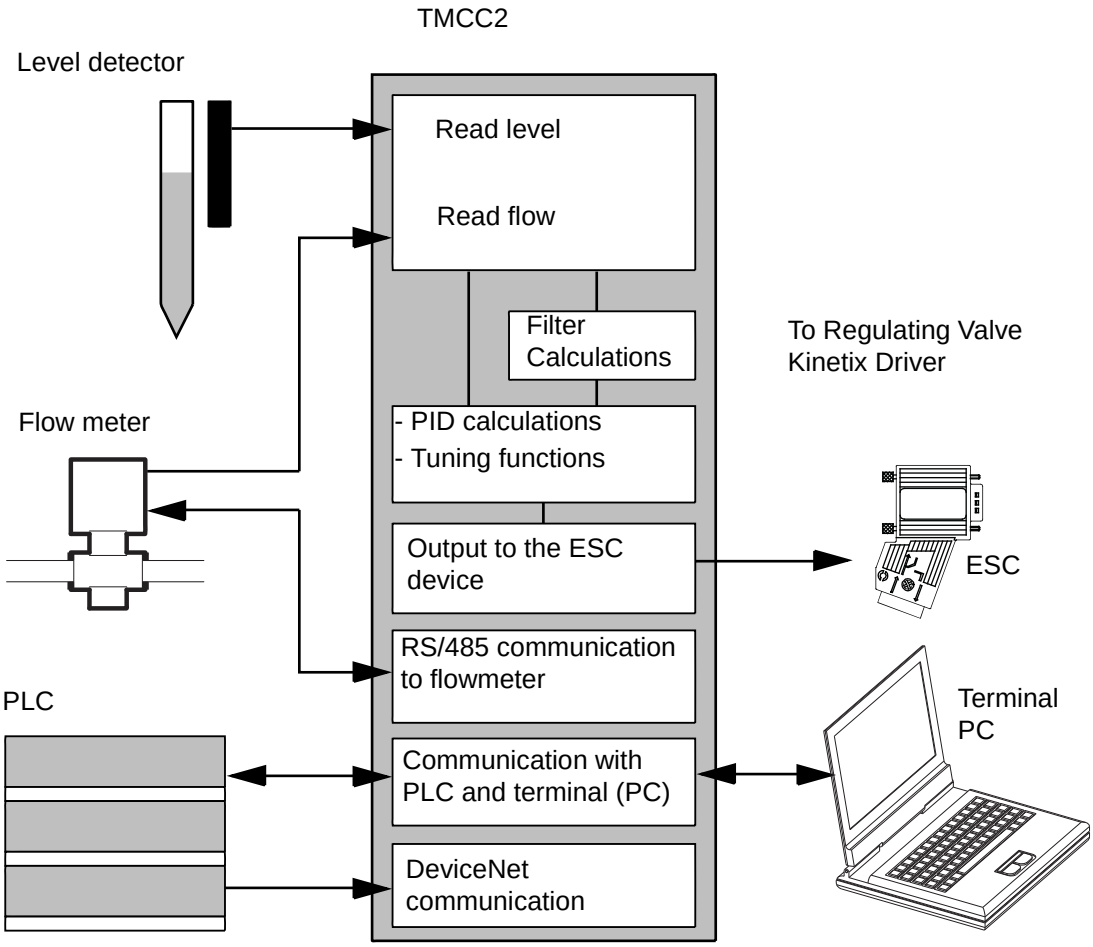

(Cont'd)

(Cont'd)

Buttons and Display

The buttons (1) and the display (2) located on the front panel of the TMCC2 card A01K5210 are used to select one of several program functions.

The display (2) is used for the following purposes:

- when the TMCC2 is idle the display (2) shows program information
- when the TMCC2 is working the display (2) is used as LEDs to display the operation of the TMCC2
- when a button (1) is pushed, the display (2) is used to navigate through a menu structure allowing the TMCC2 to be set up.

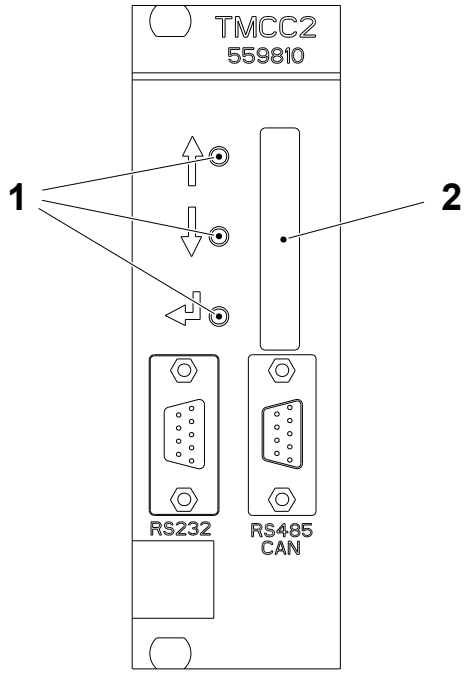

1 Button
2 Display

(Cont'd)

(Cont'd)

LED Display

The display, used as LEDs, provides the following information when the machine is in the normal PRODUCTION mode.

Card A01K5210		
LED	**Function**	**Description**
1	Production	Always ON during PRODUCTION.
2	Cleaning	Always ON during CLEANING.
3	Sterilization	Always ON during STERILISATION.
4	Fixed char	“V“
5	Level	*
6	Level	*
7	Level	*
8	Level	*

*) The level is shown on the display by using four display characters. Every character is divided into five rows, making the total number of rows 20. Every row therefore shows 5% of the level.

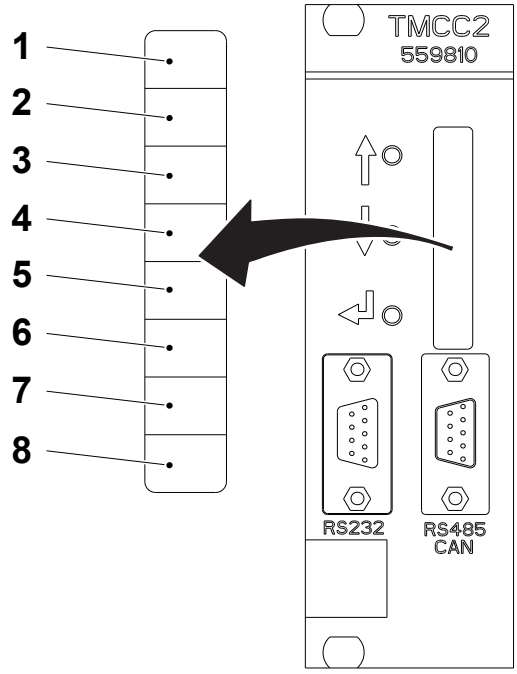

1 Production
2 Cleaning
3 Sterilisation
4 Fixed Char “V“
5 Level
6 Level
7 Level
8 Level

(Cont'd)

(Cont'd)

Menu System

Pushing any button on the TMCC2 card A01K5210 enters the first level of the menu. The ARROW buttons are then used to select an item and the ENTER button to access the submenus of that item.

Card A01K5210				
Menu level				
1	**2**	**3**	**4**	**Description**
MONITOR				Selects what data to monitor
	LEVEL			Monitors the level
	FILT LEV			Monitors the filtered level
	FLOW			Monitors the flow
	OUTPUT			Monitors the output
	BACK			Back to level 1
SETTING				Sets the filling system parameters
	FILL OK			Filling OK window menu
		WIND=±XX%		Sets the filling window*
	FLOW PID			Sets the flow PID
		P CONST		Sets the flow proportional constant value
			P = XX	Sets the P value
		I CONST		Sets the flow integral constant value
			I = XX	Sets the I value
		D CONST		Sets the flow derivative constant value
			D = XX	Sets the D value
		BACK		Back to level 2
	LEV PID			Sets the level PID
		P CONST		Sets the level proportional constant value
			P = XX	Sets the P value
		BACK		Back to level 2
	BACK			Back to level 1

*) This value can be changed by using the up and down arrow keys on the TMCC2 front panel.

(Cont'd)

(Cont'd)

Card A01K5210				
Menu level				
1	**2**	**3**	**4**	**Description**
FORCE				Forcing Menu
	OUTPUT			Forces the output value to the I/P transducer
		O=XX		Sets the forced output value
	BACK			Back to level 1
E.PIPE				Empty pipe detection menu
	E.P.DET			Turns ON or OFF the empty pipe detection function
		EPD = XX		Sets the ON or OFF value**
	E.P.TH			Empty pipe detection threshold
		T = XXXX Hz		Sets the empty pipe detection threshold value. Maximum value is 3000Hz
	BACK			Back to level 1
BACK				Exit menu

**) The empty pipe detector by default is set to ON with a threshold value of 3000 Hz, which is the maximum value that can be set. With this threshold value the flowmeter can read flows with a minimum conductivity of 30 to 35 μS/cm.

If water with a lower conductivity is used, the empty pipe detector must be set to OFF. In this way the flowmeter will read flows with a minimum conductivity of 5 μS/cm.

(Cont'd)

System Data

A PC can be used to enter commands and parameters in the FCSFA3 program and read data from the TMCC2, see 9.8-6 TMCC2 Controller - Display Report.

(Cont'd)

(Cont'd)

TMCC2 card A01K5220 (Sealing Monitoring)

Introduction

The TMCC2 card A01K5220 is a microprocessor card that monitors the sealing processes.

These processes are Transversal Sealing (TS), Longitudinal Sealing (LS), Strip Application (SA), Pull-Tab application (PT & PT High Speed).

The system detects incorrect sealing conditions and warns the operator. The TMCC2 communicates with the TPIH2500 generator via the CAN bus. Before the CAN communication can be used it must be set up, see 9.9.1-7 IH Equipment - Set CAN Communication.

(Cont'd)

(Cont'd)

Monitoring System Overview

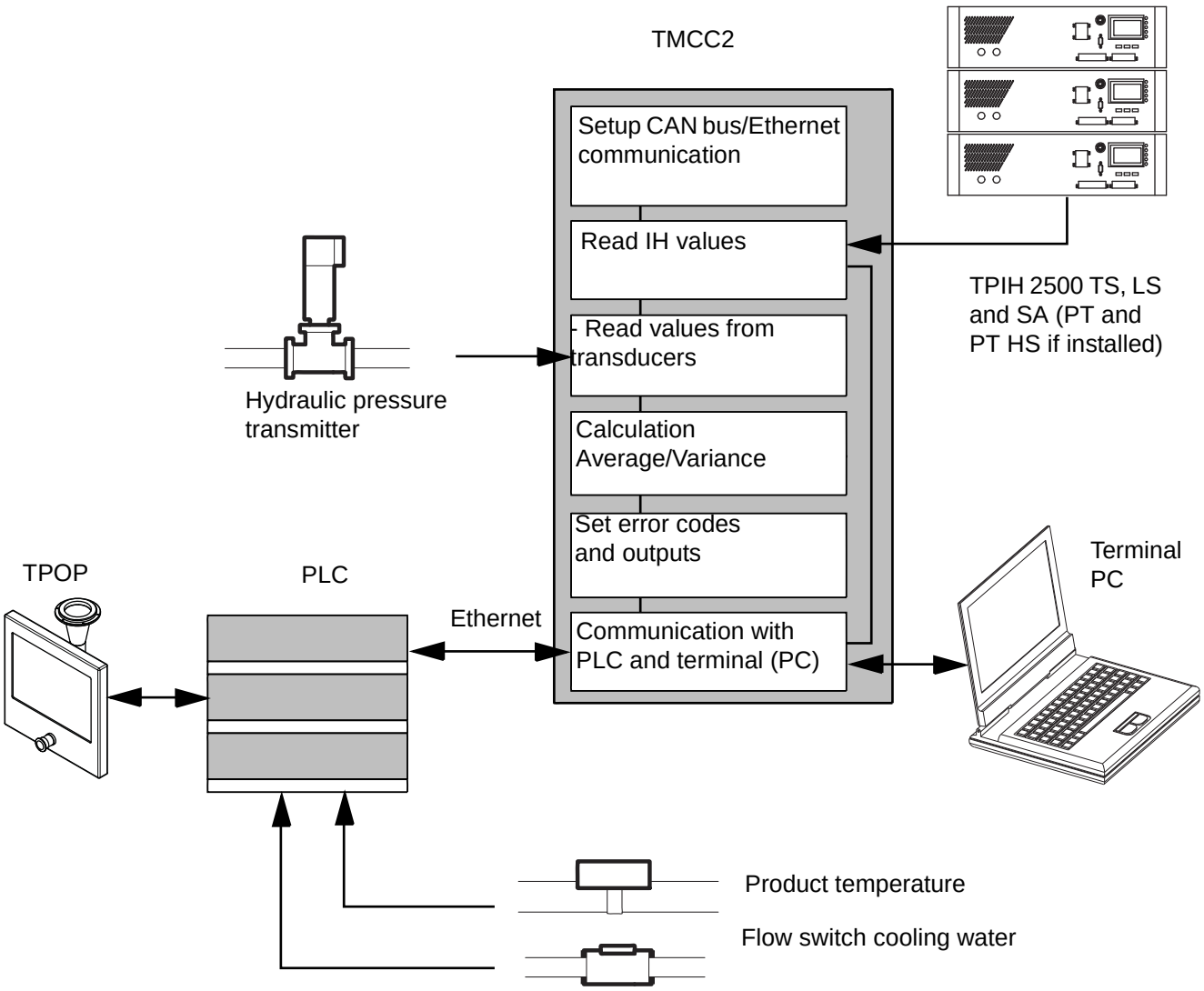

(Cont'd)

(Cont'd)

The SM is executed on the TMCC2 board and the parameters acquired are:

- voltage, current and phase angle from the TPIH generators
- power setting and status/errors from the TPIH generators
- product temperature and inductors cooling water flow status (Ethernet IP)
- hydraulic pressure during TS
- status and synchronization signals of the filling machine (Ethernet IP)

Communication between the TMCC2 and the PLC are implemented trough the Ethernet IP connection. Digital outputs of the TMCC2 are available to communicate the error conditions to PLC but normally not used.

Various information regarding the sealing process are available during production and off-line on the TMCCs RS232 port.

System Data

A PC can be used to enter commands and parameters in the SM program and read data from the TMCC2, see 9.8-6 TMCC2 Controller - Display Report.

(Cont'd)

(Cont'd)

TMCC2 Card A01K5240 (Splice Detector)

Introduction

The TMCC2 card A01K5200 is a microprocessor card that has the following functions:

- reads two analog inductive sensors, placed in the SS and SA, in order to detect the paper splices.
- implements a DeviceNet communication protocol in order to take part to the machine communication network

The program parameterization and some of the I/O signals (the not time critical ones) are performed by means this communication protocol.

Splice Detector Program Overview

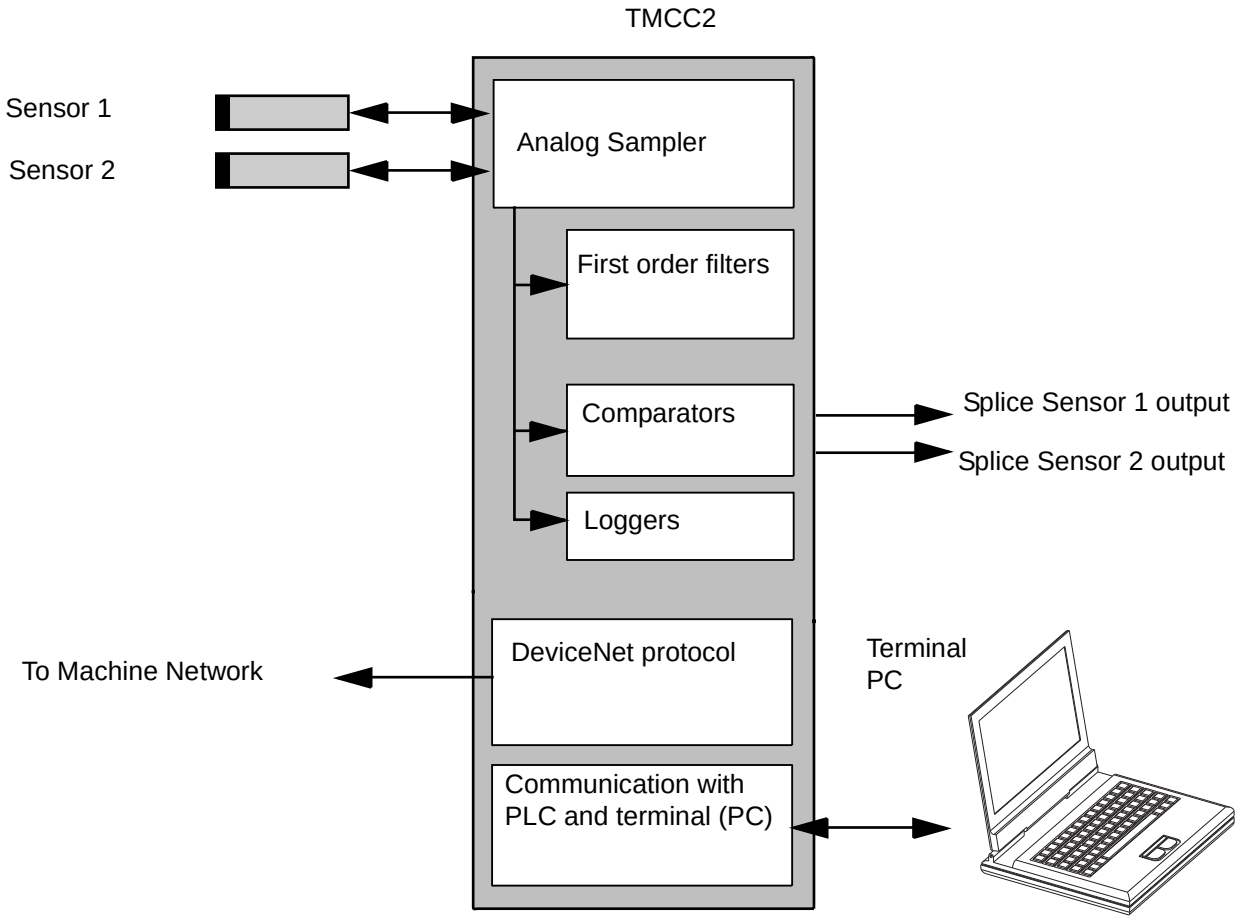

(Cont'd)

(Cont'd)

Buttons and Display

The buttons (1) and the display (2) located on the front panel of the TMCC2 card A01K5240 are used to select one of several program functions.

The display (2) is used for the following purposes:

- when the TMCC2 is idle the display (2) shows program information
- when a splice is detected the display (2) shows the following messages for three seconds:

  `*SD 1*` when splice detector 1 have found a paper splice

  `*SD 2*` when splice detector 2 have found a paper splice.
- when a button (1) is pushed, the display (2) is used to navigate through a menu structure allowing the TMCC2 to be set up.

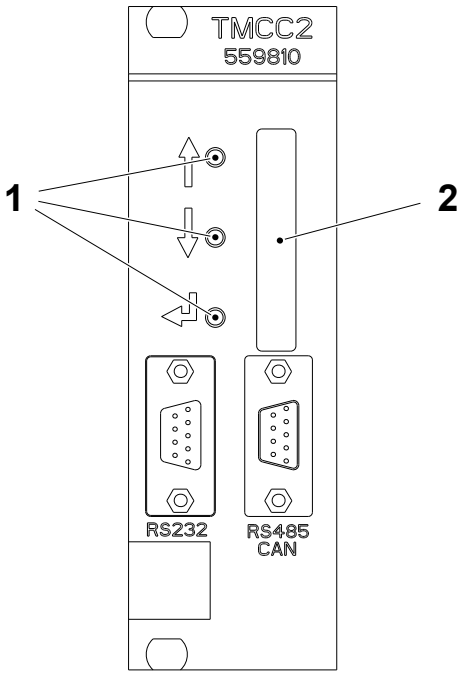

1 Button
2 Display

(Cont'd)

(Cont'd)

Menu System

Pushing any button on the TMCC2 card A01K5240 enters the first level of the menu. The ARROW buttons are then used to select an item and the ENTER button to access the submenus of that item.

Card A01K5240				
Menu level				
1	2	3	4	Description
SENSOR 1				Sensor 1 menu
	DYN.TH.			Dynamic threshold
		X.XX V		Valid range is 0.00…9.99 V
	FILTER F			Filter cut-off frequency
		X.XXX Hz		Valid range is 0.005…9.999 Hz
	PULSE			Output pulse length
		XXXXX ms		Valid range is 5…16000 ms
	HOLD OFF			Hold off time
		XXXXX ms		Valid range is 5…16000 ms
	R/F EDGE			Configure the splice detector active edge
		YYYYYYYY		Can be RISING or FALLING
	OUTPUT			Configure the output type
		YYYYYYYY		Can be NORM. L or NORM. H
	BACK			Return from Sensor 1 submenu

(Cont'd)

(Cont'd)

Card A01K5240				
Menu level				
1	2	3	4	Description
SENSOR 2				Sensor 2 menu
	DYN.TH.			Dynamic threshold
		X.XX V		Valid range is 0.00…9.99 V
	FILTER F			Filter cut-off frequency
		X.XXX Hz		Valid range is 0.005…9.999 Hz
	PULSE			Output pulse length
		XXXXX ms		Valid range is 5…16000 ms
	HOLD OFF			Hold off time
		XXXXX ms		Valid range is 5…16000 ms
	R/F EDGE			Configure the splice detector active edge
		YYYYYYYY		Can be RISING or FALLING
	OUTPUT			Configure the output type
		YYYYYYYY		Can be NORM. L or NORM. H
	BACK			Return from Sensor 2 submenu
MAC ID				Changes the MAC ID address
	MACID=*XX*			Valid range is 0…63
BACK				Exit from the menu structure

System Data

A PC can be used to enter commands and parameters in the A3SD program and read data from the TMCC2, see 9.8-6 TMCC2 Controller - Display Report.

9.8-2 TMCC2 Controller - Set Communication

Machine Status	PRODUCTION
Special Equipment	RS 232-C Communication Cable AT Compatible PC with CD Drive
SPC Reference	2849071-0100

Note! The following procedure should be used to communicate with a TMCC2 card.

Connect the TMCC2 to a PC with the connection cable (1). The connections required are:

PC 9-pin female	**TMCC2 9-pin male**
2	3
3	2
5	5

Note! Do not connect any other pin.

Set up the program to use, e.g. Windows Hyper Terminal as follows:

Baud rate	9600
Parity	None
Bits	8
Stop bits	1
Flow control	None

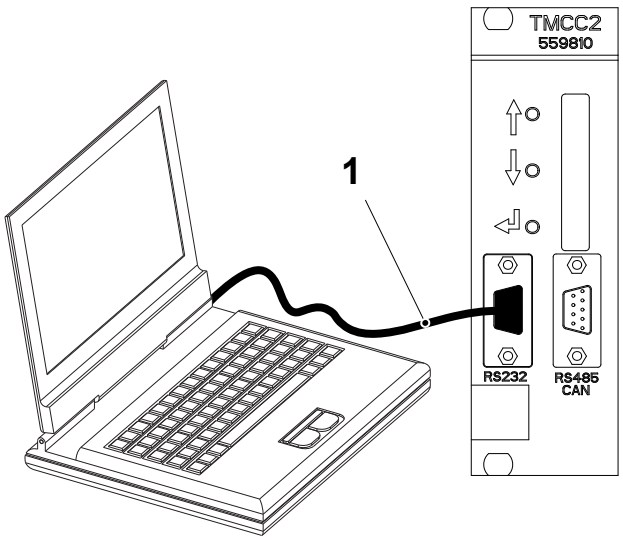

1 Connection cable

9.8-3 TMCC2 Controller - Load Program

Machine Status	PREPARATION
Special Equipment	RS 232-C Communication Cable AT Compatible PC with CD Drive
SPC Reference	2849071-0100

CAUTION
Risk of damage to the equipment.
Do not swap the TMCC2 cards because they contain different programs!

(Cont'd)

(Cont'd)

a) Locate the appropriate TMCC2 card in the electrical cabinet:
   - the card A01K5200 (1) is for the barcode readers in the ASU and DCS
   - the card A01K5210 (2) is for the filling system
   - the card A01K5220 (3) is for the sealing monitoring.
   - the card A01K5240 (4) is for the splice detector.

b) Configure a PC to be used as a hyperterminal and connect it to the TMCC2, see 9.8-2 TMCC2 Controller - Set Communication.

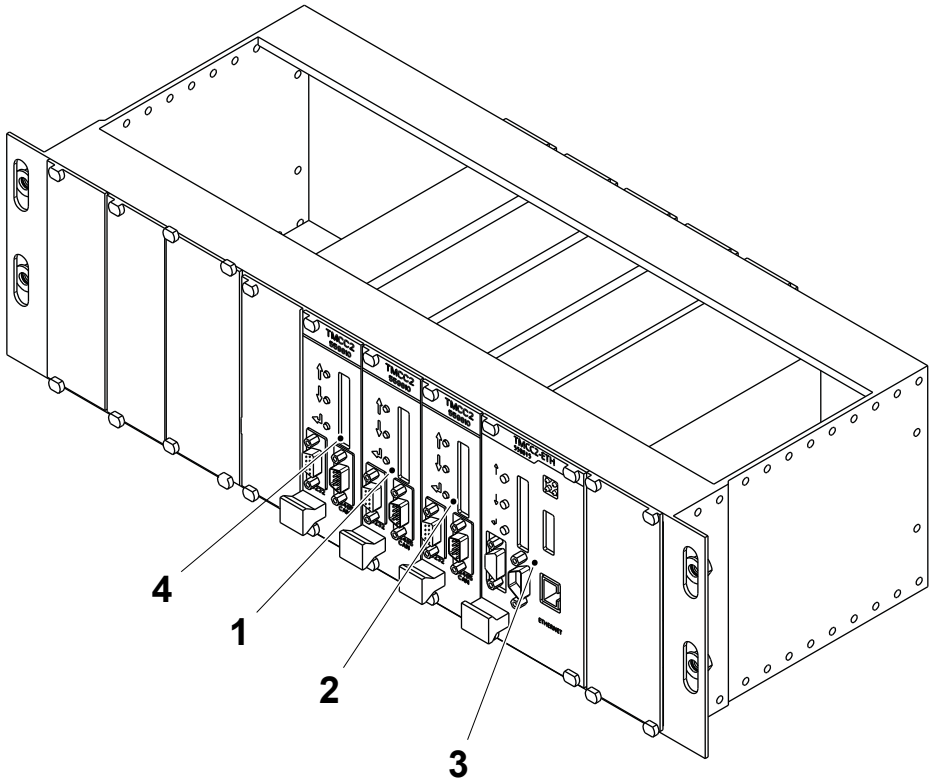

1 Card A01K5200
2 Card A01K5210
3 Card A01K5220
4 Card A01K524

(Cont'd)

(Cont'd)

c) Connect the communication cable between the PC and the TMCC2 front panel connector.

d) Type `Stop` and press the ENTER key.

e) Insert the CD marked SOFTW_CD_A3_F into the CD drive of the PC.

f) Type `E flash` and press the ENTER key.

g) When the TMCC2 prompt appears ("TMCC2->"), type `D` and press the ENTER key.

h) Select the menu `TRANSFERS` and the menu item `SEND TEXT FILE`.

i) Browse to the software CD and locate the file to be downloaded:
   - for the card A01K5200, locate the file `TMCC A3PH\xxxxxxx.100x.mhx`
   - for the card A01K5210, locate the file `TMCC FCSFA3\xxxxxxx.100x.mhx`
   - for the card A01K5220, locate the file `TMCC SM\xxxxxxx.100x.mhx`
   - for the card A01K5240, locate the file `TMCC SD\xxxxxxx.100x.mhx`

j) The download progress is displayed with dots on the screen.

k) At the TMCC2 prompt type `Run` and press the ENTER key.

l) Press the S key to verify the downloaded programs status.

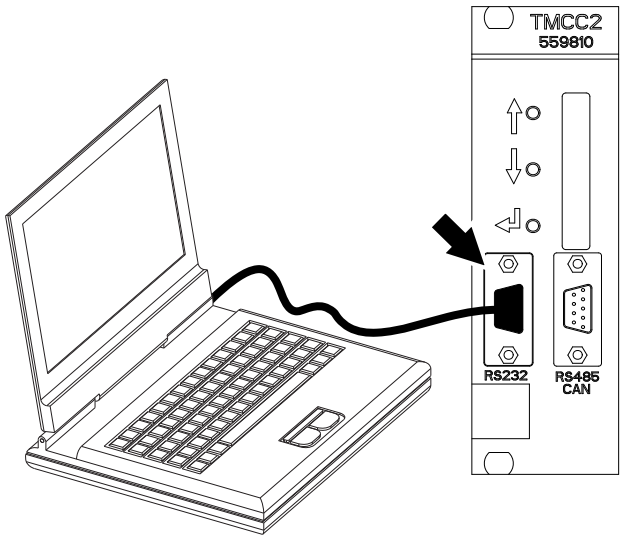

9.8-4 TMCC2 Controller - Photocells Manual Setting

Machine Status	Mains Power ON Air OFF Steam ON Water OFF
SPC Reference	2849071-0100

DCS Photocells

If errors occur after the photocell colour and sensitivity setting, set the photocells manually as described below:

a) Press any of the buttons on the TMCC2 card.

b) Use the ARROW buttons to select CONF? Y and press the ENTER key.

c) Use the ARROW buttons to select CALIB. and press the ENTER key.

d) Use the ARROW buttons to select RUN CAL. and press the ENTER key. This sets the photocells to teaching mode.

e) Move the packaging material until the photocell light spot is focused on a white part of the packaging material.

f) Press and hold the TEACH button (1).

g) Move the packaging material until the complete barcode has passed in front of the photocell and then release the TEACH button (1). The cell automatically calibrates itself.

Note! The LED (2) is lit when the photocell light spot is focused on a dark area of the packaging material.

h) Repeat the items e), f) and g) for the other photocell.

i) Use the ARROW buttons to select USE CAL. to send the taught values to all photocells.

j) Exit the menu on the TMCC2.

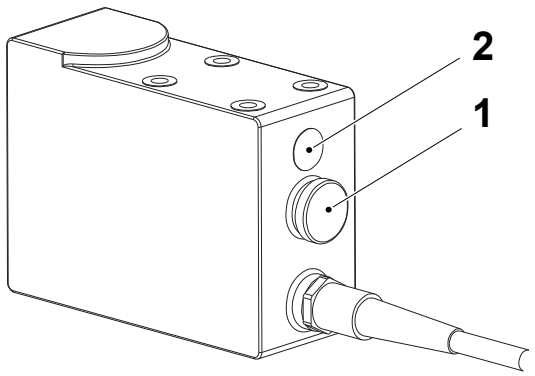

1 Teach button
2 LED

(Cont'd)

(Cont'd)

ASU Photocells

If errors occur after the photocell colour setting, set the photocells manually as described below:

a) Press any of the buttons on the TMCC2 card.

b) Use the ARROW buttons to select CONF? Y and press the ENTER button.

c) Use the ARROW buttons to select CALIB. and press the ENTER button.

d) Use the ARROW buttons to select RUN CAL. and press the ENTER button. This sets the photocells to teaching mode.

e) Make sure that the switch (1) is set to the position Q1.

f) Move the packaging material until the photocell spot is focused on a white part of the packaging material.

g) Push and hold the TEACH button (2).

h) Move the packaging material until the complete barcode has passed in front of the photocell and then release the TEACH button (2). The photocell automatically calibrates itself.

Note! The ON LED (3) is lit when power is supplied to the photocell. The LED (4) is lit when the photocell spot is focused on a dark area of the packaging material.

i) Repeat the steps from e) *to* h) for the other photocell.

j) Use the ARROW buttons to select USE CAL. and press the ENTER button.

k) Exit the menu on the TMCC2 card.

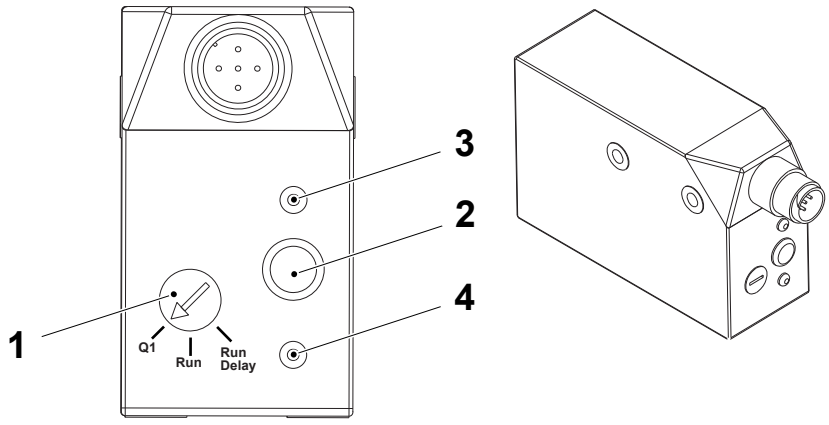

1 Switch
2 Teach button
3 ON LED
4 Q/ok LED

(Cont'd)

9.8-5 TMCC2 Controller - Set Filling Window

Machine Status	Mains Power ON Air OFF Steam ON Water OFF
SPC Reference	2849071-0100

TMCC2 A01K5210 (Filling System)

The suggested filling window amplitude is 30%.

a) Press any of the buttons on the TMCC2 A01K5210 (Filling system) card.

b) Use the arrow buttons (1) to select SETTING and press the ENTER button (2).

c) Use the arrow buttons (1) to select FILL OK and press the ENTER button (2).

d) Use the arrow buttons (1) to set a filling window amplitude and store the value by pressing the ENTER button (2).

e) Exit the menu on the TMCC2 A01K5210 (Filling system).

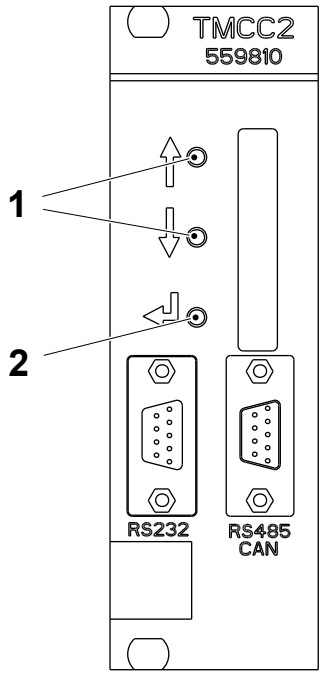

1 Arrow button
2 Enter button

9.8-6 TMCC2 Controller - Display Report

Machine Status	PRODUCTION
Special Equipment	TMCC2 Communication Cable AT Compatible PC
SPC Reference	2849071-0100

TMCC2 Card A01K5200 (Photocells Decoder)

Configure Windows Hyper Terminal on the PC and connect the PC to the TMCC2, see 9.8-2 TMCC2 Controller - Set Communication.

Enter the commands and parameters into the A3PH program via the keyboard and execute them by pressing the ENTER key. (The commands and parameters are not replicated on the terminal). The functions described below are available:

H Help Menu: displays the commands available.

L Description of the function of the display on the front panel.

S Shows the program status and if there is a failure of the photocells.

V Shows the program number and version

STOP Stops the A3PH program and enters the firmware. It is used when the application should be upgraded or in case a reset is necessary.

Y Displays a detailed status of the photocells for test and service purposes:

Commands OK:	Total number of commands executed by the photocells
Commands failed:	Total number of commands failed
Barcode decoded:	Total number of barcodes decoded by the TMCC2
Dynamic Threshold:	Photocell threshold
Light Spot:	Colour of the light spot used by the photocells
Output:	Logic of the photocell outputs (Light/Dark switching)
Photoswitch Working Hours	Number of hours that every LED of the photocell has been working
Photocell Software ver. / S.N.:	Software version of the photocell firmware and serial number

PTH=xx Changes the dynamic threshold value of the photocells. The value is a hexadecimal value ranging from 20_{16} to $F2_{16}$ stored in the EEPROM. High dynamic threshold values result in a lower photocell sensitivity.

(Cont'd)

(Cont'd)

TMCC2 card A01K5210 (Filling System)

Configure a PC to be used as Windows terminal and connect it to the TMCC2 (FCSFA3F), see 9.8-2 TMCC2 Controller - Set Communication.

Enter the commands and parameters into the FCSFA3 program via the keyboard and execute them by pressing the ENTER key. (The commands and parameters are not replicated on the terminal). The functions described below are available:

H Help Menu: displays the commands available.

S Shows the filling system status.

P <val> Changes the flow PID proportional parameter.

I <val> Changes the flow PID integral parameter.

D <val> Changes the flow PID derivative parameter.

U <val> Changes the level PID proportional parameter.

V <val> Changes the level PID integral parameter.

W <val> Changes the level PID derivative parameter.

M <val> Changes the cleaning PID proportional parameter.

N <val> Changes the cleaning PID integral parameter.

O <val> Changes the cleaning PID derivative parameter.

L <val> Changes the level setpoint. The value introduced is in the range 0-1000 that corresponds to 0-100%. It is restored to 60% at power or after a reset.

T <val> Changes the start up ramp time.

F <val> Force the analogue output value:

val=0 disables forcing

val=1..1000 forced value (0--10V)

(Cont'd)

(Cont'd)

R <val> Reporting ON/OFF. This command enables and disables the automatic reporting of the level, filtered level, flow set point, flow measure and output.

val=0 disable reporting

val=1 enable reporting in form of three columns on the screen of the terminal.

B <val> Changes the start flow percentage.

G <val> Changes the virtual level trigger.

Z Displays the flowmeter parameters.

SERVICE Displays the extra service commands help.

VER Displays the program number and version.

STOP Stops the application program and enters the firmware.

The extra service commands are:

FCLEAR restores the default flow meter configuration.

EPIPE <val> ON = Empty pipe detection activated, OFF = Empty pipe detection deactivated.

EPIPETH <val> Sets the empty pipe detection threshold, the default value is 2300 Hz and the maximum threshold is 3000 Hz which corresponds to the minimum conductivity level of the liquid.

(Cont'd)

(Cont'd)

TMCC2 Card A01K5220 (Sealing Monitoring)

Configure a PC to be used as Windows terminal and connect it to the TMCC2 (SM), see 9.8-2 TMCC2 Controller - Set Communication.

Enter the commands and parameters into the SM program via the keyboard and execute them by pressing the ENTER key. (The commands and parameters are not replicated on the terminal). The functions described below are available:

H Help Menu: displays the commands available.

A Shows one message over two on LS and SA reporting.

B <val> Set the max. power deviation allowed (20-200 W).

C Shows comments on data output.

D Toggle display report on RS232: ON/OFF.

E Shows last error condition.

J Send the jaw average values.

L Toggles display from TS, LS, SA or PT.

P <val> Set max. phase deviation (4-40 deg.).

R <val> Recall waveform: 0 last, 1 stored. This function could be used to retrieve the last samples of voltage, current and phase angle. The values are given already scaled in the right units (V, A, degree) and could be used to prepare chart and analyse trends.

S Shows the errors list.

T Test method values (average values)

V Force write EEPROM.

W Working mode TPIH 2500

X Configuration and SM status.

Z <val> Set max. Z deviation (2-20 ohm).

(Cont'd)

(Cont'd)

For LS and SA, during production the sealing values and the error codes will be sent continuously to the terminal port. Every 100 ms a new message with the sealing values is sent.

For TS, at each sealing pulse a message containing the sealing values is sent to the terminal through the RS232 port.

The fields of the message have the following meaning:

LS and SA	**TS**
Node Name (LS or SA) Voltage (V) Current (A) Phase angle (degrees) Power delivered (W) Power requested (W) Impedance (ohm) Status (status byte of TPIH 2500) Error code	Sealing time Hydraulic pressure (bar) Product temperature (ºC) Side (0=left, 1=right) Voltage (V) Current (A) Phase angle (degrees) Power delivered (W) Power requested (W) Impedance (ohm) Phase angle during pulse (degrees) Error code

(Cont'd)

(Cont'd)

TMCC2 Card A01K5240 (Splice Detector)

Configure Windows Hyper Terminal on the PC and connect the PC to the TMCC2 (SD), see 9.8-2 TMCC2 Controller - Set Communication.

Enter the commands and parameters into the A3SD program via the keyboard and execute them by pressing the ENTER key. (The commands and parameters are not replicated on the terminal). The functions described below are available:

H Help Menu: displays the commands available.

S Shows the parameters status

V Shows the program number and version

R [0/1] R1 Starts the splice detectors data reporting. R0 stops the data reporting.

T1,x Changes splice detector 1 dynamic threshold.

F1,x Changes splice detector 1 filter cut-off frequency.

P1,x Changes splice detector 1 output pulse length.

B1,x Changes splice detector 1 hold off time.

E1 [R/F] Changes splice detector 1 detection edge. R for rising edge and F for falling edge.

O1 [L/H] Changes splice detector 1 output type. L for normally low output (high level pulse) and H for normally high output (low level pulse).

(Cont'd)

(Cont'd)

T2,x Changes splice detector 2 dynamic threshold.

F2,x Changes splice detector 2 filter cut-off frequency.

P2,x Changes splice detector 2 output pulse length.

B2,x Changes splice detector 2 hold off time.

E2 [R/F] Changes splice detector 2 detection edge. R for rising edge and F for falling edge.

O2 [L/H] Changes splice detector 2 output type. L for normally low output (high level pulse) and H for normally high output (low level pulse).

LS Shows the status of the logger.

LR Resets logger buffers.

L1,x Start sending the splice detector 1 data to the serial port.

L2,x Start sending the splice detector 2 data to the serial port.

EECLEAR Restores all factory defaults values into the parameters stored into the EEPROM.

STOP Stops the A3SD application program and enters into the firmware.

9.9 TPIH

SPC Reference	2840935-0100

9.9-1 TPIH - Description

SPC Reference	2840935-0100

The TPIH 2500 generators are used for:

- TS - transversal sealing (T10G9150)
- LS - longitudinal sealing (U70G9160)
- SA - strip applicator (T10G9170).

The pulse duration is controlled by the PLC program. The power level is set via the HMI on the TPOP display. The generator is supplied with 3 phase, 400V AC and 24V DC.

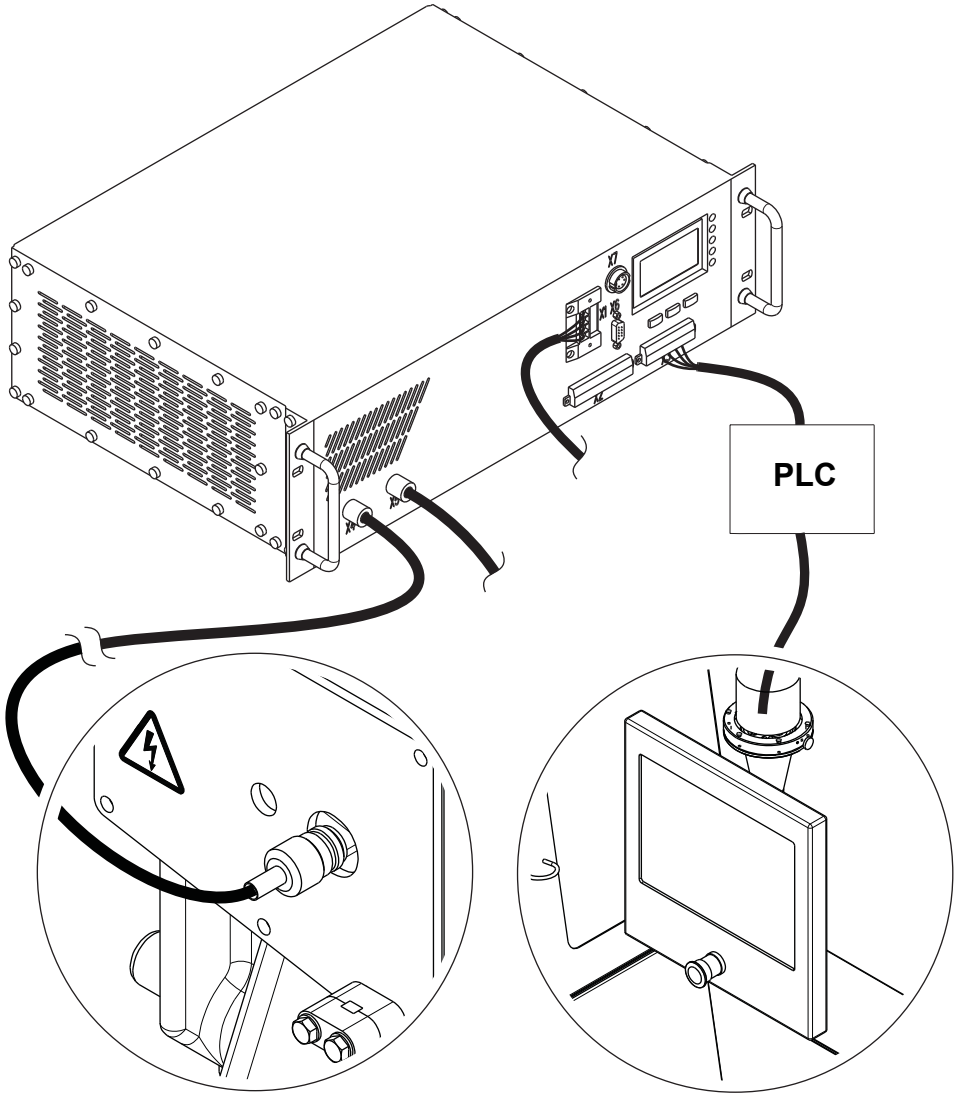

(Cont'd)

(Cont'd)

Each TPIH-2500 system normally comprises:

- TPOP (1)
- TPIH 2500 generator (2)
- coaxial cable (3)
- impedance transformer (4).

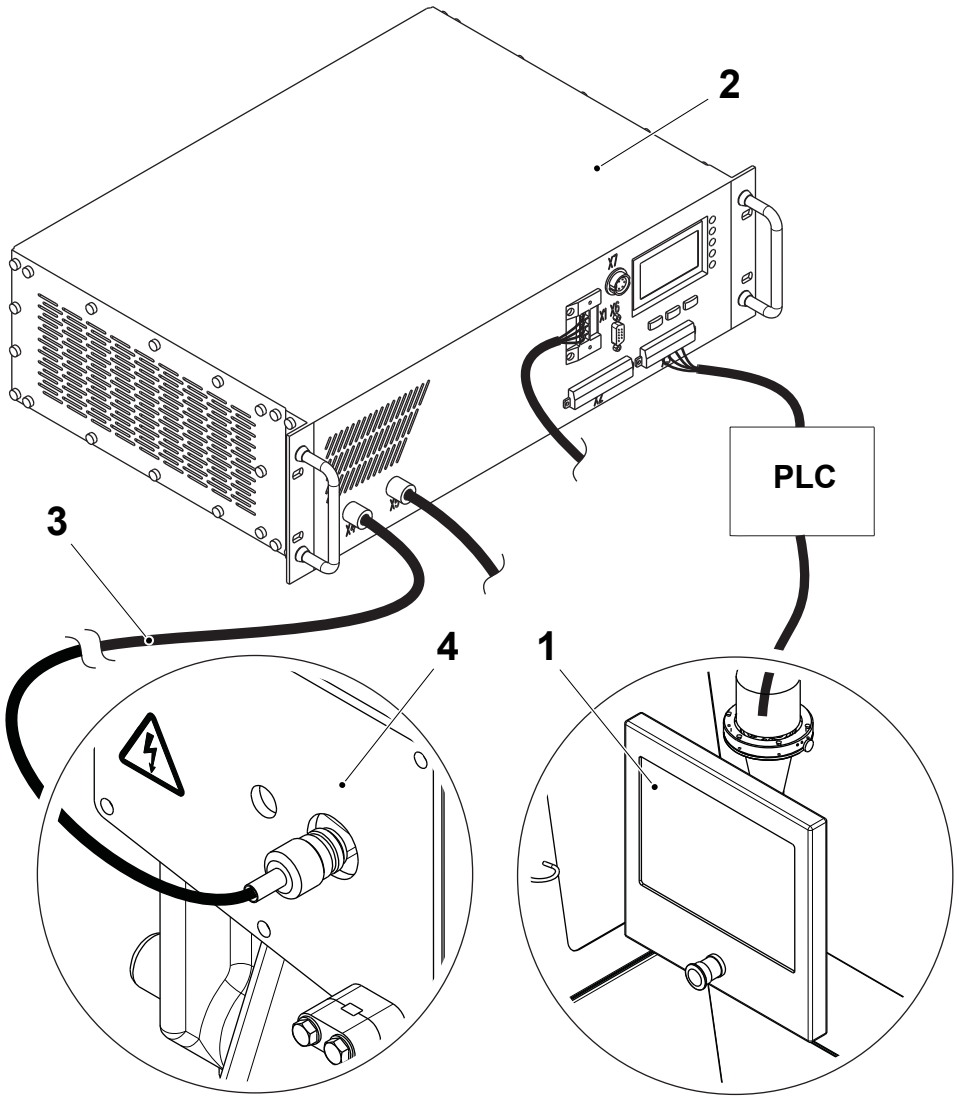

1 TPOP
2 TPIH 2500 generator
3 Coaxial cable
4 Impedance transformer

(Cont'd)

(Cont'd)

The TPIH 2500 generator normally comprises:

- output 1 X4 (5)
- output 2 X5 (6)
- serial connection X6 (7)
- 24V connection X3 (8)
- 400V connection X1 (9)
- multi-functional buttons (10)
- status LEDs (11)
- LCD display (12).

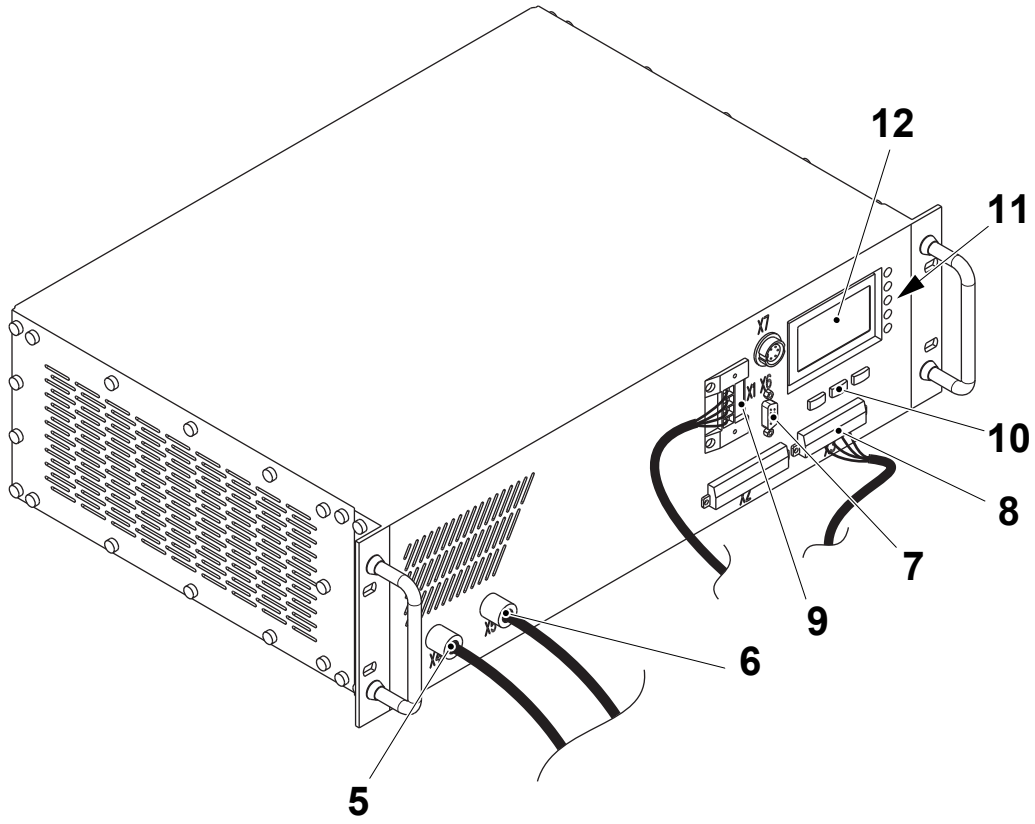

5 Output 1 X4
6 Output 2 X5
7 Serial connection X6
8 24V connection X3
9 400V connection X1
10 Multi functional button
11 LED
12 LCD display

(Cont'd)

(Cont'd)

DANGER

Hazardous voltage.

When the 400 VAC green LED (2) is OFF there can be still one or two phases present on the connector X1.

LED's Description

LED	Colour	Description
+24 VDC (1)	Green	It is ON when the 24 V supply is present. It is OFF when there is no 24 V.
400 VAC (2)	Green	It is ON when ALL 3-phases are present. It is OFF when AT LEAST one of the 3-phases is missing.
Error (3)	Red	It is ON when one or more errors have occurred. When this is case, the technician can read which errors have occurred on the LCD display. It is OFF when there are no error conditions.
Out 1 (4)	Green	It is ON when the generator is sending power through output 1 It is OFF when output 1 is inactive.
Out 2 (5)	Green	It is ON when the generator is sending power through output 2 It is OFF when output 2 is inactive.

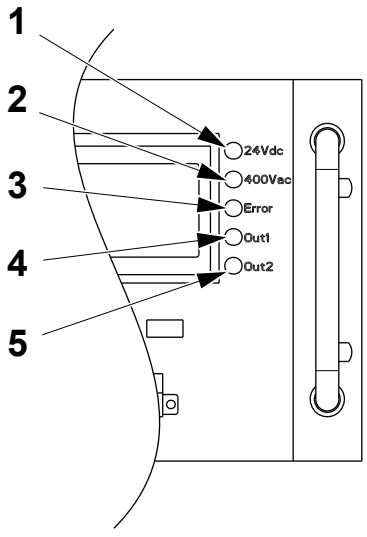

1 +24 VDC LED
2 400 VAC LED
3 Error LED
4 Out 1 LED
5 Out 2 LED

9.9.1 IH Equipment

9.9.1-1 IH Equipment - LCD Display

Machine Status	Mains Power ON Air OFF Steam ON Water OFF
SPC Reference	2840935-0100

User Menu

The TPIH 2500 provides the user with an easy way of accessing information and making settings via a menu that appears on the display.

A generic page usually consists of three parts:

- the top row that shows the page title
- the following six rows that show either commands or information
- the bottom row that shows the actions performed by the buttons. The symbol or word above each button explains which action is performed when that button is pressed.

The page on the left has a list of possible commands. The currently selected command is displayed in the reverse mode (white on black).

Pressing the left ARROW button selects the command below the current selection (in this case `SEALING VALUES`), whereas pressing the right ARROW button selects the command above the current selection.

When the OK button is pressed, the command selected at that moment is executed.

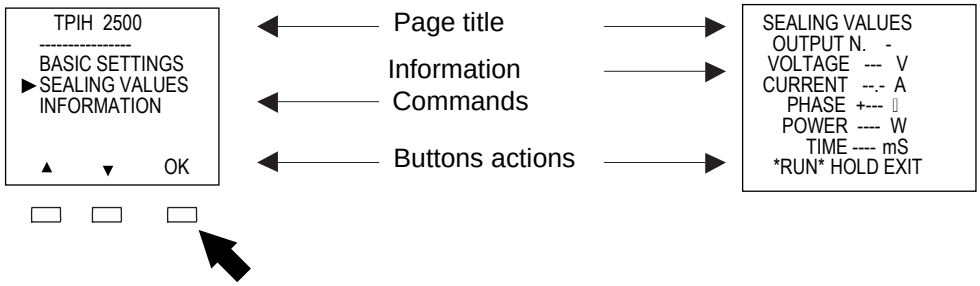

(Cont'd)

(Cont'd)

To access the page with the sealing values, do the following:

- on the main page, press the left ARROW button to select the command SEALING VALUES
- then press the OK button to execute the command.

The requested page is shown on the screen.

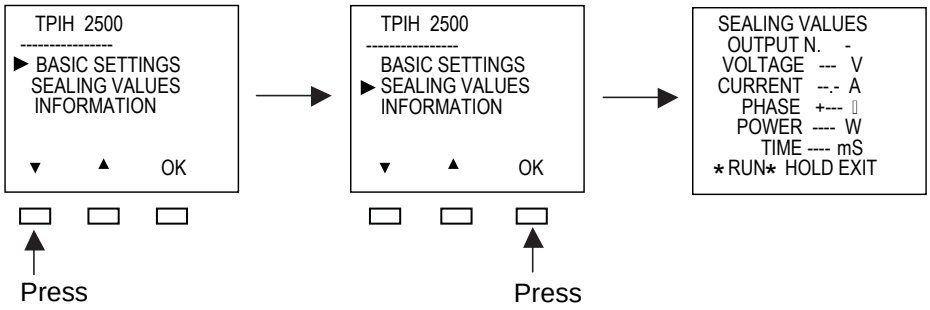

The page SEALING VALUES is an example of a page that shows information instead of commands.

It is always possible to see what the buttons will do by reading the bottom line. Every time a button is pressed the LCD back light turns on and, when no other button is pressed, turns off after approximately 10 seconds.

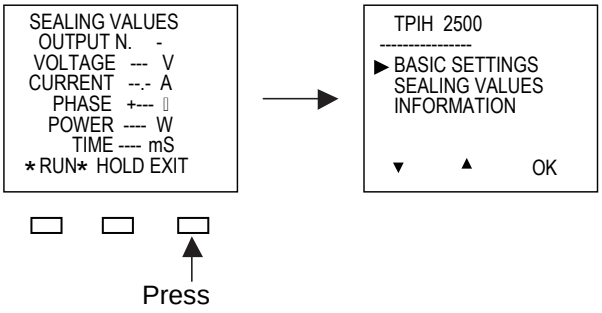

(Cont'd)

(Cont'd)

Menu Structure

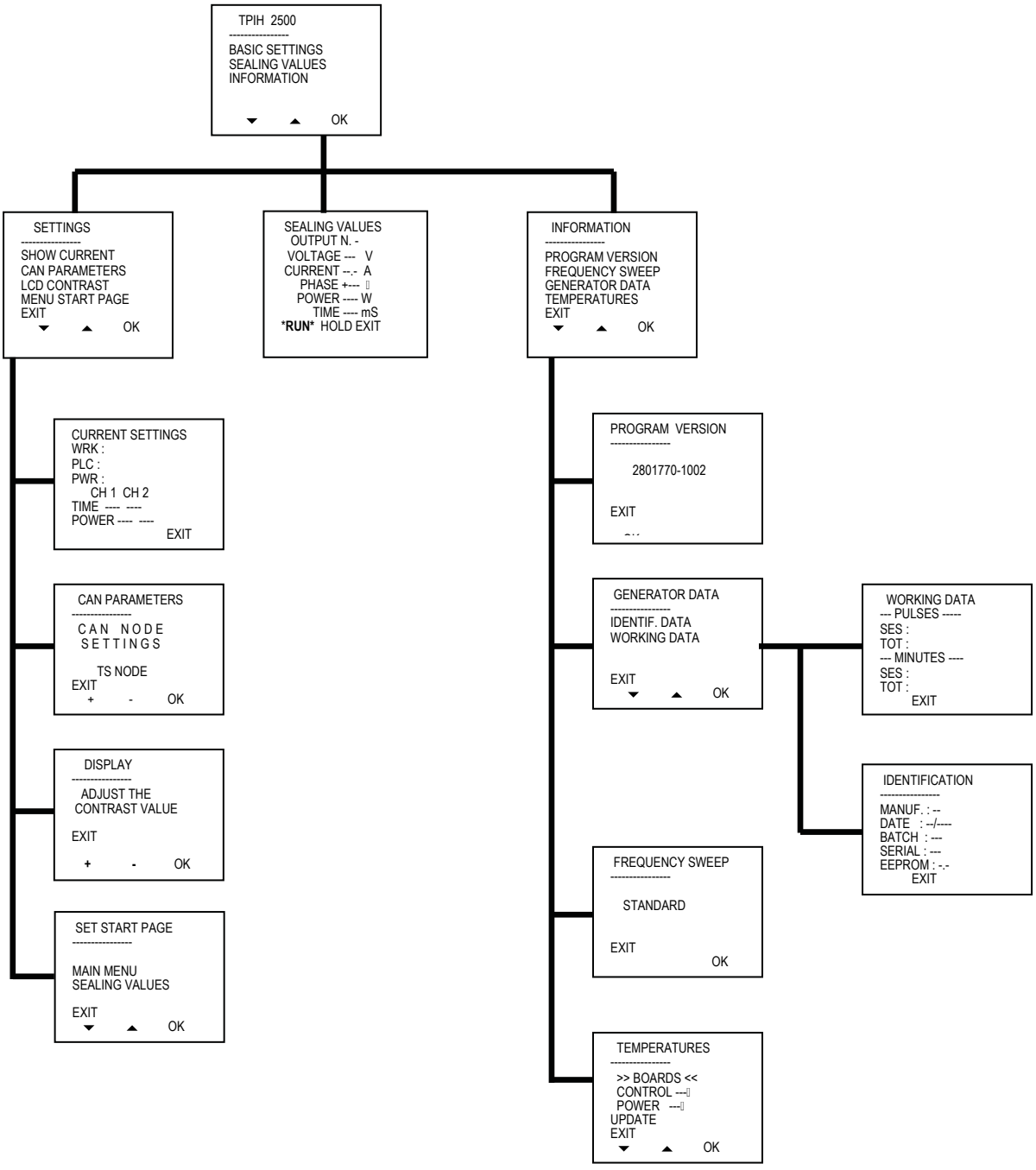

(Cont'd)

(Cont'd)

Basic Setting

From this page it is possible to access all basic settings of the generator.

SHOW CURRENT shows the current settings related to working mode, PLC mode and power setting mode.

CAN PARAMETERS allows the user to select the CAN node of the generator for field bus communication.

LCD CONTRAST allows the user to regulate the display contrast to increase the readability.

MENU START PAGE defines which page has to be used as the start page when the generator is powered on. It is possible to choose between the main menu page and the "Sealing Values".

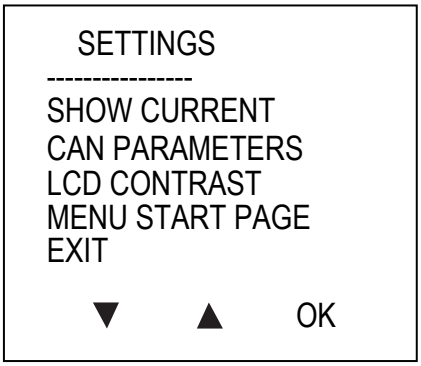

9.9.1-2 IH Equipment - Error Handling

Machine Status	PRODUCTION
Special Equipment	Test Instrument TP No. 68462-0101
SPC Reference	2840935-0100

DANGER

Hazardous voltage.

The TPIH generator **must not** be opened. Doing so may cause shock, burns or even death. In case of an accident, immediately call for medical advice.

When the generator is producing power, it controls and monitors many parameters. When an error occurs, it stops the pulse and shows the cause of the error on the LCD display. The red LED on the front panel also turns ON.

An error can be reset by pressing one of the multi-functional buttons.

Power Setting Too Low

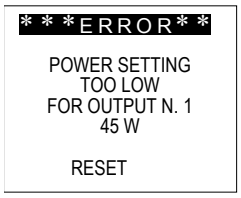

This error occurs when the generator is required to produce less power than the minimum level.

On the display the user can see on which channel the problem has occurred (in this case n. 1). The display also shows what was the power level read by the generator (in this case 45 W that is below the minimum level which is 200 W).

(Cont'd)

(Cont'd)

Usually, when this error occurs, the problem is related to the power setting potentiometer of the channel shown in the error message.

It is possible that the potentiometer is not supplied with 10 VDC by the generator on pin 8 of connector X3 or the voltage from the central contact of the potentiometer does not reach pins 1 or 2 (depending on the channel) of connector X3. This means that:

- the generator is faulty and must be replaced, or
- the +10 V DC to the potentiometer is missing, or
- the potentiometer setting is below the minimum value of 100W, or
- the potentiometer is broken (the output voltage from the potentiometer does not follow the movement of the potentiometer slider).

(Cont'd)

(Cont'd)

1 or More Phases Are Missing



This error occurs when 1 or more phases are either not present at all or are absent for at least 100 milliseconds (power supply hole).

When this error occurs, check that the connector X1 is plugged correctly into the generator and, when that is the case, check that the fuses for the 400VAC of the generator are OK.

DANGER

Hazardous voltage.
When this error occurs there can be still at least one ACTIVE phase present on the connector X1.

Temperature Too High

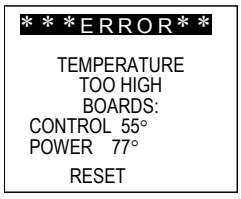

This error occurs when the temperatures inside the generator become too high.

The limits are:

- 60° for the control board
- 70° for the power board.

On the display the user can see the temperature of the two boards. The error can occur when:

- the cooling fan inside the generator is not working
- the ambient temperature is above 50°C.

Change the generator if the fan does not operate.

(Cont'd)

(Cont'd)

The Load Impedance Is Too High

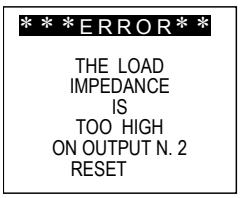

This error occurs when the generator is not able to deliver the required power because the load impedance is too high (tends to be an open circuit).

In this case the suggestion is to check all of the connections from the generator to the inductor looking for bad contacts, loosened connectors or broken cables.

When a single output is used, make sure that the load is connected to the correct output.

When both outputs are used make sure that they have not been swapped by mistake. The error can occur when:

- there is an open circuit in the coaxial cable, a busbar, an inductor or the impedance transformer
- no pressure is applied to the inductor
- the wrong type of impedance transformer is installed
- the wrong type of inductor is installed.

See 9.9.1-3 IH Equipment - Check Function.

(Cont'd)

(Cont'd)

The Load Impedance Is Too Low

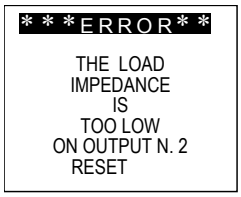

This error occurs when the generator is not able to deliver the required power because the load impedance is too low (tends to be a short circuit).

In this case the suggestion is to check all of the connections from the generator to the inductor looking for a short circuit in the connectors or in the cables. The error can occurs when:

- there is a short circuit in the coaxial cable, a busbar, an inductor or the impedance transformer.

See, 9.9.1-3 IH Equipment - Check Function.

(Cont'd)

(Cont'd)

Phase Shift Too Big

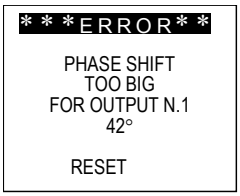

This error occurs when the load has a phase shift >+60° or <-60°.

On the display the user can see on which channel the problem has occurred (in this case n. 1). The display also shows the degree of phase shift read by the generator (in this case 42°).

Typical causes are:

- a damaged inductor
- a damaged transformer
- the incorrect positioning of the inductor with respect to the packaging material.

See, 9.9.1-3 IH Equipment - Check Function.

Over Voltage

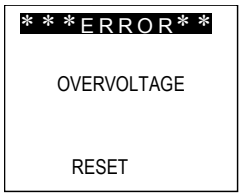

This error occurs when the voltage becomes too high between the two main power stages of the generator.

A possible cause is the failure of the generator.

If the error persists change the TPIH generator.

(Cont'd)

(Cont'd)

Error for Power on the Load Too Low

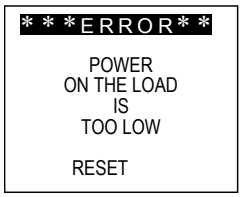

This error occurs when the output power on the load is too low. A possible cause is the failure of the generator.

Not Initialized EPROM



This error occurs when the generator is turned ON there is a failure in the test of EEPROM.

In this case all the default values and parameters are set:

- PLC mode: Driving
- power set: External.

The generator will work in these conditions. When others settings are needed they must be entered from the display or from the PC through the serial communications link.

When the error persists change the TPIH generator.

(Cont'd)

(Cont'd)

Watchdog Reset



This error occurs when the generator is reset by itself because of internal problems. When this happens, the generator keeps the previous parameter settings and can continue to work, after it has been reset, provided that the problem no longer exists.

When the error persists change the TPIH generator.

9.9.1-3 IH Equipment - Check Function

Machine Status	PRODUCTION
Special Equipment	Test Instrument TP No. 68462-0101
SPC Reference	2840935-0100

When a load error occurs the ERROR LED (1) is ON and the IH generator is unable to transmit the correct pulse due to a faulty load caused by one of the following:

- short circuit in a coaxial cable, busbar inductor or impedance transformer
- open circuit in a coaxial cable, busbar, inductor or impedance transformer
- no pressure applied to the inductor
- wrong type of impedance transformer installed
- wrong type of inductor installed.

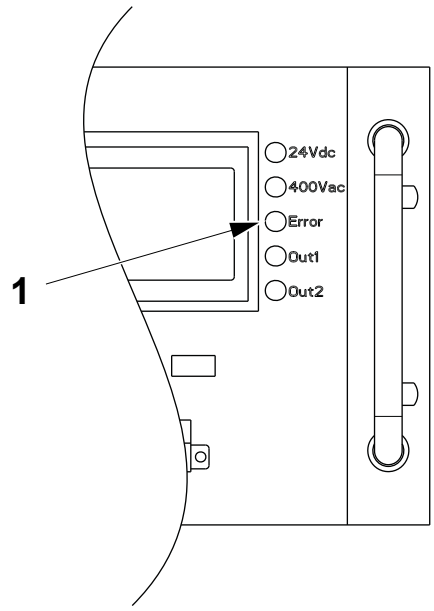

1 Error LED

(Cont'd)

(Cont'd)

The origin of load errors maybe located with the aid of the test instrument TP No. 68462-010 (2). To check the IH equipment, proceed as follows:

a) Perform a SHORT STOP.

b) Connect the test instrument (2) between the IH generator (3) and the impedance transformer (4) as indicated in the illustration.

c) Step up the machine to step PRODUCTION.

d) Measure and record the values for the; voltage, current, phase angle and pulse time within the same pulse. Use the switch (5) to select the different parameters.

Note! With a load problem only short pulses are delivered by the generator. During the entire pulse the sample LED (6) is ON, while the pulse LED (7) is OFF.

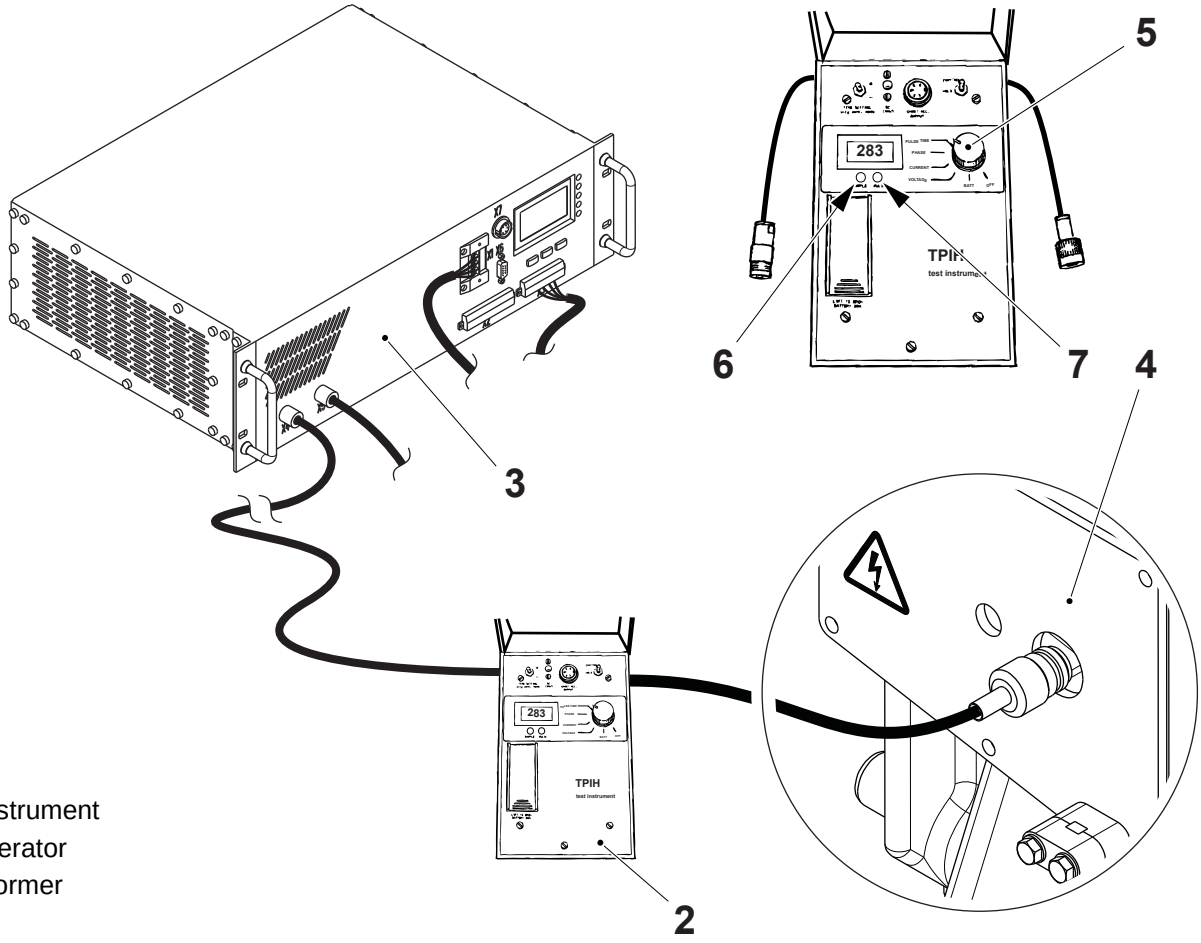

2 Test instrument
3 IH generator
4 Transformer
5 Switch
6 Sample LED
7 Pulse LED

(Cont'd)

(Cont'd)

e) Compare the values recorded with values in the table below.

Load examples	Phase angle	Voltage/Current
Optimal load	0°	50 Ω
Normal load	±15°	40 - 65 Ω
Short circuit in the coaxial cable, contacts or primary of the IH transformer	pos (3)	1 - 10 Ω (1)
Open circuit in the coaxial cable, contacts or primary of the IH transformer	neg (3)	200 - 2000 Ω (2)
Short circuit in the inductor, current rail or secondary of the IH transformer	pos	10 - 20 Ω
Open circuit in the inductor, current rail or secondary of the IH transformer	neg	2 - 5 Ω
No packaging material on the inductor	neg	5 - 15 Ω

Note! 1) Greater value = greater distance between the problem and the instrument.

Note! 2) Greater value = shorter distance between the problem and the instrument.

Note! 3) Greater phase difference = greater distance between the problem and the instrument.

f) Repeat the procedure for the other inductors.

(Cont'd)

(Cont'd)

Test Instrument TP No. 68462-0101

The TPIH test instrument is used to check the available output power from the IH generator as well as the condition of the coaxial cable, the impedance transformer, the current rail and the inductor. The test instrument is connected in series with the coaxial cable from the generator.

Note! Use the SHORT STOP procedure to prevent the generator from pulsing when the instrument is connected or disconnected.

The instrument can be used for the measurement of the following parameters:

- HF voltage (V)
- HF current (A)
- phase shift voltage/current (degrees)
- pulse duration.

The results of these measurements can be used to calculate the available HF power. The instrument simplifies the work involved when trying to locate the source of a problem.

One 9V battery is used for the instrument and an automatic power-off function is provided to minimize battery consumption. A test outlet is provided for the connection of a printing device such as a Gould recorder.

A print-out showing the HF voltage, the HF current and the phase shift as a function of time can be produced. The instrument kit contains complete operating instructions as well as a printer cable and a battery eliminator (mains adapter).

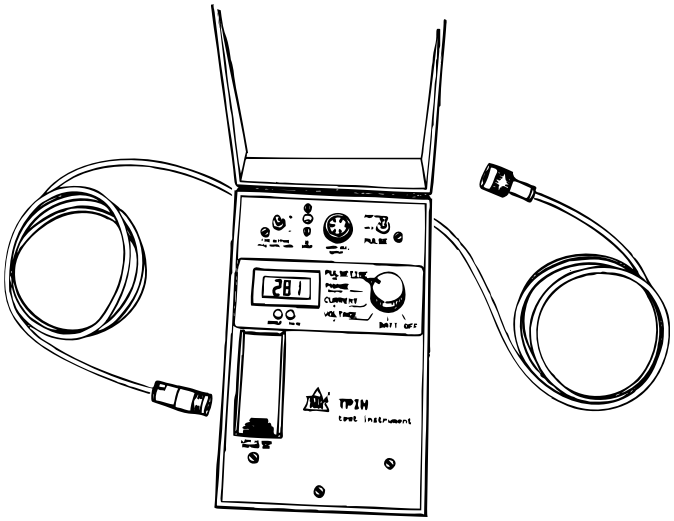

9.9.1-4 IH Equipment - Check Cables

Machine Status	Mains Power OFF Air OFF Steam ON Water OFF
SPC Reference	2840935-0100

Check for wear and damage that can affect machine efficiency in the following:

- the coaxial connectors (1), make sure that there is no moisture between the male connector and the female connector
- the rubber gasket (2) in the male connectors, make sure that it seals properly (it should not be possible to turn the male connector easily)
- the coaxial cables (3), make sure that the cables are flexible and that there are no cracks where they bend
- the busbar (4), check the rubber seal and the flat seal. Make sure that there are no signs of damage
- the impedance transformer. Make sure that there is no water/product residue inside the impedance transformer.

Clean or change if necessary.

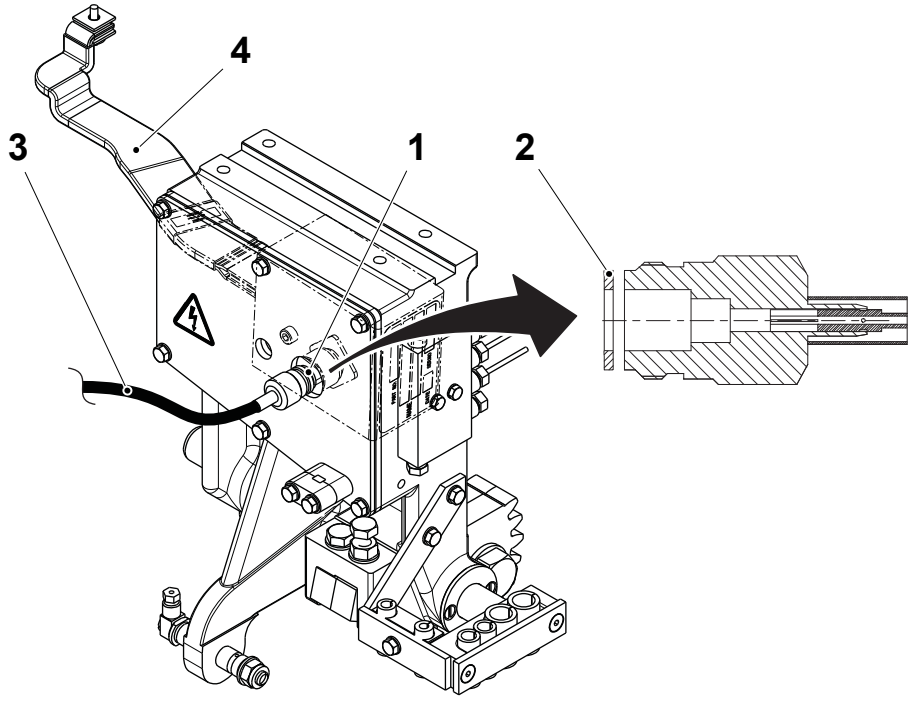

1 Coaxial connector
2 Rubber gasket
3 Coaxial cable
4 Busbar

9.9.1-5 IH Equipment - Change Generator

Machine Status	Mains Power OFF Air OFF Steam ON Water OFF
SPC Reference	2840935-0100

DANGER

Hazardous voltage.

Will cause shock, burns or even death. Do not open the generator. Perform the lockout procedure before starting any work.

(Cont'd)

(Cont'd)

a) Make sure that the main power switch is OFF and that it has been padlocked.

b) Remove the connectors X1 (1) and X3 (2).

c) Remove the coaxial connector X4 (3). For the generator A500, also remove the coaxial connector X5 (4).

d) Change the generator (5).

e) Assemble in the reverse order.

f) Set the CAN settings, see 9.9.1-7 IH Equipment - Set CAN Communication.

Note! Send the generator (5) to the nearest Tetra Pak service station for cleaning or service.

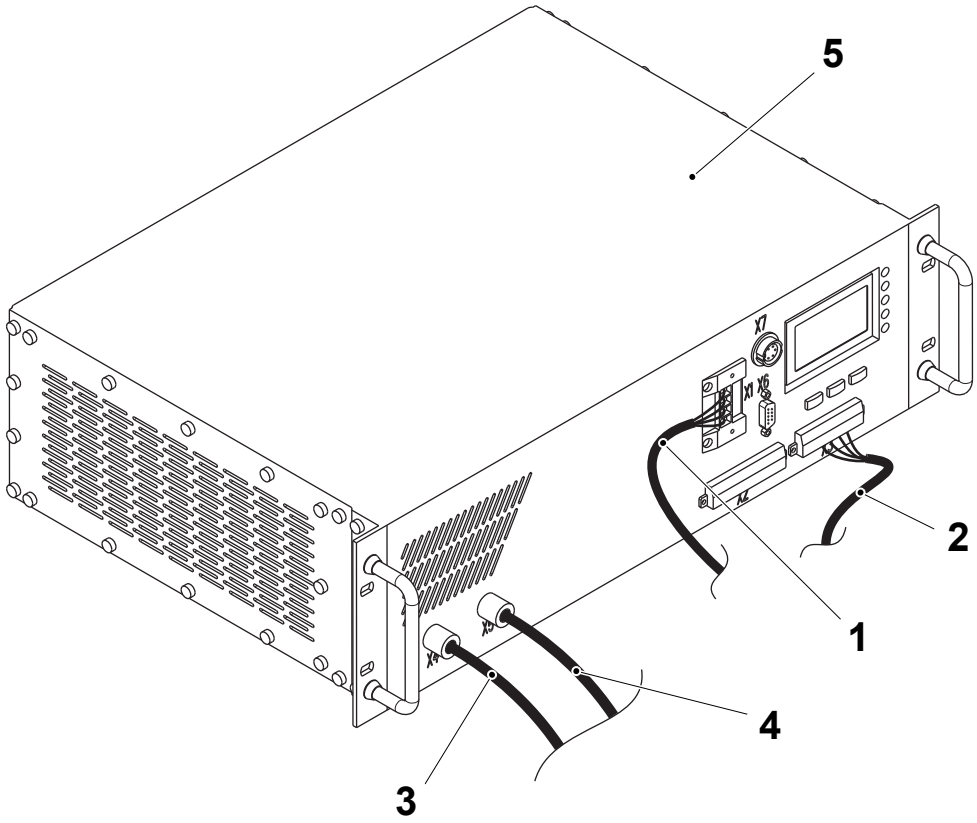

1 Connector X1
2 Connector X3
3 Coaxial connector X4
4 Coaxial connector X5
5 Generator

9.9.1-6 IH Equipment - Set Sealing

Machine Status	PRODUCTION
SPC Reference	2840935-0100

The values in the tables are the default values as stored in the machine's PLC program and are provided as a reference only. Local conditions such as packaging material being used in production, the environmental temperature of the filling room and other factors can influence the TS, LS and SA sealing and can result in the need for power adjustment.

The correct power settings can only be determined through evaluating the TS, LS and SA sealings as described in the checks section in the filling machine's Operator Manual.

Transversal Sealing

Package	Default Value (W)	Notes
TBA 1000 Sq	800 (8000 p/h)	
TBA 1000 B	725 (8000 p/h)	
TBA 1000 S	725 (8000 p/h)	
TBA 1500 S	1325 (8000 p/h)	
TBA 2000 S	1300 (8000 p/h)	
TBA 500 B	725 (8000 p/h)	
TBA 500 Sq	725 (8000 p/h)	
TPA 1000 Sq	1225 (8000 p/h)	
TPA 750 Sq	1000 (8000 p/h)	

(Cont'd)

(Cont'd)

a) On the TPOP display touch the PRODUCTION CONTROL button (1).
b) Touch the PACKAGE FORMING UNIT button (2).
c) Touch the SEALING POWER icon (3).
d) Change the sealing value (4) with the ARROW buttons (5).
e) Touch the OK button (6).

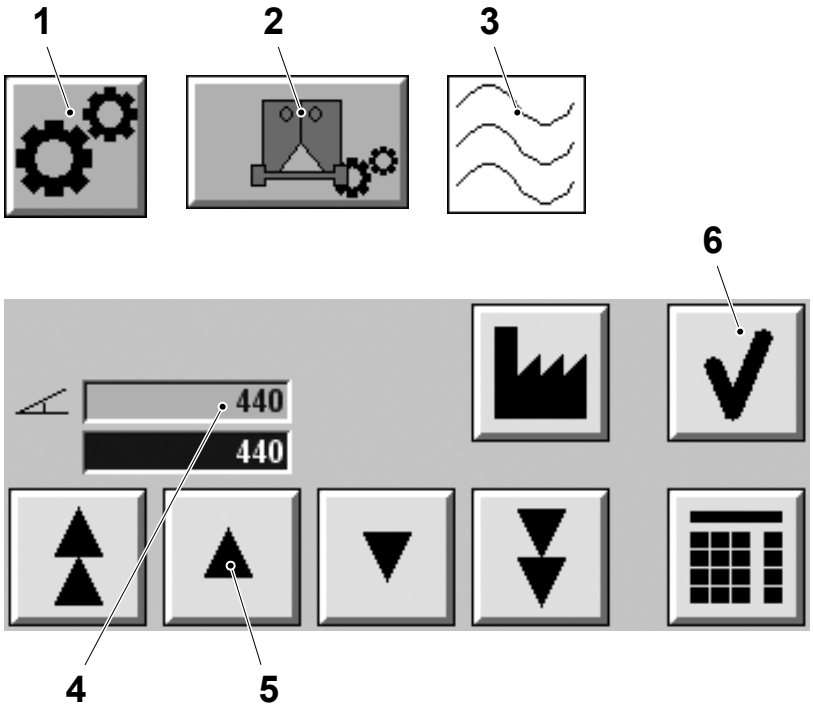

1 Production control button
2 Package forming unit button
3 Sealing power icon
4 Sealing value
5 Arrow button
6 OK button

(Cont'd)

Longitudinal Sealing

Note! The values in the table represent machine's running at the nominal speed for the volume indicated and without any speed reduction options enabled.

Package	Default Value (W)	Notes
TBA 1000 Sq	750 (8000 p/h)	
TBA 1000 B	475 (8000 p/h)	
TBA 1000 S	675 (8000 p/h)	
TBA 1500 S	775 (8000 p/h)	
TBA 2000 S	500 (8000 p/h)	
TBA 500 B	240 (8000 p/h)	
TBA 500 Sq	390 (8000 p/h)	
TPA 1000 Sq	525 (8000 p/h)	
TPA 750 Sq	525 (8000 p/h)	

(Cont'd)

(Cont'd)

a) On the TPOP display touch the PRODUCTION CONTROL button (1).
b) Touch the TUBE FORMING UNIT button (2).
c) Touch the SEALING POWER icon (3).
d) Touch the PRODUCTION SETTING icon (4).
e) Change the sealing value (5) with the ARROW buttons (6).
f) Touch the OK button (7).

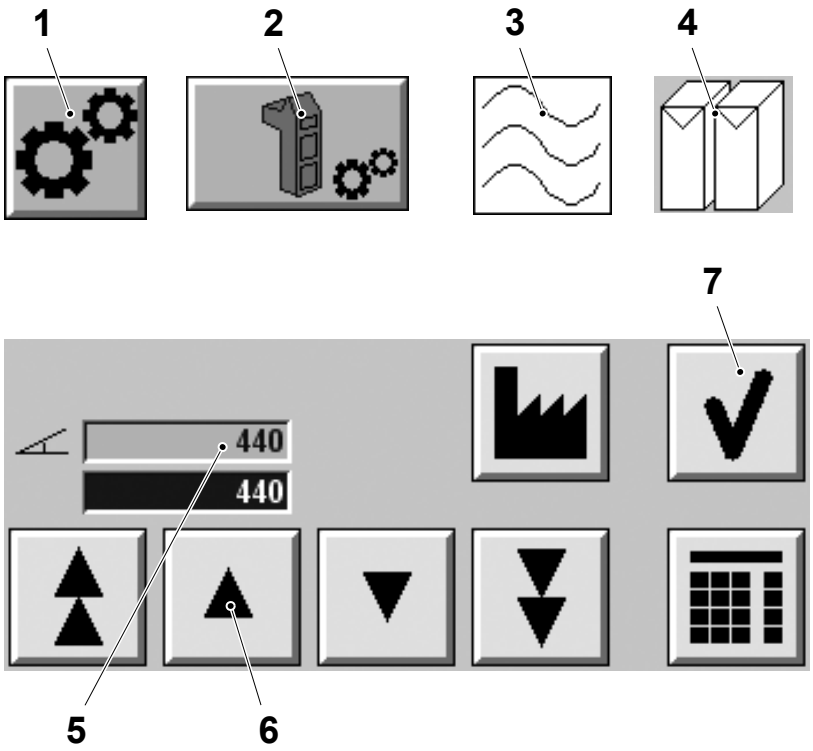

1 Production control button
2 Tube forming unit button
3 Sealing power icon
4 Production setting icon
5 Sealing value
6 Arrow button
7 OK button

(Cont'd)

(Cont'd)

Strip Applicator Sealing

Note! The values in the table represent machine's running at the nominal speed for the volume indicated and without any speed reduction options enabled.

Package	Default Value (W)	Notes
TBA 1000 Sq	575 (8000 p/h)	
TBA 1000 B	450 (8000 p/h)	
TBA 1000 S	525 (8000 p/h)	
TBA 1500 S	425 (8000 p/h)	
TBA 2000 S	475 (8000 p/h)	
TBA 500 B	525 (8000 p/h)	
TBA 500 Sq	425 (8000 p/h)	
TPA 1000 Sq	575 (8000 p/h)	
TPA 750 Sq	525 (8000 p/h)	

(Cont'd)

(Cont'd)

a) On the TPOP display touch the PRODUCTION CONTROL button (1).
b) Touch the AUTOMATIC STRIP SPLICING UNIT button (2).
c) Touch the SEALING POWER icon (3).
d) Touch the PRODUCTION SETTING icon (4).
e) Change the sealing value (5) with the ARROW buttons (6).
f) Touch the OK button (7).

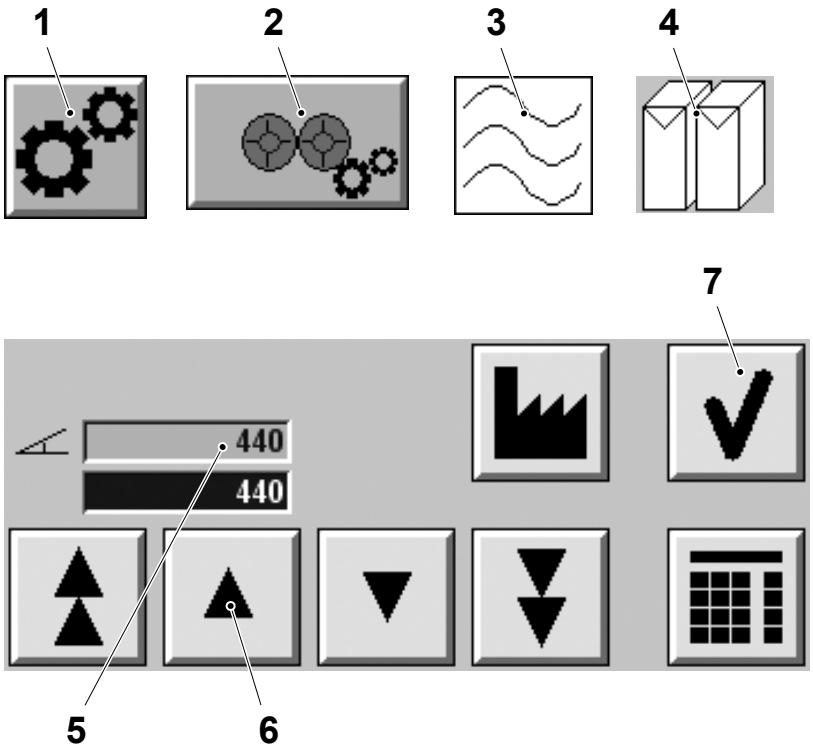

1 Production control button
2 Automatic strip splicing unit button
3 Sealing power icon
4 Production setting icon
5 Sealing value
6 Arrow button
7 OK button

(Cont'd)

(Cont'd)

ASU

a) On the TPOP display touch the PRODUCTION CONTROL button (1).
b) Touch the ASU button (2).
c) Touch the SPLICE TEMPERATURE icon (3).
d) Change the sealing value (4) with the ARROW buttons (5).
e) Touch the OK button (6).

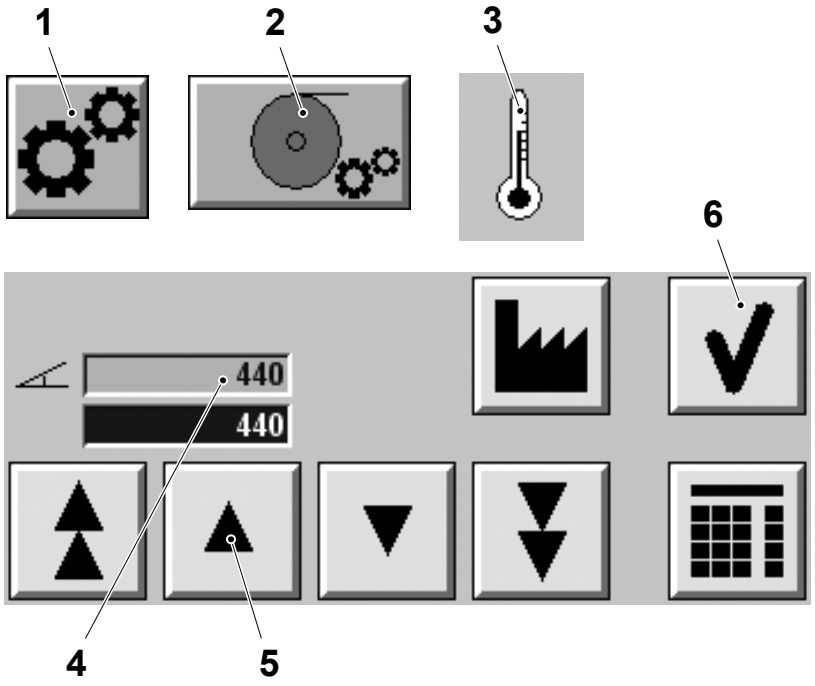

1 Production control button
2 ASU button
3 Splice temperature icon
4 Sealing value
5 Arrow button
6 OK button

9.9.1-7 IH Equipment - Set CAN Communication

Machine Status	Mains Power ON Air OFF Steam ON Water OFF
SPC Reference	2840935-0100

The TPIH 2500 generators are connected to a CAN bus together with the TMCC2 card A01K5220. This network is used to monitor the sealing quality. See section 9.8 TMCC2 Controller for details on the sealing monitoring.

Each TPIH 2500 generator should be assigned a unique node name. Recognized node names are: TS, LS, SA, PT, PT HS.

(Cont'd)

(Cont'd)

Select the appropriate node name for the generators by means of the TPIH 2500 display keyboard.

a) Use the ARROW buttons (1) to select `BASIC SETTINGS` and press the OK button (2).

b) Select `CAN PARAMETERS` and press the OK button (2).

c) Select the appropriate node name with the PLUS and MINUS buttons (3) and press the OK button (2) to store the selected name.

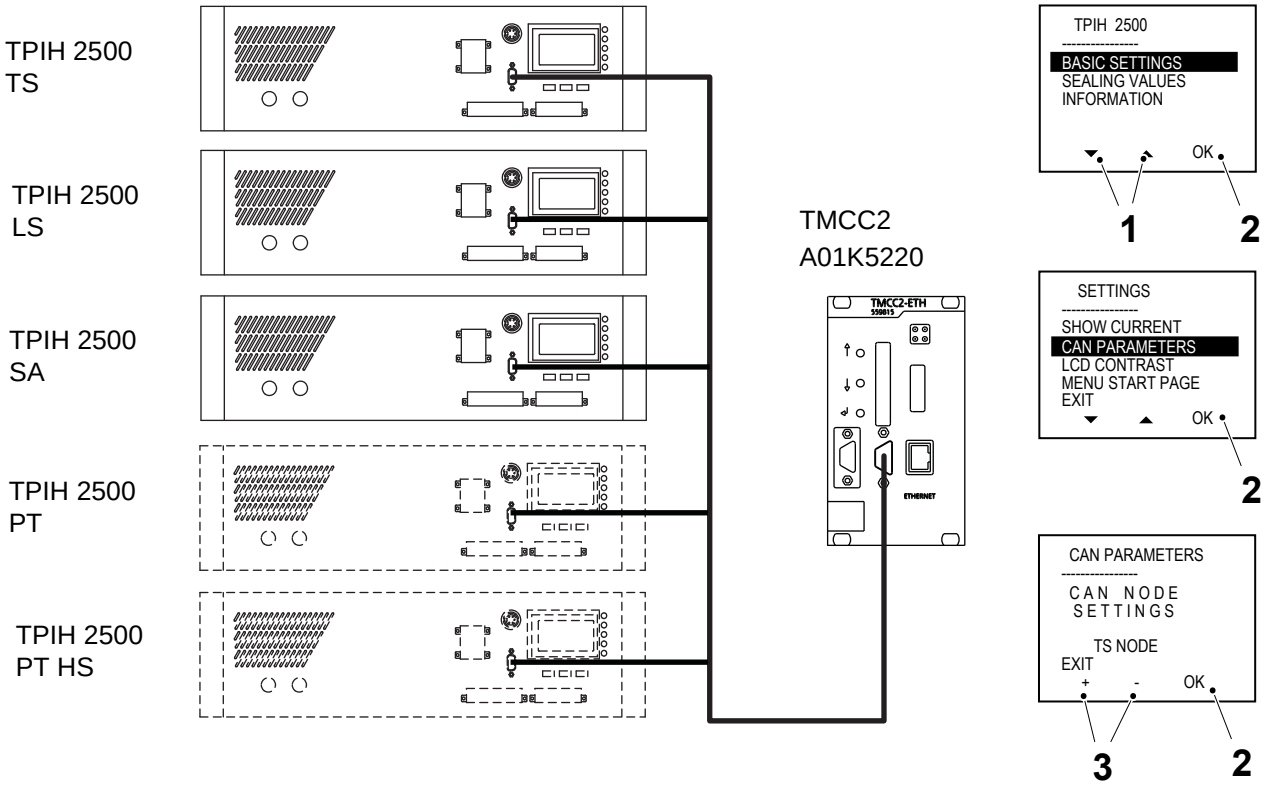

1 Arrow button
2 OK button
3 +/- button

9.9.1-8 IH Equipment - Load Firmware

Machine Status	Mains Power ON Steam ON Water OFF Air OFF
Special Equipment	Communication Cable RS 232-C PC with CD Drive
SPC Reference	2840935-0100

CAUTION
Internal memory damage.
Disconnecting the 24V auxiliary voltage during download can damage the internal memory.

CAUTION
Possible CAN BUS error.
Remember to set the CAN BUS node of each TPIH 2500 card after the firmware has been downloaded.

(Cont'd)

(Cont'd)

Checking Firmware Version

The latest release of the firmware for the TPIH 2500 is:

– 3018844-1001.128 for TPIH generator TP No. 1499642-0301.

The version of the firmware in the TPIH 2500 can be checked as follows:

- by scrolling through the menus (`MAIN MENU >> INFORMATION >> PROGRAM VERSION`) on the TPIH 2500 with the buttons (1) and reading the firmware version on the display (2), see Menu Structure on page 9-405

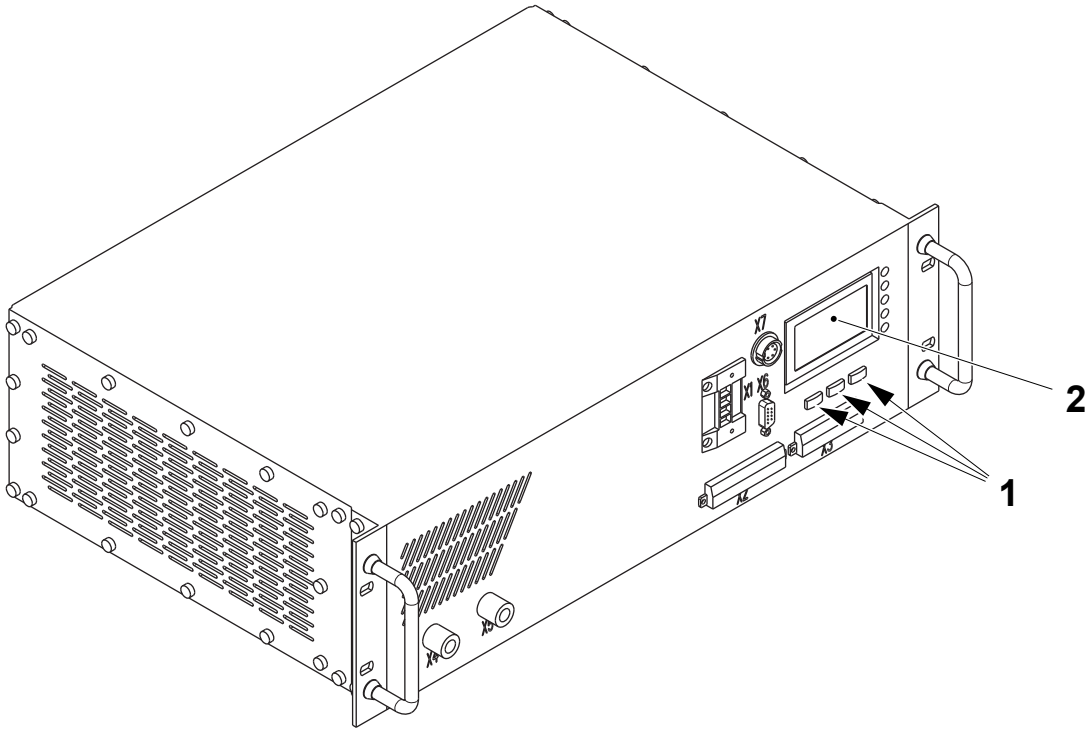

1 Button
2 Display

(Cont'd)

(Cont'd)

- by connecting the PC to the serial link (3) and using the TERMINAL.EXE program as follows:
  - open the configuration `TERMINAL.TRM`
  - from the menu select `FILE` then `OPEN` then select `TERMINAL.TRM`
  - type `H` and the press ENTER.

  The main menu of the terminal program appears with the version of the firmware displayed.

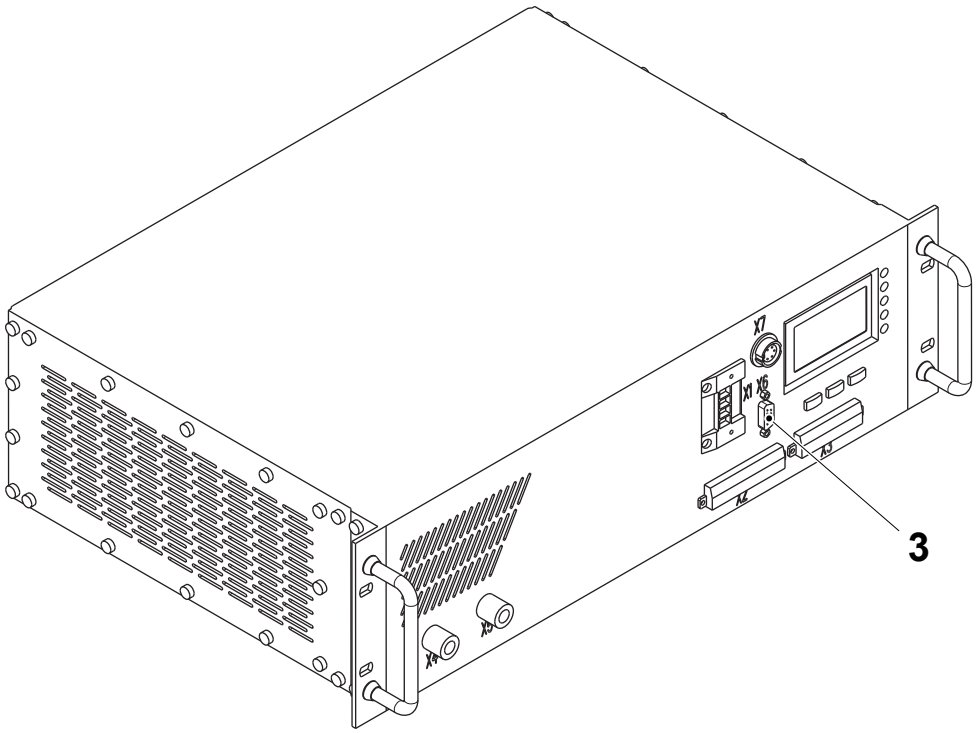

3 Serial connection

(Cont'd)

(Cont'd)

Note! Windows Hyper Terminal is not suitable for downloading.

Downloading the Firmware

The firmware can be downloaded using `TERMINAL.EXE` or the `TMCC2.EXE` programs (supplied together with firmware).

Preparation

Before starting to download the firmware:

a) Turn the mains power supply OFF on the service unit.

b) Disconnect the 440 V supply connector (1) from TPIH 2500.

c) Connect the PC to the TPIH 2500 with the serial link (2).

d) Turn the mains power supply ON, this provides the TPIH 2500 with the 24 V DC it needs to download the firmware.

e) Press simultaneously the three buttons (3) under the display (4) on the front panel (Tetra Pak logo will appear).

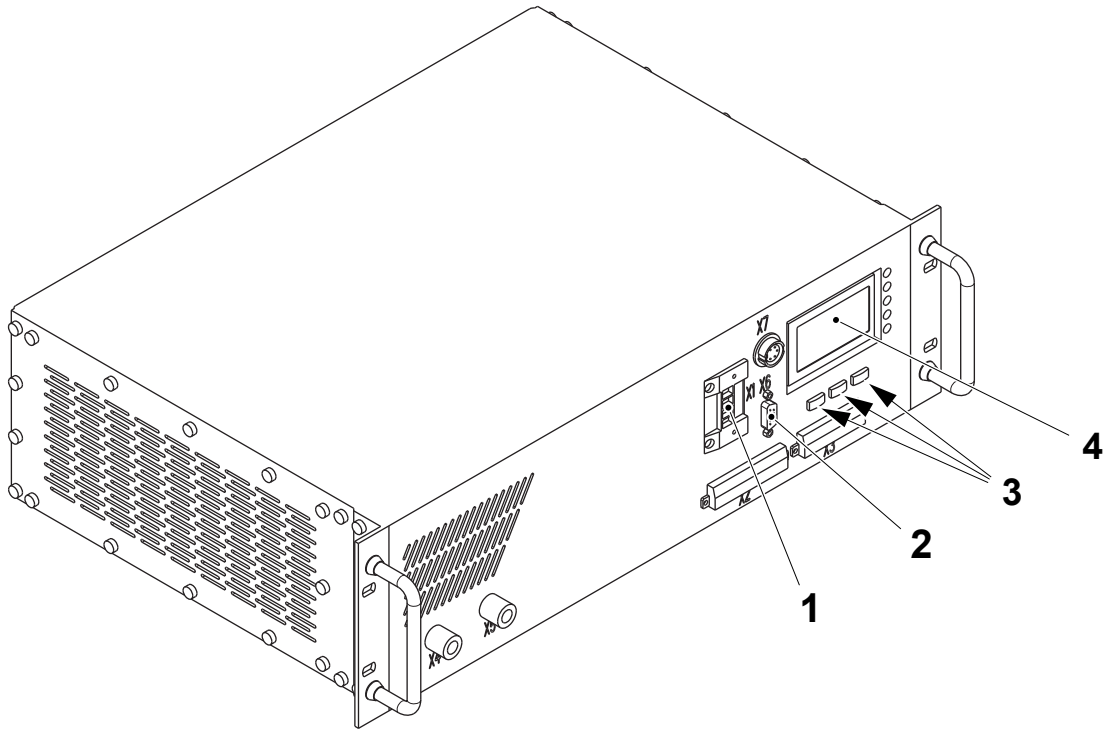

1 Supply connector
2 Serial link
3 Button
4 Display

(Cont'd)

(Cont'd)

Using TERMINAL.EXE

a) Start TERMINAL.TRM:
   – from the menu select FILE then OPEN and then select TERMINAL.TRM.

b) Verify the communication:
   – press ENTER., the FIRMWARE prompt must appear.

c) Enable the program mode:
   – press PROGRAM MODE on the terminal window.

d) Erase the memory:
   – press ERASE FLASH on the terminal window
   – wait until DONE appears.

e) Download the firmware:
   – Insert the CD containing the firmware into the CD drive of the PC
   – from the TERMINAL.TRM menu select TRANSFER and then SEND TEXT FILE; select the ALL FILE *.* option from the LIST FILES OF TYPE menu
   – browse the CD and select the file 3018844.XXXX.128 (for TPIH generator TP No. 1499642-0301) in the folder "TPIH", then press OK ("XXXX" represents the firmware version number)
   – wait until the download is finished (5-6 minutes).

f) Restart the generator:
   – enter the digit G and press ENTER to restart the generator.

g) Turn the mains power supply OFF on the service unit.

h) Disconnect the PC from the TPIH 2500.

i) Connect the 440 V supply connector to the TPIH 2500.

(Cont'd)

(Cont'd)

Using TMCC2TRM.EXE

a) Start the TMCC2 TRM.

b) Select the SET COMM button (1).

c) Set the baud rate to 9600 and the communication port to Com1.

d) Select the OK button (2).

e) Press ENTER and make sure that the TPIH generator is in the firmware mode.

f) Insert the CD containing the firmware into the CD drive of the PC

g) From the TMCC2 TRM window select the DOWNLOAD button (3).

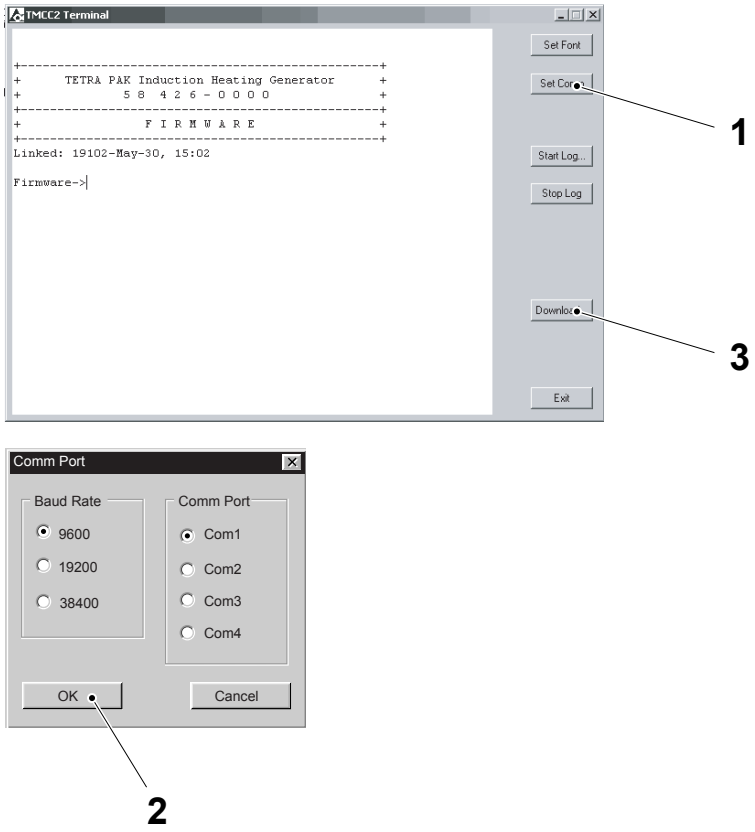

1 Set Comm button
2 OK button
3 Download button

(Cont'd)

(Cont'd)

h) Select the BROWSE button (4). Browse to the CD and select the file:
   – 3018844.XXXX.128, for TPIH generator TP No. 1499642-0301
   in the folder "TPIH" and then press OK ("XXX" represents the firmware version number).

i) Select the OPEN button (5).

j) Select the DOWNLOAD button (6) to erase the memory and to download the application.

k) Wait until the download is finished and then select the CLOSE button (7) to close the download window.

l) Enter the digit G and press ENTER to restart the TPIH generator.

m) Turn the mains power OFF on the service unit.

n) Disconnect the PC from the TPIH 2500.

o) Connect the 440 V supply connector to the TPIH 2500.

Note! Downloading the firmware application can affect the contrast regulation of LCD display on front panel. See 9.9.1-9 IH Equipment - Set Display Contrast on page 9-438.



4 Browse button
5 Open button
6 Download button
7 Close button

9.9.1-9 IH Equipment - Set Display Contrast

Machine Status	Mains Power ON Steam ON Water OFF Air OFF
Special Equipment	Communication Cable RS 232-C PC with CD Drive
SPC reference	2533651-0100

a) Connect a PC to the TPIH 2500 serial link connection and start the TERMINAL.EXE program.

b) Press the ENTER key on the PC to display the `HELP` menu and the list of available commands.

Note! "`XXX`" represents a number between 1 to 100. A high number corresponds to a darker display and a low number corresponds to a lighter display. Therefore if the display appears very dark enter a low number, whereas if the display is very light enter a high number.

c) Type "`DC XXX`" where "`XXX`" represents a number between 1 to 100. The recommended initial setting values are:

- 27 for generators with serial number 0317810139 or higher
- 95 for generators with serial number 0317810138 or lower.

9.10 Cooling System

SPC Reference	2912647-0100

9.10.1 Cooling Unit

9.10.1-1 Cooling Unit - Clean Filter

Machine Status	Mains Power ON Air ON Steam ON Water ON
SPC Reference	2912647-0100

WARNING
Refrigerant gas.
Cooling media R134A. See the Safety Precautions.

CAUTION
Risk of damage to the equipment.
Only the procedures described may be performed by Tetra Pak or Tetra Pak trained customer technicians. In all other cases contact Tetra Pak.

(Cont'd)

(Cont'd)

a) Remove the screws (1).
b) Remove the cover (2) and the filter (3).
c) Clean the filter (3) with compressed air.
d) Assemble in the reverse order.

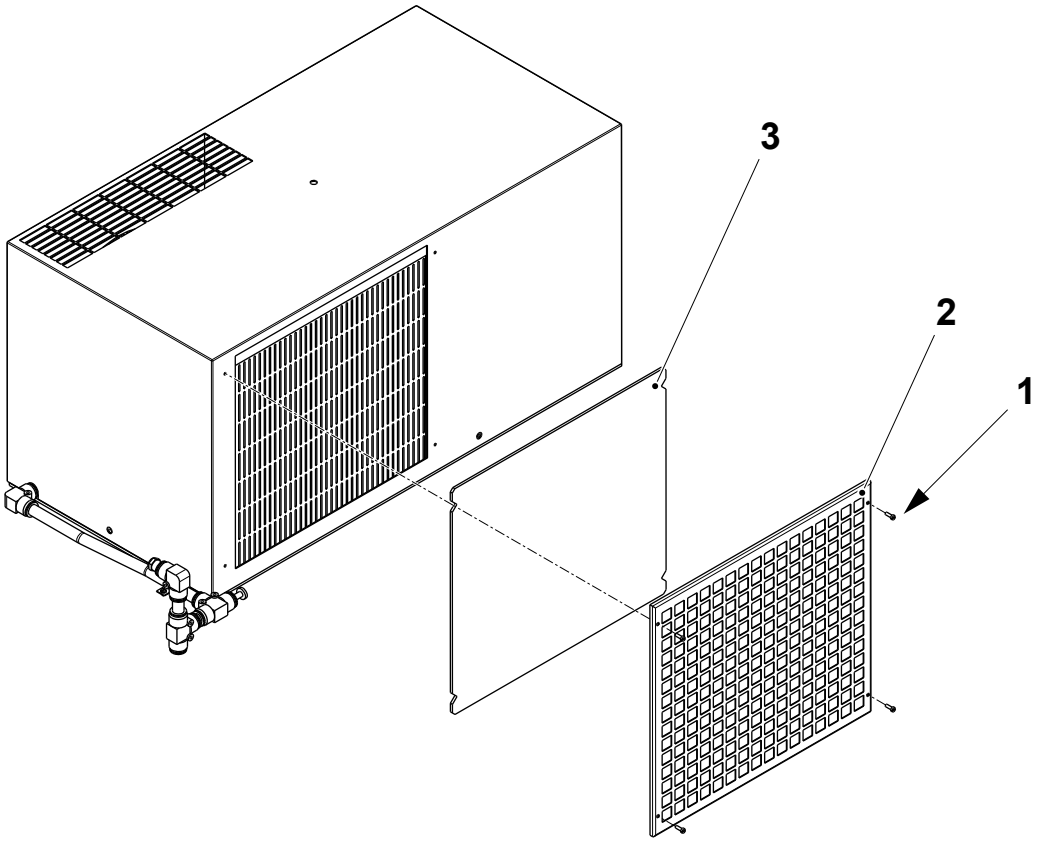

1 Screw
2 Cover
3 Filter

9.10.1-2 Cooling Unit - Change Filter

Machine Status	Mains Power OFF Air OFF Steam ON Water OFF
SPC Reference	2912647-0100

WARNING

Refrigerant gas.

Cooling media R134A. See the Safety Precautions.

CAUTION

Risk of damage to the equipment.

Only the procedures described may be performed by Tetra Pak or Tetra Pak trained customer technicians. In all other cases contact Tetra Pak.

(Cont'd)

(Cont'd)

a) Remove the screws (1).
b) Remove the cover (2) and the filter (3).
c) Change the filter (3).
d) Assemble in the reverse order.

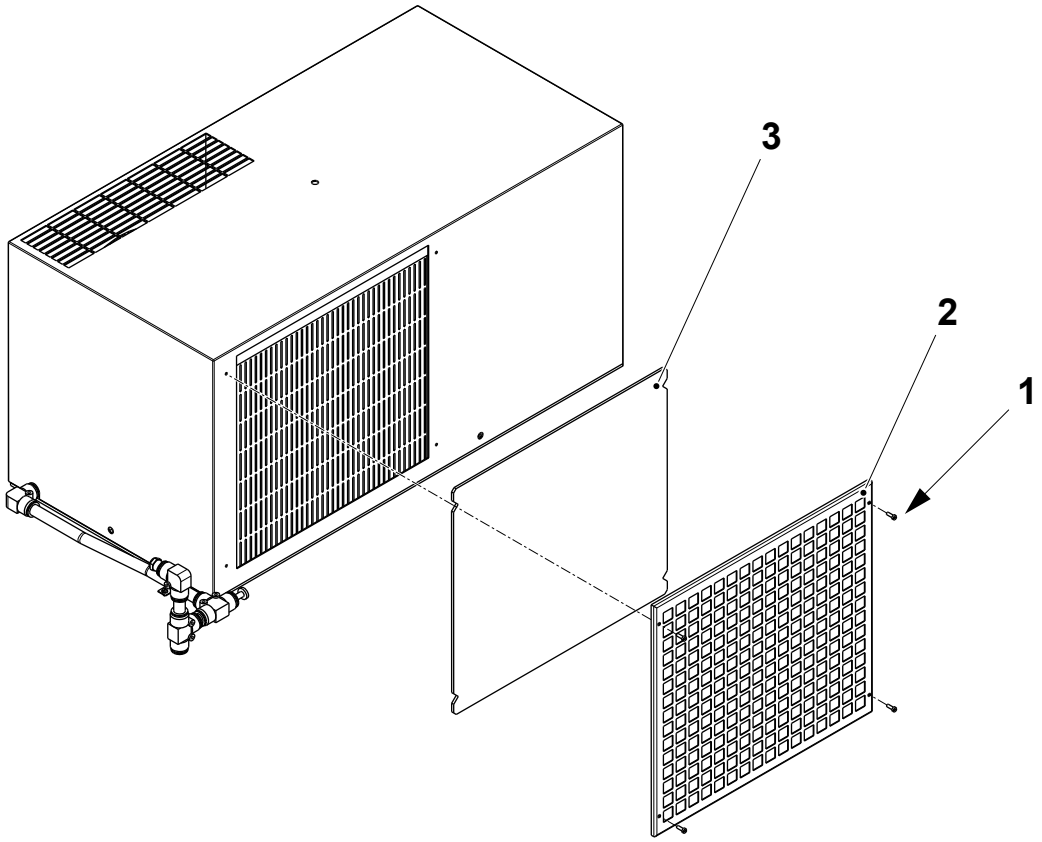

1 Screw
2 Cover
3 Filter

9.10.1-3 Cooling Unit - Check

Machine Status	Mains Power OFF Air OFF Steam ON Water OFF
SPC Reference	2912647-0100

DANGER

Hazardous voltage.
Will shock, burn or cause death. Follow the lockout procedure before performing this procedure.

CAUTION

Risk of damage to the equipment.
Only the procedures described may be performed by Tetra Pak or Tetra Pak trained customer technicians. In all other cases contact Tetra Pak.

a) Remove the screws (1) and the cover (2).

b) Clean the condenser unit (3) with compressed air, blow the compressed air through the inner side of the condenser unit (3) through to the outside of the cooling unit.

c) Clean any build up of dirt from the fan blades (4).

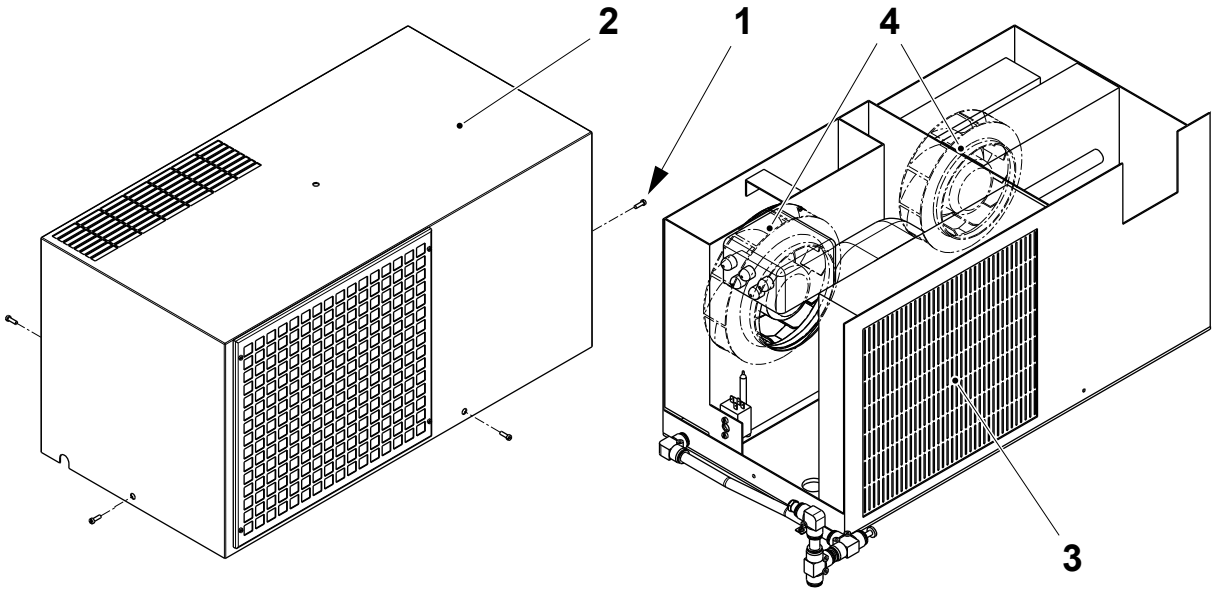

1 Screw
2 Cover
3 Condenser unit
4 Fan blade

(Cont'd)

(Cont'd)

d) Check for:

- oil leakages on the copper pipe connections, if oil is leaking from the pipe connections, contact Tetra Pak
- that the compressor (5) is securely fastened to the cooling unit base
- that the fans (6) are securely fixed and there is not excessive radial play. To change the fans, see 9.10.1-4 Cooling Unit - Overhaul.

e) Assemble in the reverse order.

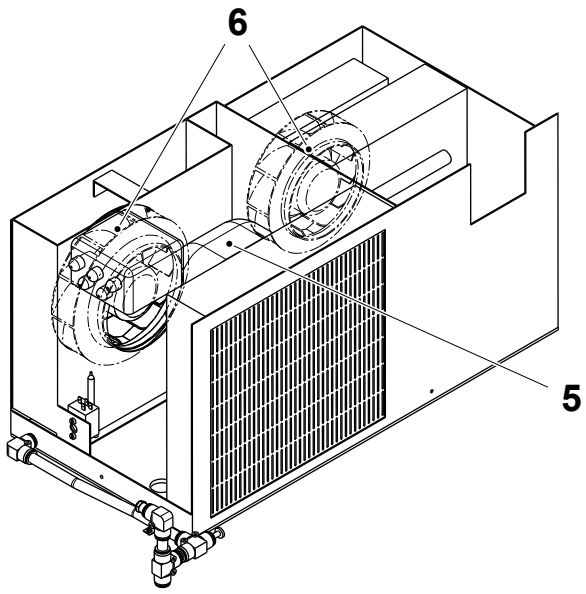

5 Compressor
6 Fan

9.10.1-4 Cooling Unit - Overhaul

Machine Status	Mains Power OFF Air OFF Steam ON Water OFF
SPC Reference	2912647-0100

DANGER

Hazardous voltage.
Will shock, burn or cause death. Follow the lockout procedure before performing this procedure.

WARNING

Refrigerant gas.
Cooling media R134A. See the Safety Precautions.

CAUTION

Risk of damage to the equipment.
Only the procedures described may be performed by Tetra Pak or Tetra Pak trained customer technicians. In all other cases contact Tetra Pak.

Note! If the cooling unit is removed from the electrical cabinet it is advisable to fit a new gasket to ensure a sufficient seal between the electrical cabinet and the cooling unit. Apply the self adhesive side of the new gasket to the cooling unit base.

(Cont'd)

(Cont'd)

a) Remove the screws (1) and the cover (2).

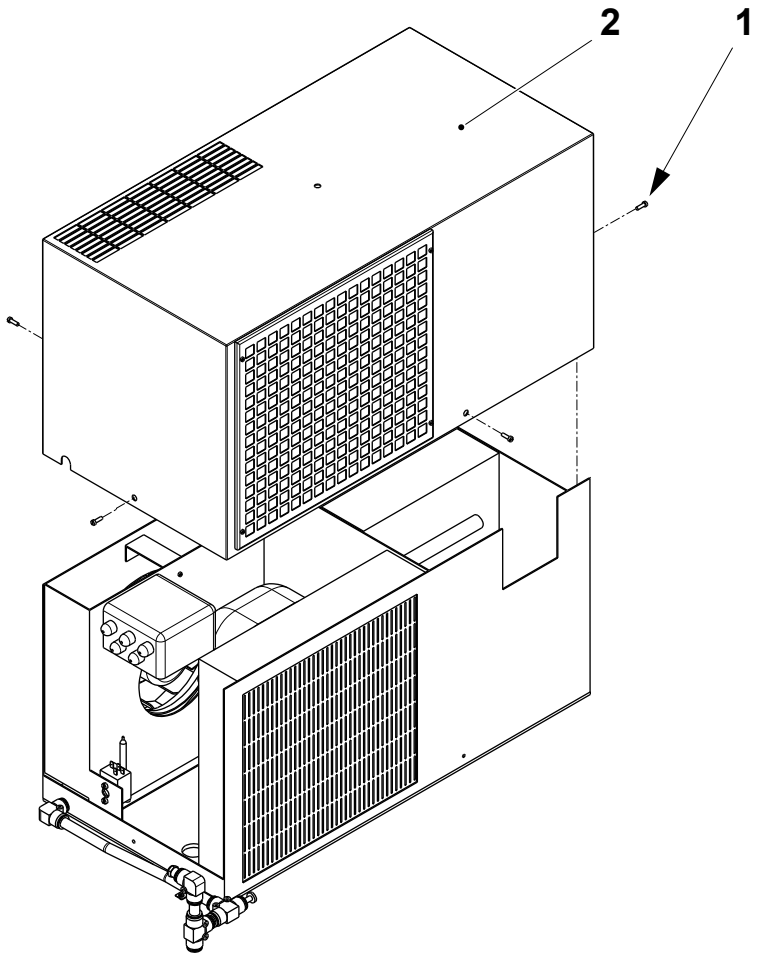

1 Screw
2 Cover

(Cont'd)

(Cont'd)

Change the Condenser Fan M002

a) Disconnect the electrical cable W009 (1) from the electrical connection box X1710 (2).

b) Remove the screws (3) and the bracket (4).

c) Remove the screws (5) and the fan (6).

d) Assemble in the reverse order.

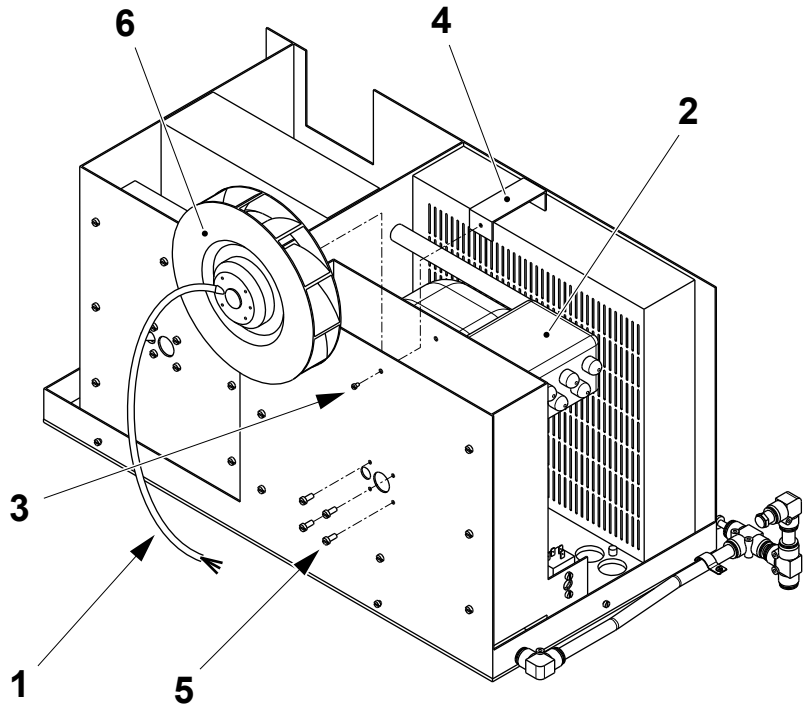

1 Electrical cable
2 Connection box
3 Screw
4 Bracket
5 Screw
6 Fan

(Cont'd)

(Cont'd)

CAUTION
Risk of damage to the equipment.
Take care to fit the fan (6) with the correct screws (5), the screws (3) may damage the fan.

Change the Evaporator Fan M032

a) Disconnect the electrical cable W010 (1) from the electrical connection box X1710 (2).

Note! If necessary cut the plastic ties securing the earth cable to the screws (3).

b) Remove the screws (3) and the cover (4).

c) Remove the screws (5) and the fan (6).

d) Assemble in the reverse order.

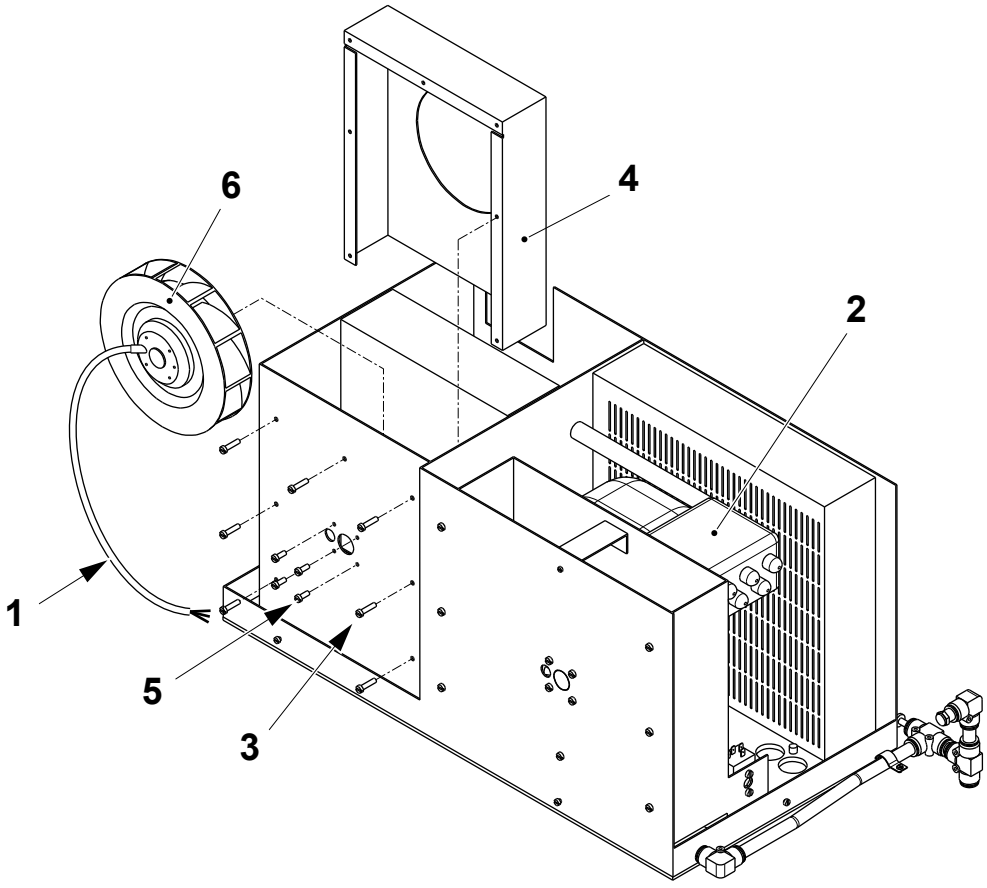

1 Electrical cable
2 Connection box
3 Screw
4 Bracket
5 Screw
6 Fan

(Cont'd)

(Cont'd)

Change the Anti-freeze Thermostat B006

a) Cut the thermostat tubing (1) where necessary and remove the thermostat tubing (1) from the cooling unit (2).

b) Remove the thermostat sensor (3) from the evaporator unit (4).

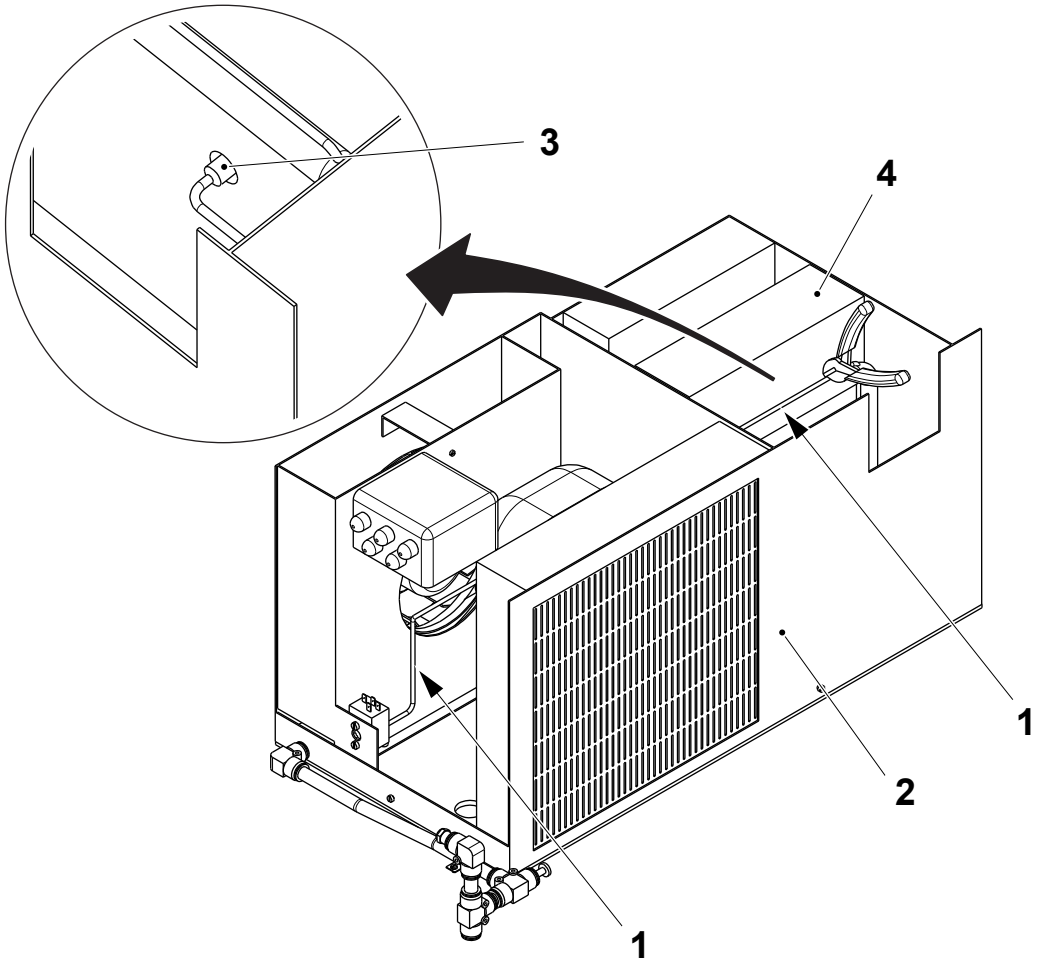

1 Thermostat tube
2 Cooling unit
3 Thermostat sensor
4 Evaporator unit

(Cont'd)

(Cont'd)

c) Remove the electrical connections (5) from the thermostat (6).

d) Remove the screws (7) and the thermostat (6).

e) Fit the new thermostat sensor (8) into the evaporator (4).

f) Thread the thermostat tube through the cooling unit following the path of the old thermostat tube.

Note! Secure the thermostat tube where necessary with plastic ties and coil any excess tube around the bracket (9) before fitting the thermostat (6).

g) Assemble in the reverse order.

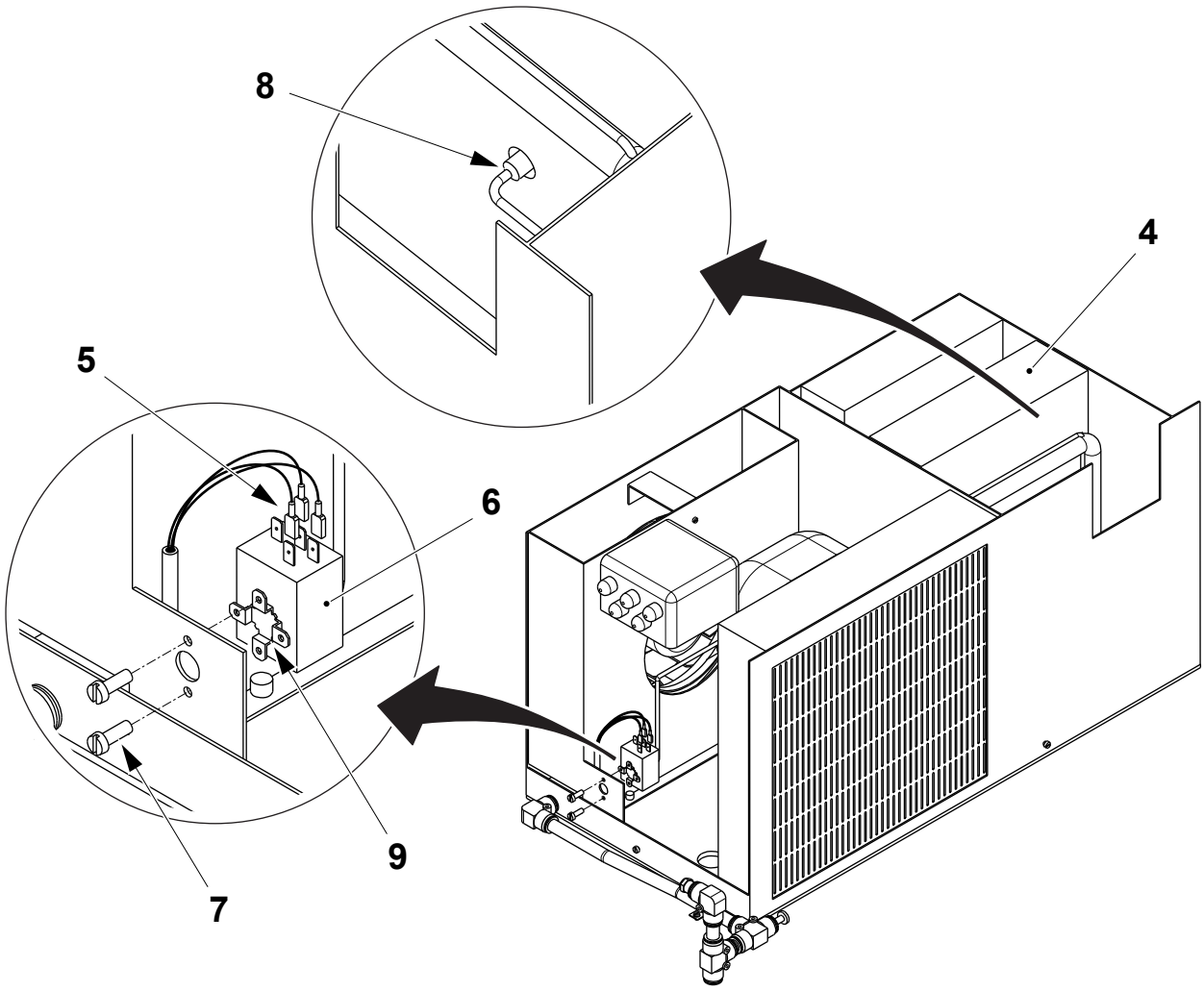

4 Evaporator
5 Electrical connection
6 Thermostat
7 Screw
8 Thermostat sensor
9 Bracket

9.10.1-5 Cooling Unit - Troubleshooting

Machine Status	Mains Power ON Air ON Steam ON Water ON
SPC Reference	2912647-0100

CAUTION
Risk of damage to the equipment.
Only the procedures described may be performed by Tetra Pak or Tetra Pak trained customer technicians. In all other cases contact Tetra Pak.

If the cooling unit fails to operate or is operating insufficiently use the table below to determine the possible cause and actions to be taken.

Description	Possible Cause	Action
The cooling unit will not start.	No mains power supply to the cooling unit.	Check the circuit breaker and connections to the mains power supply.
Only the inside fan runs. Practically no electric consumption	The electrical cabinet internal thermostat has tripped or is wrongly set. The freeze thermostat has tripped.	Check the electrical cabinet internal thermostat and if necessary set to 35°C.
Normal operation. Insufficient cooling. High electric consumption	Condenser coil or filter dirty. Faulty condenser fan. Electric panel not properly sealed.	Check coil and air filter. Check the fans. Remove any obstacles. Close the cabinet doors.
The fan runs but the compressor does not run. Low electric consumption	Compressor internal protection has tripped probably due to too many frequent start ups or insufficient refrigerant gas	Contact Tetra Pak.
Normal operation. Low electric consumption and compressor very hot.	Insufficient or complete lack of refrigerant gas.	Contact Tetra Pak.
Compressor never stops.	Check that the thermostat contacts or any switch contacts are not stuck.	Replace the necessary faulty part.
During operation a lot of condensation forms and is drained off.	Cabinet not sealed sufficiently. Cabinet doors open. Holes in cabinet walls.	Improve the cabinet sealing. Close the cabinet doors. Fill any holes in the cabinet.

9.11 Signal Exchange

SPC Reference	2576334-0100 2576335-0100

9.11.1 Signal Exchange

9.11.1-1 Signal Exchange - Configuration

Machine Status	Mains Power OFF Air OFF Steam ON Water OFF
SPC Reference	2576334-0100 2576335-0100

For instructions on how to configure the signal exchange, see the Installation Manual.

10 General

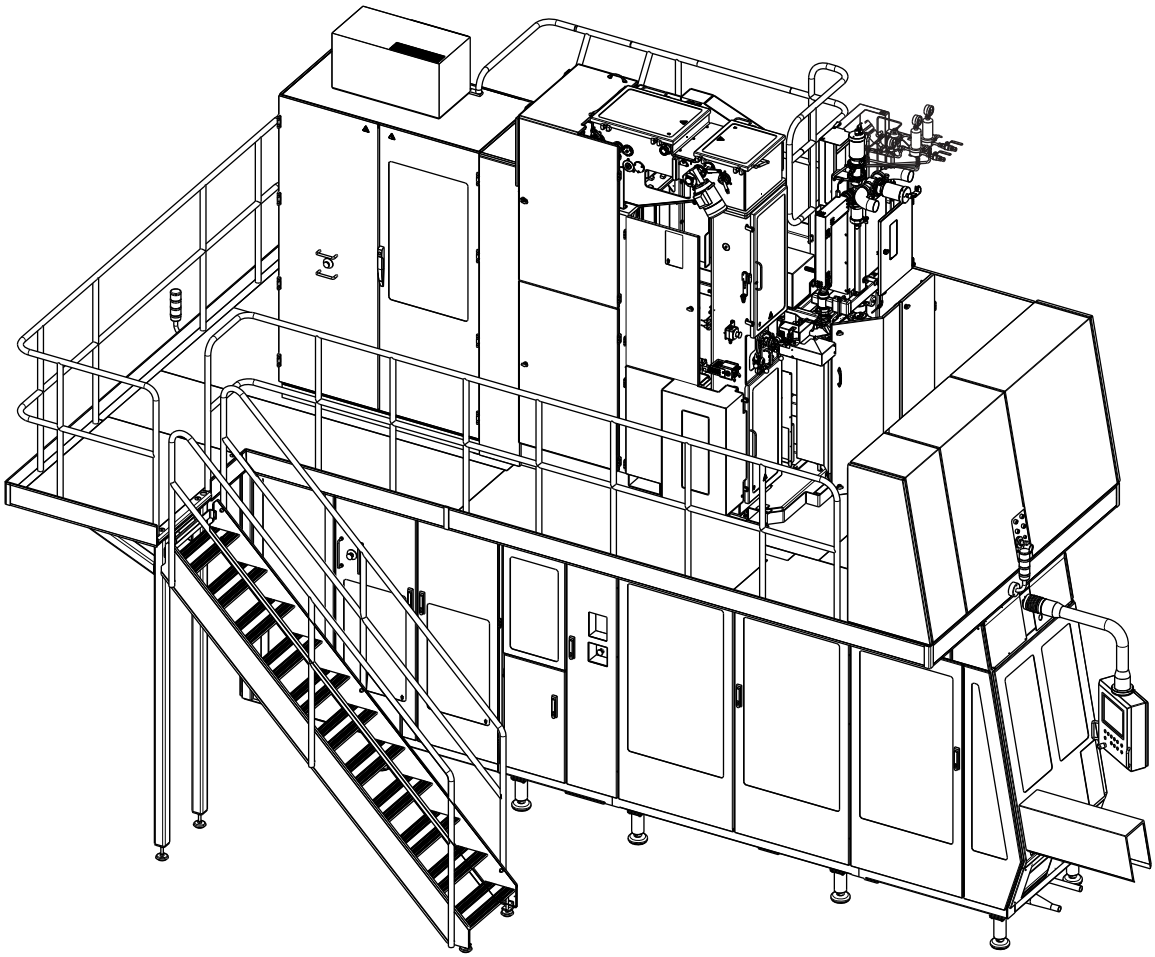

TechPub_2614345_0106 - 09_MM2819200_04en.fm

General - Description

SPC Reference	648575-0200

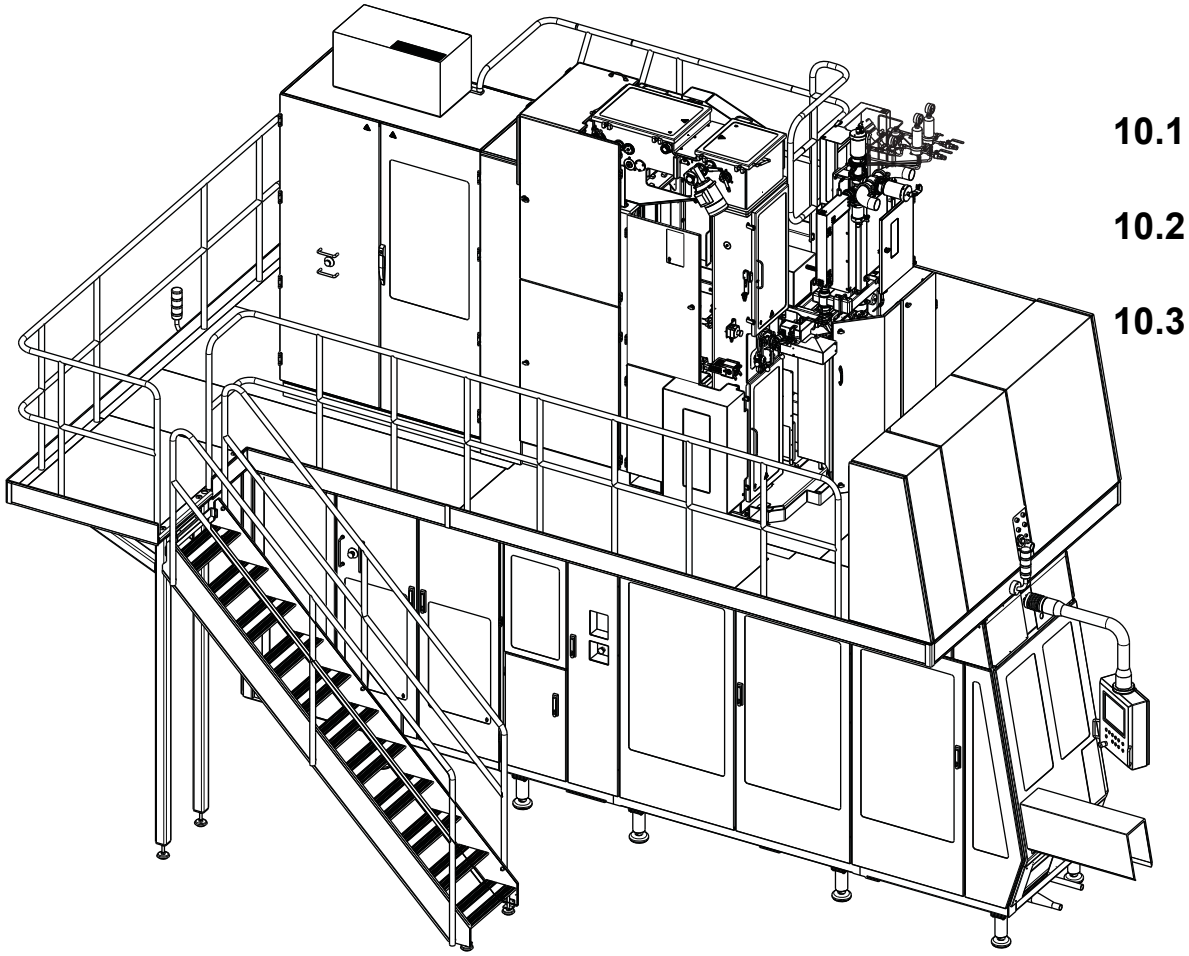

10.1

10.2

10.3

10.1 Technical Data
10.2 Templates and Tools
10.3 Consumables

TechPub_2614345_0106 - 09_MM2819200_04en.fm

10.1 Technical Data . . . . . 10 - 5

10.2 Templates and Tools . . . . . 10 - 9

10.3 Consumables . . . . . 10 - 18

10.3-1 Lubricants . . . . . 10 - 18

10.3-2 Cleaning Compounds . . . . . 10 - 20

10.4 Safety Functions . . . . . 10 - 22

10.4-1 Safety Functions - Check . . . . . 10 - 22

TechPub_2614345_0106 - 09_MM2819200_04en.fm

This page intentionally left blank

TechPub_2614345_0106 - 09_MM2819200_04en.fm

10.1 Technical Data

Pressures	**Unit**	**Value**
Central lubrication oil	Bar	30
Hydraulic unit, pressure jaw	Bar	100
Hydraulic unit, cutting jaw	Bar	85
Hydraulic unit, pressure guard	Bar	80
Flap sealing (T5306)	Bar	1.0 to 2.0
Flap blowing (T5315)	Bar	1.0 to 2.0
Overpressure final folder indexing gear and motor unit (T5001)	Bar	0.2 to 0.3
Waste conveyor front guard	Bar	1.0
Air-peroxide spray container (U70R3302)	Bar	2.0
Peroxide tank filling	Bar	0.2
Photocells jaw system (F4301)	Bar	see page 2-64
Pendulum roller	Bar	1.0 to 6.0
Calender roller TBA 2000 S All other packages	 Bar Bar	 4.0 2.0
Pendulum counter roller, drying chamber	Bar	2.0 to 2.5
Cooling water system	Bar	2.0
Sterile air system (water separator)	Bar	0.25
Foaming	Bar	5.0
Cleaning pump	Bar	4.0
Water circulation - peroxide (cold machine during start up)	Bar	1.8
Air	Bar	6 - 7
Warm water (red)	Bar	3 to 4.5
Cold water (blue)	Bar	3 to 4.5
Steam (input) Minimum supply pressure Maximum pressure fluctuation Minimum flow	 Bar Bar Kg/h	 2.0 ± 0.3 9.4
Product pressure, permitted variation during PRODUCTION	Bar	0.5 to 2.5 ± 0.1
Main air, ASU	Bar	5 - 6
Web tension, ASU	Bar	2.0
Jumbo reel brake, ASU	Bar	0.6 to 0.8

(Cont'd)

TechPub_2614345_0106 - 09_MM2819200_04en.fm

(Cont'd)

Pressure Switches	Unit	Value
Incoming air	Bar	5.5
Incoming cooling water	Bar	1.0 to 2.0
Sterile air	Bar	0.14
Incoming water alarm	Bar	2.0

Induction Heating	Unit	Value
Induction heating, transversal sealing (left / right)		see page 9-422
Induction heating, longitudinal sealing		see page 9-422
Induction heating, strip applicator		see page 9-422

(Cont'd)

TechPub_2614345_0106 - 09_MM2819200_04en.fm

(Cont'd)

Temperature		**Unit**	**Lower Limit**	**Process Value**	**Upper Limit**
Heat sterilization		°C	280	280	380
Peroxide bath		°C	76	79	90
Peroxide tank		°C	79	80	85
Top aseptic chamber		°C	72	80	110
Cooling water (compressor)		°C	7	9 to 14	17
Electrical cabinet		°C	18	30 - 34	38
Flap sealing air nozzles (LH and RH top)		°C	15 less than process value	see page 5-34	15 more than process value
Flap sealing air nozzles (LH and RH bottom)		°C	15 less than process value	see page 5-34	15 more than process value
Steam, TCSB					
	Sterilization	°C	125	130	200
	Production	°C	105	110	200
	Machine OFF, Preheating, Waiting for first production after sterilization, End of production and Intermediate cleaning	°C	105	110	200
Air superheater		°C	330	360	450
Cooling water (blue)		°C	NA	2 to 5	NA
Warm water (red)		°C	NA	20 - 25	NA
Air knife		°C	180	190	250

Incoming Media	**Unit**	**Value**
Electric voltage	V	400 to 230 ± 10%
Electric frequency	Hz	50 or 60 ± 2%

(Cont'd)

TechPub_2614345_0106 - 09_MM2819200_04en.fm

(Cont'd)

Flows	Unit	Value
Cooling water, RH jaw pair	l/min.	min. 0.8
Cooling water, LH jaw pair	l/min.	min. 0.8
Cooling water, final folder	l/min.	2.0
Cooling water, hydraulic system	l/min.	2.0
Cooling water, deionizing circuit	l/min.	1.5
Cooling water, LS	l/min.	1.0
Cooling water, main flow	l/min.	12 to 13

Miscellaneous	Unit	Value
Hydrogen peroxide	% w/w	35
Leak detection fluid (red ink)	TP No.	90298-26
Noise declaration	dB	see IM

Consumption	Unit	Value
Steam - Production	Kg/h	2.4
Steam - ICU Cycle	Kg/cycle	3.5 - 4
Hydrogen peroxide (% w/w 35)	l/h	1.5 - 2.0
Detergent, external cleaning	l/cycle	1.2 to 1.8 (alkali)
Acid (50% NHO_3), ICU cleaning	l/cycle	0.45
Alkali (30% NaOH) ICU cleaning	l/cycle	1.0

TechPub_2614345_0106 - 09_MM2819200_04en.fm

10.2 Templates and Tools

Illustration	Description
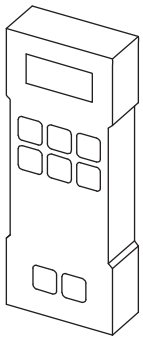	Force Gauge TP No. 90459-1467 **1 Superstructure** **8 ASU**
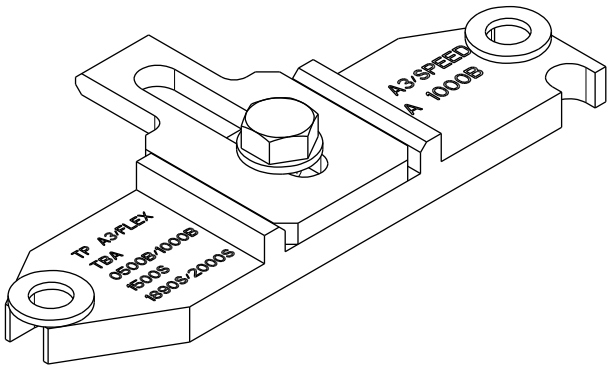	LS Roller Adjustment Template TP No. 2793320-0109 - (for TBA 500 B) TP No. 2793320-0110 - (for TBA 1000 B) TP No. 2793320-0111 - (for TBA 1500 S) TP No. 2793320-0113 - (for TBA 2000 S) TP No. 2793320-0115 - (for TBA 1000 S) TP No. 2793320-0116 - (for TBA 1000 Sq) TP No. 2793320-0120 - (for TPA 500 Sq) TP No. 2793320-0121 - (for TPA 750 Sq) TP No. 2793320-0122 - (for TPA 1000 Sq) **1 Superstructure**
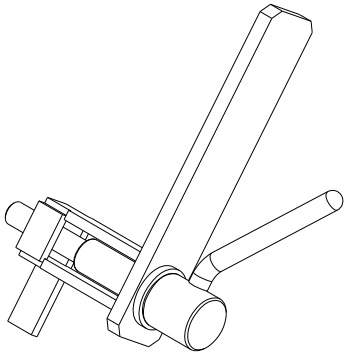	Tool Dismounting TP No. 449969-0100 **1 Superstructure**

TechPub_2614345_0106 - 09_MM2819200_04en.fm

Illustration	Description
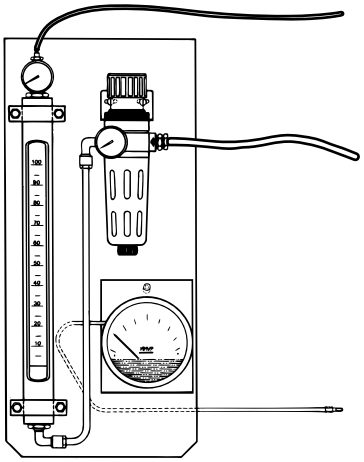	Leak Finding Equipment TP No. 533014-0100 **1 Superstructure**
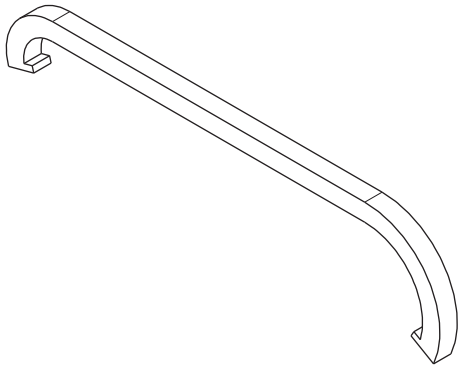	Pipe Wrench TP No. 777200-0101 **1 Superstructure**
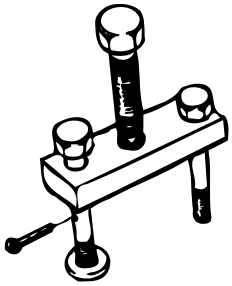	Puller TP No. 74305-0100 **1 Superstructure**
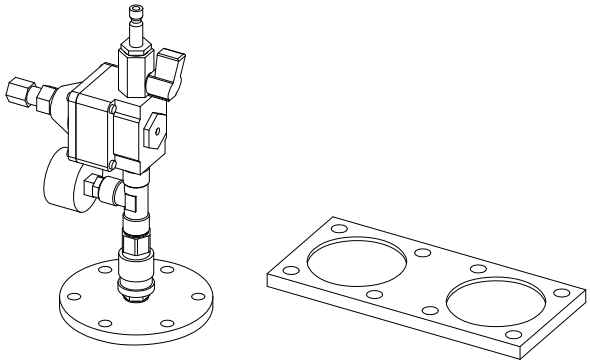	Pressure Test Equipment TP No. 1349738-0100 **1 Superstructure**

TechPub_2614345_0106 - 09_MM2819200_04en.fm

Illustration	Description
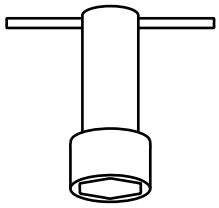	Socket Wrench TP No. 90206-0330 **1 Superstructure**
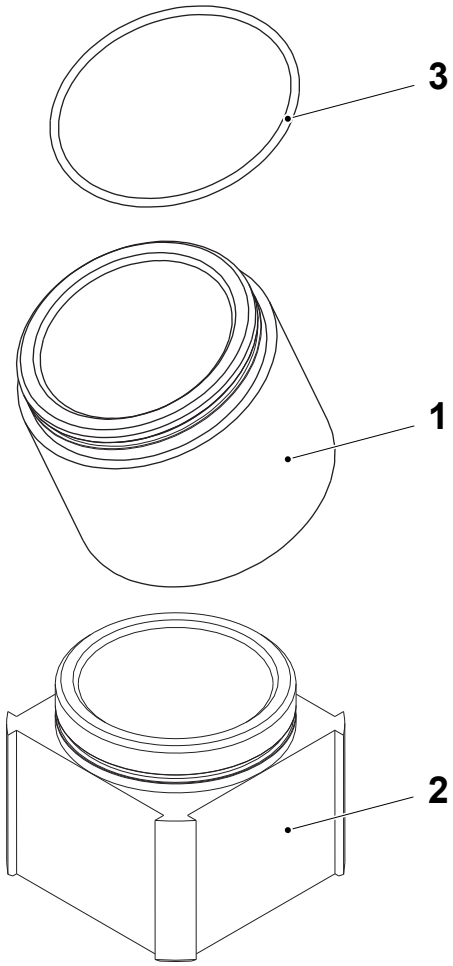	Template (1) TP No. 1498151-0000 - (for TBA 1000 S) TP No. 1517987-0000 - (for TBA 500 Sq, TBA 1000 Sq) TP No. 1524841-0000 - (for TPA 750 Sq, TPA 1000 Sq) TP No. 1498150-0000 (for TBA 1500 S) TP No. 2660843-0000 - (for TBA 2000 S) Template (2) TP No. 2774372-0000 - (for TBA 1000 B, TBA 500 B) O-ring (3) TP No. 315202-0305 - (for TBA 1000 Sq) TP No. 315202-0303 - (for TPA 750 Sq, TPA 1000 Sq) TP No. 315202-0305 - (for TBA 500 Sq, TBA 1000 Sq) TP No. 315202-0307 - (for TBA 1000 S) TP No. 315202-0308 - (for TBA 500 B, TBA 1000 B, TBA 1500 S) TP No. 315202-0310 - (for TBA 2000 S) **1 Superstructure**
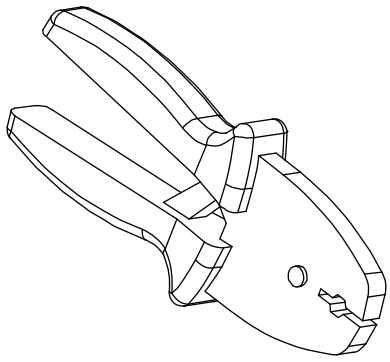	Crimp Tool TP No. 90459-1037 **2 Machine Body**

TechPub_2614345_0106 - 09_MM2819200_04en.fm

Illustration	Description
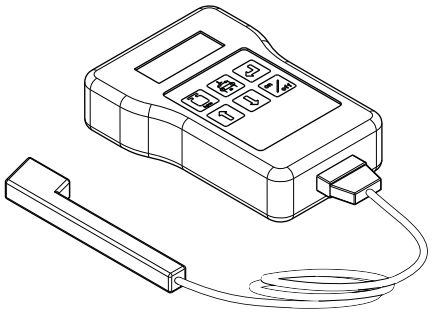	Belt Tension Meter TP No. 90600-3415 **3 Drive Unit** **4 Jaw System** **5 Final Folder**
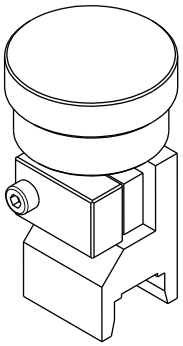	Micrometer Tool TP No. 2908997-0100 **4 Jaw System**
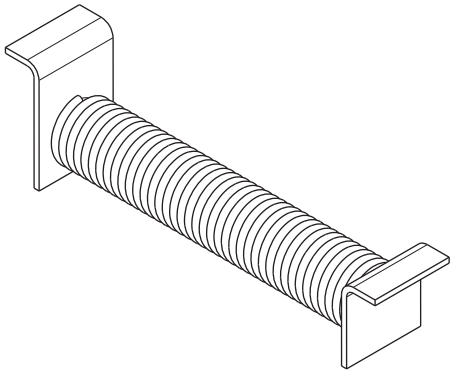	Compression Spring TP No. 72846-0101 **4 Jaw System**
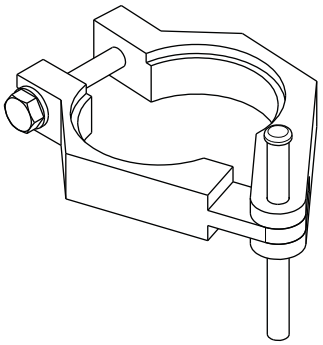	Measuring Clamp TP No. 1035362-0100 **4 Jaw System**

TechPub_2614345_0106 - 09_MM2819200_04en.fm

Illustration	Description
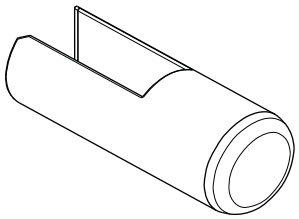	Assembly Tool TP No. 2925912-0000 **4 Jaw System**
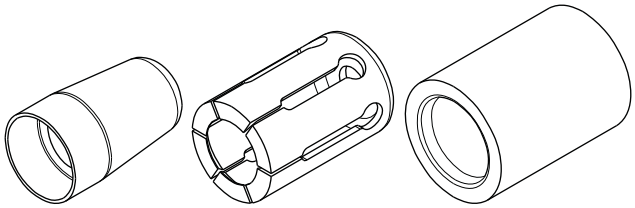	Assembly Tool (Folding Flaps) TP No. 2979735-0000 - (for TBA 2000 S) TP No. 2979736-0000 - (for all other volumes) Assembly Tool (Knife plunger) TP No. 2979734-0000 - (for TBA 2000 S) TP No. 2979733-0000 - (for all other volumes) Assembly Tool (Pressure jaw piston) TP No. 2778300-0000 - (for TBA 2000 S) TP No. 90091-0378 - (for all other volumes) **4 Jaw System**

TechPub_2614345_0106 - 09_MM2819200_04en.fm

Illustration	Description
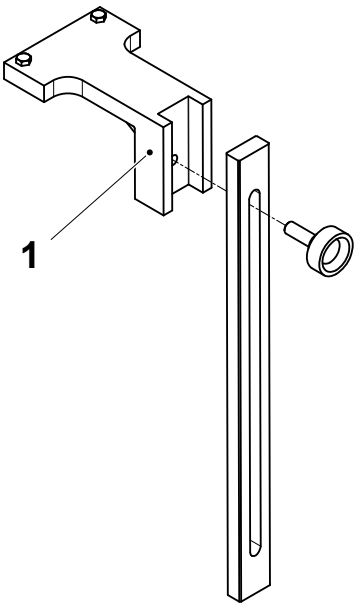	Jaw System Tool Box TP No. 2725981-0100 Including: Setting Tool (1) TP No. 2725982-0101 Setting Tools (2) TP No. 2644317-0100 TP No. 2644318-0100 Templates (3): TP No. 1478190-0000 - (for TBA 1500 S) TP No. 1140320-0000 - (for TBA 1000 S) TP No. 1498117-0000 - (for TBA 1000 Sq, TBA 500 Sq) TP No. 1140268-0000 - (for TBA 1000 B, TBA 500 B) TP No. 2649440-0000 - (for TBA 2000 S) TP No. 2503694-0000 - (for TPA 750 Sq, TPA 1000 Sq) **4 Jaw System**
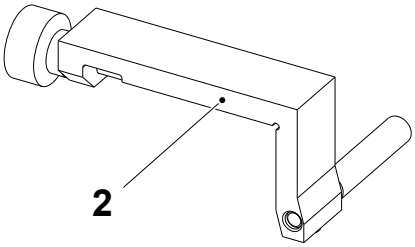	
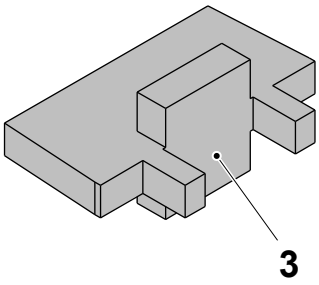	
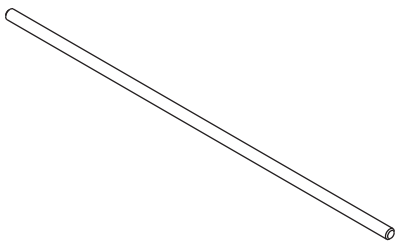	Assembly Tool TP No. 1350498-0000 **5 Final Folder**

TechPub_2614345_0106 - 09_MM2819200_04en.fm

Illustration	Description
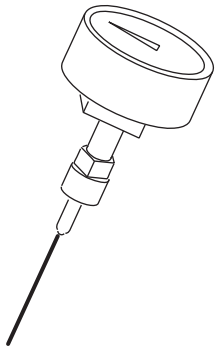	Needle Pressure Gauge TP No. 1478583-0100 **5 Final Folder**
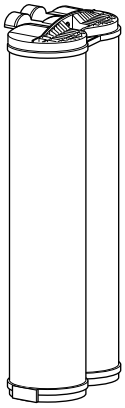	Maintenance Kit TP No. 90600-3267 **6 Service Unit**
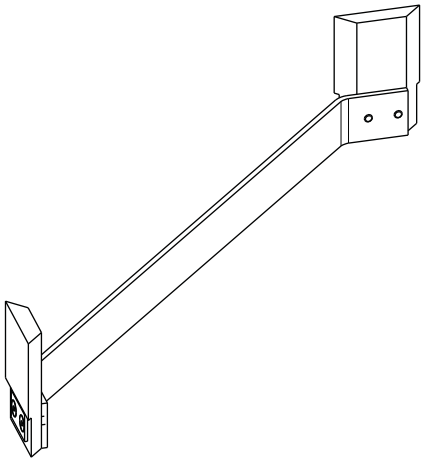	Sealing Plate Cleaning Tool TP No. 2994287-0000 **8 ASU**
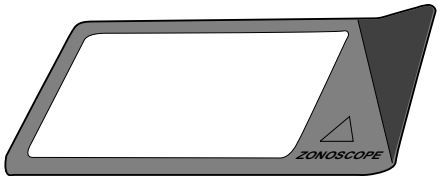	Measuring Instrument TP No. 90243-0203 **9 Electrical Cabinet**

TechPub_2614345_0106 - 09_MM2819200_04en.fm

Illustration	Description
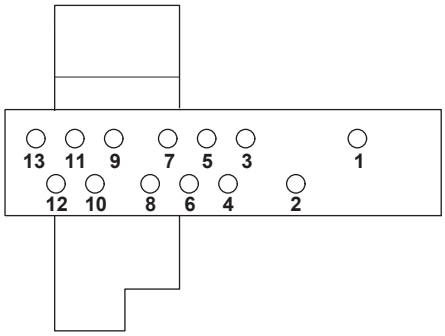	Tools and Templates TP No. 2564074-0100 Including: Setting Tool TP No. 1532459-0100 Setting Tool TP No. 2644202-0100 Hook Spanner TP No. 777170-0107 **PullTab Unit**
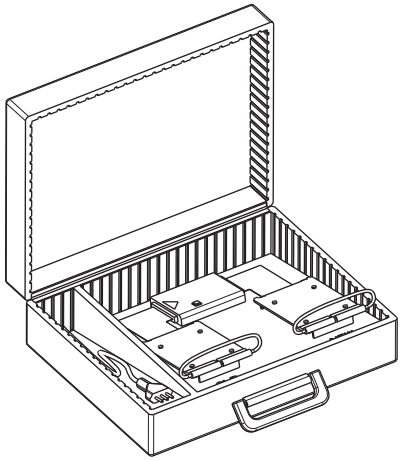	Hard Disk Copy Tool TP No. 90459-6473 **9 Electrical Cabinet**
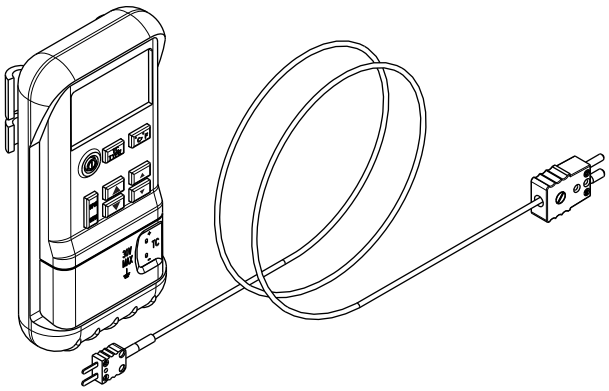	Temperature Calibrator (FLUKE 714) TP No. 90458-0914 Thermocouple Cable Male TP No. 90458-0915 **9 Electrical Cabinet**

TechPub_2614345_0106 - 09_MM2819200_04en.fm

Illustration	Description
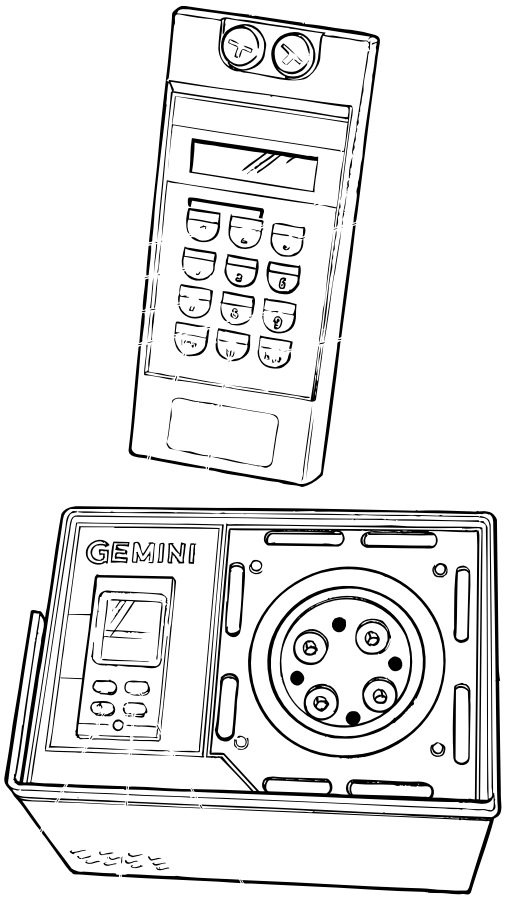	Calibration Equipment TP No. 2559112-0100 Including: Temperature Calibrator (Micromite instrument) TP No. 90410-0338 Extension Wire Male 5m. (temp.controller) TP No. 90326-0308 Extension Wire Female 1m. (oven) TP No. 90326-0309 Label TP No. 90194-0113 Temperature Calibrator Oven (Gemini) TP No. 90410-0337 Calibrated Thermocouple Type K TP No. 90326-0310 **9 Electrical Cabinet**

TechPub_2614345_0106 - 09_MM2819200_04en.fm

10.3 Consumables

10.3-1 Lubricants

WARNING

Risk of personal injury!

Certain lubricants can cause injury if they come into contact with the eyes, skin, mucous membranes, or clothing. Always follow the manufacturer's instructions for handling chemical products.

The table below lists only a selection of lubricants with their respective designations.

Lubricant specifications may be ordered from:

Tetra Pak GTS AB - Parts Supply Chain, Ruben Rausings gata, SE-221 86 LUND, Sweden

Lubricant Code	Part No. (used when ordering from Tetra Pak)	Supplier	Product Designation (2004-06)
A Motor oil	90 296-0028	Shell	Shell Rimula Oil X 10W-30
B High-pressure oil	330002-2201 330002-2202	Shell	Shell Cassida Fluid GL 220
	90296-0072 For use in production plant with start temperature below 5 °C	Shell	Shell Omala Oil 150
C Hydraulic oil	90459-1310	Shell	Shell Tellus Oil T 32
D Mist lubrication oil	90296-0080	Shell	Shell Dontax Oil TA
E Compounded cylinder oil	90296-0002	Shell	Shell Valvata Oil J460
F Lithium grease, EP type	90296-0068	Shell	Shell Alvania Grease EP2
H High-pressure oil	330002-3201 330002-3202	Shell	Shell Cassida Fluid GL 320
K Circulation oil	90296-0015	Shell	Shell Tellus Oil 100
L Silicone grease	90296-0009		Dow Corning 7
M Lithium grease, EP type	90296-0070	Shell	Shell Alvania Grease EP1
N PTFE grease	90296-0091	PINCO	Teflon Grease

TechPub_2614345_0106 - 09_MM2819200_04en.fm

Lubricant Code	**Part No. (used when ordering from Tetra Pak)**	**Supplier**	**Product Designation** (2004-06)
P Synthetic compressor oil	90296-0054	Shell	Shell Corena Oil H68
Q Low friction assembly paste	90296-0012	Dow Kluber	Molykote G-N Plus Unimoly Plus
R Synthetic grease	90459-7413 90459-7414	Kluber	Klubersynth UH1 14-1600
S Synthetic hydrocarbon grease	90296-0010	Mecman	435-1
T Synthetic lubricating grease	90459-0340	Shell	Cassida HDS2
U Hydraulic fluid	90459-1310	Shell	Cassida Fluid HF32
V Oil	90296-0104	Molykote	Molykote Foodslip EP Gear Oil 220
W Hydraulic fluid	90458-1427	Shell	Shell Tellus Oil T46
Y Lubrication oil	90458-2735	Mobil	Mobil SHC 634
Z Lubrication oil	90459-1041	Shell	Tivela S460

TechPub_2614345_0106 - 09_MM2819200_04en.fm

10.3-2 Cleaning Compounds

WARNING

Risk of explosion.

Cleaning with not recommended cleaning agents, for example agents including alcohol, could cause explosion. Use only Tetra Pak recommended cleaning agents when cleaning or disinfecting parts that can come into contact with hydrogen peroxide.

It is strongly recommend, in order to optimize the cleaning efficiency, to use water characterised by the following physio-chemical parameters:

- water quality; chlorine free, drinkable water
- pH; between 6 and 8 pH units
- water hardness; between 5 and 10 °f French degrees of hardness (between 3 and 6 German degrees of hardness)
- chlorides; lower than 50 ppm
- silicates; lower than 10 ppm.

(Cont'd)

TechPub_2614345_0106 - 09_MM2819200_04en.fm

(Cont'd)

Cleaning Compound Table

Comparable qualities from other suppliers may be selected in compliance with the technical requirements listed in the table. All cleaning compounds must comply with local legal requirements.

The supplier recommendations for concentration and temperature should be followed. When dosing the products automatically, the concentration should be checked.

Cleaning Type	TP Code		Detergent Type	Example 071119									
				Raw Material				Formulated Products					
				Name	Max Conc w/w	Use Conc w/w	Use Temp °C	Ecolab	Use Conc. w/w	Use Temp. °C	Johnson Diversey	Use Conc. vol/ vol	Use Temp. °C
CIP	A	1	Alkali	NaOH	30%	1.50%	80	P3-mip CIP	2.0%	80	VC 13 VC 7	3.0% 4.5%	80
	B	1	Acid	HNO_3	50%	1.00%	60	P3-horolith L31	1.0%	60	VA 5	2.0%	60
External Cleaning (automatic)	C	1	Alkali foam (**)					P3-Topax 12	3.0%	25	VF 9	3.0%	25
		2	Alkali solution (***)					P3-mip FPC	2.0%	55	VK 12	1.0%	55
		3	Disinfection foam (****)					P3-Topax 99	2.0%	25	VS 1	1.0%	25
		4	Acid foam (****)					P3-Topax 56		25	VF 11	2.0%	25
Manual Cleaning (wiping)	D	1	Alkali					P3-mip FPC	2.0%	25	VK 12	1.0%	25
Manual Disinfection (immersion)	F	1	Low alkali					P3-Topax 99	2.0%	25	VS 1	1.0%	25
		2	Low alkali					P3-Steril	2.0%	25	VT 1	1.0%	25
		3	Acid solution	Peracetic acid solution	15%	200ppm	25	Oxonia Active	0.50%	25	VT 6	0.10%	25
Manual Disinfection (spraying)	G	1	Alcoholic solution	Isopropanol	70%		25	Spitaderm	Pure	25	VT 10	pure	25
		2	Alcoholic solution	Ethanol	70%		25	Alcodes	Pure	25		pure	25
		3	Acid solution	Peracetic acid solution	15%	200ppm	25	Oxonia Active	0.50%	25	VT 6	0.10%	25
Hand Disinfection	H	1						Manodes	pure	25	H34	pure	25
Deliming agent	K	1	Citric acid compound (****)					Lime-A-Way Special	pure	25			

**To be used on TBA/21, TBA/22, TP A3/Flex, TP A3/Speed, TB/21, TP C3/Flex.

***To be used on TBA/8, TBA/9, TBA/19, TB/8, TB/9, TB/19.

****To be used only on C3/Flex.

TechPub_2614345_0106 - 09_MM2819200_04en.fm

10.4 Safety Functions

10.4-1 Safety Functions - Check

Machine Status	PREPARATION

Make sure that the machine can not be inched if:

- any of the doors or covers are open
- any EMERGENCY STOP is pushed
- the crank is in the cranking position.

For the location of safety components, see the sections Safeguards and Emergency Stop in the Safety Precautions chapter.

Make sure that when any EMERGENCY STOP is pushed the machine resets to step ZERO.

Check that the warning sign labels are present and readable. Replace any missing and /or illegible signs, see Locations of Safety Signs in the Safety Precautions chapter.

Also see the Optional Equipment MM's.

TechPub_2614345_0106 - 09_MM2819200_04en.fm

A

Acid Circuit - Change Container . . . . . 2 - 62
Acid Circuit - Check Container for Leakages . 2 - 61
Acid Circuit - Check Float Function (Level Monitor) 2 - 61
Acid Circuit - Check Floats (Level Monitor) . . 2 - 60
Acid Circuit - Check Pipe . . . . . 2 - 61
Acid Circuit - Drain . . . . . 2 - 60
Acid Circuit - Set Proximity Switch . . . . . 2 - 62
Air Knife - Change Slide Plates . . . . . 1 - 116
Air Knife - Check and Clean . . . . . 1 - 109
Air knife - Set . . . . . 1 - 111
Air Knife - Set Proximity Sensor . . . . . 1 - 115
Air Pipe-Line - Change Filter . . . . . 2 - 24
Air Pipe-Line - Change Gasket and Non Return Valve . . . . . 2 - 22
Air Pipe-Line - Check . . . . . 2 - 19
Air Super Heater - Check . . . . . 1 - 195
Air Super Heater - Check Heat Exchanger . 1 - 197
Air Valve - Overhaul . . . . . 1 - 207
Air Valve - Set . . . . . 1 - 203
Air Valve - Set Proximity Switch . . . . . 1 - 211
Alkali Circuit - Change Canister . . . . . 2 - 55
Alkali Circuit - Check Canister for Leakage . . 2 - 53
Alkali Circuit - Check Float Function (Level Monitor) 2 - 49
Alkali Circuit - Check Floats (Level Monitors) 2 - 45
Alkali Circuit - Check Pipe . . . . . 2 - 51
Alkali Circuit - Drain . . . . . 2 - 44
Alkali Circuit - Set Proximity Switch . . . . . 2 - 58
ASU - Check Function . . . . . 8 - 11
ASU - Force Manual Splice in Design . . . . . 8 - 19
ASU - Setting Sequence . . . . . 8 - 9

B

Bath - Change Heating Elements . . . . . 1 - 349
Bath - Change Roller Bushings . . . . . 1 - 342
Bath - Check Roller . . . . . 1 - 339
Bath - Set Bottom Cover Sensor . . . . . 1 - 352
Belt Tensioner - Overhaul . . . . . 3 - 43
Belt Tensioner - Remove . . . . . 3 - 41
Bending - Change Roller . . . . . 1 - 135
Bending Roller - Change . . . . . 1 - 89, 1 - 106
Bending Roller - Change Ball Bearings . . . . . 2 - 8
Bending Roller - Change Bearings . . . . . 8 - 73
Bending Roller - Check . . . . . 2 - 7
Bending Roller - Check Paper Guide . . . . . 1 - 373
Bending Roller - Check Proximity Switch . . . 1 - 386
Bending Roller - Check Splice Detector . . . . 1 - 363
Bending Roller - Overhaul . . . . . 1 - 359
Bending Roller - Set Paper Guide Position . . 1 - 368
Bending Roller - Set Paper Guide Pressure . 1 - 385
Bending Roller - Set Proximity Switch . . . . . 1 - 387
Bending Roller - Set Splice Detector . . . . . 1 - 366
Bending Roller - Set Web Width . . . . . 1 - 382
Blowing System - Change Gaskets . . . . . 1 - 147
Blowing System - Change Seals . . . . . 1 - 149
Blowing System - Check . . . . . 1 - 141
Blowing System - Clean Nozzles . . . . . 1 - 142
Blowing System - Set Nozzles . . . . . 1 - 145
Bobbin Brake - Set . . . . . 8 - 199
Buffer - Check . . . . . 8 - 86

C

Cable Connection - Check . . . . . 4 - 97
Calender Roller - Change . . . . . 1 - 96
Calender Roller - Check . . . . . 1 - 94
Calender Roller - Set Distance . . . . . 1 - 100
Calender Roller - Set Proximity Switch . . . . . 1 - 101
Calibrator - Set Fluke 714 . . . . . 9 - 355
Calibrator - Set Micromite II . . . . . 9 - 358
Central Lubrication - Bleed . . . . . 2 - 125, 5 - 138
Central Lubrication - Change Filter Insert . . . 2 - 128
Central Lubrication - Check . . . . . 5 - 136
Central Lubrication - Check Oil Feed . . . . . 2 - 123
Central Lubrication - Check Oil Pressure . . . 2 - 122
Central Lubrication - Check Pressure Guard 2 - 120
Central Lubrication - Clean Oil Tank . . . . . 2 - 124
Central Lubrication - Fill Oil . . . . . 2 - 127
Chemicals - Check . . . . . 2 - 42
Circuit - Change Filter . . . . . 6 - 47

TechPub_2614345_0106 - MM_2819200_0104IOM.fm

Circuit - Set Conductivity Meter . . . . . 6 - 44
Cleaning Compounds . . . . . 10 - 20
Cleaning Cup - Check Gaskets . . . . . 1 - 304
Cleaning Cup - Set Sensor . . . . . 1 - 305
Cleaning System - Check Nozzles . . . . . 2 - 78
Compressor Unit - Change Gaskets . . . . . 1 - 172
Compressor Unit - Check . . . . . 6 - 10
Compressor Unit - Check Pressure . . . . . 1 - 170
Compressor Unit - Check Sight Glass . . . . . 6 - 8
Compressor Unit - Clean Impeller . . . . . 1 - 175
Conductivity Meter - Calibrate . . . . . 9 - 287
Conductivity Meter - Change Conductivity Sensor 9 - 299
Conductivity Meter - Change Fuse . . . . . 9 - 301
Conductivity Meter - Description . . . . . 9 - 276
Conductivity Meter - Error Codes . . . . . 9 - 296
Conductivity Meter - Set . . . . . 9 - 281
Connection Box - Change Transformer . . . . . 8 - 31
Connection Box - Check Pressure Sensor . . 1 - 389
Cooling Unit - Change Filter . . . . . 9 - 441
Cooling Unit - Check . . . . . 9 - 443
Cooling Unit - Clean Filter . . . . . 9 - 439
Cooling Unit - Overhaul . . . . . 9 - 445
Cooling Unit - Troubleshooting . . . . . 9 - 451
Cooling Water System - Check . . . . . 6 - 5
Cooling Water System - Fill . . . . . 6 - 7
Counter Roller - Change . . . . . 8 - 187
Counter Roller - Check . . . . . 8 - 137
Counter Roller - Overhaul . . . . . 8 - 138
Counter Roller - Set Cylinder . . . . . 8 - 141
Covering Panel - Change Safety Key . . . . . 8 - 198
Covering Panel - Check . . . . . 8 - 195
Covering Panel - Set Safety Switches . . . . . 8 - 197
CPU Module - Change . . . . . 9 - 23
CPU Module - Change Battery . . . . . 9 - 46
CPU Module - Download Program . . . . . 9 - 33
CPU Module - LED Description . . . . . 9 - 44
CPU Module - Load Firmware . . . . . 9 - 29
Crank - Check Chain . . . . . 1 - 103
Crank - Set Position . . . . . 2 - 150
Cutting Arm - Change Bearings and Shaft . . . 4 - 79
Cutting Arm - Check . . . . . 4 - 77
Cutting Arm - Check Clearance . . . . . 4 - 83
Cutting Arm - Set Play . . . . . 4 - 82
Cutting Jaw - Assemble . . . . . 4 - 136
Cutting Jaw - Change Cutting Rails . . . . . 4 - 146
Cutting Jaw - Change Oil . . . . . 4 - 144
Cutting Jaw - Change Seals . . . . . 4 - 137
Cutting Jaw - Check . . . . . 4 - 132
Cutting Jaw - Remove . . . . . 4 - 135
Cutting Table - Change Pads and Finger . . . . 8 - 88
Cutting Table - Check . . . . . 8 - 87
Cutting Table - Set . . . . . 8 - 90

D

Damper - Overhaul . . . . . 3 - 37
Damper - Remove . . . . . 3 - 36
Design Correction Device - Change Plain Bearings 4 - 96
Design Correction Device - Check . . . . . 4 - 95
DeviceNet Compact Block I/O - Change . . . . 9 - 115
DeviceNet Compact Block I/O - Download Program 9 - 119
DeviceNet Compact Block I/O - LED Description 9 - 123
DeviceNet Compact Block I/O - Set Node Address 9 - 118
DeviceNet Point I/O Adapter - Change . . . . . 9 - 91
DeviceNet Point I/O Adapter - Download Program 9 - 96
DeviceNet Point I/O Adapter - LED Description . 9 - 100
DeviceNet Point I/O Adapter - Set Node Address 9 - 95
DeviceNet Point I/O Module - Change . . . . . 9 - 104
DeviceNet Point I/O Module - LED Description . . 9 - 108
DeviceNet PowerFlex Adapter - Change . . . 9 - 125
DeviceNet PowerFlex Adapter - Download Program 9 - 132
DeviceNet PowerFlex Adapter - LED Description 9 - 136
DeviceNet PowerFlex Adapter - Set Node Address and Baud Rate . . . . . 9 - 129
DeviceNet Scanner Module - Change . . . . . 9 - 72
DeviceNet Scanner Module - Download Program 9 -

TechPub_2614345_0106 - MM_2819200_0104IOM.fm

81
DeviceNet Scanner Module - Error Codes . . . 9 - 87
DeviceNet Scanner Module - LED Description 9 - 85
DeviceNet Scanner Module - Load Firmware 9 - 80
DeviceNet Scanner Module - Set Node Address and Baud Rate . . . . . 9 - 77
Digital I/O Modules - Change . . . . . 9 - 62
Digital I/O Modules - LED Description . . . . . 9 - 67
Distributed I/O - Description . . . . . 9 - 70
Doors and Covers - Grease Locking Devices 2 - 141
Doors and Covers - Remove . . . . . 2 - 137
Doors and Covers - Set Safety Switch . . . . . 2 - 139
Drive Roller - Change . . . . . 1 - 92
Drive Roller - Check . . . . . 1 - 90
Drive Unit - Change Bearings and Seal Ring . 4 - 90
Drive Unit - Change Belt . . . . . 4 - 89
Drive Unit - Check . . . . . 4 - 88
Drive Unit - Check Damper . . . . . 3 - 12
Drive Unit - Check Drive Belt . . . . . 3 - 13
Drive Unit - Lower Jaw System . . . . . 3 - 6
Drive Unit - Referencing . . . . . 3 - 9
Drive Unit - Release Brakes . . . . . 3 - 7
Drive Unit - Set Belt Tension . . . . . 4 - 92
Drive Unit - Set Drive Belt Tension . . . . . 3 - 16
Drive Unit - Setting Sequence . . . . . 3 - 5
Drop Chute - Check . . . . . 5 - 49
Drop Chute - Set . . . . . 5 - 51
Drying Chamber - Check Overpressure . . . . . 1 - 81
Drying Chamber - Check Rollers . . . . . 1 - 68
Drying Chamber - Grease Roller Ball Bearings 1 - 71
Drying Chamber - Leakage Detection . . . . . 1 - 73
Drying Chamber - Set Overpressure . . . . . 1 - 83

E

Edge Roller - Set . . . . . 1 - 39
Electric Equipment - Check Fan . . . . . 2 - 129
Electrical Connection- Set Sensor Sensitivity 6 - 48
EtherNet/IP Module - Change . . . . . 9 - 48
EtherNet/IP Module - LED Description . . . . . 9 - 60
EtherNet/IP Module - Load Firmware . . . . . 9 - 59
EtherNet/IP Module - Set IP Address . . . . . 9 - 53

F

Filling Pipe - Change Locking Pins . . . . . 1 - 254
Filling Pipe - Check . . . . . 1 - 228
Filling Pipe - Check Level Detector Function 1 - 252
Filling Pipe - Fit . . . . . 1 - 233
Filling Pipe - Remove . . . . . 1 - 229
Filling Pipe - Set Level Detector Position . . . 1 - 246
Filling Pipe - Set Position . . . . . 1 - 238
Filling Pipe - Set Pressure Roller . . . . . 1 - 243
Filling System - Description . . . . . 1 - 224
Filter - Change Filter Insert . . . . . 6 - 32
Filter - Change Pressure Regulator . . . . . 6 - 29
Filter - Set Pressure Regulator . . . . . 6 - 31
Final Folder - Referencing . . . . . 5 - 11
Final Folder - Set Drop Chute Position . . . . . 5 - 15
Final Folder - Set External Conveyor Motor Speed 5 - 48
Final Folder - Set Flap Heater Nozzles . . . . . 5 - 34
Final Folder - Set Folding Part . . . . . 5 - 38
Final Folder - Set Package Outfeed Counting Photocells . . . . . 5 - 47
Final Folder - Set Pressure Device Lower Turning Position . . . . . 5 - 40
Final Folder - Set Pressure Device Pushers . . 5 - 41
Final Folder - Set Pull-down Device Lower Turning Position . . . . . 5 - 28
Final Folder - Set Pull-down Device Parallelism . 5 - 25
Final Folder - Set Pull-down Device Position . 5 - 26
Final Folder - Set Top Rail . . . . . 5 - 32
Final Folder - Set Top Section . . . . . 5 - 30
Final Folder - Setting Sequence . . . . . 5 - 7
Final Folder - Synchronise Infeed Conveyor . . 5 - 18
Final Folder - Synchronise Overload Switches 5 - 45
Final Folder - Synchronise Pull-down Device . 5 - 23
Final Folder - Synchronise Wheel to the Indexing Unit . . . . . 5 - 8
Flow Meter - Change Filter . . . . . 6 - 11
Flow Meter - Change Filter Insert . . . . . 6 - 14
Flow Meter - Set Flows . . . . . 6 - 13
Flow Switch - Change Sensor Gasket . . . . . 1 - 303
Flow Switch - Check Gaskets . . . . . 1 - 301
Flow Switch - Set . . . . . 1 - 302

TechPub_2614345_0106 - MM_2819200_0104IOM.fm

Foaming Unit - Check Connections . . . . . 6 - 16
Foaming Unit - Set Pressures . . . . . 6 - 17
Folding Part - Check Water Leaks . . . . . 5 - 141
Folding Part - Set . . . . . 5 - 139
Folding Part - Set Flap Blowing Pressure . . 5 - 142
Folding Part - Set Top Rails . . . . . 5 - 140
Forming Ring - Set Clearance . . . . . 1 - 36
Forming Section - Change Forming Ring Bushings and Ball Bearings . . . . . 1 - 19
Forming Section - Check Forming Rings . . . . 1 - 15
Forming Section - Forming Ring Positioning . 1 - 21
Frame Housing - Change Seal and Gasket . . 1 - 88
Frame Housing - Check Seal and Gasket . . . 1 - 86
Frame Work - Overhaul . . . . . 5 - 118
Frame Work - Set Inductive Switch . . . . . 5 - 122
Frequency Converter - Change Parameters 9 - 206
Frequency Converters - Error Codes . . . . . 9 - 212

G

Guide - Change Drive Belt(s) . . . . . 3 - 21
Guide - Check Linear Units and Runner Blocks . . 3 - 32
Guide - Lubricate Runner Block . . . . . 3 - 31
Guide - Overhaul . . . . . 3 - 33

H

H2O2 Concentration Meter - Change O-ring . 2 - 67
H2O2 Concentration Meter - Change Pt100 Sensor 2 - 75
H2O2 Concentration Meter - Check Desiccant Cartridge . . . . . 2 - 65
H2O2 Concentration Meter - Check Prism and Led 2 - 76
H2O2 Concentration Meter - Check Pt100 Sensor 2 - 74
H2O2 Concentration Meter - Remove . . . . . 2 - 71
Heat Exchanger Valve - Overhaul . . . . . 1 - 188
Heat Exchanger Valve - Set . . . . . 1 - 192
Heating Chamber - Activate Flap Heaters . . 5 - 151
Heating Chamber - Change Heating Elements . . 5 - 143
Heating Chamber - Set I/P Transducers . . . . 5 - 150
Heating Chamber - Set Nozzles . . . . . 5 - 147
Heating Chamber - Set Pressures . . . . . 5 - 148
Heating Device - Change Plunger . . . . . 8 - 83
Heating Device - Check . . . . . 8 - 78
Heating Device - Set Position . . . . . 8 - 80
Heating Unit - Change Guides . . . . . 8 - 134
Heating Unit - Change Heat Exchanger . . . . 1 - 318
Heating Unit - Change Heating Bar . . . . . 8 - 129
Heating Unit - Change Heating Elements . . . 1 - 316
Heating Unit - Change Pneumatic Hose . . . . 8 - 136
Heating Unit - Change Venting Valve . . . . . 1 - 323
Heating Unit - Check Flow Switch . . . . . 1 - 331
Heating Unit - Check Pump . . . . . 1 - 322
Heating Unit - Check Sealing Plate . . . . . 8 - 126
Heating Unit - Check Venting Valve Floater . 1 - 327
Heating Unit - Drain U-bend . . . . . 1 - 320
HMI - User Management Change Password . 9 - 261
HMI - User Management Description . . . . . 9 - 256
HMI - User Management Log On . . . . . 9 - 258
HMI and PLMS - Description . . . . . 9 - 218
HMI and PLMS - Install Software . . . . . 9 - 223
HMI and PLMS - Log On Procedure . . . . . 9 - 220
Hub - Change Motor . . . . . 8 - 84
Hub - Set Spring Loaded Screw . . . . . 8 - 85
Hydraulic Pump - Change Electrical Motor . . 2 - 118
Hydraulic Pump - Change Filter Element . . . 2 - 113
Hydraulic Pump - Change Pump . . . . . 2 - 116
Hydraulic System - Bleed . . . . . 2 - 84
Hydraulic System - Change Oil . . . . . 2 - 80
Hydraulic System - Clean Tank . . . . . 2 - 82
Hydraulic System - Description . . . . . 2 - 79
Hydraulic Tank - Change Air Filter . . . . . 2 - 98
Hydraulic Tank - Check Level Probe . . . . . 2 - 96
Hydraulic Tank - Drain Collection Tray . . . . . 2 - 99
Hydraulic Unit - Check . . . . . 2 - 90
Hydraulic Unit - Set Pressure . . . . . 2 - 93
Hydraulic Valve - Change Accumulator . . . . . 2 - 101
Hydraulic Valve - Change Bi-stable Valve, Directional Valve and Solenoid . . . . . 2 - 104
Hydraulic Valve - Change Check Valves . . . . 2 - 107
Hydraulic Valve - Change Pressure Reducing Valve

TechPub_2614345_0106 - MM_2819200_0104IOM.fm

2 - 109
Hydraulic Valve - Change Pressure Relief Valve . 2 - 111
Hydraulic Valve - Check Accumulator . . . . . 2 - 100
Hydrogen Peroxide - Check Leakages . . . . . 2 - 9
Hydrogen Peroxide - Check Leaks . . . . . 1 - 314
Hydrogen Peroxide - Check Pump . . . . . 2 - 11
Hydrogen Peroxide - Set Pressure . . . . . 2 - 12

I

ICU - Check Leakages . . . . . 1 - 306
ICU - Check Pump . . . . . 1 - 308
IH Equipment - Change Generator . . . . . 9 - 420
IH Equipment - Check Cables . . . . . 9 - 419
IH Equipment - Check Function . . . . . 9 - 415
IH Equipment - Error Handling . . . . . 9 - 407
IH Equipment - LCD Display . . . . . 9 - 403
IH Equipment - Load Firmware . . . . . 9 - 431
IH Equipment - Set CAN Communication . . 9 - 429
IH Equipment - Set Display Contrast . . . . . 9 - 438
IH Equipment - Set Sealing . . . . . 9 - 422
Indexing Unit - Change Cam Shaft Seal Ring and O-ring . . . . . 5 - 80
Indexing Unit - Change Oil . . . . . 5 - 72
Indexing Unit - Change Oil Filter . . . . . 5 - 111
Indexing Unit - Change Superior Box . . . . . 5 - 100
Indexing Unit - Check Oil Level . . . . . 5 - 70
Indexing Unit - Clean Filter . . . . . 5 - 73
Indexing Unit - Overhaul Cam Shaft . . . . . 5 - 82
Indexing Unit - Overhaul Low Shaft . . . . . 5 - 87
Indexing Unit - Overhaul Motor Shaft . . . . . 5 - 95
Indexing Unit - Overhaul Protractor Shaft . . . 5 - 85
Indexing Unit - Overhaul Superior Box . . . . 5 - 101
Indexing Unit - Overhaul Vertical Shaft . . . . . 5 - 91
Indexing Unit - Set Clutch Tension . . . . . 5 - 78
Indexing Unit - Set Inductive Switch . . . . . 5 - 77
Indexing Unit - Set Pressure . . . . . 5 - 76
Indexing Unit - Set Protractor . . . . . 5 - 74
Inductor - Change Adhesive Tape . . . . . 8 - 58
Inductor - Change Pressure Rollers . . . . . 8 - 55
Inductor - Change Pulley Ball Bearings . . . . . 8 - 62
Inductor - Change Rollers . . . . . 8 - 48
Inductor - Change Transformer . . . . . 8 - 40
Inductor - Check . . . . . 8 - 39
Inductor - Check Pressure Rollers . . . . . 8 - 54
Inductor - Set Position . . . . . 8 - 50
Inductor - Set Pressure Roller . . . . . 8 - 56
Inductor - Set Proximity Switch . . . . . 8 - 57
Inductor - Set Volume . . . . . 8 - 52
Infeed Conveyor - Change Belts . . . . . 5 - 56
Infeed Conveyor - Check Belts . . . . . 5 - 55
Infeed Conveyor - Grease . . . . . 5 - 65
Infeed Conveyor - Overhaul . . . . . 5 - 58
Infeed Conveyor - Set Belts . . . . . 5 - 53
Infeed Conveyor - Set Inductive Switch . . . . . 5 - 64
Infeed Conveyor - Synchronisation . . . . . 5 - 52
IPC - Change CompactFlash Memory Card . 9 - 271
IPC - Description . . . . . 9 - 268

J

Jaw System - Check T-gap . . . . . 4 - 48
Jaw System - Inching, Go To Position and Manual Operation Description . . . . . 4 - 8
Jaw System - Install Front Volume Flaps . . . . 4 - 47
Jaw System - Remove Front Volume Flaps . . 4 - 29
Jaw System - Set Cutting Alignment . . . . . 4 - 30
Jaw System - Set Folding Flaps . . . . . 4 - 41
Jaw System - Set Jaw Gap . . . . . 4 - 25
Jaw System - Set Jaw Over Jaw . . . . . 4 - 33
Jaw System - Set Stroke . . . . . 4 - 15
Jaw System - Set Symmetry . . . . . 4 - 19
Jaw System - Set Volume Adjuster Height . . . 4 - 50
Jaw System - Set Volume Flaps Centring . . . . 4 - 21
Jaw System - Set Volume Flaps with the Volume Adjuster . . . . . 4 - 53
Jaw System - Setting Sequence . . . . . 4 - 7

K

Knife - Change . . . . . 4 - 150
Knife - Check . . . . . 4 - 149

TechPub_2614345_0106 - MM_2819200_0104IOM.fm

L

Last Point DE - Set Photocells . . . . . 5 - 177
Level Control - Description . . . . . 9 - 272
Level Control - Set . . . . . 9 - 275
Link - Change Bearing . . . . . 3 - 51
Link - Check . . . . . 3 - 44
Link - Connect . . . . . 3 - 48
Link - Disconnect . . . . . 3 - 45
Longitudinal Sealing - Change Rollers . . . . . 1 - 43
Longitudinal Sealing - Check . . . . . 1 - 42
Longitudinal Sealing - Set . . . . . 1 - 44
Longitudinal Sealing - Set VMN Mode . . . . . 1 - 61
Lower Forming Ring - Check Pressure Roller 1 - 34
Lower Forming Ring - Set Clearance . . . . . 1 - 24
Lower Forming Ring - Set Cylinder . . . . . 1 - 33
Lower Forming Ring - Set Overlap . . . . . 1 - 30
Lower Forming Ring - Set Position . . . . . 1 - 25
Lubricants . . . . . 10 - 18

M

Machine Body - Change Bearing Blocks . . . . 8 - 22
Machine Body - Check Bearing Blocks . . . . . 8 - 20
Machine Body - Check Bending Roller . . . . . 8 - 25
Machine Body - Overhaul Bending Roller . . . 8 - 26
Machine Body - Set Alignment . . . . . 8 - 30
Machine Body - Set Photocell Position . . . . . 8 - 27
Machine Body - Set Photocell Sensitivity . . . . 8 - 29
Magazine - Change Ropes . . . . . 8 - 193
Magazine, Lower Part - Change Ball Bearings . . 8 - 190
Magazine, Lower Part - Check . . . . . 8 - 189
Magazine, Lower Part - Set Dampers . . . . . 8 - 192
Magazine, Lower Part - Set Proximity Switch 8 - 191
Magazine, Upper Part - Change Roller Bearings . 8 - 173
Magazine, Upper Part - Set Pressure Rollers 8 - 178
Material Holder - Change Ball Bearings . . . . 8 - 147
Material Holder - Change Blade . . . . . 8 - 142
Material Holder - Set Cutting Table . . . . . 8 - 150
Material Holder - Set Proximity Sensor . . . . 8 - 145
Motor Unit - Change . . . . . 3 - 53, 5 - 114
Motor Unit - Change Flange . . . . . 3 - 74
Motor Unit - Check . . . . . 3 - 52, 5 - 112
Motor Unit - Overhaul . . . . . 3 - 71
Motor Unit - Set Pressure . . . . . 5 - 113
Mounting Sheet - Check Rollers . . . . . 8 - 91

O

Outfeed Conveyor - Set End Unit Proximity Switch 5 - 176
Outfeed Unit - Change Bushing and Bearings . . 5 - 172
Outfeed Unit - Change Carrier . . . . . 5 - 171
Outfeed Unit - Change Drive Belt . . . . . 5 - 168
Outfeed Unit - Check Oil Level . . . . . 5 - 173
OutFeed Unit - Reference Servo . . . . . 5 - 174
OutFeed Unit - Set Counting Photocells . . . . 5 - 174
Outfeed Unit - Set Drive Belt Tension . . . . . 5 - 169
Outfeed Unit - Set Queue Photocells . . . . . 5 - 175
Overload Protection - Set . . . . . 9 - 214
Overload Protection - Set Base Unit(s) . . . . . 9 - 215

P

Paper Guide - Change Ball Bearings and Bushings 8 - 110
Paper Guide - Change Guide Wheels Ball Bearings 8 - 112
Paper Guide - Check . . . . . 8 - 109, 8 - 179
Paper Guide - Set Position . . . . . 8 - 113, 8 - 180
Paper Guide - Set Spring Tension . . . . . 8 - 114
Paper Recorders - Change Fuse . . . . . 9 - 337
Paper Recorders - CIP Recorder Description 9 - 332
Paper Recorders - Clean Chart Carriage . . . 9 - 336
Paper Recorders - Process Recorder Description 9 - 328
Paper Recorders - Set Date And Time . . . . . 9 - 335
Paper Slide - Change Rollers . . . . . 8 - 116
Paper Slide - Check . . . . . 8 - 115, 8 - 181
Pendulum Counter Roller - Change Rollers . 1 - 139
Pendulum Counter Roller - Set Distance . . . 1 - 138
Pendulum Counter Roller - Set Pressure . . . 1 - 137

TechPub_2614345_0106 - MM_2819200_0104IOM.fm

Pendulum Roller - Change Bearings . . . . . 1 - 121
Pendulum Roller - Change Bushings . . . . . 1 - 129
Pendulum Roller - Check . . . . . 1 - 118
Pendulum Roller - Set Cylinder . . . . . 1 - 127
Pendulum Roller - Set I/P Transducer . . . . . 1 - 122
Pendulum Roller - Set Position . . . . . 1 - 126
Peroxide Pipe - Check . . . . . 2 - 15
Peroxide Pipe - Clean Strainer . . . . . 2 - 17
Peroxide Pump - Change Pump . . . . . 2 - 30
Peroxide Pump - Overhaul Pump . . . . . 2 - 32
Peroxide Pump - Set Impeller . . . . . 2 - 38
Peroxide Tank - Check . . . . . 2 - 13
Photocell Unit - Check . . . . . 4 - 167
Photocell Unit - Set . . . . . 4 - 168
Pipe - Change Filter . . . . . 6 - 18
Pipe Work - Check . . . . . 1 - 310
Pipe Work - Check Conductivity Sensor . . . 1 - 312
Pipe Work Air - Check Change Over Valve . 1 - 163
Pipe Work Air - Check Spray Nozzle . . . . . 1 - 155
Pipe Work Air - Clean Spray Nozzle and Balls . . 1 - 159
Pipe Work Air - Overhaul Change Over Valve . . . 1 - 165
PLMS NRG - Copy Performance and Process Data 9 - 248
PLMS NRG Configurator - Defragment the IPC Hard Disk . . . . . 9 - 244
PLMS NRG Configurator - Description . . . . 9 - 230
PLMS NRG Configurator - Distribution Equipment Setup . . . . . 9 - 241
PLMS NRG Configurator - Export/Import Configuration . . . . . 9 - 233
PLMS NRG Configurator - Select Allowed Languages . . . . . 9 - 232
PLMS NRG Configurator - Set Date and Time . . 9 - 246
PLMS NRG Configurator - Set Machine ID . 9 - 231
PLMS NRG Configurator - Translate Non-Tetra Pak DE Event Codes . . . . . 9 - 238
Pluto Module - Check Safety Relays Function . . . 9 - 200
Pluto Module - Configure in an Existing Application 9 - 186
Pluto Module - Error Codes . . . . . 9 - 197
Pluto Module - LED Description . . . . . 9 - 182
Pluto Module - Load Program . . . . . 9 - 175
Pluto Module - Set ID-FIX Address after Replacing an ID-FIX . . . . . 9 - 189
Pneumatic Panel - Change Filters . . . . . 8 - 170
Pneumatic Panel - Check . . . . . 6 - 25
Pneumatic Panel - Clean Filter Insert . . . . . 6 - 28
Pneumatic Panel - Set Pilot Valve Pressure . 8 - 172
Pneumatic Panel - Set Pressure . . . . . 6 - 27
Pneumatic Panel - Set Pressure Switch . . . . 8 - 167
Pneumatic System - Check . . . . . 1 - 388, 2 - 131
Pneumatic System - Set I/P Transducer . . . . 2 - 132
Preparation for PLC Communication - Configure PC Network Communications . . . . . 9 - 9
Preparations for PLC Communication - Configure RSLinx . . . . . 9 - 19
Pressure Arm - Check . . . . . 4 - 75
Pressure Arm - Set Play . . . . . 4 - 76
Pressure Device - Change . . . . . 5 - 154
Pressure Device - Change Lever Bushings . 5 - 162
Pressure Device - Check Belt . . . . . 5 - 164
Pressure Device - Check Package Pressure 5 - 165
Pressure Device - Grease Belt Tensioner . . . 5 - 167
Pressure Device - Overhaul . . . . . 5 - 155
Pressure Device - Set Belt . . . . . 5 - 153
Pressure Device - Set Inductive Switch . . . . 5 - 163
Pressure Device - Set Lower Turning Position . . 5 - 152
Pressure Device - Set Pushers . . . . . 5 - 152
Pressure Jaw - Assemble . . . . . 4 - 112
Pressure Jaw - Change Cylinders . . . . . 8 - 121
Pressure Jaw - Change Inductor and O-rings 4 - 124
Pressure Jaw - Change Seals . . . . . 4 - 113
Pressure Jaw - Change Transformer . . . . . 4 - 128
Pressure Jaw - Check . . . . . 4 - 107
Pressure Jaw - Check Catches and Clearance . 4 - 130
Pressure Jaw - Check Inductor . . . . . 4 - 120
Pressure Jaw - Check Knife and Dolly . . . . . 8 - 117
Pressure Jaw - Install Volume Flaps . . . . . 4 - 111
Pressure Jaw - Remove . . . . . 4 - 109
Pressure Jaw - Remove Volume Flaps . . . . . 4 - 110
Pressure Roller - Change Bearings . . . . . 8 - 183
Pressure Roller - Check . . . . . 8 - 182

TechPub_2614345_0106 - MM_2819200_0104IOM.fm

Pressure Roller - Set . . . . . 8 - 186
Pressure Unit - Check Leaks . . . . . 1 - 332
Pressure Unit - Fill . . . . . 1 - 334
Pressure Unit - Set Pressure . . . . . 1 - 337
Product Lines - Change Flow Meter . . . . . 1 - 281
Product Lines - Check Flow Meter Gaskets . 1 - 280
Product Lines - Move Regulating Valve . . . . 1 - 283
Product Lines - Overhaul Regulating Valve . 1 - 273
Product Lines - Set Regulating Valve Proximity Switch . . . . . 1 - 279
Product Valve - Change O-Rings . . . . . 1 - 264
Product Valve - Change Seals and Membranes . 1 - 259
Product Valve - Empty Tube . . . . . 1 - 272
Product Valve - Remove Cylinders . . . . . 1 - 256
Product Valve - Set Proximity Switches . . . . 1 - 271
Protective Cover - Set . . . . . 5 - 68
Pull-Down Device - Change Bushings . . . . . 5 - 131
Pull-Down Device - Check Link Heads . . . . 5 - 132
Pull-Down Device - Set Folding Fin Device . 5 - 133
Pull-Down Device - Set Lower Turning Position . 5 - 130
Pull-Down Device - Set Parallelism . . . . . 5 - 130
Pull-Down Device - Set Position . . . . . 5 - 130
Pull-Down Device - Synchronisation . . . . . 5 - 130
Pulley - Change Wheel and Bearings . . . . . 3 - 39
Pump - Change Gaskets . . . . . 6 - 19

R

Recorder - Calibrate . . . . . 9 - 320
Recorder - Change CompactFlash Card . . . 9 - 326
Recorder - Description . . . . . 9 - 302
Recorder - Load Configuration Data . . . . . 9 - 314
Recorder - Log In and Log Off . . . . . 9 - 323
Recorder - Set Date, Time and Language . . 9 - 310
Reel Trolley - Change Pump Cylinder . . . . . 8 - 204
Reel Trolley - Change Sink Valve . . . . . 8 - 207
Reel Trolley - Check . . . . . 8 - 202
Reel Trolley - Overhaul Lifting Cylinder . . . . 8 - 210
Reel Trolley - Remove Fork Wheel . . . . . 8 - 211
Reel Trolley - Remove Guide Wheel . . . . . 8 - 212
Reel Trolley - Set Brake . . . . . 8 - 213
Reel Trolley - Set Regulating Valve . . . . . 8 - 206
Residual Current Device - Check . . . . . 9 - 216
Rollers - Change Bearings . . . . . 8 - 69

S

Safety Functions - Check . . . . . 10 - 22
Safety System - Description . . . . . 9 - 172
Safety System - Troubleshooting . . . . . 9 - 173
Scissor Arm Link - Change Shafts and Flange Bushings . . . . . 4 - 86
Scissor Arm Link - Check . . . . . 4 - 85
Scrubber - Clean Filters . . . . . 1 - 214
Scrubber - Set Pressure Regulator . . . . . 1 - 213
Seal - Change . . . . . 1 - 66
Seal - Check . . . . . 1 - 64
Seal - Set . . . . . 1 - 67
Separator - Change Valve and Valve Seat . . 1 - 183
Separator - Check Pressure Gauge . . . . . 1 - 187
Separator - Clean Filter and Floater . . . . . 1 - 179
Separator - Set Float Unit . . . . . 1 - 185
Sercos Module - Change . . . . . 9 - 147
Sercos Module - LED Description . . . . . 9 - 152
Sercos Module - Load Firmware . . . . . 9 - 151
Servo Drive - Change . . . . . 9 - 156
Servo Drive - Error Codes . . . . . 9 - 166
Servo Drive - LED Description . . . . . 9 - 164
Servo Drive - Load Firmware . . . . . 9 - 163
Servo Drive - Set Baud Rate . . . . . 9 - 162
Servo System - Description . . . . . 9 - 142
Side Feeder - Change Timing Belt . . . . . 8 - 157
Side Feeder - Check Timing Belt Tension . . . 8 - 159
Side Feeder - Overhaul . . . . . 8 - 161
Side Feeder - Referencing . . . . . 8 - 155
Signal Exchange - Configuration . . . . . 9 - 452
Splice Detector - Check . . . . . 8 - 33
Splice Detector - Set . . . . . 8 - 37
Splicing Device - Change Bearings . . . . . 8 - 107
Splicing Device - Change Photocell . . . . . 8 - 98
Splicing Device - Check Drive Unit . . . . . 8 - 92
Splicing Device - Drive Unit Overhaul . . . . . 8 - 93

TechPub_2614345_0106 - MM_2819200_0104IOM.fm

Splicing Device - Move to Maintenance Position . 8-106
Splicing Device - Set Drive Unit Belt . . . . . 8 - 97
Splicing Device - Set Photocell Alignment . . 8 - 103
Splicing Device - Set Photocell Position . . . 8 - 100
Splicing Device - Set Photocell Sensitivity . . 8 - 102
Spray System - Check . . . . . 1 - 353
Spray System - Clean Filter . . . . . 1 - 357
Spray System - Clean Peroxide Filter . . . . . 1 - 354
Spray System - Set Pressure . . . . . 1 - 356
Squee-gee Roller - Change . . . . . 1 - 132
Steam System - Change Pressure Regulator 1 - 295
Steam System - Check Membrane . . . . . 1 - 293
Steam System - Clean Filter . . . . . 1 - 288
Steam System - Clean Steam Trap . . . . . 1 - 286
Steam System - Set Pressure Regulator . . . 1 - 297
Steam System - Set Steam Regulator . . . . . 1 - 300
Sterile Air Pipe - Overhaul . . . . . 1 - 220
Sterile Air Pipe - Set Nozzle . . . . . 1 - 217
Sterile Air System - Check for Leaks . . . . . 1 - 153
Sterile Water System - Change Progard Pack 6 - 40
Sterile Water System - Clean Reverse Osmosis Cartridge . . . . . 6 - 38
Sterile Water System - Drain Reservoir . . . . . 6 - 43
Sterile Water System - Set . . . . . 6 - 35
Sterile Water System - Start-Up . . . . . 6 - 33
Strip Guide - Change Guide Wheel Ball Bearing . 8-68
Strip Guide - Check . . . . . 8 - 63
Strip Guide - Set . . . . . 8 - 64
Strip Magazine - Change Transducer . . . . . 8 - 75
Strip Magazine - Check Rollers . . . . . 8 - 74
Strip Magazine - Set Sensor and Spring . . . . 8 - 77
Superstructure - Setting Sequence, Type I . . 1 - 11
Superstructure - Setting Sequence, Type II . . 1 - 12
Superstructure - Settings, Type III . . . . . 1 - 12
Support Rail - Check . . . . . 1 - 13

T

Tank - Check . . . . . 2 - 26
Tank - Clean . . . . . 2 - 28
Temperature Regulators - Calibrate . . . . . 9 - 338
Thermocouples - Check . . . . . 9 - 361
TMCC2 Controller - Description . . . . . 9 - 365
TMCC2 Controller - Display Report . . . . . 9 - 392
TMCC2 Controller - Load Program . . . . . 9 - 386
TMCC2 Controller - Photocells Manual Setting . 9-389
TMCC2 Controller - Set Communication . . . . 9 - 385
TMCC2 Controller - Set Filling Window . . . . 9 - 391
TPIH - Description . . . . . 9 - 399

U

Upper Forming Ring - Set Clearance . . . . . 1 - 35

V

Valve - Check . . . . . 1 - 131
Valve Panel - Check Photocell Filters . . . . . 2 - 63
Valve Panel - Set Photocell Pressure . . . . . 2 - 64
Volume Adjuster - Assemble . . . . . 4 - 102
Volume Adjuster - Check . . . . . 4 - 98
Volume Adjuster - Remove . . . . . 4 - 100
Volume Adjuster - Set . . . . . 4 - 99
Volume Adjuster - Set Height . . . . . 4 - 106
Volume Curve Piece - Change Cams . . . . . 4 - 161
Volume Curve Piece - Change Support Roller Flange Bushings . . . . . 4 - 164
Volume Curve Piece - Check Curve Unit . . . 4 - 159
Volume Curve Piece - Check Support Rollers . . 4-163
Volume Curve Piece - Check Tube Flushing 4 - 166
Volume Curve Piece - Set . . . . . 4 - 162
Volume Curve Piece - Set Support Rollers . . 4 - 165
Volume Flaps - Change Bushings, Curve Rollers, Cams and Shims . . . . . 4 - 154
Volume Flaps - Check . . . . . 4 - 153

W

Waste Conveyor - Change Conveyor Belt . . 2 - 146
Waste Conveyor - Change Coupling . . . . . 2 - 144

TechPub_2614345_0106 - MM_2819200_0104IOM.fm

Waste Conveyor - Check . . . . . 2 - 142
Waste Conveyor - Set Front Guard . . . . . 2 - 149
Waste Conveyor - Tension Conveyor Belt . . 2 - 147
Water Panel - Check Pressure Switch . . . . . 6 - 21
Water Panel - Clean Filters . . . . . 6 - 22
Water Panel - Set Tube Flushing Device . . . . 6 - 24
Wheel - Change . . . . . 5 - 123
Wheel - Change Rollers and Bushings . . . . 5 - 128

Y

Yoke - Change Bearings . . . . . 4 - 74
Yoke - Change Bushings and Scraper . . . . . 4 - 71
Yoke - Change Plunger and Locating Piece . 4 - 72
Yoke - Check Plunger and Locating Pieces . . 4 - 67
Yoke - Remove Guide and Yoke . . . . . 4 - 69
Yoke- Check bearings . . . . . 4 - 66

TechPub_2614345_0106 - MM_2819200_0104IOM.fm

Tetra Pak