OM

Operation Manual

Tetra Pak A3/Flex

648575-0200

TechPub_2614345_0106 - OM_2819202_0104fro.fm

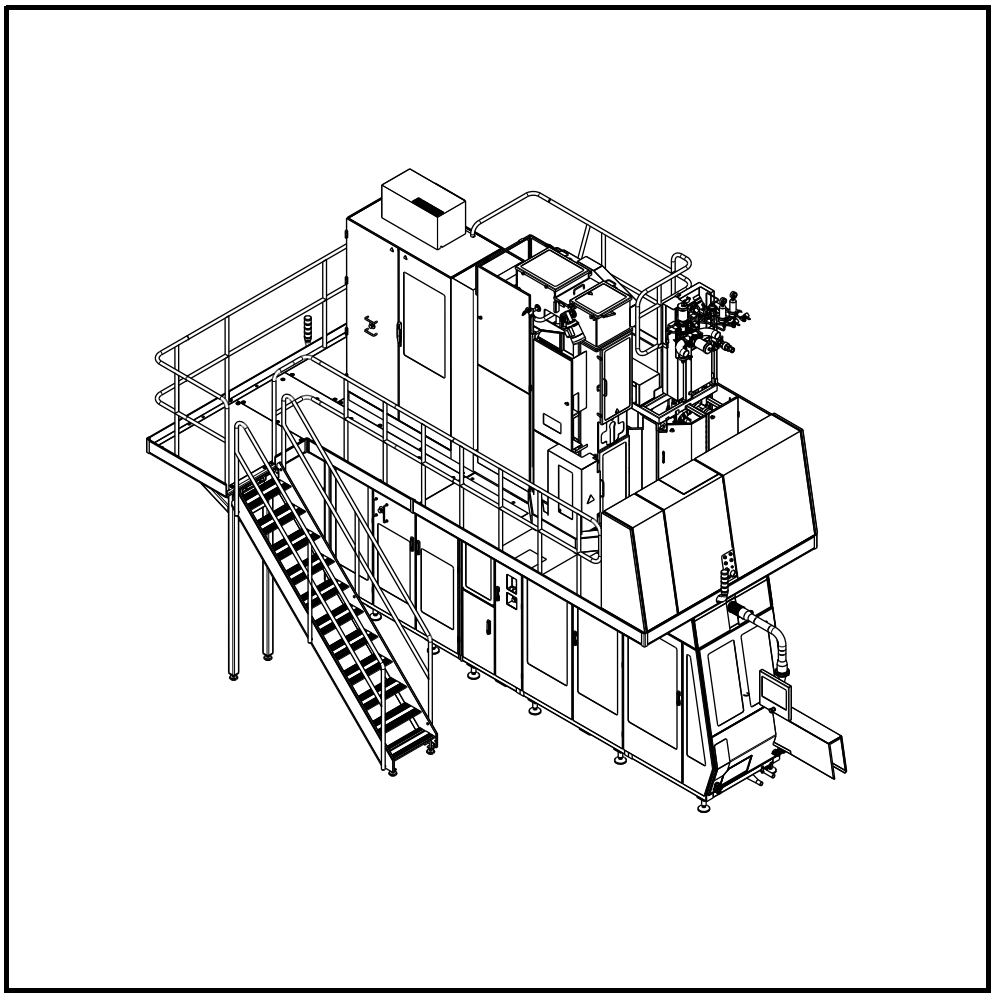

WARNING

Read and follow all safety precaution instructions throughout this manual and on safety signs attached to this equipment.

Failure to follow all safety precaution instructions could result in death or serious injury.

Tetra Pak

Doc. No. OM-2819202-0104

Copyright © 2010 Tetra Pak Group

All rights reserved. No part of this document may be reproduced or copied in any form or by any means without written permission from Tetra Pak Packaging Solutions.

Tetra Pak and all Tetra Pak products are trademarks belonging to the Tetra Pak Group.

The content of this manual is in accordance with the design and construction of the machine or equipment at the time of publishing. Tetra Pak reserves the right to introduce design modifications without prior notice.

The English language version of this document contains the original instructions. All other language versions are translations of the original instructions.

This document was produced by:

Tetra Pak Packaging Solutions
Via Delfini 1
41123 Modena
Italy

Additional copies can be ordered from Tetra Pak. When ordering additional copies, always provide the document number.

Doc. No. OM-2819202-0104

Issue 2010-08

TechPub_2614345_0106 - OM_2819202_0104fro.fm

This manual is valid for:

Series No./ Machine No. Sign.

OM

Operation Manual

Tetra Pak A3/Flex
648575-0200

i Introduction

ii Safety Precautions

1 General Description

2 Control Panels

3 Preparation

4 Start

5 Checks

6 Supply of Materials

7 Conversion

8 Stop

9 Care and Cleaning

10 Sterilization Liquid

11 Technical Data

TechPub_2614345_0106 - OM_2819202_0104fro.fm

Machine or equipment configurations that this manual is valid for are described on the next page.

Doc. No. OM-2819202-0104

Issue 2010-08

Tetra Pak

Tetra Pak Packaging Solutions

Valid for:

Name	Drawing Specification and Development Step	Additional Information
Tetra Pak A3/Flex	648575-0200	Optional Equipment: HI - Headspace by Injection 2656910-0300

TechPub_2614345_0106 - OM_2819202_0104fro.fm

i Introduction

TechPub_2614345_0106 - OM_2819202_0104int.fm

About the Introduction Chapter

This chapter contains basic information about this manual and the related Tetra Pak equipment.

TechPub_2614345_0106 - OM_2819202_0104int.fm

Abbreviations and Terminology . . . . . i - 5

Manual Information . . . . . i - 6

Delivered Manuals . . . . . i - 6

Page Layout . . . . . i - 7

Page Numbering. . . . . i - 8

Typographical Conventions . . . . . i - 8

Symbols . . . . . i - 8

Machine Introduction . . . . . i - 9

Intended Use of the Equipment . . . . . i - 9

Manufacturer . . . . . i - 9

Support and Feedback . . . . . i - 9

Identification . . . . . i - 10

CE Classification . . . . . i - 10

Machine Plate . . . . . i - 10

Orientation . . . . . i - 11

Hygiene. . . . . i - 12

Packaging Material. . . . . i - 12

Steam Barrier in the Product Valve . . . . . i - 12

How to Use This Operation Manual . . . . . i - 13

Purpose of the Operation Manual. . . . . i - 13

The Operation Manual and the Operator Work Flow . . . . . i - 13

Before Operating the Machine. . . . . i - 14

To Operate the Machine . . . . . i - 14

TechPub_2614345_0106 - OM_2819202_0104int.fm

This page intentionally left blank

TechPub_2614345_0106 - OM_2819202_0104int.fm

Abbreviations and Terminology

Abbreviation/ Terminology	Meaning	Translation
ASU	Automatic Splicing Unit	
B	Base (package shape)	
CIP	Cleaning In Place	
DE	Distribution Equipment	
DIMC	Direct Injection Moulded Concept	
ECM	Engineering Change Management	
EM	Electrical Manual	
HI	Headspace by gas Injection	
HMI	Human Machine Interface	
ICU	Integrated Cleaning Unit	
IH	Induction Heating	
LED	Light Emitting Diode	
LH	Left Hand	
LC	Line Controller	
LS	Longitudinal Seal(ing)	
min	Minimum	
max	Maximum	
MKC	Mandatory Kit Corrective	
MKS	Mandatory Kit Human and Product Safety	
MM	Maintenance Manual	
OK	Optional Kit	
OE	Optional Equipment	
OM	Operation Manual	
PE	Polyethylene	
PM	Packaging Material	
RH	Right Hand	
RK	Rebuilding Kit	
RM	Rebuilding Manual	
S	Slim (package shape)	
SA	Strip Applicator	
SPC	Spare Parts Catalogue	
Sq	Square (package shape)	
TBA	Tetra Brik Aseptic	
TMCC	Tetra Pak Multi-purpose Compact Controller	
TPOP	Tetra Pak Operator Panel	
TS	Transversal Sealing	
UK	Upgrade Kit	

TechPub_2614345_0106 - OM_2819202_0104int.fm

Manual Information

Tetra Pak recommends reading all delivered manuals carefully. Make sure that the delivered manuals are available to personnel who operate or maintain the equipment.

It is important to keep this manual for the lifetime of the equipment and to pass the manual on to any subsequent holder or user.

Tetra Pak will not be held responsible for any damage to the equipment caused by not following the instructions given in this manual.

Delivered Manuals

Manuals delivered with this equipment:

- CM
  The Conversion Manual provides technicians with information on converting the equipment between different production modes.
- EM
  The Electrical Manual provides technicians with information about the equipment's electrical system.
- IM
  The Installation Manual provides technicians with information required to safely install the equipment.
- MM
  The Maintenance Manual provides technicians with information on maintaining the equipment.
- OM
  The Operation Manual manual provides the operator with information on handling and operating the equipment before, during, and after production.
- SPC
  The Spare Parts Catalogue provides the information necessary to order spare parts from Tetra Pak
- TeM
  The Technical Manual provides technicians with information which can be:
  - information required to safely install the equipment
  - information required to maintaining the equipment
  - information about the machine's/equipment's electrical system
  - information necessary to order spare parts from Tetra Pak
  - other technical information.

TechPub_2614345_0106 - OM_2819202_0104int.fm

Page Layout

Every main page in a manual contains a header and a footer. The page header contains the chapter name (1) and the section name (2). The page footer contains the page number (3), and the document number (4). See also the Page Numbering section.

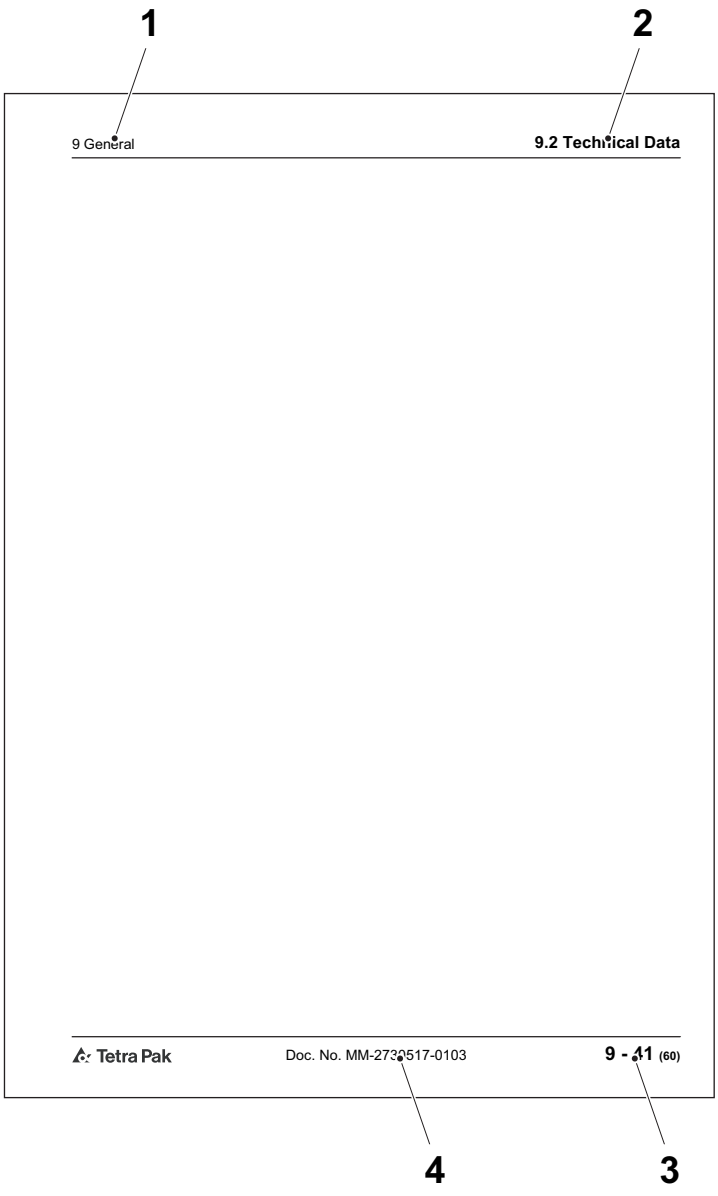

1 Chapter name
2 Section name
3 Page number
4 Document number

TechPub_2614345_0106 - OM_2819202_0104int.fm

Page Numbering

A page number has three parts:

- chapter number (1)
- consecutive page number (2) within the chapter
- total number of pages (3) in the chapter.

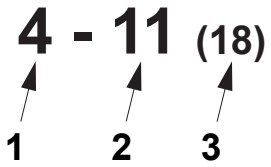

1 Chapter number
2 Consecutive page number
3 Total number of pages

Typographical Conventions

Controls on the operator panel, emergency stop devices, and program steps are printed in CAPITAL LETTERS.

Menu names, button names and other text displayed in software are printed in `courier`.

Cross-references are underlined.

Symbols

Symbols used in illustrations.

	A pointer arrow indicates the position of an object.
	A zoom arrow indicates that an object view is enlarged. The arrow points towards the enlarged view of the object.
	A rotation movement arrow indicates rotational movement of an object. The arrow points in the direction of rotation.
	A straight movement arrow indicates movement of an object. The arrow points in the direction of movement.

TechPub_2614345_0106 - OM_2819202_0104int.fm

Machine Introduction

Intended Use of the Equipment

The intended use of this Tetra Pak equipment is to pack liquid food products.

All other use is prohibited. Tetra Pak will not be held responsible for injury or damage if the equipment is used for any other purpose than the intended use described above.

Manufacturer

This Tetra Pak equipment has been manufactured by

Tetra Pak Packaging Solutions
Via Delfini 1
41123 Modena
Italy

Support and Feedback

If you encounter problems when operating this equipment or have other inquiries, comments, or suggestions for improvement, contact Tetra Pak.

TechPub_2614345_0106 - OM_2819202_0104int.fm

Identification

CE Classification

This equipment complies with the basic health and safety regulations of the European Economic Area (EEA).

Machine Plate

The illustration below shows an example of the machine plate and its location on the equipment. The machine plate carries data needed when contacting Tetra Pak concerning this specific equipment.

Make sure that the equipment data in the front pages of this manual corresponds to the machine plate data and the machine specification.

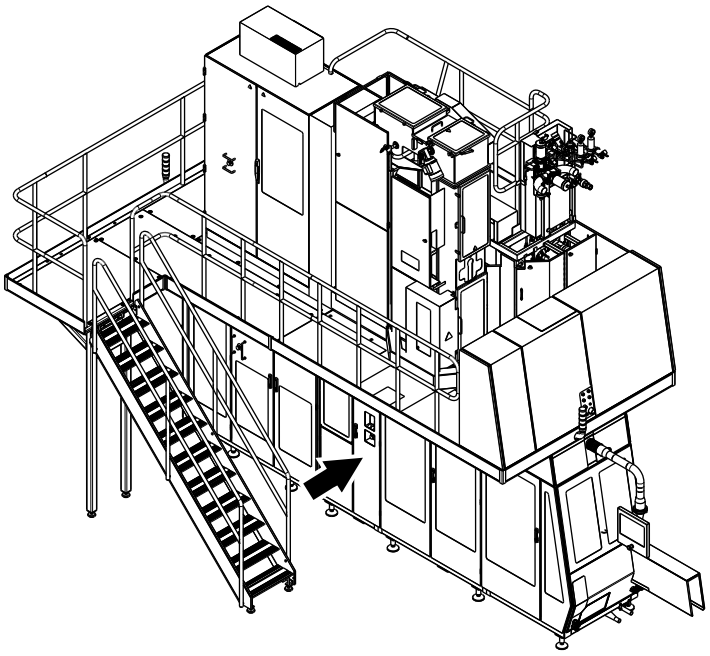

TechPub_2614345_0106 - OM_2819202_0104int.fm

1 Machine type
2 Package type
3 Drawing specifications
4 Machine serial number
5 Manufacturer
6 Year of manufacture
7 CE mark
8 3-A mark

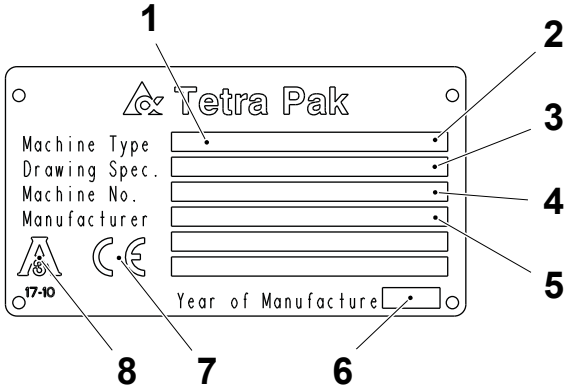

Orientation

The illustration below shows the orientation of the equipment. This orientation information will be used throughout this manual. The arrows indicate the flow of material.

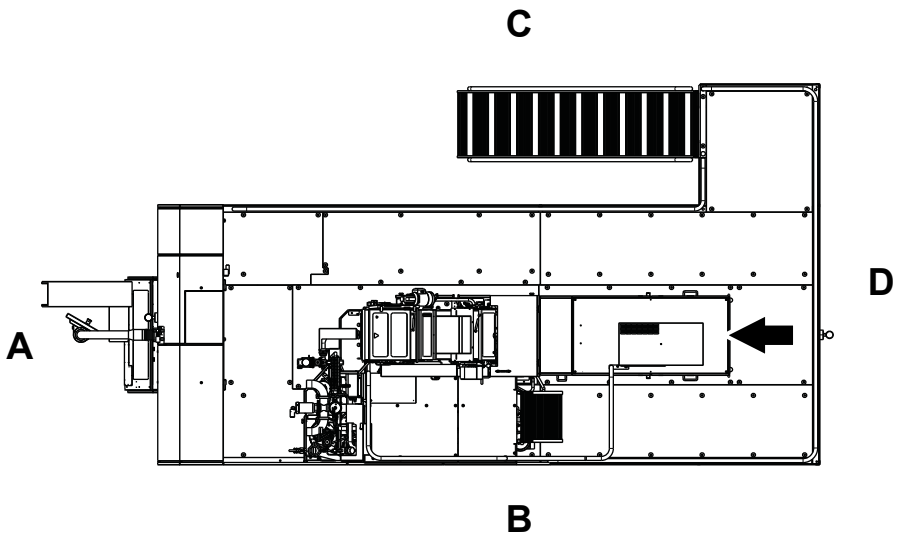

A Front
B Right-hand side
C Left-hand side
D Back

TechPub_2614345_0106 - OM_2819202_0104int.fm

Hygiene

Packaging Material

Avoid microbiological contamination of the packaging material:

- Always protect your packaging material against contamination.
- Always keep the doors to the filling room (area) closed. To prevent contamination via air streams, never open a window when the machine is in production.
- Never clean the floors or the machine in the filling room (area) when the machine is in production.
- Prepare the splicing of the packaging material as late as possible.
- Disinfect your hands before touching anything that may come into contact with the product. Use code H disinfectant. See the Technical Data chapter.
- Keep your hands clean.
- Always wear some type of hair protection (cap or hairnet) and clean clothes (preferably white).
- Do not wear a watch, ring, necklace, earrings, or any other exposed jewellery.

Steam Barrier in the Product Valve

The filling machine's product valve employs a steam barrier to separate the product supply line from the filling machine. The steam barrier allows the machine and the product supply line to be independently sterilised to commercial sterility conditions.

- Never disengage the steam barrier, and never interrupt the steam supply when the filling machine or the product supply line is being brought to the pre-sterilization phase, or when the machine is already in the production phase.
- If any maintenance activity requires disengagement of the steam barrier or the interruption of the steam supply to the machine, make sure that the product supply line is idle and empty of product.

TechPub_2614345_0106 - OM_2819202_0104int.fm

How to Use This Operation Manual

Purpose of the Operation Manual

The Operation Manual provides the operator of this machine with information on the handling and operating of the machine before, during, and after production.

The Operation Manual and the Operator Work Flow

The chapters of this Operation Manual can be divided into two groups structured to reflect the order of the operator’s work flow. The two groups contain:

- Chapters that provide general information to support and prepare the operator before operating the machine.
- Chapters that describe the actions needed during the operation and care of the machine.

The following page illustrates the two groups of the Operation Manual chapters and how they are used to instruct the operator through the sequence of work flow activities.

(Cont'd)

TechPub_2614345_0106 - OM_2819202_0104int.fm

(Cont'd)

Before Operating the Machine

Before operating the machine the operator must be familiar with the content of the following chapters.

SAFETY PRECAUTIONS
Read the important safety information described in chapter ii Safety Precautions.

GENERAL DESCRIPTION
Read the brief overview describing how the machine works in chapter 1 General Description.

CONTROL PANEL
Read how to navigate and perform settings and machine actions using the TPOP as described in chapter 2 Control Panels

TECHNICAL DATA
Provides a quick reference for pressure and temperature values and consumables, see chapter 11 Technical Data.

To Operate the Machine

To operate the machine the following chapters provide the operator with work instructions that follow the sequence of machine's cycle.

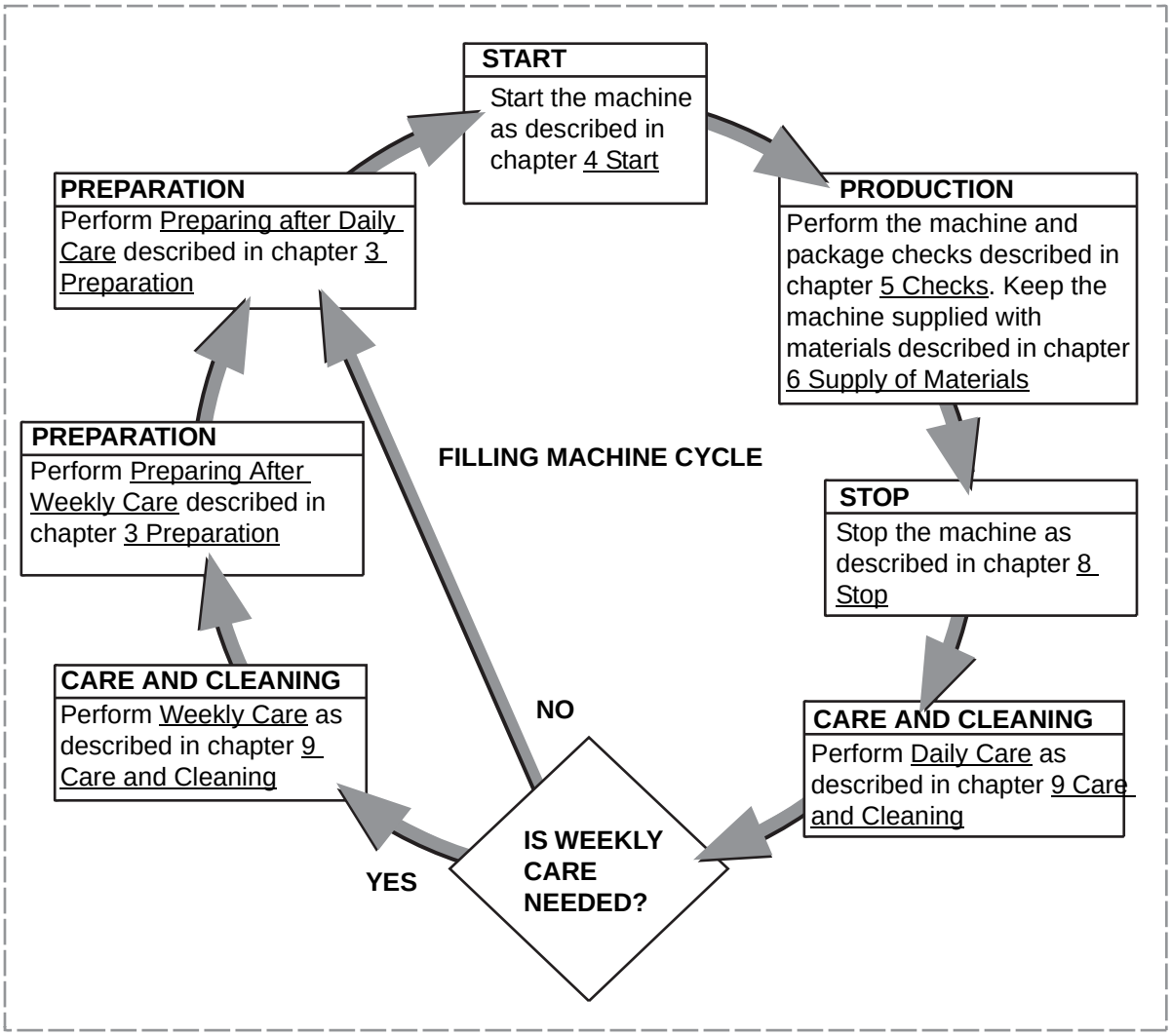

TechPub_2614345_0106 - OM_2819202_0104int.fm

ii Safety Precautions

TechPub_2614345_0106 - OM_2819202_0104sp.fm

Safety Precaution Instructions

WARNING

Read all safety precaution instructions throughout this manual and on safety signs attached to this equipment.
Failure to follow all safety precaution instructions could result in death or serious injury.

Definition of Lockout Procedure

A lockout procedure is a procedure to put each necessary energy isolating device in its safe position to prevent the energisation of the equipment, such as when a maintenance procedure should be carried out.

A lockout is the use of a device, for example, a padlock, to make sure that an energy isolating device cannot be operated.

An energy isolating device is a mechanical device that physically prevents transmission or release of energy, such as a power supply disconnector.

TechPub_2614345_0106 - OM_2819202_0104sp.fm

Safety Messages Description . . . . . ii - 5

Personnel Requirements . . . . . ii - 6

Skilled Person . . . . . ii - 6

Instructed Person. . . . . ii - 6

Safety Signs . . . . . ii - 7

Locations of Safety Signs . . . . . ii - 9

HI Equipment (OE) . . . . . ii - 17

Protective Devices. . . . . ii - 18

Emergency Stop . . . . . ii - 18

Emergency Stop Push-Buttons . . . . . ii - 19

Safeguards . . . . . ii - 20

Warning Lamp . . . . . ii - 22

Audible Alarm . . . . . ii - 22

Personal Protection. . . . . ii - 23

Noise Hazard . . . . . ii - 23

Entanglement Hazard . . . . . ii - 23

Ergonomic Hazard . . . . . ii - 23

Hazardous Substances . . . . . ii - 24

Disposal of Chemical Substances . . . . . ii - 25

Hydrogen Peroxide (H_2O_2) . . . . . ii - 26

Emergency Procedures. . . . . ii - 26

Personal Protective Equipment . . . . . ii - 27

Handling of Hydrogen Peroxide . . . . . ii - 28

Storage of Hydrogen Peroxide . . . . . ii - 29

Disposal of Hydrogen Peroxide . . . . . ii - 30

Caustic Soda/Sodium Hydroxide (NaOH) . . . . . ii - 31

Emergency Procedures. . . . . ii - 31

Personal Protective Equipment . . . . . ii - 32

TechPub_2614345_0106 - OM_2819202_0104sp.fm

Handling and Storage of Caustic Soda/Sodium Hydroxide . . . . . ii - 33
Disposal of Caustic Soda/Sodium Hydroxide . . . . . ii - 33
Nitric Acid (HNO3) . . . . . ii - 34
Emergency Procedures . . . . . ii - 34
Personal Protective Equipment . . . . . ii - 36
Handling and Storage of Nitric Acid . . . . . ii - 37
Disposal of Nitric Acid . . . . . ii - 38
Supply Systems . . . . . ii - 39
Power Supply . . . . . ii - 39
Residual Voltage . . . . . ii - 39
Electrical Cabinet . . . . . ii - 40
Socket Outlet . . . . . ii - 41
Air Supply . . . . . ii - 43
Steam Supply . . . . . ii - 44
Water Supply . . . . . ii - 45
Equipment for Lifting and Moving Loads . . . . ii - 46

TechPub_2614345_0106 - OM_2819202_0104sp.fm

Safety Messages Description

A safety message is always accompanied by a safety alert symbol and a signal word.

The safety alert symbol is used to alert about potential personal injury hazards. To avoid hazards, obey all safety messages that follow this symbol.

The following safety alert symbols and signal words are used in this manual to inform the user of hazards.

DANGER	Danger indicates an imminently hazardous situation which, if not avoided, will result in death or serious injury.
WARNING	Warning indicates a potentially hazardous situation which, if not avoided, **could** result in **death or serious injury**.
CAUTION	Caution indicates a potentially hazardous situation which, if not avoided, **may** result in **minor or moderate injury.** It may also be used to alert against unsafe practices.
CAUTION	Caution without the safety alert symbol indicates a potentially hazardous situation which, if not avoided, **may** result in **property damage**.

TechPub_2614345_0106 - OM_2819202_0104sp.fm

Personnel Requirements

Note! Personnel includes all persons working on or near this equipment.

Only skilled or instructed persons are allowed to work with this equipment.

Skilled Person

A skilled person must have relevant education and experience to enable him or her to identify hazards, analyse risks, and avoid hazards which electricity, machinery, chemicals, other energies, and supply systems on this equipment can create.

Skilled persons must meet local regulations, such as certifications and qualifications for working with these energies and systems.

Instructed Person

An instructed person must be adequately advised or supervised by a skilled person. The skilled person enables the instructed person to identify hazards, analyse risks, and avoid hazards which electricity, machinery, chemicals, other energies, and supply systems on this equipment can create.

TechPub_2614345_0106 - OM_2819202_0104sp.fm

Safety Signs

WARNING

Damaged or missing safety signs increase the risk of death or serious injury.

Replace all missing or damaged safety signs immediately.

Safety signs are attached to the equipment. The table below lists all the signs that are used, and illustrations show their locations on the equipment. Each position number refers to two variants of a safety sign in the table, but only one is used on the equipment.

- Make sure that each safety sign is legible and in its correct position after installation and maintenance.
- Replace all missing or damaged safety signs immediately.

Pos.	ISO sign	ANSI sign
1		
	Hot surface. Do not touch. Follow lockout procedure before maintenance.	
2		
	Chemical burn hazard. Wear personal protective equipment.	
3	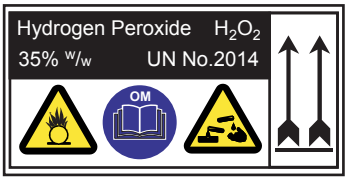	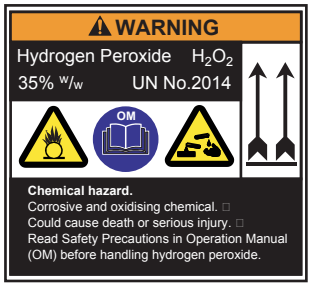
	Chemical hazard. Corrosive and oxidising chemical. Could cause death or serious injury. Read Safety Precautions in Operation Manual (OM) before handling hydrogen peroxide.	

TechPub_2614345_0106 - OM_2819202_0104sp.fm

Pos.	ISO sign	ANSI sign
4		
	Risk of eye injury. Wear eye protection.	
5		
	Hazardous voltage. Will shock, burn, or cause death. Follow lockout procedure before maintenance.	
6		
	Hazardous voltage. Can shock, burn, or cause death. Read Maintenance Manual (MM) before using this socket outlet.	
7		
	Hazardous rotating shafts and belts. Can crush and cut. Keep hands clear while the machine is operating.	
8		
	Moving parts can crush and cut. Do not operate with guard removed. Follow lockout procedure before maintenance.	

TechPub_2614345_0106 - OM_2819202_0104sp.fm

Locations of Safety Signs

The illustration shows where the safety signs are located. The position numbers refer to the table in the Safety Signs section.

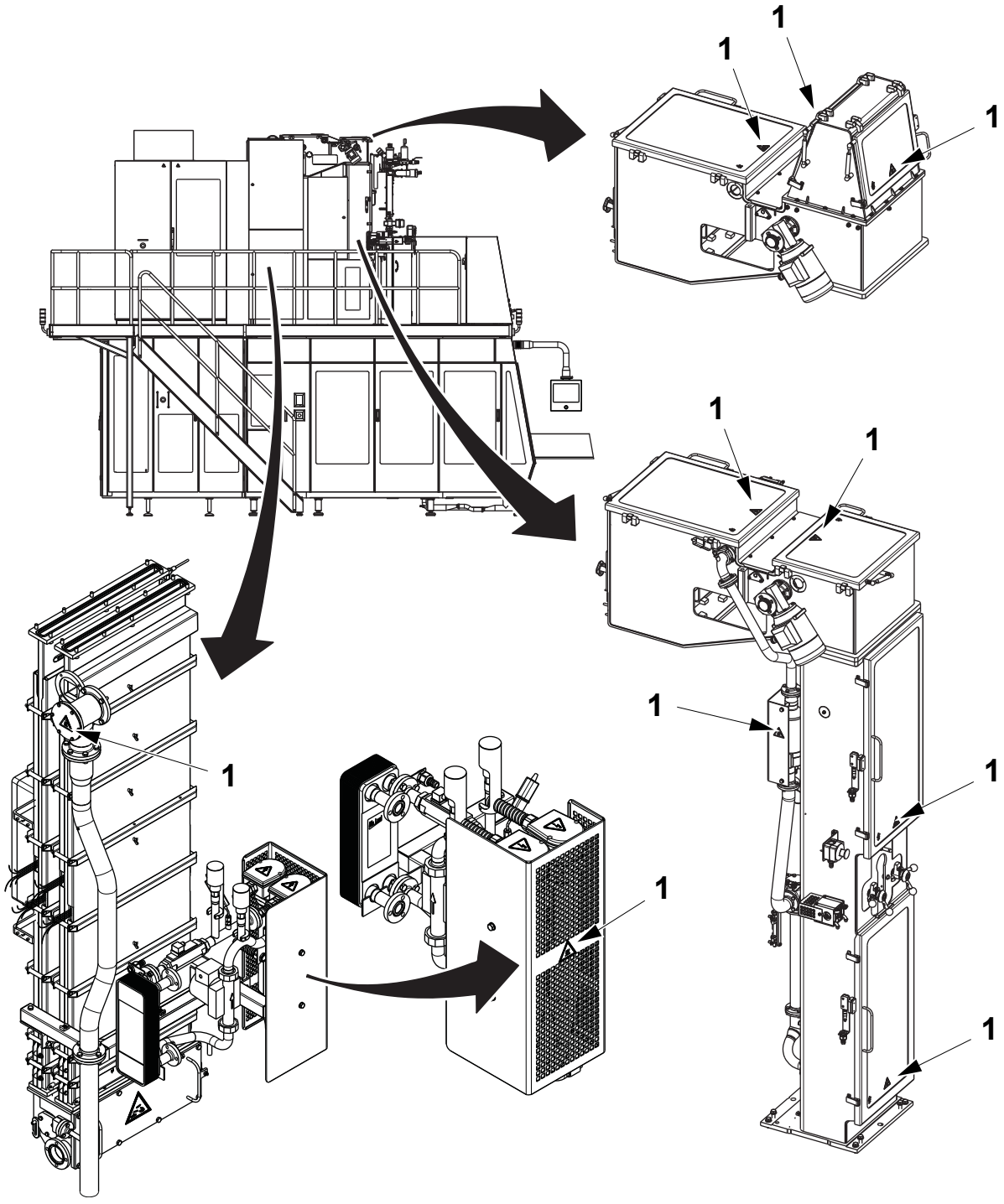

(Cont'd)

TechPub_2614345_0106 - OM_2819202_0104sp.fm

(Cont'd)

The illustration shows where the safety signs are located. The position numbers refer to the table in the Safety Signs section.

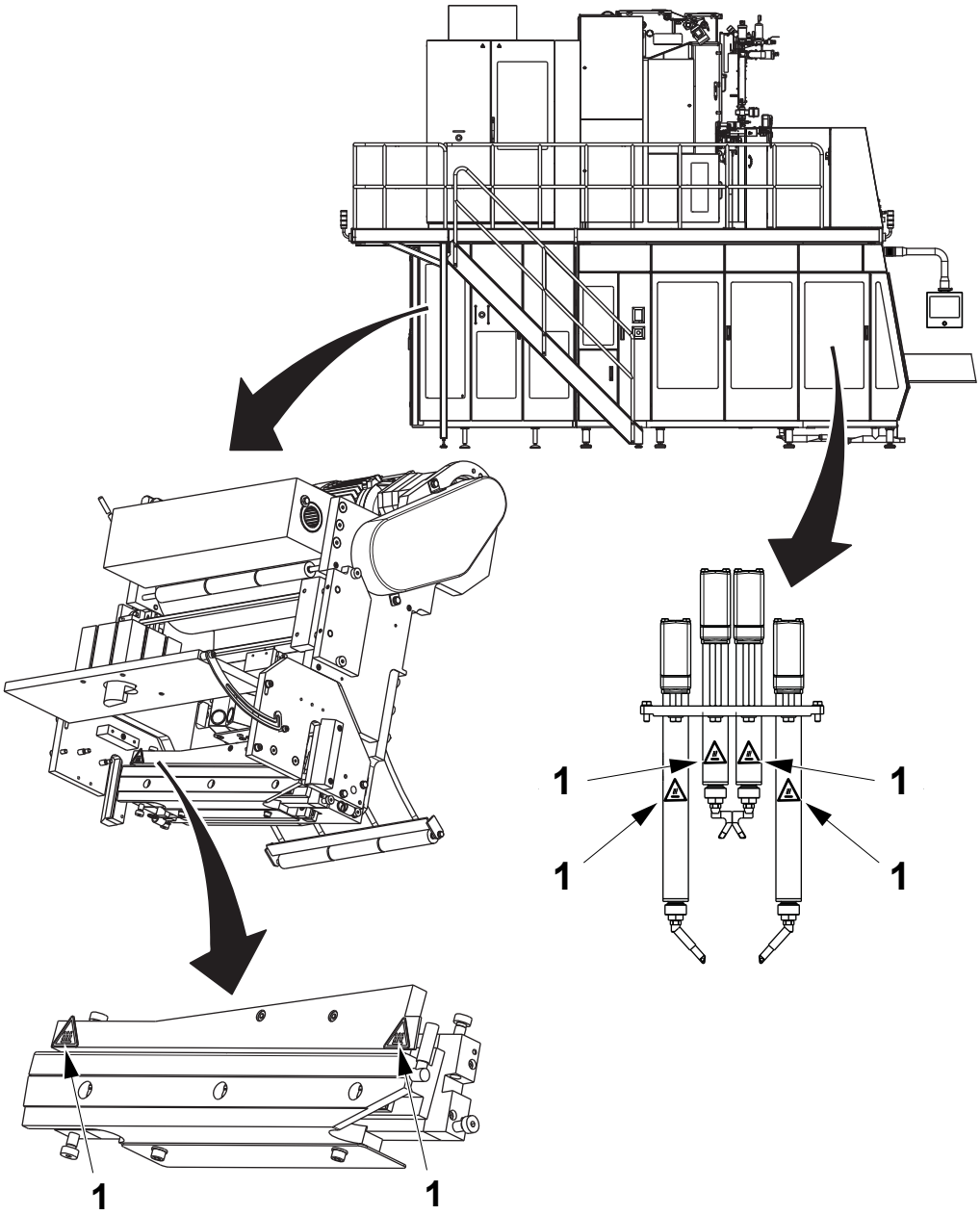

TechPub_2614345_0106 - OM_2819202_0104sp.fm

(Cont'd)

(Cont'd)

The illustration shows where the safety signs are located. The position numbers refer to the table in the Safety Signs section.

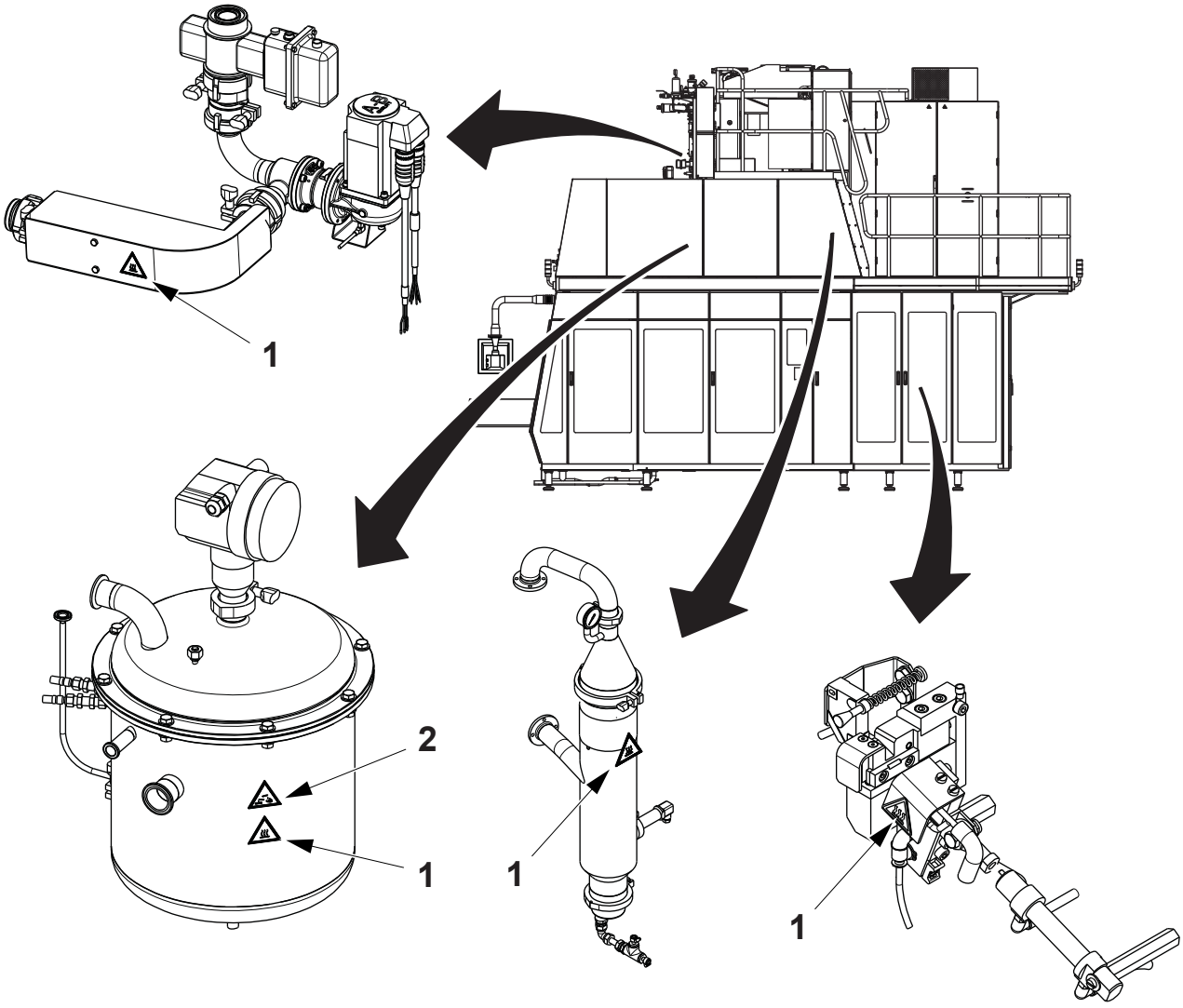

(Cont'd)

TechPub_2614345_0106 - OM_2819202_0104sp.fm

(Cont'd)

The illustration shows where the safety signs are located. The position numbers refer to the table in the Safety Signs section.

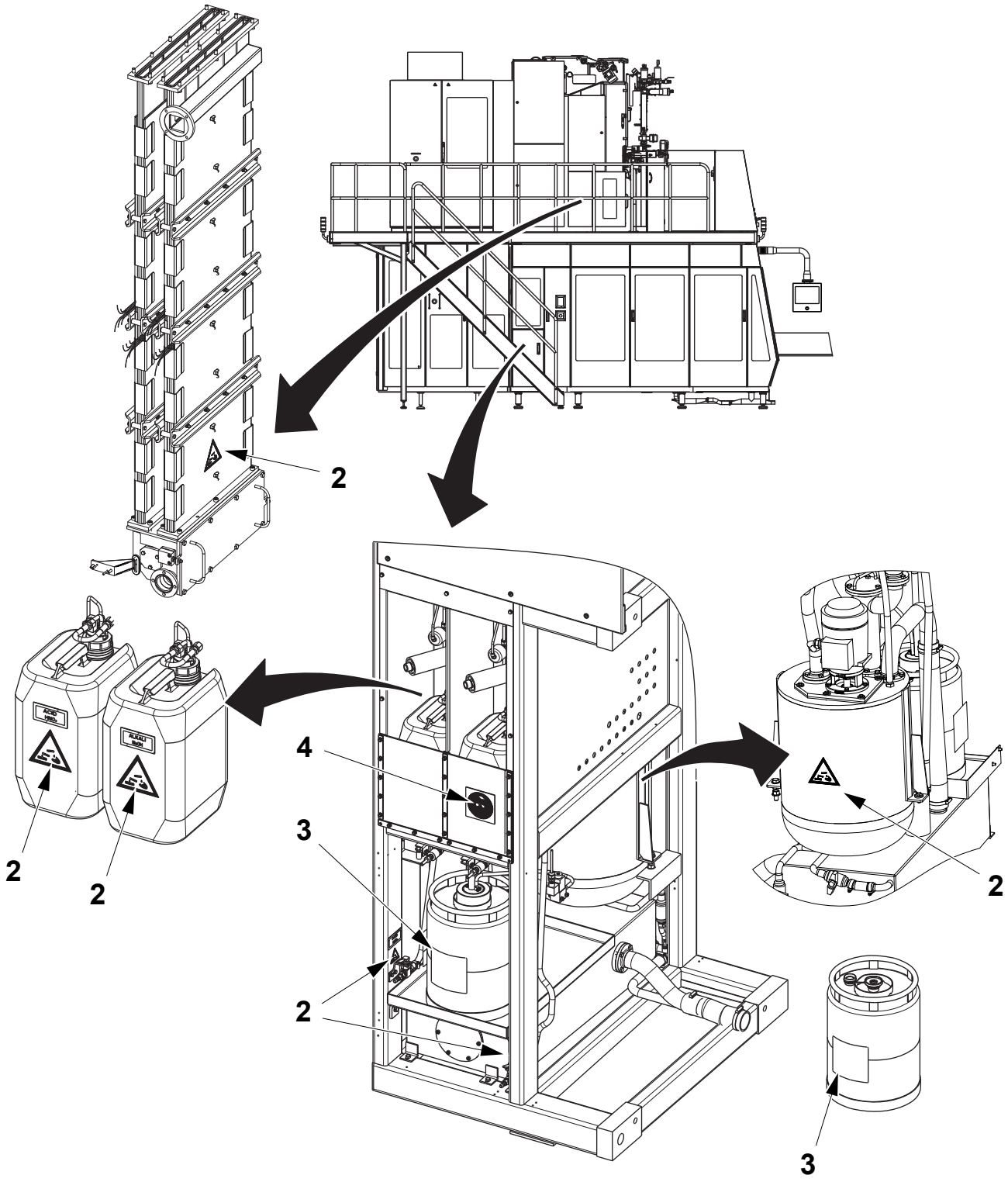

(Cont'd)

TechPub_2614345_0106 - OM_2819202_0104sp.fm

(Cont'd)

The illustration shows where the safety signs are located. The position numbers refer to the table in the Safety Signs section.

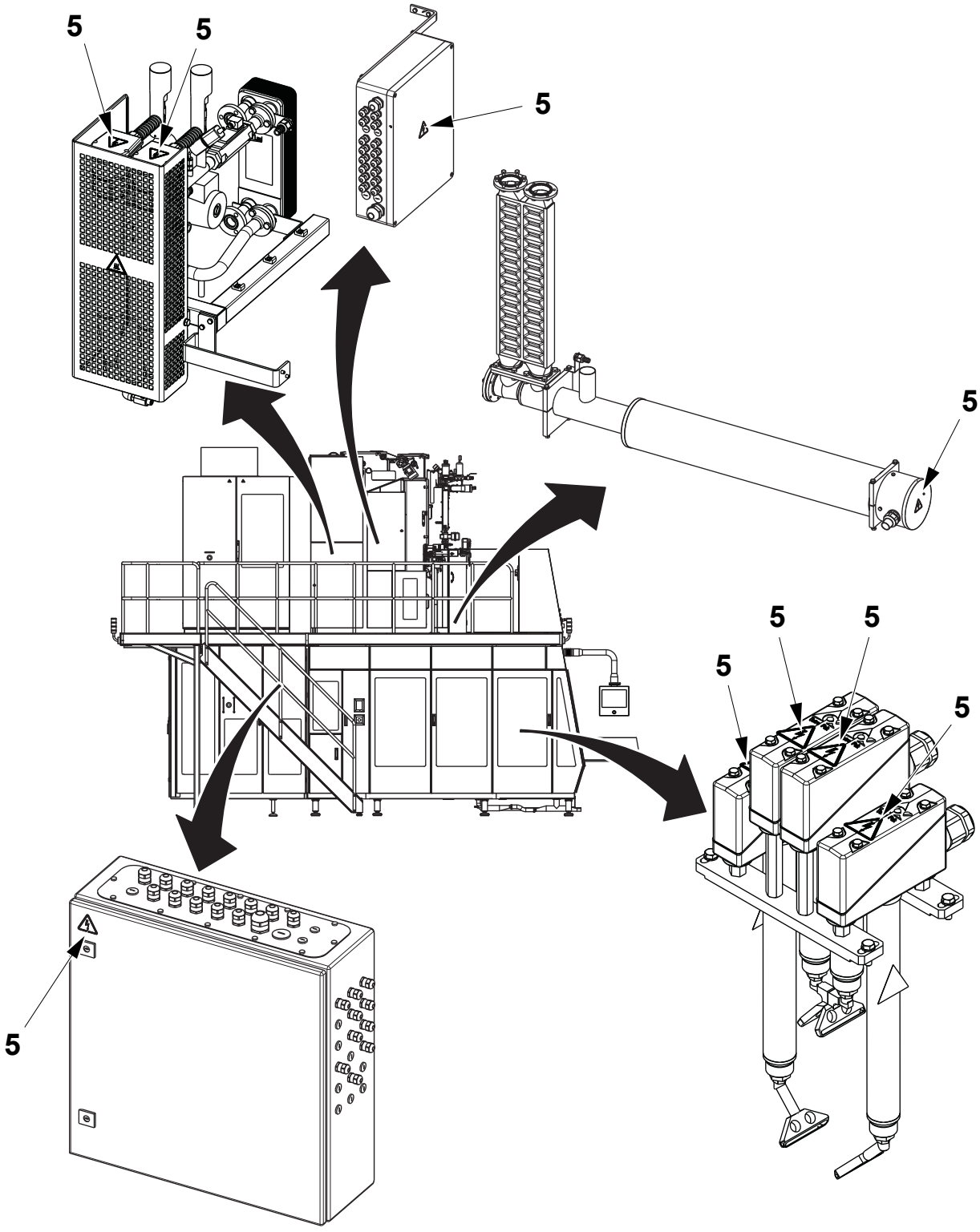

(Cont'd)

TechPub_2614345_0106 - OM_2819202_0104sp.fm

(Cont'd)

The illustration shows where the safety signs are located. The position numbers refer to the table in the Safety Signs section.

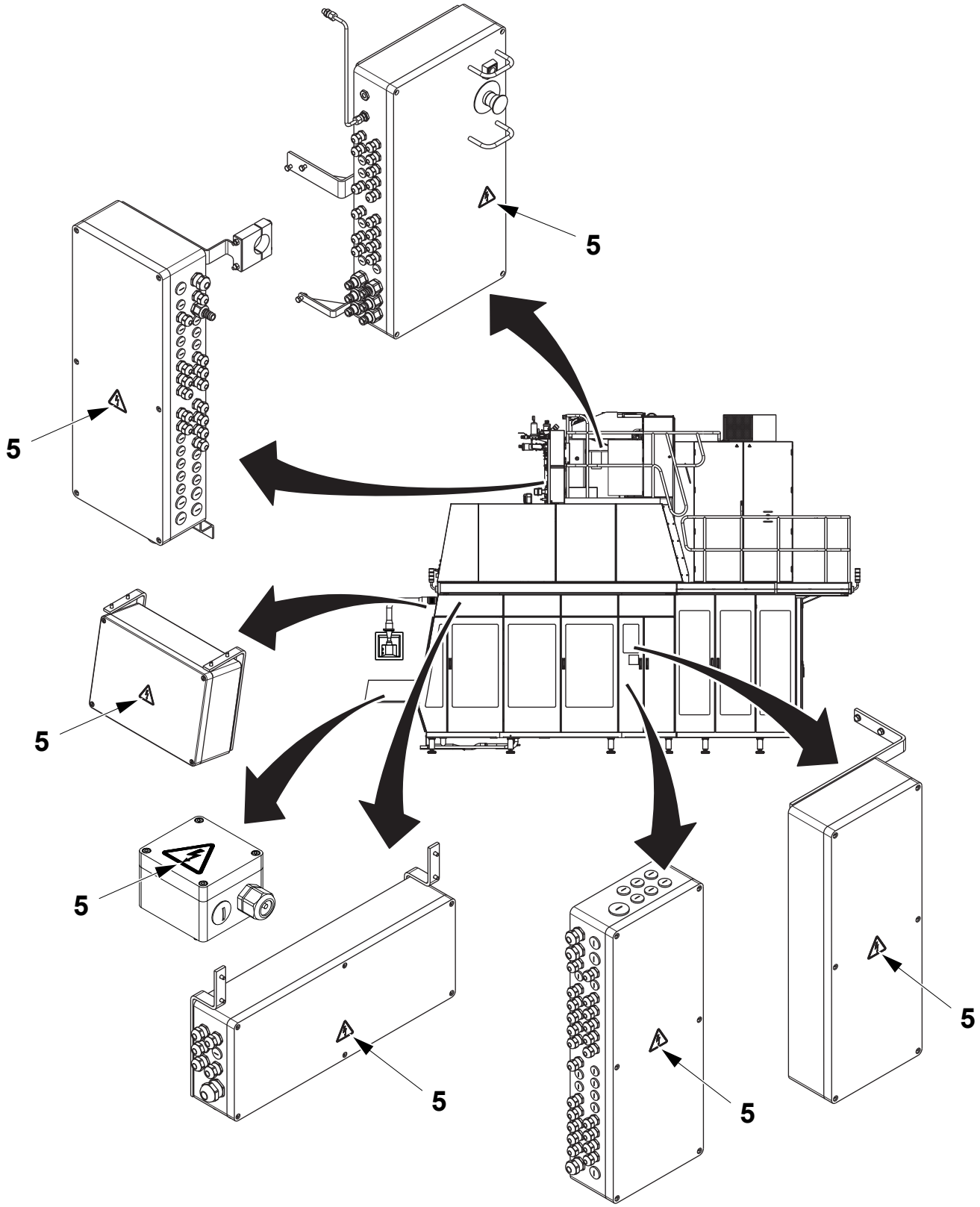

(Cont'd)

TechPub_2614345_0106 - OM_2819202_0104sp.fm

(Cont'd)

The illustration shows where the safety signs are located. The position numbers refer to the table in the Safety Signs section.

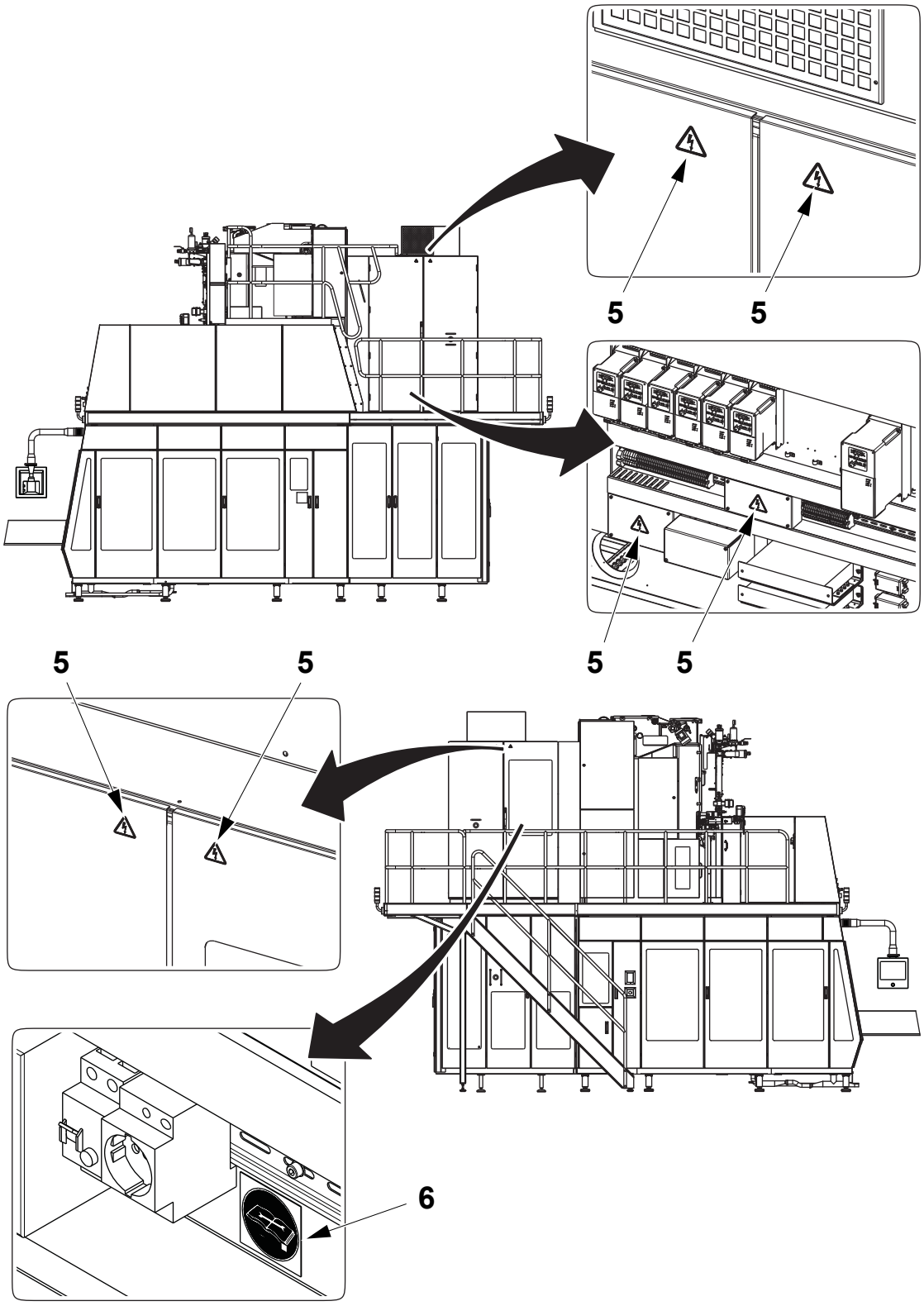

(Cont'd)

TechPub_2614345_0106 - OM_2819202_0104sp.fm

(Cont'd)

The illustration shows where the safety signs are located. The position numbers refer to the table in the Safety Signs section.

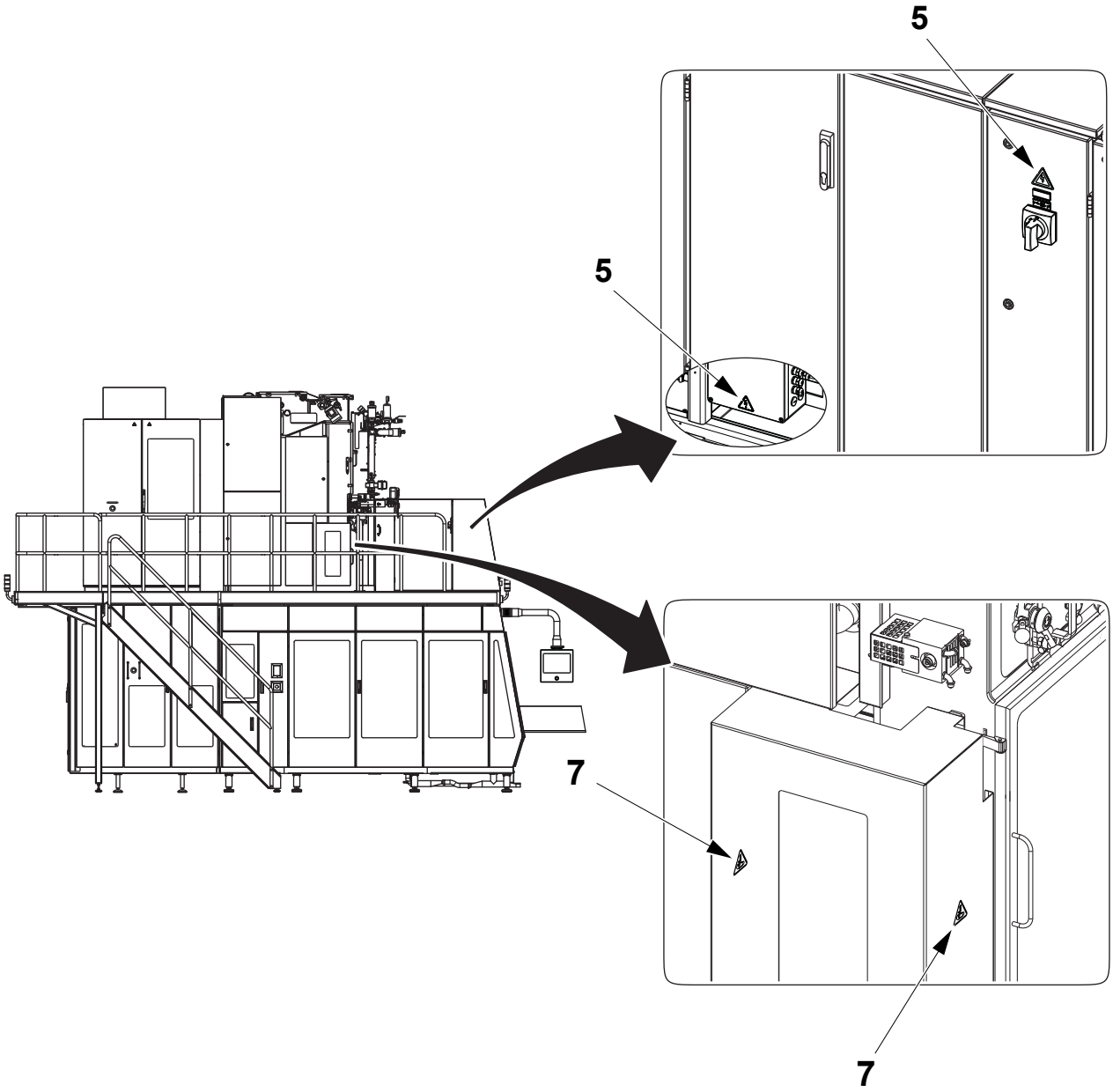

(Cont'd)

TechPub_2614345_0106 - OM_2819202_0104sp.fm

(Cont'd)

HI Equipment (OE)

The illustration shows where the safety signs are located. The position numbers refer to the table in the Safety Signs section.

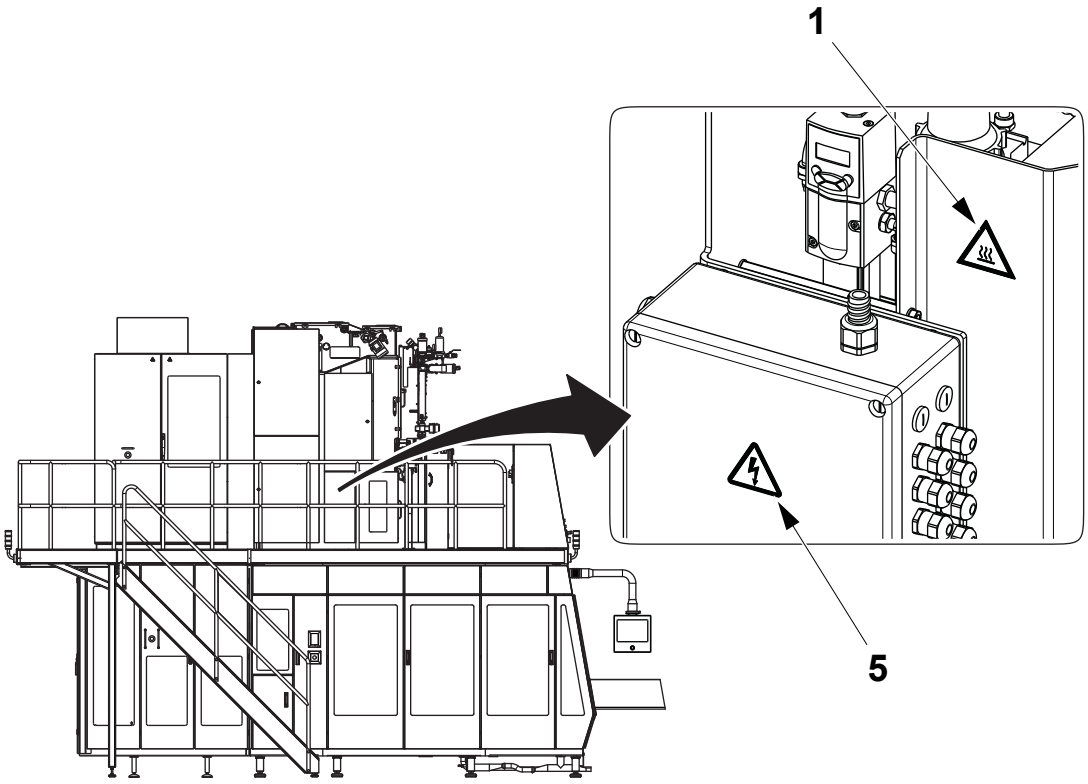

TechPub_2614345_0106 - OM_2819202_0104sp.fm

Protective Devices

There are different kinds of protective device designed to ensure safe use of the equipment. See the sections below.

WARNING

Hazardous zones.

Hazardous zones are safeguarded and provided with protective devices. Do not inch or run this equipment if any protective device is inoperative.

Change inoperative components of the safety system immediately.

For the locations of safeguards and/or other protective devices not mentioned in this section, see the Maintenance Manual.

WARNING

Hazardous voltage.

Hazardous voltage remains on this equipment after activating an EMERGENCY STOP or an interlocking device.

Emergency Stop

Emergency stop devices are used to stop this equipment immediately in an hazardous situation. Learn the positions of all emergency stop devices and how to use them.

Instructions for a normal production stop are included in the Stop chapter of the Operation Manual.

TechPub_2614345_0106 - OM_2819202_0104sp.fm

Emergency Stop Push-Buttons

Push one of the EMERGENCY STOP push-buttons to stop this equipment immediately.

The location of each EMERGENCY STOP push-button is shown by an arrow.

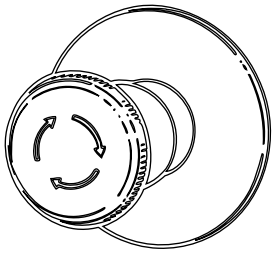

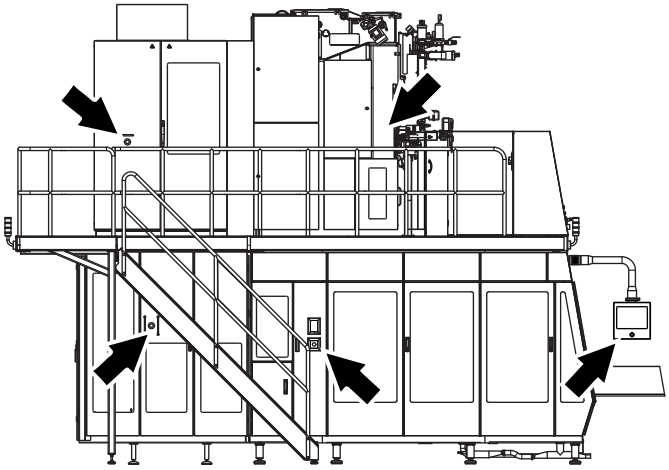

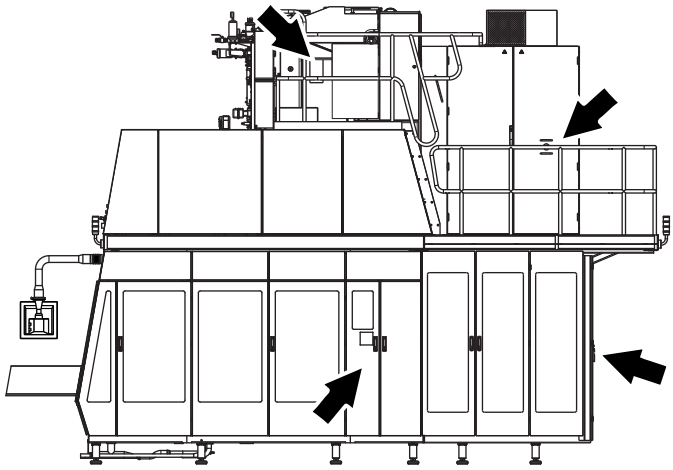

(behind door)

TechPub_2614345_0106 - OM_2819202_0104sp.fm

Safeguards

WARNING

Moving machinery.

Never defeat or bypass the interlocking devices.

Movable guards, for example, doors and covers leading to hazardous zones, are fitted with interlocking devices where required. These devices are usually electric safety switches that are parts of the safety system and must never be defeated, bypassed, or otherwise made inoperative.

WARNING

Corners and edges.

To prevent injury from corners and edges of open doors and covers, close them unless they must be open during such work. Be careful when working under an open door, cover or elsewhere below parts of the equipment with corners and edges.

CAUTION

Burn hazard.

Parts of this equipment may be hot after operation.

After installation and maintenance, and before this equipment is inched or run, check that all safeguards are in place and that they operate correctly.

(Cont'd)

TechPub_2614345_0106 - OM_2819202_0104sp.fm

(Cont'd)

CAUTION
Equipment damage.
Never stop this equipment by opening an interlocking guard.

The location of each interlocking guard is shown by an arrow.

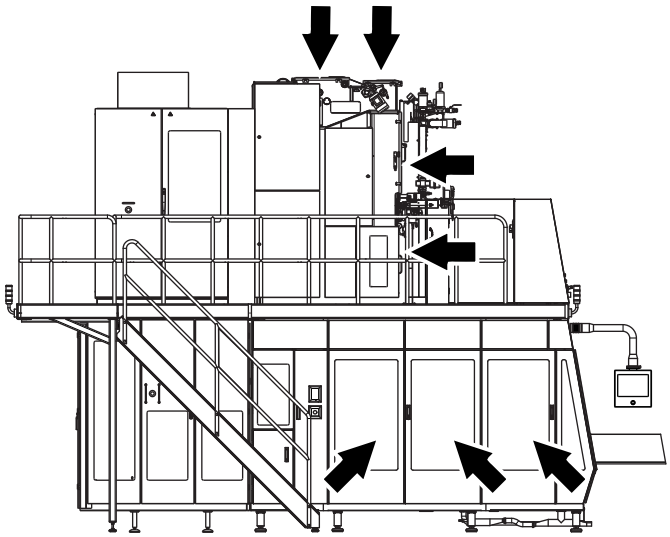

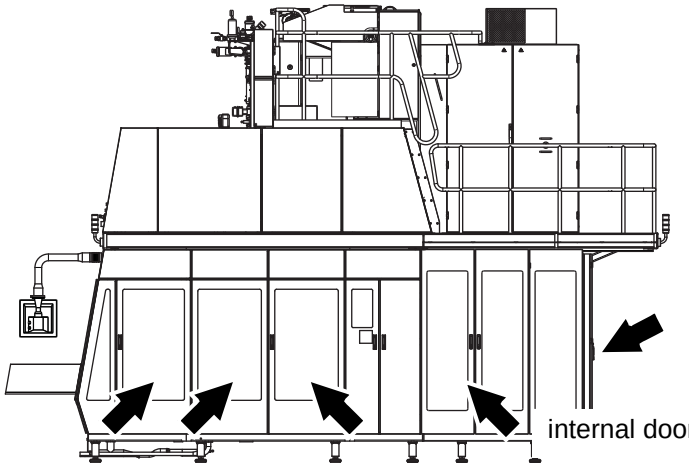

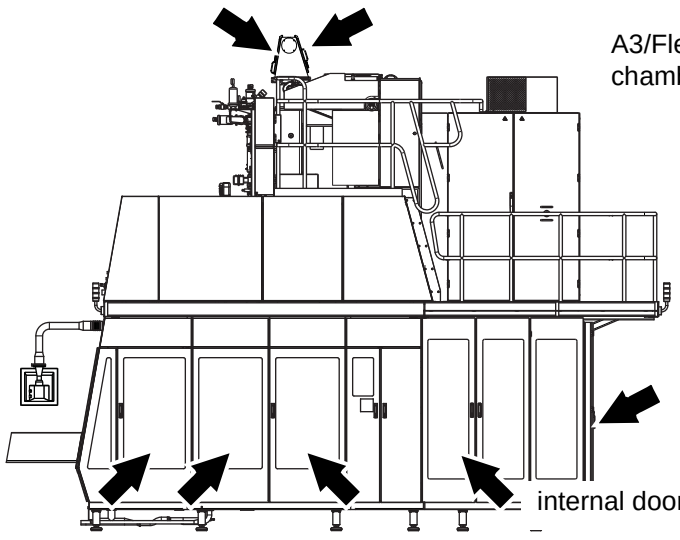

A3/Flex with upper drying chamber is shown

TechPub_2614345_0106 - OM_2819202_0104sp.fm

Warning Lamp

A warning lamp is a column of warning lights:

- A red light (2) indicates a hazardous condition. This is a situation that requires immediate action.
- A yellow light (3) indicates an abnormal or impending critical condition. This is a condition calling for action by the operator.
- A blue light (4) indicates that operator action is required.
- A green light (5) indicates a normal condition.

Audible Alarm

The audible alarm (1) produces a warning signal every time this equipment is about to start. The warning signal sounds for approximately three seconds prior to starting to alert personnel.

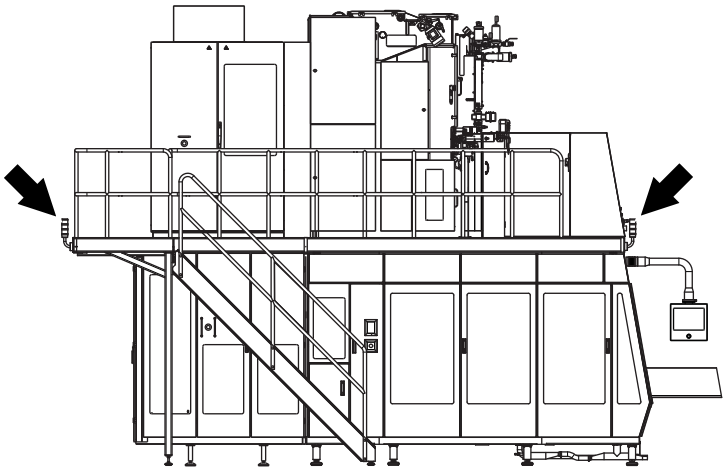

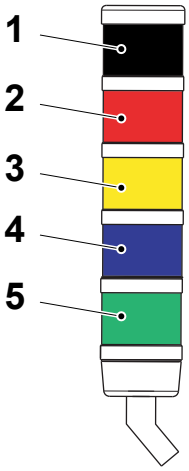

1 Audible alarm
2 Red light
3 Yellow light
4 Blue light
5 Green light

TechPub_2614345_0106 - OM_2819202_0104sp.fm

Personal Protection

This section applies to all personnel at all times when this equipment is in operation. For special personal protection required when handling hazardous substances, see the Hazardous Substances section.

Noise Hazard

CAUTION

Hazardous noise.

Risk of impaired hearing. Hearing protection is recommended whenever this equipment is in operation.

Entanglement Hazard

WARNING

Risk of entanglement.

Do not wear jewellery or loose clothing when working on or near this equipment. Long hair may not be loose.

Ergonomic Hazard

WARNING

Ergonomic hazard.

Handling materials and supplies, for the machine, can be repetitive manual work and involve ergonomic hazards with risk of personal injury.
Materials and supplies should be located to avoid twisting the body or bending the back when placing them into the machine. It is recommended to use aids such as a lifting table or lifting device for these tasks.
Follow instructions for safe work practices.

TechPub_2614345_0106 - OM_2819202_0104sp.fm

Hazardous Substances

WARNING

Contact with chemicals can cause death, serious injury, or illness.
Always read and follow the instructions in the safety data sheet supplied by the manufacturer or local supplier, when handling chemicals.

Make sure that

- the safety data sheet is available
- the showers work
- an eyewash device, movable or wall-mounted, is available and operational
- additional washing facilities are nearby

Note! Learn the locations of all washing facilities in order to act immediately in case of an accident



TechPub_2614345_0106 - OM_2819202_0104sp.fm

Disposal of Chemical Substances

Always read and follow the disposal instructions in the safety data sheet supplied by the manufacturer or local supplier.

It is strongly recommended that used chemical containers are

- disposed of according to the instructions immediately after use
- not used as disposal containers for other chemicals in order to avoid uncontrolled chemical reactions within the container

TechPub_2614345_0106 - OM_2819202_0104sp.fm

Hydrogen Peroxide (H_2O_2)

WARNING
Corrosive chemical.
Wear personal protective equipment.

In both liquid and gas states, hydrogen peroxide may cause irritation or damage if it comes into contact with skin, mucous membranes, eyes, or clothes. Call for medical attention immediately if there is an accident.

Liquid hydrogen peroxide in concentrations of less than 1% is generally considered harmless to humans.

Consult the instructions on the label of the tank or container.

Emergency Procedures

If there is an accident involving hydrogen peroxide, rinse the affected area as soon as possible with large amounts of water.

If hydrogen peroxide is swallowed

- do not attempt to cause vomiting
- drink large amounts of lukewarm water to dilute the peroxide
- call for medical attention immediately

If splashes or vapour from hydrogen peroxide come in contact with the eyes

- wash the eyes thoroughly with lukewarm water for 15 minutes (keep eyelids wide apart)
- call for medical attention immediately

If hydrogen peroxide comes into contact with skin or clothes

- rinse immediately with plenty of water
- call for medical attention immediately if skin burns appear
- thoroughly wash the clothes before wearing them again

If irritation or pain is experienced due to having **inhaled** hydrogen peroxide vapour

- leave the affected area and get some fresh air
- call for medical attention if the symptoms get worse

TechPub_2614345_0106 - OM_2819202_0104sp.fm

Personal Protective Equipment

The personal protective equipment for hydrogen peroxide is

- protective goggles (TP No. 90303-11)
- protective gloves made of neoprene (TP No. 90303-12)
- protective apron (TP No. 90303-13)
- protective shoes made of PVC, PE plastic, or rubber

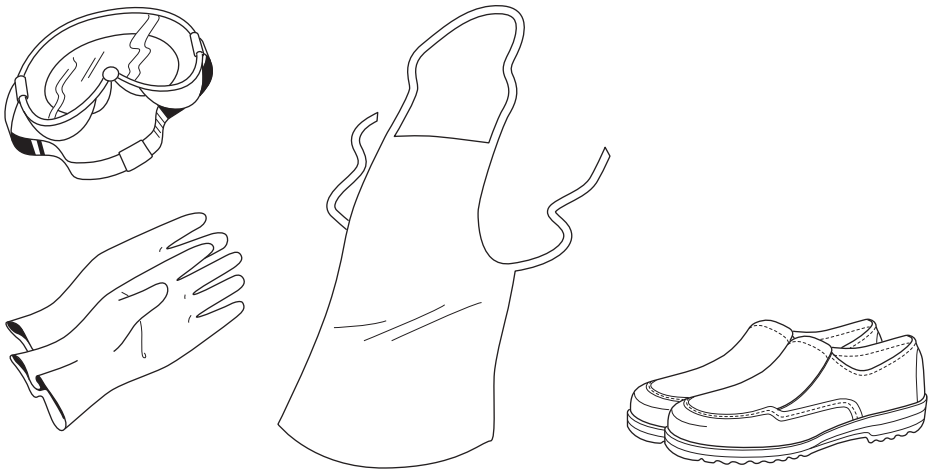

TechPub_2614345_0106 - OM_2819202_0104sp.fm

Handling of Hydrogen Peroxide

WARNING

Sudden and violent chemical reaction.

Avoid any contamination of hydrogen peroxide.

Hydrogen peroxide reacts suddenly and violently with many compounds or if it is contaminated. The reaction is a violent decomposition liberating oxygen and heat, with a big increase in volume due to the oxygen produced by the peroxide decomposition.

Never pour surplus hydrogen peroxide back into the original container if it contains fresh hydrogen peroxide. There is a risk of explosion when hydrogen peroxide is in a closed container.

Ensure that equipment used for handling and diluting hydrogen peroxide is clean before it comes in contact with hydrogen peroxide. Pumps or other equipment used for handling hydrogen peroxide must be **used for this purpose only** and must be manufactured from appropriate materials, such as stainless steel 316 L, glass, polyethylene, or teflon. After use, make sure that all peroxide residue is rinsed away.

If hydrogen peroxide is spilled, dilute it with large amounts of water. Dispose of the diluted hydrogen peroxide according to local regulations.

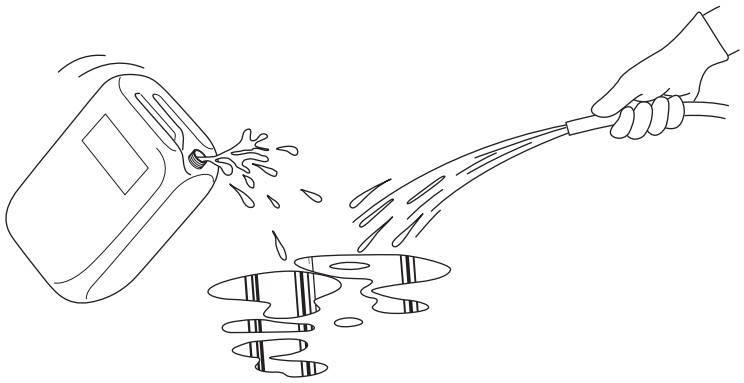

WARNING

Self-ignition.

Never wipe up hydrogen peroxide with materials such as rags or paper as these may self-ignite several hours after contact. If there is a fire, spray with large quantities of water.

TechPub_2614345_0106 - OM_2819202_0104sp.fm

Storage of Hydrogen Peroxide

DANGER

Containers may explode if not properly ventilated.
Keep the container upright and fitted with its proper ventilation cap. If there is a fire, cool all containers by spraying them with large quantities of water.

Hydrogen peroxide decomposes much faster with increasing temperature. There is a risk of explosion at high temperatures, since the ventilation cap cannot release the gases produced quickly enough.

Hydrogen peroxide **must** be stored in the **original container** delivered by the supplier. Keep the container upright and fitted with its proper ventilation cap, which allows oxygen to escape. Otherwise, there can be an explosion if decomposition of the peroxide occurs violently.

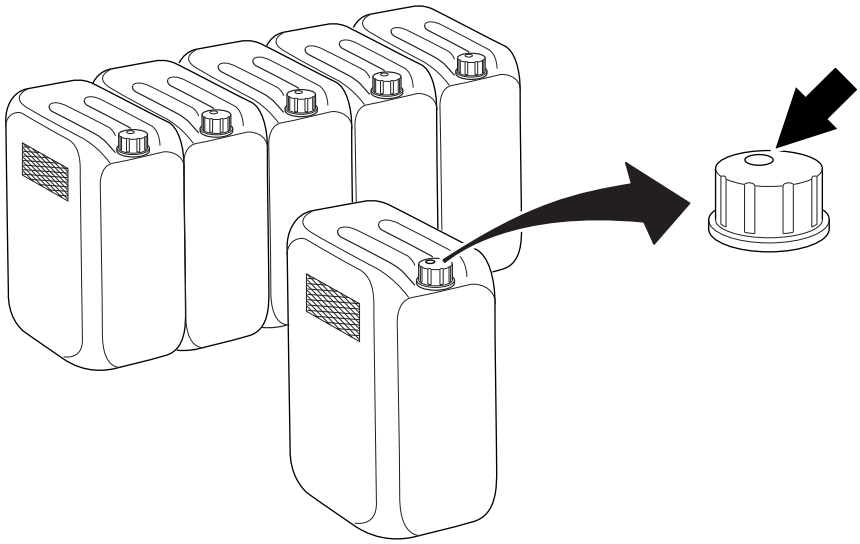

Make sure that the container is always properly closed.

(Cont'd)

TechPub_2614345_0106 - OM_2819202_0104sp.fm

(Cont'd)

Commercial food-grade hydrogen peroxide has been stabilized to inhibit the catalytic decomposition effects of metals and other impurities, but it can decompose into oxygen and water if it is exposed to heat or contaminated.

Make sure that the area used for storage of hydrogen peroxide is

- cool, clean, and well ventilated
- shielded from direct sunlight
- kept free from combustible materials

Disposal of Hydrogen Peroxide

Always read and follow the disposal instructions in the safety data sheet supplied by the manufacturer or local supplier.

TechPub_2614345_0106 - OM_2819202_0104sp.fm

Caustic Soda/Sodium Hydroxide (NaOH)

WARNING
Corrosive chemical.
Wear personal protective equipment.

Caustic soda/sodium hydroxide is highly corrosive in all forms and can cause serious burns on contact with skin and eyes.

Always wear personal protective equipment (as specified on the next page).

Emergency Procedures

First Aid Measures

Inhalation
Remove victim immediately from source of exposure, provide rest, warmth and fresh air, get medical attention if any discomfort continues.

Ingestion
Do not induce vomiting, immediately rinse mouth and drink plenty of water (200 - 300 ml) and get medical attention immediately!

Skin Contact
Immediately remove contaminated clothing, rinse the skin with lots of water and get medical attention.

Eye Contact
May cause permanent damage if eye is not immediately irrigated. Make sure to remove any contact lenses from eyes before rinsing. Promptly wash eyes with plenty of water while lifting the eyelids, get immediately medical attention and continue to rinse.

WARNING
Corrosive chemical.
Wear personal protective equipment.

Accidental Release, Spillage or Splashing
In case of accidental release, spillage or splashing

- wash contaminated area with water. Alternatively, absorb in vermiculite, dry sand or earth, place into containers and wash the affected area
- in case of contact with eyes or skin wash with plenty of water
- remove any contaminated clothing immediately

TechPub_2614345_0106 - OM_2819202_0104sp.fm

Personal Protective Equipment

The personal protective equipment for caustic soda/sodium hydroxide is

- protective goggles (TP No. 90303-11)
- protective gloves made of neoprene (TP No. 90303-12)
- protective apron (TP No. 90303-13)
- protective shoes made of PVC, PE plastic, or rubber

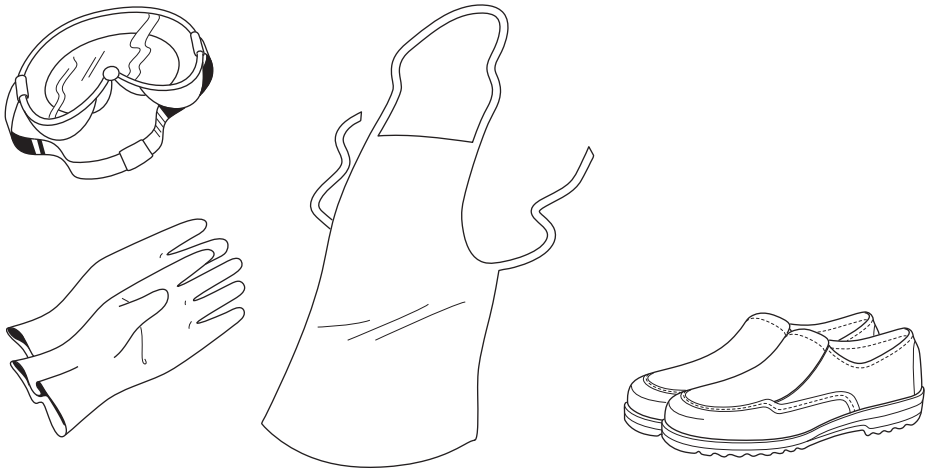

TechPub_2614345_0106 - OM_2819202_0104sp.fm

Handling and Storage of Caustic Soda/Sodium Hydroxide

WARNING

Sudden and violent chemical reaction.

Avoid any contamination of caustic soda/sodium hydroxide. Never store or mix caustic soda together with hydrogen peroxide.

Ensure that

- containers are kept tightly closed
- containers are stored in a cool dry place away from direct sunlight or sources of heat
- designated storage and handling areas are adequately ventilated and that emergency shower and eye wash facilities are available nearby
- handle containers carefully during transport
- avoid spilling, skin and eye contact
- use dedicated equipment when sampling, pouring or decanting
- never store or mix caustic soda together with hydrogen peroxide

Disposal of Caustic Soda/Sodium Hydroxide

Dispose of waste and residues in accordance with local authority requirements. Used caustic soda should be sent to an approved facility for destruction. Never allow caustic soda to be disposed into the drain.

CAUTION

Fire-Fighting Measures

Always apply the following measures.

Extinguishing Media

The product is non-combustible, use fire extinguishing media appropriate for surrounding materials.

Specific Hazards

Corrosive liquid.

Protective Measures in Fire

Self-contained breathing apparatus and full-protective clothing must be worn in case of fire.

Note! Always refer to your supplier’s Material Safety Data Sheet (MSDS) for caustic soda.

TechPub_2614345_0106 - OM_2819202_0104sp.fm

Nitric Acid (HNO_3)

WARNING
Corrosive chemical.
Wear personal protective equipment.

Nitric acid is extremely hazardous; it is corrosive, reactive, a strong oxidizer and a poison. Liquid and mist can cause serious burns on contact with skin and eyes; contact with other material may cause fire; liquid and mist cause severe burns to skin and eyes; inhalation may cause lung and tooth damage.

Always wear personal protective equipment (as specified on the next page).

Emergency Procedures

First Aid Measures

Inhalation
Remove victim immediately from source of exposure, provide rest, warmth and fresh air. If not breathing, give artificial respiration; if breathing is difficult give oxygen. Get medical attention immediately.

Ingestion
Do not induce vomiting, immediately rinse mouth and drink plenty of water or milk if available. Never give anything by mouth to an unconscious person. Get medical attention immediately.

Skin Contact
Immediately remove contaminated clothing, rinse the skin with lots of water and get medical attention.

Eye Contact
May cause permanent damage if eye is not immediately irrigated. Make sure to remove any contact lenses from eyes before rinsing. Promptly wash eyes with plenty of water while lifting the eyelids, get immediately medical attention and continue to rinse. Get medical attention if any discomfort continues.

(Cont'd)

TechPub_2614345_0106 - OM_2819202_0104sp.fm

(Cont'd)

WARNING
Corrosive chemical.
Wear personal protective equipment.

Accidental Release, Spillage or Splashing

In case of accidental release, spillage or splashing

- ventilate area of leak or spill, isolate hazard area, keep unnecessary and unprotected personnel from entering, contain and recover liquid when possible, neutralise with alkaline material (soda ash, lime) then absorb with an inert material (e.g.,vermiculite, dry sand or earth), place in a chemical waste container; do not use combustible materials, such as saw dust, rags, paper, wood
- in case of contact with eyes or skin wash with plenty of water
- remove any contaminated clothing immediately; see the Fire-fighting (fire) measures section on page ii-38

TechPub_2614345_0106 - OM_2819202_0104sp.fm

Personal Protective Equipment

The personal protective equipment for nitric acid is

- protective goggles (TP No. 90303-11)
- protective gloves made of neoprene (TP No. 90303-12)
- protective apron (TP No. 90303-13)
- protective shoes made of PVC, PE plastic, or rubber

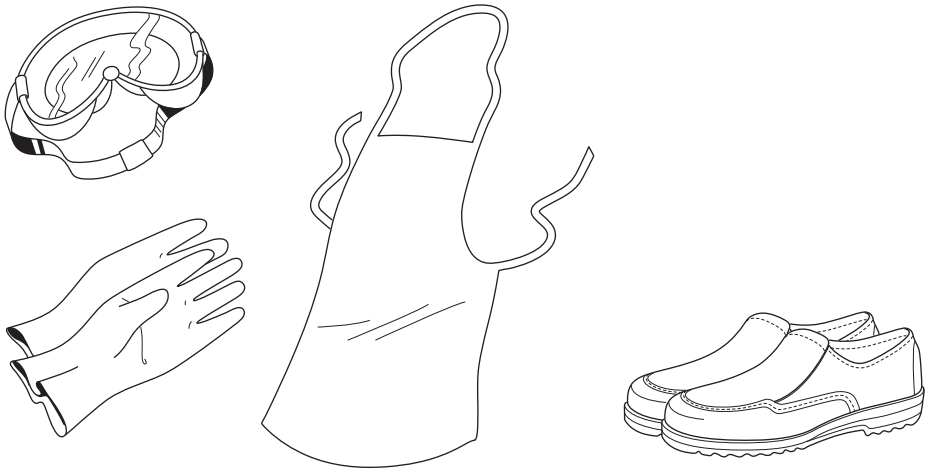

TechPub_2614345_0106 - OM_2819202_0104sp.fm

Handling and Storage of Nitric Acid

WARNING

Sudden and violent chemical reaction.

Avoid any contamination of nitric acid.

Ensure that

- containers are kept tightly closed
- containers are stored in a cool dry place away from direct sunlight or sources of heat, water and incompatible materials and that emergency shower and eye wash facilities are available nearby
- designated storage and handling areas are adequately ventilated and have acid-resistant floors
- handle containers carefully during transport
- avoid spilling, skin and eye contact
- use dedicated equipment when sampling, pouring or decanting
- do not wash out container and use it for other purposes. Containers of this material may be hazardous when empty since they retain product residues (vapours, liquid)

TechPub_2614345_0106 - OM_2819202_0104sp.fm

Disposal of Nitric Acid

Dispose of waste and residues in accordance with local authority requirements. Used nitric acid should be sent to an approved facility for destruction. Never allow nitric acid to be disposed into the drain.

CAUTION

Fire-fighting measures.

Always apply the following measures.

Fire

The product is non-combustible, but it is a strong oxidiser and its heat of reaction with reducing agents or combustibles may cause ignition. Can react with metals to release flammable hydrogen gas.

Explosion

Reacts explosively with combustible organic or readily oxidizable materials such as alcohols, turpentine, charcoal, organic refuse, metal powder, hydrogen sulphide, etc. Reacts with most metals to release hydrogen gas which can form explosive mixtures with air.

Extinguishing Media

Water spray may be used to keep containers exposed to the fire cool. Do not get water inside containers. Use fire extinguishing media appropriate for surrounding materials.

Special Information

Increases the flammability of combustible, organic and readily oxidizable materials.

Protective Measures In Fire

Self-contained breathing apparatus and full-protective clothing must be worn in case of fire.

Note! Always refer to your supplier’s Material Safety Data Sheet (MSDS) for nitric acid.

TechPub_2614345_0106 - OM_2819202_0104sp.fm

Supply Systems

Power Supply

DANGER

Hazardous voltage and moving machinery.
The power supply disconnector must be turned off and secured with a lock before any maintenance.

Note! The key to the lock must be removed by the technician and retained in his/her possession until all work is completed.

Certain maintenance procedures may require power supply systems to be on. These exceptions are clearly stated in the Maintenance Manual.

The illustrations show the power supply disconnector and its location.

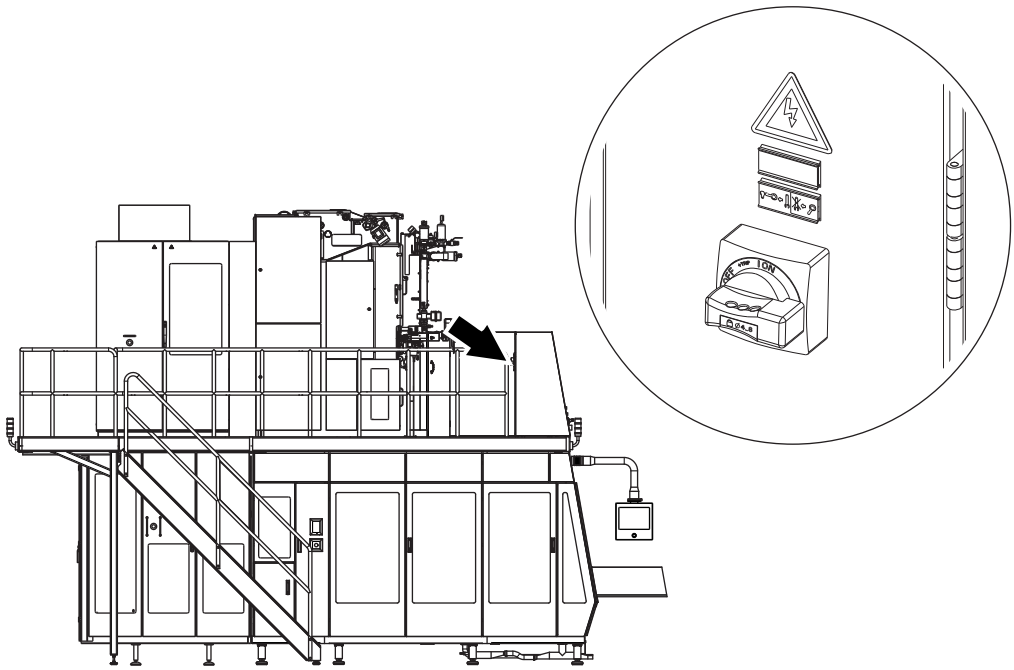

Residual Voltage

DANGER

Hazardous voltage.
Do not touch any terminals immediately after the power supply disconnector is turned off. Ensure that no residual voltage remains on the capacitors before touching. Wait five minutes. Failure to observe this information will cause death or serious injury.

After the power supply disconnector is turned off, residual voltage remains in the capacitor circuits.

TechPub_2614345_0106 - OM_2819202_0104sp.fm

Electrical Cabinet

DANGER

Hazardous voltage.
Will shock, burn, or cause death. The power supply disconnector must be turned off and secured with a lock before maintenance inside the electrical cabinet.

Note! The key to the lock must be removed by the technician and retained in his/her possession until all work is completed.

Make sure that the electrical cabinet doors are closed after working inside the electrical cabinet. Doors with lock must be locked.

The location of each electrical cabinet is shown by an arrow.

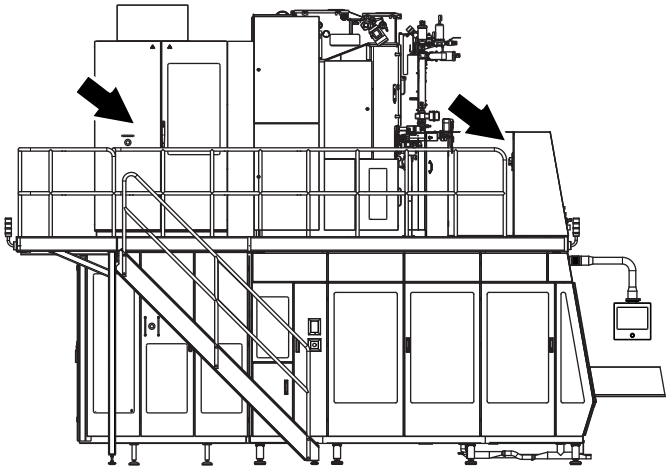

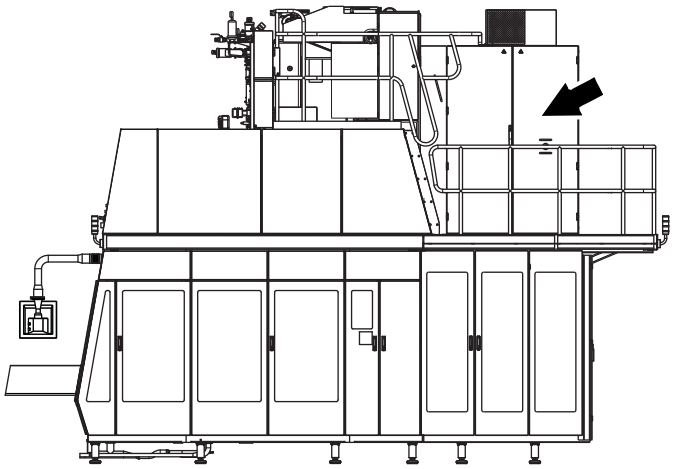

TechPub_2614345_0106 - OM_2819202_0104sp.fm

Socket Outlet

WARNING

Hazardous voltage.
Can shock, burn, or cause death. Read the Maintenance Manual before using this socket outlet.

The socket outlet (1) is connected to a residual current device (2) to protect users against electrical shock if there is an earth fault in the connected equipment. The residual current device shall be tested each time before the socket outlet is being used. See the MM for test procedure.

The illustrations show the socket outlet, the residual current device, and their location.

Note! Valid for machines with T-order: 21208/00001 to 21208/00020.

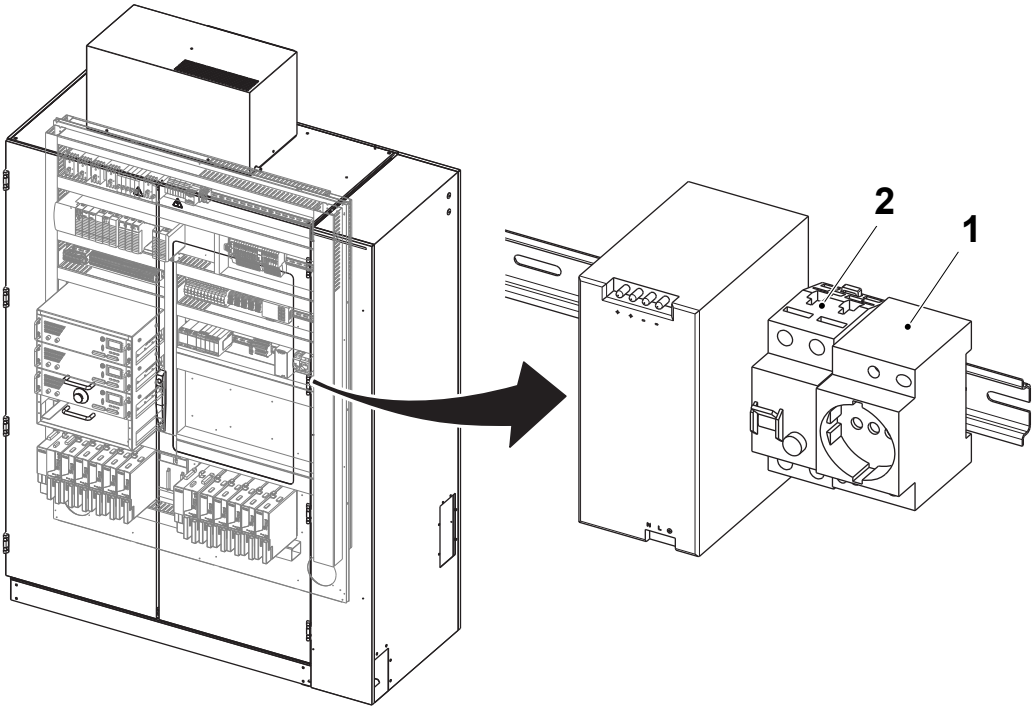

1 Socket outlet
2 Residual current device

(Cont'd)

TechPub_2614345_0106 - OM_2819202_0104sp.fm

(Cont'd)

Note! Valid for machines with T-order: 21208/00021 and above.

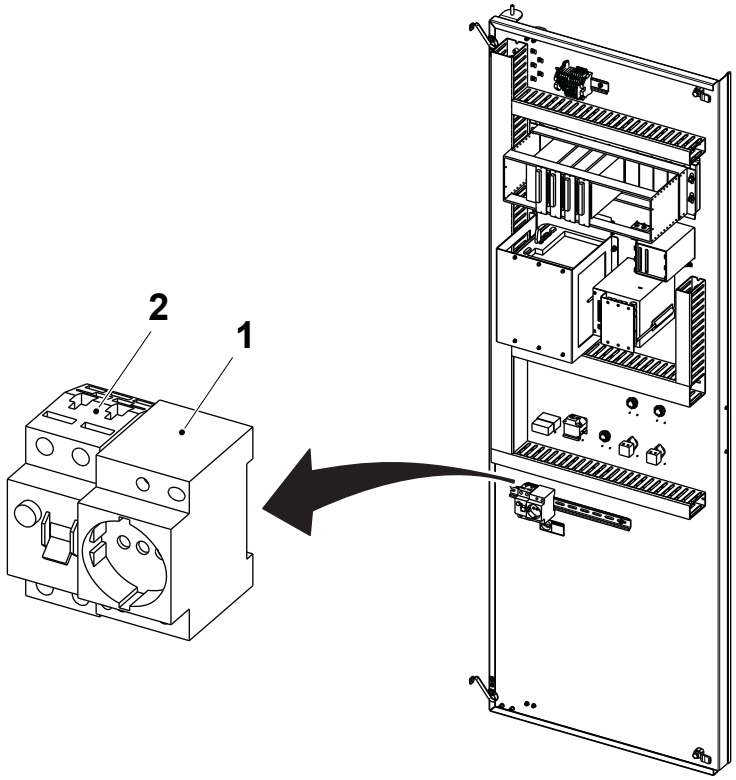

1 Socket outlet
2 Residual current device

TechPub_2614345_0106 - OM_2819202_0104sp.fm

Air Supply

WARNING

Compressed air and moving machinery.
Switch the main air off before any maintenance.

Certain maintenance procedures may require air supply systems to be on. These exceptions are clearly stated in the Maintenance Manual.

The illustrations show the main air switch (1), the main air regulator (2) and their location in the filling machine.

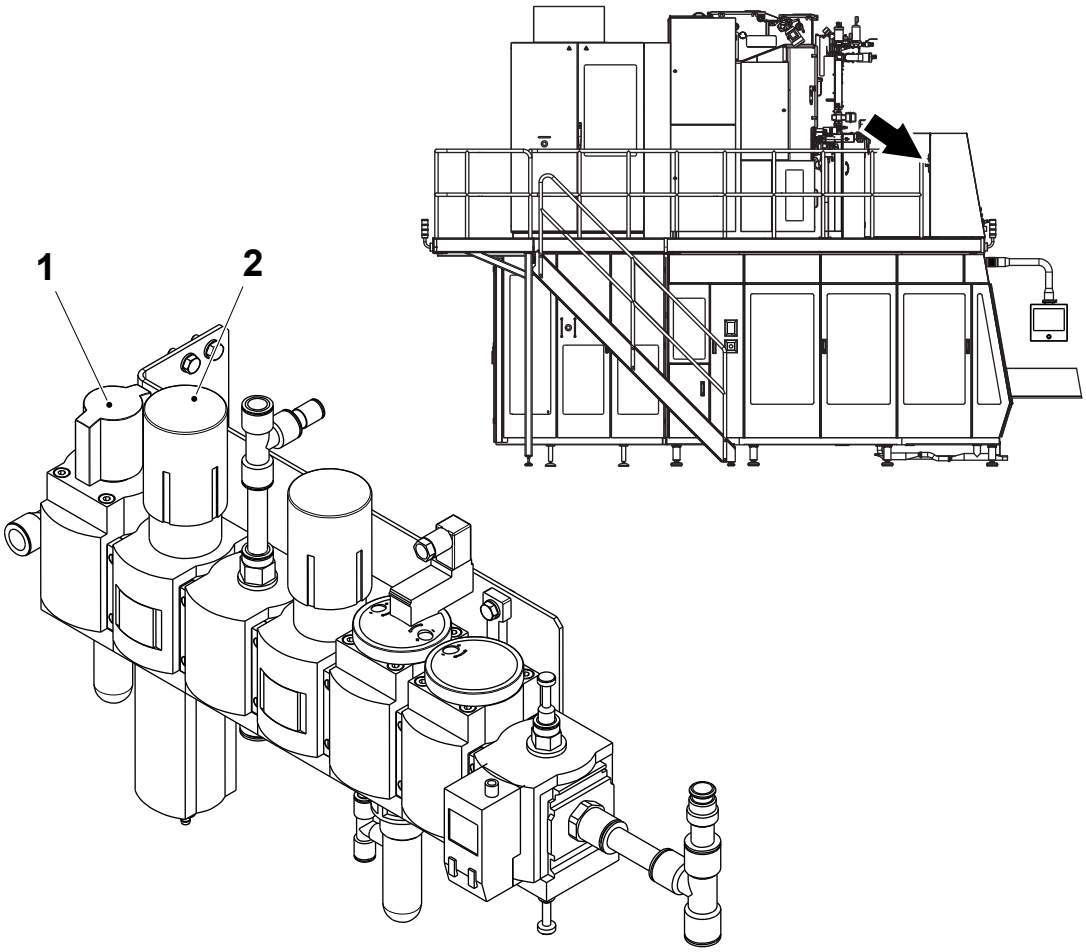

1 Main air valve
2 Main air regulator

TechPub_2614345_0106 - OM_2819202_0104sp.fm

Steam Supply

WARNING

Hot steam can cause scalds.

Pressurized steam can be discharged unexpectedly. Close the steam supply valve and lock it, depressurize and vent all steam safely before any maintenance on parts with steam, such as pipes and valves.

Note! The key to the lock must be removed by the technician and retained in his/her possession until all work is completed.

Certain maintenance procedures may require steam supply systems to be on. These exceptions are clearly stated in the Maintenance Manual.

The steam supply system is separated in two different supply: the valve (1) is for the steam barrier in the product valve, the valve (2) is for the cleaning system only.

The illustrations show the steam supply valves (1) and (2) with the padlocks (3) and their location.

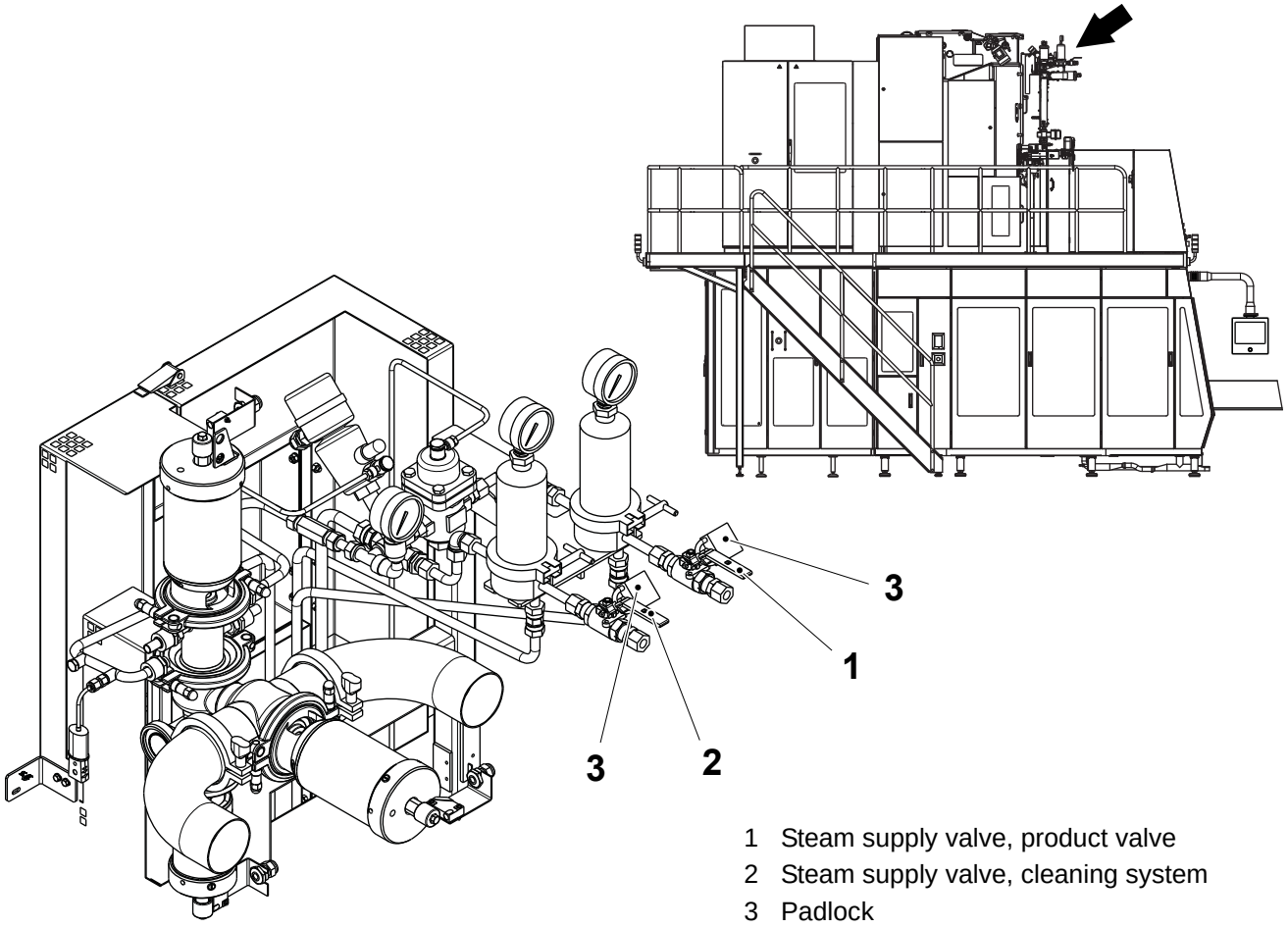

1 Steam supply valve, product valve
2 Steam supply valve, cleaning system
3 Padlock

TechPub_2614345_0106 - OM_2819202_0104sp.fm

Water Supply

CAUTION

Water under pressure.

Close the water supply valves before any maintenance.

Certain maintenance procedures may require water supply systems to be on. These exceptions are clearly stated in the Maintenance Manual.

The illustrations show the water supply valves (1) and (2), and their location.

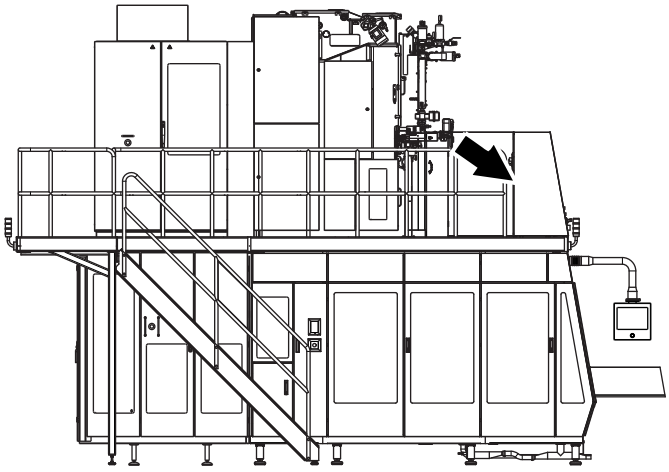

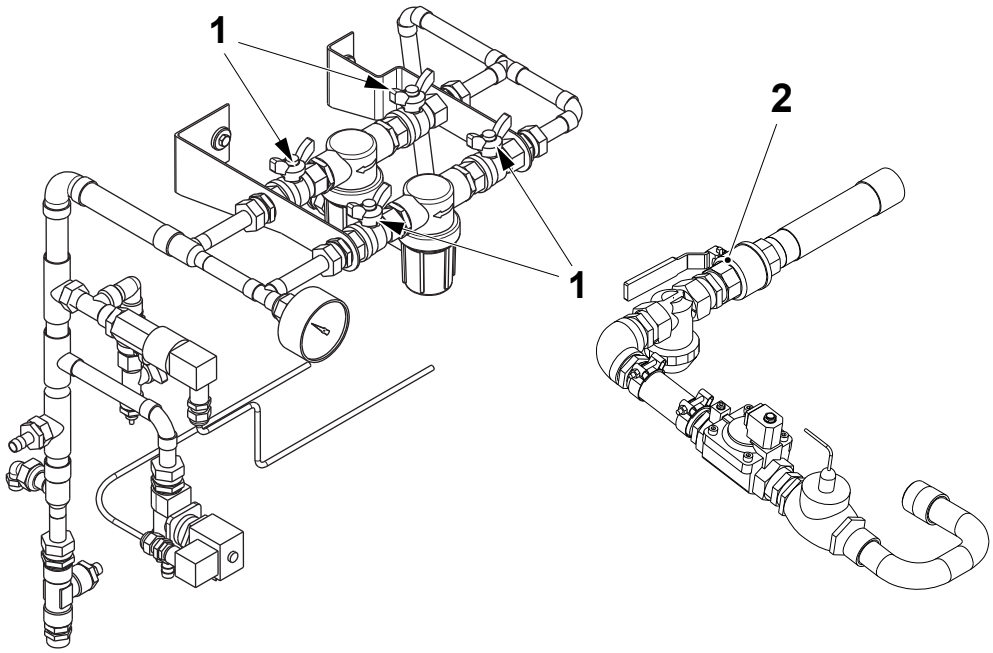

1 Water supply valve
2 Hot water supply valve

TechPub_2614345_0106 - OM_2819202_0104sp.fm

Equipment for Lifting and Moving Loads

WARNING

Risk of crushing injury.

Make sure that the capacity of the lifting equipment is adequate and that the equipment itself is in proper working order.

If lifting tackle must be joined to make up the necessary lengths, make sure that the joints are secure and have the same lifting capacity as the rest of the lifting tackle.

Always engage safety clips fitted to lifting hooks to prevent the lifting tackle from slipping off.

Use ropes or poles to steady and manoeuvre suspended loads. Do **not** use hands or feet.

Make sure that the route and destination are free from obstacles before moving a suspended load. It must always be possible to quickly and safely lower the load to the floor in an emergency.

When depositing loads, keep lifting tackle in place until the stability of the load has been substantiated.

TechPub_2614345_0106 - OM_2819202_0104sp.fm

1 General Description

TechPub_2614345_0106 - 01_2819202_04en.fm

This chapter describes the main parts of the machine and the terminology.

CAUTION

Risk of personal injury or damage to the equipment.

To ensure maximum safety, always read this section and the Safety Precautions carefully before doing any work on the equipment or making any adjustments.

TechPub_2614345_0106 - 01_2819202_04en.fm

Functional Description . . . . . 1 - 5

Main Groups of the Equipment . . . . . 1 - 10

Filling Machine, LH Side . . . . . 1 - 10

Service Unit . . . . . 1 - 11

Valve Panel, ASU LH Side . . . . . 1 - 12

Valve Panel, Superstructure LH Side . . . . . 1 - 13

Valve Panel, Service Unit. . . . . 1 - 13

Electrical Cabinet, Filling Machine LH Side . . . . . 1 - 14

Process panel, Filling Machine LH Side . . . . . 1 - 15

HI - Headspace by Injection (OE), Superstructure Front Side. . . . . 1 - 16

Filling Machine, RH Side . . . . . 1 - 17

Filling Machine, RH Side Rear, No Covers . . . . . 1 - 18

Lower Valve Panel, Machine Body RH Side . . . . . 1 - 19

Control Panel . . . . . 1 - 20

Machine Symbols . . . . . 1 - 21

Valve Panels, Symbols . . . . . 1 - 21

Service Unit, Symbols . . . . . 1 - 22

Electrical Cabinet, Symbols . . . . . 1 - 23

ASU, Symbols. . . . . 1 - 23

Process Panel, Symbols . . . . . 1 - 23

Packaging Material Web Path. . . . . 1 - 24

TechPub_2614345_0106 - 01_2819202_04en.fm

This page intentionally left blank

TechPub_2614345_0106 - 01_2819202_04en.fm

Functional Description

The filling machine is used to package liquid food products such as milk, juices or wine. To create the filled packages the filling machine needs a supply of packaging material.

Reels of packaging material are loaded into the ASU (Automatic Splicing Unit) at the rear of the filling machine. The packaging material reel is then threaded through the ASU and along a route through the machine referred to as the packaging material web path.

After the ASU, the first part of the machine to be threaded with the packaging material is the strip applicator. The strip applicator is used to apply a special strip of polyethylene to one edge of the packaging material. To keep the supply and movement of the packaging material constant whilst the strip is being applied, the packaging material is threaded through a series of “dancing” rollers. The strip will be used later to seal the two edges of the packaging material together.

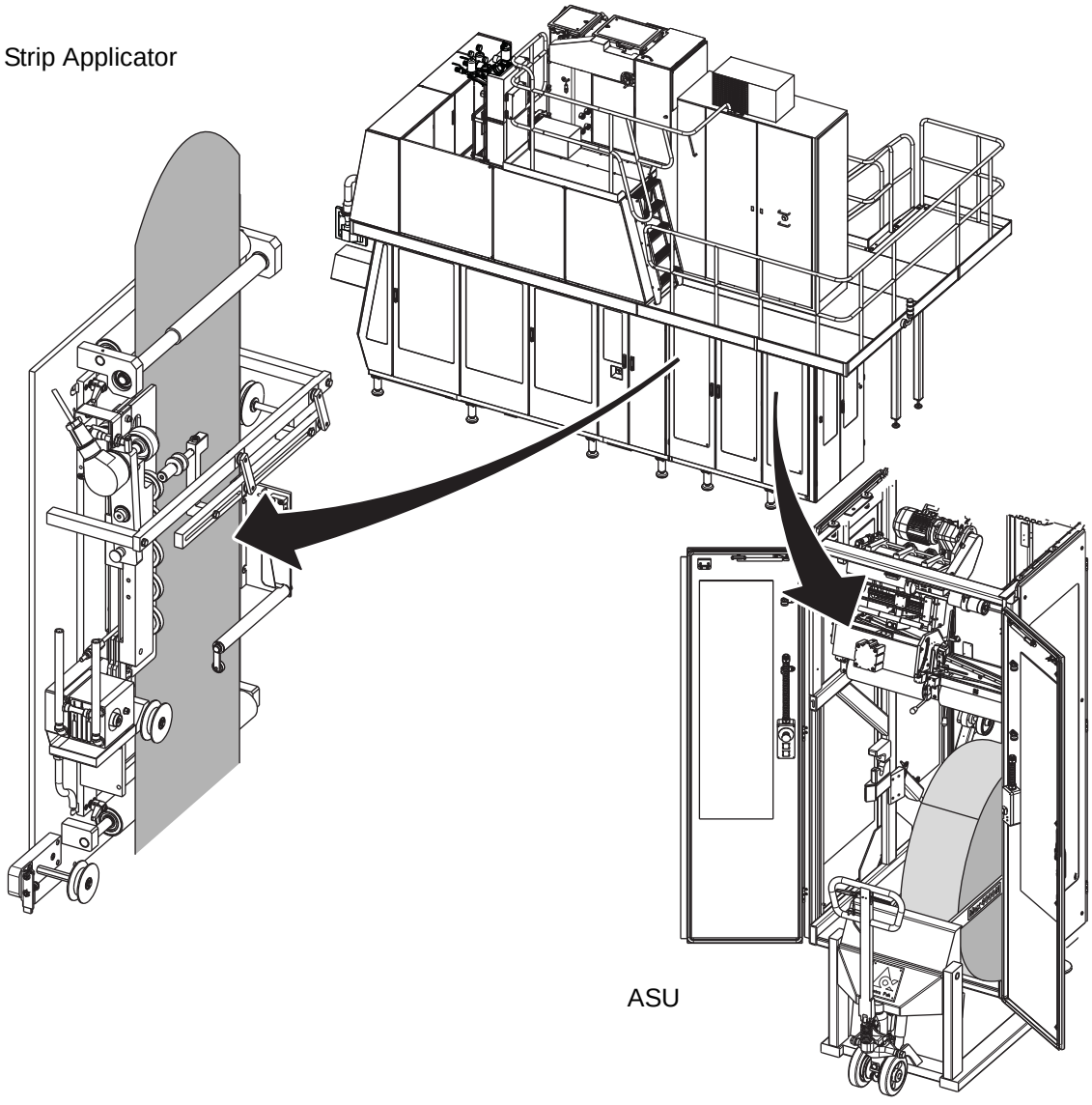

(Cont'd)

TechPub_2614345_0106 - 01_2819202_04en.fm

(Cont'd)

The packaging material is then fed up through an opening in the filling machine platform, around a bending roller and then enters the peroxide bath. The peroxide bath contains a quantity of diluted peroxide which is heated by electric heating elements attached to the outside of the bath. The peroxide sterilizes the packaging material and eliminates any bacteria that could contaminate the product. As the packaging material exits the peroxide bath, it passes between a pair of rubber coated rollers which squeeze the packaging material to remove any residual peroxide.

The packaging material then enters the drying chamber and passes through the air knife. The air knife is a narrow enclosure where extremely hot and clean air is blown down the surfaces of the packaging material. This removes any remaining traces of the peroxide from the surface of the packaging material.

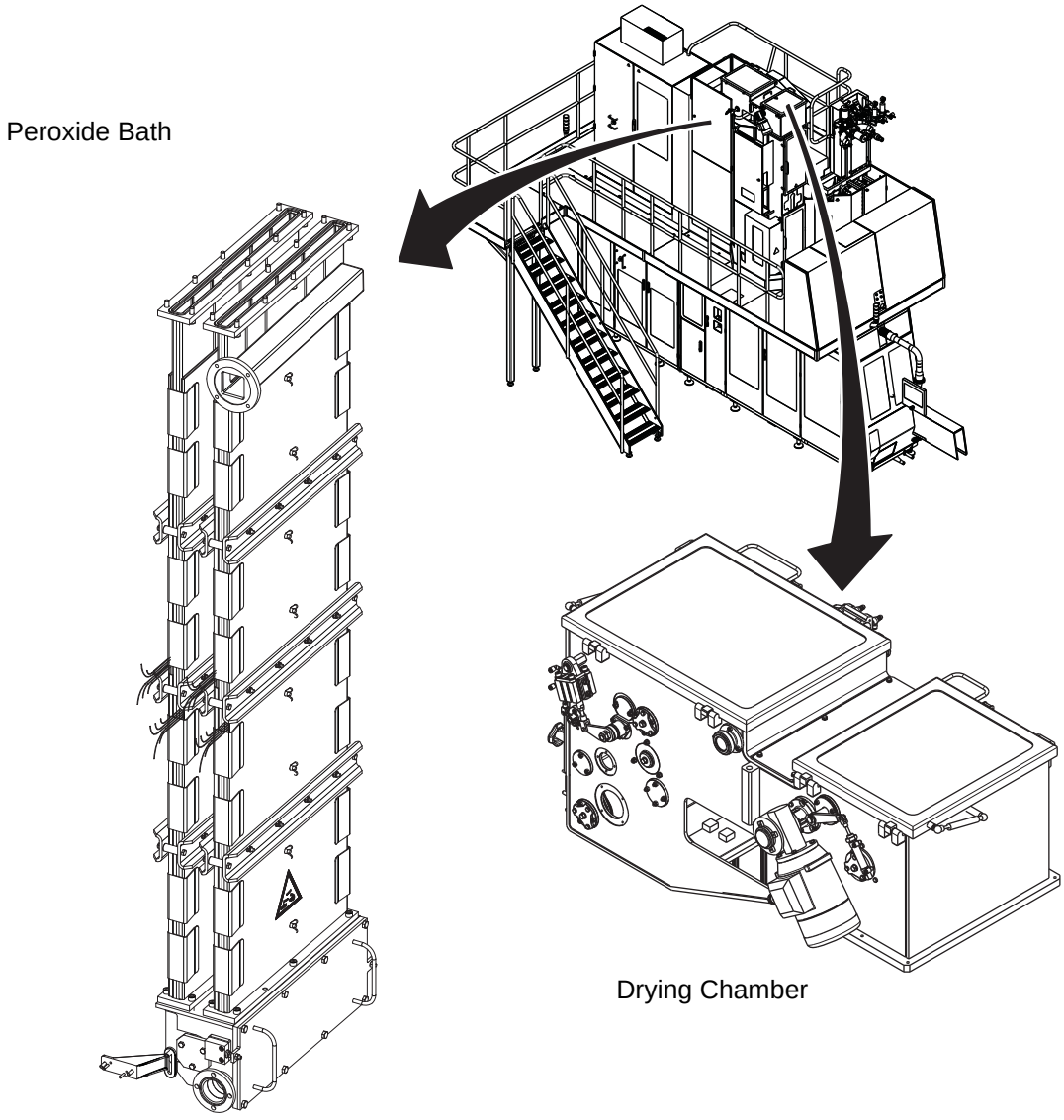

TechPub_2614345_0106 - 01_2819202_04en.fm

(Cont'd)

(Cont'd)

The packaging material is now ready to be formed and filled with product.

The forming section of the filling machine consists of a series of “forming rings” positioned at intervals inside the aseptic tower. The forming rings use rollers to progressively form the packaging material into a tube shape. As the packaging material forms a near complete tube in shape, the polyethylene strip is heated and pressed onto the other edge of the packaging material to seal the tube.

The packaging material tube is filled with product by means of a filling pipe. The filling pipe is divided into two parts, the upper filling pipe is fitted inside the aseptic chamber and positioned inside the last two forming rings and continues down into the roof of jaw system compartment below. The lower part of the filling pipe is fitted to the upper filling pipe by a locking pin in the jaw system compartment.

The filling pipe fills the sealed tube with product and the volume of product in the tube is maintained at a constant level to ensure each package is filled with the correct amount of product.

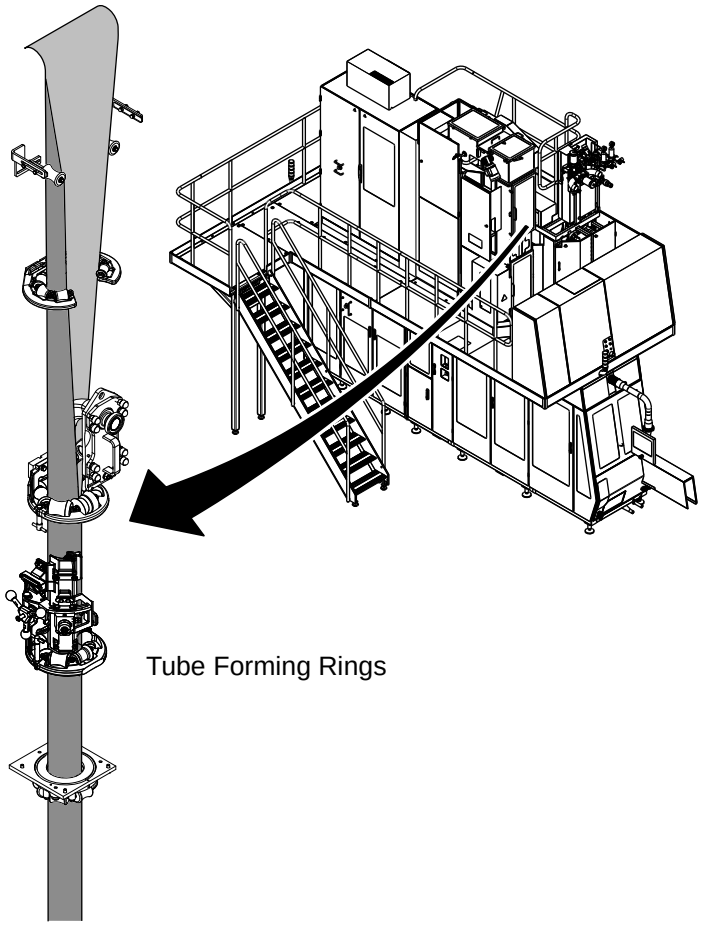

Tube Forming Rings

(Cont'd)

TechPub_2614345_0106 - 01_2819202_04en.fm

(Cont'd)

The packaging material tube then passes down into the jaw system.

The jaw system is the principal component of the filling machine, as the jaw system drives the movement of all the other filling machine components. When the packaging material tube enters the jaw system compartment, the barcode printed on the packaging material is read by two photocell units.

The jaw system needs to cut the packaging material at a specific point along the packaging material tube. This point is in the centre of the section of the packaging material where the printed design of an individual package ends and a new printed design begins.

Reading the barcode helps the filling machine to understand where the packaging material tube is positioned at that particular moment. With this knowledge the jaw system then cuts off and seals an individual package.

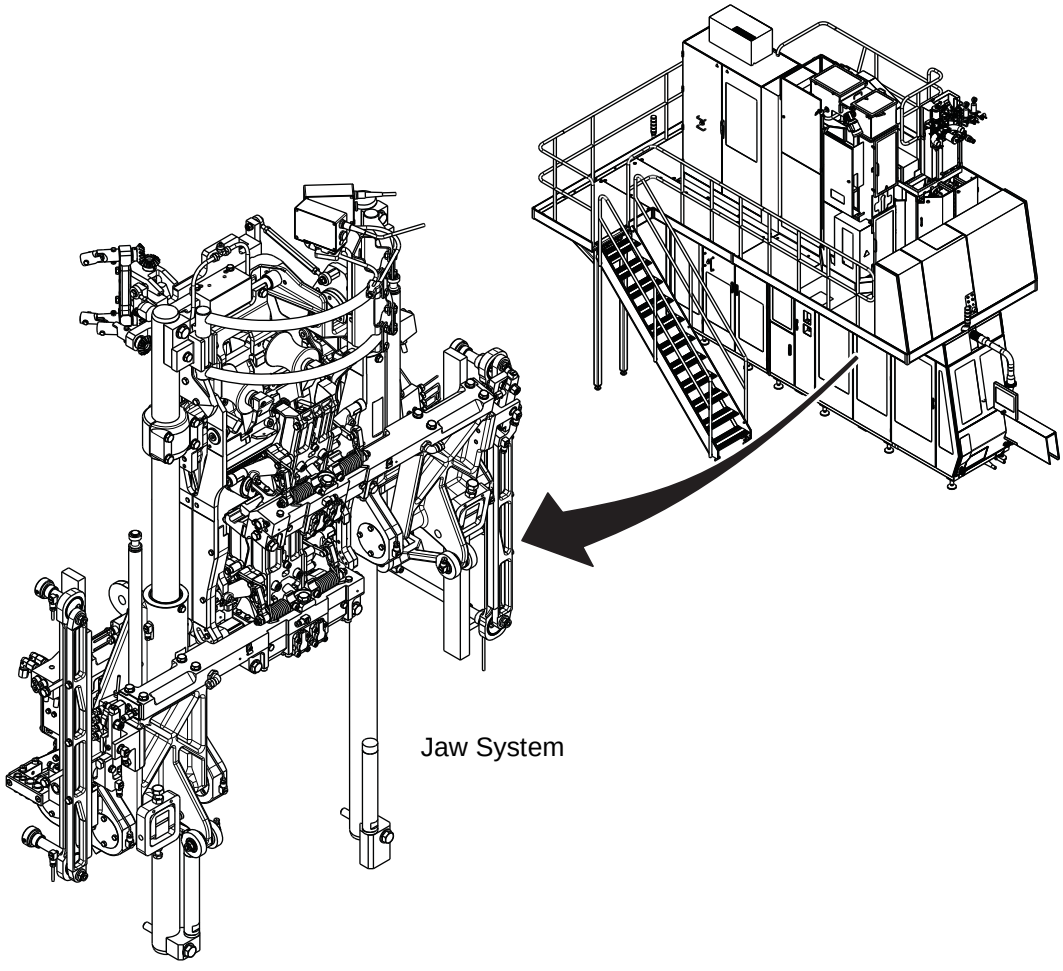

Jaw System

TechPub_2614345_0106 - 01_2819202_04en.fm

(Cont'd)

(Cont'd)

The last component of the filling machine is the final folder unit.

Once the individual package has been cut from the packaging material tube it slides down a drop chute and is carried along a short conveyor to the final folder unit. The final folder is where the package is pressed into shape.

As the package moves through the final folder, folding flaps press the package along predefined creases on the packaging material which forms the package into shape. At the same time, folding bars bend the corners (or flaps) of the package which are then heated with extremely hot air projected at spots on the corners. The hot air melts the polyethylene outer coating of the packaging material and the corners are then pressed and sealed respectively to the bottom and to the sides of the package.

The package exits the final folder unit, is carried along a conveyor and exits the filling machine.

Final Folder Unit

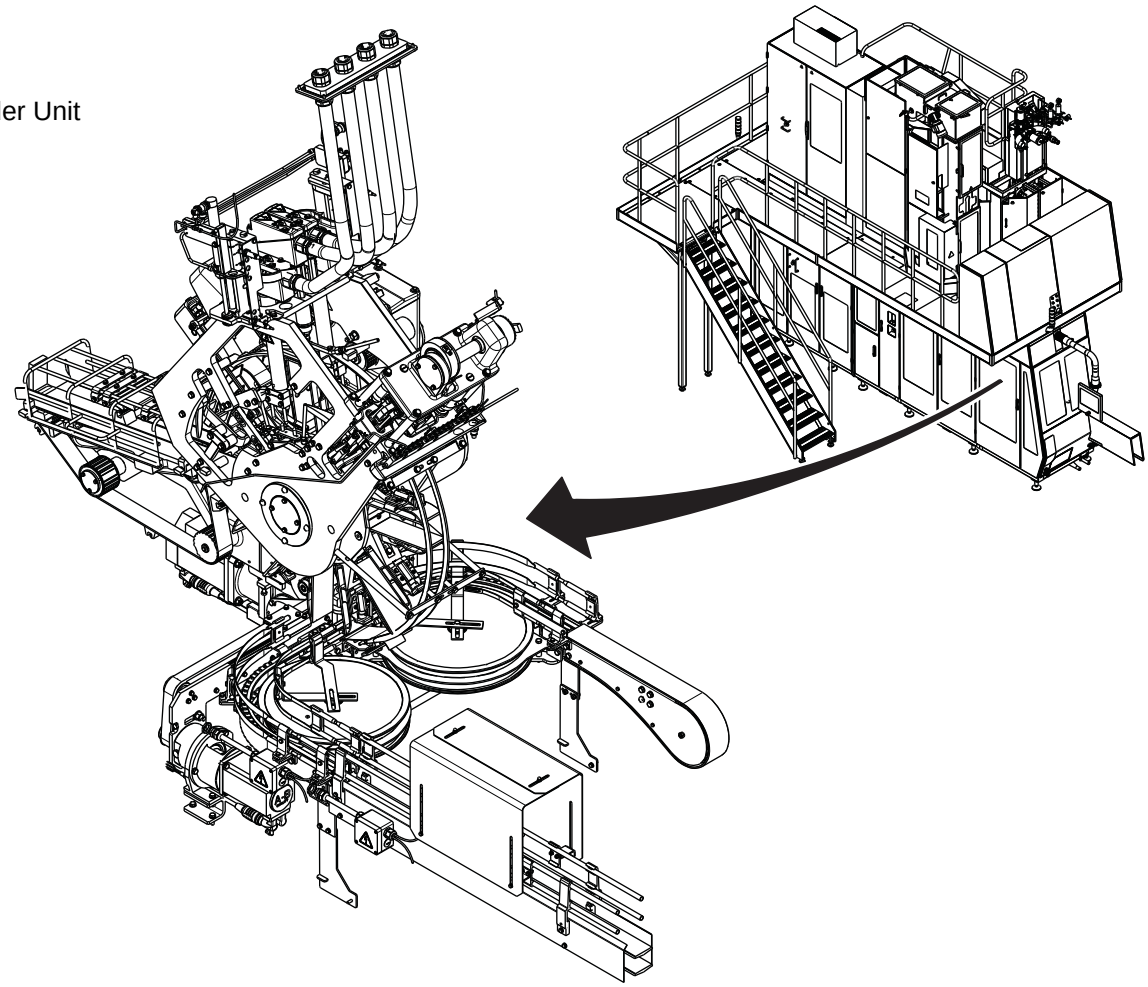

TechPub_2614345_0106 - 01_2819202_04en.fm

Main Groups of the Equipment

Filling Machine, LH Side

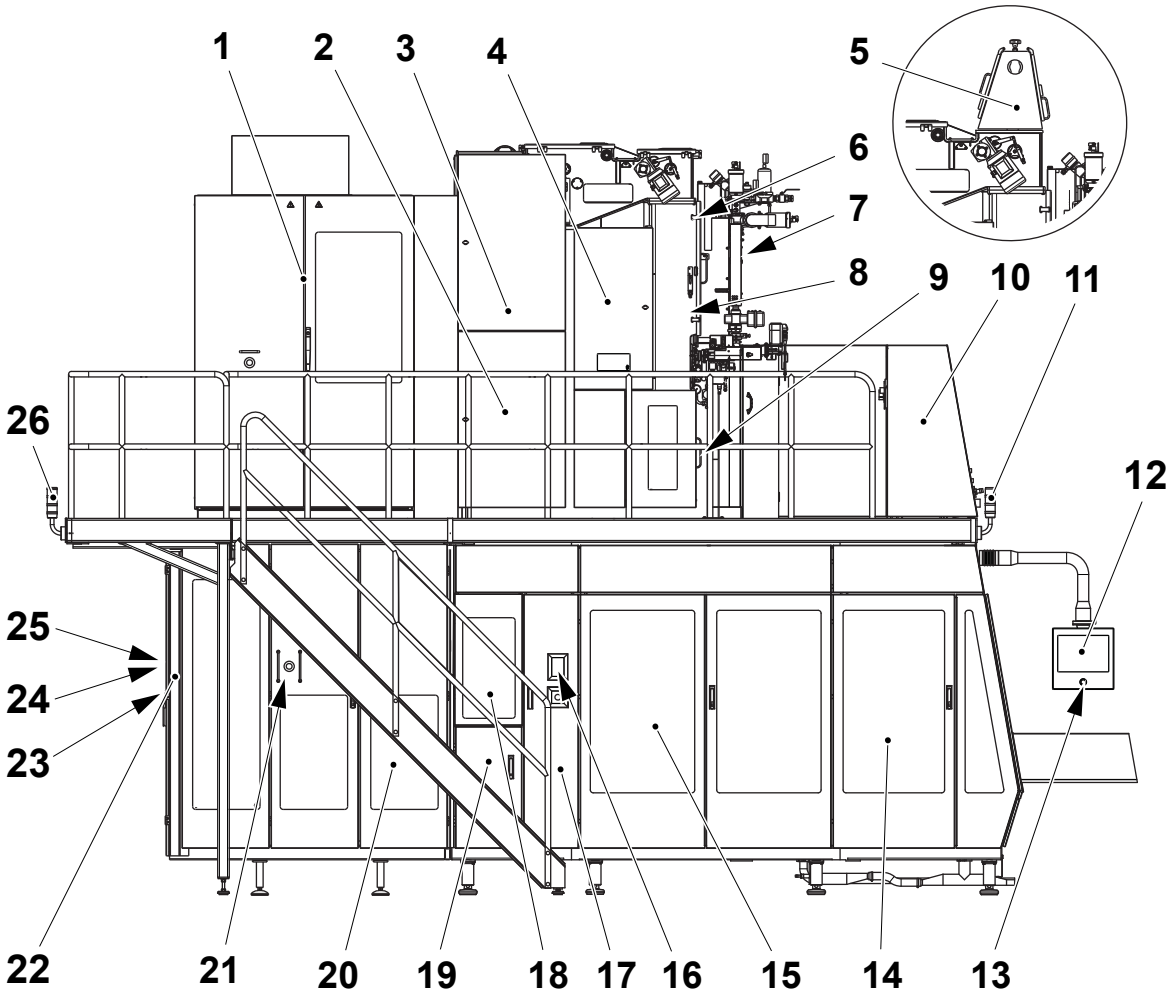

1 Electrical cabinet, filling machine
2 Lower peroxide bath door
3 Upper peroxide bath door
4 Valve panel, superstructure
5 Upper section (TBA 2000S Only)
6 Upper aseptic chamber door
7 Aseptic chamber door
8 EMERGENCY STOP button
9 Lower, aseptic chamber door
10 Service unit
11 Warning beacon
12 TPOP panel
13 EMERGENCY STOP button
14 Final folder
15 Jaw system
16 EMERGENCY STOP button
17 Central lubrication system and hydraulic unit
18 ICU chemical containers and refilling system
19 Hydrogen peroxide container
20 Valve panel, ASU
21 EMERGENCY STOP button
22 Behind ASU doors:
- EMERGENCY STOP button
- MATERIAL LOCKING button
23 SHORT STOP button
24 MANUAL WEB SPLICE button
25 MANUAL STRIP SPLICE button
26 Warning beacon

TechPub_2614345_0106 - 01_2819202_04en.fm

Service Unit

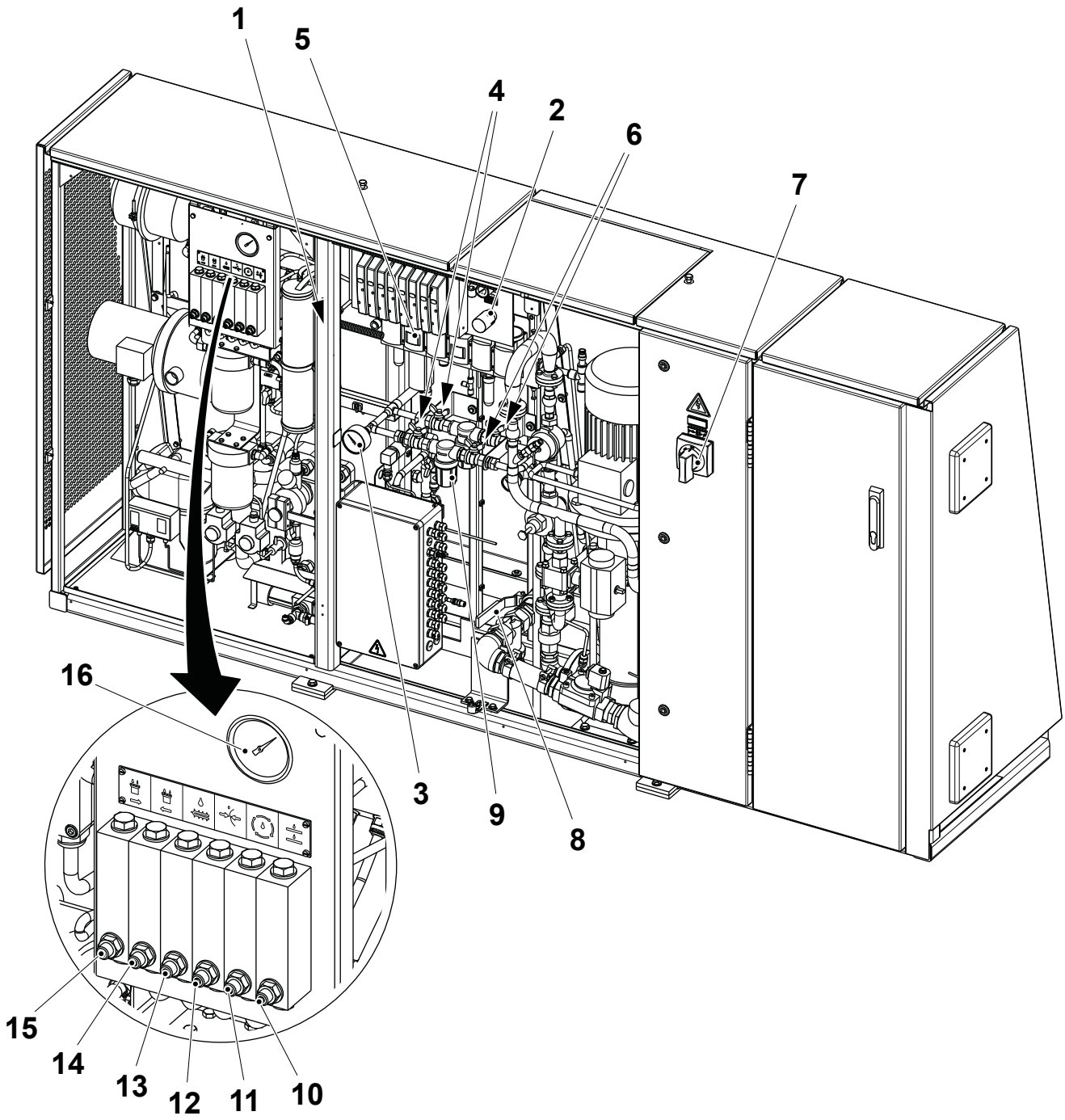

1 Cooling water refilling valve
2 Foaming pressure regulator external cleaning
3 Mains water pressure gauge
4 Mains water supply valve(s)
5 Air pressure gauge
6 Mains water supply valve (s)
7 Mains power switch
8 External cleaning handle
9 Filter, mains water supply
10 Cooling water flow meter, hydraulic system
11 De-ionizing circuit flow meter
12 Cooling water flow meter, LS transformer
13 Cooling water flow meter, final folder
14 Cooling water flow meter, jaw system, TS left
15 Cooling water flow meter, jaw system, TS right
16 Cooling water pressure gauge

TechPub_2614345_0106 - 01_2819202_04en.fm

Valve Panel, ASU LH Side

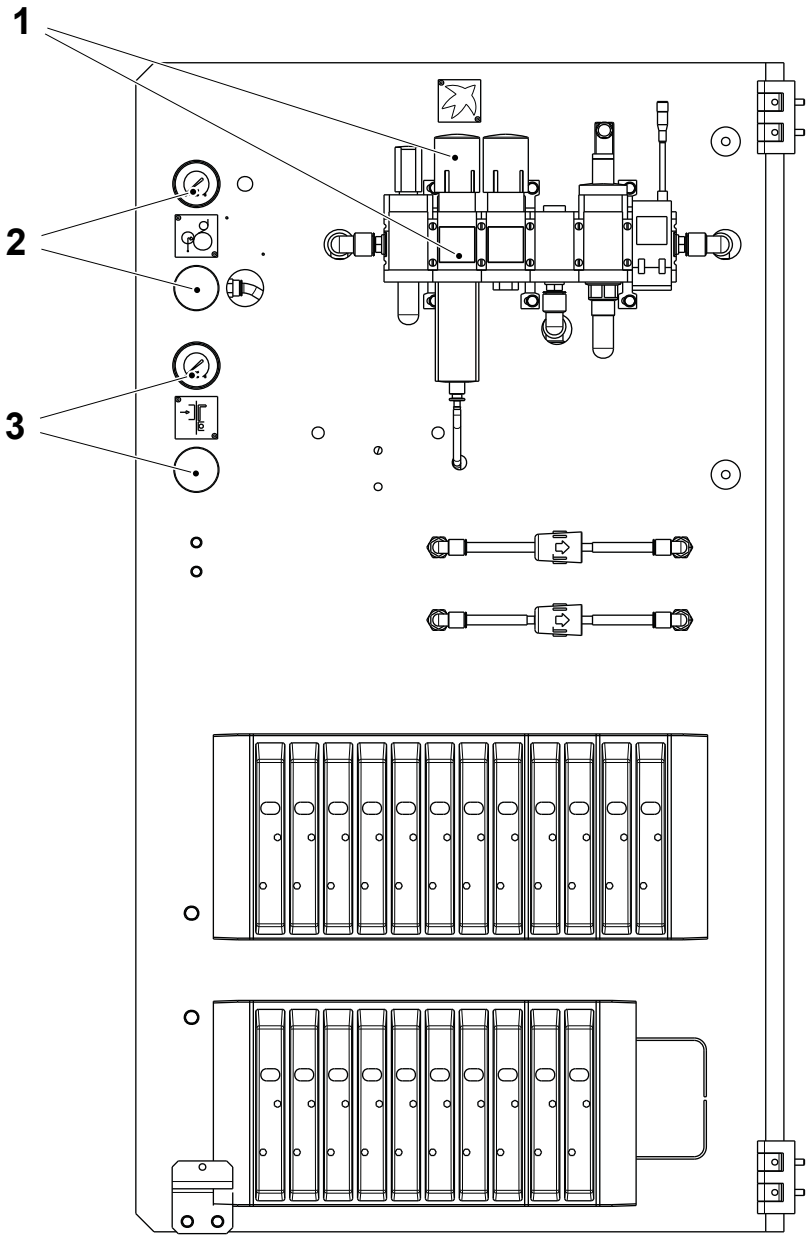

1 Air pressure gauge and regulator, main air ASU
2 Air pressure gauge and regulator, jumbo brake
3 Air pressure gauge and regulator, web tension

TechPub_2614345_0106 - 01_2819202_04en.fm

Valve Panel, Superstructure LH Side

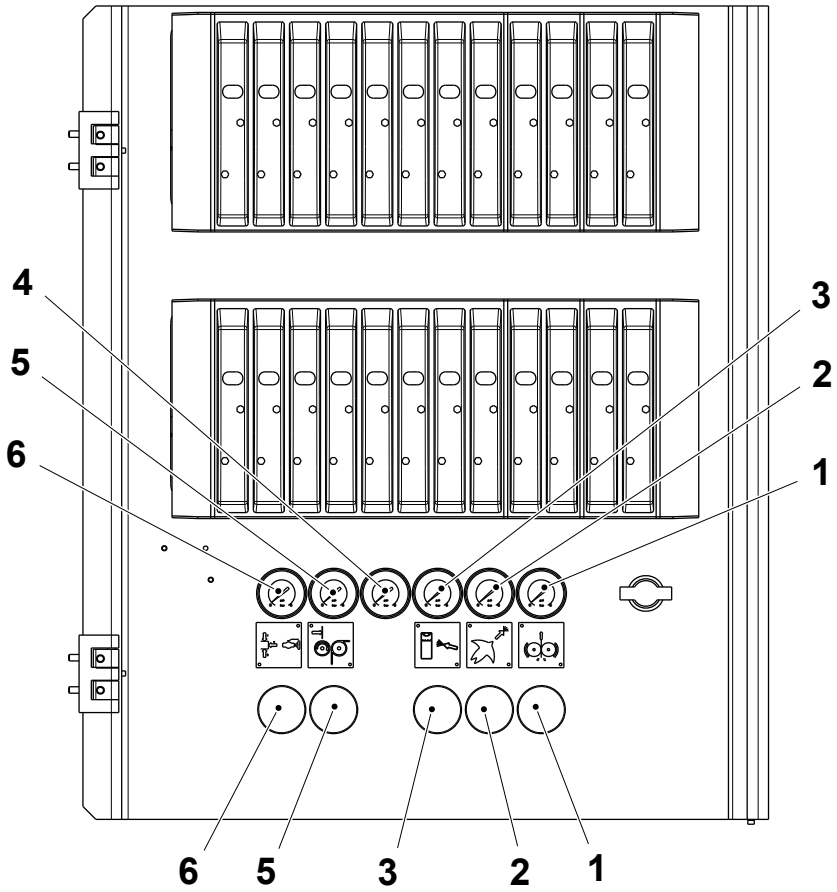

1 Air pressure gauge and regulator, calender rollers
2 Air pressure gauge and regulator, peroxide spray
3 Air pressure gauge and regulator, HI peroxide spray (OE)
4 Air pressure gauge, pendulum roller
5 Air pressure gauge and regulator, counter roller
6 Air pressure gauge and regulator, temperature control steam barrier

Valve Panel, Service Unit

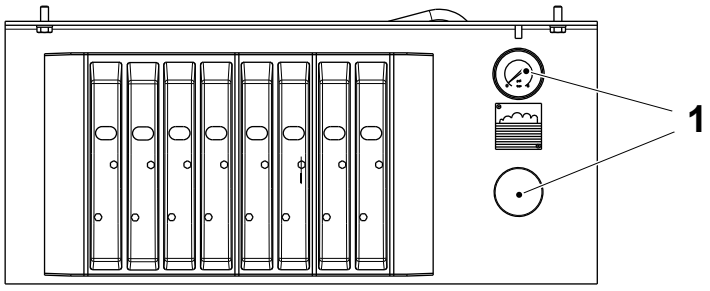

1 Air pressure gauge and regulator, foaming external cleaning

TechPub_2614345_0106 - 01_2819202_04en.fm

Electrical Cabinet, Filling Machine LH Side

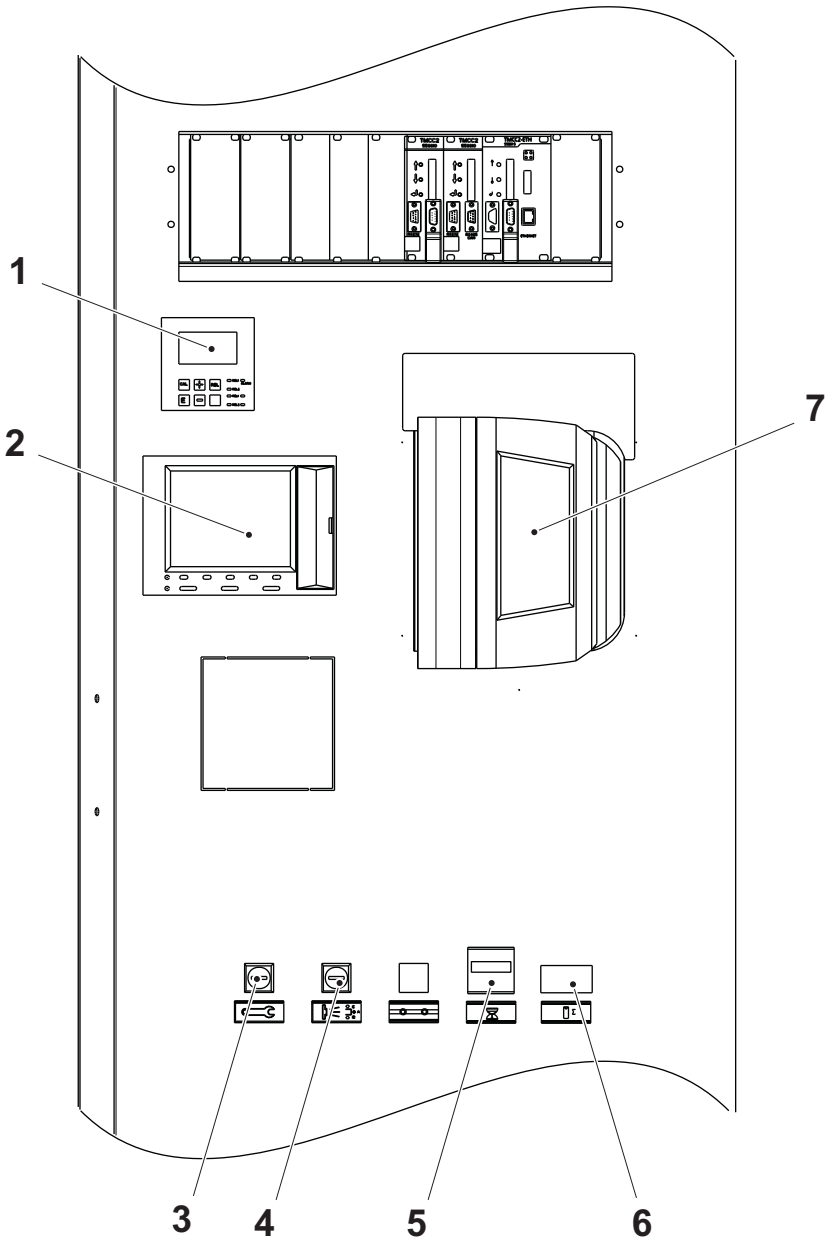

1 Conductivity meter
2 Recorder
3 Service switch
4 Cleaning steam barrier space switch
5 Time recorder
6 Package counter
7 IPC

TechPub_2614345_0106 - 01_2819202_04en.fm

Process panel, Filling Machine LH Side

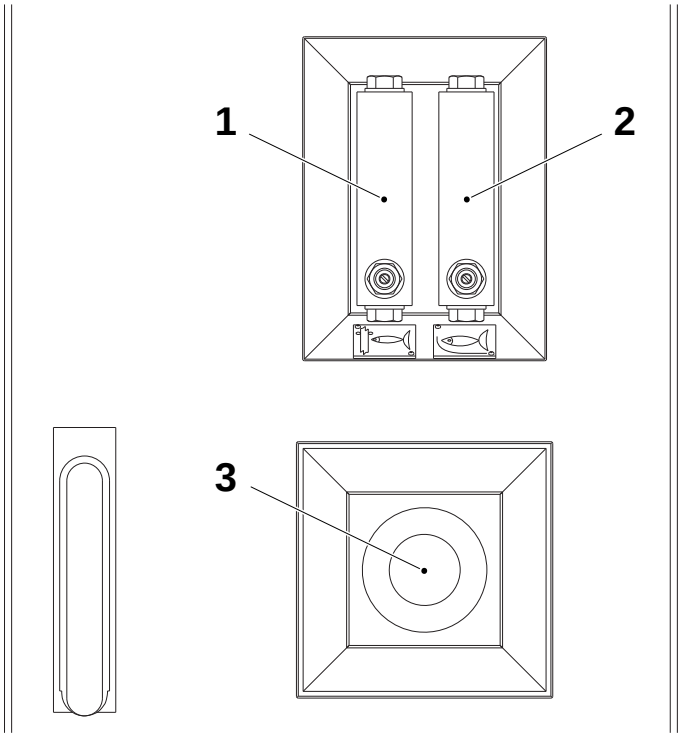

1 Tube flushing flow meter
2 Conveyor infeed flushing flow meter
3 EMERGENCY STOP button

TechPub_2614345_0106 - 01_2819202_04en.fm

HI - Headspace by Injection (OE), Superstructure Front Side

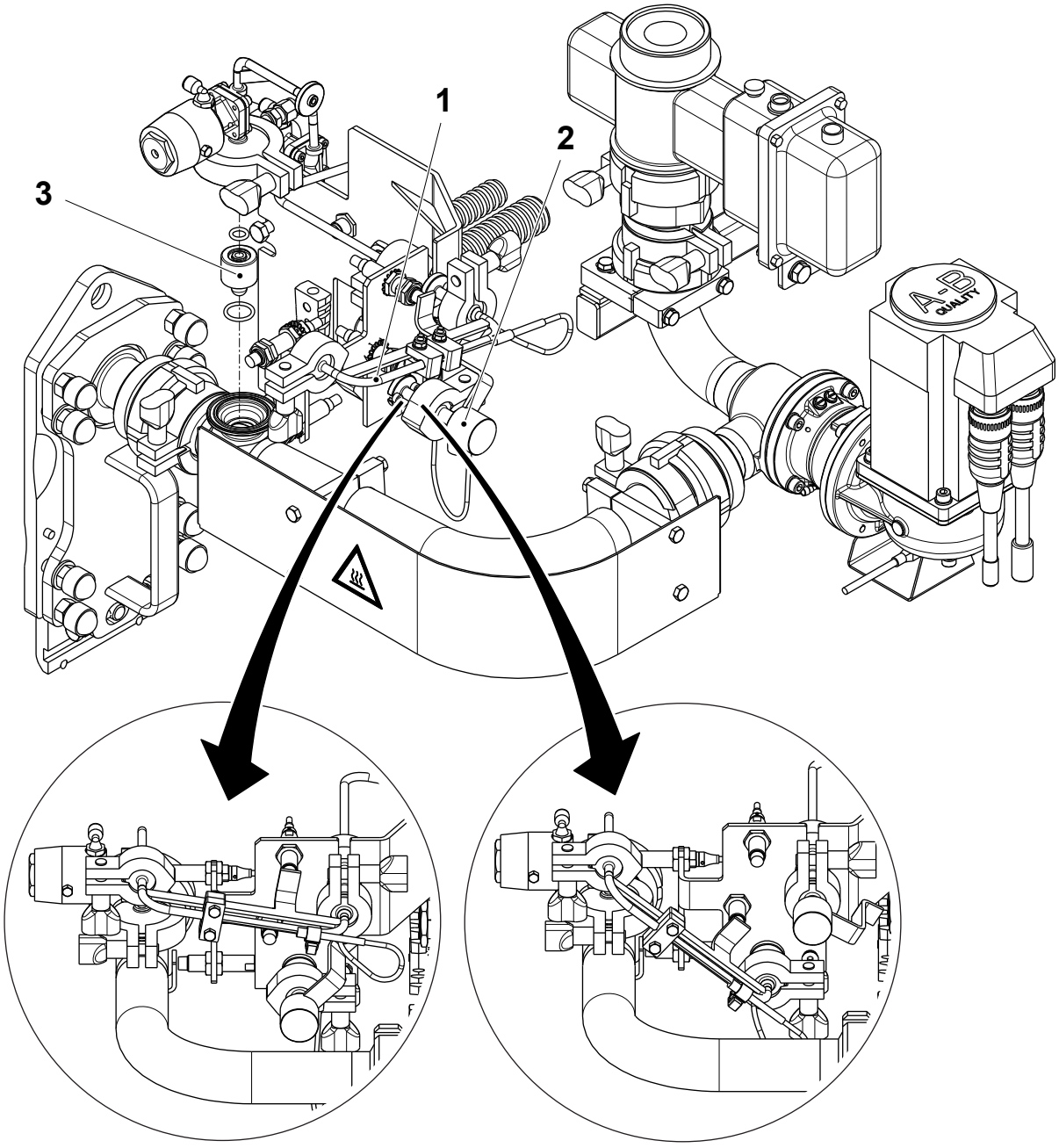

CLEANING position PRODUCTION position

1 Swing pipe
2 Cap
3 Nozzle

TechPub_2614345_0106 - 01_2819202_04en.fm

Filling Machine, RH Side

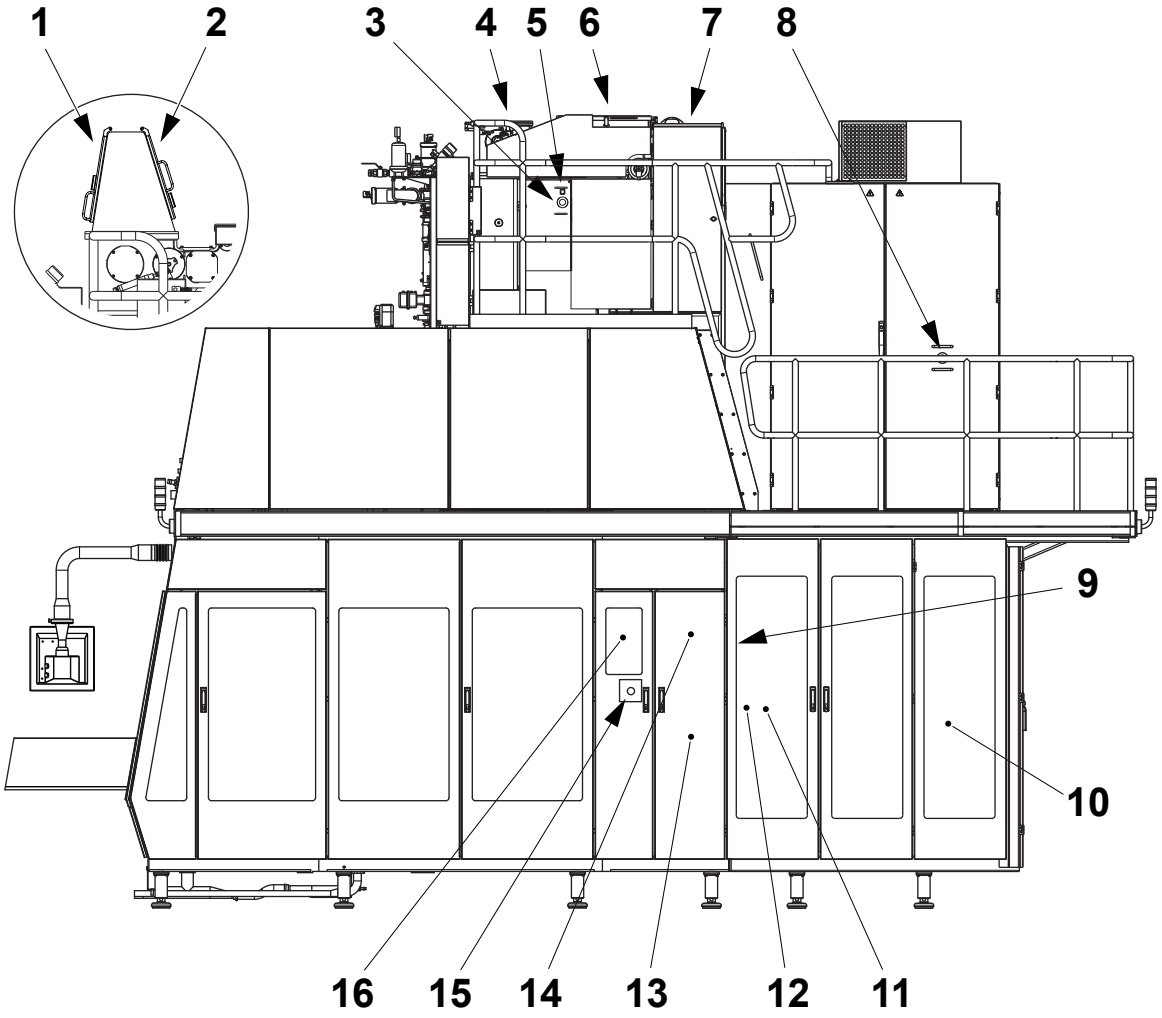

1 Upper section front door (TBA 2000 S Only)
2 Upper section rear door (TBA 2000 S Only)
3 EMERGENCY STOP button
4 Top front aseptic chamber door
5 SHORT STOP button
6 Rear door, drying unit
7 Top cover
8 EMERGENCY STOP button
9 COUNTER ROLLER button
10 ASU (Automatic Splicing Unit)
11 Strip applicator
12 Magazine
13 Hydrogen peroxide tank and dilution tank
14 Hydrogen peroxide concentration meter
15 EMERGENCY STOP button
16 Lower valve panel, machine body

TechPub_2614345_0106 - 01_2819202_04en.fm

Filling Machine, RH Side Rear, No Covers

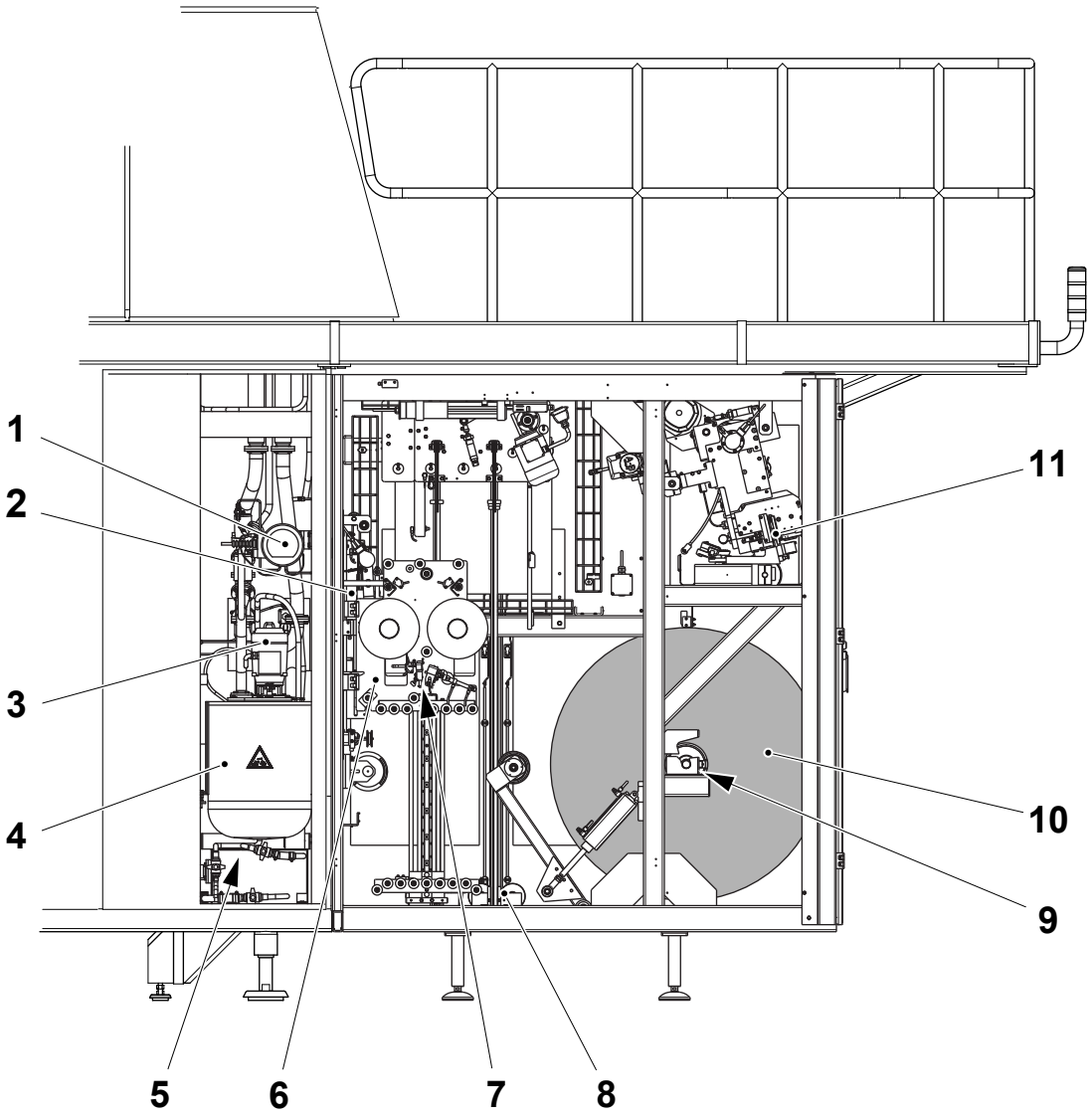

1 Hydrogen peroxide concentration meter
2 Strip applicator (SA)
3 Hydrogen peroxide pump
4 Hydrogen peroxide tank
5 Dilution tank and draining valves
6 Strip magazine
7 Strip splice
8 Packaging material web magazine
9 Packaging material reel holder
10 Packaging material reel
11 Packaging material web splice

TechPub_2614345_0106 - 01_2819202_04en.fm

Lower Valve Panel, Machine Body RH Side

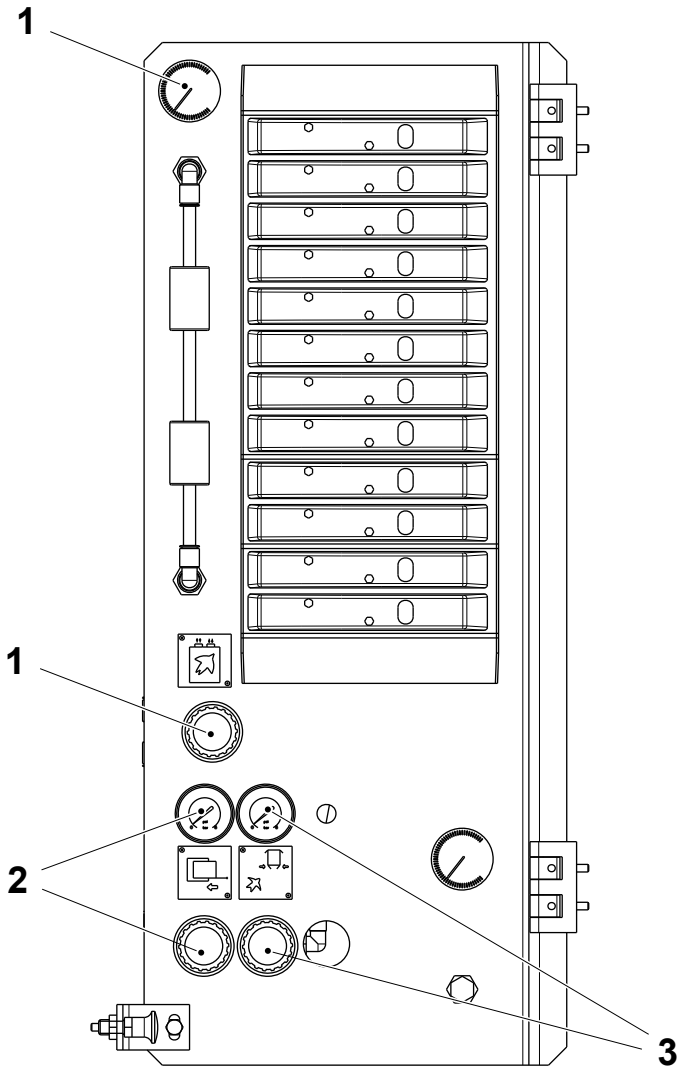

1 Air pressure gauge and regulator, design correction photocells
2 Air pressure gauge and regulator, front guard waste conveyor
3 Air pressure gauge and regulator, bottom flaps air blowing

TechPub_2614345_0106 - 01_2819202_04en.fm

Control Panel

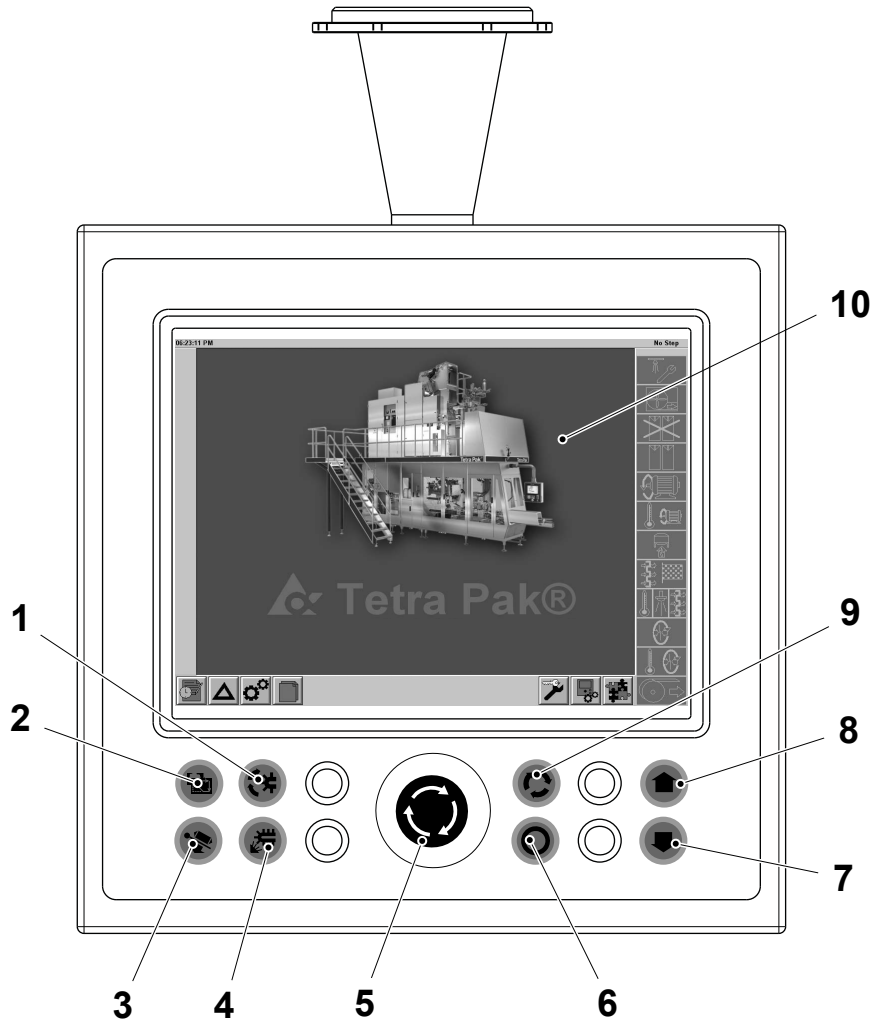

1 FINAL FOLDER INCHING
flashes when inching is possible
2 TPOP RESET
- flashing light = restart the TPOP
- constant light = start-up mode
3 PACKAGE EJECTOR/WASTE CONVEYOR
4 FINAL FOLDER MANUAL FLUSHING
5 EMERGENCY STOP
6 SHORT STOP
7 PROGRAM DOWN
8 PROGRAM UP
9 JAW SYSTEM INCHING
flashes when inching is possible
10 TPOP display (see chapter 2 Control Panels)

TechPub_2614345_0106 - 01_2819202_04en.fm

Machine Symbols

Valve Panels, Symbols

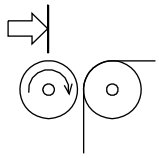	Counter rollers	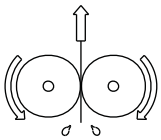	Calender rollers
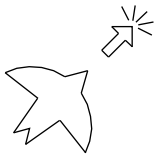	Air pressure, peroxide spray	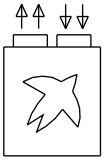	Over pressure, design correction photocells
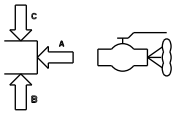	Temperature control steam barrier	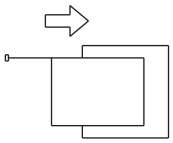	Air pressure, waste conveyor front guard
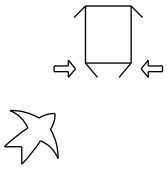	Flap sealing	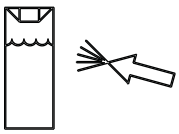	Headspace by Injection, peroxide spray (OE)
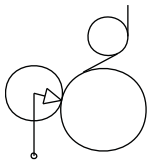	Air pressure, bobbin brake cylinder	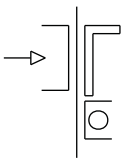	Air pressure, web tension cylinder

TechPub_2614345_0106 - 01_2819202_04en.fm

Service Unit, Symbols

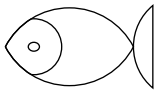	Cold water (blue)	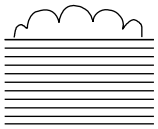	Foaming
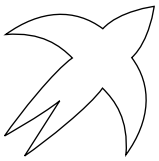	Main Air	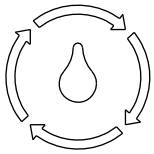	De-ionizing circuit
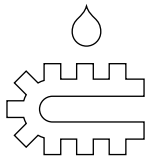	Cold water flow, final folder	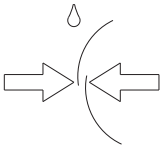	Cold water flow, LS transformer
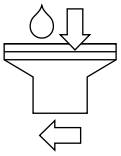	Cold water flow, TS left	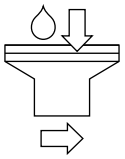	Cold water flow, TS right
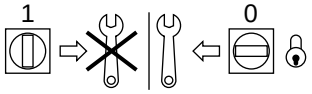	Main switch (on/off)	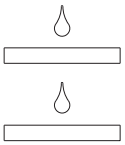	Cold water flow, hydraulic cooler

TechPub_2614345_0106 - 01_2819202_04en.fm

Electrical Cabinet, Symbols

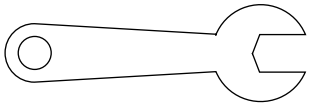 Service switch	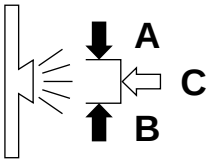 Cleaning steam barrier space
 Hour counter	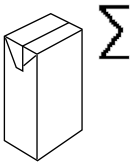 Package counter

ASU, Symbols

 Short stop	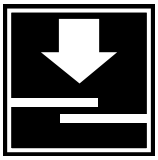 Manual web splice
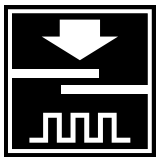 Manual strip splice	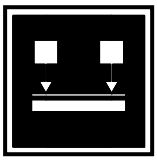 Material locking
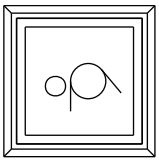 Counter pressure roller	

Process Panel, Symbols

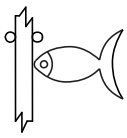 Tube flushing flow meter	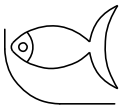 Conveyor infeed flow meter

TechPub_2614345_0106 - 01_2819202_04en.fm

Packaging Material Web Path

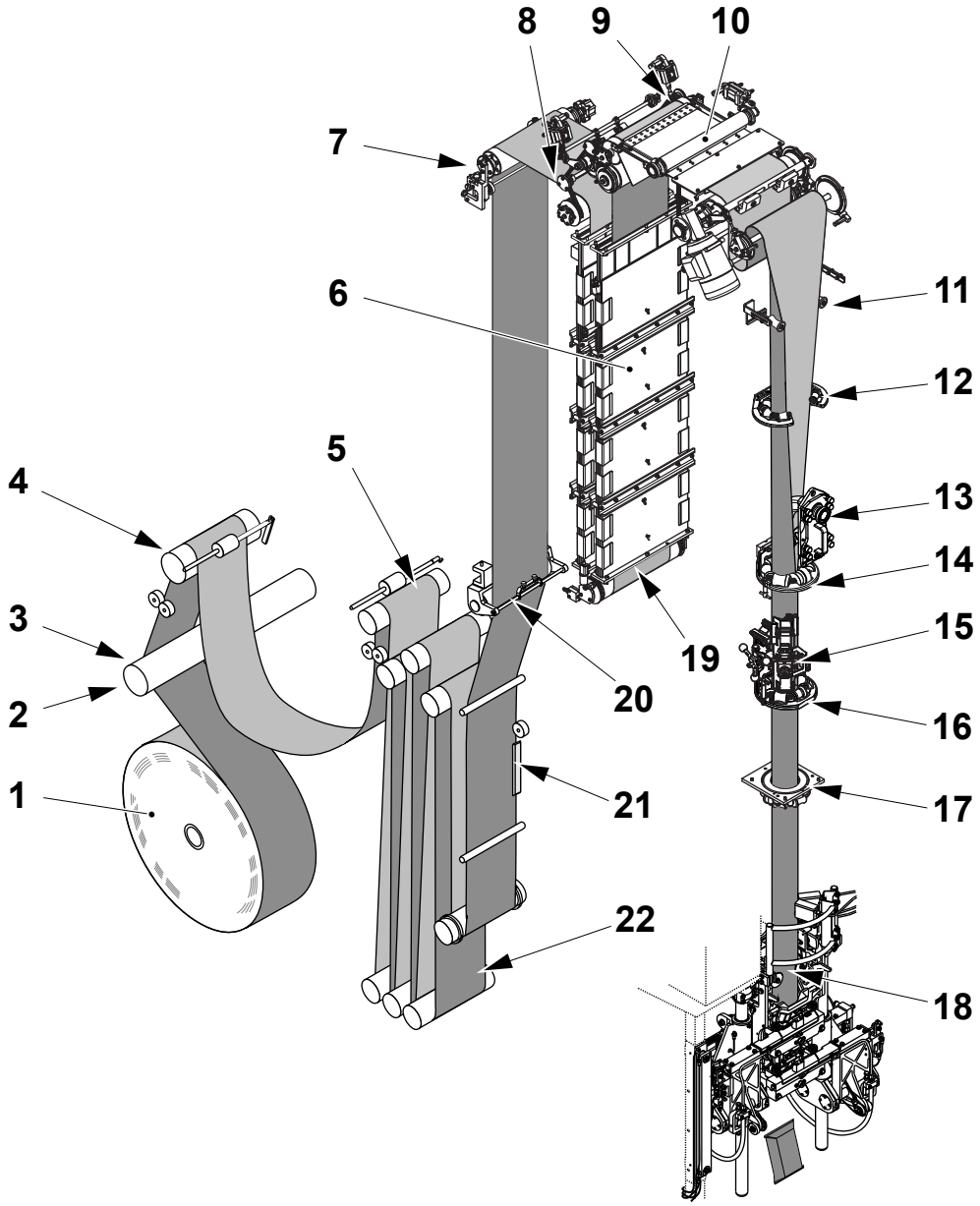

1 Packaging material reel
2 Material holder
3 Movable splicing device
4 Drive unit, rear
5 Drive unit, front
6 Hydrogen peroxide bath
7 Bending roller
8 Drying chamber inlet
9 Crank handle peroxide bath
10 Air knife
11 Edge rollers
12 Forming ring
13 Filling pipe
14 Upper forming ring
15 LS inductor
16 Lower forming ring
17 Seal, aseptic chamber
18 Photocells, design correction
19 Bath roller
20 Material lock
21 Strip applicator
22 Web magazine

TechPub_2614345_0106 - 01_2819202_04en.fm

2 Control Panels

This chapter describes how to navigate through the TPOP, what to do when alarms occur and how to make machine settings.

CAUTION
Risk of damage to the equipment.
This chapter contains instructions for making machine settings. These settings must only be performed by a trained operator.

TPOP Home Window . . . . . 2 - 9
Button Bar . . . . . 2 - 10
Production Control Button . . . . . 2 - 10
Maintenance Control Button . . . . . 2 - 10
System Setup Button . . . . . 2 - 11
Alarms Button . . . . . 2 - 11
Machine Configuration Button . . . . . 2 - 11
Collect System Button . . . . . 2 - 11
Recipes Button . . . . . 2 - 12
Title Bar . . . . . 2 - 12
Status Bar . . . . . 2 - 12
Program Steps . . . . . 2 - 13
Before and During Production . . . . . 2 - 13
After Production . . . . . 2 - 13
Stepping up to Prepare to Next Production . . . . . 2 - 14
During Cleaning CIP . . . . . 2 - 15
After Cleaning CIP . . . . . 2 - 15
Basic TPOP Navigation and Procedures . . . . . 2 - 16
Buttons . . . . . 2 - 16
Tabs . . . . . 2 - 20
Symbols . . . . . 2 - 21
Icons . . . . . 2 - 22
Procedures . . . . . 2 - 24
Selecting the Cause of an Event . . . . . 2 - 24
Monitoring and Regulating Setting Parameters . . . . . 2 - 25
Cleaning Procedures . . . . . 2 - 27

CIP Cleaning . . . . . 2 - 27
External Cleaning . . . . . 2 - 32
Alarms . . . . . 2 - 34
Alarm Modules . . . . . 2 - 34
Alarm Indication . . . . . 2 - 35
Alarm Colour Codes . . . . . 2 - 35
Navigating Alarms . . . . . 2 - 36
Managing Alarms . . . . . 2 - 37
Safety Relay Reset . . . . . 2 - 38
System Communication Fault . . . . . 2 - 38
Alarm History . . . . . 2 - 39
Collect System . . . . . 2 - 40
Collect System Events . . . . . 2 - 40
Manually Registering an Event During PREPARATION . . . . . 2 - 41
Delay in the Preparation Phase . . . . . 2 - 41
Jump to Step Zero During the Preparation Phase . . . . . 2 - 43
Manually Registering an Event During PRODUCTION . . . . . 2 - 44
Manual Recording of a Production Stop Cause . . . . . 2 - 44
Check or Change a Production Stop Cause . . . . . 2 - 47
Jump to Step ZERO During the PRODUCTION Phase . . . . . 2 - 49
Jump to Step VENTING During the PRODUCTION Phase . . . . . 2 - 49
Generic Collect System Tasks . . . . . 2 - 50
Recording Package Waste for Quality Checks . . . . . 2 - 50

Recording Maintenance Time. . . . . 2 - 52
Copying Recorded Data . . . . . 2 - 54
Machine Configuration . . . . . 2 - 55
Configuration Window . . . . . .2 - 55
Production Control . . . . . 2 - 56
Production Control Modules . . . . . .2 - 56
ASU Window . . . . . .2 - 57
Spliced Package Repeat Length Offset. . . . . 2 - 58
Move Splicing Head. . . . . 2 - 58
Constant Heat Bar Temperature. . . . . 2 - 60
Force Manual Splice . . . . . 2 - 60
Preparation Device . . . . . 2 - 61
Peroxide System Window . . . . . .2 - 62
Peroxide Concentration Monitor . . . . . 2 - 63
Peroxide Tank Level . . . . . 2 - 63
Automatic Strip Splicing Unit Window . . . . . .2 - 65
Power Setting Strip Applicator. . . . . 2 - 66
Strip Sealing Time . . . . . 2 - 67
Sterile Air System Window . . . . . .2 - 68
Package Forming Unit Window. . . . . .2 - 69
Change Inductor . . . . . 2 - 71
Package Weight. . . . . 2 - 72
Jaw Lubrication. . . . . 2 - 73
TS Power . . . . . 2 - 73
TS Fault History. . . . . 2 - 74
Folding Flaps Production Position . . . . . 2 - 74
Design Correction Offset . . . . . 2 - 75

Photocell Unit . . . . . 2 - 76
Jaw Inching Selection . . . . . 2 - 77
Jaw System Target Position . . . . . 2 - 78
Sample Package. . . . . 2 - 79
Tube Forming Unit Window. . . . . 2 - 80
Longitudinal Sealing . . . . . 2 - 81
Pendulum Roller . . . . . 2 - 81
Filling System Window . . . . . 2 - 82
Product Level and Flow Graph . . . . . 2 - 83
Starting Flow . . . . . 2 - 84
Regulating Valve Position . . . . . 2 - 85
Headspace by Injection (OE). . . . . 2 - 86
HI Pressure and Flow . . . . . 2 - 87
HI Nozzle Selection . . . . . 2 - 88
Service Unit Window . . . . . 2 - 89
Final Folder Unit Window . . . . . 2 - 90
Final Folder Synchronization . . . . . 2 - 91
Flap Heater Temperature . . . . . 2 - 92
Flap Heater Pressure . . . . . 2 - 93
Final Folder Target Position . . . . . 2 - 93
Outfeed Conveyor Speed . . . . . 2 - 94
Jog Final Folder . . . . . 2 - 95
Down Stream . . . . . 2 - 96
Belt Brake Speed . . . . . 2 - 97
Option Date Unit. . . . . 2 - 98
Package and Time Counters Window . . . . . 2 - 100
Partial Package Counters . . . . . 2 - 101
Production Time Counters . . . . . 2 - 101

Waste Counters . . . . . 2 - 102
Temperature Overview Window . . . . . 2 - 103
Recipes . . . . . 2 - 104
Recipes Window . . . . . 2 - 104
Load Recipe . . . . . 2 - 105
Mismatching Parameters . . . . . 2 - 107
Save Recipe . . . . . 2 - 109
Create New Recipe . . . . . 2 - 110
Delete Recipe . . . . . 2 - 113
System Setup . . . . . 2 - 114
User Log On . . . . . 2 - 114
Language Setting . . . . . 2 - 116
Time Setting . . . . . 2 - 117
Production Shift Setting . . . . . 2 - 118
Last Package Point Selection . . . . . 2 - 119
Recorder Navigation . . . . . 2 - 120
Recorder, Login . . . . . 2 - 120
Recorder, Log Off . . . . . 2 - 122
Recorder, Change CompactFlash Card . . . . . 2 - 123

This page intentionally left blank

TPOP Home Window

The TPOP display is a touch sensitive screen which allows the operator to manage and communicate with the filling machine control system.

The TPOP home window displays the buttons and icons used to identify the status of the machine and to access the different menus of the filling machine control system.

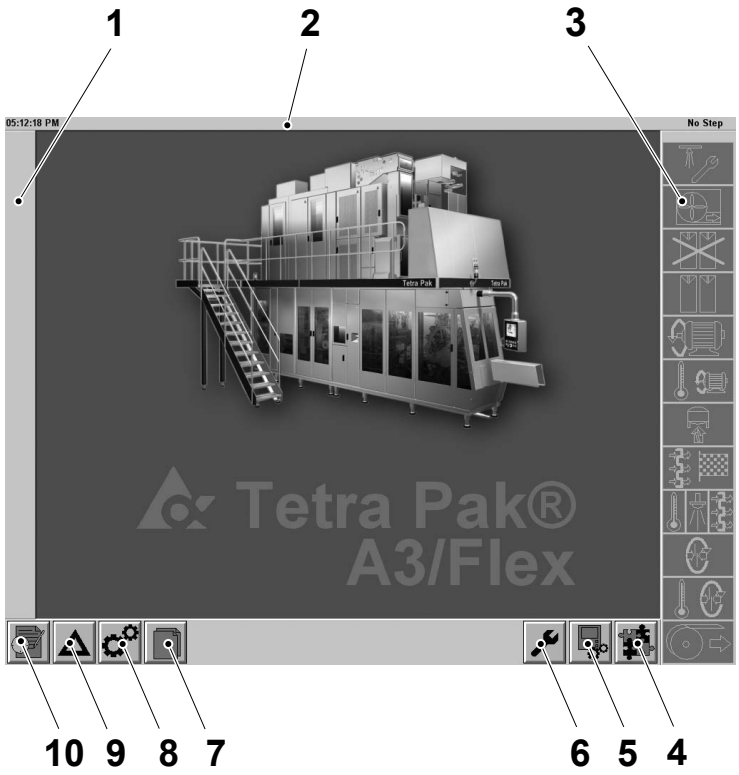

1 Status bar
2 Title bar
3 Program step icons
4 Machine configuration button
5 Setting system button
6 Maintenance control button
7 Recipes button
8 Production control button
9 Alarms button
10 Collect system button

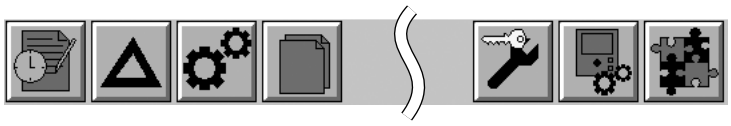

Button Bar

The button bar contains the following buttons used to access the TPOP menus:

- PRODUCTION CONTROL button
- MAINTENANCE CONTROL button
- SYSTEM SETUP button
- ALARMS button
- MACHINE CONFIGURATION button
- COLLECT SYSTEM button
- RECIPES button



Production Control Button

The PRODUCTION CONTROL button is used to access the PRODUCTION CONTROL window.

All the machine PRODUCTION settings are accessible through this window, see Production Control on page 2-56.

A green dot in the PRODUCTION CONTROL button indicates that a PRODUCTION setting has been activated. The green dot is also visible on the module button and the function icon.



Maintenance Control Button

The MAINTENANCE CONTROL button is used to access the MAINTENANCE CONTROL window.

The key symbol in the MAINTENANCE CONTROL button indicates that access to the MAINTENANCE CONTROL window is restricted and only users with a valid password can access the window.

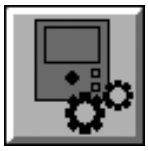

System Setup Button

The SYSTEM SETUP button is used to access the SYSTEM SETUP window.

The user log on, production shift setting, language and time settings are all accessible through this window, see System Setup on page 2-114.



Alarms Button

The ALARMS button is used to access the ALARMS window.

All the alarm modules are accessible through this button, see Alarms on page 2-34.

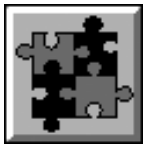

Machine Configuration Button

The MACHINE CONFIGURATION button is used to access the MACHINE CONFIGURATION window.

All the machine options which may be enable or disabled are accessible through this button, see Machine Configuration on page 2-55.



Collect System Button

The COLLECT SYSTEM button is used to access the COLLECT SYSTEM window.

The COLLECT SYSTEM is used to register events, see Collect System on page 2-40.



Recipes Button

The RECIPES button is used to access the RECIPES window.

The management of production recipes is accessible through this button, see Recipes on page 2-104.

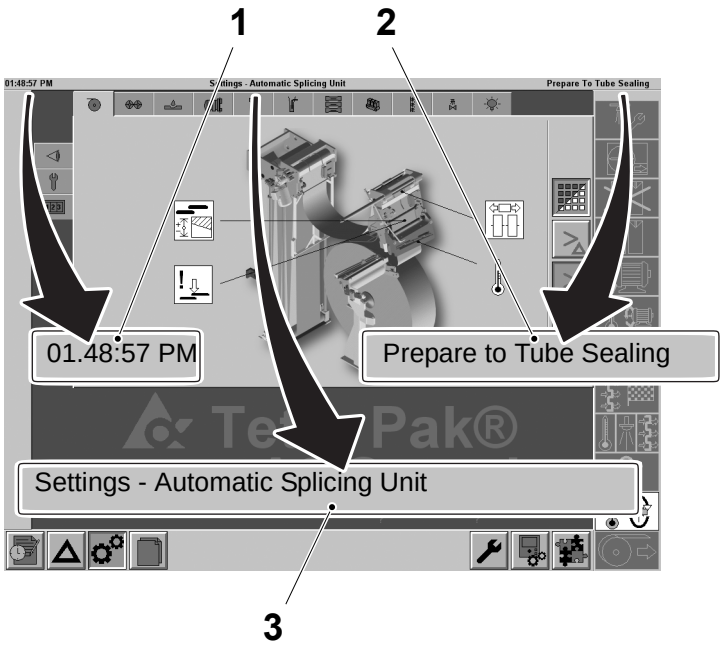

Title Bar

The title bar indicates:

- the current time (1)
- the current machine step (2)
- the name of the current module window (3).

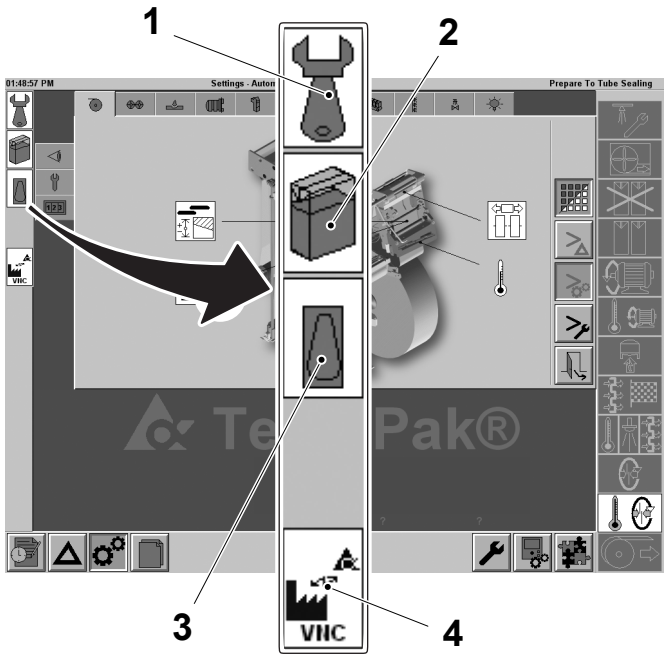

Status Bar

The status bar can indicate the status of:

- the service key (1)
- the HI (2)
- the pre-applicator (3)
- the remote control (4).

Program Steps

This section describes the program steps displayed on the TPOP to indicate the machine status before, during and after PRODUCTION and during and after CIP.

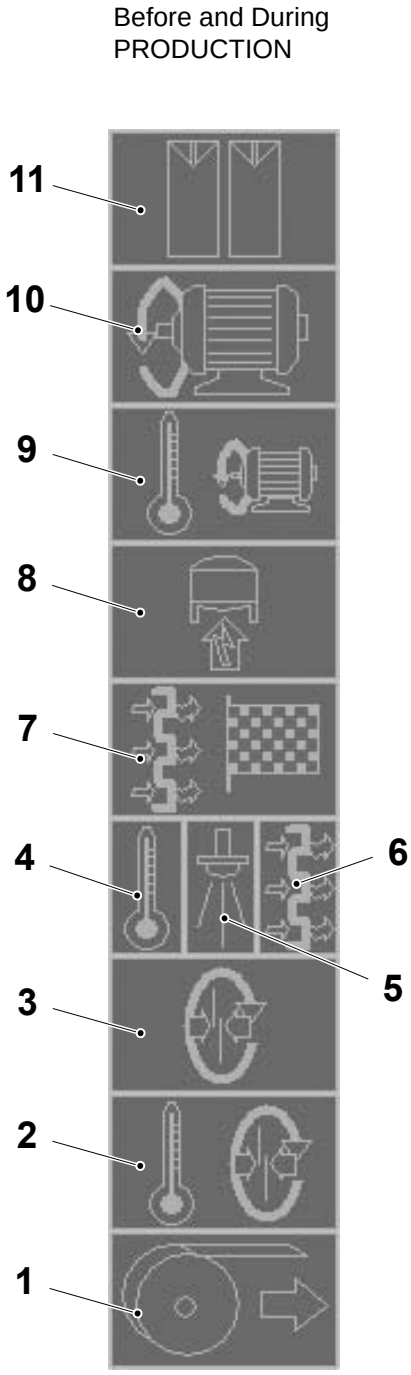

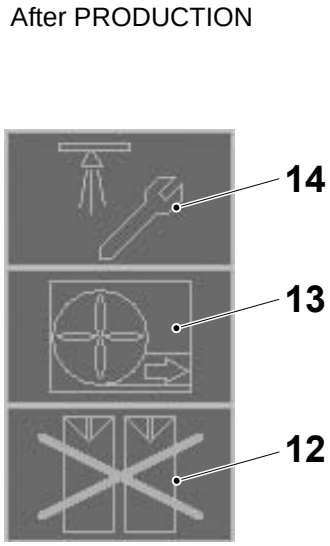

Before and During Production

1 No light = STEP ZERO
Light = PREPARATION
2 PREPARE TO TUBE SEALING
3 TUBE SEALING
4 HEAT STERILIZATION
5 SPRAYING
6 DRYING
7 STERILIZATION DONE
8 SIGNAL TO STERILIZER
9 PREPARE TO PRODUCTION
10 MOTOR START
11 PRODUCTION

After Production

12 END PRODUCTION
13 VENTING
14 PREPARE NEXT PRODUCTION

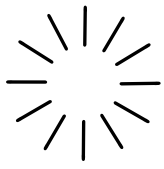

A fixed light indicates the current program step.

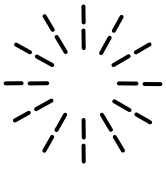

A flashing light indicates the machine is ready to begin a program step.

Stepping up to Prepare to Next Production

Only in STEP ZERO and PREPARATION, it is possible to step up directly to the step PREPARE TO NEXT PRODUCTION, for example for maintenance reasons or cleaning.

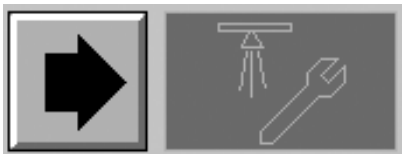

1

When this step up condition is possible, an arrow button appears close to the PREPARE TO NEXT PRODUCTION icon in the program steps column.

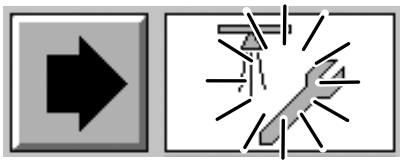

2

Press the ARROW button; the PREPARE TO NEXT PRODUCTION icon begins to flash.



3

Press the PROGRAM UP button.

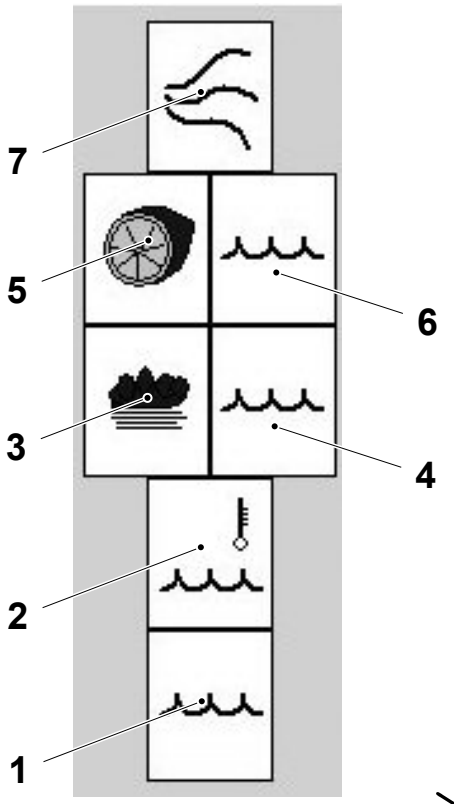

During Cleaning CIP

1 COLD WATER RINSE
2 HOT WATER RINSE
3 ALKALI CLEANING
4 ALKALI RINSE
5 ACID CLEANING
6 ACID RINSE

After Cleaning CIP

7 DRYING

Note! Steps 1 to 4 are performed when ALKALI cleaning is selected. Steps 1 to 6 are performed when ALKALI AND ACID cleaning is selected.

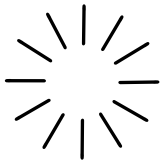

A fixed light indicates the current program step.

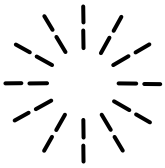

A flashing light indicates when the machine is ready to begin a program step.

Basic TPOP Navigation and Procedures

This section describes the buttons and TPOP components that are used to navigate the TPOP windows and to perform procedures.

Buttons

The following buttons are common to the TPOP windows.



The OK buttons.

Touch the OK buttons to confirm a data entry as:

- function start
- function stop
- value input
- recipe selection.



The CANCEL button.

Touch the CANCEL button to close an active window without recording any data.



The CLEAR button.

Touch the CLEAR button to clear an incorrect entry.



The ON and OFF buttons.

Touch the ON button to enable or the OFF button to disable a function.

Note! It may be necessary to touch the OK button to confirm the selection of the ON and OFF buttons and initiate the function.



The FACTORY button.

Touch the FACTORY button to display the default value.

The reset to the default value is confirmed by touching the OK button.

Note! Some settings have more than one factory value (such as the setting for the tab sealing pad heater that changes with the hole type). For these settings, the factory button only provides an approximate value.

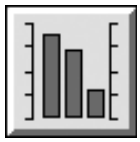

The TREND button.

Touch the TREND button to display graphical statistical information.

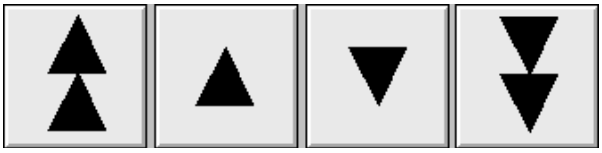

The SINGLE ARROW and DOUBLE ARROW buttons.

Touch the SINGLE ARROW buttons to increase or decrease a value by the minimum allowed step depending on the specific setting.

Touch the DOUBLE ARROW buttons to increase or decrease a value by increments of 10 steps.

Note! When a single ARROW button is touched continuously for 10 increments, the increment value will then change by a value 10 times the initial increment value.



The KEYBOARD button.

Touch the KEYBOARD button to activate the keyboard and enter a value.

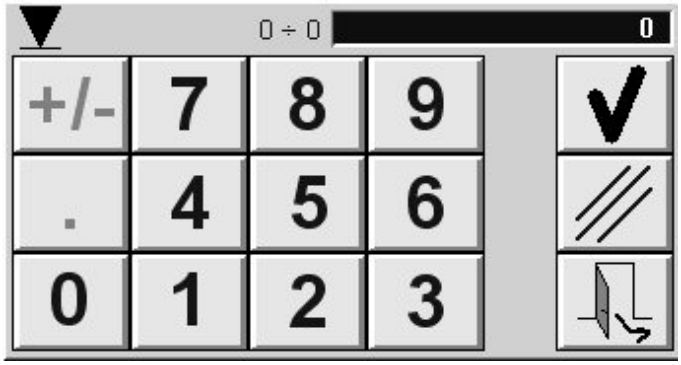



The ENABLE ICONS button.

Touch the ENABLE ICONS button to enable the grey icons in the module window.

The icons in the module window become white.



The CHANGE WINDOW buttons.

Touch one of the CHANGE WINDOW buttons to navigate among the alarms/ production control/maintenance control windows within the same module.



The EXIT buttons.

Touch the EXIT buttons to close an active window.

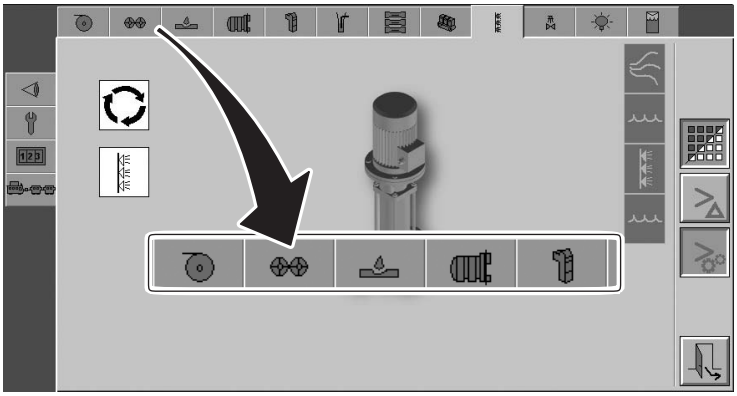

Tabs

When a PRODUCTION CONTROL MODULE window or an ALARMS MODULE window is displayed the TABS at the top and at the LH side of the window allow easy navigation to the other module windows without returning to the main window.

Symbols

The following symbols are common to the TPOP windows.

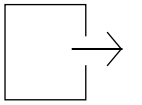

Output

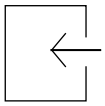

Process

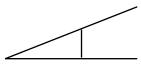

Set point

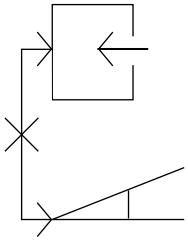

Process/set point non managed



Minimum value reached



Maximum value reached

- `OUTPUT` - percentage of intervention of the control variable within its working range
- `PROCESS` - current value
- `SET POINT` - value that has been set for the particular operation
- `PROCESS/SET POINT NON MANAGED` - values are currently not being managed and regulated by the machine
- `MINIMUM VALUE REACHED` - the value entered in the dialogue window is below the allowed minimum limit
- `MAXIMUM VALUE REACHED` - he value entered in the dialogue window is above the allowed maximum limit.

Icons

The following selectable icons are common to the TPOP SETTING windows.

Selectable icons are white, when an icon is selected the colour of the icon changes to blue.

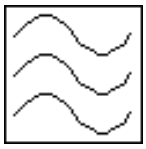

The INDUCTOR icon.

Touch the INDUCTOR icon to display the current power value(s) for an inductor.



The SEALING MONITORING icon.

Touch the SEALING MONITORING icon to display the current impedance values and phase values for each inductor.



The TEMPERATURE icon.

Touch the TEMPERATURE icon to display the current temperature value(s) dialogue window.



The FLOW icon.

Touch the FLOW icon to display the current flow value(s).

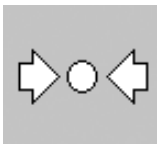

The PRESSURE icon.

Touch the PRESSURE icon to display the current pressure value(s).



The LEVEL INDICATOR icon.

Touch the LEVEL INDICATOR icon to display the current level value(s).

Procedures

The following are common procedures used to input data and use a common and repeatable logic.

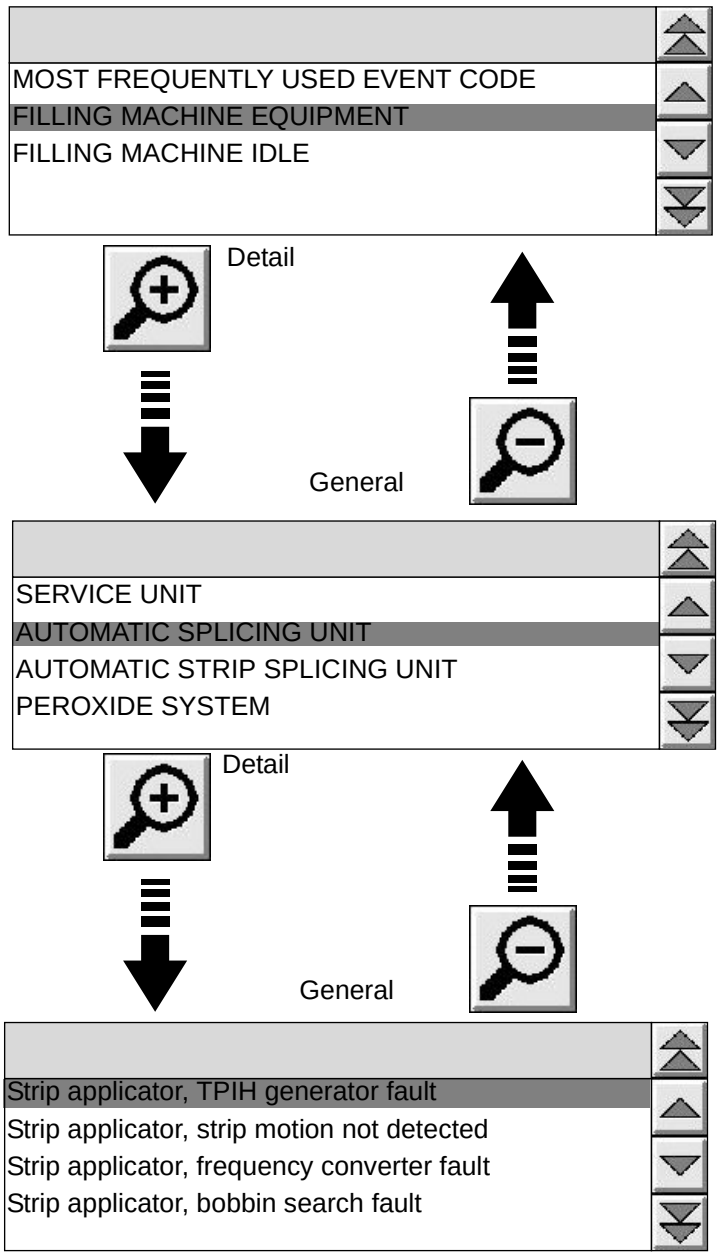

Selecting the Cause of an Event 1

When the Collect System requests the selection of the cause of an event, it is possible to allocate the cause of the event at different levels of detail.

The first window lists the main level of causes.

To find the specific cause, use the arrows to select its main module, and then touch the DETAIL button. Repeat until the specific cause is found.

To move back one level, touch the GENERAL button.

The bar at the top of the cause list shows the previous level of detail.

Every time a specific cause is selected, the MOST FREQUENTLY USED EVENT CODE list is updated.

Note! Specific cause selection can be also made by pressing the alarm module button and selecting the alarm icon.



Monitoring and Regulating Setting Parameters

1

Touch the PRODUCTION CONTROL button.

Touch one of the module buttons to open the associated dialogue window.



2

Note! This procedure is valid for both the TEMPERATURE icon and FLOW icon.

Touch a parameter icon.

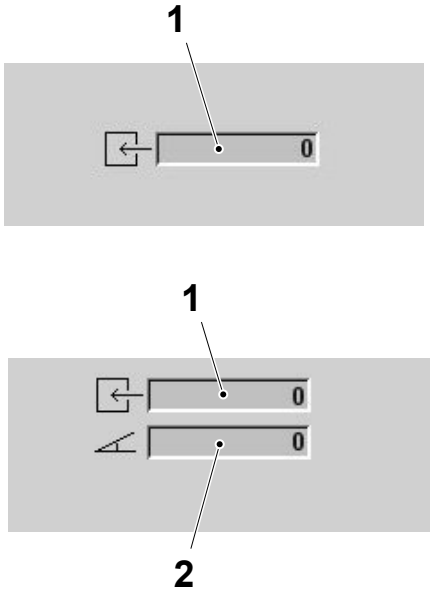

3

The dialogue window may display the following information:

- the current value (1)

or

- the current value (1) with the set point value (2), when available.

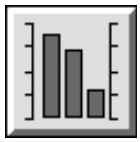

4

Touch the TREND button.

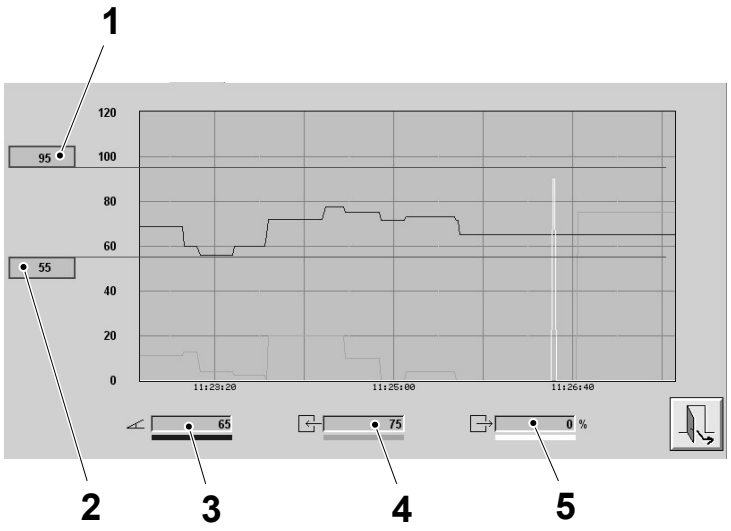

5

The graphic showing the parameter in real time is displayed. The graph displays the following information:

- the upper value alarm (1)
- the lower value alarm (2)
- the set point value (3), when available
- the process current value (4)
- the regulator output (5), if present.



6

Touch the EXIT button.

Cleaning Procedures

This section describes how to start and stop the cleaning of the product line system with the internal cleaning unit and how to start and stop the external cleaning of the exposed mechanical parts of the machine.

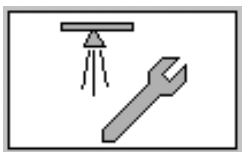

To access the cleaning procedures, the machine must be in the step PREPARE TO NEXT PRODUCTION.



Touch the `PRODUCTION CONTROL` button.

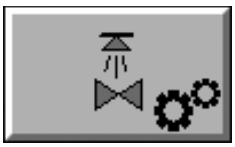

CIP Cleaning

1

To clean the product line system with the Integrated Cleaning Unit (ICU), touch the `ICU` button.

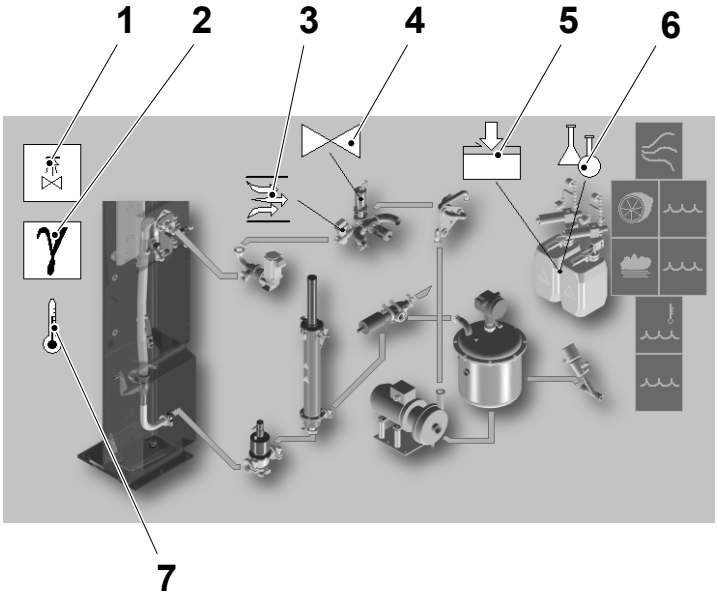

2

The ICU window is displayed.

All selectable icons are white. When an icon is selected the colour of the icon changes to blue.

In this window there are the following selectable icons:

- START CLEANING (1)
- CLEANING FLUID CONDUCTIVITY (2)
- CLEANING FLUID FLOW (3)
- FINAL CLEANING (4)
- CHEMICALS REFILLING (5)
- ALKALI/ACID SELECTION (6)
- CLEANING FLUID TEMPERATURE (7).

Note! For chemicals refilling follow the procedure Refill Containers on page 9-77.

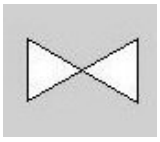

3

Decide if the INTERMEDIATE CLEANING or the FINAL CLEANING has to be performed.

FINAL CLEANING must be performed after every PRODUCTION run and at the same time as the cleaning of the product line.

To select the final cleaning, see Daily Care on page 9-30.

Touch the FINAL CLEANING button and check the current status of the steam valve C.

Note! It is recommended to perform the FINAL CLEANING at least once a week.

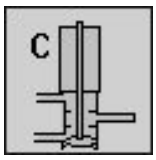

Intermediate Cleaning

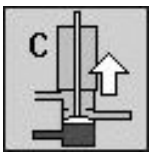

Final Cleaning

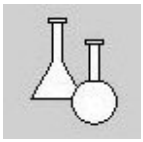

4

Touch the ALKALI/ACID SELECTION icon.

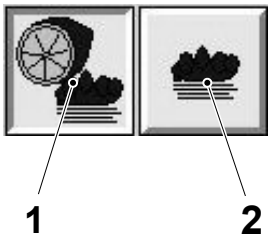

5

Touch the ALKALI AND ACID button (1) or the ALKALI button (2).

Note! It is recommended to use alkali cleaning after every production run or if production is stopped. Alkali and acid cleaning should be performed at least once a week. The use of alkali or alkali and acid for cleaning the filling system must be based on local conditions such as type of product, duration of production and the quality of the water used for cleaning.



6

Touch the CLEANING FUNCTION button.

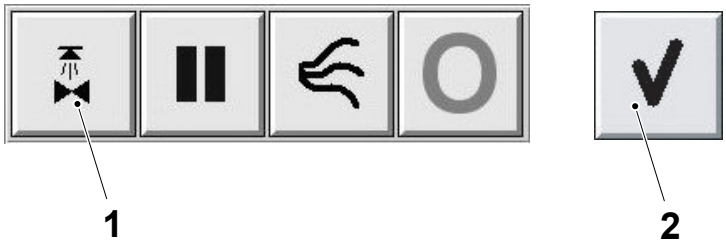

7

Touch the RUN CLEANING button (1). When the RUN CLEANING button (1) starts to flash, touch the OK button (2) to start the CIP cleaning.



8

Touch one of the three icons for cleaning liquid temperature, conductivity and flow.

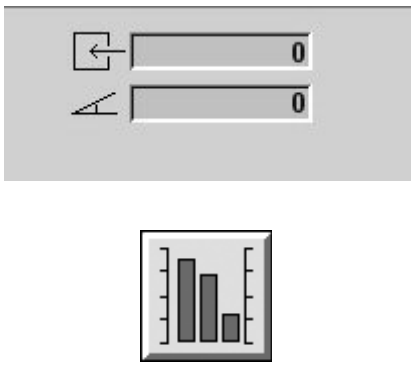

9

The dialogue window displays the current temperature, conductivity or flow value.

Touching the TREND button a graph showing the selected parameter in real time is displayed.

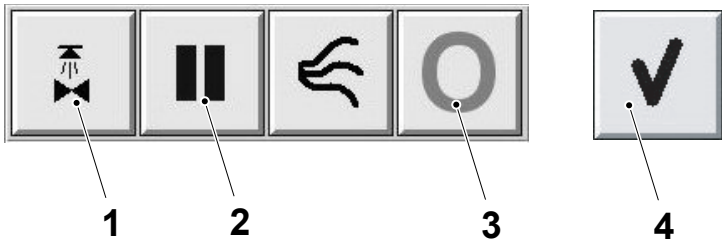

10

To pause or stop the CLEANING CIP program with the integrated cleaning unit:

- touch the PAUSE button (2): the cleaning cycle is paused and the cleaning circuit is drained.

Note! Once the cleaning cycle has been paused, there is a maximum of 50 minutes available to restart the cleaning. Touch the ICU RUN button (1) to restart the cleaning cycle from the beginning of the last uncompleted cleaning step.

- touch the STOP button (3); when it starts flashing, touch the OK button (4) to stop the cleaning.

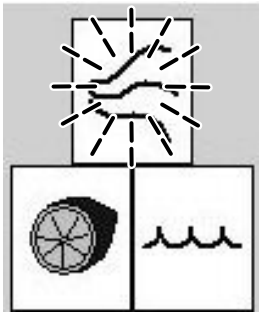

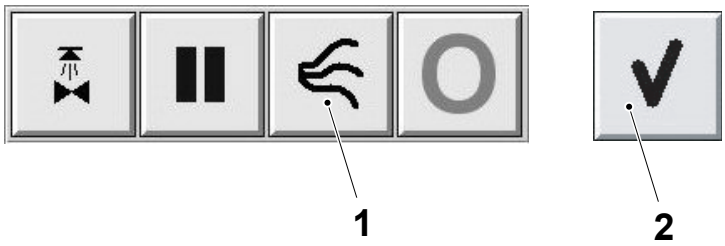

11

Once the cleaning and rinse cycle are finished, the DRYING STEP icon starts flashing.

Note! Once the CIP cleaning is completed, the drying must be performed within 5 hours. If not, repeat the CIP cleaning.

Switch the change over pipe in production position, see Daily Care, page 9-44.

Touch the DRYING button (1); when it starts flashing, touch the OK button (2).

Note! If the machine is not stepped up to PRODUCTION within 36 hours after the drying, the CIP cleaning must be repeated.

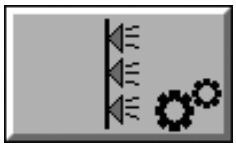

External Cleaning

1

Touch the EXTERNAL CLEANING button.

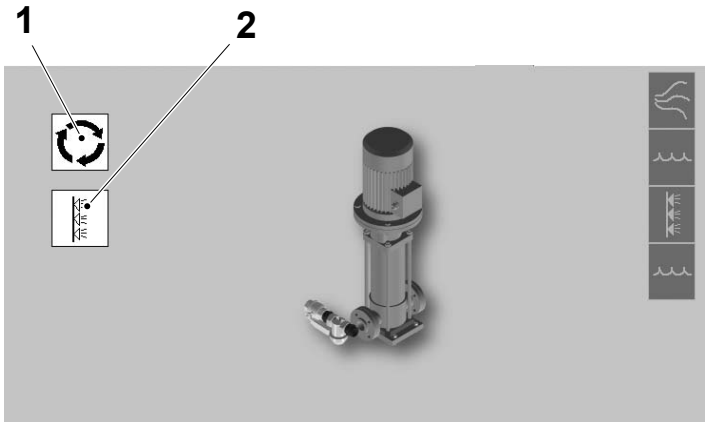

2

The EXTERNAL CLEANING window is displayed.

In this window the following information is displayed:

- CYCLES NUMBER SETTING (1)
- EXTERNAL CLEANING FUNCTION (2).



3

Touch the CYCLES NUMBER SETTING icon to set the quantity of cleaning cycles.

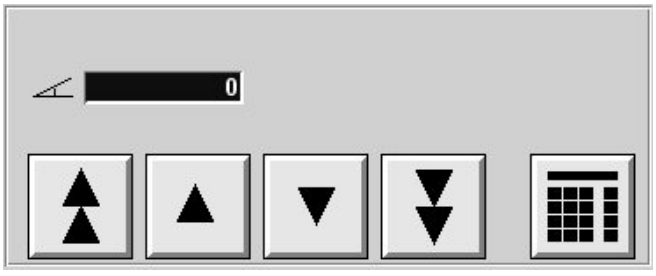

4

Use the ARROW buttons or the KEYBOARD button to set the number cycles.



5

Touch the EXTERNAL CLEANING FUNCTION icon.

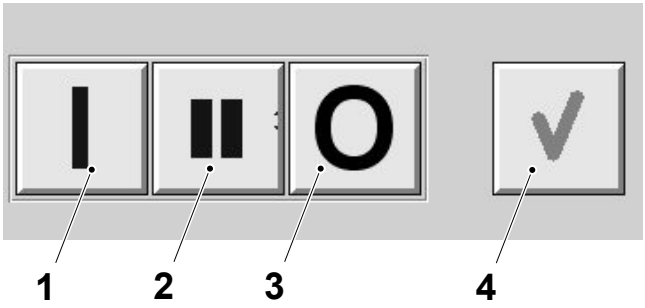

6

The ON/PAUSE/OFF buttons are displayed.

Touch the ON button (1) and then the OK button (4) to start the external cleaning cycle.

Touch the PAUSE button (2) to stop the cleaning program.

The cleaning program can be restarted from the beginning of the last in-completed cleaning step by touching again the ON button (1) and then the OK button (4).

To abort the external cleaning program, touch the OFF button (3) and then the OK button (4).

Alarms

This section describes the machine alarms and how to manage the alarms with the TPOP.



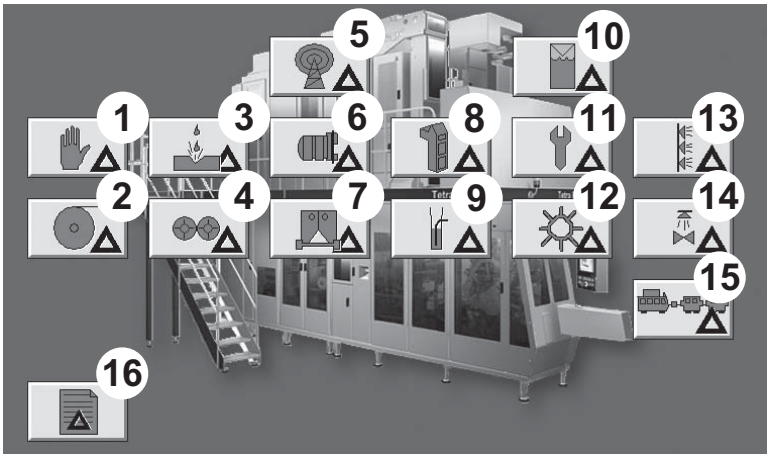

1 Safety
2 ASU
3 Peroxide System
4 SA/Magazine
5 Network
6 Sterile System
7 Drive Unit/Jaw System
8 Superstructure
9 Filling System
10 Headspace Unit (OE)
11 Service Unit
12 Final Folder
13 External Cleaning
14 ICU
15 Downstream
16 Alarm History

Alarm Modules

Alarms show where there is a problem on the machine and how to resolve it.

Alarms are divided into modules. When an alarm is activated, an alarm window is displayed with the activated alarm lit up.

If no alarms appear, touch the ALARM button.

The ALARM MODULES window is displayed showing the alarm modules. Each ALARM MODULE button opens the corresponding alarm window.

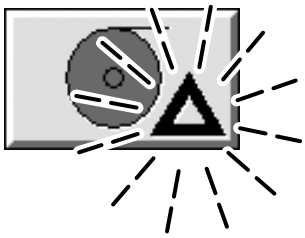

Alarm Indication

A flashing triangle symbol in an alarm module button, indicates that an alarm is active and has not been acknowledged.

Alarm Colour Codes

The alarms are colour coded:

- RED - hazardous condition
- YELLOW - abnormal condition
- BLUE - information or operator action.

When an alarm is present, the ALARM MODULE button changes colour to indicate the alarm type and the appropriate warning light on the machine warning lamp(s) light up.

A red or yellow alarm must be acknowledged. There is no need to acknowledge blue alarms as they disappear when the cause is corrected.

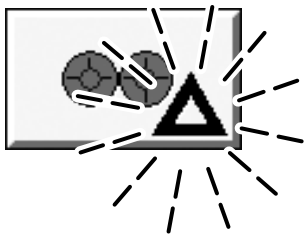

Navigating Alarms

1

When an alarm is active, the ALARMS button changes colour and the ALARM MODULE button is displayed with a flashing warning symbol.

Touch the ALARM MODULE button.

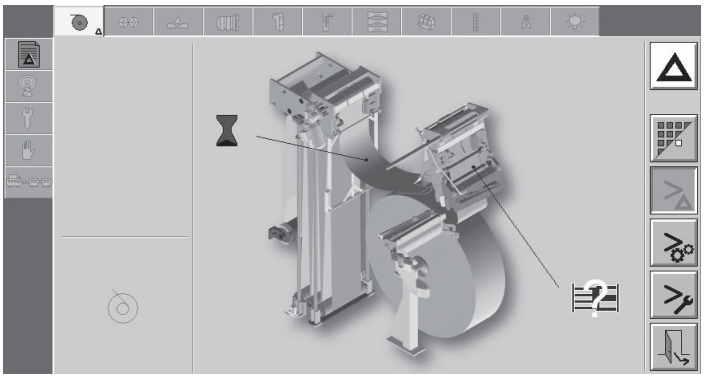

2

The ALARM MODULE window is displayed.

Only the current ALARM MODULE window and TAB are active and is not possible to navigate to the other alarm module windows.

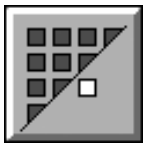

3

Touch the SHOW ALARMS button again to activate the TABS and enable navigation to the alarm module windows.

To clear an alarm follow the procedure described in Managing Alarms.

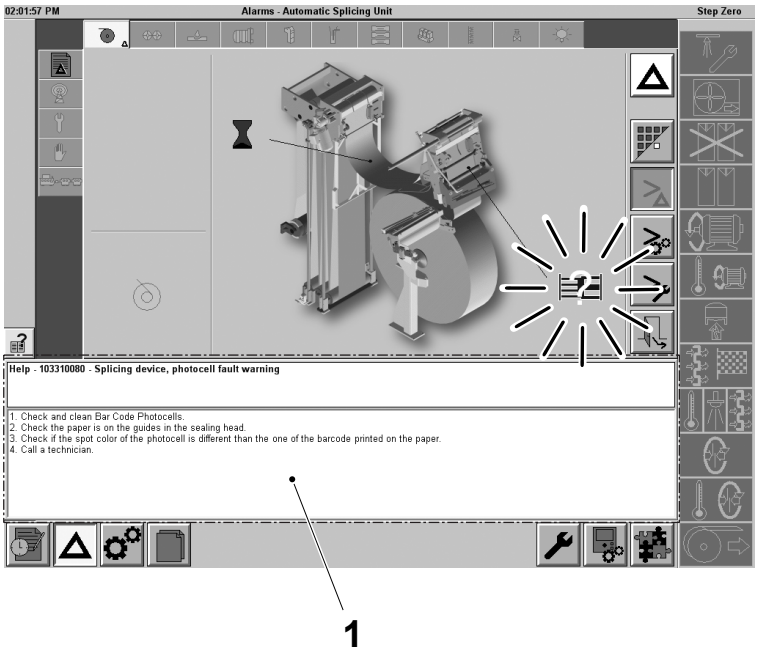

Managing Alarms

1

When an alarm module window opens, the active alarm icon is lit up. Touch the icon to open the dialogue window (1).

Follow the instructions in the order given.



2

Touch the flashing ACKNOWLEDGE button to acknowledge the alarm.

Note! If the alarm window does not close after pressing the ACKNOWLEDGE button the alarm still exists.



3

Touch the EXIT button to return to the main window.



4

Safety Relay Reset

If the ACKNOWLEDGE/RESET button appears when an ALARM MODULE window opens, an element in one of the safety circuits has been interrupted and a safety relay has been triggered.

This can be caused by opening a door fitted with a safety switch or by pressing an EMERGENCY STOP button.

Touch the ACKNOWLEDGE/RESET button to acknowledge the alarm.

Close the safety door or pull out the EMERGENCY STOP button.

Touch the ACKNOWLEDGE/RESET button to reset the safety relay and close the safety circuit.

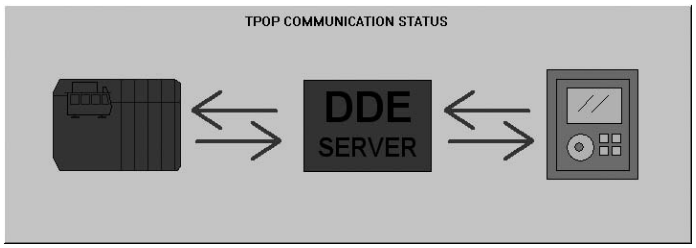

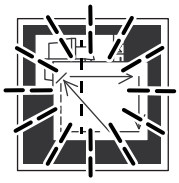

5

System Communication Fault

If a communication fault occurs, a dialogue window is displayed on the TPOP display and the TPOP RESET button flashes to show that an error has occurred.

Press the TPOP RESET button to reset the TPOP.

Note! If the communication fault remains, call a technician to check the communication cables between the PLC and the flexbox.



Alarm History

1

Touch the ALARM HISTORY button.

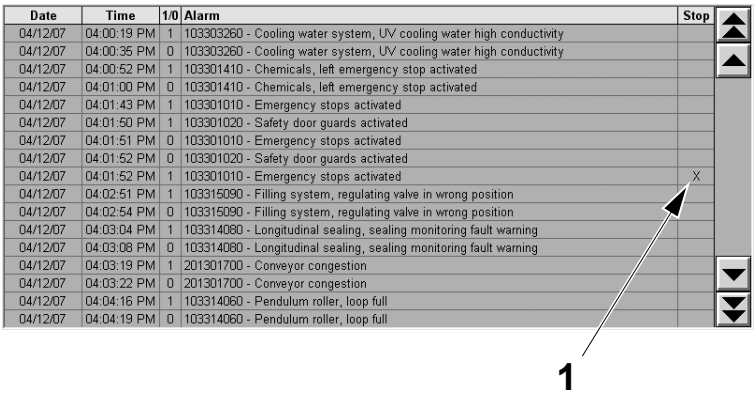

2

The ALARM HISTORY window is displayed.

The ALARM HISTORY window displays a chronological list of all the alarms that have occurred on the machine.

Note! The cross (1) in the column STOP indicates that the alarm caused a production stop.



3

Touch the EXIT button to close the ALARMS HISTORY window.

Collect System

This section describes how to register information to the machine's COLLECT system. The COLLECT system is divided into two main groups; PLANNED MAINTENANCE and WASTE.

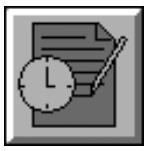

Collect System Events

The machine automatically records events for PLANNED MAINTENANCE and WASTE, but for some events the TPOP prompts the operator to select the reason for an event or input other data to the COLLECT system.

The following lists the possible TPOP prompts and the machine phases that require an operator response.

During the PREPARATION phase:

- Delay in the Preparation Phase
- Jump to Step Zero During the Preparation Phase.

During the PRODUCTION phase:

- Manual Recording of a Production Stop Cause
- Check or Change a Production Stop Cause
- Jump to Step ZERO During the PRODUCTION Phase
- Jump to Step VENTING During the PRODUCTION Phase.

Other Generic Tasks:

- Recording Package Waste for Quality Checks
- Recording Maintenance Time
- Copying Recorded Data.

Manually Registering an Event During PREPARATION

The following lists the possible TPOP prompts during the preparation phase that require an operator response.

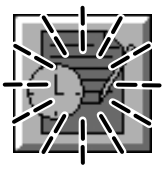

Delay in the Preparation Phase

1

If the PREPARATION PHASE is too long (more than 30 minutes), the `COLLECT SYSTEM` button starts to flash 5 minutes after the PRODUCTION phase has started.

Touch the `COLLECT SYSTEM` button.

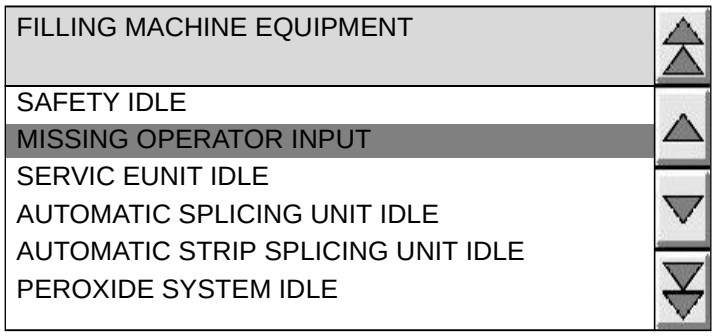

2

The TPOP prompts the question:

`WHY SO MUCH PRE-PRODUCTION DELAY?`

Select the correct cause for the event, see Selecting the Cause of an Event on page 2-24 for details.

If no answer is given within 10 minutes, a `MISSING OPERATOR INPUT` will be automatically assigned as the stop reason.

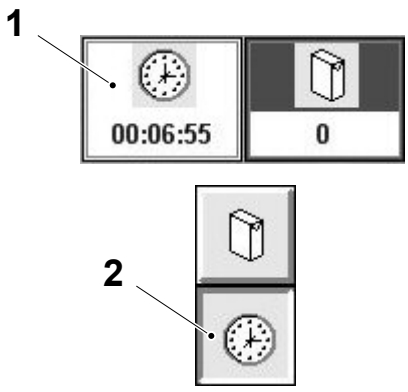

3

The CLOCK window (1) shows the extra PREPARATION time. The system allows the extra PREPARATION time to be divided and allocated to different causes.

Touch the CLOCK button (2).

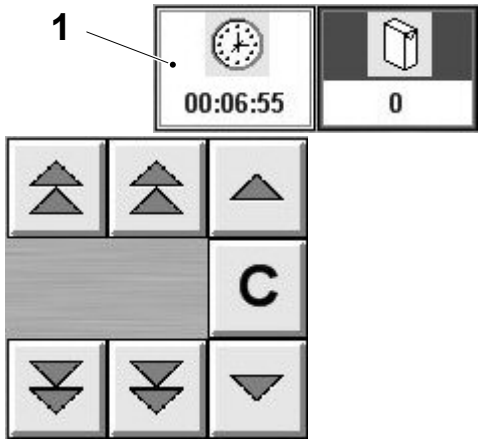

4

Enter the amount of time to be allocated to the selected cause by the ARROW buttons.

The CLOCK window (1) shows the amount of time which has been allocated to the selected cause.



5

Touch the OK button to record the data entered and return to the main window.

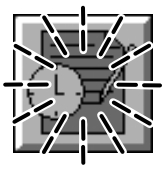

6

If the extra PREPARATION time is not fully allocated, the COLLECT SYSTEM button continues to flash.

Touch the COLLECT SYSTEM button and repeat the procedure to fully allocate the remaining extra PREPARATION time.

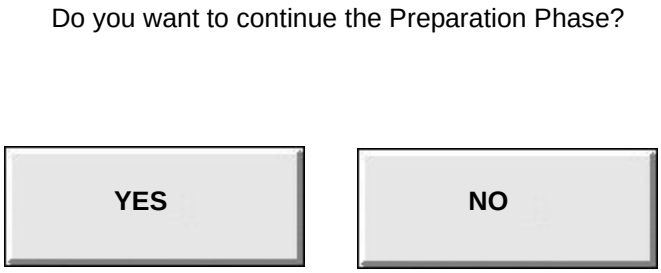

Jump to Step Zero During the Preparation Phase

When the machine steps down to ZERO during the PREPARATION PHASE the TPOP prompts the following question:

DO YOU WANT TO CONTINUE THE PREPARATION PHASE?

- If the answer is YES the TPOP keeps the PREPARATION phase open. After 10 minutes in step ZERO the TPOP prompts the same question again. If the answer is YES again, the system allows an additional 10 minutes in step ZERO then closes the PREPARATION phase automatically
- If the answer is NO the TPOP closes the PREPARATION phase
- If no answer is given within 20 minutes the PREPARATION phase closes automatically.

Manually Registering an Event During PRODUCTION

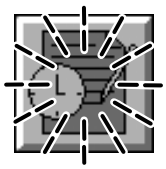

Manual Recording of a Production Stop Cause

1

During PRODUCTION phase, the machine may stop due to:

- conveyor congestion
- manual MOTOR START interruption
- manual SHORT STOP
- manual EMERGENCY STOP
- step out from PRODUCTION (Step up or Step down)
- manual filling off
- opening of a door.

The `COLLECT SYSTEM` button starts to flash.

Touch the `COLLECT SYSTEM` button.

2

The TPOP prompts one of the following questions:

- REASON FOR CONVEYOR CONGESTION?
- WHY DID YOU INTERRUPT MOTOR START?
- WHY DID YOU PRESS SHORT STOP?
- WHY DID YOU PRESS EMERGENCY STOP?
- WHY DID YOU STEP OUT FROM PRODUCTION?
- WHY DID YOU OPEN THE DOOR?
- WHY DID YOU TURN OFF THE FILLING?

Note! The TPOP prompts the question "WHY DID YOU INTERRUPT MOTOR START?" only at the first manual MOTOR START interruption after the PREPARATION phase.

Note! If the automatic catch of the distribution equipment stop function is enabled, the TPOP button will flash after a conveyor congestion only if a distribution equipment stop has not been detected.

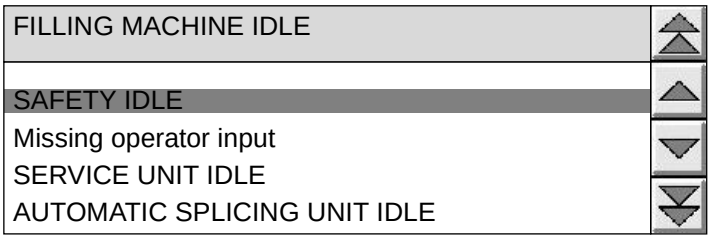

3

Answer by selecting the correct cause for the event, see Selecting the Cause of an Event on page 2-24 for details.

If no answer is given within 10 minutes after the restart, a MISSING OPERATOR INPUT will be assigned automatically as a stop reason.

Note! If the stop is due to a CONVEYOR CONGESTION, and no cause is manually selected within 10 minutes after the restart, a GENERIC CONVEYOR CONGESTION will be assigned automatically as a stop reason.

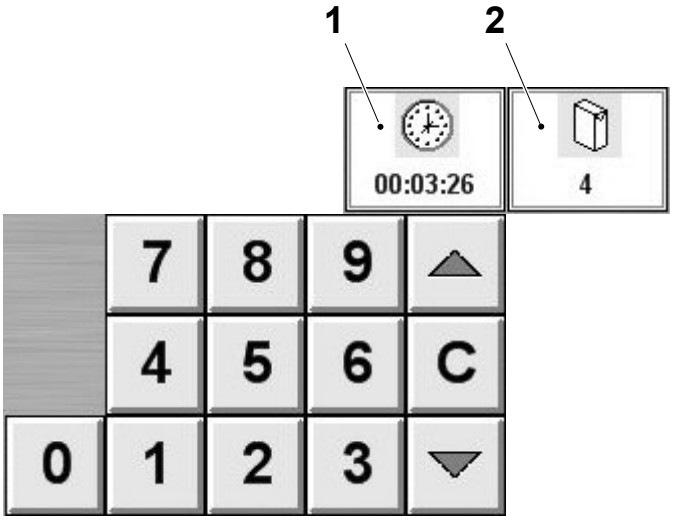

4

The CLOCK window (1) displays the total time taken for the stop.

When there is manual waste, enter the number of packaged taken using the numeric key pad.

Note! Manual waste means packages removed by the operator.

The PACKAGE window (2) displays the number of the wasted packages.



5

Touch the OK button to record the stop cause, the waste and return to the main window.



Check or Change a Production Stop Cause

1

During a production stop, it is possible to check or change production stop causes which have been automatically assigned by the system.

Touch the COLLECT SYSTEM button.

Note! This button is only available during the stop and during the first 10 minutes after the restart.



2

Touch the LAST STOP button to check if the recorded stop cause is correct.

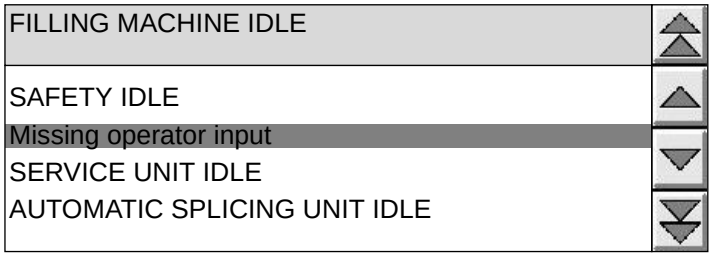

3

If the cause is not correct, select the correct cause in the scroll lists, see Selecting the Cause of an Event on page 2-24 for details.

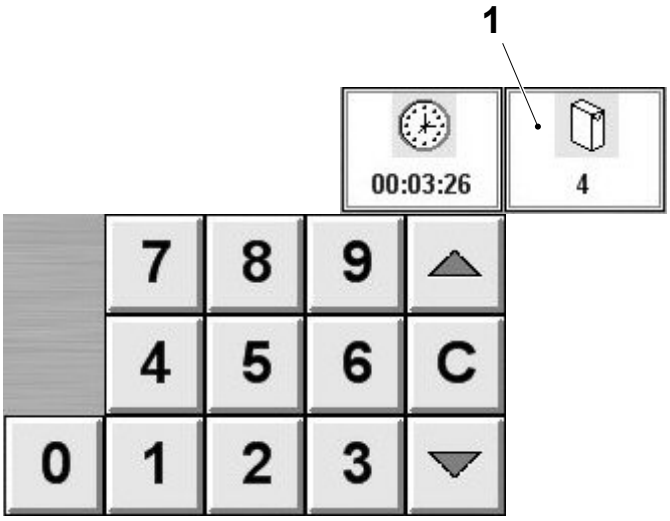

4

When there is manual waste, enter the number of packaged taken using the numeric key pad.

Note! Manual waste means packages removed by the operator.

The PACKAGE window (1) displays the number of the wasted packages.



5

Touch the OK button to record the entered data and return to the main window.

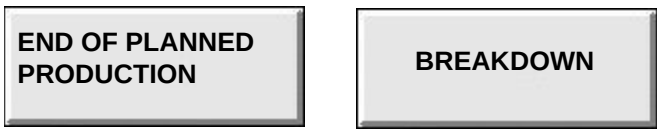

Jump to Step ZERO During the PRODUCTION Phase

When the machine steps to ZERO during the PRODUCTION phase the TPOP prompts the following question:

IS THIS THE END OF THE CURRENT PRODUCTION OR IS THERE A BREAKDOWN?

- If the answer is YES the TPOP closes the PRODUCTION phase
- If the answer is NO the TPOP keeps the PRODUCTION phase open and the period of time until the next PRODUCTION is recorded as a PRODUCTION stop. If the machine remains in step ZERO, the question appears again 10 minutes after the first prompt. If the answer is NO again, the system allows an additional 10 minutes in step ZERO, then closes the PRODUCTION phase automatically
- If no answer is given within 20 minutes, the PRODUCTION phase closes automatically.

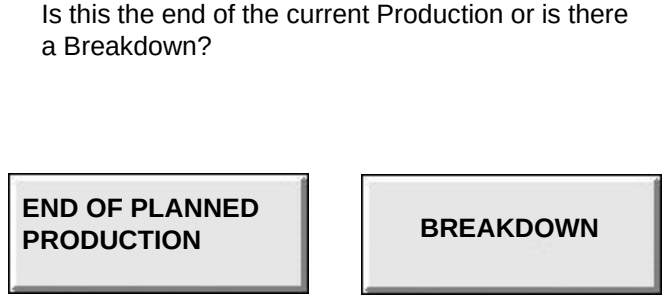

Jump to Step VENTING During the PRODUCTION Phase

When the machine steps to VENTING during the PRODUCTION phase the TPOP prompts a question.

IS THIS THE END OF THE CURRENT PRODUCTION OR IS THERE A BREAKDOWN?

- If the answer is YES the TPOP closes the PRODUCTION phase
- If the answer is NO the TPOP keeps the PRODUCTION phase open and the period of time until the next PRODUCTION is recorded as PRODUCTION stop
- If no answer is given within 4 minutes the TPOP assigns as default YES.



Generic Collect System Tasks

Recording Package Waste for Quality Checks

1

Note! Remember to record the number of packages taken whenever packages are collected for quality checks.

Touch the COLLECT SYSTEM button.



2

Touch the WASTE button.

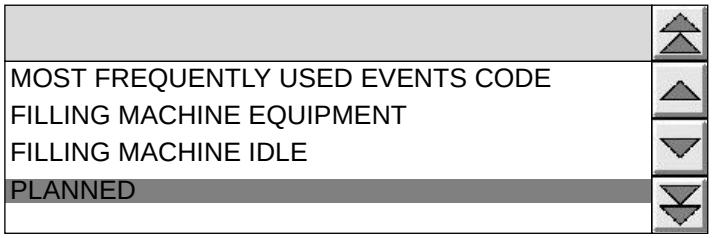





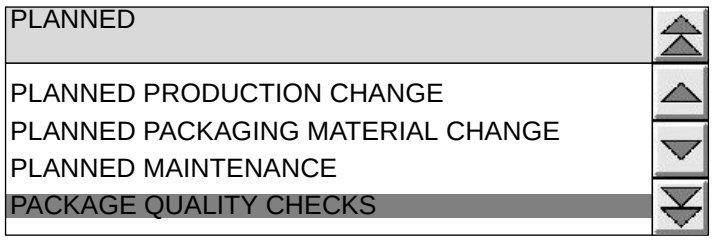

3

Use the arrow keys to select the PLANNED TIME.

Touch the DETAIL button and use the arrow keys to select PACKAGE QUALITY CHECKS.

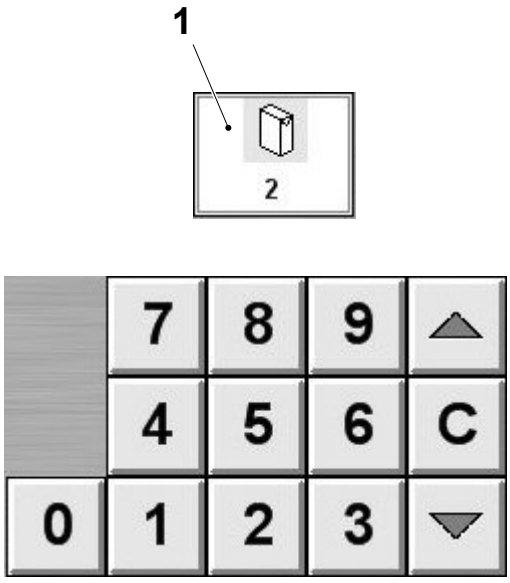

4

Enter the number of packages taken using the numeric key pad.

The PACKAGE window (1) displays the selected value.



5

Touch the OK button to record the data entry.



6

Touch the EXIT button to return to the main window.



Recording Maintenance Time

1

Touch the COLLECT SYSTEM button.



2

Touch the PLANNED MAINTENANCE button.

Note! This button is only available in step ZERO, and with the PREPARATION and PRODUCTION phases closed.

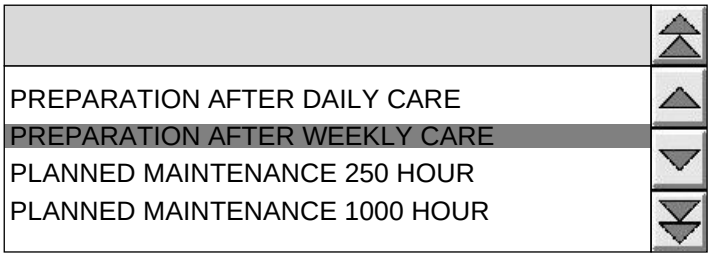

3

Select the correct item, see Selecting the Cause of an Event on page 2-24.

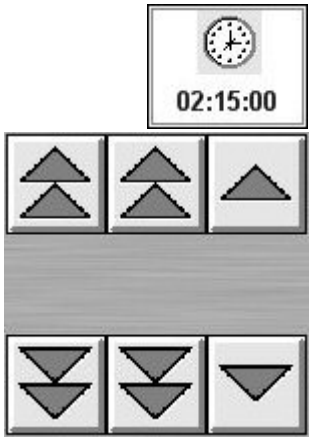

4

Use the ARROW buttons to enter the time used.

The CLOCK window displays the selected time.



5

Touch the OK button to record the data entry.



6

Touch the EXIT button to return to the main window.



Copying Recorded Data

The COPYLOG button is used to copy data from the TPOP flexbox to a floppy disk.

To analyse the data collected by the system, the data must be copied to an office PC and analysed utilising the appropriate software.

Machine Configuration

This section describes how to enable/disable the available machine options through the TPOP.

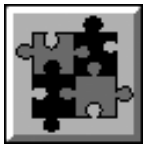

Configuration Window

Touch the MACHINE CONFIGURATION button.

The CONFIGURATION window is displayed.

The window displays the configuration of the optional equipment for the filling machine.

Note! Icons marked with a cross are not enabled.

Touching an icon displays a dialogue window with a detailed description of the optional equipment.

Touch the icon of the machine option to be enabled or disabled.

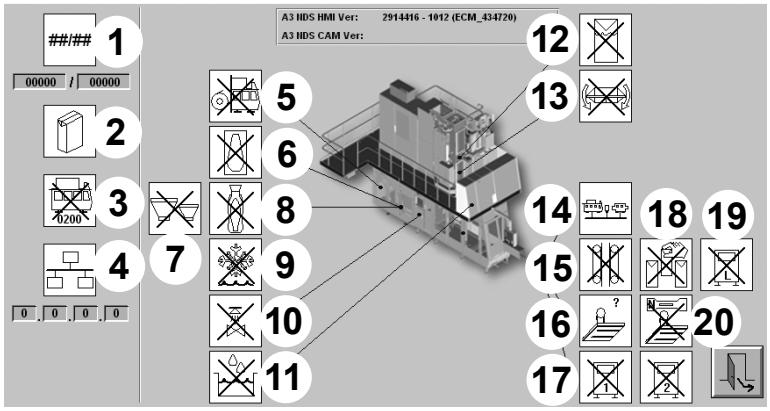

1 Machine No.
2 Volume
3 Machine development step option
4 Ethernet Level 6
5 ASU separate room
6 Pulltab
7 DIMC mixing unit
8 DIMC
9 Ice water
10 ICU
11 Dilution kit
12 Headspace by Injection
13 Tube steering
14 Line Interface
15 Belt brake
16 Date unit
17 Non TP generic equipment 1 and 2
18 Sampling unit
19 Label applicator equipment
20 Jaw event ID



The ON/OFF buttons are displayed. Touch:

- the ON button to enable the option selected
- the OFF button to disable the option selected.

Production Control

This section describes how to use the TPOP to make machine settings, view process parameters, run machine functions and view package counters.



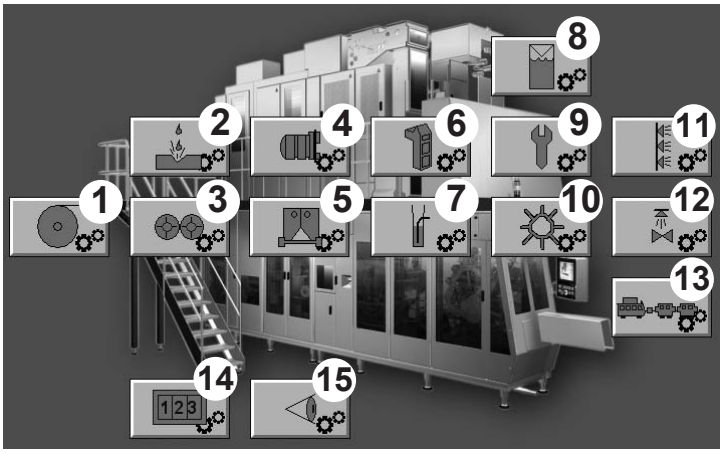

1 Automatic Splicing Unit
2 Peroxide System
3 Automatic Strip Splicing Unit
4 Sterile Air System
5 Package Forming Unit
6 Tube Forming Unit
7 Filling System
8 Headspace Unit (OE)
9 Service
10 Final Folder Unit
11 External Cleaning
12 Integrated Cleaning Unit
13 Downstream
14 Package Counters
15 Overview

Production Control Modules

Touch the PRODUCTION CONTROL button to view the buttons corresponding to the various settings grouped by machine modules or function.

Touch one of the module buttons to open the associated dialogue window.

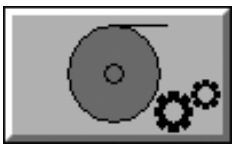

ASU Window

1

Touch the ASU button.

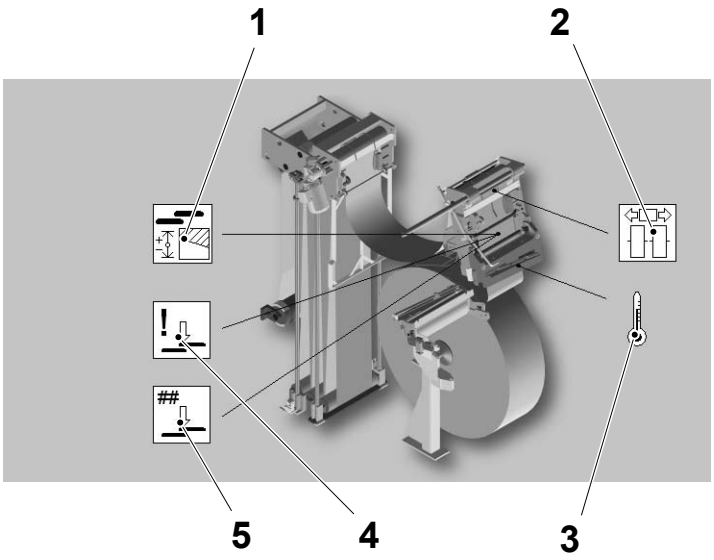

2

The ASU window is displayed.

All selectable icons are white. When an icon is selected the colour of the icon changes to blue.

In this window there are the following selectable icons:

- SPLICED PACKAGE REPEAT LENGTH (1)
- MOVE SPLICE HEAD (2)
- CONSTANT HEAT BAR TEMPERATURE (3)
- FORCE MANUAL SPLICE (4)
- PREPARATION DEVICE (5).

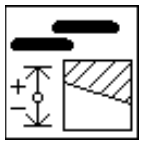

Spliced Package Repeat Length Offset

3

Touch the SPLICED PACKAGE REPEAT LENGTH OFFSET icon.

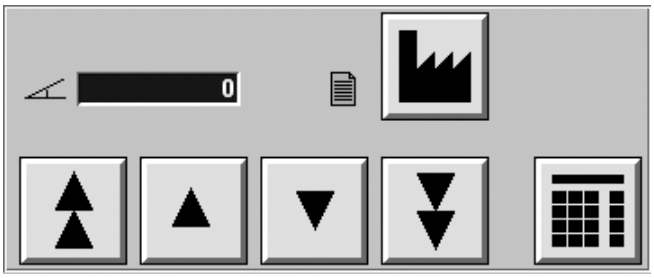

4

Use the ARROW buttons or the KEYBOARD button to set the value or touch the FACTORY button to reset the factory default value.

Note! The repeat length can be corrected with this adjustment if the error is at least ±1.5 mm.

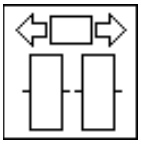

Move Splicing Head

5

Touch the MOVE SPLICING HEAD icon.

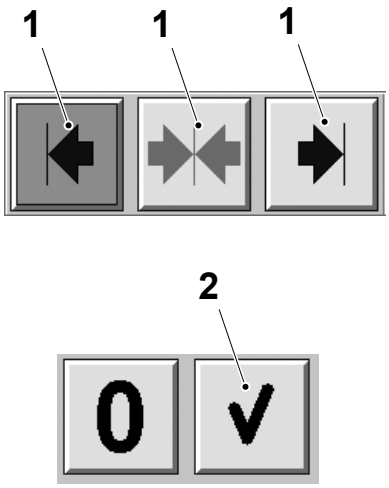

6

In PREPARATION, touch one of the ARROW buttons (1) to select the direction of the movement.

Note! The current position of the splicing head is indicated by the green coloured ARROW button.

Touch the OK button (2) to start the movement of the splicing head.

Note! There are three selectable position: RH side, LH side and central position.

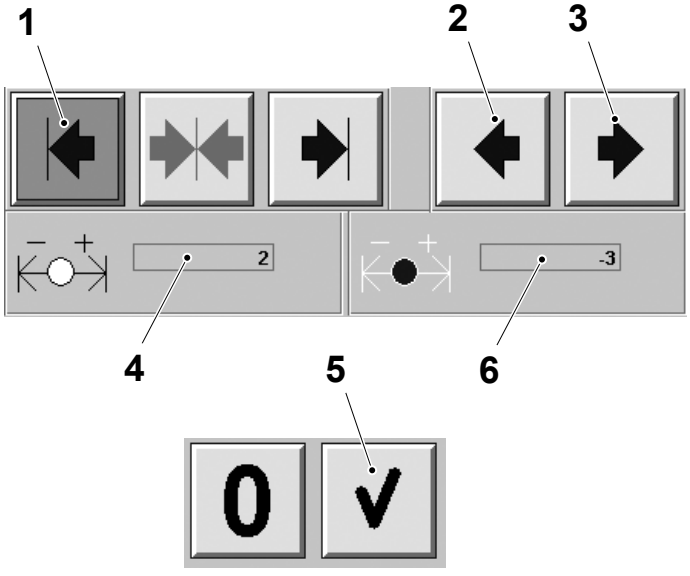

7

In PRODUCTION, the position of the splicing head on the material holders can be corrected by a value from -3 to 3 mm.

The current position of the splicing head is indicated by the green coloured ARROW button (1).

The windows (4) displays the value (mm) set for the movement on the material holder 1, the window (6) displays the value (mm) set for the movement on the material holder 2.

Touch the ARROW buttons (2) or (3) and the OK button (5) to move the splicing head of 1 mm at a time.



Constant Heat Bar Temperature

8

Touch the CONSTANT HEAT BAR TEMPERATURE icon.

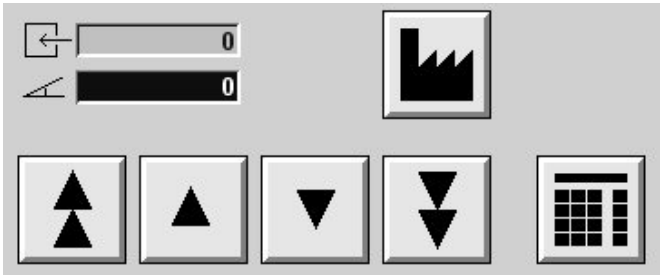

9

Use the ARROW buttons or the KEYBOARD button to set the value or touch the FACTORY button to reset the factory default value.



Force Manual Splice

10

When there is an urgent need to perform a packaging material splice because of an alarm condition, use the FORCE MANUAL SPLICE function.

This allows the possibility to perform an splice immediately and disregarding the packaging material position (out of design).

Touch the FORCE MANUAL SPLICE icon.



11

The ON/OFF buttons are displayed.

Touch the ON button to enable the FORCE MANUAL SPLICE function.

To cancel the function, touch the OFF button.

Once the function is enabled, perform the manual splice, see Manual Web Splice on page 6-26.

Preparation Device

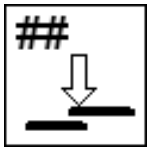

12

Touch the PREPARATION DEVICE icon.

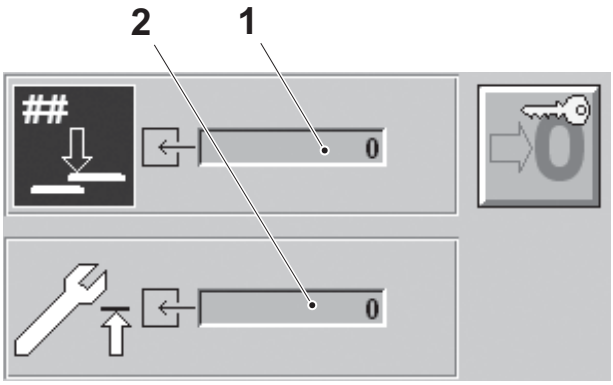

13

The dialogue window displays the following information:

- the number of splices counter (1)
- the maximum number of splices before the blade replacement (2)



14

Touch the EXIT button to return to the PRODUCTION CONTROL window.

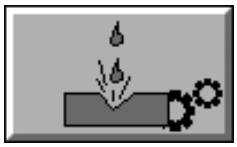

Peroxide System Window

1

Touch the PEROXIDE SYSTEM button.

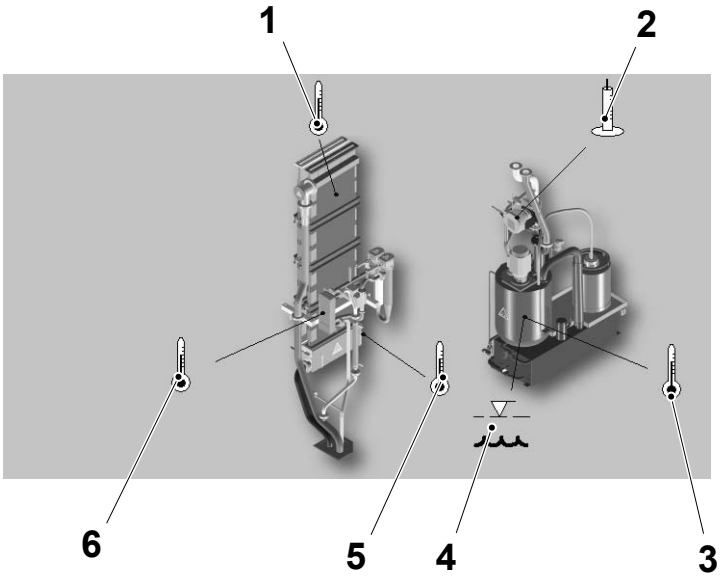

2

The PEROXIDE SYSTEM window is displayed.

All selectable icons are white. When an icon is selected the colour of the icon changes to blue.

In this window there are the following selectable icons:

- PEROXIDE BATH HEATER TEMPERATURE (1)
- PEROXIDE CONCENTRATION AND TEMPERATURE MONITOR (2)
- PEROXIDE TANK TEMPERATURE (3)
- PEROXIDE TANK LEVEL (4)
- PEROXIDE BATH TEMPERATURE (5)
- HEAT EXCHANGER WATER TEMPERATURE (6).

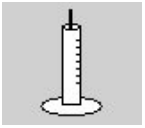

Peroxide Concentration Monitor

3

Touch the PEROXIDE CONCENTRATION AND TEMPERATURE MONITOR icon.

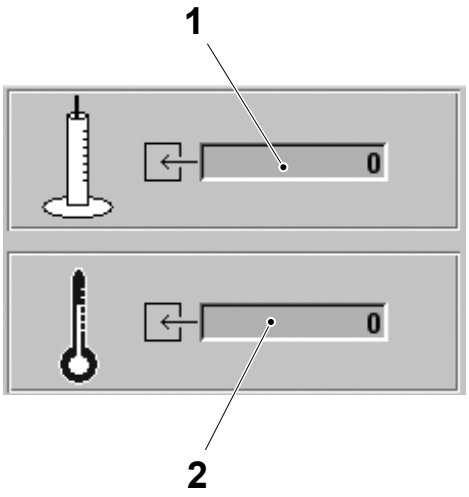

4

The dialogue window displays the following information:

- the value of the hydrogen peroxide concentration (1)
- the value of the hydrogen peroxide temperature (2)

The data is shown in real time only for the first 10 minutes when the filling machine is in step PREPARATION or from step HEAT STERILIZATION to step PRODUCTION.

Touch the TREND button to display the graph of the hydrogen peroxide concentration during the last eight hours of PRODUCTION.

Note! The graphs may show blocks of missing information due to the conditions mentioned above.

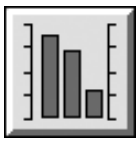



Peroxide Tank Level

5

Touch the PEROXIDE TANK LEVEL icon.

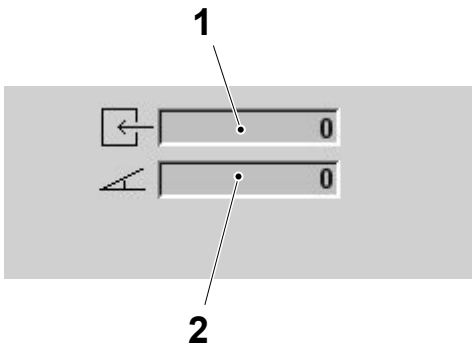

6

The dialogue window displays the following information:

- the actual value (1)
- the set point (2).

Touch the TREND button to display the graph showing the peroxide tank level in real time.

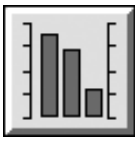



7

Touch the EXIT button to return to the PRODUCTION CONTROL window.

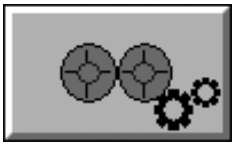

Automatic Strip Splicing Unit Window

1

Touch the AUTOMATIC STRIP SPLICING UNIT button.

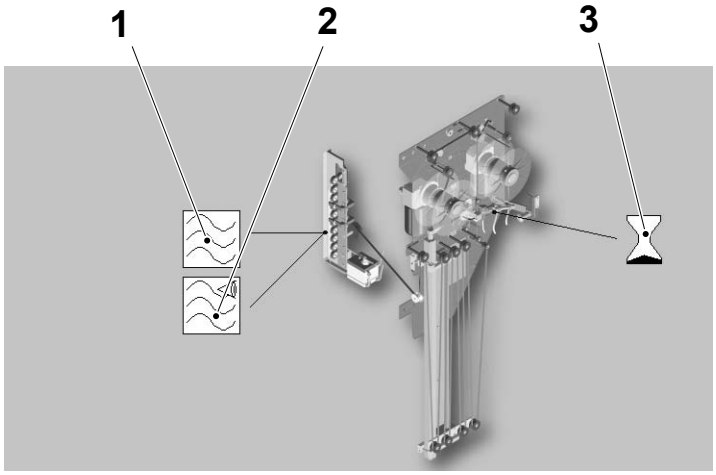

2

The AUTOMATIC STRIP SPLICING UNIT window is displayed.

All selectable icons are white. When an icon is selected the colour of the icon changes to blue.

In this window there are the following selectable icons:

- POWER SETTING STRIP APPLICATOR (1)
- SEALING MONITORING (2)
- STRIP SEALING TIME (3).

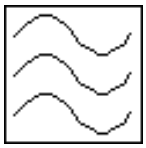

Power Setting Strip Applicator

3

Touch the POWER SETTING STRIP APPLICATOR icon.

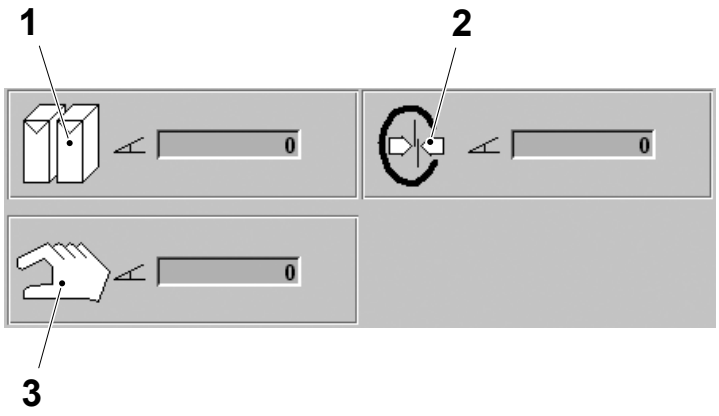

4

The following setting parameters are displayed:

- POWER DURING PRODUCTION (1)
- POWER DURING INCHING (2)
- POWER DURING MANUAL PULLING (3).

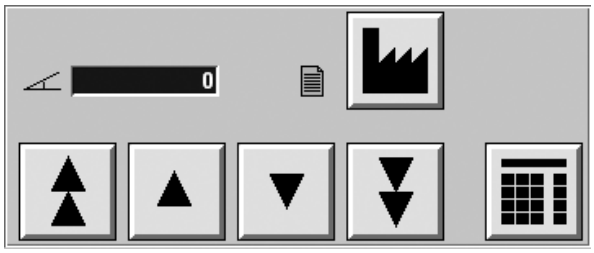

Use the ARROW buttons or the KEYBOARD button to set the value or touch the FACTORY button to reset the factory default value.



Strip Sealing Time

5

Touch the STRIP SEALING TIME icon.

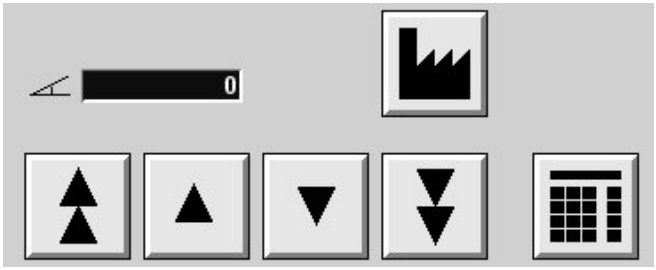

6

Use the ARROW buttons or the KEYBOARD button to set the value or touch the FACTORY button to reset the factory default value.



7

Touch the EXIT button to return to the SETTING window.

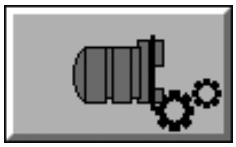

Sterile Air System Window

1

Touch the STERILE AIR SYSTEM button.

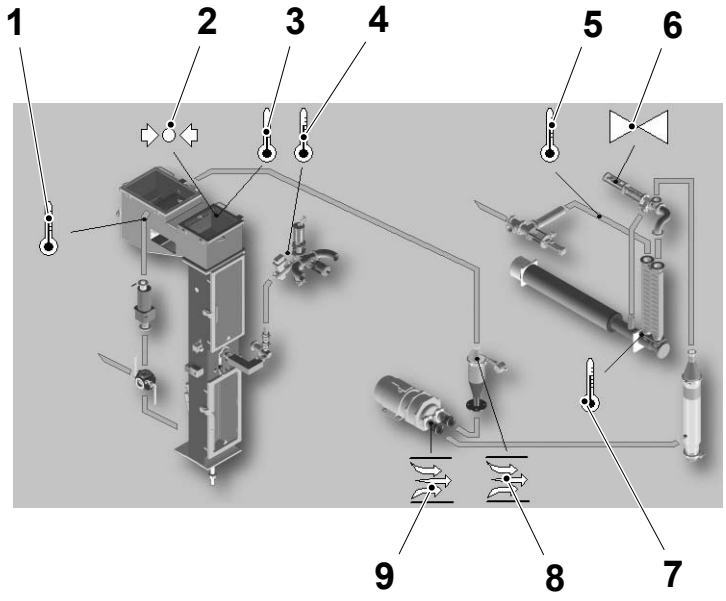

2

The STERILE AIR SYSTEM window is displayed.

All selectable icons are white. When an icon is selected the colour of the icon changes to blue.

In this window there are the following selectable icons:

- AIR KNIFE TEMPERATURE (1)
- ASEPTIC CHAMBER AIR PRESSURE (2)
- ASEPTIC CHAMBER TEMPERATURE (3)
- B-VALVE AIR TEMPERATURE IN STERILIZATION (4)
- HEAT STERILIZATION TEMPERATURE (5)
- HEAT EXCHANGER VALVE POSITION (6)
- SUPERHEATER TEMPERATURE (7)
- AIR COMPRESSOR SEALING WATER FLOW (8)
- STERILE AIR FLOW (9).

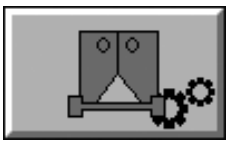

Package Forming Unit Window

1

Touch the PACKAGE FORMING UNIT button.

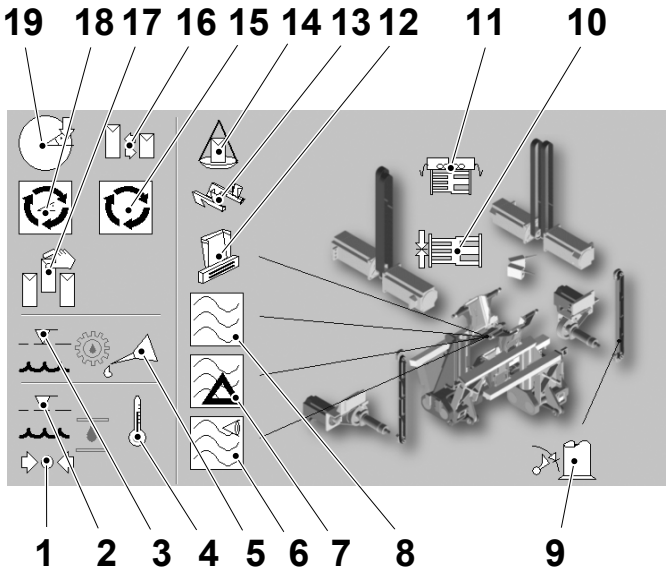

2

The PACKAGE FORMING UNIT window is displayed.

All selectable icons are white. When an icon is selected the colour of the icon changes to blue.

In this window there are the following selectable icons:

- HYDRAULIC OIL PRESSURE INDICATOR (1)
- HYDRAULIC OIL LEVEL INDICATOR (2)
- LUBRICATION OIL LEVEL INDICATOR (3)
- HYDRAULIC OIL TEMPERATURE INDICATOR (4)
- JAW SYSTEM LUBRICATION (5)
- SEALING MONITORING (6)
- TS FAULT HISTORY (7)
- TS POWER (8)
- FOLDING FLAPS PRODUCTION POSITION (9)
- DESIGN CORRECTION OFFSET (10)
- PHOTOCELL UNIT (11)
- CHANGE INDUCTOR (12)
- JAW OPEN SIDE SELECTOR (13)
- PACKAGE WEIGHT (14)
- JAW INCHING SELECTOR (15)
- CHANGE VOLUME (16)
- SAMPLE PACKAGES (17)
- JAW SYSTEM TARGET POSITION (18)
- JAW SYSTEM CURRENT POSITION (19).

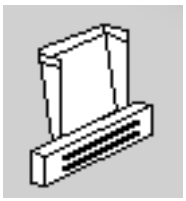

Change Inductor

3

Touch the CHANGE INDUCTOR icon.

Note! The CHANGE INDUCTOR icon is only available during step PRODUCTION.

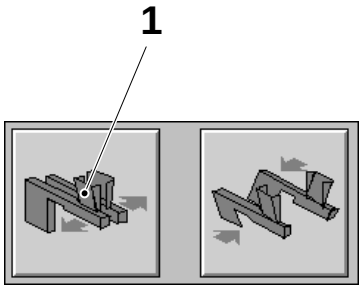

4

The CHANGE INDUCTOR buttons are displayed.

Touch the OPEN button (1).

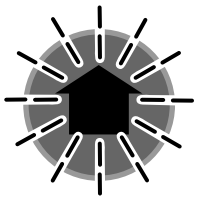

5

When the PROGRAM UP button begins to flash, press it.

The lower jaw pair open.

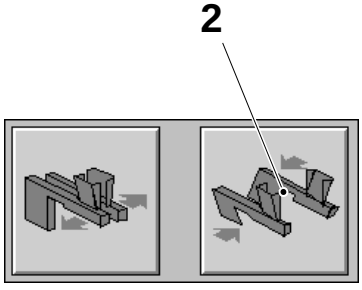

6

When the inductor has been changed and all necessary work has been completed, touch the CLOSE button (2).



Package Weight

7

Touch the PACKAGE WEIGHT icon.

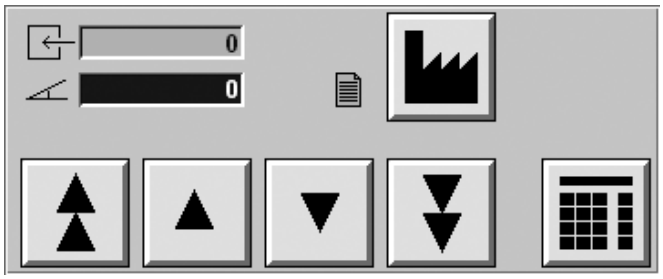

8

Use the ARROW buttons or the KEYBOARD button to set the value or touch the FACTORY button to reset the factory default values.

Note! The volume cams start to move when the value has been stable for 5 seconds. It is not possible to change the setting while the motor is moving.



Jaw Lubrication

9

Touch the JAW LUBRICATION icon.



10

CAUTION

Hygiene.

Do not repeatedly cycle the lubrication system to avoid leakage of excess lubrication oil.

The ON/OFF buttons are displayed.



Touch the ON button to enable the JAW LUBRICATION function. Touch the OK button to start the lubrication cycle.

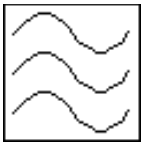

TS Power

11

Touch the TS POWER icon.

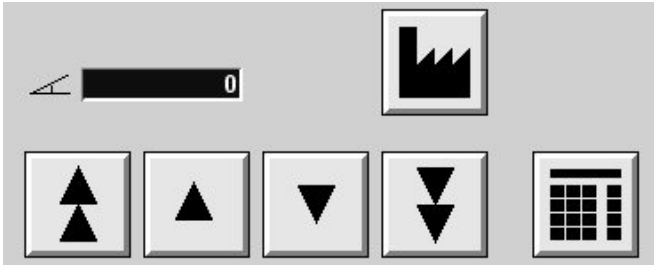

12

Use the ARROW buttons or the KEYBOARD button to set the value or touch the FACTORY button to reset the factory default values.



TS Fault History

13

Touch the TS FAULT HISTORY icon.

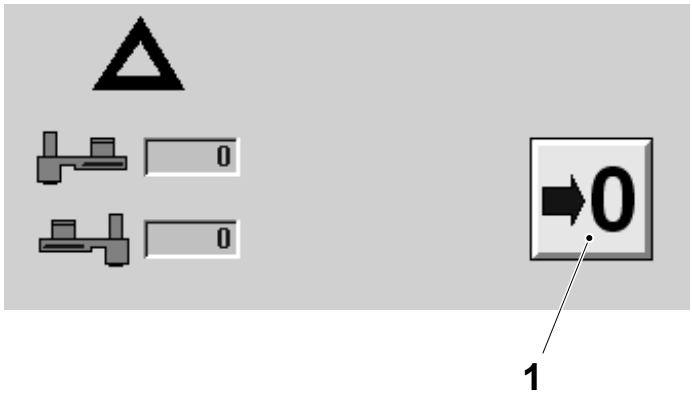

14

The number of faults of each inductor is shown.

Touch the RESET button (1) to restart counting from 0.

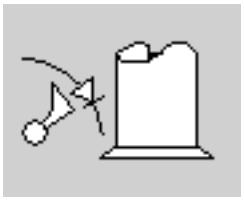

Folding Flaps Production Position

15

Touch the FOLDING FLAPS PRODUCTION POSITION icon.

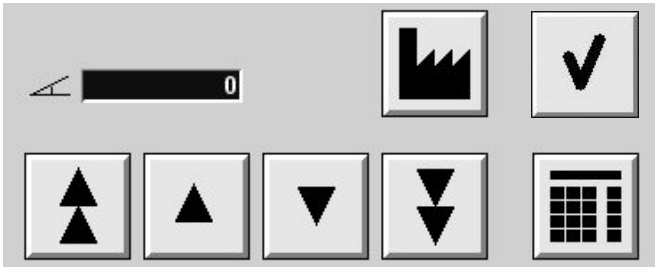

16

Use the ARROW buttons or the KEYBOARD button to set the value.

Touch the OK button to accept the new value.

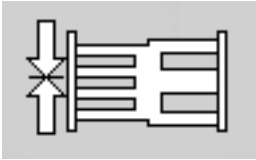

Design Correction Offset

17

Touch the DESIGN CORRECTION OFFSET icon.

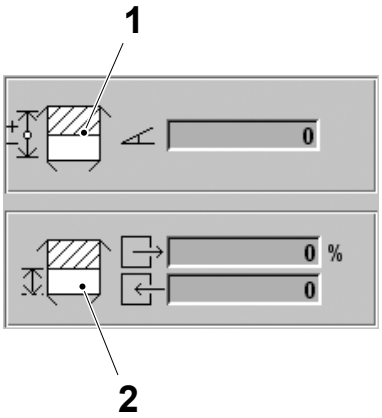

18

Two icons are displayed in the dialogue window:

Touch the DESIGN CORRECTION OFFSET icon (1) to display the key pad.

Use the ARROW buttons or the KEYBOARD button to align the package design by changing the offset value.

In the DESIGN ERROR MONITOR dialogue window (2) the following information is displayed:

- the opening percentage of the folding flaps (0% open - 100% closed)
- the current design error value.

Touch the TREND button to display a graphic showing the parameter in real time.

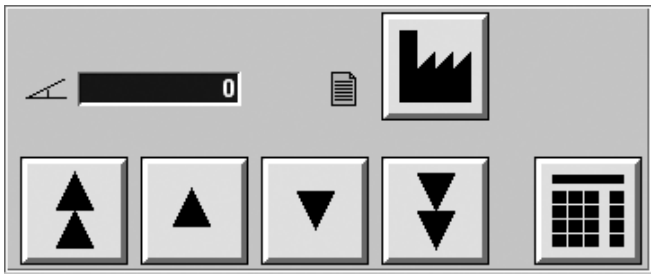

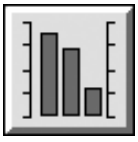

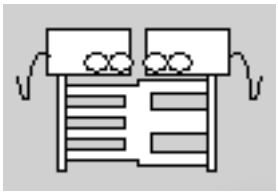

Photocell Unit

19

Touch the PHOTOCELL UNIT icon.

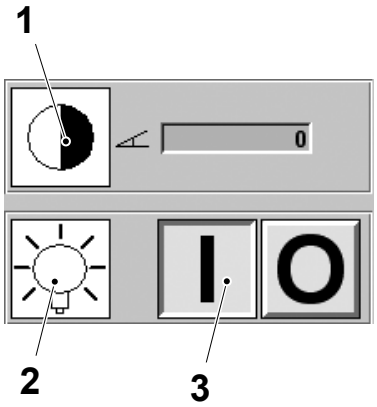

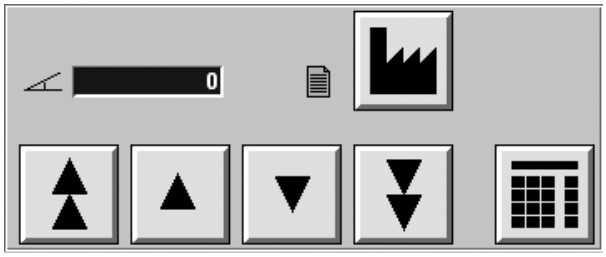

20

Three icons are displayed in the dialogue window:

Touch the PHOTOCELL SPOT ON icon (2) and the ON button (3) to light the spot on the photocells even if the machine is stopped, if needed.

Touch the PHOTOCELL SENSITIVITY icon (1). The PHOTOCELL SENSITIVITY dialogue window is displayed.

Use the ARROW buttons or the KEYBOARD button to set the value.

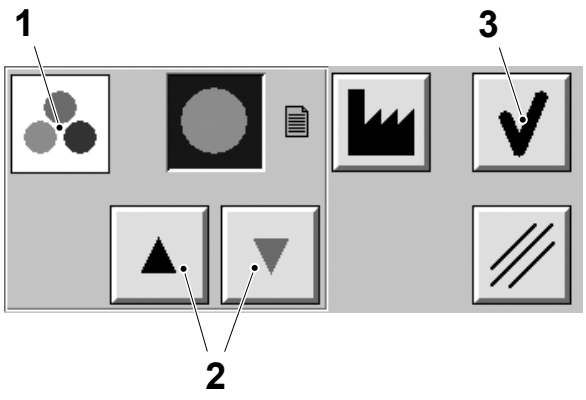

21

Touch the PHOTOCELL SPOT COLOUR icon (1). The arrows buttons are displayed.

Touch the arrows (2) buttons to change the spot colour.

Touch the OK button (3) to confirm.



Jaw Inching Selection

22

Touch the JAW INCHING SELECTION icon.

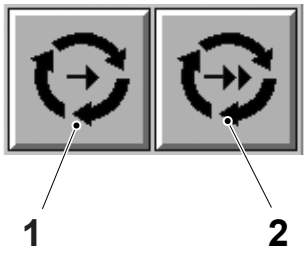

23

Touch either:

- the SLOW INCHING button (1), to slow inch the jaw system to check the machine movement or to reach an approximate position
- the FAST INCHING button (2) to fast inch the jaw system to check the machine movement.

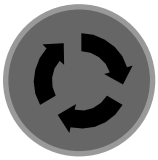

24

Press and hold the JAW SYSTEM INCHING button to start the machine movement.



Jaw System Target Position

25

Touch the JAW SYSTEM TARGET POSITION icon.

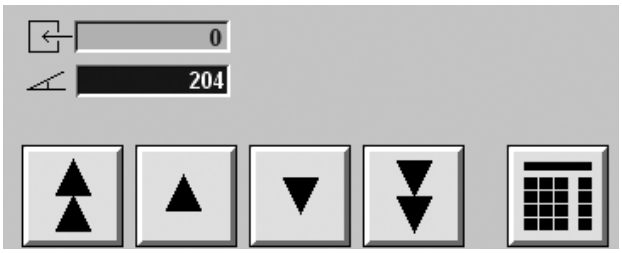

26

Use the ARROW buttons or the KEYBOARD button to select the required angle.





27

Touch the ON button to enable the target position function.

Touch the OK button to start the machine movement.

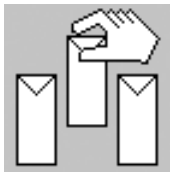

Sample Package

28

Touch the SAMPLE PACKAGE icon.

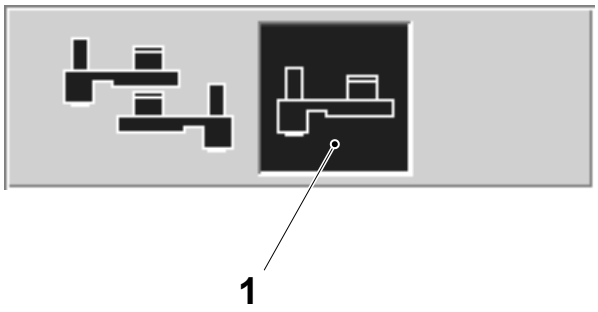

29

Note! Touching the RH side will cause the jaw system to eject a package from the LH side leaving a gap in the package outfeed to identify the RH side package.

Touch the RH SIDE OR LH SIDE icon (1) (touching the icon switches between the two sides) to select the jaw pair from which the first package sample should be taken.



30

Touch the ON button to start the sampling of the packages.



31

Touch the EXIT button to return to the PACKAGE FORMING UNIT window.

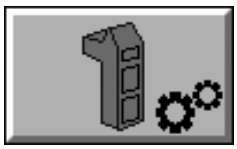

Tube Forming Unit Window

1

Touch the TUBE FORMING UNIT button.

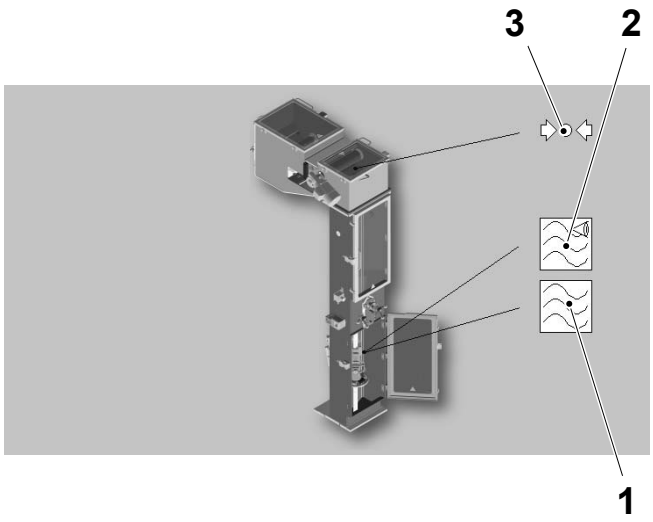

2

The TUBE FORMING UNIT window is displayed.

All selectable icons are white. When an icon is selected the colour of the icon changes to blue.

In this window there are the following selectable icons:

- LONGITUDINAL SEALING (1)
- SEALING MONITORING (2)
- PENDULUM ROLLER (3)

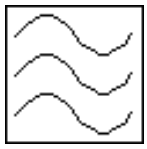

Longitudinal Sealing

3

Touch the LONGITUDINAL SEALING icon.

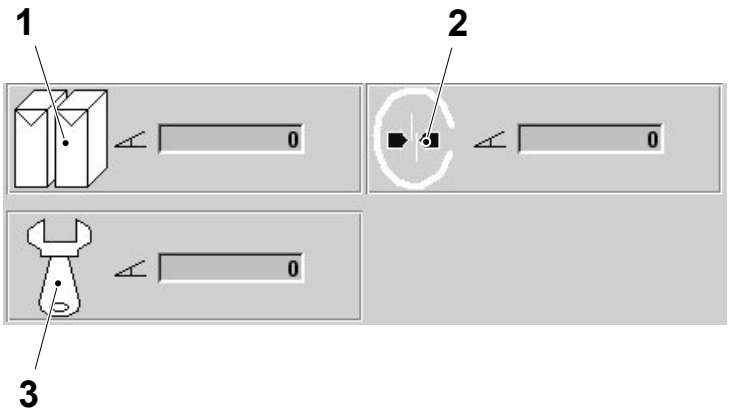

4

The following setting parameters are displayed:

- POWER DURING PRODUCTION (1)
- POWER DURING TUBE SEALING (2)
- POWER DURING SERVICE (3).

To set a parameter, touch the parameter value displayed. The background colour of the selected value changes to blue.

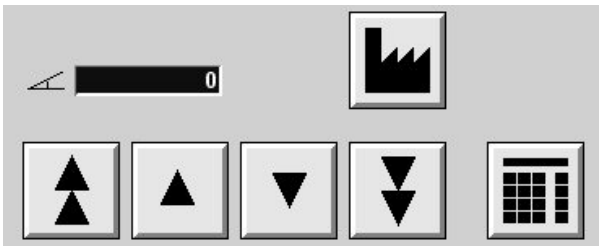

Use the ARROW buttons or the KEYBOARD button to set the value or touch the FACTORY button to reset the factory default values.

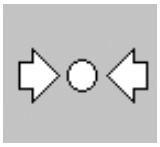

Pendulum Roller

5

Touch the PENDULUM ROLLER icon.

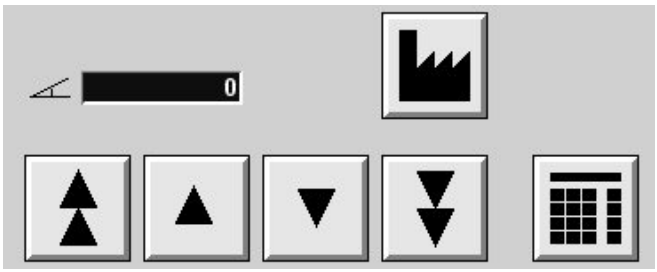

6

Use the ARROW buttons or the KEYBOARD button to set the value or touch the FACTORY button to reset the factory default value.



7

Touch the EXIT button to return to the TUBE FORMING UNIT window.

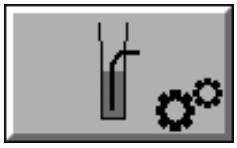

Filling System Window

1

Touch the FILLING SYSTEM button.

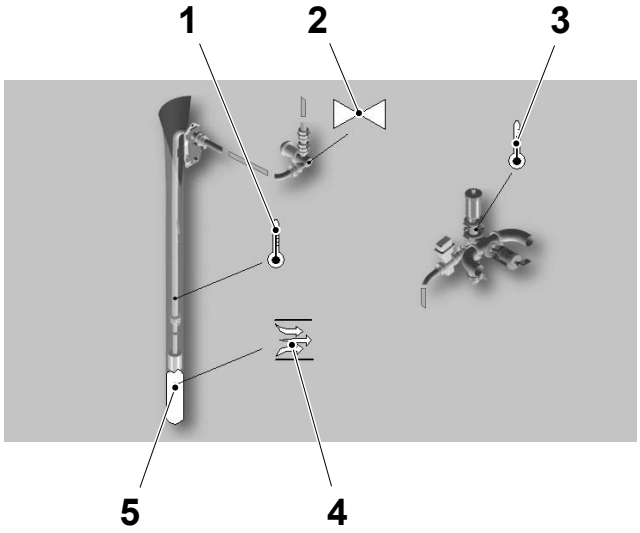

2

The FILLING SYSTEM window is displayed.

All selectable icons are white. When an icon is selected the colour of the icon changes to blue.

In this window there are the following selectable icons:

- PRODUCT TEMPERATURE (1)
- REGULATING VALVE POSITION (2)
- STEAM BARRIER TEMPERATURE (3)
- STARTING FLOW (4)
- PRODUCT LEVEL AND FLOW (5)

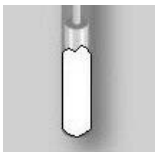

Product Level and Flow Graph

3

Touch the TUBE icon.

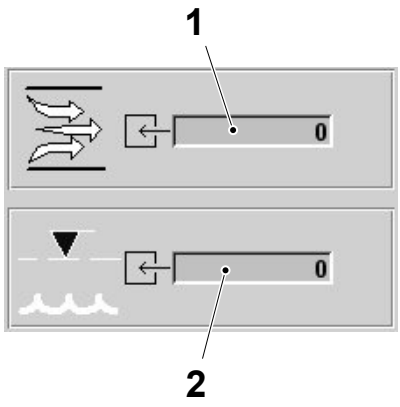

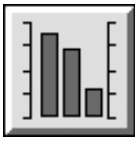

4

The dialogue window displays the following information:

- product flow (1), expressed as a percentage of machine nominal product flow
- product level (2).

Touch the TREND button to display the graph showing the values in real time.

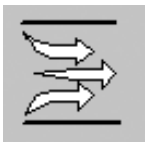

Starting Flow

5

Touch the STARTING FLOW icon to set the flow during the starting sequence.

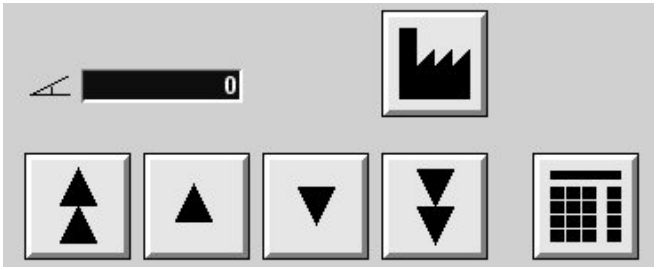

6

Use the ARROW buttons or the KEYBOARD button to set the value or touch the FACTORY button to reset the factory default value.

Increase the value in case too long time is needed to reach a stable product level; decrease the value in case of overfilling during production start.

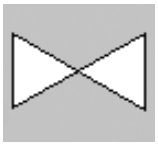

Regulating Valve Position

7

Touch the REGULATING VALVE POSITION icon to monitor the percentage of the regulating valve opening.



8

The dialogue window displays the process value and the set point value of the regulating valve opening: the range is from 0% (valve closed) to 100% (valve fully open).



9

Touch the EXIT button to return to the FILLING SYSTEM window.



Headspace by Injection (OE)

1

Touch the HEADSPACE BY INJECTION button.

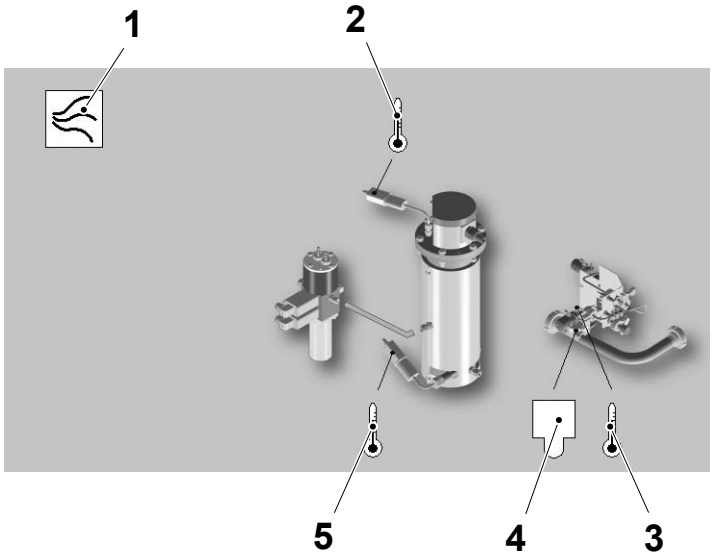

2

The HEADSPACE BY INJECTION window is displayed.

All selectable icons are white. When an icon is selected the colour of the icon changes to blue.

In this window there are the following selectable icons:

- HI PRESSURE AND FLOW (1)
- HI TEMPERATURE MONITOR (2)
- HI TRANSITION PIPE TEMPERATURE MONITOR (3)
- HI NOZZLE SELECTION (4)
- HI GAS TEMPERATURE MONITOR (5).



HI Pressure and Flow

3

Touch the HI PRESSURE AND FLOW icon.

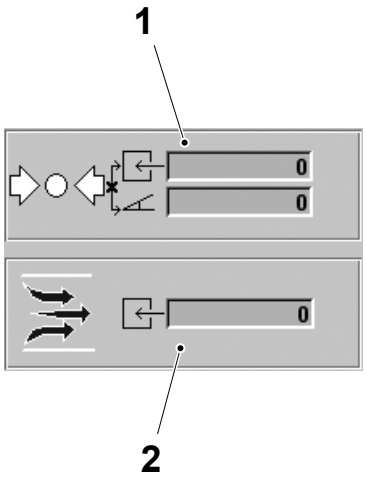

4

The dialogue window displays:

- the process value and the set point value of the HI pressure (1)
- the process value of the HI flow (2).

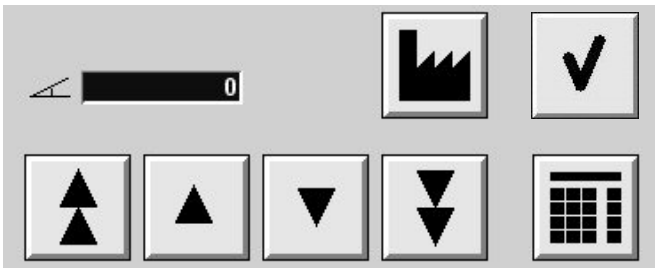

5

Use the ARROW buttons or the KEYBOARD button to set the HI pressure value or touch the FACTORY button to reset the factory default value.

Touch the OK button to confirm the new value.

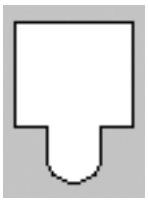

HI Nozzle Selection

6

Touch the HI NOZZLE SELECTION icon.

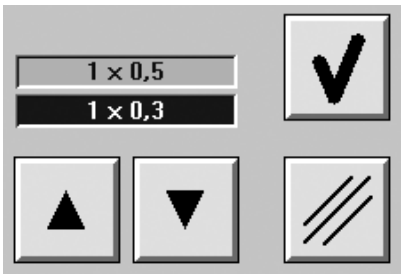

7

Use the ARROW buttons to select the nozzle size corresponding to the nozzle fitted into the product pipe.

Touch the OK button to confirm the selection.



8

Touch the EXIT button to return to the HEADSPACE BY INJECTION window.

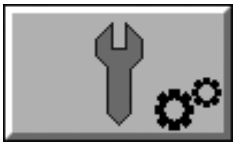

Service Unit Window

1

Touch the SERVICE UNIT button.

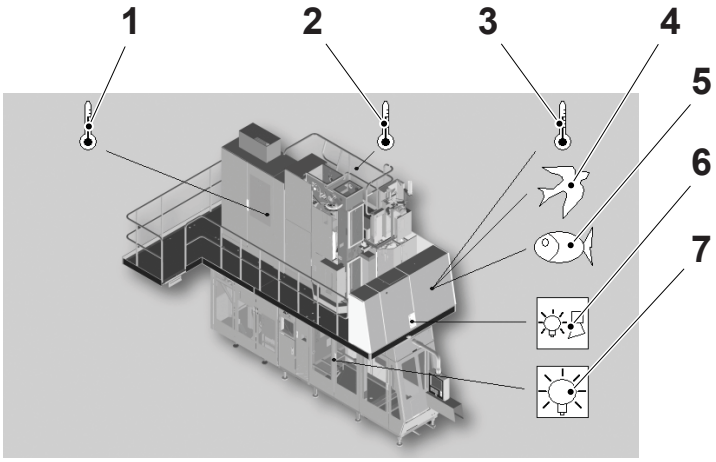

2

The SERVICE UNIT window is displayed.

All selectable icons are white. When an icon is selected the colour of the icon changes to blue.

In this window there are the following selectable icons:

- ELECTRICAL CABINET TEMPERATURE (1)
- SUPERSTRUCTURE ELECTRICAL CABINET TEMPERATURE (2)
- MAIN COOLING WATER TEMPERATURE (3)
- MAIN AIR PRESSURE (4)
- MAIN COOLING WATER PRESSURE (5)
- LAMP AND HOOTER TEST (6)
- LIGHTS ON/OFF (7)
-

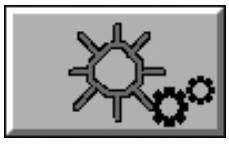

Final Folder Unit Window

1

Touch the FINAL FOLDER button.

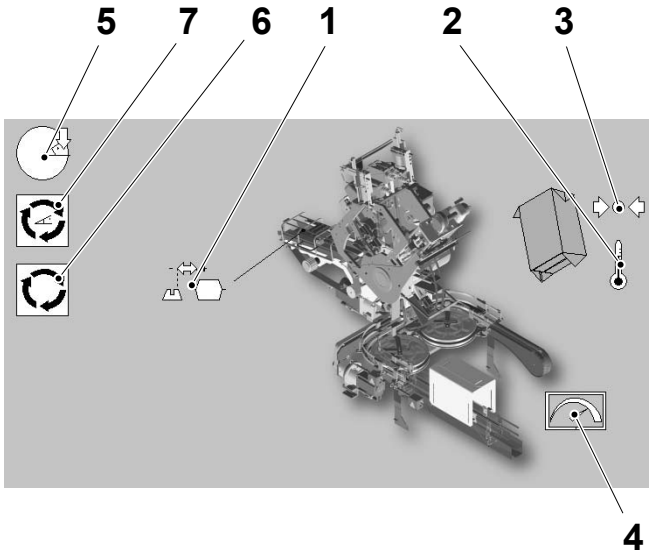

2

The FINAL FOLDER window is displayed.

All selectable icons are white. When an icon is selected the colour of the icon changes to blue.

In this window there are the following selectable icons:

- INFEED SYNCHRONIZATION (1)
- FLAP HEATER TEMPERATURE (2)
- FLAP HEATER PRESSURE (3)
- OUTFEED CONVEYOR SPEED (4)
- FINAL FOLDER ACTUAL POSITION (5)
- JOG FINAL FOLDER (6)
- FINAL FOLDER TARGET POSITION (7).
-

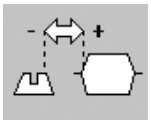

Final Folder Synchronization

3

Touch the INFEED SYNCHRONIZATION icon to set the offset between the package and the infeed station.

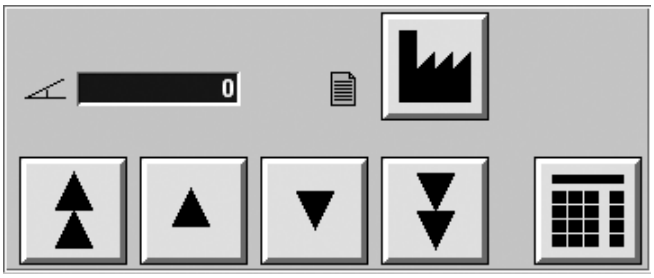

4

Use the ARROW buttons or the KEYBOARD button to set the offset value or touch the FACTORY button to reset the factory default value.



Flap Heater Temperature

5

Touch the FLAP HEATER TEMPERATURE icon.

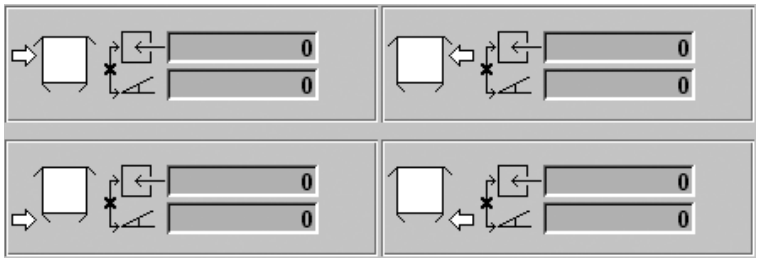

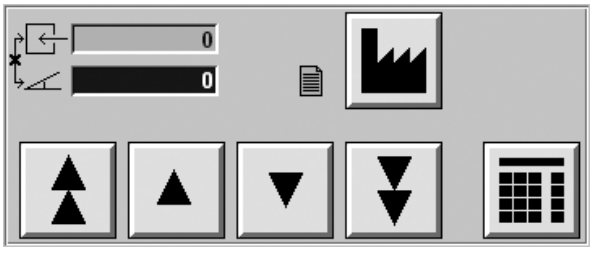

6

Note! Some temperatures can be changed, others are only monitors and cannot be changed.

The temperature of each single flap heater is displayed.

Touch one of the FLAP HEATER icons.

Use the ARROW buttons or the KEYBOARD button to set the value or touch the FACTORY button to reset the factory default value.

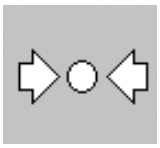

Flap Heater Pressure

7

Touch the FLAP HEATER PRESSURE icon.

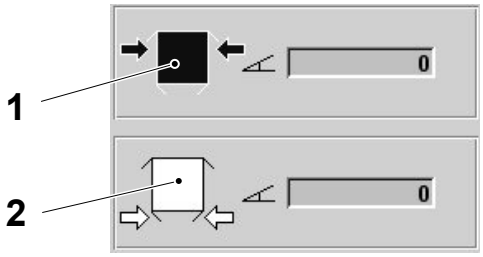

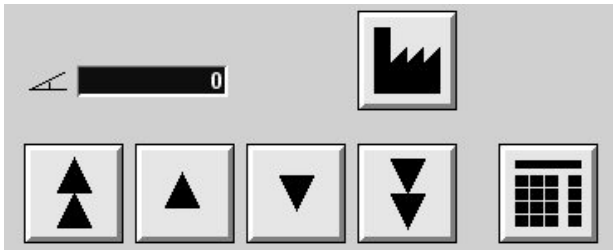

8

Touch the TOP FLAP HEATERS icon (1) or the BOTTOM FLAP HEATERS icon (2).

Use the ARROW buttons or the KEYBOARD button to set the value or touch the FACTORY button to reset the factory default value.



Final Folder Target Position

9

Touch the FINAL FOLDER POSITION icon.

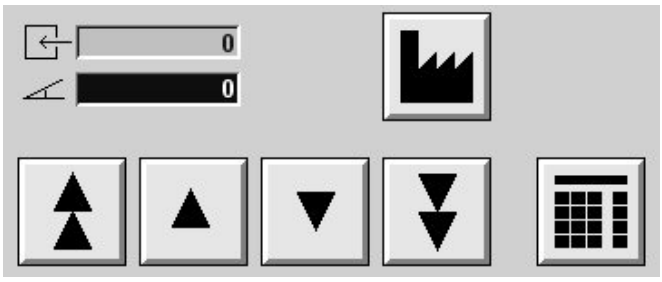

10

Use the ARROW buttons or the KEYBOARD button to set the target position.

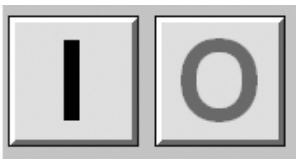



11

Touch the ON button to enable the FINAL FOLDER GO TO POSITION function.

Touch the OK button to move the final folder in the target position.

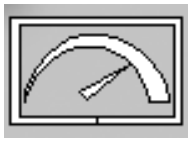

Outfeed Conveyor Speed

12

Touch the OUTFEED CONVEYOR SPEED icon.

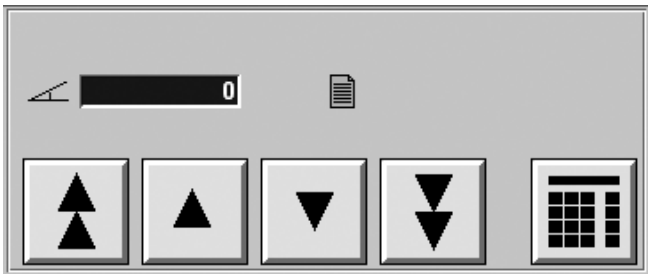

13

Use the ARROW buttons or the KEYBOARD button to set the value.



Jog Final Folder

14

Touch the JOG FINAL FOLDER icon.





15

Touch the ON button and the OK button to enable the jog function.



16

Press and hold the FINAL FOLDER INCHING button to run the final folder module independently from the machine status.



17

Touch the EXIT button to return to the FINAL FOLDER window.

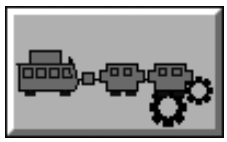

Down Stream

1

Touch the DOWN STREAM button.

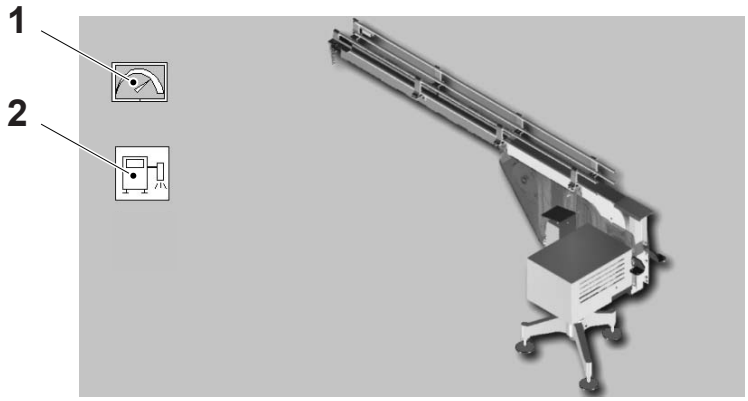

2

The DOWN STREAM window is displayed.

All selectable icons are white. When an icon is selected the colour of the icon changes to blue.

In this window there is the following selectable icon:

- BELT BRAKE SPEED (1)
- OPTION DATE UNIT (2).

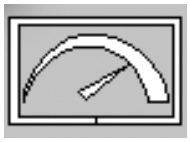

Belt Brake Speed

3

Touch the BELT BRAKE SPEED icon.

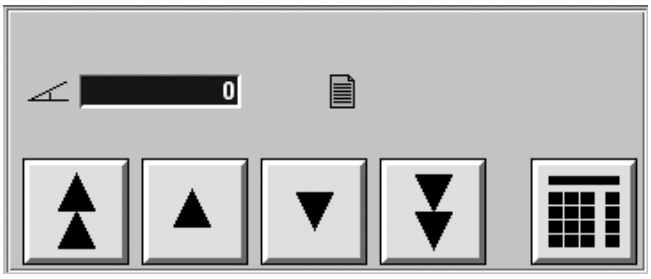

4

Use the ARROW buttons or the KEYBOARD button to set the value.

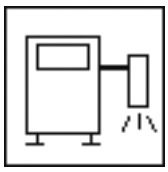

Option Date Unit

5

Touch the PRINTER INTERFACE icon.

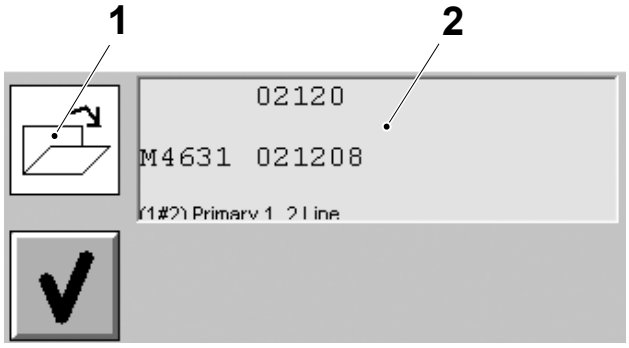

6

Touch the LAYOUT SELECTION icon (1) to load the print layout (2).

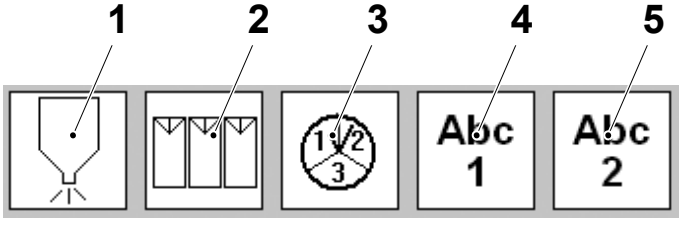

7

A set of informations may be entered in the layout by touching the following icons:

- Product (1)
- Batch (2)
- Production shift (3)
- Generic field 1 (4)
- Generic field 2 (5).

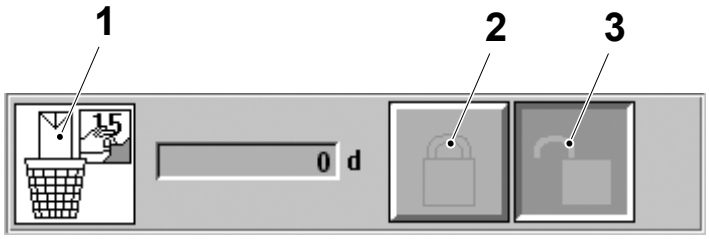

8

Best before date may be entered by touching the BEST BEFORE DATE icon (1).

Touch the LOCK icon (2) to lock the best before date (for example in case of production between two days).

Touch the UNLOCK icon (3) to unlock it.

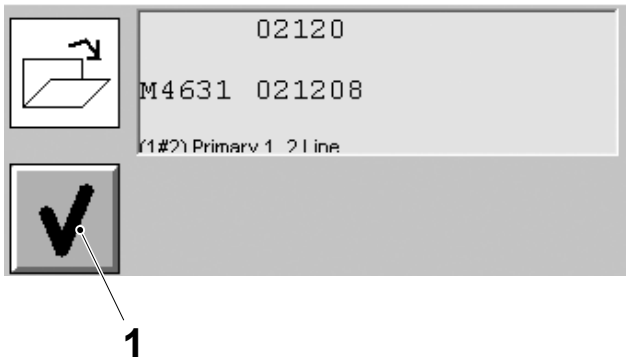

9

Touch the OK button (1) for 5 seconds to load the configuration.



10

Touch the EXIT button to return to the DOWNSTREAM window.



Package and Time Counters Window

1

Touch the PACKAGE AND TIME COUNTERS button.

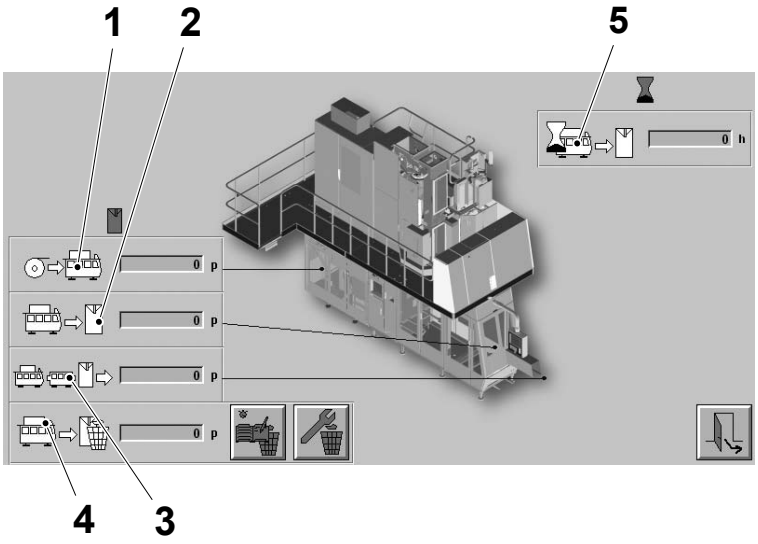

2

The PACKAGE AND TIME COUNTERS window is displayed.

On the LH side of this dialogue window the partial counters are displayed:

- the counter (1) displays the incoming packages into the filling machine
- the counter (2) displays the number of packages exiting from the final folder
- the counter (3) displays the number of packages passing the last counting point (depending on which last package point has been selected, see page 2-119)
- the counter (4) displays the total number of the wasted packages.

On the RH side of this dialogue window the counter (5) displays the total production time.

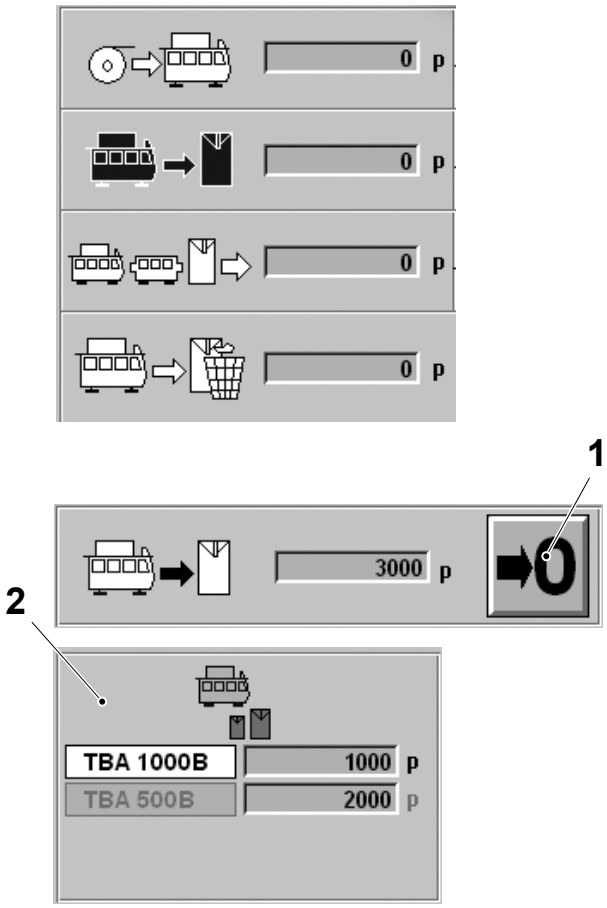

Partial Package Counters

3

Touch any of the partial package counters icons.

In the dialogue window are displayed:

- the RESET button (1)
- the number of packages for each volume (2).

To reset the counters, touch the RESET button (1) for four seconds.

Note! The counters per volume (2) cannot be reset.

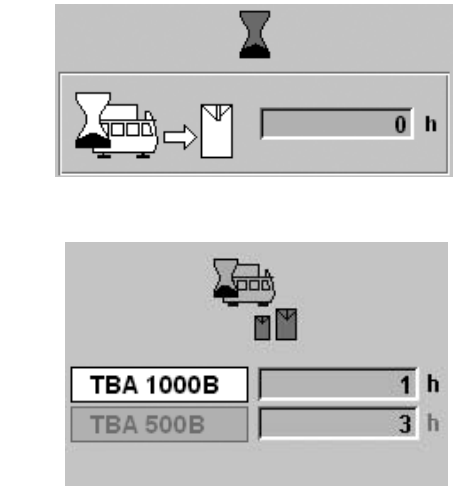

Production Time Counters

4

Touch the any of the production time button (1) to display the production time counter for each volume.

Note! These counter cannot be reset.

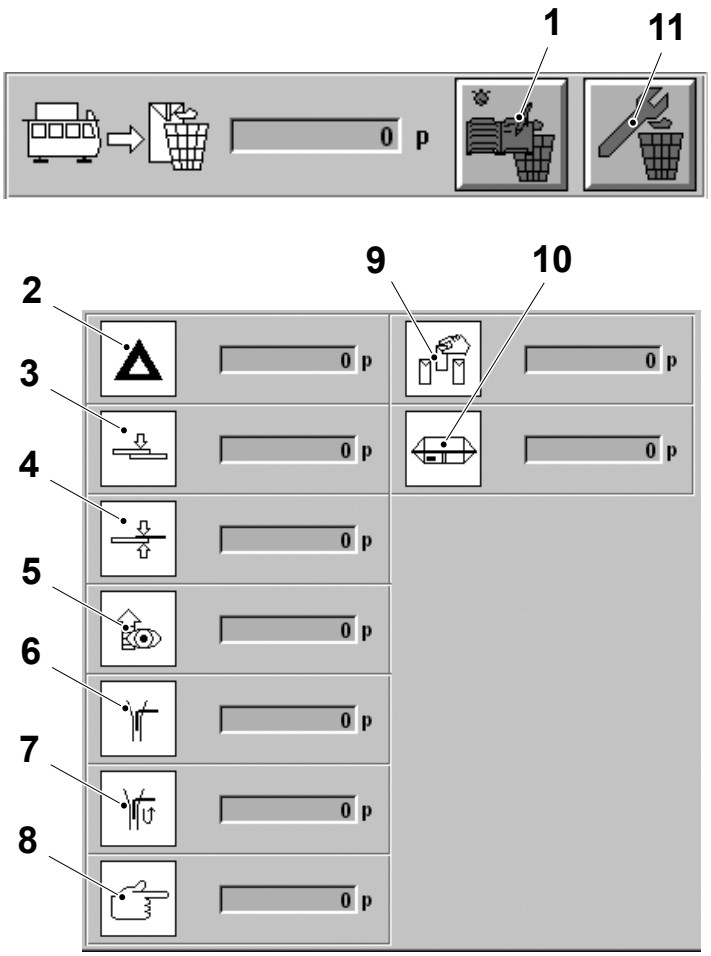

Waste Counters

5

Touch the PRODUCTION WASTE COUNTERS button (1) to identify which part of the machine is causing waste.

The following waste reasons are displayed:

- waste when stopping (2)
- packaging material splice (3)
- strip splice (4)
- package out of design (5)
- filling not OK (6)
- bucket refilling (7)
- manual waste (8)
- package sampling (9)
- pre-applicator (10).

Touch the TECHNICAL WASTE button (11) to display the technical waste reasons.



6

Touch the EXIT button to return to the PACKAGE AND TIME COUNTERS window.

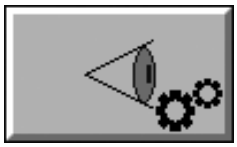

Temperature Overview Window

1

Touch the TEMPERATURE OVERVIEW button.

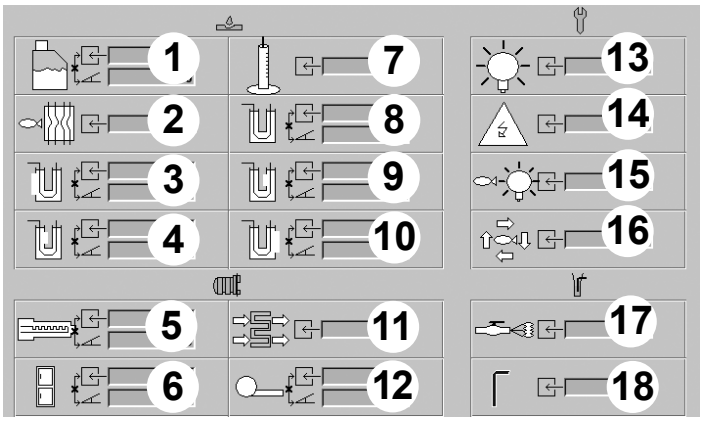

1 Peroxide tank
2 Water heat exchanger
3 Bath external heater, inlet
4 Bath internal heater, inlet
5 Air superheater
6 Aseptic chamber
7 Peroxide concentration
8 Peroxide temperature
9 Bath internal heater, outlet
10 Bath external heater, outlet
11 Pre-sterilization
12 Air knife
13 UV lamp water
14 Electrical cabinet
15 UV lamp cooling
16 Cooling water
17 Steam inlet

2

The TEMPERATURE OVERVIEW window is displayed.

To change a setting value, touch the corresponding module TAB that includes the setting value and follow the normal procedure to change the value.

Note! To keep the new value the recipe must be saved or saved as a new recipe.

Note! Values from temperature regulators can be changed, values from temperature monitors cannot be changed.



3

Touch the EXIT button to return to the TEMPERATURE OVERVIEW window.

Recipes

This section describes how to load, save and delete a production recipe with the TPOP. A recipe is a set of parameters related to a certain type of production: when a recipe is loaded, the filling machine adapts its working parameters to the ones stored in the recipe.



Recipes Window

1

Touch the RECIPES button.

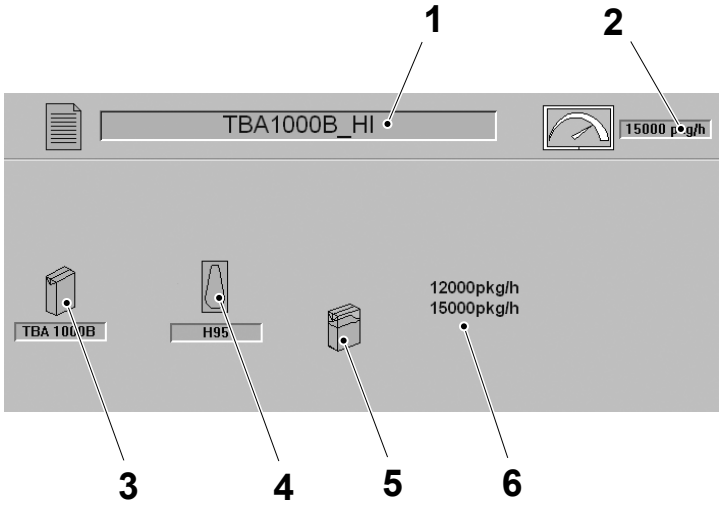

2

The RECIPE window is displayed.

The following information about the current recipe is displayed:

- the recipe name (1)
- the selected speed (2)
- the volume (3)
- the pulltab (4) and the headspace by injection (5), if present
- the list of the available speeds (6).



Touch the ARROW button to view all the machine parameters stored with the current recipe.

It is possible to:

- load stored recipes
- modify parameters of existing recipes and save them
- modify parameters of existing recipes and save them with a new name.

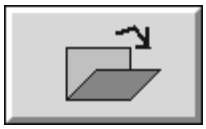

Load Recipe

3

Touch the LOAD button.

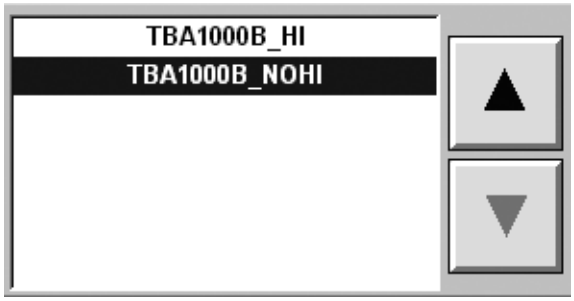

4

Use the ARROW buttons to select the new recipe from the recipes list.

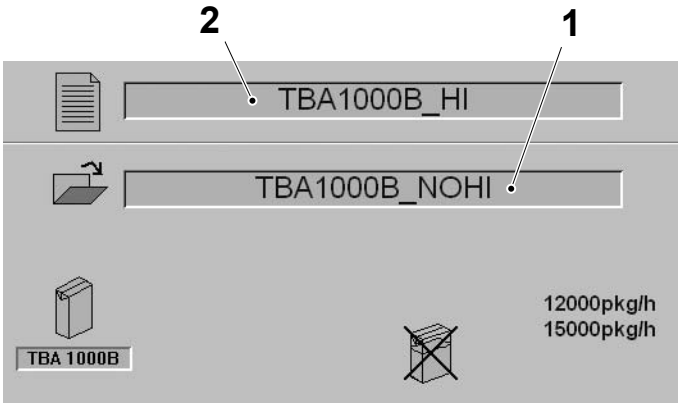

5

The recipe to be loaded (1) is displayed under the current recipe (2).



6

Touch the OK button to load the new recipe.

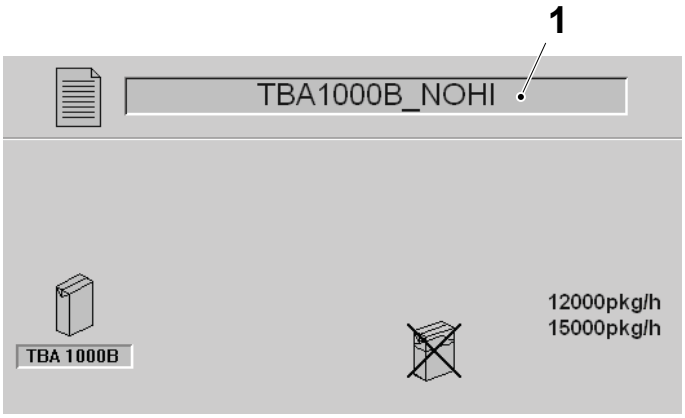

7

The new recipe is displayed in the RECIPE window (1).



8

If necessary the proposed production speed can be changed.

Touch the PRODUCTION SPEED icon.

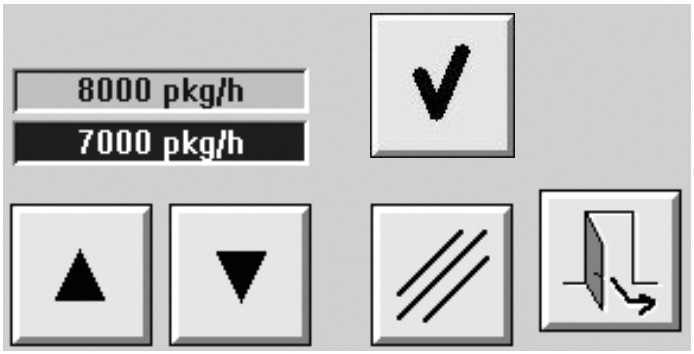

9

Use the ARROW buttons to set the production speed.

Touch the OK button to load the new speed.

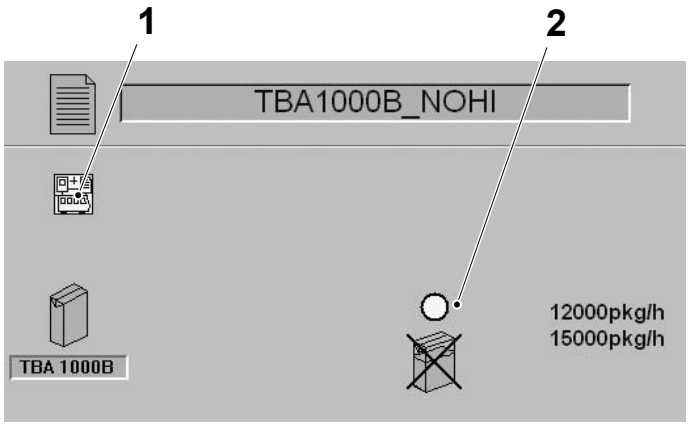

Mismatching Parameters

10

If the machine configuration has been changed since the recipe was saved, the CONFIGURATION MISMATCH icon (1) may appear.

A yellow dot (2) appears on the mismatching parameter.

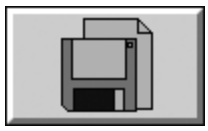

11

Touch the SAVE AS button.

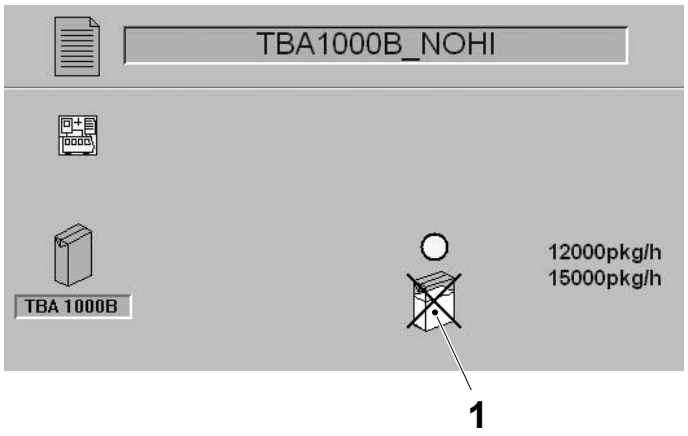

12

The mismatching parameter is highlighted.

If the mismatch concern an equipment which has been removed, a cross is displayed on the mismatching equipment icon.

Touch the mismatching parameter icon (1).



12a

Touch the RESET button.

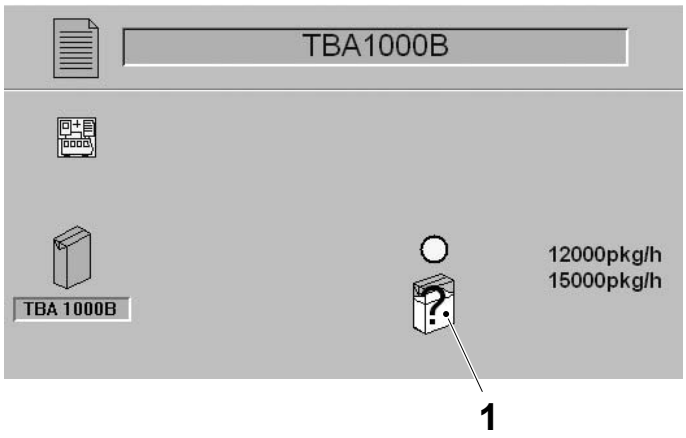

13

If the mismatch concern an equipment which has been installed, a question mark is displayed on the mismatching equipment icon.

Touch the mismatching parameter icon (1).

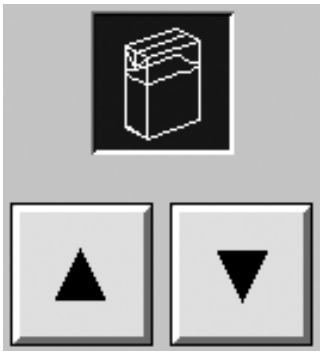

13a

Use the ARROW buttons to select the production with or without the equipment for the new recipe.

Note! The HI equipment is shown as an example.



14

Touch the OK button.

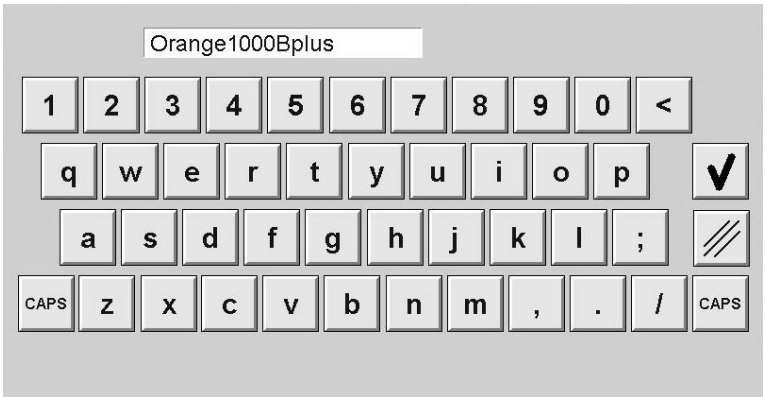

15

The KEYBOARD is displayed.

Type the new name of the recipe and touch the OK button.

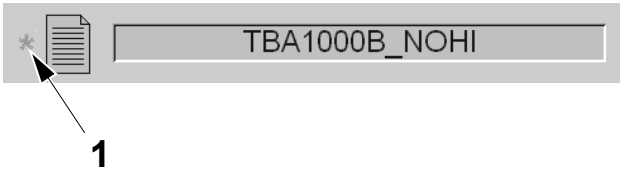

Save Recipe

16

When one or more of the recipe parameters have been modified, a star (1) appears beside the recipe name.

17

Touch either:

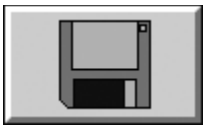

– the SAVE button to save the current recipe with the modified parameters

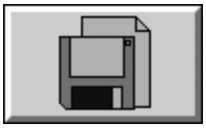

– the SAVE AS button to save the modified parameters as a new recipe.

18



Touch the OK button.

The recipe is now saved with the modified parameters.

19

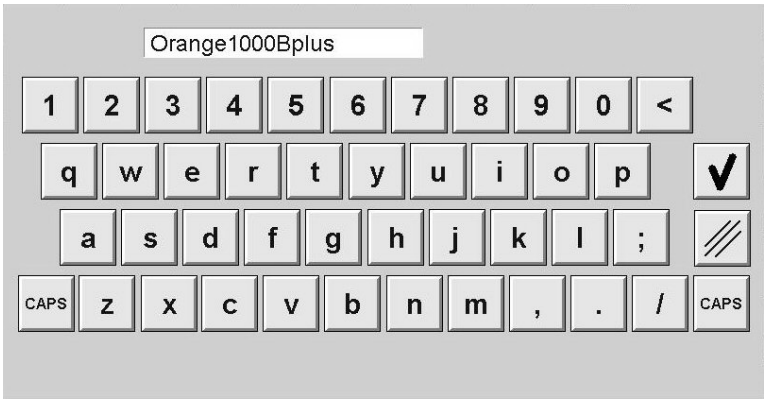

The KEYBOARD is displayed.

Type the name of the new recipe and touch the OK button.

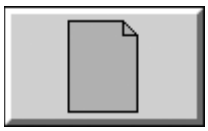

Create New Recipe

20

Touch the NEW button.

21



In the NEW RECIPE window, touch the VOLUME icon.

22

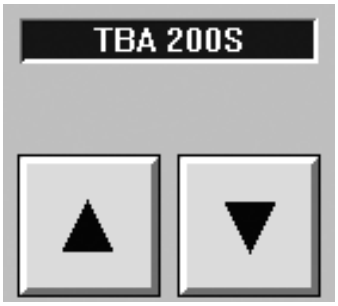

Use the ARROW buttons to select the required volume for the new recipe.

23



Touch the HI icon.

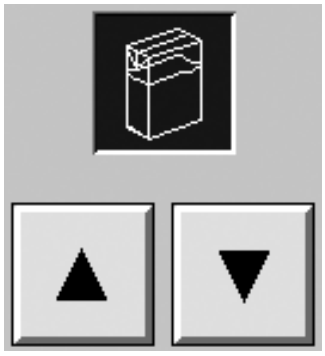

24

Use the ARROW buttons to select production with HI or NO HI for the new recipe.

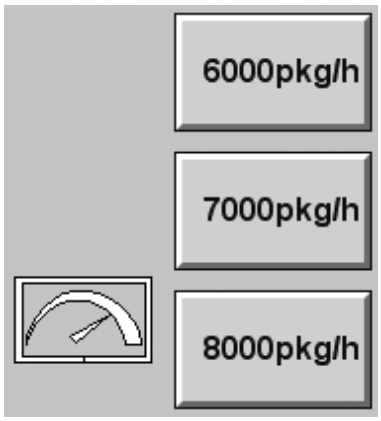

25

Touch the PRODUCTION SPEED icon.

Touch each of the required SPEED buttons that will be enabled for production with the new recipe.



26

Touch the ARROW button.

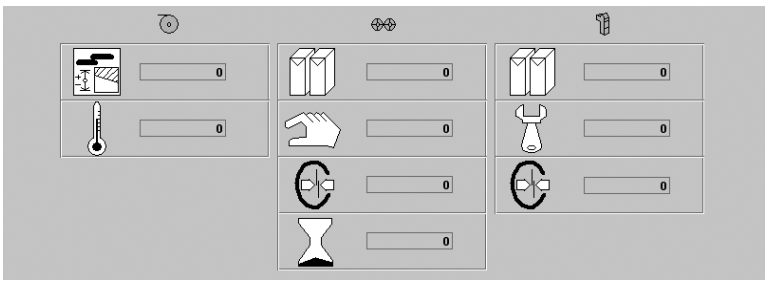

27

The default production setting values for the chosen volume are displayed by module.

To change a setting value, touch the corresponding module TAB that includes the setting value and follow the normal procedure to change the value.



28

Touch the ARROW button to display the next screen.

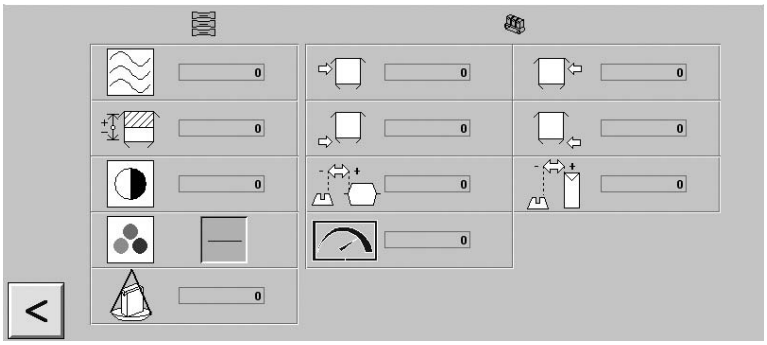

29

The default production setting values for the chosen volume are displayed by module.

Touch the ARROW button to display the next screen.

To change a setting value, touch the corresponding module TAB that includes the setting value and follow the normal procedure to change the value.



30

Touch the OK button to save the new recipe.

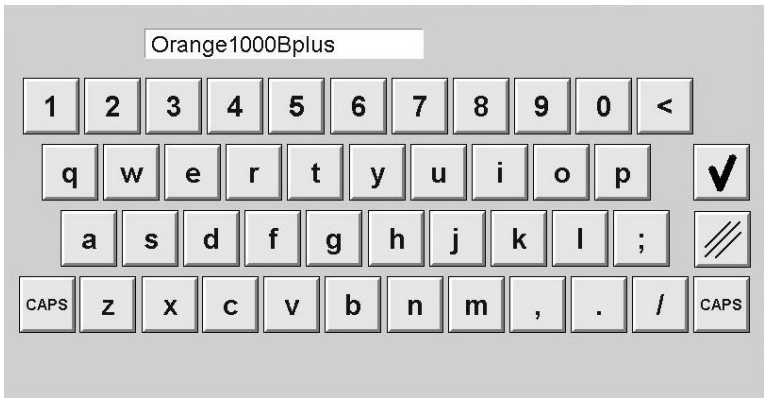

31

The KEYBOARD is displayed.

Type the name of the new recipe and touch the OK button.



Delete Recipe

32

Touch the DELETE button.

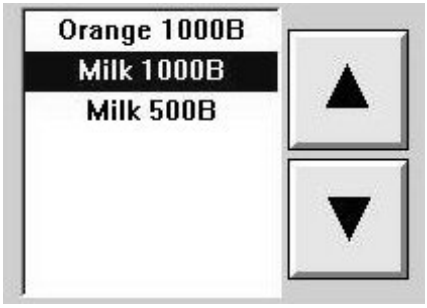

33

Use the ARROW buttons to select the recipe to delete from the recipes list.

34

Touch the OK button to delete the recipe.



35

Touch the EXIT button to return to the RECIPE window.



System Setup

This section describes how to log on as a user, make the production shift setting and the language and time settings on the TPOP.

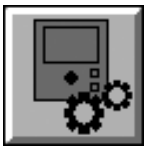

User Log On

1

Touch the SYSTEM SETUP button.



2

Touch the USER MANAGEMENT button.

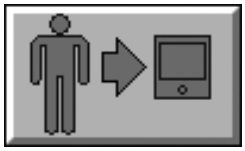

3

Touch the LOG ON button to display the LOG ON window.

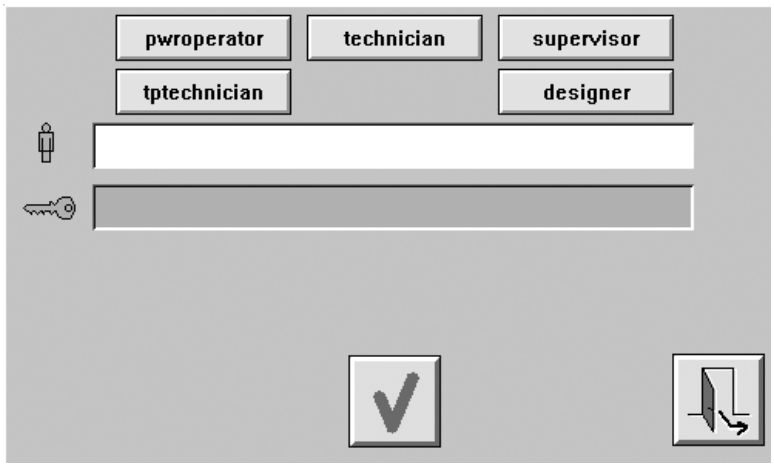

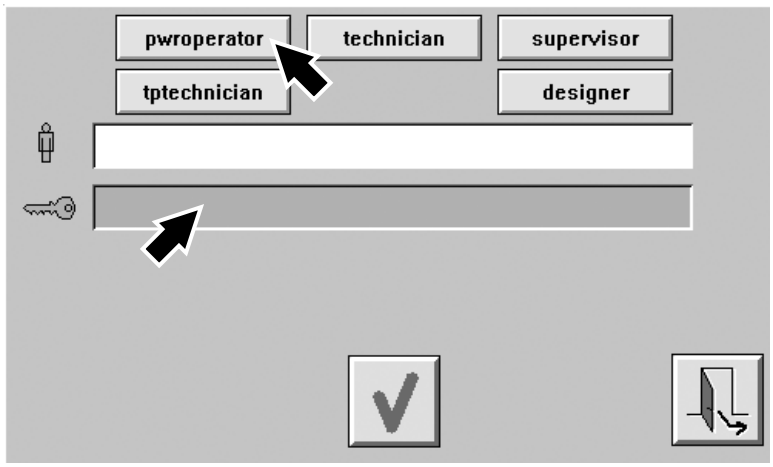

4

Touch the appropriate USER button corresponding to your user profile.

Touch the PASSWORD box to display the keyboard.



5

Use the KEYBOARD to enter the password and then touch the OK button.

Log on procedure is now complete and now allows access to restricted areas of the TPOP menus corresponding to your user profile. All changes to the system are recorded along with the user ID information.

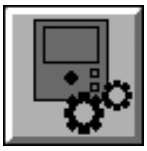

Language Setting

1

Touch the SYSTEM SETUP button.



2

Touch the LANGUAGE button.

Note! If the TPOP RESET button starts flashing, do not press it.

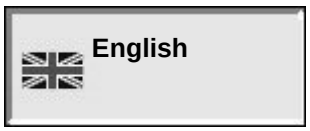

3

Touch the required LANGUAGE button.

Note! If the TPOP RESET button starts flashing, do not press it.





4

Touch the OK button and then the EXIT button.

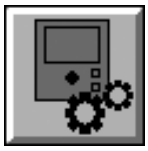

Time Setting

1

Note! The time setting procedure is only possible in STEP ZERO and with the PREPARATION and PRODUCTION phases closed.

Touch the SYSTEM SETUP button.



2

Touch the TIME button.



3

Touch the double ARROW buttons to set the hours and the single ARROW buttons to set the minutes.

It is only possible to change the time by a maximum of plus or minus three hours. The date cannot be changed.





4

Touch the OK button and then the EXIT button.

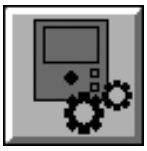

Production Shift Setting

1

Note! The Production shift setting can only be done in STEP ZERO and with the PREPARATION and PRODUCTION Phases closed.

Touch the SYSTEM SETUP button.



2

Touch the SHIFT button.

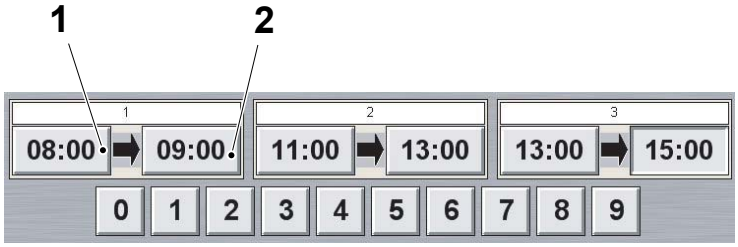

3

Input a start time (1) and an end time (2) for each shift as required.

The number may be modified when it is flashing.

Note! The shift time is preset into eight hour intervals. Do not overlap the shift times otherwise an error will be displayed.





4

Touch the OK button and then the EXIT button.

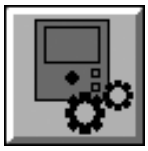

Last Package Point Selection

1

Note! The last package point selection setting can only be done in STEP ZERO and with the PREPARATION and PRODUCTION Phases closed.

Touch the SYSTEM SETUP button.



2

Touch the LAST POINT PACKAGE SELECTION button.

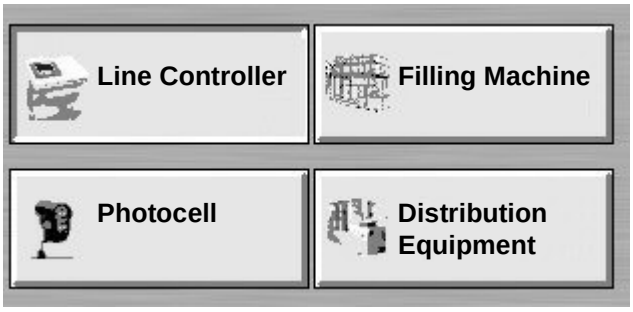

3

Select the source of the last package counting point in the line.

If selecting Distribution Equipment, select which Distribution Equipment in the list that is displayed.

Note! Select Distribution Equipment only if Line Controller is not available.





4

Touch the OK button and then the EXIT button.

Recorder Navigation

The recorder displays and records the machines critical parameters during the filling machine PRODUCTION and CIP phases. Touching the buttons on the recorder front panel allows the operator to navigate through the recorders menu system.

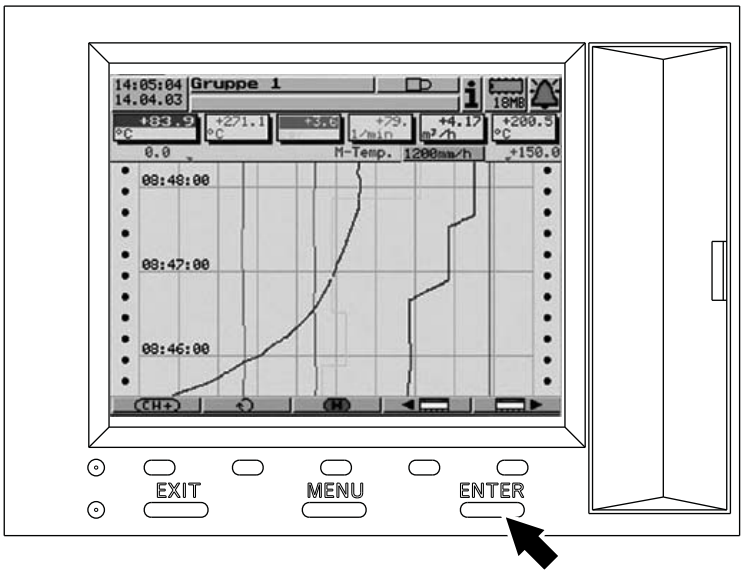

Recorder, Login

1

Press the MENU button.

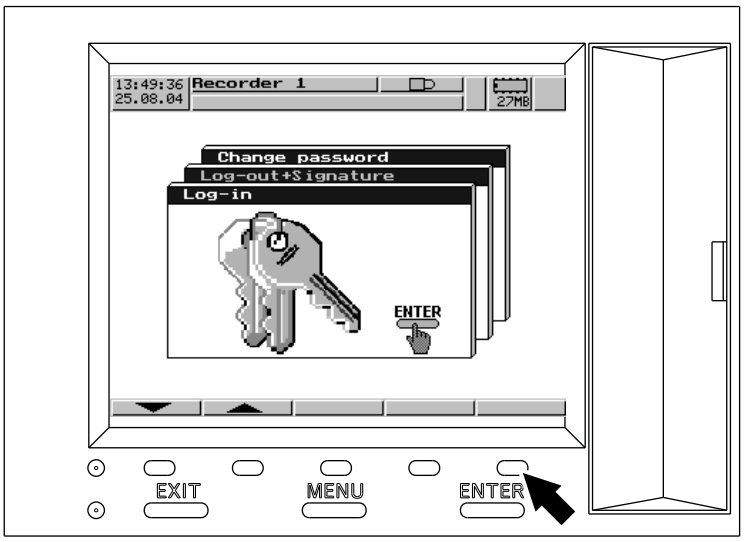

1a

Press the LOGIN AND LOG OFF button.

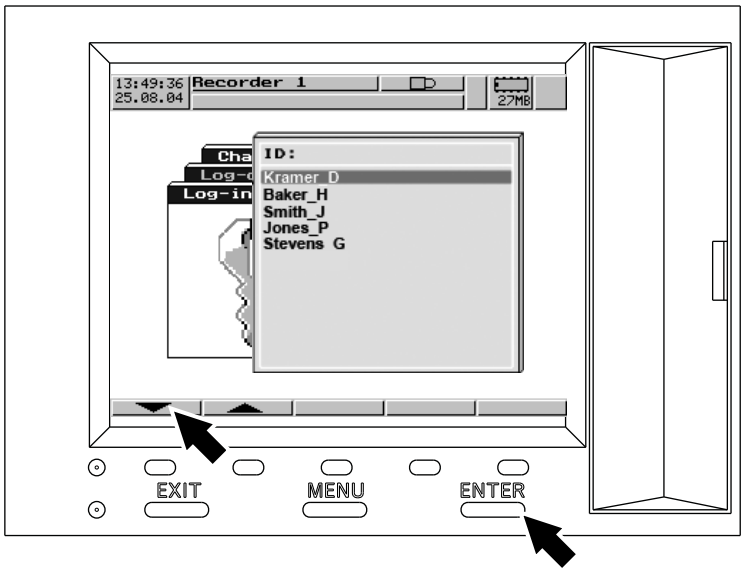

1b

The USER ID list is displayed.

Use the ARROW buttons to select either the user ID USER or if the user ID list contains the names of individual users, use the ARROW buttons to select the appropriate user ID name from the list.

Press the ENTER button.

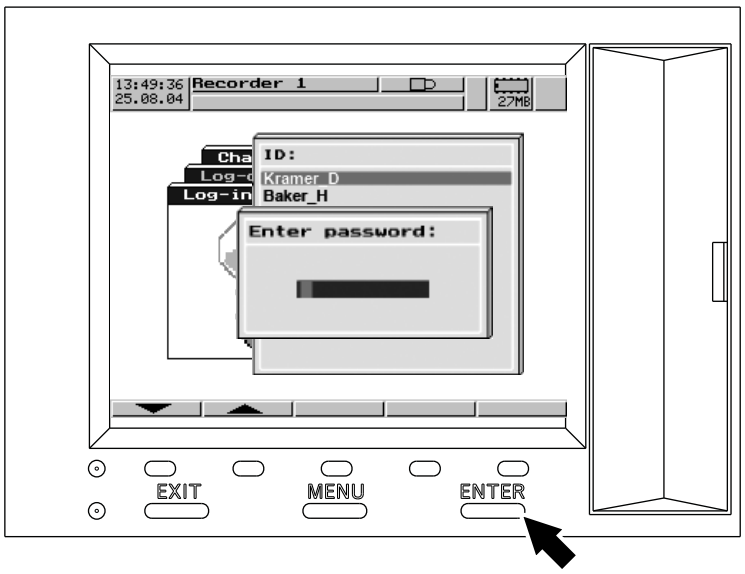

1c

The PASSWORD window is displayed.

To login to the recorder with the user ID USER, enter the password “0”

To login to the recorder with an individual user ID enter the appropriate password.

Press the ENTER button.

The user is now logged into the recorder.

Note! If this is the first time an individual user ID and password has been input, the recorder will require that the password is changed. Follow the prompts on the recorder screen to change the password.

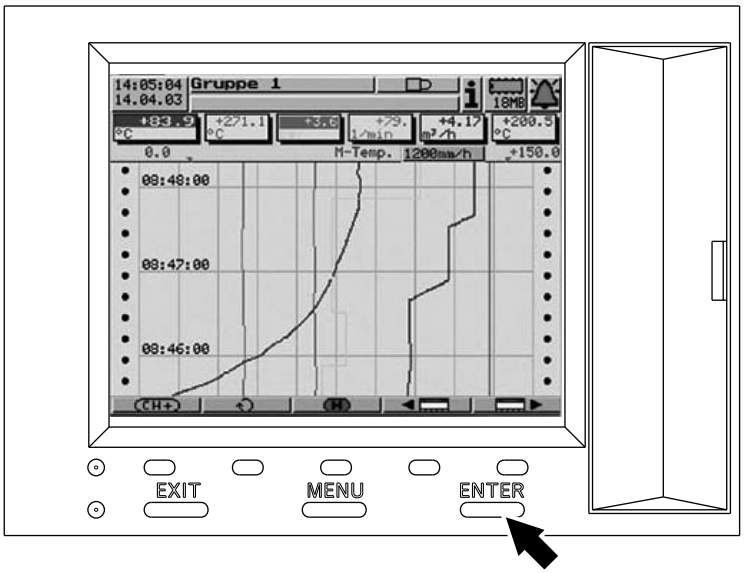

Recorder, Log Off

2

Press the MENU button.

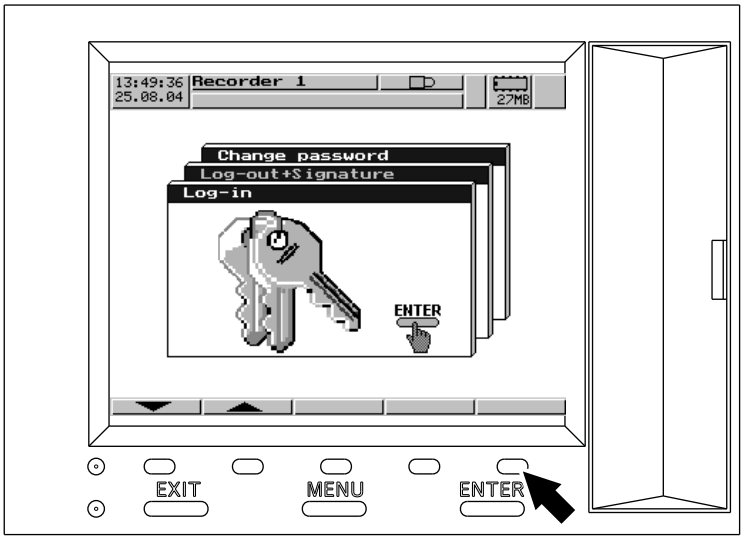

2a

Press the LOGIN AND LOG OFF button.

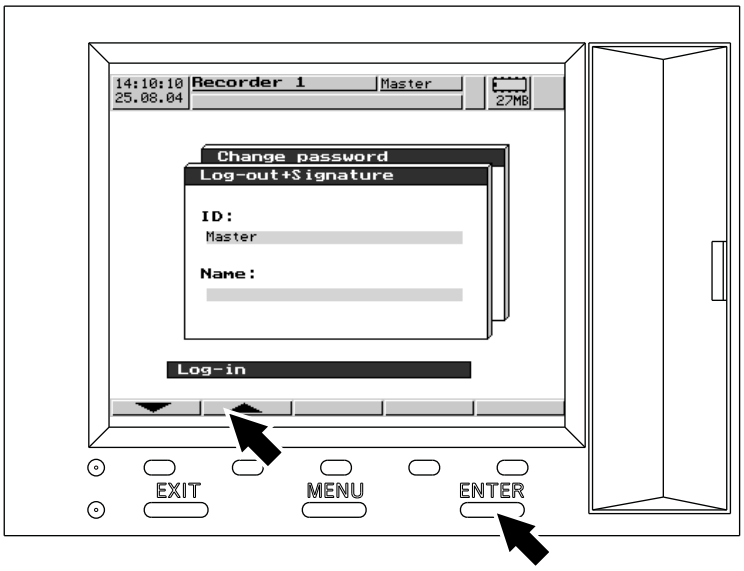

2b

Use the ARROW buttons to select the LOG OUT window.

Press the ENTER button.

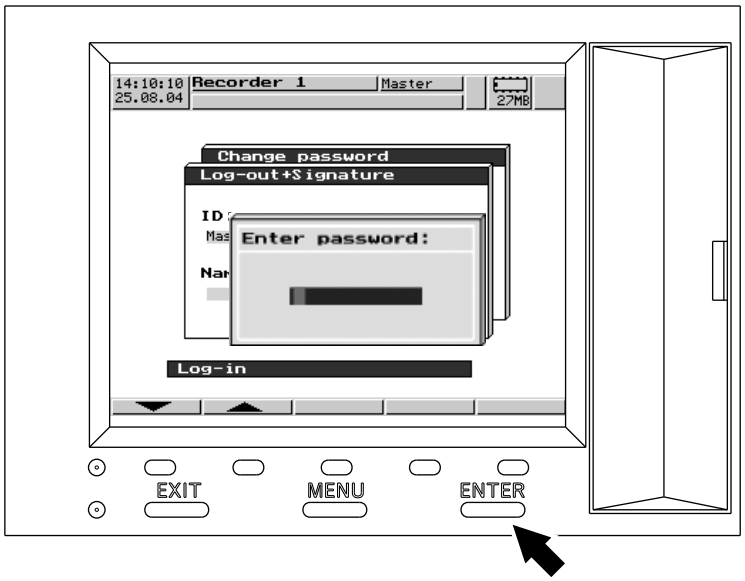

2c

The PASSWORD window is displayed.

To log off the recorder with the user ID USER, enter the password “0”

To log off the recorder with an individual user ID enter the appropriate password.

Press the ENTER button.

A window appears requesting confirmation of the log off.

Press the ENTER button.

The user is now logged off from the recorder.

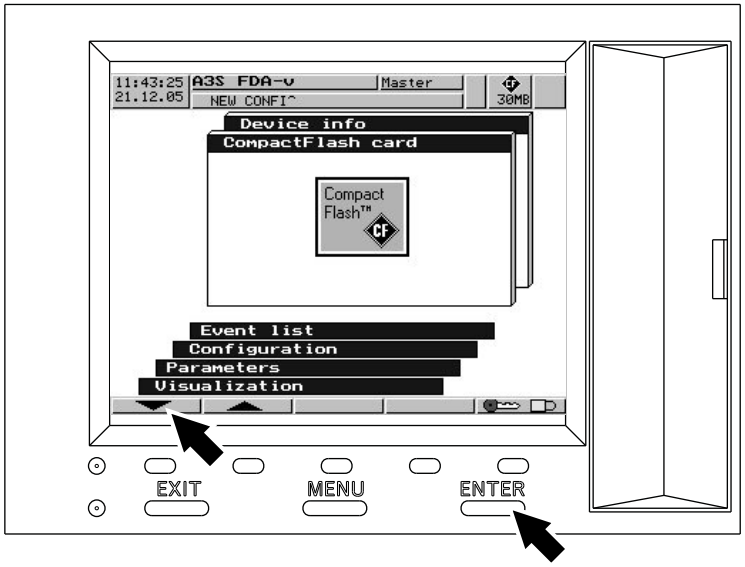

Recorder, Change CompactFlash Card

3

Note! The CompactFlash card window is only available to users with the appropriate user ID access rights.

Login to the recorder, see Recorder, Login on page 2-120.

Press the ENTER button.

Use the ARROW buttons to select the COMPACTFLASH CARD window.

Press the ENTER button.

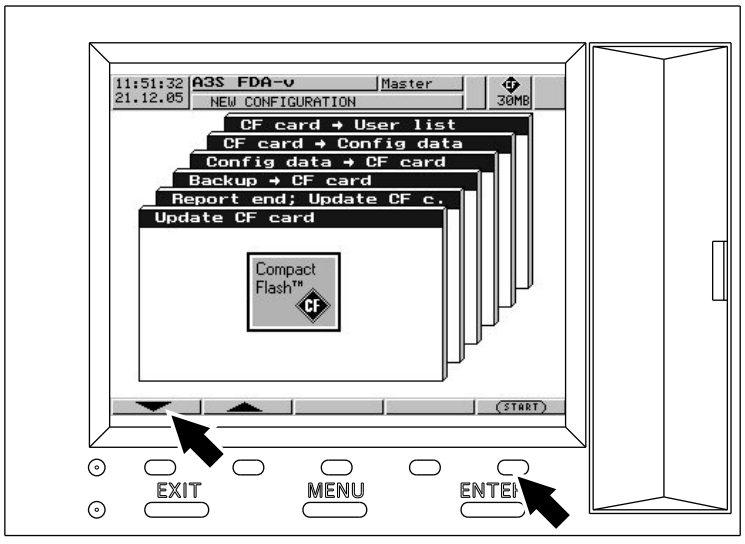

3a

Use the ARROW buttons to select either:

- UPDATE CF CARD window to download any unsaved PRODUCTION and CIP data to the Compactflash card.

or

- REPORT END + UPDATE CF CARD window to conclude any ongoing batch records and to download any unsaved PRODUCTION and CIP data to the Compactflash card.

Press the START button.

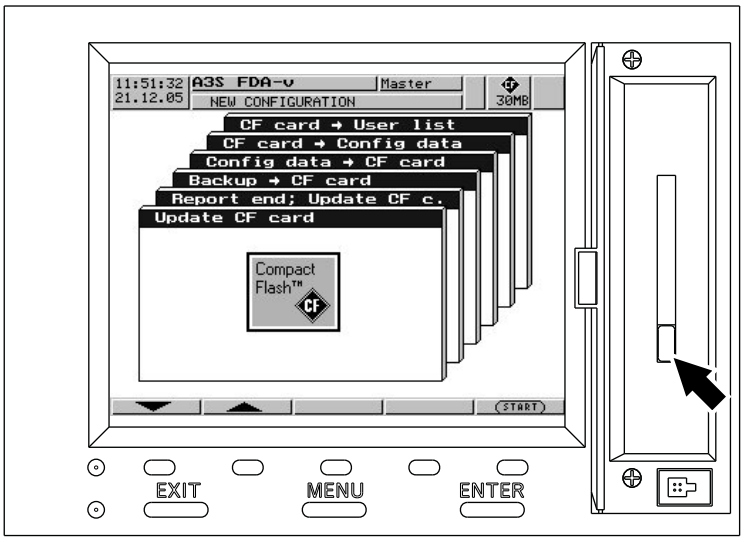

3b

When the operation is complete, open the door and eject the CompactFlash card.

Insert the new CompactFlash card and close the door.

Log off the recorder, see Recorder, Log Off on page 2-122.

Give the CompactFlash Memory Card to the person responsible for evaluation.

3 Preparation

TechPub_2614345_0106 - 03_2819202_04en.fm

This chapter describes how to prepare the machine for PRODUCTION after Care and Cleaning has been performed.

TechPub_2614345_0106 - 03_2819202_04en.fm

Preparing After Weekly Care . . . . . 3 - 5

Loading the Packaging Material Reel . . . . . .3 - 7

Threading Inside ASU Compartment . . . . . .3 - 9

Threading Inside the Magazine . . . . . .3 - 15

Threading Inside the Strip Applicator Compartment . . . . . .3 - 18

Threading up to Drying Chamber . . . . . .3 - 20

Threading Through the Hydrogen Peroxide Bath . . . . . .3 - 24

Lamp and Hooter Test . . . . . .3 - 29

Prepare the Strip Supplies for Production . . . . . .3 - 31

Preparing after Daily Care. . . . . 3 - 33

Flow Rates. . . . . .3 - 34

Recorder . . . . . .3 - 35

HI Enabled (OE). . . . . .3 - 35

HI Bypassed (OE) . . . . . .3 - 38

Hydrogen Peroxide. . . . . .3 - 40

Superstructure . . . . . .3 - 41

Strip Applicator. . . . . .3 - 45

Filling Pipe. . . . . .3 - 45

LS Strip . . . . . .3 - 54

TechPub_2614345_0106 - 03_2819202_04en.fm

This page intentionally left blank

TechPub_2614345_0106 - 03_2819202_04en.fm

Preparing After Weekly Care

Note! If only Daily Care has been performed, start with Preparing after Daily Care on page 3-33.

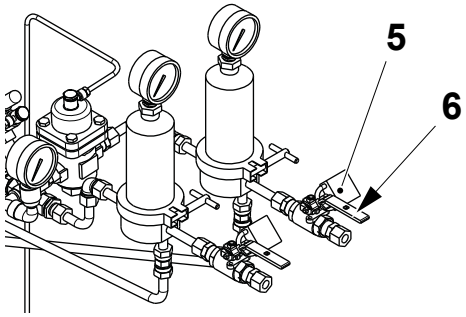

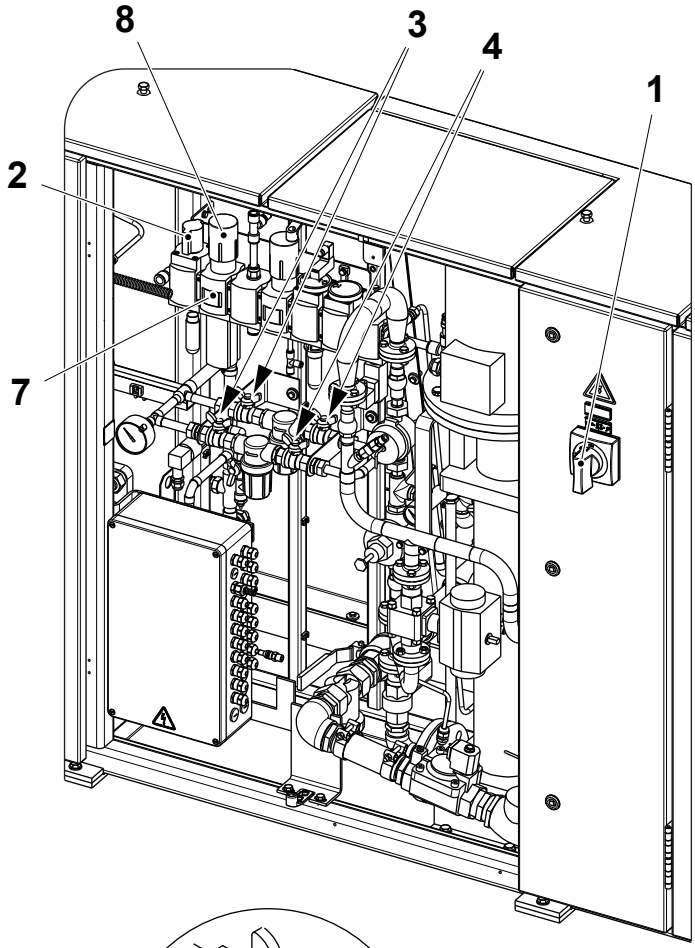

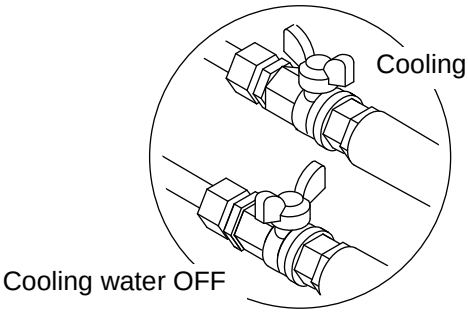

1

If the machine has been shut down:

- Turn ON the main power switch (1)
- Turn ON the air supply (2)
- Turn ON the cooling water supply (3) or (4), depending on which filter is in use
- Release the pad lock (5) and turn ON the steam (6).
- Lock the steam (6) in open position with the pad lock (5).

Check that the pressure gauge (7) shows 5.5 to 6 bar. To adjust the pressure, lift and rotate the valve (8).

TechPub_2614345_0106 - 03_2819202_04en.fm



2

Make sure all covers and doors on the machine are closed and reset any alarms TPOP display.

If an alarm reappears, take the appropriate action or call a technician.



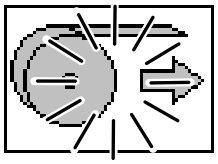

3

Press the PROGRAM UP button.

The PREPARATION symbol lights.

TechPub_2614345_0106 - 03_2819202_04en.fm

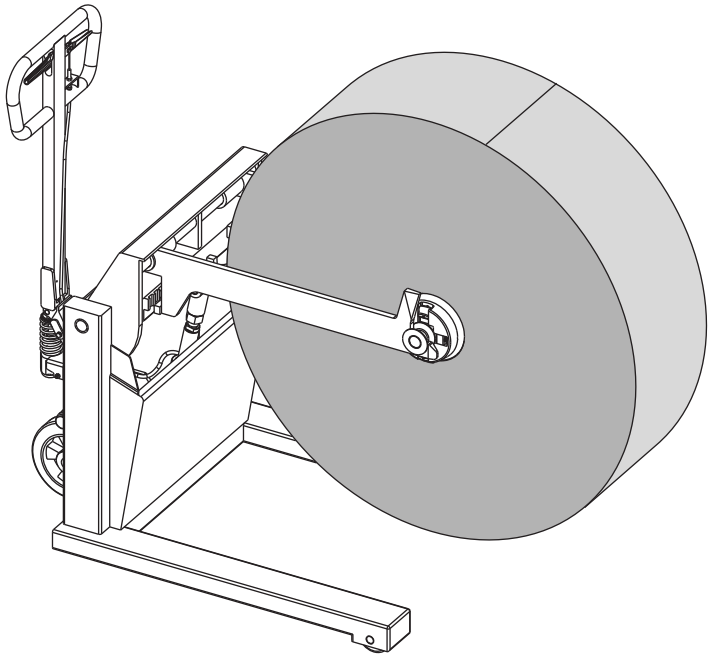

Loading the Packaging Material Reel

4

Prepare the packaging material reel and place it on the trolley, see the Reel Handling section in chapter 6 Supply of Materials.

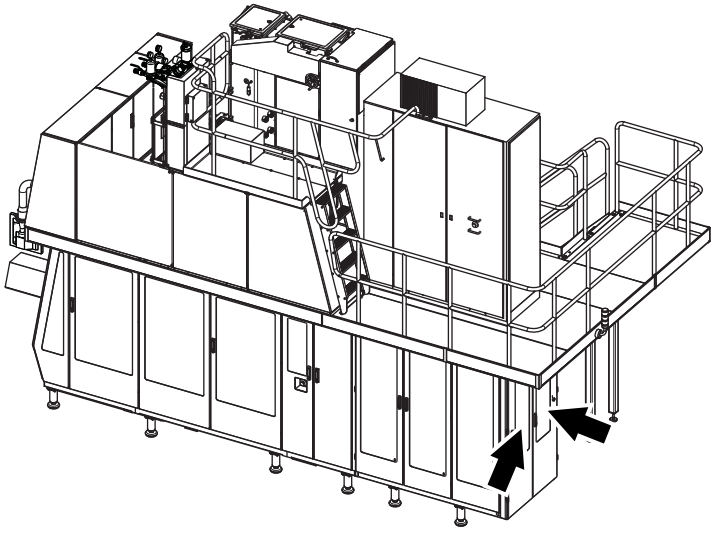

4a

Open the ASU doors.

TechPub_2614345_0106 - 03_2819202_04en.fm

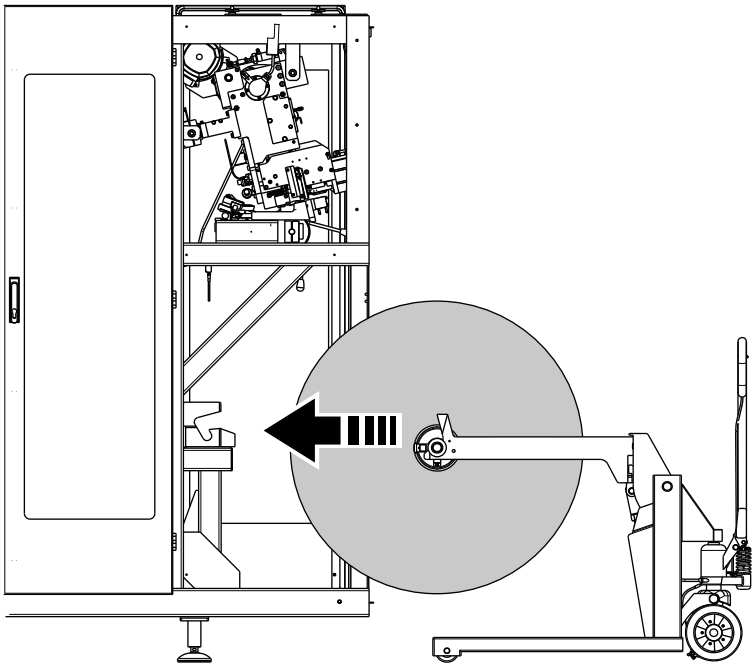

4b

Load the reel of packaging material into the ASU.

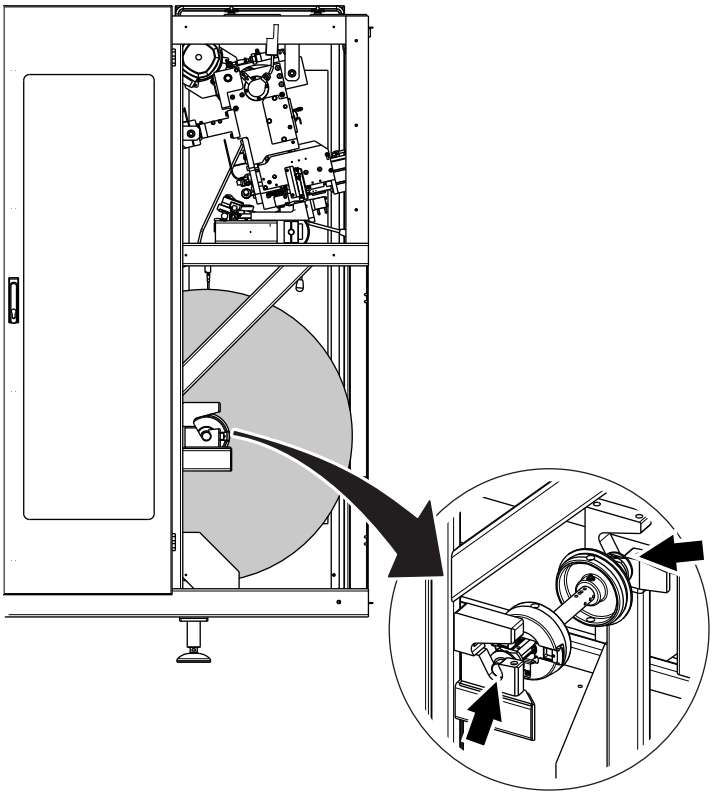

4c

Make sure the packaging material reel is aligned correctly on the bobbin holders.

TechPub_2614345_0106 - 03_2819202_04en.fm

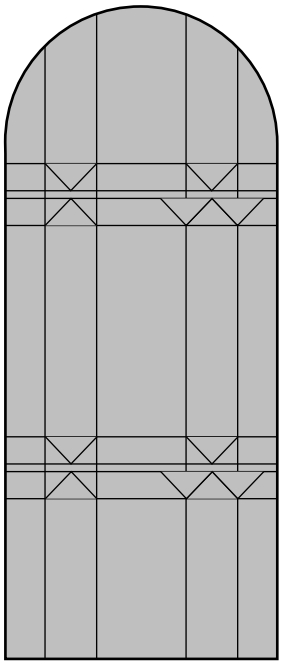

Threading Inside ASU Compartment

CAUTION

Hygiene.

Before handling clean parts, disinfect your hands/gloves with cleaning compound code **H**.

5

Cut the end of the packaging material as shown, avoiding crease lines on the tip.

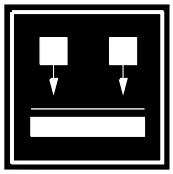

5a

Press the MATERIAL LOCKING button for at least 5 seconds to release the material holder allowing the packaging material through the cutting table.

Note! After one minute the material holder locks automatically.

TechPub_2614345_0106 - 03_2819202_04en.fm

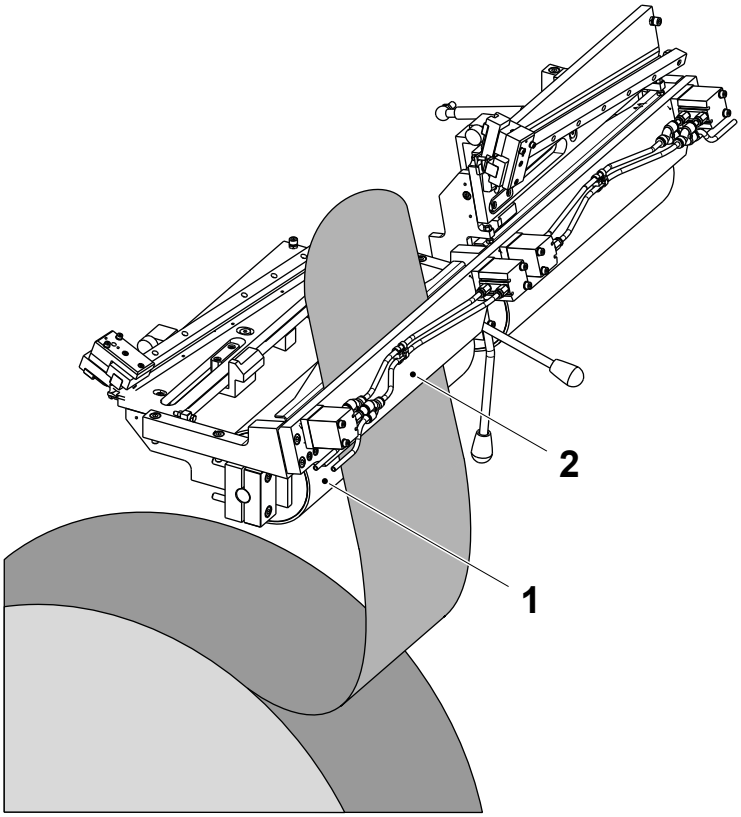

5b

Thread the packaging material around the bending roller (1) and through the packaging material holder (2).

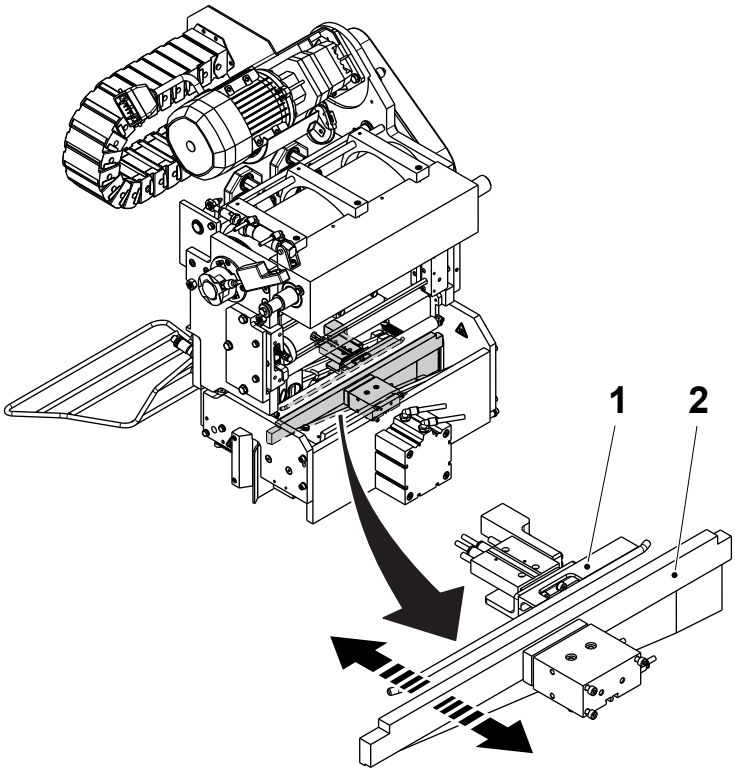

5c

Move the plate (2) forward and back to move the bracket (1) to its retracted position.

TechPub_2614345_0106 - 03_2819202_04en.fm

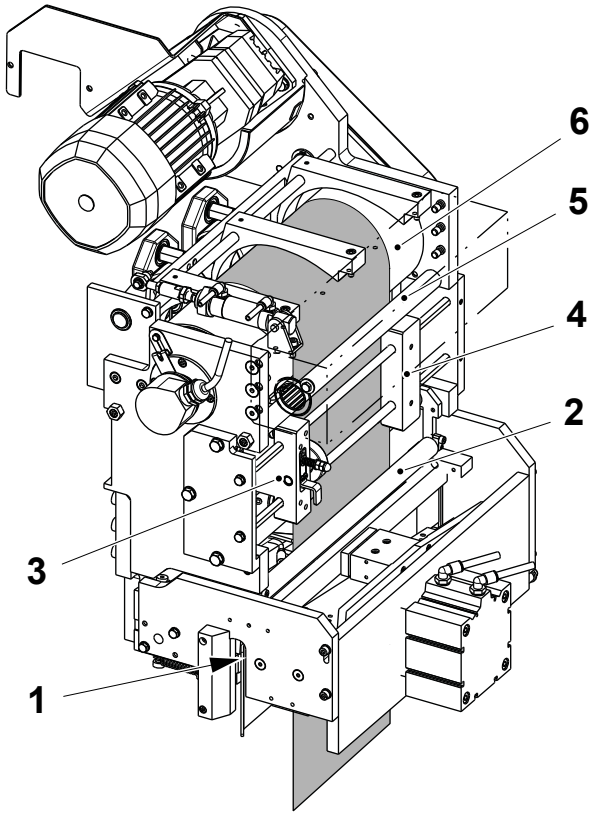

5d

Continue threading the packaging material:

- through the splice unit (1)
- under the roller (2)
- through the web guides (3) and (4)
- under the roller (5)
- over the driven bending roller (6).

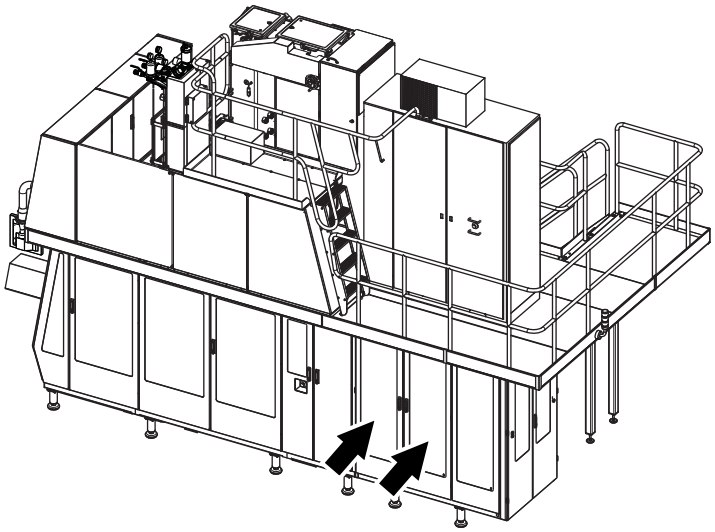

6

Open the doors to the Strip Applicator unit.

TechPub_2614345_0106 - 03_2819202_04en.fm

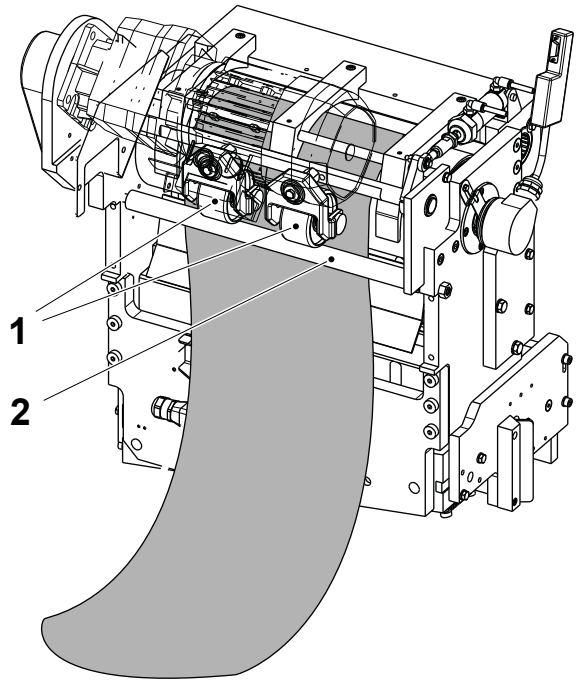

6a

Continue threading the packaging material under the pressure rollers (1) and under the roller (2).

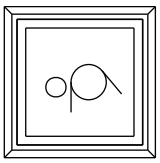

6b

Press the PRESSURE ROLLER button to release the counter pressure roller.

TechPub_2614345_0106 - 03_2819202_04en.fm

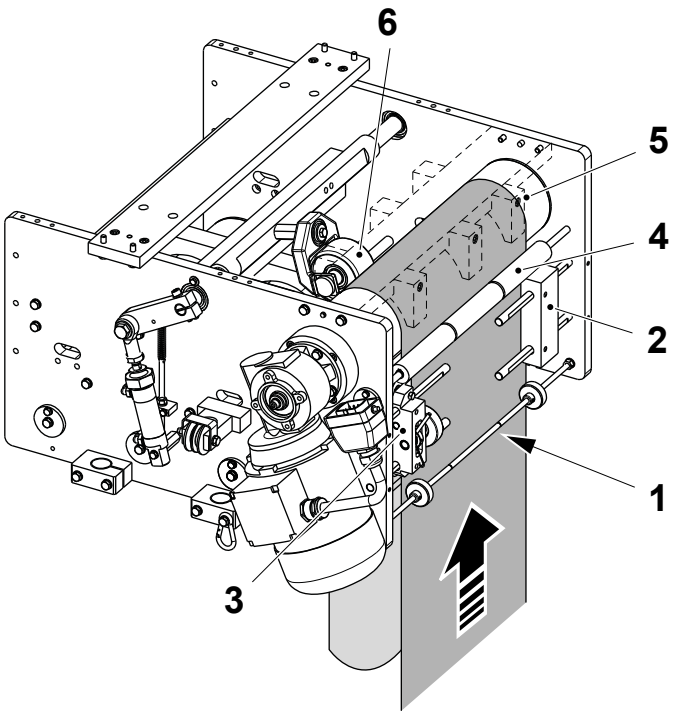

6c

Feed the packaging material:

- between the rollers (1)
- through the web guides (2) and (3)
- under the rollers (4)
- between the drive roller (5) and the counter pressure roller (6).

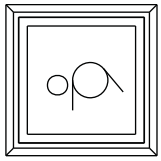

6d

Press the PRESSURE ROLLER button to close the counter pressure roller.

TechPub_2614345_0106 - 03_2819202_04en.fm

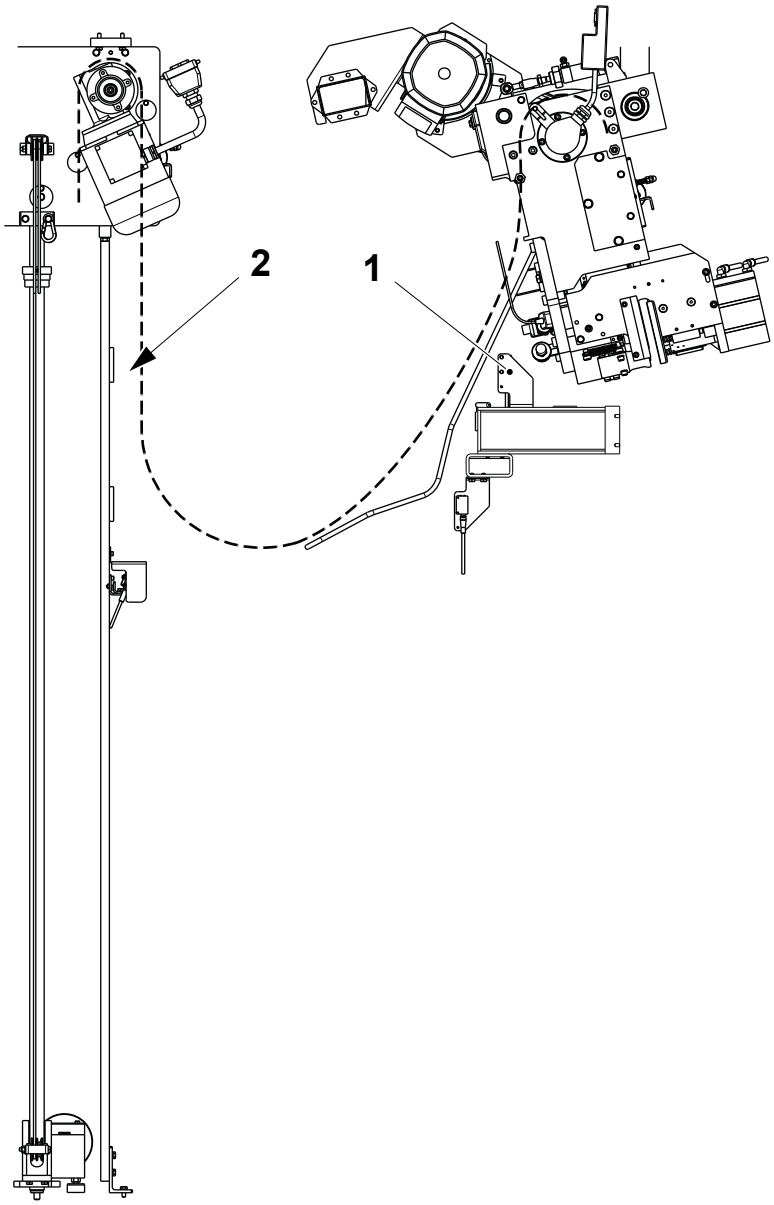

6e

Make sure the loop of the packaging material covers the photocell (1) and the reflector (2).

TechPub_2614345_0106 - 03_2819202_04en.fm



7

Close the ASU doors.

Make sure all covers and doors on the machine are closed and reset any alarms TPOP display.

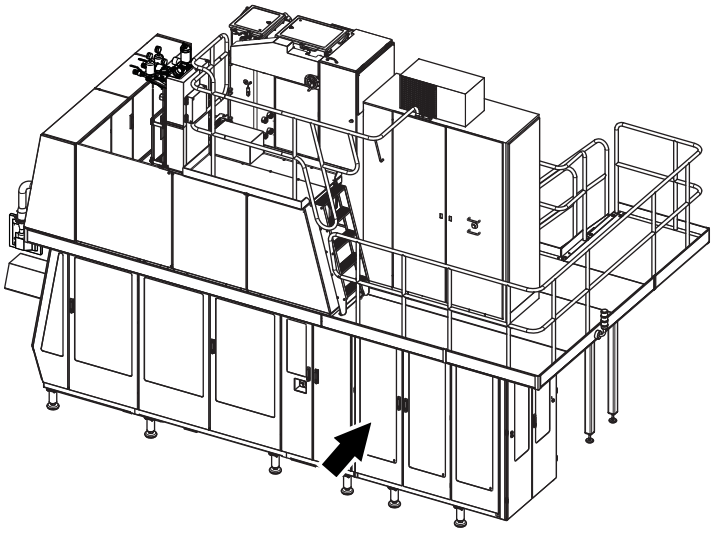

Threading Inside the Magazine

8

Open only the LH side door of the Strip Applicator unit.

Note! Do not open the RH side door.

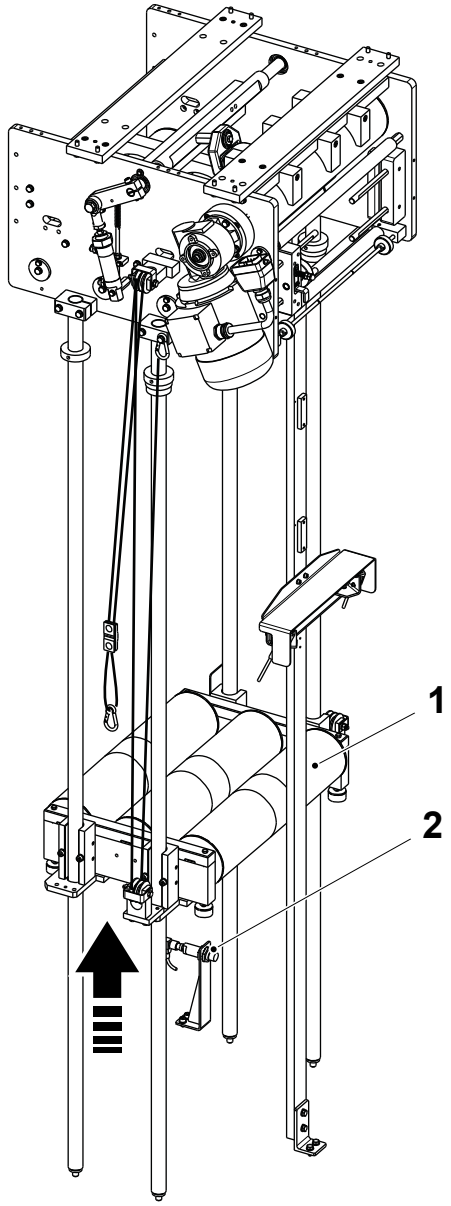

8a

Lift the magazine rollers (1) above the sensor (2) by means of the ropes: the packaging material will be fed automatically from the drive roller.

Allow approximately three meters of packaging material to feed through, then release the ropes to lower the two magazine rollers (1) and stop feeding the packaging material.

Note! When the sensor (2) does not read the presence of the rollers (1) the drive roller feeds packaging material into the magazine.

TechPub_2614345_0106 - 03_2819202_04en.fm

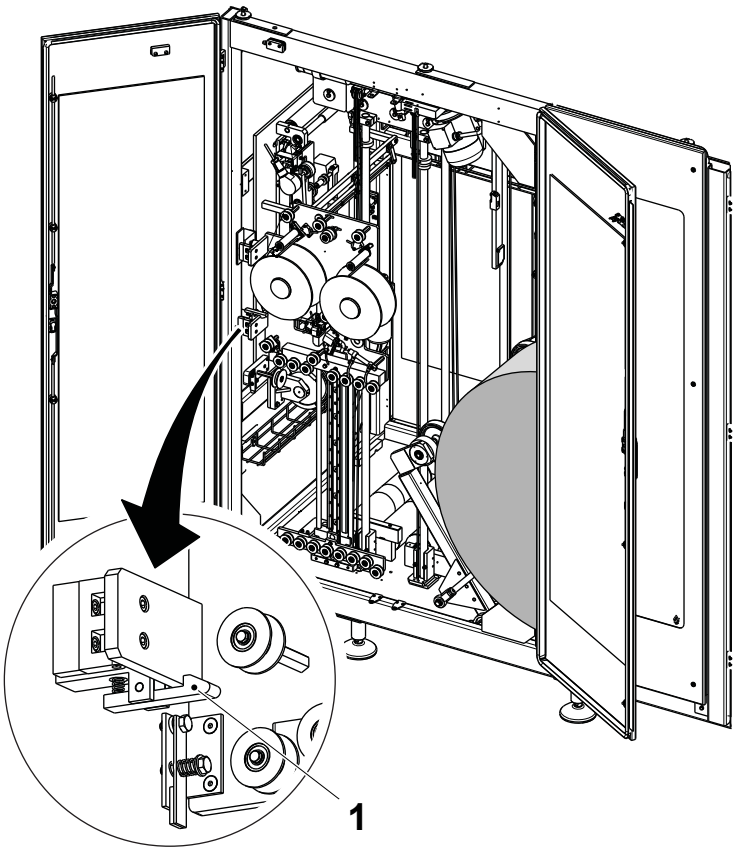

8b

Lower the catch (1) and open the strip magazine frame.

TechPub_2614345_0106 - 03_2819202_04en.fm

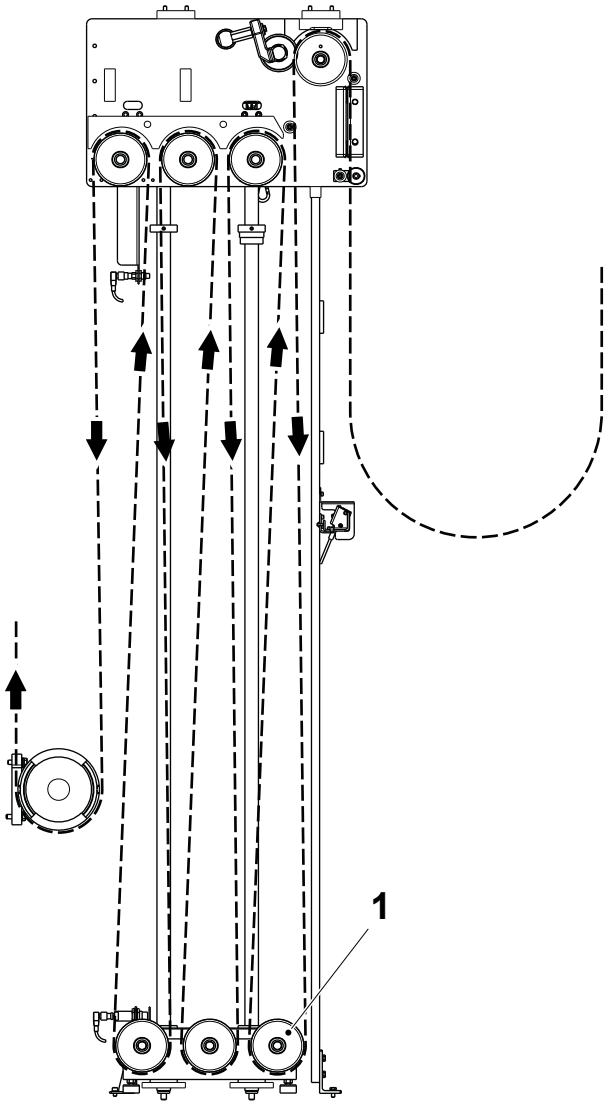

CAUTION
Hygiene.
Before handling clean parts, disinfect your hands/gloves with cleaning compound code **H**.

8c

Thread the packaging material around the magazine rollers as indicated in the illustration.

If more packaging material is needed, close all the ASU doors and reset the alarms on the TPOP.

Repeat step from 8 to 8a and allow feeding the packaging material necessary to complete the packaging material path.

Note! The packaging material feeding has to be repeated in the same way until the magazine is filled with the rollers (1) in the lower position.

TechPub_2614345_0106 - 03_2819202_04en.fm

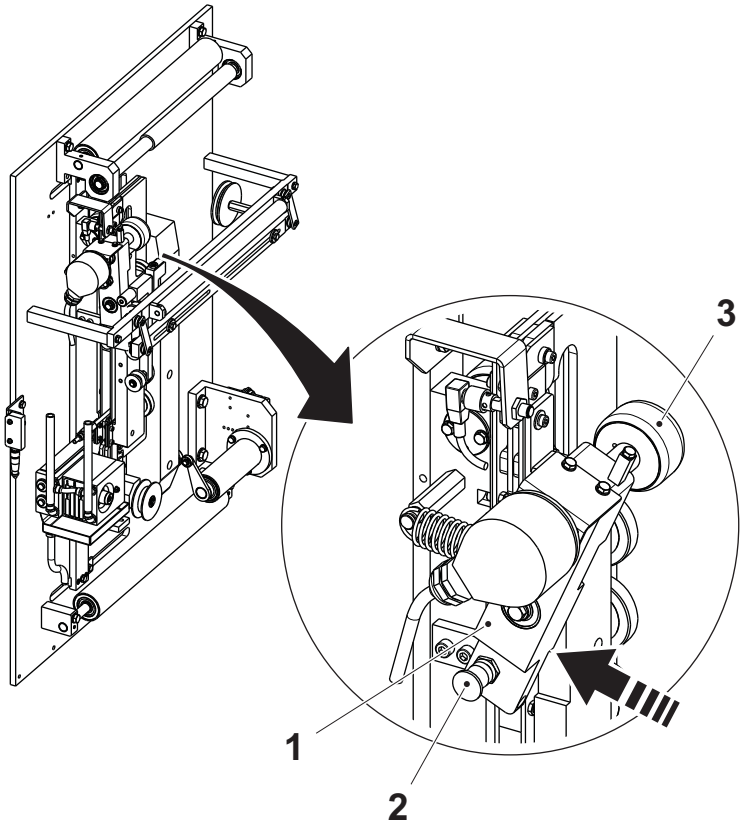

Threading Inside the Strip Applicator Compartment

9

CAUTION

Risk of damage to the equipment

Move the lever (1) by the knob (2). Do not push or pull the lever by the encoder (4).

Push the lever (1) and lock it in position with the knob (2) to move the pressure roller (3) away from its operating position.

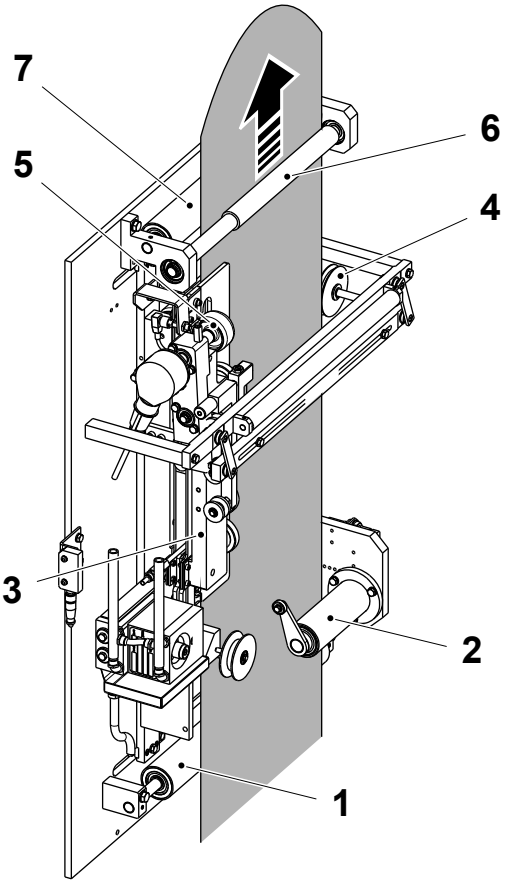

9a

Feed the packaging material:

- over the roller (1)
- between the splice detector (2)
- through the SA inductor (3)
- through the edge guide wheel (4)
- between the pressure rollers (5)
- between the shaft (6) and the roller (7).

TechPub_2614345_0106 - 03_2819202_04en.fm

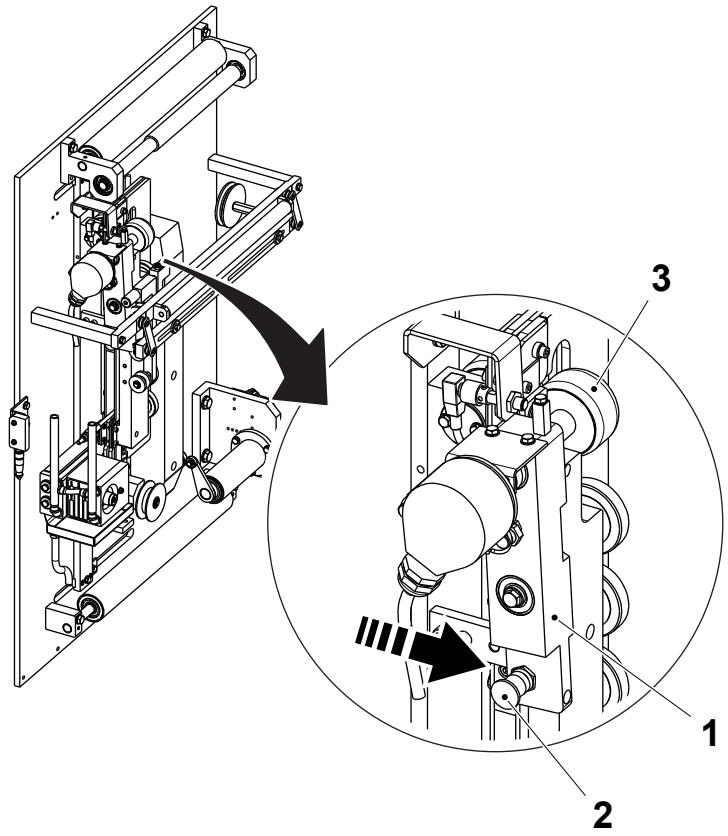

9b

Release the knob (1) and pull the lever (2) to return the pressure roller (2) to its operating position.

Note! The pressure roller will be damaged if left in the operating position and the machine is not used for a long time.

TechPub_2614345_0106 - 03_2819202_04en.fm

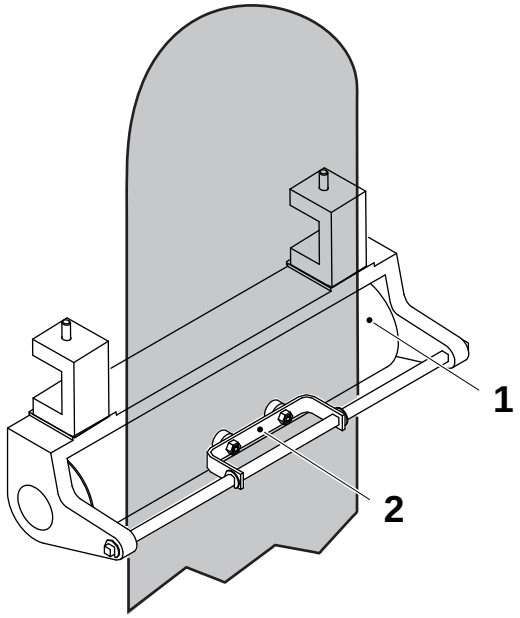

9c

Thread approximately 1 meter of packaging material up through the platform floor and passed the bending roller (1).

Lock it in place by means of the material lock (2).



10

Close the ASU doors.

Make sure all covers and doors on the machine are closed and reset any alarms TPOP display.

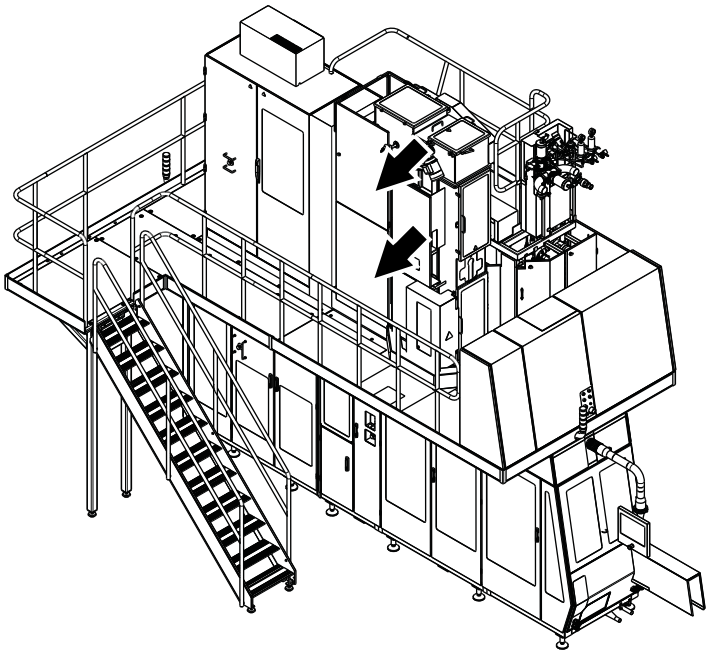

Threading up to Drying Chamber

CAUTION

Hygiene.

Before handling clean parts, disinfect your hands/gloves with cleaning compound code **H**.

11

Open the two doors on the superstructure.

TechPub_2614345_0106 - 03_2819202_04en.fm

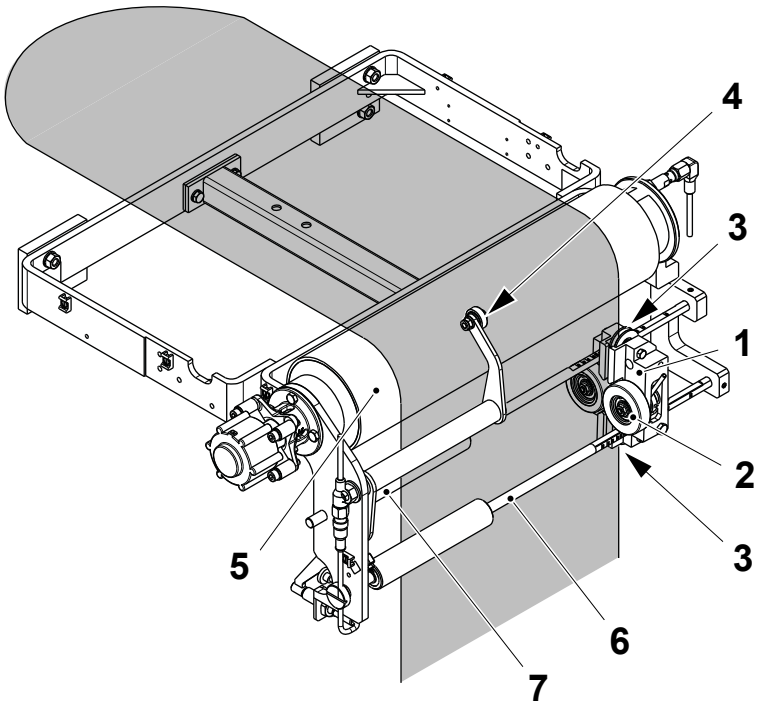

11a

Feed the packaging material through the paper guide (1), between the rollers (2) and the edge guide rollers (3), and then under the splice detector bearing (4).

Pull one metre of packaging material over the bending roller (5).

Note! The packaging material must pass in front of the roller (6) and behind the roller (7).

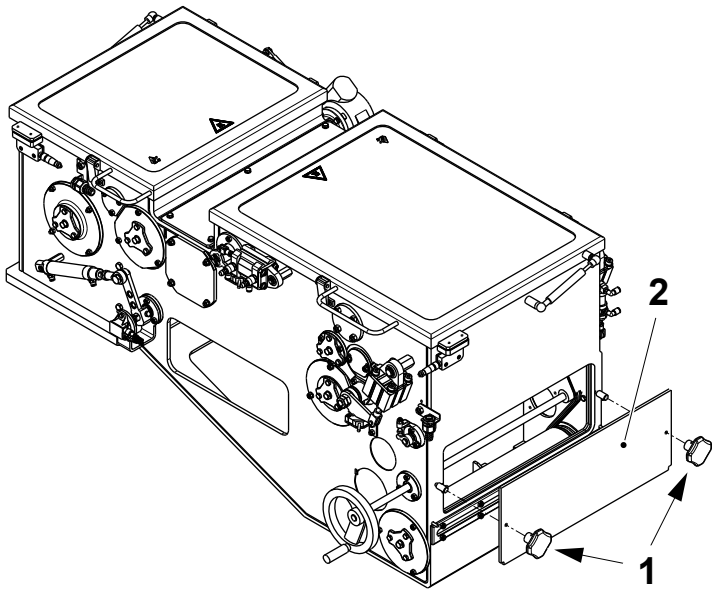

WARNING
Hydrogen Peroxide.
Follow the Safety Precautions.

11b

Loosen the handles (1) together, untightening them equally.

Remove the hatch (2).

TechPub_2614345_0106 - 03_2819202_04en.fm

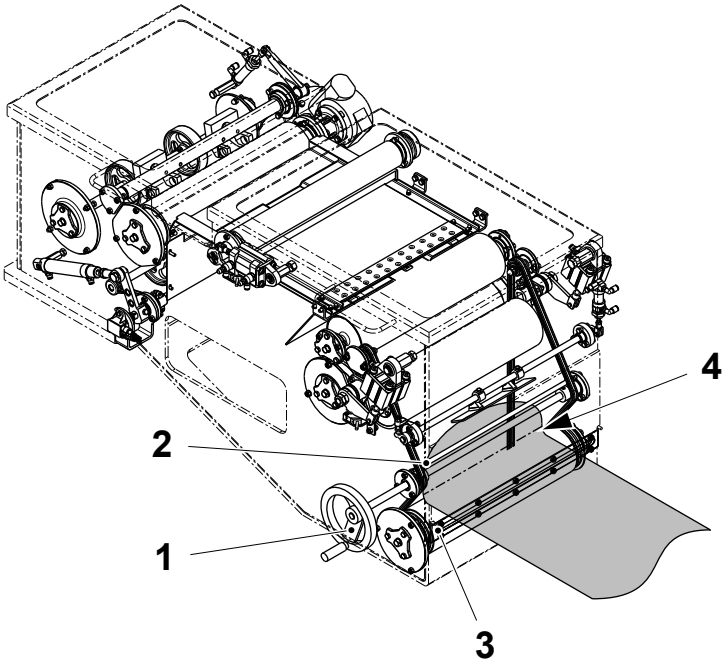

WARNING

The pins on the carrier are sharp.
Wear protective gloves.

11c

Slowly crank the handle (1) anti-clockwise until the carrier (2) on the chain stops.

Feed the packaging material through the rubber slot (3).

Fold the packaging material along a crease line (4).

Press the pins of the carrier (2) through the packaging material, then wrap the end of the packaging material around the carrier (2).

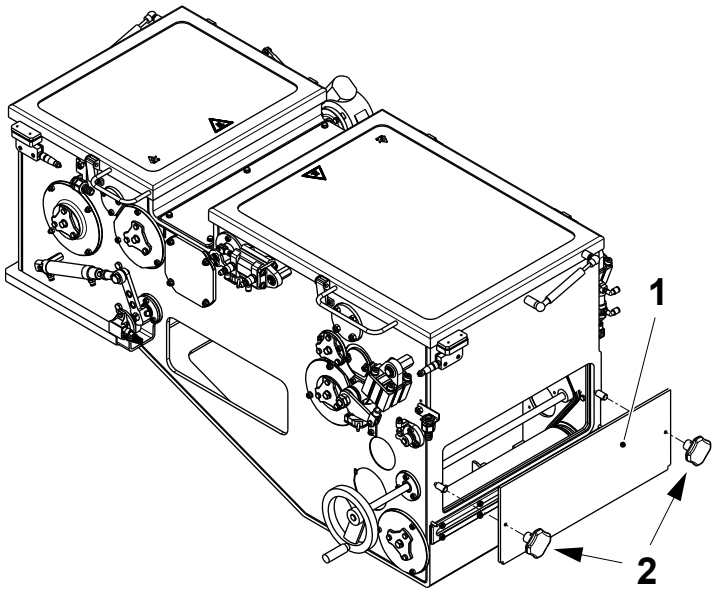

11d

Fit back the hatch (1) by the handles (2).

TechPub_2614345_0106 - 03_2819202_04en.fm

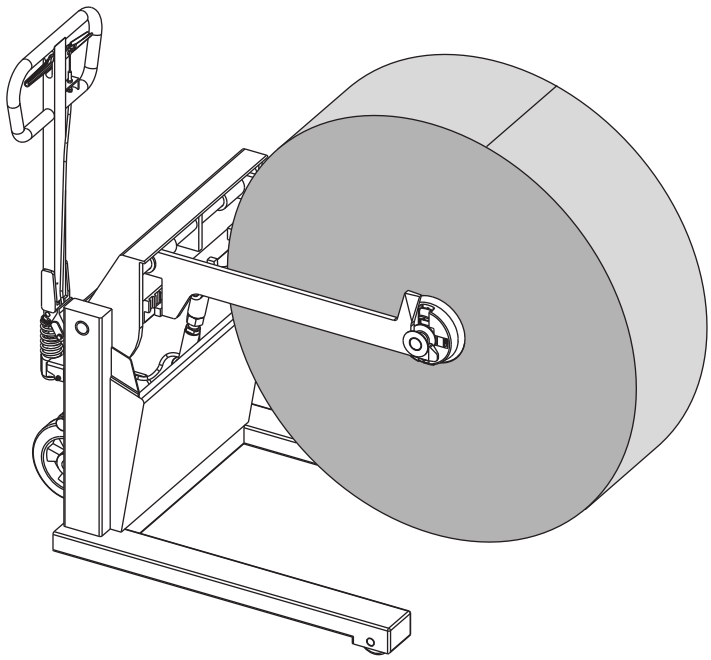

12

Load the second reel of packaging material into the ASU and prepare it for splicing, see chapter 6 Supply of Materials.

TechPub_2614345_0106 - 03_2819202_04en.fm

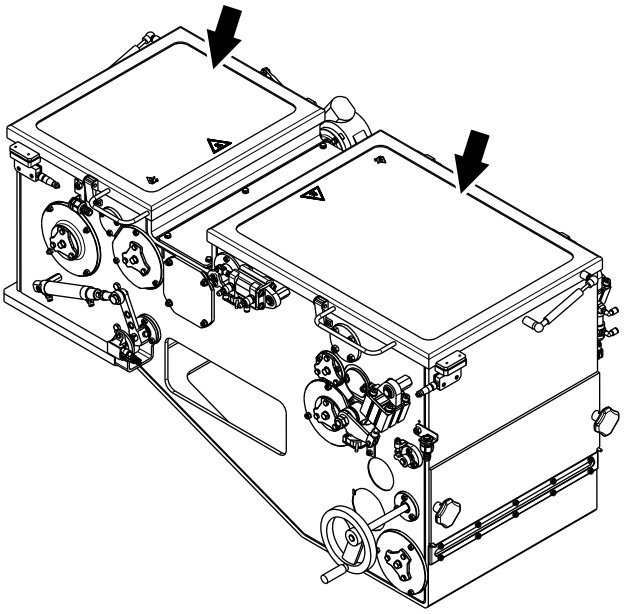

Drying chamber with upper section

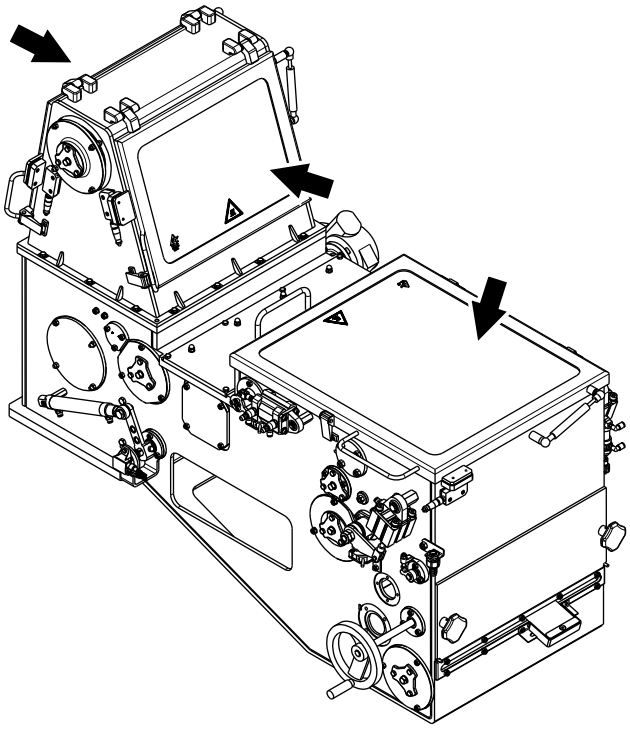

Threading Through the Hydrogen Peroxide Bath

CAUTION

Hygiene.

Before handling clean parts, disinfect your hands/gloves with cleaning compound code **H**.

12a

Open the drying chamber doors.

TechPub_2614345_0106 - 03_2819202_04en.fm

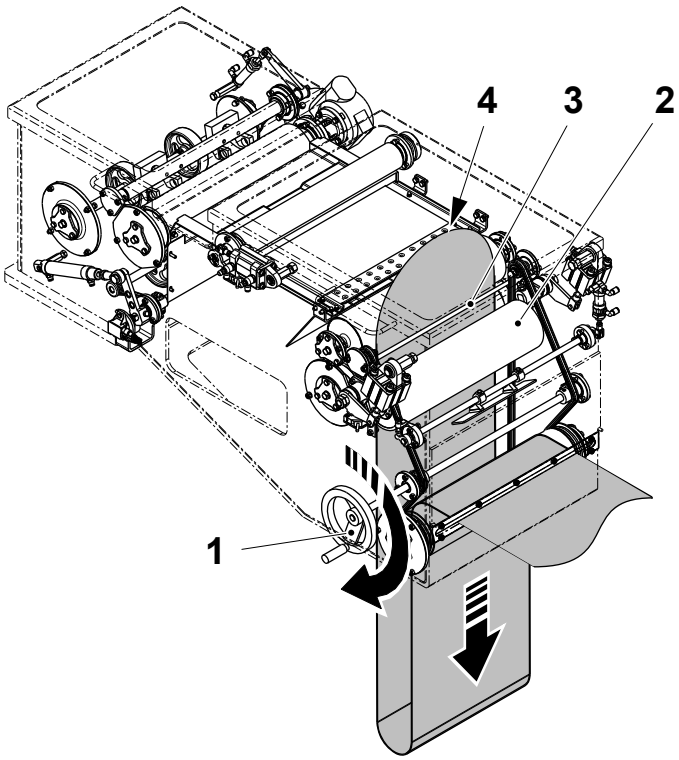

12b

Crank the handle (1) clockwise to pull the packaging material through the peroxide bath and up through the calendar rollers (2).

Remove the packaging material from the carrier (3).

Crank the handle (1) clockwise until the carrier (3) is safely out of the way of the packaging material .

Pull up the packaging material and cut the end again (4).

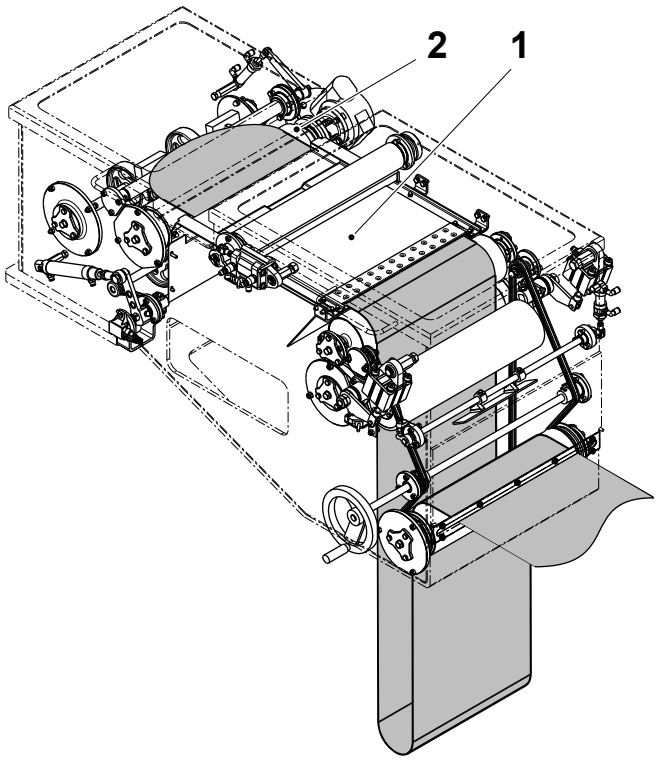

12c

Feed the packaging material through the air knife (1) and over the roller (2).

TechPub_2614345_0106 - 03_2819202_04en.fm

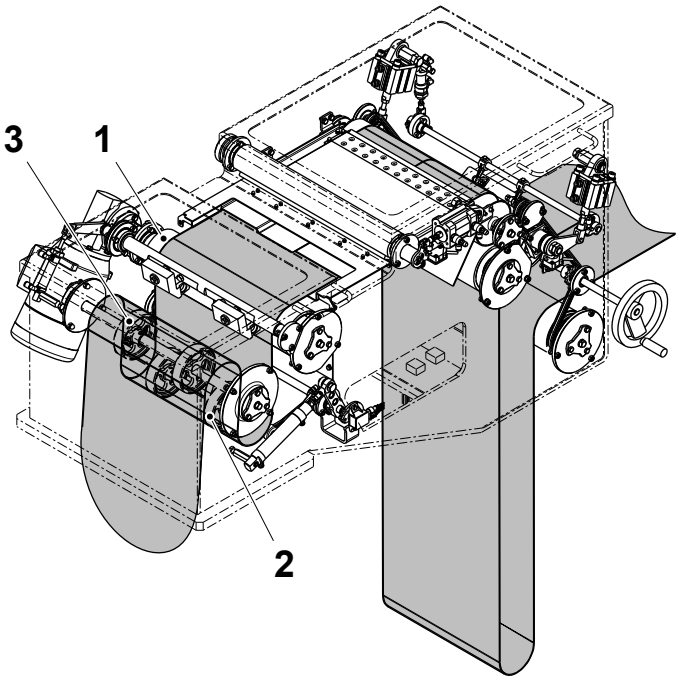

Drying chamber with upper section

12 d

Thread the packaging material over the roller (1), under the pendulum roller (2) and over the roller (3).

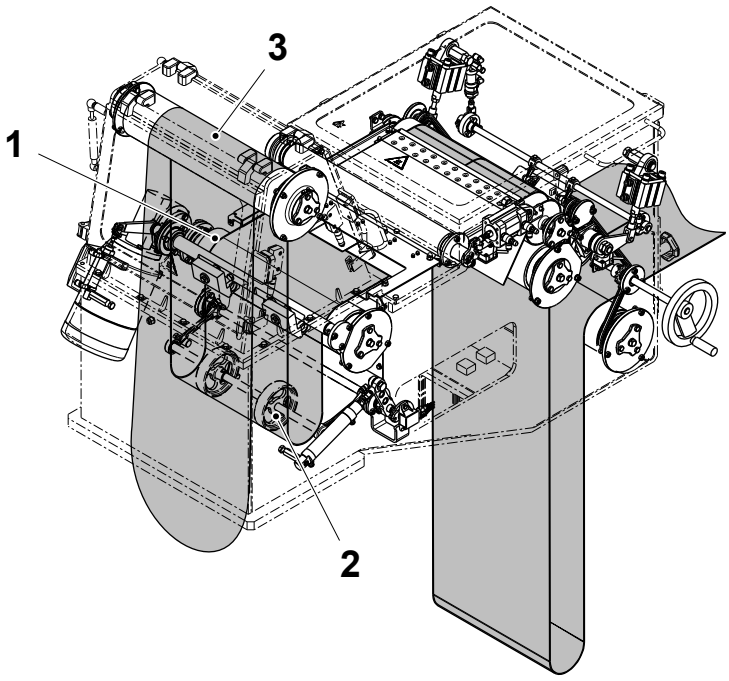

TechPub_2614345_0106 - 03_2819202_04en.fm

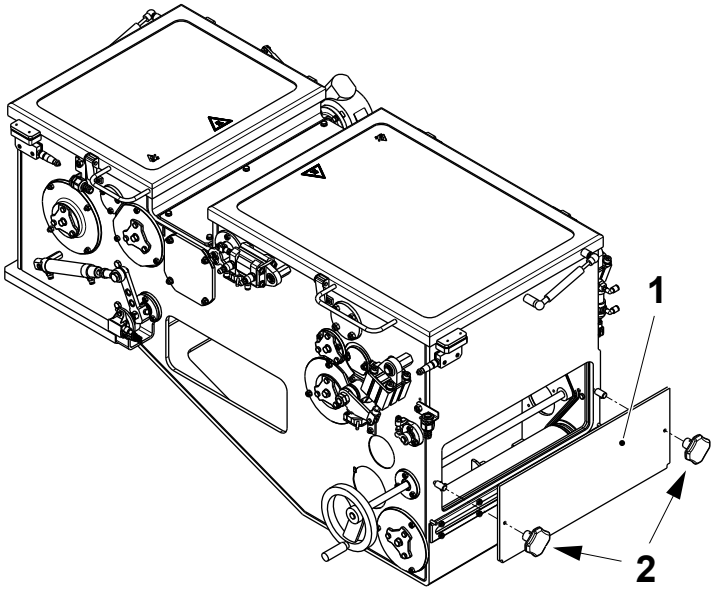

12e

Fit the hatch (1) and tighten the handles (2) equally.

TechPub_2614345_0106 - 03_2819202_04en.fm

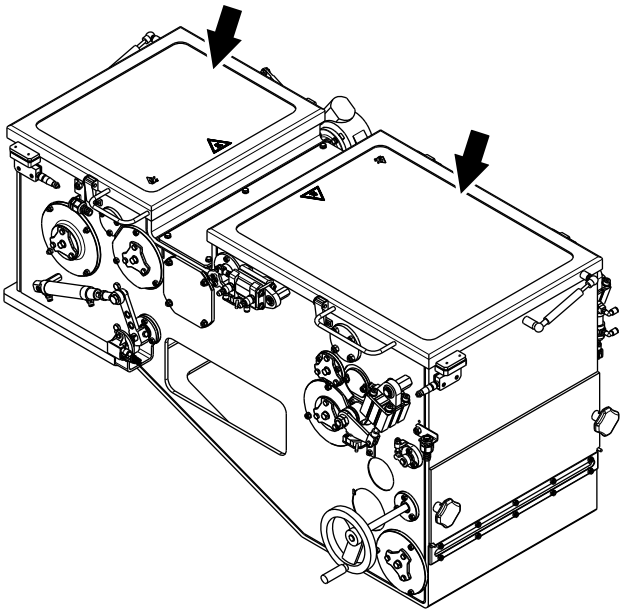

Drying chamber with upper section

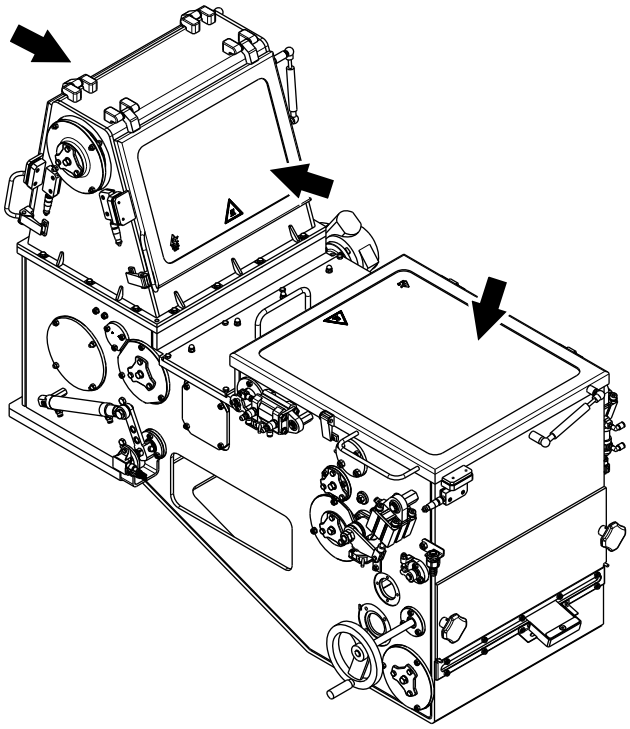

12f

Close the drying chamber doors.

TechPub_2614345_0106 - 03_2819202_04en.fm

Lamp and Hooter Test



13

Touch the PRODUCTION CONTROL button.

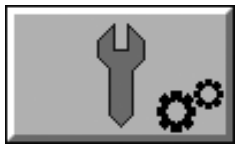

13a

Touch the SERVICE UNIT button.

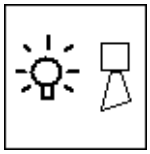

13b

Touch the LAMP AND HOOTER TEST icon.

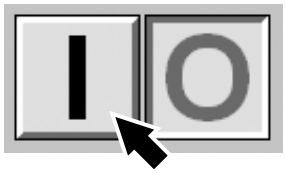

13c

Touch the START button to start the test.

TechPub_2614345_0106 - 03_2819202_04en.fm

13d

Check that:

- all the push buttons on the TPOP panel are lit
- all the lights on the warning lamps are lit
- the audible warning signal sounds steadily.

Call a technician to replace any faulty lamp or audible before starting PRODUCTION.



13e

Touch the STOP button to stop the test.

TechPub_2614345_0106 - 03_2819202_04en.fm

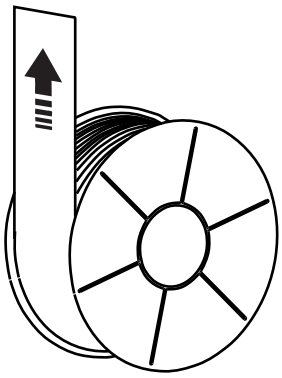

CAUTION
Hygiene.
Before handling clean parts, disinfect your hands/gloves with cleaning compound code **H**.

Prepare the Strip Supplies for Production

14

Prepare the strip applicator for PRODUCTION. See the LS Strip Thread section in chapter 6 Supply of Materials.

Note! For cleaning compound code information, see chapter 11 Technical Data.

TechPub_2614345_0106 - 03_2819202_04en.fm

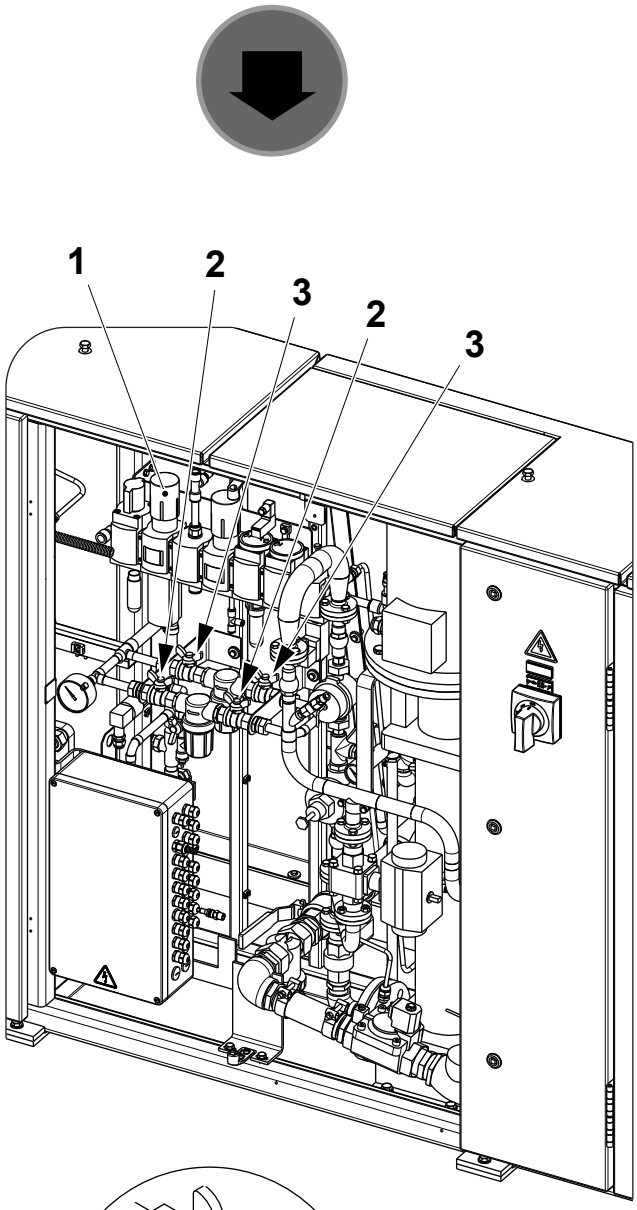

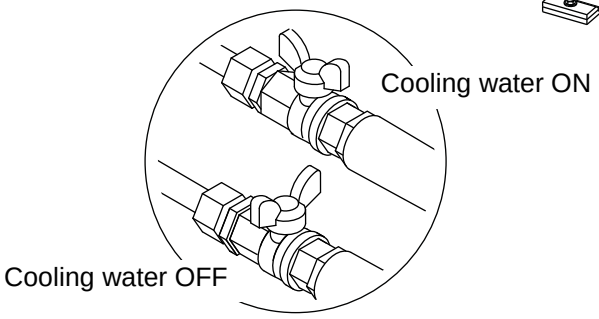

15

Preparing After Weekly Care is now finished.

If PRODUCTION is scheduled**,** continue according to Preparing after Daily Care.

If PRODUCTION is not scheduled:

- Press the PROGRAM DOWN button to step down to STEP ZERO
- Turn OFF the air supply (1)
- Turn OFF the cooling water supply (2) or (3) depending on which filter is in use.

TechPub_2614345_0106 - 03_2819202_04en.fm

Preparing after Daily Care

Note! If Weekly Care has been performed, start with Preparing After Weekly Care on page 3-5.

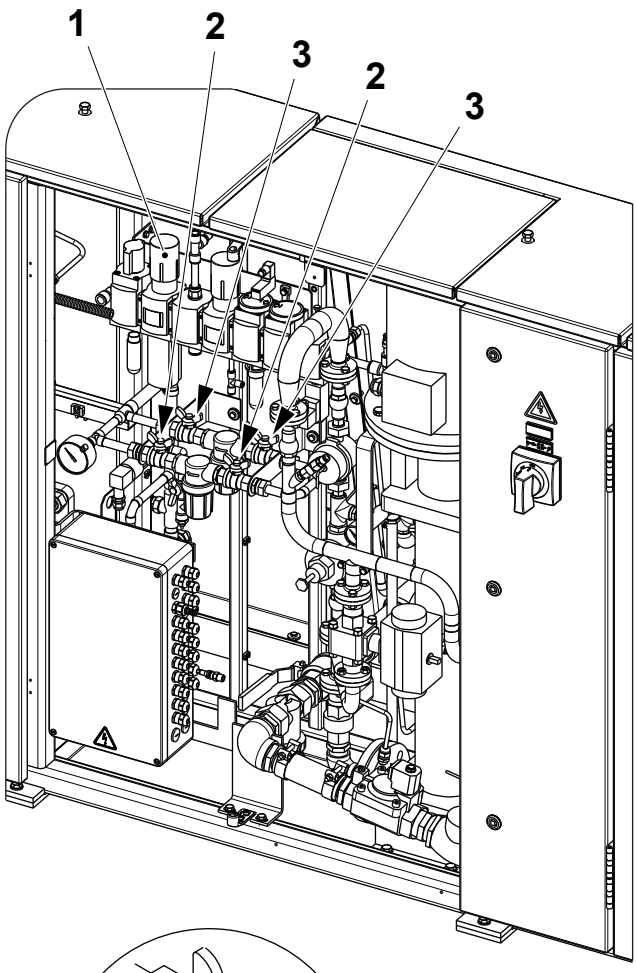

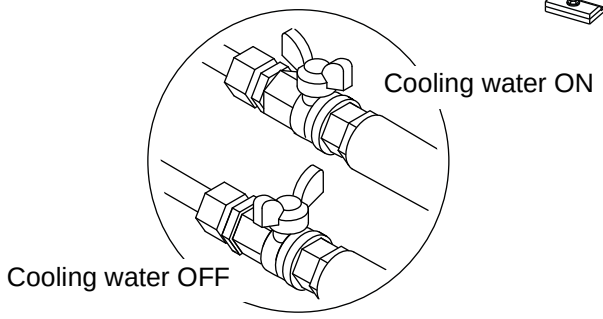

1

Note! If Preparing after Weekly Care has just been carried out, continue with item 2.

Otherwise:

- Turn ON the air supply (1)
- Turn ON the cooling water supply (2) or (3) depending on which filter is in use.

TechPub_2614345_0106 - 03_2819202_04en.fm



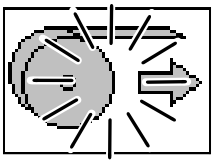

2

On the TPOP, press the PROGRAM UP button.

The machine steps to PREPARATION and the `PREPARATION` icon stops flashing.

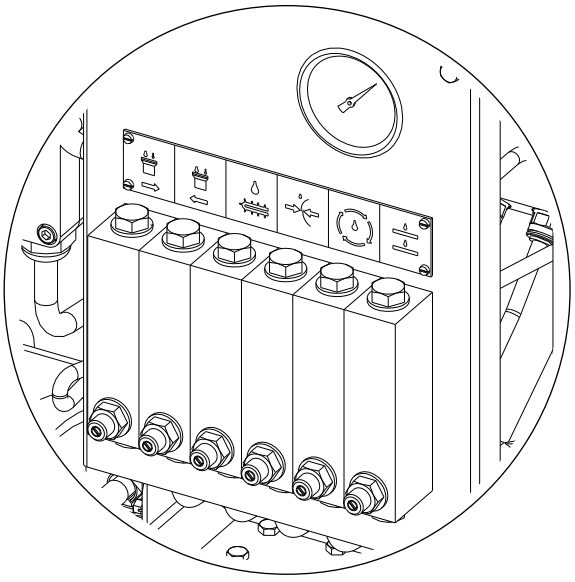

Flow Rates

3

Check that the flow rate of the cooling circuits in the service unit are correct.

See the Setting Values section in chapter 11 Technical Data for the correct flow rates.

Call a technician if adjustments are needed.

TechPub_2614345_0106 - 03_2819202_04en.fm

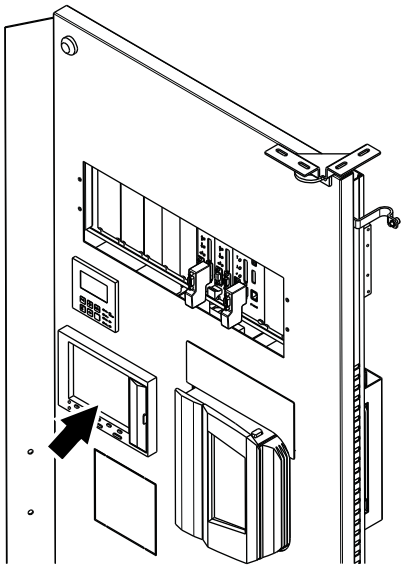

Recorder
4

Every time the machine is started for PRODUCTION**,** it is suggested to input the following information:

- Machine serial number
- Batch data.

See the JUMO manual for more details.

TechPub_2614345_0106 - 03_2819202_04en.fm

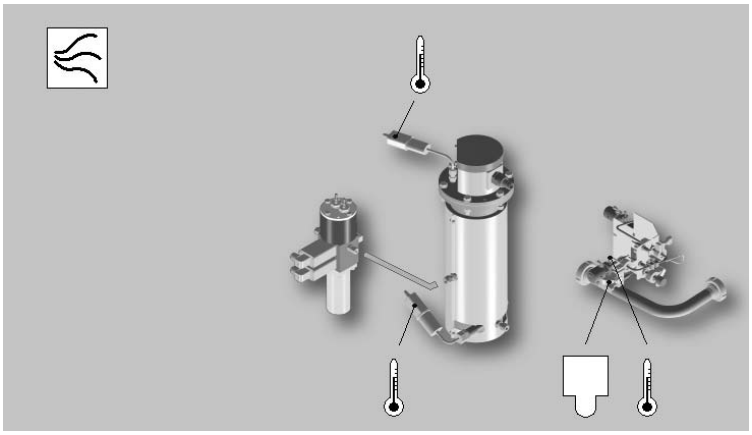

HI Enabled (OE)
5

On the TPOP, select the correct nozzle size according to the nozzle fitted into the HI product pipe.

Follow the instructions in chapter 2 Control Panels starting on page 2-82.

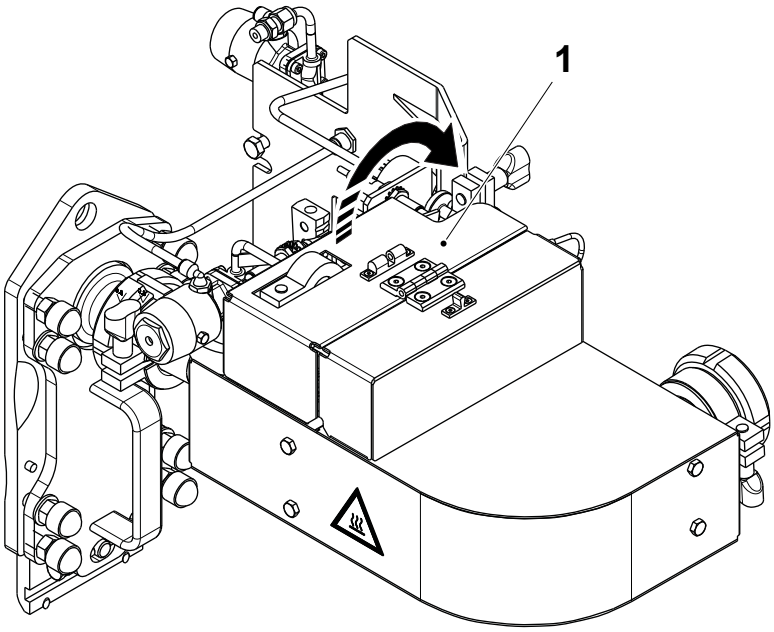

CAUTION
Hygiene.
Before handling clean parts, disinfect your hands/gloves with cleaning compound code **H**.

5a

Note! If HI is not to be used for this PRODUCTION run continue with item 6a on page 3-39.

Note! The following volumes must always be produced with HI enabled: TPA 200 Sq, TPA 250 Sq, TPA 330 Sq, TPA 500 Sq, TPA 750 Sq, TPA 1000 Sq, TBA 1890 S and TBA 2000 S.

Swing the HI cover (1) open and lock it in position.

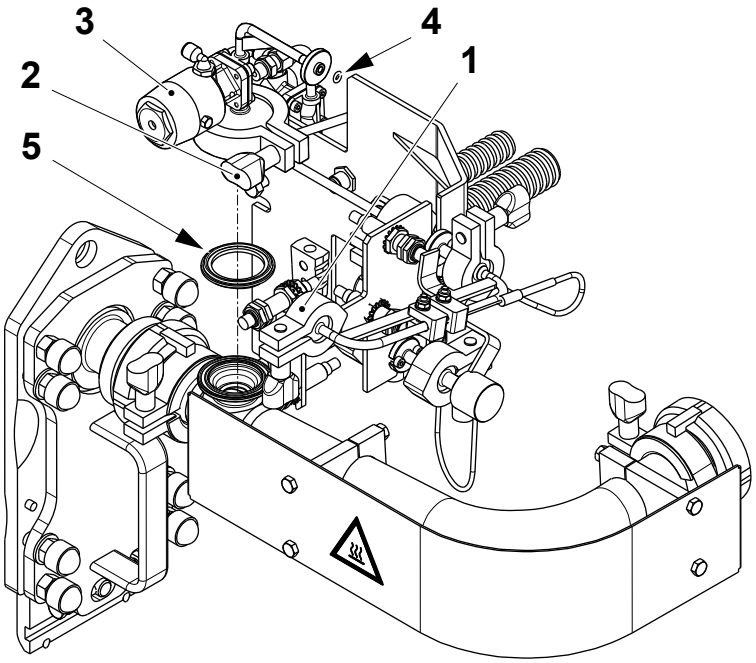

5b

Note! The HI cover is not shown in the following pictures for clarity.

Note! The following volumes must always be produced with HI enabled: TPA 200 Sq, TPA 250 Sq, TPA 330 Sq, TPA 500 Sq, TPA 750 Sq, TPA 1000 Sq, TBA 1890 S and TBA 2000 S.

Remove the clamp (1).

Loosen the clamping piece (2) and remove the pneumatic valve (3) taking care of the O-ring (4).

Remove the gasket (5).

TechPub_2614345_0106 - 03_2819202_04en.fm

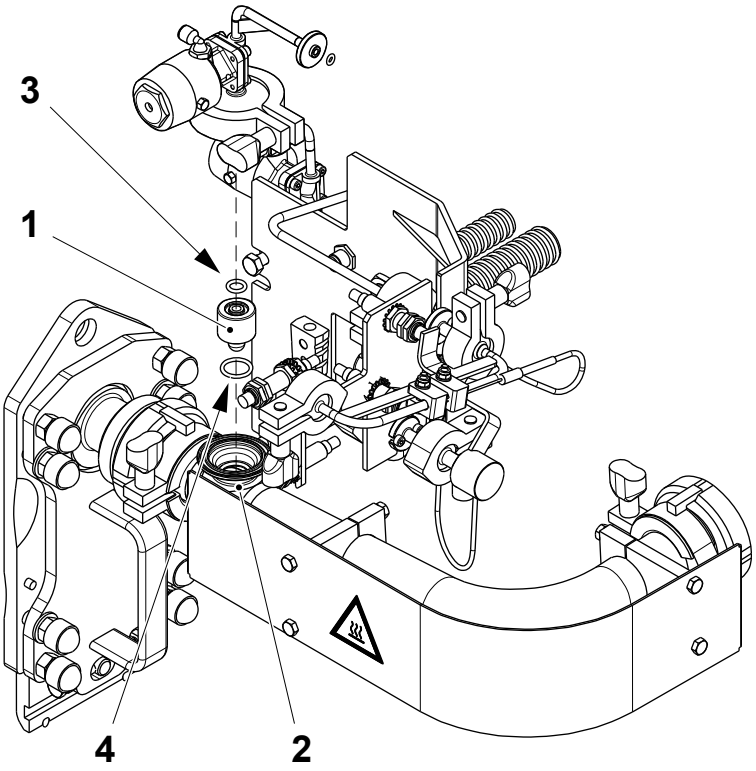

5c

Take the nozzle (1) from its storage container and fit it in the product pipe (2) with the O-rings (3) and (4).

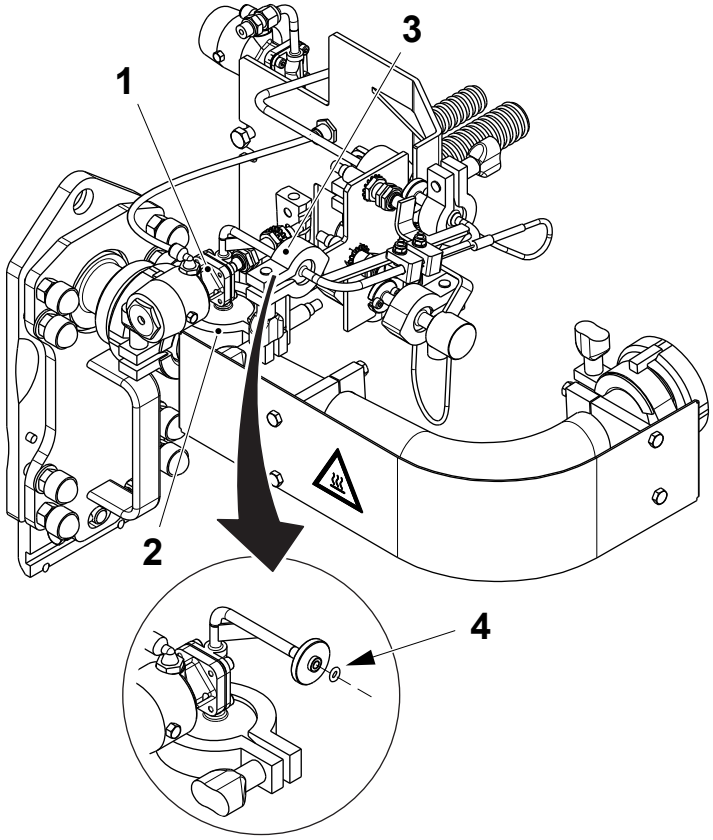

5d

Fit back the pneumatic valve (1) by tightening the clamping piece (2).

Tighten the clamp (3) on the pneumatic valve (1) with the O-ring (4).

TechPub_2614345_0106 - 03_2819202_04en.fm

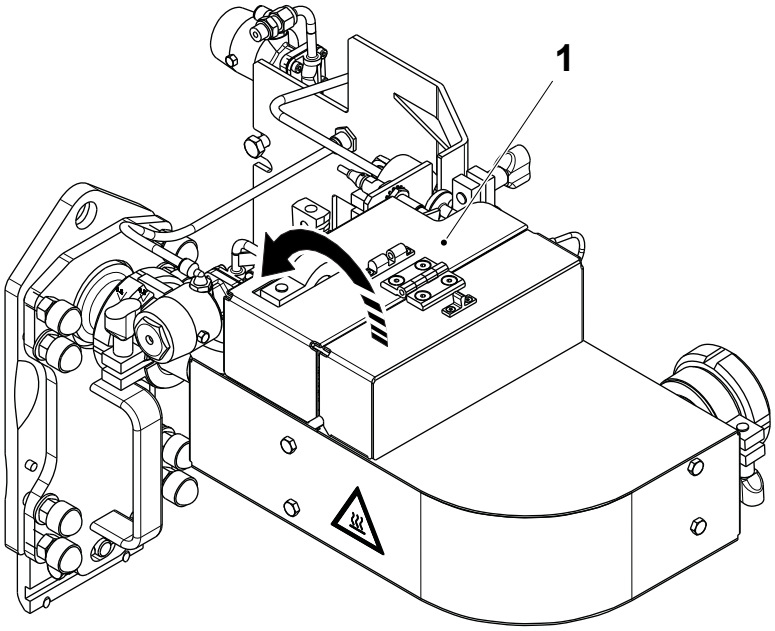

5e

Close and lock the HI cover (1).

TechPub_2614345_0106 - 03_2819202_04en.fm

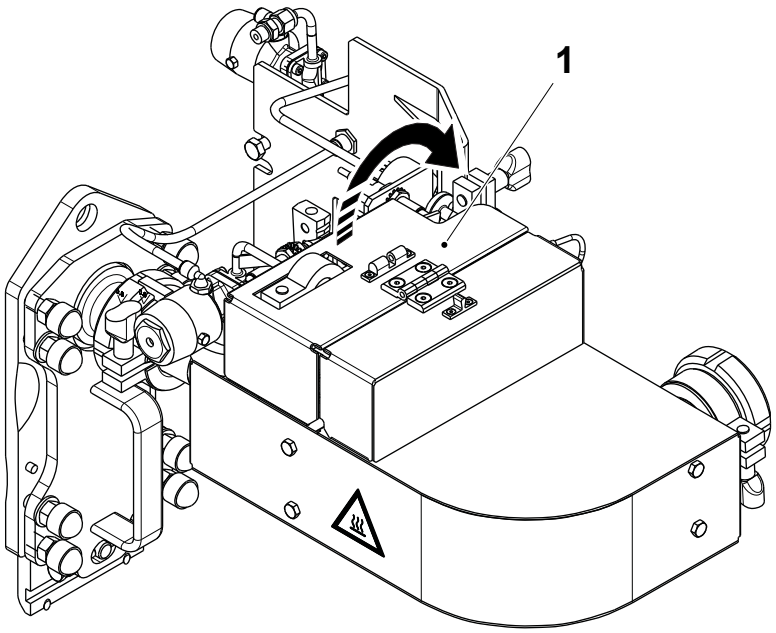

HI Bypassed (OE)

6

Note! If HI is being used with this PRODUCTION run continue with item 7.

Note! The following volumes must always be produced with HI enabled: TPA 200 Sq, TPA 250 Sq, TPA 330 Sq, TPA 500 Sq, TPA 750 Sq, TPA 1000 Sq, TBA 1890 S and TBA 2000 S.

Swing the HI cover (1) open and lock it in position.

Note! The HI cover is not shown in the following pictures for clarity.

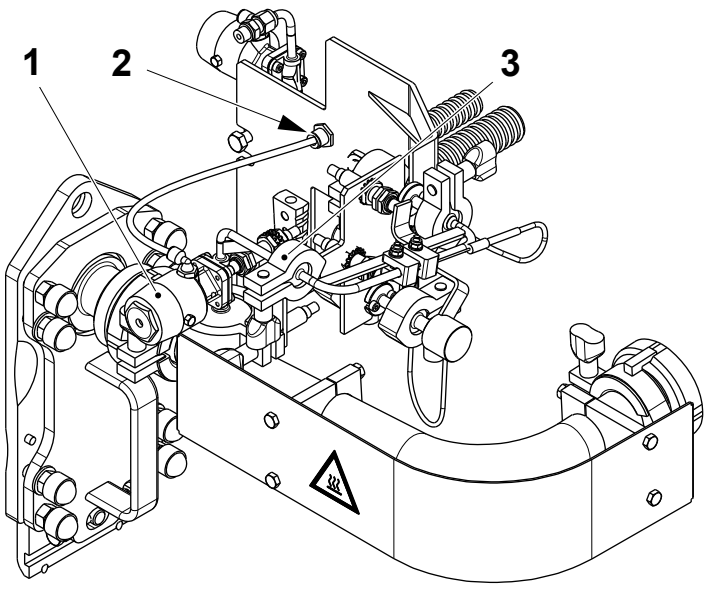

6a

Disconnect the hose of the pneumatic valve (1) from the bulkhead lead-in (2).

Remove the clamp (3).

TechPub_2614345_0106 - 03_2819202_04en.fm

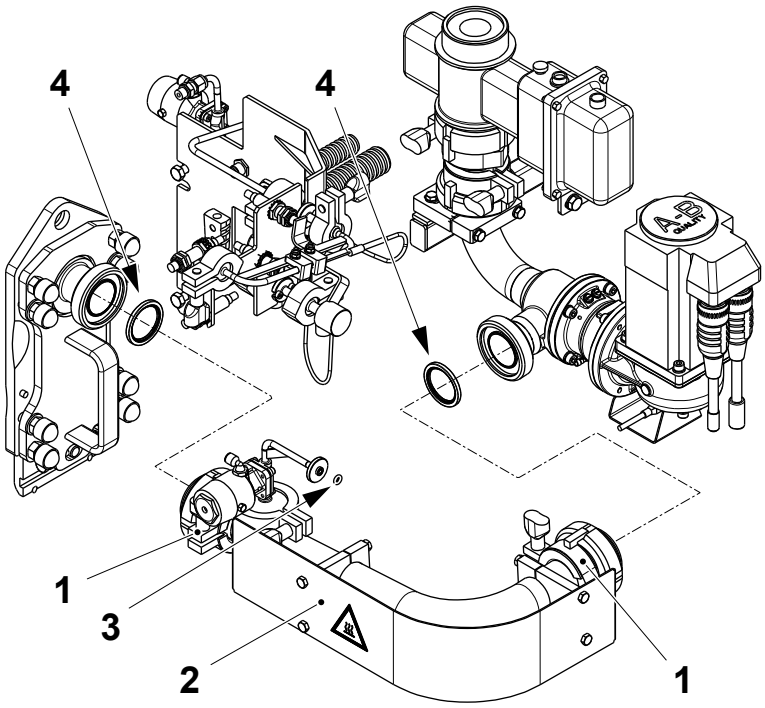

6b

Note! The gaskets (4) must be changed every time the product pipe is removed.

Loosen the locking devices (1) and remove the HI product pipe (2) taking care of the O-ring (3).

Change the gaskets (4).

Check that the HI product pipe (2) is clean and dry.

Fit plastic plugs or use a clean plastic film to plug both ends of the HI product pipe (2) and the pneumatic valve pipe.

Store the HI product pipe (2) in a dry, clean place for later use.

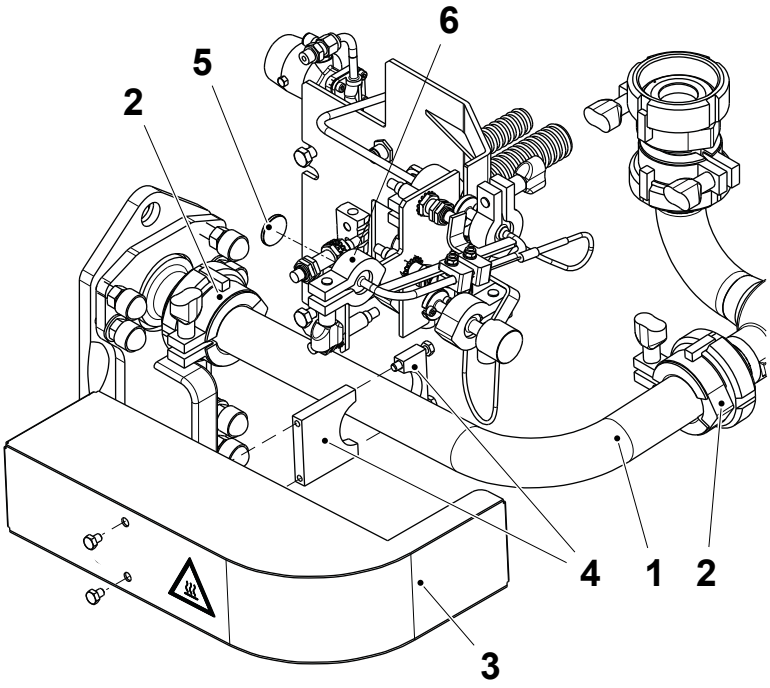

6c

Fit the standard product pipe (1) by tightening the locking devices (2).

Fit the covering panel (3) by the clamps (4).

Fit the plug (5) on the HI pipe and tighten the clamp (6).

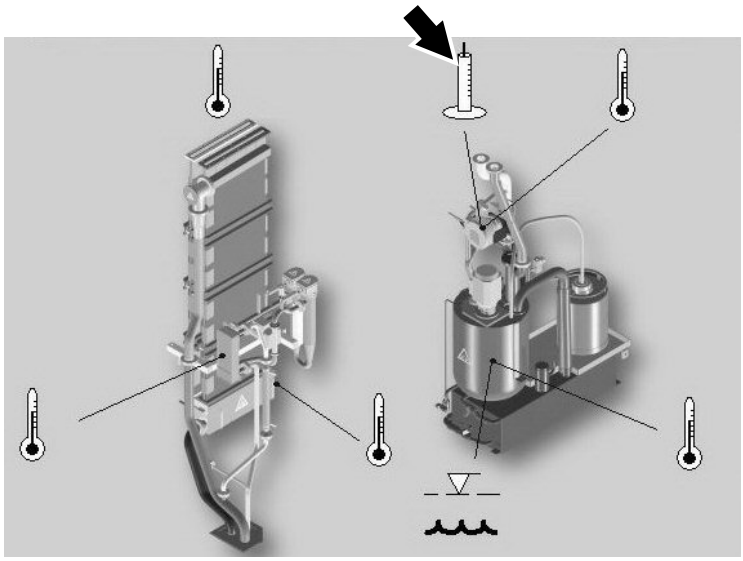

Hydrogen Peroxide 7

Check the peroxide concentration. See chapter 2 Control Panels on page 2-62.

TechPub_2614345_0106 - 03_2819202_04en.fm

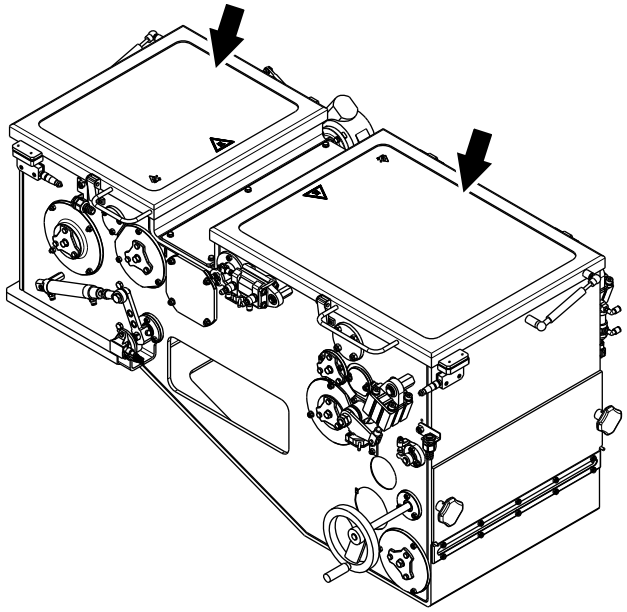

Drying chamber with upper section

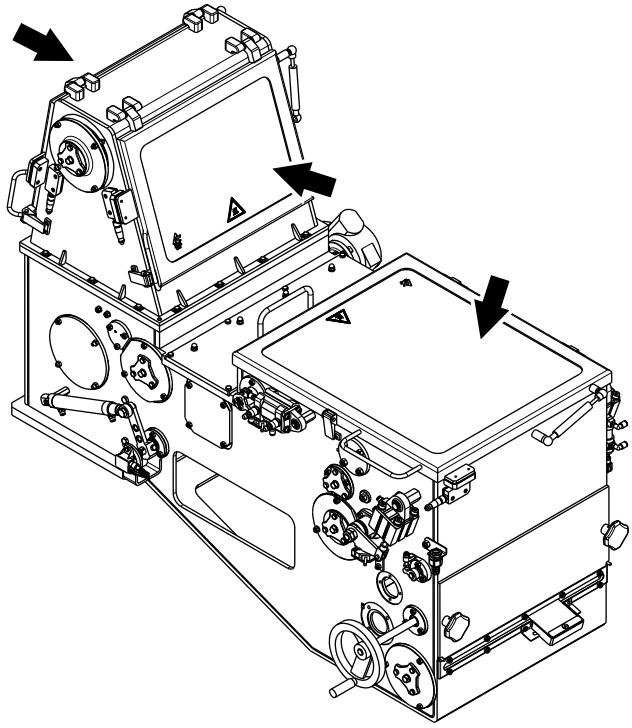

WARNING
Hydrogen Peroxide.
Follow the Safety Precautions.

CAUTION
Hygiene.
Before handling clean parts, disinfect your hands/gloves with cleaning compound code **H**.

Superstructure

8

Note! If Preparing after Weekly Care has been carried out, continue with item 10.

Open the drying chamber doors.

TechPub_2614345_0106 - 03_2819202_04en.fm

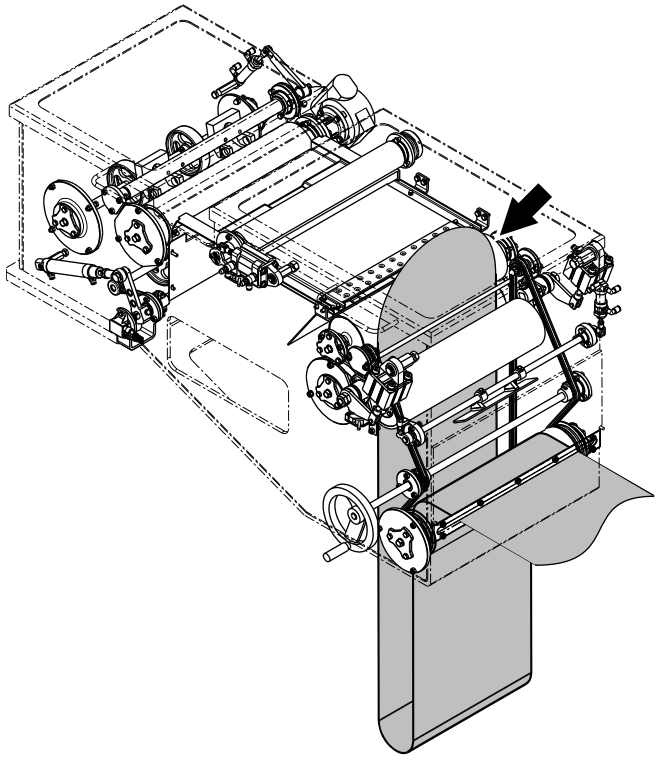

8a

Shape the end of the packaging material as shown.

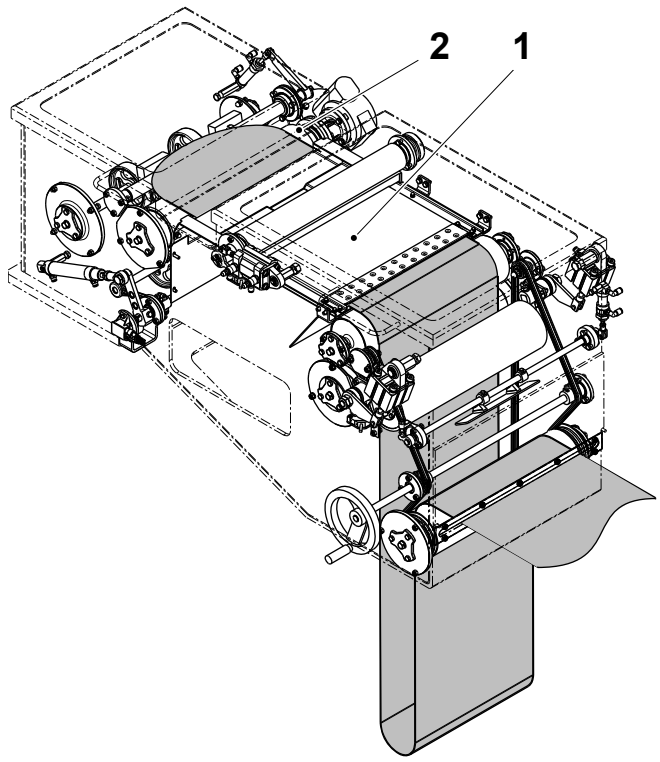

8b

Feed the packaging material through the air knife (1) and over the roller (2).

TechPub_2614345_0106 - 03_2819202_04en.fm

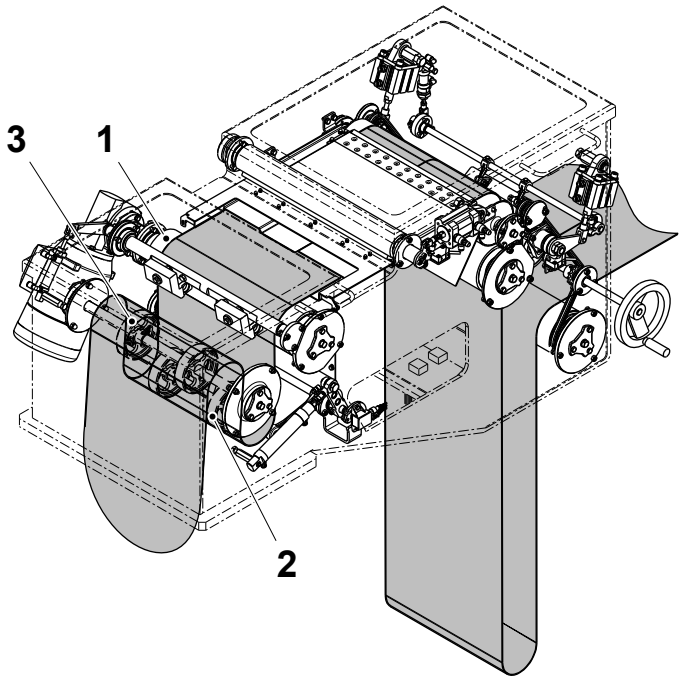

Drying chamber with upper section

8c

Thread the packaging material over the roller (1), under the pendulum roller (2) and over the roller (3).

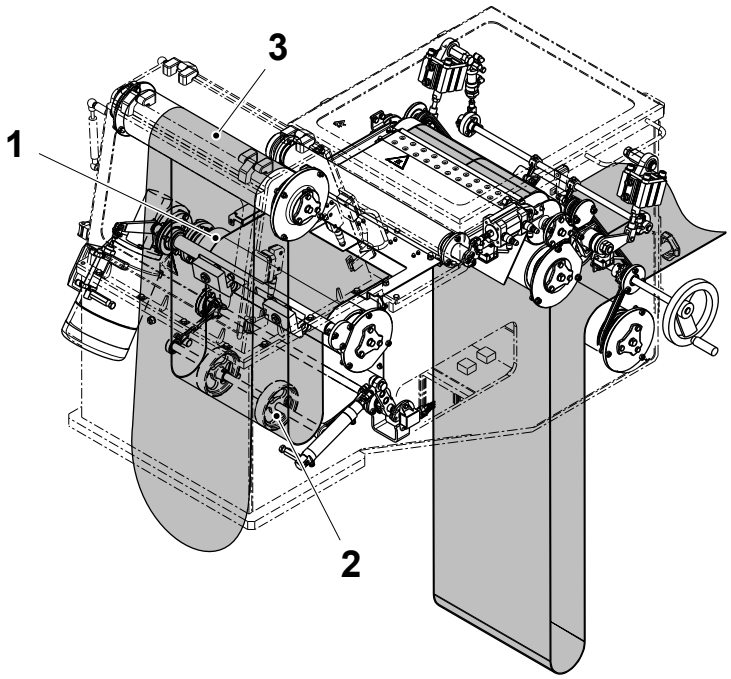

TechPub_2614345_0106 - 03_2819202_04en.fm

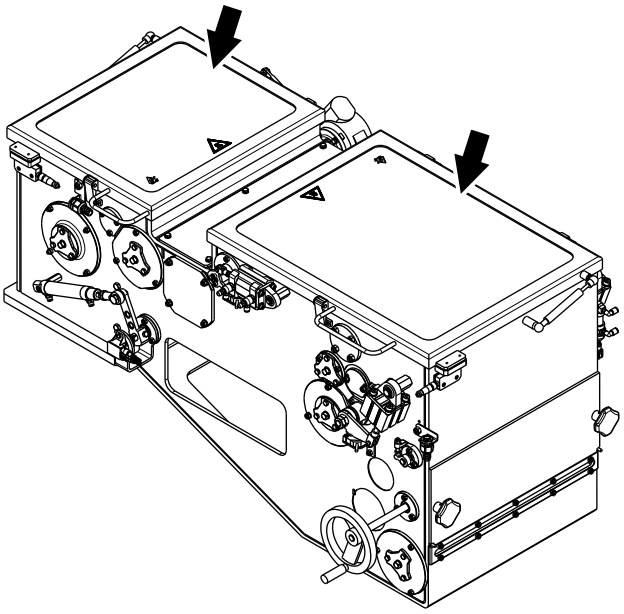

Drying chamber with upper section

8d

Close the rear door, the top door and the front door of the drying chamber.

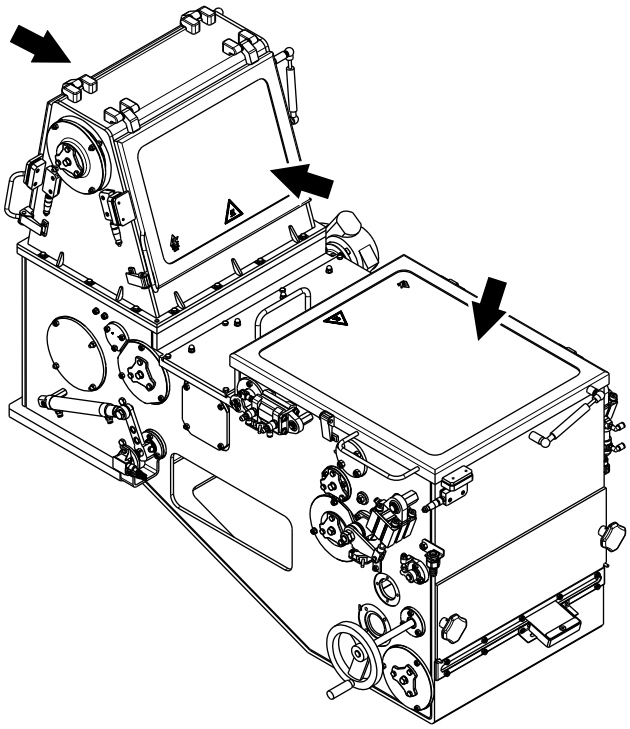

TechPub_2614345_0106 - 03_2819202_04en.fm

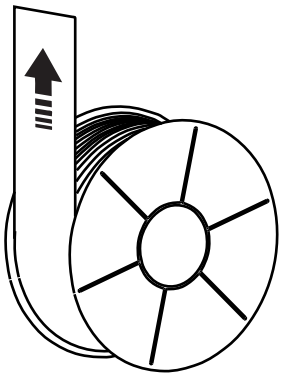

CAUTION
Hygiene.
Before handling clean parts, disinfect your hands/gloves with cleaning compound code **H**.

Strip Applicator
9

Prepare the strip applicator for PRODUCTION. See the LS Strip Thread section in chapter 6 Supply of Materials.

Note! For cleaning compound code information, see chapter 11 Technical Data.

TechPub_2614345_0106 - 03_2819202_04en.fm

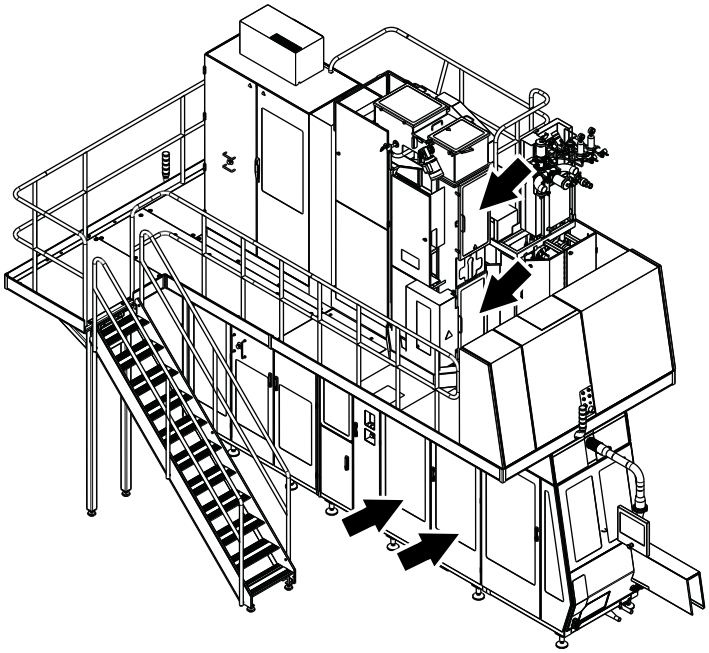

WARNING
Hydrogen Peroxide.
Follow the Safety Precautions.

Filling Pipe
10

Open the aseptic chamber doors and the jaw system doors.

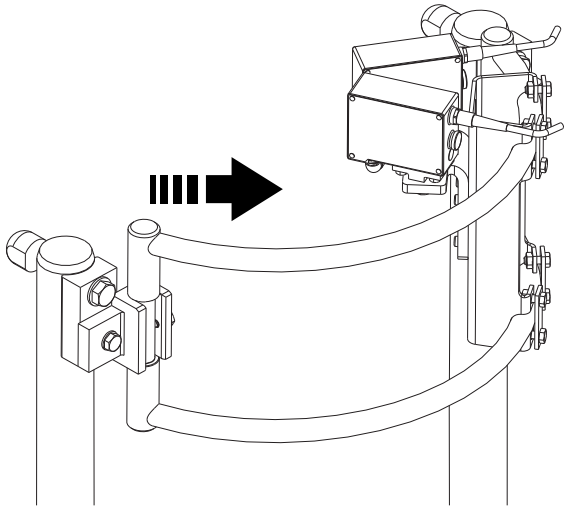

10a

Swing the bow clamp outwards.

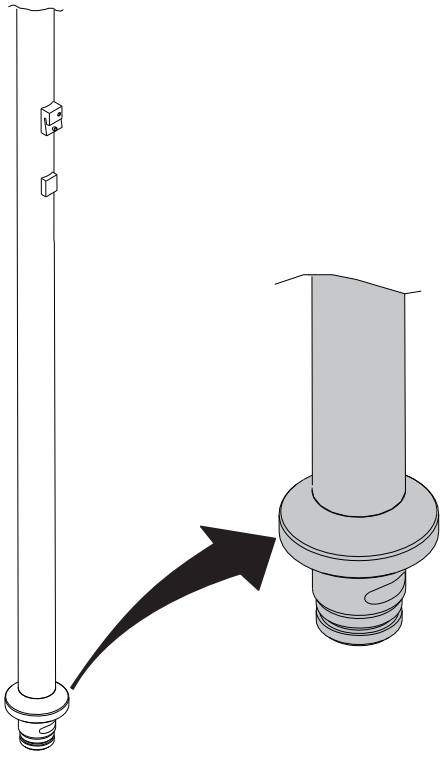

CAUTION
Risk of serious production fault.
Make sure all visible product residue has been removed from the pipe.

10b

Check that all product residue has been removed from the lower part (area shown shaded) of the upper filling pipe.

Use a sponge or brush with water and cleaning compound code **D**.

Rinse with drinking water.

Spray a small quantity of disinfectant code **G3**, on the filling pipe covering entirely the flange and the area indicated by the shading in the illustration.

Note! For cleaning compound code information, see chapter 11 Technical Data.

TechPub_2614345_0106 - 03_2819202_04en.fm

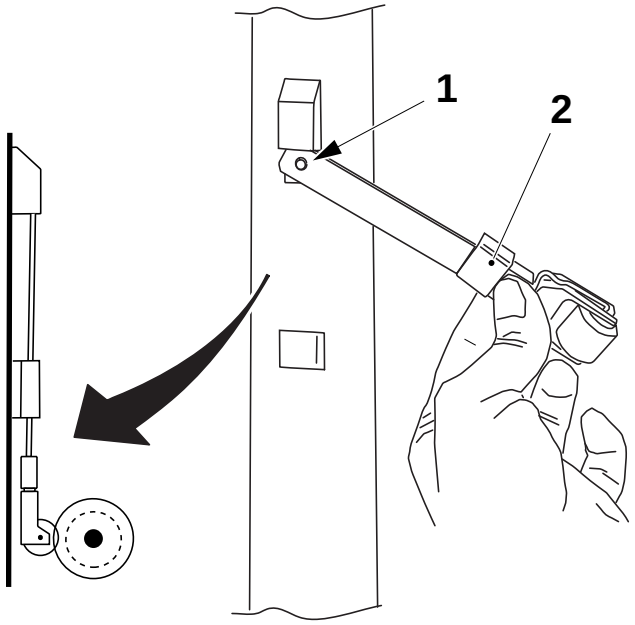

CAUTION
Hygiene.
Before handling clean parts, disinfect your hands/gloves with cleaning compound code **H**.

10c

Take the pressure roller from its storage container.

Fit the pressure roller on the pin (1).

Check that the slot in the hood (2) is towards the filling pipe.

Lock the pressure roller onto the filling pipe with the hood (2).

Note! For cleaning compound code information, see chapter 11 Technical Data.

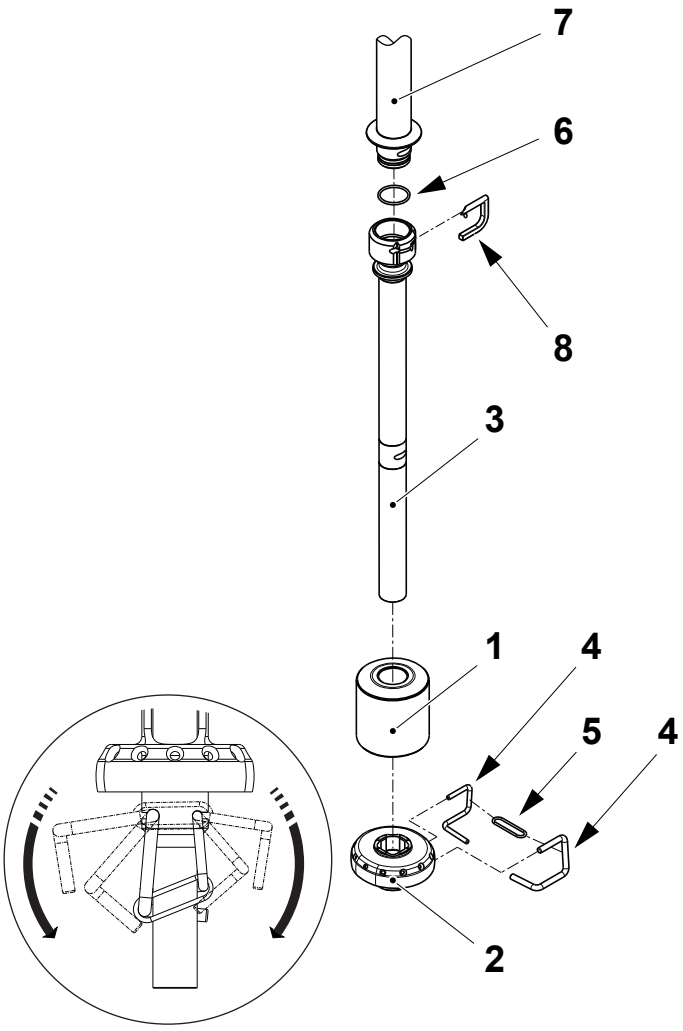

CAUTION
Hygiene.
Before handling clean parts, disinfect hand/gloves with cleaning compound code **H**. Do not rinse the lower filling pipe with water. Allow the lower filling pipe to drip dry.

10d

Fetch the lower filling pipe parts from the bath of cleaning compound.

Note! Ensure that the link (5) is fitted correctly as indicated in the illustration.

Fit the float (1) and the flange (2) to the lower filling pipe (3) with the pins (4) and the link (5).

Fit the O-ring (6).

Fit the lower filling pipe (3) to the upper filling pipe (7) by means of the locking pin (8).

Note! For cleaning compound code information, see chapter 11 Technical Data.

TechPub_2614345_0106 - 03_2819202_04en.fm

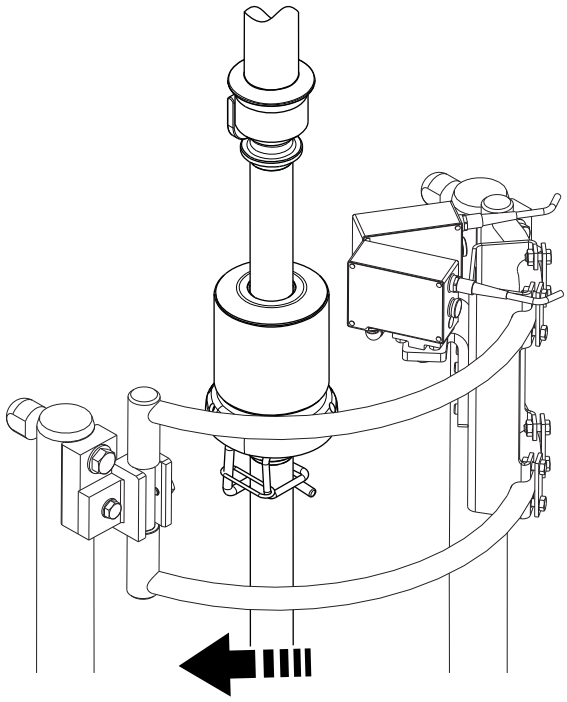

10e

Push the bow clamp inwards.

11

Reset any alarms TPOP display.

If an alarm reappears, take the appropriate action or call a technician.

TechPub_2614345_0106 - 03_2819202_04en.fm

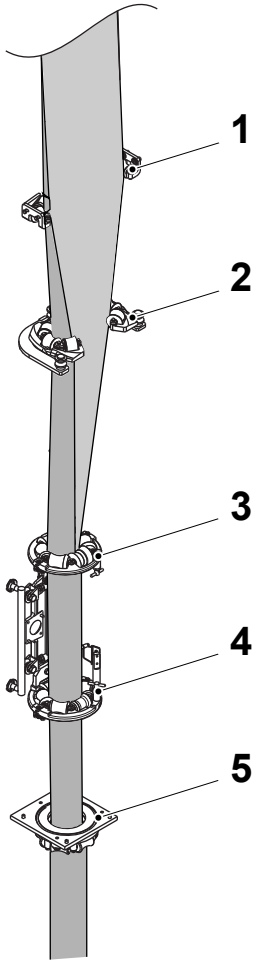

CAUTION
Hygiene.
Before handling clean parts, disinfect your hands/gloves with cleaning compound code **H**.

12

CAUTION
Risk of production fault.
Check that there are no residues of condensation on the forming rings, on the seal and on the aseptic chamber internal walls.

Pull the packaging material down through:

- the edge rollers (1)
- the forming ring (2)
- the upper forming ring (3)
- the lower forming ring (4)
- the seal (5).

Pull the packaging material down to the jaw system.

Check that the jaws grip the packaging material. If required pull down more packaging material.

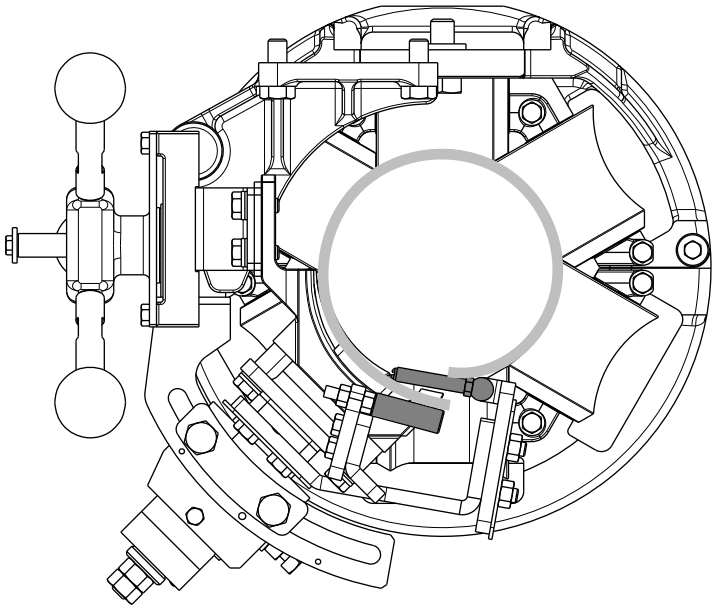

12a

Check that the packaging material is correctly positioned, as shown, on each side of the LS inductor rollers.

TechPub_2614345_0106 - 03_2819202_04en.fm



12b

Touch the PRODUCTION CONTROL button on the TPOP.

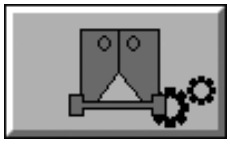

12c

Touch the PACKAGE FORMING UNIT button.



12d

Touch the JAW INCHING SELECTION icon.



12e

Touch the SLOW INCHING button.

TechPub_2614345_0106 - 03_2819202_04en.fm

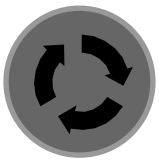

12f

Press the INCHING button when it begins to flash.

The packaging material is pulled through the filling machine.

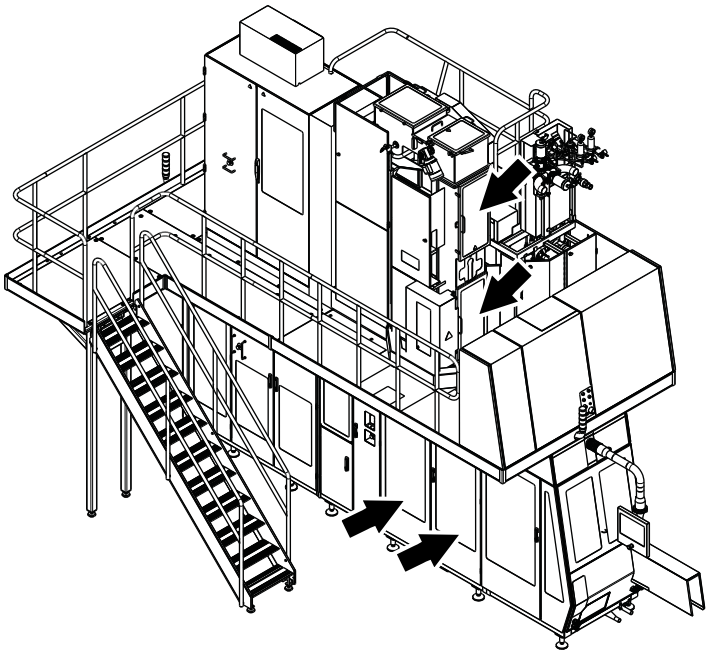

12g

Close the aseptic chamber doors and the jaw system doors.

TechPub_2614345_0106 - 03_2819202_04en.fm

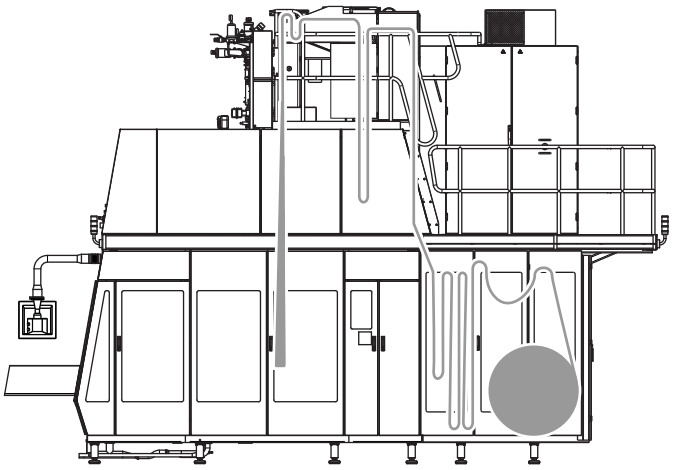

13

Check that the packaging material is properly positioned on all the filling machine bending rollers and that the packaging material passes correctly through the following areas:

- ASU
- Strip applicator
- Drying unit
- Aseptic chamber
- Jaw system.

Correct the position of the packaging material if required.

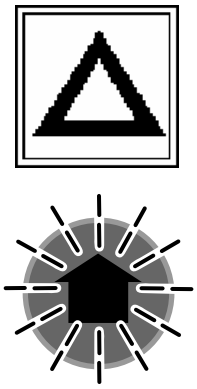

14

Close all covers and doors on the machine and reset the alarms on the TPOP display.

If an alarm is present, take the appropriate measures or call a technician.

Press the PROGRAM UP button.

TechPub_2614345_0106 - 03_2819202_04en.fm

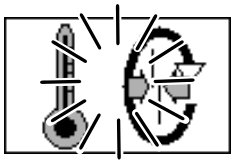

15

The machine steps to PREPARE TO TUBE SEALING.

The PREPARE TO TUBE SEALING symbol is lit.

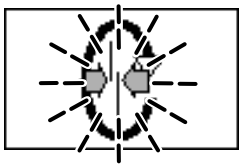

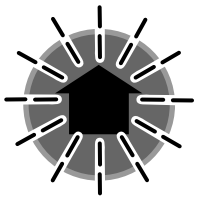

15a

When the TUBE SEALING symbol and the PROGRAM UP button starts to flash, press the PROGRAM UP button.

TechPub_2614345_0106 - 03_2819202_04en.fm

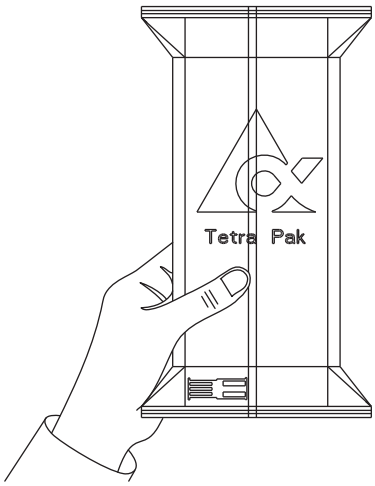

LS Strip

16

Pick out the last package inched out from the machine. Check according to the Package Checks section that:

- the LS strip is correctly positioned and properly sealed.

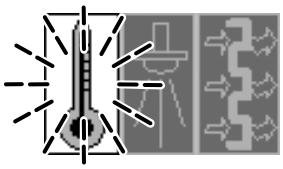

17

When the material tube has been sealed, the HEAT STERILIZATION symbol begins to flash.

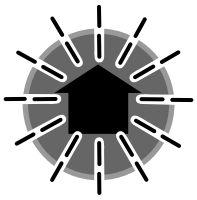



17a

Press the PROGRAM UP button and the HEAT STERILIZATION starts.

A time bar appears on the TPOP indicating the remaining time until the end of the complete sterilization sequence.

Note! The time bar indication for HEAT STERILIZATION is an estimation and the actual time can vary depending on machine specific conditions.

TechPub_2614345_0106 - 03_2819202_04en.fm

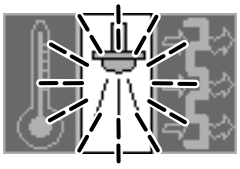

17b

When the HEAT STERILIZATION temperature has been reached, the SPRAYING symbol begins to flash and the SPRAYING sequence starts automatically.

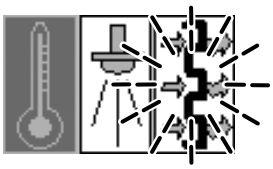



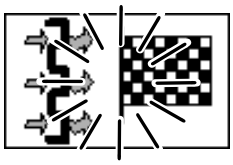

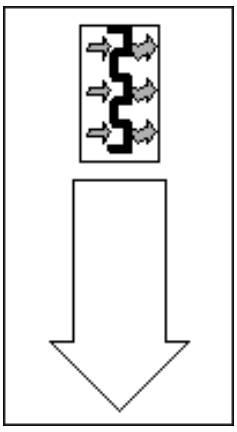

17c

After the SPRAYING sequence the SPRAYING symbol remains lit and the DRYING symbol begins to flash and the DRYING sequence starts automatically.

The DRYING sequence takes 15 minutes or 20 minutes for machines fitted with HI. A time bar displays the time remaining.

At the end of the DRYING SEQUENCE, the STERILIZATION DONE symbol is lit.

Note! After the step DRYING and up to step END PRODUCTION, the program steps VENTING and PREPARE NEXT PRODUCTION are executed automatically when the machine program is stepped down.

Note! If the STERILIZATION FAILED symbol appears on the TPOP the sterilization has failed. The machine program automatically steps down to step PREPARATION when the drying time is finished.

TechPub_2614345_0106 - 03_2819202_04en.fm

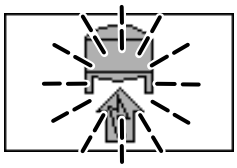

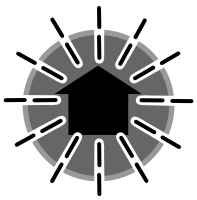

17d

When the drying sequence is completed, the SIGNAL TO STERILIZER symbol and the PROGRAM UP button begin to flash.

Press the PROGRAM UP button.

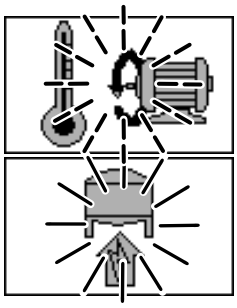

17e

The symbol SIGNAL TO STERILIZER remains lit and the PREPARE TO PRODUCTION symbol and PROGRAM UP button begin to flash.

Note! If there is a connection between the filling machine and the sterilizer equipment, a request is sent for the product.

TechPub_2614345_0106 - 03_2819202_04en.fm

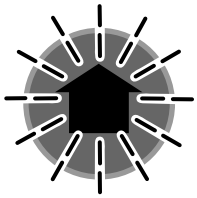

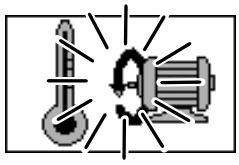

17f

Press the PROGRAM UP button.

The PREPARE TO PRODUCTION symbol remains lit.

The final folder heaters begin to heat up.

TechPub_2614345_0106 - 03_2819202_04en.fm

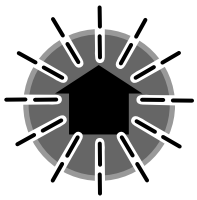

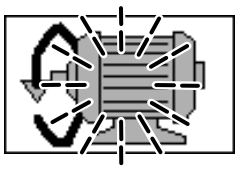

17g

Production can start when the MOTOR START symbol and PROGRAM UP button begin to flash.

Proceed according to chapter 4 Start.

This page intentionally left blank

TechPub_2614345_0106 - 03_2819202_04en.fm

4 Start

TechPub_2614345_0106 - 04_2819202_04en.fm

This chapter describes how to start the machine for PRODUCTION after Preparing after Daily Care.

To start the machine after a stop, see the Stop section.

CAUTION

Hazardous noise.

Risk of impaired hearing. Hearing protection is recommended whenever this equipment is in operation.

TechPub_2614345_0106 - 04_2819202_04en.fm

Starting Production . . . . . 4 - 5

TechPub_2614345_0106 - 04_2819202_04en.fm

This page intentionally left blank

TechPub_2614345_0106 - 04_2819202_04en.fm

Starting Production



1

Make sure all covers and doors on the machine are closed and reset any alarms on the TPOP.

If an alarm is present, take the appropriate action or call a technician.



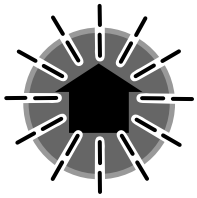

CAUTION

Risk of personal injury.

The first two packages discarded onto the waste conveyor after sterilization may contain concentrated hydrogen peroxide. It is recommended to carefully open and rinse these packages before disposal. Always wear personal protective equipment. See the Safety Precautions.

2

The machine is ready to start when the MOTOR START symbol is flashing.

Press the PROGRAM UP button. Keep the PROGRAM UP button pressed until the MOTOR START symbol remains lit and the warning signal stops.

TechPub_2614345_0106 - 04_2819202_04en.fm

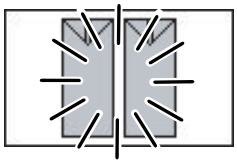

3

When the printed design on the tube is in the correct position, the PRODUCTION symbol lights up and the machine automatically lets the packages through the final folder.

CAUTION

Risk of serious production fault.
If during Stops or PRODUCTION the aseptic chamber doors are opened, or the tube bursts, tears, or it is manually cut, or product splashes occur, the machine must be cleaned and sterilized before PRODUCTION can restart.

4

Carry out the checks according to the chapter 5 Checks.



Note! Remember to register the number of packages taken for the checks. See chapter 2 Control Panels.

TechPub_2614345_0106 - 04_2819202_04en.fm

5 Checks

TechPub_2614345_0106 - 05_2819202_04en.fm

This chapter describes the checks to perform when the machine is in step PRODUCTION.

CAUTION

Hazardous noise.

Risk of impaired hearing. Hearing protection is recommended whenever this equipment is in operation.

TechPub_2614345_0106 - 05_2819202_04en.fm

Machine Checks . . . . . 5 - 5

Package Checks . . . . . 5 - 10

Package Utilisation and Recommendations . . . . . 5 - 10

Package Selection . . . . . 5 - 11

Package Identification . . . . . 5 - 12

Checking Scheme. . . . . 5 - 13

Checking Scheme Table . . . . . 5 - 14

Flowchart of the Production Quality Checks . . . . . 5 - 15

Flowchart of the Production Quality Checks . . . . . 5 - 16

Package Terms . . . . . 5 - 17

Package Quality Checks . . . . . 5 - 18

Date Printing . . . . . 5 - 18

Weight. . . . . 5 - 18

TS - Rough Check . . . . . 5 - 19

TS - Accurate Check . . . . . 5 - 19

Shape and Design . . . . . 5 - 24

Surfaces . . . . . 5 - 25

Flap Sealing . . . . . 5 - 26

LS Overlap . . . . . 5 - 26

Crease Lines . . . . . 5 - 27

LS Strip Application . . . . . 5 - 29

Laboratory Package Checks . . . . . 5 - 33

General Instructions and Recommendations . . . . . 5 - 33

Chemical terminology. . . . . 5 - 33

Checking Flowchart and Intervals for Laboratory Package Checks . . . . . 5 - 34

TechPub_2614345_0106 - 05_2819202_04en.fm

Package Integrity by Conductivity . . . . . 5 - 35

Check for Leakages with Red Ink. . . . . 5 - 38

TS Heat Pattern by Dissolving . . . . . 5 - 40

Method 1 - Dissolving with an Acid Agent . . . . . 5 - 44

Method 2 - Dissolving with an Alkaline Agent . . . . . 5 - 47

Check the Heat Pattern . . . . . 5 - 49

TS Integrity by Red Ink . . . . . 5 - 50

LS by Red Ink Injection . . . . . 5 - 52

TechPub_2614345_0106 - 05_2819202_04en.fm

Machine Checks

This section describes the checks to perform on the filling machine during PRODUCTION.

CAUTION
Risk of damage to the equipment.
Do not leave the machine unattended during PRODUCTION.

CAUTION
Risk of serious production fault.
If at any point during PRODUCTION the aseptic chamber doors are opened, or the tube bursts, tears, or it is manually cut, or product splashes occur, the machine must be cleaned and sterilized before PRODUCTION can restart.

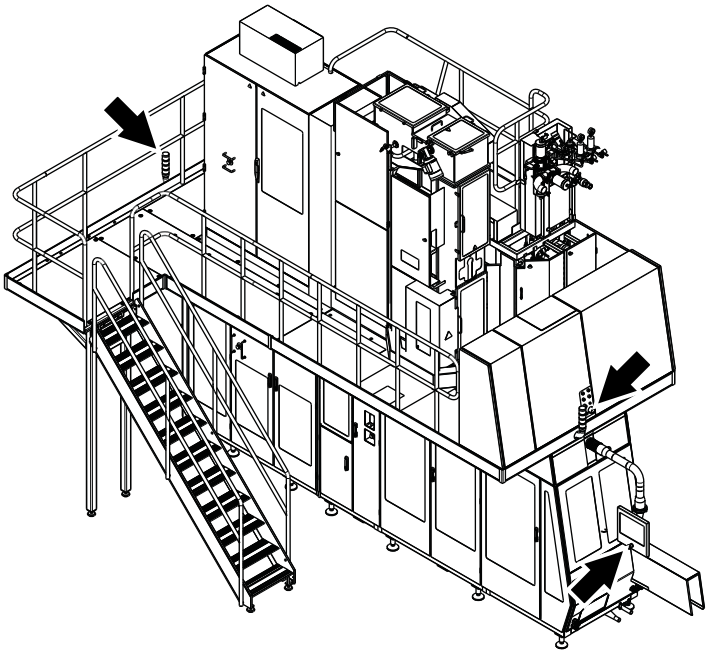

1

Check the warning beacons.

When the beacons are flashing, check the TPOP and take the appropriate action.

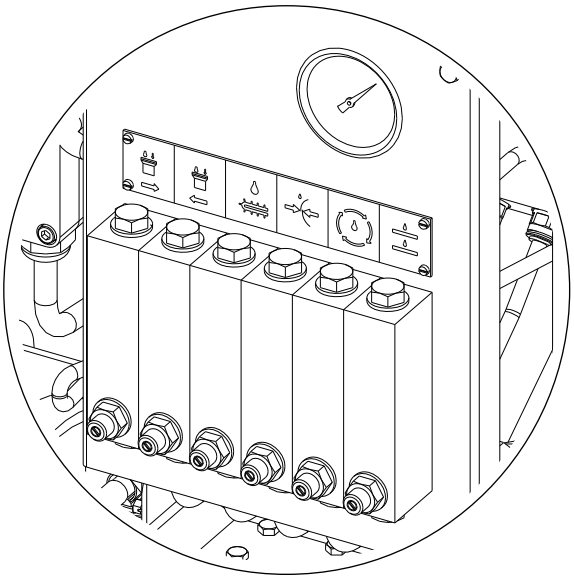

2

Check that the flow rate of the cooling circuits in the service unit are correct.

Check that all pressure gauges indicate the correct pressure setting.

See the Technical data section for the correct flow rates and pressure settings.

Call a technician if adjustments are needed.

TechPub_2614345_0106 - 05_2819202_04en.fm

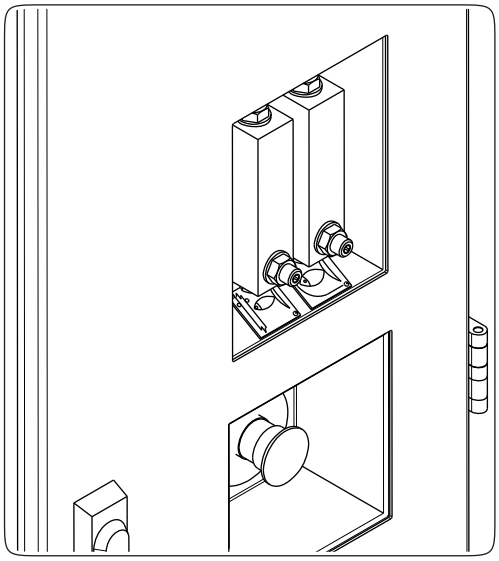

3

Check that the flow rate of the tube flushing and final folder flushing circuits on the machine body door.

See the Technical data section for the correct flow rates.

Call a technician if adjustments are needed.

TechPub_2614345_0106 - 05_2819202_04en.fm

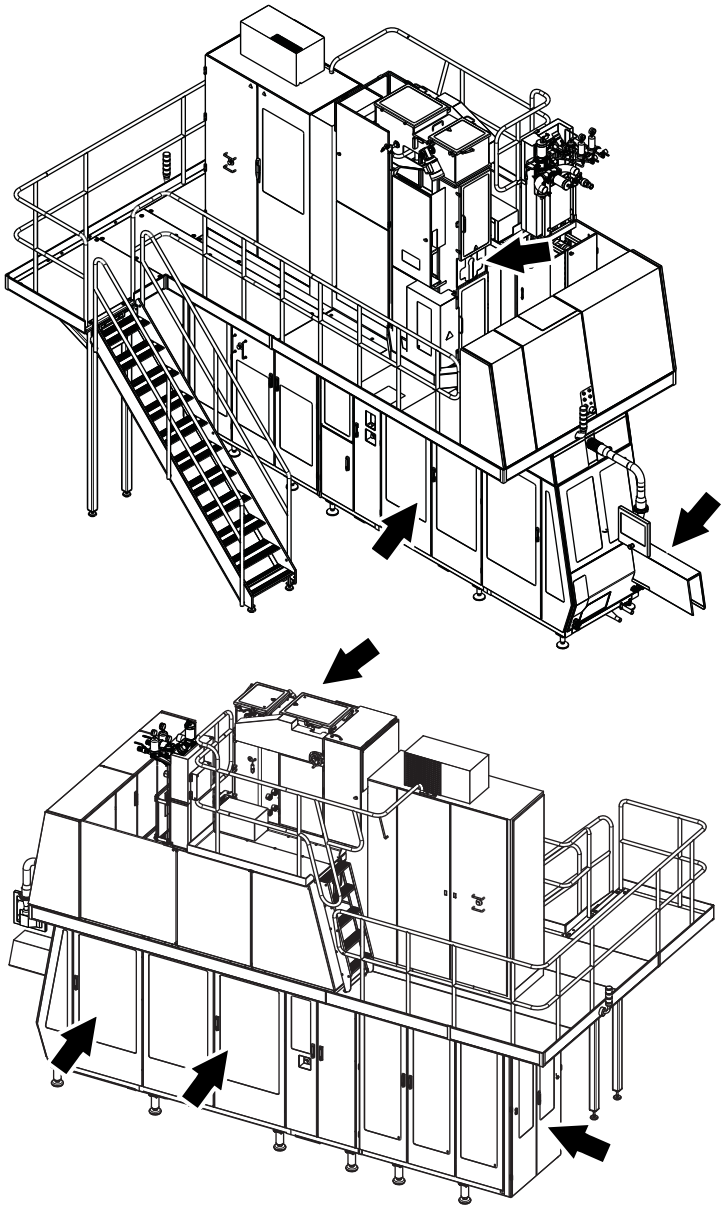

4

Make sure that the packaging material moves through the machine properly.

Make sure that all the strip supplies function correctly.

Make sure that the packages move through the jaw system, final folder area and outfeed correctly.

Refer to the threading diagram and make checks at the positions shown by the arrows:

- the ASU
- the LH side of the jaw system and final folder area
- the aseptic chamber
- the RH side of the jaw system and final folder area
- the outfeed.

TechPub_2614345_0106 - 05_2819202_04en.fm

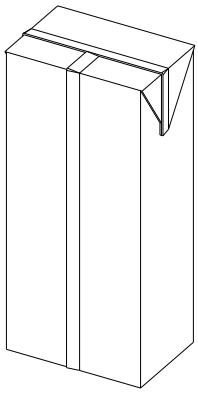

5

Check the forming and shape of the packages. See the Package checks section.

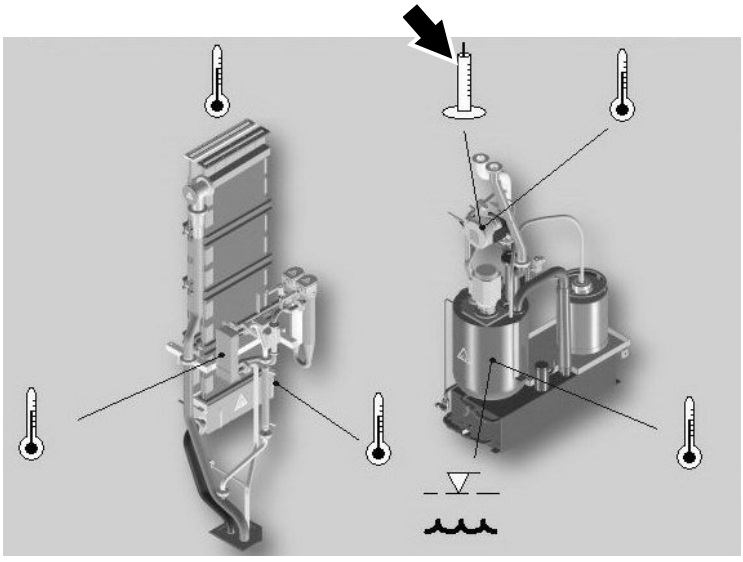

WARNING
Hydrogen Peroxide.
Follow the Safety Precautions.

6

Check the hydrogen peroxide concentration at least every eight hours of operation. See Peroxide System Window on page 2-62 of chapter 2 Control Panels.

Note! At least every 40 hours of operation check the hydrogen peroxide concentration manually as instructed in chapter 10 Sterilization Liquid.

TechPub_2614345_0106 - 05_2819202_04en.fm

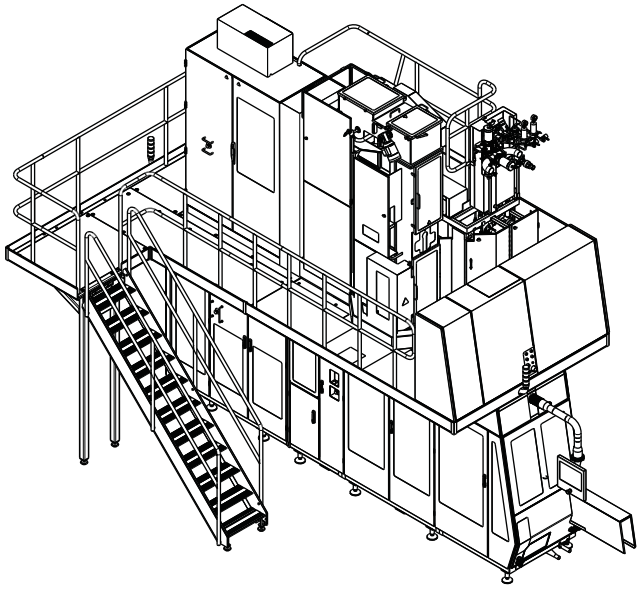

7

Check that all doors are closed. The doors of the electrical cabinet must be closed to ensure sufficient cooling.

Check that all safety covers and guards are fitted.

Make sure the platform, the stairs, and the area around the machine are clean and free from loose objects.

TechPub_2614345_0106 - 05_2819202_04en.fm

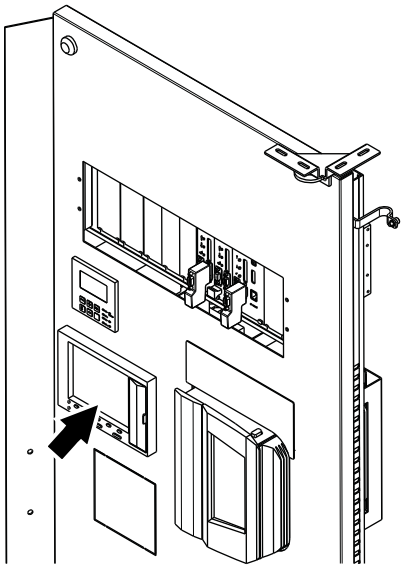

8

Check on the Production data recorder screen that the recorder is recording all of the channels. If not, call a technician.

Package Checks

This section describes the checks to perform on the packages during PRODUCTION.

CAUTION
Package Checks and corrective actions will affect the Quality of the PRODUCTION.
Use these checking methods as the minimum requirement. If there is any doubt about the integrity of the packages, pick out more packages for further checking. Whenever a fault cannot be eliminated call a technician.

Package Utilisation and Recommendations

To waste the minimum quantity of packages and to perform the checks in the optimum amount of time, proceed as follows:

Take three packages from the conveyor.

Following the instructions in Package Selection on page 5-11 and Package Identification on page 5-12.

Note! Use the same two packages to perform all the checks that require two packages, the third package is used only for the LS/SA check. Only take one package for the check performed after a LS strip splice.

Perform the package checks according to the Checking Scheme on 5-13.

Use the Flowchart of the Production Quality Checks on page 5-15 to determine what actions (if any) are needed after each package check.

Carefully read the section Package Terms on page 5-17 to become fully acquainted with the terminology used to describe the different components and characteristics of the package.

TechPub_2614345_0106 - 05_2819202_04en.fm



Package Selection

1

To select packages and to be able to identify from which jaw pair the packages were formed, proceed as follows:

Touch the PRODUCTION CONTROL button.

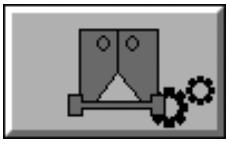

2

Touch the PACKAGE FORMING UNIT button.

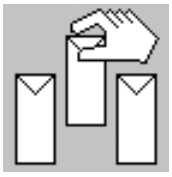

3

Touch the SAMPLE PACKAGE icon.

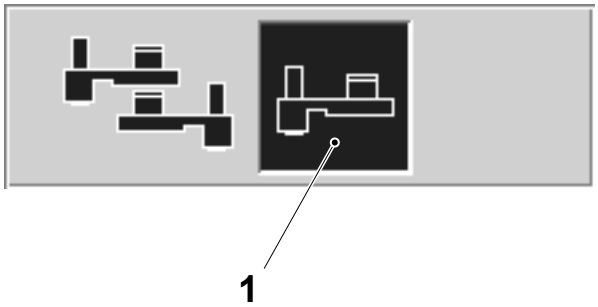

4

Touch the RH SIDE OR LH SIDE icon (1) (touching the icon switches between the LH and RH jaw sides) to select the jaw pair from which the first package sample should be taken.

Note! Touching the LH side will cause the jaw system to eject a package from the RH side jaw leaving a gap in the package outfeed to identify the LH side package.

TechPub_2614345_0106 - 05_2819202_04en.fm



5

Touch the ON button to start the sampling of the packages.

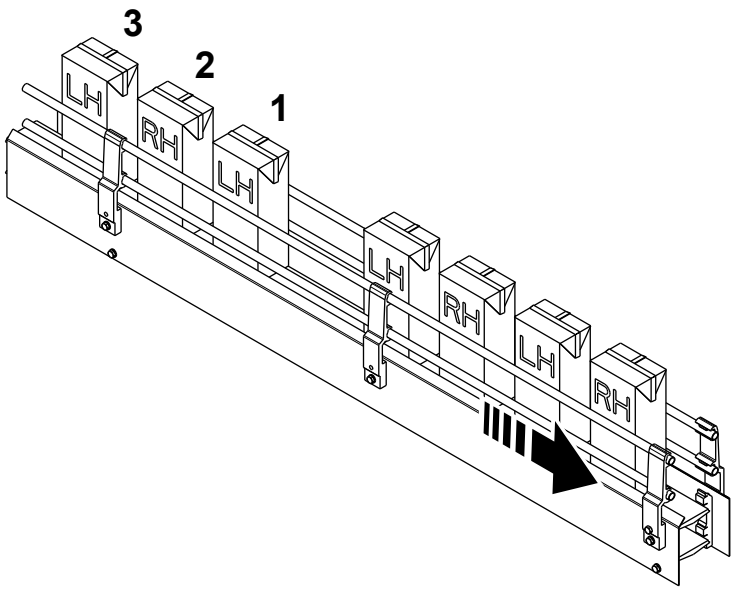

6

The jaw system discards a package.

Take the three packages from the conveyor after the gap caused by the discarded package.

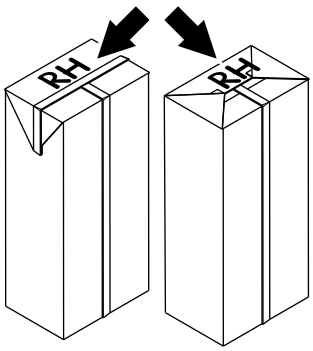

Package Identification

7

To prevent confusion, clearly mark on the top and bottom of the package made in the RH jaw the letters **RH** using an indelible pen. Mark the other packages made in the LH jaw with the letters **LH**.



Note! Remember to register the number of packages taken for the checks. See chapter 2 Control Panels.

TechPub_2614345_0106 - 05_2819202_04en.fm

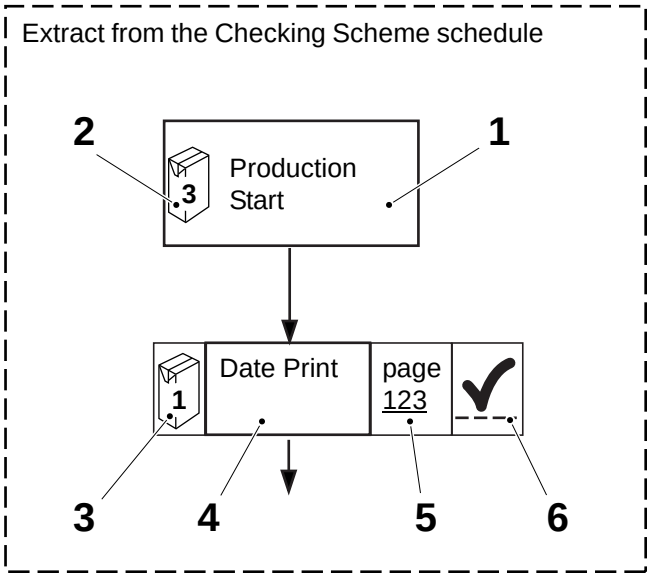

Checking Scheme

Perform the package checks in the sequence described in the Checking Scheme Table.

The Checking Scheme Table explains:

- the events which it is recommended to perform the package checks immediately after, e.g. Production Start (1)
- the number of packages needed according to which event has prompted the package checks (2)
- the number of packages on which to perform the individual checks (3)
- the check to be performed (4)
- the page number of the check instruction (5)
- to mark the check box when the check has been completed (6).

Note! The Checking Scheme Table can be photocopied and used as template during PRODUCTION.

TechPub_2614345_0106 - 05_2819202_04en.fm

Checking Scheme Table



* Intended for every packaging material reel.

TechPub_2614345_0106 - 05_2819202_04en.fm

Extract from Flowchart of operator quality checks

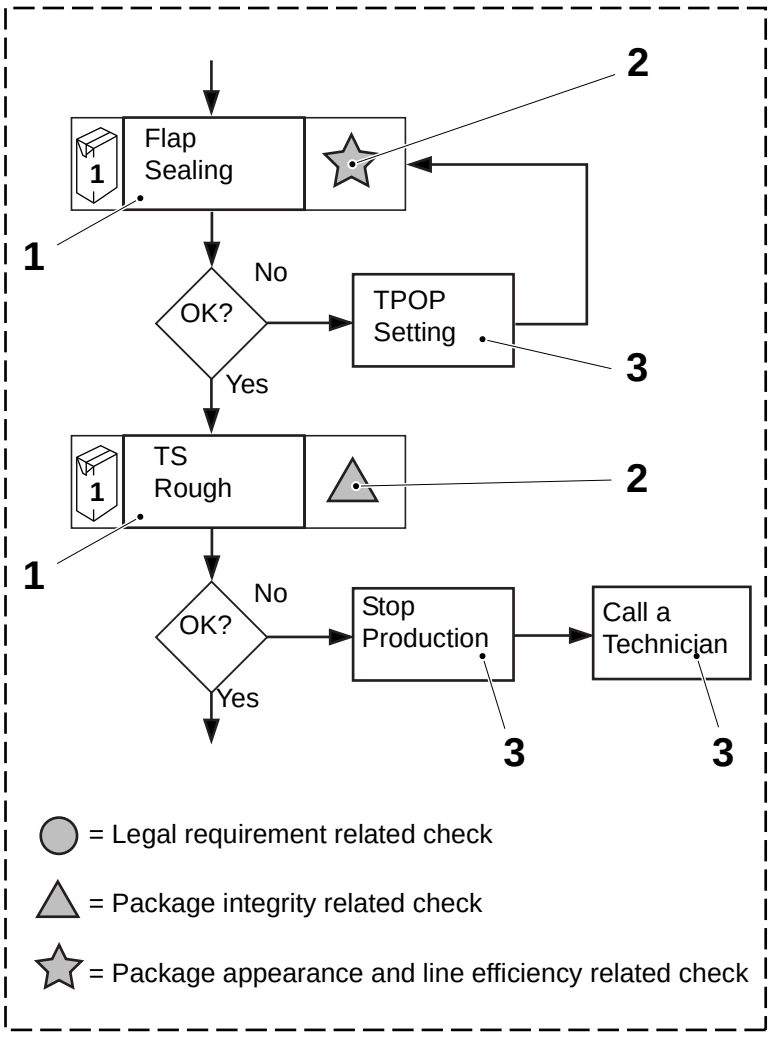

Flowchart of the Production Quality Checks

The Flowchart of Production Quality Checks displays:

- the checks to be performed in the sequence described in the checking scheme table (1)
- the type of check (2)
- the necessary actions (if any) to be taken depending on the result of the completed check (3).

TechPub_2614345_0106 - 05_2819202_04en.fm

Flowchart of the Production Quality Checks

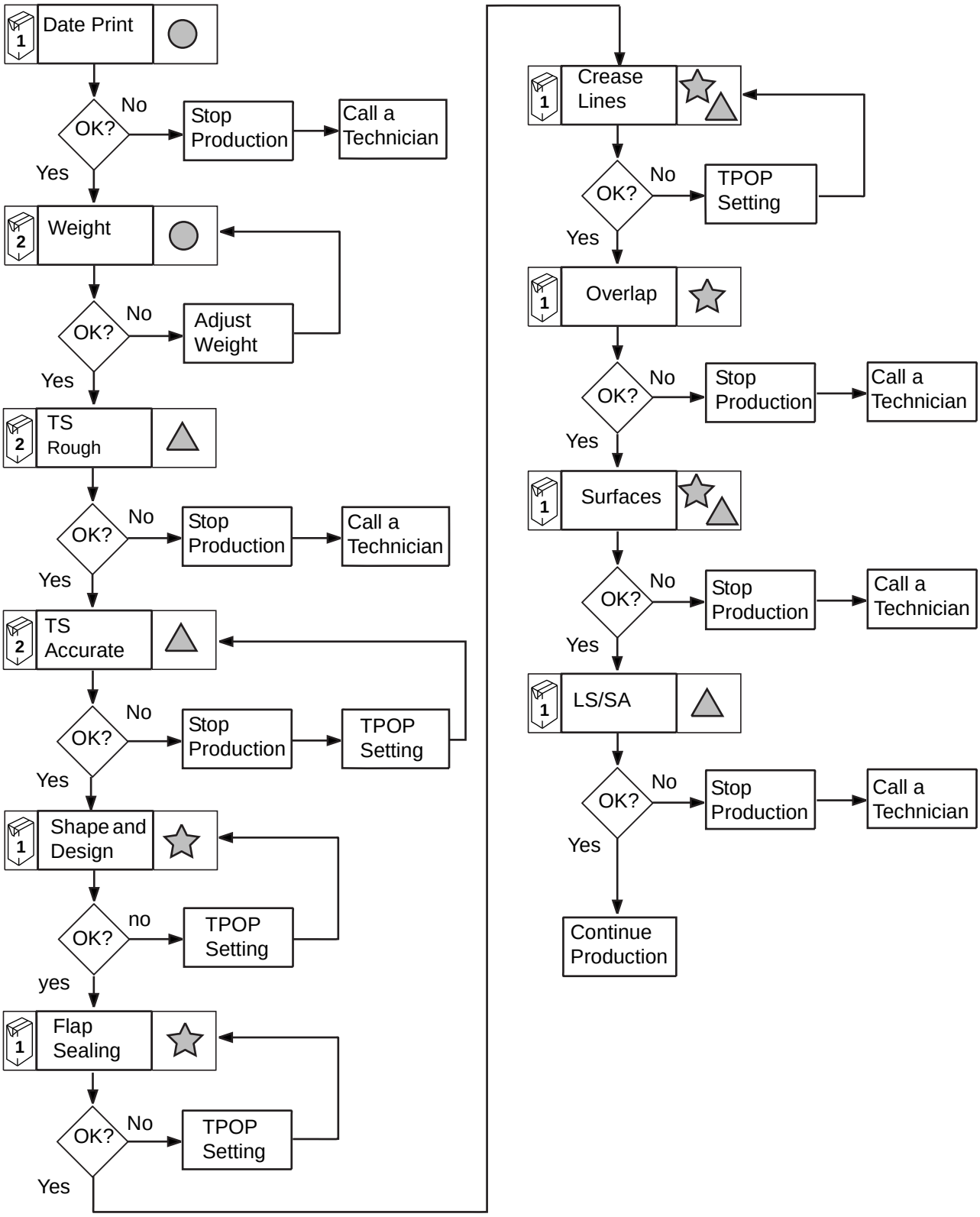

TechPub_2614345_0106 - 05_2819202_04en.fm

Package Terms

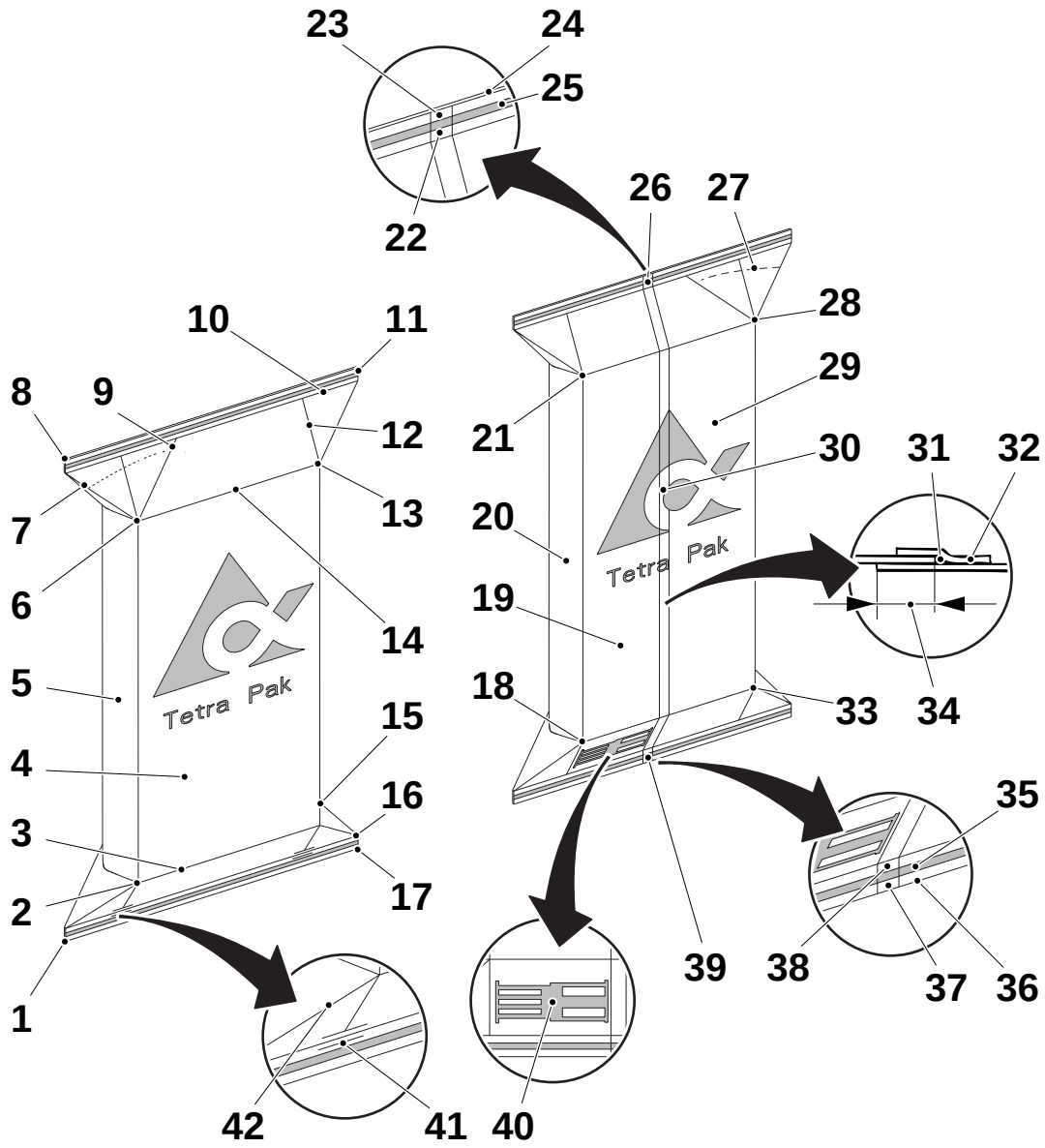

1 Bottom left fin corner
2 Bottom front left corner
3 Bottom crease
4 Front side of package/panel 3
5 Left side of package/panel 2
6 Top front left corner
7 Top flap creases
8 Top left fin corner
9 Spout crease
10 Top fin crease
11 Top right fin corner
12 Longitudinal crease
13 Top front right corner
14 Top crease
15 Bottom front right corner
16 Bottom fin crease
17 Bottom right fin corner
18 Bottom rear right corner
19 Rear side of package/panel 5
20 Right side of package/panel 4
21 Top rear right corner
22 Top inner cross
23 Top outer cross
24 Top cutting line
25 Top transversal seal
26 Top cross
27 Perforation
28 Top rear left corner
29 Rear side of package/panel 1
30 Longitudinal seal (LS)
31 Air gap
32 LS strip
33 Bottom rear left corner
34 LS overlap
35 Bottom transversal seal
36 Bottom cutting line
37 Bottom outer cross
38 Bottom inner cross
39 Bottom cross
40 Register code
41 Double creases
42 Bottom flap crease

TechPub_2614345_0106 - 05_2819202_04en.fm

Package Quality Checks

Tools needed:

- scissors
- stretch pliers, TP No. 78073-0100
- a clean work bench in a well illuminated area.

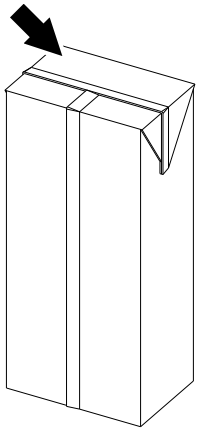

Date Printing

Check the date and code printing.

If necessary stop the filling machine and adjust the date printing according to the instructions supplied with the printer.

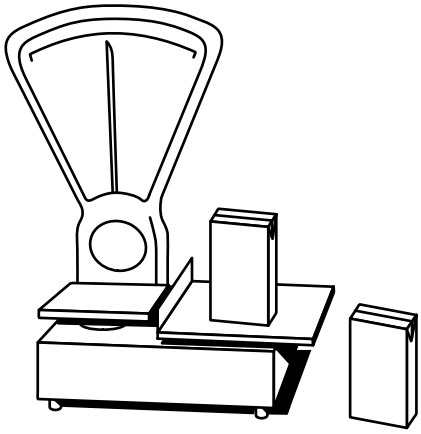

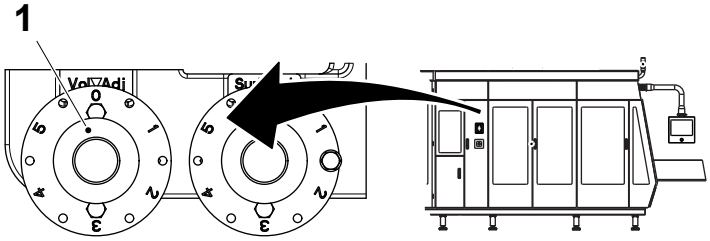

Weight

Note! If the weight of the packages produced with HI (OE) are equal but not the designated weight, follow the instructions in the Filling System Window section in chapter 2 Control Panels to adjust the HI pressure and flow.

Weigh the packages and record their weights and weight deviations.

To adjust the package weight, turn the knob (1) behind the central lubrication system door (LH side of the machine):

- turning **to the left** decreases the package weight
- turning **to the right** increases the package weight

This can be done during PRODUCTION.

After setting, pick out new packages and check them.

TechPub_2614345_0106 - 05_2819202_04en.fm

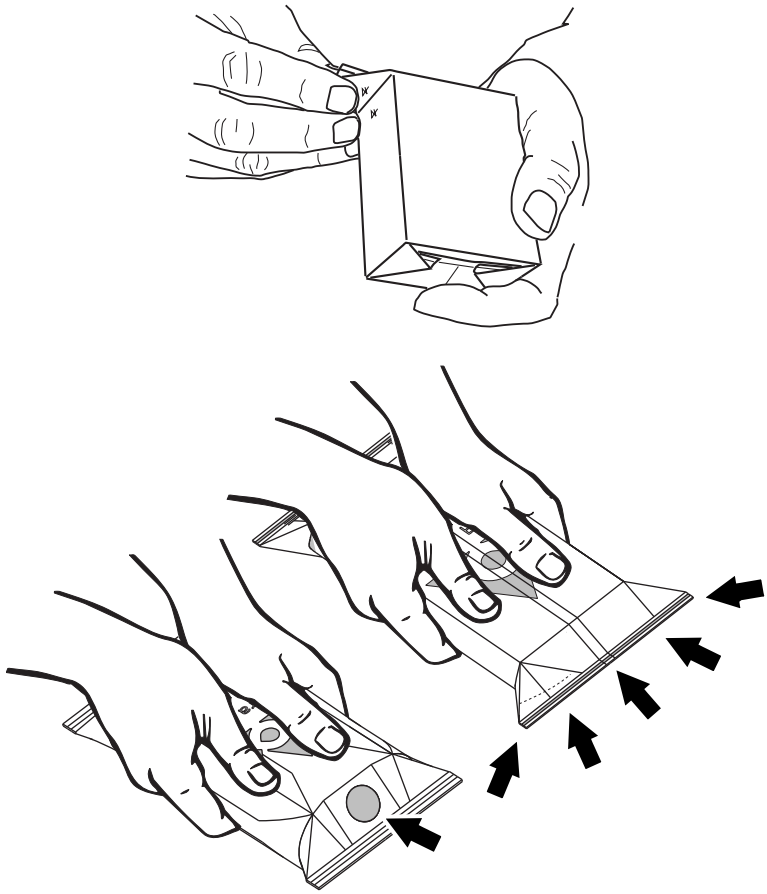

TS - Rough Check

Unfold the flaps.

Check the integrity of the top and bottom transversal seal by gently squeezing the packages by hand.

Critical points are:

- the corners
- the intersections between the LS creases and the TS
- the crosses where the TS and the LS meet.

If any product leakage is found stop the machine and call a technician.

Note! If there is leakage from between the pre-laminated hole and the package, call a technician.

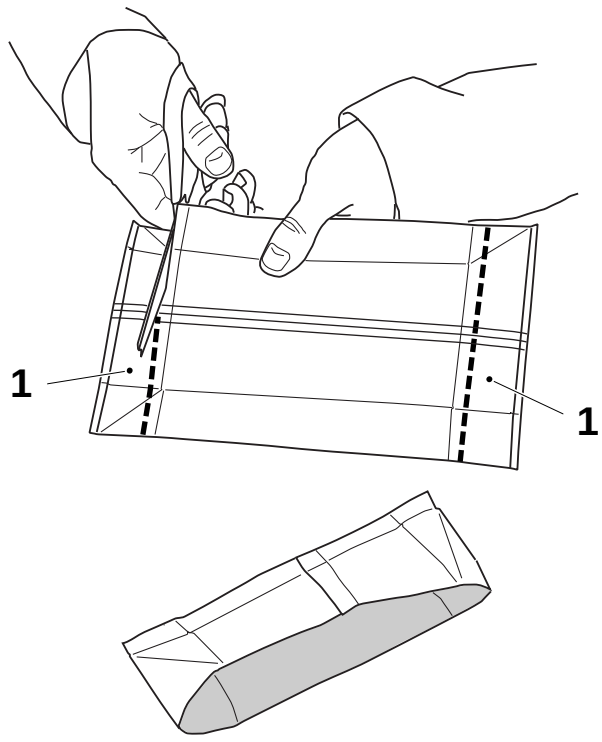

TS - Accurate Check

1

Cut a sample strip (1) of about 25 mm in width from the top and bottom transversal seals.

Wash the samples and dry them, with compressed air from the filling machine.

TechPub_2614345_0106 - 05_2819202_04en.fm

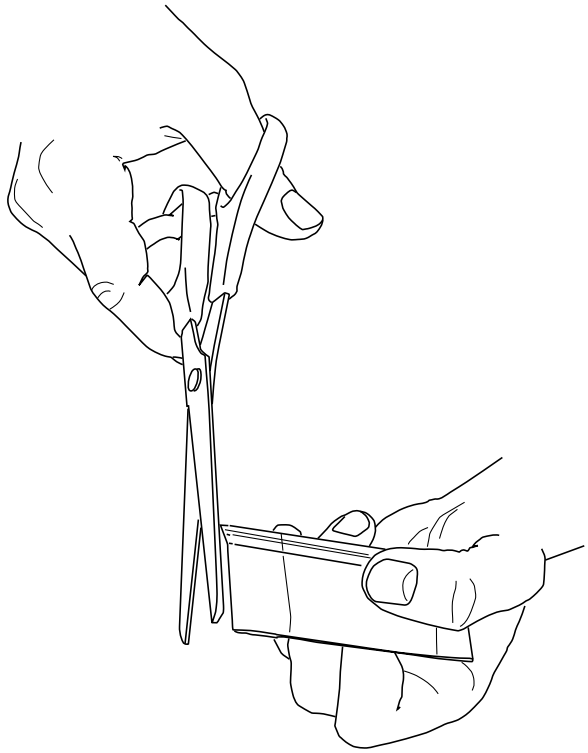

2

Cut off no more than 1 mm from each side of the package at a 90° angle to the TS.

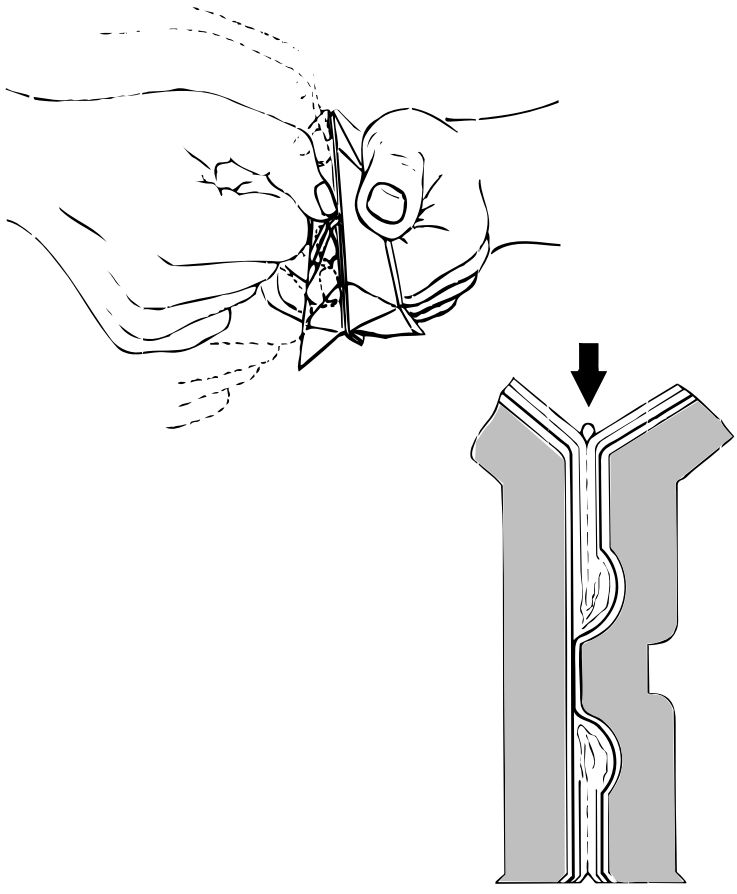

3

Bend the TS. The sealing is defective if there are lumps or ridges in the sealing area.

This may be caused by too much heat or high pressure on the jaws during sealing.

If the pressure is too high call a technician.

To adjust the power and correct the TS sealing, follow the instructions in Package Forming Unit Window on page 2-69 of chapter 2 Control Panels.

TechPub_2614345_0106 - 05_2819202_04en.fm

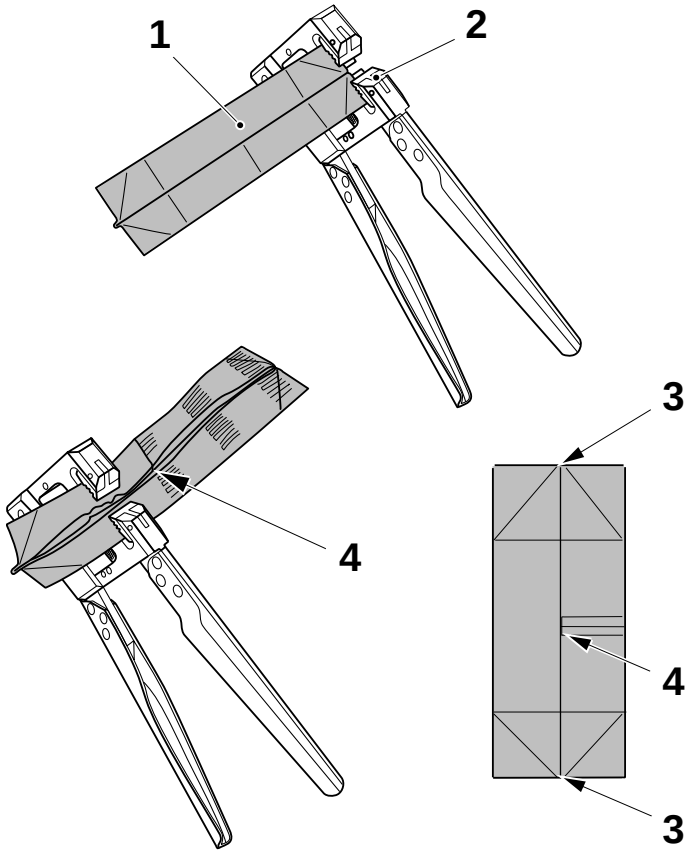

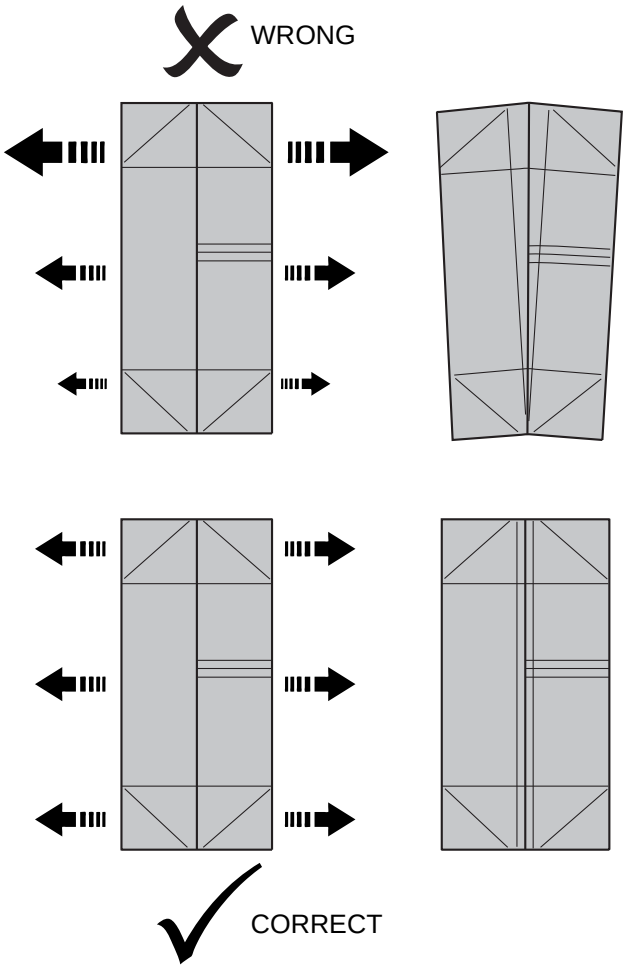

4

Insert the edges of the sample (1) into the gripping jaws (2) of the stretch pliers.

Gently squeeze the handles to stretch the seal.

Stretching slowly makes evaluation easier.

Observe that the seal area stretches and breaks.

Continue stretching along the sample (1) until it has completely opened.

The TS must be stretched and evaluated along the entire seal.

Note! Move the pliers from side to side often to avoid pulling only at one end.

Pay special attention to the TS corners (3) and where the TS and the LS meet (TS/LS cross) (4).

TechPub_2614345_0106 - 05_2819202_04en.fm

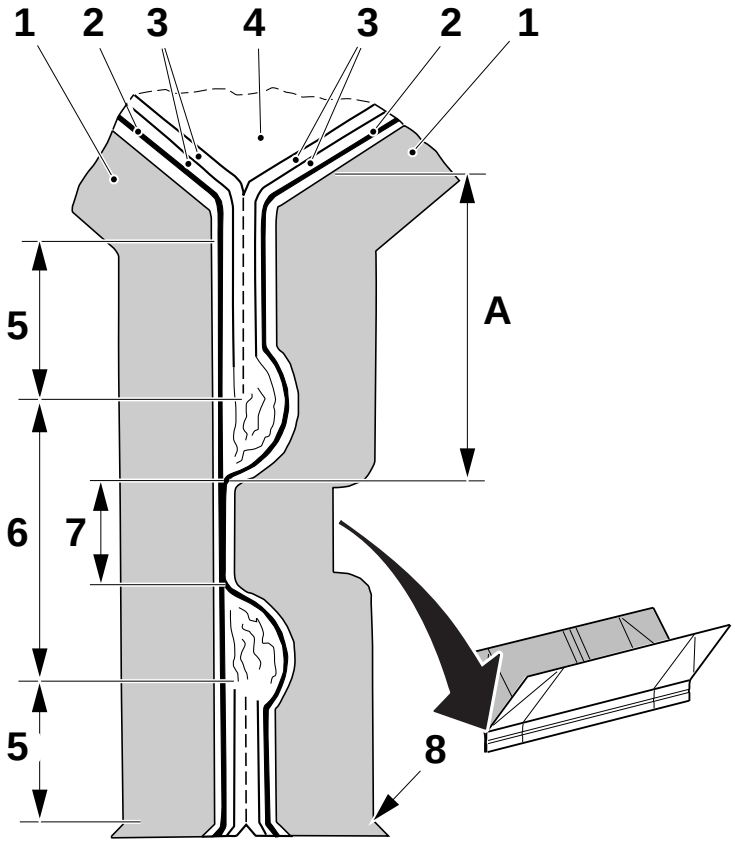

5

Stretch the TS along the entire length of the seal with the stretch pliers and evaluate the seal.

It is mainly the sealing on the product side of area **A** that is important.

1 Paper board
2 Aluminium foil
3 Polyethylene (double layer)
4 Filling product
5 Blocked area
6 Sealed area
7 Ridge
8 Cutting line

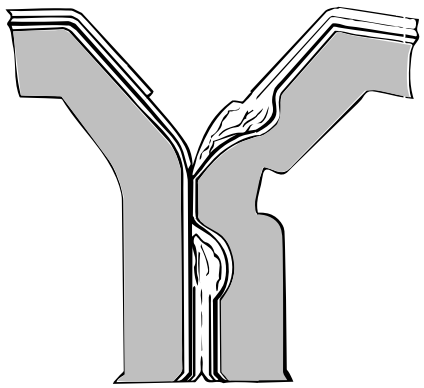

6

Check the TS sealing.

The sealing is acceptable if:

The seal remains intact but a delamination between the two inner coatings takes place.

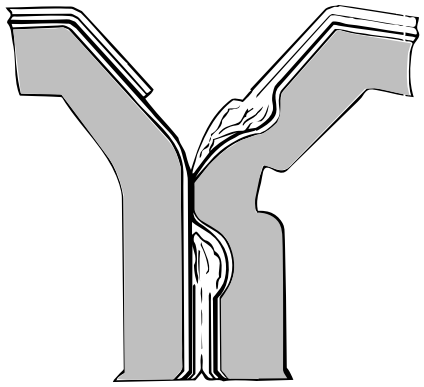

7

The sealing is acceptable if:

The seal remains intact when the joint is pulled apart, but the Al-foil comes off on one of the sides presenting a shiny metal surface.

TechPub_2614345_0106 - 05_2819202_04en.fm

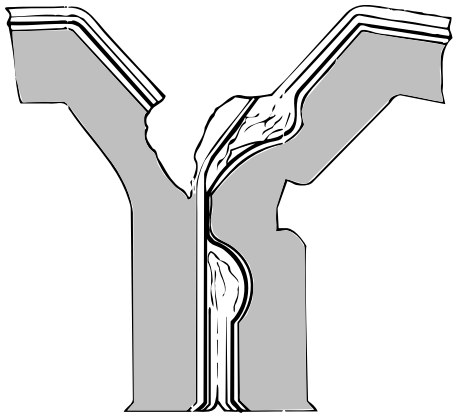

8

The sealing is acceptable if:

The seal remains intact but a rupture takes place in the layer of paper board.

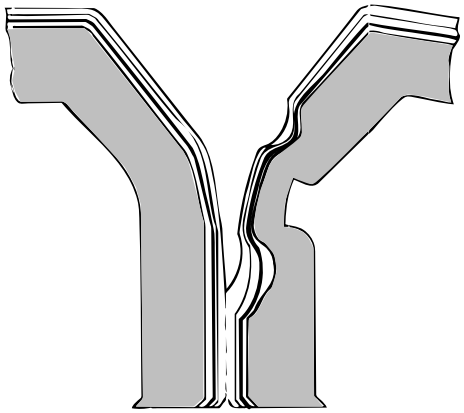

9

The sealing is defective if:

The seal is so weak that the two PE layers separate without rupturing.

Adjust the power to correct the TS sealing, follow the instructions in Package Forming Unit Window on page 2-69 of chapter 2 Control Panels.

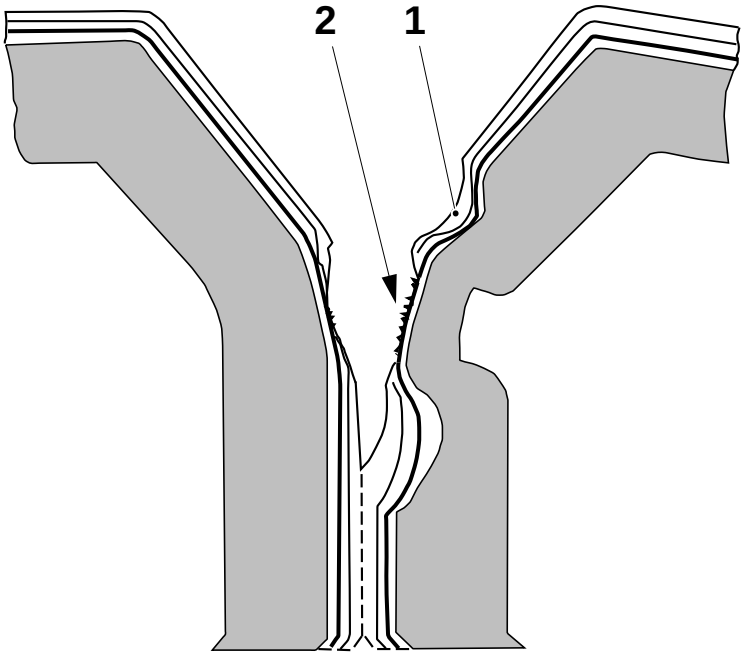

10

The TS is defective if:

The seal is so overheated that the two PE layers (1) disappear from the sealing area because they have melted away and the aluminium foil (2) shows micro-cracks and cuts.

Adjust the power to correct the TS sealing, follow the instructions in Package Forming Unit Window on page 2-69 of chapter 2 Control Panels.

TechPub_2614345_0106 - 05_2819202_04en.fm

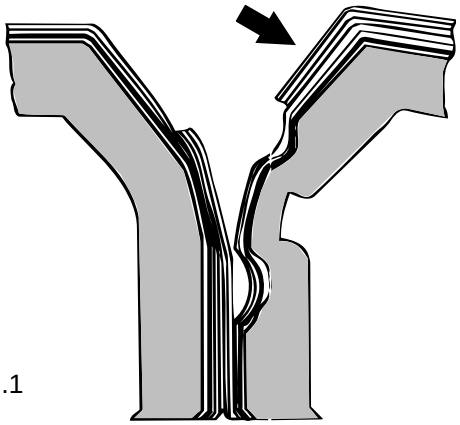

fig.1

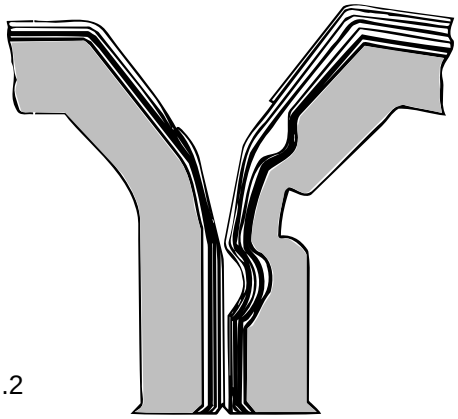

fig.2

11

Check the TS sealing in the cross area.

Note! The evaluation of the **TS** also applies to the evaluation of the cross.

The strip (shown by the arrow) can be regarded as additional layers coating the Al-foil.

The sealing is acceptable if:

a rupture occurs in any of the layers (fig.1).

The sealing is defective if:

there is **no** rupture (fig.2). This may be caused by too low a sealing power.

Adjust the power to correct the TS sealing, follow the instructions in Package Forming Unit Window on page 2-69 of chapter 2 Control Panels

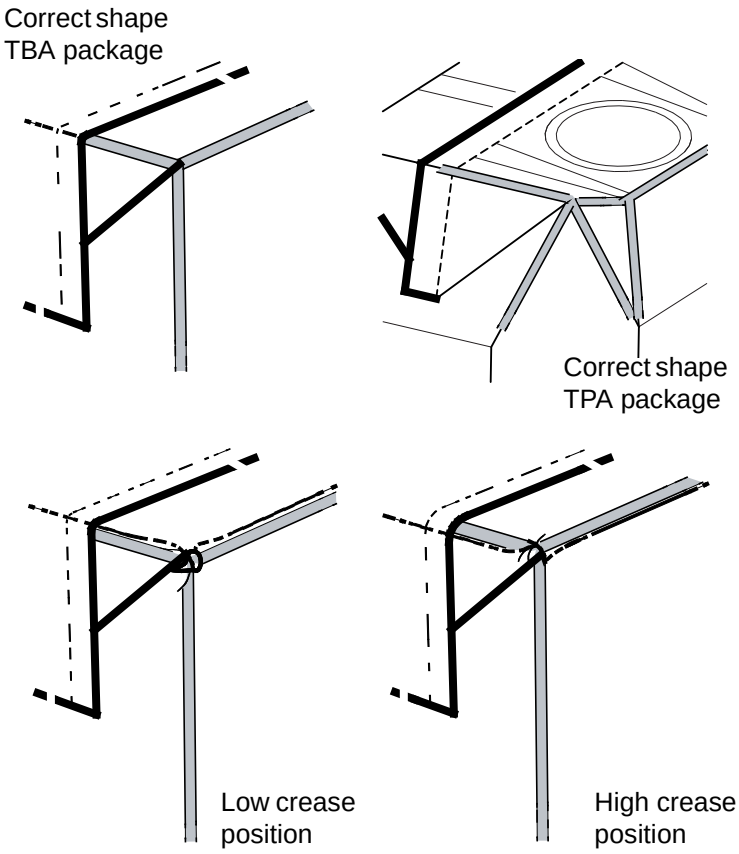

Shape and Design

1

Check the shape of the package.

Check that the preformed creases in the packaging material are correctly aligned along the edges of the package.

To adjust the package creases follow the procedure Design Correction Offset on page 2-75 of chapter 2 Control Panels

TechPub_2614345_0106 - 05_2819202_04en.fm

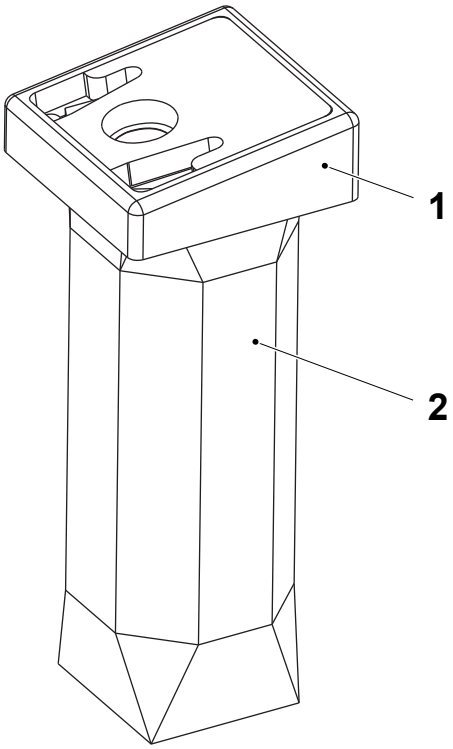

2

Pre-laminated Holes

Put the template (1) on the package (2) with the template hole over the pre-laminated hole on the package.

The package is approved if the pre-laminated hole is located within the hole diameter of the template.

Package	Template
TPA 1000 Sq TPA 750 Sq	2579622-0000

Note! See the Technical data section for the correct templates numbers.

TechPub_2614345_0106 - 05_2819202_04en.fm

fig.1

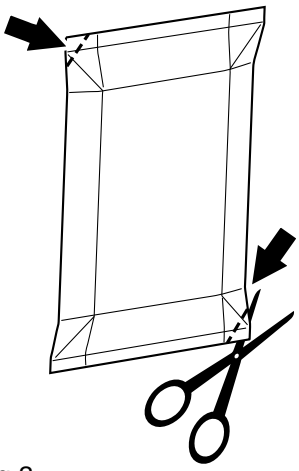

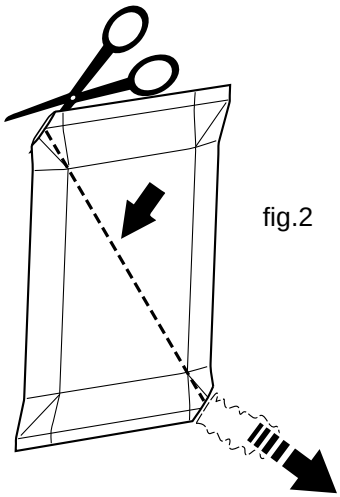

fig.2

fig.3

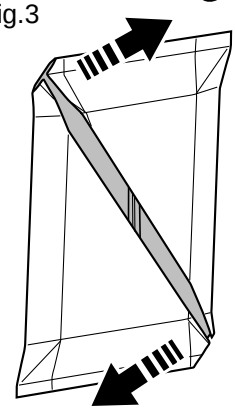

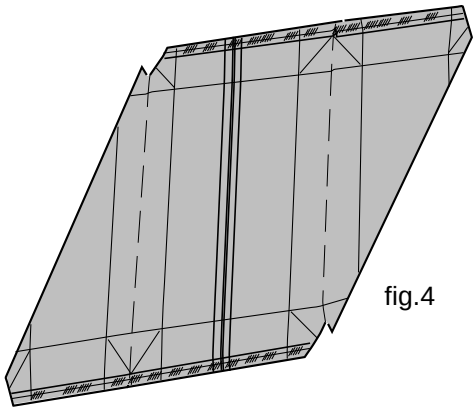

fig.4

Surfaces

Cut two opposite corners (fig.1) and empty the content of the package.

Cut transversally the front panel of the package, from the lower cut corner to the opposite one (fig.2 and 3).

Split the TS apart and open the package (fig.4).

Rinse and dry the package with compressed air from the filling machine.

Check the outside and inside surfaces of the package for scratches or other possible defects that can be detected with the fingernail.

Inside deep scratches might cause package integrity problems.

If there are any defects, call a technician.

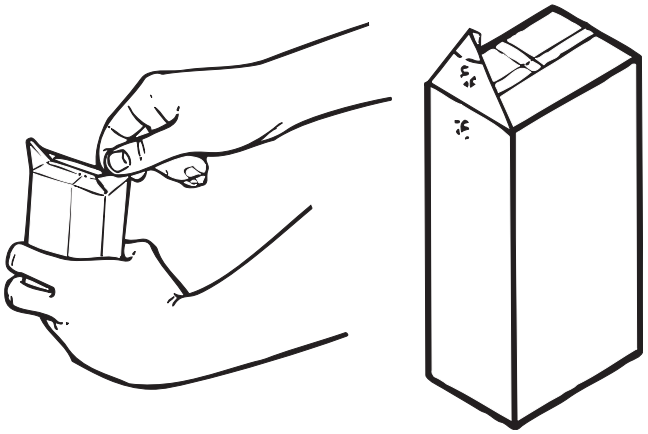

Flap Sealing

Unfold the flaps and check that they are properly sealed.

To adjust the flap sealing follow the instructions in the Final Folder Unit Window on page 2-90. of chapter 2 Control Panels.

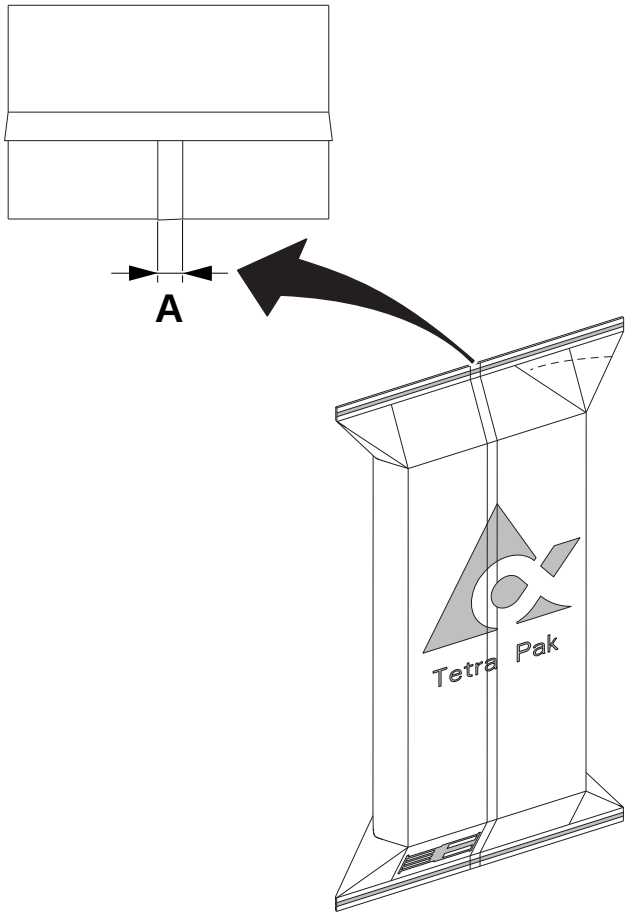

LS Overlap

Check the width of the overlap (distance **A**).

Package	Distance A
TBA 500 S	7.0 ± 1.0 mm
TBA 500 B	8.0 ± 1.0 mm
TBA 1000 B	8.0 ± 1.0 mm
TBA 1000 S	8.0 ± 1.0 mm
TBA 500 Sq	6.0 ± 1.0 mm
TBA 1000 Sq	6.0 ± 1.0 mm
TPA 750 Sq	7.0 ± 1.0 mm
TPA 1000 Sq	7.0 ± 1.0 mm
TBA 1500 S	8.0 ± 1.0 mm
TBA 2000 S	8.0 ± 1.0 mm

TechPub_2614345_0106 - 05_2819202_04en.fm

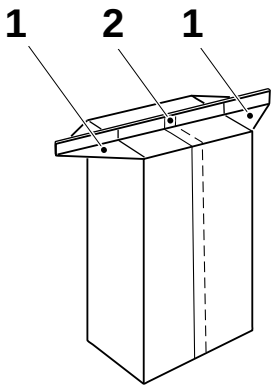

Bottom view of package

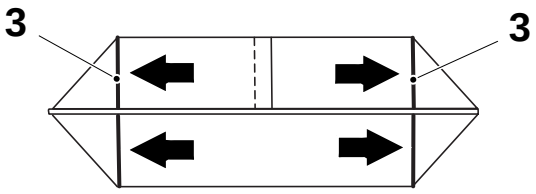

fig.1

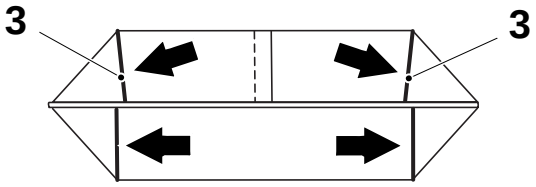

fig.2

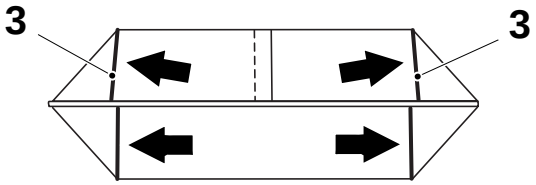

fig.3

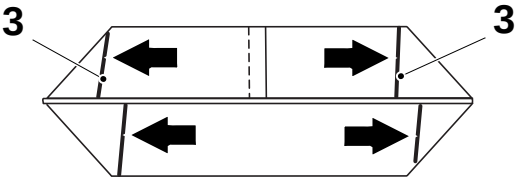

fig.4

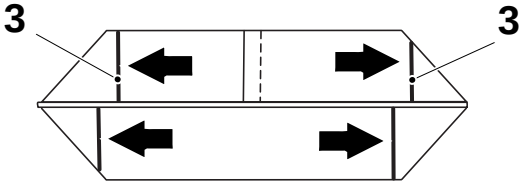

fig.5

Crease Lines

1

Unfold the bottom flaps (1) and then lift up the package bottom fin (2).

Note! To correctly check the crease line alignment, it is important to unfold the flaps. Checking the crease line alignment with the flaps in the folded position may provide an incorrect indication of the crease line alignment due to the package folding.

Check the position of the preformed crease lines (3).

The position is acceptable if:

- the creases are opposite one another (fig.1) either parallel (fig.2) or at an angle (fig.3).

The position is not acceptable if:

- the preformed crease lines are not opposite one another (fig.4 and fig.5).

Note! Figures 2, 3 and 4 show a misalignment due to the LS overlap. The crease positions in figures 2 and 3 are considered acceptable, but may compromise cap application (if any).

TechPub_2614345_0106 - 05_2819202_04en.fm

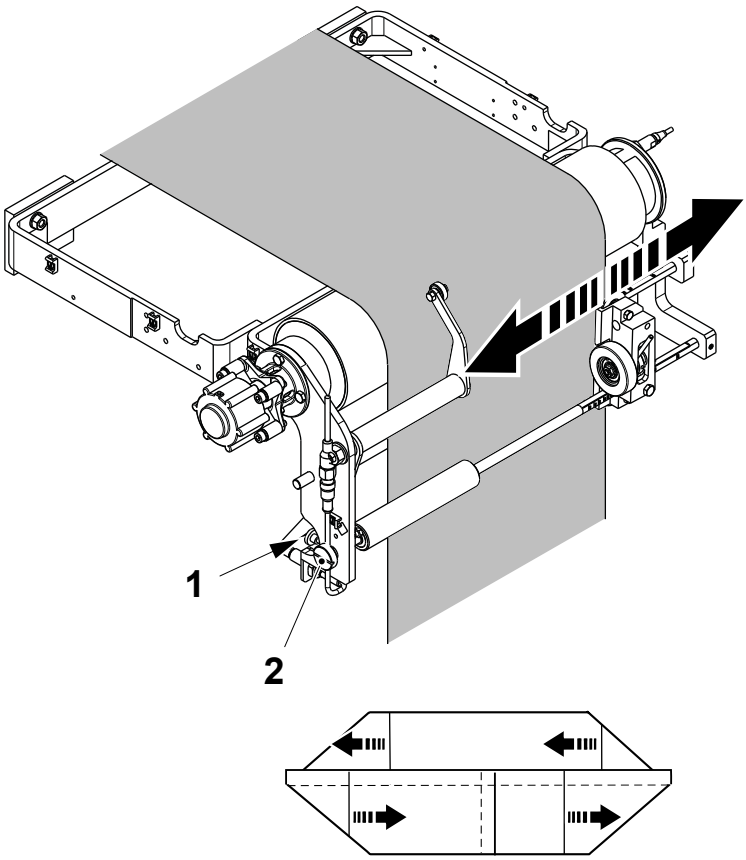

2

To adjust the position of the preformed crease lines, loosen the adjusting knob (1) and turn the knob (2) counterclockwise to adjust the position of the paper guide. This rotates the packaging material tube and moves the creases in the direction shown.

Turn the knob (2) clockwise to move the crease lines in the opposite direction.

Note! Remember to tighten the adjusting knob (1) when the adjustment is completed.

Note! For large volumes make sure that after any adjustment the packaging material and LS strip are not positioned over the end of the roller.

After adjustment, pick out new packages and check them. Check the longitudinal sealing according to item 1 on page 5-29.

TechPub_2614345_0106 - 05_2819202_04en.fm

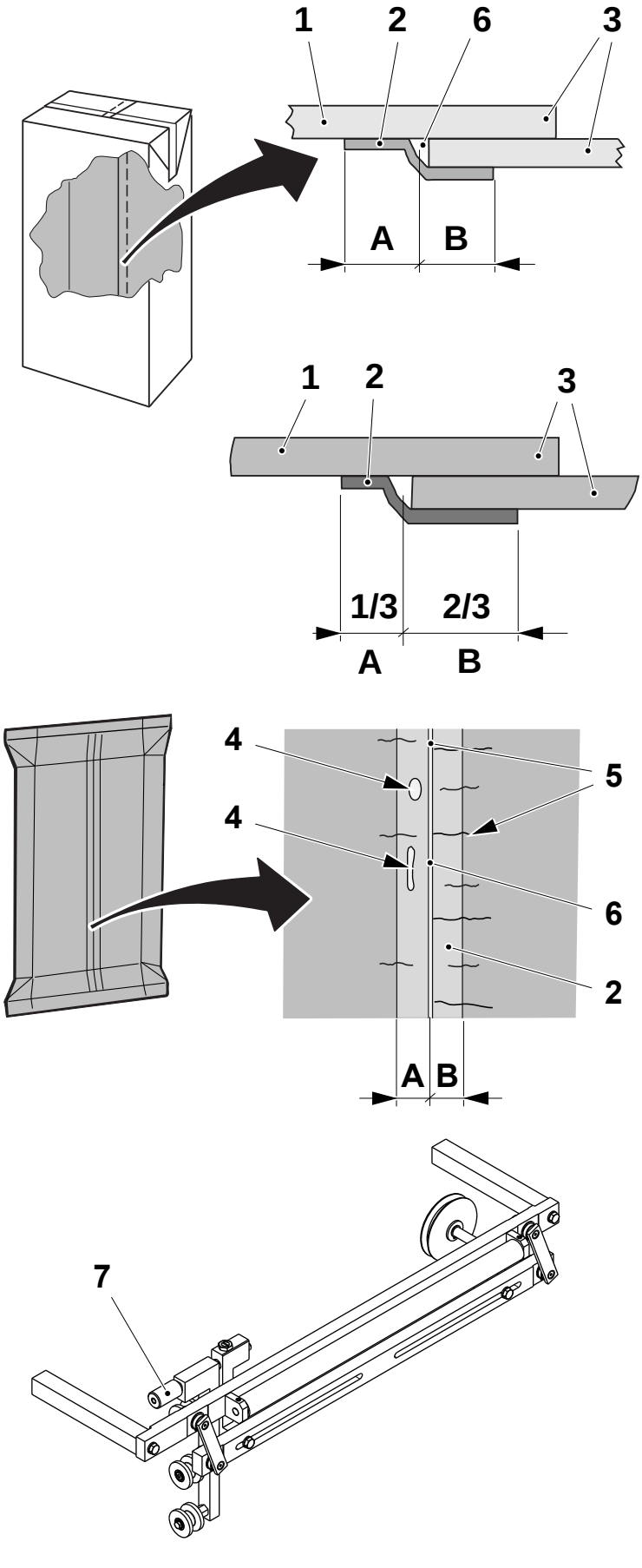

LS Strip Application

1

Note! The Longitudinal Sealing side (LS) is the side of the strip (2) where the packaging material (1) is single. The Strip Applicator side (SA) is the side of the strip where the packaging material (3) is double.

Note! For the MPM strip type, the strip must be positioned 2/3 on the SA side and 1/3 on the LS side.

Check that the strip sealed on the SA side (excluding the air gap) is more than half the width of the strip.

Check for blisters or bubbles (4) along the heated zone of the LS strip (2). The presence of blisters (4) in the LS side (**A**) of the strip (2) indicates too much sealing temperature for the LS induction heater.

Presence of blisters in the SA side (**B**) of the strip indicates too much sealing temperature for the strip applicator induction heater.

On the LS strip (2) there are some small heating lines (5) visible mainly on the SA side.

Note! Stop the machine in SHORT STOP before adjusting the strip position.

If required, adjust the position of the strip by turning the adjusting screw (7) on the strip guide.

Call a technician if the setting of the LS or SA inductors must be changed.

Note! The air channel (6) must be visible.

TechPub_2614345_0106 - 05_2819202_04en.fm

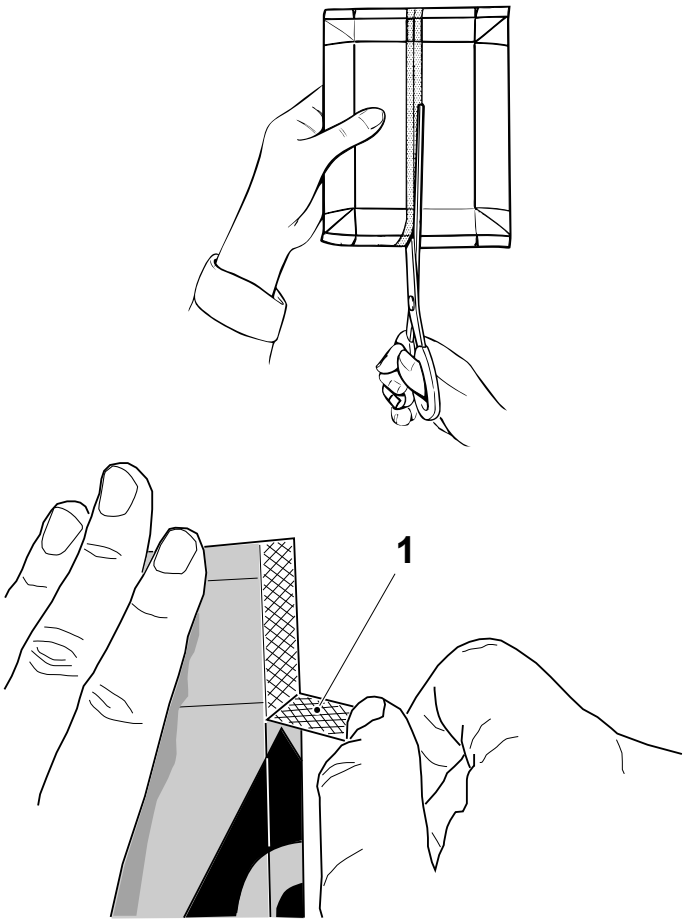

2

Check that there are no blisters in the Al-foil.

Cut through the middle of the LS strip, along the inner edge of the packaging material.

Pull off the outer layer of packaging material (1) where it is double, to check the overlap. A good overlap gives stability to the package. If there is any defect, corrective actions should be taken.

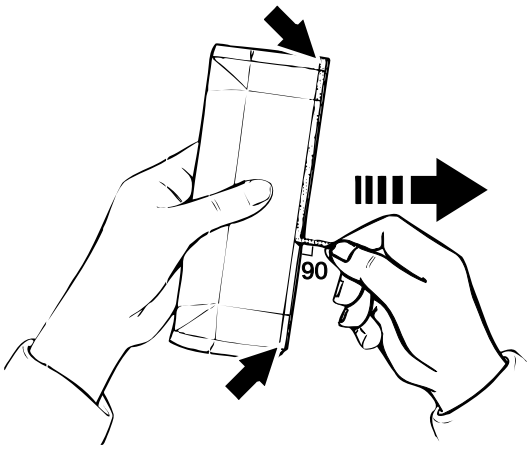

3

Check the strip sealing by slowly pulling approximately 20 mm of the strip outwards at an angle of 90°. Pull **extremely** slowly over the creases. Take hold again and pull another 20 mm. Continue along the whole edge. Pull on both sides (SA and LS).

Note! If any of the layers come off, cut the strip and start pulling again.

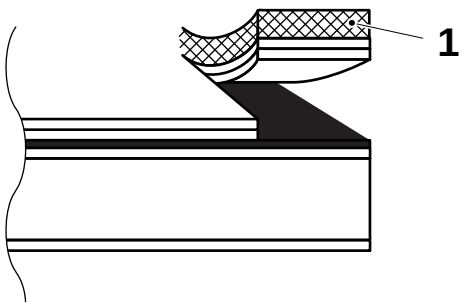

4

Check the strip sealing.

The sealing is acceptable if:

both inner coatings come off with the strip (1), leaving the Al-foil bare.

TechPub_2614345_0106 - 05_2819202_04en.fm

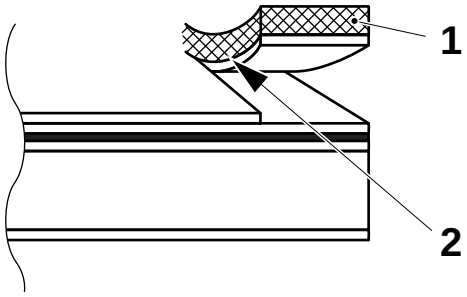

5

The sealing is acceptable if:

one of the two inner coatings comes off with the strip (1), leaving a ruptured edge (2) along the seal.

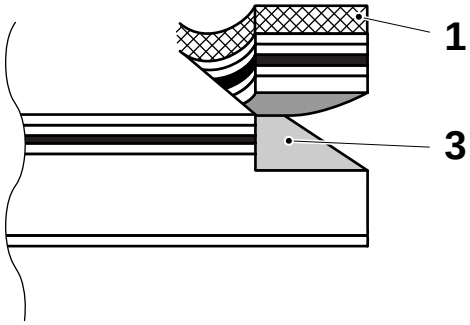

6

The sealing is acceptable if:

all the inner layers including the Al-foil come off with the strip (1), although possibly leaving paper board fibres (3).

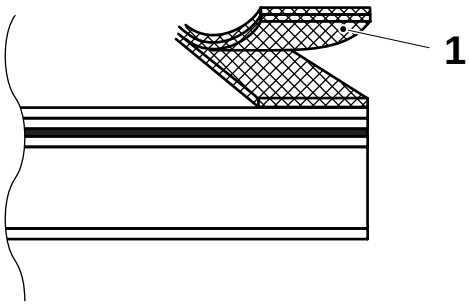

7

The sealing is acceptable if:

the strip separates (delaminates) when it is pulled off.

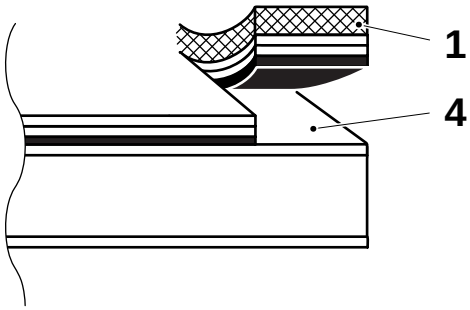

8

The sealing is acceptable if:

all the inner layers including the Al-foil come off with the strip (1), even possibly leaving part of the inner PE layer (4) on both sides.

TechPub_2614345_0106 - 05_2819202_04en.fm

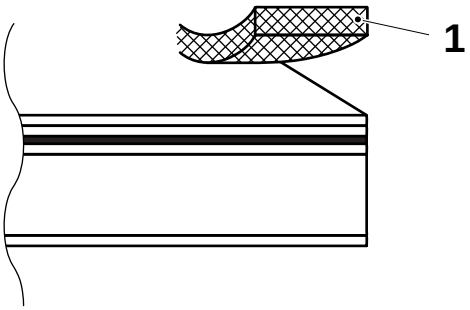

9

The sealing is defective if:

the strip (1) comes off leaving the inner coatings of the packaging unaffected. In this case, stop PRODUCTION and call a technician for specific settings.

TechPub_2614345_0106 - 05_2819202_04en.fm

Laboratory Package Checks

This section describes the laboratory checks to perform on the packages.

CAUTION
Laboratory Package Checks and corrective actions can affect the Quality of the PRODUCTION.
Whenever a fault cannot be eliminated call a technician.

General Instructions and Recommendations

These package checks are **exclusively a laboratory assessment**. After specific training by a laboratory officer, an operator might perform on his own the evaluation in the laboratory premises using the fume extractor.

The preparation of chemicals is under the laboratory responsibility.

To perform the checks at least **3** packages are needed. **2** Extra packages might be needed if conductivity and dissolving tests are to be performed in parallel.

Equipment needed:

- scissors
- plastic container
- ammeter (TP no. 90243-110)
- beakers and bowls
- table salt
- red ink (TP No.90298-28)

Chemical terminology

Formula	Extended
$CuCl_2$	Copper Cloride
NaOH	Sodium Hydroxide
HCl	Hydrocloric Acid
Na_2CO_3	Sodium Carbonate

TechPub_2614345_0106 - 05_2819202_04en.fm

Checking Flowchart and Intervals for Laboratory Package Checks

Record the checks performed using the flowcharts provided in this chapter. Archive the test samples together with the record sheet, and keep them as part of the company Quality Assurance program.

Note! Examples of Recording and Sample collecting sheets are available on request.

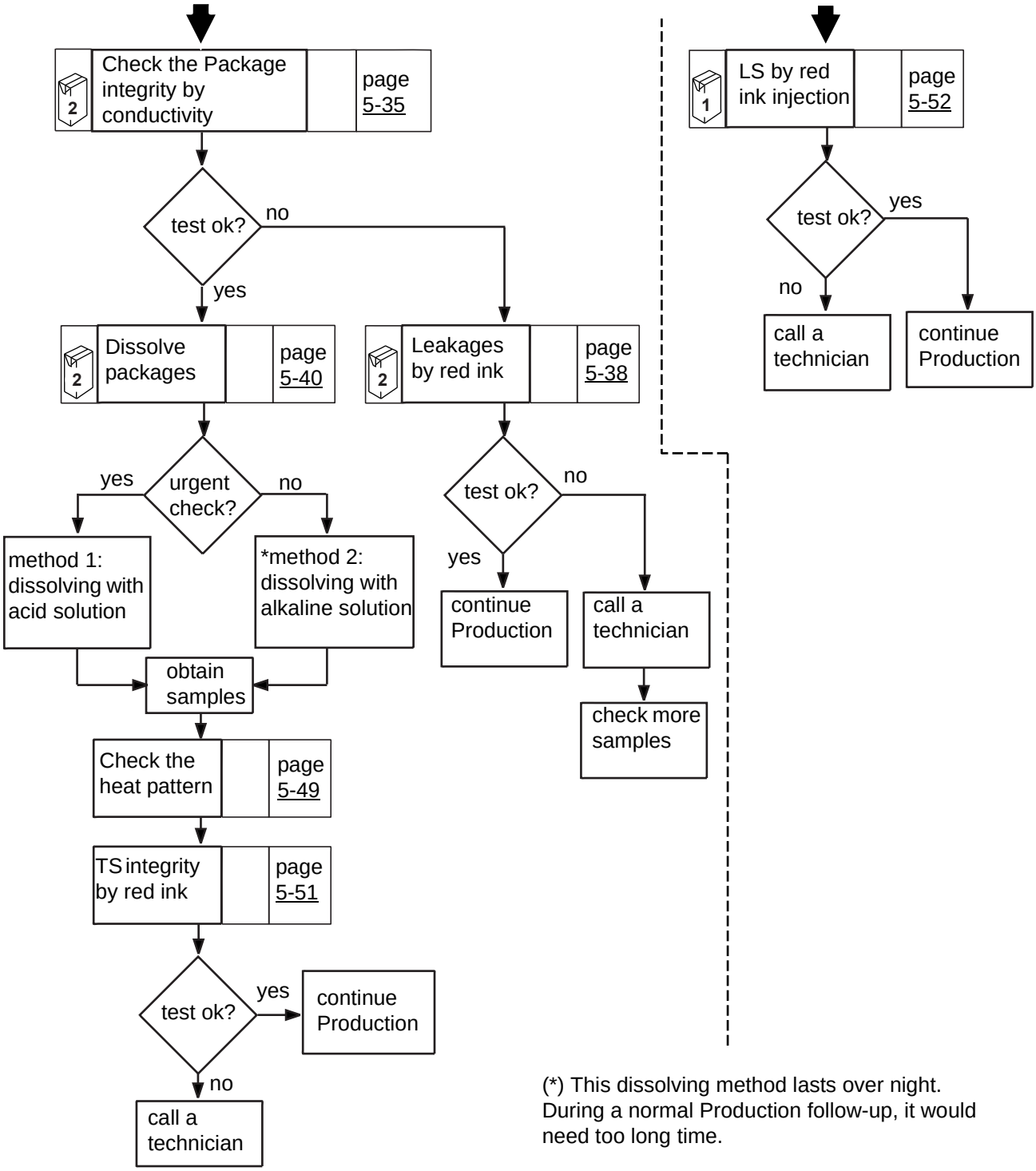

(*) This dissolving method lasts over night. During a normal Production follow-up, it would need too long time.

TechPub_2614345_0106 - 05_2819202_04en.fm

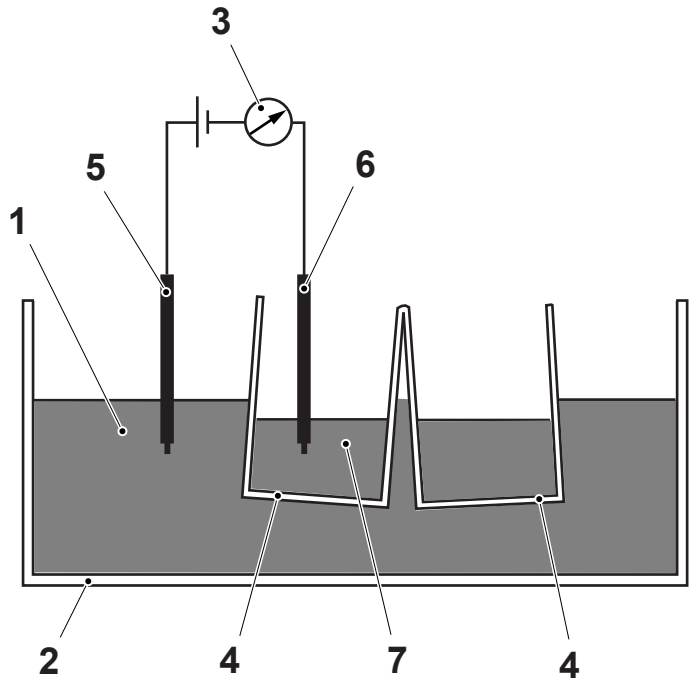

1 Table salt solution in container
2 Plastic container
3 Ammeter
4 Half package
5 Electrode
6 Electrode
7 Table salt solution in package

Package Integrity by Conductivity

1

Note! If occasional package leakages are suspected, larger-scale investigation can be carried out by measuring the electrical conductivity.

If deviations are detected during measurements, the whole package section must be checked using red ink.

The following equipment is required:

- plastic container approximately 30 cm diameter, 10 cm depth
- ammeter with battery and electrodes
- 1% table salt solution (e.g. 10g table salt in 1 Litre water).

The water is rendered electrically conducting by the addition of table salt.

If the is defective or if the internal polyethylene coating is damaged, electric current will flow and the ammeter will display a reading.

TechPub_2614345_0106 - 05_2819202_04en.fm

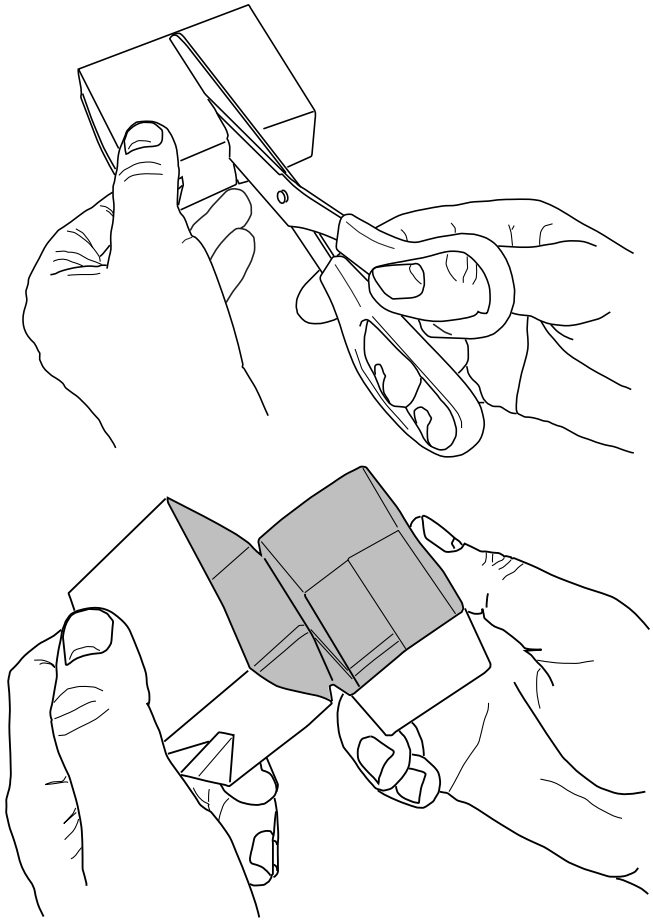

2

Note! Handling of the samples is of vital importance in the whole evaluation. Care and attention must be used at all stages of the evaluation.

Cut the package in half on the front side panel (the one without the LS), using the scissors.

Empty out the packages content.

Wash carefully the two halves of the package with water.

Dry thoroughly the cut edges of the package with paper towel.

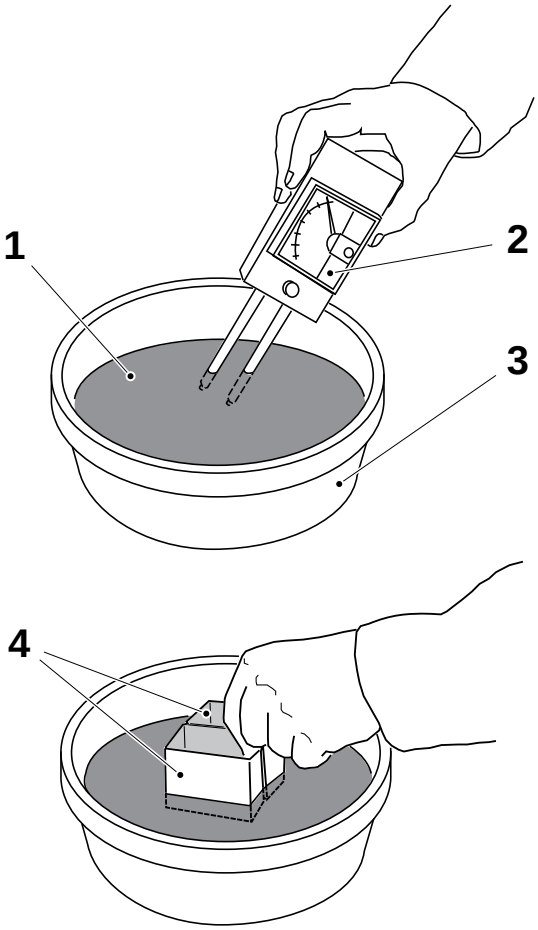

3

Pour the salt solution (1) into the container (2).

Insert the electrodes of the ammeter (3) into the salt solution (1) and check if the ammeter displays a reading.

Pour some of the salt solution into both halves of the package (4) and dry out the cut edges again with a paper towel.

Place the halves of the package (4) into the salt solution (1).

TechPub_2614345_0106 - 05_2819202_04en.fm

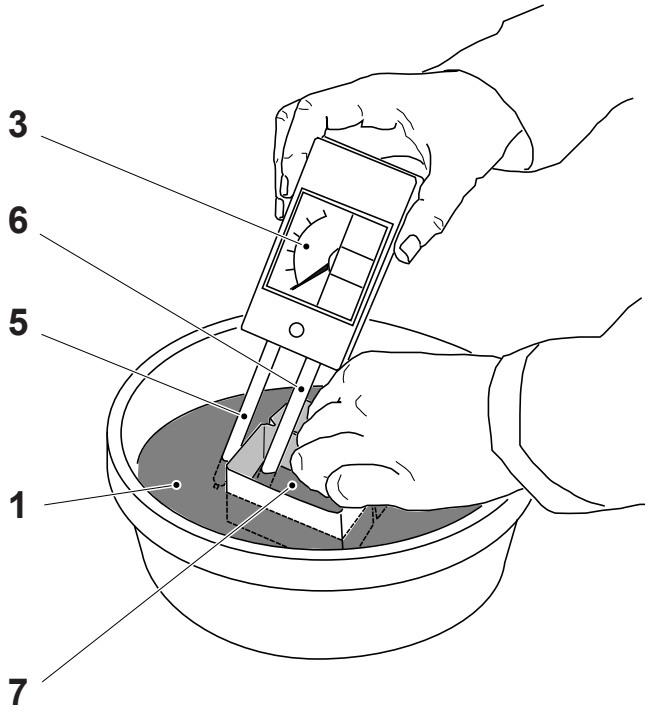

4

Immerse one electrode (5) of the ammeter (3) in the salt solution (1) and the other electrode (6) in the salt solution inside the package (7).

Check the ammeter (3) display.

- If the ammeter does not display a reading, the inner layer of PE is integer
- If the ammeter displays a reading, either the package is defective or the inner layer of PE is damaged: red ink test is needed.

Test both packages halves in the same way.

Note! The salt solution can be used several times. Change the solution when it is not clear or once a week.

- If there is no deflection of the ammeter, continue testing the package from item TS Heat Pattern by Dissolving on page 5-40
- If there is a deflection of the ammeter, test the package with red ink, from next item.

TechPub_2614345_0106 - 05_2819202_04en.fm

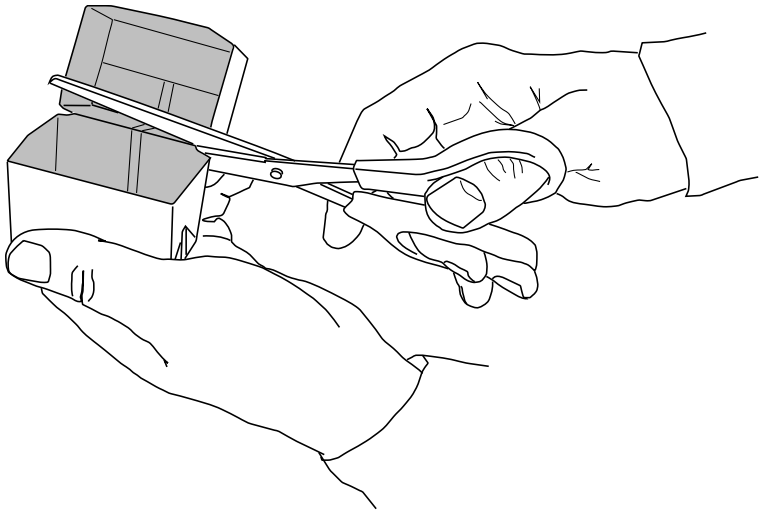

Check for Leakages with Red Ink

1

Dry carefully the inside of the halves of packages with a paper towel.

Cut the package to separate the two halves.



2

Pour some red ink inside the half package that displayed a deflection. Swirl the red ink around.

Leave the red ink inside the package for at least 5 minutes.

Remove any excess of red ink from the inside of the package with a plastic pipette.

TechPub_2614345_0106 - 05_2819202_04en.fm

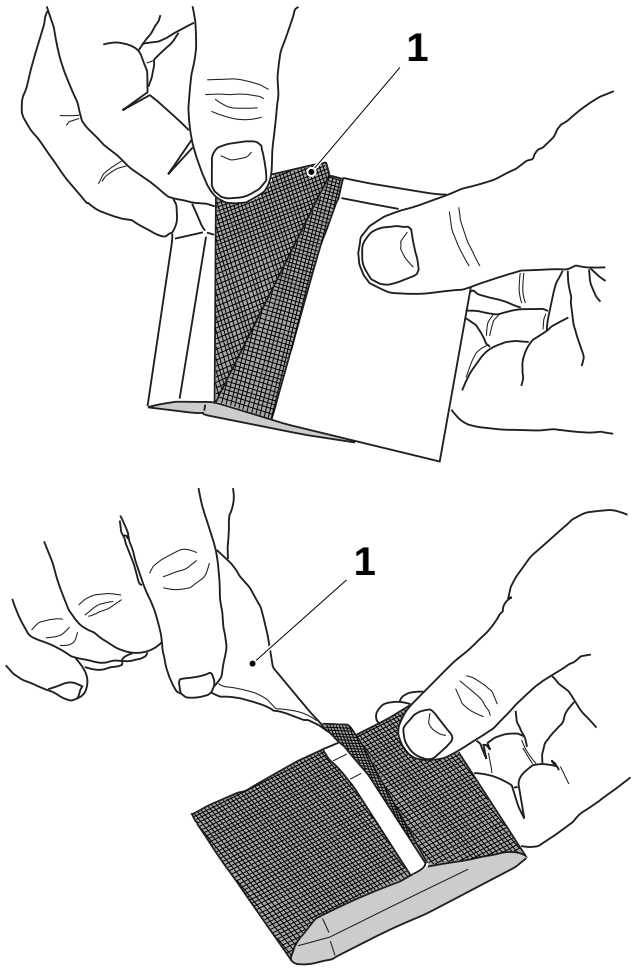

3

Rinse out the red ink residue and dry the inside of the half package with a paper towel and with compressed air from the filling machine.

Let it dry before carefully removing the outer layer of PE, splitting the packaging material. The outer PE and some paper board (1) will come off.

Note! If ink is still in the package when this operation is performed, artifact defects may be created.

TechPub_2614345_0106 - 05_2819202_04en.fm

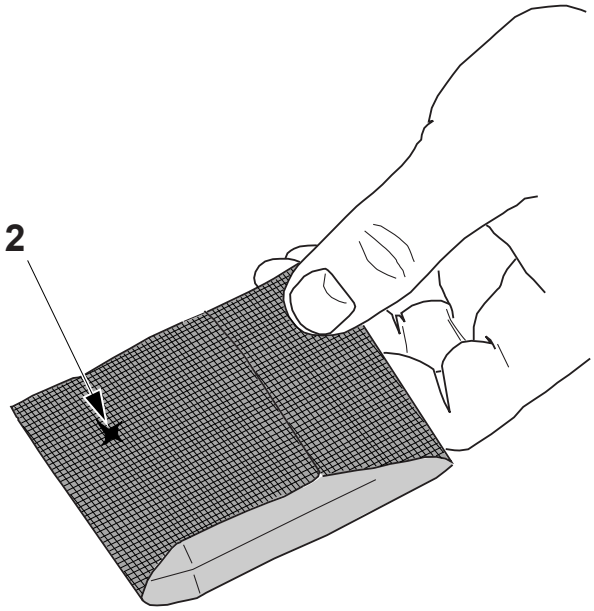

4

Check for any red marks (2) over the paper board layer over the package sample.

The presence of red marks indicates that the package leaks or that the inner PE pouch is damaged. In this case, call a technician.

TechPub_2614345_0106 - 05_2819202_04en.fm



TS Heat Pattern by Dissolving 1

Sample preparation

Take the cut package and unfold the top and bottom flaps (1) and (2).

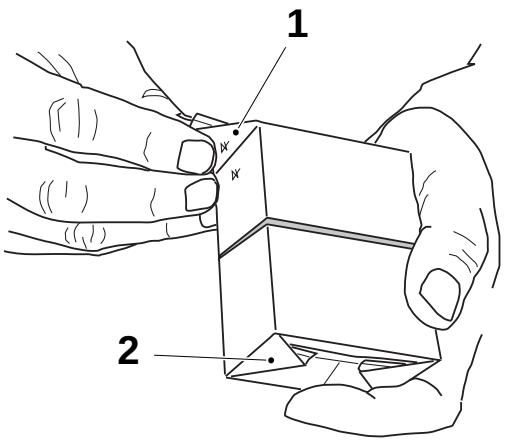

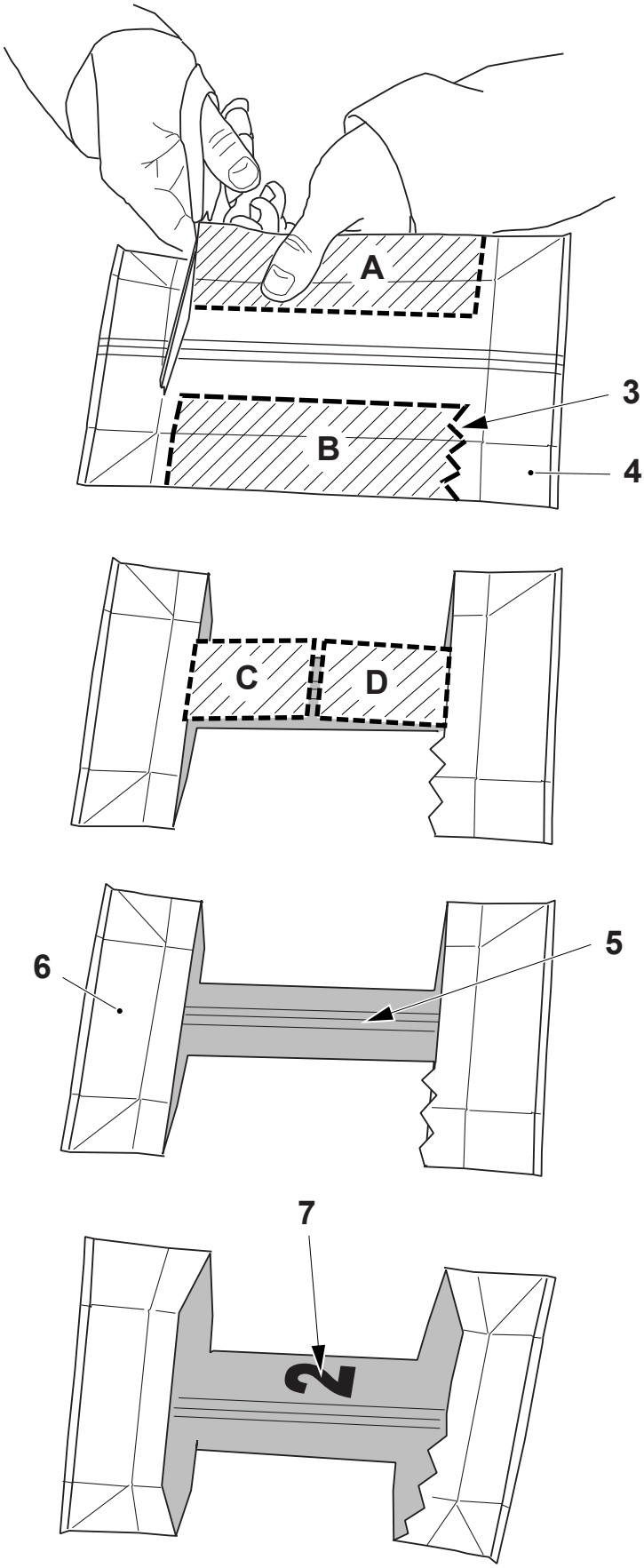

2

Flatten the package.

Note! Cut with a distinctive cut type (3) part of the sample to easily identify the top TS side (4) of the sample.

Cut out the pieces **A** and **B** to leave an I shaped sample, as shown in the drawing.

At the side not including the LS (5) cut away the pieces **C** and **D** to leave the final shape (6).

Carefully wash and dry the samples, inside and outside.

Mark each sample, on the inner PE, with progressive numbers (7), to identify from which jaw pairs the package comes.

TechPub_2614345_0106 - 05_2819202_04en.fm

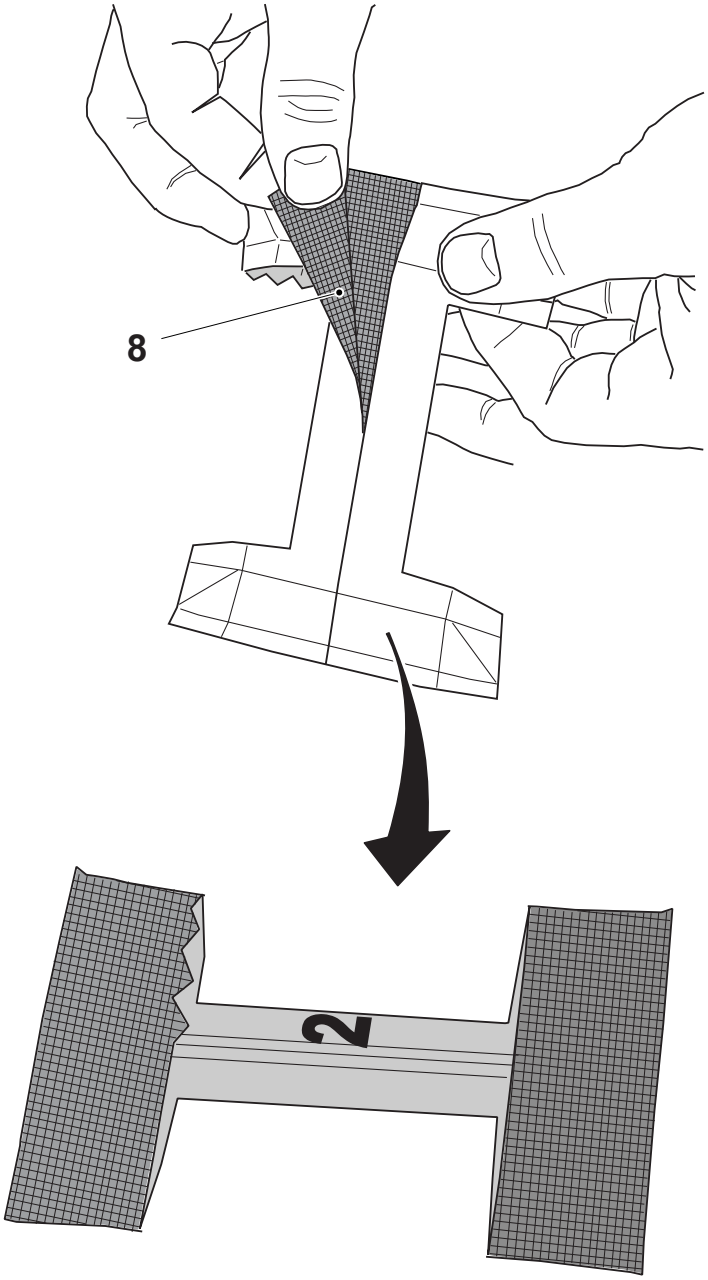

3

Carefully remove the outer layer of polyethylene, splitting the packaging material.

The outer polyethylene layer and some paper board (8) will come off to obtain the sample to utilize for the test.

TechPub_2614345_0106 - 05_2819202_04en.fm

WARNING
Alkali and Acid.
Always follow the Safety precautions when working with acid and alkalis. Preparing and working with hydrochloric acid solutions and sodium hydroxide solutions must be carried out under well ventilated conditions as fumes may be given off. Wear protective goggles and gloves. For the preparation always use heat resistant glass beakers. Used liquids should be disposed of in accordance with the prevailing regulations.

4

The microbiological quality of the TS is checked by chemically exposing the inner coating (dissolving method) and checking its tightness by means of the leak detection fluid (red ink).

Determine which type of dissolving method to use according to the time available for checking the samples. Two methods are available:

- Method 1 - Dissolving with an Acid Agent: using $CuCl_2$ in hydrochloric acid (37%) as the aluminium foil dissolving agent.

  This method is preferred when the urgency on the results is high and before production start. In this case follow the instructions on page 5-44.
- Method 2 - Dissolving with an Alkaline Agent**:** this uses NaOH in water as the aluminium foil dissolving agent: the speed of reaction is lower (at least 10 hours).

  This method is preferred when the amount of samples is large. In this case follow the instructions on page 5-47.

TechPub_2614345_0106 - 05_2819202_04en.fm

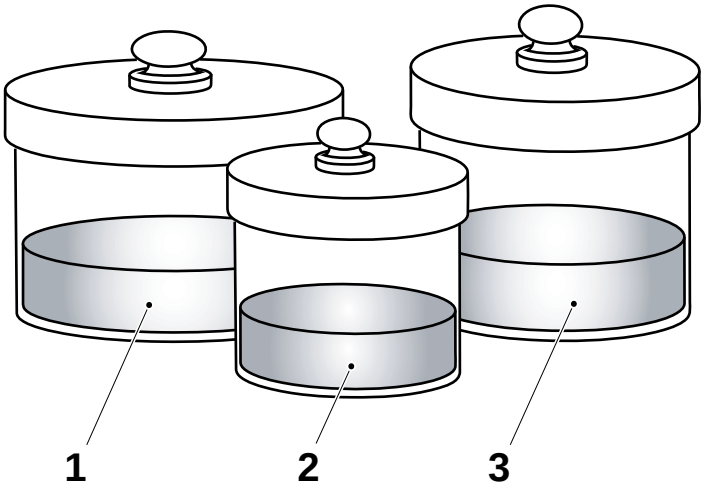

Method 1 - Dissolving with an Acid Agent

5

This consists of three solutions, bath (1), bath (2), bath (3).

The equipment and chemical preparations needed are:

- HCl 37%
- $CuCl_2$
- Na_2CO_3
- Distilled water
- Tongs
- Indelible felt-tipped pen
- Water bath
- Fume extractor
- Laboratory gloves (single use).

TechPub_2614345_0106 - 05_2819202_04en.fm

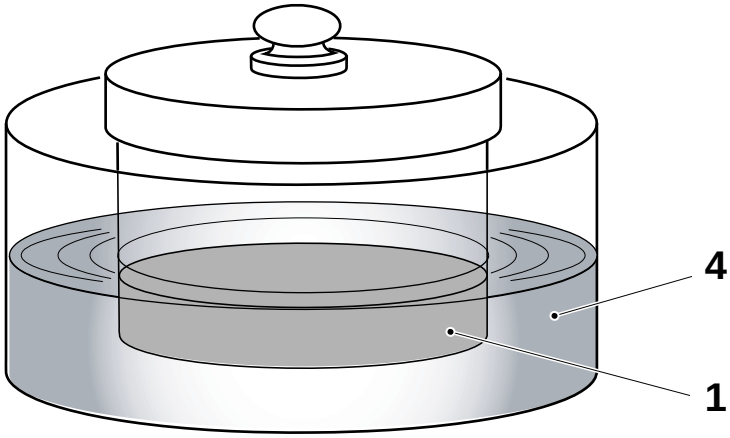

5a

Preparation of Bath 1 (hydrochloric acid at 60°C)

WARNING

Do not use a direct flame!

The solution is prepared at room temperature but must be heated using a water bath (4) at 60°C when in use.

Dilute the HCl 1:1 with distilled water.

Add 1wgt% $CuCl_2$ (e.g. 1 lt HCl, 1 lt distilled water, 20 gr. $CuCl_2$).

Store the prepared bath (1) in a glass container with a glass lid.

Note! The bath might be filtered when it becomes dirty (filter at room temperature) and used for several TS examinations.

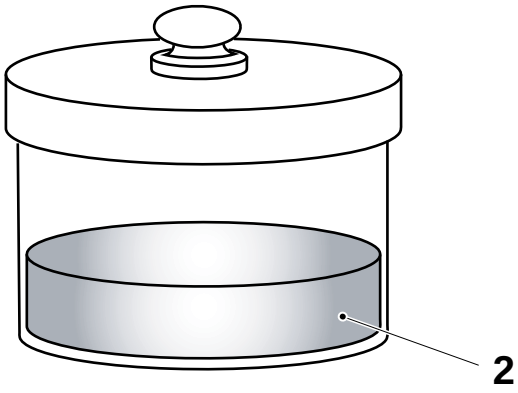

5b

Preparation of Bath 2 (hydrochloric acid at room temperature)

Dilute the HCl 1:3 with distilled water. Add 0.5 wgt% $CuCl_2$ (e.g. 250 cc HCl, 750 cc distilled water, 5 gr. $CuCl_2$).

Store the chemical in a glass container with a glass lid.

Note! The bath might be filtered when it becomes dirty (filter at room temperature) and used for several TS examinations.

TechPub_2614345_0106 - 05_2819202_04en.fm

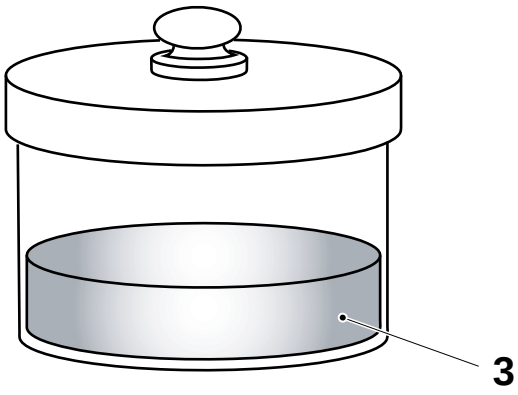

5c

Preparation of Bath 3 (sodium carbonate at room temperature)

Note! The bath (3) spoils very quickly. The preparation of a new solution becomes necessary if its bubbling does not start when the samples are immersed in the solution.

Prepare 15 wgt% solution of Na_2CO_3 in distilled water (e.g. 150 gr Na_2CO_3, 1 lt distilled water).

Store the chemical in a glass container with a glass lid.

Note! The bath might be filtered when become dirty (filter at room temperature). The consumption of this bath is high compared to the others.

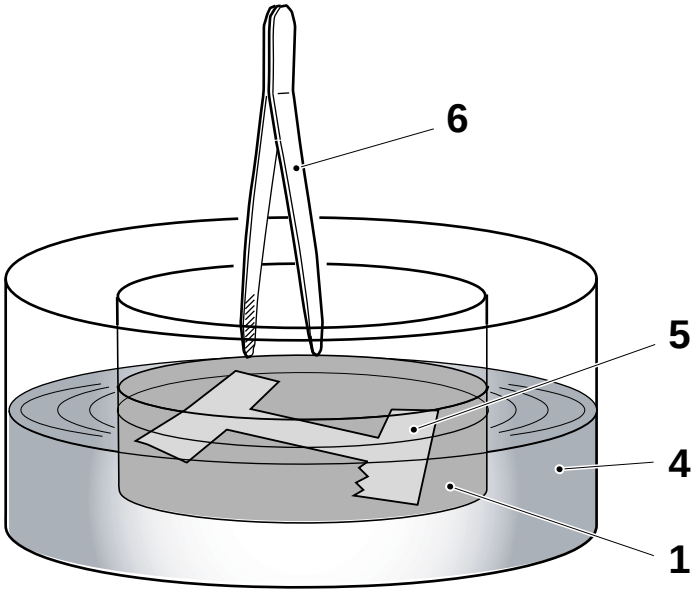

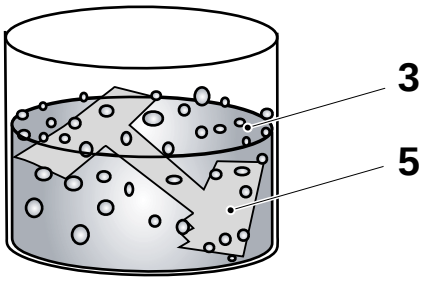

5d

Note! Use one sample (5) at a time.

Immerse the sample (5) into the **Bath 1** (1) with the aid of the tongs (6) and leave it there for approximately 4 minutes at 60°C (warm water bath (4)).

Remove the samples with the tongs and immerse them in **Bath 3** (3) to neutralize them.

Note! The sodium carbonate bath (3) should bubble. If not, prepare a new solution.

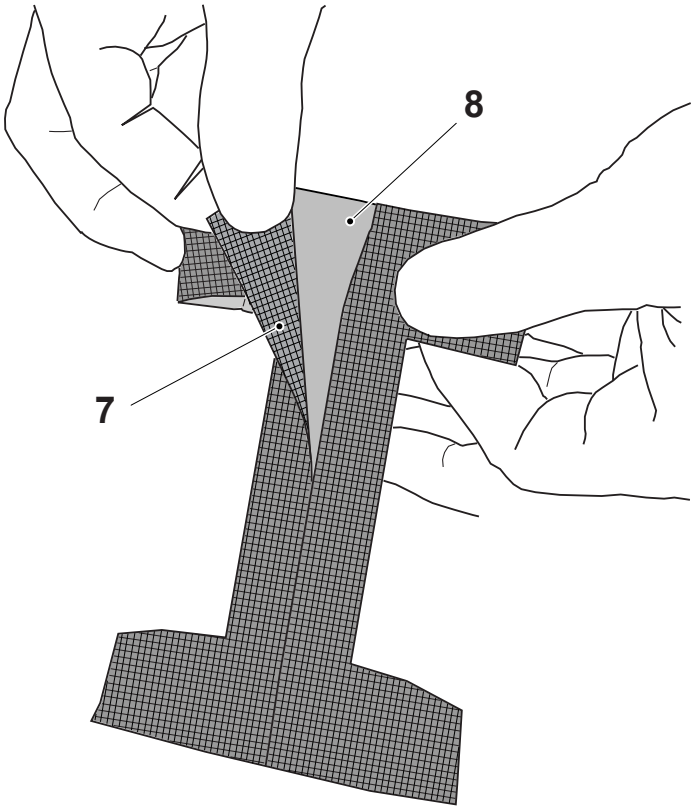

CAUTION
Chemical burn hazard.
Wear personal protective equipment.

5e

Put the sample under tap water. The lamination layer (7) will separate from the aluminium foil (8) and can be easily removed.

If not, put it back in **Bath 1** for some extra time and rinse again the samples.

The inner pouch of PE and the aluminium foil (8) are left.

TechPub_2614345_0106 - 05_2819202_04en.fm

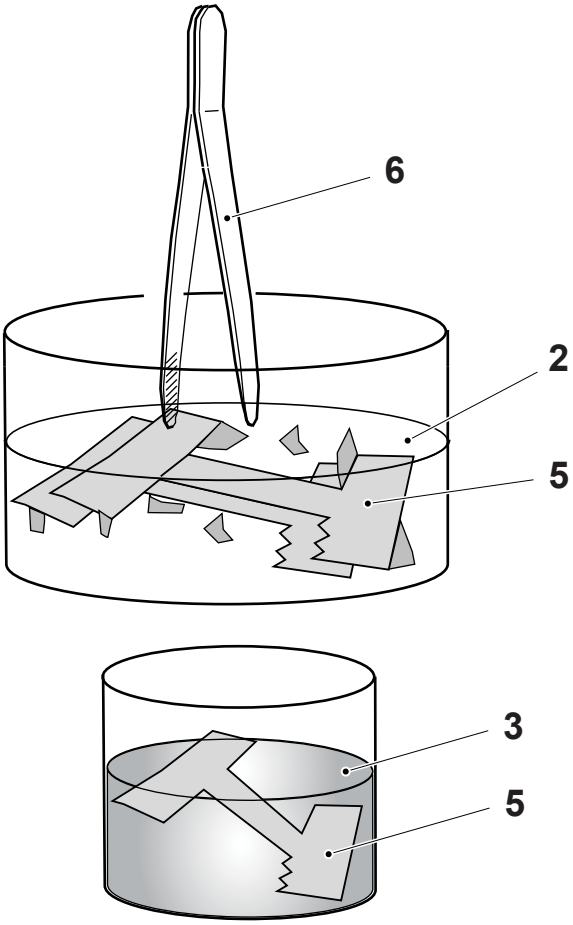

5f

Note! This step is the most delicate. If it is not performed correctly, the sample can burn and be spoiled due to building of high temperature.

Immerse the samples completely and no more than two at a time in **Bath 2** (2) with the aid of the tongs (6). Take them away from the bath in fast sequence.

The aluminium layer will become detached. After separation, the sample (5) is reduced to a single inner coating.

The sample (5) now needs to be neutralized in **Bath 3** (3) and then rinsed carefully with tap water.

Dry the samples with paper towel and leave them on filter paper.

Continue from item 7 at page 5-49.

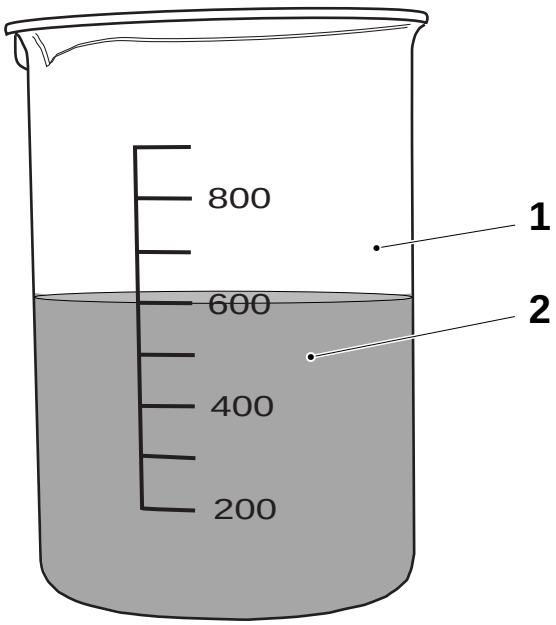

Method 2 - Dissolving with an Alkaline Agent

6

This consists of a 15% NaOH solution in water.

Prepare 15 wgt% NaOH distilled water solution by adding, while stirring, water to the NaOH pellets in a beaker (1).

The solution (2) becomes warms while water is added to the NaOH pellets.

The solution should be used at room temperature but pay attention not to wait too long as it might loose in efficiency.

Note! CIP solution (normally 30%) can be used after dilution 1:1.

TechPub_2614345_0106 - 05_2819202_04en.fm

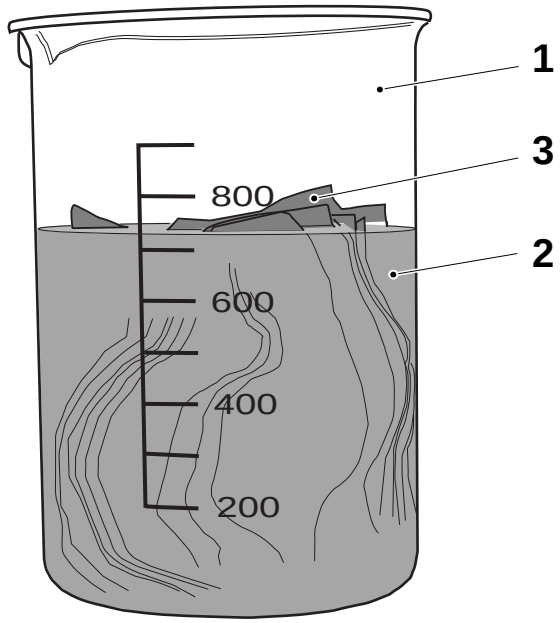

6a

Carefully immerse the samples (3) completely in the dissolving solution (2) without covering the glass beaker (1) as hydrogen fumes give off.

Note! The solution immediately starts to bubble and becomes warm. If not, make sure the solution has been freshly prepared.

Leave the samples in the dissolving solution at least overnight.

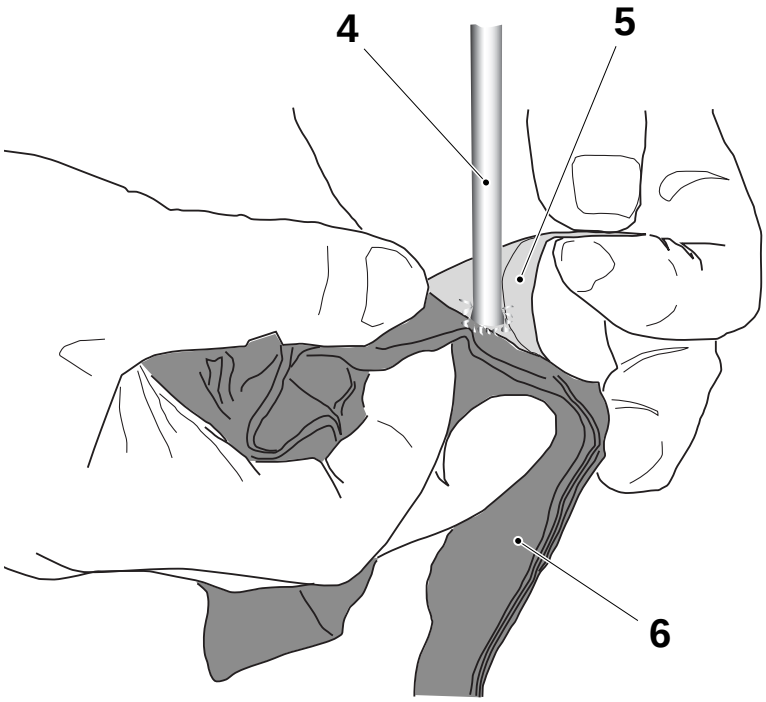

WARNING
Chemical burn hazard.
Wear personal protective equipment.

6b

Before rinsing the samples make sure that the aluminium foil has disappeared. If not leave the samples in the solution a little longer or prepare a fresh solution.

Carefully rinse and split the samples under tap water (4). The inner coating pouch (5) of the sample becomes very easy to peel off and separate from the rest of the packaging materials (6).

Leave the samples until dry on filter paper before checking their integrity by means of the leak detection fluid.

Continue from item 7 at page 5-49.

TechPub_2614345_0106 - 05_2819202_04en.fm

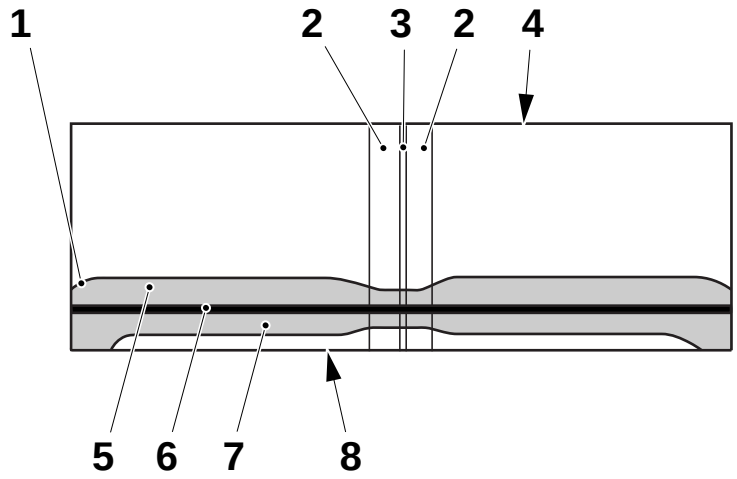

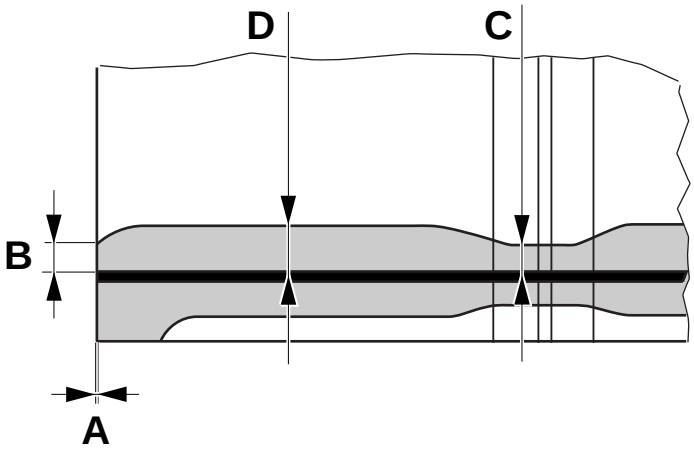

1 Bending off
2 LS
3 LS air gap
4 Product side
5 Upper heat pattern
6 Ridge
7 Lower heat pattern
8 Cutting side

Check the Heat Pattern 7

Holding the sample with both the hands, check all the critical spots like bending off (1) at the corners.

Take note of the appearance of the upper and lower heat pattern (5) and (7) and check:

- for channels to the outside
- for plastic lumps any irregularity of the sealing
- reduced heat pattern due to cold seals.

Note! In package type TBA 125 S, dimension B (Bending Off) is 0,2 mm due to geometrical components constraint.

Dimension	**Acceptable** (mm)	**NOT Acceptable** (mm)
A	0	> 0
B	≥ 0.2	< 0.2
B (TBA 125 S only)	= 0.2	-
C	≥ 1	< 1
D	≥ 1	< 1

Ruptures in the sample somewhere other than in the TS area (like corners) are due to sample handling.

Note! Do not challenge the sample in any other way (for example stretch pliers) as the mechanical properties have been changed by the dissolving. At this stage samples have to be evaluated by means of a visual inspection and red ink only.

TechPub_2614345_0106 - 05_2819202_04en.fm

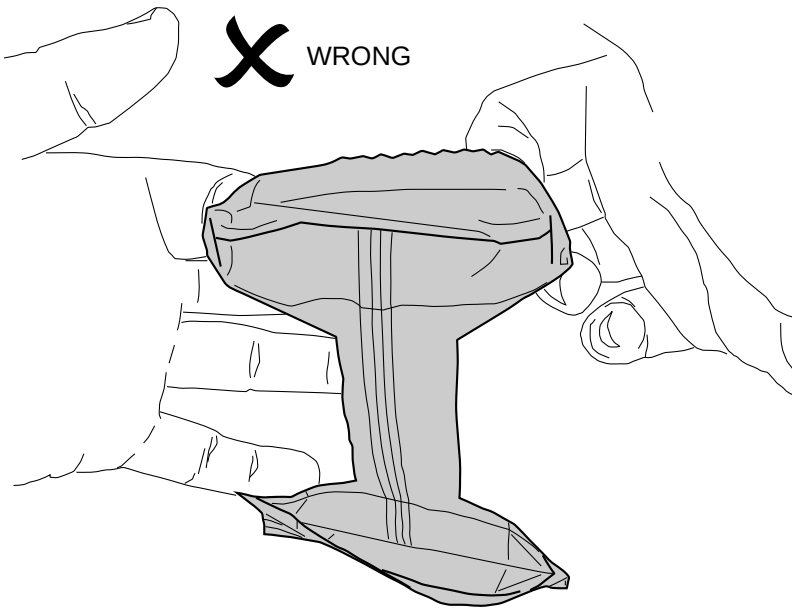

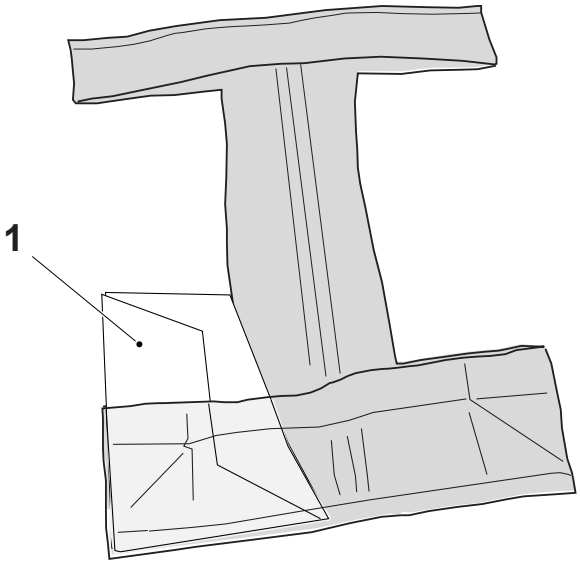

CORRECT

TS Integrity by Red Ink

1

Note! Do not dry the sample by reversing the bags. Sample can be spoiled easily. Dry the inside of the bags by carefully using paper towel.

Take one sample at a time.

Dry it carefully by inserting paper towel (1) in the bag and moving it carefully along the TS and in the bag corners.

Be sure that the sample is completely dry. Water prevents a good check.

Take note of the appearance of the sealing. Critical spots like bending off at the corners, plastic lumps, irregularity of the sealing are very easy to spot.

TechPub_2614345_0106 - 05_2819202_04en.fm

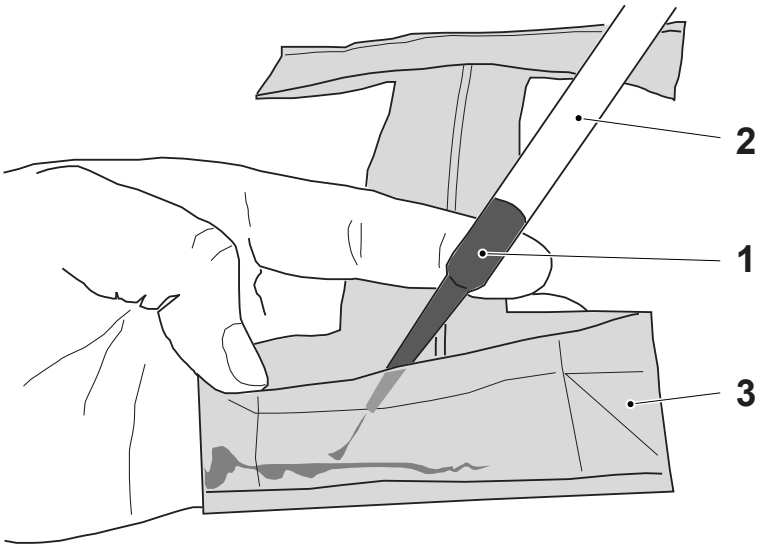

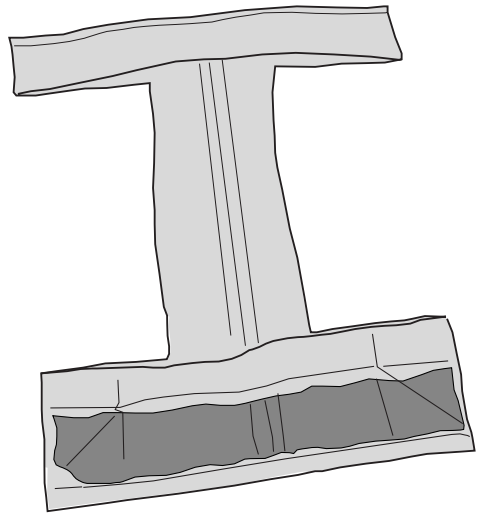

2

Pour some red ink fluid (2), by means of a plastic pipette (1), in to the pouch of the inner coating (3). Spread the red ink in to the pouch with the finger without applying pressure.

Leave it to stand for some time and then check the sample.

The sealing is defective if:

- any channel of red ink is present through the sealing.

In case channels are present, the fluid will pass through and stain the outside of the inner coating pouch.

Check again when the ink inside the sample is completely dry and, if necessary, call a technician.

TechPub_2614345_0106 - 05_2819202_04en.fm

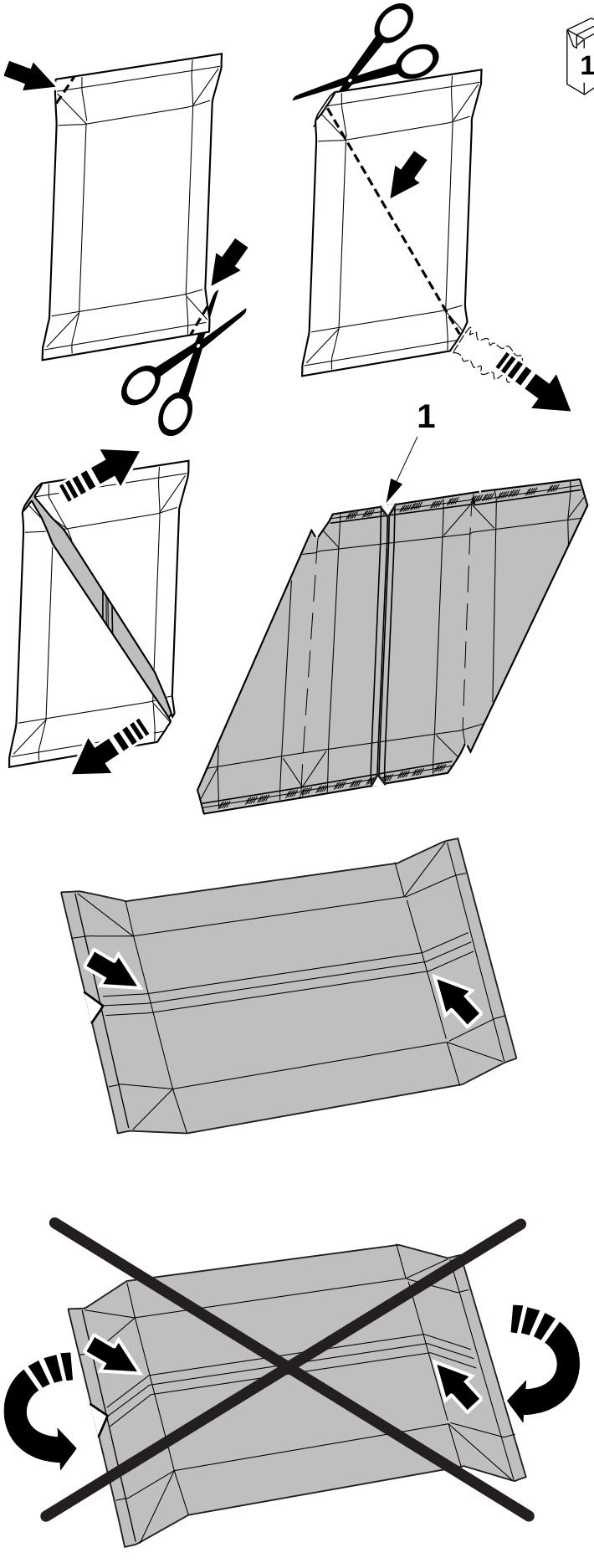

LS by Red Ink Injection 1

Note! For this check take the extra package, as shown in Checking Flowchart and Intervals for Laboratory Package Checks.

Note! Be careful not to over stress samples during their preparation.

Cut open the packages as illustrated. Cut the corner (1) at one end of the LS seal.

Rinse and dry with a paper towel the packages without folding along the top and bottom creases in reverse direction.

TechPub_2614345_0106 - 05_2819202_04en.fm

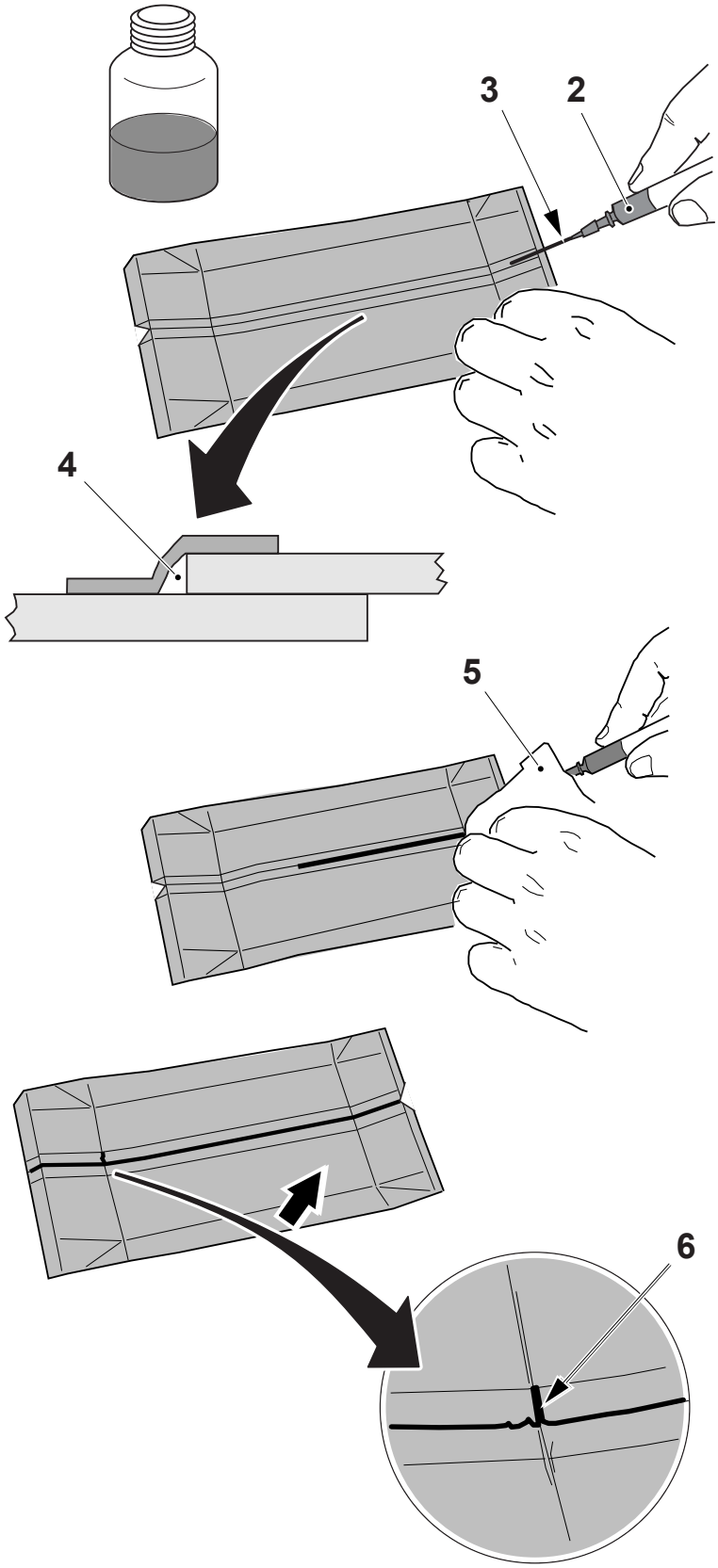

2

Prepare some red ink fluid (2) in a syringe.

Place the needle (3) of the syringe into the air channel (4) of the LS.

Cover the injection point with a piece of paper towel (5) to absorb any ink spilled and inject the red ink along the entire LS length.

The LS is defective if red ink channels (6) occur (the ink corners to the inside layers).

Call a technician in case of defects.

Critical points are where LS meets the top and bottom creases.

TechPub_2614345_0106 - 05_2819202_04en.fm

This page intentionally left blank

TechPub_2614345_0106 - 05_2819202_04en.fm

6 Supply of Materials

TechPub_2614345_0106 - 06_2819202_04en.fm

This chapter describes how to load and prepare a new reel of packaging material and how to thread and splice the strips.

CAUTION

Hazardous noise.

Risk of impaired hearing. Hearing protection is recommended whenever this equipment is in operation.

TechPub_2614345_0106 - 06_2819202_04en.fm

Strip Supplies . . . . . 6 - 5

LS Strip Thread . . . . . .6 - 5

Strip Reel Replacement . . . . . .6 - 10

Fitting a New Reel on the LH Reel Holder . . . . . 6 - 10

Fitting a New Reel on the RH Reel Holder . . . . . 6 - 11

LS Strip Break . . . . . .6 - 12

Packaging Material Supplies . . . . . 6 - 13

Reel Handling . . . . . .6 - 13

Splicing Preparation . . . . . .6 - 19

Manual Web Splice . . . . . .6 - 26

Interrupted Web Splice . . . . . .6 - 27

Packaging Material Broken or Splice Failure (ASU Loop Empty) . . . . . .6 - 28

Packaging Material Ended (ASU Magazine Empty) . . . . . .6 - 34

TechPub_2614345_0106 - 06_2819202_04en.fm

This page intentionally left blank

TechPub_2614345_0106 - 06_2819202_04en.fm

Strip Supplies

CAUTION
Hygiene.
Before touching the strip(s), disinfect hands/gloves.

Note! To avoid unnecessary PRODUCTION stops, always make sure that the strip reels are prepared and the strips are threaded.

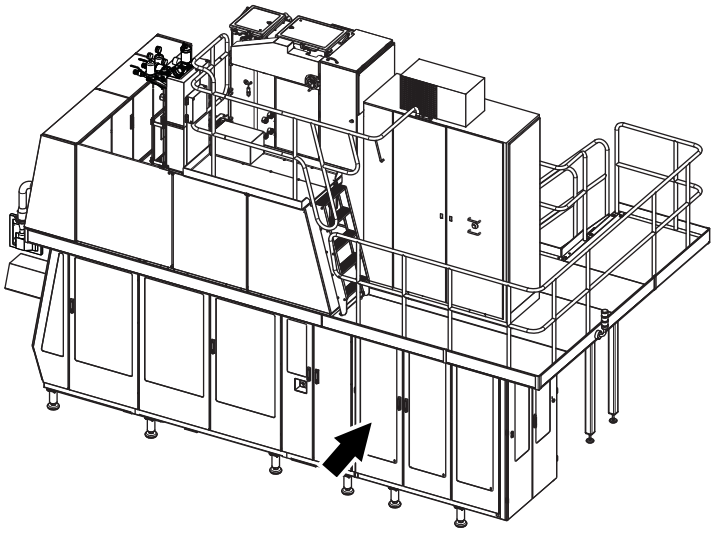

LS Strip Thread

1

Open the Strip applicator doors.

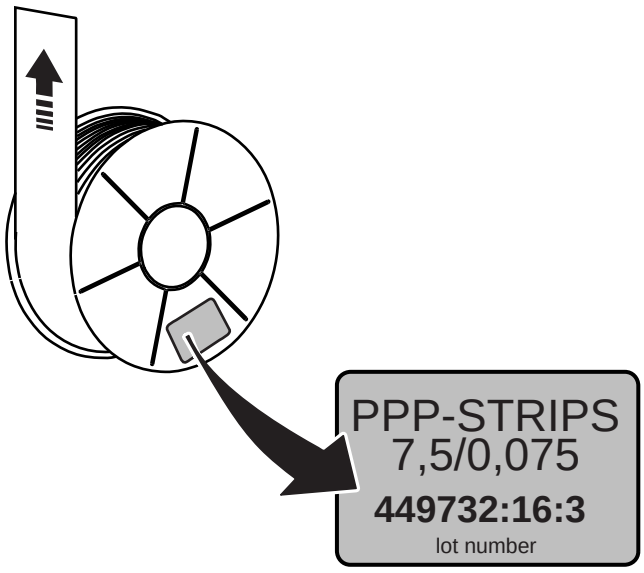

CAUTION
Hygiene.
Before handling clean parts, disinfect your hands/gloves with cleaning compound code **H**.

2

Remove the protective wrapping from the strip reel. Make a note of the strip type and the lot number indicated on the strip reel tag.

Note! The unique lot number allocated to each strip reel and printed on the strip reel tag provides traceability for the production batch. If a problem with the strip is detected the lot number must be quoted in any communication with Tetra Pak.

Note! For cleaning compound code information, see chapter 11 Technical Data.

TechPub_2614345_0106 - 06_2819202_04en.fm

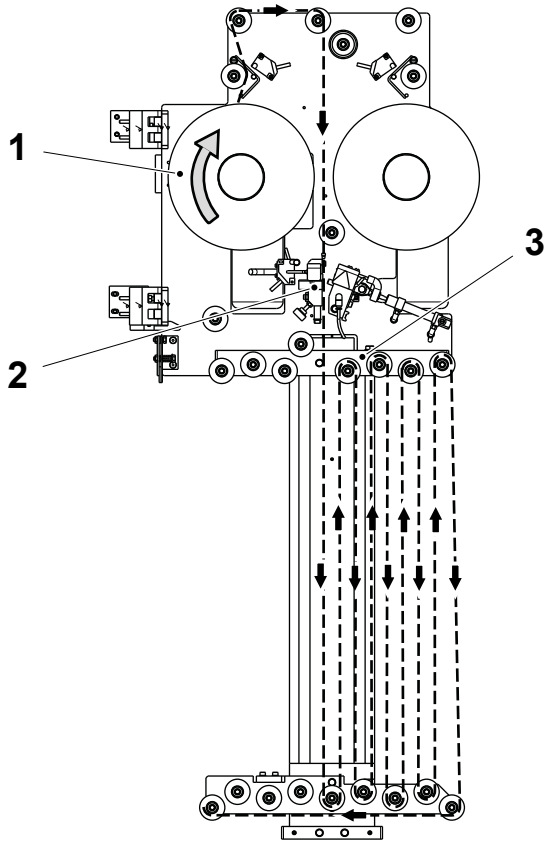

3

Fit the strip reel (1) on the left-hand reel holder. This reel is used in PRODUCTION.

Thread the strip around the rollers, through the splicing head (2), and through the RH side of the magazine (3), as shown in the picture. Avoid twisting the strip.

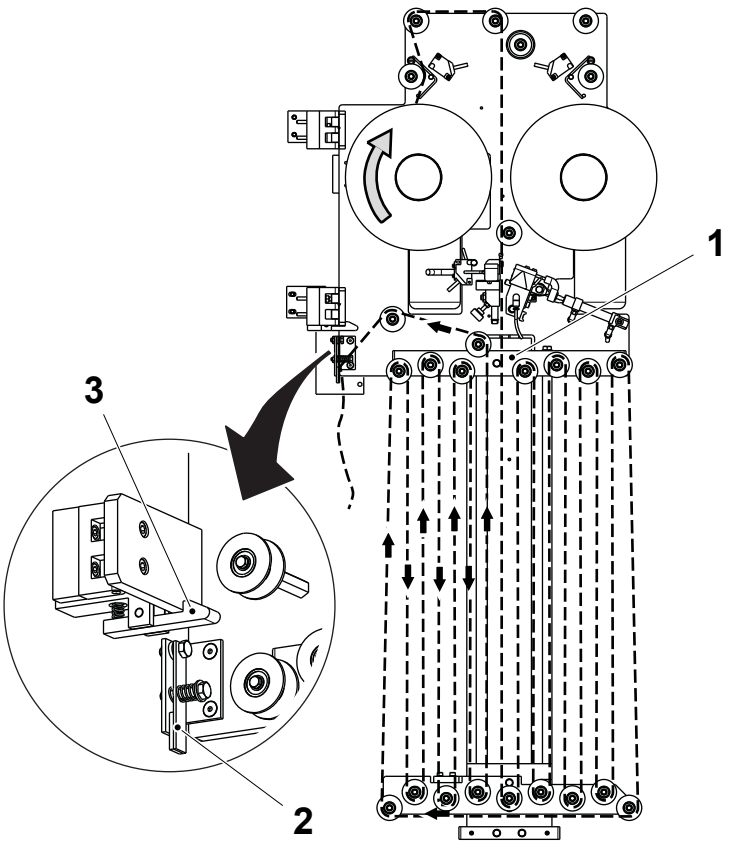

4

Continue threading the strip through the LH side of the magazine (1), as shown in the picture.

Hold the strip by the clamp (2) and leave 1 meter about of strip after the clamp (2).

Lower the catch (3) and open the strip magazine frame.

TechPub_2614345_0106 - 06_2819202_04en.fm

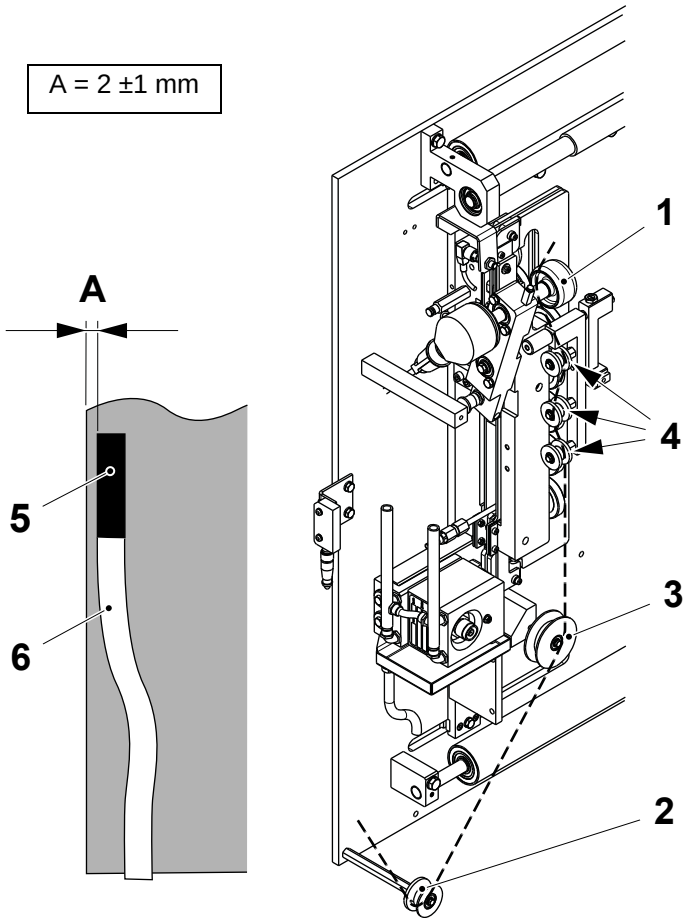

5

Move the pressure roller (1) away from the packaging material.

Thread the strip under the rollers (2) and (3), among the rollers (4) and under the pressure roller (1).

Attach a piece of adhesive tape (5) to the end of the strip (6), not wider than the strip.

Attach the tape at distance **A** from the edge of the packaging material.

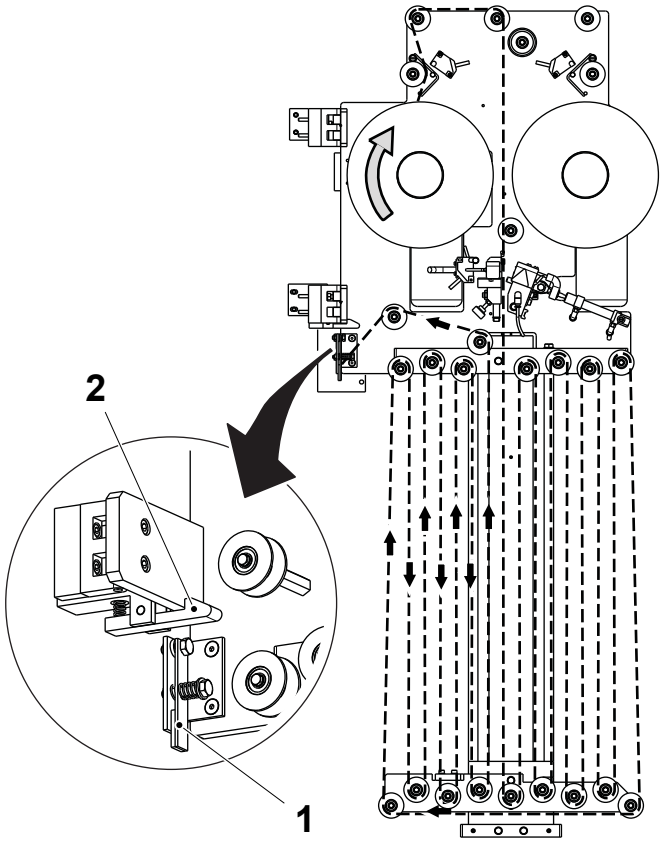

6

Release the strip opening the clamp (1) and close the strip magazine frame by the catch (2).

Note! Make sure that the strip magazine frame locks correctly.

TechPub_2614345_0106 - 06_2819202_04en.fm

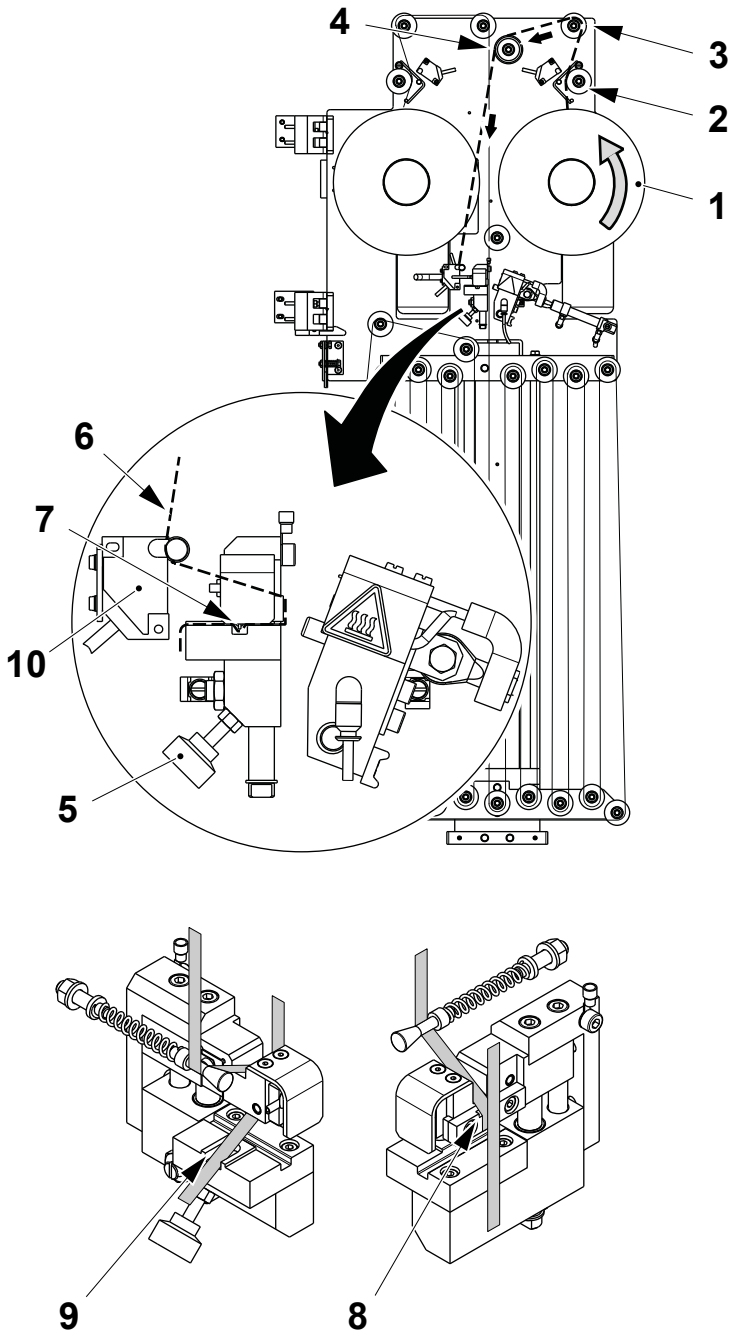

7

Fit a strip reel (1) on the right-hand reel holder. This reel is now prepared for splicing.

Thread the strip around the rollers (2) and (3), then over the **larger** diameter of the roller (4). Avoid twisting the strip.

Pull the slide knob (5) down to open the splicing head.

Feed the strip around the finger (6) and through the channel (7).

Make sure that the strip is located in the grooves (8) and (9).

Check the strip is aligned correctly against the vertical strip, close the slide and cut off any excess strip.

Rewind the strip reel slightly to tension the strip until the LED of the sensor (10) switches OFF.

Note! If the LED of the sensor (10) is ON an alarm happens on the TPOP to indicate that the strip has not been prepared.

TechPub_2614345_0106 - 06_2819202_04en.fm

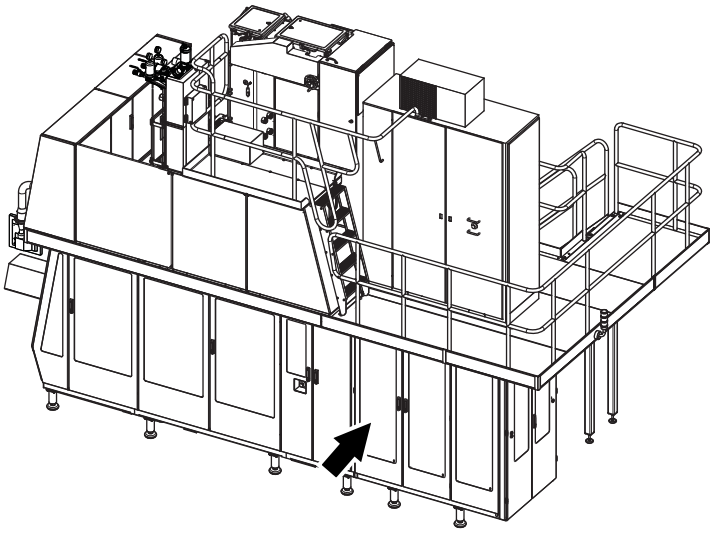

8

Close the strip applicator doors and reset the alarms on the TPOP display.

Press the ALARM RESET on the TPOP display.

The Strip Applicator is now prepared for an automatic strip splice.

Note! Make sure the strip applicator applies the strip correctly, without wrapping it around the pressure roller.

TechPub_2614345_0106 - 06_2819202_04en.fm

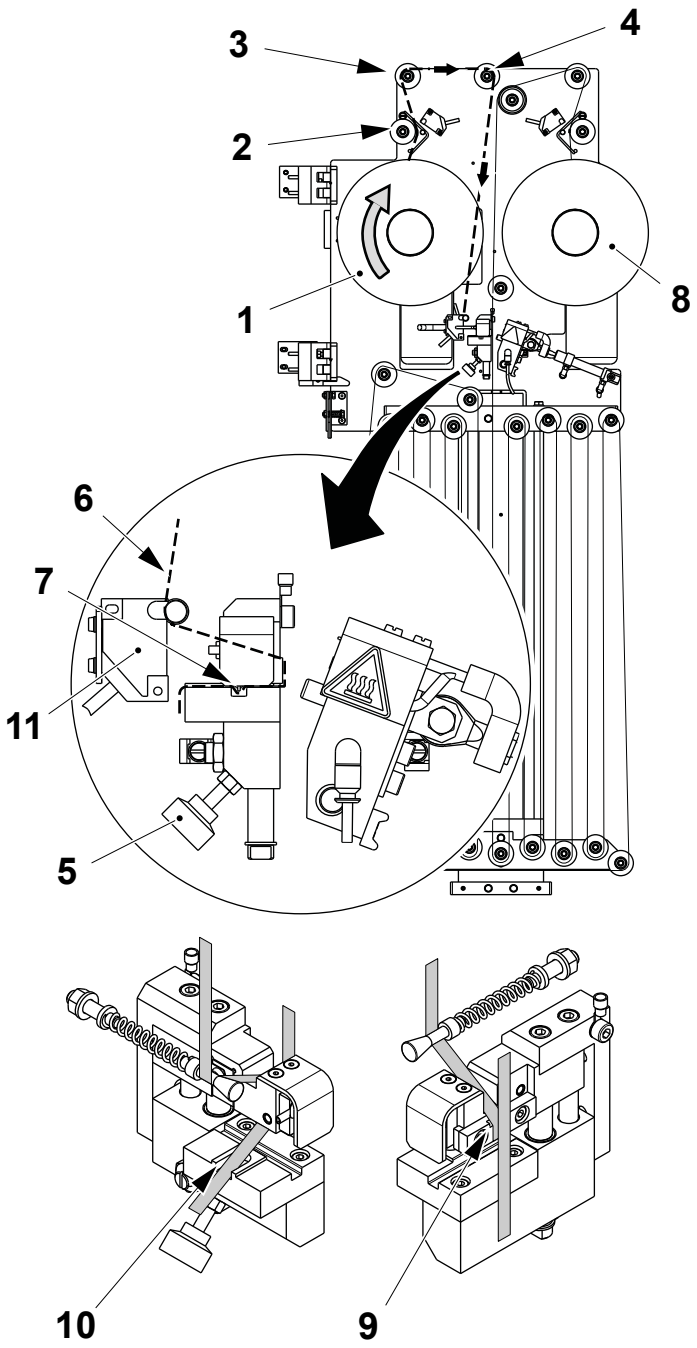

Strip Reel Replacement

CAUTION
Hygiene.
Before handling clean parts, disinfect your hands/gloves with cleaning compound code **H**.

WARNING
Burn Hazard.
Some parts may be hot. Wear personal protective equipment.

1

Fitting a New Reel on the LH Reel Holder

While the strip from the RH side strip reel (8) is running, fit a new strip reel (1) on the LH reel holder. Thread the strip around the rollers (2) and (3), then over the roller (4). Avoid twisting the strip.

Pull the slide knob (5) down to open the splicing head.

Feed the strip around the finger (6) and through the channel (7).

Make sure that the strip is located in the grooves (9) and (10).

Check the strip is aligned correctly against the vertical strip, close the slide and cut off any excess strip.

Rewind the strip reel slightly to tension the strip until the LED of the sensor (11) switches OFF.

Note! If the LED of the sensor (11) is ON an alarm happens on the TPOP to indicate that the strip has not been prepared.

TechPub_2614345_0106 - 06_2819202_04en.fm

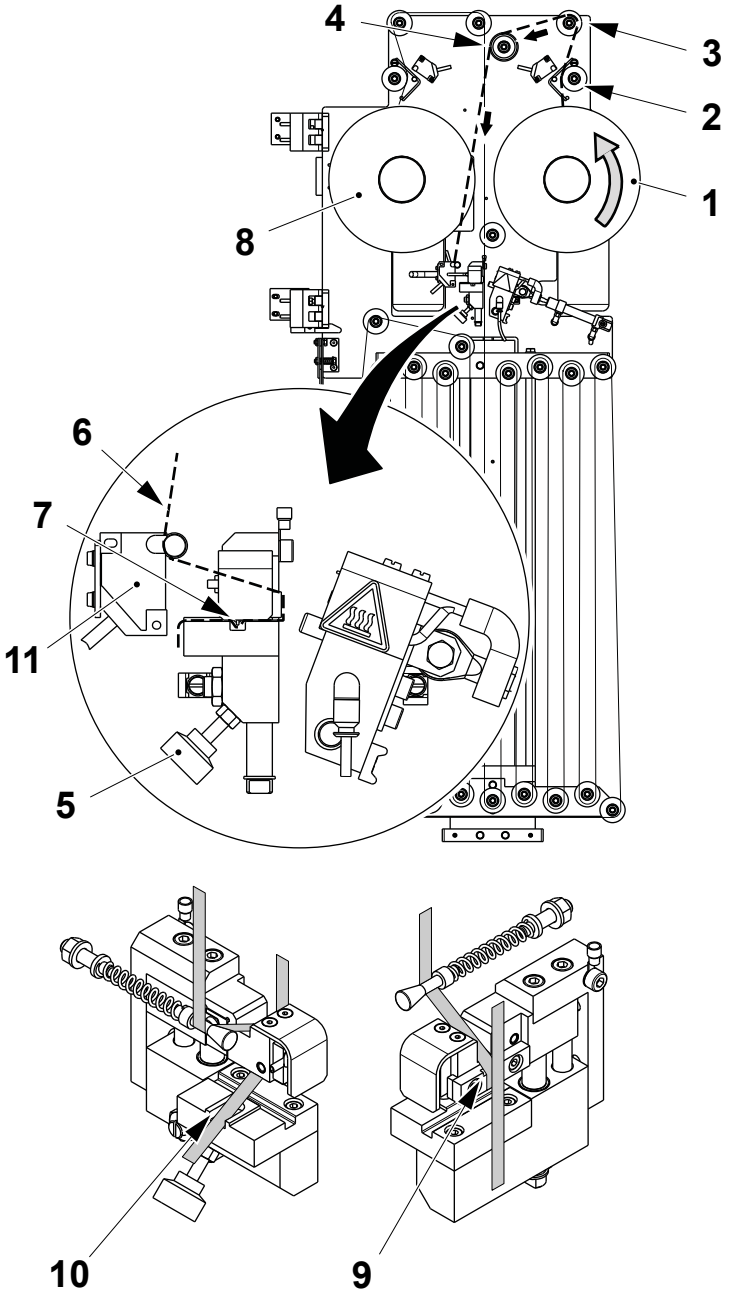

2

Fitting a New Reel on the RH Reel Holder

While the strip from the LH side strip reel (8) is running, fit a new strip reel (1) on the RH reel holder. Thread the strip around the rollers (2) and (3), then over the **larger** diameter of the roller (4). Avoid twisting the strip.

Pull the slide knob (5) down to open the splicing head.

Feed the strip around the finger (6) and through the channel (7).

Make sure that the strip is located in the grooves (9) and (10).

Check the strip is aligned correctly against the vertical strip, close the slide and cut off any excess strip.

Rewind the strip reel slightly to tension the strip until the LED of the sensor (11) switches OFF.

Note! If the LED of the sensor (11) is ON an alarm happens on the TPOP to indicate that the strip has not been prepared.

3

Some packages are discarded after the splice.

Carry out the checks according to the Package Checks section in chapter 5 Checks.



Note! Register the number of packages taken for the checks, see Recording Package Waste for Quality Checks in chapter 2 Control Panels.

TechPub_2614345_0106 - 06_2819202_04en.fm

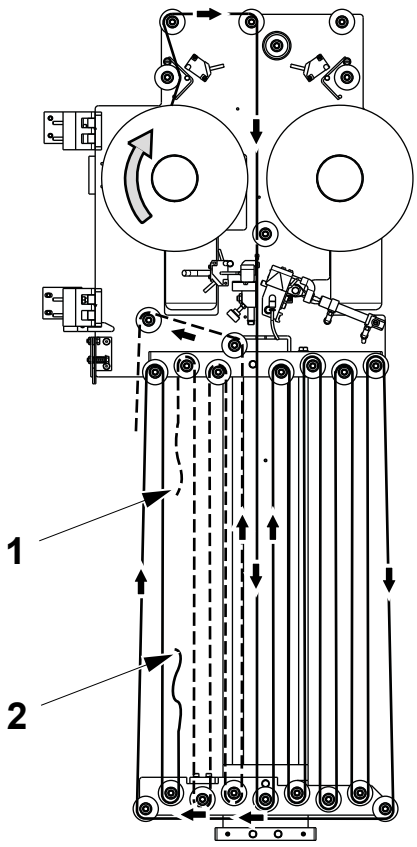

LS Strip Break

1

Note! Do not repair the LS strip with an adhesive tape.

In case of LS strip break, remove the piece of broken strip (1), shown beside by a dashed line, and thread again the strip (2) through the magazine, see LS Strip Thread.

TechPub_2614345_0106 - 06_2819202_04en.fm

Packaging Material Supplies

CAUTION
Hygiene.
The packaging material must never touch the floor. Before touching the packaging material, disinfect hands/gloves.

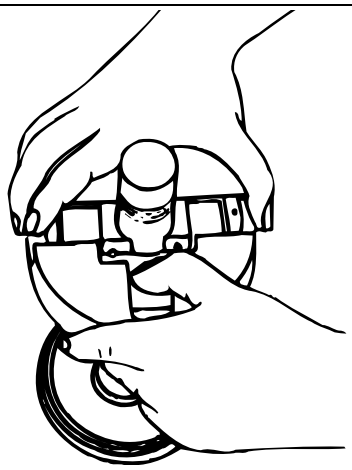

Reel Handling

1

Pull out the reel holder catch slightly while pushing in the spring-loaded lugs.

When the lugs lock, release the reel holder catch.

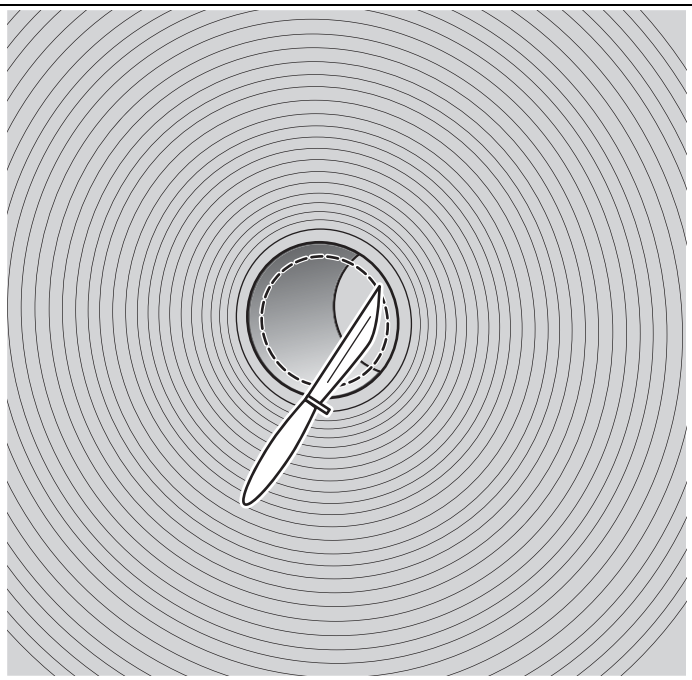

2

CAUTION
Hygienic Hazard.
Plastic wrapping around pallets of packaging material may be dirty and must be removed in the packaging material storage area and away from the machine. Plastic wrapping around individual packaging material reel must be removed after the reel has been transported to the machine.

Cut away only a piece of plastic wrapping inside the hole in the reel.

Note! Be careful not to damage the sides of the reel. A scratch can make a cut on the LS of the packages.

TechPub_2614345_0106 - 06_2819202_04en.fm

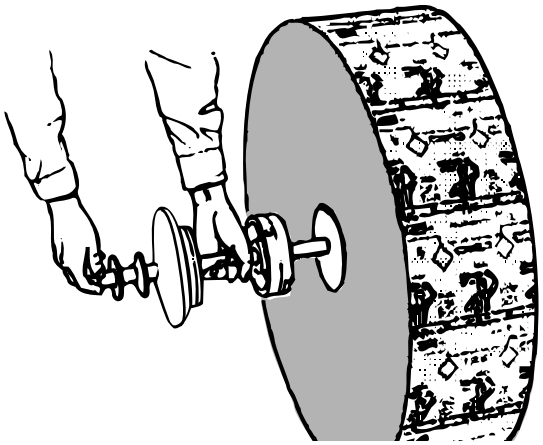

3

Insert the reel holder into the core.

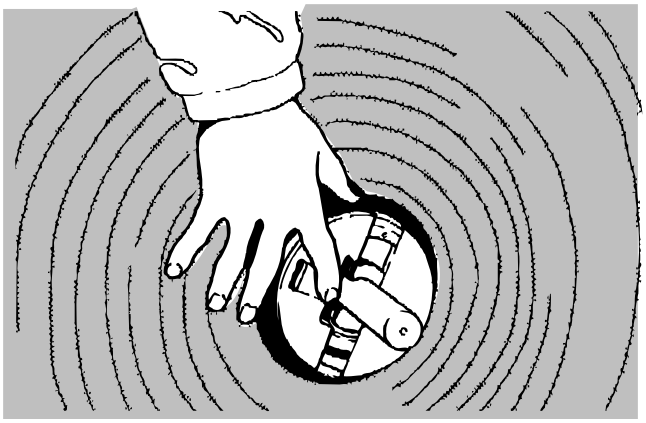

4

Pull out the reel holder catch to release the spring-loaded lugs.

Note! Check that the lugs have expanded to lock the reel holder to the reel.

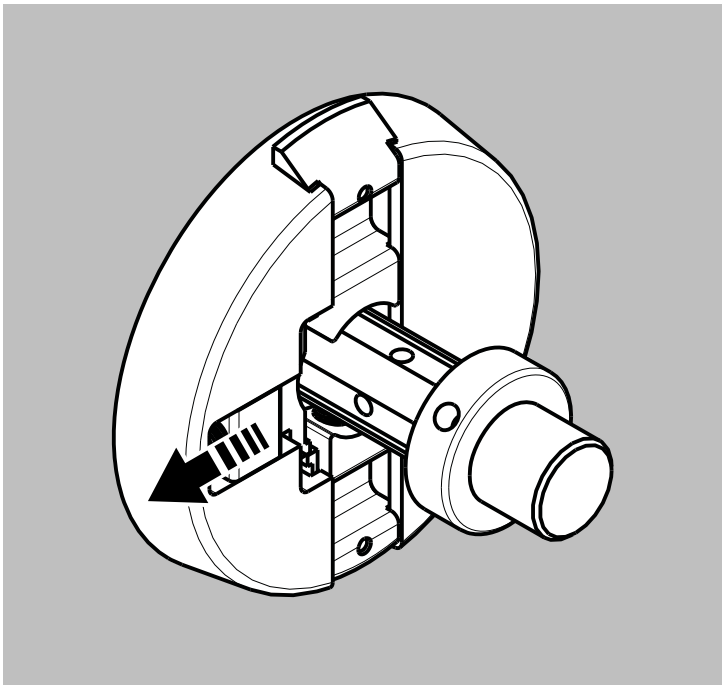

TechPub_2614345_0106 - 06_2819202_04en.fm

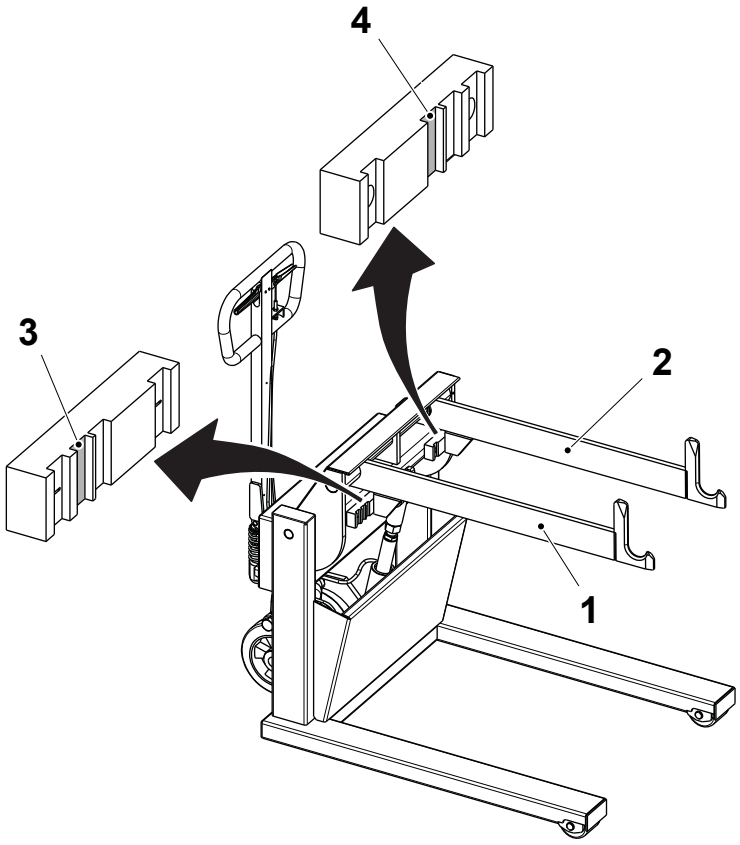

5

To adjust the trolley arms to the correct width for the packaging material reel holder, proceed as follows:

Raise the LH side arm (1) and move it in the groove (3) of LH side positioning plate.

Raise the RH side arm (2) and move it in the groove (4) of the RH side positioning plate.

The correct position of the trolley arms depends on the trolley being used, see the illustrations.

Note! The arms must be positioned asymmetrically on the positioning plates.

TechPub_2614345_0106 - 06_2819202_04en.fm

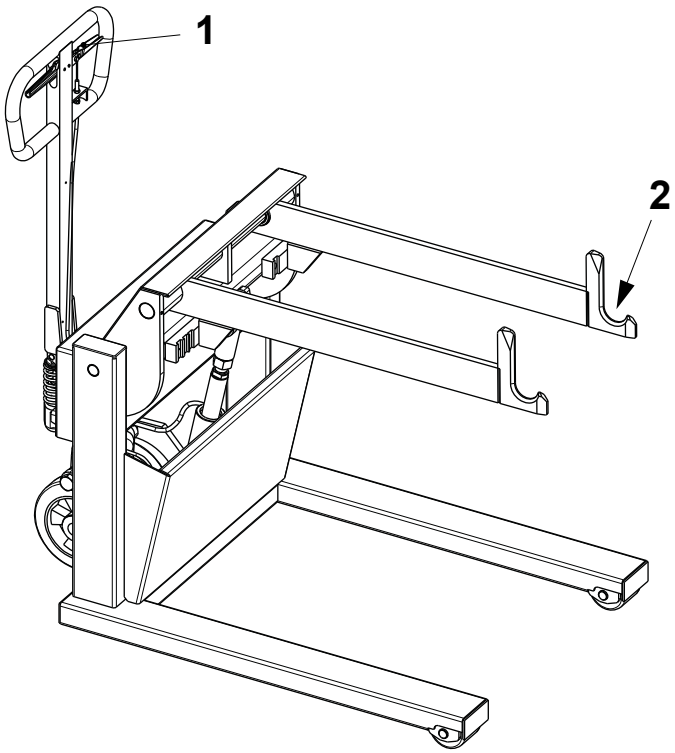

6

Position the reel so that the end of the packaging material is on top, and it will unwind towards the machine.

Squeeze the lever (1) to release the brake and move the trolley up to the reel. Position the trolley so that the spindle of the reel holder is above the yoke (2) of the trolley.

Note! Make sure the packaging material reel will be lifted onto the trolley with the correct direction of rotation as indicated in the illustration. Be careful not to damage the sides of the reel. A scratch can make a cut on the LS of the packages.

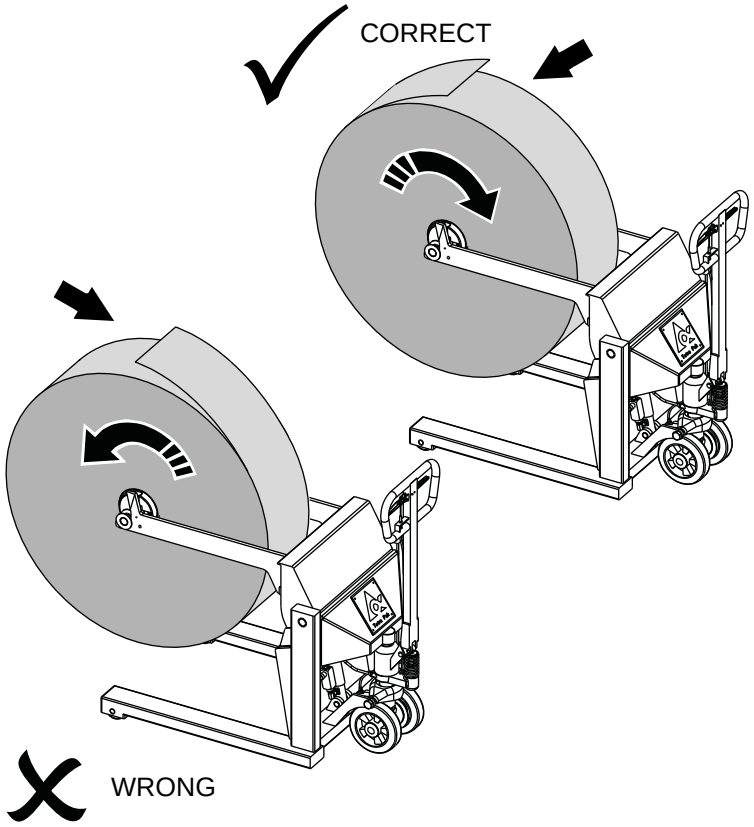

TechPub_2614345_0106 - 06_2819202_04en.fm

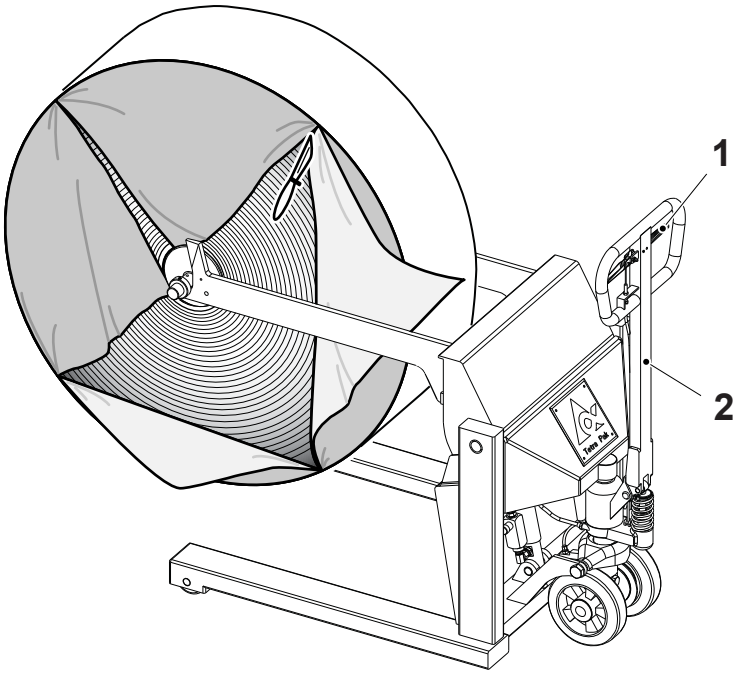

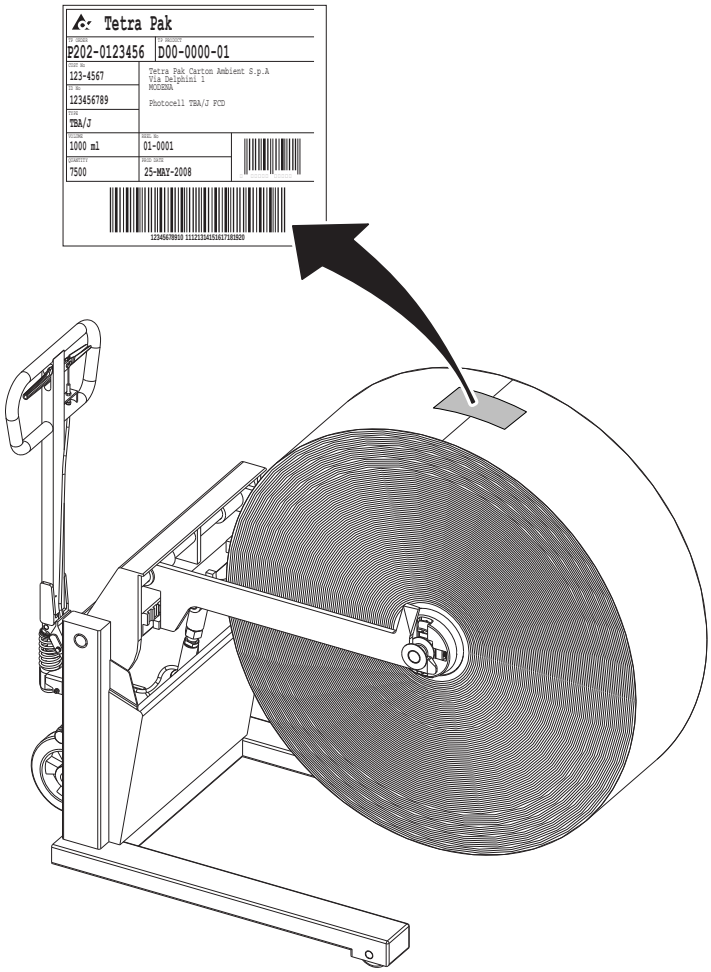

7

Push the lever (1) fully down and pump the main handle (2) to lift the trolley arms.

Remove the plastic wrapping from the reel.

CAUTION
Hygienic Hazard.
Make sure that the packaging material does not touch the floor during the entire supply procedure.

Check carefully the edges of the packaging material reel for damages, cuts or dents due to reel transportation and handling. Report any damage that may effect equipment performance.

Remove and keep the P-order tag.

Note! The unique P-order and reel numbers allocated to each packaging material reel and printed on the P-order tag provide traceability for the production batch. If a problem with the packaging material is detected these numbers must be quoted in any communication with Tetra Pak.

TechPub_2614345_0106 - 06_2819202_04en.fm

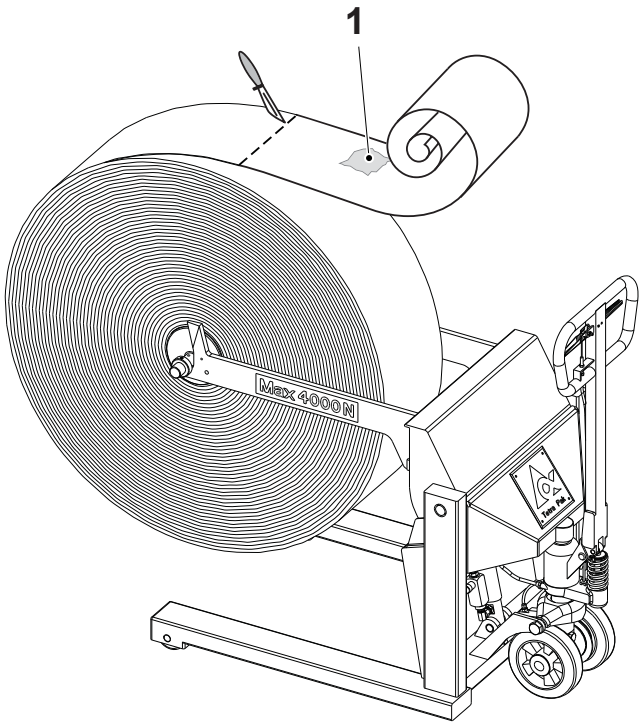

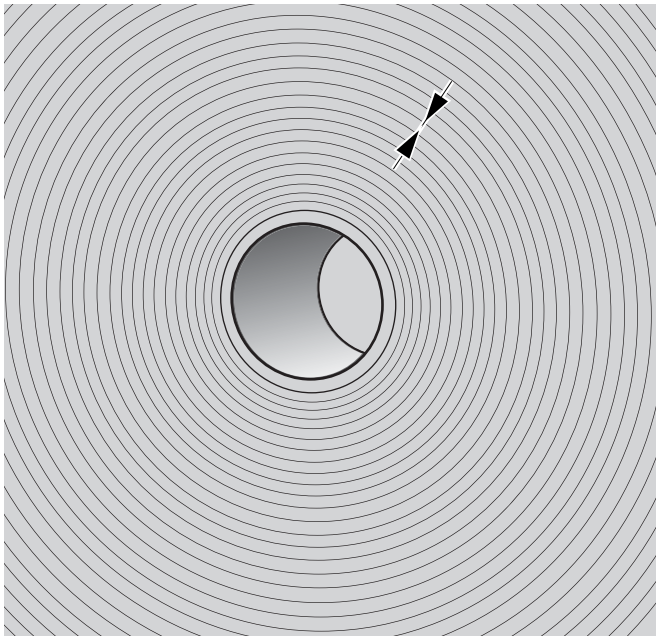

WARNING

Risk of unsterility.

Do not damage the underlying packaging material when cutting.

8

Cut approximately one turn of packaging material from the reel. Make sure that the packaging material cut includes the area (1) where the P-order tag was applied.

Note! Arrow marks on the side of the reels indicate where there are factory splices. During production, the machine will automatically discard the packages which include a factory splice.

Always check the packages after a factory splice, see the Package Checks section in chapter 5 Checks.

TechPub_2614345_0106 - 06_2819202_04en.fm

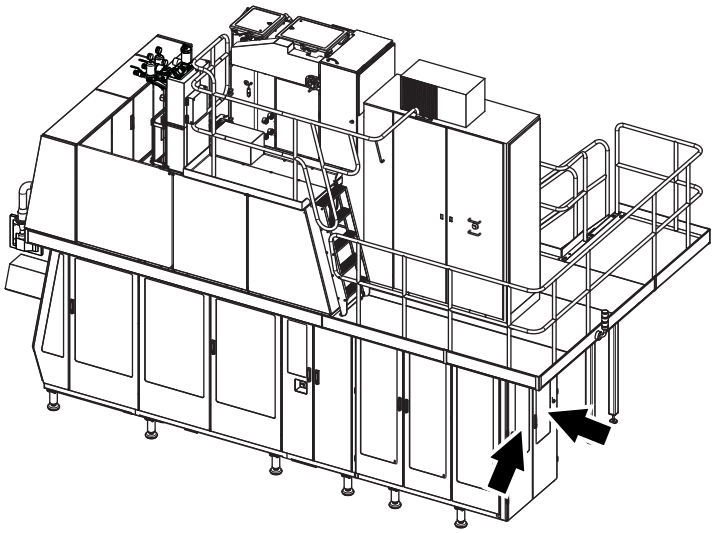

Splicing Preparation

1

Open the ASU doors.

If necessary remove the used packaging material core together with the reel holder.

TechPub_2614345_0106 - 06_2819202_04en.fm



2

Close the ASU doors and reset the alarms on the TPOP display.

If an alarm appears, take the appropriate measures or call a technician.

Prepare the new packaging material reel, see Reel Handling on page 6-13.

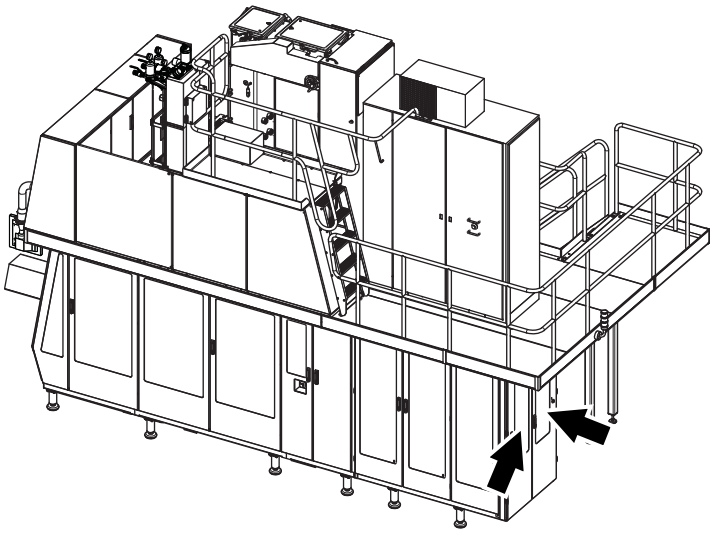

3

Open the ASU doors.

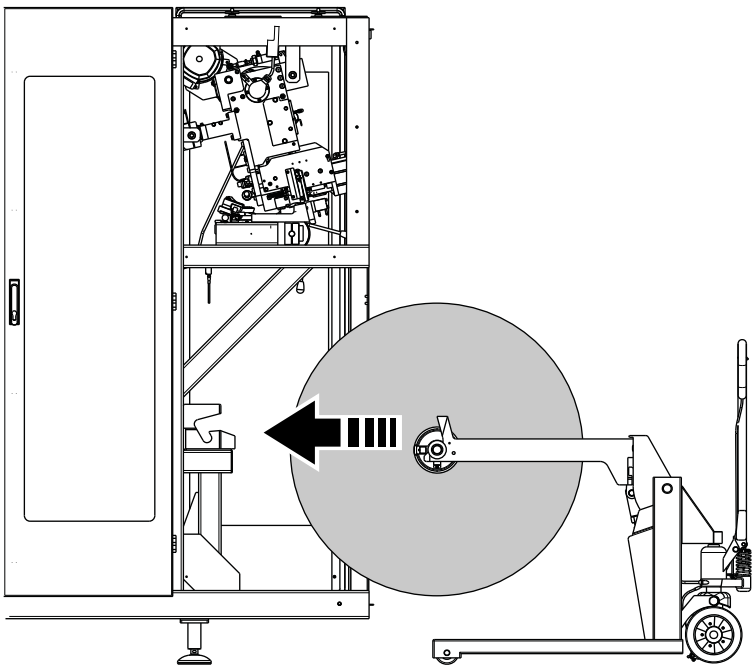

4

Load the reel of packaging material into the ASU.

TechPub_2614345_0106 - 06_2819202_04en.fm

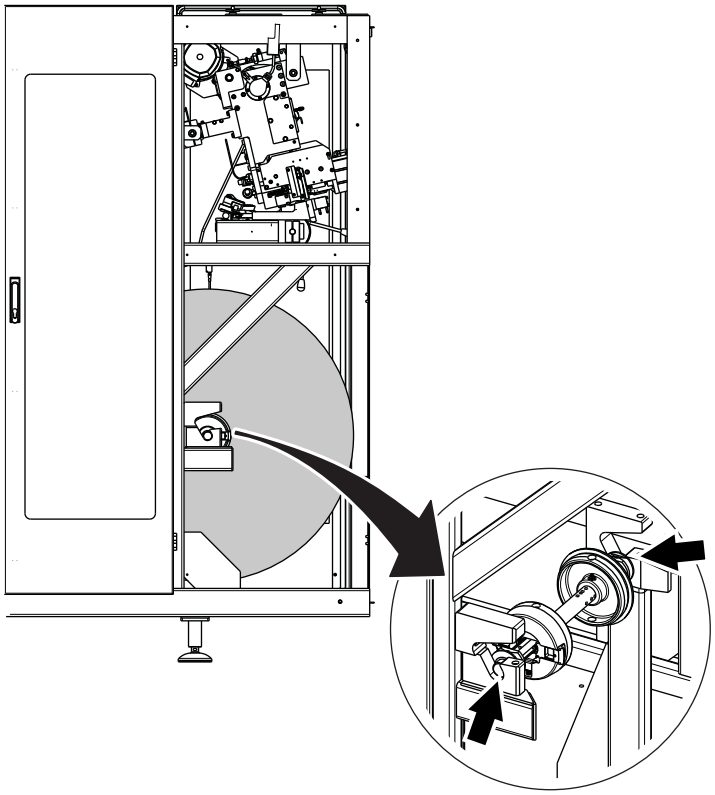

5

Make sure the packaging material reel is aligned correctly on the bobbin holders.

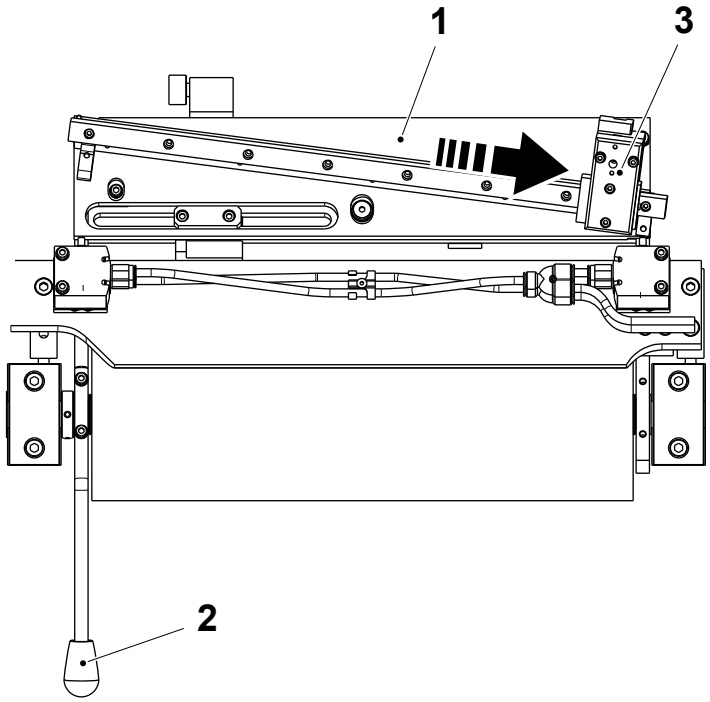

6

Raise the cutting table (1) by means of the handle (2).

Make sure that the knife holder (3) is on the RH side of the cutting table (1).

TechPub_2614345_0106 - 06_2819202_04en.fm

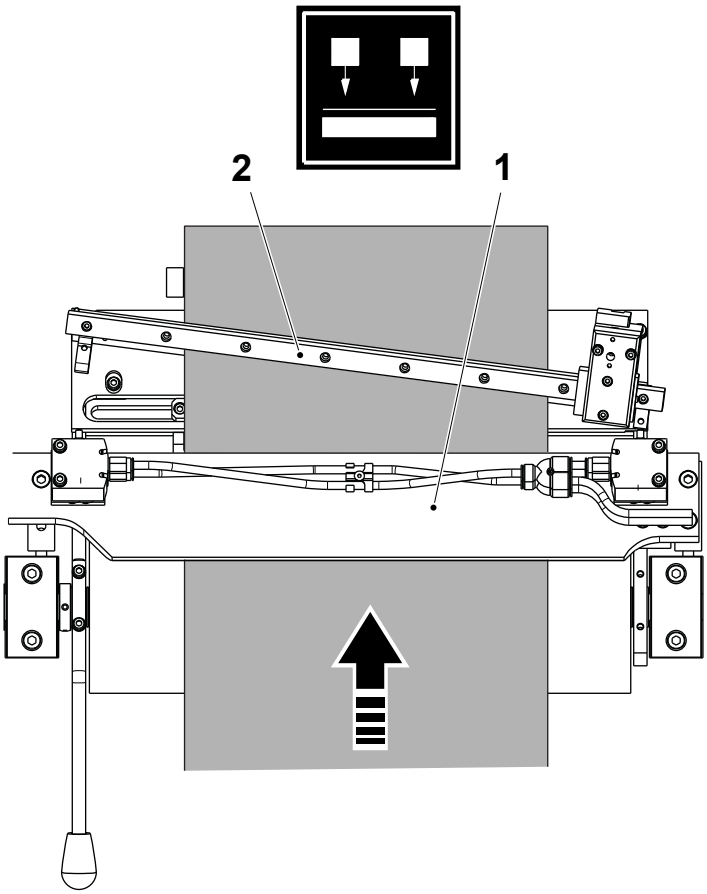

7

Press the MATERIAL LOCKING button to allow the packaging material to pass through the web brake shoe (1).

Thread the packaging material under the cutting device (2).

TechPub_2614345_0106 - 06_2819202_04en.fm

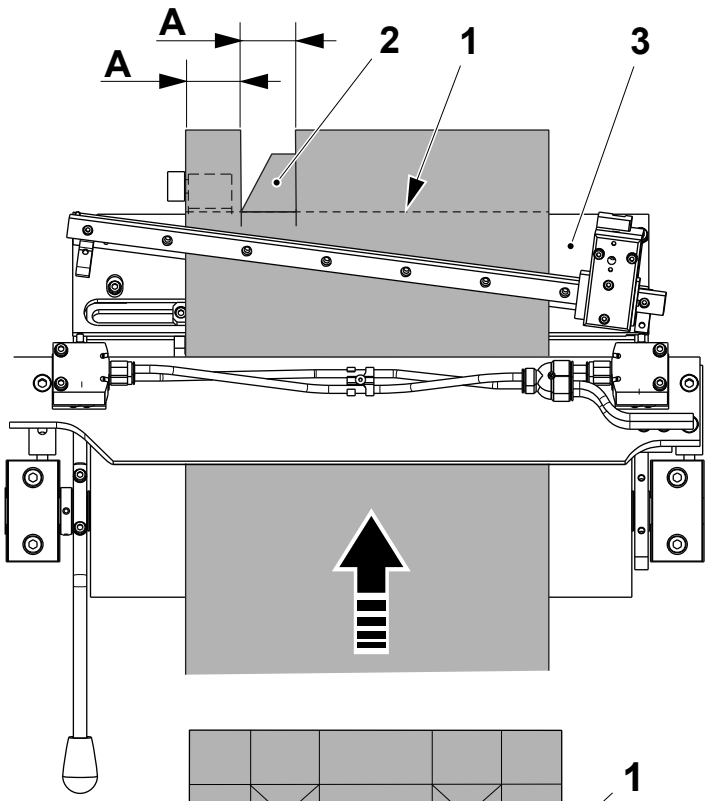

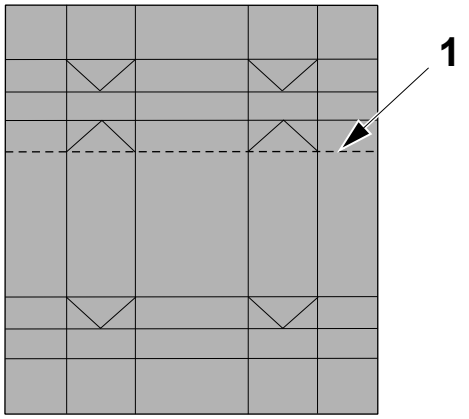

A = 40.0 mm
B = 110.0 mm

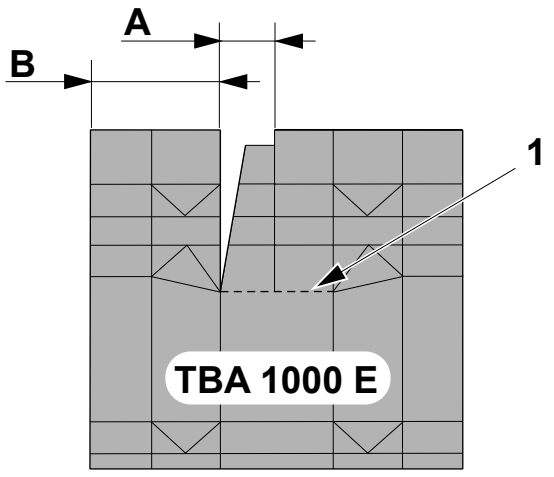

8

Fold the packaging material upwards along the top crease (1), then downwards to make a sharp crease.

Cut vertically the end of the packaging material to obtain a stripe (2) of 40 mm about at the distance 40 mm from the packaging material RH side.

Fold the stripe (2) along the top crease (1) over the edge of the cutting table (3).

TechPub_2614345_0106 - 06_2819202_04en.fm

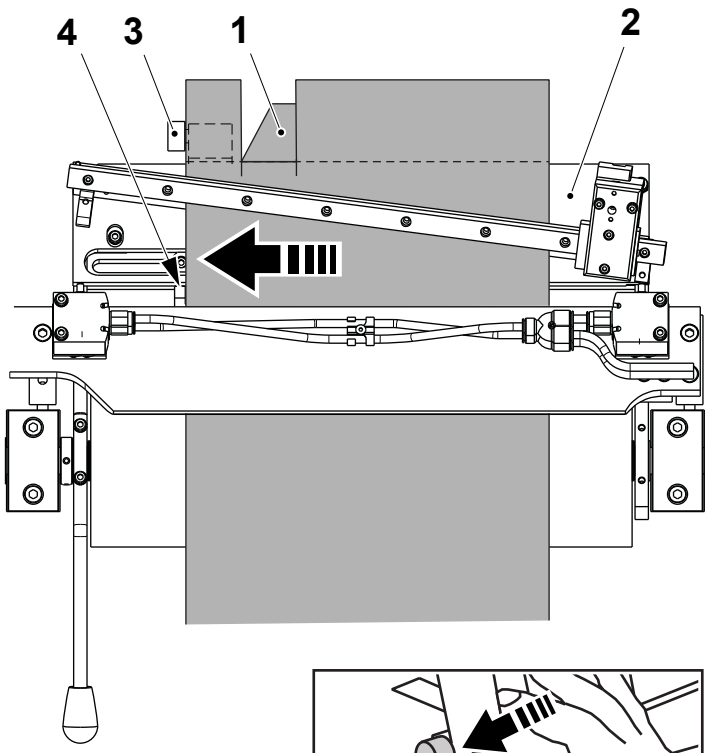

9

Hold the strip (1) over the cutting table (2).

Move the packaging material against the adjusting screw (3).

Move the packaging material against the tooth (4).

Move the packaging material down until the strip (1) is against the cutting table (2).

Press the MATERIAL LOCKING button to lock the packaging material in place.

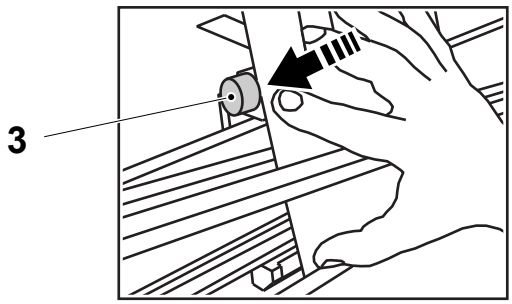

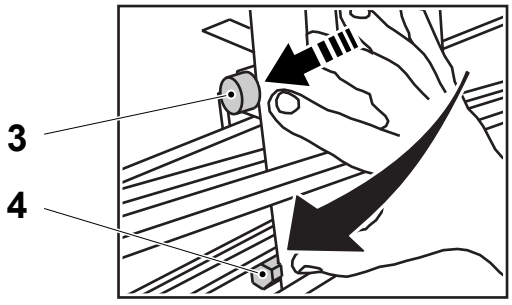

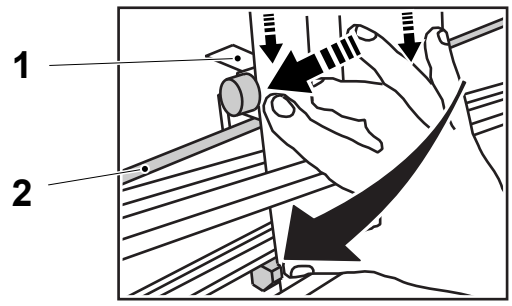

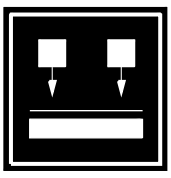

TechPub_2614345_0106 - 06_2819202_04en.fm

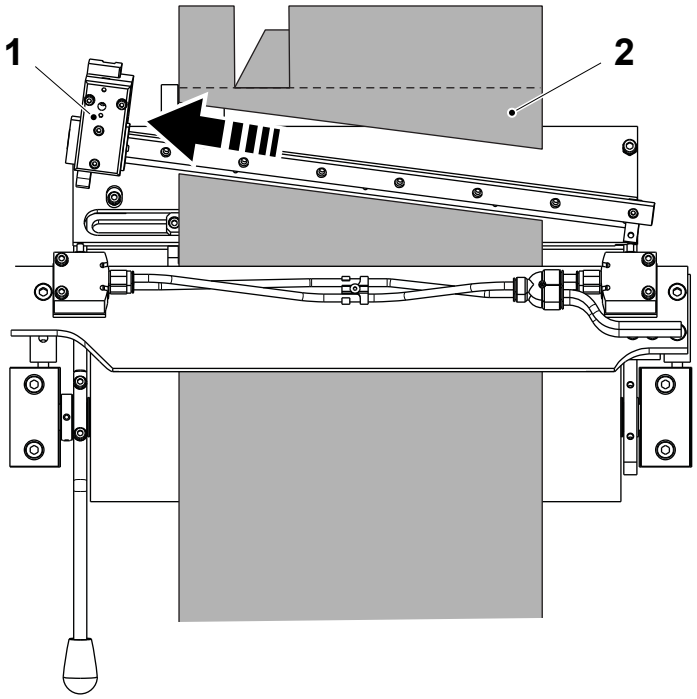

10

Cut off the end of the packaging material by sliding the knife (1) across the cutting table from RH side to LH side.

Remove the end piece (2).

Move back the knife (1) on the RH side.

TechPub_2614345_0106 - 06_2819202_04en.fm

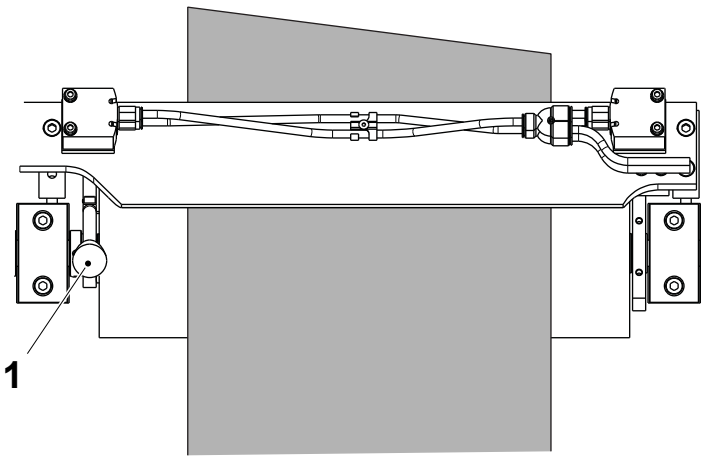

CAUTION
Risk of serious production fault.
Do not leave a loop between the packaging material reel and the cutting table: the paper splice may be broken due to the fast acceleration.

11

Lower the cutting table to the production position by means of the handle (1).



12

Close the ASU doors and reset the alarms on the TPOP display.

If an alarm appears, take the appropriate measures or call a technician.

TechPub_2614345_0106 - 06_2819202_04en.fm



Manual Web Splice

1

Press the MANUAL WEB SPLICE button.

When the machine has performed the splice, open the ASU door behind the packaging material reel that is not in use.

Follow the instructions on page 6-19.



CAUTION

Risk of personal injury.
The rollers of the ASU magazine may be suspended in an upper position when the machine is stopped due to an interrupted web splice. The rollers may drop suddenly if the packaging material web is cut.

Interrupted Web Splice

1

If the machine stops when a packaging material splice is being performed, the `SPLICE INTERRUPTED` alarm appears on the TPOP.

To restart the machine, acknowledge the alarm, remove the cause of the stoppage and follow the instructions in Manual Web Splice.

2

The packages with the splice are automatically discarded.

Carry out the checks according to the Package Checks section in chapter 5 Checks.



Note! Register the number of packages taken for the checks, see Recording Package Waste for Quality Checks in chapter 2 Control Panels.

TechPub_2614345_0106 - 06_2819202_04en.fm

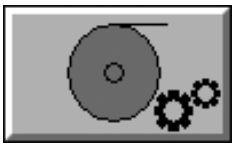

CAUTION
Hygiene.
Before handling clean parts, disinfect your hands/gloves with cleaning compound code **H**.

Packaging Material Broken or Splice Failure (ASU Loop Empty)

1

When there is an unsuccessful packaging material splice or the packaging material is broken, the ASU loop empties and the machine stops in SHORT STOP.

Touch the ASU button.



2

Touch the FORCE MANUAL SPLICE button.



3

The ON/OFF buttons are displayed.

Touch the ON button to enable the FORCE MANUAL SPLICE function.

To cancel the function, touch the OFF button.

An double audible signal is given.

Note! The splice will be performed without barcode searching (out of design).

The splicing head will be kept in position.

TechPub_2614345_0106 - 06_2819202_04en.fm

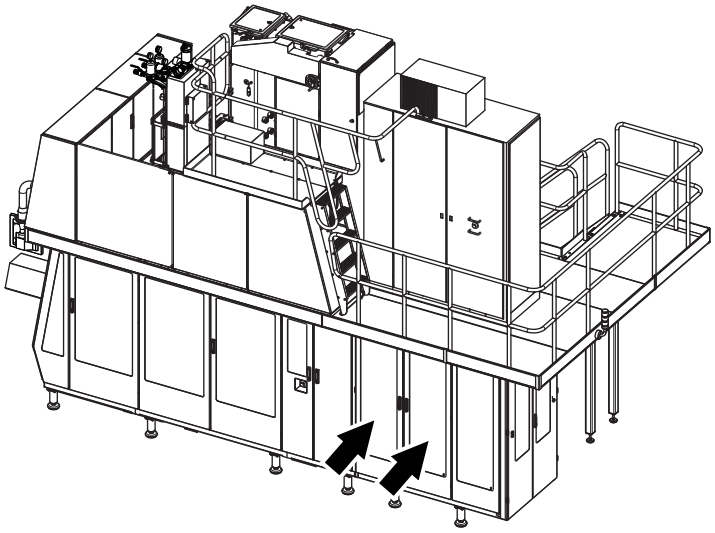

4

Open the doors to the Strip Applicator unit.

TechPub_2614345_0106 - 06_2819202_04en.fm

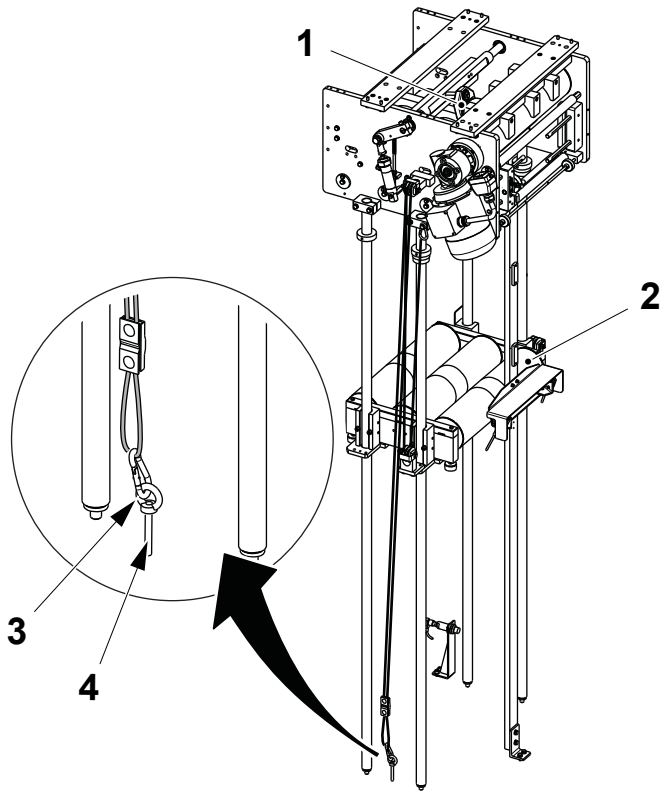

CAUTION

Risk of personal injury and /or damage to the equipment.

When the counter pressure roller (1) is released, the magazine rollers (2) may fall suddenly.

5

Secure the magazine rollers (2) by attaching the hook (3) to the eye bolt (4).

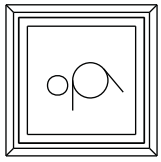

6

Press the PRESSURE ROLLER button to release the counter pressure roller.

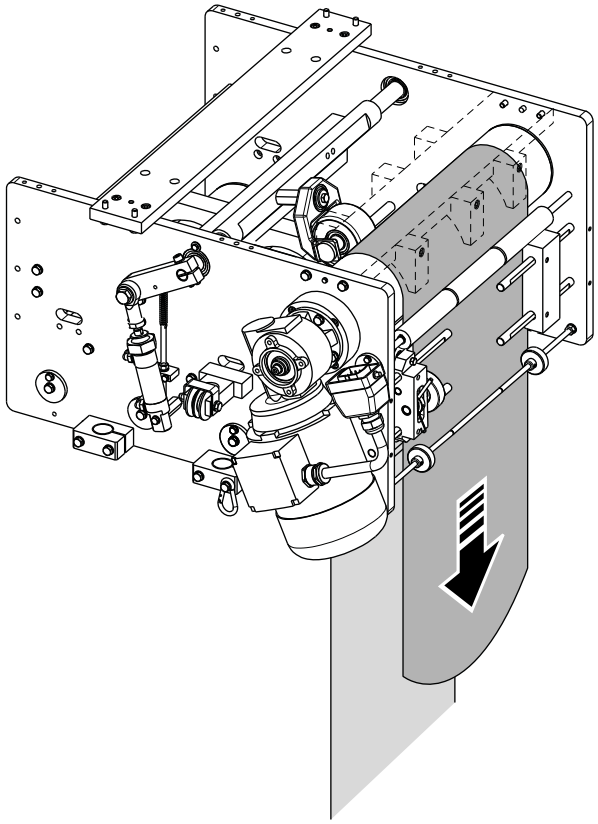

7

Thread back from the magazine the amount of packaging material necessary to reach the material holder.

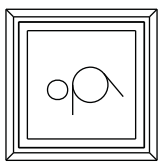

8

Press the PRESSURE ROLLER button to close the counter pressure roller.

TechPub_2614345_0106 - 06_2819202_04en.fm

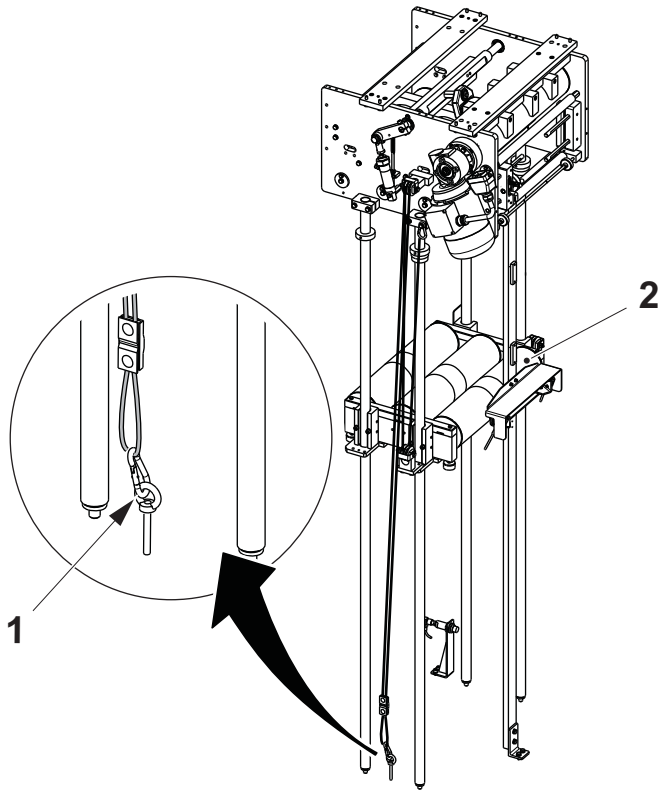

9

Release the hook (1) to make the magazine rollers (2) free.

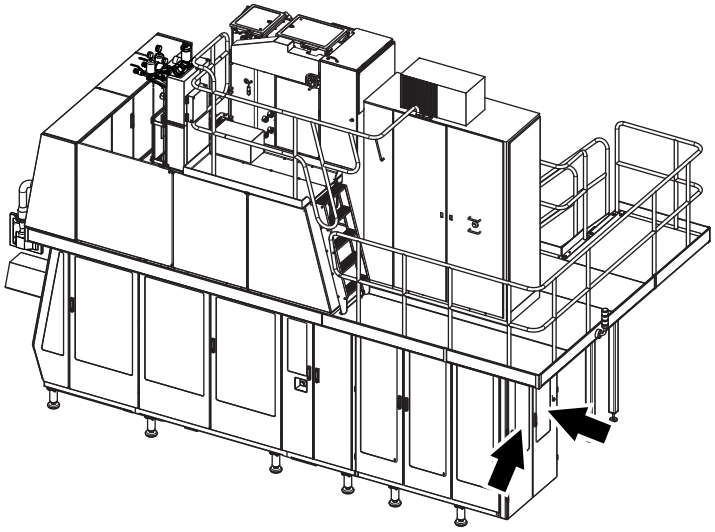

10

Open the ASU doors.

TechPub_2614345_0106 - 06_2819202_04en.fm

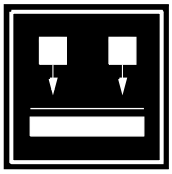

10a

Press the MATERIAL LOCKING button for at least 10 seconds to release the counter rollers and the material holder allowing the packaging material through the cutting table.

Note! After 1 minute the material holder locks automatically.

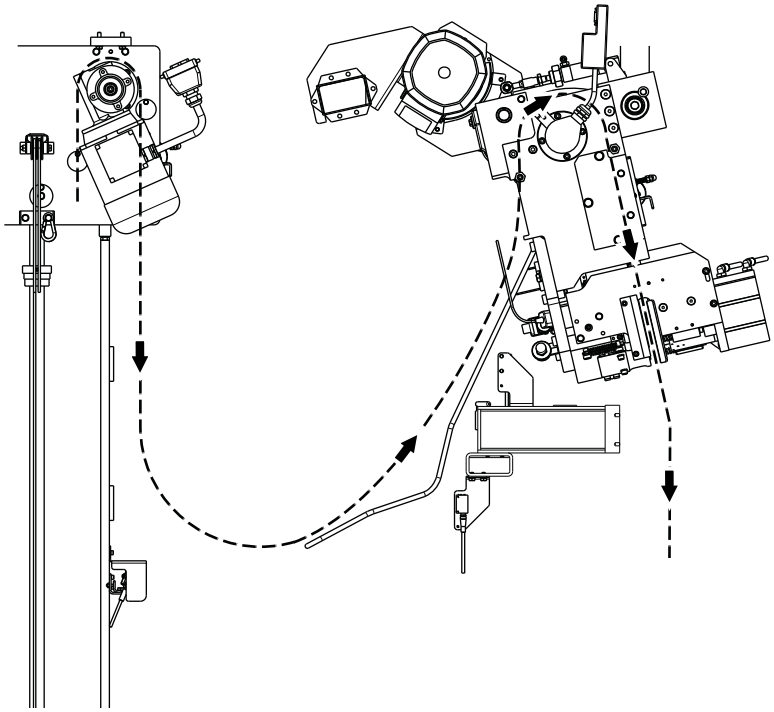

11

Thread back the packaging material through the splicing head and through the material holder until the end of the packaging material is 30 cm about under the material holder.

Prepare the other material holder for a new packaging material splice, follow the instructions on page 6-19.

TechPub_2614345_0106 - 06_2819202_04en.fm



12

Close the ASU doors.

Make sure all covers and doors on the machine are closed and reset any alarms TPOP display.



13

Press the MANUAL WEB SPLICE button.

The ASU loop is filled with packaging material.



14

Press the PROGRAM UP button to restart the machine.

TechPub_2614345_0106 - 06_2819202_04en.fm

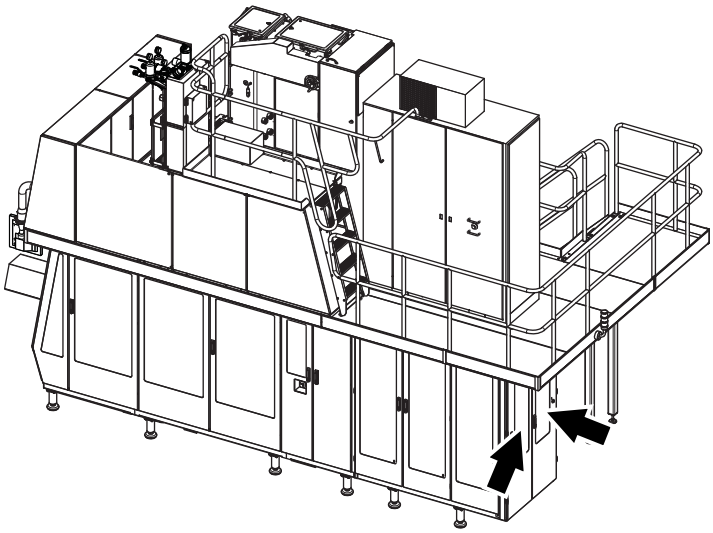

CAUTION
Hygiene.
Before handling clean parts, disinfect your hands/gloves with cleaning compound code **H**.

Packaging Material Ended (ASU Magazine Empty)

1

When the ASU magazine empties the machine stops in SHORT STOP.

Open the ASU doors.

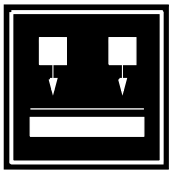

2

Press the MATERIAL LOCKING button for at least 10 seconds to release the counter rollers and the material holder allowing the packaging material through the cutting table.

Note! After one minute the material holder locks automatically.

TechPub_2614345_0106 - 06_2819202_04en.fm

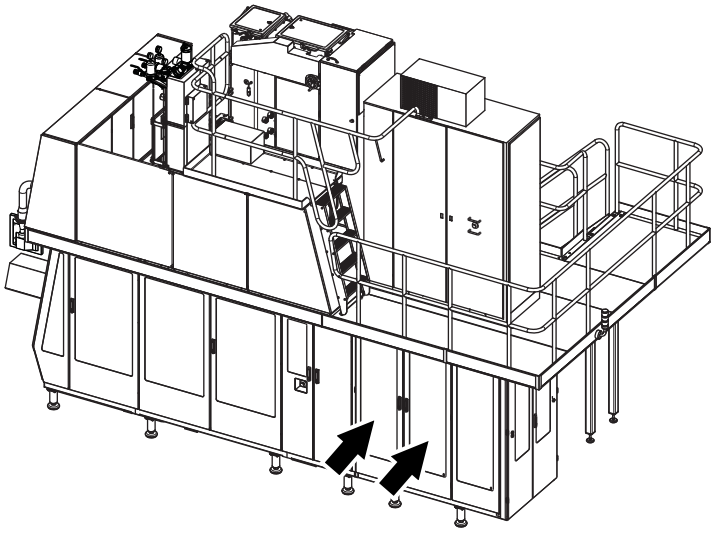

3

Open the doors to the Strip Applicator unit.

TechPub_2614345_0106 - 06_2819202_04en.fm

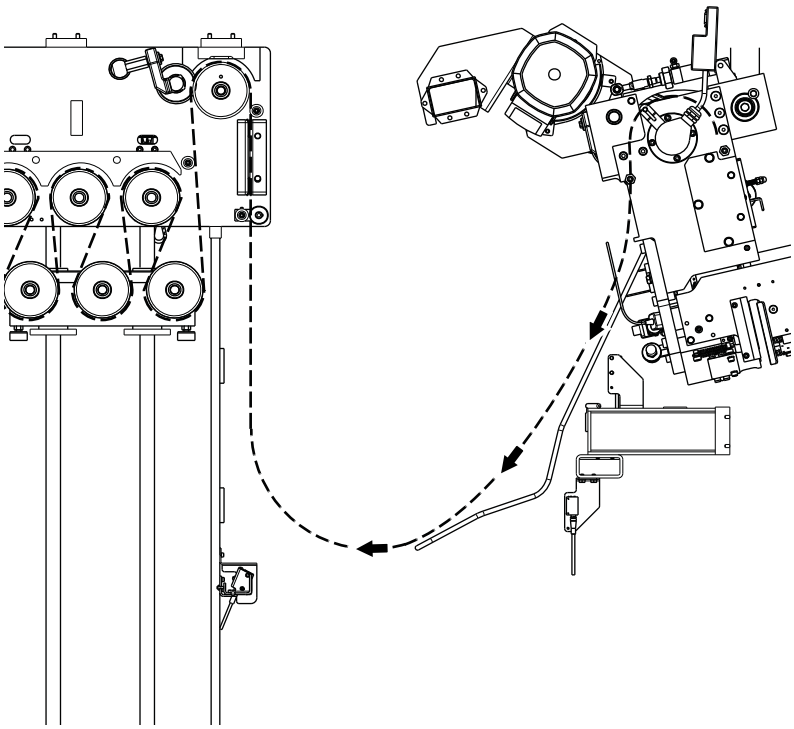

4

Check that the packaging material is not twisted around the magazine rollers.

Thread the packaging material to fill the ASU loop.

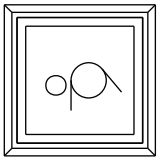

5

Press the PRESSURE ROLLER button to release the counter pressure roller.

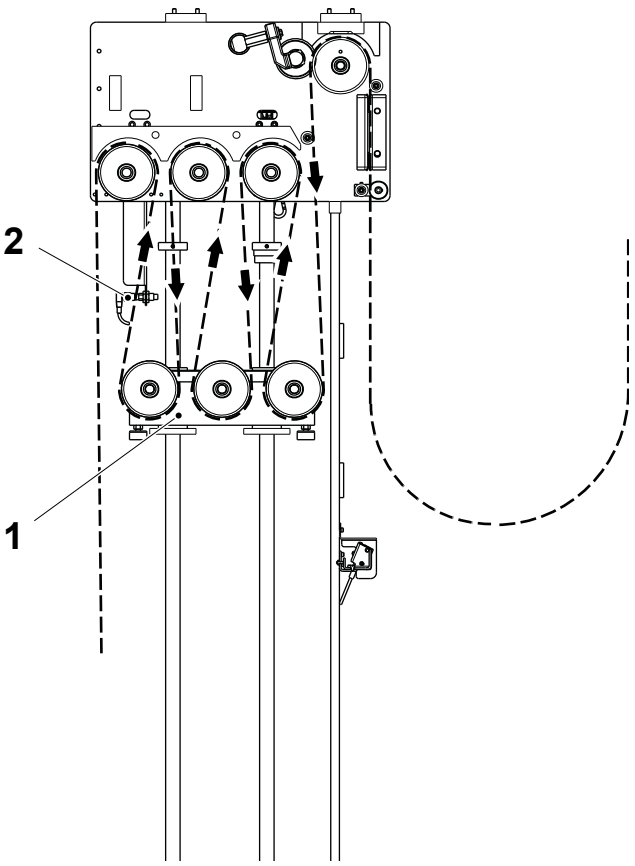

6

Feed the packaging material around the magazine rollers until the rollers (1) goes down beyond the sensor (2).

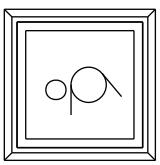

7

Press the PRESSURE ROLLER button to close the counter pressure roller.

TechPub_2614345_0106 - 06_2819202_04en.fm



8

Close the ASU doors.

Make sure all covers and doors on the machine are closed and reset any alarms TPOP display.

The ASU magazine is filled with packaging material.

TechPub_2614345_0106 - 06_2819202_04en.fm

This page intentionally left blank

TechPub_2614345_0106 - 06_2819202_04en.fm

7 Conversion

TechPub_2614345_0106 - 07_2819202_04en.fm

This chapter describes the procedures necessary to change the machine volume.

TechPub_2614345_0106 - 07_2819202_04en.fm

QuickChange . . . . . 7 - 5

Preparation . . . . . .7 - 5

Equipment Checklist. . . . . 7 - 5

Volume QuickChange. . . . . .7 - 6

Automatic Volume QuickChange During PRODUCTION . . . . . 7 - 6

Volume QuickChange During PREPARATION or NORMAL STOP . . . . . 7 - 7

Change Equipment. . . . . .7 - 9

Volume Flaps . . . . . 7 - 9

Bottom Plates . . . . . 7 - 10

Infeed Guide Plates. . . . . 7 - 10

Drop Chute Guide Plates . . . . . 7 - 11

Photocell Bracket . . . . . 7 - 11

Volume QuickChange Completion . . . . . .7 - 12

TechPub_2614345_0106 - 07_2819202_04en.fm

This page intentionally left blank

TechPub_2614345_0106 - 07_2819202_04en.fm

QuickChange

This section describes what must be done to change the package volume on A3/Flex QuickChange filling machines.

Preparation

Make sure the correct packaging material reel is spliced and prepared ready for PRODUCTION.

Change the reel as necessary and prepare a packaging reel splice, see Packaging Material Supplies in chapter 6 Supply of Materials.

Equipment Checklist

Make sure the necessary volume change equipment is available:

- cutting and pressure jaw volume flaps
- infeed guide plates
- final folder bottom plates
- drop chute guide plates

TechPub_2614345_0106 - 07_2819202_04en.fm

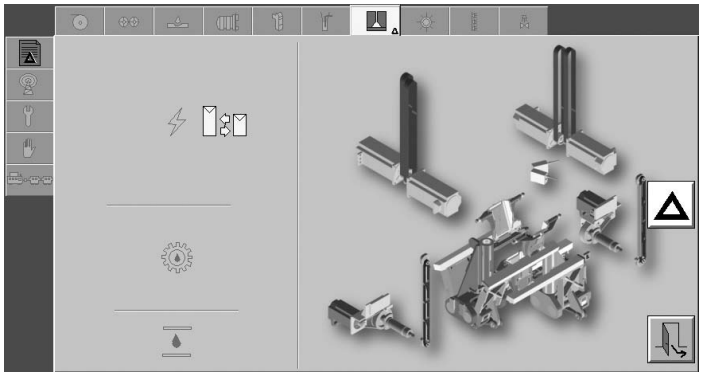

Volume QuickChange

A volume QuickChange can be performed when the machine is in step PREPARATION, PRODUCTION or during a NORMAL STOP.

Automatic Volume QuickChange During PRODUCTION

An automatic volume change is performed when the machine is running in PRODUCTION and a new volume size of packaging material is detected by the jaw system photocells.

The machine will stop automatically when the packaging material arrives at the jaw system and an alarm will appear on the TPOP.

Acknowledge the alarm and follow the procedure described in Volume QuickChange During PREPARATION or NORMAL STOP.

TechPub_2614345_0106 - 07_2819202_04en.fm

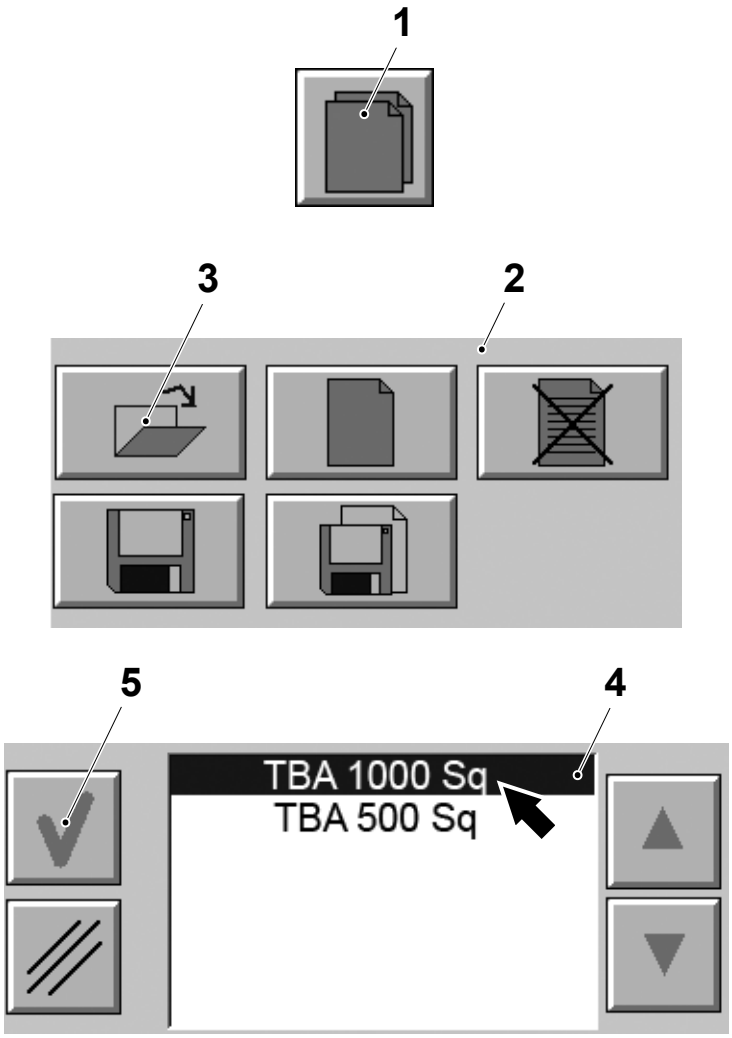

Volume QuickChange During PREPARATION or NORMAL STOP

1

a) Touch the RECIPE button (1).

b) The RECIPE window (2) is displayed.

Note! Once the RECIPE button (2) is selected and confirmed the volume change must be completed.

c) Touch the OPEN RECIPE button (3) to display the RECIPE list (4).

d) Select the new volume from the RECIPE list (4).

e) Touch the OK button (5) for four seconds to confirm the new volume.

Note! An alarm will appear on the TPOP to indicate that an action is required.

TechPub_2614345_0106 - 07_2819202_04en.fm

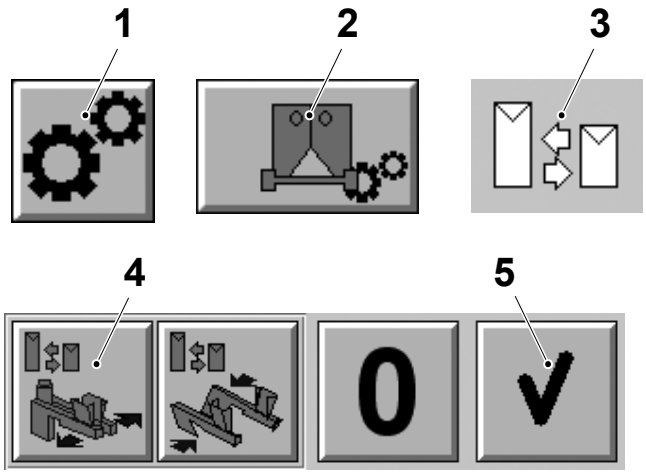

2

a) Touch the PRODUCTION CONTROL button (1).

b) Touch the PACKAGE FORMING UNIT button (2).

c) Touch the CHANGE VOLUME icon (3).

d) Touch the OPEN button (4).

e) Touch the OK button (5) to confirm the selection.

f) Wait until the jaw system movement has completed and opened both jaw pairs.

g) Continue with the section Change Equipment.

TechPub_2614345_0106 - 07_2819202_04en.fm

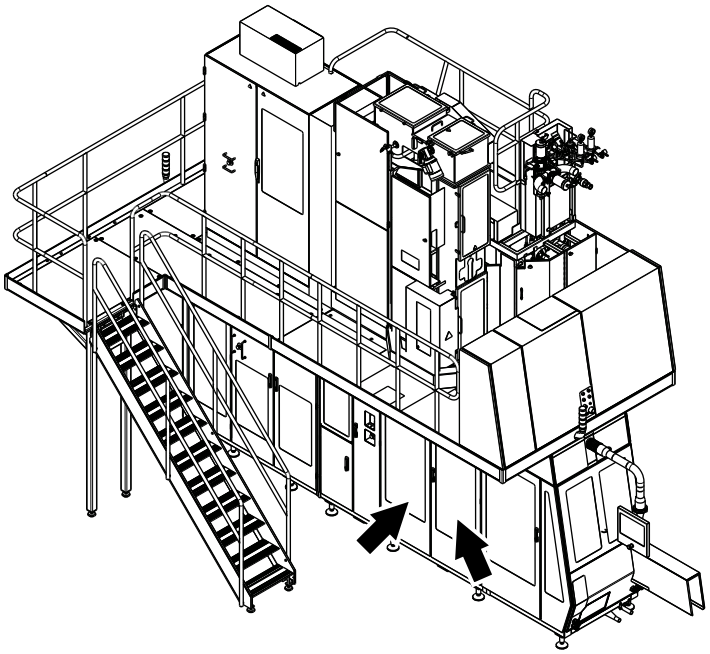

Change Equipment

1

Open the two LH jaw system doors.

TechPub_2614345_0106 - 07_2819202_04en.fm

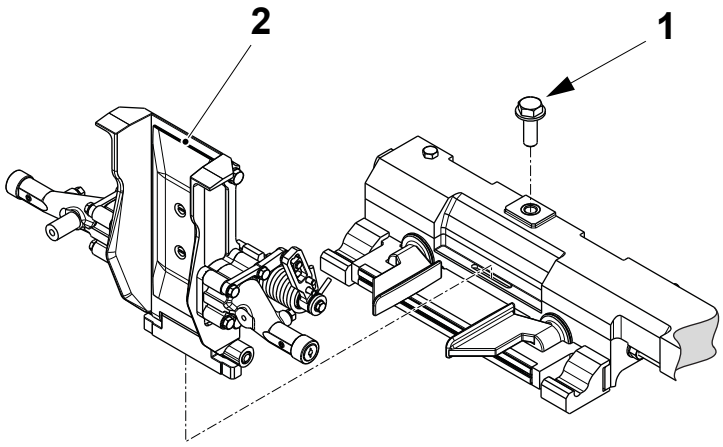

Volume Flaps

1a

On each of the four volume flaps:

Release the screw (1) securing the volume flap (2) to the carrier and remove the volume flap (2).

Note! The pressure and cutting volume flaps have unique installation positions.

Install the volume flap (2) according to the volume to be produced and secure them using the screw (1).

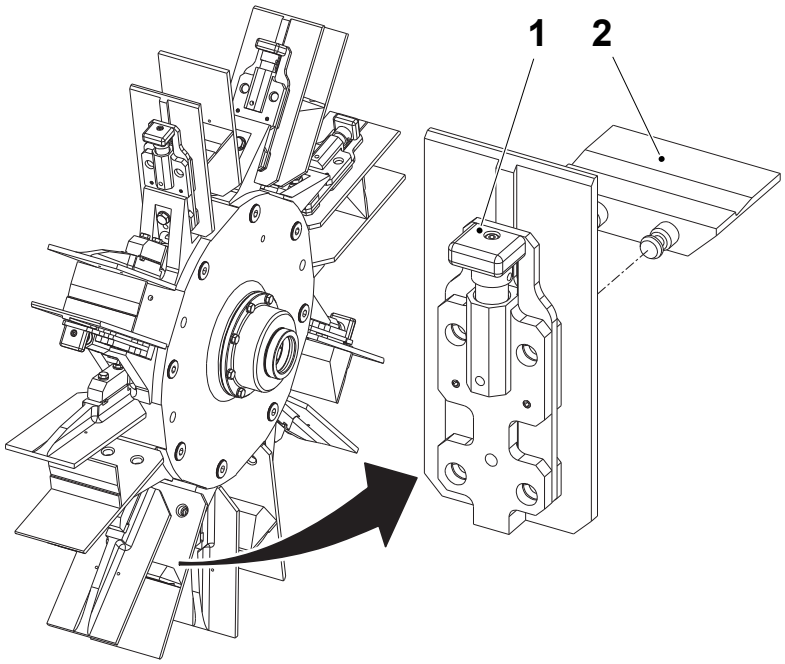

WARNING

Hot surface.
The bottom plates may be hot. Wear personal protective equipment.

Bottom Plates
1b

Note! For TBA 1000 Sq and TBA 1000B the bottom plate (2) must be removed. For TBA 500 Sq and TBA 500 B the bottom plate (2) is fitted. Crank the final folder to access the stations.

In each station push the knob (1) to release the bottom plate (2).

Change the position of the bottom plate (2) according to the volume to produced.

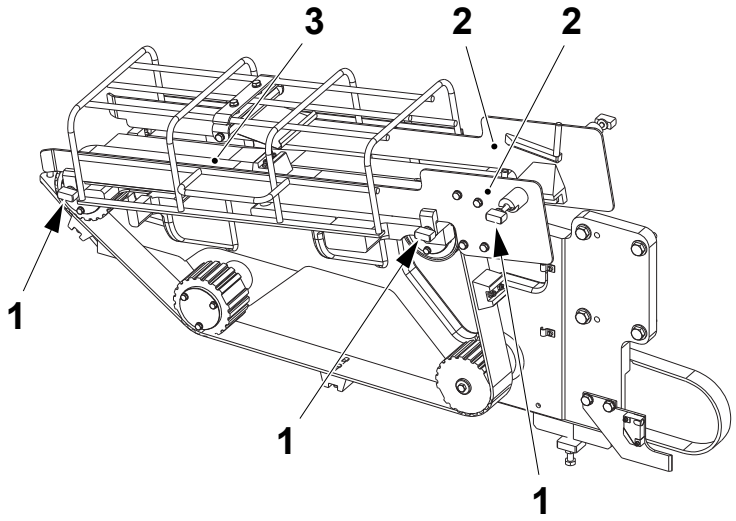

Infeed Guide Plates
1c

Release the quick-release levers (1) securing the guide plates (2) to the conveyor (3).

Install the new guide plates (2) onto the conveyor (3) and secure using the quick-release levers (1).

Note! After the volume change is complete, check the synchronisation of the final folder wheel and the infeed, see Final Folder Synchronization on page 2-91.

TechPub_2614345_0106 - 07_2819202_04en.fm

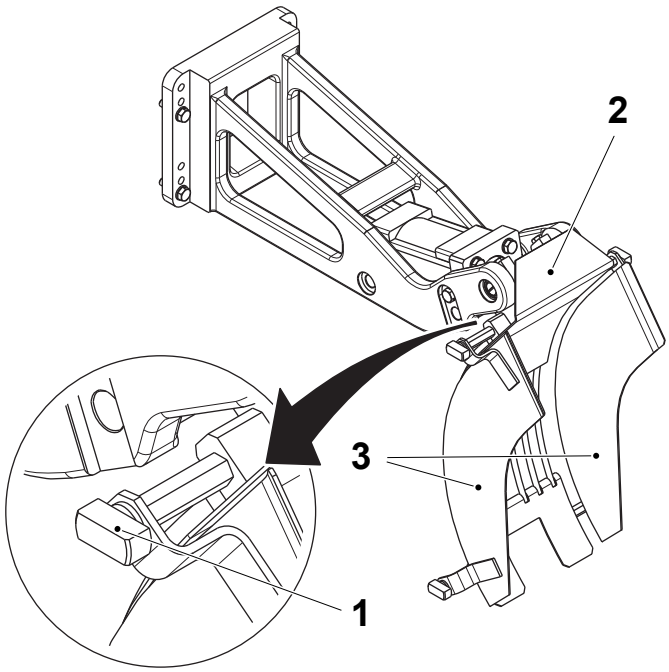

Drop Chute Guide Plates

1d

a) Remove the four screws (1) from the drop chute (2).

b) Change the guide plates (3) and tighten the screws (1).

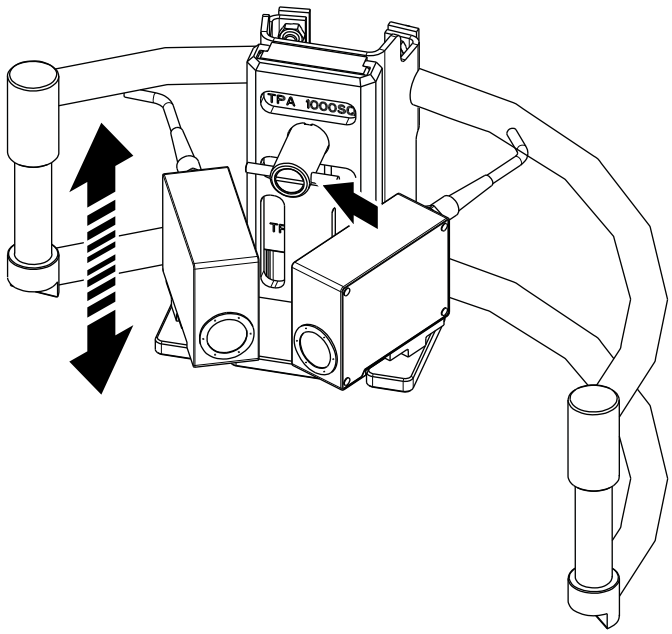

Photocell Bracket

1e

Note! Vaild for TPA 750 Sq and TPA 1000 Sq only. For all other packages continue with item 1f.

Pull the knob indicated by the arrow in the illustration and move the photocell bracket to the position marked on the bracket for the package to be produced.

TechPub_2614345_0106 - 07_2819202_04en.fm

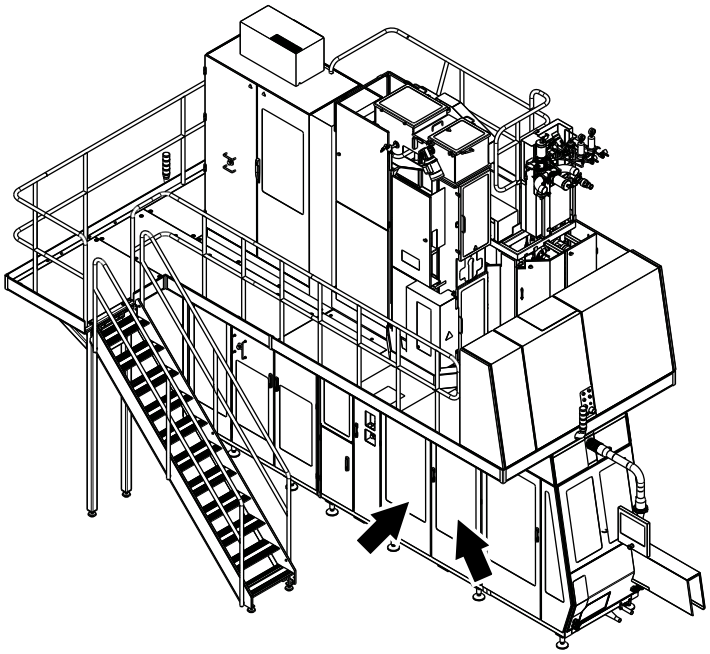

1f

Close the two LH jaw system doors.

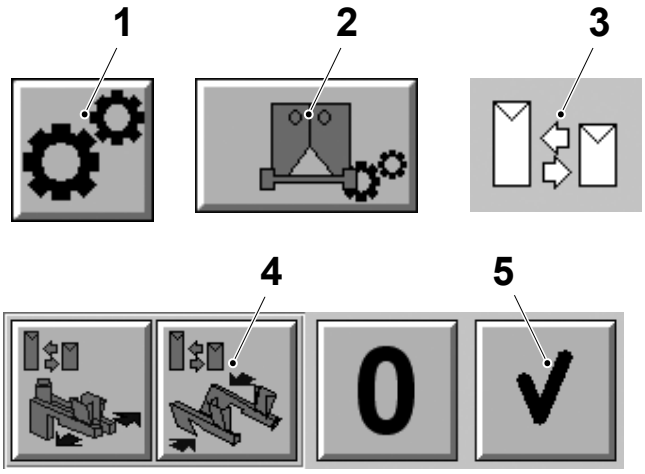

Volume QuickChange Completion

2

a) Close the LH jaw system doors and reset any alarms on the TPOP panel.

b) If not already done, touch the `PRODUCTION CONTROL` button (1).

c) Touch the `PACKAGE FORMING UNIT` button (2).

d) Touch the `CHANGE VOLUME` icon (3).

e) Touch the `CLOSE` button (4).

f) Touch the `OK` button (5) to confirm the selection.

g) Wait until the jaw system movement has completed and closed both jaw pairs.

The volume change has now been completed.

TechPub_2614345_0106 - 07_2819202_04en.fm

8 Stop

TechPub_2614345_0106 - 08_2819202_04en.fm

This chapter describes the different types of stop conditions and how to stop the machine under normal operating conditions.

CAUTION
Hazardous noise.
Risk of impaired hearing. Hearing protection is recommended whenever this equipment is in operation.

CAUTION
Risk of damage to the equipment.
When possible, the machine should normally be stopped in a SHORT STOP during PRODUCTION.

TechPub_2614345_0106 - 08_2819202_04en.fm

Emergency Stop . . . . . 8 - 5

Security Stop . . . . . 8 - 6

Aseptic Chamber Doors or Machine Failure . . . . . .8 - 6

Machine Body and ASU Doors . . . . . .8 - 7

Short Stop . . . . . 8 - 8

Production Finished Stop. . . . . 8 - 12

Interrupting the Automatic Sequence. . . . . .8 - 13

TechPub_2614345_0106 - 08_2819202_04en.fm

This page intentionally left blank

TechPub_2614345_0106 - 08_2819202_04en.fm

Emergency Stop

When there is a risk of **serious danger to people or to the machine**, push any of the EMERGENCY STOP buttons (arrows) as quickly as possible.

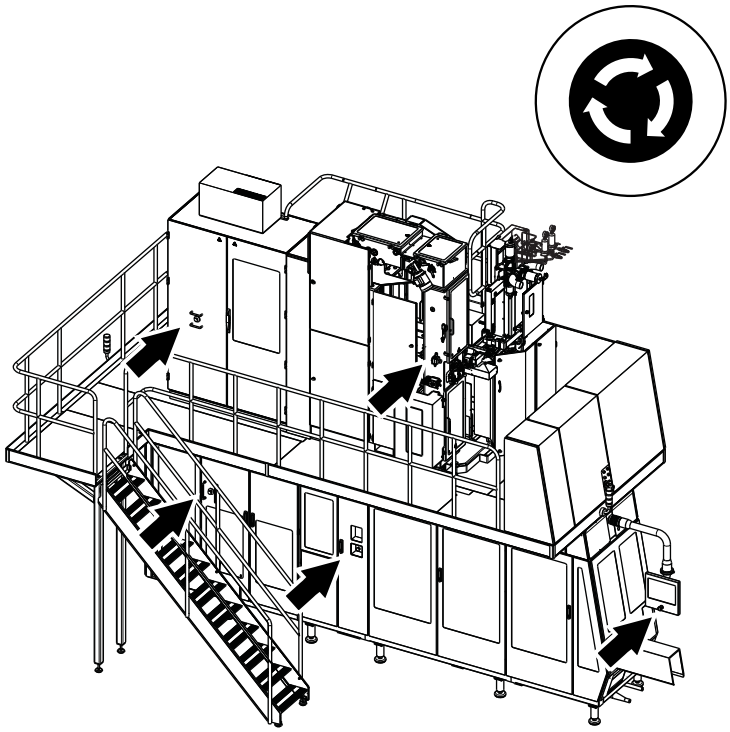

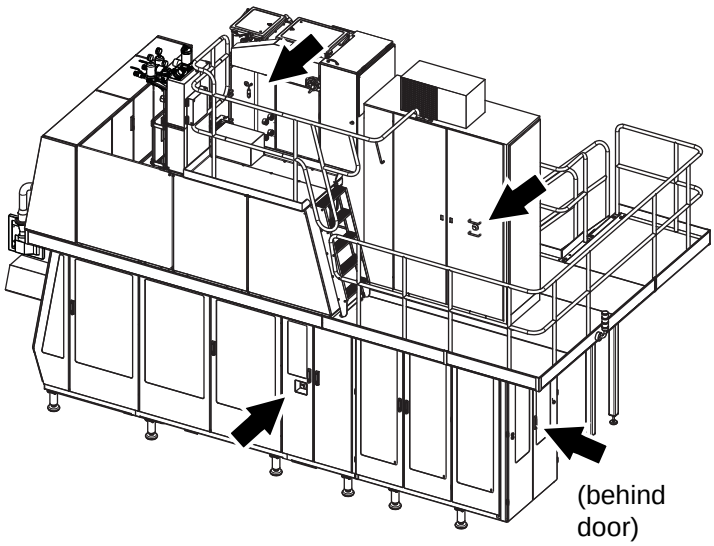

1

Pressing an EMERGENCY STOP **button results in the following:**

- All machine movements and functions stop **instantly**
- The pneumatic system de-pressurizes completely
- The machine program steps down to step ZERO.

Take the following actions:

a) Eliminate the cause of the stop and clear any alarms.

b) Cut open the product tube to empty any remaining product.

c) Register the cause and number of wasted packages in the collect system. See the Manual Recording of a Production Stop Cause in chapter 2 Control Panels.

d) Twist out and reset the EMERGENCY STOP button.

e) Clean the machine according to Daily Care.

f) Restart PRODUCTION. See the Preparing after Daily Care section.

TechPub_2614345_0106 - 08_2819202_04en.fm

Security Stop

All hazardous areas of the machine are fitted with safety switches. If any door or guard fitted with a safety switch is opened the machine will perform a SECURITY STOP.

CAUTION

Risk of serious production fault.

If during Stops the aseptic chamber doors are opened, or the tube bursts, tears, or it is manually cut, or product splashes occur, the machine must be cleaned and sterilized before PRODUCTION can restart.

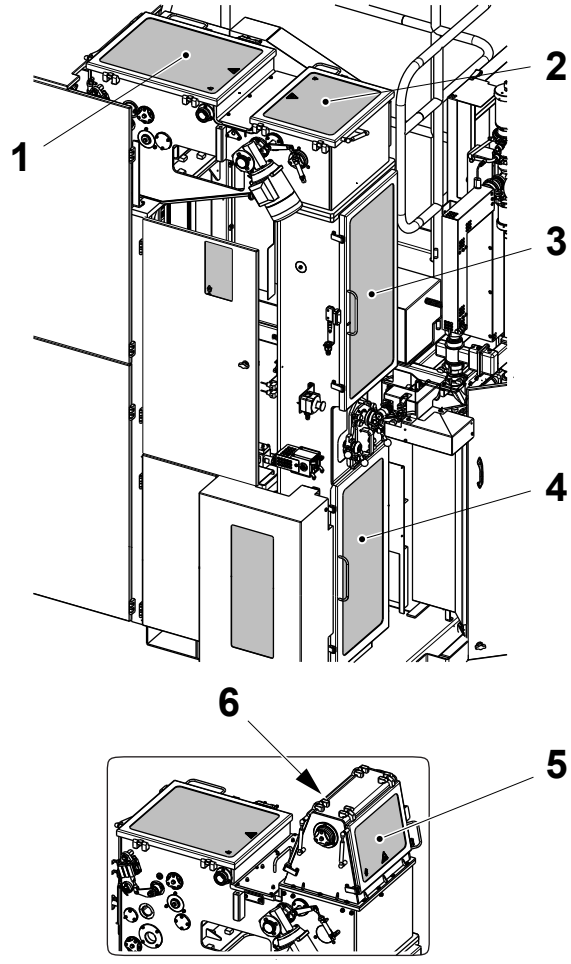

Drying chamber with upper section

Aseptic Chamber Doors or Machine Failure

1

If any of the aseptic chamber doors (1), (2), (3), (4), (5) and (6) have been opened, the machine steps to VENTING and then to step PREPARATION. Follow the instructions in the Daily Care section.

Reset any alarms on the TPOP.

TechPub_2614345_0106 - 08_2819202_04en.fm

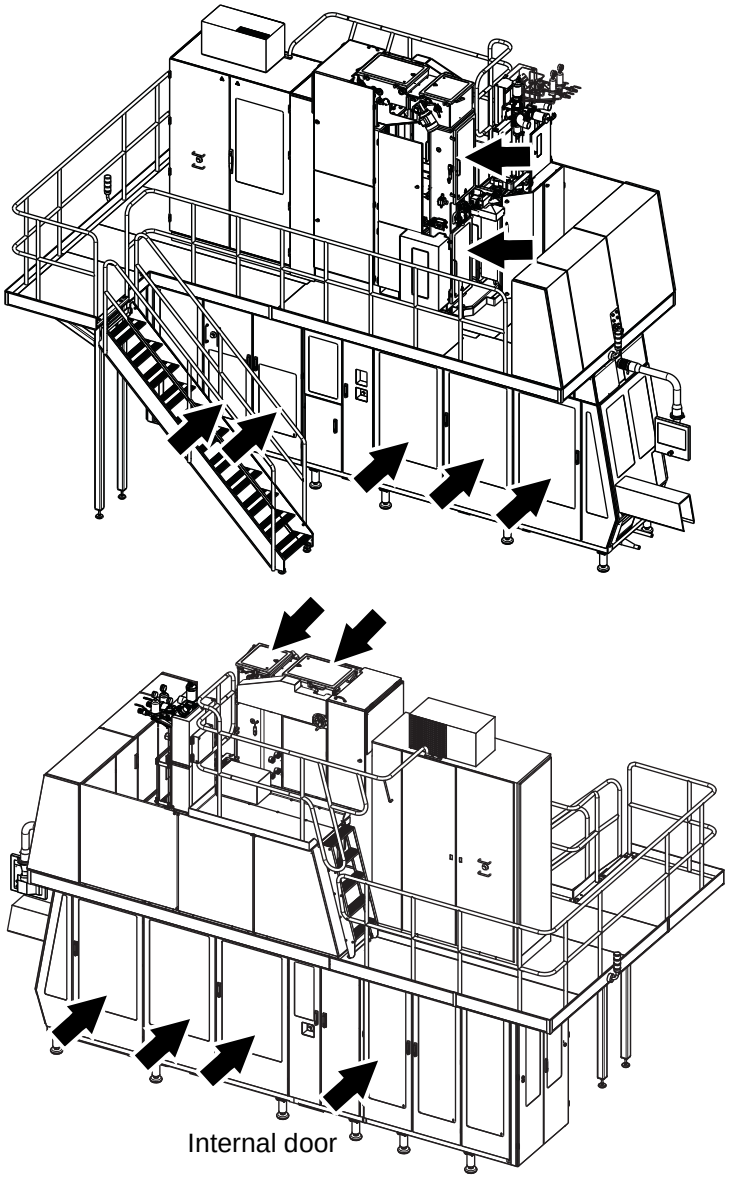

Machine Body and ASU Doors

1

During PRODUCTION the machine will stop immediately if:

- any of the doors indicated by the arrow are opened
- there are jammed packages
- there are final folder errors.

Also see the Safety Precautions chapter.

Reset any alarms on the TPOP.

TechPub_2614345_0106 - 08_2819202_04en.fm

Short Stop

Use the SHORT STOP button to stop the machine for 15 minutes or less.

CAUTION

Risk of serious production fault.

If the machine has been stopped for more than 120 minutes, the alarm `EXCESSIVE PRODUCTION STOP TIME` appears on the TPOP. It is recommended to terminate the PRODUCTION and perform CIP. For maximum waiting time recommendations, see the table Maximum Waiting/Stop Time Recommendations in chapter 11 Technical Data.

CAUTION

Risk of serious production fault.

If the packaging material tube tears or is opened, the machine must be cleaned and sterilised.

CAUTION

Risk of serious production fault.

If the machine has been stopped for more than 12 minutes the alarm `EXCEEDED SHORT STOP TIME WARNING` will appear on the TPOP. Restart production or press the INCHING button until the machine starts, the machine will automatically renew the packaging material in the superstructure to minimize the risk of unsterility and then stop. A dialogue window appears on the TPOP informing the operator of the `TUBE INTEGRITY DELAYED STOP`.

TechPub_2614345_0106 - 08_2819202_04en.fm

CAUTION

Risk of serious production fault.

If the machine has been stopped for more than 20 minutes the alarm `EXCEEDED SHORT STOP TIME` will appear on the TPOP. Restart production or press the INCHING button until the machine starts, the machine will automatically renew the packaging material in the superstructure to minimize the risk of unsterility and then stop. A dialogue window appears on the TPOP informing the operator of the `TUBE INTEGRITY DELAYED STOP`.

CAUTION

Risk of serious production fault.

If the machine has been stopped by an alarm condition located before the jaw system and the packaging material in the superstructure includes an event critical to the tube integrity, for example; a packaging material splice, black tape or LS strip sealed during a TPIH fault. The alarm `ASEPTIC CHAMBER, PM INCLUDES EVENT CRITICAL TO TUBE INTEGRITY` will appear on the TPOP. Restart production or press the INCHING button until the machine starts, the machine will automatically waste the packaging material until the event critical to tube integrity has been discarded.

CAUTION

Risk of serious production fault.

If the machine has been stopped by the operator or by an alarm condition located after the jaws and the packaging material includes an event critical to the tube integrity, for example; packaging material splice, black tape, or LS strip sealed during a TPIH fault. The alarm `TUBE INTEGRITY DELAYED STOP` will appear on the TPOP and the audible alarm will sound. The filling machine will continue to run with the A-valve closed and waste the packaging material until the event critical to tube integrity has been discarded.

TechPub_2614345_0106 - 08_2819202_04en.fm



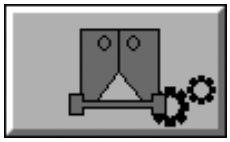

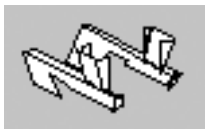

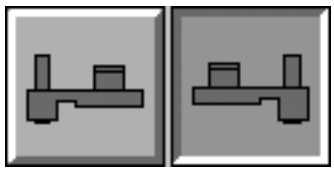

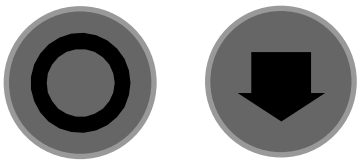

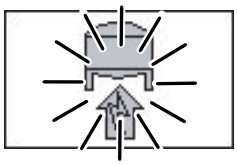

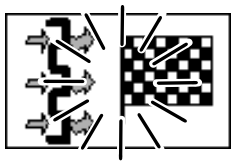

1

Use SHORT STOP or PROGRAM DOWN to stop the machine for 15 minutes or less.

To stop the machine during PRODUCTION:

- Touch the PRODUCTION CONTROL button.
- Touch the PACKAGE FORMING UNIT button.
- Touch the JAW SELECTION icon.
- select the LH or RH button to stop the machine with the selected jaw pair in the open position
- Press the SHORT STOP button or the PROGRAM DOWN button
- the machine program steps down to SIGNAL TO STERILIZER. The SIGNAL TO STERILIZER symbol and the DRYING symbol are lit
- the machine stops in design. A bar on the TPOP indicates the remaining time since the SHORT STOP button was pressed.



Note! Register the stop reason in the collect system. See chapter 2 Control Panels.

TechPub_2614345_0106 - 08_2819202_04en.fm



2

Press the PROGRAM UP button to restart the machine.

When the machine is restarted if 15 minutes of stop time has been exceeded the packaging material tube from the peroxide bath inlet down to the jaw system is wasted before filling and production can continue.

To restart the machine, see chapter 4 Start.

TechPub_2614345_0106 - 08_2819202_04en.fm

Production Finished Stop

Use PRODUCTION FINISHED if this is the planned time to end PRODUCTION.





CAUTION
Risk of production fault.
Once the production is ended, the CIP (cleaning) must be performed within two hours.
Exceeding the recommended period of waiting time increases the risk of product residue burning on hot contact surfaces and may affect the efficiency of the cleaning process. For maximum waiting time recommendations, see the table Maximum Waiting/Stop Time Recommendations in chapter 11 Technical Data.

1

To stop PRODUCTION, press the PROGRAM UP button.

The machine program steps to END PRODUCTION.

As soon as the tube is empty, there is a pause for five minutes.

Note! To interrupt the automatic sequence see Interrupting the Automatic Sequence on page 8-13.

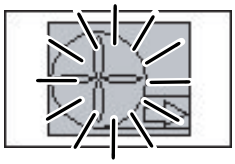

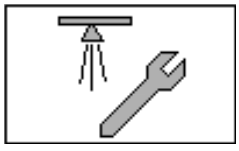

1a

After the pause the machine program steps to VENTING for 10 minutes. A time bar on the TPOP displays the remaining time.

Once the venting is completed, the peroxide fumes are exhausted, the compressor stops, and the aseptic chamber doors can be opened.

The machine program steps to PREPARE TO NEXT PRODUCTION.

TechPub_2614345_0106 - 08_2819202_04en.fm

Go immediately to VENTING

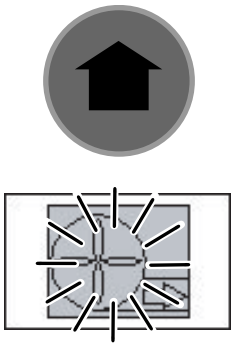

Interrupting the Automatic Sequence

2

In step END PRODUCTION, during the five minutes pause before the program steps to VENTING, it is possible to proceed straight to step VENTING, or return to PRODUCTION.

To step to VENTING:

- press the PROGRAM UP button for three seconds.

Return to PRODUCTION

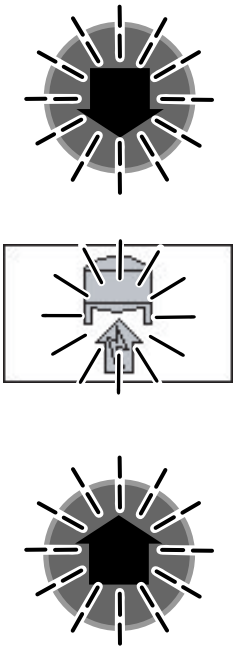

To return to PRODUCTION:

- press the PROGRAM DOWN button
  - the program steps to SIGNAL TO STERILIZER: the `SIGNAL TO STERILIZER` symbol and the PROGRAM UP button start to flash
  - press the PROGRAM UP button and restart the machine, see chapter 4 Start.

TechPub_2614345_0106 - 08_2819202_04en.fm

This page intentionally left blank

TechPub_2614345_0106 - 08_2819202_04en.fm

9 Care and Cleaning

TechPub_2614345_0106 - 09_2819202_04en.fm

This chapter describes how to clean and maintain the machine. Perform Daily Care after every PRODUCTION run. Perform Weekly care once a week or after every 120 hours of operation.

CAUTION

Risk of minor or moderate injury.

Use only Tetra Pak recommended cleaning compounds when cleaning parts which may come into contact with hydrogen peroxide. Cleaning with non-recommended compounds may cause an explosion!

TechPub_2614345_0106 - 09_2819202_04en.fm

Daily Care . . . . . 9 - 5

Daily Care or Daily and Weekly Care? . . . . . .9 - 5

Packaging Material Removal, Daily Care Only. . . . . .9 - 6

Packaging Material Removal, Daily and Weekly Care . . . . . .9 - 12

Cleaning Preparation . . . . . .9 - 16

Internal Cleaning. . . . . .9 - 28

Final Cleaning . . . . . 9 - 30

Intermediate Cleaning. . . . . 9 - 31

External Cleaning . . . . . .9 - 34

Manual Cleaning . . . . . .9 - 38

Drying . . . . . .9 - 44

Recorder . . . . . .9 - 50

Aseptic Chamber . . . . . .9 - 50

Jaw System and Final Folder Unit . . . . . .9 - 52

Check Dollies. . . . . 9 - 53

Check Inductors . . . . . .9 - 54

Weekly Care . . . . . 9 - 57

ASU . . . . . .9 - 58

Drying Chamber . . . . . .9 - 60

Aseptic Chamber . . . . . .9 - 64

Gasket Replacement. . . . . 9 - 69

Change Dollies . . . . . .9 - 71

Change Oil. . . . . .9 - 72

Peroxide Tank . . . . . .9 - 74

TechPub_2614345_0106 - 09_2819202_04en.fm

Service Unit . . . . . 9 - 76

Clean Filters . . . . . 9 - 76

Platforms and Surfaces . . . . . 9 - 76

Integrated Cleaning Unit (ICU) . . . . . 9 - 77

Refill Containers . . . . . 9 - 77

TechPub_2614345_0106 - 09_2819202_04en.fm

Daily Care

This section describes what to do after each PRODUCTION run or at least every 24 operating hours.

Daily Care or Daily and Weekly Care?

Note! IF ONLY DAILY CARE IS TO BE PERFORMED, START WITH ITEM 1 PACKAGING MATERIAL REMOVAL, DAILY CARE ONLY.

Note! IF BOTH DAILY CARE AND WEEKLY CARE HAVE TO BE PERFORMED, START FROM ITEM 2 PACKAGING MATERIAL REMOVAL, DAILY AND WEEKLY CARE.

TechPub_2614345_0106 - 09_2819202_04en.fm

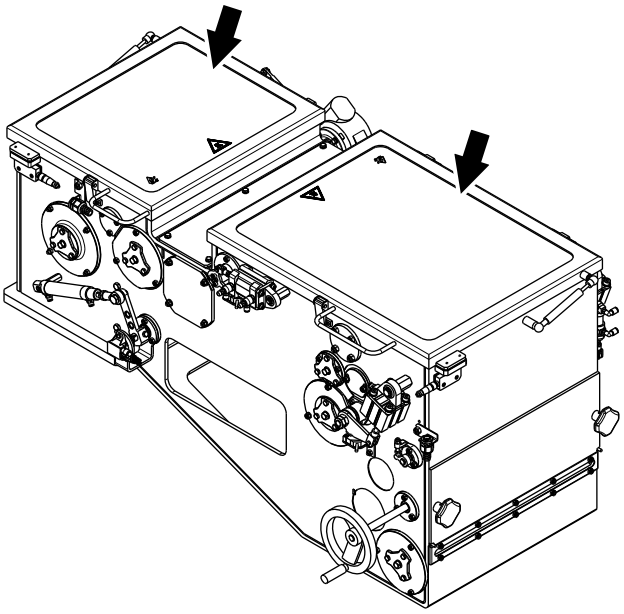

Drying chamber with upper section

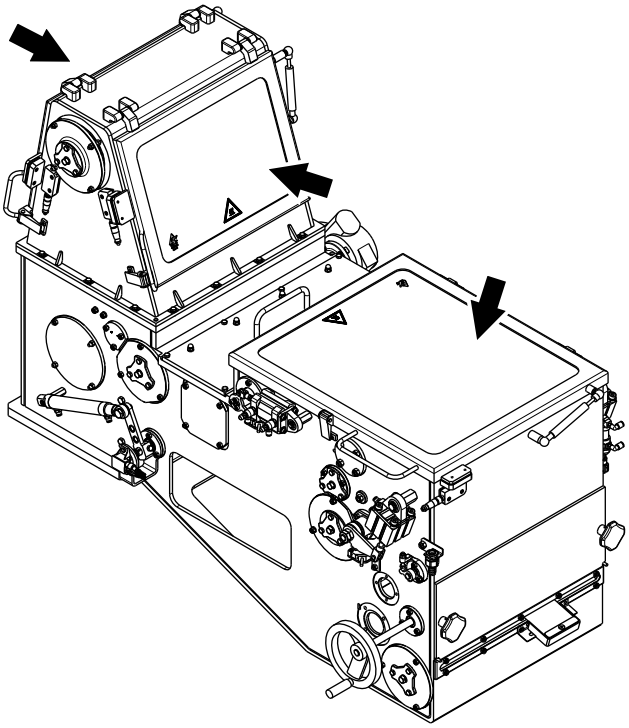

WARNING
Hydrogen Peroxide.
Follow the Safety Precautions.

Packaging Material Removal, Daily Care Only

1

Open the drying chamber doors.

TechPub_2614345_0106 - 09_2819202_04en.fm

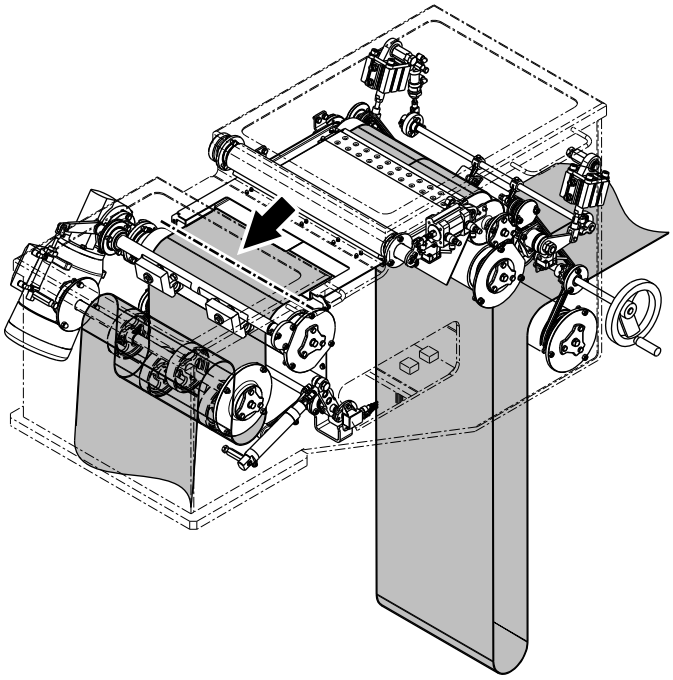

Drying chamber with upper section

1a

Cut off the packaging material at the position shown in the illustration by the arrow.

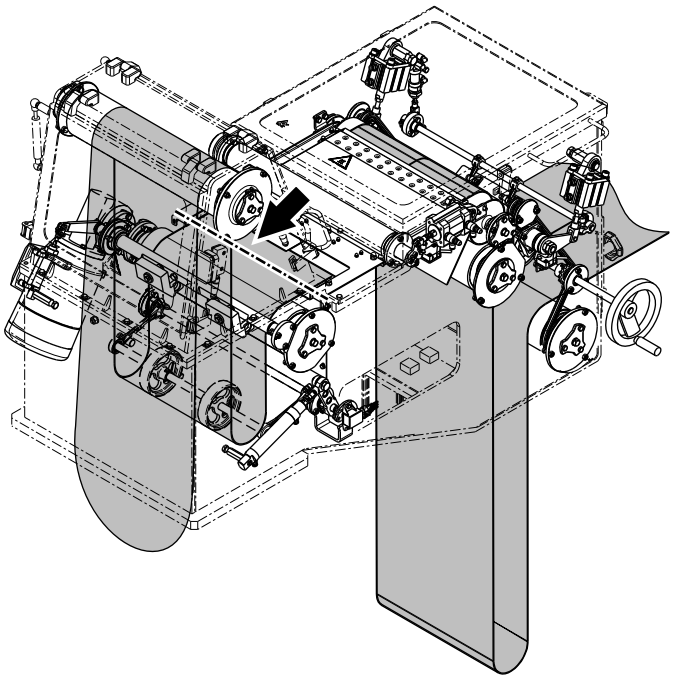

TechPub_2614345_0106 - 09_2819202_04en.fm

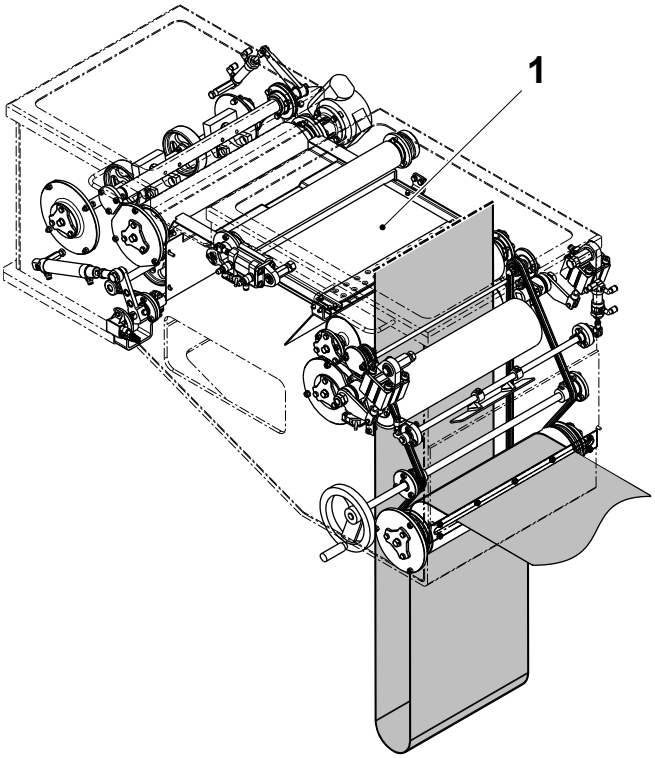

WARNING
Hydrogen Peroxide.
Follow the Safety Precautions.

1b

Pull the packaging material back through the air knife (1) into the drying chamber rear compartment, where it cannot be contaminated by the cleaning liquid.

TechPub_2614345_0106 - 09_2819202_04en.fm

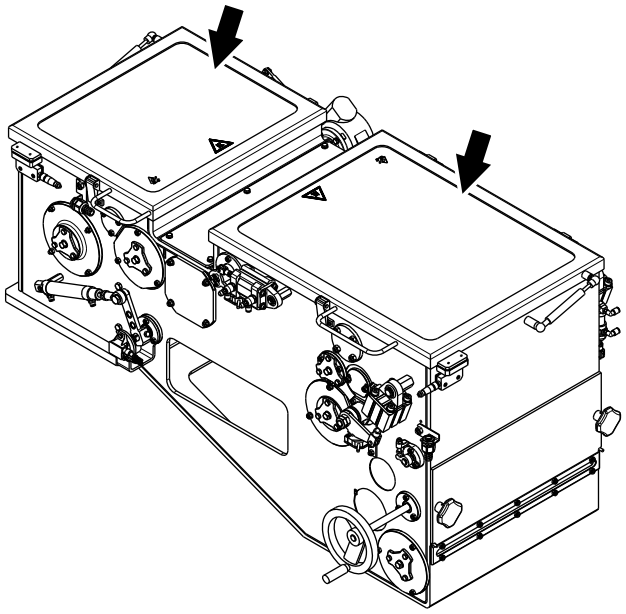

Drying chamber with upper section

1c

Close the rear door, the top door and the front door of the drying chamber.

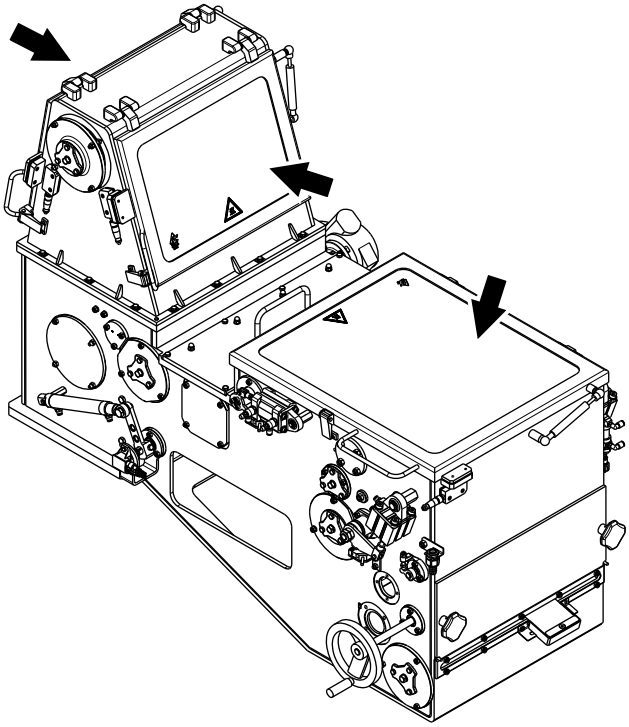

TechPub_2614345_0106 - 09_2819202_04en.fm



1d

Make sure all covers and doors on the machine are closed and reset any alarms TPOP display.

If an alarm reappears, take the appropriate action or call a technician.



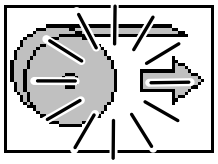

1e

Press the PROGRAM UP button.

The PREPARATION symbol lights.



1f

Touch the PRODUCTION CONTROL button.

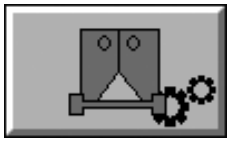

1g

Touch the PACKAGE FORMING UNIT button.

TechPub_2614345_0106 - 09_2819202_04en.fm



1h

Touch the JAW INCHING SELECTION icon.



1i

Touch the SLOW INCHING button.

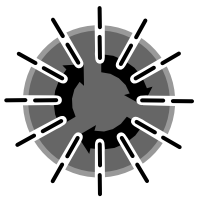

1j

Press the INCHING button when it begins to flash.

Keep the INCHING button pressed until all the packaging material tube has been fed out.

To continue with DAILY CARE only go to item 3 Cleaning Preparation.

TechPub_2614345_0106 - 09_2819202_04en.fm

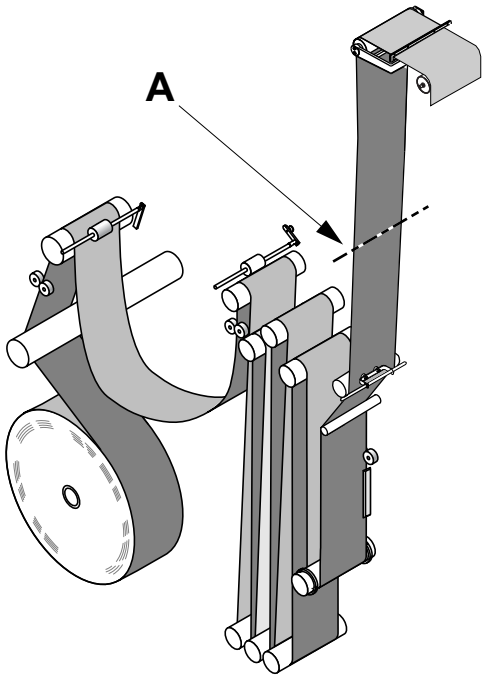

WARNING

Hydrogen Peroxide.

There is a risk of hydrogen peroxide residue on the packaging material when removing it from the hydrogen peroxide bath. Follow the Safety Precautions.

Packaging Material Removal, Daily and Weekly Care

2

Cut the packaging material at point **A**.

2a

Make sure all covers and doors on the machine are closed and reset any alarms TPOP display.

If an alarm reappears, take the appropriate action or call a technician.

TechPub_2614345_0106 - 09_2819202_04en.fm



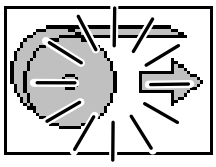

2b

Press the PROGRAM UP button.

The PREPARATION symbol lights.



2c

Touch the PRODUCTION CONTROL button.

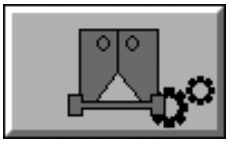

2d

Touch the PACKAGE FORMING UNIT button.



2e

Touch the JAW INCHING SELECTION icon.

TechPub_2614345_0106 - 09_2819202_04en.fm



2f

Touch the SLOW INCHING button.

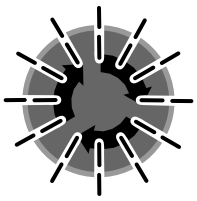

2g

Press the INCHING button when it begins to flash.

Keep the INCHING button pressed until all the packaging material has been fed out.

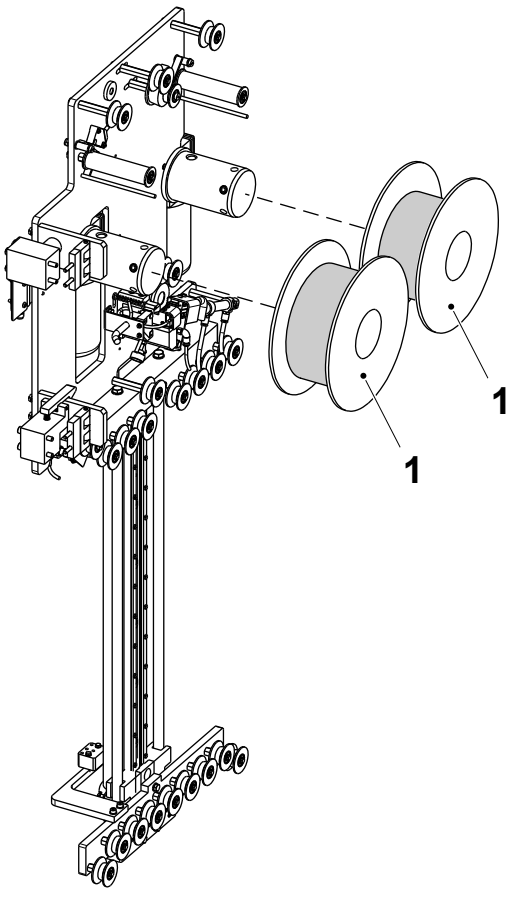

2h

Cut the LS strip away from the packaging material. Rewind both LS strips back onto the reels (1) and remove them from the machine.

TechPub_2614345_0106 - 09_2819202_04en.fm

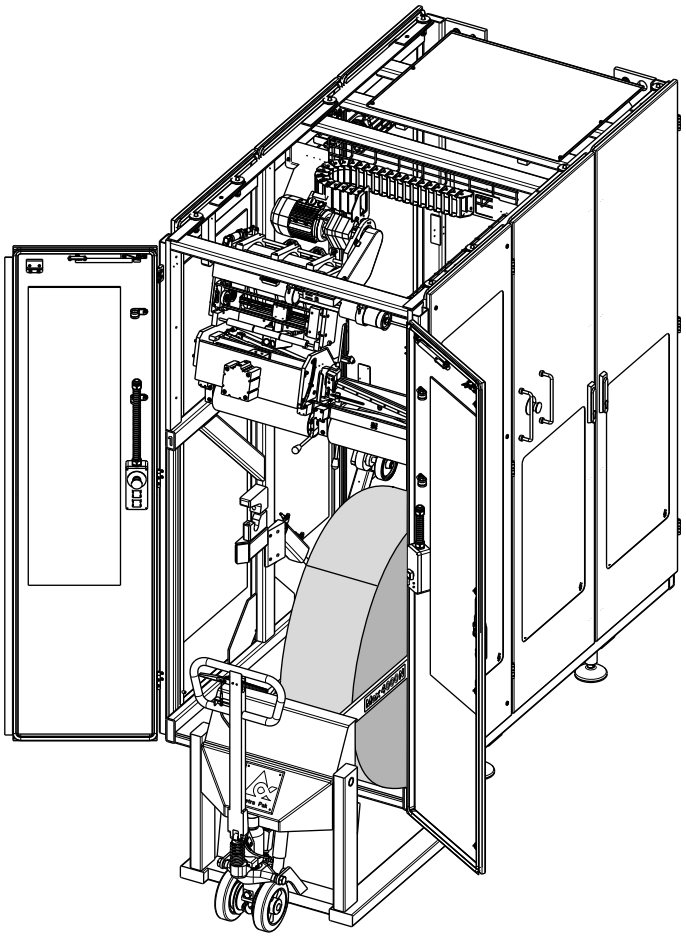

2i

Cut off the packaging material under the material holder and remove both packaging material reels.

Secure the loose ends of the reels with tape.

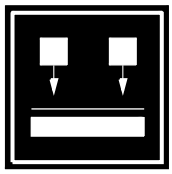

2j

Press the MATERIAL LOCKING button to release the packaging material in the ASU.

TechPub_2614345_0106 - 09_2819202_04en.fm

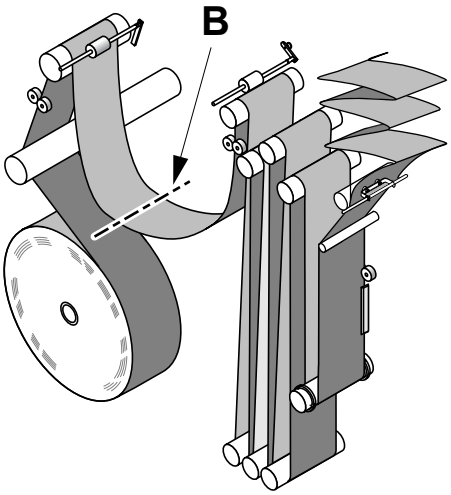

CAUTION

Risk of personal injury.
Make sure the rollers of the ASU magazine are in the lower position before cutting the packaging material web.

2k

Cut the packaging material at point **B**.

Pull forward and remove all the remaining packaging material by hand from the ASU and the rest of the machine.

Note! Cut the packaging material at additional points to facilitate the removal of the packaging material.

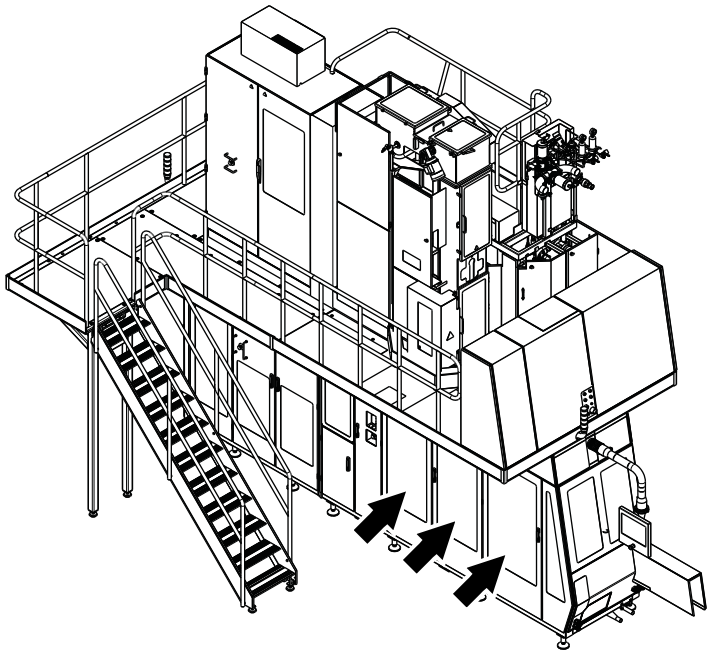

Cleaning Preparation

3

Open the doors to the jaw unit and the final folder unit.

TechPub_2614345_0106 - 09_2819202_04en.fm

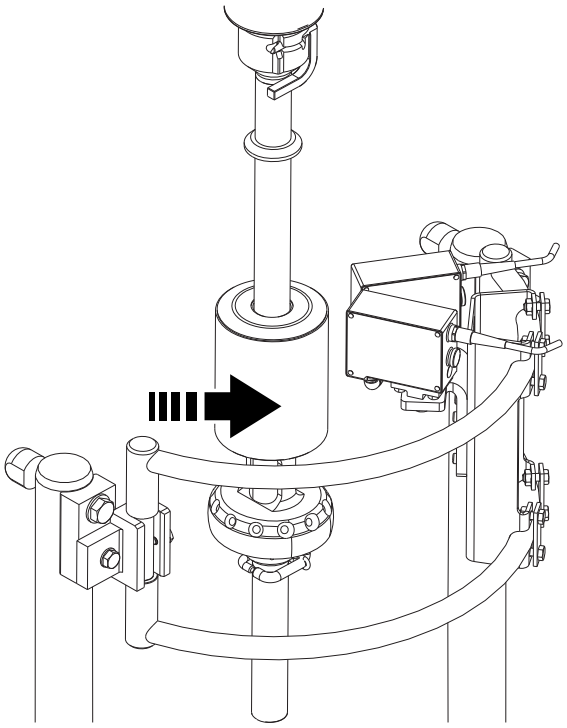

4

Swing the bow clamp outwards.

TechPub_2614345_0106 - 09_2819202_04en.fm

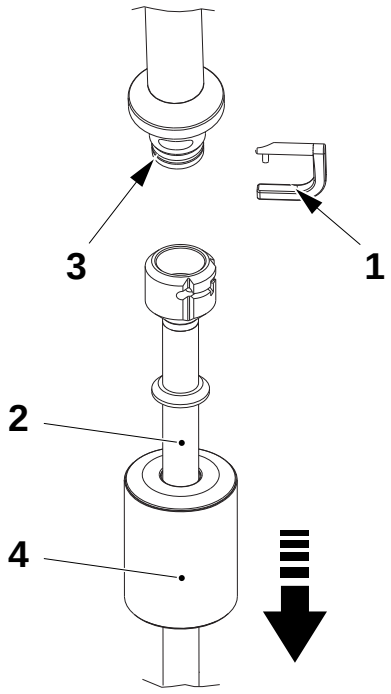

4a

Remove the lock pin (1) and the lower part of the filling pipe (2).

Remove the O-ring (3) and check for wear or damage. Change if required.

Note! Make sure that these parts are cleaned after CIP and external cleaning have been started.

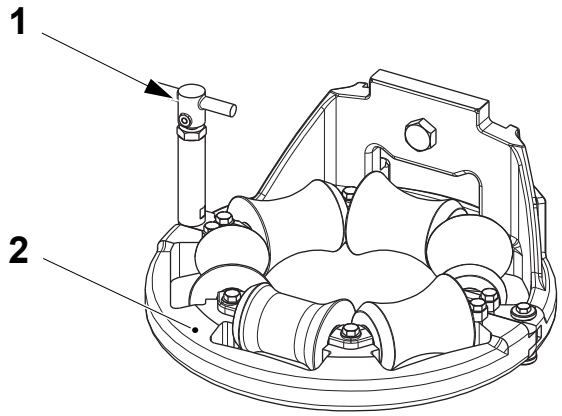

WARNING

Burn Hazard.

The components may be hot. Wear personal protective equipment.

CAUTION

Risk of damage to the equipment.

Press the front half of the lower forming ring (2) backward while turning the knob (1) to avoid damaging the threaded screw on the end of the knob (1).

4b

Turn the knob (1) and open the lower forming ring (2).

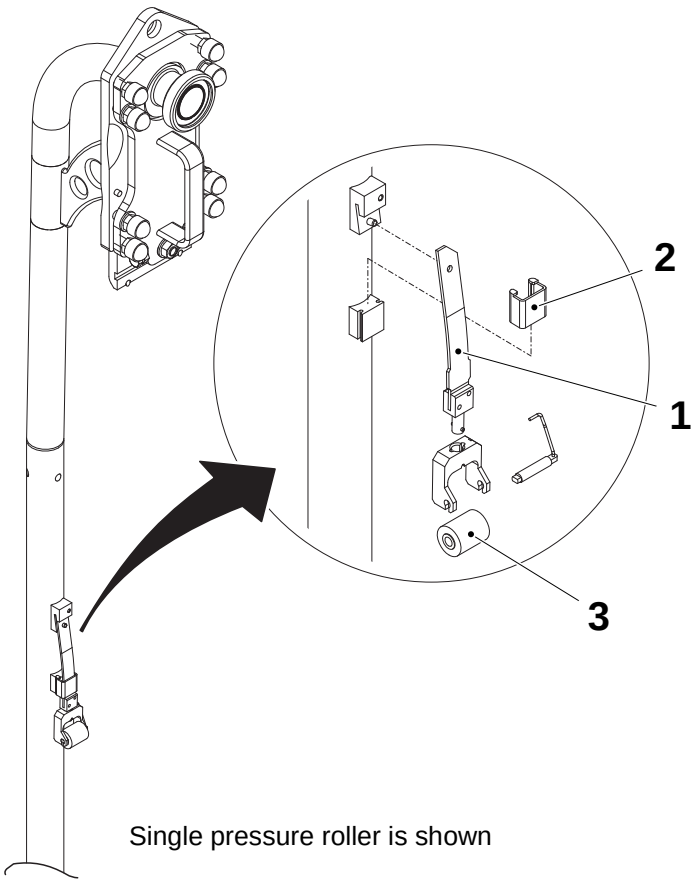

Single pressure roller is shown

4c

Note! Make a note of which direction the part number on the roller (3) is facing and assemble in the same direction after cleaning.

Press on the spring (1) and slide up the hood (2). Turn the spring (1) sideways until the pressure roller can be pulled off the filling pipe.

TechPub_2614345_0106 - 09_2819202_04en.fm

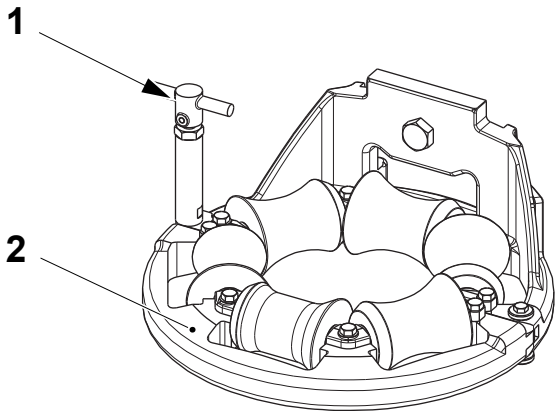

WARNING
Burn Hazard.
The components may be hot. Wear personal protective equipment.

CAUTION
Risk of damage to the equipment.
Press the front half of the lower forming ring (2) backward while tightening the knob (1) to avoid damaging the threaded screw on the end of the knob (1).

4d

Close the lower forming ring (2) and tighten the knob (1).

TechPub_2614345_0106 - 09_2819202_04en.fm

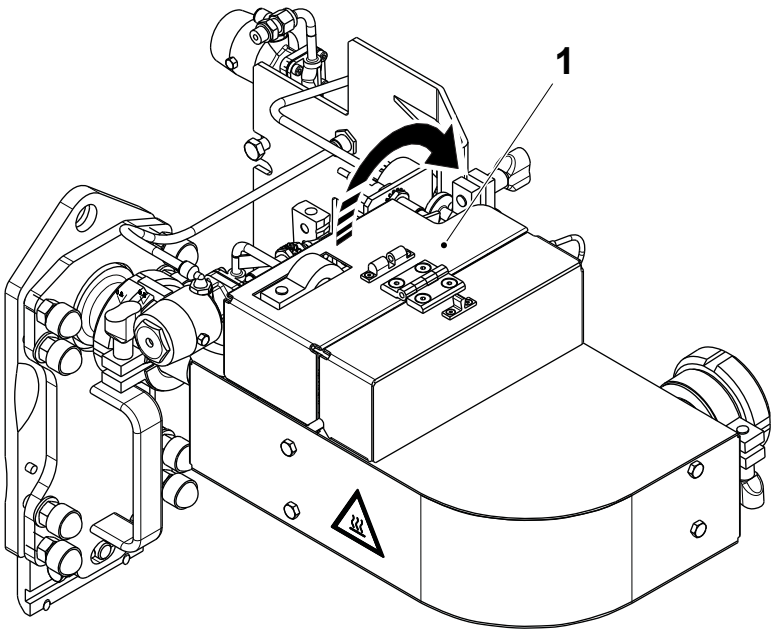

WARNING
Burn Hazard.
The components may be hot. Wear personal protective equipment.

5

Note! If the filling machine is not equipped with HI (OE) or if the HI equipment has been bypassed continue with item 6 on page 9-24.

Swing the HI cover (1) open and lock it in position.

Note! The HI cover is not shown in the following pictures for clarity.

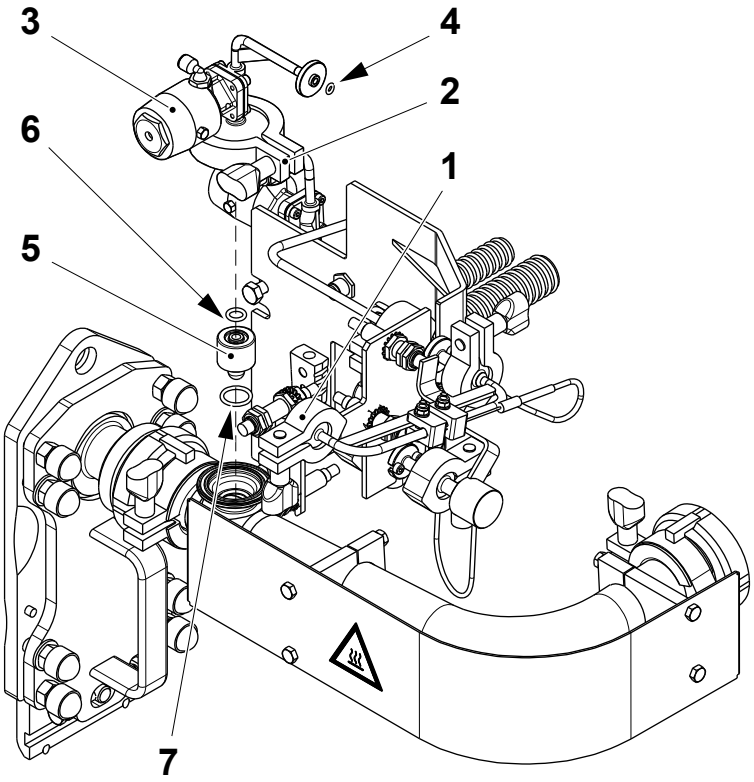

5a

Remove the clamp (1).

Loosen the clamping piece (2) and remove the pneumatic valve (3) taking care of the O-ring (4).

Remove the nozzle (5) and the O-rings (6) and (7) from the HI product pipe.

Note! Clean the nozzle (5) as described in item 17 on page 9-40.

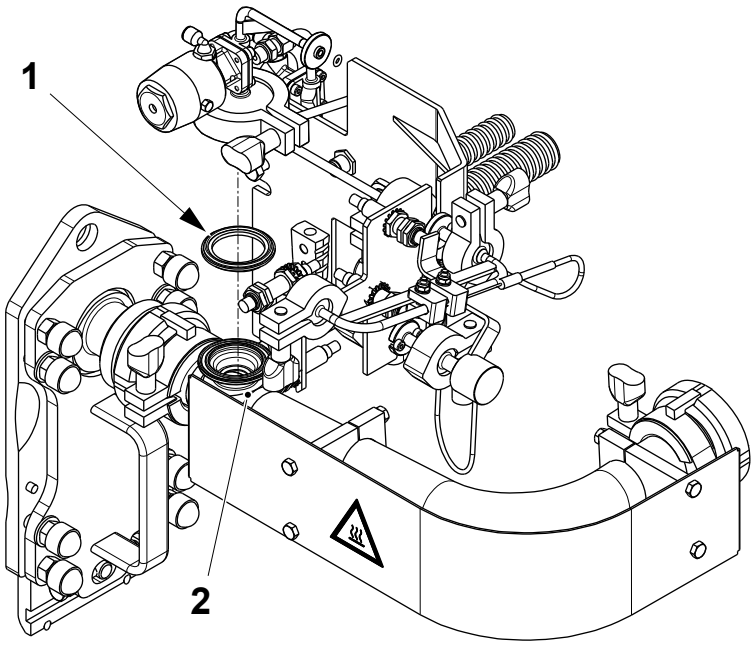

5b

Fit the gasket (1) in the product pipe (2).

TechPub_2614345_0106 - 09_2819202_04en.fm

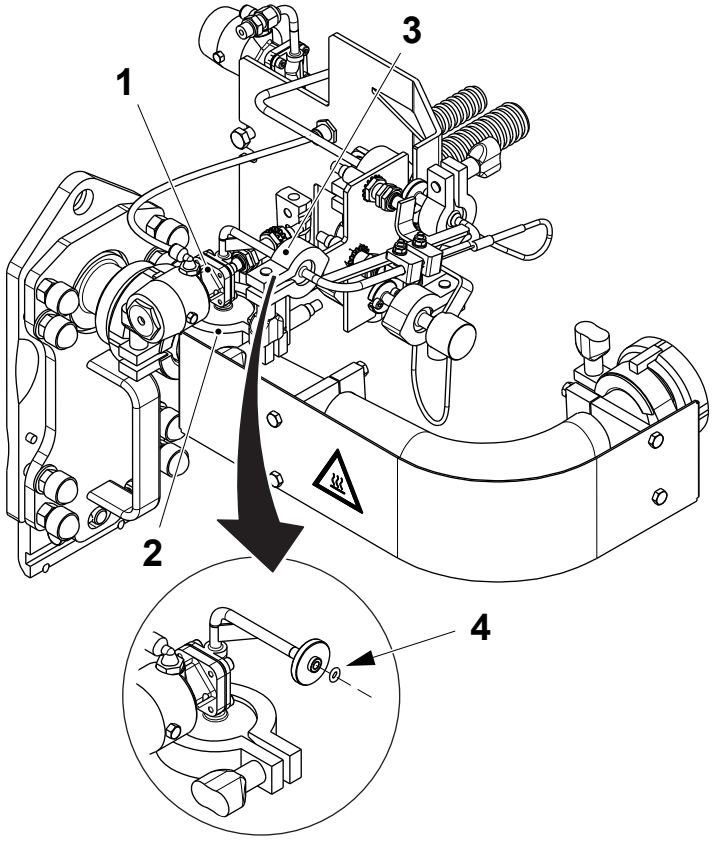

5c

Fit back the pneumatic valve (1) by tightening the clamping piece (2).

Tighten the clamp (3) on the pneumatic valve (1) with the O-ring (4).

TechPub_2614345_0106 - 09_2819202_04en.fm

PRODUCTION position

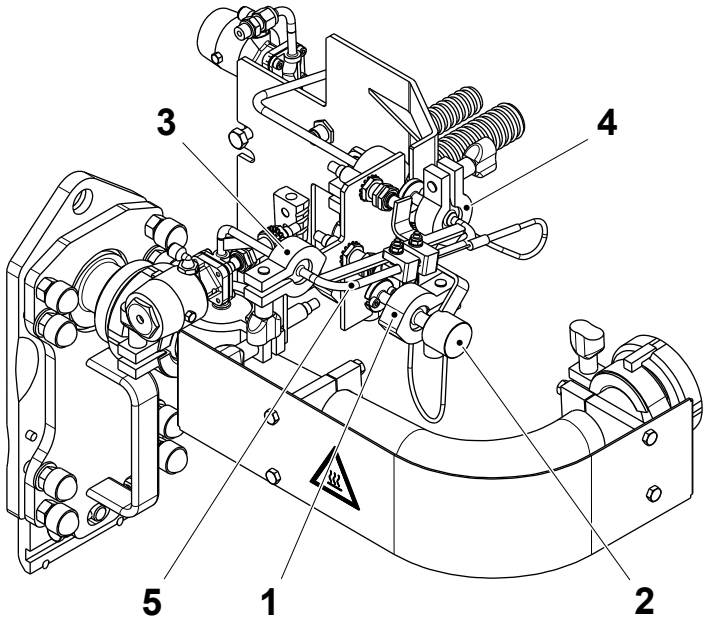

CLEANING position

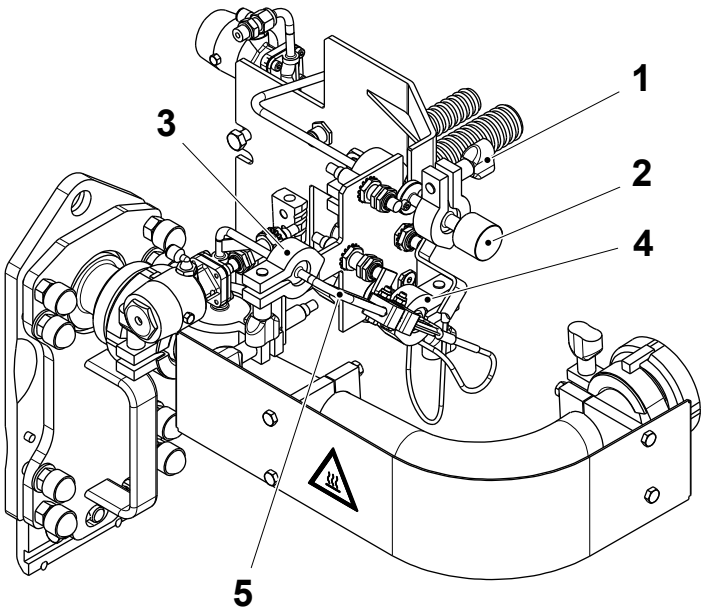

5d

Remove the clamp (1) and the cap (2) from the CLEANING connection.

Loosen the clamp (3) and remove the clamp (4) to release the pipe (5).

Swing the pipe (5) into the CLEANING position.

Fit and tighten the clamps (3) and (4).

Fit the cap (2) on the PRODUCTION connection with the clamp (1) and tighten the clamp (1).

TechPub_2614345_0106 - 09_2819202_04en.fm

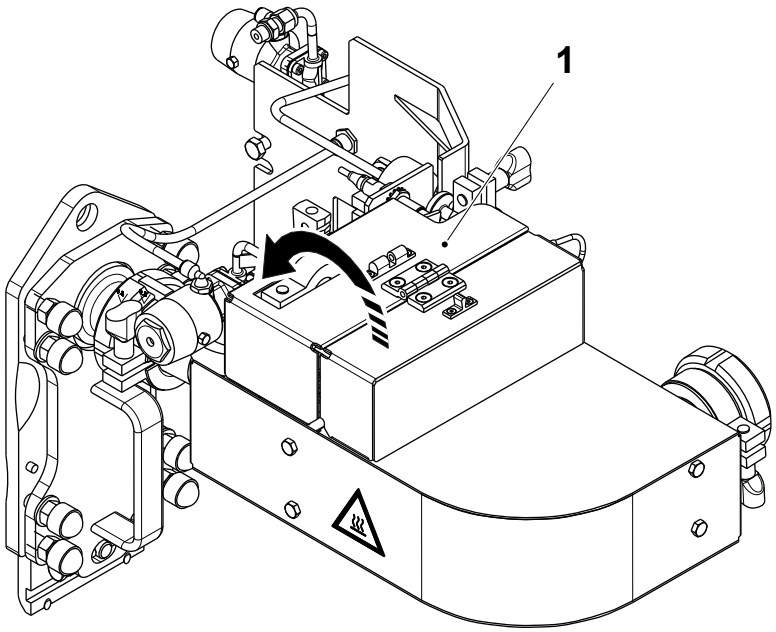

5e

Close and lock the HI cover (1).

TechPub_2614345_0106 - 09_2819202_04en.fm

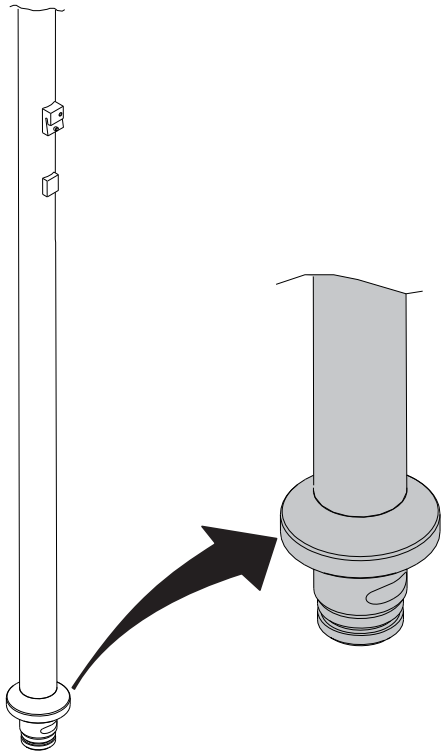

CAUTION
Risk of serious production fault.
Take care to remove all visible product residue from the pipe. Sterilisation is effective on clean surfaces but may not be effective on product residue.

CAUTION
Hygiene.
Before handling clean parts, disinfect hand/gloves with cleaning compound code **H**.

6

Wipe off any product residue on the lower part of the upper filling pipe with a sponge.

Use water and cleaning compound code **D**. Rinse with drinking water.

Spray a small quantity of disinfectant code **G3**, on the filling pipe covering entirely the flange area, shown shaded in the illustration.

Note! For cleaning compound code information, see chapter 11 Technical Data.

TechPub_2614345_0106 - 09_2819202_04en.fm

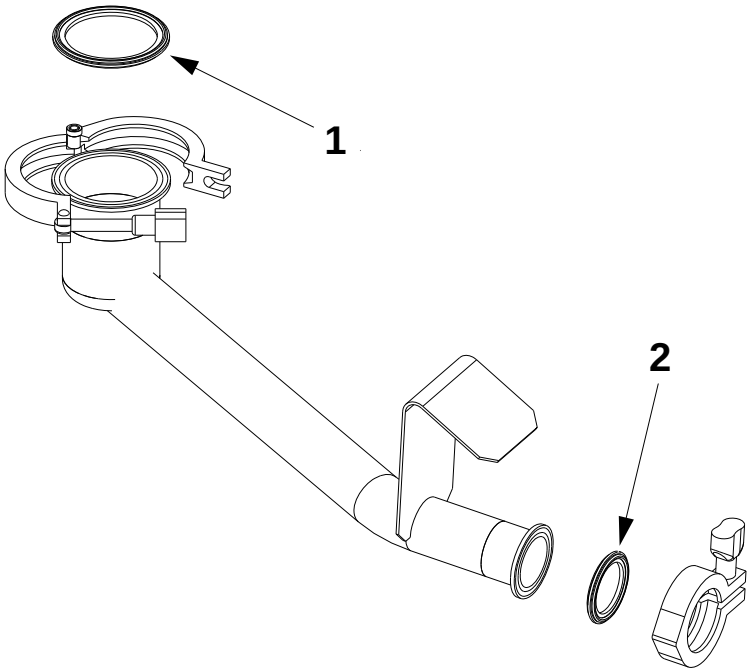

CAUTION
Risk of damage to the equipment.
Replace worn or damaged seals. A bad seal may cause leakages and an ineffective cleaning process.

6a

Check the gaskets (1) and (2) of the cleaning sleeve. Change if required.

TechPub_2614345_0106 - 09_2819202_04en.fm

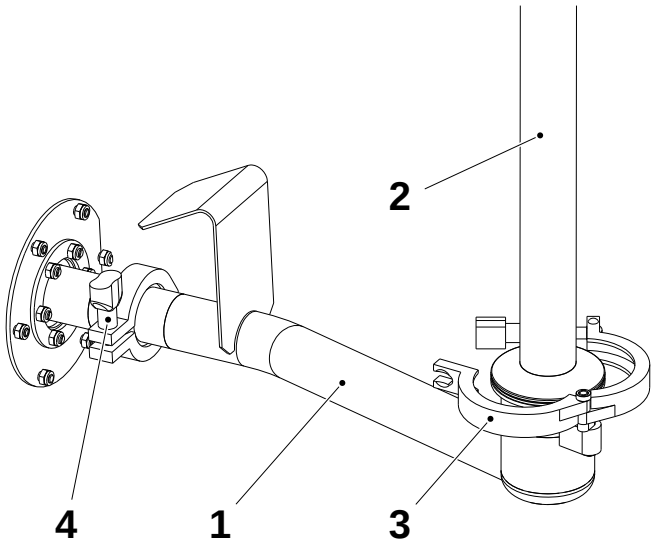

6b

Fit the cleaning sleeve (1) to the filling pipe (2) and secure it with the catches (3) and (4).

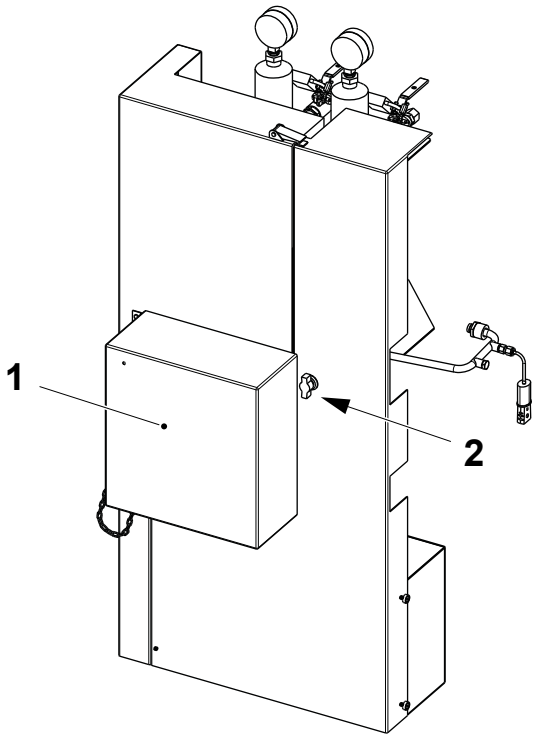

7

Open the flow switch cover (1) by the lock handle (2).

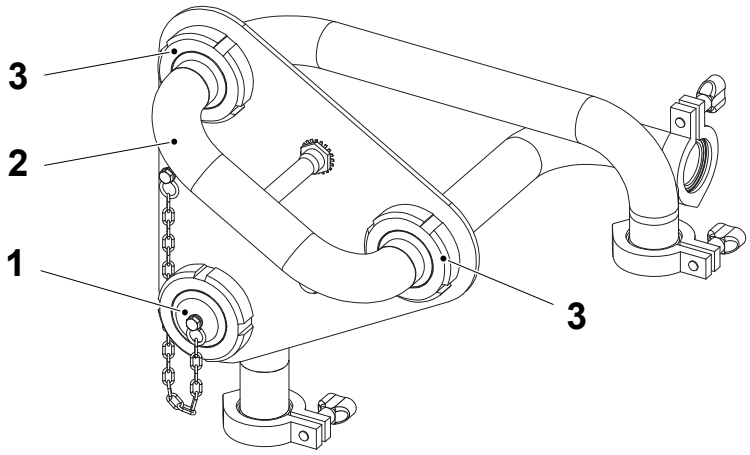

8

Remove the cap (1) from the cleaning pipe.

Remove the change-over pipe (2) from the production position by loosening the locking rings (3).

Check the gaskets of the locking rings (3) for wear or damage and change if required.

TechPub_2614345_0106 - 09_2819202_04en.fm

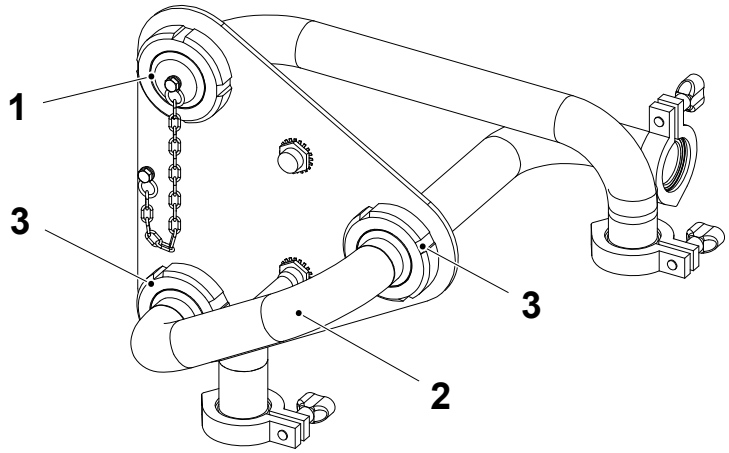

9

Fit the change-over pipe (2) into the cleaning position and tighten with the locking rings (3).

Fit the cap (1) to the product pipe.

TechPub_2614345_0106 - 09_2819202_04en.fm

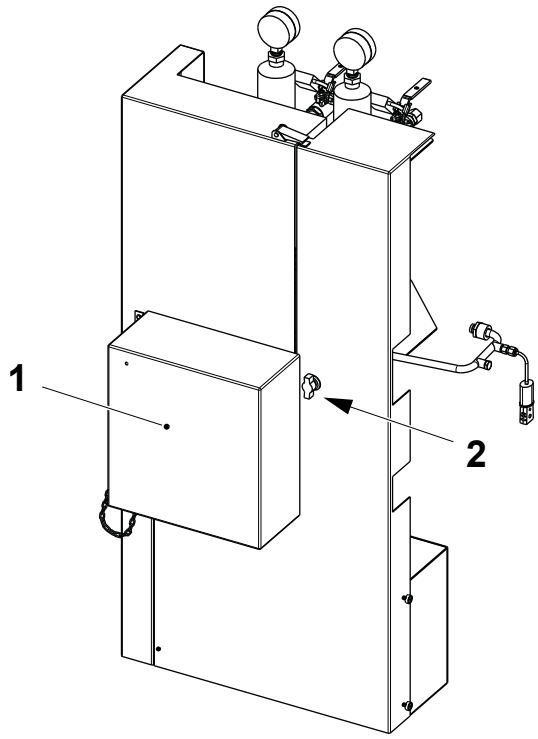

10

Close the flow switch cover (1) by the lock handle (2).

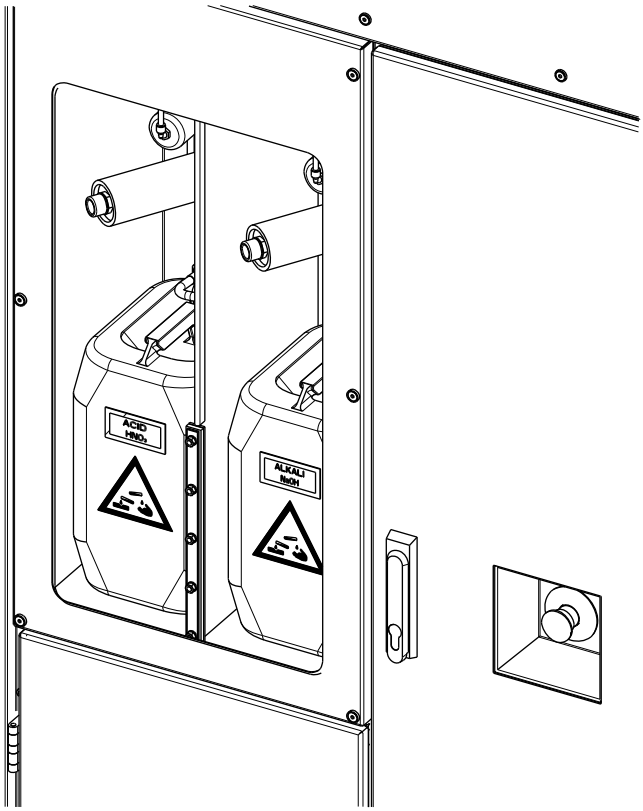

WARNING
Chemical Products.
Follow the Safety Precautions.

Note! Operators with an individual user ID for the recorder must login to the recorder before starting the CIP, see Recorder, Login on page 2-120.

Internal Cleaning

11

Check the level of alkali and acid in the containers. If required refill the containers, see the ICU refilling procedure on page 9-77.



11a

Close all covers and doors on the machine and reset the alarms on the TPOP display.

If an alarm is present, take the appropriate action or call a technician.



11b

On the TPOP, touch the PRODUCTION CONTROL button.

TechPub_2614345_0106 - 09_2819202_04en.fm

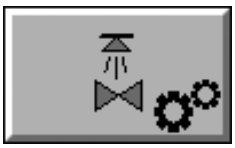

11c

Touch the ICU button.

11d

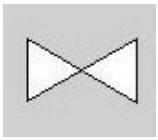

Decide which CIP method to use:

- Use INTERMEDIATE CLEANING only after an unplanned stop during production (such as an emergency stop) and when production will be started immediately after cleaning. All parts of the filling system, except the steam barrier area inside the valve C, are cleaned. Continue with item 11f to perform INTERMEDIATE CLEANING.

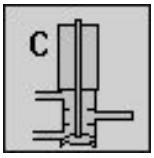

Intermediate Cleaning

- Use FINAL CLEANING after every production run and while the product line is also being cleaned. The entire filling system including the steam barrier area inside the valve C is cleaned. Continue with item 11e to perform FINAL CLEANING.

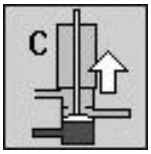

Final Cleaning

Touch the FINAL CLEANING button (1) and check the current status of the steam valve C (2).

Note! It is recommended to perform the FINAL CLEANING at least once a week.

TechPub_2614345_0106 - 09_2819202_04en.fm

Product valve during FINAL CLEANING

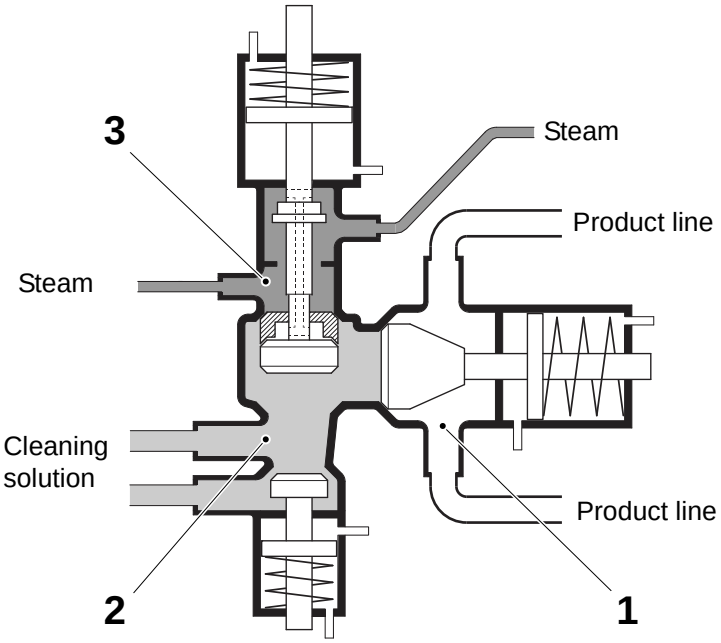

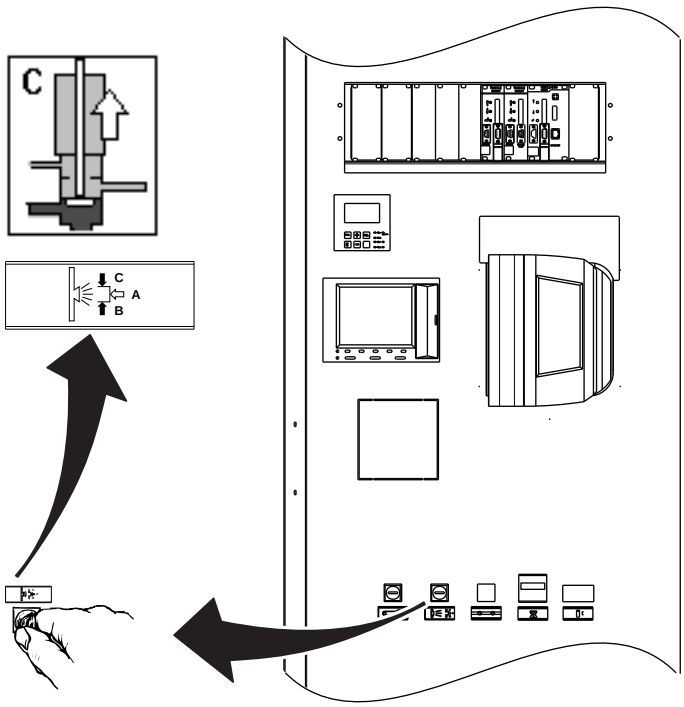

CAUTION
Risk of serious production fault.
FINAL CLEANING must only be performed if the product line is empty and no other machines connected to the product line are in the PRODUCTION phase. Never perform FINAL CLEANING while product is present in the product line.

Final Cleaning
11e

Note! For INTERMEDIATE CLEANING start with item 11f.

FINAL CLEANING must be performed after every PRODUCTION run and before or at the same time as the cleaning of the product line.

The filling system and all of the surfaces inside the product valve which are in contact with product are cleaned. This includes the area inside the product valve which acts as a steam barrier between the filling system of the machine and the product line (the steam valve C).

1 PRODUCT VALVE (A)
2 STERILE AIR VALVE (B)
3 STEAM VALVE (C)

For FINAL CLEANING, turn the non-locking key switch to the RH position.

Continue with item 11g.

Note! For further information concerning FINAL CLEANING and INTERMEDIATE CLEANING, see the manual; TeM-81648-0101 Cleaning of Tetra Brik Aseptic Filling machines.

TechPub_2614345_0106 - 09_2819202_04en.fm

Product valve during INTERMEDIATE CLEANING

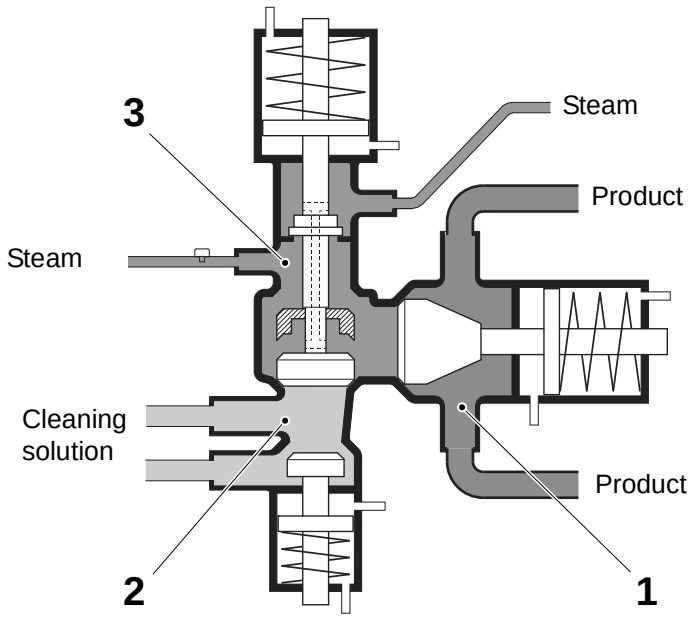

CAUTION
Risk of serious production fault.
INTERMEDIATE CLEANING does not clean the area of the product valve acting as a steam barrier between the product valve and the product line (the C valve). Do not use INTERMEDIATE CLEANING if there will be a delay between the cleaning and the start of production. Never use INTERMEDIATE CLEANING as a replacement for FINAL CLEANING.

Intermediate Cleaning

11 f

Note! For FINAL CLEANING start with item 11 e.

INTERMEDIATE CLEANING must be performed if there is an unplanned stop of the filling machine, such as an emergency stop, and the production is to be restarted immediately after the cleaning.

The filling system and all of the surfaces inside the product valve which are in contact with product are cleaned except the area which acts as a steam barrier between the filling system of the machine and the product line (the steam valve C).

1 PRODUCT VALVE (A)
2 STERILE AIR VALVE (B)
3 STEAM VALVE (C)

Continue with item 11 g.

Note! For further information concerning FINAL CLEANING and INTERMEDIATE CLEANING, see the manual; TeM-81648-0101 Cleaning of Tetra Brik Aseptic Filling machines.

TechPub_2614345_0106 - 09_2819202_04en.fm

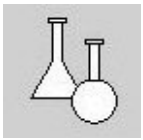

11g

Touch the ALKALI/ACID SELECTION icon.

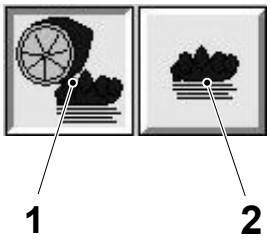

11h

Touch the ALKALI button (2) to clean with alkali or the ALKALI AND ACID button (1) to clean with alkali and acid.



11i

Touch the START CLEANING button.

TechPub_2614345_0106 - 09_2819202_04en.fm

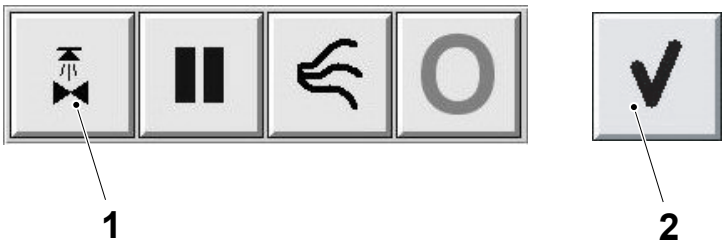

CAUTION
Risk of production fault.
Once the CIP Cleaning is ended, the CIP Drying must be performed within five hours. If not, repeat the CIP Cleaning. Exceeding the recommended period of waiting time can severely jeopardize the efficiency of the process of machine sterilization. For maximum waiting time recommendations, see the table Maximum Waiting/Stop Time Recommendations in chapter 11 Technical Data.

11j

Touch the ICU RUN button (1); when it starts flashing, touch the OK button (2) to start the CIP cleaning.

To interrupt or stop the cleaning procedure see page 2-16.

TechPub_2614345_0106 - 09_2819202_04en.fm

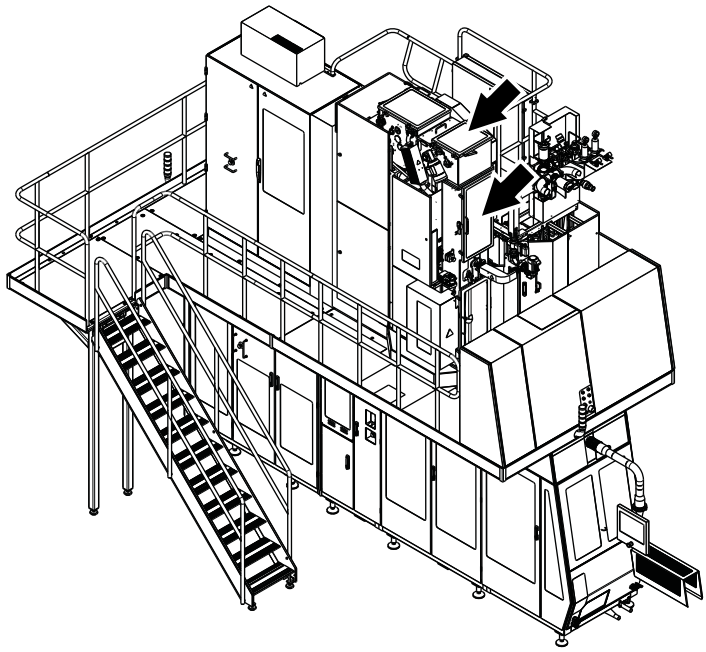

11k

Open the top aseptic chamber doors.

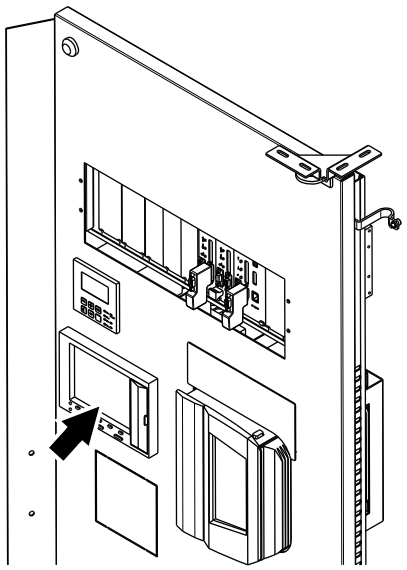

12

Check on the CIP data recorder screen that the recorder is recording all of the channels. If not, call a technician.

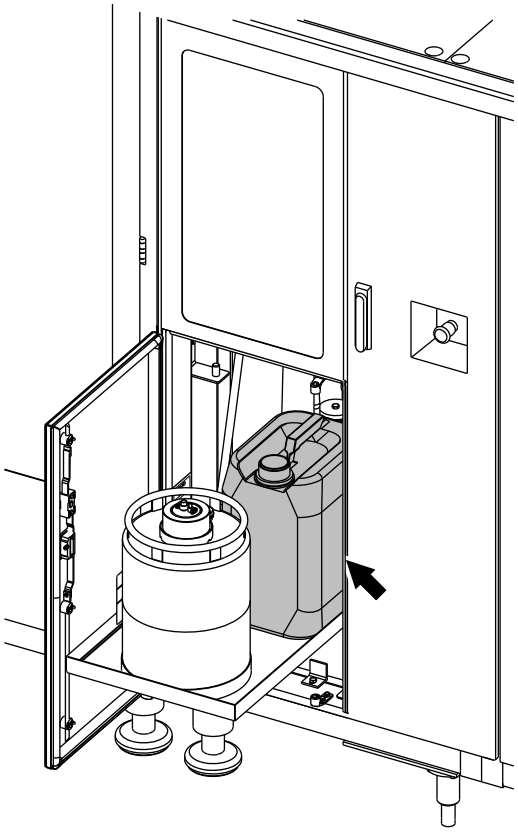

WARNING
Chemical Products.
Follow the Safety Precautions.

External Cleaning

13

Check the level of the detergent in the container used for the external cleaning. If required, top up with the cleaning compound code **C1**.

Note! For cleaning compound code information, see chapter 11 Technical Data.

TechPub_2614345_0106 - 09_2819202_04en.fm



13a

Check that there are no packages in the waste conveyor.

Press the PACKAGE EJECTION/ WASTE CONVEYOR button to remove the packages that are left in the waste conveyor.

TechPub_2614345_0106 - 09_2819202_04en.fm

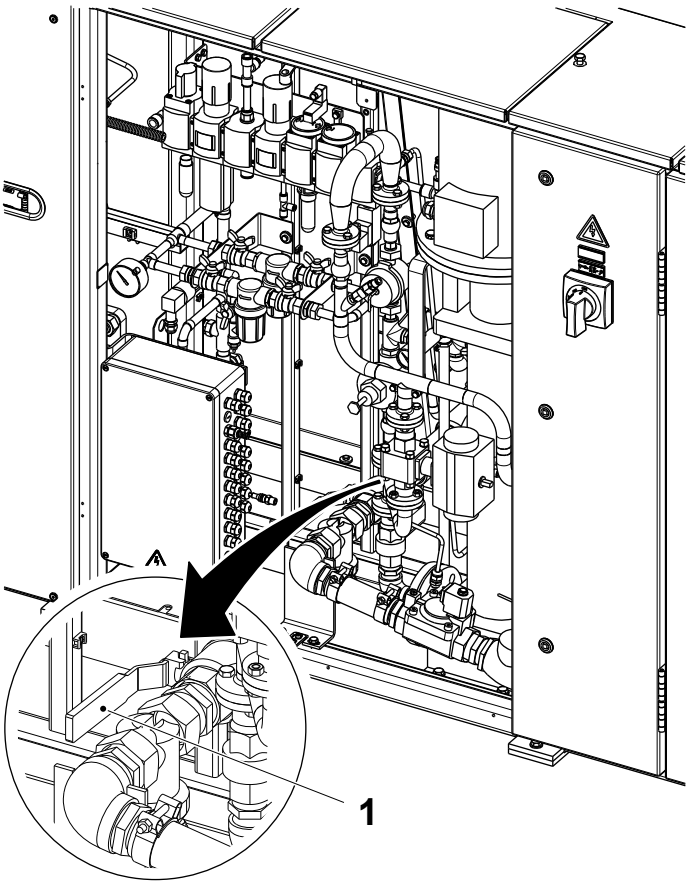

13b

Use the cleaning handle (1) to open the cleaning valve.

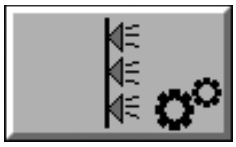

13c

Touch the EXTERNAL CLEANING button.



13d

Touch the START CLEANING icon.

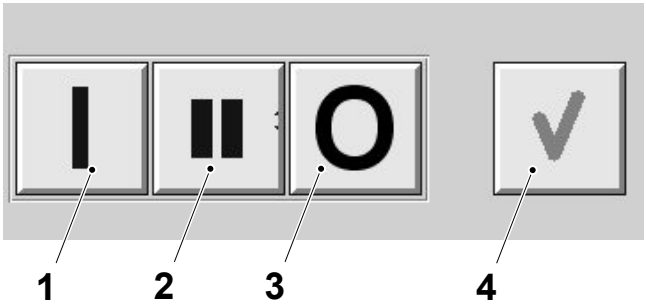

CAUTION
Risk of damage to the equipment.
Do not turn off the compressed air and the water supply until CIP cleaning and external cleaning have been completed.

13e

The ON/PAUSE/OFF buttons are displayed.

Touch the ON button (1) and the OK button (3) to start the external cleaning cycle.

To stop the external cleaning program, touch the OFF button (2) and the OK button (3).

TechPub_2614345_0106 - 09_2819202_04en.fm

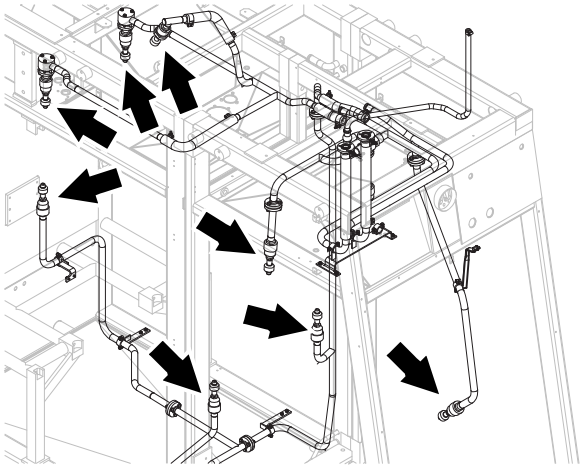

13f

Check visually through the glass that the cleaning nozzles (1) are functioning properly.

Call a service technician if any of the nozzles do not function.

TechPub_2614345_0106 - 09_2819202_04en.fm

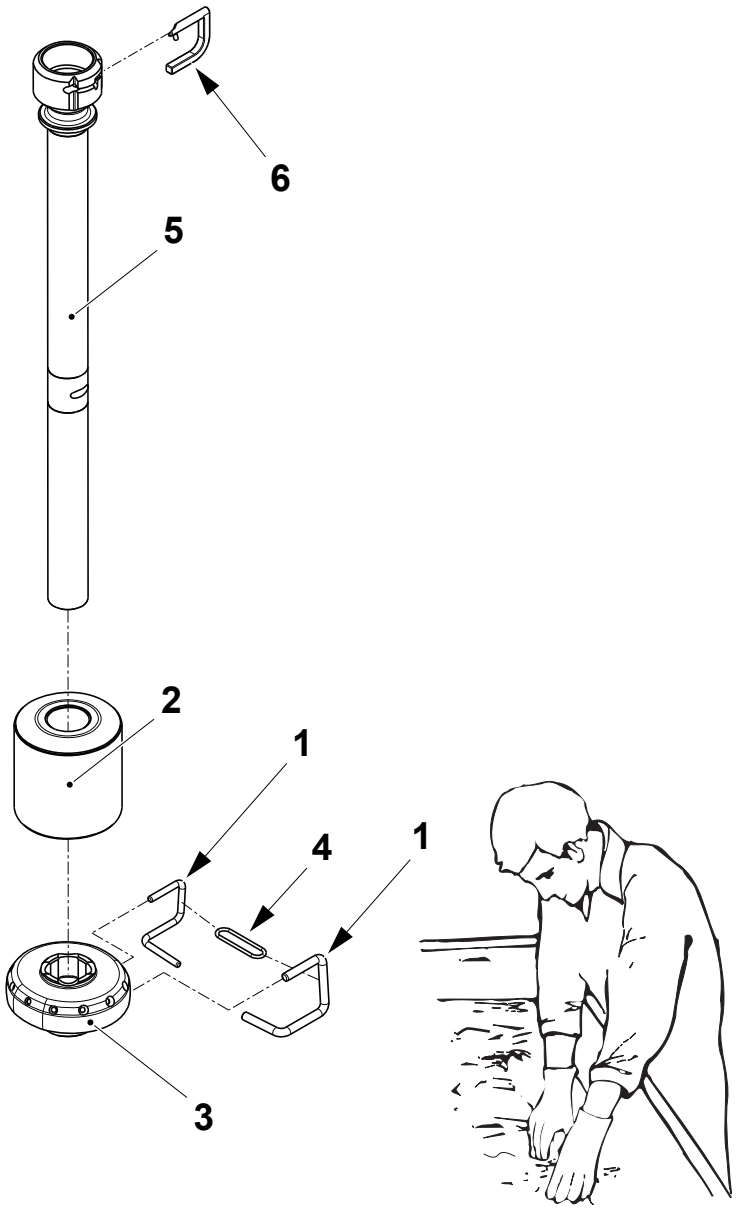

CAUTION
Risk of serious production fault.
Take care to remove all visible product residue from the parts. Sterilization is effective on clean surfaces but may not be effective on product residue.

CAUTION
Hygiene.
Before handling clean parts, disinfect hand/gloves with cleaning compound code **H**.

Manual Cleaning

14

Disassemble the lower filling pipe and clean separately by hand:

- the pins (1)
- the float (2)
- the flange (3)
- the link (4)
- lower filling pipe (5)
- the lock pin (6)

Use water and the cleaning compound code **D**. Rinse with drinking water.

Immerse the cleaned lower filling pipe parts in a bath of cleaning compound code **F3** until the next planned production.

Note! The lower filling pipe components must be immersed in the cleaning compound **F3** for a minimum of 30 minutes for the cleaning compound to have a satisfactory effect. For cleaning compound code information, see chapter 11 Technical Data.

TechPub_2614345_0106 - 09_2819202_04en.fm

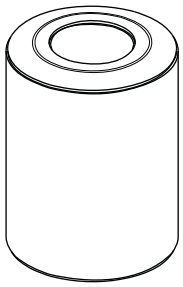

CAUTION
Risk of serious production fault.
Leakage into the float will result in product contamination.

15

Check that the float is not damaged or cracked and that no liquid has leaked inside the float. The nominal weight of the float is marked on the float. Weigh the float and change if necessary.

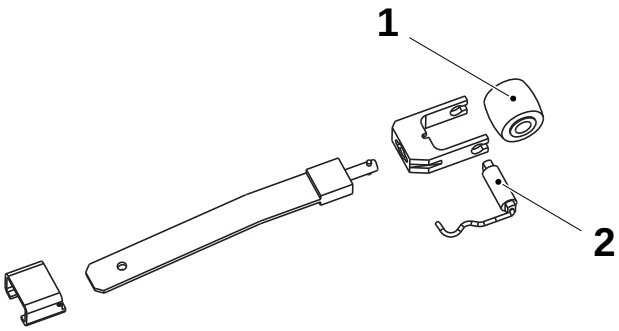

Single pressure roller

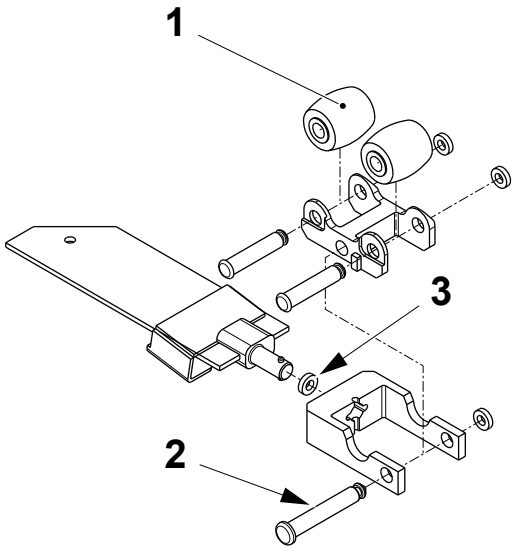

Double pressure roller

WARNING
Chemical Products.
Follow the Safety Precautions.

CAUTION
Risk of serious production fault.
Remove all product residue from the parts. Sterilisation is effective on clean surfaces but may not be effective on product residue.

CAUTION
Hygiene.
Before handling clean parts, disinfect hand/gloves with cleaning compound code **H**.

16

Carefully note how the LS strip pressure roller is assembled, then disassemble it.

Using cleaning compound code **D**, clean all parts of the LS strip pressure roller.

After cleaning, rinse with drinking water.

Make sure that the roller (1) and the shaft (2) are not worn or damaged. Change if necessary.

Note! The four locking rubbers (3) must be changed every time the LS strip pressure roller is disassembled.

Assemble the LS strip pressure roller and place it in a dry, clean place.

Note! For cleaning compound code information, see chapter 11 Technical Data.

TechPub_2614345_0106 - 09_2819202_04en.fm

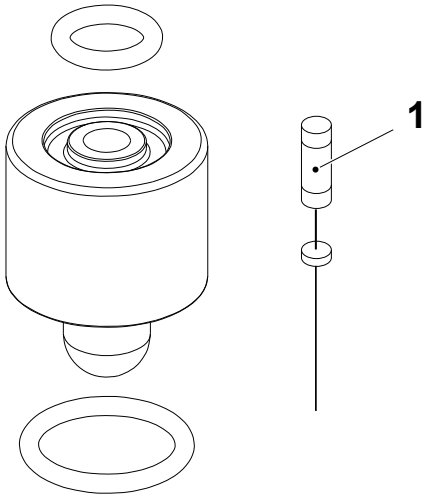

WARNING
Chemical Products.
Follow the Safety Precautions.

CAUTION
Risk of serious production fault.
Remove all product residue from the parts. Sterilisation is effective on clean surfaces but may not be effective on product residue.

CAUTION
Hygiene.
Before handling clean parts, disinfect hand/gloves with cleaning compound code **H**.

17

Note! If the filling machine is not equipped with HI (OE) or if the HI equipment has been bypassed continue with item 18 on page 9-41.

Remove the O-rings from the nozzle. check the O-rings for wear or damage and change them as required.

Clean the hole in the nozzle using the reamer (1) to remove any residue left in the nozzle.

Note! Use the appropriate reamer (1) according to the dimension of the hole in the nozzle, see chapter 11 Technical Data.

Clean the nozzle and the O-rings with cleaning compound code **D**. After cleaning rinse with drinking water.

When the nozzle is dry, hold it up to the light and check that there are no objects blocking the nozzle.

When the nozzle and the O-rings are clean place them in a dry, clean place.

Note! For cleaning compound code information, see chapter 11 Technical Data.

TechPub_2614345_0106 - 09_2819202_04en.fm

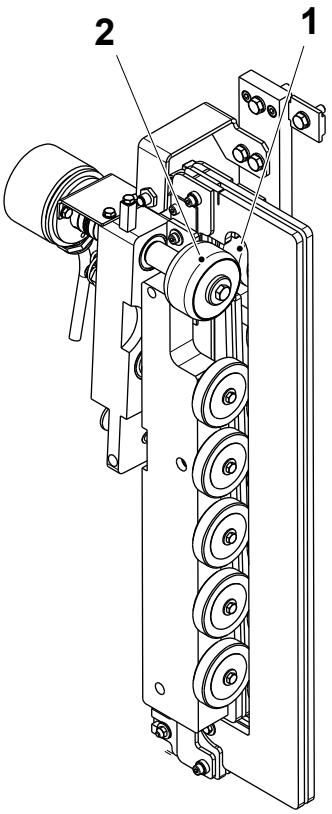

WARNING
Chemical Products.
Follow the Safety Precautions.

18

On the strip applicator, clean the counter roller (1) and the pressure roller (2) with compressed air. Then use a sponge and cleaning compound code **G1** or **G2**.

Note! For cleaning compound code information, see chapter 11 Technical Data.

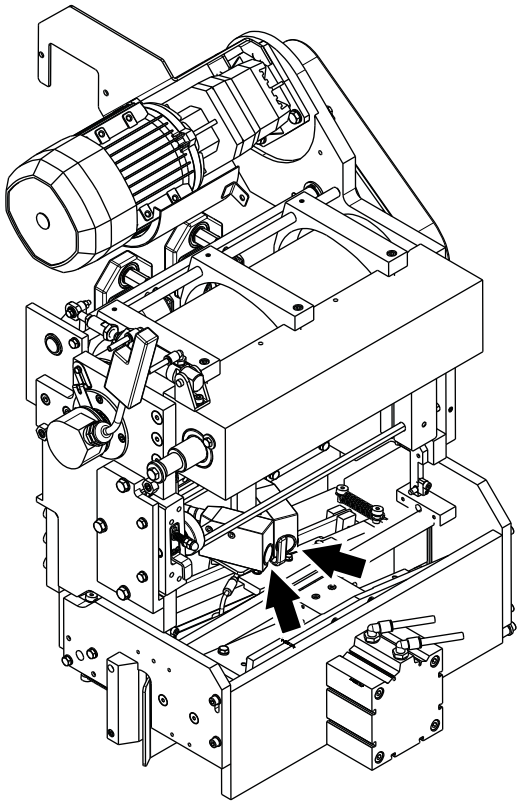

19

Clean the photocell lenses on the splicing unit using a clean cloth. A dirty lens may cause reading errors which can affect production.

TechPub_2614345_0106 - 09_2819202_04en.fm

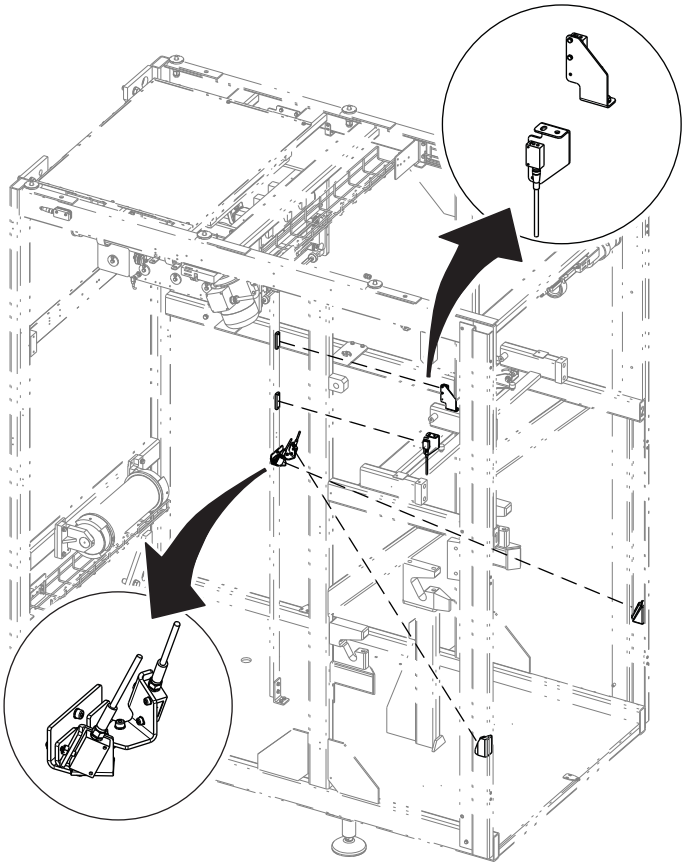

20

Note! Photocells are mounted on a moveable bracket. When cleaning, take care not to change the setting of the photocell.

Clean the photocell lenses and the reflectors in the ASU packaging material compartment with a clean dry cloth.

Note! A dirty lens may cause reading errors which can affect production.

TechPub_2614345_0106 - 09_2819202_04en.fm

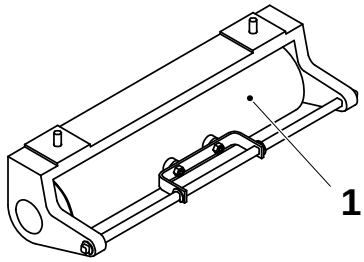

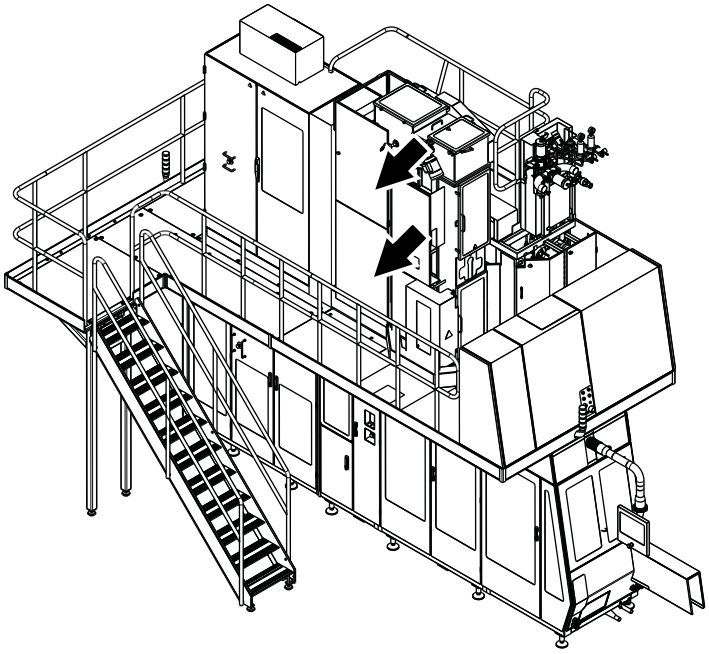

21

Open the doors indicated by the arrow in the illustration.

Clean the roller (1) with a sponge and cleaning compound code **G1** or **G2**.

Note! For cleaning compound code information, see chapter 11 Technical Data.

TechPub_2614345_0106 - 09_2819202_04en.fm

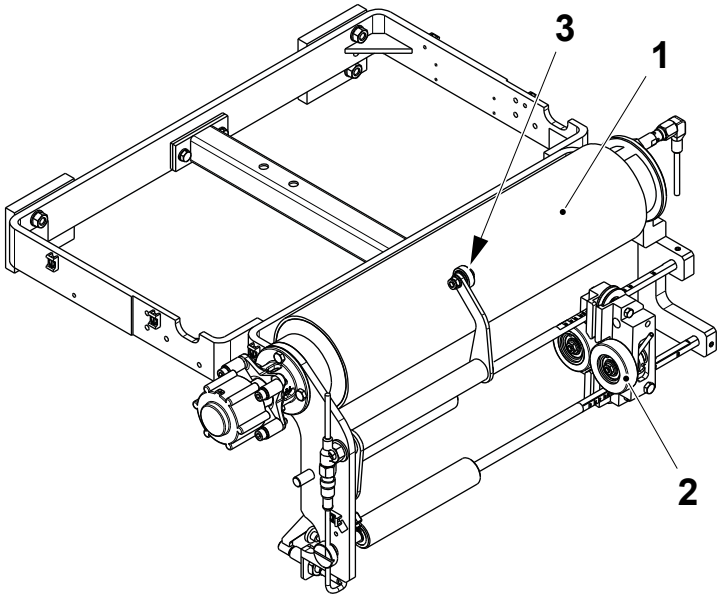

22

Clean the bending roller (1), the paper guide (2) and the splice guard (3) with a sponge. Use cleaning compound code **G1** or **G2**.

Wipe dry with a clean cloth.

Note! For cleaning compound code information, see chapter 11 Technical Data.

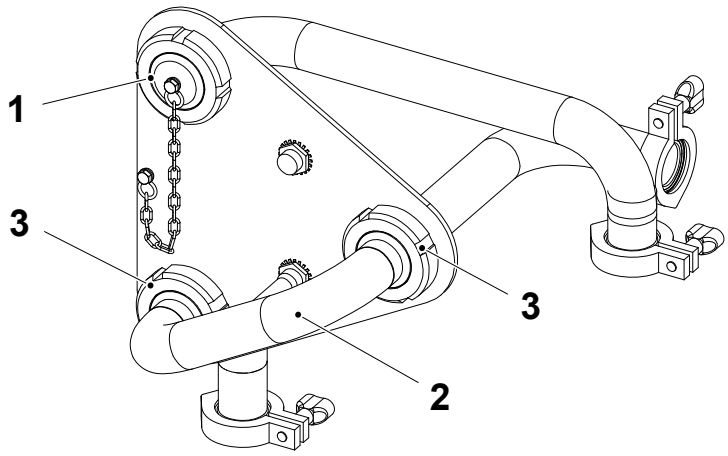

Drying

23

When the CIP cleaning is finished, open the flow switch cover (1) by the lock handle (2).

TechPub_2614345_0106 - 09_2819202_04en.fm

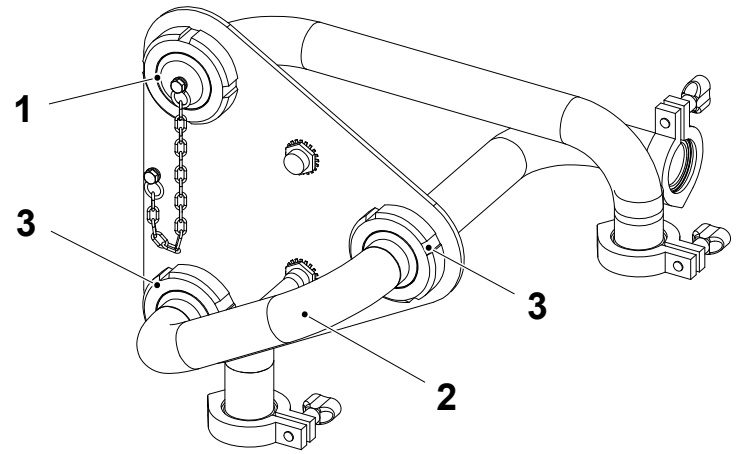

WARNING
Burn Hazard.
The components may be hot. Wear personal protective equipment.

24

When the CIP cleaning is finished, remove the change-over (2) pipe from the cleaning position by loosening the locking rings 3).

Check the gaskets of the locking rings (3) for wear or damage and change if required.

Remove the cap (1) from the production pipe.

TechPub_2614345_0106 - 09_2819202_04en.fm

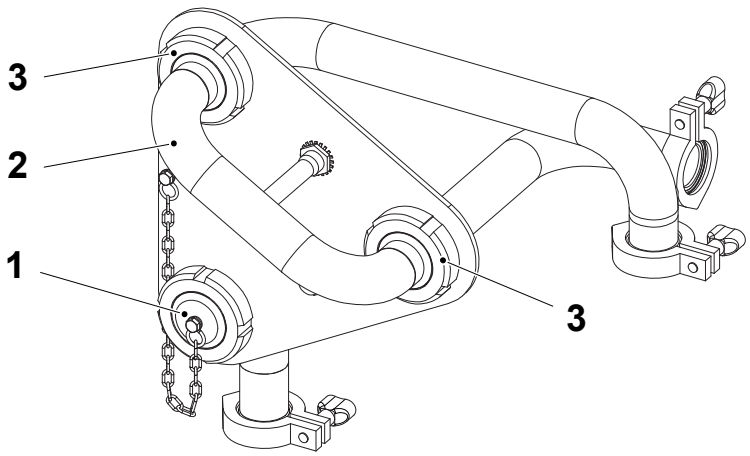

25

Fit the change-over pipe (2) into the production position and tighten with the locking rings (3).

Note! Fit the cap (1) to the cleaning pipe.

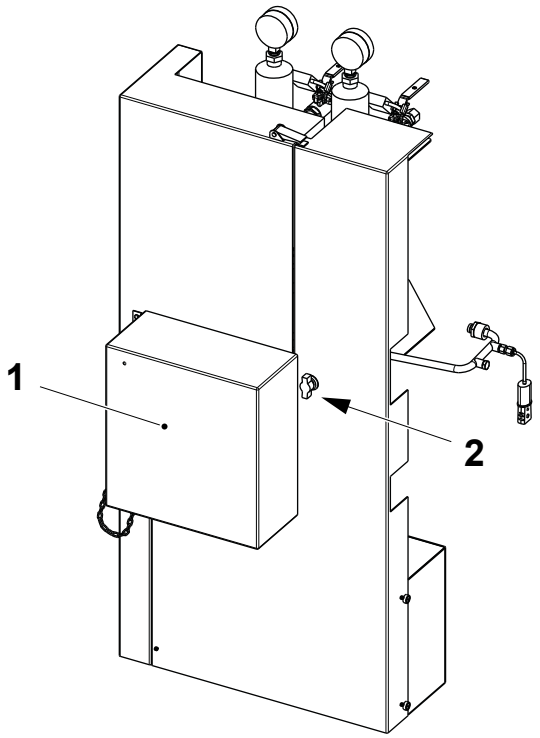

26

Close the flow switch cover (1) by the lock handle (2).

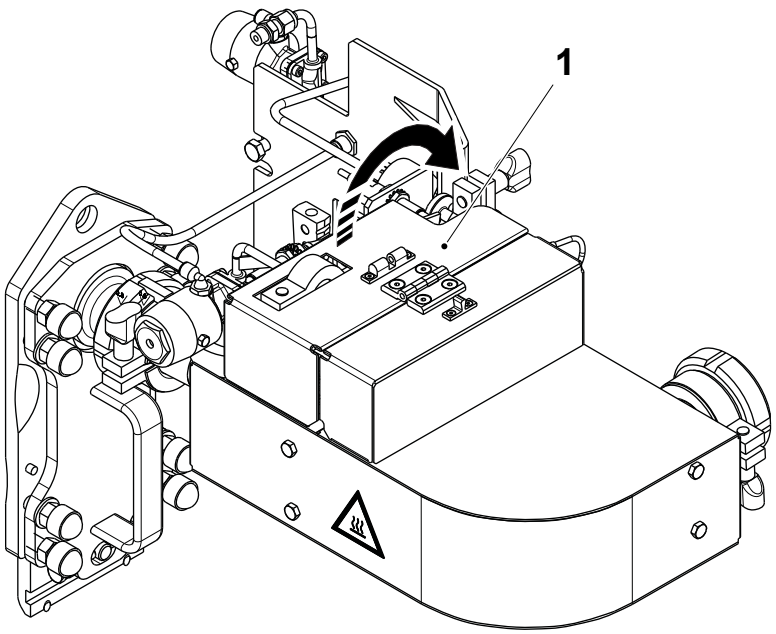

27

Note! If the filling machine is not equipped with HI (OE) or if the HI equipment has been bypassed continue with item 30 on page 9-48.

Swing the HI cover (1) open and lock it in position.

TechPub_2614345_0106 - 09_2819202_04en.fm

PRODUCTION position

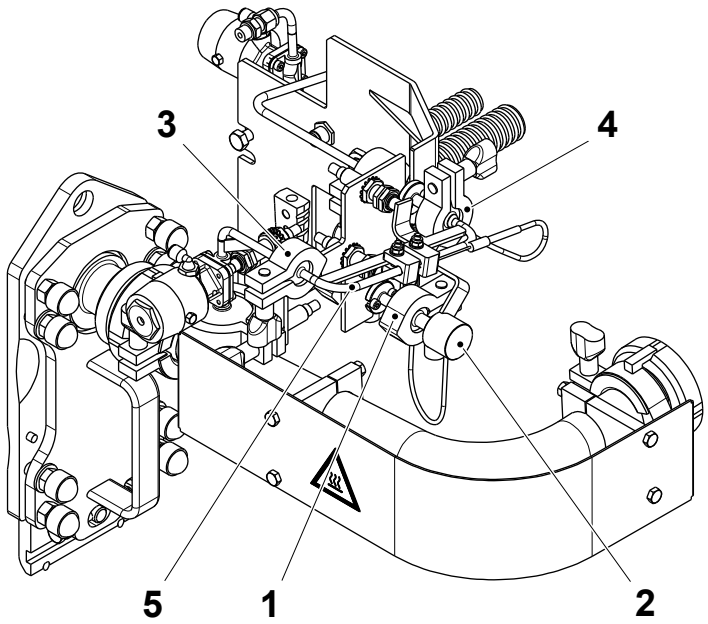

CLEANING position

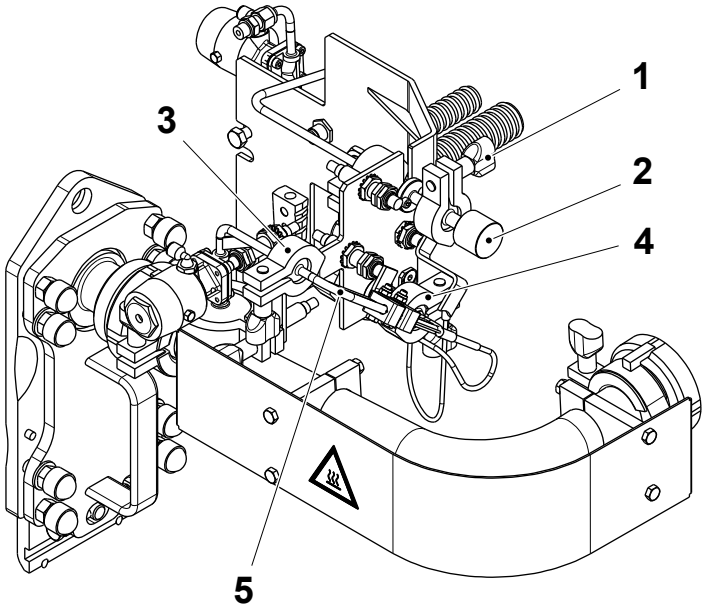

28

Remove the clamp (1) and the cap (2) from the PRODUCTION connection.

Loosen the clamp (3) and remove the clamp (4) to release the pipe (5).

Swing the pipe (5) into the PRODUCTION position.

Fit and tighten the clamps (3) and (4).

Fit the cap (2) on the CLEANING connection with the clamp (1) and tighten the clamp (1).

TechPub_2614345_0106 - 09_2819202_04en.fm

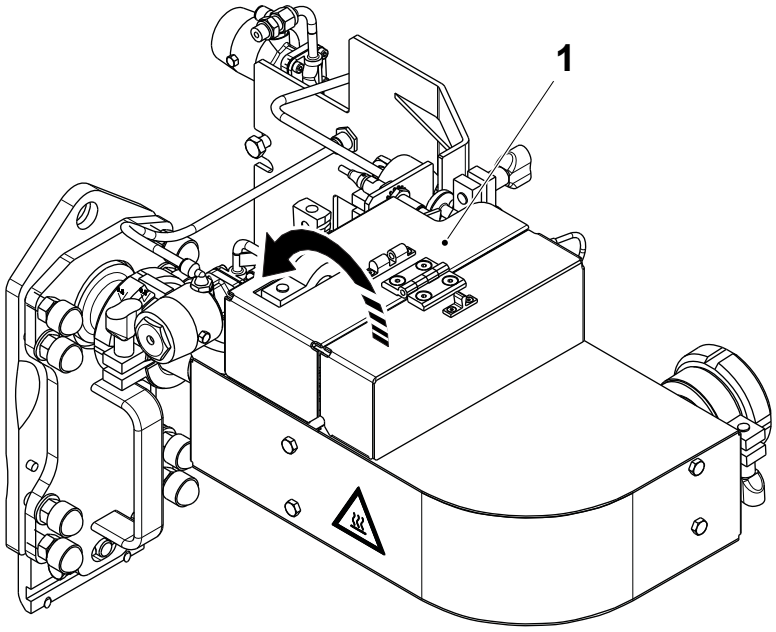

29

Close and lock the HI cover (1).

30

Close all covers and doors on the machine and reset the alarms on the TPOP.

TechPub_2614345_0106 - 09_2819202_04en.fm

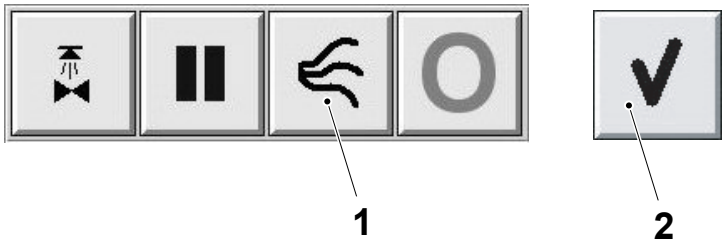

CAUTION
Risk of production fault.
Once the CIP Drying is ended, machine must be brought back to Production within 36 hours. If not, repeat the CIP Cleaning. Exceeding the recommended period of waiting time can lead to a deterioration of the condition of cleanliness established by the CIP.
For maximum waiting time recommendations, see the table Maximum Waiting/Stop Time Recommendations in chapter 11 Technical Data.

31

Touch the DRYING button (1); when it starts flashing, touch the OK button (2).

The machine will step automatically to STEP ZERO after nine minutes when the DRYING step is completed.

TechPub_2614345_0106 - 09_2819202_04en.fm

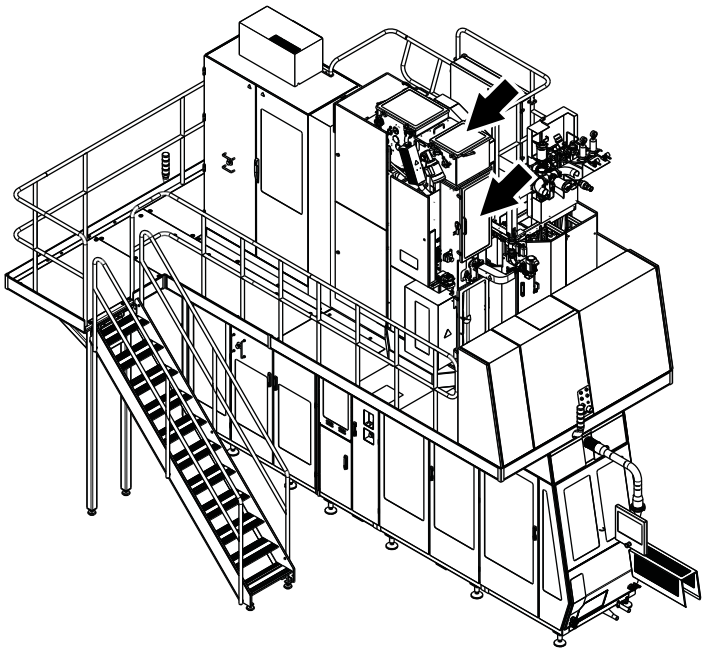

31a

Open the top aseptic chamber doors.

The machine will step automatically to STEP ZERO after nine minutes when the DRYING step is completed.

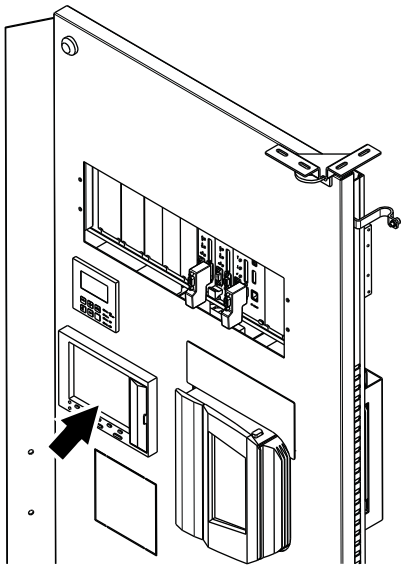

Recorder

32

When the CIP and external cleaning are finished, check the percentage level of the CompactFlash Memory Card in the recorder screen. If the CompactFlash Memory Card is full or more than 90% complete, change the CompactFlash Memory Card, see section Recorder, Change CompactFlash Card on page 2-123.

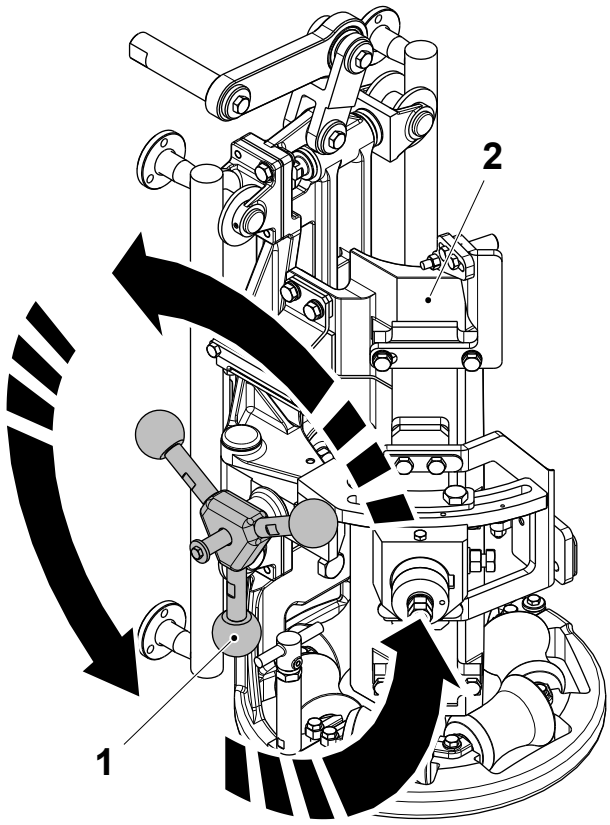

Aseptic Chamber

33

Turn the handle (1) to release the LS inductor (2) and push the LS inductor (2) as far to the LH side as possible.

TechPub_2614345_0106 - 09_2819202_04en.fm

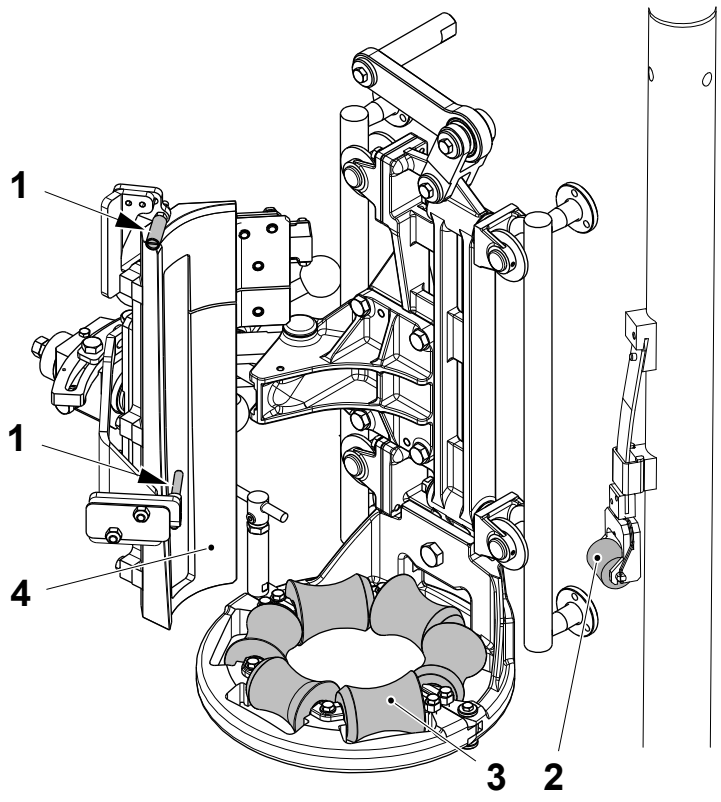

33a

Check the rotation and condition of the LS inductor guide rollers (1) and the pressure roller (2). If required, call a service technician.

Check that all rollers (3) in the forming ring rotate freely. If required, call a service technician.

Taking care not to damage the surfaces, carefully remove all residue from:

- the rollers (1) and (2)
- the inside of the LS inductor (4).

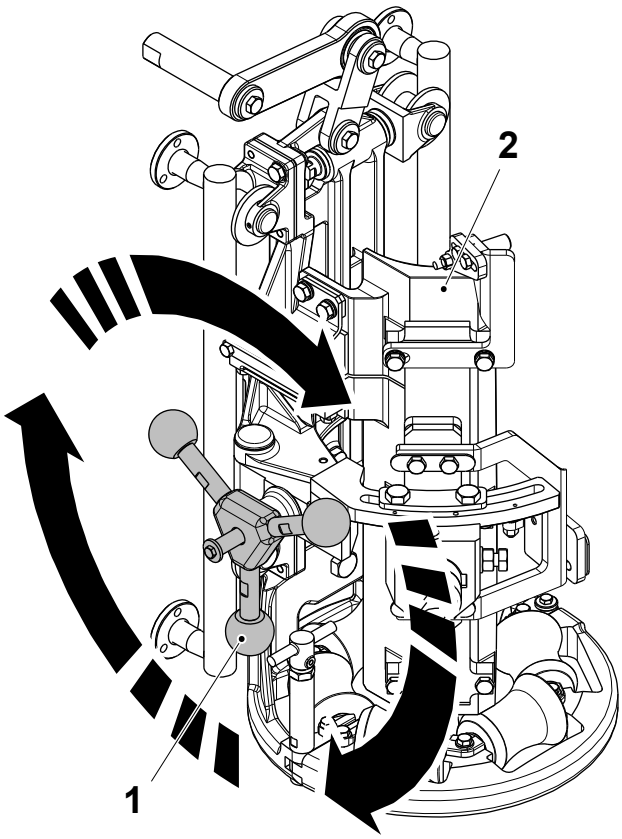

33b

Push the LS inductor as far to the RH side as possible and turn the handle (1) to secure the LS inductor (2) into the production position.

TechPub_2614345_0106 - 09_2819202_04en.fm

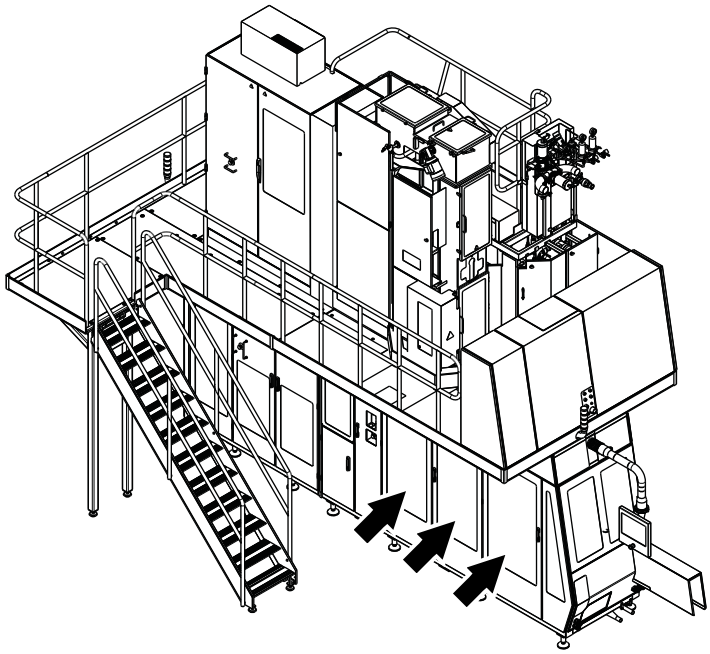

Jaw System and Final Folder Unit

34

Open the doors to the jaw unit and the final folder unit.

Wipe down all the rubber seals on the doors of the jaw unit and final folder area with a sponge to remove water residue.

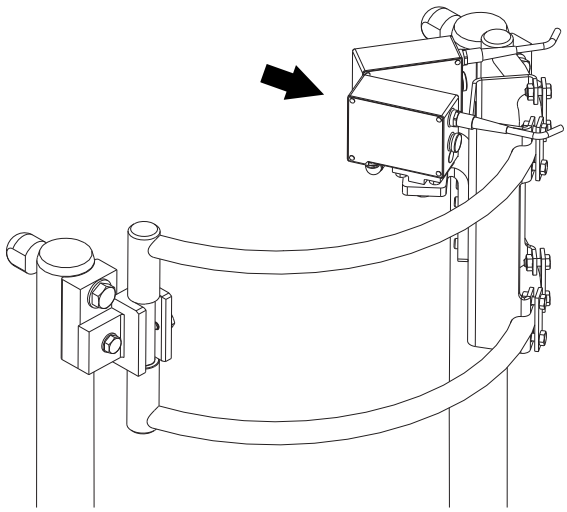

WARNING
Chemical Products.
Follow the Safety Precautions.

34a

Clean the photocell lenses with a clean dry cloth.

Note! If there are small lime deposits on the design correction photocell lenses, use cleaning compound code **D**. A dirty lens may cause reading errors which can affect PRODUCTION.

Note! For cleaning compound code information, see chapter 11 Technical Data.

TechPub_2614345_0106 - 09_2819202_04en.fm

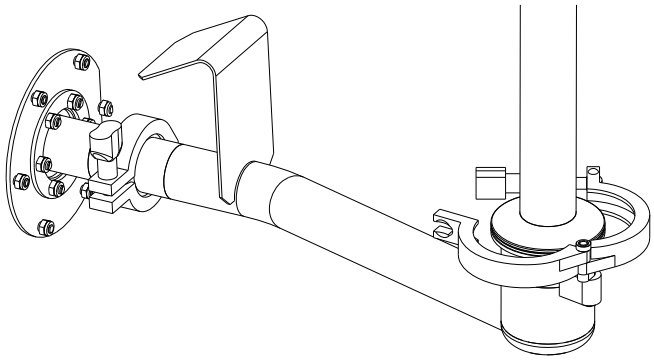

WARNING

Hot surface.

The components may be hot. Wear personal protective equipment.

34b

Disconnect the cleaning sleeve and remove it from the filling machine.

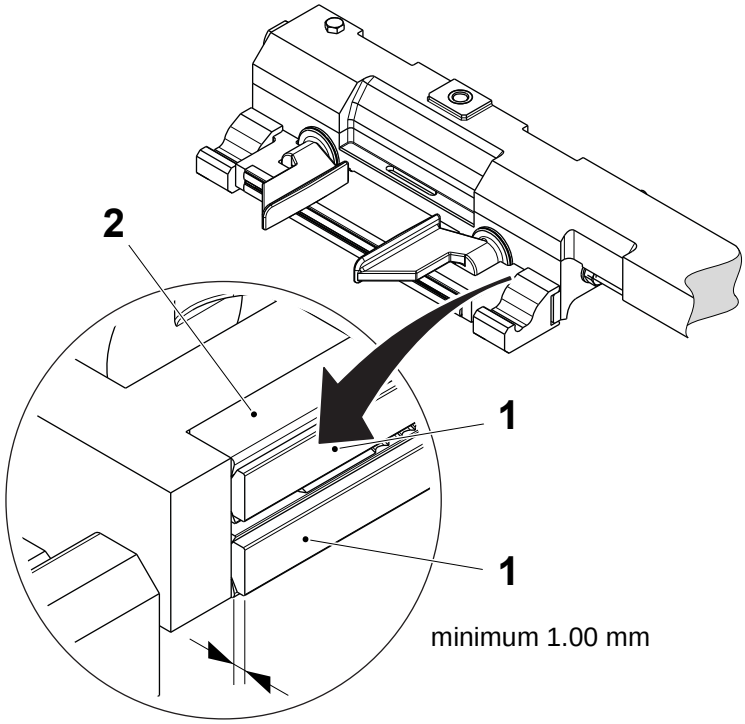

WARNING

Blade and burn hazard.

The knife is sharp and may be hot. Wear personal protective equipment.

Check Dollies

35

Check the dollies (1) for wear or damage. They must protrude at least 1.00 mm outside of the cutting rail (2). Change the dollies as necessary, follow the procedure Change Dollies on page 9-71.

TechPub_2614345_0106 - 09_2819202_04en.fm

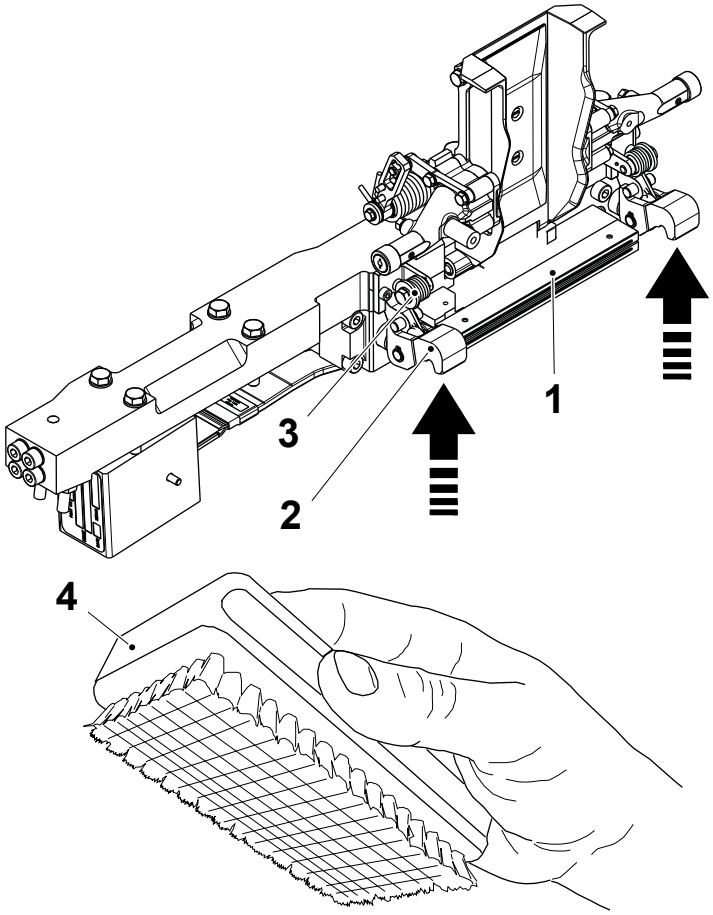

Check Inductors

36

a) Check the inductor (1) for damage and/or wear that could affect sealing quality. Clean with a nylon or hard bristle flat brush (4).

b) If required call a technician to change the inductor (1).

c) Check that the catches (2) and the catch return springs (3) are functioning: lift and then release each catch (2). The catch should return directly to the stop position.

d) Clean the catches (2) and the catch springs (3).

e) Call a technician to change the catches (2) and the catch springs (3) if required.

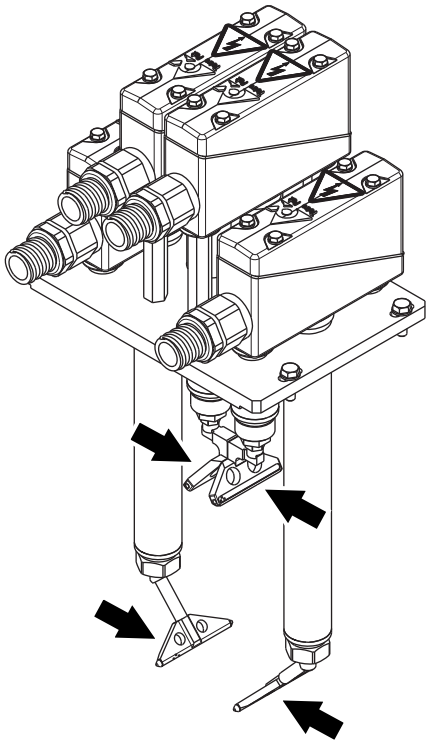

WARNING

Hot surface.

The nozzles and other parts of the final folder may be hot. Wear personal protective equipment.

37

Clean the four heating nozzles of the flap heater (arrow) in the final folder with a brass wire brush.

Check that the air holes of the nozzles are not clogged after the cleaning. Blow clean the nozzles with compressed air.

TechPub_2614345_0106 - 09_2819202_04en.fm

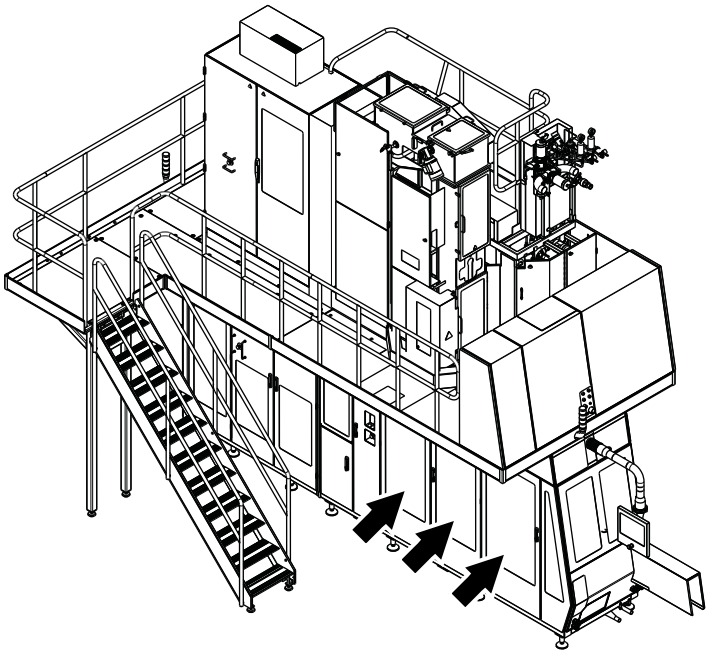

38

Close the jaw unit and final folder unit doors.

TechPub_2614345_0106 - 09_2819202_04en.fm

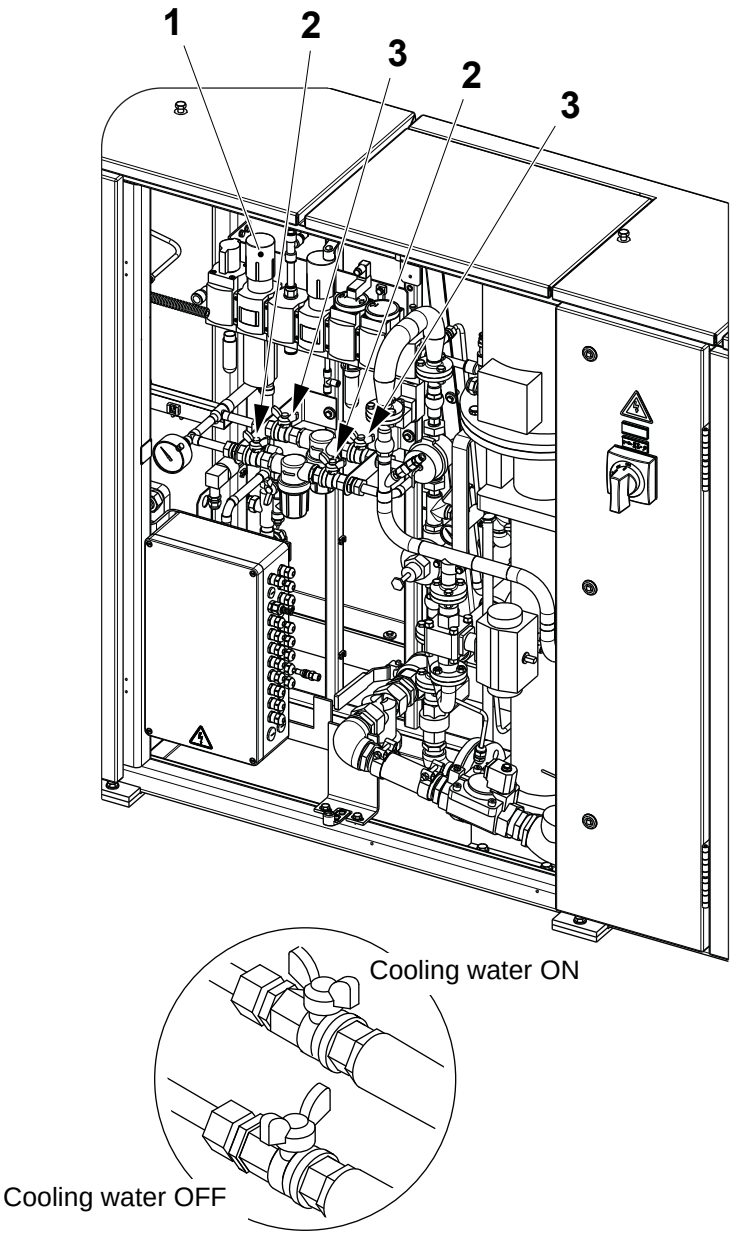

39

DAILY CARE has now been completed.

When resuming PRODUCTION, start from Preparing after Daily Care in chapter 3 Preparation.

To perform Weekly Care go to the section Weekly Care on page 9-57.

If WEEKLY CARE or PRODUCTION is not scheduled, ensure that the air supply (1) is OFF and the cooling water supply (2) or (3) is OFF, depending on which filter is in use.

TechPub_2614345_0106 - 09_2819202_04en.fm

Weekly Care

This section describes what to do once a week or at least every 120 operating hours.

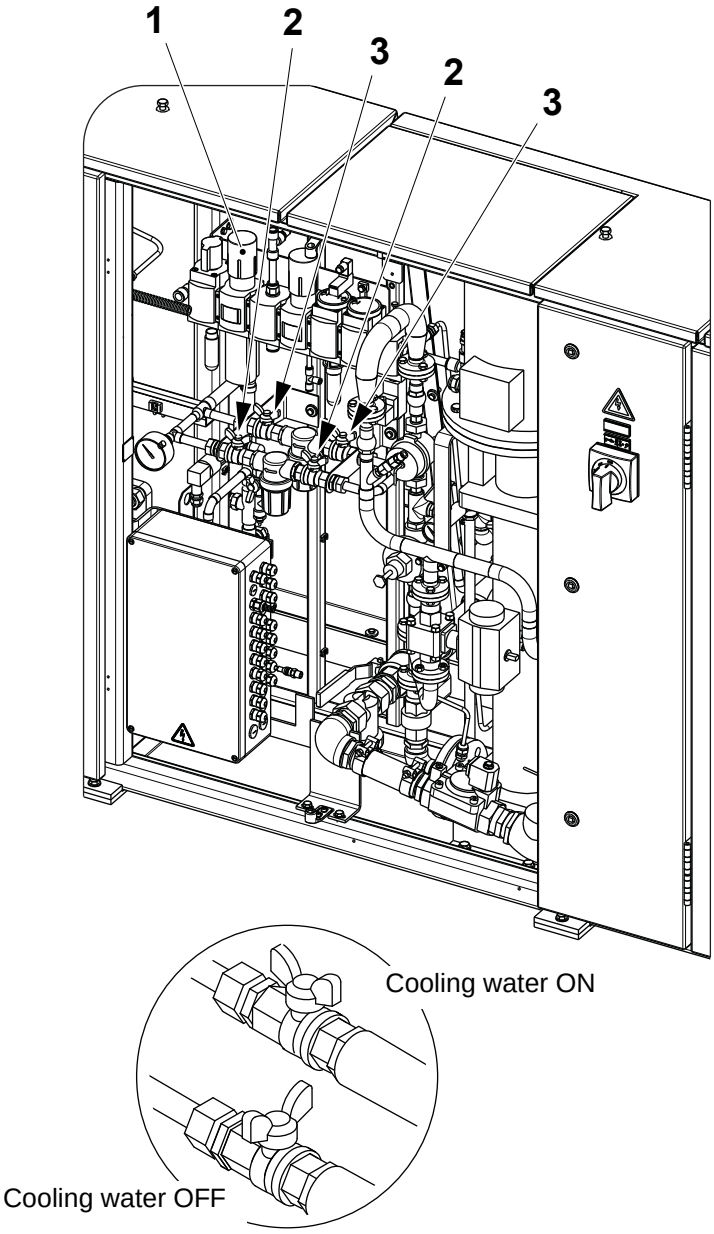

1

Turn ON the air supply (1),

Turn ON the cooling water supply (2) or (3) depending on which filter is in use.

TechPub_2614345_0106 - 09_2819202_04en.fm

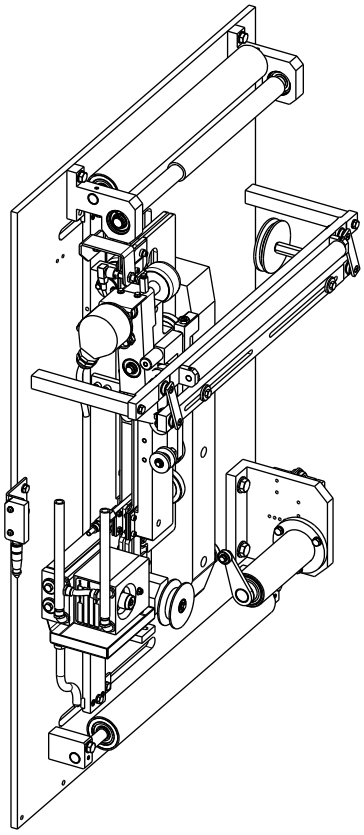

WARNING
Chemical Products.
Follow the Safety Precautions.

ASU
2

Clean the strip applicator unit with compressed air, taking care to remove any plastic residues or packaging material dust from the inductor plates.

Clean all the rollers on the strip applicator and the sealing unit with a sponge. Use cleaning compound code **G1** or **G2**.

Wipe dry with a clean cloth.

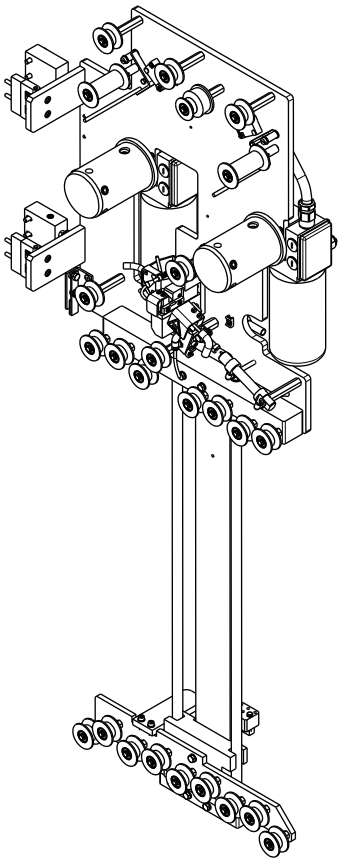

WARNING
Chemical Products.
Follow the Safety Precautions.

2a

Clean the shafts of the strip magazine with a sponge. Use cleaning compound code **G1** or **G2**.

Wipe dry with a clean cloth.

Note! For cleaning compound code information, see chapter 11 Technical Data.

TechPub_2614345_0106 - 09_2819202_04en.fm

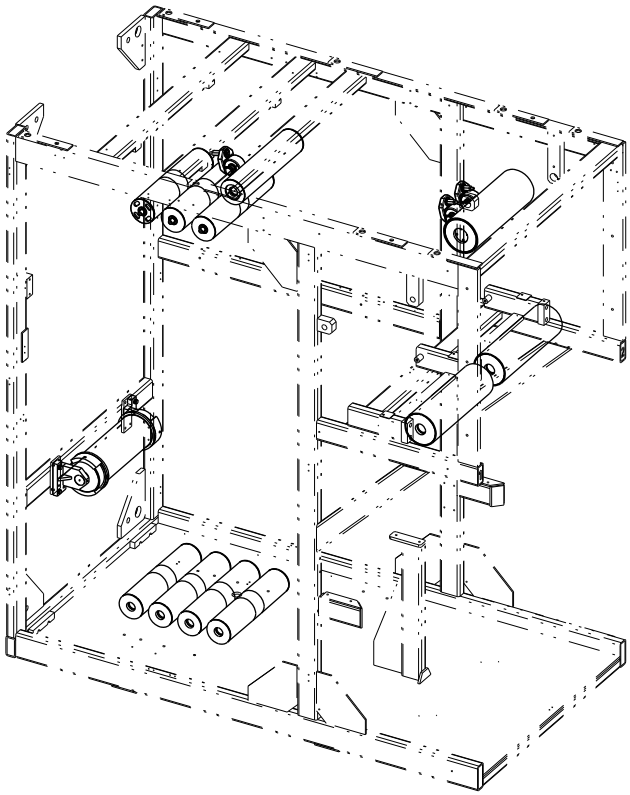

WARNING
Chemical Products.
Follow the Safety Precautions.

WARNING
Moving parts can crush and cut.
Make sure that the material holders are safely locked in either the upper or lower position.

2b

Clean all the ASU rollers shown in the illustration. Use a sponge with cleaning compound code **G1** or **G2**.

Wipe dry with a clean cloth.

Note! For cleaning compound code information, see chapter 11 Technical Data.

TechPub_2614345_0106 - 09_2819202_04en.fm

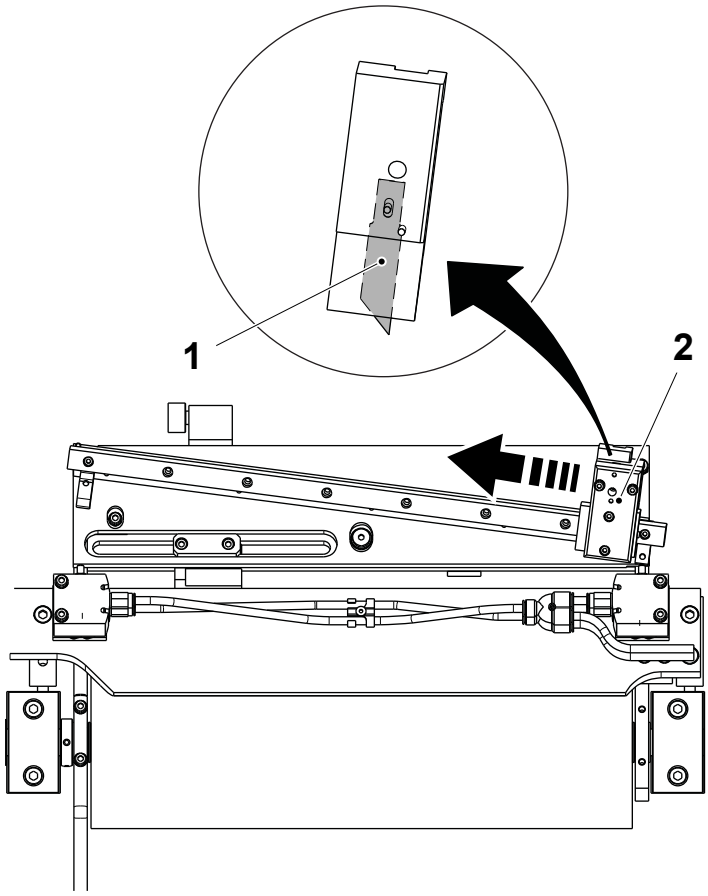

2c

Check the sharpness of the blade (1) on both the materila holders by moving the slide (2) over a piece of packaging material.

The cut must be smooth and continuous: if necessary, change the blade.

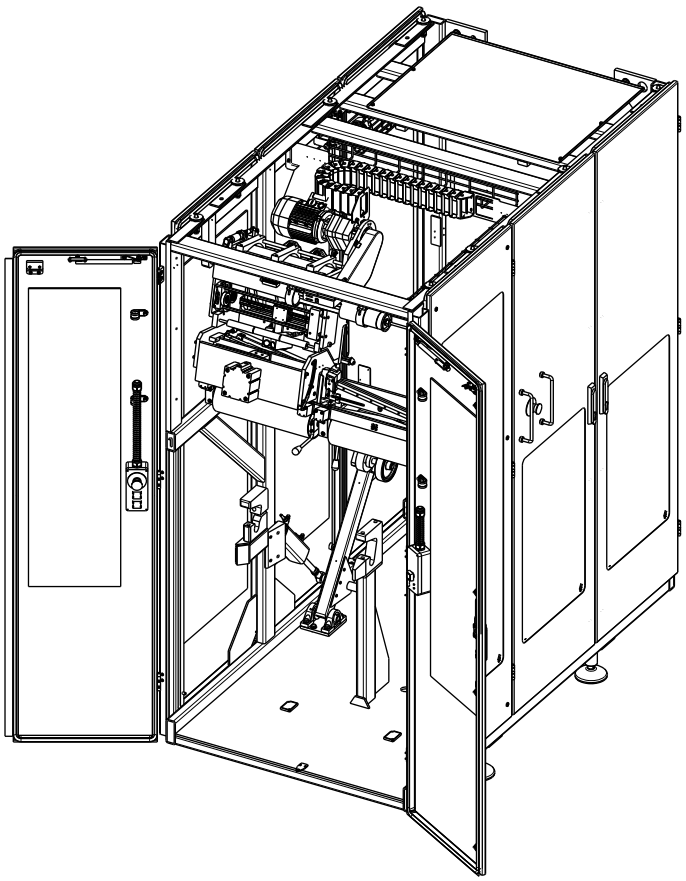

2d

Vacuum clean the inside of the ASU.

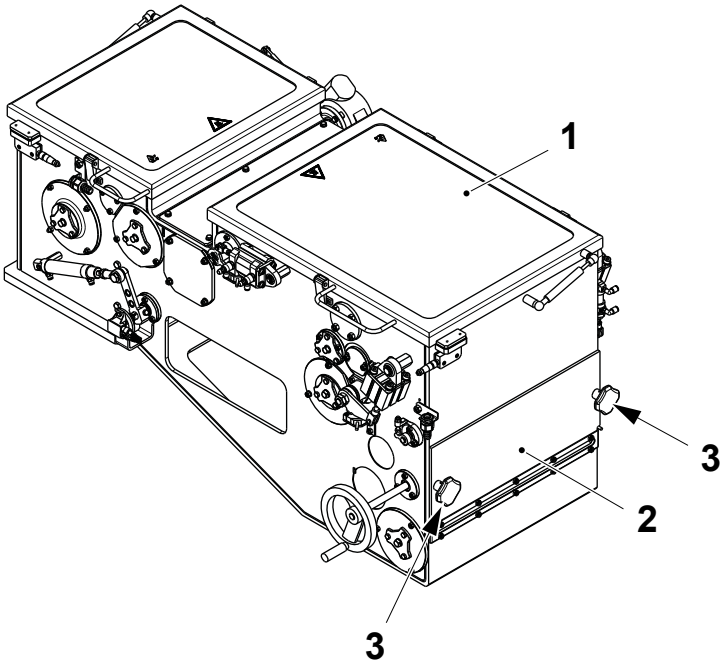

Drying Chamber

3

Open the rear door (1) of the drying chamber and remove the hatch (2) by loosening the handles (3).

TechPub_2614345_0106 - 09_2819202_04en.fm

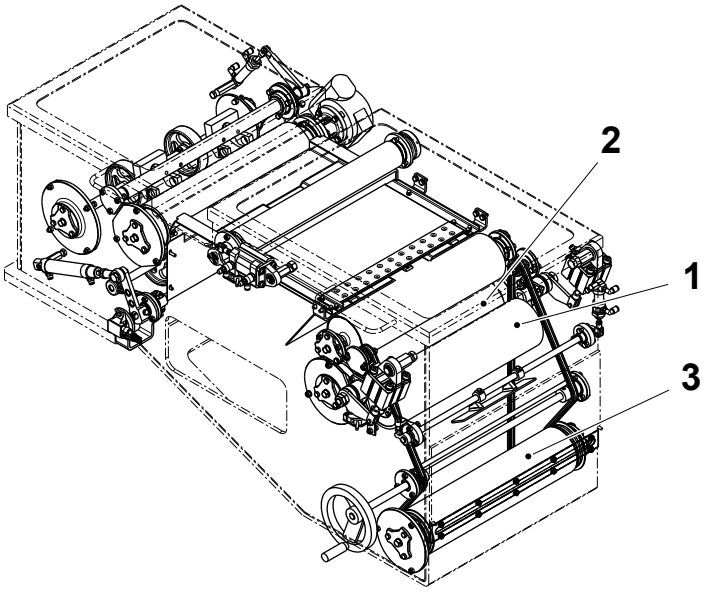

WARNING
Hydrogen Peroxide.
Follow the Safety Precautions.

3a

Make sure the surfaces on the calendar roller (1) and the squee-gee roller (2) are smooth and undamaged. Use a sponge and **distilled water** only to clean these parts:

- calendar roller (1) and squee-gee roller (2)
- the inside of the chamber and all rollers
- the window of the aseptic chamber door
- the roller (3).

TechPub_2614345_0106 - 09_2819202_04en.fm

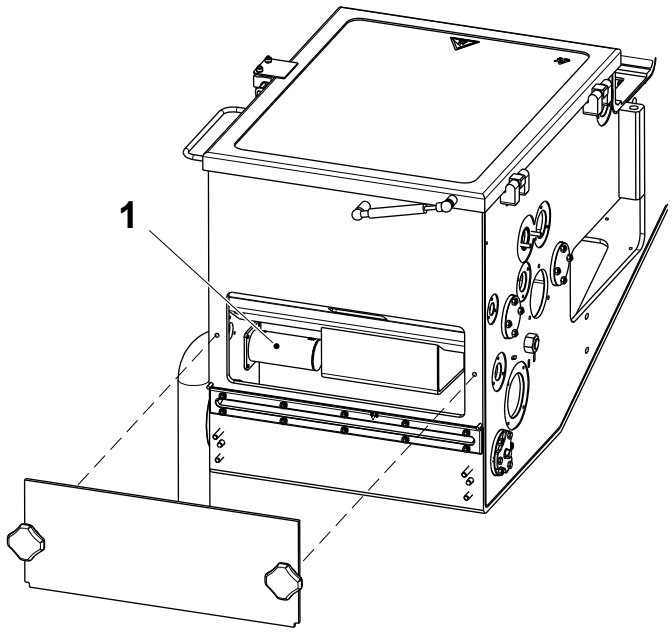

3b

Clean the filter (1) from strip or packaging material residues making sure that no packaging material or strip drops inside the peroxide bath.

If the filter (1) is very dirty, loosen the screws (2), remove the filter and clean it with a brush wire. Fit back the filter (1).

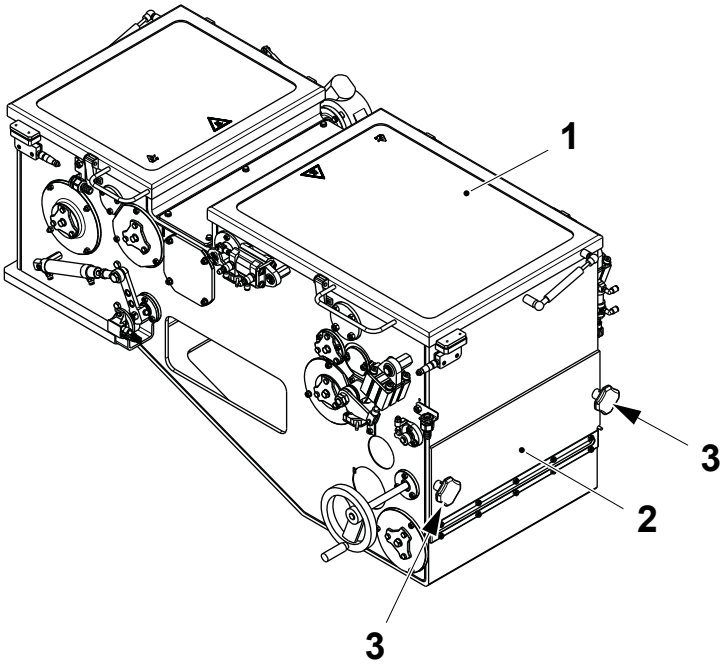

3c

Close the rear door (1) of the drying chamber and fit back the hatch (2) by tightening the handles (3) equally.

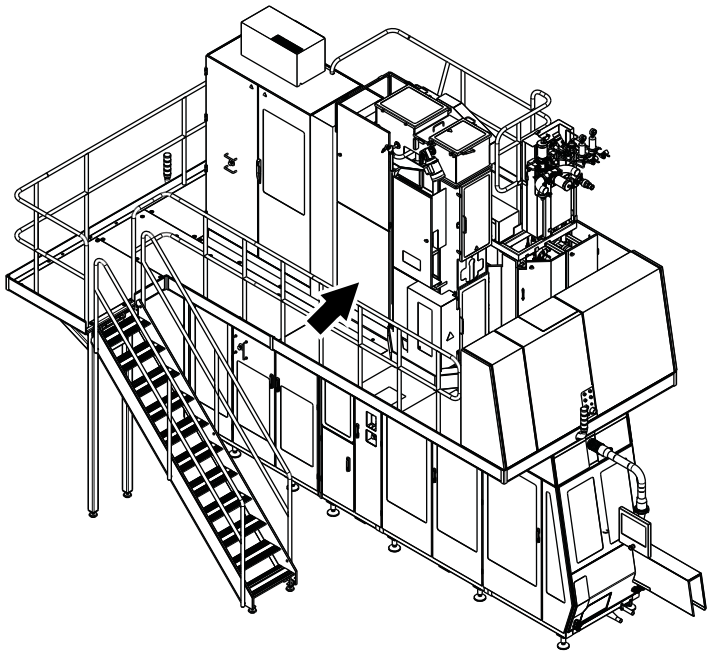

4

Open the door indicated by the arrow in the illustration.

TechPub_2614345_0106 - 09_2819202_04en.fm

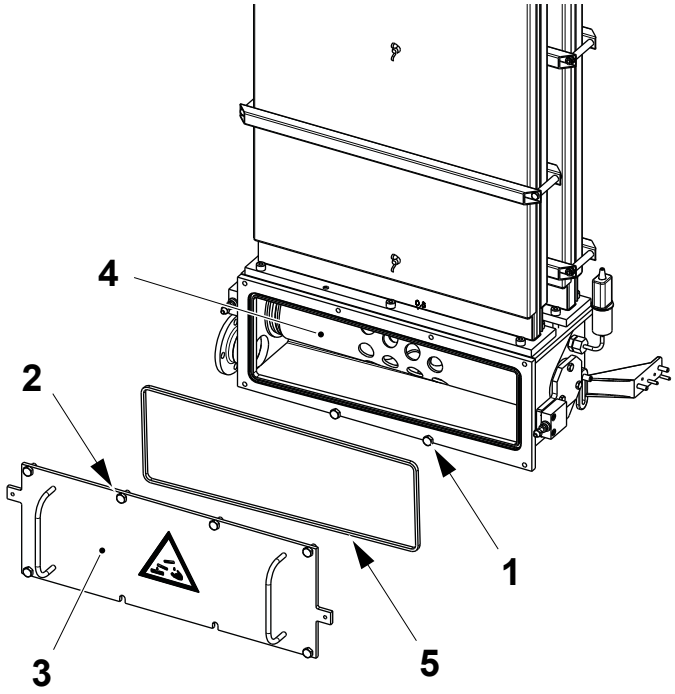

WARNING
Hydrogen Peroxide.
Follow the Safety Precautions.

4a

a) Loosen the two lower screws (1), remove the rest of the screws (2) and remove the bottom cover (3).

b) Spin the peroxide bath roller (4) by hand to make sure it rotates smoothly in both directions.

c) Check for pieces of LS strip and paper dust.

d) Clean and rinse the peroxide bath roller (4) with a sponge and **distilled water** only.

e) Check the condition of the gasket (5).

f) Put the gasket (5) and the cover (3) back and tighten the screws (2) crosswise.

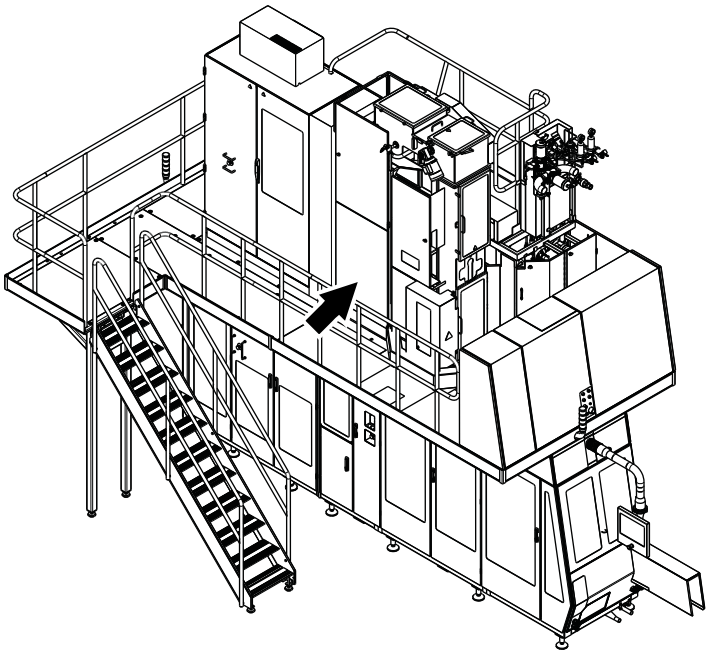

4b

Close the door indicated by the arrow in the illustration.

TechPub_2614345_0106 - 09_2819202_04en.fm

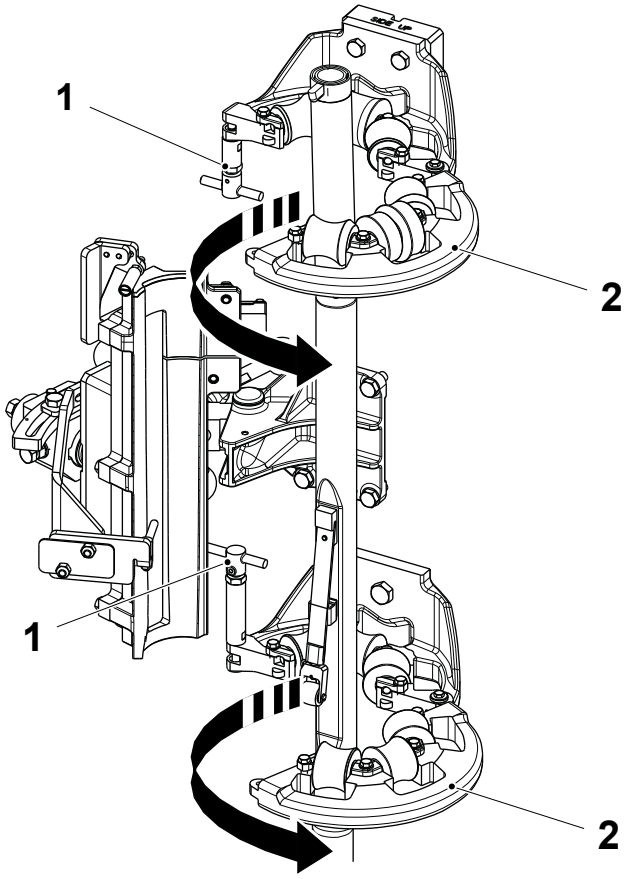

Aseptic Chamber

5

CAUTION

Risk of damage to the equipment.
Press the front half of the forming rings (2) backward while turning the levers (1) to avoid damaging the threaded screws on the end of the knobs (1).

Turn the two knobs (1) and open the two forming rings (2).

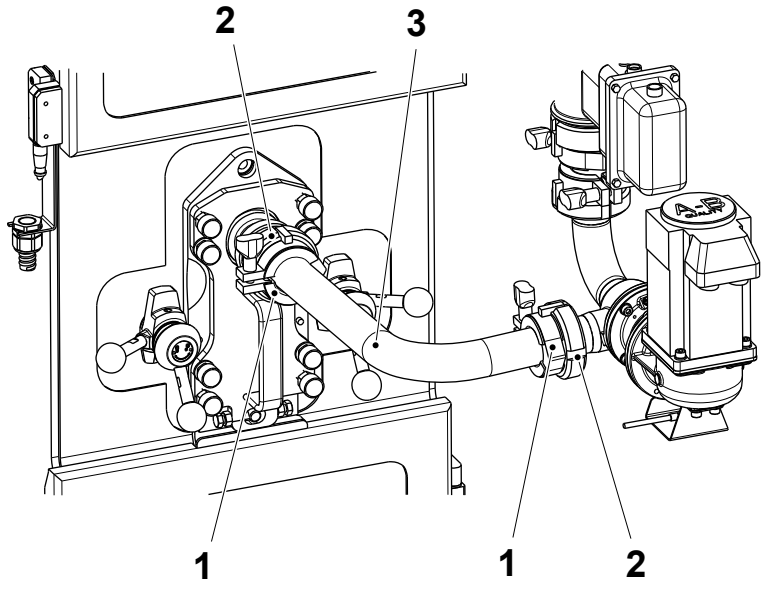

WARNING

Hot surface.
Some parts may be hot. Wear personal protective equipment.

5a

Loosen the two locking clamps (1) and the two locking nuts (2).

Remove the product pipe (3).

Note! The product pipe gaskets must be changed every time the product pipe (3) is removed.

TechPub_2614345_0106 - 09_2819202_04en.fm

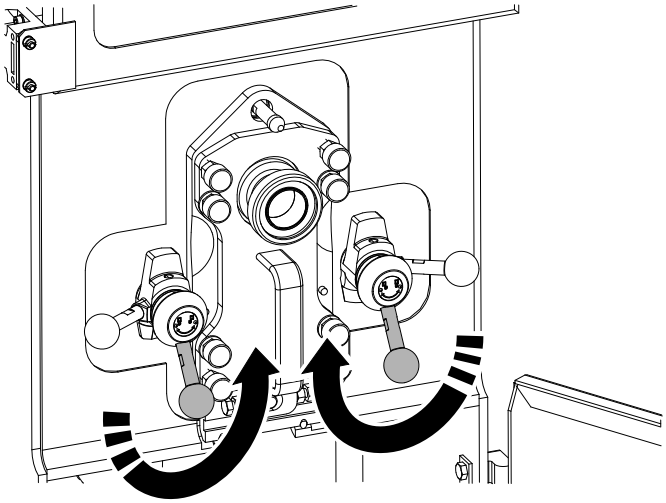

5b

Turn the two knobs in the unlocking direction.

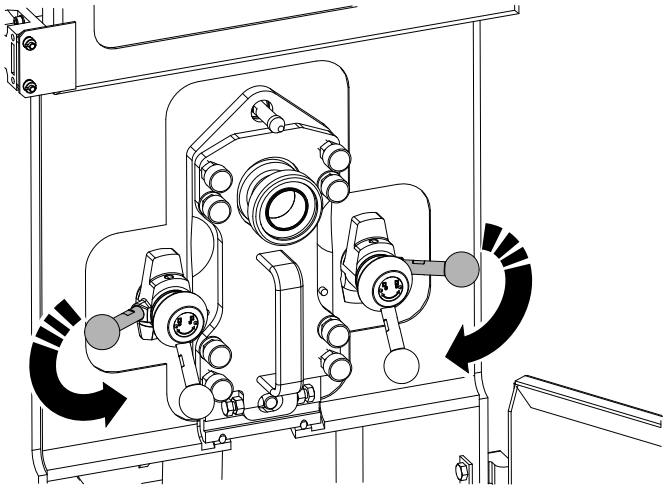

5c

With one hand firmly holding the filling pipe, turn the two knobs to release the filling pipe from the aseptic tower.

Remove the upper filling pipe.

TechPub_2614345_0106 - 09_2819202_04en.fm

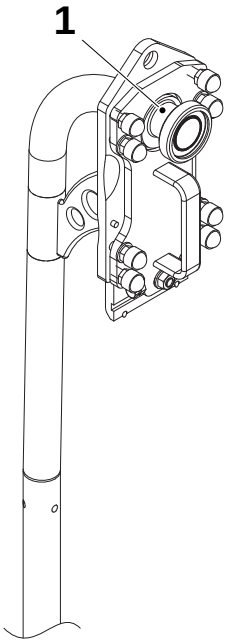

WARNING
Chemical products.
Follow the Safety precautions.

CAUTION
Risk of serious production fault.
Remove all product residue from the parts. Sterilization is effective on clean surfaces but may not be effective on product residue.

CAUTION
Risk of damage to the equipment.
Make sure the top connection area (1) does not come into contact with liquid.

5d

Clean the outside of the upper filling pipe with cleaning compound code **D** and rinse with drinking water.

Make sure that **all** product residue is removed from the pipe.

After cleaning, immerse the upper filling pipe in cleaning compound code **F3**, apart from the top connection area (1) that should remain dry and above the level of the liquid.

Note! The filling pipe must be immersed in the cleaning compound **F3** for a minimum of 1 hour for the cleaning compound to have a satisfactory effect. For cleaning compound code information, see chapter 11 Technical Data.

TechPub_2614345_0106 - 09_2819202_04en.fm

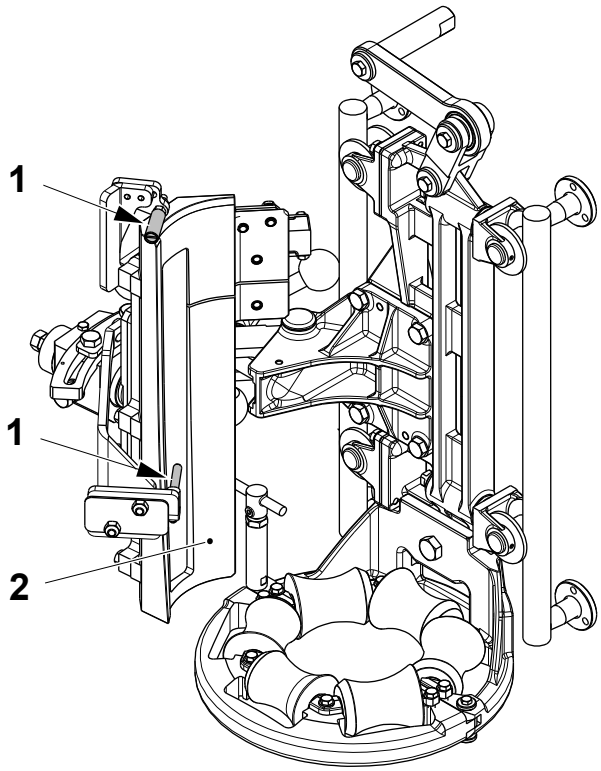

5e

Check the LS inductor guide (1) for surface damage. If necessary call a technician.

Clean the inside of the LS inductor (2) with a sponge to remove PE residue.

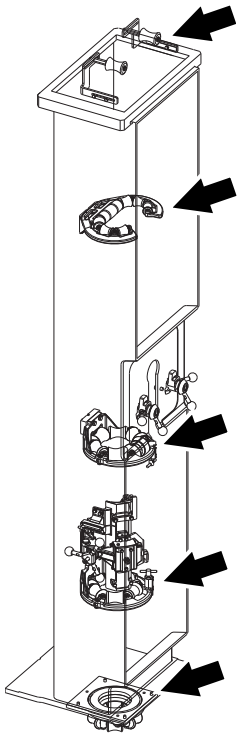

Standard forming section is shown

WARNING
Chemical Products.
Follow the Safety Precautions.

CAUTION
Risk of serious production fault.
Remove all product residue from the parts. Sterilisation is effective on clean surfaces but may not be effective on product residue.

CAUTION
Hygiene.
Do not dry with compressed air. Allow the rollers to dry.

5f

Use a sponge or brush and cleaning compound **D** to clean the rollers and forming rings.

Rinse with drinking water.

Check the rollers for surface damage and make sure that they rotate freely in both directions. If necessary call a technician.

TechPub_2614345_0106 - 09_2819202_04en.fm

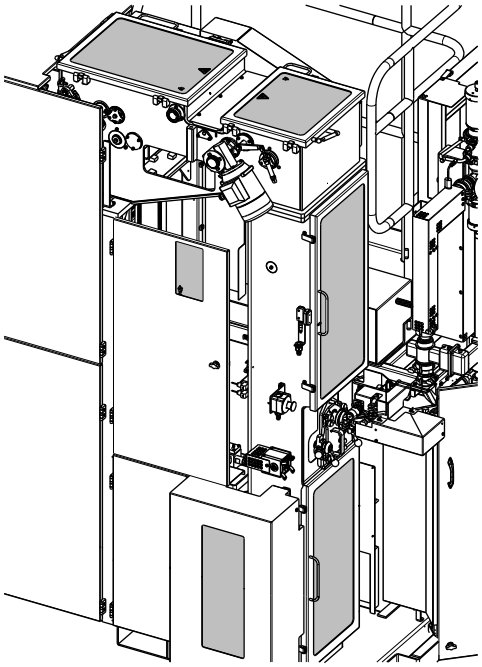

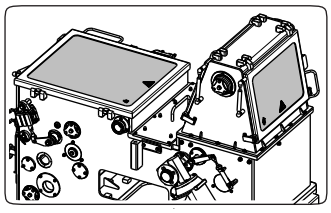

Drying chamber with upper section

WARNING
Hydrogen Peroxide.
Follow the Safety Precautions.

CAUTION
Hygiene.
Do not dry with compressed air.

5g

Clean the inside of the aseptic chamber and the door windows with a sponge. Use the cleaning compound code **D**.

Rinse with drinking water and a sponge. Wipe the windows dry with a clean cloth.

Note! For cleaning compound code information, see chapter 11 Technical Data.

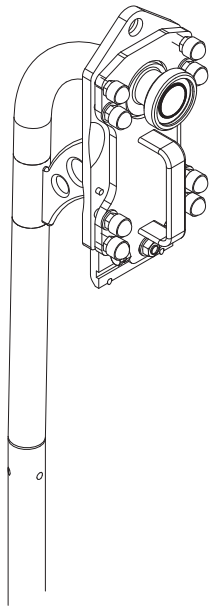

WARNING
Chemical products.
Follow the Safety Precautions.

CAUTION
Hygiene.
Before handling clean parts, disinfect your hands/gloves with cleaning compound code **H**.

5h

Remove the immersed upper filling pipe from the cleaning compound code **F3**. Let the upper filling pipe drip-dry in a clean area for about 15 minutes before re-fitting it back on the machine.

TechPub_2614345_0106 - 09_2819202_04en.fm

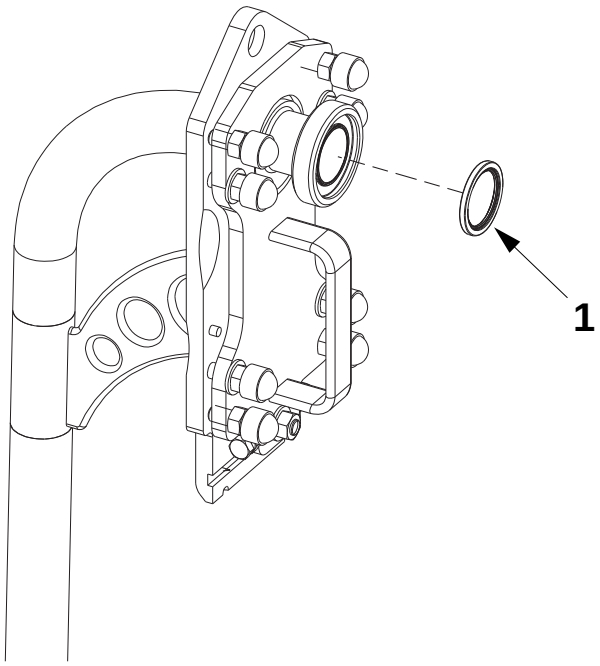

Gasket Replacement

5i

Change the gasket (1) each time the product pipe is removed from the upper filling pipe.

TechPub_2614345_0106 - 09_2819202_04en.fm

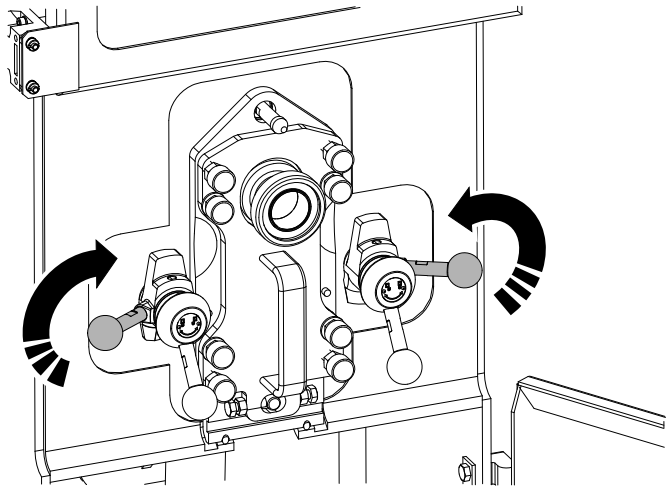

5j

Fit the upper filling pipe in the aseptic chamber.

With one hand firmly holding the filling pipe, turn the two knobs to secure the filling pipe to the aseptic tower.

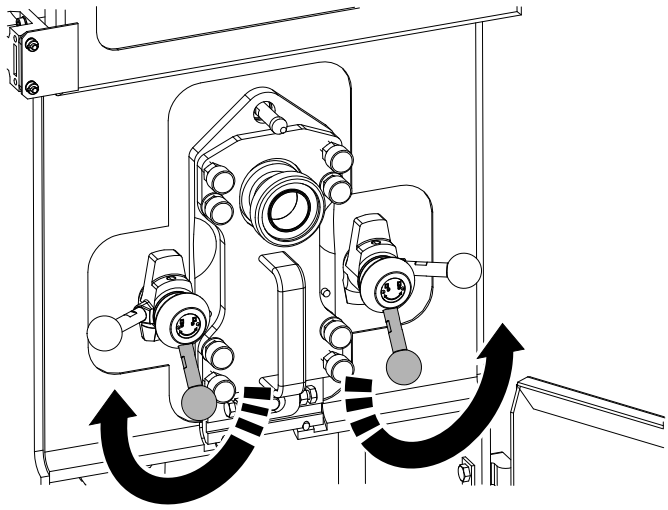

5k

Turn the two knobs in the locking direction.

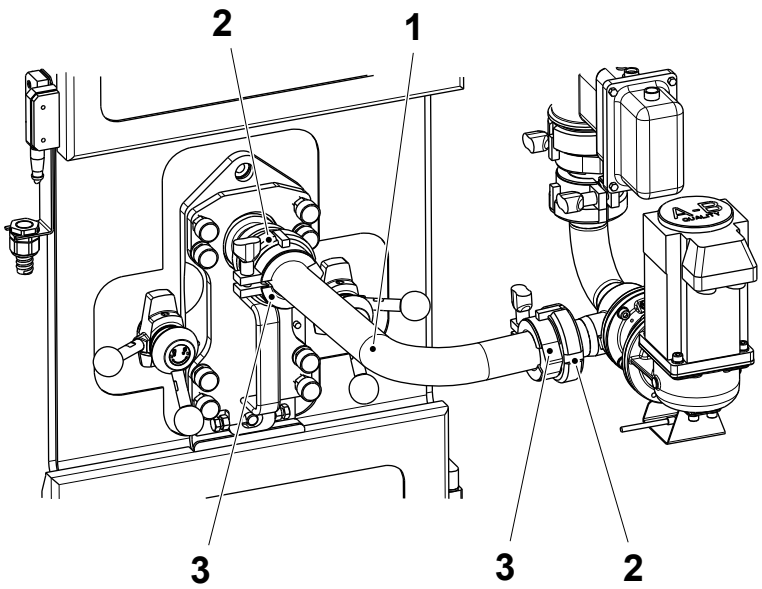

5l

Fit the product pipe (1) and tighten the two locking nuts (2) and the two locking clamps (3).

TechPub_2614345_0106 - 09_2819202_04en.fm

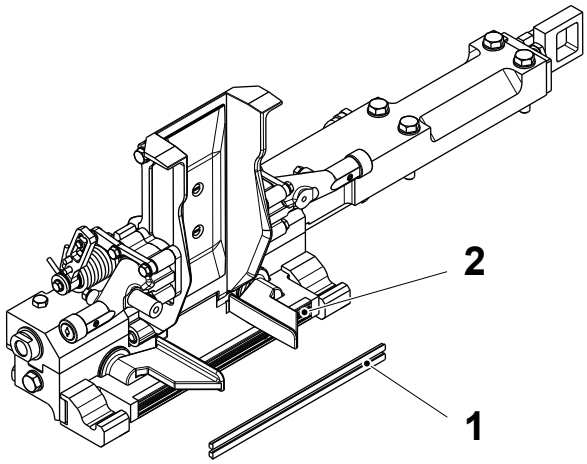

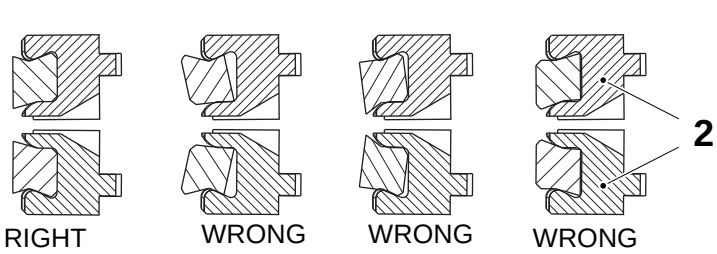

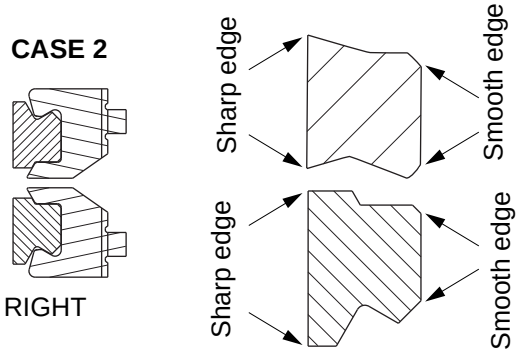

WARNING

Blade and burn hazard.

The knife is sharp and may be hot. Wear personal protective equipment.

Change Dollies

6

Perform the following work on both the jaw pairs:

a) Step up to PREPARATION.

b) Inch a jaw pair to an open position.

c) Step down to ZERO.

d) Use a suitable tool to remove the dollies (1).

e) Clean and inspect the two cutting rails (2).

f) If the cutting rails (2) are damaged or worn, call a technician to change them.

g) Make sure to correctly insert the new dollies (1) into the cutting rails (2).

Note! Take care to correctly position the profiles when fitting the dollies (1). The two sharp edges of the rubber list must be facing outwards from the rails (2).

TechPub_2614345_0106 - 09_2819202_04en.fm

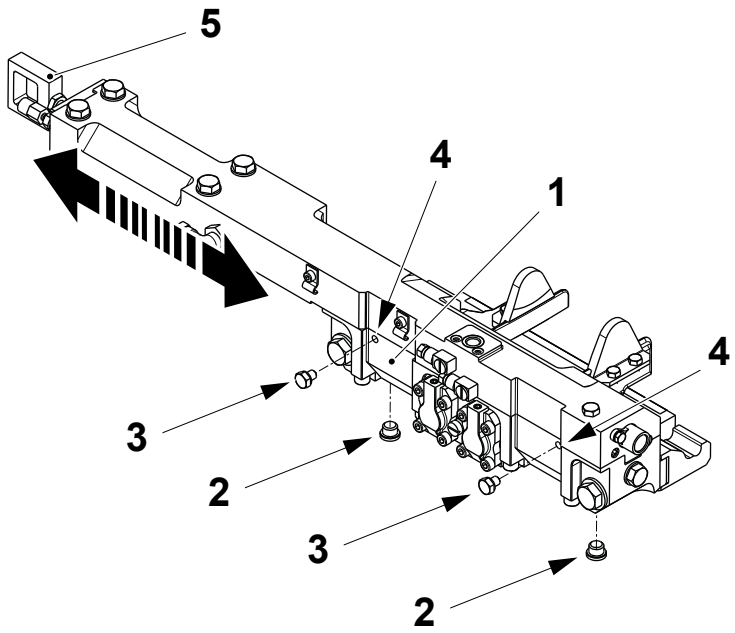

WARNING
Chemical Products.
Follow the Safety Precautions.

CAUTION
Risk of damage to the equipment.
To ensure that the cutting jaws are filled with the correct quantity of oil the cutting jaws must be positioned in the horizontal position during the filling procedure.

Change Oil 7

Perform the following work on both the cutting jaws.

a) Step up to step PREPARATION.
b) Inch a jaw pair to the lower horizontal position.
c) Step down to step ZERO.
d) Drain the oil from the bearing housing (1) by removing the drain plugs (2) and the filling plugs (3).
e) Fit and tighten the drain plugs (2).
f) Fill up the bearing housing (1) with oil through the filling plugs holes (4). Use lubricant code **H**. See the Technical data section.
g) Manually move the ear (5) to ensure that both the internal chambers of the bearing housing (1) are filled with the oil.
h) Continue to fill with oil through the filling plugs holes (4) until oil comes out of the filling plugs holes (4).
i) Fit and tighten the drain plugs (3).

TechPub_2614345_0106 - 09_2819202_04en.fm

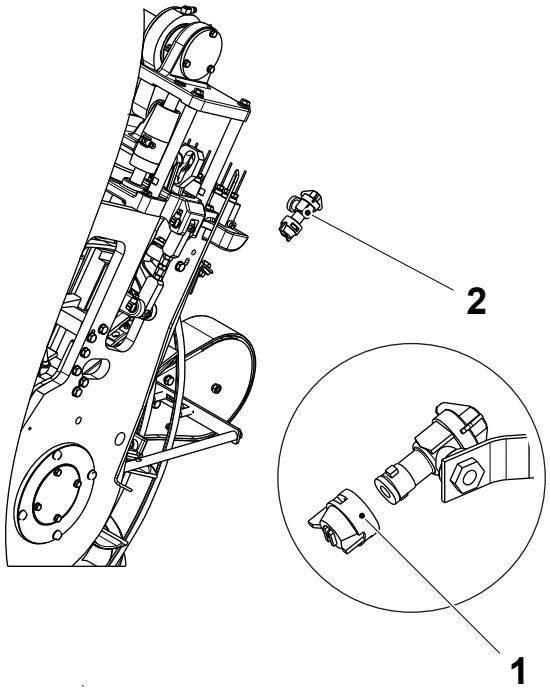

8

Remove the nozzle (1) from the final folder flusher (2).

Dip the nozzles (1) in a container with anti-limestone for approximately 10 minutes, then fit back the nozzle (1) onto the final folder flusher (2).

TechPub_2614345_0106 - 09_2819202_04en.fm

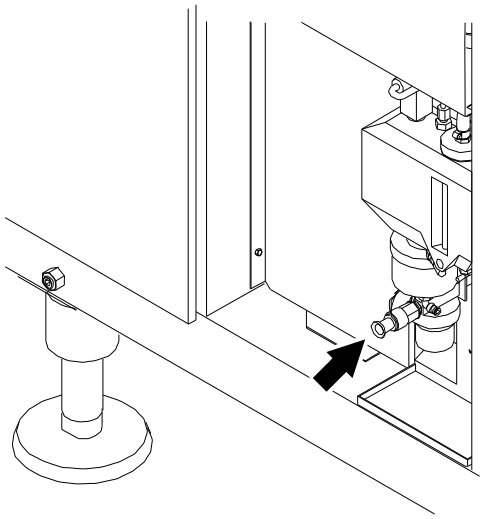

WARNING
Chemical Products.
Follow the Safety Precautions.

9

Check the oil level in the central lubrication tank. Refill if required. Use lubrication code **H**.

Note! Pump slowly as the level rises faster in the tank than in the level indicator.

Note! For lubricant code information, see chapter 11 Technical Data.

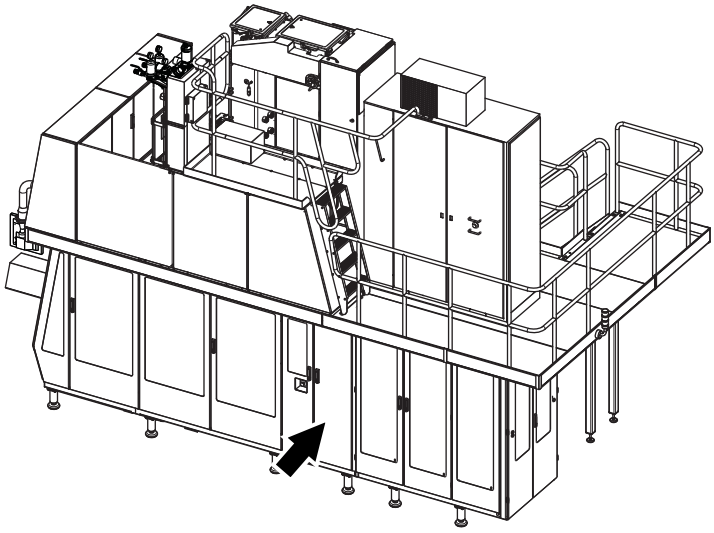

Peroxide Tank

10

Open the door indicated by the arrow in the illustration.

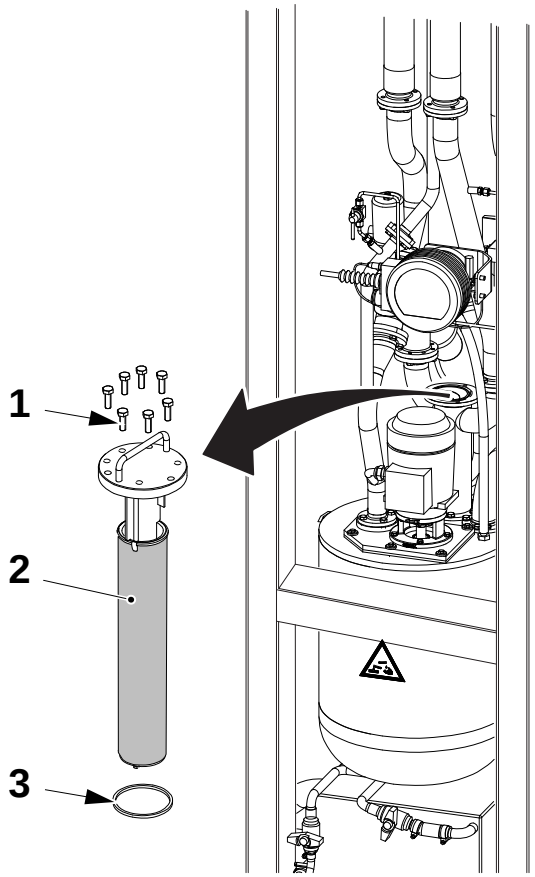

WARNING

Hydrogen Peroxide.

Follow the Safety precautions. Do not touch the filter with hands. Wear personal protective equipment.

10a

Remove screws (1) and lift up the filter (2) from the hydrogen peroxide tank. Check the filter (2) and the gasket (3). Change if needed.

Rinse the filter with distilled water and clean it using compressed air.

Rinse the filter again with distilled water.

Fit back and tighten the screws.

TechPub_2614345_0106 - 09_2819202_04en.fm

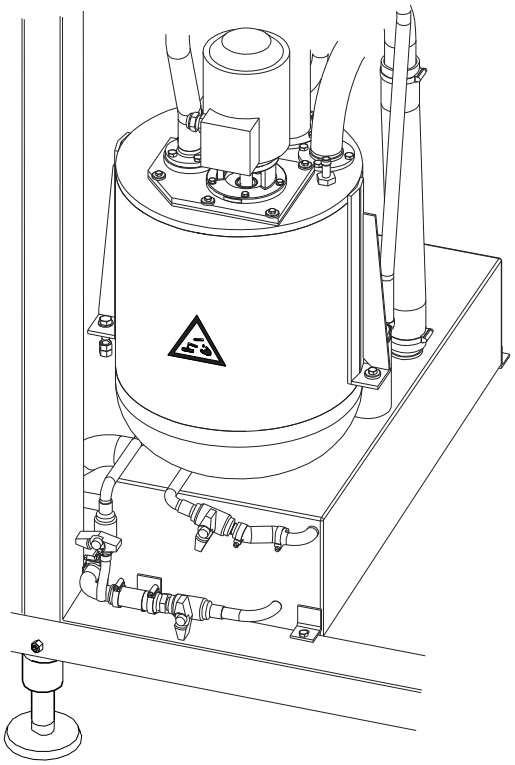

WARNING
Hydrogen Peroxide.
Follow the Safety precautions.

CAUTION
Risk of production fault.
The peroxide must be changed weekly to prevent paper dust and impurities accumulating in the tank. If this is not done, it can lead to peroxide stability problems.

10b

Change the hydrogen peroxide, see Change Hydrogen Peroxide in chapter 10 Sterilization Liquid.

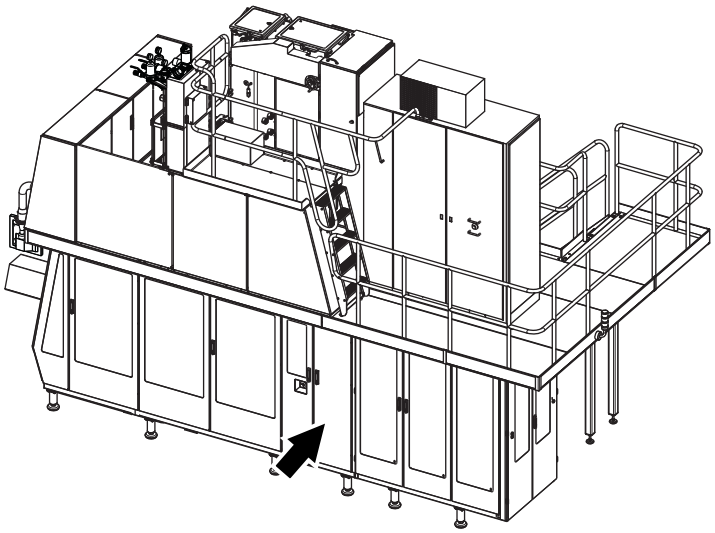

10c

Close the door indicated by the arrow in the illustration.

TechPub_2614345_0106 - 09_2819202_04en.fm

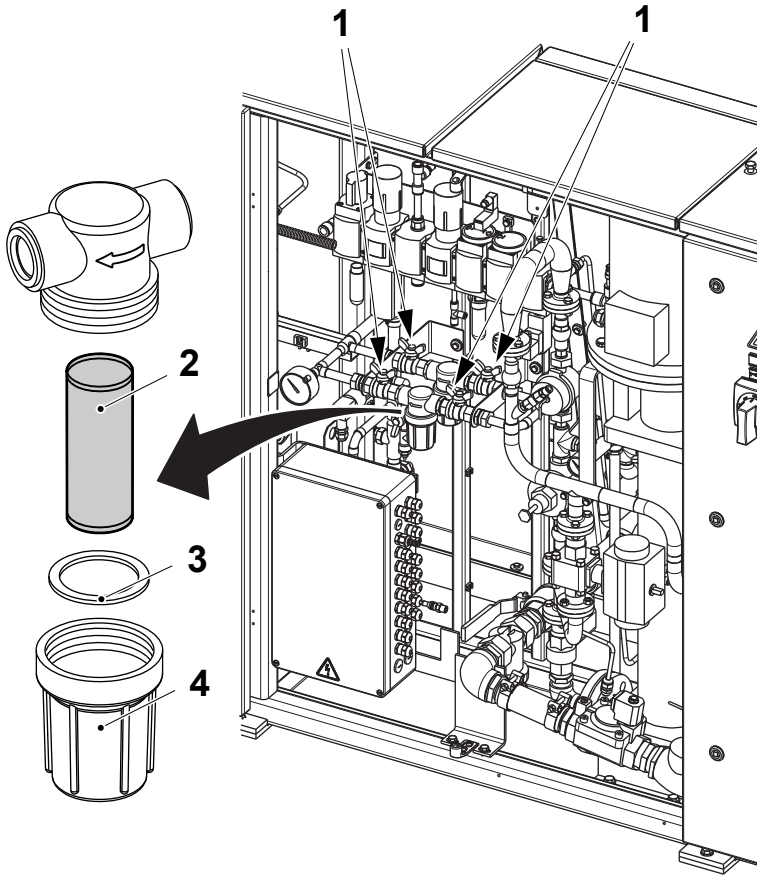

Service Unit

Clean Filters

11

Note! During PRODUCTION only one filtering line must be open.

a) Close the four water valves (1).

b) Unscrew the filter housing (4) and remove the filter insert (2).

c) Clean the filter insert (2) with compressed air or change if required.

d) Check the seal ring (3) for damage. Change as required.

e) Fit the filter insert (2), fit the seal ring (3) and tighten the filter housing (4).

f) Open two of the water valves (1) in one filtering line and make sure that there is no leakage.

Repeat the procedure for the other filter.

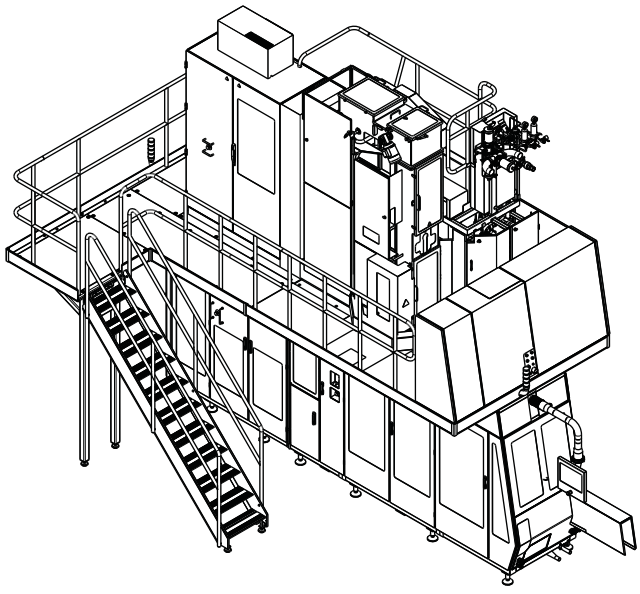

CAUTION
Risk of damage to the equipment.
Do not use flushing water to clean the platform floor.

Platforms and Surfaces

12

Clean the platform floor with a brush. Do not use any water.

Clean the outer machine surfaces with a sponge. Use cleaning compound code **G1** or **G2**.

Polish the stainless steel plating with paraffin oil.

Clean the windows on the machine with a sponge. Use cleaning compound code **G1** or **G2**.

Wipe dry with a clean cloth

Note! For cleaning compound code information, see chapter 11 Technical Data.

TechPub_2614345_0106 - 09_2819202_04en.fm

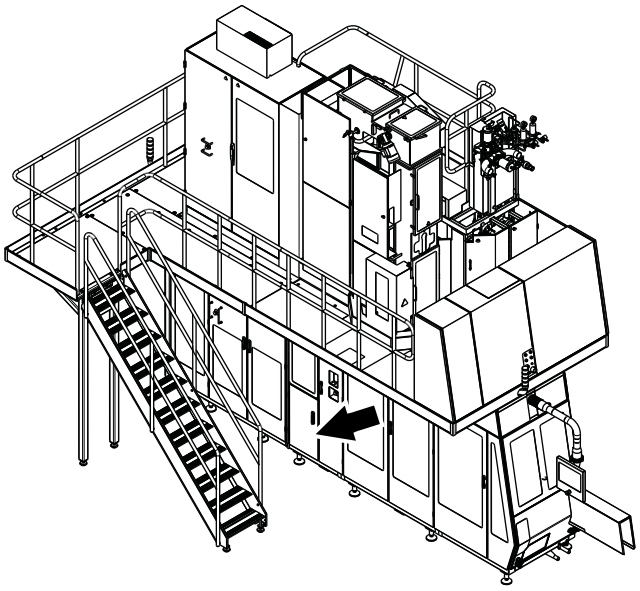

WARNING
Sudden and violent chemical reaction.
Never contaminate hydrogen peroxide with alkali or acid. The door to the hydrogen peroxide container must always be closed during the ICU refilling procedure. Keep spare hydrogen peroxide containers away from the filling machine during the ICU refilling procedure.

Integrated Cleaning Unit (ICU)

Refill Containers

13

Check the level of alkali and acid in the containers.

Open the door to the refilling unit.

TechPub_2614345_0106 - 09_2819202_04en.fm

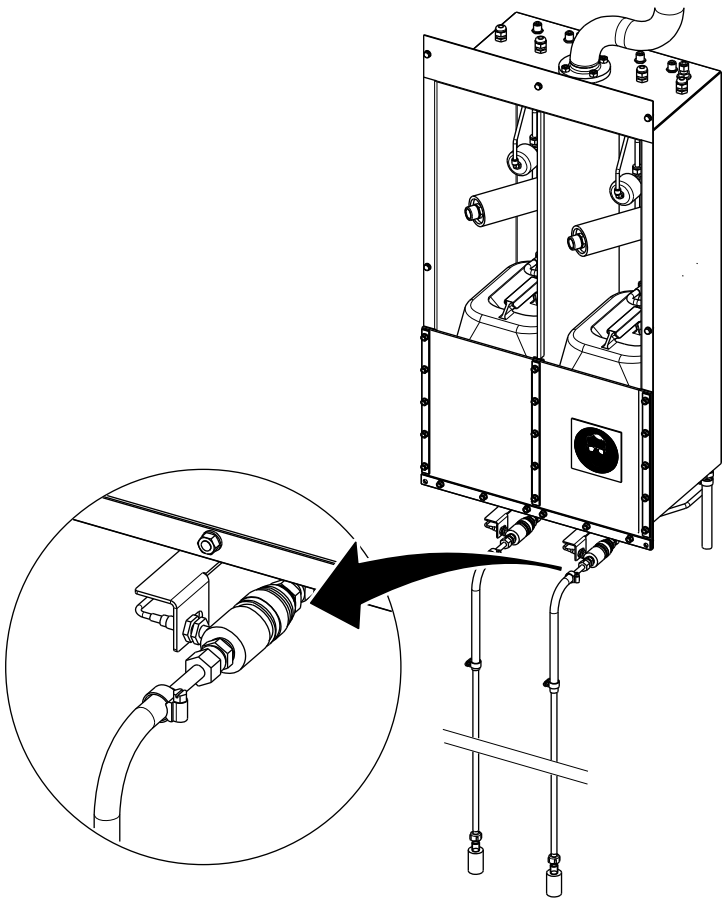

WARNING
Alkali and Acid.
Follow the Safety Precautions.

CAUTION
Risk of damage to the equipment.
The acid (Nitric Acid) concentration should not exceed a maximum of 50%. The alkali (Caustic Soda) concentration should not exceed a maximum of 30%.

13a

Connect the refilling pipe to the appropriate connection.

Step up to PREPARE NEXT PRODUCTION.

Note! The refilling pipe marked with a **yellow** stripe connects to the acid container. The refilling pipe marked with an **orange** stripe connects to the alkali container.



13b

On the TPOP, touch the PRODUCTION CONTROL button.

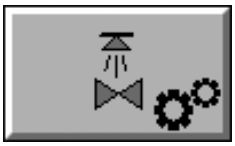

13c

Touch the ICU button.

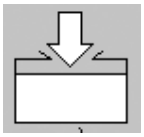

13d

Touch the CHEMICALS REFILLING icon.

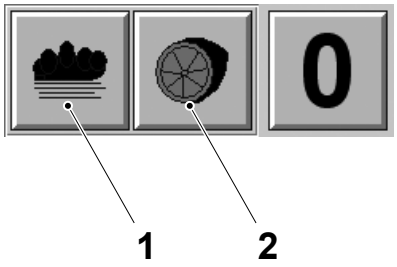

13e

Touch the ALKALI button (1) or the ACID button (2) to start the refilling of the alkali or acid container.

TechPub_2614345_0106 - 09_2819202_04en.fm



13f

Note! If it is necessary to stop the refilling procedure, touch the STOP button.

Refilling is stopped automatically when the maximum level is reached in the container.

Remove the refilling pipes after the refilling procedure.

TechPub_2614345_0106 - 09_2819202_04en.fm

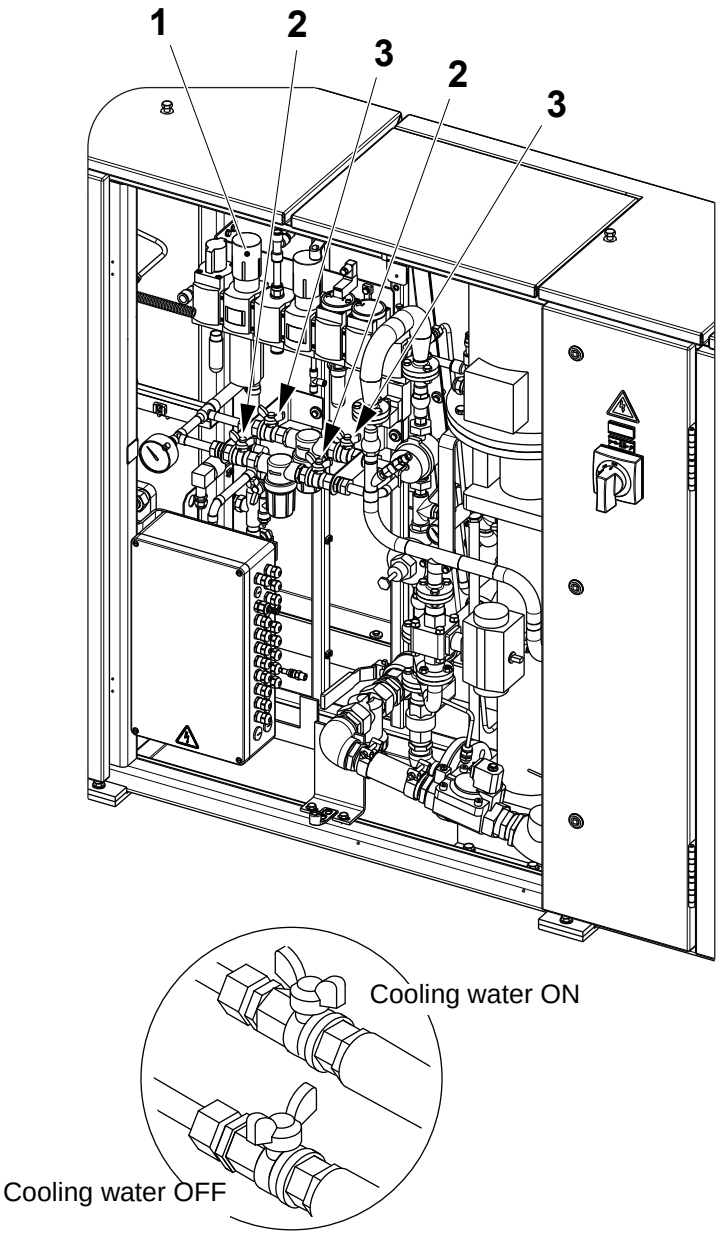

14

Weekly care is now complete. When resuming production after weekly care, start from the Preparing After Weekly Care in chapter 3 Preparation.

If PRODUCTION is not scheduled:

- turn OFF the air supply (1)
- turn OFF the cooling water (2) or (3).

TechPub_2614345_0106 - 09_2819202_04en.fm

10 Sterilization Liquid

TechPub_2614345_0106 - 10_2819202_04en.fm

This chapter describes how to handle hydrogen peroxide.

WARNING
Hydrogen Peroxide.
Follow the Safety Precautions.

TechPub_2614345_0106 - 10_2819202_04en.fm

Concentration Check . . . . . 10 - 5

Peroxide Concentration at Machine Start-up . . . . . .10 - 7

Peroxide Concentration During PRODUCTION . . . . .10 - 7

Hydrogen Peroxide Concentration (by weight) . . . . .10 - 8

Change Hydrogen Peroxide . . . . . 10 - 9

Dilution Tank . . . . . .10 - 9

Change Container . . . . . .10 - 12

TechPub_2614345_0106 - 10_2819202_04en.fm

This page intentionally left blank

TechPub_2614345_0106 - 10_2819202_04en.fm

Concentration Check

This section describes how to manually check the concentration of the hydrogen peroxide.

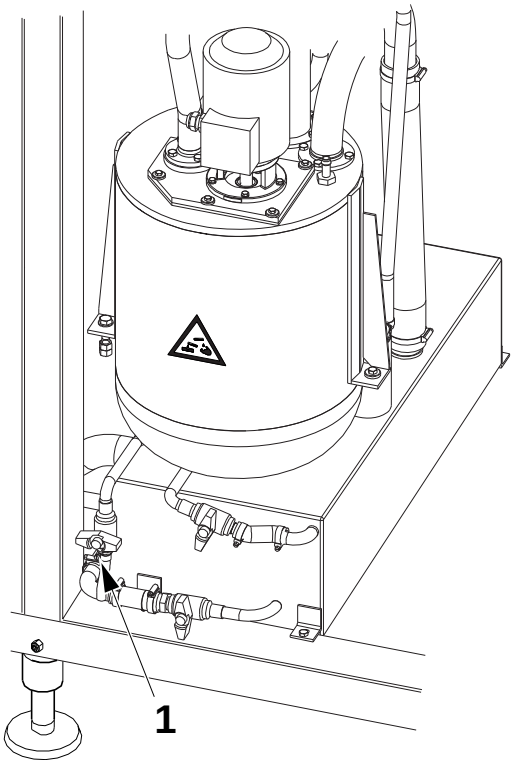

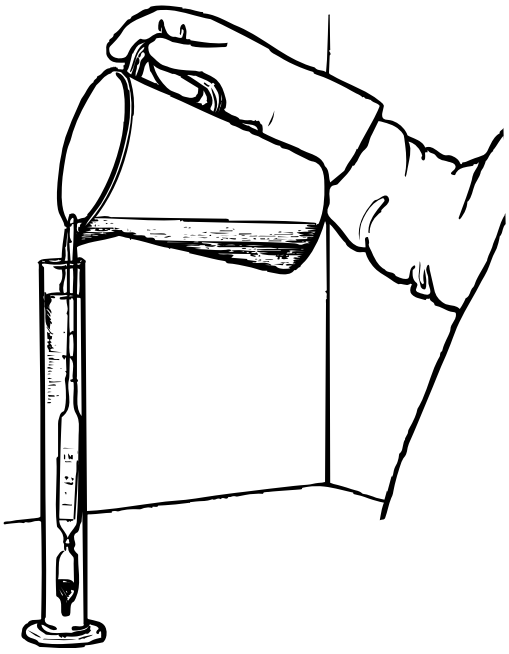

CAUTION

The equipment must be thoroughly cleaned.

1

The following equipment is required:

- aerometer with thermometer
- graduated plastic cylinder with an inside diameter of 35 - 50 mm.

Open the valve (1) and draw approximately 250 ml of hydrogen peroxide from the tank into a clean vessel.

Pour a small amount of hydrogen peroxide into the graduated cylinder.

Lower the aerometer into the cylinder making sure that it contains enough liquid to float the aerometer.

If there are air bubbles on the aerometer, stir gently until the bubbles disappear.

Read the density at the liquid level on the aerometer and **at the same time** read the temperature.

TechPub_2614345_0106 - 10_2819202_04en.fm

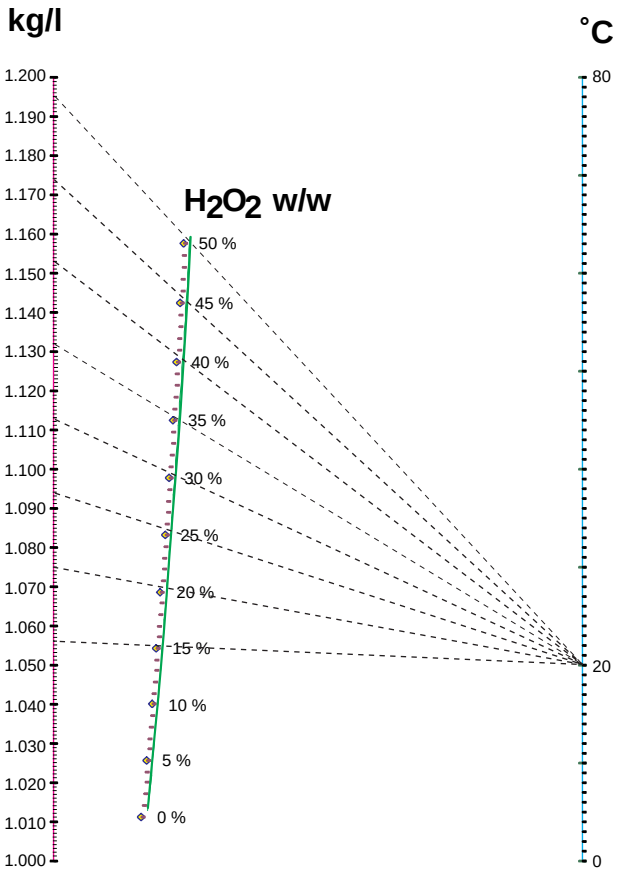

Sample nomogram

2

Evaluate the hydrogen peroxide concentration (in terms of percent by weight) from the nomogram.

With a ruler, join the density value of the sample with the temperature value to get the hydrogen peroxide concentration.

Note! Photocopying and/or resizing the nomogram may distort its accuracy. This could lead to incorrect evaluation of the hydrogen peroxide concentration.

To check the accuracy of the nomogram, refer to the following table reporting the concentration and density values calculated at 20 °C:

°C	kg/l	% w/w
20	1.056	15
20	1.075	20
20	1.094	25
20	1.113	30
20	1.132	35
20	1.153	40
20	1.174	45
20	1.195	50

TechPub_2614345_0106 - 10_2819202_04en.fm

Peroxide Concentration at Machine Start-up

Note! These values are applicable to checks made during PREPARING AFTER DAILY CARE.

3

If the concentration is below **32%** or above **48%**, change the hydrogen peroxide. See Change Hydrogen Peroxide on page 10-9.

If the hydrogen peroxide concentration is between **32%** and **35%**:

- repeat the check every 30 min
- if the concentration decreases, stop the machine and call a technician.

TechPub_2614345_0106 - 10_2819202_04en.fm

Peroxide Concentration During PRODUCTION

Note! These values are applicable to checks made during PRODUCTION.

3a

If the concentration is below **30%** or above **50%**, change the hydrogen peroxide. See Change Hydrogen Peroxide on page 10-9.

If the hydrogen peroxide concentration is between **30%** and **35%**:

- repeat the check every 30 min
- if the concentration decreases, stop the machine and call a technician.

Hydrogen Peroxide Concentration (by weight)

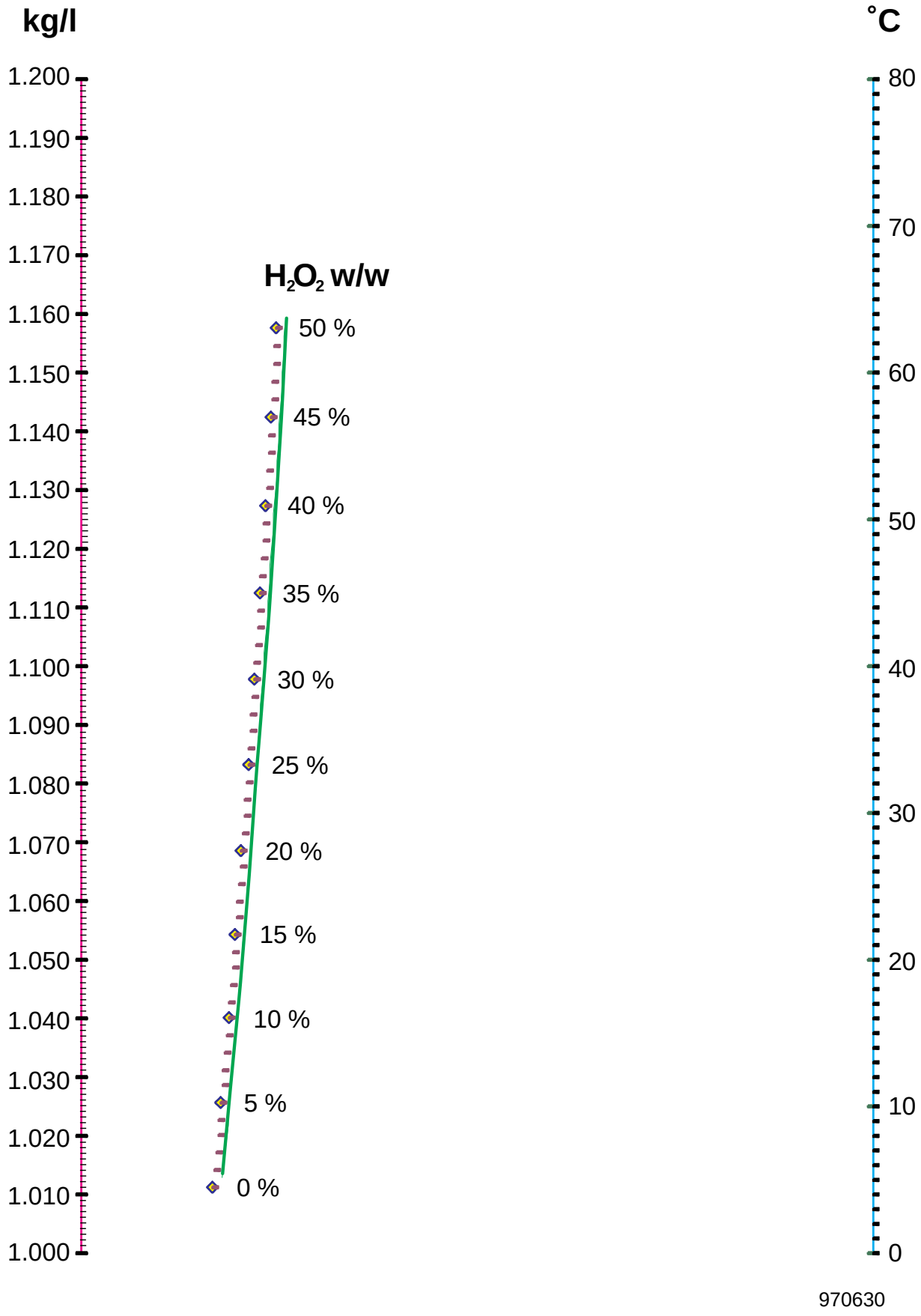

TechPub_2614345_0106 - 10_2819202_04en.fm

Change Hydrogen Peroxide

This section describes how to change the hydrogen peroxide in the dilution tank and how to change the hydrogen peroxide container.

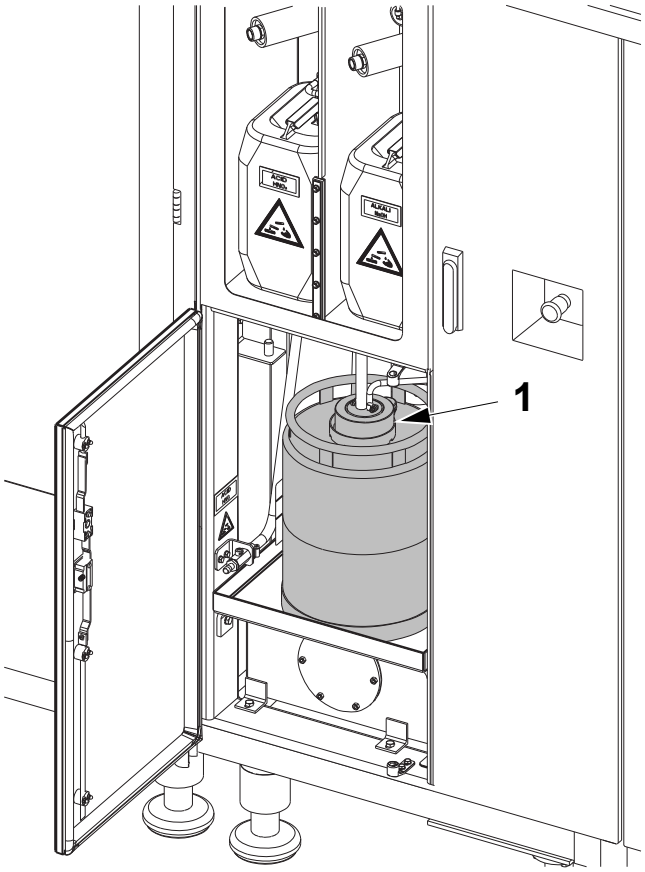

Dilution Tank

1

Lift the cap (1), to disengage the hydrogen peroxide container.

TechPub_2614345_0106 - 10_2819202_04en.fm

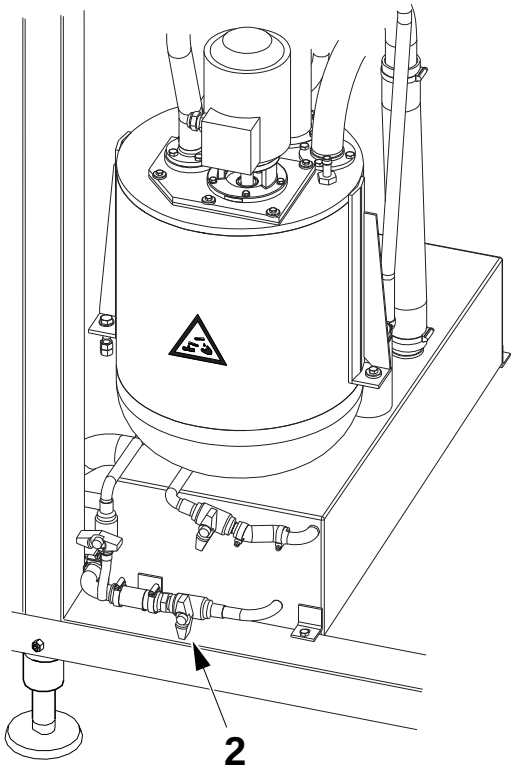

2

Open the valve (2), to empty the dilution tank. It takes approximately 5 minutes.

Note! When the machine has been in production for more than 24 hours, the hydrogen peroxide concentration in the dilution tank is less than 1%.

When the tank is empty, close the valve (2).

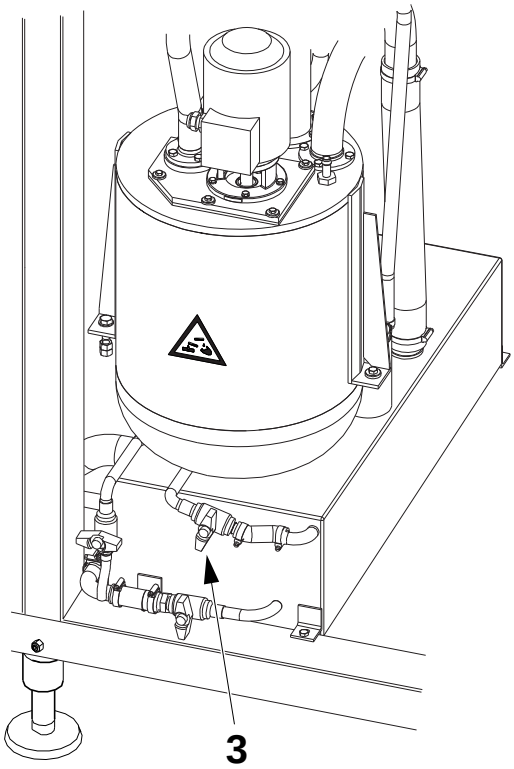

3

Open the valve (3), to drain the hydrogen peroxide from the tank into the dilution tank. It takes approximately 5 minutes.

When the tank is empty, close the valve (3).

TechPub_2614345_0106 - 10_2819202_04en.fm

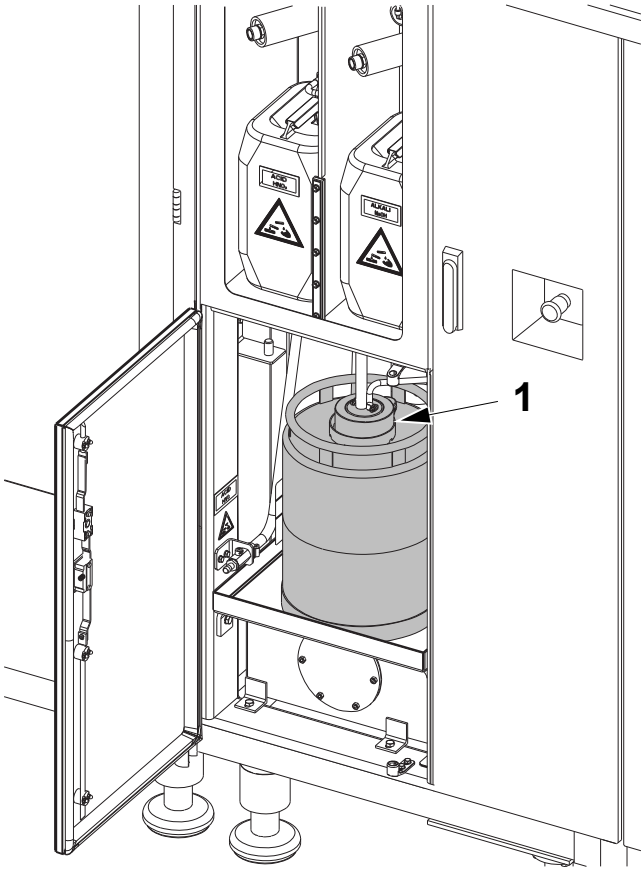

4

Fit the cap (1), to engage the hydrogen peroxide container.

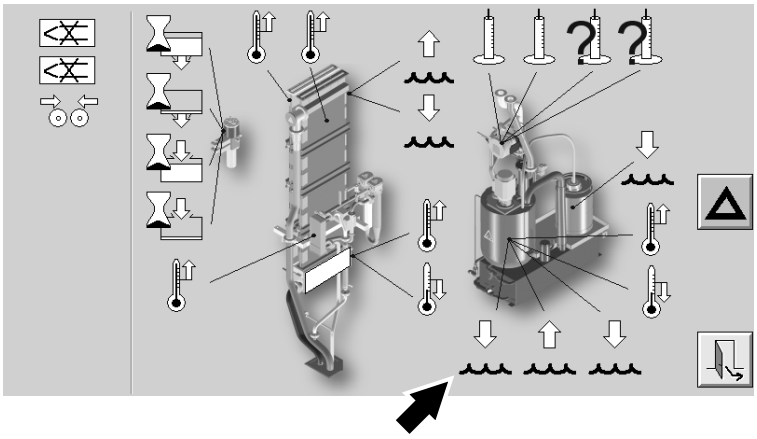

5

Follow the instructions on the TPOP when the alarm PEROXIDE CONTAINER LEVEL lights up.

Change the hydrogen peroxide container, see Change Container in this section.

It takes approximately three full containers to fill up the hydrogen peroxide tank.

TechPub_2614345_0106 - 10_2819202_04en.fm

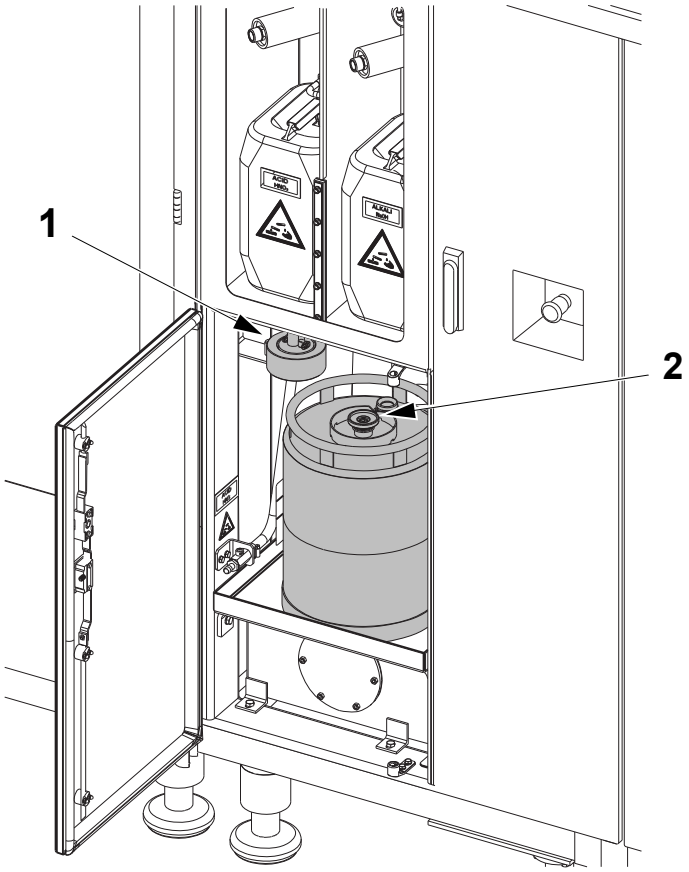

WARNING

Hydrogen Peroxide.

Always transport and keep the hydrogen peroxide container stored with the lid (2) installed.

Change Container

1

Lift the cap (1) to disengage the hydrogen peroxide container.

Put the lid (2) onto the connection and tighten it.

Remove the container from the filling machine.

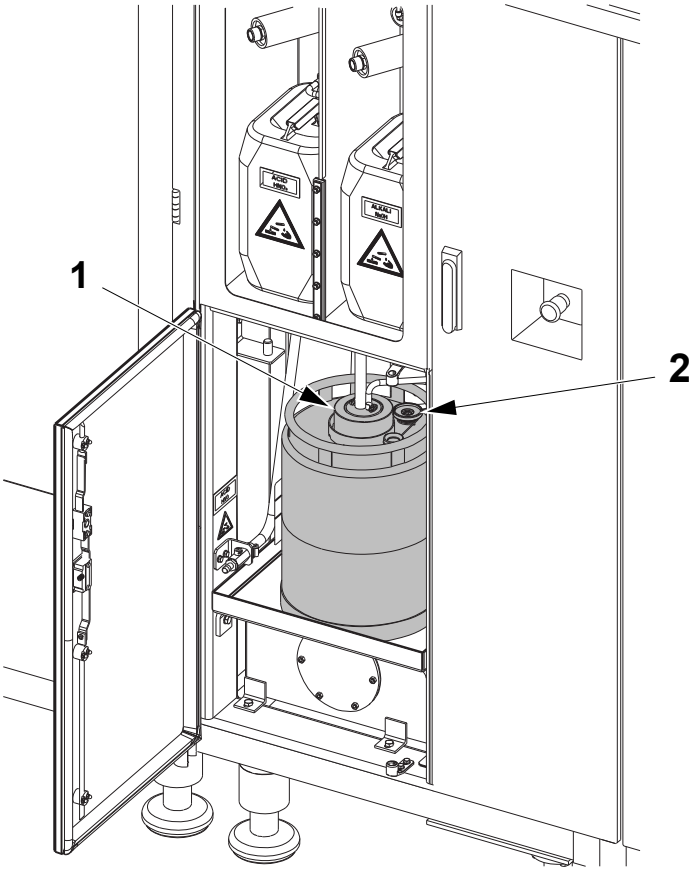

2

Place a **full** container with 35% w/w hydrogen peroxide into the filling machine.

Remove the lid (2) and place it to one side.

Fit back the cap (1) to engage the hydrogen peroxide container.

TechPub_2614345_0106 - 10_2819202_04en.fm

11 Technical Data

TechPub_2614345_0106 - 11_2819202_04en.fm

This chapter provides the standard values for setting this machine and information on the recommended chemicals and lubricants to be used with this machine.

TechPub_2614345_0106 - 11_2819202_04en.fm

Setting Values . . . . . 11 - 5

Pressure Setting Values . . . . . 11 - 5

Temperature Setting Values . . . . . 11 - 8

Coolant Flow Values . . . . . 11 - 10

Consumption Data . . . . . 11 - 11

Consumables . . . . . 11 - 11

Miscellaneous. . . . . 11 - 11

Cleaning Compounds . . . . . 11 - 12

Lubricant Recommendations . . . . . 11 - 14

Maximum Waiting/Stop Time Recommendations . . . . . 11 - 16

TechPub_2614345_0106 - 11_2819202_04en.fm

This page intentionally left blank

TechPub_2614345_0106 - 11_2819202_04en.fm

Setting Values

This section provides the correct setting values for this machine.

Pressure Setting Values

Pressure	Symbol	Value (bar)
Air spray	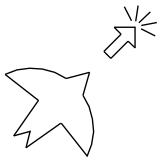	2.0
Central lubrication oil		30
Cold water	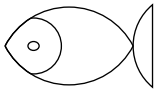	3.0 to 4.5
Cooling water system		2.0
Flap blowing	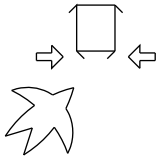	2.0 to 3.0
Flap sealing top left and right	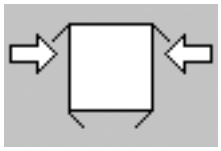	1.0 to 2.0
Flap sealing bottom left and right	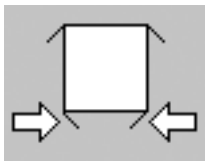	1.0 to 2.0
Foaming	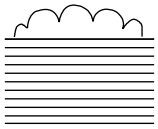	5.0

(Cont'd)

TechPub_2614345_0106 - 11_2819202_04en.fm

(Cont'd)

Pressure	Symbol	Value (bar)
Peroxide tank filling		0.2
Product pressure (dependant on product and local conditions)		0.5 to 2.5
Temperature control steam barrier	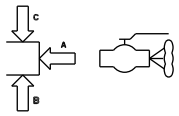	2.0
Calender roller	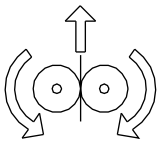	4.0 (TBA 2000 S) 2.0 (all other packages)
Photocells, design correction, air	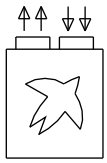	0.2
Warm water (red)	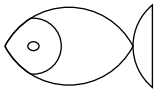	3.0 to 4.5
Air	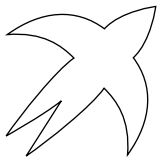	6 to 7
Waste conveyor front guard	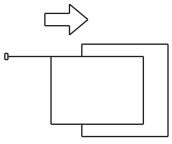	1.0
Main air, ASU	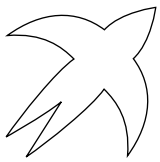	5 to 6

(Cont'd)

TechPub_2614345_0106 - 11_2819202_04en.fm

(Cont'd)

Pressure	Symbol	Value (bar)
Web tension, ASU	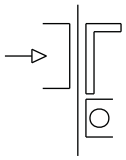	2.0
Jumbo brake, ASU	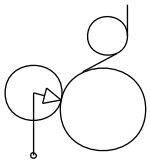	0.6 - 0.8
HI peroxide spray (OE)	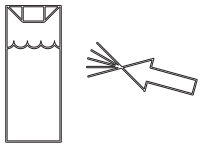	3.0

TechPub_2614345_0106 - 11_2819202_04en.fm

Temperature Setting Values

Temperature	Symbol	Process Value (°C)
Air superheater	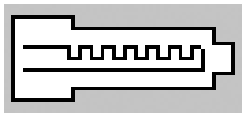	360
Main cooling water	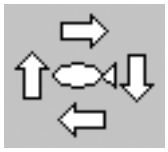	10 to 12
Flap heating, top (left and right)	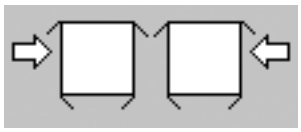	390 ± 20 (the parameter is set in the recipe and is depending on the product and the packaging material being produced)
Flap heating, bottom (left and right)	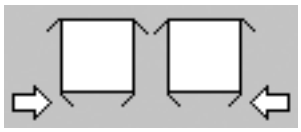	530 ± 20 (the parameter is set in the recipe and is depending on the product and the packaging material being produced)
Heat sterilization	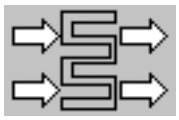	280
Cooler electrical cabinet		30 to 38
Heat exchanger	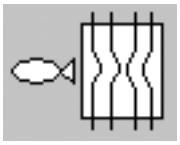	86

(Cont'd)

TechPub_2614345_0106 - 11_2819202_04en.fm

(Cont'd)

Temperature	Symbol	Process Value (°C)
Aseptic chamber	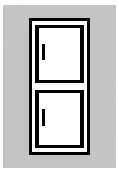	78
Peroxide bath		79
Peroxide tank	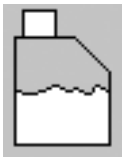	86
Steam (sterilization)	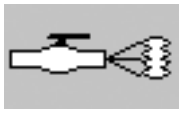	130
Steam (other phases)	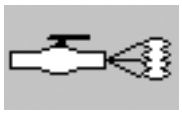	110

TechPub_2614345_0106 - 11_2819202_04en.fm

Coolant Flow Values

Flow	Symbol	Value (litre/minute)
Cold water flow, TS right	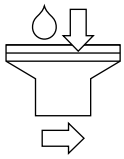	0.8
Cold water flow, TS left	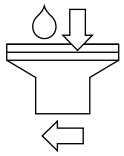	0.8
Cold water flow, final folder	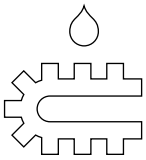	2.0
Cold water flow, hydraulic cooler	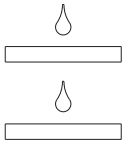	2.0
De-ionizing circuit	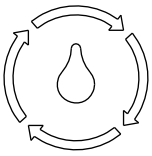	1.5
Cold water flow, LS transformer	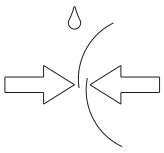	1.0
Tube flushing	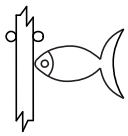	0.3 to 0.5
Conveyor flushing	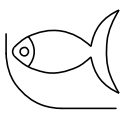	0.3 to 0.5

TechPub_2614345_0106 - 11_2819202_04en.fm

Consumption Data

Consumption	Unit	Value
Hydrogen peroxide	% w/w	35
	l/h	1.5 to 2.0
Alkali cleaning detergent	l/h	1.2
Alkali cleaning detergent (ICU)	l/cycle	1.0
Acid (ICU)	l/cycle	0.45

Consumables

Standard Consumable Materials		
Leak detection fluid (red ink)	TP No.	90298-26
LS strip:		
- MPM	TP No.	8856-951-01
- MSE	TP No.	8858-951-01
- MWM	TP No.	8854-951-01

Miscellaneous

Reamer (for HI nozzle)	TP No. 90600-5057 for nozzle Ø 0.3 TP No. 90600-5347 for nozzle Ø 0.4 TP No. 90600-5348 for nozzle Ø 0.5 TP No. 90600-5349 for nozzle Ø 0.6

TechPub_2614345_0106 - 11_2819202_04en.fm

Cleaning Compounds

WARNING

Risk of explosion.

Cleaning with not recommended cleaning agents, for example agents including alcohol, could cause explosion. Use only Tetra Pak recommended cleaning agents when cleaning or disinfecting parts that can come into contact with hydrogen peroxide.

It is strongly recommended, in order to optimize the cleaning efficiency, to use water characterised by the following physicochemical parameters:

- water quality; chlorine free, drinkable water
- pH; between 6 and 8 pH units
- water hardness; between 5 and 10 °f French degrees of hardness (between 3 and 6 German degrees of hardness)
- chlorides; lower than 50 ppm
- silicates; lower than 10 ppm (in order to reduce the formation of solid deposits difficult to be removed).

(Cont'd)

TechPub_2614345_0106 - 11_2819202_04en.fm

(Cont'd)

Cleaning Compound Table

Comparable qualities from other suppliers may be selected in compliance with the technical requirements listed in the table. All cleaning compounds must comply with local legal requirements.

The supplier recommendations for concentration and temperature should be followed. When dosing the products automatically, the concentration should be checked.

Cleaning Type	TP Code		Detergent Type	Example 071119									
				Raw Material				Formulated Products					
				Name	Max Conc w/w	Use Conc w/w	Use Temp °C	Ecolab	Use Conc. w/w	Use Temp. °C	Johnson Diversey	Use Conc. vol/ vol	Use Temp. °C
CIP	A	1	Alkali	NaOH	30%	1.50%	80	P3-mip CIP	2.0%	80	VC 13 VC 7	3.0% 4.5%	80
	B	1	Acid	HNO_3	50%	1.00%	60	P3-horolith L31	1.0%	60	VA 5	2.0%	60
External Cleaning (automatic)	C	1	Alkali foam (**)					P3-Topax 12	3.0%	25	VF 9	3.0%	25
		2	Alkali solution (***)					P3-mip FPC	2.0%	55	VK 12	1.0%	55
Manual Cleaning (wiping)	D	1	Alkali					P3-mip FPC	2.0%	25	VK 12	1.0%	25
Manual Disinfection (immersion)	F	1	Low alkali					P3-Topax 99	2.0%	25	VS 1	1.0%	25
		2	Low alkali					P3-Steril	2.0%	25	VT 1	1.0%	25
		3	Acid solution	Peracetic acid solution	15%	200ppm	25	Oxonia Active	0.50%	25	VT 6	0.10%	25
Manual Disinfection (spraying)	G	1	Alcoholic solution	Isopropanol			25	Spitaderm	Pure	25	VT 10	pure	25
		2	Alcoholic solution	Ethanol			25	Alcodes	Pure	25			25
		3	Acid solution	Peracetic acid solution	15%	200ppm	25	Oxonia Active	0.50%	25	VT 6	0.10%	25
Hand Disinfection	H	1						Manodes	pure	25	H34	pure	25

**To be used on TBA/21, TBA/22, TP A3/Flex, TP A3/Speed, TB/21, TP C3/Flex.

***To be used on TBA/8, TBA/9, TBA/19, TB/8, TB/9, TB/19.

TechPub_2614345_0106 - 11_2819202_04en.fm

Lubricant Recommendations

The table below lists only a selection of lubricants with their respective designations. Comparable lubricants from other suppliers may be selected with the aid of the lubricant specifications (document No in the table).

Lubricant specifications may be ordered from:

Tetra Pak GTS AB - Parts Supply Chain

Ruben Rausings gata - S-221 86 LUND, Sweden.

Lubricant Code	**Part No. (used when ordering from Tetra Pak)**	**Supplier**	**Product Designation** (2004-06)
A Motor oil	90 296-0028	Shell	Shell Rimula Oil X 10W-30
B High-pressure oil	330002-2201 330002-2202	Shell	Shell Cassida Fluid GL 220
	90296-0072 For use in production plant with start temperature below 5 °C	Shell	Shell Omala Oil 150
C Hydraulic oil	90296-0053	Shell	Shell Tellus Oil T 32
D Mist lubrication oil	90296-0080	Shell	Shell Dontax Oil TA
E Compounded cylinder oil	90296-0002	Shell	Shell Valvata Oil J460
F Lithium grease, EP type	90296-0068	Shell	Shell Alvania Grease EP2
H High-pressure oil	330002-3201 330002-3202	Shell	Shell Cassida Fluid GL 320
K Circulation oil	90296-0015	Shell	Shell Tellus Oil 100
L Silicon grease	90296-0009		Dow Corning 7
M Lithium grease, EP type	90296-0070	Shell	Shell Alvania Grease EP1
N PTFE grease	90296-0091	PINCO	Teflon Grease
P Synthetic compressor oil	90296-0054	Shell	Shell Corena Oil H68
Q Low friction assembly paste	90296-0012	Dow Kluber	Molykote G-N Plus Unimoly Plus

TechPub_2614345_0106 - 11_2819202_04en.fm

Lubricant Code	Part No. (used when ordering from Tetra Pak)	Supplier	Product Designation (2004-06)
R Synthetic grease	90459-7413 90459-7414	Kluber	Klubersynth UH1 14-1600
S Synthetic hydrocarbon grease	90296-0010	Mecman	435-1
T Synthetic lubricating grease	90459-0340	Shell	Cassida HDS2
U Hydraulic fluid	90459-1310	Shell	Cassida Fluid HF32
V Oil	90296-0104	Molykote	Molykote Foodslip EP Gear Oil 220
W Hydraulic fluid	90458-1427	Shell	Shell Tellus Oil T46
Y Lubrication oil	90458-2735	Mobil	Mobil SHC 634
Z Lubrication oil	90459-1041	Shell	Tivela S460

TechPub_2614345_0106 - 11_2819202_04en.fm

Maximum Waiting/Stop Time Recommendations

These recommendations are only valid for the production of plain white milk and plain fruit juice. The maximum duration of stops and waiting times for products other than plain white milk and plain fruit juice must be evaluated by each customer case by case.

The duration of stops and waiting times should, in all cases, not exceed the recommendations provided in this table.

Note! The duration of the Production phase in a food processing and packaging plant is highly product dependant and any limitations are generally related to phenomena affecting the thermal processing equipment, e.g. fouling of heat exchangers.
The duration of the Production phase is decided by each customer according to product type, best practice, risk management, economical considerations, etc. As a general indication, Tetra Pak recommends not to exceed a period of 24 hours.

(Cont'd)

TechPub_2614345_0106 - 11_2819202_04en.fm

(Cont'd)

TB No. TBA_2008_01_01 Date 2008-03-20

Machine type*	1: Maximum waiting time between End of Production and CIP start	2: Maximum waiting time between end of CIP and start of CIP Drying	3: Maximum waiting time between end of CIP and start of Disinfection	4: Maximum idle time between end of CIP and restart of operations	5: Maximum stop time during Production****	6: Maximum duration of the Production phase
Non-platform**	2 hours	n/a	TB machines: 5 hours TBA machines: n/a	36 hours	2 hours	Product dependent. Tetra Pak recommendation : 24 hours.
TB/21		n/a	5 hours			
TBA/21		5 hours***	n/a			
TBA/22		5 hours***	n/a			
TP C3/Flex		n/a	5 hours			
TP A3/Flex		5 hours	n/a			
TP A3/ CompactFlex		5 hours	n/a			
TP A3/Speed		5 hours	n/			

* Models not listed here are not covered by these recommendations

** TBA/3, TB-TBA/8, TB-TBA/9, TB-TBA/19 and earlier machine systems

*** Machines with PLC program updated to include CIP Drying

**** Jaw inching every 10 minutes recommended for Chilled/XH machines. Sterile jaw inching every 20 minutes recommended for Aseptic machines.

TechPub_2614345_0106 - 11_2819202_04en.fm

This page intentionally left blank

TechPub_2614345_0106 - 11_2819202_04en.fm